January 2022

# Operation & Maintenance Manual
# Saline Effluent Treatment Plant (SETP-WTC)
# Water Treatment Complex

In Accordance with Water License 2AM-MEL1631

Prepared by:
Agnico Eagle Mines Limited – Meliadine Division

## EXECUTIVE SUMMARY

The Nunavut Water Board (NWB) has issued Type A Water License 2AM-MEL1631 to Agnico Eagle Mines Limited (Agnico Eagle) for the Meliadine gold mine, authorizing the use of water and the disposal of waste required by mining, milling, and associated uses.

Agnico Eagle has prepared the following document which summarizes the operational and maintenance procedures to be followed at the Saline Effluent Treatment Plant (SETP-WTC) located in the Water Treatment Complex building (WTC).

This document is the stand-alone Operation & Maintenance Manual – Saline Effluent Treatment Plant, as specified under Water License 2AM-MEL1631 Part F, Item 9 and includes the following requirements:

- The manual was prepared in accordance with the “Guidelines for the Preparation of an Operation and Maintenance Manual for Sewage and Solid Waste Disposal Facilities in the Northwest Territories, 1996”, and adapted for the use of a mechanical contact water treatment facility;
- The manual includes contingency measures in the event of a plant malfunction; and
- The manual includes sludge management procedures.

## IMPLEMENTATION SCHEDULE

As required by Water License 2AM-MEL1631, Part D, Item 10, the proposed implementation schedule for this Plan is outlined below.

This Plan will be implemented upon the Board approval and is subject to any modifications proposed by the NWB, as a result of the review and approval process.

## DISTRIBUTION LIST

Agnico Eagle Internal:

- Water Management General Supervisors (Env. and E&I)
- Water Management Supervisors
- Water Management Process Engineer
- Environment Superintendent
- E&I Superintendent
- Environment General Supervisor
- RMMS&Compliance Coordinator
- Saline Effluent Treatment Plant Operators

## DOCUMENT CONTROL

| Version | Date (YMD) | Section | Page | Revision |
|---|---|---|---|---|
| 0 | 28/01/2022 | | | Operation and Maintenance Manual |
| | | | | |

# TABLE OF CONTENTS

**1 INTRODUCTION ..... 7**

1.1 Purpose ..... 7
1.2 Brief Description of the Project ..... 7
1.3 Contact Information ..... 10

**2 DESCRIPTION ..... 11**

2.1 Saline Effluent Treatment Plant (SETP-WTC) ..... 11
2.1.1 Process summary ..... 11
2.1.2 Break point chlorination ..... 14
2.1.3 Dechlorination ..... 15
2.1.4 Clarification step ..... 15
2.1.5 Polishing Filtration ..... 16
2.1.6 pH Adjustment Tank ..... 17
2.1.7 Service Water System ..... 17
2.2 Reagents ..... 18
2.3 Solid Waste Management ..... 19
2.4 Controls ..... 20

**3 OPERATION AND MAINTENANCE ..... 21**

3.1 Pumping ..... 21
3.2 Mixers ..... 21
3.3 Reagent preparation ..... 21
3.4 Clarifiers ..... 22
3.5 Filtration ..... 22
3.6 Troubleshooting and Maintenance Procedures ..... 23
3.7 Effluent Quality control ..... 23
3.8 Monitoring ..... 24
3.9 Record Keeping ..... 26
3.10 Safety Procedures For Operators ..... 27
3.11 Controlling Access to the WTC ..... 27

**4 EMERGENCY RESPONSE ..... 28**

4.1 Fire ..... 28
4.2 Spill ..... 28
4.3 Plant Malfunction ..... 28

## LIST OF FIGURES

Figure 1 – Location of Meliadine WTC in red ..... 8
Figure 2 – General Arrangement within the WTC ..... 9
Figure 3 – Flowsheet ..... 13
Figure 4 – Break point determination ..... 14
Figure 5 : Actiflo® Process ..... 15
Figure 6 : Discfilter ..... 17

## LIST OF APPENDICES

Appendix A: Drawings
Appendix B: PID
Appendix C: SDS Sheets
Appendix D: Functional Description
Appendix E: Pump specifications
Appendix F: Operations et Maintenance Manuals
Appendix G: Laboratory Testing

# 1 INTRODUCTION

## 1.1 PURPOSE

The Saline Effluent Treatment Plant (SETP-WTC) Operation and Maintenance Manual (OMM) for the Meliadine Gold Mine (the Project) has been prepared in accordance with the Nunavut Water Board (NWB) Type A Water License 2AM-MEL1631 (Type A Licence), Part F, item 9, and is based on the "*Guidelines for the Preparation of an Operation and Maintenance Manual for Sewage and Solid Waste Disposal Facilities in the Northwest Territories, 1996, prepared by the Department of Municipal and Community Affairs, NWT*". The manual has been adapted for an industrial water treatment facility.

This manual is a component of the Meliadine Environmental Management System. The objectives of this plan are summarized as follows:

1. To define the location, design and operating procedures to be used in the treatment of water generated at the Project; and
2. To provide the monitoring requirements for the SETP-WTC.

## 1.2 BRIEF DESCRIPTION OF THE PROJECT

Agnico Eagle Mines Limited (Agnico Eagle) is operating the Meliadine gold mine located approximately 25 km north of Rankin Inlet, and 80 km southwest of Chesterfield Inlet in the Kivalliq Region of Nunavut. The site is located on the peninsula between the East, South, and West basins of Meliadine Lake (63°01'23.8"N, 92°13'6.42"W). The area is accessible from the all-weather access road linking the Meliadine mine site with Rankin Inlet.

The current mine plan focuses on the development of the Tiriganiaq gold deposit which will be mined using both conventional open-pit and underground mining operations. Current mining facilities to support the mine include a plant site and accommodations, tailings storage facility, waste rock storage facilities, ore storage pads, process plant, power plant, maintenance facilities, water management treatment plants and supporting infrastructures.

Such infrastructures include water retention dikes, berms, culverts, channels, collection ponds, pumping stations, freshwater intake and water treatment plants. These infrastructures are required to manage water during pre-production, operation, and interim mine closure. In 2019, a Saline Effluent Treatment Plant (SETP), providing water treatment prior to discharge to Melvin Bay, was constructed with a design flowrate of 800 $m^3$/day. The facility was upgraded in 2020 to treat up to 1600 $m^3$/day (see design report 6526-680-132-REP-001).

To support the water management plan for the Life of Mine (LOM), a new saline effluent treatment plant located in the water treatment complex (WTC), is required. In this document, the new plant will be referred to as the SETP-WTC. TIt will be located in the WTC building already approved by the NWB (see design report 6526-694-132-REP-001 and As-built report 6526-694-132-REP-002). The SETP-WTC will be located in the same building as the Effluent Water Treatment Plant (EWTP-WTC). The EWTP-WTC has been already approved within the Design Report 6526-693-132-REP-001 and the As-built Report 6526-693-132-REP-003. No change to the functionality of the EWTP-WTC is expected from the addition of the SETP-WTC. Figures 1 and 2 illustrate the location and general arrangement of the WTC.

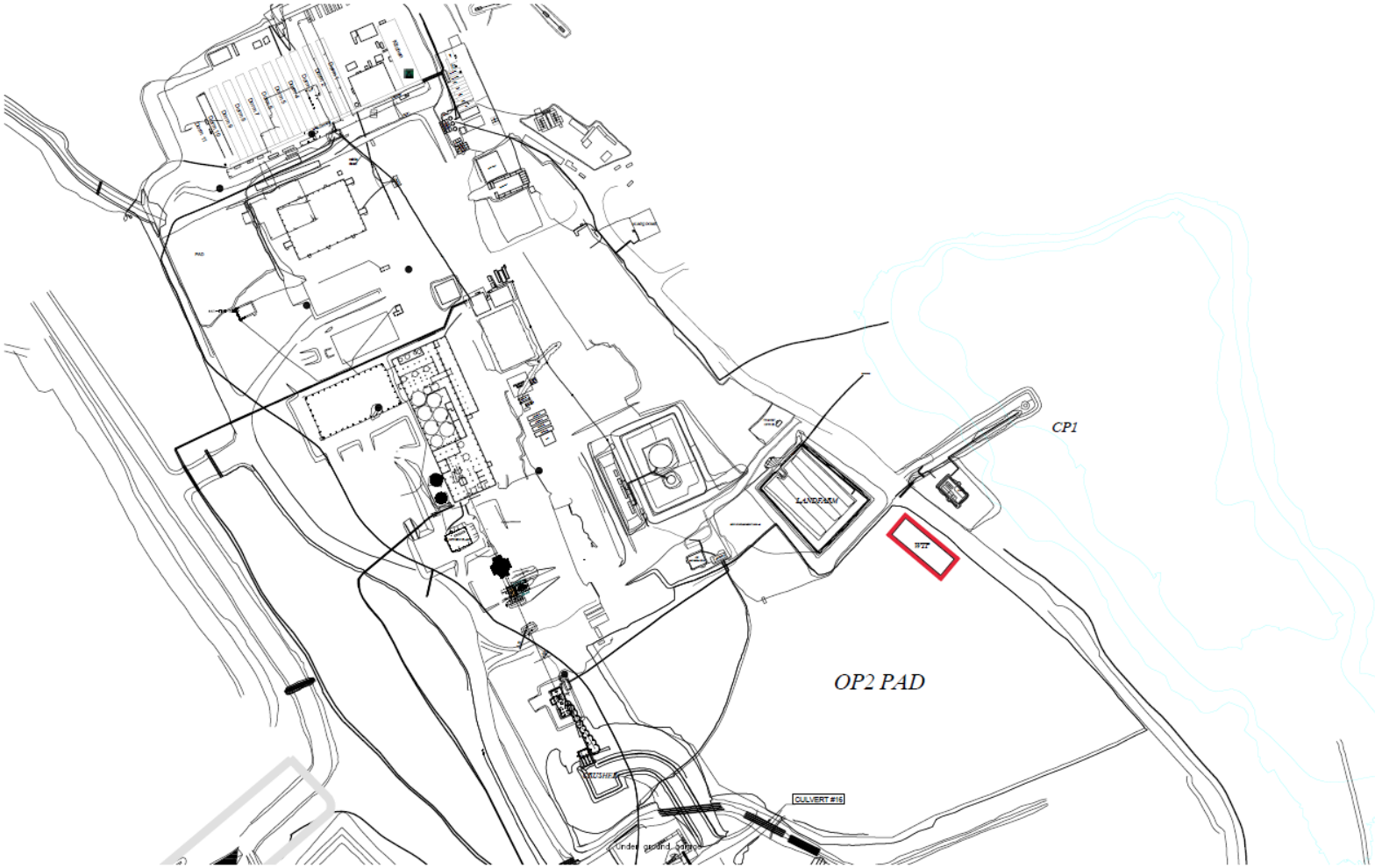


**Figure 1 – Location of Meliadine WTC in red**

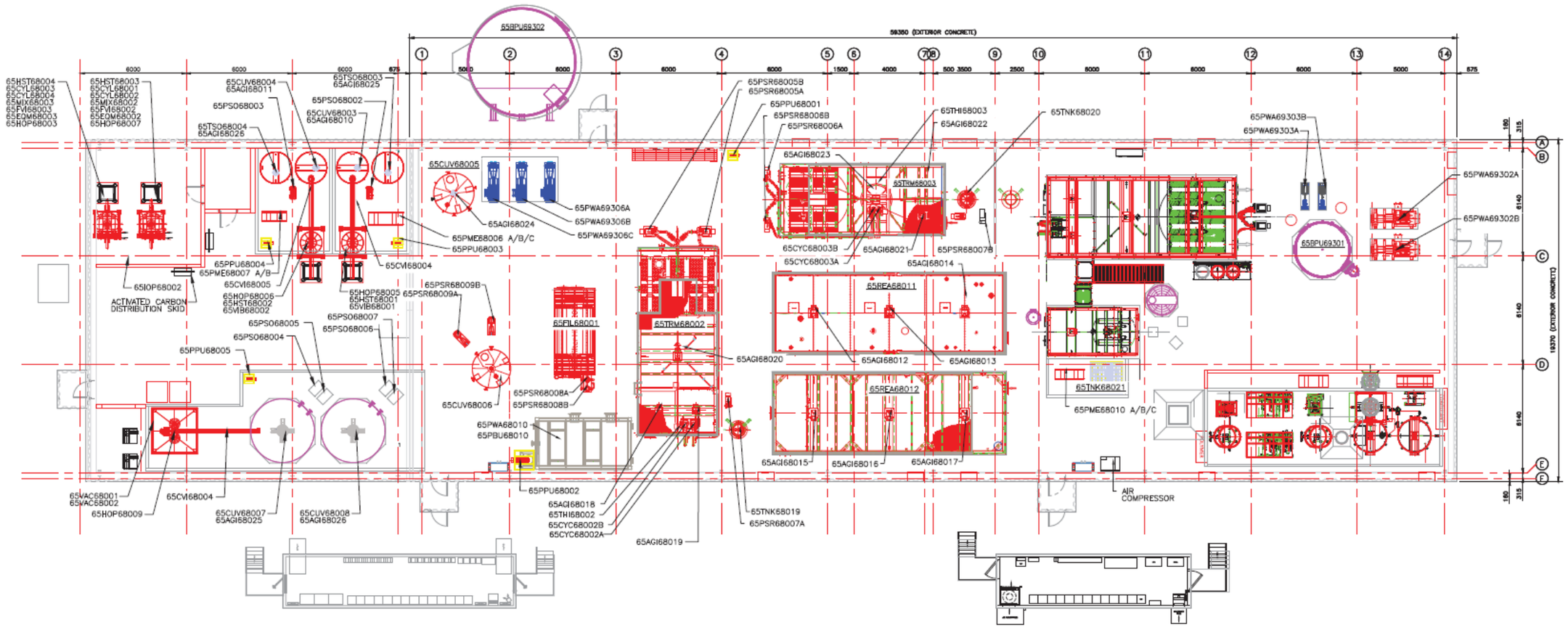


**Figure 2 – General Arrangement within the WTC**

## 1.3 CONTACT INFORMATION

The individuals responsible for the operation of the SETP-WTC are the following:

| | |
|---|---|
| E&I Water Management General Supervisor | 819-759-3555 ext 4603063 |
| E&I Superintendent | 819-759-3555 ext 4603161 |

# 2 DESCRIPTION

## 2.1 SALINE EFFLUENT TREATMENT PLANT (SETP-WTC)

### *2.1.1 Process summary*

The Raw water feeding the SETP-WTC will be pumped to two parallel treatment lines.

One line is used for ammonia and TSS removal through a break point chlorination process and TSS clarification. This line is composed of the following steps:

- Oxidation of ammonia in nitrogen gas in a mixed reactor using calcium hypochlorite solution. In this step, pH is controlled by caustic and sulphuric acid addition.
- Dechlorination using powder activated carbon to remove the excess of chlorine, followed by an addition of sodium thiosulfate for chlorine removal polishing.
- TSS removal using a sand ballasted clarifier (Actiflo®). Addition of coagulant, flocculent and microsand is required to achieve high removal rates of TSS

The second line is composed of the following step:

- TSS removal using a sand ballasted clarifier (Actiflo®). Addition of coagulant, flocculent and microsand is required to achieve high removal rates of TSS

Both lines are then conveyed in a polishing filtration step using a disk filtration system prior to being pumped in the water line pumping station, where pH can be adjusted with sulphuric acid if needed.

The treatment concept is presented in Figure 3. The layout of the SETP-WTC (including the EWTP-WTC) is presented in Appendix A. The piping and instrumentation diagrams (P&ID) can be found in Appendix B.

Design basis of the SETP-WTC are presented in the Design Report 6526-680-132-REP-006.

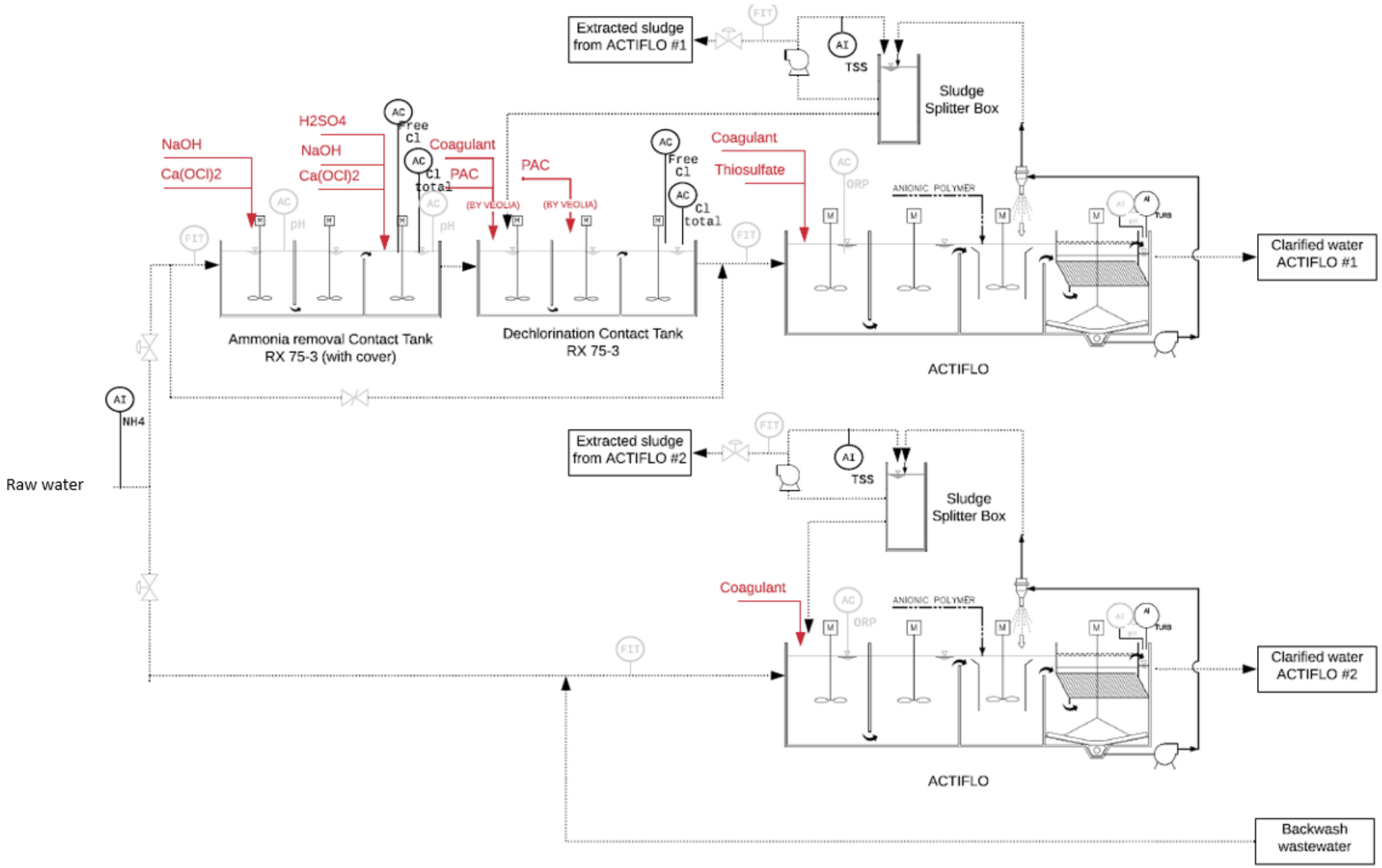
Extracted sludge from ACTIFLO #1
FIT
AI
TSS
Sludge Splitter Box
NaOH
Ca(OCl)2
H2SO4
NaOH
Ca(OCl)2
AC
Free Cl
Cl total
Coagulant
PAC
(BY VEOLIA)
PAC
(BY VEOLIA)
AC
Free Cl
AC
Cl total
Coagulant
Thiosulfate
AC
ORP
ANIONIC POLYMER
AI
TURB
pH
pH
FIT
Ammonia removal Contact Tank
RX 75-3 (with cover)
Dechlorination Contact Tank
RX 75-3
ACTIFLO
Clarified water
ACTIFLO #1
AI
NH4
Raw water
Extracted sludge from ACTIFLO #2
FIT
AI
TSS
Sludge Splitter Box
Coagulant
AC
ORP
ANIONIC POLYMER
AI
TURB
FIT
ACTIFLO
Clarified water
ACTIFLO #2
Backwash wastewater

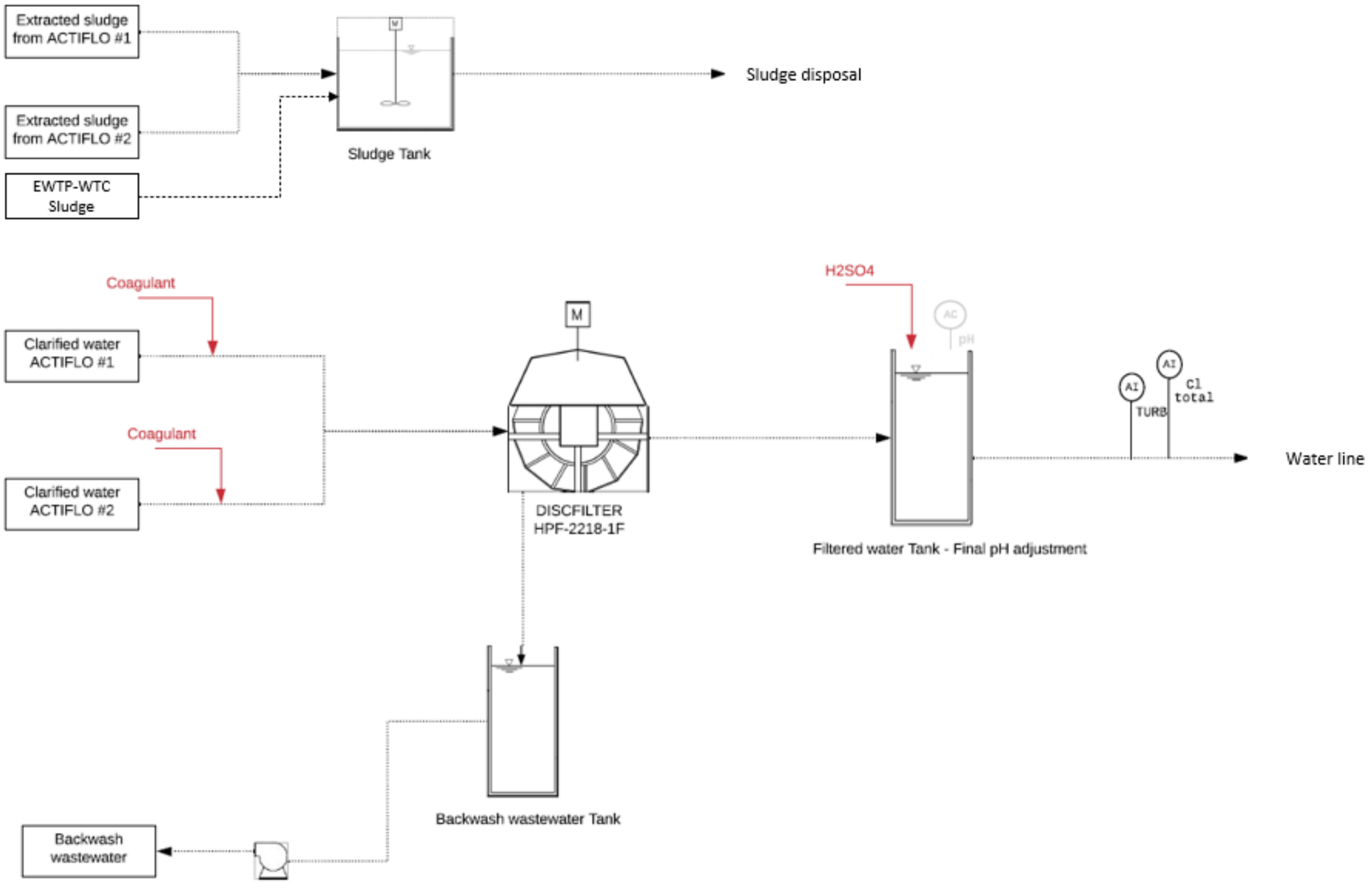


**Figure 3 – Flowsheet**

### *2.1.2 Break point chlorination*

Raw water is pumped to a closed-top reaction tank where a hypochlorite source and an alkali (NaOH) are added. The hypochlorite is a compound added to oxidize the ammonia ($NH_4^+$) into mainly nitrogen gas ($N_2$) through breakpoint chlorination and nitrite ($NO_2^-$) into nitrates ($NO_3^-$) through simple oxidation. The hypochlorite dosage is adjusted according to the dissolved organic carbon (DOC), nitrites and ammonia concentrations in the raw water, since all of these compounds will consume the added chlorine.

The hypochlorite injected in the water produces hypochlorous acid (HOCl). The hypochlorous acid is a weak acid, and part of the hypochlorous acid is decomposed in water into hypochlorite ions ($OCl^-$) depending on the pH. The pH can be adjusted to optimize the hypochlorite ion concentration in the reactor, therefore optimizing the chlorine dosage. The control of the pH also prevents the release of chlorine gas which can be observed in acidic pH and which is a safety and corrosion issue.

The hypochlorous acid and hypochlorite ions in solution will first be consumed by reducing agents and organic matter contained in the water. When more chlorine is added in solution and there is a presence of ammonia, the ammonia will react to form chloramines, specifically monochloramines ($NH_2Cl$). When the quantity of chlorine is sufficient, the monochloramine will be destroyed, and depending on the concentration, will be transformed in dichloramines ($NHCl_2$) or trichloramines ($NCl_3$) and then, finally, in nitrogen ($N_2$). If the quantity of chlorine injected is sufficient, a breakpoint is reached where all chloramines and ammonia are converted into nitrogen.

The overall reaction leading to the release of nitrogen and nitrate as a final product is presented below:

- $NH_4^+ + 1.5\ HOCl \rightarrow 0.5\ N_2 + 1.5\ H_2O + 2.5\ H^+ + 1.5\ Cl^-$
- $NH_4^+ + 4\ HOCl \rightarrow NO_3^- + H_2O + 6\ H^+ + 4\ Cl^-$

Figure 4 also presents a graphical view of the break point determination.

The retention time within the chlorination tank is typically around 20 minutes.

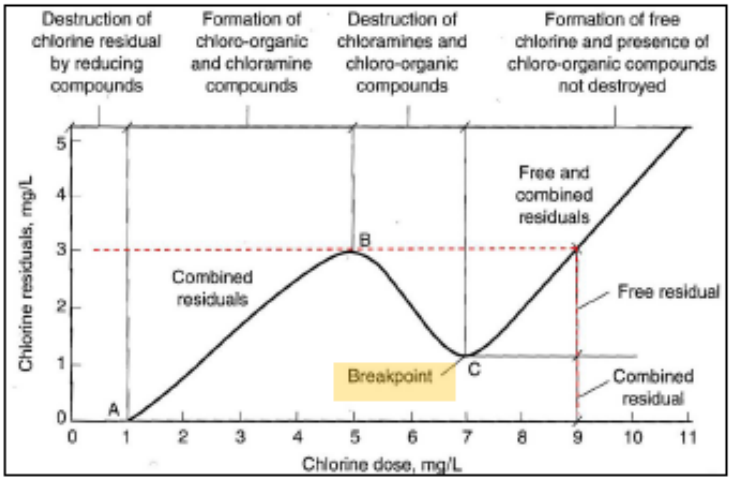


**Figure 4 – Break point determination**

### *2.1.3 Dechlorination*

The chlorinated water, containing chlorine residual, flows to the dechlorination reactor for chlorine destruction. The dechlorination process aims to ensure the destruction of the residual chlorine. Powdered Activated Carbon (PAC) is used for chlorine removal.

The PAC is dosed in the dechlorination reactor in two steps (in the first two compartments), to allow a sufficient contact time for complete chlorine destruction and provide fresh activated carbon along the dechlorination process. Continuous automatic dosing systems are used to add fresh PAC to the dechlorination step. Some recirculated PAC, from the Actiflo® ballasted flocculation system, is also added to the dechlorination reactor. This allows a slight reduction of the PAC requirement and higher efficiency for the chlorine destruction.

Coagulant addition is also done in the dechlorination reactor, which provides high reaction time for the activation of the coagulant and coagulation of the colloids particles. The coagulant acts as a destabilization agent to agglomerate TSS particles contained in the raw water for further removal.

As a polishing step for chlorine removal, sodium thiosulfate is added in the first chamber of the Actiflo® system to remove trace of chlorine.

### *2.1.4 Clarification step*

Actiflo® are sand-ballasted settling units with a high-rate coagulation/flocculation/sedimentation process that utilizes microsand as a seed for floc formation. The microsand provides a surface area that enhances flocculation and acts as a ballast or weight. The resulting floc settles very fast, allowing for compact clarifier designs with high overflow rates and short retention times. The use of microsand also permits the unit to perform well under changing flow rates without impacting final effluent quality.

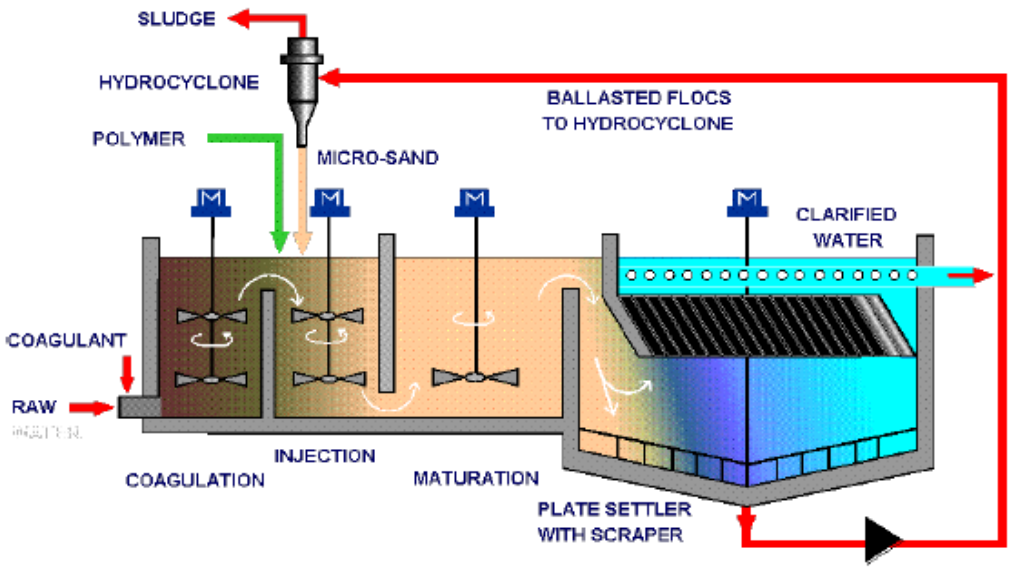


**Figure 5 : Actiflo® Process**

The slurry flows to the first basin, the coagulation chamber, where the reaction is optimized. The aluminum-based coagulant forms a floc of aluminum hydroxide ($Al(OH)_3$) which acts as a bridge to tie colloidal particles together. The coagulated water then overflows to a second tank section called the injection tank. There, the microsand and flocculent aid polymer are added. The microsand provides a large contact area for floc attachment and acts as ballast, thereby accelerating the settling of the flocs. The flocculent aid polymer binds the destabilized suspended solids to the microsand particles by forming polymer bridges. From the injection tank, the water underflows to a third tank section called the maturation tank. In this section, the microsand and sludge flocs agglomerate and grow into high-density flocs known as microsand ballasted flocs. From the maturation zone, the water overflows to the settling section of the tank. In the settling zone, the microsand ballasted flocs settle quickly to the bottom of the unit. In the settling zone, the settling efficiency is further increased by the use of the lamella tubes. The clarified water exits the system via a series of collection troughs or wires. The clarified water is monitored for turbidity.

The sand-sludge mixture settles to the bottom of the clarifier. Scrapers force the sludge collected at the bottom of the clarifier into a central cone from which is continuously withdrawn and pumped to a hydro cyclone where the sludge and microsand are separated by centrifugal force. After separation, the higher density microsand is discharged from the bottom of the hydro cyclone and reinjected into the process for reuse. The lighter density sludge is discharged from the top of the hydro cyclone and directed to the sludge splitter box (one per Actiflo®) which recirculated sludge in the process. The extraction of sludge is performed to keep a sludge solid percentage close to 2% (w/w). Sludge is conveyed into the sludge tank prior pumping to the saline contact water storage area or in an appropriate location.

There will be two Actiflo® in the SETP-WTC. Each Actiflo® as specific features, which are listed below:

- Actilfo on the Breakpoint chlorination line:
    - No coagulant is dosed in the first chamber of the Actilfo® to allow to break bubbles resulting from the dechlorination process
    - Sodium thiosulfate is dosed to remove trace of chlorine in the first chamber
    - Sludge return is done in the dechlorination reactor

- Actiflo on the TSS removal line:
    - Sludge from the splitter box overflow is recirculated at the entry of the Actiflo® system

### *2.1.5 Polishing Filtration*

Water from both Actiflo® process flows by gravity to the discfilter filtration process. The discfilter is used as a polishing step to reduce the suspended solids at the clarified water. The discfilter utilizes a filter cloth mounted on filter panels. These panels stem from a central drum where inlet water is admitted into the unit for treatment. Water is filtered in inside-out mode, flowing from the centre tube to the open base of the filter discs, through the polyester cloth before reaching the discfilter water collection tank.

The discfilter water collection tank is part of the discfilter and contains the filters and the filtered water. Particulate matter presents in the discfilter inlet water is retained by the filter media on the inside of the filter panels, eventually leading to solids built-up on the filter media. Consequently, the head loss across the discfilter increases, resulting in increased water level at the inlet of the unit. The unit includes an integral high-level switch that initiates a backwash cycle, which rotates the filter discs in order to expose clean filter media to the water flow path, while subjecting the dirty filter media to the cleaning action of the backwash spray tips. Filtered water stored in the discfilter water collection tank is pumped to feed

the series of spray tips strategically installed on the moving arms of the backwash system. This serves to clean the entire surface of the filter media while limiting the use of filtered water in the process.

An outlet weir integral to the discfilter water collection tank is used to maintain the water. The backwash water will be directed to a dirty water holding tank to be pumped back to the Actiflo® process. Filtered water flows over the weir of the tank and out of the unit.

A chemical trolley is available to clean the unit in the case of chemical scaling due to high calcium concentration in the water (possibility to use an acidic wash to wash down any calcite that might precipitate on the discs cloth).

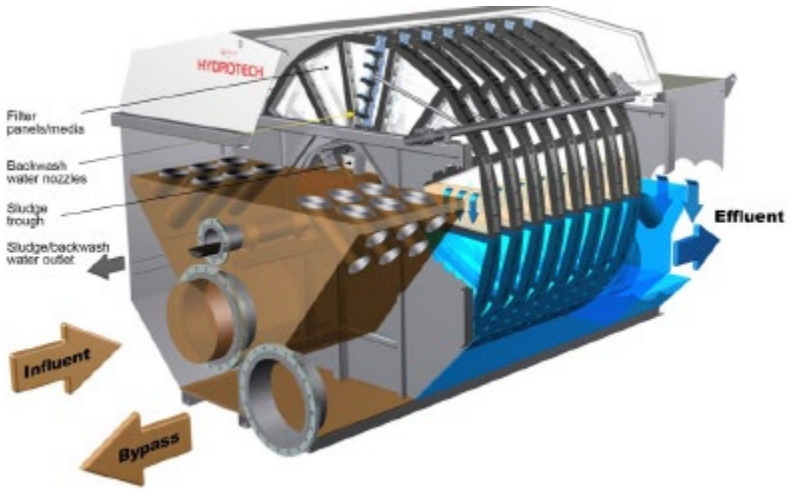


**Figure 6 : Discfilter**

### *2.1.6 pH Adjustment Tank*

Treated waters (from discfilter) flow into a transfer tank where pH is adjusted if needed. Sulphuric acid will be used for pH adjustment in this tank. Water is then pumped to the water line pumping station. Details on the water line pumping station is presented in Appendix C.

### *2.1.7 Service Water System*

The service water system will be sourced from the EWTP-WTC treated water tank. The description of the EWTP-WTC is presented in the approved reports: Design Report 6526-693-132-REP-001 and As-built Report 6526-693-132-REP-003. Below is a summary of EWTP-WTC description.

**EWTP-WTC Summary**

The purpose of the EWTP-WTC (ACP-700R) is to remove TSS from the influent water pumped from Collection Pont 1 (CP1). The equipment has an operational range of 6,250 to 28,000 $m^3$/d. The first treatment component consists of one Actiflo® clarifier with two (2) recirculation lines and two (2) hydrocyclones. The Actiflo® can be operated with one (1) or two (2) lines, depending on the influent flow rate and TSS content. The hydrocyclone overflow is sent to the Multiflo for sludge thickening. The

Multiflo overflows by gravity into a tank which is then pumped into the raw water Actiflo® inlet pipe for recirculation. The principal purpose of the Multiflo is to decrease the amount of water in the sludge. The Actiflo® overflow is designed to meet the Type A License (and MDMER) final effluent discharge criteria for TSS concentrations. The final effluent is monitored for pH, turbidity and flow rate, which are monitored continuously.

## 2.2 REAGENTS

The following reagents will be used at the SETP-WTC:

**Coagulant injection: Aluminum Chloride**

The coagulant used on site for the EWTP-WTC is dry poly-aluminum chloride. The same coagulant will be used for the SETP-WTC, reusing the same make-down system currently in operation. The dosage will be performed using mechanical diaphragm metering pumps.

**Polymer makedown and Injection: Anionic Polymer**

The use of a flocculation agent is essential for a TSS removal process in cold temperature. The selected polymer for this application is Hydrex 6105. Hydrex 6105 is a solid, anionic polymer used to enhance flocculation and will be received in 25 kg bags. The make-down system used in the current EWTP-WTC will be used in the new SETP-WTC as well. This automatic preparation make down system will be used to prepare a 0.05-0.3% solution. Warm water can be used if required for the polymer preparation. The solution will be dosed using mechanical metering pumps specifically designed for high viscosity products.

**NaOH injection**

Dry sodium hydroxide is a commodity and will be received in superbags of 1 $m^3$ at 100 % active content concentration. A solution targeted at 25% (w/w) will be prepared to reduce the risk associated with the exothermic reaction associated with NaOH dissolution and dosing of the dry powder to the water will be done in a way that limits heat production from the chemical make-down. An ambient temperature over 12 °C in the WTC will be required since 25% NaOH freezing point is at 12 °C. It is a hazardous product (class 8-corrosive) and will be handled accordingly. Note that the solution concentration may be adjusted depending on the process optimisation.

**Hypochlorite Injection**

Calcium hypochlorite solution will be used to oxidize ammonia (target concentration at 10% w/w). It will be received in 45 kg pails at a concentration of approximately 60-70% of active product. Solid will be transferred in a hopper by vacuum suction lances. Then, solid will be added with a screw conveyor in a dissolution reactor to prepare a 10% solution. This solution will be dosed from the distribution reaction to the chlorination reactor. Note that the solution concentration may be adjusted depending on the process optimisation.

**Sulphuric Acid**

Sulphuric acid is used for pH control in the chlorination reactor and before final discharge. The addition of hypochlorite has an impact on the pH of the solution. If any excess from the breakpoint chlorination was to react slightly slower than expected, the pH of the water will increase as the hypochlorite release

$OH^-$ ions once the breakpoint is reached. An increase of the pH, for a water containing high calcium concentration, would result in calcite precipitation, affects the activated carbon efficiency and causes accumulation of solids within the water treatment chain. Sulphuric acid is a commodity and will be received in bulk containers of 1 $m^3$ at 93 % concentration. This product will be used as is. Sulphuric acid has a freezing point of -30 °C. It is a hazardous product (class 8-corrosive) and will be handled accordingly.

**Powdered Activated Carbon**

The Powdered Activated Carbon (PAC) is used for the removal of residual chlorine. It will be received in superbags. PAC is dosed into the process using the HydraCarb system, which is based on a gravimetric feeder, a wetting cone and an educator to transport the PAC slurry to the dosing points. Manual injection valves allow a split between each compartment of the dechlorination reactor and dosing of the PAC is controlled by the flow of water passing in the chlorination reactor.

**Sodium Thiosulphate**

Sodium Thiosulphate is used to quench the residual chlorine prior discharge to prevent residual toxicity. It will be received in superbag of 1 $m^3$ at 100% active contact as dry product. Dosage will be performed used dosing pumps in the dichlorination reactor. Dosage will be optimised to minimize residual chlorine the effluent.

**Microsand**

The presence of microsand in the Actiflo® allows for:

- An increase in the probability of encounters between particles;
- An increase in the exchange surface and consequently in the adsorption capacity compared to conventional flocculation; and
- The formation of solid and dense ballasted flocs which will resist an energetic stirring followed by rapid settling.

These properties lead to very short residence times for flocculation as well as settling, thus optimizing the process. The microsand is recycled in the process. During the operation, it is estimated that 2 to 5 g of microsand per cubic metre of raw water will be lost in the sludge. Therefore, approximately 3 g of microsand per cubic metre of raw water needs to be added. The microsand will be supplied in 22.68 kg bags and will be added manually to the Actiflo® as required, approximately once or twice a week (the dosage of sand is through batch addition).

The SDS sheets for all these chemicals are provided in Appendices C.

## 2.3 SOLID WASTE MANAGEMENT

**Wastes**

Chemical bags and containers will be managed accordingly to the site Hazardous Materials Management Plan.

**Sludge from SETP-WTC and EWTP-WTC**

Sludge produced in the SETP-WTC and EWTP-WTC system will be stored in the sludge tank prior to being disposed in saline contact water ponds according to the site Water Management Plan.

## 2.4 CONTROLS

The general control strategy is detailed in the P&ID in Appendix B and in the Functional Description in Appendix D. The SETP-WTC pump and dosing skid will be controlled by a series of sensors measuring levels, flows, pressures and water quality. Treated water will be monitored continuously for pH, turbidity and total chlorine. These analyzers will dictate if the treated water is sent to the water line or recirculated in the saline contact water storage area. Ammonia and TSS will be analyzed periodically in the treated effluent with a manual method to assess the treatment performance.

# 3 OPERATION AND MAINTENANCE

## 3.1 PUMPING

The system includes many pumps for the operation of the SETP-WTC. Some of these pumps are equipped with Variable Frequency Drives (VFD) that can be adjusted by the Operator or by an automatic system. In all cases, the pumps can only be started by the Operator.

All pumps are regularly inspected by the Operator who will ensure the pumps continue to operate efficiently and will address any deficiencies. If the pumps require maintenance, the Operator will report the situation and take appropriate action. Some of the pumps are installed with a standby unit that allows the Operator to switch from one pump to the other if necessary. In some situations, it may be necessary to temporarily shut down the SETP-WTC for servicing of the equipment.

A preventative maintenance program, as recommended by the pump suppliers, will be followed by the Maintenance Crew to ensure the pumps are always kept in good working order.

For the operation of the SETP-WTC, the following pumps and water lines installed outside the WTC building includes:

- Lines from the surface contact water and saline contact water storage areas to the pre-mixing pond;
- Raw water line from the pre-mixing pond to the SETP-WTC;
- Water line from the SETP-WTC to Melvin Bay;
- Recirculation line from SETP-WTC to the saline contact water storage area.

More information on the pump's maintenance operation and can be found in Appendix E and G.

## 3.2 MIXERS

Mixers are essential to batch chemicals and allow chemicals to react with contaminants during the treatment process. A series of mixers are included in the process (reactor tanks and Actiflo®). All mixers are regularly inspected by the Operator who will ensure they continue to operate efficiently and will address any deficiencies. If the mixer requires maintenance, the Operator will report the situation and take appropriate action. A preventative maintenance program, as recommended by the mixer suppliers, will be followed by the Maintenance Crew to ensure the mixers are always kept in good working order.

More information on the mixer maintenance operation and can be found in Appendix F.

## 3.3 REAGENT PREPARATION

The reagent preparation systems are fully automated system. The only requirement is to change the reagent bags when are empty or transfer calcium hypochlorite pails into the storage hoper. Daily verification of the dry reagent level will be performed by the Operator to ensure stable operation of the process.

Note that the activated carbon powder preparation area is in an explosion-proof area. Special handling procedure will be put in place.

During the daily inspection, the Operator will monitor the different reagent systems and prepare additional reagent, as required, according to the reagent preparation procedures in place. The water

levels in the chemical mixing and chemical distribution tanks are instrumented and monitored, which will ensure sufficient water is supplied to the reagent preparation systems. In the event of a lack of water supply, an alarm will occur to notify the Operator.

Preventive maintenance of the mechanical equipment will be performed according to the suppliers operating manual specifications.

More information on the chemical preparation system operation and maintenance can be found in Appendix F.

## 3.4 CLARIFIERS

The main elements per Actiflo clarifier are:

- Mixers (3)
- Rake/Scraper
- Lamella
- Hydrocyclones (2)
- Recirculation pumps (2)
- Sludge splitter box
- Sludge extraction pump

The Operator will ensure that these elements are operated appropriately during his daily inspection. If one element requires maintenance, the Operator will report the situation and take appropriate action. Lamella cleaning will need to be performed periodically to ensure optimal TSS removal.

Preventive maintenance of the mechanical equipment will be performed according to the suppliers operating manual specifications.

Sand concentration needs to be kept constant within the Actiflo, thus periodic sand concentration determination will be performed and in case of low concentration, bags of sand will be added manually in the process.

Hydrocyclone inspection needs to be performed periodically to ensure that the sand is recirculated within the process continually.

More information on the clarifier’s operation and maintenance can be found in Appendix F.

## 3.5 FILTRATION

Disk filtration is an automatic process. Continuous back wash is performed to keep a good filterability. If the filterability decrease, filter clothes changing or chemical cleaning maybe be required to be done by the OOperator.

Preventive maintenance of the mechanical equipment will be performed according to the supplier operating manual specifications.

More information on the disk filter operation and maintenance can be found in Appendix F.

## 3.6 TROUBLESHOOTING AND MAINTENANCE PROCEDURES

The sections below outline the general operational and maintenance procedures at the plant. Further details are available in the manufacturer's operating manuals in Appendix F.

The break point chlorination and dechlorination are the main process within the SETP-WTC. The dosage of chemical need to be adjusted to remove ammonia and residual chlorine. In case of loss of treatment, jar test needs to be performed to reassess dosage requirements. Inline analyzers need to be maintained calibrated also during the operation of the process.

The operation of the Actiflo® process is relatively simple and a visual inspection will determine whether the process is performing as expected.

The dosage of chemical need to be adjusted to remove TSS. In case of loss of treatment, jar test needs to be performed to reassess dosage requirements.

A critical component of the process for monitoring is the maturation tank. The agitator of this tank is equipped with a VFD and the speed is adjusted to obtain a gentle mixing in this tank. When the process is operated correctly, big flocs of about 5 mm are visible in the tank and moving slowly. The agitation must be adjusted in a way that the flocs are maintained in suspension and not broken down. The water between the flocs should look clear. If flocs are visible but the water is cloudy, it is an indication that the coagulant dosage is insufficient. If the water is clear but the flocs are small, it is an indication that the flocculant addition is insufficient.

The system must also contain enough microsand to obtain flocs that are heavy enough to sink in the clarifier section. If large flocs are visible but are present at the top of the clarifier, this is an indication of insufficient microsand. Usually, the microsand load is maintained by adding one bag at a time. The frequency of the addition of microsand is determined by trial and error. There is no environmental issue with an excessive addition since it would be compensated by an increased loss within the sludge.

The hydrocyclone is also an important part of the system since it allows the microsand to be recycled in the system. The underflow of the cyclone should never be blocked, and the flow should have an umbrella shape.

The filtration system is also simple to operate, and the back wash is continuously performed. In case of poor filterability, section of the filter clothes maybe be changed, and chemical cleaning may be required.

## 3.7 EFFLUENT QUALITY CONTROL

The Operator will conduct regular inspections of the entire operating system to ensure it operates as intended. Any upset condition will be reported, and corrective actions will be applied accordingly. The OOperator will also record process key values that will allow the process to be optimized and any discrepancies between the process and expected performances to be detected.

The quality of the final effluent is monitored on a continuous basis by pH, conductivity, total chlorine and turbidity (Nephelometric Turbidity Unit (NTU)) probes. The turbidity measurement is an indirect indication of the TSS in the water and will be used to infer the effluent TSS. The output of these instruments will send an alarm indicating that the levels are higher than the set point, but lower than the maximum discharge criteria. This allows the Operator to act on the process before the limit is

exceeded. In the event that the discharge limit is about to be reached, a second alarm will send a signal to actuated valves allowing an automatic diversion of the effluent to saline contact water storage area before discharge limits are breached.

The final effluent will be sampled for water quality following the frequency and parameters stipulated in the Metal & Diamond Mining Effluent Regulations (MDMER) and sent to a certified laboratory for analysis. The results generated by the laboratory will be compared with those obtained with the plant instrumentation to detect any deviations. All the probes and instrumentation within the plant will be calibrated and serviced as per the preventative maintenance program.

As stipulated in the MDMER, the final effluent discharged shall not exceed a pH range between 6.0 and 9.5 or a maximum average concentration for TSS of 15 mg/L, and a maximum of 30 mg/L for a grab sample. The sample should not be acutely toxic.

Internal analysis will be performed at different locations of the process to measure TSS, ammonia, free and total chlorine with inline analyzers and handheld analyzers to assess process efficiency. Appendix G presents handheld protocol for chlorine and ammonia.

## 3.8 MONITORING

To ensure efficiency of SETP-WTC, samples of water will be collected, and inspections must be completed periodically.

The break point chlorination monitoring needs to be done regularly to avoid any overdosing of chlorine. This monitoring consists of verification of pH, ammonia, total and free chorine concentrations.

In the dechlorination step, pH, ammonia, total and free chorine concentrations also needs to be done regularly.

In the clarifications and filtration steps, TSS (and turbidity) will be performed periodically.

Table 3 presents the daily operation task that SETP-WTC Operator should perform.

Every day, items 1 to 4 should be performed by the Operator to ensure an optimal operation. Item 5 of Table 1 will be periodically performed according to the supplier recommendations. This preventive maintenance will allow maintaining good operation.

Table 1 : Routine Operation and Maintenance checkups[1]

| Item | Item | Action | Comments |
|---|---|---|---|
| **[1] Process parameter** | Flow rate | Daily | - |
| | Flow rate totalizer | Daily | Volume discharge |
| | Feed water turbidity and TSS | Daily | For chemical dosing adjustment |
| | Feed water pH & conductivity | Daily | For chemical dosing adjustment |
| | Feed water ammonia | Daily | For chemical dosing adjustment |
| | Treated water turbidity and TSS | Daily | Quality control |
| | Treated water pH, conductivity | Daily | Quality control |
| | Treated water ammonia & Chlorine | Daily | |
| | Duration of the operation | Daily | - |
| | Actiflo sludge solid percentage | Weekly | Process performance |
| | Water Quality | Daily | Process performance – at different locations of the process to assess efficiency |
| | Volume of sludge produced | Daily | Process performance |
| | Ponds Levels | Daily | Raw water quantity |
| | Sand concentration | Daily | Process performance |
| **[2] Chemical** | Security and PPE | Daily | Verify/use PPI and security procedure to manipulate chemical |
| | Coagulant set point | Daily | Chemical consumption |
| | Polymer anionic set point | Daily | Chemical consumption |
| | Hypochlorite set point | Daily | Chemical consumption |
| | Maturation mixer speed | Daily | |
| | Caustic set point | Daily | Chemical consumption |
| | Thiosulfate set point | Daily | Chemical consumption |
| | Activated carbon Set point | Daily | Chemical consumption |
| | Acid set point | Daily | Chemical consumption |
| | Level of chemical | Daily | Chemical consumption & preparation |
| | Dosing pumps | Daily | Calibration if needed |
| | Chemical inventory | Weekly | Storage & reorder if needed |
| | Waste disposal | Daily | |
| | Lab inventory | Weekly | Storage & reorder if needed |
| [3] Environment | Weather | Daily | - |
| | Temperature of water | Daily | - |
| **[4] Mechanical** | Complete Visual Inspection before Start-Up | Before start up | Complete a good inspection before operating.<br>Ensure that no alarms are active on the HMI.<br>Ensure equipment are in good order, with no leaks and all safety devices are in place. |
| | Complete Inspection after Start-Up or during every shift | Daily | Complete a good inspection while in operation.<br>Ensure that no strange noises are audible.<br>Make sure auxiliary equipment (valves & level probe) and PLC operate correctly.<br>Look, Listen, Smell, and Feel. |

[1] Non-exhaustive list – will be updated during commissioning and operation

| | | | |
|---|---|---|---|
| **[4] Mechanical** | Water Flow comparison | Daily | Compare flowmeter VS water level |
| | Pressure | Daily | Feed and discharge line. Process water |
| | Visual Leak On Piping | Daily | Ensure not water leaks are visible on the piping |
| | Feed, recirculation and discharge lines | Routinely | Ensure no leaks |
| | Sump Level | Daily | Ensure sump is empty |
| | Pumps inspection | Daily | Visual |
| | Manual Valve | Daily | Ensure manual valves are the appropriate positions |
| | Building | Daily | Ensure the wall exhaust fans are operational. Excess of humidity must be evacuated outside. |
| | PLC functionality - alarm | Daily | No abnormal operation. Solve each alarm |
| | Filter | Daily | No clogging – change filter, chemical cleaning |
| [5] Maintenance | Lamella cleaning | As needed | Clean lamella when SETP-WTC is offline |
| | Hydrocyclone wear parts replacement | As needed | According to supplier |
| | Dosing pump | As needed | Inspect wear parts |
| | Process pumps, Dosing pumps, rakes, mixers, pumps, compressor, dosing screws, safety shower, fire extinguisher, water heater maintenance | Periodically, | According to supplier recommendations. In case of major maintenance or malfunction, use standby equipment if possible. Critical spare parts will be kept in inventory for critical processes |
| | Instrumentation calibration | Weekly or when required | Turbidity meter, pH meter, etc. According to supplier recommendations |
| | Instrument cleaning | Periodically | Turbidity meter, pH meter etc., According to supplier recommendations |
| | Motor oil change, greasing and changing bearings | Periodically | According to supplier recommendations |
| | Winterization | Fall | Flush – drain – clean equipment, dosing skid cleaning, instrumentation (leaning, disconnecting and draining if needed), air network to be purged, shut down power. |

## 3.9 RECORD KEEPING

Records of the operational, maintenance and sampling procedures (daily log sheet) will be accessible to assist in the evaluation of the SETP-WTC performance. Details of any maintenance undertaken will also be recorded.

The volume, pH, turbidity total chlorine and temperature of effluent discharged to environment will be recorded on a continuous basis. The data will be saved on a network database.

## 3.10 SAFETY PROCEDURES FOR OPERATORS

Operators working in the WTC facility must be trained prior to work so that they are aware of the health and safety risks as well as the operational procedures associated with the EWTP-WTC and SETP-WTC. The following are important safety considerations:

- Working with non-treated water requires adequate personal protective equipment (PPE) for Operators. This includes wearing steel toed boots, hard hat, safety glasses and gloves.
- Working with chemical requires adequate personal protective equipment (PPE) for Operators. This includes wearing chemical resistant gloves, tychem, half and full-face respirator as needed. Relying on buddy system when needed will also be required.
- Operators are required to conduct good housekeeping of the working area to minimize the risk of incidents.
- Lock-out/tag-out procedures must be applied when servicing equipment.
- The SDS for reagents used in the WTC will be readily available for the Operator at all times.
- Eyewash stations and safety showers are located within proximity of reagent systems in the WTC.

## 3.11 CONTROLLING ACCESS TO THE WTC

Access to the WTC will be restricted to authorized personnel only. Signs will be posted at the WTC entrance.

# 4 EMERGENCY RESPONSE

## 4.1 FIRE

In case of fire at the WTC, the on-site Emergency Response Team (ERT) will be notified as per Agnico Eagle's protocol. Instructions from the on-site ERT will be followed by all personnel at the WTC. Further details of fire response are provided in the "*Risk Management & Emergency Response Plan*". The WTC will include the necessary fire safety protection measures in accordance with the Nunavut and North West Territories Mine Act.

## 4.2 SPILL

Spill kits and the necessary secondary containment will be provided within the building of the WTC. In the event of a spill at the WTC, the Environment Department will be notified immediately and provide support, as required. If a large spill occurs, the on-site ERT will be notified as per Agnico Eagle's protocol. Instructions from the ERT will be followed by all personnel at the WTC. A spill kit will be available at the WTC. Further details regarding the site spill response procedure are provided in the "*Spill Contingency Plan"*.

## 4.3 PLANT MALFUNCTION

If there is a major problem or failure in the SETP-WTC, it will be likely be from a problem with the reagent addition systems caused by the malfunction of the pump, a major change of water chemistry, or due to a cyclone blockage on the sludge reclaim system.

In the case of an operational upset, the most likely consequence will be an increase of TSS or ammonia or chlorine in the effluent. This would be managed by the process control systems in place, which will automatically divert the flow to the saline contact water area (recirculation mode). In such an event, the problem will be investigated while the system is operated in closed circuit. Once the problem is resolved and the water quality returns to concentrations within discharge criteria, the valves will be re-opened to allow discharge to environment.

In the case of a cyclone underflow blockage, the microsand will be completely lost to the rejected sludge. New sand will then need to be added once the issue resolved.

# Appendix A

NO. DESSIN DRAWING NO. 65-680-210-203_R0

FORMAT ARCHD

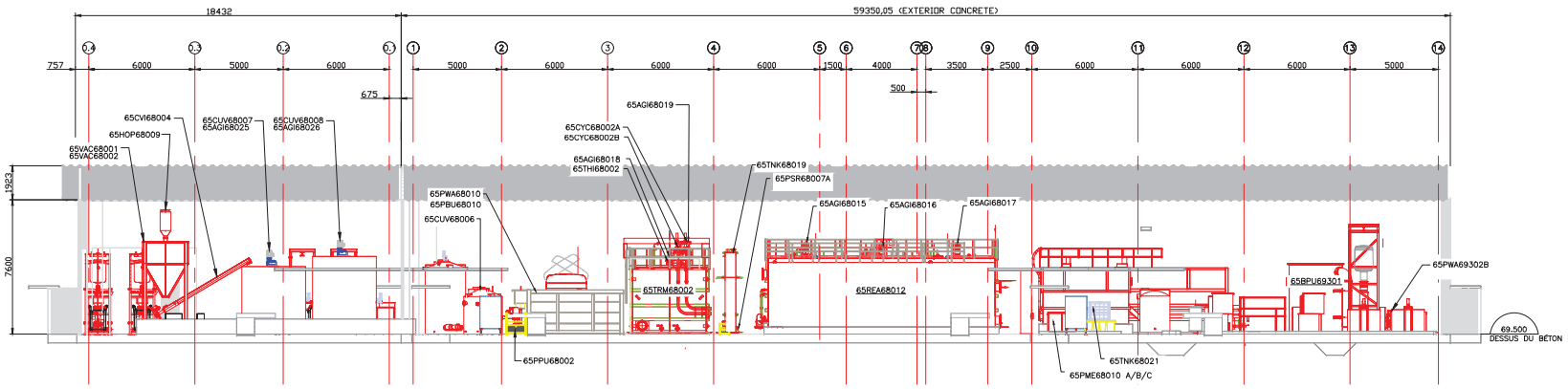


SIDE VIEW (NORTH)
1:125

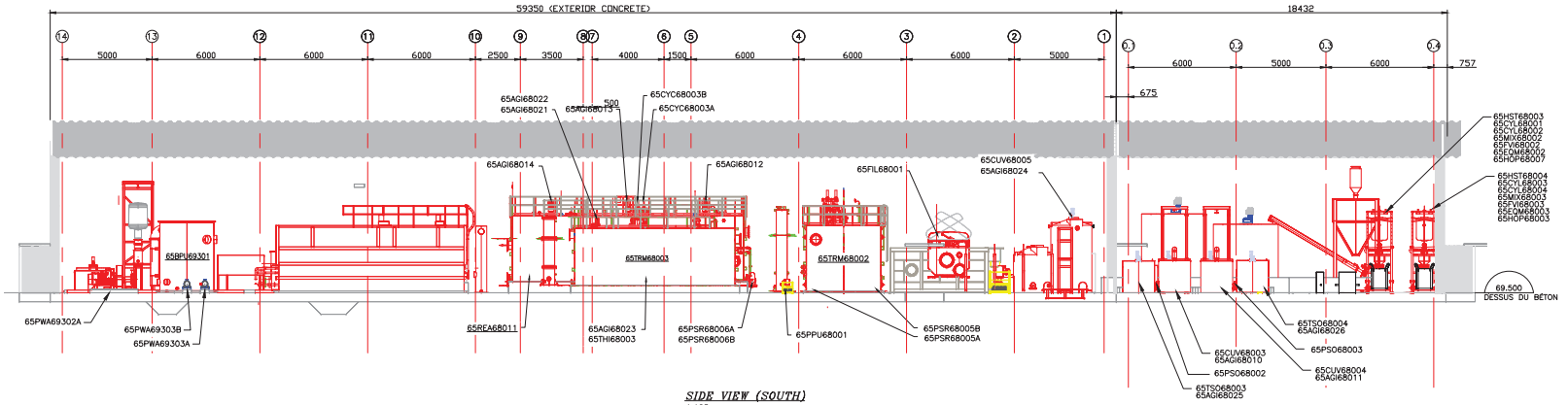


SIDE VIEW (SOUTH)
1:125

REGISTERED PROFESSIONAL ENGINEER
S. BEN SLIMANE
LICENSEE
L4770
NT/NU

POUR CONSTRUCTION
FOR CONSTRUCTION
DATE : 2021-09-27

PLAN CLÉ
KEY PLAN

wsp
1075, 3e AVENUE EST
VAL-D'OR (QUÉBEC) CANADA J9P 0J7
TÉL. : 819 825-4274 | TÉLÉC. : 819 824-1514 | WWW.WSP.COM
Ref. 201-00413-14

NOTES GÉNÉRALES / GENERAL NOTES

L'INFORMATION CI-CONTENUE EST LA PROPRIÉTÉ DE AGNICO EAGLE LTÉE ET DOIT ÊTRE RETOURNÉE SUR DEMANDE. SANS AUTORISATION ÉCRITE PRÉALABLE, TOUTE TRANSMISSION DE COPIE(S) À AUTRUI ET TOUTE UTILISATION AUTRE QUE CELLE POUR LAQUELLE L'INFORMATION EST PRÊTÉE SONT INTERDITES. © AGNICO EAGLE LTÉE

THE INFORMATION HERE ON IS THE PROPERTY OF AGNICO EAGLE LTD. AND MUST BE RETURNED UPON REQUEST. WITHOUT WRITTEN PERMISSION, ANY COPYING TRANSMITTAL TO OTHERS AND ANY USE EXCEPT THAT FOR WHICH IT IS LOANED ARE PROHIBITED. © AGNICO EAGLE LTD.

DESSINS EN RÉFÉRENCE / REFERENCE DRAWINGS

| TITRE / TITLE | # DWG |
|---|---|
| | – |
| | – |
| | – |
| | – |
| | – |

AGNICO EAGLE

| REV. | DATE | DESCRIPTION | PAR/BY | APP. | CLIENT |
|---|---|---|---|---|---|
| 0 | 2021-09-27 | EMIS POUR CONSTRUCTION | D.B. | S.B.S. | |

REVISIONS

TITRE / TITLE
AGNICO EAGLE – MELIADINE DIVISION
680-SALINE EFFLUENT TREATMENT PLANT
210-GENERAL ARRANGEMENT
SIDE VIEW (NORTH) AND SIDE VIEW (SOUTH)

| | | |
|---|---|---|
| DESSINÉ PAR DRAWN BY | ANTHONY ROSA | DATE 2021-08-06 |
| VERIFIÉ PAR CHECKED BY | SELENE BEN SLIMANE ing. | 2021-08-06 |
| APPROUVÉ PAR APPROVED BY | SELENE BEN SLIMANE ing. | 2021-08-06 |
| ÉCHELLE SCALE | INDIQUÉE | DATE 2021-08-04 |

NO. DESSIN DRAWING NO. 65-680-210-203

| NO. PROJET PROJECT NO. | REVISION | FEUILLE / SHT |
|---|---|---|
| 6526 | 0 | 1 / 1 |

AE-CART-ARCH D

FILE NO. 65-680-210-203_R0.dwg

NO. DESSIN
DRAWING NO. 65-680-210-202_R0

FORMAT ARCH D

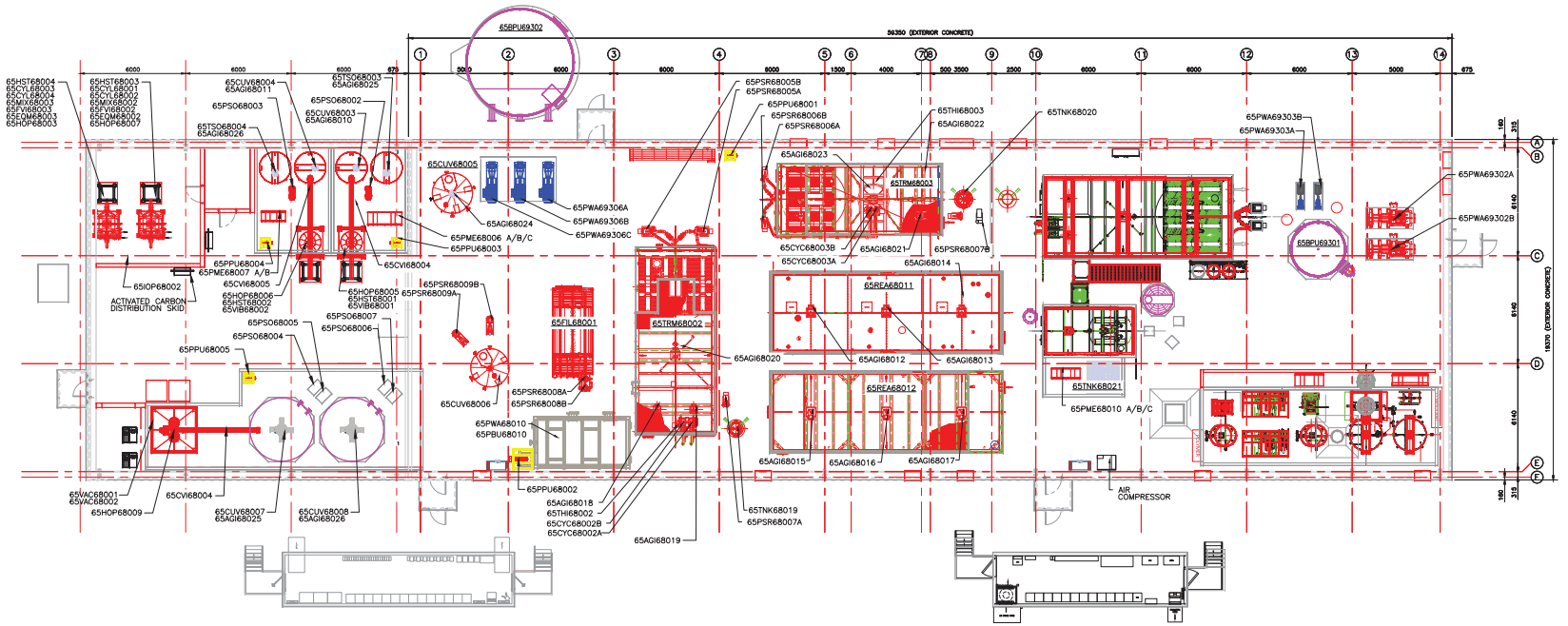


*PLAN VIEW*
1:125

REGISTERED PROFESSIONAL ENGINEER
S. BEN SLIMANE
LICENSEE
L4770
NT/NU

POUR CONSTRUCTION
FOR CONSTRUCTION
DATE : 2021-09-27

PLAN CLÉ
KEY PLAN


wsp
1075, 3e AVENUE EST
VAL-D'OR (QUÉBEC) CANADA J9P 0J7
TÉL. : 819 825-4274 | TÉLÉC. : 819 824-1514 | WWW.WSP.COM


Réf. 201-00413-14

NOTES GÉNÉRALES / GENERAL NOTES


L'INFORMATION CI-CONTENUE EST LA PROPRIÉTÉ DE AGNICO EAGLE LTÉE ET AINSI ÉTRE RETOURNÉE SUR DEMANDE. CETTE INFORMATION DOIVE DIVULGUÉE, TOUTE TRANSMISSION OU COPIE(S) À AUTRE QUE TOUTE UTILISATION AUTRE QUE CELLE POUR LAQUELLE L'INFORMATION EST PRÊTÉE SONT PROHIBÉES. © AGNICO EAGLE LTÉE

THE INFORMATION SET FORTH IN THIS DOCUMENT OF AGNICO EAGLE LTD. MAY NOT BE REPRODUCED UPON REQUEST, WITHOUT WRITTEN PERMISSION, AND EXPRESS REMAINS THE PROPERTY OF AGNICO EAGLE LTD. TO CONVEY AND NOT TO DISCLOSE OR COPY(S) THAT ARE WHICH IT IS LOANED ARE PROHIBITED. © AGNICO EAGLE LTD.


DESSINS EN RÉFÉRENCE / REFERENCE DRAWINGS

| TITRE / TITLE | # DWG |
|---|---|
| – | – |
| – | – |
| – | – |
| – | – |
| – | – |
| – | – |

AGNICO EAGLE

| REV. | DATE | DESCRIPTION | PAR/BY | APP. | CLIENT |
|---|---|---|---|---|---|
| 0 | 2021-09-27 | ÉMIS POUR CONSTRUCTION | D.B. | S.B.S. | |

REVISIONS

TITRE / TITLE
AGNICO EAGLE – MELIADINE DIVISION
680–SALINE EFFLUENT TREATMENT PLANT
210–GENERAL ARRANGEMENT
PLAN VIEW

| | | |
|---|---|---|
| DESSINÉ PAR DRAWN BY | ANTHONY ROSA | DATE 2021-08-06 |
| VERIFIÉ PAR CHECKED BY | SELENE BEN SLIMANE Ing. | 2021-08-06 |
| APPROUVÉ PAR APPROVED BY | SELENE BEN SLIMANE Ing. | 2021-08-06 |
| ÉCHELLE SCALE | INDIQUÉE | DATE 2021-08-04 |

NO. DESSIN DRAWING NO. 65-680-210-202

| NO. PROJET PROJECT NO. | REVISION | FEUILLE / SHT |
|---|---|---|
| 6526 | 0 | 1 / 1 |

AE-CART-ARCH D

\\CeMdcYDdDY\Projet__30X-XXXX-XX\201-00413-09\03-TECH_ORANGE\Dessin\Plant 3D\Meliadine WTC\Drthos\DWGs\65-680-210-202_R0.dwg-2013-02-19 14:03:39

FILE NO. 65-680-210-202_R0.dwg

NO. DESSIN DRAWING NO. 65-695-270-002

FORMAT ARCHD

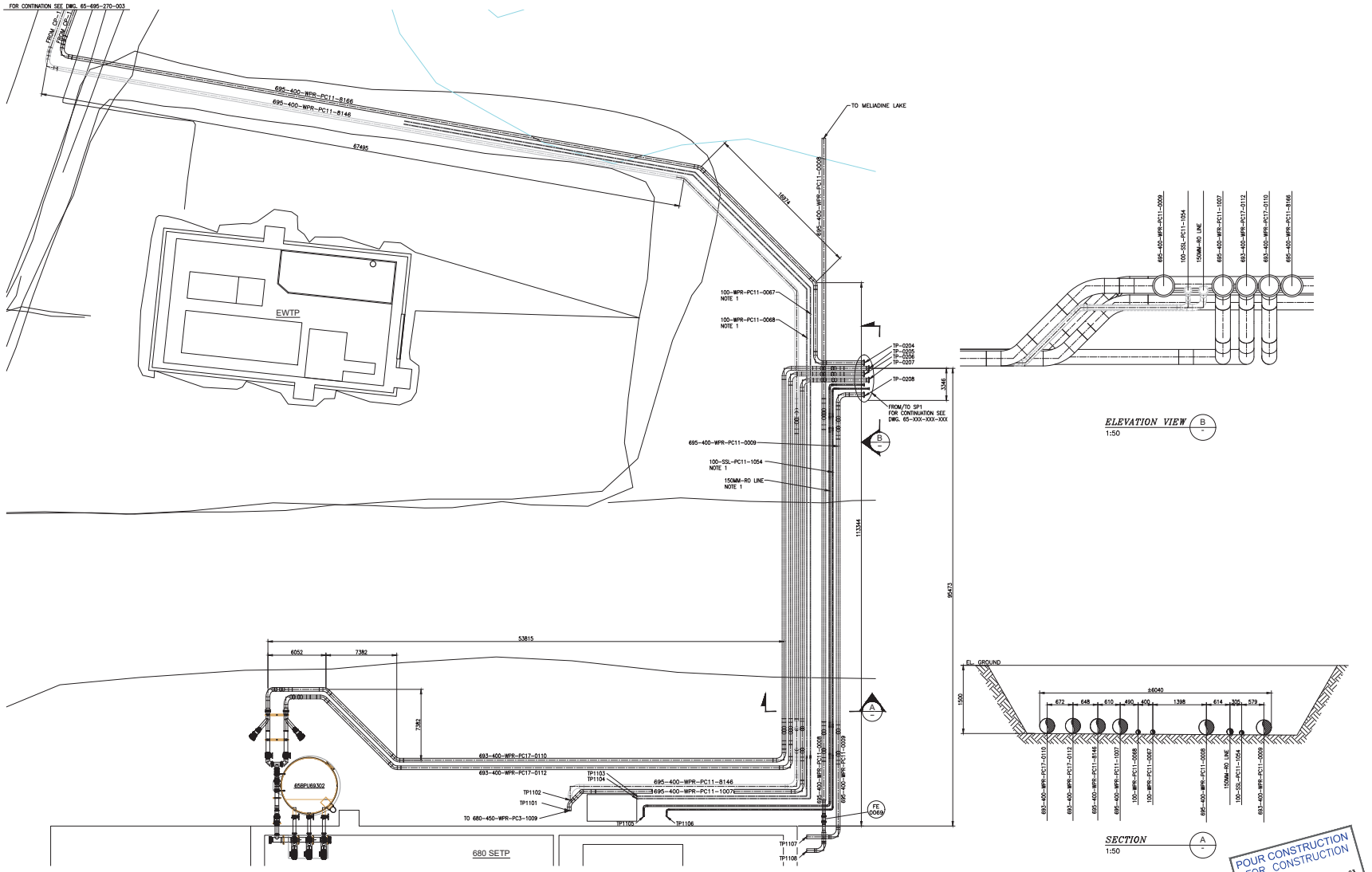


PLAN VIEW
1:500

ELEVATION VIEW B
1:50

SECTION A
1:50

POUR CONSTRUCTION
FOR CONSTRUCTION
DATE : 2021-08-23

REGISTERED PROFESSIONAL ENGINEER
S. BEN SLIMANE
LICENSEE L4776
NT/NU

PLAN CLÉ
KEY PLAN

## NOTES GÉNÉRALES / GENERAL NOTES

1. EXISTING ABOVE GROUND LINES TO BE RELOCATED UNDERGROUND TO CROSSING THE ROAD.
2. EXISTING LINE (IN PALE) IS NOT IN MTO.


L'INFORMATION CI-CONTENUE EST LA PROPRIÉTÉ DE AGNICO EAGLE LTÉE ET DOIT ÊTRE RETOURNÉE SUR DEMANDE, SANS AUTORISATION ÉCRITE PRÉALABLE, TOUTE TRANSMISSION DE COPIE(S) À AUTRUI ET TOUTE RÉALISATION AUTRE QUE CELLE POUR LAQUELLE L'INFORMATION EST PRÊTÉE SONT INTERDITES. © AGNICO EAGLE LTÉE

THE INFORMATION HERE ON IS THE PROPERTY OF AGNICO EAGLE LTD. AND MUST BE RETURNED UPON REQUEST, WITHOUT WRITTEN PERMISSION, ANY COPYING TRANSMITTAL TO OTHERS AND ANY USE EXCEPT THAT FOR WHICH IT IS LOANED ARE PROHIBITED. © AGNICO EAGLE LTD.


## DESSINS EN RÉFÉRENCE / REFERENCE DRAWINGS

| TITRE / TITLE | # DWG |
|---|---|
| | |

AGNICO EAGLE

| REV. | DATE | DESCRIPTION | PAR/BY | APP. | CLIENT |
|---|---|---|---|---|---|
| 0 | 2021-08-23 | ISSUED FOR CONSTRUCTION | EH | SBS | |

REVISIONS

TITRE / TITLE
AGNICO EAGLE – MELIADINE DIVISION
695 – ENVIRONMENT WATER MANAGEMENT
270
GENERAL ARRAGEMENT
PLAN, SECTION & ELEVATION VIEW

| | | |
|---|---|---|
| DESSINÉ PAR DRAWN BY | ERIC HAMEL | DATE 2021-07-28 |
| VERIFIÉ PAR CHECKED BY | S. BEN SLIMANE/ D. BOUCHARD | 2021-07-30 |
| APPROUVÉ PAR APPROVED BY | S. BEN SLIMANE | 2021-07-30 |
| ÉCHELLE SCALE | INDICATED | DATE 2021-07-28 |

NO. DESSIN DRAWING NO. 65-695-270-002

| NO. PROJET PROJECT NO. | REVISION | FEUILLE / SHT |
|---|---|---|
| 201-00413-14 | 0 | 1 / 1 |

AE-CART-ARCH D

FILE NO. 65-695-270-002.dwg

NO. DESSIN
DRAWING NO. 65-695-270-004_A

FORMAT ARCHD

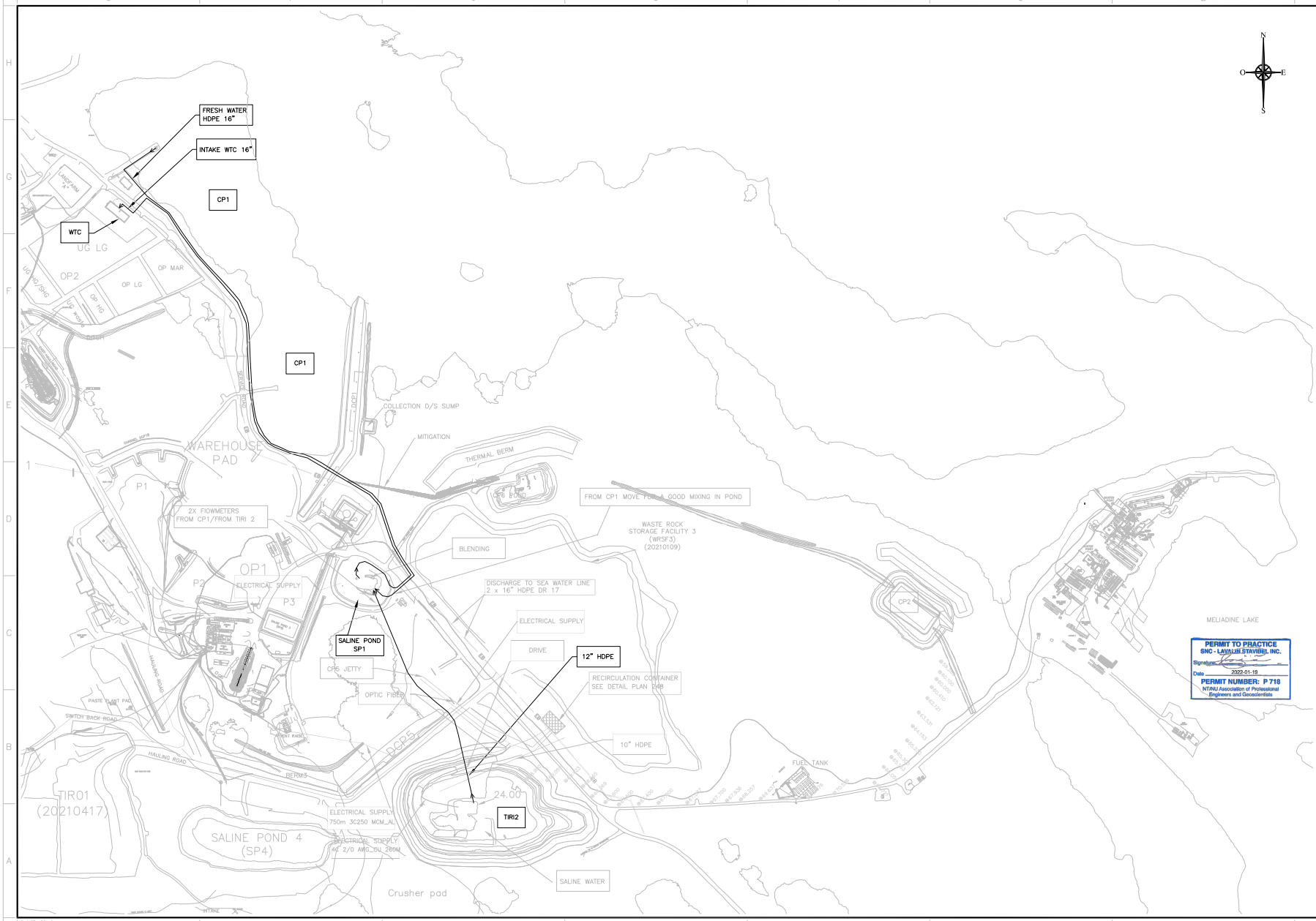


PERMIT TO PRACTICE
SNC - LAVALIN STAVIBEL INC.
Signature
Date 2022-01-19
PERMIT NUMBER: P 718
NT/NU Association of Professional Engineers and Geoscientists

PLAN CLÉ
KEY PLAN

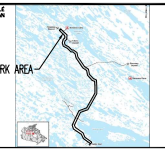


SNC-Lavalin Stavibel Inc.
150, rue Gamble Ouest
Rouyn-Noranda (Québec) J9X 2R7
TEL.: 819 764-3161 Télec.: 819 797-4158
www.cnclavalin.com

Projet No. : 674195-0000

**NOTES GÉNÉRALES / GENERAL NOTES**

COORDINATES SYSTEMS

UTM15-RKI (-0+250 TO 13+000) :
UTM15 NAD83 CSRS/SCRS (GEOID HT V2.0)
BENCHMARK CCM-14-92977013 :
EAST : 545280.004
NORTH : 6965803.749
ELE : 19.045

UTM15-MEL (13+000 TO 35+000) :
UTM15 NAD83 (GEOID HT V2.0)
BENCHMARK CCM-14-92977013 :
EAST : 545279.894
NORTH : 6965802.926
ELE : 22.598

ISSUED FOR PERMITTING
AGNICO EAGLE
DATE : 2022/01/18

COPYRIGHT © RESERVED. CE DOCUMENT EST LA PROPRIÉTÉ DE AGNICO EAGLE LTÉE ET NE PEUT ÊTRE REPRODUIT, EN ENTIER OU EN PARTIE, SOUS QUELQUE FORME QUE CE SOIT, NI UTILISÉ À DES FINS AUTRES QUE CELLES POUR LESQUELLES IL A ÉTÉ PRÉPARÉ SANS LA PERMISSION ÉCRITE D'AGNICO EAGLE LTÉE.
THE INFORMATION HEREON IS THE PROPERTY OF AGNICO EAGLE LTD. AND MUST BE RETURNED UPON REQUEST. WITHOUT WRITTEN PERMISSION, NO COPIES SHOULD BE MADE AND NO USE EXCEPT THAT FOR WHICH IT IS LOANED ARE PERMITTED.
© AGNICO EAGLE LTD.

**DESSINS EN RÉFÉRENCE / REFERENCE DRAWINGS**

| TITRE / TITLE | # DWG |
|---|---|
| – | – |
| – | – |
| – | – |
| – | – |
| – | – |
| – | – |

AGNICO EAGLE

| REV. | DATE | DESCRIPTION | PAR/BY | APP. | CLIENT |
|---|---|---|---|---|---|
| A | 2022/01/18 | ISSUED FOR PERMITTING | B.L. | I.G. | D.R. |

**REVISIONS**

TITRE / TITLE
AGNICO EAGLE – MELIADINE DIVISION
WATER MGMT (SITE DRAINAGE & SETTLING POND)
PIPING
PLAN
PONDS PUMPING LINES
MELIADINE SITE VIEW

| | | |
|---|---|---|
| DESSINÉ PAR DRAWN BY | BRUNO LEMIEUX, tech. | DATE 2022/01/18 |
| VERIFIÉ PAR CHECKED BY | MARCO VINCENT, ing. | 2022/01/18 |
| APPROUVÉ PAR APPROVED BY | ISRAEL GAGNON, ing. | 2022/01/18 |
| ÉCHELLE SCALE | 1 : 4000 | DATE 2021/11/30 |

NO. DESSIN DRAWING NO. 65-695-270-004

| NO. PROJET PROJECT NO. | REVISION | FEUILLE / SHT |
|---|---|---|
| 6526 | A | 1 / 1 |

AE-CART-ARCH D

FILE NO. 65-695-270-004_A.dwg

NO. DESSIN DRAWING NO. 65-180-270-001_R1

FORMAT ARCH D

| PIPING AND FITTINGS TABLE | | | | |
|---|---|---|---|---|
| ITEM | DIA. | DESCRIPTION | SPECIFICATION | QTY. |
| 1 | ø500mm | BUTT FUSION HDPE FLANGE ADAPTER | DR11 | 2 |
| 2 | ø500mm | FLANGE FOR HDPE ADAPTOR | DUCTILE IRON | 2 |
| 3 | ø500mm | BLIND FLANGE | DUCTILE IRON | 2 |
| 4 | ø500x400mm | HDPE ECCENTRIC REDUCER | DR11 | 2 |
| 5 | ø500x500x250mm | HDPE REDUCING TEE | DR11 | 2 |
| 6 | ø400mm | HDPE 45° ELBOW | DR11 | 2 |
| 7 | ø400mm | HDPE PIPE | DR11 | A.R. |
| 8 | ø400mm | BUTT FUSION HDPE FLANGE ADAPTER | DR11 | 12 |
| 9 | ø400mm | FLANGE FOR HDPE ADAPTOR | DUCTILE IRON | 12 |
| 10 | ø400mm | HDPE 45° LATERAL | DR11 | 2 |
| 11 | ø250mm | HDPE PIPE | DR11 | A.R. |
| 12 | ø250mm | HDPE 90° ELBOW | DR11 | 3 |
| 13 | ø250mm | HDPE TEE | DR11 | 1 |
| 14 | ø250mm | BUTT FUSION HDPE FLANGE ADAPTER | DR11 | 13 |
| 15 | ø250mm | FLANGE FOR HDPE ADAPTOR | DUCTILE IRON | 13 |

| VALVES TABLE | | | | |
|---|---|---|---|---|
| ITEM | DIA. | DESCRIPTION | SPECIFICATION | QTY. |
| V1 | ø400 | ORBINOX KNIFE GATE VALVE (MANUAL) MODEL VG, SERIE 61 | FLANGED | 2 |
| V2 | ø250 | ORBINOX KNIFE GATE VALVE (ACTUATED) MODEL VG, SERIE 61 | FLANGED | 2 |
| V3 | ø400 | ORBINOX KNIFE GATE VALVE (ACTUATED) MODEL VG, SERIE 61 | FLANGED | 2 |

| BOLTS / NUTS / WASHERS | | | | |
|---|---|---|---|---|
| B1 | M30x225mm Lg. | C/W NUTS A194 Gr.2H / WASHERS | ASTM A193 Gr.B7 | 40 |
| B2 | M24x225mm Lg. | C/W NUTS A194 Gr.2H / WASHERS | ASTM A193 Gr.B7 | 64 |
| B3 | M20x80mm Lg. | C/W WASHERS | ASTM A193 Gr.B7 | 48 |
| B4 | M24x125mm Lg. | C/W WASHERS | ASTM A193 Gr.B7 | 128 |
| B5 | M20x150mm Lg. | C/W NUTS A194 Gr.2H / WASHERS | ASTM A193 Gr.B7 | 60 |

NOTE:
- HEX. HEAD MACHINE BOLTS WITH HEAVY HEX. NUTS
- STUD BOLTS WITH HEAVY HEX. NUTS.
- GASKET: 400x3mm [16"x1/8"] 150 Lbs FF, RED SILICONE 60 DURO (SOLID SILICONE ELASTOMER)
- THE QUANTITY AND LENGTH OF BOLTS MUST BE VALIDATED BY THE CUSTOMER OR THE CONTRACTOR, ALL DEPEND ABOUT THE TYPE OF VALVES AND FLANGES SELECTED.

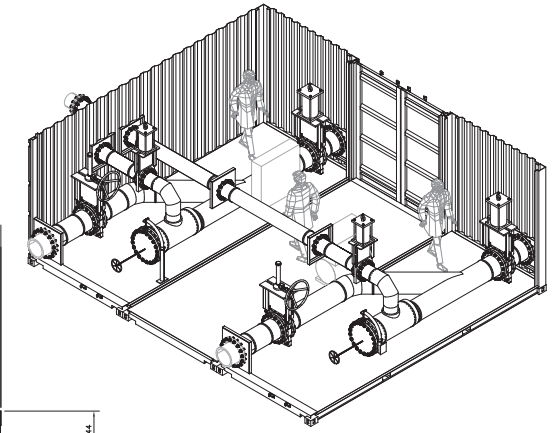

*3D VIEW*
SCALE: N/A

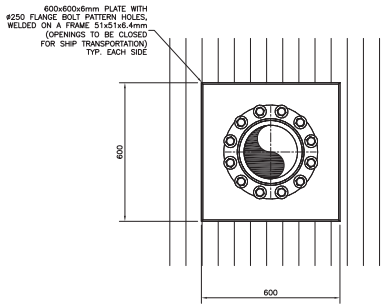


*DETAIL* 3 1/2
SCALE: 1:10
QTY: 4 REQ.

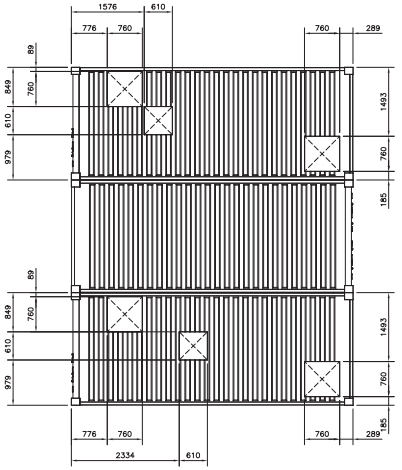


*TOP VIEW*
SCALE: 1:50

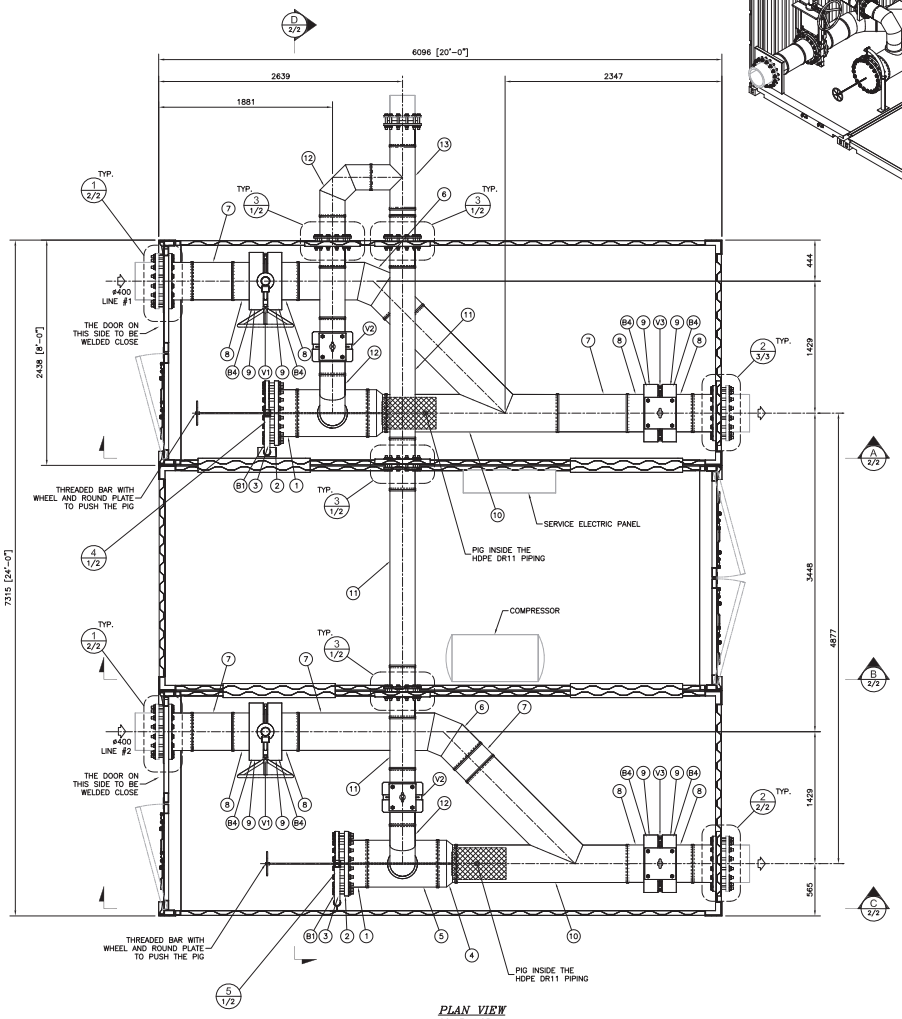


*PLAN VIEW*
SCALE: 1:25

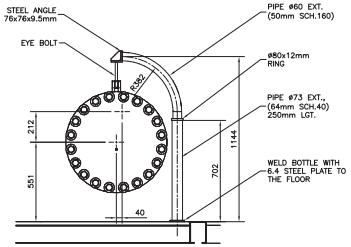


*DETAIL* 4 1/2
SCALE: 1:16

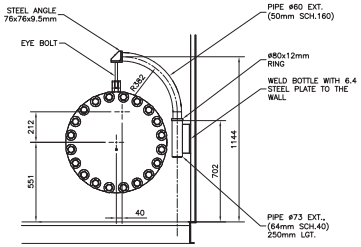


*DETAIL* 5 1/2
SCALE: 1:16

PLAN CLÉ
KEY PLAN

SNC-LAVALIN

SNC-Lavalin Stanfield Inc.
150, rue Gamble Ouest
Rouyn-Noranda (Québec) J9X 2R7
TEL: 819 764-0181 TÉLÉC.: 819 797-0158
www.snclavalin.com

Projet No. : 674195-0000

**NOTES GÉNÉRALES / GENERAL NOTES**

1. ALL PIPING SUPPORTS MUST BE PROVIDED.
2. ALL EQUIPMENTS MUST BE ANCHORED IN THE CONTAINER FOR TRANSPORT.
3. HDPE PIPE SEGMENTS SHALL BE ASSEMBLED TYPICALLY WITH A BUTT FUSION JOINT.

PERMIT TO PRACTICE
SNC - LAVALIN STANFIELD, INC.
Signature
Date 2021-06-07
PERMIT NUMBER: P 718
NTNU Association of Professional Engineers and Geoscientists

POUR CONSTRUCTION
FOR CONSTRUCTION
AGNICO EAGLE
DATE : 2021-06-04

CONFIDENTIEL-CONFIDENTIAL CE DOCUMENT EST LA PROPRIÉTÉ DE AGNICO EAGLE LTÉE ET NE DOIT ÊTRE REPRODUIT, EN ENTIER OU EN PARTIE, NI UTILISÉ, NI DIVULGUÉ À QUICONQUE SANS AUTORISATION ÉCRITE PRÉALABLE. THIS DOCUMENT IS THE PROPERTY OF AGNICO EAGLE LTD. AND MUST NOT BE REPRODUCED IN WHOLE OR IN PART, NOR USED, DISCLOSED, OR LOANED WITHOUT PRIOR WRITTEN PERMISSION.

**DESSINS EN RÉFÉRENCE / REFERENCE DRAWINGS**

| TITRE / TITLE | # DWG |
|---|---|
| PIPING & INSTRUMENTATION DIAGRAM | 65-180-205-002 |
| – | – |
| – | – |
| – | – |
| – | – |
| – | – |

AGNICO EAGLE

| REV. | DATE | DESCRIPTION | PAR/BY | APP. | CLIENT |
|---|---|---|---|---|---|
| 1 | 2021-06-04 | ISSUED FOR CONSTRUCTION | R.L. | M.V. | B.R. |
| 0 | 2021/04/26 | ISSUED FOR TENDER | R.L. | M.V. | B.R. |

**REVISIONS**

DOCUMENT SIGNÉ NUMÉRIQUEMENT

Robin Vincent 2021-06-07
M. VINCENT 2021-06-07

TITRE / TITLE
AGNICO EAGLE – MELIADINE DIVISION
180 – SALINE EFFLUENT DISCHARGE SYSTEM
270 – PIPING
PLAN VIEW
WATER LINE
RECIRCULATION CONTAINER

| | | |
|---|---|---|
| DESSINÉ PAR DRAWN BY | ROBIN LEMIEUX, tech. | 2021/04/21 |
| VÉRIFIÉ PAR CHECKED BY | MARCO VINCENT, P.Eng. | 2021/04/26 |
| APPROUVÉ PAR APPROVED BY | ISRAËL GAGNON, P.Eng. | 2021/04/26 |
| ÉCHELLE SCALE | INDICATED | DATE 2021/04/26 |

NO. DESSIN DRAWING NO. 65-180-270-001

| NO. PROJET PROJECT NO. | REVISION | FEUILLE / SHT |
|---|---|---|
| 6526 | 1 | 1 / 2 |

AE-CART-ARCH D

\\ail.lvc\lavalnet\Projet\300-RN\674195\0000\4-Ingenierie\D-Dessins maitres\65-MF\65-180-270-001_R1.dwg-2013-02-19 14:03:29

FILE NO. 65-180-270-001_R1.dwg

NO. DESSIN
DRAWING NO. 65-180-270-001_R1

FORMAT ARCHD

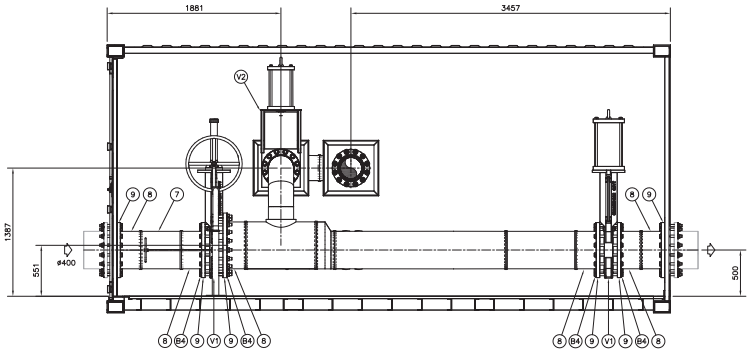


SECTION A 1/2
SCALE: 1:25

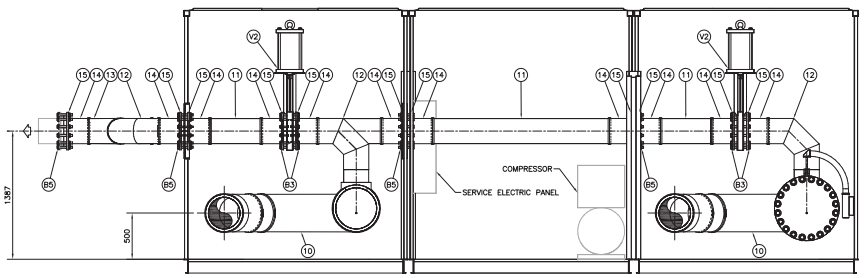


SECTION D 1/2
SCALE: 1:25

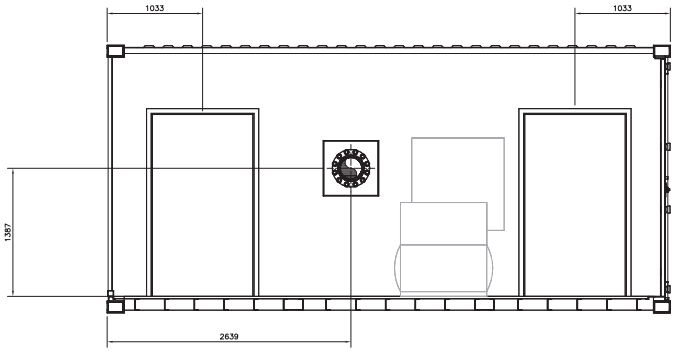


SECTION B 1/2
SCALE: 1:25

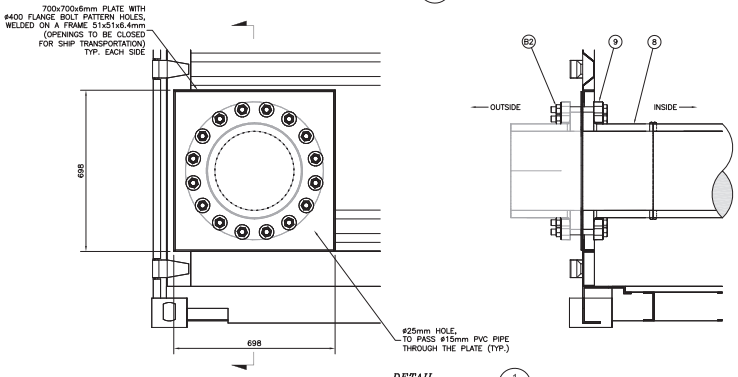


DETAIL 1 1/2
SCALE: 1:10
QTY: 2 REQ.

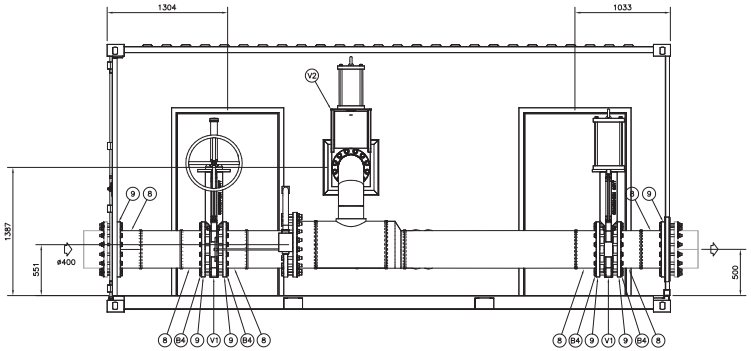


SECTION C 1/2
SCALE: 1:25

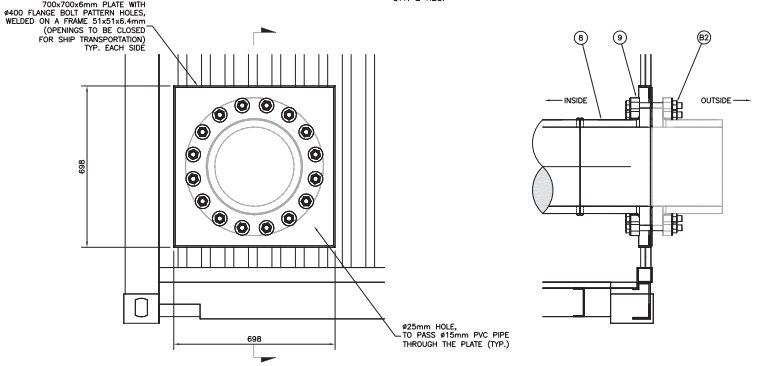


DETAIL 2 1/2
SCALE: 1:10
QTY: 2 REQ.

PLAN CLÉ
KEY PLAN


SNC-Lavalin Stavibel Inc.
150, rue Gamble Ouest
Rouyn-Noranda (Québec) J9X 2R7
TEL : 819 764-0181 TÉLÉC. : 819 797-0158
www.snclavalin.com


Projet No. : 674195-0000

NOTES GÉNÉRALES / GENERAL NOTES

1. ALL PIPING SUPPORTS MUST BE PROVIDED.
2. ALL EQUIPMENTS MUST BE ANCHORED IN THE CONTAINER FOR TRANSPORT.
3. HDPE PIPE SEGMENTS SHALL BE ASSEMBLED TYPICALLY WITH A BUTT FUSION JOINT.

PERMIT TO PRACTICE
SNC - LAVALIN STAVIBEL INC.
Signature
Date 2021-06-04
PERMIT NUMBER: P 718
NT/NU Association of Professional Engineers and Geoscientists

POUR CONSTRUCTION
FOR CONSTRUCTION
DATE : 2021-06-04
AGNICO EAGLE


L'UTILISATION DE CE DESSIN EST LA PROPRIÉTÉ DE AGNICO EAGLE LTÉE ET DOIT ÊTRE RETOURNÉ SUR DEMANDE. SAUF AUTORISATION ÉCRITE PRÉALABLE, TOUTE TRANSMISSION OU COPIE(S) À AUTRE QUE TOUTE UTILISATION AUTRE QUE CELLE POUR LAQUELLE L'AUTORISATION EST PRÉVUE EST INTERDITE. © AGNICO EAGLE LTÉE

THE INFORMATION AND IDEAS ON THIS DRAWING ARE THE PROPERTY OF AGNICO EAGLE LTD. AND MUST BE RETURNED UPON REQUEST. WITHOUT WRITTEN PERMISSION, ANY EXPRESS TRANSMITTAL OR COPIES AND USE EXCEPT THAT FOR WHICH IT IS LOANED ARE PROHIBITED. © AGNICO EAGLE LTD.


DESSINS EN RÉFÉRENCE / REFERENCE DRAWINGS

| TITRE / TITLE | # DWG |
|---|---|
| PIPING & INSTRUMENTATION DIAGRAM | 65-180-205-002 |
| – | – |
| – | – |
| – | – |
| – | – |
| – | – |

AGNICO EAGLE

| REV. | DATE | DESCRIPTION | PAR/BY | APP. | CLIENT |
|---|---|---|---|---|---|
| 1 | 2021-06-04 | ISSUED FOR CONSTRUCTION | R.L. | M.V. | B.R. |
| 0 | 2021/04/26 | ISSUED FOR TENDER | R.L. | M.V. | B.R. |

REVISIONS

DOCUMENT SIGNÉ NUMÉRIQUEMENT

Marco Vincent 121882 2021-06-04

M. VINCENT 121882 ENGINEER 2021-06-04

TITRE / TITLE

AGNICO EAGLE – MELIADINE DIVISION
180 – SALINE EFFLUENT DISCHARGE SYSTEM
270 – PIPING
SECTIONS
WATER LINE
RECIRCULATION CONTAINER

| | | |
|---|---|---|
| DESSINÉ PAR DRAWN BY | ROBIN LEMIEUX, tech. | 2021/04/21 |
| VERIFIÉ PAR CHECKED BY | MARCO VINCENT, P.Eng. | 2021/04/26 |
| APPROUVÉ PAR APPROVED BY | ISRAËL GAGNON, P.Eng. | 2021/04/26 |
| ÉCHELLE SCALE | INDICATED | DATE 2021/04/26 |

NO. DESSIN
DRAWING NO. 65-180-270-001

| NO. PROJET PROJECT NO. | REVISION | FEUILLE / SHT |
|---|---|---|
| 6526 | 1 | 2 / 2 |

AE-CART-ARCH D

FILE NO. 65-180-270-001_R1.dwg

# Appendix B

NO. DESSIN
DRAWING NO. 65-680-205-011_R0

FORMAT ARCHD

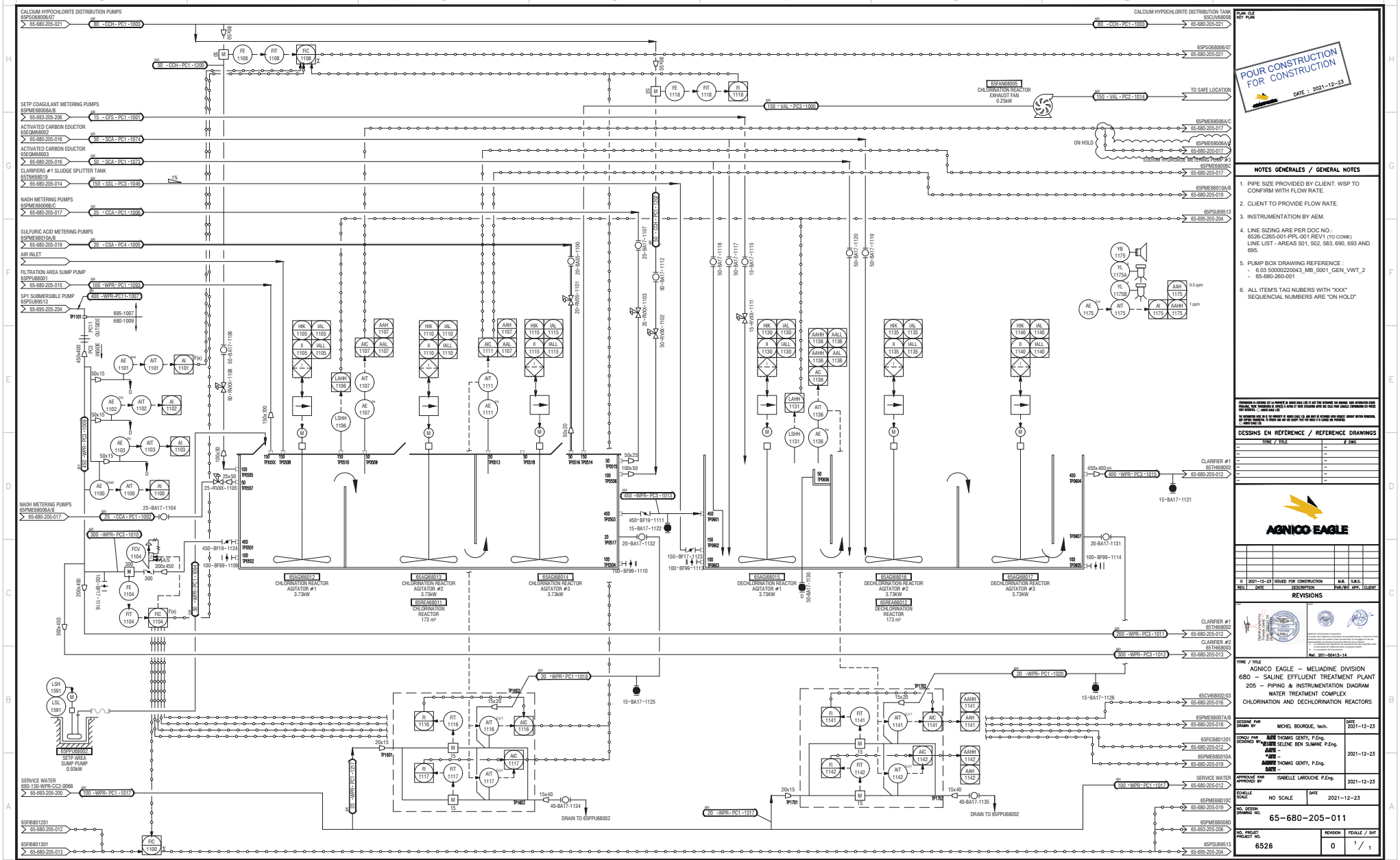


PLAN CLÉ
KEY PLAN

POUR CONSTRUCTION
FOR CONSTRUCTION
DATE : 2021-12-23

## NOTES GÉNÉRALES / GENERAL NOTES

1. PIPE SIZE PROVIDED BY CLIENT. WSP TO CONFIRM WITH FLOW RATE.
2. CLIENT TO PROVIDE FLOW RATE.
3. INSTRUMENTATION BY AEM.
4. LINE SIZING ARE PER DOC NO.: 6526-C265-001-PPL-001 REV1 (TO COME)
   LINE LIST - AREAS 501, 502, 583, 690, 693 AND 695.
5. PUMP BOX DRAWING REFERENCE :
   - 6.03 50000220043_MB_0001_GEN_VWT_2
   - 65-680-260-001
6. ALL ITEM'S TAG NUBERS WITH "XXX" SEQUENCIAL NUMBERS ARE "ON HOLD"


DIFFUSION A L'EXTERNE DE LA PRESENTE N'AMOI-SANS LIEU ET AVEC CONSENTEMENT DES GERANTS. SANS AUTORISATION ECRITE, L'UTILISATION, TOUTE TRANSMISSION OU COPIE(S) A AUTRE QUE TOUTE PERSONNE AUTRE QUE CELLE POUR LAQUELLE L'INFORMATION EST REMISE, EST INTERDITE. © AGNICO EAGLE LTÉE

THE INFORMATION HERE ON IS THE PROPERTY OF AGNICO EAGLE LTD. AND MAY BE RETURNED UPON REQUEST. WITHOUT WRITTEN PERMISSION, ANY COPYING TRANSMITTAL TO OTHERS AND USE FOR EXCEPT THAT FOR WHICH IT IS LOANED ARE PROHIBITED. © AGNICO EAGLE LTD.


## DESSINS EN RÉFÉRENCE / REFERENCE DRAWINGS

| TITRE / TITLE | # DWG |
|---|---|
| – | – |
| – | – |
| – | – |
| – | – |
| – | – |
| – | – |
| – | – |

AGNICO EAGLE

| REV. | DATE | DESCRIPTION | PAR/BY | APP. | CLIENT |
|---|---|---|---|---|---|
| 0 | 2021-12-23 | ISSUED FOR CONSTRUCTION | M.B. | S.B.S. | |

REVISIONS

Ref. 201-00413-14

TITRE / TITLE

AGNICO EAGLE – MEL IADINE DIVISION
680 – SALINE EFFLUENT TREATMENT PLANT
205 – PIPING & INSTRUMENTATION DIAGRAM
WATER TREATMENT COMPLEX
CHLORINATION AND DECHLORINATION REACTORS

| | | |
|---|---|---|
| DESSINÉ PAR / DRAWN BY | MICHEL BOURQUE, Tech. | DATE 2021-12-23 |
| CONÇU PAR / DESIGNED BY | THOMAS GENTY, P.Eng.<br>SELENE BEN SLIMANE P.Eng.<br>–<br>THOMAS GENTY, P.Eng.<br>– | 2021-12-23 |
| APPROUVÉ PAR / APPROVED BY | ISABELLE LAROUCHE P.Eng. | 2021-12-23 |
| ÉCHELLE / SCALE | NO SCALE | DATE 2021-12-23 |
| NO. DESSIN / DRAWING NO. | 65-680-205-011 | |
| NO. PROJET / PROJECT NO. | 6526 | REVISION 0 |
| | | FEUILLE / SHT 1 / 1 |

AE-CART-ARCH D

FILE NO. 65-680-205-011_R0.dwg

NO. DESSIN
DRAWING NO. 65-680-205-012_R2

FORMAT ARCH D

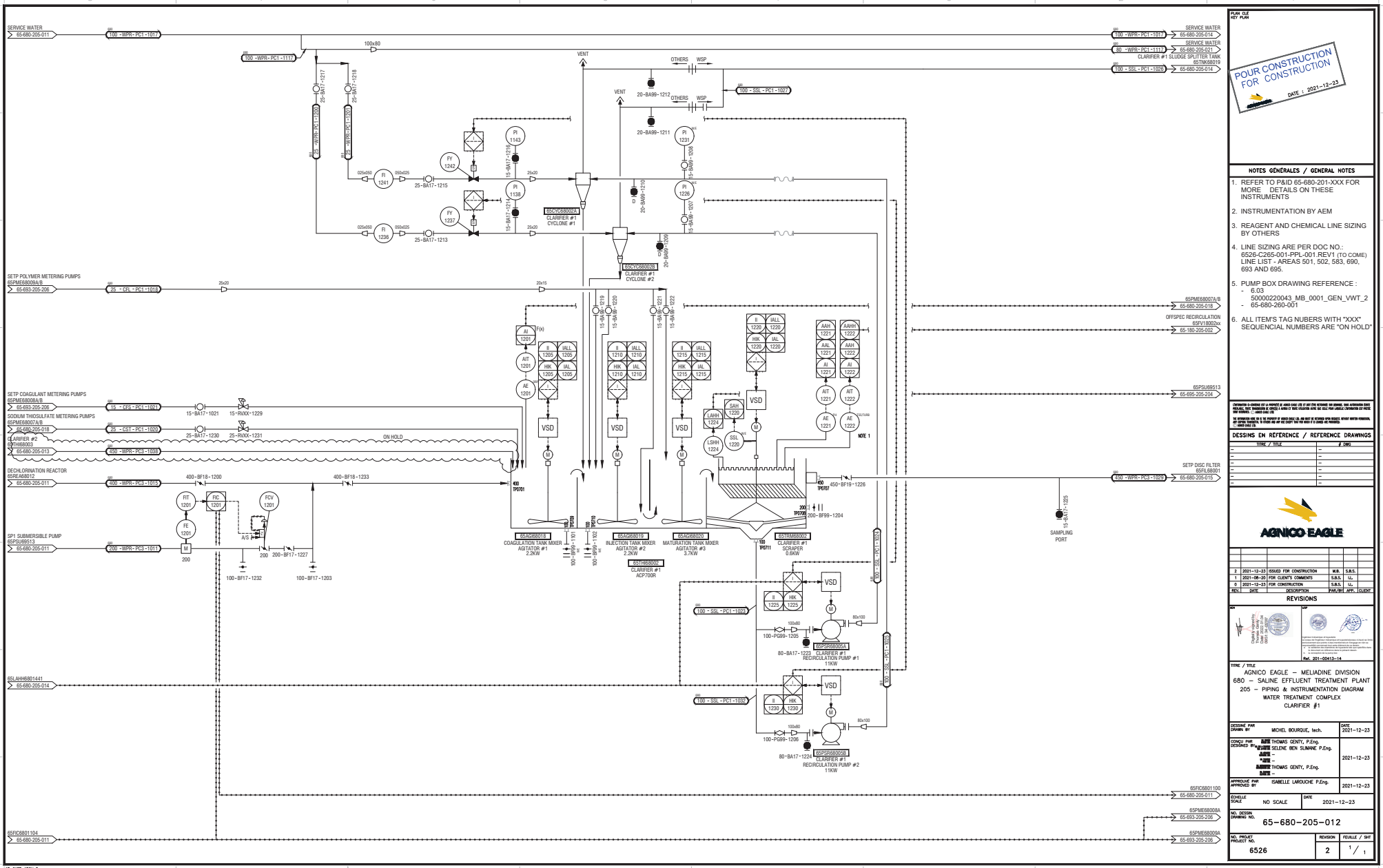


PLAN CLÉ
KEY PLAN

POUR CONSTRUCTION
FOR CONSTRUCTION
DATE : 2021-12-23

## NOTES GÉNÉRALES / GENERAL NOTES

1. REFER TO P&ID 65-680-201-XXX FOR MORE DETAILS ON THESE INSTRUMENTS
2. INSTRUMENTATION BY AEM
3. REAGENT AND CHEMICAL LINE SIZING BY OTHERS
4. LINE SIZING ARE PER DOC NO.:
   6526-C265-001-PPL-001.REV1 (TO COME)
   LINE LIST - AREAS 501, 502, 583, 690, 693 AND 695.
5. PUMP BOX DRAWING REFERENCE :
   - 6.03 50000220043_MB_0001_GEN_VWT_2
   - 65-680-260-001
6. ALL ITEM'S TAG NUBERS WITH "XXX" SEQUENCIAL NUMBERS ARE "ON HOLD"


L'UTILISATION, LA COPIE OU LA REPRODUCTION DU PRÉSENT DESSIN SANS L'AUTORISATION DE AGNICO EAGLE LTÉE OU DE SES FILIALES, SOUS QUELQUE FORME QUE CE SOIT, EST STRICTEMENT INTERDITE. © AGNICO EAGLE LTÉE

THE REPRODUCTION, USE OR DISCLOSURE OF THIS DRAWING WITHOUT THE PRIOR WRITTEN CONSENT OF AGNICO EAGLE LTD, OR ANY OF ITS AFFILIATES, IS STRICTLY PROHIBITED. © AGNICO EAGLE LTD


## DESSINS EN RÉFÉRENCE / REFERENCE DRAWINGS

| TITRE / TITLE | # DWG |
|---|---|
| – | – |
| – | – |
| – | – |
| – | – |
| – | – |
| – | – |
| – | – |

AGNICO EAGLE

| REV. | DATE | DESCRIPTION | PAR/BY | APP. | CLIENT |
|---|---|---|---|---|---|
| 3 | 2021-12-23 | ISSUED FOR CONSTRUCTION | M.B. | S.B.S. | |
| 1 | 2021-08-20 | FOR CLIENT'S COMMENTS | S.B.S. | LL. | |
| 0 | 2021-12-23 | FOR CONSTRUCTION | S.B.S. | LL. | |

REVISIONS

Ref. 201-00413-14

TITRE / TITLE

AGNICO EAGLE – MEL IADINE DIVISION
680 – SALINE EFFLUENT TREATMENT PLANT
205 – PIPING & INSTRUMENTATION DIAGRAM
WATER TREATMENT COMPLEX
CLARIFIER #1

| | | |
|---|---|---|
| DESSINÉ PAR / DRAWN BY | MICHEL BOURQUE, tech. | DATE 2021-12-23 |
| CONÇU PAR / DESIGNED BY | APE THOMAS GENTY, P.Eng.<br>APE SELENE BEN SLIMANE P.Eng.<br>APE –<br>APE –<br>APE THOMAS GENTY, P.Eng.<br>APE – | 2021-12-23 |
| APPROUVÉ PAR / APPROVED BY | ISABELLE LAROUCHE P.Eng. | 2021-12-23 |
| ÉCHELLE / SCALE | NO SCALE | DATE 2021-12-23 |
| NO. DESSIN / DRAWING NO. | 65-680-205-012 | |
| NO. PROJET / PROJECT NO. | 6526 | REVISION 2 / FEUILLE / SHT 1 / 1 |

AE-CART-ARCH D

P:\2020\1\201-00413-14\Wrwx\01-COMM\Envoye\AEM\WSP-ACM-201-00413-14-325 (P&ID 680, 693, 695 issued for Permits)\65-680-205-012_R2.dwg-2013-02-19 14:03:29

FILE NO. 65-680-205-012_R2.dwg

NO. DESSIN
DRAWING NO. 65-680-205-013_R0

FORMAT ARCHD

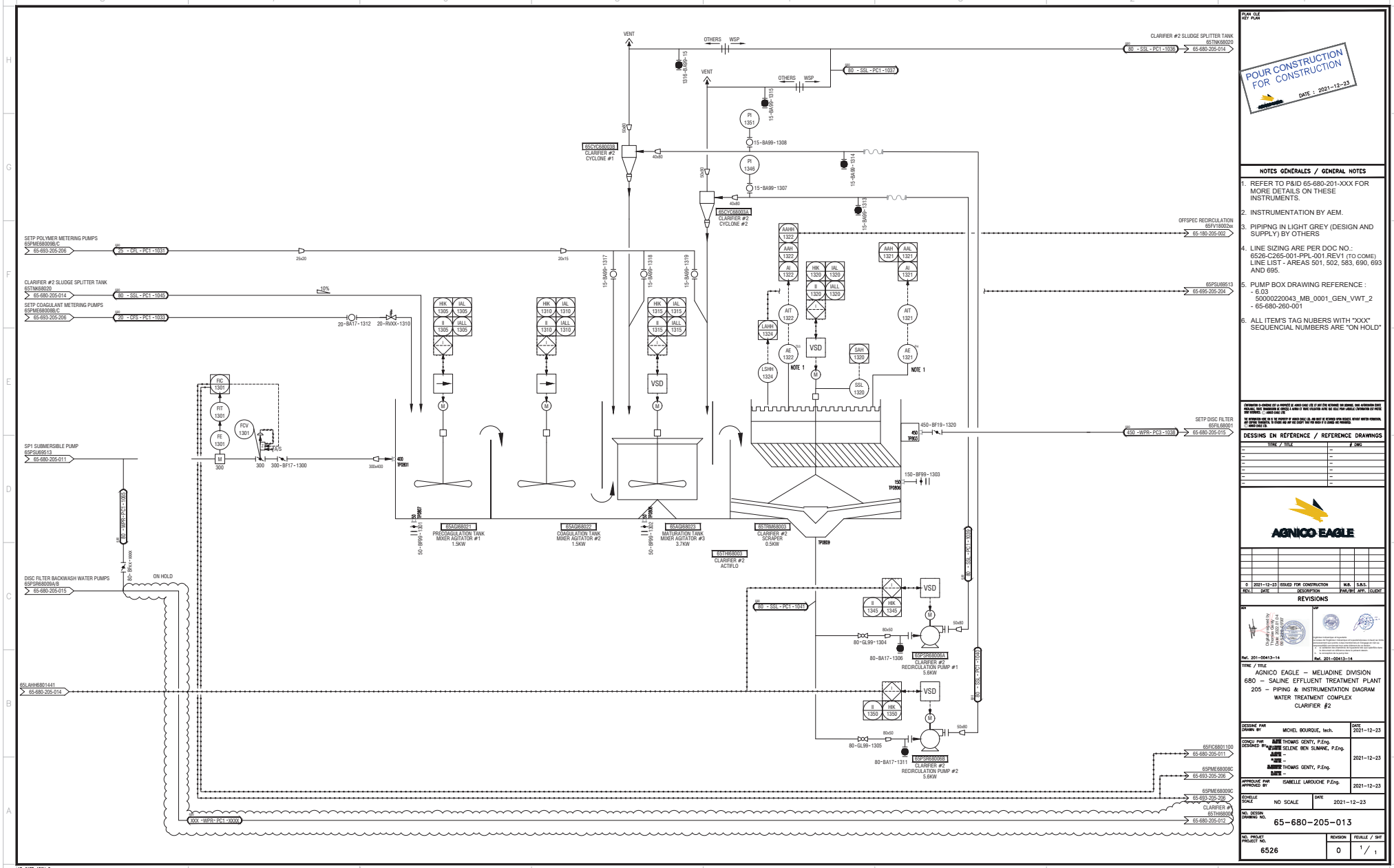


PLAN CLÉ
KEY PLAN

POUR CONSTRUCTION
FOR CONSTRUCTION
DATE : 2021-12-23

## NOTES GÉNÉRALES / GENERAL NOTES

1. REFER TO P&ID 65-680-201-XXX FOR MORE DETAILS ON THESE INSTRUMENTS.
2. INSTRUMENTATION BY AEM.
3. PIPIPNG IN LIGHT GREY (DESIGN AND SUPPLY) BY OTHERS
4. LINE SIZING ARE PER DOC NO.: 6526-C265-001-PPL-001.REV1 (TO COME) LINE LIST - AREAS 501, 502, 583, 690, 693 AND 695.
5. PUMP BOX DRAWING REFERENCE :
   - 6.03 50000220043_MB_0001_GEN_VWT_2
   - 65-680-260-001
6. ALL ITEM'S TAG NUBERS WITH "XXX" SEQUENCIAL NUMBERS ARE "ON HOLD"


L'INFORMATION A CARACTÈRE EST LA PROPRIÉTÉ DE AGNICO EAGLE LTÉE ET NE PEUT ÊTRE REPRODUITE OU UTILISÉE, EN ENTIER OU EN PARTIE, SANS AUTORISATION ÉCRITE PRÉALABLE. TOUTE REPRODUCTION OU UTILISATION NON AUTORISÉE EST INTERDITE ET PEUT ENTRAÎNER DES POURSUITES JUDICIAIRES. © AGNICO EAGLE LTÉE

THE INFORMATION HERE ON IS THE PROPERTY OF AGNICO EAGLE LTD. AND MUST BE RETURNED UPON REQUEST, WITHOUT ANOTHER NOTIFICATION, AND COPYING TRANSMITTED, TO OTHERS AND ANY USE EXCEPT THAT FOR WHICH IT IS LOANED ARE PROHIBITED. © AGNICO EAGLE LTD.


## DESSINS EN REFERENCE / REFERENCE DRAWINGS

| TITRE / TITLE | # DWG |
|---|---|
| – | – |
| – | – |
| – | – |
| – | – |
| – | – |
| – | – |
| – | – |

AGNICO EAGLE

| REV. | DATE | DESCRIPTION | PAR/BY | APP. | CLIENT |
|---|---|---|---|---|---|
| 0 | 2021-12-23 | ISSUED FOR CONSTRUCTION | M.B. | S.B.S. | |

REVISIONS

MDM

Ref. 201-00413-14

WSP

Ref. 201-00413-14

TITRE / TITLE

AGNICO EAGLE – MELIADINE DIVISION
680 – SALINE EFFLUENT TREATMENT PLANT
205 – PIPING & INSTRUMENTATION DIAGRAM
WATER TREATMENT COMPLEX
CLARIFIER #2

| | | |
|---|---|---|
| DESSINÉ PAR / DRAWN BY | MICHEL BOURQUE, tech. | 2021-12-23 |
| CONÇU PAR / DESIGNED BY | THOMAS GENTY, P.Eng.<br>SELENE BEN SLIMANE, P.Eng.<br>–<br>–<br>THOMAS GENTY, P.Eng.<br>– | 2021-12-23 |
| APPROUVÉ PAR / APPROVED BY | ISABELLE LAROUCHE P.Eng. | 2021-12-23 |
| ÉCHELLE / SCALE | NO SCALE | 2021-12-23 |
| NO. DESSIN / DRAWING NO. | 65-680-205-013 | |
| NO. PROJET / PROJECT NO. | 6526 | REVISION 0 |
| | | FEUILLE / SHT 1 / 1 |

AE-CART-ARCH D

P:\2020\1\201-00413-14\Mines\01-COMM\Envoye\AEM\WSP-AEM-201-00413-14-325 (P&ID 680, 693, 695 issued for Permits)\65-680-205-013_R0.dwg-2013-02-19 14:03:29

FILE NO. 65-680-205-013_R0.dwg

NO. DESSIN
DRAWING NO. 65-680-205-014_R0

FORMAT ARCHD

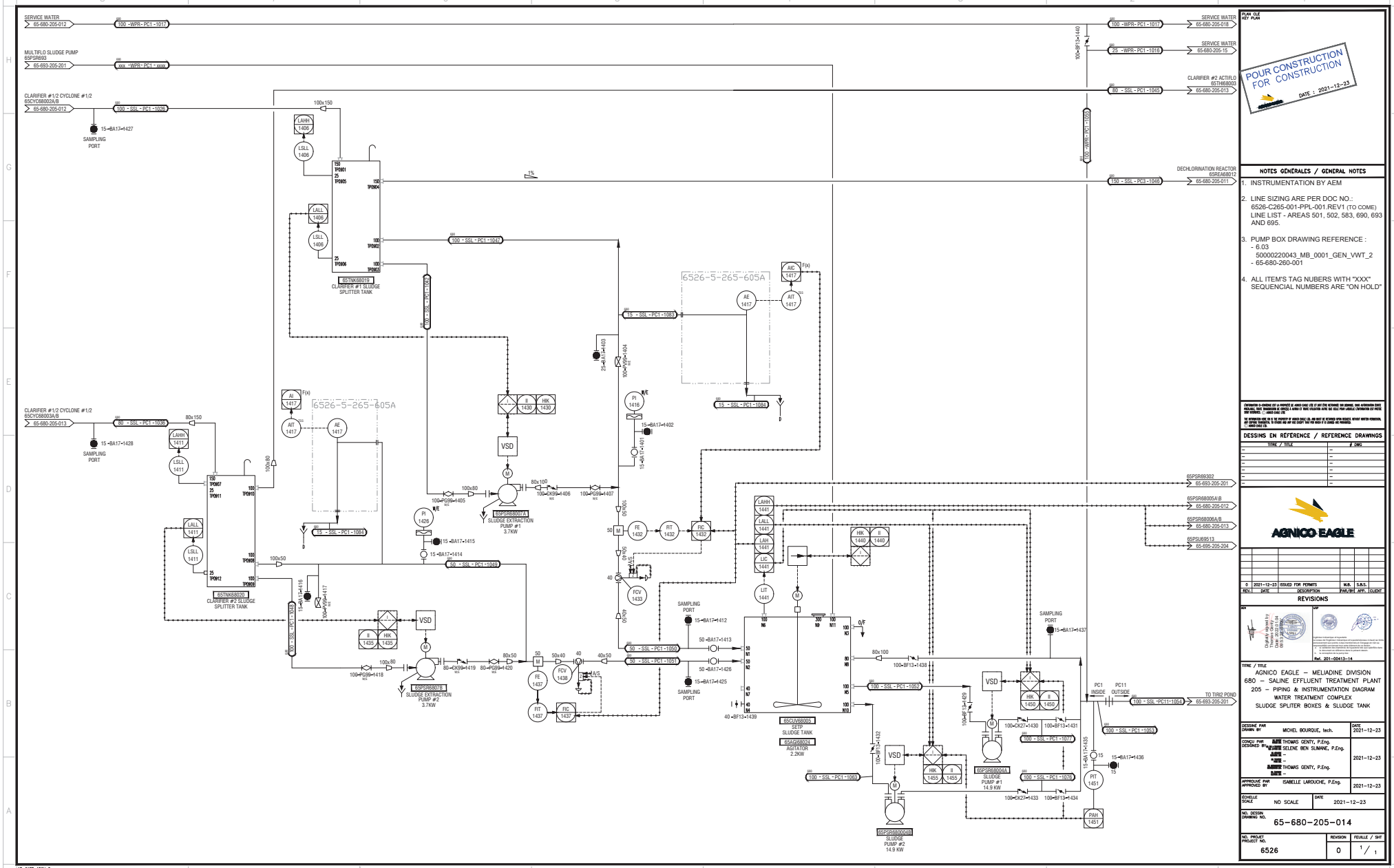


PLAN CLÉ
KEY PLAN

POUR CONSTRUCTION
FOR CONSTRUCTION
DATE : 2021-12-23

## NOTES GÉNÉRALES / GENERAL NOTES

1. INSTRUMENTATION BY AEM
2. LINE SIZING ARE PER DOC NO.:
   6526-C265-001-PPL-001.REV1 (TO COME)
   LINE LIST - AREAS 501, 502, 583, 690, 693 AND 695.
3. PUMP BOX DRAWING REFERENCE :
   - 6.03
     50000220043_MB_0001_GEN_VWT_2
   - 65-680-260-001
4. ALL ITEM'S TAG NUBERS WITH "XXX" SEQUENCIAL NUMBERS ARE "ON HOLD"


L'INFORMATION À CARACTÈRE EST LA PROPRIÉTÉ DE AGNICO EAGLE LTÉE ET NE PEUT ÊTRE REPRODUITE NON UTILISÉE, NON DIVULGUÉE, TOUTE REPRODUCTION OU EXPOSÉ À AUTRUI EST TOUTE VIOLATION AUTRE QUE CELLE POUR LAQUELLE L'AUTORISATION EST PRÉCISE PAR ÉCRIT. © AGNICO EAGLE LTÉE

THE INFORMATION HERE ON IS THE PROPERTY OF AGNICO EAGLE LTD. AND MUST BE RETURNED UPON REQUEST, WITHOUT WARTER REPRODUCTION, NOT COPIED TRANSMITTED, TO OTHERS AND ARE NOT TO BE USED FOR WORKS IT IS LICENSED AND PROVIDED. © AGNICO EAGLE LTD.


## DESSINS EN REFERENCE / REFERENCE DRAWINGS

| TITRE / TITLE | # DWG |
|---|---|
| – | – |
| – | – |
| – | – |
| – | – |
| – | – |
| – | – |
| – | – |

AGNICO EAGLE

## REVISIONS

| REV. | DATE | DESCRIPTION | PAR/BY | APP. | CLIENT |
|---|---|---|---|---|---|
| 0 | 2021-12-23 | ISSUED FOR PERMITS | M.B. | S.B.S. | |

Digitally signed by Thomas Genty Date: 2021.12.23 08:53:26 -05'00'

Ref. 201-00413-14

TITRE / TITLE

AGNICO EAGLE – MEL IADINE DIVISION
680 – SALINE EFFLUENT TREATMENT PLANT
205 – PIPING & INSTRUMENTATION DIAGRAM
WATER TREATMENT COMPLEX
SLUDGE SPLITER BOXES & SLUDGE TANK

| | | |
|---|---|---|
| DESSINÉ PAR / DRAWN BY | MICHEL BOURQUE, tech. | 2021-12-23 |
| CONÇU PAR / DESIGNED BY | THOMAS GENTY, P.Eng.<br>SELENE BEN SLIMANE, P.Eng.<br>–<br>THOMAS GENTY, P.Eng.<br>– | 2021-12-23 |
| APPROUVÉ PAR / APPROVED BY | ISABELLE LAROUCHE, P.Eng. | 2021-12-23 |
| ÉCHELLE / SCALE | NO SCALE | 2021-12-23 |
| NO. DESSIN / DRAWING NO. | 65-680-205-014 | |
| NO. PROJET / PROJECT NO. | 6526 | REVISION 0 / FEUILLE / SHT 1 / 1 |

AE-CART-ARCH D

P:\2020\1\201-00413-14\Wrwa\01-COMM\Envoyé\AEM\WSP-AEM-201-00413-14-325 (P&ID 680, 693, 695 issued for Permits)\65-680-205-014_R0.dwg-2013-02-19 14:03:29

FILE NO. 65-680-205-014_R0.dwg

NO. DESSIN
DRAWING NO. 65-680-205-015_R2

FORMAT ARCHD

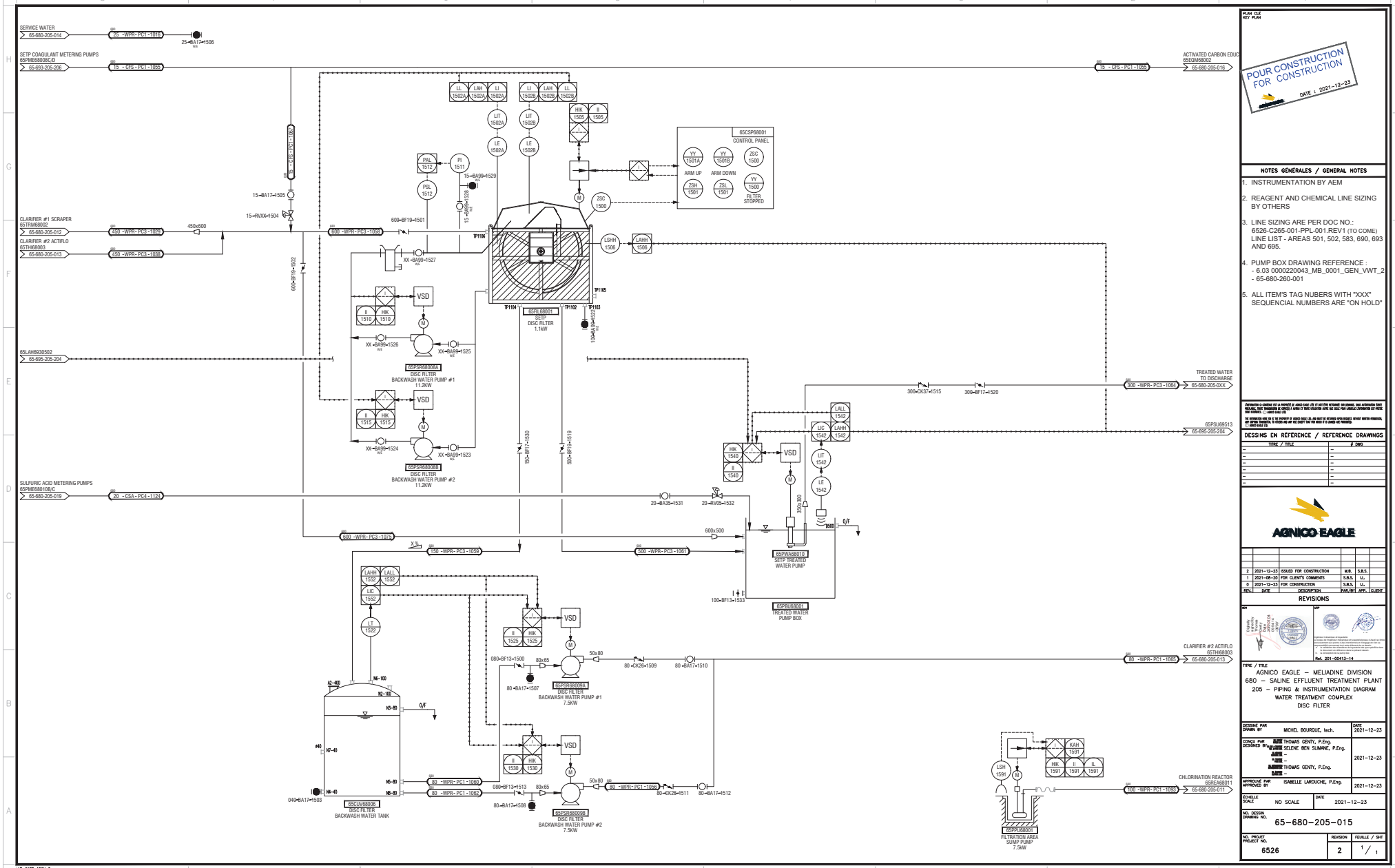


PLAN CLÉ
KEY PLAN

POUR CONSTRUCTION
FOR CONSTRUCTION
DATE : 2021-12-23

## NOTES GÉNÉRALES / GENERAL NOTES

1. INSTRUMENTATION BY AEM
2. REAGENT AND CHEMICAL LINE SIZING BY OTHERS
3. LINE SIZING ARE PER DOC NO.: 6526-C265-001-PPL-001.REV1 (TO COME) LINE LIST - AREAS 501, 502, 583, 690, 693 AND 695.
4. PUMP BOX DRAWING REFERENCE :
   - 6.03 0000220043_MB_0001_GEN_VWT_2
   - 65-680-260-001
5. ALL ITEM'S TAG NUBERS WITH "XXX" SEQUENCIAL NUMBERS ARE "ON HOLD"


L'UTILISATION, LA COPIE OU LA REPRODUCTION DE CE DESSIN SANS L'AUTORISATION DE AGNICO EAGLE LTÉE OU DE AGNICO EAGLE LTD EST STRICTEMENT INTERDITE. CE DESSIN EST LA PROPRIÉTÉ DE AGNICO EAGLE LTÉE OU DE AGNICO EAGLE LTD.

THE REPRODUCTION, USE OR THE PROPERTY OF AGNICO EAGLE LTD. ARE NOT BE RETAINED UPON REQUEST, WITHOUT WRITTEN PERMISSION OF AGNICO EAGLE LTÉE OU DE AGNICO EAGLE LTD.


## DESSINS EN RÉFÉRENCE / REFERENCE DRAWINGS

| TITRE / TITLE | # DWG |
|---|---|
| – | – |
| – | – |
| – | – |
| – | – |
| – | – |
| – | – |
| – | – |

AGNICO EAGLE

| REV. | DATE | DESCRIPTION | PAR/BY | APP. | CLIENT |
|---|---|---|---|---|---|
| 3 | 2021-12-23 | ISSUED FOR CONSTRUCTION | M.B. | S.B.S. | |
| 1 | 2021-08-20 | FOR CLIENT'S COMMENTS | S.B.S. | LL. | |
| 0 | 2021-12-23 | FOR CONSTRUCTION | S.B.S. | LL. | |

REVISIONS

Ref. 201-00413-14

TITRE / TITLE

AGNICO EAGLE – MELIADINE DIVISION
680 – SALINE EFFLUENT TREATMENT PLANT
205 – PIPING & INSTRUMENTATION DIAGRAM
WATER TREATMENT COMPLEX
DISC FILTER

| | | |
|---|---|---|
| DESSINÉ PAR / DRAWN BY | MICHEL BOURQUE, tech. | DATE 2021-12-23 |
| CONÇU PAR / DESIGNED BY | THOMAS GENTY, P.Eng.<br>SELENE BEN SLIMANE, P.Eng.<br>–<br>THOMAS GENTY, P.Eng.<br>– | 2021-12-23 |
| APPROUVÉ PAR / APPROVED BY | ISABELLE LAROUCHE, P.Eng. | 2021-12-23 |
| ÉCHELLE / SCALE | NO SCALE | DATE 2021-12-23 |
| NO. DESSIN / DRAWING NO. | 65-680-205-015 | |
| NO. PROJET / PROJECT NO. | 6526 | REVISION 2 |
| | | FEUILLE / SHT 1 / 1 |

AE-CART-ARCH D

P:\2020\1\201-00413-14\Wrwx\01-COMM\Envoyé\AEM\WSP-AEM-201-00413-14-325 (P&ID 680, 693, 695 issued for Permits)\65-680-205-015_R2.dwg-2013-02-19 14:03:29

FILE NO. 65-680-205-015_R2.dwg

NO. DESSIN DRAWING NO. 65-680-205-016_R2

FORMAT ARCHD

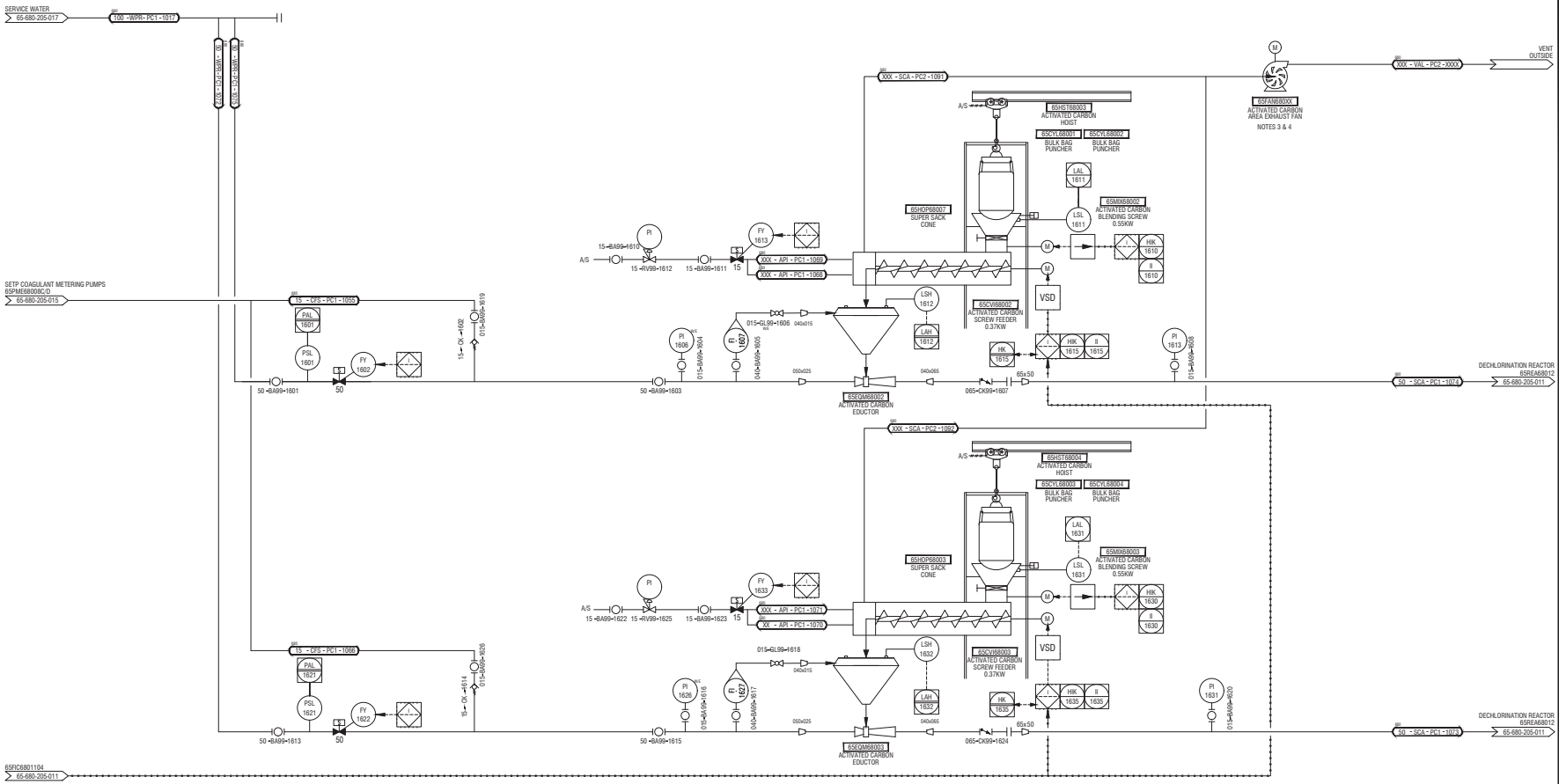


PLAN CLÉ
KEY PLAN

POUR CONSTRUCTION
FOR CONSTRUCTION
DATE : 2021-12-23

## NOTES GÉNÉRALES / GENERAL NOTES

1. INSTRUMENTATION BY AEM
2. REAGENT AND CHEMICAL LINE SIZING BY AEM
3. FAN INLET AND OUTLET PIPE SIZING BY AEM
4. FAN TAG # TO BE CONFIRMED BY AEM.
5. LINE SIZING ARE PER DOC NO.: 6526-C265-001-PPL-001.REV1 (TO COME) LINE LIST - AREAS 501, 502, 583, 690, 693 AND 695.
6. PUMP BOX DRAWING REFERENCE :
   - 6.03 0000220043_MB_0001_GEN_VWT_2
   - 65-680-260-001
7. ALL ITEM'S TAG NUBERS WITH "XXX" SEQUENCIAL NUMBERS ARE "ON HOLD"

L'INFORMATION CI-CONTENUE EST LA PROPRIÉTÉ DE AGNICO EAGLE LTÉE ET DOIT ÊTRE RETOURNÉE SUR DEMANDE. SANS AUTORISATION ÉCRITE PRÉALABLE, TOUTE TRANSMISSION DE COPIE(S) À AUTRUI ET TOUTE UTILISATION AUTRE QUE CELLE POUR LAQUELLE L'INFORMATION EST PRÊTÉE SONT INTERDITES. © AGNICO EAGLE LTÉE

THE INFORMATION HERE ON IS THE PROPERTY OF AGNICO EAGLE LTD. AND MUST BE RETURNED UPON REQUEST. WITHOUT WRITTEN PERMISSION, ANY COPYING TRANSMITTAL TO OTHERS AND ANY USE EXCEPT THAT FOR WHICH IT IS LOANED ARE PROHIBITED. © AGNICO EAGLE LTD.

## DESSINS EN RÉFÉRENCE / REFERENCE DRAWINGS

| TITRE / TITLE | # DWG |
|---|---|
| – | – |
| – | – |
| – | – |
| – | – |
| – | – |
| – | – |

AGNICO EAGLE

| REV. | DATE | DESCRIPTION | PAR/BY | APP. | CLIENT |
|---|---|---|---|---|---|
| 2 | 2021-12-23 | ISSUED FOR CONSTRUCTION | M.B. | S.B.S. | |
| 1 | 2021-08-20 | FOR CLIENT'S COMMENTS | S.B.S. | L.L. | |
| 0 | 2021-12-23 | FOR CONSTRUCTION | S.B.S. | L.L. | |

REVISIONS

REA

Digitally signed by Thomas Genty
DN: C=CA, O=Agnico Eagle, CN=Thomas Genty
Date: 2021.12.23 16:04:51 -05'00'

VSP

Ref. 201-00413-14

TITRE / TITLE

AGNICO EAGLE – MELIADINE DIVISION
680 – SALINE EFFLUENT TREATMENT PLANT
205 – PIPING & INSTRUMENTATION DIAGRAM
WATER TREATMENT COMPLEX
REAGENTS – ACTIVATED CARBON

| | | |
|---|---|---|
| DESSINÉ PAR DRAWN BY | MICHEL BOURQUE | DATE 2021-12-23 |
| CONÇU PAR DESIGNED BY | THOMAS GENTY, P.Eng.<br>SELENE BEN SLIMANE P.Eng.<br>–<br>THOMAS GENTY, P.Eng.<br>– | 2021-12-23 |
| APPROUVÉ PAR APPROVED BY | ISABELLE LAROUCHE P.Eng. | 2021-12-23 |
| ÉCHELLE SCALE | NO SCALE | DATE 2021-12-23 |
| NO. DESSIN DRAWING NO. | 65-680-205-016 | |
| NO. PROJET PROJECT NO. 6526 | REVISION 2 | FEUILLE / SHT 1 / 1 |

AE-CART-ARCH D

P:\2020\1\201-00413-14\Mines\01-COMM\Envoyé\AEM\WSP-AEM-201-00413-14-325 (P&ID 680, 693, 695 Issued for Permits)\65-680-205-016_R2.dwg-2013-02-19 14:03:29

FILE NO. 65-680-205-016_R2.dwg

NO. DESSIN
DRAWING NO. 65-680-205-017_R2

FORMAT ARCH D

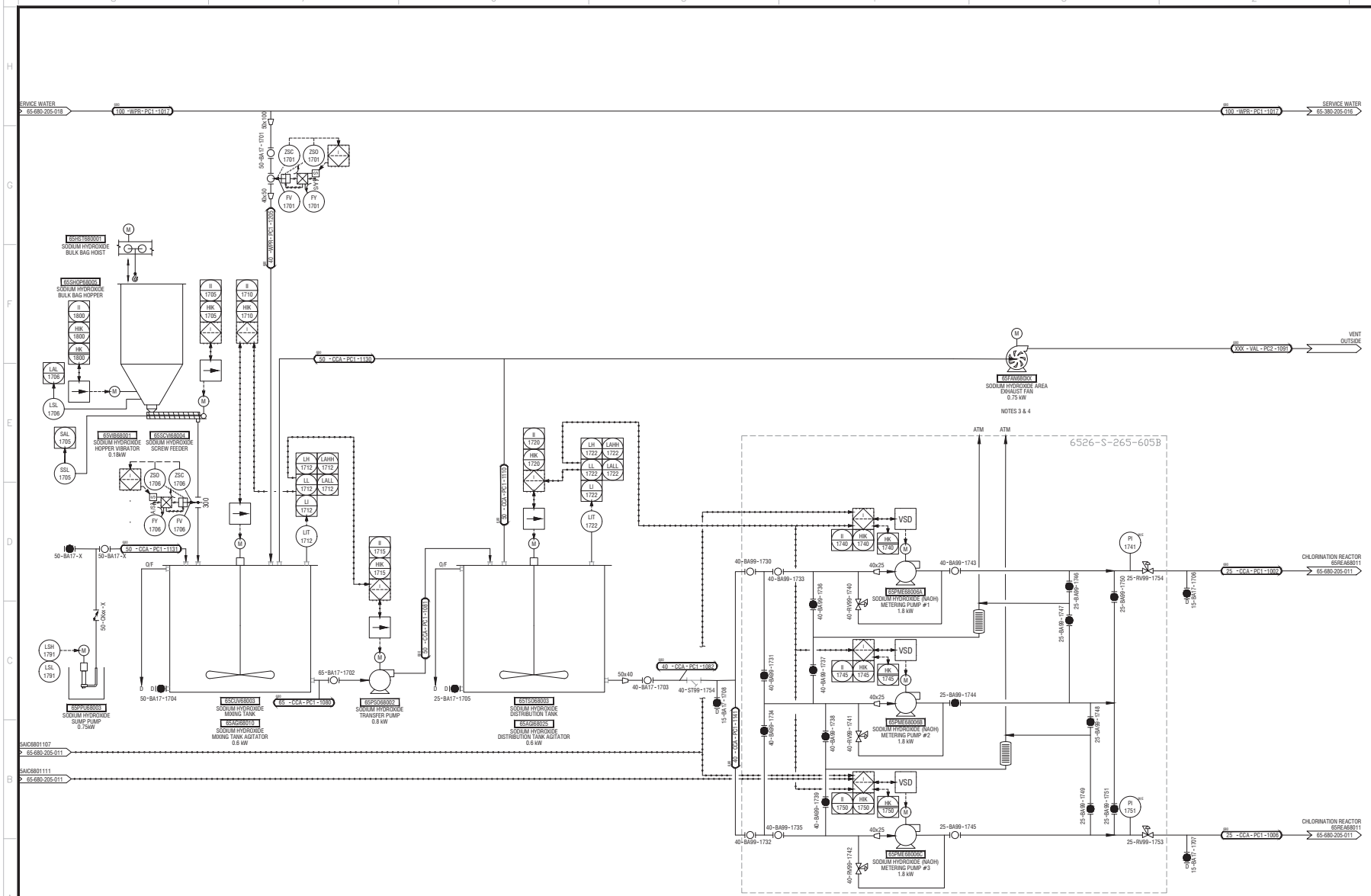


PLAN CLÉ
KEY PLAN

POUR CONSTRUCTION
FOR CONSTRUCTION
DATE : 2021-12-23

## NOTES GÉNÉRALES / GENERAL NOTES

1. INSTRUMENTATION BY AEM
2. REAGENT AND CHEMICAL LINE SIZING BY AEM
3. FAN INLET AND OUTLET PIPE SIZING BY AEM
4. FAN TAG # TO BE CONFIRMED BY AEM
5. LINE SIZING ARE PER DOC NO.: 6526-C265-001-PPL-001.REV1 (TO COME) LINE LIST - AREAS 501, 502, 583, 690, 693 AND 695.
6. PUMP BOX DRAWING REFERENCE : - 6.03.00002200043_MB_0001_GEN_VWT_2 - 65-680-260-001
7. ALL ITEM'S TAG NUBERS WITH "XXX" SEQUENCIAL NUMBERS ARE "ON HOLD"


DISTRIBUTION À L'EXTÉRIEUR DE LA PROPRIÉTÉ DE AGNICO EAGLE LTÉE EST ABSOLUMENT INTERDITE SANS AUTORISATION ÉCRITE PRÉALABLE. CETTE INFORMATION EST CONFIDENTIELLE ET DOIT ÊTRE UTILISÉE UNIQUEMENT PAR LES EMPLOYÉS DE AGNICO EAGLE LTÉE POUR LESQUELS L'INFORMATION EST DESTINÉE. AGNICO EAGLE LTÉE

THE INFORMATION HERE ON IS THE PROPERTY OF AGNICO EAGLE LTD. AND MUST BE RETURNED UPON REQUEST, WITHOUT WRITTEN PERMISSION, ANY COPYING FORBIDDEN. THE STUDIES AND ARE FOR EXCLUSIVE USE FOR WHICH IT IS LOANED AND PROVIDED. AGNICO EAGLE LTD.


## DESSINS EN RÉFÉRENCE / REFERENCE DRAWINGS

| TITRE / TITLE | # DWG |
|---|---|
| – | – |
| – | – |
| – | – |
| – | – |
| – | – |
| – | – |
| – | – |

AGNICO EAGLE

| REV. | DATE | DESCRIPTION | PAR/BY | APP. | CLIENT |
|---|---|---|---|---|---|
| 2 | 2021-12-23 | ISSUED FOR CONSTRUCTION | M.B. | S.B.S. | |
| 1 | 2021-08-20 | FOR CLIENT'S COMMENTS | S.B.S. | L.L. | |
| 0 | 2021-12-23 | FOR CONSTRUCTION | S.B.S. | L.L. | |

REVISIONS

Ref. 201-00413-14

TITRE / TITLE

AGNICO EAGLE – MELIADINE DIVISION
680 – SALINE EFFLUENT TREATMENT PLANT
205 – PIPING & INSTRUMENTATION DIAGRAM
WATER TREATMENT COMPLEX
REAGENTS – NaOH

| | | |
|---|---|---|
| DESSINÉ PAR / DRAWN BY | MICHEL BOURQUE, tech. | 2021-12-23 |
| CONÇU PAR / DESIGNED BY | THOMAS GENTY, P.Eng. | 2021-12-23 |
| APPROUVÉ PAR / APPROVED BY | ISABELLE LAROUCHE, P.Eng. | 2021-12-23 |

ÉCHELLE / SCALE: NO SCALE — DATE: 2021-12-23

NO. DESSIN / DRAWING NO.: 65-680-205-017

| NO. PROJET / PROJECT NO. | REVISION | FEUILLE / SHT |
|---|---|---|
| 6526 | 2 | 1 / 1 |

AE-CART-ARCH D

P:\2020\1\201-00413-14\Wrwa\01-COMM\Envoyé\AEM\MSP-AEM-201-00413-14-325 (P&ID 680, 693, 695 issued for Permits)\65-680-205-017_R2.dwg-2013-02-19 14:03:29

FILE NO. 65-680-205-017_R2.dwg

NO. DESSIN
DRAWING NO. 65-680-205-018_R2

FORMAT ARCH D

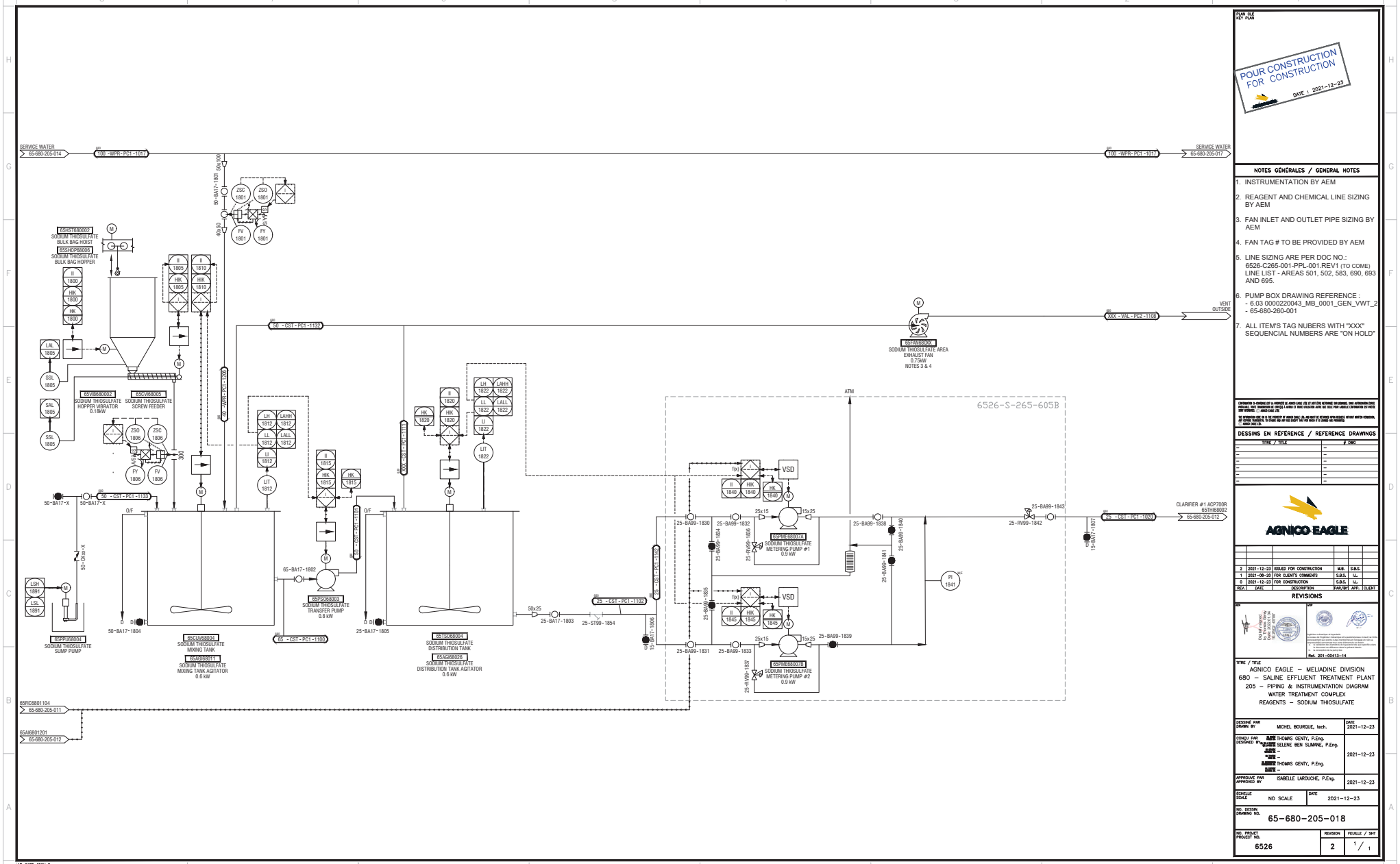


PLAN CLÉ
KEY PLAN

POUR CONSTRUCTION
FOR CONSTRUCTION
DATE : 2021-12-23

## NOTES GÉNÉRALES / GENERAL NOTES

1. INSTRUMENTATION BY AEM
2. REAGENT AND CHEMICAL LINE SIZING BY AEM
3. FAN INLET AND OUTLET PIPE SIZING BY AEM
4. FAN TAG # TO BE PROVIDED BY AEM
5. LINE SIZING ARE PER DOC NO.: 6526-C265-001-PPL-001.REV1 (TO COME) LINE LIST - AREAS 501, 502, 583, 690, 693 AND 695.
6. PUMP BOX DRAWING REFERENCE :
   - 6.03 0000220043_MB_0001_GEN_VWT_2
   - 65-680-260-001
7. ALL ITEM'S TAG NUBERS WITH "XXX" SEQUENCIAL NUMBERS ARE "ON HOLD"


L'INFORMATION À CARACTÈRE NON CONFIDENTIEL CONTENUE DANS CE DOCUMENT EST LA PROPRIÉTÉ DE AGNICO EAGLE MINES LTÉE. CE DOCUMENT NE PEUT ÊTRE REPRODUIT OU DIVULGUÉ À DES TIERS SANS L'AUTORISATION ÉCRITE DE AGNICO EAGLE MINES LTÉE.

THE INFORMATION HERE ON IS THE PROPERTY OF AGNICO EAGLE LTD. AND MUST BE RETURNED UPON REQUEST. WITHOUT WRITTEN PERMISSION, ANY COPYING TRANSMITTAL TO OTHERS AND USE ARE NOT EXCEPT THAT FOR WHICH IT IS LOANED AND PROVIDED.
© AGNICO EAGLE LTD.


## DESSINS EN RÉFÉRENCE / REFERENCE DRAWINGS

| TITRE / TITLE | # DWG |
|---|---|
| – | – |
| – | – |
| – | – |
| – | – |
| – | – |
| – | – |
| – | – |

AGNICO EAGLE

| REV. | DATE | DESCRIPTION | PAR/BY | APP. | CLIENT |
|---|---|---|---|---|---|
| 2 | 2021-12-23 | ISSUED FOR CONSTRUCTION | M.B. | S.B.S. | |
| 1 | 2021-08-20 | FOR CLIENT'S COMMENTS | S.B.S. | L.L. | |
| 0 | 2021-12-23 | FOR CONSTRUCTION | S.B.S. | L.L. | |

REVISIONS

Ordre d'Ingénieurs du Québec
Permission d'utiliser
Ref. 201-00413-14

TITRE / TITLE

AGNICO EAGLE – MELIADINE DIVISION
680 – SALINE EFFLUENT TREATMENT PLANT
205 – PIPING & INSTRUMENTATION DIAGRAM
WATER TREATMENT COMPLEX
REAGENTS – SODIUM THIOSULFATE

| | | |
|---|---|---|
| DESSINÉ PAR / DRAWN BY | MICHEL BOURQUE, tech. | DATE 2021-12-23 |
| CONÇU PAR / DESIGNED BY | ARE THOMAS GENTY, P.Eng.<br>APPROVE SELENE BEN SLIMANE, P.Eng.<br>ARE –<br>ARE –<br>ARE THOMAS GENTY, P.Eng.<br>ARE – | 2021-12-23 |
| APPROUVÉ PAR / APPROVED BY | ISABELLE LAROUCHE, P.Eng. | 2021-12-23 |
| ÉCHELLE / SCALE | NO SCALE | DATE 2021-12-23 |

NO. DESSIN / DRAWING NO. 65-680-205-018

| NO. PROJET / PROJECT NO. | REVISION | FEUILLE / SHT |
|---|---|---|
| 6526 | 2 | 1 / 1 |

AE-CART-ARCH D

P:\2020\1\201-00413-14\Wrwa\01-COMM\Envoyé\AEM\MSP-AEM-201-00413-14-325 (P&ID 680, 693, 695 issued for Permits)\65-680-205-018_R2.dwg-2013-02-19 14:03:29

FILE NO. 65-680-205-018_R2.dwg

NO. DESSIN
DRAWING NO. 65-680-205-019_R2

FORMAT ARCHD

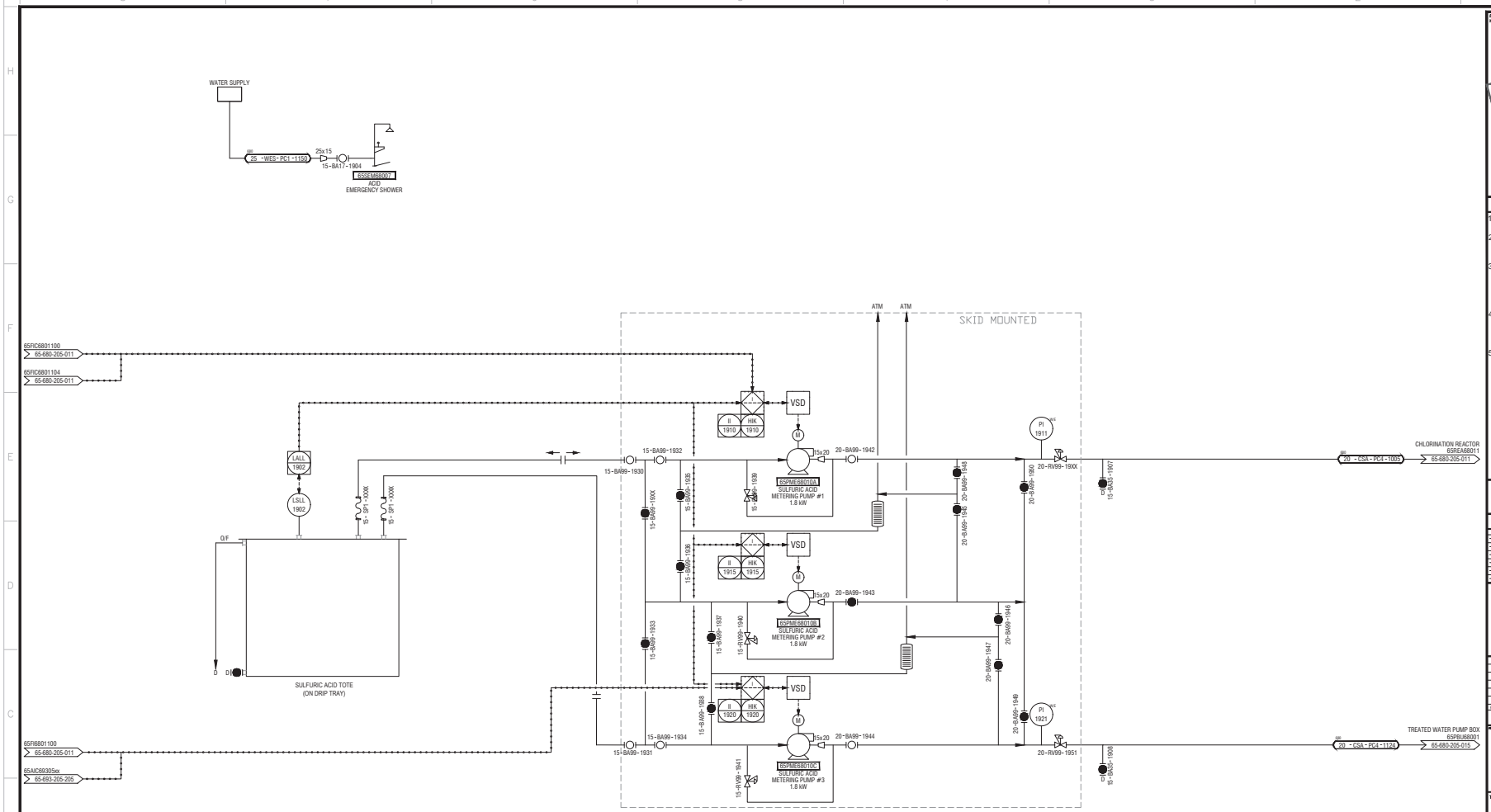


PLAN CLÉ
KEY PLAN

POUR CONSTRUCTION
FOR CONSTRUCTION
DATE : 2021-12-23

## NOTES GÉNÉRALES / GENERAL NOTES

1. INSTRUMENTATION BY AEM
2. REAGENT AND CHEMICAL LINE SIZING BY AEM
3. LINE SIZING ARE PER DOC NO.: 6526-C265-001-PPL-001.REV1 (TO COME) LINE LIST - AREAS 501, 502, 583, 690, 693 AND 695.
4. PUMP BOX DRAWING REFERENCE :
   - 6.03 0000220043_MB_0001_GEN_VWT_2
   - 65-680-260-001
5. ALL ITEM'S TAG NUBERS WITH "XXX" SEQUENCIAL NUMBERS ARE "ON HOLD"

L'INFORMATION CI-CONTENUE EST LA PROPRIÉTÉ DE AGNICO EAGLE LTÉE ET DOIT ÊTRE RETOURNÉE SUR DEMANDE. SANS AUTORISATION ÉCRITE PRÉALABLE, TOUTE TRANSMISSION DE CHOSES À AUTRUI ET TOUTE UTILISATION AUTRE QUE CELLE POUR LAQUELLE L'INFORMATION EST PRÊTÉE SONT INTERDITES. © AGNICO EAGLE LTÉE

THE INFORMATION HERE ON IS THE PROPERTY OF AGNICO EAGLE LTD. AND MUST BE RETURNED UPON REQUEST. WITHOUT WRITTEN PERMISSION, ANY COPYING TRANSMITTAL TO OTHERS AND ANY USE EXCEPT THAT FOR WHICH IT IS LOANED ARE PROHIBITED. © AGNICO EAGLE LTD.

## DESSINS EN RÉFÉRENCE / REFERENCE DRAWINGS

| TITRE / TITLE | # DWG |
|---|---|
| – | – |
| – | – |
| – | – |
| – | – |
| – | – |
| – | – |

AGNICO EAGLE

| REV. | DATE | DESCRIPTION | PAR/BY | APP. | CLIENT |
|---|---|---|---|---|---|
| 2 | 2021-12-23 | ISSUED FOR CONSTRUCTION | M.B. | S.B.S. | |
| 1 | 2021-06-20 | FOR CLIENT'S COMMENTS | S.B.S. | LL. | |
| 0 | 2021-12-23 | FOR CONSTRUCTION | S.B.S. | LL. | |

REVISIONS

NEW

Digitally signed by Thomas Genty, P.Eng. Date: 2021.12.24 11:17:18 -05'00'

VISP

Ref. 201-00413-14

TITRE / TITLE
AGNICO EAGLE – MELIADINE DIVISION
680 – SALINE EFFLUENT TREATMENT PLANT
205 – PIPING & INSTRUMENTATION DIAGRAM
WATER TREATMENT COMPLEX
REAGENTS – SULFURIC ACID

| | | |
|---|---|---|
| DESSINÉ PAR / DRAWN BY | MICHEL BOURQUE, tech. | DATE 2021-12-23 |
| CONÇU PAR / DESIGNED BY | THOMAS GENTY, P.Eng.<br>SELENE BEN SLIMANE, P.Eng.<br>–<br>THOMAS GENTY, P.Eng.<br>– | 2021-12-23 |
| APPROUVÉ PAR / APPROVED BY | ISABELLE LAROUCHE, P.Eng. | 2021-12-23 |
| ÉCHELLE / SCALE | NO SCALE | DATE 2021-12-23 |
| NO. DESSIN / DRAWING NO. | 65-680-205-019 | |
| NO. PROJET / PROJECT NO. 6526 | REVISION 2 | FEUILLE / SHT 1 / 1 |

AE-CART-ARCH D

P:\2020\1\201-00413-14\Mines\01-COMM\Envoyé\AEM\WSP-AEM-201-00413-14-325 (P&ID 680, 693, 695 issued for Permits)\65-680-205-019_R2.dwg-2013-02-19 14:03:29

FILE NO. 65-680-205-019_R2.dwg

NO. DESSIN
DRAWING NO. 65-680-205-020_R0

FORMAT ARCHD

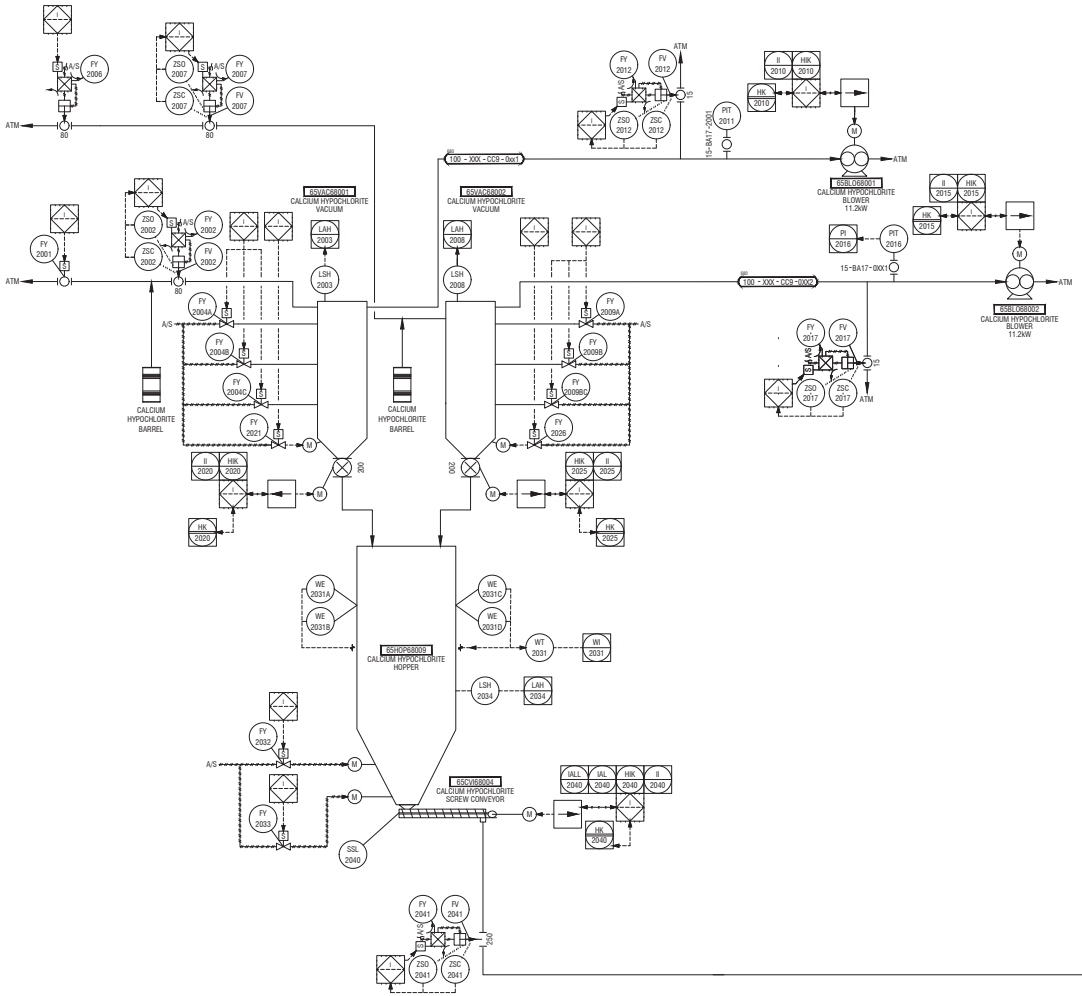


PLAN CLÉ
KEY PLAN

POUR CONSTRUCTION
FOR CONSTRUCTION
DATE : 2021-12-23

## NOTES GÉNÉRALES / GENERAL NOTES

1. INSTRUMENTATION BY AEM
2. REAGENT AND CHEMICAL LINE SIZING BY AEM
3. LINE SIZING ARE PER DOC NO.: 6526-C265-001-PPL-001.REV1 (TO COME) LINE LIST - AREAS 501, 502, 583, 690, 693 AND 695.
4. PUMP BOX DRAWING REFERENCE : - 6.03 0000220043_MB_0001_GEN_VWT_2 - 65-680-260-001
5. ALL ITEM'S TAG NUBERS WITH "XXX" SEQUENCIAL NUMBERS ARE "ON HOLD"


L'INFORMATION À CARACTÈRE EST LA PROPRIÉTÉ DE AIMCO EAGLE LTÉE ET NE PEUT ÊTRE REPRODUITE NON DIVULGUÉE, NON ASSIMILÉE SOUS QUELQUE FORME QUE CE SOIT, SANS L'AUTORISATION ÉCRITE DE AIMCO EAGLE LTÉE.

THE INFORMATION HERE ON IS THE PROPERTY OF AIMCO EAGLE LTD. AND MUST BE RETURNED UPON REQUEST, WITHOUT WRITTEN PERMISSION, ANY COPYING TRANSMITTAL, TO OTHERS AND USE FOR EXCEPT THAT FOR WHICH IT IS LOANED ARE PROHIBITED.
© AIMCO EAGLE LTD.


## DESSINS EN REFERENCE / REFERENCE DRAWINGS

| TITRE / TITLE | # DWG |
|---|---|
| – | – |
| – | – |
| – | – |
| – | – |
| – | – |
| – | – |
| – | – |

AGNICO EAGLE

| REV. | DATE | DESCRIPTION | PAR/BY | APP. | CLIENT |
|---|---|---|---|---|---|
| 0 | 2021-12-23 | ISSUED FOR CONSTRUCTION | M.B. | S.B.S. | |

REVISIONS

MDA

Digitally signed by Thomas Genty
Date: 2021.12.23 10:04:14 -05'00'

MDP

Ref. 201-00413-14

TITRE / TITLE

AGNICO EAGLE – MELIADINE DIVISION
680 – SALINE EFFLUENT TREATMENT PLANT
205 – PIPING & INSTRUMENTATION DIAGRAM
WATER TREATMENT COMPLEX
REAGENTS – CALCIUM HYPOCHLORITE HANDLING

| | | |
|---|---|---|
| DESSINÉ PAR / DRAWN BY | MICHEL BOURQUE, tech. | 2021-12-23 |
| CONÇU PAR / DESIGNED BY | ARE THOMAS GENTY, P.Eng.<br>PROCESS SELENE BEN SLIMANE, P.Eng.<br>ARE –<br>MEC –<br>ELECT THOMAS GENTY, P.Eng.<br>INTR – | 2021-12-23 |
| APPROUVÉ PAR / APPROVED BY | ISABELLE LAROUCHE, P.Eng. | 2021-12-23 |
| ÉCHELLE / SCALE | NO SCALE | DATE 2021-12-23 |
| NO. DESSIN / DRAWING NO. | 65-680-205-020 | |
| NO. PROJET / PROJECT NO. | 6526 | REVISION 0 / FEUILLE / SHT 1 / 1 |

AE-CART-ARCH D

P:\2020\1\201-00413-14\Wrwa\01-COMM\Envoyé\AEM\MSP-AEM-201-00413-14-325 (P&ID 680, 693, 695 issued for Permits)\65-680-205-020_R0.dwg-2013-02-19 14:03:29

FILE NO. 65-680-205-020_R0.dwg

NO. DESSIN
DRAWING NO. 65-680-205-021_R2

FORMAT ARCHD

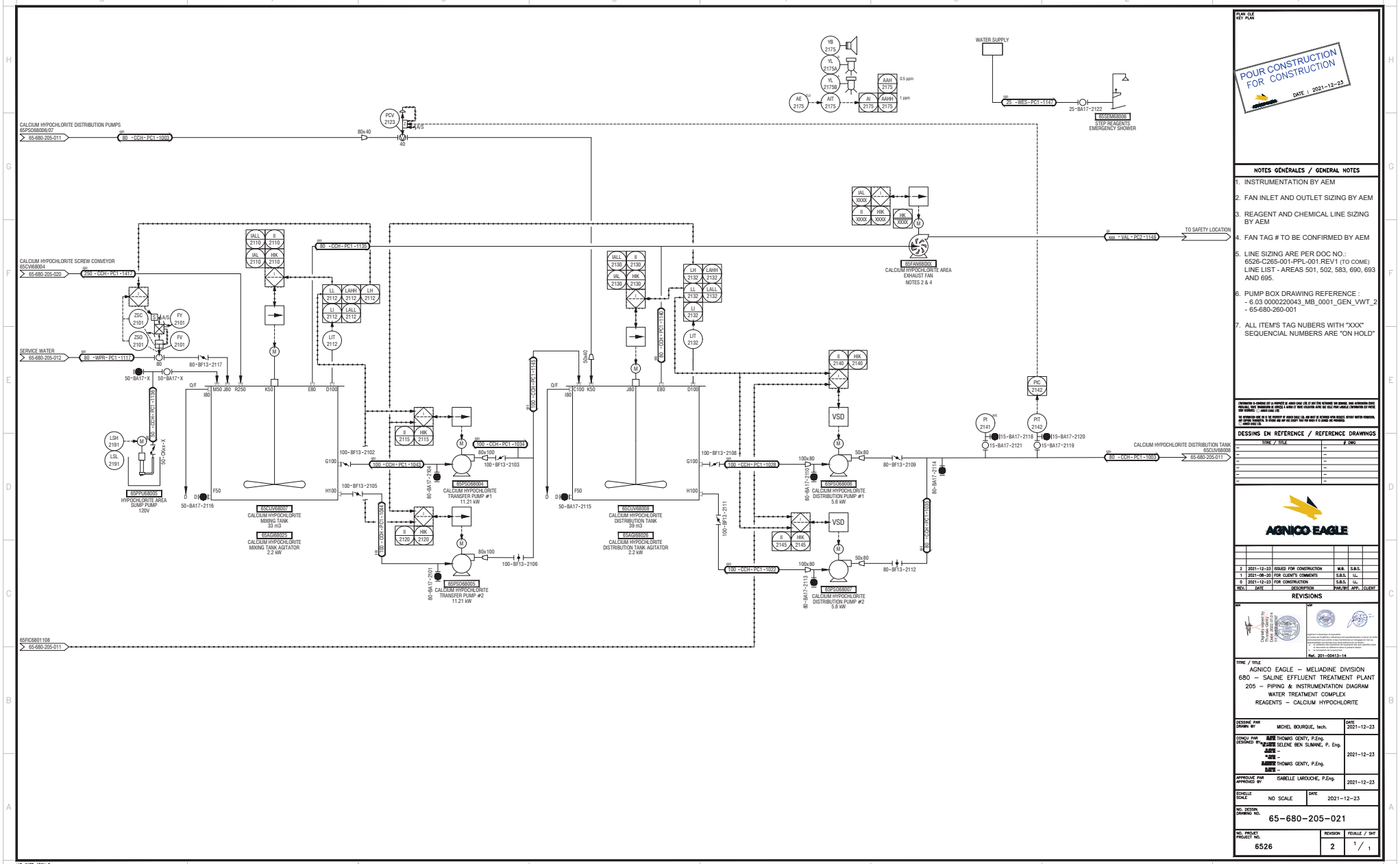


PLAN CLÉ
KEY PLAN

POUR CONSTRUCTION
FOR CONSTRUCTION
DATE : 2021-12-23

## NOTES GÉNÉRALES / GENERAL NOTES

1. INSTRUMENTATION BY AEM
2. FAN INLET AND OUTLET SIZING BY AEM
3. REAGENT AND CHEMICAL LINE SIZING BY AEM
4. FAN TAG # TO BE CONFIRMED BY AEM
5. LINE SIZING ARE PER DOC NO.: 6526-C265-001-PPL-001.REV1 (TO COME) LINE LIST - AREAS 501, 502, 583, 690, 693 AND 695.
6. PUMP BOX DRAWING REFERENCE :
   - 6.03 0000220043_MB_0001_GEN_VWT_2
   - 65-680-260-001
7. ALL ITEM'S TAG NUBERS WITH "XXX" SEQUENCIAL NUMBERS ARE "ON HOLD"

L'INFORMATION À CARACTÈRE QUI LA REPRODUIT OU AUQUEL AVEC LUI IL EST ÉTÉ RETRANSMIS SON ORIGINAL, SONT AUTOMATIQUEMENT DONT ORIGINALE, TOUTE TRANSMISSION OU COPIE(S) À UNE(S) TIERCE PERSONNE(S) SONT INTERDITES SANS QUE CELLE POUR LAQUELLE L'INFORMATION EST PRÉVUE SOIT INFORMÉE. © AGNICO EAGLE LTÉE

THE INFORMATION HERE ON IS THE PROPERTY OF AGNICO EAGLE LTD. AND MUST BE RETURNED UPON REQUEST, WITHOUT WRITTEN PERMISSION, ANY COPYING TRANSMITTAL TO OTHERS AND USE ARE NOT EXCEPT THAT FOR WHICH IT IS LOANED AND PROVIDED. © AGNICO EAGLE LTD.

## DESSINS EM REFERENCE / REFERENCE DRAWINGS

| TITRE / TITLE | # DWG |
|---|---|
| – | – |
| – | – |
| – | – |
| – | – |
| – | – |
| – | – |
| – | – |

AGNICO EAGLE

| REV. | DATE | DESCRIPTION | PAR/BY | APP. | CLIENT |
|---|---|---|---|---|---|
| 3 | 2021-12-23 | ISSUED FOR CONSTRUCTION | M.B. | S.B.S. | |
| 1 | 2021-08-20 | FOR CLIENT'S COMMENTS | S.B.S. | I.L. | |
| 0 | 2021-12-23 | FOR CONSTRUCTION | S.B.S. | I.L. | |

REVISIONS

Ref. 201-00413-14

TITRE / TITLE

AGNICO EAGLE – MELIADINE DIVISION
680 – SALINE EFFLUENT TREATMENT PLANT
205 – PIPING & INSTRUMENTATION DIAGRAM
WATER TREATMENT COMPLEX
REAGENTS – CALCIUM HYPOCHLORITE

| | | |
|---|---|---|
| DESSINÉ PAR / DRAWN BY | MICHEL BOURQUE, tech. | DATE 2021-12-23 |
| CONÇU PAR / DESIGNED BY | APP. THOMAS GENTY, P.Eng.<br>APP. SELENE BEN SLIMANE, P. Eng.<br>APP. –<br>APP. –<br>APP. THOMAS GENTY, P.Eng.<br>APP. – | 2021-12-23 |
| APPROUVÉ PAR / APPROVED BY | ISABELLE LAROUCHE, P.Eng. | 2021-12-23 |
| ÉCHELLE / SCALE | NO SCALE | DATE 2021-12-23 |

NO. DESSIN / DRAWING NO. 65-680-205-021

| NO. PROJET / PROJECT NO. | REVISION | FEUILLE / SHT |
|---|---|---|
| 6526 | 2 | 1 / 1 |

AE-CART-ARCH D

P:\2020\1\201-00413-14\Wrwa\01-COMM\Envoye\AEM\WSP-AEM-201-00413-14-325 (P&ID 680, 693, 695 issued for Permits)\65-680-205-021_R2.dwg-2013-02-19 14:03:29

FILE NO. 65-680-205-021_R2.dwg

NO. DESSIN
DRAWING NO. 65-693-205-200_R13

FORMAT ARCHD

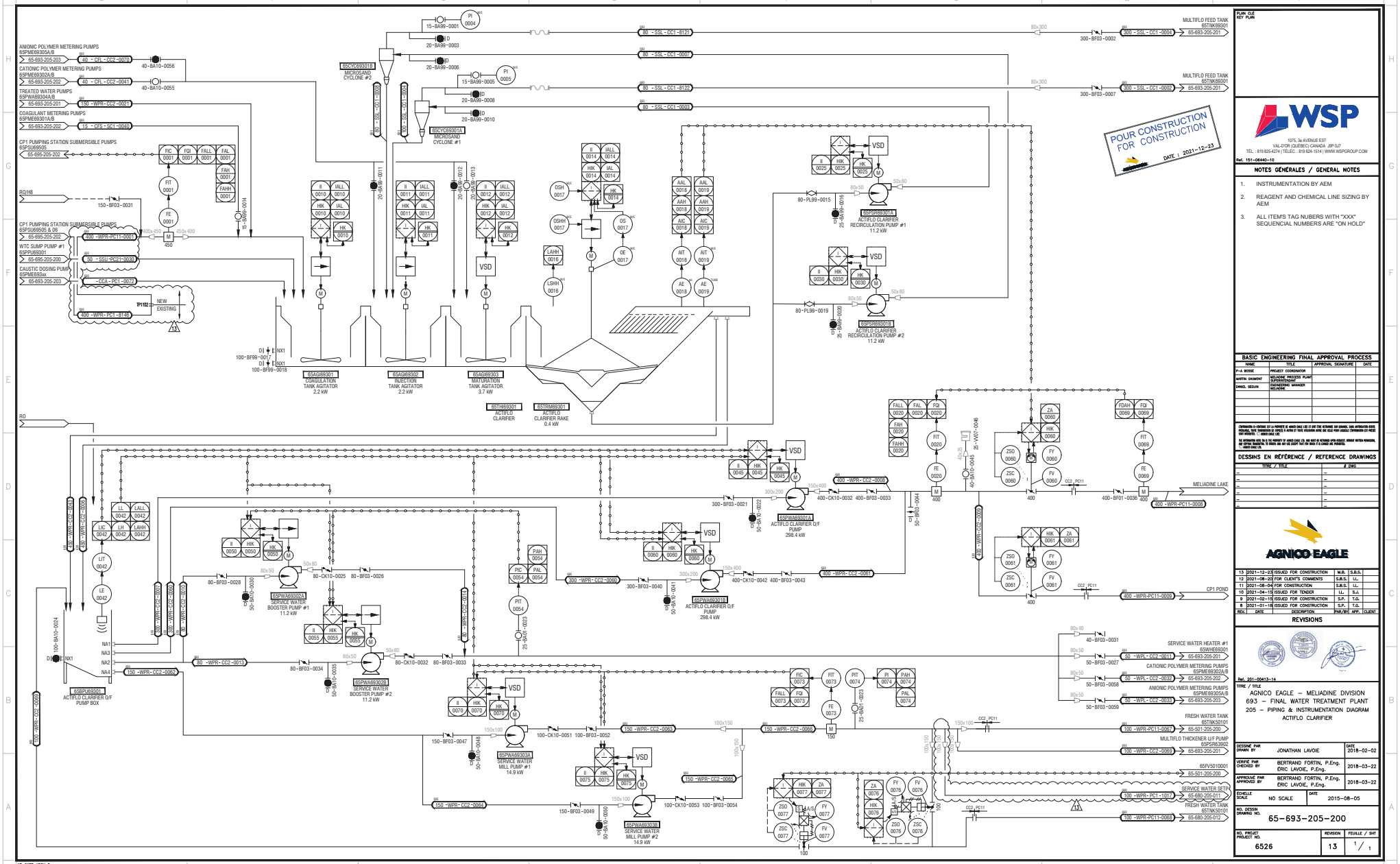


PLAN CLÉ
KEY PLAN

WSP
1075, 3e AVENUE EST
VAL-D'OR (QUÉBEC) CANADA J9P 0J7
TÉL. : 819 825-4274 | TÉLÉC. : 819 824-1514 | WWW.WSPGROUP.COM
Ref. 151-06440-10

## NOTES GÉNÉRALES / GENERAL NOTES

1. INSTRUMENTATION BY AEM
2. REAGENT AND CHEMICAL LINE SIZING BY AEM
3. ALL ITEM'S TAG NUBERS WITH "XXX" SEQUENCIAL NUMBERS ARE "ON HOLD"

## BASIC ENGINEERING FINAL APPROVAL PROCESS

| NAME | TITLE | APPROVAL SIGNATURE | DATE |
|---|---|---|---|
| P-A. BOSSE | PROJECT COORDINATOR | | |
| MARTIN GIRARDIN | MELIADINE PROCESS PLANT SUPERINTENDANT | | |
| DANIEL SEGUIN | ENGINEERING MANAGER MELIADINE | | |

CONFIDENTIALITÉ ET DROIT DE PROPRIÉTÉ DE AGNICO EAGLE LTÉE ET SES FILIALES. CE DESSIN EST LA PROPRIÉTÉ DE AGNICO EAGLE LTÉE ET SES FILIALES. CE DESSIN NE DOIT PAS ÊTRE REPRODUIT, EN TOUT OU EN PARTIE, SOUS QUELQUE FORME QUE CE SOIT, NI ÊTRE UTILISÉ À DES FINS AUTRES QUE CELLES POUR LESQUELLES IL A ÉTÉ FOURNI SANS L'AUTORISATION ÉCRITE PRÉALABLE D'AGNICO EAGLE LTÉE.

THE INFORMATION AND DATA IN THIS DOCUMENT OF AGNICO EAGLE LTD. ARE HELD AS INTENDED UPON AGNICO EAGLE. WHERE WITHIN PERMITTED, ANY EXPRESS TRANSMITTAL TO OTHERS DOES NOT GIVE EXCEPT THAT FOR WHICH IT IS LOANED ARE PROHIBITED. AGNICO EAGLE LTD.

## DESSINS EN RÉFÉRENCE / REFERENCE DRAWINGS

| TITRE / TITLE | # DWG |
|---|---|
| – | – |
| – | – |
| – | – |
| – | – |
| – | – |
| – | – |
| – | – |

AGNICO EAGLE

| REV. | DATE | DESCRIPTION | PAR/BY | APP. | CLIENT |
|---|---|---|---|---|---|
| 13 | 2021-12-23 | ISSUED FOR CONSTRUCTION | M.B. | S.B.S. | |
| 12 | 2021-08-20 | FOR CLIENT'S COMMENTS | S.B.S. | LL. | |
| 11 | 2021-08-04 | FOR CONSTRUCTION | S.B.S. | LL. | |
| 10 | 2021-04-15 | ISSUED FOR TENDER | LL. | S.A. | |
| 9 | 2021-02-15 | ISSUED FOR CONSTRUCTION | S.P. | T.G. | |
| 8 | 2021-01-18 | ISSUED FOR CONSTRUCTION | S.P. | T.G. | |

## REVISIONS

Ref. 201-00413-14

TITRE / TITLE

AGNICO EAGLE – MELIADINE DIVISION
693 – FINAL WATER TREATMENT PLANT
205 – PIPING & INSTRUMENTATION DIAGRAM
ACTIFLO CLARIFIER

| | | |
|---|---|---|
| DESSINÉ PAR DRAWN BY | JONATHAN LAVOIE | DATE 2018-02-02 |
| VÉRIFIÉ PAR CHECKED BY | BERTRAND FORTIN, P.Eng, ÉRIC LAVOIE, P.Eng. | 2018-03-22 |
| APPROUVÉ PAR APPROVED BY | BERTRAND FORTIN, P.Eng, ÉRIC LAVOIE, P.Eng. | 2018-03-22 |
| ÉCHELLE SCALE | NO SCALE | DATE 2015-08-05 |

NO. DESSIN DRAWING NO. 65-693-205-200

| NO. PROJET PROJECT NO. | REVISION | FEUILLE / SHT |
|---|---|---|
| 6526 | 13 | 1 / 1 |

AE-CART-ARCH D

FILE NO. 65-693-205-200_R13.dwg

NO. DESSIN / DRAWING NO. 65-693-205-201_R7

FORMAT ARCH D

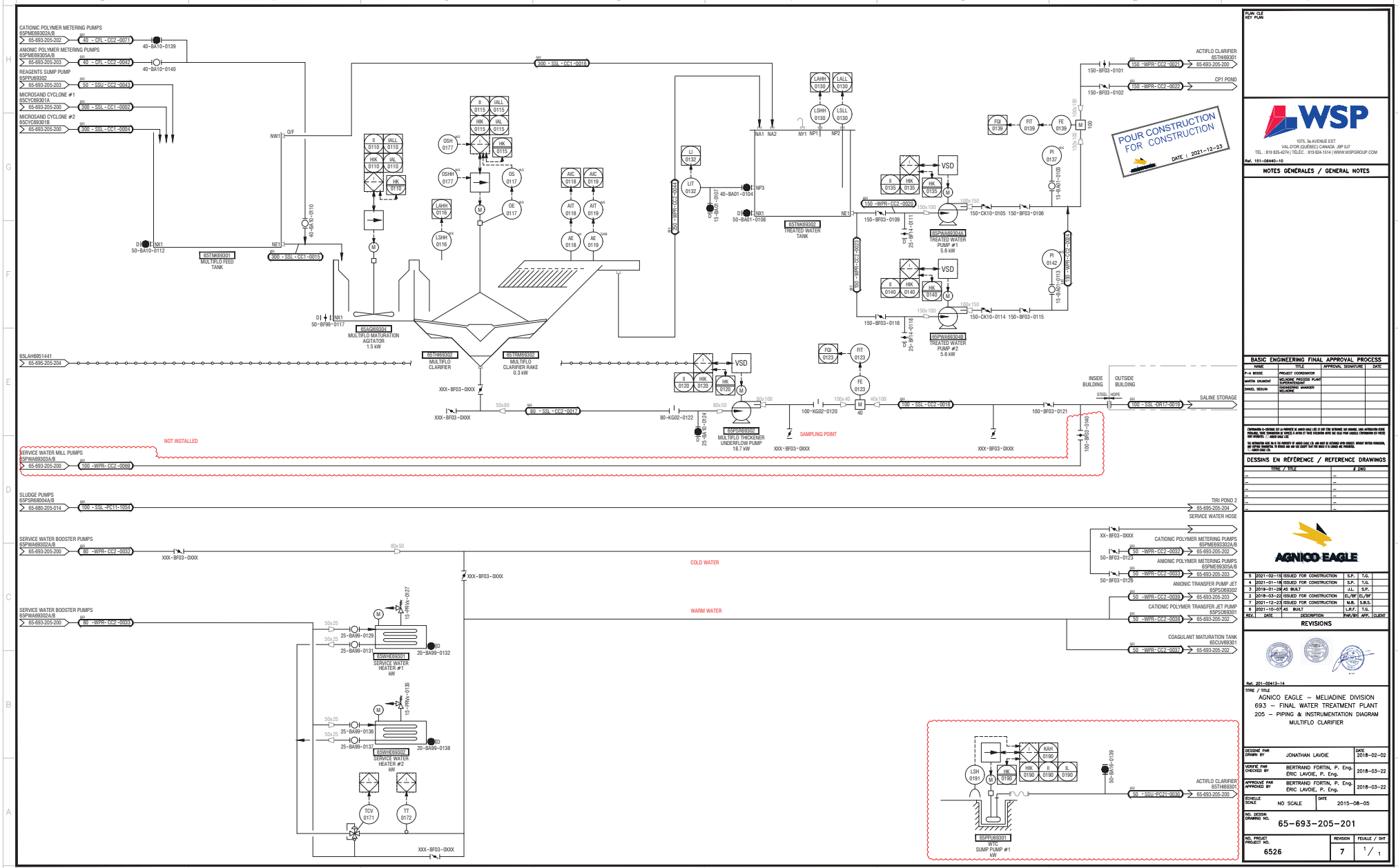


POUR CONSTRUCTION FOR CONSTRUCTION
DATE : 2021-12-23

PLAN CLÉ / KEY PLAN

WSP
1075, 3e AVENUE EST
VAL-D'OR (QUÉBEC) CANADA J9P 0J7
TÉL. : 819 825-4274 | TÉLÉC. : 819 824-1514 | WWW.WSPGROUP.COM
Réf. 151-06440-10

NOTES GÉNÉRALES / GENERAL NOTES

BASIC ENGINEERING FINAL APPROVAL PROCESS

| NAME | TITLE | APPROVAL SIGNATURE | DATE |
|---|---|---|---|
| P-A BOSSE | PROJECT COORDINATOR | | |
| MARTIN CHUMONT | MELIADINE PROCESS PLANT SUPERINTENDANT | | |
| DANIEL SEGUIN | ENGINEERING MANAGER MELIADINE | | |

CONFIDENTIALITÉ ET DROITS DE PROPRIÉTÉ DE AGNICO EAGLE LTÉE ET SES FILIALES : CE DOCUMENT EST LA PROPRIÉTÉ DE AGNICO EAGLE LTÉE ET SES FILIALES. IL NE DOIT PAS ÊTRE REPRODUIT, EN ENTIER OU EN PARTIE, SANS L'AUTORISATION ÉCRITE PRÉALABLE D'UN REPRÉSENTANT DÛMENT AUTORISÉ DE AGNICO EAGLE LTÉE.

CONFIDENTIALITY AND PROPRIETARY INTERESTS OF AGNICO EAGLE LTD AND ITS SUBSIDIARIES: THIS DOCUMENT IS THE PROPERTY OF AGNICO EAGLE LTD AND ITS SUBSIDIARIES. IT MUST NOT BE REPRODUCED, IN WHOLE OR IN PART, WITHOUT THE PRIOR WRITTEN CONSENT OF AN AUTHORIZED REPRESENTATIVE OF AGNICO EAGLE LTD.

DESSINS EN RÉFÉRENCE / REFERENCE DRAWINGS

| TITRE / TITLE | # DWG |
|---|---|
| – | – |
| – | – |
| – | – |
| – | – |
| – | – |
| – | – |
| – | – |

AGNICO EAGLE

REVISIONS

| REV. | DATE | DESCRIPTION | PAR/BY | APP. | CLIENT |
|---|---|---|---|---|---|
| 8 | 2021-12-23 | ISSUED FOR CONSTRUCTION | N.B. | S.B.S. | |
| 7 | 2021-10-07 | AS BUILT | L.R.F. | T.G. | |
| 6 | 2021-02-18 | ISSUED FOR CONSTRUCTION | S.P. | T.G. | |
| 5 | 2021-01-18 | ISSUED FOR CONSTRUCTION | S.P. | T.G. | |
| 4 | 2019-01-29 | AS BUILT | J.L. | S.P. | |
| 3 | 2018-03-23 | ISSUED FOR CONSTRUCTION | EL/SF | EL/SF | |
| 2 | 2018-03-22 | ISSUED FOR CONSTRUCTION | EL/SF | EL/SF | |
| 1 | 2018-02-02 | ISSUED FOR CONSTRUCTION | EL/SF | EL/SF | |

Réf. 201-00413-14

TITRE / TITLE

AGNICO EAGLE – MEL IADINE DIVISION
693 – FINAL WATER TREATMENT PLANT
205 – PIPING & INSTRUMENTATION DIAGRAM
MULTIFLO CLARIFIER

| | | |
|---|---|---|
| DESSINÉ PAR / DRAWN BY | JONATHAN LAVOIE | 2018-02-02 |
| VÉRIFIÉ PAR / CHECKED BY | BERTRAND FORTIN, P. Eng.<br>ÉRIC LAVOIE, P. Eng. | 2018-03-22 |
| APPROUVÉ PAR / APPROVED BY | BERTRAND FORTIN, P. Eng.<br>ÉRIC LAVOIE, P. Eng. | 2018-03-22 |
| ÉCHELLE / SCALE | NO SCALE | DATE 2015-08-05 |

NO. DESSIN / DRAWING NO. 65-693-205-201

| NO. PROJET / PROJECT NO. | RÉVISION | FEUILLE / SHT |
|---|---|---|
| 6526 | 7 | 1 / 1 |

AE-CART-ARCH D

FILE NO. 65-693-205-201_R7.dwg

NO. DESSIN
DRAWING NO. 65-693-205-202_R8

FORMAT ARCHD

SERVICE WATER HEATERS
65WHE69301/02
65-693-205-201
693 50 -WPR- CC2 -0037
50-BA01-0201
50
FV 0201
FY 0201
S/V
FAL 0202
LSL 0202
1000 kg/BAG
65HOP69302
COAGULANT BAG LOADING HOPPER
50x15
693 15 -WPR- CC2 -0058
65SCB69301
COAGULANT SCRUBBER
IAL 0225
II 0225
HIK 0225
HK 0225
M
693 150 - VAL - PC1 -0013
ATM
693 150 - VAL - PC1 -0012
65FAN69301
COAGULANT SCRUBBER EXHAUST FAN
0.1 kW
20x15
15-BA99-0202
HIK 0209
II 0209
HK 0209
M1
M2
65EQM69301
COAGULANT LUMP BREAKER
3 kW
65EQM69302
COAGULANT FEED AGITATOR
II 0205
HIK 0205
HK 0205
II 0207
HIK 0207
HK 0207
VSD
65CVI69303
COAGULANT SCREW FEEDER
0.8 kW
25x6
K3
FY 0206
M
99T
65HST69301
COAGULATION HOIST & TROLLEY
2.6 kW
SERVICE & INSTRUMENTATION AIR
65-693-205-203
8-PRV1-0213
25-PRV1-0215
693 25 - APL - CC8 -0052
O/F
NA1 NA2 NE2
NW1
D DI NX1
50-BA99-0217
IALL 0210
IAL 0210
HIK 0210
HK 0210
LH 0212
LAHH 0212
LI 0212
LL 0212
LALL 0212
LIT 0212
NP1
HIK 0215
HK 0215
II 0215
NE1
50-BA99-0218
50x25
25x40
65PWA69305
COAGULANT TRANSFER PUMP
0.8 kW
65CUV69301
COAGULANT MATURATION TANK
7.4 m3
65AGI69305
COAGULANT MATURATION TANK AGITATOR
1.1 kW
40-ND99-0204
O/F
NW1 NA1
D DI NX1
50-BA99-0219
40 - CFS - PC1 -0043
65TSO69301
COAGULANT DOSAGE TANK
7.4 m3
65AGI69306
COAGULANT DOSAGE TANK AGITATOR
0.8 kW
IALL 0220
II 0220
HIK 0220
HK 0220
IAL 0220
NA3
NA4
LH 0222
LAHH 0222
LL 0222
LALL 0222
LI 0222
FI 0222
LIT 0222
NP1
NE1
NE2
25 - CFS - PC1 -8124
20x25
20 - CFS - SC1 -0004
50x40
40x50
20-BA99-0208
20-BA99-0209
20-BA99-0221
20-BA99-0222
15-BA99-0214
15-BA99-0224
693 20 - CFS - SC1 -0004
VSD
II 0230
HIK 0230
HK 0230
M
YA 0230
YS 0230
YA 0235
65PME69301A
COAGULANT METERING PUMP #1
0.8 kW
65PME69301B
COAGULANT METERING PUMP #2
0.8 kW
YS 0235
II 0235
HIK 0235
HK 0235
15x20
15-BA99-0210
15-BA99-0223
15-PRV9-0206
15-PRV9-0220
40x15
LF
15-BA99-0205
15-BA99-0216
PI 0279
20x15
15-BA99-0203
15-BA99-0207
15-BA99-0211
15-PRV9-0212
PI 0237
693 15 - CFS - SC1 -0040
693 15 - CFS - SC1 -0005
ACTIFLO CLARIFIER
65THI69301
65-693-205-200
NOT INSTALLED
693 25 - CFS - PC1 -1160
SETP COAGULANT METERING PUMPS
65-693-205-206

SERVICE WATER BOOSTER PUMPS
65PWA69302A/B
65-693-205-200
693 50 -WPR- CC2 -0032
65VAC69301
CATIONIC POLYMER VACUUM
0.8 kW
65HOP69304
CATIONIC POLYMER LOADING HOPPER
1000 kg/BAG
65AGI69307
CATIONIC POLYMER HOPPER AGITATOR
0.6 kW
HK 0255
HIK 0255
II 0255
M
LSL 0254
HK 0257
HIK 0257
II 0257
FSL 0232
PI 0233
23x6
25x15
SERVICE WATER HEATERS
65WHE69301/02
65-693-205-201
50x25
693 50 -WPR- CC2 -0038
693 25 -WPR- CC2 -0038
25
II 0259
HIK 0259
HK 0259
65CVI69301
CATIONIC POLYMER SCREW CONVEYOR
0.4 kW
50x10
15-BA99-0228
15-BA99-0229
25x6
65HOP69301
CATIONIC POLYMER WETTING CONE
65PSO69301
CATIONIC POLYMER TRANSFER JET PUMP
FV 0250
FY 0250
S/V
HIK 0250
K3
FY 0251
SERVICE & INSTRUMENTATION AIR
65-693-205-203
8-PRV1-0239
25-PRV1-0240
693 25 - APL - CC8 -0053
O/F
NA1
NW1
D DI NX1
100-BA99-0242
II 0260
IALL 0260
HIK 0260
IAL 0260
HK 0260
LH 0262
LAHH 0262
LI 0262
LL 0262
LALL 0262
LIT 0262
NP1
HIK 0263
A/S
FY 0263
FV 0263
NE1
100
693 100 - CFL - CC2 -0045
65CUV69302
CATIONIC POLYMER MATURATION TANK
0.75 m3
65AGI69308
CATIONIC POLYMER MATURATION TANK AGITATOR
1.1 kW
O/F
NW1 NA1
D DI NX1
100-BA99-0243
65TSO69302
CATIONIC POLYMER DOSAGE TANK
30.2 m3
NA2
NA3
LH 0267
LAHH 0267
LL 0267
LALL 0267
LI 0267
FI 0267
LIT 0267
NP1
NE1
40-BA99-0244
40-BA99-0225
50x40
40x50
40-BA99-0236
40-BA99-0233
40-BA99-0234
15-BA99-0231
15-BA99-0232
II 0270
HIK 0270
HK 0270
VSD
M
YA 0270
YS 0270
YA 0275
65PME69302A
CATIONIC POLYMER METERING PUMP #1
0.8 kW
65PME69302B
CATIONIC POLYMER METERING PUMP #2
0.8 kW
YS 0275
II 0275
HIK 0275
HK 0275
40-BA99-0246
40-BA99-0247
15-BA99-0245
15-BA99-0241
40-BA99-0249
40-BA99-0250
40x32
32x40
40-CK99-0235
40-CK99-0248
40-PRV9-0231
40-PRV9-0245
40x15
LF
15-BA99-0230
15-BA99-0241
PI 0229
20x15
15-BA99-0227
15-BA99-0232
PI 0277
40-PRV9-0238
693 40 - CFL - CC2 -0041
693 40 - CFL - CC2 -0071
ACTIFLO CLARIFIER
65THI69301
65-693-205-200
MULTIFLO CLARIFIER
65THI69302
65-693-205-201
FV 0281
FY 0281
FI 0282
A/S
HIK 0281
50
50-GV15-0226

PLAN CLÉ
KEY PLAN


WSP
1075, 3e AVENUE EST
VAL-D'OR (QUÉBEC) CANADA J9P 0J7
TÉL. : 819 825-4274 | TÉLÉC. : 819 824-1514 | WWW.WSPGROUP.COM


Ref. 151-06440-10

NOTES GÉNÉRALES / GENERAL NOTES


ORDRE DES INGÉNIEURS PROFESSIONNELS DU QUÉBEC
T. GENTY
LICENSEE
L4751
NT/NU


TEL QUE CONSTRUIT
AS BUILT
AGNICO EAGLE
DATE : 2021-10-07

BASIC ENGINEERING FINAL APPROVAL PROCESS

| NAME | TITLE | APPROVAL SIGNATURE | DATE |
|---|---|---|---|
| P-A BOSSÉ | PROJECT COORDINATOR | | |
| MARTIN GAUMONT | MELIADINE PROCESS PLANT SUPERINTENDANT | | |
| DANIEL SÉGUIN | ENGINEERING MANAGER MELIADINE | | |
| | | | |
| | | | |
| | | | |
| | | | |


L'INFORMATION CI-CONTENUE EST LA PROPRIÉTÉ DE AGNICO EAGLE LTÉE ET DOIT ÊTRE RETOURNÉE SUR DEMANDE, SANS AUTORISATION ÉCRITE PRÉALABLE, TOUTE TRANSMISSION DE COPIE(S) À AUTRUI ET TOUTE UTILISATION AUTRE QUE CELLE POUR LAQUELLE L'INFORMATION EST PRÊTÉE SONT INTERDITES. © AGNICO EAGLE LTÉE.

THE INFORMATION HERE ON IS THE PROPERTY OF AGNICO EAGLE LTD. AND MUST BE RETURNED UPON REQUEST, WITHOUT WRITTEN PERMISSION, ANY COPYING TRANSMITTAL TO OTHERS AND ANY USE EXCEPT THAT FOR WHICH IT IS LOANED ARE PROHIBITED. © AGNICO EAGLE LTD.


DESSINS EN RÉFÉRENCE / REFERENCE DRAWINGS

| TITRE / TITLE | # DWG |
|---|---|
| – | – |
| – | – |
| – | – |
| – | – |
| – | – |
| – | – |

AGNICO EAGLE

| REV. | DATE | DESCRIPTION | PAR/BY | APP. | CLIENT |
|---|---|---|---|---|---|
| 5 | 2021-02-15 | ISSUED FOR CONSTRUCTION | S.P. | T.G. | |
| 4 | 2021-01-18 | ISSUED FOR CONSTRUCTION | S.P. | T.G. | |
| 3 | 2019-01-29 | AS BUILT | J.L. | S.P. | |
| 8 | 2021-10-07 | AS BUILT | L.R.F. | T.G. | |
| 7 | 2021-09-20 | ADD FI6930222 & FI6930267 | C.B. | A.C. | |
| 6 | 2021-04-15 | ISSUED FOR TENDER | L.L. | S.J. | |

REVISIONS

TITRE / TITLE

AGNICO EAGLE – MELIADINE DIVISION
693 – FINAL WATER TREATMENT PLANT
205 – PIPING & INSTRUMENTATION DIAGRAM
COAGULANT & CATIONIC POLYMER

| | | |
|---|---|---|
| DESSINÉ PAR DRAWN BY | JONATHAN LAVOIE | DATE 2018-02-02 |
| VERIFIÉ PAR CHECKED BY | BERTRAND FORTIN, P. Eng.<br>ÉRIC LAVOIE, P. Eng. | 2018-03-22 |
| APPROUVÉ PAR APPROVED BY | BERTRAND FORTIN, P. Eng.<br>ÉRIC LAVOIE, P. Eng. | 2018-03-22 |
| ÉCHELLE SCALE | NO SCALE | DATE 2015-08-05 |

NO. DESSIN
DRAWING NO. 65-693-205-202

| NO. PROJET PROJECT NO. | REVISION | FEUILLE / SHT |
|---|---|---|
| 6526 | 8 | 1 / 1 |

AE-CART-ARCH D

FILE NO. 65-693-205-202_R8.dwg

NO. DESSIN
DRAWING NO. 65-693-205-203_R8

FORMAT ARCHD

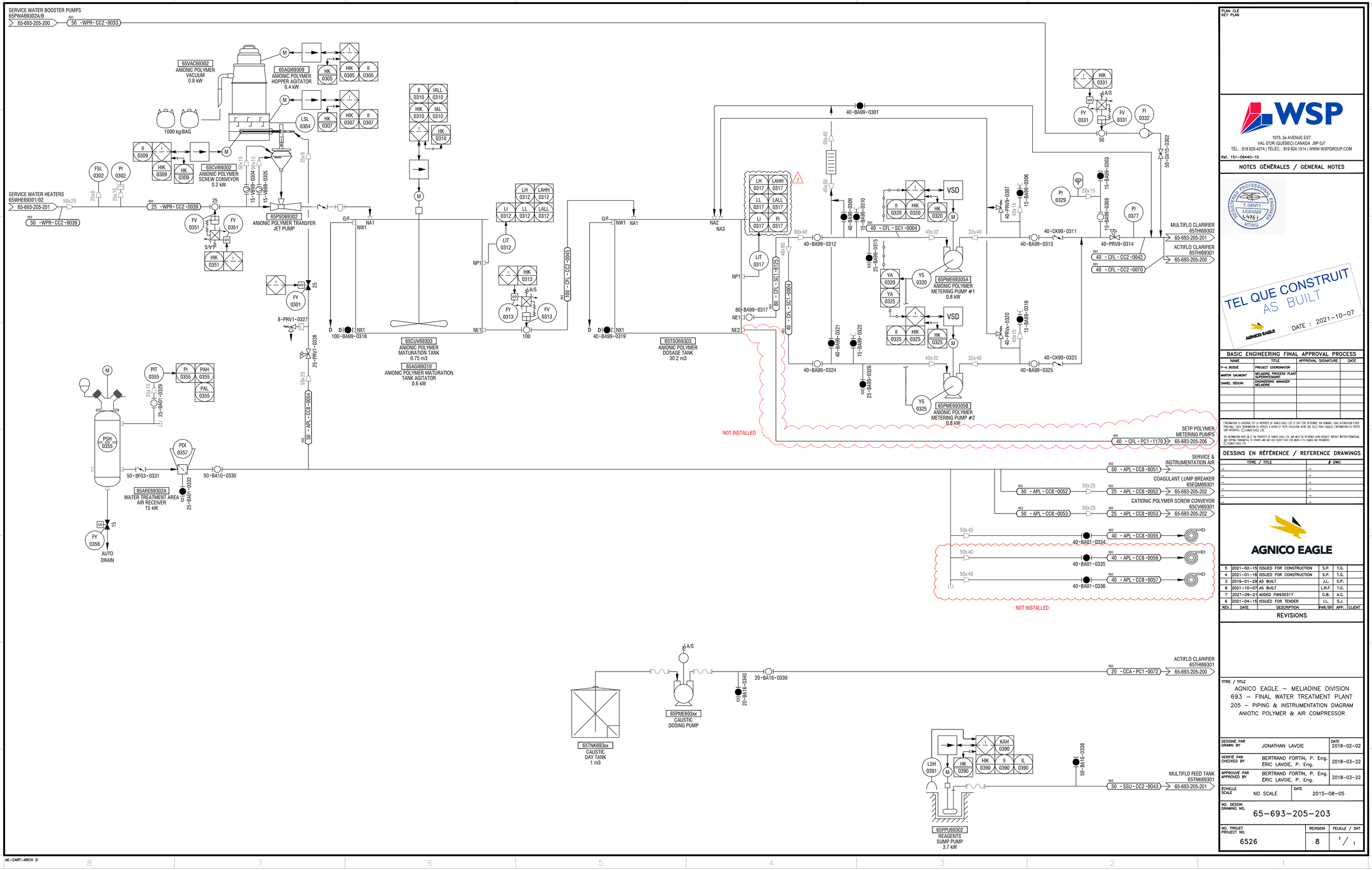


PLAN CLÉ
KEY PLAN


WSP
1075, 3e AVENUE EST
VAL-D'OR (QUÉBEC) CANADA J9P 0J7
TÉL. : 819 825-4274 | TÉLÉC. : 819 824-1514 | WWW.WSPGROUP.COM


Ref. 151-06440-10

NOTES GÉNÉRALES / GENERAL NOTES

ORDRE DES INGÉNIEURS PROFESSIONNELS DU NUNAVUT
T. GENTY
LICENSEE
L4951
NT/NU

TEL QUE CONSTRUIT
AS BUILT
AGNICO EAGLE
DATE : 2021-10-07

BASIC ENGINEERING FINAL APPROVAL PROCESS

| NAME | TITLE | APPROVAL SIGNATURE | DATE |
|---|---|---|---|
| P-A BOSSÉ | PROJECT COORDINATOR | | |
| MARTIN GAUMONT | MELIADINE PROCESS PLANT SUPERINTENDANT | | |
| DANIEL SÉGUIN | ENGINEERING MANAGER MELIADINE | | |
| | | | |
| | | | |
| | | | |


L'INFORMATION CI-CONTENUE EST LA PROPRIÉTÉ DE AGNICO EAGLE LTÉE ET DOIT ÊTRE RETOURNÉE SUR DEMANDE, SANS AUTORISATION ÉCRITE PRÉALABLE, TOUTE TRANSMISSION DE COPIE(S) À AUTRUI ET TOUTE UTILISATION AUTRE QUE CELLE POUR LAQUELLE L'INFORMATION EST PRÊTÉE SONT INTERDITS. © AGNICO EAGLE LTÉE.
THE INFORMATION HERE ON IS THE PROPERTY OF AGNICO EAGLE LTD. AND MUST BE RETURNED UPON REQUEST, WITHOUT WRITTEN PERMISSION, ANY COPYING TRANSMITTAL TO OTHERS AND ANY USE EXCEPT THAT FOR WHICH IT IS LOANED ARE PROHIBITED. © AGNICO EAGLE LTD.


DESSINS EN RÉFÉRENCE / REFERENCE DRAWINGS

| TITRE / TITLE | # DWG |
|---|---|
| – | – |
| – | – |
| – | – |
| – | – |
| – | – |
| – | – |

AGNICO EAGLE

| REV. | DATE | DESCRIPTION | PAR/BY | APP. | CLIENT |
|---|---|---|---|---|---|
| 5 | 2021-02-15 | ISSUED FOR CONSTRUCTION | S.P. | T.G. | |
| 4 | 2021-01-18 | ISSUED FOR CONSTRUCTION | S.P. | T.G. | |
| 3 | 2019-01-29 | AS BUILT | J.L. | S.P. | |
| 8 | 2021-10-07 | AS BUILT | L.R.F. | T.G. | |
| 7 | 2021-09-21 | ADDED FI6930317 | C.B. | A.C. | |
| 6 | 2021-04-15 | ISSUED FOR TENDER | I.L. | S.J. | |

REVISIONS

TITRE / TITLE
AGNICO EAGLE – MELIADINE DIVISION
693 – FINAL WATER TREATMENT PLANT
205 – PIPING & INSTRUMENTATION DIAGRAM
ANIOTIC POLYMER & AIR COMPRESSOR

| | | |
|---|---|---|
| DESSINÉ PAR DRAWN BY | JONATHAN LAVOIE | DATE 2018-02-02 |
| VERIFIÉ PAR CHECKED BY | BERTRAND FORTIN, P. Eng.<br>ÉRIC LAVOIE, P. Eng. | 2018-03-22 |
| APPROUVÉ PAR APPROVED BY | BERTRAND FORTIN, P. Eng.<br>ÉRIC LAVOIE, P. Eng. | 2018-03-22 |
| ÉCHELLE SCALE | NO SCALE | DATE 2015-08-05 |

NO. DESSIN DRAWING NO. 65-693-205-203

| NO. PROJET PROJECT NO. | REVISION | FEUILLE / SHT |
|---|---|---|
| 6526 | 8 | 1 / 1 |

AE-CART-ARCH D

FILE NO. 65-693-205-203_R8.dwg

NO. DESSIN
DRAWING NO. 65-693-205-206_R2

FORMAT ARCHD

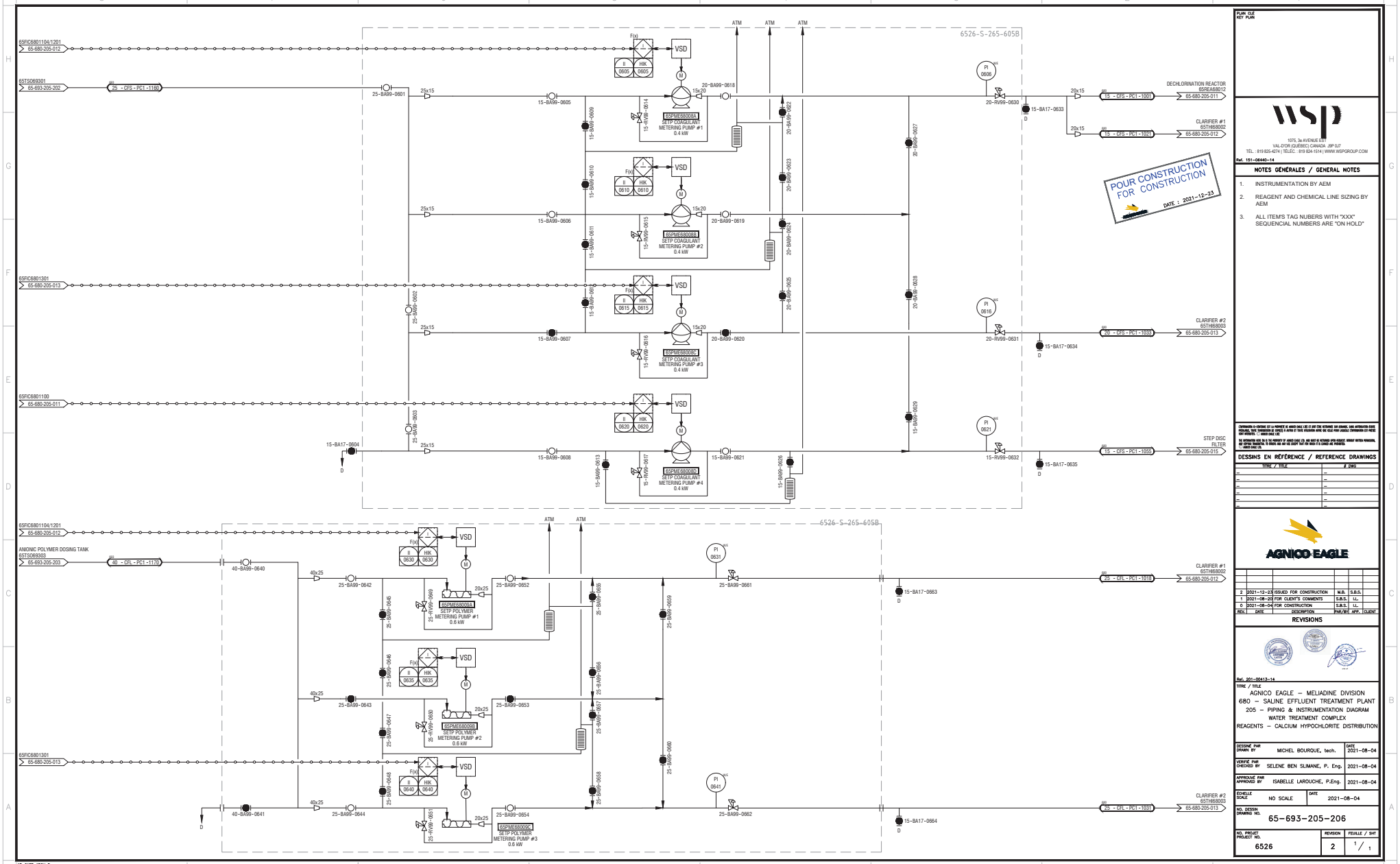


PLAN CLÉ
KEY PLAN


wsp
1075, 3e AVENUE EST
VAL-D'OR (QUÉBEC) CANADA J9P 0J7
TÉL. : 819 825-4274 | TÉLÉC. : 819 824-1514 | WWW.WSPGROUP.COM


Ref. 151-06440-14

## NOTES GÉNÉRALES / GENERAL NOTES

1. INSTRUMENTATION BY AEM
2. REAGENT AND CHEMICAL LINE SIZING BY AEM
3. ALL ITEM'S TAG NUBERS WITH "XXX" SEQUENCIAL NUMBERS ARE "ON HOLD"


CONFIDENTIEL ET PROPRIÉTAIRE. CE DOCUMENT EST LA PROPRIÉTÉ DE AGNICO EAGLE LTÉE ET NE DOIT ÊTRE DIVULGUÉ À AUCUNE AUTRE PERSONNE, SOCIÉTÉ, FIRME, ORGANISME OU ASSOCIÉ À MOINS D'AVOIR OBTENU LE CONSENTEMENT ÉCRIT PRÉALABLE DE AGNICO EAGLE LTÉE.

THE INFORMATION HERE ON IS THE PROPERTY OF AGNICO EAGLE LTD. AND MUST BE WITHHELD UPON REQUEST. WITHOUT WRITTEN PERMISSION, NOT DISCLOSED TRANSMITTED, TO OTHERS AND NOT TO BE COPIED THAT ARE NEEDED IT IS LOANED AND PROPERTIES. AGNICO EAGLE LTD.


## DESSINS EN RÉFÉRENCE / REFERENCE DRAWINGS

| TITRE / TITLE | # DWG |
|---|---|
| – | – |
| – | – |
| – | – |
| – | – |
| – | – |
| – | – |

AGNICO EAGLE

| REV. | DATE | DESCRIPTION | PAR/BY | APP. | CLIENT |
|---|---|---|---|---|---|
| 2 | 2021-12-23 | ISSUED FOR CONSTRUCTION | M.B. | S.B.S. | |
| 1 | 2021-08-20 | FOR CLIENT'S COMMENTS | S.B.S. | LL. | |
| 0 | 2021-08-04 | FOR CONSTRUCTION | S.B.S. | LL. | |

REVISIONS

Ref. 201-00413-14

TITRE / TITLE

AGNICO EAGLE – MELIADINE DIVISION
680 – SALINE EFFLUENT TREATMENT PLANT
205 – PIPING & INSTRUMENTATION DIAGRAM
WATER TREATMENT COMPLEX
REAGENTS – CALCIUM HYPOCHLORITE DISTRIBUTION

| | | |
|---|---|---|
| DESSINÉ PAR / DRAWN BY | MICHEL BOURQUE, tech. | 2021-08-04 |
| VÉRIFIÉ PAR / CHECKED BY | SELENE BEN SLIMANE, P. Eng. | 2021-08-04 |
| APPROUVÉ PAR / APPROVED BY | ISABELLE LAROUCHE, P.Eng. | 2021-08-04 |
| ÉCHELLE / SCALE | NO SCALE | DATE 2021-08-04 |

NO. DESSIN / DRAWING NO. 65-693-205-206

| NO. PROJET / PROJECT NO. | REVISION | FEUILLE / SHT |
|---|---|---|
| 6526 | 2 | 1 / 1 |

AE-CART-ARCH D

FILE NO. 65-693-205-206_R2.dwg

NO. DESSIN
DRAWING NO. 65-695-205-202_R4

FORMAT ARCHD

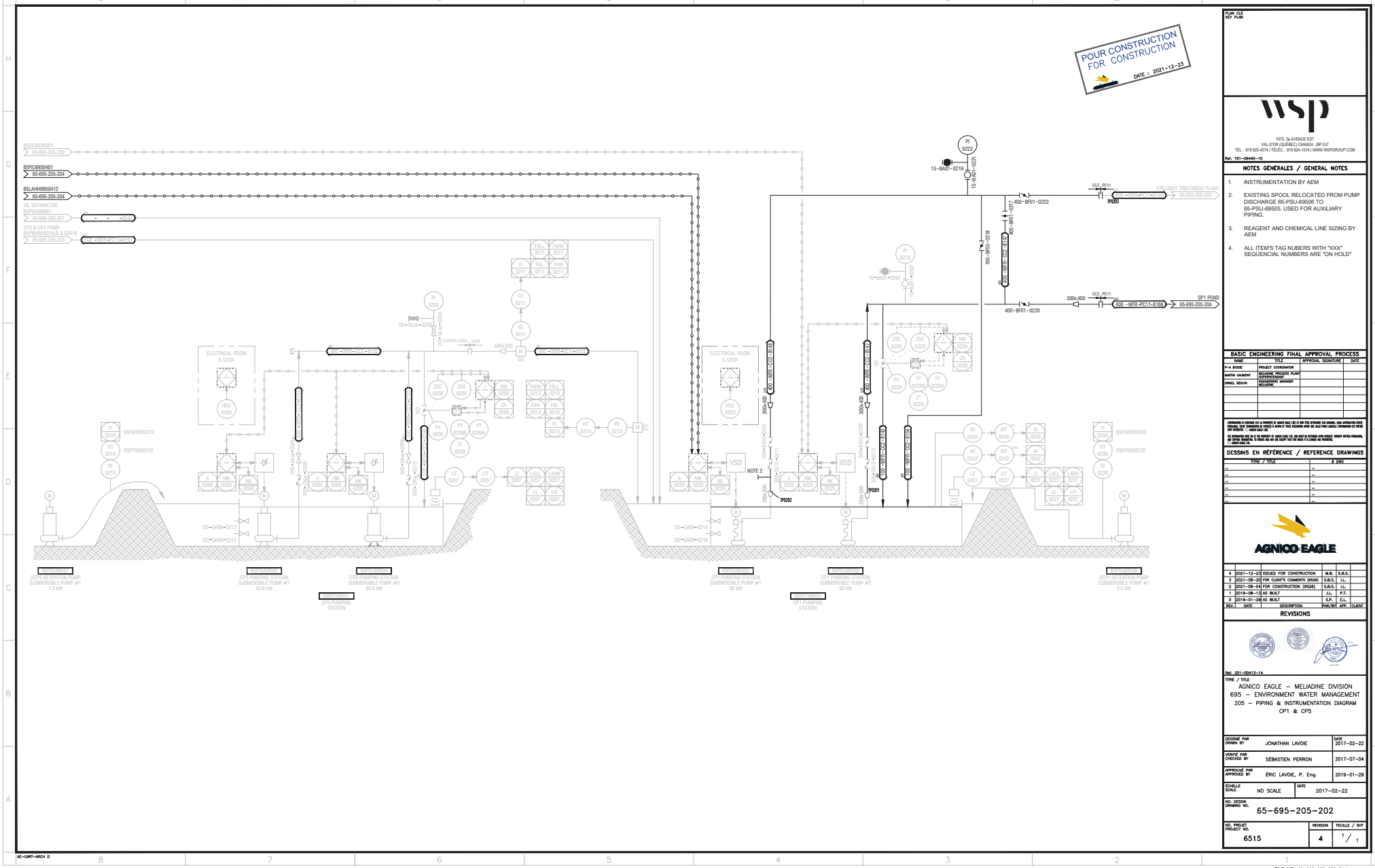


PLAN CLÉ
KEY PLAN


1075, 3e AVENUE EST
VAL-D'OR (QUÉBEC) CANADA J9P 0J7
TÉL. : 819 825-4274 | TÉLÉC. : 819 824-1514 | WWW.WSPGROUP.COM


Ref. 151-06440-10

## NOTES GÉNÉRALES / GENERAL NOTES

1. INSTRUMENTATION BY AEM
2. EXISTING SPOOL RELOCATED FROM PUMP DISCHARGE 65-PSU-69506 TO 65-PSU-69505. USED FOR AUXILIARY PIPING.
3. REAGENT AND CHEMICAL LINE SIZING BY AEM
4. ALL ITEM'S TAG NUBERS WITH "XXX" SEQUENCIAL NUMBERS ARE "ON HOLD"

## BASIC ENGINEERING FINAL APPROVAL PROCESS

| NAME | TITLE | APPROVAL SIGNATURE | DATE |
|---|---|---|---|
| P-A BOSSE | PROJECT COORDINATOR | | |
| MARTIN GIAMONT | MELIADINE PROCESS PLANT SUPERINTENDANT | | |
| DANIEL SEGUIN | ENGINEERING MANAGER MELIADINE | | |


CONFIDENTIEL ET PROPRIÉTÉ DE AGNICO EAGLE LTÉE ET SONT ÉTRE RETOURNÉS SUR DEMANDE. SANS AUTORISATION ÉCRITE PRÉALABLE, TOUTE TRANSMISSION OU DIVULGATION À AUTRE QUE TOUTE RÉVISION AVANT SOIT DÉTRUITE PAR LA PRÉSENTE. © AGNICO EAGLE LTÉE

THE INFORMATION HERE ON IS THE PROPERTY OF AGNICO EAGLE LTD. AND MUST BE RETURNED UPON REQUEST. WITHOUT WRITTEN PERMISSION, ANY COPYING, TRANSMITTAL TO, DISCLOSURE AND USE EXCEPT THAT FOR WHICH IT IS LOANED ARE PROHIBITED.
© AGNICO EAGLE LTD.


## DESSINS EN RÉFÉRENCE / REFERENCE DRAWINGS

| TITRE / TITLE | # DWG |
|---|---|
| – | – |
| – | – |
| – | – |
| – | – |
| – | – |
| – | – |

AGNICO EAGLE

| REV. | DATE | DESCRIPTION | PAR/BY | APP. | CLIENT |
|---|---|---|---|---|---|
| 4 | 2021-12-23 | ISSUED FOR CONSTRUCTION | M.B. | S.B.S. | |
| 3 | 2021-08-20 | FOR CLIENT'S COMMENTS (6526) | S.B.S. | L.L. | |
| 2 | 2021-08-04 | FOR CONSTRUCTION (6526) | S.B.S. | L.L. | |
| 1 | 2019-08-13 | AS BUILT | J.L. | P.T. | |
| 0 | 2019-01-29 | AS BUILT | S.P. | E.L. | |

REVISIONS

Ref. 201-00413-14

TITRE / TITLE

AGNICO EAGLE – MELIADINE DIVISION
695 – ENVIRONMENT WATER MANAGEMENT
205 – PIPING & INSTRUMENTATION DIAGRAM
CP1 & CP5

| | | |
|---|---|---|
| DESSINÉ PAR / DRAWN BY | JONATHAN LAVOIE | 2017-02-22 |
| VÉRIFIÉ PAR / CHECKED BY | SÉBASTIEN PERRON | 2017-07-04 |
| APPROUVÉ PAR / APPROVED BY | ÉRIC LAVOIE, P. Eng. | 2019-01-29 |
| ÉCHELLE / SCALE | NO SCALE | DATE 2017-02-22 |

NO. DESSIN / DRAWING NO. 65-695-205-202

| NO. PROJET / PROJECT NO. | REVISION | FEUILLE / SHT |
|---|---|---|
| 6515 | 4 | 1 / 1 |

AE-CART-ARCH D

FILE NO. 65-695-205-202_R4.dwg

NO. DESSIN
DRAWING NO. 65-695-205-204_R2

FORMAT ARCH D

POUR CONSTRUCTION
FOR CONSTRUCTION
DATE : 2021-12-23

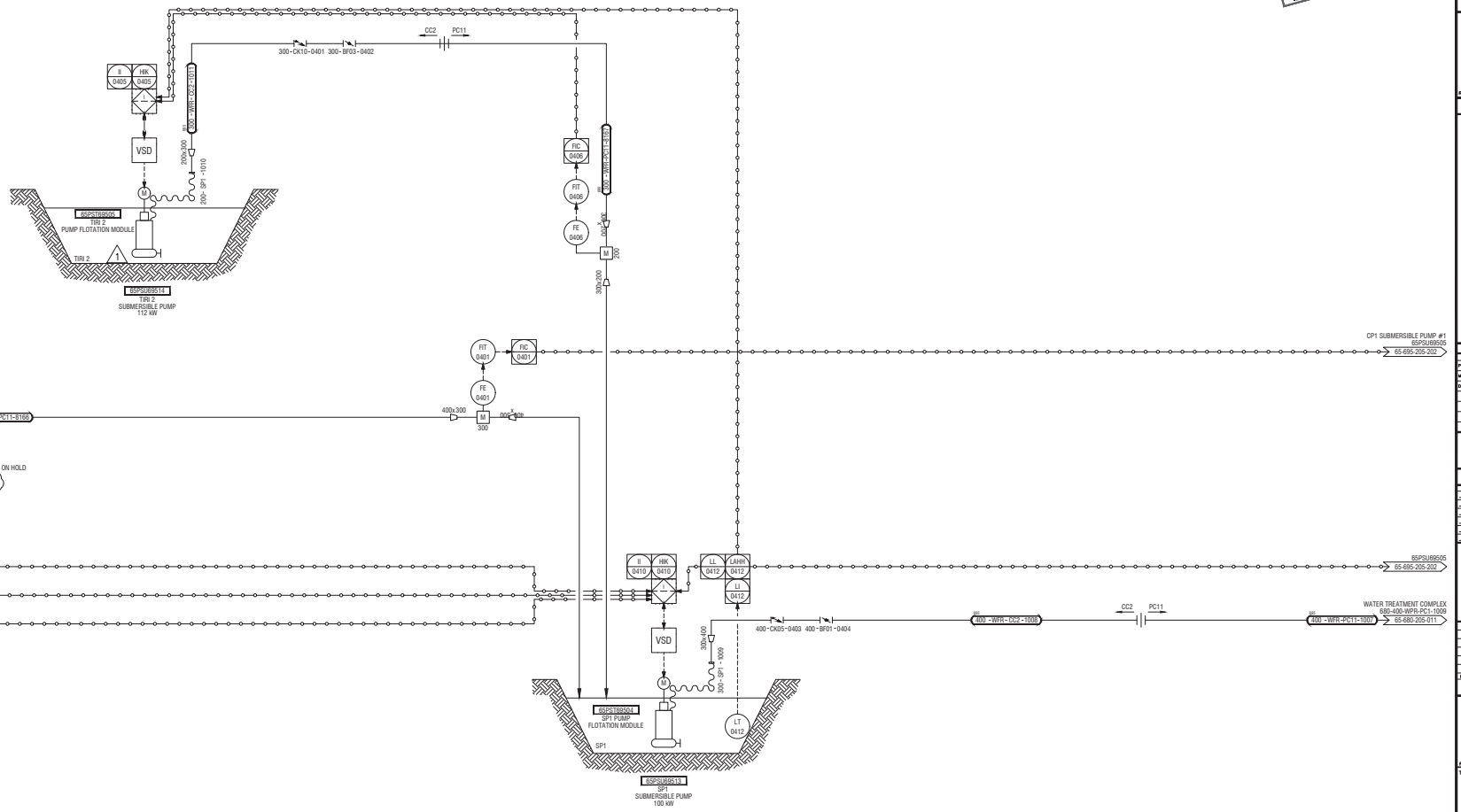


PLAN CLÉ
KEY PLAN


wsp
1075, 3e AVENUE EST
VAL-D'OR (QUÉBEC) CANADA J9P 0J7
TÉL. : 819 825-4274 | TÉLÉC. : 819 824-1514 | WWW.WSPGROUP.COM


Ref. 151-08440-10

NOTES GÉNÉRALES / GENERAL NOTES

BASIC ENGINEERING FINAL APPROVAL PROCESS

| NAME | TITLE | APPROVAL SIGNATURE | DATE |
|---|---|---|---|
| P-A BOSSE | PROJECT COORDINATOR | | |
| MARTIN CHUMONT | MELIADINE PROCESS PLANT SUPERINTENDANT | | |
| DANIEL SEGUIN | ENGINEERING MANAGER MELIADINE | | |


L'INFORMATION CI-CONTENUE EST LA PROPRIÉTÉ DE AGNICO EAGLE LTÉE ET EST TOUTE RETENUE SOUS LEURRE. SAUF AUTORISATION ÉCRITE PRÉALABLE, TOUTE REPRODUCTION OU DIVULGATION À AUTRE QUE TOUTE VERSION AUTRE QUE CELLE POUR LAQUELLE L'INFORMATION EST FOURNIE EXPRESSÉMENT PAR AGNICO EAGLE LTÉE.

THE INFORMATION HERE IN IS THE PROPERTY OF AGNICO EAGLE LTD. AND MUST BE WITHHELD UPON REQUEST. WITHOUT WRITTEN PERMISSION, ANY COPYING TRANSMITTAL TO OTHERS AND USE NOT EXCEPT THAT FOR WHICH IT IS LOANED ARE PROHIBITED. AGNICO EAGLE LTD.


DESSINS EN RÉFÉRENCE / REFERENCE DRAWINGS

| TITRE / TITLE | # DWG |
|---|---|
| – | – |
| – | – |
| – | – |
| – | – |
| – | – |
| – | – |

AGNICO EAGLE

| REV. | DATE | DESCRIPTION | PAR/BY | APP. | CLIENT |
|---|---|---|---|---|---|
| 2 | 2021-12-23 | ISSUED FOR CONSTRUCTION | M.B. | S.B.S. | |
| 1 | 2021-08-20 | FOR CLIENT'S COMMENTS | S.B.S. | LL. | |
| 0 | 2021-08-04 | FOR CONSTRUCTION | S.B.S. | LL. | |

REVISIONS

Ref. 201-00413-14

TITRE / TITLE

AGNICO EAGLE – MELIADINE DIVISION
695 – ENVIRONMENT WATER MANAGEMENT
205 – PIPING & INSTRUMENTATION DIAGRAM
TIRI 2 & SP1

| | | |
|---|---|---|
| DESSINÉ PAR / DRAWN BY | PIERRE-GARANT GAGNON | DATE 2021-08-04 |
| VÉRIFIÉ PAR / CHECKED BY | SELENE BEN SLIMANE, P.ENG. | 2021-08-04 |
| APPROUVÉ PAR / APPROVED BY | ISABELLE LAROUCHE, P.ENG. | 2021-08-04 |
| ÉCHELLE / SCALE | NO SCALE | DATE 2021-08-04 |

NO. DESSIN / DRAWING NO.
65-695-205-204

| NO. PROJET / PROJECT NO. | REVISION | FEUILLE / SHT |
|---|---|---|
| 6526 | 2 | 1 / 1 |

AE-CART-ARCH D

FILE NO. 65-695-205-204_R2.dwg

NO. DESSIN
DRAWING NO. 65-693-205-205_R0

FORMAT ARCHD

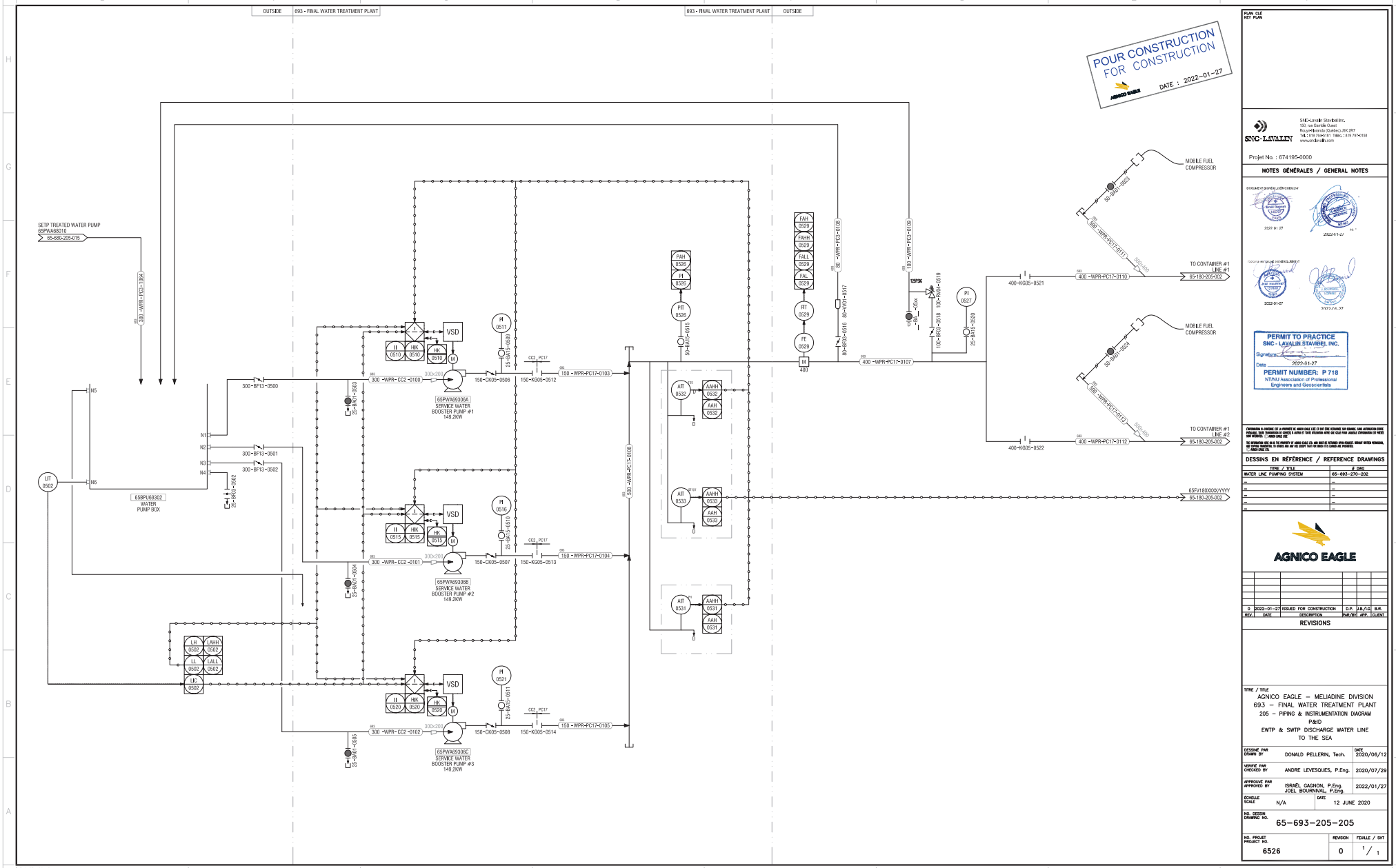


PLAN CLÉ
KEY PLAN

SNC-LAVALIN

SNC-Lavalin Stantec Inc.
150, rue Gamble Ouest
Rouyn-Noranda (Québec) J9X 2R7
TEL : 819 764-0181 TÉLÉC. : 819 797-0158
www.snclavalin.com

Projet No. : 674195-0000

## NOTES GÉNÉRALES / GENERAL NOTES

2022-01-27

PERMIT TO PRACTICE
SNC - LAVALIN STAVIBEL INC.
Signature
Date 2022-01-27
PERMIT NUMBER: P 718
NT/NU Association of Professional Engineers and Geoscientists

## DESSINS EN RÉFÉRENCE / REFERENCE DRAWINGS

| TITRE / TITLE | # DWG |
|---|---|
| WATER LINE PUMPING SYSTEM | 65-693-270-202 |
| – | – |
| – | – |
| – | – |
| – | – |
| – | – |

AGNICO EAGLE

| REV. | DATE | DESCRIPTION | PAR/BY | APP. | CLIENT |
|---|---|---|---|---|---|
| D | 2022-01-27 | ISSUED FOR CONSTRUCTION | D.P. | J.B./J.G. | B.R. |

## REVISIONS

TITRE / TITLE

AGNICO EAGLE – MELIADINE DIVISION
693 – FINAL WATER TREATMENT PLANT
205 – PIPING & INSTRUMENTATION DIAGRAM
P&ID
EWTP & SWTP DISCHARGE WATER LINE
TO THE SEA

| | | |
|---|---|---|
| DESSINÉ PAR DRAWN BY | DONALD PELLERIN, Tech. | DATE 2020/06/12 |
| VÉRIFIÉ PAR CHECKED BY | ANDRE LEVESQUES, P.Eng. | 2020/07/29 |
| APPROUVÉ PAR APPROVED BY | ISRAËL GAGNON, P.Eng.<br>JOEL BOURNIVAL, P.Eng. | 2022/01/27 |
| ÉCHELLE SCALE | N/A | DATE 12 JUNE 2020 |

NO. DESSIN
DRAWING NO.
65-693-205-205

| NO. PROJET PROJECT NO. | REVISION | FEUILLE / SHT |
|---|---|---|
| 6526 | 0 | 1 / 1 |

AE-CART-ARCH D

\\S82042\stavibel\Projet\300-RN\674195\0000\4-Ingenierie\D-Dessins maitres\48-IC\65-693-205-205_R0.dwg-2013-02-19 14:03:29

FILE NO. 65-693-205-205_R0.dwg

NO. DESSIN
DRAWING NO. 65-180-205-002_R0

FORMAT ARCHD

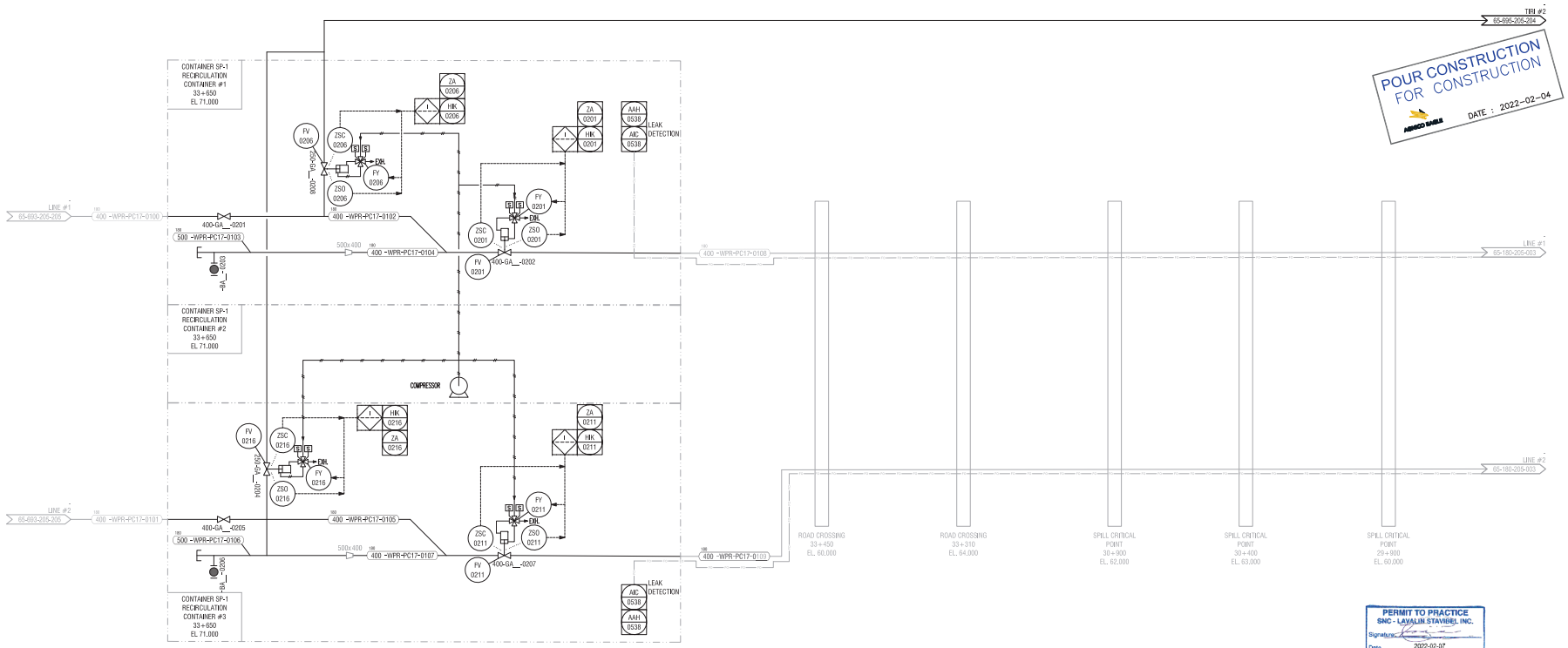


POUR CONSTRUCTION
FOR CONSTRUCTION
AGNICO EAGLE
DATE : 2022-02-04

PERMIT TO PRACTICE
SNC - LAVALIN STAVIBEL INC.
Signature:
Date 2022-02-07
PERMIT NUMBER: P 718
NT/NU Association of Professional Engineers and Geoscientists

PLAN CLÉ
KEY PLAN

SNC-LAVALIN
SNC-Lavalin Stavibel Inc.
150, rue Gamble Ouest
Rouyn-Noranda (Québec) J9X 2R7
Tél. : 819 764-5181 Téléc. : 819 797-0158
www.snclavalin.com

Projet No. : 674195-0000

NOTES GÉNÉRALES / GENERAL NOTES

2022 02 07

2022-02-07

L'INFORMATION CI-CONTENUE EST LA PROPRIÉTÉ DE AGNICO EAGLE LTÉE ET DOIT ÊTRE RETOURNÉE SUR DEMANDE. SANS AUTORISATION ÉCRITE PRÉALABLE, TOUTE TRANSMISSION DE COPIE(S) À AUTRUI ET TOUTE UTILISATION AUTRE QUE CELLE POUR LAQUELLE L'INFORMATION EST PRÊTÉE SONT INTERDITES. ☐ AGNICO EAGLE LTÉE

THE INFORMATION HERE ON IS THE PROPERTY OF AGNICO EAGLE LTD. AND MUST BE RETURNED UPON REQUEST. WITHOUT WRITTEN PERMISSION, ANY COPYING TRANSMITTAL TO OTHERS AND ANY USE EXCEPT THAT FOR WHICH IT IS LOANED ARE PROHIBITED. ☐ AGNICO EAGLE LTD.

DESSINS EN RÉFÉRENCE / REFERENCE DRAWINGS

| TITRE / TITLE | # DWG |
|---|---|
| WATER LINE HIGH POINT CONTAINER | 65-180-270-203 |
| WATER LINE DOWNSTREAM CONTAINER | 65-180-270-204 |
| – | – |
| – | – |
| – | – |
| – | – |

AGNICO EAGLE

| REV. | DATE | DESCRIPTION | PAR/BY | APP. | CLIENT |
|---|---|---|---|---|---|
| 0 | 2022-02-04 | ISSUE DFOR CONSTRUCTION | D.P. | J.B./J.G. | |

REVISIONS

2022 02 07

2022-02-07

TITRE / TITLE
AGNICO EAGLE – MELIADINE DIVISION
180 – SALINE EFFLUENT DISCHARGE SYSTEM
205 – PIPING & INSTRUMENTATION DIAGRAM
P&ID
DISCHARGE TO THE SEA
WATERLINE

| | | |
|---|---|---|
| DESSINÉ PAR / DRAWN BY | DONALD PELLERIN, Tech. | DATE 2020/07/09 |
| VERIFIÉ PAR / CHECKED BY | ANDRE LEVESQUE, P.Eng. | 2020/07/29 |
| APPROUVÉ PAR / APPROVED BY | ISRAËL GAGNON, P.Eng. JOEL BOURNIVAL, P.Eng. | 2022/02/04 |
| ÉCHELLE / SCALE | N/A | DATE 9 JULY 2020 |

NO. DESSIN / DRAWING NO. 65-180-205-002

| NO. PROJET / PROJECT NO. | REVISION | FEUILLE / SHT |
|---|---|---|
| 6526 | 0 | 1 / 1 |

AE-CART-ARCH D

\\SI2042\stavibel\Projet\300-89\674195\0000\4-Ingenierie\D-Dessins maitres\48-IC\65-180-205-002_R0.dwg-2013-02-19 14:03:29

FILE NO. 65-180-205-002_R0.dwg

# Appendix C

# SAFETY DATA SHEET

## 1. Identification

**Product identifier** **HYDREX 3267**

**Other means of identification** None.

**Recommended use** Potable Water Treatment

**Recommended restrictions** PROFESSIONAL USE ONLY

**Manufacturer/Importer/Supplier/Distributor information**

**Supplier** Veolia Water Technologies Canada Inc.

**Address** 2000 Argentia Road, Plaza IV, Suite 430
Mississauga, ON L5N 1W1
Canada

**Contact Person** Hydrex Product Specialist

**Telephone** (905) 286-4846

**Fax** (905) 286-0488

**e-mail** vwtcanada-hydrex@veolia.com

**24-Hour Emergency telephone** +1-760-476-3962 (Code:333239)

**Supplier** Not available.

## 2. Hazard(s) identification

**Physical hazards** Not classified.

**Health hazards** Not classified.

**Environmental hazards** Hazardous to the aquatic environment, acute hazard Category 3

**Label elements**

**Hazard symbol** None.

**Signal word** None.

**Hazard statement** Harmful to aquatic life.

**Precautionary statement**

**Prevention** Avoid release to the environment.

**Response** Wash hands after handling.

**Storage** Store in cool place. Protect from sunlight. Store away from incompatible materials.

**Disposal** Dispose of contents/container to an appropriate treatment and disposal facility in accordance with applicable laws and regulations, and product characteristics at time of disposal.

**Other hazards** None known.

**Supplemental information** None.

## 3. Composition/information on ingredients

**Mixtures**

| Chemical name | Common name and synonyms | CAS number | % |
|---|---|---|---|
| ALUMINUM, WATER SOLUBLE SALTS, N.O.S. | | 39290-78-3 | 95 |
| Other components below reportable levels | | | 5 |

All concentrations are in percent by weight unless ingredient is a gas. Gas concentrations are in percent by volume.

## 4. First-aid measures

**Inhalation** Move to fresh air. Call a physician if symptoms develop or persist.

**Skin contact** Wash off with soap and water. Get medical attention if irritation develops and persists.

**Eye contact** Do not rub eyes. Rinse with water. Get medical attention if irritation develops and persists.

| | |
|---|---|
| **Ingestion** | Rinse mouth. Get medical attention if symptoms occur. |
| **Most important symptoms/effects, acute and delayed** | Dusts may irritate the respiratory tract, skin and eyes. |
| **Indication of immediate medical attention and special treatment needed** | Treat symptomatically. |
| **General information** | Ensure that medical personnel are aware of the material(s) involved, and take precautions to protect themselves. |

## 5. Fire-fighting measures

| | |
|---|---|
| **Suitable extinguishing media** | Water fog. Foam. Dry chemical powder. Carbon dioxide (CO2). |
| **Unsuitable extinguishing media** | Not available. |
| **Specific hazards arising from the chemical** | During fire, gases hazardous to health may be formed. |
| **Special protective equipment and precautions for firefighters** | Self-contained breathing apparatus and full protective clothing must be worn in case of fire. |
| **Fire fighting equipment/instructions** | Use water spray to cool unopened containers. |
| **Specific methods** | Use standard firefighting procedures and consider the hazards of other involved materials. |
| **General fire hazards** | No unusual fire or explosion hazards noted. |

## 6. Accidental release measures

| | |
|---|---|
| **Personal precautions, protective equipment and emergency procedures** | Keep unnecessary personnel away. Keep people away from and upwind of spill/leak. Wear appropriate protective equipment and clothing during clean-up. Ensure adequate ventilation. Local authorities should be advised if significant spillages cannot be contained. For personal protection, see section 8 of the SDS. |
| **Methods and materials for containment and cleaning up** | Avoid the generation of dusts during clean-up. Collect dust using a vacuum cleaner equipped with HEPA filter. Prevent product from entering drains.<br><br>Large Spills: Stop the flow of material, if this is without risk. Shovel the material into waste container. Following product recovery, flush area with water.<br><br>Small Spills: Sweep up or vacuum up spillage and collect in suitable container for disposal. For waste disposal, see section 13 of the SDS. |
| **Environmental precautions** | Avoid release to the environment. Inform appropriate managerial or supervisory personnel of all environmental releases. Prevent further leakage or spillage if safe to do so. Avoid discharge into drains, water courses or onto the ground. |

## 7. Handling and storage

| | |
|---|---|
| **Precautions for safe handling** | Minimize dust generation and accumulation. Provide appropriate exhaust ventilation at places where dust is formed. Wear appropriate personal protective equipment. Avoid release to the environment. Observe good industrial hygiene practices. |
| **Conditions for safe storage, including any incompatibilities** | Store in original tightly closed container. Store in a well-ventilated place. Store away from incompatible materials (see Section 10 of the SDS). |

## 8. Exposure controls/personal protection

**Occupational exposure limits**

**US. ACGIH Threshold Limit Values**

| Material | Type | Value | Form |
|---|---|---|---|
| HYDREX 3267 | TWA | 1 mg/m3 | Respirable fraction. |

**Canada. Alberta OELs (Occupational Health & Safety Code, Schedule 1, Table 2)**

| Material | Type | Value |
|---|---|---|
| HYDREX 3267 | TWA | 2 mg/m3 |

**Canada. British Columbia OELs. (Occupational Exposure Limits for Chemical Substances, Occupational Health and Safety Regulation 296/97, as amended)**

| Material | Type | Value | Form |
|---|---|---|---|
| HYDREX 3267 | TWA | 1 mg/m3 | Respirable. |

**Canada. Ontario OELs. (Control of Exposure to Biological or Chemical Agents)**

| Material | Type | Value | Form |
|---|---|---|---|
| HYDREX 3267 | TWA | 1 mg/m3 | Respirable fraction. |

**Canada. Quebec OELs. (Ministry of Labor - Regulation Respecting the Quality of the Work Environment)**

| Material | Type | Value |
|---|---|---|
| HYDREX 3267 | TWA | 2 mg/m3 |

**Biological limit values** No biological exposure limits noted for the ingredient(s).

**Appropriate engineering controls** If material is ground, cut, or used in any operation which may generate dusts, use appropriate local exhaust ventilation to keep exposures below the recommended exposure limits.

**Individual protection measures, such as personal protective equipment**

**Eye/face protection** Wear safety glasses with side shields (or goggles) and a face shield. Chemical goggles and face shield are recommended. Before any handling, wear protective glasses side-shields complying with the NF EN 166.

**Skin protection**

**Hand protection** Chemical resistant gloves.

**Other** Wear suitable protective clothing. Chemical resistant gloves.

**Respiratory protection** Wear respirator with dust filter.

**Thermal hazards** Wear appropriate thermal protective clothing, when necessary.

**General hygiene considerations** Always observe good personal hygiene measures, such as washing after handling the material and before eating, drinking, and/or smoking. Routinely wash work clothing and protective equipment to remove contaminants.

## *9. Physical and chemical properties*

**Appearance** Powder.

**Physical state** Solid.

**Form** Powder.

**Color** Pale yellow

**Odor** Slight

**Odor threshold** Not available.

**pH** 3 - 5 (0.3% solution)

**Melting point/freezing point** 10.4 °F (-12 °C) (33% solution)

**Initial boiling point and boiling range** Not available.

**Flash point** Not available.

**Evaporation rate** Not available.

**Flammability (solid, gas)** Not available.

**Upper/lower flammability or explosive limits**

**Flammability limit - lower (%)** Not available.

**Flammability limit - upper (%)** Not available.

**Explosive limit - lower (%)** Not available.

**Explosive limit - upper (%)** Not available.

**Vapor pressure** Not available.

**Vapor density** Not available.

**Relative density** Not available.

**Solubility(ies)**

| | |
|---|---|
| **Solubility (water)** | Easily soluble in cold water. |
| **Partition coefficient (n-octanol/water)** | Not available. |
| **Auto-ignition temperature** | Not available. |
| **Decomposition temperature** | Not available. |
| **Viscosity** | Not available. |

**Other information**

| | |
|---|---|
| **Density** | 800.00 - 900.00 kg/m3 |
| **Explosive properties** | Not explosive. |
| **Oxidizing properties** | Not oxidizing. |
| **Specific gravity** | 0.8 - 0.9 |

## *10. Stability and reactivity*

| | |
|---|---|
| **Reactivity** | The product is stable and non-reactive under normal conditions of use, storage and transport. |
| **Chemical stability** | Material is stable under normal conditions. |
| **Possibility of hazardous reactions** | No dangerous reaction known under conditions of normal use. |
| **Conditions to avoid** | Contact with incompatible materials. None under normal conditions. |
| **Incompatible materials** | Ammonia. Chlorine. Do not mix with other chemicals. Alkalies. |
| **Hazardous decomposition products** | Aluminum and Sulfur oxides. |

## *11. Toxicological information*

**Information on likely routes of exposure**

| | |
|---|---|
| **Inhalation** | Dust may irritate respiratory system. |
| **Skin contact** | Dust or powder may irritate the skin. |
| **Eye contact** | Dust may irritate the eyes. |
| **Ingestion** | Expected to be a low ingestion hazard. |
| **Symptoms related to the physical, chemical and toxicological characteristics** | Dusts may irritate the respiratory tract, skin and eyes. |

**Information on toxicological effects**

| | |
|---|---|
| **Acute toxicity** | Not available. |
| **Skin corrosion/irritation** | Prolonged skin contact may cause temporary irritation. |
| **Serious eye damage/eye irritation** | Direct contact with eyes may cause temporary irritation. |

**Respiratory or skin sensitization**

| | |
|---|---|
| **Respiratory sensitization** | Not a respiratory sensitizer. |
| **Skin sensitization** | This product is not expected to cause skin sensitization. |
| **Germ cell mutagenicity** | No data available to indicate product or any components present at greater than 0.1% are mutagenic or genotoxic. |
| **Carcinogenicity** | Not available. |
| **Reproductive toxicity** | This product is not expected to cause reproductive or developmental effects. |
| **Specific target organ toxicity - single exposure** | Not classified. |
| **Specific target organ toxicity - repeated exposure** | Not classified. |
| **Aspiration hazard** | Not an aspiration hazard. |

## *12. Ecological information*

| | |
|---|---|
| **Ecotoxicity** | Harmful to aquatic life. |

| Product | | Species | Test Results |
|---|---|---|---|
| HYDREX 3267 | | | |
| **Aquatic** | | | |
| Crustacea | EC50 | Daphnia | 91.5789 mg/l, 48 hours estimated |
| *Acute* | | | |
| Algae | EC50 | Algae | 14 mg/l, 72 hours OCDE TG 201 |

* Estimates for product may be based on additional component data not shown.

**Persistence and degradability**

**Bioaccumulative potential** No data available.

**Mobility in soil** No data available.

**Other adverse effects** No other adverse environmental effects (e.g. ozone depletion, photochemical ozone creation potential, endocrine disruption, global warming potential) are expected from this component.

## 13. Disposal considerations

**Disposal instructions** Collect and reclaim or dispose in sealed containers at licensed waste disposal site. Do not allow this material to drain into sewers/water supplies. Do not contaminate ponds, waterways or ditches with chemical or used container. Dispose of contents/container in accordance with local/regional/national/international regulations.

**Local disposal regulations** Dispose in accordance with all applicable regulations.

**Hazardous waste code** The waste code should be assigned in discussion between the user, the producer and the waste disposal company.

**Waste from residues / unused products** Dispose of in accordance with local regulations. Empty containers or liners may retain some product residues. This material and its container must be disposed of in a safe manner (see: Disposal instructions).

**Contaminated packaging** Since emptied containers may retain product residue, follow label warnings even after container is emptied. Empty containers should be taken to an approved waste handling site for recycling or disposal.

## 14. Transport information

**TDG**

Not regulated as dangerous goods.

**IATA**

Not regulated as dangerous goods.

**IMDG**

Not regulated as dangerous goods.

**Transport in bulk according to Annex II of MARPOL 73/78 and the IBC Code** Not applicable.

## 15. Regulatory information

**Canadian regulations** This product has been classified in accordance with the hazard criteria of the HPR and the SDS contains all the information required by the HPR.

**Controlled Drugs and Substances Act**

Not regulated.

**Export Control List (CEPA 1999, Schedule 3)**

Not listed.

**Greenhouse Gases**

Not listed.

**Precursor Control Regulations**

Not regulated.

**International regulations** Additional information is given in the Safety Data Sheet.

**Stockholm Convention**

Not applicable.

**Rotterdam Convention**

Not applicable.

**Kyoto protocol**

Not applicable.

**Montreal Protocol**

Not applicable.

**Basel Convention**

Not applicable.

**International Inventories**

| Country(s) or region | Inventory name | On inventory (yes/no)* |
|---|---|---|
| Australia | Australian Inventory of Chemical Substances (AICS) | No |
| Canada | Domestic Substances List (DSL) | Yes |
| Canada | Non-Domestic Substances List (NDSL) | No |
| China | Inventory of Existing Chemical Substances in China (IECSC) | Yes |
| Europe | European Inventory of Existing Commercial Chemical Substances (EINECS) | Yes |
| Europe | European List of Notified Chemical Substances (ELINCS) | No |
| Japan | Inventory of Existing and New Chemical Substances (ENCS) | No |
| Korea | Existing Chemicals List (ECL) | Yes |
| New Zealand | New Zealand Inventory | No |
| Philippines | Philippine Inventory of Chemicals and Chemical Substances (PICCS) | No |
| United States & Puerto Rico | Toxic Substances Control Act (TSCA) Inventory | Yes |

*A "Yes" indicates that all components of this product comply with the inventory requirements administered by the governing country(s)
A "No" indicates that one or more components of the product are not listed or exempt from listing on the inventory administered by the governing country(s).

## *16. Other information*

**Issue date** 04-20-2017

**Version #** 01

**Disclaimer** Veolia Water Technologies is not able to anticipate all conditions under which this information and its product, or the products of other manufacturers in combination with its product, may be used. It is the user's responsibility to ensure safe conditions for handling, storage and disposal of the product, and to assume liability for loss, injury, damage or expense due to improper use and or non respect of Veolia Water Technologies' requirement.

**Revision information**

Product and Company Identification: Product Review
Composition / Information on Ingredients: Ingredients
Physical & Chemical Properties: Multiple Properties
Toxicological Information: Toxicological Data
Ecological Information: Ecotoxicity
Regulatory Information: United States
GHS: Classification

# FICHE SIGNALÉTIQUE

## 1. Identification

**Identificateur de produit** **HYDREX 3267**

**Autres moyens d'identification** Aucune.

**Usage recommandé** Traitement de l'eau potable

**Restrictions d'utilisation** USAGE PROFESSIONNEL

**Renseignements sur le fabricant/importateur/fournisseur/distributeur**

**Fournisseur** Veolia Water Technologies Canada Inc.

**Adresse** 2000 Argentia Road, Plaza IV, Suite 430
Mississauga, ON L5N 1W1
Canada

**Personne à contacter** Hydrex Product Specialist

**Téléphone** (905) 286-4846

**Télécopieur** (905) 286-0488

**courriel** vwtcanada-hydrex@veolia.com

**24 Hr Numéro de téléphone d'appel d'urgence** +1-760-476-3962 (Code:333239)

**Fournisseur** Non disponible.

## 2. Identification des dangers

**Dangers physiques** Non classé.

**Dangers pour la santé** Non classé.

**Dangers environnementaux** Dangereux pour le milieu aquatique, danger aigu Catégorie 3

**Éléments d'étiquetage**

**Symbole de danger** Aucune.

**Mention d'avertissement** Aucune.

**Mention de danger** Nocif pour les organismes aquatiques.

**Conseil de prudence**

**Prévention** Éviter le rejet dans l'environnement.

**Intervention** Se laver les mains après utilisation.

**Stockage** Stocker dans un endroit frais. Protéger du rayonnement solaire. Conserver à l'écart de matières incompatibles.

**Élimination** Éliminer le contenu/contenant dans une installation appropriée de traitement et d'élimination conformément aux lois et règlements applicables, ainsi qu'en fonction des caractéristiques du produit au moment de l'élimination.

**Autres dangers** Aucun(e) connu(e).

**Renseignements supplémentaires** Aucune.

## 3. Composition/information sur les ingrédients

**Mélanges**

| Dénomination chimique | Nom commun et synonymes | Numéro d'enregistrement CAS | % |
|---|---|---|---|
| ALUMINIUM , WATER SOLUBLE SALTS, n.s.a. | | 39290-78-3 | 95 |
| Autres composant sous les niveaux à déclarer | | | 5 |

Toutes les concentrations sont en pourcentage en poids, sauf si l'ingrédient est un gaz. Les concentrations des gaz sont er pourcentage en volume.

## 4. Premiers soins

| | |
|---|---|
| **Inhalation** | Transporter à l'extérieur. Appeler un médecin si des symptômes se développent ou persistent |
| **Contact avec la peau** | Laver avec de l'eau et du savon. Consulter un médecin si une irritation se développe et persiste. |
| **Contact avec les yeux** | Ne pas se frotter les yeux. Rincer avec de l'eau. Consulter un médecin si une irritation se développe et persiste. |
| **Ingestion** | Rincer la bouche. Consulter un médecin si des symptômes apparaissent. |
| **Symptômes et effets les plus importants, qu'ils soient aigus ou retardés** | La poussière peut irriter les voies respiratoires, la peau et les yeux. |
| **Mention de la nécessité d'une prise en charge médicale immédiate ou d'un traitement spécial, si nécessaire** | Traiter de manière symptomatique. |
| **Informations générales** | S'assurer que le personnel médical est averti du (des) produits(s) en cause et qu'il prend des mesures pour se protéger. |

## 5. Mesures à prendre en cas d'incendie

| | |
|---|---|
| **Agents extincteurs appropriés** | Brouillard d'eau. Mousse. Poudre chimique. Dioxyde de carbone (CO2). |
| **Agents extincteurs inappropriés** | Non disponible. |
| **Dangers spécifiques du produit dangereux** | Des gaz dangereux pour la santé peuvent se former pendant un incendie. |
| **Équipements de protection spéciaux et précautions spéciales pour les pompiers** | Porter un appareil respiratoire autonome et un vêtement de protection complet en cas d'incendie. |
| **Équipement/directives de lutte contre les incendies** | Utiliser une pulvérisation d'eau pour refroidir les récipients fermés. |
| **Méthodes particulières d'intervention** | Utiliser des procédures standard en cas d'incendie et tenir compte des dangers des autres substances en cause. |
| **Risques d'incendie généraux** | Aucun risque inhabituel d'incendie ou d'explosion observé. |

## 6. Mesures à prendre en cas de déversement accidentel

| | |
|---|---|
| **Précautions individuelles, équipements de protection et mesures d'urgence** | Tenir à l'écart le personnel non requis. Ternir les gens à l'écart de l'endroit du déversement/de la fuite et en amont du vent. Porter un équipement et des vêtements de protection appropriés durant le nettoyage. S'assurer une ventilation adéquate. Prévenir les autorités locales si des fuites significatives ne peuvent pas être contenues. Pour la protection individuelle, voir la section 8 de la FDS. |
| **Méthodes et matériaux pour le confinement et le nettoyage** | Éviter la formation de poussières pendant le nettoyage. Récupérer la poussière en utilisant un aspirateur muni d'un filtre HEPA. Empêcher le produit de pénétrer dans les égouts.<br><br>Déversements importants : Arrêter l'écoulement de la substance, si cela peut se faire sans risque. Pelleter le matériau dans un conteneur à déchets. Après avoir récupéré le produit, rincer la zone à l'eau.<br><br>Déversements peu importants : Balayer ou aspirer le déversement et mettre dans un récipient approprié pour élimination. Pour l'élimination des déchets, voir la section 13 de la FDS. |
| **Précautions relatives à l'environnement** | Éviter le rejet dans l'environnement. Informer le personnel de direction et de supervision de tous les rejets dans l'environnement. Empêcher d'autres fuites ou déversements lorsqu'il est possible de le faire en toute sécurité. Éviter le rejet dans les égouts, les cours d'eau ou sur le sol. |

## 7. Manutention et stockage

| | |
|---|---|
| **Précautions relatives à la sûreté en matière de manutention** | Minimiser la formation et l'accumulation de poussière. Assurer une ventilation aspirante adéquate aux endroits où la poussière se forme. Porter un équipement de protection individuelle approprié. Éviter le rejet dans l'environnement. Observer de bonnes pratiques d'hygiène industrielle. |
| **Conditions de sûreté en matière de stockage, y compris les incompatibilités** | Stocker dans des récipients d'origine fermés de manière étanche. Stocker dans un endroit bien ventilé. Stocker à l'écart des matériaux incompatibles (Consulter la section 10 de la FDS). |

## 8. Contrôle de l'exposition/protection individuelle

**Limites d'exposition professionnelle**

**ÉTATS-UNIS. Valeurs limites d'exposition de l'ACGIH**

| Substance | Type | Valeur | Forme |
|---|---|---|---|
| HYDREX 3267 | TWA | 1 mg/m3 | Fraction respirable. |

**Canada. LEMT pour l'Alberta (Code de l'hygiène et de la sécurité au travail, Annexe 1, Tableau 2)**

| Substance | Type | Valeur |
|---|---|---|
| HYDREX 3267 | TWA | 2 mg/m3 |

**Canada. LEMT pour la Colombie-Britannique. (Valeurs limites d'exposition en milieu de travail pour les substances chimiques, Réglementation sur la santé et sécurité au travail 296/97, ainsi modifiée**

| Substance | Type | Valeur | Forme |
|---|---|---|---|
| HYDREX 3267 | TWA | 1 mg/m3 | Respirable. |

**Canada. LEMT pour l'Ontario. (Contrôle de l'exposition à des agents biologiques et chimiques)**

| Substance | Type | Valeur | Forme |
|---|---|---|---|
| HYDREX 3267 | TWA | 1 mg/m3 | Fraction respirable. |

**Canada. LEMT du Québec, (Ministère du Travail. Règlement sur la qualité du milieu de travail)**

| Substance | Type | Valeur |
|---|---|---|
| HYDREX 3267 | TWA | 2 mg/m3 |

**Valeurs biologiques limites** Aucune limite d'exposition biologique observée pour les ingrédients.

**Contrôles d'ingénierie appropriés** Si le matériau est moulu, coupé ou utilisé dans toute opération susceptible de créer des poussières, utiliser une ventilation locale par aspiration appropriée pour maintenir les expositions sous les limites d'exposition recommandées.

**Mesures de protection individuelle, telles que les équipements de protection individuelle**

**Protection du visage/des yeux** Porter des lunettes de sécurité à écrans latéraux (ou des lunettes à coques) et un écran facial. Il est recommandé de porter des lunettes de protection chimique et un écran facial. Avant toute manipulation, il est nécessaire de porter des lunettes à protection latérale conformes à la norme NF EN 166.

**Protection de la peau**

**Protection des mains** Gants résistants aux produits chimiques.

**Autre** Porter un vêtement de protection approprié. Gants résistants aux produits chimiques.

**Protection respiratoire** Porter un appareil respiratoire muni de filtres antipoussière.

**Dangers thermiques** Porter des vêtements de protection thermique appropriés, au besoin.

**Considérations d'hygiène générale** Toujours adopter de bonnes pratiques d'hygiène personnelle, comme se laver après avoir manipulé la substance et avant de manger, de boire ou de fumer. Laver régulièrement les vêtements de travail et l'équipement de protection pour éliminer les contaminants

## 9. Propriétés physiques et chimiques

**Apparence** Poudre.

**État physique** Solide.

**Forme** Poudre.

**Couleur** Jaune pâle

**Odeur** Léger

**Seuil olfactif** Non disponible.

**pH** 3 - 5 (0.3% solution)

**Point de fusion et point de congélation** -12 °C (10.4 °F) (33% solution)

**Point initial d'ébullition et domaine d'ébullition** Non disponible.

**Point d'éclair** Non disponible.

**Taux d'évaporation** Non disponible.

| | |
|---|---|
| **Inflammabilité (solides et gaz)** | Non disponible. |
| **Limites supérieures et inférieures d'inflammabilité ou d'explosibilité** | |
| **Limites d'inflammabilité - inférieure (%)** | Non disponible. |
| **Limites d'inflammabilité - supérieure (%)** | Non disponible. |
| **Limite d'explosibilité - inférieure (%)** | Non disponible. |
| **Limite d'explosibilité - supérieure (%)** | Non disponible. |
| **Tension de vapeur** | Non disponible. |
| **Densité de vapeur** | Non disponible. |
| **Densité relative** | Non disponible. |
| **Solubilité** | |
| **Solubilité (eau)** | Facilement soluble dans l'eau froide. |
| **Coefficient de partage n-octanol/eau** | Non disponible. |
| **Température d'auto-inflammation** | Non disponible. |
| **Température de décomposition** | Non disponible. |
| **Viscosité** | Non disponible. |
| **Autres informations** | |
| **Densité** | 800.00 - 900.00 kg/m3 |
| **Propriétés explosives** | Non explosif. |
| **Propriétés comburantes** | Non oxydant. |
| **Densité** | 0.8 - 0.9 |

## *10. Stabilité et réactivité*

| | |
|---|---|
| **Réactivité** | Le produit est stable et non réactif dans des conditions normales d'utilisation, d'entreposage et de transport. |
| **Stabilité chimique** | La substance est stable dans des conditions normales. |
| **Risque de réactions dangereuses** | Aucune réaction dangereuse connue dans des conditions normales d'utilisation. |
| **Conditions à éviter** | Contact avec des matériaux incompatibles. Aucun(e) dans des conditions normales. |
| **Matériaux incompatibles** | Ammoniac. Chlore Ne pas mélanger avec d'autres produits chimiques. Alcalis. |
| **Produits de décomposition dangereux** | Aluminium et Oxydes de soufre. |

## *11. Données toxicologiques*

**Renseignements sur les voies d'exposition probables**

| | |
|---|---|
| **Inhalation** | La poussière peut irriter l'appareil respiratoire. |
| **Contact avec la peau** | La poussière ou la poudre peut irriter la peau. |
| **Contact avec les yeux** | La poussière peut irriter les yeux. |
| **Ingestion** | Faible danger présumé en cas d'ingestion. |
| **Les symptômes correspondant aux caractéristiques physiques, chimiques et toxicologiques** | La poussière peut irriter les voies respiratoires, la peau et les yeux. |

**Renseignements sur les effets toxicologiques**

| | |
|---|---|
| **Toxicité aiguë** | Non disponible. |
| **Corrosion cutanée/irritation cutanée** | Un contact prolongé avec la peau peut causer une irritation temporaire. |

**Lésions oculaires graves/irritation oculaire** Le contact direct avec les yeux peut causer une irritation temporaire.

**Sensibilisation respiratoire ou cutanée**

**Sensibilisation respiratoire** Pas un sensibilisant respiratoire.

**Sensibilisation cutanée** On ne s'attend pas à ce que ce produit provoque une sensibilisation cutanée.

**Mutagénicité sur les cellules germinales** Il n'existe pas de données qui indiquent que ce produit, ou tout composant présent à des taux de plus de 0,1 %, soit mutagène ou génétoxique.

**Cancérogénicité** Non disponible.

**Toxicité pour la reproduction** On ne s'attend pas à ce que ce produit présente des effets sur la reproduction ou le développement.

**Toxicité pour certains organes cibles - exposition unique** Non classé.

**Toxicité pour certains organes cibles - expositions répétées** Non classé.

**Danger par aspiration** Pas un danger par aspiration.

## *12. Données écologiques*

**Écotoxicité** Nocif pour les organismes aquatiques.

| Produit | | Espèces | Résultats d'épreuves |
|---|---|---|---|
| HYDREX 3267 | | | |
| **Aquatique** | | | |
| Crustacés | CE50 | Daphnia | 91.5789 mg/l, 48 heures estimation |
| *Aiguë* | | | |
| Algues | CE50 | Algues | 14 mg/l, 72 heures OCDE TG 201 |

* Les estimations pour le produit peuvent être basées sur d'autres données de composants non montrées.

**Persistance et dégradation**

**Potentiel de bioaccumulation** Aucune donnée disponible.

**Mobilité dans le sol** Aucune donnée disponible.

**Autres effets nocifs** On ne s'attend pas à ce que ce composant ait des effets néfastes sur l'environnement (par ex., appauvrissement de la couche d'ozone, potentiel de formation photochimique d'ozone, perturbation endocrinienne, potentiel de réchauffement de la planète).

## *13. Données sur l'élimination*

**Instructions pour l'élimination** Recueillir et réutiliser ou éliminer dans des récipients scellés dans un site d'élimination des déchets autorisé. Ne pas laisser la substance
s'infiltrer dans les égoûts/les conduits d'alimentation en eau. Ne pas contaminer les étangs, les voies navigables ou les fossés avec le produit ou le récipient utilisés. Éliminer le contenu/récipient conformément à la réglementation locale/régionale/nationale/internationale.

**Règlements locaux d'élimination** Détruire conformément à
toutes les réglementations applicables.

**Code des déchets dangereux** Les codes de déchets doivent être attribués dans le cadre d'une consultation entre l'utilisateur, le fabricant et l'entreprise de décharge.

**Déchets des résidus / produits non utilisés** Éliminer conformément à la réglementation locale. Les récipients ou pochettes vides peuvent conserver certains résidus de produit. Éliminer ce produit et son récipient d'une manière sûre (voir : instructions d'élimination).

**Emballages contaminés** Comme les récipients vides peuvent contenir un résidu du produit, suivre les avertissements de l'étiquette, même une fois le récipient vide. Les contenants vides doivent être acheminés vers une installation certifiée de traitement des déchets en vue de leur élimination ou recyclage.

## *14. Informations relatives au transport*

**TMD**

N'entre pas dans la réglementation des marchandises dangereuses.

**IATA**

N'entre pas dans la réglementation des marchandises dangereuses.

**IMDG**

N'entre pas dans la réglementation des marchandises dangereuses.

**Transport en vrac selon l'Annexe II de MARPOL 73/78 et le recueil IBC** Sans objet.

## 15. Informations sur la réglementation

**Réglementation canadienne** Ce produit a été classé conformément aux critères de danger énoncés dans le Règlement sur les produits dangereux et la FDS contient tous les renseignements exigés par le Règlement sur les produits dangereux.

**Loi réglementant certaines drogues et autres substances**

Non réglementé.

**Liste des marchandises d'exportation contrôlée (LCPE 1999, Annexe 3)**

Non inscrit.

**Gaz à effet de serre**

Non inscrit.

**Règlements sur les précurseurs**

Non réglementé.

**Règlements internationaux** Renseignements supplémentaires fournis sur la fiche de données de sécurité.

**Convention de Stockholm**

Sans objet.

**Convention de Rotterdam**

Sans objet.

**Protocole de Kyoto**

Sans objet.

**Protocole de Montréal**

Sans objet.

**Convention de Bâle**

Sans objet.

**Inventaires Internationaux**

| Pays ou région | Nom de l'inventaire | En stock (Oui/Non)* |
|---|---|---|
| Australie | Inventaire australien des substances chimiques (AICS) | Non |
| Canada | Liste intérieure des substances (LIS) | Oui |
| Canada | Liste extérieure des substances (LES) | Non |
| Chine | Inventaire des substances chimiques existantes en Chine (IECSC) | Oui |
| Europe | Inventaire européen des substances chimiques commerciales existantes (EINECS) | Oui |
| Europe | Liste européenne des substances chimiques notifiées (ELINCS) | Non |
| Japon | Inventaire des substances chimiques existantes et nouvelles (ENCS) | Non |
| Corée | Liste des produits chimiques existants (ECL) | Oui |
| Nouvelle-Zélande | Inventaire de la Nouvelle-Zélande | Non |
| Philippines | Inventaire philippin des produits et substances chimiques (PICCS) | Non |
| États-Unis et Porto Rico | Inventaire du TSCA (Toxic Substances Controls Act - Loi réglementant les substances toxiques) | Oui |

*La réponse « Oui » indique que tous les composants du produit sont conformes aux exigences d'entreposage du pays ayant compétence Un « Non » indique qu'un ou plusieurs composant(s) du produit n'est/ne sont pas inscrit(s) ou exempt(s) d'une inscription sur l'inventaire administré par le(s) pays ayant compétence.

## 16. Autres informations

**Date de publication** 20-Avril-2017

**Version n°** 01

**Avis de non-responsabilité**

Veolia Water Solutions & Technologies ne peut prévoir toutes les conditions d'utilisation des présents renseignements et de son produit, ou des produits d'autres fabricants en association avec son produit. L'utilisateur est responsable d'assurer des conditions sécuritaires de manutention, d'entreposage et d'élimination du produit, et il assume toute responsabilité quant à des pertes, des blessures, des dommages ou des dépenses liés à une utilisation incorrecte ou au non-respect des exigences de Veolia Solutions & Technologies.

**Informations relatives à la révision**

Identification du produit et de l'entreprise : Identification du produit et de l'entreprise
Composition / renseignements sur les ingrédients : Sommaire des composants
Propriétés physiques et chimiques : Propriétés multiples
Données toxicologiques : Données toxicologiques
Données écologiques: Effets écotoxicologiques
Données réglementaires: États-Unis
GHS: Classification

# Coagulant
# Water Clarification - Polyaluminum Chloride

## Description and Use

Hydrex 3267 is a highly effective polyaluminum chloride based coagulant, supplied in solid form. This product provides a most concentrated form of active aluminum and is a cost-efficient approach where bulk delivery of liquid product is not an option.

## Advantages

Hydrex 3267 provides the performance well associated with polyaluminum chloride coagulant chemistry in a most concentrated form. Reduced transportation costs, the elimination of bulk storage footprint or the elimination of tote IBC management issues are benefits associated with this form of polyaluminum chloride.

## Application Information

Hydrex 3267 is rehydrated to a 33 percent (by weight) solution, prior to dosing to the system. Contact your Hydrex representative to provide verification of the active aluminum concentration of this solution.

Rehydration of Hydrex 3267 to a 33% solution should be performed with th highest quality water available. Dissolution is best acheived through use of warm water to a temperature limit of 70 degrees celsius. While complete dissolution is attainable at lower temperature, additional mixing time may be required. Take care to add the dry Hydrex 3267 in a controlled flow of the powder. Avoid "dumping" large mass of Hydrex 3267 that is disportionately greater to the mass of dilution water.

Hydrex 3267 is to be stored in a cool, dry location. Keep shipping containers unopened until required for use. For best results, Hydrex 3267 should be stored in conditons in which relative humidity does not exceed 30%. Storage temperature should not exceed 30 degrees celsius. Environmental control systems are recommended for optimal product performance.

No binding document, just for information purposes - Created : 11/13 - Modified : 11/13 - Revision : 1

Veolia Water Solutions & Technologies Headquarters
"L'aquarène" 1, Place Montgolfier - 94417 Saint-Maurice Cedex - France
Tél. +33 1 45 11 55 55
Website : www.veoliawaterst.com

# Coagulant
# Water Clarification - Polyaluminum Chloride

## Specifications

| | |
|---|---|
| Physical Form : | Solid (powder) |
| Bulk Density : | 800 to 900 kg/m3 |
| Specific Gravity (g/cm3) @ 25°C : | 1.1 to 1.3 (as 33% solution) |
| Product pH : | 3.0 to 5.0 (as 33% solution) |
| Color : | Pale Yellow |
| Freezing Point (°C/°F) : | Not Applicable |
| Solubility : | Complete (30 minutes in most cases) |

## Materials Compatibility

Solution tanks, piping and all wetted components should be constructed from a selection including teflon or cross-linked polyethylene. Hydrex 3267 is mildly corrosive. Avoid use of mild steel, copper, aluminum and stainless steel in contact with the solution.

Storage of the the dry Hydrex 3267 in stainless steel is acceptable.

## Packaging

Hydrex 3267 is available in 25 kags or 800 kilogram supersacs.

## Safety Information

Refer to the product Material Safety Data Sheet before use.

No binding document, just for information purposes - 11/13

VEOLIA WATER
Solutions & Technologies

Veolia Water Solutions & Technologies
Headquarters
"L'aquarène"- 1, Place Montgolfier - 94417
Saint-Maurice Cedex - France
Tél. +33 1 45 11 55 55
Website : www.veoliawaterst.com

# Polychlorure d’aluminium en poudre

## Applications

L’HYDREX 3267 est un polychlorure d’aluminium parmi les plus performant.

Ce coagulant de haute pureté, partiellement neutralisé et polymérisé, permet d’obtenir d’excellentes performances dans le traitement des eaux potables, usées et industrielles.

---

## Avantages

L’HYDREX 3267 amène une réduction du volume de boues, une diminution des produits correcteurs de pH, une meilleure qualité d’eau finie et des performances accrues en eaux froides.

L’HYDREX 3267 réagit particulièrement bien dans les procédés ou applications de filtration directe, de maturation des filtres, de décantation lestée, ou sur des eaux à très faibles ou très fortes turbidités.

L’utilisation du L’HYDREX 3267 en poudre permet de réduire les coûts de transport et de faciliter l’entreposage dans des conditions froides.

---

## Mise en œuvre

**DOSAGE**

L’HYDREX 3267 peut être remis en solution. Afin d’obtenir une concentration de 5,3% Al (solution originale), ajouter en rapport massique 1 partie de HYDREX 3267 à 2 parties d’eau. Ajouter graduellement la poudre à l’eau tout en mélangeant.

Document non contractuel, à caractère informatif - 11/09

Veolia Water Solutions & Technologies
Headquarters
"L'aquarène" 1, Place Montgolfier - 94417 Saint-Maurice Cedex - France
Tél. +33 1 45 11 55 55
Website : www.veoliawaterst.com

# Polychlorure d'aluminium en poudre

## Spécifications

**SPÉCIFICATIONS – CANADA**

| | |
|---|---|
| Apparence : | Poudre jaune pâle,hygroscopique |
| Aluminium (Al) : | >15,9% |
| $Al_2O_3$ (%) : | >30% |
| Basicité : | 51 ± 4% |
| Sulfates ($SO_4$) : | 9,0 ± 0,5% |
| Densité de vrac : | 0, 85 ± 0,05 |
| Humidité (%) : | 4,50 ± 2,0% |

**TYPIQUEMENT pour une solution de 33%**

| | |
|---|---|
| pH (0,3% massique) | 4,3 ± 0,7 |
| Basicité (%) | 50% |
| Densité relative | 1,23 kg/L |
| Point de congélation | $-12^0$ C / $10^0$ F |

## Compatibilité Matériels

Le Kemira STERNPAC DRY devrait être entreposé dans un endroit sec.

Protéger de l'humidité

## Conditionnement

Sur demande

## Sécurité

La manipulation de tous produits chimiques demande de la précaution.

Quiconque est responsable de l'utilisation et de la manipulation de L'HYDREX 3267 devrait se familiariser avec les consignes de sécurité détaillées dans notre fiche signalétique.

Document non contractuel, à caractère informatif - 11/09

VEOLIA WATER
Solutions & Technologies

Veolia Water Solutions & Technologies
Headquarters
"L'aquarène" 1, Place Montgolfier - 94417
Saint-Maurice Cedex - France
Tél. +33 1 45 11 55 55
Website : www.veoliawaterst.com

# SAFETY DATA SHEET

## 1. Identification

| | |
|---|---|
| **Product identifier** | **Hydrex 3613** |
| **Other means of identification** | None. |
| **Recommended use** | Potable Water Flocculant |
| **Recommended restrictions** | PROFESSIONAL USE ONLY |

**Manufacturer/Importer/Supplier/Distributor information**

| | |
|---|---|
| **Supplier** | Veolia Water Technologies Canada Inc. |
| **Address** | 2000 Argentia Road, Plaza IV, Suite 430<br>Mississauga, ON L5N 1W1<br>Canada |
| **Contact Person** | Hydrex Product Specialist |
| **Telephone** | (905) 286-4846 |
| **Fax** | (905) 286-0488 |
| **e-mail** | vwtcanada-hydrex@veolia.com |
| **24-Hour Emergency telephone** | +1-760-476-3962 (Code:333239) |
| **Supplier** | Not available. |

## 2. Hazard(s) identification

| | |
|---|---|
| **Physical hazards** | Not classified. |
| **Health hazards** | Not classified. |
| **Environmental hazards** | Not classified. |

**Label elements**

| | |
|---|---|
| **Hazard symbol** | None. |
| **Signal word** | None. |
| **Hazard statement** | The mixture does not meet the criteria for classification. |
| **Precautionary statement** | |
| **Prevention** | Observe good industrial hygiene practices. |
| **Response** | Wash hands after handling. |
| **Storage** | Store in cool place. Protect from sunlight. Store away from incompatible materials. |
| **Disposal** | Dispose of contents/container to an appropriate treatment and disposal facility in accordance with applicable laws and regulations, and product characteristics at time of disposal. |
| **Other hazards** | None known. |
| **Supplemental information** | None. |

## 3. Composition/information on ingredients

**Mixtures**

| Chemical name | Common name and synonyms | CAS number | % |
|---|---|---|---|
| ADIPIC ACID | | 124-04-9 | 1 - < 3 |
| Other components below reportable levels | | | 90 - 100 |

All concentrations are in percent by weight unless ingredient is a gas. Gas concentrations are in percent by volume.

## 4. First-aid measures

| | |
|---|---|
| **Inhalation** | Move to fresh air. Call a physician if symptoms develop or persist. |
| **Skin contact** | Wash off with soap and water. Get medical attention if irritation develops and persists. |
| **Eye contact** | Do not rub eyes. Rinse with water. Get medical attention if irritation develops and persists. |
| **Ingestion** | Rinse mouth. Get medical attention if symptoms occur. |

| | |
|---|---|
| **Most important symptoms/effects, acute and delayed** | Dusts may irritate the respiratory tract, skin and eyes. |
| **Indication of immediate medical attention and special treatment needed** | Treat symptomatically. |
| **General information** | Ensure that medical personnel are aware of the material(s) involved, and take precautions to protect themselves. |

## 5. Fire-fighting measures

| | |
|---|---|
| **Suitable extinguishing media** | Water fog. Foam. Dry chemical powder. Carbon dioxide (CO2). |
| **Unsuitable extinguishing media** | Not available. |
| **Specific hazards arising from the chemical** | Material can be slippery when wet. During fire, gases hazardous to health may be formed. |
| **Special protective equipment and precautions for firefighters** | Self-contained breathing apparatus and full protective clothing must be worn in case of fire. |
| **Fire fighting equipment/instructions** | Use water spray to cool unopened containers. |
| **Specific methods** | Use standard firefighting procedures and consider the hazards of other involved materials. |
| **General fire hazards** | No unusual fire or explosion hazards noted. |

## 6. Accidental release measures

| | |
|---|---|
| **Personal precautions, protective equipment and emergency procedures** | Keep unnecessary personnel away. Wear appropriate protective equipment and clothing during clean-up. For personal protection, see section 8 of the SDS. Slippery when wet. |
| **Methods and materials for containment and cleaning up** | Avoid the generation of dusts during clean-up. Collect dust using a vacuum cleaner equipped with HEPA filter. Stop the flow of material, if this is without risk.<br><br>Large Spills: Wet down with water and dike for later disposal. Shovel the material into waste container. Following product recovery, flush area with water.<br><br>Small Spills: Sweep up or vacuum up spillage and collect in suitable container for disposal. For waste disposal, see section 13 of the SDS. |
| **Environmental precautions** | Avoid discharge into drains, water courses or onto the ground. |

## 7. Handling and storage

| | |
|---|---|
| **Precautions for safe handling** | Minimize dust generation and accumulation. Provide appropriate exhaust ventilation at places where dust is formed. Material can be slippery when wet. Practice good housekeeping. |
| **Conditions for safe storage, including any incompatibilities** | Store in original tightly closed container. Store in a well-ventilated place. Store away from incompatible materials (see Section 10 of the SDS). |

## 8. Exposure controls/personal protection

| | |
|---|---|
| **Occupational exposure limits** | No exposure limits noted for ingredient(s). |
| **Biological limit values** | No biological exposure limits noted for the ingredient(s). |
| **Appropriate engineering controls** | If material is ground, cut, or used in any operation which may generate dusts, use appropriate local exhaust ventilation to keep exposures below the recommended exposure limits. |

**Individual protection measures, such as personal protective equipment**

| | |
|---|---|
| **Eye/face protection** | Wear safety glasses with side shields (or goggles) and a face shield. Chemical goggles and face shield are recommended. Before any handling, wear protective glasses side-shields complying with the NF EN 166. |
| **Skin protection** | |
| **Hand protection** | Chemical resistant gloves. |
| **Other** | Wear suitable protective clothing. Chemical resistant gloves. |
| **Respiratory protection** | Wear respirator with dust filter. |
| **Thermal hazards** | Wear appropriate thermal protective clothing, when necessary. |

| | |
|---|---|
| **General hygiene considerations** | Always observe good personal hygiene measures, such as washing after handling the material and before eating, drinking, and/or smoking. Routinely wash work clothing and protective equipment to remove contaminants. |

## 9. Physical and chemical properties

| | |
|---|---|
| **Appearance** | Granular or Powder. |
| **Physical state** | Solid. |
| **Form** | Powder. |
| **Color** | Off-white. |
| **Odor** | Not available. |
| **Odor threshold** | Not available. |
| **pH** | Not available. |
| **Melting point/freezing point** | Not available. |
| **Initial boiling point and boiling range** | Not available. |
| **Flash point** | Not available. |
| **Evaporation rate** | Not available. |
| **Flammability (solid, gas)** | Not available. |
| **Upper/lower flammability or explosive limits** | |
| **Flammability limit - lower (%)** | Not available. |
| **Flammability limit - upper (%)** | Not available. |
| **Explosive limit - lower (%)** | Not available. |
| **Explosive limit - upper (%)** | Not available. |
| **Vapor pressure** | Not available. |
| **Vapor density** | Not available. |
| **Relative density** | Not available. |
| **Solubility(ies)** | |
| **Solubility (water)** | Not available. |
| **Partition coefficient (n-octanol/water)** | Not available. |
| **Auto-ignition temperature** | Not available. |
| **Decomposition temperature** | Not available. |
| **Viscosity** | Not available. |
| **Other information** | |
| **Density** | 0.70 - 0.80 g/cm3 |
| **Explosive properties** | Not explosive. |
| **Oxidizing properties** | Not oxidizing. |
| **pH of 1% Solution** | 3 - 5 |

## 10. Stability and reactivity

| | |
|---|---|
| **Reactivity** | The product is stable and non-reactive under normal conditions of use, storage and transport. |
| **Chemical stability** | Material is stable under normal conditions. Material is stable under normal conditions. |
| **Possibility of hazardous reactions** | Hazardous polymerization does not occur. |
| **Conditions to avoid** | Contact with incompatible materials. None under normal conditions. |
| **Incompatible materials** | Oxygen. |
| **Hazardous decomposition products** | No dangerous reaction known under conditions of normal use. At thermal decomposition temperatures, carbon monoxide and carbon dioxide. Ammonia. Nitrogen oxides (NOx). Hydrogen chloride. |

## 11. Toxicological information

**Information on likely routes of exposure**

**Inhalation** Dust may irritate respiratory system.

**Skin contact** Dust or powder may irritate the skin.

**Eye contact** Dust may irritate the eyes.

**Ingestion** Expected to be a low ingestion hazard.

**Symptoms related to the physical, chemical and toxicological characteristics** Dusts may irritate the respiratory tract, skin and eyes.

**Information on toxicological effects**

**Acute toxicity** Not known.

| Product | Species | Test Results |
|---|---|---|
| Hydrex 3613 | | |
| **Acute** | | |
| **Oral** | | |
| LD50 | Rat | > 5000 mg/kg |

* Estimates for product may be based on additional component data not shown.

**Skin corrosion/irritation** Prolonged skin contact may cause temporary irritation.

**Serious eye damage/eye irritation** Direct contact with eyes may cause temporary irritation.

**Respiratory or skin sensitization**

**Respiratory sensitization** Not a respiratory sensitizer.

**Skin sensitization** This product is not expected to cause skin sensitization.

**Germ cell mutagenicity** No data available to indicate product or any components present at greater than 0.1% are mutagenic or genotoxic.

**Carcinogenicity** Not available.

**Reproductive toxicity** This product is not expected to cause reproductive or developmental effects.

**Specific target organ toxicity - single exposure** Not classified.

**Specific target organ toxicity - repeated exposure** Not classified.

**Aspiration hazard** Not an aspiration hazard.

**Further information** This product has no known adverse effect on human health.

## 12. Ecological information

**Ecotoxicity** The product is not classified as environmentally hazardous. However, this does not exclude the possibility that large or frequent spills can have a harmful or damaging effect on the environment.

| Product | | Species | Test Results |
|---|---|---|---|
| Hydrex 3613 | | | |
| **Aquatic** | | | |
| Crustacea | EC50 | Daphnia | > 10 mg/l, 48 hr |
| Fish | LC50 | Fish | 3880 mg/l, 96 hours estimated |

* Estimates for product may be based on additional component data not shown.

**Persistence and degradability**

**Bioaccumulative potential**

**Mobility in soil** No data available.

**Other adverse effects** No other adverse environmental effects (e.g. ozone depletion, photochemical ozone creation potential, endocrine disruption, global warming potential) are expected from this component.

## 13. Disposal considerations

| | |
|---|---|
| **Disposal instructions** | Collect and reclaim or dispose in sealed containers at licensed waste disposal site. |
| **Local disposal regulations** | Dispose in accordance with all applicable regulations. |
| **Hazardous waste code** | The waste code should be assigned in discussion between the user, the producer and the waste disposal company. |
| **Waste from residues / unused products** | Dispose of in accordance with local regulations. Empty containers or liners may retain some product residues. This material and its container must be disposed of in a safe manner (see: Disposal instructions). |
| **Contaminated packaging** | Since emptied containers may retain product residue, follow label warnings even after container is emptied. Empty containers should be taken to an approved waste handling site for recycling or disposal. |

## 14. Transport information

**TDG**

Not regulated as dangerous goods.

**IATA**

Not regulated as dangerous goods.

**IMDG**

Not regulated as dangerous goods.

| | |
|---|---|
| **Transport in bulk according to Annex II of MARPOL 73/78 and the IBC Code** | Not applicable. |

## 15. Regulatory information

**Canadian regulations** This product has been classified in accordance with the hazard criteria of the HPR and the SDS contains all the information required by the HPR.

**Controlled Drugs and Substances Act**

Not regulated.

**Export Control List (CEPA 1999, Schedule 3)**

Not listed.

**Greenhouse Gases**

Not listed.

**Precursor Control Regulations**

Not regulated.

**International regulations** Additional information is given in the Safety Data Sheet.

**Stockholm Convention**

Not applicable.

**Rotterdam Convention**

Not applicable.

**Kyoto protocol**

Not applicable.

**Montreal Protocol**

Not applicable.

**Basel Convention**

Not applicable.

**International Inventories**

| Country(s) or region | Inventory name | On inventory (yes/no)* |
|---|---|---|
| Australia | Australian Inventory of Chemical Substances (AICS) | Yes |
| Canada | Domestic Substances List (DSL) | Yes |
| Canada | Non-Domestic Substances List (NDSL) | No |
| China | Inventory of Existing Chemical Substances in China (IECSC) | Yes |
| Europe | European Inventory of Existing Commercial Chemical Substances (EINECS) | No |
| Europe | European List of Notified Chemical Substances (ELINCS) | No |

| Country(s) or region | Inventory name | On inventory (yes/no)* |
|---|---|---|
| Japan | Inventory of Existing and New Chemical Substances (ENCS) | Yes |
| Korea | Existing Chemicals List (ECL) | Yes |
| New Zealand | New Zealand Inventory | Yes |
| Philippines | Philippine Inventory of Chemicals and Chemical Substances (PICCS) | Yes |
| United States & Puerto Rico | Toxic Substances Control Act (TSCA) Inventory | Yes |

*A "Yes" indicates that all components of this product comply with the inventory requirements administered by the governing country(s)
A "No" indicates that one or more components of the product are not listed or exempt from listing on the inventory administered by the governing country(s).

## *16. Other information*

**Issue date** 04-20-2017

**Version #** 01

**Disclaimer** Veolia Water Technologies is not able to anticipate all conditions under which this information and its product, or the products of other manufacturers in combination with its product, may be used. It is the user's responsibility to ensure safe conditions for handling, storage and disposal of the product, and to assume liability for loss, injury, damage or expense due to improper use and or non respect of Veolia Water Technologies' requirement.

**Revision information** Product and Company Identification: Product Review
Hazards Identification: US Hazardous
Composition / Information on Ingredients: Ingredients
Toxicological Information: Toxicological Data
Regulatory Information: United States
GHS: Classification

# FICHE SIGNALÉTIQUE

## 1. Identification

**Identificateur de produit** **Hydrex 3613**

**Autres moyens d'identification** Aucune.

**Usage recommandé** Floculant pour eau potable

**Restrictions d'utilisation** USAGE PROFESSIONNEL

**Renseignements sur le fabricant/importateur/fournisseur/distributeur**

**Fournisseur** Veolia Water Technologies Canada Inc.

**Adresse** 2000 Argentia Road, Plaza IV, Suite 430
Mississauga, ON L5N 1W1
Canada

**Personne à contacter** Hydrex Product Specialist

**Téléphone** (905) 286-4846

**Télécopieur** (905) 286-0488

**courriel** vwtcanada-hydrex@veolia.com

**24 Hr Numéro de téléphone d'appel d'urgence** +1-760-476-3962 (Code:333239)

**Fournisseur** Non disponible.

## 2. Identification des dangers

**Dangers physiques** Non classé.

**Dangers pour la santé** Non classé.

**Dangers environnementaux** Non classé.

**Éléments d'étiquetage**

**Symbole de danger** Aucune.

**Mention d'avertissement** Aucune.

**Mention de danger** Le mélange ne satisfait pas les critères de classification.

**Conseil de prudence**

**Prévention** Observer de bonnes pratiques d'hygiène industrielle.

**Intervention** Se laver les mains après utilisation.

**Stockage** Stocker dans un endroit frais. Protéger du rayonnement solaire. Conserver à l'écart de matières incompatibles.

**Élimination** Éliminer le contenu/contenant dans une installation appropriée de traitement et d'élimination conformément aux lois et règlements applicables, ainsi qu'en fonction des caractéristiques du produit au moment de l'élimination.

**Autres dangers** Aucun(e) connu(e).

**Renseignements supplémentaires** Aucune.

## 3. Composition/information sur les ingrédients

**Mélanges**

| Dénomination chimique | Nom commun et synonymes | Numéro d'enregistrement CAS | % |
|---|---|---|---|
| ACIDE ADIPIQUE | | 124-04-9 | 1 - < 3 |
| Autres composant sous les niveaux à déclarer | | | 90 - 100 |

Toutes les concentrations sont en pourcentage en poids, sauf si l'ingrédient est un gaz. Les concentrations des gaz sont er pourcentage en volume.

## 4. Premiers soins

| | |
|---|---|
| **Inhalation** | Transporter à l'extérieur. Appeler un médecin si des symptômes se développent ou persistent |
| **Contact avec la peau** | Laver avec de l'eau et du savon. Consulter un médecin si une irritation se développe et persiste. |
| **Contact avec les yeux** | Ne pas se frotter les yeux. Rincer avec de l'eau. Consulter un médecin si une irritation se développe et persiste. |
| **Ingestion** | Rincer la bouche. Consulter un médecin si des symptômes apparaissent. |
| **Symptômes et effets les plus importants, qu'ils soient aigus ou retardés** | La poussière peut irriter les voies respiratoires, la peau et les yeux. |
| **Mention de la nécessité d'une prise en charge médicale immédiate ou d'un traitement spécial, si nécessaire** | Traiter de manière symptomatique. |
| **Informations générales** | S'assurer que le personnel médical est averti du (des) produits(s) en cause et qu'il prend des mesures pour se protéger. |

## 5. Mesures à prendre en cas d'incendie

| | |
|---|---|
| **Agents extincteurs appropriés** | Brouillard d'eau. Mousse. Poudre chimique. Dioxyde de carbone (CO2). |
| **Agents extincteurs inappropriés** | Non disponible. |
| **Dangers spécifiques du produit dangereux** | Le matériau peut être glissant lorsque mouillé. Des gaz dangereux pour la santé peuvent se former pendant un incendie. |
| **Équipements de protection spéciaux et précautions spéciales pour les pompiers** | Porter un appareil respiratoire autonome et un vêtement de protection complet en cas d'incendie. |
| **Équipement/directives de lutte contre les incendies** | Utiliser une pulvérisation d'eau pour refroidir les récipients fermés. |
| **Méthodes particulières d'intervention** | Utiliser des procédures standard en cas d'incendie et tenir compte des dangers des autres substances en cause. |
| **Risques d'incendie généraux** | Aucun risque inhabituel d'incendie ou d'explosion observé. |

## 6. Mesures à prendre en cas de déversement accidentel

| | |
|---|---|
| **Précautions individuelles, équipements de protection et mesures d'urgence** | Tenir à l'écart le personnel non requis. Porter un équipement et des vêtements de protectior appropriés durant le nettoyage. Pour la protection individuelle, voir la section 8 de la FDS. Glissant lorsque mouillé. |
| **Méthodes et matériaux pour le confinement et le nettoyage** | Éviter la formation de poussières pendant le nettoyage. Récupérer la poussière en utilisant un aspirateur muni d'un filtre HEPA. Arrêter l'écoulement de la substance, si cela peut se faire sans risque.<br><br>Déversements importants : Mouiller avec de l'eau et endiguer pour une élimination ultérieure. Pelleter le matériau dans un conteneur à déchets. Après avoir récupéré le produit, rincer la zone à l'eau.<br><br>Déversements peu importants : Balayer ou aspirer le déversement et mettre dans un récipient approprié pour élimination. Pour l'élimination des déchets, voir la section 13 de la FDS. |
| **Précautions relatives à l'environnement** | Éviter le rejet dans les égouts, les cours d'eau ou sur le sol. |

## 7. Manutention et stockage

| | |
|---|---|
| **Précautions relatives à la sûreté en matière de manutention** | Minimiser la formation et l'accumulation de poussière. Assurer une ventilation aspirante adéquate aux endroits où la poussière se forme. Le matériau peut être glissant lorsque mouillé. Assurer un bon entretien ménager. |
| **Conditions de sûreté en matière de stockage, y compris les incompatibilités** | Stocker dans des récipients d'origine fermés de manière étanche. Stocker dans un endroit bien ventilé. Stocker à l'écart des matériaux incompatibles (Consulter la section 10 de la FDS). |

## 8. Contrôle de l'exposition/protection individuelle

| | |
|---|---|
| **Limites d'exposition professionnelle** | Il n'y a pas de limites d'exposition pour ce ou ces ingrédients. |
| **Valeurs biologiques limites** | Aucune limite d'exposition biologique observée pour les ingrédients. |
| **Contrôles d'ingénierie appropriés** | Si le matériau est moulu, coupé ou utilisé dans toute opération susceptible de créer des poussières, utiliser une ventilation locale par aspiration appropriée pour maintenir les expositions sous les limites d'exposition recommandées. |

**Mesures de protection individuelle, telles que les équipements de protection individuelle**

| | |
|---|---|
| **Protection du visage/des yeux** | Porter des lunettes de sécurité à écrans latéraux (ou des lunettes à coques) et un écran facial. Il est recommandé de porter des lunettes de protection chimique et un écran facial. Avant toute manipulation, il est nécessaire de porter des lunettes à protection latérale conformes à la norme NF EN 166. |
| **Protection de la peau** | |
| **Protection des mains** | Gants résistants aux produits chimiques. |
| **Autre** | Porter un vêtement de protection approprié. Gants résistants aux produits chimiques. |
| **Protection respiratoire** | Porter un appareil respiratoire muni de filtres antipoussière. |
| **Dangers thermiques** | Porter des vêtements de protection thermique appropriés, au besoin. |
| **Considérations d'hygiène générale** | Toujours adopter de bonnes pratiques d'hygiène personnelle, comme se laver après avoir manipulé la substance et avant de manger, de boire ou de fumer. Laver régulièrement les vêtements de travail et l'équipement de protection pour éliminer les contaminants |

## 9. Propriétés physiques et chimiques

| | |
|---|---|
| **Apparence** | Granuleux. ou Poudre. |
| **État physique** | Solide. |
| **Forme** | Poudre. |
| **Couleur** | Blanc cassé. |
| **Odeur** | Non disponible. |
| **Seuil olfactif** | Non disponible. |
| **pH** | Non disponible. |
| **Point de fusion et point de congélation** | Non disponible. |
| **Point initial d'ébullition et domaine d'ébullition** | Non disponible. |
| **Point d'éclair** | Non disponible. |
| **Taux d'évaporation** | Non disponible. |
| **Inflammabilité (solides et gaz)** | Non disponible. |

**Limites supérieures et inférieures d'inflammabilité ou d'explosibilité**

| | |
|---|---|
| **Limites d'inflammabilité - inférieure (%)** | Non disponible. |
| **Limites d'inflammabilité - supérieure (%)** | Non disponible. |
| **Limite d'explosibilité - inférieure (%)** | Non disponible. |
| **Limite d'explosibilité - supérieure (%)** | Non disponible. |
| **Tension de vapeur** | Non disponible. |
| **Densité de vapeur** | Non disponible. |
| **Densité relative** | Non disponible. |

**Solubilité**

| | |
|---|---|
| **Solubilité (eau)** | Non disponible. |

| | |
|---|---|
| **Coefficient de partage n-octanol/eau** | Non disponible. |
| **Température d'auto-inflammation** | Non disponible. |
| **Température de décomposition** | Non disponible. |
| **Viscosité** | Non disponible. |
| **Autres informations** | |
| **Densité** | 0.70 - 0.80 g/cm3 |
| **Propriétés explosives** | Non explosif. |
| **Propriétés comburantes** | Non oxydant. |
| **pH (solution à 1%)** | 3 - 5 |

## *10. Stabilité et réactivité*

| | |
|---|---|
| **Réactivité** | Le produit est stable et non réactif dans des conditions normales d'utilisation, d'entreposage et de transport. |
| **Stabilité chimique** | La substance est stable dans des conditions normales. La substance est stable dans des conditions normales. |
| **Risque de réactions dangereuses** | Une polymérisation dangereuse ne se produit pas. |
| **Conditions à éviter** | Contact avec des matériaux incompatibles. Aucun(e) dans des conditions normales. |
| **Matériaux incompatibles** | Oxygène. |
| **Produits de décomposition dangereux** | Aucune réaction dangereuse connue dans des conditions normales d'utilisation. Aux températures de décomposition thermique, du monoxyde et du dioxyde de carbone. Ammoniac. Oxydes d'azote (NOx). Chlorure d'hydrogène. |

## *11. Données toxicologiques*

**Renseignements sur les voies d'exposition probables**

| | |
|---|---|
| **Inhalation** | La poussière peut irriter l'appareil respiratoire. |
| **Contact avec la peau** | La poussière ou la poudre peut irriter la peau. |
| **Contact avec les yeux** | La poussière peut irriter les yeux. |
| **Ingestion** | Faible danger présumé en cas d'ingestion. |
| **Les symptômes correspondant aux caractéristiques physiques, chimiques et toxicologiques** | La poussière peut irriter les voies respiratoires, la peau et les yeux. |

**Renseignements sur les effets toxicologiques**

| | |
|---|---|
| **Toxicité aiguë** | Inconnu(e). |

| **Produit** | **Espèces** | **Résultats d'épreuves** |
|---|---|---|
| Hydrex 3613 | | |
| **Aiguë** | | |
| **Orale** | | |
| DL50 | Rat | > 5000 mg/kg |

* Les estimations pour le produit peuvent être basées sur d'autres données de composants non montrées.

| | |
|---|---|
| **Corrosion cutanée/irritation cutanée** | Un contact prolongé avec la peau peut causer une irritation temporaire. |
| **Lésions oculaires graves/irritation oculaire** | Le contact direct avec les yeux peut causer une irritation temporaire. |

**Sensibilisation respiratoire ou cutanée**

| | |
|---|---|
| **Sensibilisation respiratoire** | Pas un sensibilisant respiratoire. |
| **Sensibilisation cutanée** | On ne s'attend pas à ce que ce produit provoque une sensibilisation cutanée. |
| **Mutagénicité sur les cellules germinales** | Il n'existe pas de données qui indiquent que ce produit, ou tout composant présent à des taux de plus de 0,1 %, soit mutagène ou génétoxique. |

| | |
|---|---|
| **Cancérogénicité** | Non disponible. |
| **Toxicité pour la reproduction** | On ne s'attend pas à ce que ce produit présente des effets sur la reproduction ou le développement. |
| **Toxicité pour certains organes cibles - exposition unique** | Non classé. |
| **Toxicité pour certains organes cibles - expositions répétées** | Non classé. |
| **Danger par aspiration** | Pas un danger par aspiration. |
| **Autres informations** | Ce produit n'est associé à aucun effet néfaste connu pour la santé humaine. |

## *12. Données écologiques*

**Écotoxicité** Le produit n'est pas classé comme dangereux pour l'environnement. Toutefois, ceci n'exclut pas la possibilité que des déversements importants ou fréquents puissent avoir un effet nocif ou nuisible sur l'environnement.

| Produit | | Espèces | Résultats d'épreuves |
|---|---|---|---|
| Hydrex 3613 | | | |
| **Aquatique** | | | |
| Crustacés | CE50 | Daphnia | > 10 mg/l, 48 hr |
| Poisson | CL50 | Poisson | 3880 mg/l, 96 heures estimation |

* Les estimations pour le produit peuvent être basées sur d'autres données de composants non montrées.

**Persistance et dégradation**

**Potentiel de bioaccumulation**

| | |
|---|---|
| **Mobilité dans le sol** | Aucune donnée disponible. |
| **Autres effets nocifs** | On ne s'attend pas à ce que ce composant ait des effets néfastes sur l'environnement (par ex., appauvrissement de la couche d'ozone, potentiel de formation photochimique d'ozone, perturbation endocrinienne, potentiel de réchauffement de la planète). |

## *13. Données sur l'élimination*

| | |
|---|---|
| **Instructions pour l'élimination** | Recueillir et réutiliser ou éliminer dans des récipients scellés dans un site d'élimination des déchets autorisé. |
| **Règlements locaux d'élimination** | Détruire conformément à toutes les réglementations applicables. |
| **Code des déchets dangereux** | Les codes de déchets doivent être attribués dans le cadre d'une consultation entre l'utilisateur, le fabricant et l'entreprise de décharge. |
| **Déchets des résidus / produits non utilisés** | Éliminer conformément à la réglementation locale. Les récipients ou pochettes vides peuvent conserver certains résidus de produit. Éliminer ce produit et son récipient d'une manière sûre (voir : instructions d'élimination). |
| **Emballages contaminés** | Comme les récipients vides peuvent contenir un résidu du produit, suivre les avertissements de l'étiquette, même une fois le récipient vide. Les contenants vides doivent être acheminés vers une installation certifiée de traitement des déchets en vue de leur élimination ou recyclage. |

## *14. Informations relatives au transport*

**TMD**

N'entre pas dans la réglementation des marchandises dangereuses.

**IATA**

N'entre pas dans la réglementation des marchandises dangereuses.

**IMDG**

N'entre pas dans la réglementation des marchandises dangereuses.

| | |
|---|---|
| **Transport en vrac selon l'Annexe II de MARPOL 73/78 et le recueil IBC** | Sans objet. |

## 15. Informations sur la réglementation

**Réglementation canadienne** Ce produit a été classé conformément aux critères de danger énoncés dans le Règlement sur les produits dangereux et la FDS contient tous les renseignements exigés par le Règlement sur les produits dangereux.

**Loi réglementant certaines drogues et autres substances**

Non réglementé.

**Liste des marchandises d'exportation contrôlée (LCPE 1999, Annexe 3)**

Non inscrit.

**Gaz à effet de serre**

Non inscrit.

**Règlements sur les précurseurs**

Non réglementé.

**Règlements internationaux** Renseignements supplémentaires fournis sur la fiche de données de sécurité.

**Convention de Stockholm**

Sans objet.

**Convention de Rotterdam**

Sans objet.

**Protocole de Kyoto**

Sans objet.

**Protocole de Montréal**

Sans objet.

**Convention de Bâle**

Sans objet.

**Inventaires Internationaux**

| Pays ou région | Nom de l'inventaire | En stock (Oui/Non)* |
|---|---|---|
| Australie | Inventaire australien des substances chimiques (AICS) | Oui |
| Canada | Liste intérieure des substances (LIS) | Oui |
| Canada | Liste extérieure des substances (LES) | Non |
| Chine | Inventaire des substances chimiques existantes en Chine (IECSC) | Oui |
| Europe | Inventaire européen des substances chimiques commerciales existantes (EINECS) | Non |
| Europe | Liste européenne des substances chimiques notifiées (ELINCS) | Non |
| Japon | Inventaire des substances chimiques existantes et nouvelles (ENCS) | Oui |
| Corée | Liste des produits chimiques existants (ECL) | Oui |
| Nouvelle-Zélande | Inventaire de la Nouvelle-Zélande | Oui |
| Philippines | Inventaire philippin des produits et substances chimiques (PICCS) | Oui |
| États-Unis et Porto Rico | Inventaire du TSCA (Toxic Substances Controls Act - Loi réglementant les substances toxiques) | Oui |

*La réponse « Oui » indique que tous les composants du produit sont conformes aux exigences d'entreposage du pays ayant compétence Un « Non » indique qu'un ou plusieurs composant(s) du produit n'est/ne sont pas inscrit(s) ou exempt(s) d'une inscription sur l'inventaire administré par le(s) pays ayant compétence.

## 16. Autres informations

**Date de publication** 20-Avril-2017

**Version n°** 01

**Avis de non-responsabilité** Veolia Water Solutions & Technologies ne peut prévoir toutes les conditions d'utilisation des présents renseignements et de son produit, ou des produits d'autres fabricants en association avec son produit. L'utilisateur est responsable d'assurer des conditions sécuritaires de manutention, d'entreposage et d'élimination du produit, et il assume toute responsabilité quant à des pertes, des blessures, des dommages ou des dépenses liés à une utilisation incorrecte ou au non-respect des exigences de Veolia Solutions & Technologies.

| | |
|---|---|
| **Informations relatives à la révision** | Identification du produit et de l'entreprise : Identification du produit et de l'entreprise<br>Identification des dangers : Danger aux États-Unis<br>Composition / renseignements sur les ingrédients : Ingrédients<br>Données toxicologiques : Données toxicologiques<br>Données réglementaires: États-Unis<br>GHS: Classification |

# Solids conditioning for dewatering operations and water clarification aid in various industries

## Description and Use

HYDREX 3613 is a highly effective cationic flocculant of high molecular weight.

HYDREX 3613 conditions solids for dewatering operations and aids water clarification processes in various industries.

HYDREX 3613 shows exceptional performance in liquid-solid separations in a wide range of shear conditions.

HYDREX 3613 may be beneficial in any liquid-solid separation process. It is especially recommended for:

- Belt filter, centrifuge and screw press dewatering
- Dissolved air floatation
- Filtration
- Thickening
- Water clarification

## Advantages

- Dry product minimizes storage requirements
- Economical to use – effective at low dosage levels
- Effective high solids removal
- Effective over a wide pH range; does not alter the system pH
- Improves production and cake solids

## Application Information

Stock solutions can be prepared up to 0.5 % concentration via an automated make down unit or on a batch basis. Solutions should be aged 30-60 minutes for maximum effectiveness. High quality make up water should be used. Secondary dilution water should be added to the stock solution prior to the addition point at a ratio of at least 10:1.

Centrifugal pumps should be avoided for polymer transfer.

No binding document, just for information purposes - 02/09

More information on the back

Veolia Water Solutions & Technologies
Headquarters
"L'aquarène" 1, Place Montgolfier - 94417 Saint-Maurice Cedex - France
Tél. +33 1 45 11 55 55
Website : www.veoliawaterst.com

VEOLIA WATER
Solutions & Technologies

# Solids conditioning for dewatering operations and water clarification aid in various industries

## Specifications

| | |
|---|---|
| Appearance: | Off White, granular powder |
| Degree of Charge : | Low |
| Relative Molecular Weight: | High |
| Bulk Density, kg/m$^3$: | 750 +/- 50 |
| pH of 0.5 % solution, at 25°C: | 3.0 - 5.0 |
| Standard Viscosity, cps : | 3.0 - 3.8 |
| Viscosity at 25°C, Cps: | |
| 0.10 %: | 80 |
| 0.25 %: | 200 |
| 0.50 %: | 400 |
| 1.00 %: | 800 |

| | |
|---|---|
| Product Sales Specification: | |
| Insolubles, % w/w : | 0.5 max |
| Residual Acrylamide, %: | 0.020 max |

The shelf life of HYDREX 3613 is 24 months when stored in unopened packages in a dry atmosphere at temperatures no higher than 40°C.

## Materials Compatibility

Solutions are no more corrosive than water and recommended materials of construction include stainless steel, fiber glass, plastic, and glass or epoxy-lined vessels. Do not use iron, copper or aluminium.

## Packaging

Supplied in bags. Other packaging : please consult us.

## Safety Information

Spilled polymer is very slippery and should be collected prior to flushing with water. Whoever is responsible for the use and the manipulation of HYDREX 3613 should be familiar with the safety detailed in our MSDS.

Regulatory Approvals : see MSDS

No binding document, just for information purposes - 02/09

VEOLIA WATER
Solutions & Technologies

Veolia Water Solutions & Technologies
Headquarters
"L'aquarène" 1, Place Montgolfier - 94417
Saint-Maurice Cedex - France
Tél. +33 1 45 11 55 55
Website : www.veoliawaterst.com

# Conditionnement de solides pour la déshydratation et les opérations de clarification de l'eau

## Applications

HYDREX 3613 est un floculant cationique très efficace, de haut poids moléculaire.

HYDREX 3613 montre des performances exceptionnelles en séparation solide/liquide sur un large éventail de conditions.

HYDREX 3613 est bénéfique à tout processus de séparation solide liquide-. Il est particulièrement recommandé pour:

• Les deshydratation surfiltres à bande, centrifugeuses et filtres presses
• Les opérations de flottation à air dissous
• La filtration
• L'épaississement
• La clarification de l'eau.

---

## Avantages

• Produit sec : minimise les besoins en stockage
• Économique à l'utilisation : efficace à faible doses
• Efficace, même sur effluents fortement chargés en solides
• Efficace sur une large gamme de pH : ne modifie pas le pH
• Améliore la production et la qualité des gâteaux de filtration.

---

## Mise en oeuvre

HYDREX 3613 ne peut être utilisé tel quel. Il faut au préalable préparer une solution stock.
Utiliser pour ce faire une installation de dispersion et de maturation de la poudre prévue à cet effet.

Concentration maxi de la solution stock (g/l) : 5
Utiliser pour ce faire une eau de bonne qualité
Temps de maturation nécessaire : de 30-60 minutes

Une dilution secondaire est préférable avant le point d'injection à un ratio d'au moins 10:1.
Les Pompes centrifuges sont à proscrire pour le transfert des polymères

Document non contractuel, à caractère informatif - 11/09

Veolia Water Solutions & Technologies
Headquarters
"L'aquarène" 1, Place Montgolfier - 94417 Saint-Maurice Cedex - France
Tél. +33 1 45 11 55 55
Website : www.veoliawaterst.com

VEOLIA WATER
Solutions & Technologies

# HYDREX 3613
Fiche Produit

## Conditionnement de solides pour la déshydratation et les opérations de clarification de l'eau

## Spécifications

| | |
|---|---|
| Aspect : | Blanc cassé, sous forme de poudre granuleuse |
| Degré de Charge: | Basse |
| Masse moléculaire relative: | Haute |
| Densité: | 750+ / - 50 |
| pH de solution à 0,5%, à 25°C: | 3.0 - 5.0 |
| Viscosité standard, Cps: | 3.0-3.8 |
| Viscosité à 25°C, Cps: | |
| @0,10%: | 80 |
| @0,25%: | 200 |
| @0,50%: | 400 |
| @1.00 %: | 800 |

Spécifications de ventes du produit :

| | |
|---|---|
| Insolubles,% w / w: | 0.5 max |
| Acrylamide résiduel,%: | 0,020 max. |

HYDREX 3613 se conserve jusqu'à 24 mois dans son emballage d'origine non entamé, au sec et à une température ne dépassant pas 40°C.

## Compatibilité Matériels

Les solutions ne sont plus corrosives que l'eau. Les matériaux recommandés sont : l'acier inoxydable, la fibre de verre, le plastique et de verre ou matériaux enduits époxy ou fibre de verre.
Ne pas utiliser de fer, cuivre ou aluminium.

## Conditionnement

Livraison par sacs. Pour toute autre demande d'emballage : veuillez nous consulter.

## Sécurité

Le déversement de polymère rend les surfaces très glissantes.
La manipulation de tous produits chimiques demande de la précaution. Quiconque est responsable de l'utilisation et de la manipulation de l'hydrex 3613 devrait se familiariser avec les consignes de sécurité détaillées dans notre MSDS.

Agréments: voir la msds

Document non contractuel, à caractère informatif - 11/09

VEOLIA WATER
Solutions & Technologies

Veolia Water Solutions & Technologies
Headquarters
"L'aquarène" 1, Place Montgolfier - 94417
Saint-Maurice Cedex - France
Tél. +33 1 45 11 55 55
Website : www.veoliawaterst.com

# SAFETY DATA SHEET

## 1. Identification

**Product identifier** **VEOLIA ACTISAND**

**Other means of identification** None.

**Recommended use** Wastewater Treatment

**Recommended restrictions** Workers (and your customers or users in the case of resale) should be informed of the potential presence of respirable dust and respirable crystalline silica as well as their potential hazards. Appropriate training in the proper use and handling of this material should be provided as required under applicable regulations. PROFESSIONAL USE ONLY

**Manufacturer/Importer/Supplier/Distributor information**

**Manufacturer**

**Supplier** Veolia Water Technologies Canada Inc.

**Address** 2000 Argentia Road, Plaza IV, Suite 430
Mississauga, ON L5N 1W1
Canada

**Contact Person** Hydrex Product Specialist

**Telephone** (905) 286-4846

**Fax** (905) 286-0488

**e-mail** vwtcanada-hydrex@veolia.com

**24-Hour Emergency telephone** +1-760-476-3962 (Code:333239)

**Supplier** Not available.

## 2. Hazard(s) identification

**Physical hazards** Not classified.

**Health hazards** Carcinogenicity Category 1A

**Environmental hazards** Not classified.

**Label elements**



**Signal word** Danger

**Hazard statement** May cause cancer.

**Precautionary statement**

**Prevention** Obtain special instructions before use. Do not handle until all safety precautions have been read and understood. Wear protective gloves/protective clothing/eye protection/face protection.

**Response** IF exposed or concerned: Get medical advice/attention.

**Storage** Not available.

**Disposal** Dispose of contents/container in accordance with local/regional/national/international regulations.

**Other hazards** None known.

**Supplemental information** None.

## 3. Composition/information on ingredients

**Mixtures**

| Chemical name | Common name and synonyms | CAS number | % |
|---|---|---|---|
| Crystalline sillica | | 14808-60-7 | 100 |

All concentrations are in percent by weight unless ingredient is a gas. Gas concentrations are in percent by volume.

## 4. First-aid measures

| | |
|---|---|
| **Inhalation** | Move to fresh air. Call a physician if symptoms develop or persist. |
| **Skin contact** | Wash off with soap and water. Get medical attention if irritation develops and persists. |
| **Eye contact** | Rinse with water. Get medical attention if irritation develops and persists. |
| **Ingestion** | Rinse mouth. Get medical attention if symptoms occur. |
| **Most important symptoms/effects, acute and delayed** | Coughing. |
| **Indication of immediate medical attention and special treatment needed** | Provide general supportive measures and treat symptomatically. Keep victim under observation. Symptoms may be delayed. |
| **General information** | IF exposed or concerned: Get medical advice/attention. Ensure that medical personnel are aware of the material(s) involved, and take precautions to protect themselves. |

## 5. Fire-fighting measures

| | |
|---|---|
| **Suitable extinguishing media** | Water fog. Foam. Dry chemical powder. Carbon dioxide (CO2). |
| **Unsuitable extinguishing media** | Not available. |
| **Specific hazards arising from the chemical** | During fire, gases hazardous to health may be formed. |
| **Special protective equipment and precautions for firefighters** | Self-contained breathing apparatus and full protective clothing must be worn in case of fire. |
| **Fire fighting equipment/instructions** | Use water spray to cool unopened containers. |
| **Specific methods** | Use standard firefighting procedures and consider the hazards of other involved materials. |
| **General fire hazards** | No unusual fire or explosion hazards noted. |

## 6. Accidental release measures

| | |
|---|---|
| **Personal precautions, protective equipment and emergency procedures** | Keep unnecessary personnel away. Keep people away from and upwind of spill/leak. Wear appropriate protective equipment and clothing during clean-up. Ensure adequate ventilation. Local authorities should be advised if significant spillages cannot be contained. For personal protection, see section 8 of the SDS. |
| **Methods and materials for containment and cleaning up** | The product is immiscible with water and will spread on the water surface. Stop the flow of material, if this is without risk. Following product recovery, flush area with water. For waste disposal, see section 13 of the SDS. |
| **Environmental precautions** | Avoid discharge into drains, water courses or onto the ground. |

## 7. Handling and storage

| | |
|---|---|
| **Precautions for safe handling** | Obtain special instructions before use. Do not handle until all safety precautions have been read and understood. Keep formation of airborne dusts to a minimum. Provide appropriate exhaust ventilation at places where dust is formed. Do not breathe dust. Avoid prolonged exposure. Should be handled in closed systems, if possible. Wear appropriate personal protective equipment. Observe good industrial hygiene practices. |
| **Conditions for safe storage, including any incompatibilities** | Protect from sunlight. Store in original tightly closed container. Store away from incompatible materials (see Section 10 of the SDS). Store in cool, dry place. |

## 8. Exposure controls/personal protection

**Occupational exposure limits**

**US. ACGIH Threshold Limit Values**

| Material | Type | Value | Form |
|---|---|---|---|
| VEOLIA ACTISAND | TWA | 0.025 mg/m3 | Respirable fraction. |

| Components | Type | Value | Form |
|---|---|---|---|
| Crystalline sillica (CAS 14808-60-7) | TWA | 0.025 mg/m3 | Respirable fraction. |

**Canada. Alberta OELs (Occupational Health & Safety Code, Schedule 1, Table 2)**

| Material | Type | Value | Form |
|---|---|---|---|
| VEOLIA ACTISAND | TWA | 0.025 mg/m3 | Respirable particles. |

| Components | Type | Value | Form |
|---|---|---|---|
| Crystalline sillica (CAS 14808-60-7) | TWA | 0.025 mg/m3 | Respirable particles. |

**Canada. British Columbia OELs. (Occupational Exposure Limits for Chemical Substances, Occupational Health and Safety Regulation 296/97, as amended)**

| Material | Type | Value | Form |
|---|---|---|---|
| VEOLIA ACTISAND | TWA | 0.025 mg/m3 | Respirable fraction. |

| Components | Type | Value | Form |
|---|---|---|---|
| Crystalline sillica (CAS 14808-60-7) | TWA | 0.025 mg/m3 | Respirable fraction. |

**Canada. Manitoba OELs (Reg. 217/2006, The Workplace Safety And Health Act)**

| Components | Type | Value | Form |
|---|---|---|---|
| Crystalline sillica (CAS 14808-60-7) | TWA | 0.025 mg/m3 | Respirable fraction. |

**Canada. Ontario OELs. (Control of Exposure to Biological or Chemical Agents)**

| Material | Type | Value | Form |
|---|---|---|---|
| VEOLIA ACTISAND | TWA | 0.1 mg/m3 | Respirable. |

| Components | Type | Value | Form |
|---|---|---|---|
| Crystalline sillica (CAS 14808-60-7) | TWA | 0.1 mg/m3 | Respirable. |

**Canada. Quebec OELs. (Ministry of Labor - Regulation Respecting the Quality of the Work Environment)**

| Material | Type | Value | Form |
|---|---|---|---|
| VEOLIA ACTISAND | TWA | 0.1 mg/m3 | Respirable dust. |

| Components | Type | Value | Form |
|---|---|---|---|
| Crystalline sillica (CAS 14808-60-7) | TWA | 0.1 mg/m3 | Respirable dust. |

**Biological limit values** No biological exposure limits noted for the ingredient(s).

**Exposure guidelines** Occupational exposure to nuisance dust (total and respirable) and respirable crystalline silica should be monitored and controlled.

**Appropriate engineering controls** Good general ventilation (typically 10 air changes per hour) should be used. Ventilation rates should be matched to conditions. If applicable, use process enclosures, local exhaust ventilation, or other engineering controls to maintain airborne levels below recommended exposure limits. If exposure limits have not been established, maintain airborne levels to an acceptable level.

**Individual protection measures, such as personal protective equipment**

**Eye/face protection** Wear safety glasses with side shields (or goggles).

**Skin protection**

**Hand protection** Chemical resistant gloves. Suitable gloves can be recommended by the glove supplier.

**Other** Use of an impervious apron is recommended. Chemical resistant gloves.

**Respiratory protection** Use a particulate filter respirator for particulate concentrations exceeding the Occupational Exposure Limit.

**Thermal hazards** Not available.

**General hygiene considerations** Observe any medical surveillance requirements. Always observe good personal hygiene measures, such as washing after handling the material and before eating, drinking, and/or smoking. Routinely wash work clothing and protective equipment to remove contaminants.

## *9. Physical and chemical properties*

**Appearance**

**Physical state** Solid.

**Form** Solid.

**Color** Not available.

| | |
|---|---|
| **Odor** | Not available. |
| **Odor threshold** | Not available. |
| **pH** | Not available. |
| **Melting point/freezing point** | Not available. |
| **Initial boiling point and boiling range** | Not available. |
| **Flash point** | Not available. |
| **Evaporation rate** | Not available. |
| **Flammability (solid, gas)** | Not available. |
| **Upper/lower flammability or explosive limits** | |
| **Flammability limit - lower (%)** | Not available. |
| **Flammability limit - upper (%)** | Not available. |
| **Explosive limit - lower (%)** | Not available. |
| **Explosive limit - upper (%)** | Not available. |
| **Vapor pressure** | < 0.0000001 kPa at 25 °C |
| **Vapor density** | Not available. |
| **Relative density** | Not available. |
| **Solubility(ies)** | |
| **Solubility (water)** | Insoluble |
| **Partition coefficient (n-octanol/water)** | Not available. |
| **Auto-ignition temperature** | Not available. |
| **Decomposition temperature** | Not available. |
| **Viscosity** | Not available. |
| **Other information** | |
| **Explosive properties** | Not explosive. |
| **Heat of combustion (NFPA 30B)** | 0 kJ/g |
| **Molecular formula** | O2Si |
| **Oxidizing properties** | Not oxidizing. |

## *10. Stability and reactivity*

| | |
|---|---|
| **Reactivity** | The product is stable and non-reactive under normal conditions of use, storage and transport. |
| **Chemical stability** | Material is stable under normal conditions. |
| **Possibility of hazardous reactions** | No dangerous reaction known under conditions of normal use. |
| **Conditions to avoid** | Contact with incompatible materials. |
| **Incompatible materials** | Powerful oxidizers. Chlorine. |
| **Hazardous decomposition products** | No hazardous decomposition products are known. |

## *11. Toxicological information*

**Information on likely routes of exposure**

| | |
|---|---|
| **Inhalation** | Prolonged inhalation may be harmful. |
| **Skin contact** | No adverse effects due to skin contact are expected. |
| **Eye contact** | Direct contact with eyes may cause temporary irritation. |
| **Ingestion** | Expected to be a low ingestion hazard. |

**Symptoms related to the physical, chemical and toxicological characteristics** Coughing.

**Information on toxicological effects**

**Acute toxicity** Not available.

**Skin corrosion/irritation** Prolonged skin contact may cause temporary irritation.

**Serious eye damage/eye irritation** Direct contact with eyes may cause temporary irritation.

**Respiratory or skin sensitization**

**Respiratory sensitization** Not a respiratory sensitizer.

**Skin sensitization** This product is not expected to cause skin sensitization.

**Germ cell mutagenicity** No data available to indicate product or any components present at greater than 0.1% are mutagenic or genotoxic.

**Carcinogenicity** In 1997, IARC (the International Agency for Research on Cancer) concluded that crystalline silica inhaled from occupational sources can cause lung cancer in humans. However in making the overall evaluation, IARC noted that "carcinogenicity was not detected in all industrial circumstances studied. Carcinogenicity may be dependent on inherent characteristics of the crystalline silica or on external factors affecting its biological activity or distribution of its polymorphs." (IARC Monographs on the evaluation of the carcinogenic risks of chemicals to humans, Silica, silicates dust and organic fibres, 1997, Vol. 68, IARC, Lyon, France.) In June 2003, SCOEL (the EU Scientific Committee on Occupational Exposure Limits) concluded that the main effect in humans of the inhalation of respirable crystalline silica dust is silicosis. "There is sufficient information to conclude that the relative risk of lung cancer is increased in persons with silicosis (and, apparently, not in employees without silicosis exposed to silica dust in quarries and in the ceramic industry). Therefore, preventing the onset of silicosis will also reduce the cancer risk..." (SCOEL SUM Doc 94-final, June 2003) According to the current state of the art, worker protection against silicosis can be consistently assured by respecting the existing regulatory occupational exposure limits. May cause cancer. Occupational exposure to respirable dust and respirable crystalline silica should be monitored and controlled.

**ACGIH Carcinogens**

| | |
|---|---|
| Crystalline sillica (CAS 14808-60-7) | A2 Suspected human carcinogen. |

**Canada - Alberta OELs: Carcinogen category**

| | |
|---|---|
| Crystalline sillica (CAS 14808-60-7) | Suspected human carcinogen. |

**Canada - Manitoba OELs: carcinogenicity**

| | |
|---|---|
| SILICA, CRYSTALLINE-.ALPHA.-QUARTZ, RESPIRABLE FRACTION (CAS 14808-60-7) | Suspected human carcinogen. |

**Canada - Quebec OELs: Carcinogen category**

| | |
|---|---|
| Crystalline sillica (CAS 14808-60-7) | Suspected carcinogenic effect in humans. |

**IARC Monographs. Overall Evaluation of Carcinogenicity**

| | |
|---|---|
| Crystalline sillica (CAS 14808-60-7) | 1 Carcinogenic to humans. |

**Reproductive toxicity** This product is not expected to cause reproductive or developmental effects.

**Specific target organ toxicity - single exposure** Not classified.

**Specific target organ toxicity - repeated exposure** Not classified.

**Aspiration hazard** Not an aspiration hazard.

**Chronic effects** Prolonged inhalation may be harmful. Prolonged exposure may cause chronic effects.

## *12. Ecological information*

**Ecotoxicity** The product is not classified as environmentally hazardous. However, this does not exclude the possibility that large or frequent spills can have a harmful or damaging effect on the environment.

**Persistence and degradability** No data is available on the degradability of this product.

**Bioaccumulative potential** No data available.

**Mobility in soil** No data available.

**Other adverse effects** No other adverse environmental effects (e.g. ozone depletion, photochemical ozone creation potential, endocrine disruption, global warming potential) are expected from this component.

## 13. Disposal considerations

| | |
|---|---|
| **Disposal instructions** | Collect and reclaim or dispose in sealed containers at licensed waste disposal site. Dispose of contents/container in accordance with local/regional/national/international regulations. |
| **Local disposal regulations** | Dispose in accordance with all applicable regulations. |
| **Hazardous waste code** | The waste code should be assigned in discussion between the user, the producer and the waste disposal company. |
| **Waste from residues / unused products** | Dispose of in accordance with local regulations. Empty containers or liners may retain some product residues. This material and its container must be disposed of in a safe manner (see: Disposal instructions). |
| **Contaminated packaging** | Since emptied containers may retain product residue, follow label warnings even after container is emptied. Empty containers should be taken to an approved waste handling site for recycling or disposal. |

## 14. Transport information

**TDG**

Not regulated as dangerous goods.

**IATA**

Not regulated as dangerous goods.

**IMDG**

Not regulated as dangerous goods.

**Transport in bulk according to Annex II of MARPOL 73/78 and the IBC Code** Not applicable.

## 15. Regulatory information

**Canadian regulations**

**Controlled Drugs and Substances Act**

Not regulated.

**Export Control List (CEPA 1999, Schedule 3)**

Not listed.

**Greenhouse Gases**

Not listed.

**Precursor Control Regulations**

Not regulated.

**International regulations**

**Stockholm Convention**

Not applicable.

**Rotterdam Convention**

Not applicable.

**Kyoto protocol**

Not applicable.

**Montreal Protocol**

Not applicable.

**Basel Convention**

Not applicable.

**International Inventories**

| Country(s) or region | Inventory name | On inventory (yes/no)* |
|---|---|---|
| Australia | Australian Inventory of Chemical Substances (AICS) | Yes |
| Canada | Domestic Substances List (DSL) | Yes |
| Canada | Non-Domestic Substances List (NDSL) | No |
| China | Inventory of Existing Chemical Substances in China (IECSC) | Yes |
| Europe | European Inventory of Existing Commercial Chemical Substances (EINECS) | Yes |
| Europe | European List of Notified Chemical Substances (ELINCS) | No |

| Country(s) or region | Inventory name | On inventory (yes/no)* |
|---|---|---|
| Japan | Inventory of Existing and New Chemical Substances (ENCS) | Yes |
| Korea | Existing Chemicals List (ECL) | Yes |
| New Zealand | New Zealand Inventory | Yes |
| Philippines | Philippine Inventory of Chemicals and Chemical Substances (PICCS) | Yes |
| United States & Puerto Rico | Toxic Substances Control Act (TSCA) Inventory | Yes |

*A "Yes" indicates that all components of this product comply with the inventory requirements administered by the governing country(s)
A "No" indicates that one or more components of the product are not listed or exempt from listing on the inventory administered by the governing country(s).

## *16. Other Information*

**Issue date** 08-16-2016

**Version #** 01

**Disclaimer** Veolia Water Technologies is not able to anticipate all conditions under which this information and its product, or the products of other manufacturers in combination with its product, may be used. It is the user's responsibility to ensure safe conditions for handling, storage and disposal of the product, and to assume liability for loss, injury, damage or expense due to improper use and or non respect of Veolia Water Technologies' requirement.

**Revision information** Product and Company Identification: Product Review

# FICHE SIGNALÉTIQUE

## 1. Identification

| | |
|---|---|
| **Identificateur de produit** | **VEOLIA ACTISAND** |
| **Autres moyens d'identification** | Aucune. |
| **Usage recommandé** | Traitement des eaux usées |
| **Restrictions d'utilisation** | Les travailleurs (et vos clients et utilisateurs dans le cas d'une revente) doivent être informés de la présence possible de poussière respirable et de silice cristalline respirable ainsi que de leurs dangers possibles. Une formation appropriée dans la bonne utilisation et la bonne manipulation de cette matière doit être fournie selon la réglementation applicable.<br>USAGE PROFESSIONNEL |

**Renseignements sur le fabricant/importateur/fournisseur/distributeur**

| | |
|---|---|
| **Fabricant** | |
| **Fournisseur** | Veolia Water Technologies Canada Inc. |
| **Adresse** | 2000 Argentia Road, Plaza IV, Suite 430<br>Mississauga, ON L5N 1W1<br>Canada |
| **Personne à contacter** | Hydrex Product Specialist |
| **Téléphone** | (905) 286-4846 |
| **Télécopieur** | (905) 286-0488 |
| **courriel** | vwtcanada-hydrex@veolia.com |
| **24 Hr Numéro de téléphone d'appel d'urgence** | +1-760-476-3962 (Code:333239) |
| **Fournisseur** | Non disponible. |

## 2. Identification des dangers

| | | |
|---|---|---|
| **Dangers physiques** | Non classé. | |
| **Dangers pour la santé** | Cancérogénicité | Catégorie 1A |
| **Dangers environnementaux** | Non classé. | |

**Éléments d'étiquetage**



| | |
|---|---|
| **Mention d'avertissement** | Danger |
| **Mention de danger** | Peut provoquer le cancer. |
| **Conseil de prudence** | |
| **Prévention** | Se procurer les instructions avant utilisation. Ne pas manipuler avant d'avoir lu et compris toutes les mesures de sécurité. Porter des gants/vêtements de protection/ équipement de protection des yeux/du visage. |
| **Intervention** | Si exposé(e) ou préoccupé(e) : Obtenir une consultation médicale ou des soins médicaux. |
| **Stockage** | Non disponible. |
| **Élimination** | Éliminer le contenu/les conteneurs selon la loi internationale/nationale/régionale/locale. |
| **Autres dangers** | Aucuns connus. |
| **Renseignements supplémentaires** | Aucune. |

## 3. Composition/information sur les ingrédients

**Mélanges**

| Dénomination chimique | Nom commun et synonymes | Numéro d'enregistrement CAS | % |
|---|---|---|---|
| Crystalline sillica | | 14808-60-7 | 100 |

Toutes les concentrations sont en pourcentage en poids, sauf si l'ingrédient est un gaz. Les concentrations des gaz sont en pourcentage en volume.

## 4. Premiers soins

**Inhalation** Sortir au grand air. Appeler un médecin si les symptômes se développent ou s'ils persistent.

**Contact avec la peau** Laver avec de l'eau et du savon. Consulter un médecin si une irritation se développe et persiste.

**Contact avec les yeux** Rincer avec de l'eau. Consulter un médecin si une irritation se développe et persiste.

**Ingestion** Rincer la bouche. Faire appel à une assistance médicale si des symptômes apparaissent.

**Symptômes et effets les plus importants, qu'ils soient aigus ou retardés** Toux.

**Mention de la nécessité d'une prise en charge médicale immédiate ou d'un traitement spécial, si nécessaire** Donner des soins généraux et traiter en fonction des symptômes. Garder la victime en observation. Les symptômes peuvent se manifester à retardement.

**Informations générales** Si exposé(e) ou préoccupé(e) : Obtenir une consultation médicale ou des soins médicaux. S'assurer que le personnel médical est averti des substances impliquées et prend les précautions pour se protéger.

## 5. Mesures à prendre en cas d'incendie

**Agents extincteurs appropriés** Brouillard d'eau. Mousse. Poudre chimique sèche. Dioxyde de carbone (CO2).

**Agents extincteurs inappropriés** Non disponible.

**Dangers spécifiques du produit dangereux** Des gaz dangereux pour la santé peuvent se former pendant l'incendie.

**Équipements de protection spéciaux et précautions spéciales pour les pompiers** Porter un appareil respiratoire autonome et un vêtement de protection complet en cas d'incendie.

**Équipement/directives de lutte contre les incendies** Les récipients fermés peuvent être refroidis par eau pulvérisée.

**Méthodes particulières d'intervention** Employer des méthodes normales de lutte contre l'incendie et tenir compte des dangers associés aux autres substances présentes.

**Risques d'incendie généraux** Aucun risque exceptionnel d'incendie et d'explosion.

## 6. Mesures à prendre en cas de déversement accidentel

**Précautions individuelles, équipements de protection et mesures d'urgence** Tenir à l'écart le personnel dont la présence sur les lieux n'est pas indispensable. Garder les personnes à l'écart de l'endroit du déversement/de la fuite et en amont du vent. Porter un équipement et des vêtements de protection appropriés durant le nettoyage. S'assurer une ventilation adéquate. Prévenir les autorités locales si des fuites significatives ne peuvent pas être contenues. Pour s'informer sur la protection individuelle, voir la rubrique 8.

**Méthodes et matériaux pour le confinement et le nettoyage** Le produit n'est pas miscible avec l'eau et se dispersera sur la surface de l'eau. Arrêter l'écoulement de la substance, si cela peut se faire sans risque. Après avoir récupéré le produit, rincer la zone à l'eau. Pour se renseigner sur l'élimination, voir la rubrique 13.

**Précautions relatives à l'environnement** Éviter le rejet dans les égouts, les cours d'eau ou sur le sol.

## 7. Manutention et stockage

**Précautions relatives à la sûreté en matière de manutention** Se procurer les instructions avant utilisation. Ne pas manipuler avant d'avoir lu et compris toutes les mesures de sécurité. Minimiser la formation de poussières en suspension dans l'air. Fournir une ventilation aspirante adéquate aux endroits où la poussière se forme. Ne pas respirer les poussières. Éviter l'exposition prolongée. Si possible, manipuler dans un système clos. Porter un équipement de protection individuelle approprié. Observer de bonnes pratiques d'hygiène industrielle.

**Conditions de sûreté en matière de stockage, y compris les incompatibilités**

Protéger du rayonnement solaire. Conserver dans l'emballage d'origine à fermeture étanche. Conserver à l'écart de matières incompatibles (voir rubrique 10). Entreposer dans un endroit frais et sec.

## *8. Contrôle de l'exposition/protection individuelle*

**Limites d'exposition professionnelle**

**ÉTATS-UNIS. Valeurs limites d'exposition de l'ACGIH**

| Substance | Type | Valeur | Forme |
|---|---|---|---|
| VEOLIA ACTISAND | TWA | 0.025 mg/m3 | Fraction respirable. |
| **Composants** | **Type** | **Valeur** | **Forme** |
| Crystalline sillica (CAS 14808-60-7) | TWA | 0.025 mg/m3 | Fraction respirable. |

**Canada. LEMT pour l'Alberta (Code de l'hygiène et de la sécurité au travail, Annexe 1, Tableau 2)**

| Substance | Type | Valeur | Forme |
|---|---|---|---|
| VEOLIA ACTISAND | TWA | 0.025 mg/m3 | Particules inhalables. |
| **Composants** | **Type** | **Valeur** | **Forme** |
| Crystalline sillica (CAS 14808-60-7) | TWA | 0.025 mg/m3 | Particules inhalables. |

**Canada. LEMT pour la Colombie-Britannique. (Valeurs limites d'exposition en milieu de travail pour les substances chimiques, Réglementation sur la santé et sécurité au travail 296/97, ainsi modifiée**

| Substance | Type | Valeur | Forme |
|---|---|---|---|
| VEOLIA ACTISAND | TWA | 0.025 mg/m3 | Fraction respirable. |
| **Composants** | **Type** | **Valeur** | **Forme** |
| Crystalline sillica (CAS 14808-60-7) | TWA | 0.025 mg/m3 | Fraction respirable. |

**Canada. LEMT de Manitoba (Règlement 217/2006, Loi sur la sécurité et l'hygiène du travail)**

| Composants | Type | Valeur | Forme |
|---|---|---|---|
| Crystalline sillica (CAS 14808-60-7) | TWA | 0.025 mg/m3 | Fraction respirable. |

**Canada. LEMT pour l'Ontario. (Contrôle de l'exposition à des agents biologiques et chimiques)**

| Substance | Type | Valeur | Forme |
|---|---|---|---|
| VEOLIA ACTISAND | TWA | 0.1 mg/m3 | Respirable. |
| **Composants** | **Type** | **Valeur** | **Forme** |
| Crystalline sillica (CAS 14808-60-7) | TWA | 0.1 mg/m3 | Respirable. |

**Canada. LEMT du Québec, (Ministère du Travail. Règlement sur la qualité du milieu de travail)**

| Substance | Type | Valeur | Forme |
|---|---|---|---|
| VEOLIA ACTISAND | TWA | 0.1 mg/m3 | Poussière respirable. |
| **Composants** | **Type** | **Valeur** | **Forme** |
| Crystalline sillica (CAS 14808-60-7) | TWA | 0.1 mg/m3 | Poussière respirable. |

**Valeurs biologiques limites**

Aucune limite d'exposition biologique observée pour les ingrédients.

**Directives au sujet de l'exposition**

Une exposition professionnelle à de la poussière nuisible (totale et respirable) et à de la silice cristalline respirable doit être suivie et contrôlée.

**Contrôles d'ingénierie appropriés**

Il faut utiliser une bonne ventilation générale (habituellement dix changements d'air l'heure). Les débits de ventilation doivent être adaptés aux conditions. S'il y a lieu, utiliser des enceintes d'isolement, une ventilation locale ou d'autres mesures d'ingénierie pour maintenir les concentrations atmosphériques sous les limites d'exposition recommandées. Si des limites d'exposition n'ont pas été établies, maintenir les concentrations atmosphériques à un niveau acceptable.

**Mesures de protection individuelle, telles que les équipements de protection individuelle**

**Protection du visage/des yeux**

Porter des lunettes de sécurité à écrans latéraux (ou des lunettes à coques).

**Protection de la peau**

**Protection des mains** Gants résistants aux produits chimiques. Les gants appropriés peuvent être indiqués par le fournisseur de gants.

**Autre** L'emploi d'un tablier imperméable est recommandé. Gants résistants aux produits chimiques.

**Protection respiratoire** Utiliser un respirateur avec filtre particulaire lorsque les concentrations particulaires sont supérieures à la limite d'exposition professionnelle.

**Dangers thermiques** Non disponible.

**Considérations d'hygiène générale** Suivre toutes les exigences de surveillance médicale. Toujours adopter de bonnes pratiques d'hygiène personnelle, telles que se laver après avoir manipulé la substance et avant de manger, de boire ou de fumer. Nettoyer régulièrement la tenue de travail et l'équipement de protection pour éliminer les contaminants.

## *9. Propriétés physiques et chimiques*

**Apparence**

**État physique** Solide.

**Forme** Solide.

**Couleur** Non disponible.

**Odeur** Non disponible.

**Seuil olfactif** Non disponible.

**pH** Non disponible.

**Point de fusion et point de congélation** Non disponible.

**Point initial d'ébullition et domaine d'ébullition** Non disponible.

**Point d'éclair** Non disponible.

**Taux d'évaporation** Non disponible.

**Inflammabilité (solides et gaz)** Non disponible.

**Limites supérieures et inférieures d'inflammabilité ou d'explosibilité**

**Limites d'inflammabilité - inférieure (%)** Non disponible.

**Limites d'inflammabilité - supérieure (%)** Non disponible.

**Limite d'explosibilité - inférieure (%)** Non disponible.

**Limite d'explosibilité - supérieure (%)** Non disponible.

**Tension de vapeur** < 0.0000001 kPa à 25 °C

**Densité de vapeur** Non disponible.

**Densité relative** Non disponible.

**Solubilité**

**Solubilité (eau)** Insoluble

**Coefficient de partage n-octanol/eau** Non disponible.

**Température d'auto-inflammation** Non disponible.

**Température de décomposition** Non disponible.

**Viscosité** Non disponible.

**Autres informations**

**Propriétés explosives** Non explosif.

| | |
|---|---|
| **Chaleur de combustion (NFPA 30B)** | 0 kJ/g |
| **Formule moléculaire** | O2Si |
| **Propriétés comburantes** | Non oxydant. |

## *10. Stabilité et réactivité*

| | |
|---|---|
| **Réactivité** | Le produit est stable et non réactif dans des conditions normales d'utilisation, d'entreposage et de transport. |
| **Stabilité chimique** | La substance est stable dans des conditions normales. |
| **Risque de réactions dangereuses** | Pas de réactions dangereuses connues dans les conditions normales d'utilisation. |
| **Conditions à éviter** | Contact avec des matériaux incompatibles. |
| **Matériaux incompatibles** | Oxydants puissants. Chlore |
| **Produits de décomposition dangereux** | Aucun produit dangereux de décomposition n'est connu. |

## *11. Données toxicologiques*

**Renseignements sur les voies d'exposition probables**

| | |
|---|---|
| **Inhalation** | Toute inhalation prolongée peut être nocive. |
| **Contact avec la peau** | Aucun effet indésirable par contact avec la peau n'est attendu. |
| **Contact avec les yeux** | Le contact direct avec les yeux peut causer une irritation temporaire. |
| **Ingestion** | Faible danger présumé en cas d'ingestion. |
| **Les symptômes correspondant aux caractéristiques physiques, chimiques et toxicologiques** | Toux. |

**Renseignements sur les effets toxicologiques**

| | |
|---|---|
| **Toxicité aiguë** | Non disponible. |
| **Corrosion cutanée/irritation cutanée** | Un contact prolongé avec la peau peut entraîner une irritation temporaire. |
| **Lésions oculaires graves/irritation oculaire** | Le contact direct avec les yeux peut causer une irritation temporaire. |

**Sensibilisation respiratoire ou cutanée**

| | |
|---|---|
| **Sensibilisation respiratoire** | N'est pas un sensibilisant respiratoire. |
| **Sensibilisation cutanée** | Ce produit ne devrait pas causer une sensibilisation de la peau. |
| **Mutagénicité sur les cellules germinales** | Il n'existe pas de données indiquant que ce produit, ou tout composant présent à des taux de plus de 0,1 %, soit mutagène ou génétoxique. |
| **Cancérogénicité** | En 1997, le CIRC (Centre international de recherche sur le cancer) a conclu que la silice cristalline inhalée de sources professionnelles pouvait provoquer un cancer du poumon chez l'homme. Toutefois, lors de son évaluation globale, le CIRC a observé que « le pouvoir cancérogène n'était pas détecté dans toutes les conditions industrielles examinées. Le pouvoir cancérogène peut dépendre de caractéristiques intrinsèques de la silice cristalline ou de facteurs externes qui touchent son activité biologique ou la distribution de ses polymorphes. » (Monographies du CIRC sur l'évaluation des risques cancérogènes de substances chimiques pour l'être humain, Silice, poussière de silicates et fibres organiques, 1997, vol. 68, CIRC, Lyon, France.) En juin 2003, le CSLEP (Comité scientifique en matière de limites d'exposition professionnelle à des agents chimiques) a conclu que le principal effet chez l'être humain de l'inhalation de la poussière de silice cristalline respirable est la silicose. « Les données disponibles sont suffisantes pour conclure que le risque de cancer du poumon est accru chez les personnes atteintes de silicose (et non, semble-t-il, chez les employés exempts de silicose exposés à la poussière de silice dans les carrières et dans le secteur industriel des céramiques). Dès lors, la prévention de l'apparition de la silicose réduira également le risque de cancer... » (SCOEL SUM Doc 94-final, juin 2003) Selon l'état de la technique actuel, la protection des travailleurs contre la silicose peut être assurée de manière systématique en respectant les limites d'exposition professionnelle réglementaires existantes. Peut provoquer le cancer. Une exposition professionnelle à de la poussière respirable et à de la silice cristalline respirable doit être suivie et contrôlée. |

**Carcinogènes selon l'ACGIH**

| | |
|---|---|
| Crystalline sillica (CAS 14808-60-7) | A2 Probablement cancérogène pour l'homme. |

**Canada - LEMT pour l'Alberta : Catégorie de carcinogène**

| | |
|---|---|
| Crystalline sillica (CAS 14808-60-7) | Probablement cancérogène pour l'homme. |

**Canada - LEMT pour le Manitoba : cancérogénicité**

| | |
|---|---|
| SILICE, CRISTALLINE-.ALPHA.-QUARTZ, FRACTION RESPIRABLE (CAS 14808-60-7) | Probablement cancérogène pour l'homme. |

**Canada - LEMT pour le Québec : Catégorie de carcinogène**

| | |
|---|---|
| Crystalline sillica (CAS 14808-60-7) | Effet cancérogène suspecté chez les humains. |

**Monographies du CIRC. Évaluation globale de la cancérogénicité**

| | |
|---|---|
| Crystalline sillica (CAS 14808-60-7) | 1 Cancérogène pour l'homme. |

| | |
|---|---|
| **Toxicité pour la reproduction** | On ne s'attend pas à ce que ce produit présente des effets sur la reproduction ou le développement. |
| **Toxicité pour certains organes cibles - exposition unique** | Non classé. |
| **Toxicité pour certains organes cibles - expositions répétées** | Non classé. |
| **Danger par aspiration** | N'est pas un danger d'aspiration. |
| **Effets chroniques** | Toute inhalation prolongée peut être nocive. Une exposition prolongée peut causer des effets chroniques. |

## *12. Données écologiques*

| | |
|---|---|
| **Écotoxicité** | Le produit n'est pas classé comme dangereux pour l'environnement. Toutefois, ceci n'exclut pas la possibilité que des déversements importants ou fréquents puissent avoir un effet nocif ou nuisible sur l'environnement. |
| **Persistance et dégradation** | Aucune donnée n'est disponible sur la biodégradabilité du produit. |
| **Potentiel de bioaccumulation** | Aucune donnée disponible. |
| **Mobilité dans le sol** | Aucune donnée disponible. |
| **Autres effets nocifs** | On ne prévoit aucun autre effet environnemental négatif (par ex., appauvrissement de la couche d'ozone, potentiel de formation photochimique d'ozone, perturbation endocrinienne, potentiel de réchauffement de la planète) causé par ce composant. |

## *13. Données sur l'élimination*

| | |
|---|---|
| **Instructions pour l'élimination** | Recueillir et réutiliser ou éliminer dans des récipients scellés dans un site d'élimination des déchets autorisé. Éliminer le contenu/les conteneurs selon la loi internationale/nationale/régionale/locale. |
| **Règlements locaux d'élimination** | Détruire conformément à toutes les réglementations applicables. |
| **Code des déchets dangereux** | Les codes de déchets doivent être attribués dans le cadre d'une consultation entre l'utilisateur, le fabricant et l'entreprise de décharge. |
| **Déchets des résidus / produits non utilisés** | Éliminer le produit conformément avec la réglementation locale en vigueur. Des résidus de produit peuvent demeurer dans les contenants vides et sur les toiles d'emballage. Ce produit et son contenant doivent être éliminés de façon sécuritaire (voir les instructions d'élimination). |
| **Emballages contaminés** | Comme les récipients vides peuvent contenir des résidus de produit, respecter les avertissements sur l'étiquette même après avoir vidé le récipient. Les contenants vides doivent être acheminés vers une installation certifiée de traitement des déchets en vue de leur élimination ou recyclage. |

## *14. Informations relatives au transport*

**TMD**

N'entre pas dans la réglementation des marchandises dangereuses.

**IATA**

N'entre pas dans la réglementation des marchandises dangereuses.

**IMDG**

N'entre pas dans la réglementation des marchandises dangereuses.

**Transport en vrac selon l'Annexe II de MARPOL 73/78 et le recueil IBC** Sans objet.

## 15. Informations sur la réglementation

**Réglementation canadienne**

**Loi réglementant certaines drogues et autres substances**

Non réglementé.

**Liste des marchandises d'exportation contrôlée (LCPE 1999, Annexe 3)**

Non inscrit.

**Gaz à effet de serre**

Non inscrit.

**Règlements sur les précurseurs**

Non réglementé.

**Règlements internationaux**

**Convention de Stockholm**

Sans objet.

**Convention de Rotterdam**

Sans objet.

**Protocole de Kyoto**

Sans objet.

**Montreal Protocol**

Sans objet.

**Convention de Bâle**

Sans objet.

**Inventaires Internationaux**

| Pays ou région | Nom de l'inventaire | En stock (Oui/Non)* |
|---|---|---|
| Australie | Inventaire australien des substances chimiques (AICS) | Oui |
| Canada | Liste intérieure des substances (LIS) | Oui |
| Canada | Liste extérieure des substances (LES) | Non |
| Chine | Inventaire des substances chimiques existantes en Chine (IECSC) | Oui |
| Europe | Inventaire européen des substances chimiques commerciales existantes (EINECS) | Oui |
| Europe | Liste européenne des substances chimiques notifiées (ELINCS) | Non |
| Japon | Inventaire des substances chimiques existantes et nouvelles (ENCS) | Oui |
| Corée | Liste des produits chimiques existants (ECL) | Oui |
| Nouvelle-Zélande | Inventaire de la Nouvelle-Zélande | Oui |
| Philippines | Inventaire philippin des produits et substances chimiques (PICCS) | Oui |
| États-Unis et Porto Rico | Inventaire du TSCA (Toxic Substances Controls Act - Loi réglementant les substances toxiques) | Oui |

*La réponse « Oui » indique que tous les composants du produit sont conformes aux exigences d'entreposage du pays ayant compétence Un « Non » indique qu'un ou plusieurs composant(s) du produit n'est/ne sont pas inscrit(s) ou exempt(s) d'une inscription sur l'inventaire administré par le(s) pays ayant compétence.

## 16. Renseignements divers

**Date de publication** 16-Août-2016

**Version n°** 01

**Avis de non-responsabilité** Veolia Water Solutions & Technologies ne peut prévoir toutes les conditions d'utilisation des présents renseignements et de son produit, ou des produits d'autres fabricants en association avec son produit. L'utilisateur est responsable d'assurer des conditions sécuritaires de manutention, d'entreposage et d'élimination du produit, et il assume toute responsabilité quant à des pertes, des blessures, des dommages ou des dépenses liés à une utilisation incorrecte ou au non-respect des exigences de Veolia Solutions & Technologies.

| | |
|---|---|
| **Informations relatives à la révision** | Identification du produit et de l'entreprise : Identification du produit et de l'entreprise |

Hydrex

# MATERIAL SAFETY DATA SHEET

## 1. Product and Company Identification

| | |
|---|---|
| **Product identifier** | **Hydrex 6105** |
| **Version #** | 01 |
| **Issue date** | 08-15-2014 |
| **CAS #** | Mixture |
| **Product use** | Wastewater Flocculant |
| **Manufacturer** | |
| **Supplier** | VWS Canada |
| **Address** | 2000 Argentia Road, Plaza IV, Suite 430<br>Mississauga, ON L5N 1W1<br>Canada |
| **Contact Person** | Hydrex Product Specialist |
| **Telephone** | (905) 286-4846 |
| **Fax** | (905) 286-0488 |
| **e-mail** | vwscanada.hydrex@veoliawater.com |
| **24-Hour Emergency telephone** | +1-760-476-3962 (Code:333239) |

## 2. Hazards Identification

**Potential health effects**

| | |
|---|---|
| **Eyes** | Health injuries are not known or expected under normal use. |
| **Skin** | Health injuries are not known or expected under normal use. |
| **Inhalation** | Health injuries are not known or expected under normal use. |
| **Ingestion** | Health injuries are not known or expected under normal use. |

## 3. Composition / Information on Ingredients

The components are not hazardous or are below required disclosure limits.

## 4. First Aid Measures

**First aid procedures**

| | |
|---|---|
| **Eye contact** | Rinse with water. Get medical attention if irritation develops and persists. |
| **Skin contact** | Rinse skin with water/shower. Get medical attention if irritation develops and persists. |
| **Inhalation** | If breathing is difficult, remove to fresh air and keep at rest in a position comfortable for breathing. Call a physician if symptoms develop or persist. |
| **Ingestion** | Rinse mouth. If ingestion of a large amount does occur, call a poison control center immediately. |
| **General advice** | If you feel unwell, seek medical advice (show the label where possible). Show this safety data sheet to the doctor in attendance. |

## 5. Fire Fighting Measures

| | |
|---|---|
| **Flammable properties** | Dust accumulation from this product may present an explosion hazard in the presence of an ignition source. |
| **Extinguishing media** | |
| **Suitable extinguishing media** | Water spray, fog, CO2, dry chemical, or alcohol resistant foam. |
| **Protection of firefighters** | |
| **Protective equipment for firefighters** | In the event of fire, wear self-contained breathing apparatus. |
| **Fire fighting equipment/instructions** | Use water spray to cool unopened containers. Dust may form an explosive mixture in the atmosphere. |
| **Specific methods** | Use water spray to cool unopened containers. |

**Explosion data**

| | |
|---|---|
| **Sensitivity to static discharge** | Not available. |
| **Sensitivity to mechanical impact** | Not available. |

## 6. Accidental Release Measures

| | |
|---|---|
| **Personal precautions** | Slippery when wet. |
| **Environmental precautions** | Prevent further leakage or spillage if safe to do so. Do not contaminate water. |
| **Methods for cleaning up** | Should not be released into the environment. Following product recovery, flush area with water. For waste disposal, see section 13 of the MSDS. |

## 7. Handling and Storage

| | |
|---|---|
| **Handling** | Avoid release to the environment. Material can be slippery when wet. |
| **Storage** | Store in a dry area. Store in closed original container at temperatures between 5°C and 30°C. |

## 8. Exposure Controls / Personal Protection

| | |
|---|---|
| **Biological limit values** | No biological exposure limits noted for the ingredient(s). |

**Personal protective equipment**

| | |
|---|---|
| **Eye / face protection** | Chemical goggles are recommended. |
| **Skin protection** | Normal work clothing (long sleeved shirts and long pants) is recommended. |
| **Respiratory protection** | No specific recommendation made, but protection against nuisance dust must be used when the general level exceeds 10 mg/m3. |

## 9. Physical & Chemical Properties

| | |
|---|---|
| **Appearance** | Not available. |
| **Physical state** | Solid. |
| **Form** | Not available. |
| **Color** | White |
| **Odor** | Not available. |
| **pH** | Not available. |
| **Vapor pressure** | 0 hPa estimated |
| **Vapor density** | Not available. |
| **Boiling point** | Not available. |
| **Melting point/Freezing point** | Not available. |
| **Solubility (water)** | Not available. |
| **Specific gravity** | 0.65 - 0.9 |
| **Flash point** | Not available. |
| **Auto-ignition temperature** | Not available. |
| **Ph Of 1% Solution** | 5 - 7 |

## 10. Chemical Stability & Reactivity Information

| | |
|---|---|
| **Chemical stability** | Material is stable under normal conditions. |
| **Conditions to avoid** | None under normal conditions. |
| **Incompatible materials** | Not available. |
| **Hazardous decomposition products** | Upon decomposition, this product may yield oxides of nitrogen and ammonia, carbon dioxide, carbon monoxide and other low molecular weight hydrocarbons. |

## 11. Toxicological Information

**Toxicological data**

| Product | Species | Test Results |
|---|---|---|
| Hydrex 6105 (CAS Mixture) | | |
| **Acute** | | |
| *Dermal* | | |
| LD50 | Rabbit | > 10000 mg/kg |
| *Oral* | | |
| LD50 | Rat | > 5000 mg/kg |

* Estimates for product may be based on additional component data not shown.

**Chronic effects** Not expected to be hazardous by WHMIS criteria.

## 12. Ecological Information

**Ecotoxicological data**

| Product | | Species | Test Results |
|---|---|---|---|
| Hydrex 6105 (CAS Mixture) | | | |
| Algae | IC50 | Algae | 2276 mg/l, 72 hr |
| Crustacea | EC50 | Daphnia | > 100 mg/l, 48 hr |
| Other | LC50 | Rainbow Trout | > 120 mg/l, 96 hr |
| **Aquatic** | | | |
| Fish | LC50 | Zebra danio (Danio rerio) | > 100 mg/l, 96 hr |

* Estimates for product may be based on additional component data not shown.

**Ecotoxicity** Contains a substance which causes risk of hazardous effects to the environment.

**Environmental effects** An environmental hazard cannot be excluded in the event of unprofessional handling or disposal.

**Persistence and degradability** Not available.

## 13. Disposal Considerations

**Disposal instructions** Collect and reclaim or dispose in sealed containers at licensed waste disposal site. Do not allow this material to drain into sewers/water supplies. This product, in its present state, when discarded or disposed of, is not a hazardous waste according to Federal regulations (40 CFR 261.4 (b)(4)). Under RCRA, it is the responsibility of the user of the product to determine, at the time of disposal, whether the product meets RCRA criteria for hazardous waste. Dispose in accordance with all applicable regulations.

**Contaminated packaging** Empty containers should be taken to an approved waste handling site for recycling or disposal.

## 14. Transport Information

**TDG**

Not regulated as dangerous goods.

**IATA**

Not regulated as dangerous goods.

**IMDG**

Not regulated as dangerous goods.

## 15. Regulatory Information

**Canadian regulations** This product has been classified in accordance with the hazard criteria of the CPR and the MSDS contains all the information required by the CPR.

**WHMIS status** Non-controlled

**Inventory status**

| Country(s) or region | Inventory name | On inventory (yes/no)* |
|---|---|---|
| Australia | Australian Inventory of Chemical Substances (AICS) | Yes |
| Canada | Domestic Substances List (DSL) | Yes |

| Country(s) or region | Inventory name | On inventory (yes/no)* |
|---|---|---|
| Canada | Non-Domestic Substances List (NDSL) | No |
| China | Inventory of Existing Chemical Substances in China (IECSC) | Yes |
| Europe | European Inventory of Existing Commercial Chemical Substances (EINECS) | No |
| Europe | European List of Notified Chemical Substances (ELINCS) | No |
| Japan | Inventory of Existing and New Chemical Substances (ENCS) | Yes |
| Korea | Existing Chemicals List (ECL) | Yes |
| New Zealand | New Zealand Inventory | Yes |
| Philippines | Philippine Inventory of Chemicals and Chemical Substances (PICCS) | Yes |
| United States & Puerto Rico | Toxic Substances Control Act (TSCA) Inventory | Yes |

*A "Yes" indicates that all components of this product comply with the inventory requirements administered by the governing country(s)
A "No" indicates that one or more components of the product are not listed or exempt from listing on the inventory administered by the governing country(s).

## 16. Other Information

**Further information**
HMIS® is a registered trade and service mark of the NPCA.

**HMIS® ratings**
Health: 0
Flammability: 1
Physical hazard: 0

**NFPA ratings**
Health: 0
Flammability: 1
Instability: 0

**Disclaimer**
Veolia Water Solutions & Technologies is not able to anticipate all conditions under which this information and its product, or the products of other manufacturers in combination with its product, may be used. It is the user's responsibility to ensure safe conditions for handling, storage and disposal of the product, and to assume liability for loss, injury, damage or expense due to improper use and or non respect of Veolia Water Solutions & Technologies' requirement.

**This data sheet contains changes from the previous version in section(s):**
Product and Company Identification: Product and Company Identification

# SAFETY DATA SHEET

**SULFURIC ACID 66 BE**

## Section 1. Identification

**Product identifier** : SULFURIC ACID 66 BE

**Product code** : Q02248

**Relevant identified uses of the substance or mixture**

| Identified uses |
| --- |
| Industrial applications |

**Supplier's details** : QUADRA CHEMICALS LTD.
3901 F.X Tessier
Vaudreuil-Dorion, QC
CANADA J7V 5V5
1-800-665-6553

**Emergency telephone number (with hours of operation)** : **TRANSPORTATION EMERGENCY - 24HRS/DAY - 7 DAYS/WEEK IN CANADA - CALL 1-800-567-7455**

## Section 2. Hazard identification

**Classification of the substance or mixture** : CORROSIVE TO METALS - Category 1
SKIN CORROSION - Category 1
SERIOUS EYE DAMAGE - Category 1
CARCINOGENICITY - Category 1
Health Hazards Not Otherwise Classified - Category 1

**GHS label elements**

**Hazard pictograms** :



**Signal word** : Danger

**Hazard statements** : May be corrosive to metals.
Causes digestive tract burns.
Causes respiratory tract burns.
Causes severe skin burns and eye damage.
May cause cancer.

**Precautionary statements**

**Prevention** : Obtain special instructions before use. Do not handle until all safety precautions have been read and understood. Wear protective gloves. Wear eye or face protection. Wear protective clothing. Keep only in original packaging. Wash hands thoroughly after handling.

## Section 2. Hazard identification

**Response** : Absorb spillage to prevent material damage. IF exposed or concerned: Get medical attention. IF INHALED: Remove person to fresh air and keep comfortable for breathing. Immediately call a POISON CENTER or physician. IF SWALLOWED: Immediately call a POISON CENTER or physician. Rinse mouth. Do NOT induce vomiting. IF ON SKIN (or hair): Take off immediately all contaminated clothing. Rinse skin with water. Wash contaminated clothing before reuse. Immediately call a POISON CENTER or physician. IF IN EYES: Rinse cautiously with water for several minutes. Remove contact lenses, if present and easy to do. Continue rinsing. Immediately call a POISON CENTER or physician.

**Storage** : Store locked up. Store in a corrosion resistant container with a resistant inner liner.

**Disposal** : Dispose of contents and container in accordance with all local, regional, national and international regulations.

**Supplemental label elements** : Keep container tightly closed. Do not breathe vapor or spray. Do not taste or swallow. Use only with adequate ventilation. Wash thoroughly after handling.

## Section 3. Composition/information on ingredients

**Substance/mixture** : Substance

| Ingredient name | % (w/w) | CAS number |
|---|---|---|
| sulphuric acid | 93 | 7664-93-9 |

**There are no additional ingredients present which, within the current knowledge of the supplier and in the concentrations applicable, are classified as hazardous to health or the environment and hence require reporting in this section.**

**Occupational exposure limits, if available, are listed in Section 8.**

## Section 4. First-aid measures

### Description of necessary first aid measures

**Eye contact** : Get medical attention immediately. Call a poison center or physician. Immediately flush eyes with plenty of water, occasionally lifting the upper and lower eyelids. Check for and remove any contact lenses. Continue to rinse for at least 10 minutes. Chemical burns must be treated promptly by a physician.

**Inhalation** : Get medical attention immediately. Call a poison center or physician. Remove victim to fresh air and keep at rest in a position comfortable for breathing. If it is suspected that fumes are still present, the rescuer should wear an appropriate mask or self-contained breathing apparatus. If not breathing, if breathing is irregular or if respiratory arrest occurs, provide artificial respiration or oxygen by trained personnel. It may be dangerous to the person providing aid to give mouth-to-mouth resuscitation. If unconscious, place in recovery position and get medical attention immediately. Maintain an open airway. Loosen tight clothing such as a collar, tie, belt or waistband.

**Skin contact** : Get medical attention immediately. Call a poison center or physician. Wash contaminated skin with soap and water. Remove contaminated clothing and shoes. Wash contaminated clothing thoroughly with water before removing it, or wear gloves. Continue to rinse for at least 10 minutes. Chemical burns must be treated promptly by a physician. Wash clothing before reuse. Clean shoes thoroughly before reuse.

# Section 4. First-aid measures

**Ingestion** : Get medical attention immediately. Call a poison center or physician. Wash out mouth with water. Remove dentures if any. Remove victim to fresh air and keep at rest in a position comfortable for breathing. If material has been swallowed and the exposed person is conscious, give small quantities of water to drink. Stop if the exposed person feels sick as vomiting may be dangerous. Do not induce vomiting unless directed to do so by medical personnel. If vomiting occurs, the head should be kept low so that vomit does not enter the lungs. Chemical burns must be treated promptly by a physician. Never give anything by mouth to an unconscious person. If unconscious, place in recovery position and get medical attention immediately. Maintain an open airway. Loosen tight clothing such as a collar, tie, belt or waistband.

## Most important symptoms/effects, acute and delayed

### Potential acute health effects

**Eye contact** : Causes serious eye damage.

**Inhalation** : Corrosive to the respiratory system.

**Skin contact** : Causes severe burns.

**Ingestion** : May cause burns to mouth, throat and stomach. Corrosive to the digestive tract. Causes burns.

### Over-exposure signs/symptoms

**Eye contact** : Adverse symptoms may include the following:
pain
watering
redness

**Inhalation** : Adverse symptoms may include the following:
respiratory tract irritation
coughing

**Skin contact** : Adverse symptoms may include the following:
pain or irritation
redness
blistering may occur

**Ingestion** : Adverse symptoms may include the following:
stomach pains

## Indication of immediate medical attention and special treatment needed, if necessary

**Notes to physician** : Treat symptomatically. Contact poison treatment specialist immediately if large quantities have been ingested or inhaled.

**Specific treatments** : No specific treatment.

**Protection of first-aiders** : No action shall be taken involving any personal risk or without suitable training. If it is suspected that fumes are still present, the rescuer should wear an appropriate mask or self-contained breathing apparatus. It may be dangerous to the person providing aid to give mouth-to-mouth resuscitation. Wash contaminated clothing thoroughly with water before removing it, or wear gloves.

**See toxicological information (Section 11)**

# Section 5. Fire-fighting measures

## Extinguishing media

**Suitable extinguishing media** : Use an extinguishing agent suitable for the surrounding fire.

**Unsuitable extinguishing media** : None known.

**Specific hazards arising from the chemical** : In a fire or if heated, a pressure increase will occur and the container may burst.

**Hazardous thermal decomposition products** : Decomposition products may include the following materials:
sulfur oxides

**Special protective actions for fire-fighters** : Promptly isolate the scene by removing all persons from the vicinity of the incident if there is a fire. No action shall be taken involving any personal risk or without suitable training.

**Special protective equipment for fire-fighters** : Fire-fighters should wear appropriate protective equipment and self-contained breathing apparatus (SCBA) with a full face-piece operated in positive pressure mode.

# Section 6. Accidental release measures

## Personal precautions, protective equipment and emergency procedures

**For non-emergency personnel** : No action shall be taken involving any personal risk or without suitable training. Evacuate surrounding areas. Keep unnecessary and unprotected personnel from entering. Do not touch or walk through spilled material. Do not breathe vapor or mist. Provide adequate ventilation. Wear appropriate respirator when ventilation is inadequate. Put on appropriate personal protective equipment.

**For emergency responders** : If specialized clothing is required to deal with the spillage, take note of any information in Section 8 on suitable and unsuitable materials. See also the information in "For non-emergency personnel".

**Environmental precautions** : Avoid dispersal of spilled material and runoff and contact with soil, waterways, drains and sewers. Inform the relevant authorities if the product has caused environmental pollution (sewers, waterways, soil or air).

## Methods and materials for containment and cleaning up

**Small spill** : Stop leak if without risk. Move containers from spill area. Dilute with water and mop up if water-soluble. Alternatively, or if water-insoluble, absorb with an inert dry material and place in an appropriate waste disposal container. Absorb spillage to prevent material damage. Dispose of via a licensed waste disposal contractor.

**Large spill** : Stop leak if without risk. Move containers from spill area. Absorb spillage to prevent material damage. Approach release from upwind. Prevent entry into sewers, water courses, basements or confined areas. Wash spillages into an effluent treatment plant or proceed as follows. Contain and collect spillage with non-combustible, absorbent material e.g. sand, earth, vermiculite or diatomaceous earth and place in container for disposal according to local regulations (see Section 13). The spilled material may be neutralized with sodium carbonate, sodium bicarbonate or sodium hydroxide. Dispose of via a licensed waste disposal contractor. Contaminated absorbent material may pose the same hazard as the spilled product. Note: see Section 1 for emergency contact information and Section 13 for waste disposal.

# Section 7. Handling and storage

## Precautions for safe handling

**Protective measures** : Put on appropriate personal protective equipment (see Section 8). Avoid exposure - obtain special instructions before use. Do not handle until all safety precautions have been read and understood. Do not get in eyes or on skin or clothing. Do not breathe vapor or mist. Do not ingest. Use only with adequate ventilation. Wear appropriate respirator when ventilation is inadequate. Keep in the original container or an approved alternative made from a compatible material, kept tightly closed when not in use. Keep away from alkalis. Empty containers retain product residue and can be hazardous. Do not reuse container. Absorb spillage to prevent material damage.

**Advice on general occupational hygiene** : Eating, drinking and smoking should be prohibited in areas where this material is handled, stored and processed. Workers should wash hands and face before eating, drinking and smoking. Remove contaminated clothing and protective equipment before entering eating areas. See also Section 8 for additional information on hygiene measures.

**Conditions for safe storage, including any incompatibilities** : Store in accordance with local regulations. Store in original container protected from direct sunlight in a dry, cool and well-ventilated area, away from incompatible materials (see Section 10) and food and drink. Store in a corrosion resistant container with a resistant inner liner. Store locked up. Separate from alkalis. Keep container tightly closed and sealed until ready for use. Containers that have been opened must be carefully resealed and kept upright to prevent leakage. Do not store in unlabeled containers. Use appropriate containment to avoid environmental contamination.

# Section 8. Exposure controls/personal protection

## Control parameters

### Occupational exposure limits

| Ingredient name | Exposure limits |
|---|---|
| sulphuric acid | **ACGIH TLV (United States, 3/2016).**<br>TWA: 0.2 mg/m³ 8 hours. Form: Thoracic fraction |

**Appropriate engineering controls** : Use only with adequate ventilation. If user operations generate dust, fumes, gas, vapor or mist, use process enclosures, local exhaust ventilation or other engineering controls to keep worker exposure to airborne contaminants below any recommended or statutory limits.

**Environmental exposure controls** : Emissions from ventilation or work process equipment should be checked to ensure they comply with the requirements of environmental protection legislation. In some cases, fume scrubbers, filters or engineering modifications to the process equipment will be necessary to reduce emissions to acceptable levels.

## Individual protection measures

**Hygiene measures** : Wash hands, forearms and face thoroughly after handling chemical products, before eating, smoking and using the lavatory and at the end of the working period. Appropriate techniques should be used to remove potentially contaminated clothing. Wash contaminated clothing before reusing. Ensure that eyewash stations and safety showers are close to the workstation location.

## Section 8. Exposure controls/personal protection

**Eye/face protection** : Safety eyewear complying with an approved standard should be used when a risk assessment indicates this is necessary to avoid exposure to liquid splashes, mists, gases or dusts. If contact is possible, the following protection should be worn, unless the assessment indicates a higher degree of protection: chemical splash goggles and/or face shield. If inhalation hazards exist, a full-face respirator may be required instead.

**Hand protection** : Chemical-resistant, impervious gloves complying with an approved standard should be worn at all times when handling chemical products if a risk assessment indicates this is necessary. Considering the parameters specified by the glove manufacturer, check during use that the gloves are still retaining their protective properties. It should be noted that the time to breakthrough for any glove material may be different for different glove manufacturers. In the case of mixtures, consisting of several substances, the protection time of the gloves cannot be accurately estimated.

**Body protection** : Personal protective equipment for the body should be selected based on the task being performed and the risks involved and should be approved by a specialist before handling this product.

**Other skin protection** : Appropriate footwear and any additional skin protection measures should be selected based on the task being performed and the risks involved and should be approved by a specialist before handling this product.

**Respiratory protection** : Based on the hazard and potential for exposure, select a respirator that meets the appropriate standard or certification. Respirators must be used according to a respiratory protection program to ensure proper fitting, training, and other important aspects of use.

## Section 9. Physical and chemical properties

**Physical state** : Liquid. [Oily liquid. Clear.]

**Color** : Colorless to amber.

**Odor** : Odorless.

**Odor threshold** : Not available.

**pH** : <0.1

**Melting point** : 10.5°C (50.9°F)

**Boiling point** : 280°C (536°F)

**Flash point** : Not available.

**Evaporation rate** : Not available.

**Flammability (solid, gas)** : Not available.

**Lower and upper explosive (flammable) limits** : Not available.

**Vapor pressure** : <0.04 kPa (<0.3 mm Hg) [room temperature]

**Vapor density** : 3.4 [Air = 1]

**Relative density** : 1.84

**Density** : Not available.

**Solubility** : Easily soluble in the following materials: cold water.

**Dispersibility properties** : Not available.

**Partition coefficient: n-octanol/water** : Not available.

**Auto-ignition temperature** : Not available.

**Decomposition temperature** : Not available.

**Viscosity** : Not available.

# Section 9. Physical and chemical properties

**Volatility** : Not available.

# Section 10. Stability and reactivity

**Reactivity** : No specific test data related to reactivity available for this product or its ingredients.

**Chemical stability** : The product is stable.

**Possibility of hazardous reactions** : Under normal conditions of storage and use, hazardous reactions will not occur.

**Conditions to avoid** : No specific data.

**Incompatible materials** : oxidizing materials
reducing materials
combustible materials
organic materials
metals
acids
alkalis
moisture

**Hazardous decomposition products** : Under normal conditions of storage and use, hazardous decomposition products should not be produced.

# Section 11. Toxicological information

## Information on toxicological effects

### Acute toxicity

| Product/ingredient name | Result | Species | Dose | Exposure |
|---|---|---|---|---|
| sulphuric acid | LD50 Oral | Rat | 2140 mg/kg | - |

### Irritation/Corrosion

| Product/ingredient name | Result | Species | Score | Exposure | Observation |
|---|---|---|---|---|---|
| sulphuric acid | Eyes - Severe irritant | Rabbit | - | 250 Micrograms | - |
| | Eyes - Severe irritant | Rabbit | - | 0.5 minutes 5 milligrams | - |

### Sensitization

Not available.

### Mutagenicity

Not available.

### Carcinogenicity

Not available.

### Carcinogenicity Classification

| Product/ingredient name | IARC | NTP | ACGIH |
|---|---|---|---|
| sulphuric acid | 1 | Known to be a human carcinogen. | A2 |

# Section 11. Toxicological information

### Reproductive toxicity

Not available.

### Teratogenicity

Not available.

### Specific target organ toxicity (single exposure)

Not available.

### Specific target organ toxicity (repeated exposure)

Not available.

### Aspiration hazard

Not available.

**Information on the likely routes of exposure** : Routes of entry anticipated: Oral, Inhalation.

### Potential acute health effects

**Eye contact** : Causes serious eye damage.

**Inhalation** : Corrosive to the respiratory system.

**Skin contact** : Causes severe burns.

**Ingestion** : May cause burns to mouth, throat and stomach. Corrosive to the digestive tract. Causes burns.

### Symptoms related to the physical, chemical and toxicological characteristics

**Eye contact** : Adverse symptoms may include the following:
pain
watering
redness

**Inhalation** : Adverse symptoms may include the following:
respiratory tract irritation
coughing

**Skin contact** : Adverse symptoms may include the following:
pain or irritation
redness
blistering may occur

**Ingestion** : Adverse symptoms may include the following:
stomach pains

### Delayed and immediate effects and also chronic effects from short and long term exposure

#### Short term exposure

**Potential immediate effects** : Not available.

**Potential delayed effects** : Not available.

#### Long term exposure

**Potential immediate effects** : Not available.

**Potential delayed effects** : Not available.

### Potential chronic health effects

**General** : No known significant effects or critical hazards.

**Carcinogenicity** : May cause cancer. Risk of cancer depends on duration and level of exposure.

# Section 11. Toxicological information

## Numerical measures of toxicity

### Acute toxicity estimates

| Route | ATE value |
|---|---|
| Oral | 2301.1 mg/kg |

# Section 12. Ecological information

## Toxicity

| Product/ingredient name | Result | Species | Exposure |
|---|---|---|---|
| sulphuric acid | Acute LC50 42500 µg/l Marine water<br><br>Acute LC50 36 ul/L Marine water | Crustaceans - Pandalus montagui - Adult<br>Fish - Agonus cataphractus | 48 hours<br><br>96 hours |

## Persistence and degradability

| Product/ingredient name | Aquatic half-life | Photolysis | Biodegradability |
|---|---|---|---|
| SULFURIC ACID 66 BE | - | - | Readily |

## Bioaccumulative potential

Not available.

## Mobility in soil

**Soil/water partition coefficient ($K_{OC}$)** : Not available.

**Other adverse effects** : No known significant effects or critical hazards.

# Section 13. Disposal considerations

**Disposal methods** : The generation of waste should be avoided or minimized wherever possible. Disposal of this product, solutions and any by-products should at all times comply with the requirements of environmental protection and waste disposal legislation and any regional local authority requirements. Dispose of surplus and non-recyclable products via a licensed waste disposal contractor. Waste should not be disposed of untreated to the sewer unless fully compliant with the requirements of all authorities with jurisdiction. Waste packaging should be recycled. Incineration or landfill should only be considered when recycling is not feasible. This material and its container must be disposed of in a safe way. Care should be taken when handling emptied containers that have not been cleaned or rinsed out. Empty containers or liners may retain some product residues. Avoid dispersal of spilled material and runoff and contact with soil, waterways, drains and sewers.

## Section 14. Transport information

| | TDG Classification |
|---|---|
| **UN number** | 1830 |
| **UN proper shipping name** | SULFURIC ACID |
| **Transport hazard class(es)** | 8  |
| **Packing group** | II |
| **Additional information** | ERP / PIU # 2-0032 |

## Section 15. Regulatory information

**Canada inventory** : All components are listed or exempted.

## Section 16. Other information

**History**

**Date of issue/Date of revision** : 10 July 2017

**Prepared by** : Regulatory Affairs

**Key to abbreviations** : ATE = Acute Toxicity Estimate
BCF = Bioconcentration Factor
GHS = Globally Harmonized System of Classification and Labelling of Chemicals
LogPow = logarithm of the octanol/water partition coefficient
UN = United Nations
HPR = Hazardous Products Regulations

**Procedure used to derive the classification**

| Classification | Justification |
|---|---|
| CORROSIVE TO METALS - Category 1 | Expert judgment |
| SKIN CORROSION - Category 1 | On basis of test data |
| SERIOUS EYE DAMAGE - Category 1 | On basis of test data |
| CARCINOGENICITY - Category 1 | Calculation method |
| Health Hazards Not Otherwise Classified - Category 1 | Calculation method |

**Notice to reader**

**To the best of our knowledge, the information contained herein is accurate. However, neither the above-named supplier, nor any of its subsidiaries, assumes any liability whatsoever for the accuracy or completeness of the information contained herein.**
**Final determination of suitability of any material is the sole responsibility of the user. All materials may present unknown hazards and should be used with caution. Although certain hazards are described herein, we cannot guarantee that these are the only hazards that exist.**

# SAFETY DATA SHEET

## 1. Identification

| | |
|---|---|
| **Product identifier** | **HYDREX 3966** |
| **Other means of identification** | None. |
| **Recommended use** | Potable Water Treatment<br>PROFESSIONAL USE ONLY |
| **Recommended restrictions** | No other uses are advised. |

**Manufacturer/Importer/Supplier/Distributor information**

| | |
|---|---|
| **Supplier** | Veolia Water Technologies Canada Inc. |
| **Address** | 2000 Argentia Road, Plaza IV, Suite 430<br>Mississauga, ON L5N 1W1<br>Canada |
| **Contact Person** | Hydrex Product Specialist |
| **Telephone** | (905) 286-4846 |
| **Fax** | (905) 286-0488 |
| **e-mail** | vwtcanada-hydrex@veolia.com |
| **24-Hour Emergency telephone** | 24 Hour Number: +1-760-476-3962 (Code:333239) |
| **Supplier** | Not available. |

## 2. Hazard identification

| | | |
|---|---|---|
| **Physical hazards** | Self-heating substances and mixtures | Category 2 |
| **Health hazards** | Not classified. | |
| **Environmental hazards** | Not classified. | |

**Label elements**



| | |
|---|---|
| **Signal word** | Warning |
| **Hazard statement** | Self-heating in large quantities; may catch fire. |
| **Precautionary statement** | |
| **Prevention** | Keep cool. Wear protective gloves/protective clothing/eye protection/face protection. |
| **Response** | Wash hands after handling. |
| **Storage** | Maintain air gap between stacks or pallets. Store separately. |
| **Disposal** | Dispose of waste and residues in accordance with local authority requirements. |
| **Other hazards** | Warning: Wet activated carbon depletes oxygen from the air and therefore dangerously low levels of oxygen may be encountered. Whenever workers enter a vessel containing activated carbon, the oxygen content should be determined and work procedures for potentially low oxygen areas should be followed. |
| **Supplemental information** | None. |

## 3. Composition/information on ingredients

**Mixtures**

| Chemical name | Common name and synonyms | CAS number | % |
|---|---|---|---|
| Activated Carbon | | 7440-44-0 | 100 |

All concentrations are in percent by weight unless ingredient is a gas. Gas concentrations are in percent by volume.

## 4. First-aid measures

| | |
|---|---|
| **Inhalation** | Move to fresh air. Call a physician if symptoms develop or persist. |
| **Skin contact** | Wash off with soap and water. Get medical attention if irritation develops and persists. Remove and isolate contaminated clothing and shoes. |
| **Eye contact** | Rinse with water. Get medical attention if irritation develops and persists. |
| **Ingestion** | Rinse mouth. Drink 1 or 2 glasses of water. Get medical attention if symptoms occur. |
| **Most important symptoms/effects, acute and delayed** | Coughing. |
| **Indication of immediate medical attention and special treatment needed** | Treat symptomatically. Medications efficiency can be reduced by the adsorbing power of the activated carbon. |
| **General information** | Ensure that medical personnel are aware of the material(s) involved, and take precautions to protect themselves. |

## 5. Fire-fighting measures

| | |
|---|---|
| **Suitable extinguishing media** | Water fog. Foam. Dry chemical powder. Carbon dioxide (CO2). |
| **Unsuitable extinguishing media** | Not available. |
| **Specific hazards arising from the chemical** | During fire, gases hazardous to health may be formed. |
| **Special protective equipment and precautions for firefighters** | Self-contained breathing apparatus and full protective clothing must be worn in case of fire. |
| **Fire fighting equipment/instructions** | Use water spray to cool unopened containers. |
| **Specific methods** | Use standard firefighting procedures and consider the hazards of other involved materials. |
| **General fire hazards** | Self-heating in large quantities; may catch fire. |

## 6. Accidental release measures

| | |
|---|---|
| **Personal precautions, protective equipment and emergency procedures** | Keep unnecessary personnel away. Keep people away from and upwind of spill/leak. Wear appropriate protective equipment and clothing during clean-up. Ensure adequate ventilation. Local authorities should be advised if significant spillages cannot be contained. For personal protection, see section 8 of the SDS. |
| **Methods and materials for containment and cleaning up** | Stop the flow of material, if this is without risk.<br><br>Large Spills: Following product recovery, flush area with water. For waste disposal, see section 13 of the SDS. |
| **Environmental precautions** | Avoid discharge into drains, water courses or onto the ground. |

## 7. Handling and storage

| | |
|---|---|
| **Precautions for safe handling** | Keep cool. Provide adequate ventilation. Wear appropriate personal protective equipment. Observe good industrial hygiene practices. |
| **Conditions for safe storage, including any incompatibilities** | Store in a cool, dry place out of direct sunlight. Store in tightly closed container. Store away from other materials. Maintain air gap between stacks/pallets. Store in cool, dry place. Keep away from moisture. |

## 8. Exposure controls/personal protection

| | |
|---|---|
| **Occupational exposure limits** | No exposure limits noted for ingredient(s). |
| **Biological limit values** | No biological exposure limits noted for the ingredient(s). |
| **Appropriate engineering controls** | Not available. |

**Individual protection measures, such as personal protective equipment**

| | |
|---|---|
| **Eye/face protection** | Wear dust goggles. |
| **Skin protection** | |
| **Hand protection** | Chemical resistant gloves. |
| **Other** | Wear suitable protective clothing. Chemical resistant gloves. |

| | |
|---|---|
| **Respiratory protection** | In case of insufficient ventilation, wear suitable respiratory equipment. Wear a disposable respiratory equipment against droplets and which complies with NF EN 149, category P1. Use a particulate filter respirator for particulate concentrations exceeding the Occupational Exposure Limit. |
| **Thermal hazards** | Not applicable. |
| **General hygiene considerations** | Always observe good personal hygiene measures, such as washing after handling the material and before eating, drinking, and/or smoking. Routinely wash work clothing and protective equipment to remove contaminants. |

## *9. Physical and chemical properties*

| | |
|---|---|
| **Appearance** | |
| **Physical state** | Solid. |
| **Form** | Solid. Powder. |
| **Color** | Black. |
| **Odor** | Odorless. |
| **Odor threshold** | Not available. |
| **pH** | Not available. |
| **Melting point/freezing point** | Not available. |
| **Initial boiling point and boiling range** | Not available. |
| **Flash point** | Not available. |
| **Evaporation rate** | Not available. |
| **Flammability (solid, gas)** | Not available. |
| **Upper/lower flammability or explosive limits** | |
| **Flammability limit - lower (%)** | Not available. |
| **Flammability limit - upper (%)** | Not available. |
| **Explosive limit - lower (%)** | 60 g/m3 |
| **Explosive limit - upper (%)** | Not available. |
| **Vapor pressure** | Not available. |
| **Vapor density** | Not available. |
| **Relative density** | Not available. |
| **Solubility(ies)** | |
| **Solubility (water)** | 0 % OECD Guideline 105 (Water Solubility) |
| **Partition coefficient (n-octanol/water)** | Not applicable |
| **Auto-ignition temperature** | Not available. |
| **Decomposition temperature** | Not available. |
| **Viscosity** | Not available. |
| **Other information** | Physical and chemical properties of the saturated activated carbon may be different from the virgin material. |
| **Bulk density** | 300 - 600 kg/m³ |
| **Dust explosion properties** | |
| **Pmax** | 6 bar |
| **dP/dT** | 160 bar/s |
| **St class** | 1 Weak explosion. |
| **Minimum ignition energy (MIE) - dust cloud** | > 1200 mJ |

| | |
|---|---|
| **Minimum ignition temperature (MIT) - dust cloud** | 1256 °F (680 °C) EN50281/VDI2263 - dust cloud in contact with a hot surface (Godbert-Greenwald) |
| **Explosive properties** | Explosion risk in case of fire. |
| **Explosivity** | Explosible |
| **Oxidizing properties** | Not oxidizing. |
| **pH of 1% Solution** | 7 - 11 |

## 10. Stability and reactivity

| | |
|---|---|
| **Reactivity** | The product is stable and non-reactive under normal conditions of use, storage and transport. |
| **Chemical stability** | Material is stable under normal conditions. |
| **Possibility of hazardous reactions** | No dangerous reaction known under conditions of normal use. |
| **Conditions to avoid** | Keep away from heat, hot surfaces, sparks, open flames and other ignition sources. Contact with incompatible materials. |
| **Incompatible materials** | Oxygen. Chlorine. Solvents. Strong acids. Strong oxidizing agents. Combustible material. Humid air. |
| **Hazardous decomposition products** | At thermal decomposition temperatures, carbon monoxide and carbon dioxide. |

## 11. Toxicological information

**Information on likely routes of exposure**

| | |
|---|---|
| **Inhalation** | No adverse effects due to inhalation are expected. |
| **Skin contact** | No adverse effects due to skin contact are expected. |
| **Eye contact** | Direct contact with eyes may cause temporary irritation. |
| **Ingestion** | Expected to be a low ingestion hazard. |
| **Symptoms related to the physical, chemical and toxicological characteristics** | Coughing. |

**Information on toxicological effects**

**Acute toxicity** Not known.

| Product | Species | Test Results |
|---|---|---|
| HYDREX 3966 | | |
| **Acute** | | |
| **Inhalation** | | |
| *Dust* | | |
| LC50 | Rat | > 64 mg/l OECD 403 Acute Inhalation Toxicity |
| **Oral** | | |
| *Solid* | | |
| LD50 | Rat | > 2000 mg/kg bw/day OECD 423 |
| **Presumed Non-Toxic** | | |
| **Dermal** | | |
| *Solid* | | |
| LD50 | Rat | |

| | |
|---|---|
| **Skin corrosion/irritation** | Prolonged skin contact may cause temporary irritation. |
| **Serious eye damage/eye irritation** | Direct contact with eyes may cause temporary irritation. |

**Respiratory or skin sensitization**

| | |
|---|---|
| **Respiratory sensitization** | Not a respiratory sensitizer. |
| **Skin sensitization** | This product is not expected to cause skin sensitization. |
| **Germ cell mutagenicity** | No data available to indicate product or any components present at greater than 0.1% are mutagenic or genotoxic. |
| **Carcinogenicity** | Not classifiable as to carcinogenicity to humans. |

| | |
|---|---|
| **Reproductive toxicity** | This product is not expected to cause reproductive or developmental effects. |
| **Specific target organ toxicity - single exposure** | Not classified. |
| **Specific target organ toxicity - repeated exposure** | Not classified. |
| **Aspiration hazard** | Not an aspiration hazard. |

## 12. Ecological information

**Ecotoxicity** The product is not classified as environmentally hazardous. However, this does not exclude the possibility that large or frequent spills can have a harmful or damaging effect on the environment.

| Product | | Species | Test Results |
|---|---|---|---|
| HYDREX 3966 | | | |
| **Aquatic** | | | |
| *Acute* | | | |
| Algae | Presumed Non-Toxic | Algae | |
| Crustacea | Presumed Non-Toxic | Crustacea | |
| | | Daphnia | |
| Fish | Presumed Non-Toxic | Fish | |

| | |
|---|---|
| **Persistence and degradability** | The product is not biodegradable. |
| **Bioaccumulative potential** | It is expected to be nonbiodegradable and unlikely to bioconcentrate. |
| **Mobility in soil** | No data available. |
| **Other adverse effects** | No other adverse environmental effects (e.g. ozone depletion, photochemical ozone creation potential, endocrine disruption, global warming potential) are expected from this component. |

## 13. Disposal considerations

| | |
|---|---|
| **Disposal instructions** | Consult authorities before disposal. Dispose of contents/container in accordance with local/regional/national/international regulations. Warning: Wet activated carbon depletes oxygen from the air and therefore dangerously low levels of oxygen may be encountered. |
| **Local disposal regulations** | Dispose in accordance with all applicable regulations. |
| **Hazardous waste code** | The waste code should be assigned in discussion between the user, the producer and the waste disposal company. |
| **Waste from residues / unused products** | Dispose of in accordance with local regulations. Empty containers or liners may retain some product residues. This material and its container must be disposed of in a safe manner (see: Disposal instructions). |
| **Contaminated packaging** | Since emptied containers may retain product residue, follow label warnings even after container is emptied. Empty containers should be taken to an approved waste handling site for recycling or disposal. |

## 14. Transport information

**TDG**

| | |
|---|---|
| **UN number** | UN1362 |
| **UN proper shipping name** | CARBON, ACTIVATED |
| **Transport hazard class(es)** | |
| **Class** | 4.2 |
| **Subsidiary risk** | - |
| **Packing group** | III |
| **Environmental hazards** | Not available. |
| **Special precautions for user** | Read safety instructions, SDS and emergency procedures before handling. |

**IATA**

| | |
|---|---|
| **UN number** | UN1362 |
| **UN proper shipping name** | Carbon, activated |
| **Transport hazard class(es)** | |
| **Class** | 4.2 |

| | |
|---|---|
| **Subsidiary risk** | - |
| **Packing group** | III |
| **Environmental hazards** | No. |
| **ERG Code** | 4L |
| **Special precautions for user** | Read safety instructions, SDS and emergency procedures before handling. |
| **Other information** | |
| **Passenger and cargo aircraft** | Allowed with restrictions. |
| **Cargo aircraft only** | Allowed with restrictions. |

**IMDG**

| | |
|---|---|
| **UN number** | UN1362 |
| **UN proper shipping name** | CARBON, ACTIVATED |
| **Transport hazard class(es)** | |
| **Class** | 4.2 |
| **Subsidiary risk** | - |
| **Packing group** | III |
| **Environmental hazards** | |
| **Marine pollutant** | No. |
| **EmS** | F-A, S-J |
| **Special precautions for user** | Read safety instructions, SDS and emergency procedures before handling. |

**Transport in bulk according to Annex II of MARPOL 73/78 and the IBC Code** Not applicable.

**IATA; IMDG; TDG**




**General information** Under the UN classification for activated carbon, all activated carbons have been identified as a class 4.2 product. However, This product has been tested according to the United Nations Transport of Dangerous Goods test protocol for a "self-heating substance" (United Nations Transportation of Dangerous Goods, Manual of Tests and Criteria, Part III, Section 33.3.1.6 – Test N.4 – Test Method for Self Heating Substances) and it has been specifically determined that this product does not meet the definition of a self heating substance (class 4.2) or any other hazard class, and therefore should not be listed as a hazardous material. This information is applicable only for the Activated Carbon Product identified in this document.

## *15. Regulatory information*

**Canadian regulations** This product has been classified in accordance with the hazard criteria of the HPR and the SDS contains all the information required by the HPR.

**Controlled Drugs and Substances Act**

Not regulated.

**Export Control List (CEPA 1999, Schedule 3)**

Not listed.

**Greenhouse Gases**

Not listed.

**Precursor Control Regulations**

Not regulated.

**International regulations**

**Stockholm Convention**

Not applicable.

**Rotterdam Convention**

Not applicable.

**Kyoto protocol**

Not applicable.

**Montreal Protocol**

Not applicable.

**Basel Convention**

Not applicable.

**International Inventories**

| Country(s) or region | Inventory name | On inventory (yes/no)* |
|---|---|---|
| Australia | Australian Inventory of Chemical Substances (AICS) | Yes |
| Canada | Domestic Substances List (DSL) | Yes |
| Canada | Non-Domestic Substances List (NDSL) | No |
| China | Inventory of Existing Chemical Substances in China (IECSC) | Yes |
| Europe | European Inventory of Existing Commercial Chemical Substances (EINECS) | Yes |
| Europe | European List of Notified Chemical Substances (ELINCS) | No |
| Japan | Inventory of Existing and New Chemical Substances (ENCS) | No |
| Korea | Existing Chemicals List (ECL) | Yes |
| New Zealand | New Zealand Inventory | Yes |
| Philippines | Philippine Inventory of Chemicals and Chemical Substances (PICCS) | Yes |
| Taiwan | Taiwan Chemical Substance Inventory (TCSI) | No |
| United States & Puerto Rico | Toxic Substances Control Act (TSCA) Inventory | Yes |

*A "Yes" indicates that all components of this product comply with the inventory requirements administered by the governing country(s)
A "No" indicates that one or more components of the product are not listed or exempt from listing on the inventory administered by the governing country(s).

## *16. Other information*

**Issue date** 10-30-2020

**Version #** 01

**Disclaimer** Veolia Water Technologies is not able to anticipate all conditions under which this information and its product, or the products of other manufacturers in combination with its product, may be used. It is the user's responsibility to ensure safe conditions for handling, storage and disposal of the product, and to assume liability for loss, injury, damage or expense due to improper use and or non respect of Veolia Water Technologies' requirement.

**Revision information**

Product and Company Identification: Product Review
Composition / Information on Ingredients: Ingredients
Physical & Chemical Properties: Multiple Properties
Toxicological Information: Toxicological Data
Ecological Information: Ecotoxicity
Transport Information: Proper Shipping Name/Packing Group
Regulatory Information: United States
GHS: Classification

Jacobi | THE CARBON COMPANY

# TECHNICAL DATASHEET

# AquaSorb™ CP1

## Activated carbon for potable and industrial water treatment

AquaSorb™ CP1 is a high activity powdered activated carbon, specifically manufactured for the treatment of water for human consumption, in both municipal and industrial applications. This grade of activated carbon is highly microporous and is particularly suited to the removal of low molecular weight organics present in low concentrations. Manufactured from a sustainable raw material, AquaSorb™ CP1 contributes to a reduction in atmospheric carbon dioxide ($CO_2$). The material is compliant with international standards for activated carbon products used in this application.



**SPECIFICATION***

| | |
|---|---|
| Iodine adsorption | min. 1000 mg/g |
| Total ash content | max. 5% |
| Moisture content | max. 5% |

**TYPICAL PROPERTIES***

| | |
|---|---|
| Surface area (BET $N_2$) | 1050 $m^2/g$ |
| Water solubles | max. 3% |
| Apparent density, aspirated | 330 $kg/m^3$ |
| Apparent density, tapped | 505 $kg/m^3$ |

* SPECIFICATIONS AND TYPICAL PROPERTIES ARE PRODUCED USING JACOBI CARBONS' TEST METHODS. THEY ARE LISTED FOR INFORMATIONAL PURPOSES ONLY AND NOT TO BE USED AS PURCHASE SPECIFICATIONS. SALES SPECIFICATIONS CAN BE OBTAINED FROM YOUR JACOBI CARBONS TECHNICAL SALES REPRESENTATIVE AND SHOULD BE REVIEWED BEFORE PLACING AN ORDER.

### Features and Benefits

- Rapid adsorption kinetics
- High activity adsorbent
- Microporous product
- High trace contaminant removal efficiency
- Carefully controlled particle size
- Compliant with international standards (AWWA/EN12903/ ANSI NSF61)

### Available Particle Sizes

- PAC–C $d_{50}$ >35µm
- PAC–S $d_{50}$ 15-35µm
- PAC–F $d_{50}$ 8-15µm
- PAC-MG $d_{50}$ 6-10µm

### Supply options

- Standard PAC
- Pre-wetted carbon 'cake'
- Liquid suspension (HYDROSOL® S23)
- Other supply forms considered on request

### Standard Packaging

- 25 kg sack (55 lb)
- 500 kg bulk bag (1100 lb)
- Bulk tanker
- Other packing considered on request




Polypropylene liner-free FIBCs (super sacks), two bags per pallet

# Technical Datasheet: AquaSorb™ CP1








## SUSTAINABILITY

A variety of raw materials can be used for the manufacture of activated carbons. Only coconut shell is truly sustainable, using a renewable source of material that complements other uses for parts of the nut; from the flesh used for foodstuffs, to the coir used to produce matting.

The use of coconut shell in the production of activated carbon represents a net reduction of atmospheric Carbon Dioxide ($CO_2$), and almost a four-fold lower emission of greenhouse gases than the use of coal as a raw material source.

## PRODUCTION CAPABILITY

Jacobi Carbons operates multiple facilities for the manufacture of activated carbons. These production plants are strategically located close to market and raw material sources. With an annual output in excess of 70 000 metric tonnes, Jacobi Carbons is able to supply product to all locations around the globe.

Our production units are certified according to internationally recognised standards. Quality control is consistent throughout the group of companies and goods are always shipped in compliance with customer specifications.

**BURNING AND EXPLOSION CHARACTERISTICS**

| | | |
|---|---|---|
| Auto-ignition temperature | 260 °C | |
| Smolder temperature | No smoldering up to 400 °C | |
| Dust explosion class | St1 (weak explosion potential) | |
| TGA/TDA under air | 288°C (medium reactivity) | |
| Minimum ignition energy | >1200mJ | |
| Minimum ignition temperature | >680°C | |
| Lower explosion limit | >60g/m³ | |
| Explosion severity (20l sphere) | P max. | 6 bar |
| | MRE (ΔP) | 160 bar/s |
| | Kmax or Kst | 43 bar/m/s |

DATA PROVIDED IS INDICATIVE ONLY AND BASED ON THE ANALYSIS OF MATERIAL UNDER SPECIFIC CONDITIONS. THESE MAY NOT BE REPRESENTATIVE OF PREVAILING CIRCUMSTANCES DURING THE HANDLING AND USE OF THIS ACTIVATED CARBON GRADE.

## CARBON APPLICATION KNOWLEDGE

The supply of activated carbon products is supported by an industry-leading technical support service. Our in-house expertise extends over many years of practical experience in the design and utilisation of activated carbon in a variety of applications. Jacobi Carbons can assist in the design, specification and method of use of our products to achieve the optimum treatment outcome required. Our laboratory facilities support our product portfolio with a extensive library of technical data.

**NOTICE** Due to the progressive nature of the Jacobi Carbons Group and the continually improving design and performance of our products, we reserve the right to change product specifications without prior notification. The information contained in this datasheet is intended to assist a customer in the evaluation and selection of products supplied by Jacobi Carbons. The customer is responsible for determining whether products and the information contained in this document are appropriate for customer's use. Jacobi Carbons assumes no obligation or liability for the usage of the information in this datasheet, no guarantees or warranties, expressed or implied, are provided. Jacobi Carbons disclaims responsibility and the user must accept full responsibility for performance of systems based on this data.

**© Copyright 2012**. Jacobi, Jacobi Carbons, PICA and the Jacobi and PICA logos are registered trademarks and AquaSorb, EcoSorb, ColorSorb, DiaxSorb, AddSorb, ReSorb, PICACTIF, PICAPURE, PICATOX, PICACARB, PICAGOLD, PICARESP, PICAHYDRO and PICACLEAN are trademarks of Jacobi Carbons, all of which may or may not be used in certain jurisdictions.

JACOBI-TDS-AQUASORB-CP1-A4-ENG-C0414

LENNTECH
info@lenntech.com Te. 31-152-610-900
www.lenntech.com . 31-152-616-289

Jacobi THE CARBON COMPANY

# SAFETY DATA SHEET

## 1. Identification

| | |
|---|---|
| **Product identifier** | **HYDREX 9508** |
| **Other means of identification** | None. |
| **Recommended use** | Industrial Process Aid |
| **Recommended restrictions** | INDUSTRIAL USE ONLY. |
| **Manufacturer/Importer/Supplier/Distributor information** | |
| **Supplier** | Veolia Water Technologies Canada Inc. |
| **Address** | 2000 Argentia Road, Plaza IV, Suite 430<br>Mississauga, ON L5N 1W1<br>Canada |
| **Contact Person** | Hydrex Product Specialist |
| **Telephone** | (905) 286-4846 |
| **Fax** | (905) 286-0488 |
| **e-mail** | vwtcanada-hydrex@veolia.com |
| **24-Hour Emergency telephone** | 24 Hour Number: +1-760-476-3962 (Code:333239) |
| **Supplier** | Not available. |

## 2. Hazard identification

| | | |
|---|---|---|
| **Physical hazards** | Corrosive to metals | Category 1 |
| **Health hazards** | Acute toxicity, dermal | Category 4 |
| | Skin corrosion/irritation | Category 1A |
| | Serious eye damage/eye irritation | Category 1 |
| **Environmental hazards** | Hazardous to the aquatic environment, acute hazard | Category 3 |

**Label elements**



| | |
|---|---|
| **Signal word** | Danger |
| **Hazard statement** | May be corrosive to metals. Harmful in contact with skin. Causes severe skin burns and eye damage. Causes serious eye damage. Harmful to aquatic life. |
| **Precautionary statement** | |
| **Prevention** | Keep only in original packaging. Wash hands thoroughly after handling. Avoid release to the environment. Wear protective gloves/protective clothing/eye protection/face protection. Observe good industrial hygiene practices. |
| **Response** | IF SWALLOWED: Rinse mouth. Do NOT induce vomiting. IF ON SKIN (or hair): Take off immediately all contaminated clothing. Rinse skin with water. IF INHALED: Remove person to fresh air and keep comfortable for breathing. IF IN EYES: Rinse cautiously with water for several minutes. Remove contact lenses, if present and easy to do. Continue rinsing. Immediately call a POISON CENTER/doctor/paramedic. Call a POISON CENTER/doctor/paramedic if you feel unwell. Specific treatment (see First aid measures on this label). Take off contaminated clothing and wash it before reuse. Absorb spillage to prevent material-damage. Wash hands after handling. |
| **Storage** | Store in cool place. Store in corrosive resistant container with a resistant inner liner. Protect from sunlight. Store away from incompatible materials. |
| **Disposal** | Dispose of waste and residues in accordance with local authority requirements. Dispose of contents/container to an appropriate treatment and disposal facility in accordance with applicable laws and regulations, and product characteristics at time of disposal. |
| **Other hazards** | None known. |

**Supplemental information** None.

## 3. Composition/information on ingredients

**Mixtures**

| Chemical name | Common name and synonyms | CAS number | % |
|---|---|---|---|
| Sodium hydroxide | | 1310-73-2 | 95 - 100 |
| Non-hazardous ingredients | | | <5 |

*Designates that a specific chemical identity and/or percentage of composition has been withheld as a trade secret. All concentrations are in percent by weight unless ingredient is a gas. Gas concentrations are in percent by volume.

## 4. First-aid measures

**Inhalation** If breathing is difficult, remove to fresh air and keep at rest in a position comfortable for breathing. Call a physician if symptoms develop or persist.

**Skin contact** Take off immediately all contaminated clothing. Rinse skin with water/shower. Call a physician or poison control center immediately. Chemical burns must be treated by a physician. Wash contaminated clothing before reuse.

**Eye contact** Immediately flush eyes with plenty of water for at least 15 minutes. Remove contact lenses, if present and easy to do. Continue rinsing. Call a physician or poison control center immediately.

**Ingestion** Call a physician or poison control center immediately. Rinse mouth. Do not induce vomiting. If vomiting occurs, keep head low so that stomach content doesn't get into the lungs.

**Most important symptoms/effects, acute and delayed** Burning pain and severe corrosive skin damage. Causes serious eye damage. Symptoms may include stinging, tearing, redness, swelling, and blurred vision. Permanent eye damage including blindness could result.

**Indication of immediate medical attention and special treatment needed** Provide general supportive measures and treat symptomatically. Chemical burns: Flush with water immediately. While flushing, remove clothes which do not adhere to affected area. Call an ambulance. Continue flushing during transport to hospital. Keep victim warm. Keep victim under observation. Symptoms may be delayed.

**General information** If you feel unwell, seek medical advice (show the label where possible). Ensure that medical personnel are aware of the material(s) involved, and take precautions to protect themselves. Show this safety data sheet to the doctor in attendance.

## 5. Fire-fighting measures

**Suitable extinguishing media** Water fog. Foam. Dry chemical powder. Carbon dioxide (CO2).

**Unsuitable extinguishing media** Do not use water jet as an extinguisher, as this will spread the fire.

**Specific hazards arising from the chemical** During fire, gases hazardous to health may be formed.

**Special protective equipment and precautions for firefighters** Self-contained breathing apparatus and full protective clothing must be worn in case of fire.

**Fire fighting equipment/instructions** Move containers from fire area if you can do so without risk.

**Specific methods** Use standard firefighting procedures and consider the hazards of other involved materials.

**General fire hazards** No unusual fire or explosion hazards noted.

## 6. Accidental release measures

**Personal precautions, protective equipment and emergency procedures** Keep unnecessary personnel away. Wear appropriate protective equipment and clothing during clean-up. Do not touch damaged containers or spilled material unless wearing appropriate protective clothing. Ensure adequate ventilation. Local authorities should be advised if significant spillages cannot be contained.

**Methods and materials for containment and cleaning up**

Prevent entry into waterways, sewer, basements or confined areas.

Large Spills: Stop the flow of material, if this is without risk. Dike the spilled material, where this is possible. Absorb spillage to prevent material damage. Use a non-combustible material like vermiculite, sand or earth to soak up the product and place into a container for later disposal. Shovel up and place in a container for salvage or disposal. Following product recovery, flush area with water.

Small Spills: Sweep or scoop up and remove. Clean surface thoroughly to remove residual contamination.

Never return spills to original containers for re-use.

**Environmental precautions**

Avoid release to the environment. Inform appropriate managerial or supervisory personnel of all environmental releases. Prevent further leakage or spillage if safe to do so. Avoid discharge into drains, water courses or onto the ground.

## *7. Handling and storage*

**Precautions for safe handling**

Do not get in eyes, on skin, or on clothing. Avoid prolonged exposure. When using, do not eat, drink or smoke. Provide adequate ventilation. Wear appropriate personal protective equipment. Wash hands thoroughly after handling. Avoid release to the environment. Handle and open container with care. Wash contaminated clothing before reuse. Observe good industrial hygiene practices. Use care in handling/storage.

**Conditions for safe storage, including any incompatibilities**

Store in a cool, dry place out of direct sunlight. Store in corrosive resistant container with a resistant inner liner. Keep only in the original container. Use care in handling/storage. Store in cool, dry place.

## *8. Exposure controls/personal protection*

**Occupational exposure limits**

**US. ACGIH Threshold Limit Values**

| Material | Type | Value |
|---|---|---|
| HYDREX 9508 | Ceiling | 2 mg/m3 |
| **Components** | **Type** | **Value** |
| Sodium Hydroxide (CAS 1310-73-2) | Ceiling | 2 mg/m3 |

**Canada. Alberta OELs (Occupational Health & Safety Code, Schedule 1, Table 2)**

| Material | Type | Value |
|---|---|---|
| HYDREX 9508 | Ceiling | 2 mg/m3 |
| **Components** | **Type** | **Value** |
| Sodium Hydroxide (CAS 1310-73-2) | Ceiling | 2 mg/m3 |

**Canada. British Columbia OELs. (Occupational Exposure Limits for Chemical Substances, Occupational Health and Safety Regulation 296/97, as amended)**

| Material | Type | Value |
|---|---|---|
| HYDREX 9508 | Ceiling | 2 mg/m3 |
| **Components** | **Type** | **Value** |
| Sodium Hydroxide (CAS 1310-73-2) | Ceiling | 2 mg/m3 |

**Canada. Manitoba OELs (Reg. 217/2006, The Workplace Safety And Health Act)**

| Material | Type | Value |
|---|---|---|
| HYDREX 9508 | Ceiling | 2 mg/m3 |
| **Components** | **Type** | **Value** |
| Sodium Hydroxide (CAS 1310-73-2) | Ceiling | 2 mg/m3 |

**Canada. Ontario OELs. (Control of Exposure to Biological or Chemical Agents)**

| Material | Type | Value |
|---|---|---|
| HYDREX 9508 | Ceiling | 2 mg/m3 |
| **Components** | **Type** | **Value** |
| Sodium Hydroxide (CAS 1310-73-2) | Ceiling | 2 mg/m3 |

**Canada. Quebec OELs. (Ministry of Labor - Regulation respecting occupational health and safety)**

| Material | Type | Value |
|---|---|---|
| HYDREX 9508 | Ceiling | 2 mg/m3 |
| **Components** | **Type** | **Value** |
| Sodium Hydroxide (CAS 1310-73-2) | Ceiling | 2 mg/m3 |

**Canada. Saskatchewan OELs (Occupational Health and Safety Regulations, 1996, Table 21)**

| Material | Type | Value |
|---|---|---|
| HYDREX 9508 | Ceiling | 2 mg/m3 |
| **Components** | **Type** | **Value** |
| Sodium Hydroxide (CAS 1310-73-2) | Ceiling | 2 mg/m3 |

**Biological limit values** No biological exposure limits noted for the ingredient(s).

**Exposure guidelines** No exposure standards allocated.

**Appropriate engineering controls** General ventilation normally adequate. Eye wash facilities and emergency shower must be available when handling this product.

**Individual protection measures, such as personal protective equipment**

**Eye/face protection** Wear safety glasses with side shields (or goggles) and a face shield. Chemical goggles and face shield are recommended.

**Skin protection**

**Hand protection** Chemical resistant gloves. Suitable gloves can be recommended by the glove supplier.

**Other** Wear appropriate chemical resistant clothing. Use of an impervious apron is recommended. Chemical resistant gloves.

**Respiratory protection** In case of insufficient ventilation, wear suitable respiratory equipment.

**Thermal hazards** Not applicable.

**General hygiene considerations** Always observe good personal hygiene measures, such as washing after handling the material and before eating, drinking, and/or smoking. Routinely wash work clothing and protective equipment to remove contaminants.

## *9. Physical and chemical properties*

**Appearance**

**Physical state** Solid.

**Form** Powder. Dry flowable granules. Flakes.

**Color** White

**Odor** Odorless.

**Odor threshold** Not available.

**pH** 12 [0.05% wt/wt solution]

**Melting point/freezing point** 613.4 °F (323 °C)

**Initial boiling point and boiling range** 2530.4 °F (1388 °C)

**Flash point** Not available.

**Evaporation rate** Not available.

**Flammability (solid, gas)** Not available.

**Upper/lower flammability or explosive limits**

| | |
|---|---|
| **Flammability limit - lower (%)** | Not available. |
| **Flammability limit - upper (%)** | Not available. |
| **Explosive limit - lower (%)** | Not available. |
| **Explosive limit - upper (%)** | Not available. |
| **Vapor pressure** | < 0.0000001 kPa at 25 °C |
| **Vapor density** | Not available. |
| **Relative density** | Not available. |
| **Solubility(ies)** | |
| **Solubility (water)** | 1110 g/l |
| **Partition coefficient (n-octanol/water)** | Not available. |
| **Auto-ignition temperature** | Not available. |
| **Decomposition temperature** | Not available. |
| **Viscosity** | Not available. |
| **Other information** | |
| **Density** | 2.13 g/cm3 estimated at 25 °C |
| **Explosive properties** | Not explosive. |
| **Oxidizing properties** | Not oxidizing. |
| **Specific gravity** | 2.13 at 25 °C |
| **Surface tension** | 101.05 mN/m (64.4 °F (18 °C)) |

## *10. Stability and reactivity*

| | |
|---|---|
| **Reactivity** | Reacts violently with strong acids. This product may react with oxidizing agents. May be corrosive to metals. |
| **Chemical stability** | Material is stable under normal conditions. |
| **Possibility of hazardous reactions** | No dangerous reaction known under conditions of normal use. Hazardous polymerization does not occur. |
| **Conditions to avoid** | Contact with incompatible materials. Do not mix with other chemicals. |
| **Incompatible materials** | Strong acids. Acids. Strong oxidizing agents. Oxidizing agents. Metals. |
| **Hazardous decomposition products** | No dangerous reaction known under conditions of normal use. Thermal decomposition can emit : Sodium oxides. |

## *11. Toxicological information*

**Information on likely routes of exposure**

| | |
|---|---|
| **Inhalation** | May cause irritation to the respiratory system. Prolonged inhalation may be harmful. |
| **Skin contact** | Causes severe skin burns. Harmful in contact with skin. |
| **Eye contact** | Causes serious eye damage. |
| **Ingestion** | Causes digestive tract burns. May cause discomfort if swallowed. However, ingestion is not likely to be a primary route of occupational exposure. |
| **Symptoms related to the physical, chemical and toxicological characteristics** | Burning pain and severe corrosive skin damage. Causes serious eye damage. Symptoms may include stinging, tearing, redness, swelling, and blurred vision. Permanent eye damage including blindness could result. Exposure may cause temporary irritation, redness, or discomfort. |

**Information on toxicological effects**

| | |
|---|---|
| **Acute toxicity** | Harmful in contact with skin. |

| Components | Species | Test Results |
|---|---|---|
| Sodium hydroxide (CAS 1310-73-2) | | |
| **Acute** | | |
| **Oral** | | |
| *Liquid* | | |
| LD50 | Rat | > 300 mg/kg |

* Estimates for product may be based on additional component data not shown.

**Skin corrosion/irritation** Causes severe skin burns and eye damage.

**Serious eye damage/eye irritation** Causes serious eye damage.

**Respiratory or skin sensitization**

**Canada - Alberta OELs: Irritant**

Sodium hydroxide (CAS 1310-73-2) Irritant

**Respiratory sensitization** Not a respiratory sensitizer.

**Skin sensitization** This product is not expected to cause skin sensitization.

**Germ cell mutagenicity** No data available to indicate product or any components present at greater than 0.1% are mutagenic or genotoxic.

**Carcinogenicity** This product is not considered to be a carcinogen by IARC, ACGIH, NTP, or OSHA. Not classifiable as to carcinogenicity to humans.

**Reproductive toxicity** This product is not expected to cause reproductive or developmental effects.

**Specific target organ toxicity - single exposure** Based on available data, the classification criteria are not met.

**Specific target organ toxicity - repeated exposure** Not classified.

**Aspiration hazard** Not an aspiration hazard.

**Chronic effects** Not expected to be hazardous by WHMIS criteria. Prolonged inhalation may be harmful.

## 12. Ecological information

**Ecotoxicity** Harmful to aquatic life.

| Components | | Species | Test Results |
|---|---|---|---|
| Sodium hydroxide (CAS 1310-73-2) | | | |
| **Aquatic** | | | |
| *Acute* | | | |
| Crustacea | EC50 | Water flea (Ceriodaphnia dubia) | 34.59 - 47.13 mg/l, 48 hours |
| Fish | LC50 | Western mosquitofish (Gambusia affinis) | 125 mg/l, 96 hours |

* Estimates for product may be based on additional component data not shown.

**Persistence and degradability** Not applicable.

**Bioaccumulative potential** No data available.

**Mobility in soil** No data available.

**Other adverse effects** No other adverse environmental effects (e.g. ozone depletion, photochemical ozone creation potential, endocrine disruption, global warming potential) are expected from this component.

## 13. Disposal considerations

**Disposal instructions** Contract with a disposal operator licensed by the Law on Disposal and Cleaning. Do not allow this material to drain into sewers/water supplies. Do not contaminate ponds, waterways or ditches with chemical or used container. Dispose of contents/container in accordance with local/regional/national/international regulations. When your own wastewater treatment plant is not available, collect entire waste and then charge to a licensed industrial waste management professional with manifests for industrial waste.

**Local disposal regulations** Dispose in accordance with all applicable regulations.

**Hazardous waste code** D002: Waste Corrosive material [pH <=2 or =>12.5, or corrosive to steel]
The waste code should be assigned in discussion between the user, the producer and the waste disposal company.

| | |
|---|---|
| **Waste from residues / unused products** | Dispose of in accordance with local regulations. Empty containers or liners may retain some product residues. This material and its container must be disposed of in a safe manner (see: Disposal instructions). Not applicable. |
| **Contaminated packaging** | Empty containers should be taken to an approved waste handling site for recycling or disposal. Since emptied containers may retain product residue, follow label warnings even after container is emptied. |

## *14. Transport information*

**TDG**

| | |
|---|---|
| **UN number** | UN1823 |
| **UN proper shipping name** | SODIUM HYDROXIDE, SOLID |
| **Transport hazard class(es)** | |
| **Class** | 8 |
| **Subsidiary risk** | - |
| **Packing group** | II |
| **Environmental hazards** | Not available. |
| **Special precautions for user** | Not available. |

**IATA**

| | |
|---|---|
| **UN number** | UN1823 |
| **UN proper shipping name** | Sodium hydroxide, solid |
| **Transport hazard class(es)** | |
| **Class** | 8 |
| **Subsidiary risk** | - |
| **Packing group** | II |
| **Environmental hazards** | No. |
| **ERG Code** | 8L |
| **Special precautions for user** | Not available. |
| **Other information** | |
| **Passenger and cargo aircraft** | Allowed with restrictions. |
| **Cargo aircraft only** | Allowed with restrictions. |

**IMDG**

| | |
|---|---|
| **UN number** | UN1823 |
| **UN proper shipping name** | SODIUM HYDROXIDE, SOLID |
| **Transport hazard class(es)** | |
| **Class** | 8 |
| **Subsidiary risk** | - |
| **Packing group** | II |
| **Environmental hazards** | |
| **Marine pollutant** | No. |
| **EmS** | F-A, S-B |
| **Special precautions for user** | Not available. |

**Transport in bulk according to Annex II of MARPOL 73/78 and the IBC Code** Not established.

**IATA; IMDG; TDG**



## 15. Regulatory information

**Canadian regulations** This product has been classified in accordance with the hazard criteria of the CPR and the SDS contains all the information required by the CPR.

**Controlled Drugs and Substances Act**

Not regulated.

**Export Control List (CEPA 1999, Schedule 3)**

Not listed.

**Greenhouse Gases**

Not listed.

**Precursor Control Regulations**

Not regulated.

**International regulations** The product is classified and labelled in accordance with EC directives or respective national laws This Safety Data Sheet complies with the requirements of Regulation (EC) No 1907/2006. The product does not need to be labelled in accordance with EC directives or respective national laws.

**Stockholm Convention**

Not applicable.

**Rotterdam Convention**

Not applicable.

**Kyoto protocol**

Not applicable.

**Montreal Protocol**

Not applicable.

**Basel Convention**

Not applicable.

**International Inventories**

| Country(s) or region | Inventory name | On inventory (yes/no)* |
|---|---|---|
| Australia | Australian Inventory of Chemical Substances (AICS) | Yes |
| Canada | Domestic Substances List (DSL) | Yes |
| Canada | Non-Domestic Substances List (NDSL) | No |
| China | Inventory of Existing Chemical Substances in China (IECSC) | Yes |
| Europe | European Inventory of Existing Commercial Chemical Substances (EINECS) | Yes |
| Europe | European List of Notified Chemical Substances (ELINCS) | No |
| Japan | Inventory of Existing and New Chemical Substances (ENCS) | Yes |
| Korea | Existing Chemicals List (ECL) | Yes |
| New Zealand | New Zealand Inventory | Yes |
| Philippines | Philippine Inventory of Chemicals and Chemical Substances (PICCS) | Yes |
| Taiwan | Taiwan Chemical Substance Inventory (TCSI) | No |
| United States & Puerto Rico | Toxic Substances Control Act (TSCA) Inventory | Yes |

*A "Yes" indicates that all components of this product comply with the inventory requirements administered by the governing country(s)
A "No" indicates that one or more components of the product are not listed or exempt from listing on the inventory administered by the governing country(s).

## 16. Other information

**Issue date** 10-29-2020

**Version #** 01

**Further information** HMIS® is a registered trade and service mark of the NPCA.

**References**

ACGIH
ACGIH Documentation of the Threshold Limit Values and Biological Exposure Indices
EPA: AQUIRE database
GOST 30333-2007 - Chemical production safety passport. General requirements
HSDB® - Hazardous Substances Data Bank
IARC Monographs. Overall Evaluation of Carcinogenicity
National Toxicology Program (NTP) Report on Carcinogens
NLM: Hazardous Substances Data Base
US. IARC Monographs on Occupational Exposures to Chemical Agents
Korea. Accidental Release Prevention Substances (Presidential Decree of Toxic Chemical Control Law, Executive Order No. 19203)
Korea. Dangerous Substances Threshold Quantity (Presidential Decree of Dangerous Substances Safety Management Act No. 18406, Schedule 1)
Korea. Harmful Substances Prohibited from Manufacturing (Presidential Decree on the Industrial Safety and Health Act (No. 13053), Article 29)
Korea. Harmful Substances Requiring Permission for Manufacture or Use (Presidential Decree on the Industrial Safety and Health Act (No. 13053), Article 30)
Korea. Non-Toxic Chemicals List (National Institute of Environment Research (NIER) Public Notice No. 1997-10, as amended)
Korea. Observational Chemicals (Ministerial Decree of TCCL Article 6)
Korea. OELs. Regulation for Permitted Concentration of Hazardous Substances (Ministry of Labor (MOL) Public Notice No. 1986-45, as amended)
Korea. Prohibited Chemical Substances (TCCL Article 11)
Korea. Regulated volatile organic compounds (VOCs) (MOE Notice No. 2001-36, March 8, 2001, as amended)
Korea. Restricted Chemical Substances (TCCL Article 11)
Korea. Toxic Chemical Control Law (TCCL), Existing Chemicals Inventory (KECI)
Korea. Toxic Chemical Control Law (TCCL), pre-1997 List
Korea. Toxic Chemicals (TCCL Article 10)
Korea. Toxic Release Inventory (TRI) Chemicals (TCCL Article 14)
Taiwan. Dangerous Materials (Rules on Hazard Communication of Dangerous Materials and Toxic Materials)
Taiwan. Industrial Precursor Chemicals (Categories and Regulations Governing Inspection and Declaration of Industrial Precursor Chemicals, MOEA Decree No. 87, as amended)
Taiwan. OELs. (Standards on Workplace Atmosphere of Dangerous and Hazardous Materials)
Taiwan. Toxic Chemical Substances (TCS) (List of Toxic Chemical Substances announced by the Environmental Protection Administration)
Taiwan. Toxic Materials (Rules on Hazard Communication of Dangerous Materials and Toxic Materials)
Japan Society for Occupational Health, Recommendation of Occupational Exposure Limits
Japan Chemical Industry Association (JCIA) GHS Guideline, June 2012
JIS Z 7252:2014 Classification of chemicals based on "Globally Harmonized System of Classification and Labelling of Chemicals (GHS)"
JIS Z 7253:2012 Hazard communication of chemicals based on GHS – Labelling and Safety Data Sheet (SDS)

**Disclaimer**

Veolia Water Technologies is not able to anticipate all conditions under which this information and its product, or the products of other manufacturers in combination with its product, may be used. It is the user's responsibility to ensure safe conditions for handling, storage and disposal of the product, and to assume liability for loss, injury, damage or expense due to improper use and or non respect of Veolia Water Technologies' requirement.

# SAFETY DATA SHEET

## 1. Identification

| | |
|---|---|
| **Product identifier** | **HYDREX 9566** |
| **Other means of identification** | None. |
| **Recommended use** | Industrial Process Aid<br>PROFESSIONAL USE ONLY |
| **Recommended restrictions** | No other uses are advised. |
| **Manufacturer/Importer/Supplier/Distributor information** | |
| **Supplier** | Veolia Water Technologies Canada Inc. |
| **Address** | 2000 Argentia Road, Plaza IV, Suite 430<br>Mississauga, ON L5N 1W1<br>Canada |
| **Contact Person** | Hydrex Product Specialist |
| **Telephone** | (905) 286-4846 |
| **Fax** | (905) 286-0488 |
| **e-mail** | vwtcanada-hydrex@veolia.com |
| **24-Hour Emergency telephone** | 24 Hour Number: +1-760-476-3962 (Code:333239) |
| **Supplier** | Not available. |

## 2. Hazard identification

| | |
|---|---|
| **Physical hazards** | Not classified. |
| **Health hazards** | Not classified. |
| **Environmental hazards** | Not classified. |
| **Label elements** | |
| **Hazard symbol** | None. |
| **Signal word** | None. |
| **Hazard statement** | The mixture does not meet the criteria for classification. |
| **Precautionary statement** | |
| **Prevention** | Observe good industrial hygiene practices. |
| **Response** | Wash hands after handling. |
| **Storage** | Store away from incompatible materials. |
| **Disposal** | Dispose of waste and residues in accordance with local authority requirements. |
| **Other hazards** | None known. |
| **Supplemental information** | None. |

## 3. Composition/information on ingredients

**Mixtures**

| Chemical name | Common name and synonyms | CAS number | % |
|---|---|---|---|
| SODIUM THIOSULFATE | | 10102-17-7 | 99 |
| Other components below reportable levels | | | 1 |

All concentrations are in percent by weight unless ingredient is a gas. Gas concentrations are in percent by volume.

## 4. First-aid measures

| | |
|---|---|
| **Inhalation** | Move to fresh air. Call a physician if symptoms develop or persist. |
| **Skin contact** | Wash off with soap and water. Get medical attention if irritation develops and persists. |
| **Eye contact** | Rinse with water. Get medical attention if irritation develops and persists. |
| **Ingestion** | Rinse mouth. Get medical attention if symptoms occur. |

| | |
|---|---|
| **Most important symptoms/effects, acute and delayed** | Direct contact with eyes may cause temporary irritation. |
| **Indication of immediate medical attention and special treatment needed** | Treat symptomatically. |
| **General information** | Ensure that medical personnel are aware of the material(s) involved, and take precautions to protect themselves. |

## 5. Fire-fighting measures

| | |
|---|---|
| **Suitable extinguishing media** | Water fog. Foam. Dry chemical powder. Carbon dioxide (CO2). |
| **Unsuitable extinguishing media** | Not available. |
| **Specific hazards arising from the chemical** | During fire, gases hazardous to health may be formed. |
| **Special protective equipment and precautions for firefighters** | Self-contained breathing apparatus and full protective clothing must be worn in case of fire. |
| **Fire fighting equipment/instructions** | Use water spray to cool unopened containers. |
| **Specific methods** | Use standard firefighting procedures and consider the hazards of other involved materials. |
| **General fire hazards** | No unusual fire or explosion hazards noted. |

## 6. Accidental release measures

| | |
|---|---|
| **Personal precautions, protective equipment and emergency procedures** | Keep unnecessary personnel away. For personal protection, see section 8 of the SDS. |
| **Methods and materials for containment and cleaning up** | Stop the flow of material, if this is without risk. Following product recovery, flush area with water. For waste disposal, see section 13 of the SDS. |
| **Environmental precautions** | Avoid discharge into drains, water courses or onto the ground. |

## 7. Handling and storage

| | |
|---|---|
| **Precautions for safe handling** | Observe good industrial hygiene practices. |
| **Conditions for safe storage, including any incompatibilities** | Protect from sunlight. Store in tightly closed container. Store away from incompatible materials (see Section 10 of the SDS). Store in cool, dry place. |

## 8. Exposure controls/personal protection

| | |
|---|---|
| **Occupational exposure limits** | No exposure limits noted for ingredient(s). |
| **Biological limit values** | No biological exposure limits noted for the ingredient(s). |
| **Appropriate engineering controls** | General ventilation normally adequate. |

**Individual protection measures, such as personal protective equipment**

| | |
|---|---|
| **Eye/face protection** | Do not get this material in contact with eyes. Wear safety glasses with side shields (or goggles). |
| **Skin protection** | |
| **Hand protection** | Wear appropriate chemical resistant gloves. |
| **Other** | Wear appropriate chemical resistant clothing. |
| **Respiratory protection** | In case of insufficient ventilation, wear suitable respiratory equipment. |
| **Thermal hazards** | Not applicable. |
| **General hygiene considerations** | Always observe good personal hygiene measures, such as washing after handling the material and before eating, drinking, and/or smoking. Routinely wash work clothing and protective equipment to remove contaminants. |

## 9. Physical and chemical properties

**Appearance**

| | |
|---|---|
| **Physical state** | Solid. |
| **Form** | Crystalline. |

| | |
|---|---|
| **Color** | Colorless to White |
| **Odor** | Odorless. |
| **Odor threshold** | Not available. |
| **pH** | Not available. |
| **Melting point/freezing point** | 118.4 °F (48 °C) |
| **Initial boiling point and boiling range** | Not available. |
| **Flash point** | Not available. |
| **Evaporation rate** | Not available. |
| **Flammability (solid, gas)** | Not available. |
| **Upper/lower flammability or explosive limits** | |
| **Flammability limit - lower (%)** | Not available. |
| **Flammability limit - upper (%)** | Not available. |
| **Explosive limit - lower (%)** | Not available. |
| **Explosive limit - upper (%)** | Not available. |
| **Vapor pressure** | Not available. |
| **Vapor density** | Not available. |
| **Relative density** | Not available. |
| **Solubility(ies)** | |
| **Solubility (water)** | Not available. |
| **Partition coefficient (n-octanol/water)** | Not available. |
| **Auto-ignition temperature** | Not available. |
| **Decomposition temperature** | Not available. |
| **Viscosity** | Not available. |
| **Other information** | |
| **Density** | 1.01 g/ml |
| **Explosive properties** | Not explosive. |
| **Oxidizing properties** | Not oxidizing. |
| **Specific gravity** | 1.69 |
| **pH of 10% Solution** | 6 - 9 |

## *10. Stability and reactivity*

| | |
|---|---|
| **Reactivity** | The product is stable and non-reactive under normal conditions of use, storage and transport. |
| **Chemical stability** | Material is stable under normal conditions. |
| **Possibility of hazardous reactions** | No dangerous reaction known under conditions of normal use. |
| **Conditions to avoid** | Keep away from heat, hot surfaces, sparks, open flames and other ignition sources. Contact with incompatible materials. |
| **Incompatible materials** | Strong oxidizing agents. |
| **Hazardous decomposition products** | No dangerous reaction known under conditions of normal use. Thermal decomposition can emit : Sulfur oxides, Sodium oxides. |

## *11. Toxicological information*

**Information on likely routes of exposure**

| | |
|---|---|
| **Inhalation** | No adverse effects due to inhalation are expected. |
| **Skin contact** | No adverse effects due to skin contact are expected. |
| **Eye contact** | Direct contact with eyes may cause temporary irritation. |
| **Ingestion** | Expected to be a low ingestion hazard. |

**Symptoms related to the physical, chemical and toxicological characteristics** Direct contact with eyes may cause temporary irritation.

**Information on toxicological effects**

| Product | Species | Test Results |
|---|---|---|
| HYDREX 9566 | | |
| **Acute** | | |
| **Oral** | | |
| *Solid* | | |
| LD50 | Rat | > 2500 mg/kg |
| **Presumed Non-Toxic** | | |
| **Dermal** | | |
| *Solid* | | |

**Skin corrosion/irritation** Prolonged skin contact may cause temporary irritation.

**Serious eye damage/eye irritation** Direct contact with eyes may cause temporary irritation.

**Respiratory or skin sensitization**

**Respiratory sensitization** Not a respiratory sensitizer.

**Skin sensitization** This product is not expected to cause skin sensitization.

**Germ cell mutagenicity** No data available to indicate product or any components present at greater than 0.1% are mutagenic or genotoxic.

**Carcinogenicity** Not listed by ACGIH, IARC, NIOSH, NTP OR OSHA.

**Reproductive toxicity** This product is not expected to cause reproductive or developmental effects.

**Specific target organ toxicity - single exposure** Not classified.

**Specific target organ toxicity - repeated exposure** Not classified.

**Aspiration hazard** Not an aspiration hazard.

## 12. Ecological information

**Ecotoxicity** The product is not classified as environmentally hazardous. However, this does not exclude the possibility that large or frequent spills can have a harmful or damaging effect on the environment.

| Product | | Species | Test Results |
|---|---|---|---|
| HYDREX 9566 | | | |
| **Aquatic** | | | |
| *Acute* | | | |
| Crustacea | EC50 | Daphnia | > 100 mg/l, 48 hours |
| Fish | LC50 | Fish | >= 100 mg/l, 96 hours |

| Components | | Species | Test Results |
|---|---|---|---|
| SODIUM THIOSULFATE (CAS 10102-17-7) | | | |
| **Aquatic** | | | |
| Fish | LC50 | Western mosquitofish (Gambusia affinis) | 24000 mg/l, 96 hours |

**Persistence and degradability** No data is available on the degradability of any ingredients in the mixture.

**Bioaccumulative potential** No data available.

**Mobility in soil** No data available.

**Other adverse effects** No other adverse environmental effects (e.g. ozone depletion, photochemical ozone creation potential, endocrine disruption, global warming potential) are expected from this component.

## 13. Disposal considerations

**Disposal instructions** Collect and reclaim or dispose in sealed containers at licensed waste disposal site.

**Local disposal regulations** Dispose in accordance with all applicable regulations.

**Hazardous waste code** The waste code should be assigned in discussion between the user, the producer and the waste disposal company.

| | |
|---|---|
| **Waste from residues / unused products** | Dispose of in accordance with local regulations. Empty containers or liners may retain some product residues. This material and its container must be disposed of in a safe manner (see: Disposal instructions). |
| **Contaminated packaging** | Since emptied containers may retain product residue, follow label warnings even after container is emptied. Empty containers should be taken to an approved waste handling site for recycling or disposal. |

## 14. Transport information

**TDG**

Not regulated as dangerous goods.

**IATA**

Not regulated as dangerous goods.

**IMDG**

Not regulated as dangerous goods.

| | |
|---|---|
| **Transport in bulk according to Annex II of MARPOL 73/78 and the IBC Code** | Not applicable. |

## 15. Regulatory information

**Canadian regulations**

This product has been classified in accordance with the hazard criteria of the HPR and the SDS contains all the information required by the HPR.

**Controlled Drugs and Substances Act**

Not regulated.

**Export Control List (CEPA 1999, Schedule 3)**

Not listed.

**Greenhouse Gases**

Not listed.

**Precursor Control Regulations**

Not regulated.

**International regulations**

**Stockholm Convention**

Not applicable.

**Rotterdam Convention**

Not applicable.

**Kyoto protocol**

Not applicable.

**Montreal Protocol**

Not applicable.

**Basel Convention**

Not applicable.

**International Inventories**

| Country(s) or region | Inventory name | On inventory (yes/no)* |
|---|---|---|
| Australia | Australian Inventory of Chemical Substances (AICS) | Yes |
| Canada | Domestic Substances List (DSL) | Yes |
| Canada | Non-Domestic Substances List (NDSL) | No |
| China | Inventory of Existing Chemical Substances in China (IECSC) | Yes |
| Europe | European Inventory of Existing Commercial Chemical Substances (EINECS) | Yes |
| Europe | European List of Notified Chemical Substances (ELINCS) | No |
| Japan | Inventory of Existing and New Chemical Substances (ENCS) | Yes |
| Korea | Existing Chemicals List (ECL) | Yes |
| New Zealand | New Zealand Inventory | Yes |
| Philippines | Philippine Inventory of Chemicals and Chemical Substances (PICCS) | Yes |
| Taiwan | Taiwan Chemical Substance Inventory (TCSI) | No |

| Country(s) or region | Inventory name | On inventory (yes/no)* |
|---|---|---|
| United States & Puerto Rico | Toxic Substances Control Act (TSCA) Inventory | Yes |

*A "Yes" indicates that all components of this product comply with the inventory requirements administered by the governing country(s)
A "No" indicates that one or more components of the product are not listed or exempt from listing on the inventory administered by the governing country(s).

## *16. Other information*

**Issue date** 10-30-2020

**Version #** 01

**Disclaimer** Veolia Water Technologies is not able to anticipate all conditions under which this information and its product, or the products of other manufacturers in combination with its product, may be used. It is the user's responsibility to ensure safe conditions for handling, storage and disposal of the product, and to assume liability for loss, injury, damage or expense due to improper use and or non respect of Veolia Water Technologies' requirement.

**Revision information**
Product and Company Identification: Product Review
Composition / Information on Ingredients: Ingredients
Physical & Chemical Properties: Multiple Properties
Toxicological Information: Toxicological Data
Ecological Information: Ecotoxicity
GHS: Classification

# SAFETY DATA SHEET

## 1. Identification

| | |
|---|---|
| **Product identifier** | **HYDREX 9578** |
| **Other means of identification** | None. |
| **Recommended use** | Disinfectants for drinking water.<br>PROFESSIONAL USE ONLY |
| **Recommended restrictions** | No other uses are advised. |

**Manufacturer/Importer/Supplier/Distributor information**

| | |
|---|---|
| **Supplier** | Veolia Water Technologies Canada Inc. |
| **Address** | 2000 Argentia Road, Plaza IV, Suite 430<br>Mississauga, ON L5N 1W1<br>Canada |
| **Contact Person** | Hydrex Product Specialist |
| **Telephone** | (905) 286-4846 |
| **Fax** | (905) 286-0488 |
| **e-mail** | vwtcanada-hydrex@veolia.com |
| **24-Hour Emergency telephone** | 24 Hour Number: +1-760-476-3962 (Code:333239) |
| **Supplier** | Not available. |

## 2. Hazard identification

| | | |
|---|---|---|
| **Physical hazards** | Oxidizing solids | Category 2 |
| **Health hazards** | Acute toxicity, oral | Category 4 |
| | Skin corrosion/irritation | Category 1B |
| | Serious eye damage/eye irritation | Category 1 |
| **Environmental hazards** | Hazardous to the aquatic environment, acute hazard | Category 1 |

**Label elements**



| | |
|---|---|
| **Signal word** | Danger |
| **Hazard statement** | May intensify fire; oxidizer. Harmful if swallowed. Causes severe skin burns and eye damage. Very toxic to aquatic life. |

**Precautionary statement**

| | |
|---|---|
| **Prevention** | Keep away from heat, hot surfaces, sparks, open flames and other ignition sources. No smoking. Keep away from clothing and other combustible materials. Wash thoroughly after handling. Do not eat, drink or smoke when using this product. Avoid release to the environment. Wear protective gloves/protective clothing/eye protection/face protection. |
| **Response** | IF SWALLOWED: Rinse mouth. Do NOT induce vomiting. IF ON SKIN (or hair): Take off immediately all contaminated clothing. Rinse skin with water. IF INHALED: Remove person to fresh air and keep comfortable for breathing. IF IN EYES: Rinse cautiously with water for several minutes. Remove contact lenses, if present and easy to do. Continue rinsing. Immediately call a POISON CENTER/doctor. Wash contaminated clothing before reuse. In case of fire: Use appropriate media to extinguish. Collect spillage. |
| **Storage** | Store locked up. |
| **Disposal** | Dispose of contents/container in accordance with local/regional/national/international regulations. |
| **Other hazards** | None known. |
| **Supplemental information** | None. |

## 3. Composition/information on ingredients

**Mixtures**

| Chemical name | Common name and synonyms | CAS number | % |
|---|---|---|---|
| Calcium hypochlorite | CALCIUM HYPOCHLORITE MIXTURE, DRY<br>HYPOCHLOROUS ACID, CALCIUM SALT (AS TOTAL AVAILABLE CHLORINE)<br>HTH<br>Lime chloride | 7778-54-3 | 60 - 80 |
| Hydrated Lime | Hydrated lime<br>LIME WATER<br>MILK OF LIME<br>SLAKED LIME | 1305-62-0 | 5 -15 |
| Non-hazardous ingredients | | | 5 - 10 |

All concentrations are in percent by weight unless ingredient is a gas. Gas concentrations are in percent by volume.

## 4. First-aid measures

**Inhalation** Move to fresh air. Call a physician if symptoms develop or persist.

**Skin contact** If on clothing: Rinse immediately contaminated clothing and skin with plenty of water before removing clothes. Rinse skin with water/shower. Call a physician or poison control center immediately. Chemical burns must be treated by a physician. Wash contaminated clothing before reuse.

**Eye contact** Immediately flush eyes with plenty of water for at least 15 minutes. Remove contact lenses, if present and easy to do. Continue rinsing. Call a physician or poison control center immediately.

**Ingestion** Call a physician or poison control center immediately. Rinse mouth. Do not induce vomiting. If vomiting occurs, keep head low so that stomach content doesn't get into the lungs.

**Most important symptoms/effects, acute and delayed** Burning pain and severe corrosive skin damage. Causes serious eye damage. Symptoms may include stinging, tearing, redness, swelling, and blurred vision. Permanent eye damage including blindness could result.

**Indication of immediate medical attention and special treatment needed** Provide general supportive measures and treat symptomatically. Chemical burns: Flush with water immediately. While flushing, remove clothes which do not adhere to affected area. Call an ambulance. Continue flushing during transport to hospital. Keep victim warm. Keep victim under observation. Symptoms may be delayed.

**General information** Take off all contaminated clothing immediately. Contact with combustible material may cause fire. Ensure that medical personnel are aware of the material(s) involved, and take precautions to protect themselves. Show this safety data sheet to the doctor in attendance. Wash contaminated clothing before reuse.

## 5. Fire-fighting measures

**Suitable extinguishing media** Water fog. Foam. Dry chemical powder. Carbon dioxide (CO2).

**Unsuitable extinguishing media** An explosion can occur if either a carbon tetrachloride or a dry ammonium compound fire extinguisher is used to extinguish a fire involving calcium hypochlorite.

**Specific hazards arising from the chemical** Greatly increases the burning rate of combustible materials. Containers may explode when heated. During fire, gases hazardous to health may be formed.

**Special protective equipment and precautions for firefighters** Self-contained breathing apparatus and full protective clothing must be worn in case of fire.

**Fire fighting equipment/instructions** In case of fire and/or explosion do not breathe fumes. Move containers from fire area if you can do so without risk. Use water spray to cool unopened containers.

**Specific methods** Cool containers exposed to flames with water until well after the fire is out.

**General fire hazards** May intensify fire; oxidizer. Contact with combustible material may cause fire.

## 6. Accidental release measures

**Personal precautions, protective equipment and emergency procedures** Keep unnecessary personnel away. Keep people away from and upwind of spill/leak. Keep away from clothing and other combustible materials. Wear appropriate protective equipment and clothing during clean-up. Do not touch damaged containers or spilled material unless wearing appropriate protective clothing. Ensure adequate ventilation. Local authorities should be advised if significant spillages cannot be contained. For personal protection, see section 8 of the SDS.

**Methods and materials for containment and cleaning up**

Eliminate all ignition sources (no smoking, flares, sparks, or flames in immediate area). Keep combustibles (wood, paper, oil, etc.) away from spilled material. Ventilate the contaminated area. Minimize dust generation and accumulation. Wear appropriate protective equipment and clothing during clean-up. Prevent product from entering drains.

Large Spills: Seek advice of a specialist. Following product recovery, flush area with water.

Small Spills: Transfer to a container that contains water. Carefully destroy the hypochlorite by adding hydrogen peroxide. Hydrogen peroxide reacts with calcium hypochlorite to form calcium chloride and oxygen gas. Do not close container. Other chemicals that can be used are sodium sulfite and sodium bisulfite. Once calcium hypochlorite is reduced, the remaining solution should be neutralized cautiously with dilute hydrochloric acid or sulfuric acid to near neutral pH level. Clean surface thoroughly to remove residual contamination.

Never return spills to original containers for re-use. For waste disposal, see section 13 of the SDS.

**Environmental precautions**

Avoid release to the environment. Inform appropriate managerial or supervisory personnel of all environmental releases. Prevent further leakage or spillage if safe to do so. Avoid discharge into drains, water courses or onto the ground.

## 7. Handling and storage

**Precautions for safe handling**

Minimize dust generation and accumulation. Routine housekeeping should be instituted to ensure that dusts do not accumulate on surfaces. Keep away from heat. Take any precaution to avoid mixing with combustibles. Keep away from clothing and other combustible materials. Do not get in eyes, on skin, or on clothing. Do not taste or swallow. When using, do not eat, drink or smoke. Provide adequate ventilation. Wear appropriate personal protective equipment. Wash hands thoroughly after handling. Avoid release to the environment. Observe good industrial hygiene practices.

**Conditions for safe storage, including any incompatibilities**

Store locked up. Keep away from heat. Store in a cool, dry place out of direct sunlight. Store in tightly closed container. Store in a well-ventilated place. Do not store near combustible materials. Store away from incompatible materials (see Section 10 of the SDS). Store in cool, dry place. To maintain good product quality and a shelf life of 12 months, store between 5°C (41°F) and 30°C (86°F). Keep from contact with oxidizing materials, highly oxygenated or halogenated solvents, organic compounds containing reducible functional groups, or aqueous ammonia. Charcoal (activated or not). Urea. Organic sulfur compounds.

## 8. Exposure controls/personal protection

**Occupational exposure limits**

**US. ACGIH Threshold Limit Values**

| Components | Type | Value |
|---|---|---|
| HYDRATED LIME (CAS 1305-62-0) | TWA | 5 mg/m3 |

**Canada. Alberta OELs (Occupational Health & Safety Code, Schedule 1, Table 2)**

| Components | Type | Value |
|---|---|---|
| HYDRATED LIME (CAS 1305-62-0) | TWA | 5 mg/m3 |

**Canada. British Columbia OELs. (Occupational Exposure Limits for Chemical Substances, Occupational Health and Safety Regulation 296/97, as amended)**

| Components | Type | Value |
|---|---|---|
| HYDRATED LIME (CAS 1305-62-0) | TWA | 5 mg/m3 |

**Canada. Manitoba OELs (Reg. 217/2006, The Workplace Safety And Health Act)**

| Components | Type | Value |
|---|---|---|
| HYDRATED LIME (CAS 1305-62-0) | TWA | 5 mg/m3 |

**Canada. Ontario OELs. (Control of Exposure to Biological or Chemical Agents)**

| Components | Type | Value |
|---|---|---|
| HYDRATED LIME (CAS 1305-62-0) | TWA | 5 mg/m3 |

**Canada. Quebec OELs. (Ministry of Labor - Regulation respecting occupational health and safety)**

| Components | Type | Value |
|---|---|---|
| HYDRATED LIME (CAS 1305-62-0) | TWA | 5 mg/m3 |

**Biological limit values** No biological exposure limits noted for the ingredient(s).

**Appropriate engineering controls** Good general ventilation should be used. Ventilation rates should be matched to conditions. If applicable, use process enclosures, local exhaust ventilation, or other engineering controls to maintain airborne levels below recommended exposure limits. If exposure limits have not been established, maintain airborne levels to an acceptable level. Eye wash facilities and emergency shower must be available when handling this product.

**Individual protection measures, such as personal protective equipment**

**Eye/face protection** Avoid contact with eyes. Wear chemical goggles. Provide an emergency eye wash fountain and quick drench shower in the immediate work area.

**Skin protection**

**Hand protection** Wear protective gloves. PVC or rubber gloves are recommended.

**Other** Wear appropriate chemical resistant clothing. Use of an impervious apron is recommended.

**Respiratory protection** In case of insufficient ventilation, wear suitable respiratory equipment. NIOSH RECOMMENDATIONS FOR CHLORINE CONCENTRATIONS IN AIR: Up to 5 ppm: (APF = 10) Chemical cartridge respirator; SAR. Up to 10 ppm: (APF = 25) SAR operated in a continuous-flow mode; Powered, air-purifying respirator with cartridge(s).

**Thermal hazards** Not applicable.

**General hygiene considerations** Keep from contact with clothing and other combustible materials. Remove and wash contaminated clothing promptly. Keep away from food and drink. Always observe good personal hygiene measures, such as washing after handling the material and before eating, drinking, and/or smoking. Routinely wash work clothing and protective equipment to remove contaminants.

## *9. Physical and chemical properties*

**Appearance**

**Physical state** Solid.

**Form** Powder. or Granular.

**Color** White. or Light grey.

**Odor** Slight Chlorine.

**Odor threshold** Not available.

**pH** Not available.

**Melting point/freezing point** Not available.

**Initial boiling point and boiling range** Not available.

**Flash point** Not available.

**Evaporation rate** Not available.

**Flammability (solid, gas)** Not available.

**Upper/lower flammability or explosive limits**

**Flammability limit - lower (%)** Not available.

**Flammability limit - upper (%)** Not available.

**Explosive limit - lower (%)** Not available.

**Explosive limit - upper (%)** Not available.

**Vapor pressure** Not available.

**Vapor density** 6.9

**Relative density** Not available.

**Solubility(ies)**

**Solubility (water)** > 200 g/l

| | |
|---|---|
| **Partition coefficient (n-octanol/water)** | -2.46 |
| **Auto-ignition temperature** | Not available. |
| **Decomposition temperature** | 212 °F (100 °C) |
| **Viscosity** | Not available. |
| **Other information** | |
| **Dust explosion properties** | |
| **Kst** | 0 (non-combustible dust) |
| **St class** | Not Applicable |
| **Explosive properties** | Not explosive. |
| **Oxidizing properties** | May intensify fire; oxidizer. |
| **Specific gravity** | 2.35 |
| **pH of 1% Solution** | 12 - 12.5 |

## *10. Stability and reactivity*

| | |
|---|---|
| **Reactivity** | Greatly increases the burning rate of combustible materials. |
| **Chemical stability** | Material is stable under normal conditions. |
| **Possibility of hazardous reactions** | Hazardous polymerization does not occur. |
| **Conditions to avoid** | Keep away from heat, hot surfaces, sparks, open flames and other ignition sources. Avoid temperatures exceeding the decomposition temperature. Contact with incompatible materials. |
| **Incompatible materials** | Water, moisture. Acids. Oxidizing agents. Combustible material. Reducing agents. Maleic anhydride. Nitroethane. Nitromethane. Nitroparaffins. Nitropropane. Phosphorus. Cyanides. Ethanol. Metals. Sulfur compounds. |
| **Hazardous decomposition products** | Hydrogen chloride. Oxygen. Chlorine compounds. |

## *11. Toxicological information*

**Information on likely routes of exposure**

| | |
|---|---|
| **Inhalation** | May cause irritation to the respiratory system. |
| **Skin contact** | Causes severe skin burns. |
| **Eye contact** | Causes serious eye damage. |
| **Ingestion** | Causes digestive tract burns. Harmful if swallowed. |
| **Symptoms related to the physical, chemical and toxicological characteristics** | Burning pain and severe corrosive skin damage. Causes serious eye damage. Symptoms may include stinging, tearing, redness, swelling, and blurred vision. Permanent eye damage including blindness could result. |

**Information on toxicological effects**

**Acute toxicity** Harmful if swallowed.

| Components | Species | Test Results |
|---|---|---|
| Calcium hypochlorite (CAS 7778-54-3) | | |
| **Acute** | | |
| **Dermal** | | |
| *Solid* | | |
| LD50 | Rat | 2200 mg/kg |
| **Inhalation** | | |
| *Dust* | | |
| LC50 | Rat | 480 mg/m3 |
| **Oral** | | |
| LD50 | Rat | 850 mg/kg |
| Hydrated Lime (CAS 1305-62-0) | | |
| **Acute** | | |
| **Oral** | | |
| LD50 | Rat | 7300 mg/kg |

**Skin corrosion/irritation** Causes severe skin burns and eye damage.

**Serious eye damage/eye irritation** Causes serious eye damage.

**Respiratory or skin sensitization**

**Canada - Alberta OELs: Irritant**

Hydrated Lime (CAS 1305-62-0) Irritant

**Respiratory sensitization** Not a respiratory sensitizer.

**Skin sensitization** This product is not expected to cause skin sensitization.

**Germ cell mutagenicity** No data available to indicate product or any components present at greater than 0.1% are mutagenic or genotoxic.

**Carcinogenicity**

**IARC Monographs. Overall Evaluation of Carcinogenicity**

Calcium hypochlorite (CAS 7778-54-3) 3 Not classifiable as to carcinogenicity to humans.

**Reproductive toxicity** This product is not expected to cause reproductive or developmental effects.

**Specific target organ toxicity - single exposure** May cause respiratory irritation.

**Specific target organ toxicity - repeated exposure** Not classified.

**Aspiration hazard** Not an aspiration hazard.

## *12. Ecological information*

**Ecotoxicity** Very toxic to aquatic life.

| Product | | Species | Test Results |
|---|---|---|---|
| HYDREX 9578 | | | |
| **Aquatic** | | | |
| Crustacea | EC50 | Daphnia | 1.16 mg/l, 48 hours estimated |
| Fish | LC50 | Fish | 0.26 mg/l, 96 hours estimated |
| **Components** | | **Species** | **Test Results** |
| Calcium hypochlorite (CAS 7778-54-3) | | | |
| **Aquatic** | | | |
| Crustacea | EC50 | Rotifer (Philodina acuticornis) | 0.07 mg/l, 48 hours |
| Fish | LC50 | Atlantic silverside (Menidia menidia) | 0.04 mg/l, 96 hours |
| Hydrated Lime (CAS 1305-62-0) | | | |
| *Acute* | | | |
| Other | EC50 | Pseudokirchnerella subcapitata | 184.57 mg/l, 72 hours |
| | LD50 | Bird | 111 mg/kg |
| **Aquatic** | | | |
| *Acute* | | | |
| Crustacea | LC50 | Crustacea | 50 - 500 mg/l, 96 hours |
| Fish | LC50 | Threespine stickleback (Gasterosteus aculeatus) | 262 - 785 mg/l, 96 hours |
| | | Western mosquitofish (Gambusia affinis) | 220 mg/l, 48 hours |
| | | Zambezi barbel (Clarias gariepinus) | 33.88 mg/l, 96 hours |

**Persistence and degradability** No data is available on the degradability of any ingredients in the mixture.

**Bioaccumulative potential** No data available.

**Partition coefficient n-octanol / water (log Kow)**

HYDREX 9578 -2.46

**Mobility in soil** No data available.

**Other adverse effects** No other adverse environmental effects (e.g. ozone depletion, photochemical ozone creation potential, endocrine disruption, global warming potential) are expected from this component.

## 13. Disposal considerations

| | |
|---|---|
| **Disposal instructions** | Collect and reclaim or dispose in sealed containers at licensed waste disposal site. Do not allow this material to drain into sewers/water supplies. Do not contaminate ponds, waterways or ditches with chemical or used container. Dispose of contents/container in accordance with local/regional/national/international regulations. |
| **Local disposal regulations** | Dispose in accordance with all applicable regulations. |
| **Hazardous waste code** | The waste code should be assigned in discussion between the user, the producer and the waste disposal company. |
| **Waste from residues / unused products** | Dispose of in accordance with local regulations. Empty containers or liners may retain some product residues. This material and its container must be disposed of in a safe manner (see: Disposal instructions). |
| **Contaminated packaging** | Since emptied containers may retain product residue, follow label warnings even after container is emptied. Empty containers should be taken to an approved waste handling site for recycling or disposal. |

## 14. Transport information

**TDG**

| | |
|---|---|
| **UN number** | UN2880 |
| **UN proper shipping name** | CALCIUM HYPOCHLORITE, HYDRATED, with not less than 5.5% but not more than 16% water |
| **Transport hazard class(es)** | |
| **Class** | 5.1 |
| **Subsidiary risk** | - |
| **Packing group** | II |
| **Environmental hazards** | Not available. |
| **Special precautions for user** | Read safety instructions, SDS and emergency procedures before handling. |

**IATA**

| | |
|---|---|
| **UN number** | UN2880 |
| **UN proper shipping name** | Calcium hypochlorite, hydrated with >= 5.5% but <= 16% water |
| **Transport hazard class(es)** | |
| **Class** | 5.1 |
| **Subsidiary risk** | - |
| **Packing group** | II |
| **Environmental hazards** | No. |
| **ERG Code** | 5L |
| **Special precautions for user** | Read safety instructions, SDS and emergency procedures before handling. |
| **Other information** | |
| **Passenger and cargo aircraft** | Allowed with restrictions. |
| **Cargo aircraft only** | Allowed with restrictions. |

**IMDG**

| | |
|---|---|
| **UN number** | UN2880 |
| **UN proper shipping name** | CALCIUM HYPOCHLORITE, HYDRATED or CALCIUM HYPOCHLORITE, HYDRATED MIXTURE with not less than 5.5% but not more than 16% water |
| **Transport hazard class(es)** | |
| **Class** | 5.1 |
| **Subsidiary risk** | - |
| **Packing group** | II |
| **Environmental hazards** | |
| **Marine pollutant** | No. |
| **EmS** | F-H, S-Q |
| **Special precautions for user** | Read safety instructions, SDS and emergency procedures before handling. |

**Transport in bulk according to Annex II of MARPOL 73/78 and the IBC Code** Not applicable.

**IATA; IMDG; TDG**




## 15. Regulatory information

**Canadian regulations** This product has been classified in accordance with the hazard criteria of the HPR and the SDS contains all the information required by the HPR.

**Controlled Drugs and Substances Act**

Not regulated.

**Export Control List (CEPA 1999, Schedule 3)**

Not listed.

**Greenhouse Gases**

Not listed.

**Precursor Control Regulations**

Not regulated.

**International regulations**

**Stockholm Convention**

Not applicable.

**Rotterdam Convention**

Not applicable.

**Kyoto protocol**

Not applicable.

**Montreal Protocol**

Not applicable.

**Basel Convention**

Not applicable.

**International Inventories**

| Country(s) or region | Inventory name | On inventory (yes/no)* |
|---|---|---|
| Australia | Australian Inventory of Chemical Substances (AICS) | Yes |
| Canada | Domestic Substances List (DSL) | Yes |
| Canada | Non-Domestic Substances List (NDSL) | No |
| China | Inventory of Existing Chemical Substances in China (IECSC) | Yes |
| Europe | European Inventory of Existing Commercial Chemical Substances (EINECS) | Yes |
| Europe | European List of Notified Chemical Substances (ELINCS) | No |
| Japan | Inventory of Existing and New Chemical Substances (ENCS) | Yes |
| Korea | Existing Chemicals List (ECL) | Yes |
| New Zealand | New Zealand Inventory | Yes |
| Philippines | Philippine Inventory of Chemicals and Chemical Substances (PICCS) | Yes |
| Taiwan | Taiwan Chemical Substance Inventory (TCSI) | No |
| United States & Puerto Rico | Toxic Substances Control Act (TSCA) Inventory | Yes |

*A "Yes" indicates that all components of this product comply with the inventory requirements administered by the governing country(s)
A "No" indicates that one or more components of the product are not listed or exempt from listing on the inventory administered by the governing country(s).

## 16. Other information

**Issue date** 10-30-2020

| | |
|---|---|
| **Revision date** | 02-25-2021 |
| **Version #** | 02 |
| **Disclaimer** | Veolia Water Technologies is not able to anticipate all conditions under which this information and its product, or the products of other manufacturers in combination with its product, may be used. It is the user's responsibility to ensure safe conditions for handling, storage and disposal of the product, and to assume liability for loss, injury, damage or expense due to improper use and or non respect of Veolia Water Technologies' requirement. |
| **Revision information** | Product and Company Identification: Product Review<br>Composition / Information on Ingredients: Undisclosed Ingredient Statement<br>Physical & Chemical Properties: Multiple Properties<br>Transport Information: Proper Shipping Name/Packing Group<br>GHS: Classification |

# Appendix D

# PROCESS FUNCTIONAL DESCRIPTION

## Agnico Eagle Mines Limited

## WATER TREATMENT PLANT- AMMONIA REMOVAL USING BREAKPOINT CHLORINATION

Rev. 2

**VEOLIA WATER TECHNOLOGIES CANADA**

www.veoliawatertechnologies.com

*WATER TECHNOLOGIES*

# REVISION STATUS

| Issue | Date | Created | Reviewed | Approved | Description of Changes |
|---|---|---|---|---|---|
| 1 | 2021/03/08 | ED | GP | GP | First Issue |
| 2 | 2021/04/23 | GM | ED | ED | Revision of Appendix D |
| | | | | | |
| | | | | | |
| | | | | | |

# TABLE OF CONTENTS


**1 INTRODUCTION ..... 8**

1.1 PROJECT DEFINITION ..... 8

1.2 PROCESS SUMMARY ..... 8

*1.2.1 Breakpoint Chlorination for Ammonia Removal ..... 8*

*1.2.2 Dechlorination Using Activated Carbon ..... 9*

*1.2.3 Breakpoint Chlorination Actiflo ..... 10*

*1.2.4 Secondary Actiflo ..... 11*

*1.2.5 Discfilter Filtration ..... 12*

*1.2.6 Backwash tank ..... 12*

*1.2.7 Sludge tank ..... 12*

1.3 LIST OF RELATED DOCUMENTS ..... 13

1.4 LIST OF ABBREVIATIONS ..... 13

1.5 LIST OF UNITS ..... 13

**2 OVERALL PLANT CONTROL ..... 14**

2.1 OVERVIEW ..... 14

2.2 PLANT OVERALL CONTROL ..... 14

**3 INLET FLOWRATE DISTRIBUTION ..... 16**

3.1 DESCRIPTION ..... 16

3.2 CONTROLS ..... 17

*3.2.1 Flow rates calculation ..... 17*

*3.2.2 Flow control mode ..... 20*

3.3 FAULT RESPONSE ..... 20

**4 CHLORINATION TANK ..... 21**

4.1 DESCRIPTION ..... 21
4.2 CONTROLS ..... 21
*4.2.1 Chlorination tank Start/Stop/Auto function ..... 21*
*4.2.2 Alkali pH control loop ..... 22*
*4.2.3 Acid pH control loop ..... 22*
*4.2.4 Ammonia and chlorine residual control ..... 23*
4.3 SYSTEM AVAILABILITY CONDITIONS ..... 24
4.4 FAULT RESPONSE ..... 24
4.5 INTERLOCKS ..... 25
**5 DECHLORINATION TANK ..... 26**
5.1 DESCRIPTION ..... 26
5.2 CONTROLS ..... 26
*5.2.1 Dechlorination tank Start/Stop/Auto function ..... 26*
*5.2.2 Chlorine residual control ..... 27*
*5.2.3 Coagulant dosage ..... 27*
5.3 SYSTEM AVAILABILITY CONDITIONS ..... 27
5.4 FAULT RESPONSE ..... 27
5.5 INTERLOCKS ..... 28
**6 BREAKPOINT CHLORINATION ACTIFLO ..... 29**
6.1 DESCRIPTION ..... 29
6.2 CONTROLS ..... 30
*6.2.1 Acticarb Start/Stop/Auto function ..... 30*
*6.2.2 Sodium thiosulfate dosage ..... 30*
6.3 FAULT RESPONSE ..... 31

6.4 INTERLOCKS. ....32

**7 SECONDARY ACTIFLO ....33**

7.1 CONTROLS ....34

*7.1.1 Actiflo® Start/Stop/Auto function ....34*

*7.1.2 Sludge recirculation/extraction control ....34*

7.2 FAULT RESPONSE ....35

7.3 INTERLOCKS. ....35

**8 DISCFILTER ....36**

8.1 DESCRIPTION ....36

8.2 CONTROLS ....37

8.3 FAULT RESPONSE ....37

8.4 INTERLOCKS. ....37

**9 HYDRACARB ....38**

9.1 DESCRIPTION ....38

9.2 CONTROLS ....38

9.3 FAULT RESPONSE ....38

9.4 INTERLOCKS. ....38

**10 SAMPLING AND ANALYSES UNIT ....39**

10.1 PROCESS OVERVIEW ....39

10.2 CONTROLS ....39

*10.2.1 Calculation of the chlorine concentration ....39*

*10.2.2 Pump control ....40*

10.2.2.1 Dilution flow control ....40

10.2.2.2 Chlorine residual control ....40

10.3 SYSTEM AVAILABILITY CONDITIONS ....40

10.4 FAULT RESPONSE ..... 40

**11 TREATED WATER ..... 42**

11.1 DESCRIPTION ..... 42

11.2 CONTROLS ..... 42

FAULT RESPONSE ..... 43

11.3 ..... 43

11.4 INTERLOCK ..... 43

**12 BACKWASH TANK ..... 44**

12.1 DESCRIPTION ..... 44

12.2 CONTROLS ..... 44

*12.2.1 Level control ..... 44*

*12.2.2 Backwash tank transfer pumps' Logic ..... 45*

12.3 FAULT RESPONSE ..... 46

12.4 INTERLOCK ..... 46

**13 SLUDGE TANK ..... 47**

13.1 DESCRIPTION ..... 47

13.2 CONTROLS ..... 47

*13.2.1 Level control ..... 47*

*13.2.2 Sludge tank mixing ..... 48*

13.3 FAULT RESPONSE ..... 48

13.4 INTERLOCK ..... 48

**14 SUMMARY OF INTERLOCKS THAT TRIGGER WTP TRIP ..... 49**

**15 TRENDS ..... 51**

15.1 GRAPHIC PAGES ..... 51

15.2 DISPLAY AND INDICATIONS ..... 51

15.3 FAULTS AND ALARMS ....51
15.4 COMPILED DATA ....52
15.5 TRENDS ....52
15.6 ALARM MANAGEMENT ....52
**APPENDIX A ....53**
**APPENDIX B ....54**
**APPENDIX C ....55**
**APPENDIX D ....56**
**APPENDIX E ....57**

# 1 INTRODUCTION

## 1.1 Project Definition

Veolia Water Technologies Canada (VWTC) was contracted by Agnico Eagles Mines (A.E.M.) to supply the equipment for a mining effluent treatment.

VWTC is responsible for the supply of mechanical equipment.

This control narrative shall be read in conjunction with the related documents as listed in Section 1.3.

## 1.2 Process Summary

The treatment system proposed will consist of the following steps:

- Breakpoint chlorination for ammonia removal
- Dechlorination using activated carbon
- Breakpoint chlorination Actiflo
- Secondary Actiflo
- Discfilter filtration
- Backwash tank
- Sludge tank

### 1.2.1 Breakpoint Chlorination for Ammonia Removal

Part of the raw water, which is composed of a mix of underground saline water and surface water, is sent to a closed-top reaction tank where a hypochlorite source and an alkali (NaOH) are added. The hypochlorite is a compound added to oxidize the ammonia ($NH_{4+}$) into mainly nitrogen gas ($N_2$) through breakpoint chlorination and ammonia and nitrite ($NO_{2-}$) into nitrates ($NO_{3-}$) through simple oxidation. The hypochlorite dosage is adjusted according to the dissolved organic carbon (DOC), nitrites and ammonia concentrations in the raw water as all of these compounds will consume the added chlorine.

The hypochlorite injected in the water produces hypochlorous acid (HOCl). The hypochlorous acid is a weak acid, and part of the hypochlorous acid is decomposed in water into hypochlorite ions ($OCl_-$) depending of the pH. The pH can be adjusted to optimize the hypochlorite ion concentration in the reactor, therefore optimizing the chlorine dosage. The control of the pH also prevents the release of chlorine gas, which can be observed in acidic pH and which is a safety and corrosion issue.

The hypochlorous acid and hypochlorite ions in solution will first be consumed by reducing agents and organic matter contained in the water. When more chlorine is added in solution and there is a presence of ammonia, the ammonia will react to form chloramines, specifically monochloramines ($NH_2Cl$). When the

quantity of chlorine is sufficient, the monochloramine will be destroyed, and depending of the concentration, will be transformed in dichloramines ($NHCl_2$) or trichloramines ($NCl_3$) and then, finally, in nitrogen ($N_2$). If the quantity of chlorine injected is sufficient, a breakpoint is reached where all chloramines and ammonia are converted into nitrogen. The raw water is sent to a reaction tank where calcium hypochlorite and an alkali are added. The calcium hypochlorite is a compound added to oxidize the ammonia ($NH_4^+$) into nitrogen ($N_2$). The calcium hypochlorite feed is added as a function of nitrites ($NO_2^-$) and ammonia concentration in the raw water.

The Figure 1.1 below presents a typical curve showing chlorination breakpoint

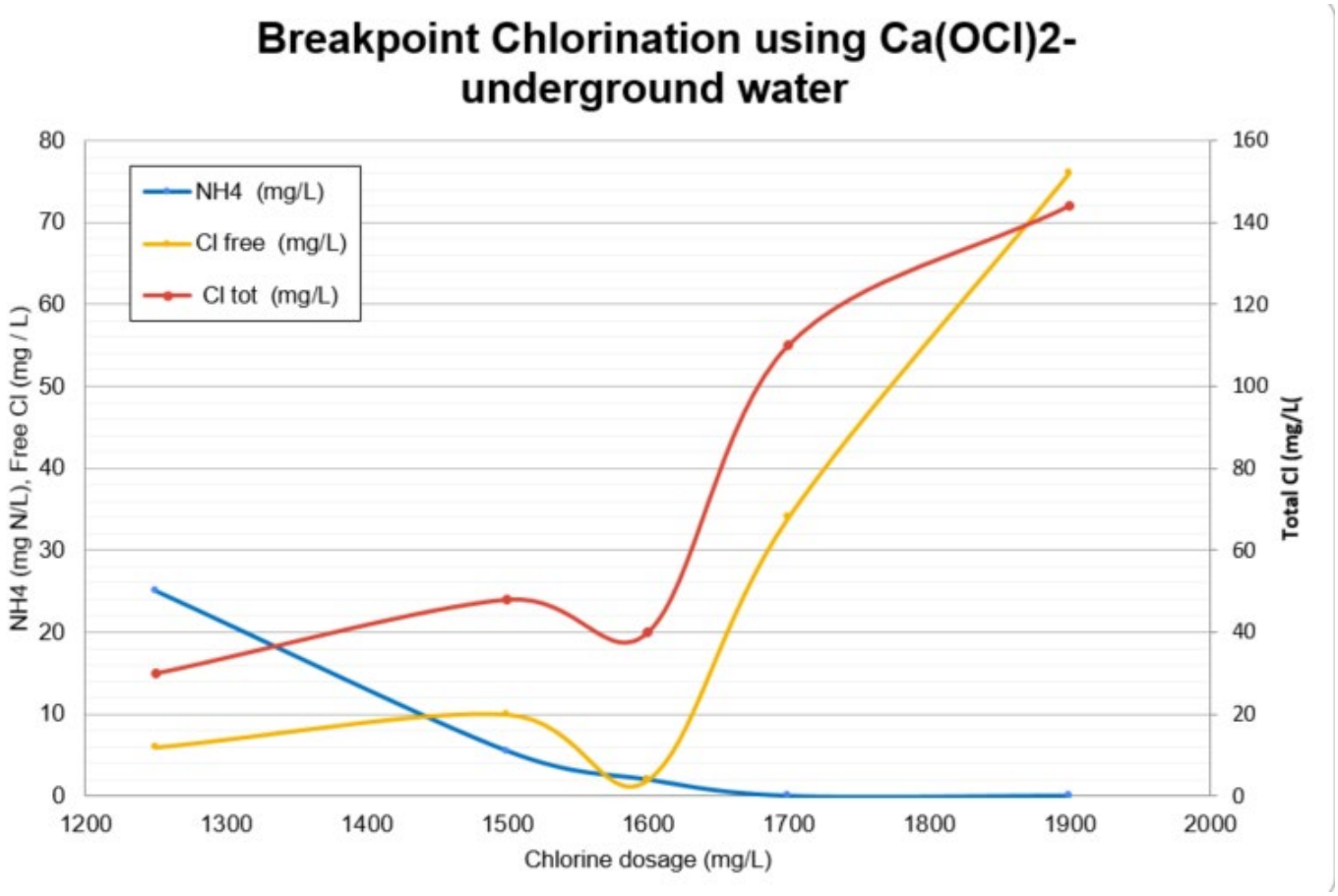


Figure 1: Breakpoint chlorination determination

It is important to notice that once the breakpoint is passed, ammonia concentration is still low but free and combined chlorine are climbing up again. Accurate management of ammonia but also chlorine residual out of the chlorination tank is required to not exhaust the downstream Powder Activated Carbon (PAC) - see Section 1.2.3.

### 1.2.2 Dechlorination Using Activated Carbon

The chlorinated water, containing chlorine residual, flows to the dechlorination reactor for chlorine destruction. The dechlorination process aims to ensure the destruction of the residual chlorine, which is

acutely lethal to aquatic life. Traditional breakpoint chlorination, which is already in place on site, uses powder activated carbon (PAC) for the chlorine destruction. Since the use of calcium hypochlorite causes inactivation issues on the PAC, powdered activated carbon (PAC) is used for chlorine destruction instead.

The PAC is dosed in the dechlorination reactor in two steps (in the first two compartments), to allow a sufficient contact time for complete chlorine destruction and provide fresh activated carbon along the dechlorination process. Continuous automatic dosing systems are used to add fresh PAC to the dechlorination step. Some recirculated PAC, from the ACTIFLO ballasted flocculation system, is also added to the dechlorination reactor. This allows a slight reduction of the PAC requirement and higher efficiency for the chlorine destruction.

Since the proposed water treatment chain will be operating in cold water conditions, coagulant addition is also done in the dechlorination reactor, which provides high reaction time for the activation of the coagulant and coagulation of the colloids particles. The coagulant acts as a destabilization agent to agglomerate TSS particles contained in the raw water for further removal.

### 1.2.3 Breakpoint Chlorination Actiflo

The Breakpoint chlorination Actiflo receives two streams.

In the first stream, the water is charged with PAC, destabilized TSS and with a slight chlorine residual flows to the ACTIFLO clarifier. The proposed ACTIFLO is designed to remove suspended solids presents in the water and the PAC dosed for chlorine destruction.

In the second stream, the water, bypassed from the two RX, goes directly to the breakpoint chlorination ACTIFLO. For this reason, a security coagulant dosage point is added to address possible by-passed water and increase the coagulant efficiency.

Sand-ballasted settling is a high-rate coagulation/flocculation/ sedimentation process that utilizes microsand as a seed for floc formation. The microsand provides a surface area that enhances flocculation and acts as a ballast or weight. The resulting floc settles very fast, allowing for compact clarifier designs compared to conventional clarifiers, with high overflow rates and short detention times. The use of microsand also permits the unit to perform well under dramatically changing flow rates without impacting final effluent quality

The ACTIFLO has three active chambers. The slurry flows through the first chamber, to break bubbles formed during the chlorine destruction, which could affect the settling efficiency. Within the Breakpoint chlorination ACTIFLO, sodium thiosulfate, a quenching agent, is also dosed to the first chamber of the ACTIFLO to destroy any residual chlorine coming from the dechlorination reactor. The slurry, bubble-free and chlorine residual free, flows to the second chamber, the maturation tank, where anionic polymeric flocculant and microsand are added to initiate floc formation. These serve as a “seed” for floc formation and development in the next process step.

The sand-sludge-PAC mixture settles to the bottom of the clarifier. Scrapers force the sludge collected at the bottom of the clarifier into a centre cone from which it is continuously withdrawn and pumped to a

cyclone where sludge and microsand are separated by centrifugal force. After separation, the higher density microsand is discharged from the bottom of the cyclone and reinjected into the process for re-use.

The sludge from the breakpoint chlorination ACTIFLO, coming from the hydrocyclone overflow, flows by gravity to a dedicated Splitter Box where part of the sludge flows back in the reaction tank. The sludge splitter box from the breakpoint Chlorination ACTIFLO is used for homogenization of the sludge quality over time, providing some thickening up to 20 g/L of the sludge. In addition, it promotes the reuse of the PAC in the ACTIFLO, the sludge is partly recirculated to the dechlorination reactor, thus reducing the PAC requirement for dechlorination. The excess sludge is sent to a common sludge holding tank thus mixing spend PAC from the breakpoint chlorination ACTIFLO and the partially thickened sludge from the bypass ACTIFLO.

### 1.2.4 Secondary Actiflo

The secondary Actiflo receives the third stream composed of the underground water and surface water. It is designed to remove suspended solids present in the raw water. A coagulant is dosed within the first chamber to provide coagulation of the colloids particles. The coagulant then acts as a destabilization agent to agglomerate TSS particles contained in the raw water for further removal.

The ACTIFLO has three active chambers. A coagulant is dosed within the first chamber to provide coagulation of the colloids particles. The coagulant then acts as a destabilization agent to agglomerate TSS particles contained in the raw water for further removal. The water then flows into the second chamber, the injection tank, where an anionic polymeric flocculant and microsand is added to initiate floc formation. These serve as a “seed” for floc formation and development in the next process step. From the injection tank, the water underflows to a third tank section called the maturation tank.

In this tank, a TURBOMIX® mixer provides ideal conditions for bridging between the microsand and the destabilized suspended solids. The fully formed ballasted floc enters into the third and final tank, the settling tank, equipped with a lamella, which provides the rapid and effective removal of the microsand/sludge floc. The clarified water exits the system via a weir and flows to a clarified water holding tank.

The sand-sludge-PAC mixture settles to the bottom of the clarifier. Scrapers force the sludge collected at the bottom of the clarifier into a centre cone from which it is continuously withdrawn and pumped to a cyclone where sludge and microsand are separated by centrifugal force. After separation, the higher density microsand is discharged from the bottom of the cyclone and reinjected into the process for re-use. The sludge from the secondary ACTIFLO, coming from the hydrocyclone overflow, flows by gravity to a dedicated Splitter Box where part of the sludge flows back in the first chamber of the secondary ACTIFLO. The sludge splitter boxes from the secondary ACTIFLO is used for homogenization of the sludge quality over time, providing some thickening up to 20 g/L of the sludge.

### 1.2.5 Discfilter Filtration

Water from both ACTIFLO process flows by gravity to the DISCFILTER filtration process. The DISCFILTER is used as a polishing step to reduce the suspended solids at the clarified water aiming further reduction of metal at the final effluent. The DISCFILTER utilizes a filter cloth mounted on filter panels. These panels stem from a central drum where inlet water is admitted into the unit for treatment. Water is filtered in inside-out mode, flowing from the centre tube to the open base of the filter discs, through the polyester cloth before reaching the DISCFILTER water collection tank. The DISCFILTER water collection tank is part of the DISCFILTER and contains the filters and the filtered water. Particulate matter presents in the DISCFILTER inlet water is retained by the filter media on the inside of the filter panels, eventually leading to solids built-up on the filter media. Consequently, the head loss across the DISCFILTER increases, resulting in increased water level at the inlet of the unit. The unit includes an integral high level switch that initiates a backwash cycle, which rotates the filter discs in order to expose clean filter media to the water flow path, while subjecting the dirty filter media to the cleaning action of the backwash spray tips. Filtered water stored in the DISCFILTER water collection tank is pumped to feed the series of spray tips strategically installed on the moving arms of the backwash system. This serves to clean the entire surface of the filter media while limiting the use of filtered water in the process. An outlet weir integral to the DISCFILTER water collection tank is used to maintain the water. The backwash water will be directed to a dirty water holding tank to be pumped back to the ACTIFLO process. Filtered water flows over the weir of the tank and out of the unit. A chemical trolley is available with the DISCFILTER unit in the case of chemical scaling due to high calcium concentration in the water (possibility to use an acidic wash to wash down any calcite that might precipitate on the discs cloth). The water then flows to a treated water tank and is pumped to discharge. Online TSS and Total Chlorine will be monitored at the outlet for discharge compliance.

### 1.2.6 Backwash tank

The Backwash tank collects the dirty backwash water that flows out of the DISCFILTER unit. The backwash waste is pumped from the holding tank to the secondary ACTIFLO (for TSS removal only). The flow of the backwash watse must be considered in the hydraulic of the ACTIFLO in order not to exceed the maximum flow to the bypass ACTIFLO.

### 1.2.7 Sludge tank

The sludge holding tank is required for sludge management. Sludge is pumped from the two sludge splitter boxes to the sludge holding tank, which will be mixed to prevent any settling and accumulation within the sludge tank.

## 1.3 List of related documents

This document is to be read in conjunction with the following documents:

- P&IDs (5000220043_PI0001)
- Equipment List
- Table of setpoint and alarms
- All GA drawings

## 1.4 List of abbreviations

The following abbreviations are used in the text of this document.

HMI: Human/Machine Interface
PLC: Programmable Logic Controller
SCADA: Supervisory Control and Data Acquisition
VFD: Variable Frequency Drive
VWTC: Veolia Water Technologies Canada

## 1.5 List of Units

The following lists the parameters referred to in this document and the units they are measured in unless otherwise specified.

Concentration (in general): mg/L
Flowrate (main process): $m^3/h$
Flowrate (chemical dosing): LPH
Level in tank: %
pH: -
Pressure: PSIg
Temperature: ° C
Turbidity: NTU
TSS: mg/L

# 2 Overall Plant Control

In this section, only the automatic control sequences are described.

## 2.1 Overview

The process includes the following unit operations:

- One (1) Chlorination Tank, mixing and instrumentation
- One (1) Dechlorination Tank, mixing and instrumentation
- One (1) Breakpoint Chlorination Actiflo and instrumentation
- One (1) Secondary Actiflo and instrumentation
- One (1) Discfilter
- One (1) Powder activated Carbon preparation and dosing system
- Two (2) Total Chlorine analyzer and associated flowmeter
- Two (2) Free Chlorine analyzer and associated flowmeter
- Two (2) Splitter Boxes

The WTP will receive an influent flow rate up to 20 000 m3/d.

## 2.2 Plant overall control

The inlet water flowrate is controlled from a setpoint adjustable by the operator, using two (2) modes: Program or Local.

The program modes calculate the breakpoint chlorination flowrate using the ammonia concentration value at the inlet, the ammonia concentration setpoint at the outlet and the inlet water flowrate. The remaining flowrate is then distributed between the breakpoint chlorination bypass and the secondary Actiflo.

The effluent flows to the whole treatment chain by gravity. Both streams coming from Each Actiflo are combined together and feeds the Discfilter.

Sludge produced by each actiflo is either recirculated or extracted to the sludge discharge line depending on a timer with feedback on TSS concentration in the sludge.

Backwash water from Discfilter is collected into a backwash tank and evacuated gradually using backwash pumps back to the secondary Actiflo.

Chemicals are dosed proportionally to flow with correction factors to take into account pH or ammonia values for final effluent quality adjustment and oxidation efficiency.

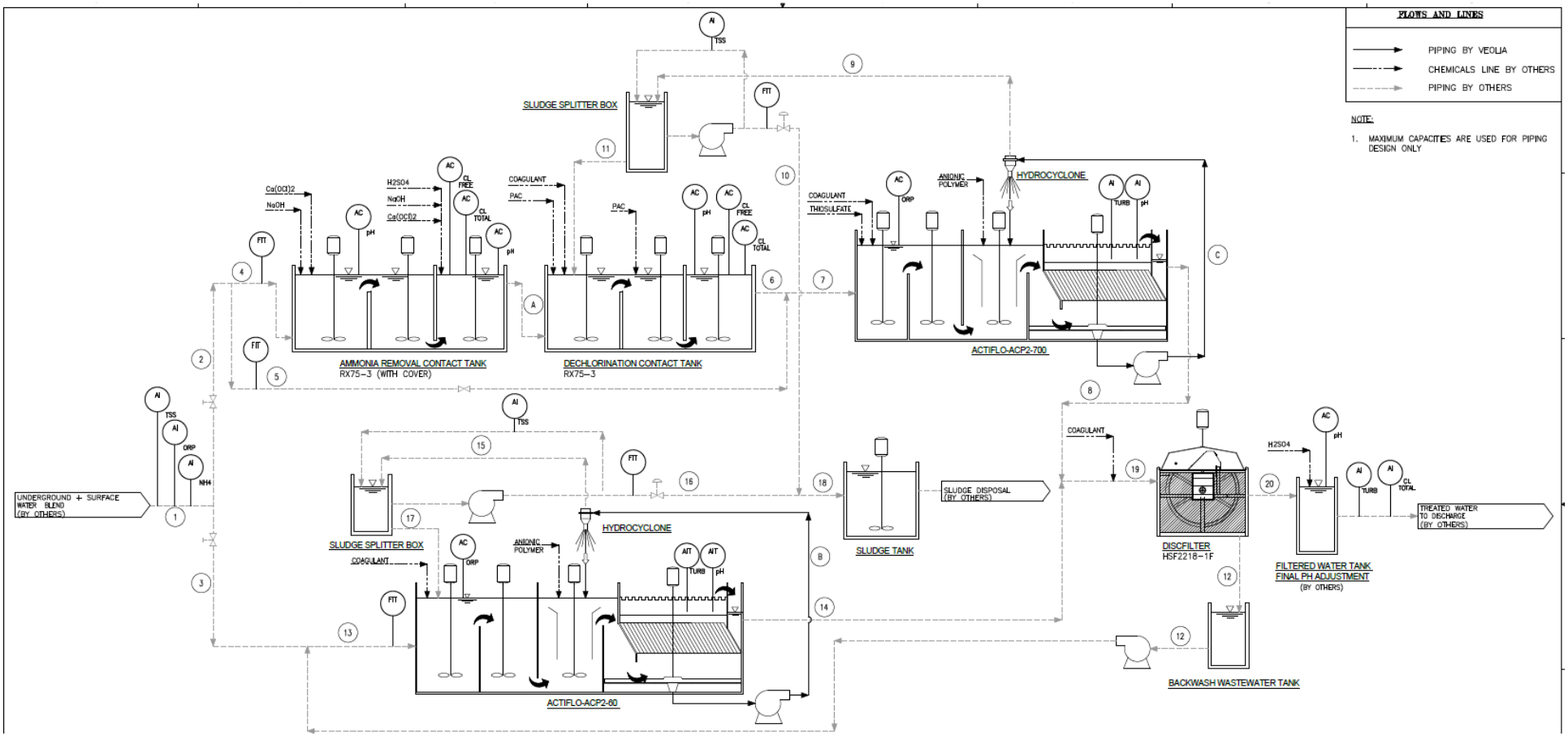
FLOWS AND LINES
PIPING BY VEOLIA
CHEMICALS LINE BY OTHERS
PIPING BY OTHERS
NOTE:
1. MAXIMUM CAPACITIES ARE USED FOR PIPING DESIGN ONLY
SLUDGE SPLITTER BOX
AMMONIA REMOVAL CONTACT TANK
RX75-3 (WITH COVER)
DECHLORINATION CONTACT TANK
RX75-3
HYDROCYCLONE
ACTIFLO-ACP2-700
SLUDGE SPLITTER BOX
HYDROCYCLONE
ACTIFLO-ACP2-60
SLUDGE TANK
SLUDGE DISPOSAL (BY OTHERS)
DISCFILTER
HSF2218-1F
FILTERED WATER TANK
FINAL PH ADJUSTMENT
(BY OTHERS)
TREATED WATER TO DISCHARGE (BY OTHERS)
BACKWASH WASTEWATER TANK
UNDERGROUND + SURFACE WATER BLEND (BY OTHERS)
Ca(OCl)2
NaOH
H2SO4
COAGULANT
PAC
ANIONIC POLYMER
THIOSULFATE

# 3 Inlet Flowrate Distribution

## 3.1 Description

The inlet flowrate distribution can be done following two (2) modes:

In Local mode, operator will manually enter the desired water flowrates on the PID loop pop-up page.

In Program mode, the flowrate setpoints are calculated as described below.

The ammonia concentration at the outlet and total inlet Flowrate are two fixed value entered by the operator on the HMI. Using these values and the ammonia concentration measured at the inlet, the minimum ammonia load to be removed is calculated and the breakpoint chlorination flowrate is deducted. The remaining flowrate is then calculated and compared to the minimum allowable flow rates of each Actiflo (using a settling rate of 20 m/h).

*Table 3-1: Inlet control devices*

| SKID | P&ID TAG | DESCRIPTION | COMMENTS |
|---|---|---|---|
| | 65AIT6801102 | Inlet TSS meter | |
| | 65AIT6801101 | Inlet NH3 analyzer | |
| | 65AIT680110X | Inlet ORP analyzer | |
| | 65AIT680110X | Inlet PH analyzer | |
| | 65FI6801102 | Inlet Breakpoint Chlorination flowmeter | |
| | 65FCV6801102 | Inlet Breakpoint Chlorination modulating valve | |
| | 65FIXX | Bypass Breakpoint Chlorination flowmeter | |
| | 65FCVxx | Bypass Breakpoint Chlorination modulating valve | |
| | 65FI6801301 | Secondary flowmeter | |
| | 65FCV6801302 | Secondary modulating valve | |

## 3.2 Controls

### 3.2.1 Flow rates calculation

The raw inlet flowrate Qin is entered by the operator on the HMI. It is then distributed among the three streams as per the following equation:

**Qin = QBPC + QBPBPC + QSec**

Where :

Qin : inlet flowrate in m3/d

QBPC : Flow going to chlorination tank (breakpoint chlorination) in m3/d

QBPBPC : : Flow by-passing the breakpoint chlorination but being treated by the breakpoint chlorination Actiflo in m3/d

QSec : Flow by-passing the breakpoint chlorination to the secondary ACTIFLO unit in m3/d

**QBPTOT = QBPBPC + QSec**

Where ;

QBPTOT : Total flow by-passing the breakpoint chlorination step (going to one or the other ACTIFLO unit) in m3/d

The ammonia concentration measured at the inlet determines the usage of the breakpoint chlorination treatment chain. The following equation presents the calculation of the Breakpoint chlorination flow rate :

**QBPC= Qin*(NH4 in – SP NH4 out)/(NH4 in – NH4 outBPC)**

Where :

NH4 in: Ammonia in raw water. The value of NH4 as measured by the ammonia analyzer. The operator selects one of the three modes : Local (concentration entered by the operator in mg/L), Remote 1 (direct usage of the ammonia analyzer 65AIT6801101 signal ), Remote 2 (Calculated mobile average concentration measured by ammonia analyzer 65AIT6801101 refreshed every 4 hours – adjustable delay).

SP NH4 out : Targeted concentration at final discharge. Can be modified, but restricted access (in case of law modification in the future). Will be initially set at 40 mg N/L.

NH4 outBPC : Ammonia concentration out of the BPC process. Can be modified, but with restricted access (after better understanding of optimal operation on site). Will be initially set at 5 mg N/L.

The decision diagram below presents the calculation steps of the breakpoint chlorination flowrate (QBPC) and the total flow bypassing the BPC treatment chain (QBPTOT)

*Figure 3.1 : Breakpoint chlorination flowrate Flowchart*

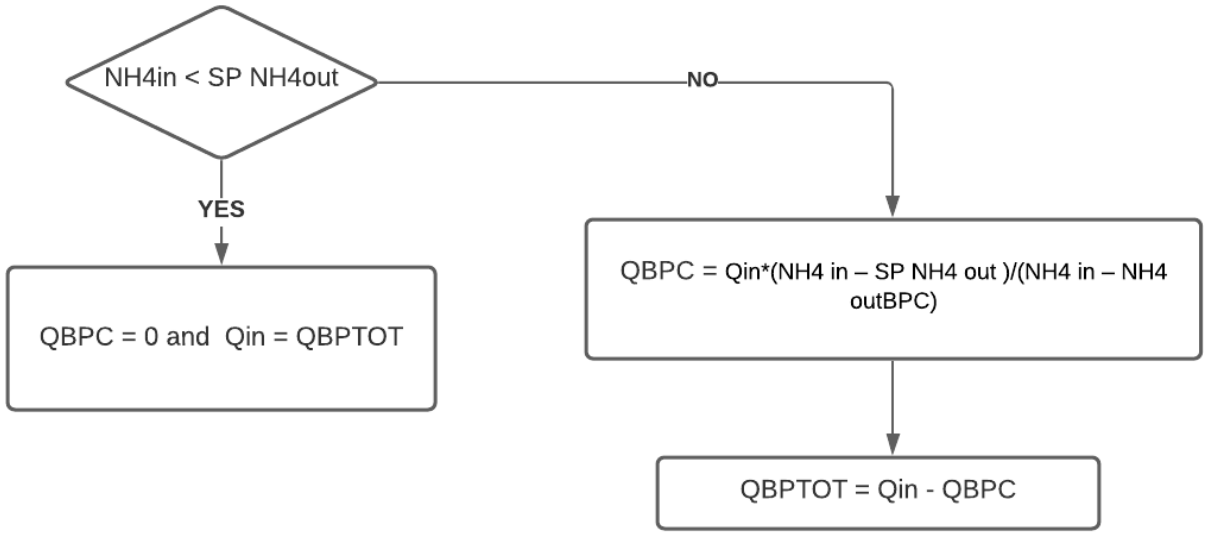


The next figure presents the calculation steps of the Bypass flowrate (QBPBPC and Qsec)

*Figure 3.2 : Bypass flowrate Flowchart*

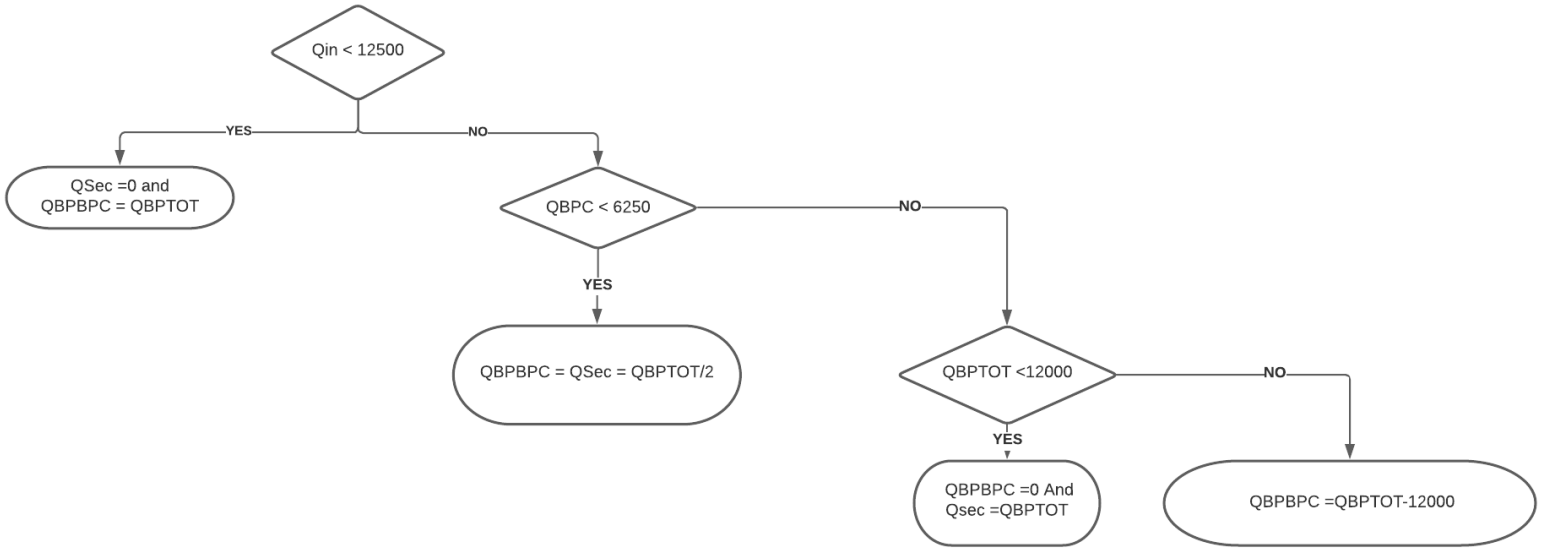


An overview page presents the flowrates for each stream, the ammonia load removed, the ammonia concentration at the inlet, the targeted ammonia concentration at the outlet and the ammonia concentration out of the BPC process.

### 3.2.2 Flow control mode

The calculated flowrate is used as a setpoint. PID loop controls the modulating valve opening accordingly, using the flowrate from each flowmeter as a process value and the valve opening as a manipulated variable.

In either mode (Program or local), priority of the flow control loop shall be assigned in the following order:

1. Breakpoint chlorination flow control
2. Secondary flowrate (if active)

The breakpoint chlorination (B.C.) bypass flow control is not activated in that case and is used as an exhaust of the system in order to avoid a fight between the different flow control loop.

## 3.3 Fault response

**Ammonia Analyzer out of range**

Tag: 65AIT6801101

The ammonia analyzer is used for inlet distribution flow rate calculation. If the instrument fails, a FATAL alarm is displayed on the screen and the last value recorded is used for calculation. The operator can override the value on the screen.

**Flowmeter out of range**

Tag: 65FIT6801102, 65FIT XX, 65FIT6801301

The flowmeters are used for the flow control of the modulating valves. If one of the three flowmeter falls out of range, a FATAL alarm is displayed on the screen and the openings of the valves are held in last position. . The flow calculation is disabled until the fault is acknowledged on the HMI. The flow control is used in local mode.

**Flow control valve Fault**

Tag: 65FCVXX, 65FCV6801302, 65FCV6801102
If one of the three fow control valve falls out of range, a FATAL alarm is displayed on the screen. . The flow calculation is disabled until the fault is acknowledged on the HMI.

# 4 Chlorination tank

## 4.1 Description

In the chlorination tank, the chlorine level and pH control is achieved by the following control devices and instruments:

*Table 4-1: Chlorination tank devices*

| SKID | P&ID TAG | DESCRIPTION | COMMENTS |
|---|---|---|---|
| | 65LSHH6801106 | HIGH HIGH LEVEL SWITCH | |
| | 65AIT6801107 | INLET PH METER | |
| | 65AIT6801111 | OUTLET PH METER | |
| | 65AGI68012 | MIXER #1 | |
| | 65AGI68013 | MIXER #2 | |
| | 65AGI68014 | MIXER #3 | |
| | 65FAN68005 | FAN | |
| | 65AIT6801117 | TOTAL CHLORINE ANALYZER | |
| | 65AIT6801116 | FREE CHLORINE ANALYZER | |

## 4.2 Controls

### 4.2.1 Chlorination tank Start/Stop/Auto function

By activating the Auto function, the Chlorination tank is set in Auto start mode and is ready to start. If all the system availability conditions are satisfied, it starts only after receiving the automatic start command.

A start and a stop button will be displayed on the HMI.

- By activating the Start function, the chlorination tank starts the fan and then the three mixers after a delay adjustable on the HMI whatever the automatic start command status.
- By activating the Stop function on the HMI, the chlorination tank stops the three mixers and then the fan after a delay adjustable on the HMI.

If required equipment is in manual and not running when the chlorination tank Auto function is triggered, automatic starting command cannot be activated.

### 4.2.2 Alkali pH control loop

The alkali is dosed in the first compartment proportionally to the calculated flowrate, but the dosage is modulated to maintain a pH at an adjustable setpoint entered by the operator on the interface.

A PID loop controls dosing setpoint accordingly, using the pH meter 65AIT6801107 as a process value and the dosing rate as a manipulated process value to maintain a constant pH.

If the pH value as read by the pH meter 65AIT6801107 is below the pH setpoint, the dosing rate is incremented.

If the pH value as read by the pH meter 65AIT6801107 is above the pH setpoint, the dosing rate is decreased.

The changes are capped by an adjustable range to prevent overdose or underdose of alkali.

If the pH meter is out of range, the PID loop is deactivated and only dosing setpoint is taken into account.

A button on the interface also allows the operator to select the pH control or disable it (in case of pH sensor malfunction).

### 4.2.3 Acid pH control loop

The sulfuric acid is dosed in the last compartment of the chlorination tak. The dosage is modulated to maintain a pH at an adjustable setpoint entered by the operator on the interface.

A PID loop controls dosing setpoint accordingly. The control loop uses the pH meter 65AIT680111 as a feedforward process value, the pH meter 65AIT680136 (located in the dechlorination tank) as feedback value and the dosing rate as a manipulated process value to maintain a constant pH.

If the pH value as read by the pH meter 65AIT680111 is below the pH setpoint, the dosing rate is incremented.

If the pH value as read by the pH meter 65AIT680111 is above the pH setpoint, the dosing rate is decreased.

The changes are capped by an adjustable range to prevent overdose or underdose of sulfuric acid.

If the pH meter is out of range, the PID loop is deactivated and only dosing setpoint is taken into account.

A button on the interface also allows the operator to select the pH control or disable it (in case of pH sensor malfunction).

### 4.2.4 Ammonia and chlorine residual control

The calcium hypochlorite is dosed proportionally to the calculated flowrate as described. But the dosage is modulated to maintain a fixed outlet ammonia concentration. The outlet ammonia concentration is an adjustable setpoint entered by the operator on the interface.

The operator has two options for the hypochlorite dosing:

**Option 1: Stoichiometric dosage with free chlorine residual correction**

The required dosage concentration $RC_{HYPO}$ when expressed in mg/L is calculated as follows:

$RC_{HYPO}$= 7.6 x ([NH4 inf]-[NH4 eff]) + Correction factor 1

Where NH4inf is the ammonia concentration in mg/L as given by ammonia analyzer 65AIT6801101 at the raw water inlet and NH4 eff the required ammonia concentration at the outlet.

The correction factor 1 can be modulated by the operator to control the free chlorine residual as measured by 65AIT6801116 and is clamped by an adjustable range to avoid underdosing or overdosing of calcium hypochlorite.

A free chlorine setpoint is adjustable by the operator on the HMI. A volumic PI loop controls dosing manipulated process value accordingly, using the free chlorine analyzer 65AIT6801116 (when reading chlorination tank effluent) as a process value and the free chlorine setpoint as target value to optimize calcium hypochlorite dosages. The volumic integral pH control loop applies a correction to the calculated required dosage. It considers the volume between the dosing point and the measurement (hydraulic retention time) and the pH setpoint Vs the actual pH value (Error). A Gain applies a factor on the error. The loop is tuned by adjusting the gain and the volume.

If the residual free chlorine value as read by the free chlorine analyzer 65AIT6801116 is above the free chlorine setpoint, the calcium hypochlorite dosing setpoint is decreased.

If the residual free chlorine value as read by the free chlorine analyzer 65AIT6801116 is below the free chlorine setpoint, the calcium hypochlorite dosing setpoint is increased.

**Option 2: Dosage entry**

If chorine analysers falls out of range, the operator can enter the required calcium hypochlorite dosage $RC_{HYPO}$ in mg/L or µL/L on the interface.

## 4.3 System Availability Conditions

The automatic start sequence will be activated when the automatic start command is true and the following conditions are met:

- At least two mixers are in PROGRAM mode
- No major fault

## 4.4 Fault response

The following are the possible major faults associated with the contact reactor.

1. Chlorination tank high high level switch
2. Multiple chlorination tank mixers fault
3. Fan fault

A major fault on the chlorination tank stops the associated alkali pumps, sulfuric acid pump and calcium hypochlorite pumps.

**Chlorination tank high high level switch**

Tag: 65LSHH6801106

A float in the chlorination tank is used as a high high Level switch. It is a major fault. Stop the Plant according to the automatic stop sequence when the switch is activated.

Fail safe mode:

The floats are to be wired so that the when no current is detected, the float fault alarm is activated.

**Chlorination tank mixer fault**

Tag: 65AGI68012/65AGI68013/65AGI68014

If one Chlorination tank mixer faults (1 of 3), the treatment train is not stopped. An alarm is activated, signalling to the operator there is a fault, but treatment continues. If more than one contact reactor mixer faults it is considered a major fault and the Plant is stopped according to the automatic stop sequence.

**Fan fault**

Tag : 65FAN68005

The Fan fault is a major fault and the plant is stopped according to the automatic stop sequence.

## 4.5 Interlocks

The faults that stop and prevent the Chlorination tank to start are as follows:

- The feeding pumps (by others) are in fault.
- The inlet breakpoint chlorination flowmeter 65FI6801102 is in out of range fault
- Dechlorination tank in major fault
- Breakpoint chlorination Actiflo is in major fault

# 5 Dechlorination tank

## 5.1 Description

In the dechlorination tank, PAC is added in the first section and in the third one. Each addition is done by a disctinct PAC preparation system. The chlorine level is monitored at the outlet in order to manually adjust the PAC dosage. Chlorine removal is achieved by the following control devices and instruments

*Table 4-1: Dechlorination tank devices*

| SKID | P&ID TAG | DESCRIPTION | COMMENTS |
|---|---|---|---|
| | 65LSHH6801131 | HIGH HIGH LEVEL SWITCH | |
| | 65AIT6801136 | OUTLET PH METER | |
| | 65AGI68015 | MIXER #1 | |
| | 65AGI68016 | MIXER #2 | |
| | 65AGI68017 | MIXER #3 | |
| | 65AIT6801142 | TOTAL CHLORINE ANALYZER | |
| | 65AIT6801141 | FREE CHLORINE ANALYZER | |

## 5.2 Controls

### 5.2.1 Dechlorination tank Start/Stop/Auto function

By activating the Auto function, the Dechlorination tank is set in Auto start mode and is ready to start. If all the system availability conditions are satisfied, it starts only after receiving the automatic start command.

A start and a stop button will be displayed on the HMI.

- by activating the Start function, the dechlorination tank starts the three mixers whatever the automatic start command status.
- by activating the Stop function on the HMI, the dechlorination tank stops the three mixers.

If required equipment is in manual and not running when the dechlorination tank Auto function is triggered, automatic starting command cannot be activated.

### 5.2.2 Chlorine residual control

Free chlorine concentration and total chlorine concentrations are continuously monitored. The PAC dosages are manually adjusted on the HMI accordingly by the operator. See functional description in appendix E.

### 5.2.3 Coagulant dosage

Coagulant is dosed proportionally to the Breakpoint chlorination water flow rate indicated by 65FI6801102.

The coagulant dosage in mg/L is entered by the operator on the HMI.

## 5.3 System Availability Conditions

The automatic start sequence will be activated when the automatic start command is true and the following conditions are met:

- At least two mixers are in PROGRAM mode
- No major fault

## 5.4 Fault response

The following are the possible major faults associated with the contact reactor.

- Dechlorination tank high high level switch
- Multiple dechlorination tank mixers fault

A major fault on the dechlorination tank stops the associated pac dosages and coagulant pump,

**Dechlorination tank high high level switch**

Tag: 65LSHH6801131

A float in the dechlorination tank is used as a high high Level switch. It is a major fault. Stop the Plant according to the automatic stop sequence when the switch is activated.

Fail safe mode:

The floats are to be wired so that the when no current is detected, the float fault alarm is activated.

**Dechlorination tank mixer fault**

Tag: 65AGI68015/65AGI68016/65AGI68017

If one Dechlorination tank mixer faults (1 of 3), the treatment train is not stopped. An alarm is activated, signalling to the operator there is a fault, but treatment continues. If more than one contact reactor mixer faults it is considered a major fault and the Plant is stopped according to the automatic stop sequence.

## 5.5 Interlocks

The faults that stop and prevent the Chlorination tank to start are as follows:

- The feeding pumps (by others) are in fault.
- The inlet breakpoint chlorination flowmeter 65FI6801102 is in out of range fault
- Chlorination tank in major fault
- Breakpoint chlorination Actiflo is in major fault

# 6 Breakpoint Chlorination Actiflo

## 6.1 Description

The dechlorination effluent enters the Breakpoint chlorination Actiflo (Acticarb).

A quenching agent (sodium thiosulfate) is dosed in the coagulation chamber in order to remove any remaining chlorine. The sodium thiosulfate dosage is controlled with a Volumic PID loop using the ORP analyzer as a process value

The clarified water is collected by throughs and gets mixed with the secondary Actiflo clarified effluent prior to Discfilter filtration. Part of the sludge produced by the Acticarb is directed to the dechlorination tank. The remaining sludge is pumped to the sludge tank.

The detailed Acticarb process functional description is presented in Appendix B.

The Acticarb unit and its Activated Carbon Extraction/Recirculation consists on the following control devices and instruments:

*Table 6-1: Acticarb control devices*

| SKID | P&ID TAG | DESCRIPTION | COMMENTS |
|---|---|---|---|
| | 65AGI68018 | Coagulation mixer | |
| | 65AGI68019 | Injection mixer | |
| | 65AGI68020 | Maturation mixer | VFD |
| | 65TRM68001 | Scraper | |
| | 65LSHH6801224 | High High level switch | |
| | 65AIT6801221 | pH meter | |
| | 65AIT6801201 | ORP meter | |
| | 65AIT6801222 | Turbidity meter | |
| | 65FY6801242 | Injection water solenoid valve hydrocyclone #1 | |
| | 65FY6801237 | Injection water solenoid valve hydrocyclone #2 | |
| | 65AIT6801417 | TSS meter sludge | |

| | |
|---|---|
| 65PSR68005A | Recirculation pump #1 |
| 65PSR68005B | Recirculation pump #2 |
| 65AIT6801417 | TSS meter sludge |
| 65FIT6801432 | Extracted sludge flowmeter |
| 65LSHH6801406 | Splitter box High high level switch |
| 65LSLL6801406 | Splitter box Low low level switch |
| 65PSR68007A | Activated carbon extraction pump |
| 65FCV6801433 | Activated carbon extraction control valve |
| 65PSR68005A | Recirculation pump #1 |

## 6.2 Controls

### 6.2.1 Acticarb Start/Stop/Auto function

By activating the Auto function, the Acticarb is set in Auto start mode and is ready to start. If all start sequence conditions are satisfied, it starts only after receiving the automatic start command.

By deactivating the Auto mode, the Acticarb stops following the automatic stopping sequence and a start and a stop button will be displayed on the HMI.

- by activating the Start function, the Acticarb starts following the automatic starting sequence whatever the automatic start command status.
- by activating the Stop function on the HMI, the Acticarb stops following the automatic stopping sequence.

If required equipment is in manual and not running when the Acticarb Auto function is triggered, starting sequence cannot be activated.

### 6.2.2 Sodium thiosulfate dosage

The sodium thiosulfate is dosed in the coagulation chamber proportionally to the calculated flowrate and the free chlorine value measured at the outlet of the dechlorination tank. The dosage is corrected to maintain an ORP at an adjustable setpoint entered by the operator on the interface.

The required dosage concentration $RC_{ST}$ when expressed in mg/L is calculated as follows:

$RC_{ST}$= A x ([FCl meas]-[FCl SP]) + Correction factor 1

Where:

A : is a stoichiometric factor determined with lab tests

[FCl meas] : is the free chlorine concentration as measured with 65AIT6801141

[FCl SP] : is the free chlorine setpoint

A volumic PI loop controls dosing setpoint according to the value read by 65AIT6801141 (FFW), using the ORP meter 65AIT6801201 as a (FB) process value and the dosing rate as a manipulated process value to maintain a constant ORP.

If the ORP value as read by the ORP meter 65AIT6801201 is below the ORP setpoint, the dosing rate is incremented.

If the ORP value as read by the ORP meter 65AIT680120 is above the ORP setpoint, the dosing rate is decreased.

The changes are capped by an adjustable range to prevent overdose or underdose of sodium thiosulfate.

If the ORP meter is out of range, the feedback is disabled and the sodium thiosulfate is controlled with an open PID loop.

A button on the interface also allows the operator to select the ORP control or disable it (in case of ORP sensor malfunction).

## 6.3 Fault response

If a fault occurs on one activated carbon extraction pump, the Acticarb is stopped according to emergency shutdown sequence.(Emergency)
If the sludge valve 65FCV6801433 falls in fault, an alarm is generated. (Warning)

If the sludge flowmeter 65FIT6801432are in out of range fault, an alarm is generated. (Warning)

If the sludge flowmeter 65FIT6801432 is in deviation alarm and the valve 65FCV6801433 is closed, an alarm is generated, a major fault is generated and the Actiflo is stopped according to automatic shutdown sequence to prevent pump or line blockage. (Fatal)

If the sludge flowmeter 65FIT6801432 is in low low alarm and the valve 65FCV6801433 is open, but the 65FIT6801432 value is above the low low alarm, an alarm is generated. If the fault is not reset after an adjustable delay, the Actiflo is stopped according to automatic shutdown sequence to prevent line blockage. (Emergency).

Specific Acticarb faults are detailed in Acticarb FD in Appendix C

## 6.4 Interlocks.

The faults that stop and prevent the Acticarb to start are as follows:

- Sludge extraction pump is in fault
- The feeding pumps (by others) are in fault.
- The inlet flowmeter 65FI6801102 is in out of range fault
- Chlorination tank in major fault
- Dechlorination tank in major fault

# 7 Secondary Actiflo

The secondary Actiflo receives the third stream composed of the underground water and surface water. It is designed to remove suspended solids present in the raw water. The secondary flowrate is defined as explained in section 1.

A coagulant is dosed within the first chamber to provide coagulation of the colloids particles. The coagulant then acts as a destabilization agent to agglomerate TSS particles contained in the raw water for further removal.

The sludge from the secondary ACTIFLO, coming from the hydrocyclone overflow, flows by gravity to a dedicated Splitter Box where part of the sludge flows back in the first chamber of the secondary. The remaining sludge is pumped to the sludge tank. The flow rate to the sludge storage tank is controlled through a control valve and a turbidity control loop.

A recirculation loop on the sludge splitter box prevents sludge from settling. The sludge recirculation loop is equipped with a turbidity mete.

The clarified water is collected by throughs and gets mixed with the breakpoint chlorination Actiflo clarified effluent prior to Discfilter filtration. Part of the sludge produced by the Acticarb is directed to the dechlorination tank.

The detailed Actiflo process functional description is presented in Appendix C

The Actiflo unit and its Actiflo Extraction/Recirculation splitter box consists on the following control devices and instruments:

*Table 7-1: Actiflo control devices*

| SKID | P&ID TAG | DESCRIPTION | COMMENTS |
|---|---|---|---|
| | 65AGI68021 | Coagulation mixer | |
| | 65AGI68022 | Injection mixer | |
| | 65AGI68023 | Maturation mixer | VFD |
| | 65TRM68003 | Scraper | |
| | 65LSHH6801324 | High High level switch | |
| | 65AIT6801321 | pH meter | |

| | |
|---|---|
| 65AIT6801322 | Turbidity meter |
| SSL20-01 | High High Torque detection |
| 65PSR68006A | Recirculation pump #1 |
| 65PSR68006B | Recirculation pump #2 |
| 65AIT6801427 | TSS meter sludge |
| 65FIT6801437 | Extracted sludge flowmeter |
| 65LSHH6801411 | Splitter box High high level switch |
| 65LSLL6801411 | Splitter box Low low level switch |
| 65PSR68007C | Sludge extraction pump |
| 65FCV6801437 | Sludge extraction control valve |

## 7.1 Controls

### 7.1.1 Actiflo® Start/Stop/Auto function

By activating the Auto function, the Actiflo® is set in Auto start mode and is ready to start. If all start sequence conditions are satisfied, it starts only after receiving the automatic start command.

By deactivating the Auto mode, the Actiflo® stops following the automatic stopping sequence and a start and a stop button will be displayed on the HMI.

- by activating the Start function, the Actiflo® starts following the automatic starting sequence whatever the automatic start command status.
- by activating the Stop function on the HMI, the Actiflo® stops following the automatic stopping sequence.

If required equipment is in manual and not running when the Actiflo® Auto function is triggered, starting sequence cannot be activated.

### 7.1.2 Sludge recirculation/extraction control

The TSS control loop will act on the opening of the splitter box outlet flow control valve to adjust the sludge flow rate being recirculated back to the coagulation chamber.

A TSS set point will be entered by the operator. If the TSS measured by 65AIT6801427 is below the set point, the control loop will close 65FCV6801437. This will increase the sludge recirculation to the coagulation chamber and increase the turbidity.

On the contrary, if the measured TSS is above the set point, the control loop will open 65FCV6801437. This will decrease the sludge recirculation to the coagulation chamber and increase the sludge flow rate going to the sludge storage tank.

If the TSS analyzer is in fault, an alarm is generated and the sludge valve 65FCV6801437 opens to prevent sludge build-up in the Actiflo process.

If the fault is not reset after an adjustable delay, the Actiflo is stopped according to automatic shutdown sequence.

## 7.2 Fault response

If a fault occurs on one sludge extraction pump, the Actiflo is stopped according to emergency shutdown sequence.(Emergency)
If the sludge valve 65FCV6801437 falls in fault, an alarm is generated. (Warning)

If the sludge flowmeter 65FIT6801437are in out of range fault, an alarm is generated. (Warning)

If the sludge flowmeter 65FIT6801437 is in deviation alarm and the valve 65FCV6801437 is closed, an alarm is generated, a major fault is generated and the Actiflo is stopped according to automatic shutdown sequence to prevent pump or line blockage. (Fatal)

If the sludge flowmeter 65FIT6801437 is in low low alarm and the valve 65FCV6801437 is open, but the 65FIT6801437 value is above the low low alarm, an alarm is generated. If the fault is not reset after an adjustable delay, the Actiflo is stopped according to automatic shutdown sequence to prevent line blockage. (Emergency).

Specific Actiflo faults are detailed in Actiflo FD in Appendix C

## 7.3 Interlocks.

The faults that stop and prevent the Actiflo to start are as follows:

- Sludge extraction pumps is in fault
- The feeding pumps (by others) are in fault.
- The secondary flowmeter 65FI6801301 is in out of range fault

Specific Actiflo interlocks are detailed in Actiflo FD in Appendix C.

# 8 Discfilter

## 8.1 Description

Water from both ACTIFLO process flows by gravity to the DISCFILTER filtration process. The DISCFILTER is used as a polishing step to reduce the suspended solids at the clarified water aiming further reduction of metal at the final effluent.

The DISCFILTER utilizes a filter cloth mounted on filter panels. These panels stem from a central drum where inlet water is admitted into the unit for treatment. Water is filtered in inside-out mode, flowing from the centre tube to the open base of the filter discs, through the polyester cloth before reaching the DISCFILTER water collection tank. The DISCFILTER water collection tank is part of the DISCFILTER and contains the filters and the filtered water. Particulate matter presents in the DISCFILTER inlet water is retained by the filter media on the inside of the filter panels, eventually leading to solids built-up on the filter media. Consequently, the head loss across the DISCFILTER increases, resulting in increased water level at the inlet of the unit.

The unit includes an integral two level transmitters located upstream and downstream. The differential level initiates a backwash cycle, which rotates the filter discs in order to expose clean filter media to the water flow path, while subjecting the dirty filter media to the cleaning action of the backwash spray tips.

Filtered water stored in the DISCFILTER water collection tank is pumped to feed the series of spray tips strategically installed on the moving arms of the backwash system. This serves to clean the entire surface of the filter media while limiting the use of filtered water in the process. An outlet weir integral to the DISCFILTER water collection tank is used to maintain the water level. The backwash water will be directed to backwash tank to be pumped back to the secondary ACTIFLO. Filtered water flows over the weir of the tank and out of the unit.

A chemical trolley is available with the DISCFILTER unit in the case of chemical scaling due to high calcium concentration in the water (possibility to use an acidic wash to wash down any calcite that might precipitate on the discs cloth). The water then flows to a treated water tank and is pumped to discharge. Online TSS and Total Chlorine will be monitored at the outlet for discharge compliance.

*Table 7-1: Discfilter ® control devices*

| SKID | P&ID TAG | DESCRIPTION | COMMENTS |
|---|---|---|---|
| | 65LIT6801502A | Upstream level transmitter | |
| | 65LIT6801502B | Downstream level transmitter | |
| | PSL-8165 | Pressure switch low | |

| | | |
|---|---|---|
| 65PSR68008A | Discfilter Backwash pump #1 | |
| 65PSR68008B | Discfilter Backwash pump #2 | |
| MTXX | Motor drive | |
| XXX | Discfilter cover actuator #1 | VFD |
| XXX | Discfilter cover actuator #2 | |
| XXx | Discfilter spray arm actuator | |
| XXX | Chemical cleaning pump | |

## 8.2 Controls

See Discfilter FD in Appendix D

## 8.3 Fault response

See Discfilter FD in Appendix D

## 8.4 Interlocks.

See Discfilter FD in Appendix D

# 9 Hydracarb

## 9.1 Description

Two Powder activated preparation and dosing systems are supplied. Each system is provided with its dedicated control panel. Based on the lab test, the operator calculates the total PAC dosage requirement in mg/L and enters the value on the HMI.

*Table 9-1: Hydracarb® control devices*

| SKID | P&ID TAG | DESCRIPTION | COMMENTS |
|---|---|---|---|
| | 65LSH6801612 | Wetting cone high Level switch #1 | |
| | 65LSH6801632 | Wetting cone high Level switch #2 | |
| | 65LSL6801611 | Hopper Low level Switch #1 | |
| | 65LSL6801631 | Hopper Low level Switch #2 | |
| | 65PSL6801621 | Service Water Pressure Switch #1 | |
| | 65PSL6801621 | Service Water Pressure Switch #2 | |
| | 65FY6801613 | Air Solenoid valve #1 | |
| | 65FY6801633 | Air Solenoid valve #2 | |
| | 65FY6801602 | Service Water Inlet Solenoid Valve | |
| | 65FY6801622 | Service Water Inlet Solenoid Valve | |

## 9.2 Controls

See Hydracarb FD in Appendix E

## 9.3 Fault response

See Hydracarb FD in Appendix E

## 9.4 Interlocks.

See Hydracarb FD in Appendix E

# 10 Sampling and analyses unit

## 10.1 Process overview

The free / total chlorine analysers skid is connected to the third compartment of each of the chlorination and dechlorination tank, a sample flow will be directed into the skid through gravity. A gravity settling system will allow the separation of the PAC particles and any other solids present in the sampled water. Then the effluent of the settling system is pumped into the dilution system of the skid. The pumped effluent is diluted with service water. In addition, both pumped effluent and service water flowrates are measured by a rotameter and a magnetic flowmeter respectively and controlled by controlling valves, therefore to meet the dilution ratio required to fit the analysers measuring ranges.

*Table 9.1: Free / Total Chlorine Analysers Skid devices*

| SKID | P&ID TAG | DESCRIPTION | COMMENTS |
|---|---|---|---|
| | 65PSRXXX | SAMPLE PUMP | |
| | 15-BA99-XXX | SAMPLE CONTROL VALVE #1 | |
| | 65FIXXX | SAMPLE ROTAMETER #1 | Not controlled |
| | 15-BA99-XXX | SAMPLE CONTROL VALVE #2 | |
| | 65FIXXX | SAMPLE ROTAMETER #2 | Not controlled |
| | 15-BA99-XXX | SERVICE WATER – CONTROL VALVE #1 | |
| | 65FITXXX | SERVICE WATER – FLOWMETER #1 | |
| | 15-BA99-XXX | SERVICE WATER – CONTROL VALVE #2 | |
| | 65FITXXX | SERVICE WATER – FLOWMETER #2 | |
| | 65AIT6801142 / 65AIT6801117 | TOTAL CHLORINE ANALYSER | |
| | 65AIT6801141 / 65AIT6801116 | FREE CHLORINE ANALYSER | |

## 10.2 Controls

### 10.2.1 Calculation of the chlorine concentration

The equations below calculates the initial chlorine concentration using the different flowrates measured :

$[CLfree_0] = [CLfree_m] . (Q_{dil} + Qp_1) / (Qp1)$

Where

$[CLfree_0]$ : is the initial free chlorine concentration measured in the chlorination/dechlorination tank

$[CLfree_m]$ : is the free chlorine concentration measure by the free chlorine analyzer

Qdil : is dilution flow rate measured by the flowmeter 65FITXXX

QP1 : is the pumped flow rate entered by the operator and measured with the rotameter.

The same equation applies for the total chlorine.

### 10.2.2 Pump control

Prior to operating the pump, its priming should be done by keeping both sample control valves #1 and #2 at the discharge section closed and opening the isolation valve at the suction section. When the suction line is filled, the pump can be started. All the listed valves are controlled manually.

#### 10.2.2.1 Dilution flow control

For an efficient free chlorine and total chlorine concentration monitoring, the dilution process should be done adequately. Without the appropriate service water and sample flows, this can't be achieved. This control is done by monitoring the service water flowmeters #1 / #2 and the sample rotameters #1 / #2 of each dilution line per the listed set points.

#### 10.2.2.2 Chlorine residual control

The free / total chlorine residual is measured by the analysers and it is controlled by a range of set points to avoid overdosing or underdosing of calcium hypochlorite and PAC dosages.

## 10.3 System Availability Conditions

For the system to run the following conditions should be met:

- Successful manual pump priming
- There is no major fault on the system

## 10.4 Fault Response

The following are the possible major faults associated with the sampling and analyses units:

1. Pump fault
2. Low low service water flow
3. Chlorine analysers out of range fault

**Pump Fault**

Tag: 65PSRXXX

Failure in priming the pump prior to its operation will result in a pump fault, the pump should be stopped and the skid should be isolated.

**Low Low Service Water Flow**

Tag: 65FITXXX

If service flowmeters indicate a low flow fault, a fatal alarm is signaled. The operator should give this major fault immediate attention in order to regulate the control valve 15-BA99-XXX upstream of the flowmeters 65FITXXX in order to avoid erroneous measures by the analysers.

**Chlorine Analysers Out of Range Fault**

Tag: 65AIT6801142 / 65AIT6801117 / 65AIT6801141 / 65AIT6801116

If analysers fall in out of range fault, a fatal alarm is generated. It will impact the calcium hypochlorite and PAC dosages. If fault persists, the operator can enter the required calcium hypochlorite and PAC dosages on the interface.

# 11 Treated water

## 11.1 Description

Water is pumped from treated water tank prior to discharge.
The treated water monitoring is composed of the following control devices and instruments.

*Table 11.1: treated water system control devices*

| SKID | P&ID TAG | DESCRIPTION | COMMENTS |
|---|---|---|---|
| | pH | pH analyzer | |
| | AITXXX | Total Chlorine analyzer | |
| | AITXXX | TSS Analyzer | |

## 11.2 Controls

In order to discharge effluent within effluent criteria, chlorine analyzer , TSS and pH analyzer are installed on the effluent line, prior to discharge.

The allowed discharge effluent setpoints ($TSS_{max}$, $pH_{min}$, $pH_{max}$, $Chlorine_{max}$) is entered by the operator at the interface.

When the transfer pump from treated water tank starts, the discharge valve (treated water valve by others) opens.

During the initial start-up of the plant, alarms are disabled for an adjustable period to enable enough time for complete on-line water analysis. After this adjustable delay, if all the effluent values are lower than the setpoints (including an adjustable hysteresis to prevent frequent opening and closing of the valve) for an adjustable delay, the treated water valve stays open.

When at least one of the values is above the corresponding setpoint (or below for $pH_{min}$) for an adjustable delay, , the off spec valve (by others) will open to allow water to be directed back to treatment chain inlet through to the off-spec line and discharge valve (by others) will close once the opening status of the off-spec valve is confirmed.

The raw water pumps will be stopped to prevent more water to enter the off-spec water loop. The chemical dosages will be adapted depending on the source of the non-compliance.

When all of the values are below the corresponding setpoint (or above $pH_{min}$) for an adjustable delay, the discharge valve will open to allow water to be directed to the treated water line and off-spec valve will close once the opening status of the discharge valve is confirmed.

The raw water pumps will then restart in automatic mode to provide water to the treatment plant.

## 11.3 Fault response

The following faults will stop the raw water pumps :

1. opening/closing fault from discharge valve (treated water valve)

If one of the analyzer (pH, TSS, chlorine ) is in fault, an alarm is generated and the off-spec valve opens and discharge valve closes to prevent off-spec water to be discharged to the treated water line.

## 11.4 Interlock

No interlock.

# 12 Backwash tank

## 12.1 Description

The backwash tank collects water from the discfilter. Two transfer pumps (duty / assist) are used to recirculate the backwash effluent to the head of the secondary Actiflo.

The backwash tank is made up of the following control devices and instruments:

*Table 6.1: Backwash tank control devices*

| SKID | P&ID TAG | DESCRIPTION | COMMENTS |
|---|---|---|---|
| | LITXX/LITXX | Level transmitters | |
| | 65PSR68009A | Backwash tank pump #1 | |
| | 65PSR68009B | Backwash tank pump #2 | |

## 12.2 Controls

### 12.2.1 Level control

The backwash tank is equipped with two redundant level transmitters, LITXX and LITXX and two transfer pumps.

Level transmitters can be set with priority. The two level transmitters operate in a duty/standby configuration

The level transmitter priority (lead /lag) is changed manually by the operator. The priority is changed automatically when one transmitter is in out of range fault.

The transfer pumps are equipped with VFD. A loop controls the Pump VFD accordingly, using the lead level transmitter as a process value and the speed of the pumps as setpoints.

If the level in this tank increases, the flow rate pumped from the tank should also increase. If the level in the tank is lower, the pump will slowly decrease speed until stop level is reached.

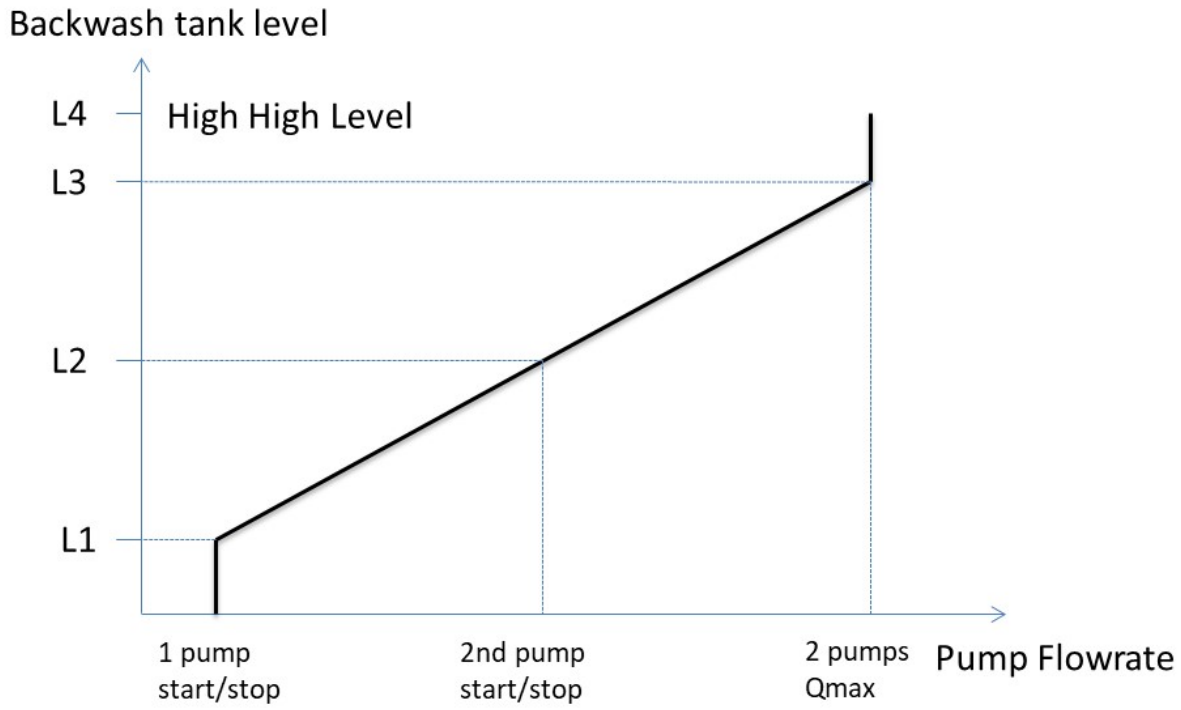


*Figure 6-1 backwash tank level control*

The following three (3) set points must be entered by the operator to properly control the flow and number of operating pumps.

Duty pump start level (LT_SP1);
Assist pump start level (LT_SP2);
Maximum speed pumps (LT_SP3);

When two pumps are operated at the same time, the pumps VFD setpoints are equal.

### 12.2.2 Backwash tank transfer pumps' Logic

In normal operation, only one transfer pump needs to run. The operator selects the assist pump on the interface.

Each time the running pump is stopped, the other pump starts at the next start sequence. If the pump is in manual or in fault, the second pump starts.

A button on the HMI permits to alternate manually the priority.

## 12.3 Fault Response

When the duty pump is in fault or not running and the secondary actiflo unit is in operation, the assist pump starts. If the second pump is in fault or in manual (not running) an alarm is generated and a message is displayed to warn the operator.

If low low level alarm on duty LITXX is activated, transfer pump is stopped until operator is able to reset the alarm.

If the two transmitters readings have discrepancy higher than an adjustable deviation value, an alarm is generated.

If the duty level transmitter is out of range, the priority is automatically transferred to the stand-by level transmitter. If both level transmitters are out of range, an alarm is generated and message is displayed to warn the operator about risk of overflow during discfilter backwash. The backwash pumps and discfilter are stopped.

## 12.4 Interlock

The interlocks that prevent the backwash tank pumps to start are:

- Low low level in backwash tank from duty level transmitter
- Both level transmitters out of range
- Secondary ACtiflo not running

# 13 Sludge tank

## 13.1 Description

The excess sludge from the two splitter boxes is pumped to a sludge holding tank. The sludge will be mixed to prevent any settling and accumulation within the sludge tank.

The sludge tank is made up of the following control devices and instruments:

*Table 6.1: Sludge tank control devices*

| SKID | P&ID TAG | DESCRIPTION | COMMENTS |
|---|---|---|---|
| | LITXX/65LIT6801441 | Level transmitters | |
| | 65PSR68009A | Sludge tank pump #1 | |
| | 65PSR68009B | Backwash tank pump #2 | |
| | 65AGI68024 | Mixer | |

## 13.2 Controls

### 13.2.1 Level control

The Sludge tank is equipped with two redundant level transmitters, LITXX and 65LIT6801441 and one transfer pump (by others).

Level transmitters can be set with priority. The two level transmitters operate in a duty/standby configuration

The level transmitter priority (lead /lag) is changed manually by the operator. The priority is changed automatically when one transmitter is in out of range fault.

The transfer pumps shall be equipped with VFD. A loop controls the Pump VFD accordingly, using the lead level transmitter as a process value and the speed of the pumps as setpoints.

If the level in this tank increases, the flow rate pumped from the tank should also increase. If the level in the tank is lower, the pump will slowly decrease speed until stop level is reached.

### 13.2.2 Sludge tank mixing

The mixer starts when the sludge level is above the low Level.

## 13.3 Fault Response

If low low level alarm on duty LITXX is activated, transfer pump and mixer are stopped until operator is able to reset the alarm.

If the two transmitters readings have discrepancy higher than an adjustable deviation value, an alarm is generated.

If the duty level transmitter is out of range, the priority is automatically transferred to the stand-by level transmitter. If both level transmitters are out of range, an alarm is generated and message is displayed to warn the operator about risk of overflow. The Sludge extraction pumps and the sludge pump are stopped.

If the mixer is in fault or in manual (not running) a fatal alarm is generated and a message is displayed to warn the operator

## 13.4 Interlock

The interlocks that prevent the Sludge tank pumps to start and stop the mixer are:

- Low low level in Sludge tank from duty level transmitter
- Both level transmitters out of range

# 14 Summary of Interlocks that trigger WTP trip

- BREAKPOINT CHLORINATION FLOWMETER OUT OF RANGE
- BYPASS BREAKPOINT CHLORINATION FLOWMETER OUT OF RANGE
- SECONDARY FLOWMETER OUT OF RANGE
- BREAKPOINT CHLORINATION FLOWMETER LOW LOW FLOWRATE
- BYPASS BREAKPOINT CHLORINATION FLOWMETER LOW LOW FLOWRATE
- SECONDARY FLOWMETER LOW LOW FLOWRATE
- BREAKPOINT CHLORINATION FLOWMETER HIGH HIGH FLOWRATE
- BYPASS BREAKPOINT CHLORINATION FLOWMETER HIGH HIGH FLOWRATE
- SECONDARY FLOWMETER HIGH HIGH FLOWRATE
- HIGH HIGH ACTICARB TURBIDITY
- HIGH HIGH ACTIFLO TURBIDITY
- DECHLORINATION TANK HIGH HIGH LEVEL
- CHLORINATION TANK HIGH HIGH LEVEL
- ACTIFLO HIGH HIGH LEVEL
- ACTICARB HIGH HIGH LEVEL
- B.C. SPLITTER BOX HIGH HIGH LEVEL
- SECONDARY SPLITTER BOX HIGH HIGH LEVEL
- HIGH HIGH ACTIFLO SCRAPER TORQUE
- HIGH HIGH ACTICARB SCRAPER TORQUE
- CHLORINATION TANK AGITATOR FAULT
- DECHLORINATION TANK AGITATOR FAULT
- ACTIFLO TANK AGITATOR FAULT
- ACTICARB TANK AGITATOR FAULT
- ACTIFLO SCRAPER FAULT
- ACTICARB SCRAPER FAULT
- ACTIFLO BOTH SLUDGE PUMPS FAULT
- ACTICARB BOTH SLUDGE PUMPS FAULT
- CHLORINATION TANK HIGH HIGH LEVEL
- BOTH BACKWASH TANK LEVEL METERS IN FAULT
- BOTH SLUDGE TANK LEVEL METERS IN FAULT
- SLUDGE MIXER IN FAULT
- BACKWASH PUMPS NOT READY /FAULT
- SLUDGE EXTRACTION PUMPS NOT READY /FAULT
- COAGULANT DOSING SYSTEM IN FAULT
- POLYMER DOSING SYSTEM IN FAULT

- SODIUM THISOULFATE DOSING SYSTEM IN FAULT
- SULFURIC ACID SYSTEM PUMPS IN FAULT
- CALCIUM HYPOCHLORITE SYSTEM PUMPS IN FAULT
- ALKALI SYSTEM IN FAULT
- HYDRACARB IN FAULT

# 15 Trends

## 15.1 Graphic pages

The Contractor must provide the graphic pages necessary for the proper operation of the system. The following list is not exhaustive and should correspond to the requirements of the plans and specifications:

1. One page on the entire operation of the treatment station and one page for each P & ID page;
2. Real time data;
3. Alarms graphic page;
4. Graphical page of trend curves (flow, on-line analyzers);
5. Graphical equipment calibration page.

## 15.2 Display and indications

• State:

1. State of the breakpoint chlorination treatment plant;
2. Operating condition of each pump or motorized equipment;
3. Indication of flow rates;
4. Indication of all analytical values (pH, NH4, Chlorine, TSS, turbidity)
5. Operating status of chemical dosing systems
6. Operating pressure of operating systems;
7. Measurement of tanks levels;
8. Operation of VFDs;
9. Equipment running time.

## 15.3 Faults and alarms

Failure of motorized equipment and instruments;

Alarms according to the table of setpoints, parameters and alarms.

## 15.4 Compiled data

1. Measurement and compilation of all flows;
2. Cumulative run times of each pump and equipment;
3. Number of departures per day for the last five days for each pump;
4. Daily, weekly, monthly and annual average of influent flow, sludge discharge flow, off-spec flow and treated water flow.

## 15.5 Trends

1. Trends can be analog points or the internal result.
2. Trend curves will be recorded on a 30-day possibility.

## 15.6 Alarm management

1. Alarm management is required to inform the operator of the status of the water treatment system. All alarms will be compiled into a register for later reference.
2. The alarms will be transmitted to the operator via a communication system integrated into the supervision software.
3. The combined alarm will operate a strobe light/horn outside the building (TBC).

# APPENDIX A

# Set point table

| | | | |
|---|---|---|---|
| **Project :** | MELIADINE | 5000220043 | **APPENDIX A: SET POINTS, ALARMS AND PARAMETERS** |
| **By :** | E.D./C.E.K. | | |
| **Chkd :** | E.D. | | |
| **Appvd :** | T.S. | | |
| **Rev :** | 01 | | |

| Process | From or is | Parameters or Set-Points | | | Units | Value | Range | Delay (s) | Action/Comment | Rev |
|---|---|---|---|---|---|---|---|---|---|---|
| | | Name | Control Philosophy Tag | Program Tag* | | | | | | |
| **GENERAL** | DELAY | Maximum time for opening or closing valve automatic valves | | | N/A | N/A | N/A | 30 | FAULT | **1** |
| **RAW WATER** | 65AIT6801102 | Raw water - TSSmeter - Out of range | AAOR | | N/A | N/A | N/A | 60 | ALARM | **1** |
| | | Raw water - TSSmeter - Low low | AALL | | g/L | - | 0.001-50 | 60 | DISMISSED | **1** |
| | | Raw water - TSSmeter - Low | AAL | | g/L | - | 0.001-50 | 60 | DISMISSED | **1** |
| | | Raw water - TSSmeter - High | AAH | | g/L | 0.25 | 0.001-50 | 60 | ALARM | **1** |
| | | Raw water - TSSmeter - High High | AAHH | | g/L | 0.3 | 0.001-50 | 60 | ALARM | **1** |
| | 65AIT6801101 | Raw water - NH3 analyzer- Out of range | AAOR | | N/A | N/A | N/A | 60 | ALARM | **1** |
| | | Raw water - NH3 analyzer - Low low | AALL | | mg/L | - | 0-100 | 60 | DISMISSED | **1** |
| | | Raw water - NH3 analyzer - Low | AAL | | mg/L | - | 0-100 | 60 | DISMISSED | **1** |
| | | Raw water - NH3 analyzer - High | AAH | | mg/L | 90 | 0-100 | 60 | ALARM | **1** |
| | | Raw water - NH3 analyzer - High High | AAHH | | mg/L | 150 | 0-100 | 60 | ALARM | **1** |
| | | Raw water - NH3 analyzer - Setpoint | SP | | mg/L | TBD | 0-100 | 60 | ALARM | **1** |
| | 65AIT680110X | Raw water - ORP analyzer- Out of range | AAOR | | N/A | N/A | N/A | 60 | ALARM | **1** |
| | | Raw water - ORP analyzer- Low low | AALL | | mV | TBD | BY CLIENT | 60 | DISMISSED | **1** |
| | | Raw water - ORP analyzer- Low | AAL | | mV | TBD | BY CLIENT | 60 | DISMISSED | **1** |
| | | Raw water - ORP analyzer - High | AAH | | mV | TBD | BY CLIENT | 60 | ALARM | **1** |
| | | Raw water - ORP analyzer - High High | AAHH | | mV | TBD | BY CLIENT | 60 | ALARM | **1** |
| | 65AIT680110X | Raw water - pH analyzer- Out of range | AAOR | | N/A | N/A | N/A | 60 | ALARM | **1** |
| | | Raw water - pH analyzer- Low low | AALL | | _ | 5.5 | BY CLIENT | 60 | ALARM | **1** |
| | | Raw water - pH analyzer- Low | AAL | | _ | 6 | BY CLIENT | 60 | ALARM | **1** |
| | | Raw water - pH analyzer - High | AAH | | _ | 8 | BY CLIENT | 60 | ALARM | **1** |
| | | Raw water - pH analyzer - High High | AAHH | | _ | 8.5 | BY CLIENT | 60 | ALARM | **1** |
| | | Raw water - pH analyzer - Setpoint | SP | | pH | TBD | BY CLIENT | 60 | ALARM | **1** |
| | set point | Treated water - NH3 concentration | SP | | mg/L | TDB | 0-100 | 30 | used for calculation | **1** |
| | set point | Raw Water - Total inlet Flow rate | SP | | m3/h | TBD | BY CLIENT | 30 | | **1** |
| | Calculations | Ammonia Load to be removed | CALC | | kg/h | TBD | | 30 | | **1** |
| | Calculations | Inlet + Bypass Breakpoint Chlorination Flowmeters - Low low | LL | | $m^3/d$ | 4700 | BY CLIENT | 60 | ALARM-START SHUT DOWN SEQUENCE | **1** |
| | | Inlet + Bypass Breakpoint Chlorination Flowmeters - Low | L | | $m^3/d$ | 6250 | BY CLIENT | 60 | ALARM | **1** |
| | | Inlet + Bypass Breakpoint Chlorination Flowmeters - High | H | | $m^3/d$ | 12500 | BY CLIENT | 60 | ALARM | **1** |
| | | Inlet + Bypass Breakpoint Chlorination Flowmeters - High high | HH | | $m^3/d$ | 15600 | BY CLIENT | 60 | ALARM - START SHUT DOWN SEQUENCE | **1** |
| | 65FIT6801102 | Inlet Breakpoint Chlorination Flowmeter - Fault | OR | | N/A | N/A | N/A | 0 | ALARM - START SHUT DOWN SEQUENCE | **1** |
| | | Inlet Breakpoint Chlorination Flowmeter - Setpoint | SP | | $m^3/d$ | TBD | BY CLIENT | | Calculated | **1** |
| | 65FIT XX | Bypass Breakpoint Chlorination Flowmeter - Setpoint | SP | | $m^3/d$ | TBD | BY CLIENT | | Calculated | **1** |
| | | Bypass Breakpoint Chlorination Flowmeter - Fault | OR | | N/A | N/A | N/A | 0 | ALARM - START SHUT DOWN SEQUENCE | **1** |
| | 65FCV6801102 | Inlet Breakpoint Chlorination valve - Fault | OR | | N/A | N/A | N/A | 0 | ALARM - START SHUT DOWN SEQUENCE | **1** |
| | 65FCVXX | Bypass Breakpoint Chlorination valve - fixed opening | SP | | % | TBD | BY CLIENT | 0 | Used when bypass BC flow control loop not active | **1** |
| | | Bypass Breakpoint Chlorination valve - Fault | OR | | N/A | N/A | N/A | 0 | ALARM - START SHUT DOWN SEQUENCE | **1** |
| | 65FIT6801301 | Secondary Flowmeter - Fault | OR | | N/A | N/A | N/A | 0 | ALARM - START SHUT DOWN SEQUENCE | **1** |
| | | Secondary Flowmeter - Low low | LL | | $m^3/d$ | 3000 | BY CLIENT | 60 | ALARM - START SHUT DOWN SEQUENCE | **1** |
| | | Secondary Flowmeter - Low | L | | $m^3/d$ | 5600 | BY CLIENT | 60 | ALARM | **1** |
| | | Secondary Flowmeter - High | H | | $m^3/d$ | 12000 | BY CLIENT | 60 | ALARM | **1** |
| | | Secondary Flowmeter - High high | HH | | $m^3/d$ | 14000 | BY CLIENT | 60 | ALARM - START SHUT DOWN SEQUENCE | **1** |
| | | Secondary Flowmeter - Setpoint | SP | | $m^3/d$ | TBD | BY CLIENT | | Calculated | **1** |

| | | | |
|---|---|---|---|
| **Project :** | MELIADINE | 5000220043 | **APPENDIX A: SET POINTS, ALARMS AND PARAMETERS** |
| **By :** | E.D./C.E.K. | | |
| **Chkd :** | E.D. | | |
| **Appvd :** | T.S. | | |
| **Rev :** | 01 | | |

| Process | From or is | Parameters or Set-Points | | | Units | Value | Range | Delay (s) | Action/Comment | Rev |
|---|---|---|---|---|---|---|---|---|---|---|
| | | Name | Control Philosophy Tag | Program Tag* | | | | | | |
| | 65FCV6801302 | Secondary valve - fixed opening | SP | | % | TBD | BY CLIENT | 0 | Used when bypass BC flow control loop not active | **1** |
| | | Secondary valve - Fault | OR | | N/A | N/A | N/A | 0 | ALARM - START SHUT DOWN SEQUENCE | **1** |
| **CHLORINATION TANK** | 65LSHH6801106 | Chlorination tank - Level - High High | LAHH | | Inches/ top | 3 | N/A | 5 | ALARM - START SHUT DOWN SEQUENCE | **1** |
| | 65AIT6801107 | Chlorination Tank inlet - pHmeter - Out of range | AAOR | | N/A | N/A | N/A | 0 | ALARM | **1** |
| | | Chlorination Tank inlet- pHmeter - High High | AAHH | | pH | 8.5 | BY CLIENT | 60 | ALARM | **1** |
| | | Chlorination Tank inlet- pHmeter - High | AAH | | pH | 8 | BY CLIENT | 60 | ALARM | **1** |
| | | Chlorination Tank inlet- pHmeter - Low | AAL | | pH | 6 | BY CLIENT | 60 | ALARM | **1** |
| | | Chlorination Tank inlet- pHmeter - Low Low | AALL | | pH | 5.5 | BY CLIENT | 60 | ALARM | |
| | | Chlorination Tank inlet- pHmeter - Setpoint | SP | | pH | TBD | BY CLIENT | 60 | ALARM | **1** |
| | 65AIT6801111 | Chlorination Tank outlet- pHmeter - Out of range | AAOR | | N/A | N/A | N/A | 0 | ALARM | **1** |
| | | Chlorination Tank outlet- pHmeter - High High | AAHH | | pH | 8.5 | BY CLIENT | 60 | ALARM | **1** |
| | | Chlorination Tank outlet- pHmeter - High | AAH | | pH | 8 | BY CLIENT | 60 | ALARM | **1** |
| | | Chlorination Tank outlet- pHmeter - Low | AAL | | pH | 6 | BY CLIENT | 60 | ALARM | **1** |
| | | Chlorination Tank outlet- pHmeter - Low Low | AALL | | pH | 5.5 | BY CLIENT | 60 | ALARM | **1** |
| | | Chlorination Tank inlet- pHmeter - Setpoint | SP | | pH | TBD | BY CLIENT | 60 | ALARM | **1** |
| | 65AIT6801117 | Chlorination Tank - Total chlorine analyzer - Out of range | AAOR | | N/A | N/A | N/A | 0 | ALARM | **1** |
| | | Chlorination Tank - Total chlorine analyzer - High High | AAHH | | PPM | 10 | 0-20.00 | 60 | ALARM | **1** |
| | | Chlorination Tank - Total chlorine analyzer - High | AAH | | PPM | 8 | 0-20.00 | 60 | ALARM | **1** |
| | | Chlorination Tank - Total chlorine analyzer - Low | AAL | | PPM | 2 | 0-20.00 | 60 | ALARM | **1** |
| | | Chlorination Tank - Total chlorine analyzer - Low Low | AALL | | PPM | 2.5 | 0-20.00 | 60 | ALARM | **1** |
| | | Chlorination Tank - Free chlorine analyzer -Setpoint | SP | | PPM | TBD | 0-20.00 | 60 | SETPOINT | **1** |
| | 65AIT6801116 | Chlorination Tank - Free chlorine analyzer - Out of range | AAOR | | N/A | N/A | N/A | 0 | ALARM | **1** |
| | | Chlorination Tank - Free chlorine analyzer - High High | AAHH | | PPM | 5 | 0-10,00 | 60 | ALARM | **1** |
| | | Chlorination Tank - Free chlorine analyzer - High | AAH | | PPM | 4.5 | 0-10,00 | 60 | ALARM | **1** |
| | | Chlorination Tank - Free chlorine analyzer - Low | AAL | | PPM | 2 | 0-10,00 | 60 | ALARM | **1** |
| | | Chlorination Tank - Free chlorine analyzer - Low Low | AALL | | PPM | 1.25 | 0-10,00 | 60 | ALARM | **1** |
| | | Chlorination Tank - Free chlorine analyzer -Setpoint | SP | | PPM | TBD | 0-10.00 | 60 | SETPOINT | **1** |
| | 65FITXX | Chlorination Tank - Free chlorine - dilution flowmter | PV | | dm3/min | 0.2 | 0-0.5 | 60 | PPROCESS VALUE USED FOR CALCULATION OF FREE CHLORINE CONCENTRATION | **1** |
| | 65FITXX | Chlorination Tank - Total chlorine - dilution flowmter | PV | | dm3/min | 0.5 | 0-0.5 | 60 | PROCESS VALUE USED FOR CALCULATION OF TOTAL CHLORINE CONCENTRATION | **1** |
| | PARAMETER | Required calcium hypochlorite dosage concentration | PAR | | mg/L | TBD | BY CLIENT | 30 | PARAMETER INSERTED BY THE OPERATOR | **1** |

| | | |
|---|---|---|
| **Project :** | MELIADINE | 5000220043 |
| **By :** | E.D./C.E.K. | |
| **Chkd :** | E.D. | |
| **Appvd :** | T.S. | |
| **Rev :** | 01 | |

**APPENDIX A: SET POINTS, ALARMS AND PARAMETERS**

VEOLIA

| Process | From or is | Parameters or Set-Points | | | Units | Value | Range | Delay (s) | Action/Comment | Rev |
|---|---|---|---|---|---|---|---|---|---|---|
| | | Name | Control Philosophy Tag | Program Tag* | | | | | | |
| DECHLORINATION TANK | 65LSHH6801131 | Dechlorination tank - Level - High High | LAHH | | Inches/ top | 3 | N/A | 5 | ALARM - START SHUT DOWN SEQUENCE | **1** |
| | 65AIT6801136 | Dechlorination Tank outlet- pHmeter - Out of range | AAOR | | N/A | N/A | N/A | 0 | ALARM | **1** |
| | | Dechlorination Tank outlet- pHmeter - High High | AAHH | | pH | 8.5 | 0-14.00 | 60 | ALARM | **1** |
| | | Dechlorination Tank outlet- pHmeter - High | AAH | | pH | 8 | 0-14.00 | 60 | ALARM | **1** |
| | | Dechlorination Tank outlet- pHmeter - Low | AAL | | pH | 6 | 0-14.00 | 60 | ALARM | **1** |
| | | Dechlorination Tank outlet- pHmeter - Low Low | AALL | | pH | 5.5 | 0-14.00 | 60 | ALARM | **1** |
| | | Dechlorination Tank outlet- pHmeter - set point | SP | | pH | TBD | 0-14.00 | 60 | ALARM | **1** |
| | 65AIT6801142 | Dechlorination Tank - Total chlorine analyzer - Out of range | AAOR | | N/A | N/A | N/A | 0 | ALARM | **1** |
| | | Dechlorination Tank - Total chlorine analyzer - High High | AAHH | | PPM | 10 | 0-20.00 | 60 | ALARM | **1** |
| | | Dechlorination Tank - Total chlorine analyzer - High | AAH | | PPM | 8 | 0-20.00 | 60 | ALARM | **1** |
| | | Dechlorination Tank - Total chlorine analyzer - Low | AAL | | PPM | 2 | 0-20.00 | 60 | ALARM | **1** |
| | | Dechlorination Tank - Total chlorine analyzer - Low Low | AALL | | PPM | 2.5 | 0-20.00 | 60 | ALARM | **1** |
| | | Dechlorination Tank - Free chlorine analyzer -Setpoint | SP | | PPM | TBD | 0-20.00 | 60 | SET POINT | **1** |
| | 65AIT6801141 | Dechlorination Tank - Free chlorine analyzer - Out of range | AAOR | | N/A | N/A | N/A | 0 | ALARM | **1** |
| | | Dechlorination Tank - Free chlorine analyzer - High High | AAHH | | PPM | 5 | 0-10,00 | 60 | ALARM | **1** |
| | | Dechlorination Tank - Free chlorine analyzer - High | AAH | | PPM | 4.5 | 0-10,00 | 60 | ALARM | **1** |
| | | Dechlorination Tank - Free chlorine analyzer - Low | AAL | | PPM | 2 | 0-10,00 | 60 | ALARM | **1** |
| | | Dechlorination Tank - Free chlorine analyzer - Low Low | AALL | | PPM | 1.25 | 0-10,00 | 60 | ALARM | **1** |
| | | DEchlorination Tank - Free chlorine analyzer -Setpoint | SP | | PPM | TBD | 0-10.00 | 60 | SETPOINT | **1** |
| | 65FITXX | Dechlorination Tank - Free chlorine - dilution flowmeter | PV | | dm3/min | 0.2 | 0-0.5 | 60 | PPROCESS VALUE USED FOR CALCULATION OF FREE CHLORINE CONCENTRATION | **1** |
| | 65FITXX | Dechlorination Tank - Total chlorine - dilution flowmeter | PV | | dm3/min | 0.5 | 0-0.5 | 60 | PROCESS VALUE USED FOR CALCULATION OF TOTAL CHLORINE CONCENTRATION | **1** |
| BREAKPOINT CHLORINATION ACTIFLO | 65LSHH6801224 | B.C. Actiflo - Level - High High | LAHH | | Inches/ top | 3 | N/A | 5 | ALARM -START SHUT DOWN SEQUENCE | **1** |
| | 65AIT6801222 | Clarified water Turbidity - B.C. Actiflo- Out of range | AAOR | | N/A | N/A | N/A | 60 | ALARM | **1** |
| | | Clarified water Turbidity - B.C. Actiflo- Low low | AALL | | g/L | - | 0.001-50 | - | DISMISSED | **1** |
| | | Clarified water Turbidity - B.C. Actiflo- Low | AAL | | g/L | - | 0.001-50 | - | DISMISSED | **1** |
| | | Clarified water Turbidity - B.C. Actiflo- High | AAH | | g/L | 0.02 | 0.001-50 | 60 | ALARM | **1** |
| | | Clarified water Turbidity - B.C. Actiflo- High High | AAHH | | g/L | 0.03 | 0.001-50 | 60 | ALARM | **1** |
| | | Clarified water Turbidity - B.C. Actiflo- Setpoint | SP | | g/l | 0.012 | 0.001-50 | 60 | ALARM | **1** |
| | 65AIT6801221 | Clarified water pH - B.C. Actiflo- Out of range | AAOR | | N/A | N/A | N/A | 60 | ALARM | **1** |
| | | Clarified water pH - B.C. Actiflo- Low low | AALL | | pH | 5.5 | BY CLIENT | - | DISMISSED | **1** |
| | | Clarified water pH - B.C. Actiflo- Low | AAL | | pH | 6 | BY CLIENT | - | DISMISSED | **1** |
| | | Clarified water pH - B.C. Actiflo- High | AAH | | pH | 8 | BY CLIENT | 60 | ALARM | **1** |
| | | Clarified water pH - B.C. Actiflo- High High | AAHH | | pH | 8.5 | BY CLIENT | 60 | ALARM | **1** |
| | | Clarified water pH - B.C. Actiflo- set point | SP | | pH | TBD | BY CLIENT | 60 | ALARM | **1** |
| | 65AIT6801201 | ORP - B.C. Actiflo- Out of range | AAOR | | N/A | N/A | N/A | 60 | ALARM | **1** |
| | | ORP - B.C. Actiflo- Low low | AALL | | mV | TBD | BY CLIENT | - | DISMISSED | **1** |
| | | ORP - B.C. Actiflo- Low | AAL | | mV | TBD | BY CLIENT | - | DISMISSED | **1** |
| | | ORP - B.C. Actiflo- High | AAH | | mV | TBD | BY CLIENT | 60 | ALARM | **1** |
| | | ORP - B.C. Actiflo- High High | AAHH | | mV | TBD | BY CLIENT | 60 | ALARM | **1** |
| | | ORP - B.C. Actiflo- Setpoint | SP | | mV | TBD | BY CLIENT | 60 | ALARM | **1** |

| | | | |
|---|---|---|---|
| **Project :** | MELIADINE | 5000220043 | **APPENDIX A: SET POINTS, ALARMS AND PARAMETERS** |
| **By :** | E.D./C.E.K. | | |
| **Chkd :** | E.D. | | |
| **Appvd :** | T.S. | | |
| **Rev :** | 01 | | |

| Process | From or is | Parameters or Set-Points | | | Units | Value | Range | Delay (s) | Action/Comment | Rev |
|---|---|---|---|---|---|---|---|---|---|---|
| | | Name | Control Philosophy Tag | Program Tag* | | | | | | |
| | SA20-03 | High Torque detection | AAHH | | rpm | To be set on site | N/A | 30 | ALARM - START SHUT DOWN SEQUENCE | **1** |
| **BREAKPOINT CHLORINATION SPLITTER BOX** | 65LSHH6801406 | Splitter Box- B.C. Actiflo - Level - High High | LAHH | | Inches/ top | 3 | N/A | 5 | ALARM - START SHUT DOWN SEQUENCE | **1** |
| | 65LSLL6801406 | Splitter Box- B.C. Actiflo - Level - Low Low | LALL | | Inches/ bottom | 3 | N/A | 5 | ALARM - START SHUT DOWN SEQUENCE | **1** |
| | 65FCV6801433 | Splitter Box - B.C. Actiflo- Discharge valve - Fault | OR | | N/A | N/A | N/A | 0 | ALARM - START SHUT DOWN SEQUENCE | **1** |
| | 65AIT6801417 | Splitter Box - B.C. Actiflo -TSSmeter - Out of range | AAOR | | N/A | N/A | N/A | 60 | ALARM | **1** |
| | | Splitter Box - B.C. Actiflo -TSSmeter - Low low | AALL | | g/L | - | 0.001-50 | - | DISMISSED | **1** |
| | | Splitter Box - B.C. Actiflo -TSSmeter - Low | AAL | | g/L | - | 0.001-50 | - | DISMISSED | **1** |
| | | Splitter Box - B.C. Actiflo -TSSmeter - High | AAH | | g/L | 25 | 0.001-50 | 60 | ALARM - START DISCHARGE TIMER | **1** |
| | | Splitter Box - B.C. Actiflo -TSSmeter - High High | AAHH | | g/L | 30 | 0.001-50 | 60 | ALARM - RESTART DISCHARGE TIMER | **1** |
| | 65FIT6801432 | Splitter Box - B.C. Actiflo - Discharge Flowmeter - Fault | OR | | N/A | N/A | N/A | 0 | ALARM - START SHUT DOWN SEQUENCE | **1** |
| | | Splitter Box - B.C. Actiflo - Discharge Flowmeter - Low low | LL | | $m^3/h$ | TBD | BY CLIENT | - | ALARM - START SHUT DOWN SEQUENCE | **1** |
| | | Splitter Box - B.C. Actiflo - Discharge Flowmeter - Low | L | | $m^3/h$ | TBD | BY CLIENT | - | ALARM | **1** |
| | | Splitter Box - B.C. Actiflo - Discharge Flowmeter - High | H | | $m^3/h$ | SP: FOR OPENING OF 65FCV6801433 | BY CLIENT | 20 | ALARM | **1** |
| | | Splitter Box - B.C. Actiflo - Discharge Flowmeter - High high | HH | | $m^3/h$ | 5.9 | BY CLIENT | 30 | ALARM - START SHUT DOWN SEQUENCE | **1** |
| **SECONDARY ACTIFLO** | 65LSHH6801324 | Secondary Actiflo - Level - High High | LAHH | | Inches/ top | 3 | N/A | 5 | ALARM - START SHUT DOWN SEQUENCE | **1** |
| | 65AIT6801427 | Clarified water Turbidity - Secondary Actiflo- Out of range | AAOR | | N/A | N/A | N/A | 60 | ALARM | **1** |
| | | Clarified water Turbidity - Secondary Actiflo- Low low | AALL | | g/L | - | 0.001-50 | - | DISMISSED | **1** |
| | | Clarified water Turbidity - Secondary Actiflo- Low | AAL | | g/L | - | 0.001-50 | - | DISMISSED | **1** |
| | | Clarified water Turbidity - Secondary Actiflo- High | AAH | | g/L | 0.025 | 0.001-50 | 60 | ALARM | **1** |
| | | Clarified water Turbidity - Secondary Actiflo- High High | AAHH | | g/L | 0.03 | 0.001-50 | 60 | ALARM | **1** |
| | | Clarified water Turbidity - Secondary Actiflo- Setpoint | SP | | g/l | 0.01 | 0.001-50 | 60 | ALARM | **1** |
| | 65AIT6801321 | Clarified water pH - Secondary Actiflo- Out of range | AAOR | | N/A | N/A | N/A | 60 | ALARM | **1** |
| | | Clarified water pH - Secondary Actiflo- Low low | AALL | | pH | 5.5 | BY CLIENT | - | ALARM | **1** |
| | | Clarified water pH - Secondary Actiflo- Low | AAL | | pH | 6 | BY CLIENT | - | ALARM | **1** |
| | | Clarified water pH - Secondary Actiflo- High | AAH | | pH | 8 | BY CLIENT | 60 | ALARM | **1** |
| | | Clarified water pH - Secondary Actiflo- High High | AAHH | | pH | 8.5 | BY CLIENT | 60 | ALARM | **1** |
| | | Clarified water pH - Secondary Actiflo- Setpoint | SP | | pH | TBD | BY CLIENT | 60 | ALARM | **1** |
| | SA20-03 | High Torque detection | AAHH | | rpm | To be set on site | N/A | 60 | ALARM - START SHUT DOWN SEQUENCE | **1** |

| | | |
|---|---|---|
| **Project :** | MELIADINE | 5000220043 |
| **By :** | E.D./C.E.K. | |
| **Chkd :** | E.D. | |
| **Appvd :** | T.S. | |
| **Rev :** | 01 | |

**APPENDIX A: SET POINTS, ALARMS AND PARAMETERS**

VEOLIA

| Process | From or is | Parameters or Set-Points | | | Units | Value | Range | Delay (s) | Action/Comment | Rev |
|---|---|---|---|---|---|---|---|---|---|---|
| | | Name | Control Philosophy Tag | Program Tag* | | | | | | |
| SECONDARY SPLITTER BOX | 65LSHH6801411 | Splitter Box- Secondary Actiflo - Level - High High | LAHH | | Inches/ top | 3 | N/A | 5 | ALARM - START SHUT DOWN SEQUENCE | 1 |
| | 65LSLL6801411 | Splitter Box- Secondary Actiflo - Level - Low Low | LALL | | Inches/ bottom | 3 | N/A | 5 | ALARM - START SHUT DOWN SEQUENCE | 1 |
| | 65FCV6801438 | Splitter Box - Secondary Actiflo- Discharge valve - Fault | OR | | N/A | N/A | N/A | 0 | ALARM - START SHUT DOWN SEQUENCE | 1 |
| | 65AIT6801427 | Splitter Box - Secondary Actiflo -TSSmeter - Out of range | AAOR | | N/A | N/A | N/A | 60 | ALARM - START SHUT DOWN SEQUENCE | 1 |
| | | Splitter Box - Secondary Actiflo -TSSmeter - Low low | AALL | | g/L | - | 0.001-50 | - | ALARM | 1 |
| | | Splitter Box - Secondary Actiflo -TSSmeter - Low | AAL | | g/L | - | 0.001-50 | - | ALARM | 1 |
| | | Splitter Box - Secondary Actiflo -TSSmeter - High | AAH | | g/L | 25 | 0.001-50 | 60 | ALARM - START DISCHARGE TIMER | 1 |
| | | Splitter Box - Secondary Actiflo -TSSmeter - High High | AAHH | | g/L | 30 | 0.001-50 | 60 | ALARM - RESTART DISCHARGE TIMER | 1 |
| | | Splitter Box - Secondary Actiflo -TSSmeter - Setpoint | SP | | g/L | 20 | 0.001-50 | 60 | | 1 |
| | 65FIT6801437 | Splitter Box - Secondary Actiflo - Discharge Flowmeter - Fault | OR | | N/A | N/A | N/A | 0 | ALARM | 1 |
| | | Splitter Box - Secondary Actiflo - Discharge Flowmeter - Low low | LL | | $m^3/h$ | - | BY CLIENT | - | DISMISSED | 1 |
| | | Splitter Box - Secondary Actiflo - Discharge Flowmeter - Low | L | | $m^3/h$ | - | BY CLIENT | - | DISMISSED | 1 |
| | | Splitter Box - Secondary Actiflo - Discharge Flowmeter - High | H | | $m^3/h$ | SP: FOR OPENING OF 65FCV6801438 | BY CLIENT | 20 | ALARM | 1 |
| | | Splitter Box - Secondary Actiflo - Discharge Flowmeter - High high | HH | | $m^3/h$ | 2.5 | BY CLIENT | 30 | ALARM | 1 |
| BACKWASH TANK | | Backwash Tank level transmitter - Setpoint | SP | | | | | | Setpoint used with priority level transmitter for BW pump control | 1 |
| | 65LITXXX | Backwash Tank level transmitter #1 - Out of range | LAOR | | N/A | N/A | N/A | 0 | ALARM | 1 |
| | | Backwash Tank level transmitter #1 - High High | LAHH | | Inches/top | To be set on site | BY CLIENT | 5 | ALARM - 65PSR68002A/B start | 1 |
| | | Backwash Tank level transmitter #1 - High | LAH | | Inches/top | To be set on site | BY CLIENT | 30 | ALARM | 1 |
| | | Backwash Tank level transmitter #1 - Low | LAL | | Inches/top | To be set on site | BY CLIENT | 30 | ALARM | 1 |
| | | Backwash Tank level transmitter #1 - Low Low | LALL | | Inches/top | To be set on site | BY CLIENT | 5 | ALARM - 65PSR68002A/B are stopped | 1 |
| | 65LITXXX | Backwash Tank level transmitter #2 - Out of range | LAOR | | N/A | N/A | N/A | 0 | ALARM | 1 |
| | | Backwash Tank level transmitter #2 - High High | LAHH | | Inches/bottom | To be set on site | BY CLIENT | 5 | ALARM - 65PSR68002A/B start | 1 |
| | | Backwash Tank level transmitter #2 - High | LAH | | Inches/bottom | To be set on site | BY CLIENT | 30 | ALARM | 1 |
| | | Backwash Tank level transmitter #2 - Low | LAL | | Inches/bottom | To be set on site | BY CLIENT | 30 | ALARM | 1 |
| | | Backwash Tank level transmitter #2 - Low Low | LALL | | Inches/bottom | To be set on site | BY CLIENT | 5 | ALARM - 65PSR68002A/B are stopped | 1 |
| | 65PSR68009A | Backwash Tank pump #1 - Leak | XS | | N/A | N/A | N/A | 0 | INTERLOCK- 65PSR68009A is stopped | 1 |
| | 65PSR68009B | Backwash Tank pump #2 - Leak | XS | | N/A | N/A | N/A | 0 | INTERLOCK - 65PSR68009B is stopped | 1 |
| SLUDGE TANK | 65LIT6801441 | Sludge Tank level transmitter #1 - Out of range | LAOR | | N/A | N/A | N/A | 0 | ALARM | 1 |
| | | Sludge Tank level transmitter #1 - High High | LAHH | | Inches/top | To be set on site | BY CLIENT | 5 | ALARM | 1 |
| | | Sludge Tank level transmitter #1 - High | LAH | | Inches/bottom | To be set on site | BY CLIENT | 30 | ALARM | 1 |
| | | Sludge Tank level transmitter #1 - Low | LAL | | Inches/bottom | To be set on site | BY CLIENT | 30 | ALARM | 1 |
| | | Sludge Tank level transmitter #1 - Low Low | LALL | | Inches/bottom | To be set on site | BY CLIENT | 5 | ALARM | 1 |
| | LIT3-012 | Sludge Tank level transmitter #2 - Out of range | LAOR | | N/A | N/A | N/A | 0 | ALARM | 1 |
| | | Sludge Tank level transmitter #2 - High High | LAHH | | Inches/top | To be set on site | BY CLIENT | 5 | ALARM | 1 |
| | | Sludge Tank level transmitter #2 - High | LAH | | Inches/bottom | To be set on site | BY CLIENT | 30 | ALARM | 1 |
| | | Sludge Tank level transmitter #2 - Low | LAL | | Inches/bottom | To be set on site | BY CLIENT | 30 | ALARM | 1 |
| | | Sludge Tank level transmitter #2 - Low Low | LALL | | Inches/bottom | To be set on site | BY CLIENT | 5 | ALARM | 1 |

| | | | |
|---|---|---|---|
| **Project :** | MELIADINE | 5000220043 | **APPENDIX A: SET POINTS, ALARMS AND PARAMETERS** |
| **By :** | E.D./C.E.K. | | |
| **Chkd :** | E.D. | | |
| **Appvd :** | T.S. | | |
| **Rev :** | 01 | | |

| Process | From or is | Parameters or Set-Points | | | Units | Value | Range | Delay (s) | Action/Comment | Rev |
|---|---|---|---|---|---|---|---|---|---|---|
| | | Name | Control Philosophy Tag | Program Tag* | | | | | | |
| DISCFILTER | 65PSL8165 | Discfilter Pressure switch - Low Low | LALL | | N/A | Detection | N/A | 2 | ALARM - Backwash pumps are stopped | 1 |
| | 65LIT6801502A | Discfilter - Upstream level transmitter - Out of range | LAOR | | N/A | N/A | N/A | 0 | ALARM | 1 |
| | | Discfilter - Upstream level transmitter - High High | LAHH | | mm | To be set on site | BY CLIENT | 5 | ALARM - Overflow by the by-pass weir | 1 |
| | | Discfilter - Upstream level transmitter - High | LAH | | mm | To be set on site | BY CLIENT | 30 | ALARM | 1 |
| | | Discfilter - Upstream level transmitter - Low | LAL | | mm | N/A | N/A | N/A | | 1 |
| | | Discfilter - Upstream level transmitter - Low Low | LALL | | mm | N/A | N/A | N/A | | 1 |
| | 65LIT6801502B | Discfilter - Downstream level transmitter - Out of range | LAOR | | N/A | N/A | N/A | 0 | ALARM | 1 |
| | | Discfilter - Downstream level transmitter - High High | LAHH | | mm | N/A | N/A | N/A | | 1 |
| | | Discfilter - Downstream level transmitter - High | LAH | | mm | N/A | N/A | N/A | | 1 |
| | | Discfilter - Downstream level transmitter - Low | LAL | | mm | To be set on site | BY CLIENT | 30 | ALARM | 1 |
| | | Discfilter - Downstream level transmitter - Low Low | LALL | | mm | To be set on site | BY CLIENT | 5 | ALARM - Backwash pumps are stopped | 1 |
| | CALC | Discfilter- Differential level - BW - High High | LAHH | | mm | 300 | 0-1000 | 30 | WARNING " HIGH DIFFERENCE LEVEL" | 1 |
| | ZSC | Discfilter cover - Limit switch Closed | | | | | | | | 1 |
| | ZSO | Discfilter cover - Limit switch Open | | | | | | | WARNING " COVER NOT CLOSED" | 1 |
| | ZSC | Discfilter - sprayarm #1 Limit switch Closed | | | | | | | TBC | 1 |
| | ZSO | Discfilter - sprayarm #1 Limit switch Open | | | | | | | TBC | 1 |
| | | Drum start delay | | | s | 2 | 0-10 | N/A | | 1 |
| | | Backwash stop delay | | | s | 20 | 0-400 | N/A | | 1 |
| | | Timed backwash interval | | | min | 30 | 0-240 | N/A | | 1 |
| | | Drum speed | | | Hz | To be set on site | 0-60 | N/A | | 1 |
| | | Number of cleaning cycles | | | N/A | 1 | 1-10 | N/A | | 1 |
| | | Drum start delay chemical cleaning | | | s | 5 | 0-60 | N/A | | 1 |
| | | Chemical spraying timer | | | s | 13 | 1-30 | N/A | | 1 |
| | | Chemical soaking timer | | | s | 120 | 1-600 | N/A | | 1 |
| | | Chemical cleaning drum speed | | | Hz | 15 | 0-60 | N/A | | 1 |
| | | Rotations per chemical cleaning cycle | | | N/A | 5 | 1-10 | N/A | | 1 |
| | | Rinsing backwash timer | | | s | 300 | 1-600 | N/A | | 1 |
| TREATED WATER | 65AIT6801603 | Treated water - TSSmeter - Out of range | AAOR | | N/A | N/A | N/A | 0 | ALARM | 1 |
| | | Treated water - TSSmeter - Low low | AALL | | g/L | 0.001 | 0.001-50 | - | ALARM | 1 |
| | | Treated water - TSSmeter - Low | AAL | | g/L | 0.015 | 0.001-50 | - | ALARM | 1 |
| | | Treated water - TSSmeter - High | AAH | | g/L | 0.01 | 0.001-50 | 60 | ALARM | 1 |
| | | Treated water - TSSmeter - High High | AAHH | | g/L | 0.015 | 0.001-50 | 60 | ALARM | 1 |
| | 65AIT6801604 | Treated Water - Total chlorine analyzer - Out of range | AAOR | | N/A | N/A | N/A | 0 | ALARM | 1 |
| | | Treated Water - Total chlorine analyzer - High High | AAHH | | PPM | 1.5 | 0-10.00 | 60 | ALARM | 1 |
| | | Treated Water - Total chlorine analyzer - High | AAH | | PPM | 1 | 0-10.00 | 60 | ALARM | 1 |
| | | Treated Water - Total chlorine analyzer - Low | AAL | | PPM | 0.5 | 0-10.00 | 60 | ALARM | 1 |
| | | Treated Water - Total chlorine analyzer - Low Low | AALL | | PPM | 0 | 0-10.00 | 60 | ALARM | 1 |
| | 65AITXXX | Treated water pH - Out of range | AAOR | | N/A | N/A | N/A | 60 | ALARM | 1 |
| | | Treated water pH - Low low | AALL | | pH | 5.5 | BY CLIENT | 60 | ALARM | 1 |
| | | Treated water pH - Low | AAL | | pH | 6 | BY CLIENT | 60 | ALARM | 1 |
| | | Treated water pH - High | AAH | | pH | 9 | BY CLIENT | 60 | ALARM | 1 |
| | | Treated water pH - High High | AAHH | | pH | 9.5 | BY CLIENT | 60 | ALARM | 1 |

| | | | |
|---|---|---|---|
| **Project :** | MELIADINE | 5000220043 | **APPENDIX A: SET POINTS, ALARMS AND PARAMETERS** |
| **By :** | E.D./C.E.K. | | |
| **Chkd :** | E.D. | | |
| **Appvd :** | T.S. | | |
| **Rev :** | 01 | | |

| **Process** | **From or is** | **Parameters or Set-Points** | | | **Units** | **Value** | **Range** | **Delay (s)** | **Action/Comment** | **Rev** |
|---|---|---|---|---|---|---|---|---|---|---|
| | | **Name** | **Control Philosophy Tag** | **Program Tag*** | | | | | | |
| **HYDRACARB #1** | 65LSL6801611 | Hydracarb #1 Hopper - Level -Low Low | LALL | | Inches/ bottom | Parameters integrated in standard program | N/A | Parameters integrated in standard program | Parameters integrated in standard program | **1** |
| | 65PSL6801601 | Hydracarb #1 - Pressure - Low Low | LALL | | PSI | | -14.5-145 | | | **1** |
| **HYDRACARB #2** | 65LSL6801631 | Hydracarb #1 Hopper - Level -Low Low | LALL | | Inches/ bottom | Parameters integrated in standard program | N/A | Parameters integrated in standard program | Parameters integrated in standard program | **1** |
| | 65PSL6801621 | Hydracarb #1 - Pressure - Low Low | LALL | | PSI | | -14.5-145 | | | **1** |

# APPENDIX B

# ACTICARB®

# Functional Description

# ACTICARB® – ACP

## PROCESS CONTROL DESCRIPTION

**VEOLIA WATER TECHNOLOGIES CANADA**
www.veoliawatertechnologies.com

# REVISION STATUS

| Issue | Date | Created | Reviewed | Approved | Description of Changes |
|---|---|---|---|---|---|
| 1 | 2021/03/11 | CEK | ED | TS | First Issue |
| | | | | | |
| | | | | | |
| | | | | | |
| | | | | | |

# TABLE OF CONTENT

**1 INTRODUCTION ..... 5**

1.1 Reference Documents ..... 5

1.2 Process Overview ..... 5

1.3 List of Abbreviations ..... 6

1.4 List of Units ..... 6

**2 ACTICARB® CONTROL DESCRIPTION ..... 7**

2.1 Equipment and Instrument ..... 7

2.2 Operating Modes Overview ..... 8

2.3 Permissive ..... 9

2.4 Semi-Auto Train Response to Equipment Conditions ..... 9

2.4.1 Equipment Removed From Auto PLC Response ..... 9

2.4.2 Equipment Failure PLC Response ..... 9

2.5 Recirculation Pumps Logic ..... 10

2.5.1 Duty/Standby Orientation ..... 10

2.6 SEQUENCES OF FUNCTIONS ..... 11

2.6.1 Start-up Sequence ..... 11

2.6.2 Shutdown Sequence ..... 12

2.7 Alarm/Failure Conditions and PLC Responses ..... 15

2.7.1 Alarm Priorities ..... 15

2.7.2 Alarm and Set Point Table ..... 15

2.8 Safety ..... 16

2.8.1 Emergency Stop ..... 16

2.8.2 Control Power Failure PLC Response ..... 16

2.9 System Available Conditions ..... 17

2.9.1 Conditions for automatic Start sequence ..... 17

2.9.2 Conditions for automatic stop sequence ..... 17

2.10 ACTICARB® Fault Responses ..... 17

2.11 Controls ..... 18

2.11.1 General ..... 18

2.11.2 Recirculation pumps logic ..... 19

2.11.3 Maturation Mixer Speed ..... 19
2.11.4 ACTICARB® High Level Switch ..... 19
2.11.5 Activated Carbon Extraction Control ..... 20
2.11.6 Activated Carbon Concentration ..... 20
2.11.7 Solids Residence Time ..... 21
2.11.8 Activated Carbon Extraction Valve ..... 21
2.12 Activated Carbon Extraction/ Recirculation System Fault Response ..... 22
2.13 Calculated Parameters ..... 23
2.13.1 Flow Pace Control ..... 23
2.14 Interlocks ..... 24
2.14.1 ACTICARB® High Level Switch ..... 24
2.14.2 High Scraper Torque ..... 24
2.14.3 Activated Carbon Extraction Pump ..... 24
2.14.4 Maturation Mixer ..... 24
**3 APPENDIX A – ALARMS, PARAMETERS AND SET POINTS ..... 25**

# 1 INTRODUCTION

## 1.1 Reference Documents

| Document Number | Name | Revision |
|---|---|---|
| 5000220043_PI_0001_GEN_VWT | PI001 _Process and Instrumentation diagram | 1 |
| | | |
| | | |

## 1.2 Process Overview

The ACTICARB® clarifier are based on the ballasted flocculation process. The key feature of this process is that very fine sand (85 µm or 130 µm size), termed “microsand” is added to the pre coagulated effluent loaded with PAC. A polymer is also added that binds the microsand to the floc, creating a ballasted floc with greatly increased effective density. The ballasted flocculation process is capable of being shut down when treatment capacity is not needed and then rapidly restarted when needed.

The flocs settle in the clarifier portion of the system where they are collected by a rake mechanism. A percentage of the unit’s design raw water flow is continuously withdrawn from the clarifier and pumped to a hydrocyclone system which separates the microsand from the sludge. The recovered microsand (typically 20% of the recycled flow) is reused in the process. A small quantity of the microsand is not recovered by the hydrocyclones and is discharged with the sludge. The lost microsand needs to be replaced periodically by adding more of it to the process (typically 1 to 3 mg/L). After sand separation, the sludge is rejected to another set of reactors, from which a portion will be recirculated to upstream points in the treatment train, and the remainder extracted.

A tank downstream of the ACTICARB® unit accepts the sludge removed in the ACTICARB® clarification process. This tank splits the rejected mix of activated carbon and flocs into two streams. A fraction is pumped and rejected into the sludge tank unit in order to be extracted from the process. The remaining fraction is recirculated by gravity into the contact reactor in order to increase the activated carbon contact time in the process. The flowrate of the pumped fraction is controlled by a flowrate control loop. The flowrate is measured by a flowmeter and controlled by a modulating valve (pinch valve).

## 1.3 List of Abbreviations

The following abbreviations are used in the text of this document.

- HMI: Human/Machine Interface
- H-O-A: Hand-Off-Auto
- PLC: Programmable Logic Controller
- LCP: Local Control Panel
- VFD: Variable Frequency Drive
- VWT: Veolia Water Technologies Canada

## 1.4 List of Units

The following lists the parameters referred to in this document and the units they are measured in unless otherwise specified.

- Concentration (in general): mg/L
- Dosing rate: mL/L
- Flow rate (main process): $m^3/h$
- Flow rate (chemical dosing): LPH
- Level in the tanks: %
- pH: -
- Pressure: PSIg
- Temperature: °C
- Turbidity: mg/L or NTU

# 2 ACTICARB® CONTROL DESCRIPTION

## 2.1 Equipment and Instrument

This section connects the tags from the P&ID and the terminology used throughout Equipment and Instrument Schedules

| P&ID TAG | DESCRIPTION |
|---|---|
| 65FIT6801102 | Inlet Breakpoint Chlorination Flowmeter |
| 65FCV6801102 | Inlet Breakpoint Chlorination valve |
| 65AGI68018 | Coagulation mixer |
| 65AGI68019 | Injection mixer |
| 65AGI68020 | Maturation mixer |
| 65TRM68002 | Scraper |
| SSL20-03 | High Torque detector |
| 65PSR68005A | Recirculation pump #1 |
| 65PSR68005B | Recirculation pump #2 |
| 65AIT6801221 | pH meter |
| 65AIT6801222 | Turbidity meter |
| 65LSHH6801224 | High high level switch |
| 65AIT6801201 | ORP meter |
| N/A | Pressure transmitter first recirculation line |
| N/A | Pressure transmitter second recirculation line |
| 65FY6801242 | Injection water solenoid valve hydrocyclone #1 |
| 65FY6801237 | Injection water solenoid valve hydrocyclone #2 |
| 65FIT6801432 | Activated carbon extraction flowmeter |
| 65LSHH6801406 | Splitter box High high level switch |
| 65LSLL6801406 | Splitter box Low low level switch |
| 65PSR68007A | Activated carbon extraction pump |
| 65FCV68011433 | Activated carbon extraction control valve |

## 2.2 Operating Modes Overview

There are two primary modes for each ACTICARB®: Manual and Semi-Automatic. The Manual mode is designed for operation of individual equipment. The Semi-Auto mode is designed for operation of the ACTICARB® system as a whole.

**HMI manual mode**

Manual operation from the HMI provides the same equipment protection and alarming as Semi-Auto.

**Semi-Auto**

Semi-Auto mode allows the operator to initiate the ACTICARB® system start-up and shutdown sequences from HMI or remotely.

**NOTE: Train equipment cannot be controlled manually while in Semi-Auto operation.**

The coagulation mixer or injection mixer, maturation mixer, scraper, and at least one recirculation pump H-O-As must be in Auto to enable Semi-Automatic control of all respective equipment at the HMI All start-up sequences are described below. Each ACTICARB® train and its associated equipment are controlled as an independent system by the PLC.

The table below presents the control modes summary.

*Table 1: Summary of Control Modes*

| | HMI Manual | Semi-Auto |
|---|---|---|
| Control Functions | N/A | Allowed (PLC) |
| Initiation of Semi-Automatic functions | N/A | Operator or Remote Start-up Initiation Required |
| HMI Operation of Individual Equipment | Allowed (virtual HOA on HMI) | Not Allowed |

## 2.3 Permissive

Permissive to allow initiation of the Semi-Automatic start sequence are:

- H-O-A selector switches for mixers, scraper and at least one recirculation pump, are in Auto at the HMI.
- Mixers whichever is in Auto at HMI, scraper, and the above mentioned recirculation pump do not have existing equipment alarms.
- Aforementioned equipment alarms must be manually reset.

## 2.4 Semi-Auto Train Response to Equipment Conditions

### 2.4.1 Equipment Removed From Auto PLC Response

If the mixers and the scraper are removed from Auto while the PLC is running in Semi-Automatic control of the ACTICARB® system, the PLC will initiate a Shutdown Sequence as described in section 2.6.2.

Since the scraper will not be operational, the Shutdown Sequence will consist of the recirculation pump running for the durations indicated in section 2.6.2.

If the lead recirculation pump is removed from Auto, the PLC will sequentially initiate operation of the next available pump. If all recirculation pumps are removed from Auto or no additional pumps are available, the PLC will initiate an emergency shutdown of all equipment.

**NOTE: No alarm will be generated if an ACTICARB® system shutdown is initiated due to a piece of equipment being removed from Auto by the operator.**

### 2.4.2 Equipment Failure PLC Response

If the coagulation mixer fails during Semi-Automatic control of the ACTICARB® system, the system will continue to run.

Should the injection mixer or the maturation mixer fail at any time during Semi-Automatic control of the ACTICARB® system, the PLC will issue an equipment alarm and will initiate a Shutdown Sequence as described in section 2.6.2.

Should the scraper fail at any time during operation or start-up, the PLC will issue an equipment alarm and will initiate a Shutdown Sequence as described in section 2.6.2 .Since the scraper will not be operational, the Shutdown Sequence will consist of the recirculation pumps running for the durations indicated in section 2.6.2.

Should lead recirculation pump fail, the PLC will issue an equipment alarm and sequentially initiate operation of the next available pump. If all recirculation pumps fail or no additional pumps are available, the PLC will initiate an emergency shutdown of all equipment.

**NOTE: An AVAILABLE recirculation pump is defined as one that is placed in Auto and does not have any existing un-reset alarm conditions.**

## 2.5 Recirculation Pumps Logic

### 2.5.1 Duty/Standby Orientation

When two recirculation lines are provided they can be set with priority. The two recirculation pumps operate in a Duty / standby orientation. If all recirculation pumps are in “auto” but not running, the pump set as priority (duty) will start when the start condition will be met.

The recirculation pumps priority (duty/standby) is changed manually by the operator anytime or is changed automatically when the plant stops.

## 2.6 SEQUENCES OF FUNCTIONS

### 2.6.1 Start-up Sequence

If all permissive conditions are present and no respective equipment alarms exist, the HMI will display **"Train Ready"**. The Start-up Sequence can now be initiated via the HMI or remotely. Refer to table 2 for more information.

**NOTE: To prevent damage to the equipment, the Train must have water in the tanks above the mixer impeller elevations prior to Start-up (to be checked by the operator).**

To start the train when "Train Ready" is displayed on the HMI, the operator presses the "Train Start" pushbutton. A starting system displays "Train Starting" at the HMI. The start-up sequence automatically cycles through the steps listed below.

1. System Start-up Initiated:
    a. **Start duty recirculation pump**
    b. **Open injection water solenoid valve**
    c. **Start activated carbon extraction pump**

If a failure occurs, the duty pump will be locked out in the PLC and the next available pump will be assigned as the lead pump. The PLC will then attempt to continue operation. This cycle will occur until a recirculation pump starts or all recirculation pumps have been locked out. If all sand pumps are locked out, the PLC will immediately abort the start-up.

2. Delay 30 seconds (adjustable):
    a. **Start the Scraper**

If a Scraper failure occurs initiate a Shutdown Sequence.

3. Delay 10 seconds (adjustable):
    a. **Start the mixers**. These mixers start are respectively staggered by 5 seconds.

If a maturation Mixer failure occurs initiate a Shutdown Sequence.

4. Delay 10 seconds (adjustable):
    a. **Start the chemical feed pumps**
    b. **Start activated carbon flow control loop**
    c. HMI will display **"Train Started"**

If any Duty Chemical Feed Pump is not available while in operation, the Stand-by pump shall be initiated. The duty pump will not be locked out so when the pump is placed back into Semi-Auto, it will resume operation. Duty chemical feed pump alternation is manual and available only at the HMI.

The Operator can terminate the start-up at any point in the sequence by pressing the "Train Stop" pushbutton. If any pertinent equipment fails during the start-up sequence, the PLC will initiate a train shutdown. The operator can correct the failure, and then resume the start-up sequence from the current shutdown sequence step by pressing the "Train Start" pushbutton.

### 2.6.2 Shutdown Sequence

When in Semi-Automatic mode, the operator may implement the Shutdown Sequence at any time from the HMI or remotely. During shutdown, the HMI will display “Train Stopping”. Refer to table 3 for more information

The shutdown sequence automatically cycles through the steps listed below.

1. System Shutdown Initiated:
    a. **Close the inlet breakpoint chlorination valve**
    b. **Shutdown the Chemical Feed Pumps**
    c. **Shutdown the mixers**
    d. **Stop Water Polymer Carrier Solenoid valve.**
2. Delay (Operator Adjustable) (10-30 minutes):
    a. **Shutdown the scraper**
3. Delay 5 minutes:
    a. **Shutdown the duty recirculation pump**
    b. **Close injection water solenoid valves**

**NOTE: This delay allows purging of sand and sludge contained in the settling tank and piping and re-deposits it back into the Maturation tank.**

The operator can initiate the Train start-up sequence from the current shutdown sequence step by pressing the “Train Start” pushbutton without stopping the equipment already started.

## Start-up Sequence

*Table 1: ACTICARB® automatic start sequence*

| Step # | STEP NAME | ACTION | STEP CHANGE CONDITION | Recirculation pumps | Coagulation mixer | Injection mixer | Maturation Mixer | Dosage & raw water flow | Scraper | Injection Water Valve | Activated carbon extraction pump | Activated carbon extraction valve | Status light | Status output |
|---|---|---|---|---|---|---|---|---|---|---|---|---|---|---|
| **0** | FULL STOP | Stopped | | S | S | S | S | C | S | S | S | C | Off | U |
| | | | Start Condition Sequence | | | | | | | | | | | |
| **1** | START SEQUENCE | Start recirculation pump<br>Open Injection Water Solenoid Valve<br>Start Activated Carbon Extraction Pump. | | R | S | S | S | C | S | O | R | O | Off | U |
| | | | Delay (DEL-STA-MOT 0 to 30 sec.) | | | | | | | | | | | |
| **2** | START SEQUENCE | Start scraper | | R | S | S | S | C | R | O | R | O | RF | U |
| | | | Delay (DEL-STA-MOT 0 to 10 sec.) | | | | | | | | | | | |
| **3** | START SEQUENCE | Start coagulation mixer | | R | R | S | S | C | R | O | R | O | RF | U |
| | | | Delay (DEL-STA-MOT 0 to 5 sec.) | | | | | | | | | | | |
| **4** | START SEQUENCE | Start injection mixer | | R | R | R | S | C | R | O | R | O | RF | U |
| | | | Delay (DEL-STA-MOT 0 to 5 sec.) | | | | | | | | | | | |
| **5** | NORMAL AUTOMATED OPERATION | Start maturation mixer / start chemical dosage / Start Activated Carbon Flow ctrl loop | | R | R | R | R | O | R | O | R | O | On | A |

***LEGEND:*** R=RUNNING S= STOPPED O= OPEN C=CLOSED RF=RAPID BLINK A=AVAILABLE U= UNAVAILABLE

## Shutdown Sequence

*Table 3: ACTICARB® automatic start sequence*

| Step # | STEP NAME | ACTION | STEP CHANGE CONDITION | Recirculation pumps | Coagulation mixer | Injection mixer | Maturation mixer | Dosage & raw water flow | Scraper | Injection Water Valve | Activated carbon extraction pump | Activated carbon extraction valve | Status light | Status output |
|---|---|---|---|---|---|---|---|---|---|---|---|---|---|---|
| | | | Stop Sequence conditions | | | | | | | | | | | |
| 1 | STOP SEQUENCE | Stop Activated Carbon extraction pump<br>Close Activated Carbon extraction valve<br>Stop maturation mixer<br>Stop injection mixer<br>Stop coagulation mixer<br>Stop chemical dosage (polymer pumps)<br>Close polymer service water transport valves | | R | S | S | S | S | R | C | S | C | SF | U |
| | | | Delay (DEL-STO-SCR 0 to 30 min.) | | | | | | | | | | | |
| 2 | STOP SEQUENCE | Stop scraper | | R | S | S | S | S | S | O | S | C | SF | U |
| | | | Delay (DEL-STO-PRS 0 to 30 min.) | | | | | | | | | | | |
| 3 | STOP SEQUENCE | Stop recirculation pumps<br>Close injection water solenoid valves | | S | S | S | S | S | S | C | S | C | SF | U |
| | | | Delay (1 sec) | | | | | | | | | | | |
| 4 | STOP SEQUENCE | ACTICARB stopped | | S | S | S | S | S | S | C | S | C | SF | U |

***LEGEND:*** R=RUNNING S= STOPPED O= OPEN C=CLOSED RF=RAPID BLINK A=AVAILABLE U= UNAVAILABLE

## 2.7 Alarm/Failure Conditions and PLC Responses

### 2.7.1 Alarm Priorities

Alarms are grouped in to 3 priority levels for various attention requirements:

**Emergency alarms:**

1. Needs immediate operator attention.
2. The ACTICARB® unit will initiate the emergency shutdown sequence.

**Fatal alarms:**

1. Needs immediate operator attention.
2. The ACTICARB® unit will initiate the stop sequence.

**Warning alarms:**

1. Does not need immediate operator attention.

If the ACTICARB® unit was stopped by an Emergency alarm or fatal alarm, it will not restart automatically. The operator must remove alarm condition and reset the alarm. Then press the start button on the operator interface will restart the unit if all automatic start sequence conditions are satisfied. In case of remote control, the system will wait for rising edge of the remote start signal.

### 2.7.2 Alarm and Set Point Table

Refer to Appendix A.

## 2.8 Safety

### 2.8.1 Emergency Stop

**Emergency stop actions**

When an emergency stop button is activated, an alarm is triggered. The fault associated with this alarm will latch.

During emergency stop, many stopping actions are initiated on equipment. These actions are presented in sections describing the relevant equipment.

**Recovery after emergency stop**

When all emergency stop buttons are back into normal position, the fault associated with an alarm is maintained until the operator presses the reset button.

### 2.8.2 Control Power Failure PLC Response

Should control power fail at any time during Semi-Automatic control of the ACTICARB® system, the PLC will issue an alarm and will initiate a Shutdown Sequence as described in this document. Systems with an Uninterruptable Power Supply (UPS) will see the alarm as the condition occurs. Systems without an UPS will see the alarm upon restoration of power. There is a ten (10) second delay upon restoring power, and then the train will enter the Shutdown Sequence as described in this document. If the restored power does not include the actual motor controls, a run status will not be received by the PLC and equipment (pumps and scraper) will shut down immediately without a re-inventory of the sand to the maturation tank. If the unit is configured to resume via the HMI, it will automatically resume to the last known state. Otherwise the unit will remain in Stop.

## 2.9 System Available Conditions

### 2.9.1 Conditions for automatic Start sequence

The automatic start sequence will be activated when the automatic start command is true and the following conditions are met:

1. If delay for power return is elapsed;
2. If remote run request bit is activated;
3. ACTICARB® in Auto start mode.

### 2.9.2 Conditions for automatic stop sequence

The automatic stop sequence will be activated when any of the following conditions are met:

1. The ACTICARB® Auto start mode is deactivated on the interface or one of the following occurs:
   a. If a major fault is active;
   b. If remote contact is not activated;
2. The ACTICARB® automatic start command is false.

## 2.10 ACTICARB® Fault Responses

*Table 4: ACTICARB® major faults*

| MAJOR FAULT | ALARM TYPE |
|---|---|
| Coagulation mixer | FATAL |
| Injection mixer | FATAL |
| Maturation mixer | EMERGENCY |
| Scraper High High torque | EMERGENCY |
| Recirculation pumps | EMERGENCY |
| High High clarified water turbidity | FATAL |
| High high water level | EMERGENCY |
| Activated carbon extraction system | FATAL |
| Coagulant dosing system | FATAL |
| Polymer dosing system | FATAL |
| Power failure | EMERGENCY |

If the ACTICARB was stopped by a major fault, it will not restart automatically. The operator must fix the problem on the operator interface. The ACTICARB will restart if all automatic start sequence conditions are satisfied.

## 2.11 Controls

### 2.11.1 General

1. ACTICARB® Start/Stop push button function:
   - By pushing the Start/Stop push button, the ACTICARB® will be set in Auto start mode and will be ready to start. If all automatic start sequence conditions are satisfied, it will start only after receiving the automatic start command.
   - If the ACTICARB® is in Auto start mode and it is running or on starting sequence, pushing the Start/Stop push button will activate the stopping sequence and deactivate the Auto start mode. Pushing the Start/Stop push button again will restart the ACTICARB® if the automatic start command is still true.

2. If an essential equipment is in manual and not running when the ACTICARB® Start/Stop push button is pressed to activate the Auto mode, Auto start mode cannot be activated.
   The essential ACTICARB equipment's to be in Auto are:
   - Coagulation mixer
   - Injection mixer
   - Maturation mixer
   - Scraper
   - Recirculation pumps

3. If a major fault occurs while the ACTICARB® is in start sequence or is running, the ACTICARB® is forced into a stop sequence and the ACTICARB® major fault is set.

4. The operator may set/reset the ACTICARB® in Auto start mode by pressing the Start/Stop push button from the HMI.
   The conditions to activate the Auto mode are the followings:
   - No major faults;
   - All equipment in Auto on HMI or running;
   - No Polymer system fault
   - No sludge recirculation pump fault

Pressing on the ACTICARB® Start/Stop push button on the operator interface for 3 seconds when the ACTICARB® is stopped and will enable forced start mode if all the conditions to activate the Auto mode are true the forced start mode will become active. The unit will then start all the drives and request to open the raw water valve, bypassing the auto start sequence commands.

### 2.11.2 Recirculation pumps logic

**Pump Fault**
The pump is in fault when:

- The command is present and the status is not for a short delay

When the duty pump is in fault, and the ACTICARB® unit is in operation the standby pump will start, the ACTICARB® will not stop, a WARNING alarm is activated and a message is displayed. If the second pump was in fault or in manual (not running), a FATAL alarm is activated, a message will be displayed and the ACTICARB® unit will stop.

**Pump Priority**
Each time the running pump is stopped, the other pump will start at the next ACTICARB® start sequence. If the other pump is in manual or in fault, the first pump will restart.

### 2.11.3 Maturation Mixer Speed

The maturation mixer motor is powered by a variable speed drive (VFD). The speed of the mixer will be set on the PLC during the process start-up of the system to get an optimal mixing. Thereafter, the speed usually does not need any further adjustment.

### 2.11.4 ACTICARB® High Level Switch

A float over the settling tank is used as a High Level switch. When the switch is activated, stop the corresponding ACTICARB® unit according to the automatic stop sequence.

### 2.11.5 Activated Carbon Extraction Control

Several parameters affect the performance of PAC in the treatment (mixing, injection point, concentration, residence time, temperature etc.).
The required concentration and the time of contact are a function of the characteristics and the concentration of the chlorine to be eliminated. An insufficient time of contact requires more PAC for a same removal rate.

The dechlorination tank will provide a minimum Hydraulic Residence Time of 20 minutes at the max flowrate for the fresh PAC Slurry. During this time the fresh powder will remove chlorine. Its removal rate will decrease in the process due to the addition of coagulant and polymers into the ACTICARB®. However some active remaining sites will be used by recirculating the sludge extracted from the ACTICARB® Clarifier. The effective Residence Time of the powder in the process is called the Solids Residence Time (SRT).

The concentration and the Solids Residence Time will be adjusted by the operators with the molecules removal rates measured by a laboratory.

### 2.11.6 Activated Carbon Concentration

The sample of Activated Carbon will be taken by the operator at the bottom of the splitter box. The measure of the concentration with a thermal weighing scale will be the exact value of the extracted activated carbon ($C_{acext}$) in g/m3.

With the following equation, the operator will know the activated carbon concentration in the ACTICARB® and the dechlorination tank ($C_{acdt}$).

$$\mathbf{C_{acdt} = (C_{acext}.\ Q_{recir}.f_{hydr}) / (Q_{indt})}$$

Where:

**$C_{acdt}$**= activated carbon concentration in the process (g/m$^3$)

**$C_{acext}$**= extracted activated carbon concentration (g/m$^3$)

**$Q_{recir}$** = Total flowrate of the ACTICARB recirculation pump (m$^3$/h)

**$f_{hydr}$** = Hydrocyclones hydraulic split ratio. Entered with a value < 1. Ex: 0,8 for 80%

**$Q_{indt}$** = Inlet Breakpoint chlorination flowrate incoming into the dechlorination tank.

**$Q_{indt}$** = Inlet Breakpoint chlorination flowrate (65FIT6801102) + Chemicals Flowrate (calcium hypochlorite) - Extracted Activated Carbon (65FIT6801432) + hydrocyclone overflow flowrate (m$^3$/h) The operator will enter the overflow flowrate of each hydrocyclone on the interface.

### 2.11.7 Solids Residence Time

The Solids Residence Time is calculated by the equation:

Solids Residence Time = Activated Carbon Mass in the dechlorination tank (g) / Extracted Activated Carbon Massic Flowrate (g/h)

Or:

$$\mathbf{SRT = m_{acdt} / Q_{macext}}$$

With:

$$\mathbf{m_{acdt} = V_{dt} \,.\, C_{acdt}}$$

$$\mathbf{Q_{macext} = Q_{vacext} \,.\, C_{acext}}$$

And where:

**SRT** = Solids Residence Time (h)

$\mathbf{m_{acdt}}$= Activated Carbon Mass in the dechlorination tank (g)

$\mathbf{V_{dtx}}$ = dechlorination tank Volume ($m^3$)

$\mathbf{C_{acdt}}$= activated carbon concentration in the process ($g/m^3$). See above.

$\mathbf{C_{acext}}$= extracted activated carbon concentration ($g/m^3$). See above.

$\mathbf{Q_{macext}}$ = Activated Carbon Massic Flowrate (g/h)

$\mathbf{Q_{vacext}}$ = Activated Carbon Volumic Flowrate ($m^3/h$). Process value of 65FIT6801432.

### 2.11.8 Activated Carbon Extraction Valve

The extraction valve has two available operation modes:

- **Normal mode:** the valve is controlled with a PID loop and its opening is used as a manipulated variable to reach the flow set point.
- **Pulse mode:** as very low flow rates can be difficult to achieve with the valve, a pulse mode shall be programmed. Parameters such as opening duration and opening frequency shall be entered by the operator on the HMI. The extracted volume is totalized over time by the flowmeter.

## 2.12 Activated Carbon Extraction/ Recirculation System Fault Response

The following are the major faults associated with the activated carbon recirculation and extraction system.

1. **Activated Carbon splitter box tank high high level**

   The ACTICARB® unit falls on major fault and is stopped according to the automatic stop sequence.

2. **Activated Carbon splitter box tank low low level**

   The ACTICARB® unit falls on major fault and is stopped according to the automatic stop sequence.

3. **Sludge tank high high level**

   The ACTICARB® unit falls on major fault and is stopped according to the automatic stop sequence.

4. **Activated Carbon Extraction pump fault**

   The ACTICARB® unit falls on major fault and is stopped according to the automatic stop sequence.

5. **Extraction modulating valve open failure**

   The ACTICARB® unit falls on major fault and is stopped according to the automatic stop sequence.

## 2.13 Calculated Parameters

The following sections explain the main calculations made in the control of the ACTICARB® system.

The PLC calculates the chemical feed rates and controls the chemical metering pumps using the following procedure. The chemical feed rate is based on:

1. The influent raw water flow rate
2. The chemical dose
3. The physical properties of the chemicals
4. The capacity and settings of the metering pump
5. The raw water turbidity

The influent raw water flow rate is obtained through the raw water flow meter, which sends a signal to the PLC.

The influent raw water turbidity rate is obtained through the raw water turbidity meter.

The chemical dose, physical properties and metering pump capacity are input by the user/operator at the HMI.

The basic equation for the chemical feed rate is:

$$\text{Chemical feed rate} = \frac{\text{influent flow rate} \times \text{chemical dose}}{\text{stock chemical concentration}}$$

This equation is the general form for all chemical feed rates that use flow pacing control, including coagulant and polymer.

### 2.13.1 Flow Pace Control

The way the PLC uses these calculations to determine the chemical metering pump output is:

1. The chemical feed rate equations are programmed into the PLC.
2. The user/operator inputs the chemical dose, physical properties, and maximum chemical metering pump capacity at the HMI on the ACTICARB® control panel. The PLC calculates the specific chemical feed rate based on the user/operator inputs and the influent (raw water) flow to the train.
3. The calculated feed rate is then converted by the PLC into a percent speed, based on the maximum capacity of the metering pumps. This signal is then sent to the metering pump.

## 2.14 Interlocks

### 2.14.1 ACTICARB® High Level Switch

A float over the settling tank is used as a High Level switch. When the switch is activated, stop the corresponding ACTICARB® unit according to the automatic stop sequence

### 2.14.2 High Scraper Torque

The torque detector/alarm is independent from the PLC. So it is enabled (will stop the scraper) through a hardwired interlock to the scraper starter in the corresponding ACTICARB® control panel.

A high torque alarm is activated when the torque is higher than the adjustable set point for more than the adjustable delay.

When the alarm is activated, the scraper is stopped and then the ACTICARB® is stopped according to the automatic stop sequence.

### 2.14.3 Activated Carbon Extraction Pump

The activated carbon extraction pump cannot be started if the low level switch has been activated. If the pump is in operation and the low level switch is activated the pump is stopped by interlock.

### 2.14.4 Maturation Mixer

The maturation mixer cannot run if the scraper is not running.

# 3 APPENDIX A – ALARMS, PARAMETERS AND SET POINTS

# APPENDIX C

# Actiflo®

# Functional Description

# Actiflo® – ACP

## PROCESS CONTROL DESCRIPTION

**VEOLIA WATER TECHNOLOGIES CANADA**
www.veoliawatertechnologies.com

# REVISION STATUS

| Issue | Date | Created | Reviewed | Approved | Description of Changes |
|---|---|---|---|---|---|
| 1 | 2021/03/11 | CEK | ED | TS | First Issue |
| | | | | | |
| | | | | | |
| | | | | | |
| | | | | | |

# TABLE OF CONTENT

**1 INTRODUCTION ..... 5**
1.1 Reference Documents ..... 5
1.2 Process Overview ..... 5
1.3 List of Abbreviations ..... 6
1.4 List of Units ..... 6
**2 ACTIFLO® CONTROL DESCRIPTION ..... 7**
2.1 Equipment and Instrument ..... 7
2.2 Operating Modes Overview ..... 8
2.3 Permissive ..... 9
2.4 Semi-Auto Train Response To Equipment Conditions ..... 9
2.4.1 Equipment Removed From Auto PLC Response ..... 9
2.4.2 Equipment Failure PLC Response ..... 9
2.5 Recirculation Pumps Logic ..... 10
2.5.1 Duty/Stand by Orientation ..... 10
2.6 Sequences Of Functions ..... 11
2.6.1 Start-up Sequence ..... 11
2.6.2 Shutdown Sequence ..... 12
2.7 Alarm/Failure Conditions and PLC Responses ..... 15
2.7.1 Alarm Priorities ..... 15
2.7.2 Alarm and Set Point Table ..... 15
2.8 Safety ..... 16
2.8.1 Emergency Stop ..... 16
2.8.2 Control Power Failure PLC Response ..... 16
2.9 System Availability Conditions ..... 17
2.9.1 Conditions for automatic Start sequence ..... 17
2.9.2 Conditions for automatic stop sequence ..... 17
2.10 Actiflo® Fault Responses ..... 17

2.11 Controls ..... 18
2.11.1 General ..... 18
2.11.2 Recirculation pumps logic ..... 19
2.11.3 Maturation Mixer Speed ..... 19
2.11.4 ACTIFLO® High Level Switch ..... 19
2.11.5 Sludge Extraction Control ..... 20
2.11.6 Sludge Extraction Valve ..... 20
2.12 Sludge Extraction/Recirculation System Fault response ..... 21
2.13 Calculated Parameters ..... 22
2.13.1 Flow Pace Control ..... 22
2.14 Interlocks ..... 23
2.14.1 Actiflo® High Level Switch ..... 23
2.14.2 High Scraper Torque ..... 23
2.14.3 Sludge Extraction Pump ..... 23
2.14.4 Maturation Mixer ..... 23
**3 Appendix A – Alarms, parameters and set points ..... 24**

# 1 INTRODUCTION

## 1.1 REFERENCE DOCUMENTS

| Document Number | Name | Revision |
|---|---|---|
| 5000220043_PI_0001_GEN_VWT | PI001 _Process and Instrumentation diagram | 1 |
| | | |
| | | |

## 1.2 PROCESS OVERVIEW

ACTIFLO® units are based on the ballasted flocculation process. The key feature of this process is that very fine sand (85 µm or 130 µm size), termed “microsand” is added to the raw water following coagulant addition. A polymer is also added that binds the microsand to the floc, creating a ballasted floc with greatly increased effective density. The ballasted flocculation process is capable of being shut down when treatment capacity is not needed and then rapidly restarted when needed.

Ballasted flocculation works with most types of waters but is most advantageous with raw waters that either experience high turbidity raw water conditions (up to 2 500 NTU) and/or rapidly changing raw water turbidity conditions. It is also suitable for low turbidity, highly colored raw waters.

It consists of a coagulation basin, an injection basin, a maturation basin, and a lamella tube clarifier. Coagulant is added at the inlet and subsequent formation of microfloc takes place in the coagulant basin prior to addition of microsand and polymer in the injection basin. The water then flows into the maturation tank where bridging between the microsand and the destabilized suspended solids occurs.

The ballasted flocs settle in the clarifier portion of the system where they are collected by a rake mechanism. Typically 3% to 6% of the unit’s design raw water flow is continuously withdrawn from the clarifier and pumped to a hydrocyclone system which separates the microsand from the sludge. The recovered microsand (typically 20% of the recycled flow) is reused in the process. A small quantity of the microsand is not recovered by the hydrocyclones and is discharged with the sludge. Thus the lost microsand needs to be made up by periodically adding it to the process (typically 1 to 3 mg/L). After sand separation, sludge are partially wasted and recycled with the sludge withdrawn from the clarifier. Approximately 1% to 2,4% of flow becomes waste or residuals stream.

A tank downstream of the ACTIFLO® unit accepts the sludge removed in the ACTIFLO® clarification process. This tank splits the rejected mix of activated carbon and flocs into two streams. A fraction is pumped and rejected into the sludge tank unit in order to be extracted from the process. The remaining fraction is recirculated by gravity into the contact reactor in order to increase the activated carbon contact time in the process. The flowrate of the pumped fraction is controlled by a flowrate control loop. The flowrate is measured by a flowmeter and controlled by a modulating valve (pinch valve).

## 1.3 List of Abbreviations

The following abbreviations are used in the text of this document.

- HMI: Human/Machine Interface
- H-O-A: Hand-Off-Auto
- PLC: Programmable Logic Controller
- LCP: Local Control Panel
- VFD: Variable Frequency Drive
- VWT: Veolia Water Technologies Canada

## 1.4 List of Units

The following lists the parameters referred to in this document and the units they are measured in unless otherwise specified.

- Concentration (in general): mg/L
- Dosing rate: mL/L
- Flow rate (main process): $m^3/h$
- Flow rate (chemical dosing): LPH
- Level in the tanks: %
- pH: -
- Pressure: PSIg
- Temperature: °C
- Turbidity: mg/L or NTU

# 2 ACTIFLO® CONTROL DESCRIPTION

## 2.1 EQUIPMENT AND INSTRUMENT

This section connects the tags from the P&ID and the terminology used throughout Equipment and Instrument Schedules.

| Project Tag No | Description |
|---|---|
| 65AGI68021 | Coagulation mixer |
| 65AGI68022 | Injection mixer |
| 65AGI68023 | Maturation mixer |
| 65TRM68003 | Scraper |
| 65LSHH6801324 | High High level switch |
| 65AIT6801322 | Turbidity meter |
| 65AIT6801321 | pH meter |
| SSL20-03 | High Torque detector |
| 65PSR68006A | Recirculation pump #1 |
| 65PSR68006B | Recirculation pump #2 |
| 65FIT6801437 | Sludge extraction flowmeter |
| 65LSHH6801411 | Splitter box High high level switch |
| 65LSLL6801411 | Splitter box Low low level switch |
| 65AIT6801427 | TSS meter sludge |
| 65PSR68007C | Sludge extraction pump |
| 65FCV6801438 | Sludge extraction control valve |

## 2.2 OPERATING MODES OVERVIEW

There are two primary modes for each ACTIFLO®: Manual and Semi-Automatic. The Manual mode is designed for operation of individual equipment. The Semi-Auto mode is designed for operation of the ACTIFLO® system as a whole.

**HMI manual mode**

Manual operation from the HMI provides the same equipment protection and alarming as Semi-Auto.

**Semi-Auto**

Semi-Auto mode allows the operator to initiate the ACTIFLO® system start-up and shutdown sequences from HMI or remotely.

**NOTE: Train equipment cannot be controlled manually while in Semi-Auto operation.**

The coagulation mixer or injection mixer, maturation mixer, scraper, and at least one sand pump H-O-As must be in Auto to enable Semi-Automatic control of all respective equipment at the HMI. All startup sequences are described below. Each ACTIFLO® train and its associated equipment are controlled as an independent system by the PLC.

The table below presents the control modes summary.

*Table 1: Summary of Control Modes*

| | HMI Manual | Semi-Auto |
|---|---|---|
| Control Functions | N/A | Allowed (PLC) |
| Initiation of Semi-Automatic functions | N/A | Operator or Remote Start-up Initiation Required |
| HMI Operation of Individual Equipment | Allowed (virtual HOA on HMI) | Not Allowed |

## 2.3 PERMISSIVE

Permissive to allow initiation of the Semi-Automatic start sequence are:

- H-O-A selector switches for mixers, scraper and at least one recirculation pump, are in Auto at the HMI.
- Mixers whichever is in Auto at HMI, scraper, and the above mentioned recirculation pump do not have existing equipment alarms.
- Aforementioned equipment alarms must be manually reset.

## 2.4 SEMI-AUTO TRAIN RESPONSE TO EQUIPMENT CONDITIONS

### 2.4.1 Equipment Removed From Auto PLC Response

If the mixers and the scraper are removed from Auto while the PLC is running in Semi-Automatic control of the ACTIFLO® system, the PLC will initiate a Shutdown Sequence as described in section 2.6.2.

Since the scraper will not be operational, the Shutdown Sequence will consist of the recirculation pump running for the durations indicated in section 2.6.2.

If the lead recirculation pump is removed from Auto, the PLC will sequentially initiate operation of the next available pump. If all sand pumps are removed from Auto or no additional pumps are available, the PLC will initiate an emergency shutdown of all equipment.

**NOTE: No alarm will be generated if an ACTIFLO® system shutdown is initiated due to a piece of equipment being removed from Auto by the operator.**

### 2.4.2 Equipment Failure PLC Response

If the coagulation mixer fails during Semi-Automatic control of the ACTIFLO® system, the system will continue to run.

Should the injection mixer or the maturation mixer fail at any time during Semi-Automatic control of the ACTIFLO® system, the PLC will issue an equipment alarm and will initiate a Shutdown Sequence as described in section 2.6.2.

Should the scraper fail at any time during operation or start-up, the PLC will issue an equipment alarm and will initiate a Shutdown Sequence as described in section 2.6.2. Since the scraper will not be operational, the Shutdown Sequence will consist of the sand recirculation pumps running for the durations indicated in section 2.6.2.

Should lead recirculation pump fail, the PLC will issue an equipment alarm and sequentially initiate operation of the next available pump. If all sand pumps fail or no additional pumps are available, the PLC will initiate an emergency shutdown of all equipment.

**NOTE: An AVAILABLE sand pump is defined as one that is placed in Auto at the LCP and does not have any existing un-reset alarm conditions.**

## 2.5 RECIRCULATION PUMPS LOGIC

### 2.5.1 Duty/Stand by Orientation

When two recirculation lines are provided they can be set with priority. The two recirculation pumps operate in a Duty / Stand by orientation. If all recirculation pumps are in “auto” but not running, the pump set as priority (duty) will start when the start condition will be met.

The recirculation pumps priority (duty or stand by) is changed manually by the operator anytime or is changed automatically when the plant stops.

## 2.6 SEQUENCES OF FUNCTIONS

### 2.6.1 Start-up Sequence

If all permissive conditions are present and no respective equipment alarms exist, the HMI will display **"Train Ready"**. The Start-up Sequence can now be initiated via the HMI or remotely. Refer to table 2 for more information.

**NOTE: To prevent damage to the equipment, the Train must have water in the tanks above the mixer impeller elevations prior to Start-up (to be checked by the operator).**

To start the train when "Train Ready" is displayed on the HMI, the operator presses the "Train Start" pushbutton. A starting system displays "Train Starting" at the HMI. The start-up sequence automatically cycles through the steps listed below.

1. System Start-up Initiated:
    a. **Start duty recirculation pump**
    b. **Start sludge extraction pump**

If a failure occurs, the duty pump will be locked out in the PLC and the next available pump will be assigned as the lead pump. The PLC will then attempt to continue operation. This cycle will occur until a recirculation pump starts or all recirculation pumps have been locked out. If all sand pumps are locked out, the PLC will immediately abort the start-up.

2. Delay 30 seconds (adjustable):
    a. **Start the Scraper**

If a Scraper failure occurs initiate a Shutdown Sequence.

3. Delay 10 seconds (adjustable):
    a. **Start the mixers**. These mixers start are respectively staggered by 5 seconds.

If a maturation Mixer failure occurs initiate a Shutdown Sequence.

4. Delay 10 seconds (adjustable):
    a. **Start the Chemical Feed Pumps**
    b. **Open Raw water Valve. Open Water Polymer Carrier Solenoid valve**
    c. **Start sludge flow control loop**
    d. HMI will display **"Train Started"**

If any Duty Chemical Feed Pump is not available while in operation, the Stand-by pump shall be initiated. The duty pump will not be locked out so when the pump is placed back into Semi-Auto, it will resume operation. Duty chemical feed pump alternation is manual and available only at the HMI.

The Operator can terminate the start-up at any point in the sequence by pressing the "Train Stop" pushbutton. If any pertinent equipment fails during the start-up sequence, the PLC will

initiate a train shutdown. The operator can correct the failure, and then resume the start-up sequence from the current shutdown sequence step by pressing the “Train Start” pushbutton.

### 2.6.2 Shutdown Sequence

When in Semi-Automatic mode, the operator may implement the Shutdown Sequence at any time from the HMI or remotely. During shutdown, the HMI will display “Train Stopping”. Refer to table 3 for more information.

The shutdown sequence automatically cycles through the steps listed below.

1. System Shutdown Initiated:
    a. **Close the secondary valve**
    b. **Shutdown the Chemical Feed Pumps**
    c. **Shutdown the mixers**
    d. **Stop Water Polymer Carrier Solenoid valve.**
2. Delay an (Operator Adjustable) (10-30 minutes):
    a. **Shutdown the Scraper**
3. Delay 5 minutes:
    a. **Shutdown the duty recirculation pump**

**NOTE: This delay allows purging of sand and sludge contained in the settling tank and piping and re-deposits it back into the Maturation tank.**

The operator can initiate the Train start-up sequence from the current shutdown sequence step by pressing the “Train Start” pushbutton without stopping the equipment already started.

## Start-up Sequence

*Table 1: ACTIFLO® automatic start sequence*

| Step # | STEP NAME | ACTION | STEP CHANGE CONDITION | Recirculation pumps | Coagulation mixer | Injection mixer | Maturation Mixer | Dosage & raw water flow | Scraper | Injection Water Valve | Sludge extraction pump | Sludge extraction valve | Status light | Status output |
|---|---|---|---|---|---|---|---|---|---|---|---|---|---|---|
| **0** | FULL STOP | Stopped | | S | S | S | S | C | S | S | S | C | Off | U |
| | | | Start Condition Sequence | | | | | | | | | | | |
| **1** | START SEQUENCE | Start recirculation pump<br>Open Injection Water Solenoid Valve<br>Start Sludge Extraction Pump. | | R | S | S | S | C | S | O | R | O | Off | U |
| | | | Delay (DEL-STA-MOT 0 to 30 sec.) | | | | | | | | | | | |
| **2** | START SEQUENCE | Start scraper | | R | S | S | S | C | R | O | R | O | RF | U |
| | | | Delay (DEL-STA-MOT 0 to 10 sec.) | | | | | | | | | | | |
| **3** | START SEQUENCE | Start coagulation mixer | | R | R | S | S | C | R | O | R | O | RF | U |
| | | | Delay (DEL-STA-MOT 0 to 5 sec.) | | | | | | | | | | | |
| **4** | START SEQUENCE | Start injection mixer | | R | R | R | S | C | R | O | R | O | RF | U |
| | | | Delay (DEL-STA-MOT 0 to 5 sec.) | | | | | | | | | | | |
| **5** | NORMAL AUTOMATED OPERATION | Start maturation mixer / start chemical dosage /Start Sludge Flow ctrl loop | | R | R | R | R | O | R | O | R | O | On | A |

***LEGEND:*** R=RUNNING S= STOPPED O= OPEN C=CLOSED RF=RAPID BLINK A=AVAILABLE U= UNAVAILABLE

## Shutdown Sequence

*Table 3: ACTIFLO® automatic start sequence*

| Step # | STEP NAME | ACTION | STEP CHANGE CONDITION | Recirculation pumps | Coagulation mixer | Injection mixer | Maturation mixer | Dosage & raw water flow | Scraper | Injection Water Valve | Sludge extraction pump | Sludge extraction valve | Status light | Status output |
|---|---|---|---|---|---|---|---|---|---|---|---|---|---|---|
| | | | Stop Sequence conditions | | | | | | | | | | | |
| 1 | STOP SEQUENCE | Stop sludge extraction pump<br>Close sludge extraction valve if open<br>Stop maturation mixer<br>Stop injection mixer<br>Stop coagulation mixer<br>Stop chemical dosage (polymer pumps)<br>Close polymer service water transport valves | | R | S | S | S | S | R | C | S | C | SF | U |
| | | | Delay (DEL-STO-SCR 0 to 30 min.) | | | | | | | | | | | |
| 2 | STOP SEQUENCE | Stop scraper | | R | S | S | S | S | S | O | S | C | SF | U |
| | | | Delay (DEL-STO-PRS 0 to 30 min.) | | | | | | | | | | | |
| 3 | STOP SEQUENCE | Stop recirculation pumps<br>Close injection water solenoid valves | | S | S | S | S | S | S | C | S | C | SF | U |
| | | | Delay (1 sec) | | | | | | | | | | | |
| 4 | STOP SEQUENCE | ACTIFLO stopped | | S | S | S | S | S | S | C | S | C | SF | U |

***LEGEND:*** R=RUNNING S= STOPPED O= OPEN C=CLOSED RF=RAPID BLINK A=AVAILABLE U= UNAVAILABLE

## 2.7 ALARM/FAILURE CONDITIONS AND PLC RESPONSES

### 2.7.1 Alarm Priorities

Alarms are grouped in to 3 priority levels for various attention requirements:

**Emergency alarms:**

1. Needs immediate operator attention.
2. The ACTIFLO® unit will initiate the emergency shutdown sequence.

**Fatal alarms:**

1. Needs immediate operator attention.
2. The ACTIFLO® unit will initiate the stop sequence.

**Warning alarms:**

1. Does not need immediate operator attention.

If the ACTIFLO® unit was stopped by an Emergency alarm or fatal alarm, it will not restart automatically. The operator must remove alarm condition and reset the alarm. Then press the start button on the operator interface will restart the unit if all automatic start sequence conditions are satisfied. In case of remote control, the system will wait for rising edge of the remote start signal.

### 2.7.2 Alarm and Set Point Table

Refer to Appendix A.

## 2.8 SAFETY

### 2.8.1 Emergency Stop

**Emergency stop actions**

When an emergency stop button is activated, an alarm is triggered. The fault associated with this alarm will latch.

During emergency stop, many stopping actions are initiated on equipment. These actions are presented in sections describing the relevant equipment.

**Recovery after emergency stop**

When all emergency stop buttons are back into normal position, the fault associated with an alarm is maintained until the operator presses the reset button.

### 2.8.2 Control Power Failure PLC Response

Should control power fail at any time during Semi-Automatic control of the ACTIFLO® system, the PLC will issue an alarm and will initiate a Shutdown Sequence as described in this document. Systems with an Uninterruptable Power Supply (UPS) will see the alarm as the condition occurs. Systems without an UPS will see the alarm upon restoration of power. There is a ten (10) second delay upon restoring power, and then the train will enter the Shutdown Sequence as described in this document. If the restored power does not include the actual motor controls, a run status will not be received by the PLC and equipment (pumps and scraper) will shut down immediately without a re-inventory of the sand to the maturation tank. If the unit is configured to resume via the HMI, it will automatically resume to the last known state. Otherwise the unit will remain in Stop.

## 2.9 System Availability Conditions

### 2.9.1 Conditions for automatic Start sequence

The automatic start sequence will be activated when the automatic start command is true and the following conditions are met:

1. If delay for power return is elapsed;
2. If remote run request bit is activated;
3. ACTIFLO® in Auto start mode.

### 2.9.2 Conditions for automatic stop sequence

The automatic stop sequence will be activated when any of the following conditions are met:

1. The ACTIFLO® Auto start mode is deactivated on the interface or one of the following occurs:
   a. If a major fault is active;
   b. If remote contact is not activated;
2. The ACTIFLO® automatic start command is false.

## 2.10 ACTIFLO® Fault Responses

*Table 4: ACTIFLO® major faults*

| MAJOR FAULT | ALARM TYPE |
|---|---|
| Coagulation mixer | FATAL |
| Injection mixer | FATAL |
| Maturation mixer | EMERGENCY |
| Scraper High High torque | EMERGENCY |
| Recirculation pumps | EMERGENCY |
| High High clarified water turbidity | FATAL |
| High high water level | EMERGENCY |
| Sludge extraction system | FATAL |
| Coagulant dosing system | FATAL |
| Polymer dosing system | FATAL |
| Power failure | EMERGENCY |

If the ACTIFLO® was stopped by a major fault, it will not restart automatically. The operator must fix the problem on the operator interface. The ACTIFLO® will restart if all automatic start sequence conditions are satisfied.

## 2.11 CONTROLS

### 2.11.1 General

1. ACTIFLO® Start/Stop push button function:
   - By pushing the Start/Stop push button, the ACTIFLO® will be set in Auto start mode and will be ready to start. If all automatic start sequence conditions are satisfied, it will start only after receiving the automatic start command.
   - If the ACTIFLO® is in Auto start mode and it is running or on starting sequence, pushing the Start/Stop push button will activate the stopping sequence and deactivate the Auto start mode. Pushing the Start/Stop push button again will restart the ACTIFLO® if the automatic start command is still true.

2. If an essential equipment is in manual and not running when the ACTIFLO® Start/Stop push button is pressed to activate the Auto mode, Auto start mode cannot be activated.
   The essential ACTIFLO® equipment's to be in Auto are:
   - Coagulation mixer
   - Injection mixer
   - Maturation mixer
   - Scraper
   - Recirculation pumps

3. If a major fault occurs while the ACTIFLO® is in start sequence or is running, the ACTIFLO® is forced into a stop sequence and the ACTIFLO® major fault is set.

4. The operator may set/reset the ACTIFLO® in Auto start mode by pressing the Start/Stop push button from the HMI.
   The conditions to activate the Auto mode are the followings:
   - No major faults;
   - All equipment in Auto on HMI or running;
   - No Polymer system fault
   - No sludge recirculation pump fault

Pressing on the ACTIFLO® Start/Stop push button on the operator interface for 3 seconds when the ACTIFLO® is stopped and will enable forced start mode if all the conditions to activate the Auto mode are true the forced start mode will become active. The unit will then start all the drives and request to open the raw water valve, bypassing the auto start sequence commands.

### 2.11.2 Recirculation pumps logic

#### 2.11.2.1 Pump Fault

The pump is in fault when:

- The command is present and the status is not for a short delay

When the duty pump is in fault, and the ACTIFLO® unit is in operation the standby pump will start, the ACTIFLO® will not stop, a WARNING alarm is activated and a message is displayed. If the second pump was in fault or in manual (not running), a FATAL alarm is activated, a message will be displayed and the ACTIFLO® unit will stop.

#### 2.11.2.2 Pump Priority

Each time the running pump is stopped, the other pump will start at the next ACTIFLO® start sequence. If the other pump is in manual or in fault, the first pump will restart.

### 2.11.3 Maturation Mixer Speed

The maturation mixer motor is powered by a variable speed drive (VFD). The speed of the mixer will be set on the PLC during the process start-up of the system to get an optimal mixing. Thereafter, the speed usually does not need any further adjustment.

### 2.11.4 ACTIFLO® High Level Switch

A float over the settling tank is used as a High Level switch. When the switch is activated, stop the corresponding ACTIFLO® unit according to the automatic stop sequence.

### 2.11.5 Sludge Extraction Control

The TSS control loop will act on the opening of the splitter box outlet flow control valve to adjust the sludge flow rate being recirculated back to the coagulation chamber.

A TSS set point will be entered by the operator. If the TSS measured by 65AIT6801427 is below the set point, the control loop will close 65FCV6801437. This will increase the sludge recirculation to the coagulation chamber and increase the turbidity.

On the contrary, if the measured TSS is above the set point, the control loop will open 65FCV6801437. This will decrease the sludge recirculation to the coagulation chamber and increase the sludge flow rate going to the sludge storage tank.

If the TSS analyzer is in fault, an alarm is generated and the sludge valve 65FCV6801437 opens to prevent sludge build-up in the ACTIFLO® process.

If the fault is not reset after an adjustable delay, the ACTIFLO® is stopped according to automatic shutdown sequence.

### 2.11.6 Sludge Extraction Valve

The extraction valve has two available operation modes:

- **Normal mode:** the valve is controlled with a PID loop and its opening is used as a manipulated variable to reach the flow set point.
- **Pulse mode:** as very low flow rates can be difficult to achieve with the valve, a pulse mode shall be programmed. Parameters such as opening duration and opening frequency shall be entered by the operator on the HMI. The extracted volume is totalized over time by the flowmeter.

## 2.12 SLUDGE EXTRACTION/RECIRCULATION SYSTEM FAULT RESPONSE

The following are the major faults associated with the Sludge recirculation and extraction system.

1. **Sludge splitter box tank high high level**

   The ACTIFLO® unit falls on major fault and is stopped according to the automatic stop sequence.

2. **Sludge splitter box tank low low level**

   The ACTIFLO® unit falls on major fault and is stopped according to the automatic stop sequence.

3. **Sludge tank high high level**

   The ACTIFLO® unit falls on major fault and is stopped according to the automatic stop sequence.

4. **Sludge Extraction pump fault**

   The ACTIFLO® unit falls on major fault and is stopped according to the automatic stop sequence.

5. **Extraction modulating valve open failure**

   The corresponding ACTIFLO® unit falls on major fault and is stopped according to the automatic stop sequence.

## 2.13 CALCULATED PARAMETERS

The following sections explain the main calculations made in the control of the ACTIFLO® system.

The PLC calculates the chemical feed rates and controls the chemical metering pumps using the following procedure. The chemical feed rate is based on:

1. The influent raw water flow rate
2. The chemical dose
3. The physical properties of the chemicals
4. The capacity and settings of the metering pump
5. The raw water turbidity

The influent raw water flow rate is obtained through the raw water flow meter, which sends a signal to the PLC.

The influent raw water turbidity rate is obtained through the raw water turbidity meter.

The chemical dose, physical properties and metering pump capacity are input by the user/operator at the HMI.

The basic equation for the chemical feed rate is:

$$\text{Chemical feed rate} = \frac{\text{influent flow rate} \times \text{chemical dose}}{\text{stock chemical concentration}}$$

This equation is the general form for all chemical feed rates that use flow pacing control, including coagulant and polymer.

### 2.13.1 Flow Pace Control

The way the PLC uses these calculations to determine the chemical metering pump output is:

1. The chemical feed rate equations are programmed into the PLC.
2. The user/operator inputs the chemical dose, physical properties, and maximum chemical metering pump capacity at the HMI on the ACTIFLO® control panel. The PLC calculates the specific chemical feed rate based on the user/operator inputs and the influent (raw water) flow to the train.

3. The calculated feed rate is then converted by the PLC into a percent speed, based on the maximum capacity of the metering pumps. This signal is then sent to the metering pump.

## 2.14 INTERLOCKS

### 2.14.1 Actiflo® High Level Switch

A float over the settling tank is used as a High Level switch. When the switch is activated, stop the corresponding Actiflo® unit according to the automatic stop sequence.

### 2.14.2 High Scraper Torque

The torque detector/alarm is independent from the PLC. So it is enabled (will stop the scraper) through a hardwired interlock to the scraper starter in the corresponding Actiflo® control panel.

A high torque alarm is activated when the torque is higher than the adjustable set point for more than the adjustable delay.

When the alarm is activated, the scraper is stopped and then the Actiflo® is stopped according to the automatic stop sequence.

### 2.14.3 Sludge Extraction Pump

The sludge extraction pump cannot be started if the low level switch has been activated. If the pump is in operation and the low level switch is activated the pump is stopped by interlock.

### 2.14.4 Maturation Mixer

The maturation mixer cannot run if the scraper is not running.

# 3 APPENDIX A – ALARMS, PARAMETERS AND SET POINTS

# APPENDIX D

# Discfilter

# Functional Description

# Hydrotech® – DISCFILTER

## PROCESS CONTROL DESCRIPTION

**VEOLIA WATER TECHNOLOGIES CANADA**
www.veoliawatertechnologies.com

# REVISION STATUS

| Issue | Date | Created | Reviewed | Approved | Description of Changes |
|---|---|---|---|---|---|
| 1 | 2021/03/16 | GM | ED | TS | First Issue |
| 2 | 2021/04/21 | GM | ED | TS | Added cover actuators |
| | | | | | |
| | | | | | |
| | | | | | |

# TABLE OF CONTENT

**1 INTRODUCTION ..... 5**

1.1 Reference Documents ..... 5

1.2 Process Overview ..... 5

1.3 List of Abbreviations ..... 6

1.4 List of Units ..... 6

**2 HYDROTECH® CONTROL DESCRIPTION ..... 7**

2.1 Equipment and Instrument ..... 7

2.1.1 Backwash Pump ..... 7

2.1.2 Drum Drive ..... 7

2.1.3 VFD (by others) ..... 7

2.1.4 Level Sensor/Level transmitter (Inlet box) ..... 8

2.1.5 Low Level Sensor Probe/Low Level transmitter (Effluent side) ..... 8

2.2 Operating Modes Overview ..... 9

2.3 Permissive ..... 10

2.4 Auto Train Response To Equipment Conditions ..... 11

2.4.1 Equipment Removed From Auto PLC Response ..... 11

2.4.2 Equipment Failure PLC Response ..... 11

2.5 Sequences Of Functions ..... 11

2.5.1 Discfilter functions ..... 11

*Filtration* ..... 11

*Level Initiated Backwash* ..... 12

*Timed Backwash* ..... 12

*Manual ("Hand") Backwash* ..... 12

2.5.2 Operating Sequence ..... 12

2.5.3 Chemical Cleaning ..... 12

**Chemical Cleaning Sequence ..... 13**

2.6 Alarm/Failure Conditions and PLC Responses ..... 14

2.6.1 Major faults ..... 14

2.6.2 Alarm Table ..... 14

2.7 Safety ..... 15
2.7.1 Emergency Stop ..... 15
2.7.2 Control Power Failure PLC Response ..... 15
2.8 Calculated Parameters ..... 16
2.8.1 Setpoints Table ..... 16
2.9 Interlocks ..... 17
2.9.1 Effluent Side Level transmitter ..... 17
2.9.2 Backwash pump low Pressure Switch ..... 17

# 1 INTRODUCTION

## 1.1 REFERENCE DOCUMENTS

| Document Number | Name | Revision |
|---|---|---|
| 5000220043_PI_0001_GEN_VWT | Piping & Instrumentation Diagram | 1 |
| | | |
| | | |

## 1.2 PROCESS OVERVIEW

The Discfilter is a mechanical and self-cleaning filter unit that offers a large filter area on a small footprint. This design is superior to any filtration in fine solids removal and product recovery within micro screens.

The water flows by gravity into the center of the drum and into the filter segments. The disc filter unit remains stationary under normal filtration. Solids are separated from the water by the micro screen cloth mounted on two sides of the disc segments. The buildup of captured solids increases the head loss across the Discfilter and as a result the inlet water level rises. At a predetermined level a backwash cycle is initiated which results in Discfilter rotation presenting clean filter elements in to the flow path and at the same time cleaning the filter elements with high-pressure water jets. The backwash water is collected in a trough within the center of the Discfilter and flows away by gravity. When the inlet water level falls under the set point, the backwash sequence continues for approximately 20 seconds (controlled by a timer and adjusted during commissioning to reflect local conditions).

Once the timed over-run is elapsed, the disc filter drive and backwash pump stop. The disc filter unit returns to a stationary state until the next backwash cycle is initiated. Filtration is continuous even during the backwash cycle and the effluent water quality is also the same throughout the backwash cycle. The operational head loss across the unit varies from zero to approximately 250mm.

## 1.3 LIST OF ABBREVIATIONS

The following abbreviations are used in the text of this document.

- HMI: Human/Machine Interface
- H-O-A: Hand-Off-Auto
- PLC: Programmable Logic Controller
- LCP: Local Control Panel
- VFD: Variable Frequency Drive
- VWT: Veolia Water Technologies Canada

## 1.4 LIST OF UNITS

The following lists the parameters referred to in this document and the units they are measured in unless otherwise specified.

- Concentration (in general): mg/L
- Dosing rate: mL/L
- Flow rate (main process): $m^3/h$
- Flow rate (chemical dosing): LPH
- Level in the tanks: %
- pH: -
- Pressure: PSIg
- Temperature: °C
- Turbidity: mg/L or NTU

# 2 HYDROTECH® CONTROL DESCRIPTION

## 2.1 EQUIPMENT AND INSTRUMENT

This section connects the tags from the P&ID and the terminology used throughout Equipment and Instrument Schedules.

| Project Tag No | Standard Tag-No. | Description |
|---|---|---|
| 65PSL8165 | PS4-031 | Pressure switch backwash pump |
| 65LIT6801502A | LT3-031 | Level transmitter inlet channel |
| 65LIT6801502B | LT3-032 | Level transmitter effluent channel |
| 65FIL68001 | M4-001 | Drum motor Disc |
| 65PSR68008A / 65PSR68008B | P4-001 | Backwash pump #1/#2 |

### 2.1.1 Backwash Pump

Number of Pieces: 2 per unit
Operation: On/Off
Indication: Run status in local and SCADA
Control: The pump runs intermittently or continuous and is initiated during the backwash operation.

### 2.1.2 Drum Drive

Number of Pieces: 1 per unit
Operation: On/Off
Indication: Run status in local and SCADA
Control: The drum motor/drive runs intermittently or continuous and is initiated during the backwash operation.

### 2.1.3 VFD (by others)

Number of Pieces: 1 per unit
Operation: Open/Close
Indication: Run status in local and SCADA
Control: The VFD controls the drum motor/drive. It ramps up the drive motor to operating speed and runs a long as required by the backwash operation.

### 2.1.4 Level Sensor/Level transmitter (Inlet box)

Number of Pieces: 1 located in discfilter inlet box
Indication: Local and SCADA
Control: Main unit used in process control to calculate the backwash elevation setting and high water alarm setting. This calculated parameter is used for control actions and alarms.

### 2.1.5 Low Level Sensor Probe/Low Level transmitter (Effluent side)

Number of Pieces: 1 per Unit
Indication: Local and SCADA
Control: Used in process control to calculate the backwash elevation and to prevent the backwash pump from dry operation during the backwash initiation. This parameter is used for control actions and alarms.

### 2.1.6 Cover Actuator

Number of Pieces: 2 per Unit
Operation: Open/Close
Indication: Local and SCADA
Control: Used to open and close cover panels of the discfilter to access nozzles and media panels.

### 2.1.7 Spray Bar Actuator

Number of Pieces: 1 per Unit
Operation: Open/Close
Indication: Local and SCADA
Control: Used to raise spray bar of backwash nozzles.

## 2.2 OPERATING MODES OVERVIEW

There are two primary modes for each Hydrotech®: Manual and Automatic. The Manual mode is designed for operation of individual equipment. The Auto mode is designed for operation of the Hydrotech® system as a whole.

Manual mode

In manual Mode, the operator can operate individual equipment.

Equipment can be started manually at the LCP using the Hand position of the H-O-A.
In the manual operating mode, the drum rotation and backwash are started manually.
The backwash nozzles spray backwash water on the outside of the filter panels.
When the backwash pump and drum drive are placed in HAND, the Discfilter operates in a continuous backwash.
The solid particles that accumulate are washed from the filter panels to the sludge channel, at the same time as the drum rotates.
The removed particles and backwash water flow with gravity out of the filter.
The H-O-A switch is placed in the OFF position to prevent the respective piece of equipment from operating.

Automatic mode

Auto mode allows the operator to initiate the Hydrotech® system sequence from HMI or remotely.

**NOTE: Train equipment cannot be controlled manually while in Semi-Auto operation.**

The drum motor, and backwash pump H-O-As must be in Auto to enable Automatic control of all respective equipment at the HMI and at the LCP. The automatic sequence is described below. Each Hydrotech® train and its associated equipment are controlled as an independent system by the PLC.

The table below presents the control modes summary.

*Table 1: Summary of Control Modes*

| | Manual | | Auto |
|---|---|---|---|
| | **Local (HOA Selector)** | **HMI Manual** | |
| Control Functions | N/A | N/A | Allowed (PLC), Backwash sequence |
| Initiation of Automatic functions | N/A | N/A | Operator or Remote Start-up Initiation Required |
| HMI Operation of Individual Equipment | N/A | Allowed (virtual HOA on HMI) | Not Allowed |
| Local Operation of Individual Equipment | Allowed By HOA on LCP | N/A | Not Allowed |

## 2.3 PERMISSIVE

Permissive to allow initiation of the Automatic start sequence are:

- H-O-A selector switches for drum motor and backwash pump, are in Auto at the HMI and at the LCP.
- Motor (whichever is in Auto at HMI and LCP) and the backwash pump do not have existing equipment alarms.
- Aforementioned equipment alarms must be manually reset.
- No interlocking conditions are present to prevent the backwash pump from starting.
- Remote request run bit is activated.
- E-stop not activated.

## 2.4 AUTO TRAIN RESPONSE TO EQUIPMENT CONDITIONS

In the automatic operating mode, the solid particles that accumulate on the inside of the filter media gradually reduce the water flow through the filter panel.
The water level on the inside of the drum begins to rise ultimately triggering the backwash sequence.

### 2.4.1 Equipment Removed From Auto PLC Response

If the drum motor and the pump are removed from Auto at the LCP while the PLC is running in Automatic control of the Hydrotech® system, the system will be paused.

Since the Discfilter will not be operational, the water level will rise and trigger the high level alarm. An alarm will be sent to operator and influent water will overflow into the backwash waste tank.

**NOTE: No alarm will be generated if an Hydrotech® system shutdown is initiated due to a piece of equipment being removed from Auto by the operator.**

### 2.4.2 Equipment Failure PLC Response

Should the drum motor fail at any time during Automatic control of the Hydrotech® system, the PLC will issue an equipment alarm and the system will be paused.

Should the backwash pump fail at any time during backwash sequence, the PLC will issue an equipment alarm and the system will be paused.

## 2.5 SEQUENCES OF FUNCTIONS

### 2.5.1 Discfilter functions

Discfilter operation consists of four (4) functions:

- Filtration
- Level Initiated Backwash
- Time Initiated Backwash
- Manual (“Hand”) Backwash

***FILTRATION***
The Discfilter system is filtering any time water is passing through the media. Even in static (non-backwash) conditions, the filter units are filtering the water, provided they are not hydraulically isolated from the influent flow (i.e an inlet valve or gate is closed).

***LEVEL INITIATED BACKWASH***

Water level difference is calculated using inlet box and effluent side level transmitters. This differential elevation is then used to trigger a backwash cycle when it reaches a predefined setpoint. When that happens, the PLC controller starts the backwash cycle of the filter. The backwash pump and drum motor are started. Once the backwash begins and the inlet box water level drops and the differential elevation decreases below the setpoint, the backwash process will stop after a predefined timer. With the standard settings, ¾ of a rotation (based on time) is done to ensure all clogged media panels have been taken through backwash nozzles spray. This will reset the timed backwash timer.

***TIMED BACKWASH***

If the Discfilter system is static without any backwash due to low flow or no flow, the backwash cycle will be initiated with a predefined timer. This operation will prevent solids from drying onto the media. The timed backwash is also useful for outdoor installations in cold weather conditions to prevent icing in the backwash piping by initiating a frequent backwash during low flow periods.

***MANUAL ("HAND") BACKWASH***

A manual backwash can be triggered with a button at any given time. This will reset the timed backwash timer.

### 2.5.2 Operating Sequence

If all permissive conditions are present and no respective equipment alarms exist, the HMI will display **"Filtration"**.

### 2.5.3 Chemical Cleaning

If the backwash frequency is increasing or if the inlet box level does not decrease during backwash cycle, there is a possibility of long term clogging, which may be caused by, among others, iron and calcium precipitates or organic fouling.
It might then be necessary to chemically clean the filter media. The small frequency of chemical cleanings is estimated to 1 to 3 times per year according to needs.

The chemical cleanings are planned to be conducted as the Discfilter is in operation and filtering. It will start a sequence during which the chemical solution is dosed onto the part of the filter above the water level, while the submerged part continues to filter. A time is allowed for chemical reaction and then the chemically cleaned filters are rinsed as the discs rotate and cleaned filters become submerged. Please refer to operation manual for chemical selection.

The automatic chemical cleaning procedure is fully automated once the HCT has been filled with the cleaning chemical to be used, connected to the filter and control cabinet and the operation of the filter is changed to cleaning mode. For the automatic chemical cleaning to start, the operator has to press the buttons manually. Consequently, the chemical cleaning requires someone to be on site to make sure that it is safe to start the chemical cleaning. The cleaning procedure takes approximately 20 minutes. The procedure is as follows.

- Fill the container with the chemical to be used.
- Connect the HCT to the filter and the PLC
- Change to the cleaning mode in the HMI.
- When the panels are clean, disconnect the HCT from the filter unit and the PLC.
- Change to the standard operation mode in the HMI.

## Chemical Cleaning Sequence

The chemical cleaning is controlled by the Discfilter control panel and will be started manually from the HMI.

- The chemical pump starts.
- After a set time, the drum start delay, when the pressure in the chemical spray bar has built up and the spray pattern is right, the filter drum starts to rotate at the set drum dispersing speed.
- The drum rotates for a set time, the drum dispersing time, during which 2-3 segments are sprayed with the cleaning chemicals.
- When the drum dispersing time has elapsed, a stop signal is sent to the drum motor, which ramps down the rotation of the drum. Due to the time it will take to slow down and stop the filter drum, a chemical pump stop delay is used, in order to make sure the chemicals are evenly applied to all of the filter segments.
- After the chemical pump and the drum has stopped, the segments sprayed with cleaning chemicals will soak during a soaking time of, usually, 300-600 s.
- After the soaking time, the whole cleaning sequence (steps 1-5 above) is repeated on the other segments, until all of the filter segments have been cleaned. The number of repetitions will depend on the filter model. As an example, a disc filter from the HSF2600-series has 14 segments and requires a minimum of 5 index steps to clean the whole filter discs. It is recommended, however, to clean the filter in 6-8 index steps to ensure that the filter segments are completely covered by cleaning chemicals. For other filter models and placements of the chemical spray bar, other settings might be needed.
- When all of the filter segments have been sprayed and left soaking with cleaning chemicals, the chemical cleaning sequence is finished by backwashing of the filter for a rinsing time of approximately 5 minutes, to remove the cleaning chemicals from the filter media.

It is strongly recommended during commissioning of the filters that all of the above settings are evaluated, and if necessary adjusted, by using tap water. This should be done by having manometers installed on the chemical spray bar and the filter lid kept open, to be able to inspect the performance.
The key is to verify the spray pattern from the chemical nozzles (spray pressure >3 bar) before the filter starts to rotate, that the filter stops before the treated segments enter the water, that the treated segments are left soaking long enough and that the cleaning of the filter segments overlap to avoid untreated sections.

## 2.6 ALARM/FAILURE CONDITIONS AND PLC RESPONSES

### 2.6.1 Major faults

The following are the major faults associated with the Discfilter:

- Discfilter High High level (bypass alarm)
  The Hydrotech® discfilter is in major fault.
- Backwash pump in fault
  The Hydrotech® discfilter is in major fault
- Discfilter motor in fault
  The Hydrotech® discfilter is in major fault

### 2.6.2 Alarm Table

Refer to Project Alarm and setpoint Table for specific values. Table 2 below presents the typical alarm list.

*Table 2: List of alarms*

| Description | Alarm Type | Alarm Delay | System Action | Equipment Action / Alarm Action |
|---|---|---|---|---|
| Control Panel Power Failure | Discrete | NA | Alarm, | Shutdown |
| | | | | |
| Backwash Pump Overload Condition | Discrete | NA | Alarm, | Shutdown |
| Backwash pump Fail to Start (No Run Status) | Discrete | NA | Alarm, | Shutdown |
| | | | | |
| Drum Drive Fail Condition | Discrete | NA | Alarm, | Shutdown |
| Drum Drive Fail To Start | Discrete | NA | Alarm, | Shutdown |
| | | | | |
| Backwash Pump Low Level (Dry Run Protection) | Discrete | NA | Alarm, | Interlock of Backwash pumps / Operator Reset |
| | | | | |
| Inlet Box High Level (Bypass Level) | Discrete | NA | Alarm, | NA |

## 2.7 SAFETY

### 2.7.1 Emergency Stop

**Emergency stop actions**

When an emergency stop button is activated, an alarm is triggered. The fault associated with this alarm will latch.
During emergency stop, many stopping actions are initiated on equipment. These actions are presented in sections describing the relevant equipment.

**Recovery after emergency stop**

When all emergency stop buttons are back into normal position, the fault associated with an alarm is maintained until the operator presses the reset button.

### 2.7.2 Control Power Failure PLC Response

Should control power fail at any time during Automatic control of the Hydrotech® system, the PLC will issue an alarm. Systems with an Uninterruptable Power Supply (UPS) will see the alarm as the condition occurs. Systems without an UPS will see the alarm upon restoration of power. There is a ten (10) second delay upon restoring power, and then the train will resume to the last known state

## 2.8 CALCULATED PARAMETERS

The following sections explain the main calculations made in the control of the Discfilter® system.

**Backwash frequency**

This parameter is calculated using this equation

$$BF = t_B * 100 / (t_S + t_B)$$

With:

BF: Backwash frequency [%]

$t_B$: Time of the last backwash sequence [s]

$t_S$: Time in Filtration mode before last backwash [s]

This parameter should be available on history trend to assess chemical cleaning requirement.

### 2.8.1 Setpoints Table

The Table 3 presents the list of the main process setpoints.

*Table 3: List of operator setpoint*

| Name | Controller Actions | Increment Setting | Typical Settings |
|---|---|---|---|
| Drum Start Delay ($t_1$) | The drum delay setpoint delays drum rotation until the backwash pump is operating at full pressure. | 1 to 10 seconds | 1-2 seconds |
| Backwash Stop Delay ($t_2$) | The backwash Stop Delay time is initiated after the water falls away from the backwash level threshold to ensure the drum rotates at least ¾ of a rotation for complete media panel cleaning. | 10 to 400 seconds | Approximately 20 seconds |
| Timed Backwash Interval ($t_3$) | Initiates a backwash after preset period of static time with no backwash events. This mode prevents solids from drying onto the media from a prolonged period of static operation. | 5 to 240 minutes | 30 minutes |
| Drum Speed | Drum rotation speed during backwash sequence | 0 to 60 Hz | Adjust to have 2.85 RPM |
| **Chemical Cleaning Sequence** | | | |
| Number of cleaning cycles | Number of chemical cleaning cycles to be performed when starting the chemical cleaning sequence | 1 to 5 | 1 |

| | | | |
|---|---|---|---|
| Drum Start Delay Chemical Cleaning | The drum delay setpoint delays drum rotation until the chemical cleaning system is operating at full pressure. | 1 to 60 seconds | 1-5 seconds |
| Chemical Spraying Timer | Duration of the spraying phase for each chemical cleaning segment | 1 to 30 seconds | 13 seconds |
| Chemical Soaking Timer | Duration of the soaking phase for each chemical cleaning segment | 1 to 600 seconds | 120 seconds |
| Chemical Cleaning Drum Speed | Drum rotation speed during the chemical cleaning sequence | 0 to 60 Hz | 10-20 Hz |
| Rotations Per Chemical Cleaning Cycle | Number of spraying/soaking steps to repeat during one cycle of chemical cleaning | 1 to 10 | Adjust to ensure all panels are sprayed during one cycle |
| Rinsing Backwash Timer | Duration of the backwash sequence performed after chemical cleaning to rinse the panels | 1 to 600 seconds | 300 seconds |

## 2.9 INTERLOCKS

### 2.9.1 Effluent Side Level transmitter

Tag: 65LIT6801502B

- Dry running protection

A low level switch or low low level alarm (transmitter option) prevents the backwash pump from running dry. Dry running is reset with a reset button.

### 2.9.2 Backwash pump low Pressure Switch

Tag: 65PSL8165

- Low pressure protection

A pressure sensor is preset at 2-4 bar and pressure must be obtained within a time limit preset otherwise the backwash sequence shuts down and gives an alarm “Pump low pressure”. Low pressure is reset with a reset button. The backwash sequence is stopped and system returns to static mode.

### 2.9.3 Cover proximity switch

- Spray bar opening protection

A proximity switch prevent the spray bar to be raised if the cover is not open.

- Rotating equipment protection

A proximity switch prevent the rotation of the filter drum when the cover is open. An override of this interlock must be programmed for commissioning and troubleshooting of the backwash and chemical cleaning sequences.

# APPENDIX E

# Hydracarb®

# Functional Description

# HYDRACARB® –

## PROCESS CONTROL DESCRIPTION

**VEOLIA WATER TECHNOLOGIES CANADA**
www.veoliawatertechnologies.com

# REVISION STATUS

| Issue | Date | Created | Reviewed | Approved | Description of Changes |
|---|---|---|---|---|---|
| 1 | 2021/03/11 | CEK/GM | ED | TS | First Issue |
| | | | | | |
| | | | | | |
| | | | | | |
| | | | | | |

# TABLE OF CONTENT

1 INTRODUCTION ..... 4
1.1 Reference Documents ..... 4
1.2 Process Overview ..... 4
1.3 List of Abbreviations ..... 5
1.4 List of Units ..... 5
2 ACTICARB® CONTROL DESCRIPTION ..... 6
2.1 Equipment and Instrument ..... 6
2.2 Controls ..... 7
2.2.1 Continuous dosing ..... 7
2.2.2 Discharge Pipe rinsing ..... 7
2.3 System Availability Conditions ..... 9
2.3.1 Conditions for automatic sequence ..... 9
2.4 Fault response ..... 9
2.5 Interlocks ..... 9
2.5.1 Service Water Inlet Pressure Switch ..... 9
2.5.2 Wetting Cone High Level Switch ..... 9

# 1 INTRODUCTION

## 1.1 Reference Documents

| Document Number | Name | Revision |
|---|---|---|
| 5000220043_PI_0001_GEN_VWT | PI001 _Process and Instrumentation diagram | 1 |
| | | |
| | | |

## 1.2 Process Overview

Powder activated carbon (PAC) will be received in 550 kg bags. Since this chemical is classified as a solid product that can easily ignite (CSA Class 2, Div. 1, Gr. F), make-up system is a classified area. Also, PAC is a hydroscopic solid, so it as to be stored in a dry and warm environment to avoid plugging in the dosing system. The dry powder will be dosed using a solid-liquid system consisting of a volumetric feeder dosing powder into a high energy eductor.

The principle is to use fresh water under pressure through a converging nozzle in the eductor and produces a high velocity jet. This creates a vacuum in the body of the eductor which causes the material to be drawn into the solids inlet and entrained by the liquid. Both the motive liquid and the entrained material are intimately mixed in the throat of the educator and discharged against some backpressure as a slurry.

This PAC slurry can be easily carried to the Dechlorination tank Reactor in order to renew the extracted activated carbon powder. The suction in the eductor must be well established before dosing activated carbon. A rinse sequence will be initiated after each screw stop.

## 1.3 List of Abbreviations

The following abbreviations are used in the text of this document.

- HMI: Human/Machine Interface
- H-O-A: Hand-Off-Auto
- PLC: Programmable Logic Controller
- LCP: Local Control Panel
- VFD: Variable Frequency Drive
- VWT: Veolia Water Technologies Canada

## 1.4 List of Units

The following lists the parameters referred to in this document and the units they are measured in unless otherwise specified.

- Concentration (in general): mg/L
- Dosing rate: mL/L
- Flow rate (main process): $m^3/h$
- Flow rate (chemical dosing): LPH
- Level in the tanks: %
- pH: -
- Pressure: PSIg
- Temperature: °C
- Turbidity: mg/L or NTU

# 2 ACTICARB® CONTROL DESCRIPTION

## 2.1 Equipment and Instrument

This section connects the tags from the P&ID and the terminology used throughout Equipment and Instrument Schedules

| P&ID TAG | DESCRIPTION |
|---|---|
| 65LSH6801612<br>65LSH6801632 | Wetting cone high Level switch |
| 65LSL6801611<br>65LSL6801631 | Hopper Low level Switch |
| 65PSL6801601<br>65PSL6801621 | Service Water Pressure Switch |
| 65FY6801613<br>65FY6801633 | Air Solenoid valve |
| 65FY6801602<br>65FY6801622 | Service Water Inlet Solenoid Valve |

## 2.2 Controls

### 2.2.1 Continuous dosing

Dosing is continuous with the dosing screw and the required dosing flowrate is adjusted using the VFD of the dosing screw motor. The calculation of the dosage percentage is done by integrating calibration values retrieved from the dosing screw.

$$(QP_{PAC}) = (CF_{PAC}) * (Q_{RW}) \ / \ (SG_{PAC}) * 1000$$

Where:
**$QP_{PAC}$** = Required PAC Dosing Flowrate (L/h)
**$CF_{PAC}$** = Required Chemicals Concentration in the process (mg/L)
**$Q_{RW}$** = Raw Water Flowrate (m3/h). Process Value given by the inlet raw water flowmeter.
**$SG_{PAC}$** = Chemical Specific Gravity (kg/L) see 5000220043_PSDS_0001_SKG_VWT

### 2.2.2 Discharge Pipe rinsing

The piping of the activated carbon injection line must be flushed with service water to prevent build-up every times that the dosing screw shuts downs. Service water should be flushed through the lines for 1.5 times the transit time the flushing water takes to pass through the pipes.

*Table 1: Activated Carbon automatic sequence*

| Step # | Step name | Actions<br>Transition conditions | Dosing screw | Service water valve | Powder Supply Valve | Blending tool |
|---|---|---|---|---|---|---|
| 0 | Stand-by | Equipment shut off | S | C | C | S |
| | | | | | | |
| 1 | Open injection line | Open injection valve<br>Open Powder Supply valve | S | C | O | S |
| | | Valve delay has elapsed | | | | |
| 2 | Vacuum | Open Service water Inlet | S | O | O | S |
| | | 20 s delay | | | | |
| 3 | Dosing | Start hopper agitator cycle<br>Start dosing screw<br>Active coagulant metering pump | R | O | O | R |
| | | Normal Stop condition | | | | |
| 4 | Rinsing | Stop the feeder<br>Stop blending tool<br>Close Powder Supply Valve | S | O | C | S |
| | | Rinsing delay elapsed (45 sec) | | | | |
| 5 | End | Close the Service water inlet valve | S | C | C | S |
| | | Go to Step 0 at end of normal sequence and reset timers<br>Go to Step 7 at end of sequence if a fault occurs | | | | |
| 6 | Sequence stopped on a fault | Stop the feeder<br>Stop blending tool<br>Close the powder supply valve<br>Close the Service water inlet valve<br>Wait for fault reset | S | C | C | S |
| | | Go to Step 1 | | | | |

***Legend***

| ***Motor*** | ***Valve*** | ***Cycle*** |
|---|---|---|
| *S: Stop* | *C: Closed* | *D : Deactivate* |
| *R: Running* | *O: Open* | *A : Activate* |

***Note: if there is a power outage before the completed preparation confirmation is active, repeat at Step 1 when the power returns.***

## 2.3 System Availability Conditions

### 2.3.1 Conditions for automatic sequence

The automatic start sequence will be activated when the automatic start command is true and the following conditions are met:

1. If delay for power return is elapsed;
2. If remote run request bit is activated (exchange table);
3. Activated Carbon dosing system components are in Auto start mode.
4. Service Water System components are in Auto start mode (exchange table);
5. Low Pressure Switch is not activated
6. Low level switch is not activated

## 2.4 Fault response

The major faults associated with the make-up sequence are:

1. Dosing screw motor fault
2. Blending tool motor fault

## 2.5 Interlocks

### 2.5.1 Service Water Inlet Pressure Switch

If the low pressure switch on the service water inlet is activated when the system is running, it will stop the sequence on a fault as per table 1. The Interlock is active in automatic mode and interface manual mode.

When the service water inlet valve is closed, the signal of the pressure switch is disabled.

### 2.5.2 Wetting Cone High Level Switch

If the high level switch on the wetting cone is activated when the system is running, it will stop the sequence on a fault as per table 1. The Interlock is active in automatic mode and interface manual mode.

# Appendix E

**Sump pumps**

# Series 70, 71, 125, 126

2" NPT Male Discharge

## *Sump & Utility Pumps*

| | | |
|---|---|---|
| **DISCHARGE** | | 2” NPT, Male, Vertical |
| **MOTOR SHELL** | | Stainless Steel |
| **VOLUTE** | | Non-Metallic |
| **IMPELLER** | | Non-Merallic |
| **SHAFT** | | 420 Stainless Steel |
| **HARDWARE** | | 300 Series Stainless Steel |
| **SEAL:** | *Design* | Double Mechanical, Oil Filled Reservoir |
| *Material:* | *Stationary Face* | Silicon/Carbide, Pump End |
| | | Ceramic, Motor End |
| | *Rotating Face* | Carbon |
| | *Elastomer* | Buna-N |
| | *Hardware* | 300 Series Stainless |
| **CORD ENTRY** | | 50 ft. (15m) Cord with plug on 120 Volt Models. Molded for strain relief and compression seal |
| **MOTOR:** | *Design* | NEMA Design L - Single Phase. Completely Air-Filled, Squirrel Cage Induction |
| **SINGLE PHASE** | | Capacitor Start and Run. Includes Overload Protection in Motor |
| **STRAINER** | | .25" (6mm) Openings, Non-Metallic, Rubberized |
| **LIFTING HANDLE** | | Non-Metallic |
| **LIFTING ROPE** | | 3/8" (9.7mm) Polypropylene, 25 ft. (7.6m) |

C SA US
LR16567

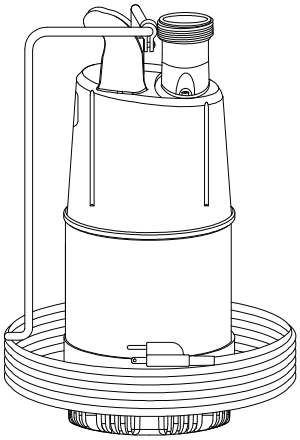

## Series: 70, 71, 125, 126
## .7 & 1.25HP, 3450RPM, 60Hz

**DESCRIPTION:**
The pumps are compact, lightweight units and highly portable. Designed specifically for use by contractors and utility service personnel. These pumps can operate in up to 104°F (40°C) temperature water. Before pumping fluids other than water consult the factory, giving fluid, fluid temperature, specific gravity, viscosity, capacity in USGPM and total head and/or pressure requirements, including friction loss through discharge line, fittings, valves, etc.

**WARNING:**
CANCER AND REPRODUCTIVE HARM - WWW.P65WARNINGS.CA.GOV

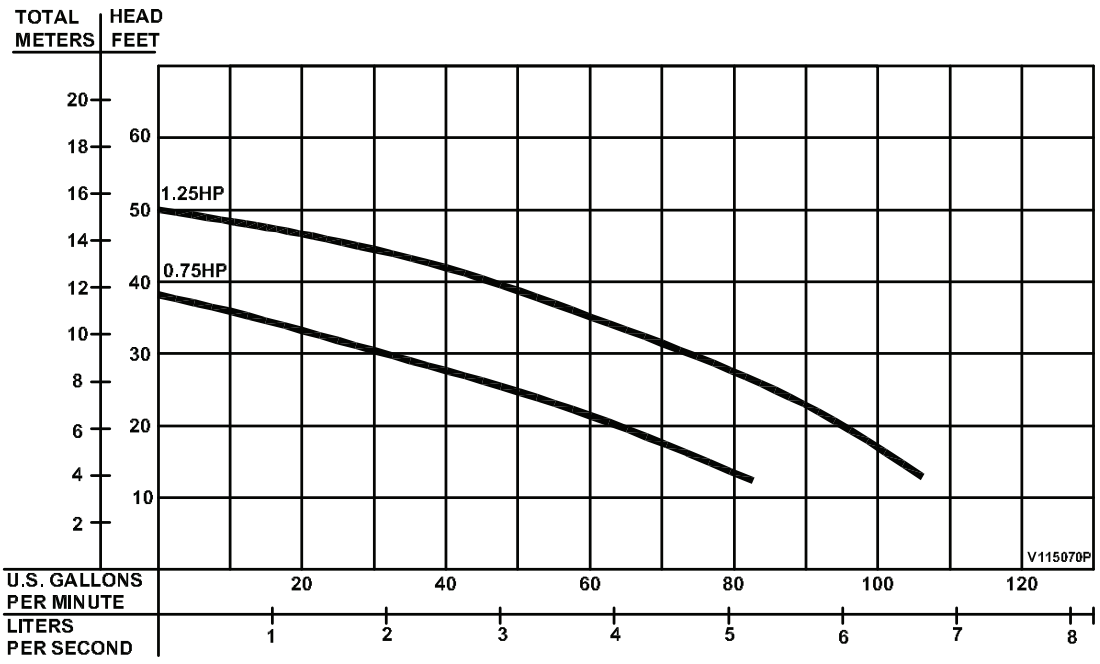


Testing is performed with water specific gravity of 1.0 @ 68˚F (20˚C), other fluids may vary performance

# Series 70, 71, 125, 126

2" NPT Male Discharge

BARNES®

www.cranepumps.com

## *Sump & Utility Pumps*

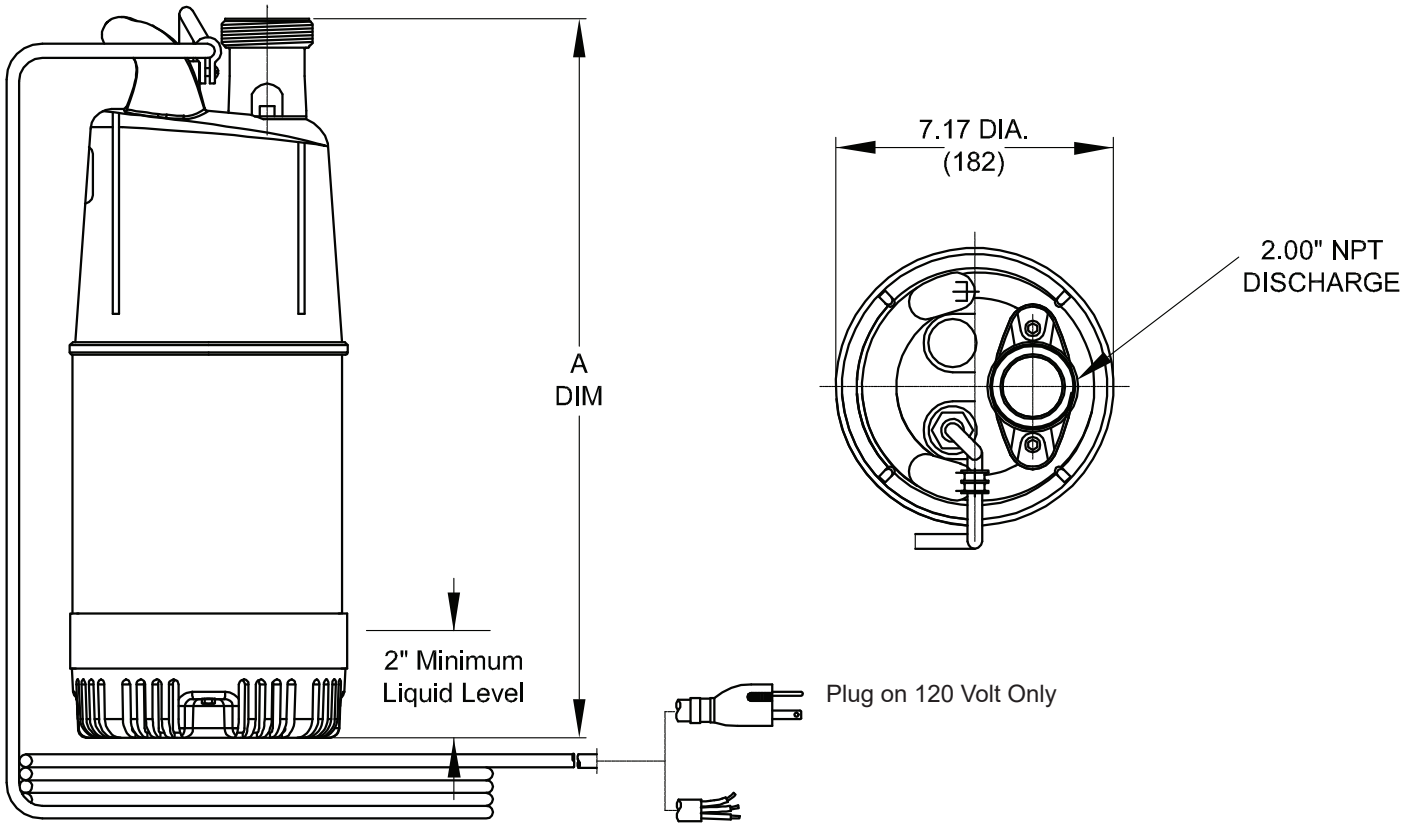


| MODEL NO | PART NO | A DIM inch (mm) | HP | VOLT/PH | Hz | RPM (Nom) | FULL LOAD AMPS | PUMP WEIGHT |
|---|---|---|---|---|---|---|---|---|
| 70 | 115070 | 17.76 (451) | 0.7 | 120/1 | 60 | 3450 | 8.0 | 30 lbs (13.6kg) |
| 71 | 115071 | 17.76 (451) | 0.7 | 240/1 | 60 | 3450 | 4.0 | 30 lbs (13.6kg) |
| 125 | 115125 | 18.54 (471) | 1.25 | 120/1 | 60 | 3450 | 15.0 | 35 lbs (15.9kg) |
| 126 | 115126 | 18.54 (471) | 1.25 | 240/1 | 60 | 3450 | 7.6 | 35 lbs (15.9kg) |

Pump rated for operation at ± 10% voltage at motor.

**IMPORTANT !**

1.) PUMP MAY BE OPERATED "DRY" FOR EXTENDED PERIODS WITHOUT DAMAGE TO MOTOR AND/OR SEALS.
2.) INSTALLATIONS SUCH AS DECORATIVE FOUNTAINS OR WATER FEATURES PROVIDED FOR VISUAL ENJOYMENT MUST BE INSTALLED IN ACCORDANCE WITH THE NATIONAL ELECTRIC CODE ANSI/NFPA 70 AND/OR THE AUTHORITY HAVING JURISDICTION. THIS PUMP IS NOT INTENDED FOR USE IN SWIMMING POOLS, RECREATIONAL WATER PARKS, OR INSTALLATIONS IN WHICH HUMAN CONTACT WITH PUMPED MEDIA IS A COMMON OCCURRENCE.

# Control Float

## Piggy-Back In-Line Floats
## 125 Volt

***Basins & Accessories***

## Specifications:

**CORD**: **P/N 125150:** .....18/2 SJOW
**P/N 125151:** .....16/2 SJOW
**PLUG**.....125 VAC NEMA 5-15 Piggy-Back Plug
**FLOAT**.....Polypropylene for use in water & sewage up to 140° (60° C).
**WATER DEPTH**.....Maximum 30' (9m), 13 PSI
**SWITCH**.....Snap Action, Normally Open
**CLAMP**.....Stainless Steel Construction. Range: 1" to 3" Dia.
**MOUNTING SADDLE**.....ABS/Nylon
**SWITCH COMPONENT ELECTRICAL RATINGS:**
**P/N 125150, 125 VAC:**.....Maximum Electrical Load: 10.0 Amps
Maximum Starting Current: 60.0 Amps
Minimum Electrical Load: 100.0 Milliamps @ 12 VAC
**P/N 125151, 125 VAC:**.....Maximum Electrical Load: 13.0 Amps
Maximum Starting Current: 78.0 Amps
Minimum Electrical Load: 100.0 Milliamps @ 12 VAC
**ELECTRICAL CONFIGURATION:**
.....Normally Open
**COLOR**.....Black
**PACKING**.....Pack Float Assembly, Clamp, Saddle & Instruction Sheet in Individual Carton.

| PART NUMBER | CORD LENGTH | TYPE INSTALLATION | CONTACTS |
|---|---|---|---|
| 125150 | 10', 20', 30' | Pipe Mounted 125 Volt | OPEN |
| 125151 | 15', 20', 30', 50' | Pipe Mounted 125 Volt | OPEN |

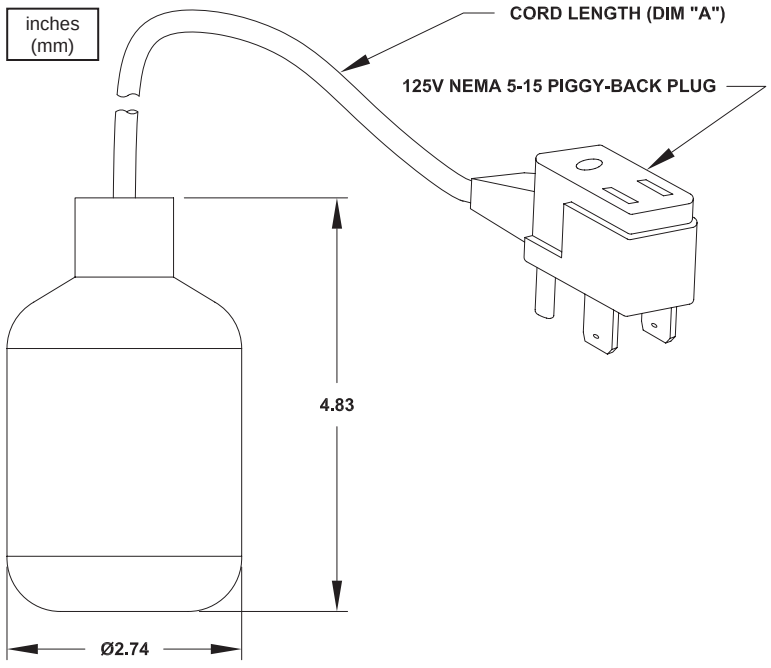


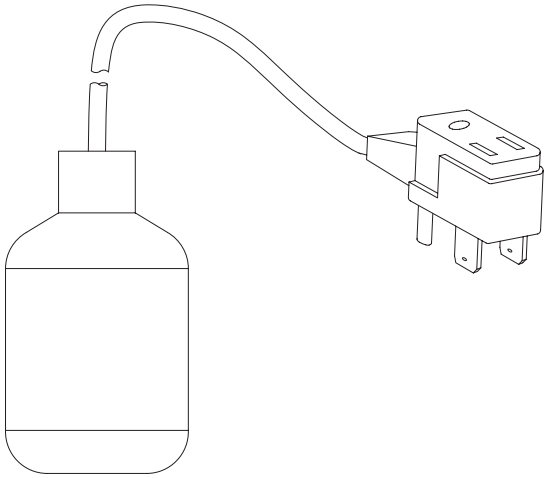

P/N: 125150
125151

**SETP Area sump pump**

# ***MAV-410***

**Publication number 001**

**June 25, 2020**



HydroTech Mining

# ***MAV-410 Specifications sheet***

| | |
|---|---|
| Discharge Diameter - inch (mm) | 4 (100) |
| Flow at rated point - USGPM (m3/h) | 264 (60) |
| Head at rated point - ft (m) | 89 (27) |
| Impeller Type | Closed Impeller |
| Max Solide Sizes - inch (mm) | NA |
| Weight - lb (kg) | 260 (118) |
| Diameter - inch (mm) | 15 (370) |
| Height - inch (mm) | 33 (835) |
| Motor size - HP (kw) | 10 (7,5) |
| Seal Type | Double Mechanical Seal |
| Mechanical Seal Cooler | Non-additive Turbine Oil (JIS No.1) |
| Oil Capacity - Gallons (L) | 0,42 (1,6) |
| Number of bearings | 2 |
| Run Dry Motor | Yes |
| Speed - RPM | 3600 |
| Voltage - V (at 60Hz) | 575 |
| Rated Current - A (at 60Hz) | 11,0 |
| Motor Service Factor | 1,0 |
| Motor Protection | NA |
| Starting Method | Direct On Line |
| Insulation Class | B |
| Service Factor | 1,0 |
| Cable length - ft (m) | 50 (16) |
| Shaft | SUS420J2 Stainless Steel |
| Pump Casing | Cast Iron |
| Impeller | High Chrome Alloy |
| Suction Cover | Cast Iron |
| Upper Bearing | 6306ZZC3 |
| Lower Bearing | 6309ZZC3 |
| Standard Connection Type | 4'' Victaulic |

# ***MAV-410 Performance Curve***

DISCH.DIA 4''

HydroTech Mining
Solutions de pompage intégrées

| | TEST LIQUID | CAPACITY (M³/H) | TOTAL HEAD (M) | SYNCHRONOUS SPEED (RPM) | SHAFT POWER (KW) | PUMP EFFICIENCY (%) |
|---|---|---|---|---|---|---|
| SPECIFICATION | WATER | 60 | 27 | 3600 | 7,5 | 61 |

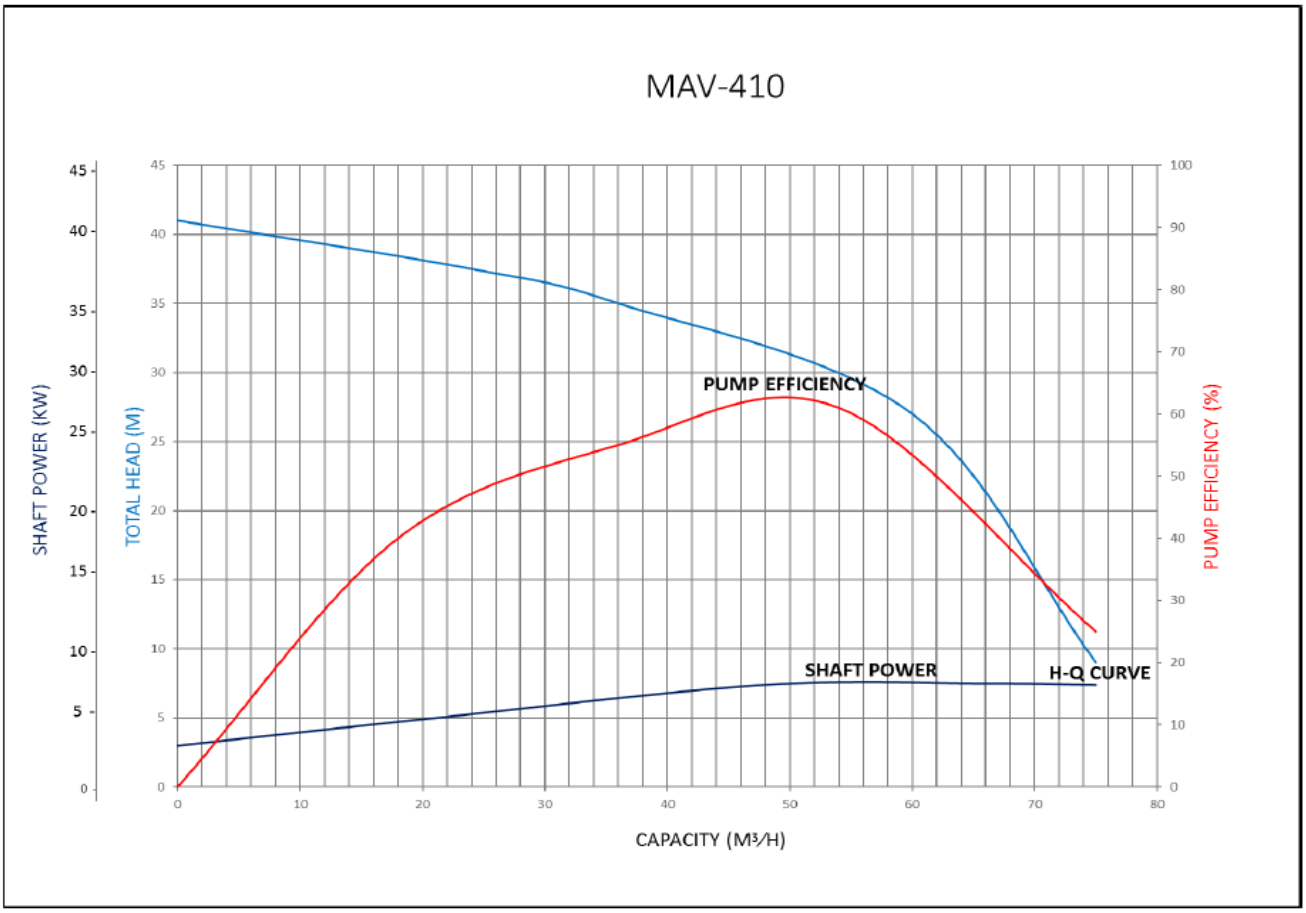

# MAV-410 Dimensions

| | |
|---|---|
| **Weight-lbs (kg) :** | 260 (118) |
| **Volume-ft³ (m³) :** | 3,187 (0,09) |

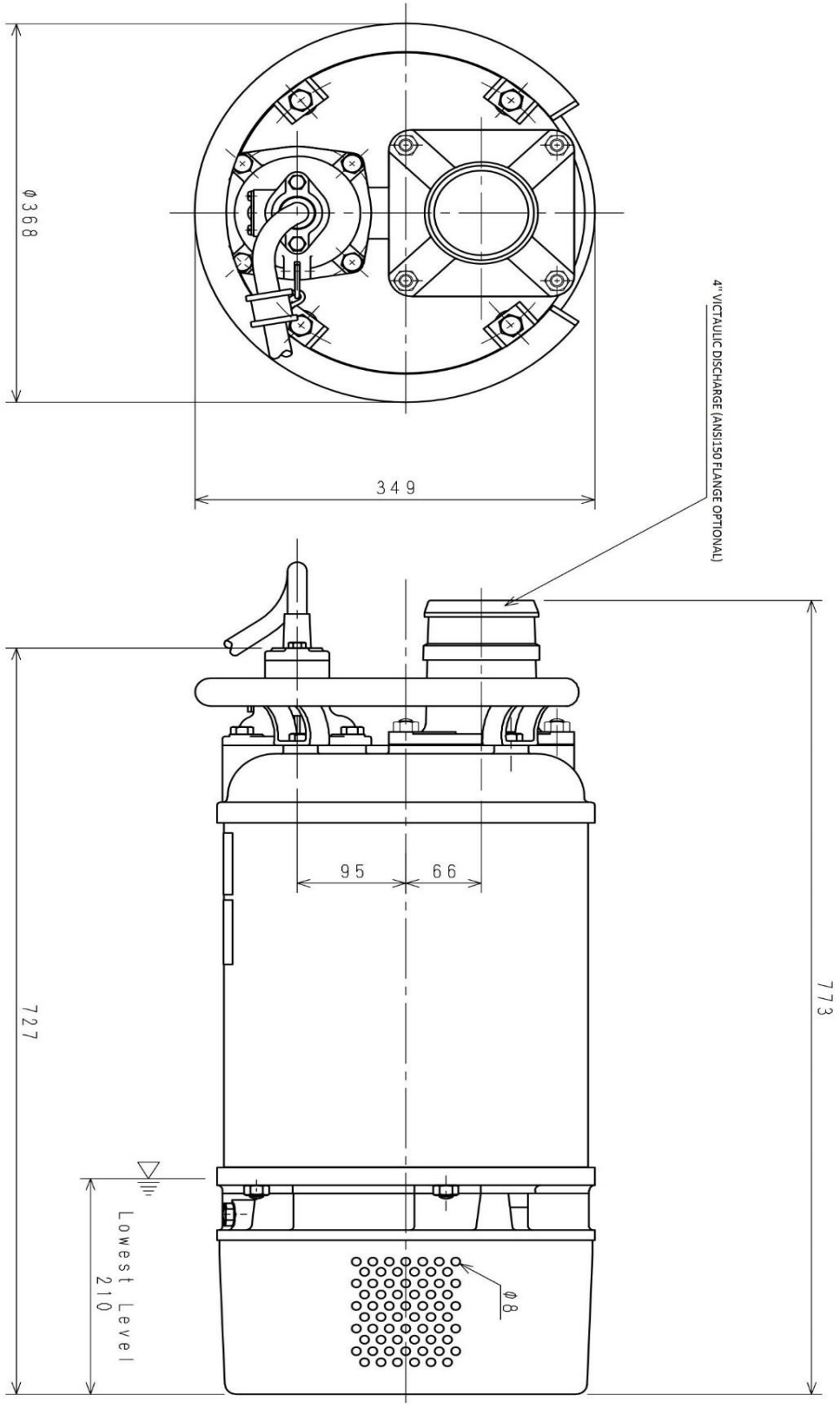

# ***MAV-410 Parts list***

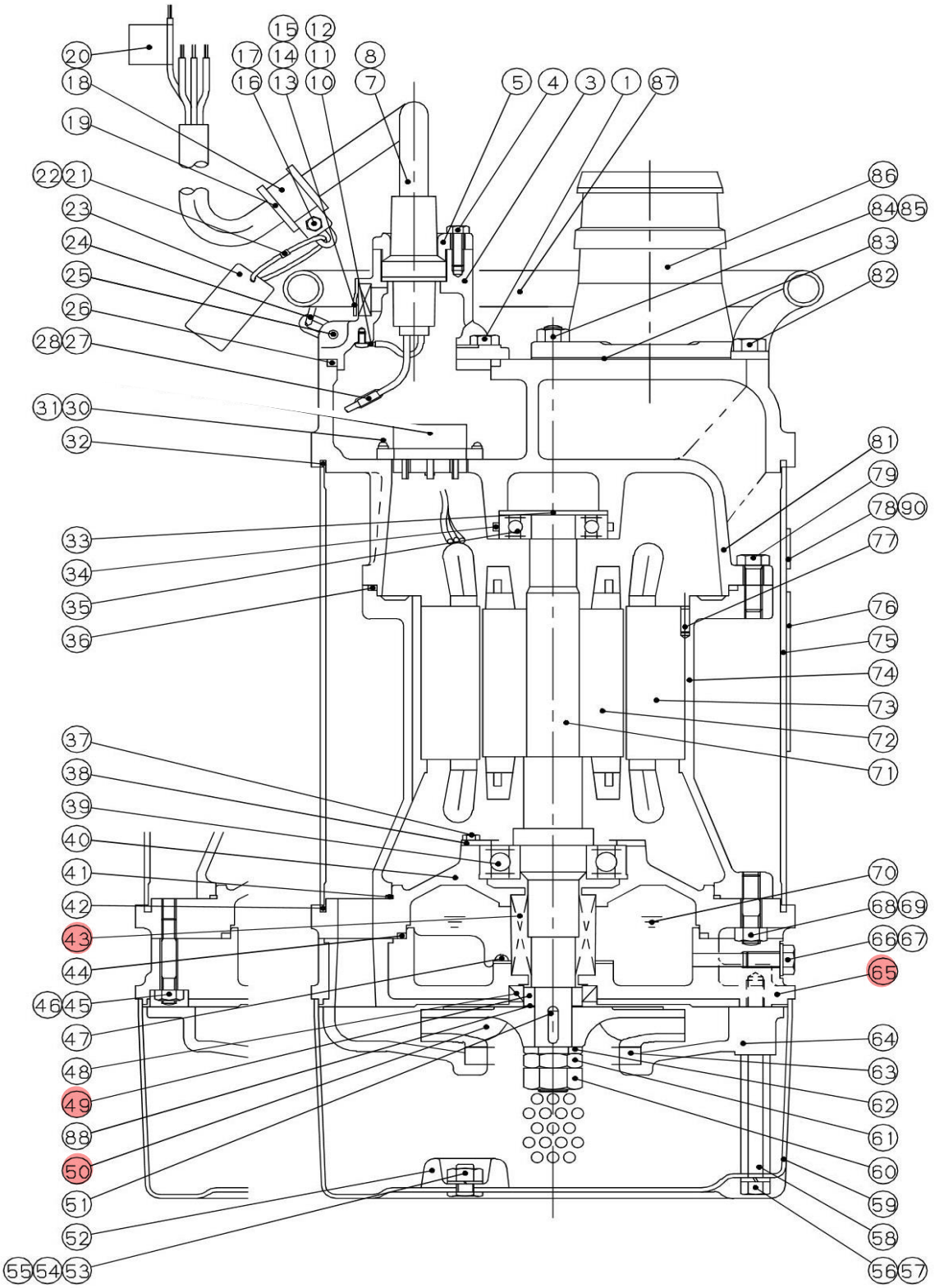

# MAV-410 Parts list

| # | Part HTM | Part Name | Material | Qty |
|---|---|---|---|---|
| 1 | **MAV-01309** | Hexagon Bolt | SUS304<br>Stainless Steel | 4 |
| 3 | **MAV-01359** | Terminal Box Cover | FC<br>Cast Iron | 1 |
| 4 | **RIP-02833** | Hexagon Bolt | SUS304<br>Stainless Steel | 2 |
| 5 | **MAV-01358** | Gland | FC<br>Cast Iron | 1 |
| 7 | **MAV-01311** | Washer | sus<br>St ainless Steel | 1 |
| 8 | **MAV-01437** | Shielded cable #12 | 2PNCTS<br>Rubber insulated flexible cables | 16 m |
| 10 | **MAV-01110** | Screw | C2700W<br>Brass | 1 |
| 11 | **MAV-01376** | Spring Washer | SUS304<br>Stainless Steel | 1 |
| 12 | **ASK** | Tip | C1020PC<br>Copper | 1 |
| 13 | **MAV-01323** | Safety Valve | | 1 |
| 14 | **MAV-01324** | Valve Cover | SUS304<br>Stainless Steel | 1 |
| 15 | **MAV-01110** | Screw | C2700W<br>Brass | 2 |
| 16 | **MAV-02863** | Hexagon Bolt | SUS304<br>Stainless Steel | 1 |
| 17 | **MAV-01172** | Hexagon Nut | SUS304<br>Stainless Steel | 1 |
| 18 | **MAV-01312** | Cable Clamp | SUS304<br>Stainless Steel | 1 |
| 19 | **MAV-01381** | Rubber Bush | Synthetic Rubber | 1 |
| 20 | **ASK** | Earth Label AE | Synthetic Resin | 1 |
| 21 | **ASK** | Wire Ring | SUS304<br>Stainless Steel | 1 |
| 22 | **ASK** | Crimping Sleeve | C1020PC<br>Copper | 1 |
| 23 | **ASK** | Caution Plate | A1050P<br>Aluminume | 1 |
| 24 | **MAV-01340** | Chain | SUS304<br>Stainless Steel | 1 |
| 25 | **MAV-01356** | Fastener Pin | SWRM<br>Mild Steel | 1 |
| 26 | **(*)** | O-ring | Synthetic Rubber | 1 |
| 27 | **ASK** | Crimping Sleeve | C1020PC<br>Copper | 3 |
| 28 | **ASK** | Insulating Sleeve | Synthetic Resin | 3 |
| 30 | **MAV-01352** | Screw | C2700W<br>Brass | 2 |
| 31 | **MAV-01327** | Washer | SPC<br>Mild Steel | 2 |
| 32 | **MAV-03069** | L Packing | Synthetic Rubber | 1 |
| 33 | **MAV-01357** | Wave Washer | SK5<br>Hard St eel | 1 |
| 34 | **(*)** | O-ring | Synthetic Rubber | 1 |
| 35 | **MAV-01005** | Bearing | 6306ZZC3<br>Ball Bearing | 1 |
| 36 | **(*)** | O-ring | Synthetic Rubber | 1 |
| 37 | **MAV-01104** | Hexagon Bolt | S25C<br>Mild Steel | 4 |
| 38 | **MAV-01105** | Bearing Cover | SPC<br>Mild Steel | 1 |
| 39 | **MAV-01287** | Bearing | 6309ZZC3<br>Ball Bearing | 1 |
| 40 | **MAV-01107** | Lower Bracke t | FC<br>Cast I on | 1 |
| 41 | **(*)** | O-ring | Synthetic Rubber | 1 |
| 42 | **MAV-03069** | L Packing | Synthetic Rubber | 1 |
| 43 | **MAV-01108** | Mechanical Seal | | 1 Set |
| 44 | **(*)** | O-ring | Synthetic Rubber | 1 |
| 45 | **MAV-01109** | Stud Bolt | SUS304<br>Stainless Steel | 4 |

RECOMMENDED SPARE PARTS

**(*) ARE INCLUDED IN THE ORING KIT**

# MAV-410 Parts list

| # | Part HTM | Part Name | Material | Qty |
|---|---|---|---|---|
| 46 | **MAV-01099** | Hexagon Nut | SUS304<br>Stainless Steel | 4 |
| 47 | **MAV-01110** | Screw | C2700W<br>Brass | 3 |
| 48 | **MAV-01111** | Oil Seal | Synthetic Rubber | 1 |
| 49 | **MAV-01112** | Shaft Sleeve | SUS304<br>Stainless Steel | 1 |
| 50 | **MAV-01113** | Impeller (60Hz) | High Chrome Alloy | 1 |
| 51 | **MAV-01114** | Impeller Key | sus<br>Stainless Steel | 1 |
| 52 | **MAV-01091** | Sacrificial Anode | Aluminum Alloy | 1 |
| 53 | **MAV-01092** | Hexagon Bolt | S25C<br>Mild Steel | 2 |
| 54 | **MAV-01053** | Hexagon Nut | SUS304<br>Stainless Steel | 2 |
| 55 | **MAV-01022** | Spring Washer | SUS304<br>Stainless Steel | 2 |
| 56 | **MAV-01053** | Hexagon Nut | SUS304<br>Stainless Steel | 4 |
| 57 | **MAV-01022** | Spring Washer | SUS304<br>Stainless Steel | 4 |
| 58 | **MAV-01116** | Strainer Bolt | sus<br>Stainless Steel | 4 |
| 59 | **MAV-01117** | Strainer | SPC<br>Mild Steel | 1 |
| 60 | **MAV-01118** | Hexagon Nut | SUS304<br>Stainless Steel | 1 |
| 61 | **MAV-01119** | Hexagon Nut | SUS304<br>Stainless Steel | 1 |
| 62 | **MAV-01120** | Impeller Washer | sus<br>Stainless Steel | 1 |
| 63 | **MAV-01121** | Mouth Ring | High Chrome Alloy | 1 |
| 64 | **MAV-01122** | Casing | FCD<br>Ductile Cast Iron | 1 |
| 65 | **MAV-01123** | Casing Cover | FC<br>Cast Iron/ Synthetic Rubber | 1 |
| 66 | **MAV-01097** | Hexagon Bolt | SUS304<br>Stainless Steel | 1 |
| 67 | **MAV-01098** | Seal Washer | SUS+<br>Stainless Steel+Synthetic Rubber | 1 |
| 68 | **MAV-03075** | Stud Bolt | SUS304<br>Stainless Steel | 4 |
| 69 | **MAV-01124** | Hexagon Nut | SUS304<br>Stainless Steel | 4 |
| 70 | **ASK** | Lubricant | Turbine Oil | 1,6 L |
| 71 | **MAV-03548** | Motor Shaft | SUS420J2<br>Stainless Steel | 1 |
| 72 | | Rotor | | 1 |
| 73 | **MAV-03547** | Stator 575V | | 1 |
| 74 | **MAV-01377** | Motor Frame | FC<br>Cast Iron | 1 |
| 75 | **MAV-01378** | Out Cover | SPC<br>Mild Steel | 1 |
| 76 | **ASK** | Name Plate | Tetron | 1 |
| 77 | **MAV-01356** | Fastener Pin | SWRM<br>Mild Steel | 1 |
| 78 | **ASK** | Caution Label AE | Synthetic Resin | 1 |
| 79 | **MAV-01143** | Hexagon Bolt | SUS304<br>Stainless Steel | 4 |
| 81 | **MAV-01382** | Upper Bracket | FC<br>Cast Iron | 1 |
| 82 | **MAV-01097** | Hexagon Bolt | SUS304<br>Stainless Steel | 4 |
| 83 | **MAV-03091** | Packing | Cork | 1 |
| 84 | **MAV-03080** | Stud Bolt | SUS304<br>Stainless Steel | 4 |
| 85 | **MAV-01124** | Hexagon Nut | SUS304<br>St ainless Steel | 4 |
| 86 | **MAV-02943** | 4'' Victaulic discharge | FC<br>Cast Iron | 1 |
| 87 | **MAV-01379** | Handle | SGP<br>Mild Steel | 1 |
| 88-1 | **MAV-01263** | Impeller Collar | SUS304<br>Stainless Steel | |

RECOMMENDED SPARE PARTS

(*) ARE INCLUDED IN THE ORING KIT

# MAV-410 Parts list

| # | Part HTM | Part Name | Material | Qty |
|---|---|---|---|---|
| 88-2 | **MAV-01264** | Impeller Collar | SUS304<br>Stainless Steel | |
| 88-3 | **MAV-01265** | Impeller Collar | SUS304<br>Stainless Steel | |
| 90 | **ASK** | I.P.Seal | Tetron | 1 |
| 901 | **MAV-01126** | Packing & O-ring Set | | 1 |
| 902 | **ASK** | Discharge Pipe With Flange | FC<br>Cast Iron | 1 |
| 903 | **MAV-01380** | Rubber Sleeve | Synthetic Rubber | 1 |

RECOMMENDED SPARE PARTS

**(*) ARE INCLUDED IN THE ORING KIT**

**SETP Feed pump**

# Electric Motor Driven
# Submersible Pump
## Model GRP-38521
## Size 12”

Certified in Canada

CERTIFIED PERFORMANCE
CONTRACTORS PUMP BUREAU cpb
The manufacturer of this pump certifies that it was manufactured in accordance with the standards of the Contractors Pump Bureau.

**PUMP SPECIFICATIONS**
**Diffuser:** Ductile Iron 80-60-03.
Maximum Operating Pressure 90 psi (621 kPa).*
**Impeller:** Ductile Iron 60-40-18.
**Suction Head**: Gray Iron 30.
**Wear Ring**: Copper Alloy C93200.
**Motor Housing:** Aluminum Alloy 356-T6.
**Intermediate Bracket:** Aluminum Alloy 356-T6.
**Seal Plate:** Gray Iron 30.
**Motor Shaft:** Stainless Steel 17-4 PH.
**Bearings:** Upper, Open Single Row Ball.
Lower, Sealed Double Row Ball.
**Discharge Flange**: Gray Iron 30.
**Gaskets:** Cork w/Nitrile Binder (NC710) and Vegetable Fiber.
**O-Ring:** Buna-N
**Wetted Hardware:** Standard Plated Steel and Stainless Steel.
**Strainer:** Urethane Coated Steel; 60% Open Area,
1.00” (25,4 mm) Square Openings.
**Hoisting Eye Bolts:** Urethane Coated Steel.
**Standard Equipment:**
**NEMA Type 3R Rainproof Control Box.** Provides On-Off, Circuit Breaker and Motor Overload Protection. (See Section 130, Page 100.)
**Staging Adapter.**
**Optional Equipment**
**Liquid Level Control:** (See Sec. 130, Page 150.)
a. Turtle Type Pressure Activated Level Switch.
b. Float Activated Level Switch.

**MOTOR/CABLE SPECIFICATIONS**
**Motor:** Oil Filled Enclosure; 140 H.P.; 1750 R.P.M.; Three Phase: 460/575 Volt, 60 Hz, 171/137 Full Load Amps, 117 kW (Max.)
**Power Cable:** 6 Wire; Type GGC;
**(460V)** 2/0 AWG 3 Power Conductors, 2 Ground Conductors and 1 Ground Check.
**(575V)** 1 AWG; 3 Power Conductors, 2 Ground Conductors and 1 Ground Check.
Nominal Length 50 Feet (15 m) Standard.
(*Specify Alternate Length at Time of Order.*)
**Recommended Generator Size:** 200 kW Across the Line Start, 150 kW for Reduced Voltage Starting.
*.* Consult Factory for Applications Exceeding Maximum Pressure and/or Temperature Indicated.*

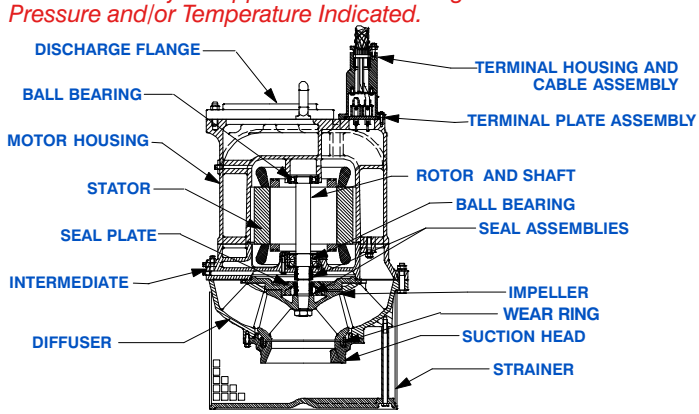




**WARNING!**
**Do not use in explosive atmosphere or for pumping volatile flammable liquids.**

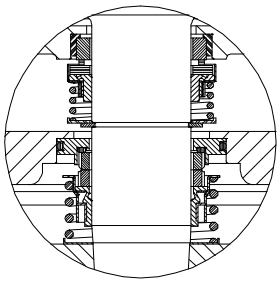

**SEAL DETAILS**
Tandem, Oil Lubricated.

**Upper Seal:** Type 21, Mechanical. Carbon Rotating Face. Ni-Resist Stationary Face. Buna-N Elastomers. Stainless Steel 18-8 Cage and Spring.

**Lower Seal:** Type 2, Mechanical. Tungsten Titanium Carbide Rotating and Stationary Faces. Stainless Steel 316 Stationary Seat. Fluorocarbon Elastomers (DuPont Viton® or Equivalent). Stainless Steel 18-8 Cage and Spring.

Maximum Temperature of Liquid Pumped,122°F (50°C).*



**Specifications Subject to Change Without Notice**

| Specification Data | APPROXIMATE DIMENSIONS and WEIGHTS | NET WEIGHT: 1485 LBS. (674 KG.)<br>SHIPPING WEIGHT: 1840 LBS. (835 KG.)<br>EXPORT CRATE: 58 CU. FT. (1,6 CU. M.) |
|---|---|---|
| SECTION 130, PAGE 1700C | | |

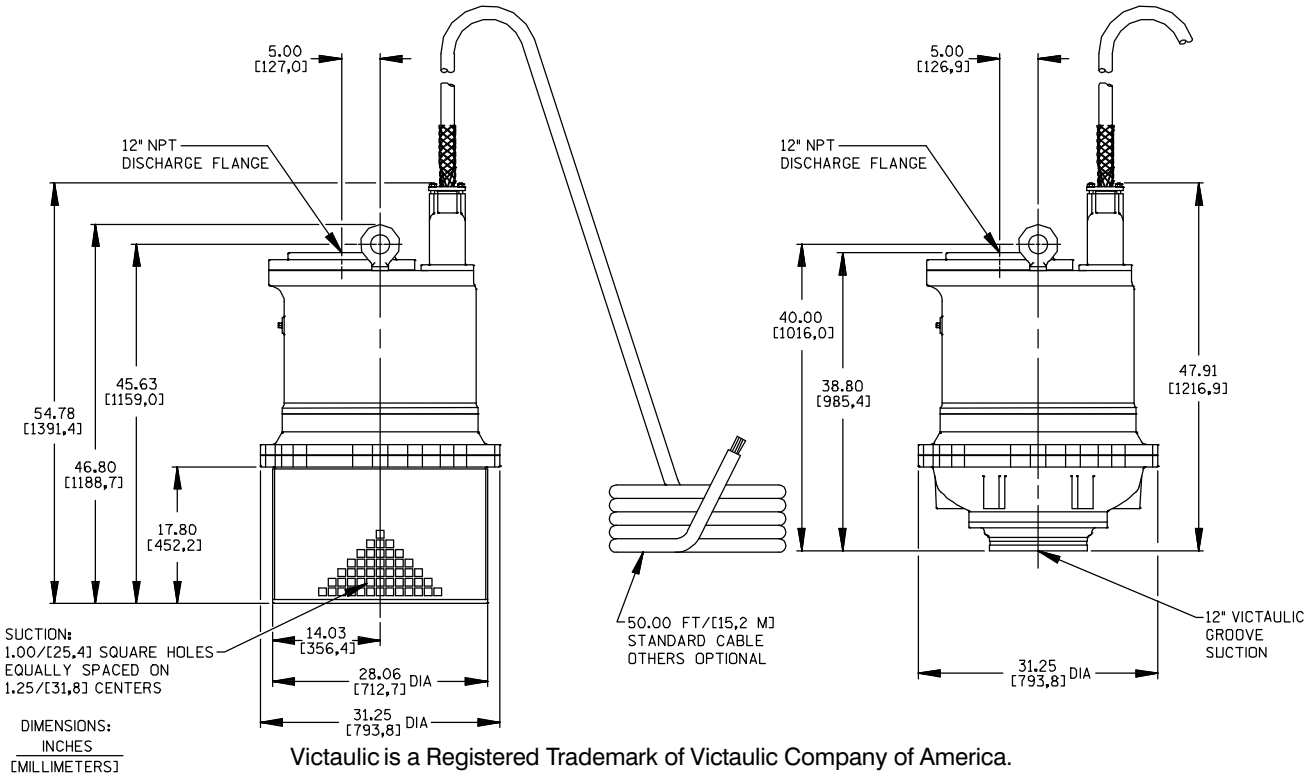


Victaulic is a Registered Trademark of Victaulic Company of America.

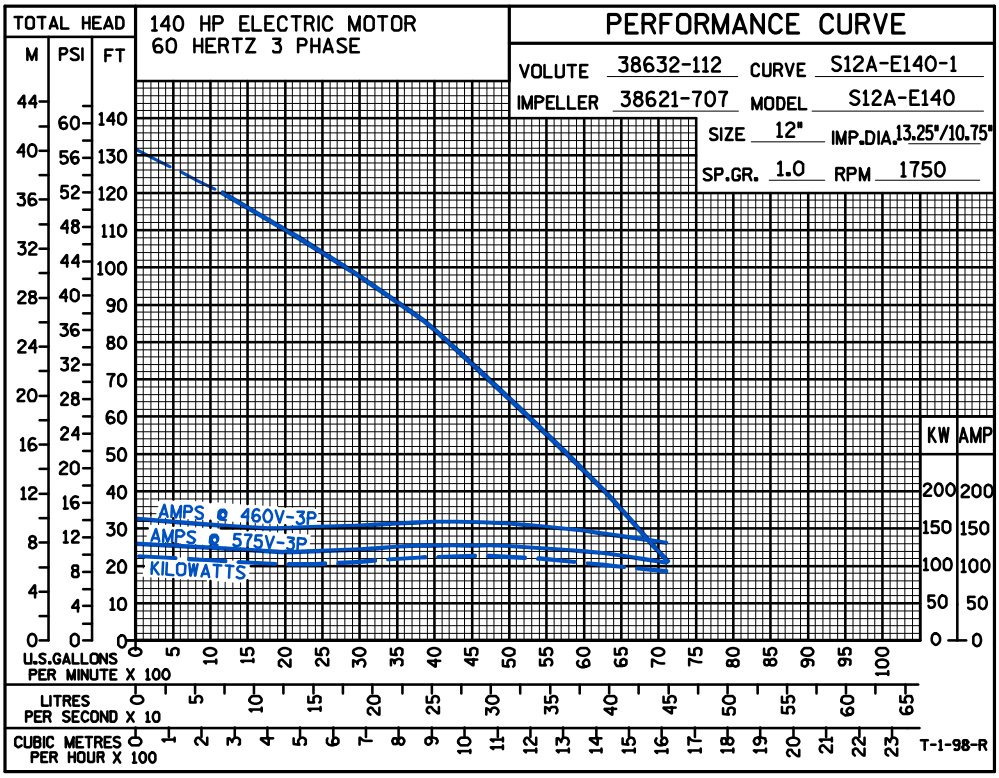


HydroTech Mining
Organized dewatering solutions

# INSTALLATION AND OPERATION

**SUBMERSIBLE PUMP MODEL GRP-38521 (OPP21-023)**



HydroTech Mining

**UPDATE : FEB 2022**

# INTRODUCTION

**Thank You** for purchasing a Gorman-Rupp S Series Pump. **Read this manual** carefully to learn how to safely install and operate your pump. Failure to do so could result in personal injury or damage to the pump.

A set of three manuals accompanies your pump. Each set consists of three parts; the Installation/ Operation Manual contains essential information on installing and operating the pump, and on making electrical connections. However, since pump installations are seldom identical, some of the information only summarizes general recommendations and practices required to inspect, position, and arrange the pump and piping.

The Parts List Manual provides performance curve(s), a pump model cross-section drawing, and parts list for your pump.

The Maintenance and Repair Manual provides troubleshooting and maintenance instructions required to properly diagnose operational problems, and to service the pump hydraulic components. Pump motor maintenance may be performed **only** by a Gorman-Rupp authorized repair facility, or the factory. Otherwise, the pump warranty will be negated, and damage to the pump, and injury or death to personnel can result. Contact the factory for the authorized repair facility closest to you.

The integral electric motor must be operated through the control box furnished with the pump as standard equipment. If the motor is dual-voltage, the pump is shipped from the factory wired **only** for the voltage shown on the nameplate. If desired to have the voltage changed, return the pump to the factory or to a Gorman-Rupp authorized submersible repair facility.

The pump motor **must** be operated through an appropriate control box matching the voltage, phase and other characteristics of the motor. The control box must be approved by Gorman-Rupp for the application and environment intended, and must also provide for proper operation of the motor protection devices, such as the integral moisture and thermal switches. Control boxes and other control devices not integral to the pump are **no**t covered in this manual.

Pump construction may be aluminum with ductile iron or steel wearing parts, or stainless steel fitted, or completely stainless steel. The pump may be operated fully or partially submerged. Neither the pump nor the control box are explosion-proof, and should not be operated in a hazardous atmosphere.

Because pump installations are seldom identical, this manual cannot possibly provide detailed instructions and precautions for every aspect of each specific application. Therefore, it is the responsibility of the owner/installer of the pump to ensure that applications not addressed in this manual are performed **only** after establishing that neither operator safety nor pump integrity are compromised by the installation. Pumps and related equipment **must** be installed and operated according to all national, local and industry standards.

If there are any questions regarding the pump which are not covered in this manual or in other literature accompanying the unit, please contact your Gorman-Rupp distributor or the Gorman-Rupp Company**.**

## CONTENTS

**SAFETY — SECTION A**
**INSTALLATION — SECTION B**
GENERAL INFORMATION . . . . . PAGE B — 1
PREINSTALLATION INSPECTION . . . . . PAGE B — 1
LUBRICATION . . . . . PAGE B — 1
MOTOR SPECIFICATIONS . . . . . PAGE B — 2
PUMP INSTALLATION . . . . . PAGE B — 10

ELECTRICAL CONNECTIONS . . . . . PAGE B – 11
**OPERATION – SECTION C**
GENERAL INFORMATION . . . . . PAGE C – 1
PUMP OPERATION . . . . . PAGE C – 1
STARTING, STOPPING, AND OPERATIONAL CHECKS . . . . . PAGE C – 3
COLD WEATHER PRESERVATION . . . . . PAGE C – 4
LUBRICATION . . . . . PAGE C – 4

## RECORDING MODEL AND SERIAL NUMBERS

Please record the pump model, serial number, voltage, and motor frame size in the spaces provided below. Your Gorman-Rupp distributor needs this information when you require parts or service.

Pump Model: _____

Serial Number: _____

Voltage: _____

Phase: _____

## WARRANTY INFORMATION

The warranty provided with your pump is part of Gorman-Rupp's support program for customers who operate and maintain their equipment as described in this and the other accompanying literature. Please note that should the equipment be abused or modified to change its performance beyond the original factory specifications, the warranty will become void and any claim will be denied.

The following are used to alert personnel to procedures which require special attention, to those which could damage equipment, and to those which could be dangerous to personnel:

**DANGER!**

**Immediate hazards which WILL result in severe personal injury or death. These instructions describe the procedure required and the injury which will result from failure to follow the procedure.**

**WARNING!**

**Hazards or unsafe practices which COULD result in severe personal injury or death. These instructions describe the procedure required and the injury which could result from failure to follow the procedure.**

**CAUTION**

Hazards or unsafe practices which COULD result in minor personal injury or product or property damage. These instructions describe the requirements and the possible damage which could result from failure to follow the procedure.

**NOTE**

*Instructions to aid in installation, operation, and maintenance or which clarify a procedure*.

# SAFETY — SECTION A

**This information applies to the S Series submersible motor driven pumps and control boxes.**

**Because pump installations are seldom identical, this manual cannot possibly provide detailed instructions and precautions for each specific application. Therefore, it is the owner/installer's responsibility to ensure that applications not addressed in this manual are performed only after establishing that neither operator safety nor pump integrity are compromised by the installation.**

## WARNING!

**Before attempting to open or service the pump:**

1. **Familiarize yourself with this manual.**
2. **Lock out incoming power to the control box to ensure that the pump will remain inoperative.**
3. **Allow the pump to completely cool if overheated.**
5. **Close the discharge valve (if used).**

## WARNING!

**This pump is not designed to pump volatile, explosive, or flammable materials. Do not attempt to pump any liquids for which you pump is not approved, or which may damage the pump or endanger personnel as a result of pump failure. Consult the factory for specific application data.**

## WARNING!

**Before connecting any cable to the control box, be sure to ground the control box. Refer to the Control Box Manual for the suggested grounding methods.**

## WARNING!

**The pump motor is designed to be operated through the control box furnished with the pump. The control box provides overload protection and power control. Do not connect the pump motor directly to the incoming power lines.**

## WARNING!

**The electrical power used to operate this pump is high enough to cause injury or death. Obtain the services of a qualified electrician to make all electrical connections. Make certain that the pump and enclosure are properly grounded; never use gas pipe as an electrical ground. Be sure that the incoming power matches the voltage and phase of the pump and control before connecting the power source. Do not run the pump if the voltage is not within the limits. If the overload unit is tripped during pump operation, correct the problem before restarting the pump.**

## WARNING!

**The electrical power used to operate this pump is high enough to cause injury or death. Make certain that the control handle on the control box is in the OFF**

position and locked out, or that the power supply to the control box has been otherwise cut off and locked out, before attempting to open or service the pump assembly. Tag electrical circuits to prevent accidental start-up.

**WARNING!**

Never attempt to alter the length or repair any power cable with a splice. The pump motor and cable must be completely waterproof. Injury or death may result from alterations.

**WARNING!**

All electrical connections must be in accordance with The National Electric Code and all local codes. If there is a conflict between the instructions provided and N.E.C. Specifications, N.E.C. Specifications shall take precedence. All electrical equipment supplied with this pump was in conformance with N.E.C. requirements in effect on the date of manufacture. Failure to follow applicable specifications, or substitution of electrical parts not supplied or approved by the manufacturer, can result in severe injury or death and void warranty.

**WARNING!**

Death or serious personal injury and damage to the pump or components can occur if proper lifting procedures are not observed. Make certain that hoists, chains, slings or cables are in good working condition and of sufficient capacity and that they are positioned so that loads will be balanced and the pump or components will not be damaged when lifting. Do not attempt to lift this pump by the motor or control cables, or the piping. Attach proper lifting equipment to the lifting bail fitted on the pump. Lift the pump or component only as high as necessary and keep personnel away from suspended objects.

**WARNING!**

After the pump has been installed, make certain that the pump and all piping or hose connections are secure before operation.

**WARNING!**

Obtain the services of a qualified electrician to troubleshoot, test and/or service the electrical components of this pump.

**WARNING!**

Approach the pump cautiously after it has been running. Although the motor is cooled by the liquid being pumped, normal operating temperatures can be high enough to cause burns. The temperature will be especially high if operated against a closed discharge valve. Never operate against a closed discharge valve for long periods of time.

**WARNING!**

Do not remove plates, covers, gauges, pipe plugs, or fittings from an overheated pump. Vapor pressure within the pump can cause parts being disengaged to be ejected with great force. Al-

**low the pump to completely cool before servicing.**




**Do not attempt to lift the pump by the motor power cable or the piping. Attach proper lifting equipment to the lifting device fitted to the pump. If chains or cable are wrapped around the pump to lift it, make certain that they are positioned so as not to damage the pump, and so that the load will be balanced.**




Pumps and related equipment must be installed and operated according to all national, local and industry standards.

# INSTALLATION — SECTION B

## GENERAL INFORMATION

**Review all SAFETY information in Section A.**

Since pump installations are seldom identical, this section is intended only to summarize general recommendations and practices required to inspect, position, and arrange the pump and piping. If there are any questions concerning your specific installation, contact your Gorman-Rupp distributor or the Gorman-Rupp Company.

Liquid level devices are available from Gorman-Rupp as optional equipment. For information on installing and operating these items, refer to the literature accompanying them.

**Pump Model Designation**

Following is a description of the model numbering system for S Series pumps. These submersible pumps are available in a range of sizes. Refer to the following chart to identify the size for your specific pump model.

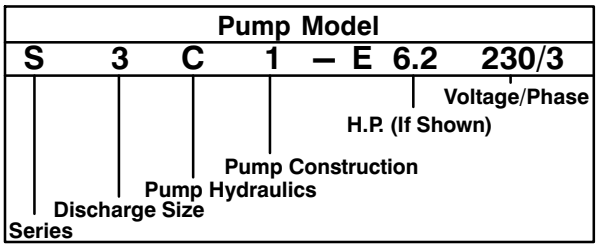


## PREINSTALLATION INSPECTION

The pump assembly was inspected and tested before shipment from the factory. Before installation, check for damage which may have occurred during shipment. Check as follows:

a. Inspect the pump assembly for cracks, dents, damaged threads, and other obvious damage.

b. Check for loose attaching hardware. Since gaskets tend to shrink after drying, check for loose hardware at the mating surfaces.

c. Inspect the power cable for cuts or any other obvious damage.

d. Check that amperes, phase, voltage and hertz indicated on the name plate match the ratings on the control box and incoming power.

e. Carefully read all tags, decals, and markings on the pump, and perform all duties indicated.

f. Check for oil leaks. If there is any indication of an oil leak, see **LUBRICATION** at the end of this manual.

## PUMP SEAL

S Series pumps utilize one of the following sealing methods.

1. There are two shaft seals in the pump. The lower seal prevents liquid from entering the intermediate cavity at the impeller end. The upper seal prevents oil leakage from the motor housing cavity and acts as back-up protection in the event of lower seal failure.

2. The pump is equipped with one double-faced seal assembly. It is designed to prevent the liquid being pumped from entering the intermediate cavity at the impeller end, and to prevent moisture from entering the motor housing cavity at the motor end.

Regardless of which sealing method is used, the seal is lubricated by premium quality submersible pump oil.

## LUBRICATION

S series pumps are lubricated in one of the following methods.

1. Some pumps utilize two lubrication cavities. The motor housing cavity provides lubrication to the motor assembly and bearings, while the intermediate cavity provides lubrication to the pump seal.

2. Some pumps utilize one lubrication cavity, located just behind the seal plate. It is filled with premium quality submersible pump oil which lubricates the pump seal. The motor operates in and is cooled by air, therefore it requires no lubrication.

All S Series pumps are fully lubricated when shipped from the factory. However, lubrication levels **must be checked** before installing the pump

(see **LUBRICATION** in the **MAINTENANCE AND REPAIR MANUAL**). An additional quart (0,9 liter) of oil is provided to "top off" the oil level in the pump motor cavity, if so required. If the oil level is abnormally low, determine the cause before putting the pump into service.

Due to differences in pump design, the quantity of oil and manner in which oil is to be added to the seal cavity varies between pump models. Refer to Table B-2 for oil capacities and positions for filling the seal cavity in each pump. Motor cavities requiring lubrication should always be positioned vertically for filling. Refer to **LUBRICATION**, Section C for lubrication specifications and intervals.

## PUMP INSTALLATION

### Pump Motor Specifications

See Table B-1 for pump specifications.

**Table B-1. Pump Specifications**

| Model | Voltage/ Phase | Dual Voltage | Pump HP/ KW | Motor Speed (RPM) | Full Load Amperes | No Load Amperes | Locked Rotor Amperes | Discharge Size (NPT) |
|---|---|---|---|---|---|---|---|---|
| S2A | 115/1 | NO | 2 HP | 3450 | 28 | 14 | 82 | 2 INCH |
| | 230/1 | | | | 14 | 7 | 44 | |
| S2B | 115/1 | NO | 2 HP | 3450 | 28 | 9 | 85 | 2 INCH |
| | 230/1 | YES | | | 12 | 4.2 | 38 | |
| | 200/3 | NO | | | 8.3 | 4.6 | 57.5 | |
| | 230/3 | YES | | | 7.2 | 4 | 50 | |
| | 460/3 | | | | 3.6 | 2 | 25 | |
| | 575/3 | NO | | | 2.9 | 1.6 | 20 | |
| | 380/3 | NO | 1.4 KW | 2900 | 2.5 | 2 | 25 | |
| S2E | 200/3 | NO | 3.5 HP | 3450 | 10.4 | 1.8 | 23 | 2 INCH |
| | 230/3 | YES | | | 9.0 | 4 | 50 | |
| | 460/3 | | | | 4.5 | 2 | 25 | |
| | 575/3 | NO | | | 3.6 | 1.6 | 20 | |
| | 380/3 | NO | 1.4 KW | 2900 | 3.8 | 2 | 25 | |
| S2F | 115/1 | YES | 1 HP | 3450 | 15 | 9.7 | 54 | 2 INCH |
| | 230/1 | | | | 7.5 | 4.9 | 36 | |
| | 200/3 | NO | | | 5 | 3.7 | 24 | |
| | 230/3 | YES | | | 4.3 | 3.2 | 21 | |
| | 460/3 | | | | 2.2 | 1.6 | 10.5 | |
| | 575/3 | NO | | | 1.8 | 1.3 | 8.4 | |
| | 110/1 | YES | 1.1 KW | 2900 | 12 | 9.8 | 54 | |
| | 220/1 | | | | 6 | 5.6 | 36 | |
| | 380/3 | NO | | | 1.8 | 1.5 | 10.5 | |
| S3A | 230/1 | NO | 5 HP | 3450 | 28 | 5 | 125 | 2 INCH |
| | 200/3 | NO | | | 18 | 9 | 75 | |

**Table B-1. Pump Specifications (continued)**

| Model | Voltage/ Phase | Dual Voltage | Pump HP/ KW | Motor Speed (RPM) | Full Load Amperes | No Load Amperes | Locked Rotor Amperes | Discharge Size (NPT) |
|---|---|---|---|---|---|---|---|---|
| S3A | 230/3 | YES | 5 HP | 3450 | 16 | 8 | 65 | 3 INCH |
| | 460/3 | | | | 8 | 4 | 35 | |
| | 575/3 | NO | | | 6.5 | 3.2 | 28 | |
| | 380/3 | NO | 3 KW | 2900 | 5.4 | 3.5 | 35 | |
| S3B | 230/1 | NO | 6 HP | 3450 | 34 | 8 | 95 | 3 INCH |
| | 200/3 | NO | | | 26.5 | 13.8 | 115 | |
| | 230/3 | YES | | | 23 | 12 | 100 | |
| | 460/3 | | | | 11.5 | 6 | 50 | |
| | 575/3 | NO | | | 9.2 | 4.8 | 40 | |
| | 380/3 | NO | 4 KW | 2900 | 12.4 | 6 | 50 | |
| S3C | 230/1 | NO | 6 HP | 3450 | 34 | 8 | 95 | 3 INCH |
| | 200/3 | NO | | | 26.5 | 13.8 | 115 | |
| | 230/3 | YES | | | 23 | 12 | 100 | |
| | 460/3 | | | | 11.5 | 6 | 50 | |
| | 575/3 | NO | | | 9.2 | 4.8 | 40 | |
| | 380/3 | NO | 4 KW | 2900 | 8 | 6 | 50 | |
| S3D | 230/1 | NO | 5 HP | 3450 | 28 | 5 | 125 | 3 INCH |
| | 200/3 | NO | | | 18 | 9 | 75 | |
| | 230/3 | YES | | | 16 | 8 | 65 | |
| | 460/3 | | | | 8 | 4 | 35 | |
| | 575/3 | NO | | | 6.5 | 3.2 | 28 | |
| | 380/3 | NO | 3 KW | 2900 | 5.4 | 4 | 35 | |
| S4A | 230/3 | NO | 25 HP | 1750 | 160 | 10 | 204 | 4 INCH |
| | 460/3 | | | | 30 | 5 | 102 | |
| | 575/3 | | | | 24 | 4 | 82 | |
| | 380/3 | | 12 KW | 1450 | 21 | 5 | 102 | |
| S4B | 230/3 | NO | 50 HP | 1750 | 124 | 30 | 400 | 4 INCH |
| | 460/3 | | | | 62 | 15 | 200 | |
| | 575/3 | | | | 50 | 12 | 160 | |
| | 380/3 | | 25 KW | 1450 | 46 | 11 | 137 | |
| S4C | 200/3 | NO | 10 HP | 3450 | 39 | 8 | 170 | 4 INCH |
| | 230/3 | YES | | | 34 | 7 | 148 | |

**Table B-1. Pump Specifications (continued)**

| Model | Voltage/ Phase | Dual Voltage | Pump HP/ KW | Motor Speed (RPM) | Full Load Amperes | No Load Amperes | Locked Rotor Amperes | Discharge Size (NPT) |
|---|---|---|---|---|---|---|---|---|
| S4C | 460/3 | YES | 10 HP | 3450 | 17 | 3.5 | 74 | 4 INCH |
| | 575/3 | NO | | | 13.6 | 2.8 | 60 | |
| | 380/3 | NO | 6.7 KW | 2900 | 11.5 | 3.5 | 74 | |
| S4D | 200/3 | NO | 10 HP | 3450 | 39 | 8 | 170 | 4 INCH |
| | 230/3 | YES | | | 34 | 7 | 148 | |
| | 460/3 | | | | 17 | 3.5 | 74 | |
| | 575/3 | NO | | | 13.6 | 2.8 | 60 | |
| | 380/3 | NO | 6.7 KW | 2900 | 11.5 | 3.5 | 74 | |
| S4E | 460/3 | NO | 20 HP | 3450 | 26 | 4.4 | 170 | 4 INCH |
| | 575/3 | | | | 20.8 | 3.5 | 136 | |
| S4F | 460/3 | NO | 20 HP | 3450 | 26 | 4.4 | 170 | 4 INCH |
| | 575/3 | | | | 20.8 | 3.5 | 136 | |
| S4G | 460/3 | NO | 30 HP | 3450 | 38.5 | 7.5 | 213 | 4 INCH |
| | 575/3 | | | | 30.8 | 6 | 170 | |
| S4H | 200/3 | NO | 10 HP | 3450 | 39 | 8 | 276 | 4 INCH |
| | 230/3 | YES | | | 34 | 7 | 240 | |
| | 460/3 | | | | 17 | 3.5 | 120 | |
| | 575/3 | NO | | | 13.6 | 2.8 | 96 | |
| | 380/3 | YES | 6.7 KW | 2900 | 11.5 | 3.5 | 145 | |
| S4J | 460/3 | NO | 60 HP | 3450 | 66 | 11 | 500 | 4 INCH |
| | 575/3 | | | | 52.8 | 8.8 | 400 | |
| S4K | 460/3 | NO | 15 HP | 3450 | 17 | 3.5 | 100 | 4 INCH |
| | 575/3 | | | | 13.6 | 2.8 | 80 | |
| S6A | 230/3 | NO | 60 HP | 1750 | 130 | 30 | 574 | 6 INCH |
| | 460/3 | | | | 65 | 15 | 287 | |
| | 575/3 | | | | 52 | 12 | 230 | |
| | 380/3 | | 26 KW | 1450 | 47 | 12 | 200 | |
| S6B | 230/3 | NO | 95 HP | 1750 | 210 | 70 | 930 | 6 INCH |
| | 460/3 | | | | 105 | 35 | 465 | |
| | 575/3 | | | | 84 | 28 | 372 | |
| | 380/3 | | 41 KW | 1450 | 76 | 20 | 287 | |
| | 500/3 | | | | 58 | 15 | 264 | |

**Table B-1. Pump Specifications (continued)**

| Model | Voltage/ Phase | Dual Voltage | Pump HP/ KW | Motor Speed (RPM) | Full Load Amperes | No Load Amperes | Locked Rotor Amperes | Discharge Size (NPT) |
|---|---|---|---|---|---|---|---|---|
| S6C | 230/3 | NO | 35 HP | 1750 | 80 | 14 | 274 | 6 INCH |
| | 460/3 | | | | 40 | 7 | 137 | |
| | 575/3 | | | | 32 | 5.5 | 110 | |
| | 380/3 | | 15 KW | 1450 | 28 | 6 | 102 | |
| S6D | 460/3 | NO | 30 HP | 3450 | 38.5 | 7.5 | 213 | 6 INCH |
| | 575/3 | | | | 30.8 | 6 | 170 | |
| S6E | 460/3 | NO | 60 HP | 3450 | 66 | 11 | 500 | 6 INCH |
| | 575/3 | | | | 52.8 | 8.8 | 400 | |
| S8A | 230/3 | NO | 95 HP | 1750 | 210 | 70 | 930 | 8 INCH |
| | 460/3 | | | | 105 | 35 | 465 | |
| | 575/3 | | | | 84 | 28 | 372 | |
| | 380/3 | | 44 KW | 1450 | 82 | 20 | 287 | |
| S8B | 460/3 | NO | 100 HP | 1750 | 125 | 35 | 465 | 8 INCH |
| | 575/3 | | | | 100 | 28 | 372 | |
| | 380/3 | | 51 KW | 1450 | 96 | 20 | 287 | |
| S8C | 460/3 | NO | 140 HP | 1750 | 165 | 50 | 697 | 8 INCH |
| | 575/3 | | | | 132 | 40 | 558 | |
| | 380/3 | | 65 KW | 1450 | 115 | 24 | 465 | |
| S8D | 460/3 | NO | 275 HP | 1750 | 353 | 69 | 1750 | 8 INCH |
| | 575/3 | | | | 282 | 55 | 1400 | |
| S12A | 460/3 | NO | 140 HP | 1750 | 160 | 50 | 697 | 12 INCH |
| | 575/3 | | | | 128 | 40 | 558 | |

**Table B-2. Additional Specifications**

| Pump Model | Voltage/ Phase | Approximate Weight — Lbs. (kg) | | Oil Capacity Ounces (Liters) | | Seal Cavity Filling Position (H)orizontal (V)ertical *(A)ngle |
|---|---|---|---|---|---|---|
| | | Pump | 50 Ft. Cable | Seal Cavity | Motor Cavity | |
| S2A | 115/1 | 62 (28) | 18 (8) | 8 (0,2) | 32 (1) | A |
| | 230/1 | 57 (26) | 12 (5) | | | |
| S2B | 115/1 | 56 (25) | 18 (8) | 8 (0,2) | 32 (1) | V |
| | 230/1 | | 12 (5) | | | |
| | 200/3 | | | | | |
| | 230/3 | | | | | |
| | 460/3 | | | | | |
| | 575/3 | | | | | |
| | 380/3 | | | | | |
| S2E | 200/3 | 73 (33) | 12 (5) | 8 (0,2) | 32 (1) | V |
| | 230/3 | | | | | |
| | 460/3 | | | | | |
| | 575/3 | | | | | |
| | 380/3 | | | | | |
| S2F | 115/1 | 44 (20) | 12 (5) | 8 (0,2) | 32 (1) | V |
| | 230/1 | | | | | |
| | 200/3 | | | | | |
| | 230/3 | | | | | |
| | 460/3 | | | | | |
| | 575/3 | | | | | |
| | 110/1 | | | | | |
| | 220/1 | | | | | |
| | 380/3 | | | | | |
| S3A | 230/1 | 55 (25) | 18 (8) | 24 (0,6) | 32 (1) | A |
| | 200/3 | | | | | |
| | 230/3 | | | | 56 (1,7) | |
| | 460/3 | | | | | |
| | 575/3 | | | | | |
| | 380/3 | | | | | |

*** Position Pumps at Approximately 30° off Vertical**

**Table B-2. Additional Specifications (continued)**

| Pump Model | Voltage/ Phase | Approximate Weight — Lbs. (kg) | | Oil Capacity Ounces (Liters) | | Seal Cavity Filling Position (H)orizontal (V)ertical *(A)ngle |
|---|---|---|---|---|---|---|
| | | Pump | 50 Ft. Cable | Seal Cavity | Motor Cavity | |
| S3B | 230/1 | 77 (35) | 18 (8) | 16 (0,5) | 80 (2,4) | H |
| | 200/3 | | | | 96 (2,8) | |
| | 230/3 | | | | | |
| | 460/3 | | | | | |
| | 575/3 | | | | | |
| | 380/3 | | | | | |
| S3C | 230/1 | 102 (46) | 18 (8) | 16 (0,5) | 80 (2,4) | H |
| | 200/3 | | | | 96 (2,8) | |
| | 230/3 | | | | | |
| | 460/3 | | | | | |
| | 575/3 | | | | | |
| | 380/3 | | | | | |
| S3D | 230/1 | 102 (46) | 18 (8) | 24 (0,7) | 32 (1) | H |
| | 200/3 | | | | 56 (1,7) | |
| | 230/3 | | | | | |
| | 460/3 | | | | | |
| | 575/3 | | | | | |
| | 380/3 | | | | | |
| S4A | 230/3 | 423 (192) | 43 (20) | 96 (2,8) | 352 (10,4) | V |
| | 460/3 | | | | | |
| | 575/3 | | | | | |
| | 380/3 | | | | | |
| S4B | 230/3 | 741 (336) | 80 (36) | 160 (4,7) | 256 (7,6) | V |
| | 460/3 | | 43 (20) | | | |
| | 575/3 | | | | | |
| | 380/3 | | | | | |

*** Position Pumps at Approximately 30° off Vertical**

**Table B-2. Additional Specifications (continued)**

| Pump Model | Voltage/ Phase | Approximate Weight — Lbs. (kg) | | Oil Capacity Ounces (Liters) | | Seal Cavity Filling Position (H)orizontal (V)ertical *(A)ngle |
|---|---|---|---|---|---|---|
| | | Pump | 50 Ft. Cable | Seal Cavity | Motor Cavity | |
| S4C | 200/3 | 173 (78) | 33 (15) | 20 (0,6) | 96 (2,8) | H |
| | 230/3 | | | | | |
| | 460/3 | | | | | |
| | 575/3 | | 18 (8) | | | |
| | 380/3 | | 33 (15) | | | |
| S4D | 200/3 | 167 (76) | 33 (15) | 20 (0,6) | 96 (2,8) | H |
| | 230/3 | | | | | |
| | 460/3 | | | | | |
| | 575/3 | | 18 (8) | | | |
| | 380/3 | | 33 (15) | | | |
| S4E | 460/3 | 302 (137) | 38 (17) | 32 (1) | ––– | H |
| | 575/3 | | | | | |
| S4F | 460/3 | 339 (154) | 38 (17) | 32 (1) | ––– | H |
| | 575/3 | | | | | |
| S4G | 460/3 | 588 (267) | 38 (17) | 112 (3,3) | ––– | V |
| | 575/3 | | | | | |
| S4H | 200/3 | 167 (76) | 33 (15) | 20 (0,6) | 96 (2,8) | H |
| | 230/3 | | | | | |
| | 460/3 | | | | | |
| | 575/3 | | 18 (8) | | | |
| | 380/3 | | 33 (15) | | | |
| S4J | 460/3 | 666 (302) | 53 (24) | 144 (4,3) | ––– | V |
| | 575/3 | | | | | |
| S4K | 460/3 | 248 (113) | 38 (17) | 32 (1) | ––– | H |
| | 575/3 | | | | | |
| S6A | 230/3 | 705 (320) | 80 (36) | 176 (5,2) | 832 (24,6) | V |
| | 460/3 | 743 (337) | 43 (20) | | | |
| | 575/3 | | | | | |
| | 380/3 | | | 160 (4,7) | 256 (7,6) | |

*** Position Pumps at Approximately 30° off Vertical**

**Table B-2. Additional Specifications (continued)**

| Pump Model | Voltage/ Phase | Approximate Weight — Lbs. (kg) | | Oil Capacity Ounces (Liters) | | Seal Cavity Filling Position (H)orizontal (V)ertical *(A)ngle |
|---|---|---|---|---|---|---|
| | | Pump | 50 Ft. Cable | Seal Cavity | Motor Cavity | |
| S6B | 230/3 | 865 (392) | 150 (68) | 176 (5,2) | 576 (17) | V |
| | 460/3 | | 69 (31) | | | |
| | 575/3 | | | | | |
| | 380/3 | | | | 608 (18) | |
| | 500/3 | | 43 (20) | | | |
| S6C | 230/3 | 435 (197) | 80 (36) | 96 (2,8) | 288 (8,5) | V |
| | 460/3 | 473 (214) | 43 (20) | | | |
| | 575/3 | | | | | |
| | 380/3 | | | | 320 (9,5) | |
| S6D | 460/3 | 538 (244) | 33 (15) | 112 (3,3) | ——— | V |
| | 575/3 | | | | | |
| S6E | 460/3 | 765 (347) | 53 (24) | 144 (4,3) | ——— | V |
| | 575/3 | | | | | |
| S8A | 230/3 | 870 (395) | 150 (68) | 176 (5,2) | 576 (17) | V |
| | 460/3 | | 80 (36) | | | |
| | 575/3 | | | | | |
| | 380/3 | | | | 608 (18) | |
| S8B | 460/3 | 1175 (533) | 105 (48) | 224 (6,6) | 768 (22,7) | V |
| | 575/3 | | | | | |
| | 380/3 | | 80 (36) | | 864 (25,6) | |
| S8C | 460/3 | 1210 (549) | 150 (68) | 208 (6,2) | 576 (17) | V |
| | 575/3 | 1255 (569) | | | | |
| | 380/3 | | | | 768 (22,7) | |
| S8D | 460/3 | 3462 (1570) | 150 (68) each, 2 cables required | 461 (13,6) | 1709 (50,5) | V |
| | 575/3 | | | | | |
| S12A | 460/3 | 1441 (654) | 150 (68) | 102 (3) | 592 (17,5) | V |
| | 575/3 | | 105 (48) | | | |

*** Position Pumps at Approximately 30° off Vertical**

**Pump Dimensions**

For the approximate physical dimensions of your pump, refer to the pump specification data sheet or contact your Gorman-Rupp distributor or the Gorman-Rupp Company.

## PUMP INSTALLATION

**WARNING!**

**When installing or servicing the pump or controls, follow all requirements for the installation of wiring or electrical equipment as outlined in the National Electric Code. Follow all safety requirements. Failure to observe these requirements could result in injury or death to personnel.**

**CAUTION**

**Do not** allow the free end of the power cable to enter the liquid being pumped. The free end of the cable **must** be kept dry to prevent liquid from wicking through the cable and into the motor.

**NOTE**

*Refer to the performance curve in the Parts List Manual when determining the most efficient piping installation.* ***The recommended maximum submergence depth is 65 feet.***

**Lifting**

Pump unit weights will vary depending on the mounting and drive provided. Check the shipping tag on the unit packaging for the actual weight, and use lifting equipment with appropriate capacity. Drain the pump and remove all customer-installed equipment such as suction and discharge hoses or piping before attempting to lift existing, installed units.

Refer to Table B–2 for the approximate maximum weight for each pump.

**WARNING!**

**Death or serious personal injury and damage to the pump or components can occur if proper lifting procedures are not observed. Make certain that hoists, chains, slings or cables are in good working condition and of sufficient capacity and that they are positioned so that loads will be balanced and the pump or components will not be damaged when lifting. Do not attempt to lift this pump by the motor or control cables, or the piping. Attach proper lifting equipment to the lifting bail fitted on the pump. Lift the pump or component only as high as necessary and keep personnel away from suspended objects.**

**CAUTION**

Use **Only Genuine Gorman–Rupp** replacement parts. Failure to do so may create a hazard and damage the pump or diminish optimal pump performance. Any such hazard, damage or diminished performance is not covered by the warranty.

**NOTE**

*When appropriate recycling facilities are available, the user should recycle components and fluids when doing any routine maintenance / repairs and also at the end of the pump's useful life. All other components and fluids shall be disposed of according to all applicable codes and regulations.*

**Positioning the Pump**

**NOTE**

*Before installing and operating the pump, check the direction of impeller rotation to ensure that the pump is properly wired at the control box. See* ***IMPELLER ROTATION****, Section C.*

The pump is designed to operate fully or partially submerged. The rotating parts are oil lubricated, and the motor is cooled by a constant flow of liquid or air discharged through internal passages.

As a safeguard against rupture or explosion due to heat, models equipped with oil-lubricated motors are fitted with a pressure relief valve which will open if vapor pressure within the pump motor reaches a critical point.

The pump will operate if positioned on its side, but this is not recommended because the motor torque could cause the pump to roll during operation.

The pump should be independently secured and supported by the lifting device fitted on the pump. If the application involves a lot of debris, protect the pump from excessive wear and clogging by suspending it in a perforated barrel or culvert pipe. If the bottom is heavily sludge-covered, rest the pump on support blocks or suspend it from a raft or similar device near the surface of the liquid. See Figure B—1 for typical pump installations.

All liquid entering the pump must pass through a strainer screen. Any spherical solids which pass through the screen will pass through the pump.

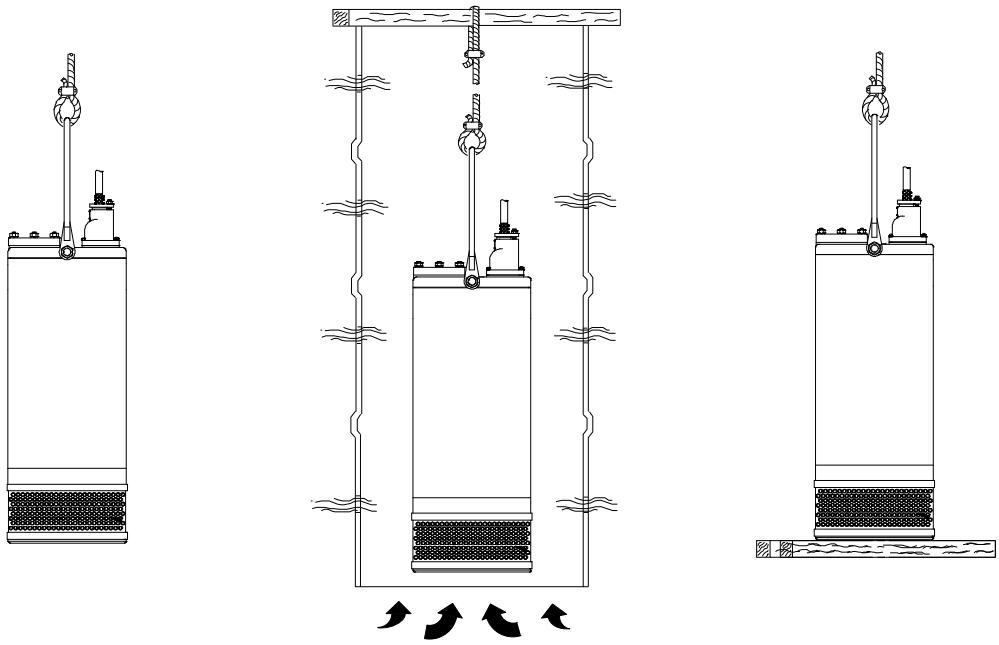

**BY BAIL** **IN PERFORATED CULVERT PIPE** **ON SUPPORTS**

**Figure B—1 Typical Pump Installations**

**Piping**

No suction piping is required in a standard installation.

S Series pumps are provided with a suction strainer to prevent large solids from clogging the impeller. On some models the strainer can be removed and the pump suction “staged” to the discharge of another pump, allowing one pump to feed the other on high discharge head applications.

To determine the size of the discharge connection, see **Table B—1, Pump Specifications**. Either hose or rigid pipe may be used. To facilitate mobility and maintenance, it is recommended that the discharge line be fitted with a quick disconnect fitting near the pump. The discharge line must be independently supported to avoid strain and vibration on the pump.

Either hose or rigid pipe may be used to make discharge connections. For maximum pumping capacity, keep the line as short and straight as possible. Elbows and fittings used in discharge lines increase friction loss, minimize their use.

It is recommended that a check valve or throttling valve be installed in the discharge line to control siphoning or back flow when the pump is shut off.

## ELECTRICAL CONNECTIONS

**WARNING!**

**Install and operate this pump in accordance with the National Electrical Code and all local codes. Have a qualified electrician perform all checks and connections in this section.**

**Never attempt to alter the length of the pump motor cable or to repair it with a splice. The power cable and pump motor must be kept completely waterproof. Serious damage to the pump and injury or death to personnel can result from any alteration to the cable.**

**Control Box Installation**

**WARNING!**

**The pump is designed to be operated through the control box furnished with the pump. The control box provides overload protection and power control. Do not connect the pump motor directly to the incoming power lines.**

The control box is a rainproof enclosure with a padlockable front cover. **The enclosure is not designed to be watertight, and should not be submerged.** Refer to the control box manual for enclosure dimensions and parts.

Secure the control vertically on a level surface, above flood level. The box should be easily accessible to the operator, and located close enough to the pump to avoid excessive voltage drop due to cable length (see **Pump Power Cable Connection**). After the box is installed, make certain the front cover latches properly.

**CAUTION**

Failure to mount the control box vertically on a level surface may affect operation of the pump controls.

**Dual Voltage Usage**

Some pumps are powered by a dual-voltage motor for utilization with high or low voltage. The motor was originally wired and shipped from the factory for use with the voltage indicated as “Factory Wired” on the pump’s name plate. The name plate also indicates the dual voltage pertaining to this motor. If the alternate voltage must be utilized, control box modifications and/or certain wiring changes are required.

The control box assembly provided with this pump has been designed to accommodate **only** the voltage indicated on the front of the box. This voltage coincides with the “Factory Wired” voltage of the motor. If the alternate voltage is utilized, the control box must be replaced with another box designed for the appropriate voltage. Alternate voltage control boxes are shown in the Parts List Manual under Pump Options.

**WARNING!**

**Dual voltage pumps are wired at the factory <u>only</u> for the voltage shown on the name plate. Make certain that the control box voltage matches the pump voltage before using. If the pump voltage is changed, the pump name plate must be changed and a new control box must be installed. Do not run the pump if the voltages do not match; otherwise, the pump warranty will be negated, and damage to the pump, and injury or death to personnel can result.**

The motor wiring **must also** be changed before utilizing alternate voltage. For detailed instructions on disassembly and reassembly of the terminal housing, see **Terminal Housing and Power Cable Disassembly** and **Terminal Housing and Power**

**Cable Reassembly** in the Maintenance And Repair manual. Change the motor leads as indicated on the wiring diagram plate affixed to the side of the terminal housing (see Figure B–2). **Be sure** to tag the revised voltage on the pump.

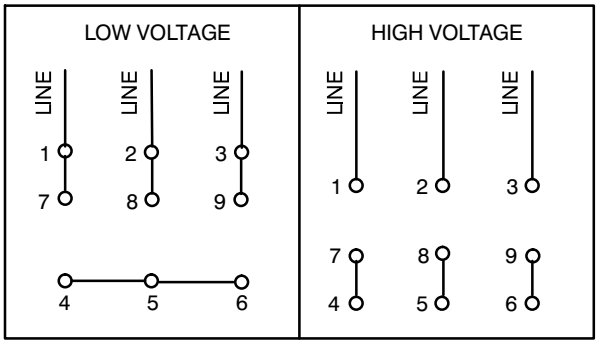


**Field Wiring Connections (Incoming Power)**

## WARNING!

**The electrical power used to operate this pump is high enough to cause injury or death. Obtain the services of a qualified electrician to make all electrical connections. Make certain that the pump and enclosure are properly grounded; never use gas pipe as an electrical ground. Be sure that the incoming power matches the voltage and phase of the pump and control before connecting the power source. Do not run the pump if the voltage is not within the limits.**

## WARNING!

**Do not connect the pump motor directly to the incoming power lines. The pump motor is designed to operate through a Gorman-Rupp approved control box which provides overload protection and power control; otherwise, the pump warranty will be voided. Make certain that the pump and control box are properly grounded. Install and operate the control box in accordance with the National Electric Code and all local codes. Failure to follow these could result in injury or death to personnel.**

Field wiring is **not** provided with the pump, and must be supplied by the user. The field wiring must be of the proper size and type to ensure an adequate voltage supply to the pump. Voltage available **at the motor** must be within the range indicated in Table B-3.

To calculate the voltage available at the motor, proceed as follows:

a. Measure the voltage across the incoming lines (1 & 2 for single phase, 1 & 2, 2 & 3, and 1 & 3 for three phase) **while the pump is operating at full capacity**. Refer to the literature supplied with the control box for power supply connections.

b. Next, subtract the motor cable voltage drop (see Table 4, **Pump Power Cable Specifications**).

c. Do not continue to operate the pump if this voltage is not within the recommended limits. Obtain the services of a qualified electrician to determine the correct field wiring size and other details to ensure an adequate voltage supply to the pump.

**Table B-3. Pump Voltage Requirements**

| NOMINAL VOLTAGE | PHASE | MINIMUM VOLTAGE | MAXIMUM VOLTAGE |
|---|---|---|---|
| 115 | 1 | 110 | 120 |
| 230 | 1 | 220 | 240 |
| 230 | 3 | 210 | 250 |
| 460 | 3 | 420 | 500 |
| 575 | 3 | 520 | 630 |
| 380 | 3 | 345 | 415 |

Make certain all connections are tight and that cable entry points are rainproof. Support the cable weight, if required, to prevent excessive strain on cable clamps and cable.

**Grounding Methods**

Electrically ground the installation before connecting the field wiring to the control box. Install a

grounding terminal to the enclosure and connect it to a properly embedded electrode.

The material used for the electrode **must** be an excellent conductor of electricity, such as copper. If iron or steel is used, it must be galvanized or otherwise metal plated to resist corrosion. **Do not** coat the electrode with any material of poor conductivity, such as paint or plastic.

The electrode must conform to the recommendations of N.E.C. ARTICLE 250. Follow all installation requirements of the N.E.C., and all applicable codes. See Figure B—3 for some suggested grounding methods.

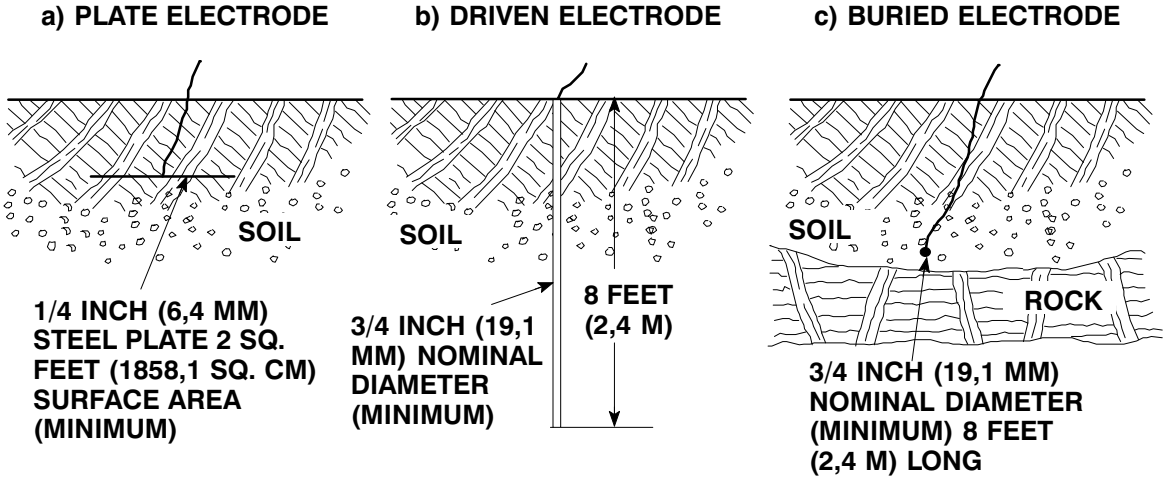


**Figure B—3. Suggested Grounding Methods**

a. **Plate Electrode:** An iron or steel plate, 1/4 inch (6,4 mm) thick, completely impeded in the ground. The plate must present a surface area of at least 2 square feet (1858,1 sq. cm.).

b. **Driven Electrode:** A rod or pipe, 3/4 inch (19,1 mm) in diameter minimum, 8 feet (2,4 m) long, completely driven into the ground.

c. **Buried electrode:** If rock or stone prevents embedding the full 8 foot (2,4 m) length of the ground rod, bury it horizontally in a trench.

   Space the ground rod or plates at least 6 feet (1,8) from any other electrode or ground rod, such as those used for signal circuits, radio grounds, lightning rods, etc.

   The earth surrounding the ground rod or plate **must** contain enough moisture to make a good electrical connection. In dry or sandy areas, pour water around the rod, or consult qualified personnel to devise a method of improving the connections.

**WARNING!**

**The electrical power used to operate this pump is high enough to cause injury or death. Make certain that the control box is properly grounded after installation.**

Refer to the literature accompanying the control box for field wiring connections.

**Pump Power Cable Connections**

**WARNING!**

**The electrical power used to operate this pump is high enough to cause injury or death. Obtain the services of a qualified electrician to make all electrical connections. Make certain that incoming power to the control box is in the OFF position and locked out, or that the power supply to the control box has**

**been otherwise cut off and locked out, before connecting power or accessory cables.**

The pump is provided with a 50 ft. (15,2 m) power cable (see Table B–4 for standard power cable specifications). If a longer cable is required, an optional cable assembly **must** be ordered from the factory. Splicing of the power cable is **not** recommended by the Gorman-Rupp Company due to safety and warranty considerations.




**Never attempt to alter the length or repair any power cable with a splice. The pump motor and cable must be completely waterproof. Injury or death may result from alternations.**

**Table B-4. Pump Power Cable Specifications**

| Pump Model | Voltage/ Phase | A.W.G Cable Size | Cable O.D. Inches (mm) | Conductor Dia. Inches (mm) | Amp Rating (See Note Below) | Cable Type | DC Resistance (ohms) at 225°C (77°F) per 1000 ft. (305 m) | Voltage Drop per 100 ft. (30,5m) at Max. Load |
|---|---|---|---|---|---|---|---|---|
| S2A | 115/1 | 10 | 0.75 (19) | 0.12 (3) | 25* | ◗ SO | 1.11 | 6.22 |
| | 230/1 | 14 | 0.61 (16) | 0.075(2) | 15* | | 2.73 | 7.64 |
| S2B | 115/1 | 10 | 0.75 (19) | 0.12 (3) | 25* | ◗ SO | 1.11 | 6.22 |
| | 230/1 | 14 | 0.61 (16) | 0.075(2) | 15* | ◗ SO | 2.73 | 6.55 |
| | 200/3 | | | | | | | 4.53 |
| | 230/3 | | | | | | | 3.93 |
| | 460/3 | | | | | | | 1.96 |
| | 575/3 | | | | | | | 1.58 |
| | 380/3 | | | | | | | 1.37 |
| S2E | 200/3 | 14 | 0.61 (16) | 0.075(2) | 15* | ◗ SO | 2.73 | 6.80 |
| | 230/3 | | | | | | | 5.90 |
| | 460/3 | | | | | | | 2.95 |
| | 575/3 | | | | | | | 2.35 |
| | 380/3 | | | | | | | 2.07 |
| S2F | 115/1 | 14 | 0.61 (16) | 0.075(2) | 15* | ◗ SO | 2.73 | 8.19 |
| | 230/1 | | | | | | | 4.10 |
| | 200/3 | | | | | | | 2.73 |
| | 230/3 | | | | | | | 2.36 |
| | 460/3 | | | | | | | 1.20 |
| | 575/3 | | | | | | | 0.98 |
| | 110/1 | | | | | | | 6.44 |
| | 220/1 | | | | | | | 3.28 |
| | 380/3 | | | | | | | 0.98 |
| S3A | 230/1 | 10 | 0.75 (19) | 0.12 (3) | 25* | ◗ SO | 1.11 | 6.22 |
| | 200/3 | | | | | | | 4.00 |
| | 230/3 | | | | | | | 3.55 |
| | 460/3 | | | | | | | 1.78 |
| | 575/3 | | | | | | | 1.44 |
| | 380/3 | | | | | | | 1.20 |

**NOTE: * Amp Rating at 30°C (86°F)**
**** Amp Rating at 40°C (104°F)**
**◗ Canada Use Type SOW Cable**

**Table B-4. Pump Power Cable Specifications (Continued)**

| Pump Model | Voltage/ Phase | A.W.G Cable Size | Cable O.D. Inches (mm) | Conductor Dia. Inches (mm) | Amp Rating (See Note Below) | Cable Type | DC Resistance (ohms) at 225°C (77°F) per 1000 ft. (305 m) | Voltage Drop per 100 ft. (30,5m) at Max. Load |
|---|---|---|---|---|---|---|---|---|
| S3B | 230/1 | 10 | 0.75 (19) | 0.12 (3) | 25* | ◗ SO | 1.11 | 7.55 |
| | 200/3 | | | | | | | 5.88 |
| | 230/3 | | | | | | | 5.10 |
| | 460/3 | | | | | | | 2.55 |
| | 575/3 | | | | | | | 2.04 |
| | 380/3 | | | | | | | 1.78 |
| S3C | 230/1 | 10 | 0.75 (19) | 0.12 (3) | 25* | ◗ SO | 1.11 | 7.55 |
| | 200/3 | | | | | | | 5.88 |
| | 230/3 | | | | | | | 5.10 |
| | 460/3 | | | | | | | 2.55 |
| | 575/3 | | | | | | | 2.04 |
| | 380/3 | | | | | | | 1.78 |
| S3D | 230/1 | 10 | 0.75 (19) | 0.12 (3) | 25* | ◗ SO | 1.11 | 6.22 |
| | 200/3 | | | | | | | 4.00 |
| | 230/3 | | | | | | | 3.55 |
| | 460/3 | | | | | | | 1.78 |
| | 575/3 | | | | | | | 1.44 |
| | 380/3 | | | | | | | 1.20 |
| S4A | 230/3 | 6 | 1.01 (26) | 0.21 (5) | 79** | GGC | 0.45 | 5.40 |
| | 460/3 | | | | | | | 2.70 |
| | 575/3 | | | | | | | 2.16 |
| | 380/3 | | | | | | | 1.89 |
| S4B | 230/3 | 2 | 1.34 (34) | 0.34 (9) | 138** | GGC | 0.17 | 4.22 |
| | 460/3 | 6 | 1.01 (26) | 0.21 (3) | 79** | | 0.45 | 5.58 |
| | 575/3 | | | | | | | 4.50 |
| | 380/3 | | 1.05 (27) | | | | | 4.14 |
| S4C | 200/3 | 8 | 0.97 (25) | 0.17 (4) | 59** | GGC | 0.71 | 4.80 |
| | 230/3 | | | | | | | 4.85 |
| | 460/3 | | | | | | | 2.42 |
| | 575/3 | 10 | 0.75 (19) | 0.12 (3) | 25* | ◗ SO | 1.11 | 3.20 |

**NOTE: * Amp Rating at 30°C (86°F)**
**** Amp Rating at 40°C (104°F)**
**◗ Canada Use Type SOW Cable**

**Table B-4. Pump Power Cable Specifications (Continued)**

| Pump Model | Voltage/ Phase | A.W.G Cable Size | Cable O.D. Inches (mm) | Conductor Dia. Inches (mm) | Amp Rating (See Note Below) | Cable Type | DC Resistance (ohms) at 225°C (77°F) per 1000 ft. (305 m) | Voltage Drop per 100 ft. (30,5m) at Max. Load |
|---|---|---|---|---|---|---|---|---|
| S4C | 380/3 | 8 | 0.97 (25) | 0.17 (4) | 59** | GGC | 0.71 | 2.04 |
| S4D | 200/3 | 8 | 0.97 (25) | 0.17 (4) | 59** | GGC | 0.71 | 4.80 |
| | 230/3 | | | | | | | 4.85 |
| | 460/3 | | | | | | | 2.42 |
| | 575/3 | 10 | 0.75 (19) | 0.12 (3) | 25* | ◗ SO | 1.11 | 3.02 |
| | 380/3 | 8 | 0.97 (25) | 0.17 (4) | 59** | GGC | 0.71 | 1.63 |
| S4E | 460/3 | 8 | 1.05 (27) | 0.17 (4) | 59** | SPC | 0.71 | 3.69 |
| | 575/3 | | | | | | | 2.95 |
| S4F | 460/3 | 8 | 1.05 (27) | 0.17 (4) | 59** | SPC | 0.71 | 3.69 |
| | 575/3 | | | | | | | 2.95 |
| S4G | 460/3 | 8 | 1.05 (27) | 0.17 (4) | 59** | SPC | 0.71 | 5.47 |
| | 575/3 | | | | | | | 4.37 |
| S4H | 200/3 | 8 | 0.97 (25) | 0.17 (4) | 59** | GGC | 0.71 | 4.80 |
| | 230/3 | | | | | | | 4.85 |
| | 460/3 | | | | | | | 2.42 |
| | 575/3 | 10 | 0.75 (19) | 0.12 (3) | 25* | ◗ SO | 1.11 | 3.02 |
| | 380/3 | 8 | 0.97 (25) | 0.17 (4) | 59** | GGC | 0.71 | 1.63 |
| S4J | 460/3 | 6 | 1.25 (32) | 0.21 (5) | 79** | SPC | 0.45 | 5.94 |
| | 575/3 | | | | | | | 4.75 |
| S4K | 460/3 | 12 | .89 (23) | 0.10 (3) | 30* | SPC | 1.72 | 5.85 |
| | 575/3 | | | | | | | 4.68 |
| S6A | 230/3 | 2 | 1.34 (34) | 0.34 (9) | 138** | GGC | 0.173 | 4.42 |
| | 460/3 | 6 | 1.01 (26) | 0.21 (5) | 79** | | 0.45 | 5.85 |
| | 575/3 | | | | | | | 4.68 |
| | 380/3 | | 1.05 (27) | | | | | 4.23 |

**NOTE: * Amp Rating at 30°C (86°F)**
**** Amp Rating at 40°C (104°F)**
**◗ Canada Use Type SOW Cable**

**Table B-4. Pump Power Cable Specifications (Continued)**

| Pump Model | Voltage/ Phase | A.W.G Cable Size | Cable O.D. Inches (mm) | Conductor Dia. Inches (mm) | Amp Rating (See Note Below) | Cable Type | DC Resistance (ohms) at 225°C (77°F) per 1000 ft. (305 m) | Voltage Drop per 100 ft. (30,5m) at Max. Load |
|---|---|---|---|---|---|---|---|---|
| S6B | 230/3 | 2/0 | 1.75 (44) | 0.48 (12) | 215** | GGC | 0.09 | 3.78 |
| | 460/3 | 2 | 1.34 (34) | 0.34 (9) | 138** | | 0.17 | 3.57 |
| | 575/3 | | | | | | | 2.86 |
| | 380/3 | | | | | | | 2.58 |
| | 500/3 | 6 | 1.05 (27) | 0.12 (5) | 79** | | 0.45 | 5.22 |
| S6C | 230/3 | 2 | 1.34 (34) | 0.34 (8) | 138** | GGC | 0.17 | 2.72 |
| | 460/3 | 6 | 1.01 (26) | 0.21 (5) | 79** | | 0.45 | 3.60 |
| | 575/3 | | | | | | | 2.88 |
| | 380/3 | | 1.05 (27) | | | | | 2.52 |
| S6D | 460/3 | 8 | 1.05 (27) | 0.17 (4) | 59** | SPC | 0.71 | 5.47 |
| | 575/3 | | | | | | | 4.37 |
| S6E | 460/3 | 6 | 1.25 (32) | 0.21 (5) | 79** | SPC | 0.45 | 5.94 |
| | 575/3 | | | | | | | 4.75 |
| S8A | 230/3 | 2/0 | 1.75 (45) | 0.48 (12) | 215** | GGC | 0.09 | 3.78 |
| | 460/3 | 2 | 1.34 (34) | 0.34 (9) | 138** | | 0.17 | 3.57 |
| | 575/3 | | | | | | | 2.86 |
| | 380/3 | | | | | | | 2.75 |
| S8B | 460/3 | 1 | 1.51 (38) | 0.38 (10) | 161** | GGC | 0.13 | 3.25 |
| | 575/3 | | | | | | | 2.60 |
| | 380/3 | 2 | 1.34 (34) | 0.34 (9) | 138** | | 0.17 | 3.26 |
| S8C | 460/3 | 2/0 | 1.75 (45) | 0.48 (12) | 215** | GGC | 0.09 | 2.97 |
| | 575/3 | 1 | 1.51 (38) | 0.38 (10) | 161** | | 0.13 | 3.43 |
| | 380/3 | | | | | | | 2.99 |
| S8D | 460/3 | (2) 2/0 | 1.75 (45) | 0.48 (12) | 215** | GGC | 0.09 | 2.88 |
| | 575/3 | | | | | | | 2.30 |
| S12A | 460/3 | (2) 2/0 | 1.75 (45) | 0.48 (12) | 215** | GGC | 0.09 | 3.04 |
| | 575/3 | 1 | 1.51 (38) | 0.38 (10) | 161** | | 0.13 | 3.52 |

**NOTE: * Amp Rating at 30°C (86°F)** ◗ **Canada Use Type SOW Cable**
**** Amp Rating at 40°C (104°F)**

When necessary to change or connect the pump power cable to the control box, make certain the incoming power is **OFF** and **LOCKED OUT**, Make certain the control box is **PROPERLY GROUNDED** and that the electrical data on the control matches the motor name plate data.

Connect the pump power cable to the control box as shown in the wiring diagrams in the control box manual. Use conduit or cable clamps to secure the power cable to the control box. Make certain that all connections are tight and that cable entry points are rainproof.

**NOTE**

*The power cable furnished with the pump includes three electrical conductors (white, red, and black), two grounding conductors (green) and one ground check conductor (yellow). The yellow ground check lead is used in conjunction with customer-supplied ground monitoring equipment. If this equipment is not used, the yellow lead should be used as a ground conductor.*

**Control Box Specifications**

**WARNING!**

**Any control box used to operate the pump must be approved by the Gorman-Rupp Company for the application.**

**Motor Cable Grounding Test**

**WARNING!**

**Do not connect the pump control cable to the control box or incoming voltage before verifying the pump ground; otherwise, personnel will be exposed to serious injury or death.**

Using a volt-ohm meter, connect one lead to the motor cable green/yellow ground lead. Connect the other lead to an **uninsulated** point on the pump body. The test circuit should close.

If the test circuit does not close, there is a defect in the cable or motor which must be corrected.

**Control Box Connections**

This pump is shipped completely wired for the voltage shown on the name plate, and is ready for operation through an approved control box.

Ground and wire the control box in accordance with the instructions accompanying it.

**NOTE**

*For reference, internal motor wiring connections are shown in the Maintenance and Repair manual.*

**Liquid Level Devices**

The standard pump is **not** furnished with a means to automatically regulate liquid level. However, the pump may be controlled to perform filling or dewatering functions by using **either** of the following optional sensing devices (see Figure B–4):

- **Diaphragm Type:** two fixed-position sensors (upper and lower) each contain a diaphragm which flexes with changes in liquid level, thus activating an enclosed miniature switch.
- **Bulb (Float) Type:** a bulb raises or lowers (floats) with the liquid level, thus activating an enclosed miniature switch.

Models under 6 horsepower require an additional control box to incorporate liquid level controls. For models over 6 horsepower, the circuitry may be prewired as a factory option, or easily added to the standard control box in the field by qualified personnel. The unit is complete except for the remote float switches. For installation and operation, see the detailed instructions included with the optional package.

**CAUTION**

Liquid level devices **must** be positioned far enough apart to allow 10 minutes between starts. If the pump motor cycles more than 6 starts per hour, it will over-heat, resulting in damage to the motor windings or control box components.

Other types of liquid level devices may also be used. Consult the factory for the liquid level device best suited for your application.

**CAUTION**

If the pump requires liquid level devices, install the liquid level devices and connect them to the control box in accordance with the instructions accompanying the devices.

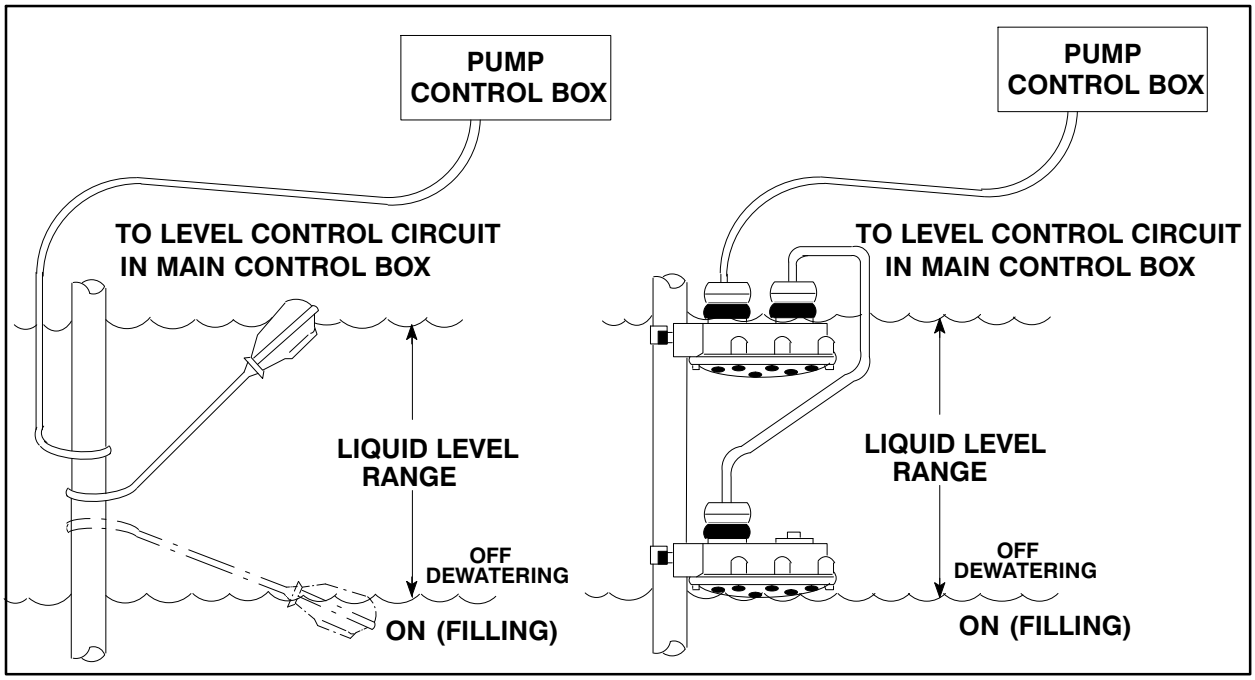


**Figure B—4. Liquid Level Devices**

**CAUTION**

The internal wiring of the sensing devices are different for filling and dewatering functions. Be sure to follow the instructions included with the option before making wiring connections.

## WIRING DIAGRAMS

Refer to the appropriate wiring diagram in the literature accompanying the control box when making electrical connections.

# OPERATION — SECTION C

## GENERAL INFORMATION

**Review all SAFETY information in Section A.**

**WARNING!**

**This pump is designed to handle most non-volatile, non-flammable liquids. Do not attempt to pump any liquids for which your pump is not approved, or which may damage the pump or endanger personnel as a result of pump failure. Consult the factory for specific application data.**

Follow the instructions on all tags, labels and decals attached to the pump.

**Pump Performance**

**CAUTION**

Since operation of the pump motor is dependent upon the quality and performance of the electrical controls, the pump warranty is valid only when controls have been specified or provided by The Gorman-Rupp Company.

Refer to the pump Specification Data Sheet or the accompanying Parts List Manual for the specific performance for your pump.

**Control Box**

A control box is provided to facilitate operation of the pump. It contains controls for starting and stopping the pump, and provides overload protection for the pump motor. The pump control (for models 10 horsepower and up) may be equipped with an optional automatic liquid level sensing device, in which case those circuits are also contained within the control box. Pump models under 6 horsepower require an additional control box to incorporate liquid level controls.

**WARNING!**

**The pump motor and control box are not designed to be explosion-proof. Do not operate in an explosive atmosphere. Any control box used to operate the pump must be approved by the Gorman-Rupp Company for the application. Improper location of a non-explosion proof control box could result in destruction of equipment, injury or death to personnel.**

See the operating instructions furnished with the control box, and with other optional accessories and controls, before attempting to start the pump.

## PUMP OPERATION

**Liquid Temperature and Overheating.**

**WARNING!**

**Overheated pumps can cause severe burns and injury. If the pump becomes overheated:**

1. **Stop the pump immediately.**
2. **Lock out the power to the control panel to ensure that the pump will remain inoperative.**
3. **Allow the pump to completely cool if overheated.**
4. **Close the discharge valve (if used).**
5. **Refer to instructions in this manual before restarting the pump.**

Overheating can occur if the pump is misapplied; if it is started more than 6 times within one hour; if the temperature of the liquid being pumped ex-

ceeds the temperature for which the pump was designed, if the control box fails to provide overload or thermal protection, or if the pump is operated against a closed discharge valve for an extended period of time.

**CAUTION**

Do not start the pump more than 6 times per hour. If the motor does not cool between starts it will overheat, resulting in damage to the motor windings.

As a safeguard against rupture or explosion due to heat, models equipped with oil-lubricated motors are fitted with a pressure relief valve which will open if vapor pressure within the pump motor reaches a critical point. Always terminate power to the pump and control before investigating pump or control box problems.

**WARNING!**

**Approach the pump cautiously after it has been running. Although the motor is cooled by the liquid being pumped, normal operating temperatures can be high enough to cause burns. The temperature will be especially high if operated against a closed discharge valve. Never operate against a closed discharge valve for long periods of time.**

If overheating does occur, stop the pump immediately and allow it to cool before servicing it. **Approach any overheated pump cautiously.**

**WARNING!**

**Overheated pumps can cause severe burns and injuries. If overheating of the pump occurs:**

1. **Stop the pump immediately.**
2. **Ventilate the area.**
3. **Allow the pump to completely cool.**
4. **Check the temperature before servicing.**
5. **Vent the pump slowly and cautiously**
6. **Refer to instructions in this manual before restarting the pump.**

Is so equipped, it is recommended that the pressure relief valve assembly be replaced at each overhaul, or any time the pump motor overheats and activates the valve. **Never** replace this valve with a substitute which has not been specified or provided by the Gorman-Rupp Company.

**Impeller Rotation**

Check impeller rotation as follows before operation to ensure that the impeller is rotating in the correct direction.

**CAUTION**

While checking impeller rotation, secure the pump to prevent the power cable from coiling.

Suspend the pump from the lifting device fitted on the pump. Apply power briefly and note the direction of pump kickback. As viewed from the top, the pump should kick in a **counterclockwise** direction; this will indicate that impeller rotation is correct.

If the pump kicks in a **clockwise** direction, impeller rotation is incorrect. If the pump is powered by a three-phase motor, have a qualified electrician interchange the control box connections of any two pump motor power leads. Re-check pump kickback; it should now be in a counterclockwise direction.

If rotation is incorrect on a single-phase motor, contact the factory before installing the pump.

## WARNING!

**The electrical power used to operate this pump is high enough to cause injury or death. Make certain that incoming power is off and locked out before interchanging motor leads.**

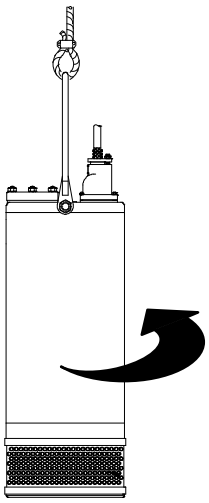

**DIRECTION OF KICKBACK AT STARTUP**

**Figure C—1. Checking Pump Rotation**

## STARTING, STOPPING, AND OPERATIONAL CHECKS

### Starting

## CAUTION

Do not attempt to operate the pump until impeller rotation has been checked; improper rotation will affect pump performance and may damage the pump.

Follow the instructions accompanying the control box, start the pump, and run any recommended checks.

## CAUTION

Never start the pump more than 6 times per hour. If the pump motor does not cool between starts, it will over-heat, resulting in damage to the motor windings.

### Stopping

Follow the instructions accompanying the control box for stopping the pump.

## WARNING!

**On pumps equipped with a motor thermal protector, the integral thermal overload device will shut off the motor if the temperature rises above design limits. When the pump cools and the temperature falls below these limits, the motor will restart automatically. To avoid the hazards of an unexpected motor startup, do not attempt to handle or service the pump unless all power to the motor has been shut off and locked out at the control box; otherwise, serious personal injury could result.**

**During motor shutoff by the thermal overload device, control box circuits remain live. Do not attempt to service any control box components unless incoming power has been shut off.**

To stop the pump, turn the control handle OFF, thereby opening the circuit breakers. This **does not** terminate incoming power through the field wiring connected to the control box.

After stopping the pump, be sure to perform all required maintenance and preservation procedures.

### Operational Checks

To detect minor problems, check the pump for proper operation when it is first started, and at periodic intervals during operation.

**CAUTION**

To avoid serious damage to the pump, check for unusual noises or excessive vibration while the pump is running. If noise or vibration is excessive, stop operation and refer to the troubleshooting chart in the maintenance and repair manual.

The suction inlet or impeller may become clogged with debris. In some cases, stopping the pump momentarily may backflush this blockage. If backflushing does not clear the debris, remove the pump from the sump or wet well and clear manually.

**WARNING!**

**Never introduce air or steam pressure into the pump casing to remove a blockage. This could result in personal injury or damage to the equipment. If backflushing is absolutely necessary, limit liquid pressure input to 50% of the maximum permissible operating pressure shown in the pump performance curve (refer to the accompanying Parts List Manual).**

Check the pump for overheating. Overheating can occur if the pump is misapplied, required to start repeatedly, if the control box fails to provide overload or thermal protection, or if the pump is operated against a closed discharge valve for an extended period of time.

**CAUTION**

Do not start the pump more than 6 times per hour. If the motor does not cool between starts it will overheat, resulting in damage to the motor windings.

Check the oil level(s) as indicated in the following **LUBRICATION** section.

## COLD WEATHER PRESERVATION

**WARNING!**

**Do not attempt to thaw the pump by using a torch or other source of flame. This could damage gaskets, O-rings or heat the oil in the seal housing above critical temperatures, causing the pump to rupture or explode.**

The pump will not freeze as long as the casing is submerged in liquid. If the casing is not submerged, or if the liquid begins to freeze, remove the pump from the sump or wet well and dry it thoroughly. Run the pump for two or three minutes to dry the inner walls.

If the pump does freeze while it is out of the liquid, submerge it until thawed; if the liquid is near freezing, the pump must be submerged for an extended period of time. Check thawing by starting the pump and checking that the shaft rotates freely. If the pump remains frozen, allow additional thawing time before attempting to restart.

If submerging does not thaw the pump, move it into a warm area until completely thawed.

## LUBRICATION

**WARNING!**

**Do not remove plates, covers, gauges, pipe plugs or fittings from an overheated pump. Vapor pressure within the pump can cause parts being disengaged to be ejected with great force. Allow the pump to completely cool before servicing.**

On a new pump, check the oil level in both seal and motor cavities (if oil lubricated) before initial startup, and drain and replace the oil after the first 200 hours of operation. Following this, check the oil level in the seal cavity after the first two weeks of op-

eration, and every month thereafter. Check the motor lubrication level any time the pressure relief valve is activated, and replace the oil annually.

Before installing or removing the lubrication plug(s), always clean the area around the plug(s) to prevent contamination.

**Draining Oil**

Refer to the Parts List Manual for drain plug location.

For the smaller pump, lay the pump horizontal on a flat work surface with the seal cavity drain plug facing up. Remove the drain plug slowly to release any pressure. Install a short pipe nipple in the hole. Place a clean container under the plug and roll the pump on its side to drain the seal housing.

For the larger pump, remove the drain plug slowly to release any pressure. Install a short pipe nipple in the hole. Place a clean container under the plug and using a hoist, tilt the pump at an angle of approximately 60 degrees.

If the motor is oil-cooled, repeat the procedure for the motor housing oil.

**Condition Of Oil**

Check the condition of the oil drained from the pump. Clear oil indicates that the pump seal(s) are functioning properly. If the oil is milky or contains a small amount of water, it must be changed.

If the oil contains a large amount of water, it must be changed, and the seal(s) must be checked before the pump is put back in operation (refer to the Maintenance and Repair Manual).

**Adding Oil**

Due to differences in pump design, the quantity of oil and manner in which oil is to be added to the seal cavity varies between pump models. Refer to Table B–2 in **INSTALLATION** for oil capacities and positions for filling the seal cavity in each pump. Motor cavities requiring lubrication should always be positioned vertically for filling.

The grade of lubricant used is critical to the operation of this pump. Use premium quality submersible pump oil as specified in the following table. Oil must be stored in a clean, tightly closed container in a reasonably dry environment.

When lubricating the seal cavity, remove the lubrication plug as indicated in **Draining Oil**, and position the pump as indicated in Table B–2. Add premium quality submersible pump oil through this plug hole. If the pump is to be positioned vertically or at an angle, fill the cavity to the bottom of the plug hole. If the pump is to be positioned horizontally, completely fill the cavity.

Install and tighten the lubrication plug.

When lubricating the motor cavity, add oil through the hole for the pressure relief valve. If the pump is equipped with a motor lubricant level plug, remove this plug and fill the cavity until oil escapes through the hole. If the pump is not equipped with a motor lubricant level plug, fill the cavity to the top of the hole.

Reinstall the pressure relief valve.

**Table C—1. Pump Oil Specifications**

| | |
|---|---|
| Specifications: | |
| Type | Premium high viscosity index, anti-wear hydraulic oil |
| Viscosity @ 100°F (38°C) | 110 to 155 |
| Viscosity @ 210°F (99°C) | 40 to 50 |
| Dielectric | 26,000 (volts-min) |
| Recommended supplier: | |
| Gulf Oil Company | Gulf Harmony HVI AW 26 |
| Acceptable alternate suppliers: | |
| Gulf Oil Company | Gulf Harmony 32 AW |
| Texas Oil Company | Rando HD 32 or HD AZ 32 |
| Sun Oil Company | Sunvis 816 or 916 |
| BP (Also Boron) | Energol-HLP 32 |
| Shell Oil Company | Tellus 32, Tellus T-23 or T32 |
| ARCO | Duro 32 |
| Exxon (Also Esso) | Nuto H 32 |
| Petro-Canada | Harmony HVI 22 |



# PARTS MANUAL

**SUBMERSIBLE PUMP MODEL GRP-38521**
**(OPP21-023)**



HydroTech Mining

**UPDATE : FEB 2022**

# PERFORMANCE CURVE – SECTION A

## RECORDING MODEL AND SERIAL NUMBERS

Please record the pump model and serial number in the spaces provided below and in the separate Installation/Operation Manual accompanying your pump. Your Gorman-Rupp distributor needs this information when you require parts or service.

Pump Model: _____

Serial Number: _____

## WARRANTY INFORMATION

The pump warranty is provided as part of Gorman-Rupp's support program for customers who operate and maintain their equipment as described in this manual and other accompanying literature. Please note that should the equipment be abused or modified to change its performance beyond the original factory specifications, the warranty will become void and any claim will be denied.

## PERFORMANCE CURVES

The performance curves on the following page are based on 70° F (21° C) clear water at sea level. Since pump installations are seldom identical, your performance may be different due to such factors as viscosity, specific gravity, elevation, temperature, and impeller trim.

If your pump serial number is followed by an "N", your pump is **NOT** a standard production model. Contact the Gorman-Rupp Company to verify performance or part numbers.




Pump speed and operating condition points must be within the continuous performance range shown on the curve(s).

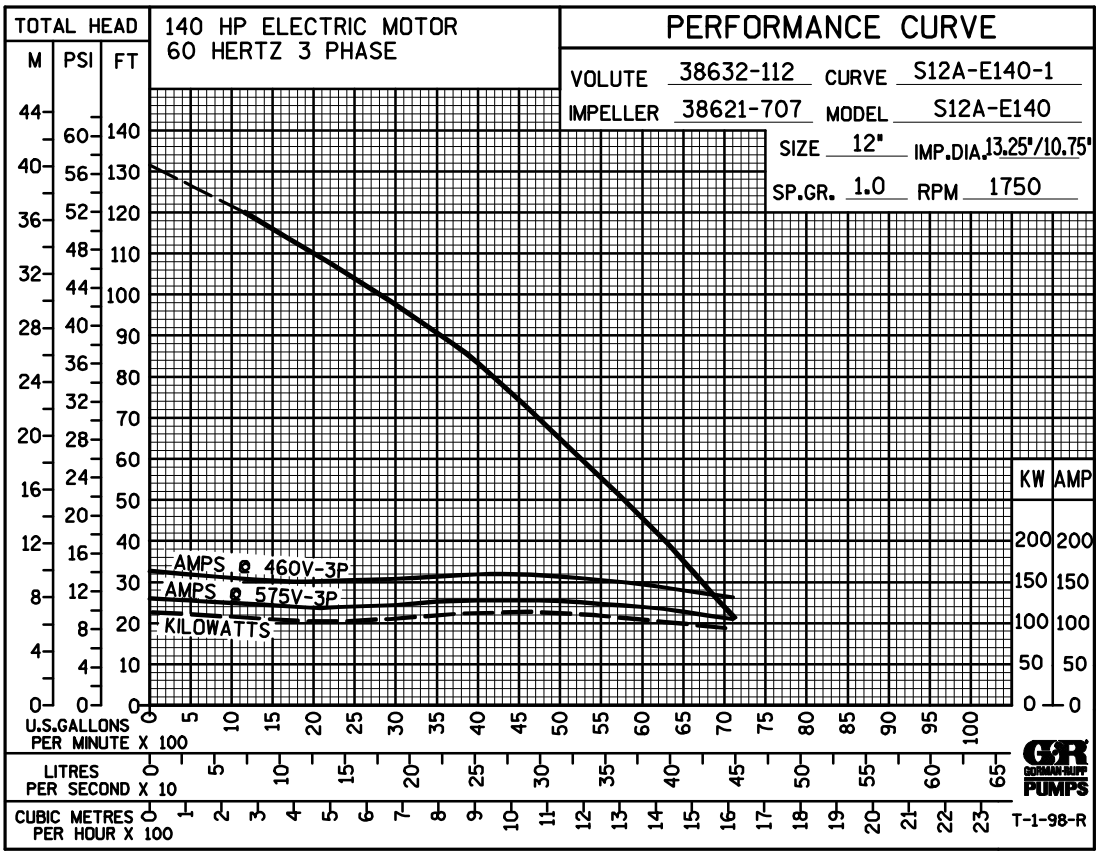


**Performance Curve — Model S12A1—E140 460/575/3**

**This Page Intentionally Blank**

# GRP-38521

**S/N 1366457 UP**

**PUMP ISSUE 2**

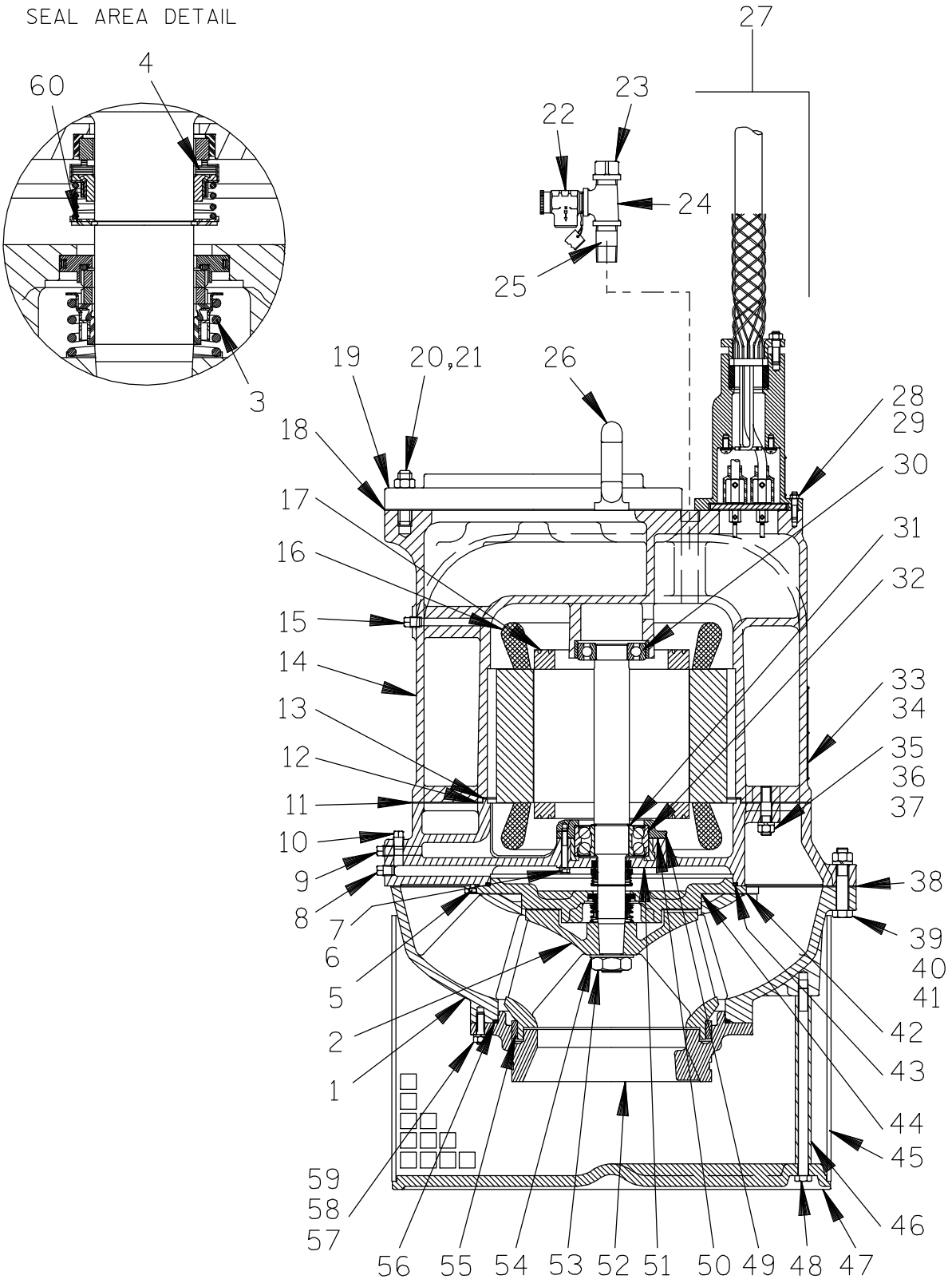

# GRP-38521

**S/N 1366457 UP**

**PUMP ISSUE 2**

If your pump serial number is followed by an "N", your pump is NOT a standard production model. Contact the Gorman-Rupp Company to verify part numbers.

| ITEM NO. | | PART NAME | PART NUMBER | MAT'L CODE | QTY |
|---|---|---|---|---|---|
| 1 | | DIFFUSER | 38632−112 | 11030 | 1 |
| 2 | ✳ | IMPELLER | 38621−707 | 11000 | 1 |
| 3 | ✳ | LOWER SEAL ASSY | 46512−055 | −−− | 1 |
| 4 | ✳ | UPPER SEAL ASSY | 25271−947 | −−− | 1 |
| 5 | | SOCKET HD CAPSCREW | BD0503 | 17000 | 6 |
| 6 | | HEX HD CAPSCREW | B0610 | 15991 | 4 |
| 7 | | LOCKWASHER | J06 | 15991 | 4 |
| 8 | | SEAL CVTY DRAIN PLUG | P06 | 17000 | 1 |
| 9 | | MTR CAVITY DRAIN PLUG | P06 | 17000 | 1 |
| 10 | | SEAL CAVITY FILL PLUG | P06 | 17000 | 1 |
| 11 | ✳ | MOTOR HOUSING GSKT | 38682−816 | 20000 | 1 |
| 12 | ✳ | MOTOR HOUSING GSKT | 10062G | 20000 | 1 |
| 13 | ✳ | MOTOR HOUSING GSKT | 10038G | 20000 | 1 |
| 14 | | MOTOR HOUSING ASSY | 42822−018 | 24130 | 1 |
| 15 | | MTR CVIY OIL LVL PLUG | P06 | 17000 | 1 |
| 16 | | STATOR ASSY | | | |
| | | −460/3 | 47113−077 | −−− | 1 |
| | | −575/3 | 47113−078 | −−− | 1 |
| 17 | | ROTOR & SHAFT ASSY | 47112−078 | −−− | 1 |
| 18 | ✳ | DISCH FLANGE GASKET | 4991G | 18000 | 1 |
| 19 | | DISCHARGE FLANGE | 4991A | 10010 | 1 |
| 20 | | STUD | C1414 | 15991 | 12 |
| 21 | | HEX NUT | D14 | 15991 | 12 |
| 22 | | PRESS RELIEF VALVE | 14139 | −−− | 1 |
| 23 | | MTR CVTY OIL FILL CAP | V16 | 11999 | 1 |
| 24 | | STREET TEE ASSY | 14138 | −−− | 1 |
| 25 | | HVY PIPE NIPPLE | THA16 | 15079 | 1 |
| 26 | | EYE BOLT | AR2414 | 1505V | 2 |
| 27 | | TERMINAL HSG AND CABLE ASSY | | | |
| | | −460/3 | 47367−061 | −−− | 1 |
| | | −575/3 | 47367−028 | −−− | 1 |
| 28 | | STUD | C0607 | 17000 | 6 |
| 29 | | DEFORM LOCK NUT | DD06 | 17000 | 6 |
| 30 | ✳ | UPPER BALL BEARING | S1077 | −−− | 1 |
| 31 | | RETAINING RING | S215 | −−− | 1 |
| 32 | ✳ | LOWER BALL BEARING | 23425−462 | −−− | 1 |
| 33 | | NAME PLATE | 50376 | −−− | 1 |
| 34 | | DRIVE SCREW | BM#04−03 | 17000 | 6 |
| 35 | | STUD | 10443 | 17000 | 12 |
| 36 | | LOCKWASHER | J10 | 17000 | 12 |
| 37 | | HEX NUT | D10 | 17000 | 12 |
| 38 | ✳ | DIFFUSER GSKT | 38682−813 | 20000 | 1 |
| 39 | | HEX HD CAPSCREW | B1216 | 15991 | 20 |
| 40 | | HEX NUT | D12 | 15991 | 20 |
| 41 | | LOCKWASHER | J12 | 15991 | 20 |
| 42 | ✳ | SEAL PLATE GSKT | 38682−817 | 20000 | 1 |
| 43 | ✳ | SEAL PLATE O-RING | S2207 | −−− | 1 |
| 44 | | SEAL PLATE | 38272−712 | 10000 | 1 |
| 45 | | STRAINER SCREEN | 38661−706 | 2415V | 1 |
| 46 | | HOSE | 31412−068 | 19060 | 6 |
| 47 | | BASE PLATE | 10036 | 13080 | 1 |
| 48 | | HEX HD CAPSCREW | B1050 | 15991 | 6 |
| 49 | | BEARING CAP | 38322−424 | 10000 | 1 |
| 50 | | BEARING CAP GSKT | 38683−463 | 20000 | 1 |
| 51 | | INTERMEDIATE | 38261−112 | 13000 | 1 |
| 52 | | SUCTION HEAD | 38246−035 | 10000 | 1 |
| 53 | | JAM LOCKNUT | AT20S | 17000 | 1 |
| 54 | ✳ | IMPELLER WASHER | 11199 | 17000 | 1 |
| 55 | ✳ | WEAR RING | 4181A | 14000 | 1 |
| 56 | ✳ | DIFFUSER O-RING | S1914 | −−− | 1 |
| 57 | | STUD | C0808 | 17000 | 5 |
| 58 | | HEX NUT | D08 | 17000 | 5 |
| 59 | | LOCKWASHER | J08 | 17000 | 5 |
| 60 | | RETAINING RING | S264 | −−− | 1 |
| NOT SHOWN: | | | | | |
| | | CONTROL BOX | | | |
| | | −460/3 | 27515−507 | −−− | 1 |
| | | −575/3 | 27515−517 | −−− | 1 |
| | | QT. SUB PUMP OIL | 9568 | −−− | 1 |
| | | IMPELLER KNOCKER | 2177C | 14070 | 1 |
| | | MOTOR VOLTAGE TAG | 50405 | −−− | 1 |
| | | INSTRUCTION PLATE | 50397 | 17990 | 1 |
| | | NAMEPLATE DECAL | 50402 | −−− | 1 |
| | | INSTRUCTION DECAL | 50420 | −−− | 1 |
| | | HEATER PACK | | | |
| | | −460/3 | 27521−220 | −−− | 1 |
| | | −575/3 | 27521−219 | −−− | 1 |
| OPTIONAL: | | | | | |
| | | HEAT-SHRINK TUBE & ADHESIVE KIT | 48315−004 | −−− | 1 |
| LIQUID LEVEL DEVICES: | | | | | |
| | | DIAPHRAGM TYPE | GRP48−03 | −−− | 1 |
| | | | GRP48−06 | −−− | 1 |
| | | FLOAT TYPE | 27471−155 | −−− | 1 |
| | | LIQ LVL CONT. RELAY | 27521−321 | −−− | 1 |

✳

# GRP-38521

**S/N 1366457 UP**

**PUMP ISSUE 2**

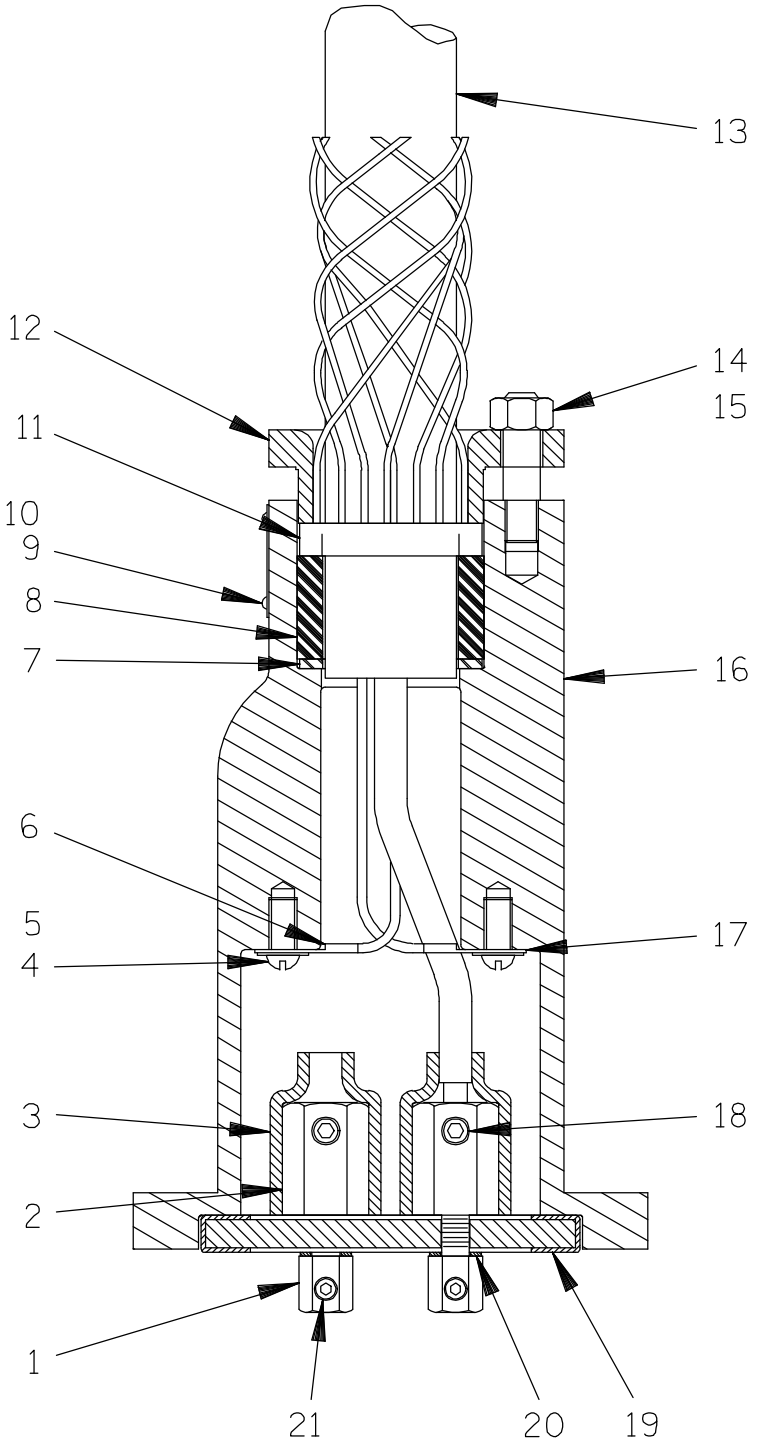

# GRP-38521

**S/N 1366457 UP**

**PUMP ISSUE 2**

## 460/3 Terminal Housing And Cable Assembly 47367—061

| ITEM NO. | | PART NAME | PART NUMBER | MAT'L CODE | QTY |
|---|---|---|---|---|---|
| 1 | | TERMINAL POST | 38724—009 | 14100 | 3 |
| 2 | | TERMINAL COLLAR | 10052A | 14100 | 3 |
| 3 | | HEAT SHRINK TUBE | 31417—030 | 19530 | 3 |
| 4 | | T TYPE LOCKWASHER | AK06 | 15991 | 2 |
| 5 | | RD HD MACH SCREW | X0603 | 14990 | 2 |
| 6 | | TERMINAL | 27214—058 | ——— | 1 |
| 7 | | WASHER | 10659B | 15991 | 1 |
| 8 | ✳ | GLAND BUSHING | 10758E | 19100 | 1 |
| 9 | | INFORMATION PLATE | 38816—047 | 17990 | 1 |
| 10 | | DRIVE SCREW | BM#04—03 | 17000 | 4 |
| 11 | | CABLE GRIP | 11227F | ——— | 1 |
| 12 | | TERMINAL GLAND | 10658 | 13040 | 1 |
| 13 | ✳ | POWER CABLE | 10325A | ——— | 1 |
| 14 | | HEX NUT | D08 | 17000 | 2 |
| 15 | | STUD | C0808 | 17000 | 2 |
| 16 | | TERMINAL HOUSING | 10088B | 13040 | 1 |
| 17 | | TERMINAL | 27214—065 | ——— | 1 |
| 18 | | ALLEN HEAD SETSCREW | GA0602 | 14990 | 3 |
| 19 | | TERMINAL PLATE ASSY | 11163 | 24010 | 1 |
| 20 | ✳ | DYNA SEAL WASHER | S1586 | ——— | 3 |
| 21 | | ALLEN HD SETSCREW | GA0501 1/2 | 14990 | 3 |
| NOT SHOWN: | | | | | |
| | | 2 OZ. RTV SEALANT | 18771—106 | ——— | 1 |

✳ INDICATES PARTS RECOMMENDED FOR STOCK

# GRP-38521

**S/N 1366457 UP**

**PUMP ISSUE 2**

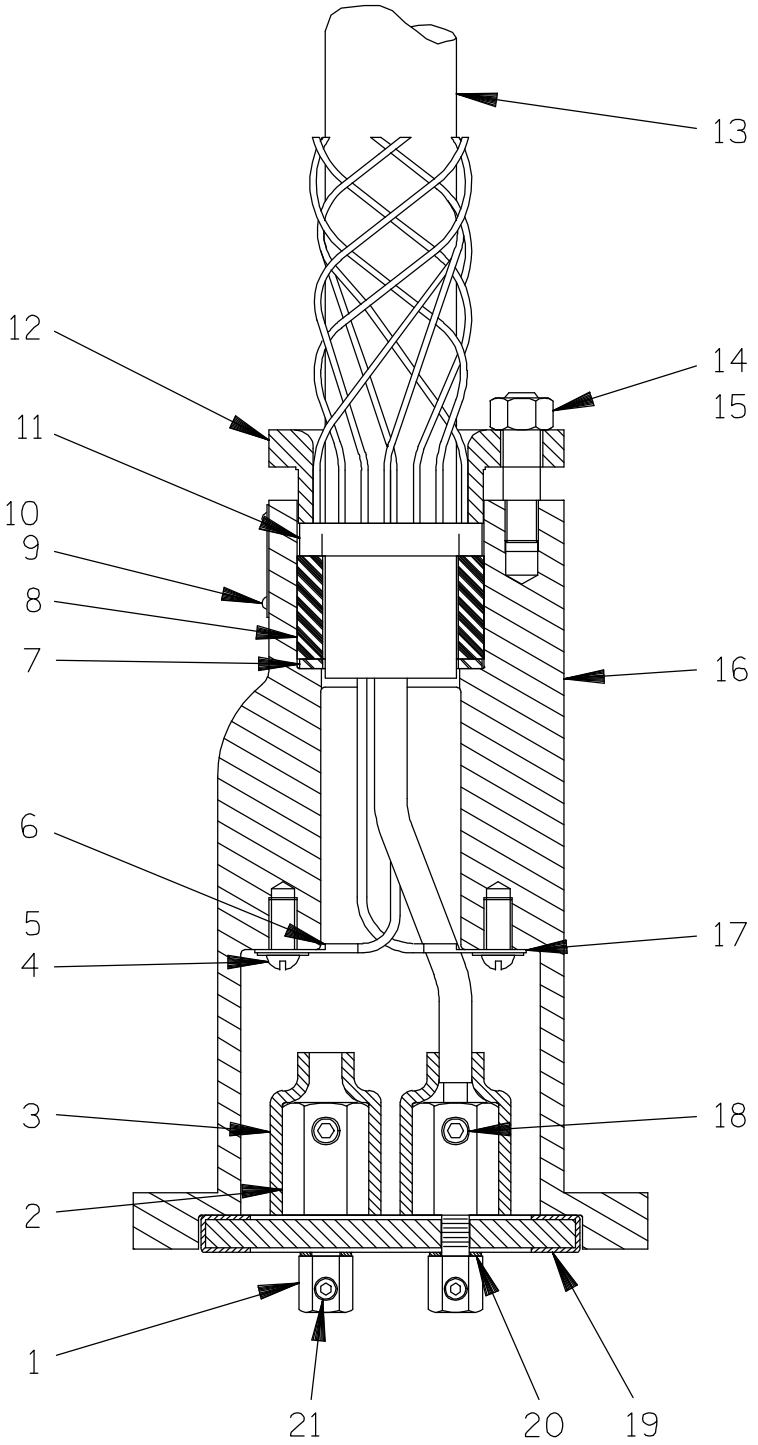

# GRP-38521

**S/N 1366457 UP**

**PUMP ISSUE 2**

## 575/3 Terminal Housing And Cable Assembly 47367—028

| ITEM NO. | | PART NAME | PART NUMBER | MAT'L CODE | QTY |
|---|---|---|---|---|---|
| 1 | | TERMINAL POST | 38724—009 | 14100 | 3 |
| 2 | | TERMINAL COLLAR | 10052A | 14100 | 3 |
| 3 | | HEAT SHRINK TUBE | 31417—030 | 19530 | 3 |
| 4 | | T TYPE LOCKWASHER | AK06 | 15991 | 2 |
| 5 | | RD HD MACH SCREW | X0603 | 14990 | 2 |
| 6 | | TERMINAL | 27214—062 | ——— | 1 |
| 7 | | WASHER | 31133—110 | 15991 | 1 |
| 8 | ✳ | GLAND BUSHING | 31144—001 | 19100 | 1 |
| 9 | | INFORMATION PLATE | 38816—047 | 17990 | 1 |
| 10 | | DRIVE SCREW | BM#04—03 | 17000 | 4 |
| 11 | | CABLE GRIP | 11227H | ——— | 1 |
| 12 | | TERMINAL GLAND | 10658 | 13040 | 1 |
| 13 | ✳ | POWER CABLE | 10325L | ——— | 1 |
| 14 | | HEX NUT | D08 | 17000 | 2 |
| 15 | | STUD | C0808 | 17000 | 2 |
| 16 | | TERMINAL HOUSING | 10088B | 13040 | 1 |
| 17 | | TERMINAL | S1550 | ——— | 1 |
| 18 | | ALLEN HEAD SETSCREW | GA0602 | 14990 | 3 |
| 19 | | TERMINAL PLATE ASSY | 11163 | 24010 | 1 |
| 20 | ✳ | DYNA SEAL WASHER | S1586 | ——— | 3 |
| 21 | | ALLEN HD SETSCREW | GA0501 1/2 | 14990 | 3 |
| NOT SHOWN: | | | | | |
| | | 2 OZ. RTV SEALANT | 18771—106 | ——— | 1 |

✳ INDICATES PARTS RECOMMENDED FOR STOCK



GORMAN-RUPP PUMPS | CANADA

# PUMP TEST RECORD

Model: S12A1-E140 575/3 J.O. # 15850 Test By: VENNO Date: 09-19-19 Sheet 1 o (circ

Suction Line Size: — Discharge Line Size: — Static Lift: —

**NOTE: If no data is required under a column, fill in using "N/A" or "---".**

| | 1 | | 2 | | 3 | | 4 | CIRCLE TEST(S) PERFORMED | VOLTS | | | SUBMERSIBLE PUMPS ONLY: OHM'S (REF. ONLY) | | | SUBMERSIBLE PUMPS ONLY: Hi-Pot | AMPS - Std. Pumps: "No Load" AMPS / "Max. flow @ 0 head" AMPS for Submersibles | | | |
|---|---|---|---|---|---|---|---|---|---|---|---|---|---|---|---|---|---|---|---|
| SEQ NO. | PUMP SERIAL NO. ENGINE SERIAL NO. (IF APPLICABLE) & CONTROL PANEL SERIAL NO. (IF APPLICABLE) | RPM or Strokes Per Minute | DISCHARGE PRESSURE FT. | SUCTION PRESSURE FT. | MAX. VACUUM FT. | (PA ONLY) DRY MAX. VACUUM FT. | SHUT OFF HEAD FT. | HYDROSTATIC TEST, AIR TEST - TIME @ PSI or VAC TEST - TIME @ In. Hg. | PH 1 | PH 2 | PH 3 | PH 1 | PH 2 | PH 3 | CHECK BOX | PH 1 | PH 2 | PH 3 | INITI |
| 1 | P: 16899933 | | | | | | | 30 x 20 5 MIN | | | | 8841 | 8830 | 8969 | ✓ | | | | |
| | E: | | | CP: | | | | | | | | | | | | | | | |
| 2 | P: 16899934 | | | | | | | 30 x 20 5 MIN | | | | 8731 | 8739 | 8731 | ✓ | 42.4 | 47.6 | 44.1 | MC |
| | E: | | | CP: | | | | | 606 | 606 | 604 | | | | | 88.6 | 93.5 | 88.5 | |
| 3 | P: | | | | | | | | | | | | | | | | | | |
| | E: | | | CP: | | | | | | | | | | | | | | | |
| 4 | P: | | | | | | | | | | | | | | | | | | |
| | E: | | | CP: | | | | | | | | | | | | | | | |
| 5 | P: | | | | | | | | | | | | | | | | | | |
| | E: | | | CP: | | | | | | | | | | | | | | | |
| 6 | P: | | | | | | | | | | | | | | | | | | |
| | E: | | | CP: | | | | | | | | | | | | | | | |
| 7 | P: | | | | | | | | | | | | | | | | | | |
| | E: | | | CP: | | | | | | | | | | | | | | | |
| 8 | P: | | | | | | | | | | | | | | | | | | |
| | E: | | | CP: | | | | | | | | | | | | | | | |
| 9 | P: | | | | | | | | | | | | | | | | | | |
| | E: | | | CP: | | | | | | | | | | | | | | | |
| 10 | P: | | | | | | | | | | | | | | | | | | |
| | E: | | | CP: | | | | | | | | | | | | | | | |

# Job Operation Listing Report

9/1/2021 10:51:03AM

**Job:** J000022053-0000 **Job Date:** 9/1/2021 **Status:** R **Released** **Start Date** 09/01/2021
**Co-product Mix:** **End Date** 09/07/2021
**Item:** S12A1-E140 575/3~ **Released:** 1.00 **Rework** No
SUBMERSIBLE PUMP **Planner Code** 70A
**Revision:** 002 **Drawing / Revision:** 46127897 / A
**Customer:** 2900800 **Reference:** O C000038203 1 **Lot #:**
TOROMONT CAT POWER SYSTEMS **Customer Item:**
**Config Code** SPC,N/A,0 -V W I P S E F *

S/N 1751983N

PUMP LESS CONTROL PANEL
FOR TOROMONT, BRAMPTON, CO C38203 - DUE 9/3 S/N 1689934 - J15850

| Oper Ctrl | WC | Description | Move Hours / Lbr Hours/Pc | Queue Hours / Mch Hours/Pc | Setup Hours / Fixed Sched Hours | Start / Offset Hours | End |
|---|---|---|---|---|---|---|---|
| 10 | 500 | STORES | 0.00 | 0.00 | 0.00 | | |
| Yes | | | 0.25 | 0.00 | ? | ? | |
| 20 | 600 | ASSEMBLY | 0.00 | 0.00 | 0.00 | | |
| Yes | | | 0.25 | 0.00 | ? | ? | |
| 50 | 700 | SHIPPING | 0.00 | 0.00 | 0.00 | | |
| Yes | | | 0.25 | 0.00 | ? | ? | |

9-2-31.

# Job Operation Listing Report

9/1/2021 10:51:04AM

**Job:** J000022053-0000 **Job Date:** 9/1/2021 **Status:** R **Released** **Start Date** 09/01/2021
**Co-product Mix:** **End Date** 09/07/2021
**Item:** S12A1-E140 575/3~ **Released:** 1.00 **Rework** No
SUBMERSIBLE PUMP **Planner Code** 70A
**Revision:** 002 **Drawing / Revision:** 46127897 / A
**Customer:** 2900800 **Reference:** O C000038203 1 **Lot #:**
TOROMONT CAT POWER SYSTEMS **Customer Item:**
**Config Code** SPC,N/A,0 -V W I P S E F *

| Option | OptionValue | Quantity |
|---|---|---|
| Pump Type . . . . . : | [S] SPECIAL | |
| Impeller Trim Diameter. : | 0.000 | |
| Component Part Number to Delete | 50516 (P) [CONTROL BOX ASSY] | 1 |
| Volute Casing | [V] STANDARD PRODUCT | |
| Wear Plate | [W] STANDARD PRODUCT | |
| Impeller | [I] STANDARD PRODUCT | |
| Seal Plate | [P] STANDARD PRODUCT | |
| Shaft | [S] STANDARD PRODUCT | |
| Seal Elastmeric Material | [E] STANDARD PRODUCT | |
| Seal Face Material | [F] STANDARD PRODUCT | |
| Cable Length in ft. | | |

**Tiri2 pump**

# ***MAV-8150HHC***

**Publication number 001**

**July 7, 2020**



HydroTech Mining

# ***MAV-8150HHC Specification Sheet***

| | |
|---|---|
| Discharge Diameter - inch (mm) | 8 (200) |
| Flow at rated point - USGPM (m3/h) | 1188 (270) |
| Head at rated point - ft (m) | 295 (90) |
| Impeller Type | Closed-Impeller |
| Max Solide Sizes - inch (mm) | NA |
| Weight - lb (kg) | 2376 (1080) |
| Diameter - inch (mm) | 22.3 (568) |
| Height - inch (mm) | 61.02 (1550) |
| Motor size - HP (kw) | 150 (110) |
| Seal Type | Double Mechanical Seal |
| Mechanical Seal Cooler | Non-additive Turbine Oil (JIS No.1) |
| Oil Capacity - Gallons (L) | 1.980 (7.5) |
| Number of bearings | 3 |
| Run Dry Motor | Yes |
| Speed - RPM | 3600 |
| Voltage - V (at 60Hz) | 575 |
| Rated Current - A (at 60Hz) | 144,0 |
| Motor Service Factor | 1,0 |
| Motor Protection | NA |
| Starting Method | Softstart |
| Insulation Class | F |
| Service Factor | 1,0 |
| Cable length - ft (m) | 50 (16) |
| Shaft | SUS420J2 Stainless Steel |
| Pump Casing | Ductile Cast Iron |
| Impeller | High Chrome Alloy |
| Suction Cover | Cast Iron |
| Upper Bearing | NU310C3 |
| Lower Bearing | 7313BTDBC3+SP |
| Standard Connection Type | 8'' Victaulic |

# ***MAV-8150HHC Performance Curve***

DISCH.DIA 8''

HydroTech Mining
*Solutions de pompage intégrées*

| | TEST LIQUID | CAPACITY (M³/H) | TOTAL HEAD (M) | SYNCHRONOUS SPEED (RPM) | SHAFT POWER (KW) | PUMP EFFICIENCY (%) |
|---|---|---|---|---|---|---|
| SPECIFICATION | WATER | 270 | 90 | 3600 | 110 | 65 |

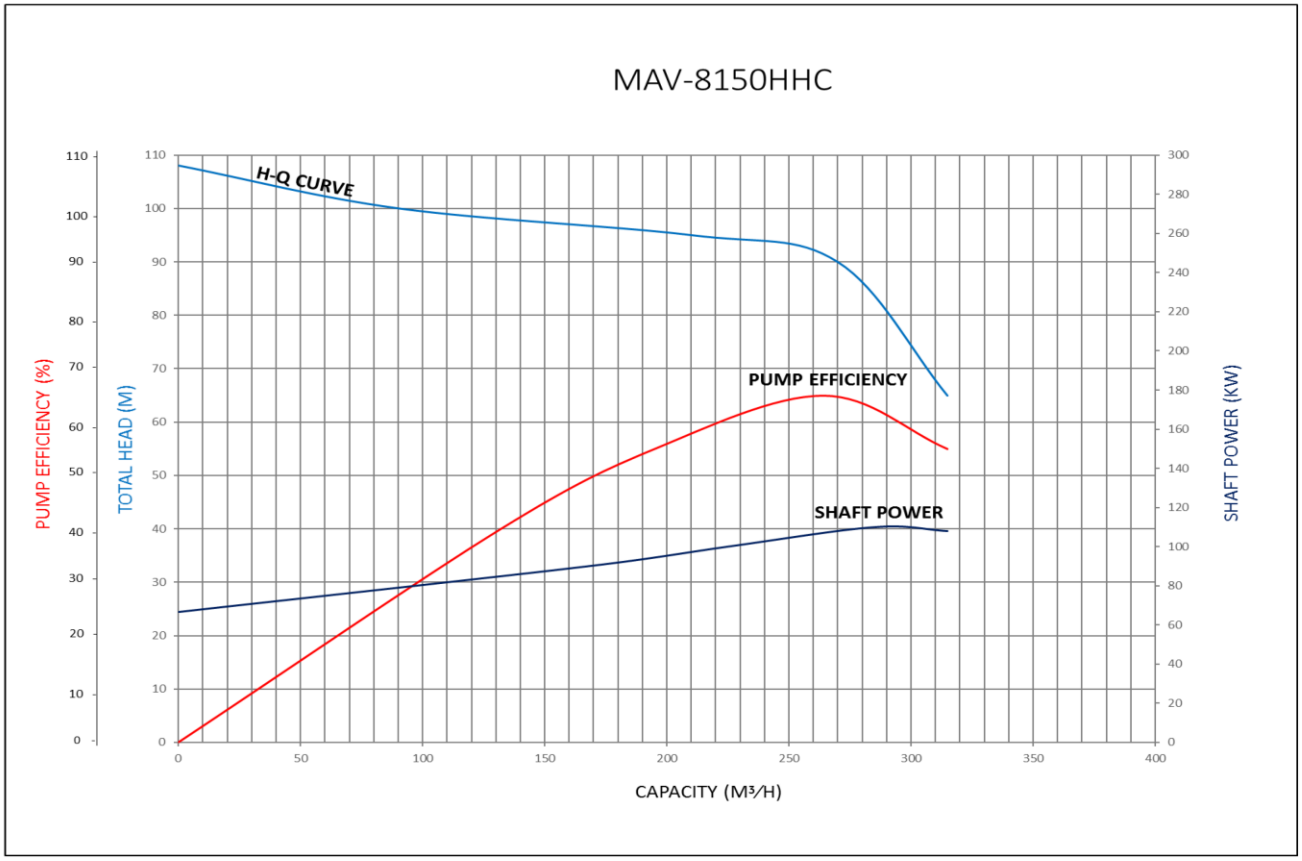

# *MAV-8150HHC Dimensions*

| | |
|---|---|
| **Weight-lbs (kg) :** | 2376 (1080) |
| **Volume-ft³ (m³) :** | 14,667 (0,414) |

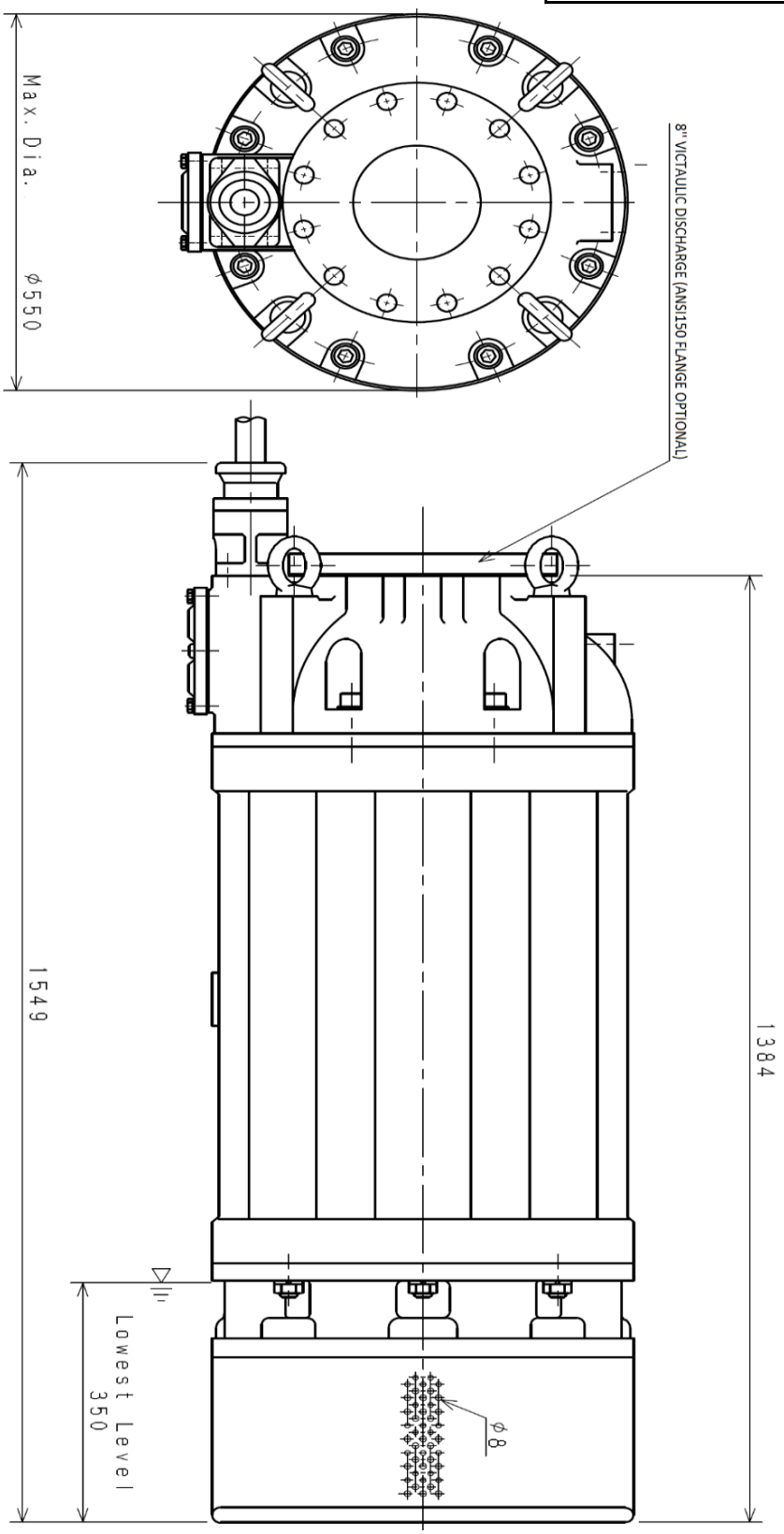

# ***MAV-8150HHC Parts list***

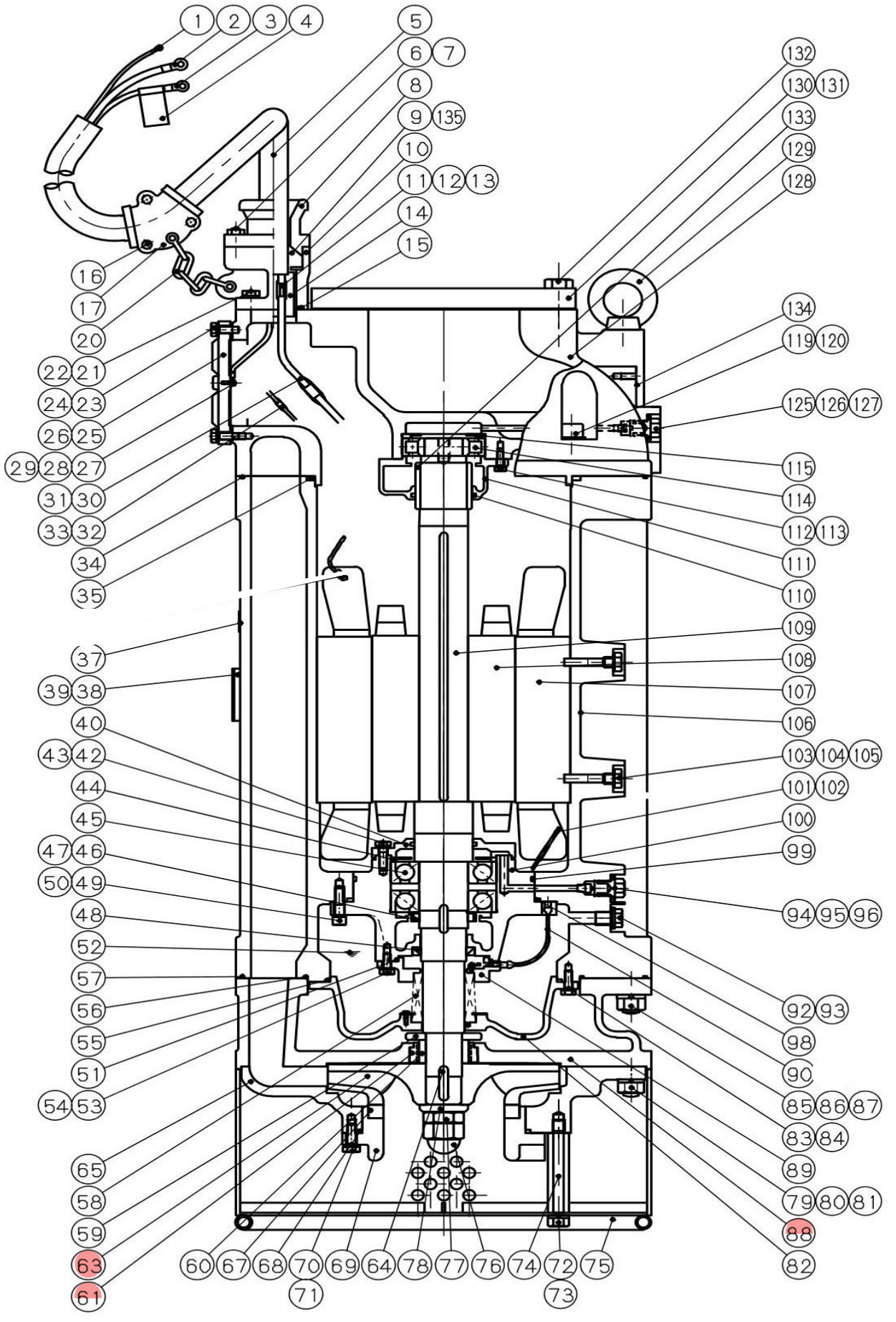

# MAV-8150HHC Parts list

| # | Part HTM | Part Name | Material | Qty |
|---|---|---|---|---|
| 1 | **ASK** | Tip | C1020PC<br>Copper | 3 |
| 2 | **ASK** | Tip | C1020PC<br>Copper | 6 |
| 3 | **ASK** | Tip | C1020PC<br>Copper | 1 |
| 4 | **ASK** | Earth Label AE | Synthetic Resin | 1 |
| 5 | **MAV-01825** | Shielded Cable + diode | 2PNCTS<br>Rubber insulated flixible cables | 16 m |
| 6 | **MAV-03086** | Stud Bolt | SUS304<br>Stainless Steel | 2 |
| 7 | **MAV-01053** | Hexagon Nut | SUS304<br>Stainless Steel | 2 |
| 8 | **MAV-03137** | Packing Gland | FC<br>Cast Iron | 1 |
| 9 | **MAV-02130** | Rubber Packing | SUS+<br>StainlessSteel+Synthetic Rubber | 1 |
| 10 | **MAV-01417** | Stuffing Case | FC<br>Cast Iron | 1 |
| 11 | **ASK** | Tube | Synthetic Resin | 6 |
| 12 | **ASK** | Tube | Synthetic Resin | 1 |
| 13 | **ASK** | Tube | Synthetic Resin | 3 |
| 14 | **ASK** | Compound | Epoxy resin | 120 cc |
| 15 | **(*)** | O-ring | Synthetic Rubber | 1 |
| 16 | **MAV-01411** | Hollowset Bolt | SUS304<br>Stainless Steel | 3 |
| 17 | **MAV-03138** | Cable Clamp | FC<br>Cast Iron | 1 Set |
| 20 | **MAV-01403** | Shackle | SUS304<br>Stainless Steel | 3 |
| 21 | **MAV-01143** | Hexagon Bolt | SUS304<br>Stainless Steel | 4 |
| 22 | **MAV-01022** | Spring Washer | SUS304<br>Stainless Steel | 4 |
| 23 | **MAV-01054** | Hexagon Bolt | SUS304<br>Stainless Steel | 6 |
| 24 | **MAV-01033** | Spring Washer | SUS304<br>Stainless Steel | 6 |
| 25 | **MAV-01404** | Terminal Box Cover | FC<br>Cast Iron | 1 |
| 26 | **MAV-02882** | Seat Packing | Synthetic Rubber | 1 |
| 27 | **ASK** | Tip | C1020PC<br>Copper | 1 |
| 28 | **MAV-01110** | Screw | SUS304<br>Stainless Steel | 1 |
| 29 | **MAV-01376** | Spring Washer | SUS304<br>Stainless Steel | 1 |
| 30 | **ASK** | Crimping Sleeve | C1020PC<br>Copper | 6 |
| 31 | **ASK** | Insulating Sleeve | Synthetic Resin | 12 |
| 32 | **ASK** | Crimping Sleeve | C1020PC<br>Copper | 3 |
| 33 | **ASK** | Insulating Sleeve | Synthetic Resin | 3 |
| 34 | **(*)** | O-ring | Synthetic Rubber | 1 |
| 35 | **(*)** | O-ring | Synthetic Rubber | 1 |
| 37 | **ASK** | Caution Label AE | Synthetic Resin | 1 |
| 38 | **ASK** | Name Plate | C2801P<br>Brass | 1 |
| 39 | **ASK** | Rivet | SUS304<br>Stainless Steel | 4 |
| 40 | **MAV-01412** | Bearing Cover | SS400<br>Mild Steel | 1 |
| 42 | **MAV--01209** | Hexagon Bolt | S25C<br>Mild Steel | 8 |
| 43 | **MAV-01210** | Spring Washer | SWRH4A<br>Stainless Steel | 8 |
| 44 | **MAV-03087** | Grease Catcher | SS400<br>Mild Steel | 1 |
| 45 | **MAV-01211** | Bearing | 7313DBBTH<br>73130BBTH | 3 |

RECOMMENDED SPARE PARTS

(*) ARE INCLUDED IN THE ORING KIT

# MAV-8150HHC Parts list

| # | Part HTM | Part Name | Material | Qty |
|---|---|---|---|---|
| 46 | **MAV-01212** | Lock Nut | S25C<br>Mild Steel | 1 |
| 47 | **MAV-01213** | Bearing Washer | SS400<br>Mild Steel | 1 |
| 48 | **MAV-01214** | Oil Seal | Synthetic Rubber | 1 |
| 49 | **MAV-01215** | Hollow set Bolt | SUS304<br>Stainless Steel | 8 |
| 50 | **MAV-01022** | Spring Washer | SUS304<br>Stainless Steel | 8 |
| 51 | **(*)** | O-ring | Synthetic Rubber | 1 |
| 52 | **ASK** | Lubricant | Turbine Oil | 7.5 L |
| 53 | **MAV-01309** | Hexagon Bolt | SUS304<br>Stainless Steel | 4 |
| 54 | **MAV-01033** | Spring Washer | SUS304<br>Stainless Steel | 4 |
| 55 | **(*)** | O-ring | Synthetic Rubber | 1 |
| 56 | **(*)** | O-ring | Synthetic Rubber | 1 |
| 57 | **(*)** | O-ring | Synthetic Rubber | 1 |
| 58 | **MAV-01216** | Mechanical Seal | | 1 Set |
| 59 | **MAV-01217** | Water Shut Disk | SUS<br>Stainless Steel | 1 |
| 60 | **MAV-01218** | Shaft Sleeve | S20C+<br>Mild Steel+Coating | 1 |
| 61 | **MAV-01150** | Labyrinth Seal | High Chrome Alloy | 1 |
| 63 | **MAV-01983** | Impeller | High Chrome Alloy | 1 |
| 64 | **MAV-01220** | Impeller Key | SUS304<br>Stainless Steel | 1 |
| 65 | **MAV-01949** | Casing | FCD<br>Ductile Cast Iron | 1 |
| 67 | **MAV-01957** | Mouth Ring | High Chrome Alloy | 1 |
| 68 | **(*)** | O-ring | Synthetic Rubber | 1 |
| 69 | **MAV-01955** | Suction Mouth | FCD<br>Ductile Cast Iron | 1 |
| 70 | **MAV-01143** | Hexagon Bolt | SUS304<br>Stainless Steel | 4 |
| 71 | **MAV-01022** | Spring Washer | SUS304<br>Stainless Steel | 4 |
| 72 | **MAV-01031** | Hexagon Nut | SUS304<br>Stainless Steel | 4 |
| 73 | **MAV-01058** | Spring Washer | SUS304<br>Stainless Steel | 4 |
| 74 | **MAV-01141** | Strainer Bolt | SS400<br>Mild Steel | 4 |
| 75 | **MAV-01956** | Strainer | SS400<br>Mild Steel | 1 |
| 76 | **MAV-01225** | Impeller Nut | SUS304<br>Stainless Steel | 1 |
| 77 | **MAV-01226** | Hexagon Cup Nut | SUS304<br>Stainless Steel | 1 |
| 78 | **MAV-01227** | Impeller Washer | SUS<br>Stainless Steel | 1 |
| 79 | **MAV-01228** | Stud Bolt | SUS304<br>Stainless Steel | 8 |
| 80 | **MAV-01118** | Hexagon Nut | SUS304<br>Stainless Steel | 8 |
| 81 | **MAV-01229** | Spring Washer | SUS304<br>Stainless Steel | 8 |
| 82 | **MAV-01230** | Oil Casing | FC<br>Cast Iron | 1 |
| 83 | **MAV-01186** | Hexagon Bolt | SUS304<br>Stainless Steel | 8 |
| 84 | **MAV-01033** | Spring Washer | SUS304<br>Stainless Steel | 8 |
| 85 | **MAV-01231** | Stud Bolt | SUS304<br>Stainless Steel | 8 |
| 86 | **MAV-01232** | Hexagon Nut | SUS304<br>Stainless Steel | 8 |
| 87 | **MAV-01233** | Spring Washer | SUS304<br>Stainless Steel | 8 |
| 88 | **MAV-01982** | Casing Cover | FC<br>Cast Iron | 1 |
| 89 | **MAV-01235** | Detector Housing | FC<br>Cast Iron | 1 |

RECOMMENDED SPARE PARTS

(*) ARE INCLUDED IN THE ORING KIT

# MAV-8150HHC Parts list

| # | Part HTM | Part Name | Material | Qty |
|---|---|---|---|---|
| 90 | MAV-01198 | Detector Leading Wire | | 1 |
| 92 | MAV-01237 | Oil Plug | sus<br>Stainless Steel | 1 |
| 93 | MAV-03096 | Packing | Non-Asbestos | 1 |
| 94 | MAV-01406 | Grease Plug | SUS<br>Stainless Steel | 1 |
| 95 | (*) | O-ring | Synthetic Rubber | 1 |
| 96 | MAV | Grease Nipple | | 1 |
| 98 | (*) | O-ring | Synthetic Rubber | 1 |
| 99 | (*) | O-ring | Synthetic Rubber | 1 |
| 100 | MAV-03089 | Lower Bracket | FC<br>Cast Iron | 1 |
| 101 | ASK | Crimping Sleeve | C1020PC<br>Copper | 1 |
| 102 | MAV-01200 | Insulating Sleeve | Synthetic Resin | 1 |
| 103 | MAV-03090 | Hexagon Bolt | SUS304<br>Stainless Steel | 2 |
| 104 | MAV-03091 | Seal Washer | SUS+<br>StainlessSteel+Synthetic Rubber | 2 |
| 105 | MAV-03092 | Fastener Pin | SWRM<br>Mild Steel | 2 |
| 106 | MAV-03093 | Motor Frame | FC<br>Cast Iron | 1 |
| 107 | MAV-03139 | Stator 575V | | 1 |
| 108 | MAV-03140 | Rotor | | 1 |
| 109 | | Motor Shaft | SUS420J2<br>Stainless Steel | 1 |
| 110 | MAV-01350 | Felt Ring | Felt | 1 |
| 111 | MAV-01238 | Bearing Cover | FC<br>Cast Iron | 1 |
| 112 | MAV-01895 | Hexagon Bolt | S25C<br>Mild Steel | 4 |
| 113 | MAV-01207 | Spring Washer | SWRH4A<br>Stainless Steel | 4 |
| 114 | MAV-01239 | Upper Bearing | NU310C3<br>NU310C3 | 1 |
| 115 | MAV-01413 | Grease Catcher | SS400<br>Mild Steel | 1 |
| 119 | MAV-01414 | Hollow set Bolt | SUS304<br>Stainless Steel | 8 |
| 120 | MAV-01409 | Seal Washer | SUS+ ,5xU<br>StainlessSteel+Synthetic Rubber | 8 |
| 122 | ASK | Frequency Label | Tetron | 1 |
| 123 | ASK | I.P.Seal | Tetron | 1 |
| 124 | MAV-01110 | Screw | SUS304<br>Stainless Steel | 3 |
| 125 | MAV-01406 | Grease Plug | SUS<br>Stainless Steel | 1 |
| 126 | (*) | O-ring | Synthetic Rubber | 1 |
| 127 | MAV-01408 | Grease Nipple | | 1 |
| 128 | MAV-03097 | Upper Bracket | FC<br>Cast Iron | 1 |
| 129 | MAV-03098 | Eye Bolt | SS400<br>Mild Steel | 4 |
| 130 | ASK | Companion Flange | SS400<br>Mild Steel | 1 |
| 131 | MAV-03099 | Packing | Synthetic Rubber | 1 |
| 132 | MAV-03100 | Hexagon Bolt | SUS304<br>Stainless Steel | 12 |
| 133 | MAV-01240 | Shaft Sleeve | SS400<br>Mild Steel | 1 |
| 134 | ASK | Caution Plate | BSP | 1 |
| 135 | MAV-01231 | Washer | SUS<br>Stainless Steel | 1 |
| 136 | MAV-03152 | Impeller Collar | SUS304<br>Stainless Steel | |
| 901 | MAV-03101 | Packing & 0 ring Set | | 1 |
| 902 | MAV-02126 | Discharge Pipe With Flange | SS400<br>Mild Steel | 1 |

RECOMMENDED SPARE PARTS

(*) ARE INCLUDED IN THE ORING KIT

# HydroTech Mining inc

**ITEM: 6526-S-265-607A**

**DESCRIPTION: TIRI 2 POND SUBMERSIBLE PUMP MAV-8150HHC**

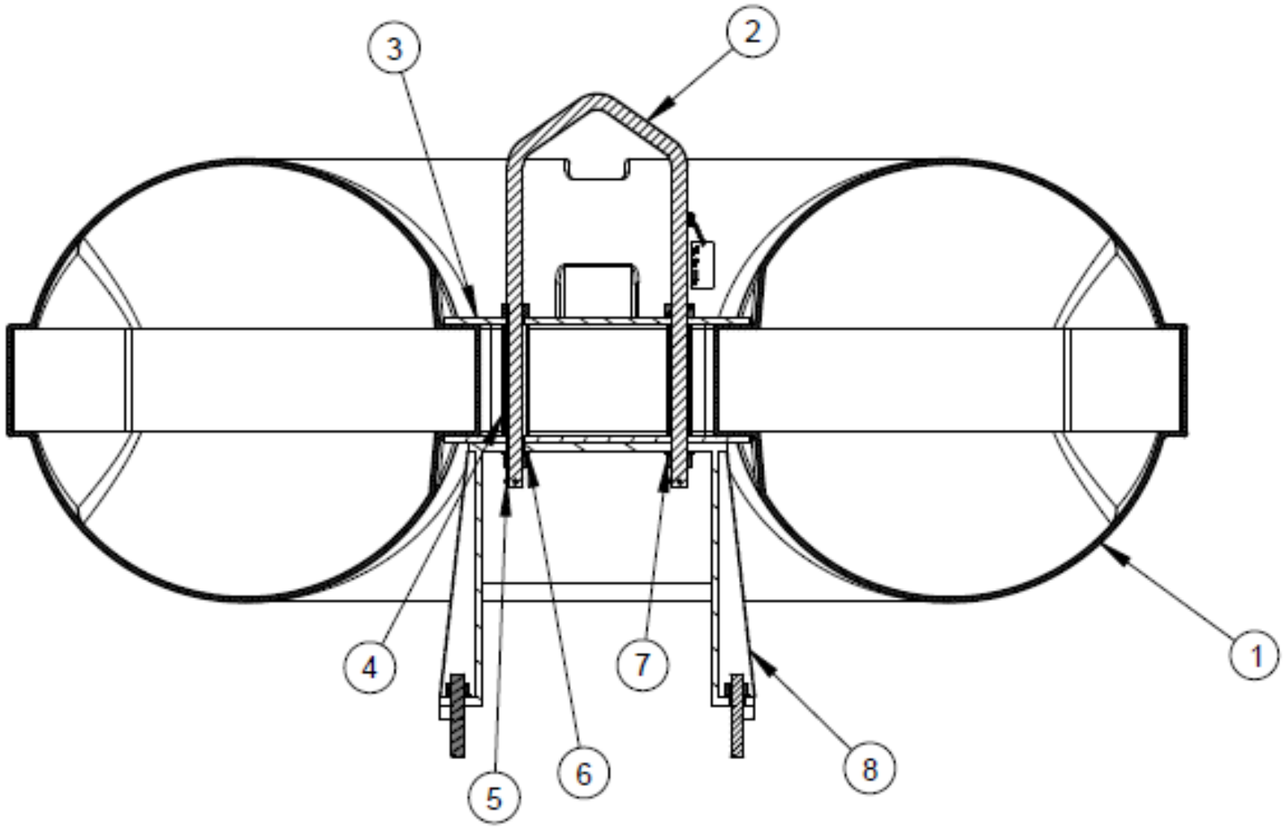


| 691 70 10 | | | |
|---|---|---|---|
| Pos. | Part number | Denomination | Pcs. |
| 1 | 690 77 00 | Raft | 1 |
| 2 | 692 84 00 | Lifting eye unit | 1 |
| 3 | 691 47 00 | Guiding plate | 2 |
| 4 | 692 85 02 | Distance pipe | 2 |
| 5 | 80 66 11 | Cotter pin | 2 |
| 6 | 82 35 80 | Plain washer | 2 |
| 7 | 82 23 39 | Hexagon nut | 2 |

**HydroTech Mining**

**Organized Dewatering Solutions**

| | | | | |
|---|---|---|---|---|
| | | REVISION: R0 | | TITLE: GA |
| TOLÉRANCE GÉNÉRAL SAUF SI INDIQUÉ | | UNLESS OTHERWISE SPECIFIED: DIMENSIONS ARE IN INCH | FINISH: DEBURR AND BREAK SHARP EDGES | |
| 10-1/8" | +/- 1/16 | | NAME | DATE |
| 10.1" | +/-0.1 | DESSINÉ PAR: | - | 2021-08-04 |
| 10.13" | +/-0.05 | PRÉPARÉ PAR: | | |
| 10.125" | +/-0.005 | | | |

DWG NO. RAFT (OPP21-023) — A3

WEIGHT: — SCALE: 1:1

# HD Polyurethane Discharge Hose
## Tuyau de refoulement en polyuréthane HD




**Tube:** polyurethane - available in black, yellow, red, blue.
**Reinforcement:** high tensile textile.
**Cover:** black, yellow, blue or red polyurethane - ribbed or smooth cover.
**Application:** lay flat irrigation, pumping of sludge and liquid fertilizers, supply or drag hose.
**Constant operation:** -50 °C +80 °C (-58 °F +176 °F)

**Tuyau :** polyuréthane - disponible en noir, jaune, rouge, bleu.
**Renfort:** Nappes textiles haute résistance.
**Revêtement:** polyuréthane noir, jaune, rouge ou blue - couverture nervuré ou lisse
**Application :** pose d'irrigation à plat, pompage de boues et d' engrais liquide, tuyau d'alimentation ou de traînée.
**Plage de température de fonctionnement :**
-50 °C à +80 °C (-58 °F à +176 °F)






| | | WP | | BP | | Elongation at WP MAX<br>Allongement à WP | Expansion at WP MAX<br>Expansion à WP | GRIP<br>POIGNÉE | | Weight / Poids | |
|---|---|---|---|---|---|---|---|---|---|---|---|
| mm | in/po | bar | psi | bar | psi | | | mm | po/in | kg/m | lb/ft |
| 102 | 4 | 20 | 300 | 60 | 900 | ≤1 | ≤8 | 508 | 20 | 1,3 | 0,87 |
| 125 | 5 | 10 | 150 | 20 | 300 | ≤1 | ≤8 | 609,6 | 24 | 1,8 | 1,21 |
| 152 | 6 | 17 | 250 | 51 | 750 | ≤1 | ≤8 | 762 | 30 | 2,1 | 1,41 |
| 152 | 6 | 20 | 300 | 60 | 900 | ≤2 | ≤8 | 762 | 30 | 2,6 | 1,74 |
| 204 | 8 | 13 | 200 | 41 | 600 | ≤1 | ≤10 | 889 | 35 | 2,9 | 1,94 |
| 204 | 8 | 20 | 300 | 60 | 900 | ≤1 | ≤10 | 889 | 35 | 3,0 | 2,02 |
| 254 | 10 | 13 | 200 | 41 | 600 | ≤1 | ≤10 | 889 | 35 | 4,1 | 2,75 |
| 254 | 10 | 20 | 300 | 60 | 900 | ≤2 | ≤8 | 889 | 35 | 5,6 | 3,75 |

**SETP treated water punps**

HydroTech Mining
Organized dewatering solutions

# Technical Data

Project : **OPP21-020**

Pump : **PUM-38114**

Customer no. --

Customer -

Positioning **7**

Delivery time: General

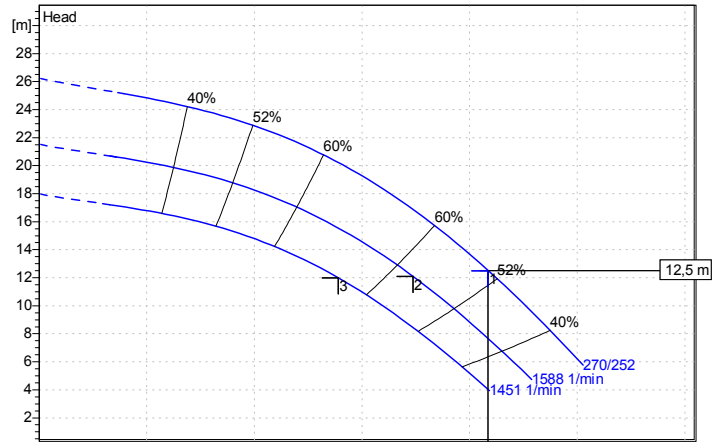


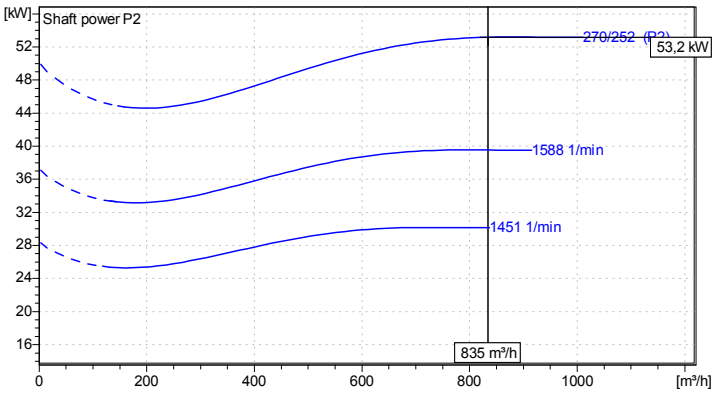


## Requested data

| | | |
|---|---|---|
| *Fluid Saline water* | | *100 %* |
| *Temp: 35 °C* | *Dens: 1 kg/dm³* | *Visc:1,0004 mm²/s* |
| Flow | 834 | m³/h |
| Head | 12,5 | m |

## Pump data

| | | |
|---|---|---|
| Type | **INVCP-250/300C** | |
| Design | Group without Motor-1 Pipe length | |
| Impeller type | Closed | |
| Impeller size | 270/252 | mm |
| Outlet width | 77 | mm |

## ISO 9906 class 3B, below 10 kW acc. to § 4.4.2

| | | |
|---|---|---|
| Flow | 835 | m³/h |
| Head | 12,5 | m |
| Speed | 1753 | 1/min |
| Shaft power | 53,2 | kW |

## Materials — Execution: 0305

| | |
|---|---|
| Pump housing | Stainless Steel (A351 GR CF8M) |
| Pump cover | Stainless Steel (A351 GR CF8M) |
| Impeller | Stainless Steel (A743 GR CF8M) |
| Pump shaft | Stainless Steel (1.4404) |
| Housing wear ring | Stainless Steel (1.4404/AISI 316L) |
| Friction bearing pump side | Standard TFM |

## Shaft seal — Lip seal

| | |
|---|---|
| Type | RETEN |
| Materials / Shaft seal | |

## Motor data — ITUR

**Three-phase IP-55** *Size 280 S*

| | | |
|---|---|---|
| Rated power P2 | 75 kW | |
| Speed | 1785 1/min | 60 Hz |
| Rated voltage | 460V | |
| Rated current | 118 A | |
| Protection | IP 55 | |
| Insulation class | F | |
| Temperature class | B | |

## Bearing Lubrication — Internal

### Nozzles

**DNd** Discharge side
ANSI
14 in 150 Lb

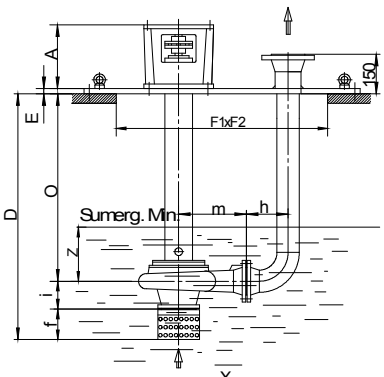


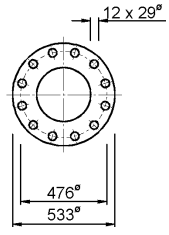


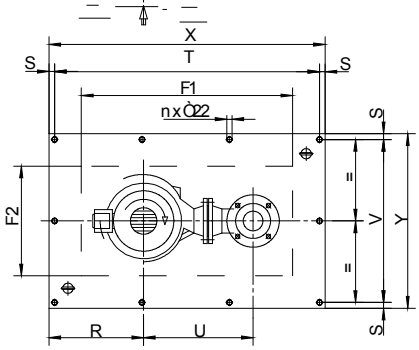


SISTEMAS DE LUBRICACIÓN / LUBRICATION SYSTEMS:

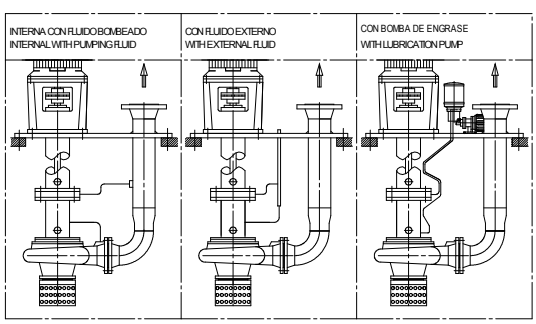


**Dimensions in mm**

| | |
|---|---|
| A | 600 |
| D | 1565 |
| DNd | 350 |
| E | - |
| f | 250 |
| F1 | 1465 |
| F2 | 700 |
| h | 452 |
| i | 230 |
| m | 470 |
| n | 10 |
| O | 1085 |
| R | - |
| S | 30 |
| T | - |
| U | - |
| V | - |
| Z | 300 |

Connection dimensions for pumps: DIN 735 / ISO 2768-vK
Dimensions w/o tolerances. Welded parts: ISO 13920-B/F
Dimensions w/o tolerances: ISO 2768-cK
Dimensions w/o tolerances. Castings: ISO 8062-CT9

**Weight 1044 kg**

# HydroTech Mining inc

**ITEM: 65PWA68010**

**DESCRIPTION: SETP Treated Water Pump**

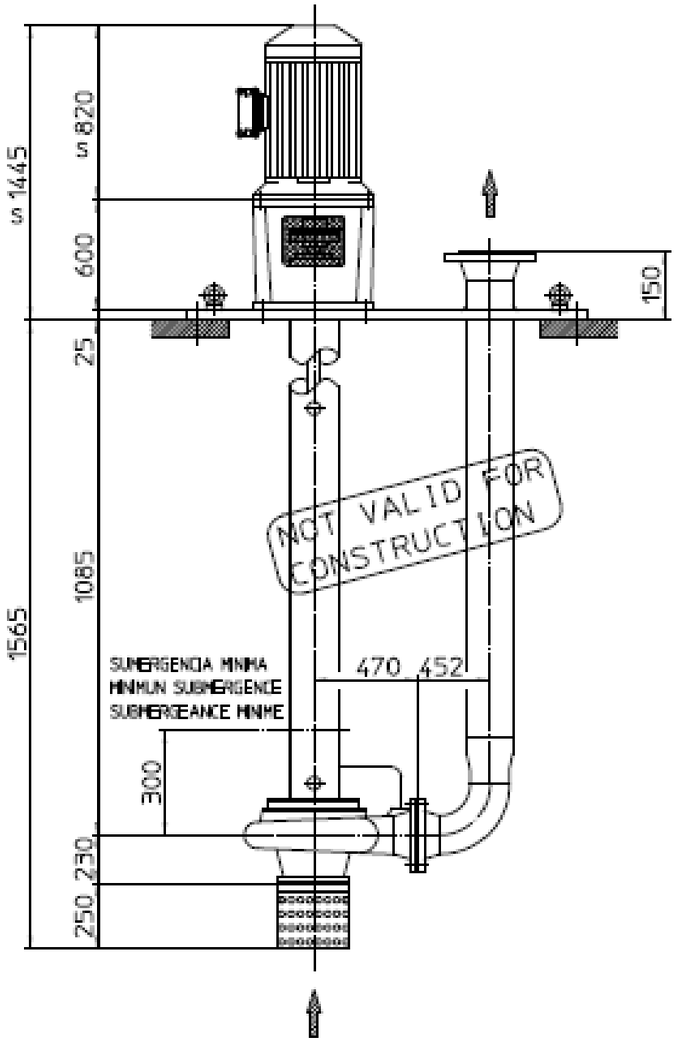


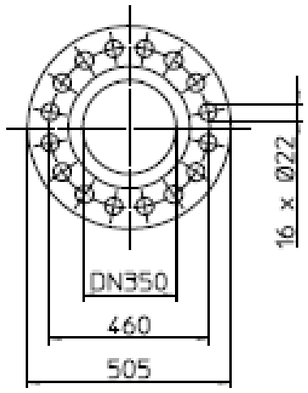


BRIDA DE IMPULSION
DELIVERY FLANGE
BRIDE DE REFOULEMENT
DN350 PN10RF

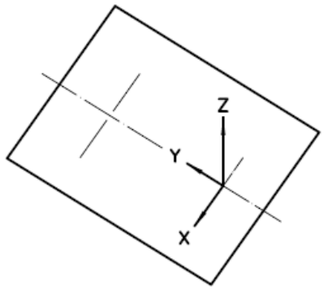


Connection dimensions for pumps: DIN 735/ISO 2768-vK
Dimensions w/o tolerances. Welded parts: ISO 13920-B/F
Dimensions w/o tolerances: ISO 2768-cK
Dimensions w/o tolerances. Castings: ISO 8062-CT9

| CARGAS EN FUNDACIONES-FUNDATION LOADS<br>CHARGES SUR FONDATIONS | | | |
|---|---|---|---|
| SENTIDO-SENSE-SENS | X | Y | Z |
| FUERZA-FORCE-CHARGE N | 5640 | 6270 | 28070 |
| MOMENTOS-BEND.-COUPLE Nm | 12131 | 7179 | 8147 |

| PESO-WEIGHT<br>POID 2151 Kgs. | BRIDA-FLANGE<br>FLASQUE PN10RF | CARGAS EN TOBERAS-NOZZLE LOADS<br>CHARGES SUR TUYAUTERIE | | | | | | |
|---|---|---|---|---|---|---|---|---|
| | | ESFUERZ.<br>STRESES<br>ALLURES | Fo N | | | Mo Nm | | |
| | | | Fx | Fy | Fz | Mx | My | Mz |
| POTENCIA-POWER-PUISSANCE | VELOCIDAD-SPEED-VELOCITE | B. ASPIRAC.<br>SUC. FLANG.<br>FLASQ. ASPI. | 0 | 0 | 0 | 0 | 0 | 0 |
| 75 KW | 1785 R.P.M. | B. IMPULSION<br>DEL. FLANG.<br>FLASQ. REFO. | 5640 | 6270 | 6990 | 3810 | 4650 | 3300 |

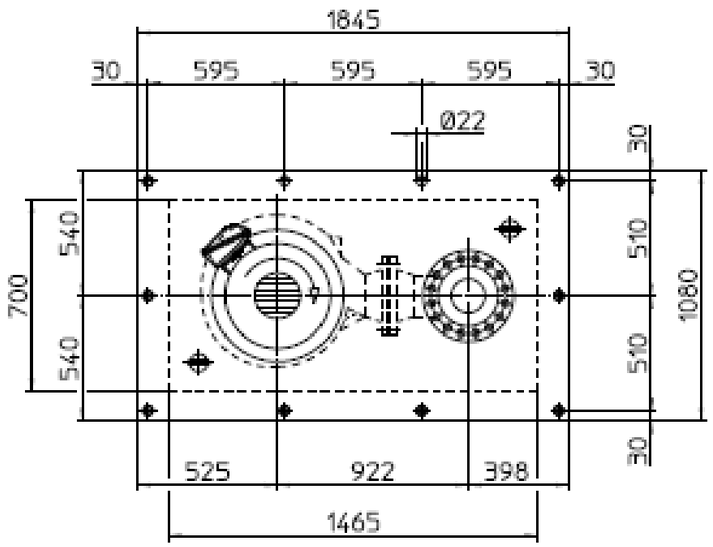


## HydroTech Mining

**Organized Dewatering Solutions**

REVISION: R0

TITLE: INSTALLATION PLAN

| TOLÉRANCE GÉNÉRAL SAUF SI INDIQUÉ | | UNLESS OTHERWISE SPECIFIED: DIMENSIONS ARE IN INCH | FINISH: DEBURR AND BREAK SHARP EDGES | |
|---|---|---|---|---|
| 10-1/8" | +/- 1/16 | | NAME | DATE |
| 10.1" | +/-0.1 | DESSINÉ PAR: | - | 2021-05-21 |
| 10.13" | +/-0.05 | PRÉPARÉ PAR: | | |
| 10.125" | +/-0.005 | | | |

DWG NO. INVCP-250/300C (OPP21-020) A3

WEIGHT: SCALE: 1:1 SHEET: 1

# HydroTech Mining inc

**ITEM: 65PWA68010**
**DESCRIPTION: SETP Treated Water Pump**

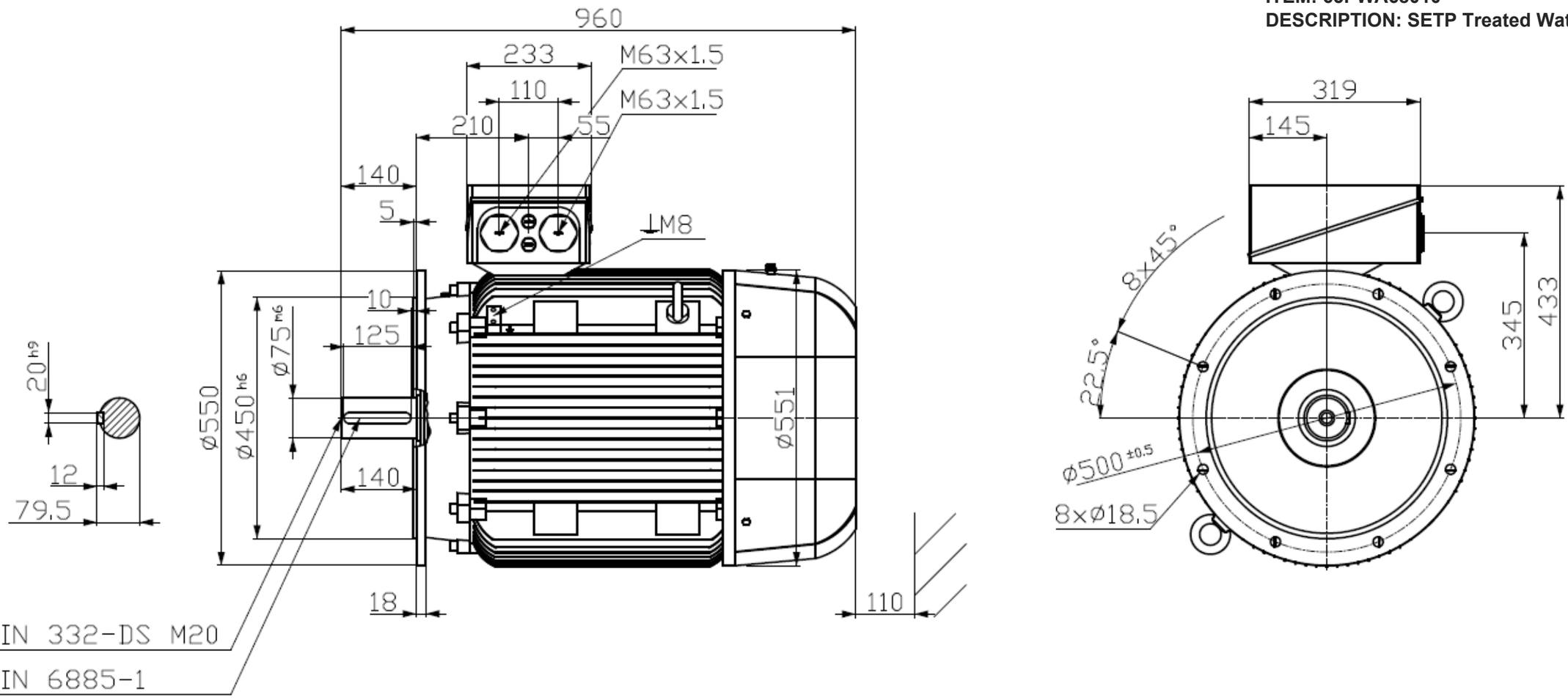


## Mechanical data

| | | | | |
|---|---|---|---|---|
| Sound level (SPL / SWL) at 50Hz\|60Hz | 69.0 / 83.0 dB(A) [2] | 77.0 / 91.0 dB(A) [2] | External earthing terminal | Yes (standard) |
| Moment of inertia | 1.3900 kg m² | | Vibration severity grade | A |
| Bearing DE \| NDE | 6317 C3 | 6317 C3 | Insulation | 155(F) to 130(B) |
| **bearing lifetime** | | | Duty type | S1 |
| $L_{10mh}$ $F_{Rad\ min}$ for coupling operation 50\|60Hz [1] | 40000 h | 32000 h | Direction of rotation | bidirectional |
| Relubrication interval/quantity DE \| NDE | 30 g \| 30 g<br>8000 h | | Frame material | cast iron |
| Lubricants | Unirex N3 | | Coating (paint finish) | Standard paint finish C2 |
| Regreasing device | Yes (standard) | | Color, paint shade | RAL7030 |
| Grease nipple | M10x1 DIN 3404 A | | Motor protection | (B) 3 PTC thermistors - for tripping (2 terminals) |
| Type of bearing | Locating bearing DE | | Method of cooling | IC411 - self ventilated, surface cooled |
| Condensate drainage holes | Yes (standard) | | | |

## Terminal box

| | | | |
|---|---|---|---|
| Terminal box position | top | Max. cross-sectional area | 120.0 mm² |
| Material of terminal box | cast iron | Cable diameter from ... to ... | 34.0 mm - 42.0 mm |
| Type of terminal box | TB1 N01 | Cable entry | 2xM63x1,5-2xM20x1,5 |
| Contact screw thread | M10 | Cable gland | 4 plugs |

## Electrical data — Safe Area

| U [V] | Δ / Y | f [Hz] | P [kW] | P [hp] | I [A] | n [1/min] | M [Nm] | η [3] 4/4 | η [3] 3/4 | η [3] 2/4 | cosφ [3] 4/4 | cosφ [3] 3/4 | cosφ [3] 2/4 | $I_A/I_N$ $I_I/I_N$ | $M_A/M_N$ $T_I/T_N$ | $M_K/M_N$ $T_B/T_N$ | IE-CL |
|---|---|---|---|---|---|---|---|---|---|---|---|---|---|---|---|---|---|
| 400 | Δ | 50 | 75.00 | -/- | 133.00 | 1485 | 480.0 | 95.0 | 95.3 | 95.0 | 0.86 | 0.83 | 0.75 | 6.9 | 2.5 | 3.0 | IE3 |
| 460 | Δ | 60 | 86.00 | -/- | 131.00 | 1785 | 460.0 | 94.5 | 94.7 | 94.2 | 0.87 | 0.85 | 0.77 | 6.8 | 2.5 | 2.9 | IE2 |
| 460 | Δ | 60 | 75.00 | 100.00 | 116.00 | 1788 | 400.0 | 95.4 | 95.3 | 94.5 | 0.85 | 0.81 | 0.72 | 7.7 | 2.8 | 3.3 | MG1 |

IM V1 / IM 3011 | FS 280 S | 570 kg | IP55 | CC032A | IEC/EN 60034 | IEC, EN, UL, CSA, NEMA MG1-12-12 | kVA Code: J

Environmental conditions : -20 °C - +40 °C / 1000 m | Locked rotor time (hot / cold) : 31.2 s | 47.7 s

# HydroTech Mining

**Organized Dewatering Solutions**

REVISION: R0

TITLE: INSTALLATION PLAN

| TOLÉRANCE GÉNÉRAL SAUF SI INDIQUÉ | | UNLESS OTHERWISE SPECIFIED: DIMENSIONS ARE IN INCH | FINISH: DEBURR AND BREAK SHARP EDGES |
|---|---|---|---|
| 10-1/8" | +/- 1/16 | | NAME / DATE |
| 10.1" | +/-0.1 | DESSINÉ PAR: | - / 2021-05-21 |
| 10.13" | +/-0.05 | PRÉPARÉ PAR: | |
| 10.125" | +/-0.005 | | |

DWG NO. SIEMENS75KW (OPP21-020) — A3

WEIGHT: | SCALE: 1:1 | SHEET: 2

# INSTRUCTIONS MANUAL

**VERTICAL SUMP PUMP : PUM-38114**
**(OPP21-020)**



HydroTech Mining

**UPDATE : FEB 2022**

# PUM-38114

**Vertical pumps for tanks**

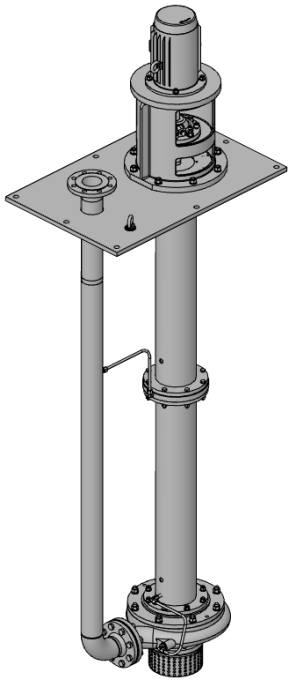

**This manual contains important instructions and warnings. You must read them before mounting, making the electrical connections and starting up. You must also comply with the instructions for the components related to this pump.**

**You should also remember that it is essential to keep this Manual close to the motor pump equipment.**

**Index**


**1 GENERAL ..... 3**

**2 SAFETY ..... 3**

2.1 MARKING OF WARNINGS IN THIS MANUAL ..... 3
2.2 PERSONNEL QUALIFICATIONS AND INSTRUCTION ..... 3
2.3 RISKS OF FAILING TO COMPLY WITH THE SAFETY INSTRUCTIONS ..... 3
2.4 CONSCIENTIOUS SAFETY AT WORK ..... 3
2.5 SAFETY INSTRUCTIONS FOR USERS AND SERVICE PERSONNEL ..... 3
2.6 SAFETY INSTRUCTIONS FOR MAINTENANCE, INSPECTION AND ASSEMBLY WORK ..... 4
2.7 MODIFICATIONS AND ARBITRARY MANUFACTURE OF SPARE PARTS ..... 4
2.8 UNAUTHORISED OPERATION MODES ..... 4
2.9 WARNINGS FOR EQUIPMENT WITH A MARKING  .... 4

**3 TRANSPORT AND STORAGE ..... 4**

3.1 TRANSPORT AND HANDLING ..... 4
3.2 PROVISIONAL STORAGE/CONSERVATION ..... 4

**4 GROUP DESCRIPTION ..... 5**

4.1 GENERAL DESCRIPTION ..... 5
4.2 DENOMINATION ..... 5
4.3 FORM OF CONSTRUCTION ..... 5
4.4 NOISE. PERMITTED LEVELS ..... 5
4.5 FORCES AND MOMENTS PERMITTED ..... 6

**5 INSTALLATION ..... 7**

5.1 CHECK BEFORE ASSEMBLY ..... 7
5.2 GROUP POSITIONING ..... 7
*5.2.1 Vertical groups ..... 7*
5.3 PIPE JOINT ..... 7
*5.3.1 Auxiliary connections ..... 8*
5.4 ELECTRICAL CONNECTION ..... 8
*5.4.1 Motor connection ..... 8*
*5.4.2 Time relay adjustment ..... 9*
*5.4.3 Rotation direction. Check ..... 9*

**6 START-UP ..... 9**

6.1 FIRST START-UP ..... 9
*6.1.1 Lubricant ..... 9*
*6.1.2 Filling (priming) of the pump ..... 9*
*6.1.3 Final control ..... 9*
*6.1.4 Impeller adjustment ..... 10*
*6.1.5 Start-up ..... 10*
*6.1.6 Shutdown ..... 10*
6.2 SERVICE LIMITS ..... 10
*6.2.1 Switching frequency ..... 10*
*6.2.2 Temperature of the liquid to be pumped ..... 11*
*6.2.3 Density of the liquid to be pump ..... 11*
*6.2.4 Viscosity of the liquid to be pumped ..... 11*
*6.2.5 Maximum pump speed ..... 11*
6.3 STARTING UP AFTER STORAGE ..... 11

**7 MAINTENANCE/CONSERVATION ..... 11**

7.1 GENERAL INSTRUCTIONS ..... 11
7.2 MAINTENANCE/INSPECTION ..... 11
*7.2.1 Checking instructions ..... 11*
*7.2.2 Lubrication ..... 11*
7.3 EMPTYING/DRAINAGE ..... 12
7.4 DISMANTLING ..... 12
*7.4.1 Fundamental instructions/observations ..... 12*
*7.4.2 Coupling ..... 12*
*7.4.3 Mechanical seal (where fitted) ..... 12*
*7.4.4 Packing (where fitted) ..... 12*
*7.4.5 Pump ..... 13*
7.5 ASSEMBLY ..... 13
*7.5.1 Coupling ..... 13*
*7.5.2 Mechanical seal (where fitted) ..... 14*
*7.5.3 Packing (where fitted) ..... 14*
*7.5.4 Pump ..... 14*
*7.5.5 Tightening torque of the screws/nuts ..... 14*
*7.5.6 Tightening torque of the impeller nuts ..... 14*
7.6 RECOMMENDED SPARE PARTS ..... 15
7.7 PREVENTATIVE MAINTENANCE ..... 15

**8 TROUBLE-SHOOTING ..... 16**

**9 ANNEXES ..... 17**

9.1 SECTIONAL PLANS ..... 17
9.2 MINIMUM SUBMERGENCE CHART AND EXTERIOR BEARINGS WATER CONSUMPTION. ..... 19

# 1 General

**Note** This KSB ITUR pump has been developed in line with state-of-the-art technology, manufactured with great care and put through continuous Quality Control. The present Instructions Manual will provide you with knowledge of the pump and the ways it can be applied.

It contains important instructions to operate the pump appropriately and profitably. It is important to comply with the manual in order to guarantee reliability and a long useful life for the pump, whilst avoiding any possible risks.

This manual does not include any local regulations or any instructions with regards to assembly personnel, which the user shall be responsible for.

 This group cannot be used in conditions in excess of those established in the technical documentation with regards to the liquid to be pumped, flow, speed (rpm), density, pressure and temperature, and with regards to the motor power or anything else set out in the instructions manual and contractual documentation. Check with the manufacturer as appropriate.

The factory plate shows the model/size, the main service data and the manufacture number of the pump. Please include these data in any queries, subsequent orders or requests for spare parts.

If you require any additional information or have problems with regards to failures, please contact the nearest KSB ITUR service.

# 2 Safety

This instructions manual contains fundamental instructions which must be complied with in assembly, service and maintenance. It must be read by assembly personnel, competent technical personnel and users before installing and starting up, and it must be available at all times at the place of location of the machine.
Proceed not only in line with this main safety chapter, but also observing the instructions described in other similarly important safety points.

## 2.1 Marking of warnings in this manual

The instructions which may involve hazard if not observed are highlighted with the following general symbols:

 Safety instructions which may involve a hazard to people and facilities if not complied with in accordance with ISO 7000-0434.

 Safety instructions to prevent electrical hazards in accordance with IEC 417-5036.

**Note** Safety instructions which may affect the equipment and its operation if not complied with.

 Safety instructions to prevent the risk of explosion. Only applicable to groups with ATEX plate, specially designed to satisfy Directive 94/9/EC on the prevention of the risk of explosion.

The details shown directly on the machine, such as:

- Rotation direction arrow
- Fluid connection identifications

These must be observed, and conserved in a manner which ensures they are legible.

## 2.2 Personnel qualifications and instruction

All Service, Maintenance, Inspection and Assembly personnel must be duly qualified. The terms regarding responsibility, competence and supervision of personnel must be regulated by the user in an exact manner.

Any personnel lacking appropriate know-how must be duly instructed. This preparation can be obtained upon request by the machine user to the manufacturer or supplier of the machine.

Finally, the user must ensure that all personnel have fully understood the content of the instructions manual.

## 2.3 Risks of failing to comply with the safety instructions

Failure to comply with the safety instructions may lead to risks both for people, the environment and the machine, and may lead to the loss of any entitlement to claims.

In particular, failure to comply may cause the following hazards:

- Failure of important machine/facility functions.
- Failure of the prescribed maintenance and conservation methods.
- Personal hazard resulting from electrical, mechanical or chemical effects.
- Danger to the environment due to escaping noxious products.

## 2.4 Conscientious safety at work

The safety instructions contained in this Manual must be observed, as must international prescriptions on Health and Safety at Work and any possible Safety Regulations at the workplace of the user.

## 2.5 Safety instructions for users and service personnel

 The operator is responsible for keeping the temperature of the fluid within the pump classification temperature limits.

- The installer must ensure that the parts of the machine which may create danger due to heat or cold are protected against accidental contact.
- The contact protections of moving parts (e.g. couplings) must not be removed whilst the machine is in service.
- Any possible leaks (e.g. through the shaft sealing) of hazardous products must be channelled in such a manner as they do not present any risk to people or the environment, in line with corresponding legislation.
- Electrical hazard must be avoided (see details in the specific legislation of the country and/or the electricity supply company).

### 2.6 Safety instructions for maintenance, inspection and assembly work

The user must ensure that all maintenance, inspection and assembly tasks are carried out by authorised, qualified, specialised personnel who have been sufficiently informed through careful study of the instructions manual.

The pump frame must have returned to environmental temperature. It must then be depressurised and emptied of liquid.

It is a fundamental principle that any work on the machine must be carried only during standstill. It is essential to respect the pump shutdown procedure described in the instructions manual.

All pumps or motor pumps which pump hazardous materials must be decontaminated.

All safety and protection devices must be installed and put into operation as soon as work concludes.

Before starting up again, all that described in the First Start-Up section must be followed.

### 2.7 Modifications and arbitrary manufacture of spare parts

The machine must not be modified or changed without prior agreement with the manufacturer. Only original spare parts and accessories approved by the manufacturer can guarantee safety. The use of other components may terminate any liability for consequences deriving from their use.

### 2.8 Unauthorised operation modes

The safe service of the supplied pump can only be guaranteed through correct use, in line with section 4 of the Instructions Manual. The operation limits established in the Datasheet must not be exceeded under any circumstance.

### 2.9 Warnings for equipment with a marking

KSB ITUR pumps marked with the ATEX plate are valid for group II category 2 and 3, zones 1, 21, 2 and 22 temperature class as shown on the plate and Conformity Certificate.

Reliability may be lost through incorrect use, poor connections or any modifications, however small.

It is necessary to take into account the rules on the connection and use of electrical devices in hazardous areas, in particular national regulations on installation. Only qualified personnel who are familiar with these rules should handle this type of machine.

Any repair made by the end user, unless explicitly approved by KSB ITUR, shall release the manufacturer from any liability relating to Directive 94/9/EC. Individual pieces supplied as spare parts must be originals, supplied and checked by KSB ITUR.

## 3 Transport and storage

### 3.1 Transport and handling

The transport and handling of the equipment must be carried out using suitable means in line with the weight to be supported. The weight is generally shown on the delivery note or on the data plate. If it is not, and the equipment cannot be handled safely, please contact KSB ITUR.

Remember that the equipment should never be lifted using the ring bolts of each of the elements, e.g. the motor and pump ring bolts, which are exclusively for independent transport.

**Note** It is also important not to use the pump and pipe flanges or joining elements, e.g. couplings.

**Note** If the equipment is to be lifted using straps, these must always be run underneath the motor and pump support.

**Note** Do not position the pump on the filter/suction hood. When positioning the pump outside of the well on the ground, place a wooden plug at the height of the pump casing, in order to prevent the filter being the support point for the pump.

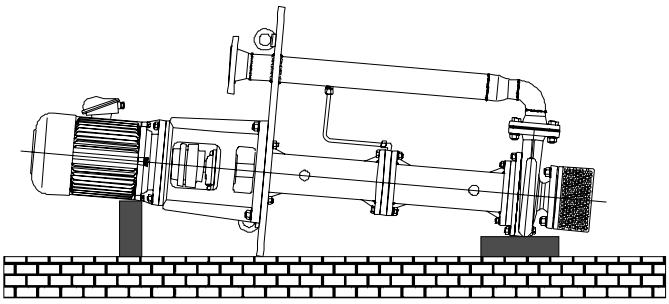

When the pumps are dismounted from their transport pallet, suitable means must be used to ensure the stability of the equipment, until it is finally secured at its definitive location.

### 3.2 Provisional storage/conservation

During provisional storage, it is only necessary to protect with preservation products those low alloy parts in contact with the liquid (e.g. grey cast, nodular cast, etc). Preservation products available on the sector market can be used, in line with the manufacturer's instructions on application and disposal.

The pump, or motor pump, shall be deposited in a dry site where the relative humidity is as constant as possible.

When stored outside, it is necessary to keep the pump/motor pump in an impermeable box, ensuring it does not come into contact with external humidity.

**Note** Protect the stored product from humidity, dirt, parasites and unauthorised access! All openings must remain closed, and must not be opened until required during assembly!

The shiny (mechanised) parts and surfaces of the pump must be protected from corrosion using silicone-free oil or grease.

The electric motor must be disconnected, the connection cables removed and the terminal box closed with its cover on.

The switchboards must be in vertical position and disconnected.

# 4 Group description

## 4.1 General description

Vertical centrifugal pump designed for wells, ditches and tanks. For neutral or aggressive liquids, both clean and with light solid particles.

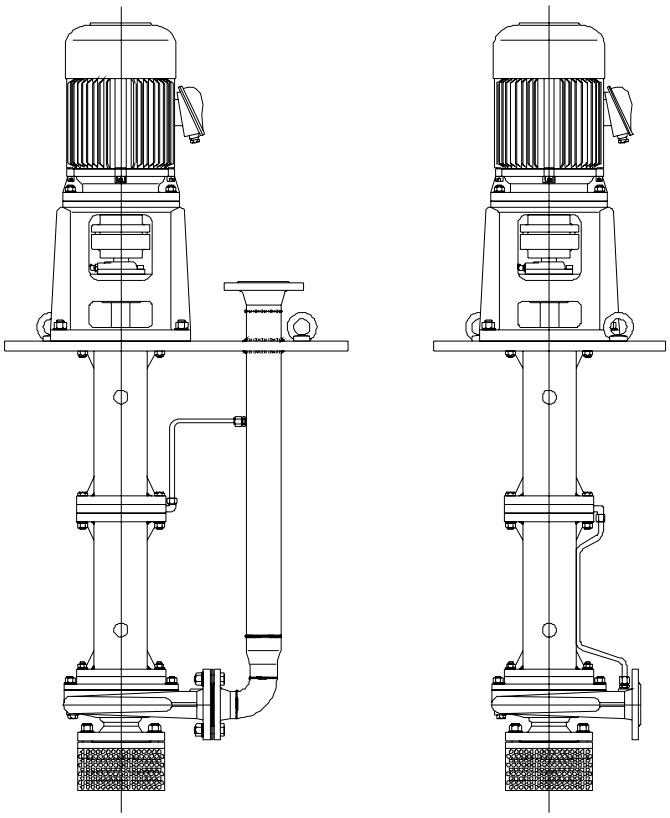

INVCP INVCN

## 4.2 Denomination

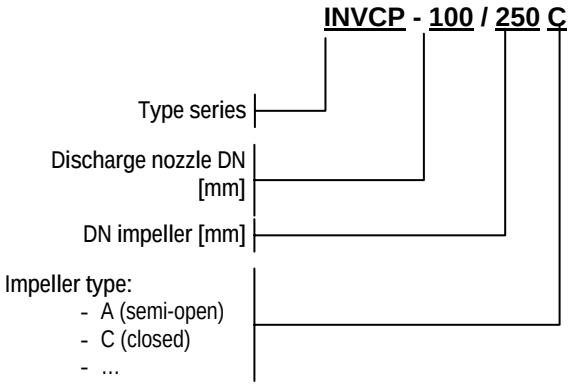


## 4.3 Form of construction

Spiral pump casing with axial suction and radial impulsion. Single-stage impeller closed or semi-open. Filter in suction.

The INVCP series has a discharge pipe to the outside of the base plate.

The INVCN series does not have a discharge pipe.

Bearings: Both series are fitted with two classes of bearing: grease-lubricated ballbearings and friction bearings lubricated by the pumped liquid (when possible) or through the exterior injection of liquid or grease.

Shaft sealing: The standard sealing system is by way of a lip seal. This can be done optionally using a packing or mechanical seal.

## 4.4 Noise. Permitted levels

The acoustic pressure level of these pumps is less than 90 dB (A) at 1 m in any operation point within the operation range without cavitation. The acoustic power is less than 100 dB (A).

### 4.5 Forces and moments permitted

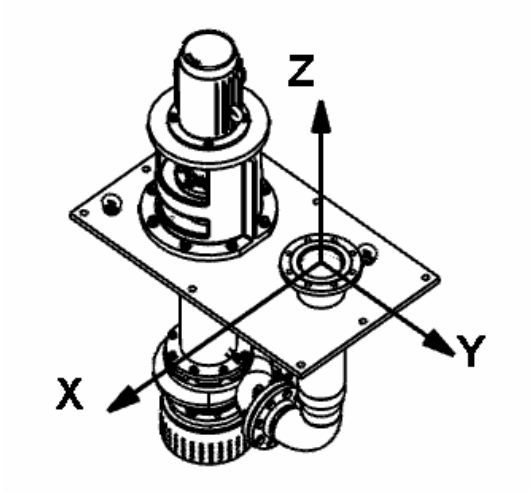


| Maximum permitted strain in the upper discharge flange, INVCP series exclusively | | | | | | |
|---|---|---|---|---|---|---|
| | Force [N] | | | Moment [N·m] | | |
| DN | Fz | Fx | Fy | Mz | Mx | My |
| 32 - 1 1/4" | 630 | 510 | 540 | 450 | 510 | 660 |
| 40 - 1 1/2" | 750 | 600 | 660 | 540 | 630 | 780 |
| 50 - 2" | 990 | 810 | 900 | 600 | 690 | 840 |
| 65 - 2 1/2" | 1260 | 1020 | 1110 | 660 | 720 | 900 |
| 80 - 3" | 1500 | 1230 | 1350 | 690 | 780 | 960 |
| 100 - 4" | 2010 | 1620 | 1800 | 750 | 870 | 1050 |
| 125 - 5" | 2370 | 1920 | 2130 | 900 | 1140 | 1260 |
| 150 - 6" | 3000 | 2430 | 2700 | 1050 | 1230 | 1500 |
| 200 - 8" | 4020 | 3240 | 3600 | 1380 | 1590 | 1950 |
| 250 - 10" | 5010 | 4050 | 4470 | 1890 | 2190 | 2670 |
| 300 - 12" | 6000 | 4830 | 5370 | 2580 | 2970 | 3630 |
| 350 - 14" | 6990 | 5640 | 6270 | 3300 | 3810 | 4650 |
| 400 - 16" | 7980 | 6450 | 7170 | 4140 | 4770 | 5820 |

**The INVCN series does not admit any strain on the discharge flange.**

# 5 Installation

The electropump is dispatched totally mounted and prepared for installation and operation (except for the few cases of the motor being dispatched disassembled, as is the case of large, heavy motors).

**Note** The design of the pipe systems, anchorings and other installation areas corresponds to other parties. KSB ITUR only offers details and comments as a help, but does not assume any responsibility with regards to the design, assembly and operation of any installation. We recommend that customers check with a specialist in the design of castings, pipes, wells, etc in order to interpret and supplement the information given by KSB ITUR and to ensure correct operation.

## 5.1 Check before assembly

Before positioning, check that the assembly base is in line with the dimensional plan of the equipment.

The upper surface of the base must be horizontal and flat.

If the anchor pins are to be placed in existing holes, place the anchor pins in their orifices suspended from the pump.

Do not connect the suction and impulsion nozzles until the equipment is completely installed on its base.

## 5.2 Group positioning

### 5.2.1 Vertical groups

**Levelling**

Use a spirit level to level the equipment. Use wedges to alter the height at different points. The maximum deviation permitted is 0.2 mm/m.

The correct separation between the two coupling halves must be maintained.

**Pump - motor alignment**

In order to prevent misalignment between the shafts, it is necessary to correctly install, check and maintain the coupling. See the instructions manual of the coupling.

The coupling may produce a source of ignition or high temperature in the event of incorrect operation. The coupling must be classified as non-electric equipment with at least the same type of area and temperature as the pump. It is necessary to follow the instructions in the coupling manual which is included with the pump.

The equipment is aligned at factory, and this alignment will never be lost. In case of dismantling of the motor and when mounting again the motor following instructions must be followed:

- Check that the flange support surface of the motor support and of the motor itself are perfectly clean and smooth.
- Check the correct separation between the two halves of the coupling.
- Check that the alignment between both shafts is correct by turning the equipment by hand.

## 5.3 Pipe joint

In no case can the pump be used as a fixed point for the pipes.

The pipe system must at no time exercise force in excess of the values shown in the chart in point 4.5 (due to connection, thermal variation, etc) in the pump.

The short pipes must be of at least the diameter of the pump connections. The diameter of long pipes is, in some cases, determined by economic criteria.

Transition pieces at larger diameters must have an extension angle of around 8°, in order to prevent pressure drops.

The thermal expansions of the pipes must be compensated with suitable measures, in order not to exceed the maximum strains permitted on the pump.

The diameters of the pipes, valves and accessories must be calculated in line with the load losses envisaged in the installation, so that the fluid impulsion speeds in the pipes will be from 2 to 3 m/s

Exceeding the admitted strains of the pipes may lead to leaks in the pump and to the fluid escaping. Hazard of death with hot liquids!

The suction and impulsion flange covers of the pump must be removed before connecting the pipes.

Before starting up a new installation, it is necessary to thoroughly clean the tanks, pipes and accessories by brushing and blowing. Welding material, scales and other impurities are often cast off some time after.

**Note** In order to prevent the rotation of the pumps in inverse direction (danger of the impeller breaking out), a retention valve must be placed in the impulsion pipe.

**Wet well. Suction conditions**

It is not enough to simply submerge the pump in the well to make it primed. We need to pay attention to the suction of the pump, since in this case good suction will depend more on the environment surrounding the pump (physical conditions of the well or sump) than on the pump itself.

An insufficient liquid submergence level may lead to dry operation of the parts of the pump, which in turn leads to the heating of the parts in sliding contact. This circumstance should be avoided, with plant operators manually checking or equipment stop devices ensuring that the liquid level in the suction well is never lower than the indicated submergence level.

High suction pressure may overload the bearings and lead to their overheating. This circumstance must be avoided, to which end the suction pressure must not exceed that shown in the data sheet, either through manual control by the operators or through devices which stop the equipment in the event of excessive pressure.

The pump must not work without liquid under any circumstance. If this condition may come about, the installation must be fitted with safety devices which prevent the operation of the pump without liquid inside, or have automatic devices to discharge the minimum flow of the pump. See the section Minimum flow necessary for the pump

As a general rule we can make some observations:

- The minimum liquid level in the well must be at the distance indicated in the table in annex 9.2, except for particular pump plans or datasheets showing other greater or lower values for minimum submergence.
- The input of liquid to the well must be carried out gently, without any fluctuation or turbulence which may harm the pump suction, always aiming to achieve the most stable flow possible.
- If several pumps are working in parallel in a single well, they should be at a suitable distance from each other, or precautions should be taken to ensure there is no disturbance which may affect the suction conditions of the pump.

The maximum liquid level must always be below the base plate in order for it not to overflow.

**Dry well. Suction conditions**

In this type of installation we need to:

- In the pump suction, avoid sharp elbows and accessories which lead to brusque narrowing and widening.
- Position a gate valve in the suction to isolate the pump during maintenance.
- With a pipe, take the excess fluid of the column from the orifice in the upper column through to an upper level at the maximum water level of the suction tank or suitable drainage system.

The minimum liquid level in the well in start-up must be a least 0.5 m above the pump suction flange, and must be maintained at sufficient height as to avoid air coming in through suction due to the vortex effect.

### 5.3.1 Auxiliary connections

The equipment is normally delivered mounted and ready for immediate operation, with only the hydraulic and exterior electrical connections being necessary.

In the case of dirty or abrasive pumping liquids in which it is necessary to connect the auxiliary refrigeration connections or lubrication of the equipment, follow the instructions detailed in 7.2.2 or in annexes to this manual.

**Note** Auxiliary pipes are designed exclusively to support internal strains due to the pressure of the circulating fluid, to which end it is forbidden to subject them to additional exterior strains (e.g leaning on them, etc).

If the pumping liquid is fuel and the leak can lead to ignition, this contingency should be avoided through constant control of the seal tightness of the auxiliary pipe joints by the plant operator.

## 5.4 Electrical connection

The electrical connection must be carried out by a specialist electrician! Applicable regulations must be complied with.

Check the mains voltage available with the factory plate data and choose the appropriate connection.

**The technical connection conditions and the conditions of the local energy supply company must be observed when carrying out the connections.**

**We strongly recommend the use of a safety circuit breaker for the motor and a thermistor associated to a trigger device.**

**These instructions apply to asynchronous three-phase standard electric motors with a squirrel cage both in horizontal and vertical execution, in IP-23, IP-54 and IP-55 protection grades, with frame sizes of between 56L and 355S, both inclusive, with voltages of 200 to 500 V between phases.**

Before starting up the pump, it must be earthed or the frame must be connected to an effective earthed point of the installation

### 5.4.1 Motor connection

Whilst connecting the cables, ensure it is not possible for voltage to appear.

Check that the earth connection is in line with local regulations.

The coupling may produce a source of ignition or high temperature in the event of incorrect operation. For this reason, the motor must be classified with at least the same type of zone and temperature as the pump. It is necessary to follow the instructions in the coupling manual which is included with the pump.

**Connection in single speed motors**

Direct start-up:

In direct start-up the motor can be used in two different connections:

The voltage and the connection, e.g. 400 VY, 240 VD is stamped on the motor plate. This means that the motor can connect at 400 volts in star connection (Y) or at 240 volts in delta connection (D).

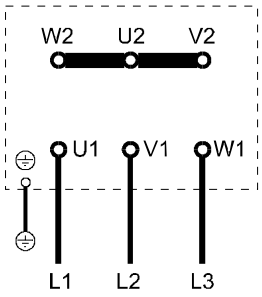


**Star connection**

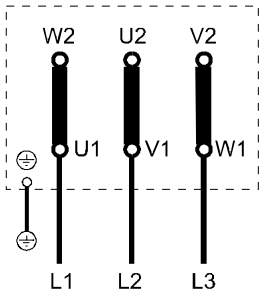


**Delta connection**

Star-delta start-up:

In star-delta start-up, the line voltage must coincide with the voltage shown on the motor for delta start up (D). The six terminals indicated in the following diagram will be connected:

Connection to the star-delta contactor

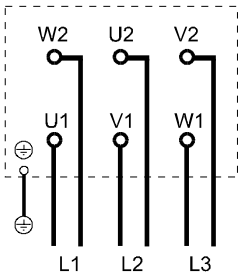

#### 5.4.2 Time relay adjustment

In the star-delta start-up of three-phase motors, it is necessary to ensure that the switching from star to delta takes place quickly. Prolonged switchover periods may damage the pump.

Time relay adjustment in the star-triangle connection:

| Motor power | Time adjustment -Y |
|---|---|
| ≤ 30 kW | < 3 sec. |
| > 30 kW | < 5 sec. |

#### 5.4.3 Rotation direction. Check

**Note** Check the motor rotation direction by starting up and immediately stopping. The rotation direction must correspond with that shown by the pump arrow located on the pump casing or support. If the rotation direction is not correct, any two phases L1, L2 or L3 of the power cable must be inverted in the motor terminal box.

The incorrect rotation of the pump may lead to the incorrect operation of the seal and the heating of its faces. For this reason, correct rotation direction must be ensured using the arrow shown on the pump, with the pump completely filled with liquid and properly vented.

## 6 Start-up

It is necessary to prevent the formation of explosive atmosphere within the well or tank where the pump is to be installed.

Start-up shall be carried out when all the necessary mechanical, hydraulic, electrical and pneumatic connections are complete.

**Motor checks.**

When making the electrical connection, ensure the type of current and nominal voltage shown on the motor's data plate concur with the type of current and the mains voltage in the place of installation.

Follow the instructions described in the motor manual.

### 6.1 First start-up

The pump cannot operate with a closed impulsion valve, as this may lead to overheating of the pumped liquid. If it is necessary to work with the discharge valve closed, a minimum flow relief device is required at the output. This device does not form part of the pump and will be separate from the pump's discharge flange.

Other recommended devices include the constant output orifice plates, constant bypass valves and automatic recirculation valves. If you require further details, please check with KSB ITUR.

The pump cannot work in closed suction valve conditions. If this condition may come about, the plant operator must use a device which detects this condition and forces the pump to stop when it occurs.

#### 6.1.1 Lubricant

**BEARINGS:**

Lubricated with grease. PUMP WITH GREASE NIPPLES: The pump leaves the factory with the bearings greased for approximately 1000 hours of operation. See lubricant in section 7.2.2.

**FRICTION BEARINGS:**

Lubricated with pumping fluid: If the pumped fluid is clean (without particles in suspension) and non-aggressive, the friction bearings are lubricated with the pumped fluid. Lubricant is not required.

**Note** Lubricated with external fluid. PUMPS WITH EXTERIOR AUXILIARY CONNECTION IN THE BASE PLATE: If the pumped fluid is dirty, aggressive, abrasive, etc, the PUMP HAS A CONNECTION for the lubrication and cooling of the bearings through an exterior means. Clean water or another fluid compatible with the pumped fluid must be injected. See section 7.2.2.

**Note** Lubricated WITH AUTOMATIC LUBRICATION PUMP IN THE BASE PLATE: If the pumped fluid is dirty, aggressive, abrasive, etc, the PUMP HAS AN AUTOMATIC LUBRICATION PUMP ON THE BASE PLATE for the lubrication and cooling of the bearings. The automatic pump container must be filled with grease before starting up. See lubricant in section 7.2.2.

The bearings must be lubricated with oil/grease in a good state, to which end it is essential to follow the lubrication instructions indicated in 7.2.2.

If the bearings support suffers impediments which prevent correct air-cooling, the resulting excess temperature may be excessive for the classification temperature class. For this reason, the support must be kept free of obstacles, thus facilitating natural air cooling.

#### 6.1.2 Filling (priming) of the pump

- Check that the level of liquid in the well is sufficient.
- Turn the pump shaft by hand in order to break any adherence.

**Shaft sealing**

Packing: The packing gland nuts must be gently tightened (by hand). The packing gland must form a right angle to the shaft.

#### 6.1.3 Final control

Make the final check of the group alignment in accordance with 5.2.1. The coupling/shaft must allow easy manual rotation.

**Note** Check all the auxiliary connections are correct and functioning.

According to the **rules on the prevention of accidents at work**, equipment cannot be started up without protection for the coupling. If the buyer has expressly requested that this protector be excluded from supply, it must be provided by the user.

Before and during the operation of the pump, the coupling guard must be in place and firmly secured. Regularly check this state in order to prevent problems resulting from incorrect positioning or deficient attachment. The coupling guard must be free of any foreign elements.

#### 6.1.4 Impeller adjustment

Turn the pump shaft by hand to check that the rotor is not blocked. Should interior contact in the pump be detected, carry out an axial regulation. To do this:

- Release the attachment screws (2)
- Tighten the adjusting screws (1) to slightly raise the whole moving section.
- Turn the shaft again by hand and check that the rotor rotates freely without any internal contact. If there is still contact, tighten a little more using the adjusting screws.
- Tighten the attachment screws (2) to fix the position reached.

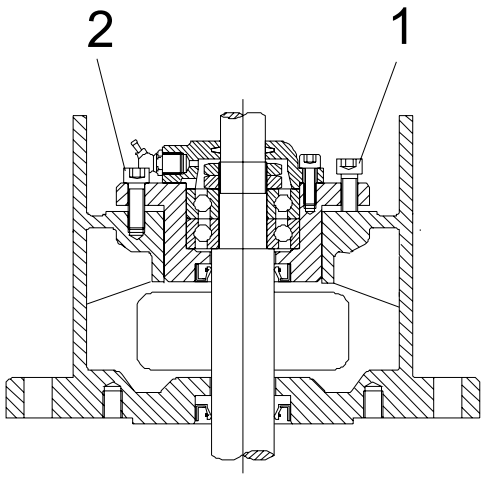


**Note** If a mechanical seal is used, remove it first before regulating. Please contact us before carrying out this operation.

#### 6.1.5 Start-up

Before starting up the group, check all the sections with regards to chapter 6.

The start-up must be carried out with the suction valve (where fitted) completely open and the impulsion valve partially closed. Once the pump has reached its service speed and the suction air has been eliminated, regulate the operation point using the impulsion valve.

If the electric motor guard is triggered when starting up, close the impulsion valve more until the equipment starts up normally.

The pump must NEVER work with zero flow or flow which is less than the operating minimum, as internal recirculation will cause the fluid to heat up quickly, leading to hazards (including explosion) as a result of the high pressures reached within the frame. Check the minimum flow in the operation curves.

Minimum flow necessary for the pump

The pumps cannot work below the minimum flow specified in the datasheets.

If this condition may come about, the installation must be fitted with safety devices which prevent the operation of the pump without liquid inside, or have automatic devices to discharge the minimum flow of the pump.

For liquids other than water, the minimum flow is determined by the following formula:

$$Qmin = \frac{3.600.000 \times Pa}{Pe \times Ce}$$

In which:

*Qmin: Minimum flow in $m^3/h$.*

*Pa: Power absorbed by the pump in kW at closed valve.*

*Ce: Specific heat of the fluid in J/kg*ºC.*

*Pe: Specific weight of the fluid in $kg/m^3$*

Maximum flow permitted by the pump

Unless indicated in another datasheet, the maximum flow permitted is 1.1x optimum flow of the pump with the supplied impeller diameter.

#### 6.1.6 Shutdown

Close the impulsion pipe valve.

If there is anti-return in impulsion with counter pressure, leave the impulsion valve open.

- Shutdown the motor. Check that shutdown is normal.
- In prolonged periods of non-operation, close the suction pipe valve (where fitted) and the auxiliary connection valves.
- The pump must be protected from freezing whenever this risk exists, and must be emptied in prolonged periods of non-operation.

If, whilst the pump is in standstill, it must remain on standby for service, start up at regular intervals for around 5 minutes (see also 7.2)

- Fire pumps: 1x/month, at minimum.
- Drink-safe water pumps: 1x/48 hours, at minimum.
- Reserve pumps: 1x/week, at minimum (it is best to change the operating pump every day).

The seal tightness and function of the auxiliary connections must be examined during these start-ups.

### 6.2 Service limits

#### 6.2.1 Switching frequency

In order to prevent abnormally high temperatures and overloading of the motor, pump, coupling, seals, etc, the switching frequency must not exceed the following number of start-ups per hour:

| MOTOR POWER | MAX. START-UPS/HOUR |
|---|---|
| Up to 3 kW | 20 |
| From 4 to 11 kW | 15 |
| From 11 to 45 kW | 10 |
| From 45 kW | 5 |

#### 6.2.2 Temperature of the liquid to be pumped

The permitted operation temperature is indicated in the order and in the ATEX conformity declaration. If the pump is to work at a higher temperature or you do not have the data sheet, please ask KSB ITUR.

#### 6.2.3 Density of the liquid to be pump

The power absorbed by the pump increases in direct proportion to the density of the impelled liquid. In order to prevent overloading in the motor, pump and coupling, this density must not exceed that shown in the order and in the ATEX declaration of conformity.

#### 6.2.4 Viscosity of the liquid to be pumped

The power absorbed by the pump increases with the viscosity of the impelled liquid. In order to prevent overloading in the motor, pump and coupling, this viscosity must not exceed that shown in the order and in the ATEX declaration of conformity.

#### 6.2.5 Maximum pump speed

In order to protect the pump from excess speed, the maximum rotation speed shall be that shown on the plate engraved in the pump, and in the ATEX declaration of conformity. First check with KSB ITUR if you wish for the pump to work at a higher speed.

### 6.3 Starting up after storage

If the storage and/or standstill of the pump has been for a prolonged period of time (over 6 months), it is necessary to:

- Check the state of the joints.
- Check the levelling.
- Check all the auxiliary connections.
- Renew the lubrication of the bearings (where fitted).
- Change the packing (when fitted).
- After a short storage period, simply turn the pump shaft manually to unlock the rotor equipment.
- Follow the specific post-storage instructions in the motor manuals and other items.
- Observe all the steps shown in the "Start-up" section.

**Note** If the equipment is going to be in shutdown state for a certain period of time and there is the possibility of freezing temperatures, it is necessary to completely drain the pump in order to prevent any deterioration from the freezing of the contained fluid.

## 7 Maintenance/Conservation

### 7.1 General instructions

Before dismounting, ensure that:

The motor cannot be operated accidentally, by disconnecting from the electricity supply (e.g. removing cut-outs, unplugging, disconnecting the automatic circuit breaker, etc) or the start-up batteries (disconnect operating energy).

The pump is free of pumped fluid, cleaning it internally with appropriate liquid whenever it is a hazardous fluid (hot, contaminant, inflammable,…)

### 7.2 Maintenance/inspection

#### 7.2.1 Checking instructions

<u>During the first minutes of operation:</u>

In cases of mechanical seal

- There may be a brief large leak during start up. Should this leak persist, shutdown the group and determine the cause. The causes may be, amongst others, dirt in the pumped area or dry operation due to incomplete discharge of the pump air.

In cases of packing:

- There is no leak; immediately loosen the packing gland until a small dripping is achieved.
- Excessive fluid leak; leave to settle for 10 minutes; tighten the packing gland by turning 1/6th and leaving for 5 minutes. Repeat the process until between 20 and 60 drops per minute are achieved.

<u>After a few hours operation:</u>

**Note** Check the bearing temperature at the point in the bearing location area. Normal temperature can reach up to 40°C above environmental temperature, but must never exceed 90°C.

Observe the possible anomalies shown in point 8 of this manual.

The reserve pumps should be started up and shutdown once a week, in order to ensure they are always in service conditions.

The failure of one or both sides of the seal may lead to excess heating. This can be corrected by following the instructions of the seal manufacturer, both with regards to its assembly and the maintenance of the auxiliary seal devices, where appropriate. Alternatively, the pump may be fitted with a surveillance device if the purchaser has so specified.

#### 7.2.2 Lubrication

Before lubricating the pump, ensure that

The pump is stopped and cannot be started up accidentally.

The bearing support temperature is less than 40ºC, in order to prevent burns to the hands. To do this, measure the temperature with a thermocouple.

The absence of grease in the bearing support may lead to a lack of lubrication of the lip seals, which will come into dry contact with the shaft. This contact may lead to a high shaft temperature which might cause ignition. To prevent this, regularly check the grease level in the bearings support.

**BEARINGS:**

<u>Lubricated with grease. PUMP WITH GREASE NIPPLES:</u>

The pump leaves the factory with the bearings greased for approximately 1000 hours of operation.

For lubrication, a chart is attached with the amount of grease to be applied in each greaser, along with the regularity.

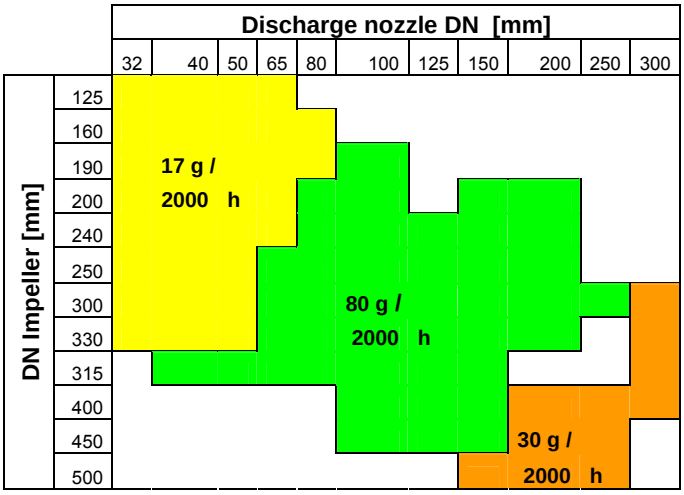


Grease change

In order to completely change the grease, first dismantle the bearings and carefully clean their positions in the support in order to remove old grease.

Type of grease:

We recommend using lytic-based lubrication grease with antioxidant additives, of consistency 3 in line with DIN-51502 K3K.

**FRICTION BEARINGS:**

The friction bearings are found in the cover of pumps (always) and also in case of double/triple intermediate pipe pumps, in the intermediate couplings. These bearings must always be lubricated and cooled. There are three types of lubrication:

1. Lubricated with pumping fluid: If the pumped fluid is clean (without particles in suspension) and non-aggressive, the friction bearings are lubricated with the pumped fluid. Lubricant is not required.

**Note** 2. Lubricated with external fluid. PUMPS WITH EXTERIOR AUXILIARY CONNECTION IN THE BASE PLATE: For this purpose there is an adapter in the base plate which the customer will inject with clean water or another fluid compatible with the pumped fluid at a pressure of approximately 3 kg/cm$^2$ (manometer). The flow necessary per bearing can be seen in the chart in annex 9.2.

**Note** 3. Lubricated WITH AUTOMATIC LUBRICATION PUMP IN THE BASE PLATE: The auxiliary pump has a container with grease to lubricate the bearings. We recommend using lytic-based lubrication grease with antioxidant additives, of consistency 2, in line with DIN-51502 class K2K. The auxiliary pump does not require maintenance, although the container must contain grease at all times.

**Note** The automatic pump container must be filled with grease before starting up.

Excessive wear of the bearings may cause friction of the metal parts, thus locally increasing the temperature. The pump shall have forced refrigeration from the pumping fluid if it is clean or with exterior lubrication of clean liquid if the pumping fluid is dirty. In the latter case, the plant operator must maintain a permanent input of clean liquid to ensure the correct maintenance of the bearing refrigeration fluid and conducts.

### 7.3 Emptying/Drainage

The emptying and drainage of pumps used to expel liquids which are a health hazard must be carried out in such a way as there is no risk to people or to the environment, in line with legislation. If necessary, use protective clothing and mask.

### 7.4 Dismantling

#### 7.4.1 Fundamental instructions/observations

**Note** Before dismantling, ensure the pump cannot be started up.

The suction and impulsion valves must be closed.

The pump frame must have returned to environmental temperature.

The pump frame must be emptied.

Comply with all safety measures in accordance with 7.1. When working on the motor, also take into account the rules and instructions of the manufacturer.

#### 7.4.2 Coupling

**Motor pump coupling**

- Release the motor attachment screws and remove the motor along with the male coupling.
- The rubber plugs can then be extracted from the female coupling.
- If you need to release the coupling, use an extractor. Never bang in order to extract, as this may cause serious damage to the bearings.

**Intermediate coupling**

- Release the cover halves on both ends of the coupling.
- Uncouple the two shafts by gently and uniformly banging the coupling with a plastic hammer.

#### 7.4.3 Mechanical seal (where fitted)

In order to access the seal, first dismount almost all the pump as described in point 7.4.5 (until the seal dismantling section is reached). Once this process is complete:

- Release the seal cover joining screws and slide the cover carefully along the shaft towards the pump.
- Release the keep pins from the casing or rechangeable bushing and slide this, along with the moving part of the seal, along the shaft towards the pump.
- Slide and carefully extract the seal cover along with the fixed part of the seal along the shaft towards the pump. We can then release the fixed part of the seal by pushing it from outside (upper part of the cover), taking care for it not to touch the contact face.

#### 7.4.4 Packing (where fitted)

In order to access the seal, first dismount almost all the pump as described in point 7.4.5 (until the packing dismantling section is reached). Once this process is complete:

- Release the packing gland.
- Slide and extract the cover with the packing along the shaft towards the pump side.
- Extract the packing from the cover. If the lantern ring is also extracted, note down the order in which is disposed.

### 7.4.5 Pump

For the extraction of ballbearings, shaft, bearings, etc., it is necessary to dismantle the entire pump.

To do this, see the sectional plan and diagram with a breakdown of the attached pieces.

Before dismantling the pump, remove it from its location:

- Release the pins which fix the attachment plate to the support plate of the well.

First check that the lifting clamp bolts are securely in place, as they will be used to lift the equipment. In this position, leave to drain for a few moments to discharge the fluid contained in the pump.

- Lay down or support the equipment on the edge of the attachment plate, supporting the motor to ensure it does not rest on it as a cantilever.

DISMANTLING:

As a general guide to dismount the equipment, follow these steps:

- Loosen the screws which join the pump to the impulsion pipe, therefore releasing it. (1)
- Release the auxiliary connections. (2)
- Release the nuts which join the cover to the pump casing and separate it. Use extractor screws to separate the casing. It is not necessary to release the suction filter, although we can clean it if the orifices are blocked. (3)
- Release the impeller attachment nuts and extract it. At this moment the wear rings are accessible (where appropriate). (4)
- Release the nuts which attach the cover to the intermediate pipe and extract the cover. (5)
- Remove the impeller key and remove the re-changeable bushing. Check the state of the friction bearing located in the bearing carrier cover. (6)
- If an intermediate bearing is fitted (7):
  - o Release the nuts which join the intermediate bearing support to the lower intermediate pipe and extract it.
  - o Release the nuts which join the intermediate bearing support to the upper intermediate pipe.
  - o Remove the whole intermediate bearing support by taking it to the side of the impeller, sliding it along the shaft without coming into contact with the edges.
  - o Observe the state of the friction bearing.
- Release the nuts which join the intermediate pipe to the support, and remove the intermediate pipe. (8)
- When an intermediate coupling is fitted, follow that indicated in point 7.4.2.. (9)
- Release the bolts which join the motor to the support, and dismount the motor and the coupling as shown in point 7.4.2.
- If fitted, release the seal or the packing as described in point 7.4.3 or 7.4.4, if not, release the lip seal.
- The support cover is released.
- Using a plastic hammer, gently bang the shaft on the side opposite the motor, causing the shaft and the bearings to come up where the motor was.
- Loosening the nut(s) of the bearings will release them and the pump as a whole.

**Pump bearing failure.**

Failure of the bearings may cause ignition through increased heat on the surface of the bearings. This can be avoided by using officially approved quality bearings, which are supplied as original spare parts.

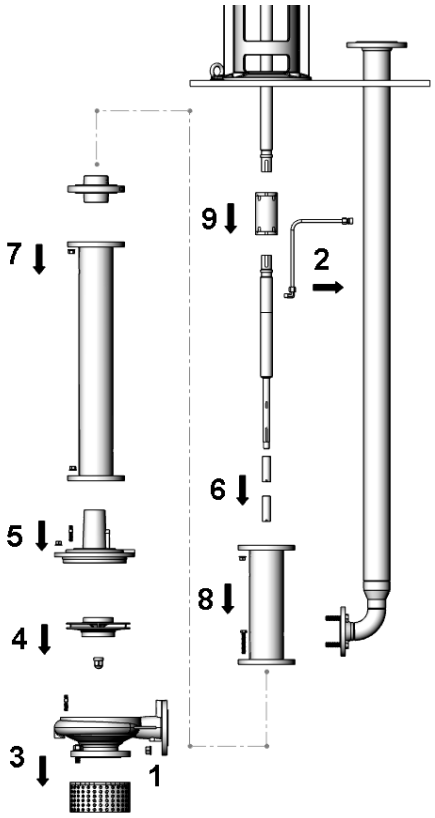


### 7.5 Assembly

#### 7.5.1 Coupling

**Motor pump coupling**

**Note**

- Proceed in inverse order to assembly. It is not necessary to check the alignment, due to the design of the pump in which the concentricity of the shafts is guaranteed by way of guides between the motor and the pump support.

**Intermediate coupling**

- The two shafts are positioned: motor side and pump side in line, then position the key.
- Introduce the coupling in both ends of the shaft and attach axially with two screwed cover halves on each side.

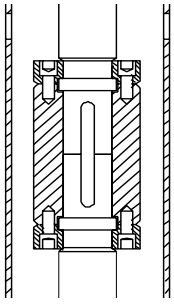

### 7.5.2 Mechanical seal (where fitted)

Mount in reverse order to dismounting.

**Note** For the correct operation of the seal it is necessary to at least:

- Take great care when cleaning the different parts of the mechanical seal, especially the contact faces. Not use lubricant; use only clean water with a cloth for cleaning optical devices.
- Not damage the O-rings during assembly.

### 7.5.3 Packing (where fitted)

- Introduce the packing gland and the cover along the shaft.
- Mount and secure the cover on the lantern support.
- Cut the new packing, forming as many rings as required. The cuts, seen from above, may be straight or inclined at 45º.
- We recommend leaving a small clearance of 0.5 mm in the packing cut.
- Position the rings one by one, pushing on them but without excessive force. The rings shall be introduced with the cut ends alternated 90°.
- Take care to introduce the lantern ring in the same order as before.
- Once the packing has been introduced, check that the shaft rotates freely without any stiff points.
- Secure the packing gland. The packing gland must not penetrate its entire free length. If necessary, introduce more rings.
- Gently tighten the gland nuts.
- In order to determine the appropriate torque of the gasket, proceed as indicated in point 7.2.

### 7.5.4 Pump

Proceed in reverse order to that described above, taking special care:

- When mounting the shaft in the support, take care to ensure it does not tilt and maintains the axial direction with the support.
- To introduce the different elements, use a plastic hammer, banging gently in order to prevent damage to the ballbearings, seals and bearings.
- Proceed to lubricate the bearings.
- Do not forget to position new joints. There should be no clearances and the joints should be perfect.

The pump materials have been selected in accordance with the process fluid indicated in the datasheets. If this fluid is modified, check with KSB ITUR that the new fluid is suitable for the pump.

- Note that the mounted intermediate bearing support is not symmetrical, since it presents a larger interior diameter on one side than on the other. Tighten the keep pin which secures the intermediate bearing. The smaller interior diameter part of the intermediate bearing support must remain towards the bottom, on the side of the pump.
- Use your hand to check that the shaft rotates freely every time a piece is mounted.
- If the friction bearing has been removed from its position in the cover, clean the inside of the cover and the exterior bearing surface before returning it, and use a plastic hammer to hit an intermediate piece into place. Do not forget to position the keep pin which fixes the bearing to the pump cover.
- It is very important to check that the bearings are perfectly aligned with the shaft, without any gaps which may lead to the deviation of the shaft.
- The impulsion pipes of the INVCP series pumps must take a position perpendicular to the support plate without presenting tensions or deviations from the shaft.

**Note**

- Check the correct positioning of pieces, especially seals, bushing and impellers.

### 7.5.5 Tightening torque of the screws/nuts

| | Steel | Stainless steel |
|---|---|---|
| **ISO Metric thread** | Tightening Torque in [N·m] (for non-lubricated thread) | |
| M4 | 3.1 | 2.15 |
| M5 | 6.1 | 4.25 |
| M6 | 10.4 | 7.3 |
| M8 | 25.2 | 17.7 |
| M10 | 49.5 | 34.8 |
| M12 | 85.2 | 59.9 |
| M16 | 211 | 148 |
| M20 | 412 | 290 |
| M24 | 710 | 276 |
| M27 | 1050 | 409 |
| M30 | 1420 | 554 |

### 7.5.6 Tightening torque of the impeller nuts

| Metric thread | Tightening Torque in [N·m] (for non-lubricated thread) |
|---|---|
| M14x1.5 | 38 |
| M20x1.5 | 100 |
| M27x1.5 | 250 |
| M33x1.5 | 460 |
| M52x1.5 | 2000 |

### 7.6 Recommended spare parts

| Piece denomination | Reference Nº | Recommended spare parts (1) | | |
|---|---|---|---|---|
| | | Start up | 2 years | 5 years |
| Joints (set) | --- | 1 | 2 | 5 |
| Mechanical seal | 433 | 1 | 2 | 3 |
| Packing | 461 | 1 | 2 | 5 |
| Wear plate (2) | 135 | | 1 | 2 |
| Bearing (set) | 320 | | 1 | 2 |
| Lip seal (set) | 420 | | 1 | 2 |
| Felt ring (set) | 422 | | 1 | 2 |
| Lantern ring | 458 | | 1 | 2 |
| Wear ring (set) (3) | 502 | | 1 | 2 |
| Shaft bushing | 520 | | 1 | 2 |
| Shaft casing (4) | 523 | | 1 | 2 |
| Bearing (set) | 545 | | 1 | 2 |
| Coupling flexible (set) | 867 | | 1 | 2 |
| Impeller nut | 922 | | 1 | 2 |
| Key (set) | 940 | | 1 | 2 |
| Pump shaft(s) (set) | 211, 213 | | | 1 |
| Impeller | 230 | | | 1 |
| Coupling (set) | 840, 844 | | | 1 |

(1) Amounts recommended for a pump in continuous service (2) Only for version with semi-open impeller (3) Only for version with closed impeller (4) Only for version with mechanical seal or packing

### 7.7 Preventative maintenance

| Nº | DESCRIPTION OF THE OPERATION TO BE CARRIED OUT | PROCEDURE | REGULARITY | CONSEQUENCE |
|---|---|---|---|---|
| 1 | Check for mechanical seal leaks | Visual inspection | Weekly | 18 |
| 2 | Check for packing leaks | Visual inspection | Weekly | 19, 20 |
| 3 | Check for leaks between flanges | Visual inspection | Monthly | 17 |
| 4 | Check for grease leaks | Visual inspection | Monthly | 10, 16 |
| 5 | Check for heating of the bearings | With thermocouple | Quarterly | 5,14,16 Dismount the support |
| 6 | COMPLETE PUMP CHECK | Checking and dismounting the pump. See point 7 of the manual | Yearly | 1,2,3,6,7,8,9,12,14,17,21 |
| 7 | Check tightness of connecting bolts | Manually | Yearly | |
| 8 | Check for wear of the shaft, bearings and lip seals | Dismount casing Visual inspection | Yearly | |
| 9 | Check for wear of the shaft, bearings and lip seals | Dismount support, Visual inspection | Yearly | |
| 10 | Change the lubricant | See point 7.2.2 of the manual | Yearly (1) | |
| 11 | Change the rubber coupling plugs | See point 7.4.2 and 7.5.1 of the manual | Yearly | |
| 12 | Check for wear of the bearing | Dismount pump visual inspection | Yearly | |
| 13 | Clean the auxiliary automatic pump of any lubrication (2) | Clean the pump | Yearly | |
| 14 | Check functional characteristics loss | Instrument reading | In accordance with use | Check the installation |
| 15 | Fill the auxiliary automatic lubrication pump with grease (2) | Manually | In accordance with use | |
| 16 | Fill with grease | See point 7.2.2 of the manual | See point 7.2.2 | |
| 17 | Change the joints | Manually | Every time they are removed | |
| 18 | Change mechanical seal | See point 7.4.3 and 7.5.2 of the manual | When detecting leaks | |
| 19 | Tighten gland | Manually | When the leaks are excessive | |
| 20 | Change the packing | See point 7.4.4 and 7.5.3 of the manual | Every 4000 hours | |
| 21 | Carry out the axial regulation | See point 6 of the manual | When detecting contact and when dismounting | |

(1) If the environment is dusty, humid or aggressive, the grease change should be carried out more often
(2) Where fitted

## 8 Trouble-shooting

The pump does not move the fluid
| Insufficient pressure or flow
| | Excessive absorbed power
| | | Excessive vibrations and noise
| | | | Excessive support temperature
| | | | | Loss of fluid through the mechanical seal
| | | | | | Wear rings deteriorate quickly

| | | | | | | | Cause | Solution |
|---|---|---|---|---|---|---|---|---|
| X | X | | | | | | Suction or impulsion valves closed or poorly regulated | Open the suction valve or search for work point with the impulsion valve |
| X | | | | | | | Incorrect rotation direction | Change the motor connections |
| X | X | | | | | | Pipes, filter or impeller obstructed | Dismount and unblock |
| X | X | | X | | | | Pump not correctly submerged | Check minimum submergence (See point 5.3) |
| X | X | | | | | | Maximum height generated by the pump lower than that required by the installation or counter pressure too high. | Increase the rotation speed. If this is not possible, a larger impeller or larger pump needs to be assembled. Please ask |
| | X | | | | | | Rotation speed incorrect | Measure the speed, check the motor drive power supply voltage |
| | X | | X | | | | Wear rings or bearings deteriorated or incorrectly assembled | Dismount and change, or reinstall them |
| | X | | | | | | Leaks between the casing and pipes | Dismount and check the joints |
| | X | | | | | | Unsuitable installation/disturbances from other pumps | Check with the installer |
| | | X | | | | | Liquid viscosity or density greater than normal. | Reduce the design point or change the motor |
| | | X | X | X | | X | Poor motor assembly | Check and clean the pump-motor joint. |
| | | X | | | | | Obstruction inside the pump. | Dismount the pump and clean the impeller, inlets, pipe or filter |
| | | X | | | | | The real height to be generated by the pump is lower than that of the design point, meaning the flow and power are greater | Partially close the impulsion valve |
| | | X | X | X | | | Ballbearings deteriorated, poorly assembled or poorly lubricated | Check them, check the assembly or lubricate them, adjust them properly in their positions. |
| | | X | | | | | Excessive contact in rotating parts | Dismount the pump and check elements are correctly assembled and/or worn |
| | | X | X | X | | X | Misaligned or deformed shaft | Dismount it and replace it |
| | | | X | | | | Loose impeller support nuts | Dismount the pump and tighten them |
| | | X | X | X | | X | Pipe tensions on the pump | Check the installation |
| | | | X | | | | Lack of rigidity in the foundations or anchor bolts loose | Make new foundations or tighten the bolts |
| | | | X | | | | Pump cavitation | Improve the suction. Please ask. |
| | | | X | X | | X | Impeller imbalanced or deteriorated | Balance the impeller or change it |
| | | | X | | | X | Bearings excessively worn or deteriorated | Change bearings |
| | | | | | X | | Very deteriorated mechanical seal, seal spring broken or without elasticity, poorly assembled seal, or joints broken, deformed or without elasticity, or contact faces of the seal very deteriorated. | Dismount and replace the seal, or dismount, review damage and change as appropriate. |
| | | | | X | | | High suction pressure | Please ask |
| | | | | | X | | Re-changeable bushing scratched or deteriorated | Dismount and change the bushing |

# 9 Annexes

## 9.1 Sectional plans

| Nº | Denomination |
|---|---|
| 102 | Volute casing |
| 135 | Wear plate |
| 143 | Suction strainer |
| 160 | Cover |
| 161 | Pump cover |
| 211 | Pump shaft |
| 212 | Intermediate drive shaft |
| 230 | Impeller |
| 301 | Intermediate bearing |
| 320 | Bearing |
| 341 | Pedestal |
| 360 | Bearing cover |
| 382 | Bearing support |
| 400 | Gasket |
| 412 | O'ring |
| 420 | Lip seal |
| 422 | Felt ring |
| 433 | Mechanical seal |
| 452 | Packing gland |
| 458 | Lantern ring |
| 461 | Packing |
| 471 | Mechanical seal cover |
| 502 | Wear ring |
| 505 | Retaining ring |
| 520 | Shaft sleeve |
| 523 | Shaft wearing sleeve |
| 542 | Throttling bush |
| 545 | Friction bearing bush |
| 554 | Flat washer |
| 636 | Grease nipple |
| 703 | Cooling pipe |
| 711 | Discharge pipe |
| 712 | Intermediate pipe |
| 800 | Motor |
| 840 | Coupling |
| 844 | Rigid coupling |
| 867 | Coupling flexible |
| 890 | Base plate |
| 900 | Screw |
| 901 | Hexagon head screw |
| 902 | Bolt |
| 903 | Plug |
| 904 | Setscrew |
| 914 | Allen screw |
| 920 | Nut |
| 922 | Impeller nut |
| 923 | Bearing nut |
| 940 | Key |

INVCP
Sectional C-1298

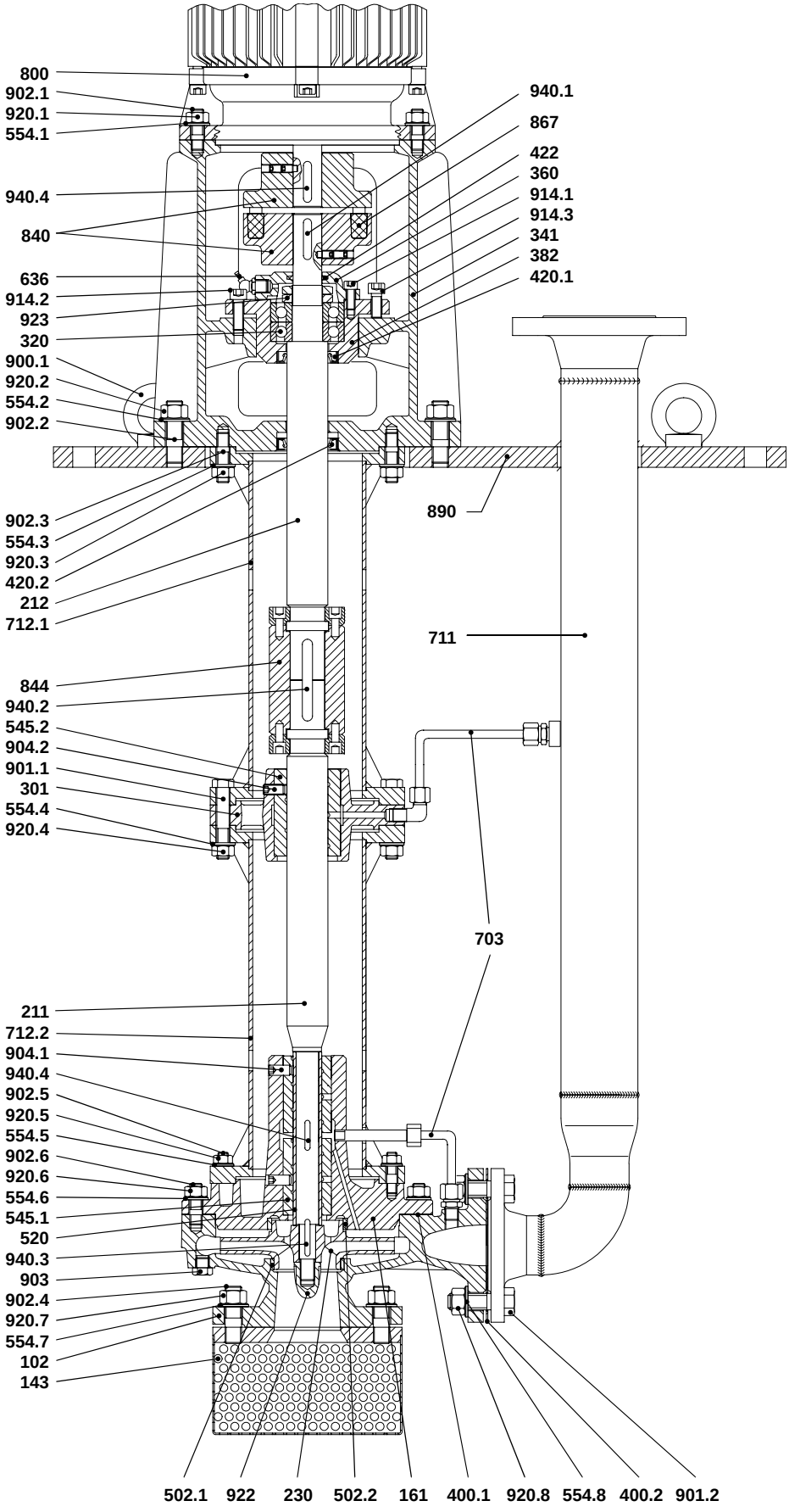

Details of variant with semi-open impeller

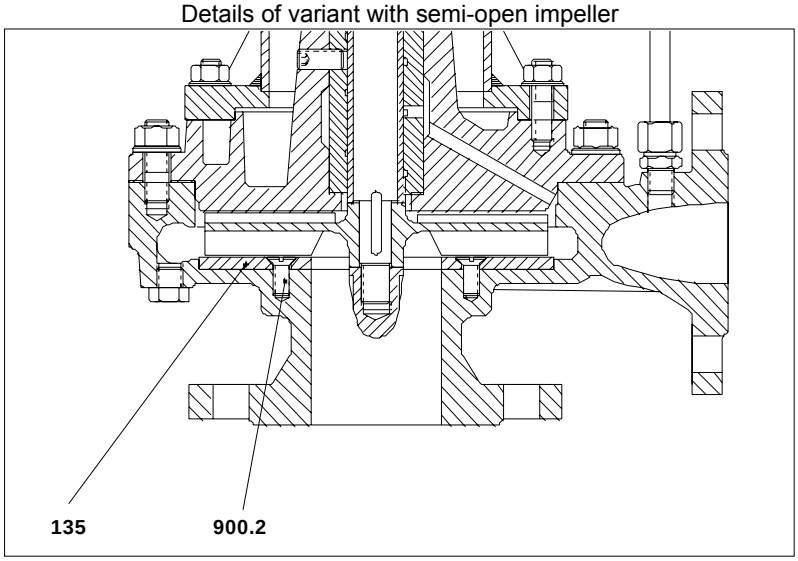


Details of variant with mechanically sealed shaft

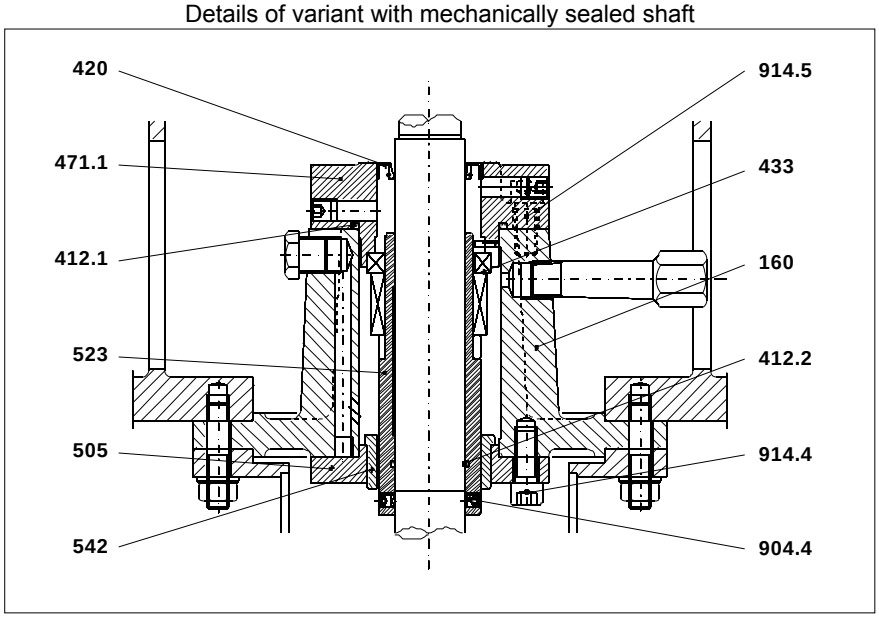


Details of variant with packing sealed shaft

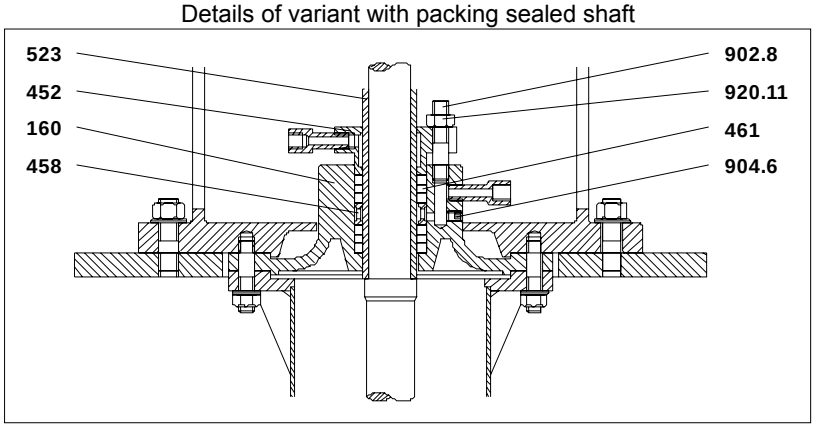

**9.2 Minimum submergence chart and exterior bearings water consumption.**

| Size | Minimum submergence S [mm] | Bearing/exterior water consumption Qe [l/h] (1) |
|---|---|---|
| **32/125** | 120 | 250 |
| **32/160** | 120 | 250 |
| **32/200** | 200 | 250 |
| **32/250** | 200 | 250 |
| **40/125** | 120 | 250 |
| **40/160** | 120 | 250 |
| **40/200** | 200 | 250 |
| **40/250** | 200 | 250 |
| **40/315** | 220 | 320 |
| **50/125** | 120 | 250 |
| **50/160** | 120 | 250 |
| **50/200** | 220 | 250 |
| **50/250** | 220 | 250 |
| **50/315** | 220 | 320 |
| **65/125** | 120 | 250 |
| **65/160** | 220 | 250 |
| **65/200** | 220 | 250 |
| **65/250** | 220 | 320 |
| **65/315** | 220 | 320 |
| **80/160** | 220 | 250 |
| **80/200** | 220 | 320 |
| **80/250** | 240 | 320 |
| **80/315** | 240 | 320 |
| **80/400** | 240 | 500 |
| **100/190** | 220 | 320 |
| **100/200** | 220 | 320 |
| **100/250** | 220 | 320 |
| **100/315** | 220 | 320 |
| **100/400** | 240 | 500 |
| **125/240** | 220 | 320 |
| **125/250** | 220 | 320 |
| **125/315** | 240 | 500 |
| **125/400** | 240 | 500 |
| **150/200** | 240 | 320 |
| **150/240** | 240 | 320 |
| **150/250** | 240 | 320 |
| **150/315** | 240 | 500 |
| **150/400** | 240 | 500 |
| **150/500** | 440 | 650 |
| **200/240** | 260 | 320 |
| **200/250** | 260 | 320 |
| **200/330** | 260 | 500 |
| **200/400** | 300 | 650 |
| **250/300** | 400 | 500 |
| **250/400** | 300 | 650 |
| **300/300** | 400 | 650 |
| **300/350** | 500 | 650 |

(1) At a pressure of 3 kg/cm$^2$ (manometric). This consumption is only applicable when there is an external connection (case of dirty or abrasive fluids)

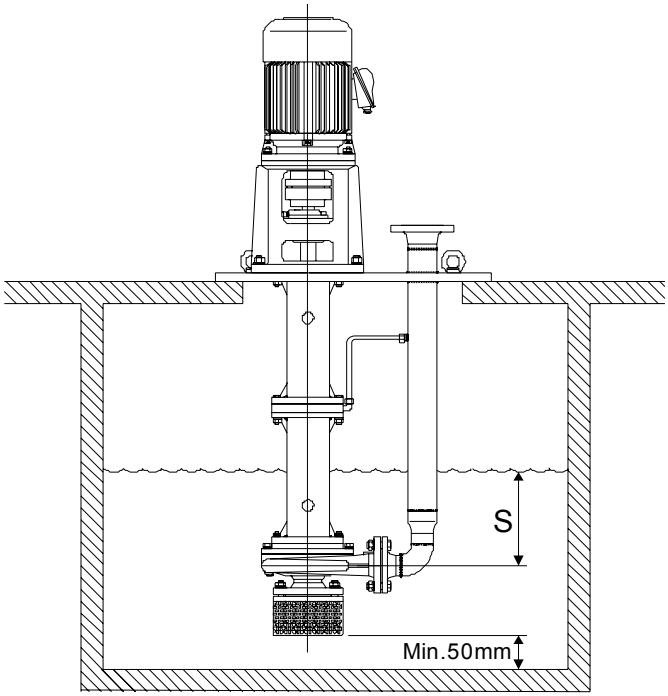


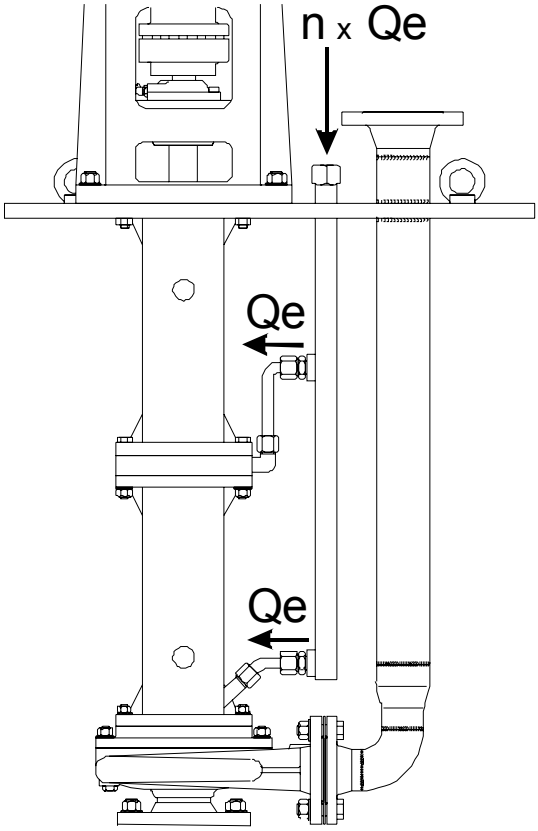



# IOM OF ELECTRIC MOTORS

**VERTICAL SUMP PUMP : PUM-38114**
**(OPP21-020)**



HydroTech Mining

**UPDATE : FEB 2022**

# Manual geral de instalação, operação e manutenção de motores elétricos — PT

# Installation, operation and maintenance manual of electric motors — EN

# Manual general de instalación, operación y mantenimiento de motores eléctricos — ES

# Installations-, Betriebs- und Wartungsanleitung für elektrische Motoren — DE

# Manual de instalare, exploatare şi întreţinere a motoarelor electrice — RO

# Ръководство за монтаж, експлоатация и поддръжка на електродвигатели — BG

# Руководство по установке, эксплуатации и техническому обслуживанию электрических двигателей — RU

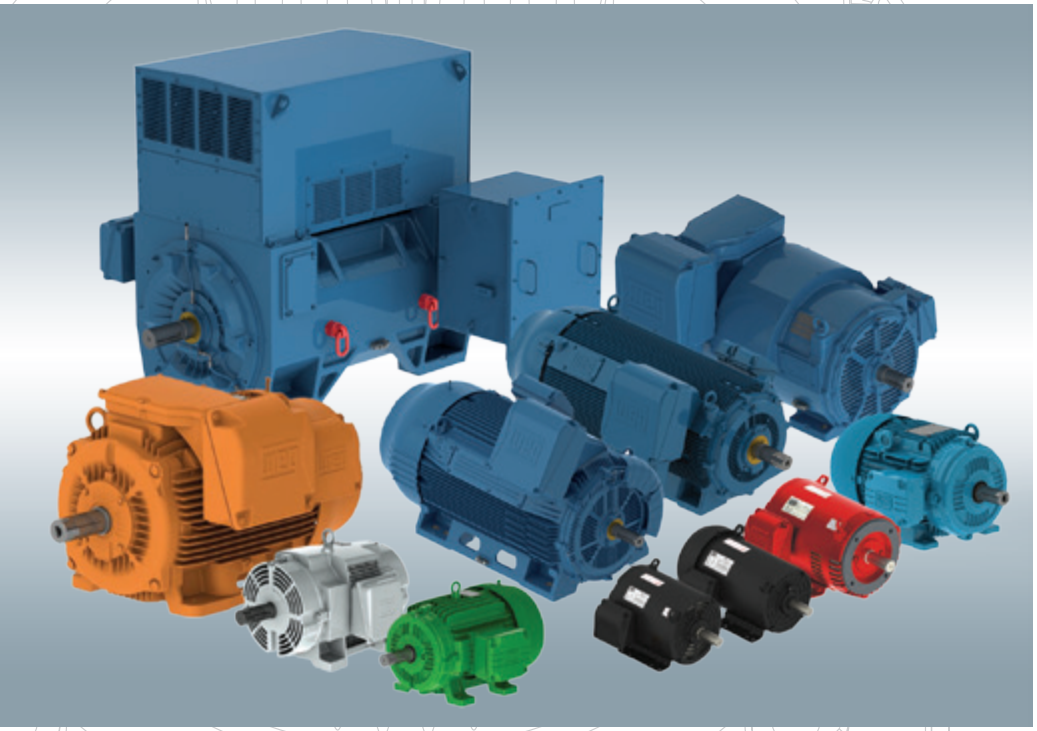

| | | |
|---|---|---|
| Português | PT | 2 |
| English | EN | 58 |
| Español | ES | 113 |
| Deutsch | DE | 169 |
| Română | RO | 225 |
| Български | BG | 280 |
| Русский | RU | 337 |


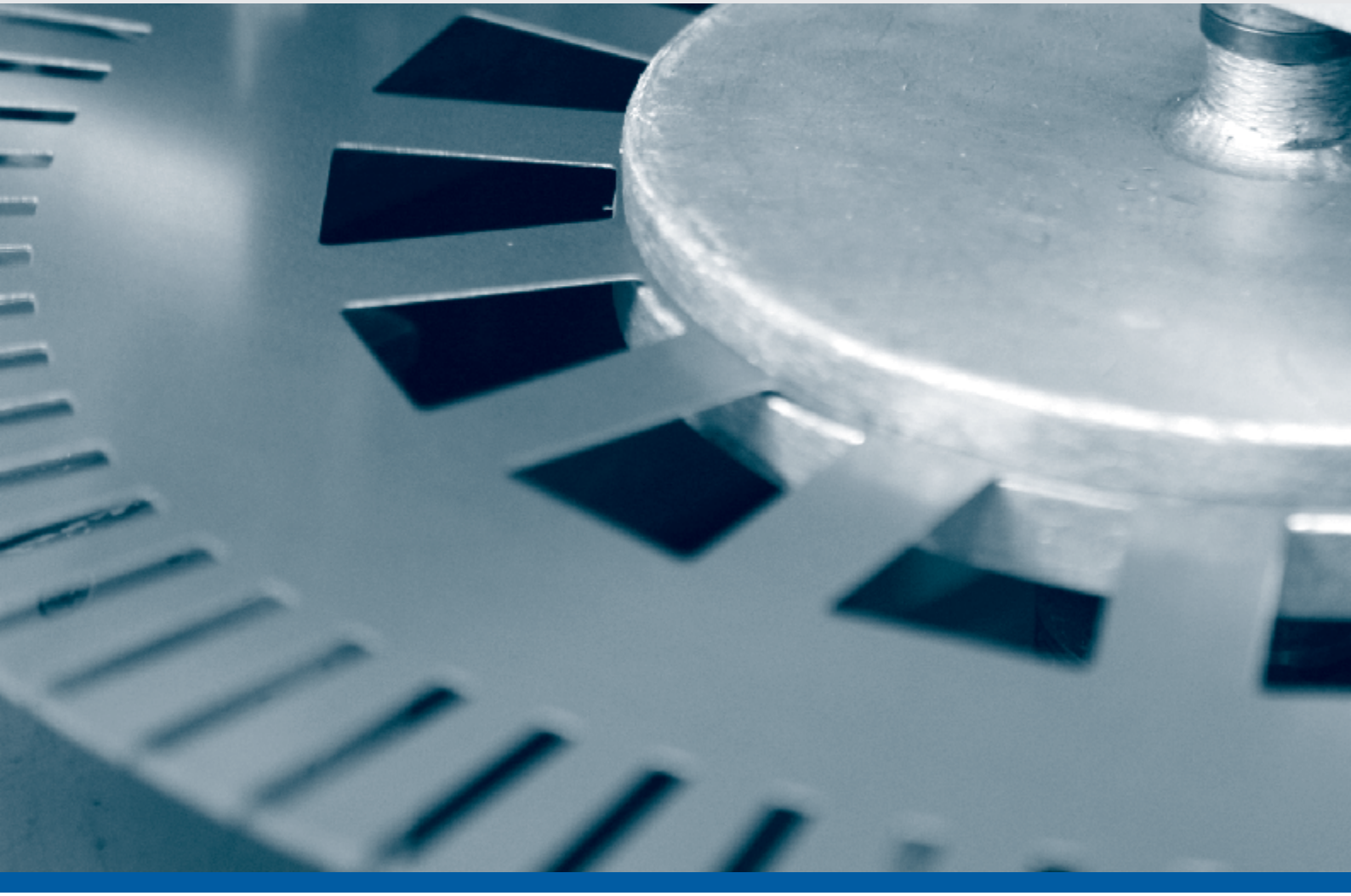

# INSTALLATION, OPERATION AND MAINTENANCE MANUAL OF ELECTRIC MOTORS

This manual provides information about WEG induction motors fitted with squirrel cage, permanent magnet or hybrid rotors, low, medium and high voltage, in frame sizes IEC 56 to 630 and NEMA 42 to 9606/10.
The motor lines indicated below have additional information that can be checked in their respective manuals:

- Smoke Extraction Motors;
- Electromagnetic Brake Motors;
- Hazardous Area Motors.

These motors meet the following standards, if applicable:

- NBR 17094-1: Máquinas Elétricas Girantes - Motores de Indução - Parte 1: trifásicos.
- NBR 17094-2: Máquinas Elétricas Girantes - Motores de Indução - Parte 2: monofásicos.
- IEC 60034-1: Rotating Electrical Machines - Part 1: Rating and Performance.
- NEMA MG 1: Motors and Generators.
- CSA C 22.2 N°100: Motors and Generators.
- UL 1004-1: Rotating Electrical Machines - General Requirements.

If you have any questions regarding this manual please contact your local WEG branch, contact details can be found at www.weg.net.

# TABLE OF CONTENTS


*1. TERMINOLOGY* 62

*2. INITIAL RECOMMENDATIONS* 63

*2.1. WARNING SYMBOL* ... 63
*2.2. RECEIVING INSPECTION* ... 63
*2.3. NAMEPLATES* ... 64

*3. SAFETY INSTRUCTIONS* 67

*4. HANDLING AND TRANSPORT* 68

*4.1. LIFTING* ... 68
*4.1.1. Horizontal motors with one eyebolt* ... 68
*4.1.2. Horizontal motor with two eyebolts* ... 69
*4.1.3. Vertical motors* ... 70
*4.1.3.1. Procedures to place W22 motors in the vertical position* ... 70
*4.1.3.2. Procedures to place HGF and W50 motors in the vertical position* ... 71
*4.2 Procedures to place W22 vertical mount motors in horizontal position* ... 72

*5. STORAGE* 74

*5.1. EXPOSED MACHINED SURFACES* ... 74
*5.2. STORAGE* ... 74
*5.3 BEARINGS* ... 75
*5.3.1 Grease lubricated bearings* ... 75
*5.3.2 Oil lubricated bearings* ... 75
*5.3.3 Oil Mist lubricated bearings* ... 76
*5.3.4 Sleeve bearing* ... 76
*5.4. INSULATION RESISTANCE* ... 76
*5.4.1. Insulation resistance measurement* ... 76

*6. INSTALLATION* 79

*6.1. FOUNDATIONS* ... 80
*6.2. MOTOR MOUNTING* ... 82
*6.2.1. Foot mounted motors* ... 82
*6.2.2. Flange mounted motors* ... 82
*6.2.3. Pad mounted motors* ... 83
*6.3. BALANCING* ... 83
*6.4. COUPLINGS* ... 83
*6.4.1. Direct coupling* ... 84
*6.4.2. Gearbox coupling* ... 84
*6.4.3. Pulley and belt coupling* ... 84
*6.4.4. Coupling of sleeve bearing motors* ... 84
*6.5. LEVELING* ... 85
*6.6. ALIGNMENT* ... 85
*6.7. CONNECTION OF OIL LUBRICATED OR OIL MIST LUBRICATED MOTORS* ... 86
*6.8. CONNECTION OF THE COOLING WATER SYSTEM* ... 86
*6.9. ELECTRICAL CONNECTION* ... 86
*6.10. CONNECTION OF THE THERMAL PROTECTION DEVICES* ... 91
*6.11. RESISTANCE TEMPERATURE DETECTORS (PT-100)* ... 92
*6.12. CONNECTION OF THE SPACE HEATERS* ... 93

*6.13. STARTING METHODS ..... 94*
*6.14. MOTORS DRIVEN BY FREQUENCY INVERTER ..... 95*
*6.14.1. Use of dV/dt filter ..... 95*
*6.14.1.1. Motor with enameled round wire ..... 95*
*6.14.1.2. Motor with prewound coils ..... 95*
*6.14.2. Bearing insulation ..... 96*
*6.14.3. Switching frequency ..... 96*
*6.14.4. Mechanical speed limitation ..... 96*

*7. COMMISSIONING 97*

*7.1. INITIAL START-UP ..... 97*
*7.2. OPERATING CONDITIONS ..... 99*
*7.2.1.Limits of vibration ..... 100*

*8. MAINTENANCE 101*

*8.1. GENERAL INSPECTION ..... 101*
*8.2. LUBRICATION ..... 101*
*8.2.1. Grease lubricated rolling bearings ..... 102*
*8.2.1.1. Motor without grease fitting ..... 105*
*8.2.1.2. Motor with grease fitting ..... 105*
*8.2.1.3. Compatibility of the Mobil Polyrex EM grease with other greases ..... 106*
*8.2.2. Oil lubricated bearings ..... 106*
*8.2.3. Oil mist lubricated bearings ..... 107*
*8.2.4. Sleeve bearings ..... 107*
*8.3. MOTOR ASSEMBLY AND DISASSEMBLY ..... 108*
*8.3.1. Terminal box ..... 109*
*8.4. DRYING THE STATOR WINDING INSULATION ..... 109*
*8.5. SPARE PARTS ..... 110*

*9. ENVIRONMENTAL INFORMATION 111*

*9.1. PACKAGING ..... 111*
*9.2. PRODUCT ..... 111*

*10. TROUBLESHOOTING CHART X SOLUTIONS 112*

# 1. TERMINOLOGY

***Balancing:*** the procedure by which the mass distribution of a rotor is checked and, if necessary, adjusted to ensure that the residual unbalance or the vibration of the journals and/or forces on the bearings at a frequency corresponding to service speed are within specified limits in International Standards.
[ISO 1925:2001, definition 4.1]

***Balance quality grade:*** indicates the peak velocity amplitude of vibration, given in mm/s, of a rotor running free-in-space and it is the product of a specific unbalance and the angular velocity of the rotor at maximum operating speed.

***Grounded Part:*** metallic part connected to the grounding system.

***Live Part:*** conductor or conductive part intended to be energized in normal operation, including a neutral conductor.

***Authorized personnel:*** employee who has formal approval of the company.

***Qualified personnel:*** employee who meets the following conditions simultaneously:
- Receives training under the guidance and responsibility of a qualified and authorized professional;
- Works under the responsibility of a qualified and approved professional.

***Note****: The qualification is only valid for the company that trained the employee in the conditions set out by the authorized and qualified professional responsible for training.*

# 2. INITIAL RECOMMENDATIONS

Electric motors have energized circuits, exposed rotating parts and hot surfaces that may cause serious injury to people during normal operation. Therefore, it is recommended that transportation, storage, installation, operation and maintenance services are always performed by qualified personnel.
Also the applicable procedures and relevant standards of the country where the machine will be installed must be considered.
Noncompliance with the recommended procedures in this manual and other references on the WEG website may cause severe personal injuries and/or substantial property damage and may void the product warranty.

For practical reasons, it is not possible to include in this Manual detailed information that covers all construction variables nor covering all possible assembly, operation or maintenance alternatives.
This Manual contains only the required information that allows qualified and trained personnel to carry out their services. The product images are shown for illustrative purpose only.

For *Smoke Extraction Motors*, please refer to the additional instruction manual 50026367 available on the website www.weg.net.

For brake motors, please refer to the information contained in WEG 50021973 brake motor manual available on the website www.weg.net.

For information about permissible radial and axial shaft loads, please check the product technical catalogue.

The user is responsible for the correct definition of the installation environment and application characteristics.

During the warranty period, all repair, overhaul and reclamation services must be carried out by WEG authorized Service Centers to maintain validity of the warranty.

## 2.1. WARNING SYMBOL

Warning about safety and warranty.

## 2.2. RECEIVING INSPECTION

All motors are tested during the manufacturing process.
The motor must be checked when received for any damage that may have occurred during the transportation. All damages must be reported in writing to the transportation company, to the insurance company and to WEG. Failure to comply with such procedures will void the product warranty.
You must inspect the product:
- Check if nameplate data complies with the purchase order;
- Remove the shaft locking device (if any) and rotate the shaft by hand to ensure that it rotates freely;
- Check that the motor has not been exposed to excessive dust and moisture during the transportation.

Do not remove the protective grease from the shaft, or the plugs from the cable entries. These protections must remain in place until the installation has been completed.

## 2.3. NAMEPLATES

The nameplate contains information that describes the construction characteristics and the performance of the motor. Figure 2.1 and Figure 2.2 show nameplate layout examples.

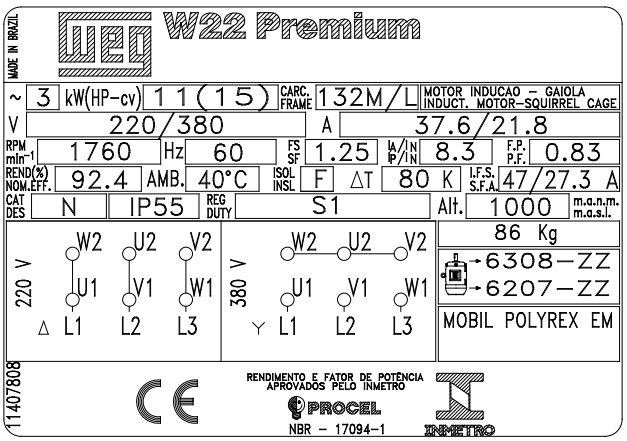


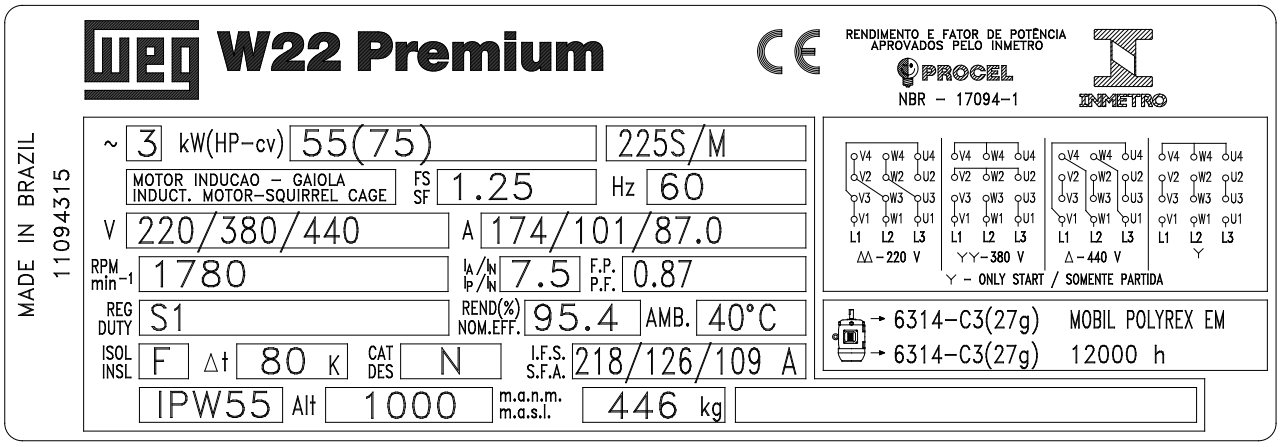


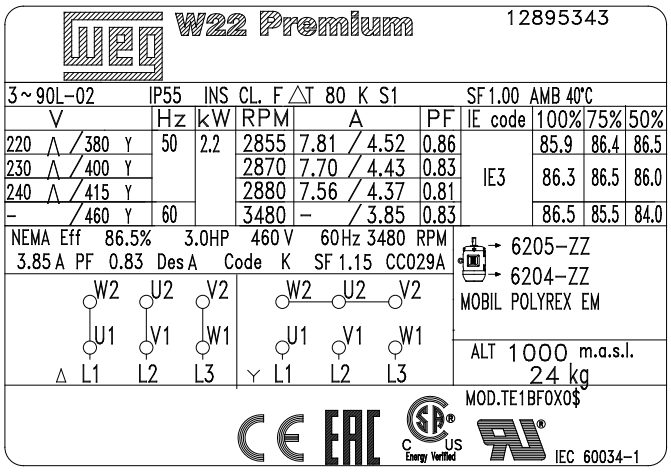


***Figure 2.1*** *- IEC motor nameplate*




***Figure 2.1*** - *IEC motor nameplate*

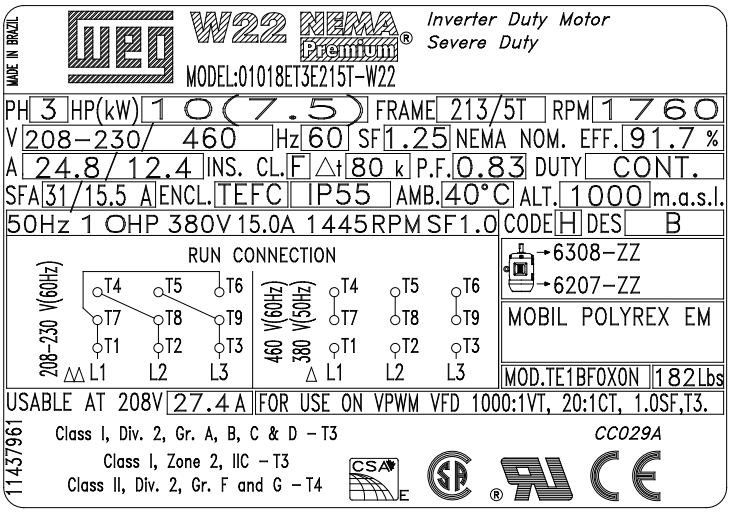


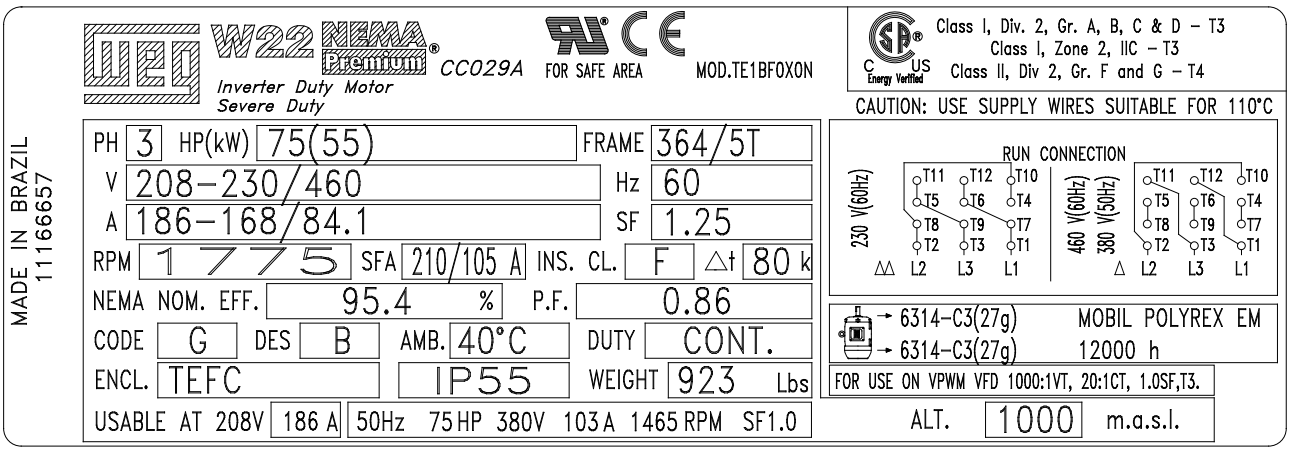


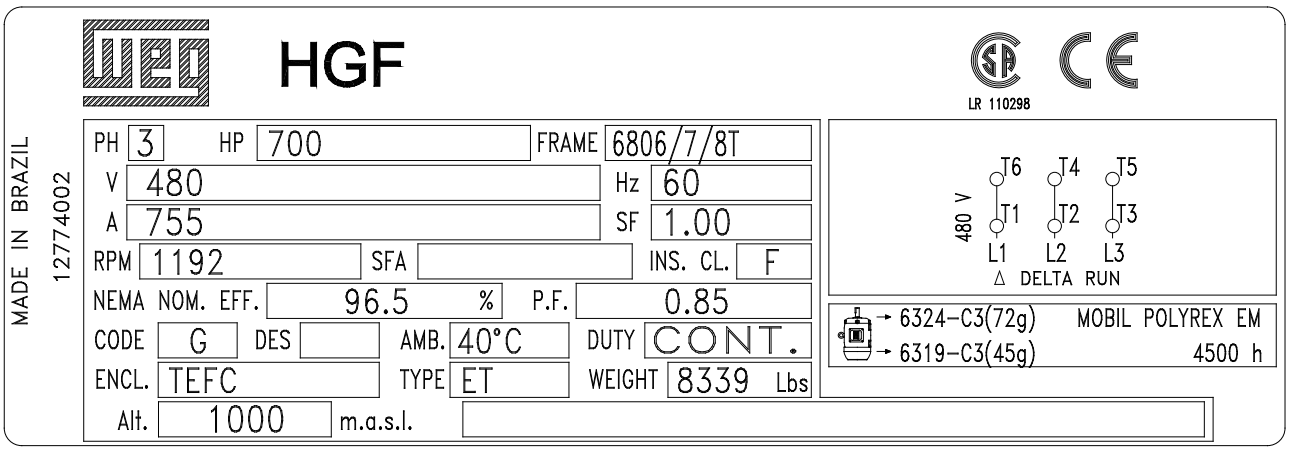


***Figure 2.2*** - *NEMA motor nameplate*

# 3. SAFETY INSTRUCTIONS



The motor must be disconnected from the power supply and be completely stopped before conducting any installation or maintenance procedures. Additional measures should be taken to avoid accidental motor starting.



Professionals working with electrical installations, either in the assembly, operation or maintenance, should use proper tools and be instructed on the application of standards and safety requirements, including the use of Personal Protective Equipment (PPE) that must be carefully observed in order to reduce risk of personal injury during these services.



Electric motors have energized circuits, exposed rotating parts and hot surfaces that may cause serious injury to people during normal operation. It is recommended that transportation, storage, installation, operation and maintenance services are always performed by qualified personnel.

Always follow the safety, installation, maintenance and inspection instructions in accordance with the applicable standards in each country.

# 4. HANDLING AND TRANSPORT

Individually packaged motors should never be lifted by the shaft or by the packaging. They must be lifted only by means of the eyebolts, when supplied. Use always suitable lifting devices to lift the motor. Eyebolts on the frame are designed for lifting the machine weight only as indicated on the motor nameplate. Motors supplied on pallets must be lifted by the pallet base with lifting devices fully supporting the motor weight.

The package should never be dropped. Handle it carefully to avoid bearing damage.

Eyebolts provided on the frame are designed for lifting the machine only. Do not use these eyebolts for lifting the motor with coupled equipment such as bases, pulleys, pumps, reducers, etc..

Never use damaged, bent or cracked eyebolts. Always check the eyebolt condition before lifting the motor.

Eyebolts mounted on components, such as on end shields, forced ventilation kits, etc. must be used for lifting these components only. Do not use them for lifting the complete machine set.

Handle the motor carefully without sudden impacts to avoid bearing damage and prevent excessive mechanical stresses on the eyebolts resulting in its rupture.

To move or transport motors with cylindrical roller bearings or angular contact ball bearings, use always the shaft locking device provided with the motor.
All HGF, W50 and W60 motors, regardless of bearing type, must be transported with shaft locking device fitted.
Vertical mounted motors with oil-lubricated bearings must be transported in the vertical position. If necessary to move or transport the motor in the horizontal position, install the shaft locking device on both sides (drive end and non-drive end) of the motor.



## 4.1. LIFTING

Before lifting the motor ensure that all eyebolts are tightened properly and the eyebolt shoulders are in contact with the base to be lifted, as shown in Figure 4.1. Figure 4.2 shows an incorrect tightening of the eyebolt.
Ensure that lifting machine has the required lifting capacity for the weight indicated on the motor nameplate.



***Figure 4.1*** *- Correct tightening of the eyebolt*

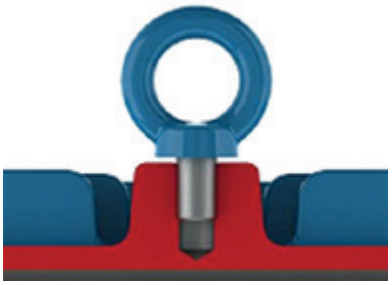

***Figure 4.2*** *- Incorrect tightening of the eyebolt*

The center-of-gravity may change depending on motor design and accessories. During the lifting procedures the maximum allowed angle of inclination should never be exceeded as specified below.

### 4.1.1. Horizontal motors with one eyebolt

For horizontal motors fitted with only one eyebolt, the maximum allowed angle-of-inclination during the lifting process should not exceed 30º in relation to the vertical axis, as shown in Figure 4.3.

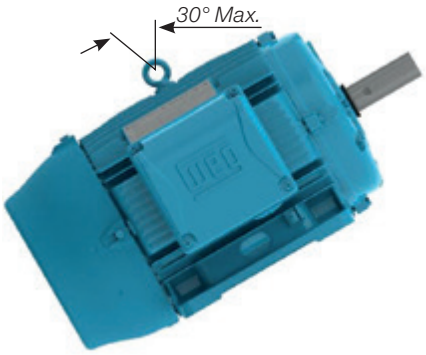


***Figure 4.3*** *- Maximum allowed angle-of-inclination for motor with one eyebolt*

### 4.1.2. Horizontal motor with two eyebolts

When motors are fitted with two or more eyebolts, all supplied eyebolts must be used simultaneously for the lifting procedure.

There are two possible eyebolt arrangements (vertical and inclined), as shown below:

- For motors with vertical lifting eyebolts, as shown in Figure 4.4, the maximum allowed lifting angle should not exceed 45° in relation to the vertical axis. We recommend to use a spreader beam for maintaining the lifting elements (chain or rope) in vertical position and thus preventing damage to the motor surface;




***Figure 4.4*** *- Maximum resulting angle for motors with two or more lifting eyebolts*

- For HGF, W40 and W50 motors, as shown in Figure 4.5, the maximum resulting angle should not exceed 30° in relation to the vertical axis;

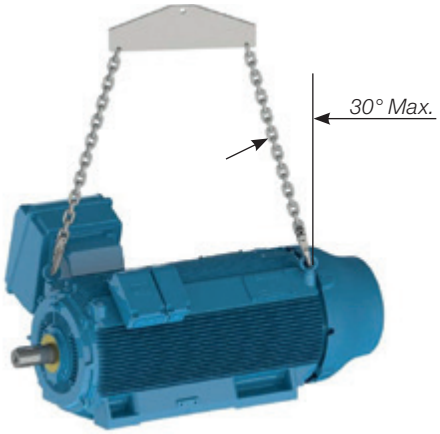


***Figure 4.5*** *- Maximum resulting angle for horizontal HGF, W40 and W50 motors*

For W60 motors, as shown in Figure 4.6, the use of a spreader beam is required for maintaining the lifting elements (chain or rope) in vertical position and thus preventing damage to the motor surface.

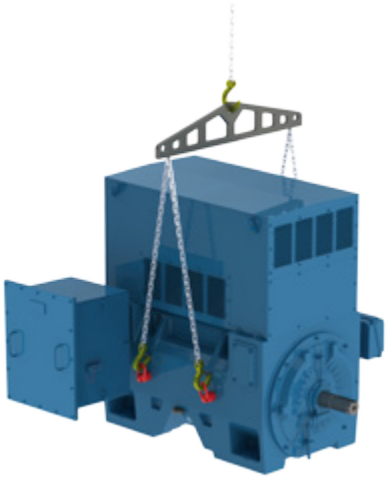

***Figure 4.6*** *- Lifting for W60 motors with paralel chains*

- For motors fitted with inclined eyebolts, as shown in Figure 4.7, the use of a spreader beam is required for maintaining the lifting elements (chain or rope) in vertical position and thus preventing damage to the motor surface.



***Figure 4.7*** *- Use of a spreader beam for lifting*

### 4.1.3. Vertical motors

For vertical mounted motors, as shown in Figure 4.8, the use of a spreader beam is required for maintaining the lifting element (chain or rope) in vertical position and thus preventing damage to the motor surface.



***Figure 4.8*** *- Lifting of vertical mounted motors*

Always use the eyebolts mounted on the top side of the motor, diametrically opposite, considering the mounting position. See Figure 4.9.



***Figure 4.9*** *- Lifting of HGF and W50 motors.*

#### 4.1.3.1. Procedures to place W22 motors in the vertical position

For safety reasons during the transport, vertical mounted Motors are usually packed and supplied in horizontal position.
To place W22 motors fitted with eyebolts (see Figure 4.7), to the vertical position, proceed as follows:

1. Ensure that the eyebolts are tightened properly, as shown in Figure 4.1;
2. Remove the motor from the packaging, using the top mounted eyebolts, as shown in Figure 4.10;



***Figure 4.10*** *- Removing the motor from the packaging*

3. Install a second pair of eyebolts, as shown in Figure 4.11;



***Figure 4.11*** *- Installation of the second pair of eyebolts*

4. Reduce the load on the first pair of eyebolts to start the motor rotation, as shown in Figure 4.12. This procedure must be carried out slowly and carefully.



***Figure 4.12*** *- End result: motor placed in vertical position*

These procedures will help you to move motors designed for vertical mounting. These procedures are also used to place the motor from the horizontal position into the vertical position and vertical to horizontal.

### 4.1.3.2. Procedures to place HGF and W50 motors in the vertical position

HGF motors are fitted with eight lifting points: four at drive end and four at non-drive end. W50 motors are fitted with nine lifting points: four at drive end, one in the central part and four at non-drive end. The motors are usually transported in horizontal position, however for the installation they must be placed in the vertical position.
To place an these motors in the vertical position, proceed as follows:

1. Lift the motor by using the four lateral eyebolts and two hoists, see Figure 4.13;



***Figure 4.13*** *- Lifting of HGF and W50 motors with two hoists*

2. Lower the hoist fixed to motor drive end while lifting the hoist fixed to motor non-drive end until the motor reaches its equilibrium, see Figure 4.14;



***Figure 4.14*** *- Placing HGF and W50 motors in vertical position*

3. Remove the hoist hooks from the drive end eyebolts and rotate the motor 180° to fix the removed hooks into the two eyebolts at the motor non-drive end, see Figure 4.15;



***Figure 4.15*** *- Lifting HGF and W50 motors by the eyebolts at the non-drive end*

4. Fix the removed hoist hooks in the other two eyebolts at the non-drive end and lift the motor until the vertical position is reached, see Figure 4.16.



***Figure 4.16*** *- HGF and W50 motors in the vertical position*

These procedures will help you to move motors designed for vertical mounting. These procedures are also used to place the motor from the horizontal position into the vertical position and vertical to horizontal.

## 4.2 Procedures to place W22 vertical mount motors in horizontal position

To place W22 vertical mount motor in horizontal position, proceed as follows:

1. Ensure that all eyebolts are tightened properly, as shown in Figure 4.1;

2. Install the first pair of eyebolts and lift the motor as shown in Figure 4.17;



***Figure 4.17 -*** *Install the first pair of eyebolts*

3. Install the second pair of eyebolts, as shown in Figure 4.18;



***Figure 4.18 -*** *Install the second pair of eyebolts*

4. Reduce the load on the first pair of eyebolts for rotating the motor, as shown in Figure 4.19. This procedure must be carried out slowly and carefully;



***Figure 4.19 -*** *Motor is being rotated to horizontal position*

5. Remove the first pair of eyebolts, as shown in Figure 4.20.



***Figure 4.20 -*** *Final result: motor placed in horizontal position*

# 5. STORAGE

If the motor is not installed immediately, it must be stored in a dry and clean environment, with relative humidity not exceeding 60%, with an ambient temperature between 5 °C and 40 °C, without sudden temperature changes, free of dust, vibrations, gases or corrosive agents. The motor must be stored in horizontal position, unless specifically designed for vertical operation, without placing objects on it. Do not remove the protection grease from shaft end to prevent rust.

If the motor are fitted with space heaters, they must always be turned on during the storage period or when the installed motor is out of operation. Space heaters will prevent water condensation inside the motor and keep the winding insulation resistance within acceptable levels. Store the motor in such position that the condensed water can be easily drained. If fitted, remove pulleys or couplings from the shaft end (more information are given on item 6).

The space heaters should never be energized when the motor is in operation.

## 5.1. EXPOSED MACHINED SURFACES

All exposed machined surfaces (like shaft end and flange) are factory-protected with temporary rust inhibitor. A protective film must be reapplied periodically (at least every six months), or when it has been removed and/or damaged.

## 5.2. STORAGE

The stacking height of the motor packaging during the storage period should not exceed 5 m, always considering the criteria indicated in Table 5.1:

***Table 5.1*** *- Max. recommended stacking height*

| Packaging type | Frame sizes | Maximum stacking quantity |
|---|---|---|
| **Cardboard box** | IEC 63 to 132<br>NEMA 143 to 215 | Indicated on the top side of the cardboard box |
| **Wood crate** | IEC 63 to 315<br>NEMA 48 to 504/5 | 06 |
| | IEC 355<br>NEMA 586/7 and 588/9 | 03 |
| | W40 / W50 / W60 / HGF IEC 315 to 630<br>W40 / W50 / HGF NEMA 5000 to 9600 | Indicated on the packaging |

***Notes****:*
*1) Never stack larger packaging onto smaller packaging;*
*2) Align the packaging correctly (see Figure 5.1 and Figure 5.2);*

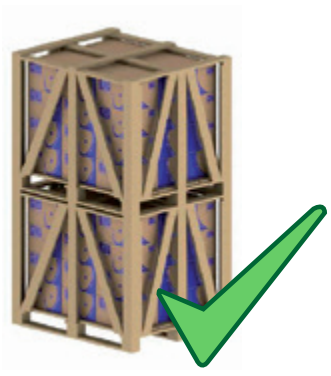

***Figure 5.1*** *- Correct stacking*



***Figure 5.2*** *- Incorrect stacking*

*3) The feet of the crates above should always be supported by suitable wood battens (Figure 5.3) and never stand on the steel tape or without support (Figure 5.4);*

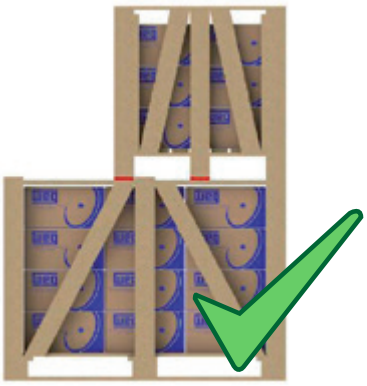

*Figure 5.3 - Correct stacking*



*Figure 5.4 - Incorrect stacking*

*4) When stacking smaller crates onto longer crates, always ensure that suitable wooden supports are provided to withstand the weight (see Figure 5.5). This condition usually occurs with motor packaging above IEC 225S/M (NEMA 364/5T) frame sizes.*

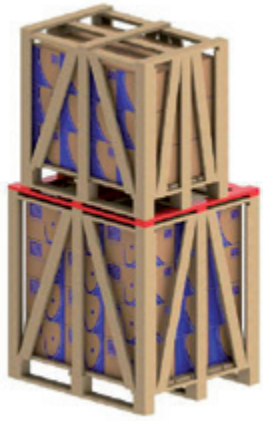

***Figure 5.5** - Use of additional battens for stacking*



## 5.3 BEARINGS

### 5.3.1 Grease lubricated bearings

We recommend rotating the motor shaft at least once a month (by hand, at least five revolutions, stopping the shaft at a different position from the original one). If the motor is fitted with shaft locking device, remove it before rotating the shaft and install it again before performing any handling procedure. Vertical motors may be stored in the vertical or in horizontal position. If motors with open bearings are stored longer than six months, the bearings must be relubricated according to item 8.2 before commissioning of the motor.
If the motor is stored for longer than 2 years, the bearings must be replaced or removed, washed, inspected and relubricated according to item 8.2.

### 5.3.2 Oil lubricated bearings

The motor must be stored in its original operating position and with oil in the bearings. Correct oil level must be ensured. It should be in the center of the sight glass.
During the storage period, remove the shaft locking device and rotate the shaft by hand every month, at least five revolutions, thus achieving an even oil distribution inside the bearing and maintaining the bearing in good operating conditions. Reinstall the shaft locking device every time the motor has to be moved.
If the motor is stored for a period equal or longer than the oil change interval, the oil must be replaced according to Item 8.2, before starting the operation. If the motor is stored for a period of over two years, the bearings must be replaced or removed, washed according to manufacturer instructions, checked and relubricated according to Item 8.2. The oil of vertical mounted motors is removed to prevent oils leaks during the transport. After receiving  the motor the bearings must be lubricated.

### 5.3.3 Oil Mist lubricated bearings

The motor must be stored in horizontal position. Lubricate the bearings with ISO VG 68 mineral oil in the amount indicated in the Table 5.2 (this is also valid for bearings with equivalent dimensions). After filling with oil, rotate the shaft by hand, at least five revolutions)
During the storage period, remove the shaft locking device (if any) and rotate the shaft by hand every week, at least five revolutions, stopping it at a different position from the original one. Reinstall the shaft locking device every time the motor has to be moved. If the motor is stored for a period of over two years, the bearings must be replaced or removed, washed according to manufacturer instructions, checked and relubricated according to item 8.2.

***Table 5.2** - Amount of oil per bearing*

| Bearing size | Amount of oil (ml) | Bearing size | Amount of oil (ml) |
|---|---|---|---|
| 6201 | 15 | 6309 | 65 |
| 6202 | 15 | 6311 | 90 |
| 6203 | 15 | 6312 | 105 |
| 6204 | 25 | 6314 | 150 |
| 6205 | 25 | 6315 | 200 |
| 6206 | 35 | 6316 | 250 |
| 6207 | 35 | 6317 | 300 |
| 6208 | 40 | 6319 | 350 |
| 6209 | 40 | 6320 | 400 |
| 6211 | 45 | 6322 | 550 |
| 6212 | 50 | 6324 | 600 |
| 6307 | 45 | 6326 | 650 |
| 6308 | 55 | 6328 | 700 |

The oil must always be removed when the motor has to be handled. If the oil mist system is not operating after installation, fill the bearings with oil to prevent bearing rusting. During the storage period, rotate the shaft by hand, at least five revolutions, stopping it at a different position from the original one. Before starting the motor, all bearing protection oil must be drained from the bearing and the oil mist system must be switched ON.

### 5.3.4 Sleeve bearing

The motor must be stored in its original operating position and with oil in the bearings. Correct oil level must be ensured. It should be in the middle of the sight glass. During the storage period, remove the shaft locking device and rotate the shaft by hand every month, at least five revolutions, and at 30 rpm, thus achieving an even oil distribution inside the bearing and maintaining the bearing in good operating conditions. Reinstall the shaft locking device every time the motor has to be moved.
If the motor is stored for a period equal or longer than the oil change interval, the oil must be replaced, according to Item 8.2, before starting the operation.

If the motor is stored for a period longer than the oil change interval, or if it is not possible to rotate the motor shaft by hand, the oil must be drained and a corrosion protection and dehumidifiers must be applied.

## 5.4. INSULATION RESISTANCE

We recommend measuring the winding insulation resistance at regular intervals to follow-up and evaluate its electrical operating conditions. If any reduction in the insulation resistance values are recorded, the storage conditions should be evaluated and corrected, where necessary.

### 5.4.1. Insulation resistance measurement

We recommend measuring the winding insulation resistance at regular intervals to follow-up and evaluate its electrical operating conditions. If any reduction in the insulation resistance values are recorded, the storage conditions should be evaluated and corrected, where necessary.



The insulation resistance must be measured in a safe environment.

The insulation resistance must be measured with a megohmmeter. The machine must be in cold state and disconnected from the power supply.

To prevent the risk of an electrical shock, ground the terminals before and after each measurement. Ground the capacitor (if any) to ensure that it is fully discharged before the measurement is taken.

It is recommended to insulate and test each phase separately. This procedure allows the comparison of the insulation resistance between each phase. During the test of one phase, the other phases must be grounded. The test of all phases simultaneously evaluates the insulation resistance to ground only but does not evaluate the insulation resistance between the phases.
The power supply cables, switches, capacitors and other external devices connected to the motor may considerably influence the insulation resistance measurement. Thus all external devices must be disconnected and grounded during the insulation resistance measurement.
Measure the insulation resistance one minute after the voltage has been applied to the winding. The applied voltage should be as shown in Table 5.3.

***Table 5.3*** *- Voltage for the insulation resistance*

| Winding rated voltage (V) | Testing voltage for measuring the insulation resistance (V) |
|---|---|
| < 1000 | 500 |
| 1000 - 2500 | 500 - 1000 |
| 2501 - 5000 | 1000 - 2500 |
| 5001 - 12000 | 2500 - 5000 |
| > 12000 | 5000 - 10000 |

The reading of the insulation resistance must be corrected to 40 °C as shown in the Table 5.4.

***Table 5.4*** *- Correction factor for the insulation resistance corrected to 40 °C*

| Measuring temperature of the insulation resistance (°C) | Correction factor of the insulation resistance corrected to 40 °C | Measuring temperature of the insulation resistance (°C) | Correction factor of the insulation resistance corrected to 40 °C |
|---|---|---|---|
| 10 | 0.125 | 30 | 0.500 |
| 11 | 0.134 | 31 | 0.536 |
| 12 | 0.144 | 32 | 0.574 |
| 13 | 0.154 | 33 | 0.616 |
| 14 | 0.165 | 34 | 0.660 |
| 15 | 0.177 | 35 | 0.707 |
| 16 | 0.189 | 36 | 0.758 |
| 17 | 0.203 | 37 | 0.812 |
| 18 | 0.218 | 38 | 0.871 |
| 19 | 0.233 | 39 | 0.933 |
| 20 | 0.250 | 40 | 1.000 |
| 21 | 0.268 | 41 | 1.072 |
| 22 | 0.287 | 42 | 1.149 |
| 23 | 0.308 | 43 | 1.231 |
| 24 | 0.330 | 44 | 1.320 |
| 25 | 0.354 | 45 | 1.414 |
| 26 | 0.379 | 46 | 1.516 |
| 27 | 0.406 | 47 | 1.625 |
| 28 | 0.435 | 48 | 1.741 |
| 29 | 0.467 | 49 | 1.866 |
| 30 | 0.500 | 50 | 2.000 |

The motor insulation condition must be evaluated by comparing the measured value with the values indicated in Table 5.5 (corrected to 40 °C):

***Table 5.5*** *- Evaluation of the insulation system*

| Limit value for rated voltage up to 1.1 kV (MΩ) | Limit value for rated voltage above 1.1 kV (MΩ) | Situation |
|---|---|---|
| Up to 5 | Up to 100 | Dangerous. The motor can not be operated in this condition |
| 5 to 100 | 100 to 500 | Regular |
| 100 to 500 | Higher than 500 | Good |
| Higher than 500 | Higher than 1000 | Excellent |

The values indicated in the table should be considered only as reference values. It is advisable to log all measured values to provide a quick and easy overview on the machine insulation resistance.
If the insulation resistance is low, moisture may be present in the stator windings. In this case the motor should be removed and transported to a WEG authorized Service Center for proper evaluation and repair (This service is not covered by the warranty). To improve the insulation resistance through the drying process, see section 8.4.

# 6. INSTALLATION

The insulation resistance must be measured in a safe environment.

Check some aspects before proceeding with the installation:

1. Insulation resistance: must be within the acceptable limits. See item 5.4.
2. Bearings:
   If the motor is installed without running immediately, proceed as described in item 5.3.
3. Operating conditions of the start capacitors: If single-phase motors are stored for a period of over two years, it is recommended to change the start capacitors before motor starting since they lose their operating characteristics.
4. Terminal box:
   a. the inside of the terminal box must be clean and dry;
   b. the contacts must be correctly connected and corrosion free. See 6.9 and 6.10;
   c. the cable entries must be correctly sealed and the terminal box cover properly mounted in order to ensure the degree of protection indicated on the motor nameplate.
5. Cooling: the cooling fins, air inlet and outlet openings must be clean and unobstructed. The distance between the air inlet openings and the wall should not be shorter than ¼ (one quarter) of the diameter of the air inlet. Ensure sufficient space to perform the cleaning services. See item 7.
6. Coupling: remove the shaft locking device (where fitted) and the corrosion protection grease from the shaft end and flange just before installing the motor. See item 6.4.
7. Drain hole: the motor must always be positioned so the drain hole is at the lowest position (If there is any indication arrow on the drain, the drain must be so installed that the arrow points downwards).
   Motors supplied with rubber drain plugs leave the factory in the closed position and must be opened periodically to allow the exit of condensed water. For environments with high water condensation levels and motor with degree of protection IP55, the drain plugs can be mounted in open position (see Figure 6.1).
   For motors with degree of protection IP56, IP65 or IP66, the drain plugs must remain at closed position (see Figure 6.1), being opened only during the motor maintenance procedures.
   The drain system of motors with Oil Mist lubrication system must be connected to a specific collection system (see Figure 6.12).

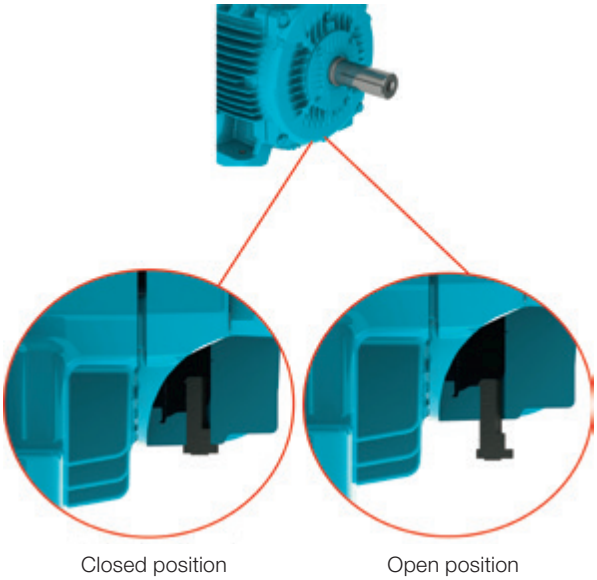


***Figure 6.1*** *- Detail of the rubber drain plug mounted in closed and open position*

8.Additional recommendations:
a. Check the direction of motor rotation, starting the motor at no-load before coupling it to the load;
b. Vertical mounted motors with shaft end down must be fitted with drip cover to protect them from liquids or solids that may drop onto the motors;
c. Vertical mounted motors with shaft end up should be fitted with water slinger ring to prevent water ingress inside the motor.
d. The fixing elements mounted in the threaded through holes in the motor enclosure (for example, the flange) must be properly sealed.

Remove or fix the shaft key before starting the motor.

Changes on the motor construction (features), such as installation of extended grease fittings or modification of the lubrication system, installation of accessories at alternative locations, etc., can be carried out only after prior written consent from WEG.

## 6.1. FOUNDATIONS

The foundation is the structure, structural element, natural or prepared base, designed to withstand the stresses produced by the installed equipment, ensuring safe and stable performance during operation. The foundation design should consider the adjacent structures to avoid the influences of other installed equipment and no vibration is transferred through the structure

The foundation must be flat and its selection and design must consider the following characteristics:

a) The features of the machine to be installed on the foundation, the driven loads, application, maximum allowed deformations and vibration levels (for instance, motors with reduced vibration levels, foot flatness, flange concentricity, axial and radial loads, etc. lower than the values specified for standard motors).

b) Adjacent buildings, conservation status, maximum applied load estimation, type of foundation and fixation and vibrations transmitted by theses constructions.

If the motor is supplied with leveling/alignment bolts, this must be considered in the base design.

Please consider for the foundation dimensioning all stresses that are generated during the operation of the driven load.
The user is responsible for the foundation designing and construction.

The foundation stresses can be calculated by using the following equations (see Figure 6.2):

$$F_1 = 0,5 * g * m - (4 * T_b / A)$$
$$F_2 = 0,5 * g * m + (4 * T_b / A)$$

Where:

$F_1$ and $F_2$ = lateral stresses (N);
g = gravitational acceleration (9,8 m/s$^2$);
m = motor weight (kg);
$T_b$ = breakdown torque (Nm);
A = distance between centerlines of mounting holes in feet or base of the machine (end view) (m).

The motors may be mounted on:

- Concrete bases: are most used for large-size motors (see Figure 6.2);
- Metallic bases: are generally used for small-size motors (see Figure 6.3).

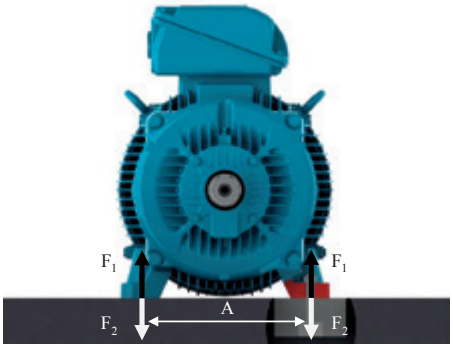


***Figure 6.2*** *- Motor installed on concrete base*



***Figure 6.3*** *- Motor installed on metallic base*

The metallic and concrete bases may be fitted with sliding system. These types of foundations are generally used where the power transmission is achieved by belts and pulleys. This power transmission system is easier to assemble/disassemble and allows the belt tension adjustment. Other important aspect of this foundation type is the location of the base locking screws that must be diagonally opposite. The rail nearest the drive pulley is placed in such a way that the positioning bolt is between the motor and the driven machine. The other rail must be placed with the bolt on the opposite side (diagonally opposite), as shown in Figure 6.4 .

To facilitate assembly, the bases may have the following features:

- Shoulders and/or recesses;
- Anchor bolts with loose plates;
- Bolts cast in the concrete;
- Leveling screws;
- Positioning screws;
- Steel & cast iron blocks, plates with flat surfaces.



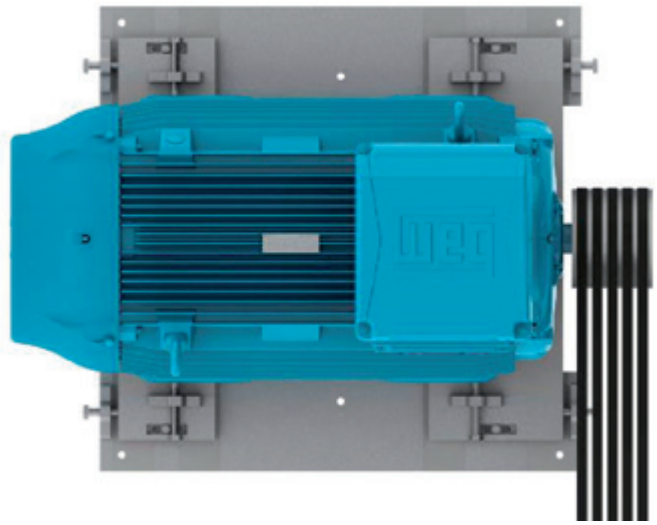

***Figure 6.4*** *- Motor installed on sliding base*

After completing the installation, it is recommended that all exposed machined surfaces are coated with suitable rust inhibitor.

## 6.2. MOTOR MOUNTING

Footless motors supplied with transportation devices, according to Figure 6.5, must have their devices removed before starting the motor installation.

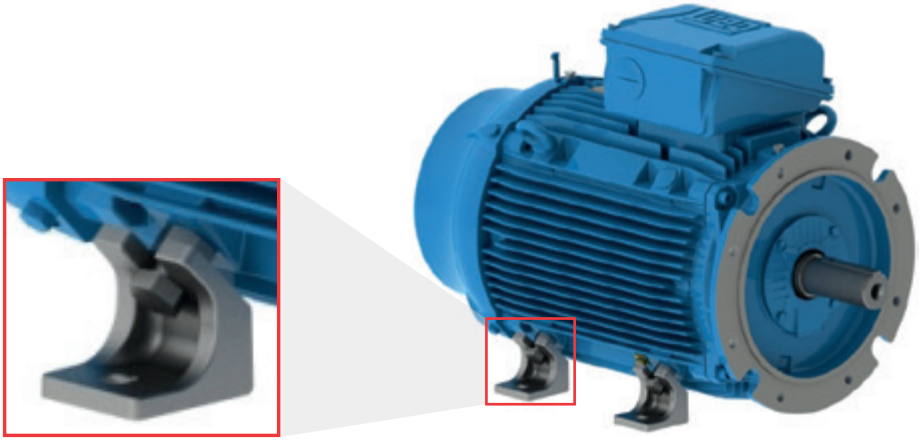

***Figure 6.5*** *- Detail of the transportation devices for footless motors*

### 6.2.1. Foot mounted motors

The drawings of the mounting hole dimensions for NEMA or IEC motors can be checked in the respective technical catalogue.
The motor must be correctly aligned and leveled with the driven machine. Incorrect alignment and leveling may result in bearing damage, generate excessive vibration and even shaft distortion/breakage.
For more details, see section 6.3 and 6.6. The thread engagement length of the mounting bolt should be at least 1.5 times the bolt diameter. This thread engagement length should be evaluated in more severe applications and increased accordingly.
Figure 6.6 shows the mounting system of a foot mounted motor indicating the minimum required thread engagement length.

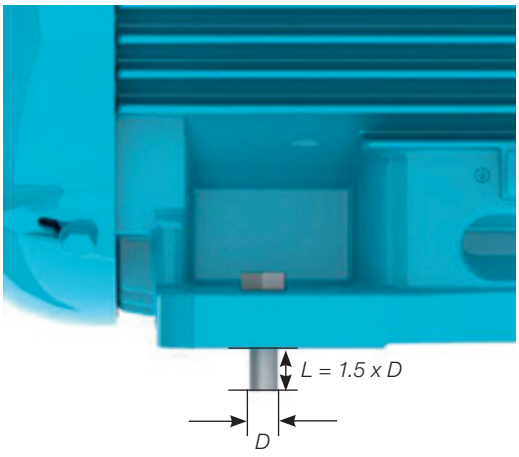


***Figure 6.6*** *- Mounting system of a foot mounted motor*

### 6.2.2. Flange mounted motors

The drawings of the flange mounting dimensions, IEC and NEMA flanges, can be checked in the technical catalogue.
The coupling of the driven equipment to the motor flange must be properly dimensioned to ensure the required concentricity of the assembly.
Depending on the flange type, the mounting can be performed from the motor to the driven equipment flange (flange FF (IEC) or D (NEMA)) or from the driven equipment flange to the motor (flange C (DIN or NEMA)).
For the mounting process from the driven equipment flange to the motor, you must consider the bolt length, flange thickness and the thread depth of the motor flange.

If the motor flange has tapped through-holes, the length of the mounting bolts must not exceed the tapped through-hole length of the motor flange, thus preventing damage to the winding head.

For flange mounting the thread engagement length of the mounting bolt should be at least 1.5 times the bolt diameter. In severe applications, longer thread engagement length may be required.
In severe applications or if large motors are flange mounted, a foot or pad mounting may be required in addition to the flange mounting (Figure 6.7). The motor must never be supported on its cooling fins.

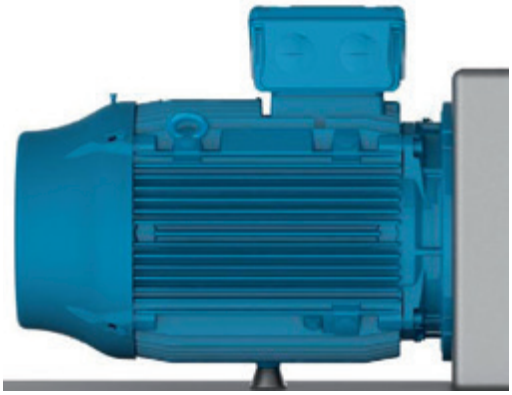

***Figure 6.7*** *- Mounting method of flange mounted motors with frame base support*

***Note****:*
*When liquid (for example oil) is likely to come into contact with the shaft seal, please contact your local WEG representative.*

### 6.2.3. Pad mounted motors

Typically, this method of mounting is used in axial fans. The motor is fixed by tapped holes in the frame. The dimensions of these tapped holes can be checked in the respective product catalogue. The selection of the motor mounting rods/bolts must consider the dimensions of the fan case, the installation base and the thread depth in the motor frame.
The mounting rods and the fan case wall must be sufficiently stiff to prevent the transmission of excessive vibration to the machine set (motor & fan). Figure 6.8 shows the pad mounting system.

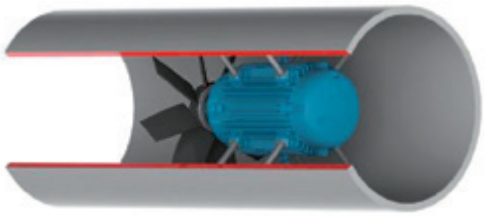

***Figure 6.8*** *- Mounting of the motor inside the cooling duct*

## 6.3. BALANCING

Unbalanced machines generate vibration which can result in damage to the motor. WEG motors are dynamically balanced with “half key” and without load (uncoupled). Special balancing quality level must be stated in the Purchase Order.

The transmission elements, such as pulleys, couplings, etc., must balanced with “half key” before they are mounted on the motor shaft.

The balance quality grade meets the applicable standards for each product line.

The maximum balancing deviation must be recorded in the installation report.

## 6.4. COUPLINGS

Couplings are used to transmit the torque from the motor shaft to the shaft of the driven machine. The following aspects must be considered when couplings are installed:

- Use proper tools for coupling assembly & disassembly to avoid damages to the motor and bearings;
- Whenever possible, use flexible couplings, since they can absorb eventual residual misalignments during the machine operation;
- The maximum loads and speed limits informed in the coupling and motor manufacturer catalogues cannot be exceeded;
- Level and align the motor as specified in sections 6.5 and 6.6, respectively.

Remove or fix the shaft key firmly when the motor is operated without coupling in order to prevent accidents.

### 6.4.1. Direct coupling

Direct coupling is characterized when the Motor shaft is directly coupled to the shaft of the driven machine without transmission elements. Whenever possible, use direct coupling due to lower cost, less space required for installation and more safety against accidents.

Do not use roller bearings for direct coupling, unless sufficient radial load is expected.

### 6.4.2. Gearbox coupling

Gearbox coupling is typically used where speed reduction is required.
Make sure that shafts are perfectly aligned and strictly parallel (in case of straight spur gears) and in the right meshing angle (in case of bevel and helical gears).

### 6.4.3. Pulley and belt coupling

Pulleys and belts are used when speed increase or reduction between motor shaft and driven load is required.

Excessive belt tension will damage the bearings and cause unexpected accidents such as breakage of the motor shaft.

### 6.4.4. Coupling of sleeve bearing motors

Motors designed with sleeve bearings must be operated with direct coupling to the driven machine or a gearbox. Pulley and belts can not be applied for sleeve bearing motors.

Motors designed with sleeve bearings have 3 (three) marks on the shaft end. The center mark is the indication of the magnetic center and the 2 (two) outside marks indicate the allowed limits of the rotor axial movement, as shown in Figure 6.9.
The motor must be so coupled that during operation the arrow on the frame is placed over the central mark indicating the rotor magnetic center. During start-up, or even during operation, the rotor may freely move between the two outside marks when the driven machine exerts an axial load on the motor shaft. However, under no circumstance, the motor can operate continuously with axial forces on the bearing.

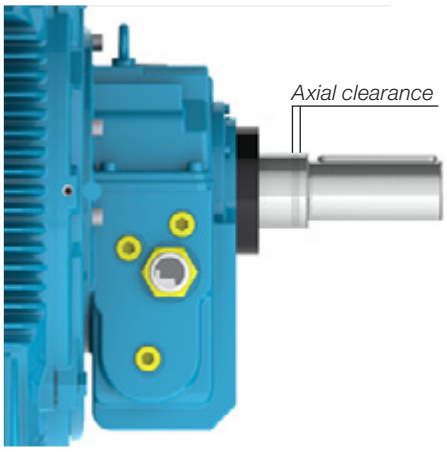


***Figure 6.9*** *- Axial clearance of motor designed with sleeve bearing*

For coupling evaluation consider the maximum axial bearing clearance as shown in Table 6.1.
The axial clearance of the driven machine and coupling influence the maximum bearing clearance.

***Table 6.1*** *- Clearance used for sleeve bearings*

| Bearing size | Total axial clearance (mm) |
|---|---|
| 9* | 3 + 3 = 6 |
| 11* | 4 + 4 = 8 |
| 14* | 5 + 5 =10 |
| 18 | 7,5 + 7,5 = 15 |

** For Motors in accordance with API 541, the total axial clearance is 12.7 mm*

The sleeve bearings used by WEG were not designed to support axial load continuously.
Under no circumstance must the motor be operated continuously at its axial clearance limits.

## 6.5. LEVELING

The motor must be leveled to correct any deviations in flatness arising from the manufacturing process and the material structure rearrangement. The leveling can be carried out by a leveling screw fixed on the motor foot or on the flange or by means of thin compensation shims. After the leveling process, the leveling height between the motor mounting base and the motor cannot exceed 0.1 mm.
If a metallic base is used to level the height of the motor shaft end and the shaft end of the driven machine, level only the metallic base relating to the concrete base.

Record the maximum leveling deviations in the installation report.

## 6.6. ALIGNMENT

The correct alignment between the motor and the driven machine is one of the most important variables that extends the useful service life of the motor. Incorrect coupling alignment generates high loads and vibrations reducing the useful life of the bearings and even resulting in shaft breakages. Figure 6.10 illustrates the misalignment between the motor and the driven machine.

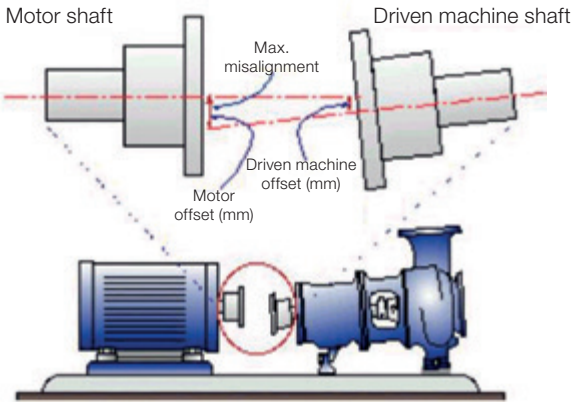


***Figure 6.10*** *- Typical misalignment condition*

Alignment procedures must be carried out using suitable tools and devices, such as dial gauge, laser alignment instruments, etc.. The motor shaft must be aligned axially and radially with the driven machine shaft.

The maximum allowed eccentricity for a complete shaft turn should not exceed 0.03 mm, when alignment is made with dial gauges, as shown in Figure 6.11. Ensure a gap between couplings to compensate the thermal expansion between the shafts as specified by the coupling manufacturer.

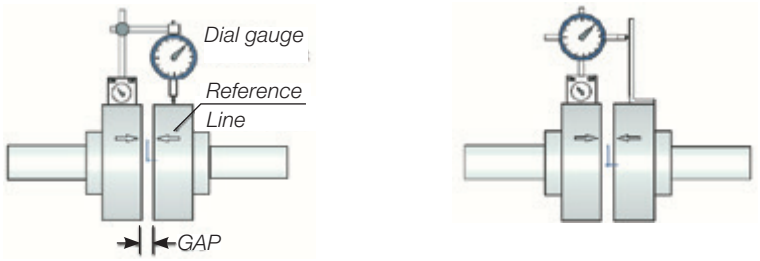


*Parallel alignment* *Angular alignment*

***Figure 6.11*** *- Alignment with dial gauge*

If alignment is made by a laser instrument, please consider the instructions and recommendations provided by the laser instrument manufacturer.
The alignment should be checked at ambient temperature with machine at operating temperature.

The coupling alignment must be checked periodically.

Pulley and belt couplings must be so aligned that the driver pulley center lies in the same plane of the driven pulley center and the motor shaft and the shaft of the driven machine are perfectly parallel.
After completing the alignment procedures, ensure that mounting devices do not change the motor and machine alignment and leveling resulting into machine damage during operation.

It is recommended to record the maximum alignment deviation in the Installation Report.

## 6.7. CONNECTION OF OIL LUBRICATED OR OIL MIST LUBRICATED MOTORS

When oil lubricated or oil mist lubricated motors are installed, connect the existing lubricant tubes (oil inlet and oil outlet tubes and motor drain tube), as shown in Figure 6.12. The lubrication system must ensure continuous oil flow through the bearings as specified by the manufacturer of the installed lubrication system.

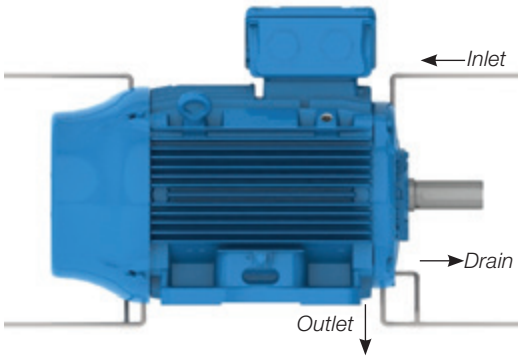


***Figure 6.12*** *- Oil supply and drain system of oil lubricated or oil mist lubricated motors*

## 6.8. CONNECTION OF THE COOLING WATER SYSTEM

When water cooled motors are installed, connect the water inlet and outlet tubes to ensure proper motor cooling. According to item 7.2, ensure correct cooling water flow rate and water temperature in the motor cooling system.

## 6.9. ELECTRICAL CONNECTION

Consider the rated motor current, service factor, starting current, environmental and installation conditions, maximum voltage drop, etc. to select appropriate power supply cables and switching and protection devices. All motors must be installed with overload protection systems. Three-phase motors should be fitted with phase fault protection systems.

Before connecting the motor, check if the power supply voltage and the frequency comply with the motor nameplate data. All wiring must be made according to the connection diagram on the motor nameplate. Please consider the connection diagrams in the Tables 6.2 and 6.3 as reference value.
To prevent accidents, check if motor has been solidly grounded in accordance with the applicable standards.

***Table 6.2*** *- Typical connection diagram for three-phase motors.*

| Configuration | Quantity of leads | Type of connection | Connection diagram |
|---|---|---|---|
| Single speed | 3 | - | 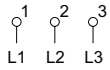  |
| | 6 | Δ - Y | 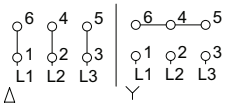  |
| | 9 | YY - Y | 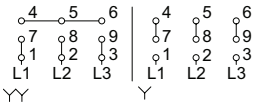  |
| | | ΔΔ - Δ | 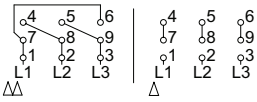  |
| | 12 | ΔΔ - YY - Δ - Y | 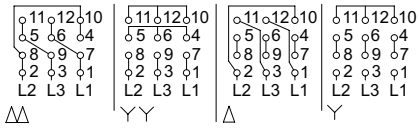  |
| | | Δ - PWS Part-winding start | 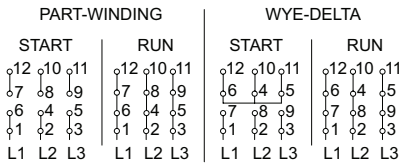  |
| Double speed Dahlander | 6 | YY - Y Variable Torque | 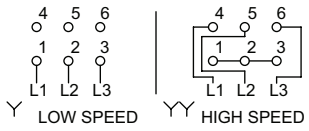  |
| | | Δ - YY Constant Torque | 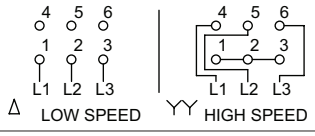  |
| | | YY - Δ Constant Output | 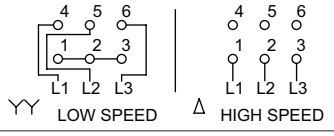  |
| | 9 | Δ - Y - YY | 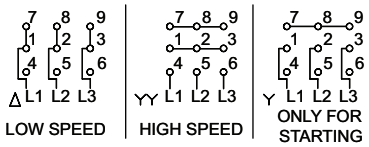  |
| Double speed Double winding | 6 | - | 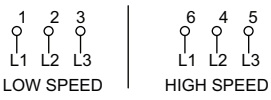  |

| Equivalent table for lead identification | | | | | | | | | | | | | |
|---|---|---|---|---|---|---|---|---|---|---|---|---|---|
| **Lead identification on the wiring diagram** | | **1** | **2** | **3** | **4** | **5** | **6** | **7** | **8** | **9** | **10** | **11** | **12** |
| Single speed | NEMA MG 1 Part 2 | T1 | T2 | T3 | T4 | T5 | T6 | T7 | T8 | T9 | T10 | T11 | T12 |
| | IEC 60034-8 | U1 | V1 | W1 | U2 | V2 | W2 | U3 | V3 | W3 | U4 | V4 | W4 |
| Double speed (Dahlander / Double winding) | NEMA MG 1 Part 2[1)] | 1U | 1V | 1W | 2U | 2V | 2W | 3U | 3V | 3W | 4U | 4V | 4W |
| | IEC 60034-8 | 1U | 1V | 1W | 2U | 2V | 2W | 3U | 3V | 3W | 4U | 4V | 4W |

*1) NEMA MG 1 Part 2 defines T1 to T12 for two or more winding, however WEG adopts 1U to 4W.*

*Table 6.3* - *Typical connection diagram for single-phase motors.*

| Voltage | Direction of Rotation | Thermal Protection | Type | Connection diagram |
|---|---|---|---|---|
| Single | CW or CCW | With or Without | Run / Permanent Capacitors Two values |   |
| | Both | Without | | 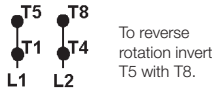  |
| | | Phenolic Thermal Protector | | 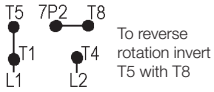  |
| | | Thermostat | | 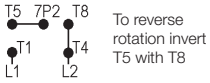  |
| Double | CW or CCW | Without | Run / Permanent Capacitors Two values or Split Phase | 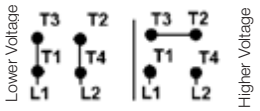  |
| | | Phenolic Thermal Protector | | 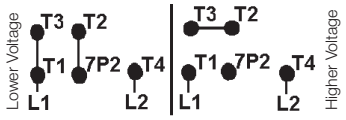  |
| | | Thermostat | | 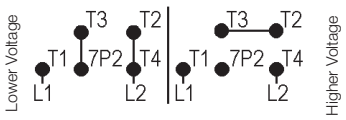  |
| | Both | Without | Split Phase (without capacitor) | 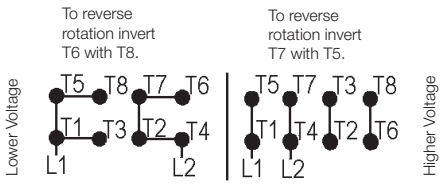  |
| | | | Run / Permanent Capacitors Two values | 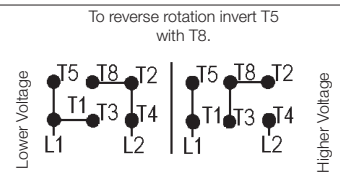  |
| | | Phenolic Thermal Protector | Split Phase (without capacitor) | 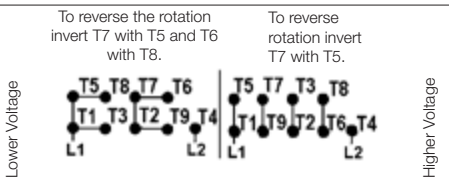  |
| | | | Run / Permanent Capacitors Two values | 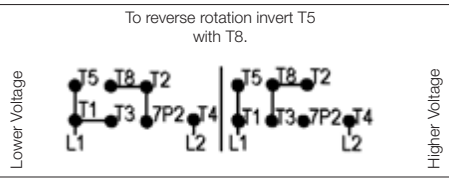  |
| | | Thermostat | Split Phase (without capacitor) | 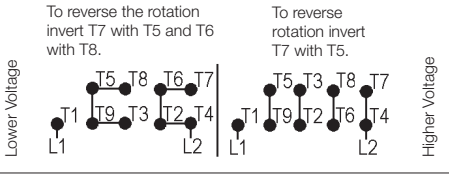  |
| | | | Run / Permanent Capacitors Two values | 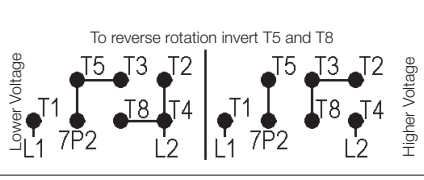  |

WARNING - Local Standards have priority on the definition of the connection standards.

The connections presented below are a reference for the connection of the customer's power cables on low voltage motors with terminal block. The terminal blocks presented below are the standard for each product line, however variations may occur.
It is recommended the use of terminals made of electrolytic copper or brass, similar to the terminals used on the motors cables.

### W21 and W22

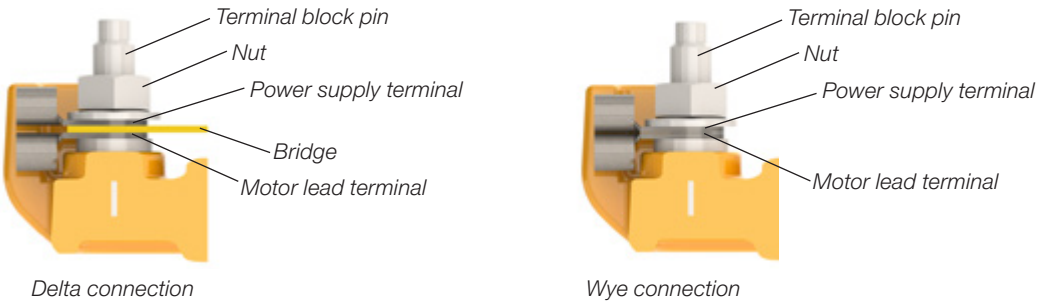


***Figure 6.13*** *- Connetion for W21 and W22 motors with terminal block*

### HGF, W40, W50 and W60

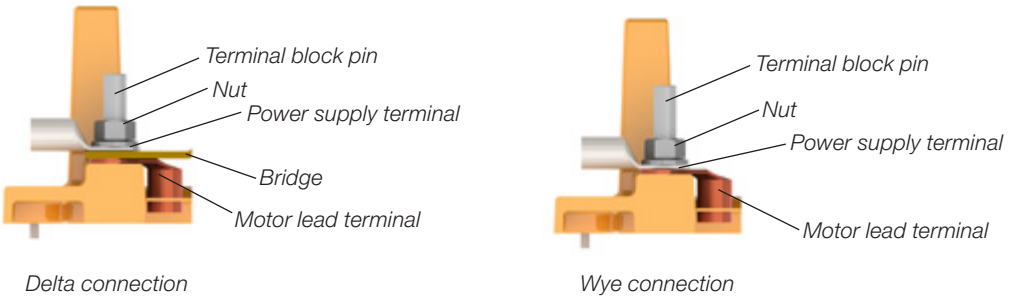


***Figure 6.14*** *- Connetion for HGF, W40, W50 and W60 motors with terminal block*

If motors are supplied without terminal blocks, insulate the cable terminals with suitable insulation material that meets the power supply voltage and the insulation class indicated on the motor nameplate.

Ensure correct tightening torque for the power cable and grounding connections as specified in Table 8.11

The clearance distance (see Figure 6.15) between non-insulated live parts with each other and between grounded parts must be as indicated in Table 6.4.

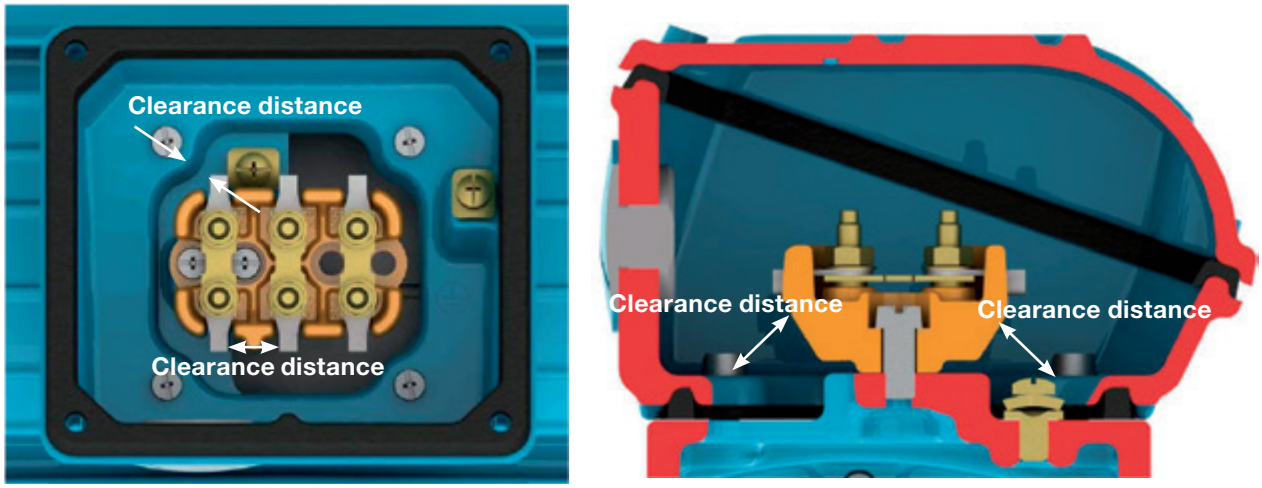


***Figure 6.15*** *- Clearance distance representation*

***Table 6.4*** *- Minimum clearance distance (mm) x supply voltage*

| Voltage | Minimum clearance distance (mm) |
|---|---|
| U ≤ 440 V | 4 |
| 440 < U ≤ 690 V | 5.5 |
| 690 < U ≤ 1000 V | 8 |
| 1000 < U ≤ 6900 V | 45 |
| 6900 < U ≤ 11000 V | 70 |
| 11000 < U ≤ 16500 V | 105 |

Even when the motor is off, dangerous voltages may be present inside the terminal box used for the space heater supply or winding energization when the winding is used as heating element.
Motor capacitors will hold a charge even after the power has been cut off. Do not touch the capacitors and/or motor terminals, before discharging the capacitors completely.

After the motor connection has been completed, ensure that no tool or foreign body has been left inside the terminal box.

Take the required measures in order to ensure the degree of protection indicated on the motor nameplate:
- unused cable inlet holes in the terminal boxes must be properly closed with blanking plugs;
- components supplied loose (for example, terminal boxes mounted separately) must be properly closed and sealed.
The cable inlets used for power supply and control must be fitted with components (for example, cable-glands and conduits) that meet the applicable standards and regulations in each country.

If the motor is fitted with accessories, such as brakes and forced cooling systems, these devices must be connected to the power supply according to the information provided on their nameplates and with special care as indicated above.

All protection devices, including overcurrent protection, must be set according to the rated machine conditions. These protection devices must protect the machine against short circuit, phase fault or locked rotor condition. The motor protection devices must be set according to the applicable standards.

Check the direction of rotation of the motor shaft. If there is no limitation for the use of unidirectional fans, the shaft rotation direction can be changed by reversing any two of the phase connections. For single-phase motor, check the connection diagram indicated on the motor nameplate.

## 6.10. CONNECTION OF THE THERMAL PROTECTION DEVICES

If the motor is supplied with temperature monitoring devices, such as, thermostat, thermistors, automatic thermal protectors, Pt-100 (RTD), etc., they must be connected to the corresponding control devices as specified on the accessory nameplates. The non-compliance with this procedure may void the product warranty and cause serious material damages.

Do not apply test voltage above 2.5 V on thermistors and current above 1 mA on RTDs (Pt-100) according to IEC 60751 standard.

Figure 6.16 and Figure 6.17 show the connection diagram of the bimetal thermal protector (thermostats) and thermistors, respectively.

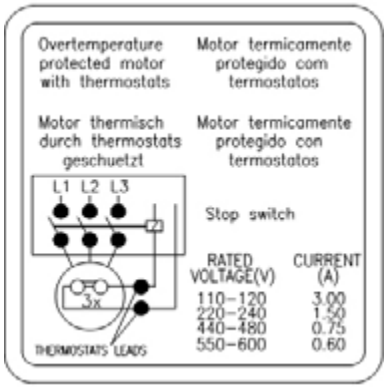


***Figure 6.16*** *- Connection of the bimetal thermal protectors (thermostats)*

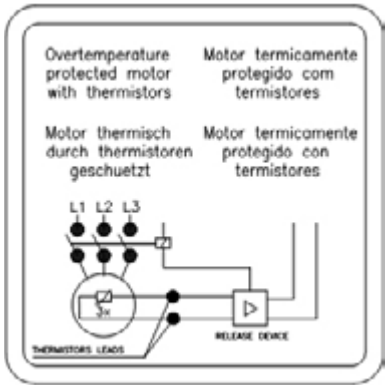


***Figure 6.17*** *- Thermistor connection*

The alarm temperature limits and thermal protection shutdowns can be defined according to the application; however these temperature limits can not exceed the values in Table 6.5.

***Table 6.5*** *- Maximum activation temperature of the thermal protections*

| Component | Insulation class | Maximum temperature of the protection setting (°C) | |
|---|---|---|---|
| | | Alarm | Tripping |
| Winding | B | - | 130 |
| | F | 130 | 155 |
| | H | 155 | 180 |
| Bearing | All | 110 | 120 |

***Notes:***
*1) The number and type of the installed protection devices are stated on the accessory nameplate of the motor.*
*2) If the motor is supplied with calibrated resistance, (for example, Pt-100), the motor protection system must be set according to the operating temperatures indicated in Table 6.5.*

## 6.11. RESISTANCE TEMPERATURE DETECTORS (PT-100)

The thermocouples Pt-100 are made of materials, whose resistance depends on the temperature variation, intrinsic property of some materials (usually platinum, nickel or copper), calibrated resistance. Its operation is based on the principle that the electric resistance of a metallic conductor varies linearly with the temperature, thus allowing a continuous monitoring of the motor warm-up through the controller display ensuring a high level of precision and answer stability. These devices are widely used for measuring temperatures in various industry sectors.
In general these devices are used in installations where precise temperature control is required, for example, in installation for irregular or intermittent duty.
The same detector may be used for alarm and tripping purposes.

Table 6.6 and Figure 6.18 show the equivalence between the Pt-100 resistance and the temperature.

***Table 6.6*** *- Equivalence between the Pt-100 resistance and the temperature*

| °C | Ω | °C | Ω | °C | Ω | °C | Ω | °C | Ω |
|---|---|---|---|---|---|---|---|---|---|
| -29 | 88.617 | 17 | 106.627 | 63 | 124.390 | 109 | 141.908 | 155 | 159.180 |
| -28 | 89.011 | 18 | 107.016 | 64 | 124.774 | 110 | 142.286 | 156 | 159.553 |
| -27 | 89.405 | 19 | 107.404 | 65 | 125.157 | 111 | 142.664 | 157 | 159.926 |
| -26 | 89.799 | 20 | 107.793 | 66 | 125.540 | 112 | 143.042 | 158 | 160.298 |
| -25 | 90.193 | 21 | 108.181 | 67 | 125.923 | 113 | 143.420 | 159 | 160.671 |
| -24 | 90.587 | 22 | 108.570 | 68 | 126.306 | 114 | 143.797 | 160 | 161.043 |
| -23 | 90.980 | 23 | 108.958 | 69 | 126.689 | 115 | 144.175 | 161 | 161.415 |
| -22 | 91.374 | 24 | 109.346 | 70 | 127.072 | 116 | 144.552 | 162 | 161.787 |
| -21 | 91.767 | 25 | 109.734 | 71 | 127.454 | 117 | 144.930 | 163 | 162.159 |
| -20 | 92.160 | 26 | 110.122 | 72 | 127.837 | 118 | 145.307 | 164 | 162.531 |
| -19 | 92.553 | 27 | 110.509 | 73 | 128.219 | 119 | 145.684 | 165 | 162.903 |
| -18 | 92.946 | 28 | 110.897 | 74 | 128.602 | 120 | 146.061 | 166 | 163.274 |
| -17 | 93.339 | 29 | 111.284 | 75 | 128.984 | 121 | 146.438 | 167 | 163.646 |
| -16 | 93.732 | 30 | 111.672 | 76 | 129.366 | 122 | 146.814 | 168 | 164.017 |
| -15 | 94.125 | 31 | 112.059 | 77 | 129.748 | 123 | 147.191 | 169 | 164.388 |
| -14 | 94.517 | 32 | 112.446 | 78 | 130.130 | 124 | 147.567 | 170 | 164.760 |
| -13 | 94.910 | 33 | 112.833 | 79 | 130.511 | 125 | 147.944 | 171 | 165.131 |
| -12 | 95.302 | 34 | 113.220 | 80 | 130.893 | 126 | 148.320 | 172 | 165.501 |
| -11 | 95.694 | 35 | 113.607 | 81 | 131.274 | 127 | 148.696 | 173 | 165.872 |
| -10 | 96.086 | 36 | 113.994 | 82 | 131.656 | 128 | 149.072 | 174 | 166.243 |
| -9 | 96.478 | 37 | 114.380 | 83 | 132.037 | 129 | 149.448 | 175 | 166.613 |
| -8 | 96.870 | 38 | 114.767 | 84 | 132.418 | 130 | 149.824 | 176 | 166.984 |
| -7 | 97.262 | 39 | 115.153 | 85 | 132.799 | 131 | 150.199 | 177 | 167.354 |
| -6 | 97.653 | 40 | 115.539 | 86 | 133.180 | 132 | 150.575 | 178 | 167.724 |
| -5 | 98.045 | 41 | 115.925 | 87 | 133.561 | 133 | 150.950 | 179 | 168.095 |
| -4 | 98.436 | 42 | 116.311 | 88 | 133.941 | 134 | 151.326 | 180 | 168.465 |
| -3 | 98.827 | 43 | 116.697 | 89 | 134.322 | 135 | 151.701 | 181 | 168.834 |
| -2 | 99.218 | 44 | 117.083 | 90 | 134.702 | 136 | 152.076 | 182 | 169.204 |
| -1 | 99.609 | 45 | 117.469 | 91 | 135.083 | 137 | 152.451 | 183 | 169.574 |
| 0 | 100.000 | 46 | 117.854 | 92 | 135.463 | 138 | 152.826 | 184 | 169.943 |
| 1 | 100.391 | 47 | 118.240 | 93 | 135.843 | 139 | 153.200 | 185 | 170.313 |
| 2 | 100.781 | 48 | 118.625 | 94 | 136.223 | 140 | 153.575 | 186 | 170.682 |
| 3 | 101.172 | 49 | 119.010 | 95 | 136.603 | 141 | 153.950 | 187 | 171.051 |
| 4 | 101.562 | 50 | 119.395 | 96 | 136.982 | 142 | 154.324 | 188 | 171.420 |
| 5 | 101.953 | 51 | 119.780 | 97 | 137.362 | 143 | 154.698 | 189 | 171.789 |
| 6 | 102.343 | 52 | 120.165 | 98 | 137.741 | 144 | 155.072 | 190 | 172.158 |
| 7 | 102.733 | 53 | 120.550 | 99 | 138.121 | 145 | 155.446 | 191 | 172.527 |
| 8 | 103.123 | 54 | 120.934 | 100 | 138.500 | 146 | 155.820 | 192 | 172.895 |
| 9 | 103.513 | 55 | 121.319 | 101 | 138.879 | 147 | 156.194 | 193 | 173.264 |
| 10 | 103.902 | 56 | 121.703 | 102 | 139.258 | 148 | 156.568 | 194 | 173.632 |
| 11 | 104.292 | 57 | 122.087 | 103 | 139.637 | 149 | 156.941 | 195 | 174.000 |
| 12 | 104.681 | 58 | 122.471 | 104 | 140.016 | 150 | 157.315 | 196 | 174.368 |
| 13 | 105.071 | 59 | 122.855 | 105 | 140.395 | 151 | 157.688 | 197 | 174.736 |
| 14 | 105.460 | 60 | 123.239 | 106 | 140.773 | 152 | 158.061 | 198 | 175.104 |
| 15 | 105.849 | 61 | 123.623 | 107 | 141.152 | 153 | 158.435 | 199 | 175.472 |
| 16 | 106.238 | 62 | 124.007 | 108 | 141.530 | 154 | 158.808 | 200 | 175.840 |

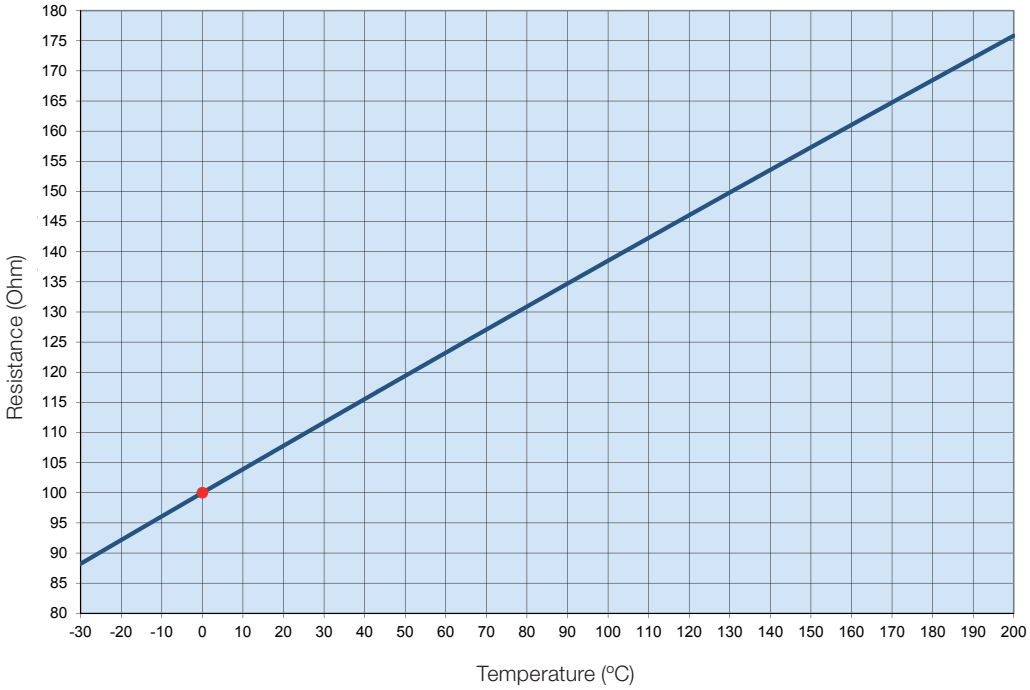


***Figure 6.18*** *- Ohmic resistance of the Pt-100 x temperature*

## 6.12. CONNECTION OF THE SPACE HEATERS

Before switching ON the space heaters, check if the space heaters connection have been made according to the connection diagram shown on the space heater nameplate. For motors supplied with dual voltage space heaters (110-127/220-240 V), see Figure 6.19.

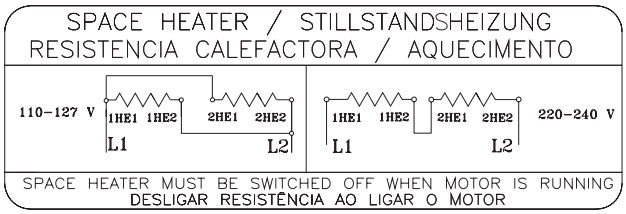


***Figure 6.19*** *- Dual voltage space heater connection*

The space heaters should never be energized when the motor is in operation.

ENGLISH

## 6.13. STARTING METHODS

Whenever possible, the motor starting must be Direct On Line (DOL) at rated voltage. This is the most simple and feasible starting method. However, it must only be applied when the starting current does not affect the power supply. Please consider the local electric utility regulations when installing a motor.
High inrush current may result in:
a) high voltage drop in the power supply line creating unacceptable line disturbance on the distribution system;
b) requiring oversized protection system (cables and contactor) increasing the installation costs.

If DOL starting is not allowed due to the reasons mentioned above, an indirect starting method compatible with the load and motor voltage to reduce the starting current may be used.
If reduced voltage starters are used for starting, the motor starting torque will also be reduced.

Table 6.7 shows the possible indirect starting methods that can be used depending on the number of the motor leads.

***Table 6.7*** *- Starting method x number of motor leads*

| Number of leads | Possible starting methods |
|---|---|
| 3 leads | Autotransformer<br>Soft-starter |
| 6 leads | Star-Delta<br>Autotransformer<br>Soft-starter |
| 9 leads | Series/Parallel<br>Part winding<br>Autotransformer<br>Soft-starter |
| 12 leads | Star-Delta<br>Series/Parallel<br>Part winding<br>Autotransformer<br>Soft-starter |

Table 6.8 shows examples of possible indirect starting methods to be used according to the voltage indicated on the motor nameplate and the power supply voltage.

***Table 6.8*** *- Starting methods x voltage*

| Nameplate voltage | Operating voltage | Star-delta | Autotransformer starting | Starting by series/ parallel switch | Part-winding starting | Starting by Soft-starter |
|---|---|---|---|---|---|---|
| 220/380 V | 220 V<br>380 V | YES<br>NO | YES<br>YES | NO<br>NO | NO<br>NO | YES<br>YES |
| 220/440 V | 220 V<br>440 V | NO<br>NO | YES<br>YES | YES<br>NO | YES<br>NO | YES<br>YES |
| 230/460 V | 230 V<br>460 V | NO<br>NO | YES<br>YES | YES<br>NO | YES<br>NO | YES<br>YES |
| 380/660 V | 380 V | YES | YES | NO | NO | YES |
| 220/380/440 V | 220 V<br>380 V<br>440 V | YES<br>NO<br>YES | YES<br>YES<br>YES | YES<br>YES<br>NO | YES<br>YES<br>NO | YES<br>YES<br>YES |

The WQuattro line motors must be started direct on-line (DOL) or driven by a frequency inverter in scalar mode.

## 6.14. MOTORS DRIVEN BY FREQUENCY INVERTER

The operation with frequency inverter must be stated in the Purchase Order since this drive type may require some changes of the motor design.

Wmagnet Motors must only be driven by WEG frequency inverter.

The frequency inverter used to drive motors up to 690 V must be fitted with Pulse With Modulation (PWM) with vector control.

When a motor is driven by a frequency inverter at lower frequencies than the rated frequency, you must reduce the motor torque to prevent motor overheating. The torque reduction (derating torque) can be found in the item 6.4 of the "Technical Guidelines for Induction Motors driven by PWM Frequency inverters" available on the site www.weg.net.

If the motor is operated above the rated frequency, please note:
- That the motor must be operated at constant output;
- That the motor can supply max. 95% of its rated output;
- Do not exceed the maximum speed and please consider:
  - max. operating frequency stated on the additional nameplate;
  - mechanical speed limitation of the motor.

Information on the selection of the power cables between the frequency inverter and the motor can be found in the item 6.4 of the "Technical Guidelines for Induction Motors driven by PWM Frequency inverters" available at www.weg.net.

### 6.14.1. Use of dV/dt filter

#### 6.14.1.1. Motor with enameled round wire

Motors designed for rated voltages up to 690 V, when driven by frequency inverter, do not require the use of dV/dT filters, provided they comply with the criteria in Table 6.9.

***Table 6.9*** *- Criteria for the selection of motors with round enameled wire when driven by frequency inverter*

| Motor rated votage [1] | Peak voltage at the motor terminals (max) | dV/dt inverter output (max) | Inverter Rise Time [2] (min.) | MTBP [2] Time between pulses (min) |
|---|---|---|---|---|
| Vnom < 460 V | ≤ 1600 V | ≤ 5200 V/µs | ≥ 0,1 µs | ≥ 6 µs |
| 460 ≤ Vnom < 575 V | ≤ 2000 V | ≤ 6500 V/µs | | |
| 575 ≤ Vnom ≤ 1000 V | ≤ 2400 V | ≤ 7800 V/µs | | |

***Notes:***
*1. For the application of dual voltage motors, example 380/660 V, consider the lower voltage (380 V).*
*2. Information supplied by the inverter manufacturer.*

#### 6.14.1.2. Motor with prewound coils

Motors with prewound coils (medium and high voltage motors regardless of frame sizes, and low voltage motors from IEC 500 / NEMA 800 frame on), designed for the use with frequency inverters, do not require the use of filters, provided they comply with the criteria in Table 6.10.

***Table 6.10*** *- Criteria to be considered when using motor with prewound coils to be drive by frequency inverters*

| Motor rated voltage | Type of modulation | Turn to turn insulation (phase-phase) | | Phase-ground insulation | |
|---|---|---|---|---|---|
| | | Peak voltage at the motor terminals | dV/dt at the motor terminals | Peak voltage at the motor terminals | dV/dt at the motor terminals |
| 690 < Vnom ≤ 4160 V | Sinusoidal | ≤ 5900 V | ≤ 500 V/µs | ≤ 3400 V | ≤ 500 V/µs |
| | PWM | ≤ 9300 V | ≤ 2700 V/µs | ≤ 5400 V | ≤ 2700 V/µs |
| 4160 < Vnom ≤ 6600 V | Sinusoidal | ≤ 9300 V | ≤ 500 V/µs | ≤ 5400 V | ≤ 500 V/µs |
| | PWM | ≤ 14000 V | ≤ 1500 V/µs | ≤ 8000 V | ≤ 1500 V/µs |

### 6.14.2. Bearing insulation

Only the motors in IEC frame size 315 (NEMA 50) and larger are supplied, as standard, with insulated bearing. If motor must be driven by frequency inverter, insulate the bearing according to Table 6.11.

***Table 6.11*** *- Recommendation on the bearing insulation for inverter driven motors*

| Frame size | Recommendation |
|---|---|
| IEC 315 and 355<br>NEMA 445/7 to L5810/11 | ■ Insulated bearing/end shield<br>■ Grounding between shaft and frame by grounding brush |
| IEC 400 and larger<br>NEMA 680 and larger | ■ Insulated NDE bearing<br>■ Grounding between shaft and frame by grounding brush |

When motors are supplied with shaft grounding system, monitor the grounding brush constantly during its operation and, when it reaches the end of its useful life, it must be replaced by another brush with the same specification.

### 6.14.3. Switching frequency

The minimum inverter switching frequency must not be lower than 2 kHz and should not exceed 5 kHz.

The non-compliance with the criteria and recommendations indicated in this manual may void the product warranty.

### 6.14.4. Mechanical speed limitation

Table 6.12 shows the maximum speeds allowed for motors driven by frequency inverter.

***Table 6.12*** *- Maximum motor speed (in rpm)*

| Frame size | | DE-bearing | Maximum speed for standard motors |
|---|---|---|---|
| IEC | NEMA | | |
| 63-90 | 143/5 | 6201<br>6202<br>6203<br>6204<br>6205 | 10400 |
| 100 | - | 6206 | 8800 |
| 112 | 182/4 | 6207 | 7600 |
| | | 6307 | 6800 |
| 132 | 213/5 | 6308 | 6000 |
| 160 | 254/6 | 6309 | 5300 |
| 180 | 284/6 | 6311 | 4400 |
| 200 | 324/6 | 6312 | 4200 |
| 225-630 | 364/5-9610 | 6314 | 3600 |
| | | 6315 | 3600 |
| | | 6316 | 3200 |
| | | 6218 | 3600 |
| | | 6319 | 3000 |
| | | 6220 | 3600 |
| | | 6320 | 2200 |
| | | 6322 | 1900 |
| | | 6324 | 1800 |
| | | 6328 | 1800 |
| | | 6330 | 1800 |
| | | 6224 | 1800 |
| | | 6228 | 1800 |

***Note:***
*To select the maximum allowed motor speed, consider the motor torque derating curve.*

For more information on the application of frequency inverters, contact WEG or check the “Technical Guidelines for Induction Motors driven by PWM Frequency inverters” available at www.weg.net.

# 7. COMMISSIONING

## 7.1. INITIAL START-UP

After finishing the installation procedures and before starting the motor for the first time or after a long period without operation, the following items must be checked:

- If the nameplate data (voltage, current, connection diagram, degree of protection, cooling system, service factor, etc.) meet the application requirements;
- If the machine set (motor + driven machine) has been mounted and aligned correctly;
- If the motor driving system ensures that the motor speed does not exceed the max. allowed speed indicated in Table 6.12;
- Measure the winding insulation resistance, making sure it complies with the specified values in item 5.4;
- Check the motor rotation direction;
- Inspect the motor terminal box for damage and ensure that it is clean and dry and all contacts are rust-free, the seals are in perfect operating conditions and all unused threaded holes are properly closed thus ensuring the degree of protection indicated on the motor nameplate;
- Check if the motor wiring connections, including grounding and auxiliary equipment connection, have been carried out properly and are in accordance with the recommendations in item 6.9;
- Check the operating conditions of the installed auxiliary devices (brake, encoder, thermal protection device, forced cooling system, etc.);
- Check bearing operating conditions. If the motors are stored and/or installed for more than two years without running, it is recommended to change the bearings, or to remove, wash, inspect and relubricate them before the motor is started. If the motor is stored and/or installed according to the recommendations described in item 5.3, lubricate the bearings as described in item 8.2. For the bearing condition evaluation, it is recommended to use of the vibration analysis techniques: Envelope Analysis or Demodulation Analysis.
- For roller bearing motors with oil lubrication, ensure:
  - The oil level should be in the center of the sight glass (see Figure 8.1 and 8.2);
  - That if the motor is stored for a period equal or longer than the oil change interval, the oil must be changed before starting the motor.
- When motors are fitted with sleeve bearings, ensure:
  - Correct oil level for the sleeve bearing. The oil level should be in the center of the sight glass (see Figure 8.3);
  - That the motor is not started or operated with axial or radial loads;
  - That if the motor is stored for a period equal or longer than the oil change interval, the oil must be changed before starting the motor.
- Inspect the capacitor operating condition, if any. If motors are installed for more than two years, but were never commissioned, it is recommended to change the start capacitors since they lose their operating characteristics;
- Ensure that the air inlet and outlet opening are not blocked. The minimum clearance to the nearest wall (L) should be at least ¼ of the fan cover diameter (D), see Figure 7.1. The intake air temperature must be at ambient temperature.

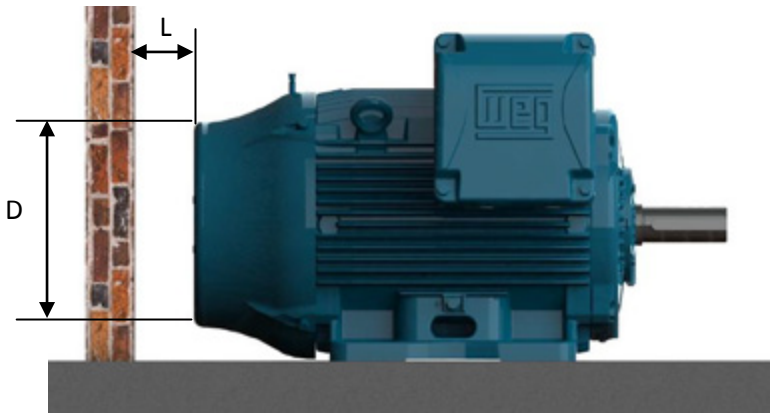


***Figure 7.1**- Minimum clearance to the wall*

Please consider the minimum distances shown in the Table 7.1 as reference value;

***Table 7.1*** *- Minimum distance between the fan cover and wall*

| Frame size | | Distance between the fan cover and the wall (L) | |
|---|---|---|---|
| **IEC** | **NEMA** | **mm** | **inches** |
| 63 | - | 25 | 0.96 |
| 71 | - | 26 | 1.02 |
| 80 | - | 30 | 1.18 |
| 90 | 143/5 | 33 | 1.30 |
| 100 | - | 36 | 1.43 |
| 112 | 182/4 | 41 | 1.61 |
| 132 | 213/5 | 50 | 1.98 |
| 160 | 254/6 | 65 | 2.56 |
| 180 | 284/6 | 68 | 2.66 |
| 200 | 324/6 | 78 | 3.08 |
| 225<br>250 | 364/5<br>404/5 | 85 | 3.35 |
| 280 | 444/5<br>445/7<br>447/9 | 108 | 4.23 |
| 315 | L447/9<br>504/5<br>5006/7/8<br>5009/10/11 | 122 | 4.80 |
| 355 | 586/7<br>588/9<br>5807/8/9<br>5810/11/12 | 136 | 5.35 |
| 400 | 6806/7/8<br>6809/10/11 | 147 | 5.79 |
| 450 | 7006/10 | 159 | 6.26 |
| 500 | 8006/10 | 171 | 6.73 |
| 560 | 8806/10 | 185 | 7.28 |
| 630 | 9606/10 | 200 | 7.87 |

- Ensure correct water flow rate and water temperature when water cooled motors are used. See item 7.2;
- Ensure that all rotating parts, such as pulleys, couplings, external fans, shaft, etc. are protected against accidental contact.

Other tests and inspections not included in the manual may be required, depending on the specific installation, application and/or motor characteristics.

After all previous inspections have been carried out, proceed as follows to start the motor:

- Start the motor on no-load (if possible) and check the motor direction of rotation. Check for the presence of any abnormal noise, vibration or other abnormal operating conditions;
- Ensure the motor starts smoothly. If any abnormal operating condition is noticed, switch off the motor, check the assembly system and connections before the motor is started again;
- If excessive vibrations are noticed, check if the motor mounting bolts are well tightened or if the vibrations are not generated and transmitted from adjacent installed equipment. Check the motor vibration periodically and ensure that the vibration limits are as specified in item 7.2.1;
- Start the motor at rated load during a short time and compare the operating current with the rated current indicated on the nameplate;
- Continue to measure the following motor variables until thermal equilibrium is reached: current, voltage, bearing and motor frame temperature, vibration and noise levels;
- Record the measured current and voltage values on the Installation Report for future comparisons.

As induction motors have high inrush currents during start-up, the acceleration of high inertia load requires an extended starting time to reach full speed resulting in fast motor temperature rise. Successive starts within short intervals will result in winding temperature increases and can lead to physical insulation damage reducing the useful life of the insulation system. If the duty cycle S1 / CONT. is specified on the motor nameplate, this means that the motor has been designed for:

- Two successive starts: first start from cold condition, i. e., the motor windings are at room temperature and the second start immediately after the motor stops;
- One start from hot condition, i. e., the motor windings are at rated temperature.

The Troubleshooting Chart in section 10 provides a basic list of unusual cases that may occur during motor operation with the respective corrective actions.

## 7.2. OPERATING CONDITIONS

Unless otherwise stated in the Purchase Order, electric motors are designed and built to be operated at altitudes up to 1000 meters above sea level and in a temperature range from -20 °C to +40 °C. Any deviation from the normal condition of motor operation must be stated on the motor nameplate. Some components must be changed if the ambient temperature is different from the specified one. Please contact WEG to check the required special features.

For operating temperatures and altitudes differing from those above, the factors indicated in Table 7.2 must be applied to the nominal motor power rating in order to determine the derated available output (Pmax = Pnom x correction factor).

***Table 7.2 -*** *Correction factors for altitude and ambient temperature*

| T (°C) | Altitude (m) | | | | | | | | |
|---|---|---|---|---|---|---|---|---|---|
| | 1000 | 1500 | 2000 | 2500 | 3000 | 3500 | 4000 | 4500 | 5000 |
| 10 | | | | | | | 0.97 | 0.92 | 0.88 |
| 15 | | | | | | 0.98 | 0.94 | 0.90 | 0.86 |
| 20 | | | | | 1.00 | 0.95 | 0.91 | 0.87 | 0.83 |
| 25 | | | | 1.00 | 0.95 | 0.93 | 0.89 | 0.85 | 0.81 |
| 30 | | | 1.00 | 0.96 | 0.92 | 0.90 | 0.86 | 0.82 | 0.78 |
| 35 | | 1.00 | 0.95 | 0.93 | 0.90 | 0.88 | 0.84 | 0.80 | 0.75 |
| 40 | 1.00 | 0.97 | 0.94 | 0.90 | 0.86 | 0.82 | 0.80 | 0.76 | 0.71 |
| 45 | 0.95 | 0.92 | 0.90 | 0.88 | 0.85 | 0.81 | 0.78 | 0.74 | 0.69 |
| 50 | 0.92 | 0.90 | 0.87 | 0.85 | 0.82 | 0.80 | 0.77 | 0.72 | 0.67 |
| 55 | 0.88 | 0.85 | 0.83 | 0.81 | 0.78 | 0.76 | 0.73 | 0.70 | 0.65 |
| 60 | 0.83 | 0.82 | 0.80 | 0.77 | 0.75 | 0.73 | 0.70 | 0.67 | 0.62 |
| 65 | 0.79 | 0.76 | 0.74 | 0.72 | 0.70 | 0.68 | 0.66 | 0.62 | 0.58 |
| 70 | 0.74 | 0.71 | 0.69 | 0.67 | 0.66 | 0.64 | 0.62 | 0.58 | 0.53 |
| 75 | 0.70 | 0.68 | 0.66 | 0.64 | 0.62 | 0.60 | 0.58 | 0.53 | 0.49 |
| 80 | 0.65 | 0.64 | 0.62 | 0.60 | 0.58 | 0.56 | 0.55 | 0.48 | 0.44 |

Motors installed inside enclosures (cubicles) must be ensured an air renewal rate in the order of one cubic meter per second for each 100 kW installed power or fraction of installed power. Totally Enclosed Air Over motors - TEAO (fan and exhaust / smoke extraction) are supplied without cooling fan and the manufacturer of the driven machine is responsible for sufficient motor cooling. If no minimum required air speed between motor fins is indicated on the motor nameplate, ensure the air speed indicated in the table 7.3 is provided. The values shown in Table 7.3 are valid for 60 Hz motors. To obtain the minimum air speed for 50 Hz motors, multiply the values in the table by 0.83.

***Table 7.3*** *- Minimum required air speed between motor fins (metres/second)*

| Frame | | Poles | | | |
|---|---|---|---|---|---|
| IEC | NEMA | 2 | 4 | 6 | 8 |
| 63 to 90 | 143/5 | 13 | 7 | 5 | 4 |
| 100 to 132 | 182/4 to 213/5 | 18 | 12 | 8 | 6 |
| 160 to 200 | 254/6 to 324/6 | 20 | 15 | 10 | 7 |
| 225 to 280 | 364/5 to 444/5 | 22 | 20 | 15 | 12 |
| 315 to 450 | 445/7 to 7008/9 | 25 | 25 | 20 | 15 |

The voltage and frequency variations may affect the performance characteristics and the electromagnetic compatibility of the motor. The power supply variations should not exceed the values specified in the applicable standards. Examples:

- ABNT NBR 17094 - Parts 1 and 2. The motor has been designed to supply the rated torque for a combined variation in voltage and frequency:
  - Zone A: ±5% of the rated voltage and ±2% of the rated frequency;
  - Zone B: ±10% of the rated voltage and +3% -5% of the rated frequency.

When operated continuously in Zone A or B, the motor may show performance variations and the operating temperature may increase considerably. These performance variations will be higher in Zone B. Thus it is not recommended to operate the motor in Zone B during extended periods.

- IEC 60034-1. The motor has been designed to supply the rated torque for combined variation in voltage and frequency:
  - Zone A: ±5% of the rated voltage and ±2% of the rated frequency;
  - Zone B: ±10% of the rated voltage and +3% -5% of the rated frequency.

When operated continuously in Zone A or B, the motor may show performance variations and the operating temperature may increase considerably. These performance variations will be higher in Zone B. Thus it is not recommended to operate the motor in Zone B during extended periods. For multivoltage motors (example 380-415/660 V), a ±5% voltage variation from the rated voltage is allowed.

- NEMA MG 1 Part 12. The motor has been designed to be operated in one of the following variations:
  - ±10% of the rated voltage, with rated frequency;
  - ±5% of the rated frequency, with rated voltage;
  - A combined variation in voltage and frequency of ±10%, provided the frequency variation does not exceed ±5%.

If the motor is cooled by ambient air, clean the air inlet and outlet openings and cooling fins at regular intervals to ensure a free airflow over the frame surface. The hot air should never be returned to the motor. The cooling air must be at room temperature limited to the temperature range indicated on the motor nameplate (if no room temperature is specified, please consider a temperature range between -20 °C and +40 °C).

Table 7.4* shows the minimum required water flow for water cooled motors considering the different frame sizes and the maximum allowed temperature rise of the cooling water after circulating through the motor. The inlet water temperature should not exceed 40 °C.

***Table 7.4*** *- Minimum required water flow and the maximum allowed temperature rise of the cooling water after circulating through the motor*

| Frame size | | Flow rate (litres/minute) | Maximum allowed water temperature rise (°C) |
|---|---|---|---|
| IEC | NEMA | | |
| 180 | 284/6 | 12 | 5 |
| 200 | 324/6 | 12 | 5 |
| 225 | 364/5 | 12 | 5 |
| 250 | 404/5 | 12 | 5 |
| 280 | 444/5<br>445/7<br>447/9 | 15 | 6 |
| 315 | 504/5 | 16 | 6 |
| 355 | 586/7<br>588/9 | 25 | 6 |

For W60 motors, please see the nameplate at heat-exchanger.
Motors fitted with oil mist lubrication systems can be operated continuously for a maximum of one hour after the failure of the oil pumping system.

Considering the sun's heat increases the operating temperature, externally mounted motors should always be protected from direct sunlight exposure.

Each and every deviation from the normal operating condition (tripping of the thermal protection, noise and vibration level increase, temperature and current rise) should be investigated and corrected by WEG Authorized Service Centers.

Motors fitted with cylindrical roller bearings require a minimum radial load to ensure a normal operation. For information regarding the radial preload, please contact WEG.

### 7.2.1.Limits of vibration

The vibration severity is the maximum vibration value measured at all positions and in all directions as recommended in the standard IEC 60034-14. Table 7.5 specifies the limits of the maximum vibrations magnitudes according to standard IEC 60034-14 for shaft heights IEC 56 to 400, for vibrations grades A and B. The vibration severity limits in Table 7.5 are given as RMS values (Root Mean Square values or effective values) of the vibration speed in mm/s measured in free suspension condition.

***Table 7.5*** *- Recommended limits for the vibration severity according to standard IEC 60034-14*

| Shaft height [mm] | 56 ≤ H ≤ 132 | 132 ≤ H ≤ 280 | H > 280 |
|---|---|---|---|
| Vibration grade | Vibration severity on elastic base [mm/s RMS] | | |
| A | 1.6 | 2.2 | 2.8 |
| B | 0.7 | 1.1 | 1.8 |

***Notes:***
*1 - The values in Table 7.5 are valid for measurements carried out with decoupled machines (without load) operated at rated voltage and frequency.*
*2 - The values in Table 7.5 are valid regardless of the direction of rotation of the machine.*
*3 - The values in Table 7.5 are not applicable to single-phase motors, three-phase motors powered by a single-phase system or to machines mounted in situ or coupled with inertia flywheels or to loads.*

According to NEMA MG 1, the allowed vibration limit for standard motors is 0.15 in/s (peak vibration in in/s).

***Note:***
*For the load operation condition, the use of the standard ISO 10816-3 is recommended for evaluating the motor vibration limits. In the load condition the motor vibration will be influenced by several factors, such as, type of the coupled load, condition of the motor fixation, alignment condition under load, structure or base vibration due to other equipments, etc..*

# 8. MAINTENANCE

The purpose of the maintenance is to extend the useful life of the equipment. The non-compliance with one of these previous items can cause unexpected machine failures.

If motors with cylindrical roller or angular contact bearings are to be transported during the maintenance procedures, the shaft locking device must always be fitted. All HGF, W50 and W60 motors, regardless of the bearing type, must always be transported with the shaft locking device fitted.

All repairs, disassembly and assembly related services must be carried out only by qualified and well-trained personnel by using proper tools and techniques. Make sure that the machine has stopped and it is disconnected from the power supply, including the accessory devices (space heater, brake, etc.), before any servicing is undertaken.
The company does not assume any responsibility or liability for repair services or maintenance operations executed by non-authorized Service Centers or by non qualified service personnel. The company shall have no obligation or liability whatsoever to the buyer for any indirect, special, consequential or incidental loss or damage caused or arising from the company's proven negligence

## 8.1. GENERAL INSPECTION

The inspection intervals depend on the motor type, application and installation conditions. Proceed as follows during inspection:

- Visually inspect the motor and coupling. Check if abnormal noises, vibrations, excessive heating, wear signs, misalignment or damaged parts are noticed. Replace the damaged parts as required;
- Measure the insulation resistance according to the item 5.4;
- Clean the motor enclosure. Remove oil spills and dust accumulation from the motor frame surface to ensure a better heat transfer to the surrounding ambient;
- Check cooling fan condition and clean the air inlet & outlet openings to ensure a free air flow over the motor;
- Investigate the actual condition of the seals and replace them, if required;
- Drain the condensed water from inside the motor. After draining, reinstall the drain plugs to ensure the degree of protection as indicated on the motor nameplate. The motor must always be positioned so the drain hole is at the lowest position (see item 6);
- Check the connections of the power supply cables, ensuring the correct clearance distance between live and grounded parts, as specified in Table 6.3;
- Check if the tightening torque of the bolted connections and mounting bolts meets the tightening torque specified in Table 8.11;
- Check the status of the cable passages, the cable gland seals and the seals inside the terminal box and replace them, if required;
- Check the bearing operating conditions. Check for the presence of any abnormal noise, vibration or other abnormal operating conditions, like motor temperature rise. Check the oil level, the lube oil condition and compare the workings hours with the informed life time;
- Record and file all changes performed on the motor.



Do not reuse damaged or worn parts. Damaged or worn parts must be replaced by parts supplied by the manufacturer and must be installed as if they were the original parts.

## 8.2. LUBRICATION

Proper lubrication plays a vital role in the motor performance. Only use the grease or oil types, amounts and lubrication intervals recommended for the bearings. This information is available on the motor nameplate and the lubrication procedures must be carried out according to the type of lubricant (oil or grease).
When the motor is fitted with thermal protection devices for bearing temperature control, consider the operating temperature limits shown in Table 6.4.
The maximum operating temperature of motors used in special applications may differ from those shown in Table 6.4. The grease and oil disposal should be made in compliance with applicable laws in each country.



Please contact WEG when motors are to be installed in special environments or used for special applications.

### 8.2.1. Grease lubricated rolling bearings

Excess grease causes bearing overheating, resulting in bearing failure.

The lubrication intervals specified in Table 8.1, Table 8.2, Table 8.3, Table 8.4, Table 8.5, Table 8.6, Table 8.7, Table 8.8 and Table 8.9 consider an absolute temperature on the bearing of 70 °C (up to frame size IEC 200 / NEMA 324/6) and 85 °C (for frame size IEC 225 / NEMA 364/5 and above), the motor running at rated speed, a motor mounted in horizontal position and greased with Mobil Polyrex EM grease. Any variation of the parameters listed above must be evaluated.

***Table 8.1*** *- Lubrication intervals for ball bearings*

| Frame | | Poles | Bearing designation | Amount of grease (g) | Lubrication intervals (hours) | | | | | |
|---|---|---|---|---|---|---|---|---|---|---|
| | | | | | ODP (Open Drip Proof) | | W21 TEFC (Totally Enclosed Fan Cooled) | | W22 TEFC (Totally Enclosed Fan Cooled) | |
| IEC | NEMA | | | | 50 Hz | 60 Hz | 50 Hz | 60 Hz | 50 Hz | 60 Hz |
| 90 | 143/5 | 2 | 6205 | 4 | - | - | 20000 | 20000 | 25000 | 25000 |
| | | 4 | | | | | | | | |
| | | 6 | | | | | | | | |
| | | 8 | | | | | | | | |
| 100 | - | 2 | 6206 | 5 | | | | | | |
| | | 4 | | | | | | | | |
| | | 6 | | | | | | | | |
| | | 8 | | | | | | | | |
| 112 | 182/4 | 2 | 6207/ 6307 | 9 | | | | | | |
| | | 4 | | | | | | | | |
| | | 6 | | | | | | | | |
| | | 8 | | | | | | | | |
| 132 | 213/5 | 2 | 6308 | 11 | | | | 18400 | | |
| | | 4 | | | | | | 20000 | | |
| | | 6 | | | | | | | | |
| | | 8 | | | | | | | | |
| 160 | 254/6 | 2 | 6309 | 13 | 20000 | 20000 | 18100 | 15700 | | |
| | | 4 | | | | | 20000 | 20000 | | |
| | | 6 | | | | | | | | |
| | | 8 | | | | | | | | |
| 180 | 284/6 | 2 | 6311 | 18 | | | 13700 | 11500 | | |
| | | 4 | | | | | 20000 | 20000 | | |
| | | 6 | | | | | | | | |
| | | 8 | | | | | | | | |
| 200 | 324/6 | 2 | 6312 | 21 | | | 11900 | 9800 | | |
| | | 4 | | | | | 20000 | 20000 | | |
| | | 6 | | | | | | | | |
| | | 8 | | | | | | | | |
| 225 250 280 315 355 | 364/5 404/5 444/5 445/7 447/9 L447/9 504/5 5008 5010/11 586/7 588/9 | 2 | 6314 | 27 | 18000 | 14400 | 4500 | 3600 | 5000 | 4000 |
| | | 4 | | | 20000 | 20000 | 11600 | 9700 | 14000 | 12000 |
| | | 6 | | | | | 16400 | 14200 | 20000 | 17000 |
| | | 8 | | | | | 19700 | 17300 | 24000 | 20000 |
| | | 2 | 6316 | 34 | 14000 | *Upon request | 3500 | *Upon request | 4000 | *Upon request |
| | | 4 | | | 20000 | 20000 | 10400 | 8500 | 13000 | 10000 |
| | | 6 | | | | | 14900 | 12800 | 18000 | 16000 |
| | | 8 | | | | | 18700 | 15900 | 20000 | 20000 |
| | | 2 | 6319 | 45 | *Upon request | | | | | |
| | | 4 | | | 20000 | 20000 | 9000 | 7000 | 11000 | 8000 |
| | | 6 | | | | | 13000 | 11000 | 16000 | 13000 |
| | | 8 | | | | | 17400 | 14000 | 20000 | 17000 |
| | | 4 | 6322 | 60 | | | 7200 | 5100 | 9000 | 6000 |
| | | 6 | | | | | 10800 | 9200 | 13000 | 11000 |
| | | 8 | | | | | 15100 | 11800 | 19000 | 14000 |

*Table 8.2* - *Lubrication intervals for cylindrical roller bearings*

| Frame | | Poles | Bearing designation | Amount of grease (g) | Lubrication intervals (hours) | | | | | |
|---|---|---|---|---|---|---|---|---|---|---|
| | | | | | ODP (Open Drip Proof) | | W21 TEFC (Totally Enclosed Fan Cooled) | | W22 TEFC (Totally Enclosed Fan Cooled) | |
| IEC | NEMA | | | | 50 Hz | 60 Hz | 50 Hz | 60 Hz | 50 Hz | 60 Hz |
| 160 | 254/6 | 2 | NU309 | 13 | 20000 | 19600 | 13300 | 9800 | 16000 | 12000 |
| | | 4 | | | | 20000 | 20000 | 20000 | 25000 | 25000 |
| | | 6 | | | | | | | | |
| | | 8 | | | | | | | | |
| 180 | 284/6 | 2 | NU311 | 18 | 18400 | 12800 | 9200 | 6400 | 11000 | 8000 |
| | | 4 | | | 20000 | 20000 | 20000 | 19100 | 25000 | 25000 |
| | | 6 | | | | | | 20000 | | |
| | | 8 | | | | | | | | |
| 200 | 324/6 | 2 | NU312 | 21 | 15200 | 10200 | 7600 | 5100 | 9000 | 6000 |
| | | 4 | | | 20000 | 20000 | 20000 | 17200 | 25000 | 21000 |
| | | 6 | | | | | | 20000 | | 25000 |
| | | 8 | | | | | | | | |
| 225 250 280 315 355 | 364/5 404/5 444/5 445/7 447/9 L447/9 504/5 5008 5010/11 586/7 588/9 | 4 | NU314 | 27 | 17800 | 14200 | 8900 | 7100 | 11000 | 9000 |
| | | 6 | | | 20000 | 20000 | 13100 | 11000 | 16000 | 13000 |
| | | 8 | | | | | 16900 | 15100 | 20000 | 19000 |
| | | 4 | NU316 | 34 | 15200 | 12000 | 7600 | 6000 | 9000 | 7000 |
| | | 6 | | | 20000 | 19000 | 11600 | 9500 | 14000 | 12000 |
| | | 8 | | | | 20000 | 15500 | 13800 | 19000 | 17000 |
| | | 4 | NU319 | 45 | 12000 | 9400 | 6000 | 4700 | 7000 | 5000 |
| | | 6 | | | 19600 | 15200 | 9800 | 7600 | 12000 | 9000 |
| | | 8 | | | 20000 | 20000 | 13700 | 12200 | 17000 | 15000 |
| | | 4 | NU322 | 60 | 8800 | 6600 | 4400 | 3300 | 5000 | 4000 |
| | | 6 | | | 15600 | 11800 | 7800 | 5900 | 9000 | 7000 |
| | | 8 | | | 20000 | 20000 | 11500 | 10700 | 14000 | 13000 |

*Table 8.3* - *Lubrication intervals for ball bearings - HGF line*

| Frame | | Poles | Bearing designation | Amount of grease (g) | Lubrication intervals (hours) | |
|---|---|---|---|---|---|---|
| IEC | NEMA | | | | 50 Hz | 60 Hz |
| 315L/A/B and 315C/D/E | 5006/7/8T and 5009/10/11T | 2 | 6314 | 27 | 3100 | 2100 |
| | | 4 - 8 | 6320 | 50 | 4500 | 4500 |
| | | | 6316 | 34 | | |
| 355L/A/B and 355C/D/E | 5807/8/9T and 5810/11/12T | 2 | 6314 | 27 | 3100 | 2100 |
| | | 4 - 8 | 6322 | 60 | 4500 | 4500 |
| | | | 6319 | 45 | | |
| 400L/A/B and 400 C/D/E | 6806/7/8T and 6809/10/11T | 2 | 6315 | 30 | 2700 | 1800 |
| | | 4 - 8 | 6324 | 72 | 4500 | 4500 |
| | | | 6319 | 45 | | |
| 450 | 7006/10 | 2 | 6220 | 31 | 2500 | 1400 |
| | | 4 | 6328 | 93 | 4500 | 3300 |
| | | | 6322 | 60 | | 4500 |
| | | 6 - 8 | 6328 | 93 | | |
| | | | 6322 | 60 | | |
| 500 | 8006/10 | 4 | 6330 | 104 | 4200 | 2800 |
| | | | 6324 | 72 | 4500 | 4500 |
| | | 6 - 8 | 6330 | 104 | | |
| | | | 6324 | 72 | | |
| 560 | 8806/10 | 4 - 8 | *Upon request | | | |
| 630 | 9606/10 | 4 - 8 | | | | |

*Table 8.4* - *Lubrication intervals for cylindrical roller bearings - HGF line*

| Frame | | Poles | Bearing designation | Amount of grease (g) | Lubrication intervals (hours) | |
|---|---|---|---|---|---|---|
| IEC | NEMA | | | | 50 Hz | 60 Hz |
| 315L/A/B and 315C/D/E | 5006/7/8 and 5009/10/11 | 4 | NU320 | 50 | 4300 | 2900 |
| | | 6 - 8 | | | 4500 | 4500 |
| 355L/A/B and 355C/D/E | 5807/8/9 and 5810/11/12 | 4 | NU322 | 60 | 3500 | 2200 |
| | | 6 - 8 | | | 4500 | 4500 |
| 400L/A/B and 400C/D/E | 6806/7/8 and 6809/10/11 | 4 | NU324 | 72 | 2900 | 1800 |
| | | 6 - 8 | | | 4500 | 4500 |
| 450 | 7006/10 | 4 | NU328 | 93 | 2000 | 1400 |
| | | 6 | | | 4500 | 3200 |
| | | 8 | | | 4500 | 4500 |
| 500 | 8006/10 | 4 | NU330 | 104 | 1700 | 1000 |
| | | 6 | | | 4100 | 2900 |
| | | 8 | | | 4500 | 4500 |
| 560 | 8806/10 | 4 | NU228 + 6228 | 75 | 2600 | 1600 |
| | | 6 - 8 | | 106 | 4500 | 4500 |
| 630 | 9606/10 | 4 | NU232 + 6232 | 92 | 1800 | 1000 |
| | | 6 | | 120 | 4300 | 3100 |
| | | 8 | | 140 | 4500 | 4500 |

*Table 8.5* - *Lubrication intervals for ball bearings - W50 line*

| | Frame IEC | Frame NEMA | Poles | DE Bearing | Amount of grease (g) | 50 Hz (h) | 60 Hz (h) | NDE Bearing | Amount of grease (g) | 50 Hz (h) | 60 Hz (h) |
|---|---|---|---|---|---|---|---|---|---|---|---|
| Horizontal mounting Ball bearings | 315 H/G | 5009/10 | 2 | 6314 | 27 | 4500 | 3500 | 6314 | 27 | 4500 | 3500 |
| | | | 4 - 8 | 6320 | 50 | | 4500 | 6316 | 34 | | 4500 |
| | 355 J/H | 5809/10 | 2 | 6314 | 27 | | 3500 | 6314 | 27 | | 3500 |
| | | | 4 - 8 | 6322 | 60 | | 4500 | 6319 | 45 | | 4500 |
| | 400 L/K and 400 J/H | 6806/07 and 6808/09 | 2 | 6218 | 24 | 3800 | 2500 | 6218 | 24 | 3800 | 1800 |
| | | | 4 - 8 | 6324 | 72 | 4500 | 4500 | 6319 | 45 | 4500 | 4500 |
| | 450 L/K and 450 J/H | 7006/07 and 7008/09 | 2 | 6220 | 31 | 3000 | 2000 | 6220 | 31 | 3000 | 2000 |
| | | | 4 | 6328 | 93 | 4500 | 3300 | 6322 | 60 | 4500 | 4500 |
| | | | 6 - 8 | | | | 4500 | | | | |
| Vertical mounting Ball bearings | 315 H/G | 5009/10 | 2 | 7314 | 27 | 2500 | 1700 | 6314 | 27 | 2500 | 1700 |
| | | | 4 | 6320 | 50 | 4200 | 3200 | 6316 | 34 | 4500 | 4500 |
| | | | 6 - 8 | | | 4500 | 4500 | | | | |
| | 355 J/H | 5809/10 | 2 | 7314 | 27 | 2500 | 1700 | 6314 | 27 | 2500 | 1700 |
| | | | 4 | 6322 | 60 | 3600 | 2700 | 6319 | 45 | 4500 | 3600 |
| | | | 6 - 8 | | | 4500 | 4500 | | | | 4500 |
| | 400 L/K and 400 J/H | 6806/07 and 6808/09 | 2 | 7218 | 24 | 2000 | 1300 | 6218 | 24 | 2000 | 1300 |
| | | | 4 | 7324 | 72 | 3200 | 2300 | 6319 | 45 | 4500 | 3600 |
| | | | 6 | | | 4500 | 4300 | | | | 4500 |
| | | | 8 | | | | 4500 | | | | |
| | 450 L/K and 450 J/H | 7006/07 and 7008/09 | 2 | 7220 | 31 | 1500 | 1000 | 6220 | 31 | 1500 | 1000 |
| | | | 4 | 7328 | 93 | 2400 | 1700 | 6322 | 60 | 3500 | 2700 |
| | | | 6 | | | 4100 | 3500 | | | 4500 | 4500 |
| | | | 8 | | | 4500 | 4500 | | | | |

*Table 8.6* - *Lubrication intervals for cylindrical roller bearings - W50 line*

| | Frame IEC | Frame NEMA | Poles | DE Bearing | Amount of grease (g) | 50 Hz (h) | 60 Hz (h) | NDE Bearing | Amount of grease (g) | 50 Hz (h) | 60 Hz (h) |
|---|---|---|---|---|---|---|---|---|---|---|---|
| Horizontal mounting Roller bearings | 315 H/G | 5009/10 | 4 | NU320 | 50 | 4300 | 2900 | 6316 | 34 | 4500 | 4500 |
| | | | 6 -8 | | | 4500 | 4500 | | | | |
| | 355 J/H | 5809/10 | 4 | NU322 | 60 | 3500 | 2200 | 6319 | 45 | | |
| | | | 6 - 8 | | | 4500 | 4500 | | | | |
| | 400 L/K and 400 J/H | 6806/07 and 6808/09 | 4 | NU324 | 72 | 2900 | 1800 | | | | |
| | | | 6 - 8 | | | 4500 | 4500 | | | | |
| | 450 L/K and 450 J/H | 7006/07 and 7008/09 | 4 | NU328 | 93 | 2000 | 1400 | 6322 | 60 | | |
| | | | 6 | | | 4500 | 3200 | | | | |
| | | | 8 | | | | 4500 | | | | |

*Table 8.7* - *Lubrication intervals for ball bearings - W40 line*

| | Frame IEC | Frame NEMA | Poles | DE Bearing | Amount of grease (g) | 50 Hz (h) | 60 Hz (h) | NDE Bearing | Amount of grease (g) | 50 Hz (h) | 60 Hz (h) |
|---|---|---|---|---|---|---|---|---|---|---|---|
| Horizontal mounting Ball bearings | 160M/L | 254/6 | 2 - 8 | 6309 | 13 | 20000 | 20000 | 6209 | 9 | 20000 | 20000 |
| | | | | 6311 | 18 | | | 6211 | 11 | | |
| | 180M/L | 284/6 | | | | | | | | | |
| | | | | 6312 | 21 | | | | | | |
| | 200M/L | 324/6 | | 6314 | 27 | 18000 | 14400 | 6212 | 13 | | |
| | 225S/M | 364/5 | 2 | | | | | | | | |
| | | | 4 – 8 | | | | | | | | |
| | 250S/M | 404/5 | 2 | | | | | | | | |
| | | | 4 – 8 | 6316 | 34 | 20000 | 20000 | | | | |
| | 280S/M | 444/5 | 2 | 6314 | 27 | 18000 | 14400 | | | | |
| | | | 4 – 8 | 6319 | 45 | 20000 | 20000 | 6314 | 27 | 18000 | 14400 |
| | 280L | 447/9 | 2 | 6314 | 27 | 18000 | 14400 | | | 20000 | 20000 |
| | | | 4 – 8 | 6319 | 45 | 20000 | 20000 | | | | |
| | 315G/F | 5010/11 | 2 | 6314 | 27 | 4500 | 4500 | | | 4500 | 4500 |
| | | | 4 – 8 | 6319 | 45 | | | | | | |
| | 355J/H | L5010/11 | 2 | 6218 | 24 | 2200 | 2200 | 6218 | 24 | 2200 | 2200 |
| | | | 4 – 8 | 6224 | 43 | 4500 | 4500 | | | 4500 | 4500 |
| | 400J/H | L5810/11 | 2 | 6220 | 31 | 2200 | 2200 | 6220 | 31 | 2200 | 2200 |
| | | | 4 – 8 | 6228 | 52 | 4500 | 4500 | | | 4500 | 4500 |
| | 450K/J | L6808/09 | 2 | 6220 | 31 | 2200 | 2200 | | | 2200 | 2200 |
| | | | 4 – 8 | 6228 | 52 | 4500 | 4500 | | | 4500 | 4500 |

*Table 8.8 - Lubrication intervals for cylindrical roller bearings - W40 line*

| | Frame | | Poles | DE Bearing | Amount of grease (g) | 50 Hz (h) | 60 Hz (h) | NDE Bearing | Amount of grease (g) | 50 Hz (h) | 60 Hz (h) |
|---|---|---|---|---|---|---|---|---|---|---|---|
| | IEC | NEMA | | | | | | | | | |
| Horizontal mounting Roller bearings | 225S/M | 364/5 | 4 – 8 | NU314 | 27 | 20000 | 20000 | 6314 | 27 | 20000 | 20000 |
| | 250S/M | 404/5 | | NU316 | 34 | | | | | | |
| | 280S/M | 444/5 | | NU319 | 45 | | 18800 | | | | |
| | 280L | 447/9 | | | | 4500 | 4500 | 6218 | 24 | 4500 | 4500 |
| | 315G/F | 5010/11 | | | | | | | | | |
| | 355J/H | L5010/11 | | NU224 | 43 | | | | | | |
| | 400J/H | L5810/11 | | NU228 | 52 | | 3300 | 6220 | 31 | | |
| | 450K/J | L6808/09 | | | | | | | | | |

*Table 8.9 - Lubrication intervals for ball bearings and for cylindrical roller bearings - line W60*

| | Frame | | Poles | DE Bearing | Amount of grease (g) | 50 Hz (h) | 60 Hz (h) | NDE Bearing | Amount of grease (g) | 50 Hz (h) | 60 Hz (h) |
|---|---|---|---|---|---|---|---|---|---|---|---|
| | IEC | NEMA | | | | | | | | | |
| Horizontal mounting Ball bearings | 355H/G | 5810/11 | 2 | 6218 | 24 | 2300 | 1500 | 6218 | 24 | 2300 | 1500 |
| | | | 4/8 | 6224 | 43 | 4500 | 4500 | | | 4500 | 4500 |
| | 400J/H | L5810/11 | 2 | 6220 | 31 | 1800 | 1200 | 6220 | 31 | 1800 | 1200 |
| | | | 4/8 | 6228 | 52 | 4500 | 4500 | | | 4500 | 4500 |
| | 400G/F | 6810/11 | 2 | 6220 | 31 | 1800 | 1200 | | | 1800 | 1200 |
| | | | 4/8 | 6228 | 52 | 4500 | 4500 | | | 4500 | 4500 |
| Horizontal mounting Roller bearings | 355H/G | 5810/11 | 4 | NU224 | 43 | 4500 | 4500 | 6218 | 24 | | |
| | | | 6/8 | | | | | | | | |
| | 400J/H | L5810/11 | 4 | NU228 | 52 | | 1500 | 6220 | 31 | | 1500 |
| | | | 6/8 | | | | 4500 | | | | 4500 |
| | 400G/F | 6810/11 | 4 | | | | 1500 | | | | 1500 |
| | | | 6/8 | | | | 4500 | | | | 4500 |

For each increment of 15 °C above the bearing temperature, the relubrication intervals given in the Table must be halved. The relubrication interval of motors designed by the manufacturer for mounting in horizontal position, but installed in vertical position (with WEG authorization), must be halved.
For special applications, such as: high and low temperatures, aggressive environments, driven by frequency inverter (VFD - frequency inverter), etc., please contact WEG about the required amount of grease and the relubrication intervals.

### 8.2.1.1. Motor without grease fitting

Motors without grease fittings must be lubricated in accordance with the existing Maintenance Plan. Motor disassembly must be carried out as specified in Item 8.3. If motors are fitted with shielded bearings (for example, ZZ, DDU, 2RS, VV), these bearings must be replaced at the end of the grease service life.

### 8.2.1.2. Motor with grease fitting

To lubricate the bearings with the motor stopped, proceed as follows:
- Before lubricating, clean the grease nipple and immediate vicinity thoroughly;
- Lift grease inlet protection;
- Remove the grease outlet plug;
- Pump in approximately half of the total grease indicated on the motor nameplate and run the motor for about 1 (one) minute at rated speed;
- Switch-off the motor and pump in the remaining grease;
- Lower again the grease inlet protection and reinstall the grease outlet protection.

To grease the motor while running, proceed as follows:
- Before lubricating, clean the grease nipple and immediate vicinity thoroughly;
- Pump the total grease indicated on the motor nameplate;
- Lower again the grease inlet protection.



For lubrication, use only manual grease gun.

If Motors are provided with a spring device for grease removal, the grease excess must be removed by pulling the rod and cleaning the spring until the spring does not remove more grease.

### 8.2.1.3. Compatibility of the Mobil Polyrex EM grease with other greases

The Mobil Polyrex EM grease has a polyurea thickener and a mineral oil and it is not compatible with other greases.
If you need another type of grease, contact WEG.
It is not recommended to mix different types of greases. In such a case, clean the bearings and lubrication channels before applying new grease.
The used grease must have in its formulation corrosion and oxidation inhibitors.

### 8.2.2. Oil lubricated bearings

To change the oil of oil lubricated motor proceed as follows:
- Switch-off the motor;
- Remove threaded oil drain plug;
- Open the valve and drain the oil;
- Close the drain valve again;
- Reinstall the threaded oil drain plug;
- Fill-up with the type and amount of oil as specified on the nameplate;
- Check oil level. The oil level is OK when the lubricant can be viewed approximately in the center of the sight glass;
- Reinstall oil inlet plug;
- Check for oil leaks and ensure that all not used threaded plugs are closed with plugs.



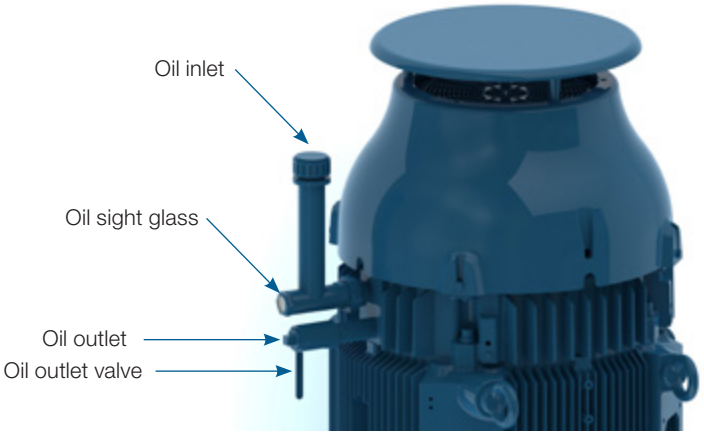


***Figure 8.1*** *- Oil lubricated bearing - vertical mounting*

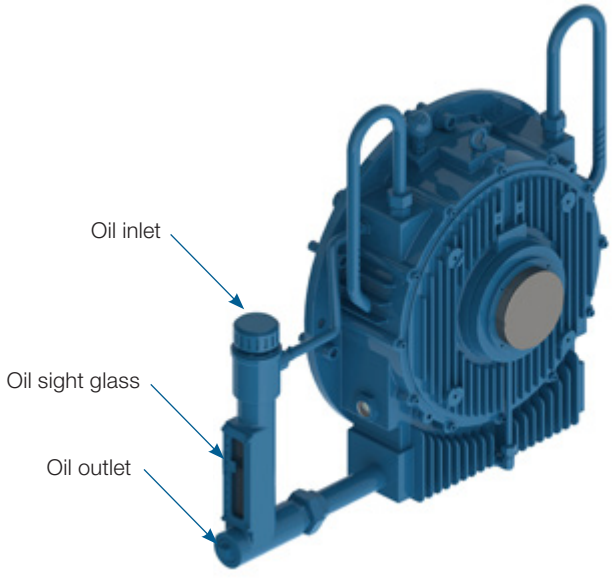


***Figure 8.2*** *- Oil lubricated bearing - horizontal mounting*

The bearing lubricating oil must be replaced as specified on the nameplate or whenever changes in the oil properties are noticed. The oil viscosity and pH must be checked periodically. The oil level must be checked every day and must be kept in the center of the sight glass.
Please contact WEG, when oils with different viscosities should be used.

***Note**:*
*The HGF vertical mounted motors with high axial thrust are supplied with grease lubricated DE-bearings and with oil lubricated NDE-bearings. The DE-bearings must be lubricated according to recommendations in item 8.2.1. Table 8.10 specifies the oil type and the amount of oil required for this motor lubrication.*

***Table 8.10** - Oil properties for HGF vertical mounted motors with high axial thrust*

| Mounting - high axial thrust | Frame | | Poles | Bearing designation | Oil (liters) | Interval (h) | Lubricant | Lubricant specification |
|---|---|---|---|---|---|---|---|---|
| | IEC | NEMA | | | | | | |
| | 315L/A/B and 315C/D/E | 5006/7/8T and 5009/10/11T | 4 - 8 | 29320 | 20 | 8000 | FUCHS Renolin DTA 40 / Mobil SHC 629 | ISO VG150 mineral oil with antifoam and antioxidant additives |
| | 355L/A/B and 355C/D/E | 5807/8/9T and 5810/11/12T | | | 26 | | | |
| | 400L/A/B and 400C/D/E | 6806/7/8T and 6809/10/11T | | | 37 | | | |
| | 450 | 7006/10 | | | 45 | | | |

### 8.2.3. Oil mist lubricated bearings

Check the service conditions of the seals and if replacement is required use only original components. Clean the seal components before assembly (bearing caps, end shields, etc.).
Apply joint sealant between the bearing caps and end shields. The joint sealant must be compatible with the used lubricating oil. Connect the oil lubricant tubes (oil inlet and oil outlet tubes and motor drain tube), as shown in Figure 6.12.

### 8.2.4. Sleeve bearings

The lubricating oil of sleeve bearings must be changed at the intervals specified in Table 8.11. To replace the oil, proceed as follows:

- NDE-bearing: remove the protection plate from the fan cover;
- Drain the oil through the drain hole located at the bottom of the bearing (see Figure 8.3);
- Close the oil drain hole;
- Remove the oil inlet plug;
- Fill the sleeve bearing with the specified oil and with the amount of oil specified in;
- Check the oil level and ensure it is kept close to the center of the sight glass;
- Install the oil inlet plug;
- Check for oil leaks.

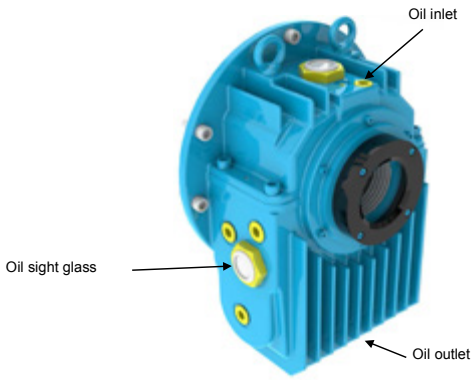


***Figure 8.3** - Sleeve bearing*

*Table 8.11 - Oil properties for sleeve bearings*

| Frame | | Poles | Bearing designation | Oil (liters) | Interval (h) | Lubricant | Lubricant specification |
|---|---|---|---|---|---|---|---|
| IEC | NEMA | | | | | | |
| 315 | 5000 | 2 | 9-80 | 3.6 | 8000 | FUCHS Renolin DTA 10 | ISO VG32 mineral oil with antifoam and antioxidant additives |
| 355 | 5800 | | | | | | |
| 400 | 6800 | | | | | | |
| 450 | 7000 | | | | | | |
| 315 | 5000 | 4 - 8 | 9-90 | | 8000 | FUCHS Renolin DTA 15 | ISO VG46 mineral oil with antifoam and antioxidant additives |
| 355 | 5800 | | 9-100 | | | | |
| 400 | 6800 | | 11-110 | 4.7 | | | |
| 450 | 7000 | | 11-125 | | | | |
| 500 | 8000 | | | | | | |

The lubricating oil must be replaced as specified on the nameplate or whenever changes on the oil properties are noticed. The oil viscosity and pH must be checked periodically. The oil level must be checked every day and kept in the center of the sight glass.
Please contact WEG, when oils with different viscosities are to be used.

## 8.3. MOTOR ASSEMBLY AND DISASSEMBLY

All repair services on motors should be always performed by qualified personnel and in accordance with the applicable laws and regulations in each country. Always use proper tools and devices for motor disassembly and assembly.

Disassembly and assembly services can be carried out only after the motor has been disconnected from the power supply and is completely stopped.

Dangerous voltages may be present at the motor terminals inside the terminal box since capacitors can retain electrical charge for long periods of time even when they are not connected directly to a power source or when space heaters are connected to the motor or when the motor windings are used as space heaters. Dangerous voltages may be present at the motor terminals when they are driven by frequency inverter even when they are completely stopped.

Record the installation conditions such as terminal connection diagram, alignment / leveling conditions before starting the disassembly procedures. These records should be considered for later assembly.

Disassemble the motor carefully without causing scratches on machined surfaces or damaging the threads.

Assemble the motor on a flat surface ensuring a good support base. Footless motors must be fixed/locked on the base to prevent accidents.

Handle the motor carefully to not damage the insulated components such as windings, insulated rolling bearings, power cables etc..

Seal elements, such as joint seals and bearing seals should always be replaced when wear or damage is noticed.
Motors with degree of protection higher than IP55 are supplied with joint and screw seal Loctite 5923 (Henkel) Clean the components and apply a new coat of Loctite 5923 on the surfaces before assembly.

For the W40, W50 and HGF motor lines provided with axial fans, the motor and the axial fan have different markings for indicating the direction of rotation for prevent incorrect assembly.
The axial fan must be assembled so that the indicative arrow for direction of rotation is always visible, viewing the non-drive end side. The marking indicated on the axial fan blade, CW for clockwise direction of rotation or CCW for counterclockwise direction of rotation, indicates the direction of rotation of the motor viewing the drive end side.

### 8.3.1. Terminal box

Proceed as follows to remove the terminal box cover and to disconnect/connect the power supply cables and the cables of the accessory devices:

- Ensure that during the screw removal the terminal box cover does not damage the components installed inside the terminal box;
- If the terminal box cover is fitted with lifting eyebolt, lift the terminal box cover always by its lift eyebolt;
- If motors are supplied with terminal blocks, ensure the correct tightening torque on the motor terminals as specified in Table 8.12;
- Ensure that the cables do not contact sharp edges;
- Ensure that the original IP degree of protection is not changed and is maintained as indicate on the motor nameplate. The power supply cables and the control cables must always be fitted with components (cable glands, conduits) that meet the applicable standards and regulations of each country;
- Ensure that the pressure relief device is in perfect operating condition, if provided. The seals in the terminal box must be in perfect condition for reuse and must be reinstalled correctly to ensure the specified degree of protection;
- Ensure the correct tightening torque for the securing bolts of the terminal box cover as specified in Table 8.12.

***Table 8.12*** *- Tightening torque for the securing bolts [Nm]*

| Screw type and seal | M4 | M5 | M6 | M8 | M10 | M12 | M14 | M16 | M20 |
|---|---|---|---|---|---|---|---|---|---|
| Hex bolt/hex socket bolt (rigid joint) | - | 3,5 to 5 | 6 to 9 | 14 to 20 | 28 to 40 | 45 to 70 | 75 to 110 | 115 to 170 | 230 to 330 |
| Combined slotted screw (rigid joint) | 1,5 to 3 | 3 to 5 | 5 to 10 | 10 to 18 | - | - | - | - | - |
| Hex bolt/hex socket bolt (flexible joint) | - | 3 to 5 | 4 to 8 | 8 to 15 | 18 to 30 | 25 to 40 | 30 to 45 | 35 to 50 | - |
| Combined slotted screw (flexible joint) | - | 3 to 5 | 4 to 8 | 8 to 15 | - | - | - | - | - |
| Terminal blocks | 1 to 1,5 | 2 to 4 1) | 4 to 6,5 | 6,5 to 9 | 10 to 18 | 15,5 to 30 | - | 30 to 50 | 50 to 75 |
| Grounding terminals | 1,5 to 3 | 3 to 5 | 5 to 10 | 10 to 18 | 28 to 40 | 45 to 70 | - | 115 to 170 | - |

*Note: 1) For 12-pin terminal block, apply the minimum torque of 1.5 Nm and maximum torque of 2.5 Nm.*

## 8.4. DRYING THE STATOR WINDING INSULATION

Dismantle the motor completely. Remove the end shields, the rotor with the shaft, the fan cover, the fan and the terminal box before the wound stator with the frame is transferred to the oven for the drying process. Place the wound stator in the oven heated to max. 120 °C for two hours. For larger motors a longer drying time may be required. After the drying process has been concluded, allow the stator to cool to room temperature. Measure the insulation resistance again as described in item 5.4. Repeat the stator drying process if the required insulation resistance does not meet the values specified in Table 5.3. If the insulation resistance does not improve despite several drying processes, evaluate the causes of the insulation resistance drop carefully and an eventual replacement of the motor winding may be required. If in doubt contact WEG.



To prevent electrical shock, discharge the motor terminals immediately before, and after each measurement. If the motor is equipped with capacitors, these must be discharged before beginning any repair.

## 8.5. SPARE PARTS

When ordering spare parts, always provide complete motor designation, indicating the motor type, the code number and the serial number, which are stated on the motor nameplate.

Spare parts must always be purchased from WEG authorized Service Centers. The use of non-original spare parts can cause motor failure, performance drop and void the product warranty.

The spare parts must be stored in a clean, dry and properly ventilated room, with relative air humidity not exceeding 60%, with ambient temperature between 5 °C and 40 °C, free of dust, vibrations, gases, corrosive smokes and at constant temperature. The spare parts must be stored in their normal mounting position without placing other components onto them.

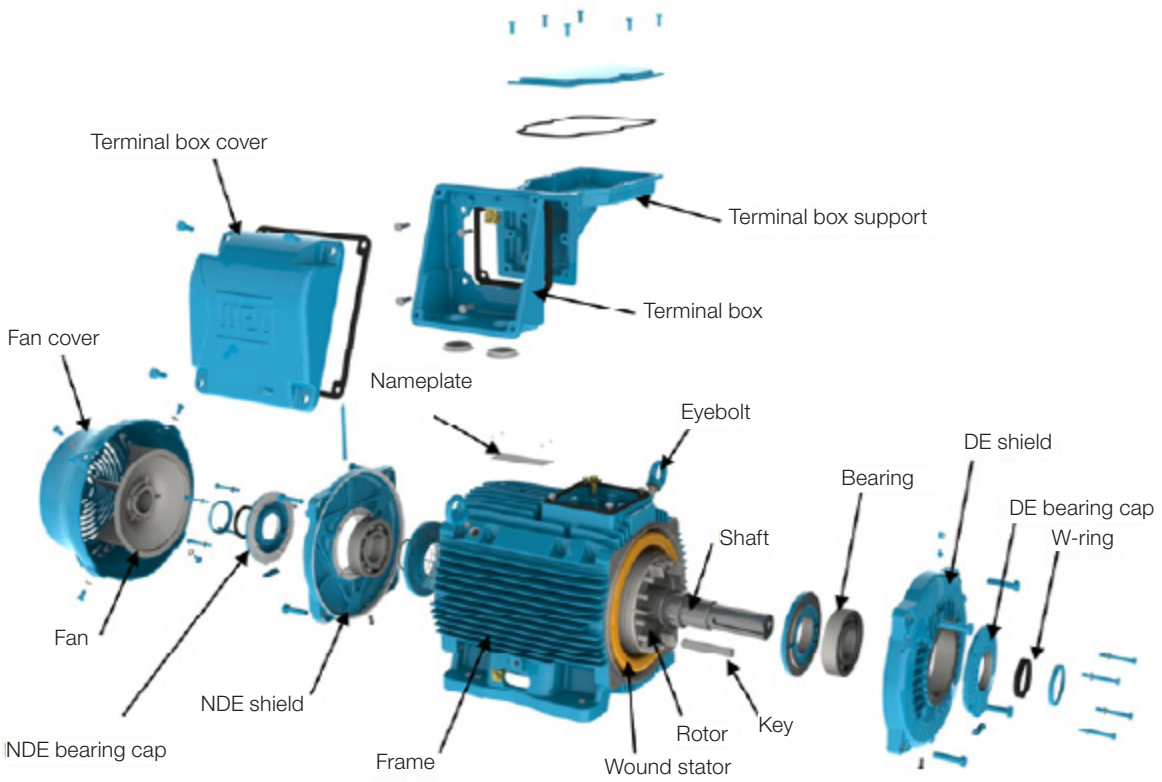


***Figure 8.4*** *- Exploded view of the components of a W22 motor*

# 9. ENVIRONMENTAL INFORMATION

## 9.1. PACKAGING

WEG electric motors are supplied in cardboard, plastic or wooden packaging. These materials can be recycled and must be disposed according to the applicable laws and regulations in each country. All wood used in the packaging of WEG motors come from the company reforestation program and is not submitted to any chemical conservation treatment.

## 9.2. PRODUCT

Electric motors consist mainly of ferrous metals (steel plates and cast iron), non ferrous metals (copper and aluminum) and plastic materials.

In general, electric motors have relatively long service live. However when they must be discarded, WEG recommends to dismantle the motor, sort the different materials and send them for recycling.

No-recyclable materials should be disposed of at industrial landfills according to the applicable environmental laws and regulations in each country, or co-processed in cement kilns or incinerated.

The recycling service providers, the disposal in industrial landfills, the waste co-processing or the incineration process must be properly authorized by the state environment agency to carry out these activities.

# 10. TROUBLESHOOTING CHART X SOLUTIONS

This troubleshooting chart provides a basic list of problems that may occur during motor operation, possible causes and recommended corrective actions. In case of doubts, please contact WEG Service Center.

| Problem | Possible cause | Corrective action |
|---|---|---|
| Motor does not start, neither coupled nor decoupled | Power cables are interrupted | Check the control panel and the motor power supply cables |
| | Blown fuses | Replace blown fuses |
| | Wrong motor connection | Correct the motor connection according to connection diagram |
| | Locked rotor | Check motor shaft to ensure that it rotates freely |
| The motor starts at no-load, but fails when load is applied. It starts very slowly and does not reach the rated speed | Load toque is too high during start-up | Do not start the motor on load |
| | Too high voltage drop in the power cables | Check the installation dimensioning (transformer, cable cross section, relays, circuit breakers, etc.) |
| Abnormal/excessive noise | Defective transmission component or defective driven machine | Check the transmission force, the coupling and the alignment |
| | Misaligned / unleveled base | Align / level the motor with the driven machine |
| | Unbalanced components or unbalanced driven machine | Balance the machine set again |
| | Different balancing methods used for motor and coupling balancing (halve key, full key) | Balance the motor again |
| | Wrong motor direction of rotation | Reverse the direction of rotation |
| | Loose bolts | Retighten the bolts |
| | Foundation resonance | Check the foundation design |
| | Damaged bearings | Replace the bearings |
| Motor overheating | Insufficient cooling | Clean air inlet and outlet and cooling fins |
| | | Check the minimum required distance between the fan cover and nearest walls. See item 7 |
| | | Check air temperature at inlet |
| | Overload | Measure motor current, evaluate motor application and if required, reduce the load |
| | Number of starts per hour is too high or the load inertia moment is too high | Reduce the number of starts per hour |
| | Power supply voltage too high | Check the motor power supply voltage. Power supply voltage must not exceed the tolerance specified in item 7.2 |
| | Power supply voltage too low | Check the motor power supply voltage and the voltage drop. Power supply voltage must not exceed the tolerance specified in item 7.2 |
| | Interrupted power supply | Check the connection of the power cables |
| | Voltage unbalance at the motor terminals | Check for blown fuses, wrong commands, voltage unbalance in the power line, phase fault or interrupted power cables |
| | Direction of rotation is not compatible with the unidirectional fan | Check if the direction of rotation matches the rotation arrow indicated on end shield |
| Bearing overheating | Excessive grease/oil | Clean the bearing and lubricate it according to the provided recommendations |
| | Grease/oil aging | |
| | The used grease/oil does not matches the specified one | |
| | Lack of grease/oil | Lubricate the bearing according to the provided recommendations |
| | Excessive axial or radial forces due to the belt tension | Reduce the belt tension |
| | | Reduce the load applied to the motor |



# MOTOR DATA SHEET

**VERTICAL SUMP PUMP : PUM-38114**
**(OPP21-020)**



HydroTech Mining

**UPDATE : FEB 2022**

# DATA SHEET

## Three Phase Induction Motor - Squirrel Cage

| | | | |
|---|---|---|---|
| Customer | : | | |
| Product line | : W22 - Nema Premium Efficiency | Product code | : |

| | | | |
|---|---|---|---|
| Frame | : 404/5TD | Locked rotor time | : 13 s (hot) 23 s (cold) |
| Output | : 100 HP (75 kW) | Temperature rise[4] | : 80 K |
| Poles | : 4 | Duty cycle | : Cont.(S1) |
| Frequency | : 60 Hz | Ambient temperature | : -20 ℃ to +40 ℃ |
| Rated voltage | : 575 V | Altitude | : 1000 m.a.s.l |
| Rated current | : 90.4 A | Degree of protection | : IP55 |
| L. R. Amperes | : 660 A | Cooling method | : IC411 - TEFC |
| LRC (p.u.) | : 7.3 | Mounting | : W-6 |
| No load current | : 30.4 A | Direct of rotation[1] | : Both |
| Rated speed | : 1780 rpm | Noise level[2] | : 68.0 dB(A) |
| Slip | : 1.11 % | Vibration class | : B |
| Rated torque | : 295 ft.lb | Starting method | : Direct On Line |
| Locked rotor torque | : 240 % | Coupling | : Direct |
| Pull up torque | : 185 % | Approx. weight[3] | : 1183 lb |
| Breakdown torque | : 260 % | Painting plan | : 203A |
| Insulation class | : F | Color | : RAL 5009 |
| Service factor | : 1.25 | Efficiency level | : Nema Premium |
| Moment of inertia (J) | : 29.9 sq.ft.lb | Design | : B |

| Output | Start | 50% | 75% | 100% |
|---|---|---|---|---|
| Efficiency (%) | - | 95.0 | 95.0 | 95.4 |
| Power factor | 0.43 | 0.77 | 0.84 | 0.87 |

Load type: -

Load torque: -

Load inertia (J=GD²/4): -

| | Drive end | Non drive end |
|---|---|---|
| Bearing type | 6316-C3 | 6314-C3 |
| Lubrication interval | 5000 h | 6000 h |
| Lubricant amount | 34 g | 27 g |
| Lubricant type | MOBIL POLYREX EM | |

Foundation loads

| | | |
|---|---|---|
| Maximum traction | : | 1679 lb |
| Maximum compression | : | 2862 lb |

Notes:

Standards

| | | | |
|---|---|---|---|
| Specification | : MG1 - Part 10 | Vibration | : MG1 - Part 7 |
| Tests | : MG1 - Part 12 | Tolerance | : MG1 - Part 12 |
| Noise | : MG1 - Part 9 | | |

This revision replaces and cancels the previous one, which must be eliminated.

(1) When viewed from the drive end.

(2) Measured at 1m and with tolerance of +3dB(A).

(3) Approximate weight subject to changes after manufacturing process.

(4) At the rated point.

These are average values based on tests with sinusoidal power supply, subject to the tolerances stipulated in NEMA MG 1-12.

| Rev. | Summary of changes | Performed | Checked | Date |
|---|---|---|---|---|
| | | | | |

| | | | | |
|---|---|---|---|---|
| Performed by | t-omars | | 215082/2021 | |
| Checked by | AUTOMATICO | | Page | Revision |
| Date | 05/08/2021 | | 1/5 | 0 |

*This document is exclusive property of WEG S/A. Reprinting is not allowed without written authorization.*

# TORQUE AND CURRENT X SPEED CURVE

## Three Phase Induction Motor - Squirrel Cage

| | | | |
|---|---|---|---|
| Customer | : | | |
| Product line | : W22 - Nema Premium Efficiency | Product code | : |

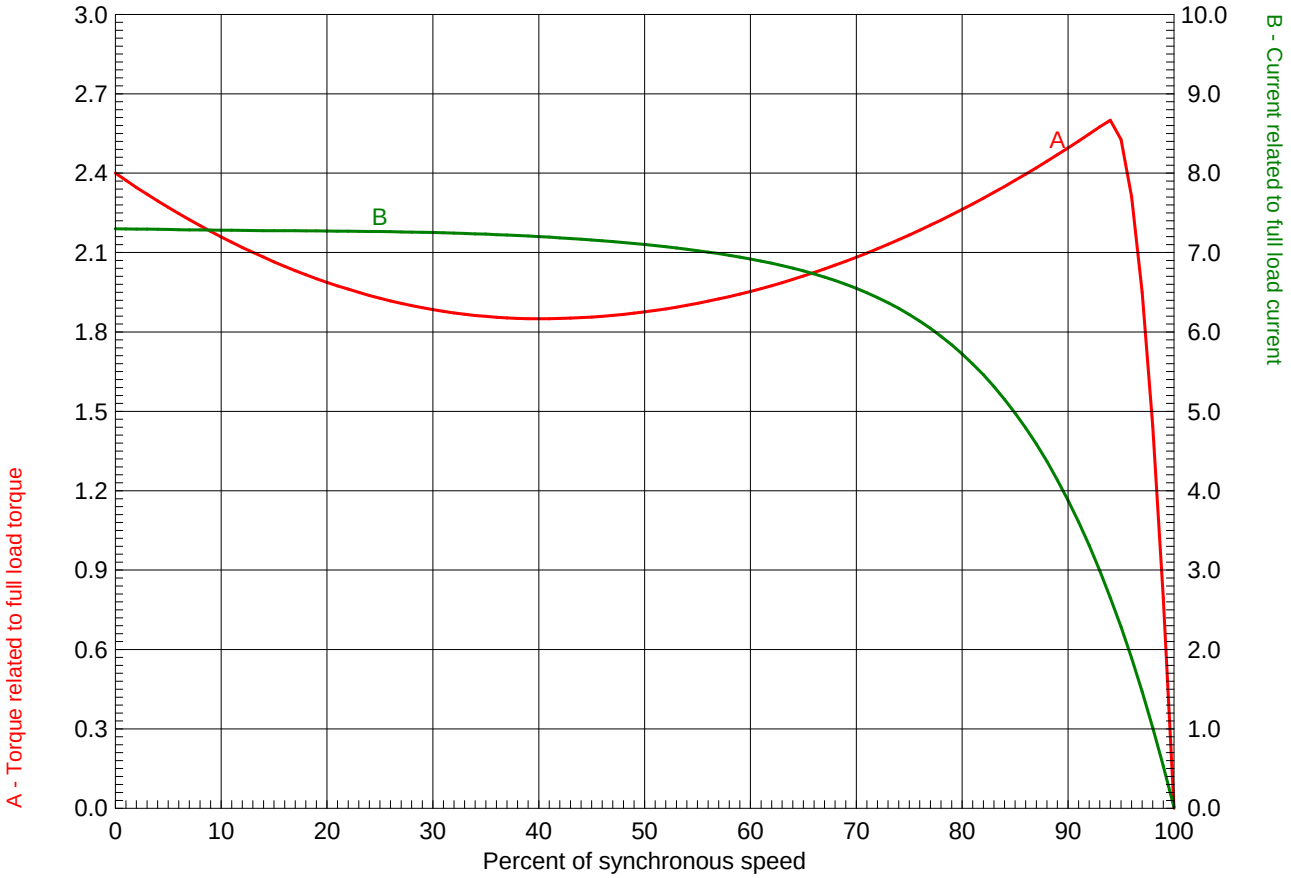


| | | | | | |
|---|---|---|---|---|---|
| Performance | : 100 HP (75 kW) 575 V 60 Hz 4P 404/5TD | | | | |
| Rated current | : 90.4 A | | Moment of inertia (J) | : 29.9 sq.ft.lb | |
| LRC (p.u.) | : 7.3 | | Duty cycle | : Cont.(S1) | |
| Rated torque | : 295 ft.lb | | Insulation class | : F | |
| Locked rotor torque | : 240 % | | Service factor | : 1.25 | |
| Breakdown torque | : 260 % | | Temperature rise | : 80 K | |
| Rated speed | : 1780 rpm | | Design | : B | |
| Locked rotor time 100% | : 13 s (hot) 23 s (cold) | | | | |
| Load inertia (J=GD²/4) | : 29.89410 sq.ft.lb | | | | |

| Rev. | Summary of changes | Performed | Checked | Date |
|---|---|---|---|---|
| | | | | |

| | | | | |
|---|---|---|---|---|
| Performed by | t-omars | | 215082/2021 | |
| Checked by | AUTOMATICO | | Page | Revision |
| Date | 05/08/2021 | | 2/5 | 0 |

*This document is exclusive property of WEG S/A. Reprinting is not allowed without written authorization.*

# LOAD PERFORMANCE CURVE

## Three Phase Induction Motor - Squirrel Cage

| | | | |
|---|---|---|---|
| Customer | : | | |
| Product line | : W22 - Nema Premium Efficiency | Product code | : |

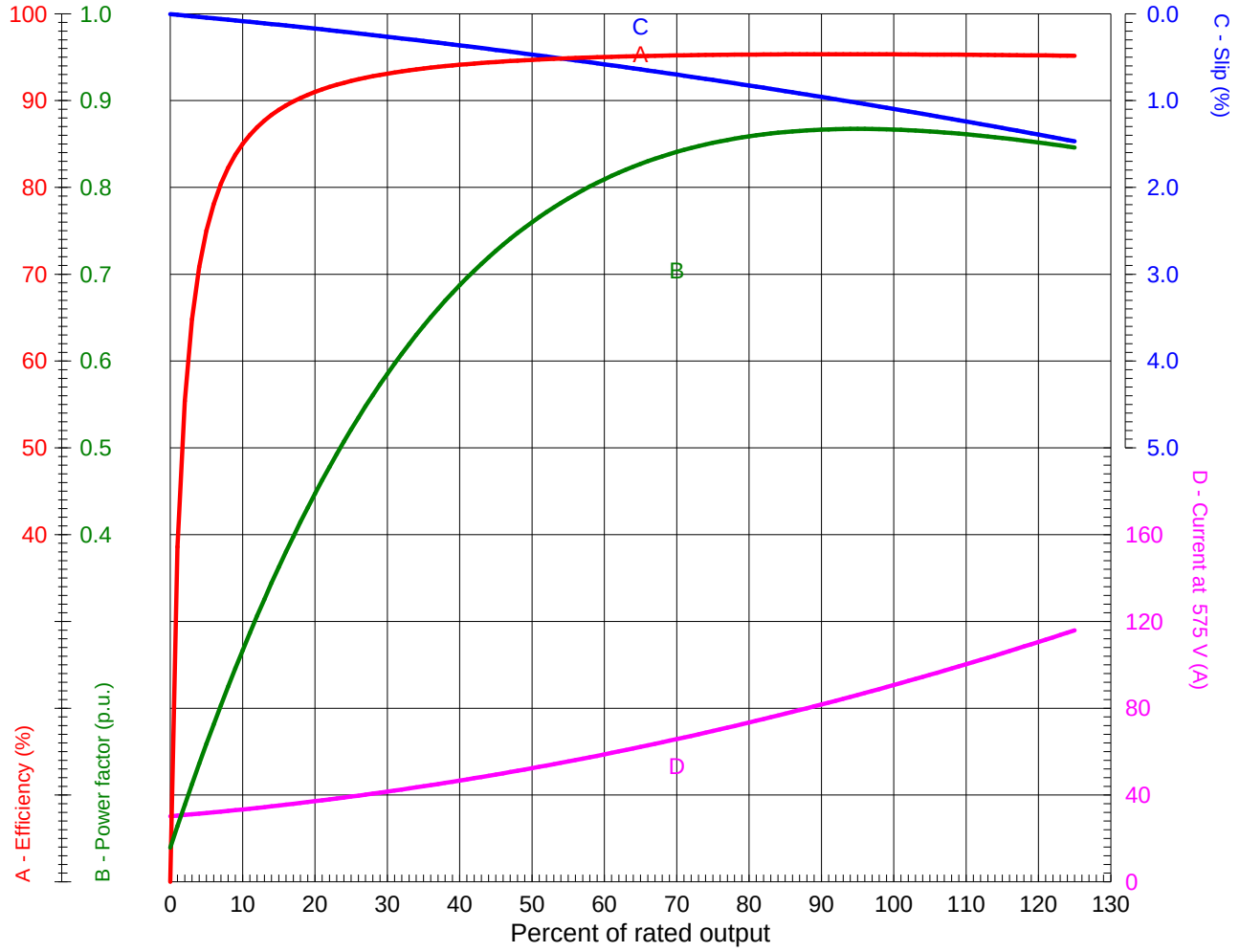


| | | | |
|---|---|---|---|
| Performance | : 100 HP (75 kW) 575 V 60 Hz 4P 404/5TD | | |
| Rated current | : 90.4 A | Moment of inertia (J) | : 29.9 sq.ft.lb |
| LRC (p.u.) | : 7.3 | Duty cycle | : Cont.(S1) |
| Rated torque | : 295 ft.lb | Insulation class | : F |
| Locked rotor torque | : 240 % | Service factor | : 1.25 |
| Breakdown torque | : 260 % | Temperature rise | : 80 K |
| Rated speed | : 1780 rpm | Design | : B |

| Rev. | Summary of changes | Performed | Checked | Date |
|---|---|---|---|---|
| | | | | |

| | | | | |
|---|---|---|---|---|
| Performed by | t-omars | | 215082/2021 | |
| Checked by | AUTOMATICO | | Page | Revision |
| Date | 05/08/2021 | | 3/5 | 0 |

*This document is exclusive property of WEG S/A. Reprinting is not allowed without written authorization.*

# THERMAL LIMIT CURVE

## Three Phase Induction Motor - Squirrel Cage

| | | | |
|---|---|---|---|
| Customer | : | | |
| Product line | : W22 - Nema Premium Efficiency | Product code | : |

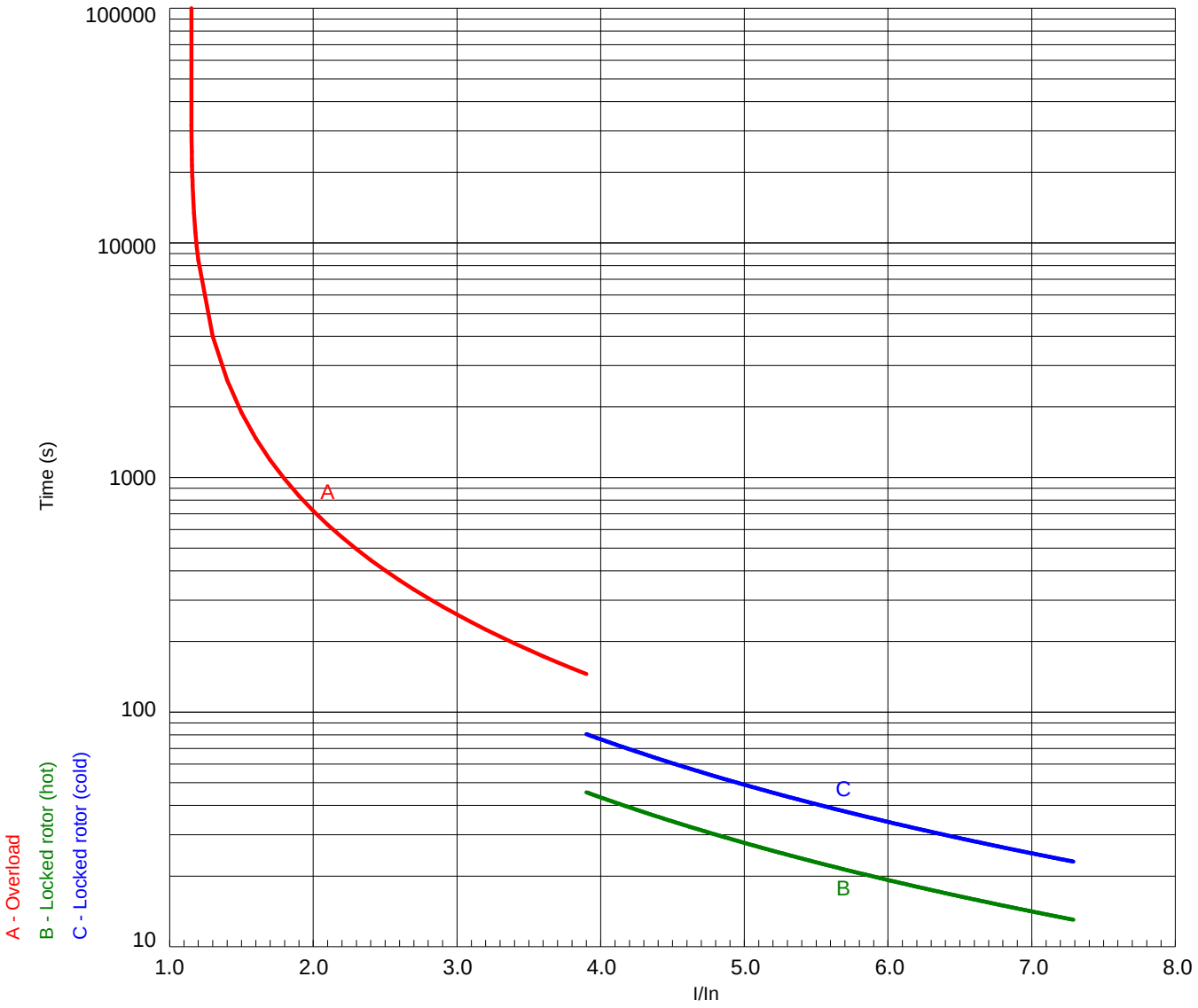


| | | | |
|---|---|---|---|
| Performance | : 100 HP (75 kW) 575 V 60 Hz 4P 404/5TD | | |
| Rated current | : 90.4 A | Moment of inertia (J) | : 29.9 sq.ft.lb |
| LRC (p.u.) | : 7.3 | Duty cycle | : Cont.(S1) |
| Rated torque | : 295 ft.lb | Insulation class | : F |
| Locked rotor torque | : 240 % | Service factor | : 1.25 |
| Breakdown torque | : 260 % | Temperature rise | : 80 K |
| Rated speed | : 1780 rpm | Design | : B |
| Heating constant | : 34.9 min | | |
| Cooling constant | : 104.7 min | | |

| Rev. | Summary of changes | Performed | Checked | Date |
|---|---|---|---|---|
| | | | | |

| | | | | |
|---|---|---|---|---|
| Performed by | t-omars | | 215082/2021 | |
| Checked by | AUTOMATICO | | Page | Revision |
| Date | 05/08/2021 | | 4/5 | 0 |

*This document is exclusive property of WEG S/A. Reprinting is not allowed without written authorization.*

# VFD OPERATION CURVE

## Three Phase Induction Motor - Squirrel Cage

| | | | |
|---|---|---|---|
| Customer | : | | |
| Product line | : W22 - Nema Premium Efficiency | Product code | : |

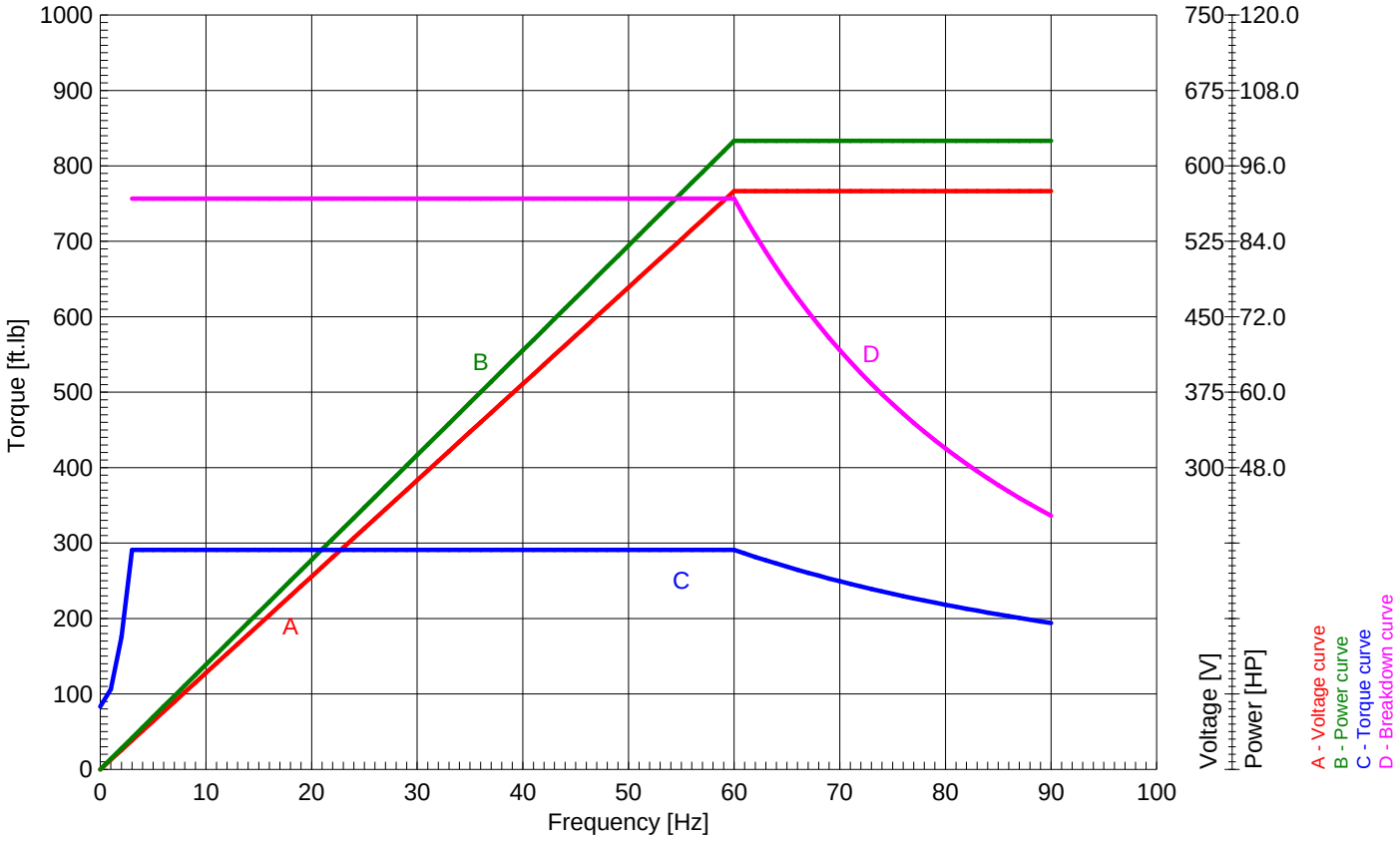


* Motor is suitable to work with VFD (1.0 SF and 105K temperature rise).

| | | | | | |
|---|---|---|---|---|---|
| Performance | : 100 HP (75 kW) 575 V 60 Hz 4P 404/5TD | | | | |
| Rated current | : 90.4 A | Moment of inertia (J) | : 29.9 sq.ft.lb | | |
| LRC (p.u.) | : 7.3 | Duty cycle | : Cont.(S1) | | |
| Rated torque | : 295 ft.lb | Insulation class | : F | | |
| Locked rotor torque | : 240 % | Service factor | : 1.25 | | |
| Breakdown torque | : 260 % | Temperature rise | : 80 K | | |
| Rated speed | : 1780 rpm | Design | : B | | |
| | | Maximum peak voltage phase-to-phase | <= 2400 V | | |
| | | dV/dt | <= 7800 V/µs | | |
| | | Rise time | >= 0,1 µs | | |

| Rev. | Summary of changes | Performed | Checked | Date |
|---|---|---|---|---|
| | | | | |

| | | | | |
|---|---|---|---|---|
| Performed by | t-omars | | 215082/2021 | |
| Checked by | AUTOMATICO | | Page | Revision |
| Date | 05/08/2021 | | 5/5 | 0 |

*This document is exclusive property of WEG S/A. Reprinting is not allowed without written authorization.*



**Sludge pumps**

PUM-36488

HydroTech Mining
Organized dewatering solutions

# Product Data Sheet

**Features**

- Pumps abrasive slurries, corrosive material, solids and gaseous liquids with ease
- Ideal for high viscosity or shear sensitive products
- Pumps can run-dry indefinitely without damage
- No check valves or seal water flush systems
- Fully reversible – pumps in either direction
- Minimal maintenance – the hose is the only wearing part
- Pump casings available in a choice of materials including stainless steel
- Suction lift capability up to 9.5 metres and self-priming
- Highly accurate

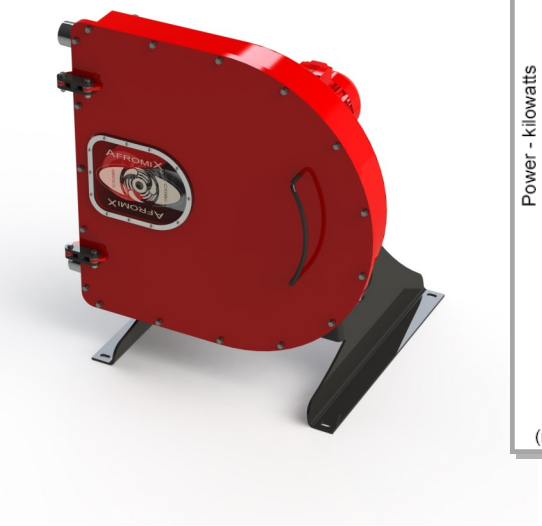

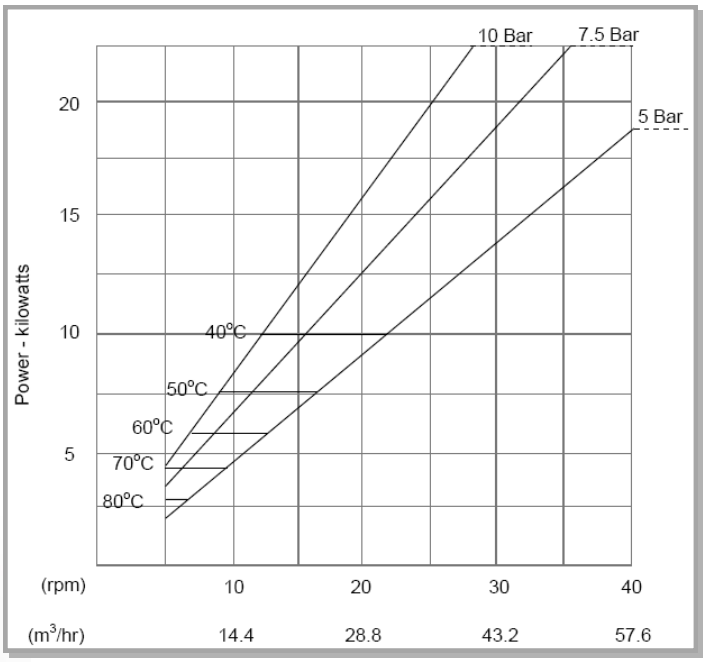


**Technical Specifications**

| | |
|---|---|
| Maximum intermittent flow rate of: | 57,600 litres per hour / 254 gallons per minute |
| Maximum continuous flow rate of: | 43,200 litres per hour / 190 gallons per minute |
| Flow per revolution of: | 24 litres / 6.87 gallons |
| Pressure capability of: | 10 Bar / 150 psi |
| Maximum temperature: | 80 Degrees Celsius / 176 Degrees Fahrenheit |
| Inner hose diameter of: | 100 mm / 4 inches |

**Technical Specifications**

| | |
|---|---|
| Operating Speeds: | 0 to 40rpm |
| Product Temperature Range: | -10 °C to +80 °C / 14 °F to 176 °F |
| Suction Lift: | 9.5 metres / 30 feet lift |
| Hose Materials: | Natural Rubber, Nitrile (Buna), EPDM and CSM |
| Connections available: | BSP, NPT, DIN, ASA, Groove End: 316 St. Stl., PVC |
| Hose Lubricant Required: | 40 litres / 10.6 gallons |
| Sound level at 1m: | < 70 dB(A) (pumping water at maximum continuous flow) |
| Optional Hose Failure Sensor: | Capacitive DC sensor |

**Materials of Construction**

| | |
|---|---|
| Pump housing: | Carbon steel or stainless steel |
| Rotor: | Aluminium or carbon steel |
| Compression rollers: | Aluminium or steel |
| Front cover: | Carbon steel |
| Support Frame: | Carbon steel |
| Seals: | Neoprene or Nitrile |

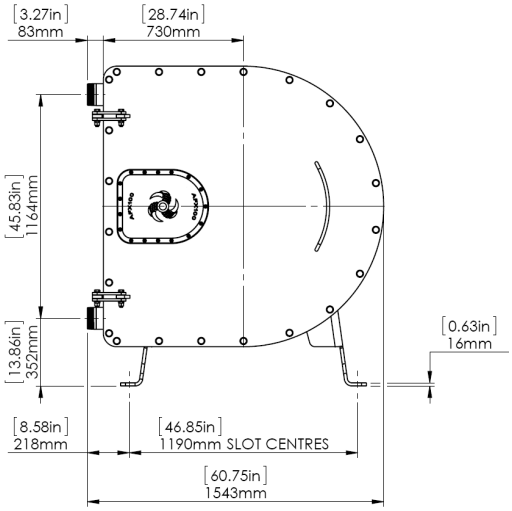


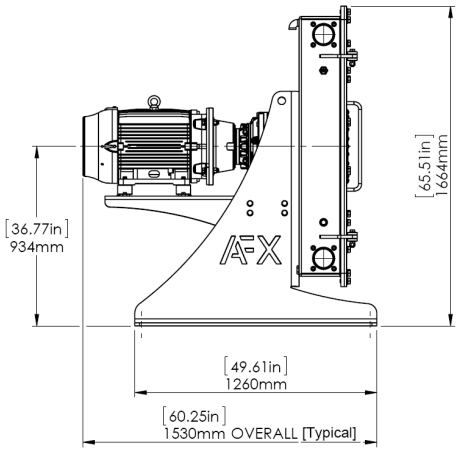


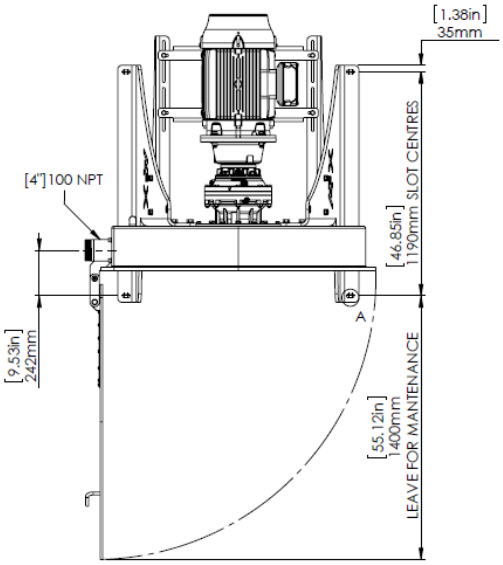


Approximate Weight 1,300kgs / 2,866lbs

Actual weight depends upon drive fitted. Contact factory for details.

# MOTOR DATA SHEET

**PERISTALTIC PUMP MODEL PUM-36488 (OPP21-020)**



HydroTech Mining

**UPDATE : FEB 2022**

# DATA SHEET

## Three Phase Induction Motor - Squirrel Cage

| | |
|---|---|
| Customer | : |

| | | | |
|---|---|---|---|
| Product line | : W22 NEMA Premium Efficiency Three-Phase | Product code : | 12446946 |
| | | Catalog # : | CT015504NPW22 |

| | | | |
|---|---|---|---|
| Frame | : 254/6TC | Locked rotor time | : 30s (cold) 17s (hot) |
| Output | : 15 HP (11 kW) | Temperature rise | : 80 K |
| Poles | : 4 | Duty cycle | : Cont.(S1) |
| Frequency | : 60 Hz | Ambient temperature | : -20°C to +40°C |
| Rated voltage | : 575 V | Altitude | : 1000 m.a.s.l. |
| Rated current | : 14.4 A | Protection degree | : IP55 |
| L. R. Amperes | : 92.2 A | Cooling method | : IC411 - TEFC |
| LRC | : 6.4x(Code G) | Mounting | : F-1 |
| No load current | : 5.44 A | Rotation[1] | : Both (CW and CCW) |
| Rated speed | : 1765 rpm | Noise level[2] | : 64.0 dB(A) |
| Slip | : 1.94 % | Starting method | : Direct On Line |
| Rated torque | : 6.08 kgfm | Approx. weight[3] | : 143 kg |
| Locked rotor torque | : 229 % | | |
| Breakdown torque | : 270 % | | |
| Insulation class | : F | | |
| Service factor | : 1.25 | | |
| Moment of inertia (J) | : 0.1104 kgm² | | |
| Design | : B | | |

| Output | 25% | 50% | 75% | 100% |
|---|---|---|---|---|
| Efficiency (%) | 90.2 | 91.0 | 91.7 | 92.4 |
| Power Factor | 0.44 | 0.68 | 0.78 | 0.83 |

| Foundation loads | |
|---|---|
| Max. traction | : 190 kgf |
| Max. compression | : 333 kgf |

| | | Drive end | Non drive end |
|---|---|---|---|
| Bearing type | : | 6309 C3 | 6209 C3 |
| Sealing | : | V'Ring | V'Ring |
| Lubrication interval | : | 20000 h | 20000 h |
| Lubricant amount | : | 13 g | 9 g |
| Lubricant type | : | Mobil Polyrex EM | |

Notes

This revision replaces and cancel the previous one, which must be eliminated.
(1) Looking the motor from the shaft end.
(2) Measured at 1m and with tolerance of +3dB(A).
(3) Approximate weight subject to changes after manufacturing process.
(4) At 100% of full load.

These are average values based on tests with sinusoidal power supply, subject to the tolerances stipulated in NEMA MG-1.

| Rev. | Changes Summary | Performed | Checked | Date |
|---|---|---|---|---|
| | | | | |

| | | | | |
|---|---|---|---|---|
| Performed by | | | | |
| Checked by | | | Page | Revision |
| Date | 20/11/2019 | | 1 / 6 | |

This document is exclusive property of WEG S/A. Reprinting is not allowed without written authorization of WEG S/A.
Subject to change without notice

# TORQUE AND CURRENT VS SPEED CURVE

## Three Phase Induction Motor - Squirrel Cage

| | |
|---|---|
| Customer | : |

| | | | |
|---|---|---|---|
| Product line | : W22 NEMA Premium Efficiency Three-Phase | Product code : | 12446946 |
| | | Catalog # : | CT015504NPW22 |

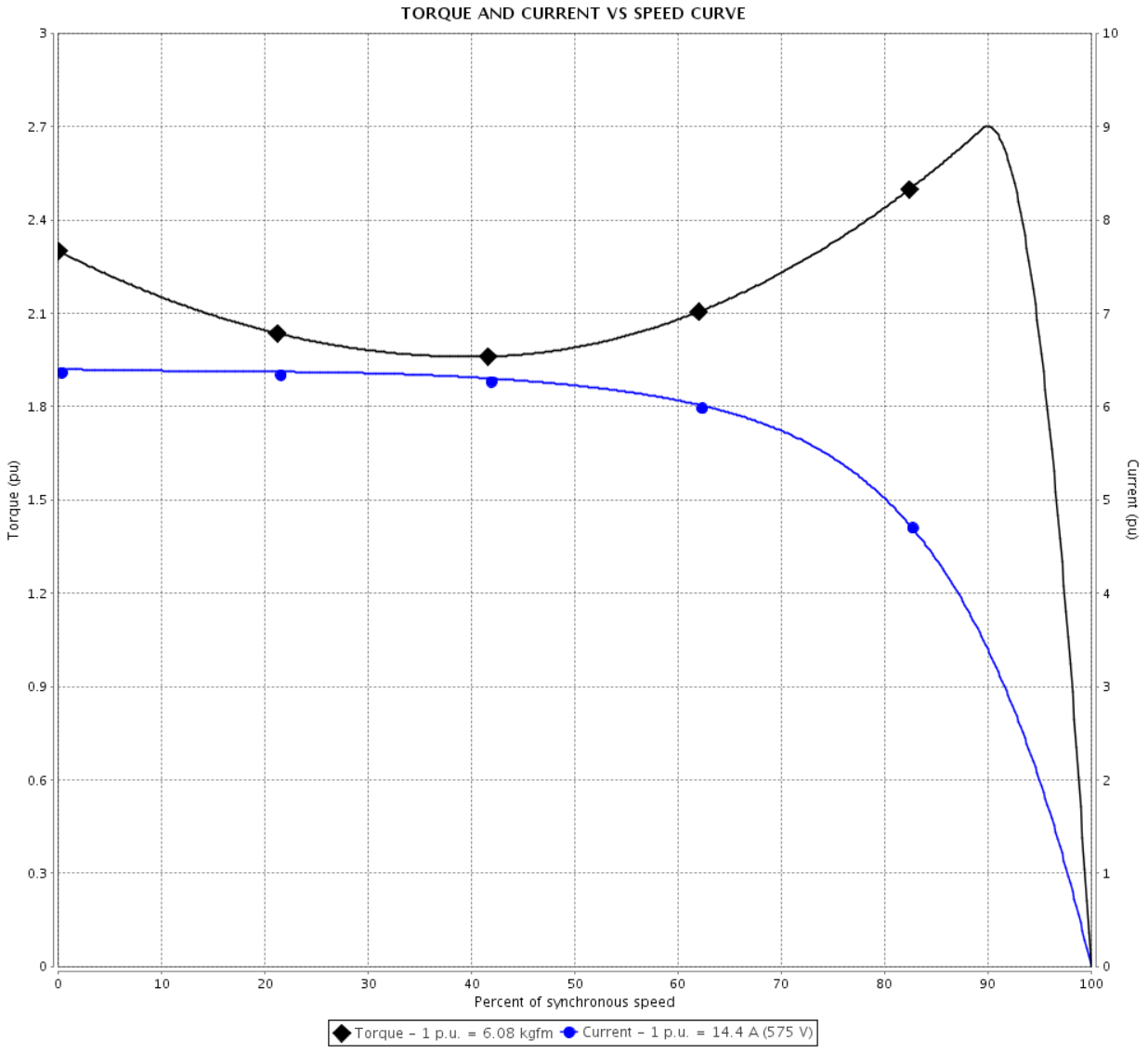


| | |
|---|---|
| Performance | : 575 V 60 Hz 4P |

| | | | |
|---|---|---|---|
| Rated current | : 14.4 A | Moment of inertia (J) | : 0.1104 kgm² |
| LRC | : 6.4 | Duty cycle | : Cont.(S1) |
| Rated torque | : 6.08 kgfm | Insulation class | : F |
| Locked rotor torque | : 229 % | Service factor | : 1.25 |
| Breakdown torque | : 270 % | Temperature rise | : 80 K |
| Rated speed | : 1765 rpm | Design | : B |

| | |
|---|---|
| Locked rotor time | : 30s (cold) 17s (hot) |

| Rev. | Changes Summary | Performed | Checked | Date |
|---|---|---|---|---|
| | | | | |

| | | | | |
|---|---|---|---|---|
| Performed by | | | | |
| Checked by | | | Page | Revision |
| Date | 20/11/2019 | | 2 / 6 | |

This document is exclusive property of WEG S/A. Reprinting is not allowed without written authorization of WEG S/A.
Subject to change without notice

# LOAD PERFORMANCE CURVE

## Three Phase Induction Motor - Squirrel Cage

| | |
|---|---|
| Customer | : |

| | | | |
|---|---|---|---|
| Product line | : W22 NEMA Premium Efficiency Three-Phase | Product code : | 12446946 |
| | | Catalog # : | CT015504NPW22 |

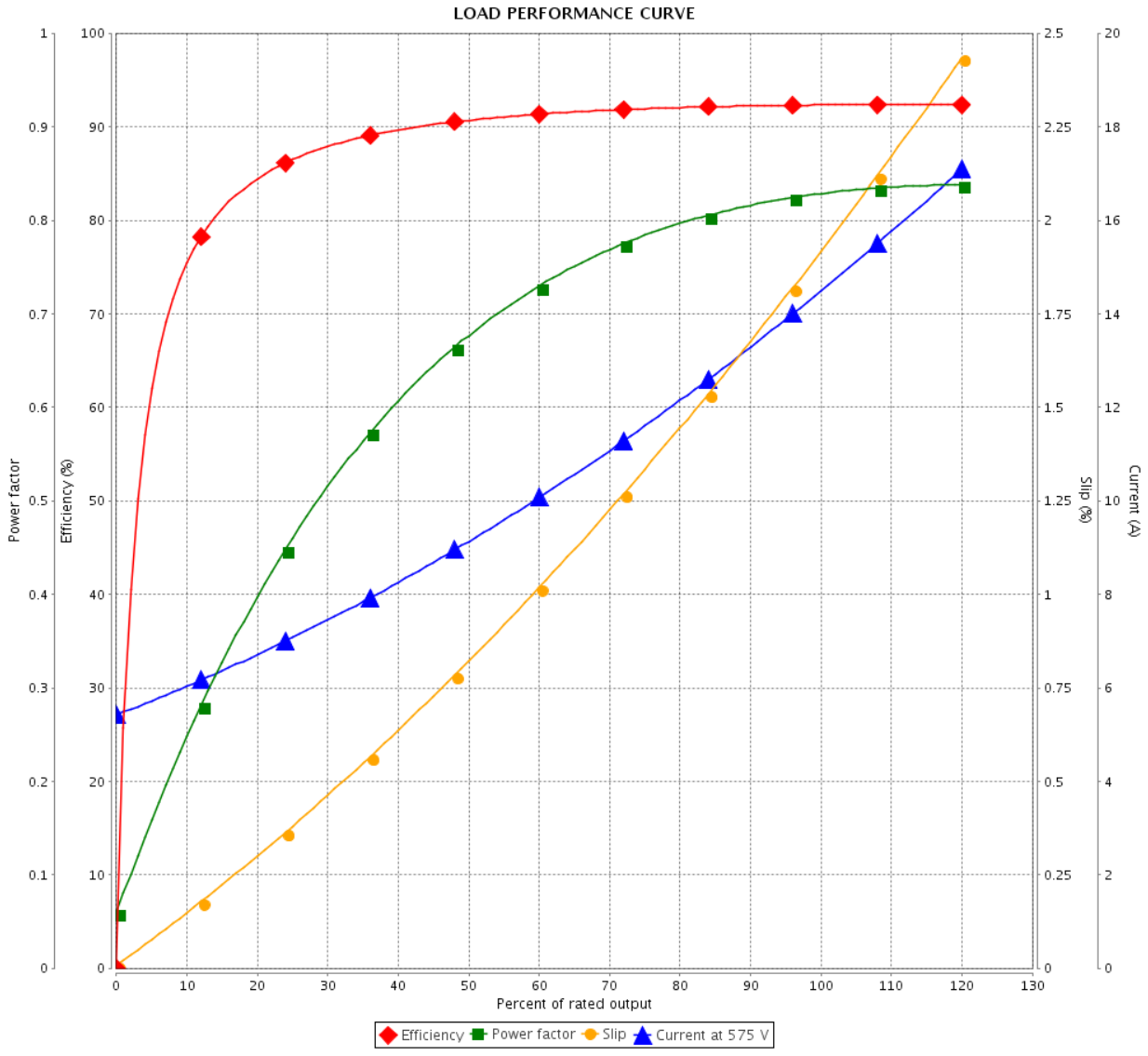


| | |
|---|---|
| Performance | : 575 V 60 Hz 4P |

| | | | |
|---|---|---|---|
| Rated current | : 14.4 A | Moment of inertia (J) | : 0.1104 kgm² |
| LRC | : 6.4 | Duty cycle | : Cont.(S1) |
| Rated torque | : 6.08 kgfm | Insulation class | : F |
| Locked rotor torque | : 229 % | Service factor | : 1.25 |
| Breakdown torque | : 270 % | Temperature rise | : 80 K |
| Rated speed | : 1765 rpm | Design | : B |

| Rev. | Changes Summary | Performed | Checked | Date |
|---|---|---|---|---|
| | | | | |

| | | | | |
|---|---|---|---|---|
| Performed by | | | | |
| Checked by | | | Page | Revision |
| Date | 20/11/2019 | | 3 / 6 | |

This document is exclusive property of WEG S/A. Reprinting is not allowed without written authorization of WEG S/A.
Subject to change without notice

# THERMAL LIMIT CURVE

## Three Phase Induction Motor - Squirrel Cage

| | | | |
|---|---|---|---|
| Customer | : | | |
| Product line | : W22 NEMA Premium Efficiency Three-Phase | Product code : | 12446946 |
| | | Catalog # : | CT015504NPW22 |

| | |
|---|---|
| Performance | : 575 V 60 Hz 4P |

| | | | |
|---|---|---|---|
| Rated current | : 14.4 A | Moment of inertia (J) | : 0.1104 kgm² |
| LRC | : 6.4 | Duty cycle | : Cont.(S1) |
| Rated torque | : 6.08 kgfm | Insulation class | : F |
| Locked rotor torque | : 229 % | Service factor | : 1.25 |
| Breakdown torque | : 270 % | Temperature rise | : 80 K |
| Rated speed | : 1765 rpm | Design | : B |

| | |
|---|---|
| Heating constant | |
| Cooling constant | |

| Rev. | Changes Summary | Performed | Checked | Date |
|---|---|---|---|---|
| | | | | |

| | | | | |
|---|---|---|---|---|
| Performed by | | | | |
| Checked by | | | Page | Revision |
| Date | 20/11/2019 | | 4 / 6 | |

This document is exclusive property of WEG S/A. Reprinting is not allowed without written authorization of WEG S/A.
Subject to change without notice

# THERMAL LIMIT CURVE

## Three Phase Induction Motor - Squirrel Cage

Customer :

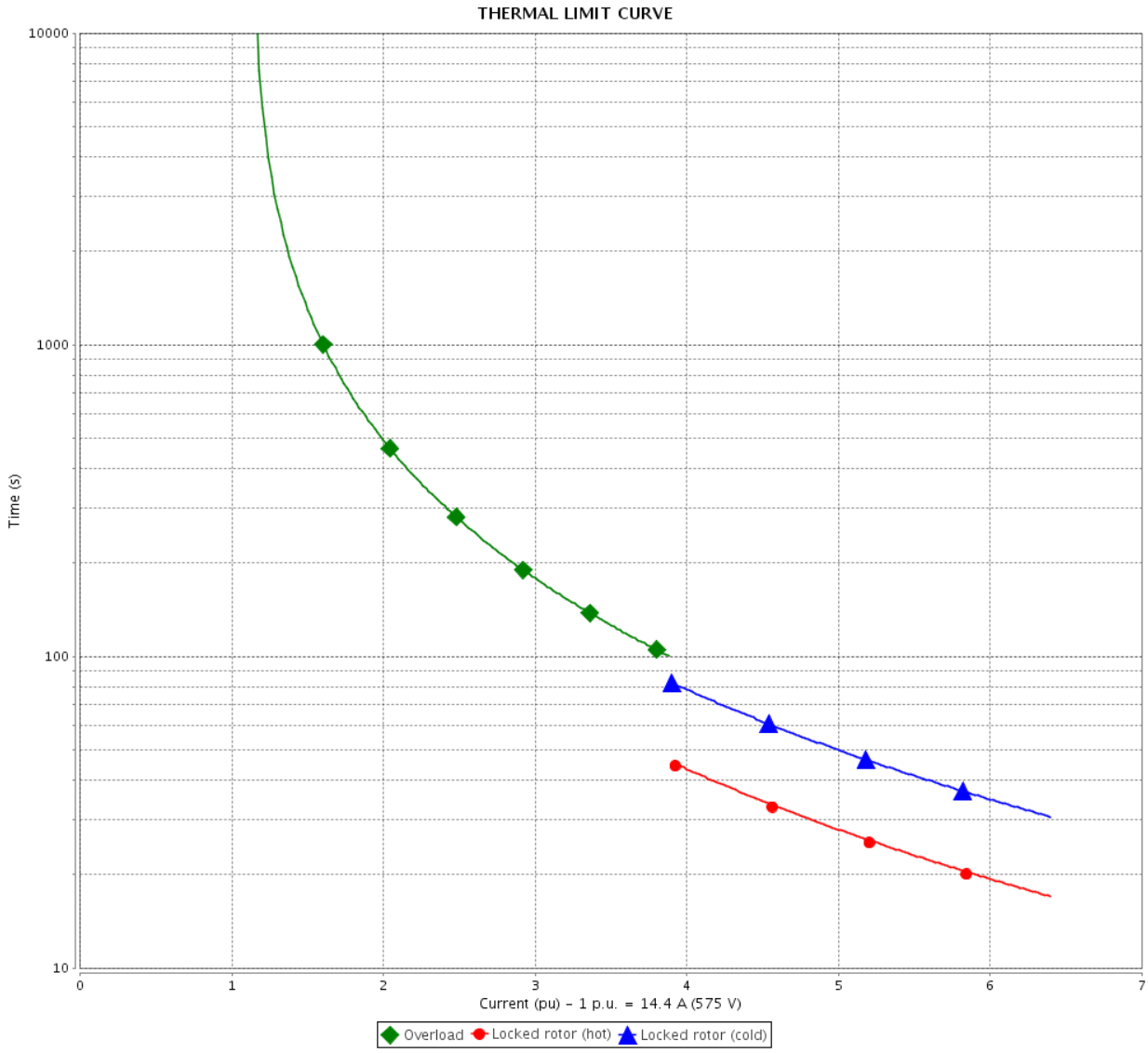


| Rev. | Changes Summary | Performed | Checked | Date |
|---|---|---|---|---|
| | | | | |

| | | | | |
|---|---|---|---|---|
| Performed by | | | | |
| Checked by | | | Page | Revision |
| Date | 20/11/2019 | | 5 / 6 | |

This document is exclusive property of WEG S/A. Reprinting is not allowed without written authorization of WEG S/A.
Subject to change without notice

# VFD OPERATION CURVE

## Three Phase Induction Motor - Squirrel Cage

| | | | |
|---|---|---|---|
| Customer | : | | |
| Product line | : W22 NEMA Premium Efficiency Three-Phase | Product code : | 12446946 |
| | | Catalog # : | CT015504NPW22 |

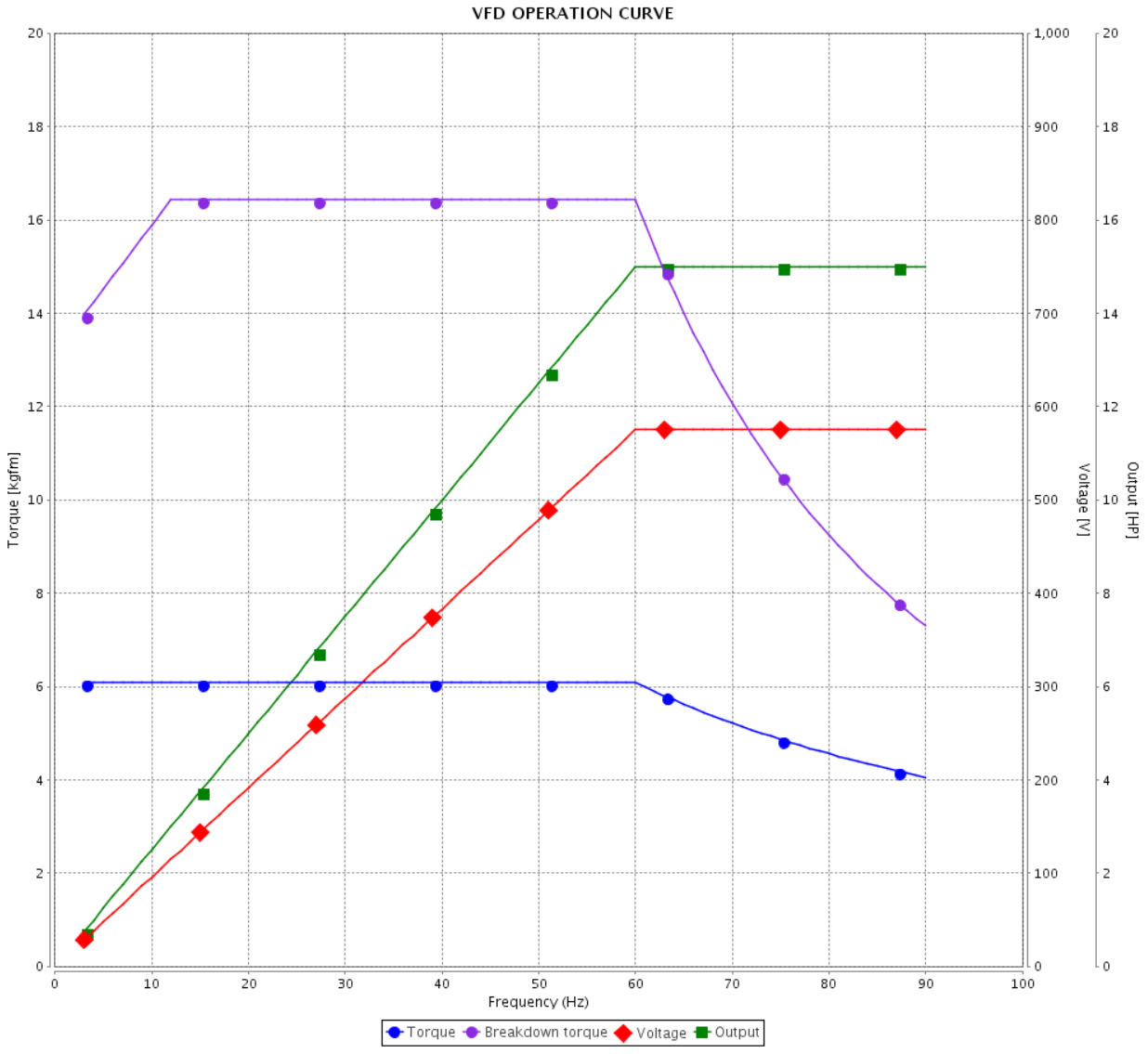


| | | | |
|---|---|---|---|
| Performance | : 575 V 60 Hz 4P | | |
| Rated current | : 14.4 A | Moment of inertia (J) | : 0.1104 kgm² |
| LRC | : 6.4 | Duty cycle | : Cont.(S1) |
| Rated torque | : 6.08 kgfm | Insulation class | : F |
| Locked rotor torque | : 229 % | Service factor | : 1.25 |
| Breakdown torque | : 270 % | Temperature rise | : 80 K |
| Rated speed | : 1765 rpm | Design | : B |

| Rev. | Changes Summary | Performed | Checked | Date |
|---|---|---|---|---|
| | | | | |

| | | | | |
|---|---|---|---|---|
| Performed by | | | | |
| Checked by | | | Page | Revision |
| Date | 20/11/2019 | | 6 / 6 | |

This document is exclusive property of WEG S/A. Reprinting is not allowed without written authorization of WEG S/A.
Subject to change without notice

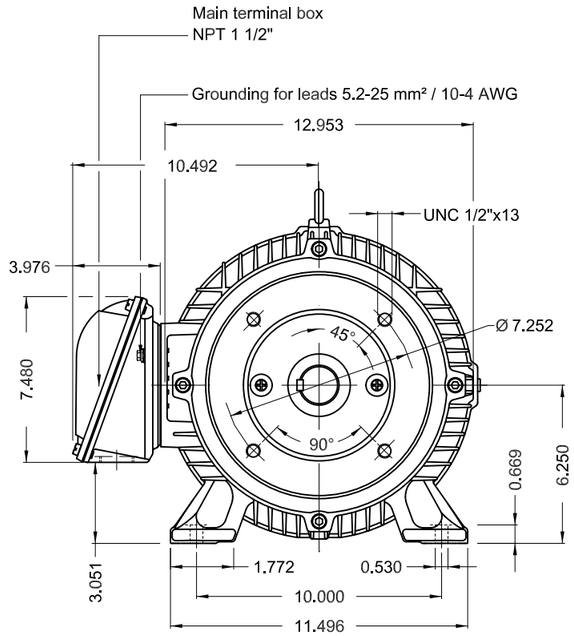


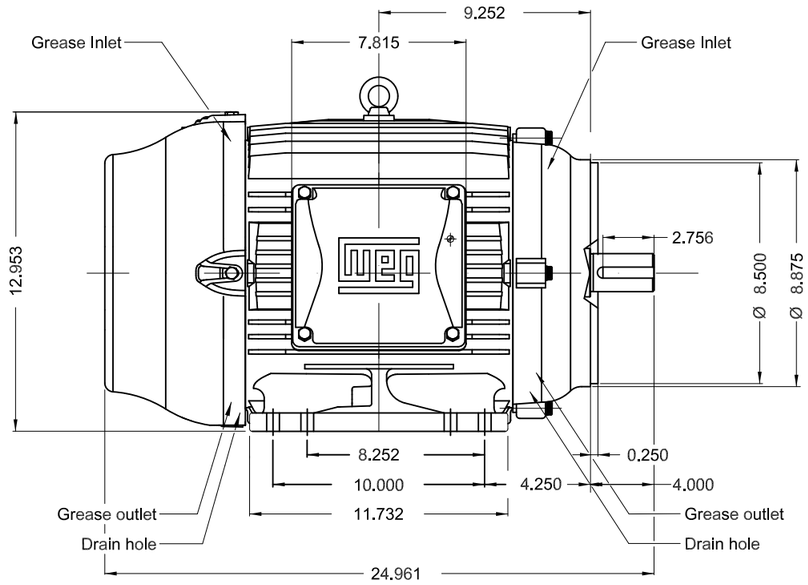


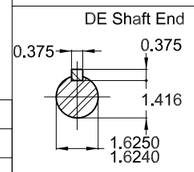


Color RAL 5009
Painting plan 203A
Mounting B34R(D)

15 HP 04 Poles 60Hz | A

| ECM | LOC | SUMMARY OF MODIFICATIONS | EXECUTED | CHECKED | RELEASED | DATE | VER |
|---|---|---|---|---|---|---|---|

| | | | |
|---|---|---|---|
| EXECUTED | PIRWBUSER | THREE PHASE W22 MOTOR - NEMA PREMIUM EFF | PREVIEW |
| CHECKED | | FRAME 254/6TC IP55 TEFC | WDD |
| RELEASED | | | |
| REL DT. | | WMO Jaragua do Sul Product Engineering | SHEET 1 / 1 |

Dimensions in inches
XME A3

WEG's property. Forbidden reproduction without previous authorization.

297 7e Rue
Val-d'Or (Québec)
Canada J9P 0G5
www.hydrotechmining.com
info@hydrotechmining.com
Tél : (819) 874-4499 / Fax : (819) 874-0259

# ***PUM-36488 pump spare parts***

| Item num. | Product number | Description | Qty | Unit price ($ CAD) | Total ($CAD) |
|---|---|---|---|---|---|
| 1 | ACC-36490 | Natural Rubber Hose | 1 | $3,974 | $3,974 |
| 2 | ACC-36491 | Lube refill kit | 1 | $979 | $979 |
| 3 | ACC-36492 | Heavy Duty Hose Clamps | 6 | $45 | $269 |
| 4 | ACC-36493 | Complete roller assembly, 11kw electric motor & Brevini gearbox | 1 | $13,938 | $13,938 |
| Total | | | | | $19,160 |

**Discharge to sea pumps**

FLOWSERVE

# Construction Datasheet

| | | | | |
|---|---|---|---|---|
| Customer | : - | Pump / Stages | : 41K8x6-19OP | / 1 |
| Customer reference | : LP-11685 | Based on curve no. | : 41K8x6-19OP-4-60 | |
| Item number | : 65PWA69306 A/B/C | Flowserve reference | : 2608211051 | |
| Service | : Water line pumps | Date | : February 26, 2021 | |

## Construction

| Nozzles | Size | Rating | Face | Position |
|---|---|---|---|---|
| Suction | 8.00 in | 150# | FF | End |
| Discharge | 6.00 in | 150# | FF | Top |

| | |
|---|---|
| Casing mounting | : Foot |
| Casing split | : Radial |
| Impeller type | : All impeller types |
| Bearing type (radial) | : Ball |
| Bearing number (radial) | : 6218/C3 |
| Bearing type (thrust) | : Ball |
| Bearing number (thrust) | : 7316 BEGAY |
| Bearing lubrication | : Flood |
| Rotation (view from driver) | : CW per Hyd. Institute |

## Materials

| | |
|---|---|
| Casing | : A995 Gr. 1B CD4MCuN |
| Impeller | : A995 Gr. 1B CD4MCuN |
| Seal chamber | : A995 Gr. 1B CD4MCuN |
| Shaft | : ASTM A434 4140B Steel |
| Sleeve | : A276 S32205 Duplex Steel |

## Baseplate, Coupling and Guard

| | |
|---|---|
| Baseplate type | : Type D fabricated |
| Baseplate material | : ASTM A36 Steel |
| Baseplate size | : 4109 |
| Coupling manufacturer | : TB Wood's Sure-Flex® |
| Coupling size | : 10SC/13SCHx10SC/13S... |
| Coupling / Shaft guard | : Carbon Steel |
| Shaft / seal guard | : 304 SS |

## Weights (Approx.)

| | |
|---|---|
| Bareshaft pump (net) | : 520.3 kg |
| Baseplate (net) | : 749.8 kg |
| Driver (net) | : - |
| Shipping gross weight/volume | : 1460.6 kg / 2.64 m³ |

## Testing

| | |
|---|---|
| Hydrostatic test | : Non witnessed |
| Performance test | : None |
| NPSH test | : None |

## Paint and Package

| | |
|---|---|
| Pump paint | : Maufacturer's Standard |
| Base grout surface prep | : Maufacturer's Standard |
| Shipment type | : Export |

## Driver Information

| | |
|---|---|
| Manufacturer | : - |
| Power | : 200 hp / 149 kW |
| Service factor (requested / actual) | : 1.0 / 1.0 |
| Synchronous speed | : 1800 rpm |
| Orientation / Mounting | : Horizontal / Foot |
| Driver type | : - |
| Frame-size / material | : 447T / - |
| Enclosure | : - |
| Hazardous area class | : - |
| Explosion 'T' rating | : - |
| Volts / Phase / Hz | : 575 / 3 / 60 Hz |
| Amps-full load/locked rotor | : - / - |
| Motor starting | : Direct on line (DOL) |
| Insulation | : - |
| Temperature rise | : - |
| Bearings | : - |
| Lubrication | : - |
| Motor mounted by | : Flowserve |

## Sound Pressure (dBA @ 1.0 m)

| | |
|---|---|
| Driver, expected | : - |
| Pump & driver, estimated | : - |

## Seal Information

| | |
|---|---|
| Arrangement | : Single Cartridge |
| Size | : 3.25", Large Bore |
| Manufacturer / Type | : Flowserve / ISC2 Pusher |
| Material code (Man'f/API) | : C2CPX3250EAXEB / - |
| Internal neck bushing | : - |

## Gland

| | |
|---|---|
| Gland material | : 316 SS |
| Flush | : 3/4" NPT |
| Vent | : 3/8" NPT |
| Drain | : 3/8" NPT |
| Auxiliary seal device | : Carbon Bush |

## Piping

| | |
|---|---|
| Seal flush plan | : - |
| Seal flush construction | : - |
| Seal flush material | : - |
| Aux seal flush plan | : None |
| Aux seal flush construction | : - |
| Aux seal flush material | : - |

## Notes

APE4 Power-End to ASME B73.2 c/w IPS Beacon Monitor

NPT Threaded Casing Drain - 3/4" Plugged

-

-

-

-

AGNICO EAGLE

**Vendor Document Status**

1 ☐ Proceed to next submission and status.

2 ☐ Proceed with exceptions as noted to next submission and status.

3 ☐ Do not proceed.
Revise as noted and resubmit next submission and status.

4 ☒ Complete, no further submission required.

By: Date:

Review and authorization to fabricate are only for general conformance with the design concept of the Project as expressed in the Contract Documents. Sole responsibility for the accuracy and completeness of this document, including but not limited to dimensions and quantities, remains with the Supplier/Contractor. Agnico Eagle does not warrant the accuracy or completeness of any of the information contained herein, nor does Agnico Eagle authorize or approve any construction means, methods, techniques, sequences or any safety precautions or procedures.

Agnico Eagle No. VDL 3.02 Equipment data sheets R:

**DOCUMENT FOR INFORMATION**

Copyright © 2016 Flowserve. All rights reserved.

| | | | |
|---|---|---|---|
| Customer | : - | Capacity | : 418.0 m³/h |
| Item number | : 65PWA69306 A/B/C | Head | : 70.50 m |
| Service | : Water line pumps | Density / Specific gravity | : - / 1.050 |
| Flowserve reference | : 2608211051 | Pump speed | : 1758 rpm |
| Pump size & type / Stages | : 41K8x6-19OP / 1 | Ns / Nss | : 1132 / 14534 (Metric units) |
| Based on curve no. | : 41K8x6-19OP-4-60 | Test tolerance | : ANSI/HI 14.6 Grade 1B |
| Impeller diameter | : 403 mm | Date | : February 26, 2021 |

CURVES ARE APPROXIMATE, PUMP IS GUARANTEED FOR ONE SET OF CONDITIONS; CAPACITY, HEAD, AND EFFICIENCY.

**Vendor Document Status**

**AGNICO EAGLE**

1 ☐ Proceed to next submission and status.

2 ☐ Proceed with exceptions as noted to next submission and status.

3 ☐ Do not proceed. Revise as noted and resubmit next submission and status.

4 ■ Complete, no further submission required.

By: Date:

Review and authorization to fabricate are only for general conformance with the design concept of the Project as expressed in the Contract Documents. Sole responsibility for the accuracy and completeness of this document, including but not limited to dimensions and quantities, remains with the Supplier/Contractor. Agnico Eagle does not warrant the accuracy or completeness of any of the information contained herein, nor does Agnico Eagle authorize or approve any construction means, methods, techniques, sequences or any safety precautions or procedures.

Agnico Eagle No. VDL 3.06 DATA AND PERFORMANCE CURVES R:

**DOCUMENT FOR INFORMATION**

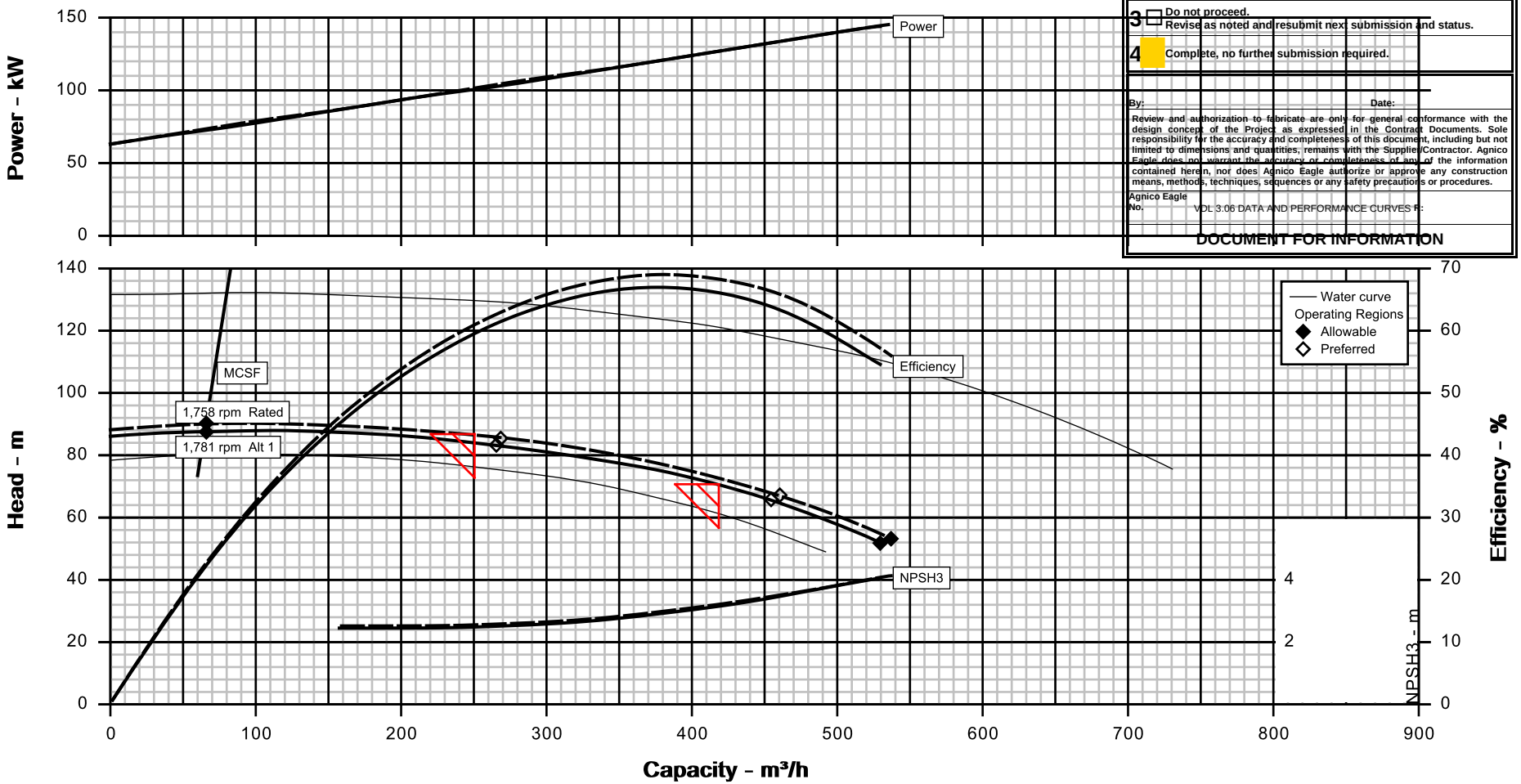


Copyright © 2016 Flowserve. All rights reserved.

FLOWSERVE

# Hydraulic Datasheet

| | | | |
|---|---|---|---|
| Customer | : - | Pump / Stages | : 41K8x6-19OP / 1 |
| Customer reference | : LP-11685 | Based on curve no. | : 41K8x6-19OP-4-60 |
| Item number | : 65PWA69306 A/B/C | Flowserve reference | : 2608211051 |
| Service | : Water line pumps | Date | : February 26, 2021 |

| | Unit | Water line pumps | Alternate 1 | - | - |
|---|---|---|---|---|---|
| **Operating Conditions** | | | | | |
| Capacity | m³/h | 418.0 | 250.0 | - | - |
| Water capacity / CQ | m³/h | - / 1.00 | - / 1.00 | - / - | - / - |
| Normal capacity | m³/h | - | - | - | - |
| Total developed head | m | 70.50 | 86.50 | - | - |
| Water head / CH | m | - / 1.00 | - / 1.00 | - / - | - / - |
| NPSH available (NPSHa) | m | 7.3 | 7.3 | - | - |
| NPSHa less NPSH margin | m | - | - | - | - |
| Maximum suction pressure | kPa.g | 0.0 | 0.0 | - | - |
| Rated suction pressure | kPa.g | 0.0 | 0.0 | - | - |
| **Liquid** | | | | | |
| Liquid type | | Other | Other | - | - |
| Liquid description | | Actiflo-SETP Effluent | Actiflo-SETP Effluent | - | - |
| Temperature / Specific gravity | °C/ | 25 / 1.050 | 25 / 1.050 | - / - | - / - |
| Solid Size - Actual / Limit | mm/mm | - / 22.860 | - / 22.860 | - / - | - / - |
| Viscosity / Vapor pressure | cP/kPa.a | 1.00 / - | 1.00 / - | - / - | - / - |
| **Performance** | | | | | |
| Actual head | m | 70.50 | 86.50 | - | - |
| Hydraulic power | kW | 84.2 | 61.8 | - | - |
| Pump speed | rpm | 1758 | 1781 | - | - |
| Pump overall efficiency (CE=1.00) | % | 66.4 | 61.1 | - | - |
| NPSH required (NPSH3) | m | 3.2 | 2.6 | - | - |
| Rated brake power | kW | 127 | 101 | - | - |
| Maximum brake power | kW | 144 | 146 | - | - |
| Driver power rating | hp / kW | 200 hp / 149 kW | 200 hp / 149 kW | - | - |
| Casing working pressure | kPa.g | 884.5 | 907.8 | - | - |
| (based on shut off @ cut dia/rated SG) | | | | | |
| Maximum allowable | kPa.g | 1999.5 | 1999.5 | - | - |
| Hydrostatic test pressure | kPa.g | 2999.2 | 2999.2 | - | - |
| Estimated rated seal chamber pressure | kPa.g | 114.1 | 140.0 | - | - |
| Impeller diameter, Rated | mm | 403 | 403 | - | - |
| Impeller diameter, Maximum/Minimum | mm/mm | 480 / 387 | 480 / 387 | - / - | - / - |
| Ns / Nss | (Metric un... | 1132 / 14534 | 1132 / 14534 | - / - | - / - |
| Minimum continuous flow | m³/h | 65.8 | 66.7 | - | - |
| Maximum head at rated diameter | m | 86.03 | 88.29 | - | - |
| Flow at BEP | m³/h | 378.6 | 383.6 | - | - |
| Flow as % of BEP | % | 110.4 | 65.2 | - | - |
| Efficiency at normal flow | % | - | - | - | - |
| Impeller diameter ratio (rated/max) | % | 84.0 | 84.0 | - | - |
| Head rise to shut off | % | 22.0 | 2.1 | - | - |
| Total head ratio (rated / max) / (max / rated) | % | 58.2 / 171.7 | 65.0 / 153.8 | - / - | - / - |

**Materials / Specification**

| | | | |
|---|---|---|---|
| Material column code | : CD4 | Pump specification | : - |

**Other Requirements**

Hydraulic selection : No specification
Construction : No specification
Test tolerance : ANSI/HI 14.6 Grade 1B
Driver Sizing : Max Power(MCSF to EOC) using SF
Seal configuration : Single Seal

Copyright © 2016 Flowserve. All rights reserved.

| | | | | | |
|---|---|---|---|---|---|
| Order Number | 1387128 | FLOWSERVE | Date | 15-Apr-21 | Rev 1 |
| Customer | PSI Prolew | | Project Manger | John Fleming | |
| PO Number | OC-1017216 | | Job Number(s) | 6526-S-265-603B | |
| Project / Site | Nunavut | | Pump Model | 41K8X6-19OP-CD4M | |
| End User | Agnico Eagle | Inspection and Test Plan (ITP) | Tag Number(s) | 65PWA69306A/B&C | |

| Activity No. | Activity | Control Procedure Ref. | Acceptance Criteria | Verifying Documents | Inspection Requirements | | |
|---|---|---|---|---|---|---|---|
| | | | | | Flowserve | | |
| 1 | Procurement - Confirm/Acknowledge PO with Order Entry | QP06-001/002 | CUSTOMER PO | | A | | |
| 2 | Material Receiving / Machining - Dimensional & Visual Inspection | QA10-001/2/4 | Drawings | Bill of Material / Machine Drawings | T | R | |
| 3 | Hydrostatic Test - 10 min. (Casing & Cover) | OP09-002 | No visible leakage | Hydro Certification QAF-076 | T, C | R, C | |
| 8 | Impeller Balancing | OP09-001 | ISO 1940-1 Quality Level Grade 6.3 | QAF-073 | T, C | R, C | |
| 9 | Cleanliness - Prior to Assembly | OP15-001 | Power End Components | Cert. of Conf. QAF 122 | T | | |
| 10 | Assembly - Verification of dimensions | QP09-005 | Drawings | Cert. of Conf. QAF 122 | T | | |
| 15 | Pump and Motor Line-up with coupling & Coupling Guard | OP09-004 | GA Drawings | Alignment Data | T | | |
| 16 | Painting | OP15-001 | 6.1 Coating System 1 | 6.1 Coating System 1 | T | | |
| 17 | Final Inspection | QP10-003 | | | T | H | |
| 18 | Preservation, Packing and Preparation for Shipment | OP15-002/3/4 | Complete as Required | Shipping List, tagging & marking, | T | R | |
| **Legend** | **C = Certificate Required W = Witness Point NW = Non-Witness H = Hold Point M = Monitor R = Review A = Random Audit by Flowserve T = 100% Inspection by Flowserve** | | | | | | |

**AGNICO EAGLE** **Vendor Document Status**

1 ☐ Proceed to next submission and status.

2 ☐ Proceed with exceptions as noted to next submission and status.

3 ☐ Do not proceed.
Revise as noted and resubmit next submission and status.

4 ☐ Complete, no further submission required.

By: Date:

Review and authorization to fabricate are only for general conformance with the design concept of the Project as expressed in the Contract Documents. Sole responsibility for the accuracy and completeness of this document, including but not limited to dimensions and quantities, remains with the Supplier/Contractor. Agnico Eagle does not warrant the accuracy or completeness of any of the information contained herein, nor does Agnico Eagle authorize or approve any construction means, methods, techniques, sequences or any safety precautions or procedures.

Agnico Eagle No. VDL 7.03 Insp Test Plan R:

**DOCUMENT FOR INFORMATION**

See Table 10: *Recommended Oils* for recommended lubricants. **DO NOT USE DETERGENT OILS**. The oil must be free of water, sediment, resin, soaps, acid and fillers of any kind. It should contain rust oxidation inhibitors and anti-foam additives. The proper oil viscosity is determined by the bearing housing operating temperature as given in Table 12: *Oil Viscosity Grades*.

Note that on APE4 power ends there is no constant level oiler and no vent/breather (replaced by a plug). This is the ASME B73.1 compliant configuration and is preferred. As stated above, proper oil level is the center of the "bull's eye" sight glass [8221]. Refer to Figure 22

**NOTICE** Only add oil when the pump has not operated for a least five minutes. Due to windage of the bearing housing oil, the observed oil level will appear to drop when the pump is running. This is normal operation. Do not add additional oil while the pump is running.

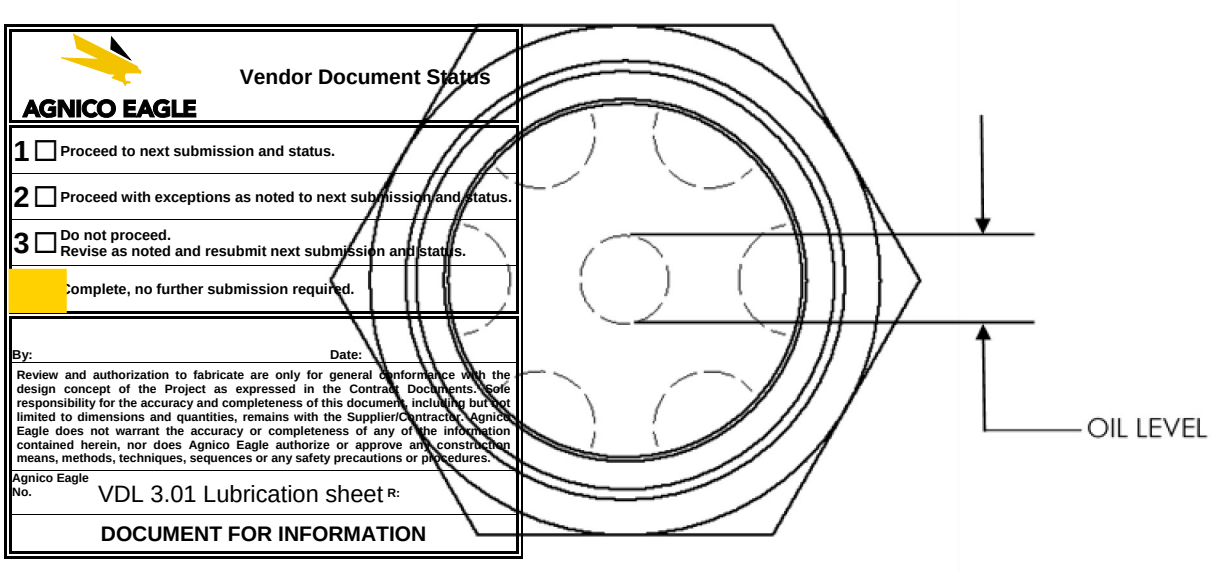


Figure 22: Sight Glass [8221]

In many pumping applications lubricating oil becomes contaminated before it loses its lubricating qualities or breaks down. For this reason, it is recommended that the first oil change take place after approximately 160 hours of operation, at which time, the used oil should be examined carefully for contaminants. During the initial operating period, monitor and record the oil temperature. See Table 12: *Oil Viscosity Grades* for maximum acceptable temperatures. Verify that the initial oil fill viscosity is appropriate for the previously recorded oil temperature. The normal oil change interval is based on temperature and is shown in Table 13: *Lubricant Intervals*.

Table 9: Oil Sump Capacity

| | |
|---|---|
| **Frame 41K** | 2500 ml (84.5 fl. oz.) |
| **Frame 42K** | 2700 ml (91.3 fl. oz.) |

Table 10: Recommended Oils

| | Oil | Oil bath/ Purge oil mist/ pure oil mist lubrication | | |
|---|---|---|---|---|
| **Centrifugal pump lubrication** | Viscosity cSt @ 40 °C | 32 | **46** | 68 |
| | Oil temperature range * | -5 to 58 °C (23 to 136 °F) | **-5 to 70 °C (23 to 158 °F)** | -5 to 80 °C (23 to 176 °F) |
| | Designation according to ISO 3448 and DIN51524 part 2 | ISO VG 32 32 HLP | **ISO VG 46 46 HLP** | ISO VG 68 68 HLP |
| **Oil companies and lubricants** | **BP Castrol** † | Energol™ HLP-HM 32 | **Energol™ HLP-HM 46** | Energol™ HLP-HM 68 |
| | **ESSO** † | Nuto™ HP 32 | **Nuto™ HP 46** | Nuto™ HP 68 |
| | **elf/TOTAL** † | ELFOLNA DS 32 AZOLLA ZS 32 | **ELFOLNA DS 46 AZOLLA ZS 46** | ELFOLNA DS 68 AZOLLA ZS 68 |
| | **LSC® (For oil mist) **** | LSO 32 (Synthetic oil) | **LSO 46 (Synthetic oil)** | LSO 68 (Synthetic oil) |
| | **Mobil** † | Mobil DTE™ 24 | **Mobil DTE™ 25** | Mobil DTE™ 26 |
| | **Q8** † | Q8 Haydn 32 | **Q8 Haydn 46** | Q8 Haydn 68 |
| | **Shell** † | Shell Tellus 32 | **Shell Tellus 46** | Shell Tellus 68 |
| | **Chevron Texaco** † | Rando® HD 32 | **Rando® HD 46** | Rando® HD 68 |
| | **SRS Industrial Lubricants** † | Wiolan HS 32 | **Wiolan HS 46** | Wiolan HS 68 |
| | **Fuchs** † | Renolin CL 32 | **Renolin CL 46** | Renolin CL 68 |
| | **Royal Purple **** | SYNFILM 32 | **SYNFILM 46** | SYNFILM 68 |

( * ) Note that it normally takes 4 hours for bearing temperature to stabilize and the final temperature will depend on the ambient, r/min, pumpage temperature and pump size. Also some oils have a greater viscosity index than the minimum acceptable of 95 (eg Mobil DTE 10 Excel™ Series) which may extend the minimum temperature capability of the oil. Always check the grade capability where the ambient is less than -5 ˚C (23 ˚F). An oil heater is recommended for temperatures below -12 ˚C (14 ˚F).

( † ) Use LSC for oil mist. Oil parameters provide flash point >166 ˚C (331 ˚F), density >0.87 @ 15 ˚C (59 ˚F), pour point of -10 ˚C (14 ˚F) or lower.

( ** ) Normal compounded oils CANNOT be used with oil mist as anti-foam additives need to be avoided. Most oils recommended for wet splash lubrication contain foam inhibitors, as well as, antioxidants and anticorrosion additives, so they are unsuitable for oil mist. Some synthetic lubricants may attack the Nitrile seals when used in the bearing housing. The LSC LSO oils are recommended for oil mist applications. The APE4 and OPE4 power end are equipped with fluoroelastomers O-rings, for compatibility with synthetic lubricants.

Where the ambient temperature is very low, special lubricants are required. When oil lubrication is utilized and the ambient is less than -5 ˚C (23 ˚F), ensure the oil pour point is at least 15 ˚K (27 ˚F) below the lowest anticipated ambient temperature, and ensure the upper operating range of the oil is not exceeded. IS0 VG 46 oil is generally selected for an initial lubrication schedule, when ambient temperatures are expected to between 7 ˚C (45 ˚F) and 32 ˚C (90 ˚F).

Other drivers and gearboxes, if appropriate, should be lubricated in accordance with their manuals.

Table 11: Recommended Greases

| | |
|---|---|
| **General Purpose Grease** | Mobil Polyrex™ EM (or compatible) Polyurea with mineral oil. Factory fill. 0.885g/ml |
| **Food Grade** | Klübersynth UH1 64-62. (NLGI 2) NSF H1 registered, complies with FDA 21 CFR § 178.3570, 0.920g/ml |
| **Low Temp** | Aeroshell 22 -60 to 38 °C (-76 to 100 °F), 0.868g/ml<br>Aeroshell 7 -35 to 60 °C (-31 to 140 °F), 0.966g/ml |

**Note:** Grease lubricated pumps and electric motors are supplied pre-greased.

Table 12: Oil Viscosity Grades

| Maximum Oil Temperature | ISO Viscosity Grade | Minimum Viscosity Index |
|---|---|---|
| Up to 58 °C (136 °F) | 32 | 95 |
| Up to 70 °C (158 °F) | 46 | 95 |
| Up to 80 °C (176 °F) | 68 | 95 |
| Up to 90 °C (194 °F) | 100 | 95 |

**NOTICE** **The maximum temperature that the bearings can be exposed to is 105 ˚C (220 ˚F).**

Table 13: Lubricant Intervals*

| Lubricants | Under 60 °C (140 °F)*** | 60-70 °C (140-158 °F)*** | 71-80 °C (158-176 °F)*** | 80-90 °C (176-194 °F)*** |
|---|---|---|---|---|
| Grease | 12 months | 6 months | 3 months | 1.5 months |
| Mineral oil | 12 months | 6 months | 3 months | 1.5 months |
| Synthetic oil** | 24 months | 18 months | 18 months | 18 months |

( * ) Assuming good maintenance and operation practices, and no contamination.
( ** ) May be increased to 36 months after initial oil change with APE4 power end.
( *** ) Bearing temperatures up to 16 ˚C (30 ˚F) higher than housing.

#### 5.3.2.2 Re-greaseable: RPE4

**Single shielded re-greaseable bearings**

When the grease lubrication option is specified the bearing housing [3200] is equipped with, a single shielded inboard (radial) bearing [3011], outboard (thrust) bearing retainer [2530] with integral grease shield, oil return blocking pin [6810], grease fittings [3853.1 & .2] and an inboard (radial) bearing grease relief fitting [9220].

**NOTICE** **The orientation of the bearing shield, as shown in Figure 23**

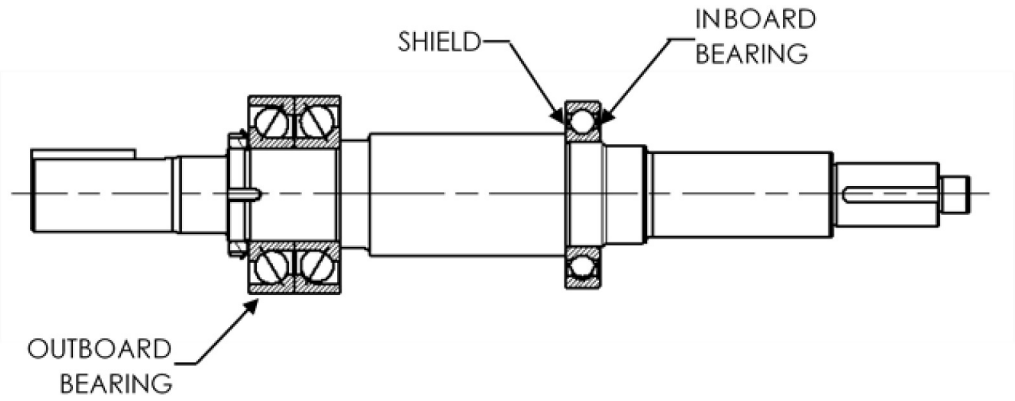


Figure 23: Bearing Shield Orientation

Pump bearings are packed with Mobil Polyrex™ EM grease prior to assembly. See Table 13: *Lubricant Intervals* for the recommend re-lubrication interval. For re-lubrication, a grease with the same type base (polyurea) and oil (mineral) should be used. To re-grease the radial bearing, add grease to the inboard grease fitting until grease exits the relief fitting on the opposite side of the bearing housing. To re-grease the thrust bearing, add the measured amount of grease specified in Table 14: *Grease Lubrication Amount*. Refer to Figure 24 for the grease fitting locations. After eight (8) re-lubrication intervals or three (3) years, it is recommended that the power end be disassembled and thoroughly cleaned, removing any used grease. See Section 8 for complete maintenance instructions.

**NOTICE** **Do not intermix greases shown in Table 11**: *Recommended Greases*. **They are not compatible.**

Table 14: Grease Lubrication Amount**

| Power End | Initial lube* | Re-lubrication |
|---|---|---|
| Frame 41K inboard | 77g | 24g |
| Frame 41K outboard | 125g | 66g |
| Frame 42K inboard | 115g | 31g |
| Frame 42K outboard | 173g | 82g |

(*) If new bearings are not lubricated, they should be hand packed, approximately 70% of the open bearing volume, with the initial lube quantity prior to installation.
(**) Listed quantities are for Polyrex™EM with a density of 0.885g/ml. Grease quantity must be adjusted for the density of the grease applied. Multiply the ratio of {0.885/grease density} by the quantities listed to arrive at the required amount in grams.

AGNICO EAGLE
FLOWSERVE

**Vendor Document Status**

1 ☐ Proceed to next submission and status.

2 ☐ Proceed with exceptions as noted to next submission and status.

3 ☐ Do not proceed.
Revise as noted and resubmit next submission and status.

4 ☐ Complete, no further submission required.

By: Date:

Review and authorization to fabricate are only for general conformance with the design concept of the Project as expressed in the Contract Documents. Sole responsibility for the accuracy and completeness of this document, including but not limited to dimensions and quantities, remains with the Supplier/Contractor. Agnico Eagle does not warrant the accuracy or completeness of any of the information contained herein, nor does Agnico Eagle authorize or approve any construction means, methods, techniques, sequences or any safety precautions or procedures.

Agnico Eagle No. VDL 3.11 Preliminary general arrangement dwg R:

**DOCUMENT FOR INFORMATION**

# Full Page GA Drawing

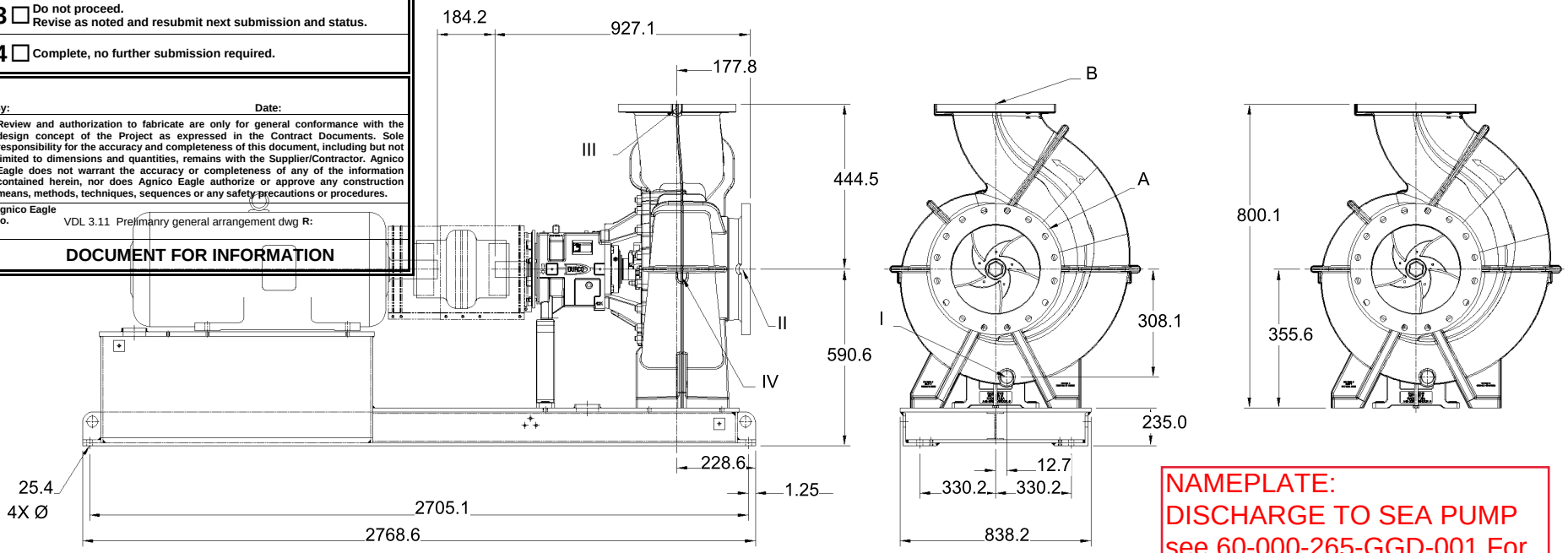


NAMEPLATE:
DISCHARGE TO SEA PUMP
see 60-000-265-GGD-001 For nameplate information requested.

General Notes:

1. Consult User Instruction Manual before pump installation.
2. Installation dimensions are +/- .13" (3 mm) unless otherwise noted.
3. Foundation bolts and piping should not be set rigidly before receipt of equipment.
4. Allow a minimum of .75" (19 mm) under the baseplate for adjustment and grouting.
5. All holes in flanges straddle centerlines.
6. Recheck alignment after the unit reaches operating conditions.
7. Piping, foundations, and systems are the responsibility of others. Flowserve Pump Division (FPD) data and comments are offered as an aid, but FPD cannot assume responsibility for the system design or operation. It is recommended that a specialist skilled in this area be consulted to ensure a successful installation.
8. Use only certified prints for construction.

Total weight?

AGNICO EAGLE MINE MELIADINE
OC-1017215

DO NOT SCALE DRAWING

-

| Connection Table | | |
|---|---|---|
| Item | Description | Connection Type |
| A | Suction Flange | ASME B16.5, 150#, 8.00" F.F. |
| B | Discharge Flange | ASME B16.5, 150#, 6.00" F.F. |
| I | Casing Drain | 3/4"" NPT - Plugged |
| II | Suction Tap | No Suction Tap Provided |
| III | Discharge Tap | 1/2" NPT - Plugged |
| IV | Tap IV | No Tap IV Provided |

| | | | | | |
|---|---|---|---|---|---|
| Customer | : - | Pump size & type | : 41K8x6-19OP | Drawing number | : - |
| Item number | : 65PWA69306 A/B/C | Pump speed / Stages | : 1758 rpm / 1 | Date | : February 26, 2021 |
| Service | : Water line pumps | Flow / Head | : 418.0 m³/h / 70.50 m | Certified by / Date : | : - |
| Customer PO # | : - | Driver power / Frame | : 200 hp / 149 kW / 447T | Seal type | : ISC2 Pusher |
| Flowserve reference | : 2608211051 | Volts / Phase / Hz | : 575 / 3 / 60 Hz | Seal flush plan | : - |

Copyright © 2016 Flowserve. All rights reserved.

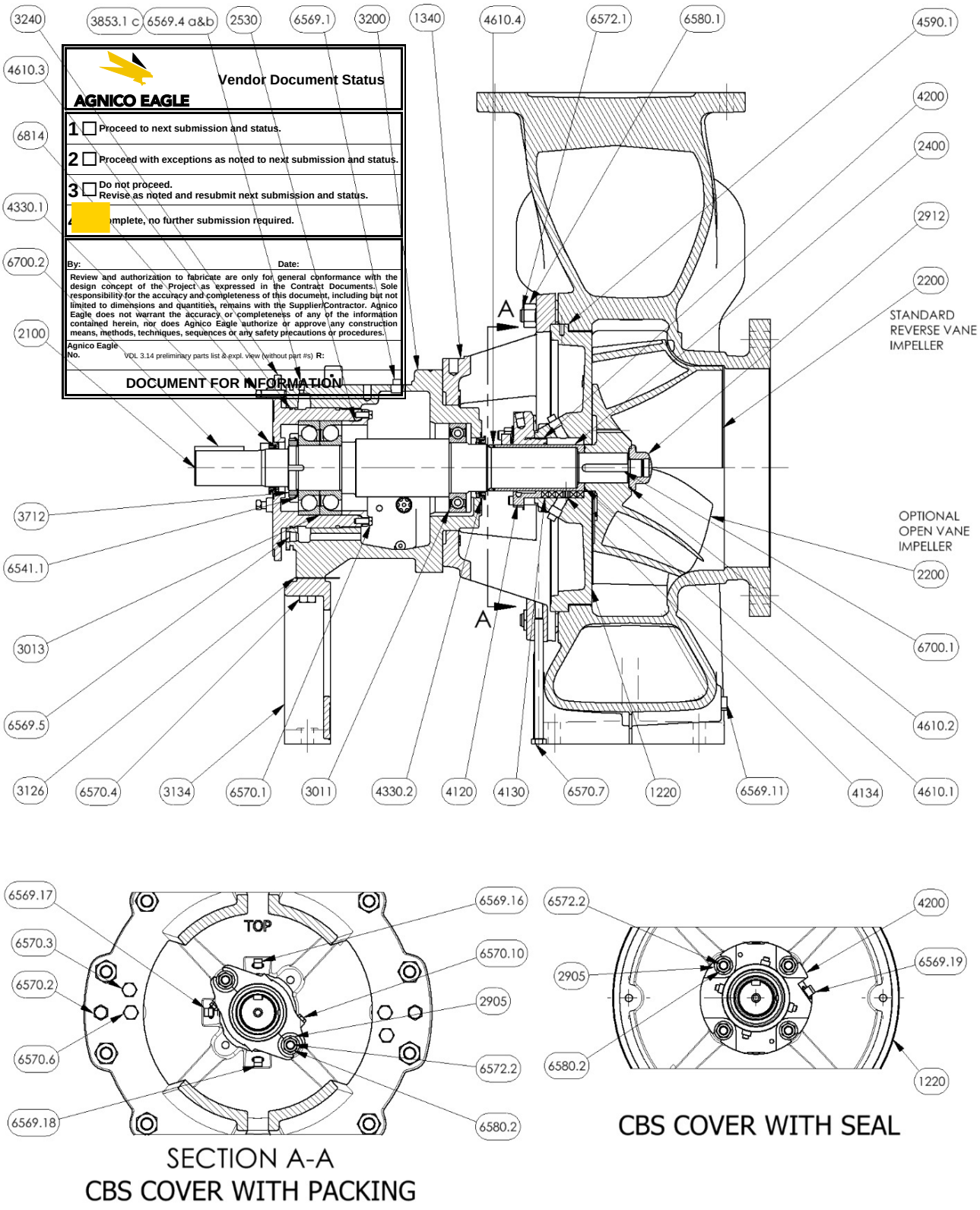


Figure 30: Sectional of pump with APE4 & CBS cover

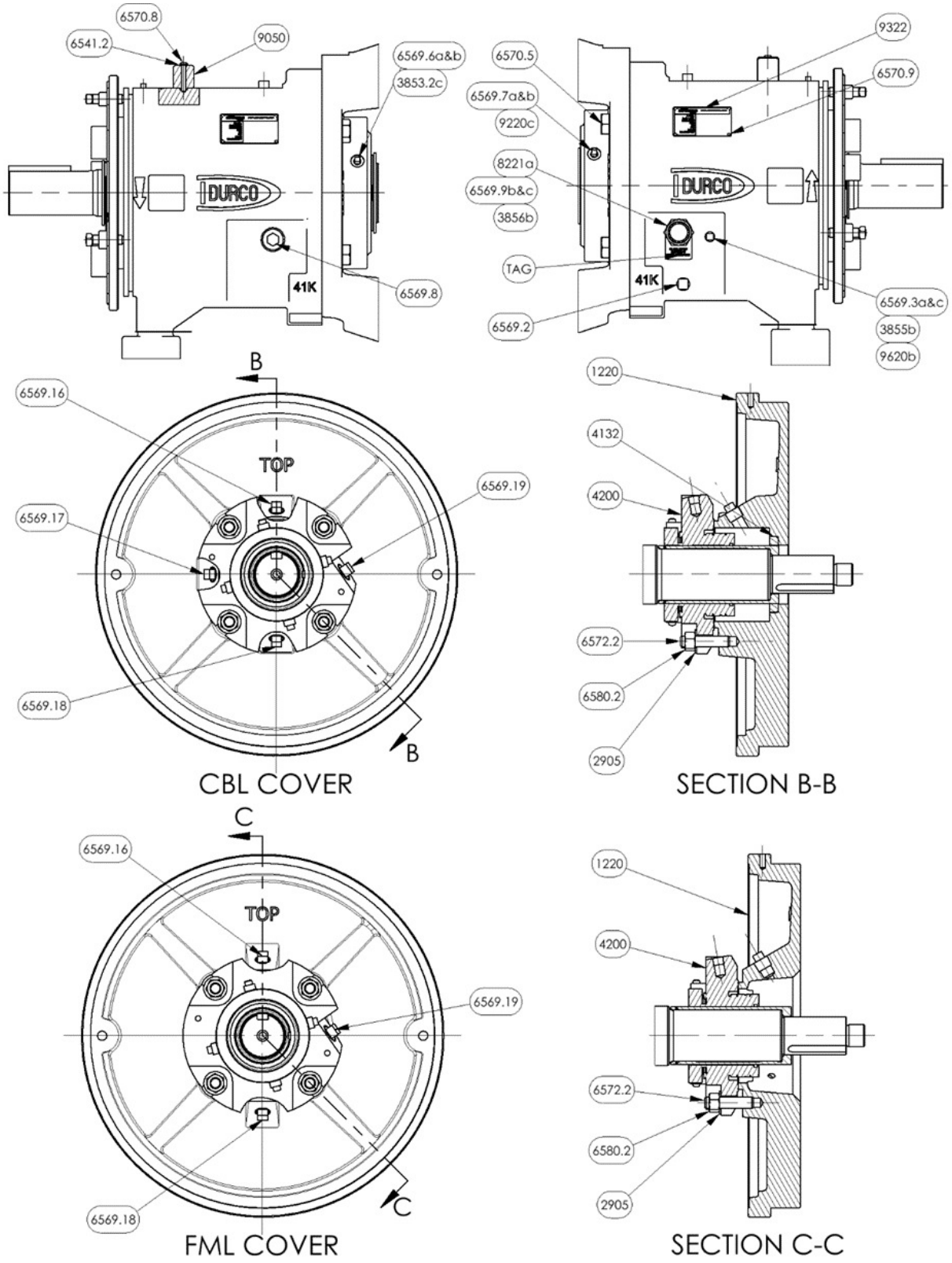


Figure 31: Sectional of APE4 bearing housing, CBL & FML Covers

Table 22: Parts List

| ITEM | TITLE | ITEM | TITLE |
|---|---|---|---|
| 1100 | Casing | 6569.2 | Plug- Drain (magnetic) [a] |
| 1220 | Casing Cover | 6569.3 | Plug – Oiler Tap [a / c / d] |
| 1340 | Adapter | 6569.4 | Plug – Thrust bearing [a / b / d] |
| 2100 | Shaft | 6569.5 | Plug – Thrust Bearing Drain Port |
| 2200 | Impeller RV/OP | 6569.6 | Plug – Radial Bearing (right) [a / b / d] |
| 2400 | Shaft Sleeve | 6569.7 | Plug – Radial Bearing (left) [a / b / d] |
| 2530 | Retaining Ring (oil) [a / b / d] | 6569.8 | Plug – Sight Glass (right) |
| 2530 | Retaining Ring (grease) [NS / c] | 6569.9 | Plug – Sight Glass (left) [NS / b / c / d] |
| 2905 | Plain Washer | 6569.11 | Plug – Casing Drain (optional) |
| 2912 | Impeller Nut | 6569.12 | Plug – Casing Suction (optional) [NS] |
| 3011 | Radial Bearing w/o shield [a / b / d] | 6569.13 | Plug – Casing Discharge (optional) [NS] |
| 3011 | Radial Bearing with shield [NS / c] | 6569.16 | Plug – Cover Seal Chamber (optional-FML) |
| 3013 | Thrust Bearing | 6569.17 | Plug – Cover Seal Chamber, Flush (optional) |
| 3126 | Shim - Foot | 6569.18 | Plug – Cover Seal Chamber, Bottom (optional) |
| 3134 | Foot – Bearing housing | 6569.19 | Plug – Mechanical Seal |
| 3200 | Bearing housing | 6570.1 | Cap Screw – Bearing Retainer |
| 3240 | Bearing carrier | 6570.2 | Cap Screw – Jack Bolts, Casing |
| 3712 | Locknut - Shaft | 6570.3 | Cap Screw – Jack Bolts, Cover |
| 3853.1 | Grease Fitting – Thrust Bearing [NS / c] | 6570.4 | Cap Screw – Bearing Housing Foot |
| 3853.2 | Grease Fitting – Radial Bearing [NS / c] | 6570.5 | Cap Screw – Adapter |
| 3855 | Oiler Opto-Matic [NS / b] | 6570.6 | Cap Screw – Token Bolt |
| 3856 | Oiler Watchdog [NS / b] | 6570.7 | Cap Screw – Adapter Support |
| 4120 | Gland Packing | 6570.8 | Button Socket Cap Screw – Beacon (optional) |
| 4130 | Packing | 6570.9 | Driver Screw – Nameplate |
| 4132 | Throat Bushing | 6570.10 | Cap Screw – Split Gland |
| 4134 | Lantern Ring - Packing | 6572.1 | Stud – Casing |
| 4200 | Mechanical Seal | 6572.2 | Stud – Gland |
| 4330.1 | Bearing Isolator (outboard) | 6580.1 | Nut – Casing |
| 4330.2 | Bearing Isolator (inboard) | 6580.2 | Nut – Gland |
| 4590.1 | Gasket – Casing / Cover | 6700.1 | Key – Impeller |
| 4610.1 | O-Ring – Impeller | 6700.2 | Key – Coupling |
| 4610.2 | O-Ring – Impeller Nut | 6810 | Pin – Bearing Housing [NS / c / d] |
| 4610.3 | O-Ring – Bearing Carrier | 6814 | Set Screw – Bearing Carrier |
| 4610.4 | O-Ring – Sleeve | 8221 | Gauge – Sight Glass [a] |
| 6521 | Breather [NS / b] | 9050 | IPS Beacon™ 2 (optional) |
| 6541.1 | Lock Washer – Shaft | 9322 | Nameplate |
| 6541.2 | Lock Washer – Beacon (optional) | 9220 | Relief Fitting [NS / c] |
| 6569.1 | Plug – Vent [a / c / d] | 9620 | Nipple [NS / b] |
| 6569.2 | Plug – Drain [b / c] | TAG | Tag – Oil Level [a / b] |

**Note:** The following subscripts also apply for Figures: 30 and 31 Only
APE4 power end is shown in sectionals
a = APE4 power end b = OPE4 power end c = RPE4 power end d = MPE4 power end NS = Not Shown in Sectionals

FLOWSERVE

USER INSTRUCTIONS

# Durco® Mark 3™ Group 4 High-Capacity Chemical Process Pump

Mark 3 standard single stage, radially split foot mounted pumps

## Installation
## Operation
## Maintenance

75715555 EN

***Original Instructions***

⚠ ***These instructions must be read prior to installing, operating, and maintaining this equipment.***




Experience In Motion

## Copyright

All rights reserved. No part of these instructions may be reproduced, stored in a retrieval system or transmitted in any form or by any means without prior permission of Flowserve Corporation.

## Document Version

Release, Date: 13-SEP-2018

## CONTENTS

**1 General Information ..... 4**
1.1 Scope of manual ..... 4
1.2 Disclaimer ..... 5
1.3 Certification instruction ..... 5
1.4 Units ..... 5
**2 Safety Information ..... 6**
2.1 Intended use ..... 6
2.2 Safety symbols and description ..... 6
2.3 General hazard sources ..... 8
2.4 Potential explosive areas ..... 11
2.5 Responsibility of the operating company ..... 16
2.6 Qualified personnel and targeted group ..... 16
2.7 Industrial health and safety measures ..... 16
2.8 Protective equipment ..... 16
**3 Product Description ..... 17**
3.1 General product description ..... 17
3.2 Design ..... 18
3.3 Scope of delivery ..... 19
3.4 Function description ..... 19
3.5 Connections ..... 19
3.6 Controls ..... 35
3.7 Accessories ..... 35
3.8 Tools, equipment, and fixtures ..... 35
**4 Packaging, Transportation and Storage ..... 36**
4.1 Consignment receipt ..... 36
4.2 Unpacking ..... 36
4.3 Packaging ..... 37
4.4 Transportation ..... 38
4.5 Storage and packing ..... 45
**5 Installation ..... 47**
5.1 Inspection and preparation ..... 47
5.2 Baseplate mounting ..... 48
5.3 Installation ..... 52
**6 Commissioning ..... 64**
**7 Operation ..... 65**
7.1 Start-up ..... 65
7.2 Normal operation ..... 65
7.3 Cleaning, disinfecting, and sterilizing ..... 71

7.4 Shut-down ..... 71
**8 Maintenance, disassembly, inspection of parts, & assembly ..... 72**
8.1 Maintenance procedure ..... 72
8.2 Schedule ..... 74
8.3 Special tools ..... 75
8.4 Required replacement parts for maintenance ..... 75
8.5 Disassembly ..... 76
8.6 Inspection of parts ..... 85
8.7 Power end assembly ..... 97
8.8 Wet end assembly ..... 106
8.9 Post maintenance inspection ..... 117
8.10 Spare parts stocking recommendation ..... 118
**9 Troubleshooting Guide ..... 121**
**10 Decommissioning and Recommissioning ..... 124**
10.1 Decommissioning ..... 124
10.2 Recommissioning ..... 124
**11 Returns and Disposal ..... 125**
11.1 Returns ..... 125
11.2 Disposal and recycling ..... 125
**12 Technical Data ..... 126**
12.1 Equipment dimensions and weights ..... 126
12.2 Nameplate ..... 127
12.3 Operating limits ..... 128
12.4 Torque requirements ..... 128
12.5 Noise level ..... 128
12.6 Energy rating ..... 130
**Annex A: Declaration of Conformity ..... 131**
**Annex B: Technical Terms, Acronyms, and Abbreviations ..... 132**
**Annex C: Additional Sources of Information ..... 133**
**Annex D: Supplementary User Instructions ..... 135**
**NOTES: ..... 136**

# 1 General Information

## 1.1 Scope of manual

**These instructions must be kept close to the product's operating location or directly with the product.**

**These instructions must be read prior to installing, operating, using, or maintaining the equipment in any region worldwide. The equipment must not be put into service until all of the safe operating conditions noted in the instructions have been met. Failure to comply with the information provided in the User Instructions is considered to be misuse. Personal injury, product damage, delay in operation, or product failure caused by misuse are not covered by the Flowserve warranty.**

Flowserve products are designed, developed and manufactured with state-of-the-art technologies in modern facilities. The unit is produced with great care and commitment to continuous quality control, utilizing sophisticated quality techniques, and safety requirements.

Flowserve is committed to continuous quality improvement and being at your service for any further information about the product in its installation and operation or about its support products, repair and diagnostic services.

The following user information covers the Flowserve, Durco, Mark 3 Group 4:
English ASME Units - Class 150,
Suction NPS 8" – 16"
Discharge NPS 4" – 16"
Comes with or without Flowserve IPS-Beacon™ equipment

These instructions are intended to familiarize the reader with the product and its permitted use. Operating the product in compliance with these instruction is important to help ensure reliability in service and avoid risks. These instructions may not take into account all local regulations; ensure such regulations are observed by all, including those installing the product. Always coordinate repair activities with operations personnel, and follow all plant safety requirements and applicable safety and health legislation.

Supplementary user instructions determined from the contract requirements for inclusion into User Instructions for buy-out equipment such as driver, instrumentation, controller, sub-driver, seals, seal system, mounting component etc. If required, copies of other information sent separately to the Purchaser should be obtained from the Purchaser and retained with these User Instructions.

The typical general arrangement drawing and any specific drawings required by the contract will be sent to the Purchaser separately unless the contract specifically calls for these to be included into the User Instructions. If required, copies of other drawings sent separately to the Purchaser should be obtained from the Purchaser and retained with these User Instructions.

If any changes, agreed with Flowserve Solution group, are made to the product after it is supplied, a record of the details should be maintained with these User instructions.

## 1.2 Disclaimer

**Information in this User Instruction is believed to be complete and reliable. In spite of all Flowserve's efforts to provide comprehensive information and instructions, sound engineering and safety practices should always be used. Please consult with a qualified engineer.**

Flowserve manufactures products to applicable International Quality Management System Standards as certified and audited by external Quality Assurance organizations. Genuine parts and accessories have been designed, tested, and incorporated into the products to help ensure continued product quality and performance in use. As Flowserve cannot test parts and accessories sourced from other vendors the incorrect incorporation of such parts and accessories may adversely affect the performance and safety features of the product. The failure to properly select, install, or use authorized Flowserve parts and accessories is considered to be misuse. Damage or failure caused by misuse is not covered by Flowserve's warranty. In addition, any modification of Flowserve products or removal of original components may impair the safety of these products in use.

## 1.3 Certification instruction

Certificates defined in the Contract requirements are provided with these instructions where applicable. Examples are certificates for CE marking and ATEX marking etc. If required, copies of other certificates sent separately to the Purchaser should be obtained from the Purchaser for retention with this User Instruction.

## 1.4 Units

This product was designed with United States customary system (USC) units. However, the primary system of units in this document is the International System of Units (SI). USC units are display in (parenthesize).

# 2 Safety Information

## 2.1 Intended use

This product has been selected to meet the specifications of your purchase order. The acknowledgement of these conditions has been sent separately to the Purchaser. A copy should be kept with these instructions.

**⚠ The product/system must not be operated beyond the parameters specified for the application. If there is any doubt as to the suitability of the product/system for the application intended, contact Flowserve for advice, quoting the serial number.**

- Installing, operating, or maintaining the product/system in any way that is not covered in this User Instruction could cause death, serious personal injury, or damage to the equipment. This includes any modification to the product/system or use of the parts not provided by Flowserve.
- Only operate the product/system when it has successful passed all inspection acceptance criteria
- Do not operate the product/system in a partially assembled condition.
- If the conditions of service on the customer's purchase order change (i.e. pumping fluid, temperature, or duty conditions) it is requested that the user seeks written agreement from Flowserve before start up.
- Observe equipment labels, such as arrows designating the direction of rotation, warning signs, etc., and keep them in a legible condition. Replace any damaged and/or illegible labels immediately.

If the conditions of service on your purchase order are going to be changed (for example liquid pumped, temperature or duty) it is requested that user seeks the written agreement of Flowserve before start up.

## 2.2 Safety symbols and description

This User Instruction contains specific safety markings where non-observance of an instruction would cause a hazard. The specific safety markings can be found in Table 1: *Definition of safety symbols and markings*, and Table 2: *Additional symbols*.

Table 1: Definition of Safety Symbols & Markings

| Symbol | Description |
|---|---|
| DANGER | **DANGER**<br>This symbol indicates a hazardous situation which, if not avoided, will result in death or serious injury |
| WARNING | **WARNING**<br>This symbol indicates a hazardous situation which, if not avoided, could result in death or serious injury |
| CAUTION | **CAUTION**<br>This symbol indicates a hazardous situation which, if not avoided, could result in minor or moderate injury |
| SAFETY INSTRUCTIONS | **SAFETY INSTRUCTIONS**<br>This symbol indicates specific safety-related instruction or procedures |
| NOTICE | **NOTICE**<br>This symbol is used to address practices not related to physical injury |
|  | This is the safety alert symbol. It is used to alert you to potential physical injury hazards. Obey all safety messages that follow this symbol to avoid possible injury or death. |

Table 2: Additional Symbols

| Symbol | Description |
|---|---|
|  | **ELECTRICAL HAZARD**<br>This symbol indicates electrical safety instructions where non-compliance would affect personal safety and could result in loss of life |
|  | **TOXIC HAZARD**<br>This symbol indicates "hazardous substances and toxic fluid" safety instructions where non-compliance would affect personal safety and would damage the equipment or property |
|  | **ATEX EXPLOSION PROTECTION**<br>This symbol indicates explosive atmosphere marking according to ATEX. It is used in safety instructions where non-compliance in the hazardous area would cause the risk of an explosion |
|  | **DO NOT USE DRY CLOTH**<br>This symbol is used in safety instructions to remind not to rub non-metallic surfaces with a dry cloth; ensure the cloth is damp. It is used in safety instructions where non-compliance in the hazardous area would cause risk of an explosion. |

## 2.3 General hazard sources

This is a summary of conditions and actions to help prevent injury to personnel and damage to the environment. For products used in potentially explosive atmospheres section 2.4 also applies.

### 2.3.1 Mechanical hazards

**Lifting limits and guidelines**

The load values mentioned in this section are Flowserve recommendations only. All lifting must be done in compliance with site safety protocol, local regulations, and related industry standards.

 Many precision parts have sharp corners which require appropriate personal protective equipment during handling. Prior to any attempt to lift an item, personnel must first determine the approximate weight and stability of the load.

- Large, unstable, or awkward loads should always be handled with the assistance of additional personnel or appropriate mechanical means.
- Loads in excess of 23 kg (50 lb.) should only be lifted by appropriate mechanical means and in accordance with current local legislation or with the assistance of additional personnel.
- Lifting items less than 23 kg (50 lb.) may be prohibited without assistance if the lift is repetitive and/or awkward (i.e., away from the body, above the shoulders or below the knees) thus placing excessive stress on the personnel.
- Repetitive lifting of any kind should be evaluated as part of a documented end-user safety program.

See section 4.4, Transportation for proper lifting instructions.

### 2.3.2 Electrical hazards

 NEVER DO MAINTENANCE WORK WHEN THE UNIT IS CONNECTED TO POWER (Lock out)

### 2.3.3 Hazardous Liquids

 When the pump is handling hazardous liquids, care must be taken to avoid exposure to the liquid by appropriate siting of the pump by limiting personnel access and by operator training. If the liquid is flammable and/or explosive, strict safety procedures must be applied.

**⚠CAUTION GLAND PACKING MUST NOT BE USED WHEN PUMPING HAZARDOUS LIQUIDS**

**⚠CAUTION PREVENT EXCESSIVE EXTERNAL PIPE LOAD**

Do not use pump as a support for piping. Do not mount piping expansion joints, unless allowed by Flowserve in writing, so that their force, due to internal pressure, acts on the pump flange. When applied on a pressure line, tie rods limiting the elongation of the joint and take the axial thrust created by the internal pressure must be used.

 **⚠CAUTION NEVER RUN THE PUMP DRY OR WITHOUT PROPER PRIME** (Casing flooded)

 **⚠CAUTION NEVER OPERATE THE PUMP WITH THE DISCHARGE VALVE CLOSED**. Unless otherwise instructed at a specific point in the User Instructions. See section 6, *Commissioning*, & Section 7, *Operation*

 **⚠CAUTION NEVER OPERATE THE PUMP WITH SUCTION VALVE CLOSED**. It should be fully opened when the pump is running

 **⚠CAUTION NEVER OPERATE THE PUMP AT ZERO FLOW OR FOR EXTENDED PERIODS BELOW THE MINIMUM CONTINUOUS FLOW**

 **⚠CAUTION DO NOT RUN THE PUMP AT ABNORMALLY HIGH OR LOW FLOW RATES**

Operating at a flow rate higher than normal or at a flow rate with no back pressure on the pump may overload the motor and cause cavitation. Low flow rates may cause a reduction in pump/bearing life, overheating of the pump, instability and cavitation/vibration

 **⚠CAUTION ENSURE CORRECT LUBRICATION**

See section 5.3.2, *Pump lubricants*

**⚠CAUTION NEVER EXCEED THE MAXIMUM DESIGN PRESSURE (MDP) AT THE TEMPERATURE SHOWN ON THE PUMP NAMEPLATE**

See section 7, for pressure versus temperature ratings based on the material of construction

**⚠CAUTION THE PUMP SHAFT MUST TURN CLOCKWISE WHEN VIEWED FROM THE MOTOR END**

It is absolutely essential that the rotation of the motor be checked before installation of the coupling spacer and starting the pump. Incorrect rotation of the pump for even a short period can unscrew the impeller nut, which can cause significant damage.

### 2.3.4 Additional hazards

**⚠ GUARDS MUST NOT BE REMOVED WHILE THE PUMP IS OPERATIONAL**

**⚠ NEVER OPERATE THE PUMP WITHOUT THE COUPLING GUARD AND ALL OTHER SAFETY DEVICES CORRECTLY INSTALLED**

**⚠ DRAIN THE PUMP AND ISOLATE PIPEWORK BEFORE DISMANTLING THE PUMP**

The appropriate safety precautions should be taken where the pumped liquids are hazardous.

**⚠ NEVER APPLY HEAT TO REMOVE IMPELLER**

Trapped lubricants or vapor could cause an explosion.

**⚠ FLUOROELASTOMERS** (When fitted)

When a pump has experienced temperatures over 250 ˚C (482 ˚F), partial decomposition of fluoroelastomers (example: Viton®, ASTM D1418 1629 - FKM) will occur. In this condition these are extremely dangerous and skin contact must be avoided.

**⚠ THERMAL SHOCK**

Rapid changes in the temperature of the liquid within the pump can cause thermal shock, which can result in damage or breakage of components and should be avoided.

**HOT & COLD PARTS**

If hot or freezing components or auxiliary heating equipment can present a danger to operators and persons entering the immediate area, action must be taken to avoid accidental contact (such as shielding). If complete protection is not possible, the machine access must be limited to maintenance staff only with clear visual warnings and indicators to those entering the immediate area. Note: bearing housings must not be insulated and drive motors and bearings may be hot.

**If the temperature is greater than 80 ˚C (175 ˚F) or below -5 ˚C (23 ˚F) in a restricted zone, or exceeds local regulations, action as above shall be taken.**

## 2.4 Potential explosive areas

Measures are required to:

- Avoid excess temperature
- Prevent build-up of explosive mixtures
- Prevent the generation of sparks
- Prevent leakages
- Maintain the pump to avoid hazard

All instructions for equipment installed in potentially explosive atmospheres must be followed to help ensure explosion protection. For ATEX, both electrical and non-electrical equipment must meet the requirements of the European Explosion Protection Directive 2014/34/EU. Always observe the regional legal Ex requirements, e.g. Ex electrical items outside the EU may be required certified to other than ATEX e.g. IECEx, UL.

### 2.4.1 Scope of compliance

Use equipment only in the zone for which it is appropriate. Always check that all equipment is suitably rated and/or certified for the classification of the specific atmosphere in which they are to be installed.

Where Flowserve has supplied only the bare shaft pump, the Ex rating applies only to the pump. The party responsible for assembling the ATEX pump set shall select the coupling, driver and any additional equipment, with the necessary CE Certificate/Declaration of Conformity establishing it is suitable for the area in which it is to be installed.

The output from a variable frequency drive (VFD) can cause additional heating affects in the motor. On pump installations controlled by a VFD, the ATEX Certification for the motor must state that it covers the situation where electrical supply is form the VFD. This particular requirement still applies even if the VFD is in a safe area.

### 2.4.2 Marking

It is a legal requirement that machinery and equipment put into service within certain regions of the world shall conform with the applicable CE Marking Directives covering Machinery and, where applicable, Low Voltage Equipment, Electromagnetic Compatibility (EMC), Pressure Equipment Directive (PED) and Equipment for Potentially Explosive Atmospheres (ATEX).

Where applicable, the Directive and any additional Approvals, cover important safety aspects relating to machinery and equipment and the satisfactory provision of technical documents and safety instructions. Where applicable this document incorporates information relevant to these Directives and Approvals.

To confirm the Approvals applying and if the product is CE marked, checked the serial number plate markings and the Certification. (See section 1.3, *Certification instruction*)

An example of ATEX equipment marking is shown below. The actual classification of pump will be engraved on the nameplate.

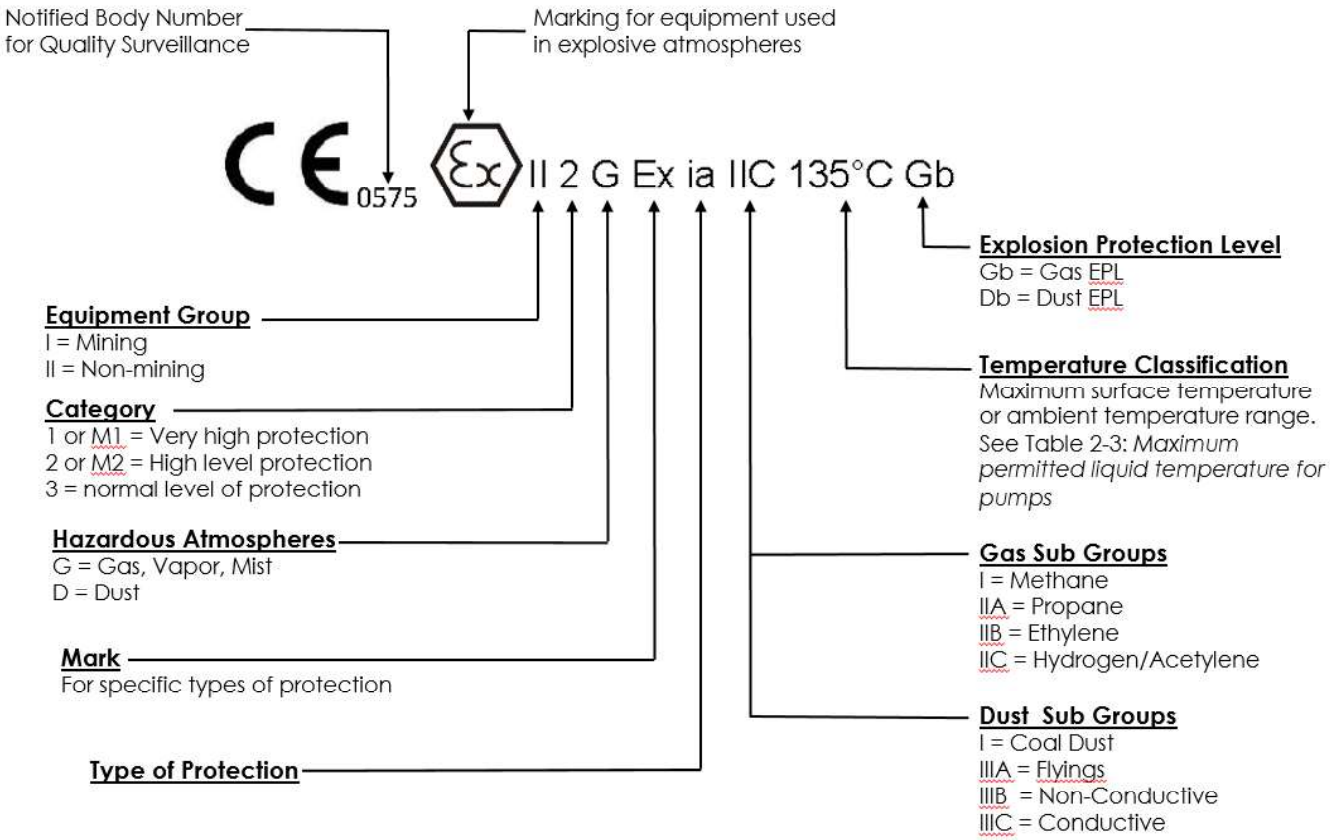


### 2.4.3 Avoiding excessive surface temperatures

ENSURE THE EQUIPMENT TEMPERATURE CLASS IS SUITABLE FOR THE HAZARD ZONE

**Pump liquid temperature**

Pumps have a temperature class as stated in the ATEX Ex rating on the nameplate. These are based on a maximum ambient temperature of 40 ˚C (104 ˚F); refer to Flowserve for higher ambient temperatures.

The surface temperature on the pump is influenced by the temperature of the liquid handled. The maximum permissible liquid temperature depends on the temperature class and must not exceed the values in the table applicable below.

Table 3: Maximum Permitted Temperature

| Temperature class to En 13463-1 | Maximum surface temperature permitted | Temperature limit of liquid handled |
|---|---|---|
| T6 | 85 ˚C (185 ˚F) | Consult Flowserve * |
| T5 | 100 ˚C (212 ˚F) | Consult Flowserve * |
| T4 | 135 ˚C (275 ˚F) | 115 ˚C (239 ˚F) * |
| T3 | 200 ˚C (392 ˚F) | 180 ˚C (356 ˚F) * |

*The table only takes the ATEX temperature class into consideration. Pump design or material, as well as component design or material, may further limit the maximum working temperature of the liquid.

The temperature-rise at the seals/bearings and due to the minimum permitted flow rate is taken into account in the temperatures stated.

**The operator is responsible to ensure the specified maximum liquid temperature is not exceeded.**

Temperature classification "Tx" is used when the liquid temperature varies and when the pump is required to be used in differently classified potentially explosive atmospheres. In this case, the user is responsible for ensuring that the pump surface temperature does not exceed that permitted in its actual installed location.

Do not attempt to check the direction of rotation with coupling element/pins fitted due to risk of severe contact between rotating and stationary components.

Avoid mechanical, hydraulic or electrical overload by using motor overload trips, temperature monitor or a power monitor and perform routine vibration monitoring.

In dirty or dusty environments, make regular checks and remove dirt from areas around close clearances, bearing housings and motors.

Where there is any risk of the pump being run against a closed valve generating high liquid and casing external surface temperature, fit an external surface temperature protection device.

Where the system operation does not ensure control of priming, as defined in these User Instructions, and the maximum permitted surface temperature of the T Class could be exceeded, install an external surface temperature protection device.

### 2.4.4 Preventing the buildup of explosive mixtures

 ENSURE THE PUMP IS PROPERLY FILLED AND VENTED AND DOES NOT RUN DRY

Ensure that the pump and relevant suction and discharge piping system is totally filled with liquid at all times during the pumps operation so that an explosive atmosphere is prevented.

In addition, it is essential to make sure that seal chamber, auxiliary shaft seal systems and any heating and cooling systems are properly filled.

If the operation of the system cannot avoid this condition, fit an appropriate dry run protection device (for example liquid detection or a power monitor).

To avoid potential hazards from fugitive emissions of vapor or gas to atmosphere, the surrounding area must be well ventilated.

### 2.4.5 Preventing sparks

 To prevent a potential hazard from mechanical contact, the coupling guard must be non-sparking for Category 2.

To avoid the potential hazard from random induced current generating a spark, the baseplate must be properly grounded.

 Avoid electrostatic charge. Do not rub non-metallic surfaces with a dry cloth; ensure the cloth is damp.

For ATEX the coupling must be selected to comply with 2014/34/EU. Correct coupling alignment must be maintained.

**Additional requirements for metallic pumps on non-metallic baseplates**

When metallic components are fitted on a non-metallic baseplate they must be individually earthed.

### 2.4.6 Preventing leakage


The pump must only be used to handle liquids for which it has been approved to have the correct corrosion resistance.

Avoid entrapment of liquid in the pump and associated piping due to closing of suction and discharge valves, which could cause dangerous excessive pressures to occur if there is heat input to the liquid. This can occur if the pump is stationary or running.

Bursting of liquid containing parts due to freezing must be avoided by draining or protecting the pump and auxiliary systems.

Where there is the potential hazard of a loss of a seal barrier fluid or external flush, the fluid must be monitored.

If leakage of liquid to atmosphere can result in a hazard, install a liquid detection device.

### 2.4.7 Maintenance to avoid the hazard


CORRECT MAINTENANCE IS REQUIRED TO AVOID POTENTIAL HAZARDS WHICH GIVE A RISK OF EXPLOSION

**The responsibility for compliance with maintenance instructions is with the plant operator**.

To avoid potential explosion hazards during maintenance, the tools, cleaning and painting materials used must not give rise to sparking or adversely affect the ambient conditions. Where there is a risk from such tools or materials, maintenance must be conducted in a safe area.

It is recommended that a maintenance plan and schedule is adopted. (See section 8, *Maintenance*)

## 2.5 Responsibility of the operating company

To ensure personnel safety the operating company must do the following:

- Complete a risk assessment of the site where the product/system will be in operation, by observing the working conditions
- Create site specific work instructions for the operation of the product
- Ensure that the personnel have read and understand all applicable instructions
- Provide regular training to the necessary personnel in regular intervals
- Provide the required personal protective equipment

## 2.6 Qualified personnel and targeted group

All personnel involved in the operation, installation, inspection and maintenance of the unit must be qualified to carry out the work involved. If the personnel in question does not already possess the necessary knowledge and skill, appropriate training and instruction must be provided. If required, the operator may commission the manufacturer / supplier to provide applicable training.

Always co-ordinate repair activities with operation and health and safety personnel, and follow all plant safety requirements and applicable safety and health laws and regulations.

## 2.7 Industrial health and safety measures

Follow industry safety standards including the use of appropriate equipment in required areas.

## 2.8 Protective equipment

Necessary protective equipment including personal protective equipment shall adhere to facility standards.

# 3 Product Description

## 3.1 General product description

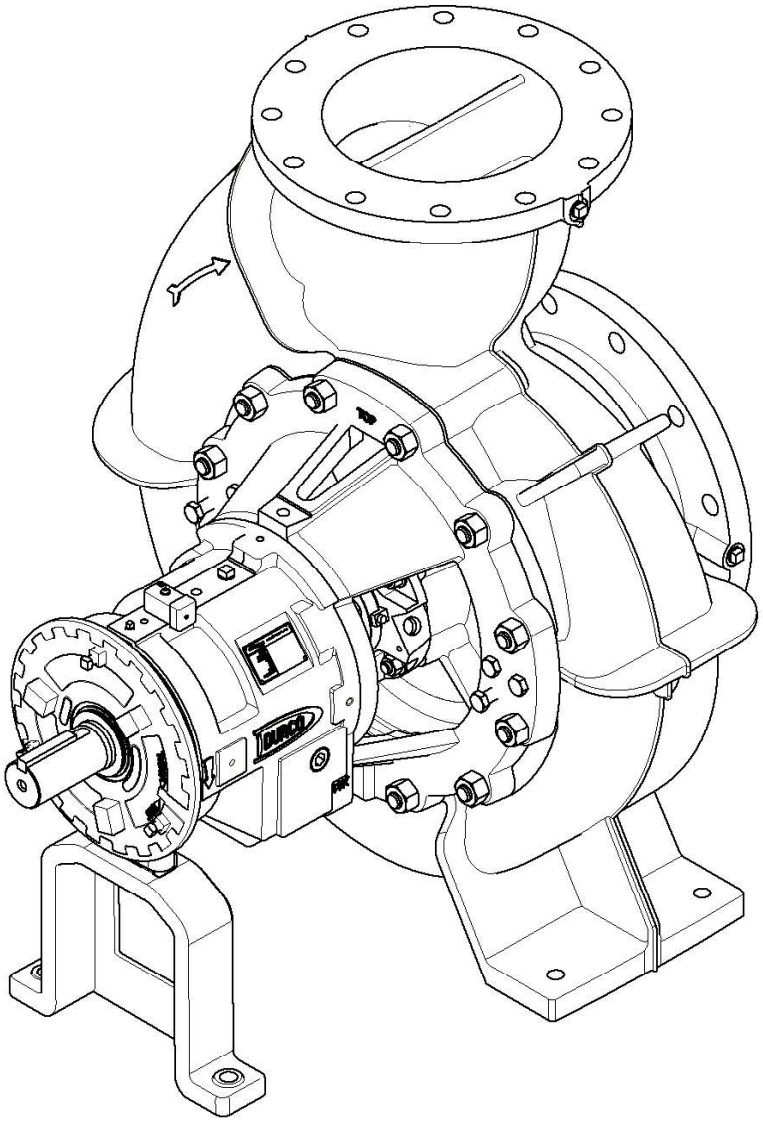

Figure 1: Isometric view of the Mark 3 Group 4

The Flowserve Durco Mark 3 Group 4 product line, is a single stage centrifugal, flexibly coupled, horizontal, foot mounted, end suction, center-line discharge, back pullout pump designed to ASME B73.1 Specification for Horizontal End Suction Centrifugal Pump for Chemical Processing functional requirements.

## 3.2 Design

### 3.2.1 Pump Casing

The casing design permits removal of the back pullout assembly from the casing without disturbing the suction and discharge connections. Tapped holes for jackscrews are provided in the adapter to facilitate removal of the back pullout assembly. The design also avoids disturbing the motor, with use of a spacer coupling with sufficient DBSE (Distance Between Shaft Ends).

### 3.2.2 Impeller

Depending on the configuration, the impeller is either a reverse vane or semi-open design. The attachment is keyed and is protected so not to be wetted by the pumped fluid.

### 3.2.3 Shaft/sleeve

Solid and sleeved shafts are available, supported on bearings, and keyed drive end. Solid and sleeved shafts are designed to limit dynamic shaft deflection at the impeller centerline to not exceed 0.13 mm (0.005in.) within the allowable operating region as specified in ASME B73.1.

### 3.2.4 Pump bearings & lubrication

Anti-friction bearings are fitted as standard and may be either oil bath, oil mist or grease lubricated. Bearings are sized in accordance with ANSI/ABMA-9, ANSI/ABMA-11, and ISO 281. The minimum L10 bearing life is 17,500 hr in the allowable operating region.

### 3.2.5 Bearing Housing

The bearing housing is designed to incorporate four types of lubrication options. The options are ASME B73 Power End (APE4), Oiler Power End (OPE4), Re-greaseable Power End (RPE4) and Oil Mist Power End (MPE4). For details on each configuration and lubricants needed see section 5.3.2, *Pump lubricants*.

### 3.2.6 Seal Chamber (cover)

The seal chamber has a spigot (rabbet) fit between the pump casing and bearing housing adapter for optimum concentricity. The seal chamber can be a cylindrical or a self-venting tapered design with radial flow modifiers, which eliminates fitting the pump with auxiliary seal piping in many services. A packing box may be fitted as an option.

### 3.2.7 Shaft Seal

The mechanical seal(s), attached to the pump shaft, prevents the pumped liquid from entering the environment. When fitted with optional shaft packing, pump liquid will exist the pump during normal operation.

### 3.2.8 Driver

The driver is normally an electric motor. Different drive configurations may be fitted such as internal combustion engines, steam turbines, hydraulic turbines, driven via couplings, belts, gearboxes, drive shafts etc.

### 3.2.9 Accessories

Accessories may be fitted when specified by the customer. The operation and maintenance of these may not be covered in this document.

## 3.3 Scope of delivery

The exact scope of the delivery is stated in the order documentation.

## 3.4 Function description

The Flowserve Mark 3 Group 4 is single-stage centrifugal pump. Mark 3 Group 4 pumps are categorized as a kinetic-energy pump which uses centrifugal force to push the liquid outward from the eye of the impeller where it enters the casing. Differential head can be increased by increasing impeller rotation speed or increasing impeller diameter. The impeller and fluid being pumped are isolated from outside contaminants by packing or mechanical seals. Radial and thrust bearings restrict the movement of the shaft and reduce the fiction of rotation. The Mark 3 Group 4 design is widely accepted and has proven to be highly reliable in many applications.

For performance parameters see section 2.1, Intended use. Where performance data has been supplied separately to the purchaser these should be obtained and retained with these User Instructions.

## 3.5 Connections

### 3.5.1 Electrical connections

 Electrical connections must be made by a qualified Electrician in accordance with relevant local, national and international regulations.

 It is important to be aware of the EUROPEAN DIRECTIVE on potentially explosive areas where compliance with IEC 60079-14 is an additional requirement for making electrical connections.

 It is important to be aware of the EUROPEAN DIRECTIVE on electromagnetic compatibility when wiring up and installing equipment on site. Attention must be paid to ensure that the techniques used during wiring/installation do not increase electromagnetic emissions or decrease the electromagnetic immunity of the equipment, wiring or any connected devices. If in any doubt, contact Flowserve for advice.

The motor must be wired up in accordance with the motor manufacturer's instructions (normally supplied within the terminal box) including any temperature, earth leakage, current and other protective devices as appropriate. The identification nameplate should be checked to ensure the power supply is appropriate.

A device to provide emergency stopping must be fitted. If not supplied pre-wired to the pump unit, the controller/starter electrical details will also be supplied within the controller/starter. For electrical details on pump sets with controllers see the separate wiring diagram.

**CAUTION** **See section 8, Maintenance, for direction of rotation before connecting the motor to the electrical supply**.

### 3.5.2 Suction & discharge piping connections

**CAUTION** **Protective covers are fitted to both the suction and discharge flanges of the casing and must be removed prior to connecting the pump to any pipes**.

All piping must be independently supported, accurately aligned and preferably connected to the pump by a short length of flexible piping. The pump should not have to support the dead weight of the pipe, its contents or compensate for misalignment. It should be possible to install suction and discharge bolts through mating flanges without pulling or prying either of the flanges. All piping must be tight. Pumps may air-bind if air is allowed to leak into the piping. If the pump flange(s) have tapped holes, select flange fasteners with thread engagement at least equal to the fasteners diameter but that do not bottom out in the tapped holes before the joint is tight.

#### 3.5.2.1 Suction Piping

To avoid NPSH and suction problems, suction piping must be at least as large as the pump suction connection. Never use pipe or fittings on the suction that are smaller in diameter than the pump suction size. Figure 2 illustrates the ideal piping configuration with a minimum of 10 pipe diameters between the source and the pump suction. Refer to ANSI/HI 9.6.6-2016 Rotodynamic Pump for Pump Piping for minimum required straight pipe length. When multiple fittings are adjacent, the fitting with the longest minimum length requirement will govern the minimum length of the pipe attached to the pump suction.

Where no potential for air or vapor accumulation exists, a concentric reducer is recommended. When the potential for air of vapor accumulation exists, an eccentric convergent reducer is recommended. Where piping approaches from below, the flat side shall be located on top, as shown in Figure 3, with a maximum of one pipe size reduction. Mount eccentric reducers with the flat side down, when the inlet approaches from above. Horizontally mounted concentric reducers should not be used if there is any possibility of entrained air in the process fluid. Vertically mounted concentric reducers are acceptable.

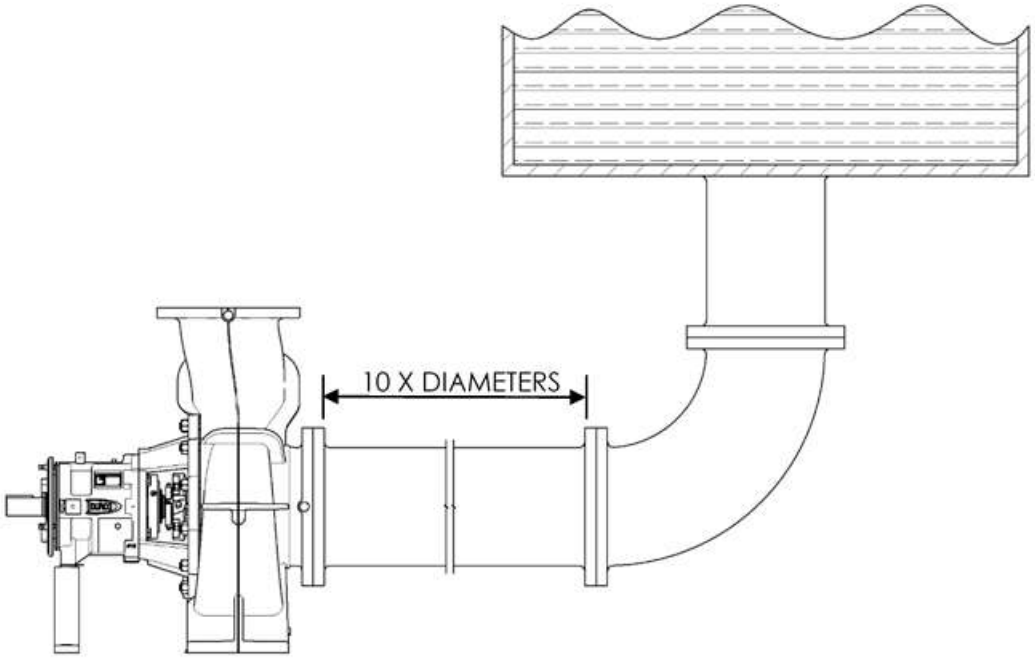


Figure 2: Minimum Piping Configuration

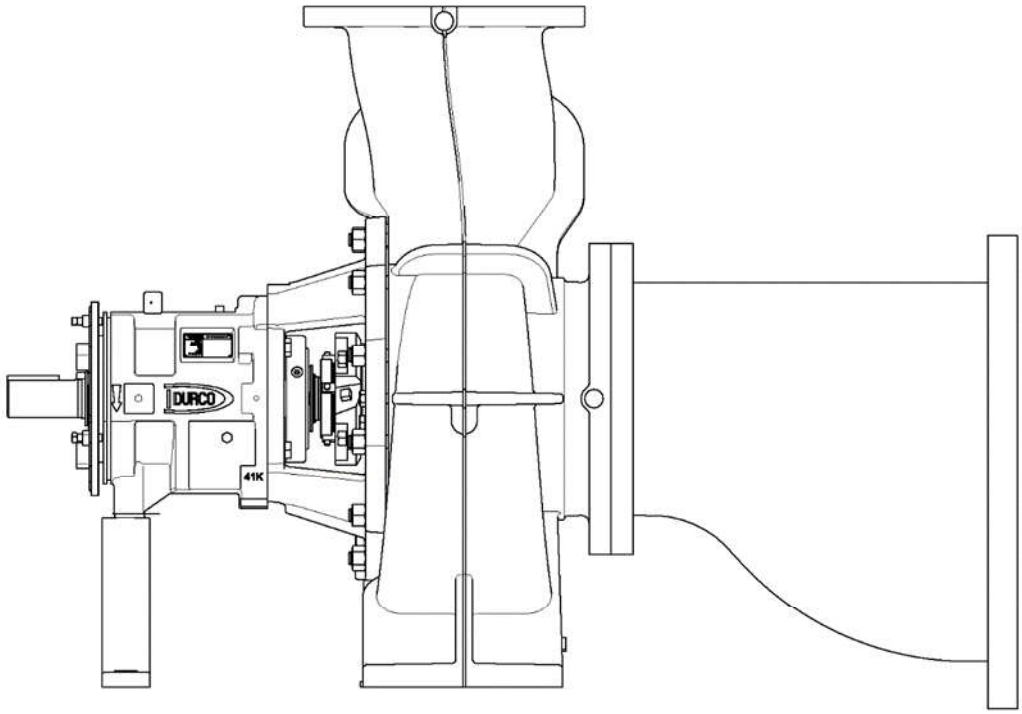


Figure 3: Suction Piping with Eccentric Reducer

Start-up strainers must be removed shortly before final start-up. When the pump is installed below the source of supply, a valve should be installed in the suction line to isolate the pump and permit pump inspection and maintenance. However, never place a valve directly on the suction nozzle of the pump.

A cruciform flow conditioner, as shown in Figure 4, is recommended. Cruciform suction piping is designed as a flow conditioner which reduces swirl, pulsation, noise, and reduces flow profile distortion. The cruciform should extend (2) pipe diameters in to the suction pipe. Minimum length of suction pipe before the cruciform is as specified in ANSI/HI 9.6.6 for length of pipe prior to the pump inlet. See Annex C for addition source recommendation on suction piping.

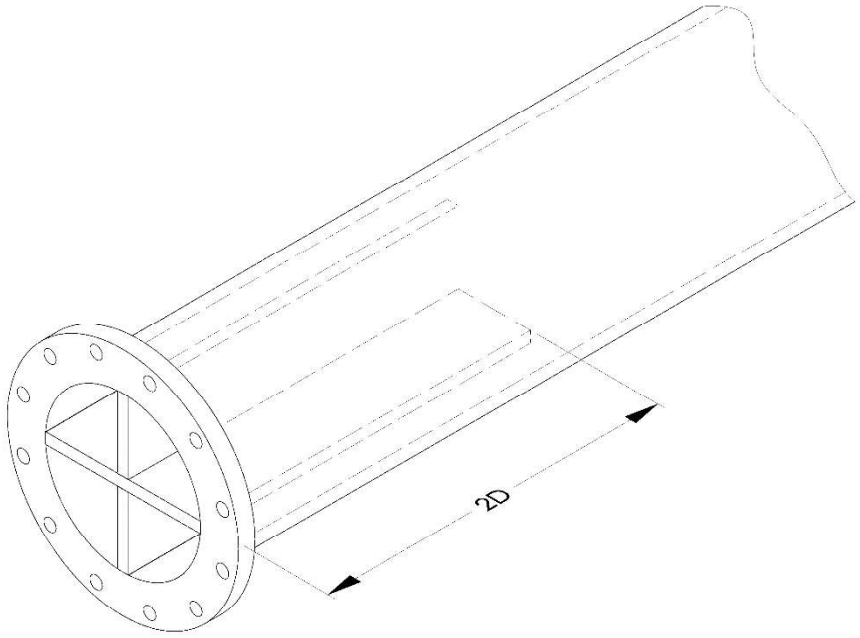


Figure 4: Suction Cruciform

Refer to Section 7.2.6 for performance and operating limits.

#### 3.5.2.2 Discharge piping

Install a valve in the discharge line. This valve is required for regulating flow and/or to isolate the pump for inspection and maintenance. The maximum recommended velocity in the discharge piping is 4.5 m/s (15 ft/s). The straight length of pipe at the discharge nozzle is not subject to this velocity limitation.

An elbow should not be connected directly to the pump discharge. Flow distribution in the discharge nozzle will be affected, reducing pump performance, and having possible other negative effects. This can result in increased noise, vibration, increased nozzle loads.

**⚠CAUTION When Fluid velocity in the pipe is high, for example, 3 m/s (10 ft/sec) or higher, a rapidly closing discharge valve can cause a damaging pressure surge, or water hammer. A dampening arrangement should be provided in the piping. Refer to ANSI/HI 9.6.6-Appendix B-Water-2016 Hammer for further information.**

#### 3.5.2.3 Gage connections

The pump should be optionally configured with discharge and suction gage connection, TAP II and TAP III, if pump hydraulic performance is to be monitored. Fittings located between the pump and any gage connection should be avoided, as changes in fluid velocity and flow distribution will cause significant errors in observed pressure. Observations taken in the field do not constitute certified results.

#### 3.5.2.4 Allowable nozzle load

In this section, F represents force, M represents moment. Combinations of subscripts are used to define direction, type, and location of the load. Definitions of the subscripts:

1. X, Y, Z: Directions of the load
2. S: Suction flange
3. D: Discharge flange
4. A: Applied load
5. R: Resultant load
6. adj: Adjusted load
7. xS: Horizontal distance from the face of the suction flange to the pump discharge centerline
8. zD: Vertical distance from the face of the discharge flange to the pump suction centerline
9. C: Pump Center

The Flowserve Durco Mark 3 Group 4 pumps are designed with reference to the allowable nozzle loads specified by API 610. The calculation approach is developed based on API 610 with reference to ANSI/HI 9.6.2. The following steps describe how to calculate the allowable loads for each pump and how to determine if the applied loads are acceptable.

1. Determine the appropriate casing "Material Group No." in Section 7.2.7 Table 17: *Alloy Cross-Reference*.
2. Find the "Casing material correction factor" in Table 4: *Casing Material Correction Factor* based upon the "Material Group No." and operating temperature. Linear interpolation may be used to determine the correction factor for a specific temperature.
3. Find the "Baseplate correction factor" in Table 5: *Baseplate Correction Factor*. Note that the correction factor depends upon how the baseplate is to be installed.
4. Locate the pump size being evaluated in Table 7: *Nozzle Loading*, and record the allowable load component values.
5. Multiply each load rating found in Table 7: *Nozzle Loading* by the casing material correction factors to get the "adjusted loads" $F_{XS\_adj}$, $F_{YS\_adj}$, $F_{ZS\_adj}$, $M_{XS\_adj}$, $M_{YS\_adj}$, $M_{ZS\_adj}$, $F_{XD\_adj}$, $F_{YD\_adj}$, $F_{ZD\_adj}$, $M_{XD\_adj}$, $M_{YD\_adj}$, $M_{ZD\_adj}$.
6. Record the applied loads at the casing flanges according to the coordinate system found in Figure 5. The 12 forces and moments possible are $F_{XSA}$, $F_{YSA}$, $F_{ZSA}$, $M_{XSA}$, $M_{YSA}$, $M_{ZSA}$, $F_{XDA}$, $F_{YDA}$, $F_{ZDA}$, $M_{XDA}$, $M_{YDA}$, $M_{ZDA}$.
7. The equation sets 1 through 3 found in Table 6: *Acceptance criteria equations* must be satisfied.
8. **Equation Set 1.** Each applied load is divided by the corresponding adjusted values from Table 7: *Nozzle Loading*. The absolute value of each ratio must be less than two.
9. **Equation Set 2.** Calculate the resultant applied forces and resultant adjusted Table 7: *Nozzle Loading* forces ($F_{RSA}$, $F_{RDA}$, $F_{RS\_adj}$, $F_{RD\_adj}$), resultant applied moments and resultant adjusted Table 7 moments ($M_{RSA}$, $M_{RDA}$, $M_{RS\_adj}$, $M_{RD\_adj}$). Calculate the ratios and summations listed in the equations. The final values must be less than two.

10. **Equation Set 3.** From Table 8: *Pump Nozzles to Centerline*, find the distance from the center of the pump to the suction and discharge nozzles, xS and zD. Translate the applied component forces and moments applied to each pump nozzle flange to the center of the pump. Calculate component loads at the center of the pump, $F_{XCA}$, $F_{YCA}$, $F_{ZCA}$, $M_{XCA}$, $M_{YCA}$, $M_{ZCA}$. Calculate the resultant loads at the center of the pump $F_{RCA}$, $M_{RCA}$. These values shall be limited by the formula shown.

Table 4: Casing Material Correction Factor

| | Material Group No. | | | | | | | | | | | | |
|---|---|---|---|---|---|---|---|---|---|---|---|---|---|
| | 1.0 | 1.1 | 2.1 | 2.2 | 2.3 | 2.4 | 2.8 | 3.1 | 3.2 | 3.4 | 3.5 | 3.7 | 3.8 |
| | | | Austenitic Steels | | | | | Nickel and Nickel Alloys | | | | | |
| Temp °C (°F) | Ductile Iron | Carbon steel | Type 304 | Type 316 | Type 304L and 316L | Type 321 | CD-4MCuN | Alloy 20 | Nickel | Monel | Inconel | Hast. B | Hast. C |
| -29 to 38 (-20 to 100) | 0.89 | 1.00 | 1.00 | 1.00 | 0.83 | 1.00 | 1.00 | 0.83 | 0.50 | 0.83 | 1.00 | 1.00 | 1.00 |
| 93 (200) | 0.83 | 0.94 | 0.83 | 0.86 | 0.70 | 0.98 | 1.00 | 0.77 | 0.50 | 0.74 | 0.93 | 1.00 | 1.00 |
| 149 (300) | 0.78 | 0.91 | 0.74 | 0.78 | 0.63 | 0.83 | 1.00 | 0.73 | 0.50 | 0.69 | 0.89 | 1.00 | 1.00 |
| 204 (400) | 0.73 | 0.88 | 0.65 | 0.72 | 0.58 | 0.69 | 0.98 | 0.67 | 0.50 | 0.67 | 0.85 | 0.98 | 0.98 |

Table 5: Baseplate Correction Factor

| Baseplate | Grouted | Bolted |
|---|---|---|
| Type D | 1.00 | 0.80 |
| Type E – PIP | 1.00 | 0.95 |

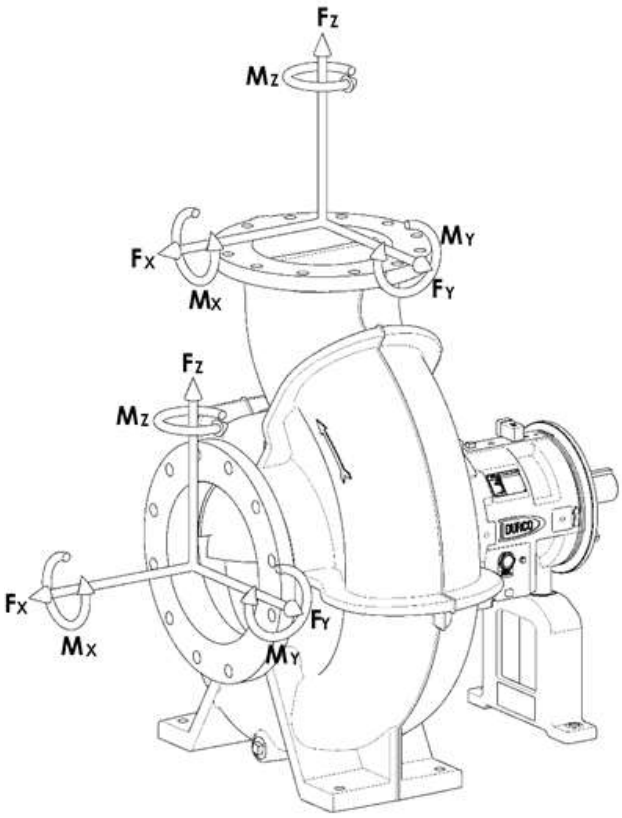


Figure 5: Coordinate system

Table 6: Acceptance criteria equations

| Set | Equations | Remarks |
|---|---|---|
| 1 | $\left\|\frac{F_{XSA}}{F_{XS\_adj}}\right\| < 2.0,\ \left\|\frac{F_{YSA}}{F_{YS\_adj}}\right\| < 2.0,\ \left\|\frac{F_{ZSA}}{F_{ZS\_adj}}\right\| < 2.0, \left\|\frac{M_{XSA}}{M_{XS\_adj}}\right\| < 2.0,\ \left\|\frac{M_{YSA}}{M_{YS\_adj}}\right\| < 2.0,\ \left\|\frac{M_{ZSA}}{M_{ZS\_adj}}\right\| < 2.0,$<br>$\left\|\frac{F_{XDA}}{F_{XD\_adj}}\right\| < 2.0, \left\|\frac{F_{YDA}}{F_{YD\_adj}}\right\| < 2.0,\ \left\|\frac{F_{ZDA}}{F_{ZD\_adj}}\right\| < 2.0, \left\|\frac{M_{XDA}}{M_{XD\_adj}}\right\| < 2.0,\ \left\|\frac{M_{YDA}}{M_{YD\_adj}}\right\| < 2.0,\ \left\|\frac{M_{ZDA}}{M_{ZD\_adj}}\right\| < 2.0$ | Maximum Individual Loading |
| 2 | $F_{RSA} = \sqrt{{F_{XSA}}^2 + {F_{YSA}}^2 + {F_{ZSA}}^2},\ M_{RSA} = \sqrt{{M_{XSA}}^2 + {M_{YSA}}^2 + {M_{ZSA}}^2}$<br>$F_{RDA} = \sqrt{{F_{XDA}}^2 + {F_{YDA}}^2 + {F_{ZDA}}^2},\ M_{RDA} = \sqrt{{M_{XDA}}^2 + {M_{YDA}}^2 + {M_{ZDA}}^2}$<br>$F_{RS\_adj} = \sqrt{{F_{XS\_adj}}^2 + {F_{YS\_adj}}^2 + {F_{ZS\_adj}}^2},\ M_{RS\_adj} = \sqrt{{M_{XS\_adj}}^2 + {M_{YS\_adj}}^2 + {M_{ZS\_adj}}^2}$<br>$F_{RD\_adj} = \sqrt{{F_{XD\_adj}}^2 + {F_{YD\_adj}}^2 + {F_{ZD\_adj}}^2},\ M_{RD\_adj} = \sqrt{{M_{XD\_adj}}^2 + {M_{YD\_adj}}^2 + {M_{ZD\_adj}}^2}$<br>$\frac{F_{RSA}}{1.5 \times F_{RS\_adj}} + \frac{M_{RSA}}{1.5 \times M_{RS\_adj}} < 2.0$<br>$\frac{F_{RDA}}{1.5 \times F_{RD\_adj}} + \frac{M_{RDA}}{1.5 \times M_{RD\_adj}} < 2.0$ | Resultant loads on each nozzle |
| 3 | $F_{XCA} = F_{XSA} + F_{XDA},\ F_{YCA} = F_{YSA} + F_{YDA},\ F_{ZCA} = F_{ZSA} + F_{ZDA}$<br>For SI units, 1000 is used to convert millimeters to meter in the following equations.<br>$M_{XCA} = M_{XSA} + M_{XDA} - F_{YDA} \times zD/1000$<br>$M_{YCA} = M_{YSA} + M_{YDA} + (F_{XDA} \times zD - F_{ZSA} \times xS)/1000$<br>$M_{ZCA} = M_{ZSA} + M_{ZDA} + F_{YSA} \times xS/1000$<br>For USC units, 12 should be used to convert inch to foot.<br>$M_{XCA} = M_{XSA} + M_{XDA} - F_{YDA} \times zD/12$<br>$M_{YCA} = M_{YSA} + M_{YDA} + (F_{XDA} \times zD - F_{ZSA} \times xS)/12$<br>$M_{ZCA} = M_{ZSA} + M_{ZDA} + F_{YSA} \times xS/12$<br>$F_{RCA} = \sqrt{{F_{XCA}}^2 + {F_{YCA}}^2 + {F_{ZCA}}^2},\ M_{RCA} = \sqrt{{M_{XCA}}^2 + {M_{YCA}}^2 + {M_{ZCA}}^2}$<br>$F_{RCA} < 1.5 \times (F_{RS\_adj} + F_{RD\_adj})$<br>$M_{RCA} < 1.5 \times (M_{RS\_adj} + M_{RD\_adj})$<br>$\lvert M_{YCA} \rvert < 2.0 \times (M_{YS\_adj} + M_{YD\_adj})$ | Resultant loads at pump center |

Table 7: Nozzle Loading

| Pump size | Suction Flange | | | | | | Discharge Flange | | | | | |
|---|---|---|---|---|---|---|---|---|---|---|---|---|
| | Force N (lbf) | | | Moments Nm (lbf•ft) | | | Force N (lbf) | | | Moments Nm (lbf•ft) | | |
| | Fxs | Fys | Fxs | Mxs | Mys | Mzs | Fxd | Fyd | Fzd | Mxd | Myd | Mzd |
| 12X10-16 | 8 000 (1 800) | 6 670 (1 500) | 5 340 (1 200) | 6 100 (4 500) | 2 980 (2 200) | 4 610 (3 400) | 5 340 (1 200) | 4 450 (1 000) | 6 670 (1 500) | 5 020 (3 700) | 2 440 (1 800) | 3 800 (2 800) |
| 14X14-16 | 8 900 (2 000) | 7 120 (1 600) | 5 780 (1 300) | 6 370 (4 700) | 3 120 (2 300) | 4 750 (3 500) | 7 120 (1 600) | 5 780 (1 300) | 8 900 (2 000) | 6 370 (4 700) | 3 120 (2 300) | 4 750 (3 500) |
| 8X4-19 | 4 890 (1 100) | 3 780 (850) | 3 110 (700) | 3 530 (2 600) | 1 760 (1 300) | 2 580 (1 900) | 1 420 (320) | 1 160 (260) | 1 780 (400) | 1 330 (980) | 680 (500) | 1 000 (740) |
| 8X6-19 | 4 890 (1 100) | 3 780 (850) | 3 110 (700) | 3 530 (2 600) | 1 760 (1 300) | 2 580 (1 900) | 2 490 (560) | 2 050 (460) | 3 110 (700) | 2 300 (1 700) | 1 180 (870) | 1760 (1 300) |
| 10X6-19 | 6 670 (1 500) | 5 340 (1 200) | 4 450 (1 000) | 5 020 (3 700) | 2 440 (1 800) | 3 800 (2 800) | 2 490 (560) | 2 050 (460) | 3 110 (700) | 2 300 (1 700) | 1 180 (870) | 1 760 (1 300) |
| 12X10-19 | 8 000 (1 800) | 6 670 (1 500) | 5 340 (1 200) | 6 100 (4 500) | 2 980 (2 200) | 4 610 (3 400) | 5 340 (1 200) | 4 450 (1 000) | 6 670 (1 500) | 5 020 (3 700) | 2 440 (1 800) | 3 800 (2 800) |
| 14X12-19 | 8 900 (2 000) | 7 120 (1 600) | 5 780 (1 300) | 6 370 (4 700) | 3 120 (2 300) | 4 750 (3 500) | 6 670 (1 500) | 5 340 (1 200) | 8 000 (1 800) | 6 100 (4 500) | 2 980 (2 200) | 4 610 (3 400) |
| 10X8-19 | 6 670 (1 500) | 5 340 (1 200) | 4 450 (1 000) | 5 020 (3 700) | 2 440 (1 800) | 3 800 (2 800) | 3 780 (850) | 3 110 (700) | 4 890 (1 100) | 3 530 (2 600) | 1 760 (1 300) | 2 580 (1 900) |
| 16X16-19 | 10 230 (2 300) | 8 450 (1 900) | 6 670 (1 500) | 7 320 (5 400) | 3 660 (2 700) | 5 420 (4 000) | 8 450 (1 900) | 6 670 (1 500) | 10 230 (2 300) | 7 320 (5 400) | 3 660 (2 700) | 5 420 (4 000) |
| 12X8-22 | 8 000 (1 800) | 6 670 (1 500) | 5 340 (1 200) | 6 100 (4 500) | 2 980 (2 200) | 4 610 (3 400) | 3 780 (850) | 3 110 (700) | 4 890 (1 100) | 3 530 (2 600) | 1 760 (1 300) | 2 580 (1 900) |
| 12X10-22 | 8 000 (1 800) | 6 670 (1 500) | 5 340 (1 200) | 6 100 (4 500) | 2 980 (2 200) | 4 610 (3 400) | 5 340 (1 200) | 4 450 (1 000) | 6 670 (1 500) | 5 020 (3 700) | 2 440 (1 800) | 3 800 (2 800) |
| 14X12-22 | 8 900 (2 000) | 7 120 (1 600) | 5 780 (1 300) | 6 370 (4 700) | 3 120 (2 300) | 4 750 (3 500) | 6 670 (1 500) | 5 340 (1 200) | 8 000 (1 800) | 6 100 (4 500) | 2 980 (2 200) | 4 610 (3 400) |
| 16X14-22 | 10 230 (2 300) | 8 450 (1 900) | 6 670 (1 500) | 7 320 (5 400) | 3 660 (2 700) | 5 420 (4 000) | 7 120 (1 600) | 5 780 (1 300) | 8 900 (2 000) | 6 370 (4 700) | 3 120 (2 300) | 4 750 (3 500) |

**Notes:**

1. As per ANSI/HI 9.6.2-2015 standard, table is applicable ASME B73.1 pump construction A351/A351M - Grade CF8M (type 316 SS) operated between -20 & 100 ˚F mounted on a grouted metal baseplate.
2. These values are taken from the API 610 and it does not specify any conditions.

Table 8: Pump Nozzles Centerline

| Pump size | Suction flange to pump discharge centerline, xS | | Discharge flange to pump suction centerline, zD | |
|---|---|---|---|---|
| | mm | (in) | mm | (in) |
| 41K12X10-16 | 241 | (9.50) | 597 | (23.50) |
| 41K14X14-16 | 292 | (11.50) | 673 | (26.50) |
| 41K8X4-19 | 178 | (7.00) | 419 | (16.50) |
| 41K8X6-19 | 178 | (7.00) | 445 | (17.50) |
| 41K10X6-19 | 210 | (8.25) | 495 | (19.50) |
| 41K12X10-19 | 248 | (9.75) | 597 | (23.50) |
| 41K14X12-19 | 286 | (11.25) | 673 | (26.50) |
| 41K10X8-19 | 197 | (7.75) | 559 | (22.00) |
| 42K16X16-19 | 318 | (12.50) | 749 | (29.50) |
| 42K12X8-22 | 235 | (9.25) | 597 | (23.50) |
| 42K12X10-22 | 267 | (10.50) | 673 | (26.50) |
| 42K14X12-22 | 292 | (11.50) | 749 | (29.50) |
| 42K16X14-22 | 330 | (13.00) | 749 | (29.50) |

### 3.5.3 Auxiliary connections

**Mechanical seal**

When the pump is intended to be equipped with a mechanical seal, it is Flowserve's standard practice to install the mechanical seal in the pump prior to shipment. Specific order requirements may specify that the seal be shipped separately, or none be supplied. It is the pump installer's responsibility to determine if a seal was installed. If a seal was supplied but not installed, the seal and installation instructions will be shipped with the pump.

**⚠CAUTION Failure to ensure that a seal is installed may result in serious leakage of the pumped fluid.**

Seal and seal support system must be installed and operational as specified by the seal manufacturer.

The packing box/seal chamber/gland may have ports that have been temporarily plugged at the factory to keep out foreign matter. It is the installer's responsibility to determine if these plugs should be removed and external piping connected. Refer to the seal drawings and or the local Flowserve representative for the proper connections.

**Packing**

When the pump is intended to be equipped with shaft packing, it is not Flowserve standard practice not to install packing in the packing box prior to shipment. The packing is shipped with the pump. It is the pump installer's responsibility to install the packing in the packing box.

**⚠CAUTION Failure to ensure that the packing is installed may result in serious leakage of the pumped fluid.**

### 3.5.3.1 Seal/packing support system

**⚠CAUTION If the pump has a seal support system, it is mandatory that this system be fully installed and operational before the pump is started.**

**Packing Lubrication**

When the pumpage is a clean liquid and there is a positive pressure on the suction, the packing box can be packed solid and adjusted so that a slight spray leakage cools and lubricates the packing. TAP V should be plugged. The gland should be adjusted to give a flow rate of 10 to 12 drops per minute for clean fluid. Allow packing to leak freely at first and gradually tighten gland, over a 24-hour period, to the desired leakage rate. Do not overtighten the packing.

When pumpage contains abrasives, or is corrosive a cool clean liquid compatible with the pumpage, should be introduced into TAP V, as shown in Figure 6, at pressure 69 to 103 kPa (10 to 15 psi) above the packing box pressure (The packing box pressure can be obtained from Flowserve, the pump size, rotating speed, suction pressure, fluid specific gravity and impeller diameter are needed to provide the correct information.) The gland should be adjusted to give a flow rate of 40 to 60 drops per minute. For abrasive applications, the regulated flow rate should be 0.06 to 0.13 l/s (1 to 2 US gpm). FIS107 Compression Packing Installation Instructions, is available from Flowserve.

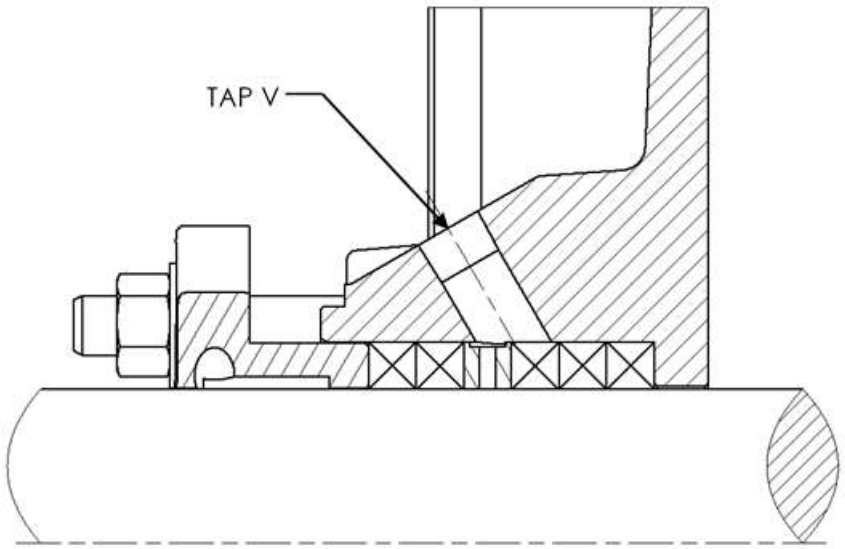


Figure 6: Grease Lube, TAP V with Packing

Grease lubrication, when compatible with the liquid being pumped, may be used. Again, introduced into TAP V.

In non-abrasive applications the liquid being pumped may be sufficient to lubricate the packing without need for external lines. Bearing housing cooling system

Make connections as shown below. Liquid at less than 32 ˚C (90 ˚F) should be supplied at a regulated flow rate of at least 0.06 l/s (1.0 US gpm).

#### 3.5.3.2 Bearing Housing cooling system

The piping connections for jacketed covers and casings are shown below. The flow rate of the cooling water – less than 32 ˚C (90 ˚F) – should be at least 0.13 l/s (2 gpm). Do not allow the oil temperature to drop below the dew point, or condensation and contamination of the oil with water will occur.

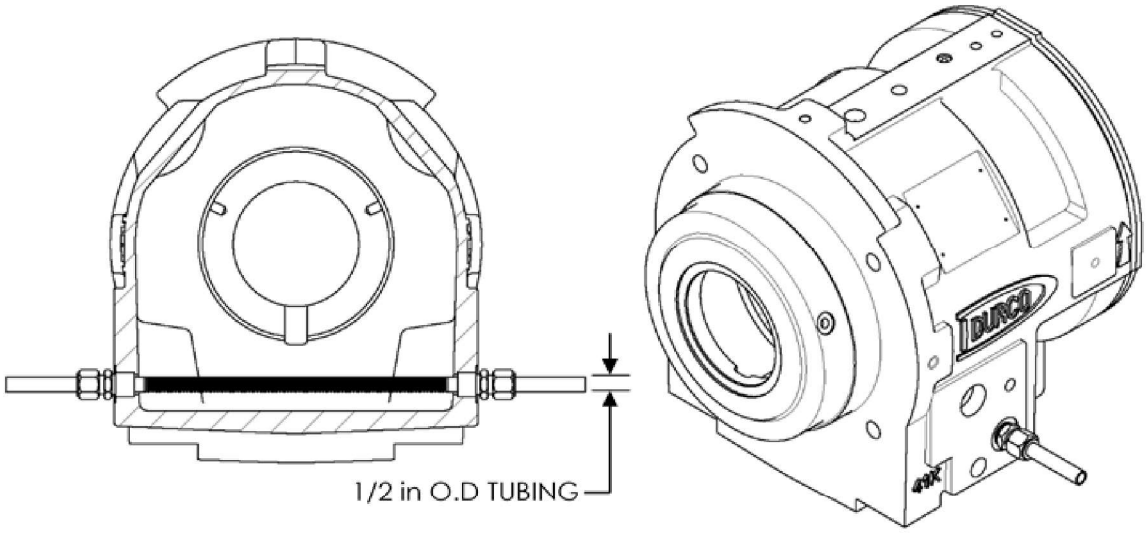


Figure 7: Bearing Housing Cooling System

#### 3.5.3.3 Heating/cooling fluid for jacketed cover/casing

The piping connections for jacketed covers and casings are shown below. The flow rate of the cooling water – less than 32 ˚C (90 ˚F) – should be at least 0.13 l/s (2 US gpm). Jacket Maximum Design Pressure (MDP) is 689 kPa gage @ 171 ˚C (100 psig at 340˚F).

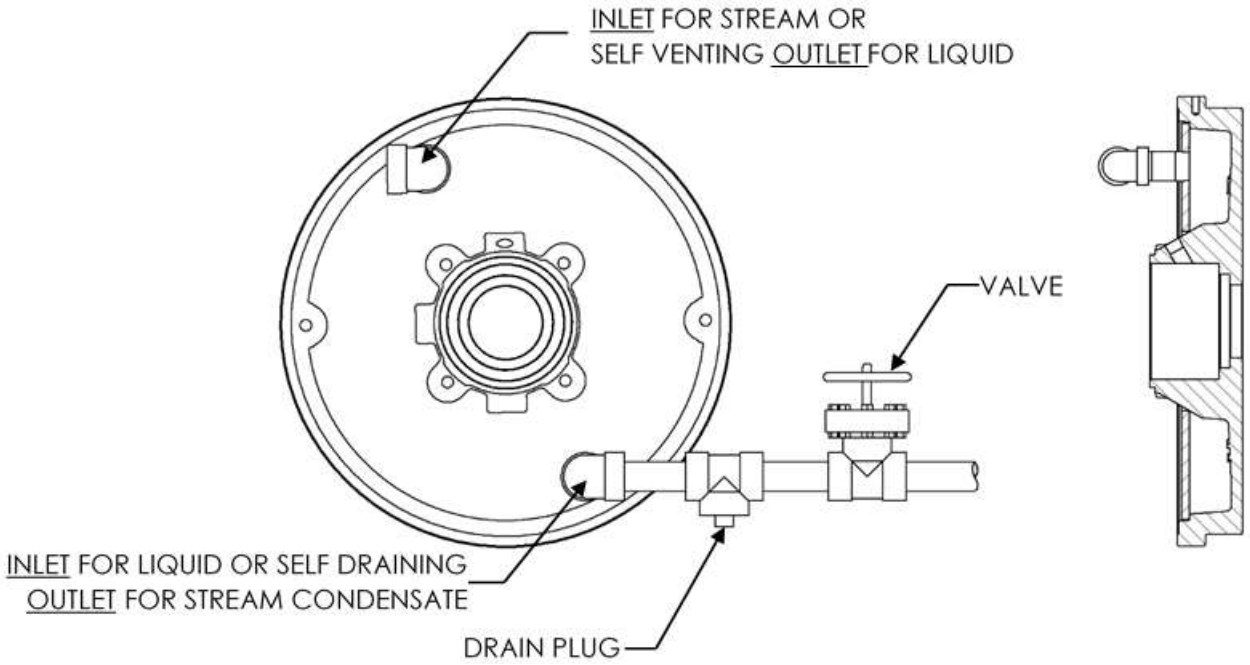


Figure 8: Heating/Cooling Fluid (cover)

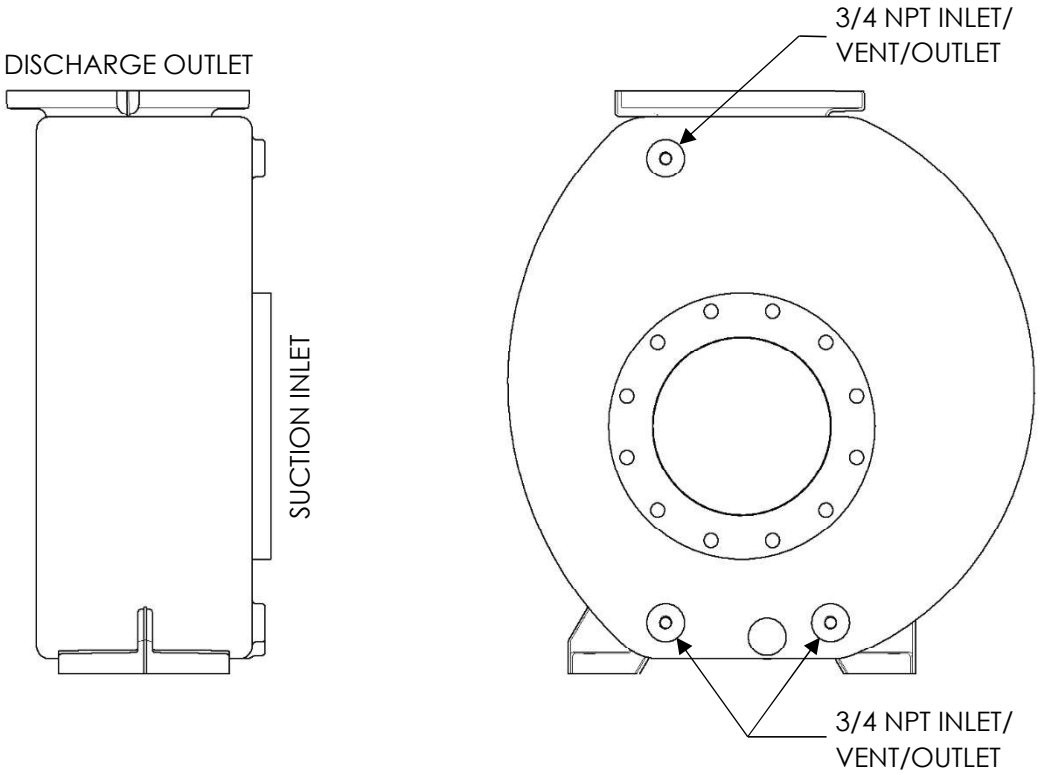


Figure 9: Heating/Cooling Fluid (casing)

**NOTICE** When circulating steam, use top hole for inlet. Both bottom holes must be plumbed together for outlet, to ensure draining both sides of jacket.

**NOTICE** When circulating liquid use both bottom holes as inlets. Use top hole as outlet.

#### 3.5.3.4 Oil mist lubrication system - MPE4

The piping connection for an oil mist lubrication system are shown in Figures 10 & 11.

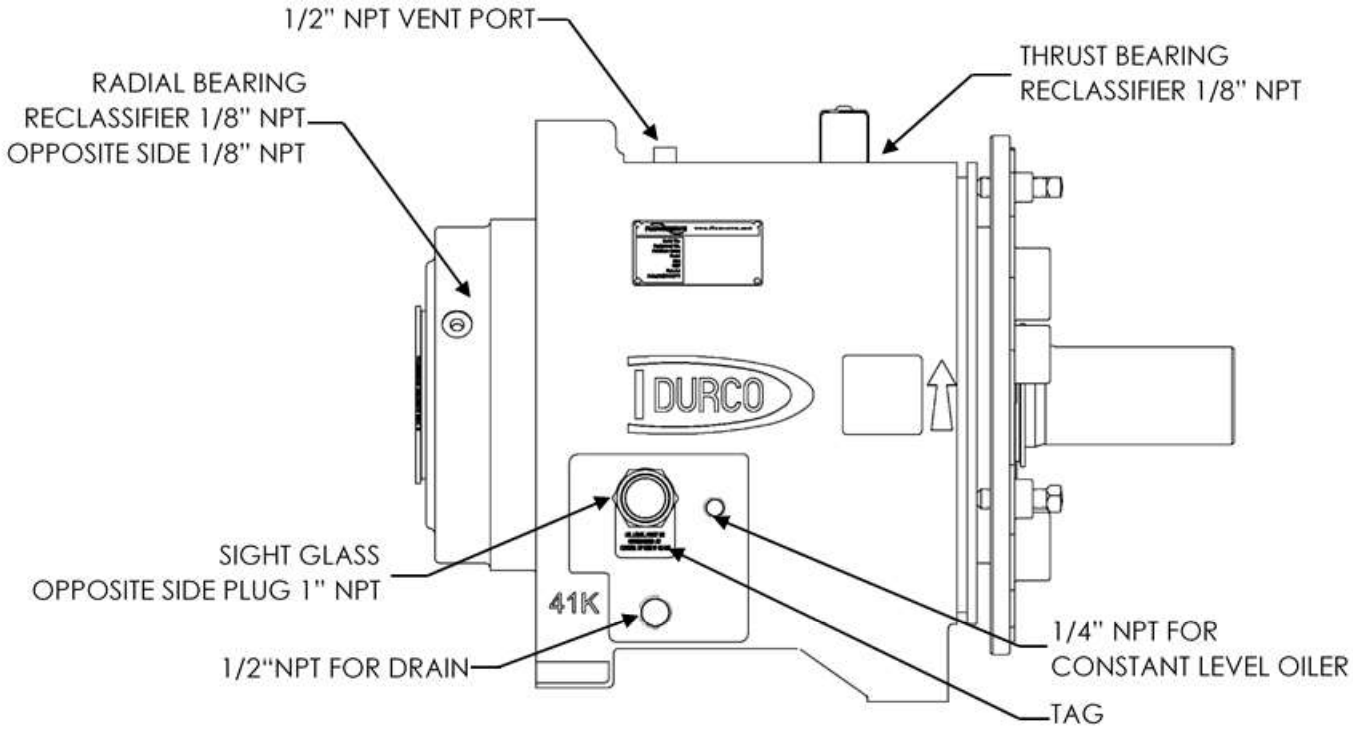


Figure 10: Oil Mist Lubrication System (wet sump)

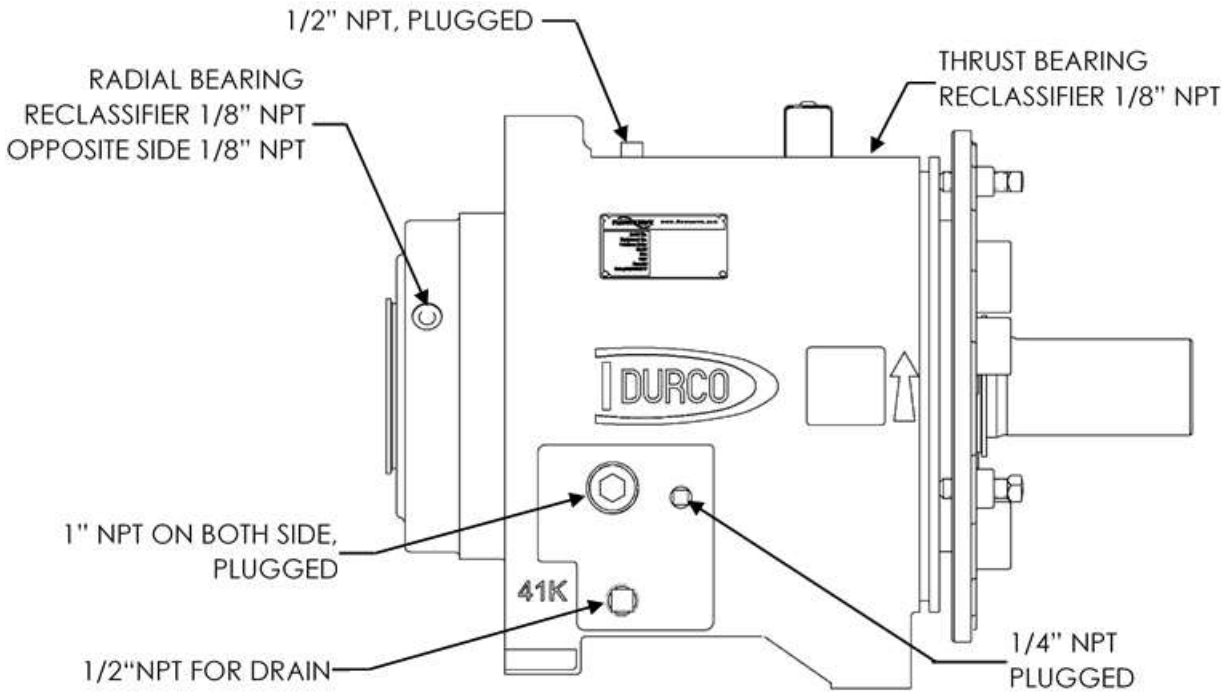


Figure 11: Oil Mist Lubrication System (dry sump)

## 3.6 Controls

### 3.6.1 Protection system


The following protection systems are recommended particularly if the pump is installed in a potentially explosive area or is handling a hazardous liquid. If in doubt consult Flowserve.

If there is any possibility of the system allowing the pump to run against a closed valve or below minimum continuous safe flow a protection should be installed to ensure the temperature of the liquid does not rise to an unsafe level.

If there are any circumstances in which the system can allow the pump to run dry, or start up empty, a power monitor should be fitted to stop the pump or prevent it from being started. This is particularly relevant if the pump is handling a flammable liquid.

If leakage of product from the pump or its associated sealing system can cause a hazard it is recommended that an appropriate leakage detection system is installed.

To prevent excessive surface temperatures at bearings it is recommended that temperature or vibration monitoring is carried out.

## 3.7 Accessories

If you have purchased a bare shaft pump, the following items are required for operations.

1. Mechanical Seal or Packing
2. Auxiliary piping plan for seal
3. Seal Guard
4. Coupling
5. Coupling Guard
6. Baseplate
7. Driver (typical a NEMA motor)

## 3.8 Tools, equipment, and fixtures

See Section 8.3, Special tools, for necessary tools/special tools needed for disassembly, maintenance and reassembly.

# 4 Packaging, Transportation and Storage

## 4.1 Consignment receipt

Immediately after receipt of the product/system it must be checked against the delivery/shipping documents for its completeness and that there has been no damage in transportation. Any shortage and/or damage must be reported immediately to Flowserve Solution Group and must be received in writing within (10) ten days of receipt of the equipment. Later claims cannot be accepted.

The following symbols are used to label the packaging:


This side up


Fragile


Keep dry


Protect from direct sunlight


Centre of gravity


Do not use hooks


Attachment point

## 4.2 Unpacking

The pump and its associated equipment were carefully inspected at the factory prior to shipment, to ensure quality compliance. It is suggested that the equipment be inspected on arrival and that any irregularities or damage be reported to the carrier immediately.

The condition of the skid and covering is indicative of the way the shipment was handled. Broken skids, torn covering, bent hold down bolts, broken straps, etc. indicate rough handling. The protective covers on the pump nozzles should be in place and undamaged.

In general, care is to be taken when removing crating, coverings, and strapping in order not to damage any auxiliary equipment and/or the paint finish.

Check any crate, boxes or wrappings for any accessories or spare parts that may be packed separately with the equipment or attached to side wall of the box or equipment.

Each product has a unique serial number. Check that this number corresponds with that advised and always quote this number in correspondence as well as when ordering spare parts or further accessories.

Boxes, crates, pallets or cartons may be unloaded using fork lift vehicles or slings dependent on their size and construction.

## 4.3 Packaging

The equipment has been packaged in a suitable container or transporting device that protects the material from exterior forces or impact, vibration, and environmental conditions normally encountered during transportation. Flowserve completes the following in preparation for shipment:

1. All items are inspected for cleanliness immediately before packaging. Dirt, oil residue, metal chips or other forms of contamination are removed by approved cleaning methods.
2. Components which are not immediately packaged, are protected from contamination and oxidation. Package with a barrier such that water vapor, salt air, dust, dirt and other forms of contamination do not penetrate the package.
3. Items that can be damaged by condensation trapped within the package are packaged with approved desiccant inside the water vapor proof barrier or by an equivalent method.
4. Items and their containers are properly identified by markings.

It is Flowserve's responsibility to ensure that materials and products are handled, prior to shipment, in a manner that will prevent deterioration or damage to the product or personnel.

Material that has been subjected to conditions that may result in hidden damage are disassembled as required and inspected. A record of the inspection is retained in the appropriate job file or quality records.

Additional care should be taken, by all involved parties, to ensure that the quality of items being loaded/unloaded will not be damaged.

Before shipping, a packing slip is prepared and fasten it to the unit. The packing slip contain the following information:

1. Customer's Purchase Order Number.
2. Flowserve Job Number.
3. Customer's Name and Address.
4. "Ship to" Address.
5. Quantity.
6. Description.
7. Date Shipped.
8. Carrier Used.

For shipments with more than one-unit container or package for any given order, each parcel is marked as 1 of 3, 2 of 3, etc., and contain a copy of the packing list.

## 4.4 Transportation

A crane must be used for all pump sets more than 23 kg (50 lb). Fully trained personnel must carry out lifting, in accordance with local regulations.

Sling, ropes and other lifting gear should be positioned where they cannot slip and where a balanced lift is obtained. The angle between sling or ropes used for lifting must not exceed 60˚.

**CAUTION**

**Pumps and motors often have integral lifting lugs or eye bolts. These are intended for use in only lifting the individual piece of equipment.**

**CAUTION** **Do not use eye bolts or cast-in lifting lugs to lift pump, motor and baseplate assemblies.**

**NOTICE** **To avoid distortion, the pump unit should be lifted as shown**.

**CAUTION** **Care must be taken to lift components or assemblies above the center of gravity to prevent the unit from flipping**.

### 4.4.1 Lifting pump components

For component or assembled components that weigh more than 23 kg (50 lb), Flowserve uses the technique below to properly transport components during assembly or disassembly procedures. If the site does not utilize rigging equipment mentioned, use the facilities' procedures while adhering to each component's lifting procedures.

#### 4.4.1.1 Casing [1100]

Use a choker hitch sling pulled tight around the discharge nozzle. See Figure 17: Lifting Bare Pump, for the casing rigging technique.

#### 4.4.1.2 Cover [1220]

With the back pullout assembly secured to the work surface, See Figure 51: Removing Impeller, Insert a long shank eyebolt in the drilled and taped hole at the top of the cover. Sling or hook through the eye of the eyebolt. Install the (2) Token bolt cap screws [6570.6] before removing tension from load.

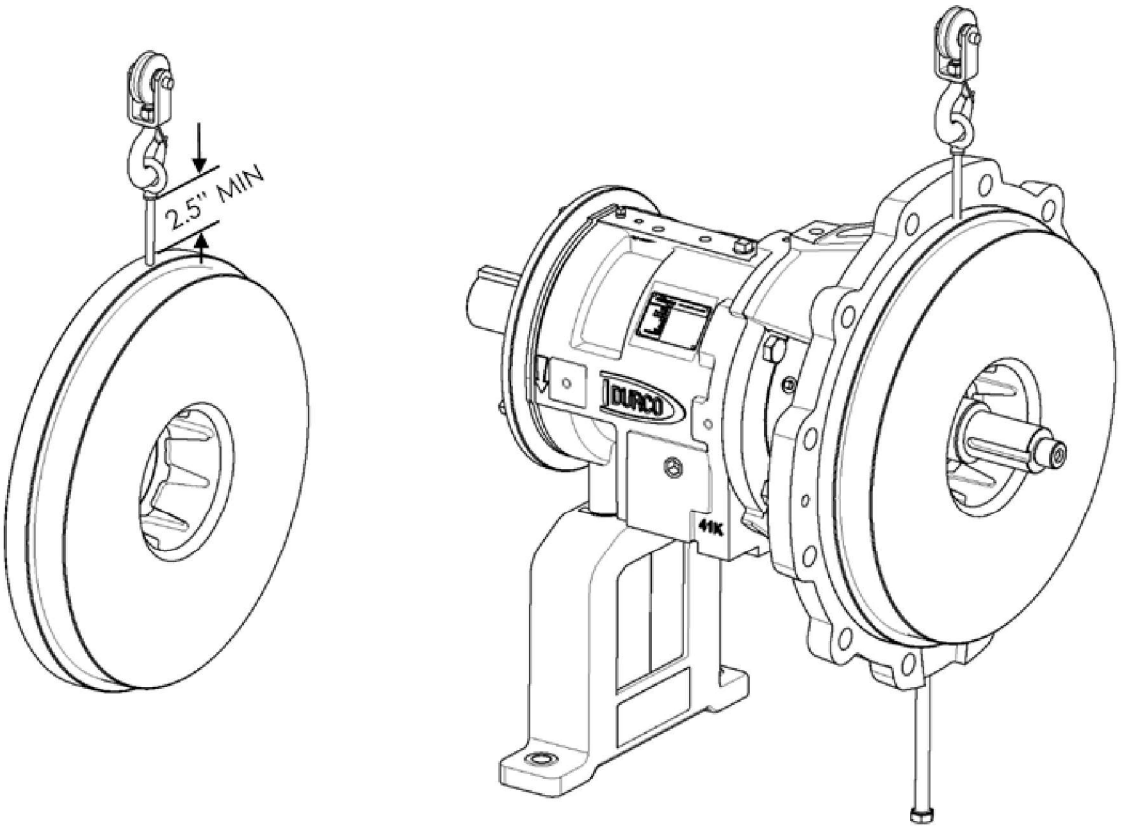


Figure 12: Lifting Cover

#### 4.4.1.3 Impeller [2200]

Use a clamp suitable for lifting the impeller, as shown in Figure 13. A suitable clamp example is a Campbell® GX clamp no. 642300. *Read all safety instruction for the lifting device used.*

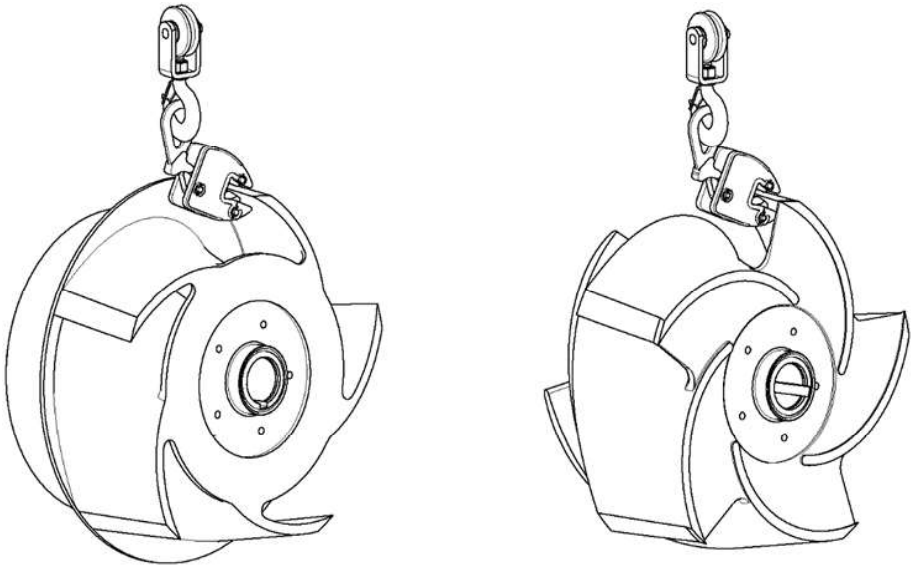

Figure 13: Lifting Impeller

#### 4.4.1.4 Adapter [1340]

Insert hitch choker sling in openings of adapter, ensure a tight fit, as shown in Figure 14.

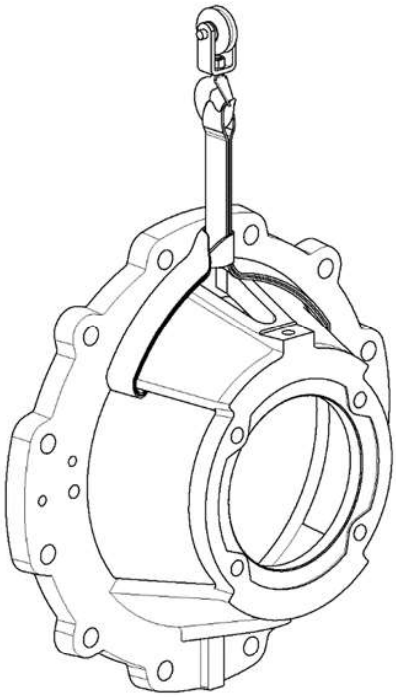

Figure 14: Lifting Adapter

#### 4.4.1.5 Bearing housing [3200]

Insert either a sling or hook through a Shoulder Type Machinery Eye Bolt, installed on the top of the housing

with the Eye Bolt shoulder squarely against the bearing housing, as shown in Figure 15.

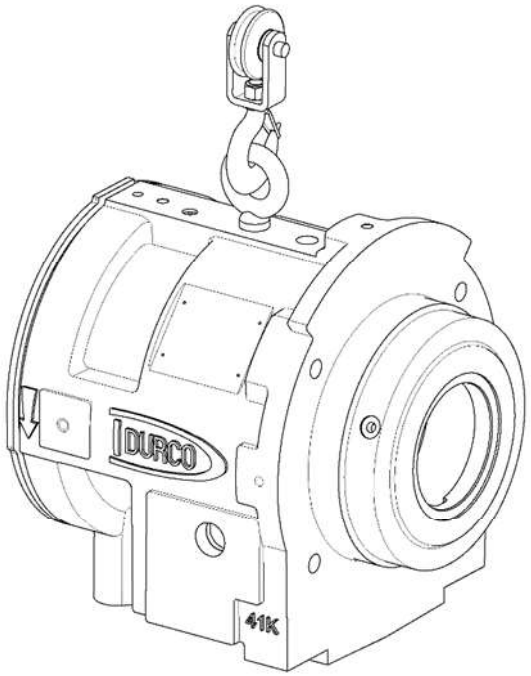


Figure 15: Lifting Bearing Housing

#### 4.4.1.6 Back Pullout Assembly (Power end)

Insert hitch choker sling in openings of adapter, ensure tight fit, or hook through a Shoulder Type Machinery Eye Bolt, installed on the top of the adapter, with the Eye Bolt shoulder squarely against the adapter, as shown in Figure 16.

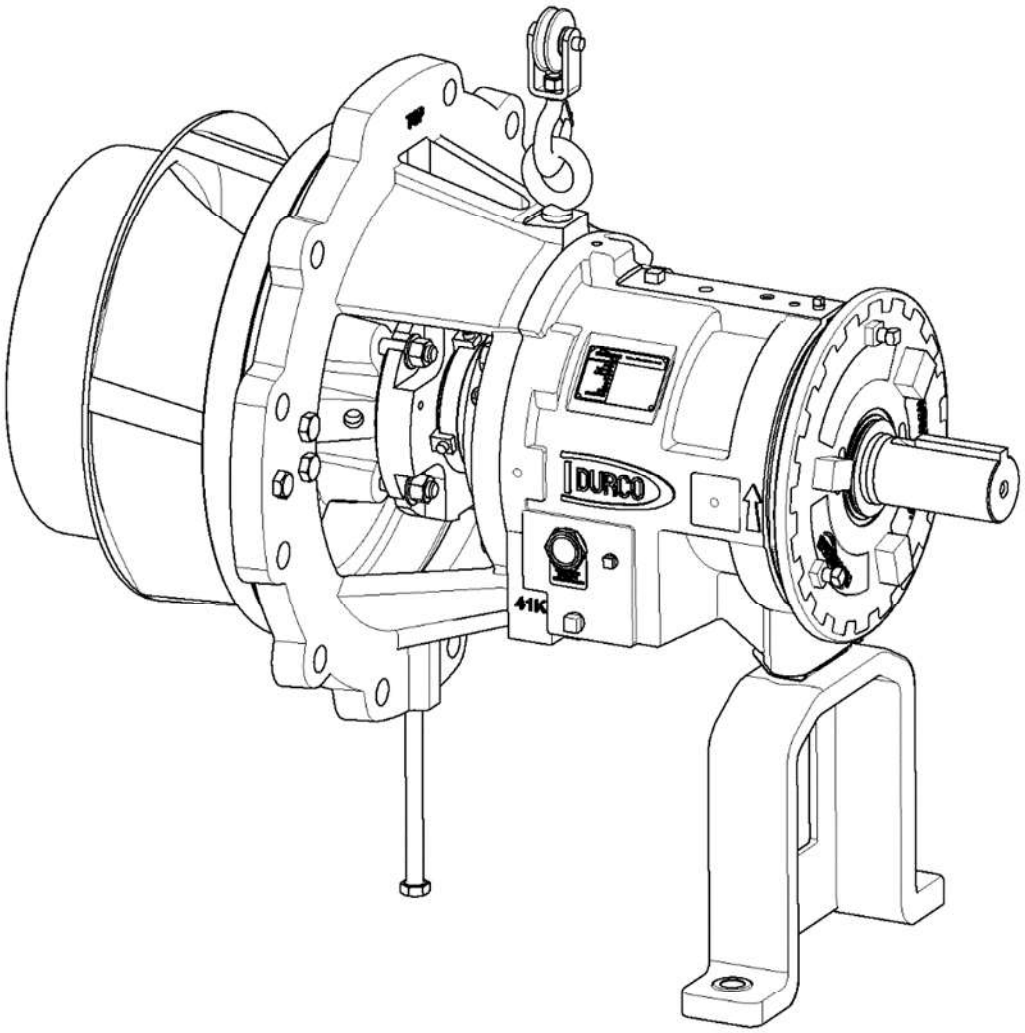


Figure 16: Lifting Back Pullout Assembly

#### 4.4.1.7 Bare pump

Sling around the pump discharge nozzle. This is sufficient to lift the pump level in most instances. If the pump does not lift level, choke around the outboard end of the bearing housing with second sling. Choker hitches must be pulled tight at each attachment. The choker hitch on the discharge nozzle is towards the coupling end of the pump shaft, as shown in Figure 17. If two slings are used, sling lengths should be adjusted to balance the load before attaching the lifting hook.

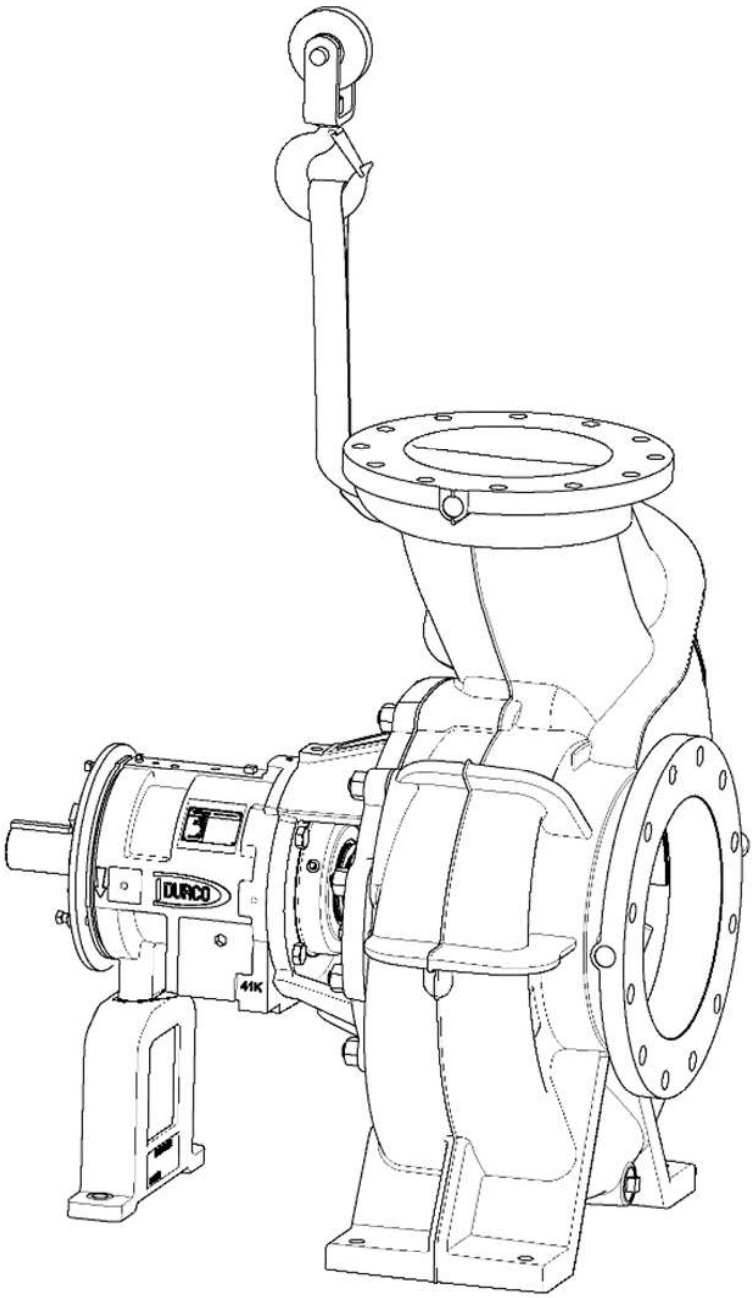


Figure 17: Lifting Bare Pump

#### 4.4.1.8 Assembled pump with baseplate and motor

Use spreader beams with dropper chains attached to a lifting beam, as shown in Figure 18. This method eliminates compressive loads on the baseplate. Do not use slings through the lifting holes. Using lifting holes located in the baseplate corners (Type D and Type E bases), hook with SOS chain slings, connect the master links to the spreader beam hooks. Attach the spreader beam master links to the lifting beam hooks. Adjust the lifting beam bail to balance the load.

**⚠CAUTION Do not lift or transport baseplates with motors larger than a NEMA 449 Frame, or above 1590 kg (3500 lb). Permanent damage to the baseplate may result.**

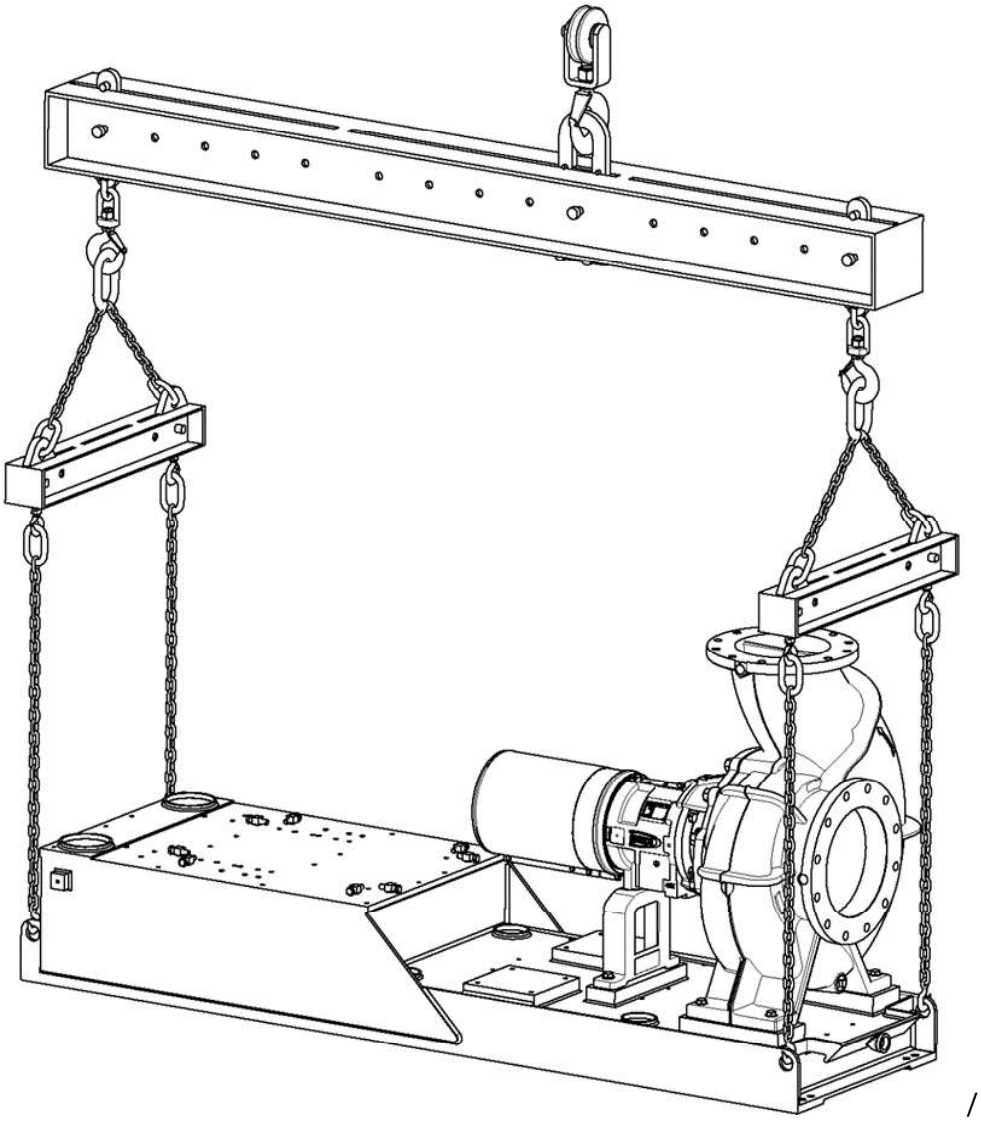

Figure 18: Lifting Assembled Pump with Baseplate

## 4.5 Storage and packing

**NOTICE** **Store the pump in a clean, dry location away from vibration. Leave flange covers in place to keep dirt and other foreign material out of the pump casing. Turn the pump shaft at regular intervals to prevent brinelling of the bearings and the seal faces, if fitted, from sticking.**

The pump may be stored as above for up to six months. Consult Flowserve for preservative actions when a longer storage period is needed.

### 4.5.1 Short term procedures

Normal packaging is designed to protect the pump and parts during shipment and for dry, indoor storage for up to six months or less. The following is an overview of our normal packaging:

1. All loose unmounted items are packaged in a water proof plastic bag and placed under the coupling guard
2. Inner surfaces of the bearing housing, shaft (area through bearing housing) and bearings are coated with Cortec VpCI®-329 rust inhibitor, or equal

   **NOTICE** **Bearing housing are not filled with oil prior to shipment**
3. Re-greaseable bearings are packed with grease (EXXON POLYREX EM for horizontal pumps)
4. The internal surface of ferrous casings, covers, flange faces, and the impeller surface are sprayed with Cortec VpCI®-389, or equal
5. Exposed shafts are taped with Polywrap
6. Flange covers are secured to both the suction and discharge flanges
7. In some cases, with assemblies ordered with external piping, components may be disassembled for shipment
8. The pump must be stored in a covered, dry location

### 4.5.2 Long term storage and packing

Long term storage is defined as more than six months, but less than twelve months. The procedure Flowserve follows for long-term storage of pumps is given below. These procedures are in addition to the short-term procedure.

1. Each assembly is hermetically (heat) sealed from the atmosphere by means of tack wrap sheeting and rubber bushings (mounting holes)
2. Desiccant bags are placed inside the track wrapped packaging
3. A solid wood box is used to cover the assembly

This packaging will provide protection for up to twelve months from humidity, salt laden air, dust etc.

After unpacking, protection will be the responsibility of the user. Addition of oil to the bearing housing will remove the inhibitor. If units are to be idle for extended periods after addition of lubricants, inhibitor oils, and greases should be used. Every three months, the pump shaft should be rotated approximately ten (10) revolutions.

# 5 Installation

## 5.1 Inspection and preparation

### 5.1.1 Location

The pump should be located to allow room for access, ventilation, maintenance, and inspection with ample headroom for lifting and should be as close as practicable to the supply of liquid to be pumped. Refer to the general arrangement drawing for the pump set.

### 5.1.2 Part assemblies

The supply of motors and baseplates are optional. Equipment must be remove from the baseplate, when installed correctly. *It is the responsibility of the installer to align the pump and motor set, as detailed in Section 5.3 Installation.*

### 5.1.3 Protection of openings and threads

When the pump is shipped, all taped connection, threads and all openings are covered or plugged. This protection/covering should not be removed until installation. If for any reason, the pump is removed from service, this protection should be reinstalled. When equipment is removed from the baseplate, in a non-weather protected location, reinstall hardware with Henkel Loctite® 242 locker and sealant applied to thread. This prevents moisture and debris from entering unprotected threaded hole.

### 5.1.4 Rigid baseplate – overview

The baseplate provides a rigid foundation for the pump and driver. Its primary function is to maintain alignment between the pump and driver shafts. Two styles of grouted baseplates are available for the Mark 3 Group 4, Type D and Type E, as shown in Figure 19.




Figure 19: Type D & Type E Baseplates

Baseplates intended for grouted installation are designed to use the grout as a stiffening member. It must provide certain functions that ensure a reliable installation. Three of these requirements are:

1. The baseplate must provide sufficient rigidity to assure the assembly can be transported and installed, given reasonable care in handling, without damage. It must also be rigid enough when properly installed to resist operating loads.

**NOTICE** After factory pre-alignment verification is completed, motors larger than a NEMA 449T frame are unmounted, packaged and shipped separately from the pump and baseplate.

2. The baseplate must provide a reasonably flat mounting surface for the pump and driver. Uneven surfaces will result in a soft-foot condition that may make alignment difficult or impossible. Experience indicates that a baseplate with a top surface flatness of 1.25 mm/m (0.015 in/ft) across the diagonal corners of the baseplate provides such a mounting surface. Therefore, this is the tolerance to which we supply our standard Type D baseplate. Some users may desire an even flatter surface, which complies with API 686-2009 Section 3 paragraph 3.9.4.4 for level requirements. Flowserve will supply flatter baseplates upon request at extra cost. For example, mounting surface flatness of 0.17 mm/m (0.002 in/ft) is offered, as standard, on the Flowserve Type E "Ten Point" baseplate, as shown in Figure 19.
3. The baseplate must be designed to allow the user to final field align the pump and driver to within their own particular standards and to compensate for any pump or driver movement that occurred during handling. Normal industry practice is to achieve final alignment by moving the motor to match the pump. Flowserve practice is to pre-align confirm in our shop that the pump assembly can be accurately aligned. Before shipment, the factory verifies that there is enough horizontal movement capability at the motor to obtain a "perfect" final alignment when the installer puts the baseplate assembly into its original, top levelled, unstressed condition. When a baseplate, pump and motor assembly is supplied as a unit, a label showing the completed pre-alignment verification results is attached to the coupling guard.

## 5.2 Baseplate mounting

The following steps are grouting instructions to install Type D and Type E baseplates.

### 5.2.1 Mounting grouted baseplates

1. The pump foundation should be located as close to source of the fluid to be pumped as practical.
2. There should be adequate space for workers to install, operate, and maintain the pump. The foundation should be sufficient to absorb any vibration and should provide a rigid support for the pump, motor and baseplate.
3. Recommended mass of a concrete foundation should be at minimum three times that of the pump, motor and base. Refer to Figure 20

**NOTICE** Foundation bolts are imbedded in the concrete inside a sleeve to allow some movement of the anchor.

**NOTICE** If the baseplate is sandblasted in preparation for grouting, all equipment must be removed and protected from blasting media.

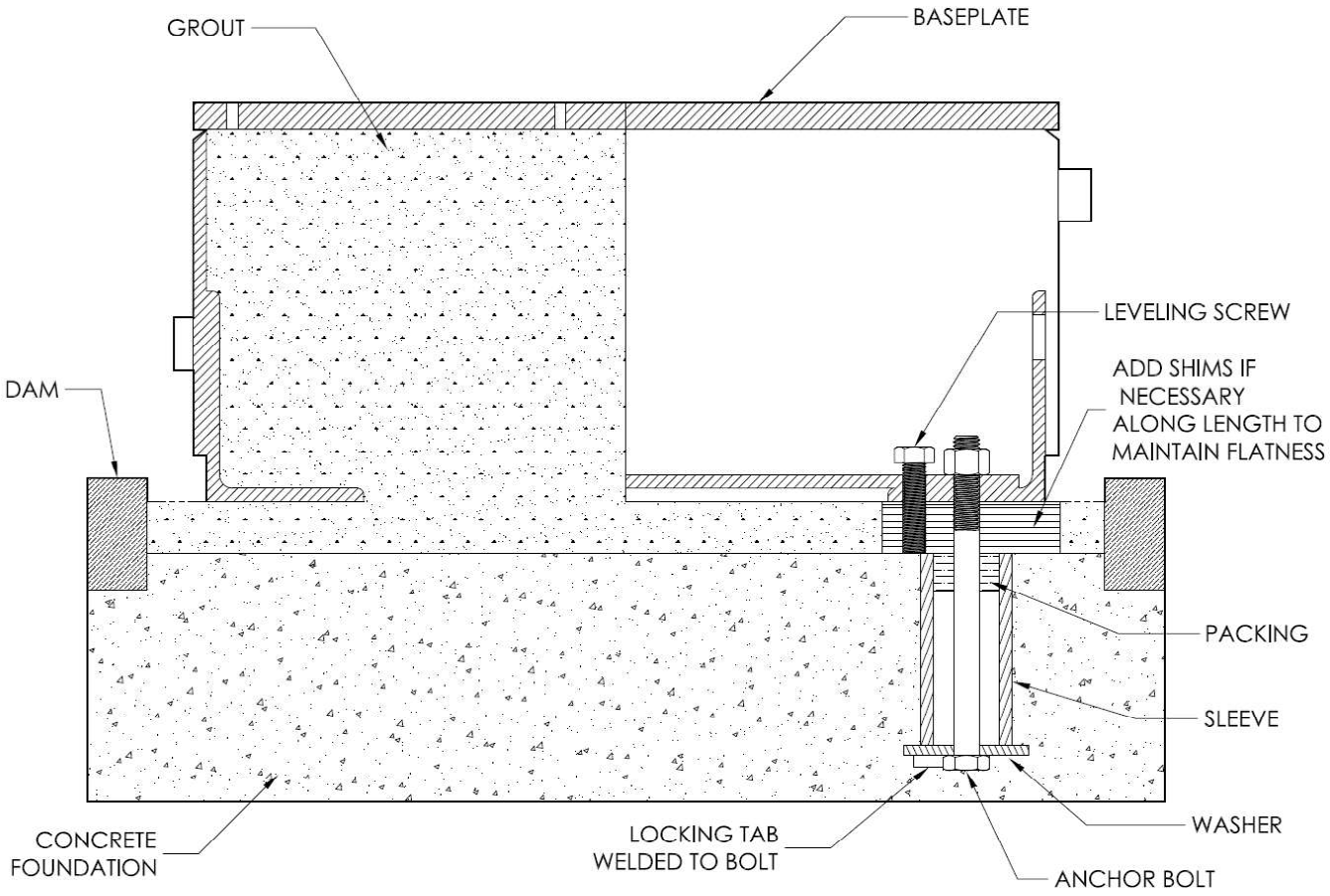


Figure 20: Grouted Mount Baseplate

4. Level Type D baseplate mounting surfaces longitudinally and transversely within 1.25 mm/m (0.015 in/ft). Level Type E baseplate mounting surfaces longitudinally and transversely within 0.42 mm/m (0.005 in/ft); level within 0.30 mm/m (0.0035 in/ft) is achievable in most cases, but not required. The machined coplanar and parallel mounting surfaces are to be referenced when levelling the baseplate. This may require that the pump and motor be removed from the baseplate to reference the machined faces. DO NOT stress the baseplate.
5. Do not bolt the suction or discharge flanges of the pump to the piping, until the baseplate foundation is completely installed. Use levelling jackscrews to level the baseplate. Check for levelness in both the longitudinal and lateral directions, to values in paragraph 4. If necessary, shims should be placed along the middle edge of the base. Do not rely on the bottom of the baseplate to be flat. The bottom baseplate surface is not machined, and it is unlikely that the field mounting surface is flat.
6. After levelling the baseplate, tighten the anchor bolts. If shims were used, make sure that the levelling screws are in contact with the foundation before tightening. Failure to do this may result in a twist of the baseplate, which could make it impossible to obtain final alignment.

7. Check the level of the baseplate to make sure that tightening the anchor bolts did not disturb the level of the baseplate. If the anchor bolts did change the level, adjust the levelling screws, and shims if used, as needed to level the baseplate.
8. Continue adjusting the levelling screws and tightening the anchor bolts until the baseplate is level.
9. Check initial alignment. If the pump and/or motor were removed from the baseplate proceed with step 10 first, then the pump and/or motor should be reinstalled onto the baseplate using Flowserve's factory preliminary alignment procedure as described in Section 5.2.2, and then continue with the following. As described above, pumps are given a preliminary alignment at the factory. This preliminary alignment is done in a way that ensures that, if the installer duplicates the factory conditions, there will be sufficient clearance between the motor hold down bolts and motor foot holes to move the motor into final alignment. If the pump and motor were properly reinstalled to the baseplate or if they were not removed from the baseplate and there has been no transit damage, and if the above steps were done properly, the pump and driver should be within 0.38 mm (0.015 in) FIM (Full Indicator Movement) parallel, and 0.0025 mm/mm (0.0025 in/in) FIM angular. If this is not the case, first check to see if the driver mounting fasteners are centered in the driver feet holes. If not, re-center the fasteners and perform a preliminary alignment to the above tolerances by shimming under the motor for vertical alignment, and by moving the pump for horizontal alignment.
10. Grout the baseplate. A non-shrinking grout should be used. Make sure the grout fills all areas under the baseplate. After the grout has cured, check for voids and repair them. Jackscrews, shims and wedges should be removed from under the baseplate at this time. If they were to be left in place, they could rust, swell, and cause distortion in the baseplate. Fill the voids left from removal of the jackscrews and shims with flexible seam sealant.
11. After grouting baseplate some distortion may occur during grouting cure. The post-grout cure level criterion, for Type E baseplates, is a maximum of 0.67 mm/m (0.008 in/ft) (both longitudinally and transversely). For Type D baseplates the criterion, is a maximum of 1.50 mm/m (0.018 in/ft) Mounting plates that settle unevenly and/or beyond the specified level tolerance shall be corrected. Correction of level may include removal and regrouting or field machining of the equipment mounting surfaces.
12. Run piping to the suction and discharge of the pump. There should be no piping loads transmitted to the pump after connection is made. Place dial indicators vertically and horizontally at the end of the pump shaft. Zero the indicators and observe any movement as the suction flange fasteners are tightened in increments of 10%, 30%, 60% and 100% of the required final torque. (See ASME PCC-1-2013 for additional details) Repeat the process on the discharge flange. Movement more than 0.05 mm (0.002 in), indicates excess pipe strain is present. Loosen flange fasteners, remove the flange gasket, and correct the source of pipe strain. Replace the flange gasket(s), and then repeat this step until pipe strain is eliminated.

### 5.2.2 Initial alignment procedure

The purpose of factory alignment is to ensure that the user will have full utilization of the clearance in the motor holes for final job-site alignment. To achieve this, the factory alignment procedure specifies that the pump be aligned in the horizontal plane to the motor, with the motor foot bolts centered in the motor holes. This procedure ensures that there is sufficient clearance in the motor holes for the customer to field align the motor to the pump, to zero tolerance. This philosophy requires that the customer can place the base in the same condition as the factory. Thus, the factory alignment will be done with the base sitting in an unrestrained

condition on a flat and level surface. This standard also emphasizes the need to ensure that shaft spacing is adequate to accept the specified coupling spacer.

The factory alignment procedure is summarized below:

1. The baseplate is placed on a flat and level workbench in a free and unstressed position.
2. The baseplate is levelled as necessary. Levelling is accomplished by placing shims under the rails of the base at the appropriate anchor bolt hole locations. Levelness is checked in both the longitudinal and lateral directions.
3. The motor and appropriate motor mounting hardware is placed in the baseplate and the motor is checked for any planar soft-foot condition. If any is present it is eliminated by shimming.
4. The motor feet holes are centered on the motor mounting fasteners. This is done by using a centering nut, as shown in Figure 21.

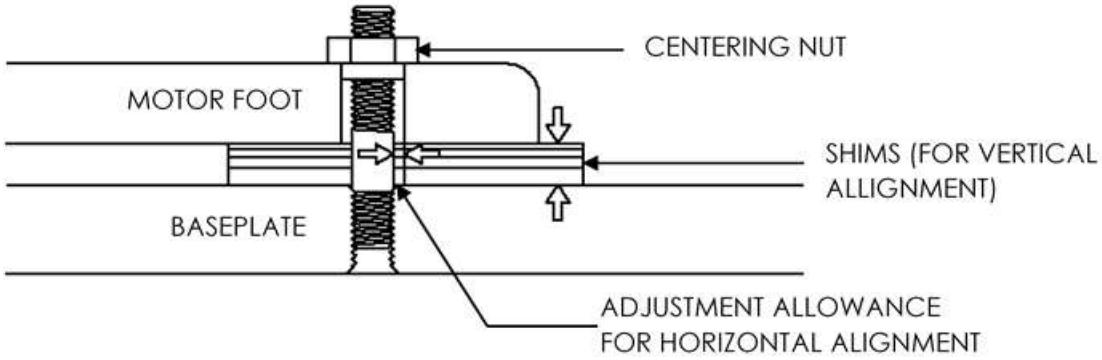


Figure 21: Center Mounting Feet Holes

5. The motor is fastened in place by tightening the nuts on two diagonal motor mounting studs.
6. The pump is put onto the baseplate and levelled. The foot piece under the bearing housing is adjustable. It is used to level the pump, if necessary.

**NOTICE** If an adjustment is necessary, add or remove shims [3126.1] between the foot piece and the bearing housing.

The standard shim [3126.1] thickness is 0.76 mm (0.030 in); 0.13 mm (0.005 in) and 0.25 mm (0.010 in) are available.

7. The spacer coupling gap is verified.
8. The parallel and angular vertical alignment is made by shimming under the motor.
9. The motor feet holes are again centered on the motor mounting studs using the centering nut. At this point the centering nut is removed and replaced with a standard nut. This gives maximum potential mobility for the motor to be horizontally moved during the final, field alignment. All four motor feet are tightened down.
10. The pump and motor shafts are then aligned horizontally, both parallel and angular, by moving the pump to the fixed motor. The pump feet are tightened down.

11. Both horizontal and vertical alignment is again final checked as is the coupling spacer gap.
12. The nominal DBSE is 6 mm (0.25 in) longer than the coupling spacer length, facilitating installation and removal of the coupling spacer. Example: A pump/motor combination requiring a 178 mm (7.00 in) spacer coupling has a nominal DBSE of 184 mm (7.25 in)
13. **NOTICE** See section 5.3.7 for Final Shaft Alignment

## 5.3 Installation

### 5.3.1 Pump and shaft alignment check

After connecting the piping (Section 5.3.7), rotate the pump drive shaft clockwise (viewed from motor end) by hand several complete revolutions to be sure there is no binding and that all parts are free. Recheck shaft alignment (Section 5.2.2). If piping caused unit to be out of alignment, correct piping to relieve strain on the pump.

### 5.3.2 Pump lubricants

#### 5.3.2.1 Oil Bath: APE4 / OPE4

Oil bath is available on all product models. The standard bearing housing configuration is oil bath lubricated and is not lubricated by Flowserve. Before operating the pump, fill the bearing housing to the center of the oil sight glass with the proper type oil, when equipped sight glass or Watchdog oiler. (See Table 9: *Oil Sump Capacity* for approximate amount of oil required – do not overfill.)

The oil level in the bearing housing must be maintained at ±3 mm (±1/8 in) from the center of the sight glass. The sight glass has a 6 mm (1/4 in) hole in the center of its reflector. The bearing housing oil level must be within the circumference of the center hole to ensure adequate lubrication of the bearings.

**NOTICE** The correct oil level can only be obtained when the pump is level in the longitudinal and transverse plans. Failure to level the pump may result in bearing damage and/or oil leakage. See Section 5 for levelling instructions.

To add oil to the housing, clean the area adjacent to and then remove the vent/breather [6521] at the top of the bearing housing, pour in oil until it is visually half way up in the sight glass [8221] or Watchdog oiler [3856] integral sight glass. Oil added to the bearing housing through vent location the falls directly on to the shaft. It takes several minutes for the oil level to rise to it finial level after adding oil. To avoid overfilling the bearing housing, wait several minutes after the oil level has reached the bottom of the center hole in the sight glass reflector [8221]. Then, add additional oil slowly to raise the oil level to the center of the reflector. When not equipped with a sight glass, the correct oil level is obtained with the constant level oiler in its lowest position, which results in the oil level being at the top of the oil inlet pipe nipple, or half way up in the sight glass window. Oil must be visible in the bottle at all times.

See Table 10: *Recommended Oils* for recommended lubricants. **DO NOT USE DETERGENT OILS**. The oil must be free of water, sediment, resin, soaps, acid and fillers of any kind. It should contain rust oxidation inhibitors and anti-foam additives. The proper oil viscosity is determined by the bearing housing operating temperature as given in Table 12: *Oil Viscosity Grades*.

Note that on APE4 power ends there is no constant level oiler and no vent/breather (replaced by a plug). This is the ASME B73.1 compliant configuration and is preferred. As stated above, proper oil level is the center of the "bull's eye" sight glass [8221]. Refer to Figure 22

**NOTICE** Only add oil when the pump has not operated for a least five minutes. Due to windage of the bearing housing oil, the observed oil level will appear to drop when the pump is running. This is normal operation. Do not add additional oil while the pump is running.

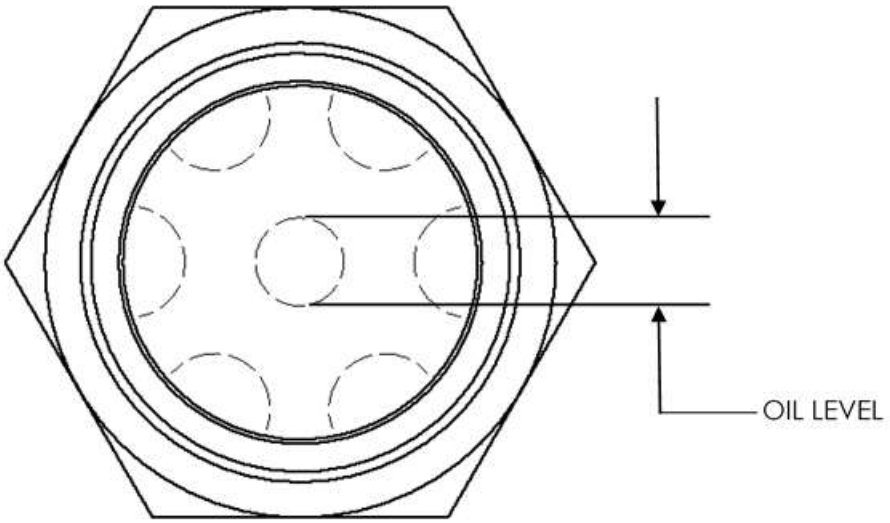


Figure 22: Sight Glass [8221]

In many pumping applications lubricating oil becomes contaminated before it loses its lubricating qualities or breaks down. For this reason, it is recommended that the first oil change take place after approximately 160 hours of operation, at which time, the used oil should be examined carefully for contaminants. During the initial operating period, monitor and record the oil temperature. See Table 12: *Oil Viscosity Grades* for maximum acceptable temperatures. Verify that the initial oil fill viscosity is appropriate for the previously recorded oil temperature. The normal oil change interval is based on temperature and is shown in Table 13: *Lubricant Intervals*.

Table 9: Oil Sump Capacity

| | |
|---|---|
| **Frame 41K** | 2500 ml (84.5 fl. oz.) |
| **Frame 42K** | 2700 ml (91.3 fl. oz.) |

Table 10: Recommended Oils

| | Oil | Oil bath/ Purge oil mist/ pure oil mist lubrication | | |
|---|---|---|---|---|
| **Centrifugal pump lubrication** | Viscosity cSt @ 40 °C | 32 | **46** | 68 |
| | Oil temperature range * | -5 to 58 °C (23 to 136 °F) | **-5 to 70 °C (23 to 158 °F)** | -5 to 80 °C (23 to 176 °F) |
| | Designation according to ISO 3448 and DIN51524 part 2 | ISO VG 32 32 HLP | **ISO VG 46 46 HLP** | ISO VG 68 68 HLP |
| **Oil companies and lubricants** | **BP Castrol** † | Energol™ HLP-HM 32 | **Energol™ HLP-HM 46** | Energol™ HLP-HM 68 |
| | **ESSO** † | Nuto™ HP 32 | **Nuto™ HP 46** | Nuto™ HP 68 |
| | **elf/TOTAL** † | ELFOLNA DS 32 AZOLLA ZS 32 | **ELFOLNA DS 46 AZOLLA ZS 46** | ELFOLNA DS 68 AZOLLA ZS 68 |
| | **LSC® (For oil mist) **** | LSO 32 (Synthetic oil) | **LSO 46 (Synthetic oil)** | LSO 68 (Synthetic oil) |
| | **Mobil** † | Mobil DTE™ 24 | **Mobil DTE™ 25** | Mobil DTE™ 26 |
| | **Q8** † | Q8 Haydn 32 | **Q8 Haydn 46** | Q8 Haydn 68 |
| | **Shell** † | Shell Tellus 32 | **Shell Tellus 46** | Shell Tellus 68 |
| | **Chevron Texaco** † | Rando® HD 32 | **Rando® HD 46** | Rando® HD 68 |
| | **SRS Industrial Lubricants** † | Wiolan HS 32 | **Wiolan HS 46** | Wiolan HS 68 |
| | **Fuchs** † | Renolin CL 32 | **Renolin CL 46** | Renolin CL 68 |
| | **Royal Purple **** | SYNFILM 32 | **SYNFILM 46** | SYNFILM 68 |

( * ) Note that it normally takes 4 hours for bearing temperature to stabilize and the final temperature will depend on the ambient, r/min, pumpage temperature and pump size. Also some oils have a greater viscosity index than the minimum acceptable of 95 (eg Mobil DTE 10 Excel™ Series) which may extend the minimum temperature capability of the oil. Always check the grade capability where the ambient is less than -5 ˚C (23 ˚F). An oil heater is recommended for temperatures below -12 ˚C (14 ˚F).

( † ) Use LSC for oil mist. Oil parameters provide flash point >166 ˚C (331 ˚F), density >0.87 @ 15 ˚C (59 ˚F), pour point of -10 ˚C (14 ˚F) or lower.

( ** ) Normal compounded oils CANNOT be used with oil mist as anti-foam additives need to be avoided. Most oils recommended for wet splash lubrication contain foam inhibitors, as well as, antioxidants and anticorrosion additives, so they are unsuitable for oil mist. Some synthetic lubricants may attack the Nitrile seals when used in the bearing housing. The LSC LSO oils are recommended for oil mist applications. The APE4 and OPE4 power end are equipped with fluoroelastomers O-rings, for compatibility with synthetic lubricants.

Where the ambient temperature is very low, special lubricants are required. When oil lubrication is utilized and the ambient is less than -5 ˚C (23 ˚F), ensure the oil pour point is at least 15 ˚K (27 ˚F) below the lowest anticipated ambient temperature, and ensure the upper operating range of the oil is not exceeded. IS0 VG 46 oil is generally selected for an initial lubrication schedule, when ambient temperatures are expected to between 7 ˚C (45 ˚F) and 32 ˚C (90 ˚F).

Other drivers and gearboxes, if appropriate, should be lubricated in accordance with their manuals.

Table 11: Recommended Greases

| | |
|---|---|
| **General Purpose Grease** | Mobil Polyrex™ EM (or compatible) Polyurea with mineral oil. Factory fill. 0.885g/ml |
| **Food Grade** | Klübersynth UH1 64-62. (NLGI 2) NSF H1 registered, complies with FDA 21 CFR § 178.3570, 0.920g/ml |
| **Low Temp** | Aeroshell 22 -60 to 38 °C (-76 to 100 °F), 0.868g/ml<br>Aeroshell 7 -35 to 60 °C (-31 to 140 °F), 0.966g/ml |

**Note:** Grease lubricated pumps and electric motors are supplied pre-greased.

Table 12: Oil Viscosity Grades

| Maximum Oil Temperature | ISO Viscosity Grade | Minimum Viscosity Index |
|---|---|---|
| Up to 58 °C (136 °F) | 32 | 95 |
| Up to 70 °C (158 °F) | 46 | 95 |
| Up to 80 °C (176 °F) | 68 | 95 |
| Up to 90 °C (194 °F) | 100 | 95 |

**NOTICE** **The maximum temperature that the bearings can be exposed to is 105 ˚C (220 ˚F).**

Table 13: Lubricant Intervals*

| Lubricants | Under 60 °C (140 °F)*** | 60-70 °C (140-158 °F)*** | 71-80 °C (158-176 °F)*** | 80-90 °C (176-194 °F)*** |
|---|---|---|---|---|
| Grease | 12 months | 6 months | 3 months | 1.5 months |
| Mineral oil | 12 months | 6 months | 3 months | 1.5 months |
| Synthetic oil** | 24 months | 18 months | 18 months | 18 months |

( * ) Assuming good maintenance and operation practices, and no contamination.
( ** ) May be increased to 36 months after initial oil change with APE4 power end.
( *** ) Bearing temperatures up to 16 ˚C (30 ˚F) higher than housing.

#### 5.3.2.2 Re-greaseable: RPE4

**Single shielded re-greaseable bearings**

When the grease lubrication option is specified the bearing housing [3200] is equipped with, a single shielded inboard (radial) bearing [3011], outboard (thrust) bearing retainer [2530] with integral grease shield, oil return blocking pin [6810], grease fittings [3853.1 & .2] and an inboard (radial) bearing grease relief fitting [9220].

**NOTICE** **The orientation of the bearing shield, as shown in Figure 23**

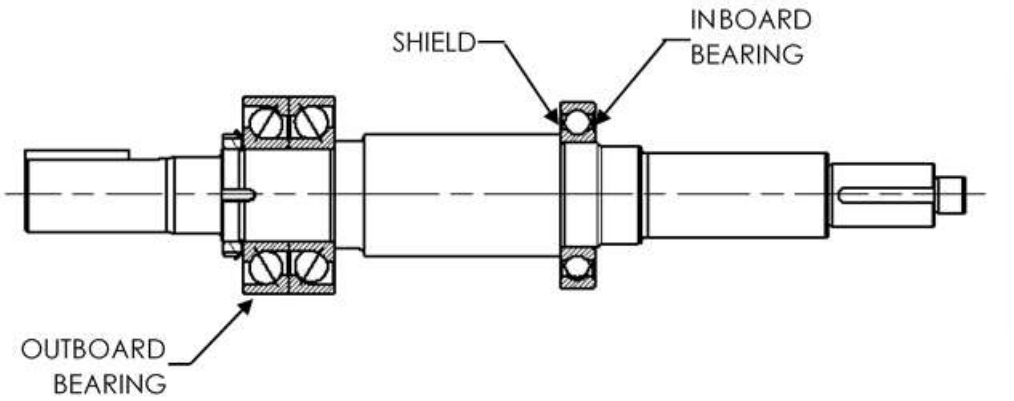


Figure 23: Bearing Shield Orientation

Pump bearings are packed with Mobil Polyrex™ EM grease prior to assembly. See Table 13: *Lubricant Intervals* for the recommend re-lubrication interval. For re-lubrication, a grease with the same type base (polyurea) and oil (mineral) should be used. To re-grease the radial bearing, add grease to the inboard grease fitting until grease exits the relief fitting on the opposite side of the bearing housing. To re-grease the thrust bearing, add the measured amount of grease specified in Table 14: *Grease Lubrication Amount*. Refer to Figure 24 for the grease fitting locations. After eight (8) re-lubrication intervals or three (3) years, it is recommended that the power end be disassembled and thoroughly cleaned, removing any used grease. See Section 8 for complete maintenance instructions.

**NOTICE** **Do not intermix greases shown in Table 11**: *Recommended Greases*. **They are not compatible.**

Table 14: Grease Lubrication Amount**

| Power End | Initial lube* | Re-lubrication |
|---|---|---|
| Frame 41K inboard | 77g | 24g |
| Frame 41K outboard | 125g | 66g |
| Frame 42K inboard | 115g | 31g |
| Frame 42K outboard | 173g | 82g |

(*) If new bearings are not lubricated, they should be hand packed, approximately 70% of the open bearing volume, with the initial lube quantity prior to installation.
(**) Listed quantities are for Polyrex™EM with a density of 0.885g/ml. Grease quantity must be adjusted for the density of the grease applied. Multiply the ratio of {0.885/grease density} by the quantities listed to arrive at the required amount in grams.

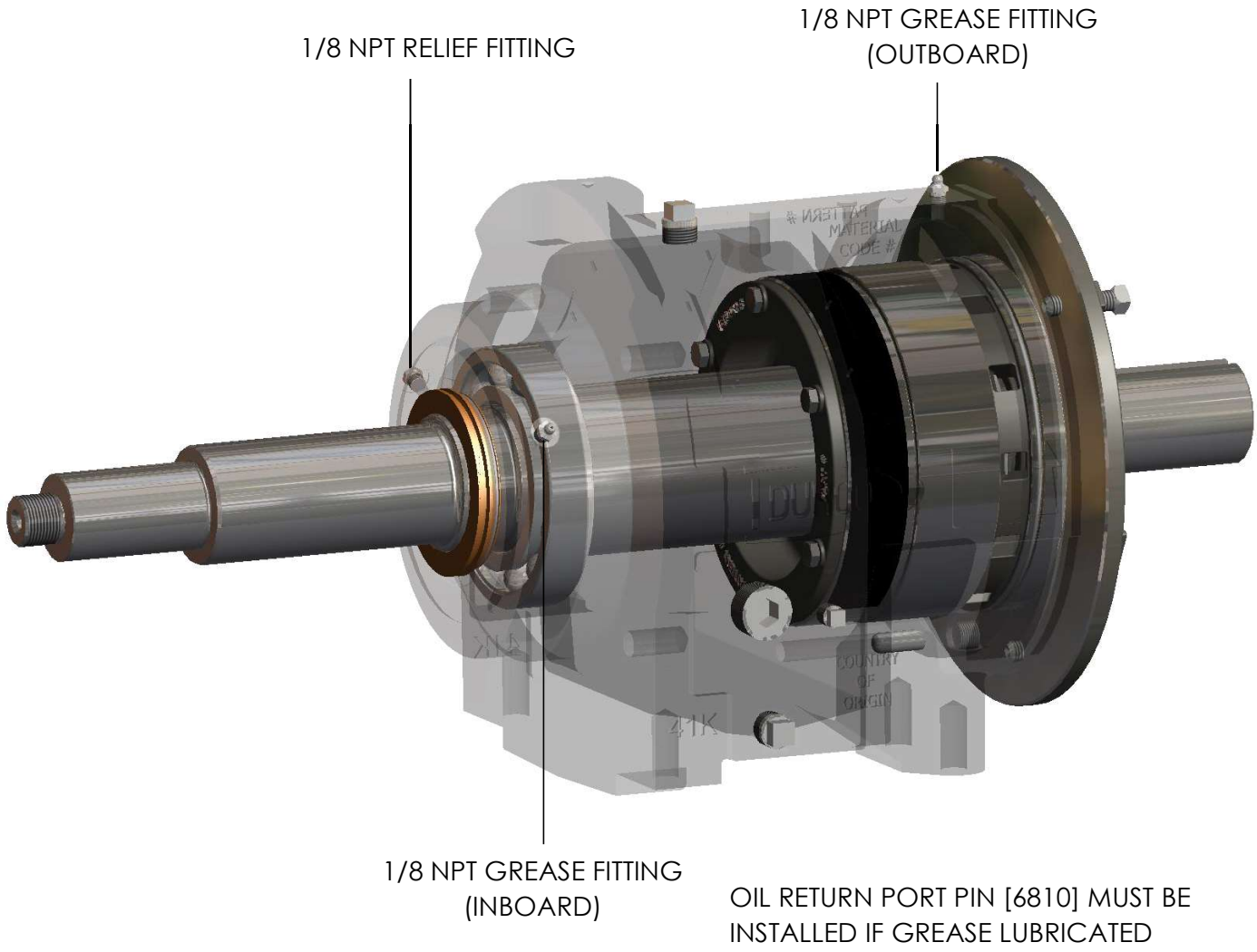


Figure 24: Re-greaseable Option

**NOTICE** **Do not fill the housing with oil when greased bearings are used. The power end must be configured for oil; APE4 or OPE4 power end configuration required for oil.**

**NOTICE** **Do not convert the power end to grease lubrication without installing the grease return pin [6810] in the bearing housing [3200]. The inboard bearing [3011] must contain a shield. The bearing retainer [2530] functions as a shield for the outboard bearings [3013]. See Figure 34: RPE4 Power End Assembly**

#### 5.3.2.3 Grease for life

Grease for life option is not available with the Mark 3 Group 4 models.

#### 5.3.2.4 Oil Mist: MPE4

To further limit dirt ingress and dew point issues within the bearing housing a ½ NPT. connection is available for a low-pressure instrument air or nitrogen supply where applicable.

The oil-mist fitting connections are located so that oil mist flows through the rolling element bearings to the sump. The thrust bearing inlet connection is a plugged 1/8 NPT port located on top of the rear most section of the bearing housing. The two radial bearing inlet connections are plugged 1/8 NPT ports located inside the adapter 25 degrees above horizontal. Either of the radial bearing connections can be used for the reclassifier connection. The unused connection must remain plugged. A plugged ½ NPT bottom drain is provided on the bearing housing. See section 3.5.3.4 for connection locations, *Oil mist lubrication system*. Do not allow oil level to remain above the center of the bearing housing sight glass window with purge mist (wet sump) systems. The thrust bearing oil return port must be closed with the Bearing Housing Pin [6810].

### 5.3.3 Impeller clearance

The impeller [2200] clearance was set at the factory. No further impeller adjustment should be necessary, see Table 15: *Impeller Clearance Setting*, unless the pump serviced. For reverse-vane impellers, the clearance is set to the cover [1220], while the semi-open impeller clearance is set to the casing [1100]. See section 8.8.3, for *Setting impeller clearance and impeller replacement*.

Table 15: Impeller Clearance Setting

| Temperature ˚C (˚F) | Clearance mm (in.) |
|---|---|
| -73 to 204 (-100 to 400) | 0.81 (0.032) |

**Notes:**

1. Rotation of bearing carrier from center of one lug to center of next results in axial shaft movement of 0.10 mm (0.004 in)
2. Set Reverse vane impeller clearance to cover, and semi-open impeller clearance to casing

### 5.3.4 Direction of rotation

All Mark 3 Group 4 pumps turn clockwise as viewed from the motor end. Direction arrows are cast in each side of the bearing housing [3200], as well as, the front and rear of the casing [1100], as shown in Figure 25. Bump the motor starter button without the pump connected to the motor. Verify that the motor rotates clockwise.

**⚠CAUTION** **It is essential that the rotation of the motor be checked before connecting the shaft coupling. Incorrect rotation of the pump, for even a short time, can dislodge and damage the impeller, casing, shaft and shaft seal**.

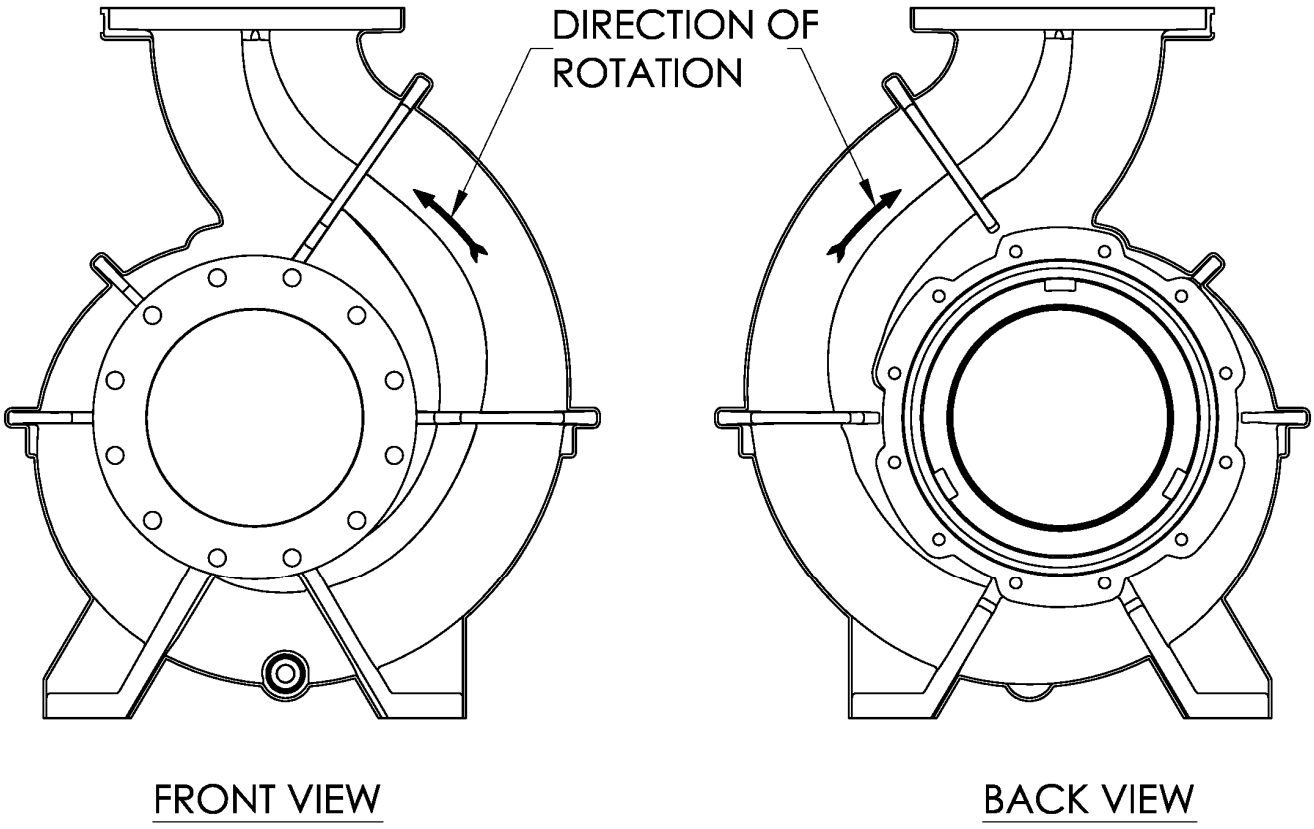


Figure 25: Direction of Rotation

### 5.3.5 Coupling installation

**CAUTION** **The coupling (Figure 26) should be installed as advised by the coupling manufacturer.** Pumps are shipped without the spacer installed. If the spacer has been installed to facilitate alignment, then it must be removed prior to checking rotation. Remove all protective material from the coupling and shaft before installing the coupling.

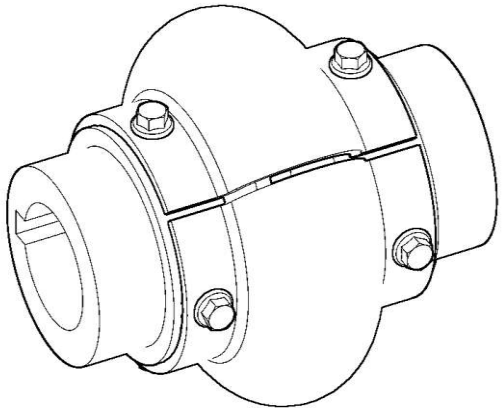

Figure 26: Coupling (typical)

### 5.3.6 Guarding

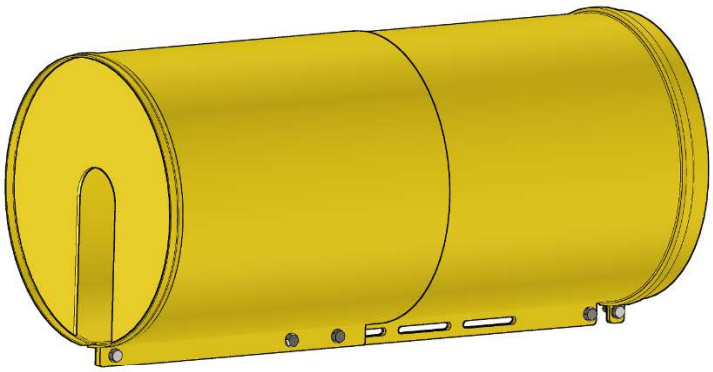

Figure 27: Assembled Guard

**CAUTION** **Power must never be applied to the driver when the coupling guard is not installed.**

**NOTICE** In member countries of the EU and EFTA, it is a legal requirement that fasteners for guards must remain captive in the guard to comply with the Machinery Directive 2006/42/EC. When releasing such guards, the fasteners must be unscrewed in an appropriate way to ensure that the fasteners remain captive.

Flowserve coupling guards are safety devices intended to protect workers from inherent dangers of the rotating pump shaft, motor shaft and coupling. It is intended to prevent entry of hands, fingers or other body parts into a point of hazard by reaching through, over, under or around the guard. No standard coupling guard provides complete protection from a disintegrating coupling. Flowserve cannot guarantee their guards will completely contain an exploding coupling.

Guarding is supplied and fitted to the pump set. If this has been removed or disturbed, ensure pump driver has been disconnected from its power supply.

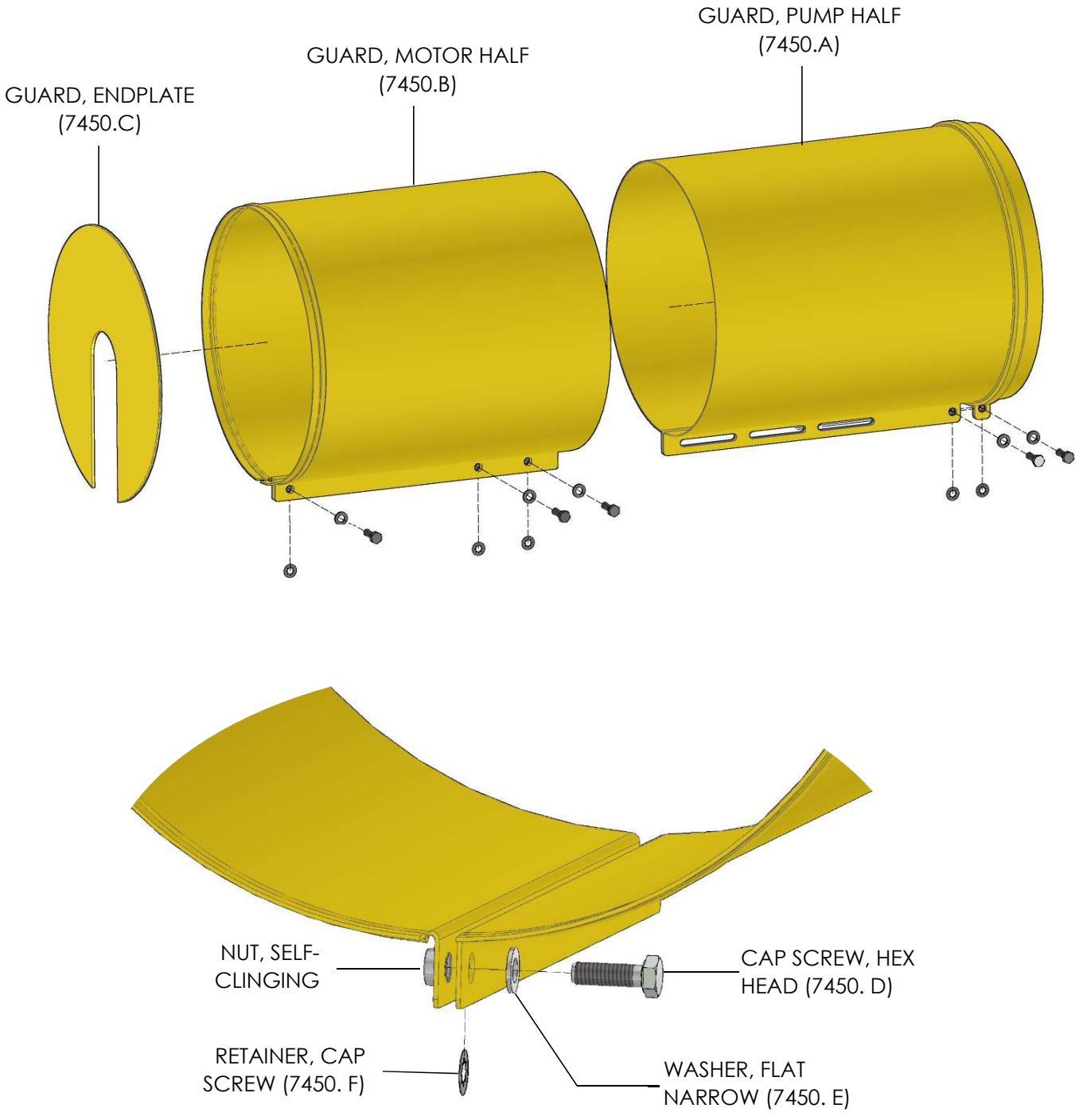


Figure 28: Guard Assembly

#### 5.3.6.1 Removing coupling guard

Refer to Figure 28: Guard Assembly

1. De-energize the driver. Isolate from the power supply following your site's lockout-tagout (tag and lock) procedures.
2. Loosen all cap screws [7450. D] in the slotted holes in the center of the coupling guard. Cap screws should remain attached to the guard.
3. Slide the Motor Half [7450. B] towards the Pump Half [7450.A]
4. Remove the Endplate [7450. C], by slightly spreading the bottom of the Motor Half apart.
5. Remove the Motor Half, by slightly spreading the bottom apart and lifting upwards.
6. Remove the Pump Half from the bearing carrier [3240], by slightly spread the bottom apart and lifting upwards.

#### 5.3.6.2 Installing coupling guard

Refer to Figure 28: Guard Assembly

1. De-energize the driver. Isolate from the power supply following your site's lockout-tagout (tag and lock) procedures.
2. Place Pump Half [7450.A] around bearing carrier [3240], by slightly spread bottom apart and placing over bearing carrier.
3. Loosely tighten the (2) cap screw [7450.D] in the Pump Half.
4. Place Motor Half [7450.B] around the Pump Half, by slightly spreading the bottom apart.
5. Place Endplate [7450.C] in the internal circumferential groove in the Motor Half.
6. Loosely tighten the (3) cap screw on the Motor Half.
7. Slide the assembled Motor Half towards the driver until it or the Endplate contacts the driver. If the driver is equipped with a bearing isolator, leave a distance of 6mm (0.25in) to the isolator rotor.
8. Once both halves of the guard are positioned correctly, tighten the (5) Cap Screws into the self-clinging nuts [7450.G]. Torque (5) Cap Screws to 12Nm (9 ft-lb).

### 5.3.7 Final shaft alignment check

1. Check and level the baseplate if needed. See 5.2.1 Mounting grouted baseplates
2. Mount and level pump, if not completed previously. Level the pump by putting a level on the discharge flange.
3. If not level, adjust the foot piece by adding or deleting shims [3126] between the foot piece [3143] and the bearing housing [3200].
4. Check initial alignment. If pump and driver have been remounted or the specifications given below are not met, perform an initial alignment as described in Section 5.2.2. This ensures there will be sufficient clearance between the motor hold down bolts and motor foot holes to move the motor into final alignment. The pump and driver should be within 0.38 mm (0.015 in) FIM (full indicator movement) parallel, and 0.0025 mm/mm (0.0025 in/in) FIM angular.

5. Run piping to the suction and discharge of the pump. There should be no piping loads transmitted to the pump after connection is made. Recheck the initial alignment to verify that there are no significant changes. If either the vertical or horizontal alignment changes more than 0.05 mm (0.002 in) after final torque of flange bolts, correct pipe strain before continuing to final alignment.
6. Perform final alignment. Check for soft-foot under the driver. Place a dial indicator base on the baseplate with the indicator in contact with the top on the motor foot. Then loosen the holding down bolt while noting any deflection reading on the Dial Test Indicator – a maximum of 0.05 mm (0.002 in) is considered acceptable, but any more will have to be corrected by adding shims, for example, if the dial indicator shows the foot lifting 0.15 mm (0.006 in) then this is the thickness of shim to be placed under that foot. Tighten down and repeat the same procedure on all other feet until all are within tolerance.
7. When satisfactory alignment is obtained the number of shims in the pack should be minimized. It is recommended that no more than five shims be used under any foot. Final horizontal alignment is made by moving the driver. Maximum pump reliability is obtained by having near perfect alignment. Flowserve recommends no more than 0.05 mm (0.002 in) TIR parallel, and 0.0005 mm/mm (0.0005 in/in) angular misalignment. It is recommended that the motor shaft is set 0.05 mm (0.002 in) below the pump shaft during cold alignment, to allow for vertical thermal growth of the motor. (See section 8.6.11, Installed pump)
8. Operate the pump for at least two hours or until it and the driver reaches final operating temperature. Shut the pump down and recheck alignment while the pump is hot. Piping thermal expansion and motor vertical growth may change the alignment. Realign pump as necessary.

### 5.3.8 Priming and auxiliary supplies

The Mark 3 Group 4 standard pump will not move liquid unless the pump is primed. A pump is said to be "primed" when the casing and the suction piping are completely filled with liquid. To prime open discharge valves a slight amount. This will allow any entrapped air to escape and will normally allow the pump to prime, if the suction source is above the pump. When the suction source is below the pump, close the discharge valve and open the suction valve. The pump requires manual venting to prime the pump with vacuum. Once the pump fills with liquid, isolate the vacuum source and start the pump.

When a condition exists where the suction pressure may drop below the pump's suction capability (NPSHr), it is advisable to add a low-pressure control device to shut the pump down when the pressure drops below a predetermined minimum.

# 6 Commissioning

**CAUTION** **These operations must be carried out by fully qualified personnel**.

**Pre-commissioning procedure**

Prior to starting the pump, it is essential that the following checks be made. These checks are all described in detail in Section 8, *Maintenance*.

1. Pump and motor properly secured to the baseplate
2. All fasteners tightened to the correct torque
3. Coupling guard in place and not rubbing
4. Rotation check, see Section 5.3.4, *Direction of rotation*. **This is essential**
5. Impeller clearance setting
6. Shaft seal properly installed
7. Seal support system operational
8. Bearing are lubricated
9. Bearing housing cooling system operational, if fitted
10. Support leg cooling for center line mounting option operational
11. Heating/cooling for jacketed casing/cover operational
12. Pump instrumentation is operational
13. Pump is primed, See Section 5.3.8, *Priming and auxiliary supplies*
14. Rotation of shaft by hand

As a final step in preparation for operation, it is important to rotate the shaft by hand to be certain that all rotating parts move freely, and that there are no foreign objects in the pump casing.

**WARNING** Driver power must be isolated. Lockout-tagout required prior to checking for free rotation.

# 7 Operation

## 7.1 Start-up

1. Fully open the suction valve. The suction valve must remain open while the pump is operating. Any throttling or adjusting of flow must be done through the discharge valve. Partially closing the suction valve can create cavitation and related pump performance problems.

   **NOTICE** **Never operate pump with the suction valve partially or fully closed. Damage to the pump is likely.**

   **⚠WARNING** **Never operate pump with both the suction and discharge valves closed. This could cause an explosion**.
2. If liquid supply in not above pump, prime pump. See Section 5.3.8, *Priming and auxiliary supplies*
3. All cooling, heating, and flush lines must be started and regulated.
4. Start the driver (typically, the electric motor).

   **NOTICE** **Always operate the pump above 400 rpm. Otherwise damage to the labyrinth seals will occur.**
5. Slowly open the discharge valve until the desired flow is reached. Maintain capacity above the Minimum Continuous Stable Flow (MCSF) listed in Section 7.2.1

   **⚠WARNING** **The discharge valve must be opened within a short interval after starting the driver. Failure to do so could cause a dangerous build-up of heat, and possibly and explosion. See section 7.2.2 *Minimum thermal flow***

## 7.2 Normal operation

### 7.2.1 Minimum Continuous Sable Flow (MSCF)

Minimum continuous stable flow (MCSF) is the lowest flow at which the pump can operate and still meet the bearing life, shaft deflection and bearing housing vibration limits documented in ASME B73.1. Pumps may be operated at lower flows, but it must be recognized that the pump may exceed one or more of these limits. For example, vibration may exceed the limit set by the ASME standard. The size of the pump, the energy absorbed, and the liquid pumped are some of the considerations in determining MCSF.

The minimum continuous stable flow (MCSF) is based on a percentage of the best efficiency point (BEP). Table 16: *Minimum Continuous Stable Flow* identifies the MCSF for each Mark 3 Group 4 pump models. **Do not operate the pump below the MCSF shown on the Hydraulic Datasheet.**

When operating on a VFD at speeds not listed, the MCSF is obtained by linearly interpolating between the speeds shown in Table: 16 *Minimum Continuous Stable Flow*.

Table 16: Minimum Continuous Stable Flow

| Pump Size | 60 Hz | | 50 Hz | |
|---|---|---|---|---|
| | RPM | Min. Flow (% of BEP) | RPM | Min. Flow (% of BEP) |
| 41K8X4-19 OP | 1780 | 48% | 1480 | 21% |
| | 1180 | 19% | 980 | 21% |
| 41K8X4-19 RV | 1780 | 49% | 1480 | 29% |
| | 1180 | 30% | 980 | 30% |
| 41K8X6-19 OP | 1780 | 15% | 1480 | 13% |
| | 1180 | 14% | 980 | 29% |
| 41K8X6-19 RV | 1780 | 51% | 1480 | 36% |
| | 1180 | 38% | 980 | 40% |
| 41K10X6-19 OP | 1780 | 52% | 1480 | 47% |
| | 1180 | 38% | 980 | 49% |
| 41K10X6-19 RV | 1780 | 69% | 1480 | 61% |
| | 1180 | 24% | 980 | 39% |
| 41K12X10-19 OP | 1180 | 49% | 980 | 51% |
| | 885 | 48% | 740 | 60% |
| 41K12X10-19 RV | 1180 | 37% | 980 | 38% |
| | 885 | 34% | 740 | 14% |
| 42K12X8-22 OP | 1180 | 62% | 980 | 49% |
| | 885 | 62% | 740 | 70% |
| 42K12X8-22 RV | 1180 | 60% | 980 | 25% |
| | 885 | 25% | 740 | 25% |
| 42K12X10-22 OP | 1180 | 65% | 980 | 63% |
| | 885 | 65% | 740 | 70% |
| 42K12X10-22 RV | 1180 | 65% | 980 | 14% |
| | 885 | 19% | 740 | 20% |

### 7.2.2 Minimum thermal flow

All Mark 3 pumps also have a *minimum thermal flow*. This is defined as the minimum flow that will not cause an excessive temperature rise. Minimum thermal flow is application dependent.

**⚠WARNING Do not operate the pump below minimum thermal flow, as this could cause an excessive temperature rise. Contact a Flowserve sales engineer for determination of minimum thermal flow, if you are not qualified to determine this value.**

Avoid running a centrifugal pump at drastically reduced capacities or with discharge valve closed for extended periods of time. This can cause rapid temperature rise and the liquid in the pump may reach its boiling point. If this occurs, the mechanical seal will be exposed to vapor. The lack of fluid lubrication to the seal, may damage the seal faces. Continued running under these conditions when the suction valve is also closed can create an explosive condition due to the confined vapor at high pressure and temperature.

Thermostats may be used to safeguard against overheating by shutting down the pump at a predetermined temperature.

Safeguards should also be taken against possible operation with a closed discharge valve, such as installing a bypass back to the suction source. The size of the bypass line and the required bypass flow rate is a function of the input horsepower and the allowable temperature rise.

### 7.2.3 Reduced head

As the discharge value is opened, discharge pressure will drop and capacity will increase. Power drawn by the pump will increase with the increase capacity. Increased motor temperature, is an indication of overload. A motor temperature above 60 ˚C (140 ˚F) is an indication of overload (consult motor manufacture for specific maximum temperature recommendations). If overloading occurs, throttle the discharge.

Reduced discharge is also an indication higher than normal flow. Cavitation and recirculation may occur, damaging the pump. If abnormal noise is heard, throttle the pumps.

### 7.2.4 Surging condition

A rapidly closing discharge or check valve can cause a damaging pressure surge (water hammer). A dampening arrangement should be provided in the piping.

**⚠CAUTION Pressure rise due to water hammer can exceed the MDP (Maximum Design Pressure) for the pump. The mechanical seal, gaskets or casing can fail, causing a loss of the pumped liquid.**

### 7.2.5 Operation in sub-freezing conditions

When using the pump in sub-freezing conditions where the pump is periodically idle, the pump should be properly drained or protected with thermal devices which will keep the liquid in the pump from freezing.

### 7.2.6 Performance and operation limits

This product has been selected to meet the specification of your purchase order. See section 2.1, Intended use. The data in the following sub-sections contains additional information to help with your installation. It is typical, and factors such as liquid being pumped, temperature, material of construction, and seal type may influence this data. If required, a definitive statement for your application can be obtained from Flowserve.

### 7.2.7 Alloy cross reference chart

Table 17: Alloy Cross-Reference

| Flowserve Material code | Designation | Durco Legacy Codes | ACI Designation | Equivalent Wrought Designation | ASTM Specifications | Material Group No. |
|---|---|---|---|---|---|---|
| E3020 | Ductile iron | DCI | None | None | A395, Gr. 60-40-18 | 1.0 |
| C3009 | Carbon steel | DS | None | Carbon steel | A216, Gr. WCB | 1.1 |
| C3062 | Durco CF8 | D2 | CF8 | 304 | A744, Gr. CF8 | 2.1 |
| C3069 | Durco CF3 | D2L | CF3 | 304L | A744, Gr. CF3 | 2.3 |
| C3063 | Durco CF8M | D4 | CF8M | 316 | A744, Gr. CF8M | 2.2 |
| C3067 | Durco CF3M | D4L | CF3M | 316L | A744, Gr. CF3M | 2.3 |
| C3107 | Durcomet 100 | CD4M | CD4MCuN | Ferralium® | A995, Gr. 1B | 2.8 |
| C4028 | Durimet 20 | D20 | CN7M | Alloy 20 | A744, Gr. CN7M | 3.17 |
| C4029 | Durcomet 5 | DV | None | None | None | 2.2 |
| K3005 | Durco CY40 | DINC | CY40 | Inconel® 600 | A494, Gr. CY40 | 3.5 |
| K3007 | Durco M35 | DMM | M351 | Monel® 400 | A494, Gr. M35-1 | 3.4 |
| K3008 | Nickel | DNI | CZ100 | Nickel 200 | A494, Gr. CZ100 | 3.2 |
| K4007 | Chlorimet 2 | DC2 | N7M | Hastelloy® B | A494, Gr. N7M | 3.7 |
| K4008 | Chlorimet 3 | DC3 | CW6M | Hastelloy® C | A494, Gr. CW6M | 3.8 |

® Ferralium is a registered trademark of Langley Alloys.

® Hastelloy is a registered trademark of Haynes International, Inc.

® Inconel and Monel are registered trademarks of International Nickel Co. Inc.

### 7.2.8 Pressure-temperature ratings

The pressure-temperature (P-T) ratings for Mark 3 Group 4 pumps are shown in Table 18. Determine the appropriate casing "Material Group No." in Table 17: *Alloy Cross-Reference*. Interpolation may be used to find the pressure rating for a specific temperature.

**Example:**

The pressure temperature rating for a Mark 3 Group 4 pump with Class 150 flanges and CF8M construction at an operating temperature of 150 ˚C (140 ˚F) is found as Follows:

1. The correct pressure - temperature chart is Table 18: *P-T Rating for 150# Flanges*
2. From Table 17: *Alloy Cross-Reference*, the correct material group for CF8M (D4) is 2.2
3. From Table 18: *P-T Rating for 150# Flanges*, the pressure-temperature rating is 14.8 bar (215 psig)
    a. Linearly interpolate between listed temperatures to determine P-T ratings at other temperatures.

 The maximum discharge pressure must be less than or equal to the P-T rating. Discharge pressure may be approximated by adding the suction pressure and the differential head developed by the pump.

Table 18: P-T Rating for 150# Flanges

| **Temp °C** | **Material Group No.** | | | | | | | | | | |
|---|---|---|---|---|---|---|---|---|---|---|---|
| | 1.0 | 1.1 | 2.1 | 2.2 | 2.8 | 3.2 | 3.4 | 3.5 | 3.7 | 3.8 | 3.17 |
| | **barg** | | | | | | | | | | |
| -73 | - | - | 19.0 | 19.0 | 20.0 | 12.7 | 15.9 | 20.0 | 20.0 | 20.0 | 15.9 |
| -29 | 17.2 | 19.6 | 19.0 | 19.0 | 20.0 | 12.7 | 15.9 | 20.0 | 20.0 | 20.0 | 15.9 |
| -18 | 17.2 | 19.6 | 19.0 | 19.0 | 20.0 | 12.7 | 15.9 | 20.0 | 20.0 | 20.0 | 15.9 |
| 38 | 17.2 | 19.6 | 19.0 | 19.0 | 20.0 | 12.7 | 15.9 | 20.0 | 20.0 | 20.0 | 15.9 |
| 50 | 17.0 | 19.2 | 18.3 | 18.4 | 19.5 | 12.7 | 15.4 | 19.5 | 19.5 | 19.5 | 15.4 |
| 100 | 16.0 | 17.7 | 15.7 | 16.2 | 17.7 | 12.7 | 13.8 | 17.7 | 17.7 | 17.7 | 13.5 |
| 150 | 14.8 | 15.8 | 14.2 | 14.8 | 15.8 | 12.7 | 12.9 | 15.8 | 15.8 | 15.8 | 12.3 |
| 200 | 13.9 | 13.8 | 13.2 | 13.7 | 13.8 | 12.7 | 12.5 | 13.8 | 13.8 | 13.8 | 11.3 |
| **Temp °F** | **Material Group No.** | | | | | | | | | | |
| | 1.0 | 1.1 | 2.1 | 2.2 | 2.8 | 3.2 | 3.4 | 3.5 | 3.7 | 3.8 | 3.17 |
| | **psig** | | | | | | | | | | |
| -100 | - | - | 275 | 275 | 290 | 185 | 230 | 290 | 290 | 290 | 230 |
| -20 | 250 | 285 | 275 | 275 | 290 | 185 | 230 | 290 | 290 | 290 | 230 |
| 0 | 250 | 285 | 275 | 275 | 290 | 185 | 230 | 290 | 290 | 290 | 230 |
| 100 | 250 | 285 | 275 | 275 | 290 | 185 | 230 | 290 | 290 | 290 | 230 |
| 200 | 235 | 260 | 230 | 235 | 260 | 185 | 200 | 260 | 260 | 260 | 200 |
| 300 | 215 | 230 | 205 | 215 | 230 | 185 | 190 | 230 | 230 | 230 | 180 |
| 400 | 200 | 200 | 190 | 195 | 200 | 185 | 180 | 200 | 200 | 200 | 160 |

### 7.2.9 Maximum suction pressure

The maximum suction pressure for Mark 3 Group 4 pumps with reverse-vane (RV) impeller is located in Table 19: *Maximum Suction Pressure (RV)*. Suction pressure is limited to the lower of the maximum suction pressure listed or the P-T rating determined is Section 7.2.8 *Pressure temperature ratings*. For semi-open (OP) impellers, suction pressure is only limited by the P-T rating.

Table 19: Maximum Suction Pressure (RV)

| Pump Size | Max. Suction Pressure barg (psig) |
|---|---|
| 41K12X10-16 | 5.7 (80) |
| 41K14X14-16 | 16.9 (245) |
| 41K8X4-19 | 6.4 (90) |
| 41K8X6-19 | 7.5 (110) |
| 41K10X6-19 | 8.2 (120) |
| 41K12X10-19 | 15.4 (220) |
| 41K14X12-19 | 16.0 (230) |
| 42K10X8-19 | 9.4 (135) |
| 42K16X16-19 | 16.4 (235) |
| 42K12X8-22 | 12.8 (185) |
| 42K12X10-22 | 13.3 (190) |
| 42K14X12-22 | 13.8 (200) |
| 42K16X14-22 | 6.2 (90) |

**Notes:**
For suction pressure above 4 barg (60 psig) other factors may reduce the maximum allowable suction pressure, Refer to application specific Hydraulic Datasheet for details

## 7.3 Cleaning, disinfecting, and sterilizing

One of the major causes of pump failure is the presence of contaminants in the bearing housing. This contamination can be in the form of moisture, dust, dirt and other solid particles such as metal chips. Contamination can also be harmful to the mechanical seal (especially the seal faces) as well as other parts of the pump. For example, dirt in the impeller hub bore could cause the impeller to not be seated properly against the shaft. For these reasons, it is very important that proper cleanliness be maintained. Some guidelines are listed below.

- After draining the oil from the bearing housing, periodically send it out for analysis. If it is contaminated, determine the cause and correct.
- The work area should be clean and free from dust, dirt, oil, grease etc.
- Hands and gloves should be clean.
- Only clean towels, rags and tools should be used.

## 7.4 Shut-down

When the pump is being shut down, the procedure should be the reverse of the start-up procedure.

1. Slowly close the discharge valve
2. Shut down the driver
3. Close the suction valve

 Closing the suction valve while the pump is running is a safety hazard and could seriously damage the pump and other equipment.

# 8 Maintenance, disassembly, inspection of parts, & assembly

## 8.1 Maintenance procedure

It is the plant operator's responsibility to ensure that all maintenance, inspection and assembly work is carried out by authorized and qualified personnel who have adequately familiarized themselves with the subject matter by studying this manual in detail. (See Section 2)

⚠ Any work on the machine must be performed when it is at a standstill and de-energized state. It is imperative that the procedure for shutting down the machine is followed, as described in Section 7.4, *Shut-down*.

Guard fasteners must remain captive during dismantling of guards, as described in Section 5.3.6, *Guarding*.

On completion of work all guards and safety devices must be re-installed and made operative again. Before restarting the machine, the relevant instruction listed in Section 6, Commissioning, must be observed.

Oil and grease leaks may make the ground slippery. Machine maintenance must always begin and finish by cleaning the ground and the exterior of the machine.

If platforms, stairs and guard rails are required for maintenance, they must be placed for easy access to areas where maintenance and inspection are to be carried out. The positioning of these accessories must not limit access or hinder lifting of the part to be serviced.

When air or compressed inert gas is used in the maintenance process, the operator and anyone in the vicinity must be careful and have the appropriate PPE, Personal Protective Equipment.

*Do not spray air or compressed inert gas on skin*

*Do not direct an air or gas jet towards other people*

*Never use air or compressed inert gas to clean clothes*

*Never use air or compressed inert gas to spin bearings*

 Follow your company's lock-out tag-out procedures. If none exist perform the following steps:

Before working on the pump, take measures to prevent the pump from being accidently started. Place a warning sign on the starter device:

**"Machine under repair: do not start."**

With electric drive equipment, lock the main switch open and withdraw any fuses. Put a warning sign on the fuse box or main switch:

**"Machine under repair: do not connect."**

 Never clean equipment with flammable solvent or carbon tetrachloride. Protect yourself against toxic fumes when using cleaning agents, using appropriate PPE.

Refer to Table 22: *Parts List* shown in Section 8.5 for items number reference used throughout this section.

### 8.1.1 Preventive maintenance

The following sections of this manual give instructions on how to perform a complete maintenance overhaul. However, it is also important to periodically repeat the pre-commission procedures listed in Section 6. These checks will help extend pump like as well as the length of time between major overhauls.

### 8.1.2 Need for maintenance records

A procedure for keeping accurate maintenance records is critical part of any program to improve pump reliability. There are many variables that can contribute to pump failures. Often long term and repetitive problems can only be solved by analysing these variables through pump maintenance records.

## 8.2 Schedule

Table 20: Maintenance Schedule

| Frequency | Task |
|---|---|
| Daily | Check suction and discharge gauges<br>Check for abnormal conditions (high/low temperature, flows, vibration, pressure etc.)<br>Check motor current/driver power.<br>Check for leakage from seals and joints.<br>Check all lubricants levels (i.e. bearings housing oilers, seal plan 52/53, seal supply systems) (if applicable).<br>Check for free flow of cooling medium (if applicable).<br>Check stand-by pump is at applicable temperature and available to start as required. |
| Weekly | Check unit vibration<br>Check operators log for loss of unit performance |
| Monthly | Check all lubricants for contaminations by sample analysis.<br>Check all paint or protective coatings.<br>Check all power/instrument cable glands for tightness |
| Every Six Months | Change all lubricants. See Table 13: *Lubrication Intervals* for specific recommendations. |
| Yearly | Check foundation fixing, bolting, grouting for looseness, cracking or general distress.<br>Check unit alignment against previous inspections.<br>Check calibration of instruments. |
| Every Three Years | Check internal conditions of pump and all auxiliary piping for corrosion/erosion.<br>Check internal pump components for wear. |

**NOTICE** This schedule is a recommendation only and is intended to be amended by site experience of the prevailing conditions. It outlines recommendations for the pump only and must be supplemented by schedules for other equipment on the package.

## 8.3 Special tools

A typical range of tolls that will be required to maintain these pumps is listed below. SAE standard tools are required (standard inch).

- Hand wrenches
- Socket wrenches
- Allen wrenches
- Soft mallet
- Screwdrivers

**Special equipment**

- Bearing pullers
- Bearing induction heaters
- Dial indicators
- Spanner wrench
- Torque wrenches
- Flowserve Mark 3 Group 4 tool kit (see below)

To simplify maintenance, it is recommended that Flowserve Mark 3 Group 4 tool kit, as shown in Figure 29, is used. This tool kit includes a handy impeller wrench, which simplifies installation and removal of the impeller. It also contains "nose cones" which protect shaft threads and O-rings during maintenance. This tool kit can be ordered from your local Flowserve sales engineer or from a Flowserve distributor or representative.



Figure 29: Mark 3 Group 4 tool kit

## 8.4 Required replacement parts for maintenance

- Mechanical process fluid seals
- Bearing housing seals
- Bearings
- Shaft or shaft sleeve
- Impeller
- Gaskets / O-rings

## 8.5 Disassembly

Table 21: Torque Requirements

| Item | Location & Description | | Frame 41K | | Frame 42K | |
|---|---|---|---|---|---|---|
| | | | Nominal size | Fasteners Nm (ft-lb) | Nominal size | Fasteners Nm (ft-lb) |
| 2912 | Impeller | Nut [1] | 1.250-12 UNF | 380 (280) | 1.375-12 UNF | 530 (390) |
| 6570.1 | Bearing Retainer | Screw | .375-16 UNC | 18 (13) | .375-16 UNC | 18 (13) |
| 6570.4 | Bearing Housing Foot | Cap Screw | .750-10 UNC | 150 (110) | .750-10 UNC | 150 (110) |
| 6570.5 | Adapter | Screw | .750-10 UNC | 150 (110) | .750-10 UNC | 150 (110) |
| 6570.6 | Cap Screw – 16" | Token Bolt | .500-13 UNC | 43 (32) | N/A | N/A |
| 6570.6 | Cap Screw – 19" | Token Bolt | .625-11 UNC | 86 (64) | .625-11 UNC | 86 (64) |
| 6570.6 | Cap Screw – 22" | Token Bolt | N/A | N/A | .625-11 UNC | 86 (64) |
| 6570.8 | IPS Beacon™ 2 | Button Head | .25-28 UNF | 8.5 (6.3) | .25-28 UNF | 8.5 (6.3) |
| 6580.1 | Casing – 16" Impeller | Nuts | .750-10 UNC | 110 (79)*** | N/A | N/A |
| 6572.1 | | Studs | | | | |
| 6580.1 | Casing – 19" Impeller | Nuts | .875-9 UNC | 170 (130)*** | .875-9 UNC | 170 (130)*** |
| 6572.1 | | Studs | | | | |
| 6580.1 | Casing – 22" Impeller | Nuts | N/A | N/A | .875-9 UNC | 170 (130)*** |
| 6572.1 | | Studs | | | | |
| 6580.2 | Gland* | Nuts | .625-11 UNC | 54 (40) | .625-11 UNC | 54 (40) |
| 6572.2 | | Studs | | | | |
| 6580.2 | Mechanical Seal** Gland with O-ring | Nuts | .625-11 UNC | 68 (50) | .625-11 UNC | 68 (50) |
| 6572.2 | | Studs | | | | |
| 6814 | Bearing Carrier | Set Screw | .500-13 UNC | 37 (27) | .500-13 UNC | 37 (27) |
| 6541.1 | Shaft | Locknut | AN 16 | 267 - 273 (197 - 275) | AN 18 | 336 - 508 (248 - 375) |
| - | Foot to Baseplate | Cap Screw | .750-10 UNC | 150 (110) | .750-10 UNC | 150 (110) |
| - | Casing to Baseplate | Cap Screw | .750-10 UNC | 150 (110) | .875-9 UNC | 250 (190) |

**Note:**

1. Use Nickel Anti-Seize lubricant on the impeller nut thread.
2. Unless noted values shown are for non-lubricated / non-coated threads.
3. Gasket joints torque values are for unfilled PTFE gaskets. Other gaskets materials may require additional torque to seal. Exceeding metal joint torque values is not recommended.
4. Use only AS
5. A193 studs and A194 nuts. This is a requirement for pressure retaining fastener per ASTM Boiler Pressure Vessel Code BPVC. Studs ends must be stamped with the ASTM A193 Grade designation. Examples: B7, B8, B8M, B7TF. Grade B8C1 is only suitable for packing gland studs.

* Use the values shown if the torque value is not supplied by the seal manufacture.

** These values apply to factory supplied Flowserve ISC2 Series seals only. For all other seals follow the manufacture's recommendations.

*** These values apply to B8, B8M, and B7TF studs. If needed to seal the joint, B7FT stud torque can be increased up to 20%, and B8 stud torque can be increased up to 10%.

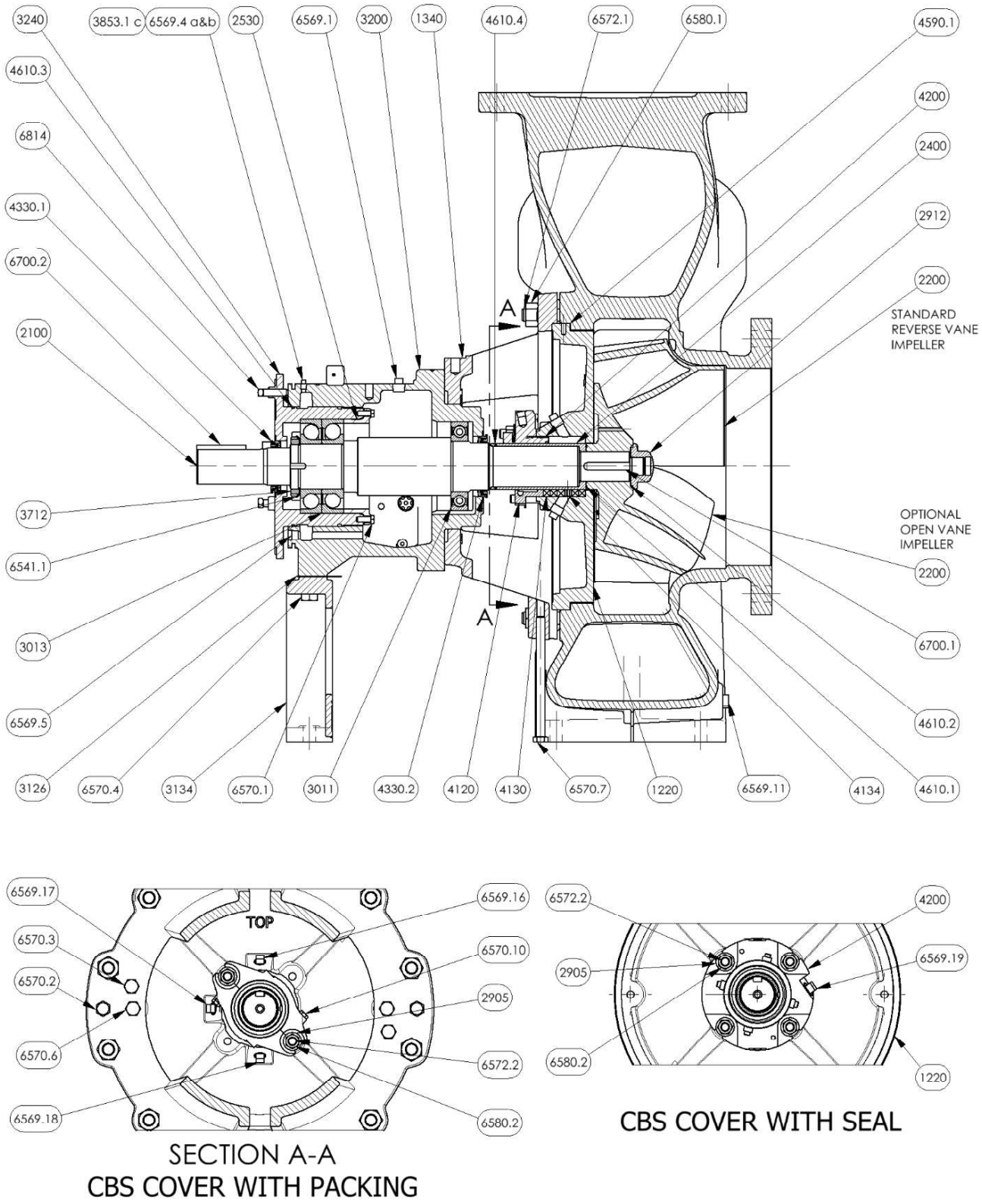


Figure 30: Sectional of pump with APE4 & CBS cover

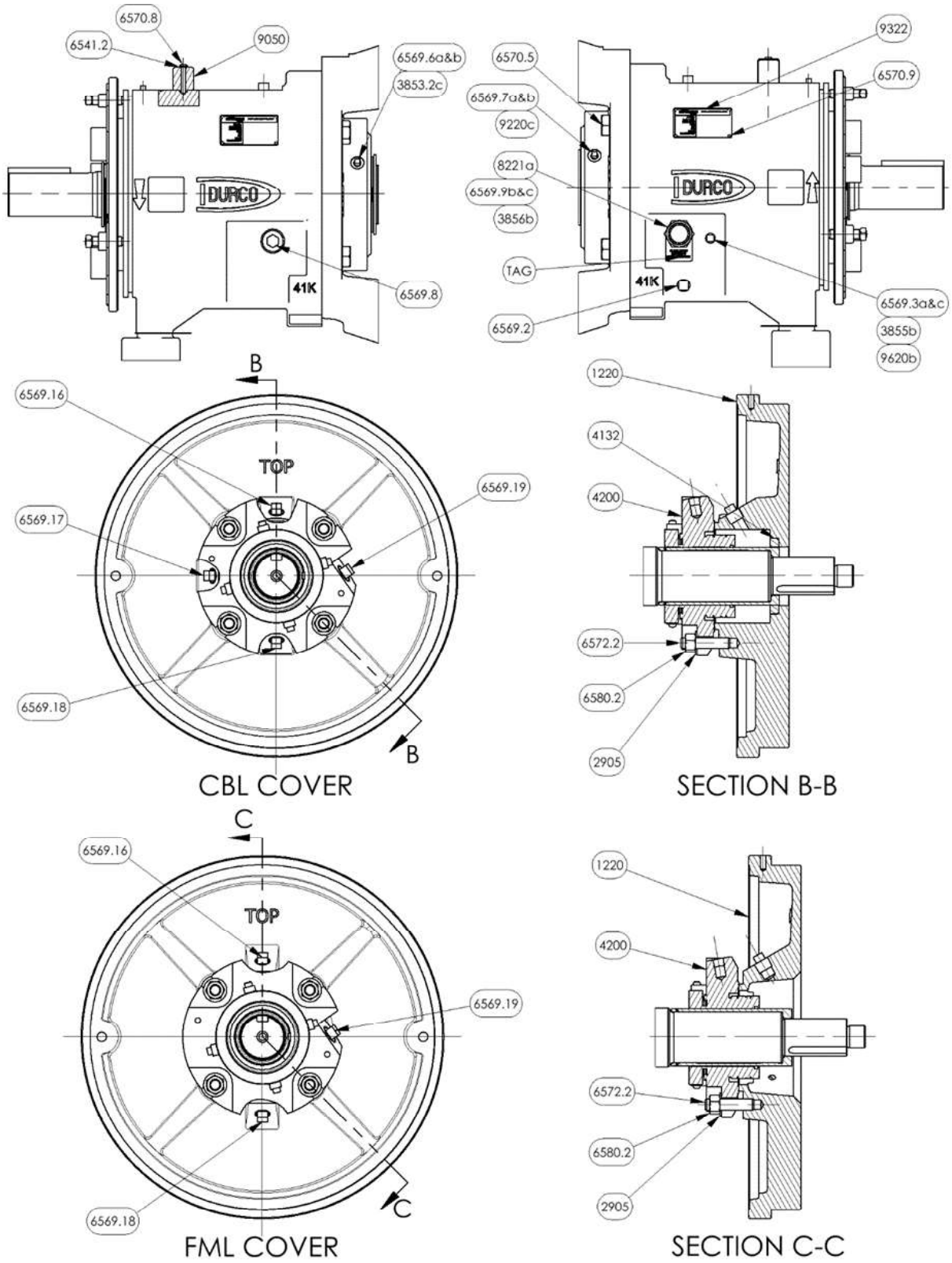


Figure 31: Sectional of APE4 bearing housing, CBL & FML Covers

Table 22: Parts List

| ITEM | TITLE | ITEM | TITLE |
|---|---|---|---|
| 1100 | Casing | 6569.2 | Plug- Drain (magnetic) [a] |
| 1220 | Casing Cover | 6569.3 | Plug – Oiler Tap [a / c / d] |
| 1340 | Adapter | 6569.4 | Plug – Thrust bearing [a / b / d] |
| 2100 | Shaft | 6569.5 | Plug – Thrust Bearing Drain Port |
| 2200 | Impeller RV/OP | 6569.6 | Plug – Radial Bearing (right) [a / b / d] |
| 2400 | Shaft Sleeve | 6569.7 | Plug – Radial Bearing (left) [a / b / d] |
| 2530 | Retaining Ring (oil) [a / b / d] | 6569.8 | Plug – Sight Glass (right) |
| 2530 | Retaining Ring (grease) [NS / c] | 6569.9 | Plug – Sight Glass (left) [NS / b / c / d] |
| 2905 | Plain Washer | 6569.11 | Plug – Casing Drain (optional) |
| 2912 | Impeller Nut | 6569.12 | Plug – Casing Suction (optional) [NS] |
| 3011 | Radial Bearing w/o shield [a / b / d] | 6569.13 | Plug – Casing Discharge (optional) [NS] |
| 3011 | Radial Bearing with shield [NS / c] | 6569.16 | Plug – Cover Seal Chamber (optional-FML) |
| 3013 | Thrust Bearing | 6569.17 | Plug – Cover Seal Chamber, Flush (optional) |
| 3126 | Shim - Foot | 6569.18 | Plug – Cover Seal Chamber, Bottom (optional) |
| 3134 | Foot – Bearing housing | 6569.19 | Plug – Mechanical Seal |
| 3200 | Bearing housing | 6570.1 | Cap Screw – Bearing Retainer |
| 3240 | Bearing carrier | 6570.2 | Cap Screw – Jack Bolts, Casing |
| 3712 | Locknut - Shaft | 6570.3 | Cap Screw – Jack Bolts, Cover |
| 3853.1 | Grease Fitting – Thrust Bearing [NS / c] | 6570.4 | Cap Screw – Bearing Housing Foot |
| 3853.2 | Grease Fitting – Radial Bearing [NS / c] | 6570.5 | Cap Screw – Adapter |
| 3855 | Oiler Opto-Matic [NS / b] | 6570.6 | Cap Screw – Token Bolt |
| 3856 | Oiler Watchdog [NS / b] | 6570.7 | Cap Screw – Adapter Support |
| 4120 | Gland Packing | 6570.8 | Button Socket Cap Screw – Beacon (optional) |
| 4130 | Packing | 6570.9 | Driver Screw – Nameplate |
| 4132 | Throat Bushing | 6570.10 | Cap Screw – Split Gland |
| 4134 | Lantern Ring - Packing | 6572.1 | Stud – Casing |
| 4200 | Mechanical Seal | 6572.2 | Stud – Gland |
| 4330.1 | Bearing Isolator (outboard) | 6580.1 | Nut – Casing |
| 4330.2 | Bearing Isolator (inboard) | 6580.2 | Nut – Gland |
| 4590.1 | Gasket – Casing / Cover | 6700.1 | Key – Impeller |
| 4610.1 | O-Ring – Impeller | 6700.2 | Key – Coupling |
| 4610.2 | O-Ring – Impeller Nut | 6810 | Pin – Bearing Housing [NS / c / d] |
| 4610.3 | O-Ring – Bearing Carrier | 6814 | Set Screw – Bearing Carrier |
| 4610.4 | O-Ring – Sleeve | 8221 | Gauge – Sight Glass [a] |
| 6521 | Breather [NS / b] | 9050 | IPS Beacon™ 2 (optional) |
| 6541.1 | Lock Washer – Shaft | 9322 | Nameplate |
| 6541.2 | Lock Washer – Beacon (optional) | 9220 | Relief Fitting [NS / c] |
| 6569.1 | Plug – Vent [a / c / d] | 9620 | Nipple [NS / b] |
| 6569.2 | Plug – Drain [b / c] | TAG | Tag – Oil Level [a / b] |

**Note:** The following subscripts also apply for Figures: 30 and 31 Only APE4 power end is shown in sectionals

a = APE4 power end b = OPE4 power end c = RPE4 power end d = MPE4 power end NS = Not Shown in Sectionals

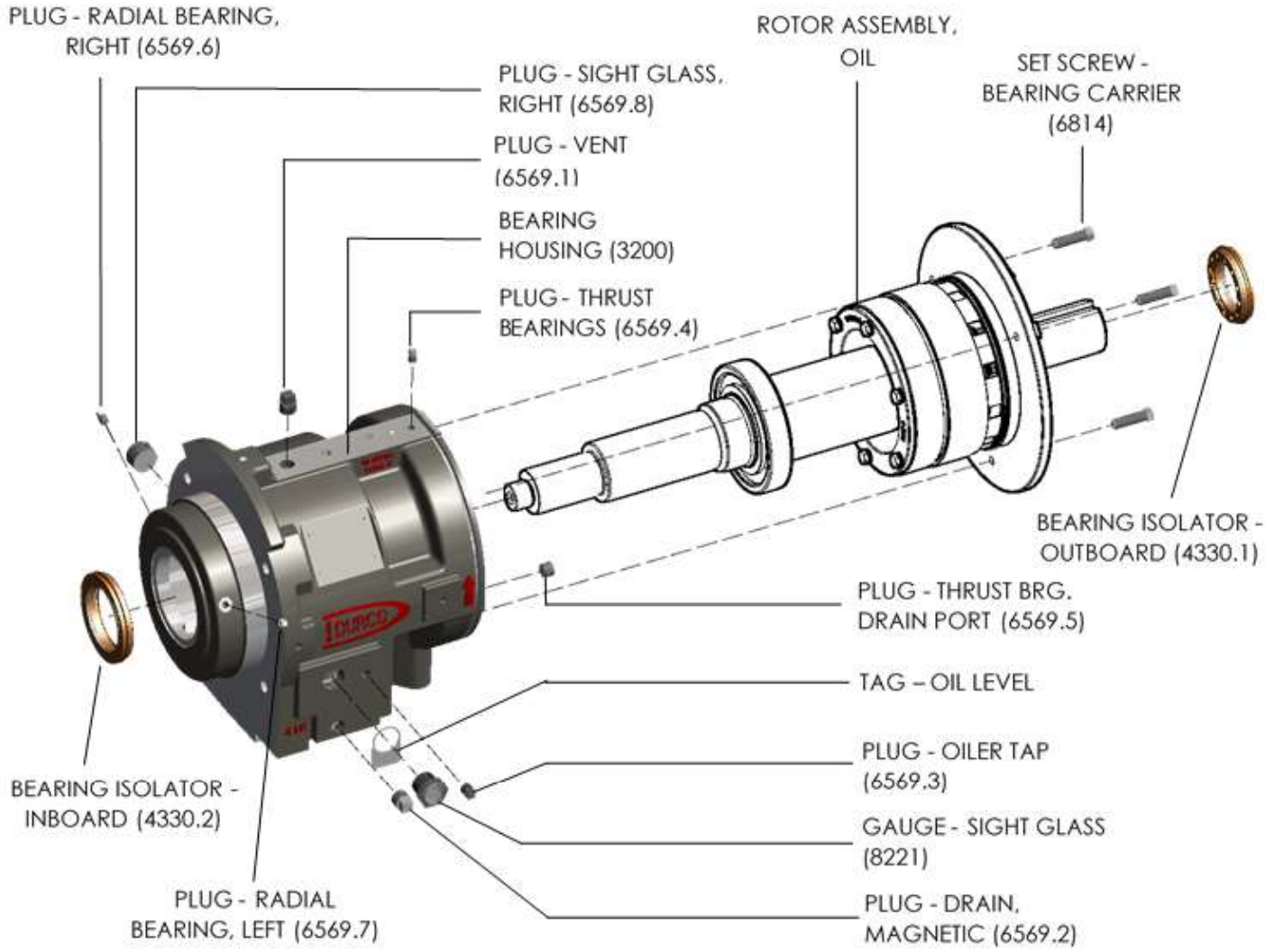


Figure 32: APE4 Power End

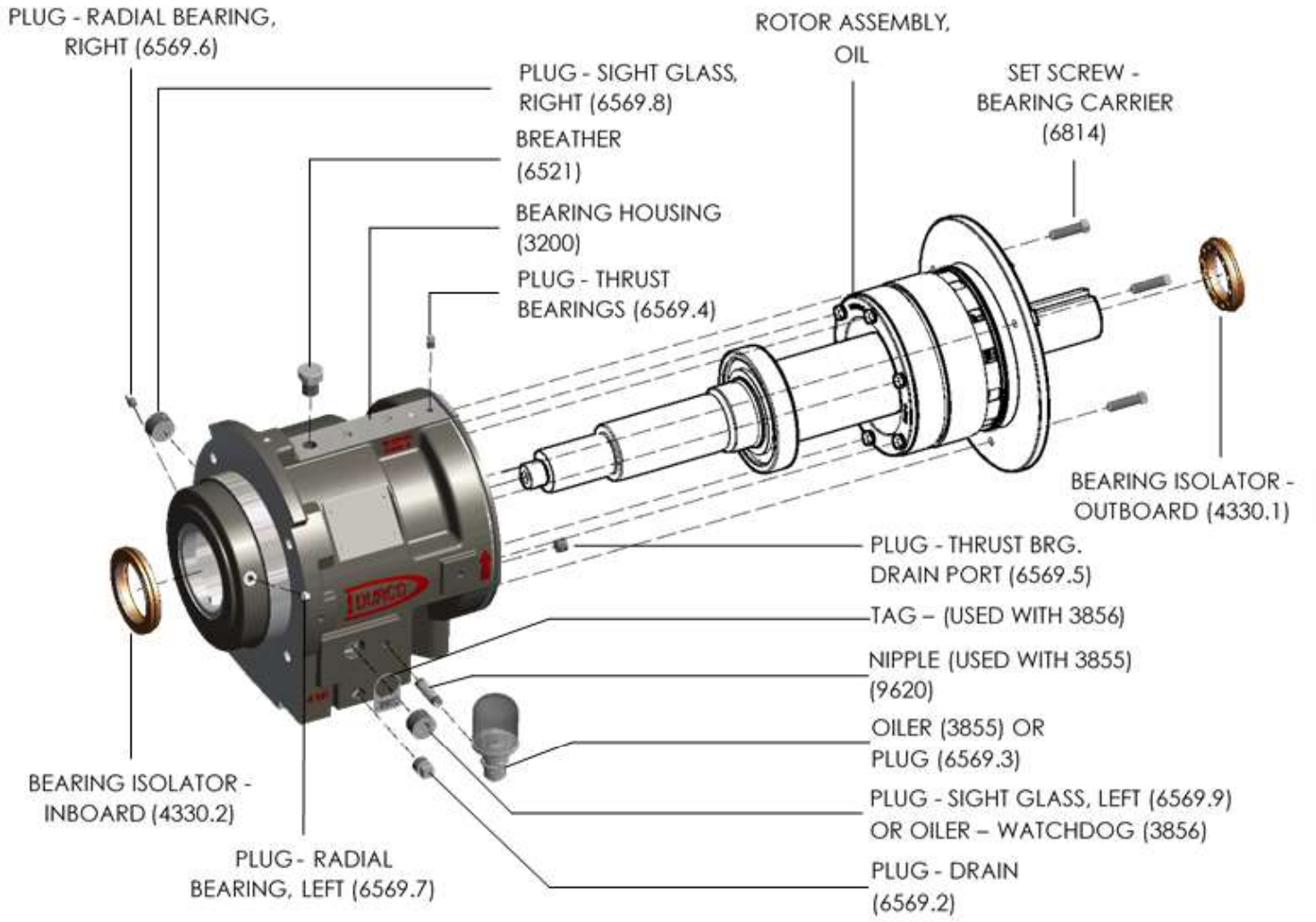


Figure 33: OPE4 Power End Assembly

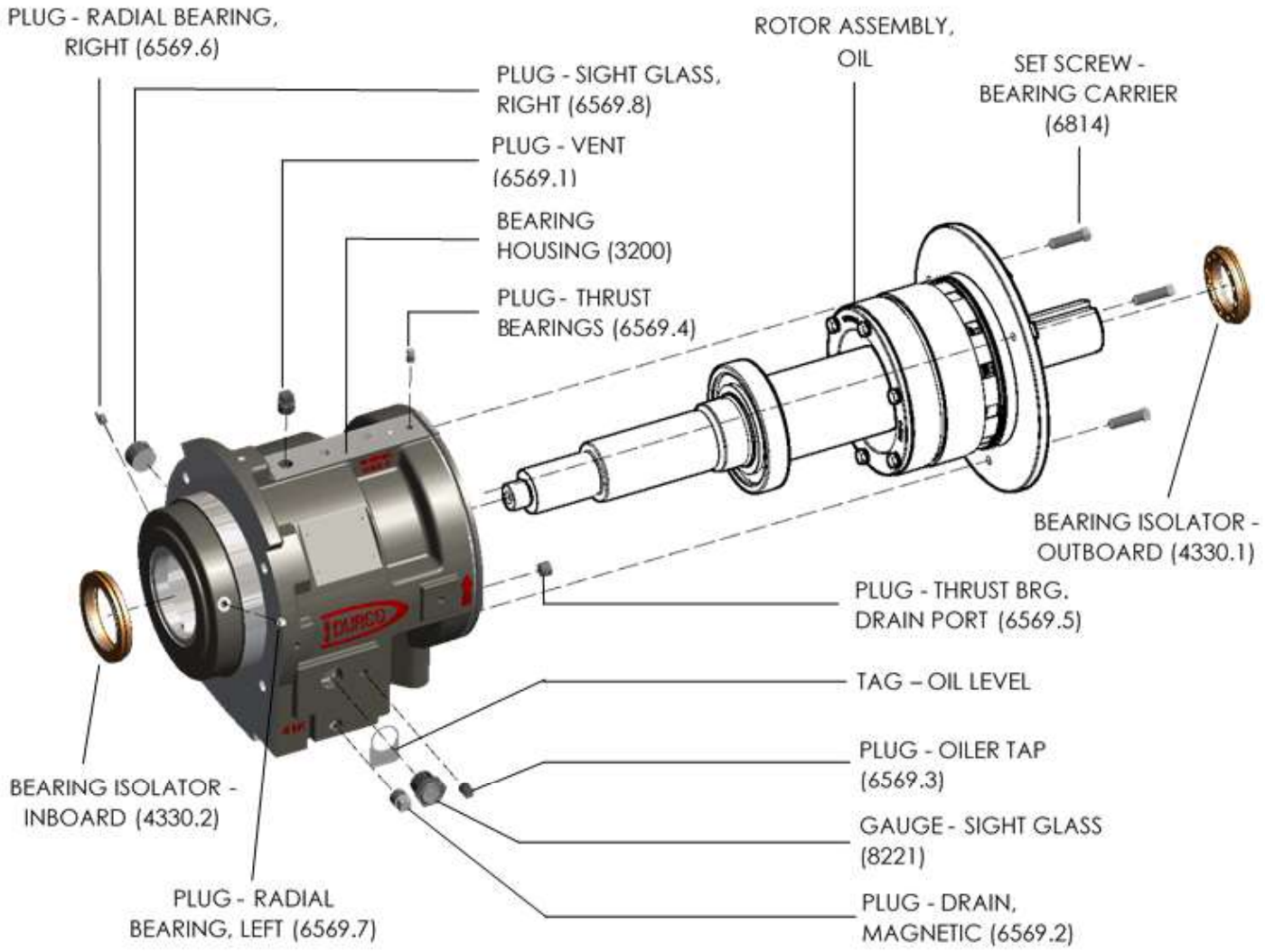


Figure 34: RPE4 Power End Assembly

**⚠CAUTION** **The power end / rear cover assembly is heavy, as are the individual components**. Follow the lifting procedure found in Section 4, *Transportation*, when moving, disassembling or assembling the pump. Always follow facility safety guidelines when lifting.

### 8.5.1 Power end removal

1. Before performing any maintenance, lock-out and tag-out driver.

   **CAUTION** **Lock out power to driver to prevent personal injury.**
2. Close the discharge and suction valves, and drain all the liquid from the pump.
3. Close all valves on auxiliary equipment and piping, then disconnect all auxiliary piping.
4. Decontaminate the pump as necessary.

   **WARNING** **If the pumps contain dangerous chemicals, it is important to follow plant safety guidelines to avoid personal injury or death.**
5. Remove the coupling guard. (see Section 5.3.6)
6. Remove the spacer from the coupling.
7. Remove casing fasteners [6580.1].
8. Remove the fasteners holding the bearing housing foot to the baseplate.
9. Move the (back pullout assembly) power end, rear cover, impeller and seal chamber assembly away from the casing. Discard the casing/cover gasket [4590.1]
10. Install the adapter support screw [6570.7].
11. Transport the assembly to maintenance shop.

### 8.5.2 Pump disassembly

1. Remove the coupling hub from the pump shaft [2100].
2. If oil or oil mist lubricated, remove drain plug [6569.2] from the bearing housing [3200] to drain oil. Recycle or disposed of using local environmental regulation methods.
3. Bolt or clamp the bearing housing foot [3134] securely to a heavy work table. Using the coupling key [6700.2], mount the impeller wrench from the Flowserve Mark 3 tool kit (Figure 29) to the end of the shaft, as shown in Figure 51: Removing Impeller. With the impeller wrench handle pointing to the left when viewed from the impeller end, with an impact wrench, loosen the impeller nut [2913], turning counter-clockwise.
4. Carefully remove impeller. Mark 3 Group 4 impellers weight up to 77 kg (170 lb). Secure the impeller, as shown in Figure 13: Lifting Impeller. Remove the impeller key [6700.1]
5. Discard the impeller and impeller nut O-rings [4610.1] and [4610.2].
6. **CAUTION** **Do not apply heat to the impeller. If liquid is entrapped in the hub, an explosion could occur.**
7. If equipped with a cartridge type mechanical seal [4200], reinstall the seal setting clips or tabs, per the seal manufacturer's instructions. This will ensure that the proper seal compression is maintained.
8. Remove the seal or packing gland nuts [6580.2] and washers [2905], if so equipped.
9. If a component type outside mechanical seal is used, loosen the set screws on the rotating unit and remove it from the shaft. Remove the gland and the stationary seat. Remove the stationary seat from the gland. Discard all O-rings and gaskets.
10. If a cartridge type inside mechanical seal [4200] is used, loosen the set screws on the rotating unit and remove it from the shaft, see Figure 49: FML Cover with Cartridge Seal. Then pull the

gland [4120] and stationary seat off the shaft. Remove the stationary seat from the gland. Discard all O-rings and gaskets.

11. If a component type inside mechanical seal is used, remove the gland and the stationary seat. Remove the stationary seat from the gland. Loosen the set screws in the rotating unit and remove it from the shaft. Discard all O-rings and gaskets.
12. If packing [4130] is used, remove it and the seal cage [lantern ring, 4134], using a packing puller.
13. To remove the cover, first secure with a long shank lifting eye, as shown in Figure 12: Lifting Cover. Remove the two token bolt screws [6570.6], that attach the Cover [1220] to the adapter. Carefully remove lift and remove the cover.
14. If packing is used, remove the packing gland [4120]
15. If the pump has a hook type sleeve [2400] it can now be removed. Discard the sleeve O-ring [4610.4]

    **NOTICE** Do not pry against the shaft.
16. Loosen the (3) three set screws [6814] on the bearing carrier [3240]. The bearing carrier must be completely unscrewed from the bearing housing. The face of the bearing carrier has three square lugs that protrude from the surface. Turn the bearing carrier [3240] counter-clockwise, using an open-end wrench on one of the rectangular lugs.
17. The carrier O-ring [4610.3], radial bearing [3011] fit in the bearing housing [3200], and the inboard bearing isolator [4330.2] O-rings on the shaft [2100] will cause some resistance in removing the bearing carrier assembly from the housing. Temporarily, screw the impeller nut [2912] on to the shaft hand tight. A slight impact, with a soft mallet, on the impeller nut, will free the bearing carrier assembly with the shaft and bearings, see Figure 44: Rotor Assembly - Oil. Further disassembly is not required unless the bearings are to be replaced, or cleaned (grease lubrication).

    **⚠CAUTION** **The rotor assembly weight up to 80 kg (176 lb). Use appropriate lifting equipment.**
18. Remove the (6) bearing retainer – cap screws [6570.1] and bearing retainer [2530]. Remove the carrier [3240] from the thrust bearing [3013].
19. One tab on the lock-washer will be engaged in the locknut. Bend the tab on the lock-washer [6541.1] away from the locknut [3712]. The bearing locknut and lock-washer may now be removed from the shaft [2100]. Discard the lock-washer.
20. An arbor or hydraulic press may be used to remove the bearings [3011] and [3013] from the shaft. It is extremely important to apply even pressure to the inner bearing race only. Never apply pressure to the outer race as this exerts excess load on the balls and causes damage.

    **⚠CAUTION** **Applying pressure to the outer race could will damage the bearing. And, the outer bearing race to separate from the balls and inner race.**
21. On the adapter [1340] side of the bearing housing [3200], remove the plugs [ 6569.6 & 7] or grease fitting [3853.2] and [9220] from the bearing housing.
22. The bearing housing [3200] must be separated from the adapter [1340]. This is accomplished by removing the (4) cap screws [6570.5], which thread into the bearing housing.
23. If the bearing isolators [4330] are removed from either the bearing carrier or bearing housing they must not be reused, discard appropriately. The isolator rotor O-rings should be replaced, if reusing the isolators.
24. If magnetic seals are used, maintain the seals as specified by manufacturer.

25. Remove Oiler and/or sight glass
    a) OPE4 design
        - Remove the Trico Watchdog oiler/sight glass [3856] or Opti-Matic oiler [3855] and oil level tag, if equipped, from the bearing housing. See Figures 35 and 36.
    b) APE4 design
        - Remove the sight glass [8221] and oil level tag from the bearing housing. See Figures 35 and 36.

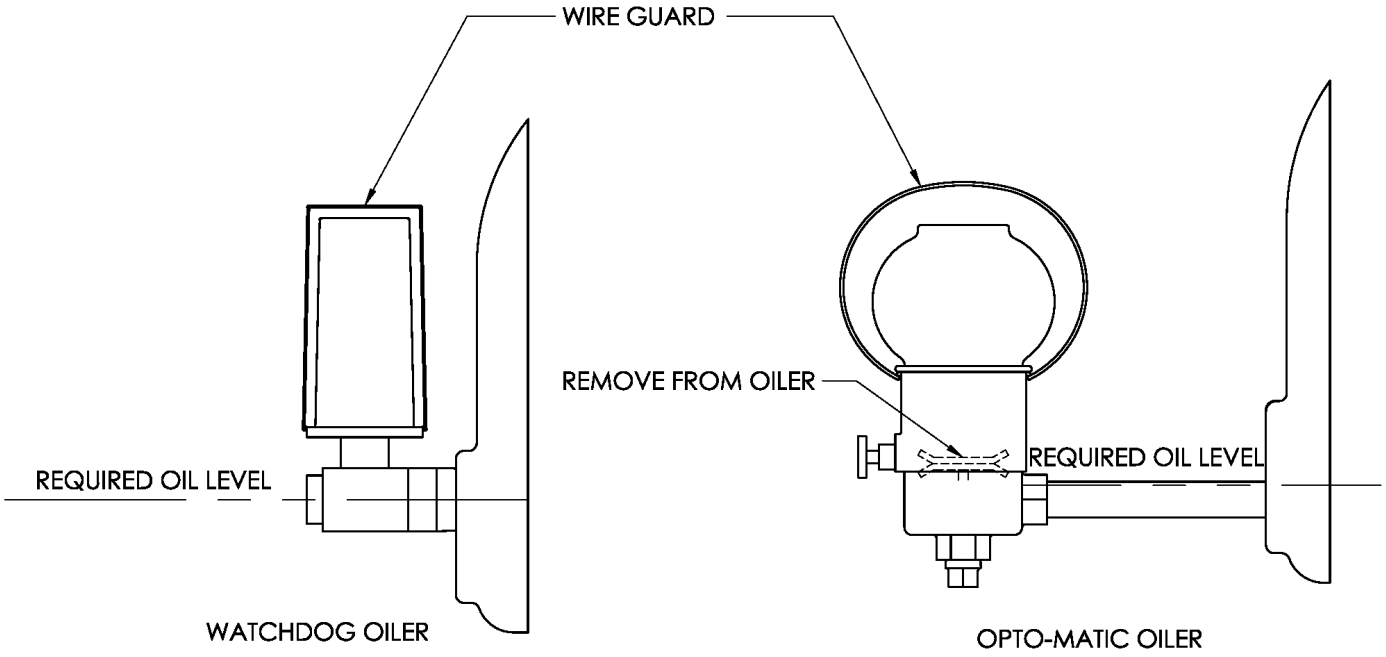


Figure 35: Oilers options




Figure 36: Oil Level Tag

## 8.6 Inspection of parts

### 8.6.1 Cleaning/inspection

All parts should now be thoroughly cleaned and inspected. New bearings, O-rings, gaskets, and lip seals should be used. Any parts that show wear or corrosion should be replaced with new genuine Flowserve parts.

**⚠CAUTION** **It is important that only non-flammable, non-contaminated cleaning fluids are used. These fluids must comply with plant safety and environmental guidelines**.

### 8.6.2 Critical measurements and tolerances

To maximize reliability of pumps, it is important that certain parameters and dimensions are measured and maintained within specified tolerances. It is important that all parts be checked. Any parts that do not conform to the specifications should be replaced with new Flowserve parts. All geometrical and dimensional values contained in this document are at a standard reference temperature of 20 ˚C (68 ˚F). See ISO 1:2016

### 8.6.3 Parameters that should be checked by users

Flowserve recommends that the user check the measurements and tolerance in Table 23: *Measurements & Tolerances* whenever pump maintenance is performed. Each of these measurements is described in more detail on the following pages.

### 8.6.4 Additional parameters checked by Flowserve

The parameters listed below are somewhat more difficult to measure and/or may require specialized equipment. For this reason, they are not typically checked by our customers, although they are monitored by Flowserve during the manufacturing and/or design process.

### 8.6.5 Shaft and sleeve (if fitted)

Replace if grooved, pitted or worn. Prior to mounting bearings or installing the shaft into the bearings housing, check the following parameters.

#### 8.6.5.1 Diameter/tolerance, under bearings

To ensure proper fit between the shaft and bearings, verify that both the inboard (IB) and outboard (OB) shaft diameter is consistently within the minimum/maximum values shown in table 24: *Bearing Fits*. A micrometer should be used to check these outside diameters (O.D.) dimensions on the shaft.

### 8.6.6 Bearings

It is recommended that bearings not be re-used after removal from the shaft. Prior to mounting bearings, check the following parameters.

#### 8.6.6.1 Diameter/tolerance, inside diameters

In order to ensure proper fit between bearings and the shaft, verify that the inside diameter (I.D.) of both the IB and OB bearings are consistently within the minimum/maximum values shown in Table 24: *Bearing Fits*. A bore gauge should be used to check I.D. of the bearings.

#### 8.6.6.2 Diameter/tolerance, outside diameters

To ensure proper fit between bearings and the bearing housing, verify that the outside diameter (O.D.) on both the IB and OB bearings are consistently within the minimum/maximum values shown in Table 24: *Bearing Fits*. A micrometer should be used to check the O.D. on the bearings.

### 8.6.7 Impeller balancing

Shaft whip is deflection where the centerline of the impeller is moving around the true axis of the pump. It is not caused by hydraulic force but rather by a mass imbalance within the rotating element. Shaft whip shortens the life of mechanical seals, because the rotating face must move with each shaft revolution in order to maintain contact. To minimize shaft whip it is imperative that the impeller is balanced. All impellers manufactured by Flowserve are balanced after they are trimmed. If for any reason, a customer trims an impeller, it must be re-balanced. See note 1 under Table 23: *Measurements and tolerances* regarding acceptance criteria.

### 8.6.8 Bearing housing/carrier

Prior to installing the shaft into the bearing housing, check the following parameters.

#### 8.6.8.1 Diameter/tolerance, at bearing surface

To ensure proper fit between the bearing housing/carrier and the bearings, verify that the inside diameter (I.D.) of both the IB and OB bearings surfaces are consistently within the minimum/maximum values shown in Table 23: *Measurements & Tolerances*. An inside micrometer or bore gauge should be used to check I.D. dimensions in the bearings housing.

Table 23: Measurements & Tolerances

| Topic | ASME B73.1 Standard mm (in.) | Suggested by major seal vendor mm (in.) | Suggested and/or provided by Flowserve mm (in.) |
|---|---|---|---|
| **Shaft Journals** | | | |
| Diameter tolerance, under bearings | N/S | - | 0.013 (0.0005) |
| **Impeller** | | | |
| Balance | ISO 21940-11 G6.3 | - | ISO 21940-11 G6.3 |
| **Bearing Housing Journals** | | | |
| Inside diameter, tolerance at bearings | N/S | - | 0.02 (0.001) |
| **Power end assembly** | | | |
| Shaft runout (See note 4) | 0.05 (0.002) | 0.03 (0.001) | 0.03 (0.001) |
| Shaft sleeve runout | 0.05 (0.002) | 0.05 (0.002) | 0.05 (0.002) |
| Radial Deflection – static | N/S | 0.08 (0.003) | 0.05 (0.002) |
| Shaft End Play | N/S | 0.05 (0.002) | 0.00 (0.000) |
| **Seal Chamber** | | | |
| Face squareness to shaft | 0.08 (0.003) | 0.03 (0.001) | 0.08 (0.003) |
| Register concentricity | 0.13 (0.005) | 0.13 (0.005) | 0.13 (0.005) |
| **Complete pump** | | | |
| Shaft movement caused by pipe strain | N/S | 0.05 (.002) | 0.05 (0.002) |
| Alignment | N/S | - | See note 2 |
| Vibration at bearing housing | See note 3 | - | See note 3 |

**Notes:**

N/S = not specified.

1. The maximum values of acceptable unbalance are:
   a) 1500 r/min: 40 g•mm/kg (1800 r/min: 0.021 oz-in/lb) of mass.
   b) 2900 rpm: 20 g•mm/kg (3600) rpm: 0.011 oz-in/lb) of mass.
   c) Flowserve performs a two-plane dynamic balance, as required by the ASME B73.1 standard. All balancing is performed to the ISO 21940-11 Grade 6.3 tolerance criteria.
2. The ASME B73.1 standard does not specify a recommended level of alignment. Flowserve recommends that the pump and motor shafts be aligned to within 0.05 mm (0.002 in.) parallel FIM (full indicator movement) and 0.0005 mm/mm (0.0005 in./in.) angular FIM. Closer alignment will extend MTBPM. For a detailed discussion of this subject see the alignment section of this manual.
3. The ASME B73.1, Paragraph 7.1.4
4. The ASME B73.1, Paragraph 5.5.3

Table 24: Bearing Fits

| Bearing to Shaft | | | Bearing to Carrier | | |
|---|---|---|---|---|---|
| **OB Brg./Shaft mm (in.)** | **Frame 41K** | **Frame 42K** | **OB Brg./Carrier mm (in.)** | **Frame 41K** | **Frame 42K** |
| Bearing | 79.985/80.000 (3.1490/3.1496) | 89.985/90.000 (3.5427/3.5433) | Bearing | 169.982/170.000 (6.6922/6.6929) | 189.979/190.000 (7.4795/7.4803) |
| Shaft | 80.002/80.015 (3.1497/3.1502) | 90.005/90.018 (3.5435/3.5440) | Shaft | 80.002/80.015 (6.6935/6.6945) | 190.015/190.043 (7.4809/7.4820) |
| Fit | 0.003 T-0.030 T (0.0001 T-0.0012 T) | 0.003 T-0.033 T (0.0001 T-0.0013 T) | Fit | 0.015 L-0.058 L (0.0006 L-0.0023 L) | 0.015 L-0.064 L (0.0006 L-0.0025 L) |
| **IB Brg./Shaft mm (in.)** | **Frame 41K** | **Frame 42K** | **IB Brg./Carrier mm (in.)** | **Frame 41K** | **Frame 42K** |
| Bearing | 89.985/90.000 (3.5427/3.5433) | 99.985/100.000 (3.9364/3.9370) | Bearing | 159.982/160.000 (6.2985/6.2992) | 179.979/180.000 (7.0858/7.0866) |
| Shaft | 90.005/90.018 (3.5435/3.5440) | 100.002/100.018 (3.9371/3.9377) | Shaft | 160.015/160.040 (6.2998/6.3008) | 180.015/180.043 (7.0872/7.0883) |
| Fit | 0.003 T-0.033 T (0.0001 T-0.0013 T) | 0.003 T-0.033 T (0.0001 T-0.0013 T) | Fit | 0.015 L-0.058 L (0.0006 L-0.0023 L) | 0.015 L-0.064 L (0.0006 L-0.0025 L) |

**Note:** All geometrical and dimensional values contained in this document are at a standard reference temperature of 20 ˚C (68 ˚F). See ISO 1:2016

T = Interference fit
L = Loose fit

### 8.6.9 Power end inspection

Perform the follow checked to the assembled bearing housing, carrier, bearings, shaft, seals and adapter.

#### 8.6.9.1 Shaft/shaft sleeve runout

Shaft runout is the amount the shaft is "out of true" when rotated in the pump. It is measured by attaching a dial indicator to a stationary part of the pump so that its contact point indicates the radial movement of the shaft surface as the shaft is rotated slowly. If a shaft sleeve is used, then shaft sleeve runout must be checked. It is analogous to shaft runout. Measurement of shaft runout/shaft sleeve runout will disclose any out of roundness of the shaft, any eccentricity between the shaft and the sleeve, any permanent bend in the shaft, and/or any eccentricity in the way the shaft or bearings are mounted in the bearing housing.

Excessive shaft runout can shorten the life of the bearings and the mechanical seal. The following diagrams show how to measure shaft/shaft sleeve runout. Note that both ends need to be checked. The runout should be 0.05 mm (0.002 in.) FIM or less at the gland end of the seal chamber.

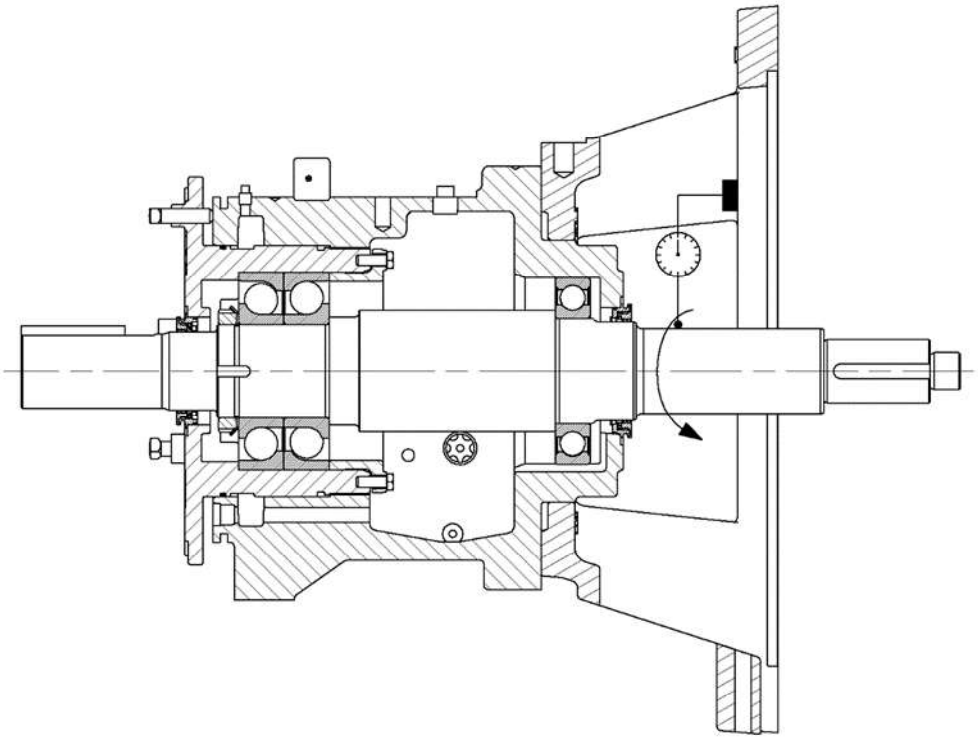

Figure 37: Runout

#### 8.6.9.2 Radial deflection – static

Radial movement of the shaft can be caused by a loose fit between the shaft and the bearing and/or the bearing and the housing. Tighten bearing the (3) three bearing carrier set screws [6814] to the torque value shown in Table 21: *Torque Requirements*. Movement is measured by attempting to displace the shaft vertically by applying an upward force of approximately 9.1 kg (20 lb) to the impeller end of the shaft. While applying this force, indicator movement is observed, as shown in Figure 38. Check movement at a point as near as possible to the location of the seal faces. A movement of more than 0.05 mm (0.002 in.) is not acceptable.

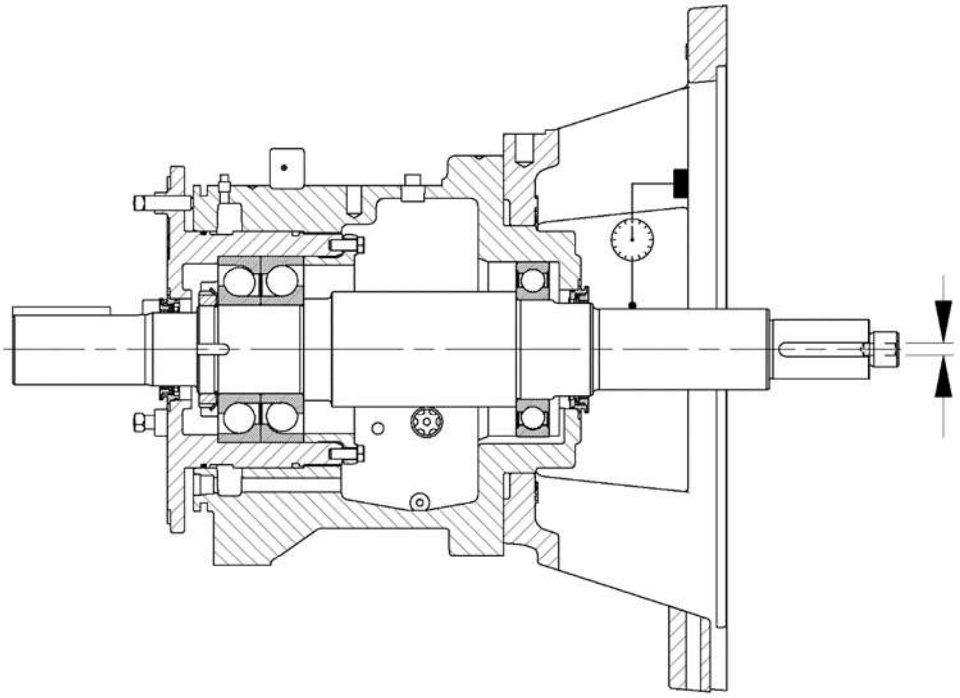

Figure 38: Radial Deflection

#### 8.6.9.3 Shaft endplay

The maximum amount of axial shaft movement, or endplay, on a Mark 3 Group 4 pump should be 0.013 mm (0.0005 in.) With the bearing carrier set screws [6814] tighten to the torque value shown in Table 21: *Torque Requirements*, and standard BEGAY designation thrust bearings installed, endplay is measured, as shown in Figure 39. Observe indicator movement while lightly impacting the shaft from each end in turn with a soft mallet. Shaft endplay can cause several problems. It can cause fretting or wear at the point of contact between the shaft and the secondary sealing element. It can also cause seal overloading or under loading and possibly chipping of the seal faces. It can also cause the faces to separate if significant axial vibration occurs.

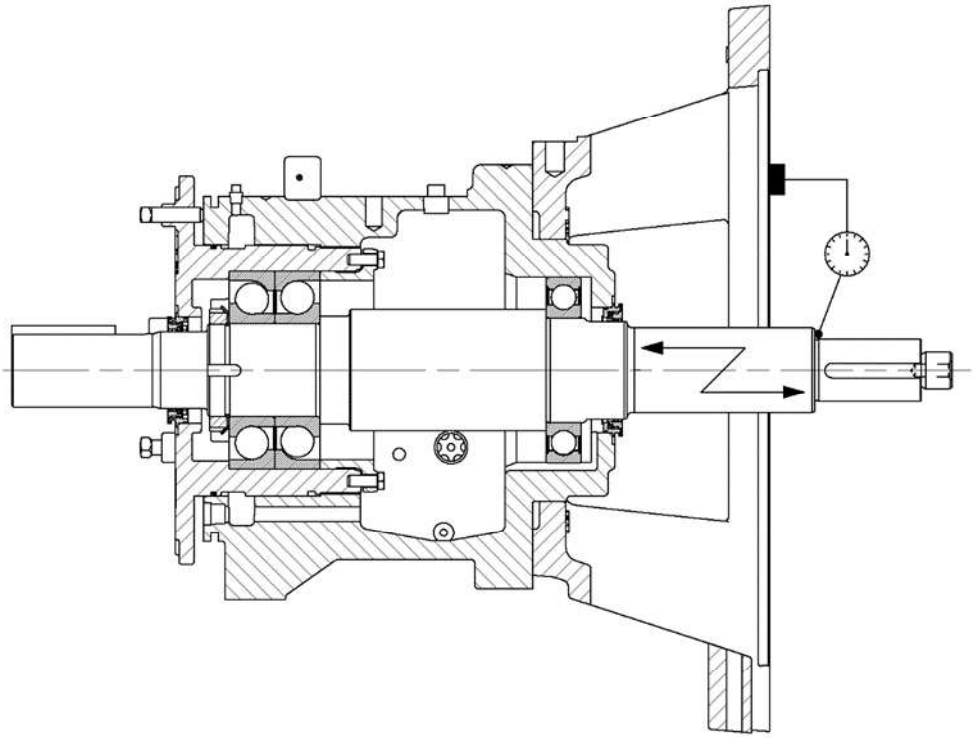

Figure 39: Endplay

### 8.6.10 Seal chamber inspection

Perform the following checks with the assembled power end and rear cover.

#### 8.6.10.1 Seal chamber face perpendicularity to shaft

Also referred to as "Seal Chamber Face Runout." This runout occurs when the seal chamber face is not perpendicular to the shaft axis. This will locate the gland askew in relation to the shaft axis, which causes the stationary seat to be cocked, resulting is excess seal rotor movement, wear and a possible leak. This runout should be less than 0.08 mm (0.003 in.) FIM and should be measured, as shown in Figure 40.

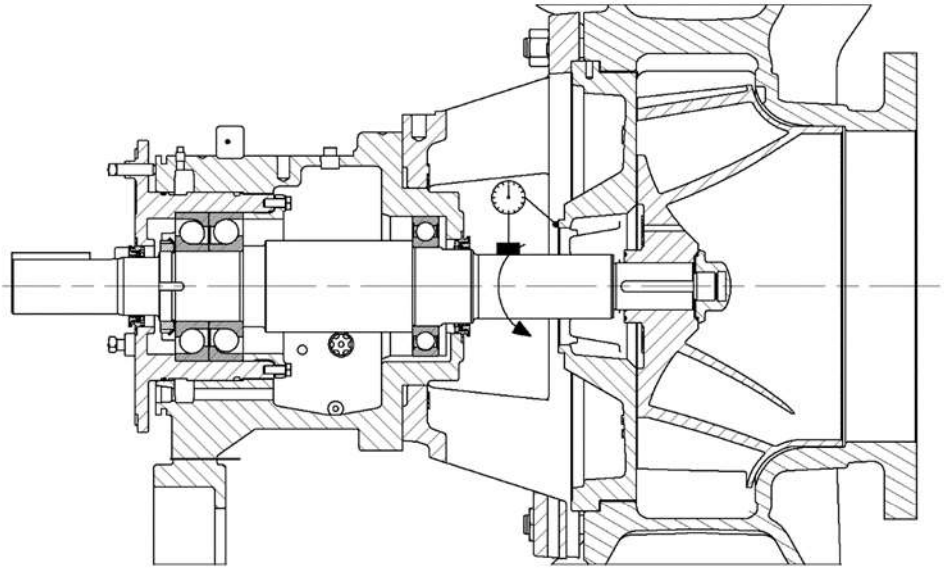

Figure 40: Face Perpendicularity

#### 8.6.10.2 Seal Chamber register concentricity

An eccentric seal chamber bore or gland register can interfere with the piloting and centering of the seal components and alter the hydraulic loading of the seal faces, resulting in reduction of seal life and performance. The seal chamber register concentricity with the shaft or sleeve should be less than 0.13 mm (0.005 in.) TIR. The diagram below shows how to measure this concentricity.

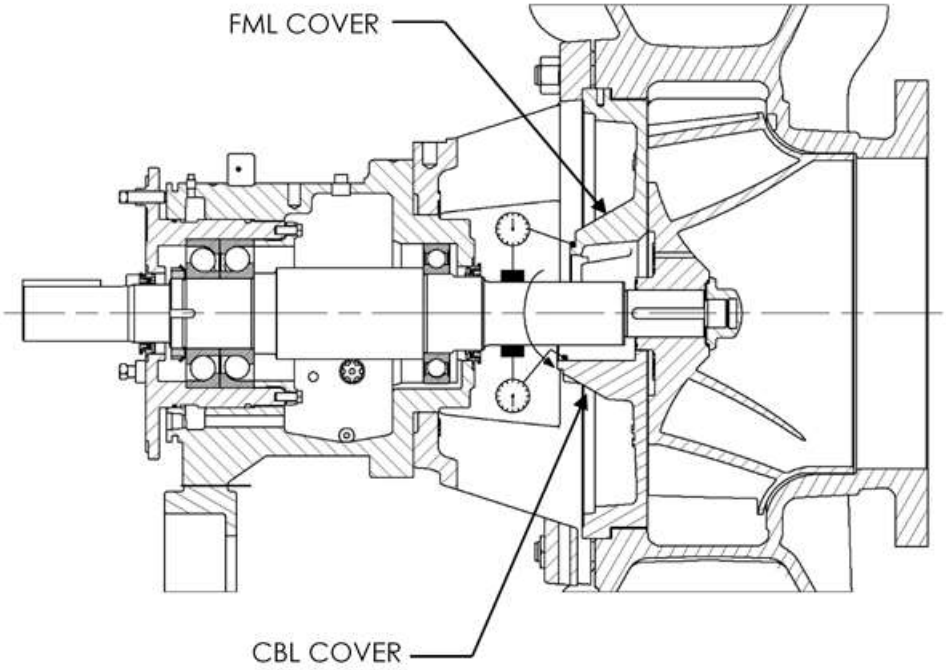


Figure 41: Concentricity

### 8.6.11 Installed pump: complete pump installed

The following must be checked during the installation and initial run-in of the pump.

#### 8.6.11.1 Shaft movement caused by pipe strain

Pipe strain is excessive force put on the pump casing by the piping. Pipe strain should be measured, as shown in Figure 42. Install dial indicators or laser equipment as shown before attaching the piping to the pump. The flanges should now be bolted to the piping separately, starting with the suction. Continuously observed the indicators for movement. Tighten the flange bolts in steps. First to 10% of total torque, 30%, 60% and then 100% of total final torque. The maximum shaft movement in either direction, after finial tightening, is 0.05 mm (0.002 in.). If the movement exceeds 0.05 mm (0.002 in.), loosen the flange bolts, make corrections to the piping or supports. Replace the flange gaskets and repeat the procedure. If multiple pumps are attached to common suction or discharge piping, piping strain is to be checked simultaneously on all pumps.

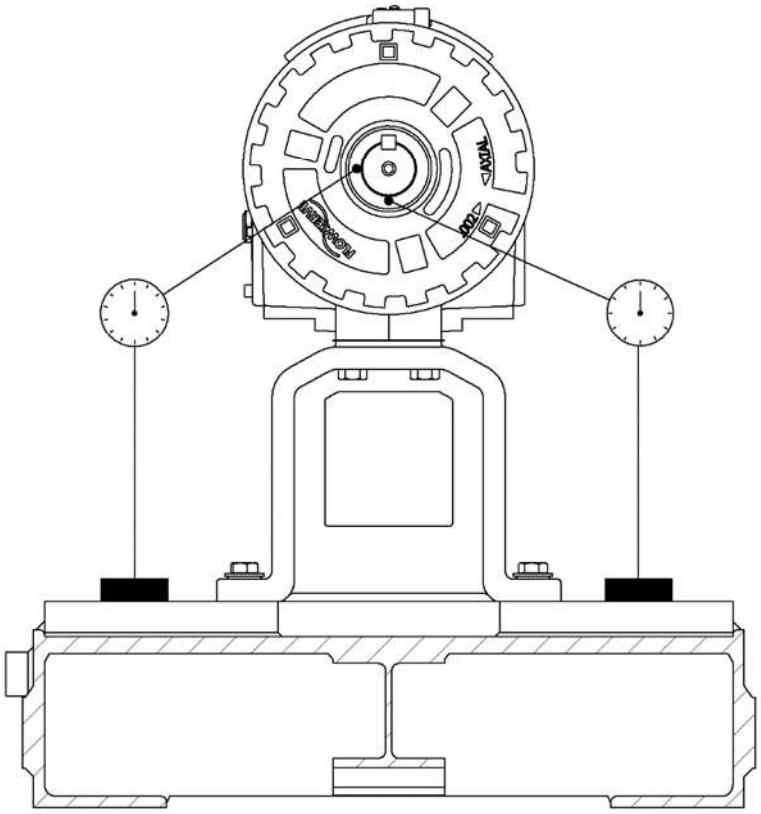

Figure 42: Pipe Strain Movement

#### 8.6.11.2 Final alignment

Misalignment of the pump and motor shafts can cause the following problems:

- Failure of the mechanical seal
- Failure of the motor and/or pump bearings
- Failure of the coupling
- Excessive vibration/noise

The schematics below show the technique for a typical reverse rim alignment using dial indicators. It is important that this alignment be done after the flanges are connected, and at typical operating temperatures.

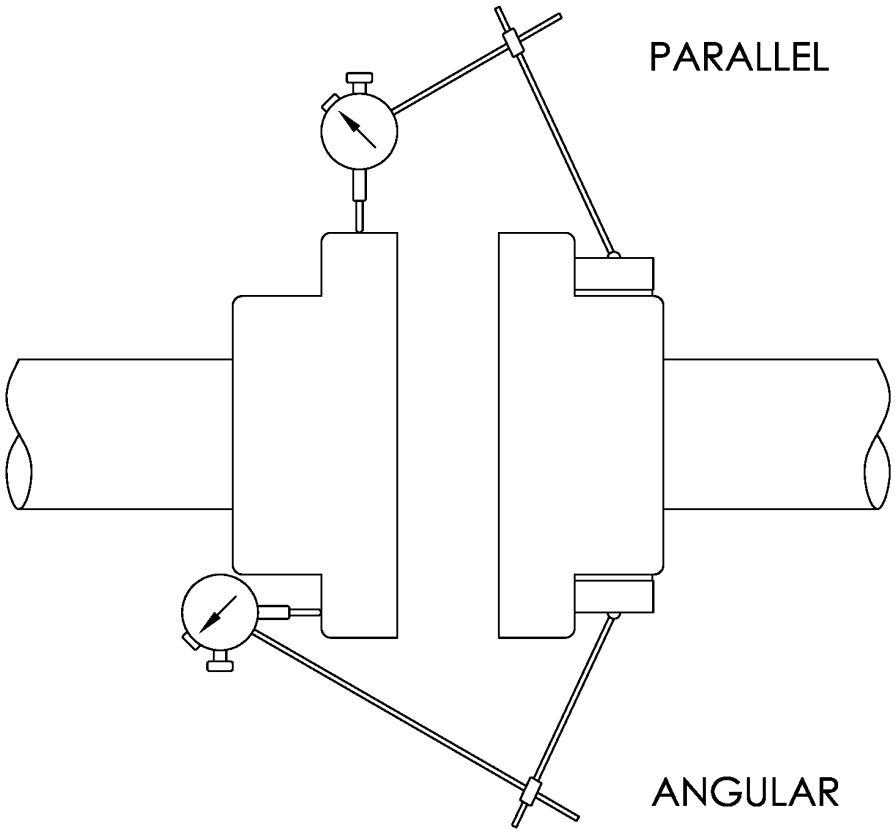


Figure 43: Alignment

Many companies today are using laser alignment which is more sophisticated and accurate technique. With this method a laser and sensor measure misalignment. This is fed to a computer with a graphic display that shows the required adjustment for each of the motor feet.

Detailed finial alignment instructions are outside the scope of this document. Only experienced trained personnel should perform the finial alignment. Flowserve can provide this service at additional cost.

See Section 5.3.7 for recommended final shaft alignment limits.

#### 8.6.11.3 Vibration analysis

Vibration analysis is a type of condition monitoring where a pump's vibration "signature" is monitored on a regular, periodic basis. The primary goal of vibration analysis is extension of Mean Team Between Pump Maintenance (MTBPM). By using this tool Flowserve can often determine not only the existence of a problem before it becomes serious, but also the root cause and possible solution.

Modern vibration analysis equipment can not only detect if a vibration problem exists, but can also suggest the possible source of the problem. On a centrifugal pump, these causes can include the following:

- Unbalance
- Misalignment
- Soft-foot
- Defective bearings
- Resonance
- Hydraulic forces
- Pipe Strain
- Cavitation
- Recirculation

Once identified, the problem can be corrected, leading to increased MTBPM for the pump.

Flowserve does not make vibration analysis equipment; however, Flowserve strongly urges customers to work with an equipment supplier or consultant to establish an on-going vibration analysis program. See note 4 under Table 23: *Measurements and tolerances*, regarding acceptance criteria.

## 8.7 Power end assembly

PTFE tape provides a very reliable seal over a wide range of fluids, but it has a serious shortcoming if not installed properly. If, during application to the threads, the tape is wrapped over the end of the male thread, the tape is wrapped over the end of the male thread, strings of the tape will be formed when threaded into the female fitting. These strings can then tear away and lodge in the piping system.

If this occurs in the seal flush system, small orifice can become blocked effectively shutting off flow. For this reason, Flowserve does not recommend the use of PTFE tape as a thread sealant.

Flowserve has investigated and tested alternate sealants and has identified LOCTITE® 567™ provides an effective seal on tapered threads. The lubricating properties of this compound prevent galling on all metal pipe threads and fittings. LOCTITE® 567™ offers high temperature performance and oil tolerance.

**⚠CAUTION** **It is important that all pipe threads be sealed properly.**

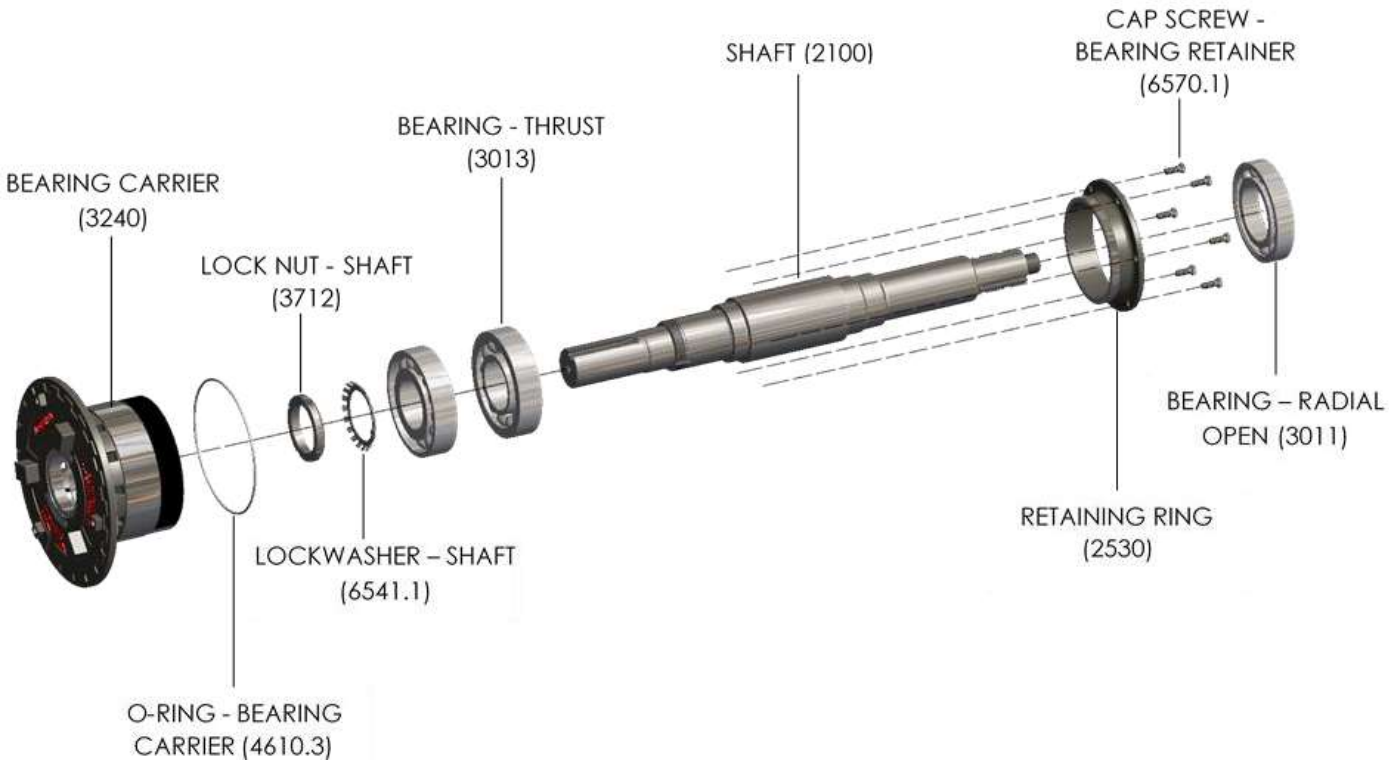


Figure 44: Rotor Assembly, Oil

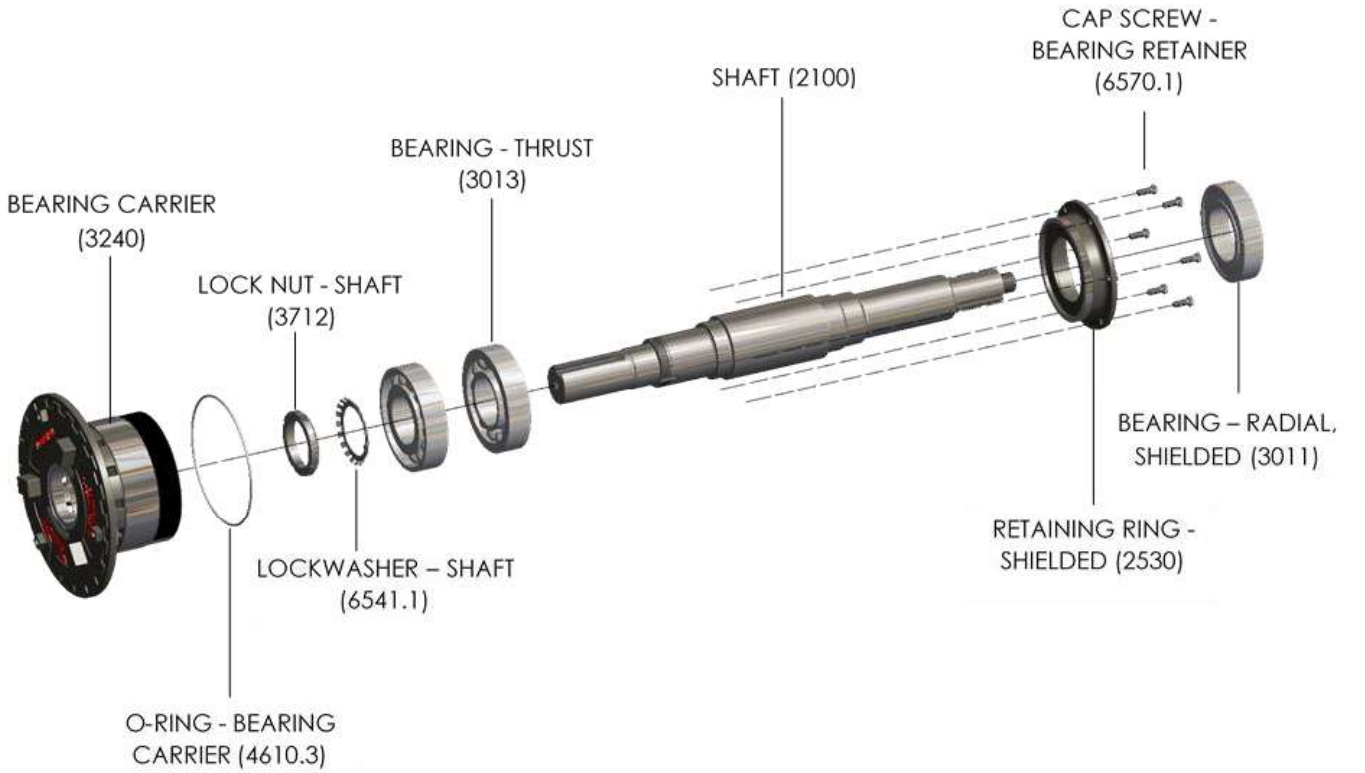


Figure 45: Rotor Assembly, Grease

### 8.7.1 Bearing installation

Mounting of bearings on shafts must be done in a clean environment. Bearings and power end life can be drastically reduced if even very small foreign particles work their way into the bearings. Wear clean gloves.

Bearings should be removed from their protective packing only immediately before assembly to limit exposure to possible contamination. After removing the packing, they should only come in contact with clean hands, fixtures, tools and work surfaces.

Table 25: *Flowserve Mark 3 Group 4 Bearings* gives the SKF part numbers for bearings in Flowserve Mark 3 Group 4 pumps. Note that the term Inboard Bearing (IB) refers to the bearings nearest to the casing. Outboard Bearing (OB) refers to the bearings nearest to the motor. See Figure 23: *Bearing Shield Orientation*

**NOTICE** **Both bearings have a slight interference fit which requires that they be pressed on the shaft with an arbor or hydraulic press. Tables: 24 identifies the bearings fits. Even force should be applied to only the inner race. Never press on the outer race, as the force will damage the balls and races.**

An alternate method of installing bearings is to heat the bearings to 93 ˚C (200 ˚F) by means of an oven or induction heater. The shaft temperature must be below 38 ˚C (100 ˚F) before attempting to install bearings. With this approach the bearing must be quickly positioned on the shaft.

Never heat the bearings above 110 ˚C (230 ˚F). Doing so may cause the bearings fit to permanently change, leading to early failure.

1. Install the radial IB bearing [3011] on the shaft [2100]
   If the power end is equipped with single shielded re-greaseable bearings, position shield, as shown in Figure 23: *Bearing Shield Orientation*.
2. Before installing the thrust bearings [3013] on the shaft [2100]. Place the bearing retainer [2530.1] onto the outboard end of the shaft and slide down to the inboard bearing.
3. Install the duplex angular contact bearings. The bearing must be mounted back-to-back with the wider thrust sides of the outer races in contact with each other shown in Figure 46. Only bearings designed for universal mounting should be used. The SKF designation is "BEGAY".

**NOTICE** The inboard bearings must be positioned against the shoulder and the bearing retainer placed on the shaft oriented, as shown in Figure 23: *Bearing Shield Orientation*.

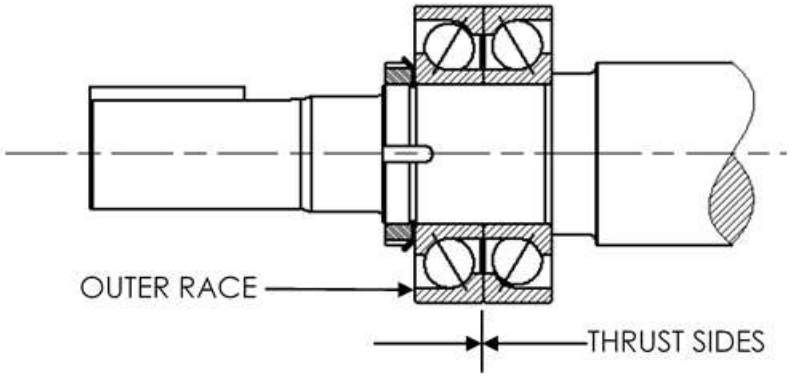


Figure 46: Duplex angular contact bearing

**NOTICE** It must be understood that fixtures and equipment used to press the bearing must be designed so no load is ever transmitted through the bearing balls. This would damage the bearing.

4. If the thrust bearing [3013] is installed by the heating method, the install the locknut [3712] immediately after the bearing is placed on the shaft and tightened to ensure the bearing remains in contact with the shaft shoulder. As the bearing cools tighten the locknut repeatedly. Once cool remove the locknut.
5. Install lock washer [6451.1] and locknut [3712]. Torque the locknut to the minimum value shown in Table 21: *Torque Requirements*. Then continue turning the locknut clockwise until a single notch aligns with a tang on the lock washer. Bend one of the lock washer tangs into the corresponding groove on the locknut.
6. Let the shaft assembly cool to room temperature before proceeding to the bearing carrier [3240] installation. Protect from airborne debris.

Table 25: Flowserve Mark 3 Group 4 Bearings

| Frame | Type of bearing | Duplex angular contact ball bearing (outboard) [6] | Deep groove ball bearing (inboard) [6] |
|---|---|---|---|
| 41 K | Oil bath/mist – open | 7316 BEGAY | 6218/C3 [1] |
| | Re-greaseable single shielded | Note 4 | 6218-Z/C3 [2] |
| 42 K | Oil bath/mist – open | 7318 BEGAY | 6220/C3 [1] |
| | Re-greaseable single shielded [2] | Note 4 | 6220-Z/C3 [2] |

**Notes:**

1. These bearings are open on both sides. They are lubricated by oil bath or oil mist.
2. These bearings are pre-greased by Flowserve. Replacement bearings will generally not be pre-greased, so grease must be applied by the user. They have a single shield, which is located away from the grease reservoir. The grease reservoir is initially filled with grease by Flowserve. Lubrication fittings are provided, to allow the customer to periodically replenish the grease, as recommended by the bearings and/or grease manufacturer.
3. The codes shown are SKF codes. Standard inboard bearings have the C3, greater than "normal" clearance. These clearances are recommended by SKF to maximize bearing life, in most applications. Flowserve Engineering may specify other clearances in some applications. Away verify the replacement bearing designation is identical to the original.

4. Re-greaseable – single shielded bearings are not available in the duplex configuration; however, open oil bath-type bearings are used for the re-greaseable configuration. The bearing retainer features an integral shield to retain grease. These bearings must be pre-greased during assembly. Lubrication fittings are provided, to allow the user to periodically replenish the grease, as recommended by the bearing and/or grease manufacturer.
5. Deep groove bearings configurations are supplied only with steel cages. Angular contact ball bearings are supplied with machined brass cages.
6. Only SKF – Explore performance class bearings are approved for uses in the Mark 3 Group 4 pump. SKF bearing are often counterfeited. Purchasing bearings from Flowserve to assure authenticity. If bearings are purchased from a non-Flowserve supplier and are suspected to be counterfeit, SKF advises that sharp pictures of all visual markings on the bearing and/or its package is taken and sent to genuine@skf.com T.

### 8.7.2 Bearing carrier installation

1. Install new O-ring [4610.3] onto the bearing carrier.
2. Slide the bearing carrier [3240] over the outboard (OB) bearing [3013].
3. Slide the bearing retainer [2530] against the OB bearing. Install the (6) six socket head cap screws [6570.1]. See Table 21: *Torque Requirements*, for correct torque values.

### 8.7.3 Rotor installation

1. Place the bearing housing, with the inboard bearing bore facing down, on a work surface or assembly fixture capable of supporting a minimum of 227 kg (500 lb). A 230 to 254 mm (9.00 to 10.00 in) diameter opening in the work surface is require for the end of the bearing housing to pass through. The opening allows the shaft [2100] pass through the bearing housing. 18 in of clearance is required below the work surface, allowing the shaft [2100] pass through the bearing housing.
2. *If previously removed, reinstall the thrust bearing oil return port plug [6569.5] in the bearing housing [3200]. Apply LOCTITE® 567™ to the plug prior to installation. Failure to install this plug will result is a total loss of lubricating oil. See Figure 34: RPE4 Power End Assembly for the correct location.*
3. Install a swivel lifting eye on the outboard end of the shaft. The internal shaft threads are ½-13 UNC – 2B, 1.00 in thread depth. Hook the lifting eye and carefully lift the rotor assembly in to a vertical position with a crane.
4. Lubricate the bearing carrier [3240] O-ring and threads, and bearing housing [3200] internal bores with oil. The shaft, bearings, and bearing carrier, *rotor assembly*, can now be installed into the bearing housing. See Figures 44 & 45
5. Slowly lower the rotor assembly in to the bearing housing [3200] until the bearing carrier [3240] threads contact the bearing housing threads. See Figure 34: *RPE4 Power End Assembly* for the correct orientation.
6. To avoid damaging the threads the they must be properly indexed. With the rotor assembly still attached to the crane, and a portion of the rotor assemblies weight still supported, rotate the bearing carrier [3240] counter-clockwise, until the rotor assembly drops approximate 1.6 mm (0.06 in) further in to the bearing housing [3200]. The bearing housing and carrier threads are now indexed.
7. Thread the bearing carrier [3240] into the bearing housing [3200] by turning it clockwise. Thread the bearing carrier onto the housing until the carrier flange is approximately 3 mm (0.13 in.) from the bearing housing. Install the (3) three set screws [6570.3] loosely, not to contact the bearing housing.

8. Reinstall any tags, plugs, site gages and oiler, as shown.
    a) APE4, ASME Power End (See Figure 33)
        - If the adapter is to be install immediately after completion of the power end, do not install Radial bearing plugs [6569.4] & [6569.5], at this time.
    b) OPE4, Oiler Power End (See Figure 34)
        - If the adapter is to be install immediately after completion of the power end, do not install Radial bearing plugs [6569.4] & [6569.5], at this time.
    c) RPE4, Regreaseable Power End (See Figure 35)
        - If the adapter is to be install immediately after completion of the power end, do not install the Radial bearing grease fitting [3853.2], and Radial bearing relief fitting [9200]
    d) MPE4, (Not Shown) all opening are plugged
        - If the adapter is to be install immediately after completion of the power end, do not install Radial bearing plugs [6569.4] & [6569.5], at this time.

### 8.7.4 Adapter Installation

1. Assemble the adapter [1340] to the bearing housing [3200]. Thread the cap screws [6570.5] through the adapter and into the tapped holes in the bearing housing.
2. Install the radial bearing plugs [6569.4] & [6569.5], or radial bearing grease fitting [3853.2], and radial bearing relief fitting [9200], as required.
3. If the pump is equipped with a hook type sleeve [2400], install the sleeve O-ring [4610.4] in the sleeve's internal groove. Lubricate the O-ring with oil or Parker-O-Lube. Slip the sleeve into place over the impeller end of the shaft [2100].

### 8.7.5 Bearing housing seals

#### 8.7.5.1 Flowserve® Bearing Gard™ Bearing Isolators

The standard bearing housing seal is the Flowserve Bearing Gard™. It is a permanent, non-wearing bearing protection device. Its main purpose is to retain lubrication in the bearing housing and prevent the ingress of contamination as this can lead to premature failure of the lubrication and bearings. The Bearing Gard™ also services to regulate the passage of atmosphere in and out of the bearing housing.

**NOTICE** Bearing Gard's labyrinth is designed to contain oil and repel water. It is not designed for use in either horizontal or vertical application that are flooded with oil or other liquid.

**NOTICE** To ensure safe and reliable operation of the Bearing Gard™ follow all installation, operation, and maintenance instructions. Failure to comply with these instructions may result in frictional heating of the Bearing Gard™ components and will result in loss in performance.

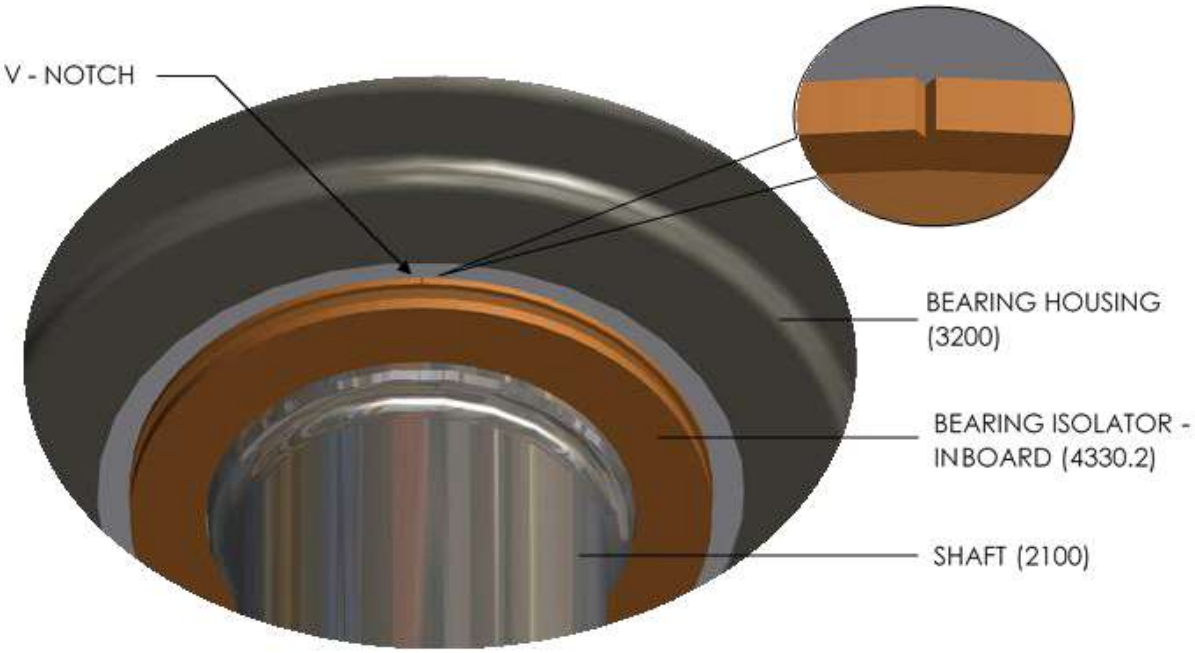


Figure 47: Inboard (IB) Bearing Gard™ Orientation (V-Notch)

#### 8.7.5.2 Preparation for Installation

Do not disassemble the Bearing Gard™. It is designed to be installed as an assembly. Leave the Bearing Gard™ in its original packaging until installation.

1. Inspect for and remove sharp edges from the housing bore, and shaft steps where Bearing Gard™ O-Rings must pass.
2. Thoroughly clean both the shaft and housing bore.
3. Ensure Bearing Gard™ shaft O-ring position is located on an area of the shaft free from scratches, nicks, or dings.
4. Shaft and housing surface must be 0.8 micrometer (32 µin) or better.

#### 8.7.5.3 Inboard Installation [4330.2]

See section 8.7.5.1 for proper V-Notch position before installing. Do not disassemble the Bearing Gard™. It is designed to be installed as an assembly. Leave the Bearing Gard™ in its original packaging until installation.

1. Lightly lubricate O-rings, shaft, and housing bore with the lubricant provided.
2. Align the Bearing Gard™ in housing so the oil and contaminant outlets are located on the bottom at 6 o'clock. The V-Notch must be vertically up when the pump assembly is complete.
3. Use an arbor press to push the Bearing Gard™ over the shaft into the housing bore. The tool should contact as much of rotor surface as possible. Do not hammer or hit the Bearing Gard™ directly. A sleeve for pressing in the isolator can be made of a Delrin®, HDPE tube or similar engineered plastic.
4. Visually confirm the Bearing Gard™ is fully seated against the bearing housing shoulder.

5. Spin shaft by hand. Listen and feel for any shaft binding for rubbing. If binding or rubbing occurs, repeat step 4 to reseat the isolator.
6. If shaft binding or rubbing remains, remove the Bearing Gard™ and verify equipment is within tolerance shown below in Table 26: *Bearing Gard™ Tolerance & Limits*.
7. Correct any defect and repeat steps 1 thru 4.

#### 8.7.5.4 Outboard Installation [4330.1]

The outboard Bearing Gard™ will function is any radial position.

1. Rotate the power end assembly, so that the outboard end (coupling end) is facing up.
2. Lightly lubricate O-rings, shaft, and housing bore with the lubricant provided.
3. Use an arbor press to push the Bearing Gard™ over the shaft into the housing bore. The tool should contact as much of rotor surface as possible. Do not hammer or hit the Bearing Gard™ directly. A sleeve for pressing in the isolator can be made of a Delrin®, HDPE tube or similar engineered plastic.
4. Visually confirm the Bearing Gard™ is fully seated against the bearing housing shoulder.
5. Spin shaft by hand. Listen and feel for any shaft binding for rubbing. If binding or rubbing occurs, repeat step 4 to reseat the isolator.

Table 26: Bearing Gard™ Tolerance & Limits

| Parts | Tolerance | |
|---|---|---|
| Shaft | ± 0.051 mm | ± 0.002 in. |
| Housing | ± 0.025 mm | ± 0.001 in. |
| Maximum axial movement (TIR) | 0.63 mm | 0.025 in. |
| Maximum radial runout (TIR) | 0.13 mm | 0.005 in. |
| Maximum Temperature * | 190 ˚C | 375 ˚F |
| Maximum Speed | 30 m/s | 6000 ft/min |

* For ATEX parts, see attached document that is provided with pump

#### 8.7.5.5 Lip Seals

**NOTICE** Lip seals are not available. Shaft design and finishes DO NOT accommodate their operation. ASME B73.1 specifies labyrinth-type bearing isolators as standard. Flowserve no longer recommends lip seals on ASME B73.1 Chemical Process Pumps.

#### 8.7.5.6 INPRO/SEAL® VBXX®-D Bearing Isolators

The installation instructions for the INPRO/SEAL® VBXX®-D bearing isolators are identical to the Flowserve Bearing Gard™, with the following modifications

1. The stator has an interference fit in the housing and the elastomer O-ring located on the outside diameter (O.D.) of the seal has been sized to overfill the groove in which it is located. When installing the seal into its corresponding housing, in addition to compressing the O-ring a certain amount of material may shear off. This sheared material should be removed.
2. If the INPRO/SEAL® is removed and reinstalled for any reason, replace the stator O-ring, as some of the material may have sheared off during the initial installation.
3. Install the inboard seal in the bore of the bearing housing with the single expulsion port positioned at the bottom 6 o'clock position. A V-Notch is not present on the stator to verify orientation after assembly.

#### 8.7.5.7 Other Bearing Isolators and Magnetic seals

Follow the installation instruction provided by the manufacturer.

### 8.7.6 Operation

1. The maintain pump speed above 400 rpm, when Bearing Gard™ isolators are installed.
2. Contact your Flowserve seal representative for technical support of the Bearing Gard™.

## 8.8 Wet end assembly

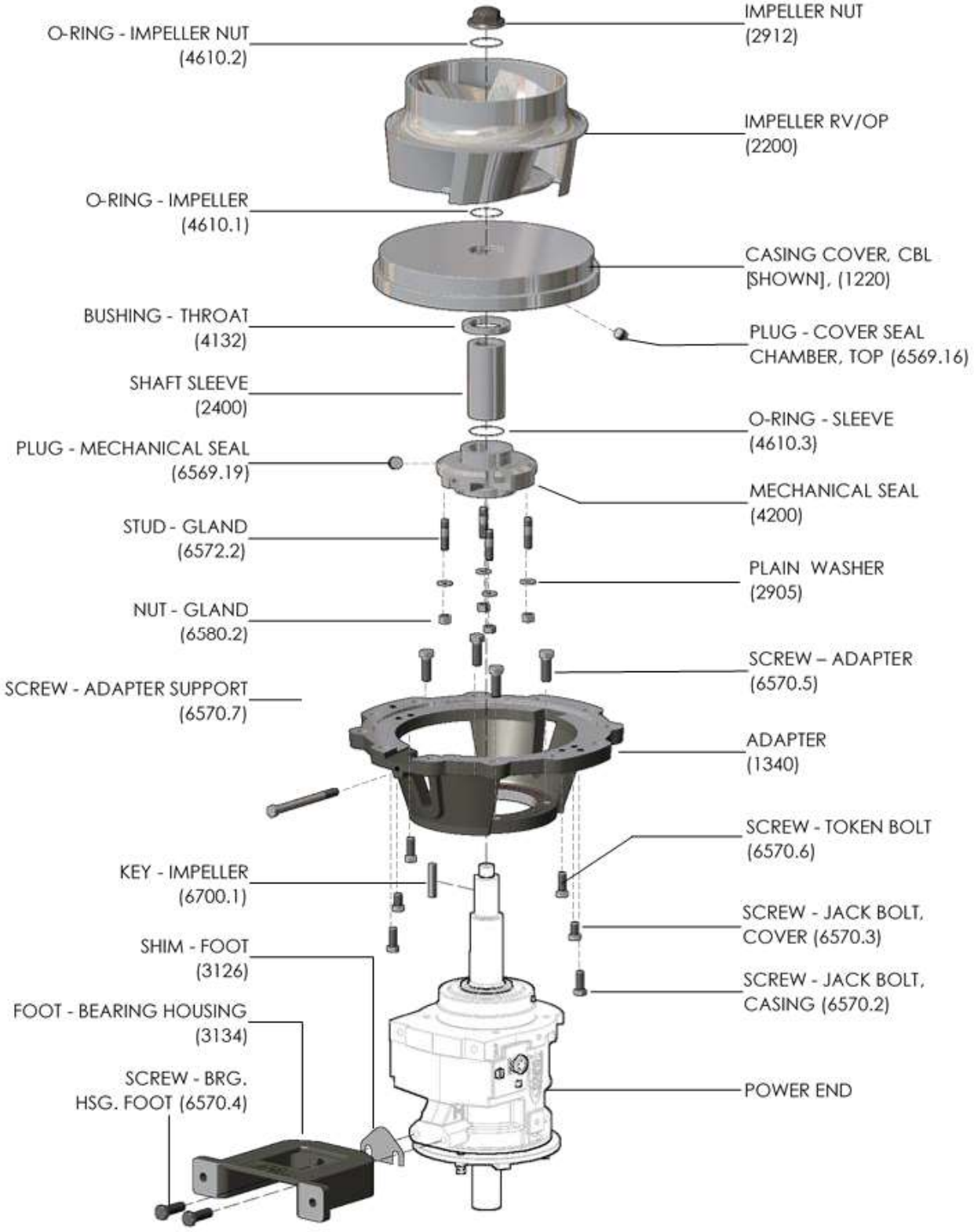


Figure 48: Back Pullout Assembly

### 8.8.1 Cartridge mechanical seals

Review the seal assembly instructions and drawings provided by the seal manufacturer.

1. A nose cone is not required. The outside diameter shaft [2100] or sleeve [2400] end is machined with a 20-degree lead chamfer to facilitate installation of the mechanical seal [4200]. Lubricate the shaft or sleeve and the mechanical seal O-ring (not shown) with the supplied lubricant or Parker-O-Lube.
2. Place the mechanical seal on the shaft end with the seal collar facing the bearing housing [3200]. Slide the mechanical seal onto the shaft until it lightly touches the bearing isolator [4330.2]. *Orient the seal ports as shown on the seal assembly drawing.*
3. Install the casing cover [1220] to the adapter [1340] with the word, "TOP" oriented, as shown is Figure 49 and 50, secure with (2) cap screws [6570.6]; token bolts. Now slide the mechanical seal to the casing cover [1220], using gland studs [6572.2], washers [2905] and gland nuts [6580.2], fasten the seal to the cover. Torque the gland studs to the value shown in the instructions supplied with the seal.
4. Install the impeller [2200] and then set the impeller clearance, as instructed in Section 8.8.3, *Setting impeller clearance and replacement*.
5. Hand tighten the seal collar set screw to lock the rotating unit to the shaft. Then torque to the value shown in the instructions supplied with the seal. If no value is provided torque set screws with 3/8-16 threads to 47 Nm (35 lb-ft) and 5/16-18 threads to 27 Nm (20 lb-ft).
6. Finally remove centering clips or tabs from the seal.

**NOTICE** Retain centering clips and tabs for future maintenance.

### 8.8.2 Packing and split gland installation

1. Install the casing cover [1220] to the bearing housing adapter by using the cap screws [6570.6], token bolts.
2. Install and set the impeller clearance as outlined in Section 8.8.3
3. Install packing rings [4130] and lantern ring packing [4134] into the packing box in an alternating sequence. The typical order is, as shown in Figure 30. Always stagger the end gaps 90 degrees to ensure a better seal. To speed installation of each ring, have an assistant turn the pump shaft in one direction. This movement of the shaft will tend to draw the rings into the packing box. Corrugated cardboard rolled around the shaft or split tubing can be used to tamp the packing rings in to the packing box. Install rings in to the box in this order. P = Packing Ring, L = Lantern Ring
    a. Clean service operating on a suction lift: 2P-L-3P
    b. Clean service operating with a flooded suction: 2P-L-3P
    c. Clean service with >2 barg (30psig) suction pressure: 3P-L-2P or 6P
    d. Dirty service operating on a suction lift to <4barg (60psig): 3P-L-2P
    e. Dirty service with >4 barg (60psig) suction pressure: *Packing Not Recommended*
4. The split gland [4120] is an assembly of two matched gland halves. Install the gland halves around the shaft. Bolt the halves together using (2) cap screws [6570.10] to form a gland assembly.
5. Attached the gland assembly [4120] using studs [6572.2], washers [2905] and gland nuts [6580.2].
6. Lightly snug up the gland nuts. Final adjustments must be made after the pump has begun operation. See Section 3.5.3.1 Seal/packing support system, for final adjustment procedures.

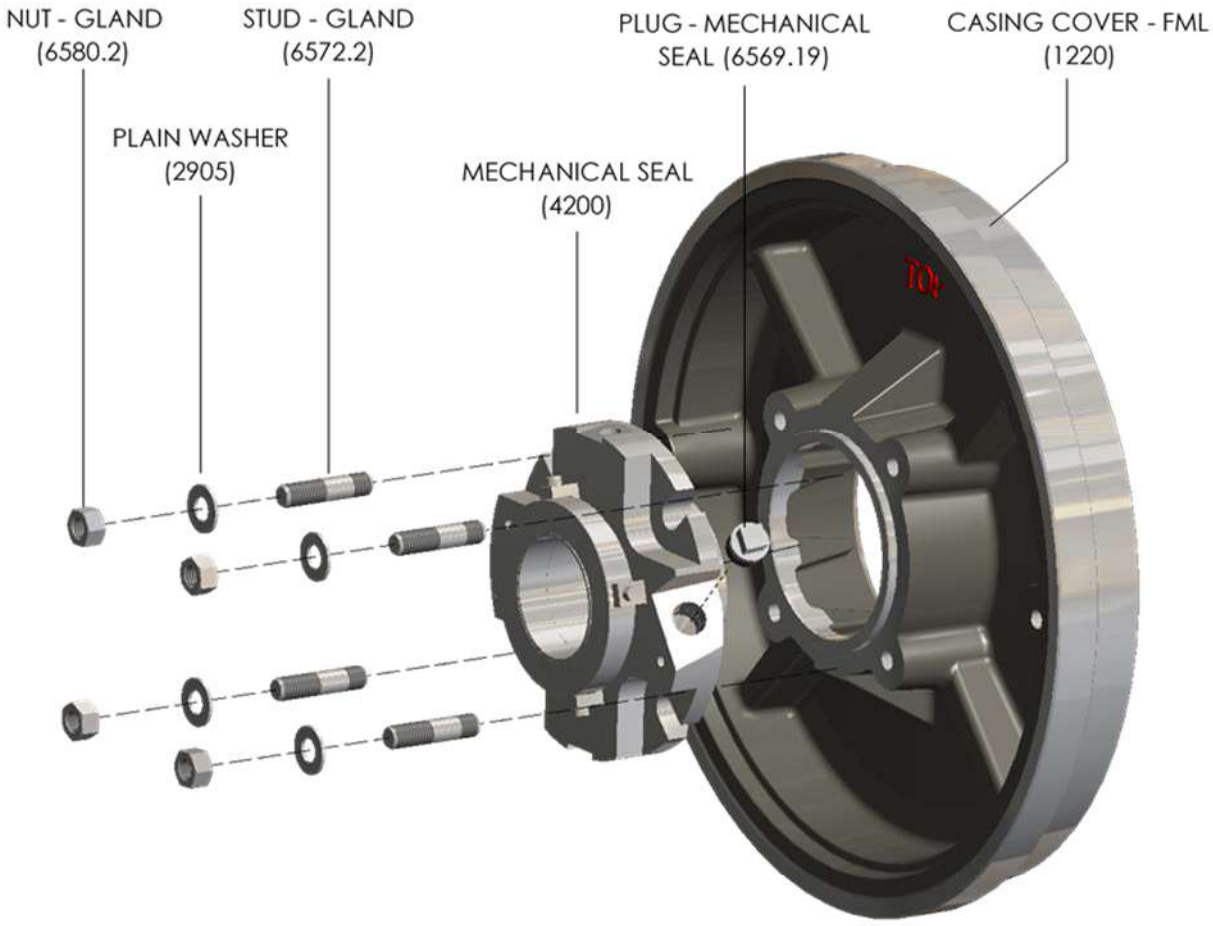


Figure 49: FML Cover with Cartridge Seal

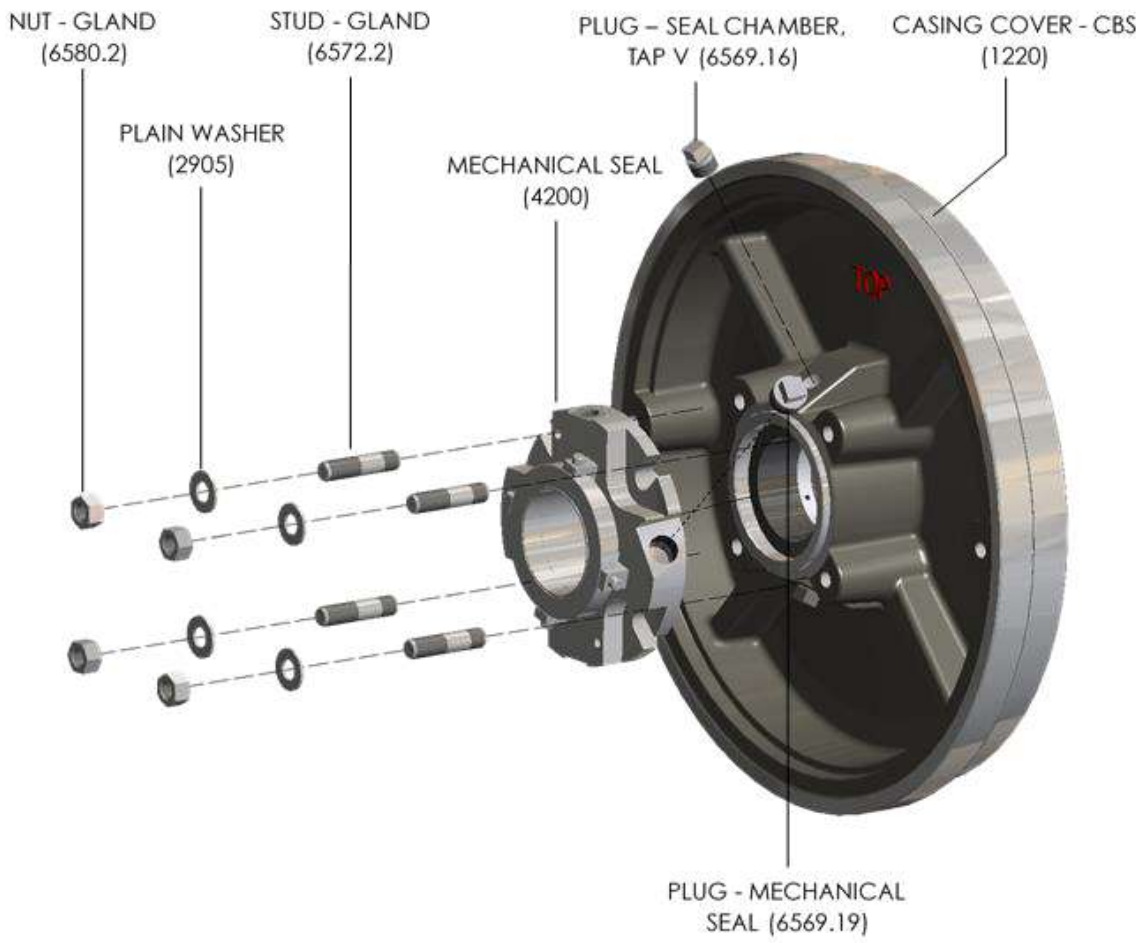


Figure 50: CBS Cover with Cartridge Seal

### 8.8.3 Setting impeller clearance and impeller replacement

A new impeller O-ring [4610.1] and impeller nut O-ring [4610.2] must be installed whenever the impeller has been removed from the shaft. Impeller clearance settings may be found in Section 5.3.3. Impeller balancing instruction may be found in Section 8.6.7.

**Do not adjust the impeller clearance with the seal set. Doing so may result in seal leakage and/or damage. Hazardous material may be released.**

**CAUTION** **The impeller could have sharp edges, which could cause injury. It is very important to wear heavy gloves**.

**CAUTION** **It is recommended that a crane and rigging or two people install a Group 4 impeller. Depending on pump size and trim, impeller weight is 32-77 kg (70-170 lbs).**

#### 8.8.3.1 Removal of Impeller

Follow the steps below to properly remove impeller, refer to Figure 51. For lifting techniques see section 4.4.1, *Lifting pump components*.

1. Ensure that pump casing [1100] is removed.
2. Place power end with assembly fastened on a level work surface, by the foot [3134].
3. Place the impeller wrench supplied in the Mark 3 Group 4 tool kit on the shaft [2100] with the shaft key [6700.2].
4. Turn the impeller wrench clockwise until impeller wrench handle touches the work surface.
5. Remove the impeller nut [2912] by rotating counter clockwise using an impact wrench.
6. Discard impeller nut O-ring [4610.2]
7. Secure impeller with suitable clamp. Remove impeller and impeller key [6700.1] from the shaft. Refer to Section 4.4.1.3 Impeller [2200] for lifting instructions.
8. Discard impeller O-ring [4610.1].
9.




Figure 51: Removing Impeller

#### 8.8.3.2 Installing new impeller

**NOTICE** Ensure Back Pullout Assembly, Figure 48, is properly installed up to the Cover [1220]

1. Start the impeller [2200] installation by placing impeller wrench onto the shaft with shaft key.
2. Turn impeller wrench clockwise until impeller wrench touches the work station.
3. Add new impeller O-ring [4610.1].
4. Place impeller key in slot between shaft and impeller.
5. Slide impeller onto the shaft. Ensure the impeller keyway is aligned with impeller key.
6. Install a new impeller nut O-ring [4610.2] on the impeller nut [2912].
7. Lubricate the impeller nut threads. Hand tighten impeller nut.
8. Verify the impeller and impeller nut are fully seated and the O-Rings are not pinched.
9. Tighten the impeller nut to the torque value listed in *Table 21: Torque Requirements*. See Note 1




Figure 52: Installing Impeller

#### 8.8.3.3 Installation and clearance setting for Reverse Vane (RV) Impellers

Flowserve reverse vane (RV) impellers are set off the cover. This allows the impeller to be set without the casing. Set the impeller clearance by loosening the set screws [6814] and rotating the bearing carrier [3240] to obtain the proper clearance. Turn the bearing carrier counter-clockwise until the impeller [2200] comes into light rubbing contact with the cover [1220]. Rotating the shaft at the same time will accurately determine this zero setting. Now, rotate the bearing carrier clockwise to get the proper clearance. Refer to Table 15: *Impeller Clearance Setting* for the impeller clearance based on the fluid operating temperature.

Rotating the bearing carrier one width of the indicator patterns cast into the bearing carrier moves the impeller axially 0.10 mm (0.004 in.). See Figure 53

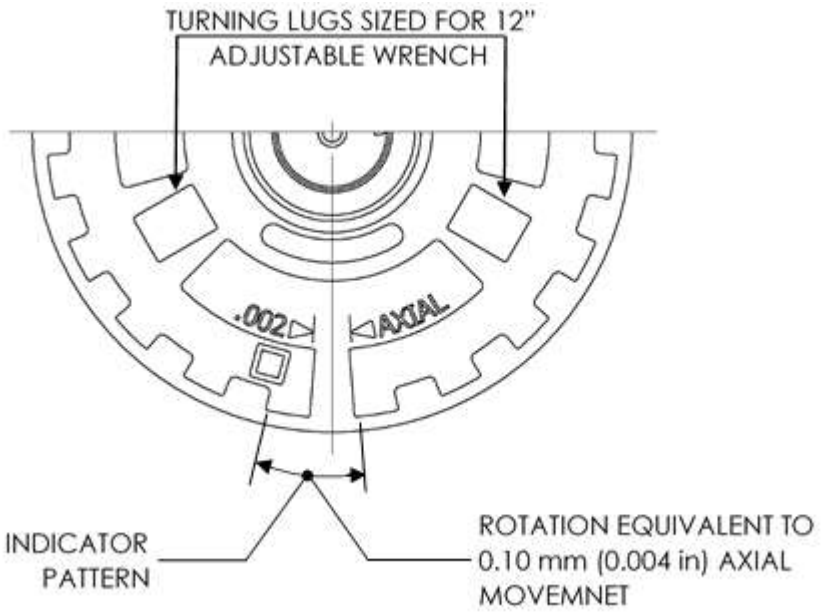


Figure 53: Bearing Carrier Indicator

Determine how far to rotate the bearing carrier by dividing the desired impeller clearance by 0.10 mm (0.004 in.) (one indicator pattern). Tightening the set screws [6814] will move the impeller 0.05 mm (0.002 in.) closer to the cover, due to the internal looseness in the bearing carrier threads. This must be considered when setting impeller clearance. Rotate the bearing carrier clockwise the required amount to obtain desired RV impeller clearance to the cover.

**NOTICE** After adjustment, uniformly tighten the (3) three set screws [6814] in incremental steps up to the final torque, value locking the bearing carrier in place. See Table 21: *Torque Requirements*




Figure 54: Bearing Carrier Markings

**Example:** When setting a pump with a RV impeller with an operating temperature of 100 ˚C (212 ˚F), the impeller setting the off the cover [1220] wear surface is 0.81 mm (0.032 in.), as shown in Table 15: *Impeller Clearance Setting*. To compensate for additional movement caused by tightening the set screws [6814], add 0.05 mm (0.002 in.) to the specified impeller clearance. Thus, an initial adjustment of 0.86 mm (0.034 in.) is needed.

First, turn the bearing carrier [3240] counter-clockwise until the impeller [2200] comes into light rubbing contact with the cover. Using a felt tip pen mark the initial reference point on the bearing housing [3200] and the bearing carrier, as shown in Figure 54. Then make mark a second mark on the bearing carrier the predetermined number of indicator patterns counter-clockwise from the initial reference point. Rotate the bearing carrier clockwise until the second mark aligns with the initial reference point on the bearing housing.

To complete the setting, lock the bearing carrier. Uniformly tighten the (3) three set screws [6814] in incremental steps up to the final torque. See Table 21: *Torque Requirements*

To determine the number of indicator patterns that you will need to rotate the carrier, divide 0.10 mm (0.004 in.) into the desired setting;

From above 0.86 mm / 0.10 mm or (0.034 in. / 0.004 in.) = 9.5 patterns, round up to the nearest half pattern if required. Rotate the bearing carrier clockwise 9.5 indicator patterns which results in a clearance of 0.81 mm (0.032 in.).

#### 8.8.3.4 Installation and clearance setting for Semi-Open Vane (OP) Impellers

Like all semi-open style impellers, the Flowserve semi-open impeller clearance must be set off the casing. The casing must be installed to accurately set the impeller clearance. (Realizing that this can be difficult, Flowserve strongly promotes the use of reverse vane impellers, which do not require the presence of the casing to properly set.)

With the back pullout assembly installed in the casing [1100], See Section 8.8.4. Set the impeller clearance by loosening the set screws [6814] and rotating the bearing carrier [3240] to obtain the proper clearance. Turn the bearing carrier clockwise until the impeller [2200] comes into light rubbing contact with the casing [1100]. Rotating the shaft at the same time will assist in determine this zero setting. Now, rotate the bearing carrier clockwise to get the proper clearance. Refer to Table 15: *Impeller Clearance Setting* for the impeller clearance based on the fluid operating temperature.

Rotating the bearing carrier one width of the indicator patterns cast into the bearing carrier moves the impeller axially 0.10 mm (0.004 in.). See Figure 53

Determine how far to rotate the bearing carrier by dividing the desired impeller clearance by 0.10 mm (0.004 in.) (one indicator pattern). Tightening the set screws [6814] will move the impeller 0.05 mm (0.002 in.) closer to the cover [1240], due to the internal looseness in the bearing carrier threads. This must be considered when setting impeller clearance. Rotate the bearing carrier counter-clockwise the required amount to obtain the desired OP impeller clearance to the casing.

**NOTICE** After adjustment, uniformly tighten the (3) three set screws [6814] in incremental steps up to the final torque, value locking the bearing carrier in place. See Table 21: *Torque Requirements*

See section 5.3.3 for impeller clearance settings.

**Example:** When setting a pump with a OP impeller with an operating temperature of 150 ˚C (302 ˚F), the impeller setting the off the casing [1100] wear surface is 0.81 mm (0.032 in.), as shown in Table 15: *Impeller Clearance Setting*. To compensate for additional movement caused by tightening the set screws [6814], subtract 0.05 mm (0.002 in.) to the specified impeller clearance. Thus, an initial adjustment of 0.76 mm (0.030 in.) is needed.

First, turn the bearing carrier [3240] clockwise until the impeller [2200] comes into light rubbing contact with the casing. Using a felt tip pen mark the initial reference point on the bearing housing [3200] and the bearing carrier, as shown in Figure 54. Then make mark a second mark on the bearing carrier the predetermined number of indicator patterns clockwise from the initial reference point. Rotate the bearing carrier counter-clockwise until the second mark aligns with the initial reference point on the bearing housing.

To complete the setting, lock the bearing carrier. Uniformly tighten the (3) three set screws [6814] in incremental steps up to the final torque. See Table 21: *Torque Requirements*

To determine the number of indicator patterns that you will need to rotate the carrier, divide 0.10 mm (0.004 in.) into the desired setting;

From above 0.76 mm / 0.10 mm or (0.030 in. / 0.004 in.) = 8.5 patterns, round up to the nearest half pattern if required. Rotate the bearing carrier clockwise 8.5 indicator patterns which results in a clearance of 0.81 mm (0.032 in.).

#### 8.8.3.5 Back pullout assembly clearance setting for Semi-Open Vane (OP) Impellers

The above procedure, 8.8.3.4 Installation and clearance setting for Semi-Open Vane (OP) Impellers, is straightforward when doing the final setting of the impeller. However, it can be quite laborious when servicing a back pullout assembly as a spare and performing the preliminary setting to establish the location of the mechanical seal. For this reason, the following practice is recommended. Before the pump is taken out of service, install the mechanical seal locking clips or tabs. Loosen the seal collar set screws. Adjust the impeller, by turning the bearing carrier clockwise, until it touches the casing. Then rotate the bearing carrier counter-clockwise until the desired impeller clearance is obtained. Identify this location on the bearing carrier and then continue rotating the bearing carrier counter-clockwise until the impeller contacts the cover. Record the distance from the desired impeller clearance setting to when the impeller contacts the cover. The pump (back pullout assembly) is now removed from the casing and taken to the shop for maintenance. When it is time to set the seal, the impeller is simply set off the cover by the same distance recorded earlier.

**NOTICE** The above technique is only applicable if all the original pump components are reinstalled. If the casing, cover, impeller or shaft is replaced, or casing gasket type changed this method must not be used.

### 8.8.4 Back pullout assembly installation in casing

1. Remove the adapter support screw [6570.7], not shown.
2. Install a new casing/cover gasket [4590.1] between the cover [1220] and casing [1100].
3. Lift the back pullout assembly in to the casing, See Section 4.4.1.6.
   *The pump casing and bearing housing feet must be on the baseplate or a machined worktable to align the feet on the same plane, prior to final tightening of the casing fasteners.*
4. Lightly snug all casing nuts [6580.1]. Check that feet are in plane. If a 0.05 mm (0.002 in.) thick shim cannot be slid under the bearing housing or casing feet, continue to Step 5.
5. If the shim can be slid under a foot, loosen the casing nuts and rotate the bearing housing to bring the bearing housing foot in to plate. Repeat Step 4.
6. Tighten the casing nuts in a Cross-Pattern in three increments of final the torque value shown in Table 21: *Torque Requirements*. 30%, 60% and 100% of final torque.
7. Place the coupling key [6700.2] in the shaft [2100] keyway. Apply tape around the shaft and key. This will retain the key until the coupling is install.
8. The pump assembly is now complete. The (optional) IPS Beacon™ 2 [9050] can now be installed. A plastic thread protector or screw may be in the Beacon mounting threads. Remove if either is present. Attach the Beacon with button socket head cap screw [6570.8] and lock washer [6541.2]. Torque to value show in Table 21: *Torque Requirements*. See Figure 56

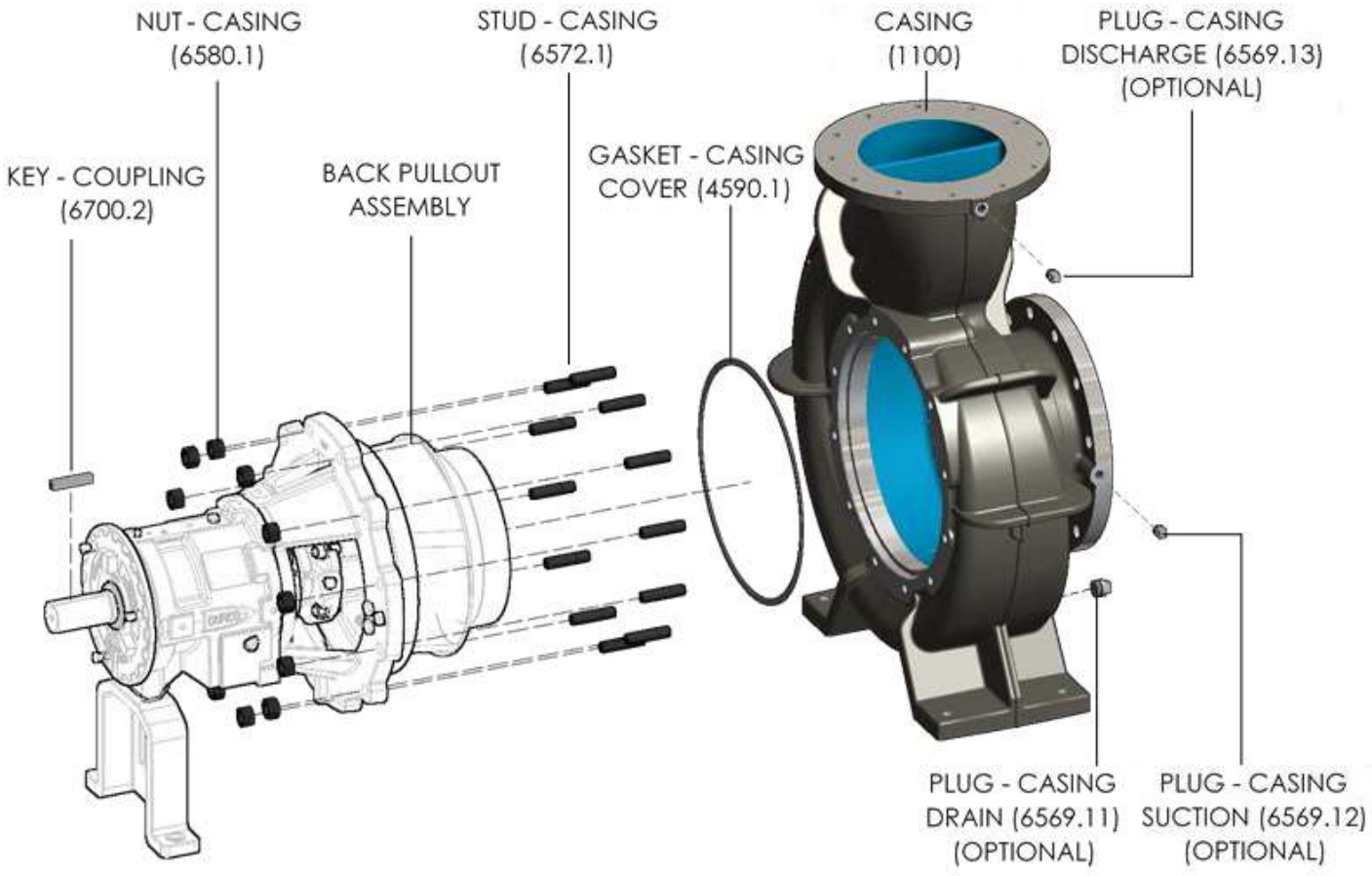


Figure 55: Final Pump Assembly

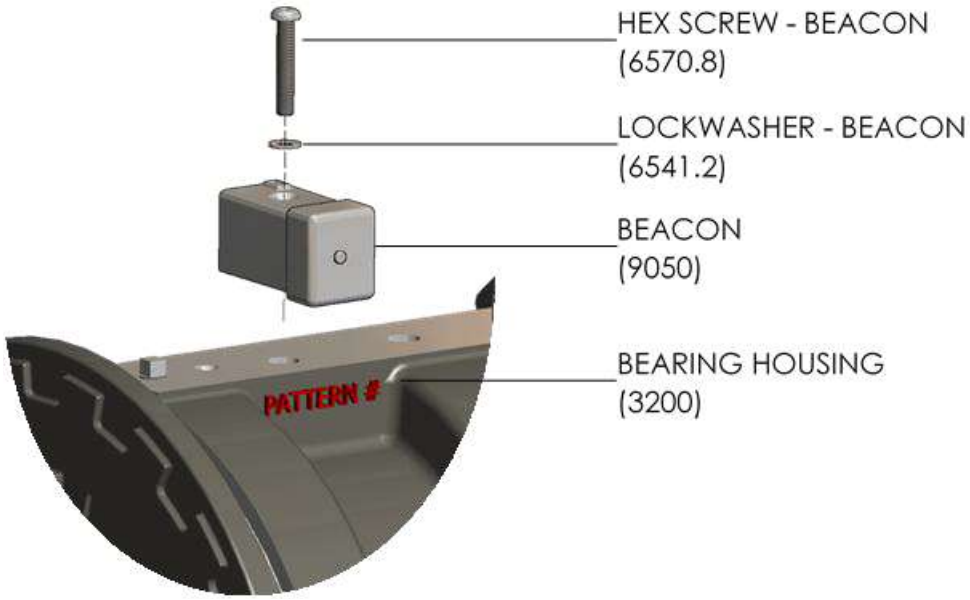


Figure 56: Beacon Assembly (Optional)

## 8.9 Post maintenance inspection

It is recommended that a maintenance plan and schedule be implemented, in accordance with these User Instructions, to include the following:

1. Any auxiliary systems installed must be monitored, if necessary, to ensure they function correctly.
2. Gland packing must be adjusted correctly to give visible leakage and concentric alignment of the gland follower to prevent excessive temperature of the packing or follower.
3. Check for any leaks from gaskets and seals. The correct functioning of the shaft seal must be checked regularly.
4. Check bearing lubricant level, and the remaining hours before a lubricant change is required.
5. Check that the duty conditions are in the safe operating range for the pump.
6. Check vibration, noise level and surface temperature at the bearings to confirm satisfactory operation.
7. Check dirt and dust is removed from areas around close clearances, bearings housings and motors.
8. Check coupling alignment and re-align if necessary.

See Section 6 *Commissioning*, for pre-commissioning procedures.

## 8.10 Spare parts stocking recommendation

The decision on what spare parts to stock varies greatly depending on many factors such as the criticality of the application, the time required to buy and receive new spares, the erosive/corrosive nature of the application, and the cost of the spare part. Section 8.5 identifies all of the components that make up each pump addressed in this manual.

Recommended spares are defined on the following basis:

- Class 1 – Start-up and commissioning spares
- Class 2 – Two-year spares requirements covering maintenance for this period
- Class 3 – Capital spares requirements

Flowserve keeps records of all pumps that have been supplied. Spare parts can be ordered from your local Flowserve sales engineer or from a Flowserve distributor or representative.

When ordering spare parts, the following information should be provided to Flowserve:

1. Pump serial number
2. Pump size and type
3. Part name – taken from the parts list/sectional drawing
4. Part item number – taken from the parts list/sectional drawing
5. Material of construction (alloy)
6. Number of parts required
7. Part number – taken from the parts list/sectional drawing*

*If an as built sectional drawing is available, provide sectional drawing number. Or if taken from an existing part.

The product size and serial number are provided on the nameplate.

**SAFETY INSTRUCTIONS**

To ensure continued satisfactory operation, replacement parts to the original design specification should be obtained from Flowserve. Any change to the original design specification (modification or use of non-standard part) will invalidate the product safety certification.

### 8.10.1 Spare parts per pump

The following spare parts are recommended for an individual pump installation. Were a population of identical pumps or a family of pumps utilizing the same power end exist, Section 8.10.2 applies.

Table 27: Recommended Spares & Consumable Items (Individual Pump)

| Commissioning Spares (Class 1) | Two Years Operational Spares (Class 2) | Five Years Operational Spares (Class 3) | Part Description | |
|---|---|---|---|---|
| | | | Sleeved Shaft & Solid Shaft | |
| | | | Labyrinth Oil Seal | |
| | | | Description | Item |
| 1 | 1 | 2 | O-Ring – Impeller | 4610.1 |
| 1 | 1 | 2 | O-Ring – Impeller Nut | 4610.2 |
| N/A | 2 | 4 | O-Ring – Bearing Carrier | 4610.3 |
| N/A | 2 | 4 | O-Ring – sleeve | 4610.4 |
| N/A | N/A | 1 | Impeller | 2200 |
| N/A | N/A | 1* | Casing Cover | 1220 |
| 1 | 1 | 2 | Gasket – Casing/Cover | 4590.1 |
| N/A | 1 | 2 | Radial Bearing | 3011 |
| N/A | 1 | 2 | Thrust Bearing | 3013 |
| N/A | 1 | 2 | Locknut -Shaft | 3712 |
| N/A | 1 | 2 | Lock Washer -Shaft | 6541.1 |
| N/A | 1 | 2 | Bearing Isolator – Outboard | 4330.1 |
| N/A | 1 | 2 | Bearing Isolator – Inboard | 4330.2 |
| N/A | 1 | 2 | Key - Impeller | 6700.1 |
| N/A | 1 | 2 | Key - Coupling | 6700.2 |
| N/A | N/A | 1 | Sleeve (if fitted) | 2400 |
| N/A | N/A | 1 | Shaft | 2100 |

* abrasive service with an RV impeller

### 8.10.2 Spare parts per pump

The following spare parts are recommended with an installation population of identical pumps or a family of pumps utilizing the same power end exist.

Table 28: Recommended Spares & Consumable Items (Multiple identical pumps)

| Item | Designation | Number of Pumps (including stand-by) | | | | | | |
|---|---|---|---|---|---|---|---|---|
| | | **2** | **3** | **4** | **5** | **6/7** | **8/9** | **10(+)** |
| 2200 | Impeller | 1 | | | 2 | | 3 | 30% |
| 2400 | Sleeve (if fitted) | 2 | | | 3 | | 4 | 50% |
| 2912 | Impeller nut | 1 | | 2 | | | 3 | 30% |
| 2100 | Shaft | 1 | | 2 | | | 3 | 30% |
| 3712 | Locknut - Shaft | 1 | | 2 | | 3 | 4 | 50% |
| 6541.1 | Lock Washer - Shaft | 1 | | 2 | | 3 | 4 | 50% |
| 3011 | Radial Bearing | 1 | | 2 | | 3 | 4 | 50% |
| 3013 | Thrust Bearing** | 1 | | 2 | | 3 | 4 | 50% |
| 4590.1 | Gasket – Casing/Cover | 4 | 6 | 8 | | 9 | 12 | 150% |
| 4610.1 | O-Ring – Impeller | 4 | 6 | 8 | | 9 | 12 | 150% |
| 4610.2 | O-Ring – Impeller Nut | 4 | 6 | 8 | | 9 | 12 | 100% |
| 4610.4 | O-Ring - Sleeve (if fitted) | 2 | | 3 | | | 4 | 50% |
| 4610.3 | O-Ring – Bearing Carrier | 4 | 6 | 8 | | 9 | 12 | 150% |
| 4330.1 / 4330.2 | Bearing Isolators | 1 | 2 | | | 3 | | 30% |
| 4130 | Gland Packing* | 2 | | 3 | | | 4 | 40% |
| 4134 | Lantern Ring | 1 | 2 | | | 3 | | 30% |
| 4200 | Mechanical Seal | 1 | 2 | | | 3 | | 30% |
| - | Power end | - | - | - | - | - | 1 | 2 |
| 6700.1 | Key – Impeller | 1 | | 2 | | | 3 | 30% |
| 6700.2 | Key - Coupling | 1 | | 2 | | | 3 | 30% |

*Full set of packing is (3) rings

**The duplex Thrust Bearing requires (2) two bearings for a complete assembly

# 9 Troubleshooting Guide

The following is a guide to troubleshooting problems with Flowserve Mark 3 pumps. Common problems are analysed and solutions offered. Obviously, it is impossible to cover every possible scenario. If a problem exists that is not covered by one of the examples, then refer to one of the books listed in Annex C "Additional Sources of Information" or contact a Flowserve sales engineer or distributor/representative for assistance.

Table 29: Trouble Shooting Recommendations

| Pump not reaching design flow rate | | | | | | | | |
|---|---|---|---|---|---|---|---|---|
| ⇓ | Pump not reaching design head (TDH) | | | | | | | |
| | ⇓ | No discharge or flow with pump running | | | | | | |
| | | ⇓ | Pump operates for short period, then loses prime | | | | | |
| | | | ⇓ | Excessive noise from wet end | | | | |
| | | | | ⇓ | Excessive noise from power end | | | |
| | | | | | ⇓ | | | |
| | | | | | | ⇓ | **Possible Causes** | **Possible Remedies** |
| ● | ● | | ● | ● | | | Insufficient NPSH. (Noise may not be present). | Recalculate NPSH available. It must be greater than the NPSH required by pump at desired flow. If not, redesign suction piping, holding number of elbows and number of plans to a minimum to avoid adverse flow rotation as it approaches the impeller. |
| ● | ● | ● | | | | | System friction head greater than anticipated. | Reduce system head by increasing pipe size and/or reducing number of fittings. Increase impeller diameter. (note: Increasing impeller diameter may require use of a larger motor.) |
| ● | ● | | ● | | | | Entrained air. Air leak from atmosphere on suction side | 1. Check suction line gaskets and threads for tightness.<br>2. If vortex formation is observed in suction tank, install vortex breaker.<br>3. Check for minimum submergence |
| ● | ● | | | | | | Entrained gas from process | Process generated gases may require larger pumps. |
| ● | ● | | | | | | Speed to slow | Check motor speed against design speed. |
| ● | ● | ● | | | | | Direction of rotation wrong | After confirming wrong rotation, reverse any two of the three leads on the three phase motor. The pump should be disassembled and inspected before it is restarted. |
| ● | ● | | | | | | Impeller too small | Replace with proper diameter impeller. (NOTE: Increasing impeller diameter may require use of a larger motor.) |
| ● | ● | | | | | | Impeller clearance too large | Reset impeller clearance. |
| ● | ● | ● | | | | | Plugged impeller, suction line or casing which may be due to a product or larger solids. | 1. Reduce length of fiber when possible.<br>2. Reduce solids in the process fluid when possible.<br>3. Consider larger pump. |
| ● | ● | | | | | | Wet end parts (casing cover, impeller) worn, corroded or missing. | Replace part or parts. |

| Pump not reaching design flow rate | | | | | | | | |
|---|---|---|---|---|---|---|---|---|
| ⇓ | Pump not reaching design head (TDH) | | | | | | | |
| | ⇓ | No discharge or flow with pump running | | | | | | |
| | | ⇓ | Pump operates for short period, then loses prime | | | | | |
| | | | ⇓ | Excessive noise from wet end | | | | |
| | | | | ⇓ | Excessive noise from power end | | | |
| | | | | | ⇓ | | | |
| | | | | | | ⇓ | **Possible Causes** | **Possible Remedies** |
| | ● | ● | | | | | Not properly primed. | Repeat priming operation, recheck instructions. If pump has run dry, disassemble and inspect the pump before operation. |
| ● | ● | | | ● | | | Impeller rubbing. | 1. Check and reset impeller clearance.<br>2. Check outboard bearing assembly for axial end play.<br>3. Pump running outside of the Allowable Operating Range AOR. Check flow. |
| | ● | ● | | | | | Damaged pump shaft, impeller. | Replace damage parts. |
| | | | | ● | | | Abnormal fluid rotation due to complex suction piping. | 1. Redesign suction piping, holding the number of elbows and planes to a minimum to avoid adverse fluid rotation as it approaches the impeller.<br>2. Add cruciform to the suction piping. |
| | | | | | ● | | Bearing contamination appearing on raceways as scoring, pitting, scratching or rusting caused by adverse environment and entrance of abrasive contaminants from atmosphere. | 3. Work with clean tools in clean surroundings.<br>4. Remove all outside dirt from housing before exposing bearings.<br>5. Handle with clean dry hands.<br>6. Treat a used bearing as carefully as a new one.<br>7. Use clean solvent and flushing oil.<br>8. Protect disassembled bearing from dirt and moisture.<br>9. Keep bearings wrapped in paper or clean cloth while not in use.<br>10. Clean inside of housing before replacing bearings.<br>11. Check oil seals and replace as required.<br>12. Check all plugs and tapped openings to make sure that they are tight. |
| | | | | | ● | | Brinelling of bearing identified by indentation on the ball races, usually caused by incorrectly applied forces in assembling the bearing or by shock loading such as hitting the bearing or drive shaft with a hammer. | When mounting the bearing on the drive shaft use a proper size ring and apply the pressure against the inner ring only. Be sure when mounting a bearing to apply the mounting pressure slowly and evenly. |
| | | | | | ● | | False brinelling of bearing identified again by either axial or circumferential indentations usually caused by vibration of the balls between the races in a stationary bearing. | 1. Correct the source of vibration.<br>2. Where bearings are oil lubricated and employed in units that may be out of service for extended periods, the drive shaft should be turned over periodically to relubricate all bearings surfaces at intervals of one to three months. |
| | | | | | ● | | Thrust overload on bearings identified by flaking ball path on one side of the outer race or in the case of maximum capacity bearings, may appear as a spalling of the races in the vicinity of the loading slot. (Please note: Maximum capacity bearings are not recommended in Mark 3 pumps.) These thrust failures are caused by improper mounting of the bearing or excessive thrust loads. | 1. Check the SG of the fluid pump<br>2. Check the suction pressure<br>3. Pump running outside of the Allowable Operating Range AOR. Check flow.<br>4. Follow the correct mounting procedures for the bearing. |

| Pump not reaching design flow rate | | | | | | | | |
|---|---|---|---|---|---|---|---|---|
| ⇓ | Pump not reaching design head (TDH) | | | | | | | |
| | ⇓ | No discharge or flow with pump running | | | | | | |
| | | ⇓ | Pump operates for short period, then loses prime | | | | | |
| | | | ⇓ | Excessive noise from wet end | | | | |
| | | | | ⇓ | Excessive noise from power end | | | |
| | | | | | ⇓ | | | |
| | | | | | | ⇓ | **Possible Causes** | **Possible Remedies** |
| | | | | | ● | | Misalignment identified by fracture of ball retainer or a wide ball path on the inner race and a narrower cocked ball path on the outer race. Misalignment is caused by poor mounting practices or defective drive shaft. For example, bearing not square with the centerline or possibly a bent shaft due to improper handling. | Handle parts carefully and follow recommended mounting procedures. Check all parts for proper fit and alignment. |
| | | | | | ● | | Bearing damaged by electric arcing identified as electro-etching of both inner and outer ring as a pitting or cratering. Electrical arcing is caused by a static electrical charge emanating from belt drives, electrical leakage or short circuiting. | 1. Where current shunting through the bearing cannot be corrected, a shunt in the form of a slip ring assembly should be incorporated.<br>2. Check all wiring, insulation and rotor windings to be sure that they are sound and all connections are properly made.<br>3. Where pumps are belt driven, consider the elimination of static charges by proper grounding or consider belt material that is less generative. |
| | | | | | ● | | Bearing damage due to improper lubrication, identified by one or more of the following:<br>1. Abnormal bearing temperature rise.<br>2. A stiff cracked grease appearance.<br>3. A brown or bluish discoloration of the bearing races. | 1. Be sure the lubrication is clean.<br>2. Be sure proper amount of lubricant is used. The constant level oiler supplied with Durco pumps will maintain the proper oil level if lubricated bearings, be sure that there is space adjacent to the bearing into which it can rid itself of excessive lubricant, otherwise the bearing may overheat and fail prematurely<br>3. Be sure the proper grade of lubricant is used. |

# 10 Decommissioning and Recommissioning

## 10.1 Decommissioning

Ensure all liquids are removed from the pump as followed:

1. Drain pump
2. Drain seal systems
3. Drain oil and or remove grease

After liquid has been drained follow long term storage procedures

## 10.2 Recommissioning

For products stored for 6 months follow short term Storage procedures, section 4.5.1, for more than 6 months follow Long term procedures, section 4.5.2.

See Section 6 for commissioning & Section 7 for Operations

# 11 Returns and Disposal

## 11.1 Returns

The product/system shall be emptied, cleaned, and preserved before returning the equipment to the manufacturer. The manufacturer will only open the returned equipment if the contamination declaration is present.

(Note: the terms and conditions associated with returning a product/system shall be addressed within the purchasing agreement or contract, and not part of the User Instruction.)

**NOTICE**

*Contact Flowserve for return authorization. Any goods received without prior written authorization and proper documentation upon receipt will be return to the sender.*

## 11.2 Disposal and recycling

At the end of the equipment service life of the product or its parts, the relevant materials and parts should be recycled or disposed of using local environmental regulation methods. If the product contains substances which are harmful to the environment, then the removal or disposal of the equipment must be in accordance with local/regional regulations. This includes any liquid and/or gas in the "seal system" or other utilities.



Refer to Safety Data Sheets and make sure that hazardous substances or toxic fluids are disposed of safely and that the correct personal protective equipment is used. All activities involving hazardous substances or toxic fluids must be in compliance with published safety standards.

# 12 Technical Data

## 12.1 Equipment dimensions and weights

Table 30: *Pump Weight* shows the approximant weights for Mark 3 Group 4 pump sizes. For the exact dimensions and weights of the product ordered, refer to the General Arrangement drawing included upon receiving the product.

Table 30: Pump Weight

| Frame | Pump size | Impeller Dia. "Approx." Pump Weight kg (lb) |
|---|---|---|
| 41K | 12X10-16 | 605 (1325) |
| | 14X14-16 | 715 (1570) |
| | 8X4-19 | 450 (990) |
| | 8X6-19 | 465 (1015) |
| | 10X6-19 | 525 (1150) |
| | 12X10-19 | 645 (1415) |
| | 14X12-19 | 740 (1625) |
| 42K | 10X8-19 | 600 (1320) |
| | 16X16-19 | 950 (2080) |
| | 12X8-22 | 720 (1580) |
| | 12X10-22 | 785 (1720) |
| | 14X12-22 | 895 (1960) |
| | 16X14-22 | 1040 (2280) |

## 12.2 Nameplate

An example of the name plate is shown in Figure 57. For more details on nameplate, see the Declaration of Conformity or separate documentation included with these User Instructions.




Figure 57: Nameplate

### 12.2.1 Nomenclature

The pump size will be engraved on the nameplate typically as shown below. See section 12.2, Nameplate.

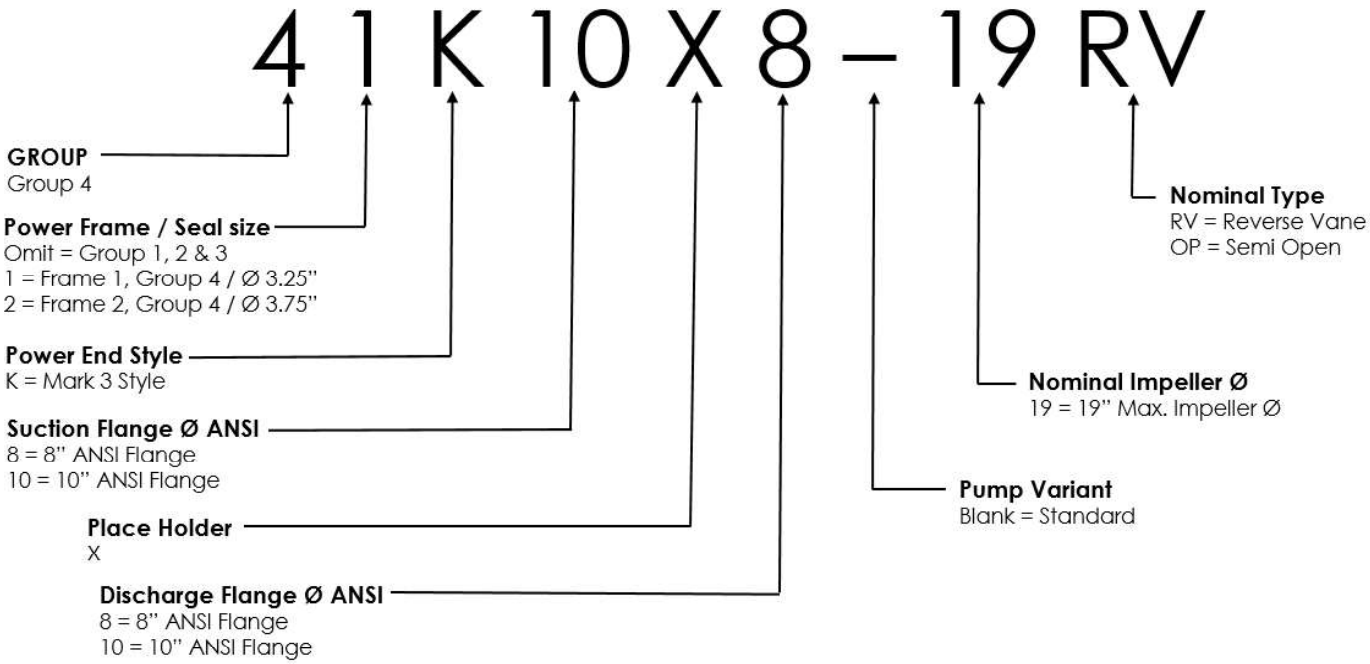

## 12.3 Operating limits

Refer to Section 7.2 for operating limits.

## 12.4 Torque requirements

Refer to Section 8.5, Table 21: *Torque Requirements*, for torque values.

## 12.5 Noise level

Attention must be given to the exposure of personnel to the noise. Local legislation will define when guidance to personnel on noise limitation is required, and when noise exposure reduction is mandatory. This is typically 80 to 85 dBA.

The usual approach is to control the exposure time to the noise or to enclose the machine to reduce emitted sound. The customer may have already specified a limiting noise level when the equipment was ordered, however if no noise requirements were defined, then attention is drawn to the following table to give an indication of equipment noise level so that the end-user can take the appropriate action in the plant, or site of operation.

Pump noise level is dependent on a number of operational factors, flow rate, pipework design and acoustic characteristics of the building, and so the values given are subject to a 3 dBA tolerance and cannot be guaranteed.

Similarly, the motor noise assumed in the "pump and motor" is that typically expected from standard and high efficiency motors when on load directly driving the pump. Note that a motor driven by an inverter may show an increased noise at some speeds.

If a pump unit only has been purchased for fitting with your own driver, then the "pump only" noise levels in the table should be combined with the level for the driver obtained from the supplier. Consult Flowserve or a noise specialist if assistance is required in combining the values.

It is recommended that where exposure approaches the prescribed limit, then site noise measurements should be made.

The values are sound pressure level $L_{pA}$ at 1 m (3.3 ft) from the machine, for "free field conditions over a reflecting plane".

For estimating sound power level $L_{WA}$ (re 1 pW) then add 14 dBA to the sound pressure value.

Table 31: Noise Levels

| Motor size and speed kW (hp) | Typical sound pressure level $L_{pA}$ at 1 m reference 20 µPa, dBa | | | | | | | | | | | |
|---|---|---|---|---|---|---|---|---|---|---|---|---|
| | 60 Hz | | | | | | 50 Hz | | | | | |
| | 1 780 r/min | | 1 180 r/min | | 885 r/min | | 1 480 r/min | | 980 r/min | | 740 r/min | |
| | Pump only | Pump and motor | Pump only | Pump and motor | Pump only | Pump and motor | Pump only | Pump and motor | Pump only | Pump and motor | Pump only | Pump and motor |
| 15 (20) | 70 | 71 | 68 | 68 | 64 | 66 | 69 | 69 | 66 | 66 | 61 | 64 |
| 18.5 (25) | 71 | 71 | 69 | 69 | 65 | 67 | 70 | 71 | 67 | 68 | 63 | 65 |
| 22 (30) | 71 | 71 | 69 | 70 | 67 | 69 | 70 | 71 | 68 | 68 | 65 | 67 |
| 30 (40) | 73 | 73 | 71 | 71 | 69 | 70 | 72 | 73 | 70 | 70 | 67 | 69 |
| 37 (50) | 73 | 74 | 71 | 72 | 69 | 70 | 72 | 73 | 70 | 71 | 67 | 70 |
| 45 (60) | 76 | 76 | 74 | 75 | 71 | 72 | 75 | 76 | 73 | 73 | 69 | 71 |
| 55 (75) | 76 | 76 | 74 | 75 | 72 | 73 | 75 | 76 | 73 | 74 | 69 | 72 |
| 75 (100) | 77 | 78 | 75 | 77 | 72 | 74 | 76 | 77 | 74 | 75 | 70 | 74 |
| 90 (125) | 78 | 79 | 75 | 78 | 73 | 75 | 76 | 78 | 74 | 75 | 71 | 76 |
| 110 (150) | 80 | 82 | 77 | 80 | 75 | 78 | 78 | 80 | 76 | 78 | 73 | 80 |
| 150 (200) | 83 | 86 | 80 | 83 | 77 | 82 | 81 | 84 | 78 | 80 | 76 | 83 |
| 200 (270) | 86 | 89 | 83 | 86 | 80 | 85 | 84 | 86 | 81 | 83 | 79 | 86 |
| 250 (335) | 87 | 90 | 84 | 87 | 81 | 86 | 85 | 87 | 83 | 85 | - | - |
| 300 (400) | 89 | 91 | 85 | 88 | 82 | 88 | 86 | 88 | 83 | 86 | - | - |
| 373 (500) | 91 | 93 | 88 | 90 | - | - | - | - | 85 | 88 | - | - |
| 447 (600) | 93 | 95 | 90 | 92 | - | - | - | - | - | - | - | - |
| 522 (700) | - | - | 93 | 94 | - | - | - | - | - | - | - | - |

**Notes:**

1. Noise values provided are for reference and are not guaranteed
2. The suction and discharge piping has a significant impact on noise level
3. Noise levels provided are for clean water. Other fluids may impact noise levels
4. Motor driven by an inverter may show an increased noise at some speeds, up 15 dBa

## 12.6 Energy rating

The Mark 3 Group 4 is excluded from Title 10 Chapter II Subchapter D Part 431 Subpart Y-Pumps of the US Code of Federal Regulations (CFR)

The Department of Energy DOE Regulations Subpart Y applies to "Clean Water" pumps only. Excluded are:

1. Chemical process pump that meets the requirements of ANSI/ASME Standard B73.1–2012, "Specification for Horizontal End Suction Centrifugal Pumps for Chemical Process", and ANSI/ASME B73.2–2002, "Specifications for Vertical In-Line Centrifugal Pumps for Chemical Process"
2. International Organization for Standardization (ISO) 2858:1975, "End-suction centrifugal pumps (rating 16 bar) -- Designation, nominal duty point and dimensions" and ISO 5199:2002, "Technical specifications for centrifugal pumps -- Class II"

# Annex A: Declaration of Conformity

If the product/system is being sold into a country which requires a Declaration of Conformity (DoC), an example of each DoC for the subject product/system must be included in this Annex.

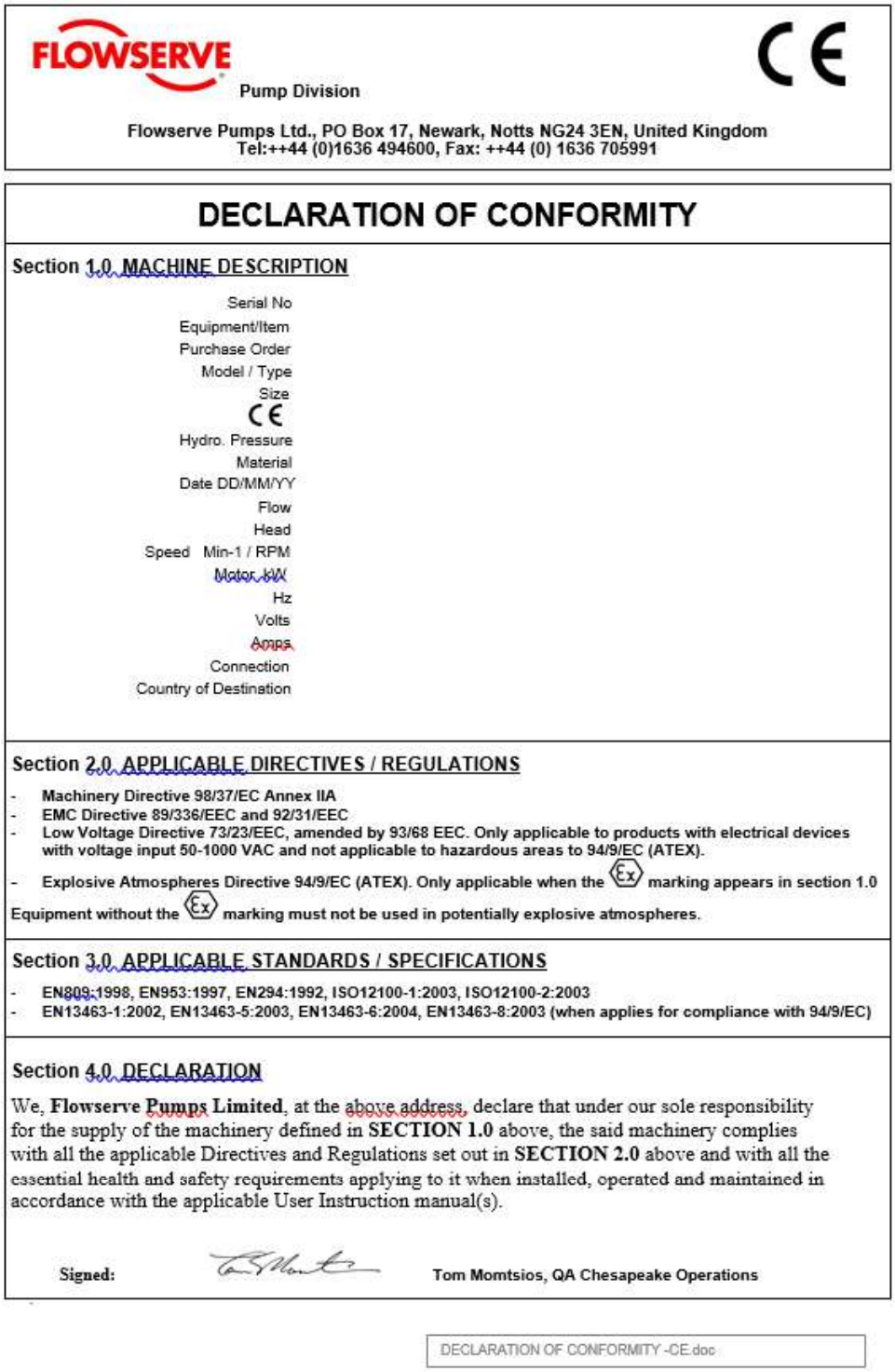

FLOWSERVE

Pump Division

CE

Flowserve Pumps Ltd., PO Box 17, Newark, Notts NG24 3EN, United Kingdom
Tel:++44 (0)1636 494600, Fax: ++44 (0) 1636 705991

## DECLARATION OF CONFORMITY

**Section 1.0 MACHINE DESCRIPTION**

Serial No
Equipment/Item
Purchase Order
Model / Type
Size
CE
Hydro. Pressure
Material
Date DD/MM/YY
Flow
Head
Speed Min-1 / RPM
Motor kW
Hz
Volts
Amps
Connection
Country of Destination

**Section 2.0 APPLICABLE DIRECTIVES / REGULATIONS**

- Machinery Directive 98/37/EC Annex IIA
- EMC Directive 89/336/EEC and 92/31/EEC
- Low Voltage Directive 73/23/EEC, amended by 93/68 EEC. Only applicable to products with electrical devices with voltage input 50-1000 VAC and not applicable to hazardous areas to 94/9/EC (ATEX).
- Explosive Atmospheres Directive 94/9/EC (ATEX). Only applicable when the Ex marking appears in section 1.0

Equipment without the Ex marking must not be used in potentially explosive atmospheres.

**Section 3.0 APPLICABLE STANDARDS / SPECIFICATIONS**

- EN809:1998, EN953:1997, EN294:1992, ISO12100-1:2003, ISO12100-2:2003
- EN13463-1:2002, EN13463-5:2003, EN13463-6:2004, EN13463-8:2003 (when applies for compliance with 94/9/EC)

**Section 4.0 DECLARATION**

We, **Flowserve Pumps Limited**, at the above address, declare that under our sole responsibility for the supply of the machinery defined in **SECTION 1.0** above, the said machinery complies with all the applicable Directives and Regulations set out in **SECTION 2.0** above and with all the essential health and safety requirements applying to it when installed, operated and maintained in accordance with the applicable User Instruction manual(s).

**Signed:** Tom Momtsios, QA Chesapeake Operations

DECLARATION OF CONFORMITY -CE.doc

# Annex B: Technical Terms, Acronyms, and Abbreviations

1. Net positive suction head – available ($NPSH_A$)
    a. The measure of the energy in a liquid above the vapor pressure. It is used to determine the likelihood that a fluid will vaporize in the pump. It is critical because a centrifugal pump is designed to pump a liquid, not a vapor.
    b. Vaporization in a pump will result in damage to the pump, causing deterioration in Total Differential Head (TDH), vibration and possibly a complete stopping of pumping. Vaporization is synonymous with cavitation.
2. Net positive suction head – required ($NPSH_R$)
    a. The fluid energy decreases between the inlet of the pump, and the point of lowest pressure in the pump. This decrease occurs because of friction losses and fluid accelerations. The total energy (NPSH) in the fluid is typically the lowest as fluid enters the impeller vanes. $NPSH_R$ is the minimum required fluid energy need to maintain pumping.
    b. The value for $NPSH_R$ for the specific pump purchased is given in the pump data sheet, and on the pump performance curve. The value varies with flow.
    c. For a pump to operate properly the $NPSH_A$ must be greater than the $NPSH_R$. Good practice dictates that this margin is at minimum 1.5 m (5 ft) or 20%, whichever is greater.

    **NOTICE** Ensuring that $NPSH_A$ is larger than $NPSH_R$ by the suggested margin will greatly enhance pump performance, efficiency and reliability. It will also reduce the likelihood of cavitation, which can severely damage the pump.
3. Specific gravity (SG)
    a. Pump capacity and total head in meter (feet) of liquid do not change with SG, however pressure displayed on a pressure gauge is directly proportional to SG. Power absorbed is also directly proportional to SG. It is therefore important to check that any change in SG will not overload the pump driver or over pressurize the pump.
4. Viscosity
    a. For a given flow rate the total head reduces with increased viscosity. Also for a given flow rate the power absorbed increases with the increased viscosity, and reduces with reduced viscosity. Contact Flowserve if changes in viscosity are planned.
5. Pump speed
    a. Changing the pump speed affects flow, total head, power absorbed, $NPSH_R$, noise and vibration levels. Flow varies in direct proportion to pump speed. Head varies as the speed ratio squared. Power varies as speed ratio cubed. If increasing speed, it is important to ensure that maximum pump working pressure is not exceeded, the driver is not overloaded, $NPSH_A > NPSH_R$ and that noise and vibration are within local requirements and regulations.
6. Pumped flow
    a. Flow must not fall outside the minimum and maximum continuous safe flows shown on the pump performance curve and or data sheet. Operate the pump between Minimum Continuous Stable Flow MCSF and End of Curve EOC.

# Annex C: Additional Sources of Information

The following are excellent sources for additional information on Flowserve Mark 3 Group 4 pumps, and centrifugal pumps in general.

Pump Engineering Manual
R.E. Syska, J.R. Birk,
Flowserve Corporation, Irving, TX, 1994

Specification for Horizontal End Suction Centrifugal Pumps for Chemical Process, ASME B73.1
The American Society of Mechanical Engineers,
New York, NY.

American National Standard for Centrifugal Pumps for Nomenclature, Definitions, Design and Application (ANSI/HI 1.1 – 1.3)
Hydraulic Institute, 9 Sylvan Way, Parsippany,
New Jersey 07054-3802.

American National Standard for Centrifugal Pumps for Installation, Operation, and Maintenance (ANSI/HI 1.4)
Hydraulic Institute, 9 Sylvan Way, Parsippany,
New Jersey 07054-3802

Recommended Practice for Machinery Installation and Installation Design (API 686 2nd Edition, 2009)
American Petroleum Institute, 1220 L Street, NW, Washington, D.C. 20005

Flowserve Mark 3 Group 4 Sales Bulletin.

RESP73H Application of ASME B73.1 - 2012, Specification for Horizontal End Suction Centrifugal Pumps for Chemical Process, Process Industries Practices
Construction Industry Institute, The University of Texas at Austin, 3208 Red River Street, Suite 300,
Austin, Texas 78705

Pump Handbook
4nd Edition, Igor J. Karassik et al, McGraw-Hill, Inc.,
New York, NY, Copyright 2008

Centrifugal Pump Sourcebook
John W. Dufour and William E. Nelson,
McGraw-Hill, Inc., New York, NY, Copyright 1993

Pumping Manual, 9th edition
T.C. Dickenson, Elsevier Advanced Technology,
Kidlington, United Kingdom, Copyright 1995

## Annex D: Supplementary User Instructions

Supplementary instructions such as for a driver, coupling, instrumentation, controller, seals, seal systems are provided as separate documents in their original format. If further copies of these are required they should be obtained from the supplier for retention with these User Instructions.

**NOTES:**

**NOTES:**

**Flowserve factory contacts:**
**Flowserve Pump Division**
**3900 Cook Boulevard**
**Chesapeake, VA 23323-2626 USA**

Telephone +1 757 485 8000
Fax +1 757 485 8149

**FLOWSERVE REGIONAL SALES OFFICES:**

**USA and Canada**
Flowserve Corporation
5215 North O'Connor Blvd.,
Suite 300
Irving, Texas 75039-5421 USA
Telephone +1 972 443 6500
Fax +1 972 443 6800

**Europe, Middle East, Africa**
Flowserve FSG – Italy
Worthington S.r.l.
Via Rossini 90/92
20033 Desio (Milan) Italy
Telephone +39 0362 6121
Fax +39 0362 628 822

**Asia Pacific**
Flowserve Pte. Ltd
10 Tuas Loop
Singapore 637345
Telephone +64 6771 0600
Fax +65 6862 2329

**Latin America and Caribbean**
Flowserve Corporation
6840 Wynnwood Lane
Houston, Texas 77008 USA
Telephone +1 713 803 4434
Fax +1 713 803 4497

Flowserve Corporation has established industry leadership in the design and manufacture of its products. When properly selected, this Flowserve product is designed to perform its intended function safely during its useful life. However, the purchaser or user of Flowserve products should be aware that Flowserve product might be used in numerous application under a wide variety of industrial service conditions. Although Flowserve can (and often does) provide general guidelines, it cannot provide specific data and warnings for all possible applications. The purchaser/user should read and understand the User Instructions: Installation Operation Maintenance included with the product, and train its employees and contractors in the safe use of Flowserve products in connection with its application

While the information and specifications contained in this literature are believed to be accurate, they are supplied for informative purpose only and should not be considered certified or as a guaranteed of satisfactory results by reliance thereon. Nothing contained herein is to be construed as a warranty or guarantee, express or implied, regarding any matter with respect to the product. Because Flowserve is continually improving and upgrading its product design, the specifications, dimensions and information contained herein are subject to change without notice. Should any question arise concerning these provisions, the purchaser/user should contact Flowserve Corporation at any one of its worldwide operations or offices.

© 2017 Flowserve Corporation, Irving, Texas, USA. Flowserve is a registered trademark of Flowserve Corporation

Português 2

English 57

Español 111

Deutsch 167

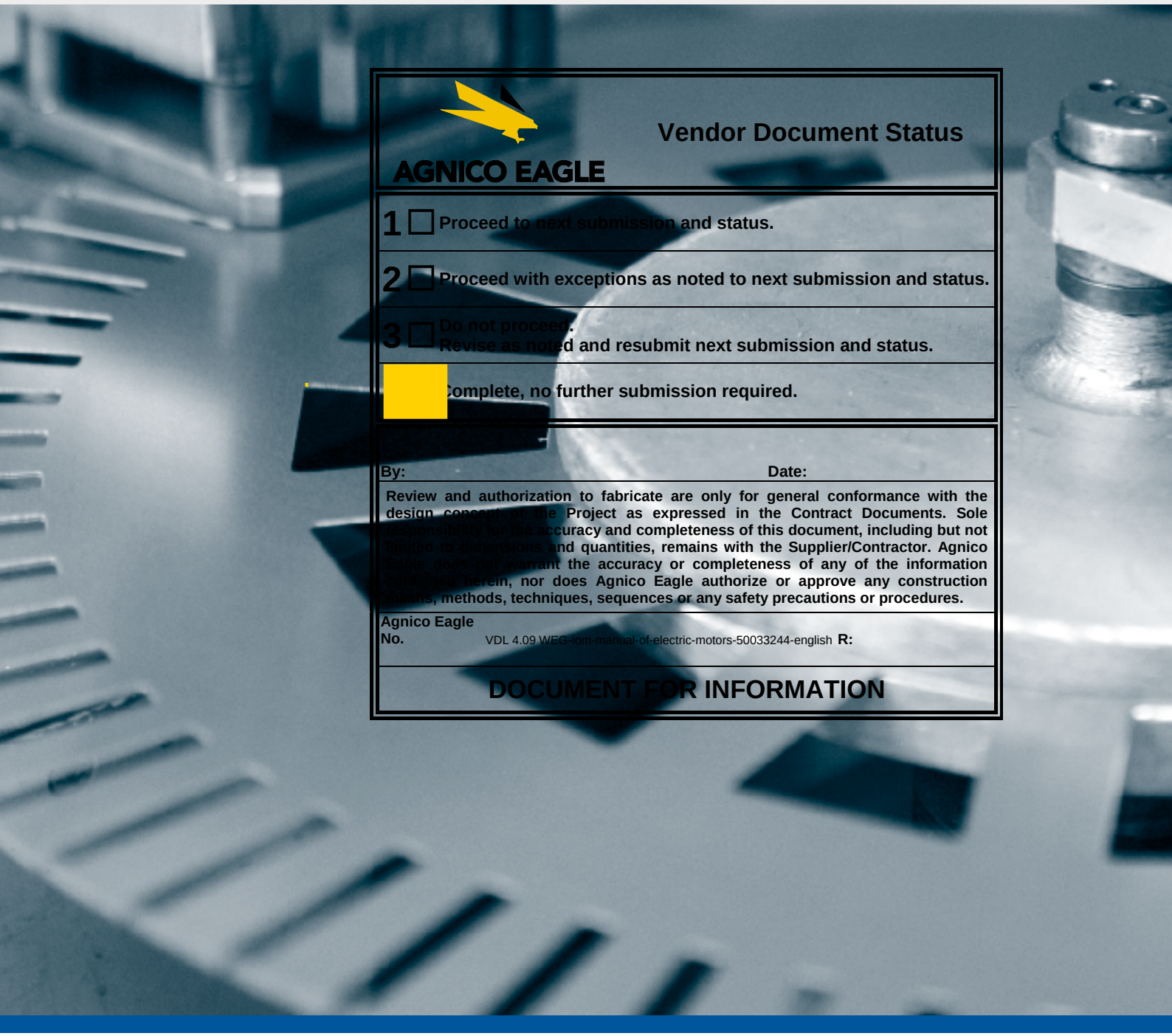

# INSTALLATION, OPERATION AND MAINTENANCE MANUAL OF ELECTRIC MOTORS

This manual provides information about WEG induction motors fitted with squirrel cage, permanent magnet or hybrid rotors, low, medium and high voltage, in frame sizes IEC 56 to 630 and NEMA 42 to 9606/10.
The motor lines indicated below have additional information that can be checked in their respective manuals:

- Smoke Extraction Motors;
- Electromagnetic Brake Motors;
- Hazardous Area Motors.

These motors meet the following standards, if applicable:

- NBR 17094-1: máquinas Elétricas Girantes - Motores de Indução - Parte 1: trifásicos
- NBR 17094-2: Máquinas Elétricas Girantes - Motores de Indução - Parte 2: monofásicos
- IEC 60034-1: Rotating Electrical Machines - Part 1: Rating and Performance
- NEMA MG 1: Motors and Generators
- CSA C 22.2 N°100: Motors and Generators
- UL 1004-1: Rotating Electrical Machines - General Requirements

If you have any questions regarding this manual please contact your local WEG branch, contact details can be found at www.weg.net.

# TABLE OF CONTENTS


1. TERMINOLOGY 61

2. INITIAL RECOMMENDATIONS 62

2.1. WARNING SYMBOL ..... 62
2.2. RECEIVING INSPECTION ..... 62
2.3. NAMEPLATES ..... 63

3. SAFETY INSTRUCTIONS 66

4. HANDLING AND TRANSPORT 67

4.1. LIFTING ..... 67
4.1.1. Horizontal motors with one eyebolt ..... 67
4.1.2. Horizontal motor with two eyebolts ..... 68
4.1.3. Vertical motors ..... 69
4.1.3.1. Procedures to place W22 motors in the vertical position ..... 69
4.1.3.2. Procedures to place HGF motors in the vertical position ..... 70
4.2 PROCEDURES TO PLACE W22 VERTICAL MOUNT MOTORS IN HORIZONTAL POSITION ..... 71

5. STORAGE 73

5.1. EXPOSED MACHINED SURFACES ..... 73
5.2. STORAGE ..... 73
5.3 BEARINGS ..... 74
5.3.1 Grease lubricated bearings ..... 74
5.3.2 Oil lubricated bearings ..... 74
5.3.3 Oil Mist lubricated bearings ..... 75
5.3.4 Sleeve bearing ..... 75
5.4. INSULATION RESISTANCE ..... 75
5.4.1. Insulation resistance measurement ..... 75

6. INSTALLATION 78

6.1. FOUNDATIONS ..... 79
6.2. MOTOR MOUNTING ..... 81
6.2.1. Foot mounted motors ..... 81
6.2.2. Flange mounted motors ..... 81
6.2.3. Pad mounted motors ..... 82
6.3. BALANCING ..... 82
6.4. COUPLINGS ..... 82
6.4.1. Direct coupling ..... 83
6.4.2. Gearbox coupling ..... 83
6.4.3. Pulley and belt coupling ..... 83
6.4.4. Coupling of sleeve bearing motors ..... 83
6.5. LEVELING ..... 84

6.6. ALIGNMENT ..... 84
6.7. CONNECTION OF OIL LUBRICATED OR OIL MIST LUBRICATED MOTORS ..... 85
6.8. CONNECTION OF THE COOLING WATER SYSTEM ..... 85
6.9. ELECTRICAL CONNECTION ..... 85
6.10. CONNECTION OF THE THERMAL PROTECTION DEVICES ..... 88
6.11. RESISTANCE TEMPERATURE DETECTORS (PT-100) ..... 89
6.12. CONNECTION OF THE SPACE HEATERS ..... 91
6.13. STARTING METHODS ..... 92
6.14. MOTORS DRIVEN BY FREQUENCY INVERTER ..... 93
6.14.1. Use of dV/dt filter ..... 93
6.14.1.1. Motor with enameled round wire ..... 93
6.14.1.2. Motor with prewound coils ..... 93
6.14.2. Bearing insulation ..... 94
6.14.3. Switching frequency ..... 94
6.14.4. Mechanical speed limitation ..... 94

7. COMMISSIONING 95

7.1. INITIAL START-UP ..... 95
7.2. OPERATING CONDITIONS ..... 97
7.2.1.Limits of vibration ..... 98

8. MAINTENANCE 99

8.1. GENERAL INSPECTION ..... 99
8.2. LUBRICATION ..... 99
8.2.1. Grease lubricated rolling bearings ..... 100
8.2.1.1. Motor without grease fitting ..... 102
8.2.1.2. Motor with grease fitting ..... 102
8.2.1.3. Compatibility of the Mobil Polyrex EM grease with other greases ..... 102
8.2.2. Oil lubricated bearings ..... 103
8.2.3. Oil mist lubricated bearings ..... 103
8.2.4. Sleeve bearings ..... 103
8.3. MOTOR ASSEMBLY AND DISASSEMBLY ..... 104
8.3.1. Terminal box ..... 105
8.4. DRYING THE STATOR WINDING INSULATION ..... 105
8.5. SPARE PARTS ..... 106

9. ENVIRONMENTAL INFORMATION 107

9.1. PACKAGING ..... 107
9.2. PRODUCT ..... 107

10. TROUBLESHOOTING CHART X SOLUTIONS 108

11. WARRANTY TERM 109

12. EC DECLARATION OF CONFORMITY 110

# 1. TERMINOLOGY

***Balancing:*** the procedure by which the mass distribution of a rotor is checked and, if necessary, adjusted to ensure that the residual unbalance or the vibration of the journals and/or forces on the bearings at a frequency corresponding to service speed are within specified limits in International Standards.
[ISO 1925:2001, definition 4.1]

***Balance quality grade:*** indicates the peak velocity amplitude of vibration, given in mm/s, of a rotor running free-in-space and it is the product of a specific unbalance and the angular velocity of the rotor at maximum operating speed.

***Grounded Part:*** metallic part connected to the grounding system.

***Live Part:*** conductor or conductive part intended to be energized in normal operation, including a neutral conductor.

***Authorized personnel:*** employee who has formal approval of the company.

***Qualified personnel:*** employee who meets the following conditions simultaneously:
- Receives training under the guidance and responsibility of a qualified and authorized professional;
- Works under the responsibility of a qualified and approved professional.

***Note****: The qualification is only valid for the company that trained the employee in the conditions set out by the authorized and qualified professional responsible for training.*

# 2. INITIAL RECOMMENDATIONS

Electric motors have energized circuits, exposed rotating parts and hot surfaces that may cause serious injury to people during normal operation. Therefore, it is recommended that transportation, storage, installation, operation and maintenance services are always performed by qualified personnel.
Also the applicable procedures and relevant standards of the country where the machine will be installed must be considered.
Noncompliance with the recommended procedures in this manual and other references on the WEG website may cause severe personal injuries and/or substantial property damage and may void the product warranty.

For practical reasons, it is not possible to include in this Manual detailed information that covers all construction variables nor covering all possible assembly, operation or maintenance alternatives.
This Manual contains only the required information that allows qualified and trained personnel to carry out their services. The product images are shown for illustrative purpose only.

For *Smoke Extraction Motors*, please refer to the additional instruction manual 50026367 available on the website www.weg.net.

For brake motors, please refer to the information contained in WEG 50006742 / 50021973 brake motor manual available on the website www.weg.net.

For information about permissible radial and axial shaft loads, please check the product technical catalogue.

The user is responsible for the correct definition of the installation environment and application characteristics.

During the warranty period, all repair, overhaul and reclamation services must be carried out by WEG authorized Service Centers to maintain validity of the warranty.



## 2.1. WARNING SYMBOL

Warning about safety and warranty.

## 2.2. RECEIVING INSPECTION

All motors are tested during the manufacturing process.
The motor must be checked when received for any damage that may have occurred during the transportation. All damages must be reported in writing to the transportation company, to the insurance company and to WEG. Failure to comply with such procedures will void the product warranty.
You must inspect the product:
- Check if nameplate data complies with the purchase order;
- Remove the shaft locking device (if any) and rotate the shaft by hand to ensure that it rotates freely.
- Check that the motor has not been exposed to excessive dust and moisture during the transportation.

Do not remove the protective grease from the shaft, or the plugs from the cable entries. These protections must remain in place until the installation has been completed.

## 2.3. NAMEPLATES

The nameplate contains information that describes the construction characteristics and the performance of the motor. Figure 2.1 and Figure 2.2 show nameplate layout examples.




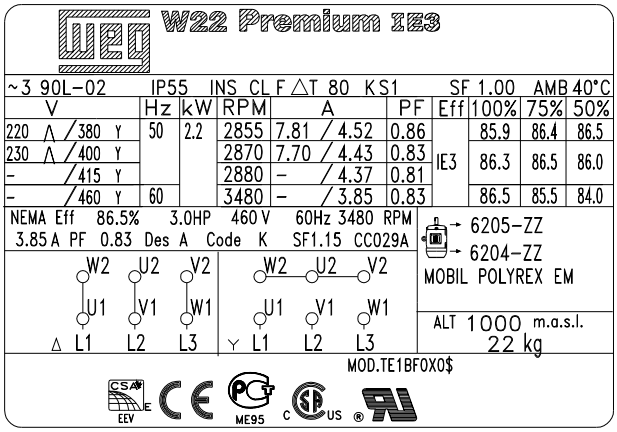


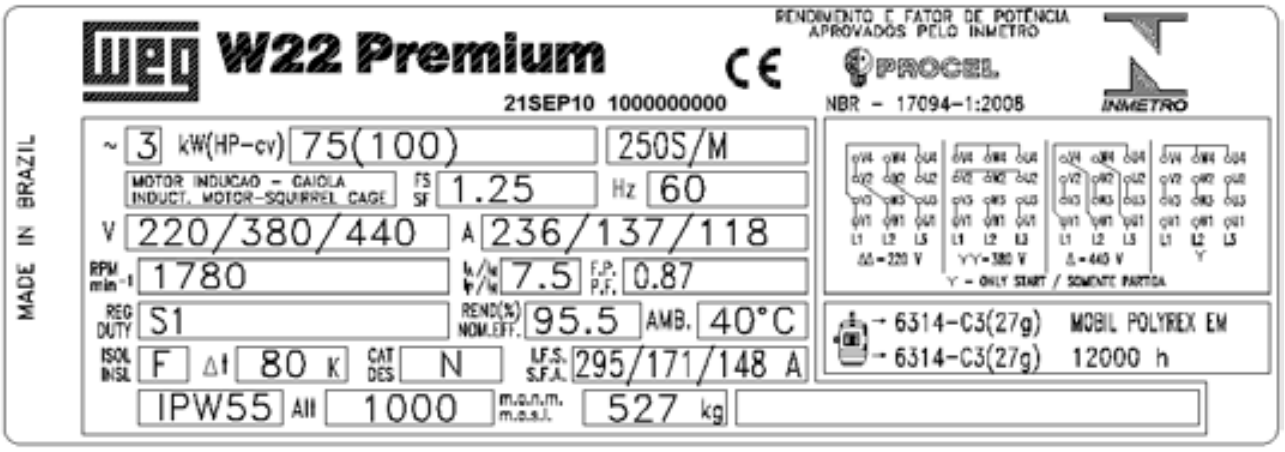


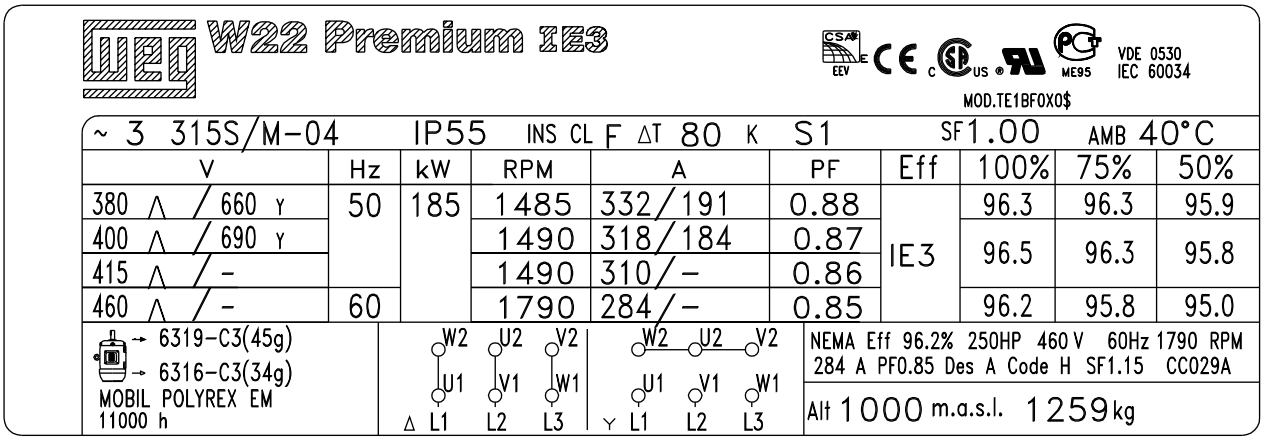

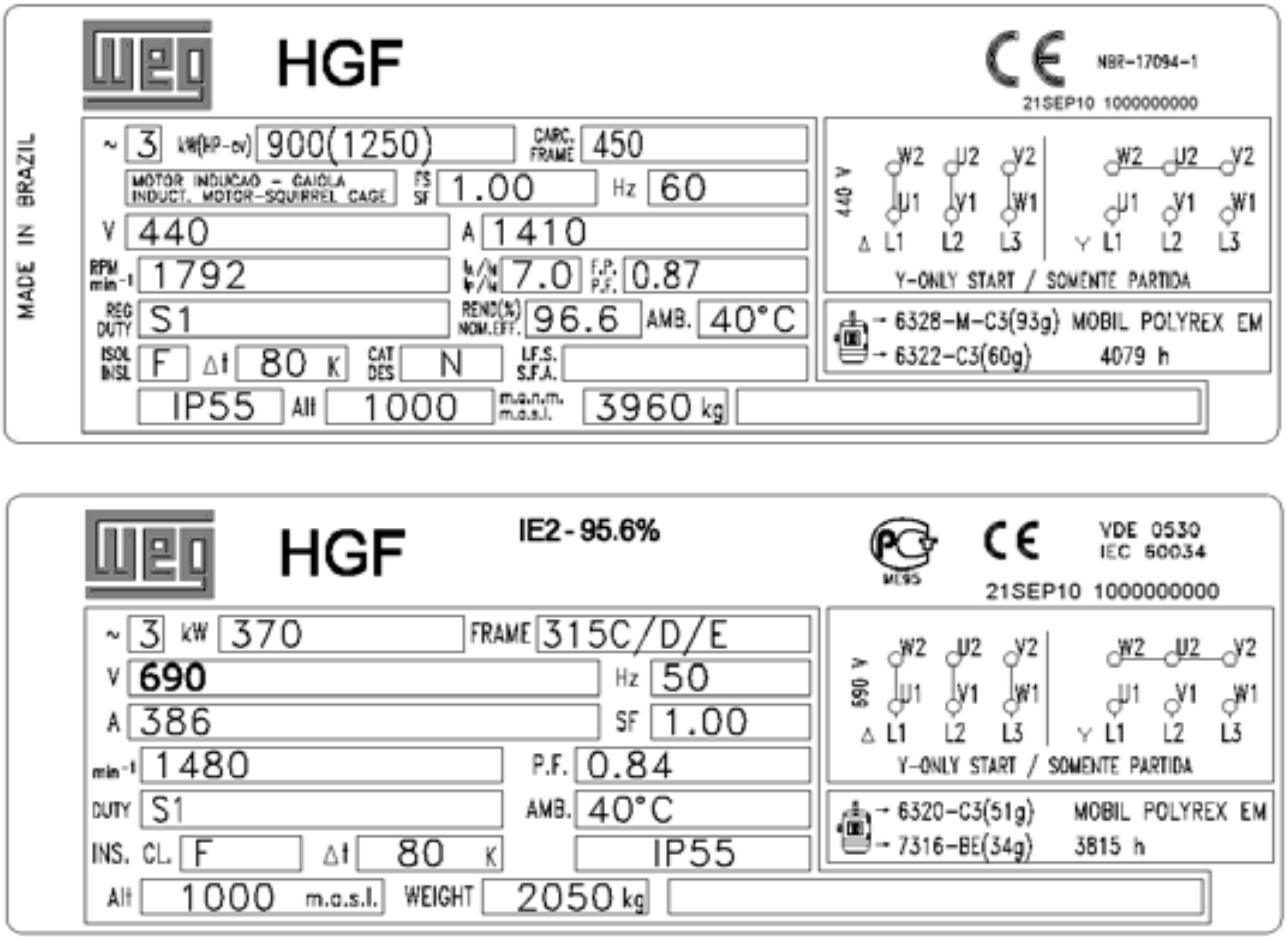


***Figure 2.1*** *- IEC motor nameplate.*

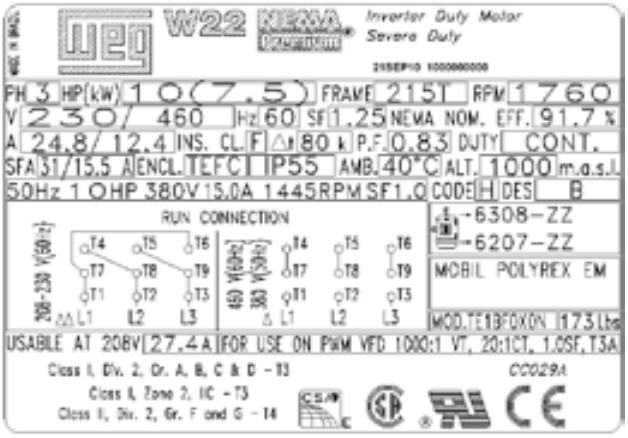

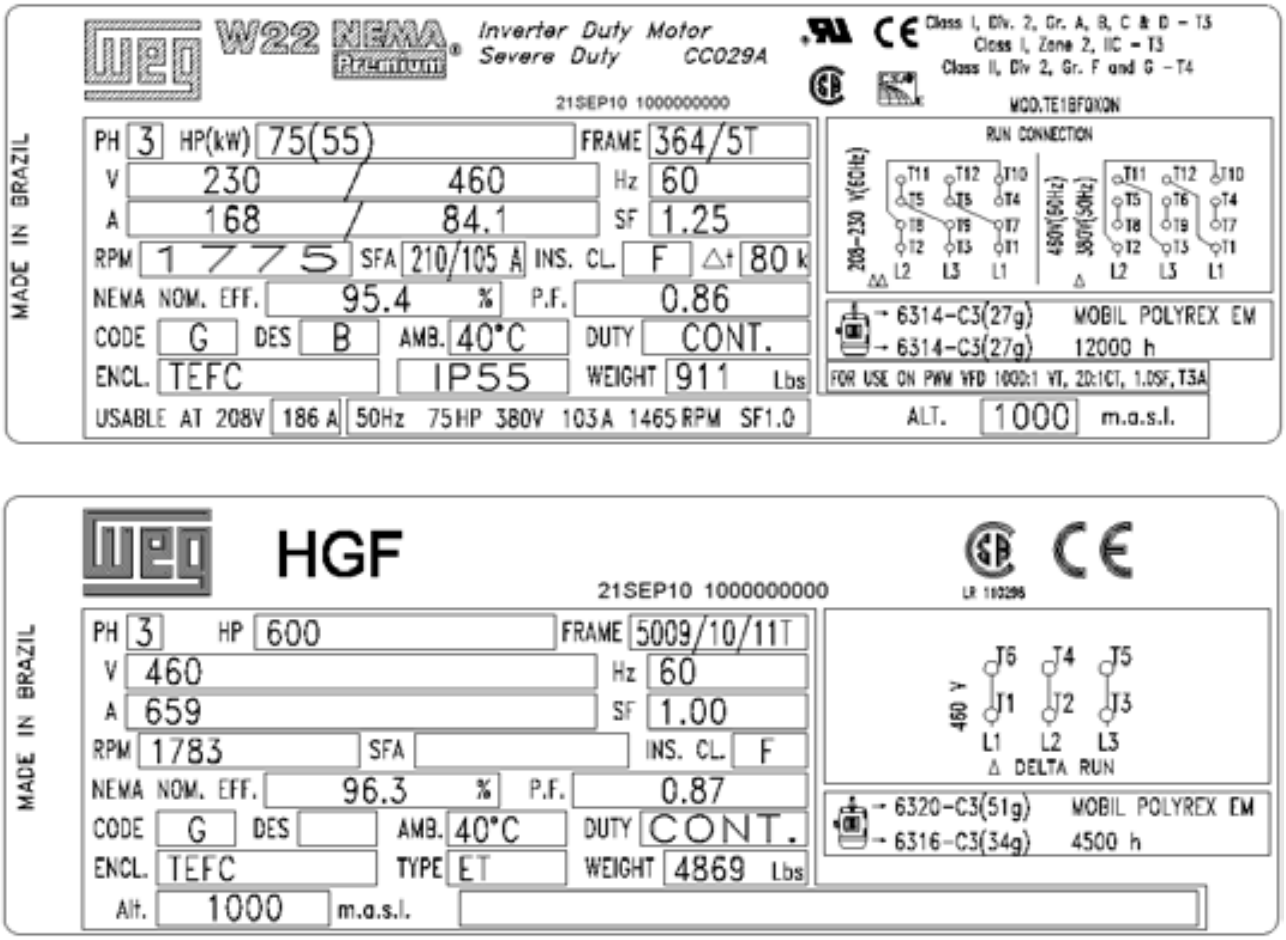


***Figure 2.2*** *- NEMA motor nameplate*

# 3. SAFETY INSTRUCTIONS



The motor must be disconnected from the power supply and be completely stopped before conducting any installation or maintenance procedures. Additional measures should be taken to avoid accidental motor starting.



Professionals working with electrical installations, either in the assembly, operation or maintenance, should use proper tools and be instructed on the application of standards and safety requirements, including the use of Personal Protective Equipment (PPE) that must be carefully observed in order to reduce risk of personal injury during these services.



Electric motors have energized circuits, exposed rotating parts and hot surfaces that may cause serious injury to people during normal operation. It is recommended that transportation, storage, installation, operation and maintenance services are always performed by qualified personnel.

Always follow the safety, installation, maintenance and inspection instructions in accordance with the applicable standards in each country.

# 4. HANDLING AND TRANSPORT

Individually packaged motors should never be lifted by the shaft or by the packaging. They must be lifted only by means of the eyebolts, when supplied. Use always suitable lifting devices to lift the motor. Eyebolts on the frame are designed for lifting the machine weight only as indicated on the motor nameplate. Motors supplied on pallets must be lifted by the pallet base with lifting devices fully supporting the motor weight.

The package should never be dropped. Handle it carefully to avoid bearing damage.

Eyebolts provided on the frame are designed for lifting the machine only. Do not use these eyebolts for lifting the motor with coupled equipment such as bases, pulleys, pumps, reducers, etc.

Never use damaged, bent or cracked eyebolts. Always check the eyebolt condition before lifting the motor.

Eyebolts mounted on components, such as on end shields, forced ventilation kits, etc. must be used for lifting these components only. Do not use them for lifting the complete machine set.

Handle the motor carefully without sudden impacts to avoid bearing damage and prevent excessive mechanical stresses on the eyebolts resulting in its rupture.

To move or transport motors with cylindrical roller bearings or angular contact ball bearings, use always the shaft locking device provided with the motor.
All HGF motors, regardless of bearing type, must be transported with shaft locking device fitted.

## 4.1. LIFTING

Before lifting the motor ensure that all eyebolts are tightened properly and the eyebolt shoulders are in contact with the base to be lifted, as shown in Figure 4.1. Figure 4.2 shows an incorrect tightening of the eyebolt.
Ensure that lifting machine has the required lifting capacity for the weight indicated on the motor nameplate.



***Figure 4.1*** *- Correct tightening of the eyebolt*

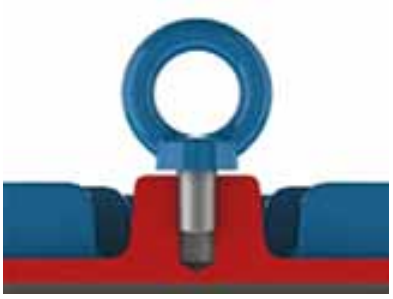

***Figure 4.2*** *- Incorrect tightening of the eyebolt.*

The center-of-gravity may change depending on motor design and accessories. During the lifting procedures the maximum allowed angle of inclination should never be exceeded as specified below.

### 4.1.1. Horizontal motors with one eyebolt

For horizontal motors fitted with only one eyebolt, the maximum allowed angle-of-inclination during the lifting process should not exceed 30° in relation to the vertical axis, as shown in Figure 4.3.

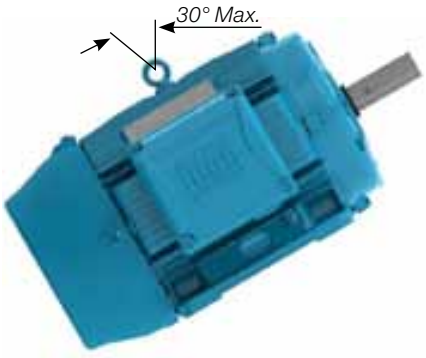


***Figure 4.3*** *- Maximum allowed angle-of-inclination for motor with one eyebolt.*

### 4.1.2. Horizontal motor with two eyebolts

When motors are fitted with two or more eyebolts, all supplied eyebolts must be used simultaneously for the lifting procedure.

There are two possible eyebolt arrangements (vertical and inclined), as shown below:

- For motors with vertical lifting eyebolts, as shown in Figure 4.4, the maximum allowed lifting angle should not exceed 45° in relation to the vertical axis. We recommend to use a spreader bar for maintaining the lifting elements (chain or rope) in vertical position and thus preventing damage to the motor surface.




***Figure 4.4*** *- Maximum resulting angle for motors with two or more lifting eyebolts.*

- For HGF motors, as shown in Figure 4.5, the maximum resulting angle should not exceed 30° in relation to the vertical axis.

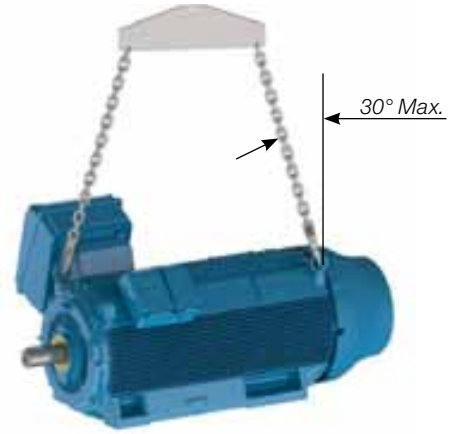


***Figure 4.5*** *- Maximum resulting angle for horizontal HGF motors*

- For motors fitted with inclined eyebolts, as shown in Figure 4.6, the use of a spreader bar is required for maintaining the lifting elements (chain or rope) in vertical position and thus preventing damage to the motor surface.



***Figure 4.6*** *- Use of a spreader bar for lifting.*

### 4.1.3. Vertical motors

For vertical mounted motors, as shown in Figure 4.7, the use of a spreader bar is required for maintaining the lifting element (chain or rope) in vertical position and thus preventing damage to the motor surface.



***Figure 4.7*** *- Lifting of vertical mounted motors.*

Always use the eyebolts mounted on the top side of the motor, diametrically opposite, considering the mounting position. See Figure 4.8.



***Figure 4.8*** *- Lifting of HGF motors.*

#### 4.1.3.1. Procedures to place W22 motors in the vertical position

For safety reasons during the transport, vertical mounted Motors are usually packed and supplied in horizontal position.
To place W22 motors fitted with eyebolts (see Figure 4.6), to the vertical position, proceed as follows:

1. Ensure that the eyebolts are tightened properly, as shown in Figure 4.1;
2. Remove the motor from the packaging, using the top mounted eyebolts, as shown in Figure 4.9;



***Figure 4.9*** *- Removing the motor from the packaging.*

3. Install a second pair of eyebolts, as shown in Figure 4.10;



***Figure 4.10*** *- Installation of the second pair of eyebolts.*

4. Reduce the load on the first pair of eyebolts to start the motor rotation, as shown in Figure 4.11. This procedure must be carried out slowly and carefully.



***Figure 4.11*** *- End result: motor placed in vertical position.*



These procedures will help you to move motors designed for vertical mounting. These procedures are also used to place the motor from the horizontal position into the vertical position and vertical to horizontal.

### 4.1.3.2. Procedures to place HGF motors in the vertical position

HGF motors are fitted with eight lifting points: four at drive end and four at non-drive end. The HGF motors are usually transported in horizontal position, however for the installation they must be placed in the vertical position.
To place an HGF motor in the vertical position, proceed as follows:

1. Lift the motor by using the four lateral eyebolts and two hoists, see Figure 4.12;



***Figure 4.12*** *- Lifting HGF motor with two hoists.*

2. Lower the hoist fixed to motor drive end while lifting the hoist fixed to motor non-drive end until the motor reaches its equilibrium, see Figure 4.13.



***Figure 4.13*** *- Placing HGF motor in vertical position*

3. Remove the hoist hooks from the drive end eyebolts and rotate the motor 180° to fix the removed hooks into the two eyebolts at the motor non-drive end, see Figure 4.14.



***Figure 4.14*** *- Lifting HGF motors by the eyebolts at the non-drive end.*

4. Fix the removed hoist hooks in the other two eyebolts at the non-drive end and lift the motor until the vertical position is reached, see Figure 4.15.



***Figure 4.15*** *- HGF motor in the vertical position*

These procedures will help you to move motors designed for vertical mounting. These procedures are also used to place the motor from the horizontal position into the vertical position and vertical to horizontal.

## 4.2 Procedures to place W22 vertical mount motors in horizontal position

To place W22 vertical mount motor in horizontal position, proceed as follows:

1. Ensure that all eyebolts are tightened properly, as shown in Figure 4.1;

2. Install the first pair of eyebolts and lift the motor as shown in Figure 4.16;



***Figure 4.16 -*** *Install the first pair of eyebolts*

3. Install the second pair of eyebolts, as shown in Figure 4.17;



***Figure 4.17 -*** *Install the second pair of eyebolts*

4. Reduce the load on the first pair of eyebolts for rotating the motor, as shown in Figure 4.18. This procedure must be carried out slowly and carefully.



***Figure 4.18 -*** *Motor is being rotated to horizontal position*

5. Remove the first pair of eyebolts, as shown in Figure 4.19.



***Figure 4.19 -*** *Final result: motor placed in horizontal position*

# 5. STORAGE

If the motor is not installed immediately, it must be stored in a dry and clean environment, with relative humidity not exceeding 60%, with an ambient temperature between 5 ºC and 40 ºC, without sudden temperature changes, free of dust, vibrations, gases or corrosive agents. The motor must be stored in horizontal position, unless specifically designed for vertical operation, without placing objects on it. Do not remove the protection grease from shaft end to prevent rust.

If the motor are fitted with space heaters, they must always be turned on during the storage period or when the installed motor is out of operation. Space heaters will prevent water condensation inside the motor and keep the winding insulation resistance within acceptable levels. Store the motor in such position that the condensed water can be easily drained. If fitted, remove pulleys or couplings from the shaft end (more information are given on item 6).

The space heaters should never be energized when the motor is in operation.

## 5.1. EXPOSED MACHINED SURFACES

All exposed machined surfaces (like shaft end and flange) are factory-protected with temporary rust inhibitor. A protective film must be reapplied periodically (at least every six months), or when it has been removed and/or damaged.

## 5.2. STORAGE

The stacking height of the motor packaging during the storage period should not exceed 5 m, always considering the criteria indicated in Table 5.1:

***Table 5.1*** *- Max. recommended stacking height*

| Packaging Type | Frame sizes | Maximum stacking quantity |
|---|---|---|
| **Cardboard box** | IEC 63 to 132<br>NEMA 143 to 215 | Indicated on the top side of the cardboard box |
| **Wood crate** | IEC 63 to 315<br>NEMA 48 to 504/5 | 06 |
| | IEC 355<br>NEMA 586/7 and 588/9 | 03 |
| | HGF IEC 315 to 630<br>HGF NEMA 5000 to 9600 | Indicated on the packaging |

***Notes****:*
*1) Never stack larger packaging onto smaller packaging.*
*2) Align the packaging correctly (see Figure 5.1 and Figure 5.2).*



***Figure 5.1*** *- Correct stacking*

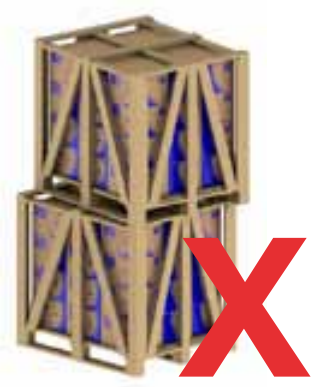

***Figure 5.2*** *- Incorrect stacking*

ENGLISH

*3) The feet of the crates above should always be supported by suitable wood battens (Figure 5.3) and never stand on the steel tape or without support (Figure 5.4).*



*Figure 5.3 - Correct stacking*

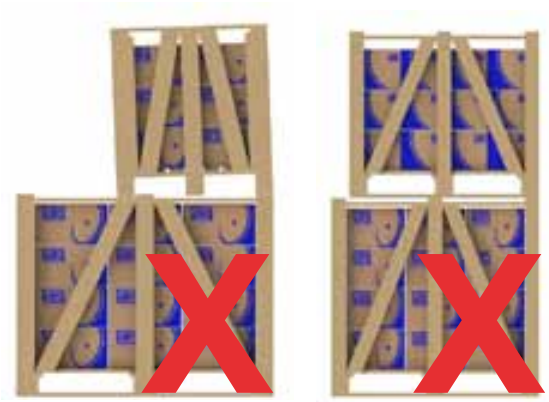

*Figure 5.4 - Incorrect stacking*

*4) When stacking smaller crates onto longer crates, always ensure that suitable wooden supports are provided to withstand the weight (see Figure 5.5). This condition usually occurs with motor packaging above IEC 225S/M (NEMA 364/5T) frame sizes.*

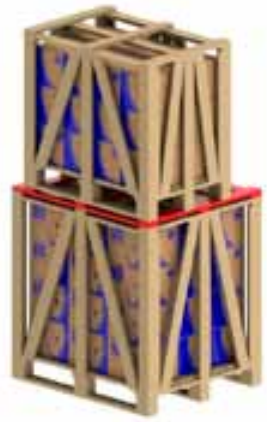

***Figure 5.5** - Use of additional battens for stacking*



## 5.3 BEARINGS

### 5.3.1 Grease lubricated bearings

We recommend rotating the motor shaft at least once a month (by hand, at least five revolutions, stopping the shaft at a different position from the original one). If the motor is fitted with shaft locking device, remove it before rotating the shaft and install it again before performing any handling procedure. Vertical motors may be stored in the vertical or in horizontal position. If motors with open bearings are stored longer than six months, the bearings must be relubricated according to item 8.2 before commissioning of the motor.
If the motor is stored for longer than 2 years, the bearings must be replaced or removed, washed, inspected and relubricated according to item 8.2.

### 5.3.2 Oil lubricated bearings

The motor must be stored in its original operating position and with oil in the bearings. Correct oil level must be ensured. It should be in the center of the sight glass.
During the storage period, remove the shaft locking device and rotate the shaft by hand every month, at least five revolutions, thus achieving an even oil distribution inside the bearing and maintaining the bearing in good operating conditions. Reinstall the shaft locking device every time the motor has to be moved.
If the motor is stored for a period of over six months, the bearings must be relubricated according to Item 8.2 before starting the operation. If the motor is stored for a period of over two years, the bearings must be replaced or removed, washed according to manufacturer instructions, checked and relubricated according to Item 8.2. The oil of vertical mounted motors that are transported in horizontal position is removed to prevent oils leaks during the transport. These motors must be stored in vertical position after receiving and the bearing must be lubricated.

### 5.3.3 Oil Mist lubricated bearings

The motor must be stored in horizontal position. Lubricate the bearings with ISO VG 68 mineral oil in the amount indicated in the Table 5.2 (this is also valid for bearings with equivalent dimensions). After filling with oil, rotate the shaft by hand, at least five revolutions)
During the storage period, remove the shaft locking device (if any) and rotate the shaft by hand every week, at least five revolutions, stopping it at a different position from the original one. Reinstall the shaft locking device every time the motor has to be moved. If the motor is stored for a period of over two years, the bearings must be replaced or removed, washed according to manufacturer instructions, checked and relubricated according to item 8.2.

***Table 5.2 -*** *Amount of oil per bearing*

| Bearing Size | Amount of Oil (ml) | Bearing Size | Amount of Oil (ml) |
|---|---|---|---|
| 6201 | 15 | 6309 | 65 |
| 6202 | 15 | 6311 | 90 |
| 6203 | 15 | 6312 | 105 |
| 6204 | 25 | 6314 | 150 |
| 6205 | 25 | 6315 | 200 |
| 6206 | 35 | 6316 | 250 |
| 6207 | 35 | 6317 | 300 |
| 6208 | 40 | 6319 | 350 |
| 6209 | 40 | 6320 | 400 |
| 6211 | 45 | 6322 | 550 |
| 6212 | 50 | 6324 | 600 |
| 6307 | 45 | 6326 | 650 |
| 6308 | 55 | 6328 | 700 |

The oil must always be removed when the motor has to be handled. If the oil mist system is not operating after installation, fill the bearings with oil to prevent bearing rusting. During the storage period, rotate the shaft by hand, at least five revolutions, stopping it at a different position from the original one. Before starting the motor, all bearing protection oil must be drained from the bearing and the oil mist system must be switched ON.

### 5.3.4 Sleeve bearing

The motor must be stored in its original operating position and with oil in the bearings. Correct oil level must be ensured. It should be in the middle of the sight glass. During the storage period, remove the shaft locking device and rotate the shaft by hand every month, at least five revolutions, and at 30 rpm, thus achieving an even oil distribution inside the bearing and maintaining the bearing in good operating conditions. Reinstall the shaft locking device every time the motor has to be moved.
If the motor is stored for a period of over six months, the bearings must be relubricated according to the Item 8.2 before starting the operation.

If the motor is stored for a period longer than the oil change interval, or if it is not possible to rotate the motor shaft by hand, the oil must be drained and a corrosion protection and dehumidifiers must be applied.

## 5.4. INSULATION RESISTANCE

We recommend measuring the winding insulation resistance at regular intervals to follow-up and evaluate its electrical operating conditions. If any reduction in the insulation resistance values are recorded, the storage conditions should be evaluated and corrected, where necessary.

### 5.4.1. Insulation resistance measurement

We recommend measuring the winding insulation resistance at regular intervals to follow-up and evaluate its electrical operating conditions. If any reduction in the insulation resistance values are recorded, the storage conditions should be evaluated and corrected, where necessary.



The insulation resistance must be measured in a safe environment.

The insulation resistance must be measured with a megohmmeter. The machine must be in cold state and disconnected from the power supply.



To prevent the risk of an electrical shock, ground the terminals before and after each measurement. Ground the capacitor (if any) to ensure that it is fully discharged before the measurement is taken.

It is recommended to insulate and test each phase separately. This procedure allows the comparison of the insulation resistance between each phase. During the test of one phase, the other phases must be grounded. The test of all phases simultaneously evaluates the insulation resistance to ground only but does not evaluate the insulation resistance between the phases.
The power supply cables, switches, capacitors and other external devices connected to the motor may considerably influence the insulation resistance measurement. Thus all external devices must be disconnected and grounded during the insulation resistance measurement.
Measure the insulation resistance one minute after the voltage has been applied to the winding. The applied voltage should be as shown in Table 5.3.

***Table 5.3*** *- Voltage for the insulation resistance*

| Winding rated voltage (V) | Testing voltage for measuring the insulation resistance (V) |
|---|---|
| < 1000V | 500 |
| 1000 - 2500 | 500 - 1000 |
| 2501 - 5000 | 1000 - 2500 |
| 5001 - 12000 | 2500 - 5000 |
| > 12000 | 5000 - 10000 |

The reading of the insulation resistance must be corrected to 40 °C as shown in the Table 5.4.

***Table 5.4*** *- Correction Factor for the Insulation Resistance corrected to 40 °C*

| Measuring temperature of the insulation resistance (°C) | Correction factor of the insulation resistance corrected to 40 °C | Measuring temperature of the insulation resistance (°C) | Correction factor of the insulation resistance corrected to 40 °C |
|---|---|---|---|
| 10 | 0.125 | 30 | 0.500 |
| 11 | 0.134 | 31 | 0.536 |
| 12 | 0.144 | 32 | 0.574 |
| 13 | 0.154 | 33 | 0.616 |
| 14 | 0.165 | 34 | 0.660 |
| 15 | 0.177 | 35 | 0.707 |
| 16 | 0.189 | 36 | 0.758 |
| 17 | 0.203 | 37 | 0.812 |
| 18 | 0.218 | 38 | 0.871 |
| 19 | 0.233 | 39 | 0.933 |
| 20 | 0.250 | 40 | 1.000 |
| 21 | 0.268 | 41 | 1.072 |
| 22 | 0.287 | 42 | 1.149 |
| 23 | 0.308 | 43 | 1.231 |
| 24 | 0.330 | 44 | 1.320 |
| 25 | 0.354 | 45 | 1.414 |
| 26 | 0.379 | 46 | 1.516 |
| 27 | 0.406 | 47 | 1.625 |
| 28 | 0.435 | 48 | 1.741 |
| 29 | 0.467 | 49 | 1.866 |
| 30 | 0.500 | 50 | 2.000 |

The motor insulation condition must be evaluated by comparing the measured value with the values indicated in Table 5.5 (corrected to 40 °C):

***Table 5.5*** *- Evaluation of the insulation system*

| Limit value for rated voltage up to 1.1 kV (MΩ) | Limit value for rated voltage above 1.1 kV (MΩ) | Situation |
|---|---|---|
| Up to 5 | Up to 100 | Dangerous. The motor can not be operated in this condition |
| 5 to 100 | 100 to 500 | Regular |
| 100 to 500 | Higher than 500 | Good |
| Higher than 500 | Higher than 1000 | Excellent |

The values indicated in the table should be considered only as reference values. It is advisable to log all measured values to provide a quick and easy overview on the machine insulation resistance.
If the insulation resistance is low, moisture may be present in the stator windings. In this case the motor should be removed and transported to a WEG authorized Service Center for proper evaluation and repair (This service is not covered by the warranty). To improve the insulation resistance through the drying process, see section 8.4.

# 6. INSTALLATION

The insulation resistance must be measured in a safe environment.

Check some aspects before proceeding with the installation:

1. Insulation resistance: must be within the acceptable limits. See item 5.4.
2. Bearings:
   a. Rolling bearings: oxidized bearings must be replaced. If no oxidation is detected, lubricate the bearings as described in Item 8.2. If the motor is stored for a period of over two years, the bearings must be replaced before starting the motor.
   b. Sleeve bearing: if sleeve bearing motors are stored longer than the recommended oil change interval, the oil must be changed before machine starting. Don't forget to remove the dehumidifiers when you drain the oil from the motor and to fill it again with new oil before starting the machine. For more details, see item 8.2.
3. Operating conditions of the start capacitors: If single-phase motors are stored for a period of over two years, it is recommended to change the start capacitors before motor starting since they lose their operating characteristics.
4. Terminal box:
   a. the inside of the terminal box must be clean and dry.
   b. the contacts must be correctly connected and corrosion free. See 6.9 and 6.10.
   c. the cable entries must be correctly sealed and the terminal box cover properly mounted in order to ensure the degree of protection indicated on the motor nameplate.
5. Cooling: the cooling fins, air inlet and outlet openings must be clean and unobstructed. The distance between the air inlet openings and the wall should not be shorter than ¼ (one quarter) of the diameter of the air inlet. Ensure sufficient space to perform the cleaning services. See item 7.
6. Coupling: remove the shaft locking device (where fitted) and the corrosion protection grease from the shaft end and flange just before installing the motor. See item 6.4.
7. Drain hole: the motor must always be positioned so the drain hole is at the lowest position (If there is any indication arrow on the drain, the drain must be so installed that the arrow points downwards).
   Motors supplied with rubber drain plugs leave the factory in the closed position and must be opened periodically to allow the exit of condensed water. For environments with high water condensation levels and motor with degree of protection IP55, the drain plugs can be mounted in open position (see Figure 6.1).
   For motors with degree of protection IP56, IP65 or IP66, the drain plugs must remain at closed position (see Figure 6.1), being opened only during the motor maintenance procedures.
   The drain system of motors with Oil Mist lubrication system must be connected to a specific collection system (see Figure 6.12).

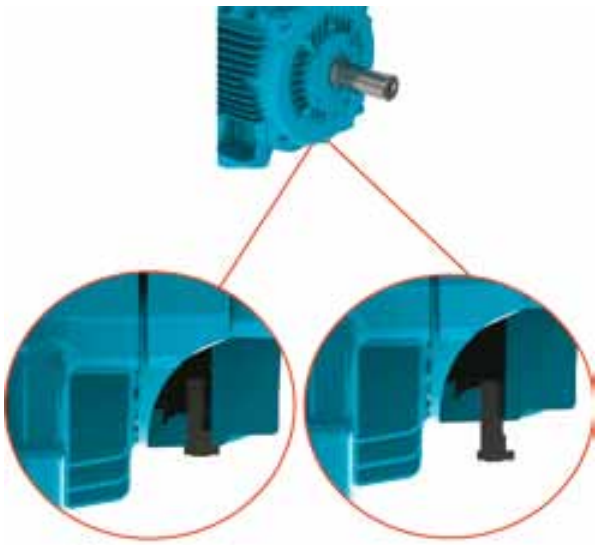


***Figure 6.1*** *- Detail of the rubber drain plug mounted in closed and open position.*

8.Additional recommendations:
a. Check the direction of motor rotation, starting the motor at no-load before coupling it to the load.
b. Vertical mounted motors with shaft end down must be fitted with drip cover to protect them from liquids or solids that may drop onto the motors.
c. Vertical mounted motors with shaft end up must be fitted with water slinger ring to prevent water penetration inside the motor.

Remove or fix the shaft key before starting the motor.

## 6.1. FOUNDATIONS

The foundation is the structure, structural element, natural or prepared base, designed to withstand the stresses produced by the installed equipment, ensuring safe and stable performance during operation. The foundation design should consider the adjacent structures to avoid the influences of other installed equipment and no vibration is transferred through the structure

The foundation must be flat and its selection and design must consider the following characteristics:

a) The features of the machine to be installed on the foundation, the driven loads, application, maximum allowed deformations and vibration levels (for instance, motors with reduced vibration levels, foot flatness, flange concentricity, axial and radial loads, etc. lower than the values specified for standard motors).

b) Adjacent buildings, conservation status, maximum applied load estimation, type of foundation and fixation and vibrations transmitted by theses constructions.

If the motor is supplied with leveling/alignment bolts, this must be considered in the base design.

Please consider for the foundation dimensioning all stresses that are generated during the operation of the driven load.
The user is responsible for the foundation designing and construction.

The foundation stresses can be calculated by using the following equations (see Figure 6.2):

$$F_1 = 0,5 * g * m - (4 * T_b / A)$$
$$F_2 = 0,5 * g * m + (4 * T_b / A)$$

Where:

$F_1$ and $F_2$ = lateral stresses (N);
g = gravitational acceleration (9,8 m/s$^2$);
m = motor weight (kg);
$T_b$ = breakdown torque (Nm);
A = distance between centerlines of mounting holes in feet or base of the machine (end view) (m).

The motors may be mounted on:
- Concrete bases: are most used for large-size motors (see Figure 6.2);
- Metallic bases: are generally used for small-size motors (see Figure 6.3).

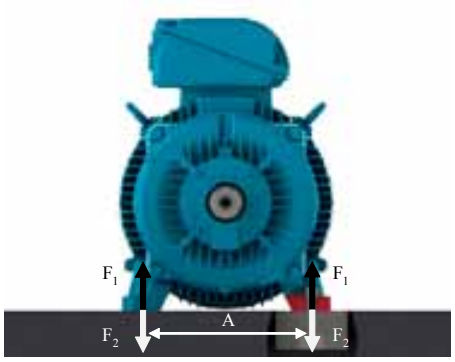


***Figure 6.2*** *- Motor installed on concrete base*



***Figure 6.3*** *- Motor installed on metallic base*

The metallic and concrete bases may be fitted with sliding system. These types of foundations are generally used where the power transmission is achieved by belts and pulleys. This power transmission system is easier to assemble/disassemble and allows the belt tension adjustment. Other important aspect of this foundation type is the location of the base locking screws that must be diagonally opposite. The rail nearest the drive pulley is placed in such a way that the positioning bolt is between the motor and the driven machine. The other rail must be placed with the bolt on the opposite side (diagonally opposite), as shown in Figure 6.4 .

To facilitate assembly, the bases may have the following features:
- shoulders and/or recesses;
- anchor bolts with loose plates;
- bolts cast in the concrete;
- leveling screws;
- positioning screws;
- steel & cast iron blocks, plates with flat surfaces.

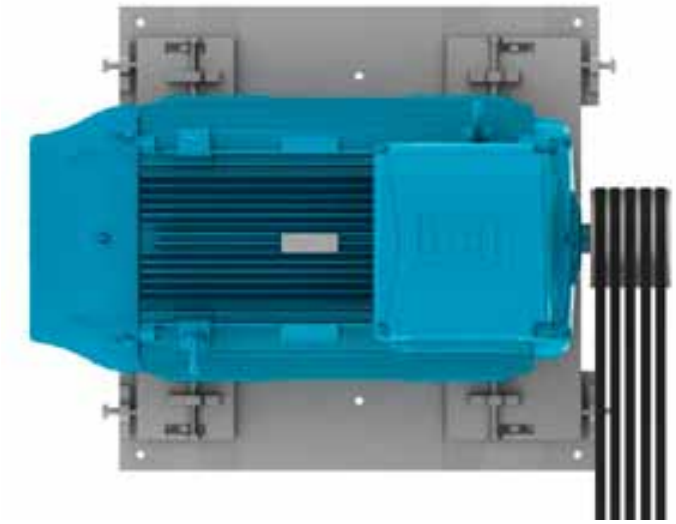

***Figure 6.4*** *- Motor installed on sliding base*

After completing the installation, it is recommended that all exposed machined surfaces are coated with suitable rust inhibitor.

## 6.2. MOTOR MOUNTING

Footless motors supplied with transportation devices, according to Figure 6.5, must have their devices removed before starting the motor installation.

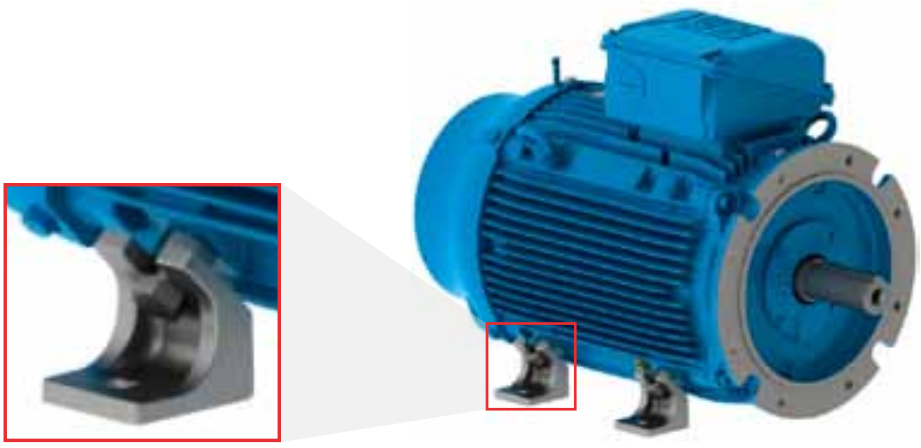

***Figure 6.5*** *- Detail of the transportation devices for footless motors.*

### 6.2.1. Foot mounted motors

The drawings of the mounting hole dimensions for NEMA or IEC motors can be checked in the respective technical catalogue.
The motor must be correctly aligned and leveled with the driven machine. Incorrect alignment and leveling may result in bearing damage, generate excessive vibration and even shaft distortion/breakage.
For more details, see section 6.3 and 6.6. The thread engagement length of the mounting bolt should be at least 1.5 times the bolt diameter. This thread engagement length should be evaluated in more severe applications and increased accordingly.
Figure 6.6 shows the mounting system of a foot mounted motor indicating the minimum required thread engagement length.

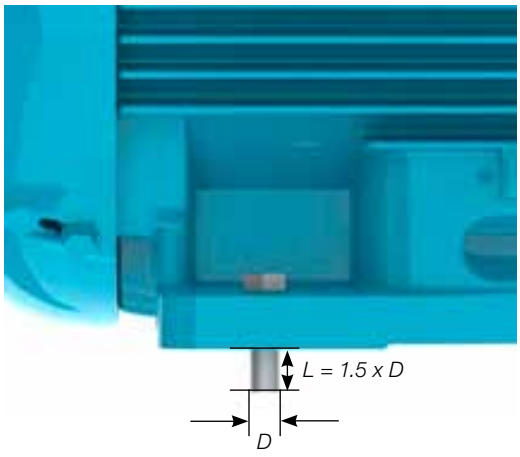


***Figure 6.6*** *- Mounting system of a foot mounted motor*

### 6.2.2. Flange mounted motors

The drawings of the flange mounting dimensions, IEC and NEMA flanges, can be checked in the technical catalogue.
The coupling of the driven equipment to the motor flange must be properly dimensioned to ensure the required concentricity of the assembly.
Depending on the flange type, the mounting can be performed from the motor to the driven equipment flange (flange FF (IEC) or D (NEMA)) or from the driven equipment flange to the motor (flange C (DIN or NEMA)).
For the mounting process from the driven equipment flange to the motor, you must consider the bolt length, flange thickness and the thread depth of the motor flange.

If the motor flange has tapped through-holes, the length of the mounting bolts must not exceed the tapped through-hole length of the motor flange, thus preventing damage to the winding head.

For flange mounting the thread engagement length of the mounting bolt should be at least 1.5 times the bolt diameter. In severe applications, longer thread engagement length may be required.
In severe applications or if large motors are flange mounted, a foot or pad mounting may be required in addition to the flange mounting (Figure 6.7). The motor must never be supported on its cooling fins.



***Figure 6.7*** *- Mounting method of flange mounted motors with frame base support*

***Note****:*
*When liquid (for example oil) is likely to come into contact with the shaft seal, please contact your local WEG representative.*

### 6.2.3. Pad mounted motors

Typically, this method of mounting is used in axial fans. The motor is fixed by tapped holes in the frame. The dimensions of these tapped holes can be checked in the respective product catalogue. The selection of the motor mounting rods/bolts must consider the dimensions of the fan case, the installation base and the thread depth in the motor frame.
The mounting rods and the fan case wall must be sufficiently stiff to prevent the transmission of excessive vibration to the machine set (motor & fan). Figure 6.8 shows the pad mounting system.



***Figure 6.8*** *- Mounting of the motor inside the cooling duct*

## 6.3. BALANCING

Unbalanced machines generate vibration which can result in damage to the motor. WEG motors are dynamically balanced with “half key” and without load (uncoupled). Special balancing quality level must be stated in the Purchase Order.

The transmission elements, such as pulleys, couplings, etc., must balanced with “half key” before they are mounted on the motor shaft.

The balance quality grade meets the applicable standards for each product line.

The maximum balancing deviation must be recorded in the installation report

## 6.4. COUPLINGS

Couplings are used to transmit the torque from the motor shaft to the shaft of the driven machine. The following aspects must be considered when couplings are installed:
- Use proper tools for coupling assembly & disassembly to avoid damages to the motor and bearings.
- Whenever possible, use flexible couplings, since they can absorb eventual residual misalignments during the machine operation.
- The maximum loads and speed limits informed in the coupling and motor manufacturer catalogues cannot be exceeded.
- Level and align the motor as specified in sections 6.5 and 6.6, respectively.

Remove or fix the shaft key firmly when the motor is operated without coupling in order to prevent accidents.

### 6.4.1. Direct coupling

Direct coupling is characterized when the Motor shaft is directly coupled to the shaft of the driven machine without transmission elements. Whenever possible, use direct coupling due to lower cost, less space required for installation and more safety against accidents.

Do not use roller bearings for direct coupling, unless sufficient radial load is expected.

### 6.4.2. Gearbox coupling

Gearbox coupling is typically used where speed reduction is required.
Make sure that shafts are perfectly aligned and strictly parallel (in case of straight spur gears) and in the right meshing angle (in case of bevel and helical gears).

### 6.4.3. Pulley and belt coupling

Pulleys and belts are used when speed increase or reduction between motor shaft and driven load is required.

Excessive belt tension will damage the bearings and cause unexpected accidents such as breakage of the motor shaft.

### 6.4.4. Coupling of sleeve bearing motors

Motors designed with sleeve bearings must be operated with direct coupling to the driven machine or a gearbox. Pulley and belts can not be applied for sleeve bearing motors.

Motors designed with sleeve bearings have 3 (three) marks on the shaft end. The center mark is the indication of the magnetic center and the 2 (two) outside marks indicate the allowed limits of the rotor axial movement, as shown in Figure 6.9.
The motor must be so coupled that during operation the arrow on the frame is placed over the central mark indicating the rotor magnetic center. During start-up, or even during operation, the rotor may freely move between the two outside marks when the driven machine exerts an axial load on the motor shaft. However, under no circumstance, the motor can operate continuously with axial forces on the bearing.




***Figure 6.9*** *- Axial clearance of motor designed with sleeve bearing*

For coupling evaluation consider the maximum axial bearing clearance as shown in Table 6.1.
The axial clearance of the driven machine and coupling influence the maximum bearing clearance.

***Table 6.1*** *- Clearance used for sleeve bearings*

| Bearing size | Total axial clearance (mm) |
|---|---|
| 9* | 3 + 3 = 6 |
| 11* | 4 + 4 = 8 |
| 14* | 5 + 5 =10 |
| 18 | 7,5 + 7,5 = 15 |

** For Motors in accordance with API 541, the total axial clearance is 12.7 mm*

The sleeve bearings used by WEG were not designed to support axial load continuously.
Under no circumstance must the motor be operated continuously at its axial clearance limits.

## 6.5. LEVELING

The motor must be leveled to correct any deviations in flatness arising from the manufacturing process and the material structure rearrangement. The leveling can be carried out by a leveling screw fixed on the motor foot or on the flange or by means of thin compensation shims. After the leveling process, the leveling height between the motor mounting base and the motor cannot exceed 0.1 mm.
If a metallic base is used to level the height of the motor shaft end and the shaft end of the driven machine, level only the metallic base relating to the concrete base.

Record the maximum leveling deviations in the installation report.

## 6.6. ALIGNMENT

The correct alignment between the motor and the driven machine is one of the most important variables that extends the useful service life of the motor. Incorrect coupling alignment generates high loads and vibrations reducing the useful life of the bearings and even resulting in shaft breakages. Figure 6.10 illustrates the misalignment between the motor and the driven machine.

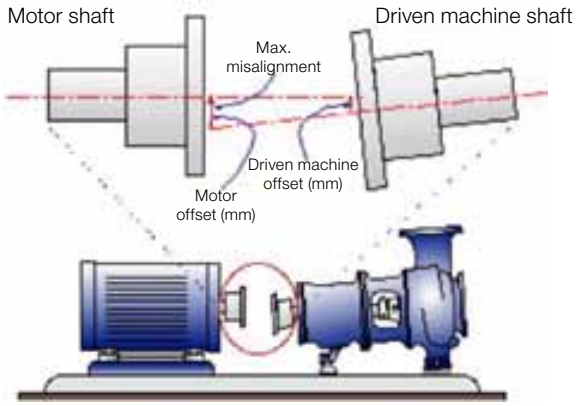


***Figure 6.10*** *- Typical misalignment condition*

Alignment procedures must be carried out using suitable tools and devices, such as dial gauge, laser alignment instruments, etc. The motor shaft must be aligned axially and radially with the driven machine shaft.

The maximum allowed eccentricity for a complete shaft turn should not exceed 0.03 mm, when alignment is made with dial gauges, as shown in Figure 6.11. Ensure a gap between couplings to compensate the thermal expansion between the shafts as specified by the coupling manufacturer.

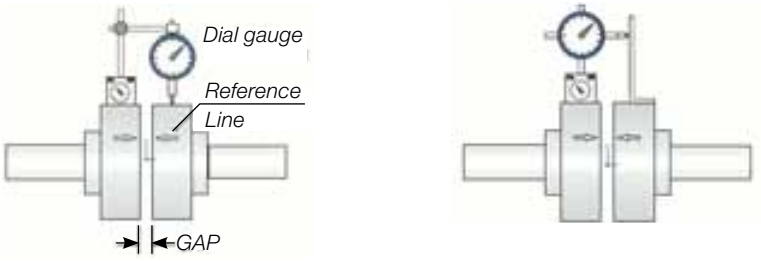


*Parallel alignment* *Angular alignment*

***Figure 6.11*** *- Alignment with dial gauge.*

If alignment is made by a laser instrument, please consider the instructions and recommendations provided by the laser instrument manufacturer.
The alignment should be checked at ambient temperature with machine at operating temperature.

The coupling alignment must be checked periodically

Pulley and belt couplings must be so aligned that the driver pulley center lies in the same plane of the driven pulley center and the motor shaft and the shaft of the driven machine are perfectly parallel.
After completing the alignment procedures, ensure that mounting devices do not change the motor and machine alignment and leveling resulting into machine damage during operation.

It is recommended to record the maximum alignment deviation in the Installation Report.

## 6.7. CONNECTION OF OIL LUBRICATED OR OIL MIST LUBRICATED MOTORS

When oil lubricated or oil mist lubricated motors are installed, connect the existing lubricant tubes (oil inlet and oil outlet tubes and motor drain tube), as shown in Figure 6.12. The lubrication system must ensure continuous oil flow through the bearings as specified by the manufacturer of the installed lubrication system.

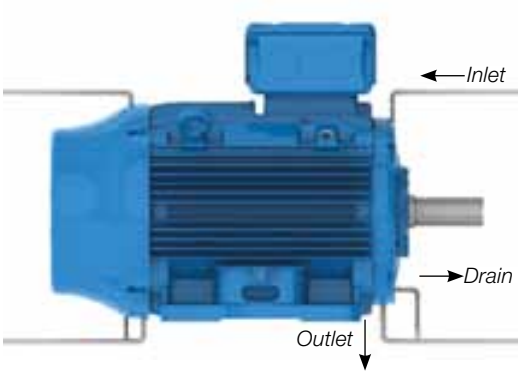


***Figure 6.12*** *- Oil supply and drain system of oil lubricated or oil mist lubricated motors*

## 6.8. CONNECTION OF THE COOLING WATER SYSTEM

When water cooled motors are installed, connect the water inlet and outlet tubes to ensure proper motor cooling. According to item 7.2, ensure correct cooling water flow rate and water temperature in the motor cooling system.

## 6.9. ELECTRICAL CONNECTION

Consider the rated motor current, service factor, starting current, environmental and installation conditions, maximum voltage drop, etc. to select appropriate power supply cables and switching and protection devices. All motors must be installed with overload protection systems. Three-phase motors should be fitted with phase fault protection systems.

Before connecting the motor, check if the power supply voltage and the frequency comply with the motor nameplate data. All wiring must be made according to the connection diagram on the motor nameplate. Please consider the connection diagrams in the Table 6.2 as reference value.
To prevent accidents, check if motor has been solidly grounded in accordance with the applicable standards.

*Table 6.2 - Typical connection diagram for three-phase motors.*

| Configuration | Quantity of Leads | Type of connection | Connection diagram |
|---|---|---|---|
| Single Speed | 3 | - | 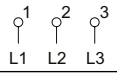 |
| | 6 | Δ - Y | 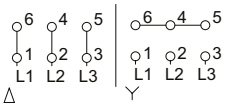 |
| | 9 | YY - Y | 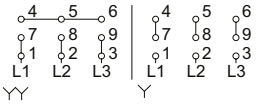 |
| | | ΔΔ - Δ | 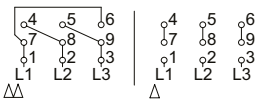 |
| | 12 | ΔΔ - YY - Δ - Y | 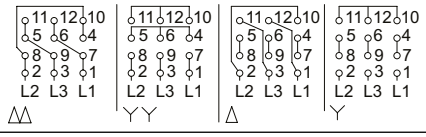 |
| | | Δ - PWS<br>Part-winding start | 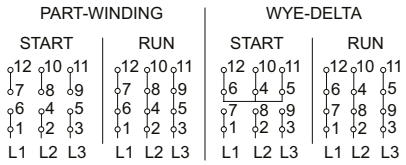 |
| Double Speed Dahlander | 6 | YY - Y<br>Variable Torque | 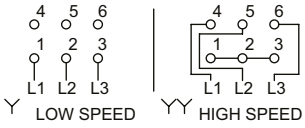 |
| | | Δ - YY<br>Constant Torque | 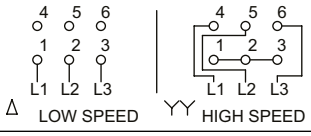 |
| | | YY - Δ<br>Constant Output | 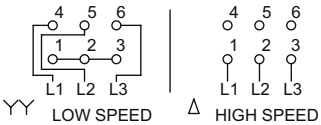 |
| | 9 | Δ - Y - YY | 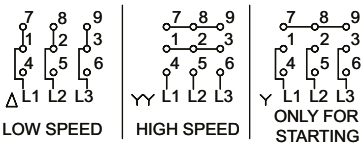 |
| Double Speed Double Winding | 6 | - |  |

| Equivalent table for lead identification | | | | | | | | | | | | | |
|---|---|---|---|---|---|---|---|---|---|---|---|---|---|
| Lead identification on the wiring diagram | | 1 | 2 | 3 | 4 | 5 | 6 | 7 | 8 | 9 | 10 | 11 | 12 |
| Single Speed | NEMA MG 1 Part 2 | T1 | T2 | T3 | T4 | T5 | T6 | T7 | T8 | T9 | T10 | T11 | T12 |
| | IEC 60034-8 | U1 | V1 | W1 | U2 | V2 | W2 | U3 | V3 | W3 | U4 | V4 | W4 |
| | JIS (JEC 2137) - up to 6 terminals | U | V | W | X | Y | Z | | | | | | |
| | JIS (JEC 2137) - above 6 terminals | U1 | V1 | W1 | U2 | V2 | W2 | U5 | V5 | W5 | U6 | V6 | W6 |
| Double Speed (Dahlander / Double Winding) | NEMA MG 1 Part 2[1)] | 1U | 1V | 1W | 2U | 2V | 2W | 3U | 3V | 3W | 4U | 4V | 4W |
| | IEC 60034-8 | 1U | 1V | 1W | 2U | 2V | 2W | 3U | 3V | 3W | 4U | 4V | 4W |
| | JIS (JEC 2137) | 1U | 1V | 1W | 2U | 2V | 2W | 3U | 3V | 3W | 4U | 4V | 4W |

*1) NEMA MG 1 Part 2 defines T1 to T12 for two or more winding, however WEG adopts 1U to 4W.*

If motors are supplied without terminal blocks, insulate the cable terminals with suitable insulation material that meets the power supply voltage and the insulation class indicated on the motor nameplate.

Ensure correct tightening torque for the power cable and grounding connections as specified in Table 8.7

The clearance distance (see Figure 6.13) between non-insulated live parts with each other and between grounded parts must be as indicated in Table 6.3.

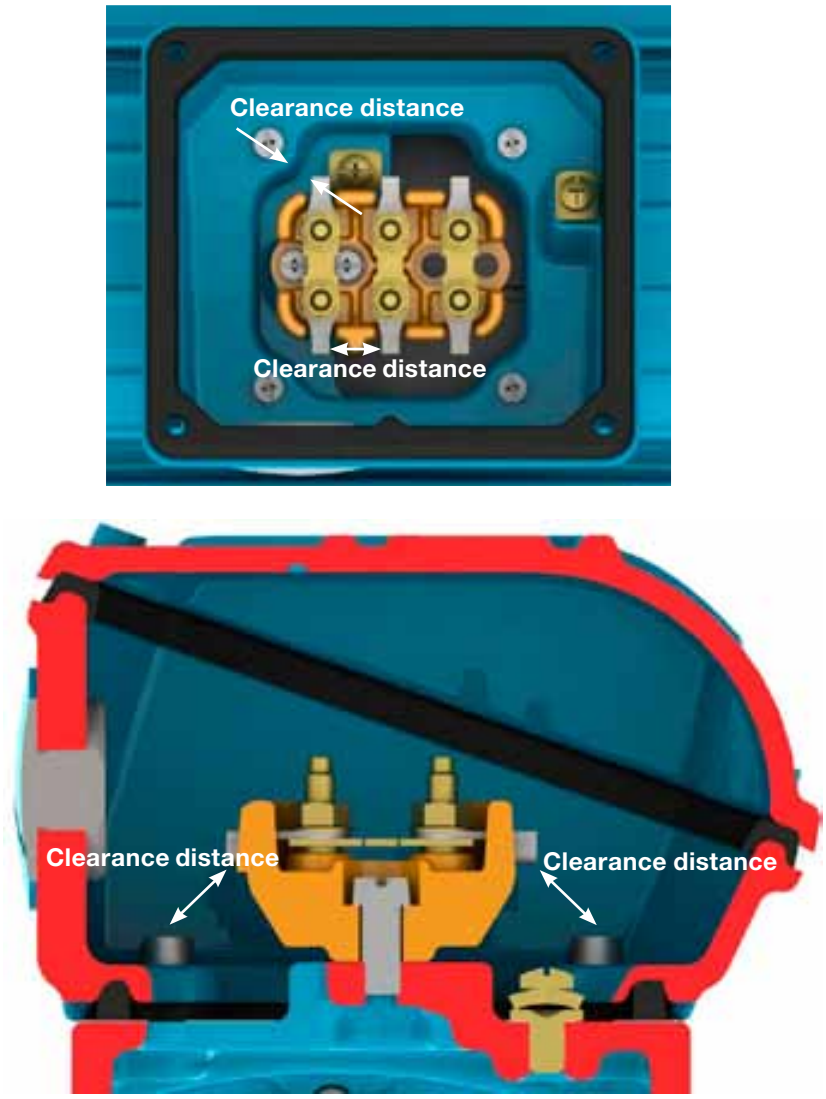


***Figure 6.13*** *- Clearance distance representation*

***Table 6.3*** *- Minimum clearance distance (mm) x supply voltage.*

| Voltage | Minimum clearance distance (mm) |
|---|---|
| U ≤ 440 V | 4 |
| 440 < U ≤ 690 V | 5.5 |
| 690 < U ≤ 1000 V | 8 |
| 1000 < U ≤ 6900 V | 45 |
| 6900 < U ≤ 11000 V | 70 |
| 11000 < U ≤ 16500 V | 105 |

Even when the motor is off, dangerous voltages may be present inside the terminal box used for the space heater supply or winding energization when the winding is used as heating element.
Motor capacitors will hold a charge even after the power has been cut off. Do not touch the capacitors and/or motor terminals, before discharging the capacitors completely.

After the motor connection has been completed, ensure that no tool or foreign body has been left inside the terminal box.

Unused cable inlet holes in the terminal box must be properly closed to ensure the degree of protection indicated on the motor nameplate.
The cable inlets used for power supply and control must be fitted with components (for example, cable-glands and conduits) that meet the applicable standards and regulations in each country.

If the motor is fitted with accessories, such as brakes and forced cooling systems, these devices must be connected to the power supply according to the information provided on their nameplates and with special care as indicated above.

All protection devices, including overcurrent protection, must be set according to the rated machine conditions. These protection devices must protect the machine against short circuit, phase fault or locked rotor condition. The motor protection devices must be set according to the applicable standards.

Check the direction of rotation of the motor shaft. If there is no limitation for the use of unidirectional fans, the shaft rotation direction can be changed by reversing any two of the phase connections. For single-phase motor, check the connection diagram indicated on the motor nameplate.

## 6.10. CONNECTION OF THE THERMAL PROTECTION DEVICES

If the motor is supplied with temperature monitoring devices, such as, thermostat, thermistors, automatic thermal protectors, Pt-100 (RTD), etc., they must be connected to the corresponding control devices as specified on the accessory nameplates. The non-compliance with this procedure may void the product warranty and cause serious material damages.

Do not apply test voltage above 2.5 V on thermistors and current above 1 mA on RTDs (Pt-100) according to IEC 60751 standard.

Figure 6.14 and Figure 6.15 show the connection diagram of the bimetal thermal protector (thermostats) and thermistors, respectively.

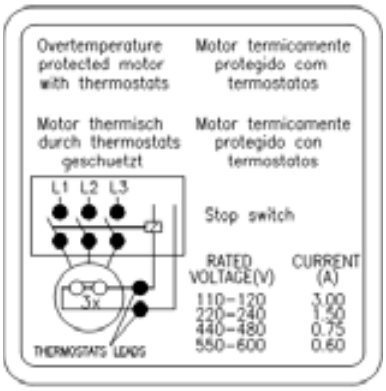


***Figure 6.14*** *- Connection of the bimetal thermal protectors (thermostats)*

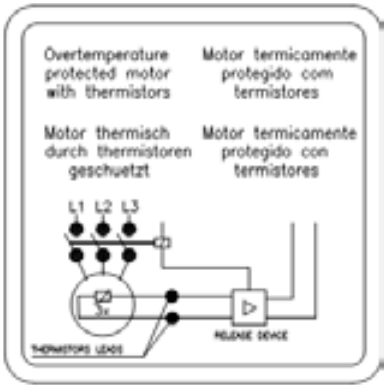


***Figure 6.15*** *- Thermistor connection*

The alarm temperature limits and thermal protection shutdowns can be defined according to the application; however these temperature limits can not exceed the values in Table 6.4.

***Table 6.4*** *- Maximum activation temperature of the thermal protections*

| Component | Insulation class | Maximum temperature of the protection setting (°C) | |
|---|---|---|---|
| | | Alarm | Tripping |
| Winding | B | - | 130 |
| | F | 130 | 155 |
| | H | 155 | 180 |
| Bearing | All | 110 | 120 |

***Notes****:*
*1) The number and type of the installed protection devices are stated on the accessory nameplate of the motor.*
*2) If the motor is supplied with calibrated resistance, (for example, Pt-100), the motor protection system must be set according to the operating temperatures indicated in Table 6.4.*

## 6.11. RESISTANCE TEMPERATURE DETECTORS (PT-100)

The thermocouples Pt-100 are made of materials, whose resistance depends on the temperature variation, intrinsic property of some materials (usually platinum, nickel or copper), calibrated resistance. Its operation is based on the principle that the electric resistance of a metallic conductor varies linearly with the temperature, thus allowing a continuous monitoring of the motor warm-up through the controller display ensuring a high level of precision and answer stability. These devices are widely used for measuring temperatures in various industry sectors.
In general these devices are used in installations where precise temperature control is required, for example, in installation for irregular or intermittent duty.
The same detector may be used for alarm and tripping purposes.

Table 6.5 and Figure 6.16 show the equivalence between the Pt-100 resistance and the temperature.

*Table 6.5 - Equivalence between the Pt-100 resistance and the temperature.*

| °C | Ω | °C | Ω | °C | Ω | °C | Ω | °C | Ω |
|---|---|---|---|---|---|---|---|---|---|
| -29 | 88.617 | 17 | 106.627 | 63 | 124.390 | 109 | 141.908 | 155 | 159.180 |
| -28 | 89.011 | 18 | 107.016 | 64 | 124.774 | 110 | 142.286 | 156 | 159.553 |
| -27 | 89.405 | 19 | 107.404 | 65 | 125.157 | 111 | 142.664 | 157 | 159.926 |
| -26 | 89.799 | 20 | 107.793 | 66 | 125.540 | 112 | 143.042 | 158 | 160.298 |
| -25 | 90.193 | 21 | 108.181 | 67 | 125.923 | 113 | 143.420 | 159 | 160.671 |
| -24 | 90.587 | 22 | 108.570 | 68 | 126.306 | 114 | 143.797 | 160 | 161.043 |
| -23 | 90.980 | 23 | 108.958 | 69 | 126.689 | 115 | 144.175 | 161 | 161.415 |
| -22 | 91.374 | 24 | 109.346 | 70 | 127.072 | 116 | 144.552 | 162 | 161.787 |
| -21 | 91.767 | 25 | 109.734 | 71 | 127.454 | 117 | 144.930 | 163 | 162.159 |
| -20 | 92.160 | 26 | 110.122 | 72 | 127.837 | 118 | 145.307 | 164 | 162.531 |
| -19 | 92.553 | 27 | 110.509 | 73 | 128.219 | 119 | 145.684 | 165 | 162.903 |
| -18 | 92.946 | 28 | 110.897 | 74 | 128.602 | 120 | 146.061 | 166 | 163.274 |
| -17 | 93.339 | 29 | 111.284 | 75 | 128.984 | 121 | 146.438 | 167 | 163.646 |
| -16 | 93.732 | 30 | 111.672 | 76 | 129.366 | 122 | 146.814 | 168 | 164.017 |
| -15 | 94.125 | 31 | 112.059 | 77 | 129.748 | 123 | 147.191 | 169 | 164.388 |
| -14 | 94.517 | 32 | 112.446 | 78 | 130.130 | 124 | 147.567 | 170 | 164.760 |
| -13 | 94.910 | 33 | 112.833 | 79 | 130.511 | 125 | 147.944 | 171 | 165.131 |
| -12 | 95.302 | 34 | 113.220 | 80 | 130.893 | 126 | 148.320 | 172 | 165.501 |
| -11 | 95.694 | 35 | 113.607 | 81 | 131.274 | 127 | 148.696 | 173 | 165.872 |
| -10 | 96.086 | 36 | 113.994 | 82 | 131.656 | 128 | 149.072 | 174 | 166.243 |
| -9 | 96.478 | 37 | 114.380 | 83 | 132.037 | 129 | 149.448 | 175 | 166.613 |
| -8 | 96.870 | 38 | 114.767 | 84 | 132.418 | 130 | 149.824 | 176 | 166.984 |
| -7 | 97.262 | 39 | 115.153 | 85 | 132.799 | 131 | 150.199 | 177 | 167.354 |
| -6 | 97.653 | 40 | 115.539 | 86 | 133.180 | 132 | 150.575 | 178 | 167.724 |
| -5 | 98.045 | 41 | 115.925 | 87 | 133.561 | 133 | 150.950 | 179 | 168.095 |
| -4 | 98.436 | 42 | 116.311 | 88 | 133.941 | 134 | 151.326 | 180 | 168.465 |
| -3 | 98.827 | 43 | 116.697 | 89 | 134.322 | 135 | 151.701 | 181 | 168.834 |
| -2 | 99.218 | 44 | 117.083 | 90 | 134.702 | 136 | 152.076 | 182 | 169.204 |
| -1 | 99.609 | 45 | 117.469 | 91 | 135.083 | 137 | 152.451 | 183 | 169.574 |
| 0 | 100.000 | 46 | 117.854 | 92 | 135.463 | 138 | 152.826 | 184 | 169.943 |
| 1 | 100.391 | 47 | 118.240 | 93 | 135.843 | 139 | 153.200 | 185 | 170.313 |
| 2 | 100.781 | 48 | 118.625 | 94 | 136.223 | 140 | 153.575 | 186 | 170.682 |
| 3 | 101.172 | 49 | 119.010 | 95 | 136.603 | 141 | 153.950 | 187 | 171.051 |
| 4 | 101.562 | 50 | 119.395 | 96 | 136.982 | 142 | 154.324 | 188 | 171.420 |
| 5 | 101.953 | 51 | 119.780 | 97 | 137.362 | 143 | 154.698 | 189 | 171.789 |
| 6 | 102.343 | 52 | 120.165 | 98 | 137.741 | 144 | 155.072 | 190 | 172.158 |
| 7 | 102.733 | 53 | 120.550 | 99 | 138.121 | 145 | 155.446 | 191 | 172.527 |
| 8 | 103.123 | 54 | 120.934 | 100 | 138.500 | 146 | 155.820 | 192 | 172.895 |
| 9 | 103.513 | 55 | 121.319 | 101 | 138.879 | 147 | 156.194 | 193 | 173.264 |
| 10 | 103.902 | 56 | 121.703 | 102 | 139.258 | 148 | 156.568 | 194 | 173.632 |
| 11 | 104.292 | 57 | 122.087 | 103 | 139.637 | 149 | 156.941 | 195 | 174.000 |
| 12 | 104.681 | 58 | 122.471 | 104 | 140.016 | 150 | 157.315 | 196 | 174.368 |
| 13 | 105.071 | 59 | 122.855 | 105 | 140.395 | 151 | 157.688 | 197 | 174.736 |
| 14 | 105.460 | 60 | 123.239 | 106 | 140.773 | 152 | 158.061 | 198 | 175.104 |
| 15 | 105.849 | 61 | 123.623 | 107 | 141.152 | 153 | 158.435 | 199 | 175.472 |
| 16 | 106.238 | 62 | 124.007 | 108 | 141.530 | 154 | 158.808 | 200 | 175.840 |

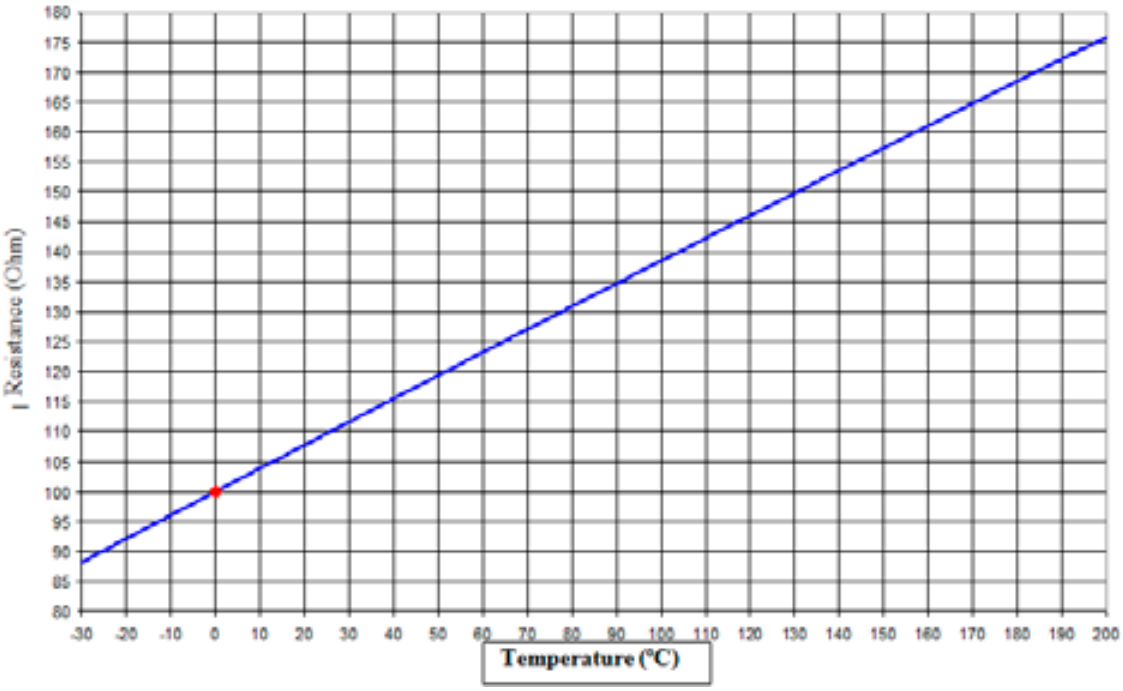


***Figure 6.16*** *- Ohmic resistance of the Pt-100 x temperature*

## 6.12. CONNECTION OF THE SPACE HEATERS

Before switching ON the space heaters, check if the space heaters connection have been made according to the connection diagram shown on the space heater nameplate. For motors supplied with dual voltage space heaters (110-127/220-240 V), see Figure 6.17.

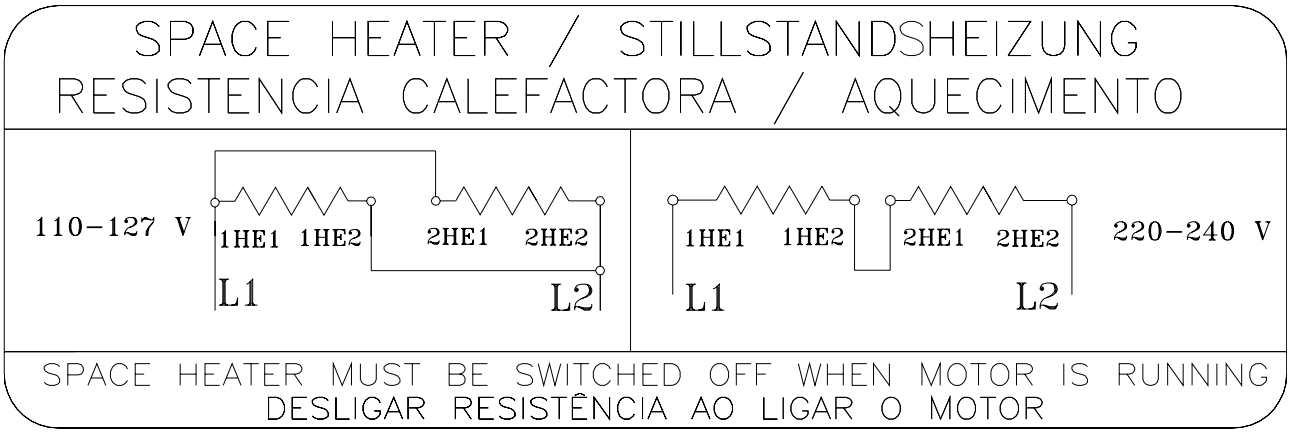


***Figure 6.17*** *- Dual voltage space heater connection.*

The space heaters should never be energized when the motor is in operation.

ENGLISH

## 6.13. STARTING METHODS

Whenever possible, the motor starting must be Direct On Line (DOL) at rated voltage. This is the most simple and feasible starting method. However, it must only be applied when the starting current does not affect the power supply. Please consider the local electric utility regulations when installing a motor.
High inrush current may result in:
a) high voltage drop in the power supply line creating unacceptable line disturbance on the distribution system;
b) requiring oversized protection system (cables and contactor) increasing the installation costs.

If DOL starting is not allowed due to the reasons mentioned above, an indirect starting method compatible with the load and motor voltage to reduce the starting current may be used.
If reduced voltage starters are used for starting, the motor starting torque will also be reduced.

Table 6.6 shows the possible indirect starting methods that can be used depending on the number of the motor leads.

***Table 6.6*** *- Starting method x number of motor leads.*

| Number of leads | Possible starting methods |
|---|---|
| 3 leads | Autotransformer<br>Soft-starter |
| 6 leads | Star-Delta<br>Autotransformer<br>Soft-Starter |
| 9 leads | Series/Parallel<br>Part Winding<br>Autotransformer<br>Soft-Starter |
| 12 leads | Star-Delta<br>Series/Parallel<br>Part Winding<br>Autotransformer<br>Soft-Starter |

Table 6.7 shows examples of possible indirect starting methods to be used according to the voltage indicated on the motor nameplate and the power supply voltage.

***Table 6.7*** *- Starting methods x voltage*

| Nameplate voltage | Operating voltage | Star-delta | Autotransformer Starting | Starting by series/ parallel switch | Part-winding Starting | Starting by soft-starter |
|---|---|---|---|---|---|---|
| 220/380 V | 220 V<br>380 V | YES<br>NO | YES<br>YES | NO<br>NO | NO<br>NO | YES<br>YES |
| 220/440 V | 220 V<br>440 V | NO<br>NO | YES<br>YES | YES<br>NO | YES<br>NO | YES<br>YES |
| 230/460 V | 230 V<br>460 V | NO<br>NO | YES<br>YES | YES<br>NO | YES<br>NO | YES<br>YES |
| 380/660 V | 380 V | YES | YES | NO | NO | YES |
| 220/380/440 V | 220 V<br>380 V<br>440 V | YES<br>NO<br>YES | YES<br>YES<br>YES | YES<br>YES<br>NO | YES<br>YES<br>NO | YES<br>YES<br>YES |

The WQuattro line motors must be started direct on-line (DOL) or driven by a frequency inverter in scalar mode.

## 6.14. MOTORS DRIVEN BY FREQUENCY INVERTER

The operation with frequency inverter must be stated in the Purchase Order since this drive type may require some changes of the motor design.

Wmagnet Motors must only be driven by WEG frequency inverter.

The frequency inverter used to drive motors up to 690 V must be fitted with Pulse With Modulation (PWM) with vector control.

When a motor is driven by a frequency inverter at lower frequencies than the rated frequency, you must reduce the motor torque to prevent motor overheating. The torque reduction (derating torque) can be found in the item 6.4 of the "Technical Guidelines for Induction Motors driven by PWM Frequency inverters" available on the site www.weg.net.

If the motor is operated above the rated frequency, please note:
- That the motor must be operated at constant output;
- That the motor can supply max. 95% of its rated output;
- Do not exceed the maximum speed and please consider:
  - max. operating frequency stated on the additional nameplate;
  - mechanical speed limitation of the motor.

Information on the selection of the power cables between the frequency inverter and the motor can be found in the item 6.4 of the "Technical Guidelines for Induction Motors driven by PWM Frequency inverters" available at www.weg.net.

### 6.14.1. Use of dV/dt filter

#### 6.14.1.1. Motor with enameled round wire

Motors designed for rated voltages up to 690 V, when driven by frequency inverter, do not require the use of dV/dT filters, provided that following criteria are considered.

| Criteria for the selection of motors with round enameled wire when driven by frequency inverter [1] | | | | |
|---|---|---|---|---|
| **Motor rated votage [2]** | **Peak voltage at the motor terminals (max)** | **dV/dt inverter output (max)** | **Inverter Rise Time [3] (min.)** | **MTBP [3] Time between pulses (min)** |
| Vnom ≤ 460 V | ≤ 1600 V | ≤ 5200 V/µs | ≥ 0,1 µs | ≥ 6 µs |
| 460 < Vnom ≤ 575 V | ≤ 1800 V | ≤ 6500 V/µs | | |
| 575 < Vnom ≤ 690 V [4] | ≤ 1600 V | ≤ 5200 V/µs | | |
| 575 < Vnom ≤ 690 V [5] | ≤ 2200 V | ≤ 7800 V/µs | | |

***Notes:***
*1. For the application of motors with round enameled wires designed for 690 < Vnom ≤ 1100 V, please contact WEG.*
*2. For the application of dual voltage motors, example 380/660 V, consider the lower voltage (380 V).*
*3. Information supplied by the inverter manufacturer.*
*4. When not stated in the Purchase Order that the motor will be driven by frequency inverter.*
*5. When stated in the Purchase Order that the motor will be driven by frequency inverter.*

#### 6.14.1.2. Motor with prewound coils

Motors with prewound coils (medium and high voltage motors regardless of frame sizes, and low voltage motors from IEC 500 / NEMA 800 frame on), designed for the use with frequency inverters, do not require the use of filters, provided they comply with the criteria in Table 6.8.

***Table 6.8*** *- Criteria to be considered when using motor with prewound coils to be drive by frequency inverters*

| **Motor rated voltage** | **Type of modulation** | **Turn to turn insulation (phase-phase)** | | **Phase-ground insulation** | |
|---|---|---|---|---|---|
| | | **Peak voltage at the motor terminals** | **dV/dt at the motor terminals** | **Peak voltage at the motor terminals** | **dV/dt at the motor terminals** |
| 690 < Vnom ≤ 4160 V | Sinusoidal | ≤ 5900 V | ≤ 500 V/µs | ≤ 3400 V | ≤ 500 V/µs |
| | PWM | ≤ 9300 V | ≤ 2700 V/µs | ≤ 5400 V | ≤ 2700 V/µs |
| 4160 < Vnom ≤ 6600 V | Sinusoidal | ≤ 9300 V | ≤ 500 V/µs | ≤ 5400 V | ≤ 500 V/µs |
| | PWM | ≤ 14000 V | ≤ 1500 V/µs | ≤ 8000 V | ≤ 1500 V/µs |

### 6.14.2. Bearing insulation

Only the motors in IEC frame size 400 (NEMA 680) and larger are supplied, as standard, with insulated bearing. If motor must be driven by frequency inverter, insulate the bearing according to Table 6.9.

***Table 6.9*** *- Recommendation on the bearing insulation for inverter driven motors*

| Frame size | Recommendation |
|---|---|
| IEC 315 and 355<br>NEMA 445/7, 447/9, L447/9, 504/5, 5006/7/8, 5009/10/11, 586/7, 5807/8/9, 5810/11/12 and 588/9 | ■ Insulated bearing/end shield<br>■ Grounding between shaft and frame by grounding brush |
| IEC 400 and larger<br>NEMA 680 and larger | ■ Insulated NDE bearing<br>■ Grounding between shaft and frame by grounding brush |



When motors are supplied with shaft grounding system, monitor the grounding brush constantly during its operation and, when it reaches the end of its useful life, it must be replaced by another brush with the same specification.

### 6.14.3. Switching frequency

The minimum inverter switching frequency must not be lower than 2.5 kHz and should not exceed 5 kHz.



The non-compliance with the criteria and recommendations indicated in this manual may void the product warranty.

### 6.14.4. Mechanical speed limitation

Table 6.10 shows the maximum speeds allowed for motors driven by frequency inverter.

***Table 6.10*** *- Maximum motor speed (in rpm).*

| Frame size | | DE-bearing | Maximum speed for standard motors |
|---|---|---|---|
| IEC | NEMA | | |
| 63-90 | 143/5 | 6201<br>6202<br>6203<br>6204<br>6205 | 10400 |
| 100 | - | 6206 | 8800 |
| 112 | 182/4 | 6207 | 7600 |
| | | 6307 | 6800 |
| 132 | 213/5 | 6308 | 6000 |
| 160 | 254/6 | 6309 | 5300 |
| 180 | 284/6 | 6311 | 4400 |
| 200 | 324/6 | 6312 | 4200 |
| 225-630 | 364/5-9610 | 6314 | 3600 |
| | | 6315 | 3600 |
| | | 6316 | 3200 |
| | | 6319 | 3000 |
| | | 6220 | 3600 |
| | | 6320 | 2200 |
| | | 6322 | 1900 |
| | | 6324 | 1800 |
| | | 6328 | 1800 |
| | | 6330 | 1800 |

***Note:***
*to select the maximum allowed motor speed, consider the motor torque derating curve.*

For more information on the application of frequency inverters, contact WEG or check the “Technical Guidelines for Induction Motors driven by PWM Frequency inverters” available at www.weg.net.

# 7. COMMISSIONING

## 7.1. INITIAL START-UP

After finishing the installation procedures and before starting the motor for the first time or after a long period without operation, the following items must be checked:

- If the nameplate data (voltage, current, connection diagram, degree of protection, cooling system, service factor, etc.) meet the application requirements.
- If the machine set (motor + driven machine) has been mounted and aligned correctly.
- If the motor driving system ensures that the motor speed does not exceed the max. allowed speed indicated in Table 6.10.
- Measure the winding insulation resistance, making sure it complies with the specified values in item 5.4.
- Check the motor rotation direction.
- Inspect the motor terminal box for damage and ensure that it is clean and dry and all contacts are rust-free, the seals are in perfect operating conditions and all unused threaded holes are properly closed thus ensuring the degree of protection indicated on the motor nameplate.
- Check if the motor wiring connections, including grounding and auxiliary equipment connection, have been carried out properly and are in accordance with the recommendations in item 6.9.
- Check the operating conditions of the installed auxiliary devices (brake, encoder, thermal protection device, forced cooling system, etc.).
- Check bearing operating conditions. If signs of oxidation are detected, replace the bearings. If no sign of oxidation is detected, relubricate the bearings as described in item 8.2. If the motors are stored for more than two years, the bearings must be replaced before starting the motor.

- When motors are fitted with sleeve bearings, ensure:
  - correct oil level for the sleeve bearing. The oil level should be in the center of the sight glass (see Figure 6.8);
  - that the motor is not started or operated with axial or radial loads;
  - that if the motor is stored for a period equal or longer than the oil change interval, the oil must be changed before starting the motor.
- Inspect the capacitor operating condition, if any. If motors are installed for more than two years, but were never commissioned, it is recommended to change the start capacitors since they lose their operating characteristics.
- Ensure that the air inlet and outlet opening are not blocked. The minimum clearance to the nearest wall (L) should be at least ¼ of the fan cover diameter (D), see Figure 7.1. The intake air temperature must be at ambient temperature.

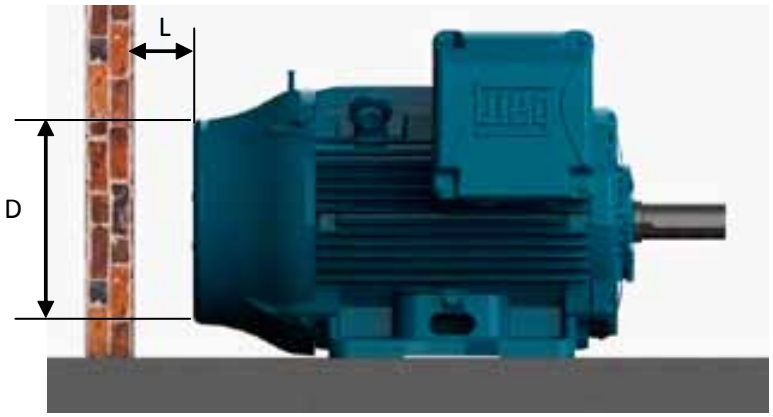


***Figure 7.1**- Minimum clearance to the wall*

Please consider the minimum distances shown in the Table 7.1 as reference value

*Table 7.1 - Minimum distance between the fan cover and wall*

| Frame size | | Distance between the fan cover and the wall (L) | |
|---|---|---|---|
| IEC | NEMA | mm | inches |
| 63 | - | 25 | 0.96 |
| 71 | - | 26 | 1.02 |
| 80 | - | 30 | 1.18 |
| 90 | 143/5 | 33 | 1.30 |
| 100 | - | 36 | 1.43 |
| 112 | 182/4 | 41 | 1.61 |
| 132 | 213/5 | 50 | 1.98 |
| 160 | 254/6 | 65 | 2.56 |
| 180 | 284/6 | 68 | 2.66 |
| 200 | 324/6 | 78 | 3.08 |
| 225<br>250 | 364/5<br>404/5 | 85 | 3.35 |
| 280 | 444/5<br>445/7<br>447/9 | 108 | 4.23 |
| 315 | L447/9<br>504/5<br>5006/7/8<br>5009/10/11 | 122 | 4.80 |
| 355 | 586/7<br>588/9<br>5807/8/9<br>5810/11/12 | 136 | 5.35 |
| 400 | 6806/7/8<br>6809/10/11 | 147 | 5.79 |
| 450 | 7006/10 | 159 | 6.26 |
| 500 | 8006/10 | 171 | 6.73 |
| 560 | 8806/10 | 185 | 7.28 |
| 630 | 9606/10 | 200 | 7.87 |

- ensure correct water flow rate and water temperature when water cooled motors are used. See item 7.2.
- ensure that all rotating parts, such as pulleys, couplings, external fans, shaft, etc. are protected against accidental contact.

Other tests and inspections not included in the manual may be required, depending on the specific installation, application and/or motor characteristics.

After all previous inspections have been carried out, proceed as follows to start the motor:

- Start the motor on no-load (if possible) and check the motor direction of rotation. Check for the presence of any abnormal noise, vibration or other abnormal operating conditions.
- Ensure the motor starts smoothly. If any abnormal operating condition is noticed, switch off the motor, check the assembly system and connections before the motor is started again.
- If excessive vibrations are noticed, check if the motor mounting bolts are well tightened or if the vibrations are not generated and transmitted from adjacent installed equipment. Check the motor vibration periodically and ensure that the vibration limits are as specified in item 7.2.1.
- Start the motor at rated load during a short time and compare the operating current with the rated current indicated on the nameplate.
- Continue to measure the following motor variables until thermal equilibrium is reached: current, voltage, bearing and motor frame temperature, vibration and noise levels.
- Record the measured current and voltage values on the Installation Report for future comparisons.

As induction motors have high inrush currents during start-up, the acceleration of high inertia load requires an extended starting time to reach full speed resulting in fast motor temperature rise. Successive starts within short intervals will result in winding temperature increases and can lead to physical insulation damage reducing the useful life of the insulation system. If the duty cycle S1 / CONT. is specified on the motor nameplate, this means that the motor has been designed for:

- two successive starts: first start from cold condition, i. e., the motor windings are at room temperature and the second start immediately after the motor stops.
- one start from hot condition, i. e., the motor windings are at rated temperature.

The Troubleshooting Chart in section 10 provides a basic list of unusual cases that may occur during motor operation with the respective corrective actions

## 7.2. OPERATING CONDITIONS

Unless otherwise stated in the Purchase Order, electric motors are designed and built to be operated at altitudes up to 1000 meters above sea level and in a temperature range from -20 °C to +40 °C. Any deviation from the normal condition of motor operation must be stated on the motor nameplate. Some components must be changed if the ambient temperature is different from the specified one. Please contact WEG to check the required special features.

For operating temperatures and altitudes differing from those above, the factors indicated in Table 7.2 must be applied to the nominal motor power rating in order to determine the derated available output (Pmax = Pnom x correction factor).

***Table 7.2 -*** *Correction factors for altitude and ambient temperature.*

| T (°C) | Altitude (m) | | | | | | | | |
|---|---|---|---|---|---|---|---|---|---|
| | 1000 | 1500 | 2000 | 2500 | 3000 | 3500 | 4000 | 4500 | 5000 |
| 10 | | | | | | | 0.97 | 0.92 | 0.88 |
| 15 | | | | | | 0.98 | 0.94 | 0.90 | 0.86 |
| 20 | | | | | 1.00 | 0.95 | 0.91 | 0.87 | 0.83 |
| 25 | | | | 1.00 | 0.95 | 0.93 | 0.89 | 0.85 | 0.81 |
| 30 | | | 1.00 | 0.96 | 0.92 | 0.90 | 0.86 | 0.82 | 0.78 |
| 35 | | 1.00 | 0.95 | 0.93 | 0.90 | 0.88 | 0.84 | 0.80 | 0.75 |
| 40 | 1.00 | 0.97 | 0.94 | 0.90 | 0.86 | 0.82 | 0.80 | 0.76 | 0.71 |
| 45 | 0.95 | 0.92 | 0.90 | 0.88 | 0.85 | 0.81 | 0.78 | 0.74 | 0.69 |
| 50 | 0.92 | 0.90 | 0.87 | 0.85 | 0.82 | 0.80 | 0.77 | 0.72 | 0.67 |
| 55 | 0.88 | 0.85 | 0.83 | 0.81 | 0.78 | 0.76 | 0.73 | 0.70 | 0.65 |
| 60 | 0.83 | 0.82 | 0.80 | 0.77 | 0.75 | 0.73 | 0.70 | 0.67 | 0.62 |
| 65 | 0.79 | 0.76 | 0.74 | 0.72 | 0.70 | 0.68 | 0.66 | 0.62 | 0.58 |
| 70 | 0.74 | 0.71 | 0.69 | 0.67 | 0.66 | 0.64 | 0.62 | 0.58 | 0.53 |
| 75 | 0.70 | 0.68 | 0.66 | 0.64 | 0.62 | 0.60 | 0.58 | 0.53 | 0.49 |
| 80 | 0.65 | 0.64 | 0.62 | 0.60 | 0.58 | 0.56 | 0.55 | 0.48 | 0.44 |

Motors installed inside enclosures (cubicles) must be ensured an air renewal rate in the order of one cubic meter per second for each 100 kW installed power or fraction of installed power. Totally Enclosed Air Over motors - TEAO (fan and exhaust / smoke extraction) are supplied without cooling fan and the manufacturer of the driven machine is responsible for sufficient motor cooling. If no minimum required air speed between motor fins is indicated on the motor nameplate, ensure the air speed indicated in the table 7.3 is provided. The values shown in Table 7.3 are valid for 60 Hz motors. To obtain the minimum air speed for 50 Hz motors, multiply the values in the table by 0.83.

***Table 7.3*** *- Minimum required air speed between motor fins (metres/second).*

| Frame | | Poles | | | |
|---|---|---|---|---|---|
| **IEC** | **NEMA** | **2** | **4** | **6** | **8** |
| 63 to 90 | 143/5 | 14 | 7 | 5 | 4 |
| 100 to 132 | 182/4 to 213/5 | 18 | 10 | 8 | 6 |
| 160 to 200 | 254/6 to 324/6 | 20 | 20 | 12 | 7 |
| 225 to 280 | 364/5 to 444/5 | 22 | 22 | 18 | 12 |
| 315 to 355 | 445/7 to 588/9 | 25 | 25 | 20 | 15 |

The voltage and frequency variations may affect the performance characteristics and the electromagnetic compatibility of the motor. The power supply variations should not exceed the values specified in the applicable standards. Examples:

- ABNT NBR 17094 - Parts 1 and 2. The motor has been designed to supply the rated torque for a combined variation in voltage and frequency:
  - Zone A: ±5% of the rated voltage and ±2% of the rated frequency.
  - Zone B: ±10% of the rated voltage and +3% -5% of the rated frequency.

When operated continuously in Zone A or B, the motor may show performance variations and the operating temperature may increase considerably. These performance variations will be higher in Zone B. Thus it is not recommended to operate the motor in Zone B during extended periods.

- IEC 60034-1. The motor has been designed to supply the rated torque for combined variation in voltage and frequency:
  - Zone A: ±5% of the rated voltage and ±2% of the rated frequency.
  - Zone B: ±10% of the rated voltage and +3% -5% of the rated frequency.

When operated continuously in Zone A or B, the motor may show performance variations and the operating temperature may increase considerably. These performance variations will be higher in Zone B. Thus it is not recommended to operate the motor in Zone B during extended periods. For multivoltage motors (example 380-415/660 V), a ±5% voltage variation from the rated voltage is allowed.

- NEMA MG 1 Part 12. The motor has been designed to be operated in one of the following variations:
  - ±10% of the rated voltage, with rated frequency;
  - ±5% of the rated frequency, with rated voltage;
  - A combined variation in voltage and frequency of ±10%, provided the frequency variation does not exceed ±5%.

If the motor is cooled by ambient air, clean the air inlet and outlet openings and cooling fins at regular intervals to ensure a free airflow over the frame surface. The hot air should never be returned to the motor. The cooling air must be at room temperature limited to the temperature range indicated on the motor nameplate (if no room temperature is specified, please consider a temperature range between -20 °C and +40 °C).

Table 7.4 shows the minimum required water flow for water cooled motors considering the different frame sizes and the maximum allowed temperature rise of the cooling water after circulating through the motor. The inlet water temperature should not exceed 40 °C.

***Table 7.4*** *- Minimum required water flow and the maximum allowed temperature rise of the cooling water after circulating through the motor*

| Frame size | | Flow rate (litres/minute) | Maximum allowed water temperature rise (°C) |
|---|---|---|---|
| IEC | NEMA | | |
| 180 | 284/6 | 12 | 5 |
| 200 | 324/6 | 12 | 5 |
| 225 | 364/5 | 12 | 5 |
| 250 | 404/5 | 12 | 5 |
| 280 | 444/5<br>445/7<br>447/9 | 15 | 6 |
| 315 | 504/5 | 16 | 6 |
| 355 | 586/7<br>588/9 | 25 | 6 |

Motors fitted with oil mist lubrication systems can be operated continuously for a maximum of one hour after the failure of the oil pumping system.

Considering the sun's heat increases the operating temperature, externally mounted motors should always be protected from direct sunlight exposure.

Each and every deviation from the normal operating condition (tripping of the thermal protection, noise and vibration level increase, temperature and current rise) should be investigated and corrected by WEG Authorized Service Centers.

Motors fitted with cylindrical roller bearings require a minimum radial load to ensure a normal operation. For information regarding the radial preload, please contact WEG.

### 7.2.1.Limits of vibration

The vibration severity is the maximum vibration value measured at all positions and in all directions as recommended in the standard IEC 60034-14. Table 7.5 specifies the limits of the maximum vibrations magnitudes according to standard IEC 60034-14 for shaft heights IEC 56 to 400, for vibrations grades A and B. The vibration severity limits in Table 7.5 are given as RMS values (Root Mean Square values or effective values) of the vibration speed in mm/s measured in free suspension condition.

***Table 7.5*** *- Recommended limits for the vibration severity according to standard IEC 60034-14*

| Shaft height [mm] | 56 ≤ H ≤ 132 | 132 ≤ H ≤ 280 | H > 280 |
|---|---|---|---|
| Vibration Grade | Vibration severity on elastic base [mm/s RMS] | | |
| A | 1.6 | 2.2 | 2.8 |
| B | 0.7 | 1.1 | 1.8 |

***Notes:***

*1 - The values in Table 7.5 are valid for measurements carried out with decoupled machines (without load) operated at rated voltage and frequency.*

*2 - The values in Table 7.5 are valid regardless of the direction of rotation of the machine.*

*3 - The values in Table 7.5 are not applicable to single-phase motors, three-phase motors powered by a single-phase system or to machines mounted in situ or coupled with inertia flywheels or to loads.*

According to NEMA MG 1, the allowed vibration limit for standard motors is 0.15 in/s (peak vibration in in/s).

***Note:***

*For the load operation condition, the use of the standard ISO 10816-3 is recommended for evaluating the motor vibration limits. In the load condition the motor vibration will be influenced by several factors, such as, type of the coupled load, condition of the motor fixation, alignment condition under load, structure or base vibration due to other equipments, etc.*

# 8. MAINTENANCE

The purpose of the maintenance is to extend the useful life of the equipment. The non-compliance with one of these previous items can cause unexpected machine failures.

If motors with cylindrical roller or angular contact bearings are to be transported during the maintenance procedures, the shaft locking device must always be fitted. All HGF motors, regardless of the bearing type, must always be transported with the shaft locking device fitted.

All repairs, disassembly and assembly related services must be carried out only by qualified and well-trained personnel by using proper tools and techniques. Make sure that the machine has stopped and it is disconnected from the power supply, including the accessory devices (space heater, brake, etc.), before any servicing is undertaken.
The company does not assume any responsibility or liability for repair services or maintenance operations executed by non-authorized Service Centers or by non qualified service personnel. The company shall have no obligation or liability whatsoever to the buyer for any indirect, special, consequential or incidental loss or damage caused or arising from the company's proven negligence

## 8.1. GENERAL INSPECTION

The inspection intervals depend on the motor type, application and installation conditions. Proceed as follows during inspection:

- Visually inspect the motor and coupling. Check if abnormal noises, vibrations, excessive heating, wear signs, misalignment or damaged parts are noticed. Replace the damaged parts as required.
- Measure the insulation resistance according to the item 5.4.
- Clean the motor enclosure. Remove oil spills and dust accumulation from the motor frame surface to ensure a better heat transfer to the surrounding ambient.
- Check cooling fan condition and clean the air inlet & outlet openings to ensure a free air flow over the motor.
- Investigate the actual condition of the seals and replace them, if required.
- Drain the condensed water from inside the motor. After draining, reinstall the drain plugs to ensure the degree of protection as indicated on the motor nameplate. The motor must always be positioned so the drain hole is at the lowest position (see item 6).
- Check the connections of the power supply cables, ensuring the correct clearance distance between live and grounded parts, as specified in Table 6.3.
- Check if the tightening torque of the bolted connections and mounting bolts meets the tightening torque specified in Table 8.7.
- Check the status of the cable passages, the cable gland seals and the seals inside the terminal box and replace them, if required.
- Check the bearing operating conditions. Check for the presence of any abnormal noise, vibration or other abnormal operating conditions, like motor temperature rise. Check the oil level, the lube oil condition and compare the workings hours with the informed life time.
- Record and file all changes performed on the motor.



Do not reuse damaged or worn parts. Damaged or worn parts must be replaced by parts supplied by the manufacturer and must be installed as if they were the original parts.

## 8.2. LUBRICATION

Proper lubrication plays a vital role in the motor performance. Only use the grease or oil types, amounts and lubrication intervals recommended for the bearings. This information is available on the motor nameplate and the lubrication procedures must be carried out according to the type of lubricant (oil or grease).
When the motor is fitted with thermal protection devices for bearing temperature control, consider the operating temperature limits shown in Table 6.4.
The maximum operating temperature of motors used in special applications may differ from those shown in Table 6.4. The grease and oil disposal should be made in compliance with applicable laws in each country



Please contact WEG when motors are to be installed in special environments or used for special applications.

### 8.2.1. Grease lubricated rolling bearings

Excess grease causes bearing overheating, resulting in bearing failure.

The lubrication intervals specified in Table 8.1, Table 8.2, Table 8.3 and Table 8.4 consider an absolute temperature on the bearing of 70 °C (up to frame size IEC 200 / NEMA 324/6) and 85 °C (for frame size IEC 225 / NEMA 364/5 and above), the motor running at rated speed, a motor mounted in horizontal position and greased with Mobil Polyrex EM grease. Any variation of the parameters listed above must be evaluated.

***Table 8.1*** *- Lubrication intervals for ball bearings*

| Frame | | Poles | Bearing designation | Amount of grease (g) | LUBRICATION INTERVALS (hours) | | | | | |
|---|---|---|---|---|---|---|---|---|---|---|
| | | | | | ODP (Open Drip Proof) | | W21 TEFC (Totally Enclosed Fan Cooled) | | W22 TEFC (Totally Enclosed Fan Cooled) | |
| IEC | NEMA | | | | 50 Hz | 60 Hz | 50 Hz | 60 Hz | 50 Hz | 60 Hz |
| 90 | 143/5 | 2 | 6205 | 4 | - | - | 20000 | 20000 | 25000 | 25000 |
| | | 4 | | | | | | | | |
| | | 6 | | | | | | | | |
| | | 8 | | | | | | | | |
| 100 | - | 2 | 6206 | 5 | - | - | 20000 | 20000 | 25000 | 25000 |
| | | 4 | | | | | | | | |
| | | 6 | | | | | | | | |
| | | 8 | | | | | | | | |
| 112 | 182/4 | 2 | 6207/ 6307 | 9 | - | - | 20000 | 20000 | 25000 | 25000 |
| | | 4 | | | | | | | | |
| | | 6 | | | | | | | | |
| | | 8 | | | | | | | | |
| 132 | 213/5 | 2 | 6308 | 11 | - | - | 20000 | 18400 | 25000 | 23200 |
| | | 4 | | | | | 20000 | 20000 | 25000 | 25000 |
| | | 6 | | | | | | | | |
| | | 8 | | | | | | | | |
| 160 | 254/6 | 2 | 6309 | 13 | 20000 | 20000 | 18100 | 15700 | 22000 | 20000 |
| | | 4 | | | | | 20000 | 20000 | 25000 | 25000 |
| | | 6 | | | | | | | | |
| | | 8 | | | | | | | | |
| 180 | 284/6 | 2 | 6311 | 18 | 20000 | 20000 | 13700 | 11500 | 17000 | 14000 |
| | | 4 | | | | | 20000 | 20000 | 25000 | 25000 |
| | | 6 | | | | | | | | |
| | | 8 | | | | | | | | |
| 200 | 324/6 | 2 | 6312 | 21 | 20000 | 20000 | 11900 | 9800 | 15000 | 12000 |
| | | 4 | | | | | 20000 | 20000 | 25000 | 25000 |
| | | 6 | | | | | | | | |
| | | 8 | | | | | | | | |
| 225 250 280 315 355 | 364/5 404/5 444/5 445/7 447/9 L447/9 504/5 5008 5010/11 586/7 588/9 | 2 | 6314 | 27 | 18000 | 14400 | 4500 | 3600 | 5000 | 4000 |
| | | 4 | | | 20000 | 20000 | 11600 | 9700 | 14000 | 12000 |
| | | 6 | | | | | 16400 | 14200 | 20000 | 17000 |
| | | 8 | | | | | 19700 | 17300 | 24000 | 20000 |
| | | 2 | 6316 | 34 | 14000 | *Upon request | 3500 | *Upon request | 4000 | *Upon request |
| | | 4 | | | 20000 | 20000 | 10400 | 8500 | 13000 | 10000 |
| | | 6 | | | | | 14900 | 12800 | 18000 | 16000 |
| | | 8 | | | | | 18700 | 15900 | 20000 | 20000 |
| | | 2 | 6319 | 45 | 9600 | *Upon request | 2400 | *Upon request | 3000 | *Upon request |
| | | 4 | | | 20000 | 20000 | 9000 | 7000 | 11000 | 8000 |
| | | 6 | | | | | 13000 | 11000 | 16000 | 13000 |
| | | 8 | | | | | 17400 | 14000 | 20000 | 17000 |
| | | 4 | 6322 | 60 | 20000 | 20000 | 7200 | 5100 | 9000 | 6000 |
| | | 6 | | | | | 10800 | 9200 | 13000 | 11000 |
| | | 8 | | | | | 15100 | 11800 | 19000 | 14000 |

*Table 8.2* - *Lubrication intervals for cylindrical roller bearings*

| Frame | | Poles | Bearing designation | Amount of grease (g) | LUBRICATION INTERVALS (hours) | | | | | |
|---|---|---|---|---|---|---|---|---|---|---|
| | | | | | ODP (Open Drip Proof) | | W21 TEFC (Totally Enclosed Fan Cooled) | | W22 TEFC (Totally Enclosed Fan Cooled) | |
| IEC | NEMA | | | | 50 Hz | 60 Hz | 50 Hz | 60 Hz | 50 Hz | 60 Hz |
| 160 | 254/6 | 2 | NU309 | 13 | 20000 | 19600 | 13300 | 9800 | 16000 | 12000 |
| | | 4 | | | | 20000 | 20000 | 20000 | 25000 | 25000 |
| | | 6 | | | | | | | | |
| | | 8 | | | | | | | | |
| 180 | 284/6 | 2 | NU311 | 18 | 18400 | 12800 | 9200 | 6400 | 11000 | 8000 |
| | | 4 | | | 20000 | 20000 | 20000 | 19100 | 25000 | 25000 |
| | | 6 | | | | | | 20000 | | |
| | | 8 | | | | | | | | |
| 200 | 324/6 | 2 | NU312 | 21 | 15200 | 10200 | 7600 | 5100 | 9000 | 6000 |
| | | 4 | | | 20000 | 20000 | 20000 | 17200 | 25000 | 21000 |
| | | 6 | | | | | | 20000 | | 25000 |
| | | 8 | | | | | | | | |
| 225<br>250<br>280<br>315<br>355 | 364/5<br>404/5<br>444/5<br>445/7<br>447/9<br>L447/9<br>504/5<br>5008<br>5010/11<br>586/7<br>588/9 | 4 | NU314 | 27 | 17800 | 14200 | 8900 | 7100 | 11000 | 9000 |
| | | 6 | | | 20000 | 20000 | 13100 | 11000 | 16000 | 13000 |
| | | 8 | | | | | 16900 | 15100 | 20000 | 19000 |
| | | 4 | NU316 | 34 | 15200 | 12000 | 7600 | 6000 | 9000 | 7000 |
| | | 6 | | | 20000 | 19000 | 11600 | 9500 | 14000 | 12000 |
| | | 8 | | | | 20000 | 15500 | 13800 | 19000 | 17000 |
| | | 4 | NU319 | 45 | 12000 | 9400 | 6000 | 4700 | 7000 | 5000 |
| | | 6 | | | 19600 | 15200 | 9800 | 7600 | 12000 | 9000 |
| | | 8 | | | 20000 | 20000 | 13700 | 12200 | 17000 | 15000 |
| | | 4 | NU322 | 60 | 8800 | 6600 | 4400 | 3300 | 5000 | 4000 |
| | | 6 | | | 15600 | 11800 | 7800 | 5900 | 9000 | 7000 |
| | | 8 | | | 20000 | 20000 | 11500 | 10700 | 14000 | 13000 |

*Table 8.3* - *Lubrication intervals for ball bearings - HGF line*

| Frame | | Poles | Bearing designation | Amount of grease (g) | Lubrication intervals (hours) | |
|---|---|---|---|---|---|---|
| IEC | NEMA | | | | 50Hz | 60Hz |
| 315L/A/B and 315C/D/E | 5006/7/8T and 5009/10/11T | 2 | 6314 | 27 | 3100 | 2100 |
| | | 4 - 8 | 6320 | 50 | 4500 | 4500 |
| | | | 6316 | 34 | 4500 | 4500 |
| 355L/A/B and 355C/D/E | 5807/8/9T and 5810/11/12T | 2 | 6314 | 27 | 3100 | 2100 |
| | | 4 - 8 | 6322 | 60 | 4500 | 4500 |
| | | | 6319 | 45 | 4500 | 4500 |
| 400L/A/B and 400 C/D/E | 6806/7/8T and 6809/10/11T | 2 | 6315 | 30 | 2700 | 1800 |
| | | 4 - 8 | 6324 | 72 | 4500 | 4500 |
| | | | 6319 | 45 | 4500 | 4500 |
| 450 | 7006/10 | 2 | 6220 | 31 | 2500 | 1400 |
| | | 4 | 6328 | 93 | 4500 | 3300 |
| | | | 6322 | 60 | 4500 | 4500 |
| | | 6 - 8 | 6328 | 93 | 4500 | 4500 |
| | | | 6322 | 60 | 4500 | 4500 |
| 500 | 8006/10 | 4 | 6330 | 104 | 4200 | 2800 |
| | | | 6324 | 72 | 4500 | 4500 |
| | | 6 - 8 | 6330 | 104 | 4500 | 4500 |
| | | | 6324 | 72 | 4500 | 4500 |
| 500 | 8006/10 | 4 | 6330 | 104 | 4200 | 2800 |
| | | | 6324 | 72 | 4500 | 4500 |
| | | 6 - 8 | 6330 | 104 | 4500 | 4500 |
| | | | 6324 | 72 | 4500 | 4500 |
| 560 | 8806/10 | 4 - 8 | *Upon request | | | |
| 630 | 9606/10 | 4 - 8 | | | | |

*Table 8.4 - Lubrication intervals for cylindrical roller bearings - HGF line*

| Frame | | Poles | Bearing designation | Amount of grease (g) | Lubrication intervals (hours) | |
|---|---|---|---|---|---|---|
| IEC | NEMA | | | | 50 Hz | 60 Hz |
| 315L/A/B and 315C/D/E | 5006/7/8 and 5009/10/11 | 4 | NU320 | 50 | 4300 | 2900 |
| | | 6 - 8 | | | 4500 | 4500 |
| 355L/A/B and 355C/D/E | 5807/8/9 and 5810/11/12 | 4 | NU322 | 60 | 3500 | 2200 |
| | | 6 - 8 | | | 4500 | 4500 |
| 400L/A/B and 400C/D/E | 6806/7/8 and 6809/10/11 | 4 | NU324 | 72 | 2900 | 1800 |
| | | 6 - 8 | | | 4500 | 4500 |
| 450 | 7006/10 | 4 | NU328 | 93 | 2000 | 1400 |
| | | 6 | | | 4500 | 3200 |
| | | 8 | | | 4500 | 4500 |
| 500 | 8006/10 | 4 | NU330 | 104 | 1700 | 1000 |
| | | 6 | | | 4100 | 2900 |
| | | 8 | | | 4500 | 4500 |
| 560 | 8806/10 | 4 | NU228 + 6228 | 75 | 2600 | 1600 |
| | | 6 - 8 | | 106 | 4500 | 4500 |
| 630 | 9606/10 | 4 | NU232 + 6232 | 92 | 1800 | 1000 |
| | | 6 | | 120 | 4300 | 3100 |
| | | 8 | | 140 | 4500 | 4500 |

For each increment of 15 ºC above the bearing temperature, the relubrication intervals given in the Table must be halved. The relubrication interval of motors designed by the manufacturer for mounting in horizontal position, but installed in vertical position (with WEG authorization), must be halved.
For special applications, such as: high and low temperatures, aggressive environments, driven by frequency inverter (VFD - frequency inverter), etc., please contact WEG about the required amount of grease and the relubrication intervals.

### 8.2.1.1. Motor without grease fitting

Motors without grease fittings must be lubricated in accordance with the existing Maintenance Plan. Motor disassembly must be carried out as specified in Item 8.3. If motors are fitted with shielded bearings (for example, ZZ, DDU, 2RS, VV), these bearings must be replaced at the end of the grease service life.

### 8.2.1.2. Motor with grease fitting

To lubricate the bearings with the motor stopped, proceed as follows:
Motors with grease fittings must be stopped to be lubricated. Proceed as follows:
- Before lubricating, clean the grease nipple and immediate vicinity thoroughly;
- Lift grease inlet protection;
- Remove the grease outlet plug;
- Pump in approximately half of the total grease indicated on the motor nameplate and run the motor for about 1 (one) minute at rated speed;
- Switch-off the motor and pump in the remaining grease;
- Lower again the grease inlet protection and reinstall the grease outlet protection.

To grease the motor while running, proceed as follows:
- Before lubricating, clean the grease nipple and immediate vicinity thoroughly;
- Pump the total grease indicated on the motor nameplate;
- Lower again the grease inlet protection.



For lubrication, use only manual grease gun.

If Motors are provided with a spring device for grease removal, the grease excess must be removed by pulling the rod and cleaning the spring until the spring does not remove more grease.

### 8.2.1.3. Compatibility of the Mobil Polyrex EM grease with other greases

The Mobil Polyrex EM grease has a polyurea thickener and a mineral oil thus being compatible with greases that contain:
- Lithium based thickener, lithium-based complex thickener, polyurea thickener and refined mineral oil;
- The used grease must have in its formulation corrosion and oxidation inhibitors.

In general terms, greases with the same type of soap are compatible to each other. However, depending on the proportion of the mixture there may be incompatibility. In such a case, it is not recommended to mix different types of greases without contacting the supplier or WEG beforehand.

### 8.2.2. Oil lubricated bearings

To change the oil of oil lubricated motor proceed as follows:
- switch-off the motor;
- remove threaded oil drain plug;
- open the valve and drain the oil;
- close the drain vale again;
- reinstall the threaded oil drain plug;
- fill-up with the type and amount of oil as specified on the nameplate;
- check oil level. The oil level is OK when the lubricant can be viewed approximately in the center of the sight glass;
- reinstall oil inlet plug;
- check for oil leaks and ensure that all not used threaded plugs are closed with plugs.

The bearing lubricating oil must be replaced as specified on the nameplate or whenever changes in the oil properties are noticed. The oil viscosity and pH must be checked periodically. The oil level must be checked every day and must be kept in the center of the sight glass.
Please contact WEG, when oils with different viscosities should be used.

***Note**:*
*The HGF vertical mounted motors with high axial thrust are supplied with grease lubricated DE-bearings and with oil lubricated NDE-bearings. The DE-bearings must be lubricated according to recommendations in item 8.2.1. Table 8.5 specifies the oil type and the amount of oil required for this motor lubrication.*

***Table 8.5** - Oil properties for HGF vertical mounted motors with high axial thrust*

| Mounting - High axial thrust | Frame | | Poles | Bearing designation | Oil (liters) | Interval (h) | Lubricant | Lubricant specification |
|---|---|---|---|---|---|---|---|---|
| | IEC | NEMA | | | | | | |
| | 315L/A/B e 315C/D/E | 5006/7/8T e 5009/10/11T | 4 - 8 | 29320 | 20 | 8000 | Renolin DTA 40 / SHC 629 | ISO VG150 mineral oil with antifoam and antioxidant additives |
| | 355L/A/B e 355C/D/E | 5807/8/9T e 5810/11/12T | 4 - 8 | 29320 | 26 | | | |
| | 400L/A/B e 400C/D/E | 6806/7/8T e 6809/10/11T | 4 - 8 | 29320 | 37 | | | |
| | 450 | 7006/10 | 4 - 8 | 29320 | 45 | | | |

### 8.2.3. Oil mist lubricated bearings

Check the service conditions of the seals and if replacement is required use only original components. Clean the seal components before assembly (bearing caps, end shields, etc.).
Apply joint sealant between the bearing caps and end shields. The joint sealant must be compatible with the used lubricating oil. Connect the oil lubricant tubes (oil inlet and oil outlet tubes and motor drain tube), as shown in Figure 6.12.

### 8.2.4. Sleeve bearings

The lubricating oil of sleeve bearings must be changed at the intervals specified in Table 8.6. To replace the oil, proceed as follows:
- NDE-bearing: remove the protection plate from the fan cover;
- Drain the oil through the drain hole located at the bottom of the bearing (see Figure 8.1);
- Close the oil drain hole;
- Remove the oil inlet plug;
- Fill the sleeve bearing with the specified oil and with the amount of oil specified in;
- Check the oil level and ensure it is kept close to the center of the sight glass;
- Install the oil inlet plug;
- Check for oil leaks.

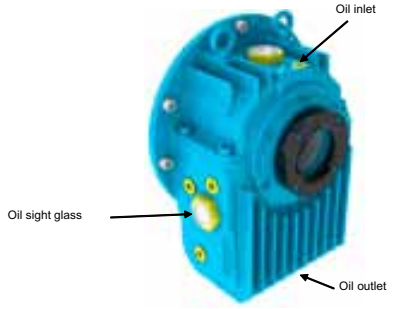


***Figure 8.1** - Sleeve bearing*

*Table 8.6* - *Oil properties for sleeve bearings.*

| Frame | | Poles | Bearing designation | Oil (liters) | Interval (h) | Lubricant | Lubricant Specification |
|---|---|---|---|---|---|---|---|
| IEC | NEMA | | | | | | |
| 315L/A/B and 315C/D/E | 5006/7/8T and 5009/10/11T | 2 | 9-80 | 2.8 | 8000 | Renolin DTA 10 | ISO VG32 mineral oil with antifoam and antioxidant additives |
| 355L/A/B and 355C/D/E | 5807/8/9T and 5810/11/12T | | | | | | |
| 400L/A/B and 400C/D/E | 6806/7/8 and 6809/10/11T | | | | | | |
| 450 | 7006/10 | | | | | | |
| 315L/A/B and 315C/D/E | 5006/7/8T and 5009/10/11T | 4 - 8 | 9-90 | 2.8 | 8000 | Renolin DTA 15 | ISO VG46 mineral oil with antifoam and antioxidant additives |
| 355L/A/B and 355C/D/E | 5807/8/9T and 5810/11/12T | | 9-100 | | | | |
| 400L/A/B and 400C/D/E | 6806/7/8 and 6809/10/11T | | 11-110 | 4.7 | | | |
| 450 | 7006/10 | | 11-125 | | | | |
| 500 | 8006/10 | | | | | | |

The lubricating oil must be replaced as specified on the nameplate or whenever changes on the oil properties are noticed. The oil viscosity and pH must be checked periodically. The oil level must be checked every day and kept in the center of the sight glass.
Please contact WEG, when oils with different viscosities are to be used.

## 8.3. MOTOR ASSEMBLY AND DISASSEMBLY

All repair services on motors should be always performed by qualified personnel and in accordance with the applicable laws and regulations in each country. Always use proper tools and devices for motor disassembly and assembly.

Disassembly and assembly services can be carried out only after the motor has been disconnected from the power supply and is completely stopped.

Dangerous voltages may be present at the motor terminals inside the terminal box since capacitors can retain electrical charge for long periods of time even when they are not connected directly to a power source or when space heaters are connected to the motor or when the motor windings are used as space heaters. Dangerous voltages may be present at the motor terminals when they are driven by frequency inverter even when they are completely stopped.

Record the installation conditions such as terminal connection diagram, alignment / leveling conditions before starting the disassembly procedures. These records should be considered for later assembly.

Disassemble the motor carefully without causing scratches on machined surfaces or damaging the threads.

Assemble the motor on a flat surface ensuring a good support base. Footless motors must be fixed/locked on the base to prevent accidents.

Handle the motor carefully to not damage the insulated components such as windings, insulated rolling bearings, power cables etc.

Seal elements, such as joint seals and bearing seals should always be replaced when wear or damage is noticed.

Motors with degree of protection higher than IP55 are supplied with joint and screw seal Loctite 5923 (Henkel) Clean the components and apply a new coat of Loctite 5923 on the surfaces before assembly.

### 8.3.1. Terminal box

Proceed as follows to remove the terminal box cover and to disconnect/connect the power supply cables and the cables of the accessory devices:

- Ensure that during the screw removal the terminal box cover does not damage the components installed inside the terminal box.
- If the terminal box cover is fitted with lifting eyebolt, lift the terminal box cover always by its lift eyebolt.
- If motors are supplied with terminal blocks, ensure the correct tightening torque on the motor terminals as specified in Table 8.7.
- Ensure that the cables do not contact sharp edges.
- Ensure that the original IP degree of protection is not changed and is maintained as indicate on the motor nameplate. The power supply cables and the control cables must always be fitted with components (cable glands, conduits) that meet the applicable standards and regulations of each country.
- Ensure that the pressure relief device is in perfect operating condition, if provided. The seals in the terminal box must be in perfect condition for reuse and must be reinstalled correctly to ensure the specified degree of protection.
- Ensure the correct tightening torque for the securing bolts of the terminal box cover as specified in Table 8.7.

***Table 8.7*** *- Tightening torque for the securing bolts [Nm]*

| Screw type and seal | M4 | M5 | M6 | M8 | M10 | M12 | M16 | M20 |
|---|---|---|---|---|---|---|---|---|
| Hex bolt/hex socket bolt (without seal) | - | 4 to 7 | 7 to 12 | 16 to 30 | 30 to 50 | 55 to 85 | 120 to 180 | 230 to 360 |
| Combined slotted screw (without seal) | - | 3 to 5 | 5 to 10 | 10 to 18 | - | - | - | - |
| Hex bolt/hex socket bolt (with seal with metallic stop/cord) | - | - | - | 13 to 20 | 25 to 37 | 40 to 55 | 50 to 65 | - |
| Combined slotted screw (with flat seal 'and/or mettallic stop/cord) | - | 3 to 5 | 4 to 8 | 8 to 15 | - | - | - | - |
| Hex bolt/hex socket bolt (with flat seal) | - | - | - | 8 to 15 | 18 to 30 | 25 to 40 | 35 to 50 | - |
| Terminal blocks | 1 to 1,5 | 1,5 to 4 | 3 to 6,5 | 6 to 9 | 10 to 18 | 15,5 to 30 | 30 to 50 | - |
| Grounding terminals | - | 3 to 5 | 5 to 10 | 10 to 18 | 30 to 50 | 55 to 85 | 120 to 180 | - |

## 8.4. DRYING THE STATOR WINDING INSULATION

Dismantle the motor completely. Remove the end shields, the rotor with the shaft, the fan cover, the fan and the terminal box before the wound stator with the frame is transferred to the oven for the drying process. Place the wound stator in the oven heated to max. 120 °C for two hours. For larger motors a longer drying time may be required. After the drying process has been concluded, allow the stator to cool to room temperature. Measure the insulation resistance again as described in item 5.4. Repeat the stator drying process if the required insulation resistance does not meet the values specified in Table 5.3. If the insulation resistance does not improve despite several drying processes, evaluate the causes of the insulation resistance drop carefully and an eventual replacement of the motor winding may be required. If in doubt contact WEG.



To prevent electrical shock, discharge the motor terminals immediately before, and after each measurement. If the motor is equipped with capacitors, these must be discharged before beginning any repair.

## 8.5. SPARE PARTS

When ordering spare parts, always provide complete motor designation, indicating the motor type, the code number and the serial number, which are stated on the motor nameplate.

Spare parts must always be purchased from WEG authorized Service Centers. The use of non-original spare parts can cause motor failure, performance drop and void the product warranty.

The spare parts must be stored in a clean, dry and properly ventilated room, with relative air humidity not exceeding 60%, with ambient temperature between 5 °C and 40 °C, free of dust, vibrations, gases, corrosive smokes and at constant temperature. The spare parts must be stored in their normal mounting position without placing other components onto them.

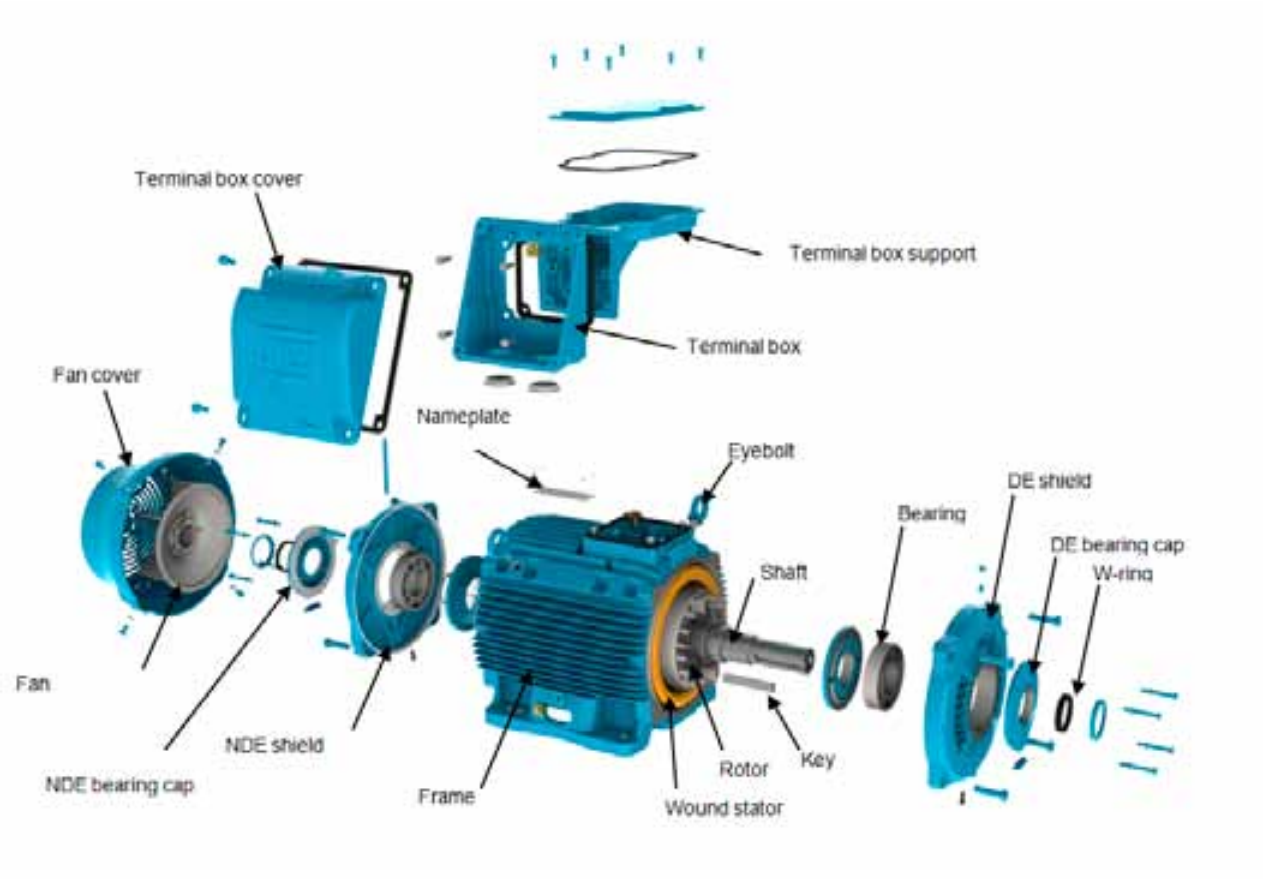


***Figure 8.2*** *- Exploded view of the components of a W22 motor*

# 9. ENVIRONMENTAL INFORMATION

## 9.1. PACKAGING

WEG electric motors are supplied in cardboard, plastic or wooden packaging. These materials can be recycled and must be disposed according to the applicable laws and regulations in each country. All wood used in the packaging of WEG motors come from the company reforestation program and is not submitted to any chemical conservation treatment.

## 9.2. PRODUCT

Electric motors consist mainly of ferrous metals (steel plates and cast iron), non ferrous metals (copper and aluminum) and plastic materials.

In general, electric motors have relatively long service live. However when they must be discarded, WEG recommends to dismantle the motor, sort the different materials and send them for recycling.

No-recyclable materials should be disposed of at industrial landfills according to the applicable environmental laws and regulations in each country, or co-processed in cement kilns or incinerated.

The recycling service providers, the disposal in industrial landfills, the waste co-processing or the incineration process must be properly authorized by the state environment agency to carry out these activities.

# 10. TROUBLESHOOTING CHART X SOLUTIONS

This troubleshooting chart provides a basic list of problems that may occur during motor operation, possible causes and recommended corrective actions. In case of doubts, please contact WEG Service Center.

| Problem | Possible cause | Corrective action |
|---|---|---|
| Motor does not start, neither coupled nor decoupled | Power cables are interrupted. | Check the control panel and the motor power supply cables. |
| | Blown fuses. | Replace blown fuses. |
| | Wrong motor connection. | Correct the motor connection according to connection diagram. |
| | Locked rotor. | Check motor shaft to ensure that it rotates freely. |
| The motor starts at no-load, but fails when load is applied. It starts very slowly and does not reach the rated speed. | Load toque is too high during start-up. | Do not start the motor on load. |
| | Too high voltage drop in the power cables | Check the installation dimensioning (transformer, cable cross section, relays, circuit breakers, etc.) |
| Abnormal / excessive noise | Defective transmission component or defective driven machine. | Check the transmission force, the coupling and the alignment. |
| | Misaligned / unleveled base. | Align / level the motor with the driven machine |
| | Unbalanced components or unbalanced driven machine | Balance the machine set again |
| | Different balancing methods used for motor and coupling balancing (halve key, full key) | Balance the motor again |
| | Wrong motor direction of rotation | Reverse the direction of rotation |
| | Loose bolts | Retighten the bolts |
| | Foundation resonance | Check the foundation design |
| | Damaged bearings | Replace the bearings |
| Motor overheating | Insufficient cooling | Clean air inlet and outlet and cooling fins |
| | | Check the minimum required distance between the fan cover and nearest walls. See item 7 |
| | | Check air temperature at inlet |
| | Overload | Measure motor current, evaluate motor application and if required, reduce the load |
| | Number of starts per hour is too high or the load inertia moment is too high | Reduce the number of starts per hour |
| | Power supply voltage too high | Check the motor power supply voltage. Power supply voltage must not exceed the tolerance specified in item 7.2 |
| | Power supply voltage too low | Check the motor power supply voltage and the voltage drop. Power supply voltage must not exceed the tolerance specified in item 7.2 |
| | Interrupted power supply | Check the connection of the power cables |
| | Voltage unbalance at the motor terminals | Check for blown fuses, wrong commands, voltage unbalance in the power line, phase fault or interrupted power cables |
| | Direction of rotation is not compatible with the unidirectional fan | Check if the direction of rotation matches the rotation arrow indicated on end shield |
| Bearing overheating | Excessive grease / oil | Clean the bearing and lubricate it according to the provided recommendations |
| | Grease / oil aging | |
| | The used grease / oil does not matches the specified one | |
| | Lack of grease / oil | Lubricate the bearing according to the provided recommendations |
| | Excessive axial or radial forces due to the belt tension | Reduce the belt tension |
| | | Reduce the load applied to the motor |

# 11. WARRANTY TERM

WEG Equipamentos Elétricos S/A, Motor Unit, offers warranty against defects in workmanship and materials for their products for a period of 18 months from the invoice issue date by factory or distributor / dealer, limited to 24 months from date of manufacture. Motors of the HGF Line are covered for a period of 12 months from the invoice issue date by the factory or distributor / dealer, limited to 18 months from the date of manufacture.

The paragraph above contains the legal warranty periods. If a warranty period is defined in a different way in the commercial, technical proposal of a particular sale, that will override the time limits set out above.
The periods above are independent of installation date and provided that the following requirements are met: proper transportation, handling and storage; correct installation in specified environmental conditions free of aggressive agents; operation within the capacity limits and observation of the Installation, Operation and Maintenance Manual; execution of regular preventive maintenance; execution of repairs and/or changes only by personnel with WEG's written authorization; in the occurrence of an anomaly, the product must be available to the supplier for the minimum period necessary to identify the cause of the anomaly and to repair it properly; the buyer must immediately notify WEG of any defects occurred and they must be later confirmed as manufacturing defects by WEG. The warranty does not include assembly and disassembly services at the buyer's premises, costs of product transportation, as well as travel, lodging and meals expenses for the technical assistance staff when requested by the customer. The warranty service will be provided exclusively at a WEG authorized Technical Assistance or at the plant.
Components, parts and materials whose useful life is usually less than 12 (twelve) months are not covered by the warranty.
Under no circumstance will warranty services extend the warranty period of the equipment. However, new warranty equivalent to the original one will be due only to the components repaired or replaced by WEG.
The present warranty is limited to the product supplied. WEG will not be liable for damages to people, third parties, other equipment and facilities, loss of profits or other incidental or consequential damages.

# 12. EC DECLARATION OF CONFORMITY

**WEG Equipamentos Elétricos S/A**
Av. Prefeito Waldemar Grubba, 3000
89256-900 - Jaraguá do Sul - SC - Brazil,

and its authorised representative established in the European Community,
**WEGeuro - Industria Electrica SA**
Rua Eng Frederico Ulrich, Apartado 6074
4476-908 - Maia - Porto - Portugal

hereby declare that the products:

WEG induction motors and components for using in these motors:

Three-phase
**IEC frames 63 to 630**
**NEMA frames 42, 48, 56 and 143 to 9610**
……

Single-phase
**IEC frames 63 to 132**
**NEMA frames 42, 48, 56 and 143 to 215**
……

when installed, maintained and used in applications for which they were designed, and in compliance with the relevant installation standards and manufacturer's instructions, comply with the requirements of the following European Directives and standards where applicable:

Directives:
**Low Voltage Directive 2006/95/EC**
**Regulation (EC) No 640/2009**
**Directive 2009/125/EC**
EMC Directive 2004/108/EC (induction motors are considered inherently benign in terms of electromagnetic compatibility)

Standards:
**EN 60034-1/2-1/5/6/7/8/9/11/12/14/30 and 60204-1**

From 29/12/2009 on low voltage electric motors are no longer considered under the scope of the current Machinery Directive 2006/42/EC.

CE marking in: 1996

Milton Oscar Castella
Engineering Director

Jaraguá do Sul, May 31st, 2011

# WEG Worldwide Operations

**ARGENTINA**
WEG EQUIPAMIENTOS ELECTRICOS
San Francisco - Cordoba
Phone: +54 3564 421 484
**info-ar@weg.net**
**www.weg.net/ar**

WEG PINTURAS - Pulverlux
Buenos Aires
Phone: +54 11 4299 8000
**tintas@weg.net**

**AUSTRALIA**
WEG AUSTRALIA
Victoria
Phone: +61 3 9765 4600
**info-au@weg.net**
**www.weg.net/au**

**AUSTRIA**
WATT DRIVE - WEG Group
Markt Piesting - Viena
Phone: +43 2633 404 0
**watt@wattdrive.com**
**www.wattdrive.com**

**BELGIUM**
WEG BENELUX
Nivelles - Belgium
Phone: +32 67 88 84 20
**info-be@weg.net**
**www.weg.net/be**

**BRAZIL**
WEG EQUIPAMENTOS ELÉTRICOS
Jaraguá do Sul - Santa Catarina
Phone: +55 47 3276-4002
**info-br@weg.net**
**www.weg.net/br**

**CHILE**
WEG CHILE
Santiago
Phone: +56 2 784 8900
**info-cl@weg.net**
**www.weg.net/cl**

**CHINA**
WEG NANTONG
Nantong - Jiangsu
Phone: +86 0513 8598 9333
**info-cn@weg.net**
**www.weg.net/cn**

**COLOMBIA**
WEG COLOMBIA
Bogotá
Phone: +57 1 416 0166
**info-co@weg.net**
**www.weg.net/co**

**FRANCE**
WEG FRANCE
Saint Quentin Fallavier - Lyon
Phone: +33 4 74 99 11 35
**info-fr@weg.net**
**www.weg.net/fr**

**GERMANY**
WEG GERMANY
Kerpen - North Rhine Westphalia
Phone: +49 2237 9291 0
**info-de@weg.net**
**www.weg.net/de**

**GHANA**
ZEST ELECTRIC GHANA
WEG Group
Accra
Phone: +233 30 27 664 90
**info@zestghana.com.gh**
**www.zestghana.com.gh**

**INDIA**
WEG ELECTRIC INDIA
Bangalore - Karnataka
Phone: +91 80 4128 2007
**info-in@weg.net**
**www.weg.net/in**

WEG INDUSTRIES INDIA
Hosur - Tamil Nadu
Phone: +91 4344 301 501
**info-in@weg.net**
**www.weg.net/in**

**ITALY**
WEG ITALIA
Cinisello Balsamo - Milano
Phone: +39 02 6129 3535
**info-it@weg.net**
**www.weg.net/it**

**JAPAN**
WEG ELECTRIC MOTORS JAPAN
Yokohama City - Kanagawa
Phone: +81 45 550 3030
**info-jp@weg.net**
**www.weg.net/jp**

**MEXICO**
WEG MEXICO
Huehuetoca
Phone: +52 55 5321 4231
**info-mx@weg.net**
**www.weg.net/mx**

VOLTRAN - WEG Group
Tizayuca - Hidalgo
Phone: +52 77 5350 9354
**www.voltran.com.mx**

**NETHERLANDS**
WEG NETHERLANDS
Oldenzaal - Overijssel
Phone: +31 541 571 080
**info-nl@weg.net**
**www.weg.net/nl**

**PERU**
WEG PERU
Lima
Phone: +51 1 472 3204
**info-pe@weg.net**
**www.weg.net/pe**

**PORTUGAL**
WEG EURO
Maia - Porto
Phone: +351 22 9477705
**info-pt@weg.net**
**www.weg.net/pt**

**RUSSIA and CIS**
WEG ELECTRIC CIS
Saint Petersburg
Phone: +7 812 363 2172
**info-ru@weg.net**
**www.weg.net/ru**

**SOUTH AFRICA**
ZEST ELECTRIC MOTORS
WEG Group
Johannesburg
Phone: +27 11 723 6000
**info@zest.co.za**
**www.zest.co.za**

**SPAIN**
WEG IBERIA
Madrid
Phone: +34 91 655 30 08
**info-es@weg.net**
**www.weg.net/es**

**SINGAPORE**
WEG SINGAPORE
Singapore
Phone: +65 68589081
**info-sg@weg.net**
**www.weg.net/sg**

**SCANDINAVIA**
WEG SCANDINAVIA
Kungsbacka - Sweden
Phone: +46 300 73 400
**info-se@weg.net**
**www.weg.net/se**

**UK**
WEG ELECTRIC MOTORS U.K.
Redditch - Worcestershire
Phone: +44 1527 513 800
**info-uk@weg.net**
**www.weg.net/uk**

**UNITED ARAB EMIRATES**
WEG MIDDLE EAST
Dubai
Phone: +971 4 813 0800
**info-ae@weg.net**
**www.weg.net/ae**

**USA**
WEG ELECTRIC
Duluth - Georgia
Phone: +1 678 249 2000
**info-us@weg.net**
**www.weg.net/us**

ELECTRIC MACHINERY
WEG Group
Minneapolis - Minnesota
Phone: +1 612 378 8000
**www.electricmachinery.com**

**VENEZUELA**
WEG INDUSTRIAS VENEZUELA
Valencia - Carabobo
Phone: +58 241 821 0582
**info-ve@weg.net**
**www.weg.net/ve**

*For those countries where there is not a WEG own operation, find our local distributor at www.weg.net.*

Grupo WEG - Motors Business Unit
Jaraguá do Sul - SC - Brazil
Phone: +55 47 3276 4000
**motores@weg.net**
**www.weg.net**

Cod: 50033244 | Rev: 06 | Date (m/y): 05/2013
The values shown are subject to change without prior notice.

# DATA SHEET

## Three Phase Induction Motor - Squirrel Cage

| | |
|---|---|
| Customer | : |

| | | | |
|---|---|---|---|
| Product line | : W22 IEEE 841 NEMA Premium Efficiency Three-Phase | Product code : | 14130524 |
| | | Catalog # : | IE200504BBW22447TIS |

| | | | |
|---|---|---|---|
| Frame | : 445/7T | Locked rotor time | : 28s (cold) 16s (hot) |
| Output | : 200 HP (150 kW) | Temperature rise | : 80 K |
| Poles | : 4 | Duty cycle | : Cont.(S1) |
| Frequency | : 60 Hz | Ambient temperature | : -20°C to +40°C |
| Rated voltage | : 575 V | Altitude | : 1000 m.a.s.l. |
| Rated current | : 184 A | Protection degree | : IP55 |
| L. R. Amperes | : 1251 A | Cooling method | : IC411 - TEFC |
| LRC | : 6.8x(Code G) | Mounting | : F-1 |
| No load current | : 56.0 A | Rotation¹ | : Both (CW and CCW) |
| Rated speed | : 1785 rpm | Noise level² | : 73.0 dB(A) |
| Slip | : 0.83 % | Starting method | : Direct On Line |
| Rated torque | : 81.3 kgfm | Approx. weight³ | : 1041 kg |
| Locked rotor torque | : 229 % | | |
| Breakdown torque | : 250 % | | |
| Insulation class | : F | | |
| Service factor | : 1.15 | | |
| Moment of inertia (J) | : 3.21 kgm² | | |
| Design | : B | | |

| Output | 50% | 75% | 100% |
|---|---|---|---|
| Efficiency (%) | 95.8 | 96.2 | 96.2 |
| Power Factor | 0.73 | 0.82 | 0.85 |

Foundation loads

| | |
|---|---|
| Max. traction | : 1258 kgf |
| Max. compression | : 2298 kgf |

| | | Drive end | Non drive end |
|---|---|---|---|
| Bearing type | : | 6319 C3 | 6316 C3 |
| Sealing | : | Inpro/Seal | Inpro/Seal |
| Lubrication interval | : | 8000 h | 10000 h |
| Lubricant amount | : | 45 g | 34 g |
| Lubricant type | : | Mobil Polyrex EM | |

Notes

AGNICO EAGLE

**Vendor Document Status**

1 ☐ Proceed to next submission and status.

2 ☐ Proceed with exceptions as noted to next submission and status.

3 ☐ Do not proceed.
Revise as noted and resubmit next submission and status.

☐ Complete, no further submission required.

By: Date:

Review and authorization to fabricate are only for general conformance with the design concept of the Project as expressed in the Contract Documents. Sole responsibility for the accuracy and completeness of this document, including but not limited to dimensions and quantities, remains with the Supplier/Contractor. Agnico Eagle does not warrant the accuracy or completeness of any of the information contained herein, nor does Agnico Eagle authorize or approve any construction means, methods, techniques, sequences or any safety precautions or procedures.

Agnico Eagle No. VDL 4.01 Mtr Data sheets IE200504BBW22447TIS R:

**DOCUMENT FOR INFORMATION**

This revision replaces and cancel the previous one, which must be eliminated.
(1) Looking the motor from the shaft end.
(2) Measured at 1m and with tolerance of +3dB(A).
(3) Approximate weight subject to changes after manufacturing process.
(4) At 100% of full load.

These are average values based on tests with sinusoidal power supply, subject to the tolerances stipulated in NEMA MG-1.

| Rev. | Changes Summary | Performed | Checked | Date |
|---|---|---|---|---|
| | | | | |

| | | | | |
|---|---|---|---|---|
| Performed by | | | | |
| Checked by | | | Page | Revision |
| Date | 14/04/2021 | | 1 / 6 | |

This document is exclusive property of WEG S/A. Reprinting is not allowed without written authorization of WEG S/A.
Subject to change without notice

# TORQUE AND CURRENT VS SPEED CURVE

## Three Phase Induction Motor - Squirrel Cage

| | |
|---|---|
| Customer | : |

| | | | |
|---|---|---|---|
| Product line | : W22 IEEE 841 NEMA Premium Efficiency Three-Phase | Product code : | 14130524 |
| | | Catalog # : | IE200504BBW22447TIS |

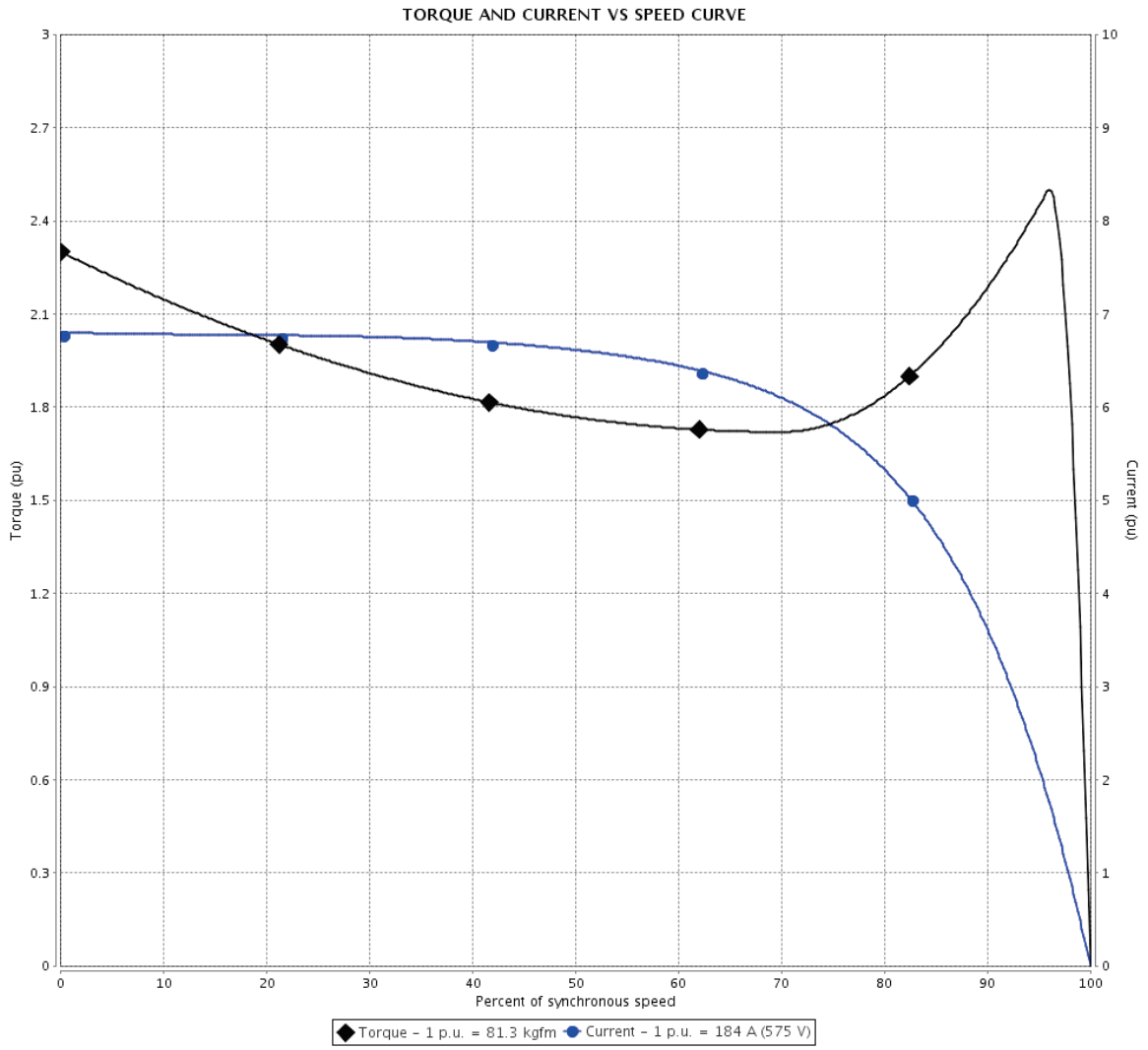


| | |
|---|---|
| Performance | : 575 V 60 Hz 4P |

| | | | |
|---|---|---|---|
| Rated current | : 184 A | Moment of inertia (J) | : 3.21 kgm² |
| LRC | : 6.8 | Duty cycle | : Cont.(S1) |
| Rated torque | : 81.3 kgfm | Insulation class | : F |
| Locked rotor torque | : 229 % | Service factor | : 1.15 |
| Breakdown torque | : 250 % | Temperature rise | : 80 K |
| Rated speed | : 1785 rpm | Design | : B |

| | |
|---|---|
| Locked rotor time | : 28s (cold) 16s (hot) |

| Rev. | Changes Summary | Performed | Checked | Date |
|---|---|---|---|---|
| | | | | |

| | | | | |
|---|---|---|---|---|
| Performed by | | | | |
| Checked by | | | Page | Revision |
| Date | 14/04/2021 | | 2 / 6 | |

This document is exclusive property of WEG S/A. Reprinting is not allowed without written authorization of WEG S/A.
Subject to change without notice

# LOAD PERFORMANCE CURVE

## Three Phase Induction Motor - Squirrel Cage

| | |
|---|---|
| Customer | : |

| | | | |
|---|---|---|---|
| Product line | : W22 IEEE 841 NEMA Premium Efficiency Three-Phase | Product code : | 14130524 |
| | | Catalog # : | IE200504BBW22447TIS |

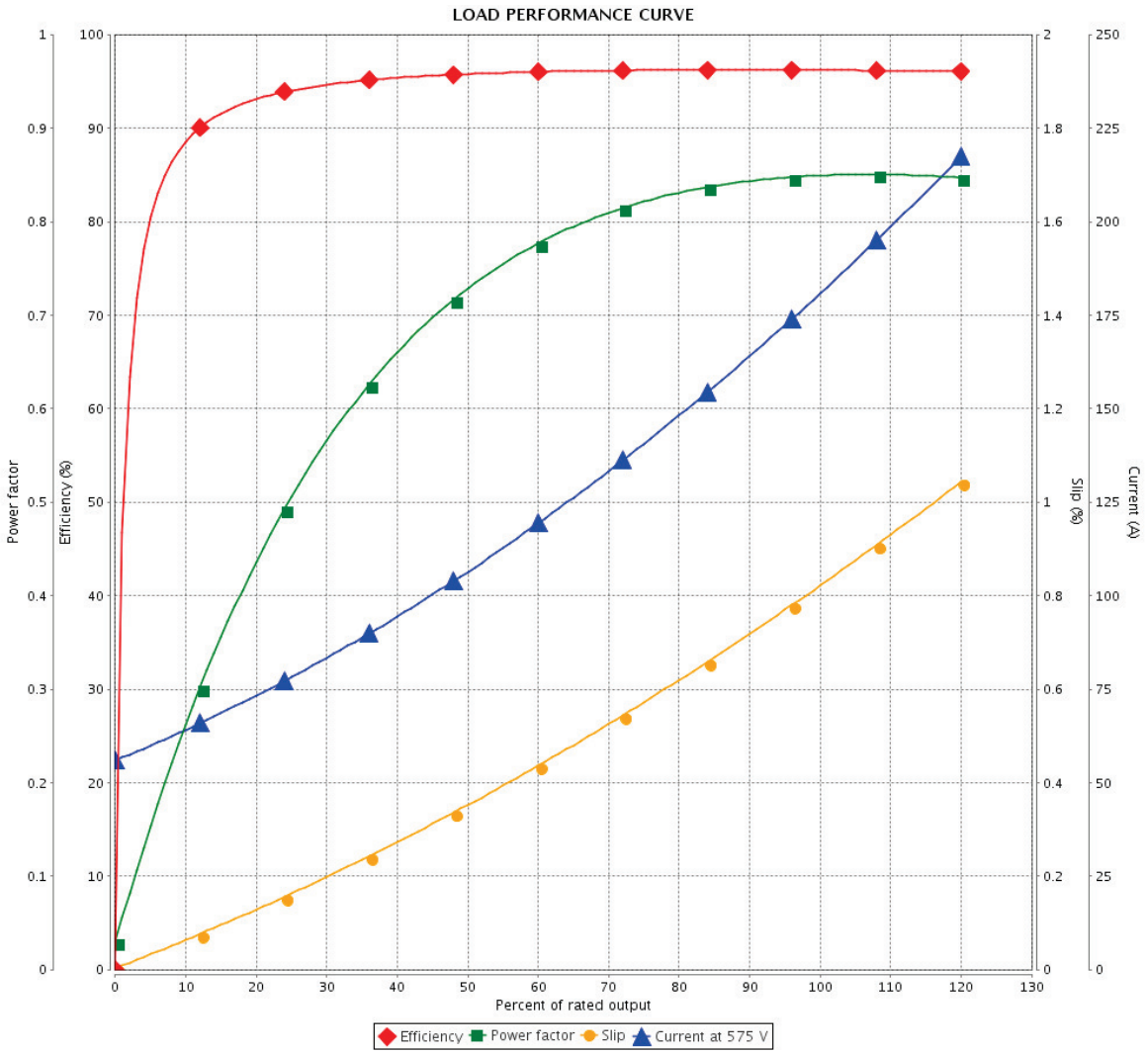


| | |
|---|---|
| Performance | : 575 V 60 Hz 4P |

| | | | |
|---|---|---|---|
| Rated current | : 184 A | Moment of inertia (J) | : 3.21 kgm² |
| LRC | : 6.8 | Duty cycle | : Cont.(S1) |
| Rated torque | : 81.3 kgfm | Insulation class | : F |
| Locked rotor torque | : 229 % | Service factor | : 1.15 |
| Breakdown torque | : 250 % | Temperature rise | : 80 K |
| Rated speed | : 1785 rpm | Design | : B |

| Rev. | Changes Summary | Performed | Checked | Date |
|---|---|---|---|---|
| | | | | |

| | | | | |
|---|---|---|---|---|
| Performed by | | | | |
| Checked by | | | Page | Revision |
| Date | 14/04/2021 | | 3 / 6 | |

This document is exclusive property of WEG S/A. Reprinting is not allowed without written authorization of WEG S/A.
Subject to change without notice

# THERMAL LIMIT CURVE

## Three Phase Induction Motor - Squirrel Cage

| | | | |
|---|---|---|---|
| Customer | : | | |
| Product line | : W22 IEEE 841 NEMA Premium Efficiency Three-Phase | Product code : | 14130524 |
| | | Catalog # : | IE200504BBW22447TIS |

| | | | |
|---|---|---|---|
| Performance | : 575 V 60 Hz 4P | | |
| Rated current | : 184 A | Moment of inertia (J) | : 3.21 kgm² |
| LRC | : 6.8 | Duty cycle | : Cont.(S1) |
| Rated torque | : 81.3 kgfm | Insulation class | : F |
| Locked rotor torque | : 229 % | Service factor | : 1.15 |
| Breakdown torque | : 250 % | Temperature rise | : 80 K |
| Rated speed | : 1785 rpm | Design | : B |
| Heating constant | | | |
| Cooling constant | | | |

| Rev. | Changes Summary | Performed | Checked | Date |
|---|---|---|---|---|
| | | | | |

| | | | | |
|---|---|---|---|---|
| Performed by | | | | |
| Checked by | | | Page | Revision |
| Date | 14/04/2021 | | 4 / 6 | |

This document is exclusive property of WEG S/A. Reprinting is not allowed without written authorization of WEG S/A.
Subject to change without notice

# THERMAL LIMIT CURVE

## Three Phase Induction Motor - Squirrel Cage

Customer :

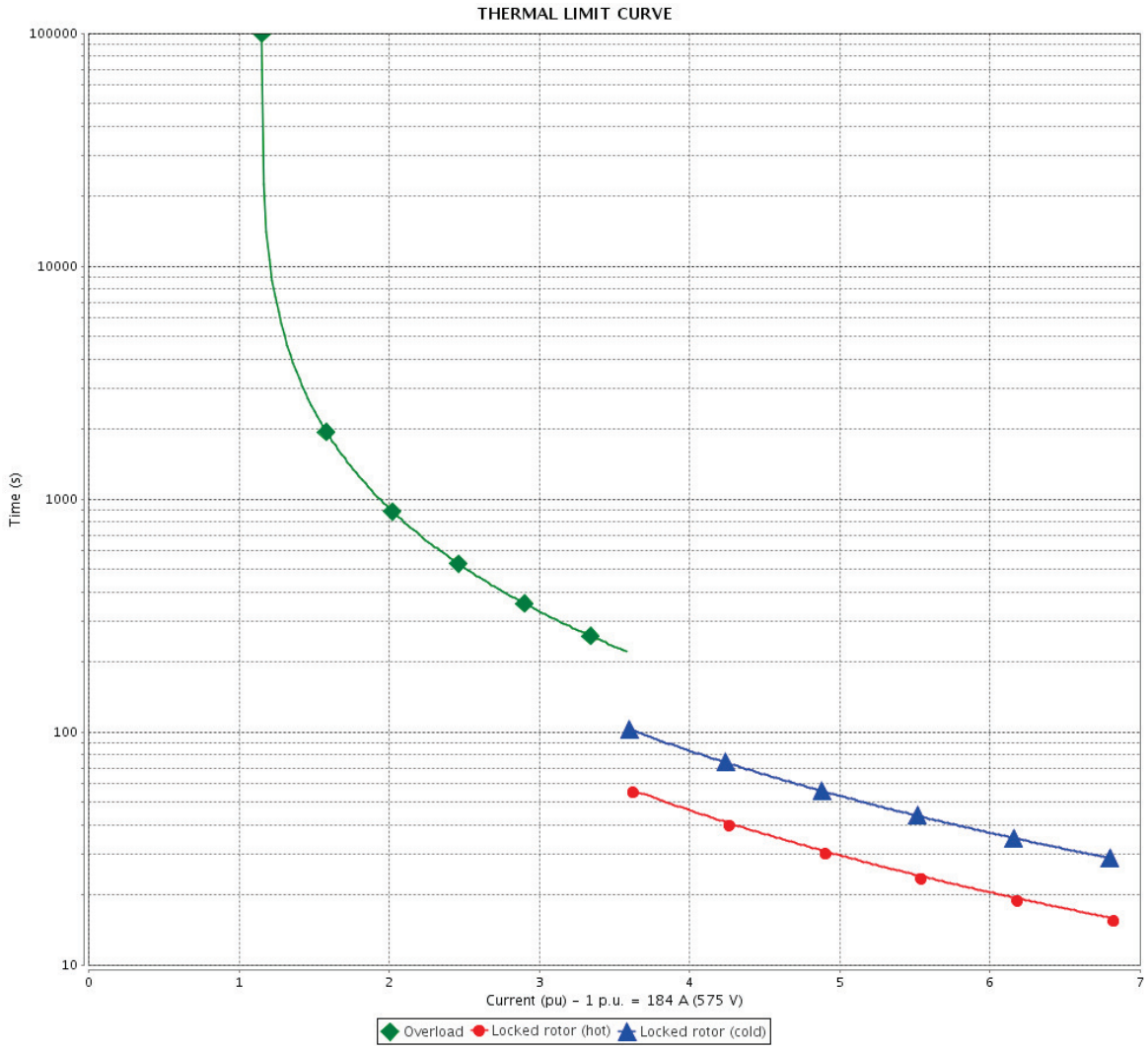


| Rev. | Changes Summary | Performed | Checked | Date |
|---|---|---|---|---|
| | | | | |

| | | | | |
|---|---|---|---|---|
| Performed by | | | | |
| Checked by | | | Page | Revision |
| Date | 14/04/2021 | | 5 / 6 | |

This document is exclusive property of WEG S/A. Reprinting is not allowed without written authorization of WEG S/A.
Subject to change without notice

# VFD OPERATION CURVE

## Three Phase Induction Motor - Squirrel Cage

| | |
|---|---|
| Customer | : |

| | | | |
|---|---|---|---|
| Product line | : W22 IEEE 841 NEMA Premium Efficiency Three-Phase | Product code : | 14130524 |
| | | Catalog # : | IE200504BBW22447TIS |

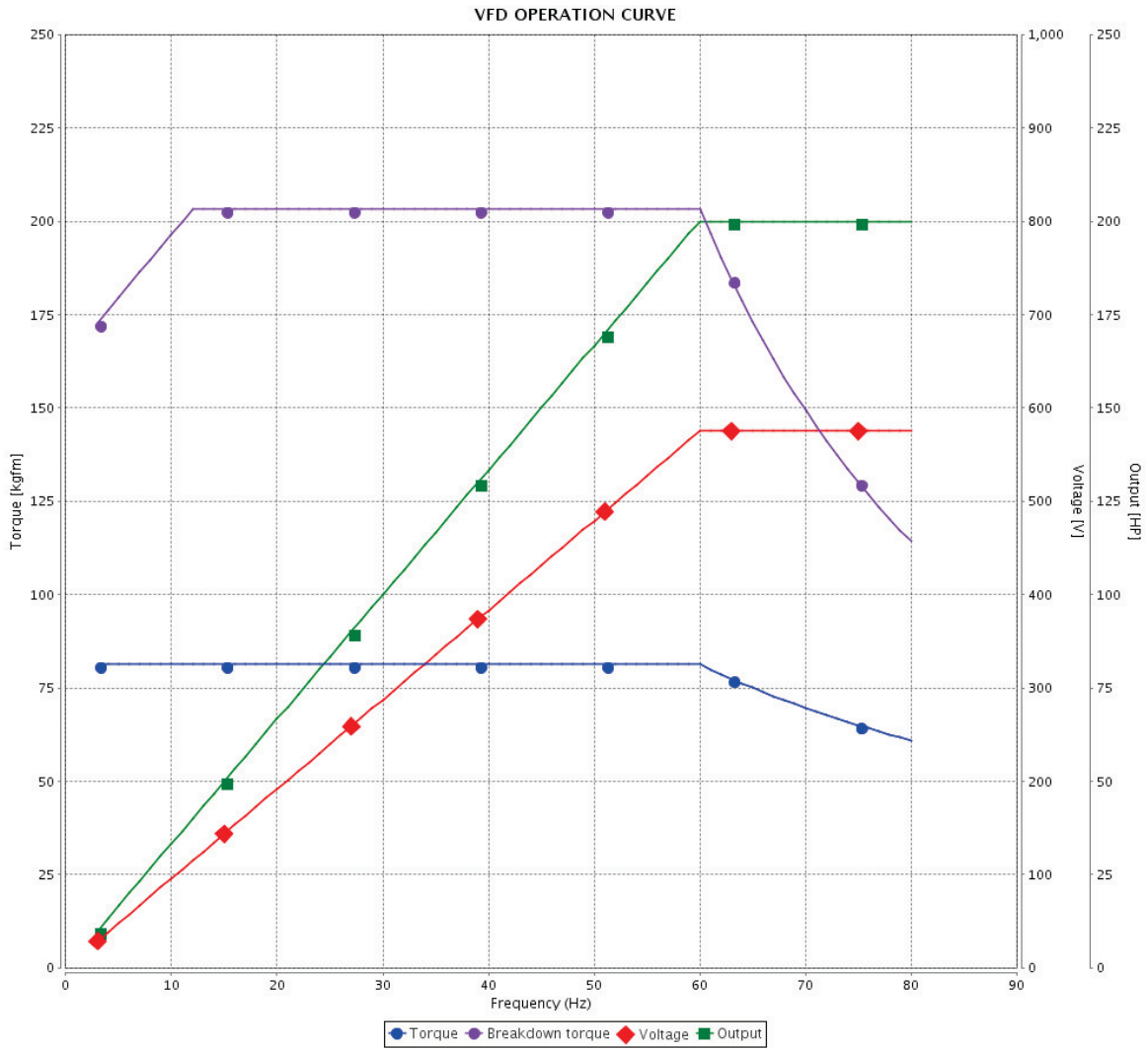


| | |
|---|---|
| Performance | : 575 V 60 Hz 4P |

| | | | |
|---|---|---|---|
| Rated current | : 184 A | Moment of inertia (J) | : 3.21 kgm² |
| LRC | : 6.8 | Duty cycle | : Cont.(S1) |
| Rated torque | : 81.3 kgfm | Insulation class | : F |
| Locked rotor torque | : 229 % | Service factor | : 1.15 |
| Breakdown torque | : 250 % | Temperature rise | : 80 K |
| Rated speed | : 1785 rpm | Design | : B |

| Rev. | Changes Summary | Performed | Checked | Date |
|---|---|---|---|---|
| | | | | |

| | | | | |
|---|---|---|---|---|
| Performed by | | | | |
| Checked by | | | Page | Revision |
| Date | 14/04/2021 | | 6 / 6 | |

This document is exclusive property of WEG S/A. Reprinting is not allowed without written authorization of WEG S/A.
Subject to change without notice

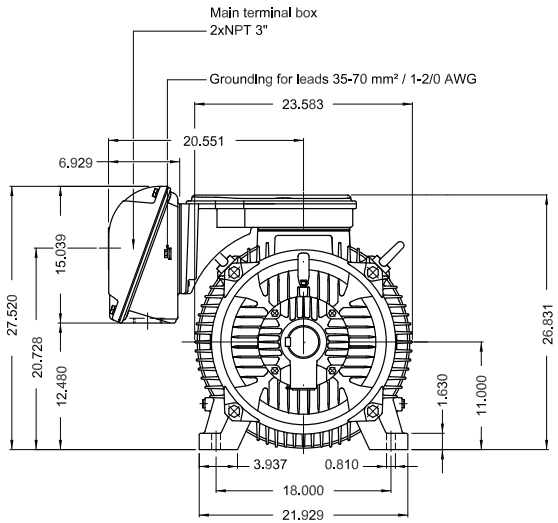


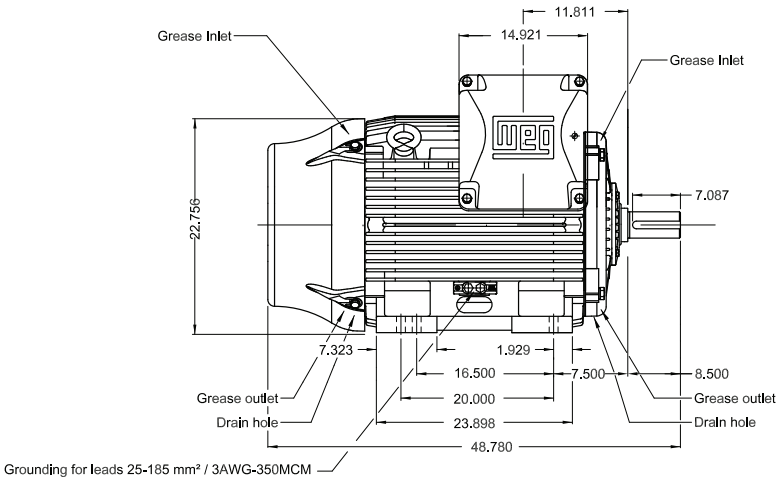


| |
|---|
| Without vertical jackscrews |
| Color RAL 5009 |
| Painting plan 202E |
| Mounting NEMA F-1 |
| Mounting B3R(D) |

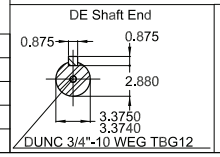


200 HP 04 Poles 60Hz | A

| ECM | LOC | SUMMARY OF MODIFICATIONS | EXECUTED | CHECKED | RELEASED | DATE | VER |
|---|---|---|---|---|---|---|---|
| | | | | | | | |

| | | | |
|---|---|---|---|
| EXECUTED | PIRWBUSER | THREE PH. W22 NEMA P.EFF MOTOR IEEE841 | PREVIEW |
| CHECKED | | FRAME 445/7T IP55 TEFC | WDD |
| RELEASED | | | |
| REL DT. | | WMO Jaragua do Sul Product Engineering | SHEET 1 / 1 |

Dimensions in inches

XME A3

WEG's property. Forbidden reproduction without previous authorization.

# Appendix F

**Main Process**

**PACKAGE NUMBER: 6526-S-265-605**
**PURCHASE ORDER NUMBER: OC-989680**

# AGNICO EAGLE MINES
# MELIADINE WTP, NUNAVUT
# BREAK POINT CHLORINATION SYSTEM

*VEOLIA Project 5000 220 043*

Operation and Maintenance Manual
Volume 1

**Prepared by:**
Veolia Water Technologies Canada Inc.
4105, Sartelon
Montreal, Quebec, Canada
H4S 2B3
Tel.: 514-334-7230

**Revision: 2**
**Date: January 2022**

**VEOLIA DOCUMENT NO: 5000220043_OMM_0001_GEN_VWT**

LEFT BLANK

The system was manufactured in Canada by:

**Veolia Water Technologies Canada**
4105, Sartelon
Saint-Laurent, Qc.
Canada H4S 2B3
Phone: 514-334-7230
Fax: 514-334-5070

For technical support or service needs, for spare parts or to get assistance during your warranty period, you may contact us at the following number during regular business hours or write us at:

**Veolia Water Technologies Canada – After Sales Support**
1-844-SER-VWT9 | 1-844-737-8989 | vwtservicecanada@veolia.com

Our business hours are from:
Monday to Friday
8:30am to 5pm (EST)

Have the following information on hand for each request or call:

Project Name: **Meliadine WTP - Break Point Chlorination System**
VWTC Reference Number: **5000 220 043**

LEFT BLANK

# TABLE OF CONTENTS
# Operation & Maintenance Manual
# Meliadine WTP – Break Point Chlorination System


**1 INTRODUCTION ..... VOLUME 1**

1.1 GENERAL DESCRIPTION

**2 SAFETY ..... VOLUME 1**

2.1 GENERAL RECOMMENDATIONS

**3 DRAWINGS ..... VOLUME 1**

3.1 PROCESS FLOW DIAGRAM
3.2 PROCESS AND INSTRUMENTATION DIAGRAM
3.3 HYDRAULIC PROFILE
3.4 GENERAL ARRANGEMENT DRAWINGS
3.5 FIELD INSTALLATION DRAWINGS

**4 DETAILED TECHNICAL DOCUMENTATION ..... VOLUME 1**

4.1 EQUIPMENT LIST
4.2 SHOP DRAWINGS
- 4.2.1 Chlorination Reactor RX75-3 #1
- 4.2.2 Dechlorination Reactor RX75-3 #2
- 4.2.3 Clarifier #1 ACP-700R
- 4.2.4 Clarifier #2 ACP2-60
- 4.2.5 Hydra-Carb Activated Carbon Preparation System
- 4.2.6 Sludge Tank
- 4.2.7 Backwash Tank
- 4.2.8 Splitter Box Clarifier #1
- 4.2.9 Splitter Box Clarifier #2
- 4.2.10 Discfilter
- 4.2.11 Instrumentation
- 4.2.12 Cathodic Protection System

# TABLE OF CONTENTS
# Operation & Maintenance Manual
# Meliadine WTP – Break Point Chlorination System


4.3 LIST OF SUPPLIERS
4.4 CONTROL NARRATIVE
4.5 COMMISSIONING AND PERFORMANCE TEST PROTOCOLS
4.6 COMMISSIONING AND PERFORMANCE TEST REPORTS

**5 ELECTRICITY AND CONTROL ..... VOLUME 1**

5.1 ELECTRICAL DRAWINGS
5.2 ELECTRICAL DATA SHEETS

**6 OPERATION AND MAINTENANCE ..... VOLUME 1**

6.1 ACTIFLO® CLARIFIER & REACTOR (ACP2-60, ACP700R, RX75-3)
6.1.1 Installation, Operation and Maintenance Manual
6.2 DISCFILTER
6.2.1 Installation, Operation and Maintenance Manual
6.3 HYDRA-CARB
6.3.1 Installation, Operation and Maintenance Manual
6.4 SPECIAL OPERATION PROCEDURES
6.4.1 Routine Operation Check List
6.4.2 Break Point Chlorination
6.4.3 Acti-Carb
6.4.4 Corrosion Protection Maintenance
6.5 TRAINING DOCUMENTS

**7 SPARE PARTS ..... VOLUME 1**

**8 MANUFACTURER MAINTENANCE MANUALS ..... VOLUME 2**

8.1 MANUFACTURER LIST
8.2 MANUFACTURER INSTALLATION, OPERATION AND MAINTENANCE MANUALS

# *OPERATION AND MAINTENANCE MANUAL*

## *VOLUME 1*

LEFT BLANK

# *1 – INTRODUCTION*

## *1.1 – GENERAL DESCRIPTION*

LEFT BLANK

# GENERAL DESCRIPTION

Veolia Water Technologies Canada Inc. (VEOLIA) has been contracted by Agnico Eagle Mines Ltd (AEM) for the supply of a new effluent treatment plant. The water to be treated is a mixture of surface water and underground water which is highly saline and contains high levels of ammonia originating from the mining activity.

This project is an expansion to the current Breakpoint Chlorination Process plant that was executed also by VEOLIA in 2019. This allows the enlargement of the treatment flow to 6000 m³/d of underground water and from 6000 m³/d to 12000 m³/d of surface water.

The treatment consists of a newly developed chain of Actiflo and reactors with powder activated carbon. The treatment will be composed of these following major equipments:

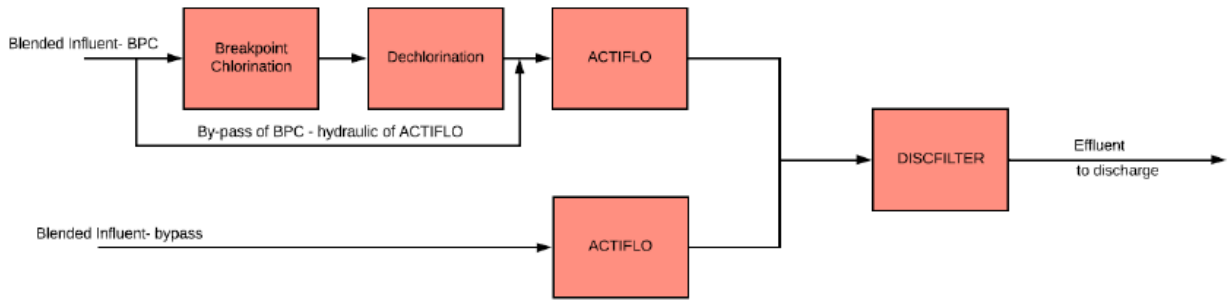


The mixed raw water, underground water and surface water, goes through the first reactor tank RX75-3, the Chlorination Reactor for the breakpoint chlorination for ammonia removal, which is a closed-top tank where an hypochlorite source which VEOLIA considered to be Calcium Hypochlorite and an alkali, Sodium hydroxide (NaOH) are added. The injected hypochlorite will produce hypochlorous acid (HOCl) which is a weak acid, and depending on the pH, part of it will decompose into hypochlorite ions (OCl-). The control of the pH is done by the injection of sulfuric acid in order to optimize the hypochlorite ion concentration thus the chlorine dosage. The control of the pH avoids generation of chlorine gases which are observed in acid pH resulting in safety and corrosion issues. The hypochlorous acid and hypochlorite ions are consumed first by the reducing agents and organic matter in the water, adding more chlorine and with the presence of ammonia, the ammonia reaction will result in forming chloramines, specifically monochloramines (NH2Cl). The adequate addition of chlorine and depending on its concentration, will lead to the destruction of the monochloramine which will be transformed to dichloramines (NHCl2) or trichloramines (NCl3) and then finally into nitrogen (N2). The breaking point will be reached if the sufficient quantity of chlorine is injected and will result in having all the chloramines and ammonia converted to nitrogen.

The effluent of the Chlorination Reactor rich in chlorine residual will go through the second reactor tank RX75-3, the Dechlorination Reactor for chlorine destruction. The dechlorination process consists of eliminating the chlorine residual which is dangerous for aquatic life. With the two steps injection of Powdered Activated Carbon (PAC) in the first two compartments of the open-top tank a sufficient contact time is allowed for complete chlorine destruction with the presence of fresh activated carbon along the process. The PAC is dosed into the process using the HydraCarb system which consists of gravimetric feeder, a wetting cone and an eductor to transport the PAC slurry to the dosing points, in addition to the superbags support system. Manual injection valve will allow the proper split of the PAC in each of the Dechlorination Reactor compartments. Some the PAC will be recirculated from the Actiflo unit ACP-700R, Clarifier #1 which will slightly reduce the PAC requirement and elevate the efficiency of chlorine destruction. Finally, due to the low water temperature, coagulant will also be injected into the Dechlorination Reactor for a higher contact time for the activation of the coagulant which is a destabilization agent in order to agglomerate TSS particles contained in the raw water for further removal.

Two Actiflo ballasted flocculation systems are placed in this process chain. The first is of the model ACP-700R, Clarifier #1, functioning as an ActiCarb for the TSS removal and the dosed PAC following the breakpoint chlorination and dechlorination process. The second is of the model ACP2-60, Clarifier #2, functioning as a by-pass to the whole breakpoint chlorination process for TSS removal only. In the proposed chain, there are three different sources of feed to the Actiflo units. The Clarifier #1 can have a first source from the breakpoint and dechlorination process coming for the upstream installed reactor tanks or from the by-pass of these tanks for which coagulant injection is added in the first compartment of the Clarifier #1 to increase coagulant efficiency. As for the Clarifier #2, the raw water composed of underground water and surface water is directly sent to it. The sand-ballasted settling is a high-rate coagulation / flocculation / sedimentation process that utilizes microsand as a seed for floc formation. The microsand will act as an additional weight on the formed flocs from the injection of polymer leading to an increase in sedimentation efficiency. The Actiflo units consist of three active chambers, the slurry flows the first chamber for bubbles bursting generated from the chlorine destruction (if applicable) to avoid having an impact of the settling process. In this compartment coagulant is injected for both clarifiers for TSS particles agglomeration, exceptionally in the Clarifier #1, sodium thiosulfate is dosed in order to destroy any residual chlorine from the Dechlorination Reactor. The chlorine and bubble free slurry flows through the second chamber, the injection compartment in which anionic polymeric flocculant and microsand are added for floc formation, then goes through the maturation compartment in order to create the ideal bridging between the microsand and the destabilized suspended solids. The fully formed ballasted flocs will enter the third and final tank, the settling tank, equipped with lamella which provide the rapid and effective removal of the microsand / sludge floc. Clarified water exits the system via a weir and flows to a clarified water holding tank. The settled sand-sludge-PAC will be forced to the center cone of the clarifier by a scraper, which will be continuously withdrawn by the recirculation pumps in the hydrocyclones in order to separate the sludge and microsand by centrifugal force.

After separation, the high density microsand will be reinjected in the clarifier, as for the sludge will be directed gravitairly to dedicated Splitter Box per Actiflo unit where part of this sludge coming from the Clarifier #1 flows back to the dechlorination reactor due to the presence of PAC in it and the one coming from the Clarifier #2 will be recirculated in its first compartment. These Sludge Splitter Boxes will allow the homogenization of the sludge quality and provide some thickening of it for later disposal by pumping it in a separate sludge holding tank which will be mixed to prevent any settling or accumulation of the sludge in it.

The clarified water of both Clarifiers #1 and #2 will then flow gravitairly to the Discfilter filtration process. This step is used as an additional suspended solids removal step aiming for supplemental metal reduction at the final effluent. The discfilter consists of a filter cloth mounted on filter panels. These panels stem from a central drum where inlet water is admitted into the unit. Water will be filtered in inside-out mode from the central tube to the open base of the filter discs though the polyester cloth before reaching its water collection tank. Solids will create build-ups on the filter media which will result in head loss generation resulting in increase of the water level at the inlet which will be detected by high level switches that initiate the backwash cycle. Part of the filtered water will be used for the backwash of the filter cloths, the collected dirty backwash water is then stored in a separate holding tank then pumped back in the Clarifier #2 for recirculation. A chemical trolley is supplied in the case of chemical scaling due to calcium concentration in the water and more aggressive backwashing of the filters is required.

Finally, in addition to the listed technologies above, to assure adequate control and analysis of this process a variation of instrumentation have been provided, the likes of the Tethys as an ammonia analyser at the inlet of the treatment along with various stand-alone instrumentation skids for the TSS and pH measurements and a dilution and analysing skid for the free and total chlorine measurements for each of the Chlorination Reactor and Dechlorination Reactor.

LEFT BLANK

# *2 – SAFETY*

## *2.1 – GENERAL RECOMMENDATIONS*

LEFT BLANK

# SAFETY

VEOLIA WATER TECHNOLOGIES CANADA INC.

# INDEX


| | | |
|---|---|---|
| 1.0 | GENERAL | **3** |
| 2.0 | OPERATION AND MAINTENANCE MANUAL | **3** |
| 3.0 | PLANT SAFETY PROCEDURES | **3** |
| 4.0 | UTILITY HAZARDS | **4** |
| | 4.1. STEAM | 4 |
| | 4.2. ELECTRICAL | 5 |
| | 4.3. HIGH PRESSURE WATER | 5 |
| | 4.4. PLANT AIR | 6 |
| 5.0 | EQUIPMENT HAZARDS | **6** |
| | 5.1. ROTATING PARTS, HAZARDOUS AREAS AND CONFINED SPACES | 6 |
| | 5.2. OPERATION AND MAINTENANCE | 6 |
| 6.0 | CHEMICAL HAZARDS | **7** |
| | 6.1. CHEMICAL BURNS | 7 |
| | 6.2. FIRE AND EXPLOSION | 8 |
| | 6.3. TOXIC EXPOSURE | 8 |
| 7.0 | SAMPLING AND LINE UNBLOCKING PROCEDURES | **9** |
| | 7.1. SAMPLING PROCEDURES | 9 |
| | 7.2. UNBLOCKING PROCEDURES | 10 |
| APPENDIX | | **11** |

## 1.0 GENERAL

It should be recognized that potential hazards exist in any processing system. By including this section in the operating manual, Veolia Water Technologies Canada Inc. is in no way attempting to override the plant safety rules laid out to the employees by their employer. However, because of our concern for good, efficient operation of the equipment furnished, we recognize our obligation to point out certain hazards. We also recognize that this section cannot cover every possible hazard; rather, it merely points out some of the most common and important ones.

In each plant, the hazards vary slightly because of the particular chemical or material that is being processed. However, there are some safety recommendations that apply to all operations. These hazards can be broken down into three general areas, namely utility hazards (compressed air, electrical, etc.), equipment hazards, and chemical hazards. These three areas will be covered separately in the following sections.

One of the most important ways to avoid hazards is to have a good understanding of the process. Familiarity with the system and good common sense will enable operators to run the system smoothly and safely.

WHMIS Safety Data Sheets (SDS) should be available for each chemical product used.

## 2.0 OPERATION AND MAINTENANCE MANUAL

It is important that the operator understand the use, security and maintenance instructions before using the Veolia Water Technologies Canada Inc. system. The manufacturer cannot be held responsible for improper use or maintenance resulting from a breach or non-compliance with instructions. The Operation and Maintenance Manual contents must be kept permanently close to Veolia Water Technologies Canada Inc. system in a safe place.

## 3.0 PLANT SAFETY PROCEDURES



As stated earlier, the safety rules and guidelines issued to the employees are the primary precautions that are necessary for the prevention of accidents. The employee should be very familiar with these rules. The safety pictograms used in the plant are to be respected at all times.

Operators should always wear the safety equipment that is provided or required by their management. Such items as hard hats, safety shoes, safety glasses, gloves, breathing protection, protective clothing, protection harness and hearing protection are very basic and go a long way in preventing accidents.



Operators should be aware of the location of fire extinguishers, eyewash stations, safety showers, self-contained breathing apparatus, first aid stations, and other safety equipment furnished for the plant.

Good housekeeping will also eliminate safety hazards such as tripping or slipping.

When spills happen, the floor should be washed as soon as possible. When construction or maintenance is finished, removing debris also eliminates a hazard. Proper housekeeping is a good indication of safety attitude in general.

Management provided training can always help in making employees more safety conscious. In these seminars, potential hazards can be pointed out. Veolia Water Technologies Canada Inc. will be glad to assist these efforts by furnishing details on its equipment relating to safety as well as on its operation.

Investigation of an accident to determine its cause will help to prevent the same accident from occurring again and will aid in finding a way of correcting or eliminating the hazard.

Remember, safety rules provided by your employer are designed to protect you and should be strictly adhered to. However, as an operator, safety is your responsibility and you should voice any concerns you have and follow through until corrective action is taken.

## 4.0 UTILITY HAZARDS

Utility hazards that may exist in the plant may include high-pressure/ high-temperature steam, high-voltage electricity, high-pressure water, and high pressure air. Care should be taken when utilizing any of the utilities.

### 4.1 STEAM



Whenever steam is used the potential for burns exist. The recommended first aid for burns is to first apply ice or cold water directly to the burn and then cover the area with cool, moist application gauze or bandage material to minimize blistering. If burns are critical (second and third degree), transport the injured person to a medical facility promptly.

Hot surfaces in areas frequented by personnel should be covered with insulation for protection. When hot surfaces must be left exposed, such as steam valves or sight glasses, operators should be warned of the potential hazard displaying pictograms, training, and supervision.

Steam valve packing, steam traps, and pipe fittings that are leaking should be brought to the attention of supervision and repaired as soon as possible. Instrumentation connections and pipeline for steam should be piped with good connections. Valves should be tagged and locked out on equipment that is being worked on where steam is used to prevent someone from opening the valve. At times, steam is used for cleaning lines. Operators should make sure that if hoses are used, they are designed for steam service. Make sure the connections are tight and do not leak.

Drain and sample connections should be suitably identified and piped with proper fittings. Rupture discs, pressure relief valves, and steam trap discharges should be suitably identified and piped in such a way that they do not release steam in an area of access. These must also be periodically checked to make sure that they are in good working order. Precautions should be taken to prevent accidental release of pressurization, which could injure personnel. Water or

steam hammering in steam lines should be investigated for the source and stopped as soon as possible to prevent rupture.

## 4.2 ELECTRICAL



As with steam, electrical equipment should never be worked on unless it is turned off and locked and tagged out. The lockout system key should belong to the person doing the repair or the on-site electrician. This will remove the potential danger for electrical shock or accidental start-up.

Electrical hazards fall into three categories: shock, burn, and fire. The severity of electrical shock depends on several items, such as the nature of the electrical impulse and the path that the shock takes through the body. Burns can be caused by contact with an electrical current. Fire can be caused by a chemical or gas burning or exploding when coming in contact with an electrical spark.

General first aid for electrical burns is as follows:

- Remove the victim from contact with the electrical current without coming into contact with the current yourself.
- Check for cardiac arrest or respiratory failure.
- Check for points of entry and exit of the current.
- Cover the burned surface with a clean dressing.
- Splint all fractures.
- Treat for physical shock.
- Transport to a medical facility promptly.

Except for very low voltage exposure (below 24 V) and very low body current (below 0.2 mA), it is difficult to state safe limits for electrical exposure. Even these low energy exposures can be traumatic for people with heart diseases.

Even though most electrical motors and switch boxes are designed to be watertight, it must be recognized that the presence of water around electrical equipment always presents a hazard and therefore should be used with care.

## 4.3 HIGH PRESSURE WATER



High pressure water is used in some pumps, cooling devices and heat exchangers. As with steam, high pressure water can be a hazard if a small leak is not repaired.

Only the proper pressure fittings should be used in the piping system. As stated earlier, leaks should be repaired as soon as possible. Isolation valves on piping that are being repaired should be shut tight and locked out. As with electrical repairs, the lockout system key should be in the possession of the individual working on the piping.

### 4.4 PLANT AIR



Care should be taken when using plant air to clean equipment, unblock lines, or blow dust off personnel. High pressure air can be very dangerous to personnel, especially in the area of the face. Pressure should be reduced before using the air to blow dust off clothing. Make sure all fittings have good connections and cannot be blown loose.

## 5.0 EQUIPMENT HAZARDS

### 5.1 ROTATING PARTS, HAZARDOUS AREAS AND CONFINED SPACES



Rotating parts

Since the system includes equipment with rotating parts (e.g. pumps, mixers, etc.). Operators should avoid wearing loose clothing and jewellery. Loose clothing can present one of the biggest safety hazards that exist when working near equipment in the process.

Dangerous Surfaces

Sharp or protruding surfaces are normally eliminated in areas frequented by personnel. When present in an operating area, the surface should be covered for protection and clearly marked to minimize the danger of contact.

High Noise

Equipment that is likely to generate high noise levels should be insulated and/or isolated for personal access. If personnel must enter a high noise area, they will wear hearing protection.

Confined Spaces

Before entering or breaking the plane of any vessel, be sure to check if it is a potential Confined Space and if a permit is required for entrance. Vessels that require a Confined Space Entry Permit may include but are not limited to flash tanks, heaters, condensers, and storage tanks.

### 5.2 OPERATION AND MAINTENANCE

The equipment in its normal use can present a hazard if not operated or repaired in a safe manner. Example of equipment: pumps, valves, instruments, hoses, etc.

All equipment should only be operated and repaired according to the recommended procedures of the manufacturer, and by qualified individuals.

Only recommended spare parts should be used. For instance, when replacing a gasket, verify the proper gasket is selected (pressure steam, corrosive, etc.).

In the repair or replacement of Veolia Water Technologies Canada Inc. furnished equipment, the Veolia Water Technologies Canada Inc. specifications should be consulted to ensure the correct

pressure rating is used.

Maintenance on pumps, piping, etc. should be performed only after valves are locked and tagged or slip blanks are installed to completely isolate the equipment being worked on. Instrumentation and controls should always be kept in good working order to help assure the safe operation of equipment. Never remove instruments or controls out of service until having communicated with the operator and have established a plan to define the operation maintenance steps. If air operated valves are used for isolation, the air line should be removed to prevent inadvertent operation of the valves. When possible the valve can also be locked in position.




When maintenance is finished on equipment, the protective caps provided must be reinstalled. If a protection must be left off, unwary personnel should be notified by using safety pictograms or installing temporary protection. Equipment should never be inspected or maintained while the equipment is operating. All pumps and various automatic valves may cause harm to an operator if care is not taken.

Before starting the equipment, the operator must verify if the maintenance staff has completed the work, if the pumps are not locked or frozen and whether bare electrical wires are present. He must also check the pipes to ensure there are no leaks, and all debris should be cleaned.

## 6.0 CHEMICAL HAZARDS

WHMIS Safety Data Sheets (SDS) should be available for each chemical product used.

Since chemicals or chemical dosage are used during normal operations of the treatment facility, the risks of fire, explosion and exposure to toxic chemicals or chemical burns are present. Chemicals that may be used regularly or, for instance, during cleaning include, without limitation, acids, caustics, polymers, ozone, coagulant and microsand. Operators should be made aware of the following:

- All chemicals which are used and any potentially dangerous reaction that could occur.
- Toxicity of all chemicals that are used or could be formed via reactions.
- Acidic or basic properties of all materials used.
- Potential fire or explosion hazards posed by the chemicals.
- Antidotes for exposure to toxic materials.
- Protective clothing that is recommended.
- Any other information that helps make the operators aware of a hazard.

### 6.1 CHEMICAL BURNS



Some treatment plant chemicals can be very acidic or basic and can cause serious burns if coming in contact with the skin or eyes. Operators should be careful when opening valves and working on lines and pumps. Safety glasses with side shields are always recommended when working around chemicals. Operators should familiarize themselves with the location and operation of safety showers and

eyewash stations. These stations should be inspected and tagged acceptably with a date and signature on a regular basis.

Whenever a leak or spill is sighted, corrective action should be taken immediately and the spill should be cleaned up. It should never be assumed that someone else is aware of the problem or will take care of the spill.

Accordingly, chemical lines should be clearly identified by colour coding or other suitable means. Routing of these lines should be in open areas and should avoid major work/ access areas wherever possible. This is critical if the vessels and piping are overhead.

Plant areas where these materials are handled should be restricted. A safety briefing for all visitors and/or new personnel is recommended before access is granted.

All plant personnel should be required to wear proper protective clothing when handling or working near these chemicals. A minimum wardrobe should include, but not be limited to, a plastic hard hat, coat, boots and gloves of a resistant material as well as a pair of safety glasses. Safety glasses, even with shields, are not adequate for use in areas where very acidic or basic materials are handled.

Accidental contact with these chemicals should be avoided. Remember, most liquid chemicals resemble water. Good housekeeping practices should be a requirement in areas where these materials are handled.

## 6.2 FIRE AND EXPLOSION



A combustible material will spontaneously start to burn when its temperature is raised to its ignition point in the presence of air. The ignition point of all chemicals used in the process should be known and posted for operators. In some cases, the mixture of vapour and air can burn violently in the form of an explosion.



Accordingly, chemicals should not be added to other materials if the effects of the addition are unknown. This includes disposal, which should only be into suitable containers. Sinks and/or sewers are not suitable for disposal.

| | |
|---|---|
| WARNING: | In systems with Actiflo® clarifier, the lamella pack is pre-installed in the settling tank section of the Actiflo®. It is made of a very flammable material. Do not expose it to open flames or sparks. Do not allow any welding works nearby unless special precautions have been taken. |

## 6.3 TOXIC EXPOSURE



Since we are dealing with the effects on individuals who may react to various toxic materials to different degrees, it is difficult to establish an absolute evaluation of toxicity.

However, most toxic materials do not have particularly adverse effects when present in small amounts. Consequently, the concept of the “threshold limit value” (TLV) has been developed and is defined as a concentration of toxic material below which it is believed nearly all individuals may be repeatedly exposed over a long duration without adverse effects. The TLV for all chemicals used should be on record and easily accessible.

## 7.0 SAMPLING AND LINE UNBLOCKING PROCEDURES

### 7.1 SAMPLING PROCEDURES

In the course of a start-up and operations of Veolia Water Technologies Canada Inc. supplied equipment, sampling of the process fluid is generally conducted in order to:



- Verify the system instrumentation.
- Adjust the system to maintain desired stability of operation.
- Troubleshoot upset conditions.
- Verify that the system performance meets contractual guarantees.



Regardless of the process fluid being sampled, care should always be taken to ensure samples are collected without placing personnel at risk of injury. Personnel who are collecting samples should always practice good safety habits in their collection routine. Personal protective equipment (PPE) should be selected and worn with respect to the type of sample being collected and its collection method.



PPE required for sampling is dependent on the material, the temperature and pressure, the sampling point, the surrounding conditions, etc. An example of the varying level of PPE required for each given sample is given below. However, the person responsible for sampling should determine for him or herself if his or her level of PPE is adequate for the task. **Remember, YOU are responsible for your safety.**



<u>PPE required for general field work</u>

- Steel-toed work boots, safety glasses, hard hat, leather gloves, hearing protection, respirator, long-sleeved shirt.

<u>Additional PPE required for handling hot, non-hazardous material</u>



- Insulated rubber gloves and face shield with goggles.

<u>Additional PPE required for handling hazardous material</u>

- Consult SDS
- Full-body suit, respirator, rubber gloves, face shield with goggles, protective sampling container.



The collector should study the pertinent sampling station specific to his/her process until comfortable he/she can collect a sample from the station in a safe manner that is also representative of the process conditions. The collector should then develop his/her own sampling procedure.

## 7.2 UNBLOCKING PROCEDURES

The systems processing highly viscous or sludgy solutions are prone to produce blocked drains, valves, and/or sampling stations. The operator should expect blocked connections in these systems. As such, the operator will eventually be required to unblock a connection to access a sample or drain a vessel or line. In doing so, the operator should:

- Review the need for proper personal protective equipment (PPE).
- Develop a plan for unblocking the connection
- Obtain the proper equipment to unblock the connection
- Safely implement the unblocking plan

Selecting the proper PPE for use in unblocking a connection is very similar to the PPE required for sampling noted in the previous section. However, unblocking a connection can result in an instantaneous release of fluid or material at velocities or forces much greater than seen during normal sampling methods. The operator should consider “what if” scenarios such as excessive splashing or large volume release after unblocking the connection and determine his/her PPE with these “worst case” conditions in mind.

Before attempting to unblock a connection, the operator should study the situation and develop a safe procedure to unblock the connection. He/she should observe the area around the connection problem in case a quick “get-a-way” should be required. He/she should inform any personnel in the area that may be affected by unblocking the connection. The operator should know the operating data of the material behind the plug, such as: its temperature, pH, pressure, etc. and modify his/her plan accordingly to develop the safest method of releasing the connection. It might be better for him/her to perform an exercise to test the method of unblocking to validate the proposed method.

Any equipment used in the unblocking process should be reviewed for adequacy of use. Is the hose rated for the material, temperature, and pressure expected in its use? Are the hose and fittings in good condition? If not, replace the unfit equipment with new or adequate equipment. Make sure all connections are tight and proper for the job. In addition, the hose assembly utilized in the unblocking process should be equipped with a bleed-off valve to depressurize the system prior to the dismantling of the connection. If a bleed-off valve does not exist, special care should be taken when dismantling a hose connection because it may still be subject to internal pressure after the release.

Once the plan and the equipment are in place, the operator must focus on the task to ensure the line is unblocked in the safest manner possible. He/she should especially be concerned not only with his/her own safety, but also of others in the area. Cordoning off the area surrounding the blocked connection is advisable. Remember, whatever means is used, with water, steam, or air, or mechanical means, BE READY FOR ANY CONSEQUENCES when unblocking the pipe.

Finally, when working with a partner, take special precautions to communicate your plan to avoid harming anyone due to miscommunication.

# APPENDIX

## Forbidden

| Subject | Pictogram |
|---|---|
| No swimming |  |
| Non-potable water |  |

## Danger

| Subject | Pictogram |
|---|---|
| Electrical hazard |  |
| Keep guards in place |  |
| This machine or installation starts automatically |  |
| Corrosive materials |  |
| Risk of falling |  |

| | |
|---|---|
| Pipe under pressure |  |
| Risk of slippage |  |
| Flammable materials |  |
| Rotating part |  |
| High temperature |  |
| Confined space |  |
| Risk of explosion |  |
| Toxic materials |  |

## Obligatory

| Subject | Pictogram |
|---|---|
| Safety glasses |  |
| Respiratory protection |  |
| Hard hat |  |
| Safety shoes |  |
| Safety gloves |  |
| Hearing protection |  |
| Personal protection against falls |  |
| Consult the manual |  |
| Mandatory use of padlocks |  |

LEFT BLANK

# *3 – DRAWINGS*

## *3.1 – PROCESS FLOW DIAGRAM*

LEFT BLANK

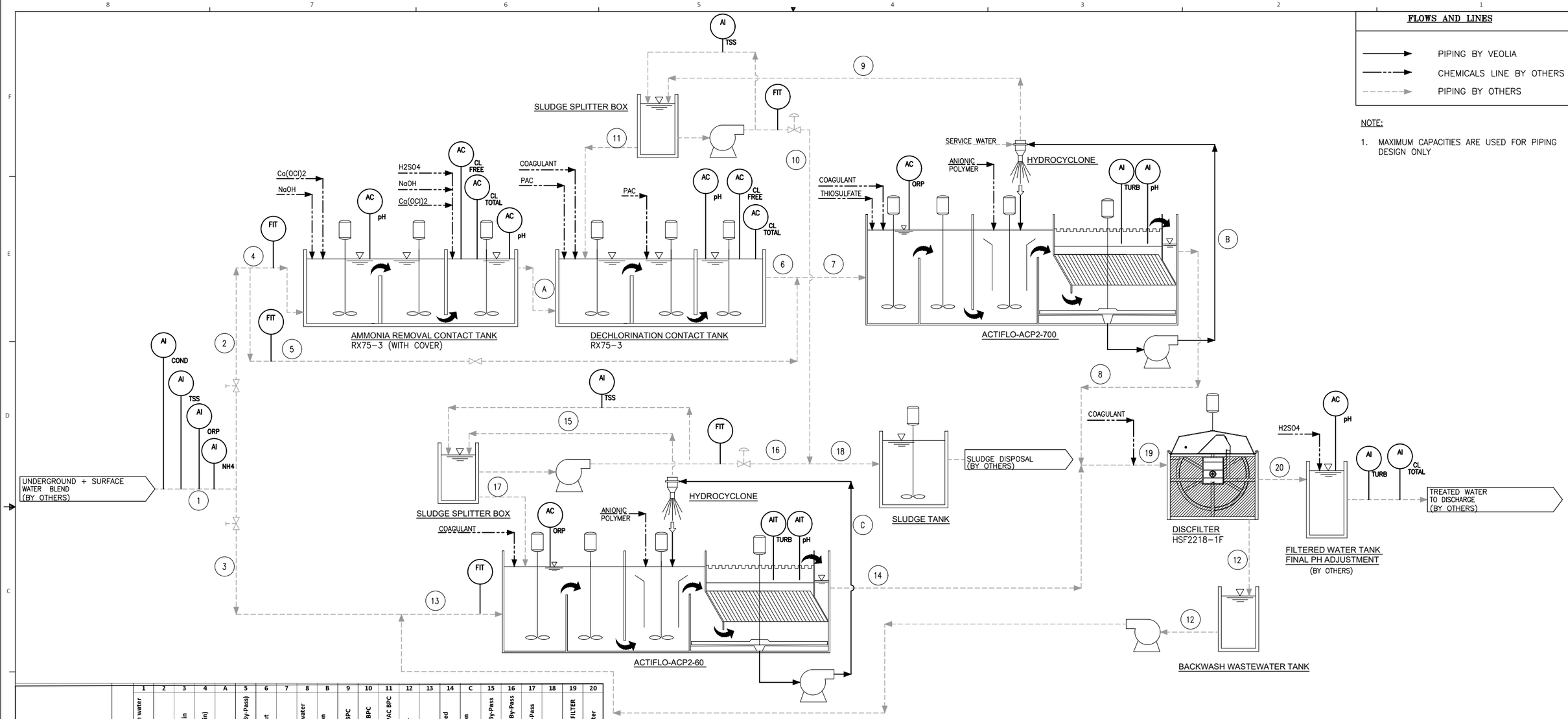


| | Unité | 1 Underground + Surface water Blend | 2 BPC treatment chain | 3 By-Pass treatment chain | 4 BPC + Dechlorination (in) | A Dechlorination in | 5 BPC+ Dechlorination (By-Pass) | 6 Dechlorination tank out | 7 ACTIFLO BPC in | 8 ACTIFLO BPC clarified water OUT | B Microsand Recirculation ACTIFLO BPC | 9 Sludge to Splitter Box BPC | 10 Extracted Sludge from BPC | 11 Recirculated sludge + PAC BPC | 12 Backwash Wastewater | 13 ACTIFLO By-Pass in | 14 ACTIFLO By-Pass clarified water OUT | C Microsand Recirculation ACTIFLOBy-Pass | 15 Sludge to Splitter Box By-Pass | 16 Extracted Sludge from By-Pass | 17 Recirculated sludge By-Pass | 18 Sludge to Sludge tank | 19 Clarified water to DISCFILTER | 20 DISCFILTER filtered water |
|---|---|---|---|---|---|---|---|---|---|---|---|---|---|---|---|---|---|---|---|---|---|---|---|---|
| Operation year 1 | m3/h | 500 | 258.6 | 241.4 | 258.6 | 265.1 | 0 | 300.4 | 300.4 | 265.1 | 45 | 40.5 | 5.9 | 34.6 | 7 | 248.4 | 246.4 | 20 | 16 | 2.5 | 13.5 | 8.4 | 511.5 | 504.5 |
| (average NH4 concentration) | m3/d | 12000 | 6207 | 5793 | 6207 | 6363 | 0 | 7209 | 7209 | 6361 | 1080 | 972 | 141.6 | 830.4 | 168 | 5961 | 5914 | 480 | 384 | 60 | 324 | 201.6 | 12275 | 12107 |
| Operation subsequent years | m3/h | 833.3 | 352.8 | 480.5 | 162.8 | 165.4 | 190 | 201 | 391 | 355.3 | 45 | 40.5 | 5.3 | 35.2 | 14.2 | 494.7 | 490.8 | 20 | 16 | 5.1 | 10.9 | 10.4 | 846.2 | 832 |
| (average NH4 concentration) | m3/d | 20000 | 3908 | 11532 | 3908 | 3969 | 4560 | 4824 | 9384 | 8528 | 1080 | 972 | 127.2 | 844.8 | 340.8 | 11873 | 11780 | 480 | 384 | 122.4 | 261.6 | 249.6 | 20308 | 19967 |

| | Unité | 1 Underground + Surface water Blend | 2 BPC treatment chain | 3 By-Pass treatment chain | 4 BPC + Dechlorination (in) | A Dechlorination in | 5 BPC+ Dechlorination (By-Pass) | 6 Dechlorination tank out | 7 ACTIFLO BPC in | 8 ACTIFLO BPC clarified water OUT | B Microsand Recirculation ACTIFLO BPC | 9 Sludge to Splitter Box BPC | 10 Extracted Sludge from BPC | 11 Recirculated sludge + PAC BPC | 12 Backwash Wastewater | 13 ACTIFLO By-Pass in | 14 ACTIFLO By-Pass clarified water OUT | C Microsand Recirculation ACTIFLOBy-Pass | 15 Sludge to Splitter Box By-Pass | 16 Extracted Sludge from By-Pass | 17 Recirculated sludge By-Pass | 18 Sludge to Sludge tank | 19 Clarified water to DISCFILTER | 20 DISCFILTER filtered water |
|---|---|---|---|---|---|---|---|---|---|---|---|---|---|---|---|---|---|---|---|---|---|---|---|---|
| At max hydraulic and chemical capacities (pumps maximums) | m3/h | 833,3 | 857,1 | 480 | 503,8 | 523,3 | 353,3 | 560,1 | 560,1 | 529,8 | 45 | 40,5 | 13,3 | 35,2 | 20 | 500 | 502,9 | 20 | 16 | 5,1 | 13,5 | 18,4 | 833,3 | 833,3 |
| | m3/d | 20000 | 20570 | 11520 | 12090 | 12559 | 8480 | 13442 | 13442 | 12715 | 1080 | 972 | 319,2 | 844,8 | 480 | 12000 | 12071 | 480 | 384 | 122,4 | 324 | 441,6 | 20000 | 20000 |

* ACCORDING TO MICROSAND CONCENTRATION IN THE ACTIFLO (10– 20 G/L)

** ALL THE CONCENTRATIONS ARE AVERAGE

| | Parameter | Unité | 1 Underground + Surface water Blend | 2 BPC treatment chain | 3 By-Pass treatment chain | 4 BPC + Dechlorination (in) | A Dechlorination in | 5 BPC+ Dechlorination (By-Pass) | 6 Dechlorination tank out | 7 ACTIFLO BPC in | 8 ACTIFLO BPC clarified water OUT | B Microsand Recirculation ACTIFLO BPC | 9 Sludge to Splitter Box BPC | 10 Extracted Sludge from BPC | 11 Recirculated sludge + PAC BPC | 12 Backwash Wastewater | 13 ACTIFLO By-Pass in | 14 ACTIFLO By-Pass clarified water OUT | C Microsand Recirculation ACTIFLOBy-Pass | 15 Sludge to Splitter Box By-Pass | 16 Extracted Sludge from By-Pass | 17 Recirculated sludge By-Pass | 18 Sludge to Sludge tank | 19 Clarified water to DISCFILTER | 20 DISCFILTER filtered water |
|---|---|---|---|---|---|---|---|---|---|---|---|---|---|---|---|---|---|---|---|---|---|---|---|---|---|
| Operation year 1 | TSS | mg/L | 200 | 200 | 200 | 200 | 200 | 200 | 417 | 417 | 12 | 130000 @ 150000 | 20000 | 20000 | 20000 | 511 | 200 | 10 | 130000 @ 150000 | 20000 | 20000 | 20000 | 20000 | 11 | 4 |
| (average NH4 concentration) | NH4 | mg/L | 78 | 78 | 78 | 78 | 1,5 | 78 | 1,5 | 1,5 | 1,5 | 1,5 | 1,5 | 1,5 | 1,5 | 38 | 78 | 78 | 78 | 78 | 78 | 78 | 24 | 38 | 38 |
| | Total Cl | mg/L | 0 | 0 | 0 | 0 | 50 | 0 | 30 | 30 | <1 | <1 | <1 | <1 | <1 | <1 | 0 | 0 | 0 | 0 | 0 | 0 | <1 | <1 | <1 |
| | Free Cl | mg/L | 0 | 0 | 0 | 0 | 15 | 0 | 6 | 6 | <1 | <1 | <1 | <1 | <1 | <1 | 0 | 0 | 0 | 0 | 0 | 0 | <1 | <1 | <1 |
| Operation subsequent years | TSS | mg/L | 200 | 200 | 200 | 200 | 200 | 200 | 302 | 252 | 12 | 130000 @ 150000 | 20000 | 20000 | 20000 | 417 | 200 | 10 | 130000 @ 150000 | 20000 | 20000 | 20000 | 20000 | 11 | 4 |
| (average NH4 concentration) | NH4 | mg/L | 49 | 49 | 49 | 49 | 1,5 | 49 | 1,5 | 25 | 25 | 25 | 25 | 25 | 25 | 39 | 49 | 49 | 49 | 49 | 49 | 49 | 37 | 39 | 39 |
| | Total Cl | mg/L | 0 | 0 | 0 | 0 | 50 | 0 | 30 | 15 | <1 | <1 | <1 | <1 | <1 | <1 | 0 | 0 | 0 | 0 | 0 | 0 | <1 | <1 | <1 |
| | Free Cl | mg/L | 0 | 0 | 0 | 0 | 15 | 0 | 6 | 3 | <1 | <1 | <1 | <1 | <1 | <1 | 0 | 0 | 0 | 0 | 0 | 0 | <1 | <1 | <1 |

| RÉV. | DESCRIPTION | DATE | RÉVISÉ REVISED | VÉRIFIÉ VERIFIED | APPROUVÉ APPROVED |
|---|---|---|---|---|---|
| 6 | FOR APPROVAL | 2021-07-02 | M.I. | MDLN | TS |
| 5 | FOR APPROVAL | 2021-05-26 | A.R. | MDLN | TS |
| 4 | FOR APPROVAL | 2021-05-12 | A.R. | MDLN | TS |
| 3 | FOR APPROVAL | 2021-04-01 | A.R. | MDLN | TS |
| 2 | FOR APPROVAL | 2021-03-10 | A.R. | MDLN | TS |
| 1 | FOR APPROVAL | 2021-01-20 | A.R. | MDLN | TS |

VEOLIA WATER TECHNOLOGIES

| | | |
|---|---|---|
| DESSINATEUR/DESIGNER | DATE | CLIENT |
| A.R. | 2020-12-08 | AEM MELIADINE – BPC |
| VÉRIFICATEUR/CHECKER | DATE | |
| MDLN | 2020-12-08 | 6526-S-265-605 / OC-989680 |
| INGÉNIEUR/ENGINEER | DATE | |
| E.D. | 2020-12-08 | |

TITRE / TITLE

MASS BALANCE – PFD

ÉCHELLE / SCALE:

| PROJET / PROJECT | DESSIN /DRAWING | INTERNE / INTERNAL | FEUILLET / SHEET | RÉV./REV |
|---|---|---|---|---|
| 5000220043 - | MB-0001 | GEN | 1/ 1 | 6 |

Ce document est la propriété de VEOLIA et ne peut être reproduit sans son autorisation écrite.
This document is the property of VEOLIA and cannot be reproduced without its written authorization.

REF: ANSI D

Jul 06, 2021 - 14:35:41 - C:\WORKSPACE-IN\ENTORY\DESIGN\DESIGN\2020\5000220043\PID-PFD\5000220043-MB-0001_6.dwg - marlaphe.lee

LEFT BLANK

# *3 – DRAWINGS*

## *3.2 – PROCESS AND INSTRUMENTATION DIAGRAM*

LEFT BLANK

## FLOWS AND LINES

PRIMARY LINE

CHEMICALS LINE

EXISTING LINE/BY OTHERS

SECONDARY FLOW

FUTURE OR OPTIONAL

LIMIT SKID

XX — XX MATERIAL SPECIFICATION CHANGE

✲ SUPPLIED BY VEOLIA

VEOLIA | OTHERS LIMIT OF SUPPLY

X% SLOPE

## LINE CONTINUATIONS

XXX
XXX
SHEET XX

INDICATES A LINE GOING TO OR COMING FROM BATTERY LIMITS (CONTRACT LIMITS)

## TIE POINT

TP
XX01

SEQUENTIAL NUMBER
SHEET NUMBER

## EQUIPMENT TAG NUMBERS

PREFIX (NOT SHOWN IN P&ID)
CATEGORY/SUB-CATEGORY (TABLE 2)
PROCESS ZONE (TABLE 3)
SEQUENTIAL NUMBER

ZZ-ABXX-YY
NAME
NAME
STAGE (TABLE 1)
TRAIN (TABLE 1)

ALL TAGS FOR EQUIPMENT AND INSTRUMENTS HAVE A PREFIX "ZZ"

## EQUIPMENT TAG DESCRIPTION

**EXAMPLE:**

ABXX-YY — TAG NUMBER
NAME/NOM
TYPE:
CAPACITY:
POWER:
VOLTAG:
MATERIAL: — INFORMATION

## EXAMPLE: VALVE TAGGING

ØXX — DIAMETER
⋈ — TAG
XXXX-XX
XX — FAIL SAFE POSITION

| FAIL SAFE POSITION | |
|---|---|
| FO | FAIL OPEN |
| FC | FAIL CLOSED |
| FL | FAIL LAST |

**TABLE 1 TRAIN/STAGE NUMBER OR PREFIX**

| FIRST DIGIT. TRAIN | SECOND DIGIT STAGE | |
|---|---|---|
| 0 | 0 | STEP UPSTREAM THE FIRST TECHNOLOGY |
| 1 | 1 | FIRST TECHNOLOGY |
| 2 | 2 | SECOND TECHNOLOGY |
| 3 | 3 | THIRD TECHNOLOGY |
| 4 | 4 | FOURTH TECHNOLOGY |
| 5 | 5 | FIFTH TECHNOLOGY |
| 6 | 6 | SIXTH TECHNOLOGY |
| 7 | 7 | SEVENTH TECHNOLOGY |
| 8 | 8 | EIGTH TECHNOLOGY |
| 9 | 9 | CHEMICALS DOSING AND PREPARATION |

**TABLE 2 EQUIPMENT TAG NUMBERS CATEGORY/SUB-CATEGORY**

| CATEGORY | SUB CATEGORY | FAMILY |
|---|---|---|
| A AGITATORS AND MIXERS | B | BLENDER |
| | G | AGITATORS |
| | K | KNEADER |
| | M | STATIC MIXER |
| | R | AERATOR |
| | S | SUBMERSIBLE AGITATOR |
| B BLOWERS | C | CENTRIFIGAL BLOWER |
| | F | FANS |
| | V | POSITIVE DISPLACEMENT BLOWER |
| C COMPRESSORS | A | CENTRIFUGAL AIR COMPRESSOR |
| | G | CENTRIFUGAL GAS COMPRESSOR |
| | V | POSITIVE DISPLACEMENT AIR COMPRESSOR |
| | W | POSITIVE DISPLACEMENT GAS COMPRESSOR |
| D DRIVERS | A | ACCESSORIES FOR DRIVERS |
| | D | GEARED MOTOR AND DRIVE UNIT |
| | E | ELECTRIC MOTOR |
| | G | GAS MOTOR |
| | H | HYDRAULIC MOTOR |
| | M | ENGINE |
| | P | POWER UNIT |
| | S | STEAM TURBINE |
| | T | GAS TURBINE |
| E HEAT EXCHANGERS | C | CONDENSERS |
| | H | HEAT EXCHANGERS |
| | L | COOLERS |
| | R | CHILLERS |
| F FURNACE | A | ACCESSORIES |
| | B | BOILERS |
| | F | FURNACES |
| | H | HEATERS |
| | K | KILNS |
| G CHEMICAL | D | CHEMICAL DOSAGE |
| | N | DISINFECTION SYSTEMS |
| | P | CHEMICAL PRODUCTION |
| | S | CHEMICAL STORAGE |
| H MEDIAS | A | ADSORPTION |
| | B | BIOLOGICAL TREATMENT |
| | F | FILTRATION |
| | S | SEDIMENTATION |
| | X | ION EXCHANGE |
| J FILTERS | G | SOLID – GAS |
| | L | SOLID – LIQUID |
| K ELECTRICAL EQUIPMENT | G | HEATING SYSTEM |
| | N | GENERATOR |
| L LIFTING EQUIPMENT | C | CRANE / LOAD LIFT – FIXED EQUIPMENT |
| | F | ELEVATOR/LIFT – FOR FREIGHT |
| | P | ELEVATOR/LIFT – FOR PASSENGERS |
| M MECHANICAL EQUIPMENT | N | SPECIAL NOZZLES & INJECTION SYSTEMS |
| N CONVEYORS | A | APRON CONVEYOR |
| | B | BELT CONVEYOR (OPEN OR CLOSED) |
| | E | BUCKET CONVEYOR, ELEVATOR |
| | M | MONORAIL CONVEYOR |
| | P | PNEUMATIC CONVEYOR |
| | R | ROLLER CONVEYOR |
| | S | SCREW CONVEYOR |
| | V | VIBRATING CONVEYOR |
| P PUMPS | A | ACCESSORIES |
| | C | CENTRIFUGAL PUMP |
| | G | GEAR PUMP |
| | S | SCREW PUMP |
| | V | VOLUMETRIC PUMP OR POSITIVE DISPLACEMENT – PISTON |
| R DRUMS | C | SCRAPERS |
| | D | DRYERS |
| | F | FLOTATION |
| | H | CHEMICAL |
| | N | CENTRIFUGES |
| | O | REVERSE OSMOSIS |
| | S | SCREENS |
| S SAFETY EQUIPMENT | E | EMERGENCY SHOWER |
| T TANKS | G | GAS STORAGE |
| | L | LIQUIDS STORAGE |
| | S | SOLIDS STORAGE |
| U MISCELLANEOUS EQUIPMENT | A | ACCESSORIES (SIGHT GLASS, SILENCER, SOUND TRAP, CONDENSATE TRAP) |
| | F | OFFICE FUNITURE |
| | S | TOOLS & LAB. EQUIPMENT (WORKSHOP MATERIAL, MANUAL BIOSTYR STRAINERWRENCH) |
| V VALVE | V | A AUTOMATIC VALVES |
| | FFCV | PROPORTIONAL CONTROL |
| | FCV | FLOW CONTROL |
| | PCV | PRESSURE CONTROL |
| | TCV | TEMPERATURE CONTROL |
| | LCV | LEVEL CONTROL |
| | V | E ELECTRO-VALVES |
| | V | M MANUAL VALVES |
| | V | N NEEDLE VALVES |
| | BPV | BACK PRESSURE |
| | PRV | BACK RELIEF |
| | V | NR CHECK |
| W TOWERS COLUMNS | | A ADSORPTION |
| | | B ABSORPTION |
| | | D DISTILLATION |
| | | E EXTRACTION |
| | | F FILTRATION |
| | | S STRIPPING |
| | | X ION EXCHANGE |
| X COMPACTORS | C | COMPACTOR |
| | M | MILLS |
| | R | CRUSHERS |
| Z | P | PACKAGE UNIT |

* SEE NOTE 1

**TABLE 3 PROCESS ZONE RULES**

| FIRST DIGIT | |
|---|---|
| 1 | PROCESS INLET |
| 2 | FIRST MAIN PROCESS |
| 3 | SECOND MAIN PROCESS |
| 4 | THIRD MAIN PROCESS |
| 5 | CHEMICALS (SEE TABLE CODE CHEMICAL PRODUCT) |
| 6 | CHEMICALS (SEE TABLE CODE CHEMICAL PRODUCT) |
| 7 | PROCESS OUTLET |
| 8 | UTILITIES LINES (INSTRUMENTATION AIR, AIR) |
| 9 | UTILITIES LINES (SERVICE WATER, DRAIN ..) |
| SECOND DIGIT | |
| 0 | MANDATORY EQUIPMENT INSTALLED ON A MANDATORY LINE |
| 1 | OPTIONAL EQUIPMENT INSTALLED ON A MANDATORY LINE |
| 2 | MANDATORY EQUIPMENT INSTALLED ON AN OPTIONAL LINE |
| 3 | OPTIONAL EQUIPMENT INSTALLED ON AN OPTIONAL LINE |

| CODE | CHEMICAL PRODUCT |
|---|---|
| 51 | COAGULANT |
| 52 | POLYMER |
| 53 | CHLORINE & SODIUM HYPOCHLORITE |
| 54 | ALCALI (NaOH & Chaux & ...) |
| 55 | ACID |
| 56 | OZONE |
| 57 | KMnO4 |
| 58 | CO2/Peroxide/Gas |
| 59 | OTHER |
| 60 | OTHER |
| 62 | HydraPOL |

## LINE NUMBER IDENTIFICATION

XXX–XXX–XXXX–XXX

PIPE DIAMETER
FLUID CODE (TABLE 5)
SERVICE CLASS
SEQUENTIAL NUMBER
SUB–FAMILY EXTENSION (OPTIONAL, SEE NOTE 1)
MATERIAL SUB–FAMILY (TABLE 6)
MATERIAL FAMILY (TABLE 6)
PRESSURE RATING (TABLE 4)

NOTE:

1. FOR MORE INFORMATION SEE DOCUMENT REFERENCE OP–REF 090AV.

**TABLE 4 PRESSURE RATING**

| CODE | PRESSURE |
|---|---|
| A | PN6 |
| B | PN10 |
| C | PN16 |
| D | PN25 |
| E | PN40 |
| F | PN100 |
| P | CLASS 150 |
| R | CLASS 300 |
| T | CLASS 600 |

* SEE NOTE 1

**TABLE 5 FLUID**

| CODE | FLUID |
|---|---|
| QCA | ACTIVATED CARBON (POWDER) |
| JSA | ACTIVATED SILICA |
| KWC | ALUMINIUM CHLORIDE BASIC(COAGULANT) |
| KSA | ALUMINIUM SULFATE |
| IDT | ANTI SCALANT |
| DCE | ASH AND RESIDUS |
| ARL | BACKWASH AIR |
| ERL | BACKWASH WATER |
| OEC | CHLORINATED WATER < 5 ppm cl2 |
| RSI | CITRIC ACID 10 – 50 % |
| ECO | COAGULATED WATER |
| EGL | COLD WATER |
| ACO | COMPRESSED AIR |
| EDD | DEGREASED WATER |
| EPO | DRINKING WATER |
| BSE | DRYED SLUDGE |
| KCF | FERRIC CHLORIDE 39 – 41 % |
| KSQ | FERRIC SULFATE |
| BFL | FLOATED SLUDGE |
| EFL | FLOCCULATED WATER |
| FEC | HOT WATER |
| AIN | INSTRUMENT AIR |
| APM | MEMBRANE PROCESS AIR |
| SMS | MICROSAND SLURRY |
| OAZ | OZONE |
| JPE | POLYMER |
| EPT | PRETREATED WATER |
| BPR | PRIMARY SLUDGE |
| BPE | PRIMARY THICKENED SLUDGE |
| APS | PROCESS AIR |
| EBR | RAW WATER |
| SAB | SAND SiO2 |
| SWA | SAND WATER |
| EID | SERVICE WATER |
| BMC | SLUDGE |
| QBS | SODIUM BISULPHITE 37% |
| PCS | SODIUM CARBONATE |
| SCS | SODIUM CHLORIDE |
| OCS | SODIUM CHLORITE |
| XFR | SODIUM FLUORIDE |
| PBS | SODIUM HYDROGENCARBONATE |
| RDA | SODIUM HYDROXYDE >50% (CAUSTIC SODA) |
| IPP | SODIUM POLYPHOSPHATE |
| RSD | SULPHURIC ACID 70 – 96% |
| RSC | SULPHURIC ACID 93 – 98% |
| AVT | TREATED AIR |
| ETE | TREATED WATER |
| COI | TURBO GENERATOR LUBRICATING OIL |
| EUS | WASTE WATER |

**TABLE 6 MATERIAL**

| MATERIAL FAMILY | | MATERIAL SUB-FAMILY | |
|---|---|---|---|
| MATERIAL | CODE | CODE | MATERIAL |
| CARBON STEEL | 1 | 0 | ASTM A53 |
| | | 1 | ASTM A106 |
| | | 2 | ASTM A53 |
| | | 3 | (OTHER) |
| COATED CARBON STEEL | 2 | 0 | GALVANIZED (A53) |
| | | 1 | GALVANIZED (A106) |
| | | 2 | GALVANIZED (A53) |
| | | 3 | EPOXY (A53) |
| | | 4 | PTFE (A53) |
| | | 5 | (SPARE) |
| | | 6 | (SPARE) |
| | | 7 | RILSAN (A53) |
| STAINLESS STEEL | 3 | 0 | AISI 304L |
| | | 1 | AISI 316L |
| | | 2 | AISI 304 |
| | | 3 | AISI 316 |
| | | 4 | DUPLEX STAINLESS STEEL SAF 2205 |
| | | 5 | DUPLEX STAINLESS STEEL 254 SMO |
| | | 6 | DUPLEX STAINLESS STEEL SAF 2507 |
| | | 7 | AISI 309S |
| | | 8 | AISI 904L |
| CAST IRON | 4 | 0 | GS DUCTILE (SPHEROIDAL GRAPHITE) WITH FLANGES |
| RIGID THERMOPLASTICS | 5 | 0 | PVC (UNPLASTICIZED POLYVINYL CHLORIDE) |
| | | 1 | CPVC (CHLORINATED POLYVINYL CHLORIDE) |
| | | 2 | HDPE |
| | | 3 | PVDF (POLYVINYLIDENE FLUORIDE) |
| | | 4 | PP (POLYPROPYLENE) |
| | | 5 | ABS (ACRYLONITRILE–BUTADIENE–STYRENE) |
| | | 6 | E–CTFE ETHYLENE–CHLOROTRIFLUORETHYLENE (HALAR) |
| FLEXIBLE THERMOPLASTICS | 6 | 0 | RILSAN/NYLON/PVC HOSE |
| | | 1 | RUBBER HOSE |
| NON–FERROUS MATERIAL | 7 | 0 | CIRCULAR ALUMINIUM DUCT (FOR VENTILATION) |
| | | 1 | RECTANGULAR ALUMINIUM 7 NON–FERROUS DUCT (FOR VENTILATION) |
| | | 2 | COPPER–NICKEL |
| THERMOSETTING PLASTICS | 8 | 0 | FRP (GLASS REINFORCED PLASTIC, POLYESTER/ VINYLESTER RESIN) |
| | | 1 | GRE (GLASS REINFORCED PLASTIC, EPOXY RESIN) |
| OTHERS | 9 | | |

* SEE NOTE 1

| RÉV. | DESCRIPTION | DATE | RÉVISÉ REVISED | VÉRIFIÉ VERIFIED | APPROUVÉ APPROVED |
|---|---|---|---|---|---|
| 5 | FOR INFORMATION | 2022-01-25 | A.R. | C.E.K. | T.S. |
| 4 | FOR INFORMATION | 2021-05-01 | A.R. | C.E.K./ G.M. | E.D. |
| 3 | FOR INFORMATION | 2021-03-11 | A.R. | C.E.K./ G.M. | E.D. |
| 2 | FOR INFORMATION | 2020-01-29 | A.R. | C.E.K./ G.M. | E.D. |
| 1 | FOR INFORMATION | 2020-01-21 | A.R. | C.E.K./ G.M. | E.D. |

VEOLIA WATER TECHNOLOGIES

DESSINATEUR/DESIGNER 2020-01-08 DATE E.D.
VÉRIFICATEUR/CHECKER 2020-01-08 DATE E.D.
INGÉNIEUR/ENGINEER DATE

CLIENT: AEM MELIADINE–BPC

6526–S–265–605 / OC–989680

TITRE / TITLE
PROCESS AND INSTRUMENTATION DIAGRAM
LEGEND
NOMENCLATURE

ÉCHELLE / SCALE: A.R.

PROJET / PROJECT 5000220043 - PI001 | DESSIN /DRAWING | INTERNE / INTERNAL | FEUILLET / SHEET 1/ 17 | REV./REV 5

Ce document est la propriété de VEOLIA et ne peut être reproduit sans son autorisation écrite.
This document is the property of VEOLIA and cannot be reproduced without its written authorization.

REF: 8 7 6 5 4 3 2 1 ANSI D

Jan 26, 2022 - 9:02:44 - C:\WORKSPACE-INVENTOR\DESIGN\EXECUTION\2020\5000220043\PID-PID\5000220043-PI001_5.dwg - arubec.ronferrero

## MANUAL VALVE SYMBOLS

- ANGLE
- BALL VALVE OPEN
- BALL VALVE CLOSED
- BUTTERFLY VALVE OPEN
- BUTTERFLY VALVE CLOSED
- CHECK VALVE
- DIAPHRAGM VALVE
- GLOBE
- KNIFE GATE
- NEEDLE
- PINCH OPEN
- PINCH CLOSED
- PLUG OPEN
- PLUG CLOSED
- VALVE NOT SPECIFIED
- THREE WAY
- FOUR WAY
- METERING

## CONTROL AND RELIEF VALVE SYMBOLS

- MULTI–FUNCTION VALVE
- RELIEF ON LINE
- PRESSURE RELIEF VALVE
- VACUUM RELIEF VALVE
- RUPTURE DISK

## OTHERS VALVE SYMBOLS

- FLOAT VALVE
- AIR RELEASE
- HOSE BIBB
- INTEGRAL BLOCK & BLEED
- PENSTOCK
- WASTE PLUG
- SQUEEZE
- MIXING VALVE

## FITTING

- CONCENTRIC REDUCER
- ECCENTRIC REDUCER
- SPECTACLE BLIND OPEN
- SPECTACLE BLIND CLOSE
- UNION

## ACTUATORS

- BACK PRESSURE REGULATOR
- BACK PRESSURE REGULATOR WITH EXTERNAL TAP
- DIAPHRAGM–SPRING
- DIAPHRAGM–SPRING WITH POSITIONER
- DIFFERENTIAL PRESSURE REDUCING REGULATOR
- ELECTRO HYDRAULIC
- ELECTRO PNEUMATIC
- HAND WHEEL WITH ACTUATOR
- MANUAL ACTUATOR
- MOTOR
- MOTORISED WITH POSITIONER
- PNEUMATIC CYLINDER WITH POSITIONER
- PNEUMATIC CYLINDER
- POSITIONER * – TYPE
- SOLENOID
- SOLENOID MANUAL RESET

## INSULATION PIPE

- INSULATION
- ELECTRIC HEAT TRACE
- STEAM HEAT TRACE

## CONNECTION

- HOSE CONNECTION
- FLANGED CONNECTION
- END CAP DISCONNECT
- PIPE TO TUBING ADAPTER
- QUICK DISCONNECT
- PLUG

## FLOW METER SYMBOLS

- FLOW ORIFICE
- CORIOLIS MASS FLOWMETER
- FLUME
- MAGNETIC FLOW METER
- SONIC FLOW METER
- TURBINE FLOW METER
- VENTURI
- WEIR
- VORTEX SENSOR
- ROTAMETER
- STOP LOG
- SIGHT FLOW STRAINER
- SIGHT FLOW INDICATOR

## AIR SUPPLY ACCESSORIES

- AIR TRAP
- AIR FILTER
- AIR LUBRICATOR
- AIR REGULATOR
- COMB. AIR FILTER/ COMC. REGULATOR W/GAUGE

## MISCELLANEOUS SYMBOLS

- AIR FILTER
- CALIBRATION COLUMN
- DRESSER COUPLING
- EJECTOR/EDUCTOR
- EXPANSION JOINT
- FLEXIBLE HOSE
- INJECTION QUILL
- PULSATION DAMPENER
- SILENCER
- STATIC MIXER
- STEAM TRAP
- STRAINER
- DRAIN
- FUNNEL
- PIGTAIL SIPHON
- VACUUM BREAKER
- VENT

## AGITATORS SYMBOLS

- AERATOR W/SPARGE RING
- AGITATOR (PROPELLER)
- AGITATOR (TURBINE)
- BLADE AGITATOR
- IN LINE MIXER
- PADDLE AGITATOR

## BLOWERS SYMBOLS

- CENTRIFUGAL BLOWER
- ROTARY BLOWER
- POSITIVE DISPLACEMENT BLOWER

## FILTERS SYMBOLS

- AUTOMATIC SELF–CLEANING STRAINER
- BAG FILTER
- BASKET FILTER
- MULTIMEDIA FILTERS
- OIL FILTER

## HEATERS SYMBOLS

- HEAT EXCHANGER
- ELECTRICAL HEATER
- INLINE HEATER

## MOTORS SYMBOLS

- MOTOR VARIABLE SPEED
- MOTOR FIXED SPEED

## PUMPS SYMBOLS

- AIR OPERATED DOUBLE DIAPHRAGM
- DRUM PUMP
- SUBMERSIBLE CENTRIFUGAL PUMP
- CENTRIFUGAL PUMP (STANDARD)
- CENTRIFUGAL SUMP PUMP
- DOUBLE SUCTION CENTRIFUGAL PUMP
- GEAR PUMP
- HORIZONTAL CENTRIFUGAL PUMP
- LIQUID RING VACUUM PUMP
- METERING PUMP
- PERISTALTIC
- POSITIVEDIS DISPLACEMENT PUMP
- PROGRESSIVE CAVITY PUMP
- SCREW PUMP
- SUBMERSIBLE PUMP
- SUBMERSIBLE WELL PUMP
- SUMP PUMP

- VERTICAL CAN PUMP
- VERTICAL INLINE PUMP

## TANKS SYMBOLS

- HORIZONTAL STORAGE TANK
- PRESSURE VESSEL
- VERTICAL TANK
- VERTICAL STORAGE TANK
- OPEN TOP TANK
- CLOSED TOP TANK
- SPLITTER BOX
- BARREL
- TOTE
- UV UNIT

## MISCELLANEOUS SYMBOLS

- AIR COMPRESSOR
- HYDROCYCLONE
- SCREW CONVEYOR
- BELT CONVEYOR

## SAFETY AND TRANSPORT SYMBOLS

- EMERGENCY SHOWER/EYE WASH
- EMERGENCY SHOWER
- HOIST WITH CARRIAGE
- LIFT TRUCK
- TANK TRUCK

## OTHERS SYMBOLS

- GFI POWER OUTLET 120VAC. C/W BOX, COVER & CONNECTOR
- CONTROL PANEL

| RÉV. | DESCRIPTION | DATE | RÉVISÉ REVISED | VÉRIFIÉ VERIFIED | APPROUVÉ APPROVED |
|---|---|---|---|---|---|
| 5 | FOR INFORMATION | 2022-01-25 | A.R. | C.E.K. | T.S. |
| 4 | FOR INFORMATION | 2021-05-01 | A.R. | C.E.K./ G.M. | E.D. |
| 3 | FOR INFORMATION | 2021-03-11 | A.R. | C.E.K./ G.M. | E.D. |
| 2 | FOR INFORMATION | 2020-01-29 | A.R. | C.E.K./ G.M. | E.D. |
| 1 | FOR INFORMATION | 2020-01-21 | A.R. | C.E.K./ G.M. | E.D. |

VEOLIA WATER TECHNOLOGIES

| | | |
|---|---|---|
| DESSINATEUR/DESIGNER | 2020–01–08 | E.D. |
| VÉRIFICATEUR/CHECKER | 2020–01–08 | E.D. |
| INGÉNIEUR/ENGINEER | | |

CLIENT: AEM MELIADINE–BPC

6526–S–265–605 / OC–989680

TITRE / TITLE

PROCESS AND INSTRUMENTATION DIAGRAM
LEGEND
PIPE, FITTING AND EQUIPMENT SYMBOLS

ÉCHELLE / SCALE: A.R.

| PROJET / PROJECT | DESSIN /DRAWING | INTERNE / INTERNAL | FEUILLET / SHEET | REV./REV |
|---|---|---|---|---|
| 5000220043 - | PI001 | | 2 / 17 | 5 |

Ce document est la propriété de VEOLIA et ne peut être reproduit sans son autorisation écrite.
This document is the property of VEOLIA and cannot be reproduced without its written authorization.

REF: 8 7 6 5 4 3 2 1 ANSI D

Jan 26, 2022 - 9:02:46 - C:\WORKSPACE-INVENTOR\DESIGNS\EXECUTION\2020\5000220043\PID-PID\5000220043-PI001_5.dwg - anderec.roeherers

## INSTRUMENTATION LINES

- CAPILLARY TUBING
- ELECTRICAL
- HYDRAULIC
- PNEUMATIC
- DATA LINK

## INSTRUMENT TAG NUMBERS

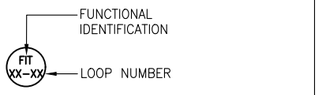


NOTE: HYPHENS ARE OPTIONAL AS SEPARATORS

## MISCELLANEOUS INSTUMENTATION SYMBOLS

- INTERLOCK
- SELECTOR SWITCHES
- VFD — VARIABLE FREQUENCY DRIVE
- EM — EMERGENCY POWER
- DIAPHRAGM SEAL
- PILOT LIGHT
- SHEET XX — INDICATES CONTINUATION OF IDENTIFICATION SIGNAL IS ON SHEET
- f(x) — FUNCTION
- Σ — SUMMATION

## ABREVIATION

| | |
|---|---|
| AVG | AVERAGE |
| CFM | CUBIC FEET PER MINUTE |
| Cl2 | CHLORINE |
| COND. | CONDUCTIVITY |
| CW | CITY WATER (POTABLE) |
| DEV | DEVIATION |
| GAL | GALLONS |
| GPD | GALLONS PER DAY |
| GPH | GALLONS PER HOUR |
| GPM | GALLONS PER MINUTE |
| HH | HIGH HIGH |
| H | HIGH |
| HOA | HAND/OFF/AUTO |
| HP | HORSEPOWER |
| IA | INSTRUMENT AIR |
| IDEM | EQUAL |
| L | LOW |
| LL | LOW LOW |
| MH | MANHOLE |
| MW | MANWAY |
| N.C. | NORMALLY CLOSED |
| N.O. | NORMALLY OPEN |
| TURB | TURBIDITY |
| OF | OVERFLOW |
| pH | PH |
| PART | PARTICLES |
| PA | PLANT AIR |
| PSIG | POUNDS PER SQUARE INCH – GAUGE |
| PW | PLANT WATER |
| RUN | RUNNING |
| RPM | REVOLUTIONS PER MINUTE |
| SCFM | STANDARD CUBIC FEET PER MINUTE |
| SCH | SCHEDULE |
| SG | SPECIFIC GRAVITY |
| SP | SETPOINT |
| SSH | STRAIGHT SIDE HEIGHT |
| SW | SEAL WATER |
| SWD | SIDE WATER DEPTH |
| TDH | TOTAL DYNAMIC HEAD (FT OF FLUID) |
| VAC | VACUUM |
| VSD | VARIABLE SPEED DRIVE |
| WC | WATER COLUMN |
| WD | WATER DEPTH |
| WL | WATER LEVEL |
| WV | WORKING VOLUME (DOES NOT INCLUDE FREEBOARD OR HEEL) |

## GENERAL INSTRUMENT OR FUNCTION SYMBOLS

| | PRIMARY LOCATION ***NORMALLY ACCESSIBLE TO OPERATOR | PRIMARY LOCATION ***NORMALLY INACCESSIBLE TO OPERATOR | FIELD MOUNTED | AUXILIARY LOCATION ***NORMALLY ACCESSIBLE TO OPERATOR |
|---|---|---|---|---|
| DISCRETE INSTRUMENTS | 1 * IP1** | 2 | 3 | 4 |
| SHARED DISPLAY, SHARED CONTROL | 5 | 6 | 7 | 8 |
| COMPUTER FUNCTION | 9 | 10 | 11 | 12 |
| PROGRAMMABLE LOGIC CONTROL | 13 | 14 | 15 | 16 |

* SYMBOL SIZE MAY VARY ACCORDING TO THE USER'S NEEDS AND THE TYPE OF DOCUMENT. A SUGGESTED SQUARE AND CIRCLE SIZE FOR LARGE DIAGRAMS IS SHOWN ABOVE. CONSISTENCY IS RECOMMENDED.

** ABBREVIATIONS OF THE USER'S CHOICE SUCH AS IP1 (INSTRUMENT PANEL #1), IC2 (INSTRUMENT CONSOLE #2), CC3 (COMPUTER CONSOLE #3), ETC., MAY BE USED WHEN IT IS NECESSARY TO SPECIFY INSTRUMENT OR FUNCTIONLOCATION.

*** NORMALLY INACCESSIBLE OR BEHIND–THE–PANEL DEVICES OR FUNCTIONS MAY BE DEPICTED BY USING THE SAME SYMBOL BUT WITH DASHED HORIZONTAL BARS, I.E.

## ISA INSTRUMENT IDENTIFICATION TABLE

| | FIRST LETTER | | SUCCEEDING LETTERS | | |
|---|---|---|---|---|---|
| | PROCESS VARIABLE | MODIFIER (IF NEEDED) | READOUT OR COMPUTER FUNCTION | OUTPUT FUNCTION | MODIFIER (IF NEEDED) |
| A | ANALYSIS | | ALARM | | |
| B | BURNER, COMBUSTION | | USER'S CHOICE | USER'S CHOICE | USER'S CHOICE |
| C | CONDUCTIVITY | | | CONTROL | CLOSED |
| D | DENSITY, SPECIFIC GRAVITY DISSOLVED SOLIDS | DIFFERENTIAL | | | |
| E | VOLTAGE | | SENSOR (PRIMARY ELEMENT) | | |
| F | FLOW RATE | | | | |
| G | GAUGING (DIMENSIONAL) | | GLASS, VIEWING DEVICE | | |
| H | MANUAL | | | | HIGH |
| I | CURRENT (ELECTRICAL) | | INDICATE | | |
| J | POWER | SCAN | | | |
| K | TIME, TIME SCHEDULE | TIME RATE OF CHANGE | | CONTROL STATION | |
| L | LEVEL | | LIGHT | | LOW |
| M | MOISTURE, HUMIDITY | | MONITOR | | MIDDLE, INTERMEDIATE |
| N | CONSISTENCY | | USER'S CHOICE | USER'S CHOICE | USER'S CHOICE |
| O | USER'S CHOICE | | ORIFICE (RESTRICTION) | | OPEN |
| P | PRESSURE, VACUUM | | POINT (TEST CONNECTION) | | |
| Q | QUANTITY | | INTEGRATE, TOTALIZE | | |
| R | RADIATION RADIOACTIVITY | RATIO | RECORD | REGULATOR | |
| S | SPEED, FREQUENCY | SAFETY | | SWITCH | |
| T | TEMPERATURE | | TRANSMIT | | |
| U | DATA LOGGER | | FILTER | | |
| V | VIBRATION, MECH. ANALYSIS VISCOSITY | | | VALVE, DAMPER, LOUVER | |
| W | WEIGHT, FORCE, TORQUE | | WELL | | |
| X | UNCLASSIFIED | X–AXIS | UNCLASSIFIED | UNCLASSIFIED | UNCLASSIFIED |
| Y | EVENT, STATE OR PRESENCE | Y–AXIS | | RELAY, COMPUTE, CONVERT | |
| Z | POSITION, DIMENSION | Z–AXIS | | DRIVER, ACTUATOR, UNCLASSIFIED CONTROL ELEMENT | |

LEGEND BASED ON ISA STANDARD S 5.1

| RÉV. | DESCRIPTION | DATE | RÉVISÉ REVISED | VÉRIFIÉ VERIFIED | APPROUVÉ APPROVED |
|---|---|---|---|---|---|
| 5 | FOR INFORMATION | 2022-01-25 | A.R. | C.E.K. | T.S. |
| 4 | FOR INFORMATION | 2021-05-01 | A.R. | C.E.K./ G.M. | E.D. |
| 3 | FOR INFORMATION | 2021-03-11 | A.R. | C.E.K./ G.M. | E.D. |
| 2 | FOR INFORMATION | 2020-01-29 | A.R. | C.E.K./ G.M. | E.D. |
| 1 | FOR INFORMATION | 2020-01-21 | A.R. | C.E.K./ G.M. | E.D. |

VEOLIA WATER TECHNOLOGIES

DESSINATEUR/DESIGNER: 2020-01-08 E.D. — DATE
VÉRIFICATEUR/CHECKER: 2020-01-08 E.D. — DATE
INGÉNIEUR/ENGINEER — DATE

CLIENT: AEM MELIADINE–BPC
6526–S–265–605 / OC–989680

TITRE / TITLE: PROCESS AND INSTRUMENTATION DIAGRAM
LEGEND
INSTRUMENTS

ÉCHELLE / SCALE: A.R.

PROJET / PROJECT: 5000220043 - PI001
DESSIN / DRAWING
INTERNE / INTERNAL
FEUILLET / SHEET: 3/17
RÉV./REV: 5

Ce document est la propriété de VEOLIA et ne peut être reproduit sans son autorisation écrite.
This document is the property of VEOLIA and cannot be reproduced without its written authorization.

REF:

ANSI D

Jan 26, 2022 - 9:02:51 - C:\WORKSPACE-IN\BITOR\DESIGNS\EXECUTION\2020\5000220043\PID-PFD\5000220043-PI001_5.dwg - ansi_d_no_reference

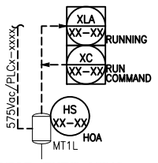


MOTOR TYPE MT1L:
MANUAL CONTROL
WITH LOCAL HOA

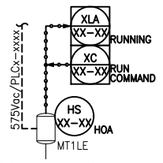


MOTOR TYPE MT1LE:
ETHERNET COMM., MANUAL
CONTROL WITH LOCAL HOA

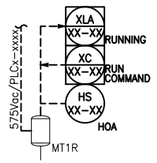


MOTOR TYPE MT1R:
MANUAL CONTROL
WITH REMOTE HOA

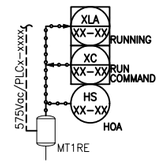


MOTOR TYPE MT1RE:
ETHERNET COMM., MANUAL
CONTROL WITH REMOTE HOA

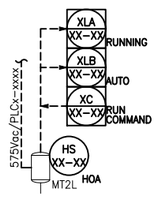


MOTOR TYPE MT2L:
AUTOMATIC CONTROL
WITH LOCAL HOA

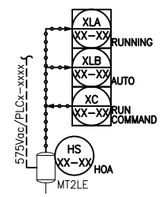


MOTOR TYPE MT2LE:
ETHERNET COMM., AUTOMATIC
CONTROL WITH LOCAL HOA

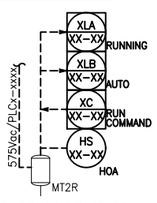


MOTOR TYPE MT2R:
AUTOMATIC CONTROL
WITH REMOTE HOA

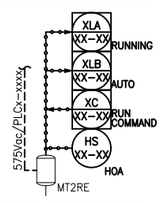


MOTOR TYPE MT2RE:
ETHERNET COMM., AUTOMATIC
CONTROL WITH REMOTE HOA

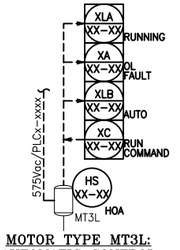


MOTOR TYPE MT3L:
AUTOMATIC CONTROL
WITH OVERLOAD
AND LOCAL HOA

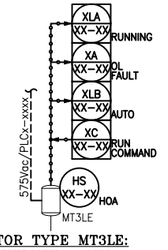


MOTOR TYPE MT3LE:
ETHERNET COMM.,
AUTOMATIC CONTROL WITH
OVERLOAD AND LOCAL HOA

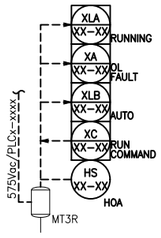


MOTOR TYPE MT3R:
AUTOMATIC CONTROL
WITH OVERLOAD
AND REMOTE HOA

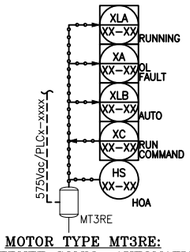


MOTOR TYPE MT3RE:
ETHERNET COMM., AUTOMATIC
CONTROL WITH OVERLOAD
AND REMOTE HOA

FIXED SPEED MOTOR TYPE

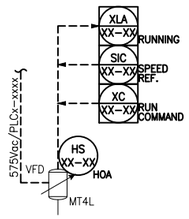


MOTOR TYPE MT4L:
SPEED FEEDBACK AND
RUNNING WITH LOCAL HOA

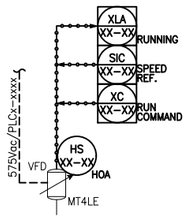


MOTOR TYPE MT4LE:
ETHERNET COMM., SPEED
FEEDBACK AND RUNNING
WITH LOCAL HOA

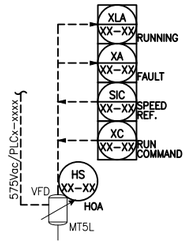


MOTOR TYPE MT5L:
SPEED FEEDBACK AND
RUNNING WITH LOCAL
HOA AND WITH FAULT

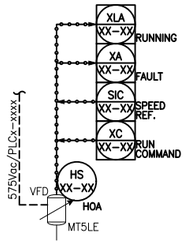


MOTOR TYPE MT5LE:
SPEED FEEDBACK AND
RUNNING WITH LOCAL
HOA AND WITH FAULT

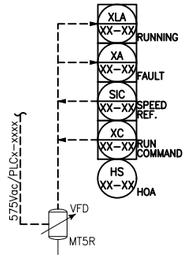


MOTOR TYPE MT5R:
SPEED FEEDBACK AND
RUNNING WITH REMOTE
HOA AND WITH FAULT

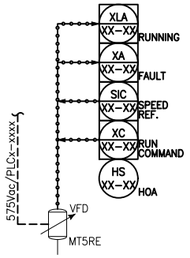


MOTOR TYPE MT5RE:
ETHERNET COMM., SPEED
FEEDBACK AND RUNNING WITH
REMOTE HOA AND WITH FAULT

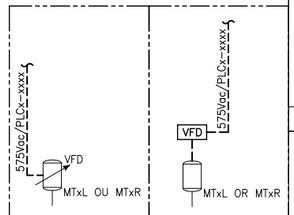


VARIABLE SPEED MOTOR TYPE

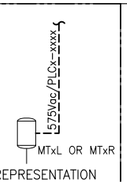


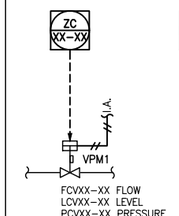


VALVE TYPE VPM1:
MODULATING

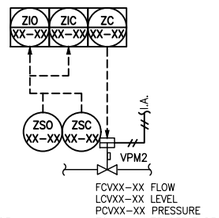


VALVE TYPE VPM2:
MODULATING WITH LIMIT
SWITCH

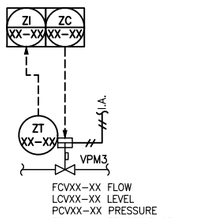


VALVE TYPE VPM3:
MODULATING WITH
POSITION FEEDBACK

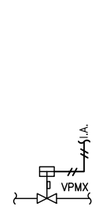


REPRESENTATION
IN P&ID

PNEUMATIC MODULATING VALVE TYPE

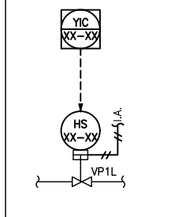


VALVE TYPE VP1L:
PNEUMATIC
ON–OFF WITH
LOCAL HS

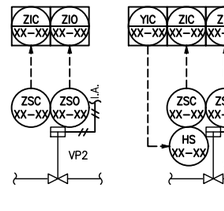


VALVE TYPE VP2:
PNEUMATIC ON/OFF
WITH LIMIT SWITCH

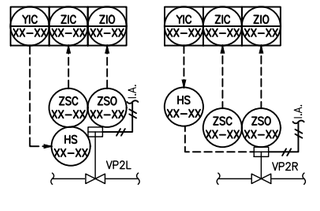


VALVE TYPE VP2L:
PNEUMATIC ON/OFF
WITH LIMIT SWITCH
WITH LOCAL HS




VALVE TYPE VP2R:
PNEUMATIC ON/OFF
WITH LIMIT SWITCH
WITH REMOTE HS




REPRESENTATION
IN P&ID

ON/OFF PNEUMATIC VALVE TYPE

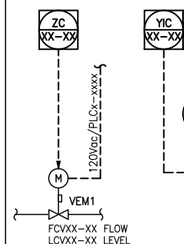


VALVE TYPE VEM1:
ELECTRICAL
MODULATING VALVE

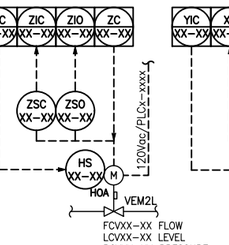


VALVE TYPE VEM2L:
ELECTRICAL MODULATING
VALVE WITH POSITION
FEEDBACK

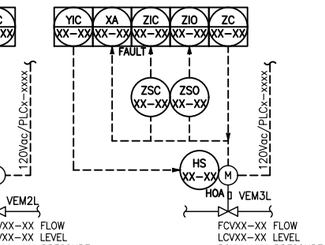


VALVE TYPE VEM3L:
ELECTRICAL MODULATING
VALVE WITH POSITION
FEEDBACK AND WITH FAULT

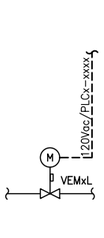


REPRESENTATION
IN P&ID

ELECTRIC MODULATING VALVE TYPE

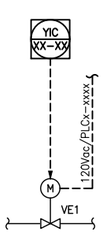


VALVE TYPE VE1:
ELECTRICAL ON/OFF
VALVE

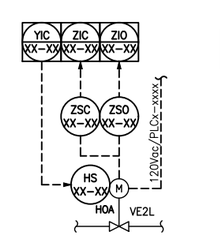


VALVE TYPE VE2L:
ELECTRICAL ON/OFF VALVE
WITH POSITION FEEDBACK

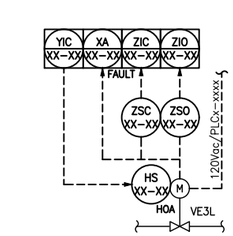


VALVE TYPE VE3L:
ELECTRICAL ON/OFF VALVE
WITH POSITION FEEDBACK AND
WITH FAULT

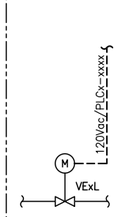


REPRESENTATION
IN P&ID

ELECTRICAL ON – OFF VALVE TYPE

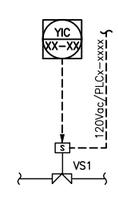


VALVE TYPE VS1:
SOLENOID VALVE

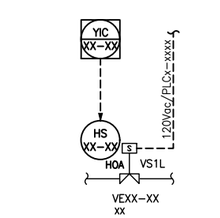


VALVE TYPE VS1L:
SOLENOID VALVE WITH LOCAL
HOA (MANUAL OVERRIDE)

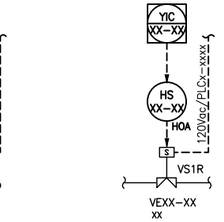


VALVE TYPE VS1R:
SOLENOID VALVE
WITH REMOTE HOA




REPRESENTATION
IN P&ID

SOLENOID VALVE TYPE

| RÉV. | DESCRIPTION | DATE | RÉVISÉ REVISED | VÉRIFIÉ VERIFIED | APPROUVÉ APPROVED |
|---|---|---|---|---|---|
| 5 | FOR INFORMATION | 2022-01-25 | A.R. | C.E.K. | T.S. |
| 4 | FOR INFORMATION | 2021-05-01 | A.R. | C.E.K./ G.M. | E.D. |
| 3 | FOR INFORMATION | 2021-03-11 | A.R. | C.E.K./ G.M. | E.D. |
| 2 | FOR INFORMATION | 2020-01-29 | A.R. | C.E.K./ G.M. | E.D. |
| 1 | FOR INFORMATION | 2020-01-21 | A.R. | C.E.K./ G.M. | E.D. |

VEOLIA WATER TECHNOLOGIES

| | | |
|---|---|---|
| DESSINATEUR/DESIGNER | 2020-01-08 | E.D. |
| VÉRIFICATEUR/CHECKER | 2020-01-08 | E.D. |
| INGÉNIEUR/ENGINEER | | DATE |

CLIENT: AEM MELIADINE–BPC

6526–S–265–605 / OC–989680

TITRE / TITLE

PROCESS AND INSTRUMENTATION DIAGRAM
LEGEND
MOTOR AND VALVE TYPES

ÉCHELLE / SCALE: A.R.

| PROJET / PROJECT | DESSIN /DRAWING | INTERNE / INTERNAL | FEUILLET / SHEET | RÉV./REV |
|---|---|---|---|---|
| 5000220043 - PI001 | | | 4 / 17 | 5 |

Ce document est la propriété de VEOLIA et ne peut être reproduit sans son autorisation écrite.
This document is the property of VEOLIA and cannot be reproduced without its written authorization.

Jan 26, 2022 - 9:02:56 - C:\WORKSPACE-INVENTOR\DESIGN\EDITION\2020\5000220043\PID-PI01\5000220043-PI001_5.dwg - ansi-d-no-frame-rev

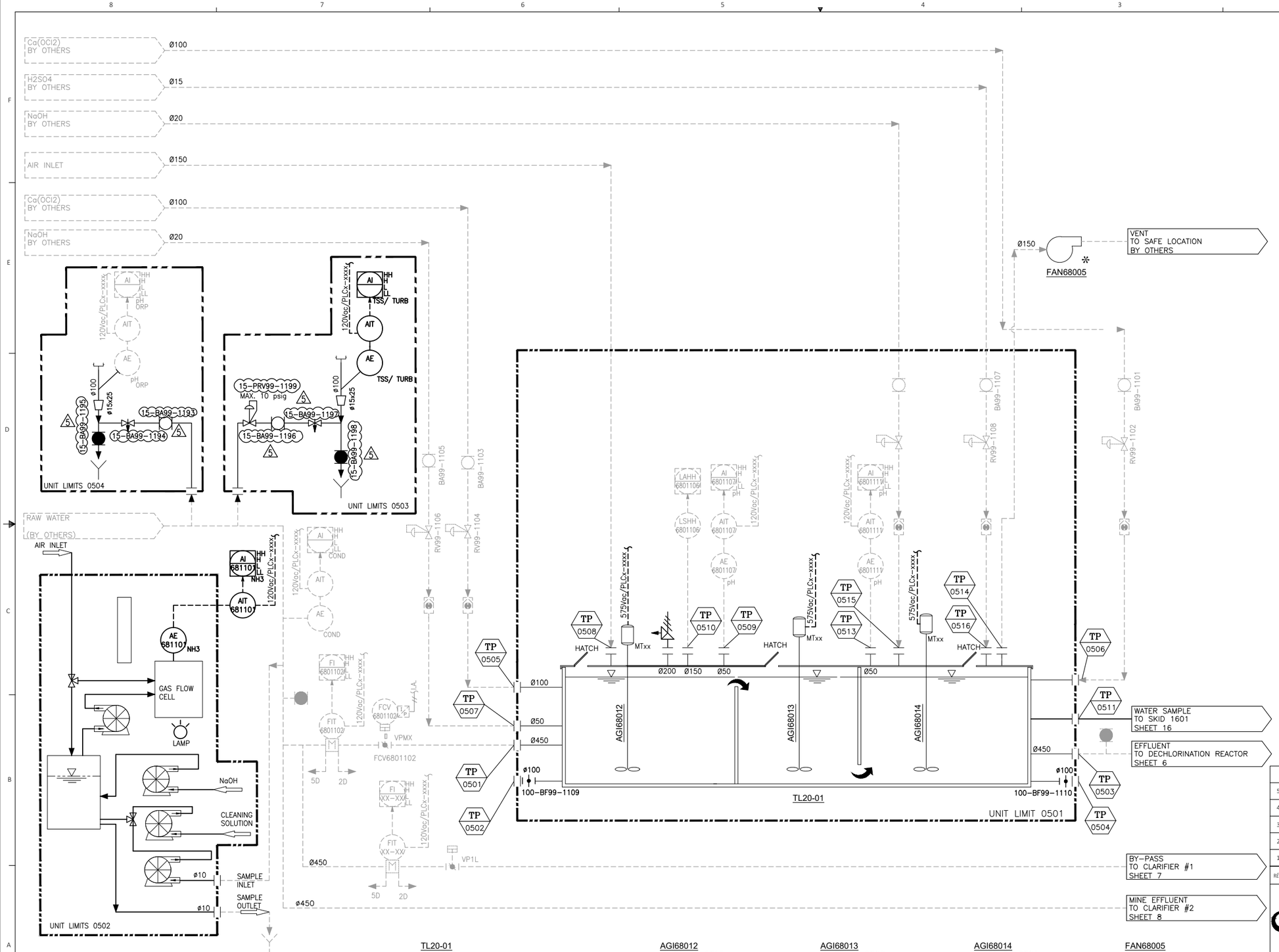


NOTE:

1. FOR TIE-POINTS DESCRIPTION, SEE GA DRAWING
2. RX75-3 REACTORS ARE PRE-MOUNTED AS MUCH AS POSSIBLE. HOWEVER, FOR FREIGHT PURPOSES OR GENERAL PRACTICAL REASONS, THE INSTALLATION OF SOME ITEMS NEEDS TO BE COMPLETED ON SITE BY THE SUBCONTRACTOR.

✻ SHIPPED LOOSE EQUIPMENT, SUPPLIED BY VEOLIA

**TL20-01**
REACTOR
MODEL RX75-3
TOTAL VOLUME: 193 m3 AT 3.52m.H.
VOLUME BASIN: 64.5m3
CONTACT TIME @ Q nom: 503m3/h=23.04minutes

**AGI68012**
MIXER REACTOR
MODEL: EVGX6-5
POWER: 5 HP
VOLTAGE: 575V/3Ph/60Hz
MATERIAL: SS 2205

**AGI68013**
MIXER REACTOR
MODEL: EVGX6-5
POWER: 5 HP
VOLTAGE: 575V/3Ph/60Hz
MATERIAL: SS 2205

**AGI68014**
MIXER REACTOR
MODEL: EVGX6-5
POWER: 5 HP
VOLTAGE: 575V/3Ph/60Hz
MATERIAL: SS 2205

**FAN68005**
FAN
MODEL: JET-20
CAPACITY: 300 cfm @ 0.5 psi
POWER: 1/3 HP
VOLTAGE: 115V/1Ph/60Hz

ALL TAGS FOR EQUIPMENT AND INSTRUMENTS HAVE A PREFIX "65"

| RÉV. | DESCRIPTION | DATE | RÉVISÉ REVISED | VÉRIFIÉ VERIFIED | APPROUVÉ APPROVED |
|---|---|---|---|---|---|
| 5 | FOR INFORMATION | 2022-01-25 | A.R. | C.E.K. | T.S. |
| 4 | FOR INFORMATION | 2021-05-01 | A.R. | C.E.K./G.M. | E.D. |
| 3 | FOR INFORMATION | 2021-03-11 | A.R. | C.E.K./G.M. | E.D. |
| 2 | FOR INFORMATION | 2020-01-29 | A.R. | C.E.K./G.M. | E.D. |
| 1 | FOR INFORMATION | 2020-01-21 | A.R. | C.E.K./G.M. | E.D. |

VEOLIA WATER TECHNOLOGIES

DESSINATEUR/DESIGNER 2020-01-08 DATE E.D.
VÉRIFICATEUR/CHECKER 2020-01-08 DATE E.D.
INGÉNIEUR/ENGINEER DATE

CLIENT
AEM MELIADINE-BPC
6526-S-265-605 / OC-989680

TITRE / TITLE
PROCESS AND INSTRUMENTATION DIAGRAM
CHLORINATION REACTOR

ÉCHELLE / SCALE: A.R.

PROJET / PROJECT 5000220043 - DESSIN /DRAWING PI001 | INTERNE / INTERNAL | FEUILLET / SHEET 5/17 | RÉV./REV 5

Ce document est la propriété de VEOLIA et ne peut être reproduit sans son autorisation écrite.
This document is the property of VEOLIA and cannot be reproduced without its written authorization.

Jan 26, 2022 9:03:01 - C:\WORKSPACE-INVENTOR\DESIGNS\EXECUTION\2020\5000220043\PID-PFD\5000220043-PI001_5.dwg - andrea.rooherrera

NOTE:

1. RX75-3 REACTORS ARE PRE-MOUNTED AS MUCH AS POSSIBLE. HOWEVER, FOR FREIGHT PURPOSES OR GENERAL PRACTICAL REASONS, THE INSTALLATION OF SOME ITEMS NEEDS TO BE COMPLETED ON SITE BY THE SUBCONTRACTOR.
2. FOR TIE-POINTS DESCRIPTION, SEE GA DRAWING.
3. FREE AND TOTAL CI2 ANALYSER WILL BE COMMON BETWEEN THE TWO REACTOR
4. TP-0606 IS USED TO REMOVE MANUALLY FLOATABLE PAC.

✲ SHIPPED LOOSE EQUIPMENT, SUPPLIED BY VEOLIA

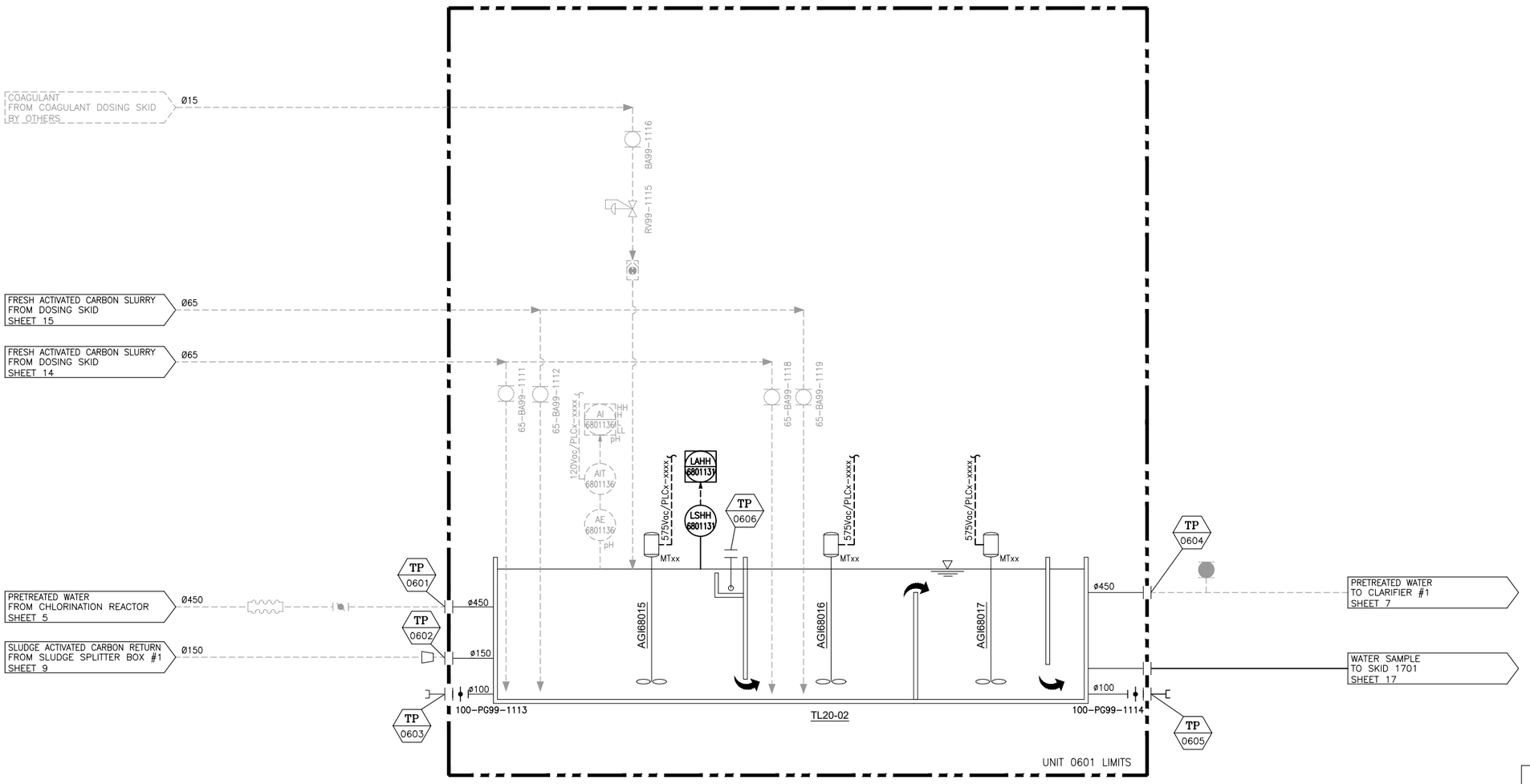


TL20-02
REACTOR
MODEL RX75-3
TOTAL VOLUME: 194 m3 @ 3.52m.H.
VOLUME BASIN: 64.5 m3
CONTACT TIME @ Q nom: 503 m3/h = 23.04 minutes

AGI68015
MIXER REACTOR
MODEL: EVGX6-5
POWER: 5 HP
VOLTAGE: 575V/3Ph/60Hz
MATERIAL: SS 2205

AGI68016
MIXER REACTOR
MODEL: EVGX6-5
POWER: 5 HP
VOLTAGE: 575V/3Ph/60Hz
MATERIAL: SS 2205

AGI68017
MIXER REACTOR
MODEL: EVGX6-5
POWER: 5 HP
VOLTAGE: 575V/3Ph/60Hz
MATERIAL: SS 2205

ALL TAGS FOR EQUIPMENT AND INSTRUMENTS HAVE A PREFIX "65"

| RÉV. | DESCRIPTION | DATE | RÉVISÉ REVISED | VÉRIFIÉ VERIFIED | APPROUVÉ APPROVED |
|---|---|---|---|---|---|
| 5 | FOR INFORMATION | 2022-01-25 | A.R. | C.E.K. | T.S. |
| 4 | FOR INFORMATION | 2021-05-01 | A.R. | C.E.K./G.M. | E.D. |
| 3 | FOR INFORMATION | 2021-03-11 | A.R. | C.E.K./G.M. | E.D. |
| 2 | FOR INFORMATION | 2020-01-29 | A.R. | C.E.K./G.M. | E.D. |
| 1 | FOR INFORMATION | 2020-01-21 | A.R. | C.E.K./G.M. | E.D. |

VEOLIA WATER TECHNOLOGIES

| | | |
|---|---|---|
| DESSINATEUR/DESIGNER 2020-01-08 | DATE E.D. | CLIENT AEM MELIADINE-BPC 6526-S-265-605 / OC-989680 |
| VÉRIFICATEUR/CHECKER 2020-01-08 | DATE E.D. | |
| INGÉNIEUR/ENGINEER | DATE | |

TITRE / TITLE
PROCESS AND INSTRUMENTATION DIAGRAM
DECHLORINATATION REACTOR

ÉCHELLE / SCALE: A.R.

| PROJET / PROJECT | DESSIN /DRAWING | INTERNE / INTERNAL | FEUILLET / SHEET | RÉV./REV |
|---|---|---|---|---|
| 5000220043 - | PI001 | | 6/17 | 5 |

Ce document est la propriété de VEOLIA et ne peut être reproduit sans son autorisation écrite.
This document is the property of VEOLIA and cannot be reproduced without its written authorization.

ANSI D

Jan 26, 2022 9:03:06 - C:\WORKSPACE-INVENTOR\DESIGNS\EXECUTION\2020\5000220043\PID-PFD\5000220043-PI001_5.dwg - andrea.rooherrera

NOTES:

1. SLUDGE DISCHARGE PIPING MUST BE DESIGNED TO PREVENT BACKPRESSURE INTO THE CYCLONES. IT IS IMPORTANT TO DROP ONE (1) FOOT AT THE SLUDGE OUTLET OF EACH HYDROCYCLONE.
   AFTER THE DROP, IF THE SLUDGE COLLECTOR IS A GRAVITY PIPE, IT MUST BE CALCULATED AS FREE FLOW WITH MAX 70–80% OF FILLING AND WITH A MAX VELOCITY OF 0.8 m/s.
   IF SEVERAL HYDROCYCLONES ARE IN OPERATION AT THE SAME TIME A VENT MUST BE ADDED ON EACH DROP.
2. ACTIFLO UNITS ARE PRE–ASSEMBLED. HOWEVER, FOR FREIGHT PURPOSES OR GENERAL PRACTICAL REASONS, THE INSTALLATION OF SOME ITEMS NEEDS TO BE COMPLETED ON SITE BY A CONTRACTOR.
3. A VENT MUST BE INSTALLED ON THE PIPE DISCHARGE IF ANY EQUIPMENT OR INSTRUMENT INSTALLED DOWNSTREAM COULD MALFUNCTION WITH AIR PRESENCE.
4. FOR TIE–POINT DESCRIPTION SEE GA DRAWING.
5. WATER ADMISSION IS REQUIRED ON THE HYDROCYCLONES TO ENHANCE THE SEPARATION OF FINE PARTICLES.

POLYMER BY OTHERS ø25 — TP 0704
NON POTABLE SERVICE WATER BY OTHERS 4.3m3/h @ 60 psi ø15 — TP 0703
25–BA99–1217, 25–BA99–1218
PI 68001143, BA99–1216
120Vac/PLCx–xxxx, 6801242
PI 68001139, BA99–1214
GL99–1215, FY6801237, GL99–1213
PI 6801241, PI 6801236
AI 6801201 HH H L LL ORP, AIT 6801201, AE 6801201 ORP
15–RV99–1224
THIOSULFATE BY OTHERS ø15 — 15–BA99–1225
COAGULANT BY OTHERS ø15
BY–PASS FROM CHLORINATION REACTOR SHEET 5 ø450
PRETREATED WATER FROM DECHLORINATION REACTOR SHEET 6 ø450
450–BF–1201 ø450x400
TP 0701 ø400
UNIT 0701 LIMITS
100–BF99–1101 ø100, 100–BF99–1102 ø100
TP 0709, TP 0710

VENT, VENT
ø100 — 20–BA99–1212
ø100 — 20–BA99–1211
PI 6801231, 15–BA99–1208 ø15
ø100 — 20–BA99–1210
PI 6801226, 15–BA99–1207 ø15
ø100 — 20–BA99–1209
CYC68002B, CYC68002A
15–BA99–1219, 15–BA99–1220, 15–BA99–1221, 15–BA99–1222
LAHH 6801224, LSHH 6801224
SA 20–03 L, SS 20–03, SSL 20–03 ROT. DETECTOR
575Vac/PLCx–xxxx, VFD, MTxx
MT3E, MT3E, MT3R
AGI68018, AGI68019, AGI68020
TRM68002
ACTIFLO ACP 700R
DRAIN 200ø
100–PG99–1205, 25–BA99–1214, 25–BA99–1203
100–PG99–1206, 25–BA99–1215
200–BF99–1204 ø200

120Vac/PLCx–xxxx, AI 6801221 HH H L LL PH, AIT 6801221, AE 6801221 PH
AI 6801222 HH H L LL TSS/TURB, AIT 6801222, AE 6801222 TSS/TURB
575Vac/PLCx–xxxx, HS HOA, VFD, MT5L, PSR68005A, PSR68005B
ø100x80, ø80, ø450

(SEE NOTE 1) SLUDGE TO SLUDGE SPLITTER TANK SHEET 9
TP 0705, TP 0706, TP 0707
(SEE NOTE 3) TREATED WATER TO DISCFILTER SHEET 11
SAMPLING POINT
TP 0708

AGI68018
COAGULATION TANK MIXER
MODEL: EVGX4–3
POWER: 3 HP
VOLTAGE: 575V/3Ph/60Hz
MATERIAL: SS 2205

AGI68019
INJECTION TANK MIXER
MODEL: EVGX4–3
POWER: 3 HP
VOLTAGE: 575V/3Ph/60Hz
MATERIAL: SS 2205

AGI68020
MATURATION TANK MIXER
MODEL: EVGX6–5
POWER: 5 HP
VOLTAGE: 575V/3Ph/60Hz
MATERIAL: SS 2205

TRM68002
SCRAPER
MODEL:
POWER: 0.75HP
VOLTAGE: 575V/3PH/60Hz
MATERIAL: SS 2205

CYC68002A/ CYC68002B
HYDROCYCLONE U4
SPLIT RATE: 90%/10%
OP. PRESSURE: 2.25 bar

PSR68005A/ PSR68005B
MICROSAND
RECIRCULATION PUMP M3H–CR 3/3
DESIGN: 45 m3/h @ 27m TDH
POWER: 15 HP
VOLTAGE: 575V/3Ph/60Hz

ALL TAGS FOR EQUIPMENT AND INSTRUMENTS HAVE A PREFIX "65"

| RÉV. | DESCRIPTION | DATE | RÉVISÉ REVISED | VÉRIFIÉ VERIFIED | APPROUVÉ APPROVED |
|---|---|---|---|---|---|
| 5 | FOR INFORMATION | 2022-01-25 | A.R. | C.E.K. | T.S. |
| 4 | FOR INFORMATION | 2021-05-01 | A.R. | C.E.K./ G.M. | E.D. |
| 3 | FOR INFORMATION | 2021-03-11 | A.R. | C.E.K./ G.M. | E.D. |
| 2 | FOR INFORMATION | 2020-01-29 | A.R. | C.E.K./ G.M. | E.D. |
| 1 | FOR INFORMATION | 2020-01-21 | A.R. | C.E.K./ G.M. | E.D. |

VEOLIA WATER TECHNOLOGIES

| | | |
|---|---|---|
| DESSINATEUR/DESIGNER | DATE | CLIENT |
| 2020–01–08 | E.D. | AEM MELIADINE–BPC |
| VÉRIFICATEUR/CHECKER | DATE | 6526–S–265–605 / OC–989680 |
| 2020–01–08 | E.D. | |
| INGÉNIEUR/ENGINEER | DATE | |

TITRE / TITLE
PROCESS AND INSTRUMENTATION DIAGRAM
CLARIFIER #1

ÉCHELLE / SCALE A.R.

| PROJET / PROJECT | DESSIN /DRAWING | INTERNE / INTERNAL | FEUILLET / SHEET | RÉV./REV |
|---|---|---|---|---|
| 5000220043 - | PI001 | | 7 / 17 | 5 |

Ce document est la propriété de VEOLIA et ne peut être reproduit sans son autorisation écrite.
This document is the property of VEOLIA and cannot be reproduced without its written authorization.

REF: 8 7 6 5 4 3 2 1 ANSI D

Jan 26, 2022 - 9:03:11 - C:\WORKSPACE-INSITE\DFJ53KS\EXECUTION\2020\5000220043\PID-PFD\5000220043-PI001_5.dwg - ansi-d-no-reference

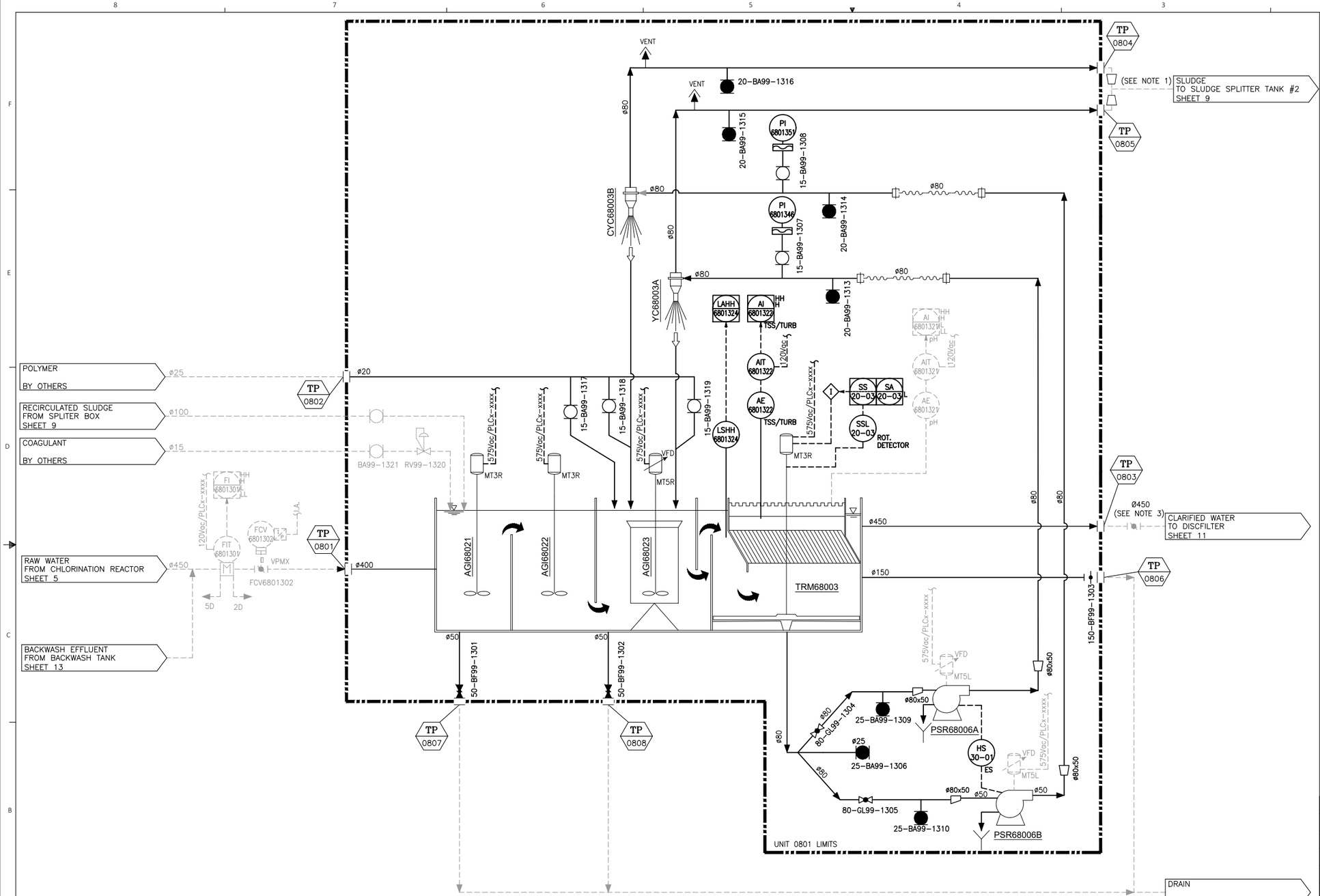


NOTES:

1. SLUDGE DISCHARGE PIPING MUST BE DESIGNED TO PREVENT BACKPRESSURE INTO THE CYCLONES. IT IS IMPORTANT TO DROP ONE (1) METER AT THE SLUDGE OUTLET OF EACH HYDROCYCLONE. AFTER THE DROP, IF THE SLUDGE COLLECTOR IS A GRAVITY PIPE, IT MUST BE CALCULATED AS FREE FLOW WITH MAX 70–80% OF FILLING AND WITH A MAX VELOCITY OF 0.8 m/s. IF SEVERAL HYDROCYCLONES ARE IN OPERATION AT THE SAME TIME A VENT MUST BE ADDED ON EACH DROP.
2. ACTIFLO UNITS ARE PRE–ASSEMBLED. HOWEVER, FOR FREIGHT PURPOSES OR GENERAL PRACTICAL REASONS, THE INSTALLATION OF SOME ITEMS NEEDS TO BE COMPLETED ON SITE BY A CONTRACTOR.
3. A VENT MUST BE INSTALLED ON THE PIPE DISCHARGE IF ANY EQUIPMENT OR INSTRUMENT INSTALLED DOWNSTREAM COULD MALFUNCTION WITH AIR PRESENCE.
4. FOR TIE–POINT DESCRIPTION SEE GA DRAWING.

**AGI68021**
PRECOAGULATION AGITATOR
MODEL:
POWER: 2.0 HP
VOLTAGE: 575V/3Ph/60Hz
MATERIAL: SS 2205

**AGI68022**
COAGULATION AGITATOR
MODEL:
POWER: 2.0 HP
VOLTAGE: 575V/3Ph/60Hz
MATERIAL: SS 2205

**AGI68023**
MATURATION AGITATOR
MODEL:
POWER: 5.0 HP
VOLTAGE: 575V/3Ph/60Hz
MATERIAL: SS 2205

**TRM68003**
SCRAPER
MODEL:
POWER: 0.7 HP
VOLTAGE: 575V/3PH/60Hz
MATERIAL: SS 2205

**YC68003A**
HYDROCYCLONE U4
SPLIT RATE: 20/80%
OP. PRESSURE: 190 kPa

**CYC68003B**
HYDROCYCLONE U4
SPLIT RATE: 20/80%
OP. PRESSURE: 190 kPa

**PSR68006A**
PUMP
MODEL: M3H–CR2
CAPACITY: 22 m3/h @ 23.89 m
POWER: 7.5 HP
VOLTAGE: 575V/3PH/60Hz

**PSR68006B**
PUMP
MODEL: M3H–CR2
CAPACITY: 22 m3/h @ 23.89 m
POWER: 7.5 HP
VOLTAGE: 575V/3PH/60Hz

COMMENTS: ALL TAGS FOR EQUIPMENT, AND INSTRUMENTS HAVE A PREFIX "65"

| RÉV. | DESCRIPTION | DATE | RÉVISÉ REVISED | VÉRIFIÉ VERIFIED | APPROUVÉ APPROVED |
|---|---|---|---|---|---|
| 5 | FOR INFORMATION | 2022-01-25 | A.R. | C.E.K. | T.S. |
| 4 | FOR INFORMATION | 2021-05-01 | A.R. | C.E.K./ G.M. | E.D. |
| 3 | FOR INFORMATION | 2021-03-11 | A.R. | C.E.K./ G.M. | E.D. |
| 2 | FOR INFORMATION | 2020-01-29 | A.R. | C.E.K./ G.M. | E.D. |
| 1 | FOR INFORMATION | 2020-01-21 | A.R. | C.E.K./ G.M. | E.D. |

VEOLIA WATER TECHNOLOGIES

| | | |
|---|---|---|
| DESSINATEUR/DESIGNER | DATE 2020-01-08 | E.D. |
| VÉRIFICATEUR/CHECKER | DATE 2020-01-08 | E.D. |
| INGÉNIEUR/ENGINEER | DATE | |

CLIENT: AEM MELIADINE–BPC

6526–S–265–605 / OC–989680

TITRE / TITLE

PROCESS AND INSTRUMENTATION DIAGRAM
CLARIFIER #2

ÉCHELLE / SCALE: A.R.

| PROJET / PROJECT DESSIN /DRAWING | INTERNE / INTERNAL | FEUILLET / SHEET | REV./REV |
|---|---|---|---|
| 5000220043 - PI001 | | 8 / 17 | 5 |

Ce document est la propriété de VEOLIA et ne peut être reproduit sans son autorisation écrite.
This document is the property of VEOLIA and cannot be reproduced without its written authorization.

REF: ANSI D

Jan 26, 2022 - 9:03:16 - C:\WORKSPACE-INVENTOR\DESIGNS\EXECUTION\2020\5000220043\PID-PFD\5000220043-PI001_5.dwg - andrec.roehrens

Jan 26, 2022 - 9:03:21 - C:\WORKSPACE-INSTATOR\DESIGNS\EXECUTION\2020\5000220043\PID-PI01\5000220043-PI001_5.dwg - anderec.noiferrera

SLUDGE FROM CLARIFIER #1 SHEET 7 — ø150

SLUDGE FROM CLARIFIER #2 SHEET 8 — ø150

ø100 — SLUDGE OVERFLOW TO CLARIFIER #2 SHEET 8

ø150 — SLUDGE OVERFLOW TO DECHLORINATION REACTOR SHEET 6

NOTE:

1. LOW POINT DRAIN AND HIGH POINT VENT WILL BE DEFINED AT DETAILED ENGINEERING PHASE.
2. STABILIZE THE SPLITTER BOXES TO AVOID LATERAL MOVEMENT.
3. USE OF FLEXIBLE JOINTS OR FLEXIBLE PIPING AT INLET AND OUTLET CONNECTION OF THE SPLITTER BOXES IS RECOMMENDED TO PREVENT EXCESSIVE SHEAR STRESS ON FLANGES WELDS.
4. HIGH SOLID CONCENTRATION AND HIGH VELOCITY IN THE PIPING COULD LEAD TO ABRASION OF MATERIAL. VWT RECOMMENDS USING ADEQUATE FLEXIBLE PIPING MATERIAL FOR EXEMPLE ALFAGOMMA TYPE 202AA.

✲ SHIPPED LOOSE EQUIPMENT, SUPPLIED BY VEOLIA

TNK68019

TP 0901 — LAHH 6801406 — LSHH 6801406 — Ø25 FNPT — TP 0905 — TP 0904 — Ø150

LALL 6801406 — LSLL 6801406 — ø25 — TP 0906 — TP 0902 — ø100 — TP 0903 — ø100

TNK68020

LAHH 6801411 — LSHH 6801411 — TP 0907 — TP 0908 — ø100 — Ø25 FNPT — TP 0911 — TP 0910

LALL 6801411 — LSLL 6801411 — ø25 — TP 0912 — ø100 — TP 0909

UNIT LIMITS 0902

AI 6801427 HH H L LL TSS — 120Vac/PLCx-xxxx — AIT 6801427 — AE 6801427 TSS — ø15x10 — ø100 — ø15x25

15-PRV99-1499 — 5 — 15-BA99-1497 — 15-BA99-1496 — 5 — MAX. 10 psig — 15-BA99-1498 — 5

AI 6801417 HH H L LL TSS — 120Vac/PLCx-xxxx — AIT 6801417 — AE 6801417 TSS — ø15x10 — ø100 — ø15x25

15-PRV99-1495 — 5 — 15-BA99-1493 — MAX. 10 psig — 15-BA99-1492 — 15-BA99-1494 — 5

UNIT LIMITS 0901

PI 6801416 — ø15 — 15-BA99-1402 — ø15 — 15-BA99-1401 — ø25 S.P. 25-BA99-1403 — 100-PV99-1404

575Vac — ø100x75 — 100-PG99-1405 — PSR68007A — ø100x75 — 100-PG99-1407

575Vac — PSR68007B ✲ ON SHELF

FI 6801432 — 120Vac/PLCx-xxxx — FIT 6801432 — FCV 6801433 — I.A. — VPM3 — ø50 — 65FCV68011433 — SLUDGE EXTRACTION TO SLUDGE TANK SHEET 10 — 5D — 2D

PI 6801426 — ø15 — 15-BA99-1415 — ø15 — 15-BA99-1414 — ø25 S.P. 25-BA99-1416 — 100-PV99-1417

575Vac — ø100x75 — 100-PG99-1418 — PSR68007C — ø100x75 — 100-PG99-1420

FI 6801437 — 120Vac/PLCx-xxxx — FIT 6801437 — FCV 6801438 — I.A. — VPM3 — ø50 — 65FCV68011438 — SLUDGE EXTRACTION TO SLUDGE TANK SHEET 10 — 5D — 2D

**TNK68019**
SLUDGE SPLITTER BOX
VOLUME: 1.3 m3
DIMENSION: ø610mm. x 4500mm. H
MATERIAL: PVC

**TNK68019**
SLUDGE SPLITTER BOX
VOLUME: 1.1 m3
DIMENSION: ø610mm. x 3750mm.H
MATERIAL: PVC

**PSR68007A/B/C**
SLUDGE EXTRACTION PUMP
MODEL: M3H-CR 3/3
CAPACITY: 40 m3/h at 5 m TDH
POWER: 5 HP
VOLTAGE: 575V/3Ph/60Hz

COMMENTS: ALL TAGS FOR EQUIPMENT AND INSTRUMENTS HAVE A PREFIX "65"

| RÉV. | DESCRIPTION | DATE | RÉVISÉ REVISED | VÉRIFIÉ VERIFIED | APPROUVÉ APPROVED |
|---|---|---|---|---|---|
| 5 | FOR INFORMATION | 2022-01-25 | A.R. | C.E.K. | T.S. |
| 4 | FOR INFORMATION | 2021-05-01 | A.R. | C.E.K./ G.M. | E.D. |
| 3 | FOR INFORMATION | 2021-03-11 | A.R. | C.E.K./ G.M. | E.D. |
| 2 | FOR INFORMATION | 2020-01-29 | A.R. | C.E.K./ G.M. | E.D. |
| 1 | FOR INFORMATION | 2020-01-21 | A.R. | C.E.K./ G.M. | E.D. |

VEOLIA WATER TECHNOLOGIES

DESSINATEUR/DESIGNER: 2020-01-08 E.D. — VÉRIFICATEUR/CHECKER: 2020-01-08 E.D. — INGÉNIEUR/ENGINEER: DATE

CLIENT: AEM MELIADINE-BPC

6526-S-265-605 / OC-989680

TITRE / TITLE

PROCESS AND INSTRUMENTATION DIAGRAM
SLUDGE SPLITTER BOX #1 / #2

ÉCHELLE / SCALE: A.R.

PROJET / PROJECT: 5000220043 - PI001 — DESSIN /DRAWING — INTERNE / INTERNAL — FEUILLET / SHEET: 9 / 17 — RÉV./REV: 5

Ce document est la propriété de VEOLIA et ne peut être reproduit sans son autorisation écrite.
This document is the property of VEOLIA and cannot be reproduced without its written authorization.

REF: — ANSI D

NOTE:

1. LOW POINT DRAIN AND HIGH POINT VENT WILL BE DEFINED AT DETAILED ENGINEERING PHASE.
2. FOR TIE-POINTS DESCRIPTION, SEE GA DRAWING.

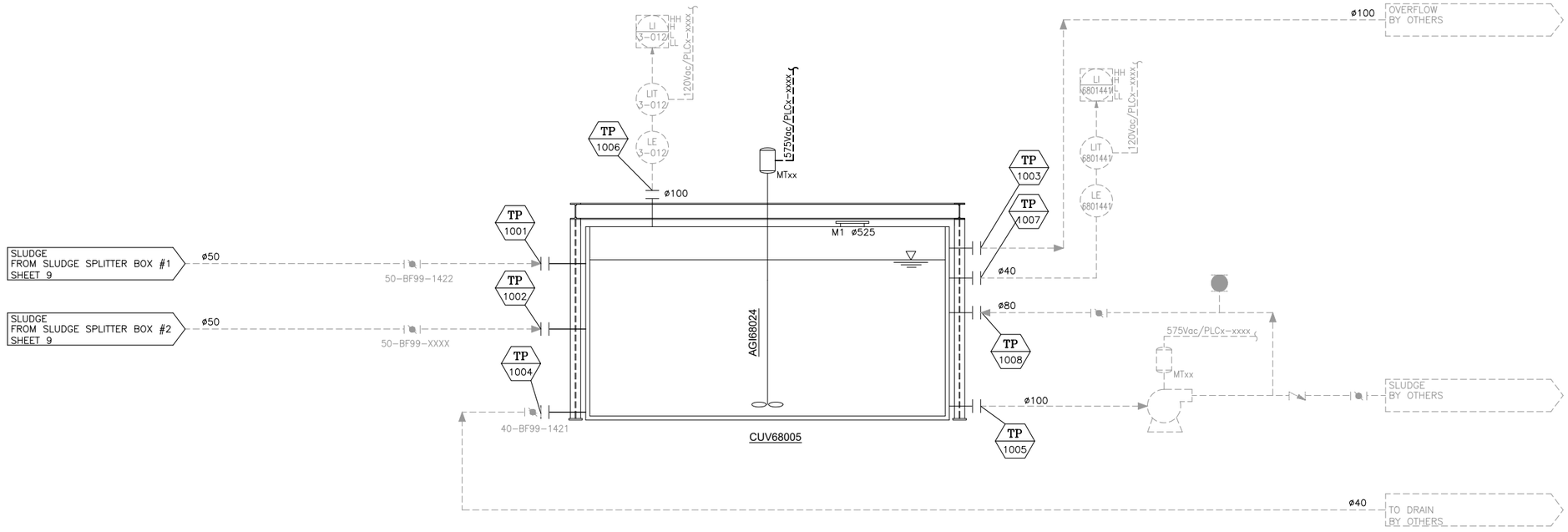


CUV68005
SLUDGE TANK
VOLUME: 15 m3
DIMENSION: ø2286mm. X 4261mm.H
MATERIAL: HDPE

AGI68024
MIXER
MODEL: EVGX4-3.0
POWER: 3 HP
MATERIAL: DUPLEX 2205
VOLTAGE: 575 V/3PH/60 HZ

COMMENTS: ALL TAGS FOR EQUIPMENT AND INSTRUMENTS HAVE A PREFIX "65"

| RÉV. | DESCRIPTION | DATE | RÉVISÉ REVISED | VÉRIFIÉ VERIFIED | APPROUVÉ APPROVED |
|---|---|---|---|---|---|
| 5 | FOR INFORMATION | 2022-01-25 | A.R. | C.E.K. | T.S. |
| 4 | FOR INFORMATION | 2021-05-01 | A.R. | C.E.K./G.M. | E.D. |
| 3 | FOR INFORMATION | 2021-03-11 | A.R. | C.E.K./G.M. | E.D. |
| 2 | FOR INFORMATION | 2020-01-29 | A.R. | C.E.K./G.M. | E.D. |
| 1 | FOR INFORMATION | 2020-01-21 | A.R. | C.E.K./G.M. | E.D. |

VEOLIA WATER TECHNOLOGIES

DESSINATEUR/DESIGNER: 2020-01-08 DATE: E.D.
VÉRIFICATEUR/CHECKER: 2020-01-08 DATE: E.D.
INGÉNIEUR/ENGINEER: DATE:

CLIENT: AEM MELIADINE-BPC
6526-S-265-605 / OC-989680

TITRE / TITLE: PROCESS AND INSTRUMENTATION DIAGRAM SLUDGE TANK

ÉCHELLE / SCALE: A.R.

PROJET / PROJECT: 5000220043 - DESSIN /DRAWING: PI001
INTERNE / INTERNAL:
FEUILLET / SHEET: 10 / 17
RÉV./REV: 5

Ce document est la propriété de VEOLIA et ne peut être reproduit sans son autorisation écrite.
This document is the property of VEOLIA and cannot be reproduced without its written authorization.

Jan 26, 2022 9:03:26 - C:\WORKSPACE-INVENTOR\DESIGNS\EXECUTION\2020\5000220043\PID-PFD\5000220043-PI001_5.dwg - andrea.rooherrera

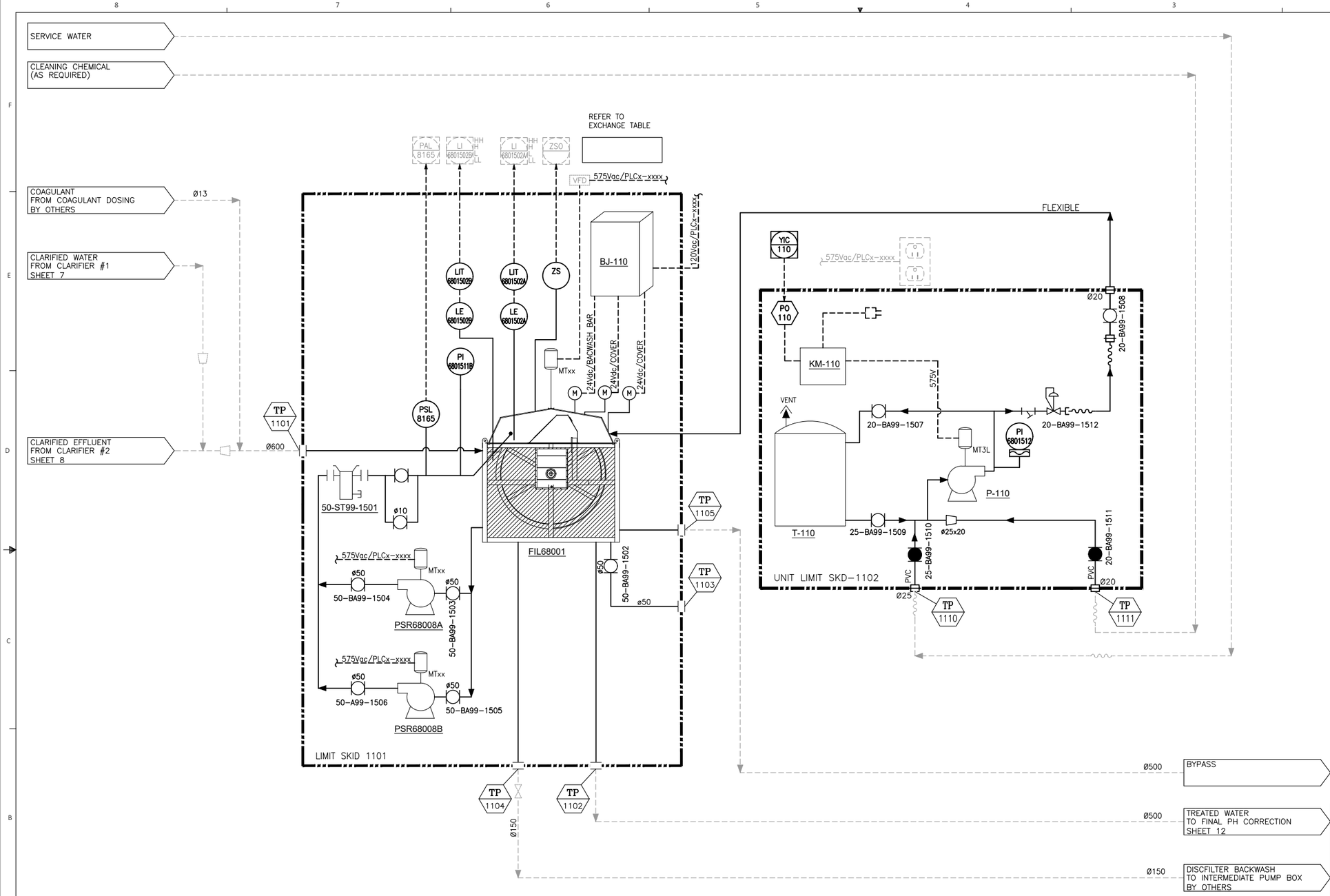


NOTE:

1. LOW POINT DRAIN AND HIGH POINT VENT WILL BE DEFINED AT DETAILED ENGINEERING PHASE.
2. FOR TIE-POINTS DESCRIPTION, SEE GA DRAWING
3. FOR CHEMICAL TYPE AND CONSUMPTION REFER TO 5000220043_HSI_0001_HSF_VWT

PSR68008A / PSR68008B
DISCFILTER No. 1 BACKWASH PUMP
DISCFILTER No. 2 BACKWASH PUMP
BACKWASH PUMP
TYPE: VERTICAL MULTISTAGE CENTRIFUGAL PUMP
DESIGN:
POWER: 15 HP
VOLTAGE: 575V/3Ph/60Hz

FIL68001
DISCFILTER No. 1 / 2
MODEL: HPF 2218-1F
OPENING: 10 MICRONS

T-110
SOLUTION TANK
VOLUME: 180 L
MATERIAL: HDPE

P-110
CLEANING CHEMICAL FEED PUMP
TYPE: MAGNETIC DRIVE PUMP
CAPACITY: 265 LPM @ 41 psig (MAX.)
POWER: 3HP
VOLTAGE: 575V/3PH/60Hz

COMMENTS: ALL TAGS FOR EQUIPMENT VALVES AND INSTRUMENTS HAVE A PREFIX "65"

| RÉV. | DESCRIPTION | DATE | RÉVISÉ REVISED | VÉRIFIÉ VERIFIED | APPROUVÉ APPROVED |
|---|---|---|---|---|---|
| 5 | FOR INFORMATION | 2022-01-25 | A.R. | C.E.K. | T.S. |
| 4 | FOR INFORMATION | 2021-05-01 | A.R. | C.E.K./G.M. | E.D. |
| 3 | FOR INFORMATION | 2021-03-11 | A.R. | C.E.K./G.M. | E.D. |
| 2 | FOR INFORMATION | 2020-01-29 | A.R. | C.E.K./G.M. | E.D. |
| 1 | FOR INFORMATION | 2020-01-21 | A.R. | C.E.K./G.M. | E.D. |

VEOLIA WATER TECHNOLOGIES

DESSINATEUR/DESIGNER: 2020-01-08 — DATE: E.D.
VÉRIFICATEUR/CHECKER: 2020-01-08 — DATE: E.D.
INGÉNIEUR/ENGINEER — DATE

CLIENT: AEM MELIADINE-BPC
6526-S-265-605 / OC-989680

TITRE / TITLE: PROCESS AND INSTRUMENTATION DIAGRAM DISCFILTER

ÉCHELLE / SCALE: A.R.

PROJET / PROJECT: 5000220043 - DESSIN /DRAWING: PI001 — INTERNE / INTERNAL — FEUILLET / SHEET: 11/17 — RÉV./REV: 5

Ce document est la propriété de VEOLIA et ne peut être reproduit sans son autorisation écrite.
This document is the property of VEOLIA and cannot be reproduced without its written authorization.

Jan 26, 2022 9:03:32 - C:\WORKSPACE-INVENTOR\DESIGNS\EXECUTION\2020\5000220043\PID-PFD\5000220043-PI001_5.dwg - andrea.rooherrera

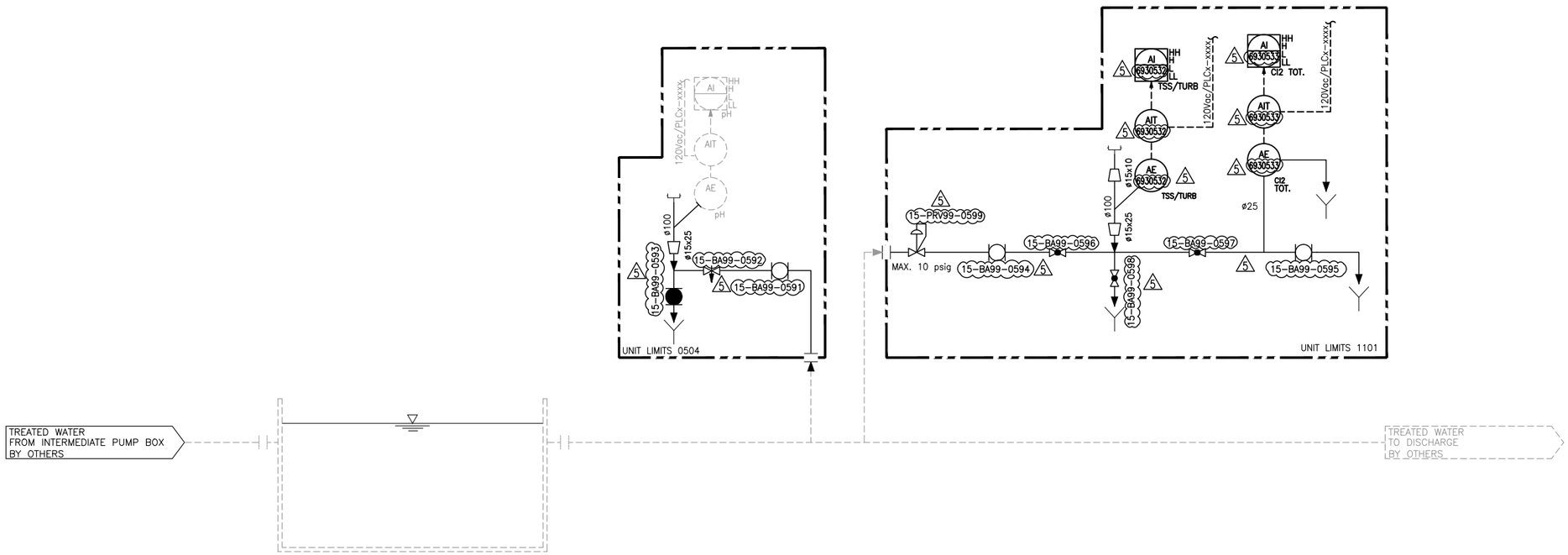


TL 30-03
FINAL PH CORRECTION TANK
BY OTHERS

COMMENTS: ALL TAGS FOR EQUIPMENT AND INSTRUMENTS HAVE A PREFIX "65"

| RÉV. | DESCRIPTION | DATE | RÉVISÉ REVISED | VÉRIFIÉ VERIFIED | APPROUVÉ APPROVED |
|---|---|---|---|---|---|
| 5 | FOR INFORMATION | 2022-01-25 | A.R. | C.E.K. | T.S. |
| 4 | FOR INFORMATION | 2021-05-01 | A.R. | C.E.K./ G.M. | E.D. |
| 3 | FOR INFORMATION | 2021-03-11 | A.R. | C.E.K./ G.M. | E.D. |
| 2 | FOR INFORMATION | 2020-01-29 | A.R. | C.E.K./ G.M. | E.D. |
| 1 | FOR INFORMATION | 2020-01-21 | A.R. | C.E.K./ G.M. | E.D. |

VEOLIA WATER TECHNOLOGIES

| | | |
|---|---|---|
| DESSINATEUR/DESIGNER 2020-01-08 | DATE E.D. | CLIENT AEM MELIADINE-BPC 6526-S-265-605 / OC-989680 |
| VÉRIFICATEUR/CHECKER 2020-01-08 | DATE E.D. | |
| INGÉNIEUR/ENGINEER | DATE | |

TITRE / TITLE

PROCESS AND INSTRUMENTATION DIAGRAM
FINAL PH CORRECTION TANK

ÉCHELLE / SCALE: A.R.

| PROJET / PROJECT | DESSIN /DRAWING | INTERNE / INTERNAL | FEUILLET / SHEET | RÉV./REV |
|---|---|---|---|---|
| 5000220043 - | PI001 | | 12/17 | 5 |

Ce document est la propriété de VEOLIA et ne peut être reproduit sans son autorisation écrite.
This document is the property of VEOLIA and cannot be reproduced without its written authorization.

REF: ANSI D

Jan 26, 2022 9:03:37 - C:\WORKSPACE-INVENTOR\DESIGNS\EXECUTION\2020\5000220043\PID-PFD\5000220043-PI001_5.dwg - andrea.roaherrera

NOTE:

1. LOW POINT DRAIN AND HIGH POINT VENT WILL BE DEFINED AT DETAILED ENGINEERING PHASE.

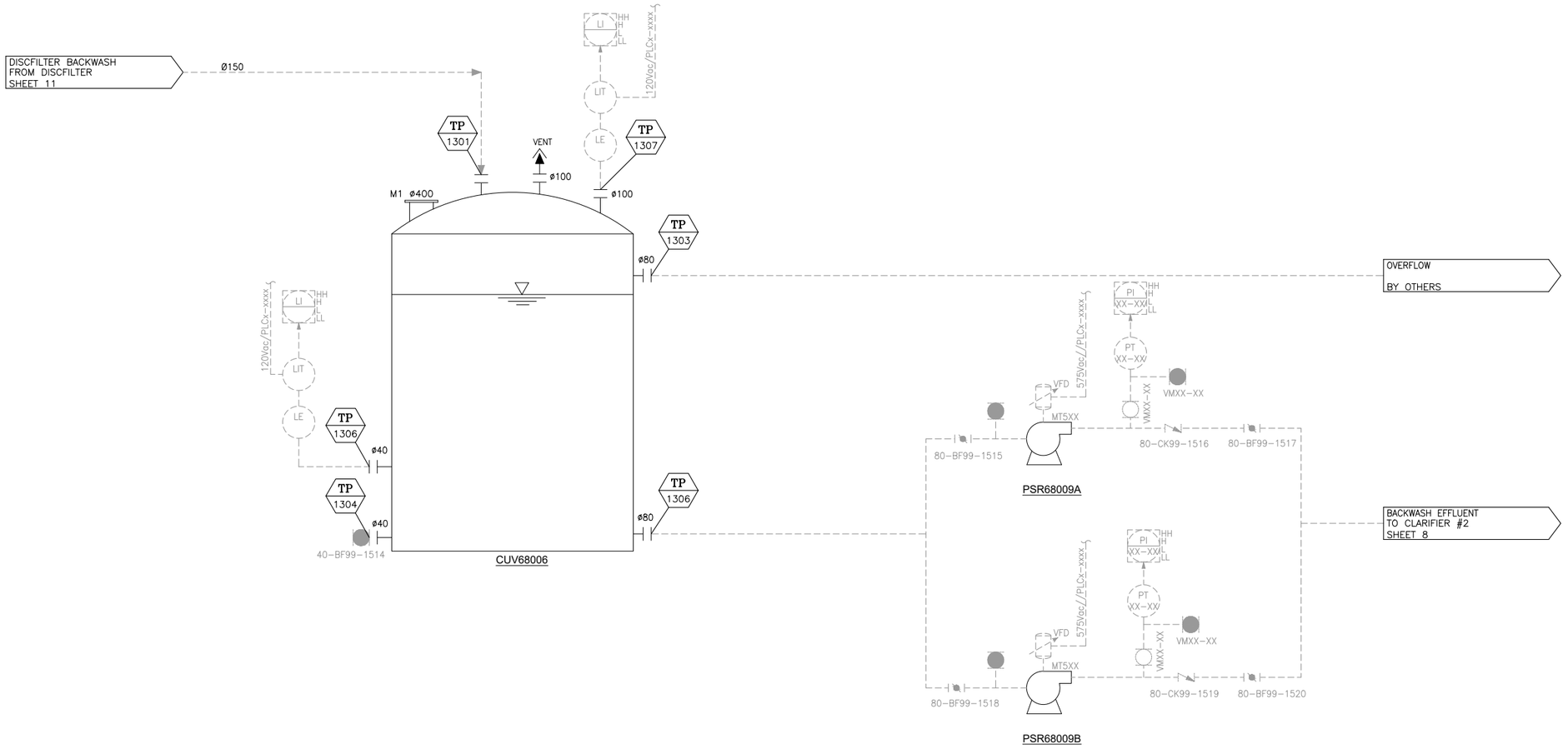


CUV68006
BACKWASH TANK
VOLUME: 5 m3
DIMENSIONS: ø2184mm x 2121mm H
MATERIAL: HDPE

PSR68009A / PSR68009B
PUMPS CENTRIFUGAL PUMPS
MODEL:
CAPACITY: 20m3/h @ 10m TDH
POWER: 10 HP
VOLTAGE: 575V/3PH/60Hz

COMMENTS: ALL TAGS FOR EQUIPMENT AND INSTRUMENTS HAVE A PREFIX "65"

| RÉV. | DESCRIPTION | DATE | RÉVISÉ REVISED | VÉRIFIÉ VERIFIED | APPROUVÉ APPROVED |
|---|---|---|---|---|---|
| 5 | FOR INFORMATION | 2022-01-25 | A.R. | C.E.K. | T.S. |
| 4 | FOR INFORMATION | 2021-05-01 | A.R. | C.E.K./ G.M. | E.D. |
| 3 | FOR INFORMATION | 2021-03-11 | A.R. | C.E.K./ G.M. | E.D. |
| 2 | FOR INFORMATION | 2020-01-29 | A.R. | C.E.K./ G.M. | E.D. |
| 1 | FOR INFORMATION | 2020-01-21 | A.R. | C.E.K./ G.M. | E.D. |

VEOLIA WATER TECHNOLOGIES

DESSINATEUR/DESIGNER: 2020-01-08 DATE: E.D.
VÉRIFICATEUR/CHECKER: 2020-01-08 DATE: E.D.
INGÉNIEUR/ENGINEER: DATE:

CLIENT: AEM MELIADINE-BPC
6526-S-265-605 / OC-989680

TITRE / TITLE: PROCESS AND INSTRUMENTATION DIAGRAM
BACKWASH TANK

ÉCHELLE / SCALE: A.R.

PROJET / PROJECT: 5000220043 - DESSIN /DRAWING: PI001
INTERNE / INTERNAL:
FEUILLET / SHEET: 13/17
RÉV./REV: 5

Ce document est la propriété de VEOLIA et ne peut être reproduit sans son autorisation écrite.
This document is the property of VEOLIA and cannot be reproduced without its written authorization.

ANSI D

Jan 26, 2022 9:03:42 - C:\WORKSPACE-INVENTOR\DESIGNS\EXECUTION\2020\5000220043\PID-PFD\5000220043-PI001_5.dwg - andrea.roaherrera

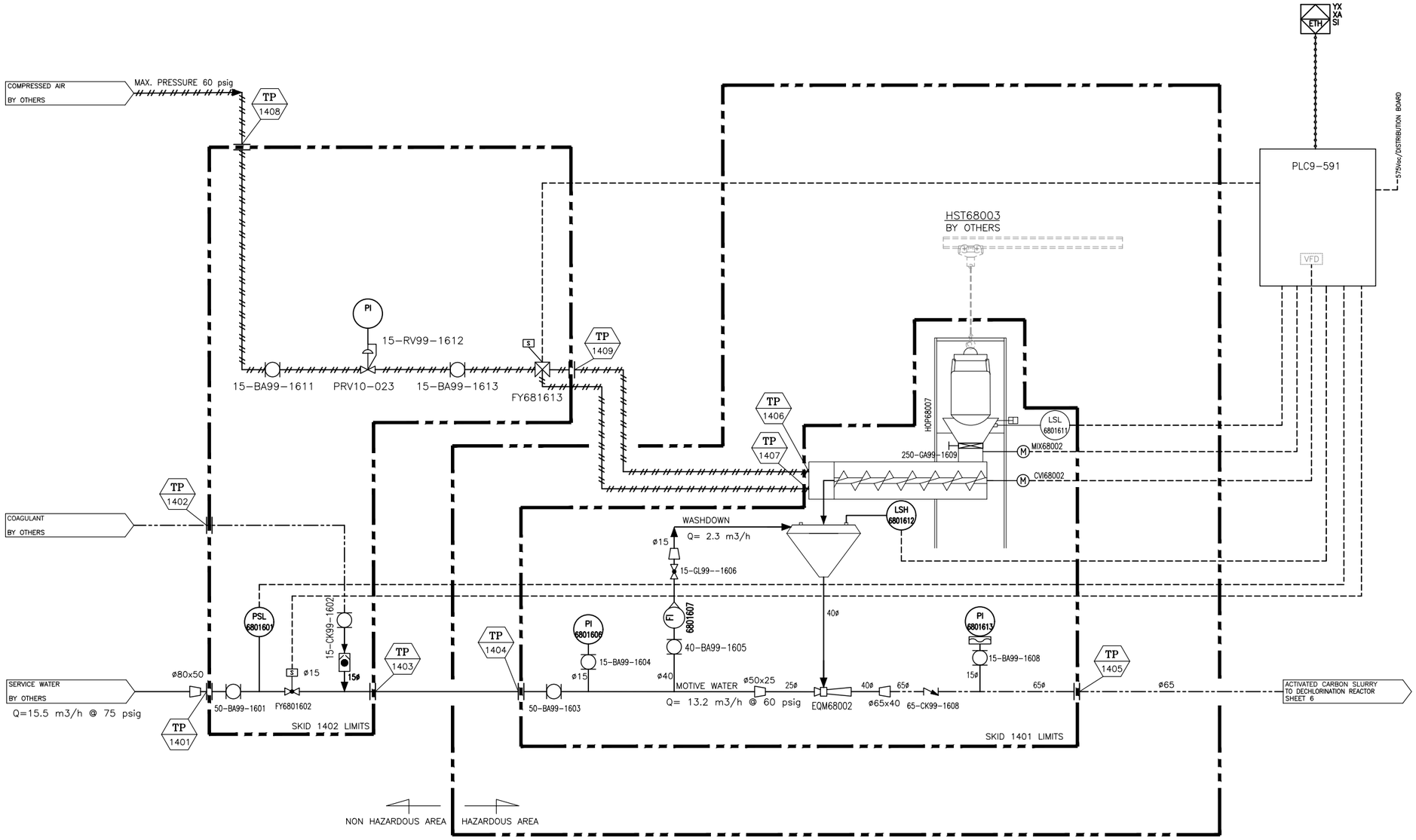


CVI68002
SCREW FEEDDER
CAPACITY: 233.1 L/H
MOTOR: 0.5 HP
VOLTAGE: 575V/3pH/60Hz
C1 II DIV. 1 Gr F

MIX68002
HOPPER AGITATOR
MOTOR:0.7 HP
VOLTAGE: 575V/3pH/60Hz
C1 II DIV. 1 Gr F

COMMENTS: ALL TAGS FOR EQUIPMENT VALVES AND INSTRUMENTS HAVE A PREFIX "65"

| RÉV. | DESCRIPTION | DATE | RÉVISÉ REVISED | VÉRIFIÉ VERIFIED | APPROUVÉ APPROVED |
|---|---|---|---|---|---|
| 5 | FOR INFORMATION | 2022-01-25 | A.R. | C.E.K. | T.S. |
| 4 | FOR INFORMATION | 2021-05-01 | A.R. | C.E.K./ G.M. | E.D. |
| 3 | FOR INFORMATION | 2021-03-11 | A.R. | C.E.K./ G.M. | E.D. |
| 2 | FOR INFORMATION | 2020-01-29 | A.R. | C.E.K./ G.M. | E.D. |
| 1 | FOR INFORMATION | 2020-01-21 | A.R. | C.E.K./ G.M. | E.D. |

VEOLIA WATER TECHNOLOGIES

DESSINATEUR/DESIGNER: 2020-01-08 — DATE: E.D.
VÉRIFICATEUR/CHECKER: 2020-01-08 — DATE: E.D.
INGÉNIEUR/ENGINEER — DATE

CLIENT: AEM MELIADINE-BPC
6526-S-265-605 / OC-989680

TITRE / TITLE: PROCESS AND INSTRUMENTATION DIAGRAM
ACTIVATED CARBON PREPARATION #1

ÉCHELLE / SCALE: A.R.

PROJET / PROJECT: 5000220043 - DESSIN /DRAWING: PI001 | INTERNE / INTERNAL | FEUILLET / SHEET: 14 / 17 | RÉV./REV: 5

Ce document est la propriété de VEOLIA et ne peut être reproduit sans son autorisation écrite.
This document is the property of VEOLIA and cannot be reproduced without its written authorization.

REF: ANSI D

Jan 26, 2022 9:03:47 - C:\WORKSPACE-INVENTOR\DESIGNS\EXECUTION\2020\5000220043\PID-PFD\5000220043-PI001_5.dwg - andrea.roaherrera

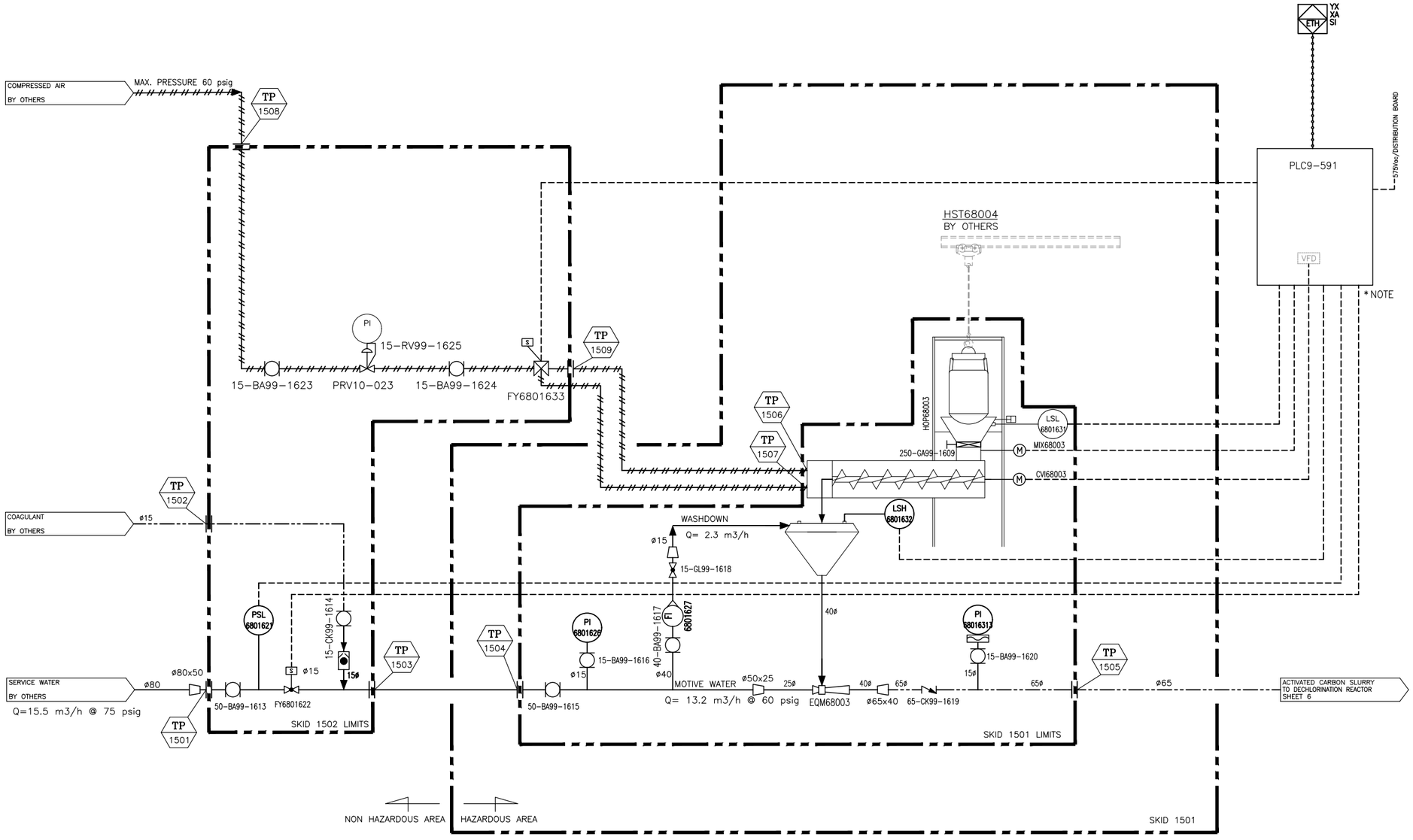


CVI68003
SCREW FEEDDER
CAPACITY: 233.1 L/h
MOTOR: 0.5 HP
VOLTAGE: 575V/3pH/60Hz
C1 II DIV. 1 Gr F

MIX68003
HOPPER AGITATOR
MOTOR:0.7 HP
VOLTAGE: 575V/3pH/60Hz
C1 II DIV. 1 Gr F

COMMENTS: ALL TAGS FOR EQUIPMENT VALVES AND INSTRUMENTS HAVE A PREFIX "65"

| RÉV. | DESCRIPTION | DATE | RÉVISÉ REVISED | VÉRIFIÉ VERIFIED | APPROUVÉ APPROVED |
|---|---|---|---|---|---|
| 5 | FOR INFORMATION | 2022-01-25 | A.R. | C.E.K. | T.S. |
| 4 | FOR INFORMATION | 2021-05-01 | A.R. | C.E.K./ G.M. | E.D. |
| 3 | FOR INFORMATION | 2021-03-11 | A.R. | C.E.K./ G.M. | E.D. |
| 2 | FOR INFORMATION | 2020-01-29 | A.R. | C.E.K./ G.M. | E.D. |
| 1 | FOR INFORMATION | 2020-01-21 | A.R. | C.E.K./ G.M. | E.D. |

VEOLIA WATER TECHNOLOGIES

DESSINATEUR/DESIGNER: 2020-01-08 — DATE: E.D.
VÉRIFICATEUR/CHECKER: 2020-01-08 — DATE: E.D.
INGÉNIEUR/ENGINEER — DATE

CLIENT: AEM MELIADINE-BPC
6526-S-265-605 / OC-989680

TITRE / TITLE: PROCESS AND INSTRUMENTATION DIAGRAM
ACTIVATED CARBON PREPARATION #2

ÉCHELLE / SCALE: A.R.

PROJET / PROJECT: 5000220043 - DESSIN /DRAWING: PI001 | INTERNE / INTERNAL | FEUILLET / SHEET: 15/17 | RÉV./REV: 5

Ce document est la propriété de VEOLIA et ne peut être reproduit sans son autorisation écrite.
This document is the property of VEOLIA and cannot be reproduced without its written authorization.

REF: ANSI D

Jan 26, 2022 9:03:52 - C:\WORKSPACE-INVENTOR\DESIGNS\EXECUTION\2020\5000220043\PID-PFD\5000220043-PI001_5.dwg - andrea.roaherrera

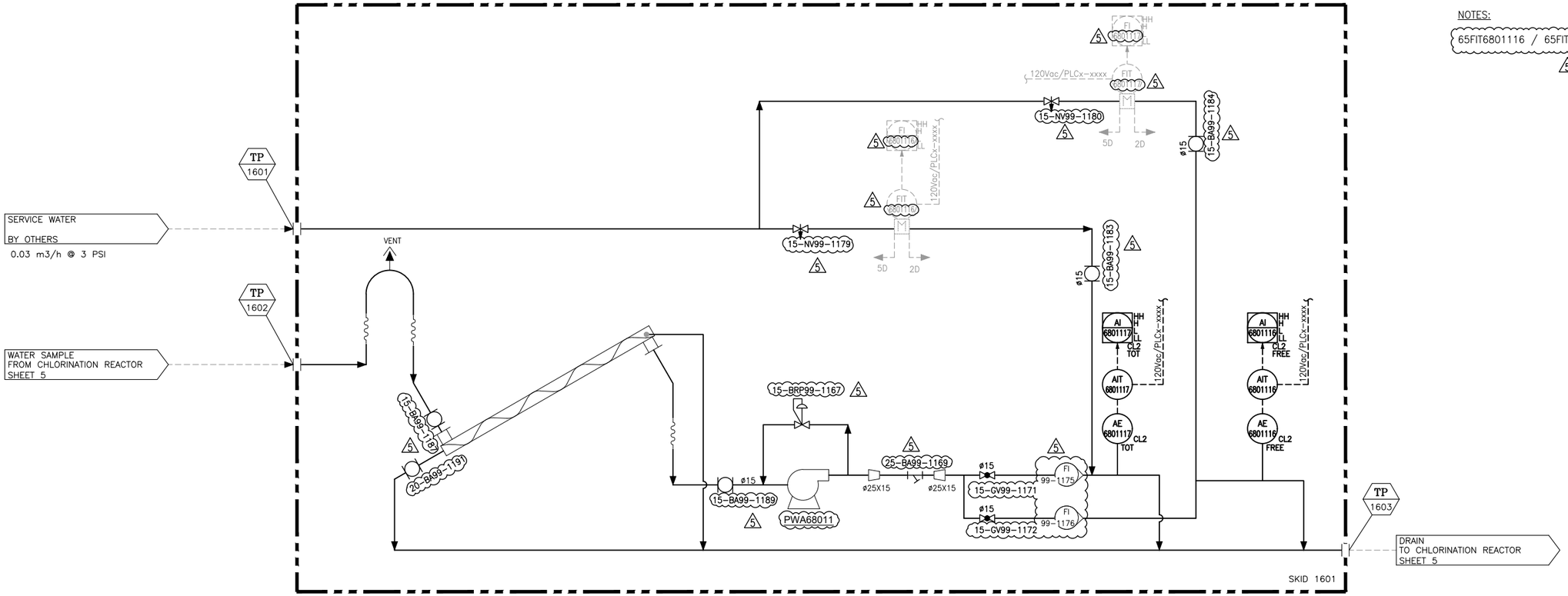


NOTES:

65FIT6801116 / 65FIT6801117 FLOWMETERS ARE SUPPLIED BY OTHERS

PSRXXXA
TRANSFET PUMP
CAPACITY: 1.13 m3/h @ 3.4m TDH
MOTOR: 1/75 HP
VOLTAGE: 120Vac/1pH/60Hz

COMMENTS: ALL TAGS FOR EQUIPMENT VALVES AND INSTRUMENTS HAVE A PREFIX "65"

| RÉV. | DESCRIPTION | DATE | RÉVISÉ REVISED | VÉRIFIÉ VERIFIED | APPROUVÉ APPROVED |
|---|---|---|---|---|---|
| 5 | FOR INFORMATION | 2022-01-25 | A.R. | C.E.K. | T.S. |
| 4 | FOR INFORMATION | 2021-05-01 | A.R. | C.E.K./ G.M. | E.D. |
| 3 | FOR INFORMATION | 2021-03-11 | A.R. | C.E.K./ G.M. | E.D. |
| 2 | FOR INFORMATION | 2020-01-29 | A.R. | C.E.K./ G.M. | E.D. |
| 1 | FOR INFORMATION | 2020-01-21 | A.R. | C.E.K./ G.M. | E.D. |

VEOLIA WATER TECHNOLOGIES

DESSINATEUR/DESIGNER 2020-01-08 DATE E.D.
VÉRIFICATEUR/CHECKER 2020-01-08 DATE E.D.
INGÉNIEUR/ENGINEER DATE

CLIENT
AEM MELIADINE-BPC
6526-S-265-605 / OC-989680

TITRE / TITLE
PROCESS AND INSTRUMENTATION DIAGRAM
RX DILUTION SKID

ÉCHELLE / SCALE: A.R.

PROJET / PROJECT DESSIN /DRAWING: 5000220043 - PI001
INTERNE / INTERNAL
FEUILLET / SHEET: 16/17
RÉV./REV: 5

Ce document est la propriété de VEOLIA et ne peut être reproduit sans son autorisation écrite.
This document is the property of VEOLIA and cannot be reproduced without its written authorization.

Jan 26, 2022 9:03:57 - C:\WORKSPACE-INVENTOR\DESIGNS\EXECUTION\2020\5000220043\PID-PFD\5000220043-PI001_5.dwg - andrea.roaherrera

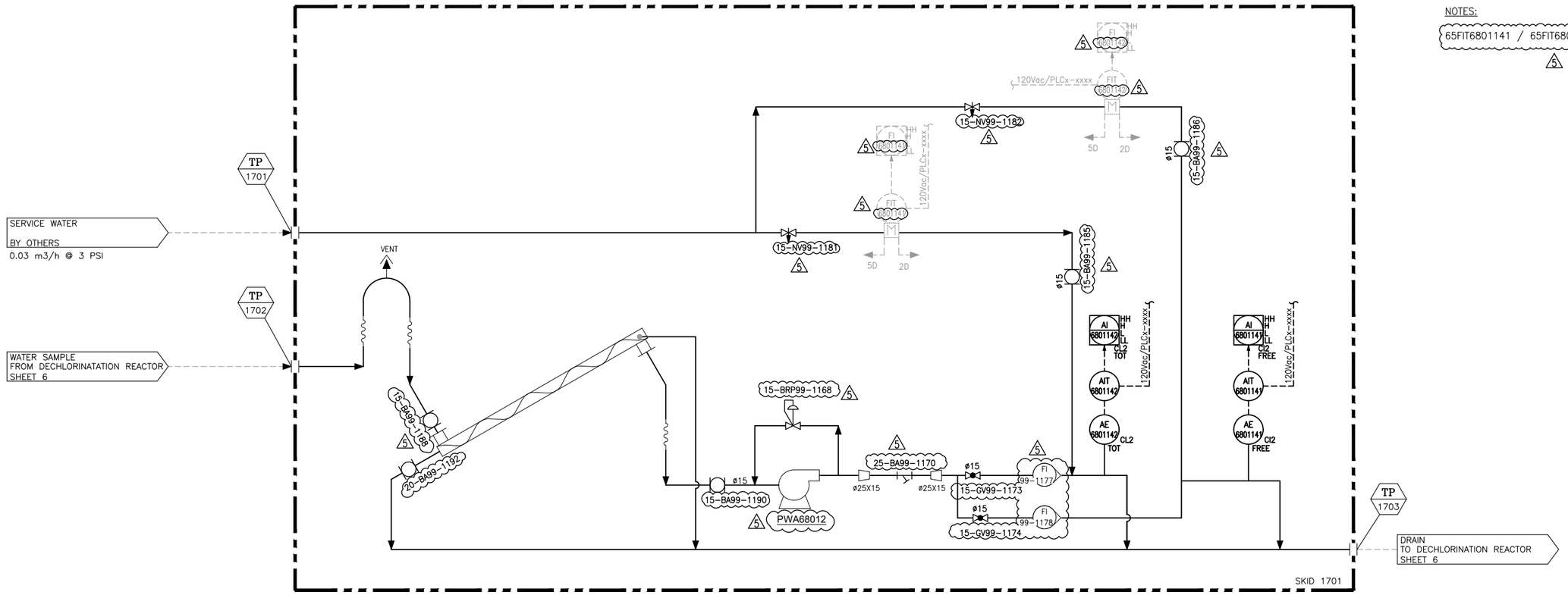


NOTES:

65FIT6801141 / 65FIT6801142 FLOWMETERS ARE SUPPLIED BY OTHERS

PSRXXXB
TRANSFET PUMP
CAPACITY: 1.13 m3/h @ 3.4m TDH
MOTOR: 1/75 HP
VOLTAGE: 120Vac/1pH/60Hz

COMMENTS: ALL TAGS FOR EQUIPMENT VALVES AND INSTRUMENTS HAVE A PREFIX "65"

| RÉV. | DESCRIPTION | DATE | RÉVISÉ REVISED | VÉRIFIÉ VERIFIED | APPROUVÉ APPROVED |
|---|---|---|---|---|---|
| 5 | FOR INFORMATION | 2022-01-25 | A.R. | C.E.K. | T.S. |
| 4 | FOR INFORMATION | 2021-05-01 | A.R. | C.E.K./ G.M. | E.D. |
| 3 | FOR INFORMATION | 2021-03-11 | A.R. | C.E.K./ G.M. | E.D. |
| 2 | FOR INFORMATION | 2020-01-29 | A.R. | C.E.K./ G.M. | E.D. |
| 1 | FOR INFORMATION | 2020-01-21 | A.R. | C.E.K./ G.M. | E.D. |

VEOLIA WATER TECHNOLOGIES

DESSINATEUR/DESIGNER 2020-01-08 DATE E.D.
VÉRIFICATEUR/CHECKER 2020-01-08 DATE E.D.
INGÉNIEUR/ENGINEER DATE

CLIENT
AEM MELIADINE-BPC
6526-S-265-605 / OC-989680

TITRE / TITLE
PROCESS AND INSTRUMENTATION DIAGRAM
RX DILUTION SKID

ÉCHELLE / SCALE: A.R.

PROJET / PROJECT 5000220043 - DESSIN /DRAWING PI001 | INTERNE / INTERNAL | FEUILLET / SHEET 17/17 | RÉV./REV 5

Ce document est la propriété de VEOLIA et ne peut être reproduit sans son autorisation écrite.
This document is the property of VEOLIA and cannot be reproduced without its written authorization.

REF: ANSI D

Jan 26, 2022 9:04:02 - C:\WORKSPACE-INVENTOR\DESIGNS\EXECUTION\2020\5000220043\PID-PFD\5000220043-PI001_5.dwg - andrea.rooherrera

LEFT BLANK

# *3 – DRAWINGS*

## *3.3 – HYDRAULIC PROFILE*

LEFT BLANK

NOTE: THE MAX. WATER LEVEL OF THE FILTRATE TANK SHALL NOT EXCEED 1 FT BELOW LEVEL 8.

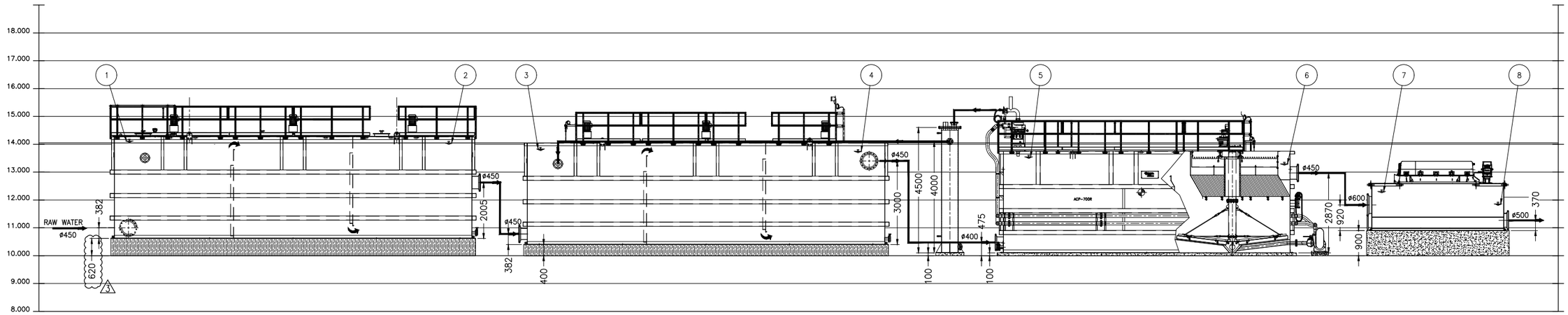


| REFERENCE | RX75-3 #1 | | RX75-3 #2 | | ACTIFLO ACP-700R | | DISCFILTER | |
|---|---|---|---|---|---|---|---|---|
| LEVEL | 1 | 2 | 3 | 4 | 5 | 6 | 7 | 8 |
| WATER LEVEL (m) | 4.12 | 4.05 | 3.90 | 3.83 | 3.55 | 3.30 | 2.31 | 1.86 |
| FLOW RATE (m3/d) | 12,090 | | 13,250 | | 13,250 | | 20,820 | |

| REV | DESCRIPTION | DATE | REV'D | CHK'D | APV'D | ECN |
|---|---|---|---|---|---|---|
| | | | | | | |
| | | | | | | |
| | | | | | | |
| 3 | FOR INFORMATION | 2021-03-31 | A.R. | E.D. | T.S. | N/A |
| 2 | FOR INFORMATION | 2021-02-15 | A.R. | E.D. | T.S. | N/A |
| 1 | FOR INFORMATION | 2021-01-20 | F.C. | E.D. | T.S. | N/A |

**CONFIDENTIALITY AND INTELLECTUAL PROPERTY NOTICE**
ALL INFORMATION CONTAINED IN THIS DOCUMENT IS THE SOLE PROPERTY OF VEOLIA WATER TECHNOLOGIES CANADA INC. AND IS PROTECTED BY ALL APPLICABLE LAWS, INCLUDING BUT NOT LIMITED TO COPYRIGHT AND OTHER INTELLECTUAL PROPERTY LAWS. THE DESIGN CONCEPTS AND INFORMATION CONTAINED HEREIN ARE PROPRIETARY TO V.W.T. AND ARE SUBMITTED IN CONFIDENCE. THEY ARE NOT TRANSFERABLE. THEY MUST BE USED ONLY FOR THE PURPOSE FOR WHICH THE DOCUMENT IS EXPRESSLY SUBMITTED AND NO IMPLICIT LICENCE IS GRANTED OTHERWISE BY THE SUBMISSION OF THIS DOCUMENT. THEY ARE CONFIDENTIAL AND PRIVILEGED INFORMATION OF V.W.T. AND THEY MUST NOT BE DISCLOSED, REPRODUCED, LOANED, REMITTED OR USED IN ANY OTHER MANNER WITHOUT THE EXPRESS WRITTEN CONSENT OF V.W.T. V.W.T. ASSUMES NO RESPONSIBILITY OR LIABILITY FOR THE USE OF THIS DOCUMENT OR THE DESIGN CONCEPTS AND INFORMATION CONTAINED HEREIN FOR ANOTHER PROJECT, OR IN A MANNER THAT DOES NOT RELATE TO THE FITNESS OR PURPOSE OF THIS DOCUMENT. IN NO EVENT SHALL THIS DOCUMENT OR THE DESIGN CONCEPTS AND INFORMATION CONTAINED HEREIN BE USED IN A MANNER DETRIMENTAL TO THE INTEREST OF V.W.T. ALL COPYRIGHT, PATENT AND OTHER INTELLECTUAL PROPERTY RIGHTS ARE RESERVED. ACCEPTANCE OF THE DELIVERY OF THIS DOCUMENT CONSTITUTES AGREEMENT TO THESE TERMS AND CONDITIONS.

| | |
|---|---|
| DESIGNER | DATE |
| F.C. | 2021-01-19 |
| CHECKER | DATE |
| G.P. | 2021-01-21 |
| ENGINEER | DATE |
| E.D. | 2021-01-21 |
| SCALE: | 1:75 |

TITLE: HYDRAULIC PROFILE

CLIENT: AEM MELIADINE – BPC
6526-S-265-605 / 0C-989680

VEOLIA WATER TECHNOLOGIES CANADA INC., 4105 Sartelon, Saint-Laurent, Qc, Canada, Tel: (514) 334-7230

| PROJECT | DRAWING | INTERNAL | SHEET | REV |
|---|---|---|---|---|
| 500022043 – HY | 0001 | GEN | 1 OF 2 | 3 |

STD: "D" 22x34 | REF: N/A

Mar 31, 2021 16:14:02 – C:\Users\rcatherra\Downloads\500022043_HY_0001_GEN_WT_3.dwg – rcatherra




| REFERENCE | ACTIFLO ACP2-60 | |
|---|---|---|
| LEVEL | 1 | 2 |
| WATER LEVEL (m) | 3.08 | 2.78 |
| FLOW RATE (m3/d) | 11,873 | |

| REV | DESCRIPTION | DATE | REV'D | CHK'D | APV'D | ECN |
|---|---|---|---|---|---|---|
| 3 | FOR INFORMATION | 2021-03-31 | A.R. | E.D. | T.S. | N/A |
| 2 | FOR INFORMATION | 2021-02-15 | A.R. | E.D. | T.S. | N/A |
| 1 | FOR INFORMATION | 2021-01-20 | F.C. | E.D. | T.S. | N/A |

**CONFIDENTIALITY AND INTELLECTUAL PROPERTY NOTICE**
ALL INFORMATION CONTAINED IN THIS DOCUMENT IS THE SOLE PROPERTY OF VEOLIA WATER TECHNOLOGIES CANADA INC. AND IS PROTECTED BY ALL APPLICABLE LAWS, INCLUDING BUT NOT LIMITED TO COPYRIGHT AND OTHER INTELLECTUAL PROPERTY LAWS. THE DESIGN CONCEPTS AND INFORMATION CONTAINED HEREIN ARE PROPRIETARY TO V.W.T. AND ARE SUBMITTED IN CONFIDENCE. THEY ARE NOT TRANSFERABLE. THEY MUST BE USED ONLY FOR THE PURPOSE FOR WHICH THE DOCUMENT IS EXPRESSLY SUBMITTED AND NO IMPLICIT LICENCE IS GRANTED OTHERWISE BY THE SUBMISSION OF THIS DOCUMENT. THEY ARE CONFIDENTIAL AND PRIVILEGED INFORMATION OF V.W.T. AND THEY MUST NOT BE DISCLOSED, REPRODUCED, LOANED, REMITTED OR USED IN ANY OTHER MANNER WITHOUT THE EXPRESS WRITTEN CONSENT OF V.W.T. V.W.T. ASSUMES NO RESPONSIBILITY OR LIABILITY FOR THE USE OF THIS DOCUMENT OR THE DESIGN CONCEPTS AND INFORMATION CONTAINED HEREIN FOR ANOTHER PROJECT, OR IN A MANNER THAT DOES NOT RELATE TO THE FITNESS OR PURPOSE OF THIS DOCUMENT. IN NO EVENT SHALL THIS DOCUMENT OR THE DESIGN CONCEPTS AND INFORMATION CONTAINED HEREIN BE USED IN A MANNER DETRIMENTAL TO THE INTEREST OF V.W.T. ALL COPYRIGHT, PATENT AND OTHER INTELLECTUAL PROPERTY RIGHTS ARE RESERVED. ACCEPTANCE OF THE DELIVERY OF THIS DOCUMENT CONSTITUTES AGREEMENT TO THESE TERMS AND CONDITIONS.

| | |
|---|---|
| DESIGNER | DATE |
| F.C. | 2021-01-19 |
| CHECKER | DATE |
| G.P. | 2021-01-21 |
| ENGINEER | DATE |
| E.D. | 2021-01-21 |
| SCALE: | 1:75 |

TITLE: HYDRAULIC PROFILE

CLIENT: AEM MELIADINE – BPC
6526-S-265-605 / OC-989680

VEOLIA
VEOLIA WATER TECHNOLOGIES CANADA INC., 4105 Sartelon, Saint-Laurent, Qc, Canada. Tel: (514) 334-7230

| PROJECT | DRAWING | INTERNAL | SHEET | REV |
|---|---|---|---|---|
| 500022043 – HY | 0001 | GEN | 2 OF 2 | 3 |

STD: "D" 22x34 | REF: N/A

Mar 31, 2021 16:14:09 – C:\Users\rcatherra\Downloads\500022043_HY_0001_GEN_WT_3.dwg – rcatherra

# *3 – DRAWINGS*

## *3.4 – GENERAL ARRANGEMENT DRAWINGS*

LEFT BLANK

| TIE-POINT # | DESCRIPTION | DIMENSION / TYPE |
|---|---|---|
| TP-0801 | RAW WATER INLET | ø400mm [ø16"] – RAISED FACE FLANGE 150# RF |
| TP-0802 | POLYMER INLET | ø20mm [ø3/4"] – UNION SOCKET |
| TP-0803 | CLARIFIED WATER OUTLET | ø450mm [ø18"] – RAISED FACE FLANGE 150# RF |
| TP-0804 | SLUDGE OUTLET | ø80mm [ø3"] – RAISED FACE FLANGE 150# RF |
| TP-0805 | SLUDGE OUTLET | ø80mm [ø3"] – RAISED FACE FLANGE 150# RF |
| TP-0806 | SETTLING TANK PARTIAL DRAIN | ø150mm [ø6"] – RAISED FACE FLANGE 150# RF |
| TP-0807 | COAGULATION TANK DRAIN | ø50mm [ø2"] – RAISED FACE FLANGE 150# RF |
| TP-0808 | FLOCULATION TANK DRAIN | ø50mm [ø2"] – RAISED FACE FLANGE 150# RF |
| 3 TP-0809 | PUMP SUCTION | ø80mm [ø3"] – RAISED FACE FLANGE 150# |

GENERAL :
–REFER TO THE INSTALLATION,OPERATION AND MAINTENANCE MANUAL (IOM) BEFOREHAND TO COORDINATE THE PLANT DESIGN, INSTALLATION AND START UP OF THE ACTIFLO PACK UNIT.
M.O.C. :
–TANK : PAINTED CARBON STEEL
–PIPING : STAINLESS STEEL 2205 AND ABRASION RESISTANT HOSE EXCEPT FOR RECIRCULATION PIPE UNDER –SETTLING TANK (STAINLESS STEEL 2205).

COLORS :
–TANK: WINDOW GRAY RAL 7040
–HANDRAILS, LADDER OR STAIRCASE – SAFETY YELLOW
TANK WEIGHTS:
–DRY SHIPPING WEIGHT: 16 000 KG (35 000 LBS)
–INSTALLED WET (FULL OF WATER) WEIGHT: 173 000 KG (273 600 LBS)
DESIGN COORDINATION :
–DO NOT SUPPORT ANY OTHER EQUIPMENT (PLATFORM, STAIRS, GRATING, PIPING, ETC..) ON UNIT STRUCTURE.
–THE TANK MUST BE GROUNDED.
–HATCHED AREA SHOWN ON THE FOOTPRINT NEEDS TO BE SUPPORTED.
–ROTATION DETECTION MONITOR ( IFM DD2503 ) MUST BE INSTALLED IN THE STARTERS PANEL OR MCC ( REFER TO IOM FOR MORE DETAILS ).
–IMPORTANT TO DROP 3 FEET AT THE SLUDGE OUTLET OF EACH HYDROCYCLONE TO AVOID BACKFLOW THROUGH HYDROCYCLONE (SEE P&ID FOR MORE DETAILS).
INSTALLATION :
–CHECK CONCRETE PAD FLATNESS BEFORE INSTALLING THE ACTIFLO UNIT.
–REFER TO FIELD INSTALLATION DRAWINGS AND IOM MANUAL FOR INSTALLATION DETAILS.
–DO NOT PULL THE UNIT ON GROUND.
–DO NOT USE LATERAL LUGS (SEE DRAWING) TO LIFT OR PULL THE UNITS.
–REMOVE LIFTING LUGS AFTER INSTALLATION.
COMMISSIONING :
–REFER TO IOM FOR COMMISSIONING INSTRUCTIONS.

1. PRE–COAGULATION TANK
2. COAGULATION TANK
3. FLOCULATION TANK
4. SETTLING TANK
5. TURBIDITY METER
6. LEVEL SWITCH
7a. PRE–COAGULATION MIXER
7b. COAGULATION MIXER
7c. FLOCULATION MIXER
8. SCRAPER
9. CLARIFIED WATER TROUGHS
10. LAMELLA
11. HYDROCYCLONE
12. RECIRCULATION PUMP
13. HANDRAIL
14. FRP GRATING

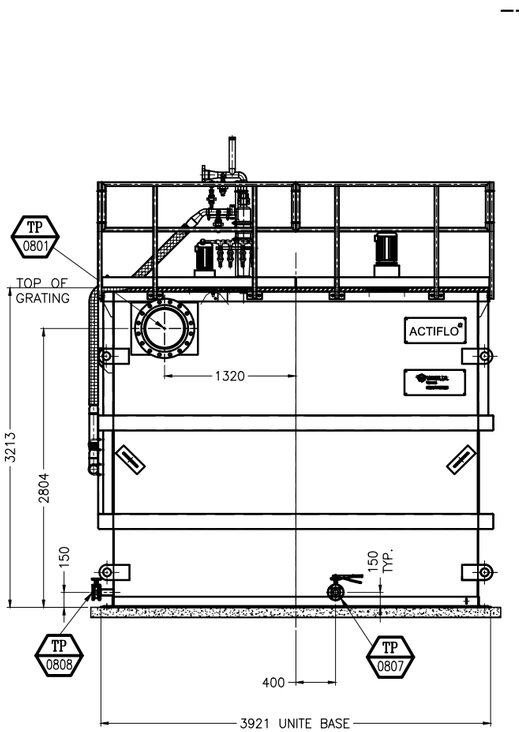


LEFT SIDE VIEW

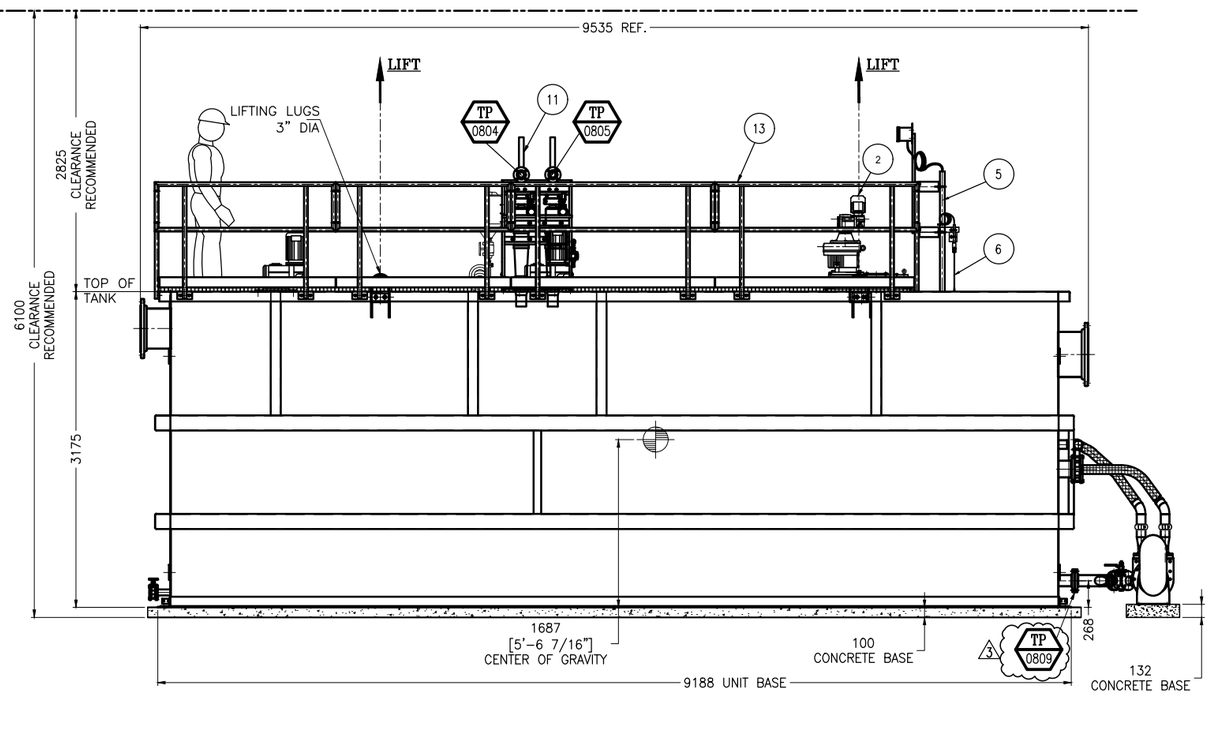


ELEVATION

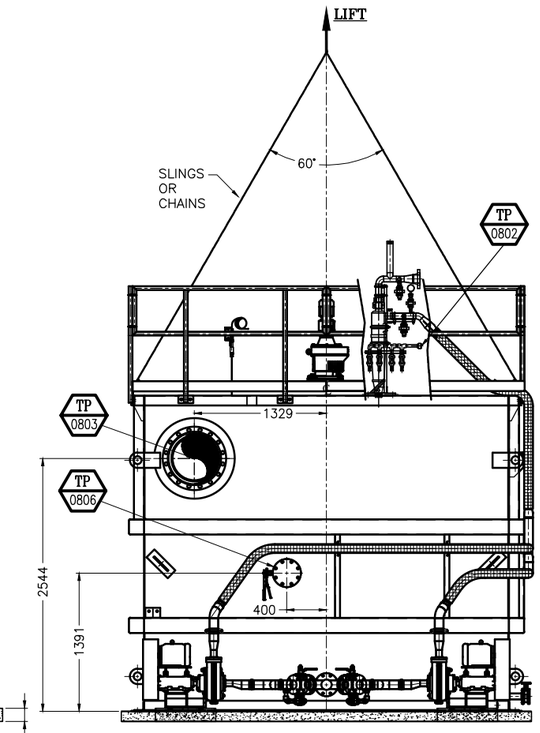


RIGHT SIDE VIEW

| REV | DESCRIPTION | DATE | REV'D | CHK'D | APV'D | ECN |
|---|---|---|---|---|---|---|
| 3 | FOR APPROVAL | 2021–06–22 | M.I. | C.E.K. | L.J. | N/A |
| 2 | FOR APPROVAL | 2021–02–10 | A.D. | S.M. | L.J. | N/A |
| 1 | FOR APPROVAL | 2021–01–07 | A.D. | S.M. | L.J. | N/A |


**CONFIDENTIALITY AND INTELLECTUAL PROPERTY NOTICE**
ALL INFORMATION CONTAINED IN THIS DOCUMENT IS THE SOLE PROPERTY OF VEOLIA WATER TECHNOLOGIES CANADA INC. AND IS PROTECTED BY ALL APPLICABLE LAWS, INCLUDING BUT NOT LIMITED TO COPYRIGHT AND OTHER INTELLECTUAL PROPERTY LAWS. THE DESIGN CONCEPTS AND INFORMATION CONTAINED HEREIN ARE PROPRIETARY TO V.W.T. AND ARE SUBMITTED IN CONFIDENCE. THEY ARE NOT TRANSFERABLE. THEY MUST BE USED ONLY FOR THE PURPOSE FOR WHICH THE DOCUMENT IS EXPRESSLY SUBMITTED AND NO IMPLICIT LICENCE IS GRANTED OTHERWISE BY THE SUBMISSION OF THIS DOCUMENT. THEY ARE CONFIDENTIAL AND PRIVILEGED INFORMATION OF V.W.T. AND THEY MUST NOT BE DISCLOSED, REPRODUCED, LOANED, REMITTED OR USED IN ANY OTHER MANNER WITHOUT THE EXPRESS WRITTEN CONSENT OF V.W.T. V.W.T. ASSUMES NO RESPONSIBILITY OR LIABILITY FOR THE USE OF THIS DOCUMENT OR THE DESIGN CONCEPTS AND INFORMATION CONTAINED HEREIN FOR ANOTHER PROJECT, OR IN A MANNER THAT DOES NOT RELATE TO THE FITNESS OR PURPOSE OF THIS DOCUMENT. IN NO EVENT SHALL THIS DOCUMENT OR THE DESIGN CONCEPTS AND INFORMATION CONTAINED HEREIN BE USED IN A MANNER DETRIMENTAL TO THE INTEREST OF V.W.T. ALL COPYRIGHT, PATENT AND OTHER INTELLECTUAL PROPERTY RIGHTS ARE RESERVED. ACCEPTANCE OF THE DELIVERY OF THIS DOCUMENT CONSTITUTES AGREEMENT TO THESE TERMS AND CONDITIONS.


| | | |
|---|---|---|
| DESIGNER | DATE | TITLE |
| O.F. | 2012–07–04 | ACTIFLO ACP2–60<br>CLARIFIER # 2<br>GENERAL ARRANGEMENT |
| CHECKER | DATE | CLIENT |
| G.M. | 2012–07–13 | AEM MELIADINE–BPC<br>6526–S–265–605 / OC–989680 |
| ENGINEER | DATE | |
| G.P. | 2012–07–13 | VEOLIA<br>VEOLIA WATER TECHNOLOGIES CANADA INC. 4105 Sartelon, Saint-Laurent, Qc, Canada. Tel: (514) 334-7230 |
| SCALE: 1:30 | PROJECT / DRAWING: 5000220043 – GA 0001 | INTERNAL: ACP2600 / SHEET: 1 OF 3 / REV: 3 |

STD: "D" 22x34 | REF:


Jun 22, 2021 11:29:31 – C:\WORKSPACE–INVENTOR\DESIGNS\EXECUTION\2020\5000220043\ACP2860\GA\5000220043–GA 0001 ACP2600.dwg – musegonha

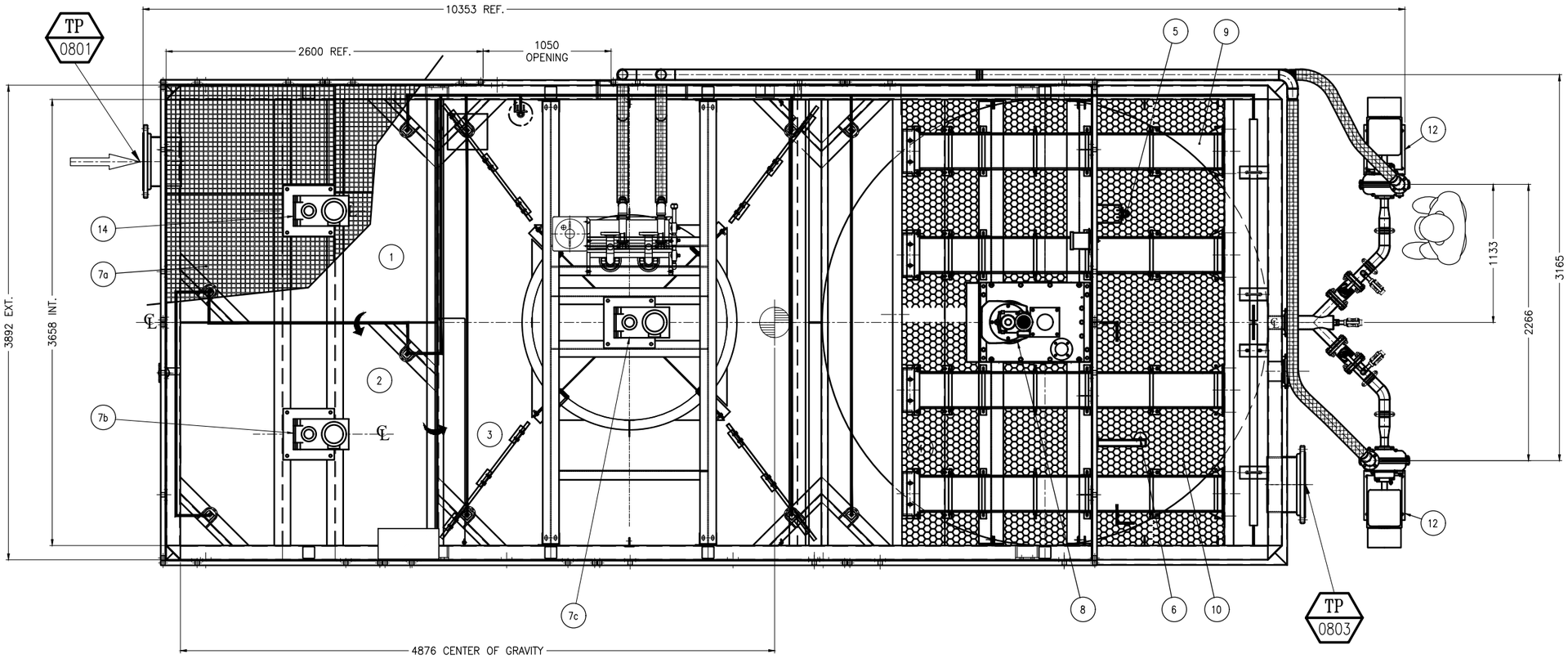


PLAN VIEW

| REV | DESCRIPTION | DATE | REV'D | CHK'D | APV'D | ECN |
|---|---|---|---|---|---|---|
| 3 | FOR APPROVAL | 2021-06-22 | M.I. | C.E.K. | L.J. | N/A |
| 2 | FOR APPROVAL | 2021-02-10 | A.D. | S.M. | L.J. | N/A |
| 1 | FOR APPROVAL | 2021-01-07 | A.D. | S.M. | L.J. | N/A |

CONFIDENTIALITY AND INTELLECTUAL PROPERTY NOTICE
ALL INFORMATION CONTAINED IN THIS DOCUMENT IS THE SOLE PROPERTY OF VEOLIA WATER TECHNOLOGIES CANADA INC. AND IS PROTECTED BY ALL APPLICABLE LAWS, INCLUDING BUT NOT LIMITED TO COPYRIGHT AND OTHER INTELLECTUAL PROPERTY LAWS. THE DESIGN CONCEPTS AND INFORMATION CONTAINED HEREIN ARE PROPRIETARY TO V.W.T. AND ARE SUBMITTED IN CONFIDENCE. THEY ARE NOT TRANSFERABLE. THEY MUST BE USED ONLY FOR THE PURPOSE FOR WHICH THE DOCUMENT IS EXPRESSLY SUBMITTED AND NO IMPLICIT LICENCE IS GRANTED OTHERWISE BY THE SUBMISSION OF THIS DOCUMENT. THEY ARE CONFIDENTIAL AND PRIVILEGED INFORMATION OF V.W.T. AND THEY MUST NOT BE DISCLOSED, REPRODUCED, LOANED, REMITTED OR USED IN ANY OTHER MANNER WITHOUT THE EXPRESS WRITTEN CONSENT OF V.W.T. V.W.T. ASSUMES NO RESPONSIBILITY OR LIABILITY FOR THE USE OF THIS DOCUMENT OR THE DESIGN CONCEPTS AND INFORMATION CONTAINED HEREIN FOR ANOTHER PROJECT, OR IN A MANNER THAT DOES NOT RELATE TO THE FITNESS OR PURPOSE OF THIS DOCUMENT. IN NO EVENT SHALL THIS DOCUMENT OR THE DESIGN CONCEPTS AND INFORMATION CONTAINED HEREIN BE USED IN A MANNER DETRIMENTAL TO THE INTEREST OF V.W.T. ALL COPYRIGHT, PATENT AND OTHER INTELLECTUAL PROPERTY RIGHTS ARE RESERVED. ACCEPTANCE OF THE DELIVERY OF THIS DOCUMENT CONSTITUTES AGREEMENT TO THESE TERMS AND CONDITIONS.

| | | |
|---|---|---|
| DESIGNER | O.F. | DATE 2012-07-04 |
| CHECKER | G.M. | DATE 2012-07-13 |
| ENGINEER | G.P. | DATE 2012-07-13 |
| SCALE: | 1:30 | |

TITLE: ACTIFLO ACP2-60
CLARIFIER # 2
GENERAL ARRANGEMENT

CLIENT: AEM MELIADINE-BPC
6526-S-265-605 / 0C-989680

VEOLIA
VEOLIA WATER TECHNOLOGIES CANADA INC. 4105 Sartelon, Saint-Laurent, Qc. Canada. Tel: (514) 334-7230

| PROJECT | DRAWING | INTERNAL | SHEET | REV |
|---|---|---|---|---|
| 5000220043 - GA 0001 | | ACP2600 | 2 OF 3 | 3 |

STD: "D" 22x34 | REF:

Jun 22, 2021 10:58:08 - C:\WORKSPACE-INVENTOR\DESIGNS\EXECUTION\2020\5000220043\ACP260\GA\5000220043-GA 0001 ACP2600.dwg - mustapha.ilas

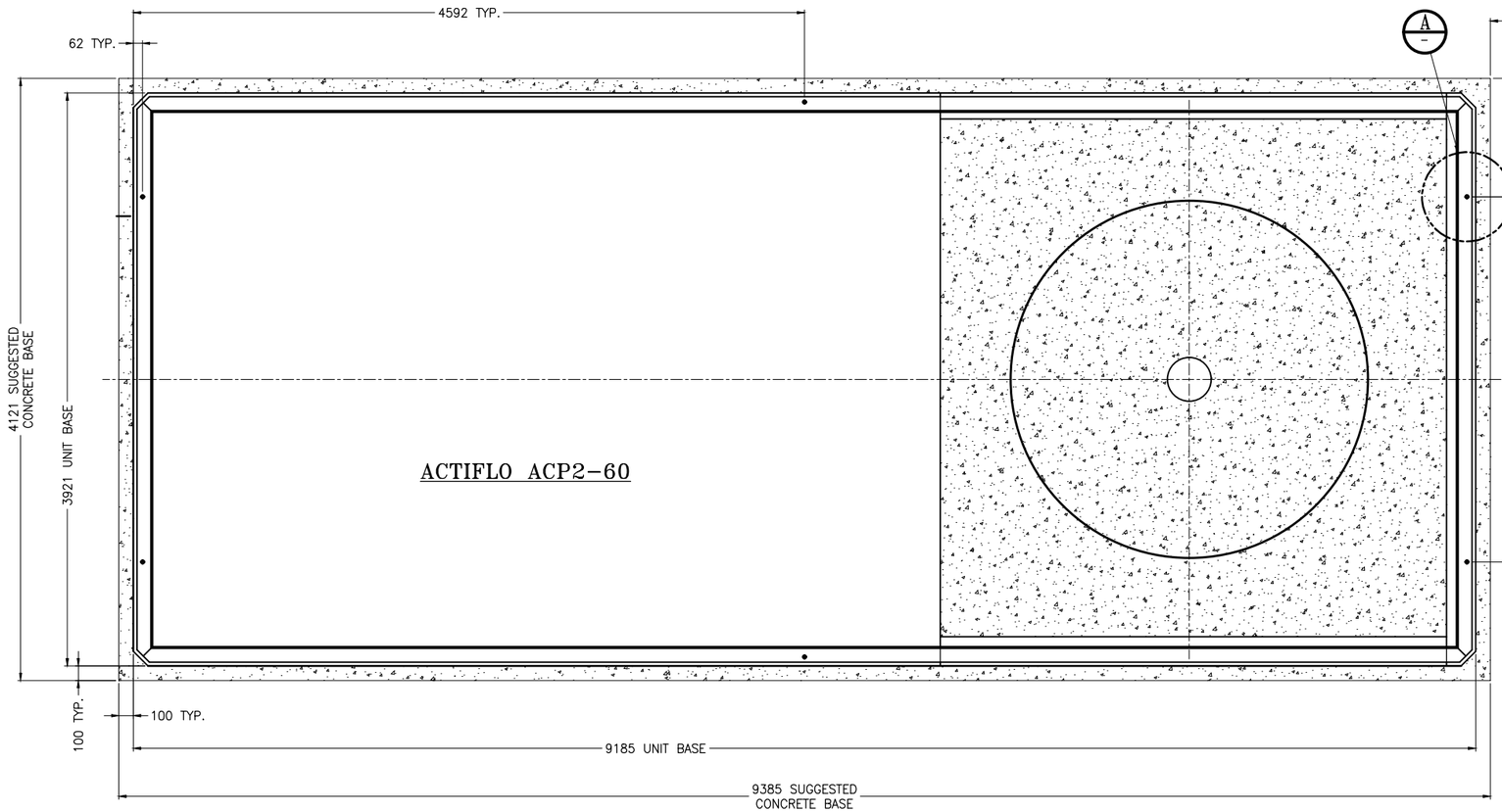


FOOTPRINT

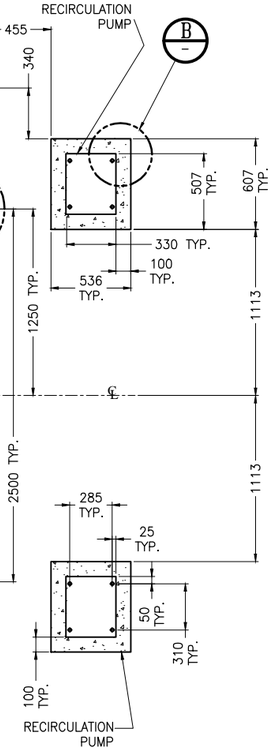


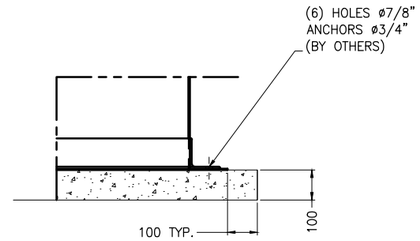


DETAIL A
SCALE: 1:10

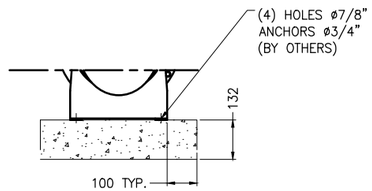


DETAIL B
SCALE: 1:10

| REV | DESCRIPTION | DATE | REV'D | CHK'D | APV'D | ECN |
|---|---|---|---|---|---|---|
| 3 | FOR APPROVAL | 2021-06-22 | M.I. | C.E.K. | L.J. | N/A |
| 2 | FOR APPROVAL | 2021-02-10 | A.D. | S.M. | L.J. | N/A |
| 1 | FOR APPROVAL | 2021-01-07 | A.D. | S.M. | L.J. | N/A |

**CONFIDENTIALITY AND INTELLECTUAL PROPERTY NOTICE**
ALL INFORMATION CONTAINED IN THIS DOCUMENT IS THE SOLE PROPERTY OF VEOLIA WATER TECHNOLOGIES CANADA INC. AND IS PROTECTED BY ALL APPLICABLE LAWS, INCLUDING BUT NOT LIMITED TO COPYRIGHT AND OTHER INTELLECTUAL PROPERTY LAWS. THE DESIGN CONCEPTS AND INFORMATION CONTAINED HEREIN ARE PROPRIETARY TO V.W.T. AND ARE SUBMITTED IN CONFIDENCE. THEY ARE NOT TRANSFERABLE. THEY MUST BE USED ONLY FOR THE PURPOSE FOR WHICH THE DOCUMENT IS EXPRESSLY SUBMITTED AND NO IMPLICIT LICENCE IS GRANTED OTHERWISE BY THE SUBMISSION OF THIS DOCUMENT. THEY ARE CONFIDENTIAL AND PRIVILEGED INFORMATION OF V.W.T. AND THEY MUST NOT BE DISCLOSED, REPRODUCED, LOANED, PERMITTED OR USED IN ANY OTHER MANNER WITHOUT THE EXPRESS WRITTEN CONSENT OF V.W.T. V.W.T. ASSUMES NO RESPONSIBILITY OR LIABILITY FOR THE USE OF THIS DOCUMENT OR THE DESIGN CONCEPTS AND INFORMATION CONTAINED HEREIN FOR ANOTHER PROJECT, OR IN A MANNER THAT DOES NOT RELATE TO THE FITNESS OR PURPOSE OF THIS DOCUMENT. IN NO EVENT SHALL THIS DOCUMENT OR THE DESIGN CONCEPTS AND INFORMATION CONTAINED HEREIN BE USED IN A MANNER DETRIMENTAL TO THE INTEREST OF V.W.T. ALL COPYRIGHT, PATENT AND OTHER INTELLECTUAL PROPERTY RIGHTS ARE RESERVED. ACCEPTANCE OF THE DELIVERY OF THIS DOCUMENT CONSTITUTES AGREEMENT TO THESE TERMS AND CONDITIONS.

| | | DATE |
|---|---|---|
| DESIGNER | O.F. | 2012-07-04 |
| CHECKER | G.M. | 2012-07-13 |
| ENGINEER | G.P. | 2012-07-13 |
| SCALE: | 1:30 | |

TITLE: ACTIFLO ACP2-60
CLARIFIER # 2
GENERAL ARRANGEMENT

CLIENT: AEM MELIADINE-BPC
6526-S-265-605 / OC-989680

VEOLIA
VEOLIA WATER TECHNOLOGIES CANADA INC. 4105 Sartelon, Saint-Laurent, Qc, Canada. Tel: (514) 334-7230

| PROJECT | DRAWING | INTERNAL | SHEET | REV |
|---|---|---|---|---|
| 5000220043 - GA 0001 | | ACP2600 | 3 OF 3 | 3 |

STD: "D" 22x34 | REF:

Jun 22, 2021 10:58:40 - C:\WORKSPACE-INVENTOR\DESIGNS\EXECUTION\2020\5000220043\ACP2600\GA\5000220043-GA 0001 ACP2600.dwg - mustaphbajjes

PROPERTY OF DRAWINGS AND PRESCRIPTIONS
All property, rights and use remain to **HYDROTECH** AB, Sweden
General conditions and use for this drawing is in accordance to ORGALIME S2000

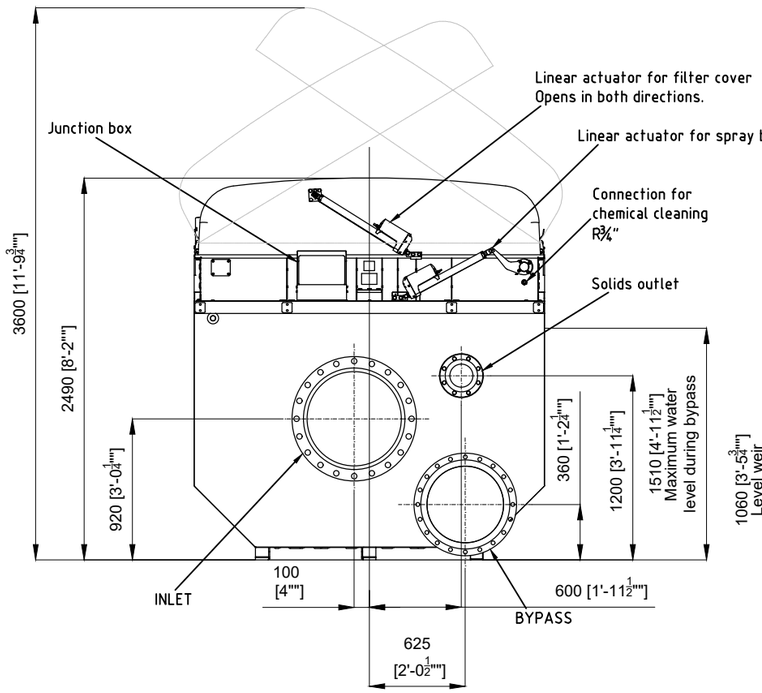


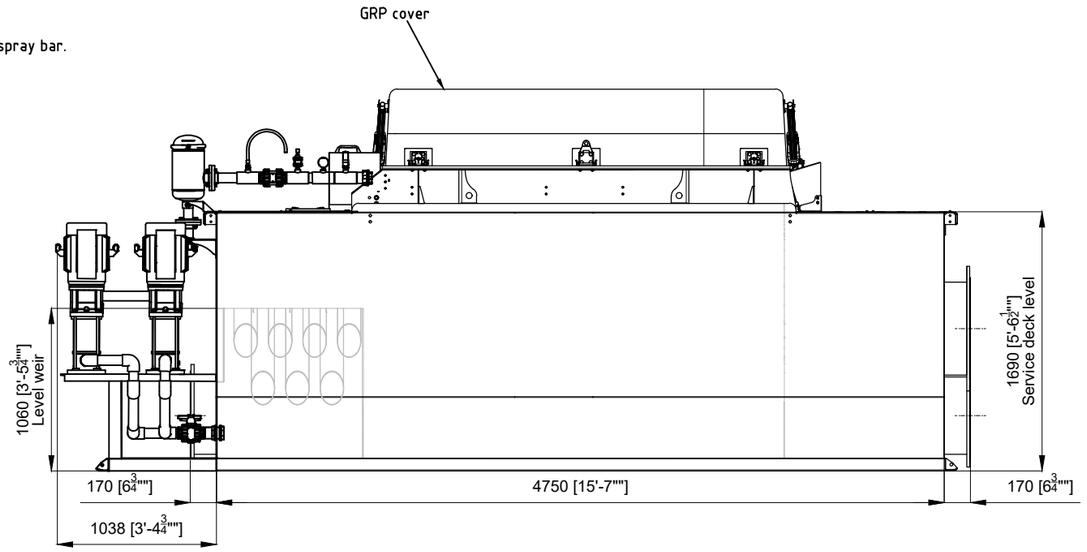


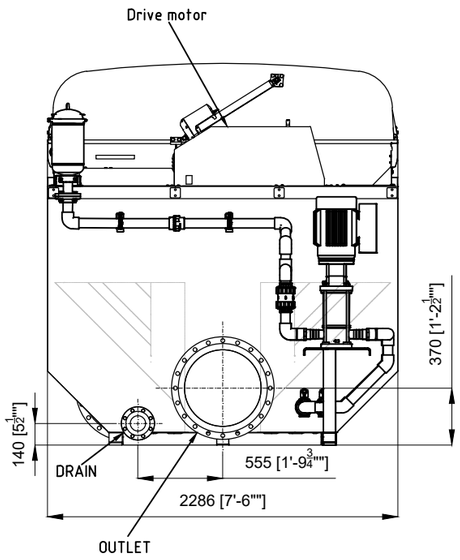


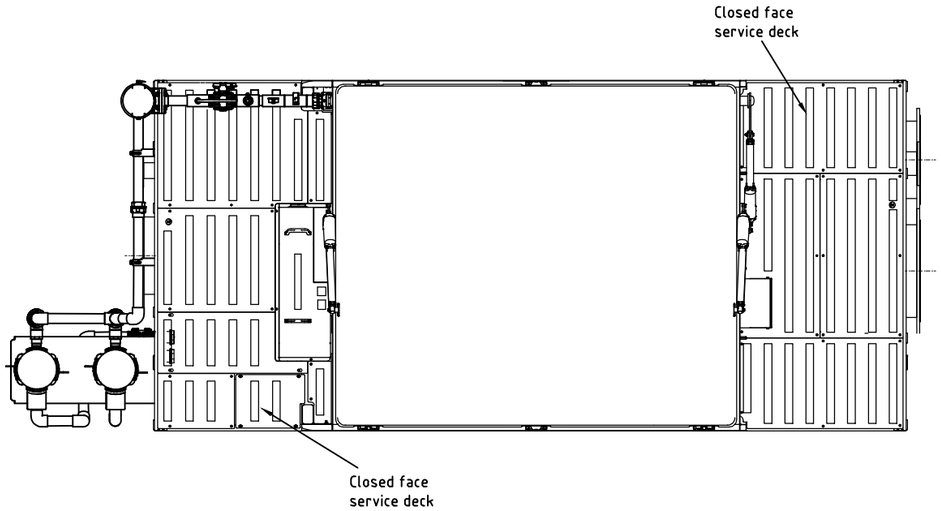


MAINTENANCE ACCESS SHOULD
BE PROVIDED TO ALL FOUR SIDES OF
THE FILTER, SIZED TO SUIT LOCAL
REGULATIONS, TYPICALLY
1000 mm, BUT NOT LESS THAN 600 mm.

WE RESERVE THE RIGHT THAT WITHOUT
ANY NOTICE TO CHANGE
THE DESIGN OF THE EQUIPMENT

CONNECTIONS:

| | |
|---|---|
| INLET: | ANSI 24" |
| OUTLET: | ANSI 20" |
| BYPASS: | ANSI 20" |
| SOLIDS OUTLET: | ANSI 6" |
| DRAIN: | ANSI 4" |

HOLE PATTERN ACCORDING TO B16.5 150 lbs.
AISI316L FLANGES, REDUCED THICKNESS.

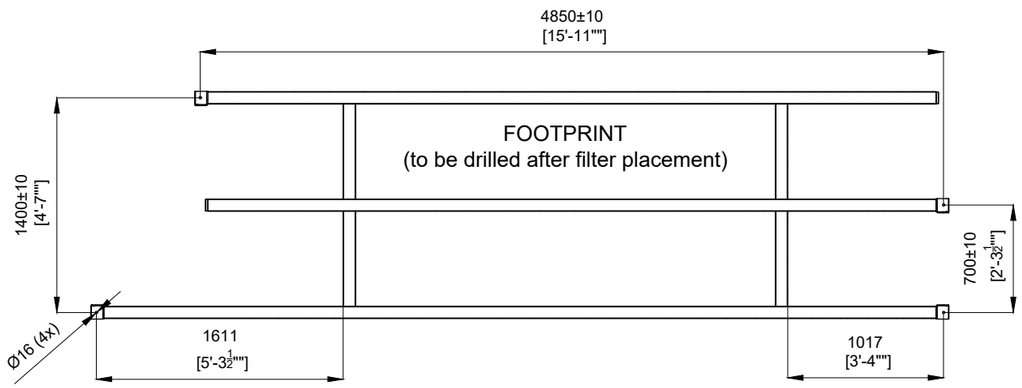


**INFORMATION ONLY**

5000220043_GA_0001_HSF_VWT
MELIADINE - BPC UPGRADE
6526-S-265-605 / OC-989680

HT NOTE:

Rördragning enligt 23000.

| Part no. | Quantity | Name | Material | Mod.-nr Blank Dimension | Remark |
|---|---|---|---|---|---|
| | | | | | |

| Designer | Drawn by | Copy | Controlled by | Stand. | Approved | Scale | Replaces | Replaced by |
|---|---|---|---|---|---|---|---|---|
| | DI | | | ISO 2768-m | | 1:40 | | |

HYDROTECH

General assembly drawing
Separate bypass, Qpeak=232 l/s
Discfilter HPF2218-1F

Date 2021-01-20

Draw. no. 10982 Edition B

| Ed. | Change and/or message no. | Date | Made by | c-m no. |
|---|---|---|---|---|
| B | Updated pump and pipework. | 210129 | DI | |

| TIE-IN POINTS # | DESCRIPTION | DIMENSION / TYPE |
|---|---|---|
| TP-0701 | RAW WATER INLET | ø16"– 150# RAISED FACE FLANGE |
| TP-0704 | POLYMER INLET | ø3/4" – SOLVENT CEMENTED SOCKET UNION PVC SCH.80 |
| TP-0705 | SLUDGE OUTLET | ø4" – 150# RAISED FACE FLANGE |
| TP-0706 | SLUDGE OUTLET | ø4" – 150# RAISED FACE FLANGE |
| TP-0707 | CLARIFIED WATER OUTLET | ø18" – 150# RAISED FACE FLANGE |
| TP-0708 | SETTLING TANK PARTIAL DRAIN | ø8" – 150# RAISED FACE FLANGE C/W BLIND FLANGE |
| TP-0709 | COAGULATION TANK DRAIN | ø4" – 150# RAISED FACE FLANGE C/W BLIND FLANGE |
| TP-0710 | INJECTION/MATURATION TANK DRAIN | ø4" – 150# RAISED FACE FLANGE C/W BLIND FLANGE |
| 3 TP-0711 | FLANGE SUCTION PUMP | ø4" – 150# RAISED FACE FLANGE |

GENERAL :
–REFER TO THE INSTALLATION,OPERATION AND MAINTENANCE MANUAL (IOM) BEFOREHAND TO COORDINATE THE PLANT DESIGN, INSTALLATION AND START UP OF THE ACTIFLO PACK UNIT.
M.O.C. :
–TANK : PAINTED CARBON STEEL
–PIPING : STAINLESS STEEL 2205 AND ABRASION RESISTANT HOSE EXCEPT FOR RECIRCULATION PIPE UNDER –SETTLING TANK (STAINLESS STEEL 2205).

COLORS :
–TANK: WINDOW GRAY RAL 7040
–HANDRAILS, LADDER OR STAIRCASE – SAFETY YELLOW
TANK WEIGHTS:
–DRY SHIPPING WEIGHT: 21 000 KG (46 000 LBS)
–INSTALLED WET (FULL OF WATER) WEIGHT: 173 000 KG (381 000 LBS)
DESIGN COORDINATION :
–DO NOT SUPPORT ANY OTHER EQUIPMENT (PLATFORM, STAIRS, GRATING, PIPING, ETC..) ON UNIT STRUCTURE.
–THE TANK MUST BE GROUNDED.
–HATCHED AREA SHOWN ON THE FOOTPRINT NEEDS TO BE SUPPORTED.
–ROTATION DETECTION MONITOR ( IFM DD2503 ) MUST BE INSTALLED IN THE STARTERS PANEL OR MCC ( REFER TO IOM FOR MORE DETAILS ).
–IMPORTANT TO DROP 3 FEET AT THE SLUDGE OUTLET OF EACH HYDROCYCLONE TO AVOID BACKFLOW THROUGH HYDROCYCLONE (SEE P&ID FOR MORE DETAILS).
INSTALLATION :
–CHECK CONCRETE PAD FLATNESS BEFORE INSTALLING THE ACTIFLO UNIT.
–REFER TO FIELD INSTALLATION DRAWINGS AND IOM MANUAL FOR INSTALLATION DETAILS.
–DO NOT PULL THE UNIT ON GROUND.
–DO NOT USE LATERAL LUGS (SEE DRAWING) TO LIFT OR PULL THE UNITS.
–REMOVE LIFTING LUGS AFTER INSTALLATION.
COMMISSIONING :
–REFER TO IOM FOR COMMISSIONING INSTRUCTIONS.

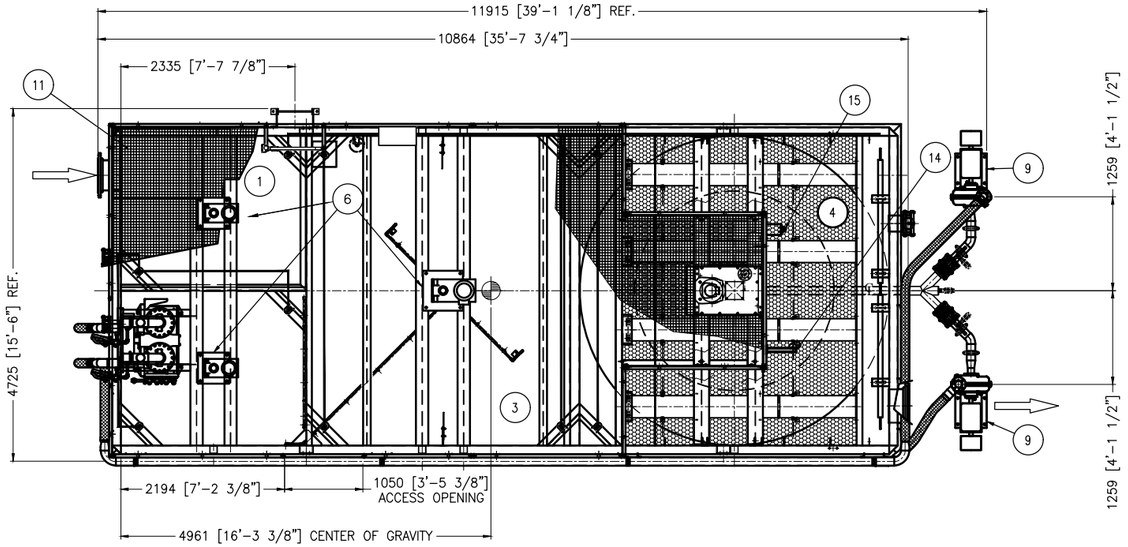


PLAN VIEW

1 COAGULATION TANK
2 INJECTION TANK
3 MATURATION TANK
4 SETTLING TANK
5 HYDROCYCLONES
6 MIXERS
7 CLARIFIED WATER TROUGH
8 LAMELLA
9 MICROSAND RECIRCULATION PUMPS
10 SCRAPER
11 FRP GRATING
12 STAIRS
13 GALVANIZED HANDRAILS
14 LEVEL SWITCH
15 CLARIFIED WATER TURBIDIMETER

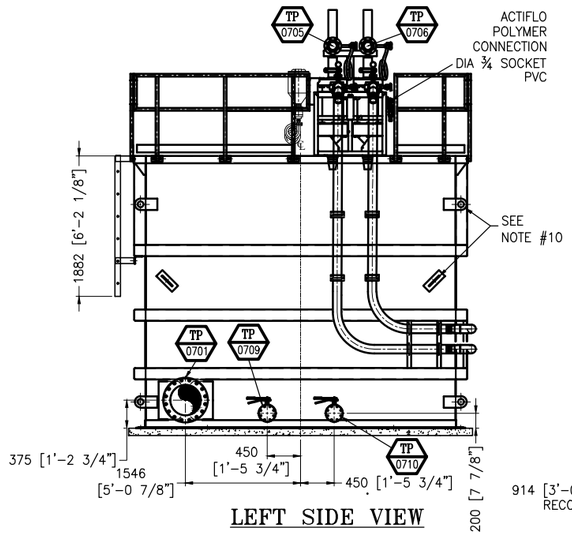


LEFT SIDE VIEW

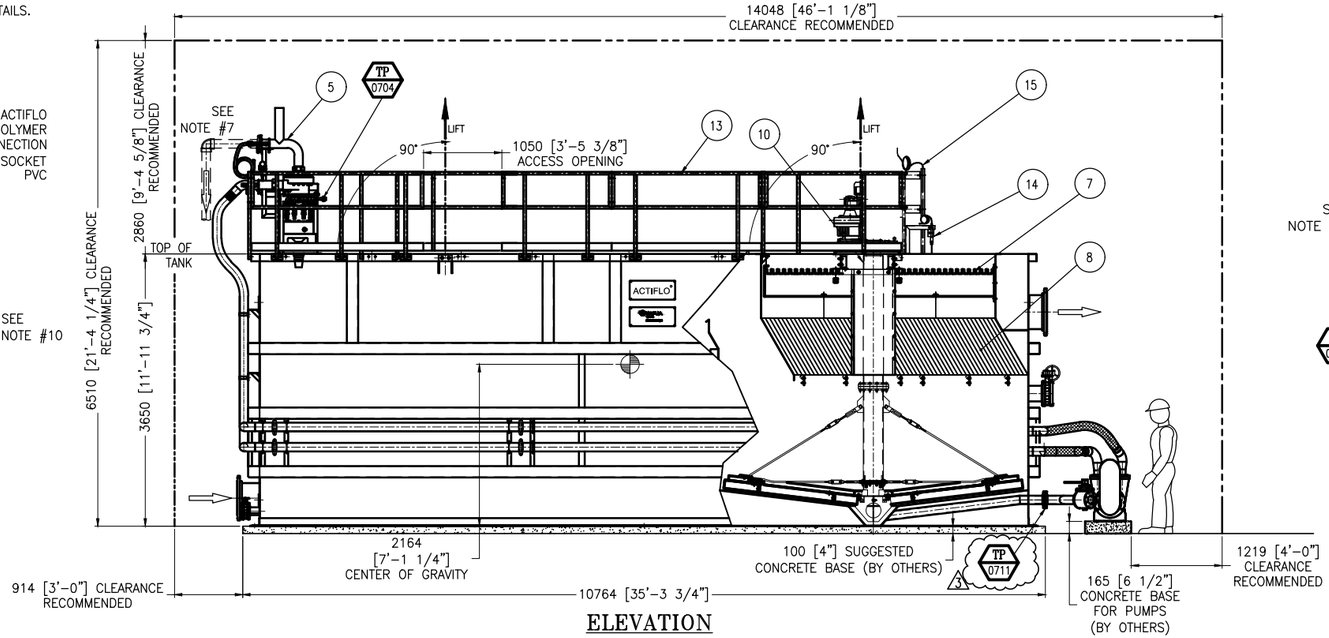


ELEVATION

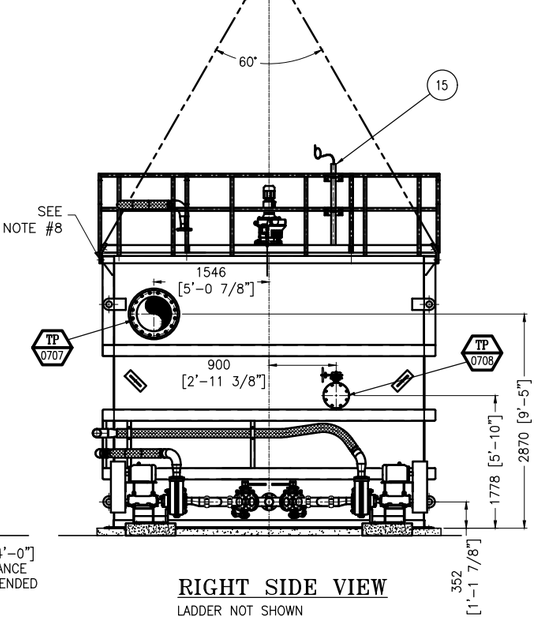


RIGHT SIDE VIEW
LADDER NOT SHOWN

| REV | DESCRIPTION | DATE | REV'D | CHK'D | APV'D | ECN |
|---|---|---|---|---|---|---|
| 3 | FOR APPROVAL | 2021–06–22 | M.I. | C.E.K. | L.J. | N/A |
| 2 | FOR APPROVAL | 2021–02–24 | A.D. | S.M. | L.J. | N/A |
| 1 | FOR APPROVAL | 2021–01–07 | A.D. | S.M. | L.J. | N/A |

CONFIDENTIALITY AND INTELLECTUAL PROPERTY NOTICE
ALL INFORMATION CONTAINED IN THIS DOCUMENT IS THE SOLE PROPERTY OF VEOLIA WATER SOLUTIONS & TECHNOLOGIES CANADA INC. AND IS PROTECTED BY ALL APPLICABLE LAWS, INCLUDING BUT NOT LIMITED TO COPYRIGHT AND OTHER INTELLECTUAL PROPERTY LAWS. THE DESIGN CONCEPTS AND INFORMATION CONTAINED HEREIN ARE PROPRIETARY TO VWS AND ARE SUBMITTED IN CONFIDENCE. THEY ARE NOT TRANSFERABLE. THEY MUST BE USED ONLY FOR THE PURPOSE FOR WHICH THE DOCUMENT IS EXPRESSLY SUBMITTED AND NO IMPLICIT LICENCE IS GRANTED OTHERWISE BY THE SUBMISSION OF THIS DOCUMENT. THEY ARE CONFIDENTIAL AND PRIVILEGED INFORMATION OF VWS AND THEY MUST NOT BE DISCLOSED, REPRODUCED, LOANED, REMITTED OR USED IN ANY OTHER MANNER WITHOUT THE EXPRESS WRITTEN CONSENT OF VWS. VWS ASSUMES NO RESPONSIBILITY OR LIABILITY FOR THE USE OF THIS DOCUMENT OR THE DESIGN CONCEPTS AND INFORMATION CONTAINED HEREIN FOR ANOTHER PROJECT, OR IN A MANNER THAT DOES NOT RELATE TO THE FITNESS OR PURPOSE OF THIS DOCUMENT. IN NO EVENT SHALL THIS DOCUMENT OR THE DESIGN CONCEPTS AND INFORMATION CONTAINED HEREIN BE USED IN A MANNER DETRIMENTAL TO THE INTEREST OF VWS. ALL COPYRIGHT, PATENT AND OTHER INTELLECTUAL PROPERTY RIGHTS ARE RESERVED. ACCEPTANCE OF THE DELIVERY OF THIS DOCUMENT CONSTITUTES AGREEMENT TO THESE TERMS AND CONDITIONS.

| | |
|---|---|
| DESIGNER | DATE |
| O.F. | 2015–01–05 |
| CHECKER | DATE |
| L.J. | 2015–01–05 |
| ENGINEER | DATE |
| L.J. | 2015–01–05 |
| SCALE: | 1:40 |

TITLE: ACTIFLO ACP–700R
CLARIFIER # 1 ACTICARB
GENERAL ARRANGEMENT

CLIENT: AEM MELIADINE–BPC
6526–S–265–605 / OC–989680

VEOLIA
VEOLIA WATER TECHNOLOGIES CANADA INC. 4105 Sartelon, Saint-Laurent, Qc, Canada, Tel: (514) 334-7230

| PROJECT | DRAWING | INTERNAL | SHEET | REV |
|---|---|---|---|---|
| 5000220043 – GA 0002 | | ACP700R | 1 OF 2 | 3 |

STD: "D" 22x34 | REF: 214065, NORMALISÉ | BAR = 1" AT PLOT SCALE

Jun 22, 2021 11:16:57 – C:\WORKSPACE–INVENTOR\DESIGNS\EXECUTION\2020\5000220043\ACP700R\GA\5000220043–GA 0002 ACP700R.dwg – mustophaciles

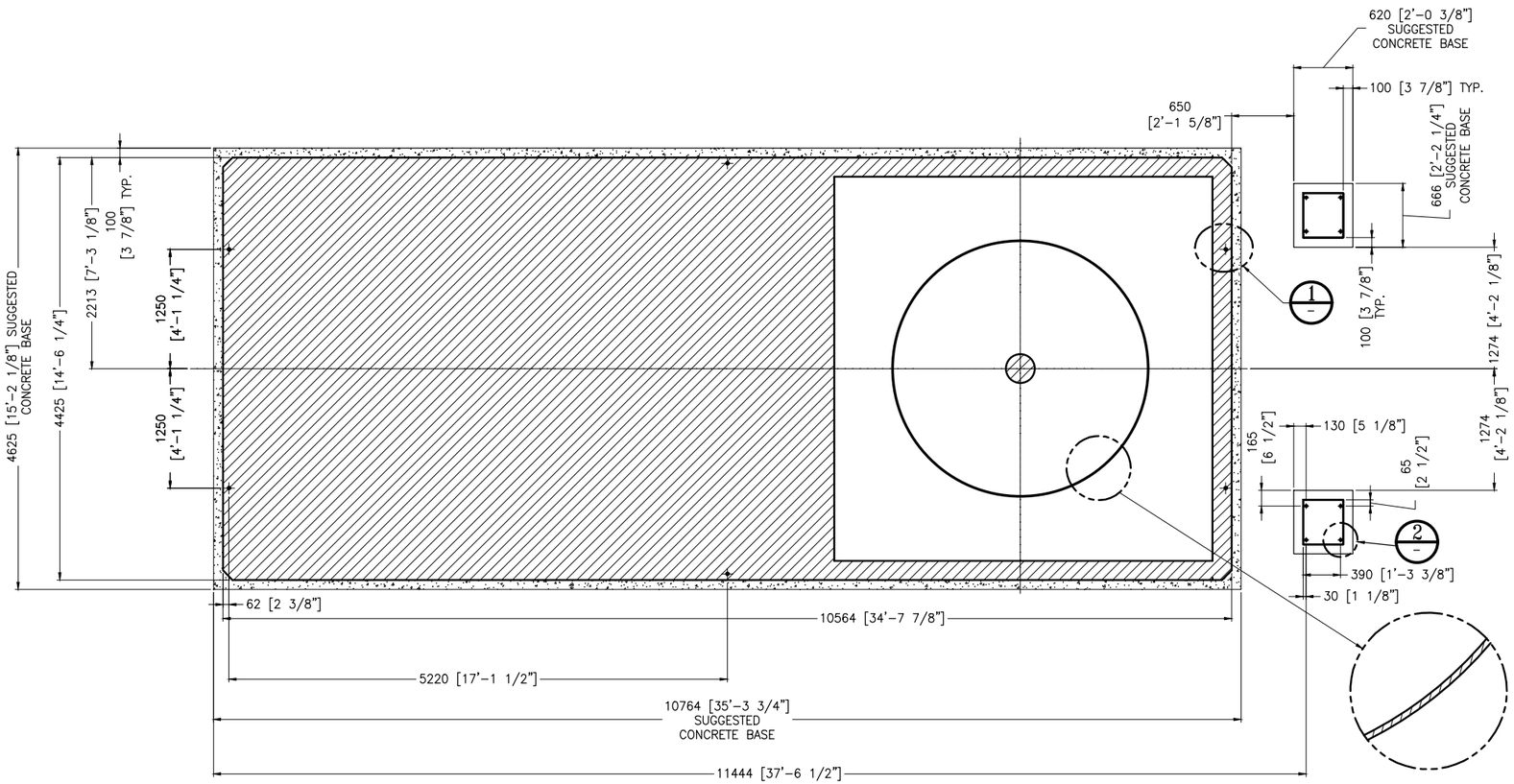


FOOTPRINT

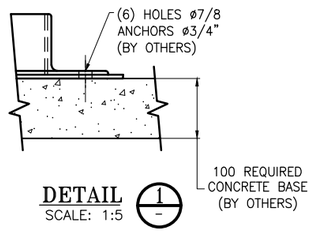


DETAIL 1 / – SCALE: 1:5

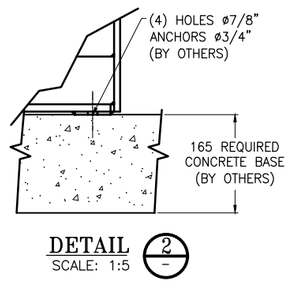


DETAIL 2 / – SCALE: 1:5

| REV | DESCRIPTION | DATE | REV'D | CHK'D | APV'D | ECN |
|---|---|---|---|---|---|---|
| 3 | FOR APPROVAL | 2021-06-22 | M.I. | C.E.K. | L.J. | N/A |
| 2 | FOR APPROVAL | 2021-02-24 | A.D. | S.M. | L.J. | N/A |
| 1 | FOR APPROVAL | 2021-01-07 | A.D. | S.M. | L.J. | N/A |

**CONFIDENTIALITY AND INTELLECTUAL PROPERTY NOTICE**
ALL INFORMATION CONTAINED IN THIS DOCUMENT IS THE SOLE PROPERTY OF VEOLIA WATER SOLUTIONS & TECHNOLOGIES CANADA INC. AND IS PROTECTED BY ALL APPLICABLE LAWS, INCLUDING BUT NOT LIMITED TO COPYRIGHT AND OTHER INTELLECTUAL PROPERTY LAWS. THE DESIGN CONCEPTS AND INFORMATION CONTAINED HEREIN ARE PROPRIETARY TO VWS AND ARE SUBMITTED IN CONFIDENCE. THEY ARE NOT TRANSFERABLE. THEY MUST BE USED ONLY FOR THE PURPOSE FOR WHICH THE DOCUMENT IS EXPRESSLY SUBMITTED AND NO IMPLICIT LICENCE IS GRANTED OTHERWISE BY THE SUBMISSION OF THIS DOCUMENT. THEY ARE CONFIDENTIAL AND PRIVILEGED INFORMATION OF VWS AND THEY MUST NOT BE DISCLOSED, REPRODUCED, LOANED, REMITTED OR USED IN ANY OTHER MANNER WITHOUT THE EXPRESS WRITTEN CONSENT OF VWS. VWS ASSUMES NO RESPONSIBILITY OR LIABILITY FOR THE USE OF THIS DOCUMENT OR THE DESIGN CONCEPTS AND INFORMATION CONTAINED HEREIN FOR ANOTHER PROJECT, OR IN A MANNER THAT DOES NOT RELATE TO THE FITNESS OR PURPOSE OF THIS DOCUMENT. IN NO EVENT SHALL THIS DOCUMENT OR THE DESIGN CONCEPTS AND INFORMATION CONTAINED HEREIN BE USED IN A MANNER DETRIMENTAL TO THE INTEREST OF VWS. ALL COPYRIGHT, PATENT AND OTHER INTELLECTUAL PROPERTY RIGHTS ARE RESERVED. ACCEPTANCE OF THE DELIVERY OF THIS DOCUMENT CONSTITUTES AGREEMENT TO THESE TERMS AND CONDITIONS.

| | |
|---|---|
| DESIGNER | DATE |
| O.F. | 2015-01-05 |
| CHECKER | DATE |
| L.J. | 2015-01-05 |
| ENGINEER | DATE |
| L.J. | 2015-01-05 |
| SCALE: | 1:30 |

TITLE: ACTIFLO ACP-700R
CLARIFIER #1 ACTICARB
GENERAL ARRANGEMENT

CLIENT: AEM MELIADINE-BPC
6526-S-265-605 / 0C-989680

VEOLIA
VEOLIA WATER TECHNOLOGIES CANADA INC. 4105 Sartelon, Saint-Laurent, Qc, Canada. Tel: (514) 334-7230

| PROJECT | DRAWING | INTERNAL | SHEET | REV |
|---|---|---|---|---|
| 5000220043 – GA 0002 | | ACP700R | 2 OF 2 | 3 |

STD: "D" 22x34 | REF: 213072 | BAR = 1" AT PLOT SCALE

Jun 22, 2021 11:17:22 – C:\WORKSPACE-INVENTOR\DESIGNS\EXECUTION\2020\5000220043\ACP700R\GA\5000220043-GA 0002 ACP700R.dwg – mustophe.lies

| TIE-POINT # | DESCRIPTION | DIMENSION / TYPE |
|---|---|---|
| TP-0501 | MINE EFFLUENT INLET | ø450mm [ø18"] – RAISED FACE FLANGE 150# RF |
| TP-0502 | DRAIN | ø100mm [ø4"] – RAISED FACE FLANGE 150# RF |
| TP-0503 | OUTLET | ø450mm [ø18"] – RAISED FACE FLANGE 150# RF |
| TP-0504 | DRAIN | ø100mm [ø4"] – RAISED FACE FLANGE 150# RF |
| TP-0505 | INLET Ca(OCl)2 | ø100mm [ø4"] – RAISED FACE FLANGE 150# RF |
| TP-0506 | INLET Ca(OCl)2 | ø100mm [ø4"] – RAISED FACE FLANGE 150# RF |
| TP-0507 | INLET NaOH | ø50mm [ø2"] – RAISED FACE FLANGE 150# RF |
| TP-0508 | AIR INLET | ø150mm [ø6"] – RAISED FACE FLANGE 150# RF |
| TP-0509 | pH PROBE | ø50mm [ø2"] – RAISED FACE FLANGE 150# RF |
| TP-0510 | LEVEL SWITCH | ø150mm [ø6"] – RAISED FACE FLANGE 150# RF |
| TP-0511 | SPARE CONNECTION | ø50mm [ø2"] – RAISED FACE FLANGE 150# RF |
| TP-0512 | SPARE CONNECTION | ø50mm [ø2"] – RAISED FACE FLANGE 150# RF |
| TP-0513 | pH PROBE | ø50mm [ø2"] – RAISED FACE FLANGE 150# RF |
| TP-0514 | CONNECTOR FAN | ø150mm [ø6"] – RAISED FACE FLANGE 150# RF |
| TP-0515 | INLET NaOH | ø50mm [ø2"] – RAISED FACE FLANGE 150# RF |
| TP-0516 | INLET H2SO4 | ø50mm [ø2"] – RAISED FACE FLANGE 150# RF |
| TP-0517 | CL2 LIBRE / TOTAL (2) | ø20mm [ø3/4"] – COUPLING FNPT |
| TP-0518 | SPARE CONNECTION (2) | ø50mm [ø2"] – RAISED FACE FLANGE 150# RF |

NOTES:
1. FOR LIST OF SUPPLY OF THIS EQUIPMENT, PLEASE REFER TO THE FIELD INSTALLATION DRAWINGS AND THE TECHNICAL SPECIFICATIONS.
2. TANK SHALL NOT BE USED AS A SUPPORT FOR ANY OTHER EQUIPMENT. EQUIPMENT THAT NEEDS TO BE CONNECTED TO TANK SHALL BE SELF-SUPPORTED.
3. HATCHED AREA SHOW IN THE FOOTPRINT NEEDS TO BE SUPPORTED.
4. FILL THE MIXERS WITH OIL BEFORE STARTING THEM.
5. REMOVE LIFTING LUGS ONCE THE TANK IS IN THE PLACE.
6. FOR UNLOADING, STORAGE AND INSTALLATION, REFER TO HANDLING, STORAGE AND INSTALLATION MANUAL.
7. LUGS FOR TRANSPORTATION USE ONLY. DO NOT USE FOR TANK LIFTING.
8. WEIGHT FOR (1) REACTION TANK:
   TOTAL WEIGHT: 25 404 KG (56 015 LBS) (WITHOUT WATER, for transport)
   TOTAL WEIGHT IN SERVICE: 235 274 KG (517 617 LBS) (WITH WATER).
9. PAINTING AS PER VEOLIA PAINT PROCEDURE: INTERNAL TREATMENT DURA-PLATE-UHS 20 TO 28 MILS DFT , COLOR « LIGHT GRAY EXTERNAL TREATMENT ENVIROLASTIC 940 LV 7.0 TO 9.0 MILS DFT, COLOR RAL 7040 WINDOW GREY.
10. MATERIAL:
    – STRUCTURAL PLATES, C AND L PROFILES AS PER CSA G40.21 GRADE 300W
    – HSS AND W PROFILES AS PER CSA G40.21 GRADE 350W

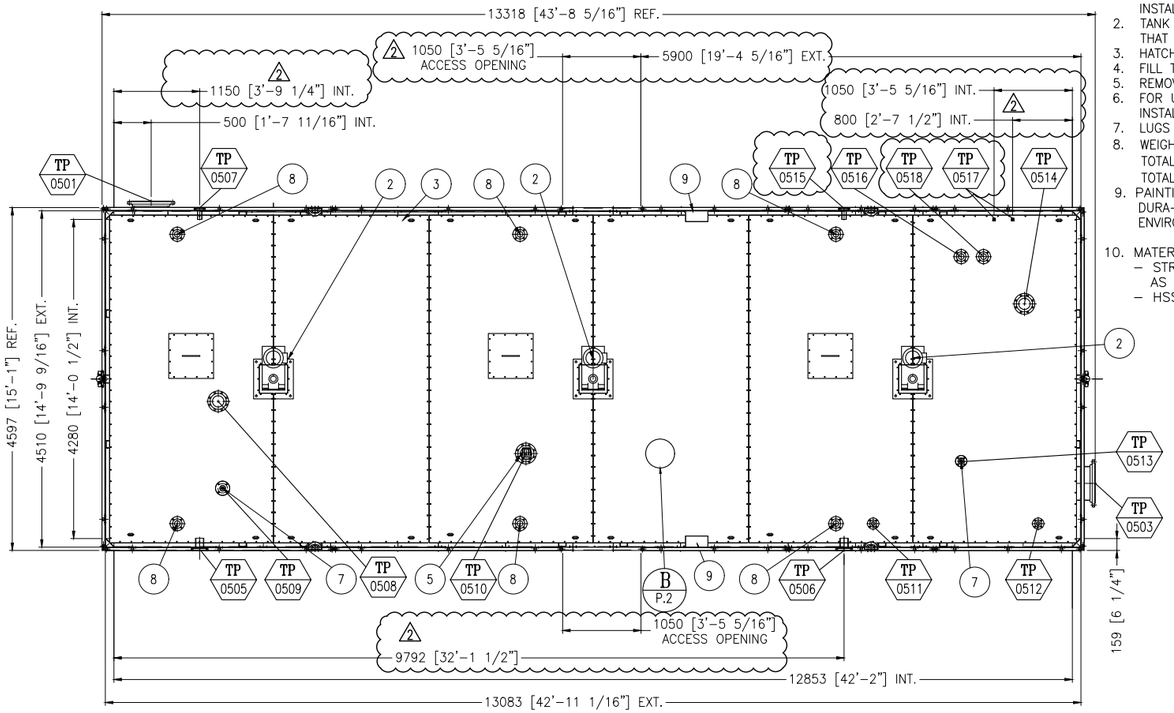


1. ANODE
2. MIXERS
3. COVER
4. HANDRAILS
5. LEVEL SWITCH
6. GROUNDING LUGS
7. pH PROBE
8. ELECTRODE WIRE
9. JUNCTION BOX

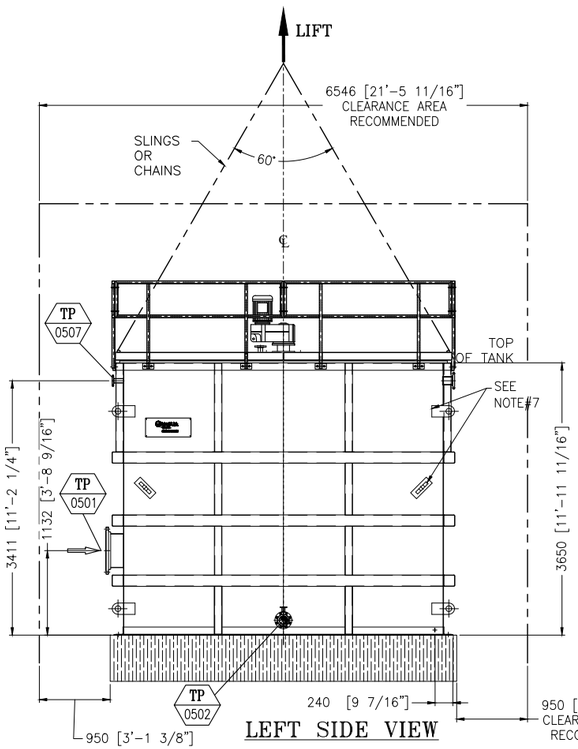


LEFT SIDE VIEW

PLAN VIEW

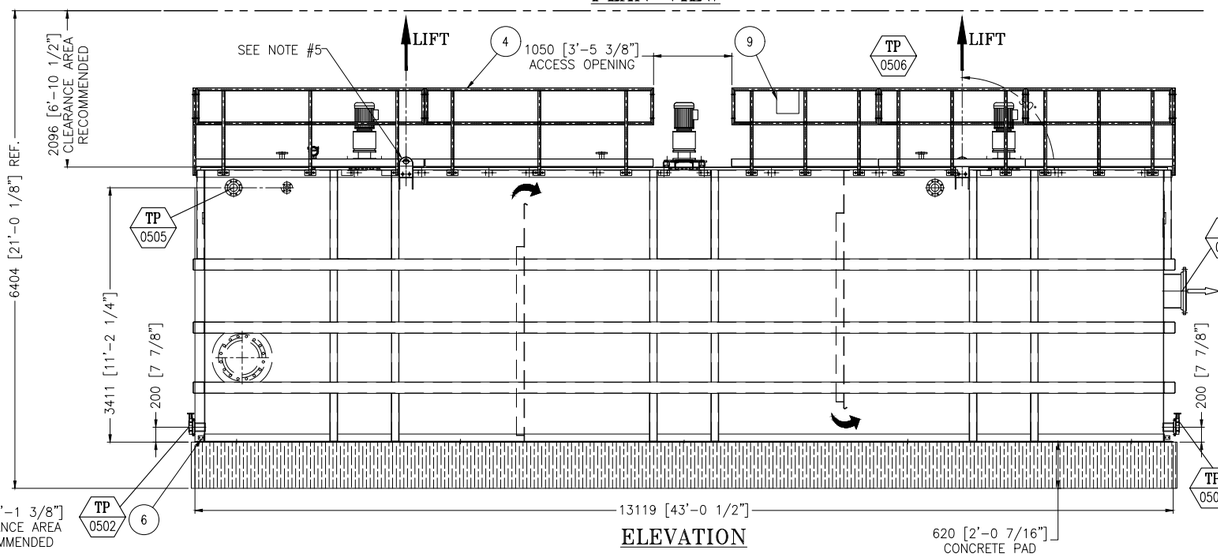


ELEVATION

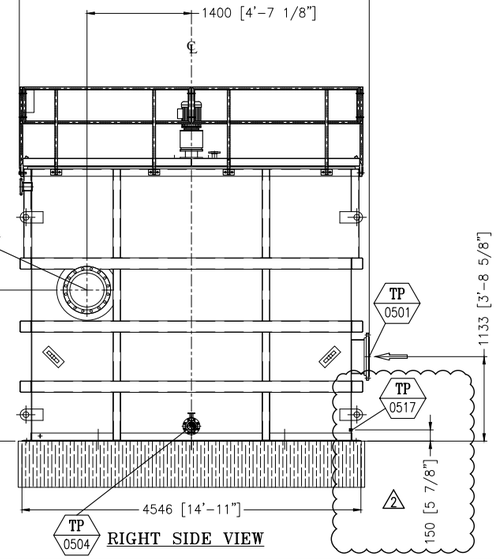


RIGHT SIDE VIEW

| REV | DESCRIPTION | DATE | REV'D | CHK'D | APV'D | ECN |
|---|---|---|---|---|---|---|
| 2 | FOR APPROVAL | 2021-02-17 | A.D. | S.M. | L.J. | N/A |
| 1 | FOR APPROVAL | 2021-01-07 | A.D. | S.M. | L.J. | N/A |


CONFIDENTIALITY AND INTELLECTUAL PROPERTY NOTICE
ALL INFORMATION CONTAINED IN THIS DOCUMENT IS THE SOLE PROPERTY OF VEOLIA WATER TECHNOLOGIES CANADA INC. AND IS PROTECTED BY ALL APPLICABLE LAWS, INCLUDING BUT NOT LIMITED TO COPYRIGHT AND OTHER INTELLECTUAL PROPERTY LAWS. THE DESIGN CONCEPTS AND INFORMATION CONTAINED HEREIN ARE PROPRIETARY TO V.W.T. AND ARE SUBMITTED IN CONFIDENCE. THEY ARE NOT TRANSFERABLE. THEY MUST BE USED ONLY FOR THE PURPOSE FOR WHICH THE DOCUMENT IS EXPRESSLY SUBMITTED AND NO IMPLICIT LICENCE IS GRANTED OTHERWISE BY THE SUBMISSION OF THIS DOCUMENT. THEY ARE CONFIDENTIAL AND PRIVILEGED INFORMATION OF V.W.T. AND THEY MUST NOT BE DISCLOSED, REPRODUCED, LOANED, REMITTED OR USED IN ANY OTHER MANNER WITHOUT THE EXPRESS WRITTEN CONSENT OF V.W.T. V.W.T. ASSUMES NO RESPONSIBILITY OR LIABILITY FOR THE USE OF THIS DOCUMENT OR THE DESIGN CONCEPTS AND INFORMATION CONTAINED HEREIN FOR ANOTHER PROJECT, OR IN A MANNER THAT DOES NOT RELATE TO THE FITNESS OR PURPOSE OF THIS DOCUMENT. IN NO EVENT SHALL THIS DOCUMENT OR THE DESIGN CONCEPTS AND INFORMATION CONTAINED HEREIN BE USED IN A MANNER DETRIMENTAL TO THE INTEREST OF V.W.T. ALL COPYRIGHT, PATENT AND OTHER INTELLECTUAL PROPERTY RIGHTS ARE RESERVED. ACCEPTANCE OF THE DELIVERY OF THIS DOCUMENT CONSTITUTES AGREEMENT TO THESE TERMS AND CONDITIONS.


| | |
|---|---|
| DESIGNER | A.D. |
| DATE | 2021-01-07 |
| CHECKER | |
| DATE | |
| ENGINEER | L.J. |
| DATE | 2021-01-07 |
| SCALE: | 1:40 |

TITLE: CHLORINATION REACTOR (WITH COVER) RX75-3 GENERAL ARRANGEMENT

CLIENT: AEM MELIADINE-BPC 6526-S-265-605 / OC-989680

VEOLIA WATER TECHNOLOGIES CANADA INC. 4105 Sartelon, Saint-Laurent, Qc, Canada. Tel: (514) 334-7230

| PROJECT | DRAWING | INTERNAL | SHEET | REV |
|---|---|---|---|---|
| 5000220043 – GA 0003 | | RX0753 | 1 OF 2 | 2 |

STD: "D" 22x34 | REF:


Jan 22, 2021 16:31:18 – C:\WORKSPACE-INVENTOR\Designs\EXECUTION\2020\5000220043 AEM MELIADINE-BPC\RX\5000220043-GA 0003 RX753(AVEC COUVERCLE).dwg – amin.dehghani

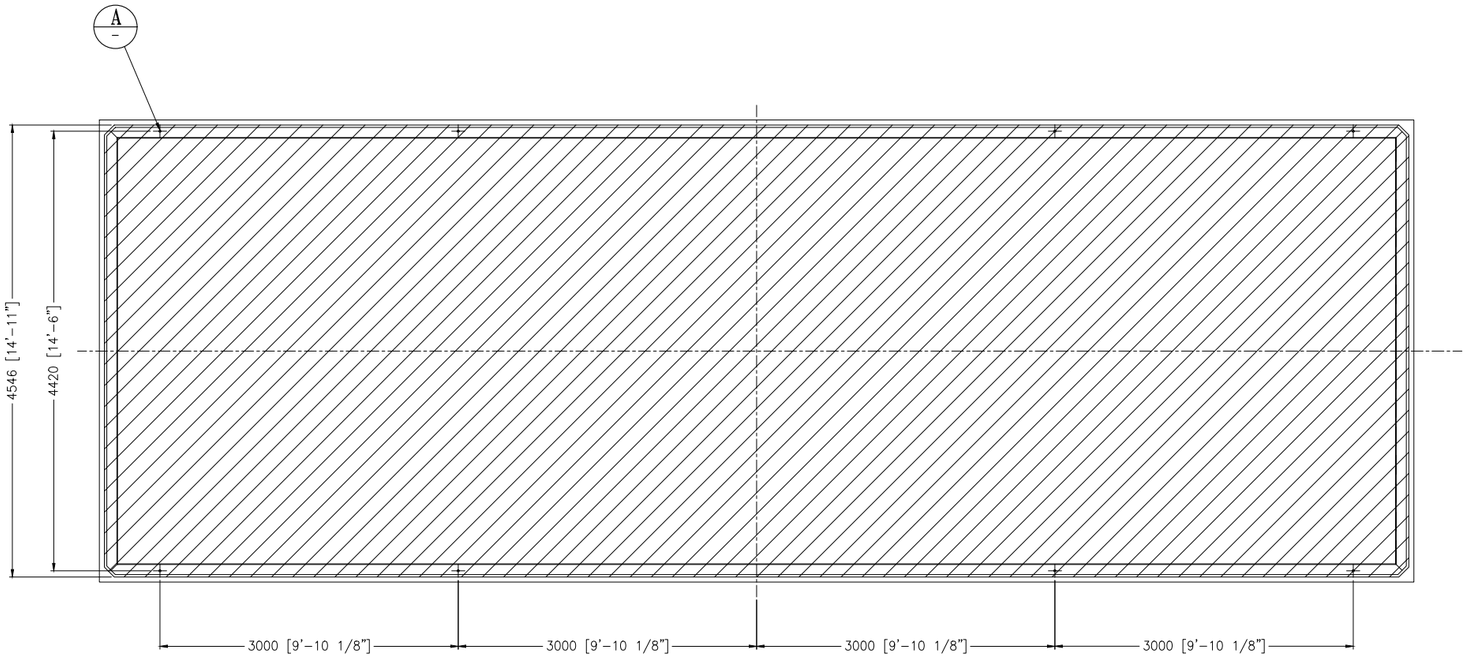


FOOTPRINT

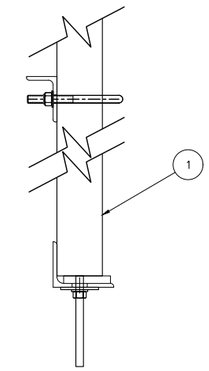


TYPICAL DETAIL
FOR ANODE
INSTALLATION

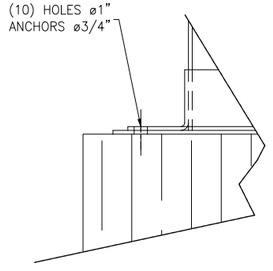


DETAIL A – SCALE: 1:5

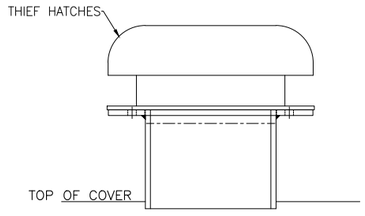


DETAIL B P.1 – SCALE: 1:5

| REV | DESCRIPTION | DATE | REV'D | CHK'D | APV'D | ECN |
|---|---|---|---|---|---|---|
| 2 | FOR APPROVAL | 2021-02-17 | A.D. | S.M. | L.J. | N/A |
| 1 | FOR APPROVAL | 2021-01-07 | A.D. | S.M. | L.J. | N/A |

**CONFIDENTIALITY AND INTELLECTUAL PROPERTY NOTICE**
ALL INFORMATION CONTAINED IN THIS DOCUMENT IS THE SOLE PROPERTY OF VEOLIA WATER TECHNOLOGIES CANADA INC. AND IS PROTECTED BY ALL APPLICABLE LAWS, INCLUDING BUT NOT LIMITED TO COPYRIGHT AND OTHER INTELLECTUAL PROPERTY LAWS. THE DESIGN CONCEPTS AND INFORMATION CONTAINED HEREIN ARE PROPRIETARY TO V.W.T. AND ARE SUBMITTED IN CONFIDENCE. THEY ARE NOT TRANSFERABLE, THEY MUST BE USED ONLY FOR THE PURPOSE FOR WHICH THE DOCUMENT IS EXPRESSLY SUBMITTED AND NO IMPLICIT LICENCE IS GRANTED OTHERWISE BY THE SUBMISSION OF THIS DOCUMENT. THEY ARE CONFIDENTIAL AND PRIVILEGED INFORMATION OF V.W.T. AND THEY MUST NOT BE DISCLOSED, REPRODUCED, LOANED, ADAPTED OR USED IN ANY OTHER MANNER WITHOUT THE EXPRESS WRITTEN CONSENT OF V.W.T. V.W.T. ASSUMES NO RESPONSIBILITY OR LIABILITY FOR THE USE OF THIS DOCUMENT OR THE DESIGN CONCEPTS AND INFORMATION CONTAINED HEREIN FOR ANOTHER PROJECT, OR IN A MANNER THAT DOES NOT RELATE TO THE FITNESS OR PURPOSE OF THIS DOCUMENT. IN NO EVENT SHALL THIS DOCUMENT OR THE DESIGN CONCEPTS AND INFORMATION CONTAINED HEREIN BE USED IN A MANNER DETRIMENTAL TO THE INTEREST OF V.W.T. ALL COPYRIGHT, PATENT AND OTHER INTELLECTUAL PROPERTY RIGHTS ARE RESERVED. ACCEPTANCE OF THE DELIVERY OF THIS DOCUMENT CONSTITUTES AGREEMENT TO THESE TERMS AND CONDITIONS.

| | |
|---|---|
| DESIGNER | DATE |
| A.D. | 2021-01-07 |
| CHECKER | DATE |
| | |
| ENGINEER | DATE |
| L.J. | 2021-01-07 |
| SCALE: | 1:40 |

TITLE: CHLORINATION REACTOR (WITH COVER)
RX75-3
GENERAL ARRANGEMENT

CLIENT: AEM MELIADINE-BPC
6526-S-265-605 / OC-989680

VEOLIA

VEOLIA WATER TECHNOLOGIES CANADA INC. 4105 Sartelon, Saint-Laurent, Qc, Canada. Tel: (514) 334-7230

| PROJECT | DRAWING | INTERNAL | SHEET | REV |
|---|---|---|---|---|
| 5000220043 – GA 0003 | | RX0753 | 2 OF 2 | 2 |

STD: "D" 22x34 | REF:

Jan 22, 2021 16:31:18 – C:\WORKSPACE-INVENTOR\Designs\EXECUTION\2020\5000220043 AEM MELIADINE-BPC\RX\5000220043-GA 0003 RX753(AVEC COUVERCLE).dwg – amin.dehghani

| TIE-POINT # | DESCRIPTION | DIMENSION / TYPE |
|---|---|---|
| TP-0601 | CHLORINATION TANK EFFLUENT INLET | ø450mm [ø18"] – RAISED FACE FLANGE 150# RF |
| TP-0602 | SLUDGE RETURN | ø150mm [ø6"] – RAISED FACE FLANGE 150# RF |
| TP-0603 | DRAIN | ø100mm [ø4"] – RAISED FACE FLANGE 150# RF |
| TP-0604 | OUTLET | ø450mm [ø18"] – RAISED FACE FLANGE 150# RF |
| TP-0605 | DRAIN | ø100mm [ø4"] – RAISED FACE FLANGE 150# RF |
| TP-0606 | FLOATABLE ACTIVATED CARBON OUTLET | ø50mm [ø2"] – COUPLING FNPT |
| TP-0607 (3) | CL2 LIBRE / TOTAL | ø20mm [ø3/4"] – COUPLING FNPT |

NOTES:
1. FOR LIST OF SUPPLY OF THIS EQUIPMENT, PLEASE REFER TO THE FIELD INSTALLATION DRAWINGS AND THE TECHNICAL SPECIFICATIONS.
2. TANK SHALL NOT BE USED AS A SUPPORT FOR ANY OTHER EQUIPMENT. EQUIPMENT THAT NEEDS TO BE CONNECTED TO TANK SHALL BE SELF-SUPPORTED.
3. HATCHED AREA SHOW IN THE FOOTPRINT NEEDS TO BE SUPPORTED.
4. FILL THE MIXERS WITH OIL BEFORE STARTING THEM.
5. REMOVE LIFTING LUGS ONCE THE TANK IS IN THE PLACE.
6. FOR UNLOADING, STORAGE AND INSTALLATION, REFER TO HANDLING, STORAGE AND INSTALLATION MANUAL.
7. LUGS FOR TRANSPORTATION USE ONLY. DO NOT USE FOR TANK LIFTING.
8. WEIGHT FOR (1) REACTION TANK:
   TOTAL WEIGHT: 22 920 KG (50 538 LBS) (WITHOUT WATER, for transport)
   TOTAL WEIGHT IN SERVICE: 232 263 KG (512 140 LBS) (WITH WATER).
9. PAINTING AS PER VEOLIA PAINT PROCEDURE: INTERNAL TREATMENT DURA-PLATE-UHS 20 TO 28 MILS DFT , COLOR « LIGHT GRAY EXTERNAL TREATMENT ENVIROLASTIC 940 LV 7.0 TO 9.0 MILS DFT, COLOR RAL 7040 WINDOW GREY.
10. MATERIAL:
   – STRUCTURAL PLATES, C AND L PROFILES AS PER CSA G40.21 GRADE 300W
   – HSS AND W PROFILES AS PER CSA G40.21 GRADE 350W

1 BASIN
2 MIXERS
3 FRP GRATING
4 HANDRAILS
5 LEVEL SWITCH
6 GROUNDING LUGS
7 CL2 TOT CL2 FREE
8 JUNCTION BOX (ON THE HANDRAIL)
9 ELECTRODES
10 ANODES

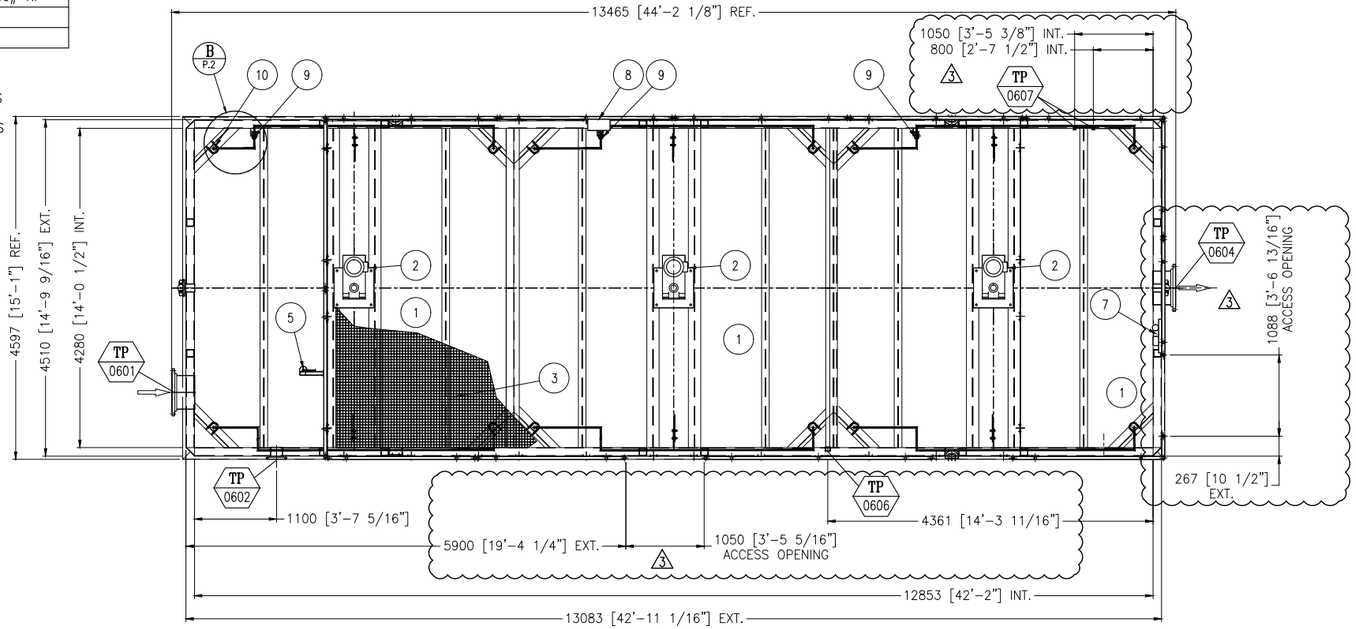


PLAN VIEW

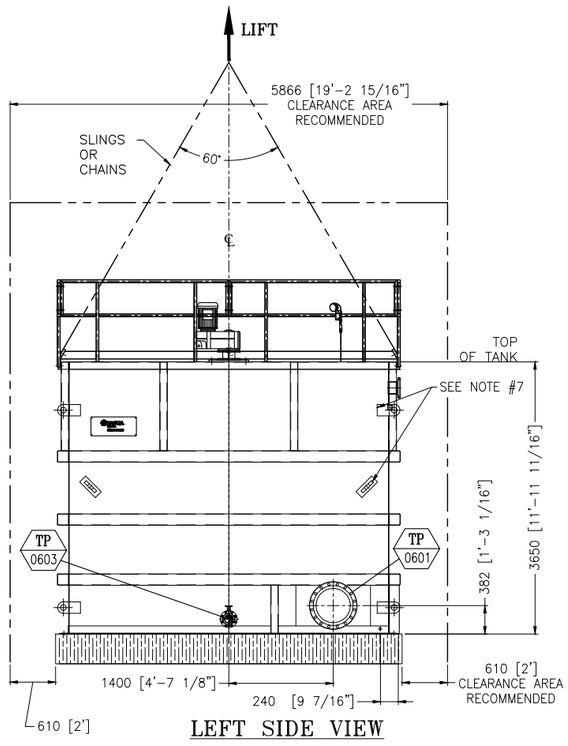


LEFT SIDE VIEW

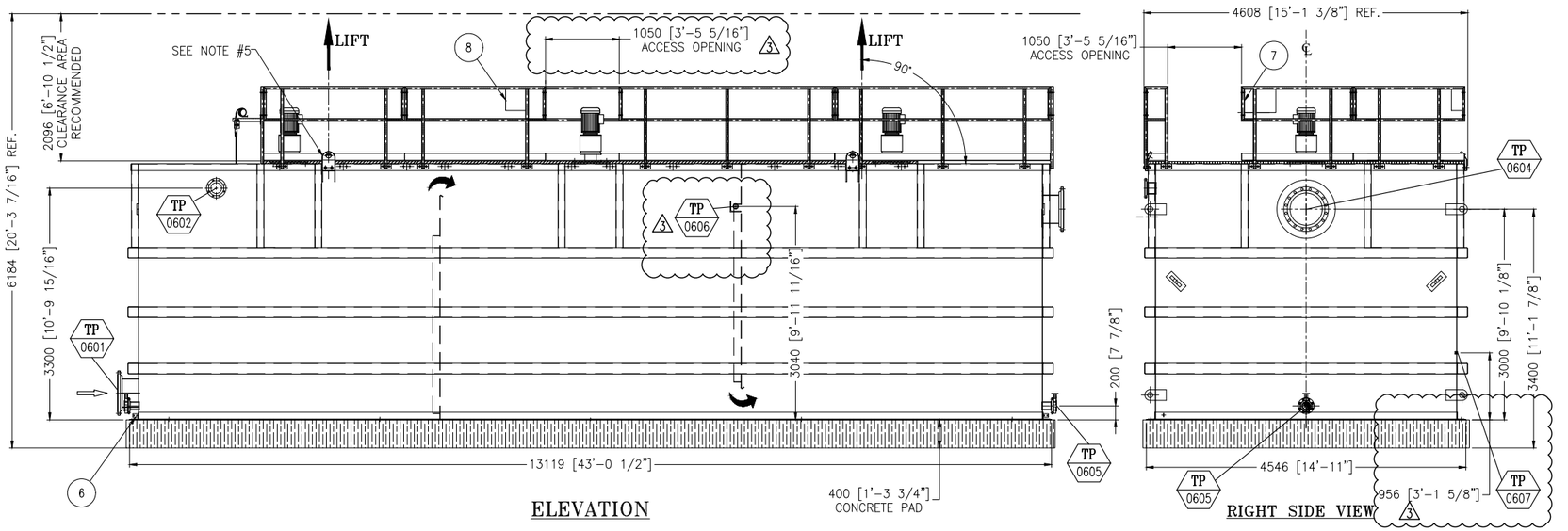


ELEVATION

RIGHT SIDE VIEW

| REV | DESCRIPTION | DATE | REV'D | CHK'D | APV'D | ECN |
|---|---|---|---|---|---|---|
| 3 | FOR APPROVAL | 2021-03-24 | A.D. | S.M. | L.J. | N/A |
| 2 | FOR APPROVAL | 2021-02-01 | A.D. | S.M. | L.J. | N/A |
| 1 | FOR APPROVAL | 2021-01-07 | A.D. | S.M. | L.J. | N/A |

CONFIDENTIALITY AND INTELLECTUAL PROPERTY NOTICE
ALL INFORMATION CONTAINED IN THIS DOCUMENT IS THE SOLE PROPERTY OF VEOLIA WATER TECHNOLOGIES CANADA INC. AND IS PROTECTED BY ALL APPLICABLE LAWS, INCLUDING BUT NOT LIMITED TO COPYRIGHT AND OTHER INTELLECTUAL PROPERTY LAWS. THE DESIGN CONCEPTS AND INFORMATION CONTAINED HEREIN ARE PROPRIETARY TO V.W.T. AND ARE SUBMITTED IN CONFIDENCE. THEY ARE NOT TRANSFERABLE. THEY MUST BE USED ONLY FOR THE PURPOSE FOR WHICH THE DOCUMENT IS EXPRESSLY SUBMITTED AND NO IMPLICIT LICENCE IS GRANTED OTHERWISE BY THE SUBMISSION OF THIS DOCUMENT. THEY ARE CONFIDENTIAL AND PRIVILEGED INFORMATION OF V.W.T. AND THEY MUST NOT BE DISCLOSED, REPRODUCED, LOANED, REMITTED OR USED IN ANY OTHER MANNER WITHOUT THE EXPRESS WRITTEN CONSENT OF V.W.T. V.W.T. ASSUMES NO RESPONSIBILITY OR LIABILITY FOR THE USE OF THIS DOCUMENT OR THE DESIGN CONCEPTS AND INFORMATION CONTAINED HEREIN FOR ANOTHER PROJECT, OR IN A MANNER THAT DOES NOT RELATE TO THE FITNESS OR PURPOSE OF THIS DOCUMENT. IN NO EVENT SHALL THIS DOCUMENT OR THE DESIGN CONCEPTS AND INFORMATION CONTAINED HEREIN BE USED IN A MANNER DETRIMENTAL TO THE INTEREST OF V.W.T. ALL COPYRIGHT, PATENT AND OTHER INTELLECTUAL PROPERTY RIGHTS ARE RESERVED. ACCEPTANCE OF THE DELIVERY OF THIS DOCUMENT CONSTITUTES AGREEMENT TO THESE TERMS AND CONDITIONS.

| | |
|---|---|
| DESIGNER | DATE |
| A.D. | 2021-01-07 |
| CHECKER | DATE |
| | |
| ENGINEER | DATE |
| L.J. | 2021-01-07 |
| SCALE: | 1:40 |

TITLE: DECHLORINATION REACTOR (WITHOUT COVER) RX75-3 GENERAL ARRANGEMENT

CLIENT: AEM MELIADINE-BPC 6526-S-265-605 / OC-989680

VEOLIA WATER TECHNOLOGIES CANADA INC. 4105 Sartelon, Saint-Laurent, Qc, Canada. Tel: (514) 334-7230

| PROJECT | DRAWING | INTERNAL | SHEET | REV |
|---|---|---|---|---|
| 5000220043 – GA 0004 | | RX0753 | 1 OF 2 | 3 |

STD: "D" 22x34 REF:

Apr 09, 2021 14:18:18 – C:\WORKSPACE-INVENTOR\DESIGNS\EXECUTION\2020\5000220043\RX\5000220043-GA 0004 RX75(SANS COUVERCLE).dwg – amin.dehghani

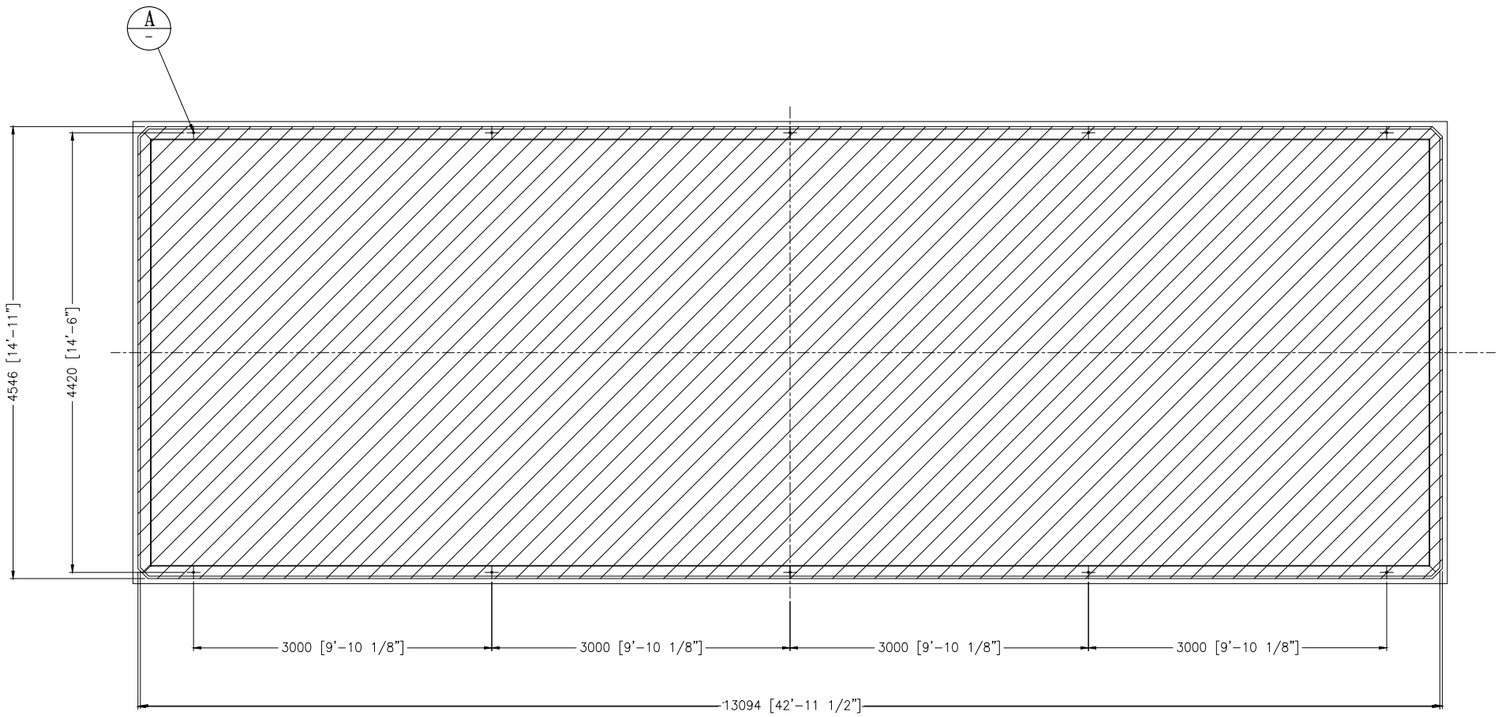


FOOTPRINT

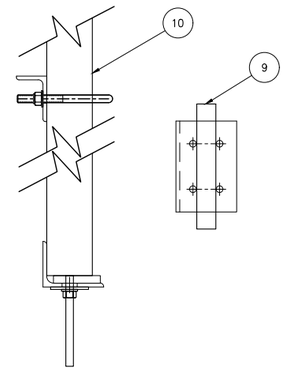


DETAIL B P.1
SCALE: 1:5

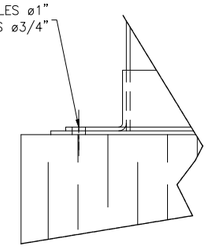


DETAIL A –
SCALE: 1:5

| REV | DESCRIPTION | DATE | REV'D | CHK'D | APV'D | ECN |
|---|---|---|---|---|---|---|
| 3 | FOR APPROVAL | 2021-03-24 | A.D. | S.M. | L.J. | N/A |
| 2 | FOR APPROVAL | 2021-02-01 | A.D. | S.M. | L.J. | N/A |
| 1 | FOR APPROVAL | 2021-01-07 | A.D. | S.M. | L.J. | N/A |

**CONFIDENTIALITY AND INTELLECTUAL PROPERTY NOTICE**
ALL INFORMATION CONTAINED IN THIS DOCUMENT IS THE SOLE PROPERTY OF VEOLIA WATER TECHNOLOGIES CANADA INC. AND IS PROTECTED BY ALL APPLICABLE LAWS, INCLUDING BUT NOT LIMITED TO COPYRIGHT AND OTHER INTELLECTUAL PROPERTY LAWS. THE DESIGN CONCEPTS AND INFORMATION CONTAINED HEREIN ARE PROPRIETARY TO V.W.T. AND ARE SUBMITTED IN CONFIDENCE. THEY ARE NOT TRANSFERABLE. THEY MUST BE USED ONLY FOR THE PURPOSE FOR WHICH THE DOCUMENT IS EXPRESSLY SUBMITTED AND NO IMPLICIT LICENCE IS GRANTED OTHERWISE BY THE SUBMISSION OF THIS DOCUMENT. THEY ARE CONFIDENTIAL AND PRIVILEGED INFORMATION OF V.W.T. AND THEY MUST NOT BE DISCLOSED, REPRODUCED, LOANED, REMITTED OR USED IN ANY OTHER MANNER WITHOUT THE EXPRESS WRITTEN CONSENT OF V.W.T. V.W.T. ASSUMES NO RESPONSIBILITY OR LIABILITY FOR THE USE OF THIS DOCUMENT OR THE DESIGN CONCEPTS AND INFORMATION CONTAINED HEREIN FOR ANOTHER PROJECT, OR IN A MANNER THAT DOES NOT RELATE TO THE FITNESS OR PURPOSE OF THIS DOCUMENT. IN NO EVENT SHALL THIS DOCUMENT OR THE DESIGN CONCEPTS AND INFORMATION CONTAINED HEREIN BE USED IN A MANNER DETRIMENTAL TO THE INTEREST OF V.W.T. ALL COPYRIGHT, PATENT AND OTHER INTELLECTUAL PROPERTY RIGHTS ARE RESERVED. ACCEPTANCE OF THE DELIVERY OF THIS DOCUMENT CONSTITUTES AGREEMENT TO THESE TERMS AND CONDITIONS.

| | | |
|---|---|---|
| DESIGNER | A.D. | DATE 2021-01-07 |
| CHECKER | | DATE |
| ENGINEER | L.J. | DATE 2021-01-07 |
| SCALE: | 1:40 | |

TITLE: DECHLORINATION REACTOR (WITHOUT COVER)
RX75-3
GENERAL ARRANGEMENT

CLIENT: AEM MELIADINE-BPC
6526-S-265-605 / OC-989680

VEOLIA
VEOLIA WATER TECHNOLOGIES CANADA INC. 4105 Sartelon, Saint-Laurent, Qc, Canada. Tel: (514) 334-7230

| PROJECT | DRAWING | INTERNAL | SHEET | REV |
|---|---|---|---|---|
| 5000220043 | GA 0004 | RX0753 | 2 OF 2 | 3 |

STD: "D" 22x34 | REF:

Apr 09, 2021 14:18:21 – C:\WORKSPACE-INVENTOR\DESIGNS\EXECUTION\2020\5000220043\RX\5000220043-GA 0004 RX753(SANS COUVERCLE).dwg – amin.dehghani

| TIE-POINT # | DESCRIPTION | DIMENSION / TYPE |
|---|---|---|
| TP-1404 / TP-1504 | WATER INLET | ø50mm [ø2"] – PVC SCH80 FLANGE 150# RF |
| TP-1405 / TP-1505 | OUTLET TO DOSING | ø65mm [ø2 1/2"] – SS316 FLANGE 150# RF |
| TP-1406 / TP-1506 | COMPRESSED AIR | ø6mm [ø1/4"] FEMALE TUBE |
| TP-1407 / TP-1507 | COMPRESSED AIR | ø6mm [ø1/4"] FEMALE TUBE |

NOTES:

1- POWDERED ACTIVATED CARBON SYSTEM IMPLIES HAZARDOUS LOCATION CLASS II DIV 1 GRP F

2- ANCHORING TO THE FLOOR IS BY OTHERS

3- REFER TO THE INSTALLATION, OPERATION AND MAINTENANCE MANUAL (IOM) BEFOREHAND TO COORDINATE THE PLANT DESIGN, INSTALLATION AND START UP OF THE SPLITTER BOX UNIT.

M.O.C.
BIG BAG WEIGHT:
- DRY SHIPPING WEIGHT: 1457 KG (3211 LBS).

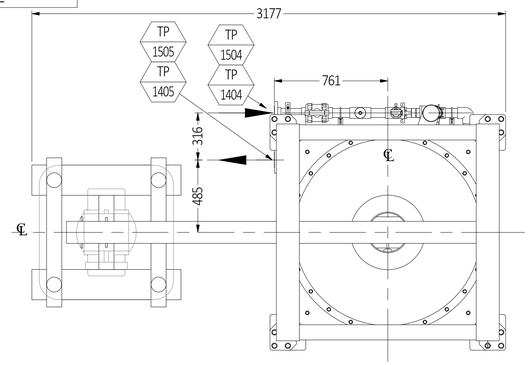


TOP VIEW

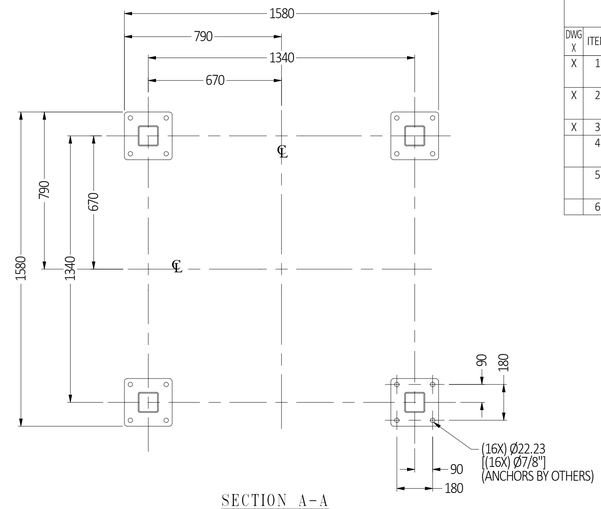


SECTION A-A

SCALE: 1:15

| | ITEM | DESCRIPTION | MATÉRIEL MATERIAL | NUMÉRO REF. REF. NUMBER | QTÉ QTY | ATELIER SHOP QTÉ TOT. TOT. QTY | E | S |
|---|---|---|---|---|---|---|---|---|
| X | 1 | LOWER SECTIONS, DOSING AND HOPPER | | SA000501 | 1 | 2 | | |
| X | 2 | HIGH SECTIONS, BIG BAG & GALLOWS | | SA000502 | 1 | 2 | | |
| X | 3 | LIFTING TOOL, BIG BAG | Generic | FA000503 | 1 | 2 | | |
| | 4 | HEX. BOLT Ø3/4"-10UNC X 2 3/4 LG. | ASTM-F593D-304 | FXSCZC200544 | 28 | 56 | | |
| | 5 | FLAT WASHER Ø3/4" TYPE A NARROW | AISI 304 | FXWAZC200678 | 56 | 112 | | |
| | 6 | HEX. NUT Ø3/4"-10UNC | ASTM-F594D-304 | FXNUZC200229 | 28 | 56 | | |

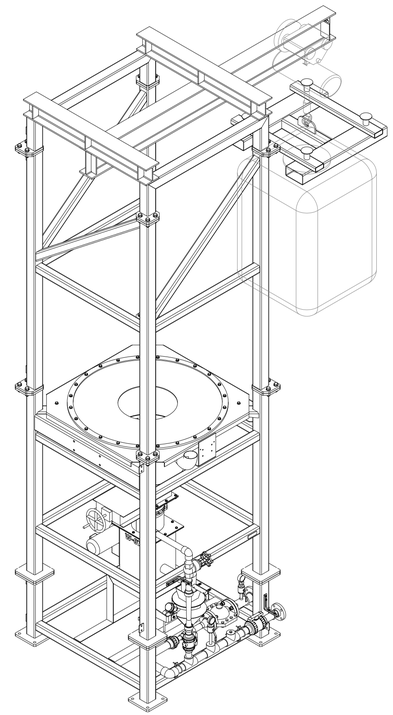

ISOMETRIC VIEW

SCALE: 1:25

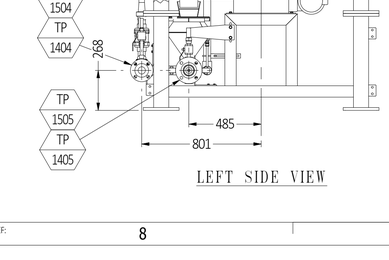


LEFT SIDE VIEW




FRONT VIEW




RIGHT SIDE VIEW

| RÉV. REV. | DESCRIPTION | DATE | DESSINÉ PAR/ DRAWN BY | PRÉPARÉ PAR/ PREPARED BY | VÉRIFIÉ PAR/ CHECKED BY |
|---|---|---|---|---|---|
| 1 | FOR FIELD INSTALLATION | 2021-03-16 | N.L. | G.M. | S.M. |

DESSINÉ PAR/DRAWN BY: NORMAND LÉGER — DATE: 2021-03-15
PRÉPARÉ PAR/PREPARED BY: GUILLAUME MUNSCH ING. — DATE: 2021-03-15
VÉRIFIÉ PAR/CHECKED BY: SIMON MORIN — DATE: 2021-03-15

CLIENT: AEM MELIADINE-BPC

6526-S-265-605 / OC-989680

VEOLIA WATER TECHNOLOGIES

TITRE / TITLE:
CARBON DOSING SYSTEM
BIG BAG WITH GALLOWS
FIELD INSTALLATION

ÉCHELLE / SCALE: 1:25

| PROJET / PROJECT · DESSIN No / DRAWING No | INTERNE / INTERNAL | FEUILLET / SHEET | RÉV/REV |
|---|---|---|---|
| 5000220043 · FI0005 | HYDRA | 1 / 1 | 1 |

Ce document est la propriété de VEOLIA et ne peut être reproduit sans son autorisation écrite.
This document is the property of VEOLIA and cannot be reproduced without its written authorization.

REF: ANSI D

TOP VIEW

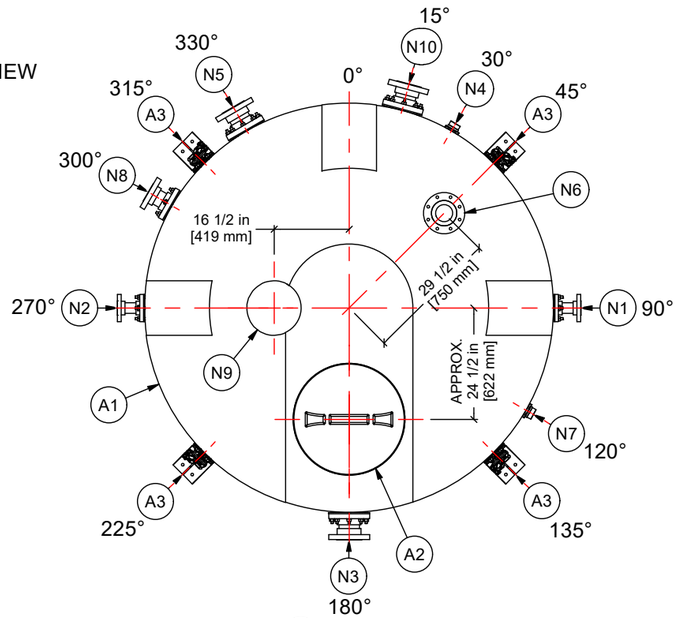


NOTES:

1. TANK IS MANUFACTURED FROM HDPE. (1.9 SG)
2. TANK IS MANUFACTURED TO ASTM-D-1998 STANDARD.
3. ALL TANK DIMENSIONS ARE SUBJECT TO A +/-3% TOLERENCE.
4. FLEXIBLE COUPLINGS ARE REQUIRED FOR ALL EXTERNAL PIPING.
5. ALL FITTING GASKETS ARE EPDM.
6. ACO RECOMMENDS ALL FLANGE GASKETS TO BE MIN. 1/4" THICK.
7. ON LARGER SIZED TANKS SOME MECHANICAL FITTINGS MAY NEED TO BE REMOVED IN ORDER TO AVOID WIDE OR OVERSIZED LOADS.
8. HDPE ALIGNMENT WEDGES ARE REQUIRED ON SOME TOP FITTINGS TO KEEP THEM PERPENDICULAR TO THE GROUND.
9. TANK MUST BE PROPERLY VENTED TO PREVENT PRESSURE OR VACUUM FROM DEVELOPING AS THE TANK IS FILLING OR EMPTYING.

| MATERIALS LIST | | |
|---|---|---|
| ITEMS | DESCRIPTION | NOTES |
| A1 | CT-3305 TANK | |
| A2 | 21" THREADED MCPHEE LID | |
| A3 | STEEL HOLD DOWN ASSEMBLY WITH LUGS AND CABLES (NON-SEISMIC) | 4 PLACES |
| N1 | 2" PVC SPOOL FLANGE W/ SS-EPDM DONKER BOLTS | BPC |
| N2 | 2" PVC SPOOL FLANGE W/ SS-EPDM DONKER BOLTS | BY-PASS |
| N3 | 4" PVC SPOOL FLANGE W/ SS-EPDM DONKER BOLTS | OVERFLOW |
| N4 | 1 1/2" FNPT PVC TANK ADAPTER | DRAIN |
| N5 | 4" PVC SPOOL FLANGE W/ SS-EPDM DONKER BOLTS | OUTLET 1 |
| N6 | 4" FNPT HDPE WELDED BOSS (HALF COUPLING) WITH PVC FLANGE ADAPTER | LIT 1 |
| N7 | 1 1/2" FNPT PVC TANK ADAPTER | LIT 2 |
| N8 | 3" PVC SPOOL FLANGE W/ SS-EPDM DONKER BOLTS | RETURN |
| N9 | 12" DRILLED HOLE | MIXER |
| N10 | 4" PVC SPOOL FLANGE W/ SS-EPDM DONKER BOLTS | OUTLET 2 |

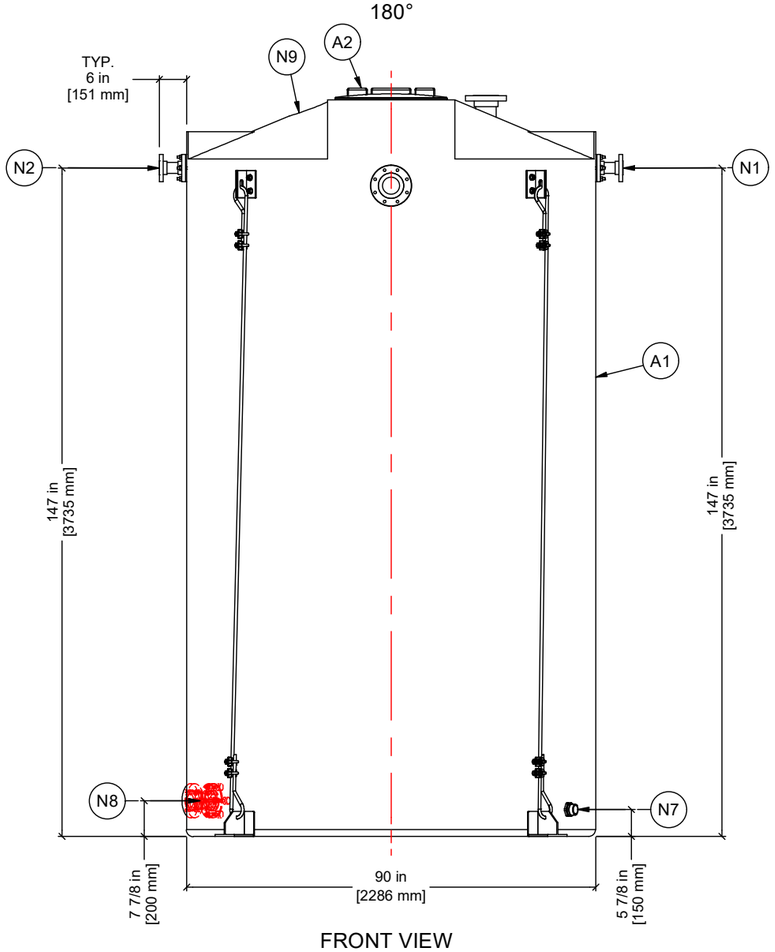


FRONT VIEW

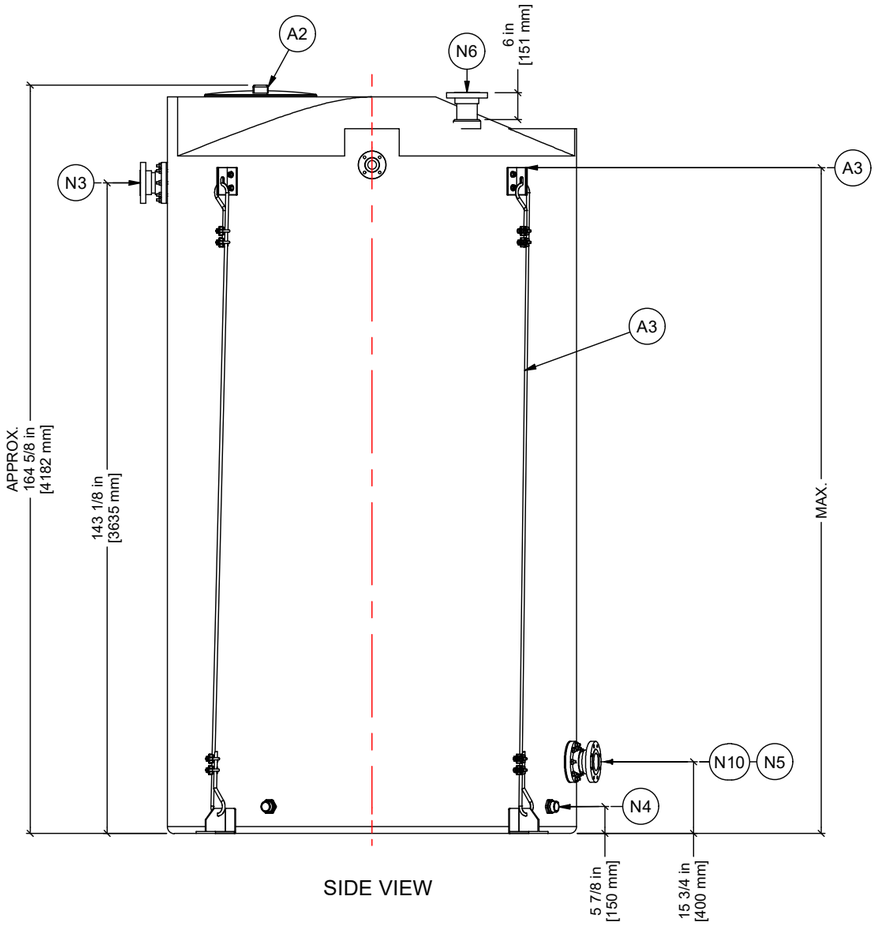


SIDE VIEW

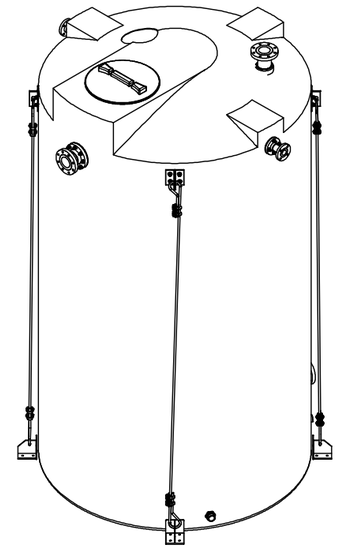

| REV | DATE | DESCRIPTION | BY | APPD | REVD |
|---|---|---|---|---|---|
| 3 | APR-07-21 | MVD N5 | WM | | |
| 2 | | MVD N6 | WM | | |
| 1 | MAR-30-21 | N6 TO WB AND FA | WM | | |

REVISIONS

CUSTOMER: VEOLIA

TITLE: 3300 IG CLOSED TOP TANK

ACO JOB NO: 78142
PURCHASE ORDER NO:
PURCHASER'S EQUIP. NO:

THIS DRAWING IS THE PROPERTY OF ROTOPLAST INC. AND SHALL NOT BE COPIED OR TRANSFERRED WITHOUT THE WRITTEN CONSENT OF ROTOPLAST INC.

ENGINEERS SEAL

ACO CONTAINER SYSTEMS
DIVISION OF ROTOPLAST INC.
PICKERING - ONTARIO - CANADA
ACO CONTAINER SYSTEMS
DIVISION OF ROTOPLAST INC.
794 MCKAY RD.
PICKERING, ONTARIO, CANADA
TEL. 905-683-8222
FAX 905-683-2969

| | |
|---|---|
| DESIGNED | |
| DRAWN | WM |
| CHECKED | |
| APPROVED | |
| SCALE | N.T.S. |
| DATE | MAR-27-2021 |

DWG No: CT-3305-78142
REV: 3

TOP VIEW

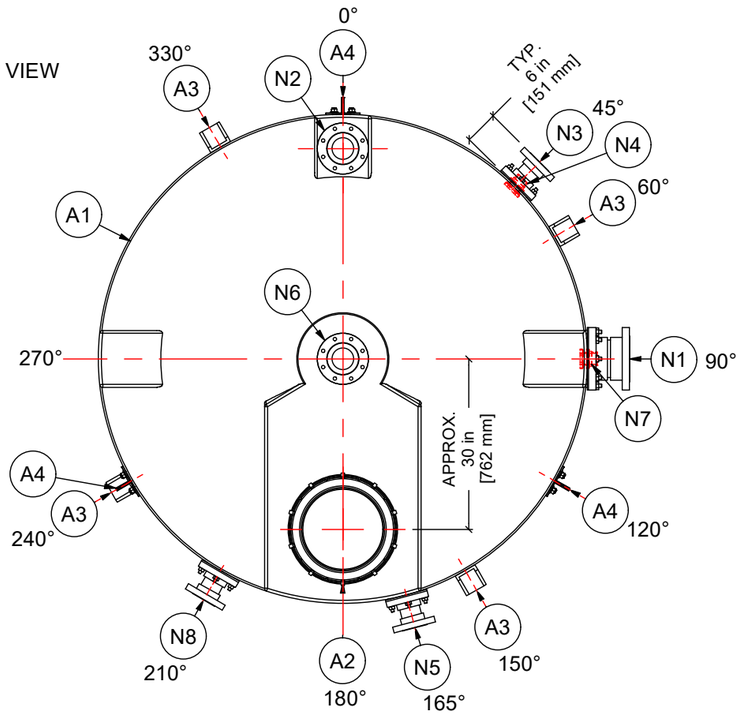


NOTES:

1. TANK IS MANUFACTURED FROM HDPE. (1.5 SG)
2. TANK IS MANUFACTURED TO ASTM-D-1998 STANDARD.
3. ALL TANK DIMENSIONS ARE SUBJECT TO A +/-3% TOLERENCE.
4. FLEXIBLE COUPLINGS ARE REQUIRED FOR ALL EXTERNAL PIPING.
5. ALL FITTING GASKETS ARE EPDM.
6. ACO RECOMMENDS ALL FLANGE GASKETS TO BE MIN. 1/4" THICK.
7. ON LARGER SIZED TANKS SOME MECHANICAL FITTINGS MAY NEED TO BE REMOVED IN ORDER TO AVOID WIDE OR OVERSIZED LOADS.
8. HDPE ALIGNMENT WEDGES ARE REQUIRED ON SOME TOP FITTINGS TO KEEP THEM PERPENDICULAR TO THE GROUND.
9. TANK MUST BE PROPERLY VENTED TO PREVENT PRESSURE OR VACUUM FROM DEVELOPING AS THE TANK IS FILLING OR EMPTYING.

| MATERIALS LIST | | |
|---|---|---|
| ITEMS | DESCRIPTION | NOTES |
| A1 | CT-1655 HDPE TANK | |
| A2 | 16IN LID WITH LOCKING STRAP | |
| A3 | HDPE WELDED HOLD DOWN LUG | 4 PLACES |
| A4 | STEEL LIFTING LUGS W/ SS-EPDM DONKER BOLTS | 3 PLACES |
| N1 | 6" PVC SPOOL FLANGE W/ SS-EPDM DONKER BOLTS | BACKWASH |
| N2 | 4" PVC SPOOL FLANGE W/ SS-EPDM DONKER BOLTS | VENT |
| N3 | 3" PVC SPOOL FLANGE W/ SS-EPDM DONKER BOLTS | OVERFLOW |
| N4 | 1 1/2" FNPT PVC TANK ADAPTER | DRAIN |
| N5 | 3" PVC SPOOL FLANGE W/ SS-EPDM DONKER BOLTS | OUTLET 1 |
| N6 | 4" PVC SPOOL FLANGE W/ SS-EPDM DONKER BOLTS | LIT 1 |
| N7 | 1 1/2" FNPT PVC TANK ADAPTER | LIT 2 |
| N8 | 3" PVC SPOOL FLANGE W/ SS-EPDM DONKER BOLTS | OUTLET 2 |

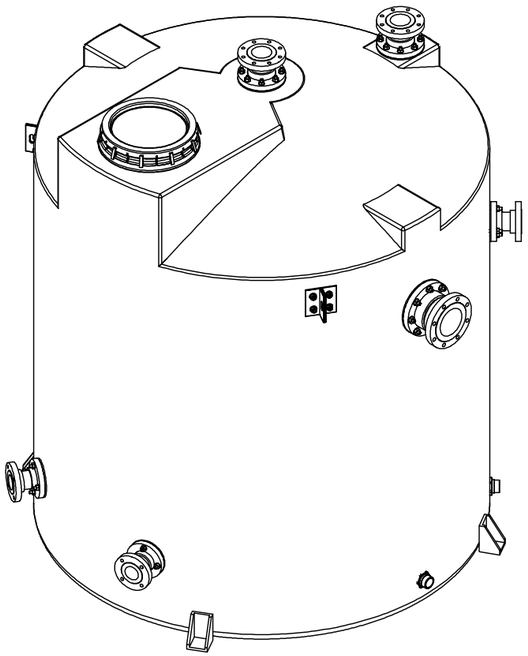

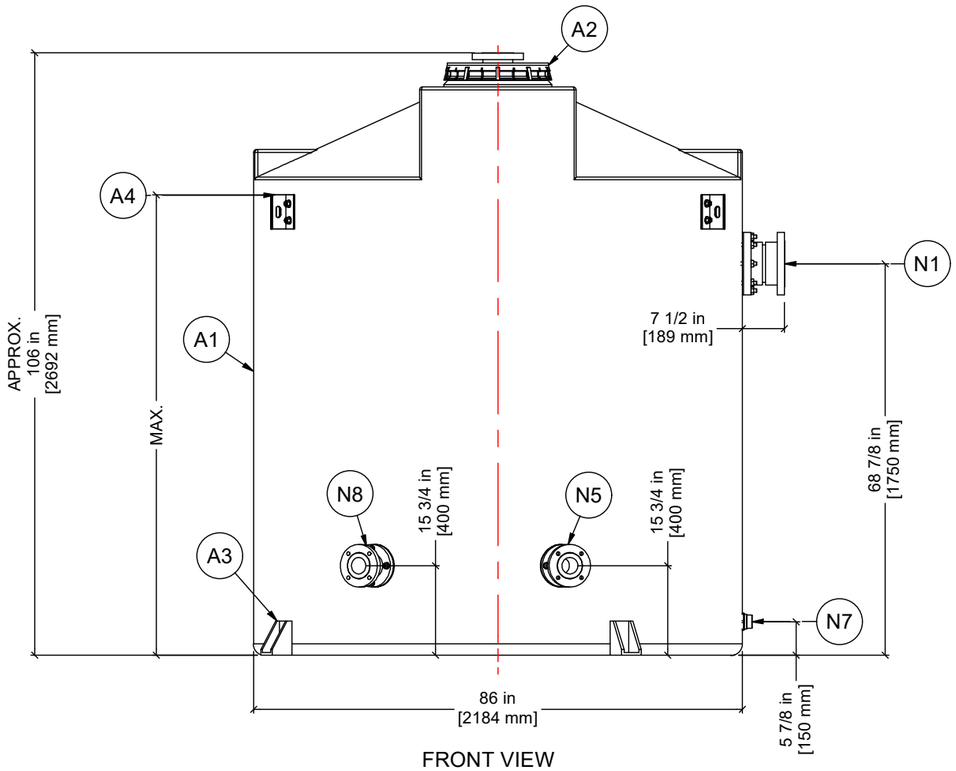


FRONT VIEW

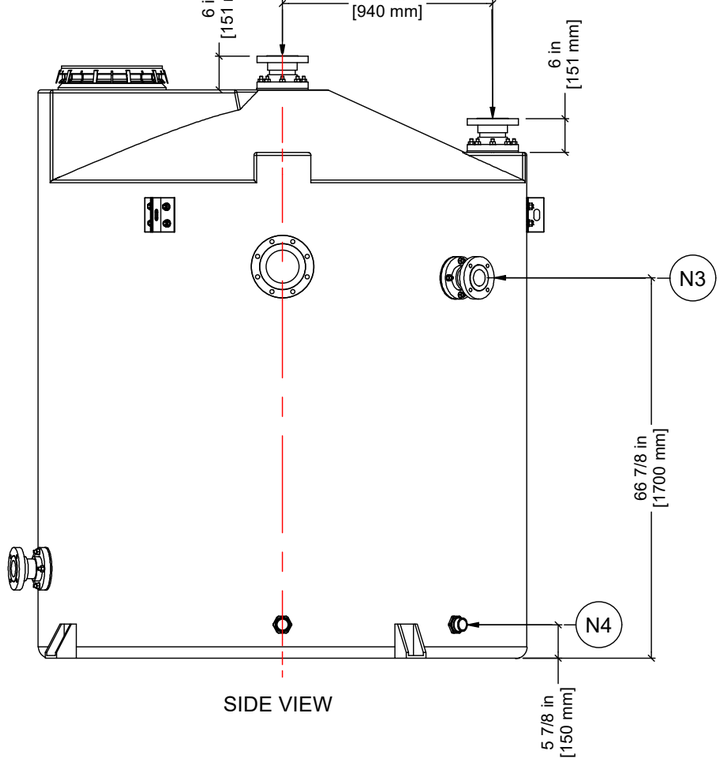


SIDE VIEW

| REV | DATE | DESCRIPTION | BY | APPD | REVD |
|---|---|---|---|---|---|
| 1 | APR-07-21 | MVD N5 AND N8 | WM | | |

REVISIONS

CUSTOMER: VEOLIA

TITLE: 1650 IG CLOSED TOP TANK

ACO JOB NO: 78142
PURCHASE ORDER NO:
PURCHASER'S EQUIP. NO:

THIS DRAWING IS THE PROPERTY OF ROTOPLAST INC. AND SHALL NOT BE COPIED OR TRANSFERRED WITHOUT THE WRITTEN CONSENT OF ROTOPLAST INC.

ENGINEERS SEAL

ACO CONTAINER SYSTEMS
DIVISION OF ROTOPLAST INC.
PICKERING - ONTARIO - CANADA
ACO CONTAINER SYSTEMS
DIVISION OF ROTOPLAST INC.
794 MCKAY RD.
PICKERING, ONTARIO, CANADA
TEL. 905-683-8222
FAX 905-683-2969

| | |
|---|---|
| DESIGNED | |
| DRAWN | WM |
| CHECKED | |
| APPROVED | |
| SCALE | N.T.S. |
| DATE | MAR-27-2021 |

DWG No: CT-1655-78142
REV: 1

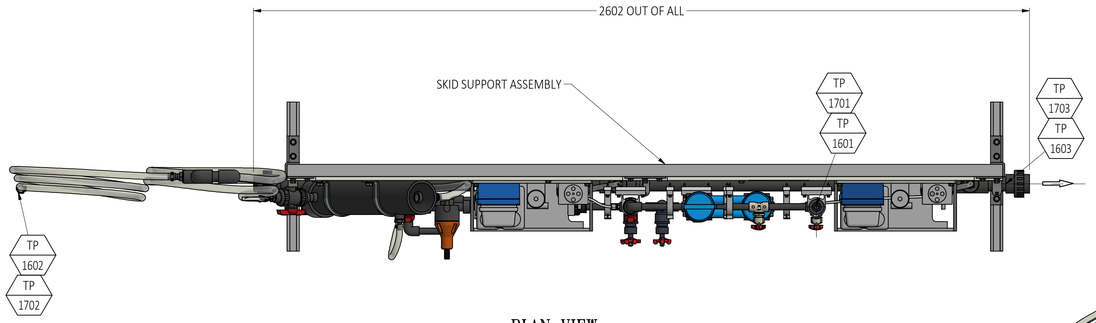


PLAN VIEW

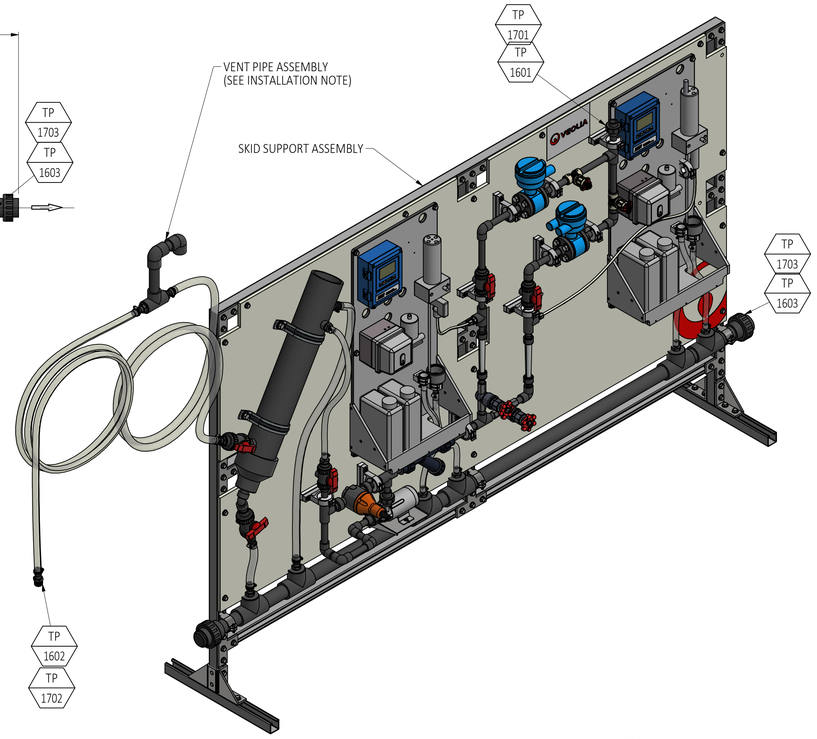


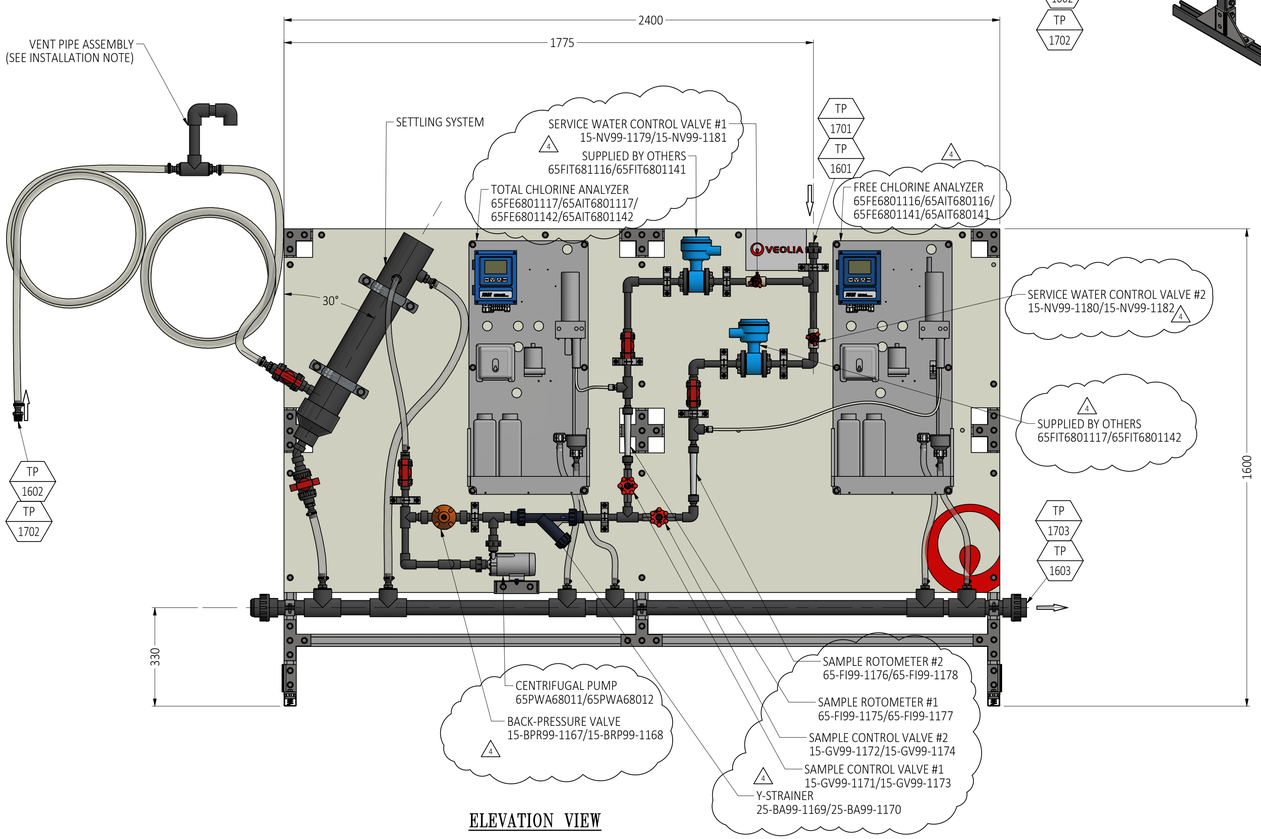


ELEVATION VIEW

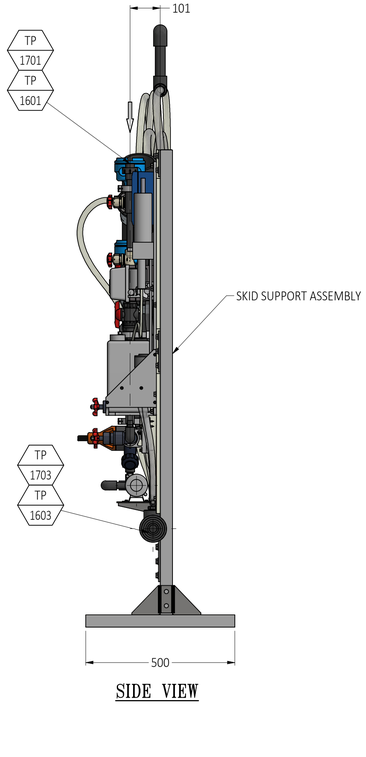


SIDE VIEW

## TIE POINTS

| TP# | DESCRIPTION | DIMENSION / TYPE |
|---|---|---|
| TP1601/TP1701 | INLET | Ø3/4"MNPT-FLEXIBLE ADAPTER |
| TP1602/TP1702 | SERVICE WATER INLET | Ø1/2" - PVC UNION |
| TP1603/TP1703 | DRAIN OUTLET | Ø1 1/2" - PVC UNION |

NOTES:
GENERAL:

REFER TO P&ID DRAWING FOR MORE INFORMATION: 500022043_PI_0001_GEN_VWT SHEET16-17
DRY WEIGHT: 718 KG (1583LBS).

MATERIAL:

PIPING: PVC SHC80. FLEXIBLE CLEAR REINFORCED PVC.
SUPPORT; GALVANIZED UNISTRUT AND POLYPROPYLENE PLATE.

DESIGN COORDINATION:

DO NOT SUPPORT OTHER EQUIPMENT (PLATFORM, STAIRS, GRIDS, PIPING, ECT...) ON THE STRUCTURE.

INSTALLATION:

SKID IS PRE MOUNTED AS MUCH AS POSSIBLE BUT FOR FREIGHT PURPOSE SOME COMPONENTS HAVE TO BE INSTALLED ON SITE BY CLIENT OR HIS INSTALLER.

REFER TO THE FIELD INSTALLATION DRAWINGS ON SITE AND THE IOM MANUAL FOR INSTALLATION DETAILS.

VENT SHOULD BE INSTALLED AT APPROXIMATELY THE SAME HEIGHT OF THE WATER LEVEL IN THE TANK WHICH WATER IS BEING SAMPLED.

START-UP:

BEFORE RUNNING THE PUMP, MANUAL PRIMING SHOULD BE DONE. THIS IS ACHIEVED BY CLOSING THE DISCHARGE VALVES AND OPENING THE SUCTION VALVE. ONCE THE SUCTION LINE IS COMPLETELY FILLED. THE PUMP CAN BE OPERATED.

CONTROL VALVES UPSTREAM OF THE FLOWMETERS AND ROTOMETERS ALOW THE MODULATION OF THE FLOWS IN ORDER TO REACH THE REQUIRED PARAMETERS:

| . | FREE CHLORINE ANALYZER | TOTAL CHLORINE ANALYZER |
|---|---|---|
| MEASURING RANGE (ppm) | 0.00–5.00 | 0.00–10.00 |
| SERVICE WATER FLOW (L/h) | 12 | 30 |
| SAMPLE FLOW (L/h) | 3 | 3 |
| DILUTION RATIO | 1:4 | 1:10 |

| RÉV. REV. | DESCRIPTION | DATE | DESSINÉ PAR/ DRAWN BY | PRÉPARÉ PAR/ PREPARED BY | VÉRIFIÉ PAR/ CHECKED BY |
|---|---|---|---|---|---|
| 4 | FOR INFORMATION IV | 2021-07-15 | SID | C.E.K. | T.S. |
| 3 | FOR INFORMATION III | 2021-05-28 | SID | E.D. | C.E.K. |
| 2 | FOR APROVAL II | 2021-04-26 | SID | C.E.K. | E.D. |
| 1 | FOR APROVAL | 2021-03-17 | SID | C.E.K. | E.D. |

DESSINÉ PAR/DRAWN BY: SMAIL IDDIR — DATE: 2021-03-17
PRÉPARÉ PAR/PREPARED BY: CHRIS EL-KHAZAKA, P. CPI. — DATE: 2021-03-17
VÉRIFIÉ PAR/CHECKED BY: EMMANUEL DOROY, P. ENG. — DATE: 2021-03-17

VEOLIA WATER TECHNOLOGIES

CLIENT: AEM MELIADINE BPC

TITRE / TITLE: DILUTION AND SETTLING SKIR FOR CHLORINE ANALYSERS GENERAL ARRANGEMENT

ÉCHELLE / SCALE: 1:10

| PROJET / PROJECT - DESSIN No / DRAWING No | INTERNE / INTERNAL | FEUILLET / SHEET | RÉV/REV |
|---|---|---|---|
| 5000220043 - GA1000 | PCH | 1 / 1 | 4 |

Ce document est la propriété de VEOLIA et ne peut être reproduit sans son autorisation écrite.
This document is the property of VEOLIA and cannot be reproduced without its written authorization.

REF: ANSI D

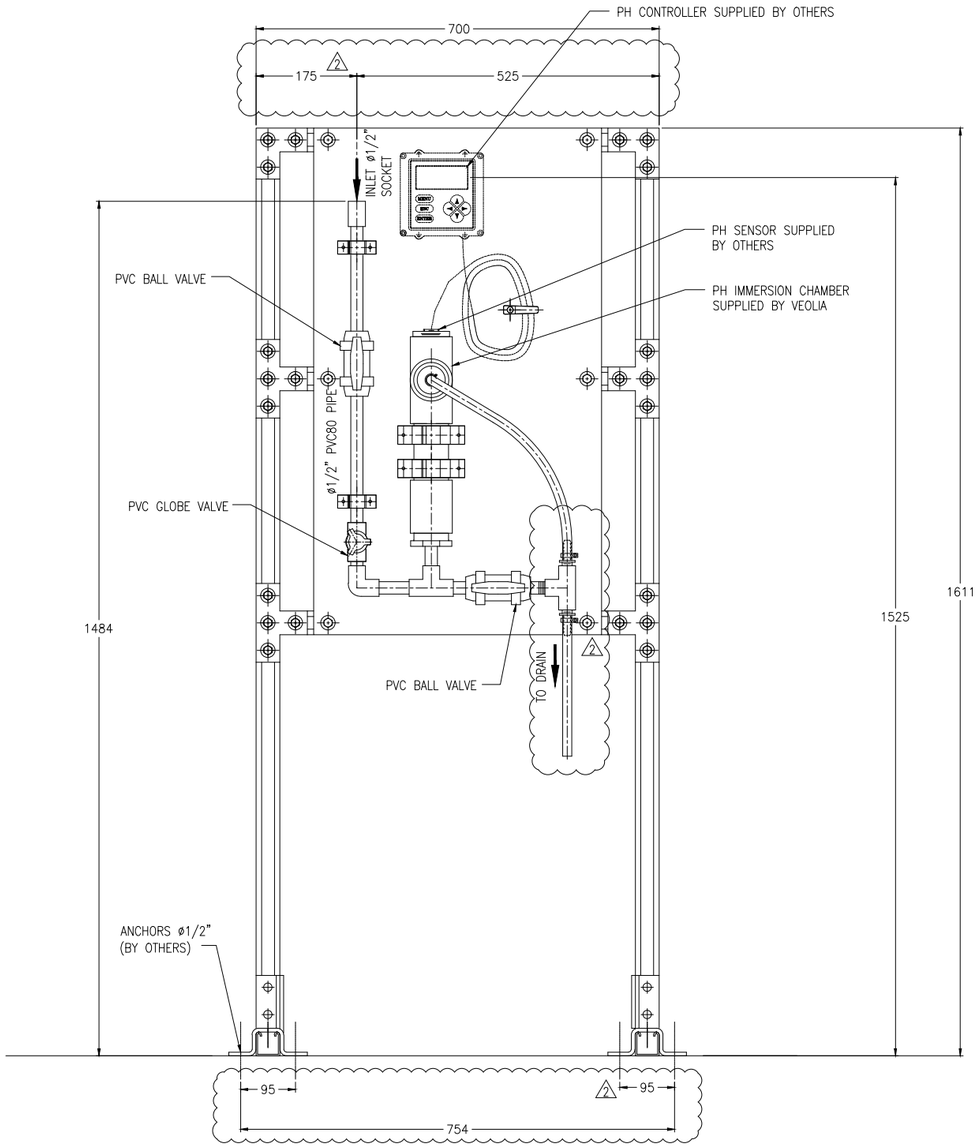


| REV. | DESCRIPTION | DATE | RÉVISÉ REVISED | VÉRIFIÉ VERIFIED | APPROUVÉ APPROVED |
|---|---|---|---|---|---|
| 2 | FOR APPROVAL II | 2021-04-07 | F.C. | C.E.K. | E.D. |
| 1 | FOR APPROVAL | 2021-03-26 | F.C. | C. E.K. | E.D. |

VEOLIA WATER TECHNOLOGIES

| | | |
|---|---|---|
| DESSINATEUR/DESIGNER | FRANCE COTNOIR | DATE 2021-03-26 |
| VÉRIFICATEUR/CHECKER | CHRIS EL-KHAZAKA | DATE 2021-03-26 |
| INGÉNIEUR/ENGINEER | EMMANUELLE DORMOY | DATE 2021-03-26 |

CLIENT: AEM-MELIADINE BPC

6526-S-265-605 / OC-989680

TITRE / TITLE

# Ph ANALYSIS UNIT

## GENERAL ARRANGEMENT

ÉCHELLE / SCALE: 1:5

| PROJET / PROJECT | DESSIN / DRAWING | INTERNE / INTERNAL | FEUILLET / SHEET | RÉV./REV |
|---|---|---|---|---|
| 5000220043 - GA15201 | | CTR0000 | 1/1 | 2 |

Ce document est la propriété de VEOLIA et ne peut être reproduit sans son autorisation écrite.
This document is the property of VEOLIA and cannot be reproduced without its written authorization.

REF: ANSI D

Apr 07, 2021 13:56:23 - C:\WORKSPACE-INVENTOR\DESIGNS\EXECUTION\2020\5000220043\3RDD INSTRUMENTATION_PH_TURBIDITE\5000220043-GA15201CTR_dwg - Colinoif

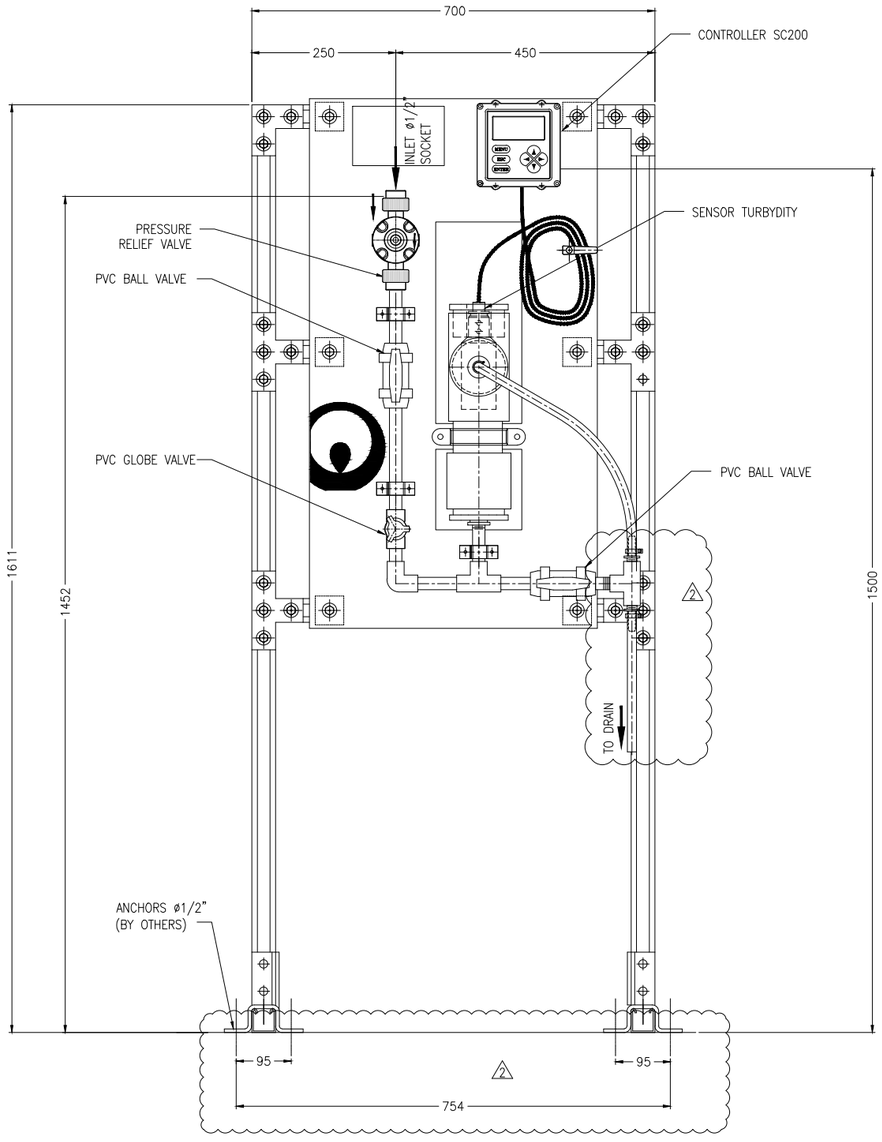


| RÉV. | DESCRIPTION | DATE | DESSINÉ PAR DRAWN BY: | PRÉPARÉ PAR PREPARED BY: | VÉRIFIÉ PAR CHECKED BY: |
|---|---|---|---|---|---|
| | | | | | |
| | | | | | |
| | | | | | |
| | | | | | |
| 2 | FOR APPROVAL II | 2021-04-07 | F.C. | C.E.K. | E.D. |
| 1 | FOR APPROVAL | 2021-03-26 | F.C. | C.E.K. | E.D. |

VEOLIA WATER TECHNOLOGIES

DESSINÉ PAR/DRAWN BY: FRANCE COTNOIR — DATE: 2021-03-25
PRÉPARÉ PAR/PREPARED BY: CHRIS EL-KHAZAKA — DATE: 2021-03-25
VÉRIFIÉ PAR/CHECKED BY: EMMANUELLE DORMOY — DATE: 2021-03-25

CLIENT: AEM-MELIADINE BPC

6526-S-265-605 / OC-989680

TITRE / TITLE

TURBIDITY ANALYSIS UNIT

GENERAL ARRANGEMENT

ÉCHELLE / SCALE: 1:

| PROJET / PROJECT | DESSIN /DRAWING | INTERNE / INTERNAL | FEUILLET / SHEET | RÉV./REV |
|---|---|---|---|---|
| 5000220043 - GA15202 | | CTR0000 | 1 / 1 | 2 |

Ce document est la propriété de VEOLIA et ne peut être reproduit sans son autorisation écrite.
This document is the property of VEOLIA and cannot be reproduced without its written authorization.

REF: ANSI D

Apr 07, 2021 14:12:15 - C:\WORKSPACE-INVENTOR\DESIGNS\EXECUTION\2020\5000220043\SKID INSTRUMENTATION_PHL_TURBIDITE\5000220043-GA15202CTR.dwg - Controlf

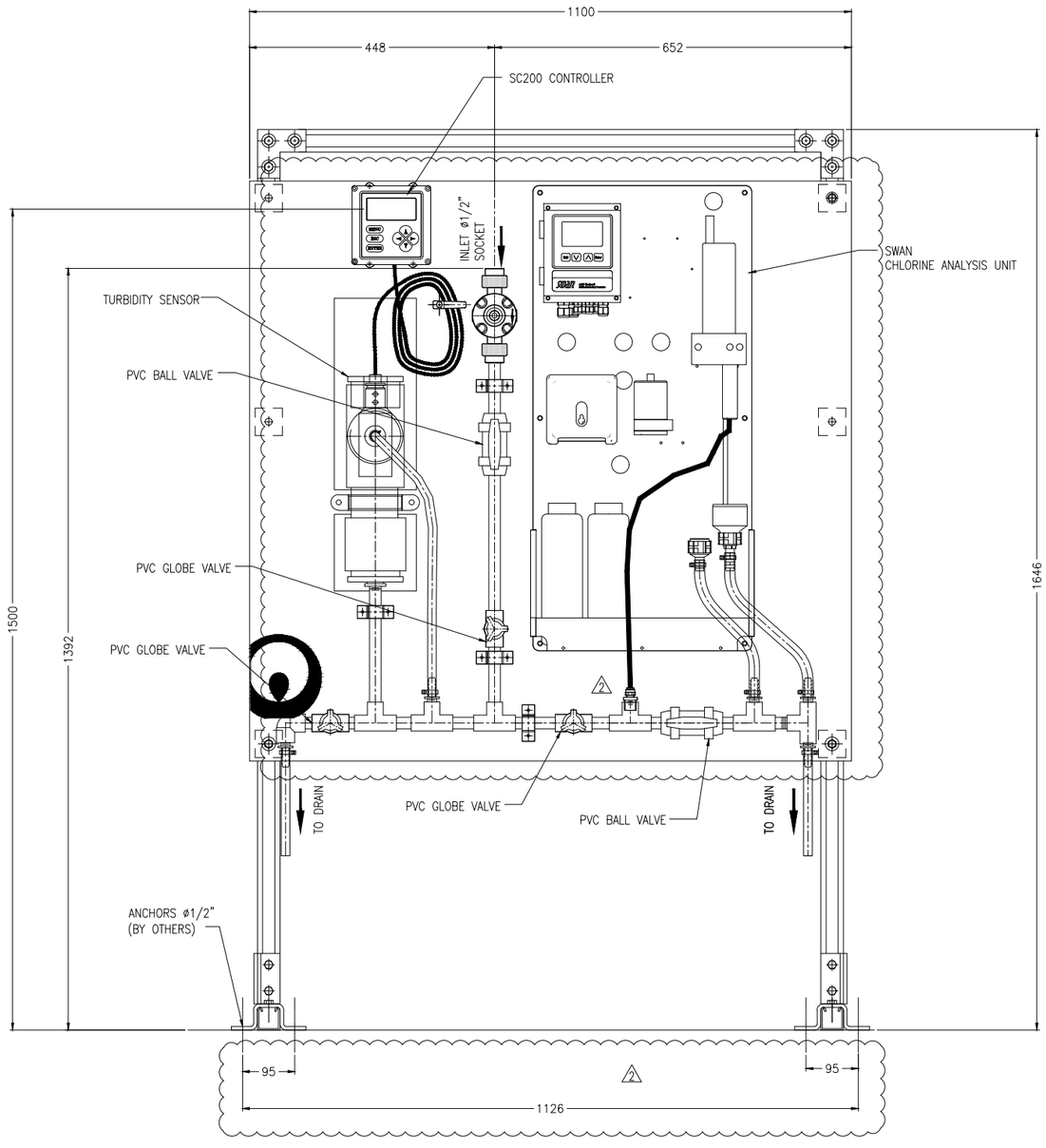


| REV. | DESCRIPTION | DATE | DESSINÉ PAR/DRAWN BY: | PRÉPARÉ PAR/PREPARED BY: | VÉRIFIÉ PAR/CHECKED BY: |
|---|---|---|---|---|---|
| 2 | FOR APPROVAL II | 2021-04-07 | F.C. | C.E.K. | E.D. |
| 1 | FOR APPROVAL | 2021-03-26 | F.C. | C.E.K | E.D. |

DESSINÉ PAR/DRAWN BY: FRANCE COTNOIR — DATE: 2021-03-26
PRÉPARÉ PAR/PREPARED BY: CHRIS EL-KHAZAKA — DATE: 2021-03-26
VÉRIFIÉ PAR/CHECKED BY: EMMANUELLE DORMOY — DATE: 2021-03-26

VEOLIA WATER TECHNOLOGIES

CLIENT: AEM-MELIADINE BPC

6526-S-265-605 / OC-989680

TITRE / TITLE: TURBIDITY & CHLORINE ANALY

GENERAL ARRANGEMENT

ÉCHELLE / SCALE: 1:5

| PROJET / PROJECT | DESSIN /DRAWING | INTERNE / INTERNAL | FEUILLET / SHEET | RÉV./REV |
|---|---|---|---|---|
| 5000220043 - GA15203 | | CTR00001 | 1 / 1 | 2 |

Ce document est la propriété de VEOLIA et ne peut être reproduit sans son autorisation écrite.
This document is the property of VEOLIA and cannot be reproduced without its written authorization.

REF: ANSI D

Apr 08, 2021 9:21:58 – C:\WORKSPACE-INVENTOR\DESIGNS\EXECUTION\2020\5000220043\SKID INSTRUMENTATION_PKL_TURBIDITY\5000220043-GA15203CTR.dwg – CotnoirF

| TIE–POINT # | DESCRIPTION | DIMENSION / TYPE |
|---|---|---|
| TP–0901 | SLUDGE FROM CLARIFIER #1 | ø150mm [ø6"] – PVC SCH80 FLANGE 150# RF |
| TP–0902 | INLET FROM PUMP | ø100mm [ø4"] – PVC SCH80 FLANGE 150# RF |
| TP–0903 | OUTLET TO PUMP | ø100mm [ø4"] – PVC SCH80 FLANGE 150# RF |
| TP–0904 | SLUDGE OVERFLOW | ø150mm [ø6"] – PVC SCH80 FLANGE 150# RF |
| TP–0905 | HIGH LEVEL SWITCH | ø25mm [ø1"] – COUPLING FNPT |
| TP–0906 | LOW LEVEL SWITCH | ø25mm [ø1"] – COUPLING FNPT |

65TNK68019

NOTES:
1- STABILIZATION OF THE SPLITTER BOX TO PREVENT LATERAL MOVEMENT.

2- ANCHORING TO THE FLOOR IS NOT CONSIDERED BECAUSE OF THE RISK OF SETTLEMENT, BRACKETS SHALL BE ADDED UPON CLIENT DISCRETION.

3- REFER TO THE INSTALLATION, OPERATION AND MAINTENANCE MANUAL (IOM) BEFOREHAND TO COORDINATE THE PLANT DESIGN, INSTALLATION AND START UP OF THE SPLITTER BOX UNIT.

M.O.C.
TANK WEIGHTS:
- DRY SHIPPING WEIGHT: 258 KG (568 LBS).
- INSTALLED WET (FULL OF WATER) WEIGHT: 1426 KG (3 143 LBS).

DESIGN COORDINATION:
- DO NOT SUPPORT ANY OTHER EQUIPMENT (PLATFORM, STAIRS, GRATING, PIPING ETC.) ON TANK.

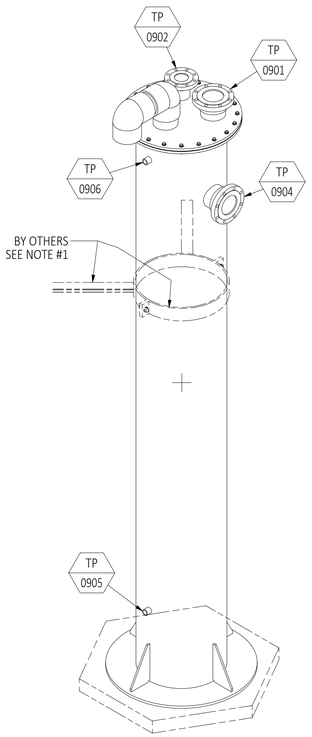


ISOMETRIC VIEW

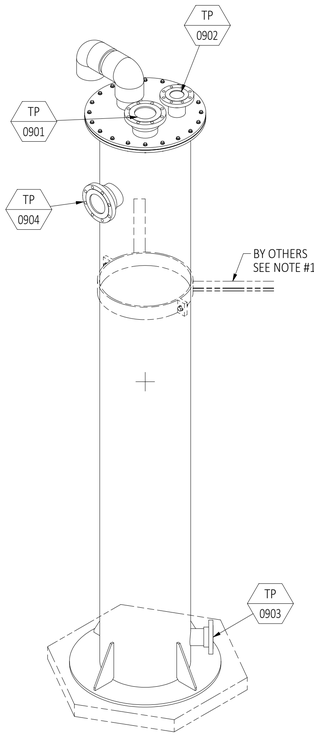


ISOMETRIC VIEW

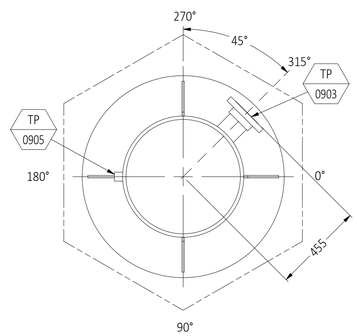


SECTION A–A
SCALE 1:15

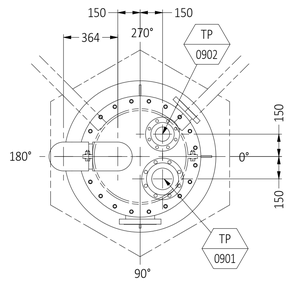


TOP VIEW

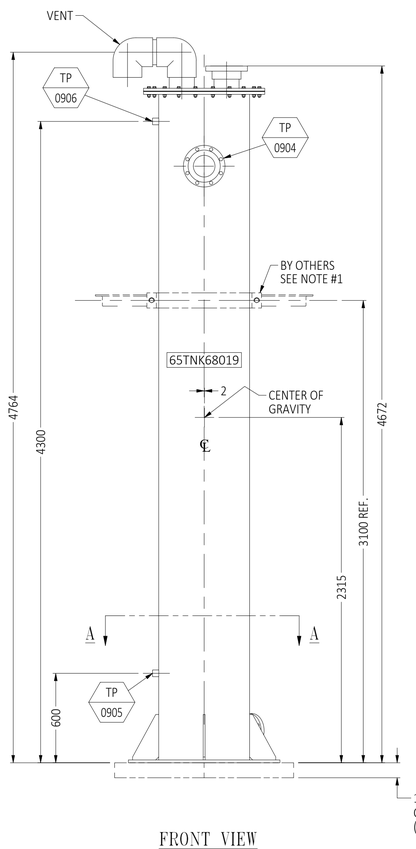


FRONT VIEW

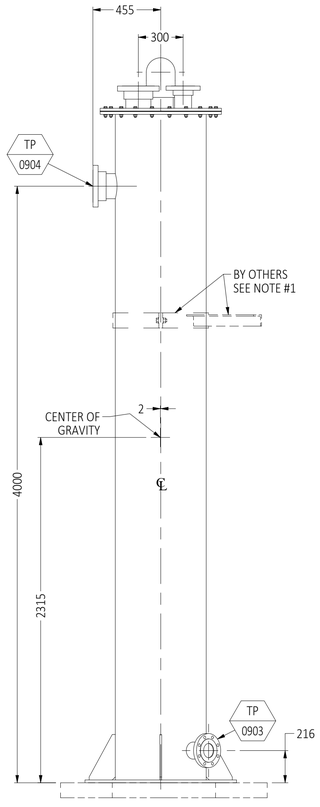


RIGHT SIDE VIEW

TOUTES LES DIMENSIONS SONT EN / ALL DIMENSIONS ARE IN: mm

| REV. | DESCRIPTION | DATE | RÉVISÉ REVISED | VÉRIFIÉ CHECKED | APPROUVÉ APPROVED | ECN |
|---|---|---|---|---|---|---|
| 2 | FOR APPROVAL II | 2021-02-02 | N.L. | S.M. | G.M. | N/A |
| 1 | FOR APPROVAL | 2021-01-07 | A.D. | S.M. | G.M. | N/A |

AVIS DE CONFIDENTIALITÉ ET DE PROPRIÉTÉ INTELLECTUELLE
L'INFORMATION CONTENUE DANS CE DOCUMENT EST LA PROPRIÉTÉ EXCLUSIVE DE VEOLIA WATER TECHNOLOGIES CANADA INC. ET EST PROTÉGÉE PAR TOUTE LOI APPLICABLE INCLUANT, NOTAMMENT, LES LOIS EN MATIÈRE DE DROITS D'AUTEUR ET DE TOUT AUTRE DROITS DE PROPRIÉTÉ INTELLECTUELLE. LES DESIGN-CONCEPTS ET L'INFORMATION CONTENUS DANS CE DOCUMENT SONT LA PROPRIÉTÉ DE V.W.T. ET SONT SOUMIS DE FAÇON CONFIDENTIELLE. CES DESIGN-CONCEPTS ET CETTE INFORMATION NE SONT PAS TRANSFÉRABLES. ILS DOIVENT ÊTRE UTILISÉS UNIQUEMENT AUX FINS POUR LESQUELLES CE DOCUMENT EST EXPRESSÉMENT SOUMIS ET AUCUNE LICENCE IMPLICITE N'EST OCTROYÉE DE QUELQUE FAÇON PAR LA SOUMISSION DE CE DOCUMENT. ILS CONSTITUENT DE L'INFORMATION DE NATURE CONFIDENTIELLE ET PRIVILÉGIÉE DE V.W.T. ET NE DOIVENT PAS ÊTRE DIVULGUÉS, REPRODUITS, PRÊTÉS, REMIS OU UTILISÉS DE TOUTE AUTRE MANIÈRE SANS LE CONSENTEMENT EXPRÈS ET ÉCRIT DE LA PART DE V.W.T.. V.W.T. DÉCLINE TOUTE RESPONSABILITÉ QUELLE QU'ELLE SOIT EN CE QUI A TRAIT À L'UTILISATION DE CE DOCUMENT AINSI QUE DES DESIGN-CONCEPTS ET DE L'INFORMATION QUI Y SONT CONTENUS DANS LE CADRE D'UN AUTRE PROJET, OU D'UNE MANIÈRE QUI N'EST PAS CONFORME À L'UTILISATION PROJETÉE OU AUX FINS DE CE DOCUMENT. CE DOCUMENT AINSI QUE LES DESIGN-CONCEPTS ET L'INFORMATION QUI Y SONT CONTENUS NE DONNENT EN AUCUN CAS ÊTRE UTILISÉS D'UNE MANIÈRE QUI POURRAIT ÊTRE PRÉJUDICIABLE AUX INTÉRÊTS DE V.W.T.. TOUT DROITS D'AUTEUR, BREVET AINSI QUE TOUT AUTRE DROITS DE PROPRIÉTÉ INTELLECTUELLE SONT RÉSERVÉS. ACCEPTER QUE CE DOCUMENT LUI SOIT LIVRÉ CONSTITUE POUR CELUI OU CELLE QUI L'A EN SA POSSESSION UN CONTRAT PAR LEQUEL IL OU ELLE S'ENGAGE À SE CONFORMER AUX DISPOSITIONS DES PRÉSENTES.
CONFIDENTIALITY AND INTELLECTUAL PROPERTY NOTICE
ALL INFORMATION CONTAINED IN THIS DOCUMENT IS THE SOLE PROPERTY OF VEOLIA WATER TECHNOLOGIES CANADA INC. AND IS PROTECTED BY ALL APPLICABLE LAWS, INCLUDING BUT NOT LIMITED TO COPYRIGHT AND OTHER INTELLECTUAL PROPERTY LAWS. THE DESIGN CONCEPTS AND INFORMATION CONTAINED HEREIN ARE PROPRIETARY TO (M) AND ARE SUBMITTED IN CONFIDENCE. THEY ARE NOT TRANSFERABLE. THEY MUST BE USED ONLY FOR THE PURPOSE FOR WHICH THE DOCUMENT IS EXPRESSLY SUBMITTED AND NO IMPLICIT LICENCE IS GRANTED OTHERWISE BY THE SUBMISSION OF THIS DOCUMENT. THEY ARE CONFIDENTIAL AND PRIVILEGED INFORMATION OF V.W.T. AND THEY MUST NOT BE DISCLOSED, REPRODUCED, LOANED, REMITTED OR USED IN ANY OTHER MANNER WITHOUT THE EXPRESS WRITTEN CONSENT OF V.W.T.. V.W.T. ASSUMES NO RESPONSIBILITY OR LIABILITY FOR THE USE OF THIS DOCUMENT OR THE DESIGN CONCEPTS AND INFORMATION CONTAINED HEREIN FOR ANOTHER PROJECT, OR IN A MANNER THAT DOES NOT RELATE TO THE FITNESS OR PURPOSE OF THIS DOCUMENT. IN NO EVENT SHALL THIS DOCUMENT OR THE DESIGN CONCEPTS AND INFORMATION CONTAINED HEREIN BE USED IN A MANNER DETRIMENTAL TO THE INTEREST OF V.W.T.. ALL COPYRIGHT, PATENT AND OTHER INTELLECTUAL PROPERTY RIGHTS ARE RESERVED. ACCEPTANCE OF THE DELIVERY OF THIS DOCUMENT CONSTITUTES AGREEMENT TO THESE TERMS AND CONDITIONS.

| | | |
|---|---|---|
| DESSINÉ PAR DRAWN BY | A.DEHGHANI | DATE 2021-01-07 |
| VÉRIFIÉ PAR CHECKED BY | S.MORIN | DATE 2021-01-07 |
| INGÉNIERIE PAR ENGINEERING BY | G.MUNSCH | DATE 2021-01-07 |
| ÉCHELLE: SCALE: | 1:20 | |

TITRE / TITLE: SLUDGE SPLITTER BOX #1
GENERAL ARRANGEMENT

CLIENT: AEM MELIADINE-BPC
6526-S-265-605 / OC-989680

VEOLIA
VEOLIA WATER TECHNOLOGIES CANADA INC. 4105 Sartelon, Saint-Laurent, Qc, Canada. Tel: (514) 334-7230

| PROJET / PROJECT | DESSIN / DRAWING | NUMÉRO INTERNE / INTERNAL NUMBER | FEUILLETS / PAGES | RÉV. / REV. |
|---|---|---|---|---|
| 5000220043 - | GA0110 | REC | 1 / 1 | 2 |

STD: "D" 22 X 34 | REF: | BARRE = 1" À L'ÉCHELLE D'IMPRESSION / BAR = 1" AT PLOT SCALE

| TIE–POINT # | DESCRIPTION | DIMENSION / TYPE |
|---|---|---|
| TP–0907 | SLUDGE FROM CLARIFIER #2 | ø150mm [ø6"] – PVC SCH80 FLANGE 150# RF |
| TP–0908 | INLET FROM PUMP | ø100mm [ø4"] – PVC SCH80 FLANGE 150# RF |
| TP–0909 | OUTLET TO PUMP | ø100mm [ø4"] – PVC SCH80 FLANGE 150# RF |
| TP–0910 | SLUDGE OVERFLOW | ø100mm [ø4"] – PVC SCH80 FLANGE 150# RF |
| TP–0911 | HIGH LEVEL SWITCH | ø25mm [ø1"] – COUPLING FNPT |
| TP–0912 | LOW LEVEL SWITCH | ø25mm [ø1"] – COUPLING FNPT |

NOTES:
1- STABILIZATION OF THE SPLITTER BOX TO PREVENT LATERAL MOVEMENT.

2- ANCHORING TO THE FLOOR IS NOT CONSIDERED BECAUSE OF THE RISK OF SETTLEMENT, BRACKETS SHALL BE ADDED UPON CLIENT DISCRETION.

3- REFER TO THE INSTALLATION, OPERATION AND MAINTENANCE MANUAL (IOM) BEFOREHAND TO COORDINATE THE PLANT DESIGN, INSTALLATION AND START UP OF THE SPLITTER BOX UNIT.

M.O.C.
TANK WEIGHTS: - WEIGHT: 223 KG (491 Lbs).
- DRY SHIPPING WEIGHT: 223 KG (491 LBS).
- INSTALLED WET (FULL OF WATER) WEIGHT: 1201 KG (2647 LBS).

DESIGN COORDINATION:
- DO NOT SUPPORT ANY OTHER EQUIPMENT (PLATFORM, STAIRS, GRATING, PIPING ETC.) ON TANK.

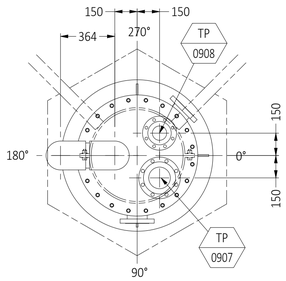


TOP VIEW

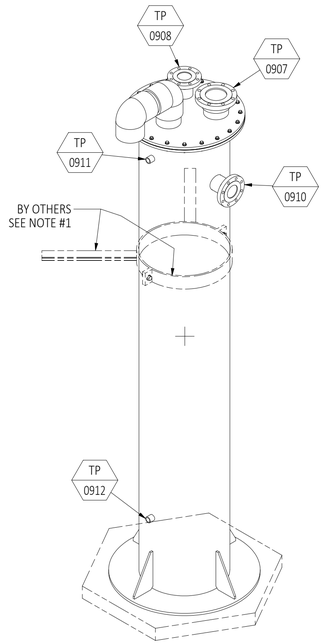


ISOMETRIC VIEW

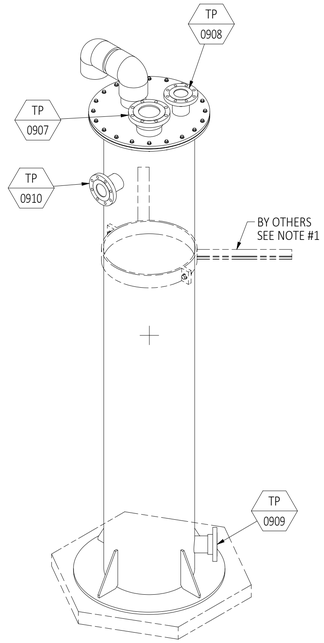


ISOMETRIC VIEW

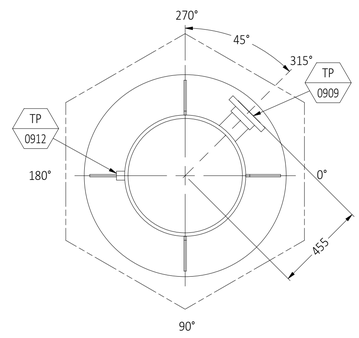


SECTION A–A
SCALE 1:15

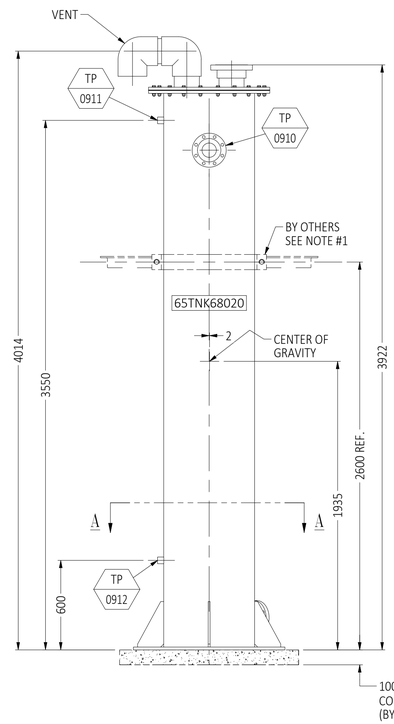


FRONT VIEW

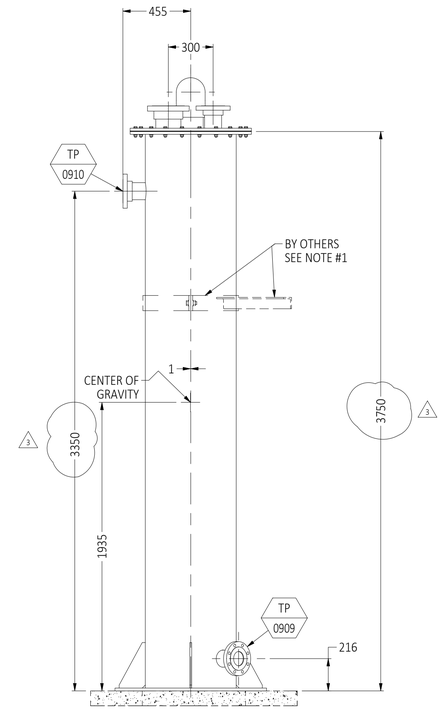


RIGHT SIDE VIEW

TOUTES LES DIMENSIONS SONT EN / ALL DIMENSIONS ARE IN: mm

| REV. | DESCRIPTION | DATE | REVISÉ REVISED | VÉRIFIÉ CHECKED | APPROUVÉ APPROVED | ECN |
|---|---|---|---|---|---|---|
| 3 | FOR APPROVAL III | 2021-02-16 | N.L. | S.M. | G.M. | N/A |
| 2 | FOR APPROVAL II | 2021-02-02 | N.L. | S.M. | G.M. | N/A |
| 1 | FOR APPROVAL | 2021-01-07 | A.D. | S.M. | G.M. | N/A |

AVIS DE CONFIDENTIALITÉ ET DE PROPRIÉTÉ INTELLECTUELLE
L'INFORMATION CONTENUE DANS CE DOCUMENT EST LA PROPRIÉTÉ EXCLUSIVE DE VEOLIA WATER TECHNOLOGIES CANADA INC. ET EST PROTÉGÉE PAR TOUTE LOI APPLICABLE INCLUANT, NOTAMMENT, LES LOIS EN MATIÈRE DE DROITS D'AUTEUR ET DE TOUT AUTRE DROITS DE PROPRIÉTÉ INTELLECTUELLE. LES DESIGN-CONCEPTS ET L'INFORMATION CONTENUS DANS CE DOCUMENT SONT LA PROPRIÉTÉ DE V.W.T. ET SONT SOUMIS DE FAÇON CONFIDENTIELLE. LES DESIGN-CONCEPTS ET CETTE INFORMATION NE SONT PAS TRANSFÉRABLES. ILS DOIVENT ÊTRE UTILISÉS UNIQUEMENT AUX FINS POUR LESQUELLES CE DOCUMENT EST EXPRESSÉMENT SOUMIS ET AUCUNE LICENCE IMPLICITE N'EST OCTROYÉE DE QUELQUE FAÇON PAR LA SOUMISSION DE CE DOCUMENT. ILS CONSTITUENT DE L'INFORMATION DE NATURE CONFIDENTIELLE ET PRIVILÉGIÉE DE V.W.T. ET NE DOIVENT PAS ÊTRE DIVULGUÉS, REPRODUITS, PRÊTÉS, REMIS OU UTILISÉS DE TOUTE AUTRE MANIÈRE SANS LE CONSENTEMENT EXPRÈS ET ÉCRIT DE LA PART DE V.W.T., V.W.T. DÉCLINE TOUTE RESPONSABILITÉ QUELLE QU'ELLE SOIT EN CE QUI A TRAIT À L'UTILISATION DE CE DOCUMENT AINSI QUE DES DESIGN-CONCEPTS ET DE L'INFORMATION QUI Y SONT CONTENUS DANS LE CADRE D'UN AUTRE PROJET, OU D'UNE MANIÈRE QUI N'EST PAS CONFORME À L'UTILISATION PROJETÉE OU AUX FINS DE CE DOCUMENT. CE DOCUMENT AINSI QUE LES DESIGN-CONCEPTS ET L'INFORMATION QUI Y SONT CONTENUS NE DOIVENT EN AUCUN CAS ÊTRE UTILISÉS D'UNE MANIÈRE QUI POURRAIT ÊTRE PRÉJUDICIABLE AUX INTÉRÊTS DE V.W.T.. TOUT DROITS D'AUTEUR, BREVET AINSI QUE TOUT AUTRE DROITS DE PROPRIÉTÉ INTELLECTUELLE SONT RÉSERVÉS. ACCEPTER QUE CE DOCUMENT LUI SOIT LIVRÉ CONSTITUE POUR CELUI OU CELLE QUI L'A EN SA POSSESSION UN CONTRAT PAR LEQUEL IL OU ELLE S'ENGAGE À SE CONFORMER AUX DISPOSITIONS DES PRÉSENTES.
CONFIDENTIALITY AND INTELLECTUAL PROPERTY NOTICE
ALL INFORMATION CONTAINED IN THIS DOCUMENT IS THE SOLE PROPERTY OF VEOLIA WATER TECHNOLOGIES CANADA INC. AND IS PROTECTED BY ALL APPLICABLE LAWS, INCLUDING BUT NOT LIMITED TO COPYRIGHT AND OTHER INTELLECTUAL PROPERTY LAWS. THE DESIGN CONCEPTS AND INFORMATION CONTAINED HEREIN ARE PROPRIETARY TO VWT AND ARE SUBMITTED IN CONFIDENCE. THEY ARE NOT TRANSFERABLE. THEY MUST BE USED ONLY FOR THE PURPOSE FOR WHICH THE DOCUMENT IS EXPRESSLY SUBMITTED AND NO IMPLICIT LICENCE IS GRANTED OTHERWISE BY THE SUBMISSION OF THIS DOCUMENT. THEY ARE CONFIDENTIAL AND PRIVILEGED INFORMATION OF V.W.T. AND THEY MUST NOT BE DISCLOSED, REPRODUCED, LOANED, REMITTED OR USED IN ANY OTHER MANNER WITHOUT THE EXPRESS WRITTEN CONSENT OF V.W.T.. V.W.T. ASSUMES NO RESPONSIBILITY OR LIABILITY FOR THE USE OF THIS DOCUMENT OR THE DESIGN CONCEPTS AND INFORMATION CONTAINED HEREIN FOR ANOTHER PROJECT, OR IN A MANNER THAT DOES NOT RELATE TO THE FITNESS OR PURPOSE OF THIS DOCUMENT. IN NO EVENT SHALL THIS DOCUMENT OR THE DESIGN CONCEPTS AND INFORMATION CONTAINED HEREIN BE USED IN A MANNER DETRIMENTAL TO THE INTEREST OF V.W.T.. ALL COPYRIGHT, PATENT AND OTHER INTELLECTUAL PROPERTY RIGHTS ARE RESERVED. ACCEPTANCE OF THE DELIVERY OF THIS DOCUMENT CONSTITUTES AGREEMENT TO THESE TERMS AND CONDITIONS.

| | |
|---|---|
| DESSINÉ PAR DRAWN BY | A.DEHGHANI |
| DATE | 2021-02-02 |
| VÉRIFIÉ PAR CHECKED BY | S.MORIN |
| DATE | 2021-02-02 |
| INGÉNIERIE PAR ENGINEERING BY | G.MUNSCH |
| DATE | 2021-02-02 |
| ÉCHELLE: SCALE: | 1:20 |

TITRE / TITLE: SLUDGE SPLITTER BOX #2
GENERAL ARRANGEMENT
CLIENT: AEM MELIADINE-BPC
6526-S-265-605 / OC-989680

VEOLIA
VEOLIA WATER TECHNOLOGIES CANADA INC. 4105 Sartelon, Saint-Laurent, Qc, Canada. Tel: (514) 334-7230

| PROJET - DESSIN PROJECT - DRAWING | NUMÉRO INTERNE INTERNAL NUMBER | FEUILLETS PAGES | RÉV. REV. |
|---|---|---|---|
| 5000220043 - GA0111 | REC | 1 / 1 | 3 |

STD: "D" 22 X 34 | REF: | BARRE = 1" À L'ÉCHELLE D'IMPRESSION / BAR = 1" AT PLOT SCALE

LEFT BLANK

# *3 – DRAWINGS*

## *3.5 – FIELD INSTALLATION DRAWINGS*

LEFT BLANK

VEOLIA

# NOMENCLATURE / BILL OF MATERIAL

| TITRE / TITLE | Rev. | DESCRIPTION | DATE | Rev | Verif. / Chk. | Appr. | CLIENT |
|---|---|---|---|---|---|---|---|
| ACTIFLOW ACP2-60 | 1 | FOR INSTALLATION I | 2021-02-25 | A.D. | S.M. | L.J. | AEM MELIADINE-BPC |
| CLARIFIER #2 | 2 | FOR INSTALLATION II | 2021−05−13 | A.D. | S.M. | L.J. | 6526-S-265-605 / OC-989680 |
| FIELD INSTALLATION | 3 | FOR INSTALLATION III | 2021−07−26 | A.D. | C.E.K. | L.J. | REF. No. 5000220043 Rev. 3 |
| | | | | | | | |
| | | | | | | | Date: 2021-02-25 |
| DESSIN # / DWG # FI001 | | | | | | | |

| REV. | ITEM | | QTÉ / QTY Unit. | QTÉ / QTY Total | DESCRIPTION | MATÉRIEL / MATERIAL | No. RÉFÉRENCE REFERENCE No. | P&ID I.D. / TAG | Commentaires / Comments |
|---|---|---|---|---|---|---|---|---|---|
| | 5000220043-FI001- | 1 | 1 | 1 | ACTIFLOW ACP-2-60, ASSEMBLY | | SA600 | | |
| | 5000220043-FI001- | 2 | 1 | 1 | SCRAPER GEAR BOX, ASSEMBLY (TYPE A) | | SA61301 | 65TRM68003 | |
| | 5000220043-FI001- | 3 | 2 | 2 | SPLIT CASING HORIZONTAL CENTRIFUGAL PUMP MCLANAHAN 2" x 2" | | ST-607-ACP-CND20-7.5-5 75-1944-841 | 65PSR68006A & 65PSR68006B | |
| | 5000220043-FI001- | 4 | 2 | 2 | GLAND DRIP PAN | | | | |
| | 5000220043-FI001- | 5 | 1 | 1 | DOUBLE HYDROCYCLONE KREBS "U4" ASSEMBLY | | SA1453 | 65CYC68003A/B INCLUDE 15-BA99-1308/1307 VALVES, 65PI6801346/1351 ASHCROFT | |
| | 5000220043-FI001- | 6 | 1 | 1 | "Y" BRANCH - 4 "x 3" DIA. | | FA650 | | |
| | 5000220043-FI001- | 7 | 2 | 2 | RECIRCULATION PIPE- 3" DIA. | | FA651 | | |
| | 5000220043-FI001- | 8 | 2 | 2 | RECIRCULATION PIPE- 3" DIA. | | FA652 | | |
| | 5000220043-FI001- | 9 | 2 | 2 | INLET PUMP ADAPTOR 3" @ 2" DIA. | | FA653 | | |
| | 5000220043-FI001- | 10 | 2 | 2 | OUTLET PUMP ADAPTOR 3" @ 2" DIA. | | FA654 | | |
| | 5000220043-FI001- | 11 | 2 | 2 | RECIRCULATION PIPE- 3" DIA. | | FA655 | | |
| | 5000220043-FI001- | 12 | 1 | 1 | RECIRCULATION PIPE- 3" DIA. | | FA656 | | |
| | 5000220043-FI001- | 13 | 1 | 1 | RECIRCULATION PIPE- 3" DIA. | | FA657 | | |
| | 5000220043-FI001- | 14 | 1 | 1 | RECIRCULATION PIPE- 3" DIA. | | FA658 | | |
| | 5000220043-FI001- | 15 | 1 | 1 | RECIRCULATION PIPE- 3" DIA. | | FA659 | | |
| | 5000220043-FI001- | 16 | 1 | 1 | SAMPLING | | SA61456 | | |
| | 5000220043-FI001- | 17 | 4 | 4 | GASKET FLANGE Ø3",FF, 1/8" TH (EPDM) | | SEGAFP201220 | | |
| | 5000220043-FI001- | 18 | 1 | 1 | GASKET FLANGE Ø4",FF, 1/8" TH (EPDM) | | SEGAFP201223 | | |
| | 5000220043-FI001- | 19 | 1 | 1 | HANDRAIL | | FA660 | | |
| | 5000220043-FI001- | 20 | 1 | 1 | HANDRAIL | | FA660 | | |
| | 5000220043-FI001- | 21 | 1 | 1 | HANDRAIL | | FA660 | | |
| | 5000220043-FI001- | 22 | 1 | 1 | HANDRAIL | | FA660 | | |
| | 5000220043-FI001- | 23 | 2 | 2 | HANDRAIL | | FA660 | | |
| | 5000220043-FI001- | 24 | 2 | 2 | HANDRAIL | | FA660 | | |
| | 5000220043-FI001- | 25 | 1 | 1 | HANDRAIL | | FA660 | | |
| | 5000220043-FI001- | 26 | 1 | 1 | HANDRAIL | | FA660 | | |
| | 5000220043-FI001- | 27 | 1 | 1 | HANDRAIL | | FA660 | | |
| | 5000220043-FI001- | 28 | 1 | 1 | HANDRAIL | | FA660 | | |
| | 5000220043-FI001- | 29 | 3 | 3 | BALL VALVE Ø1" COMBO, SEAL VITON (PVC) CHEMLINE, 21A010VC,TYPE21 | | VABLPV200245 | 25BA991306/1309/1310 | |

VEOLIA

# NOMENCLATURE / BILL OF MATERIAL

| TITRE / TITLE | Rev. | DESCRIPTION | DATE | Rev | Verif. / Chk. | Appr. | CLIENT |
|---|---|---|---|---|---|---|---|
| ACTIFLOW ACP2-60<br>CLARIFIER #2<br>FIELD INSTALLATION | 1 | FOR INSTALLATION I | 2021-02-25 | A.D. | S.M. | L.J. | AEM MELIADINE-BPC<br>6526-S-265-605 / OC-989680 |
| | 2 | FOR INSTALLATION II | 2021−05−13 | A.D. | S.M. | L.J. | |
| | 3 | FOR INSTALLATION III | 2021−07−26 | A.D. | C.E.K. | L.J. | REF. No. 5000220043 Rev. 3 |
| | | | | | | | Date: 2021-02-25 |
| DESSIN # / DWG # FI001 | | | | | | | |

| REV. | ITEM | | QTÉ / QTY Unit. | QTÉ / QTY Total | DESCRIPTION | MATÉRIEL / MATERIAL | No. RÉFÉRENCE REFERENCE No. | P&ID I.D. / TAG | Commentaires / Comments |
|---|---|---|---|---|---|---|---|---|---|
| | 5000220043-FI001- | 30 | 5 | 5 | NIPPLE Ø1" NPT x 2 1/2", (PVC80) IPEX,036504 | | FPNIPV200656 | | |
| | 5000220043-FI001- | 31 | 3 | 3 | ADAPTOR Ø1" CAM MALE x MNPT, TYPE F (POLYPROPYLENE) | | FPADPP323935 | | |
| | 5000220043-FI001- | 32 | 2 | 2 | ELBOW 90°, Ø1" FNPT, (PVC80) IPEX,036201 | | FPELPV200532 | | |
| | 5000220043-FI001- | 33 | 8 | 8 | HEX. BOLT Ø5/8"-11UNC X 3 1/2 LG. ASTM A-193 \| GR. B8 \| CLASSE 1 \| (304) | | FXSCYY326364 | | |
| | 5000220043-FI001- | 34 | 16 | 16 | HEX. NUT Ø5/8"-11UNC ASTM A-194 \| GR. 8 \| (304) | | FXNUYY311770 | | |
| | 5000220043-FI001- | 35 | 32 | 32 | FLAT WASHER Ø5/8" NARROW (TYPE A) AISI 304 | | FXWAYY200674 | | |
| | 5000220043-FI001- | 36 | 8 | 8 | HEX. BOLT Ø5/8"-11UNC X 3 LG. ASTM A-193 \| GR. B8 \| CLASSE 1 \| (304) | | FXSCYY319530 | | |
| | 5000220043-FI001- | 37 | 2 | 2 | MANUAL PLUG VALVE DURCO Ø3" | | ST-312-663 | 80-GL99-1304 & 80-GL99-1305 | |
| | 5000220043-FI001- | 38 | 6 | 6 | COUPLING Ø3" FIG.7001 GRUVLOK FLEX, 316 SS, SEAL EPDM | | FPADSS350332 | | |
| | 5000220043-FI001- | 39 | 4 | 4 | FLEXIBLE HOSE STRAP Ø3" (304) | | FXTIZK310068 | | |
| | 5000220043-FI001- | 40 | 8 | 8 | NYLON INSERT LOCK NUT Ø3/8"-16UNC (ASTM-F594C-304) | | FXNUYS200207 | | |
| | 5000220043-FI001- | 41 | 16 | 16 | FLAT WASHER Ø3/8", SAE TYPE N (304) | | FXWAYS200666 | | |
| | 5000220043-FI001- | 42 | 1 | 1 | TUBE FLEXIBLE Ø3" DI, Ø92mm DE, BLUE FDA, 240PSI ALFAGOMMA 5190E-3,20m LG. | | FTTUCS305969 | | |
| | 5000220043-FI001- | 43 | 16 | 16 | HOSE CLAMP W4, Ø85mm x Ø91mm (304), FOR 3" HOSE | | FXCLZJ301865 | | |
| | 5000220043-FI001- | 44 | 4 | 4 | HEX. HEAD SCREW Ø5/16"-18UNC x 3/4" (ASTM-F593C-304) | | FXSCYD200272 | | |
| | 5000220043-FI001- | 45 | 4 | 4 | FLAT WASHER Ø5/16", SAE TYPE N (304) | | FXWAYD200651 | | |
| | 5000220043-FI001- | 46 | 8 | 8 | HEX. HEAD SCREW Ø5/8"-11UNC x 2" (ASTM-F593G-316) | | FXSCYY200524 | | |
| | 5000220043-FI001- | 47 | 8 | 8 | FLAT WASHER Ø5/8", SAE TYPE N (316) | | FXWAYY200676 | | |
| | 5000220043-FI001- | 48 | 8 | 8 | LOCK WASHER Ø5/8" (316) | | FXWAYY200677 | | |
| | 5000220043-FI001- | 49 | 22 | 22 | HEX. HEAD SCREW Ø3/8"-16UNC x 4" ASTM A307 GR.B (GALV) | | FXSCYS311688 | | |
| | 5000220043-FI001- | 50 | 44 | 44 | FLAT WASHER Ø3/8" ASTM F436, SAE TYPE N (GALV) | | FXWAYS311690 | | |
| | 5000220043-FI001- | 51 | 22 | 22 | HEX.NUT Ø3/8"-16UNC ASTM A536 GR.A (GALV) | | FXNUYS311689 | | |

VEOLIA

# NOMENCLATURE / BILL OF MATERIAL

| TITRE / TITLE | Rev. | DESCRIPTION | DATE | Rev | Verif. / Chk. | Appr. | CLIENT |
|---|---|---|---|---|---|---|---|
| ACTIFLOW ACP2-60 | 1 | FOR INSTALLATION I | 2021-02-25 | A.D. | S.M. | L.J. | AEM MELIADINE-BPC |
| CLARIFIER #2 | 2 | FOR INSTALLATION II | 2021−05−13 | A.D. | S.M. | L.J. | 6526-S-265-605 / OC-989680 |
| FIELD INSTALLATION | 3 | FOR INSTALLATION III | 2021−07−26 | A.D. | C.E.K. | L.J. | REF. No. 5000220043 Rev. 3 |
| | | | | | | | Date: 2021-02-25 |
| DESSIN # / DWG # FI001 | | | | | | | |

| REV. | ITEM | | QTÉ / QTY Unit. | QTÉ / QTY Total | DESCRIPTION | MATÉRIEL / MATERIAL | No. RÉFÉRENCE REFERENCE No. | P&ID I.D. / TAG | Commentaires / Comments |
|---|---|---|---|---|---|---|---|---|---|
| | 5000220043-FI001- | 52 | 50 | 50 | HEX. HEAD SCREW Ø1/2"-13UNC x 1 3/4" ASTM A307 GR.B (GALV) | | FXSCYV311692 | | |
| | 5000220043-FI001- | 53 | 100 | 100 | FLAT WASHER Ø1/2" ASTM F436, SAE TYPE N (GALV) | | FXWAYV311696 | | |
| | 5000220043-FI001- | 54 | 50 | 50 | HEX.NUT Ø1/2"-13UNC ASTM A536 GR.A (GALV) | | FXNUYV311695 | | |
| | 5000220043-FI001- | 55 | 1 | 1 | FLEXIBLE TUBE Ø1/2" OD, Ø3/8" ID -5m LG. (NATURAL POLYETHYLENE) | | FTTUPE200182 | | |
| | 5000220043-FI001- | 56 | 1 | 1 | CLARIFIED WATER TURBIDIMETER MODEL: "SOLITAX" ASSEMBLY | | SA6011 | 65AE6801322 | SC200 TAG= 65AIT6801322 |
| | 5000220043-FI001- | 57 | 1 | 1 | JUNCTION BOX | | | | BY CORRPRO |
| | 5000220043-FI001- | 58 | 8 | 8 | FLAT WASHER Ø3/8", SAE TYPE N (304) | | FXWAYV200670 | | |
| | 5000220043-FI001- | 59 | 4 | 4 | HEX. HEAD SCREW Ø3/8"-16UNC x 2" (ASTM-F593C-304) | | FXSCYS200378 | | |
| | 5000220043-FI001- | 60 | 4 | 4 | NYLON INSERT LOCK NUT Ø3/8"-16UNC (ASTM-F594C-304) | | FXNUYS200207 | | |
| | 5000220043-FI001- | 61 | 10 | 10 | U-BOLT, HEAVY-DUTY , FOR PIPE ø3" (THREADED ROD 1/2"-13UNC) AISI 304 | | FXUBZI328344 | | |
| | 5000220043-FI001- | 62 | 20 | 20 | FLAT WASHER Ø1/2", SAE TYPE N (304) | | FXWAYV200670 | | |
| | 5000220043-FI001- | 63 | 20 | 20 | HEX.NUT Ø1/2"-13UNC (ASTM-F594C-304) | | FXNUYV200213 | | |
| | 5000220043-FI001- | 64 | 2 | 2 | HEX. HEAD SCREW Ø3/8"-16UNC x 3 1/2" (304) | | FXSCYS200385 | | |
| | 5000220043-FI001- | 65 | 20 | 20 | FLAT WASHER Ø3/8", SAE TYPE N (304) | | FXWAYS200666 | | |
| | 5000220043-FI001- | 66 | 18 | 18 | HEX.NUT Ø3/8"-16UNC (304) | | FXNUYS200206 | | |
| | 5000220043-FI001- | 67 | 2 | 2 | U BOLT PIPE Ø1 1/2", ROD Ø3/8"-16UNC, EXTENDED (304) | | FXUBZE200617 | | |
| | 5000220043-FI001- | 68 | 4 | 4 | HEX. HEAD SCREW Ø3/8"-16UNC x 2 1/2" (304) | | FXSCYS200380 | | |
| | 5000220043-FI001- | 69 | 2 | 2 | CABLE CONNECTOR Ø1/2" CABLE Ø3/16" @ Ø5/8", IPEX (PVC) | | CECKGU200251 | | |
| | 5000220043-FI001- | 70 | 2 | 2 | MOUNTING BRACKET 200mm LG.FOR SOLITAX SS304L FOR HANDRAIL INSTALLATION | | FA6012 | | |
| | 5000220043-FI001- | 71 | 2 | 2 | MOUNTING PLATE LG.FOR SOLITAX SS304L FOR HANDRAIL INSTALLATION | | FA6013 | | |
| | 5000220043-FI001- | 72 | 1 | 1 | CABLE TIE 7" NYLON BLACK | | FXTIYO200120 | | |
| 3 | 5000220043-FI001- | 73 | 1 | 1 | LEVEL SWITCH FLOAT13MT, ENM-10.40FT, ASSY. | | SA6001 | 65LSHH6801324 | |
| | 5000220043-FI001- | 74 | 1 | 1 | "U" SUPPORT FOR LEVEL SWITCH ENM-10 | | FABKGU329099 | | |
| | 5000220043-FI001- | 75 | 2 | 2 | HEX. HEAD SCREW Ø3/8"-16UNC x 1 1/4" (ASTM-F593C-304) | | FXSCYS200375 | | |

VEOLIA

# NOMENCLATURE / BILL OF MATERIAL

| TITRE / TITLE | Rev. | DESCRIPTION | DATE | Rev | Verif. / Chk. | Appr. | CLIENT |
|---|---|---|---|---|---|---|---|
| ACTIFLOW ACP2-60<br>CLARIFIER #2<br>FIELD INSTALLATION | 1 | FOR INSTALLATION I | 2021-02-25 | A.D. | S.M. | L.J. | AEM MELIADINE-BPC<br>6526-S-265-605 / OC-989680 |
| | 2 | FOR INSTALLATION II | 2021−05−13 | A.D. | S.M. | L.J. | |
| | 3 | FOR INSTALLATION III | 2021−07−26 | A.D. | C.E.K. | L.J. | REF. No. 5000220043 Rev. 3 |
| | | | | | | | Date: 2021-02-25 |
| DESSIN # / DWG # FI001 | | | | | | | |

| REV. | ITEM | | QTÉ / QTY Unit. | QTÉ / QTY Total | DESCRIPTION | MATÉRIEL / MATERIAL | No. RÉFÉRENCE REFERENCE No. | P&ID I.D. / TAG | Commentaires / Comments |
|---|---|---|---|---|---|---|---|---|---|
| | 5000220043-FI001- | 76 | 4 | 4 | FLAT WASHER Ø3/8", SAE TYPE N (304) | | FXWAYS200666 | | |
| | 5000220043-FI001- | 77 | 2 | 2 | HEX.NUT Ø3/8"-16UNC (ASTM-F594C-304) | | FXNUYS200206 | | |
| | 5000220043-FI001- | 78 | 1 | 1 | MECHANICAL MIXER PRE-COAGULATION TANK<br>"ENVIREQUIP"<br>MODEL: MIX-TECH EVGX-4-2.0<br>TYPE: VERTICAL MOUNTED<br>c/w OIL EXRANSION CHAMBER<br>c/w DUPLES 2205 SHAFT AND IMPELLER<br>c/w NUTS AND BOLTS<br>SHAFT: DIA.: 50 mm (2")<br>LENGTH: 2300mm (90,58")<br>IMPELLER: QTY: 1<br>DIAMETER "A": 1158.9 mm (45,625")<br>BOTTOM CLEARANCE "X": 869,2 mm (34.22")<br>ROTATION DIRECTION: CW - UP<br>c/w MOTOR 2 HP, 575 Vac/3 ph/60 Hz, 64,75 RPM<br>WEIGHT: 235,8 kg( 520 lbs) | | CMSPMI334387 | 65AGI68021 | |
| | 5000220043-FI001- | 79 | 1 | 1 | MECHANICAL MIXER COAGULATION TANK<br>"ENVIREQUIP"<br>MODEL: MIX-TECH EVGX-4-2.0<br>TYPE: VERTICAL MOUNTED<br>c/w OIL EXRANSION CHAMBER<br>c/w DUPLES 2205 SHAFT AND IMPELLER<br>c/w NUTS AND BOLTS<br>SHAFT: DIA.: 50 mm (2")<br>LENGTH: : 2300mm (90,58")<br>IMPELLER: QTY: 1<br>DIAMETER "A": 1158.9 mm (45,625")<br>BOTTOM CLEARANCE "X": 869,2 mm (34.22")<br>ROTATION DIRECTION: CCW -DOWN<br>c/w MOTOR 2 HP, 575 Vac/3 ph/60 Hz, 64,75 RPM<br>WEIGHT: 235,8 kg( 520 lbs) | | CMSPMI334388 | 65AGI68022 | |
| | 5000220043-FI001- | 80 | 1 | 1 | MECHANICAL MIXER TURBO FLOCCULATION<br>"ENVIREQUIP"<br>MODEL: MIX-TECH EVGX-4-5.0<br>TYPE: VERTICAL MOUNTED<br>c/w OIL EXRANSION CHAMBER<br>c/w DUPLES 2205L SHAFT AND IMPELLER<br>c/w NUTS AND BOLTS<br>SHAFT: DIA.: 80,51mm (2.25")<br>LENGTH: 2045mm (80,51")<br>IMPELLER: QTY: 1<br>DIAMETER "A": 1500 mm (59,05")<br>BOTTOM CLEARANCE "X": 1125 mm (44.29")<br>ROTATION DIRECTION: CW -DOWN<br>c/w MOTOR 5 HP, 575 Vac/3 ph/60 Hz, 45,81 RPM<br>WEIGHT: 235,8 kg (520 lb) | | CMSPMI334389 | 65AGI68023 | |

VEOLIA

# NOMENCLATURE / BILL OF MATERIAL

| TITRE / TITLE | Rev. | DESCRIPTION | DATE | Rev | Verif. / Chk. | Appr. | CLIENT |
|---|---|---|---|---|---|---|---|
| ACTIFLOW ACP2-60<br>CLARIFIER #2<br>FIELD INSTALLATION | 1 | FOR INSTALLATION I | 2021-02-25 | A.D. | S.M. | L.J. | AEM MELIADINE-BPC<br>6526-S-265-605 / OC-989680 |
| | 2 | FOR INSTALLATION II | 2021−05−13 | A.D. | S.M. | L.J. | |
| | 3 | FOR INSTALLATION III | 2021−07−26 | A.D. | C.E.K. | L.J. | REF. No. 5000220043 Rev. 3 |
| | | | | | | | Date: 2021-02-25 |
| DESSIN # / DWG # FI001 | | | | | | | |

| REV. | ITEM | | QTÉ / QTY Unit. | QTÉ / QTY Total | DESCRIPTION | MATÉRIEL / MATERIAL | No. RÉFÉRENCE REFERENCE No. | P&ID I.D. / TAG | Commentaires / Comments |
|---|---|---|---|---|---|---|---|---|---|
| | 5000220043-FI001- | 81 | 12 | 12 | HEX. HEAD SCREW Ø3/4"-10UNC x 3" (304) | | FXSCZC200545 | | |
| | 5000220043-FI001- | 82 | 12 | 12 | NYLON INSERT LOCK NUT Ø3/4"-10UNC (304) | | FXNUZC200230 | | |
| | 5000220043-FI001- | 83 | 24 | 24 | FLAT WASHER Ø3/4", SAE TYPE N (304) | | FXWAZC200678 | | |
| | 5000220043-FI001- | 84 | 1 | 1 | OIL, NEVASTANE EP460, 18.9L | | TOLUGU307024 | | NOT SHOWN |
| | 5000220043-FI001- | 85 | 1 | 1 | DURA-PLATE UHS PAINT, 1G, C / A GRAY + HARDENER | | TOTOGU308810 | | NOT SHOWN |
| | 5000220043-FI001- | 86 | 1 | 1 | PAINT, ENVIROLASTIC 940, JMI GRIS, 1 GAL C/W HARDENER, EPOXY TOUCH UP, EXT | | TOTOGU323630 | | NOT SHOWN |

LEFT BLANK

| BOLT SIZE | TORQUE REQUIREMENT |
|---|---|
| 1/4"–20UNC | 75 lbs*in/8.5 N*m |
| 3/8"–16UNC | 236 lbs*in/26.7 N*m |
| 1/2"–13UNC | 43 lbs*ft/58.3 N*m |
| 5/8"–11UNC | 92 lbs*ft/124.7 N*m |
| 3/4"–10UNC | 127 lbs*ft/172.2 N*m |

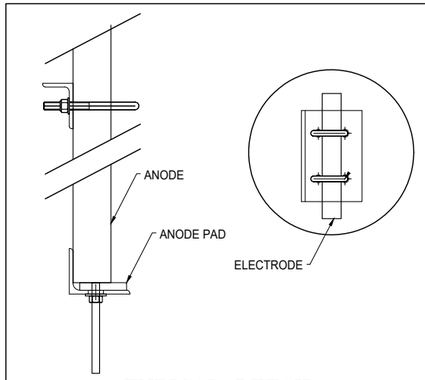


TYPICAL DETAIL
FOR ANODE
INSTALLATION

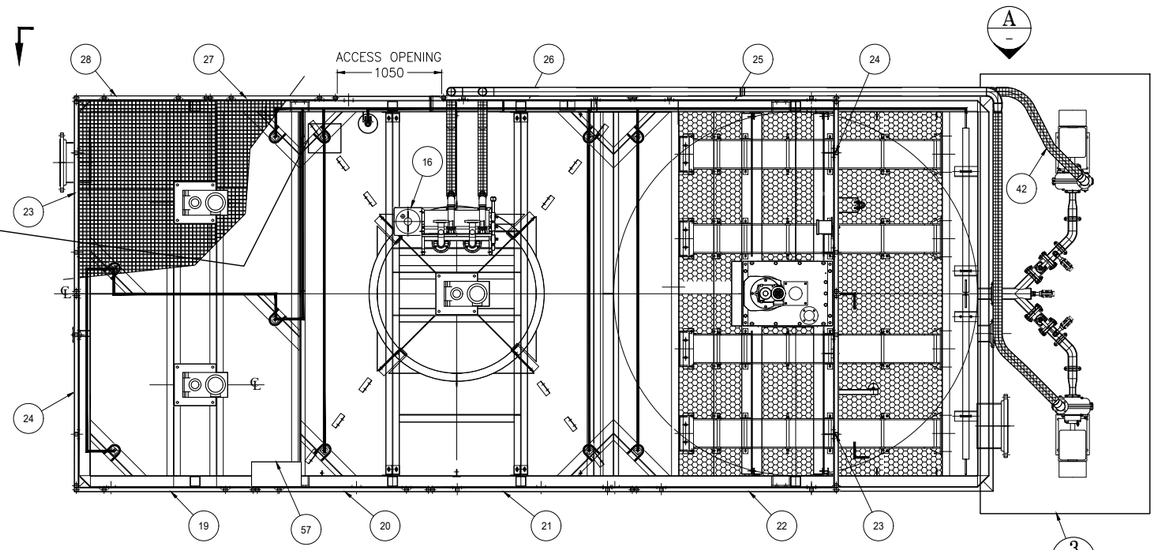


PLAN VIEW

NOTES:

1. SEE BILL OF MATERIAL : 5000220043–FI001 AND MANUFACTUR'S INSTRUCTIONS INCLUDED IN O&M MANUAL.

2. ALL ITEMS MENTIONED WILL BE SUPPLIED BY VEOLIA, AS PER B.O.M. AND WILL NEED TO BE INSTALLED ON SITE.

3. DO NOT REMOVE THE GREASE AND PROTECTION COATING WHEN INSTALLING THE SCRAPER GEAR BOX (ITEM #2).

4. THE UPPER SCRAPER SUPPORT PLATE MUST BE REMOVED IN ORDER TO INSTALL THE SCRAPER GEAR MOTOR
(ITEM #2). PLEASE USE THE SAME BOLTS AND NUTS.

5. FILL SCRAPER GEAR BOX WITH OIL (ITEM #84) PRIOR TO STARTUP.

6. PLEASE VERIFY ALL BOLTS AND NUTS ALREADY INSTALLED AND REFER TO THE TORQUE REQUIREMENTS
DATA TABLE (SEE INSTALLATION MANUAL).

7. IMPORTANT TO DROP 3 FEET AT THE SLUDGE OUTLET OF EACH HYDROCYCLONE TO AVOID BACKFLOW THROUGH HYDROCYCLONE. DISCHARGE OF SLUDGE PIPE MUST NOT BE SUBMERGED.

8. INSTALL THE BLUE FLEXIBLE TUBE (ITEM #42) IN ORDER TO AVOID ANY LOOSE SECTIONS.

9. TANKS SHALL NOT BE USED AS A SUPPORT FOR ANY OTHER EQUIPMENT. EQUIPMENTS THAT NEEDS TO BE CONNECTED
TO TANK SHALL BE SELF SUPPORTED.

10. INSERT DRIP PAN (ITEM #4) UNDER EACH PUMP DRY GLAND TO PREVENT LEAKAGE.

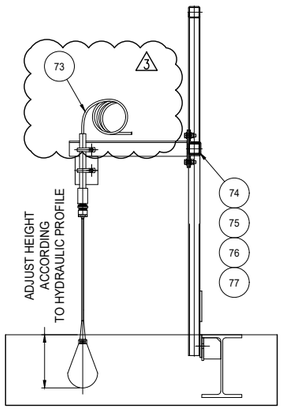


DETAIL 1 –
SCALE 1:10

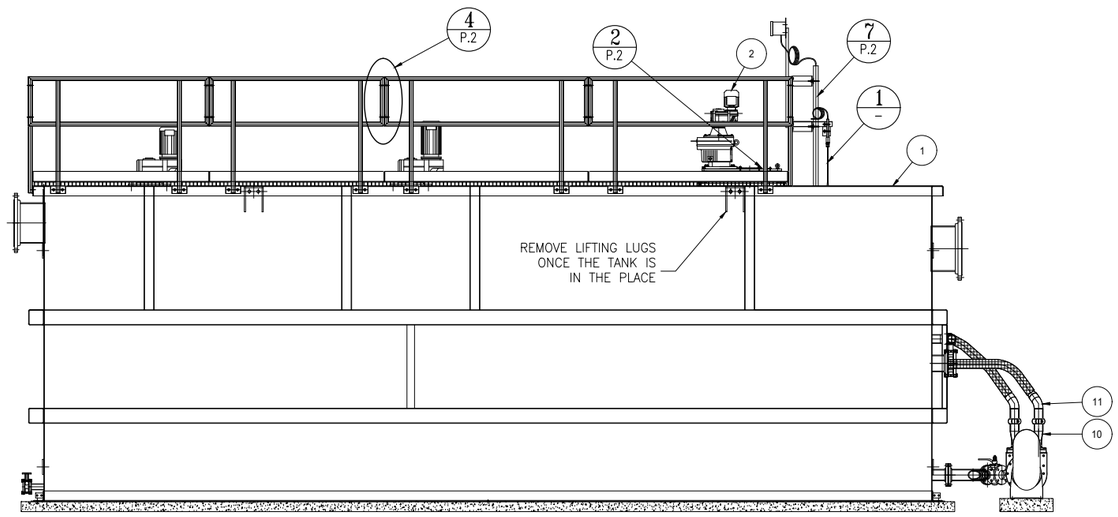


ELEVATION

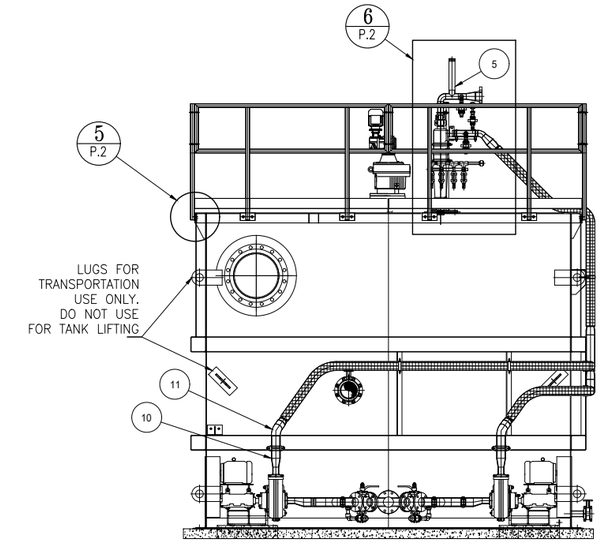


RIGHT SIDE VIEW

| REV | DESCRIPTION | DATE | REV'D | CHK'D | APV'D | ECN |
|---|---|---|---|---|---|---|
| 3 | FOR INSTALLATION III | 2021–06–27 | A.D. | C.E.K. | L.J. | N/A |
| 2 | FOR INSTALLATION II | 2021–05–13 | A.D. | S.M. | L.J. | N/A |
| 1 | FOR INSTALLATION I | 2021–02–25 | A.D. | S.M. | L.J. | N/A |

**CONFIDENTIALITY AND INTELLECTUAL PROPERTY NOTICE**
ALL INFORMATION CONTAINED IN THIS DOCUMENT IS THE SOLE PROPERTY OF VEOLIA WATER TECHNOLOGIES CANADA INC. AND IS PROTECTED BY ALL APPLICABLE LAWS, INCLUDING BUT NOT LIMITED TO COPYRIGHT AND OTHER INTELLECTUAL PROPERTY LAWS. THE DESIGN CONCEPTS AND INFORMATION CONTAINED HEREIN ARE PROPRIETARY TO V.W.T. AND ARE SUBMITTED IN CONFIDENCE. THEY ARE NOT TRANSFERABLE. THEY MUST BE USED ONLY FOR THE PURPOSE FOR WHICH THE DOCUMENT IS EXPRESSLY SUBMITTED AND NO IMPLICIT LICENCE IS GRANTED OTHERWISE BY THE SUBMISSION OF THIS DOCUMENT. THEY ARE CONFIDENTIAL AND PRIVILEGED INFORMATION OF V.W.T. AND THEY MUST NOT BE DISCLOSED, REPRODUCED, LOANED, REMITTED OR USED IN ANY OTHER MANNER WITHOUT THE EXPRESS WRITTEN CONSENT OF V.W.T. V.W.T. ASSUMES NO RESPONSIBILITY OR LIABILITY FOR THE USE OF THIS DOCUMENT OR THE DESIGN CONCEPTS AND INFORMATION CONTAINED HEREIN FOR ANOTHER PROJECT, OR IN A MANNER THAT DOES NOT RELATE TO THE FITNESS OR PURPOSE OF THIS DOCUMENT. IN NO EVENT SHALL THIS DOCUMENT OR THE DESIGN CONCEPTS AND INFORMATION CONTAINED HEREIN BE USED IN A MANNER DETRIMENTAL TO THE INTEREST OF V.W.T. ALL COPYRIGHT, PATENT AND OTHER INTELLECTUAL PROPERTY RIGHTS ARE RESERVED. ACCEPTANCE OF THE DELIVERY OF THIS DOCUMENT CONSTITUTES AGREEMENT TO THESE TERMS AND CONDITIONS.

| | |
|---|---|
| DESIGNER | DATE |
| A.D. | 2021–02–25 |
| CHECKER | DATE |
| S.M. | 2021–02–25 |
| ENGINEER | DATE |
| L.J. | 2021–02–25 |
| SCALE: | 1:30 |

TITLE: ACTIFLOW ACP2–60
CLARIFIER #2
FIELD INSTALLATION

CLIENT: AEM MELIADINE–BPC
6526–S–265–605 / OC–989680

VEOLIA

VEOLIA WATER TECHNOLOGIES CANADA INC. 4105 Sartelon, Saint-Laurent, Qc. Canada. Tel: (514) 334-7230

| PROJECT | DRAWING | INTERNAL | SHEET | REV |
|---|---|---|---|---|
| 5000220043 – FI001 | | ACP260 | 1 OF 3 | 3 |

STD: "D" 22x34 | REF:

Jul 26, 2021 14:33:34 – C:\WORKSPACE–INVENTOR\DESIGNS\EXECUTION\2020\5000220043\ACP260\5000220043–FI001 ACP2–60.dwg – amin.denghani

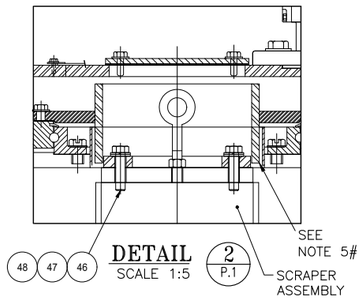


DETAIL 2 P.1
SCALE 1:5

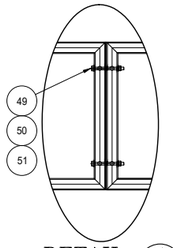


DETAIL 4 P.1
SCALE 1:10

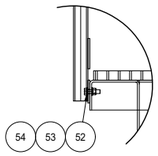


DETAIL 5 P.1
SCALE 1:10

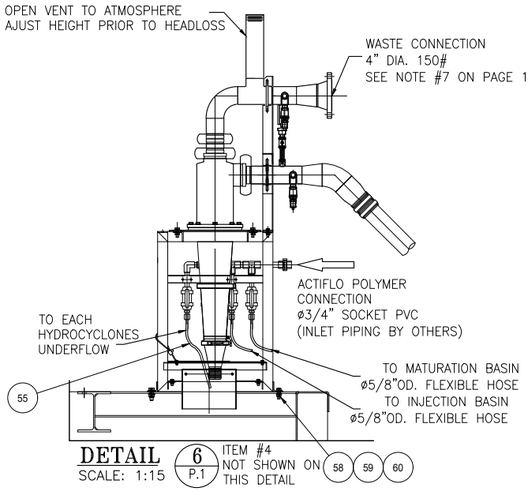


DETAIL 6 P.1
SCALE: 1:15
ITEM #4 NOT SHOWN ON THIS DETAIL

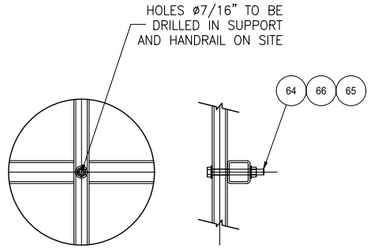


DETAIL 8 –
SCALE: 1:5

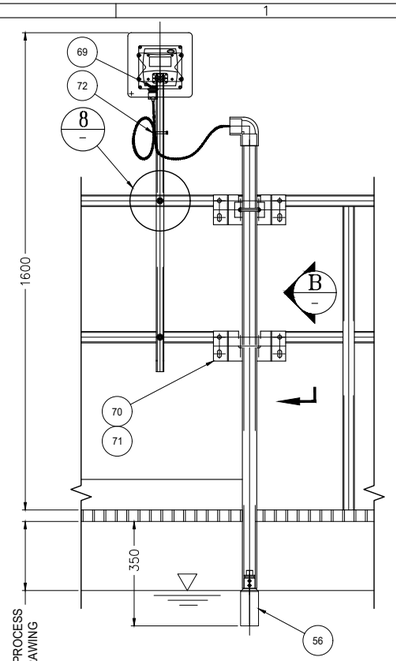


DETAIL 7 P.1
SCALE 1:10

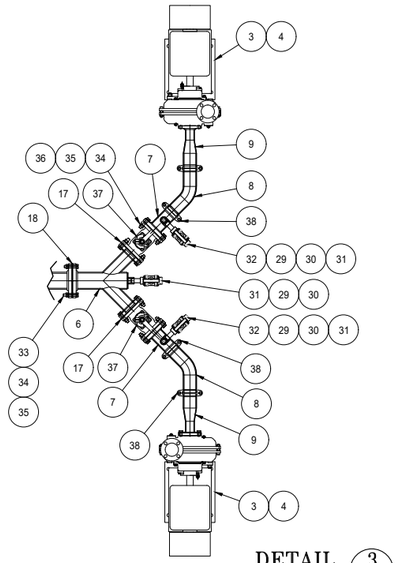


DETAIL 3 P.1
SCALE: 1:20

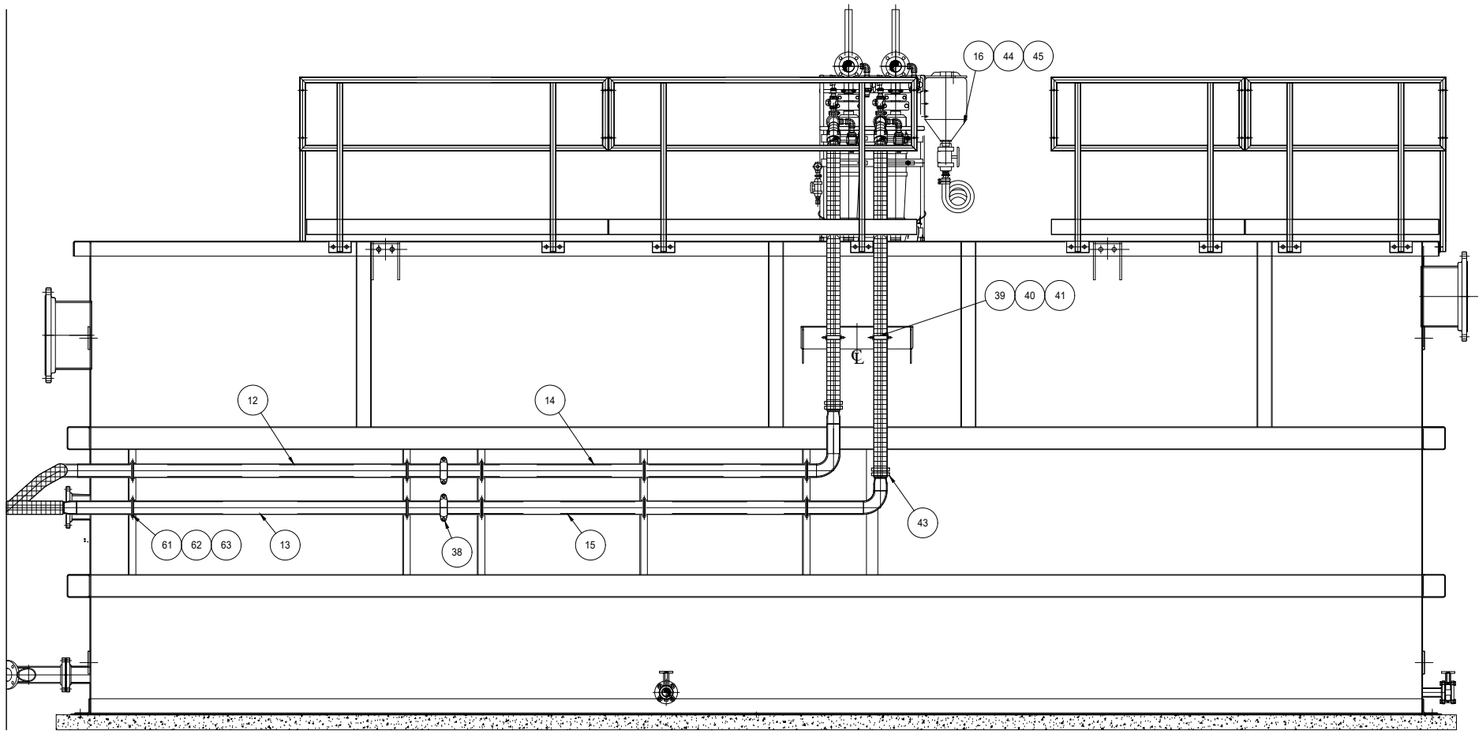


SECTION A –
SCALE: 1:20

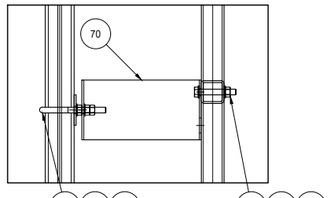


SECTION B –
SCALE: 1:5

**CONFIDENTIALITY AND INTELLECTUAL PROPERTY NOTICE**
ALL INFORMATION CONTAINED IN THIS DOCUMENT IS THE SOLE PROPERTY OF VEOLIA WATER TECHNOLOGIES CANADA INC. AND IS PROTECTED BY ALL APPLICABLE LAWS, INCLUDING BUT NOT LIMITED TO COPYRIGHT AND OTHER INTELLECTUAL PROPERTY LAWS. THE DESIGN CONCEPTS AND INFORMATION CONTAINED HEREIN ARE PROPRIETARY TO V.W.T. AND ARE SUBMITTED IN CONFIDENCE. THEY ARE NOT TRANSFERABLE, THEY MUST BE USED ONLY FOR THE PURPOSE FOR WHICH THE DOCUMENT IS EXPRESSLY SUBMITTED AND NO IMPLICIT LICENCE IS GRANTED OTHERWISE BY THE SUBMISSION OF THIS DOCUMENT. THEY ARE CONFIDENTIAL AND PRIVILEGED INFORMATION OF V.W.T. AND THEY MUST NOT BE DISCLOSED, REPRODUCED, LOANED, REMITTED OR USED IN ANY OTHER MANNER WITHOUT THE EXPRESS WRITTEN CONSENT OF V.W.T. V.W.T. ASSUMES NO RESPONSIBILITY OR LIABILITY FOR THE USE OF THIS DOCUMENT OR THE DESIGN CONCEPTS AND INFORMATION CONTAINED HEREIN FOR ANOTHER PROJECT, OR IN A MANNER THAT DOES NOT RELATE TO THE FITNESS OR PURPOSE OF THIS DOCUMENT. IN NO EVENT SHALL THIS DOCUMENT OR THE DESIGN CONCEPTS AND INFORMATION CONTAINED HEREIN BE USED IN A MANNER DETRIMENTAL TO THE INTEREST OF V.W.T. ALL COPYRIGHT, PATENT AND OTHER INTELLECTUAL PROPERTY RIGHTS ARE RESERVED. ACCEPTANCE OF THE DELIVERY OF THIS DOCUMENT CONSTITUTES AGREEMENT TO THESE TERMS AND CONDITIONS.

| REV | DESCRIPTION | DATE | REV'D | CHK'D | APV'D | ECN |
|---|---|---|---|---|---|---|
| 3 | FOR INSTALLATION III | 2021-06-27 | A.D. | C.E.K. | L.J. | N/A |
| 2 | FOR INSTALLATION II | 2021-05-13 | A.D. | S.M. | L.J. | N/A |
| 1 | FOR INSTALLATION I | 2021-02-25 | A.D. | S.M. | L.J. | N/A |

| | |
|---|---|
| DESIGNER | A.D. |
| DATE | 2021-02-25 |
| CHECKER | S.M. |
| DATE | 2021-02-25 |
| ENGINEER | L.J. |
| DATE | 2021-02-25 |
| SCALE: | 1:30 |

TITLE: ACTIFLOW ACP2-60
CLARIFIER #2
FIELD INSTALLATION

CLIENT: AEM MELIADINE-BPC
6526-S-265-605 / OC-989680

VEOLIA

VEOLIA WATER TECHNOLOGIES CANADA INC. 4105 Sartelon, Saint-Laurent, Qc, Canada. Tel: (514) 334-7230

| PROJECT | DRAWING | INTERNAL | SHEET | REV |
|---|---|---|---|---|
| 5000220043 – FI001 | | ACP260 | 2 OF 3 | 3 |

STD: "D" 22x34 | REF:

Jul 26, 2021 14:33:36 – C:\WORKSPACE-INVENTOR\DESIGNS\EXECUTION\2020\5000220043\ACP260\5000220043-FI001 ACP2-60.dwg – amin.denghani

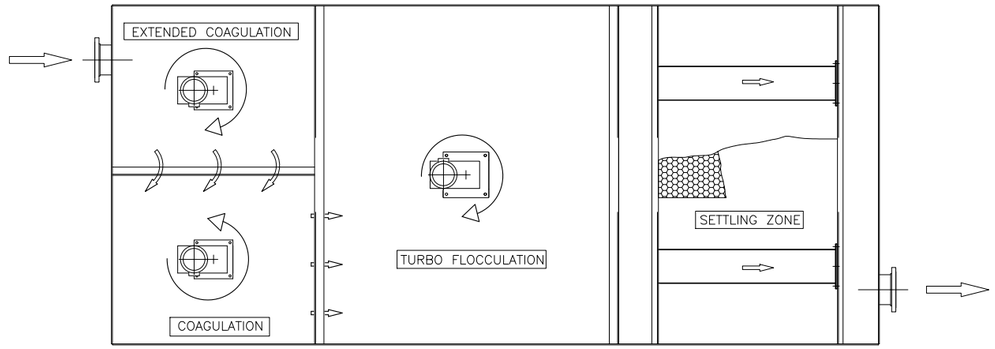


PLAN VIEW

NOTES:

1. DEPENDING ON THE IMPELLER DIAMETER, HUB AND IMPELLER BLADES MIGHT BE SHIPPED SEPARATELY FROM THE MIXER SHAFT ASSEMBLY.
2. IMPELLERS WILL NEED TO BE ASSEMBLED ON SITE
3. MIXERS WILL NEED TO BE ASSEMBLED ON SITE (SHIPPED LOOSE)
4. MIXERS AND SCRAPERS WILL NEED FOOD GRADE OIL PER SPECIFICATIONS

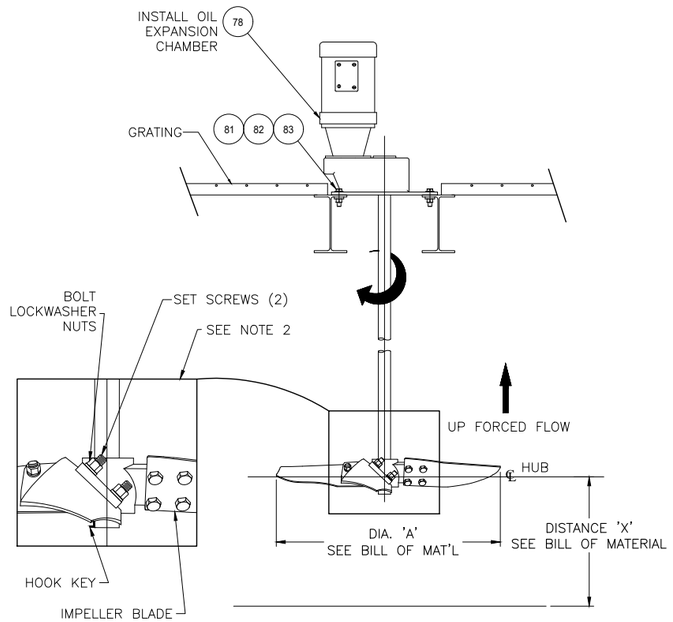


EXTENDED COAGULATION TANK

N.T.S

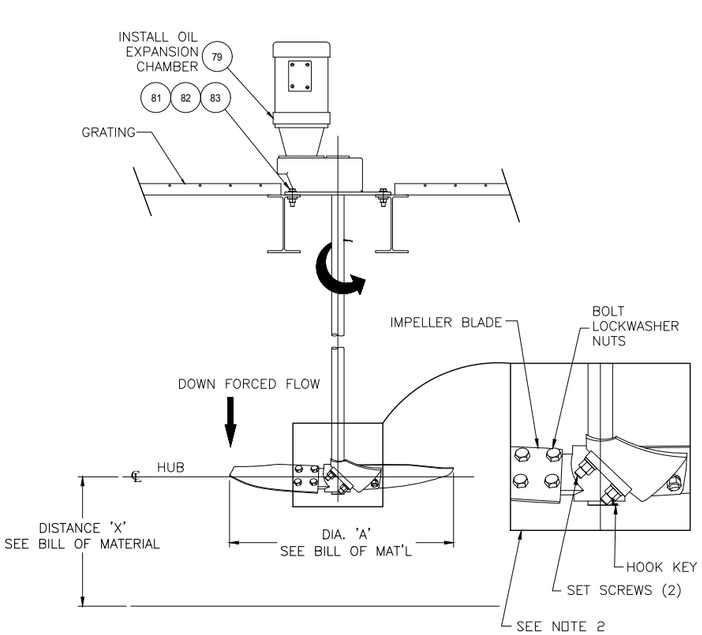


COAGULATION TANK

N.T.S

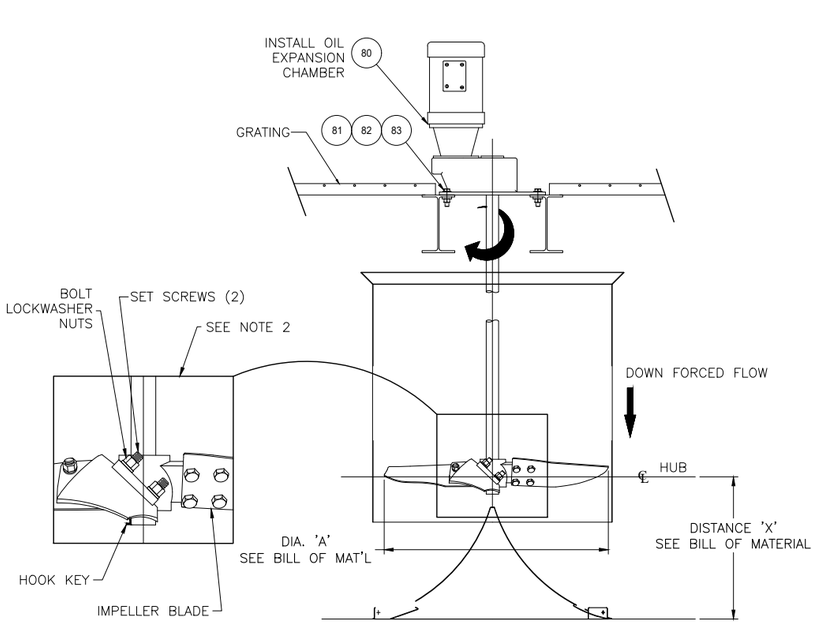


TURBO FLOCCULATION TANK

N.T.S

| REV | DESCRIPTION | DATE | REV'D | CHK'D | APV'D | ECN |
|---|---|---|---|---|---|---|
| 3 | FOR INSTALLATION III | 2021-06-27 | A.D. | C.E.K. | L.J. | N/A |
| 2 | FOR INSTALLATION II | 2021-05-13 | A.D. | S.M. | L.J. | N/A |
| 1 | FOR INSTALLATION I | 2021-02-25 | A.D. | S.M. | L.J. | N/A |

CONFIDENTIALITY AND INTELLECTUAL PROPERTY NOTICE
ALL INFORMATION CONTAINED IN THIS DOCUMENT IS THE SOLE PROPERTY OF VEOLIA WATER TECHNOLOGIES CANADA INC. AND IS PROTECED BY ALL APPLICABLE LAWS, INCLUDING BUT NOT LIMITED TO COPYRIGHT AND OTHER INTELLECTUAL PROPERTY LAWS. THE DESIGN CONCEPTS AND INFORMATION CONTAINED HEREIN ARE PROPRIETARY TO V.W.T. AND ARE SUBMITTED IN CONFIDENCE. THEY ARE NOT TRANSFERABLE. THEY MUST BE USED ONLY FOR THE PURPOSE FOR WHICH THE DOCUMENT IS EXPRESSLY SUBMITTED AND NO IMPLOIT LICENCE IS GRANTED OTHERWISE BY THE SUBMISSION OF THIS DOCUMENT. THEY ARE CONFIDENTIAL AND PRIVILEGED INFORMATION OF V.W.T. AND THEY MUST NOT BE DISCLOSED, REPRODUCED, LOANED, REMITTED OR USED IN ANY OTHER MANNER WITHOUT THE EXPRESS WRITEN CONSENT OF V.W.T. V.W.T. ASSUMES NO RESPONSIBILITY OR LIABILITY FOR THE USE OF THIS DOCUMENT OR THE DESIGN CONCEPTS AND INFORMATION CONTAINED HEREIN FOR ANOTHER PROJECT, OR IN A MANNER THAT DOES NOT RELATE TO THE FITNESS OR PURPOSE OF THIS DOCUMENT. IN NO EVENT SHALL THIS DOCUMENT OR THE DESIGN CONCEPTS AND INFORMATION CONTAINED HEREIN BE USED IN A MANNER DETRIMENTAL TO THE INTEREST OF V.W.T. ALL COPYRIGHT, PATENT AND OTHER INTELLECTUAL PROPERTY RIGHTS ARE RESERVED. ACCEPTANCE OF THE DELIVERY OF THIS DOCUMENT CONSTITUTES AGREEMENT TO THESE TERMS AND CONDITIONS.

| | |
|---|---|
| DESIGNER | A.D. |
| DATE | 2021-02-25 |
| CHECKER | S.M. |
| DATE | 2021-02-25 |
| ENGINEER | L.J. |
| DATE | 2021-02-25 |
| SCALE: | 1:30 |

TITLE: ACTIFLOW ACP2-60
CLARIFIER #2
FIELD INSTALLATION

CLIENT: AEM MELIADINE-BPC
6526-S-265-605 / OC-989680

VEOLIA

VEOLIA WATER TECHNOLOGIES CANADA INC. 4105 Sartelon, Saint-Laurent, Qc, Canada. Tel: (514) 334-7230

| PROJECT | DRAWING | INTERNAL | SHEET | REV |
|---|---|---|---|---|
| 5000220043 – FI001 | | ACP260 | 3 OF 3 | 3 |

STD: "D" 22x34 | REF:

Jul 26, 2021 14:33:41 – C:\WORKSPACE-INVENTOR\DESIGNS\EXECUTION\2020\5000220043\ACP260\5000220043-FI001 ACP2-60.dwg – amin.denghani

LEFT BLANK

VEOLIA

# NOMENCLATURE / BILL OF MATERIAL

| TITRE / TITLE | Rev. | DESCRIPTION | DATE | Rev | Verif. / Chk. | Appr. | CLIENT |
|---|---|---|---|---|---|---|---|
| ACTIFLO ACP-700R<br>CLARIFIER # 1 ACTICARB<br>INSTALLATION | 1 | FOR INSTALLATION I | 2021-03-16 | A.D. | S.M. | L.J. | AEM MELIADINE-BPC<br>6526-S-265-605 / OC-989680 |
| | 2 | FOR INSTALLATION II | 2021−05−13 | A.D. | S.M. | L.J. | |
| | 3 | FOR INSTALLATION III | 2021-07-26 | A.D. | C.E.K. | L.J. | REF. No. 5000220043 Rev. 3 |
| | | | | | | | Date: 2021-03-16 |
| DESSIN # / DWG # FI002 | | | | | | | |

| REV. | ITEM | | QTÉ / QTY Unit. | QTÉ / QTY Total | DESCRIPTION | MATÉRIEL / MATERIAL | No. RÉFÉRENCE REFERENCE No. | P&ID I.D. / TAG | Commentaires / Comments |
|---|---|---|---|---|---|---|---|---|---|
| | 5000220043-FI002- | 1 | 1 | 1 | ACTIFLO ACP-700R, ASSEMBLY | | SA100 | | |
| | 5000220043-FI002- | 2 | 1 | 1 | SCRAPER GEAR BOX, ASSEMBLY (TYPE A) | | SA1301 | 65TRM68002 | |
| | 5000220043-FI002- | 3 | 2 | 2 | GLAND DRIP PAN | | - | | |
| | 5000220043-FI002- | 4 | 2 | 2 | MCLANAHAN SLURRY PUMP 3" x 3" MODEL: M3H-CND-3/3 15HP 575V 1944 RPM IEEE 841 | | ST-999-001 | 65PSR68005A/B | |
| | 5000220043-FI002- | 5 | 6 | 6 | RECIRCULATION PIPE 4" DIA. | | FA113 | | |
| | 5000220043-FI002- | 6 | 3 | 3 | RECIRCULATION PIPE 4" DIA. | | FA114 | | |
| | 5000220043-FI002- | 7 | 1 | 1 | "Y" BRANCH - 4 "x 4"DIA. | | FA115 | | |
| | 5000220043-FI002- | 8 | 2 | 2 | INLET PUMP ADAPTOR 4" @ 3" DIA. | | FA116 | | |
| | 5000220043-FI002- | 9 | 1 | 1 | OUTLET PUMP ADAPTOR 4" @ 3" DIA. | | FA117 | | |
| | 5000220043-FI002- | 10 | 2 | 2 | RECIRCULATION PIPE 4" DIA. | | FA118 | | |
| | 5000220043-FI002- | 11 | 1 | 1 | OUTLET PUMP ADAPTOR 4" @ 3" DIA. | | FA119 | | |
| | 5000220043-FI002- | 12 | 1 | 1 | RECIRCULATION PIPE 4" DIA. | | FA120 | | |
| | 5000220043-FI002- | 13 | 1 | 1 | RECIRCULATION PIPE 4" DIA. | | FA121 | | |
| | 5000220043-FI002- | 14 | 3 | 3 | GASKET FLANGE Ø4",FF, 1/8" TH (EPDM) | | SEGAFP201223 | | |
| | 5000220043-FI002- | 15 | 2 | 2 | PLUG VALVE, MANUFACTURER : DURCO, MODEL : 4 in T4E11C11D033NW | | ST-312-664 | 100-PG99-1205 /1206 | |
| | 5000220043-FI002- | 16 | 3 | 3 | BALL VALVE Ø1" COMBO, SEAL VITON (PVC) CHEMLINE, 21A010VC,TYPE21 | | VABLPV200245 | 25-BA99-1203/1214/1215 | |
| | 5000220043-FI002- | 17 | 5 | 5 | NIPPLE Ø1" NPT x 2 1/2", (PVC80) IPEX,036504 | | FPNIPV200656 | | |
| | 5000220043-FI002- | 18 | 3 | 3 | ADAPTOR Ø1" CAM MALE x MNPT, TYPE F (POLYPROPYLENE) | | FPADPP323935 | | |
| | 5000220043-FI002- | 19 | 2 | 2 | ELBOW 90°, Ø1" FNPT, (PVC80) IPEX,036201 | | FPELPV200532 | | |
| | 5000220043-FI002- | 20 | 12 | 12 | COUPLING GRUVLOK FLEXIBLE Ø4", JOINT EPDM, 7001 SS (316) | | FPADSS350333 | | |
| | 5000220043-FI002- | 21 | 1 | 1 | FLEXIBLE TUBE Ø4" ID, Ø118mm OD, BLEU FDA, 240PSI ALFAGOMMA 519O7-4, 20mLG | | FTTUCS305970 | | |
| | 5000220043-FI002- | 22 | 1 | 1 | HANDRAIL | | FA112 | | |
| | 5000220043-FI002- | 23 | 1 | 1 | HANDRAIL | | FA112 | | |
| | 5000220043-FI002- | 24 | 1 | 1 | HANDRAIL | | FA112 | | |
| | 5000220043-FI002- | 25 | 1 | 1 | HANDRAIL | | FA112 | | |
| | 5000220043-FI002- | 26 | 1 | 1 | HANDRAIL | | FA112 | | |
| | 5000220043-FI002- | 27 | 1 | 1 | HANDRAIL | | FA112 | | |
| | 5000220043-FI002- | 28 | 2 | 2 | HANDRAIL | | FA112 | | |
| | 5000220043-FI002- | 29 | 1 | 1 | HANDRAIL | | FA112 | | |
| | 5000220043-FI002- | 30 | 1 | 1 | HANDRAIL | | FA112 | | |

VEOLIA

# NOMENCLATURE / BILL OF MATERIAL

| TITRE / TITLE | Rev. | DESCRIPTION | DATE | Rev | Verif. / Chk. | Appr. | CLIENT |
|---|---|---|---|---|---|---|---|
| ACTIFLO ACP-700R<br>CLARIFIER # 1 ACTICARB<br>INSTALLATION | 1 | FOR INSTALLATION I | 2021-03-16 | A.D. | S.M. | L.J. | AEM MELIADINE-BPC<br>6526-S-265-605 / OC-989680 |
| | 2 | FOR INSTALLATION II | 2021−05−13 | A.D. | S.M. | L.J. | |
| | 3 | FOR INSTALLATION III | 2021-07-26 | A.D. | C.E.K. | L.J. | REF. No. 5000220043 Rev. 3 |
| | | | | | | | Date: 2021-03-16 |
| DESSIN # / DWG # FI002 | | | | | | | |

| REV. | ITEM | | QTÉ / QTY Unit. | QTÉ / QTY Total | DESCRIPTION | MATÉRIEL / MATERIAL | No. RÉFÉRENCE REFERENCE No. | P&ID I.D. / TAG | Commentaires / Comments |
|---|---|---|---|---|---|---|---|---|---|
| | 5000220043-FI002- | 31 | 1 | 1 | HANDRAIL | | FA112 | | |
| | 5000220043-FI002- | 32 | 1 | 1 | HANDRAIL | | FA112 | | |
| | 5000220043-FI002- | 33 | 1 | 1 | HANDRAIL | | FA112 | | |
| | 5000220043-FI002- | 34 | 1 | 1 | HYDROCYCLONE // MANUFACTURER: VWT//MODEL:MA40 // CAPACITY: 35 M3/H @ 1.25 BAR - 60 M3/H @ 3 BAR//FEED INLET: 4" //OVERFLOW/VORTEX FINDER OUTLET: 4" // SERVICE WATER INLET: 3/4" | | SA7113 | 65CYC68002A /B | GAUGE:65PI6801226/1231 |
| | 5000220043-FI002- | 35 | 1 | 1 | SAMPLING BASIN | | SA1456 | | |
| | 5000220043-FI002- | 36 | 1 | 1 | JUNCTION BOX | | | | |
| | 5000220043-FI002- | 37 | 1 | 1 | LADDER | | FA9004 | | |
| | 5000220043-FI002- | 38 | 8 | 8 | HEX. HEAD SCREW Ø5/8"-11UNC x 2" (ASTM-F593G-316) | | FXSCYY200524 | | |
| | 5000220043-FI002- | 39 | 8 | 8 | FLAT WASHER Ø5/8", SAE TYPE N (316) | | FXWAYY200676 | | |
| | 5000220043-FI002- | 40 | 8 | 8 | LOCK WASHER Ø5/8" (316) | | FXWAYY200677 | | |
| | 5000220043-FI002- | 41 | 32 | 32 | HEX. BOLT Ø5/8"-11UNC X 3 LG. ASTM A-193 \| GR. B8 \| CLASSE 1 \| (304) | | FXSCYY319530 | | |
| | 5000220043-FI002- | 42 | 40 | 40 | FLAT WASHER Ø5/8", SAE TYPE N (304) | | FXWAYY200674 | | |
| | 5000220043-FI002- | 43 | 40 | 40 | HEX. NUT Ø5/8"-11UNC, ASTM A-194 \| GR. 8 \| (304) | | FXNUYY311770 | | |
| | 5000220043-FI002- | 44 | 8 | 8 | HEX. BOLT Ø5/8"-11UNC X 3 1/2 LG. ASTM A-193 \| GR. B8 \| CLASSE 1 \| (304) | | FXSCYY326364 | | |
| | 5000220043-FI002- | 45 | 34 | 34 | HEX. HEAD SCREW Ø3/8"-16UNC x 4" ASTM A307 GR.B (GALV) | | FXSCYS311688 | | |
| | 5000220043-FI002- | 46 | 68 | 68 | FLAT WASHER Ø3/8" ASTM F436, SAE TYPE N (GALV) | | FXWAYS311690 | | |
| | 5000220043-FI002- | 47 | 34 | 34 | HEX.NUT Ø3/8"-16UNC ASTM A536 GR.A (GALV) | | FXNUYS311689 | | |
| | 5000220043-FI002- | 48 | 64 | 64 | HEX. HEAD SCREW Ø1/2"-13UNC x 1 3/4" ASTM A307 GR.B (GALV) | | FXSCYV311692 | | |
| | 5000220043-FI002- | 49 | 128 | 128 | FLAT WASHER Ø1/2" ASTM F436, SAE TYPE N (GALV) | | FXWAYV311696 | | |
| | 5000220043-FI002- | 50 | 64 | 64 | HEX.NUT Ø1/2"-13UNC ASTM A536 GR.A (GALV) | | FXNUYV311695 | | |
| | 5000220043-FI002- | 51 | 10 | 10 | Ø4" FLEXIBLE HOSE STRAP | | FXTIZL328223 | | |
| | 5000220043-FI002- | 52 | 20 | 20 | FLAT WASHER Ø3/8", SAE TYPE N (304) | | FXWAYS200666 | | |
| | 5000220043-FI002- | 53 | 20 | 20 | NYLON INSERT LOCK NUT Ø3/8"-16UNC (ASTM-F594C-304) | | FXNUYS200207 | | |
| | 5000220043-FI002- | 54 | 1 | 1 | FLEXIBLE TUBE Ø1/2" OD, Ø3/8" ID -5m LG. (NATURAL POLYETHYLENE) | | FTTUPE200182 | | |

VEOLIA

# NOMENCLATURE / BILL OF MATERIAL

| TITRE / TITLE | Rev. | DESCRIPTION | DATE | Rev | Verif. / Chk. | Appr. | CLIENT |
|---|---|---|---|---|---|---|---|
| ACTIFLO ACP-700R<br>CLARIFIER # 1 ACTICARB<br>INSTALLATION | 1 | FOR INSTALLATION I | 2021-03-16 | A.D. | S.M. | L.J. | AEM MELIADINE-BPC<br>6526-S-265-605 / OC-989680 |
| | 2 | FOR INSTALLATION II | 2021−05−13 | A.D. | S.M. | L.J. | |
| | 3 | FOR INSTALLATION III | 2021-07-26 | A.D. | C.E.K. | L.J. | REF. No. 5000220043 Rev. 3 |
| | | | | | | | Date: 2021-03-16 |
| DESSIN # / DWG # FI002 | | | | | | | |

| REV. | ITEM | | QTÉ / QTY Unit. | QTÉ / QTY Total | DESCRIPTION | MATÉRIEL / MATERIAL | No. RÉFÉRENCE REFERENCE No. | P&ID I.D. / TAG | Commentaires / Comments |
|---|---|---|---|---|---|---|---|---|---|
| | 5000220043-FI002- | 55 | 8 | 8 | FLAT WASHER Ø1/2", SAE TYPE N (304) | | FXWAYV200670 | | |
| | 5000220043-FI002- | 56 | 4 | 4 | HEX. HEAD SCREW Ø1/2"-13UNC x 2" (ASTM-F593C-304) | | FXSCYV200429 | | |
| | 5000220043-FI002- | 57 | 4 | 4 | NYLON INSERT LOCK NUT Ø1/2"-13UNC (ASTM-F594C-304) | | FXNUYV200214 | | |
| | 5000220043-FI002- | 58 | 8 | 8 | NYLON INSERT LOCK NUT Ø3/4"-10UNC (ASTM-F594D-304) | | FXNUZC200230 | | |
| | 5000220043-FI002- | 59 | 16 | 16 | FLAT WASHER Ø3/4", SAE TYPE N (304) | | FXWAZC200678 | | |
| | 5000220043-FI002- | 60 | 8 | 8 | HEX. HEAD SCREW Ø3/4"-10UNC x 2 3/4" (ASTM-F593D-304) | | FXSCZC200544 | | |
| | 5000220043-FI002- | 61 | 4 | 4 | HEX. HEAD SCREW Ø7/8"-9UNC x 3 1/2" (ASTM-F593D-304) | | FXSCYI200319 | | |
| | 5000220043-FI002- | 62 | 8 | 8 | FLAT WASHER Ø7/8", SAE TYPE N (304) | | FXWAYI200658 | | |
| | 5000220043-FI002- | 63 | 4 | 4 | NYLON INSERT LOCK NUT Ø7/8"-9UNC (ASTM-F594D-304) | | FXNUYI200194 | | |
| | 5000220043-FI002- | 64 | 1 | 1 | MECHANICAL MIXER - COAGULATION TANK<br>"ENVIREQUIP"<br>MODEL: MIX-TECH EVGX-4-3.0<br>TYPE: VERTICAL MOUNTED<br>c/w OIL EXRANSION CHAMBER<br>c/w DUPLES 2205 SHAFT AND IMPELLER<br>c/w NUTS AND BOLTS<br>SHAFT: DIA.: 57,1 mm (2,25")<br>LENGTH: 2714,2mm (106,86")<br>IMPELLER: QTY: 1<br>DIAMETER "A": 1247,8 mm (49,125")<br>BOTTOM CLEARANCE "X": 935,8 mm (36.8")<br>ROTATION DIRECTION: CW - DOWN<br>c/w MOTOR 3 HP, 575 Vac/3 ph/60 Hz, 66,97 RPM<br>WEIGHT: 209 kg(460lbs) | | CMSPMI334390 | 65AGI68018 | |

VEOLIA

# NOMENCLATURE / BILL OF MATERIAL

| TITRE / TITLE | Rev. | DESCRIPTION | DATE | Rev | Verif. / Chk. | Appr. | CLIENT |
|---|---|---|---|---|---|---|---|
| ACTIFLO ACP-700R<br>CLARIFIER # 1 ACTICARB<br>INSTALLATION | 1 | FOR INSTALLATION I | 2021-03-16 | A.D. | S.M. | L.J. | AEM MELIADINE-BPC<br>6526-S-265-605 / OC-989680 |
| | 2 | FOR INSTALLATION II | 2021−05−13 | A.D. | S.M. | L.J. | |
| | 3 | FOR INSTALLATION III | 2021-07-26 | A.D. | C.E.K. | L.J. | REF. No. 5000220043 Rev. 3 |
| | | | | | | | Date: 2021-03-16 |
| DESSIN # / DWG # FI002 | | | | | | | |

| REV. | ITEM | | QTÉ / QTY Unit. | QTÉ / QTY Total | DESCRIPTION | MATÉRIEL / MATERIAL | No. RÉFÉRENCE REFERENCE No. | P&ID I.D. / TAG | Commentaires / Comments |
|---|---|---|---|---|---|---|---|---|---|
| | 5000220043-FI002- | 65 | 1 | 1 | MECHANICAL MIXER - INJECTION TANK<br>"ENVIREQUIP"<br>MODEL: MIX-TECH EVGX-4-3.0<br>TYPE: VERTICAL MOUNTED<br>c/w OIL EXRANSION CHAMBER<br>c/w DUPLES 2205 SHAFT AND IMPELLER<br>c/w NUTS AND BOLTS<br>SHAFT: DIA.: 57,1 mm (2,25")<br>LENGTH: 2714,2mm (106,86")<br>IMPELLER: QTY: 1<br>DIAMETER "A": 1247,8 mm (49,125")<br>BOTTOM CLEARANCE "X": 935,8 mm (36.8")<br>ROTATION DIRECTION: CCW -UP<br>c/w MOTOR 3 HP, 575 Vac/3 ph/60 Hz, 66,97 RPM<br>WEIGHT: 209 kg(460lbs) | | CMSPMI334391 | 65AGI68019 | |
| | 5000220043-FI002- | 66 | 1 | 1 | MECHANICAL MIXER - MATURATION TANK<br>"ENVIREQUIP"<br>MODEL: MIX-TECH EVGX-6-5.0<br>TYPE: VERTICAL MOUNTED<br>c/w OIL EXRANSION CHAMBER<br>c/w DUPLES 2205L SHAFT AND IMPELLER<br>c/w NUTS AND BOLTS<br>SHAFT: DIA.: 76 mm (3")<br>LENGTH: 2511mm (98,86")<br>IMPELLER: QTY: 1<br>DIAMETER "A": 2278.1 mm (89,688")<br>BOTTOM CLEARANCE "X": 1139 mm (44.84")<br>ROTATION DIRECTION: CW -DOWN<br>c/w MOTOR 5 HP, 575 Vac/3 ph/60 Hz, 21.84 RPM<br>WEIGHT: 575.96kg (1270 lb) | | CMSPMI334392 | 65AGI68020 | |
| | 5000220043-FI002- | 67 | 4 | 4 | HEX. HEAD SCREW Ø5/16"-18UNC x 3/4"<br>(ASTM-F593C-304) | | FXSCYD200272 | | |
| | 5000220043-FI002- | 68 | 4 | 4 | FLAT WASHER Ø5/16", SAE TYPE N (304) | | FXWAYD200651 | | |
| | 5000220043-FI002- | 69 | 32 | 32 | NYLON INSERT LOCK NUT Ø1/2"-13UNC<br>(ASTM-F594C-304) | | FXNUYV200214 | | |
| | 5000220043-FI002- | 70 | 32 | 32 | FLAT WASHER Ø1/2", SAE TYPE N (304) | | FXWAYV200670 | | |
| | 5000220043-FI002- | 71 | 16 | 16 | U BOLT PIPE Ø4", ROD Ø1/2"-13UNC, EXTENDED<br>(304) | | FXUBZL200636 | | |
| | 5000220043-FI002- | 72 | 1 | 1 | LEVEL SWITCH FLOAT13MT CABLE ENM-10.40FT,<br>ASSY. | 3 | SA6001 | 65LSHH6801224 | |
| | 5000220043-FI002- | 73 | 1 | 1 | "U" SUPPORT FOR LEVEL SWITCH ENM-10 | | FABKGU329099 | | |
| | 5000220043-FI002- | 74 | 2 | 2 | HEX. HEAD SCREW Ø3/8"-16UNC x 1 1/4"<br>(ASTM-F593C-304) | | FXSCYS200375 | | |

VEOLIA

# NOMENCLATURE / BILL OF MATERIAL

| TITRE / TITLE | Rev. | DESCRIPTION | DATE | Rev | Verif. / Chk. | Appr. | CLIENT |
|---|---|---|---|---|---|---|---|
| ACTIFLO ACP-700R<br>CLARIFIER # 1 ACTICARB<br>INSTALLATION | 1 | FOR INSTALLATION I | 2021-03-16 | A.D. | S.M. | L.J. | AEM MELIADINE-BPC<br>6526-S-265-605 / OC-989680 |
| | 2 | FOR INSTALLATION II | 2021−05−13 | A.D. | S.M. | L.J. | |
| | 3 | FOR INSTALLATION III | 2021-07-26 | A.D. | C.E.K. | L.J. | REF. No. 5000220043 Rev. 3 |
| | | | | | | | |
| | | | | | | | Date: 2021-03-16 |
| DESSIN # / DWG # FI002 | | | | | | | |

| REV. | ITEM | | QTÉ / QTY Unit. | QTÉ / QTY Total | DESCRIPTION | MATÉRIEL / MATERIAL | No. RÉFÉRENCE REFERENCE No. | P&ID I.D. / TAG | Commentaires / Comments |
|---|---|---|---|---|---|---|---|---|---|
| | 5000220043-FI002- | 75 | 4 | 4 | FLAT WASHER Ø3/8", SAE TYPE N (304) | | FXWAYS200666 | | |
| | 5000220043-FI002- | 76 | 2 | 2 | HEX.NUT Ø3/8"-16UNC (ASTM-F594C-304) | | FXNUYS200206 | | |
| | 5000220043-FI002- | 77 | 2 | 2 | HEX. HEAD SCREW Ø3/8"-16UNC x 3 1/2" (304) | | FXSCYS200385 | | |
| | 5000220043-FI002- | 78 | 20 | 20 | FLAT WASHER Ø3/8", SAE TYPE N (304) | | FXWAYS200666 | | |
| | 5000220043-FI002- | 79 | 18 | 18 | HEX.NUT Ø3/8"-16UNC (304) | | FXNUYS200206 | | |
| | 5000220043-FI002- | 80 | 2 | 2 | U BOLT PIPE Ø1 1/2", ROD Ø3/8"-16UNC, EXTENDED (304) | | FXUBZE200617 | | |
| | 5000220043-FI002- | 81 | 4 | 4 | HEX. HEAD SCREW Ø3/8"-16UNC x 2 1/2" (304) | | FXSCYS200380 | | |
| | 5000220043-FI002- | 82 | 1 | 1 | CLARIFIED WATER TURBIDIMETER MODEL: "SOLITAX" ASSEMBLY | | SA7011 | 65AE6801222 | SC200 =65AIT6801222 |
| | 5000220043-FI002- | 83 | 2 | 2 | CABLE CONNECTOR Ø1/2" CABLE Ø3/16" @ Ø5/8", IPEX (PVC) | | CECKGU200251 | | |
| | 5000220043-FI002- | 84 | 2 | 2 | MOUNTING BRACKET 200mm LG.FOR SOLITAX SS304L FOR HANDRAIL INSTALLATION | | FA7012 | | |
| | 5000220043-FI002- | 85 | 2 | 2 | MOUNTING PLATE LG.FOR SOLITAX SS304L FOR HANDRAIL INSTALLATION | | FA7013 | | |
| | 5000220043-FI002- | 86 | 1 | 1 | CABLE TIE 7" NYLON BLACK | | FXTIYO200120 | | |
| | 5000220043-FI002- | 87 | 1 | 1 | OIL, NEVASTANE EP460, 18.9L | | TOLUGU307024 | | NOT SHOWN. |
| | 5000220043-FI002- | 88 | 1 | 1 | DURA-PLATE UHS PAINT, 1G, C / A GRAY + HARDENER | | TOTOGU308810 | | NOT SHOWN. |
| | 5000220043-FI002- | 89 | 1 | 1 | PAINT, ENVIROLASTIC 940, JMI GRIS, 1 GAL C/W HARDENER, EPOXY TOUCH UP, EXT | | TOTOGU323630 | | NOT SHOWN. |
| | 5000220043-FI002- | 90 | 1 | 1 | SAFETY GATE SPRING CLOSED 25 3/4" -29 1/2" RANGE, YELLOW | | TACMGU313168 | | |
| | 5000220043-FI002- | 91 | 16 | 16 | HOSE CLAMP W4, Ø112mm x Ø121mm (304) | | FXCLZL301866 | | |

LEFT BLANK

| BOLT SIZE | TORQUE REQUIREMENT |
|---|---|
| 1/4"–20UNC | 75 lbs*in/8.5 N*m |
| 3/8"–16UNC | 236 lbs*in/26.7 N*m |
| 1/2"–13UNC | 43 lbs*ft/58.3 N*m |
| 5/8"–11UNC | 92 lbs*ft/124.7 N*m |
| 3/4"–10UNC | 127 lbs*ft/172.2 N*m |

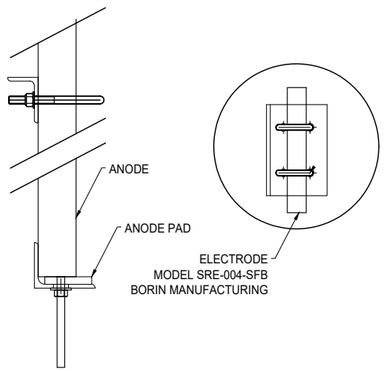


TYPICAL DETAIL FOR ANODE INSTALLATION

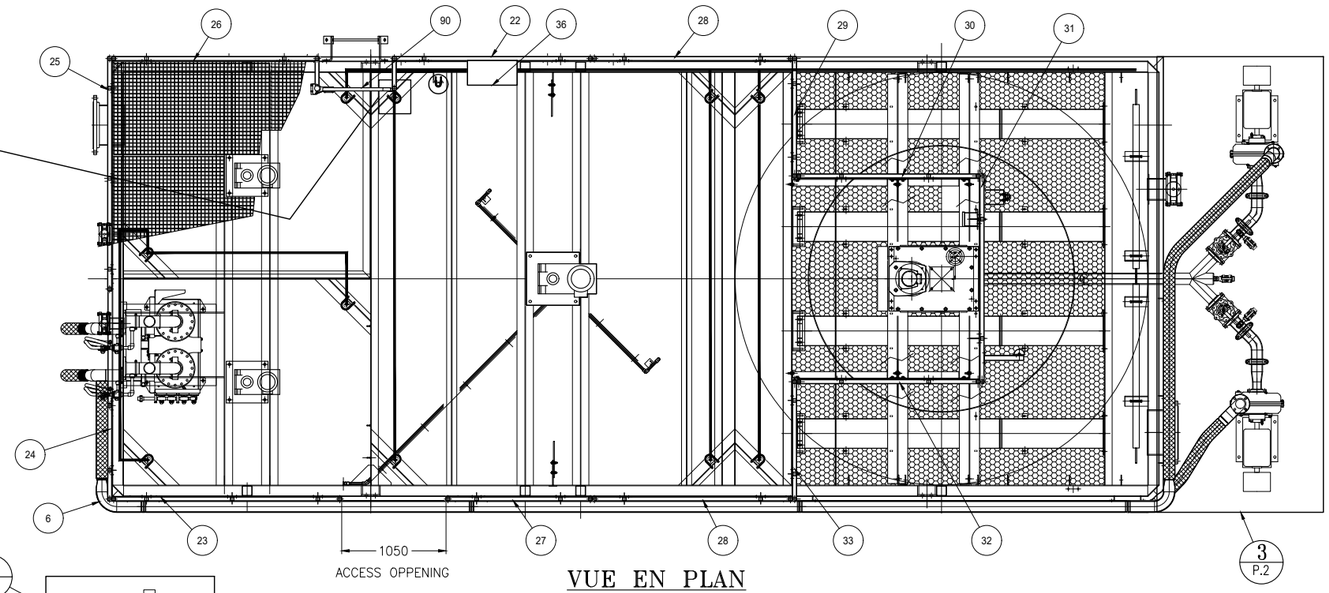


VUE EN PLAN

NOTES:

1. SEE BILL OF MATERIAL : 5000220043–FI002 AND MANUFACTUR'S INSTRUCTIONS INCLUDED IN O&M MANUAL.

2. ALL ITEMS MENTIONED WILL BE SUPPLIED BY VEOLIA, AS PER B.O.M. AND WILL NEED TO BE INSTALLED ON SITE.

3. DO NOT REMOVE THE GREASE AND PROTECTION COATING WHEN INSTALLING THE SCRAPER GEAR BOX (ITEM #2).

4. THE UPPER SCRAPER SUPPORT PLATE MUST BE REMOVED IN ORDER TO INSTALL THE SCRAPER GEAR MOTOR (ITEM #2). PLEASE USE THE SAME BOLTS AND NUTS.

5. FILL SCRAPER GEAR BOX WITH OIL (ITEM #87) PRIOR TO STARTUP.

6. PLEASE VERIFY ALL BOLTS AND NUTS ALREADY INSTALLED AND REFER TO THE TORQUE REQUIREMENTS DATA TABLE (SEE INSTALLATION MANUAL).

7. IMPORTANT TO DROP 3 FEET AT THE SLUDGE OUTLET OF EACH HYDROCYCLONE TO AVOID BACKFLOW THROUGH HYDROCYCLONE. DISCHARGE OF SLUDGE PIPE MUST NOT BE SUBMERGED.

8. INSTALL THE BLUE FLEXIBLE TUBE (ITEM #21) IN ORDER TO AVOID ANY LOOSE SECTIONS.

9. TANKS SHALL NOT BE USED AS A SUPPORT FOR ANY OTHER EQUIPMENT. EQUIPMENTS THAT NEEDS TO BE CONNECTED TO TANK SHALL BE SELF SUPPORTED.

10. INSERT DRIP PAN (ITEM #3) UNDER EACH PUMP DRY GLAND TO PREVENT LEAKAGE.

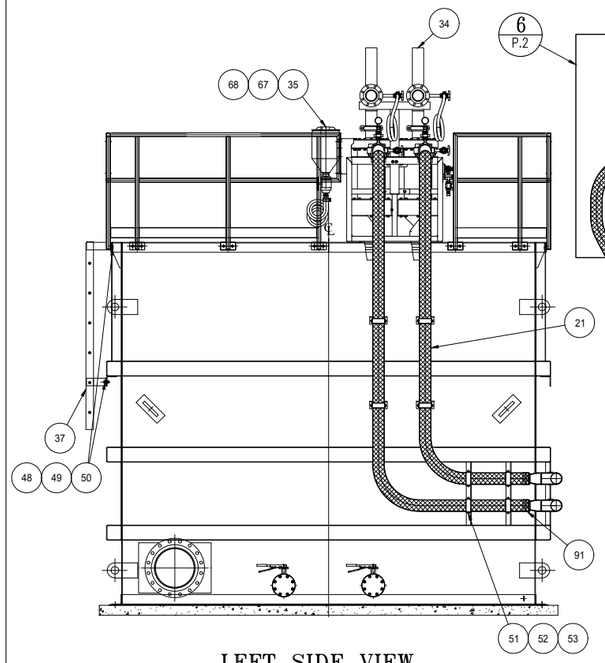

LEFT SIDE VIEW

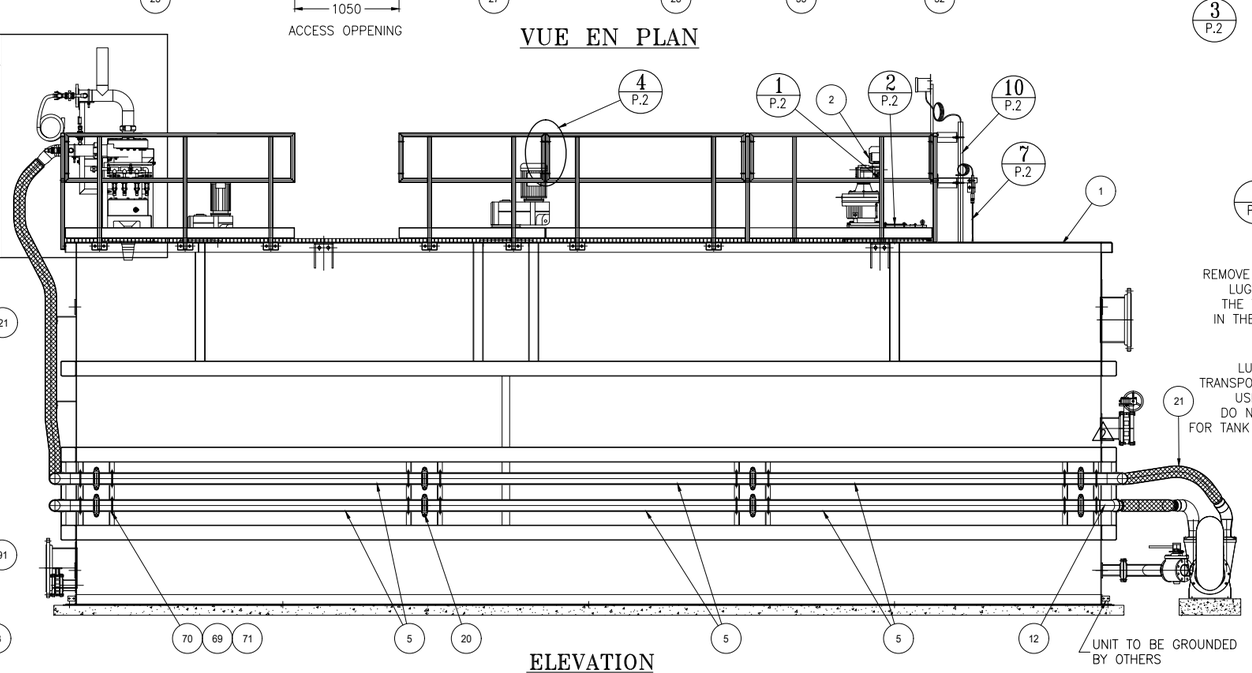


ELEVATION

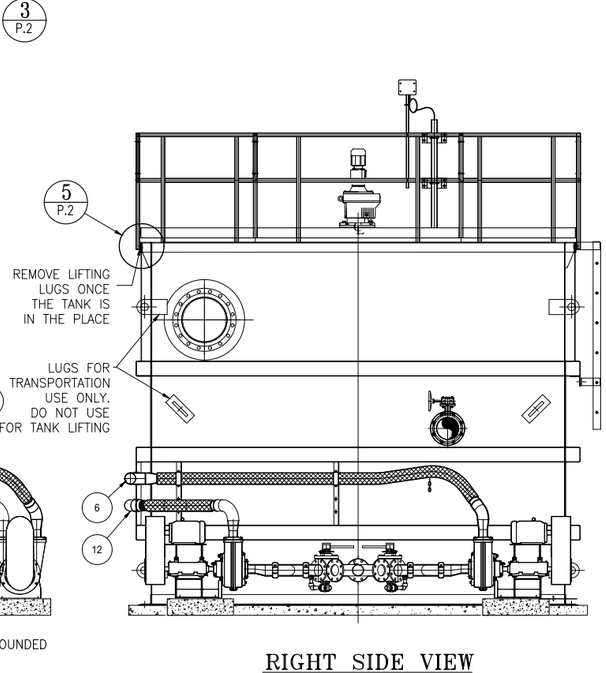


RIGHT SIDE VIEW

| REV | DESCRIPTION | DATE | REV'D | CHK'D | APV'D | ECN |
|---|---|---|---|---|---|---|
| 3 | FOR INSTALLATION III | 2021–07–26 | A.D. | C.E.K. | L.J. | N/A |
| 2 | FOR INSTALLATION II | 2021–05–13 | A.D. | S.M. | L.J. | N/A |
| 1 | FOR INSTALLATION I | 2021–03–16 | A.D. | S.M. | L.J. | N/A |

CONFIDENTIALITY AND INTELLECTUAL PROPERTY NOTICE
ALL INFORMATION CONTAINED IN THIS DOCUMENT IS THE SOLE PROPERTY OF VEOLIA WATER TECHNOLOGIES CANADA INC. AND IS PROTECTED BY ALL APPLICABLE LAWS, INCLUDING BUT NOT LIMITED TO COPYRIGHT AND OTHER INTELLECTUAL PROPERTY LAWS. THE DESIGN CONCEPTS AND INFORMATION CONTAINED HEREIN ARE PROPRIETARY TO V.W.T. AND ARE SUBMITTED IN CONFIDENCE. THEY ARE NOT TRANSFERABLE. THEY MUST BE USED ONLY FOR THE PURPOSE FOR WHICH THE DOCUMENT IS EXPRESSLY SUBMITTED AND NO IMPLICIT LICENCE IS GRANTED OTHERWISE BY THE SUBMISSION OF THIS DOCUMENT. THEY ARE CONFIDENTIAL AND PRIVILEGED INFORMATION OF V.W.T. AND THEY MUST NOT BE DISCLOSED, REPRODUCED, LOANED, REMITTED OR USED IN ANY OTHER MANNER WITHOUT THE EXPRESS WRITTEN CONSENT OF V.W.T. V.W.T. ASSUMES NO RESPONSIBILITY OR LIABILITY FOR THE USE OF THIS DOCUMENT OR THE DESIGN CONCEPTS AND INFORMATION CONTAINED HEREIN FOR ANOTHER PROJECT, OR IN A MANNER THAT DOES NOT RELATE TO THE FITNESS OR PURPOSE OF THIS DOCUMENT. IN NO EVENT SHALL THIS DOCUMENT OR THE DESIGN CONCEPTS AND INFORMATION CONTAINED HEREIN BE USED IN A MANNER DETRIMENTAL TO THE INTEREST OF V.W.T. ALL COPYRIGHT, PATENT AND OTHER INTELLECTUAL PROPERTY RIGHTS ARE RESERVED. ACCEPTANCE OF THE DELIVERY OF THIS DOCUMENT CONSTITUTES AGREEMENT TO THESE TERMS AND CONDITIONS.

| | |
|---|---|
| DESIGNER | DATE |
| A.D. | 2021–02–26 |
| CHECKER | DATE |
| S.M. | 2021–02–26 |
| ENGINEER | DATE |
| L.J. | 2021–02–26 |
| SCALE: | 1:30 |

TITLE: ACTIFLO ACP–700R CLARIFIER # 1 ACTICARB INSTALLATION

CLIENT: AEM MELIADINE–BPC 6526–S–265–605 / OC–989680

VEOLIA WATER TECHNOLOGIES CANADA INC. 4105 Sartelon, Saint-Laurent, Qc, Canada. Tel: (514) 334-7230

| PROJECT DRAWING | INTERNAL | SHEET | REV |
|---|---|---|---|
| 5000220043 – FI002 | ACP700R | 1 OF 3 | 3 |

STD: "D" 22x34 | REF:

Mar 19, 2021 13:37:34 – C:\WORKSPACE–INVENTOR\Designs\EXECUTION\2020\5000220043\ACP700R\5000220043–FI002ACP700R.dwg – omin.denghoni

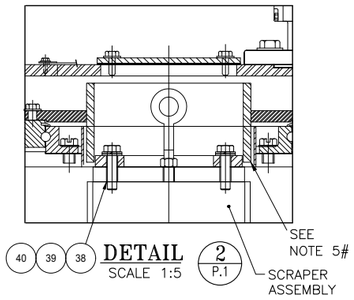


DETAIL 2 P.1
SCALE 1:5

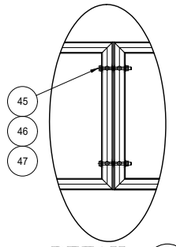


DETAIL 4 P.1
SCALE 1:10

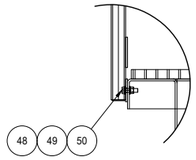


DETAIL 5 P.1
SCALE 1:10

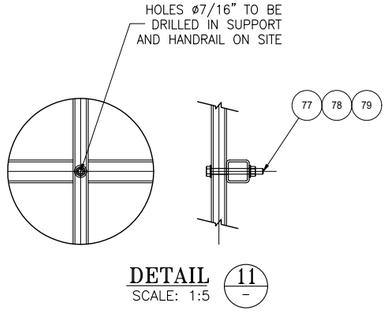


DETAIL 11 –
SCALE: 1:5

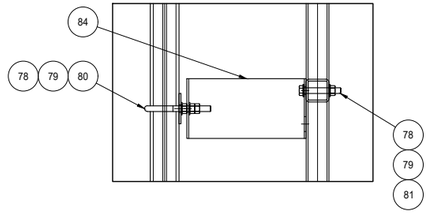


SECTION A –
SCALE: 1:5

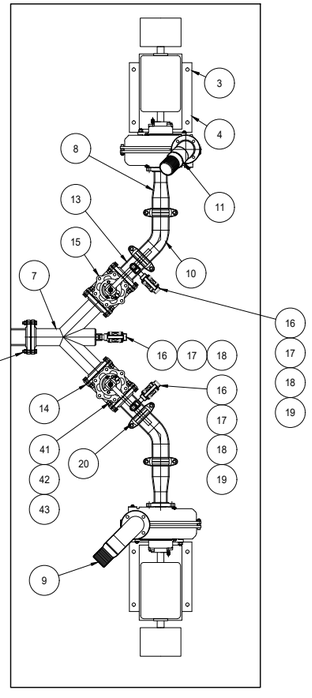


DETAIL 3 P.1
SCALE: 1:20

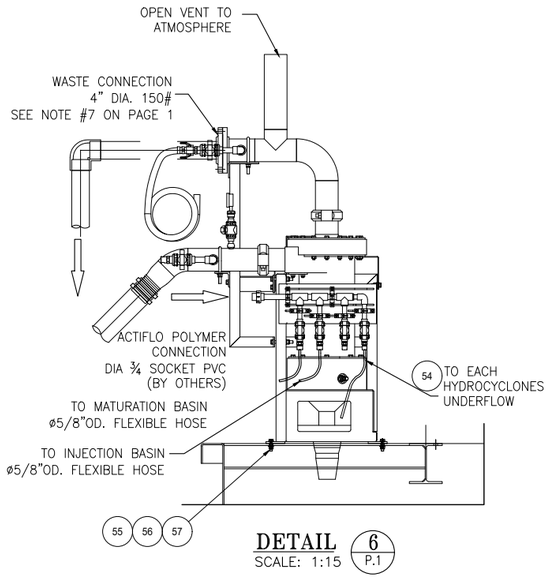


DETAIL 6 P.1
SCALE: 1:15

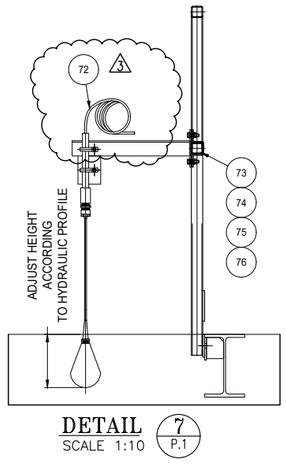


DETAIL 7 P.1
SCALE 1:10

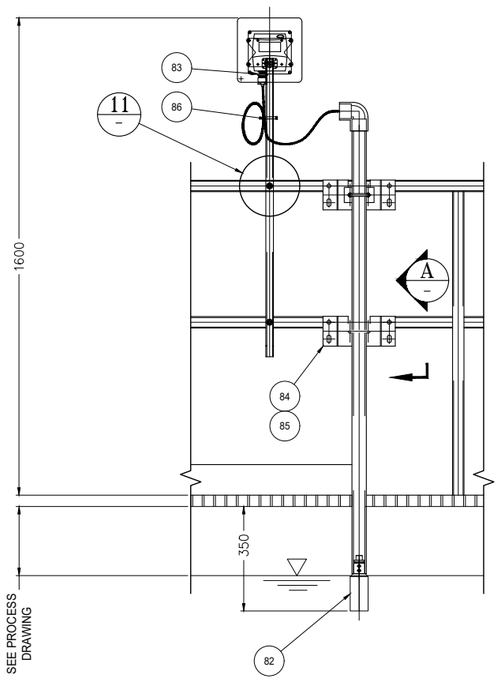


DETAIL 10 P.1
SCALE 1:10

| REV | DESCRIPTION | DATE | REV'D | CHK'D | APV'D | ECN |
|---|---|---|---|---|---|---|
| | | | | | | |
| | | | | | | |
| 3 | FOR INSTALLATION III | 2021-07-26 | A.D. | C.E.K. | L.J. | N/A |
| 2 | FOR INSTALLATION II | 2021-05-13 | A.D. | S.M. | L.J. | N/A |
| 1 | FOR INSTALLATION I | 2021-03-16 | A.D. | S.M. | L.J. | N/A |

**CONFIDENTIALITY AND INTELLECTUAL PROPERTY NOTICE**
ALL INFORMATION CONTAINED IN THIS DOCUMENT IS THE SOLE PROPERTY OF VEOLIA WATER TECHNOLOGIES CANADA INC. AND IS PROTECTED BY ALL APPLICABLE LAWS, INCLUDING BUT NOT LIMITED TO COPYRIGHT AND OTHER INTELLECTUAL PROPERTY LAWS. THE DESIGN CONCEPTS AND INFORMATION CONTAINED HEREIN ARE PROPRIETARY TO V.W.T. AND ARE SUBMITTED IN CONFIDENCE. THEY ARE NOT TRANSFERABLE. THEY MUST BE USED ONLY FOR THE PURPOSE FOR WHICH THE DOCUMENT IS EXPRESSLY SUBMITTED AND NO IMPLICIT LICENCE IS GRANTED OTHERWISE BY THE SUBMISSION OF THIS DOCUMENT. THEY ARE CONFIDENTIAL AND PRIVILEGED INFORMATION OF V.W.T. AND THEY MUST NOT BE DISCLOSED, REPRODUCED, LOANED, REMITTED OR USED IN ANY OTHER MANNER WITHOUT THE EXPRESS WRITTEN CONSENT OF V.W.T. V.W.T. ASSUMES NO RESPONSIBILITY OR LIABILITY FOR THE USE OF THIS DOCUMENT OR THE DESIGN CONCEPTS AND INFORMATION CONTAINED HEREIN FOR ANOTHER PROJECT, OR IN A MANNER THAT DOES NOT RELATE TO THE FITNESS OR PURPOSE OF THIS DOCUMENT. IN NO EVENT SHALL THIS DOCUMENT OR THE DESIGN CONCEPTS AND INFORMATION CONTAINED HEREIN BE USED IN A MANNER DETRIMENTAL TO THE INTEREST OF V.W.T. ALL COPYRIGHT, PATENT AND OTHER INTELLECTUAL PROPERTY RIGHTS ARE RESERVED. ACCEPTANCE OF THE DELIVERY OF THIS DOCUMENT CONSTITUTES AGREEMENT TO THESE TERMS AND CONDITIONS.

| | DESIGNER | DATE |
|---|---|---|
| | A.D. | 2021-02-26 |
| | CHECKER | DATE |
| | S.M. | 2021-02-26 |
| | ENGINEER | DATE |
| | L.J. | 2021-02-26 |
| | SCALE: | 1:30 |

TITLE: ACTIFLO ACP-700R
CLARIFIER # 1 ACTICARB
INSTALLATION

CLIENT: AEM MELIADINE-BPC
6526-S-265-605 / OC-989680

VEOLIA
VEOLIA WATER TECHNOLOGIES CANADA INC. 4105 Sartelon, Saint-Laurent, Qc. Canada. Tel: (514) 334-7230

| PROJECT / DRAWING | INTERNAL | SHEET | REV |
|---|---|---|---|
| 5000220043 – FI002 | ACP700R | 2 OF 3 | 3 |

STD: "D" 22x34 | REF:

Mar 19, 2021 13:37:34 – C:\WORKSPACE-INVENTOR\Designs\EXECUTION\2020\5000220043\ACP700R\5000220043-FI002ACP700R.dwg – orrin.denghoni

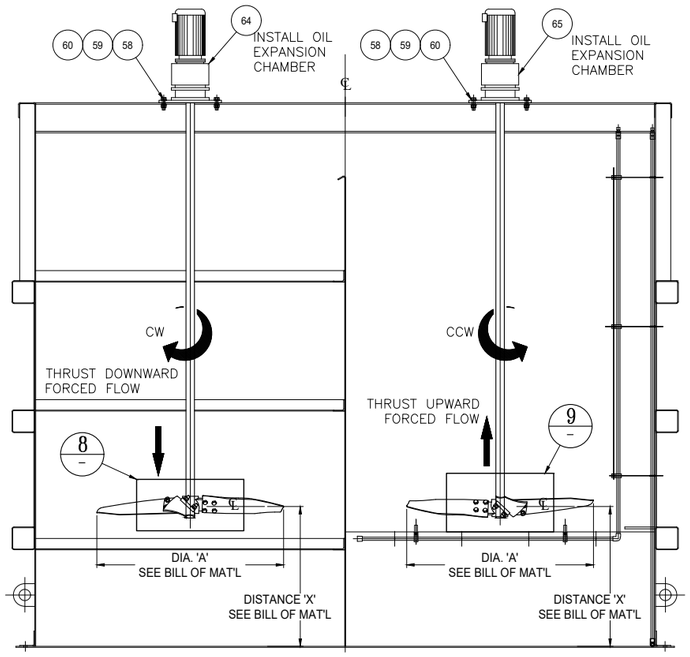


COAGULATION TANK MIXER INSTALLATION

INJECTION TANK MIXER INSTALLATION

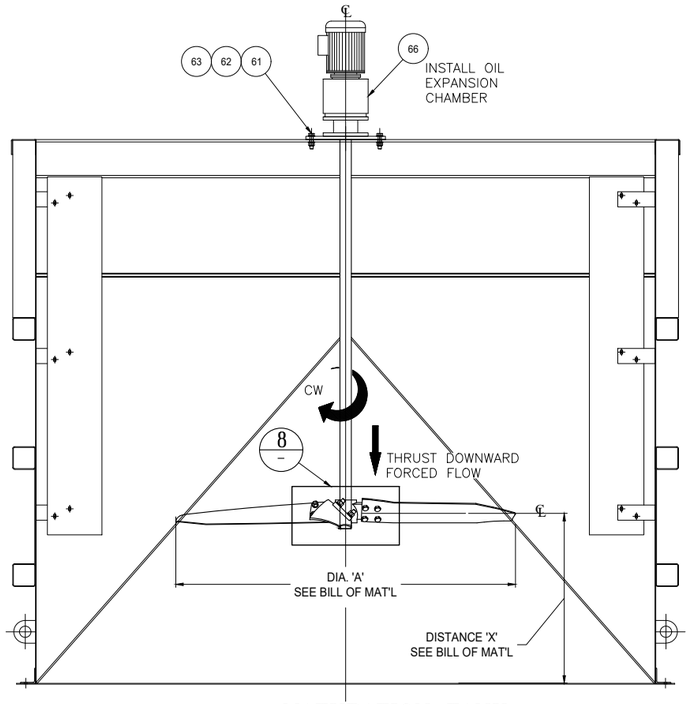


MATURATION TANK MIXER INSTALLATION

NOTES FOR MIXERS INSTALLATION:

1. DEPENDING ON THE IMPELLER DIAMETER, HUB AND IMPELLER BLADES MIGHT BE SHIPPED SEPARATELY FROM THE MIXER SHAFT ASSEMBLY.
2. IMPELLERS WILL NEED TO BE ASSEMBLED ON SITE.
3. MIXERS WILL NEED TO BE ASSEMBLED ON SITE (SHIPPED LOOSE).
4. MIXERS AND SCRAPERS WILL NEED SYNTHETIC OIL AS PER SPECIFICATIONS.

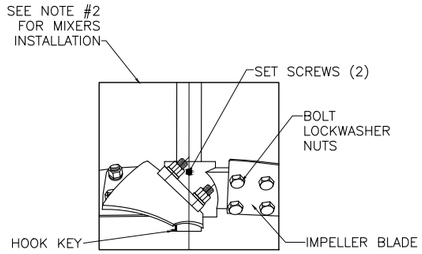


DETAIL 8 – SCALE: N.T.S.

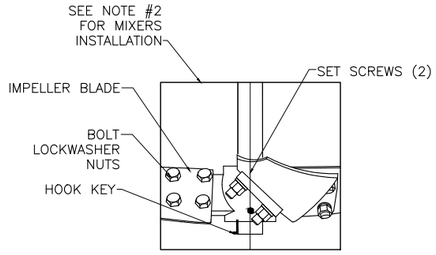


DETAIL 9 – SCALE: N.T.S.

| REV | DESCRIPTION | DATE | REV'D | CHK'D | APV'D | ECN |
|---|---|---|---|---|---|---|
| 3 | FOR INSTALLATION III | 2021-07-26 | A.D. | C.E.K. | L.J. | N/A |
| 2 | FOR INSTALLATION II | 2021-05-13 | A.D. | S.M. | L.J. | N/A |
| 1 | FOR INSTALLATION I | 2021-03-16 | A.D. | S.M. | L.J. | N/A |

**CONFIDENTIALITY AND INTELLECTUAL PROPERTY NOTICE**
ALL INFORMATION CONTAINED IN THIS DOCUMENT IS THE SOLE PROPERTY OF VEOLIA WATER TECHNOLOGIES CANADA INC. AND IS PROTECTED BY ALL APPLICABLE LAWS, INCLUDING BUT NOT LIMITED TO COPYRIGHT AND OTHER INTELLECTUAL PROPERTY LAWS. THE DESIGN CONCEPTS AND INFORMATION CONTAINED HEREIN ARE PROPRIETARY TO V.W.T. AND ARE SUBMITTED IN CONFIDENCE. THEY ARE NOT TRANSFERABLE. THEY MUST BE USED ONLY FOR THE PURPOSE FOR WHICH THE DOCUMENT IS EXPRESSLY SUBMITTED AND NO IMPLICIT LICENCE IS GRANTED OTHERWISE BY THE SUBMISSION OF THIS DOCUMENT. THEY ARE CONFIDENTIAL AND PRIVILEGED INFORMATION OF V.W.T. AND THEY MUST NOT BE DISCLOSED, REPRODUCED, LOANED, REMITTED OR USED IN ANY OTHER MANNER WITHOUT THE EXPRESS WRITTEN CONSENT OF V.W.T. V.W.T. ASSUMES NO RESPONSIBILITY OR LIABILITY FOR THE USE OF THIS DOCUMENT OR THE DESIGN CONCEPTS AND INFORMATION CONTAINED HEREIN FOR ANOTHER PROJECT, OR IN A MANNER THAT DOES NOT RELATE TO THE FITNESS OR PURPOSE OF THIS DOCUMENT. IN NO EVENT SHALL THIS DOCUMENT OR THE DESIGN CONCEPTS AND INFORMATION CONTAINED HEREIN BE USED IN A MANNER DETRIMENTAL TO THE INTEREST OF V.W.T. ALL COPYRIGHT, PATENT AND OTHER INTELLECTUAL PROPERTY RIGHTS ARE RESERVED. ACCEPTANCE OF THE DELIVERY OF THIS DOCUMENT CONSTITUTES AGREEMENT TO THESE TERMS AND CONDITIONS.

| | | |
|---|---|---|
| DESIGNER | A.D. | DATE 2021-02-26 |
| CHECKER | S.M. | DATE 2021-02-26 |
| ENGINEER | L.J. | DATE 2021-02-26 |
| SCALE: | 1:30 | |

TITLE: ACTIFLO ACP-700R CLARIFIER # 1 ACTICARB INSTALLATION

CLIENT: AEM MELIADINE-BPC 6526-S-265-605 / OC-989680

VEOLIA

VEOLIA WATER TECHNOLOGIES CANADA INC, 4105 Sartelon, Saint-Laurent, Qc, Canada. Tel: (514) 334-7230

| PROJECT | DRAWING | INTERNAL | SHEET | REV |
|---|---|---|---|---|
| 5000220043 – FI002 | | ACP700R | 3 OF 3 | 3 |

STD: "D" 22x34 REF:

Mar 19, 2021 13:37:34 – C:\WORKSPACE-INVENTOR\Designs\EXECUTION\2020\5000220043\ACP700R\5000220043-FI002ACP700R.dwg – amin.dehghani

LEFT BLANK

VEOLIA

# NOMENCLATURE / BILL OF MATERIAL

| TITRE / TITLE | Rev. | DESCRIPTION | DATE | Rev | Verif. / Chk. | Appr. | CLIENT |
|---|---|---|---|---|---|---|---|
| DECHLORINATION REACTOR (WITHOUT COVER)<br>RX75-3<br>INSTALLATION | 1 | FOR INSTALLATION I | 2021-03-24 | A.D. | S.M. | L.J. | AEM MELIADINE-BPC<br>6526-S-265-605 / OC-989680 |
| | 2 | FOR INSTALLATION II | 2021-05-13 | A.D. | S.M. | L.J. | |
| | | | | | | | REF. No. 5000220043 Rev. 2 |
| | | | | | | | |
| | | | | | | | Date: 2021-03-24 |
| DESSIN # / DWG # FI003 | | | | | | | |

| REV. | ITEM | | QTÉ / QTY Unit. | QTÉ / QTY Total | DESCRIPTION | MATÉRIEL / MATERIAL | No. RÉFÉRENCE<br>REFERENCE No. | P&ID<br>I.D. / TAG | Commentaires / Comments |
|---|---|---|---|---|---|---|---|---|---|
| | 5000220043-FI003- | 1 | 1 | 1 | REACTION TANK RX75-3 | | FA500 | | |
| | 5000220043-FI003- | 2 | 1 | 1 | MECHANICAL MIXER-TANK #1<br>"ENVIREQUIP"<br>MODEL: MIX-TECH EVGX-6-5.0<br>TYPE: VERTICAL MOUNTED<br>c/w OIL EXRANSION CHAMBER<br>c/w DUPLES 2205 SHAFT AND IMPELLER<br>c/w NUTS AND BOLTS<br>SHAFT: DIA.: 76.2 mm (3")<br>LENGTH: : 2430.8mm (95.7")<br>IMPELLER: QTY: 1<br>DIAMETER "A": 2438.4 mm (96")<br>BOTTOM CLEARANCE "X": 1291.2 mm (50.83")<br>ROTATION DIRECTION: CW -DOWN<br>c/w MOTOR 5 HP, 575 Vac/3 ph/60 Hz, 21.84 RPM<br>WEIGHT: 644 kg( 1420 lbs) | | CMSPMI334393 | 65AGI68015 | |
| | 5000220043-FI003- | 3 | 1 | 1 | MECHANICAL MIXER-TANK #2<br>"ENVIREQUIP"<br>MODEL: MIX-TECH EVGX-6-5.0<br>TYPE: VERTICAL MOUNTED<br>c/w OIL EXRANSION CHAMBER<br>c/w DUPLES 2205 SHAFT AND IMPELLER<br>c/w NUTS AND BOLTS<br>SHAFT: DIA.: 76.2 mm (3")<br>LENGTH: : 2430.8mm (95.7")<br>IMPELLER: QTY: 1<br>DIAMETER "A": 2438.4 mm (96")<br>BOTTOM CLEARANCE "X": 1291.2 mm (50.83")<br>ROTATION DIRECTION: CCW -UP<br>c/w MOTOR 5 HP, 575 Vac/3 ph/60 Hz, 21.84 RPM<br>WEIGHT: 644 kg( 1420 lbs) | | CMSPMI334394 | 65AGI68016 | |
| | 5000220043-FI003- | 4 | 1 | 1 | MECHANICAL MIXER-TANK #3<br>"ENVIREQUIP"<br>MODEL: MIX-TECH EVGX-6-5.0<br>TYPE: VERTICAL MOUNTED<br>c/w OIL EXRANSION CHAMBER<br>c/w DUPLES 2205 SHAFT AND IMPELLER<br>c/w NUTS AND BOLTS<br>SHAFT: DIA.: 76.2 mm (3")<br>LENGTH: : 2430.8mm (95.7")<br>IMPELLER: QTY: 1<br>DIAMETER "A": 2438.4 mm (96")<br>BOTTOM CLEARANCE "X": 1291.2 mm (50.83")<br>ROTATION DIRECTION: CW -DOWN<br>c/w MOTOR 5 HP, 575 Vac/3 ph/60 Hz, 21.84 RPM<br>WEIGHT: 644 kg( 1420 lbs) | | CMSPMI334395 | 65AGI68017 | |

VEOLIA

# NOMENCLATURE / BILL OF MATERIAL

| TITRE / TITLE | Rev. | DESCRIPTION | DATE | Rev | Verif. / Chk. | Appr. | CLIENT |
|---|---|---|---|---|---|---|---|
| DECHLORINATION REACTOR (WITHOUT COVER)<br>RX75-3<br>INSTALLATION | 1 | FOR INSTALLATION I | 2021-03-24 | A.D. | S.M. | L.J. | AEM MELIADINE-BPC<br>6526-S-265-605 / OC-989680 |
| | 2 | FOR INSTALLATION II | 2021-05-13 | A.D. | S.M. | L.J. | |
| | | | | | | | REF. No. 5000220043 Rev. 2 |
| | | | | | | | |
| | | | | | | | Date: 2021-03-24 |
| DESSIN # / DWG # FI003 | | | | | | | |

| REV. | ITEM | | QTÉ / QTY Unit. | QTÉ / QTY Total | DESCRIPTION | MATÉRIEL / MATERIAL | No. RÉFÉRENCE REFERENCE No. | P&ID I.D. / TAG | Commentaires / Comments |
|---|---|---|---|---|---|---|---|---|---|
| | 5000220043-FI003- | 5 | 2 | 2 | BUTTERFLY VALVE"BRAY" Ø4", MODELE: S31, LEVER | | VABFDI364242 | 100-BF99-1113/1114 | |
| | 5000220043-FI003- | 6 | 2 | 2 | BLIND FLANGE Ø4 150LBS, A182 304, B16.5 | | FPFGPV200615 | | |
| | 5000220043-FI003- | 7 | 2 | 2 | HANDRAIL | | FA515 | | |
| | 5000220043-FI003- | 8 | 2 | 2 | HANDRAIL | | FA515 | | |
| | 5000220043-FI003- | 9 | 1 | 1 | HANDRAIL | | FA515 | | |
| | 5000220043-FI003- | 10 | 1 | 1 | HANDRAIL | | FA515 | | |
| | 5000220043-FI003- | 11 | 1 | 1 | HANDRAIL | | FA515 | | |
| | 5000220043-FI003- | 12 | 6 | 6 | HANDRAIL | | FA515 | | |
| | 5000220043-FI003- | 13 | 1 | 1 | HANDRAIL | | FA515 | | |
| | 5000220043-FI003- | 14 | 34 | 34 | HEX. HEAD SCREW Ø3/8"-16UNC x 4" ASTM A307 GR.B (GALV) | | FXSCYS311688 | | |
| | 5000220043-FI003- | 15 | 68 | 68 | FLAT WASHER Ø3/8" ASTM F436, SAE TYPE N (GALV) | | FXWAYS311690 | | |
| | 5000220043-FI003- | 16 | 34 | 34 | HEX.NUT Ø3/8"-16UNC ASTM A536 GR.A (GALV) | | FXNUYS311689 | | |
| | 5000220043-FI003- | 17 | 66 | 66 | HEX. HEAD SCREW Ø1/2"-13UNC x 1 3/4" ASTM A307 GR.B (GALV) | | FXSCYV311692 | | |
| | 5000220043-FI003- | 18 | 132 | 132 | FLAT WASHER Ø1/2" ASTM F436, SAE TYPE N (GALV) | | FXWAYV311696 | | |
| | 5000220043-FI003- | 19 | 66 | 66 | HEX.NUT Ø1/2"-13UNC ASTM A536 GR.A (GALV) | | FXNUYV311695 | | |
| | 5000220043-FI003- | 20 | 12 | 12 | HEX. HEAD SCREW Ø7/8"-9UNC x 3 1/2" (ASTM-F593D-304) | | FXSCYI200319 | | |
| | 5000220043-FI003- | 21 | 12 | 12 | NYLON INSERT LOCK NUT Ø7/8"-9UNC (ASTM-F594D-304) | | FXNUYI200194 | | |
| | 5000220043-FI003- | 22 | 24 | 24 | FLAT WASHER Ø7/8", SAE TYPE N (304) | | FXWAYI200658 | | |
| | 5000220043-FI003- | 23 | 1 | 1 | LEVEL SWITCH FLOAT13MT CABLE ENM-10.40FT | | IESWLE201156 | 65LSHH6801131 | |
| | 5000220043-FI003- | 24 | 1 | 1 | "U" SUPPORT FOR LEVEL SWITCH ENM-10 | | FABKGU329099 | | |
| | 5000220043-FI003- | 25 | 2 | 2 | HEX. HEAD SCREW Ø3/8"-16UNC x 1 1/4" (ASTM-F593C-304) | | FXSCYS200375 | | |
| | 5000220043-FI003- | 26 | 4 | 4 | FLAT WASHER Ø3/8", SAE TYPE N (304) | | FXWAYS200666 | | |
| | 5000220043-FI003- | 27 | 2 | 2 | HEX.NUT Ø3/8"-16UNC (ASTM-F594C-304) | | FXNUYS200206 | | |
| | 5000220043-FI003- | 28 | 32 | 32 | HEX HEAD SCREW. Ø5/8"-11UNC x 2" (ASTM A193 GR B8-304) | | FXSCYY325343 | | |
| | 5000220043-FI003- | 29 | 1 | 1 | LEVEL SWITCH LEVEL SUPPORT | | FABKGU329098 | | |

2

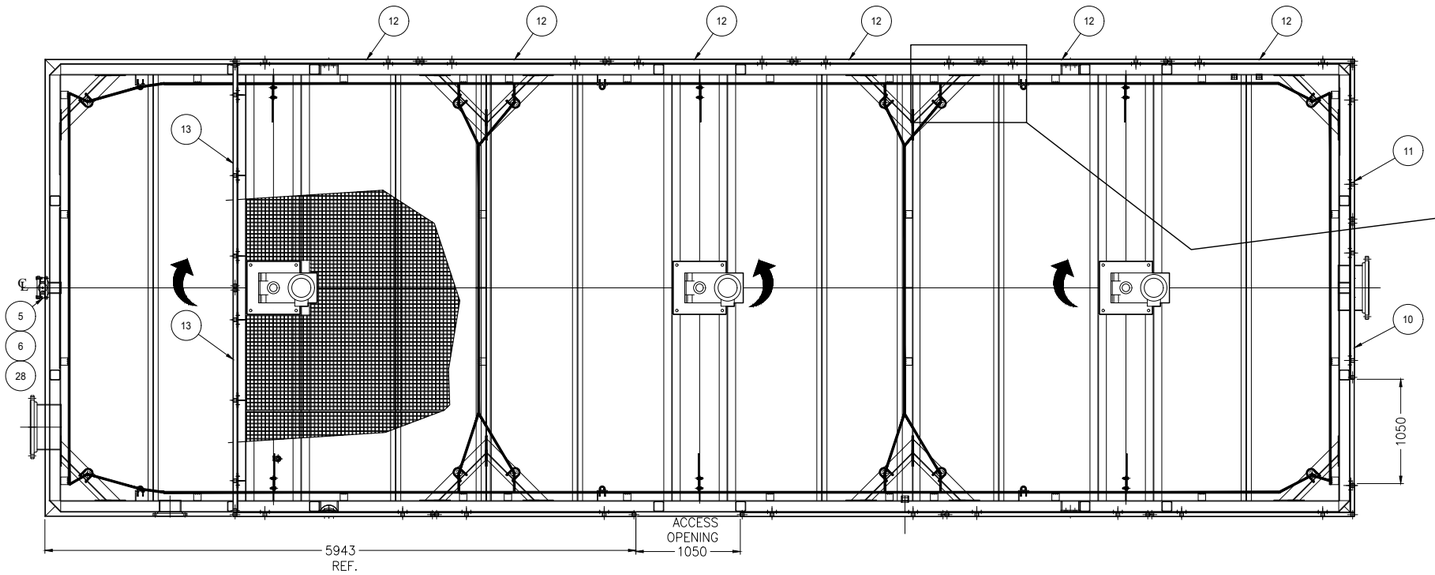


PLAN VIEW

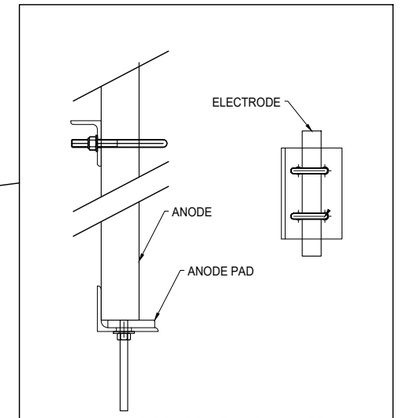


TYPICAL DETAIL
FOR ANODE
INSTALLATION

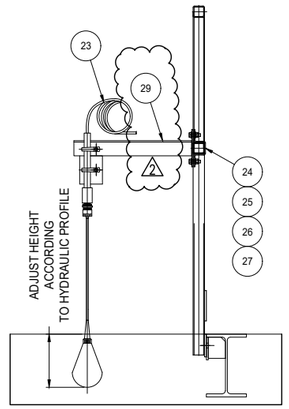


DETAIL 1 / – SCALE 1:10

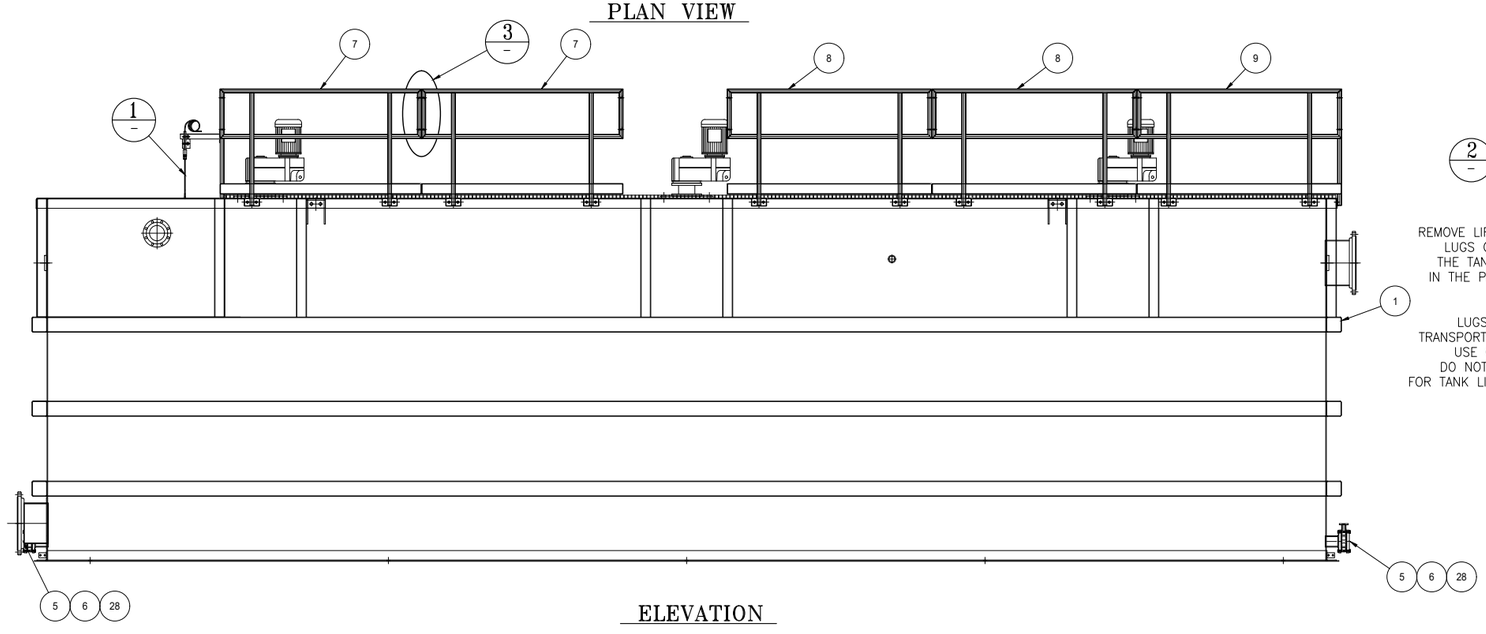


ELEVATION

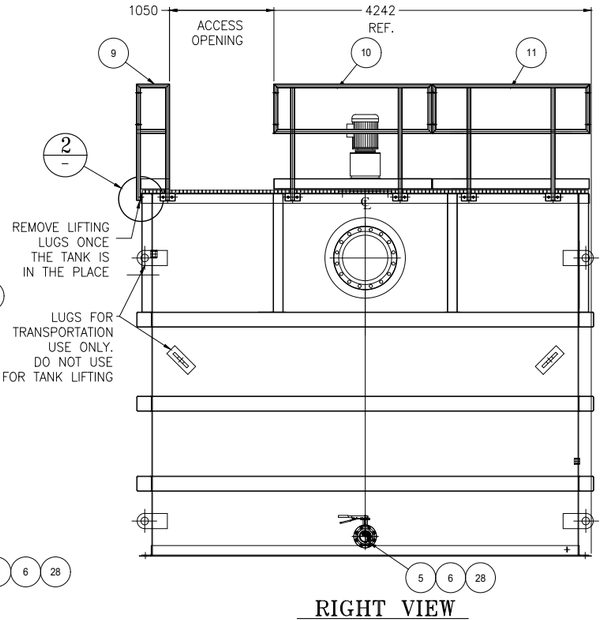


RIGHT VIEW

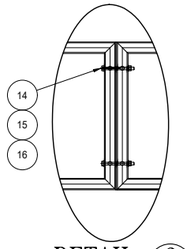


DETAIL 3 / – SCALE 1:10

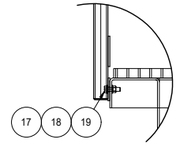


DETAIL 2 / – SCALE 1:10

NOTES:

1. SEE BILL OF MATERIAL : 5000220043–FI003 AND MANUFACTUR'S INSTRUCTIONS INCLUDED IN O&M MANUAL.

2. ALL ITEMS MENTIONED WILL BE SUPPLIED BY VEOLIA, AS PER B.O.M. AND WILL NEED TO BE INSTALLED ON SITE.

3. TANKS SHALL NOT BE USED AS A SUPPORT FOR ANY OTHER EQUIPMENT. EQUIPMENTS THAT NEEDS TO BE CONNECTED TO TANK SHALL BE SELF SUPPORTED.

4. PLEASE VERIFY ALL BOLTS AND NUTS ALREADY INSTALLED AND REFER TO THE TORQUE REQUIREMENTS DATA TABLE (SEE INSTALLATION MANUAL).

STD: "D" 22x34 | REF: | BAR = 1" AT PLOT SCALE

| REV | DESCRIPTION | DATE | REV'D | CHK'D | APV'D | ECN |
|---|---|---|---|---|---|---|
| 2 | FOR INSTALLATION II | 2021–05–13 | A.D. | S.M. | L.J. | N/A |
| 1 | FOR INSTALLATION I | 2021–03–24 | A.D. | S.M. | L.J. | N/A |

CONFIDENTIALITY AND INTELLECTUAL PROPERTY NOTICE
ALL INFORMATION CONTAINED IN THIS DOCUMENT IS THE SOLE PROPERTY OF VEOLIA WATER TECHNOLOGIES CANADA INC. AND IS PROTECTED BY ALL APPLICABLE LAWS, INCLUDING BUT NOT LIMITED TO COPYRIGHT AND OTHER INTELLECTUAL PROPERTY LAWS. THE DESIGN CONCEPTS AND INFORMATION CONTAINED HEREIN ARE PROPRIETARY TO V.W.T. AND ARE SUBMITTED IN CONFIDENCE. THEY ARE NOT TRANSFERABLE. THEY MUST BE USED ONLY FOR THE PURPOSE FOR WHICH THE DOCUMENT IS EXPRESSLY SUBMITTED AND NO IMPLICIT LICENCE IS GRANTED OTHERWISE BY THE SUBMISSION OF THIS DOCUMENT. THEY ARE CONFIDENTIAL AND PRIVILEGED INFORMATION OF V.W.T. AND THEY MUST NOT BE DISCLOSED, REPRODUCED, LOANED, REMITTED OR USED IN ANY OTHER MANNER WITHOUT THE EXPRESS WRITTEN CONSENT OF V.W.T. V.W.T. ASSUMES NO RESPONSIBILITY OR LIABILITY FOR THE USE OF THIS DOCUMENT OR THE DESIGN CONCEPTS AND INFORMATION CONTAINED HEREIN FOR ANOTHER PROJECT, OR IN A MANNER THAT DOES NOT RELATE TO THE FITNESS OR PURPOSE OF THIS DOCUMENT. IN NO EVENT SHALL THIS DOCUMENT OR THE DESIGN CONCEPTS AND INFORMATION CONTAINED HEREIN BE USED IN A MANNER DETRIMENTAL TO THE INTEREST OF V.W.T. ALL COPYRIGHT, PATENT AND OTHER INTELLECTUAL PROPERTY RIGHTS ARE RESERVED. ACCEPTANCE OF THE DELIVERY OF THIS DOCUMENT CONSTITUTES AGREEMENT TO THESE TERMS AND CONDITIONS.

| | | |
|---|---|---|
| DESIGNER | A.D. | DATE 2021–01–07 |
| CHECKER | | DATE |
| ENGINEER | L.J. | DATE 2021–01–07 |
| SCALE: | 1:30 | |

TITLE: DECHLORINATION REACTOR (WITHOUT COVER) RX75–3 GENERAL ARRANGEMENT

CLIENT: AEM MELIADINE–BPC 6526–S–265–605 / OC–989680

VEOLIA

VEOLIA WATER TECHNOLOGIES CANADA INC. 4105 Sartelon, Saint-Laurent, Qc. Canada. Tel: (514) 334-7230

| PROJECT | DRAWING | INTERNAL | SHEET | REV |
|---|---|---|---|---|
| 5000220043 – FI003 | | RX0753 | 1 OF 2 | 2 |

Mar 25, 2021 8:13:24 – C:\WORKSPACE–INVENTOR\Designs\EXECUTION\2020\5000220043\RX\5000220043–FI003 RX0753(SANS COUVERCLE).dwg – amin.dehghani

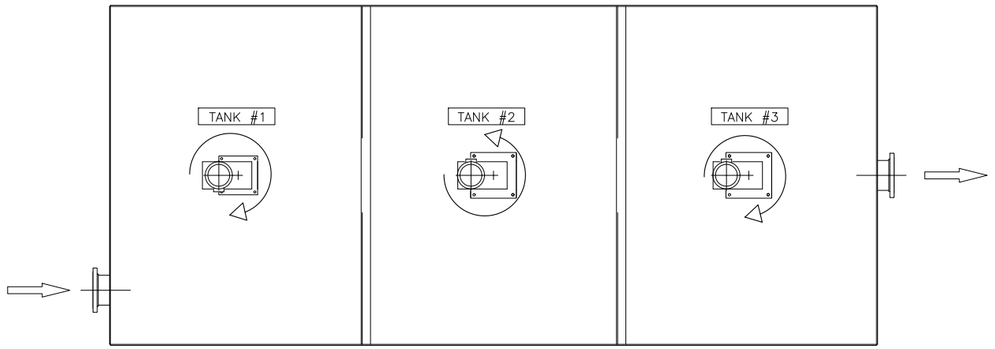


PLAN VIEW

NOTES:

1. DEPENDING ON THE IMPELLER DIAMETER, HUB AND IMPELLER BLADES MIGHT BE SHIPPED SEPARATELY FROM THE MIXER SHAFT ASSEMBLY.
2. IMPELLERS WILL NEED TO BE ASSEMBLED ON SITE.
3. MIXERS WILL NEED TO BE ASSEMBLED ON SITE. (SHIPPED LOOSE)
4. MIXERS AND SCRAPERS WILL NEED FOOD GRADE OIL PER SPECIFICATIONS.

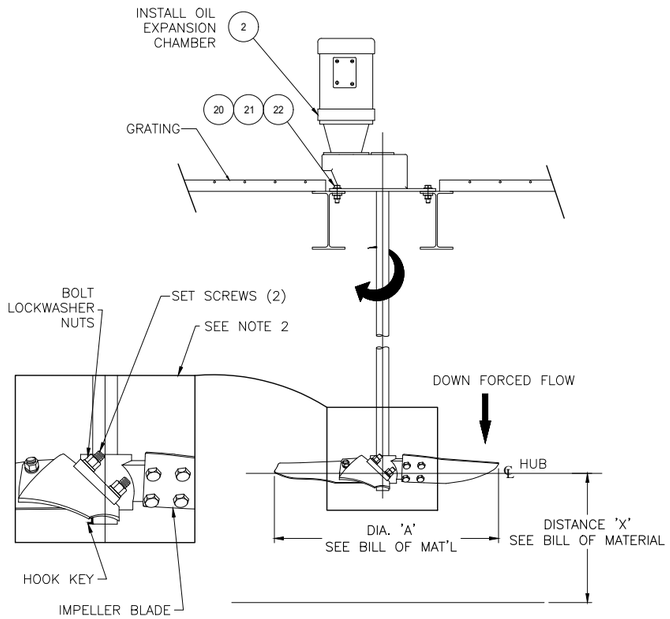


TANK #1
N.T.S

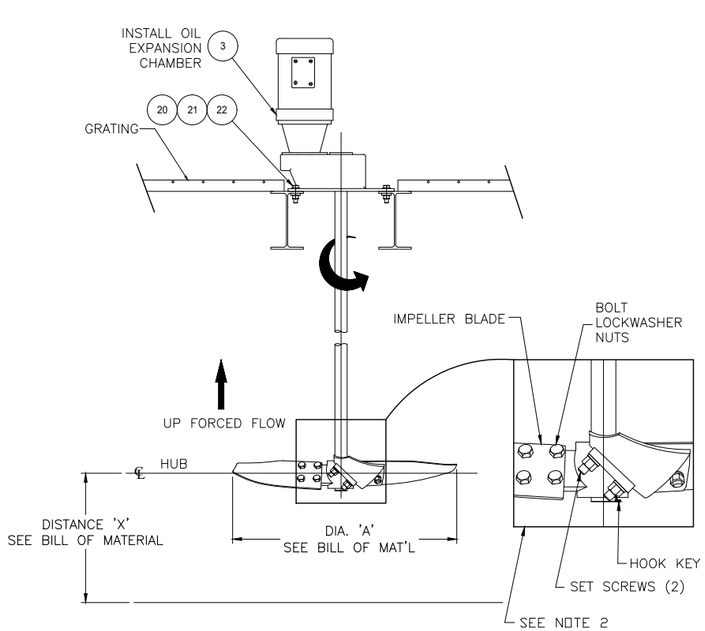


TANK #2
N.T.S

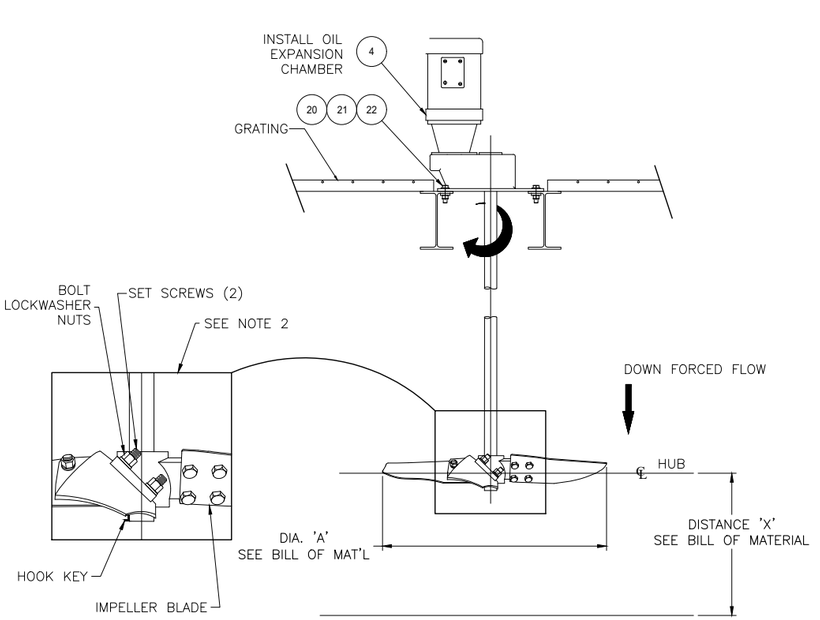


TANK #3
N.T.S

| REV | DESCRIPTION | DATE | REV'D | CHK'D | APV'D | ECN |
|---|---|---|---|---|---|---|
| 2 | FOR INSTALLATION II | 2021-05-13 | A.D. | S.M. | L.J. | N/A |
| 1 | FOR INSTALLATION I | 2021-03-24 | A.D. | S.M. | L.J. | N/A |

**CONFIDENTIALITY AND INTELLECTUAL PROPERTY NOTICE**
ALL INFORMATION CONTAINED IN THIS DOCUMENT IS THE SOLE PROPERTY OF VEOLIA WATER TECHNOLOGIES CANADA INC. AND IS PROTECTED BY ALL APPLICABLE LAWS, INCLUDING BUT NOT LIMITED TO COPYRIGHT AND OTHER INTELLECTUAL PROPERTY LAWS. THE DESIGN CONCEPTS AND INFORMATION CONTAINED HEREIN ARE PROPRIETARY TO V.W.T. AND ARE SUBMITTED IN CONFIDENCE. THEY ARE NOT TRANSFERABLE. THEY MUST BE USED ONLY FOR THE PURPOSE FOR WHICH THE DOCUMENT IS EXPRESSLY SUBMITTED AND NO IMPLICIT LICENCE IS GRANTED OTHERWISE BY THE SUBMISSION OF THIS DOCUMENT. THEY ARE CONFIDENTIAL AND PRIVILEGED INFORMATION OF V.W.T. AND THEY MUST NOT BE DISCLOSED, REPRODUCED, LOANED, REMITTED OR USED IN ANY OTHER MANNER WITHOUT THE EXPRESS WRITTEN CONSENT OF V.W.T. V.W.T. ASSUMES NO RESPONSIBILITY OR LIABILITY FOR THE USE OF THIS DOCUMENT OR THE DESIGN CONCEPTS AND INFORMATION CONTAINED HEREIN FOR ANOTHER PROJECT, OR IN A MANNER THAT DOES NOT RELATE TO THE FITNESS OR PURPOSE OF THIS DOCUMENT. IN NO EVENT SHALL THIS DOCUMENT OR THE DESIGN CONCEPTS AND INFORMATION CONTAINED HEREIN BE USED IN A MANNER DETRIMENTAL TO THE INTEREST OF V.W.T. ALL COPYRIGHT, PATENT AND OTHER INTELLECTUAL PROPERTY RIGHTS ARE RESERVED. ACCEPTANCE OF THE DELIVERY OF THIS DOCUMENT CONSTITUTES AGREEMENT TO THESE TERMS AND CONDITIONS.

| | |
|---|---|
| DESIGNER | A.D. |
| DATE | 2021-01-07 |
| CHECKER | |
| DATE | |
| ENGINEER | L.J. |
| DATE | 2021-01-07 |
| SCALE: | 1:20 |

TITLE: DECHLORINATION REACTOR (WITHOUT COVER) RX75-3 INSTALLATION

CLIENT: AEM MELIADINE-BPC
6526-S-265-605 / 0C-989680

VEOLIA WATER TECHNOLOGIES CANADA INC. 4105 Sartelon, Saint-Laurent, Qc, Canada. Tel: (514) 334-7230

| PROJECT | DRAWING | INTERNAL | SHEET | REV |
|---|---|---|---|---|
| 5000220043 - FI003 | | RX0753 | 2 OF 2 | 2 |

STD: "D" 22x34 | REF: | BAR = 1" AT PLOT SCALE

Mar 25, 2021 8:13:24 - C:\WORKSPACE-INVENTOR\Designs\EXECUTION\2020\5000220043\RX\5000220043-FI003 RX0753(SANS COUVERCLE).dwg - amin.dehghoni

VEOLIA

# NOMENCLATURE / BILL OF MATERIAL

| TITRE / TITLE | Rev. | DESCRIPTION | DATE | Rev | Verif. / Chk. | Appr. | CLIENT |
|---|---|---|---|---|---|---|---|
| CHLORINATION REACTOR (WITH COVER)<br>RX75-3<br>INSTALLATION | 1 | FOR INSTALLATION | 2021-03-24 | A.D. | S.M. | L.J. | AEM MELIADINE-BPC<br>6526-S-265-605 / OC-989680<br>REF. No. 5000220043 Rev. 1<br>Date: 2021-03-24 |
| DESSIN # / DWG # FI004 | | | | | | | |

| REV. | ITEM | | QTÉ / QTY Unit. | QTÉ / QTY Total | DESCRIPTION | MATÉRIEL / MATERIAL | No. RÉFÉRENCE REFERENCE No. | P&ID I.D. / TAG | Commentaires / Comments |
|---|---|---|---|---|---|---|---|---|---|
| | 5000220043-FI004- | 1 | 1 | 1 | REACTION TANK RX75-3 | | FA501 | | |
| | 5000220043-FI004- | 2 | 1 | 1 | MECHANICAL MIXER-TANK #1<br>"ENVIREQUIP"<br>MODEL: MIX-TECH EVGX-6-5.0<br>TYPE: VERTICAL MOUNTED<br>c/w OIL EXRANSION CHAMBER<br>c/w DUPLES 2205 SHAFT AND IMPELLER<br>c/w NUTS AND BOLTS<br>SHAFT: DIA.: 76.2 mm (3")<br>LENGTH: 2551.4 mm (100.45")<br>IMPELLER: QTY: 1<br>DIAMETER "A": 2438.4 mm (96")<br>BOTTOM CLEARANCE "X": 1291.2 mm (50.83")<br>ROTATION DIRECTION: CW -DOWN<br>c/w MOTOR 5 HP, 575 Vac/3 ph/60 Hz, 21.84 RPM<br>WEIGHT: 644 kg( 1420 lbs) | | ST-999-003 | 65AGI68012 | |
| | 5000220043-FI004- | 3 | 1 | 1 | MECHANICAL MIXER-TANK #2<br>"ENVIREQUIP"<br>MODEL: MIX-TECH EVGX-6-5.0<br>TYPE: VERTICAL MOUNTED<br>c/w OIL EXRANSION CHAMBER<br>c/w DUPLES 2205 SHAFT AND IMPELLER<br>c/w NUTS AND BOLTS<br>SHAFT: DIA.: 76.2 mm (3")<br>LENGTH: 2551.4 mm (100.45")<br>IMPELLER: QTY: 1<br>DIAMETER "A": 2438.4 mm (96")<br>BOTTOM CLEARANCE "X": 1291.2 mm (50.83")<br>ROTATION DIRECTION: CCW -UP<br>c/w MOTOR 5 HP, 575 Vac/3 ph/60 Hz, 21.84 RPM<br>WEIGHT: 644 kg( 1420 lbs) | | ST-999-004 | 65AGI68013 | |
| | 5000220043-FI004- | 4 | 1 | 1 | MECHANICAL MIXER-TANK #3<br>"ENVIREQUIP"<br>MODEL: MIX-TECH EVGX-6-5.0<br>TYPE: VERTICAL MOUNTED<br>c/w OIL EXRANSION CHAMBER<br>c/w DUPLES 2205 SHAFT AND IMPELLER<br>c/w NUTS AND BOLTS<br>SHAFT: DIA.: 76.2 mm (3")<br>LENGTH: 2551.4 mm (100.45")<br>IMPELLER: QTY: 1<br>DIAMETER "A": 2438.4 mm (96")<br>BOTTOM CLEARANCE "X": 1291.2 mm (50.83")<br>ROTATION DIRECTION: CW -DOWN<br>c/w MOTOR 5 HP, 575 Vac/3 ph/60 Hz, 21.84 RPM<br>WEIGHT: 644 kg( 1420 lbs) | | ST-999-005 | 65AGI68014 | |

VEOLIA

# NOMENCLATURE / BILL OF MATERIAL

| TITRE / TITLE | Rev. | DESCRIPTION | DATE | Rev | Verif. / Chk. | Appr. | CLIENT |
|---|---|---|---|---|---|---|---|
| CHLORINATION REACTOR (WITH COVER)<br>RX75-3<br>INSTALLATION | 1 | FOR INSTALLATION | 2021-03-24 | A.D. | S.M. | L.J. | AEM MELIADINE-BPC<br>6526-S-265-605 / OC-989680<br>REF. No. 5000220043 Rev. 1<br>Date: 2021-03-24 |
| DESSIN # / DWG # FI004 | | | | | | | |

| REV. | ITEM | | QTÉ / QTY Unit. | QTÉ / QTY Total | DESCRIPTION | MATÉRIEL / MATERIAL | No. RÉFÉRENCE REFERENCE No. | P&ID I.D. / TAG | Commentaires / Comments |
|---|---|---|---|---|---|---|---|---|---|
| | 5000220043-FI004- | 5 | 2 | 2 | BUTTERFLY VALVE"BRAY" Ø4", MODELE: S31, LEVER | | VABFDI364242 | 100-BF99-1109/1110 | |
| | 5000220043-FI004- | 6 | 2 | 2 | BLIND FLANGE Ø4 150LBS, A182 304, B16.5 | | FPFGPV200615 | | |
| | 5000220043-FI004- | 7 | 32 | 32 | HEX HEAD SCREW. Ø5/8"-11UNC x 2" (ASTM A193 GR B8-304) | | FXSCYY325343 | | |
| | 5000220043-FI004- | 8 | 1 | 1 | THIEF HATCH | | ST-999-18 | | |
| | 5000220043-FI004- | 9 | 1 | 1 | JUNCTION BOX | | | | |
| | 5000220043-FI004- | 10 | 1 | 1 | COVER I | | FA502 | | |
| | 5000220043-FI004- | 11 | 1 | 1 | COVER II | | FA503 | | |
| | 5000220043-FI004- | 12 | 1 | 1 | COVER III | | FA504 | | |
| | 5000220043-FI004- | 13 | 1 | 1 | COVER IV | | FA505 | | |
| | 5000220043-FI004- | 14 | 1 | 1 | COVER V | | FA506 | | |
| | 5000220043-FI004- | 15 | 3 | 3 | TRAP COVER | | FA508 | | |
| | 5000220043-FI004- | 16 | 1 | 1 | COVER VI | | FA509 | | |
| | 5000220043-FI004- | 17 | 6 | 6 | HANDRAIL | | FA516 | | |
| | 5000220043-FI004- | 18 | 6 | 6 | HANDRAIL | | FA516 | | |
| | 5000220043-FI004- | 19 | 4 | 4 | HANDRAIL | | FA516 | | |
| | 5000220043-FI004- | 20 | 28 | 28 | HEX. HEAD SCREW Ø3/8"-16UNC x 4" ASTM A307 GR.B (GALV) | | FXSCYS311688 | | |
| | 5000220043-FI004- | 21 | 56 | 56 | FLAT WASHER Ø3/8" ASTM F436, SAE TYPE N (GALV) | | FXWAYS311690 | | |
| | 5000220043-FI004- | 22 | 28 | 28 | HEX.NUT Ø3/8"-16UNC ASTM A536 GR.A (GALV) | | FXNUYS311689 | | |
| | 5000220043-FI004- | 23 | 72 | 72 | HEX. HEAD SCREW Ø1/2"-13UNC x 1 3/4" ASTM A307 GR.B (GALV) | | FXSCYV311692 | | |
| | 5000220043-FI004- | 24 | 144 | 144 | FLAT WASHER Ø1/2" ASTM F436, SAE TYPE N (GALV) | | FXWAYV311696 | | |
| | 5000220043-FI004- | 25 | 72 | 72 | HEX.NUT Ø1/2"-13UNC ASTM A536 GR.A (GALV) | | FXNUYV311695 | | |
| | 5000220043-FI004- | 26 | 12 | 12 | HEX. HEAD SCREW Ø7/8"-9UNC x 3 1/2" (ASTM-F593D-304) | | FXSCYI200319 | | |
| | 5000220043-FI004- | 27 | 12 | 12 | NYLON INSERT LOCK NUT Ø7/8"-9UNC (ASTM-F594D-304) | | FXNUYI200194 | | |
| | 5000220043-FI004- | 28 | 24 | 24 | FLAT WASHER Ø7/8", SAE TYPE N (304) | | FXWAYI200658 | | |
| | 5000220043-FI004- | 29 | 510 | 510 | HEX. HEAD SCREW Ø3/8"-16UNC x 1 1/4" (ASTM-F593C-304) | | FXSCYS200375 | | |
| | 5000220043-FI004- | 30 | 580 | 580 | FLAT WASHER Ø3/8", SAE TYPE N (304)) | | FXWAYS200666 | | |

VEOLIA

# NOMENCLATURE / BILL OF MATERIAL

| TITRE / TITLE | Rev. | DESCRIPTION | DATE | Rev | Verif. / Chk. | Appr. | CLIENT |
|---|---|---|---|---|---|---|---|
| CHLORINATION REACTOR (WITH COVER)<br>RX75-3<br>INSTALLATION | 1 | FOR INSTALLATION | 2021-03-24 | A.D. | S.M. | L.J. | AEM MELIADINE-BPC<br>6526-S-265-605 / OC-989680<br>REF. No. 5000220043 Rev. 1<br>Date: 2021-03-24 |
| DESSIN # / DWG # FI004 | | | | | | | |

| REV. | ITEM | | QTÉ / QTY Unit. | QTÉ / QTY Total | DESCRIPTION | MATÉRIEL / MATERIAL | No. RÉFÉRENCE REFERENCE No. | P&ID I.D. / TAG | Commentaires / Comments |
|---|---|---|---|---|---|---|---|---|---|
| | 5000220043-FI004- | 31 | 64 | 64 | HEX.NUT Ø3/8"-16UNC (ASTM-F594C-304) | | FXNUYS200206 | | |
| | 5000220043-FI004- | 32 | 64 | 64 | HEX. HEAD SCREW Ø3/8"-16UNC x 1 1/2" (ASTM-F593C-304) | | FXSCYS200376 | | |
| | 5000220043-FI004- | 33 | 2 | 2 | GASKET 1/4" TKH. NITRILE | | FA517 | | |
| | 5000220043-FI004- | 34 | 2 | 2 | GASKET 1/4" TKH. NITRILE | | FA517 | | |
| | 5000220043-FI004- | 35 | 4 | 4 | GASKET 1/4" TKH. NITRILE | | FA517 | | |
| | 5000220043-FI004- | 36 | 8 | 8 | GASKET 1/4" TKH. NITRILE | | FA517 | | |
| | 5000220043-FI004- | 37 | 6 | 6 | GASKET 1/4" TKH. NITRILE | | FA517 | | |
| | 5000220043-FI004- | 38 | 6 | 6 | GASKET 1/4" TKH. NITRILE | | FA517 | | |
| | 5000220043-FI004- | 39 | 6 | 6 | GASKET 1/4" TKH. NITRILE | | FA517 | | |
| | 5000220043-FI004- | 40 | 1 | 1 | GASKET 1/4" TKH. NITRILE | | FA517 | | |
| | 5000220043-FI004- | 41 | 1 | 1 | GASKET 1/4" TKH. NITRILE | | FA517 | | |
| | 5000220043-FI004- | 42 | 6 | 6 | BLIND FLANGE Ø3", (PVC80) IPEX,036257 | | FPFGPV200614 | | |
| | 5000220043-FI004- | 43 | 6 | 6 | GASKET FLANGE Ø3",FF, 1/8" TH (EPDM) | | SEGAFP201220 | | |
| | 5000220043-FI004- | 44 | 24 | 24 | HEX. HEAD SCREW Ø5/8"-11X3 1/2", 304,ASTM A193 GR B8 | | FXSCYY326364 | | |
| | 5000220043-FI004- | 45 | 24 | 24 | NUT,HEX Ø5/8"-11, 304,ASTM A194 GR 8 | | FXNUYY311770 | | |
| | 5000220043-FI004- | 46 | 1 | 1 | FAN | | ST-999-012 | 65FAN68005 | NOT SHOWN |

LEFT BLANK

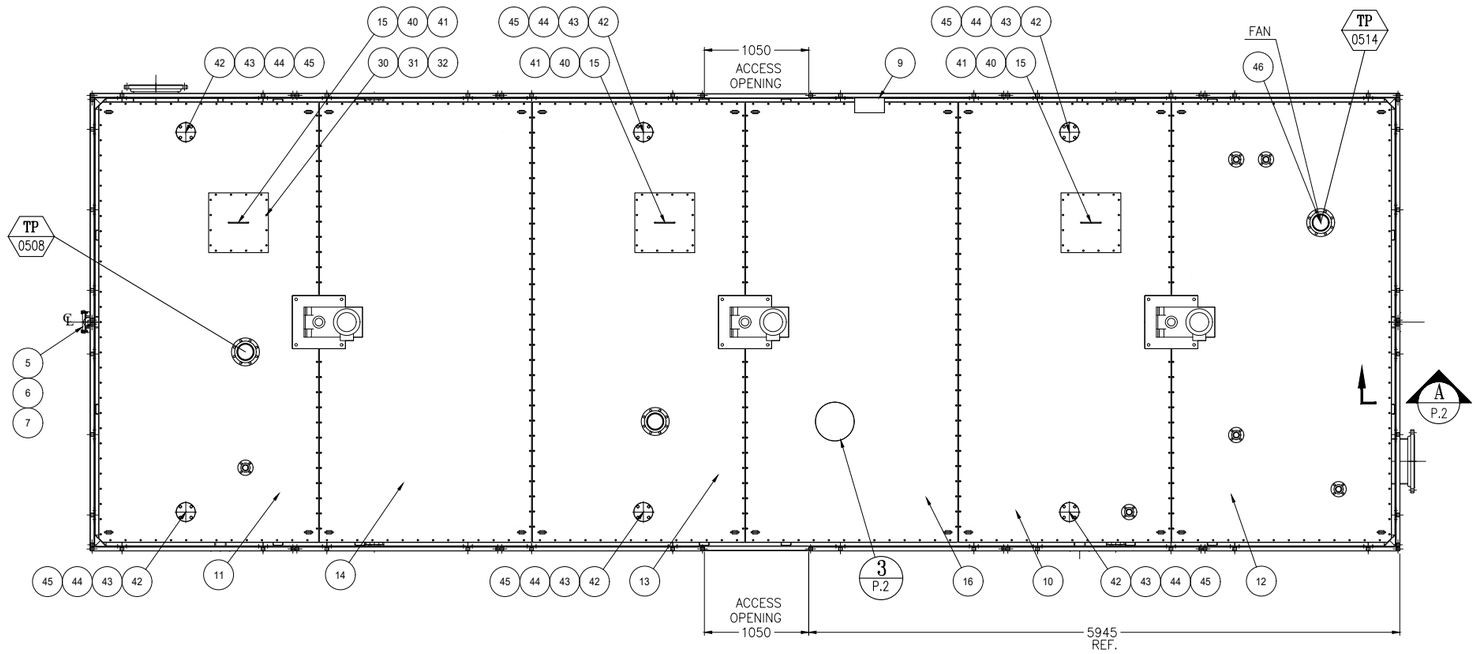


PLAN VIEW

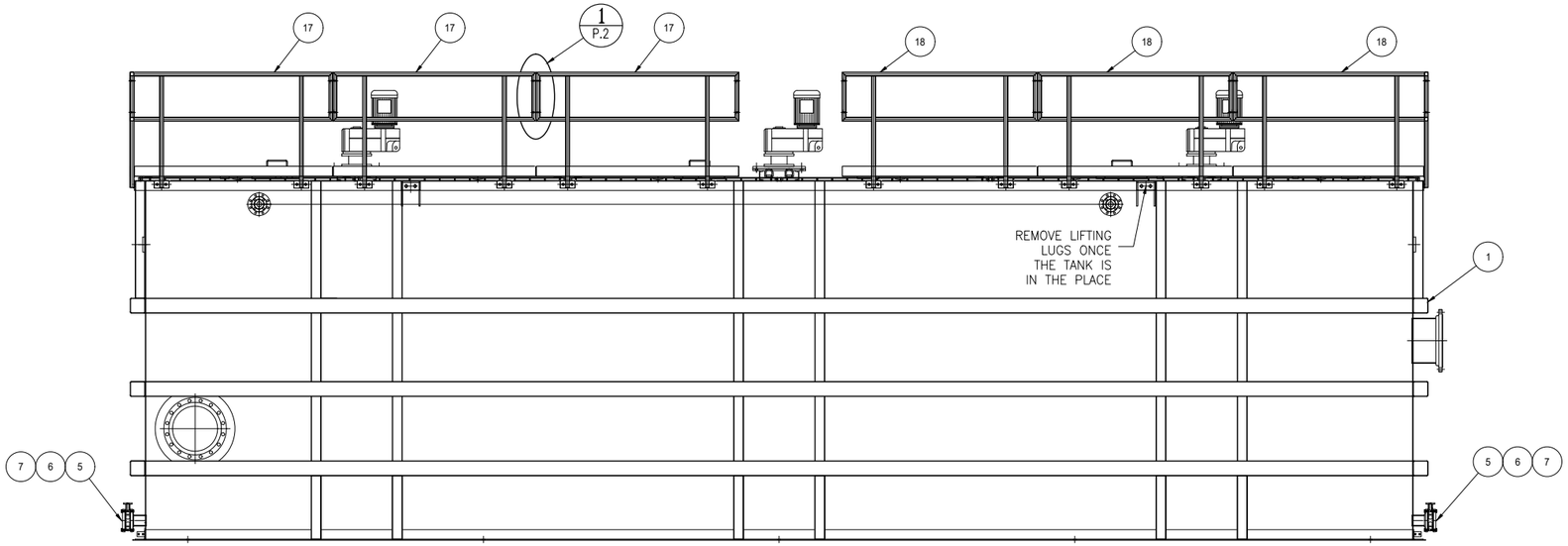


ELEVATION

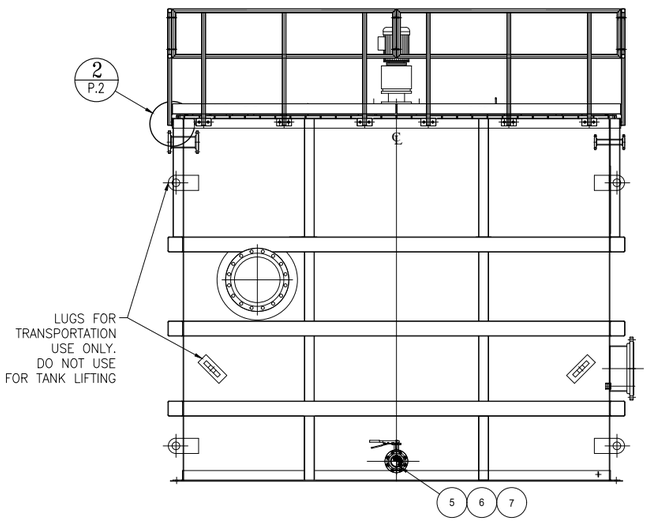


RIGHT VIEW

NOTES:

1. SEE BILL OF MATERIAL : 5000220043–FI004 AND MANUFACTUR'S INSTRUCTIONS INCLUDED IN O&M MANUAL.

2. ALL ITEMS MENTIONED WILL BE SUPPLIED BY VEOLIA, AS PER B.O.M. AND WILL NEED TO BE INSTALLED ON SITE.

3. TANKS SHALL NOT BE USED AS A SUPPORT FOR ANY OTHER EQUIPMENT. EQUIPMENTS THAT NEEDS TO BE CONNECTED TO TANK SHALL BE SELF SUPPORTED.

4. PLEASE VERIFY ALL BOLTS AND NUTS ALREADY INSTALLED AND REFER TO THE TORQUE REQUIREMENTS DATA TABLE (SEE INSTALLATION MANUAL).

5. CUT AND GLUE THE JUNCTION BETWEEN COMBINING GASKETS TO ENSURE WATERPROOFING.

| REV | DESCRIPTION | DATE | REV'D | CHK'D | APV'D | ECN |
|---|---|---|---|---|---|---|
| 1 | FOR INSTALLATION | 2021-03-24 | A.D. | S.M. | L.J. | N/A |

**CONFIDENTIALITY AND INTELLECTUAL PROPERTY NOTICE**
ALL INFORMATION CONTAINED IN THIS DOCUMENT IS THE SOLE PROPERTY OF VEOLIA WATER TECHNOLOGIES CANADA INC. AND IS PROTECTED BY ALL APPLICABLE LAWS, INCLUDING BUT NOT LIMITED TO COPYRIGHT AND OTHER INTELLECTUAL PROPERTY LAWS. THE DESIGN CONCEPTS AND INFORMATION CONTAINED HEREIN ARE PROPRIETARY TO V.W.T. AND ARE SUBMITTED IN CONFIDENCE. THEY ARE NOT TRANSFERABLE. THEY MUST BE USED ONLY FOR THE PURPOSE FOR WHICH THE DOCUMENT IS EXPRESSLY SUBMITTED AND NO IMPLICIT LICENCE IS GRANTED OTHERWISE BY THE SUBMISSION OF THIS DOCUMENT. THEY ARE CONFIDENTIAL AND PRIVILEGED INFORMATION OF V.W.T. AND THEY MUST NOT BE DISCLOSED, REPRODUCED, LOANED, REMITTED OR USED IN ANY OTHER MANNER WITHOUT THE EXPRESS WRITTEN CONSENT OF V.W.T. V.W.T. ASSUMES NO RESPONSIBILITY OR LIABILITY FOR THE USE OF THIS DOCUMENT OR THE DESIGN CONCEPTS AND INFORMATION CONTAINED HEREIN FOR ANOTHER PROJECT, OR IN A MANNER THAT DOES NOT RELATE TO THE FITNESS OR PURPOSE OF THIS DOCUMENT. IN NO EVENT SHALL THIS DOCUMENT OR THE DESIGN CONCEPTS AND INFORMATION CONTAINED HEREIN BE USED IN A MANNER DETRIMENTAL TO THE INTEREST OF V.W.T. ALL COPYRIGHT, PATENT AND OTHER INTELLECTUAL PROPERTY RIGHTS ARE RESERVED. ACCEPTANCE OF THE DELIVERY OF THIS DOCUMENT CONSTITUTES AGREEMENT TO THESE TERMS AND CONDITIONS.

| | |
|---|---|
| DESIGNER | A.D. |
| DATE | 2021-01-07 |
| CHECKER | |
| DATE | |
| ENGINEER | L.J. |
| DATE | 2021-01-07 |
| SCALE: | 1:30 |

TITLE: CHLORINATION REACTOR (WITH COVER) RX75–3 INSTALLATION

CLIENT: AEM MELIADINE–BPC 6526–S–265–605 / OC–989680

VEOLIA WATER TECHNOLOGIES CANADA INC. 4105 Sartelon, Saint-Laurent, Qc, Canada. Tel: (514) 334-7230

| PROJECT | DRAWING | INTERNAL | SHEET | REV |
|---|---|---|---|---|
| 5000220043 – FI004 | | RX0753 | 1 OF 3 | 1 |

STD: "D" 22x34 | REF: | BAR = 1" AT PLOT SCALE

Mar 25, 2021 11:11:48 – C:\WORKSPACE–INVENTOR\Designs\EXECUTION\2020\5000220043\RX\5000220043–FI004 RX0753(AVEC COUVERCLE).dwg – amin.dehghani

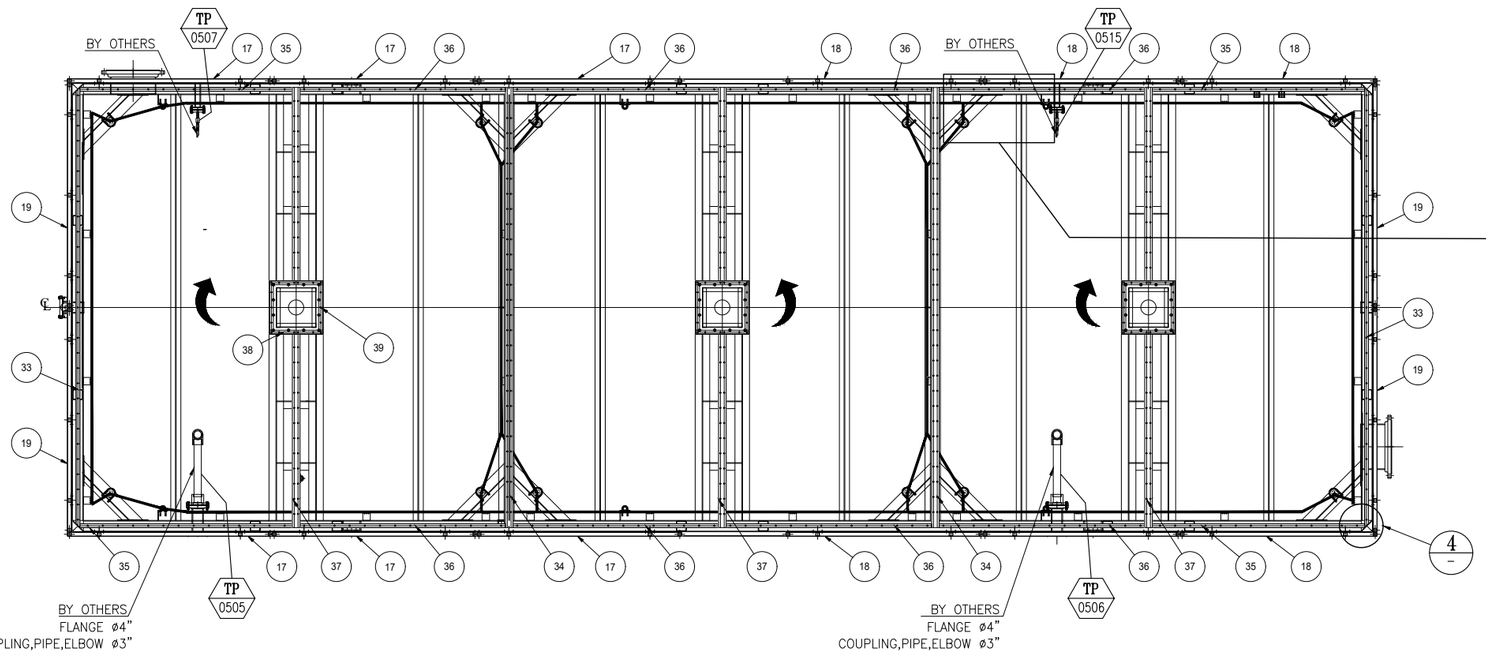


PLAN VIEW (VOVER NOT SHOWN)

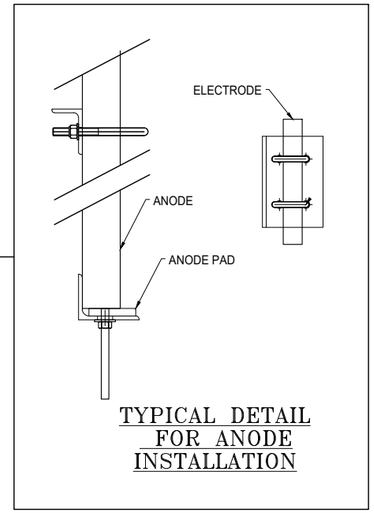


TYPICAL DETAIL FOR ANODE INSTALLATION

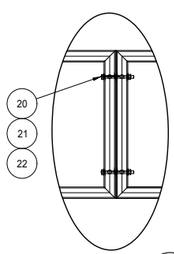

DETAIL 1 P.1
SCALE 1:10

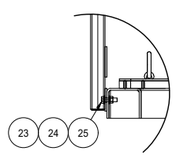

DETAIL 2 P.1
SCALE 1:10

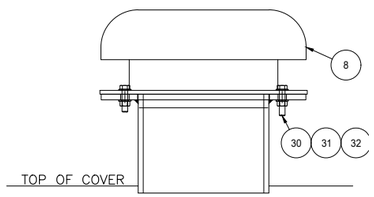


DETAIL 3 P.1
SCALE: 1:5

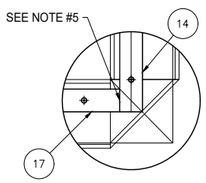


DETAIL 4 -
SCALE: 1:5

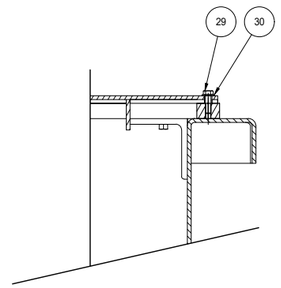

SECTION A P.1
SCALE 1 : 5

| REV | DESCRIPTION | DATE | REV'D | CHK'D | APV'D | ECN |
|---|---|---|---|---|---|---|
| 1 | FOR INSTALLATION | 2021-03-24 | A.D. | S.M. | L.J. | N/A |

**CONFIDENTIALITY AND INTELLECTUAL PROPERTY NOTICE**
ALL INFORMATION CONTAINED IN THIS DOCUMENT IS THE SOLE PROPERTY OF VEOLIA WATER TECHNOLOGIES CANADA INC. AND IS PROTECED BY ALL APPLICABLE LAWS, INCLUDING BUT NOT LIMITED TO COPYRIGHT AND OTHER INTELLECTUAL PROPERTY LAWS. THE DESIGN CONCEPTS AND INFORMATION CONTAINED HEREIN ARE PROPRIETARY TO V.W.T. AND ARE SUBMITTED IN CONFIDENCE. THEY ARE NOT TRANSFERABLE. THEY MUST BE USED ONLY FOR THE PURPOSE FOR WHICH THE DOCUMENT IS EXPRESSLY SUBMITTED AND NO IMPLICIT LICENCE IS GRANTED OTHERWISE BY THE SUBMISSION OF THIS DOCUMENT. THEY ARE CONFIDENTIAL AND PRIVILEGED INFORMATION OF V.W.T. AND THEY MUST NOT BE DISCLOSED, REPRODUCED, LOANED, REMITTED OR USED IN ANY OTHER MANNER WITHOUT THE EXPRESS WRITTEN CONSENT OF V.W.T. V.W.T. ASSUMES NO RESPONSIBILITY OR LIABILITY FOR THE USE OF THIS DOCUMENT OR THE DESIGN CONCEPTS AND INFORMATION CONTAINED HEREIN FOR ANOTHER PROJECT, OR IN A MANNER THAT DOES NOT RELATE TO THE FITNESS OR PURPOSE OF THIS DOCUMENT. IN NO EVENT SHALL THIS DOCUMENT OR THE DESIGN CONCEPTS AND INFORMATION CONTAINED HEREIN BE USED IN A MANNER DETRIMENTAL TO THE INTEREST OF V.W.T. ALL COPYRIGHT, PATENT AND OTHER INTELLECTUAL PROPERTY RIGHTS ARE RESERVED. ACCEPTANCE OF THE DELIVERY OF THIS DOCUMENT CONSTITUTES AGREEMENT TO THESE TERMS AND CONDITIONS.

| | |
|---|---|
| DESIGNER | A.D. |
| DATE | 2021-01-07 |
| CHECKER | |
| DATE | |
| ENGINEER | L.J. |
| DATE | 2021-01-07 |
| SCALE: | 1:30 |

TITLE: CHLORINATION REACTOR (WITH COVER) RX75-3 INSTALLATION

CLIENT: AEM MELIADINE-BPC
6526-S-265-605 / OC-989680

VEOLIA
VEOLIA WATER TECHNOLOGIES CANADA INC. 4105 Sartelon, Saint-Laurent, Qc, Canada. Tel: (514) 334-7230

| PROJECT | DRAWING | INTERNAL | SHEET | REV |
|---|---|---|---|---|
| 5000220043 - FI004 | | RX0753 | 2 OF 3 | 1 |

STD: "D" 22x34 | REF: | BAR = 1" AT PLOT SCALE

Mar 25, 2021 11:11:48 - C:\WORKSPACE-INVENTOR\Designs\EXECUTION\2020\5000220043\RX\5000220043-FI004 RX0753(AVEC COUVERCLE).dwg - amin.dehghani

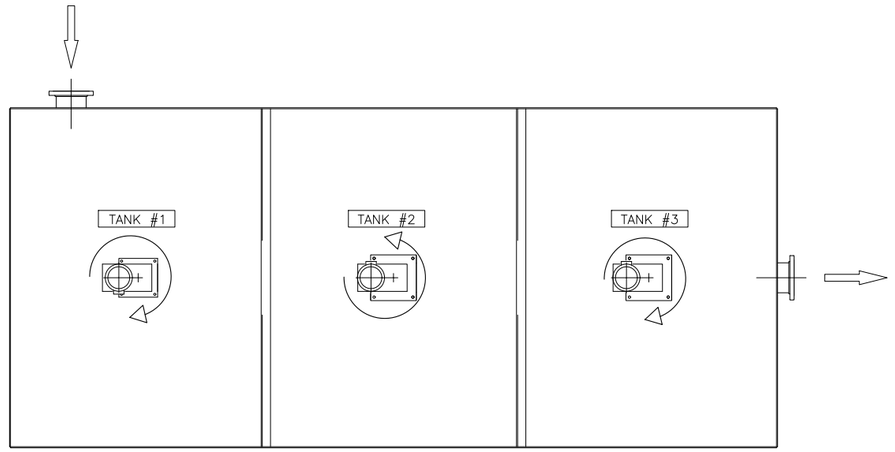


PLAN VIEW

NOTES:

1. DEPENDING ON THE IMPELLER DIAMETER, HUB AND IMPELLER BLADES MIGHT BE SHIPPED SEPARATELY FROM THE MIXER SHAFT ASSEMBLY.
2. IMPELLERS WILL NEED TO BE ASSEMBLED ON SITE.
3. MIXERS WILL NEED TO BE ASSEMBLED ON SITE. (SHIPPED LOOSE)
4. MIXERS AND SCRAPERS WILL NEED FOOD GRADE OIL PER SPECIFICATIONS.

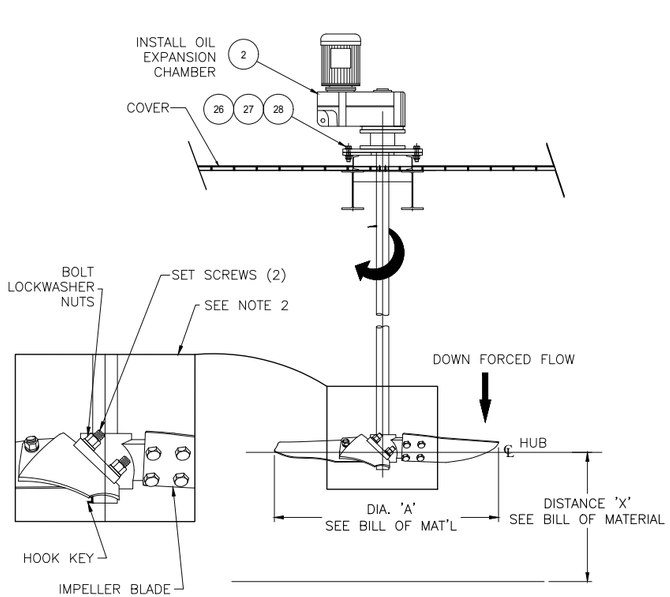


TANK #1
N.T.S

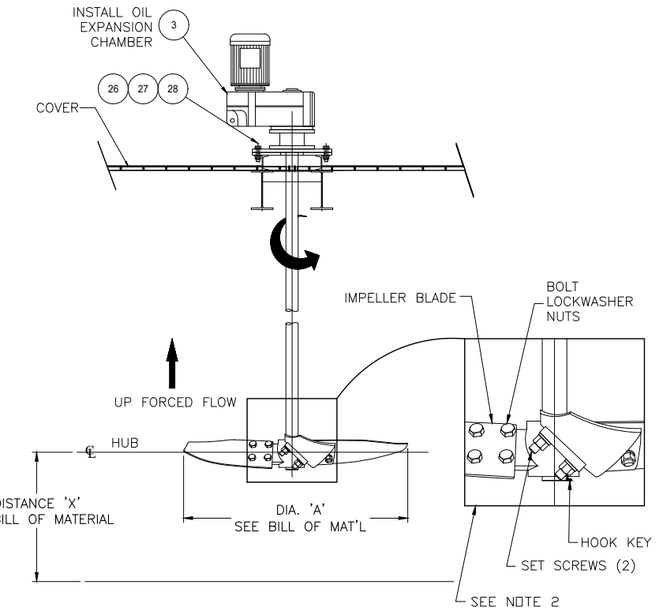


TANK #2
N.T.S

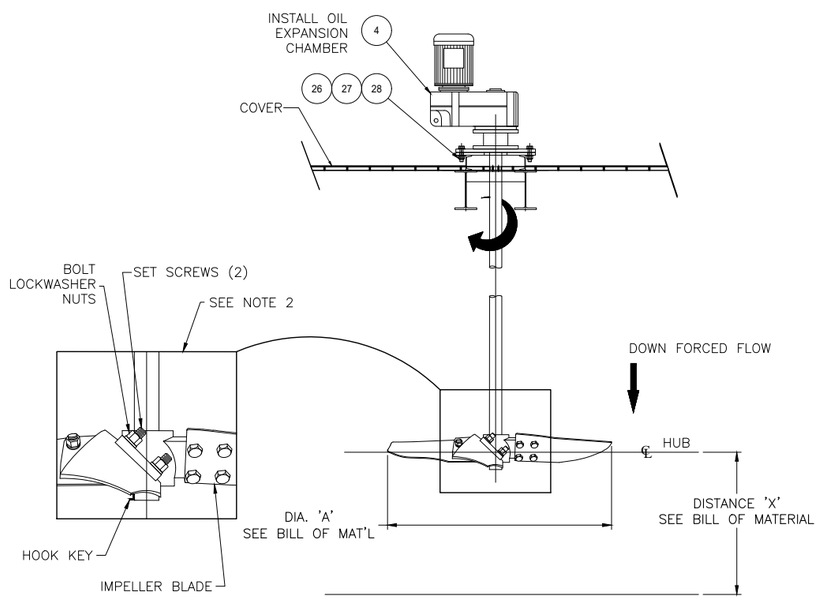


TANK #3
N.T.S

| REV | DESCRIPTION | DATE | REV'D | CHK'D | APV'D | ECN |
|---|---|---|---|---|---|---|
| 1 | FOR INSTALLATION | 2021-03-24 | A.D. | S.M. | L.J. | N/A |

**CONFIDENTIALITY AND INTELLECTUAL PROPERTY NOTICE**
ALL INFORMATION CONTAINED IN THIS DOCUMENT IS THE SOLE PROPERTY OF VEOLIA WATER TECHNOLOGIES CANADA INC. AND IS PROTECTED BY ALL APPLICABLE LAWS, INCLUDING BUT NOT LIMITED TO COPYRIGHT AND OTHER INTELLECTUAL PROPERTY LAWS. THE DESIGN CONCEPTS AND INFORMATION CONTAINED HEREIN ARE PROPRIETARY TO V.W.T. AND ARE SUBMITTED IN CONFIDENCE. THEY ARE NOT TRANSFERABLE. THEY MUST BE USED ONLY FOR THE PURPOSE FOR WHICH THE DOCUMENT IS EXPRESSLY SUBMITTED AND NO IMPLICIT LICENCE IS GRANTED OTHERWISE BY THE SUBMISSION OF THIS DOCUMENT. THEY ARE CONFIDENTIAL AND PRIVILEGED INFORMATION OF V.W.T. AND THEY MUST NOT BE DISCLOSED, REPRODUCED, LOANED, REMITTED OR USED IN ANY OTHER MANNER WITHOUT THE EXPRESS WRITTEN CONSENT OF V.W.T. V.W.T. ASSUMES NO RESPONSIBILITY OR LIABILITY FOR THE USE OF THIS DOCUMENT OR THE DESIGN CONCEPTS AND INFORMATION CONTAINED HEREIN FOR ANOTHER PROJECT, OR IN A MANNER THAT DOES NOT RELATE TO THE FITNESS OR PURPOSE OF THIS DOCUMENT. IN NO EVENT SHALL THIS DOCUMENT OR THE DESIGN CONCEPTS AND INFORMATION CONTAINED HEREIN BE USED IN A MANNER DETRIMENTAL TO THE INTEREST OF V.W.T. ALL COPYRIGHT, PATENT AND OTHER INTELLECTUAL PROPERTY RIGHTS ARE RESERVED. ACCEPTANCE OF THE DELIVERY OF THIS DOCUMENT CONSTITUTES AGREEMENT TO THESE TERMS AND CONDITIONS.

| | |
|---|---|
| DESIGNER | A.D. |
| DATE | 2021-01-07 |
| CHECKER | |
| DATE | |
| ENGINEER | L.J. |
| DATE | 2021-01-07 |
| SCALE: | 1:20 |

TITLE: CHLORINATION REACTOR (WITH COVER) RX75-3 INSTALLATION

CLIENT: AEM MELIADINE-BPC
6526-S-265-605 / OC-989680

VEOLIA WATER TECHNOLOGIES CANADA INC. 4105 Sartelon, Saint-Laurent, Qc, Canada. Tel: (514) 334-7230

| PROJECT DRAWING | INTERNAL | SHEET | REV |
|---|---|---|---|
| 5000220043 – FI004 | RX0753 | 3 OF 3 | 1 |

STD: "D" 22x34 | REF: | BAR = 1" AT PLOT SCALE

Mar 25, 2021 11:11:48 – C:\WORKSPACE-INVENTOR\Designs\EXECUTION\2020\5000220043\RX\5000220043-FI004 RX0753(AVEC COUVERCLE).dwg – amin.dehghani

LEFT BLANK

| TIE–POINT # | DESCRIPTION | DIMENSION / TYPE |
|---|---|---|
| TP–1404 / TP–1504 | WATER INLET | ø50mm [ø2"] – PVC SCH80 FLANGE 150# RF |
| TP–1405 / TP–1505 | OUTLET TO DOSING | ø65mm [ø2 1/2"] – SS316 FLANGE 150# RF |
| TP–1406 / TP–1506 | COMPRESSED AIR | ø6mm [ø1/4"] FEMALE TUBE |
| TP–1407 / TP–1507 | COMPRESSED AIR | ø6mm [ø1/4"] FEMALE TUBE |

NOTES:

1- POWDERED ACTIVATED CARBON SYSTEM IMPLIES HAZARDOUS LOCATION CLASS II DIV 1 GRP F

2- ANCHORING TO THE FLOOR IS BY OTHERS

3- REFER TO THE INSTALLATION, OPERATION AND MAINTENANCE MANUAL (IOM) BEFOREHAND TO COORDINATE THE PLANT DESIGN, INSTALLATION AND START UP OF THE SPLITTER BOX UNIT.

M.O.C.
BIG BAG WEIGHT:
- DRY SHIPPING WEIGHT: 1457 KG (3211 LBS).

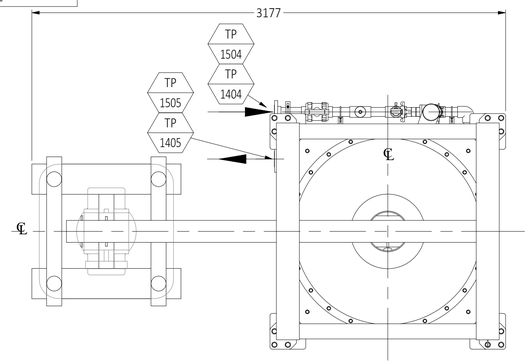


TOP VIEW

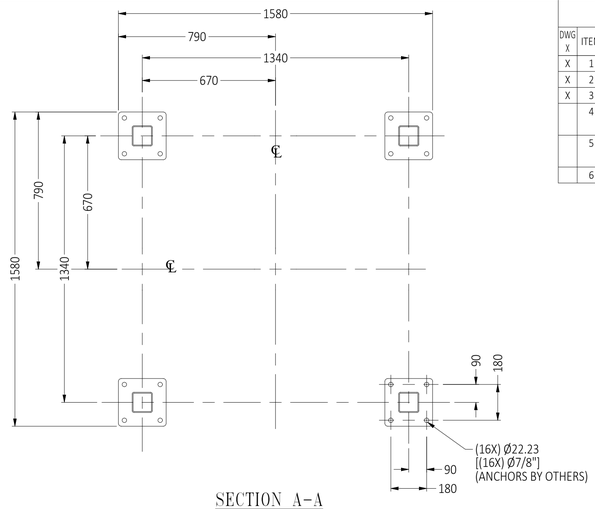


SECTION A–A

SCALE: 1:15

| INGÉNIERIE ENGINEERING | | | | | | ATELIER SHOP | | |
|---|---|---|---|---|---|---|---|---|
| DWG X | ITEM | DESCRIPTION | MATÉRIEL MATERIAL | NUMÉRO REF. REF. NUMBER | QTÉ QTY | QTÉ TOT. TOT. QTY | E | S |
| X | 1 | DOSING AND HOPPER SECTION | | SA000501 | 1 | 2 | | |
| X | 2 | BIG BAG AND GALLOWS SECTION | | SA000502 | 1 | 2 | | |
| X | 3 | LIFTING TOOL, BIG BAG | Generic | FA000503 | 1 | 2 | | |
| | 4 | HEX. BOLT Ø3/4"-10UNC X 2 3/4 LG. | ASTM-F593D-304 | FXSCZC200544 | 28 | 56 | | |
| | 5 | FLAT WASHER Ø3/4" TYPE A NARROW | AISI 304 | FXWAZC200678 | 56 | 112 | | |
| | 6 | HEX. NUT Ø3/4"-10UNC | ASTM-F594D-304 | FXNUZC200229 | 28 | 56 | | |

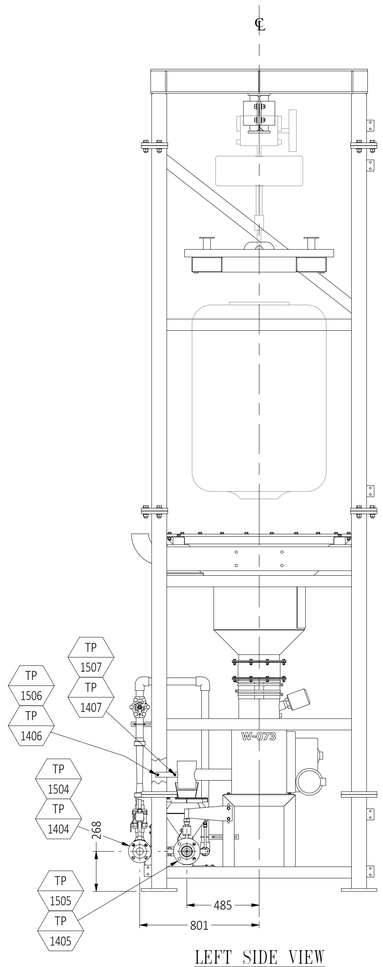


LEFT SIDE VIEW

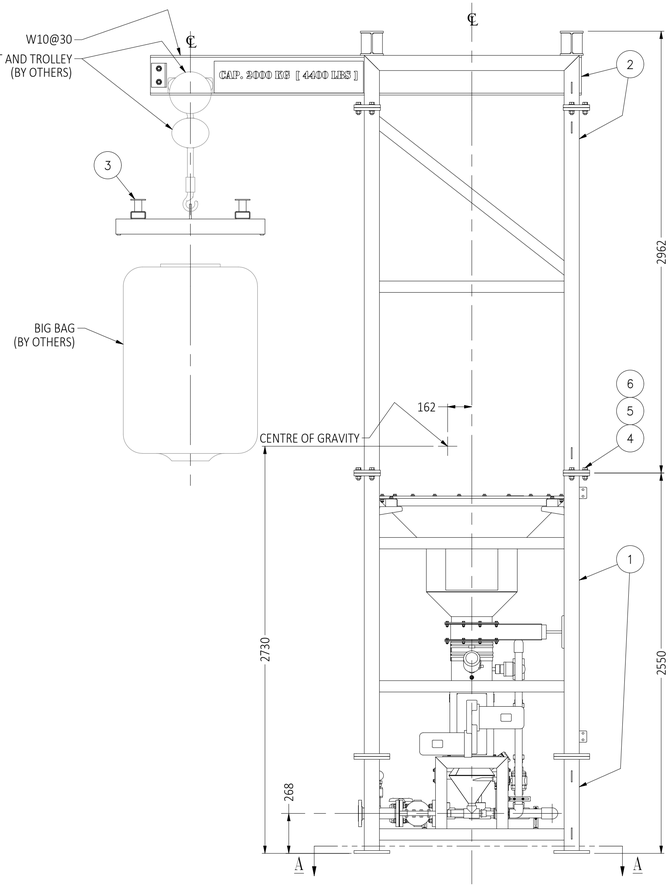


FRONT VIEW

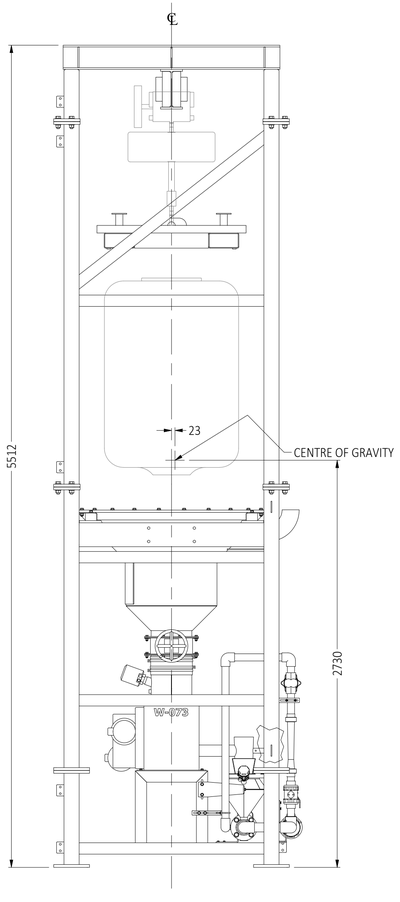


RIGHT SIDE VIEW

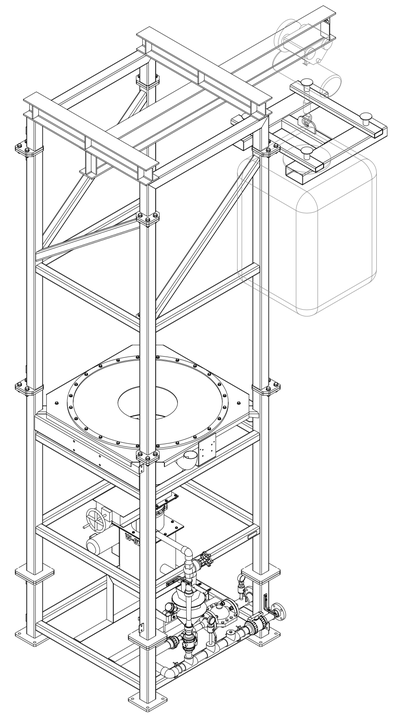

ISOMETRIC VIEW

SCALE: 1:25

| RÉV. REV: | DESCRIPTION | DATE | DESSINÉ PAR/ DRAWN BY | PRÉPARÉ PAR/ PREPARED BY | VÉRIFIÉ PAR/ CHECKED BY |
|---|---|---|---|---|---|
| 1 | FOR FIELD INSTALLATION | 2021-03-16 | N.L. | G.M. | S.M. |

DESSINÉ PAR/DRAWN BY: NORMAND LÉGER — DATE: 2021-03-15
PRÉPARÉ PAR/PREPARED BY: GUILLAUME MUNSCH ING. — DATE: 2021-03-15
VÉRIFIÉ PAR/CHECKED BY: SIMON MORIN — DATE: 2021-03-15

VEOLIA WATER TECHNOLOGIES

CLIENT: AEM MELIADINE-BPC

6526-S-265-605 / OC-989680

TITRE / TITLE:
CARBON DOSING SYSTEM
BIG BAG WITH GALLOWS
FIELD INSTALLATION

ÉCHELLE / SCALE: 1:25

| PROJET / PROJECT · DESSIN No / DRAWING No | INTERNE / INTERNAL | FEUILLET / SHEET | RÉV/REV |
|---|---|---|---|
| 5000220043 · FI0005 | HYDRA | 1 / 1 | 1 |

Ce document est la propriété de VEOLIA et ne peut être reproduit sans son autorisation écrite.
This document is the property of VEOLIA and cannot be reproduced without its written authorization.

REF: 8 7 6 5 4 3 2 1 ANSI D

| TABLEAU DES RACCORDMENT | | |
|---|---|---|
| TP 1401 | TP 1501 | CONTAINER WATER INLET L2 ø50 PVC, SOCKET |
| TP 1402 | TP 1502 | COAGULANT INLET ø15 PVC, SOCKET |
| TP 1408 | TP 1508 | COMPRESSED AIR INLET ø15 PIPE |
| TP 1409 | TP 1409 | COMPRESSED AIR OUTLET TO FDR9-591 |
| TP 1403 | TP 1503 | CONTAINER WATER OUTLET L2 ø50 PVC, SOCKET |

| PAX | ITEM | DESCRIPTION | INVENTAIRE PLAN RÉF | QTÉ UN. | QTÉ TOT. | E | S |
|---|---|---|---|---|---|---|---|
| | 1 | SKID SUPPORT | SA0501 | 1 | 2 | | |
| X | 2 | PRESSURE REGULATION VALVE, WATTS, MODEL: R-119-04C, ø1/2", NPT | ST-309-900 | 1 | 2 | | |
| X | 3 | SOLENOID VALVE, ASCO, MODEL : 8210G100, THREADED ø2, CORPS : LAITON | ST-304-111 | 1 | 2 | | |
| X | 4 | PRESSURE SWITCH, ALLEN BRADLEY, MODEL: 836T-T253J | ST-434-102 | 1 | 2 | | |
| X | 5 | INJECTION LANCE, PRIMARY FLUID, MODEL: IQ-56-PVC | ST-502-001 | 1 | 2 | | |
| | 6 | BALL VALVE 1/2" TRUE UNION TYPE21 IPEX 0321050 (PVC)* EPDM | VABLPV200249 | 1 | 2 | | |
| X | 7 | ROBINET A BOISSEAU SPHÉRIQUE, PMP, MODÈLE: A201, ø1/2", FILETÉE | ST-301-1002 | 3 | 6 | | |
| | 8 | VANNE BILLE 2" TRUE UNION-TYPE21 IPEX 0321096 (PVC)* EPDM | VABLPV200254 | 1 | 2 | | |

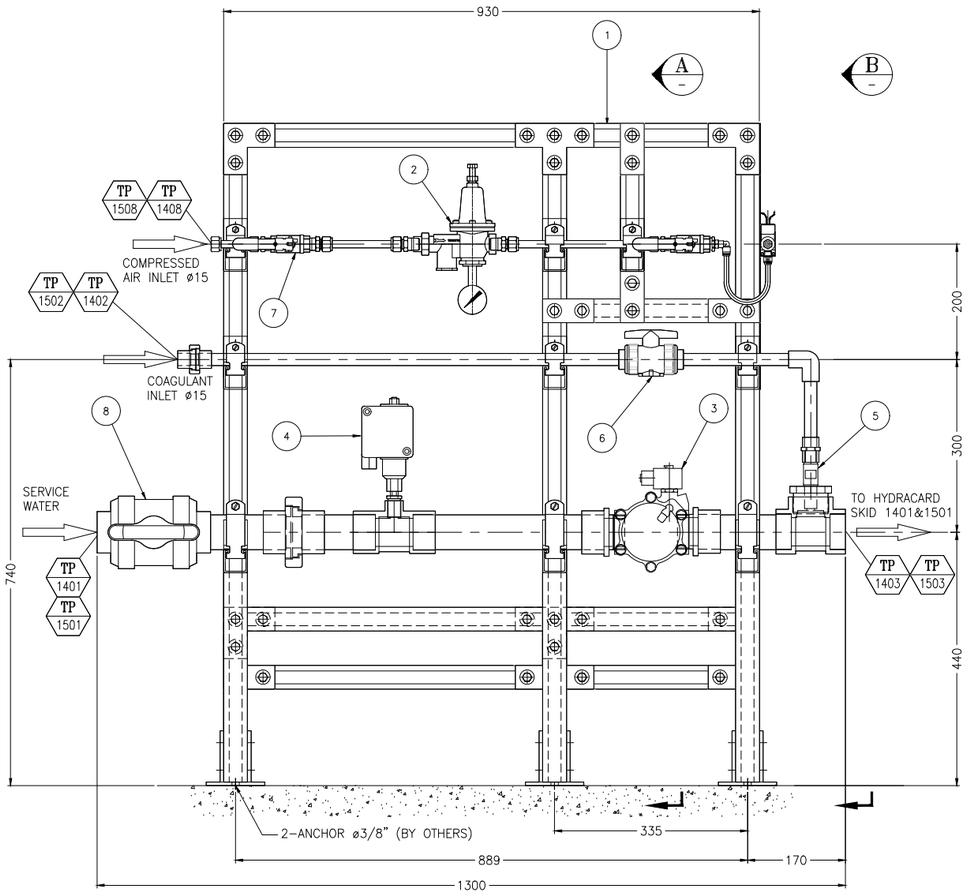


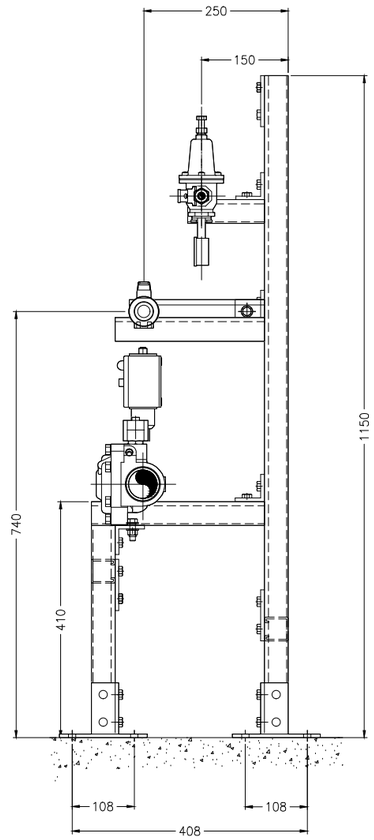


SECTION A

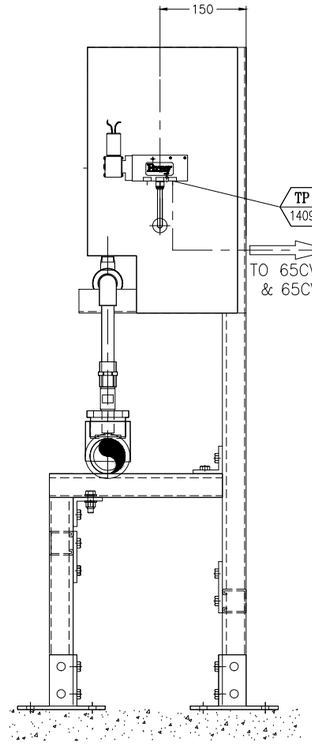


VIEW B

| RÉV. | DESCRIPTION | DATE | RÉVISÉ REVISED | VÉRIFIÉ VERIFIED | APPROUVÉ APPROVED |
|---|---|---|---|---|---|
| 1 | FOR FIELD INSTALLATION | 2021-03-18 | F.C. | G.M. | E.D. |

VEOLIA WATER TECHNOLOGIES

| | | |
|---|---|---|
| DESSINATEUR/DESIGNER | F.COTNOIR | DATE 2021-03-17 |
| VÉRIFICATEUR/CHECKER | G.MUNSCH | DATE 2021-03-17 |
| INGÉNIEUR/ENGINEER | E.DORMOY | DATE 2021-03-17 |

CLIENT: AEM MELIADINE-BPC

6526-S-265-605 / OC-989680

TITRE / TITLE:

# HYDRACARB WATER SKID FIELD INSTALLATION

ÉCHELLE / SCALE: 1:5

| PROJET / PROJECT | DESSIN / DRAWING | INTERNE / INTERNAL | FEUILLET / SHEET | RÉV./REV |
|---|---|---|---|---|
| 5000220043 - | FI0005-2 | | 1/ 1 | 1 |

Ce document est la propriété de VEOLIA et ne peut être reproduit sans son autorisation écrite.
This document is the property of VEOLIA and cannot be reproduced without its written authorization.

REF: ANSI D

Mar 18, 2021 15:41:21 - C:\WORKSPACE-INVENTOR\DESIGNS\EXECUTION\2020\5000220043\HYDRACARB\5000220043-FI0005-2.dwg - CotnoirF

| INGÉNIERIE ENGINEERING | | | | | | ATELIER SHOP | | |
|---|---|---|---|---|---|---|---|---|
| DWG X | ITEM | DESCRIPTION | MATÉRIEL MATERIAL | NUMÉRO REF. REF. NUMBER | QTÉ QTY | QTÉ TOT. TOT. QTY | E | S |
| | 1 | SLUDGE TANK - ASCO #CT3305 | HDPE | | 1 | 1 | | |
| | 2 | MIXER ENVIREQUIP EVGX4-3.0 HP | Generic | ST-999-007 | 1 | 1 | | |
| | 3 | SLUDGE TANK MIXER TOP FRAME | | SA300 | 1 | 1 | | |
| | 4 | SLUDGE TANK MIXER LEG FRAME | Generic | FA302 | 2 | 2 | | |
| | 5 | HEX. BOLT Ø3/4"-10UNC X 2 1/2 LG. | ASTM-F593D-304 | FXSCZC200543 | 10 | 10 | | |
| | 6 | LOCK-NUT Ø3/4"-10UNC | ASTM-F594D-304 | FXNUZC200230 | 10 | 10 | | |
| | 7 | FLAT WASHER Ø3/4" NARROW (TYPE A) | AISI 304 | FXWAZC200678 | 20 | 20 | | |

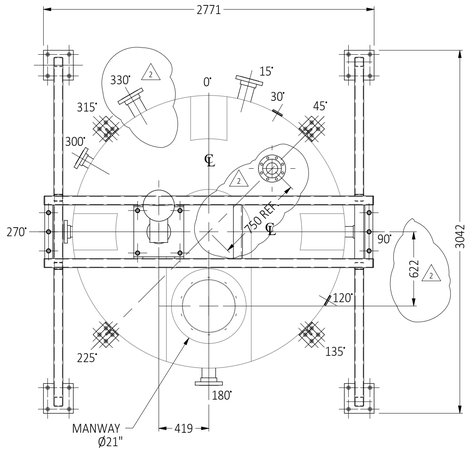


## TOP VIEW

SCALE: 1:25

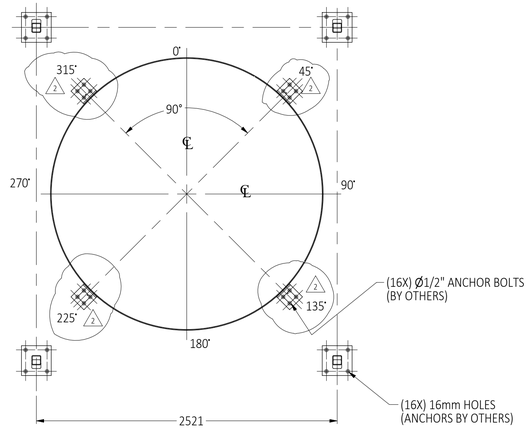


## SECTION A-A

SCALE: 1:25

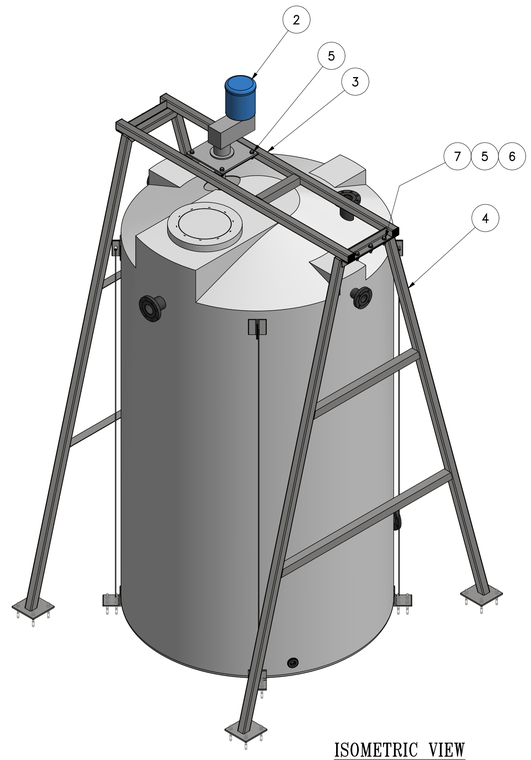


## ISOMETRIC VIEW

SCALE: 1:25

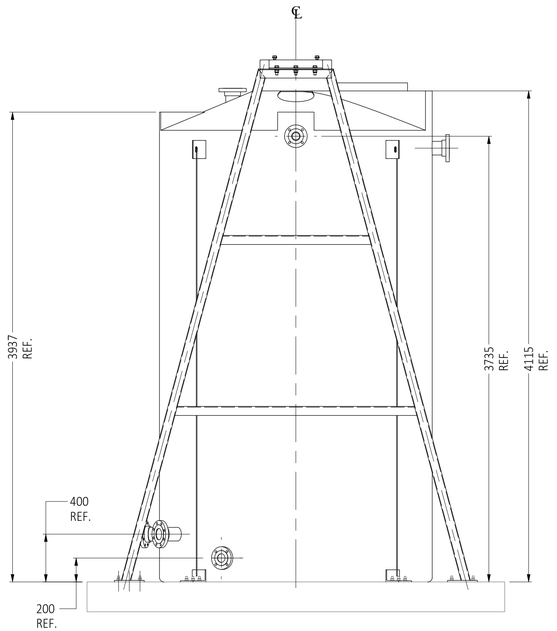


## LEFT SIDE VIEW

SCALE: 1:25

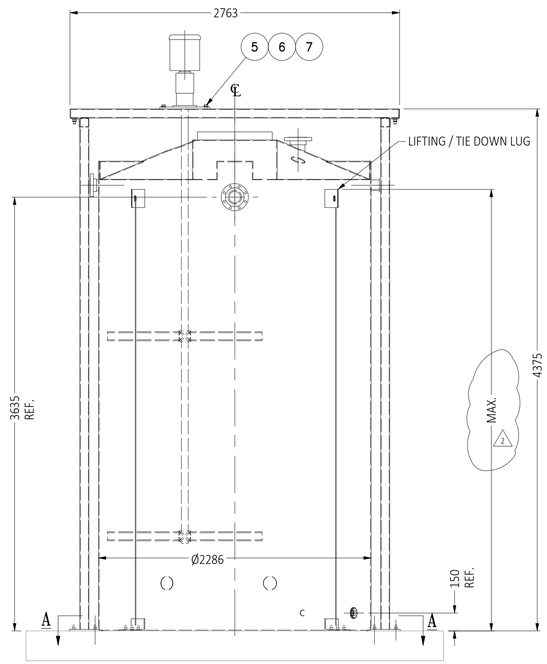


## FRONT VIEW

SCALE: 1:25

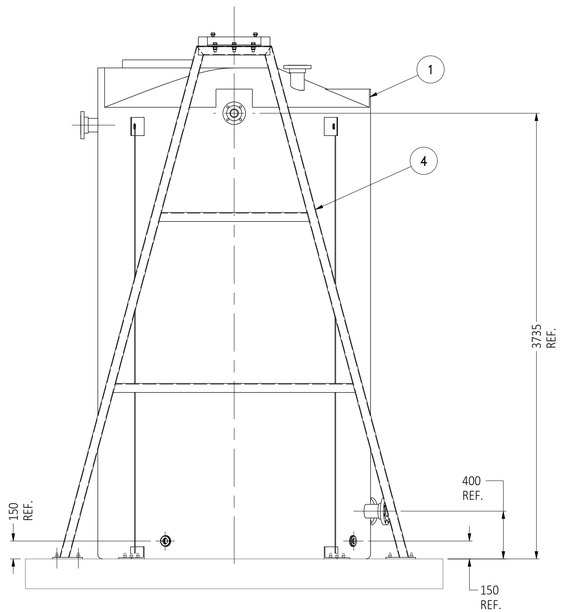


## RIGHT SIDE VIEW

SCALE: 1:25

| | | | | | |
|---|---|---|---|---|---|
| 2 | FOR APPROVAL (TANK NOZZLES & ANCHORS RELOCATED) | 2021-05-04 | H.H. | G.M. | E.D. |
| 1 | FOR FIELD INSTALLATION | 2021-03-29 | H.H. | G.M. | E.D. |
| RÉV. REV. | DESCRIPTION | DATE | DESSINÉ PAR/ DRAWN BY | PRÉPARÉ PAR/ PREPARED BY | VÉRIFIÉ PAR/ CHECKED BY |

**TOLÉRANCES / TOLERANCES**

X = ±1/16 in. / ±1.5 mm
X.X = ±0.030 in. / ±0.75 mm
X.XX = ±0.015 in. / ±0.375 mm
X.XXX = ±0.005 in. / ±0.125mm
FRACTION TOL. = ±1/16 in.
ANGLES: ±0.5°
FINI DE SURFACE / SURFACE FINISH: 250

PROJECTION ORTHOGONALE

VEOLIA WATER TECHNOLOGIES

DESSINÉ PAR/DRAWN BY: H.H. — DATE: 2021-03-18
PRÉPARÉ PAR/PREPARED BY: GUILLAUME MUNSCH — DATE: 2021-03-18
VÉRIFIÉ PAR/CHECKED BY: EMMANUELLE DORMOY, ING. — DATE: 2021-03-18

CLIENT: AEM MELIADINE-BPC

6526-S-265-605 / OC-989680

TITRE / TITLE: SLUDGE TANK INSTALLATION

ÉCHELLE / SCALE: 1:20

| PROJET / PROJECT - DESSIN No / DRAWING No | INTERNE / INTERNAL | FEUILLET / SHEET | RÉV/REV |
|---|---|---|---|
| 5000220043 - FI0006 | | 1 / 1 | 2 |

Ce document est la propriété de VEOLIA et ne peut être reproduit sans son autorisation écrite.
This document is the property of VEOLIA and cannot be reproduced without its written authorization.

REF: ANSI D

LEFT BLANK

# *4 – DETAILED TECHNICAL DOCUMENTATION*

## *4.1 – EQUIPMENT LIST*

LEFT BLANK

| | | | | | |
|---|---|---|---|---|---|
| VEOLIA | VEOLIA DOC # | 5000220043 _EQLS_0001_GEN_VWT | | DATE | 2021-02-26 |
| | VEOLIA PROJECT# | 5000220043 | CLIENT REFERENCE # | 6526-S-265-605 / OC-989680 | |
| | EQUIPMENTS LIST | | | | |

| CLIENT | REV | DESCRIPTION | DATE | BY | VER. | APP. |
|---|---|---|---|---|---|---|
| A.E.M | 1 | For Approval | 2021-02-26 | C.E.K | E.D | T.S |
| | 2 | For Information | 2021-04-26 | C.E.K | E.D | T.S |
| | 3 | For Information II | 2021-07-09 | C.E.K | M.D.G | T.S |
| PROJECT | | | | | | |
| MELIADINE-BPC UPGRADE | | | | | | |
| | | | | | | |
| | | | | | | |

| REV | EQPMT TAG NO | EQUIPMENT TYPE | EQUIPMENT CODE | MODEL NUMBER | DESCRIPTION | SUPPLIER | LOCATION | P&ID NO | COMMENT |
|---|---|---|---|---|---|---|---|---|---|
| 1 | N/A | MISC | ST-999-018 | | THIEF HATCH | JAYCO | CHLORINATION REACTOR | SHEET 05 | |
| 1 | 100-BF99-1109 | VALVE | VABFDI364242 | Serie 31 - Lug | MANUAL DRAIN VALVE | BRAY | CHLORINATION REACTOR | SHEET 05 | |
| 1 | 100-BF99-1110 | VALVE | VABFDI364242 | Serie 31 - Lug | MANUAL DRAIN VALVE | BRAY | CHLORINATION REACTOR | SHEET 05 | |
| 3 | 15-BA99-1193 | VALVE | VABLPV200249 | 21A005EC,TYPE21 | SKID INLET ISOLATION VALVE | CHEMLINE | PH INSTRUMENTATION SKID #0504 | SHEET 05 | |
| 3 | 15-BA99-1194 | VALVE | VANEPV300121 | NGA005 | MANUAL CONTROL VALVE | CHEMLINE | PH INSTRUMENTATION SKID #0504 | SHEET 05 | |
| 3 | 15-BA99-1195 | VALVE | VABLPV200249 | 21A005EC,TYPE21 | SKID OUTLET ISOLATION VALVE | CHEMLINE | PH INSTRUMENTATION SKID #0504 | SHEET 05 | |
| 3 | 15-BA99-1196 | VALVE | VABLPV200249 | 21A005EC,TYPE21 | SKID INLET ISOLATION VALVE | CHEMLINE | TURBIDITY INSTRUMENTATION SKID #0503 | SHEET 05 | |
| 3 | 15-BA99-1197 | VALVE | VANEPV300121 | NGA005 | MANUAL CONTROL VALVE | CHEMLINE | TURBIDITY INSTRUMENTATION SKID #0503 | SHEET 05 | |
| 3 | 15-BA99-1198 | VALVE | VABLPV200249 | 21A005EC,TYPE21 | SKID OUTLET ISOLATION VALVE | CHEMLINE | TURBIDITY INSTRUMENTATION SKID #0503 | SHEET 05 | |
| 3 | 15-PRV99-1199 | VALVE | VAPSPV303450 | SR50-A-005-E-U | PRESSURE REGULATING VALVE | CHEMLINE | TURBIDITY INSTRUMENTATION SKID #0503 | SHEET 05 | |
| 1 | 65AE6801101 | INSTRUMENT | ST-445-200 | UV500 | RAW WATER AMMONIA ANALYSER | TETHYS | CHLORINATION REACTOR | SHEET 05 | |
| 1 | 65AE6801102 | INSTRUMENT | IEPOTB200853 | LXV423.99.10100 | RAW WATER TSS/TURBISITY SENSOR | HACH | CHLORINATION REACTOR | SHEET 05 | |
| 1 | 65AGI68012 | MIXER | ST-999-003 | EVGX6-5.0/2205/575/W841/CWD (REACTION) | CHLORINATION REACTOR AGITATOR #1 | ENVIREQUIP | CHLORINATION REACTOR | SHEET 05 | |
| 1 | 65AGI68013 | MIXER | ST-999-004 | EVGX6-5.0/2205/575/W841/CCWU (REACTION) | CHLORINATION REACTOR AGITATOR #2 | ENVIREQUIP | CHLORINATION REACTOR | SHEET 05 | |
| 1 | 65AGI68014 | MIXER | ST-999-005 | EVGX6-5.0/2205/575/W841/CWD (REACTION) | CHLORINATION REACTOR AGITATOR #3 | ENVIREQUIP | CHLORINATION REACTOR | SHEET 05 | |
| 1 | 65AIT6801101 | INSTRUMENT | C/W ST-445-200 | N/A | RAW WATER AMMONIA TRANSMITTER | TETHYS | CHLORINATION REACTOR | SHEET 05 | |
| 1 | 65AIT6801102 | INSTRUMENT | IECNGU301374 | LXV404.99.00502 | RAW WATER TSS/TURBISITY TRANSMITTER | HACH | CHLORINATION REACTOR | SHEET 05 | |
| 1 | 65FAN68005 | MISC | ST-999-012 | JET20 | INLINE FAN | PLASTEC | CHLORINATION REACTOR | SHEET 05 | |
| 1 | 100-BF99-1113 | VALVE | VABFDI364242 | Serie 31 - Lug | MANUAL DRAIN VALVE | BRAY | DECHLORINATION REACTOR | SHEET 06 | |
| 1 | 100-BF99-1114 | VALVE | VABFDI364242 | Serie 31 - Lug | MANUAL DRAIN VALVE | BRAY | DECHLORINATION REACTOR | SHEET 06 | |
| 1 | 65AGI68015 | MIXER | CMSPMI334393 | EVGX6-5.0/2205/575/W841/CWD (REACTION) | DECHLORINATION REACTOR AGITATOR #1 | ENVIREQUIP | DECHLORINATION REACTOR | SHEET 06 | |
| 1 | 65AGI68016 | MIXER | CMSPMI334394 | EVGX6-5.0/2205/575/W841/CCWU (REACTION) | DECHLORINATION REACTOR AGITATOR #2 | ENVIREQUIP | DECHLORINATION REACTOR | SHEET 06 | |
| 1 | 65AGI68017 | MIXER | CMSPMI334395 | EVGX6-5.0/2205/575/W841/CWD (REACTION) | DECHLORINATION REACTOR AGITATOR #3 | ENVIREQUIP | DECHLORINATION REACTOR | SHEET 06 | |
| 1 | 65LSHH6801131 | INSTRUMENT | IESWLE201156 | ENM-10 (13m) | HIGH LEVEL SWITCH FLOAT | XYLEM | DECHLORINATION REACTOR | SHEET 06 | |
| 1 | N/A | MISC | C/W ST-670-ACP-MK1-700-575-DRN | | SPEED CONTROLER CLARIFIER #1 RAKE | EURODRIVE | CLARIFIER #1 | SHEET 07 | |
| 1 | 100-BF99-1101 | VALVE | VABFDI364242 | Serie 31 - Lug | MANUAL DRAIN VALVE | BRAY | CLARIFIER #1 | SHEET 07 | |

| | | | | | |
|---|---|---|---|---|---|
| VEOLIA | VEOLIA DOC # | 5000220043 _EQLS_0001_GEN_VWT | | DATE | 2021-02-26 |
| | VEOLIA PROJECT# | 5000220043 | CLIENT REFERENCE # | 6526-S-265-605 / OC-989680 | |
| | EQUIPMENTS LIST | | | | |

| CLIENT | REV | DESCRIPTION | DATE | BY | VER. | APP. |
|---|---|---|---|---|---|---|
| A.E.M | 1 | For Approval | 2021-02-26 | C.E.K | E.D | T.S |
| | 2 | For Information | 2021-04-26 | C.E.K | E.D | T.S |
| | 3 | For Information II | 2021-07-09 | C.E.K | M.D.G | T.S |
| PROJECT | | | | | | |
| MELIADINE-BPC UPGRADE | | | | | | |
| | | | | | | |
| | | | | | | |

| REV | EQPMT TAG NO | EQUIPMENT TYPE | EQUIPMENT CODE | MODEL NUMBER | DESCRIPTION | SUPPLIER | LOCATION | P&ID NO | COMMENT |
|---|---|---|---|---|---|---|---|---|---|
| 1 | 100-BF99-1102 | VALVE | VABFDI364242 | Serie 31 - Lug | MANUAL DRAIN VALVE | BRAY | CLARIFIER #1 | SHEET 07 | |
| 1 | 100-PG99-1205 | VALVE | ST-312-664 | 4"T4E11C11D033NW | RECIRCULATION LINE #1 ISOLATION VALVE | DURCO | CLARIFIER #1 | SHEET 07 | |
| 1 | 100-PG99-1206 | VALVE | ST-312-664 | 4"T4E11C11D033NW | RECIRCULATION LINE #2 ISOLATION VALVE | DURCO | CLARIFIER #1 | SHEET 07 | |
| 1 | 15-BA99-1207 | VALVE | VABLPV200243 | 21A005VC,TYPE21 | PRESSURE GAUGE #1 ISOLATION VALVE | CHEMLINE | CLARIFIER #1 | SHEET 07 | |
| 1 | 15-BA99-1208 | VALVE | VABLPV200243 | 21A005VC,TYPE21 | PRESSURE GAUGE #2 ISOLATION VALVE | CHEMLINE | CLARIFIER #1 | SHEET 07 | |
| 1 | 15-BA99-1219 | VALVE | VABLPV200249 | 21A005EC,TYPE21 | POLYMER ISOLATION VALVE | CHEMLINE | CLARIFIER #1 | SHEET 07 | |
| 1 | 15-BA99-1220 | VALVE | VABLPV200249 | 21A005EC,TYPE21 | POLYMER ISOLATION VALVE | CHEMLINE | CLARIFIER #1 | SHEET 07 | |
| 1 | 15-BA99-1221 | VALVE | VABLPV200249 | 21A005EC,TYPE21 | POLYMER ISOLATION VALVE | CHEMLINE | CLARIFIER #1 | SHEET 07 | |
| 1 | 15-BA99-1222 | VALVE | VABLPV200249 | 21A005EC,TYPE21 | POLYMER ISOLATION VALVE | CHEMLINE | CLARIFIER #1 | SHEET 07 | |
| 1 | 200-BF99-1204 | VALVE | VABFDI364244 | Serie 31 - Lug | MANUAL PARTIAL DRAIN VALVE | BRAY | CLARIFIER #1 | SHEET 07 | |
| 1 | 20-BA99-1209 | VALVE | VABLPV200244 | 21A007VC,TYPE21 | SAMPLE BALL VALVE INLET HYDROCYCLONE #1 | CHEMLINE | CLARIFIER #1 | SHEET 07 | |
| 1 | 20-BA99-1210 | VALVE | VABLPV200244 | 21A007VC,TYPE21 | SAMPLE BALL VALVE INLET HYDROCYCLONE #2 | CHEMLINE | CLARIFIER #1 | SHEET 07 | |
| 1 | 20-BA99-1211 | VALVE | VABLPV200244 | 21A007VC,TYPE21 | SAMPLE BALL VALVE OUTLET HYDROCYCLONE #1 | CHEMLINE | CLARIFIER #1 | SHEET 07 | |
| 1 | 20-BA99-1212 | VALVE | VABLPV200244 | 21A007VC,TYPE21 | SAMPLE BALL VALVE OUTLET HYDROCYCLONE #2 | CHEMLINE | CLARIFIER #1 | SHEET 07 | |
| 1 | 25-BA99-1203 | VALVE | VABLPV200245 | 21A010VC,TYPE21 | CLEANING VALVE RECIRCULATION LINE | CHEMLINE | CLARIFIER #1 | SHEET 07 | |
| 1 | 25-BA99-1214 | VALVE | VABLPV200245 | 21A010VC,TYPE21 | CLEANING VALVE RECIRCULATION LINE #1 | CHEMLINE | CLARIFIER #1 | SHEET 07 | |
| 1 | 25-BA99-1215 | VALVE | VABLPV200245 | 21A010VC,TYPE21 | CLEANING VALVE RECIRCULATION LINE #2 | CHEMLINE | CLARIFIER #1 | SHEET 07 | |
| 1 | 65AE6801222 | INSTRUMENT | IEPOTB200853 | LXV423.99.10100 | TSS/TURBISITY SENSOR | HACH | CLARIFIER #1 | SHEET 07 | |
| 1 | 65AGI68018 | MIXER | CMSPMI334390 | EVGX4-3.0/2205/575/W841 (COAG) | CLARIFIER #1 AGITATOR #1 | ENVIREQUIP | CLARIFIER #1 | SHEET 07 | |
| 1 | 65AGI68019 | MIXER | CMSPMI334391 | EVGX4-3.0/2205/575/W841 (INJ) | CLARIFIER #1 AGITATOR #2 | ENVIREQUIP | CLARIFIER #1 | SHEET 07 | |
| 1 | 65AGI68020 | MIXER | CMSPMI334392 | EVGX6-5.0/2205/575/W841 (MAT) | CLARIFIER #1 AGITATOR #3 | ENVIREQUIP | CLARIFIER #1 | SHEET 07 | |
| 1 | 65AIT6801222 | INSTRUMENT | IECNGU301374 | LXV404.99.00502 | TSS/TURBISITY TRANSMITTER | HACH | CLARIFIER #1 | SHEET 07 | |
| 1 | 65CYC68002A | HYDROCYCLONE | ST-999-002 | MA40 | CLARIFIER #1 HYDROCYCLONE #1 | VWTC | CLARIFIER #1 | SHEET 07 | |
| 1 | 65CYC68002B | HYDROCYCLONE | ST-999-002 | MA40 | CLARIFIER #1 HYDROCYCLONE #2 | VWTC | CLARIFIER #1 | SHEET 07 | |
| 1 | 65LSHH6801224 | INSTRUMENT | IESWLE201156 | ENM-10 (13m) | HIGH LEVEL SWITCH FLOAT | XYLEM | CLARIFIER #1 | SHEET 07 | |
| 1 | 65PI6801226 | INSTRUMENT | ST-413-393 | 25-1009-SW-L-02L-60# + 04-3105S-02T-XCG | RECIRCULATION LINE #1 PRESSURE GAUGE | ASHCROFT | CLARIFIER #1 | SHEET 07 | |

| | | | | | |
|---|---|---|---|---|---|
| VEOLIA | VEOLIA DOC # | 5000220043 _EQLS_0001_GEN_VWT | | DATE | 2021-02-26 |
| | VEOLIA PROJECT# | 5000220043 | CLIENT REFERENCE # | 6526-S-265-605 / OC-989680 | |
| | EQUIPMENTS LIST | | | | |

| CLIENT | REV | DESCRIPTION | DATE | BY | VER. | APP. |
|---|---|---|---|---|---|---|
| A.E.M | 1 | For Approval | 2021-02-26 | C.E.K | E.D | T.S |
| | 2 | For Information | 2021-04-26 | C.E.K | E.D | T.S |
| | 3 | For Information II | 2021-07-09 | C.E.K | M.D.G | T.S |
| PROJECT | | | | | | |
| MELIADINE-BPC UPGRADE | | | | | | |
| | | | | | | |
| | | | | | | |

| REV | EQPMT TAG NO | EQUIPMENT TYPE | EQUIPMENT CODE | MODEL NUMBER | DESCRIPTION | SUPPLIER | LOCATION | P&ID NO | COMMENT |
|---|---|---|---|---|---|---|---|---|---|
| 1 | 65PI6801231 | INSTRUMENT | ST-413-393 | 25-1009-SW-L-02L-60# + 04-3105S-02T-XCG | RECIRCULATION LINE #2 PRESSURE GAUGE | ASHCROFT | CLARIFIER #1 | SHEET 07 | |
| 1 | 65PSR68005A | PUMP | ST-999-001 | M3H-CND-3/3 15HP 575V 1944 RPM IEEE 841 | CLARIFIER #1 RECIRCULATION PUMP #1 | MCLANAHAN | CLARIFIER #1 | SHEET 07 | |
| 1 | 65PSR68005B | PUMP | ST-999-001 | M3H-CND-3/3 15HP 575V 1944 RPM IEEE 841 | CLARIFIER #1 RECIRCULATION PUMP #2 | MCLANAHAN | CLARIFIER #1 | SHEET 07 | |
| 1 | 65THI68002 | MISC | ST-999-020/21/22/23 | | LAMELLAS | PLASTITEL | CLARIFIER #1 | SHEET 07 | |
| 1 | 65TRM68002 | MOTOR | ST-670-ACP-MK1-700-575-DRN | RF97 R57 AR71/W DRN71M4/C/DH/RI, 575V/3Ph/60hz, 0.5 HP, SLIP TORQUE: 1.5 NM | CLARIFIER #1 RAKE | EURODRIVE | CLARIFIER #1 | SHEET 07 | |
| 1 | N/A | MOTOR | C/W ST-670-ACP-MK1-600-575-DRN | | SPEED CONTROLLER CLARIFIER #2 RAKE | EURODRIVE | CLARIFIER #2 | SHEET 08 | |
| 1 | 150-BF99-1303 | VALVE | VABFDI376221 | Serie 31 - Lug | MANUAL PARTIAL DRAIN VALVE | BRAY | CLARIFIER #2 | SHEET 08 | |
| 1 | 15-BA99-1307 | VALVE | VABLPV200243 | 21A005VC,TYPE21 | PRESSURE GAUGE #1 ISOLATION VALVE | CHEMLINE | CLARIFIER #2 | SHEET 08 | |
| 1 | 15-BA99-1308 | VALVE | VABLPV200243 | 21A005VC,TYPE21 | PRESSURE GAUGE #2 ISOLATION VALVE | CHEMLINE | CLARIFIER #2 | SHEET 08 | |
| 1 | 15-BA99-1317 | VALVE | VABLPV200249 | 21A005EC,TYPE21 | POLYMER ISOLATION VALVE | CHEMLINE | CLARIFIER #2 | SHEET 08 | |
| 1 | 15-BA99-1318 | VALVE | VABLPV200249 | 21A005EC,TYPE21 | POLYMER ISOLATION VALVE | CHEMLINE | CLARIFIER #2 | SHEET 08 | |
| 1 | 15-BA99-1319 | VALVE | VABLPV200249 | 21A005EC,TYPE21 | POLYMER ISOLATION VALVE | CHEMLINE | CLARIFIER #2 | SHEET 08 | |
| 1 | 20-BA99-1313 | VALVE | VABLPV200244 | 21A007VC,TYPE21 | SAMPLE BALL VALVE INLET HYDROCYCLONE #1 | CHEMLINE | CLARIFIER #2 | SHEET 08 | |
| 1 | 20-BA99-1314 | VALVE | VABLPV200244 | 21A007VC,TYPE21 | SAMPLE BALL VALVE INLET HYDROCYCLONE #2 | CHEMLINE | CLARIFIER #2 | SHEET 08 | |
| 1 | 20-BA99-1315 | VALVE | VABLPV200244 | 21A007VC,TYPE21 | SAMPLE BALL VALVE OUTLET HYDROCYCLONE #1 | CHEMLINE | CLARIFIER #2 | SHEET 08 | |
| 1 | 20-BA99-1316 | VALVE | VABLPV200244 | 21A007VC,TYPE21 | SAMPLE BALL VALVE OUTLET HYDROCYCLONE #2 | CHEMLINE | CLARIFIER #2 | SHEET 08 | |
| 1 | 25-BA99-1306 | VALVE | VABLPV200245 | 21A010VC,TYPE21 | CLEANING VALVE RECIRCULATION LINE | CHEMLINE | CLARIFIER #2 | SHEET 08 | |
| 1 | 25-BA99-1309 | VALVE | VABLPV200245 | 21A010VC,TYPE21 | CLEANING VALVE RECIRCULATION LINE #1 | CHEMLINE | CLARIFIER #2 | SHEET 08 | |
| 1 | 25-BA99-1310 | VALVE | VABLPV200245 | 21A010VC,TYPE21 | CLEANING VALVE RECIRCULATION LINE #2 | CHEMLINE | CLARIFIER #2 | SHEET 08 | |
| 1 | 50-BF99-1301 | VALVE | VABFDI364240 | Serie 31 - Lug | MANUAL DRAIN VALVE | BRAY | CLARIFIER #2 | SHEET 08 | |
| 1 | 50-BF99-1302 | VALVE | VABFDI364240 | Serie 31 - Lug | MANUAL DRAIN VALVE | BRAY | CLARIFIER #2 | SHEET 08 | |
| 1 | 65AE6801322 | INSTRUMENT | IEPOTB200853 | LXV423.99.10100 | TSS/TURBISITY SENSOR | HACH | CLARIFIER #2 | SHEET 08 | |
| 1 | 65AGI68021 | MIXER | CMSPMI334387 | EVGX4-2.0/2205/575/W841 (EXT COAG) | CLARIFIER #2 AGITATOR #1 | ENVIREQUIP | CLARIFIER #2 | SHEET 08 | |
| 1 | 65AGI68022 | MIXER | CMSPMI334388 | EVGX4-2.0/2205/575/W841 (COAG) | CLARIFIER #2 AGITATOR #2 | ENVIREQUIP | CLARIFIER #2 | SHEET 08 | |
| 1 | 65AGI68023 | MIXER | CMSPMI334389 | EVGX4-5.0/2205/575/W841 (TURBOMIX) | CLARIFIER #2 AGITATOR #3 | ENVIREQUIP | CLARIFIER #2 | SHEET 08 | |
| 1 | 65AIT6801322 | INSTRUMENT | IECNGU301374 | LXV404.99.00502 | TSS/TURBISITY TRANSMITTER | HACH | CLARIFIER #2 | SHEET 08 | |

| | | | | | |
|---|---|---|---|---|---|
| VEOLIA | VEOLIA DOC # | 5000220043 _EQLS_0001_GEN_VWT | | DATE | 2021-02-26 |
| | VEOLIA PROJECT# | 5000220043 | CLIENT REFERENCE # | 6526-S-265-605 / OC-989680 | |
| | EQUIPMENTS LIST | | | | |

| CLIENT | REV | DESCRIPTION | DATE | BY | VER. | APP. |
|---|---|---|---|---|---|---|
| A.E.M | 1 | For Approval | 2021-02-26 | C.E.K | E.D | T.S |
| | 2 | For Information | 2021-04-26 | C.E.K | E.D | T.S |
| | 3 | For Information II | 2021-07-09 | C.E.K | M.D.G | T.S |
| PROJECT | | | | | | |
| MELIADINE-BPC UPGRADE | | | | | | |
| | | | | | | |
| | | | | | | |

| REV | EQPMT TAG NO | EQUIPMENT TYPE | EQUIPMENT CODE | MODEL NUMBER | DESCRIPTION | SUPPLIER | LOCATION | P&ID NO | COMMENT |
|---|---|---|---|---|---|---|---|---|---|
| 1 | 65CYC68003A | HYDROCYCLONE | CMSPAI327847 | U4B-10-1734-RU-20M3H | CLARIFIER #2 HYDROCYCLONE #1 | KREBS | CLARIFIER #2 | SHEET 08 | |
| 1 | 65CYC68003B | HYDROCYCLONE | CMSPAI327847 | U4B-10-1734-RU-20M3H | CLARIFIER #2 HYDROCYCLONE #2 | KREBS | CLARIFIER #2 | SHEET 08 | |
| 1 | 65LSHH6801324 | INSTRUMENT | IESWLE201156 | ENM-10 (13m) | HIGH LEVEL SWITCH FLOAT | XYLEM | CLARIFIER #2 | SHEET 08 | |
| 1 | 65PI6801346 | INSTRUMENT | ST-413-393 | 25-1009-SW-L-02L-60# + 04-310SS-02T-XCG | RECIRCULATION LINE #1 PRESSURE GAUGE | ASHCROFT | CLARIFIER #2 | SHEET 08 | |
| 1 | 65PI6801351 | INSTRUMENT | ST-413-393 | 25-1009-SW-L-02L-60# + 04-310SS-02T-XCG | RECIRCULATION LINE #2 PRESSURE GAUGE | ASHCROFT | CLARIFIER #2 | SHEET 08 | |
| 1 | 65PSR68006A | PUMP | ST-607-ACP-CRD20-7.5-575-1944-841 | M3H-CRD-2/2 7.5HP 575V 1944 RPM IEEE 841 | CLARIFIER #2 RECIRCULATION PUMP #1 | MCLANAHAN | CLARIFIER #2 | SHEET 08 | |
| 1 | 65PSR68006B | PUMP | ST-607-ACP-CRD20-7.5-575-1944-841 | M3H-CRD-2/2 7.5HP 575V 1944 RPM IEEE 841 | CLARIFIER #2 RECIRCULATION PUMP #2 | MCLANAHAN | CLARIFIER #2 | SHEET 08 | |
| 1 | 65THI68003 | MISC | ST-999-024/25/26/27/28/29 | | LAMELLAS | PLASTITEL | CLARIFIER #2 | SHEET 08 | |
| 1 | 65TRM68003 | MOTOR | ST-670-ACP-MK1-600-575-DRN | RF87 R57 AR71/W DRN71M4/C/DH/RI, 575V/3Ph/60hz, 0.5 HP, SLIP TORQUE: 1.5 NM, SHAFT LENGTH: 120 MM | CLARIFIER #2 RAKE | EURODRIVE | CLARIFIER #2 | SHEET 08 | |
| 1 | 80-GL99-1304 | VALVE | ST-312-663 | 3"T4E11C11D033NW | RECIRCULATION LINE #1 ISOLATION VALVE | DURCO | CLARIFIER #2 | SHEET 08 | |
| 1 | 80-GL99-1305 | VALVE | ST-312-663 | 3"T4E11C11D033NW | RECIRCULATION LINE #2 ISOLATION VALVE | DURCO | CLARIFIER #2 | SHEET 08 | |
| 1 | 100-CK99-1406 | VALVE | ST-302-197 | BCA040ES | PUMP #1 OUTLET CHECK VALVE | CHEMLINE | CLARIFIER #1 SLUDGE SPLITTER TANK | SHEET 09 | |
| 1 | 100-CK99-1419 | VALVE | ST-302-197 | BCA040ES | PUMP #2 OUTLET CHECK VALVE | CHEMLINE | CLARIFIER #2 SLUDGE SPLITTER TANK | SHEET 09 | |
| 1 | 100-PG99-1405 | VALVE | ST-312-664 | 4"T4E11C11D033NW | PUMP #1 INLET ISOLATION VALVE | DURCO | CLARIFIER #1 SLUDGE SPLITTER TANK | SHEET 09 | |
| 1 | 100-PG99-1407 | VALVE | ST-312-664 | 4"T4E11C11D033NW | PUMP #1 OUTLET ISOLATION VALVE | DURCO | CLARIFIER #1 SLUDGE SPLITTER TANK | SHEET 09 | |
| 1 | 100-PG99-1418 | VALVE | ST-312-664 | 4"T4E11C11D033NW | PUMP #2 INLET ISOLATION VALVE | DURCO | CLARIFIER #2 SLUDGE SPLITTER TANK | SHEET 09 | |
| 1 | 100-PG99-1420 | VALVE | ST-312-664 | 4"T4E11C11D033NW | PUMP #2 OUTLET ISOLATION VALVE | DURCO | CLARIFIER #2 SLUDGE SPLITTER TANK | SHEET 09 | |
| 1 | 100-PV99-1404 | VALVE | ST-312-664 | 4"T4E11C11D033NW | RECIRCULATION ISOLATION VALVE | DURCO | CLARIFIER #1 SLUDGE SPLITTER TANK | SHEET 09 | |
| 1 | 100-PV99-1417 | VALVE | ST-312-664 | 4"T4E11C11D033NW | RECIRCULATION ISOLATION VALVE | DURCO | CLARIFIER #2 SLUDGE SPLITTER TANK | SHEET 09 | |
| 3 | 15-BA99-1492 | VALVE | VABLPV200249 | 21A005EC,TYPE21 | SKID INLET ISOLATION VALVE | CHEMLINE | TURBIDITY INSTRUMENTATION SKID #0901 | SHEET 09 | |
| 3 | 15-BA99-1493 | VALVE | VABLPV200249 | 21A005EC,TYPE21 | SKID INLET ISOLATION VALVE | CHEMLINE | TURBIDITY INSTRUMENTATION SKID #0902 | SHEET 09 | |
| 3 | 15-BA99-1494 | VALVE | VANEPV300121 | NGA005 | MANUAL CONTROL VALVE | CHEMLINE | TURBIDITY INSTRUMENTATION SKID #0901 | SHEET 09 | |
| 3 | 15-BA99-1496 | VALVE | VANEPV300121 | NGA005 | MANUAL CONTROL VALVE | CHEMLINE | TURBIDITY INSTRUMENTATION SKID #0902 | SHEET 09 | |
| 3 | 15-BA99-1497 | VALVE | VABLPV200249 | 21A005EC,TYPE21 | SKID OUTLET ISOLATION VALVE | CHEMLINE | TURBIDITY INSTRUMENTATION SKID #0901 | SHEET 09 | |
| 3 | 15-BA99-1498 | VALVE | VABLPV200249 | 21A005EC,TYPE21 | SKID OUTLET ISOLATION VALVE | CHEMLINE | TURBIDITY INSTRUMENTATION SKID #0902 | SHEET 09 | |
| 3 | 15-PRV99-1495 | VALVE | VAPSPV303450 | SR50-A-005-E-U | PRESSURE REGULATING VALVE | CHEMLINE | TURBIDITY INSTRUMENTATION SKID #0901 | SHEET 09 | |

| | | | | | |
|---|---|---|---|---|---|
| VEOLIA | VEOLIA DOC # | 5000220043 _EQLS_0001_GEN_VWT | | DATE | 2021-02-26 |
| | VEOLIA PROJECT# | 5000220043 | CLIENT REFERENCE # | 6526-S-265-605 / OC-989680 | |
| | EQUIPMENTS LIST | | | | |

| CLIENT | REV | DESCRIPTION | DATE | BY | VER. | APP. |
|---|---|---|---|---|---|---|
| A.E.M | 1 | For Approval | 2021-02-26 | C.E.K | E.D | T.S |
| | 2 | For Information | 2021-04-26 | C.E.K | E.D | T.S |
| | 3 | For Information II | 2021-07-09 | C.E.K | M.D.G | T.S |
| PROJECT | | | | | | |
| MELIADINE-BPC UPGRADE | | | | | | |
| | | | | | | |
| | | | | | | |

| REV | EQPMT TAG NO | EQUIPMENT TYPE | EQUIPMENT CODE | MODEL NUMBER | DESCRIPTION | SUPPLIER | LOCATION | P&ID NO | COMMENT |
|---|---|---|---|---|---|---|---|---|---|
| 3 | 15-PRV99-1499 | VALVE | VAPSPV303450 | SR50-A-005-E-U | PRESSURE REGULATING VALVE | CHEMLINE | TURBIDITY INSTRUMENTATION SKID #0902 | SHEET 09 | |
| 1 | 65AE6801417 | INSTRUMENT | IEPOTB200853 | LXV423.99.10100 | TSS/TURBISITY SENSOR | HACH | CLARIFIER #1 SLUDGE SPLITTER TANK | SHEET 09 | |
| 1 | 65AE6801427 | INSTRUMENT | IEPOTB200853 | LXV423.99.10100 | TSS/TURBISITY SENSOR | HACH | CLARIFIER #2 SLUDGE SPLITTER TANK | SHEET 09 | |
| 1 | 65AIT6801417 | INSTRUMENT | IECNGU301374 | LXV404.99.00502 | TSS/TURBISITY TRANSMITTER | HACH | CLARIFIER #1 SLUDGE SPLITTER TANK | SHEET 09 | |
| 1 | 65AIT6801427 | INSTRUMENT | IECNGU301374 | LXV404.99.00502 | TSS/TURBISITY TRANSMITTER | HACH | CLARIFIER #2 SLUDGE SPLITTER TANK | SHEET 09 | |
| 1 | 65PI6801416 | INSTRUMENT | ST-413-393 | 25-1009-SW-L-02L-60# + 04-3105S-02T-XCG | PRESSURE GAUGE | ASHCROFT | CLARIFIER #1 SLUDGE SPLITTER TANK | SHEET 09 | |
| 1 | 65PI6801426 | INSTRUMENT | ST-413-393 | 25-1009-SW-L-02L-60# + 04-3105S-02T-XCG | PRESSURE GAUGE | ASHCROFT | CLARIFIER #2 SLUDGE SPLITTER TANK | SHEET 09 | |
| 1 | 65PSR68007A | PUMP | ST-999-006 | M3H-CND-3/3 15HP 575V 1944 RPM IEEE 841 | SLUDGE SPLITTER TANK PUMP #1 | MCLANAHAN | CLARIFIER #1 SLUDGE SPLITTER TANK | SHEET 09 | |
| 1 | 65PSR68007B | PUMP | ST-999-006 | M3H-CND-3/3 15HP 575V 1944 RPM IEEE 841 | SLUDGE SPLITTER TANK PUMP #2 | MCLANAHAN | CLARIFIER #2 SLUDGE SPLITTER TANK | SHEET 09 | |
| 1 | 65PSR68007C | PUMP | ST-999-006 | M3H-CND-3/3 15HP 575V 1944 RPM IEEE 841 | SLUDGE SPLITTER TANK PUMP #3 | MCLANAHAN | SLUDGE SPLITTER TANK SPARE PUMP | SHEET 09 | |
| 1 | 65TNK68019 | MISC | ST-999-009 | N/A | SLUDGE SPLITTER TANK #1 | VWTC | CLARIFIER #1 SLUDGE SPLITTER TANK | SHEET 09 | |
| 1 | 65TNK68020 | MISC | ST-999-010 | N/A | SLUDGE SPLITTER TANK #2 | VWTC | CLARIFIER #2 SLUDGE SPLITTER TANK | SHEET 09 | |
| 1 | 65AGI68024 | MIXER | ST-999-007 | EVGX4-3.0/2205/575/W841/CWD (REACTION) | SLUDGE TANK AGITATOR | ENVIREQUIP | SLUDGE TANK | SHEET 10 | |
| 1 | N/A | MOTOR | Included with ST-999-011 | N/A | DISCFILTER DRIVE | HYDROTECH | DISCFILTER | SHEET 11 | |
| 1 | 20-BA99-1507 | VALVE | Included with PRCSGU344458 | N/A | ISOLATION CHEMICAL CLEANING OUTLET | VWTC | DISCFILTER | SHEET 11 | |
| 1 | 20-BA99-1508 | VALVE | Included with PRCSGU344458 | N/A | CHEMICAL CONNECTION FOR CLEANING UNIT | VWTC | DISCFILTER | SHEET 11 | |
| 1 | 20-BA99-1511 | VALVE | Included with PRCSGU344458 | N/A | RECIRCULATION ISOLATION ON CHEMICAL CLEANING UNIT | VWTC | DISCFILTER | SHEET 11 | |
| 1 | 20-BA99-1512 | VALVE | Included with PRCSGU344458 | N/A | BACKPRESSURE VALVE ON CHEMICAL CLEANING UNIT | VWTC | DISCFILTER | SHEET 11 | |
| 1 | 25-BA99-1509 | VALVE | Included with PRCSGU344458 | N/A | ISOLATION TO PUMP ON CHEMICAL CLEANING UNIT | VWTC | DISCFILTER | SHEET 11 | |
| 1 | 25-BA99-1510 | VALVE | Included with PRCSGU344458 | N/A | WATER SUPPLY ISOLATION ON CHEMICAL CLEANING UNIT | VWTC | DISCFILTER | SHEET 11 | |
| 1 | 50-BA99-1502 | VALVE | Included with ST-999-011 | N/A | MANUAL DRAIN VALVE | HYDROTECH | DISCFILTER | SHEET 11 | |
| 1 | 50-BA99-1503 | VALVE | Included with ST-999-011 | N/A | PUMP #1 RECIRUCLATION LINE ISOLATION VALVE | HYDROTECH | DISCFILTER | SHEET 11 | |
| 1 | 50-BA99-1504 | VALVE | Included with ST-999-011 | N/A | PUMP #2 RECIRUCLATION LINE ISOLATION VALVE | HYDROTECH | DISCFILTER | SHEET 11 | |
| 1 | 50-BA99-1505 | VALVE | Included with ST-999-011 | N/A | PUMP #1 RECIRUCLATION LINE ISOLATION VALVE | HYDROTECH | DISCFILTER | SHEET 11 | |
| 1 | 50-BA99-1506 | VALVE | Included with ST-999-011 | N/A | PUMP #2 RECIRUCLATION LINE ISOLATION VALVE | HYDROTECH | DISCFILTER | SHEET 11 | |
| 1 | 50-ST99-1501 | FILTER | Included with ST-999-011 | N/A | PUMPS STRAINER | HYDROTECH | DISCFILTER | SHEET 11 | |

| | | | | | |
|---|---|---|---|---|---|
| VEOLIA | VEOLIA DOC # | 5000220043 _EQLS_0001_GEN_VWT | | DATE | 2021-02-26 |
| | VEOLIA PROJECT# | 5000220043 | CLIENT REFERENCE # | 6526-S-265-605 / OC-989680 | |
| | EQUIPMENTS LIST | | | | |

| CLIENT | REV | DESCRIPTION | DATE | BY | VER. | APP. |
|---|---|---|---|---|---|---|
| A.E.M | 1 | For Approval | 2021-02-26 | C.E.K | E.D | T.S |
| | 2 | For Information | 2021-04-26 | C.E.K | E.D | T.S |
| | 3 | For Information II | 2021-07-09 | C.E.K | M.D.G | T.S |
| PROJECT | | | | | | |
| MELIADINE-BPC UPGRADE | | | | | | |
| | | | | | | |
| | | | | | | |

| REV | EQPMT TAG NO | EQUIPMENT TYPE | EQUIPMENT CODE | MODEL NUMBER | DESCRIPTION | SUPPLIER | LOCATION | P&ID NO | COMMENT |
|---|---|---|---|---|---|---|---|---|---|
| 1 | 65FIL68001 | STRUCTURE | ST-999-011 | N/A | DISCFILTER HPF2218-1F | HYDROTECH | DISCFILTER | SHEET 11 | |
| 1 | 65LIT6801502A | INSTRUMENT | Included with ST-999-011 | N/A | DISCFILTER INFLUENT LEVEL TRANSMITTER | HYDROTECH | DISCFILTER | SHEET 11 | |
| 1 | 65LIT6801502B | INSTRUMENT | Included with ST-999-011 | N/A | DISCFILTER EFFLUENT LEVEL TRANSMITTER | HYDROTECH | DISCFILTER | SHEET 11 | |
| 1 | 65PI6801511 | INSTRUMENT | Included with ST-999-011 | N/A | PUMP #1 OUTLET PRESSURE INDICATOR | HYDROTECH | DISCFILTER | SHEET 11 | |
| 1 | 65PI6801512 | VALVE | Included with PRCSGU344458 | N/A | PRESSURE GAUGE ON CHEMICAL CLEANING UNIT | VWTC | DISCFILTER | SHEET 11 | |
| 1 | 65PSH6801512 | INSTRUMENT | Included with ST-999-011 | N/A | PUMP #1 OUTLET LOW PRESSURE SWITCH | HYDROTECH | DISCFILTER | SHEET 11 | |
| 1 | 65PSR68008A | PUMP | Included with ST-999-011 | N/A | DISCFILTER BACKWASH WATER PUMP #1 | HYDROTECH | DISCFILTER | SHEET 11 | |
| 1 | 65PSR68008B | PUMP | Included with ST-999-011 | N/A | DISCFILTER BACKWASH WATER PUMP #2 | HYDROTECH | DISCFILTER | SHEET 11 | |
| 1 | P-110 | PUMP | Included with PRCSGU344458 | N/A | CHEMICAL CLEANING TROLLEY PUMP | VWTC | DISCFILTER | SHEET 11 | |
| 1 | SKD-1102 | SKID | PRCSGU344458 | N/A | CHEMICAL CLEANING TROLLEY | VWTC | DISCFILTER | SHEET 11 | |
| 1 | T-110 | TANK | Included with PRCSGU344458 | N/A | CHEMICAL CLEANING TANK | VWTC | DISCFILTER | SHEET 11 | |
| 3 | 15-BA99-0591 | VALVE | VABLPV200249 | 21A005EC,TYPE21 | SKID INLET ISOLATION VALVE | CHEMLINE | PH INSTRUMENTATION SKID #1202 | SHEET 12 | |
| 3 | 15-BA99-0592 | VALVE | VANEPV300121 | NGA005 | MANUAL CONTROL VALVE | CHEMLINE | PH INSTRUMENTATION SKID #1202 | SHEET 12 | |
| 3 | 15-BA99-0593 | VALVE | VABLPV200249 | 21A005EC,TYPE21 | SKID OUTLET ISOLATION VALVE | CHEMLINE | PH INSTRUMENTATION SKID #1202 | SHEET 12 | |
| 3 | 15-BA99-0594 | VALVE | VABLPV200249 | 21A005EC,TYPE21 | SKID INLET ISOLATION VALVE | CHEMLINE | TURBIDITY + SWAN INSTRUMENTATION SKID | SHEET 12 | |
| 3 | 15-BA99-0595 | VALVE | VABLPV200249 | 21A005EC,TYPE21 | SKID OUTLET ISOLATION VALVE | CHEMLINE | TURBIDITY + SWAN INSTRUMENTATION SKID | SHEET 12 | |
| 3 | 15-BA99-0596 | VALVE | VANEPV300121 | NGA005 | MANUAL CONTROL VALVE | CHEMLINE | TURBIDITY + SWAN INSTRUMENTATION SKID | SHEET 12 | |
| 3 | 15-BA99-0597 | VALVE | VANEPV300121 | NGA005 | MANUAL CONTROL VALVE | CHEMLINE | TURBIDITY + SWAN INSTRUMENTATION SKID | SHEET 12 | |
| 3 | 15-BA99-0598 | VALVE | VANEPV300121 | NGA005 | MANUAL CONTROL VALVE | CHEMLINE | TURBIDITY + SWAN INSTRUMENTATION SKID | SHEET 12 | |
| 3 | 15-PRV99-0599 | VALVE | VAPSPV303450 | SR50-A-005-E-U | PRESSURE REGULATING VALVE | CHEMLINE | TURBIDITY + SWAN INSTRUMENTATION SKID | SHEET 12 | |
| 3 | 65AE6930532 | INSTRUMENT | IEPOTB200853 | LXV423.99.10100 | TREATED WATER TSS/TURBISITY SENSOR | HACH | FINAL PH CORRECTION TANK | SHEET 12 | |
| 3 | 65AIT6930532 | INSTRUMENT | IECNGU301374 | LXV404.99.00502 | TREATED WATER TSS/TURBISITY TRANSMITTER | HACH | FINAL PH CORRECTION TANK | SHEET 12 | |
| 3 | 65AIT6930533 | INSTRUMENT | IECNDF315375 | A-25.441.600.0/ A-96.250.631 | TREATED WATER TOTAL CHLORINE ANALYZER | SWAN | FINAL PH CORRECTION TANK | SHEET 12 | |
| 1 | 65PSR68009A | PUMP | ST-999-008 | NP65-50-160 | BACKWASH PUMP #1 | MUNSCH | BACKWASH WASTEWATER TANK | SHEET 13 | |
| 1 | 65PSR68009B | PUMP | ST-999-008 | NP65-50-160 | BACKWASH PUMP #2 | MUNSCH | BACKWASH WASTEWATER TANK | SHEET 13 | |
| 1 | 15-BA99-1604 | VALVE | VABLSS305296 | A201 (1/2") | PRESSURE GAUGE ISOLATION VALVE | PMP | ACTIVATED CARBON PREPATION SYSTEM #1 | SHEET 14 | |

| | | | | | |
|---|---|---|---|---|---|
| VEOLIA | VEOLIA DOC # | 5000220043 _EQLS_0001_GEN_VWT | | DATE | 2021-02-26 |
| | VEOLIA PROJECT# | 5000220043 | CLIENT REFERENCE # | 6526-S-265-605 / OC-989680 | |
| | EQUIPMENTS LIST | | | | |

| CLIENT | REV | DESCRIPTION | DATE | BY | VER. | APP. |
|---|---|---|---|---|---|---|
| A.E.M | 1 | For Approval | 2021-02-26 | C.E.K | E.D | T.S |
| | 2 | For Information | 2021-04-26 | C.E.K | E.D | T.S |
| | 3 | For Information II | 2021-07-09 | C.E.K | M.D.G | T.S |
| PROJECT | | | | | | |
| MELIADINE-BPC UPGRADE | | | | | | |
| | | | | | | |
| | | | | | | |

| REV | EQPMT TAG NO | EQUIPMENT TYPE | EQUIPMENT CODE | MODEL NUMBER | DESCRIPTION | SUPPLIER | LOCATION | P&ID NO | COMMENT |
|---|---|---|---|---|---|---|---|---|---|
| 1 | 15-BA99-1608 | VALVE | VABLSS305296 | A201 (1/2") | PRESSURE GAUGE ISOLATION VALVE | PMP | ACTIVATED CARBON PREPATION SYSTEM #1 | SHEET 14 | |
| 1 | 15-BA99-1611 | VALVE | VABLSS305296 | A201 (1/2") | AIR ISOLATION VALVE | PMP | ACTIVATED CARBON PREPATION SYSTEM #1 | SHEET 14 | |
| 1 | 15-BA99-1613 | VALVE | VABLSS305296 | A201 (1/2") | AIR ISOLATION VALVE | PMP | ACTIVATED CARBON PREPATION SYSTEM #1 | SHEET 14 | |
| 1 | 15-CK99-1602 | MISC | EJGUEJ200041 | IQ-56-PVC | COAGULANT INJECTION QUILL | PRIMARY FLUID | ACTIVATED CARBON PREPATION SYSTEM #1 | SHEET 14 | |
| 1 | 15-CK99-1602-BA | VALVE | VABLPV200249 | 21A005EC,TYPE21 | COAGULANT INLET ISOLATION VALVE | CHEMLINE | ACTIVATED CARBON PREPATION SYSTEM #1 | SHEET 14 | |
| 1 | 15-GL99-1606 | VALVE | VAGLPV301163 | GVA015ET | WASHDOWN LINE GLOBE VALVE | CHEMLINE | ACTIVATED CARBON PREPATION SYSTEM #1 | SHEET 14 | |
| 1 | 15-RV99-1612 | VALVE | ST-309-900 | R-119-04C | AIR PRESSURE REGULATING VALVE | WATTS | ACTIVATED CARBON PREPATION SYSTEM #1 | SHEET 14 | |
| 1 | 250-GA99-1609 | VALVE | CMSPGU320683 | VLC0250P3/CMG0250 | HOPPER ISOLATION VALVE | WAM | ACTIVATED CARBON PREPATION SYSTEM #1 | SHEET 14 | |
| 1 | 40-BA99-1605 | VALVE | VABLPV200253 | 21A015EC | WASHDOWN LINE ISOLATION VALVE | CHEMLINE | ACTIVATED CARBON PREPATION SYSTEM #1 | SHEET 14 | |
| 1 | 50-BA99-1601 | VALVE | VABLPV200254 | 21A020EC,TYPE21 | SERVICE WATER INLET ISOLATION VALVE | CHEMLINE | ACTIVATED CARBON PREPATION SYSTEM #1 | SHEET 14 | |
| 1 | 50-BA99-1603 | VALVE | VABLPV200254 | 21A020EC,TYPE21 | SERVICE WATER ISOLATION VALVE | CHEMLINE | ACTIVATED CARBON PREPATION SYSTEM #1 | SHEET 14 | |
| 1 | 65-CK99-1608 | VALVE | ST-302-384 | RF-DBJ-C-NR-125-2.5" | ACTIVATED CARBON SLURRY CHECK VALVE | CLA-VAL | ACTIVATED CARBON PREPATION SYSTEM #1 | SHEET 14 | |
| 1 | 65CVI68002 | MOTOR | ST-999-013 | MBF/073.A/TT/UD4.SST.UO2 | ACTIVATED CARBON SCREW FEEDER | WAM | ACTIVATED CARBON PREPATION SYSTEM #1 | SHEET 14 | |
| 1 | 65EQM68002 | MISC | ST-999-014 | NCTLST5 | ACTIVATED CARBON EDUCTOR | ELMRIDGE | ACTIVATED CARBON PREPATION SYSTEM #1 | SHEET 14 | |
| 1 | 65FI6801607 | INSTRUMENT | ST-449-158 | FSA03000 | WASHDOWN LINE FLOWMETER | CHEMLINE | ACTIVATED CARBON PREPATION SYSTEM #1 | SHEET 14 | |
| 1 | 65FY6801602 | VALVE | VASDBR200093 | 8210G100 -120 VAC | SERVICE WATER INLET SOLENOID VALVE | ASCO | ACTIVATED CARBON PREPATION SYSTEM #1 | SHEET 14 | |
| 1 | 65FY6801613 | VALVE | ST-304-700 | S63 | AIR SOLENOIDE VALVE | BRAY | ACTIVATED CARBON PREPATION SYSTEM #1 | SHEET 14 | |
| 1 | 65HOP68007 | MISC | CMSPGU320685 | SBB-125.304/Cone 304 | SUPER SACK CONE | WAM | ACTIVATED CARBON PREPATION SYSTEM #1 | SHEET 14 | |
| 1 | 65LSH6801612 | INSTRUMENT | ST-451-405 | FTL50-SGM2AA5E4A+Z1 | WETTING CONE HIGH LEVEL SWITCH | ENDRESS+HAUSER | ACTIVATED CARBON PREPATION SYSTEM #1 | SHEET 14 | |
| 1 | 65LSL6801611 | INSTRUMENT | IEPOLE202138 | FTE31-C2D111-A | HOPPER LOW LEVEL SWITCH | ENDRESS+HAUSER | ACTIVATED CARBON PREPATION SYSTEM #1 | SHEET 14 | |
| 1 | 65MIX68002 | MOTOR | Included with ST-999-013 | N/A | ACTIVATED CARBON HOPPER AGITATOR | WAM | ACTIVATED CARBON PREPATION SYSTEM #1 | SHEET 14 | |
| 1 | 65PI6801606 | INSTRUMENT | ST-413-394 | 25-1009-SW-L-04L-160# | SERVICE WATER PRESSURE GAUGE | ASHCROFT | ACTIVATED CARBON PREPATION SYSTEM #1 | SHEET 14 | |
| 1 | 65PI6801613 | INSTRUMENT | IMPSGG315787 | 25-1009-SW-L-02L-160# + 04-310SS-02T-XCG | ACTIVATED CARBON SLURRY PRESSURE GAUGE | ASHCROFT | ACTIVATED CARBON PREPATION SYSTEM #1 | SHEET 14 | |
| 1 | 65PSL6801601 | INSTRUMENT | IEPOPS201955 | 836T-T253J | SERVICE WATER PRESSURE SWITCH | ALLEN BRADLEY | ACTIVATED CARBON PREPATION SYSTEM #1 | SHEET 14 | |
| 1 | 15-BA99-1616 | VALVE | VABLSS305296 | A201 (1/2") | PRESSURE GAUGE ISOLATION VALVE | PMP | ACTIVATED CARBON PREPATION SYSTEM #2 | SHEET 15 | |
| 1 | 15-BA99-1620 | VALVE | VABLSS305296 | A201 (1/2") | PRESSURE GAUGE ISOLATION VALVE | PMP | ACTIVATED CARBON PREPATION SYSTEM #2 | SHEET 15 | |

| | | | | | |
|---|---|---|---|---|---|
| VEOLIA | VEOLIA DOC # | 5000220043 _EQLS_0001_GEN_VWT | | DATE | 2021-02-26 |
| | VEOLIA PROJECT# | 5000220043 | CLIENT REFERENCE # | 6526-S-265-605 / OC-989680 | |
| | EQUIPMENTS LIST | | | | |

| CLIENT | REV | DESCRIPTION | DATE | BY | VER. | APP. |
|---|---|---|---|---|---|---|
| A.E.M | 1 | For Approval | 2021-02-26 | C.E.K | E.D | T.S |
| | 2 | For Information | 2021-04-26 | C.E.K | E.D | T.S |
| | 3 | For Information II | 2021-07-09 | C.E.K | M.D.G | T.S |
| PROJECT | | | | | | |
| MELIADINE-BPC UPGRADE | | | | | | |
| | | | | | | |
| | | | | | | |

| REV | EQPMT TAG NO | EQUIPMENT TYPE | EQUIPMENT CODE | MODEL NUMBER | DESCRIPTION | SUPPLIER | LOCATION | P&ID NO | COMMENT |
|---|---|---|---|---|---|---|---|---|---|
| 1 | 15-BA99-1623 | VALVE | VABLSS305296 | A201 (1/2") | AIR ISOLATION VALVE | PMP | ACTIVATED CARBON PREPATION SYSTEM #2 | SHEET 15 | |
| 1 | 15-BA99-1624 | VALVE | VABLSS305296 | A201 (1/2") | AIR ISOLATION VALVE | PMP | ACTIVATED CARBON PREPATION SYSTEM #2 | SHEET 15 | |
| 1 | 15-CK99-1614 | MISC | EJGUEJ200041 | IQ-56-PVC | COAGULANT INJECTION QUILL | PRIMARY FLUID | ACTIVATED CARBON PREPATION SYSTEM #2 | SHEET 15 | |
| 1 | 15-CK99-1614-BA | VALVE | VABLPV200249 | 21A005EC,TYPE21 | COAGULANT INLET ISOLATION VALVE | CHEMLINE | ACTIVATED CARBON PREPATION SYSTEM #2 | SHEET 15 | |
| 1 | 15-GL99-1618 | VALVE | VAGLPV301163 | GVA015ET | WASHDOWN LINE GLOBE VALVE | CHEMLINE | ACTIVATED CARBON PREPATION SYSTEM #2 | SHEET 15 | |
| 1 | 15-RV99-1625 | VALVE | ST-309-900 | R-119-04C | AIR PRESSURE REGULATING VALVE | WATTS | ACTIVATED CARBON PREPATION SYSTEM #2 | SHEET 15 | |
| 1 | 250-GA99-1621 | VALVE | CMSPGU320683 | VLC0250P3/CMG0250 | HOPPER ISOLATION VALVE | WAM | ACTIVATED CARBON PREPATION SYSTEM #2 | SHEET 15 | |
| 1 | 40-BA99-1617 | VALVE | VABLPV200253 | 21A015EC | WASHDOWN LINE ISOLATION VALVE | CHEMLINE | ACTIVATED CARBON PREPATION SYSTEM #2 | SHEET 15 | |
| 1 | 50-BA99-1613 | VALVE | VABLPV200254 | 21A020EC,TYPE21 | SERVICE WATER INLET ISOLATION VALVE | CHEMLINE | ACTIVATED CARBON PREPATION SYSTEM #2 | SHEET 15 | |
| 1 | 50-BA99-1615 | VALVE | VABLPV200254 | 21A020EC,TYPE21 | SERVICE WATER ISOLATION VALVE | CHEMLINE | ACTIVATED CARBON PREPATION SYSTEM #2 | SHEET 15 | |
| 1 | 65-CK99-1619 | VALVE | ST-302-384 | RF-DBJ-C-NR-125-2.5" | ACTIVATED CARBON SLURRY CHECK VALVE | CLA-VAL | ACTIVATED CARBON PREPATION SYSTEM #2 | SHEET 15 | |
| 1 | 65CVI68003 | MOTOR | ST-999-013 | MBF/073.A/TT/UD4.SST.UO2 | ACTIVATED CARBON SCREW FEEDER | WAM | ACTIVATED CARBON PREPATION SYSTEM #2 | SHEET 15 | |
| 1 | 65EQM68003 | MISC | ST-999-014 | NCTLST5 | ACTIVATED CARBON EDUCTOR | ELMRIDGE | ACTIVATED CARBON PREPATION SYSTEM #2 | SHEET 15 | |
| 1 | 65FI6801627 | INSTRUMENT | ST-449-158 | FSA03000 | WASHDOWN LINE FLOWMETER | CHEMLINE | ACTIVATED CARBON PREPATION SYSTEM #2 | SHEET 15 | |
| 1 | 65FY6801622 | VALVE | VASDBR200093 | 8210G100 -120 VAC | SERVICE WATER INLET SOLENOID VALVE | ASCO | ACTIVATED CARBON PREPATION SYSTEM #2 | SHEET 15 | |
| 1 | 65FY6801633 | VALVE | ST-304-700 | S63 | AIR SOLENOIDE VALVE | BRAY | ACTIVATED CARBON PREPATION SYSTEM #2 | SHEET 15 | |
| 1 | 65HOP68003 | MISC | CMSPGU320685 | SBB-125.304/Cone 304 | SUPER SACK CONE | WAM | ACTIVATED CARBON PREPATION SYSTEM #2 | SHEET 15 | |
| 1 | 65LSH6801632 | INSTRUMENT | ST-451-405 | FTL50-SGM2AA5E4A+Z1 | WETTING CONE HIGH LEVEL SWITCH | ENDRESS+HAUSER | ACTIVATED CARBON PREPATION SYSTEM #2 | SHEET 15 | |
| 1 | 65LSL6801631 | INSTRUMENT | IEPOLE202138 | FTE31-C2D111-A | HOPPER LOW LEVEL SWITCH | ENDRESS+HAUSER | ACTIVATED CARBON PREPATION SYSTEM #2 | SHEET 15 | |
| 1 | 65MIX68003 | MOTOR | Included with ST-999-013 | N/A | ACTIVATED CARBON HOPPER AGITATOR | WAM | ACTIVATED CARBON PREPATION SYSTEM #2 | SHEET 15 | |
| 1 | 65PI6801626 | INSTRUMENT | ST-413-394 | 25-1009-SW-L-04L-160# | SERVICE WATER PRESSURE GAUGE | ASHCROFT | ACTIVATED CARBON PREPATION SYSTEM #2 | SHEET 15 | |
| 1 | 65PI68016313 | INSTRUMENT | IMPSGG315787 | 25-1009-SW-L-02L-160# + 04-310SS-02T-XCG | ACTIVATED CARBON SLURRY PRESSURE GAUGE | ASHCROFT | ACTIVATED CARBON PREPATION SYSTEM #2 | SHEET 15 | |
| 1 | 65PSL6801621 | INSTRUMENT | IEPOPS201955 | 836T-T253J | SERVICE WATER PRESSURE SWITCH | ALLEN BRADLEY | ACTIVATED CARBON PREPATION SYSTEM #2 | SHEET 15 | |
| 3 | 15-BA99-1183 | VALVE | VABLPV200243 | 21A005VC,TYPE21 | SERVICE WATER ISOLATION VALVE #1 | CHEMLINE | CHLORINE DILUTION SKID #1601 | SHEET 16 | |
| 3 | 15-BA99-1184 | VALVE | VABLPV200243 | 21A005VC,TYPE21 | SERVICE WATER ISOLATION VALVE #2 | CHEMLINE | CHLORINE DILUTION SKID #1601 | SHEET 16 | |
| 3 | 15-BA99-1187 | VALVE | VABLPV200243 | 21A005VC,TYPE21 | SAMPLE ISOLATION VALVE #1 | CHEMLINE | CHLORINE DILUTION SKID #1601 | SHEET 16 | |

| | | | | | |
|---|---|---|---|---|---|
| VEOLIA | VEOLIA DOC # | 5000220043 _EQLS_0001_GEN_VWT | | DATE | 2021-02-26 |
| | VEOLIA PROJECT# | 5000220043 | CLIENT REFERENCE # | 6526-S-265-605 / OC-989680 | |
| | EQUIPMENTS LIST | | | | |

| CLIENT | REV | DESCRIPTION | DATE | BY | VER. | APP. |
|---|---|---|---|---|---|---|
| A.E.M | 1 | For Approval | 2021-02-26 | C.E.K | E.D | T.S |
| | 2 | For Information | 2021-04-26 | C.E.K | E.D | T.S |
| | 3 | For Information II | 2021-07-09 | C.E.K | M.D.G | T.S |
| PROJECT | | | | | | |
| MELIADINE-BPC UPGRADE | | | | | | |
| | | | | | | |
| | | | | | | |

| REV | EQPMT TAG NO | EQUIPMENT TYPE | EQUIPMENT CODE | MODEL NUMBER | DESCRIPTION | SUPPLIER | LOCATION | P&ID NO | COMMENT |
|---|---|---|---|---|---|---|---|---|---|
| 3 | 15-BA99-1189 | VALVE | VABLPV200243 | 21A005VC,TYPE21 | SAMPLE ISOLATION VALVE #2 | CHEMLINE | CHLORINE DILUTION SKID #1601 | SHEET 16 | |
| 3 | 15-BRP99-1167 | VALVE | VARFPV309378 | SB12A005VU | BACK PRESSURE VALVE | CHEMLINE | CHLORINE DILUTION SKID #1601 | SHEET 16 | |
| 3 | 15-GV99-1171 | VALVE | VAGLPV308518 | GVA005T | SAMPLE CONTROL VALVE #1 | CHEMLINE | CHLORINE DILUTION SKID #1601 | SHEET 16 | |
| 3 | 15-GV99-1172 | VALVE | VAGLPV308518 | GVA005T | SAMPLE CONTROL VALVE #2 | CHEMLINE | CHLORINE DILUTION SKID #1601 | SHEET 16 | |
| 3 | 15-NV99-1179 | VALVE | VANEPV300121 | NGA005 | SERVICE WATER CONTROL VALVE #1 | CHEMLINE | CHLORINE DILUTION SKID #1601 | SHEET 16 | |
| 3 | 15-NV99-1180 | VALVE | VANEPV300121 | NGA005 | SERVICE WATER CONTROL VALVE #2 | CHEMLINE | CHLORINE DILUTION SKID #1601 | SHEET 16 | |
| 3 | 20-BA99-1191 | VALVE | VABLPV200244 | 21A007VC,TYPE21 | SETTLING DRAIN ISOLATION VALVE | CHEMLINE | CHLORINE DILUTION SKID #1601 | SHEET 16 | |
| 3 | 25-BA99-1169 | VALVE | FPSTPV300161 | YSA010VC-24 | Y-STRAINER | CHEMLINE | CHLORINE DILUTION SKID #1601 | SHEET 16 | |
| 2 | 65AIT6801116 | INSTRUMENT | IECNDF302211 | A-25.441.100.0/ A-81.420.060/ A-96.250.571 | FREE CHLORINE ANALYZER | SWAN | CHLORINE DILUTION SKID #1601 | SHEET 16 | |
| 2 | 65AIT6801117 | INSTRUMENT | IECNDF315375 | A-25.441.600.0/ A-96.250.631 | TOTAL CHLORINE ANALYZER | SWAN | CHLORINE DILUTION SKID #1601 | SHEET 16 | |
| 3 | 65-FI99-1175 | VALVE | IMFWGG305925 | FCA00020 | SAMPLE ROTOMETER #1 | CHEMLINE | CHLORINE DILUTION SKID #1601 | SHEET 16 | |
| 3 | 65-FI99-1176 | VALVE | IMFWGG305925 | FCA00020 | SAMPLE ROTOMETER #2 | CHEMLINE | CHLORINE DILUTION SKID #1601 | SHEET 16 | |
| 3 | 65FIT6801116 | INSTRUMENT | BY OTHERS | 8711-0.15" | SERVICE WATER FLOWMETER | ROSEMOUNT | CHLORINE DILUTION SKID #1601 | SHEET 16 | |
| 3 | 65FIT6801117 | INSTRUMENT | BY OTHERS | 8711-0.15" | SERVICE WATER FLOWMETER | ROSEMOUNT | CHLORINE DILUTION SKID #1601 | SHEET 16 | |
| 3 | 65PWA68011 | PUMP | PUCGPP354049 | MD-15RT-115NL | TRANSFER PUMP | IWAKI | CHLORINE DILUTION SKID #1601 | SHEET 16 | |
| 3 | 15-BA99-1185 | VALVE | VABLPV200243 | 21A005VC,TYPE21 | SERVICE WATER ISOLATION VALVE #1 | CHEMLINE | CHLORINE DILUTION SKID #1701 | SHEET 17 | |
| 3 | 15-BA99-1186 | VALVE | VABLPV200243 | 21A005VC,TYPE21 | SERVICE WATER ISOLATION VALVE #2 | CHEMLINE | CHLORINE DILUTION SKID #1701 | SHEET 17 | |
| 3 | 15-BA99-1188 | VALVE | VABLPV200243 | 21A005VC,TYPE21 | SAMPLE ISOLATION VALVE #1 | CHEMLINE | CHLORINE DILUTION SKID #1701 | SHEET 17 | |
| 3 | 15-BA99-1190 | VALVE | VABLPV200243 | 21A005VC,TYPE21 | SAMPLE ISOLATION VALVE #2 | CHEMLINE | CHLORINE DILUTION SKID #1701 | SHEET 17 | |
| 3 | 15-BRP99-1168 | VALVE | VARFPV309378 | SB12A005VU | BACK PRESSURE VALVE | CHEMLINE | CHLORINE DILUTION SKID #1701 | SHEET 17 | |
| 3 | 15-GV99-1173 | VALVE | VAGLPV308518 | GVA005T | SAMPLE CONTROL VALVE #1 | CHEMLINE | CHLORINE DILUTION SKID #1701 | SHEET 17 | |
| 3 | 15-GV99-1174 | VALVE | VAGLPV308518 | GVA005T | SAMPLE CONTROL VALVE #2 | CHEMLINE | CHLORINE DILUTION SKID #1701 | SHEET 17 | |
| 3 | 15-NV99-1181 | VALVE | VANEPV300121 | NGA005 | SERVICE WATER CONTROL VALVE #1 | CHEMLINE | CHLORINE DILUTION SKID #1701 | SHEET 17 | |
| 3 | 15-NV99-1182 | VALVE | VANEPV300121 | NGA005 | SERVICE WATER CONTROL VALVE #2 | CHEMLINE | CHLORINE DILUTION SKID #1701 | SHEET 17 | |
| 3 | 20-BA99-1192 | VALVE | VABLPV200244 | 21A007VC,TYPE21 | SETTLING DRAIN ISOLATION VALVE | CHEMLINE | CHLORINE DILUTION SKID #1701 | SHEET 17 | |
| 3 | 25-BA99-1170 | VALVE | FPSTPV300161 | YSA010VC-24 | Y-STRAINER | CHEMLINE | CHLORINE DILUTION SKID #1701 | SHEET 17 | |

| | | | | | |
|---|---|---|---|---|---|
| VEOLIA | VEOLIA DOC # | 5000220043 _EQLS_0001_GEN_VWT | | DATE | 2021-02-26 |
| | VEOLIA PROJECT# | 5000220043 | CLIENT REFERENCE # | 6526-S-265-605 / OC-989680 | |
| | EQUIPMENTS LIST | | | | |

| CLIENT | REV | DESCRIPTION | DATE | BY | VER. | APP. |
|---|---|---|---|---|---|---|
| A.E.M | 1 | For Approval | 2021-02-26 | C.E.K | E.D | T.S |
| | 2 | For Information | 2021-04-26 | C.E.K | E.D | T.S |
| | 3 | For Information II | 2021-07-09 | C.E.K | M.D.G | T.S |
| PROJECT | | | | | | |
| MELIADINE-BPC UPGRADE | | | | | | |
| | | | | | | |
| | | | | | | |

| REV | EQPMT TAG NO | EQUIPMENT TYPE | EQUIPMENT CODE | MODEL NUMBER | DESCRIPTION | SUPPLIER | LOCATION | P&ID NO | COMMENT |
|---|---|---|---|---|---|---|---|---|---|
| 2 | 65AIT6801141 | INSTRUMENT | IECNDF302211 | A-25.441.100.0/ A-81.420.060/ A-96.250.571 | FREE CHLORINE ANALYZER | SWAN | CHLORINE DILUTION SKID #1701 | SHEET 17 | |
| 2 | 65AIT6801142 | INSTRUMENT | IECNDF315375 | A-25.441.600.0/ A-96.250.631 | TOTAL CHLORINE ANALYZER | SWAN | CHLORINE DILUTION SKID #1701 | SHEET 17 | |
| 3 | 65-FI99-1177 | VALVE | IMFWGG305925 | FCA00020 | SAMPLE ROTOMETER #1 | CHEMLINE | CHLORINE DILUTION SKID #1701 | SHEET 17 | |
| 3 | 65-FI99-1178 | VALVE | IMFWGG305925 | FCA00020 | SAMPLE ROTOMETER #2 | CHEMLINE | CHLORINE DILUTION SKID #1701 | SHEET 17 | |
| 3 | 65FIT6801141 | INSTRUMENT | BY OTHERS | 8711-0.15" | SERVICE WATER FLOWMETER | ROSEMOUNT | CHLORINE DILUTION SKID #1701 | SHEET 17 | |
| 3 | 65FIT6801142 | INSTRUMENT | BY OTHERS | 8711-0.15" | SERVICE WATER FLOWMETER | ROSEMOUNT | CHLORINE DILUTION SKID #1701 | SHEET 17 | |
| 3 | 65PWA68012 | PUMP | PUCGPP354049 | MD-15RT-115NL | TRANSFER PUMP | IWAKI | CHLORINE DILUTION SKID #1701 | SHEET 17 | |

VEOLIA

| | | | |
|---|---|---|---|
| VEOLIA DOC # | 5000220043_INLS_0001_GEN_VWT | DATE | 2021-02-26 |
| VEOLIA PROJECT# | 5000220043 | CLIENT REFERENCE # | 6526-S-265-605 / OC-989680 |

**INSTRUMENTATION LIST**

| CLIENT | REV | DESCRIPTION | DATE | BY | VER. | APP. |
|---|---|---|---|---|---|---|
| A.E.M | 1 | For Approval | 2021-02-26 | C.E.K | E.D | T.S |
| | 2 | For Information | 2021-04-28 | C.E.K | E.D | T.S |
| | 3 | For Information II | 2021-07-09 | C.E.K | M.D.G | T.S |
| PROJECT | | | | | | |
| MELIADINE-BPC UPGRADE | | | | | | |

| REV | EQPMT TAG NO | EQUIPMENT CODE | MANUFACTURER | DETAILED EQUIPMENT DESCRIPTION | MODEL NUMBER | CONDENSED INFO 1 | CONDENSED INFO 2 | CONDENSED INFO 3 | LOCATION | P&ID NO | COMMENTS |
|---|---|---|---|---|---|---|---|---|---|---|---|
| 1 | 6SAIT6801101 | C/W ST-445-200 | TETHYS | RAW WATER AMMONIA TRANSMITTER | N/A | N/A | N/A | N/A | CHLORINATION REACTOR | SHEET 05 | |
| 1 | 6SAE6801102 | IEPOTB200853 | HACH | RAW WATER TSS/TURBISITY SENSOR | LXV423.99.10100 | SOLITAX IMMERSION SENSOR FOR TURBIDITY AND INLINE SC sc PVC WITH WIPER 0.001-4000 NTU, 0.001 mg/L - 50 g/L/MANUFACTURER: HACH/ MODEL: LXV423.99.10100 | N/A | N/A | CHLORINATION REACTOR | SHEET 05 | |
| 1 | 6SAIT6801102 | IECNGU301374 | HACH | RAW WATER TSS/TURBISITY TRANSMITTER | LXV404.99.00502 | SC200 UNIVERSAL CONTROLLER: 100-240 VAC WITH ONE DIGITAL SENSOR INPUT AND TWO 4-20 MA OUTPUTS // MODEL # LXV404.99.00502 // OPERATING TEMPERATURE RANGE: -20 - 60 °C AT 0 - 95% RH (NON-CONDENSING) // | POWER REQUIREMENTS (HZ): 50 - 60 HZ POWER REQUIREMENTS (VOLTAGE): 100-240VAC // SENSOR INPUT #1: DIGITAL // CLASS I, DIV. 2 (GROUPS. A, B, C, AND D) | N/A | CHLORINATION REACTOR | SHEET 05 | |
| 1 | 6SAE6801101 | ST-445-200 | TETHYS | RAW WATER AMMONIA ANALYSER | UV500 | TETHYS UV 500 WATER NH4 ANALYZER// MANUFACTURER: TETHYS// SUPPLIER: AVENYS// BASIC UNIT:COLOR GRAPHIC DISPLAY 640x320 WITH TOUCH SCREEN//SAMPLE FLOW: 0-0.5 L/min// SAMPLE PRESSURE: 0-0.5 Bar// SAMPLE TEMPERATURE: 0-30 C// WET PART MATERIAL: PHARMED,GLASS | MEASURING TIME: 3 sec// RANGE FOR NH4: 0-100mg/l //USB PORT// AUTO. CLEANING SYST.// 90-260 VAC 50-60 Hz// IP65 NEMA4X// SS 316// DIM: 525Hx345Wx260Dmm// MOUNTING LEGS FOR WALL// CE, EN 61010-1, EN 61326 | C/W BUILT IN SAMPLING PUMP P-SPL-MO-2//SPECTRO500 SPECTROGRAPH: 180-750 nm//STRIP500 FOR UV ABSORPTION IN GAS PHASE NH4-500: 0-100PPM NH4+// OUT4-20-500-4-20mA OUTPUT MODULE//RELAYS00: RELAY MODULE | CHLORINATION REACTOR | SHEET 05 | |
| 1 | 6SLSHH6801131 | IESWLE201156 | FLYGT | HIGH LEVEL SWITCH FLOAT | ENM-10 (13m) | LEVEL SWITCH/MANUFACTURER:FLYGT// MODEL: ENM-10 (13m) | N/A | N/A | DECHLORINATION REACTOR | SHEET 06 | |
| 1 | 6SPI6801231 | ST-413-393 | ASHCROFT | RECIRCULATION LINE #2 PRESSURE GAUGE | 25-1009-SW-L-02L-60# + 04-310SS-02T-XCG | PRESSURE GAUGE C/W ISOLATOR // MANFUACTURER : ASHCROFT // MODEL : 25 1009-SW-L-02L-60# + 04-310SS-02T-XCG // 2S: 2 1/2" DIAL RANGE : 0/60 PSI //SW: 316SS //L: GLYCERIN FILLED //L: LWR MNT CONN // ISOLATOR - 04: PROCESS CONN: 1/2" MNPT - 310:NO FLUSH PRT | N/A | N/A | CLARIFIER #1 | SHEET 07 | |
| 1 | 6SAE6801222 | IEPOTB200853 | HACH | TSS/TURBISITY SENSOR | LXV423.99.10100 | SOLITAX IMMERSION SENSOR FOR TURBIDITY AND INLINE SC sc PVC WITH WIPER 0.001-4000 NTU, 0.001 mg/L - 50 g/L/MANUFACTURER: HACH/ MODEL: LXV423.99.10100 | N/A | N/A | CLARIFIER #1 | SHEET 07 | |
| 1 | 6SAIT6801222 | IECNGU301374 | HACH | TSS/TURBISITY TRANSMITTER | LXV404.99.00502 | SC200 UNIVERSAL CONTROLLER: 100-240 VAC WITH ONE DIGITAL SENSOR INPUT AND TWO 4-20 MA OUTPUTS // MODEL # LXV404.99.00502 // OPERATING TEMPERATURE RANGE: -20 - 60 °C AT 0 - 95% RH (NON-CONDENSING) // | POWER REQUIREMENTS (HZ): 50 - 60 HZ POWER REQUIREMENTS (VOLTAGE): 100-240VAC // SENSOR INPUT #1: DIGITAL // CLASS I, DIV. 2 (GROUPS. A, B, C, AND D) | N/A | CLARIFIER #1 | SHEET 07 | |
| 1 | 6SLSHH6801224 | IESWLE201156 | FLYGT | HIGH LEVEL SWITCH FLOAT | ENM-10 (13m) | LEVEL SWITCH/MANUFACTURER:FLYGT// MODEL: ENM-10 (13m) | N/A | N/A | CLARIFIER #1 | SHEET 07 | |
| 1 | 6SPI6801226 | ST-413-393 | ASHCROFT | RECIRCULATION LINE #1 PRESSURE GAUGE | 25-1009-SW-L-02L-60# + 04-310SS-02T-XCG | PRESSURE GAUGE C/W ISOLATOR // MANFUACTURER : ASHCROFT // MODEL : 25 1009-SW-L-02L-60# + 04-310SS-02T-XCG // 2S: 2 1/2" DIAL RANGE : 0/60 PSI //SW: 316SS //L: GLYCERIN FILLED //L: LWR MNT CONN // ISOLATOR - 04: PROCESS CONN: 1/2" MNPT - 310:NO FLUSH PRT | N/A | N/A | CLARIFIER #1 | SHEET 07 | |
| 1 | 6SPI6801351 | ST-413-393 | ASHCROFT | RECIRCULATION LINE #2 PRESSURE GAUGE | 25-1009-SW-L-02L-60# + 04-310SS-02T-XCG | PRESSURE GAUGE C/W ISOLATOR // MANFUACTURER : ASHCROFT // MODEL : 25 1009-SW-L-02L-60# + 04-310SS-02T-XCG // 2S: 2 1/2" DIAL RANGE : 0/60 PSI //SW: 316SS //L: GLYCERIN FILLED //L: LWR MNT CONN // ISOLATOR - 04: PROCESS CONN: 1/2" MNPT - 310:NO FLUSH PRT | N/A | N/A | CLARIFIER #2 | SHEET 08 | |
| 1 | 6SPI6801346 | ST-413-393 | ASHCROFT | RECIRCULATION LINE #1 PRESSURE GAUGE | 25-1009-SW-L-02L-60# + 04-310SS-02T-XCG | PRESSURE GAUGE C/W ISOLATOR // MANFUACTURER : ASHCROFT // MODEL : 25 1009-SW-L-02L-60# + 04-310SS-02T-XCG // 2S: 2 1/2" DIAL RANGE : 0/60 PSI //SW: 316SS //L: GLYCERIN FILLED //L: LWR MNT CONN // ISOLATOR - 04: PROCESS CONN: 1/2" MNPT - 310:NO FLUSH PRT | N/A | N/A | CLARIFIER #2 | SHEET 08 | |
| 1 | 6SLSHH6801324 | IESWLE201156 | FLYGT | HIGH LEVEL SWITCH FLOAT | ENM-10 (13m) | LEVEL SWITCH/MANUFACTURER:FLYGT// MODEL: ENM-10 (13m) | N/A | N/A | CLARIFIER #2 | SHEET 08 | |
| 1 | 6SAE6801322 | IEPOTB200853 | HACH | TSS/TURBISITY SENSOR | LXV423.99.10100 | SOLITAX IMMERSION SENSOR FOR TURBIDITY AND INLINE SC sc PVC WITH WIPER 0.001-4000 NTU, 0.001 mg/L - 50 g/L/MANUFACTURER: HACH/ MODEL: LXV423.99.10100 | N/A | N/A | CLARIFIER #2 | SHEET 08 | |
| 1 | 6SAIT6801322 | IECNGU301374 | HACH | TSS/TURBISITY TRANSMITTER | LXV404.99.00502 | SC200 UNIVERSAL CONTROLLER: 100-240 VAC WITH ONE DIGITAL SENSOR INPUT AND TWO 4-20 MA OUTPUTS // MODEL # LXV404.99.00502 // OPERATING TEMPERATURE RANGE: -20 - 60 °C AT 0 - 95% RH (NON-CONDENSING) // | POWER REQUIREMENTS (HZ): 50 - 60 HZ POWER REQUIREMENTS (VOLTAGE): 100-240VAC // SENSOR INPUT #1: DIGITAL // CLASS I, DIV. 2 (GROUPS. A, B, C, AND D) | N/A | CLARIFIER #2 | SHEET 08 | |
| 1 | 6SAE6801427 | IEPOTB200853 | HACH | TSS/TURBISITY SENSOR | LXV423.99.10100 | SOLITAX IMMERSION SENSOR FOR TURBIDITY AND INLINE SC sc PVC WITH WIPER 0.001-4000 NTU, 0.001 mg/L - 50 g/L/MANUFACTURER: HACH/ MODEL: LXV423.99.10100 | N/A | N/A | CLARIFIER #2 SLUDGE SPLITTER TANK | SHEET 09 | |
| 1 | 6SPI6801416 | ST-413-393 | ASHCROFT | PRESSURE GAUGE | 25-1009-SW-L-02L-60# + 04-310SS-02T-XCG | PRESSURE GAUGE C/W ISOLATOR // MANFUACTURER : ASHCROFT // MODEL : 25 1009-SW-L-02L-60# + 04-310SS-02T-XCG // 2S: 2 1/2" DIAL RANGE : 0/60 PSI //SW: 316SS //L: GLYCERIN FILLED //L: LWR MNT CONN // ISOLATOR - 04: PROCESS CONN: 1/2" MNPT - 310:NO FLUSH PRT | N/A | N/A | CLARIFIER #1 SLUDGE SPLITTER TANK | SHEET 09 | |
| 1 | 6SAE6801417 | IEPOTB200853 | HACH | TSS/TURBISITY SENSOR | LXV423.99.10100 | SOLITAX IMMERSION SENSOR FOR TURBIDITY AND INLINE SC sc PVC WITH WIPER 0.001-4000 NTU, 0.001 mg/L - 50 g/L/MANUFACTURER: HACH/ MODEL: LXV423.99.10100 | N/A | N/A | CLARIFIER #1 SLUDGE SPLITTER TANK | SHEET 09 | |
| 1 | 6SAIT6801417 | IECNGU301374 | HACH | TSS/TURBISITY TRANSMITTER | LXV404.99.00502 | SC200 UNIVERSAL CONTROLLER: 100-240 VAC WITH ONE DIGITAL SENSOR INPUT AND TWO 4-20 MA OUTPUTS // MODEL # LXV404.99.00502 // OPERATING TEMPERATURE RANGE: -20 - 60 °C AT 0 - 95% RH (NON-CONDENSING) // | POWER REQUIREMENTS (HZ): 50 - 60 HZ POWER REQUIREMENTS (VOLTAGE): 100-240VAC // SENSOR INPUT #1: DIGITAL // CLASS I, DIV. 2 (GROUPS. A, B, C, AND D) | N/A | CLARIFIER #1 SLUDGE SPLITTER TANK | SHEET 09 | |
| 1 | 6SAIT6801427 | IECNGU301374 | HACH | TSS/TURBISITY TRANSMITTER | LXV404.99.00502 | SC200 UNIVERSAL CONTROLLER: 100-240 VAC WITH ONE DIGITAL SENSOR INPUT AND TWO 4-20 MA OUTPUTS // MODEL # LXV404.99.00502 // OPERATING TEMPERATURE RANGE: -20 - 60 °C AT 0 - 95% RH (NON-CONDENSING) // | POWER REQUIREMENTS (HZ): 50 - 60 HZ POWER REQUIREMENTS (VOLTAGE): 100-240VAC // SENSOR INPUT #1: DIGITAL // CLASS I, DIV. 2 (GROUPS. A, B, C, AND D) | N/A | CLARIFIER #2 SLUDGE SPLITTER TANK | SHEET 09 | |
| 1 | 6SPI6801426 | ST-413-393 | ASHCROFT | PRESSURE GAUGE | 25-1009-SW-L-02L-60# + 04-310SS-02T-XCG | PRESSURE GAUGE C/W ISOLATOR // MANFUACTURER : ASHCROFT // MODEL : 25 1009-SW-L-02L-60# + 04-310SS-02T-XCG // 2S: 2 1/2" DIAL RANGE : 0/60 PSI //SW: 316SS //L: GLYCERIN FILLED //L: LWR MNT CONN // ISOLATOR - 04: PROCESS CONN: 1/2" MNPT - 310:NO FLUSH PRT | N/A | N/A | CLARIFIER #2 SLUDGE SPLITTER TANK | SHEET 09 | |
| 1 | 6SPSH6801512 | Included with ST-999-011 | HYDROTECH | PUMP #1 OUTLET LOW PRESSURE SWITCH | N/A | N/A | N/A | N/A | DISCFILTER | SHEET 11 | |
| 1 | 6SPI6801511 | Included with ST-999-011 | HYDROTECH | PUMP #1 OUTLET PRESSURE INDICATOR | N/A | N/A | N/A | N/A | DISCFILTER | SHEET 11 | |
| 1 | 6SLIT6801502B | Included with ST-999-011 | HYDROTECH | DISCFILTER EFFLUENT LEVEL TRANSMITTER | N/A | N/A | N/A | N/A | DISCFILTER | SHEET 11 | |

VEOLIA

| | | | |
|---|---|---|---|
| VEOLIA DOC # | 5000220043_INLS_0001_GEN_VWT | DATE | 2021-02-26 |
| VEOLIA PROJECT# | 5000220043 | CLIENT REFERENCE # | 6526-S-265-605 / OC-989680 |

**INSTRUMENTATION LIST**

| CLIENT | REV | DESCRIPTION | DATE | BY | VER. | APP. |
|---|---|---|---|---|---|---|
| A.E.M | 1 | For Approval | 2021-02-26 | C.E.K | E.D | T.S |
| | 2 | For Information | 2021-04-28 | C.E.K | E.D | T.S |
| | 3 | For Information II | 2021-07-09 | C.E.K | M.D.G | T.S |
| PROJECT | | | | | | |
| MELIADINE-BPC UPGRADE | | | | | | |

| REV | EQPMT TAG NO | EQUIPMENT CODE | MANUFACTURER | DETAILED EQUIPMENT DESCRIPTION | MODEL NUMBER | CONDENSED INFO 1 | CONDENSED INFO 2 | CONDENSED INFO 3 | LOCATION | P&ID NO | COMMENTS |
|---|---|---|---|---|---|---|---|---|---|---|---|
| 1 | 6SLITE801502A | Included with ST-999-011 | HYDROTECH | DISCFILTER INFLUENT LEVEL TRANSMITTER | N/A | N/A | N/A | N/A | DISCFILTER | SHEET 11 | |
| 3 | 6SAIT6930533 | IECNDF315375 | SWAN | TREATED WATER TOTAL CHLORINE ANALYZER | A-25.441.600.0/ A-96.250.631 | TOTAL CHLORINE ANALYZER// MANUFACTURER: SWAN// MODEL: MONITOR AMI CODES-I TC AC #A-25.441.600.0// RANGE: 0.0 - 5.00 ppm (STANDARD RANGE) 0-10 ppm (EXTENDED RANGE)// ELECTRONIC CASING: ALUMINIUM// CASING: PVC// IP66/NEMA4X | OP. TEMP.: -25 to 65C// POWER SUPPLY: 100-240VAC// 1 ALARM RELAY// 1 INPUT// 2 RELAY OUTPUTS// 2 SIGNAL OUTPUTS// MANUAL: A-96.250.631 | WATER CONSUMPTION: min 10l/h// WATER PRESSURE INLET: 2 TO 30 PSI | FINAL PH CORRECTION TANK | SHEET 12 | |
| 3 | 6SAE6930532 | IEPOTB200853 | HACH | TREATED WATER TSS/TURBIDITY SENSOR | LXV423.99.10100 | SOLITAX IMMERSION SENSOR FOR TURBIDITY AND INLINE SC sc PVC WITH WIPER 0.001-4000 NTU, 0.001 mg/L - 50 g/L/MANUFACTURER: HACH/ MODEL: LXV423.99.10100 | N/A | N/A | FINAL PH CORRECTION TANK | SHEET 12 | |
| 3 | 6SAIT6930532 | IECNGU301374 | HACH | TREATED WATER TSS/TURBIDITY TRANSMITTER | LXV404.99.00502 | SC200 UNIVERSAL CONTROLLER: 100-240 VAC WITH ONE DIGITAL SENSOR INPUT AND TWO 4-20 MA OUTPUTS // MODEL # LXV404.99.00502 // OPERATING TEMPERATURE RANGE: -20 - 60 °C AT 0 - 95% RH (NON-CONDENSING) // | POWER REQUIREMENTS (HZ): 50 - 60 HZ POWER REQUIREMENTS (VOLTAGE): 100-240VAC // SENSOR INPUT #1: DIGITAL // CLASS I, DIV. 2 (GROUPS. A, B, C, AND D) | N/A | FINAL PH CORRECTION TANK | SHEET 12 | |
| 1 | 6SFI6801607 | ST-449-158 | CHEMLINE | WASHDOWN LINE FLOWMETER | FSA03000 | VARIABLE AREA FLOWMETER/MANUFACTURER: CHEMLINE/ MODEL: FSA03000 | N/A | N/A | ACTIVATED CARBON PREPATION SYSTEM #1 | SHEET 14 | |
| 1 | 6SLSL6801611 | IEPOLE202138 | ENDRESS & HAUSER | HOPPER LOW LEVEL SWITCH | FTE31-C2D111-A | LEVEL SWITCH // MANUF: E&H// MODEL :FTE31-C2D111 Soliswitch FTE31, thread NPT Level limit switch, Paddel. Solid >= 100 g/dm3. 1x relay double pole change over switch. | Housing: Plastics PBT, IP65 NEMA4 Rod: steel 1.4305 (303). 1x Cable entry NPT 1/2. Approal:C CSA DIP CI. II,III, Div.1, Gr.EFG Power : 2 115VAC, relay 250VAC, 100mA -10A Proc. Conn.:D Thread NPT 1-1/2, 316L Version:1 Shaft 75mm | Paddel; Additional Option:1 316Ti; basic version Version:1 Basic version B Marking: 71072711: TAG on device | ACTIVATED CARBON PREPATION SYSTEM #1 | SHEET 14 | |
| 1 | 6SPI6801613 | IMPSGG315787 | ASHCROFT | ACTIVATED CARBON SLURRY PRESSURE GAUGE | 25-1009-SW-L-02L-160# +04-310SS-02T-XCG | PRESSURE GAUGE C/W ISOLATOR // MANFUACTURER : ASHCROFT // MODEL : 25 1009-SW-L-02L-160# + 04-310SS-02T-XCG // 25: 2 1/2" DIAL. RANGE : 0/160 PSI //SW: 316SS /:L: GLYCERIN FILLED /:L: LWR MNT CONN // ISOLATOR - 04: PROCESS CONN: 1/2" MNPT-310:NO FLUSH PRT | N/A | N/A | ACTIVATED CARBON PREPATION SYSTEM #1 | SHEET 14 | |
| 1 | 6SPI6801606 | ST-413-394 | ASHCROFT | SERVICE WATER PRESSURE GAUGE | 25-1009-SW-L-04L-160# | PRESSURE GAUGE // MANFUACTURER : ASHCROFT // MODEL : 25-1009-SW-L-04L-160# // 25: 2 1/2" DIAL. RANGE : 0/160 PSI //SW: 316SS /:L: GLYCERIN FILLED /:L: LWR MNT CONN // 04: PROCESS CONN: 1/2" MNPT | N/A | N/A | ACTIVATED CARBON PREPATION SYSTEM #1 | SHEET 14 | |
| 1 | 6SPSL6801601 | IEPOPS201955 | ALLEN BRADLEY | SERVICE WATER PRESSURE SWITCH | 836T-T253J | PRESSURE SWITCH/MANUFACTURER: ALLEN BRADLEY// MODEL: 836T-T253J | 1/4" FNPT female pipe connection | Adjustable Range : 12-150 psi | ACTIVATED CARBON PREPATION SYSTEM #1 | SHEET 14 | |
| 1 | 6SLSH6801612 | ST-451-405 | ENDRESS & HAUSER | WETTING CONE HIGH LEVEL SWITCH | FTL50-SGM2AA5E4A+Z1 | LEVEL SWITCH (VIBRONIC) // MANUF: E&H//MODEL :FTL50 SGM2AA5E4A+Z1Approval: S CSA C/US IS CI I,II,III Div.1 Gr.A-G Process Connection:GM2 Thread ANSI NPT3/4, 316L Probe Length; Type: AA Compact; Ra<3.2um/126uin | Electronics; Output: 5 FEL55; SIL 8/16mA, 11-36VDC Housing; Cable Entry: E4 F16 NEMA Type 4X Encl. Polyester; NPT1/2 thread Additional Option: A Basic version | Z1 Tagging (TAG) | ACTIVATED CARBON PREPATION SYSTEM #1 | SHEET 14 | |
| 1 | 6SFI6801627 | ST-449-158 | CHEMLINE | WASHDOWN LINE FLOWMETER | FSA03000 | VARIABLE AREA FLOWMETER/MANUFACTURER: CHEMLINE/ MODEL: FSA03000 | N/A | N/A | ACTIVATED CARBON PREPATION SYSTEM #2 | SHEET 15 | |
| 1 | 6SLSL6801631 | IEPOLE202138 | ENDRESS & HAUSER | HOPPER LOW LEVEL SWITCH | FTE31-C2D111-A | LEVEL SWITCH // MANUF: E&H// MODEL :FTE31-C2D111 Soliswitch FTE31, thread NPT Level limit switch, Paddel. Solid >= 100 g/dm3. 1x relay double pole change over switch. | Housing: Plastics PBT, IP65 NEMA4 Rod: steel 1.4305 (303). 1x Cable entry NPT 1/2. Approal:C CSA DIP CI. II,III, Div.1, Gr.EFG Power : 2 115VAC, relay 250VAC, 100mA -10AProc. Conn.:D Thread NPT 1-1/2, 316L Version:1 Shaft 75mm | Paddel; Additional Option:1 316Ti; basic version Version:1 Basic version B Marking: 71072711: TAG on device | ACTIVATED CARBON PREPATION SYSTEM #2 | SHEET 15 | |
| 1 | 6SPI6801631 | IMPSGG315787 | ASHCROFT | ACTIVATED CARBON SLURRY PRESSURE GAUGE | 25-1009-SW-L-02L-160# +04-310SS-02T-XCG | PRESSURE GAUGE C/W ISOLATOR // MANFUACTURER : ASHCROFT // MODEL : 25 1009-SW-L-02L-160# + 04-310SS-02T-XCG // 25: 2 1/2" DIAL. RANGE : 0/160 PSI //SW: 316SS /:L: GLYCERIN FILLED /:L: LWR MNT CONN // ISOLATOR - 04: PROCESS CONN: 1/2" MNPT-310:NO FLUSH PRT | N/A | N/A | ACTIVATED CARBON PREPATION SYSTEM #2 | SHEET 15 | |
| 1 | 6SPI6801626 | ST-413-394 | ASHCROFT | SERVICE WATER PRESSURE GAUGE | 25-1009-SW-L-04L-160# | PRESSURE GAUGE // MANFUACTURER : ASHCROFT // MODEL : 25-1009-SW-L-04L-160# // 25: 2 1/2" DIAL. RANGE : 0/160 PSI //SW: 316SS /:L: GLYCERIN FILLED /:L: LWR MNT CONN // 04: PROCESS CONN: 1/2" MNPT | N/A | N/A | ACTIVATED CARBON PREPATION SYSTEM #2 | SHEET 15 | |
| 1 | 6SPSL6801621 | IEPOPS201955 | ALLEN BRADLEY | SERVICE WATER PRESSURE SWITCH | 836T-T253J | PRESSURE SWITCH/MANUFACTURER: ALLEN BRADLEY// MODEL: 836T-T253J | 1/4" FNPT female pipe connection | Adjustable Range : 12-150 psi | ACTIVATED CARBON PREPATION SYSTEM #2 | SHEET 15 | |
| 1 | 6SLSH6801632 | ST-451-405 | ENDRESS & HAUSER | WETTING CONE HIGH LEVEL SWITCH | FTL50-SGM2AA5E4A+Z1 | LEVEL SWITCH (VIBRONIC) // MANUF: E&H//MODEL :FTL50 SGM2AA5E4A+Z1Approval: S CSA C/US IS CI I,II,III Div.1 Gr.A-G Process Connection:GM2 Thread ANSI NPT3/4, 316L Probe Length; Type: AA Compact; Ra<3.2um/126uin | Electronics; Output: 5 FEL55; SIL 8/16mA, 11-36VDC Housing; Cable Entry: E4 F16 NEMA Type 4X Encl. Polyester; NPT1/2 thread Additional Option: A Basic version | Z1 Tagging (TAG) | ACTIVATED CARBON PREPATION SYSTEM #2 | SHEET 15 | |
| 2 | 6SAIT6801117 | IECNDF315375 | SWAN | TOTAL CHLORINE ANALYZER | A-25.441.600.0/ A-96.250.631 | TOTAL CHLORINE ANALYZER// MANUFACTURER: SWAN// MODEL: MONITOR AMI CODES-I TC AC #A-25.441.600.0// RANGE: 0.0 - 5.00 ppm (STANDARD RANGE) 0-10 ppm (EXTENDED RANGE)// ELECTRONIC CASING: ALUMINIUM// CASING: PVC// IP66/NEMA4X | OP. TEMP.: -25 to 65C// POWER SUPPLY: 100-240VAC// 1 ALARM RELAY// 1 INPUT// 2 RELAY OUTPUTS// 2 SIGNAL OUTPUTS// MANUAL: A-96.250.631 | WATER CONSUMPTION: min 10l/h// WATER PRESSURE INLET: 2 TO 30 PSI | CHLORINE DILUTION SKID #1601 | SHEET 16 | |
| 2 | 6SAIT6801116 | IECNDF302211 | SWAN | FREE CHLORINE ANALYZER | A-25.441.100.0/ A-81.420.060/ A-96.250.571 | FREE CHLORINE ANALYZER// MANUFACTURER: SWAN// MODEL: MONITOR AMI CODES-II #A-25.441.100.0// RANGE: 0-5 ppm// ELECTRONIC CASING: CAST ALUMINIUM// CASING: PVC// IP66/NEMA4X | OP. TEMP.: -25 to 65C// POWER SUPPLY: 100-240VAC/24VDC// 1 ALARM RELAY// 1 INPUT// 2 RELAY OUTPUTS//2 SIGNAL OUTPUTS// HART INTERFACE: A-81.420.060// MANUAL: A-96.250.571 | WATER CONSUMPTION: min 10l/h// WATER PRESSURE INLET: 2 TO 30 PSI | CHLORINE DILUTION SKID #1601 | SHEET 16 | |
| 2 | 6SAIT6801142 | IECNDF315375 | SWAN | TOTAL CHLORINE ANALYZER | A-25.441.600.0/ A-96.250.631 | TOTAL CHLORINE ANALYZER// MANUFACTURER: SWAN// MODEL: MONITOR AMI CODES-I TC AC #A-25.441.600.0// RANGE: 0.0 - 5.00 ppm (STANDARD RANGE) 0-10 ppm (EXTENDED RANGE)// ELECTRONIC CASING: ALUMINIUM// CASING: PVC// IP66/NEMA4X | OP. TEMP.: -25 to 65C// POWER SUPPLY: 100-240VAC// 1 ALARM RELAY// 1 INPUT// 2 RELAY OUTPUTS// 2 SIGNAL OUTPUTS// MANUAL: A-96.250.631 | WATER CONSUMPTION: min 10l/h// WATER PRESSURE INLET: 2 TO 30 PSI | CHLORINE DILUTION SKID #1701 | SHEET 17 | |
| 2 | 6SAIT6801141 | IECNDF302211 | SWAN | FREE CHLORINE ANALYZER | A-25.441.100.0/ A-81.420.060/ A-96.250.571 | FREE CHLORINE ANALYZER// MANUFACTURER: SWAN// MODEL: MONITOR AMI CODES-II #A-25.441.100.0// RANGE: 0-5 ppm// ELECTRONIC CASING: CAST ALUMINIUM// CASING: PVC// IP66/NEMA4X | OP. TEMP.: -25 to 65C// POWER SUPPLY: 100-240VAC/24VDC// 1 ALARM RELAY// 1 INPUT// 2 RELAY OUTPUTS//2 SIGNAL OUTPUTS// HART INTERFACE: A-81.420.060// MANUAL: A-96.250.571 | WATER CONSUMPTION: min 10l/h// WATER PRESSURE INLET: 2 TO 30 PSI | CHLORINE DILUTION SKID #1701 | SHEET 17 | |

VEOLIA

| VEOLIA DOC # | 5000220043_VALS_0001_GEN_VWT | | DATE | 2021-02-26 |
|---|---|---|---|---|
| VEOLIA PROJECT# | 5000220043 | CLIENT REFERENCE # | 6526-S-265-605 / OC-989680 | |

**VALVES LIST**

| CLIENT | REV | DESCRIPTION | DATE | BY | VER. | APP. |
|---|---|---|---|---|---|---|
| A.E.M | 1 | For Approval | 2021-02-26 | C.E.K | E.D | T.S |
| | 2 | For Information | 2021-04-28 | C.E.K | E.D | T.S |
| | 3 | For Information II | 2021-07-09 | C.E.K | M.D.G | T.S |
| PROJECT | | | | | | |
| MELIADINE-BPC UPGRADE | | | | | | |

| REV | EQPMT TAG NO | EQUIPMENT CODE | MANUFACTURER | MODEL NUMBER | CONDENSED INFO 1 | CONDENSED INFO 2 | VALVE TYPE \| RATING | DIAMETER | MATERIAL: BODY | MATERIAL SEAL \| SEAT | CONNECTION TYPE \| SIZE INLET \| SIZE OUTLET | P&ID NO | COMMENTS |
|---|---|---|---|---|---|---|---|---|---|---|---|---|---|
| 1 | 100-BF99-1110 | VABFDI364242 | BRAY | Serie 31 - Lug | TYPE: BUTTERFLY \| 175 PSI (75 PSI IF DEAD-END SERVICE) / MANUF.: BRAY / MODEL: Serie 31 - Lug// Série 31- à oreilles / CONNECTION TYPE \| SIZE : \| 4" (100 mm) / BODY: DUCTILE IRON / SEAL \| SEAT : EPDM / DISC \| STEM: NYLON 11 COATED DISC \| 416 SS | / ACTUATOR TYPE: Manual \| LEVER / MANUFACTURER: BRAY / NSF61 | BUTTERFLY \| 175 PSI (75 PSI IF DEAD-END SERVICE) | 4" (100 mm) | DUCTILE IRON | EPDM | FLANGED \| 4" (100 mm) | SHEET 05 | |
| 1 | 100-BF99-1109 | VABFDI364242 | BRAY | Serie 31 - Lug | TYPE: BUTTERFLY \| 175 PSI (75 PSI IF DEAD-END SERVICE) / MANUF.: BRAY / MODEL: Serie 31 - Lug// Série 31- à oreilles / CONNECTION TYPE \| SIZE : \| 4" (100 mm) / BODY: DUCTILE IRON / SEAL \| SEAT : EPDM / DISC \| STEM: NYLON 11 COATED DISC \| 416 SS | / ACTUATOR TYPE: Manual \| LEVER / MANUFACTURER: BRAY / NSF61 | BUTTERFLY \| 175 PSI (75 PSI IF DEAD-END SERVICE) | 4" (100 mm) | DUCTILE IRON | EPDM | FLANGED \| 4" (100 mm) | SHEET 05 | |
| 1 | 100-BF99-1113 | VABFDI364242 | BRAY | Serie 31 - Lug | TYPE: BUTTERFLY \| 175 PSI (75 PSI IF DEAD-END SERVICE) / MANUF.: BRAY / MODEL: Serie 31 - Lug// Série 31- à oreilles / CONNECTION TYPE \| SIZE : \| 4" (100 mm) / BODY: DUCTILE IRON / SEAL \| SEAT : EPDM / DISC \| STEM: NYLON 11 COATED DISC \| 416 SS | / ACTUATOR TYPE: Manual \| LEVER / MANUFACTURER: BRAY / NSF61 | BUTTERFLY \| 175 PSI (75 PSI IF DEAD-END SERVICE) | 4" (100 mm) | DUCTILE IRON | EPDM | FLANGED \| 4" (100 mm) | SHEET 06 | |
| 1 | 100-BF99-1114 | VABFDI364242 | BRAY | Serie 31 - Lug | TYPE: BUTTERFLY \| 175 PSI (75 PSI IF DEAD-END SERVICE) / MANUF.: BRAY / MODEL: Serie 31 - Lug// Série 31- à oreilles / CONNECTION TYPE \| SIZE : \| 4" (100 mm) / BODY: DUCTILE IRON / SEAL \| SEAT : EPDM / DISC \| STEM: NYLON 11 COATED DISC \| 416 SS | / ACTUATOR TYPE: Manual \| LEVER / MANUFACTURER: BRAY / NSF61 | BUTTERFLY \| 175 PSI (75 PSI IF DEAD-END SERVICE) | 4" (100 mm) | DUCTILE IRON | EPDM | FLANGED \| 4" (100 mm) | SHEET 06 | |
| 1 | 15-BA99-1220 | VABLPV200249 | CHEMLINE | 21A005EC,TYPE21 | TYPE: BALL VALVE//MANUFACTURER : CHEMLINE//MODEL : Type21-A-005-E-C//CONNECTION TYPE : COMBO \| 13 mm (1/2")//BODY : PVC (ASTM D1784)// SEAL \| SEAT :PTFE \| EPDM// STEM : PVC | N/A | BALL VALVE | 15 mm (1/2") | PVC (ASTM D1784) | PTFE \| EPDM | COMBO \| 13 mm (1/2") | SHEET 07 | |
| 1 | 15-BA99-1221 | VABLPV200249 | CHEMLINE | 21A005EC,TYPE21 | TYPE: BALL VALVE//MANUFACTURER : CHEMLINE//MODEL : Type21-A-005-E-C//CONNECTION TYPE : COMBO \| 13 mm (1/2")//BODY : PVC (ASTM D1784)// SEAL \| SEAT :PTFE \| EPDM// STEM : PVC | N/A | BALL VALVE | 15 mm (1/2") | PVC (ASTM D1784) | PTFE \| EPDM | COMBO \| 13 mm (1/2") | SHEET 07 | |
| 1 | 15-BA99-1222 | VABLPV200249 | CHEMLINE | 21A005EC,TYPE21 | TYPE: BALL VALVE//MANUFACTURER : CHEMLINE//MODEL : Type21-A-005-E-C//CONNECTION TYPE : COMBO \| 13 mm (1/2")//BODY : PVC (ASTM D1784)// SEAL \| SEAT :PTFE \| EPDM// STEM : PVC | N/A | BALL VALVE | 15 mm (1/2") | PVC (ASTM D1784) | PTFE \| EPDM | COMBO \| 13 mm (1/2") | SHEET 07 | |
| 1 | 15-BA99-1219 | VABLPV200249 | CHEMLINE | 21A005EC,TYPE21 | TYPE: BALL VALVE//MANUFACTURER : CHEMLINE//MODEL : Type21-A-005-E-C//CONNECTION TYPE : COMBO \| 13 mm (1/2")//BODY : PVC (ASTM D1784)// SEAL \| SEAT :PTFE \| EPDM// STEM : PVC | N/A | BALL VALVE | 15 mm (1/2") | PVC (ASTM D1784) | PTFE \| EPDM | COMBO \| 13 mm (1/2") | SHEET 07 | |
| 1 | 15-BA99-1208 | VABLPV200243 | CHEMLINE | 21A005VC,TYPE21 | TYPE: BALL VALVE//MANUFACTURER : CHEMLINE//MODEL : Type21-A-005-V-C//CONNECTION TYPE : COMBO \| 13 mm (1/2")//BODY : PVC (ASTM D1784)// SEAL \| SEAT :PTFE \| VITON// STEM : PVC | N/A | BALL VALVE | 15 mm (1/2") | PVC (ASTM D1784) | PTFE \| VITON | COMBO \| 13 mm (1/2") | SHEET 07 | |
| 1 | 15-BA99-1207 | VABLPV200243 | CHEMLINE | 21A005VC,TYPE21 | TYPE: BALL VALVE//MANUFACTURER : CHEMLINE//MODEL : Type21-A-005-V-C//CONNECTION TYPE : COMBO \| 13 mm (1/2")//BODY : PVC (ASTM D1784)// SEAL \| SEAT :PTFE \| VITON// STEM : PVC | N/A | BALL VALVE | 15 mm (1/2") | PVC (ASTM D1784) | PTFE \| VITON | COMBO \| 13 mm (1/2") | SHEET 07 | |
| 1 | 20-BA99-1210 | VABLPV200244 | CHEMLINE | 21A007VC,TYPE21 | TYPE: BALL VALVE//MANUFACTURER : CHEMLINE//MODEL : Type21-A-007-V-C//CONNECTION TYPE : COMBO \| 20 mm (3/4")//BODY : PVC (ASTM D1784)// SEAL \| SEAT :PTFE \| VITON// STEM : PVC | N/A | BALL VALVE | 20 mm (3/4") | PVC (ASTM D1784) | PTFE \| VITON | COMBO \| 20 mm (3/4") | SHEET 07 | |
| 1 | 20-BA99-1209 | VABLPV200244 | CHEMLINE | 21A007VC,TYPE21 | TYPE: BALL VALVE//MANUFACTURER : CHEMLINE//MODEL : Type21-A-007-V-C//CONNECTION TYPE : COMBO \| 20 mm (3/4")//BODY : PVC (ASTM D1784)// SEAL \| SEAT :PTFE \| VITON// STEM : PVC | N/A | BALL VALVE | 20 mm (3/4") | PVC (ASTM D1784) | PTFE \| VITON | COMBO \| 20 mm (3/4") | SHEET 07 | |
| 1 | 20-BA99-1211 | VABLPV200244 | CHEMLINE | 21A007VC,TYPE21 | TYPE: BALL VALVE//MANUFACTURER : CHEMLINE//MODEL : Type21-A-007-V-C//CONNECTION TYPE : COMBO \| 20 mm (3/4")//BODY : PVC (ASTM D1784)// SEAL \| SEAT :PTFE \| VITON// STEM : PVC | N/A | BALL VALVE | 20 mm (3/4") | PVC (ASTM D1784) | PTFE \| VITON | COMBO \| 20 mm (3/4") | SHEET 07 | |

VEOLIA

| VEOLIA DOC # | 5000220043_VALS_0001_GEN_VWT | | DATE | 2021-02-26 |
|---|---|---|---|---|
| VEOLIA PROJECT# | 5000220043 | CLIENT REFERENCE # | 6526-S-265-605 / OC-989680 | |

**VALVES LIST**

| CLIENT | REV | DESCRIPTION | DATE | BY | VER. | APP. |
|---|---|---|---|---|---|---|
| A.E.M | 1 | For Approval | 2021-02-26 | C.E.K | E.D | T.S |
| | 2 | For Information | 2021-04-28 | C.E.K | E.D | T.S |
| | 3 | For Information II | 2021-07-09 | C.E.K | M.D.G | T.S |
| PROJECT | | | | | | |
| MELIADINE-BPC UPGRADE | | | | | | |

| REV | EQPMT TAG NO | EQUIPMENT CODE | MANUFACTURER | MODEL NUMBER | CONDENSED INFO 1 | CONDENSED INFO 2 | VALVE TYPE \| RATING | DIAMETER | MATERIAL: BODY | MATERIAL SEAL \| SEAT | CONNECTION TYPE \| SIZE INLET \| SIZE OUTLET | P&ID NO | COMMENTS |
|---|---|---|---|---|---|---|---|---|---|---|---|---|---|
| 1 | 20-BA99-1212 | VABLPV200244 | CHEMLINE | 21A007VC,TYPE21 | TYPE: BALL VALVE//MANUFACTURER : CHEMLINE//MODEL : Type21-A-007-V-C//CONNECTION TYPE : COMBO \| 20 mm (3/4")//BODY : PVC (ASTM D1784)// SEAL \| SEAT :PTFE \| VITON// STEM : PVC | N/A | BALL VALVE | 20 mm (3/4") | PVC (ASTM D1784) | PTFE \| VITON | COMBO \| 20 mm (3/4") | SHEET 07 | |
| 1 | 25-BA99-1203 | VABLPV200245 | CHEMLINE | 21A010VC,TYPE21 | TYPE: BALL VALVE//MANUFACTURER : CHEMLINE//MODEL : Type21-A-010-V-C//CONNECTION TYPE : COMBO \| 25 mm (1")//BODY : PVC (ASTM D1784)// SEAL \| SEAT :PTFE \| VITON// STEM : PVC | N/A | BALL VALVE | 25 mm (1") | PVC (ASTM D1784) | PTFE \| VITON | COMBO \| 25 mm (1") | SHEET 07 | |
| 1 | 25-BA99-1214 | VABLPV200245 | CHEMLINE | 21A010VC,TYPE21 | TYPE: BALL VALVE//MANUFACTURER : CHEMLINE//MODEL : Type21-A-010-V-C//CONNECTION TYPE : COMBO \| 25 mm (1")//BODY : PVC (ASTM D1784)// SEAL \| SEAT :PTFE \| VITON// STEM : PVC | N/A | BALL VALVE | 25 mm (1") | PVC (ASTM D1784) | PTFE \| VITON | COMBO \| 25 mm (1") | SHEET 07 | |
| 1 | 25-BA99-1215 | VABLPV200245 | CHEMLINE | 21A010VC,TYPE21 | TYPE: BALL VALVE//MANUFACTURER : CHEMLINE//MODEL : Type21-A-010-V-C//CONNECTION TYPE : COMBO \| 25 mm (1")//BODY : PVC (ASTM D1784)// SEAL \| SEAT :PTFE \| VITON// STEM : PVC | N/A | BALL VALVE | 25 mm (1") | PVC (ASTM D1784) | PTFE \| VITON | COMBO \| 25 mm (1") | SHEET 07 | |
| 1 | 100-PG99-1206 | ST-312-664 | FLOWSERVE | 4"T4E11C11D033NW | TYPE: PLUG \|150 PSI//MANUFACTURER : Flowserve DURCO//MODEL : 4"T4E11C11D033NW //CONNECTION TYPE : FLANGED #150/\| 100 mm (4")//BODY : FONTE DUCTILE// SEAL \| SEAT :PFA MOLDED PLUG | N/A | PLUG \| 150 PSI | 100 mm (4") | DUCTILE IRON | PFA LINED DUCTILE IRON | FLANGED \| 100 mm (4") | SHEET 07 | |
| 1 | 100-PG99-1205 | ST-312-664 | FLOWSERVE | 4"T4E11C11D033NW | TYPE: PLUG \|150 PSI//MANUFACTURER : Flowserve DURCO//MODEL : 4"T4E11C11D033NW //CONNECTION TYPE : FLANGED #150/\| 100 mm (4")//BODY : FONTE DUCTILE// SEAL \| SEAT :PFA MOLDED PLUG | N/A | PLUG \| 150 PSI | 100 mm (4") | DUCTILE IRON | PFA LINED DUCTILE IRON | FLANGED \| 100 mm (4") | SHEET 07 | |
| 1 | 100-BF99-1101 | VABFDI364242 | BRAY | Serie 31 - Lug | TYPE: BUTTERFLY \| 175 PSI (75 PSI IF DEAD-END SERVICE) / MANUF. : BRAY / MODEL: Serie 31 - Lug// Série 31- à oreilles / CONNECTION TYPE \| SIZE : \| 4" (100 mm) / BODY: DUCTILE IRON / SEAL \| SEAT : EPDM / DISC \| STEM: NYLON 11 COATED DISC \| 416 SS | / ACTUATOR TYPE: Manual \| LEVER / MANUFACTURER: BRAY / NSF61 | BUTTERFLY \| 175 PSI (75 PSI IF DEAD-END SERVICE) | 4" (100 mm) | DUCTILE IRON | EPDM | FLANGED \| 4" (100 mm) | SHEET 07 | |
| 1 | 100-BF99-1102 | VABFDI364242 | BRAY | Serie 31 - Lug | TYPE: BUTTERFLY \| 175 PSI (75 PSI IF DEAD-END SERVICE) / MANUF. : BRAY / MODEL: Serie 31 - Lug// Série 31- à oreilles / CONNECTION TYPE \| SIZE : \| 4" (100 mm) / BODY: DUCTILE IRON / SEAL \| SEAT : EPDM / DISC \| STEM: NYLON 11 COATED DISC \| 416 SS | / ACTUATOR TYPE: Manual \| LEVER / MANUFACTURER: BRAY / NSF61 | BUTTERFLY \| 175 PSI (75 PSI IF DEAD-END SERVICE) | 4" (100 mm) | DUCTILE IRON | EPDM | FLANGED \| 4" (100 mm) | SHEET 07 | |
| 1 | 200-BF99-1204 | VABFDI364244 | BRAY | Serie 31 - Lug | TYPE: BUTTERFLY \| 175 PSI (75 PSI IF DEAD-END SERVICE) / MANUF. : BRAY / MODEL: Serie 31 - Lug// Série 31- à oreilles / CONNECTION TYPE \| SIZE : \| 8" (200 mm) / BODY: DUCTILE IRON / SEAL \| SEAT : EPDM / DISC \| STEM: NYLON 11 COATED DISC \| 416 SS | / ACTUATOR TYPE: Manual \| HANDWHEEL / MANUFACTURER: BRAY / NSF61 | BUTTERFLY \| 175 PSI (75 PSI IF DEAD-END SERVICE) | 8" (200 mm) | DUCTILE IRON | EPDM | FLANGED \| 8" (200 mm) | SHEET 07 | |
| 1 | 15-BA99-1319 | VABLPV200249 | CHEMLINE | 21A005EC,TYPE21 | TYPE: BALL VALVE//MANUFACTURER : CHEMLINE//MODEL : Type21-A-005-E-C//CONNECTION TYPE : COMBO \| 13 mm (1/2")//BODY : PVC (ASTM D1784)// SEAL \| SEAT :PTFE \| EPDM// STEM : PVC | N/A | BALL VALVE | 15 mm (1/2") | PVC (ASTM D1784) | PTFE \| EPDM | COMBO \| 13 mm (1/2") | SHEET 08 | |
| 1 | 15-BA99-1318 | VABLPV200249 | CHEMLINE | 21A005EC,TYPE21 | TYPE: BALL VALVE//MANUFACTURER : CHEMLINE//MODEL : Type21-A-005-E-C//CONNECTION TYPE : COMBO \| 13 mm (1/2")//BODY : PVC (ASTM D1784)// SEAL \| SEAT :PTFE \| EPDM// STEM : PVC | N/A | BALL VALVE | 15 mm (1/2") | PVC (ASTM D1784) | PTFE \| EPDM | COMBO \| 13 mm (1/2") | SHEET 08 | |
| 1 | 15-BA99-1317 | VABLPV200249 | CHEMLINE | 21A005EC,TYPE21 | TYPE: BALL VALVE//MANUFACTURER : CHEMLINE//MODEL : Type21-A-005-E-C//CONNECTION TYPE : COMBO \| 13 mm (1/2")//BODY : PVC (ASTM D1784)// SEAL \| SEAT :PTFE \| EPDM// STEM : PVC | N/A | BALL VALVE | 15 mm (1/2") | PVC (ASTM D1784) | PTFE \| EPDM | COMBO \| 13 mm (1/2") | SHEET 08 | |
| 1 | 15-BA99-1308 | VABLPV200243 | CHEMLINE | 21A005VC,TYPE21 | TYPE: BALL VALVE//MANUFACTURER : CHEMLINE//MODEL : Type21-A-005-V-C//CONNECTION TYPE : COMBO \| 13 mm (1/2")//BODY : PVC (ASTM D1784)// SEAL \| SEAT :PTFE \| VITON// STEM : PVC | N/A | BALL VALVE | 15 mm (1/2") | PVC (ASTM D1784) | PTFE \| VITON | COMBO \| 13 mm (1/2") | SHEET 08 | |

VEOLIA

| VEOLIA DOC # | 5000220043_VALS_0001_GEN_VWT | | DATE | 2021-02-26 |
|---|---|---|---|---|
| VEOLIA PROJECT# | 5000220043 | CLIENT REFERENCE # | 6526-S-265-605 / OC-989680 | |

**VALVES LIST**

| CLIENT | REV | DESCRIPTION | DATE | BY | VER. | APP. |
|---|---|---|---|---|---|---|
| A.E.M | 1 | For Approval | 2021-02-26 | C.E.K | E.D | T.S |
| | 2 | For Information | 2021-04-28 | C.E.K | E.D | T.S |
| | 3 | For Information II | 2021-07-09 | C.E.K | M.D.G | T.S |
| PROJECT | | | | | | |
| MELIADINE-BPC UPGRADE | | | | | | |

| REV | EQPMT TAG NO | EQUIPMENT CODE | MANUFACTURER | MODEL NUMBER | CONDENSED INFO 1 | CONDENSED INFO 2 | VALVE TYPE \| RATING | DIAMETER | MATERIAL: BODY | MATERIAL SEAL \| SEAT | CONNECTION TYPE \| SIZE INLET \| SIZE OUTLET | P&ID NO | COMMENTS |
|---|---|---|---|---|---|---|---|---|---|---|---|---|---|
| 1 | 15-BA99-1307 | VABLPV200243 | CHEMLINE | 21A005VC,TYPE21 | TYPE: BALL VALVE//MANUFACTURER : CHEMLINE//MODEL : Type21-A-005-V-C//CONNECTION TYPE : COMBO \| 13 mm (1/2")//BODY : PVC (ASTM D1784)// SEAL \| SEAT :PTFE \| VITON// STEM : PVC | N/A | BALL VALVE | 15 mm (1/2") | PVC (ASTM D1784) | PTFE \| VITON | COMBO \| 13 mm (1/2") | SHEET 08 | |
| 1 | 20-BA99-1315 | VABLPV200244 | CHEMLINE | 21A007VC,TYPE21 | TYPE: BALL VALVE//MANUFACTURER : CHEMLINE//MODEL : Type21-A-007-V-C//CONNECTION TYPE : COMBO \| 20 mm (3/4")//BODY : PVC (ASTM D1784)// SEAL \| SEAT :PTFE \| VITON// STEM : PVC | N/A | BALL VALVE | 20 mm (3/4") | PVC (ASTM D1784) | PTFE \| VITON | COMBO \| 20 mm (3/4") | SHEET 08 | |
| 1 | 20-BA99-1314 | VABLPV200244 | CHEMLINE | 21A007VC,TYPE21 | TYPE: BALL VALVE//MANUFACTURER : CHEMLINE//MODEL : Type21-A-007-V-C//CONNECTION TYPE : COMBO \| 20 mm (3/4")//BODY : PVC (ASTM D1784)// SEAL \| SEAT :PTFE \| VITON// STEM : PVC | N/A | BALL VALVE | 20 mm (3/4") | PVC (ASTM D1784) | PTFE \| VITON | COMBO \| 20 mm (3/4") | SHEET 08 | |
| 1 | 20-BA99-1313 | VABLPV200244 | CHEMLINE | 21A007VC,TYPE21 | TYPE: BALL VALVE//MANUFACTURER : CHEMLINE//MODEL : Type21-A-007-V-C//CONNECTION TYPE : COMBO \| 20 mm (3/4")//BODY : PVC (ASTM D1784)// SEAL \| SEAT :PTFE \| VITON// STEM : PVC | N/A | BALL VALVE | 20 mm (3/4") | PVC (ASTM D1784) | PTFE \| VITON | COMBO \| 20 mm (3/4") | SHEET 08 | |
| 1 | 20-BA99-1316 | VABLPV200244 | CHEMLINE | 21A007VC,TYPE21 | TYPE: BALL VALVE//MANUFACTURER : CHEMLINE//MODEL : Type21-A-007-V-C//CONNECTION TYPE : COMBO \| 20 mm (3/4")//BODY : PVC (ASTM D1784)// SEAL \| SEAT :PTFE \| VITON// STEM : PVC | N/A | BALL VALVE | 20 mm (3/4") | PVC (ASTM D1784) | PTFE \| VITON | COMBO \| 20 mm (3/4") | SHEET 08 | |
| 1 | 25-BA99-1310 | VABLPV200245 | CHEMLINE | 21A010VC,TYPE21 | TYPE: BALL VALVE//MANUFACTURER : CHEMLINE//MODEL : Type21-A-010-V-C//CONNECTION TYPE : COMBO \| 25 mm (1")//BODY : PVC (ASTM D1784)// SEAL \| SEAT :PTFE \| VITON// STEM : PVC | N/A | BALL VALVE | 25 mm (1") | PVC (ASTM D1784) | PTFE \| VITON | COMBO \| 25 mm (1") | SHEET 08 | |
| 1 | 25-BA99-1309 | VABLPV200245 | CHEMLINE | 21A010VC,TYPE21 | TYPE: BALL VALVE//MANUFACTURER : CHEMLINE//MODEL : Type21-A-010-V-C//CONNECTION TYPE : COMBO \| 25 mm (1")//BODY : PVC (ASTM D1784)// SEAL \| SEAT :PTFE \| VITON// STEM : PVC | N/A | BALL VALVE | 25 mm (1") | PVC (ASTM D1784) | PTFE \| VITON | COMBO \| 25 mm (1") | SHEET 08 | |
| 1 | 25-BA99-1306 | VABLPV200245 | CHEMLINE | 21A010VC,TYPE21 | TYPE: BALL VALVE//MANUFACTURER : CHEMLINE//MODEL : Type21-A-010-V-C//CONNECTION TYPE : COMBO \| 25 mm (1")//BODY : PVC (ASTM D1784)// SEAL \| SEAT :PTFE \| VITON// STEM : PVC | N/A | BALL VALVE | 25 mm (1") | PVC (ASTM D1784) | PTFE \| VITON | COMBO \| 25 mm (1") | SHEET 08 | |
| 1 | 80-GL99-1305 | ST-312-663 | FLOWSERVE | 3"T4E11C11D033NW | TYPE: PLUG \|150 PSI//MANUFACTURER : Flowserve DURCO//MODEL : 3"T4E1 1C11D033NW//CONNECTION TYPE : FLANGED class150// 75 mm (3")//BODY : FONTE DUCTILE// SEAL \| SEAT :PFA molded Plug | N/A | PLUG \| 150 PSI | 50 mm (2") | DUCTILE IRON | PFA LINED DUCTILE IRON | FLANGED \| 75 mm (3") | SHEET 08 | |
| 1 | 80-GL99-1304 | ST-312-663 | FLOWSERVE | 3"T4E11C11D033NW | TYPE: PLUG \|150 PSI//MANUFACTURER : Flowserve DURCO//MODEL : 3"T4E1 1C11D033NW//CONNECTION TYPE : FLANGED class150// 75 mm (3")//BODY : FONTE DUCTILE// SEAL \| SEAT :PFA molded Plug | N/A | PLUG \| 150 PSI | 50 mm (2") | DUCTILE IRON | PFA LINED DUCTILE IRON | FLANGED \| 75 mm (3") | SHEET 08 | |
| 1 | 50-BF99-1301 | VABFDI364240 | BRAY | Serie 31 - Lug | TYPE: BUTTERFLY \| 175 PSI (75 PSI IF DEAD-END SERVICE) / MANUF. : BRAY / MODEL: Serie 31 - Lug// Série 31- à oreilles / CONNECTION TYPE \| SIZE : \| 2" (50 mm) / BODY: DUCTILE IRON / SEAL \| SEAT : EPDM / DISC \| STEM: NYLON 11 COATED DISC \| 416 SS | / ACTUATOR TYPE: Manual \| LEVER / MANUFACTURER: BRAY / NSF61 | BUTTERFLY \| 175 PSI (75 PSI IF DEAD-END SERVICE) | 2" (50 mm) | DUCTILE IRON | EPDM | FLANGED \| 2" (50 mm) | SHEET 08 | |
| 1 | 50-BF99-1302 | VABFDI364240 | BRAY | Serie 31 - Lug | TYPE: BUTTERFLY \| 175 PSI (75 PSI IF DEAD-END SERVICE) / MANUF. : BRAY / MODEL: Serie 31 - Lug// Série 31- à oreilles / CONNECTION TYPE \| SIZE : \| 2" (50 mm) / BODY: DUCTILE IRON / SEAL \| SEAT : EPDM / DISC \| STEM: NYLON 11 COATED DISC \| 416 SS | / ACTUATOR TYPE: Manual \| LEVER / MANUFACTURER: BRAY / NSF61 | BUTTERFLY \| 175 PSI (75 PSI IF DEAD-END SERVICE) | 2" (50 mm) | DUCTILE IRON | EPDM | FLANGED \| 2" (50 mm) | SHEET 08 | |
| 1 | 150-BF99-1303 | VABFDI376221 | BRAY | Serie 31 - Lug | TYPE: BUTTERFLY \| 175 PSI (75 PSI IF DEAD-END SERVICE) / MANUF. : BRAY / MODEL: Serie 31 - Lug// Série 31- à oreilles / CONNECTION TYPE \| SIZE : \| 6" (150 mm) / BODY: DUCTILE IRON / SEAL \| SEAT : \| EPDM / DISC \| STEM: NYLON 11 COATED DISC \| 416 SS | / ACTUATOR TYPE: Manual \| Lever / MANUFACTURER: BRAY / | BUTTERFLY \| 175 PSI (75 PSI IF DEAD-END SERVICE) | 6" (150 mm) | DUCTILE IRON | \| EPDM | FLANGED \| 6" (150 mm) | SHEET 08 | |

VEOLIA

| VEOLIA DOC # | 5000220043_VALS_0001_GEN_VWT | | DATE | 2021-02-26 |
|---|---|---|---|---|
| VEOLIA PROJECT# | 5000220043 | CLIENT REFERENCE # | 6526-S-265-605 / OC-989680 | |

**VALVES LIST**

| CLIENT | REV | DESCRIPTION | DATE | BY | VER. | APP. |
|---|---|---|---|---|---|---|
| A.E.M | 1 | For Approval | 2021-02-26 | C.E.K | E.D | T.S |
| | 2 | For Information | 2021-04-28 | C.E.K | E.D | T.S |
| | 3 | For Information II | 2021-07-09 | C.E.K | M.D.G | T.S |
| PROJECT | | | | | | |
| MELIADINE-BPC UPGRADE | | | | | | |

| REV | EQPMT TAG NO | EQUIPMENT CODE | MANUFACTURER | MODEL NUMBER | CONDENSED INFO 1 | CONDENSED INFO 2 | VALVE TYPE \| RATING | DIAMETER | MATERIAL: BODY | MATERIAL SEAL \| SEAT | CONNECTION TYPE \| SIZE INLET \| SIZE OUTLET | P&ID NO | COMMENTS |
|---|---|---|---|---|---|---|---|---|---|---|---|---|---|
| 1 | 100-CK99-1406 | ST-302-197 | CHEMLINE | BCA040ES | TYPE: CHECK \| 150 PSI//MANUFACTURER : CHEMLINE//MODEL : BCA040ES//CONNECTION TYPE : SOCKET \| 4"//BODY : PVC// SEAL \| SEAT :EPDM \| // STEM : N/A | N/A | CHECK \| 150 PSI | 100 mm (4") | PVC | EPDM \| | SOCKET \| 4" | SHEET 09 | |
| 1 | 100-CK99-1419 | ST-302-197 | CHEMLINE | BCA040ES | TYPE: CHECK \| 150 PSI//MANUFACTURER : CHEMLINE//MODEL : BCA040ES//CONNECTION TYPE : SOCKET \| 4"//BODY : PVC// SEAL \| SEAT :EPDM \| // STEM : N/A | N/A | CHECK \| 150 PSI | 100 mm (4") | PVC | EPDM \| | SOCKET \| 4" | SHEET 09 | |
| 1 | 100-PV99-1404 | ST-312-664 | FLOWSERVE | 4"T4E11C11D033NW | TYPE: PLUG \|150 PSI//MANUFACTURER : Flowserve DURCO//MODEL : 4"T4E11C11D033NW //CONNECTION TYPE : FLANGED #150/\| 100 mm (4")//BODY : FONTE DUCTILE// SEAL \| SEAT :PFA MOLDED PLUG | N/A | PLUG \| 150 PSI | 100 mm (4") | DUCTILE IRON | PFA LINED DUCTILE IRON | FLANGED \| 100 mm (4") | SHEET 09 | |
| 1 | 100-PG99-1405 | ST-312-664 | FLOWSERVE | 4"T4E11C11D033NW | TYPE: PLUG \|150 PSI//MANUFACTURER : Flowserve DURCO//MODEL : 4"T4E11C11D033NW //CONNECTION TYPE : FLANGED #150/\| 100 mm (4")//BODY : FONTE DUCTILE// SEAL \| SEAT :PFA MOLDED PLUG | N/A | PLUG \| 150 PSI | 100 mm (4") | DUCTILE IRON | PFA LINED DUCTILE IRON | FLANGED \| 100 mm (4") | SHEET 09 | |
| 1 | 100-PG99-1407 | ST-312-664 | FLOWSERVE | 4"T4E11C11D033NW | TYPE: PLUG \|150 PSI//MANUFACTURER : Flowserve DURCO//MODEL : 4"T4E11C11D033NW //CONNECTION TYPE : FLANGED #150/\| 100 mm (4")//BODY : FONTE DUCTILE// SEAL \| SEAT :PFA MOLDED PLUG | N/A | PLUG \| 150 PSI | 100 mm (4") | DUCTILE IRON | PFA LINED DUCTILE IRON | FLANGED \| 100 mm (4") | SHEET 09 | |
| 1 | 100-PG99-1418 | ST-312-664 | FLOWSERVE | 4"T4E11C11D033NW | TYPE: PLUG \|150 PSI//MANUFACTURER : Flowserve DURCO//MODEL : 4"T4E11C11D033NW //CONNECTION TYPE : FLANGED #150/\| 100 mm (4")//BODY : FONTE DUCTILE// SEAL \| SEAT :PFA MOLDED PLUG | N/A | PLUG \| 150 PSI | 100 mm (4") | DUCTILE IRON | PFA LINED DUCTILE IRON | FLANGED \| 100 mm (4") | SHEET 09 | |
| 1 | 100-PG99-1420 | ST-312-664 | FLOWSERVE | 4"T4E11C11D033NW | TYPE: PLUG \|150 PSI//MANUFACTURER : Flowserve DURCO//MODEL : 4"T4E11C11D033NW //CONNECTION TYPE : FLANGED #150/\| 100 mm (4")//BODY : FONTE DUCTILE// SEAL \| SEAT :PFA MOLDED PLUG | N/A | PLUG \| 150 PSI | 100 mm (4") | DUCTILE IRON | PFA LINED DUCTILE IRON | FLANGED \| 100 mm (4") | SHEET 09 | |
| 1 | 100-PV99-1417 | ST-312-664 | FLOWSERVE | 4"T4E11C11D033NW | TYPE: PLUG \|150 PSI//MANUFACTURER : Flowserve DURCO//MODEL : 4"T4E11C11D033NW //CONNECTION TYPE : FLANGED #150/\| 100 mm (4")//BODY : FONTE DUCTILE// SEAL \| SEAT :PFA MOLDED PLUG | N/A | PLUG \| 150 PSI | 100 mm (4") | DUCTILE IRON | PFA LINED DUCTILE IRON | FLANGED \| 100 mm (4") | SHEET 09 | |
| 2 | 15-BA99-0594 | VABLPV200249 | CHEMLINE | 21A005EC,TYPE21 | TYPE: BALL VALVE//MANUFACTURER : CHEMLINE//MODEL : Type21-A-005-E-C//CONNECTION TYPE : COMBO \| 13 mm (1/2")//BODY : PVC (ASTM D1784)// SEAL \| SEAT :PTFE \| EPDM// STEM : PVC | N/A | BALL VALVE | 15 mm (1/2") | PVC (ASTM D1784) | PTFE \| EPDM | COMBO \| 13 mm (1/2") | SHEET 12 | |
| 2 | 15-BA99-0591 | VABLPV200249 | CHEMLINE | 21A005EC,TYPE21 | TYPE: BALL VALVE//MANUFACTURER : CHEMLINE//MODEL : Type21-A-005-E-C//CONNECTION TYPE : COMBO \| 13 mm (1/2")//BODY : PVC (ASTM D1784)// SEAL \| SEAT :PTFE \| EPDM// STEM : PVC | N/A | BALL VALVE | 15 mm (1/2") | PVC (ASTM D1784) | PTFE \| EPDM | COMBO \| 13 mm (1/2") | SHEET 12 | |
| 2 | 15-BA99-0595 | VABLPV200249 | CHEMLINE | 21A005EC,TYPE21 | TYPE: BALL VALVE//MANUFACTURER : CHEMLINE//MODEL : Type21-A-005-E-C//CONNECTION TYPE : COMBO \| 13 mm (1/2")//BODY : PVC (ASTM D1784)// SEAL \| SEAT :PTFE \| EPDM// STEM : PVC | N/A | BALL VALVE | 15 mm (1/2") | PVC (ASTM D1784) | PTFE \| EPDM | COMBO \| 13 mm (1/2") | SHEET 12 | |
| 2 | 15-BA99-0593 | VABLPV200249 | CHEMLINE | 21A005EC,TYPE21 | TYPE: BALL VALVE//MANUFACTURER : CHEMLINE//MODEL : Type21-A-005-E-C//CONNECTION TYPE : COMBO \| 13 mm (1/2")//BODY : PVC (ASTM D1784)// SEAL \| SEAT :PTFE \| EPDM// STEM : PVC | N/A | BALL VALVE | 15 mm (1/2") | PVC (ASTM D1784) | PTFE \| EPDM | COMBO \| 13 mm (1/2") | SHEET 12 | |
| 2 | 15-BA99-0596 | VANEPV300121 | CHEMLINE | NGA005 | TYPE: NEEDLE VALVE \| 150 PSI, TEMP DEPENDENT//MANUFACTURER : CHEMLINE//MODEL : NGA005,//CONNECTION TYPE : THREADED \| 13 mm (1/2")//BODY : PVC// SEAL \| SEAT :PTFE \| N/A// STEM : N/A | N/A | NEEDLE VALVE \| 150 PSI, TEMP DEPENDENT | 13 mm (1/2") | PVC | PTFE \| N/A | THREADED \| 13 mm (1/2") | SHEET 12 | |

VEOLIA

| VEOLIA DOC # | 5000220043_VALS_0001_GEN_VWT | | DATE | 2021-02-26 |
|---|---|---|---|---|
| VEOLIA PROJECT# | 5000220043 | CLIENT REFERENCE # | 6526-S-265-605 / OC-989680 | |

**VALVES LIST**

| CLIENT | REV | DESCRIPTION | DATE | BY | VER. | APP. |
|---|---|---|---|---|---|---|
| A.E.M | 1 | For Approval | 2021-02-26 | C.E.K | E.D | T.S |
| | 2 | For Information | 2021-04-28 | C.E.K | E.D | T.S |
| | 3 | For Information II | 2021-07-09 | C.E.K | M.D.G | T.S |
| PROJECT | | | | | | |
| MELIADINE-BPC UPGRADE | | | | | | |

| REV | EQPMT TAG NO | EQUIPMENT CODE | MANUFACTURER | MODEL NUMBER | CONDENSED INFO 1 | CONDENSED INFO 2 | VALVE TYPE \| RATING | DIAMETER | MATERIAL: BODY | MATERIAL SEAL \| SEAT | CONNECTION TYPE \| SIZE INLET \| SIZE OUTLET | P&ID NO | COMMENTS |
|---|---|---|---|---|---|---|---|---|---|---|---|---|---|
| 2 | 15-BA99-0597 | VANEPV300121 | CHEMLINE | NGA005 | TYPE: NEEDLE VALVE \| 150 PSI, TEMP DEPENDENT//MANUFACTURER : CHEMLINE//MODEL : NGA005//CONNECTION TYPE : THREADED \| 13 mm (1/2")//BODY : PVC// SEAL \| SEAT :PTFE \| N/A// STEM : N/A | N/A | NEEDLE VALVE \| 150 PSI, TEMP DEPENDENT | 13 mm (1/2") | PVC | PTFE \| N/A | THREADED \| 13 mm (1/2") | SHEET 12 | |
| 2 | 15-BA99-0592 | VANEPV300121 | CHEMLINE | NGA005 | TYPE: NEEDLE VALVE \| 150 PSI, TEMP DEPENDENT//MANUFACTURER : CHEMLINE//MODEL : NGA005//CONNECTION TYPE : THREADED \| 13 mm (1/2")//BODY : PVC// SEAL \| SEAT :PTFE \| N/A// STEM : N/A | N/A | NEEDLE VALVE \| 150 PSI, TEMP DEPENDENT | 13 mm (1/2") | PVC | PTFE \| N/A | THREADED \| 13 mm (1/2") | SHEET 12 | |
| 2 | 15-BA99-0598 | VANEPV300121 | CHEMLINE | NGA005 | TYPE: NEEDLE VALVE \| 150 PSI, TEMP DEPENDENT//MANUFACTURER : CHEMLINE//MODEL : NGA005//CONNECTION TYPE : THREADED \| 13 mm (1/2")//BODY : PVC// SEAL \| SEAT :PTFE \| N/A// STEM : N/A | N/A | NEEDLE VALVE \| 150 PSI, TEMP DEPENDENT | 13 mm (1/2") | PVC | PTFE \| N/A | THREADED \| 13 mm (1/2") | SHEET 12 | |
| 1 | 15-CK99-1602-BA | VABLPV200249 | CHEMLINE | 21A005EC,TYPE21 | TYPE: BALL VALVE//MANUFACTURER : CHEMLINE//MODEL : Type21-A-005-E-C//CONNECTION TYPE : COMBO \| 13 mm (1/2")//BODY : PVC (ASTM D1784)// SEAL \| SEAT :PTFE \| EPDM// STEM : PVC | N/A | BALL VALVE | 15 mm (1/2") | PVC (ASTM D1784) | PTFE \| EPDM | COMBO \| 13 mm (1/2") | SHEET 14 | |
| 1 | 50-BA99-1603 | VABLPV200254 | CHEMLINE | 21A020EC,TYPE21 | TYPE: BALL VALVE//MANUFACTURER : CHEMLINE//MODEL : Type21-A-020-E-C//CONNECTION TYPE : COMBO \| 50 mm (2")//BODY : PVC (ASTM D1784)// SEAL \| SEAT :PTFE \| EPDM// STEM : PVC | N/A | BALL VALVE | 50 mm (2") | PVC (ASTM D1784) | PTFE \| EPDM | COMBO \| 50 mm (2") | SHEET 14 | |
| 1 | 50-BA99-1601 | VABLPV200254 | CHEMLINE | 21A020EC,TYPE21 | TYPE: BALL VALVE//MANUFACTURER : CHEMLINE//MODEL : Type21-A-020-E-C//CONNECTION TYPE : COMBO \| 50 mm (2")//BODY : PVC (ASTM D1784)// SEAL \| SEAT :PTFE \| EPDM// STEM : PVC | N/A | BALL VALVE | 50 mm (2") | PVC (ASTM D1784) | PTFE \| EPDM | COMBO \| 50 mm (2") | SHEET 14 | |
| 1 | 40-BA99-1605 | VABLPV200253 | CHEMLINE | 21A015EC | TYPE: BALL VALVE//MANUFACTURER : CHEMLINE//MODEL : Type21-A-015-E-C//CONNECTION TYPE : COMBO \| 38 mm (1-1/2")//BODY : PVC (ASTM D1784)// SEAL \| SEAT :PTFE \| EPDM// STEM : PVC | N/A | BALL VALVE | 38 mm (1-1/2") | PVC (ASTM D1784) | PTFE \| EPDM | COMBO \| 38 mm (1-1/2") | SHEET 14 | |
| 1 | 15-BA99-1608 | VABLSS305296 | PMP | A201 (1/2") | TYPE: BALL VALVE//MANUFACTURER : PMP//MODEL : A201 (1/2")//CONNECTION TYPE : THREADED (FNPT) \| 13 mm (1/2")//BODY : CF8M// SEAL \| SEAT :RPTFE \| 316SS// STEM : 316SS | N/A | BALL VALVE | 15 mm (1/2") | CF8M | RPTFE \| 316SS | THREADED (FNPT) \| 13 mm (1/2") | SHEET 14 | |
| 1 | 15-BA99-1604 | VABLSS305296 | PMP | A201 (1/2") | TYPE: BALL VALVE//MANUFACTURER : PMP//MODEL : A201 (1/2")//CONNECTION TYPE : THREADED (FNPT) \| 13 mm (1/2")//BODY : CF8M// SEAL \| SEAT :RPTFE \| 316SS// STEM : 316SS | N/A | BALL VALVE | 15 mm (1/2") | CF8M | RPTFE \| 316SS | THREADED (FNPT) \| 13 mm (1/2") | SHEET 14 | |
| 1 | 15-BA99-1613 | VABLSS305296 | PMP | A201 (1/2") | TYPE: BALL VALVE//MANUFACTURER : PMP//MODEL : A201 (1/2")//CONNECTION TYPE : THREADED (FNPT) \| 13 mm (1/2")//BODY : CF8M// SEAL \| SEAT :RPTFE \| 316SS// STEM : 316SS | N/A | BALL VALVE | 15 mm (1/2") | CF8M | RPTFE \| 316SS | THREADED (FNPT) \| 13 mm (1/2") | SHEET 14 | |
| 1 | 15-BA99-1611 | VABLSS305296 | PMP | A201 (1/2") | TYPE: BALL VALVE//MANUFACTURER : PMP//MODEL : A201 (1/2")//CONNECTION TYPE : THREADED (FNPT) \| 13 mm (1/2")//BODY : CF8M// SEAL \| SEAT :RPTFE \| 316SS// STEM : 316SS | N/A | BALL VALVE | 15 mm (1/2") | CF8M | RPTFE \| 316SS | THREADED (FNPT) \| 13 mm (1/2") | SHEET 14 | |
| 1 | 65-CK99-1608 | ST-302-384 | CLA-VAL | RF-DBJ-C-NR-125-2.5" | INLINE CHECK VALVE // Manuf : CLA-VAL // MODEL : RF-DBJ-C-NR-125-2.5" // Elastomer : Natural Rubber - Body : Coated Cast Iron // Flanged cl 150 | N/A | CHECK \| 150 PSI | | CAST IRON A126 | | | SHEET 14 | |
| 1 | 65FY6801602 | VASDBR200093 | ASCO | 8210G100 -120 VAC | TYPE: SOLENOID VALVE//MANUFACTURER : ASCO//MODEL : 8210G100-120VAC//CONNECTION TYPE : THREADED \| 50 mm (2") \| 50 mm (2")//BODY : BRASS// SEAL \| SEAT : \| // STEM : N/A | ACTING : PILOTNORMALLY : FERMÉ/CLOSED | SOLENOID VALVE | 50 mm (2") | BRASS | \| | THREADED \| 50 mm (2") \| 50 mm (2") | SHEET 14 | |

VEOLIA

| VEOLIA DOC # | 5000220043_VALS_0001_GEN_VWT | | DATE | 2021-02-26 |
|---|---|---|---|---|
| VEOLIA PROJECT# | 5000220043 | CLIENT REFERENCE # | 6526-S-265-605 / OC-989680 | |

**VALVES LIST**

| CLIENT | REV | DESCRIPTION | DATE | BY | VER. | APP. |
|---|---|---|---|---|---|---|
| A.E.M | 1 | For Approval | 2021-02-26 | C.E.K | E.D | T.S |
| | 2 | For Information | 2021-04-28 | C.E.K | E.D | T.S |
| | 3 | For Information II | 2021-07-09 | C.E.K | M.D.G | T.S |
| PROJECT | | | | | | |
| MELIADINE-BPC UPGRADE | | | | | | |

| REV | EQPMT TAG NO | EQUIPMENT CODE | MANUFACTURER | MODEL NUMBER | CONDENSED INFO 1 | CONDENSED INFO 2 | VALVE TYPE \| RATING | DIAMETER | MATERIAL: BODY | MATERIAL SEAL \| SEAT | CONNECTION TYPE \| SIZE INLET \| SIZE OUTLET | P&ID NO | COMMENTS |
|---|---|---|---|---|---|---|---|---|---|---|---|---|---|
| 1 | 65FY6801613 | ST-304-700 | BRAY | S63 | TYPE: SOLENOID VALVE//MANUF. : BRAY//MODEL : S 63 N4, 120 VAC/60Hz C/w Speed Control 55,Singleway, 1/4 NPTF | N/A | SOLENOID VALVE | | | | TYPE: SOLENOID VALVE//MANUF. : BRAY//MODEL : S 63 N4, 120 VAC/60Hz C/w Speed Control 55,Singleway, 1/4 NPT | SHEET 14 | |
| 1 | 15-GL99-1606 | VAGLPV301163 | CHEMLINE | GVA01SET | TYPE: GLOBE VALVE \| 150 PSI//MANUFACTURER : CHEMLINE//MODEL : GVA01SET//CONNECTION TYPE : THREADED \| 38 mm (1-1/2")//BODY : PVC// SEAL \| SEAT :EPDM \| N/A// STEM : PVC | ACTUATOR TYPE : MANUAL HANDWHEEL// MANUFACTURER : N/A// MODEL # :N/A// | GLOBE VALVE \| 150 PSI | 38 mm (1-1/2") | PVC | EPDM \| N/A | THREADED \| 38 mm (1-1/2") | SHEET 14 | |
| 1 | 15-CK99-1614-BA | VABLPV200249 | CHEMLINE | 21A005EC,TYPE21 | TYPE: BALL VALVE//MANUFACTURER : CHEMLINE//MODEL : Type21-A-005-E-C//CONNECTION TYPE : COMBO \| 13 mm (1/2")//BODY : PVC (ASTM D1784)// SEAL \| SEAT :PTFE \| EPDM// STEM : PVC | N/A | BALL VALVE | 15 mm (1/2") | PVC (ASTM D1784) | PTFE \| EPDM | COMBO \| 13 mm (1/2") | SHEET 15 | |
| 1 | 50-BA99-1615 | VABLPV200254 | CHEMLINE | 21A020EC,TYPE21 | TYPE: BALL VALVE//MANUFACTURER : CHEMLINE//MODEL : Type21-A-020-E-C//CONNECTION TYPE : COMBO \| 50 mm (2")//BODY : PVC (ASTM D1784)// SEAL \| SEAT :PTFE \| EPDM// STEM : PVC | N/A | BALL VALVE | 50 mm (2") | PVC (ASTM D1784) | PTFE \| EPDM | COMBO \| 50 mm (2") | SHEET 15 | |
| 1 | 50-BA99-1613 | VABLPV200254 | CHEMLINE | 21A020EC,TYPE21 | TYPE: BALL VALVE//MANUFACTURER : CHEMLINE//MODEL : Type21-A-020-E-C//CONNECTION TYPE : COMBO \| 50 mm (2")//BODY : PVC (ASTM D1784)// SEAL \| SEAT :PTFE \| EPDM// STEM : PVC | N/A | BALL VALVE | 50 mm (2") | PVC (ASTM D1784) | PTFE \| EPDM | COMBO \| 50 mm (2") | SHEET 15 | |
| 1 | 40-BA99-1617 | VABLPV200253 | CHEMLINE | 21A015EC | TYPE: BALL VALVE//MANUFACTURER : CHEMLINE//MODEL : Type21-A-015-E-C//CONNECTION TYPE : COMBO \| 38 mm (1-1/2")//BODY : PVC (ASTM D1784)// SEAL \| SEAT :PTFE \| EPDM// STEM : PVC | N/A | BALL VALVE | 38 mm (1-1/2") | PVC (ASTM D1784) | PTFE \| EPDM | COMBO \| 38 mm (1-1/2") | SHEET 15 | |
| 1 | 15-BA99-1616 | VABLSS305296 | PMP | A201 (1/2") | TYPE: BALL VALVE//MANUFACTURER : PMP//MODEL : A201 (1/2")//CONNECTION TYPE : THREADED (FNPT) \| 13 mm (1/2")//BODY : CF8M// SEAL \| SEAT :RPTFE \| 316SS// STEM : 316SS | N/A | BALL VALVE | 15 mm (1/2") | CF8M | RPTFE \| 316SS | THREADED (FNPT) \| 13 mm (1/2") | SHEET 15 | |
| 1 | 15-BA99-1624 | VABLSS305296 | PMP | A201 (1/2") | TYPE: BALL VALVE//MANUFACTURER : PMP//MODEL : A201 (1/2")//CONNECTION TYPE : THREADED (FNPT) \| 13 mm (1/2")//BODY : CF8M// SEAL \| SEAT :RPTFE \| 316SS// STEM : 316SS | N/A | BALL VALVE | 15 mm (1/2") | CF8M | RPTFE \| 316SS | THREADED (FNPT) \| 13 mm (1/2") | SHEET 15 | |
| 1 | 15-BA99-1620 | VABLSS305296 | PMP | A201 (1/2") | TYPE: BALL VALVE//MANUFACTURER : PMP//MODEL : A201 (1/2")//CONNECTION TYPE : THREADED (FNPT) \| 13 mm (1/2")//BODY : CF8M// SEAL \| SEAT :RPTFE \| 316SS// STEM : 316SS | N/A | BALL VALVE | 15 mm (1/2") | CF8M | RPTFE \| 316SS | THREADED (FNPT) \| 13 mm (1/2") | SHEET 15 | |
| 1 | 15-BA99-1623 | VABLSS305296 | PMP | A201 (1/2") | TYPE: BALL VALVE//MANUFACTURER : PMP//MODEL : A201 (1/2")//CONNECTION TYPE : THREADED (FNPT) \| 13 mm (1/2")//BODY : CF8M// SEAL \| SEAT :RPTFE \| 316SS// STEM : 316SS | N/A | BALL VALVE | 15 mm (1/2") | CF8M | RPTFE \| 316SS | THREADED (FNPT) \| 13 mm (1/2") | SHEET 15 | |
| 1 | 65-CK99-1619 | ST-302-384 | CLA-VAL | RF-DBJ-C-NR-125-2.5" | INLINE CHECK VALVE // Manuf : CLA-VAL // MODEL : RF-DBJ-C-NR-125-2.5" // Elastomer : Natural Rubber - Body : Coated Cast Iron // Flanged cl 150 | N/A | CHECK \| 150 PSI | | CAST IRON A126 | | | SHEET 15 | |
| 1 | 65FY6801622 | VASDBR200093 | ASCO | 8210G100 -120 VAC | TYPE: SOLENOID VALVE//MANUFACTURER : ASCO//MODEL : 8210G100-120VAC//CONNECTION TYPE : THREADED \| 50 mm (2") \| 50 mm (2")//BODY : BRASS// SEAL \| SEAT : \| // STEM : N/A | ACTING : PILOTNORMALLY : FERMÉ/CLOSED | SOLENOID VALVE | 50 mm (2") | BRASS | \| | THREADED \| 50 mm (2") \| 50 mm (2") | SHEET 15 | |
| 1 | 65FY6801633 | ST-304-700 | BRAY | S63 | TYPE: SOLENOID VALVE//MANUF. : BRAY//MODEL : S 63 N4, 120 VAC/60Hz C/w Speed Control 55,Singleway, 1/4 NPTF | N/A | SOLENOID VALVE | | | | TYPE: SOLENOID VALVE//MANUF. : BRAY//MODEL : S 63 N4, 120 VAC/60Hz C/w Speed Control 55,Singleway, 1/4 NPT | SHEET 15 | |

VEOLIA

| VEOLIA DOC # | 5000220043_VALS_0001_GEN_VWT | | DATE | 2021-02-26 |
|---|---|---|---|---|
| VEOLIA PROJECT# | 5000220043 | CLIENT REFERENCE # | 6526-S-265-605 / OC-989680 | |

**VALVES LIST**

| CLIENT | REV | DESCRIPTION | DATE | BY | VER. | APP. |
|---|---|---|---|---|---|---|
| A.E.M | 1 | For Approval | 2021-02-26 | C.E.K | E.D | T.S |
| | 2 | For Information | 2021-04-28 | C.E.K | E.D | T.S |
| | 3 | For Information II | 2021-07-09 | C.E.K | M.D.G | T.S |
| PROJECT | | | | | | |
| MELIADINE-BPC UPGRADE | | | | | | |

| REV | EQPMT TAG NO | EQUIPMENT CODE | MANUFACTURER | MODEL NUMBER | CONDENSED INFO 1 | CONDENSED INFO 2 | VALVE TYPE \| RATING | DIAMETER | MATERIAL: BODY | MATERIAL SEAL \| SEAT | CONNECTION TYPE \| SIZE INLET \| SIZE OUTLET | P&ID NO | COMMENTS |
|---|---|---|---|---|---|---|---|---|---|---|---|---|---|
| 1 | 15-GL99-1618 | VAGLPV301163 | CHEMLINE | GVA015ET | TYPE: GLOBE VALVE \| 150 PSI//MANUFACTURER : CHEMLINE//MODEL : GVA015ET//CONNECTION TYPE : THREADED \| 38 mm (1-1/2")//BODY : PVC// SEAL \| SEAT :EPDM \| N/A// STEM : PVC | ACTUATOR TYPE : MANUAL HANDWHEEL// MANUFACTURER : N/A// MODEL # :N/A// | GLOBE VALVE \| 150 PSI | 38 mm (1-1/2") | PVC | EPDM \| N/A | THREADED \| 38 mm (1-1/2") | SHEET 15 | |
| 3 | 15-BA99-1187 | VABLPV200243 | CHEMLINE | 21A005VC,TYPE21 | TYPE: BALL VALVE//MANUFACTURER : CHEMLINE//MODEL : Type21-A-005-V-C//CONNECTION TYPE : COMBO \| 13 mm (1/2")//BODY : PVC (ASTM D1784)// SEAL \| SEAT :PTFE \| VITON// STEM : PVC | N/A | BALL VALVE | 15 mm (1/2") | PVC (ASTM D1784) | PTFE \| VITON | COMBO \| 13 mm (1/2") | SHEET 16 | |
| 3 | 15-BA99-1189 | VABLPV200243 | CHEMLINE | 21A005VC,TYPE21 | TYPE: BALL VALVE//MANUFACTURER : CHEMLINE//MODEL : Type21-A-005-V-C//CONNECTION TYPE : COMBO \| 13 mm (1/2")//BODY : PVC (ASTM D1784)// SEAL \| SEAT :PTFE \| VITON// STEM : PVC | N/A | BALL VALVE | 15 mm (1/2") | PVC (ASTM D1784) | PTFE \| VITON | COMBO \| 13 mm (1/2") | SHEET 16 | |
| 3 | 15-BA99-1184 | VABLPV200243 | CHEMLINE | 21A005VC,TYPE21 | TYPE: BALL VALVE//MANUFACTURER : CHEMLINE//MODEL : Type21-A-005-V-C//CONNECTION TYPE : COMBO \| 13 mm (1/2")//BODY : PVC (ASTM D1784)// SEAL \| SEAT :PTFE \| VITON// STEM : PVC | N/A | BALL VALVE | 15 mm (1/2") | PVC (ASTM D1784) | PTFE \| VITON | COMBO \| 13 mm (1/2") | SHEET 16 | |
| 3 | 15-BA99-1183 | VABLPV200243 | CHEMLINE | 21A005VC,TYPE21 | TYPE: BALL VALVE//MANUFACTURER : CHEMLINE//MODEL : Type21-A-005-V-C//CONNECTION TYPE : COMBO \| 13 mm (1/2")//BODY : PVC (ASTM D1784)// SEAL \| SEAT :PTFE \| VITON// STEM : PVC | N/A | BALL VALVE | 15 mm (1/2") | PVC (ASTM D1784) | PTFE \| VITON | COMBO \| 13 mm (1/2") | SHEET 16 | |
| 3 | 20-BA99-1191 | VABLPV200244 | CHEMLINE | 21A007VC,TYPE21 | TYPE: BALL VALVE//MANUFACTURER : CHEMLINE//MODEL : Type21-A-007-V-C//CONNECTION TYPE : COMBO \| 20 mm (3/4")//BODY : PVC (ASTM D1784)// SEAL \| SEAT :PTFE \| VITON// STEM : PVC | N/A | BALL VALVE | 20 mm (3/4") | PVC (ASTM D1784) | PTFE \| VITON | COMBO \| 20 mm (3/4") | SHEET 16 | |
| 3 | 15-BRP99-1167 | VARFPV309378 | CHEMLINE | SB12A005VU | TYPE: RELIEF VALVE \| 150#//MANUFACTURER : CHEMLINE//MODEL : SB12A005VU//CONNECTION TYPE : UNION SOCKET \| 13 mm (1/2")//BODY : PVC// SEAL \| SEAT :VITON \| VITON// STEM : N/A | N/A | RELIEF VALVE \| 150# | 13 mm (1/2") | PVC | VITON \| VITON | UNION SOCKET \| 13 mm (1/2") | SHEET 16 | |
| 3 | 15-NV99-1179 | VANEPV300121 | CHEMLINE | NGA005 | TYPE: NEEDLE VALVE \| 150 PSI, TEMP DEPENDENT//MANUFACTURER : CHEMLINE//MODEL : NGA005//CONNECTION TYPE : THREADED \| 13 mm (1/2")//BODY : PVC// SEAL \| SEAT :PTFE \| N/A// STEM : N/A | N/A | NEEDLE VALVE \| 150 PSI, TEMP DEPENDENT | 13 mm (1/2") | PVC | PTFE \| N/A | THREADED \| 13 mm (1/2") | SHEET 16 | |
| 3 | 15-NV99-1180 | VANEPV300121 | CHEMLINE | NGA005 | TYPE: NEEDLE VALVE \| 150 PSI, TEMP DEPENDENT//MANUFACTURER : CHEMLINE//MODEL : NGA005//CONNECTION TYPE : THREADED \| 13 mm (1/2")//BODY : PVC// SEAL \| SEAT :PTFE \| N/A// STEM : N/A | N/A | NEEDLE VALVE \| 150 PSI, TEMP DEPENDENT | 13 mm (1/2") | PVC | PTFE \| N/A | THREADED \| 13 mm (1/2") | SHEET 16 | |
| 3 | 15-GV99-1172 | VAGLPV308518 | CHEMLINE | GVA005T | TYPE: GLOBE VALVE \| 150 PSI//MANUFACTURER : CHEMLINE//MODEL : GVA005T//CONNECTION TYPE : THREADED \| 13 mm (1/2")//BODY : PVC// SEAL \| SEAT :EPDM \| N/A// STEM : PVC | ACTUATOR TYPE : MANUAL HANDWHEEL// MANUFACTURER : N/A// MODEL # :N/A// | GLOBE VALVE \| 150 PSI | 13 mm (1/2") | PVC | EPDM \| N/A | THREADED \| 13 mm (1/2") | SHEET 16 | |
| 3 | 15-GV99-1171 | VAGLPV308518 | CHEMLINE | GVA005T | TYPE: GLOBE VALVE \| 150 PSI//MANUFACTURER : CHEMLINE//MODEL : GVA005T//CONNECTION TYPE : THREADED \| 13 mm (1/2")//BODY : PVC// SEAL \| SEAT :EPDM \| N/A// STEM : PVC | ACTUATOR TYPE : MANUAL HANDWHEEL// MANUFACTURER : N/A// MODEL # :N/A// | GLOBE VALVE \| 150 PSI | 13 mm (1/2") | PVC | EPDM \| N/A | THREADED \| 13 mm (1/2") | SHEET 16 | |
| 3 | 15-BA99-1190 | VABLPV200243 | CHEMLINE | 21A005VC,TYPE21 | TYPE: BALL VALVE//MANUFACTURER : CHEMLINE//MODEL : Type21-A-005-V-C//CONNECTION TYPE : COMBO \| 13 mm (1/2")//BODY : PVC (ASTM D1784)// SEAL \| SEAT :PTFE \| VITON// STEM : PVC | N/A | BALL VALVE | 15 mm (1/2") | PVC (ASTM D1784) | PTFE \| VITON | COMBO \| 13 mm (1/2") | SHEET 17 | |
| 3 | 15-BA99-1188 | VABLPV200243 | CHEMLINE | 21A005VC,TYPE21 | TYPE: BALL VALVE//MANUFACTURER : CHEMLINE//MODEL : Type21-A-005-V-C//CONNECTION TYPE : COMBO \| 13 mm (1/2")//BODY : PVC (ASTM D1784)// SEAL \| SEAT :PTFE \| VITON// STEM : PVC | N/A | BALL VALVE | 15 mm (1/2") | PVC (ASTM D1784) | PTFE \| VITON | COMBO \| 13 mm (1/2") | SHEET 17 | |

VEOLIA

| VEOLIA DOC # | 5000220043_VALS_0001_GEN_VWT | | DATE | 2021-02-26 |
|---|---|---|---|---|
| VEOLIA PROJECT# | 5000220043 | CLIENT REFERENCE # | 6526-5-265-605 / OC-989680 | |

**VALVES LIST**

| CLIENT | REV | DESCRIPTION | DATE | BY | VER. | APP. |
|---|---|---|---|---|---|---|
| A.E.M | 1 | For Approval | 2021-02-26 | C.E.K | E.D | T.S |
| | 2 | For Information | 2021-04-28 | C.E.K | E.D | T.S |
| | 3 | For Information II | 2021-07-09 | C.E.K | M.D.G | T.S |
| PROJECT | | | | | | |
| MELIADINE-BPC UPGRADE | | | | | | |

| REV | EQPMT TAG NO | EQUIPMENT CODE | MANUFACTURER | MODEL NUMBER | CONDENSED INFO 1 | CONDENSED INFO 2 | VALVE TYPE \| RATING | DIAMETER | MATERIAL: BODY | MATERIAL SEAL \| SEAT | CONNECTION TYPE \| SIZE INLET \| SIZE OUTLET | P&ID NO | COMMENTS |
|---|---|---|---|---|---|---|---|---|---|---|---|---|---|
| 3 | 15-BA99-1186 | VABLPV200243 | CHEMLINE | 21A005VC,TYPE21 | TYPE: BALL VALVE//MANUFACTURER : CHEMLINE//MODEL : Type21-A-005-V-C//CONNECTION TYPE : COMBO \| 13 mm (1/2")//BODY : PVC (ASTM D1784)// SEAL \| SEAT :PTFE \| VITON// STEM : PVC | N/A | BALL VALVE | 15 mm (1/2") | PVC (ASTM D1784) | PTFE \| VITON | COMBO \| 13 mm (1/2") | SHEET 17 | |
| 3 | 15-BA99-1185 | VABLPV200243 | CHEMLINE | 21A005VC,TYPE21 | TYPE: BALL VALVE//MANUFACTURER : CHEMLINE//MODEL : Type21-A-005-V-C//CONNECTION TYPE : COMBO \| 13 mm (1/2")//BODY : PVC (ASTM D1784)// SEAL \| SEAT :PTFE \| VITON// STEM : PVC | N/A | BALL VALVE | 15 mm (1/2") | PVC (ASTM D1784) | PTFE \| VITON | COMBO \| 13 mm (1/2") | SHEET 17 | |
| 3 | 20-BA99-1192 | VABLPV200244 | CHEMLINE | 21A007VC,TYPE21 | TYPE: BALL VALVE//MANUFACTURER : CHEMLINE//MODEL : Type21-A-007-V-C//CONNECTION TYPE : COMBO \| 20 mm (3/4")//BODY : PVC (ASTM D1784)// SEAL \| SEAT :PTFE \| VITON// STEM : PVC | N/A | BALL VALVE | 20 mm (3/4") | PVC (ASTM D1784) | PTFE \| VITON | COMBO \| 20 mm (3/4") | SHEET 17 | |
| 3 | 15-BRP99-1168 | VARFPV309378 | CHEMLINE | SB12A005VU | TYPE: RELIEF VALVE \| 150#//MANUFACTURER : CHEMLINE//MODEL : SB12A005VU//CONNECTION TYPE : UNION SOCKET \| 13 mm (1/2")//BODY : PVC// SEAL \| SEAT :VITON \| VITON// STEM : N/A | N/A | RELIEF VALVE \| 150# | 13 mm (1/2") | PVC | VITON \| VITON | UNION SOCKET \| 13 mm (1/2") | SHEET 17 | |
| 3 | 15-NV99-1181 | VANEPV300121 | CHEMLINE | NGA005 | TYPE: NEEDLE VALVE \| 150 PSI, TEMP DEPENDENT//MANUFACTURER : CHEMLINE//MODEL : NGA005//CONNECTION TYPE : THREADED \| 13 mm (1/2")//BODY : PVC// SEAL \| SEAT :PTFE \| N/A// STEM : N/A | N/A | NEEDLE VALVE \| 150 PSI, TEMP DEPENDENT | 13 mm (1/2") | PVC | PTFE \| N/A | THREADED \| 13 mm (1/2") | SHEET 17 | |
| 3 | 15-NV99-1182 | VANEPV300121 | CHEMLINE | NGA005 | TYPE: NEEDLE VALVE \| 150 PSI, TEMP DEPENDENT//MANUFACTURER : CHEMLINE//MODEL : NGA005//CONNECTION TYPE : THREADED \| 13 mm (1/2")//BODY : PVC// SEAL \| SEAT :PTFE \| N/A// STEM : N/A | N/A | NEEDLE VALVE \| 150 PSI, TEMP DEPENDENT | 13 mm (1/2") | PVC | PTFE \| N/A | THREADED \| 13 mm (1/2") | SHEET 17 | |
| 3 | 15-GV99-1173 | VAGLPV308518 | CHEMLINE | GVA005T | TYPE: GLOBE VALVE \| 150 PSI//MANUFACTURER : CHEMLINE//MODEL : GVA005T//CONNECTION TYPE : THREADED \| 13 mm (1/2")//BODY : PVC// SEAL \| SEAT :EPDM \| N/A// STEM : PVC | ACTUATOR TYPE : MANUAL HANDWHEEL// MANUFACTURER : N/A// MODEL # :N/A// | GLOBE VALVE \| 150 PSI | 13 mm (1/2") | PVC | EPDM \| N/A | THREADED \| 13 mm (1/2") | SHEET 17 | |
| 3 | 15-GV99-1174 | VAGLPV308518 | CHEMLINE | GVA005T | TYPE: GLOBE VALVE \| 150 PSI//MANUFACTURER : CHEMLINE//MODEL : GVA005T//CONNECTION TYPE : THREADED \| 13 mm (1/2")//BODY : PVC// SEAL \| SEAT :EPDM \| N/A// STEM : PVC | ACTUATOR TYPE : MANUAL HANDWHEEL// MANUFACTURER : N/A// MODEL # :N/A// | GLOBE VALVE \| 150 PSI | 13 mm (1/2") | PVC | EPDM \| N/A | THREADED \| 13 mm (1/2") | SHEET 17 | |
| 3 | 15-BA99-1193 | VABLPV200249 | CHEMLINE | 21A005EC,TYPE21 | TYPE: BALL VALVE//MANUFACTURER : CHEMLINE//MODEL : Type21-A-005-E-C//CONNECTION TYPE : COMBO \| 13 mm (1/2")//BODY : PVC (ASTM D1784)// SEAL \| SEAT :PTFE \| EPDM// STEM : PVC | N/A | BALL VALVE | 15 mm (1/2") | PVC (ASTM D1784) | PTFE \| EPDM | COMBO \| 13 mm (1/2") | SHEET 05 | |
| 3 | 15-BA99-1198 | VABLPV200249 | CHEMLINE | 21A005EC,TYPE21 | TYPE: BALL VALVE//MANUFACTURER : CHEMLINE//MODEL : Type21-A-005-E-C//CONNECTION TYPE : COMBO \| 13 mm (1/2")//BODY : PVC (ASTM D1784)// SEAL \| SEAT :PTFE \| EPDM// STEM : PVC | N/A | BALL VALVE | 15 mm (1/2") | PVC (ASTM D1784) | PTFE \| EPDM | COMBO \| 13 mm (1/2") | SHEET 05 | |
| 3 | 15-BA99-1195 | VABLPV200249 | CHEMLINE | 21A005EC,TYPE21 | TYPE: BALL VALVE//MANUFACTURER : CHEMLINE//MODEL : Type21-A-005-E-C//CONNECTION TYPE : COMBO \| 13 mm (1/2")//BODY : PVC (ASTM D1784)// SEAL \| SEAT :PTFE \| EPDM// STEM : PVC | N/A | BALL VALVE | 15 mm (1/2") | PVC (ASTM D1784) | PTFE \| EPDM | COMBO \| 13 mm (1/2") | SHEET 05 | |
| 3 | 15-BA99-1196 | VABLPV200249 | CHEMLINE | 21A005EC,TYPE21 | TYPE: BALL VALVE//MANUFACTURER : CHEMLINE//MODEL : Type21-A-005-E-C//CONNECTION TYPE : COMBO \| 13 mm (1/2")//BODY : PVC (ASTM D1784)// SEAL \| SEAT :PTFE \| EPDM// STEM : PVC | N/A | BALL VALVE | 15 mm (1/2") | PVC (ASTM D1784) | PTFE \| EPDM | COMBO \| 13 mm (1/2") | SHEET 05 | |
| 3 | 15-BA99-1197 | VANEPV300121 | CHEMLINE | NGA005 | TYPE: NEEDLE VALVE \| 150 PSI, TEMP DEPENDENT//MANUFACTURER : CHEMLINE//MODEL : NGA005//CONNECTION TYPE : THREADED \| 13 mm (1/2")//BODY : PVC// SEAL \| SEAT :PTFE \| N/A// STEM : N/A | N/A | NEEDLE VALVE \| 150 PSI, TEMP DEPENDENT | 13 mm (1/2") | PVC | PTFE \| N/A | THREADED \| 13 mm (1/2") | SHEET 05 | |

VEOLIA

| VEOLIA DOC # | 5000220043_VALS_0001_GEN_VWT | | DATE | 2021-02-26 |
|---|---|---|---|---|
| VEOLIA PROJECT# | 5000220043 | CLIENT REFERENCE # | 6526-S-265-605 / OC-989680 | |

**VALVES LIST**

| CLIENT | REV | DESCRIPTION | DATE | BY | VER. | APP. |
|---|---|---|---|---|---|---|
| A.E.M | 1 | For Approval | 2021-02-26 | C.E.K | E.D | T.S |
| | 2 | For Information | 2021-04-28 | C.E.K | E.D | T.S |
| | 3 | For Information II | 2021-07-09 | C.E.K | M.D.G | T.S |
| PROJECT | | | | | | |
| MELIADINE-BPC UPGRADE | | | | | | |

| REV | EQPMT TAG NO | EQUIPMENT CODE | MANUFACTURER | MODEL NUMBER | CONDENSED INFO 1 | CONDENSED INFO 2 | VALVE TYPE \| RATING | DIAMETER | MATERIAL: BODY | MATERIAL SEAL \| SEAT | CONNECTION TYPE \| SIZE INLET \| SIZE OUTLET | P&ID NO | COMMENTS |
|---|---|---|---|---|---|---|---|---|---|---|---|---|---|
| 3 | 15-BA99-1194 | VANEPV300121 | CHEMLINE | NGA005 | TYPE: NEEDLE VALVE \| 150 PSI, TEMP DEPENDENT//MANUFACTURER : CHEMLINE//MODEL : NGA005//CONNECTION TYPE : THREADED \| 13 mm (1/2")//BODY : PVC// SEAL \| SEAT :PTFE \| N/A// STEM : N/A | N/A | NEEDLE VALVE \| 150 PSI, TEMP DEPENDENT | 13 mm (1/2") | PVC | PTFE \| N/A | THREADED \| 13 mm (1/2") | SHEET 05 | |
| 3 | 15-BA99-1494 | VABLPV200249 | CHEMLINE | 21A005EC,TYPE21 | TYPE: BALL VALVE//MANUFACTURER : CHEMLINE//MODEL : Type21-A-005-E-C//CONNECTION TYPE : COMBO \| 13 mm (1/2")//BODY : PVC (ASTM D1784)// SEAL \| SEAT :PTFE \| EPDM// STEM : PVC | N/A | BALL VALVE | 15 mm (1/2") | PVC (ASTM D1784) | PTFE \| EPDM | COMBO \| 13 mm (1/2") | SHEET 09 | |
| 3 | 15-BA99-1492 | VABLPV200249 | CHEMLINE | 21A005EC,TYPE21 | TYPE: BALL VALVE//MANUFACTURER : CHEMLINE//MODEL : Type21-A-005-E-C//CONNECTION TYPE : COMBO \| 13 mm (1/2")//BODY : PVC (ASTM D1784)// SEAL \| SEAT :PTFE \| EPDM// STEM : PVC | N/A | BALL VALVE | 15 mm (1/2") | PVC (ASTM D1784) | PTFE \| EPDM | COMBO \| 13 mm (1/2") | SHEET 09 | |
| 3 | 15-BA99-1498 | VABLPV200249 | CHEMLINE | 21A005EC,TYPE21 | TYPE: BALL VALVE//MANUFACTURER : CHEMLINE//MODEL : Type21-A-005-E-C//CONNECTION TYPE : COMBO \| 13 mm (1/2")//BODY : PVC (ASTM D1784)// SEAL \| SEAT :PTFE \| EPDM// STEM : PVC | N/A | BALL VALVE | 15 mm (1/2") | PVC (ASTM D1784) | PTFE \| EPDM | COMBO \| 13 mm (1/2") | SHEET 09 | |
| 3 | 15-BA99-1496 | VABLPV200249 | CHEMLINE | 21A005EC,TYPE21 | TYPE: BALL VALVE//MANUFACTURER : CHEMLINE//MODEL : Type21-A-005-E-C//CONNECTION TYPE : COMBO \| 13 mm (1/2")//BODY : PVC (ASTM D1784)// SEAL \| SEAT :PTFE \| EPDM// STEM : PVC | N/A | BALL VALVE | 15 mm (1/2") | PVC (ASTM D1784) | PTFE \| EPDM | COMBO \| 13 mm (1/2") | SHEET 09 | |
| 3 | 15-BA99-1493 | VANEPV300121 | CHEMLINE | NGA005 | TYPE: NEEDLE VALVE \| 150 PSI, TEMP DEPENDENT//MANUFACTURER : CHEMLINE//MODEL : NGA005//CONNECTION TYPE : THREADED \| 13 mm (1/2")//BODY : PVC// SEAL \| SEAT :PTFE \| N/A// STEM : N/A | N/A | NEEDLE VALVE \| 150 PSI, TEMP DEPENDENT | 13 mm (1/2") | PVC | PTFE \| N/A | THREADED \| 13 mm (1/2") | SHEET 09 | |
| 3 | 15-BA99-1497 | VANEPV300121 | CHEMLINE | NGA005 | TYPE: NEEDLE VALVE \| 150 PSI, TEMP DEPENDENT//MANUFACTURER : CHEMLINE//MODEL : NGA005//CONNECTION TYPE : THREADED \| 13 mm (1/2")//BODY : PVC// SEAL \| SEAT :PTFE \| N/A// STEM : N/A | N/A | NEEDLE VALVE \| 150 PSI, TEMP DEPENDENT | 13 mm (1/2") | PVC | PTFE \| N/A | THREADED \| 13 mm (1/2") | SHEET 09 | |

LEFT BLANK

# *4 – DETAILED TECHNICAL DOCUMENTATION*

## *4.2 – SHOP DRAWINGS*

## *4.2.1 – CHLORINATION REACTOR RX75-3 #1*

LEFT BLANK

| | |
|---|---|
| **Project name:** | MELIADINE-BPC UPGRADE |
| **Project#:** | 5000220043 / 6526-S-265-605 / OC-989680 |
| **Document #:** | SPK_0003_RX_VWT |
| **by:** | CEK |
| **chkd:** | ED |
| **appvd:** | TS |

# SUBMITTAL PACKAGE

# CHLORINATION REACTOR RX75-3 #1

**REV 2**
**DATE:2021-03-02**

**This page is intentionally left blank**

| | |
|---|---|
| **Project name:** | MELIADINE-BPC UPGRADE |
| **Project#:** | 5000220043 |
| **Document #:** | SPK_0003_RX_VWT |
| **by:** | CEK |
| **chkd:** | ED |
| **appvd:** | TS |

# CHLORINATION REACTOR RX75-3 #1

# PROCESS DATASHEET

**OIM manual section:** 4.2.1.1

**This page is intentionally left blank**

| | | | | | | | |
|---|---|---|---|---|---|---|---|
| VEOLIA | | | | VWT DOC# | PSDS_0001_RX_VWT | | |
| | | | | PROJECT No | 5000220043 | | |
| | | | | CLIENT PROJECT # | 6526-S-265-605 / OC-989680 | | |
| | | | | Date | 2021-01-13 | | |
| | | | | | **CHLORINATION REACTOR** | | |
| **CLIENT** | **REV** | **DESCRIPTION** | | **DATE** | **By:** | **CHKD** | **APP.** |
| **A.E.M** | **1** | For Approval | | 2021-01-13 | C.E.K | E.D | T.S |
| | **2** | For Information | | 2021-03-02 | C.E.K | E.D | T.S |
| **PROJECT** | **3** | | | | | | |
| **Meliadine-BPC Upgrade** | **4** | | | | | | |
| | **5** | | | | | | |
| | **6** | | | | | | |
| | **7** | | | | | | **REV** |
| **GENERAL INFORMATION** | **Technology** | | | - | CHLORINATION REACTOR | | |
| | **Number of trains** | | | - | 1 | | |
| | **Type** | | | - | Prefab. Reaction tank | | |
| | **TAG** | | | | | | |
| | **Model** | | | | RX75-3 | | |
| | **Number of units** | | | - | 1 | | |
| **ENVIRONMENT CONDITIONS** | **Equipment Location** | | | - | Indoor | | |
| | **Altitude (if blower)** | | | **m** | N/A | | |
| | **Min. Temperature- WATER** | | | **°C** | -4 | | |
| | **Max. Temperature- WATER** | | | **°C** | 12 | | |
| | **Min. Temperature- AIR** | | | **°C** | 7 | | |
| | **Max. Temperature- AIR** | | | **°C** | 35 | | |
| | **Max. Humidity** | | | **%** | 100 | | |
| | **Corrosive atmosphere** | | | - | Corrosive | | |
| | **Freeze conditions** | | | - | Maintain above freezing temperature | | |
| | **Comments** | | | - | | | |
| **COMPONENTS APPROVAL AND CERTIFICATIONS** | **NSF-61** | | **yes/no** | - | NO | | |
| | **CSA / UL** | | **yes/no** | - | YES | | |
| | **Others** | | | - | | | |
| **SAFETY** | **Electrical Classification (according to NFPA 820)** | | | - | N/A | | |
| | **Province** | | | - | Nunavut | | |
| **REQUIRED PERFORMANCE** | **Application** | | | - | INDUSTRIAL | | |
| | **Design Capacity** | | | **$m^3/d$** | 6207-12090 | | |
| | **Nominal capacity per unit** | | | **$m^3/d$** | 12 090 | | |
| | **Retention time at nominal capacity** | | | **min** | 23,04 | | |
| | **Volume** | | | **$m^3$** | 193 | | |
| | **Effluent Quality** | | | **Specs reference (specify)** | N/A | | |
| **TECHNICAL DESCRIPTION** | **Tank # 1** | **Basin Dimensions** | **Length** | **in (mm)** | 168.5 in (4 280mm) | | |
| | | | **Width** | **in (mm)** | 168.5 in (4 280mm) | | |
| | | | **Water Depth** | **in (mm)** | 141 in (3 520 mm) | | |
| | | | **CONTACT TIME** | **min.** | 7,68 | | |
| | | **Mixers** | **Manufacturer** | - | ENVIREQUIP W.T.E.M. INC | | |
| | | | **Model** | - | Envirequip MIX-TECH EVGX-6-5,0 | | |
| | | | **Power** | **HP** | 5 HP | | |
| | | | **Weigth** | **Kg** | 1415 lb (642 kg) | | |
| | | | **Rotation/direction of thrust** | - | cw down | | 2 |
| | | | **Material and Grade** | | Duplex | | |
| | **Tank # 2** | **Basin Dimensions** | **Length** | **in (mm)** | 168.5 in (4 280mm) | | |
| | | | **Width** | **in (mm)** | 168.5 in (4 280mm) | | |
| | | | **Water Depth** | **in (mm)** | 141 in (3 520 mm) | | |
| | | | **CONTACT TIME** | **min.** | 7,68 | | |
| | | **Mixers** | **Manufacturer** | - | ENVIREQUIP W.T.E.M. INC | | |
| | | | **Model** | - | Envirequip MIX-TECH EVGX-6-5,0 | | |
| | | | **Power** | **HP** | 5 HP | | |
| | | | **Weigth** | **Kg** | 1415 lb (642 kg) | | |
| | | | **Rotation/direction of thrust** | - | ccw up | | |
| | | | **Material and Grade** | - | Duplex | | |
| | **Tank # 3** | **Basin Dimensions** | **Length** | **in (mm)** | 168.5 in (4 280mm) | | |
| | | | **Width** | **in (mm)** | 168.5 in (4 280mm) | | |
| | | | **Water Depth** | **in (mm)** | 141 in (3 520 mm) | | |
| | | | **CONTACT TIME** | **min.** | 7,68 | | |
| | | **Mixers** | **Manufacturer** | - | ENVIREQUIP W.T.E.M. INC | | |
| | | | **Model** | - | Envirequip MIX-TECH EVGX-6-5,0 | | |
| | | | **Power** | **HP** | 5 HP | | |
| | | | **Weigth** | **Kg** | 1415 lb (642 kg) | | |
| | | | **Rotation/direction of thrust** | - | cw down | | |
| | | | **Material and Grade** | | Duplex | | |

| | | | | | | | |
|---|---|---|---|---|---|---|---|
| VEOLIA | | | | VWT DOC# | PSDS_0001_RX_VWT | | |
| | | | | PROJECT No | 5000220043 | | |
| | | | | CLIENT PROJECT # | 6526-S-265-605 / OC-989680 | | |
| | | | | Date | 2021-01-13 | | |
| | | | | | **CHLORINATION REACTOR** | | |
| **CLIENT** | **REV** | **DESCRIPTION** | | **DATE** | **By:** | **CHKD** | **APP.** |
| **A.E.M** | **1** | For Approval | | 2021-01-13 | C.E.K | E.D | T.S |
| | **2** | For Information | | 2021-03-02 | C.E.K | E.D | T.S |
| **PROJECT** | **3** | | | | | | |
| **Meliadine-BPC Upgrade** | **4** | | | | | | |
| | **5** | | | | | | |
| | **6** | | | | | | |
| | **7** | | | | | | **REV** |
| | **Chemical Dosage** | | **Chemical Product** | - | Sodium Hydroxide | | |
| | | | **Dosage min/average/max** | **mg/L** | 190 / 304 / 598 | | |
| | | | **Chemical Product** | - | Sulfuric Acid | | |
| | | | **Dosage min/average/max** | **mg/L** | TBD | | |
| | | | **Chemical Product** | - | Calcium Hypochlorite | | |
| | | | **Dosage min/average/max** | **mg/L** | 1494 / 2389 / 4699 | | |
| **OTHERS CONSTRUCTION MATERIALS** | **Inside Walls (if applicable)** | | | | Painted Steel | | |
| | **Anti-rotation Baffle (if applicable)** | | | - | Duplex 2205 | | |
| | **Hardware (immerged)** | | | - | Duplex 2205 | | |
| | **Hardware (non-immerged)** | | | - | Duplex 2205 | | |
| **CONNECTIONS** | **Inlet diameter** | | | **in (mm)** | 18 in (450 mm) | | |
| | **Drain Diameter** | | | **in (mm)** | 4 in (100 mm) | | |
| | **Outlet diameter** | | | **in (mm)** | 18 in (450 mm) | | |
| **VALVES** | **X** | **Isolation valve - Drain** | **Manufacturer** | - | BRAY | | |
| | | | **Valve Type** | - | BUTTERFLY VALVE | | |
| | | | **Model \| Diam.** | - | SERIES 31 | 100 mm | |
| | | | **Quantity** | - | 2 | | |
| **INSTRUMENTATION** | **X** | **Free Chlorine Analyser** | **Manufacturer** | - | SWAN | | 2 |
| | | | **Model \| Diam.** | | AMI-CODES-II | | 2 |
| | | **Zone : *Non Hazardous*** | **Quantity** | - | 1 | | |
| | **X** | **Total Chlorine Analyser** | **Manufacturer** | - | SWAN | | 2 |
| | | | **Model \| Diam.** | | AMI-CODES-II TC | | 2 |
| | | **Zone : *Non Hazardous*** | **Quantity** | - | 1 | | |
| | **X** | **Extarction Fan** | **Manufacturer** | - | PLASTEC | | 2 |
| | | | **Model \| Diam.** | | JET-20 | | 2 |
| | | **Zone : *Non Hazardous*** | **Quantity** | - | 1 | | 2 |
| **METAL WORKS** | **Grating** | | **Dimensions/Type** | - | Refer To GA_0003_RX_VWT | | |
| | | | **Material** | - | FRP | | |
| | **Handrails** | | **Dimensions/Type** | - | Refer To GA_0003_RX_VWT | | |
| | | | **Material** | - | Painted Steel | | |
| | **Access (ladder/stairs)** | | **Dimensions/Type** | - | Refer To GA_0003_RX_VWT | | |
| | | | **Material** | - | Painted Steel | | |
| | **Cover** | | **Dimensions/Type** | - | Refer To GA_0003_RX_VWT | | |
| | | | **Material** | - | Painted Steel | | |
| **POWER FEED** | **Motors** | | | **V/ph/Hz** | 575/3/60 | | |
| | **Panels** | | | **V/ph/Hz** | 575/3/60 | | |
| | **Others** | | | **V/ph/Hz** | NA | | |
| **OTHER** | **Tank height** | | | **in (mm)** | Refer To GA_0003_RX_VWT | | |
| | **Recommended Headroom** | | | **in (mm)** | Refer To GA_0003_RX_VWT | | |
| | **Recommended overall width** | | | **in (mm)** | Refer To GA_0003_RX_VWT | | |
| | **Recommended overall length** | | | **in (mm)** | Refer To GA_0003_RX_VWT | | |
| | **Weight (dry)** | | | **Lbs (Kg)** | Refer To GA_0003_RX_VWT | | |
| | **Weight (full of water)** | | | **Lbs (Kg)** | Refer To GA_0003_RX_VWT | | |
| **COMMENTS** | ALL MOTORS PROVIDED ARE STANDARD IEEE841 | | | | | | |

**Project name:** MELIADINE-BPC UPGRADE

**Project#:** 5000220043

**Document #:** SPK_0003_RX_VWT

**by:** CEK

**chkd:** ED

**appvd:** TS

# CHLORINATION REACTOR RX75-3 #1

# GENERAL ARRANGEMENT DRAWING

**OIM manual section:** 4.2.1.2

Refer to 5000220043_GA_0003_RX_VWT REV 02
Refer to manual section 3.4

**This page is intentionally left blank**

**Project name:** MELIADINE-BPC UPGRADE

**Project#:** 5000220043

**Document #:** SPK_0003_RX_VWT

**by:** CEK

**chkd:** ED

**appvd:** TS

# CHLORINATION REACTOR RX75-3 #1

# MIXER

**OIM manual section:** 4.2.1.3

**This page is intentionally left blank**

# CS-999-003 : Identification sheet

| | | | |
|---|---|---|---|
| VWTC PROJECT NUMBER: | 5000220043 | REV: | 1 |
| PROJECT NAME: | AEM MELIADINE-BPC UPGRADE | SUBMITTED TO (COMPANY): | AEM |
| ENGINEER: | EMMANUELLE DORMOY | SUBMITTED TO (RESPONSIBLE) | |
| PROJECT MANAGER: | THOMAS SAVARY / BRUCE BRODES | PROJECT NUM REFERENCE.: | 6526-S-265-605 / OC-989680 |
| PHONE NUMBER: | 514-334-7230 | LOT NUMBER: | |

| SUPPLIER | EQPT CODE | EQPT TAG NO | DIA | DESCRIPTION | INFO 1 | INFO 2 | INFO 3 | APPLIC. | NOTE | REV |
|---|---|---|---|---|---|---|---|---|---|---|
| ENVIREQUIP | ST-999-003 | 65AGI68012 | | CHLORINATION REACTOR AGITATOR #1 | DESCRIPTION RX75-3 (575V) REACTION TANK 1// MODEL: Envirequip MIX-TECH EVGX6-5.0 // Mtl : DUPLEX STAINLESS STEEL 2205 | Impeller Dia : 96.0" // 21.84 RPM // Shaft lg : 100.45" // Direction & thrust: cw down | WEG Motor 5.0 HP / 575/3/60 // Nord reducer SK6282 AHZ/VL // Gear ratio 80.33:1 // STANDARD IEEE841 | CHLORINATION REACTOR | | 1 |

**This page is intentionally left blank**

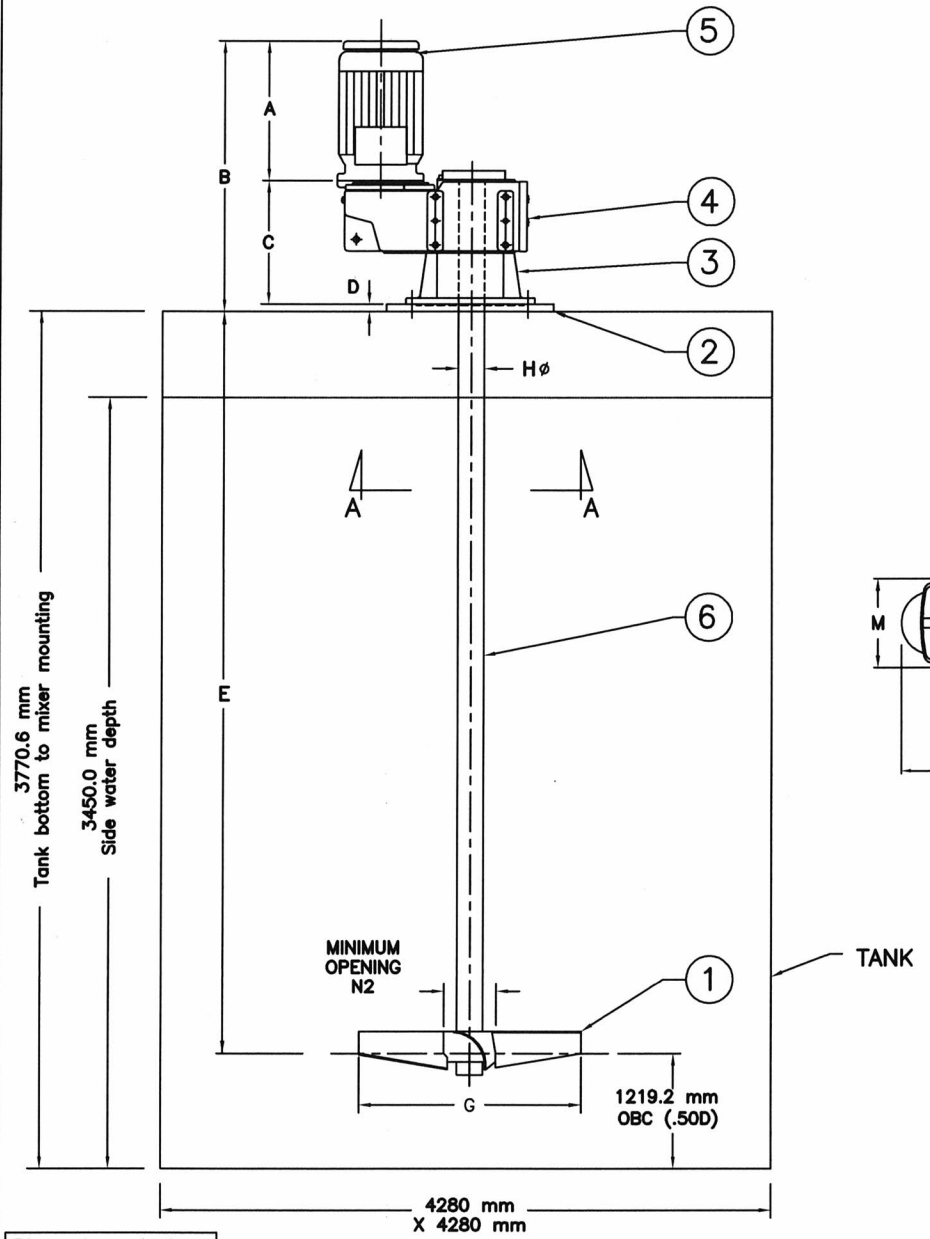


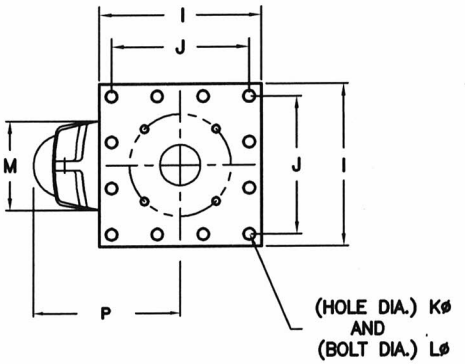


"A–A"

| ITEM | DESCRIPTION | MATERIAL |
|---|---|---|
| 1 | Envirofoil Impeller (F–4) 2438.4 mm (96.0")ø @ 22.0° | 2205 |
| 2 | Base 533.4 mm x 533.4 mm (21.0" x 21.0" ) | Steel |
| 3 | Pedestal c/w dry well (dry well) | |
| 4 | NORD reducer 21.84 RPM | |
| 5 | WEG 5.0 Hp motor, IEEE841, 575/3/60, TEFC | |
| 6 | Shaft: (1) section 2551.4 mm (100.45") @ 3.0"ø | 2205 |

| |
|---|
| APPL'N: RX75 – REACTOR – COVERED |
| ENVIREQUIP MIXERS |
| MODEL: EVGX6–5.0 |
| 3.73 kW @ 21.84 RPM |
| Rotation: Clockwise |
| Thrust: Down |
| Tag #: |

| |
|---|
| Weight: 1,420 Lbs |
| Mounting Loads |
| Torque reaction = 36,072 in lb |
| Bending moment = 48,373 in lb |

COVERED TANK 1

Dimensions: Inches

| MOD.: | A | B | C | D | E | E2 | F | Gø | Hø SHAFT | I | J | Kø | Lø | M | N2 | P |
|---|---|---|---|---|---|---|---|---|---|---|---|---|---|---|---|---|
| EVGX6 | 14.61 | 31.53 | 16.05 | .875 | 100.45 | – | – | 96.0 | 3.0 | 21.0 | 18.0 | 1.0 | .875 | 13.8 | 16.0 | 16.02 |

Dimensions: mm

| MOD.: | A | B | C | D | E | E2 | F | Gø | Hø SHAFT | I | J | Kø | Lø | M | N2 | P |
|---|---|---|---|---|---|---|---|---|---|---|---|---|---|---|---|---|
| EVGX6 | 371.1 | 801.0 | 407.7 | 22.2 | 2551.4 | – | – | 2438.4 | 76.2 | 533.4 | 457.2 | 25.4 | 22.2 | 350.5 | 406.4 | 407.0 |

Ce dessin et l'information qu'il contient est la propriété de ENVIREQUIP WTEM Inc. Il est interdit de le copier, le photographier, l'imprimer, le prêter ou de l'utiliser sans la permission de ENVIREQUIP WTEM Inc.

This drawing and the information contained thereon is the property of ENVIREQUIP WTEM Inc. It is not to be printed, photographed, copied, loaned or used without the permission of ENVIREQUIP WTEM Inc.

| NO | DATE | REVISION | P/B |
|---|---|---|---|
| | | | |

PROJET/PROJECT

RX75 – REACTOR

ENVIREQUIP WTEM INC.

490 Bord du Lac – Suite 2
Dorval, QC H9S 2A8
Montreal Tel: (514) 335-1043

RR1 (21494 Little Russell Rd.)
Glen Robertson, Ont K0B 1H0
Ontario Tel: (613) 874-2616
Fax: (613) 874-2629
E-mail: envireqp@glen-net.on

TITRE/TITLE

ENVIREQUIP MIXERS
Veolia Water Technologies
EVGX SERIES

| | |
|---|---|
| DESSINÉ PAR: DRAWN BY: PJ | DATE JAN 28, 2021 |
| DESS. NO: DWG NO: EVGX | ECH./SCALE N.T.S |
| VERIFIÉ PAR: CHECKED BY: PJ | PROJ.NO: |
| APPROUVÉ PAR: APPROVED BY: RJ | REV. 00 |

**This page is intentionally left blank**

# CS-999-004 : Identification sheet

| | | | |
|---|---|---|---|
| VWTC PROJECT NUMBER: | 5000220043 | REV: | 1 |
| PROJECT NAME: | AEM MELIADINE-BPC UPGRADE | SUBMITTED TO (COMPANY): | AEM |
| ENGINEER: | EMMANUELLE DORMOY | SUBMITTED TO (RESPONSIBLE): | |
| PROJECT MANAGER: | THOMAS SAVARY / BRUCE BRODES | PROJECT NUM REFERENCE.: | 6526-S-265-605 / OC-989680 |
| PHONE NUMBER: | 514-334-7230 | LOT NUMBER: | |

| SUPPLIER | EQPT CODE | EQPT TAG NO | DIA | DESCRIPTION | INFO 1 | INFO 2 | INFO 3 | APPLIC. | NOTE | REV |
|---|---|---|---|---|---|---|---|---|---|---|
| ENVIREQUIP | ST-999-004 | 65AGI68013 | | CHLORINATION REACTOR AGITATOR #2 | DESCRIPTION RX75-3 (575V) REACTION TANK 2// MODEL: Envirequip MIX-TECH EVGX6-5.0 // Mtl : DUPLEX STAINLESS STEEL 2205 | Impeller Dia : 96.0" // 21.84 RPM // Shaft lg : 100.45" // Direction & thrust: ccw up | WEG Motor 5.0 HP / 575/3/60 // Nord reducer SK6282 AHZ/VL // Gear ratio 80.33:1 // STANDARD IEEE841 | CHLORINATION REACTOR | | 1 |

**This page is intentionally left blank**

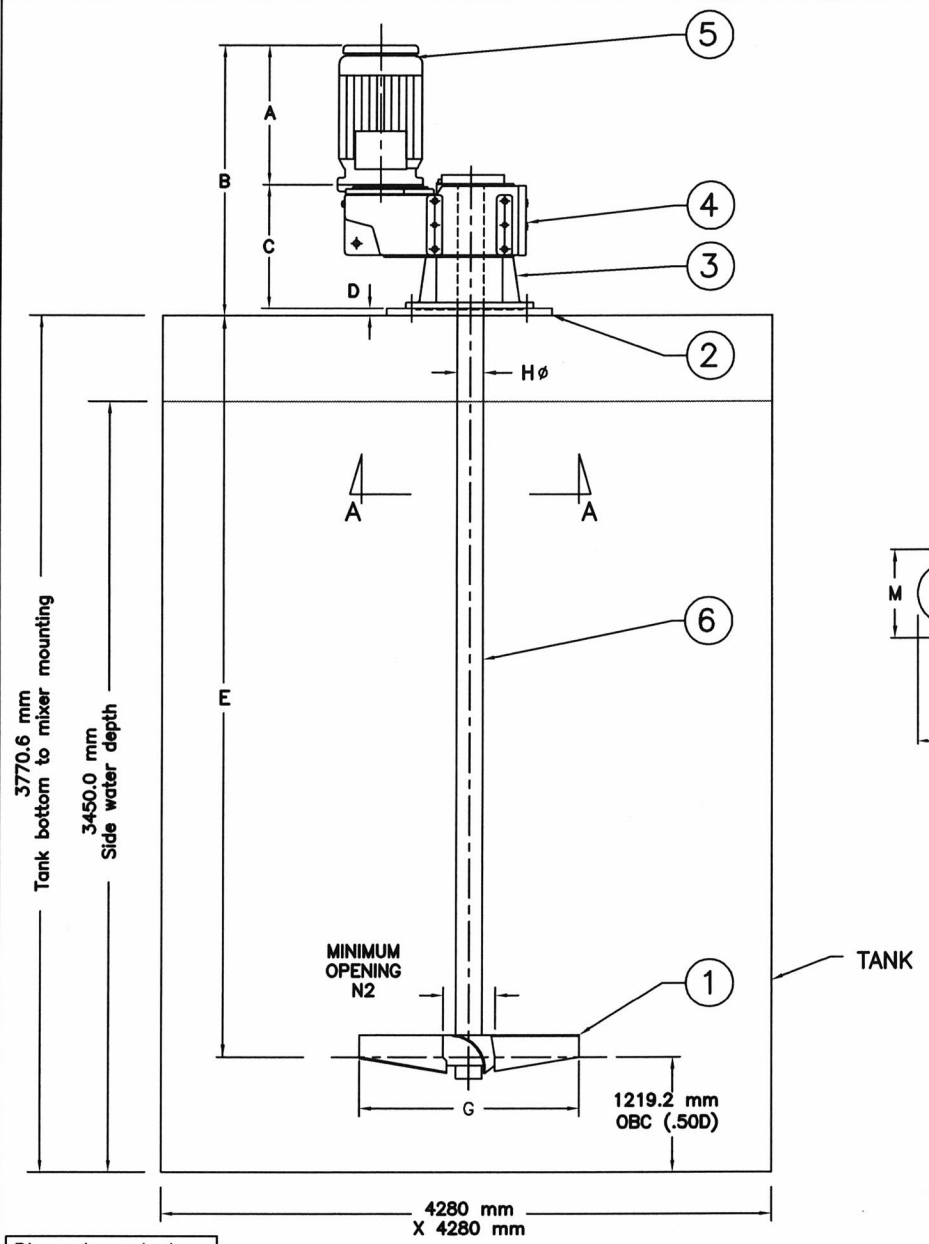


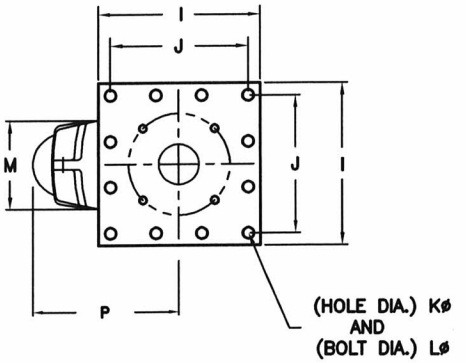


"A–A"

| ITEM | DESCRIPTION | MATERIAL |
|---|---|---|
| 1 | Envirofoil Impeller (F–4) 2438.4 mm (96.0")ø @ 22.0 ° | 2205 |
| 2 | Base 533.4 mm x 533.4 mm (21.0" x 21.0" ) | Steel |
| 3 | Pedestal c/w dry well (dry well) | |
| 4 | NORD reducer 21.84 RPM | |
| 5 | WEG 5.0 Hp motor, IEEE841, 575/3/60, TEFC | |
| 6 | Shaft: (1) section 2551.4 mm (100.45") @ 3.0"ø | 2205 |

| |
|---|
| APPL'N: RX75 – REACTOR – COVERED |
| ENVIREQUIP MIXERS |
| MODEL: EVGX6–5.0 |
| 3.73 kW @ 21.84 RPM |
| Rotation: Counter Clockwise |
| Thrust: Up |
| Tag #: |

| |
|---|
| Weight: 1,420 Lbs |
| Mounting Loads |
| Torque reaction = 36,072 in lb |
| Bending moment 48,373 in lb |

COVERED TANK 2

Dimensions: Inches

| MOD.: | A | B | C | D | E | E2 | F | Gø | Hø SHAFT | I | J | Kø | Lø | M | N2 | P |
|---|---|---|---|---|---|---|---|---|---|---|---|---|---|---|---|---|
| EVGX6 | 14.61 | 31.53 | 16.05 | .875 | 100.45 | – | – | 96.0 | 3.0 | 21.0 | 18.0 | 1.0 | .875 | 13.8 | 16.0 | 16.02 |

Dimensions: mm

| MOD.: | A | B | C | D | E | E2 | F | Gø | Hø SHAFT | I | J | Kø | Lø | M | N2 | P |
|---|---|---|---|---|---|---|---|---|---|---|---|---|---|---|---|---|
| EVGX6 | 371.1 | 801.0 | 407.7 | 22.2 | 2551.4 | – | – | 2438.4 | 76.2 | 533.4 | 457.2 | 25.4 | 22.2 | 350.5 | 406.4 | 407.0 |

Ce dessin et l'information qu'il contient est la propriété de ENVIREQUIP WTEM Inc. Il est interdit de le copier, le photographier, l'imprimer, le prêter ou de l'utiliser sans la permission de ENVIREQUIP WTEM Inc.

This drawing and the information contained thereon is the property of ENVIREQUIP WTEM Inc. It is not to be printed, photographed, copied, loaned or used without the permission of ENVIREQUIP WTEM Inc.

| NO | DATE | REVISION | P/B |
|---|---|---|---|
| | | | |

PROJET/PROJECT

RX75 – REACTOR

ENVIREQUIP WTEM INC.
490 Bord du Lac – Suite 2
Dorval, QC H9S 2A8
Montreal Tel: (514) 336–1043
RR1 (21494 Little Russle Rd.)
Glen Robertson, Ont K0B 1H0
Ontario Tel: (613) 874–2516
Fax: (613) 874–2628
E–mail: envirequip@glen–net.ca

TITRE/TITLE

ENVIREQUIP MIXERS
Veolia Water Technologies
EVGX SERIES

| | |
|---|---|
| DESSINÉ PAR: DRAWN BY: PJ | DATE JAN 28, 2021 |
| DESS. NO: DWG NO: EVGX | ÉCH./SCALE N.T.S |
| VÉRIFIÉ PAR: CHECKED BY: PJ | PROJ.NO: |
| APPROUVÉ PAR: APPROVED BY: RJ | REV. 00 |

**This page is intentionally left blank**

# CS-999-005 : Identification sheet

| | | | |
|---|---|---|---|
| VWTC PROJECT NUMBER: | 5000220043 | REV: | 1 |
| PROJECT NAME: | AEM MELIADINE-BPC UPGRADE | SUBMITTED TO (COMPANY): | AEM |
| ENGINEER: | EMMANUELLE DORMOY | SUBMITTED TO (RESPONSIBLE) | |
| PROJECT MANAGER: | THOMAS SAVARY / BRUCE BRODES | PROJECT NUM REFERENCE.: | 6526-S-265-605 / OC-989680 |
| PHONE NUMBER: | 514-334-7230 | LOT NUMBER: | |

| SUPPLIER | EQPT CODE | EQPT TAG NO | DIA | DESCRIPTION | INFO 1 | INFO 2 | INFO 3 | APPLIC. | NOTE | REV |
|---|---|---|---|---|---|---|---|---|---|---|
| ENVIREQUIP | ST-999-005 | 65AGI68014 | | CHLORINATION REACTOR AGITATOR #3 | DESCRIPTION RX75-3 (575V) REACTION TANK 3// MODEL: Envirequip MIX-TECH EVGX6-5.0 // Mtl : DUPLEX STAINLESS STEEL 2205 | Impeller Dia : 96.0" // 21.84 RPM // Shaft lg : 100.45" // Direction & thrust: cw down | WEG Motor 5.0 HP / 575/3/60 // Nord reducer SK6282 AHZ/VL // Gear ratio 80.33:1 // STANDARD IEEE841 | CHLORINATION REACTOR | | 1 |

**This page is intentionally left blank**

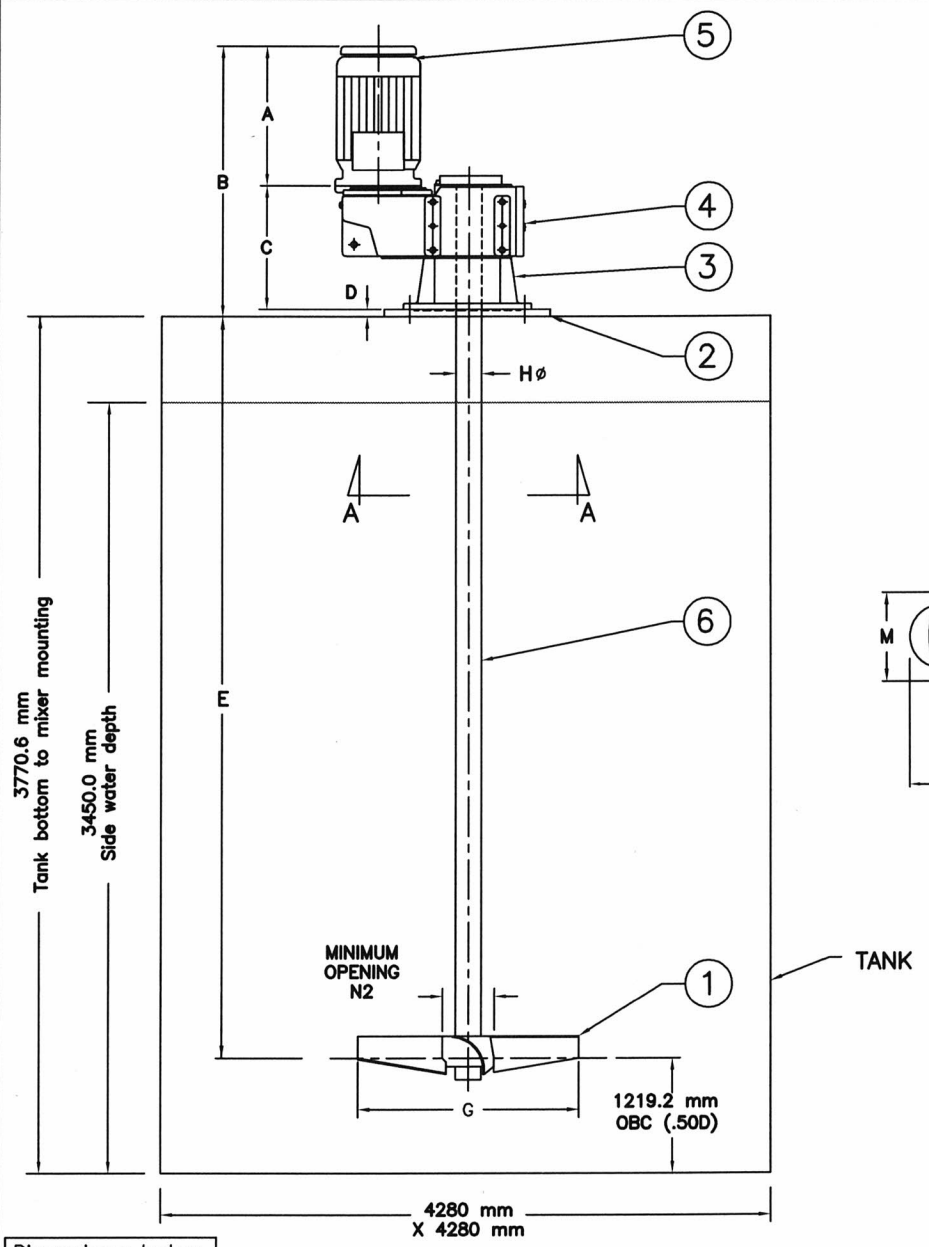


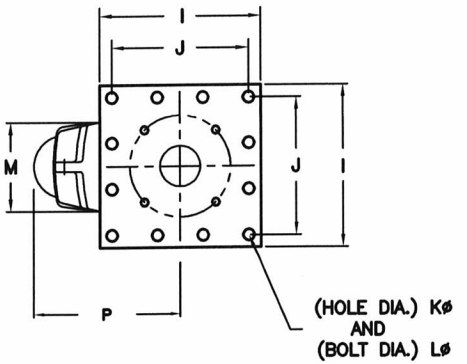


"A–A"

| ITEM | DESCRIPTION | MATERIAL |
|---|---|---|
| 1 | Envirofoil Impeller (F–4) 2438.4 mm (96.0")ø @ 22.0 ° | 2205 |
| 2 | Base 533.4 mm x 533.4 mm (21.0" x 21.0" ) | Steel |
| 3 | Pedestal c/w dry well (dry well) | |
| 4 | NORD reducer 21.84 RPM | |
| 5 | WEG 5.0 Hp motor, IEEE841, 575/3/60, TEFC | |
| 6 | Shaft: (1) section 2551.4 mm (100.45") @ 3.0"ø | 2205 |

| |
|---|
| APPL'N: RX75 – REACTOR – COVERED |
| ENVIREQUIP MIXERS |
| MODEL: EVGX6–5.0 |
| 3.73 kW @ 21.84 RPM |
| Rotation: Clockwise |
| Thrust: Down |
| Tag #: AG20–03 |

| |
|---|
| Weight: 1,420 Lbs |
| Mounting Loads |
| Torque reaction = 36,072 in lb |
| Bending moment = 48,373in lb |

COVERED TANK 3

Dimensions: Inches

| MOD.: | A | B | C | D | E | E2 | F | Gø | Hø SHAFT | I | J | Kø | Lø | M | N2 | P |
|---|---|---|---|---|---|---|---|---|---|---|---|---|---|---|---|---|
| EVGX6 | 14.61 | 31.53 | 16.05 | .875 | 100.45 | – | – | 96.0 | 3.0 | 21.0 | 18.0 | 1.0 | .875 | 13.8 | 16.0 | 16.02 |

Dimensions: mm

| MOD.: | A | B | C | D | E | E2 | F | Gø | Hø SHAFT | I | J | Kø | Lø | M | N2 | P |
|---|---|---|---|---|---|---|---|---|---|---|---|---|---|---|---|---|
| EVGX6 | 371.1 | 801.0 | 407.7 | 22.2 | 2551.4 | – | – | 2438.4 | 76.2 | 533.4 | 457.2 | 25.4 | 22.2 | 350.5 | 406.4 | 407.0 |

Ce dessin et l'information qu'il contient est la propriété de ENVIREQUIP WTEM inc. Il est interdit de le copier, le photographier, l'imprimer, le prêter ou de l'utiliser sans la permission de ENVIREQUIP WTEM inc.

This drawing and the information contained thereon is the property of ENVIREQUIP WTEM inc. It is not to be printed, photographed, copied, loaned or used without the permission of ENVIREQUIP WTEM inc.

| NO. | DATE | REVISION | P/B |
|---|---|---|---|
| | | | |

PROJET/PROJECT

RX75 REACTOR

ENVIREQUIP WTEM INC.
490 Bord du Lac – Suite 2
Dorval, QC H9S 2A8
Montreal Tel: (514) 336–1043
RR1 (21494 Little Russels Rd.)
Glen Robertson, Ont K0B 1H0
Ontario Tel: (613) 874–2516
Fax: (613) 874–2528
E–mail: envireqp@glen–net.ca

TITRE/TITLE

ENVIREQUIP MIXERS
Veolia Water Technologies
EVGX SERIES

| | |
|---|---|
| DESSINÉ PAR: DRAWN BY: PJ | DATE JAN 28, 2021 |
| DESS. NO: DWG NO: EVGX | ÉCH./SCALE N.T.S |
| VÉRIFIÉ PAR: CHECKED BY: PJ | PROJ.NO: |
| APPROUVÉ PAR: APPROVED BY: RJ | REV. 00 |

**This page is intentionally left blank**

**Project name:** MELIADINE-BPC UPGRADE

**Project#:** 5000220043

**Document #:** SPK_0003_RX_VWT

**by:** CEK

**chkd:** ED

**appvd:** TS

# CHLORINATION REACTOR RX75-3 #1

# VALVES

**OIM manual section:** 4.2.1.4

**This page is intentionally left blank**

# CS-315-900 : Identification sheet

| | | | |
|---|---|---|---|
| VWTC PROJECT NUMBER: | 5000220043 | REV: | 1 |
| PROJECT NAME: | AEM MELIADINE-BPC UPGRADE | SUBMITTED TO (COMPANY): | AEM |
| ENGINEER: | EMMANUELLE DORMOY | SUBMITTED TO (RESPONSIBLE) | |
| PROJECT MANAGER: | THOMAS SAVARY / BRUCE BRODES | PROJECT NUM REFERENCE.: | 6526-S-265-605 / OC-989680 |
| PHONE NUMBER: | 514-334-7230 | LOT NUMBER: | |

| SUPPLIER | EQPT CODE | EQPT TAG NO | DIA | DESCRIPTION | INFO 1 | INFO 2 | INFO 3 | APPLIC. | NOTE | REV |
|---|---|---|---|---|---|---|---|---|---|---|
| BRAY | VABFDI364242 | 100-BF99-1109 | 4" (100 mm) | MANUAL DRAIN VALVE | TYPE: BUTTERFLY \| 175 PSI (75 PSI IF DEAD-END SERVICE) / MANUF.: BRAY / MODEL: Serie 31 - Lug// Série 31- à oreilles / CONNECTION TYPE \| SIZE : \| 4" (100 mm) / BODY: DUCTILE IRON / SEAL \| SEAT : EPDM / DISC \| STEM: NYLON 11 COATED DISC \| 416 SS | / ACTUATOR TYPE: Manual \| LEVER / MANUFACTURER: BRAY | / NSF61 | CHLORINATION REACTOR | | 1 |
| BRAY | VABFDI364242 | 100-BF99-1110 | 4" (100 mm) | MANUAL DRAIN VALVE | TYPE: BUTTERFLY \| 175 PSI (75 PSI IF DEAD-END SERVICE) / MANUF.: BRAY / MODEL: Serie 31 - Lug// Série 31- à oreilles / CONNECTION TYPE \| SIZE : \| 4" (100 mm) / BODY: DUCTILE IRON / SEAL \| SEAT : EPDM / DISC \| STEM: NYLON 11 COATED DISC \| 416 SS | / ACTUATOR TYPE: Manual \| LEVER / MANUFACTURER: BRAY | / NSF61 | CHLORINATION REACTOR | | 1 |

**This page is intentionally left blank**

## Series 30 Wafer

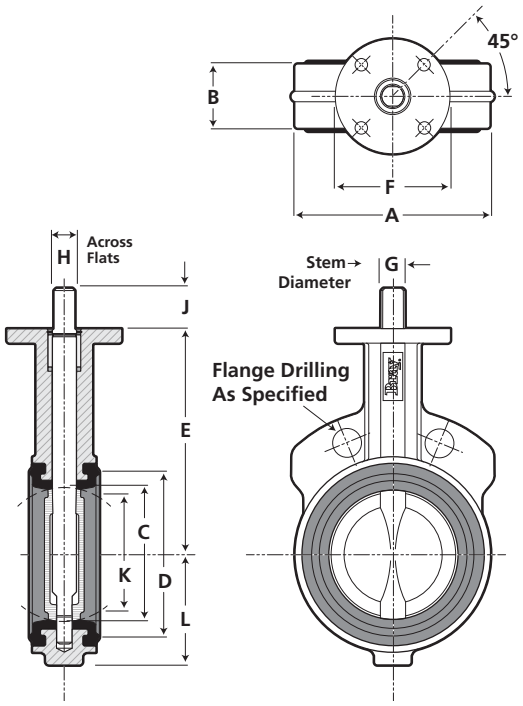


## Series 31 Lug

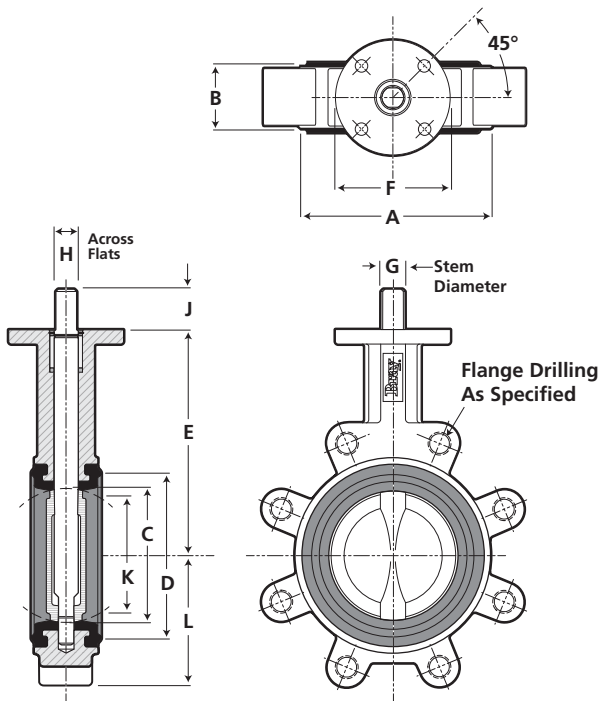


| IMPERIAL DIMENSIONS: Inches | | | | | | | | | | | | | | | | | | | Lug Bolting Data | | |
|---|---|---|---|---|---|---|---|---|---|---|---|---|---|---|---|---|---|---|---|---|---|
| Valve Size | A | B | C | D | E | F | Top Plate Drilling | | | G | H | J | K | L | | Adapter Code | Weight (lbs.) | | Bolt Circle | No of Holes | Threads ISO Coarse |
| | | | | | | | BC | No of Holes | Hole Diameter | | | | | Wafer | Lug | | Wafer | Lug | | | |
| 2 | 3.69 | 1.62 | 2.00 | 2.85 | 5.50 | 3.54 | 2.76 | 4 | .39 | .55 | 39 | 1.25 | 1.32 | 2.22 | 2.30 | A | 5.5 | 7.0 | 4.75 | 4 | 5/8-11 |
| 2 1/2 | 4.19 | 1.75 | 2.50 | 3.36 | 6.00 | 3.54 | 2.76 | 4 | .39 | .55 | .39 | 1.25 | 1.91 | 2.47 | 2.57 | A | 7.0 | 8.0 | 5.50 | 4 | 5/8-11 |
| 3 | 4.88 | 1.75 | 3.00 | 4.15 | 6.25 | 3.54 | 2.76 | 4 | .39 | .55 | .39 | 1.25 | 2.55 | 2.81 | 2.81 | A | 7.5 | 9.0 | 6.00 | 4 | 5/8-11 |
| 4 | 6.06 | 2.00 | 4.00 | 5.16 | 7.00 | 3.54 | 2.76 | 4 | .39 | .63 | .43 | 1.25 | 3.57 | 3.41 | 4.09 | B | 11.5 | 15.0 | 7.50 | 8 | 5/8-11 |
| 5 | 7.06 | 2.12 | 5.00 | 6.16 | 7.50 | 3.54 | 2.76 | 4 | .39 | .75 | .51 | 1.25 | 4.63 | 4.03 | 4.61 | C | 14.0 | 20.0 | 8.50 | 8 | 3/4-10 |
| 6 | 8.12 | 2.12 | 5.75 | 7.02 | 8.00 | 3.54 | 2.76 | 4 | .39 | .75 | .51 | 1.25 | 5.45 | 4.53 | 5.06 | C | 17.0 | 23.0 | 9.50 | 8 | 3/4-10 |
| 8 | 10.50 | 2.50 | 7.75 | 9.47 | 9.50 | 5.91 | 4.92 | 4 | .57 | .87 | .63 | 1.25 | 7.45 | 5.75 | 6.05 | D | 34.0 | 42.0 | 11.75 | 8 | 3/4-10 |
| 10 | 12.75 | 2.50 | 9.75 | 11.47 | 10.72 | 5.91 | 4.92 | 4 | .57 | 1.18 | .87 | 2.00 | 9.53 | 7.12 | 7.69 | E | 49.0 | 66.0 | 14.25 | 12 | 7/8-9 |
| 12 | 14.88 | 3.00 | 11.75 | 13.47 | 12.25 | 5.91 | 4.92 | 4 | .57 | 1.18 | .87 | 2.00 | 11.47 | 8.12 | 9.02 | E | 67.0 | 88.0 | 17.00 | 12 | 7/8-9 |

**Note: K dimension is disc chordal dimension at valve face.**

| METRIC DIMENSIONS: Millimeters | | | | | | | | | | | | | | | | | | | Lug Bolting Data | | |
|---|---|---|---|---|---|---|---|---|---|---|---|---|---|---|---|---|---|---|---|---|---|
| Valve Size | A | B | C | D | E | F | Top Plate Drilling | | | G | H | J | K | L | | Adapter Code | Weight (Kg) | | Bolt Circle | No of Holes | Threads ISO Coarse |
| | | | | | | | BC | No of Holes | Hole Diameter | | | | | Wafer | Lug | | Wafer | Lug | | | |
| 50 | 94 | 41.2 | 51 | 72 | 140 | 90 | 70 | 4 | 10 | 14 | 10 | 32 | 34 | 56 | 58 | A | 2.5 | 3 | 121 | 4 | 5/8-11 |
| 65 | 106 | 44.5 | 64 | 85 | 152 | 90 | 70 | 4 | 10 | 14 | 10 | 32 | 49 | 63 | 65 | A | 3 | 3.5 | 140 | 4 | 5/8-11 |
| 80 | 124 | 44.5 | 76 | 102 | 159 | 90 | 70 | 4 | 10 | 14 | 10 | 32 | 65 | 71 | 71 | A | 3.5 | 4 | 152 | 4 | 5/8-11 |
| 100 | 154 | 50.8 | 102 | 131 | 178 | 90 | 70 | 4 | 10 | 16 | 11 | 32 | 91 | 87 | 104 | B | 5 | 7 | 191 | 8 | 5/8-11 |
| 125 | 181 | 54.0 | 127 | 156 | 190 | 90 | 70 | 4 | 10 | 19 | 13 | 32 | 118 | 102 | 117 | C | 6 | 9 | 216 | 8 | 3/4-10 |
| 150 | 206 | 54.0 | 146 | 178 | 203 | 90 | 70 | 4 | 10 | 19 | 13 | 32 | 138 | 115 | 129 | C | 8 | 10 | 241 | 8 | 3/4-10 |
| 200 | 267 | 63.5 | 197 | 240 | 241 | 150 | 125 | 4 | 14 | 22 | 16 | 32 | 189 | 146 | 154 | D | 15 | 19 | 298 | 8 | 3/4-10 |
| 250 | 324 | 63.5 | 248 | 291 | 273 | 150 | 125 | 4 | 14 | 30 | 22 | 51 | 242 | 181 | 195 | E | 22 | 30 | 362 | 12 | 7/8-9 |
| 300 | 378 | 76.2 | 298 | 342 | 311 | 150 | 125 | 4 | 14 | 30 | 22 | 51 | 291 | 206 | 229 | E | 30 | 40 | 432 | 12 | 7/8-9 |

**Note: K dimension is disc chordal dimension at valve face.**

Drawings are for reference only. Please refer to Bray ES drawings on the Bray website, www.bray.com. Bray reserves the right to change product dimensions without notice.

## SR Drawing #30/31-2/12-in

Inquire/P.O. No.:_____

Customer/Project: _____

Bray Order No.: _____

## Series 30 Wafer

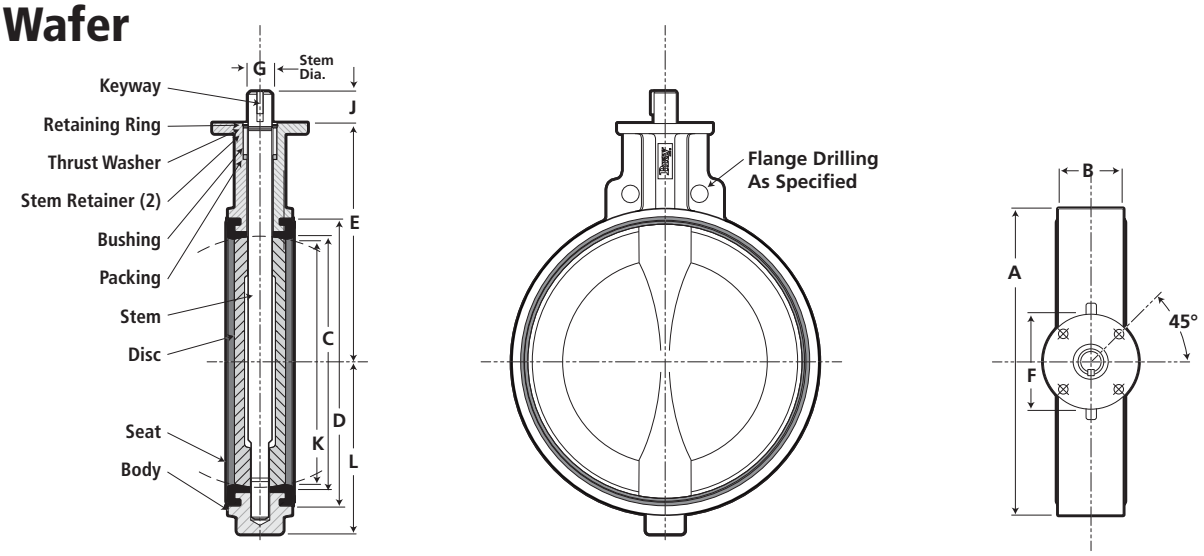


## Series 31 Lug

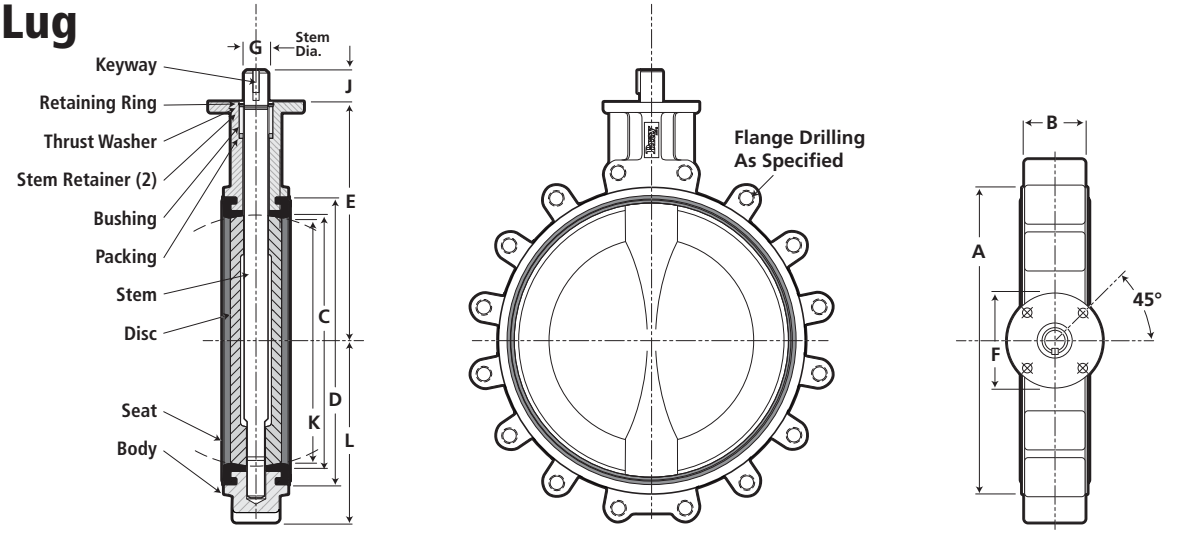


| IMPERIAL DIMENSIONS: Inches | | | | | | | | | | | | | | | | | | | | Lug Bolting Data | | |
|---|---|---|---|---|---|---|---|---|---|---|---|---|---|---|---|---|---|---|---|---|---|---|
| Valve Size | A | B | C | D | E | F | Top Plate Drilling | | | G | J | Key Size | K | L | | Adapter Code | Weight (lbs.) | | Bolt Circle | No of Holes | Threads ISO Coarse |
| | | | | | | | BC | No of Holes | Hole Diameter | | | | | Wafer | Lug | | Wafer | Lug | | | |
| 14 | 17.05 | 3.00 | 13.25 | 15.28 | 13.62 | 5.91 | 4.92 | 4 | .57 | 1.38 | 2.00 | .39x.39 | 13.04 | 9.38 | 9.93 | F | 95 | 114 | 18.75 | 12 | 1-8 |
| 16 | 19.21 | 4.00 | 15.25 | 17.14 | 14.75 | 5.91 | 4.92 | 4 | .57 | 1.38 | 2.00 | .39x.39 | 14.85 | 10.75 | 11.30 | F | 135 | 166 | 21.25 | 16 | 1-8 |
| 18 | 21.12 | 4.25 | 17.25 | 19.47 | 16.00 | 8.27 | 6.50 | 4 | .81 | 1.97 | 2.50 | .47x.39 | 16.85 | 12.00 | 12.15 | G | 200 | 226 | 22.75 | 16 | 1⅛-7 |
| 20 | 23.25 | 5.00 | 19.25 | 21.59 | 17.25 | 8.27 | 6.50 | 4 | .81 | 1.97 | 2.50 | .47x.39 | 18.73 | 14.00 | 14.00 | G | 260 | 305 | 25.00 | 20 | 1⅛-7 |

**Note: K dimension is disc chordal dimension at valve face.**

| METRIC DIMENSIONS: Millimeters | | | | | | | | | | | | | | | | | | | | Lug Bolting Data | | |
|---|---|---|---|---|---|---|---|---|---|---|---|---|---|---|---|---|---|---|---|---|---|---|
| Valve Size | A | B | C | D | E | F | Top Plate Drilling | | | G | J | Key Size | K | L | | Adapter Code | Weight (Kg) | | Bolt Circle | No of Holes | Threads ISO Coarse |
| | | | | | | | BC | No of Holes | Hole Diameter | | | | | Wafer | Lug | | Wafer | Lug | | | |
| 350 | 433 | 76.2 | 337 | 388 | 346 | 150 | 125 | 4 | 14 | 35 | 51 | 10x10 | 331 | 238 | 252 | F | 43 | 52 | 476 | 12 | 1-8 |
| 400 | 488 | 101.6 | 387 | 442 | 375 | 150 | 125 | 4 | 14 | 35 | 51 | 10x10 | 377 | 273 | 287 | F | 61 | 75 | 540 | 16 | 1-8 |
| 450 | 536 | 108.0 | 438 | 495 | 406 | 210 | 165 | 4 | 21 | 50 | 64 | 12x10 | 428 | 305 | 309 | G | 91 | 103 | 578 | 16 | 1⅛-7 |
| 500 | 591 | 127.0 | 489 | 548 | 438 | 210 | 165 | 4 | 21 | 50 | 64 | 12x10 | 476 | 348 | 358 | G | 118 | 138 | 635 | 20 | 1⅛-7 |

**Note: K dimension is disc chordal dimension at valve face.**

Drawings are for reference only. Please refer to Bray ES drawings on the Bray website, www.bray.com. Bray reserves the right to change product dimensions without notice.

## SR Drawing #30/31-14/20-in

Inquire/P.O. No.:_____

Customer/Project: _____

Bray Order No.: _____

# RESILIENT SEATED BUTTERFLY VALVES

## Technical Manual



Bray®

BRAY.COM

THE HIGH PERFORMANCE COMPANY

# Resilient Seated Butterfly Valves

## Technical Manual Table of Contents


Introduction to Torques . . . . . 3

Reduced Disc Diameter Bray Series 30/31/3A Valves . . . . . 6

Seating & Unseating Torques . . . . . 7

- Series 20/21 and 30/31/3A Torques Imperial (Lb-Ins) . . . . . 8
- Series 20/21 and 30/31/3A Torques Metric (Nm) . . . . . 9
- Series 32/33, 35/36 Torques Imperial (Lb-Ins) . . . . . 10
- Series 32/33, 35/36 Torques Metric (Nm) . . . . . 10
- Series 22/23 Torques Imperial (Lb-In) and Metric (Nm) . . . . . 11

Dynamic Torque Factors (Imperial) . . . . . 12

Dynamic Torque Factors (Metric) . . . . . 13

Valve Sizing Coefficients . . . . . 14

- **Series 20/21** - Valve Sizing Coefficient (Cv) . . . . . 15
- **Series 22/23** - Valve Sizing Coefficient (Cv) . . . . . 15
- Series 30/31/31H/3A/3AH/31U - Valve Sizing Coefficient (Cv) . . . . 16
- Series 32/33/35/36/35F/36H - Valve Sizing Coefficient (Cv) . . . . . 16
- Series 20/21 - Valve Sizing Coefficient (Kv) . . . . . 17
- Series 22/23 - Valve Sizing Coefficient (Kv) . . . . . 17
- Series 30/31/31H/3A/3AH/31U - Valve Sizing Coefficient (Kv) . . . . 18
- Series 32/33/35/36/35F/36H - Valve Sizing Coefficient (Kv) . . . . . 18

Examples of Typical Flange to Valve Bolting* . . . . . 19

Flange Bolt Tensioning . . . . . 20

Series 20/21 - Standard Metal Specifications . . . . . 23

- Series 22/23 - Standard Metal Specifications. . . . . 23
- Series 30/31, 31H, 3A/3AH, 31U - Standard Metal Specifications . . 24
- Series 32/33, 35/36, 35F, 36H - Standard Metal Specifications . . . 25





All statements, technical information, and recommendations in this bulletin are for general use only. Consult Bray representatives or factory for the specific requirements and material selection for your intended application. The right to change or modify product design or product without prior notice is reserved.

# Torques

## INTRODUCTION TO TORQUES

There are a number of torques which butterfly valves may experience such as:

- **$T_{su}$ - Seating and Unseating Torque**
- **$T_d$ - Dynamic Torque Resulting from fluid flow**
- **$T_{bf}$ – Bearing Friction Torque**
- **$T_{ss}$ – Stem Seal Friction Torque**
- **$T_e$ – Eccentricity Torque resulting from disc offset from centerline of stem (either single, double or triple offset)**
- **$T_h$ – Hydrostatic Torque**

**Factors which influence the butterfly valve torque values shown above are:**

- Type of Seat and Seat Material
- Interference of Seat I.D. and Disc O.D.
- Shaft Diameter
- Valve Diameter
- Bearing Coefficient of Friction
- Angle of Opening
- Shut-off Pressure
- Fluid Velocity
- Disc Shape and Configuration
- Piping System and Location/Orientation of Valve in Pipe Line
- System Head Characteristics
- Physical Size of Disc/Shaft Obstructing Flow
- Disc Edge Finish

With respect to Butterfly Valves, the two major conditions for determining total valve operating torque ($T_T$) exists as follows:

**CASE I** (Angle = 0° , Disc in Closed Position)

$$T_T = T_h + T_{bf} + T_{ss} + T_{su}$$

**Analyzed**

Total Torque for Case I using a symmetrical disc butterfly valve is the sum of hydrostatic torque, bearing friction torque, stem seal, friction torque, and seating/unseating torque.

### A. Hydrostatic Torque ($T_h$)

We will ignore discussion of the hydrostatic torque values as they are generally insignificant compared to the seating/unseating, bearing friction and stem seal torque values (the safety factor applied to seating/unseating, stem seal friction and bearing friction torque values more than compensates for the hydrostatic torque which is usually less than 2% of these total torques).

### B. Bearing Friction Torque ($T_{bf}$)

Bearing friction torque occurs because pressure forces against the disc are transmitted to the stem. As the stem is forced against the bearing supports, bearing friction torque is created between the stem material and the support material as the stem is turned. Bearing friction torques are normally included in the seating/unseating torque values.

**Bearing friction torques can be determined by using the following equation:**

$$T_{bf} = .785\ C_f\ D_v^2\ (d/2)\ \Delta P$$

**Where:**

- $T_{bf}$ = Bearing Friction Torque
- $C_f$ = Coefficient of Friction (approximately .25 for non-corroded stem to cast iron body) (dimensionless).
- $D_v$ = Valve Diameter (Inches)
- $d$ = Diameter of Shaft (Inches)
- $\Delta P$ = Pressure Differential (psi)

### C. Stem Seal Friction Torque ($T_{ss}$)

For all practical purposes stem seal friction torque values are insignificant when compared to seating/unseating and bearing friction torques. Stem seal friction torques are normally included in the seating/unseating torque values.



All information herein is proprietary and confidential and may not be copied or reproduced without the expressed written consent of BRAY INTERNATIONAL, Inc.
The technical data herein is for general information only. Product suitability should be based solely upon customer's detailed knowledge and experience with their application.

### D. Seating/Unseating Torques ($T_{su}$)

The seating/unseating torque value ($T_{su}$) is a function of the pressure differential, the seat material's coefficient of friction, the finished surface of the disc edge, the amount of interference between the seat I.D. and disc O.D. when flanged in piping, the seat thickness, and the type of service (media) for which the valve is being used. In determining the $T_{su}$ values for Bray resilient seated butterfly valves, Bray has developed Seating/Unseating Torque Charts incorporating all bearing friction and stem seal friction torques for three classes of services for both the valves with standard discs (rated to full pressure) and for valves with reduced diameter discs (rated for 50 psi [3.5 bar]). The three service classes are:

**Class A – Non-Corrosive, Lubricating Service**

**Class B – General Service**

**Class C – Severe Service**

Please review the guidelines for each class in the technical manual when determining which Seating/Unseating Torque Class should be used. Most butterfly valves are used in Class II, General Service applications.

### E. Total Torque ($T_T$)

The total torque values for Bray symmetrical disc valves for Case I applications are shown in the Seating/Unseating Torque Charts within this manual.

## CASE II (Disc in Partial To Full Opening Position)

$$T_T = T_{bf} + T_{ss} + T_d$$

The total Torque for Case II using a symmetrical disc butterfly valve is the summation of bearing friction torque, stem seal friction torque and dynamic torque.

### A. Bearing Friction Torque ($T_{bf}$)

See Case I discussion. This torque value is normally included in the Dynamic Torque Value.

### B. Stem Seal Friction Torque ($T_{ss}$)

See Case I discussion. This torque value is normally included in the Dynamic torque value.

### C. Dynamic Torque ($T_d$)

In a symmetrical disc design, dynamic torque occurs between the closed position, 0° and the full open position, 90°. With the disc in the partially open position, velocity of the fluid passing the leading disc edge is less than the velocity passing the trailing edge. This variance in velocity past the leading disc edge and trailing disc edge results in an unbalanced distribution of pressure forces on the upstream side of the face of the disc. The total pressure forces acting perpendicular to the disc face on the leading edge half of the disc are greater than the total pressure acting perpendicular on the trailing half of the disc. This uneven distribution of pressure on the disc face (exists on both sides of the disc) results in a torsional force which tries to turn the disc to the closed position **(Figure 1)**. This torsional closing force can become greater than the seating/unseating torque value depending on the valve angle of opening and differential pressure.

To determine dynamic torque, the following equation is applied:

$$T_d = C_{dt}\, d^3\, \Delta P$$

**Where:**

- $T_d$ = Dynamic Torque (lbs- in).
- $C_{dt}$ = Coefficient of Dynamic Torque (based on disc shape and angle of opening) (dimensionless)
- $d$ = Diameter of Disc (Inches)
- $\Delta P$ = Pressure Differential Across Valve (psi)

## Figure 1 - Pressure Distribution

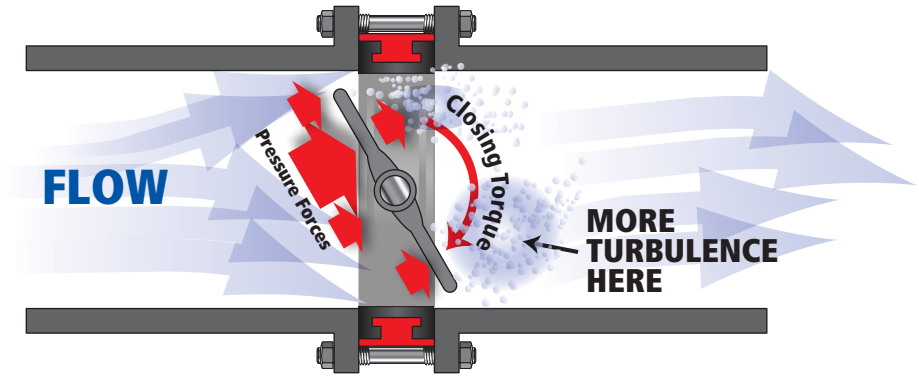




All information herein is proprietary and confidential and may not be copied or reproduced without the expressed written consent of BRAY INTERNATIONAL, Inc.
The technical data herein is for general information only. Product suitability should be based solely upon customer's detailed knowledge and experience with their application.

As shown in **Figure 2**, coefficient of dynamic torque for Bray's symmetrical disc valves is at 0° angle of opening and increases until the angle of opening reaches 75°-80°, where it then decreases to a zero value at full open (90°) (no internal friction factors considered, just dynamic torque only).

One final comment about dynamic torque is that one may minimize the dynamic torque by the orientation of the valve (stem horizontal or vertical) in the pipeline as well as by the location (distance) in the pipeline from elbows, other valves, etc. (See Bray Resilient Seated BFV Operations and Maintenance Manual).

**D. Total Torque ($T_T$)**

The total torque required for operating a Bray symmetrical disc butterfly valve at an angle opening between 0° and 90° is shown in the Dynamic Torque section of this manual. Note that the dynamic torque includes all internal friction torque values.

## CONCLUSION

In most applications for butterfly valves, especially 20˝ (DN 500) or smaller, the maximum torque required to operate the valve will be seating/unseating torque. However, dynamic torque should be considered particularly in:

- Control applications using larger valves (24˝ [DN600] and above) where the disc is maintained in the open position
- Applications using larger valves (24˝ [DN 600] and above) where the velocity is high (16 ft./sec [4.9m/sec]).

### Figure 2 - Angle of Opening

The $C_{dt}$ value for Bray symmetrical disc valves are approximately:

| Angle of Opening | 0° | 10° | 20° | 30° | 40° | 50° | 60° | 70° | 75° | 80° | 90° |
|---|---|---|---|---|---|---|---|---|---|---|---|
| $C_{dt}$ | 0 | 0.0126 | 0.0140 | 0.0251 | 0.0505 | 0.0809 | 0.1394 | 0.2384 | 0.3419 | 0.3400 | 0 |

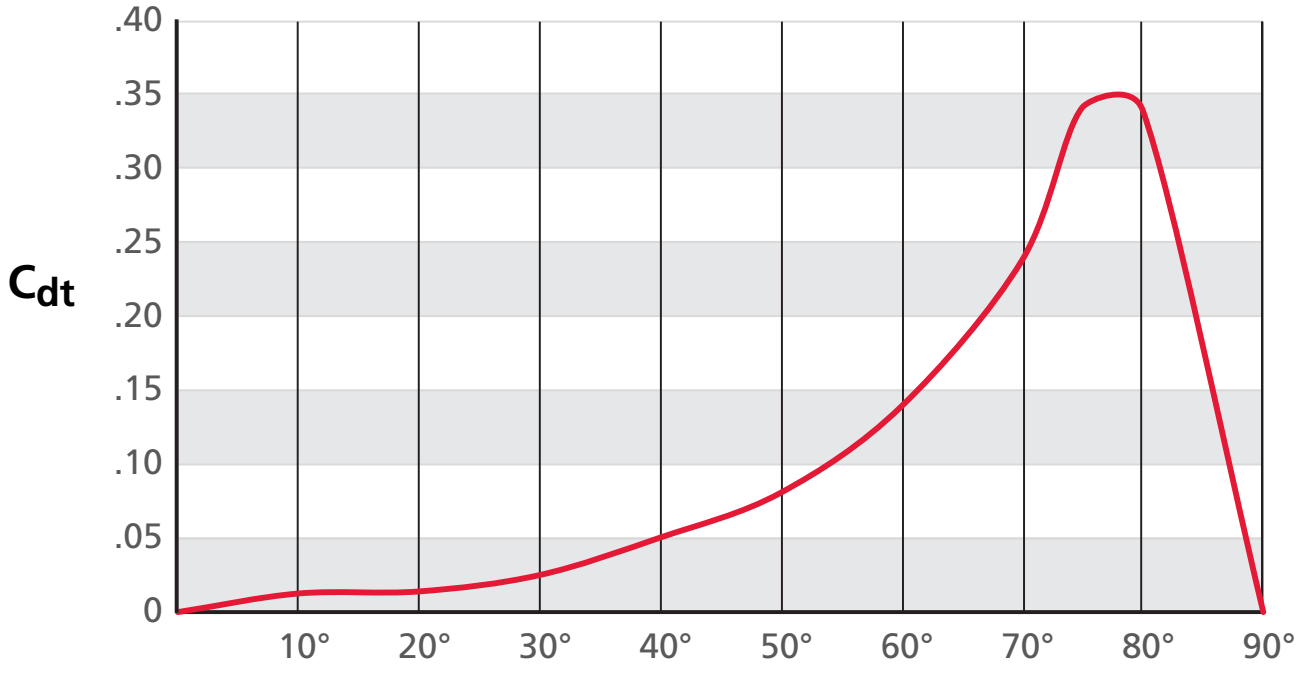




All information herein is proprietary and confidential and may not be copied or reproduced without the expressed written consent of BRAY INTERNATIONAL, Inc.
The technical data herein is for general information only. Product suitability should be based solely upon customer's detailed knowledge and experience with their application.

# REDUCED DISC DIAMETER BRAY SERIES 30/31/3A VALVES

Bray offers a reduced disc diameter for 4"-20" for Series 30, 31 and 3A valves. The purpose of reducing the disc diameter is to decrease the seating/unseating torques and extend the seat life on low pressure applications.

By reducing the disc diameter, the interference between the disc O.D. and seat I.D. is decreased and the valve pressure rating, which is a function of this interference, is reduced to 50 PSI. Less interference between the disc and seat results in reduced seating/unseating torques. Lower seating/unseating torque may allow for the use of a smaller actuator on the valve. In other applications where abrasive dry bulk materials such as cement, sugar, plastic, pellets, flour, etc., are generally pneumatically conveyed at 50 PSI or less, the reduced disc diameter not only reduces the seating/unseating torque but, very importantly, usually significantly increases the service life of the seat.

Bray does the following to differentiate reduced diameter discs from full diameter discs:

**Metal Discs:** An " R " is stamped above the part number

**Nylon 11 Coated Discs:** Discs are differentiated by the color of the Nylon 11:

**Grey** – Full Disc Diameter

**White** – Reduced Disc Diameter



All information herein is proprietary and confidential and may not be copied or reproduced without the expressed written consent of BRAY INTERNATIONAL, Inc.
The technical data herein is for general information only. Product suitability should be based solely upon customer's detailed knowledge and experience with their application.

# SEATING & UNSEATING TORQUES

Bray has developed Seating/Unseating Torque Charts for three Classes of Service for its valves with standard discs (rated for full pressure) and for valves with reduced diameter discs (rated for 50 PSI / 3.5 bar.).

The guidelines for selecting a Class to be used for determining a valve's seating/unseating torque are given below. Each valve application should comply with all five Class characteristics in order to be qualified for that Class.

| Characteristics of Application | **Class A** Non-Corrosive, Lubricating Service | **Class B** General Service | **Class C** Severe Service |
|---|---|---|---|
| **Media Type** | Lubricating hydrocarbons; Aqueous processes and Water (See Note 1) | Water; aqueous processes; all other aqueous liquids including salt water; Lubricating gases | Dry, non-lubricating such as air, dry gas, cement, pneumatic conveying mediums |
| **Corrosion by Media** | Insignificant if any | No major corrosion or deposits from media | Can incur significant corrosion such as Ductile Iron disc in water |
| **Chemical Reactions of Media with Seat** | Insignificant if any | Only minor or insignificant in nature | Reactions causing swelling and hardness occur |
| **Media Temperature** | 45º to 160ºF (7º to 71ºC) | Within seat temperature limits, not near limits | Near or at seat temperature limits |
| **Frequency of Valve Cycling** | Once weekly or more frequently | Minimum once every 3-6 weeks, or more frequently | Infrequently, sometimes not cycled for long periods |

**NOTE:**

1. For aqueous processes and water, Class A torques may be used only if a Nylon 11 coated disc is selected and all other Class A characteristics apply. Otherwise, Class B torques should be used.
2. All the material trims may be classified into Class A, B, or C except Series 20/21 valves with a PTFE Lined Elastomer seat, PTFE molded disc/stem, or rubber molded disc/stem. These trims must always use Class C Seating/Unseating Torque Values unless they are used only in a throttling application. Valves with bonded seats must always be classified as Class C.
3. If a valve is used strictly in a throttling application, that is, it is never put in the closed position but throttled between 20° and 80°, then Class A torques may be used provided you have checked to see that dynamic torques do not exceed the Class A torque values.
4. With the exception of dry, non-lubricating medias, one is usually safe electing to use Class B torques for sizing actuators for all other valve service applications. Seating/Unseating Torque values shown include friction bearing torques for stated differential pressure.
5. Dynamic Torque values are not considered. See the Dynamic Torque chart in this manual for determination of Dynamic Torque.
6. Do not apply a safety factor to torque values when determining actuator output torque requirement.
7. **For 3-way assemblies where one valve is opening and another is closing, multiply torque by a 1.5 factor.**



All information herein is proprietary and confidential and may not be copied or reproduced without the expressed written consent of BRAY INTERNATIONAL, Inc.
The technical data herein is for general information only. Product suitability should be based solely upon customer's detailed knowledge and experience with their application.

## Series 20/21 and 30/31/3A Torques Imperial (Lb-Ins)

| | Valve Size Inches | Valve Differential Pressure (PSIG) | | | | | | |
|---|---|---|---|---|---|---|---|---|
| | | Full Disc | | | | | Reduced Disc | |
| | | 0 psi | 50 psi | 100 psi | 150 psi | 175 psi | 0 psi | 50 psi |
| **Class A** Non-Corrosive, Lubricating Service | 1 | 54 | 59 | 65 | 70 | 73 | 54 | 59 |
| | 1.5 | 81 | 86 | 91 | 97 | 100 | 81 | 86 |
| | 2 | 109 | 114 | 119 | 123 | 128 | 109 | 114 |
| | 2.5 | 169 | 178 | 187 | 196 | 200 | 169 | 178 |
| | 3 | 220 | 236 | 250 | 264 | 273 | 220 | 236 |
| | 4 | 341 | 364 | 387 | 410 | 423 | 225 | 248 |
| | 5 | 510 | 560 | 610 | 660 | 687 | 324 | 374 |
| | 6 | 632 | 712 | 792 | 872 | 912 | 344 | 488 |
| | 8 | 1,182 | 1,341 | 1,500 | 1,660 | 1,741 | 735 | 894 |
| | 10 | 1,764 | 2,018 | 2,272 | 2,526 | 2,653 | 1,204 | 1,358 |
| | 12 | 2,701 | 3,110 | 3,519 | 3,928 | 4,132 | 1,665 | 2,074 |
| | 14 | 3,818 | 4,500 | 5,182 | 5,864 | — | 2,318 | 3,000 |
| | 16 | 4,638 | 5,819 | 7,000 | 8,182 | — | 2,699 | 3,880 |
| | 18 | 5,265 | 7,065 | 8,865 | 10,665 | — | 2,970 | 4,788 |
| | 20 | 7,000 | 9,364 | 11,728 | 14,091 | — | 3,356 | 6,243 |
| **Class B** General Service | 1 | 59 | 65 | 71 | 77 | 80 | 59 | 65 |
| | 1.5 | 89 | 95 | 100 | 106 | 110 | 89 | 95 |
| | 2 | 120 | 125 | 130 | 135 | 140 | 120 | 125 |
| | 2.5 | 185 | 195 | 205 | 215 | 220 | 185 | 195 |
| | 3 | 245 | 260 | 275 | 290 | 297 | 245 | 260 |
| | 4 | 375 | 400 | 425 | 450 | 462 | 252 | 267 |
| | 5 | 560 | 615 | 670 | 725 | 755 | 355 | 410 |
| | 6 | 695 | 783 | 871 | 953 | 1,003 | 427 | 537 |
| | 8 | 1,300 | 1,475 | 1,650 | 1,825 | 1,915 | 808 | 983 |
| | 10 | 1,960 | 2,240 | 2,520 | 2,800 | 2,940 | 1,213 | 1,493 |
| | 12 | 2,970 | 3,420 | 3,870 | 4,320 | 4,545 | 1,830 | 2,280 |
| | 14 | 4,200 | 4,950 | 5,700 | 6,450 | — | 2,550 | 3,300 |
| | 16 | 5,100 | 6,400 | 7,700 | 9,000 | — | 2,967 | 4,267 |
| | 18 | 5,850 | 7,850 | 9,850 | 11,850 | — | 3,267 | 5,267 |
| | 20 | 7,700 | 10,300 | 12,900 | 15,500 | — | 4,267 | 6,867 |
| **Class C** Severe Service | 1 | 74 | 82 | 89 | 97 | 100 | 74 | 82 |
| | 1.5 | 111 | 119 | 125 | 133 | 137 | 111 | 119 |
| | 2 | 151 | 157 | 163 | 169 | 175 | 151 | 157 |
| | 2.5 | 231 | 244 | 257 | 269 | 275 | 231 | 244 |
| | 3 | 306 | 325 | 344 | 363 | 375 | 306 | 325 |
| | 4 | 468 | 500 | 532 | 563 | 582 | 316 | 348 |
| | 5 | 700 | 769 | 838 | 907 | 944 | 444 | 513 |
| | 6 | 870 | 980 | 1,090 | 1,200 | 1,255 | 525 | 672 |
| | 8 | 1,625 | 1,844 | 2,063 | 2,282 | 2,394 | 1,011 | 1,230 |
| | 10 | 2,450 | 2,800 | 3,150 | 3,500 | 3,675 | 1,517 | 1,867 |
| | 12 | 3,712 | 4,275 | 4,838 | 5,400 | 5,682 | 2,287 | 2,850 |
| | 14 | 5,251 | 6,188 | 7,125 | 8,063 | — | 3,189 | 4,126 |
| | 16 | 6,375 | 8,000 | 9,625 | 11,250 | — | 3,709 | 5,334 |
| | 18 | 7,315 | 9,815 | 12,315 | 14,815 | — | 4,084 | 6,584 |
| | 20 | 9,625 | 12,875 | 16,125 | 19,375 | — | 5,334 | 8,584 |



All information herein is proprietary and confidential and may not be copied or reproduced without the expressed written consent of BRAY INTERNATIONAL, Inc.
The technical data herein is for general information only. Product suitability should be based solely upon customer's detailed knowledge and experience with their application.

## Series 20/21 and 30/31/3A Torques Metric (Nm)

| | Valve Size mm | Valve Differential Pressure (bar) | | | | | | |
|---|---|---|---|---|---|---|---|---|
| | | Full Disc | | | | | Reduced Disc | |
| | | 0 bar | 3.4 bar | 7 bar | 10.3 bar | 12 bar | 0 bar | 3.4 bar |
| **Class A** Non-Corrosive, Lubricating Service | 25 | 6 | 7 | 7 | 8 | 8 | 6 | 7 |
| | 40 | 9 | 10 | 10 | 11 | 11 | 9 | 10 |
| | 50 | 12 | 13 | 13 | 14 | 14 | 12 | 13 |
| | 65 | 19 | 20 | 21 | 22 | 23 | 19 | 20 |
| | 80 | 25 | 27 | 28 | 30 | 31 | 25 | 27 |
| | 100 | 39 | 41 | 44 | 46 | 48 | 25 | 28 |
| | 125 | 58 | 63 | 69 | 75 | 78 | 37 | 42 |
| | 150 | 71 | 80 | 89 | 99 | 103 | 39 | 55 |
| | 200 | 134 | 152 | 169 | 188 | 197 | 83 | 101 |
| | 250 | 199 | 228 | 257 | 285 | 300 | 136 | 153 |
| | 300 | 305 | 351 | 398 | 444 | 467 | 188 | 234 |
| | 350 | 431 | 508 | 585 | 663 | — | 262 | 339 |
| | 400 | 524 | 657 | 791 | 924 | — | 305 | 438 |
| | 450 | 595 | 798 | 1,002 | 1,205 | — | 336 | 541 |
| | 500 | 791 | 1,058 | 1,325 | 1,592 | — | 379 | 705 |
| **Class B** General Service | 25 | 7 | 7 | 8 | 9 | 9 | 7 | 7 |
| | 40 | 10 | 11 | 11 | 12 | 12 | 10 | 11 |
| | 50 | 14 | 14 | 15 | 15 | 16 | 14 | 14 |
| | 65 | 21 | 22 | 23 | 24 | 25 | 21 | 22 |
| | 80 | 28 | 29 | 31 | 33 | 34 | 28 | 29 |
| | 100 | 42 | 45 | 48 | 51 | 52 | 28 | 30 |
| | 125 | 63 | 69 | 76 | 82 | 85 | 40 | 46 |
| | 150 | 79 | 88 | 98 | 108 | 113 | 48 | 61 |
| | 200 | 147 | 167 | 186 | 206 | 216 | 91 | 111 |
| | 250 | 221 | 253 | 285 | 316 | 332 | 137 | 169 |
| | 300 | 336 | 386 | 437 | 488 | 514 | 207 | 258 |
| | 350 | 475 | 559 | 644 | 729 | — | 288 | 373 |
| | 400 | 576 | 723 | 870 | 1,017 | — | 335 | 482 |
| | 450 | 661 | 887 | 1,113 | 1,339 | — | 369 | 595 |
| | 500 | 870 | 1,164 | 1,458 | 1,751 | — | 482 | 776 |
| **Class C** Severe Service | 25 | 8 | 9 | 10 | 11 | 11 | 8 | 9 |
| | 40 | 13 | 13 | 14 | 15 | 15 | 13 | 13 |
| | 50 | 17 | 18 | 18 | 19 | 20 | 17 | 18 |
| | 65 | 26 | 28 | 29 | 30 | 31 | 26 | 28 |
| | 80 | 35 | 37 | 39 | 41 | 42 | 35 | 37 |
| | 100 | 53 | 56 | 60 | 64 | 66 | 36 | 39 |
| | 125 | 79 | 87 | 95 | 102 | 107 | 50 | 58 |
| | 150 | 98 | 111 | 123 | 136 | 142 | 59 | 76 |
| | 200 | 184 | 208 | 233 | 258 | 270 | 114 | 139 |
| | 250 | 277 | 316 | 356 | 395 | 415 | 171 | 211 |
| | 300 | 419 | 483 | 547 | 610 | 642 | 258 | 322 |
| | 350 | 593 | 699 | 805 | 911 | — | 360 | 466 |
| | 400 | 720 | 904 | 1,087 | 1,271 | — | 419 | 603 |
| | 450 | 826 | 1,109 | 1,391 | 1,674 | — | 461 | 744 |
| | 500 | 1,087 | 1,455 | 1,822 | 2,189 | — | 603 | 970 |



All information herein is proprietary and confidential and may not be copied or reproduced without the expressed written consent of BRAY INTERNATIONAL, Inc.
The technical data herein is for general information only. Product suitability should be based solely upon customer's detailed knowledge and experience with their application.

## Series 32/33, 35/36 Torques Imperial (Lb-Ins)

| | Valve Size inches | 32, 35 - Max △P = 75 psi | | | | 33, 36 - Max △P = 150 psi | | | |
|---|---|---|---|---|---|---|---|---|---|
| | | 0 psi | 25 psi | 50 psi | 75 psi | 0 psi | 50 psi | 100 psi | 150 psi |
| **Class B** General Service (Imperial) | 22 | 5,450 | 6,350 | 7,250 | 8,150 | 8,100 | 11,700 | 14,700 | 17,700 |
| | 24 | 6,700 | 8,100 | 9,500 | 10,900 | 10,500 | 15,000 | 19,500 | 24,000 |
| | 26 | 7,900 | 9,800 | 11,700 | 13,600 | 12,400 | 18,400 | 24,400 | 30,400 |
| | 28 | 9,200 | 11,600 | 14,000 | 16,400 | 14,200 | 21,700 | 29,200 | 36,700 |
| | 30 | 10,400 | 13,300 | 16,200 | 19,100 | 16,100 | 25,100 | 34,100 | 43,100 |
| | 32 | 11,700 | 15,600 | 19,400 | 23,300 | 18,400 | 29,700 | 41,100 | 52,400 |
| | 34 | 13,500 | 18,500 | 23,500 | 28,500 | 20,950 | 34,750 | 48,600 | 62,400 |
| | 36 | 14,300 | 20,100 | 25,900 | 31,700 | 23,000 | 39,000 | 55,000 | 71,000 |
| | 40 | 18,200 | 26,200 | 34,100 | 42,000 | 24,300 | 46,300 | 68,300 | 90,300 |
| | 42 | 20,200 | 29,200 | 38,200 | 47,200 | 25,000 | 50,000 | 75,000 | 100,000 |
| | 44 | 20,800 | 32,500 | 44,200 | 55,800 | 26,700 | 56,700 | 86,700 | 118,300 |
| | 48 | 22,000 | 39,000 | 56,000 | 73,000 | 30,000 | 70,000 | 110,000 | 150,000 |
| **Class C** | 54 | 41,500 | 73,500 | 105,500 | 138,000 | 56,300 | 131,000 | 173,000 | 282,000 |
| | 60 | 55,500 | 98,200 | 141,000 | 184,800 | 75,100 | 174,500 | 208,000 | 376,000 |
| | 66 | 115,700 | 159,400 | 203,200 | 247,000 | 161,500 | 277,500 | 393,400 | 509,400 |
| | 72 | Consult Factory | | | | | | | |
| | 78 | Consult Factory | | | | | | | |
| | 84 | Consult Factory | | | | | | | |
| | 90 | Consult Factory | | | | | | | |
| | 96 | Consult Factory | | | | | | | |

## Series 32/33, 35/36 Torques Metric (Nm)

| | Valve Size mm | 32, 35, - Max △P = 5 bar | | | | 33, 36 - Max △P = 10.3 bar | | | |
|---|---|---|---|---|---|---|---|---|---|
| | | 0 bar | 1.7 bar | 3.4 bar | 5.2 bar | 0 bar | 3.4 bar | 7 bar | 10.3 bar |
| **Class B** General Service (Metric) | 550 | 616 | 718 | 819 | 921 | 915 | 1,322 | 1,661 | 2,000 |
| | 600 | 757 | 915 | 1,074 | 1,232 | 1,187 | 1,695 | 2,204 | 2,712 |
| | 650 | 893 | 1,107 | 1,322 | 1,537 | 1,401 | 2,079 | 2,757 | 3,435 |
| | 700 | 1,040 | 1,311 | 1,582 | 1,853 | 1,605 | 2,452 | 3,300 | 4,147 |
| | 750 | 1,175 | 1,503 | 1,831 | 2,158 | 1,819 | 2,836 | 3,853 | 4,870 |
| | 800 | 1,322 | 1,763 | 2,192 | 2,633 | 2,079 | 3,356 | 4,644 | 5,921 |
| | 850 | 1,526 | 2,091 | 2,656 | 3,221 | 2,367 | 3,927 | 5,492 | 7,051 |
| | 900 | 1,616 | 2,271 | 2,927 | 3,582 | 2,599 | 4,407 | 6,215 | 8,023 |
| | 1,000 | 2,057 | 2,961 | 3,853 | 4,746 | 2,746 | 5,232 | 7,718 | 10,204 |
| | 1,050 | 2,283 | 3,300 | 4,317 | 5,334 | 2,825 | 5,650 | 8,475 | 11,300 |
| | 1,100 | 2,350 | 3,673 | 4,995 | 6,305 | 3,017 | 6,407 | 9,797 | 13,368 |
| | 1,200 | 2,486 | 4,407 | 6,328 | 8,249 | 3,390 | 7,910 | 12,430 | 16,950 |
| **Class C** | 1,400 | 4,689 | 8,304 | 11,920 | 15,592 | 6,361 | 14,801 | 19,546 | 31,862 |
| | 1,500 | 6,271 | 11,095 | 15,931 | 20,880 | 8,485 | 19,716 | 23,501 | 42,482 |
| | 1,650 | 13,072 | 18,010 | 22,959 | 27,907 | 18,247 | 31,353 | 44,448 | 57,555 |
| | 1,800 | Consult Factory | | | | | | | |
| | 2,000 | Consult Factory | | | | | | | |
| | 2,200 | Consult Factory | | | | | | | |
| | 2,250 | Consult Factory | | | | | | | |
| | 2,400 | Consult Factory | | | | | | | |



All information herein is proprietary and confidential and may not be copied or reproduced without the expressed written consent of BRAY INTERNATIONAL, Inc.
The technical data herein is for general information only. Product suitability should be based solely upon customer's detailed knowledge and experience with their application.

## Series 22/23 Torques Imperial (Lb-In) and Metric (Nm)

| | In. | mm | ΔP = 0-150 psi | ΔP = 0-10.3 bar |
|---|---|---|---|---|
| | | | Lb-In | Nm |
| Valve Size | 2 | 50 | 288 | 33 |
| | 2.5 | 65 | 350 | 40 |
| | 3 | 80 | 560 | 63 |
| | 4 | 100 | 720 | 81 |
| | 5 | 125 | 960 | 108 |
| | 6 | 150 | 1,300 | 147 |
| | 8 | 200 | 2,402 | 271 |
| | 10 | 250 | 3,840 | 434 |
| | 12 | 300 | 5,812 | 657 |
| | 14 | 350 | 8,000 | 904 |
| | 16 | 400 | 11,000 | 1,243 |
| | 18 | 450 | 15,500 | 1,751 |
| | 20 | 500 | 19,300 | 2,181 |
| | 24 | 600 | 30,500 | 3,446 |

1) Torques listed are for PTFE, PFA and UHMWPE trims.
2) All information based on full rated pressure differential.



All information herein is proprietary and confidential and may not be copied or reproduced without the expressed written consent of BRAY INTERNATIONAL, Inc.
The technical data herein is for general information only. Product suitability should be based solely upon customer's detailed knowledge and experience with their application.

# DYNAMIC TORQUE FACTORS (IMPERIAL)

**To Use the Torque Chart, note the following:**

1. Dynamic Torque values include all bearing friction and stem-seal friction torques.
2. Dynamic Torque values are per 1 PSI ΔP. To determine dynamic torque (lb-in) at a desired angle of opening, multiply the pressure drop ΔP at this angle by the appropriate dynamic torque factor in the charts below.
3. Bray recommends sizing control valves between 20° and 70°, with 60° the preferred angle.
4. Dynamic Torque will tend to close all Bray valves whose disc are symmetrical to the stem.

## Series 20/21 and 30/31/3A (Dynamic Torque Factor - lb-in./psi)

| Valve Size in. | Angle of Opening | | | | | | | | | |
|---|---|---|---|---|---|---|---|---|---|---|
| | 10° | 20° | 30° | 40° | 50° | 60° | 70° | 75° | 80° | 90° |
| 2″ | 0.11 | 0.13 | 0.23 | 0.45 | 0.73 | 1.25 | 2.14 | 3.07 | 3.05 | 0.00 |
| 2.5″ | 0.22 | 0.24 | 0.43 | 0.87 | 1.39 | 2.39 | 4.09 | 5.86 | 5.83 | 0.00 |
| 3″ | 0.37 | 0.41 | 0.73 | 1.47 | 2.36 | 4.07 | 6.95 | 9.97 | 9.92 | 0.00 |
| 4″ | 0.86 | 0.95 | 1.70 | 3.43 | 5.49 | 9.45 | 16.17 | 23.19 | 23.07 | 0.00 |
| 5″ | 1.65 | 1.83 | 3.29 | 6.61 | 10.59 | 18.25 | 31.22 | 44.77 | 44.53 | 0.00 |
| 6″ | 2.49 | 2.77 | 4.97 | 10.00 | 16.01 | 27.59 | 47.19 | 67.68 | 67.32 | 0.00 |
| 8″ | 6.60 | 6.74 | 12.08 | 24.30 | 38.93 | 67.07 | 114.71 | 164.51 | 163.64 | 0.00 |
| 10″ | 11.99 | 13.32 | 23.89 | 48.06 | 76.99 | 132.65 | 226.86 | 325.35 | 323.64 | 0.00 |
| 12″ | 20.89 | 23.21 | 41.62 | 83.74 | 134.14 | 231.14 | 395.30 | 566.91 | 563.93 | 0.00 |
| 14″ | 30.04 | 33.38 | 59.84 | 120.40 | 192.87 | 332.34 | 568.37 | 815.12 | 810.83 | 0.00 |
| 16″ | 45.65 | 50.72 | 90.94 | 182.97 | 293.12 | 505.07 | 863.76 | 1238.76 | 1232.24 | 0.00 |
| 18″ | 65.91 | 73.23 | 131.30 | 264.16 | 423.18 | 729.18 | 1247.04 | 1788.44 | 1779.02 | 0.00 |
| 20″ | 91.42 | 101.57 | 182.11 | 366.39 | 586.95 | 1011.37 | 1729.64 | 2480.55 | 2467.50 | 0.00 |

Example: 4″ Valve; 60° Open with a 10 PSI pressure drop: [Td = (9.454)(10) = 94.54 lb-in]

## Series 32/33, 35/36 (Dynamic Torque Factor - lb-in./psi)

| Valve Size in. | Angle of Opening | | | | | | | | | |
|---|---|---|---|---|---|---|---|---|---|---|
| | 10° | 20° | 30° | 40° | 50° | 60° | 70° | 75° | 80° | 90° |
| 24″ | 158.36 | 175.95 | 315.46 | 634.69 | 1016.76 | 1751.99 | 2996.23 | 4297.03 | 4274.40 | 0.00 |
| 30″ | 315.32 | 350.35 | 628.13 | 1263.77 | 2024.54 | 3488.51 | 5966.01 | 8556.12 | 8511.07 | 0.00 |
| 36″ | 551.88 | 613.21 | 1099.39 | 2211.92 | 3543.45 | 6105.77 | 10442.00 | 14975.33 | 14896.49 | 0.00 |
| Larger Size Valves - Consult Factory | | | | | | | | | | |

Example: 24″ Valve; 60° Open with a 10 PSI pressure drop: [Td = (1,751.990)(10) = 17,519.90 lb-in]



All information herein is proprietary and confidential and may not be copied or reproduced without the expressed written consent of BRAY INTERNATIONAL, Inc.
The technical data herein is for general information only. Product suitability should be based solely upon customer's detailed knowledge and experience with their application.

# DYNAMIC TORQUE FACTORS (METRIC)

**To Use the Torque Chart, note the following:**

1. Dynamic Torque values include all bearing friction and stem-seal friction torques.
2. Dynamic Torque values are per 1 bar ΔP. To determine dynamic torque (Nm) at a desired angle of opening, multiply the pressure drop ΔP at this angle by the appropriate dynamic torque factor in the charts below.
3. Bray recommends sizing control valves between 20° and 70°, with 60° the preferred angle.
4. Dynamic Torque will tend to close all Bray valves whose disc are symmetrical to the stem.

## Series 20/21 and 30/31/3A (Dynamic Torque Factor - Nm/bar)

| Valve Size mm. | Angle of Opening | | | | | | | | | |
|---|---|---|---|---|---|---|---|---|---|---|
| | 10° | 20° | 30° | 40° | 50° | 60° | 70° | 75° | 80° | 90° |
| 50 | 0.19 | 0.21 | 0.37 | 0.74 | 1.19 | 2.05 | 3.51 | 5.03 | 5.00 | 0.00 |
| 65 | 0.35 | 0.39 | 0.70 | 1.42 | 2.27 | 3.91 | 6.69 | 9.60 | 9.55 | 0.00 |
| 80 | 0.60 | 0.67 | 1.20 | 2.41 | 3.87 | 6.66 | 11.39 | 16.34 | 16.25 | 0.00 |
| 100 | 1.40 | 1.56 | 2.79 | 5.61 | 8.99 | 15.49 | 26.49 | 38.00 | 37.80 | 0.00 |
| 125 | 2.70 | 3.00 | 5.39 | 10.84 | 17.36 | 29.91 | 51.16 | 73.36 | 72.98 | 0.00 |
| 150 | 4.09 | 4.54 | 8.14 | 16.38 | 26.24 | 45.22 | 77.33 | 110.91 | 110.32 | 0.00 |
| 200 | 10.82 | 11.04 | 19.79 | 39.82 | 63.79 | 109.91 | 187.97 | 269.58 | 268.16 | 0.00 |
| 250 | 19.65 | 21.83 | 39.14 | 78.75 | 126.16 | 217.38 | 371.76 | 533.16 | 530.35 | 0.00 |
| 300 | 34.24 | 38.04 | 68.20 | 137.22 | 219.82 | 378.77 | 647.77 | 929.00 | 924.11 | 0.00 |
| 350 | 49.23 | 54.70 | 98.06 | 197.29 | 316.06 | 544.61 | 931.38 | 1335.74 | 1328.71 | 0.00 |
| 400 | 74.81 | 83.12 | 149.03 | 299.83 | 480.33 | 827.66 | 1415.46 | 2029.97 | 2019.28 | 0.00 |
| 450 | 108.01 | 120.01 | 215.15 | 432.88 | 693.46 | 1194.92 | 2043.53 | 2930.72 | 2915.29 | 0.00 |
| 500 | 149.80 | 166.45 | 298.42 | 600.40 | 961.83 | 1657.34 | 2834.37 | 4064.89 | 4043.50 | 0.00 |

Example: 100 mm Valve; 60° Open with a 10 bar pressure drop: [Td = (15.49)(2) = 30.98 Nm]

## Series 32/33, 35/36 (Dynamic Torque Factor - Nm/bar)

| Valve Size mm | Angle of Opening | | | | | | | | | |
|---|---|---|---|---|---|---|---|---|---|---|
| | 10° | 20° | 30° | 40° | 50° | 60° | 70° | 75° | 80° | 90° |
| 600 | 259.50 | 288.34 | 516.94 | 1040.07 | 1666.17 | 2871.00 | 4909.94 | 7041.56 | 7004.49 | 0.00 |
| 750 | 516.71 | 574.13 | 1029.33 | 2070.95 | 3317.62 | 5716.65 | 9776.53 | 14020.96 | 13947.15 | 0.00 |
| 900 | 904.38 | 1004.86 | 1801.57 | 3624.68 | 5806.67 | 10005.56 | 17111.37 | 24540.17 | 24410.97 | 0.00 |
| Larger Size Valves - Consult Factory | | | | | | | | | | |

Example: 600 mm Valve; 60° Open with a 10 bar pressure drop: [Td = (2871)(2) = 5742.00 Nm]



All information herein is proprietary and confidential and may not be copied or reproduced without the expressed written consent of BRAY INTERNATIONAL, Inc.
The technical data herein is for general information only. Product suitability should be based solely upon customer's detailed knowledge and experience with their application.

# VALVE SIZING COEFFICIENTS

1. **Valve Sizing Coefficients (Cv)**..... Pages 15-16

    1. **Cv** stands for **Valve Sizing Coefficient**, sometimes called the **Flow Rate Coefficient**.
    2. **Cv** varies with the valve size, angle of opening and the manufacturer's valve style.
    3. **Cv** is defined as the volume of water in USGPM that will flow through a given restriction or valve opening with a pressure drop of one (1) psi at room temperature.

2. **Valve Sizing Coefficients (Kv)**..... Pages 17-18

    1. **Kv** stands for **Valve Sizing Coefficient**, sometimes called the **Flow Rate Coefficient**.
    2. **Kv** varies with the valve size, angle of opening and the manufacturer's valve style.
    3. **Kv** is defined as the volume of water in Cubic Meters/Hour ($m^3$/hr) that will flow through a given restriction or valve opening with a pressure drop of one (1) bar at room temperature.



All information herein is proprietary and confidential and may not be copied or reproduced without the expressed written consent of BRAY INTERNATIONAL, Inc.
The technical data herein is for general information only. Product suitability should be based solely upon customer's detailed knowledge and experience with their application.

## Series 20/21 - Valve Sizing Coefficient (Cv)

| Valve Size inches | Disc Position (Degrees) | | | | | | | | |
|---|---|---|---|---|---|---|---|---|---|
| | 10° | 20° | 30° | 40° | 50° | 60° | 70° | 80° | 90° |
| 1 | 0.1 | 1 | 3 | 6 | 11 | 21 | 36 | 56 | 61 |
| 1.5 | 0.2 | 2 | 6 | 11 | 26 | 50 | 87 | 129 | 147 |
| 2 | 0.9 | 7 | 16 | 27 | 45 | 73 | 123 | 172 | 244 |
| 2.5 | 1 | 11 | 25 | 43 | 71 | 115 | 201 | 310 | 439 |
| 3 | 2 | 16 | 35 | 62 | 102 | 165 | 290 | 488 | 691 |
| 4 | 4 | 28 | 63 | 110 | 182 | 294 | 515 | 906 | 1,282 |
| 5 | 6 | 44 | 98 | 172 | 284 | 459 | 805 | 1,416 | 2,070 |
| 6 | 7 | 59 | 130 | 227 | 376 | 607 | 1,065 | 1,873 | 2,786 |
| 8 | 13 | 106 | 244 | 427 | 714 | 1,147 | 1,935 | 3,402 | 5,191 |
| 10 | 21 | 168 | 387 | 675 | 1,130 | 1,815 | 3,062 | 5,385 | 8,238 |
| 12 | 31 | 245 | 562 | 981 | 1,642 | 2,636 | 4,448 | 7,820 | 12,102 |
| 14 | 40 | 307 | 706 | 1,234 | 2,064 | 3,313 | 5,590 | 9,829 | 15,210 |
| 16 | 52 | 403 | 925 | 1,617 | 2,706 | 4,343 | 7,328 | 12,885 | 19,940 |
| 18 | 68 | 528 | 1,213 | 2,121 | 3,549 | 5,695 | 9,610 | 16,898 | 26,150 |
| 20 | 85 | 660 | 1,517 | 2,651 | 4,436 | 7,120 | 12,014 | 21,124 | 32,690 |

## Series 22/23 - Valve Sizing Coefficient (Cv)

| Valve Size inches | Disc Position (Degrees) | | | | | | | | |
|---|---|---|---|---|---|---|---|---|---|
| | 10° | 20° | 30° | 40° | 50° | 60° | 70° | 80° | 90° |
| 2 | 1 | 7 | 16 | 27 | 44 | 62 | 85 | 115 | 146 |
| 2.5 | 1 | 11 | 24 | 43 | 69 | 110 | 176 | 235 | 300 |
| 3 | 2 | 15 | 35 | 61 | 98 | 158 | 286 | 413 | 586 |
| 4 | 3 | 27 | 62 | 109 | 177 | 285 | 503 | 812 | 1,051 |
| 5 | 5 | 43 | 98 | 171 | 276 | 440 | 798 | 1,297 | 1,814 |
| 6 | 6 | 57 | 129 | 226 | 364 | 580 | 1,048 | 1,737 | 2,576 |
| 8 | 12 | 104 | 242 | 424 | 698 | 1,111 | 1,908 | 3,142 | 4,354 |
| 10 | 20 | 165 | 385 | 672 | 1,105 | 1,761 | 3,004 | 4,976 | 6,834 |
| 12 | 29 | 241 | 559 | 975 | 1,604 | 2,591 | 4,420 | 7,392 | 10,090 |
| 14 | 35 | 300 | 720 | 1,280 | 2,100 | 3,300 | 5,700 | 9,350 | 12,880 |
| 16 | 45 | 350 | 850 | 1,650 | 2,750 | 4,400 | 7,500 | 12,320 | 16,900 |
| 18 | 55 | 510 | 1,200 | 2,100 | 3,600 | 5,700 | 9,830 | 15,600 | 21,600 |
| 20 | 80 | 650 | 1,550 | 2,700 | 4,480 | 7,100 | 12,200 | 19,900 | 27,500 |
| 24 | 180 | 1,000 | 2,450 | 4,600 | 7,000 | 11,300 | 18,900 | 28,500 | 34,800 |



All information herein is proprietary and confidential and may not be copied or reproduced without the expressed written consent of BRAY INTERNATIONAL, Inc.
The technical data herein is for general information only. Product suitability should be based solely upon customer's detailed knowledge and experience with their application.

## Series 30/31/31H/3A/3AH/31U - Valve Sizing Coefficient (Cv)

| Valve Size Inches | Disc Position (Degrees) | | | | | | | | |
|---|---|---|---|---|---|---|---|---|---|
| | 10° | 20° | 30° | 40° | 50° | 60° | 70° | 80° | 90° |
| 2 | 0.8 | 7 | 16 | 27 | 43 | 61 | 84 | 114 | 144 |
| 2.5 | 1 | 11 | 24 | 43 | 67 | 107 | 163 | 223 | 282 |
| 3 | 2 | 15 | 35 | 61 | 96 | 154 | 267 | 364 | 461 |
| 4 | 3 | 27 | 62 | 109 | 171 | 274 | 496 | 701 | 841 |
| 5 | 5 | 43 | 98 | 170 | 268 | 428 | 775 | 1,146 | 1,376 |
| 6 | 6 | 56 | 129 | 225 | 354 | 567 | 1,025 | 1,542 | 1,850 |
| 8 | 12 | 102 | 241 | 421 | 680 | 1,081 | 1,862 | 2,842 | 3,316 |
| 10 | 19 | 162 | 382 | 667 | 1,076 | 1,710 | 2,948 | 4,525 | 5,430 |
| 12 | 27 | 235 | 555 | 1,005 | 1,594 | 2,563 | 4,393 | 6,731 | 8,077 |
| 14 | 34 | 299 | 756 | 1,320 | 2,149 | 3,384 | 5,939 | 8,874 | 10,538 |
| 16 | 45 | 397 | 1,001 | 1,749 | 2,847 | 4,483 | 7,867 | 11,761 | 13,966 |
| 18 | 58 | 507 | 1,281 | 2,237 | 3,643 | 5,736 | 10,065 | 14,496 | 17,214 |
| 20 | 72 | 632 | 1,595 | 2,786 | 4,536 | 7,144 | 12,535 | 18,812 | 22,339 |

## Series 32/33/35/36/35F/36H - Valve Sizing Coefficient (Cv)

| Valve Size Inches | Disc Position (Degrees) | | | | | | | | |
|---|---|---|---|---|---|---|---|---|---|
| | 10° | 20° | 30° | 40° | 50° | 60° | 70° | 80° | 90° |
| 22 | 103 | 916 | 2,070 | 3,510 | 5,640 | 9,036 | 14,562 | 22,028 | 27,168 |
| 24 | 259 | 1,028 | 2,387 | 4,244 | 6,962 | 11,040 | 18,235 | 27,186 | 33,154 |
| 26 | 289 | 1,141 | 2,752 | 4,890 | 7,824 | 12,496 | 19,921 | 29,700 | 36,220 |
| 28 | 295 | 1,324 | 3,133 | 5,399 | 8,636 | 13,838 | 22,578 | 34,683 | 41,619 |
| 30 | 420 | 1,652 | 3,986 | 7,080 | 11,328 | 18,090 | 28,844 | 43,003 | 52,443 |
| 32 | 550 | 2,026 | 4,636 | 7,983 | 12,743 | 20,410 | 32,591 | 48,558 | 60,658 |
| 34 | 533 | 2,304 | 5,210 | 8,834 | 14,179 | 22,741 | 36,648 | 55,438 | 68,374 |
| 36 | 740 | 2,775 | 5,936 | 9,790 | 15,572 | 25,053 | 40,086 | 59,667 | 77,089 |
| 40 | 757 | 2,971 | 6,925 | 11,862 | 19,307 | 30,636 | 50,406 | 73,990 | 90,175 |
| 42 | 783 | 3,502 | 7,879 | 12,997 | 21,010 | 35,016 | 54,584 | 83,421 | 102,989 |
| 44 | 904 | 4,066 | 8,698 | 14,346 | 22,818 | 36,712 | 58,740 | 87,430 | 112,960 |
| 48 | 1,023 | 4,651 | 10,365 | 17,010 | 27,242 | 43,853 | 70,431 | 108,968 | 132,888 |
| 52 | Consult Factory | | | | | | | | |
| 54 | 1,299 | 5,904 | 13,158 | 21,594 | 34,583 | 55,671 | 89,411 | 138,334 | 168,700 |
| 60 | 1,480 | 6,400 | 14,500 | 24,500 | 39,400 | 63,200 | 102,000 | 154,000 | 190,000 |
| 66 | 1,650 | 7,110 | 16,100 | 27,300 | 43,800 | 70,200 | 113,000 | 171,000 | 211,000 |
| 72 | 1,900 | 8,220 | 18,600 | 31,500 | 50,700 | 81,200 | 131,000 | 198,000 | 244,000 |
| 78 | 2,290 | 9,910 | 22,400 | 38,000 | 61,000 | 97,800 | 158,000 | 238,000 | 294,000 |
| 84 | 2,290 | 11,390 | 25,800 | 43,700 | 70,200 | 112,400 | 181,000 | 274,000 | 338,000 |
| 90 | Consult Factory | | | | | | | | |
| 96 | Consult Factory | | | | | | | | |



All information herein is proprietary and confidential and may not be copied or reproduced without the expressed written consent of BRAY INTERNATIONAL, Inc.
The technical data herein is for general information only. Product suitability should be based solely upon customer's detailed knowledge and experience with their application.

## Series 20/21 - Valve Sizing Coefficient (Kv)

| Valve Size mm | Disc Position (Degrees) | | | | | | | | |
|---|---|---|---|---|---|---|---|---|---|
| | 10° | 20° | 30° | 40° | 50° | 60° | 70° | 80° | 90° |
| 25 | 0.087 | 0.865 | 2.595 | 5.190 | 9.515 | 18.165 | 31.140 | 48.440 | 52.765 |
| 40 | 0.173 | 1.730 | 5.190 | 9.515 | 22.490 | 43.250 | 75.255 | 111.585 | 127.155 |
| 50 | 0.779 | 6.055 | 13.840 | 23.355 | 38.925 | 63.145 | 106.395 | 148.780 | 211.060 |
| 65 | 0.865 | 9.515 | 21.625 | 37.195 | 61.415 | 99.475 | 173.865 | 268.150 | 379.735 |
| 80 | 1.730 | 13.840 | 30.275 | 53.630 | 88.230 | 142.725 | 250.850 | 422.120 | 597.715 |
| 100 | 3.460 | 24.220 | 54.495 | 95.150 | 157.430 | 254.310 | 445.475 | 783.690 | 1,108.930 |
| 125 | 5.190 | 38.060 | 84.770 | 148.780 | 245.660 | 397.035 | 696.325 | 1,224.840 | 1,790.550 |
| 150 | 6.055 | 51.035 | 112.450 | 196.355 | 325.240 | 525.055 | 921.225 | 1,620.145 | 2,409.890 |
| 200 | 11.245 | 91.690 | 211.060 | 369.355 | 617.610 | 992.155 | 1,673.775 | 2,942.730 | 4,490.215 |
| 250 | 18.165 | 145.320 | 334.755 | 583.875 | 977.450 | 1,569.975 | 2,648.630 | 4,658.025 | 7,125.870 |
| 300 | 26.815 | 211.925 | 486.130 | 848.565 | 1,420.330 | 2,280.140 | 3,847.520 | 6,764.300 | 10,468.230 |
| 350 | 34.600 | 265.555 | 610.690 | 1,067.410 | 1,785.360 | 2,865.745 | 4,835.350 | 8,502.085 | 13,156.650 |
| 400 | 44.980 | 348.595 | 800.125 | 1,398.705 | 2,340.690 | 3,756.695 | 6,338.720 | 11,145.525 | 17,248.100 |
| 450 | 58.820 | 456.720 | 1,049.245 | 1,834.665 | 3,069.885 | 4,926.175 | 8,312.650 | 14,616.770 | 22,619.750 |
| 500 | 73.525 | 570.900 | 1,312.205 | 2,293.115 | 3,837.140 | 6,158.800 | 10,392.110 | 18,272.260 | 28,276.850 |

## Series 22/23 - Valve Sizing Coefficient (Kv)

| Valve Size mm | Disc Position (Degrees) | | | | | | | | |
|---|---|---|---|---|---|---|---|---|---|
| | 10° | 20° | 30° | 40° | 50° | 60° | 70° | 80° | 90° |
| 50 | 0.865 | 6.055 | 13.840 | 23.355 | 38.060 | 53.630 | 73.525 | 99.475 | 126.290 |
| 65 | 0.865 | 9.515 | 20.760 | 37.195 | 59.685 | 95.150 | 152.240 | 203.275 | 259.500 |
| 80 | 1.730 | 12.975 | 30.275 | 52.765 | 84.770 | 136.670 | 247.390 | 357.245 | 506.890 |
| 100 | 2.595 | 23.355 | 53.630 | 94.285 | 153.105 | 246.525 | 435.095 | 702.380 | 909.115 |
| 125 | 4.325 | 37.195 | 84.770 | 147.915 | 238.740 | 380.600 | 690.270 | 1,121.905 | 1,569.110 |
| 150 | 5.190 | 49.305 | 111.585 | 195.490 | 314.860 | 501.700 | 906.520 | 1,502.505 | 2,228.240 |
| 200 | 10.380 | 89.960 | 209.330 | 366.760 | 603.770 | 961.015 | 1,650.420 | 2,717.830 | 3,766.210 |
| 250 | 17.300 | 142.725 | 333.025 | 581.280 | 955.825 | 1,523.265 | 2,598.460 | 4,304.240 | 5,911.410 |
| 300 | 25.085 | 208.465 | 483.535 | 843.375 | 1,387.460 | 2,241.215 | 3,823.300 | 6,394.080 | 8,727.850 |
| 350 | 30.275 | 259.500 | 622.800 | 1,107.200 | 1,816.500 | 2,854.500 | 4,930.500 | 8,087.750 | 11,141.200 |
| 400 | 38.925 | 302.750 | 735.250 | 1,427.250 | 2,378.750 | 3,806.000 | 6,487.500 | 10,656.800 | 14,618.500 |
| 450 | 47.575 | 441.150 | 1,038.000 | 1,816.500 | 3,114.000 | 4,930.500 | 8,502.950 | 13,494.000 | 18,684.000 |
| 500 | 69.200 | 562.250 | 1,340.750 | 2,335.500 | 3,875.200 | 6,141.500 | 10,553.000 | 17,213.500 | 23,787.500 |
| 600 | 155.700 | 865.000 | 2,119.250 | 3,979.000 | 6,055.000 | 9,774.500 | 16,348.500 | 24,652.500 | 30,102.000 |



All information herein is proprietary and confidential and may not be copied or reproduced without the expressed written consent of BRAY INTERNATIONAL, Inc.
The technical data herein is for general information only. Product suitability should be based solely upon customer's detailed knowledge and experience with their application.

## Series 30/31/31H/3A/3AH/31U - Valve Sizing Coefficient (Kv)

| Valve Size mm | Disc Position (Degrees) | | | | | | | | |
|---|---|---|---|---|---|---|---|---|---|
| | 10° | 20° | 30° | 40° | 50° | 60° | 70° | 80° | 90° |
| 50 | 0.692 | 6.055 | 13.840 | 23.355 | 37.195 | 52.765 | 72.660 | 98.610 | 124.560 |
| 65 | 0.865 | 9.515 | 20.760 | 37.195 | 57.955 | 92.555 | 140.995 | 192.895 | 243.930 |
| 80 | 1.730 | 12.975 | 30.275 | 52.765 | 83.040 | 133.210 | 230.955 | 314.860 | 398.765 |
| 100 | 2.595 | 23.355 | 53.630 | 94.285 | 147.915 | 237.010 | 429.040 | 606.365 | 727.465 |
| 125 | 4.325 | 37.195 | 84.770 | 147.050 | 231.820 | 370.220 | 670.375 | 991.290 | 1,190.240 |
| 150 | 5.190 | 48.440 | 111.585 | 194.625 | 306.210 | 490.455 | 886.625 | 1,333.830 | 1,600.250 |
| 200 | 10.380 | 88.230 | 208.465 | 364.165 | 588.200 | 935.065 | 1,610.630 | 2,458.330 | 2,868.340 |
| 250 | 16.435 | 140.130 | 330.430 | 576.955 | 930.740 | 1,479.150 | 2,550.020 | 3,914.125 | 4,696.950 |
| 300 | 23.355 | 203.275 | 480.075 | 869.325 | 1,378.810 | 2,216.995 | 3,799.945 | 5,822.315 | 6,986.605 |
| 350 | 29.410 | 258.635 | 653.940 | 1,141.800 | 1,858.885 | 2,927.160 | 5,137.235 | 7,676.010 | 9,115.370 |
| 400 | 38.925 | 343.405 | 865.865 | 1,512.885 | 2,462.655 | 3,877.795 | 6,804.955 | 10,173.265 | 12,080.590 |
| 450 | 50.170 | 438.555 | 1,108.065 | 1,935.005 | 3,151.195 | 4,961.640 | 8,706.225 | 12,539.040 | 14,890.110 |
| 500 | 62.280 | 546.680 | 1,379.675 | 2,409.890 | 3,923.640 | 6,179.560 | 10,842.775 | 16,272.380 | 19,323.235 |

## Series 32/33/35/36/35F/36H - Valve Sizing Coefficient (Kv)

| Valve Size mm | Disc Position (Degrees) | | | | | | | | |
|---|---|---|---|---|---|---|---|---|---|
| | 10° | 20° | 30° | 40° | 50° | 60° | 70° | 80° | 90° |
| 550 | 89.095 | 792.340 | 1,790.550 | 3,036.150 | 4,878.600 | 7,816.140 | 12,596.130 | 19,054.220 | 23,500.320 |
| 600 | 224.035 | 889.220 | 2,064.755 | 3,671.060 | 6,022.130 | 9,549.600 | 15,773.275 | 23,515.890 | 28,678.210 |
| 650 | 249.985 | 986.965 | 2,380.480 | 4,229.850 | 6,767.760 | 10,809.040 | 17,231.665 | 25,690.500 | 31,330.300 |
| 700 | 255.175 | 1,145.260 | 2,710.045 | 4,670.135 | 7,470.140 | 11,969.870 | 19,529.970 | 30,000.795 | 36,000.435 |
| 750 | 363.300 | 1,428.980 | 3,447.890 | 6,124.200 | 9,798.720 | 15,647.850 | 24,950.060 | 37,197.595 | 45,363.195 |
| 800 | 475.750 | 1,752.490 | 4,010.140 | 6,905.295 | 11,022.695 | 17,654.650 | 28,191.215 | 42,002.670 | 52,469.170 |
| 850 | 461.045 | 1,992.960 | 4,506.650 | 7,641.410 | 12,264.835 | 19,670.965 | 31,700.520 | 47,953.870 | 59,143.510 |
| 900 | 640.100 | 2,400.375 | 5,134.640 | 8,468.350 | 13,469.780 | 21,670.845 | 34,674.390 | 51,611.955 | 66,681.985 |
| 1,000 | 654.805 | 2,569.915 | 5,990.125 | 10,260.630 | 16,700.555 | 26,500.140 | 43,601.190 | 64,001.350 | 78,001.375 |
| 1,050 | 677.295 | 3,029.230 | 6,815.335 | 11,242.405 | 18,173.650 | 30,288.840 | 47,215.160 | 72,159.165 | 89,085.485 |
| 1,100 | 781.960 | 3,517.090 | 7,523.770 | 12,409.290 | 19,737.570 | 31,755.880 | 50,810.100 | 75,626.950 | 97,710.400 |
| 1,200 | 884.895 | 4,023.115 | 8,965.725 | 14,713.650 | 23,564.330 | 37,932.845 | 60,922.815 | 94,257.320 | 114,948.120 |
| 1,300 | Consult Factory | | | | | | | | |
| 1,400 | 1,123.635 | 5,106.960 | 11,381.670 | 18,678.810 | 29,914.295 | 48,155.415 | 77,340.515 | 119,658.910 | 145,925.500 |
| 1,500 | 1,280.200 | 5,536.000 | 12,542.500 | 21,192.500 | 34,081.000 | 54,668.000 | 88,230.000 | 133,210.000 | 164,350.000 |
| 1,650 | 1,427.250 | 6,150.150 | 13,926.500 | 23,614.500 | 37,887.000 | 60,723.000 | 97,745.000 | 147,915.000 | 182,515.000 |
| 1,800 | 1,643.500 | 7,110.300 | 16,089.000 | 27,247.500 | 43,855.500 | 70,238.000 | 113,315.000 | 171,270.000 | 211,060.000 |
| 2,000 | 1,980.850 | 8,572.150 | 19,376.000 | 32,870.000 | 52,765.000 | 84,597.000 | 136,670.000 | 205,870.000 | 254,310.000 |
| 2,200 | 1,980.850 | 9,852.350 | 22,317.000 | 37,800.500 | 60,723.000 | 97,226.000 | 156,565.000 | 237,010.000 | 292,370.000 |
| 2,250 | Consult Factory | | | | | | | | |
| 2,400 | Consult Factory | | | | | | | | |



All information herein is proprietary and confidential and may not be copied or reproduced without the expressed written consent of BRAY INTERNATIONAL, Inc.
The technical data herein is for general information only. Product suitability should be based solely upon customer's detailed knowledge and experience with their application.

# EXAMPLES OF TYPICAL FLANGE TO VALVE BOLTING*

## ** Lug Style Bolting

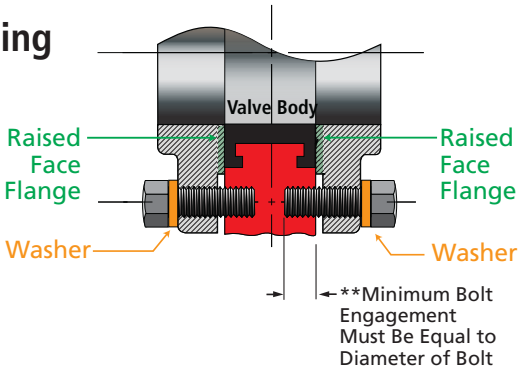


Flange Width Including Raise Face If Applicable + Washer Width + Minimum Bolt Engagement Equal to Bolt Diameter = Bolt Length



## Wafer Style Bolting

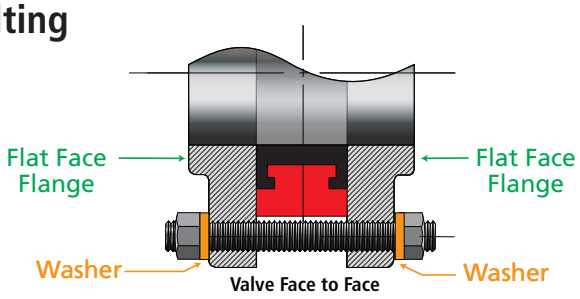


Flange Width x2 Including Raise Face If Applicable + Valve Face to Face + Washer Width x2 + Width of Nut x2 + 4 Threads (2 Per Side) = Overall Length



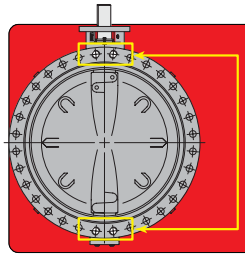

**** Note: Please refer to Appropriate Bray Dimensional Drawings for specific valve drilling information on Wafer and Lug Valves 20" and larger.**

## Please refer to ASME B-16.5 or B-16.47 for Flange and Bolt Dimension Information

* Double flange style bolting not shown.
** Lug threads may be tapped from both sides and therefore tap may not be continuous.



All information herein is proprietary and confidential and may not be copied or reproduced without the expressed written consent of BRAY INTERNATIONAL, Inc.
The technical data herein is for general information only. Product suitability should be based solely upon customer's detailed knowledge and experience with their application.

# FLANGE BOLT TENSIONING
## Bray Butterfly Valves with Metal Mating Flanges

A question frequently asked at Bray is "What torque do I apply to the flange bolts to insure the valve is properly installed?". Initially this seems to be a simple request until all of the factors are analyzed. The installation of a valve requires several components: the valve, mating flanges, nuts, bolts and studs. Each is supplied by different manufacturers and each has different characteristics. The proper torque for one combination may be too much or too little for a second combination. The following is a list of information which needs to be known in order to start calculating the torque requirements.

**Valve**
- Type
- Size
- Materials of construction (Body)
- Surface finishes / Surface conditions

**Flange**
- Type
- Size
- Finish / both sides
- Condition of flange / surface contamination

**Bolt (or Stud)**
- Type
- Materials of Construction
- Surface Conditions

**Nut**
- Type
- Materials of Construction
- Surface Conditions

**Lubrication**
- Type
- Coverage

**General Factors**
- Temperature and relative humidity at the time of installation
- Speed at which bolts are turned

**Note:** The elastomer valve seat manufactured by Bray also acts as the flange gasket. No additional gaskets are required or recommended. Other valve styles which do not have integral gaskets will need to have this component supplied. The characteristics of this component will also need to be considered.

Complete knowledge of all relevant conditions is almost impossible to obtain. As a result, the computation of the exact torque requirement is not practical. No reputable manufacturer can provide accurate information when so many outside factors are present.

The International Fasteners Institute covers some of the details required to "compute" a torque value. Even with this information the use of a torque wrench is only considered to be 25% accurate. Based on the difficulty and inaccuracy of using this method, Bray recommends the use of the "Turn of the nut" method.

**"Turn of the Nut" Tightening**
**(For ANSI Standard Iron and Steel Flanges)**
**For Non-Metallic or non-standard flanges, follow the manufacturers installation procedures.

1. The valve and flange faces must be aligned parallel to each other.

   **Note:** For rubber seated butterfly valves manufactured by Bray, it is required that the valve be fully opened prior to the tightening of the flange bolts.

2. After aligning the holes in a joint, sufficient bolts shall be placed and brought to a 'snug-tight' condition to ensure that the parts of the joint are *brought into full contact* with each other. 'Snug-Tight' is the tightness attained by the full effort of a man using a spud wrench.

3. Following the initial snugging operation, bolts shall be placed in any remaining holes and brought to snug-tightness. Re-snugging may be necessary in large joints.

4. Tighten opposite bolts in sequence to insure even pressure around the entire flange.



All information herein is proprietary and confidential and may not be copied or reproduced without the expressed written consent of BRAY INTERNATIONAL, Inc.
The technical data herein is for general information only. Product suitability should be based solely upon customer's detailed knowledge and experience with their application.

5. When all bolts are snug-tight, each bolt in the joint then shall be tightened additionally by the applicable amount of nut rotation given in Note 1. During tightening there shall be no rotation of the valve or flange.

**Note 1**

For bolt lengths **not exceeding** 8 diameters or 8 inches (203.2 mm) = **1/4 turn**
For bolt lengths **exceeding** 8 diameters or 8 inches (203.2 mm) = **1/2 turn**

**Disclaimer:**
**Bray Controls is issuing these recommendations only as a guide to installation. This recommendation is based on the full compliance of all materials supplied to their appropriate specifications. Since many of the components are not manufactured by Bray we can take no responsibility for any damage caused during installation.**

**Series 20/21 and 30/31 - Flange Bolt Torque Chart**

| Valve Size | | Normal Torque Range | Normal Torque Range |
|---|---|---|---|
| In | mm | Ft-lbs | Nm |
| 2 | 50 | 30 | 40 |
| 2.5 | 65 | 30 | 40 |
| 3 | 80 | 35 | 50 |
| 4 | 100 | 35 - 40 | 50 - 55 |
| 5 | 125 | 35 - 45 | 50 - 60 |
| 6 | 150 | 35 - 50 | 50 - 65 |
| 8 | 200 | 45 - 55 | 60 - 75 |
| 10 | 250 | 55 - 75 | 75 - 100 |
| 12 | 300 | 65 - 110 | 90 - 150 |
| 14 | 350 | 75 - 120 | 100 - 165 |
| 16 | 400 | 75 - 120 | 100 - 165 |
| 18 | 450 | 85 - 130 | 115 - 175 |
| 20 | 500 | 85 - 130 | 115 - 175 |

Please note that the Nm and Ft-lbs values are based on bolt size in respective metric and ANSI flanges, i.e. these values are not a direct conversion between Nm and Ft-lbs.

The values represent average torques needed to ensure full compression of the resilient valves' seats into the valves' bodies when installed in pipeline flanges. The face of both flanges must come into full contact with the valves' metal bodies.

No additional torque is required for proper functioning of the Bray resilient seated valves.

The torque values are based on using new, coarse-threaded, lubricated fasteners. Up to 25% may be added to the Normal Torque Range values when using non-lubricated fasteners.

Torque Values specified by flange manufacturers ***must not be exceeded.***



All information herein is proprietary and confidential and may not be copied or reproduced without the expressed written consent of BRAY INTERNATIONAL, Inc.
The technical data herein is for general information only. Product suitability should be based solely upon customer's detailed knowledge and experience with their application.

**Series 22/23 Installation - Flange Bolt Torque Chart, 150 lb Flanges**

| Valve Size | | Normal Torque Range | | Max Torque Range | |
|---|---|---|---|---|---|
| In | mm | Ft-lbs | Nm | Ft-lbs | Nm |
| 2 | 50 | 30 | 40 | 35 | 50 |
| 2.5 | 65 | 30 | 40 | 35 | 50 |
| 3 | 80 | 35 | 50 | 40 | 55 |
| 4 | 100 | 35 - 40 | 50 - 55 | 40 | 55 |
| 5 | 125 | 35 - 45 | 50 - 60 | 50 | 65 |
| 6 | 150 | 35 - 50 | 50 - 65 | 65 | 90 |
| 8 | 200 | 45 - 55 | 60 - 75 | 80 | 110 |
| 10 | 250 | 55 - 75 | 75 - 100 | 100 | 135 |
| 12 | 300 | 65 - 110 | 90 - 150 | 120 | 165 |
| 14 | 350 | 75 - 120 | 100 - 165 | 140 | 190 |
| 16 | 400 | 75 - 120 | 100 - 165 | 140 | 190 |
| 18 | 450 | 85 - 130 | 115 - 175 | 170 | 230 |
| 20 | 500 | 85 - 130 | 115 - 175 | 180 | 245 |
| 24 | 600 | 100 - 150 | 135 - 205 | 220 | 300 |

The torque values are based on using new, coarse-threaded, lubricated fasteners. Up to 15% may be added to the Normal Torque Range values when using non-lubricated fasteners. However, the maximum torque should not be exceeded.

Flange gaskets are normally not used for installation of S22/23 valves. Flange leakage may be caused by combination of out-of-parallel and/or misaligned flanges, and surface damage on the flange face and/or the face of the valve seat. In such cases, suitable flange gaskets may be used to control flange leakage.

Torque values specified by manufacturers of certain flanges, for example plastic flanges, could be lower than the values specified above. In such cases, the flange manufacturers' torque values must not be exceeded. Use flange gaskets if necessary to secure flange seal.



All information herein is proprietary and confidential and may not be copied or reproduced without the expressed written consent of BRAY INTERNATIONAL, Inc.
The technical data herein is for general information only. Product suitability should be based solely upon customer's detailed knowledge and experience with their application.

## Series 20/21 - Standard Metal Specifications

| Part | | Material | ASTM No. | UNS No. |
|---|---|---|---|---|
| **Body** | | Cast Iron | A126 Class B | |
| | | Ductile Iron | A395 Gr. 60-40-18 | F32800 |
| | | 316 Stainless Steel | A351 CF8M | J92900 |
| | | Aluminum | B26 Class B | |
| **Disc/Stem** 1-12"(25-300mm) One Piece | | 316 Stainless Steel | A351 CF8M | J92900 |
| | | Hastelloy® C22 * | B494 CX2MW | N26022 |
| | | 17-4 ph Stainless Steel | A747 CB7Cu1 Heat Treated | J92180 |
| **Disc/Stem** 14-20" (350-500mm) Fabricated | **Disc** | 316 Stainless Steel | A240 | S31600 |
| | | Hastelloy® C276 * | B575 | N10276 |
| | | 17-4 ph Stainless Steel | A564 630 Heat Treated | S17400 |
| | **Stem** | 316 Stainless Steel | A276 | S31600 |
| | | Hastelloy® C276 * | B575 | N10276 |
| | | 17-4 ph Stainless Steel | A564 630 Heat Treated | S17400 |

## Series 22/23 - Standard Metal Specifications

| Part | Material | ASTM No. | UNS No. |
|---|---|---|---|
| **Body** | Ductile Iron | A395 Gr. 60-40-18 | F32800 |
| | 316 Stainless Steel | A351 CF8M | J92900 |
| | Carbon Steel | A216 WCB | J030002 |
| **Disc** | 316 Stainless Steel | A351 CF8M | J92900 |
| | PTFE/316 SS (2"-12") | A351 CF8M | J92900 |
| | PTFE/17-4 ph SS (14"-24") | A547 CB7Cu1 | J92180 |
| | PFA/316 SS (2"-12") | A351 CF8M | J92900 |
| | PFA/17-4 ph SS (14"-24") | A547 CB7Cu1 | J92180 |
| | UHMWPE/316 SS (2"-6") | A351 CF8M | J92900 |
| | UHMWPE/DI (8"-12") | A536 Gr 65-45-12 | F33100 |
| | Hastelloy® C22 * | B494 CX2MW | N26022 |
| | Titanium | | |
| **Stem** | 17-4 ph Stainless Steel | A564 630 Heat Treated | S17400 |

* Hastelloy® is a registered trademark of Haynes International, Inc.



All information herein is proprietary and confidential and may not be copied or reproduced without the expressed written consent of BRAY INTERNATIONAL, Inc.
The technical data herein is for general information only. Product suitability should be based solely upon customer's detailed knowledge and experience with their application.

## Series 30/31, 31H, 3A/3AH, 31U - Standard Metal Specifications

| Part | Material | ASTM No. | UNS No. | 30/31 | 31H | 3A/3AH | 31U |
|---|---|---|---|---|---|---|---|
| Body | Cast Iron | A126 Class B | | ● | ● | ● | |
| | Ductile Iron | A536 Gr. 65-45-12 | F33100 | ● | ● | ● | |
| | Ductile Iron | A395 | F32800 | | | | ● |
| | Carbon Steel | A216 WCB | J030002 | ● | | ● | ● |
| | Nickel Aluminum Bronze | B148 | C95800 | | | | ● |
| | Aluminum | B26 Class B | | ● | | | |
| Disc | Aluminum Bronze | B148 | C95400 | ● | ● | ● | |
| | Nickel Aluminum Bronze | B148 | C95800 | | | | ● |
| | Nylon Coated Ductile Iron | A536 Gr. 65-45-12 | F33100 | ● | ● | ● | |
| | 316 Stainless Steel | A351 CF8M | J92900 | ● | ● | ● | ● |
| | 304 Stainless Steel | A351 CF8 | J92600 | ● | | ● | |
| | Duplex Stainless Steel | A995 Gr 4A | J92205 | ● | | ● | |
| | Super Duplex Stainless Steel | A995 Gr 5A | J93404 | ● | | ● | |
| | Super Austenitic Stainless Steel (254 SMO™)* | A351 Grade CK3MCuN | S31254 | ● | | ● | |
| | Hastelloy® C-276 * | B575 | N10276 | ● | | ● | |
| Stem | 304 Stainless Steel | A276 | S30400 | ● | | ● | |
| | 316 Stainless Steel | A276 | S31600 | ● | | ● | |
| | 416 Stainless Steel | A582 | S41600 | ● | ● | ● | ● |
| | 17-4 ph Stainless Steel | A564 630 Heat Treated | S17400 | | | | ● |
| | Monel® * | B865 | N05500 | ● | | ● | ● |

* Hastelloy® is a registered trademark of Haynes International, Inc.
Monel® is a registered trademark of International Nickel Company, Inc.
254 SMO™ is a registered trademark of Avesta AB.
AL-6XN® is a registered trademark of ATI Properties, Inc.



All information herein is proprietary and confidential and may not be copied or reproduced without the expressed written consent of BRAY INTERNATIONAL, Inc.
The technical data herein is for general information only. Product suitability should be based solely upon customer's detailed knowledge and experience with their application.

## Series 32/33, 35/36, 35F, 36H - Standard Metal Specifications

| Part | Material | ASTM No. | UNS No. | 32-36 | 36H | 35F |
|---|---|---|---|---|---|---|
| Body | Cast Iron | A126 Class B | | ● | | ● |
| | Ductile Iron | A536 Gr. 65-45-12 | F33100 | ● | ● | ● |
| | Carbon Steel | A216 Gr. WCB | J030002 | ● | | |
| | 316 Stainless Steel | A351 CF8M | J92900 | ● | | |
| Disc | Nickel Aluminum Bronze | B148 | C95800 | ● | ● | |
| | Nylon Coated Ductile Iron | A536 Gr. 65-45-12 | F33100 | ● | ● | |
| | 316 Stainless Steel | A351 CF8M | J92900 | ● | | |
| | 304 Stainless Steel | A351 CF8 | J92600 | ● | | |
| | Hastelloy® C-276 * | B575 | N10276 | CF | | ● |
| | Hastelloy® C-22 * | B494 CX2MW | N26022 | CF | | |
| | Duplex Stainless Steel | A995 Gr 5A | J93404 | ● | ● | ● |
| | Super Austenitic Stainless Steel (254 SMO ™) * | A351 Grade CK3MCuN | S31254 | ● | ● | ● |
| | Monel® * | A494 Grade M-35-1 | N24135 | ● | | |
| Stem | 304 Stainless Steel | A276 | S30400 | ● | | ● |
| | 316 Stainless Steel | A276 | S31600 | ● | | ● |
| | 416 Stainless Steel | A582 | S41600 | ● | | |
| | 17-4 ph Stainless Steel | A564 630 Heat Treated | S17400 | ● | ● | |
| | Austenitic Stainless Steel | A479 | S31651 | ● | | |
| | Super Austenitic Stainless Steel (AL-6XN®) * | A276 | N08367 | ● | ● | |
| | Monel® * | B865 | N05500 | ● | | |

* Hastelloy® is a registered trademark of Haynes International, Inc.
Monel® is a registered trademark of International Nickel Company, Inc.
254 SMO™ is a registered trademark of Avesta AB.
AL-6XN® is a registered trademark of ATI Properties, Inc.



All information herein is proprietary and confidential and may not be copied or reproduced without the expressed written consent of BRAY INTERNATIONAL, Inc.
The technical data herein is for general information only. Product suitability should be based solely upon customer's detailed knowledge and experience with their application.

Bray

BRAY FLOW CONTROL SOLUTIONS ARE
AVAILABLE FOR A VARIETY OF INDUSTRIES.

**ENERGY**
Mining
Oil & Gas
Power
Nuclear Power

**WATER**
Water / Wastewater
Ultra Pure Water
Desalination
Irrigation

**INDUSTRIAL**
Chemical
Pulp & Paper
Textile
Marine

**INFRASTRUCTURE**
Beverage & Food
Transportation
Heating, Ventilation & Air Conditioning (HVAC)

---


**US HEADQUARTERS**
**Bray International, Inc.**
13333 Westland East Blvd.
Houston, Texas 77041
Tel: +1.281.894.5454

**CHINA HEADQUARTERS**
**Bray Controls (ZheJiang) Co. Limited**
98 GaoXin #6 Road
XiaoShan Economic & Development Zone
HangZhou, ZheJiang 311231, P.R. China
Tel: +86.571.8285.2200

**EUROPE HEADQUARTERS**
**Bray Armaturen & Antriebe Europa**
Europark Fichtenhain A 13b
D-47807 Krefeld
Germany
Tel: +49.2151.5336.0

**INDIA HEADQUARTERS**
**Bray Controls India Pvt. Ltd.**
Plot No. H-18 & H-19,
SIPCOT Industrial Park
Vallam Vadagal, Echoor Post,
Sriperumbudur Taluk
Kancheepuram District,
Tami Nadu - 631 604
Tel: +91.44.67170100


---

THE SMART CHOICE FOR FLOW CONTROL SINCE 1986.
WITH MORE THAN 300 LOCATIONS WORLDWIDE,
FIND A REPRESENTATIVE NEAR YOU AT **BRAY.COM**


All statements, technical information, and recommendations in this bulletin are for general use only. Consult Bray representatives or factory for the specific requirements and material selection for your intended application. The right to change or modify product design or product without prior notice is reserved. Patents issued and applied for worldwide.

Bray® is a registered trademark of Bray International, Inc.

© 8/16/09

Bray CONTROLS



# MANUAL OPERATORS

Bray Controls offers three operators for manual control of valve position. All manual operators mount directly to Bray valves, and all are epoxy coated for excellent corrosion, abrasion and impact resistance.

| MANUAL OPERATORS | |
|---|---|
| **SERIES 01 -** Handle | 1"-12" (25mm -300mm) |
| **SERIES 04 -** Gear Operator | 2"-48" (50mm -1200mm) |
| **SERIES 05 -** Declutchable Gear Operator | 2"-36" (50mm -900mm) |

### SERIES 01 - HANDLE & NOTCH PLATE

Bray offers two handles for on-off and throttling service – one for resilient seated valves from 1"-12" (25mm-300mm), and a high torque handle for high pressure valves from 2½"- 8" (65mm-200mm). These quarter turn handles have a locking spring and a directional pointer for valve disc position indication. Bolted notch plates are offered. For resilient seated valves a 10 position plate is standard. For high pressure valves a 9 position plate is standard. Both contain on-off stops to prevent over rotation of the valve. Optionally available are an infinite position plate, a 180° notch plate, a memory stop, a padlock kit, and a 2" square nut version.

### SERIES 04 - GEAR OPERATOR

For heavy duty on-off and throttling service of 2"-48" (50mm-1200mm) valves, the Series 04 is self lubricated for smooth, trouble-free operation. The rugged, cast iron body with O-ring body seals is weatherproof to IP65. A self-locking worm and worm gear drive holds the valve in the desired position. Features include a readily accessible handwheel, a valve position indicator and mechanical travel stops which permit field adjustment of valve movement to specific degrees of rotation. Optionally available are chainwheel accessories, padlock kits and 2" square nut versions. A Gear Operator with a stainless steel housing is also available for valve sizes 1"-16".

### SERIES 05 - DECLUTCHABLE GEAR OPERATOR

Available for 2"-36" (50mm-900mm) valves. This operator is excellent for the safe handling of spring return actuators. During pneumatic operation, the worm of the gear unit is disengaged. Should the valve require opening or closing in the event of power loss, manual rotation of the declutch lever will provide a camming action and engage the worm to the segmented worm gear, allowing rotation of the valve using the handwheel. The Series 05 can be installed in the field with existing Bray pneumatic actuators.

# SERIES 04 OPTIONS

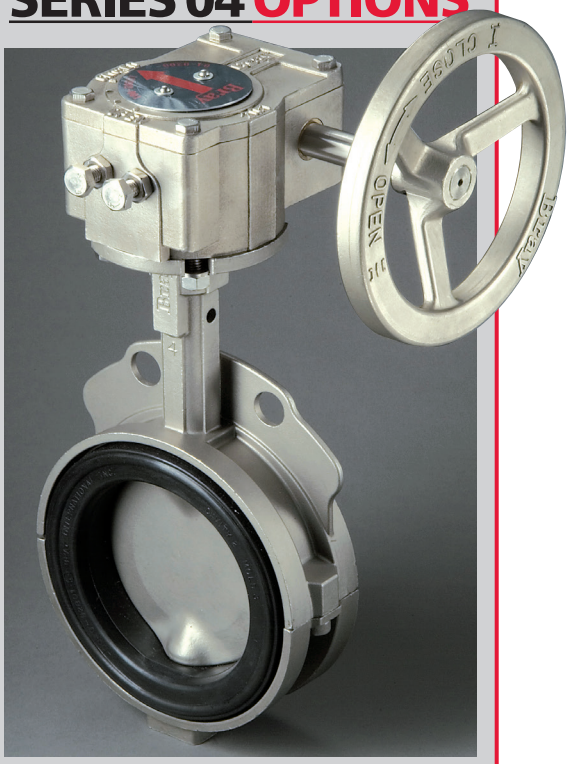

## 316 Stainless Steel
### for sanitary & corrosive applications

Bray Controls proudly offers the Series 04 Stainless Steel Gear Operator for manual operation of quarter turn valves. With stainless steel housings, input shafts and handwheels, the Series 04 is designed for service in highly corrosive environments, sanitary, breweries and pharmaceutical applications. The units are suitable for on-off and throttling service.

Series 04 Stainless Steel Gear Operator units have different gear ratios – providing a torque output range of 2,000 to 24,000 lb-in. The temperature range is -4°F (-20°C) to 250°F (120°C).

These weatherproof gear operators meet NEMA 4, 4x and IP 65 specifications.



**CHAINWHEEL** for remote access to valve positioning when the handwheel is not accessible, such as valves positioned high out of reach.

**A PADLOCK KIT & 2" SQUARE NUT** version for buried service are also available with the Series 04 (not shown).

# SERIES 01

**STANDARD 10 POSITION NOTCH PLATE** has been designed to lock the handle securely in place, preventing position change of disc due to line pressure, vibration or shock. Standard 9 Position Plate for high pressure valves is not shown.



**PADLOCK KIT** allows the customer to lock the valve in the full open or closed position, tamper proofing the valve. By drilling a new hole in the top plate, the handle can be locked in mid travel.



**HANDLE AND 180° NOTCH PLATE** allows the operator to switch the handle to either side without removing the notch plate from the valve.



**INFINITE POSITION NOTCH PLATE** for throttling applications, allows for very precise adjustments of valve disc positioning anywhere from 0° to 90°. Positioning is simply a matter of loosening the set knob, moving the handle, then retightening the knob. For resilient seated valves only.

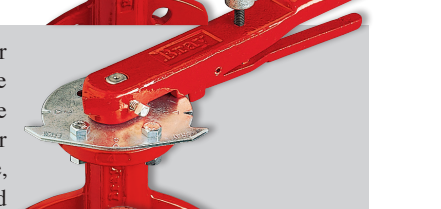

**MEMORY STOP** allows the operator to set the maximum amount the valve can open. When set, this limit will remain fixed until the stop is reset.

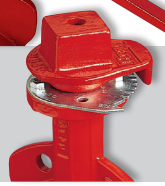

**2" SQUARE NUT** is used where the valve is buried under the surface. To rotate valve disc position, the nut is reached with a T-handle wrench.

# SERIES 05

**DECLUTCHABLE GEAR OPERATOR**

The Series 05 offers the same superior features as the Series 04 gear operator with the added ability to manually override pneumatic actuators or rotate the valve when air pressure is not available.

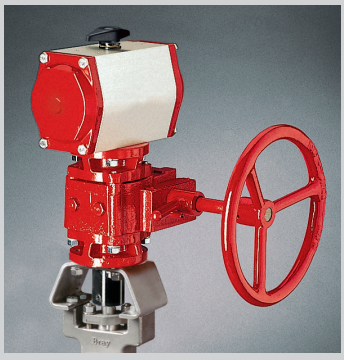

Bray® CONTROLS
A Division of BRAY INTERNATIONAL, Inc.
13333 Westland East Blvd. Houston, Texas 77041
281.894.5454 FAX 281.894.9499 www.bray.com

All statements, technical information, and recommendations in this bulletin are for general use only. Consult Bray representatives or factory for the specific requirements and material selection for your intended application. The right to change or modify product design or product without prior notice is reserved. Patents issued and applied for worldwide.

Bray® is a registered trademark of BRAY INTERNATIONAL, Inc.
© 2010 Bray International. All rights reserved. B-1025_EL_ManualOPS_2014-08

**Project name:** MELIADINE-BPC UPGRADE

**Project#:** 5000220043

**Document #:** SPK_0003_RX_VWT

**by:** CEK

**chkd:** ED

**appvd:** TS

# CHLORINATION REACTOR RX75-3 #1

# INSTRUMENTS

**OIM manual section:** 4.2.1.5

**This page is intentionally left blank**

# CS-999-012 : Identification sheet

| | | | |
|---|---|---|---|
| VWTC PROJECT NUMBER: | 5000220043 | REV: | 2 |
| PROJECT NAME: | AEM MELIADINE - BPC UPGRADE | SUBMITTED TO (COMPANY): | AEM |
| ENGINEER: | EMMANUELLE DORMOY | SUBMITTED TO (RESPONSIBLE) | |
| PROJECT MANAGER: | THOMAS SAVARY / BRUCE BORDES | PROJECT NUM REFERENCE.: | 6526-S-265-605 / OC-989680 |
| PHONE NUMBER: | 514-334-7230 | LOT NUMBER: | |

| SUPPLIER | EQPT CODE | EQPT TAG NO | DIA | DESCRIPTION | INFO 1 | INFO 2 | INFO 3 | APPLIC. | NOTE | REV |
|---|---|---|---|---|---|---|---|---|---|---|
| PLASTEC | ST-999-012 | 65FAN68005 | | INLINE FAN | DESCRIPTION: FAN // MANUFACTURER:PLASTEC//MODEL:JET20SS4P // CAPACITY: 300 CFM @ 0.5 PIS // POWER: 1/3 HP, 1725 HP// VOLTAGE: 115V/1Ph/60Hz | | | CHLORINATION REACTOR | | 2 |

**This page is intentionally left blank**

PHONE: (941) 751-7596
FAX: (941) 751-7598
www.plastecvent.net

# Performance & Dimensions

# JET 20



*Optional JET Wall Mounting Bracket Available*





*Optional Insulated Galvalume Roof Curb For Flat Roof*

*Optional 304 Stainless Steel Impeller Available*

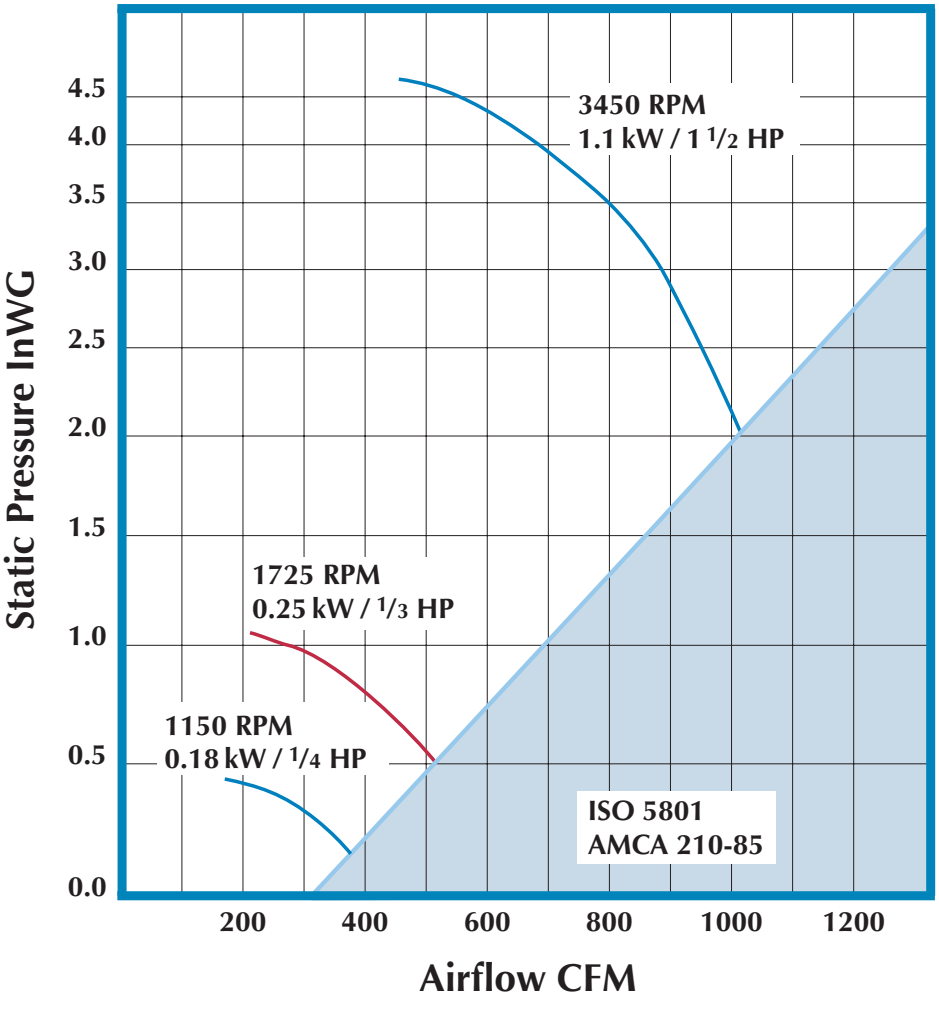


Sound Level
Type A
Free Inlet/Free Outlet
Measured at 5 Feet

| R.P.M. | LWA dB (A) |
|---|---|
| 1150 | 64 |
| 1725 | 75 |
| 3450 | 93 |

# Dimensional Data

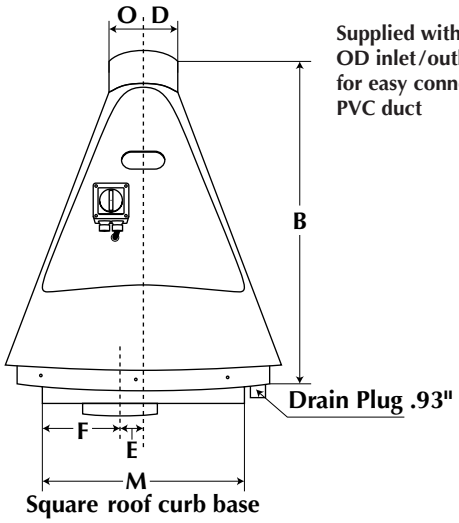


Supplied with two 6.62″ OD inlet/outlet transitions for easy connection to 6″ PVC duct

Square roof curb base

| | |
|---|---|
| Wheel Dia. | 7.87″ |
| Inlet/Outlet Out. Dia. | 6.30″ |

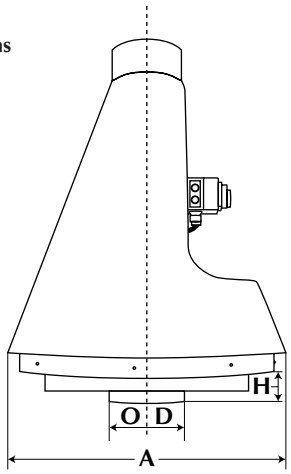


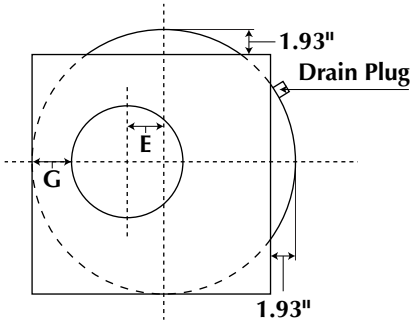




*JET with optional Wall Mounting Bracket*

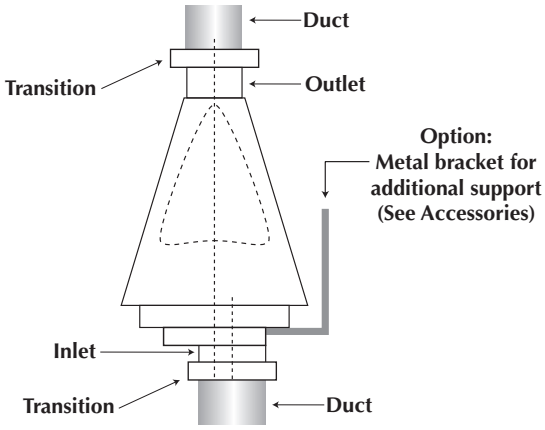


*Vertical Inline Mounting*

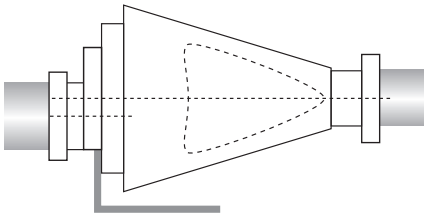

*Horizontal Inline Mounting*

***Available Heights***

12"
14"
18"
24"

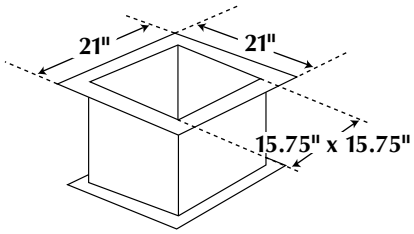


Roof Curb Sizing for Guidance Only
**Not Included*

| Dimensions (in) | | | | | | | | | |
|---|---|---|---|---|---|---|---|---|---|
| A | B | D | E | F | G | H | M (ID) | X | Y |
| 23.62 | 33.25 | 6.30 | 1.93 | 9.87 | 6.31 | 4.50 | 21.25 x 21.25 | 11 | 11.81 |

**Project name:** MELIADINE-BPC UPGRADE

**Project#:** 5000220043

**Document #:** SPK_0003_RX_VWT

**by:** CEK

**chkd:** ED

**appvd:** TS

# CHLORINATION REACTOR RX75-3 #1

# PAINT SPECS

**OIM manual section:** 4.2.1.6

**This page is intentionally left blank**

# TANK CONSTRUCTION SPECIFICATIONS
## & PAINT SPECIFICATIONS
## RAL 7040 TANK WINDOW GREY (EXTERIOR)
## & LIGHT GREY (INTERIOR)

# CC-07-ACP

## 1.0 GENERAL

This specification describes construction elements of the steel welded tank and paint specifications of ACP MK3 product.

## 2.0 MATERIALS

- Carbon steel must conform to CSA 44W, unless otherwise specified (see type on plan);
- Nominal thickness, refer to plan.

## 3.0 CONSTRUCTION

According to the specifications of the referred plan(s):

- Steel plates and sections must conform to Canadian norm G40.21M-300W, except for HSS that must conform to Canadian norm G40.21M-350W;

- Welds will be realized according to the details shown on the referenced plan. All welds must conform to the Canadian norm CSA W59 standard. Remove surface defects and grind all sharp edges. Make sure to completely remove the flux and welding splashes. The fusion welding certifications to produce by the company will be: W47.1, W59;

- Welding process:

    - Flux-Cored Arc Welding (FCAW);
    - MIG welding;
    - Electrodes (SMAW).

- Welds will be brushed and be devoid of spots;

- All modifications to the dimensions or to the quality of materials, and dispositions other than those indicated on the plans, are subject to prior demand to **Veolia Water Technologies Canada Inc's.,** person in charge, and his subsequent written.

## 4.0 STEEL PREPARATION FOR PAINTING

- Tank's interior and exterior surfaces must be perfectly cleaned from grease and all other foreign substance;

- All sharp edges must be grinded;

- All flanged surfaces and threaded connections must be cleaned and protected adequately to avoid paint contact;

- The rough edges, weld splatter, excess metal flux and sharp edges must be removed by grinding.

## 5.0 CONTROL

### 5.1 Welds

Once completed, all tank interior welds must be dye penetrant inspected to verify the quality of the welds. All welds must be water tight, free from porosity, cracks and drains and in accordance with norm CSA W59.
A dye penetrant test control should be done on all interior welds. Exterior welds must be visually inspected only.
All lifting and handling lugs must be subject to magnetic particle testing and report. Quality control from **Veolia Water Technologies Canada Inc.** will verify results of welds control.

### 5.2 Dimensional

The dimensional control will be done by the manufacturer. At the same time, **Veolia Water Technologies Canada Inc.'s** inspector will provide control. Minutes will be written detailing the dimensional and tolerance divergences. These values are noted on the piece's plan, assigned to control.

### 5.3 Documents and Certificates of Material (to Supply)

The manufacturer will supply to **Veolia Water Technologies Canada Inc.'s** inspector at the beginning of work, the following documents:

- Planning of work, with detailed manufacturing stages;
- Supply Bill of Materials;
- Material certificates with copy of the supplier's delivery slip;
- Welding procedures.

## 6.0 TREATMENT

### 6.1 Internal Treatment

- Sandblast as per SSPC-SP-10;
- Brush application on welds and difficult to reach places (inside of holes and openings) of one layer of DURA_PLATE UHS by SHERWIN WILLIAMS, color « light green » and;
- Application of one coat of DURA-PLATE-UHS NSF61 compliant by SHERWIN WILLIAMS, 20 to 28 mils dft (restricted level 5 as per SSPC-PA 2), color « light gray »;
- Important note: **Never dilute** the DURA-PLATE-UHS paint.

- Only if needed, application of one coat of DURA-PLATE UHS PRIMER by SHERWIN WILLIAMS, 4 to 8 mils dft per coat, color “Gold”, if required depending on atmospheric conditions and delays between sandblast and paint.

### 6.2 External Treatment

- Sandblast as per SSPC-SP-6;
- Spacing between intermittent welds should be filled with an hybrid sealant LOXON H-1 by SHERWIN WILLIAMS before the application of the external coating;
- Brush application on welds and difficult to reach places (inside of holes and openings) of one layer of ENVIROLASTIC 940 LV by SHERWIN WILLIAMS, color «  White »;
- Application of one layer of ENVIROLASTIC 940 LV by SHERWIN WILLIAMS, 7.0 to 9.0 mils dft, ( restricted level 5 as per SSPC-PA 2),  color RAL 7040 Window Grey.

### 6.3 Piping Treatment

Identical to the external coating of the works as stated for the tank previously.  There is no internal coating to provide for the nozzles of 3″ diameter or less (should be made from Stainless Steel). Ensure pipe ends and flanges are covered with paint with the exception of the raised face.

### 6.4 Extra Paint to be Supplied

For every equipment, a touch-up paint kit of 1 gallon for both internal and exterior paint must be provided at shipping. Please attach the product label.

### 6.5 Application Procedure

The supplier’s procedure for application must be followed.

### 6.6 Protection of Metallic Parts during Treatment

Threads, tapping, flange joint plans, etc. will be protected before sanding and treatment.

### 6.7 Paint Inspection

All interior surfaces must be inspected by performing a Holiday test in accordance with the standard NACE SP 0188, to verify the presence of discontinuity in the paint.

## 7.0 PACKAGING

- Plastic plug of the male and female threaded end caps;
- Wood plugs on flange sides.

## 8.0 HANDLING OF THE TANKS

- Always install the holding rings and any internal supporting beams before handling tanks.
- The tanks must be raised by chains attached to the holding rings. A minimum angle of 60º must be maintained. (see pictures)
- The lifting should ideally be carried out in two parallel points. (see pictures)

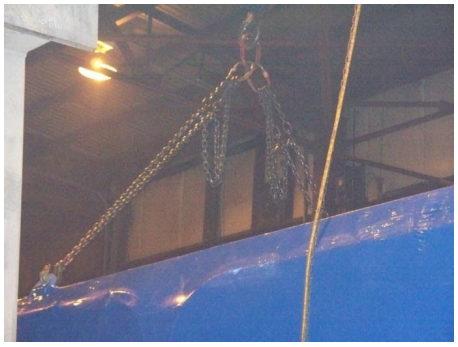



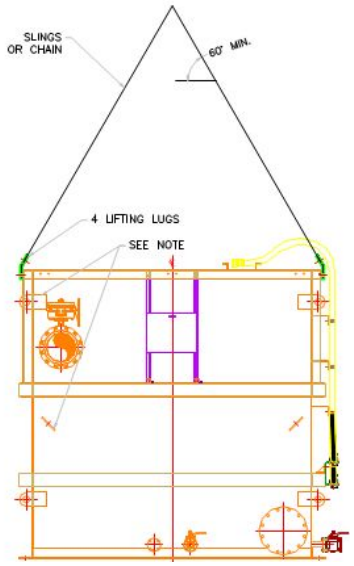


***ATTENTION*: Never use the side rings to lift and /or manipulate the tank. These rings should only be used to attach the tank during transport.**

## Tightening Torque for Lifting Hooks

| Model | Bolt Diam. | TPI | Fastener Coating (Bolt, washer & nut) | SAE & Grade (Bolt, washer & nut) | Torque Value (Lbs-ft) |
|---|---|---|---|---|---|
| **Actiflo** | | | | | |
| ACP-150R/ACP2-15 | 5/8 UNC | 11 | Zinc Plated | SAE J429 – Grade 8 | 190 |
| ACP-300R/ACP2-30 | 5/8 UNC | 11 | Zinc Plated | SAE J429 – Grade 8 | 190 |
| ACP-400R/ACP2-40 | 5/8 UNC | 11 | Zinc Plated | SAE J429 – Grade 8 | 190 |
| ACP-450R/ACP2-45 | 5/8 UNC | 11 | Zinc Plated | SAE J429 – Grade 8 | 190 |
| ACP-550R/ACP2-55 | 1 UNC | 8 | Zinc Plated | SAE J429 – Grade 8 | 818 |
| ACP-600R/ACP2-60 | 1 UNC | 8 | Zinc Plated | SAE J429 – Grade 8 | 818 |
| ACP-700R/ACP2-70 | 1 UNC | 8 | Zinc Plated | SAE J429 – Grade 8 | 818 |
| ACP-750R/ACP2-75 | 1 UNC | 8 | Zinc Plated | SAE J429 – Grade 8 | 818 |

# *4 – DETAILED TECHNICAL DOCUMENTATION*

## *4.2 – SHOP DRAWINGS*

## *4.2.2 – DECHLORINATION REACTOR RX75-3 #2*

LEFT BLANK

| | |
|---|---|
| **Project name:** | MELIADINE-BPC UPGRADE |
| **Project#:** | 5000220043 / 6526-S-265-605 / OC-989680 |
| **Document #:** | SPK_0004_RX_VWT |
| **by:** | CEK |
| **chkd:** | ED |
| **appvd:** | TS |

# SUBMITTAL PACKAGE

# DECHLORINATION REACTOR RX75-3 #2

**REV 2**
**DATE: 2021-03-02**

**This page is intentionally left blank**

| | |
|---|---|
| **Project name:** | MELIADINE-BPC UPGRADE |
| **Project#:** | 5000220043 |
| **Document #:** | SPK_0004_RX_VWT |
| **by:** | CEK |
| **chkd:** | ED |
| **appvd:** | TS |

# DECHLORINATION REACTOR RX75-3 #2

# PROCESS DATASHEET

**OIM manual section:** 4.2.2.1

**This page is intentionally left blank**

| | | | | | | | |
|---|---|---|---|---|---|---|---|
| VEOLIA | | | | VWT DOC# | PSDS_0002_RX_VWT | | |
| | | | | PROJECT No | 5000220043 | | |
| | | | | CLIENT PROJECT # | 6526-S-265-605 / OC-989680 | | |
| | | | | Date | 2021-01-13 | | |
| | | | | DECHLORINATION REACTOR | | | |
| CLIENT | REV | DESCRIPTION | | DATE | By: | CHKD | APP. |
| A.E.M | 1 | For Approval | | 2021-01-13 | C.E.K | E.D | T.S |
| | 2 | For Information | | 2021-03-02 | C.E.K | E.D | T.S |
| PROJECT | 3 | | | | | | |
| Meliadine-BPC Upgrade | 4 | | | | | | |
| | 5 | | | | | | |
| | 6 | | | | | | |
| | 7 | | | | | | REV |
| GENERAL INFORMATION | Technology | | | - | DECHLORINATION REACTOR | | |
| | Number of trains | | | - | 1 | | |
| | Type | | | - | Prefab. Reaction tank | | |
| | TAG | | | - | | | |
| | Model | | | - | RX75-3 | | |
| | Number of units | | | - | 1 | | |
| ENVIRONMENT CONDITIONS | Equipment Location | | | - | Indoor | | |
| | Altitude (if blower) | | | m | N/A | | |
| | Min. Temperature- WATER | | | °C | -4 | | |
| | Max. Temperature- WATER | | | °C | 12 | | |
| | Min. Temperature- AIR | | | °C | 7 | | |
| | Max. Temperature- AIR | | | °C | 35 | | |
| | Max. Humidity | | | % | 100 | | |
| | Corrosive atmosphere | | | - | Corrosive | | |
| | Freeze conditions | | | - | Maintain above freezing temperature | | |
| | Comments | | | - | | | |
| COMPONENTS APPROVAL AND CERTIFICATIONS | NSF-61 | | yes/no | - | NO | | |
| | CSA / UL | | yes/no | - | YES | | |
| | Others | | | - | | | |
| SAFETY | Electrical Classification (according to NFPA 820) | | | - | N/A | | |
| | Province | | | - | Nunavut | | |
| REQUIRED PERFORMANCE | Application | | | - | INDUSTRIAL | | |
| | Design Capacity | | | $m^3/d$ | 6207-12090 | | |
| | Nominal capacity per unit | | | $m^3/d$ | 12 090 | | |
| | Retention time at design capacity | | | min | 23,04 | | |
| | Volume | | | $m^3$ | 193 | | |
| | Effluent Quality | | | Specs reference (specify) | N/A | | |
| TECHNICAL DESCRIPTION | Tank # 1 | Basin Dimensions | Length | in (mm) | 168.5 in (4 280mm) | | |
| | | | Width | in (mm) | 168.5 in (4 280mm) | | |
| | | | Water Depth | in (mm) | 141 in (3 520 mm) | | |
| | | | CONTACT TIME | min. | 7,68 | | |
| | | Mixers | Manufacturer | - | ENVIREQUIP W.T.E.M. INC | | |
| | | | Model | - | Envirequip MIX-TECH EVGX-6-5,0 | | |
| | | | Power | HP | 5 HP | | |
| | | | Weigth | Kg | 1415 lb (642 kg) | | |
| | | | Rotation/direction of thrust | - | cw down | | |
| | | | Material and Grade | - | Duplex | | |
| | Tank # 2 | Basin Dimensions | Length | in (mm) | 168.5 in (4 280mm) | | |
| | | | Width | in (mm) | 168.5 in (4 280mm) | | |
| | | | Water Depth | in (mm) | 141 in (3 520 mm) | | |
| | | | CONTACT TIME | min. | 7,68 | | |
| | | Mixers | Manufacturer | - | ENVIREQUIP W.T.E.M. INC | | |
| | | | Model | - | Envirequip MIX-TECH EVGX-6-5,0 | | |
| | | | Power | HP | 5 HP | | |
| | | | Weigth | Kg | 1415 lb (642 kg) | | |
| | | | Rotation/direction of thrust | - | ccw up | | |
| | | | Material and Grade | - | Duplex | | |
| | Tank # 3 | Basin Dimensions | Length | in (mm) | 168.5 in (4 280mm) | | |
| | | | Width | in (mm) | 168.5 in (4 280mm) | | |
| | | | Water Depth | in (mm) | 141 in (3 520 mm) | | |
| | | | CONTACT TIME | min. | 7,68 | | |
| | | Mixers | Manufacturer | - | ENVIREQUIP W.T.E.M. INC | | |
| | | | Model | - | Envirequip MIX-TECH EVGX-6-5,0 | | |
| | | | Power | HP | 5 HP | | |
| | | | Weigth | Kg | 1415 lb (642 kg) | | |
| | | | Rotation/direction of thrust | - | cw down | | |
| | | | Material and Grade | - | Duplex | | |

| | | | | | | | |
|---|---|---|---|---|---|---|---|
| VEOLIA | | | | VWT DOC# | PSDS_0002_RX_VWT | | |
| | | | | PROJECT No | 5000220043 | | |
| | | | | CLIENT PROJECT # | 6526-S-265-605 / OC-989680 | | |
| | | | | Date | 2021-01-13 | | |
| | | | | DECHLORINATION REACTOR | | | |
| CLIENT | REV | DESCRIPTION | | DATE | By: | CHKD | APP. |
| A.E.M | 1 | For Approval | | 2021-01-13 | C.E.K | E.D | T.S |
| | 2 | For Information | | 2021-03-02 | C.E.K | E.D | T.S |
| PROJECT | 3 | | | | | | |
| Meliadine-BPC Upgrade | 4 | | | | | | |
| | 5 | | | | | | |
| | 6 | | | | | | |
| | 7 | | | | | | REV |
| | Chemical Dosage | | Chemical Product | - | Coagulant | | |
| | | | Dosage min/average/max | mg/L | TBD | | |
| | | | Chemical Product | - | Powder Activated Carbon | | |
| | | | Dosage min/average/max | mg/L | 150 / 250 / 300 | | |
| OTHERS CONSTRUCTION MATERIALS | Inside Walls (if applicable) | | | - | Painted Steel | | |
| | Anti-rotation Baffle (if applicable) | | | - | Duplex 2205 | | |
| | Hardware (immerged) | | | - | Duplex 2205 | | |
| | Hardware (non-immerged) | | | - | Duplex 2205 | | |
| CONNECTIONS | Inlet diameter | | | in (mm) | 18 in (450 mm) | | |
| | Drain Diameter | | | in (mm) | 4 in (100 mm) | | |
| | Outlet diameter | | | in (mm) | 18 in (450 mm) | | |
| VALVES | X | Isolation valve - Drain | Manufacturer | - | BRAY | | |
| | | | Valve Type | - | BUTTERFLY VALVE | | |
| | | | Model \| Diam. | - | SERIES 31 | 100 mm | |
| | | | Quantity | - | 2 | | |
| INSTRUMENTATION | X | Level Switch (High High) | Manufacturer | - | XYLEM | | |
| | | | Model \| Diam. | - | ENM10 (13m) | | |
| | | Zone : *Non Hazardous* | Quantity | - | 1 | | |
| | X | Free Chlorine Analyser | Manufacturer | - | SWAN | | 2 |
| | | | Model \| Diam. | - | AMI-CODES-II | | 2 |
| | | Zone : *Non Hazardous* | Quantity | - | 1 | | |
| | X | Total Chlorine Analyser | Manufacturer | - | SWAN | | 2 |
| | | | Model \| Diam. | - | AMI-CODES-II TC | | 2 |
| | | Zone : *Non Hazardous* | Quantity | - | 1 | | |
| METAL WORKS | Grating | | Dimensions/Type | - | Refer To GA_0004_RX_VWT | | |
| | | | Material | - | FRP | | |
| | Handrails | | Dimensions/Type | - | Refer To GA_0004_RX_VWT | | |
| | | | Material | - | Painted Steel | | |
| | Access (ladder/stairs) | | Dimensions/Type | - | Refer To GA_0004_RX_VWT | | |
| | | | Material | - | Painted Steel | | |
| | Others | | | - | N/A | | |
| POWER FEED | Motors | | | V/ph/Hz | 575/3/60 | | |
| | Panels | | | V/ph/Hz | 575/3/60 | | |
| | Others | | | V/ph/Hz | NA | | |
| OTHER | Tank height | | | in (mm) | Refer To GA_0004_RX_VWT | | |
| | Recommended Headroom | | | in (mm) | Refer To GA_0004_RX_VWT | | |
| | Recommended overall width | | | in (mm) | Refer To GA_0004_RX_VWT | | |
| | Recommended overall length | | | in (mm) | Refer To GA_0004_RX_VWT | | |
| | Weight (dry) | | | Lbs (Kg) | Refer To GA_0004_RX_VWT | | |
| | Weight (full of water) | | | Lbs (Kg) | Refer To GA_0004_RX_VWT | | |
| COMMENTS | ALL MOTORS PROVIDED ARE STANDARD IEEE841 | | | | | | |

**Project name:** MELIADINE-BPC UPGRADE

**Project#:** 5000220043

**Document #:** SPK_0004_RX_VWT

**by:** CEK

**chkd:** ED

**appvd:** TS

# DECHLORINATION REACTOR RX75-3 #2

# GENERAL ARRANGEMENT DRAWING

**OIM manual section:** 4.2.2.2

Refer to 5000220043_GA_0004_RX_VWT REV 02
Refer to manual section 3.4

**This page is intentionally left blank**

**Project name:** MELIADINE-BPC UPGRADE

**Project#:** 5000220043

**Document #:** SPK_0004_RX_VWT

**by:** CEK

**chkd:** ED

**appvd:** TS

# DECHLORINATION REACTOR RX75-3 #2

# MIXER

**OIM manual section:** 4.2.2.3

**This page is intentionally left blank**

# CS-652-RX75 : Identification sheet

| | | | |
|---|---|---|---|
| VWTC PROJECT NUMBER: | 5000220043 | REV: | 1 |
| PROJECT NAME: | AEM MELIADINE-BPC UPGRADE | SUBMITTED TO (COMPANY): | AEM |
| ENGINEER: | EMMANUELLE DORMOY | SUBMITTED TO (RESPONSIBLE): | |
| PROJECT MANAGER: | THOMAS SAVARY / BRUCE BRODES | PROJECT NUM REFERENCE.: | 6526-S-265-605 / OC-989680 |
| PHONE NUMBER: | 514-334-7230 | LOT NUMBER: | |

| SUPPLIER | EQPT CODE | EQPT TAG NO | DIA | DESCRIPTION | INFO 1 | INFO 2 | INFO 3 | APPLIC. | NOTE | REV |
|---|---|---|---|---|---|---|---|---|---|---|
| ENVIREQUIP | CMSPMI334393 | 65AGI68015 | N/A | DECHLORINATION REACTOR AGITATOR #1 | DESCRIPTION RX75-3 (575V) REACTION TANK 1// MODEL: Envirequip MIX-TECH EVGX6-5.0 // Mtl : DUPLEX STAINLESS STEEL 2205 | Impeller Dia : 96.0" // 21.84 RPM // Shaft lg : 95.7" // Direction & thrust: cw down | WEG Motor 5.0 HP / 575/3/60 // Nord reducer SK6282 AHZ/VL // Gear ratio 80.33:1 // STANDARD IEEE841 | DECHLORINATION REACTOR | | 1 |

**This page is intentionally left blank**

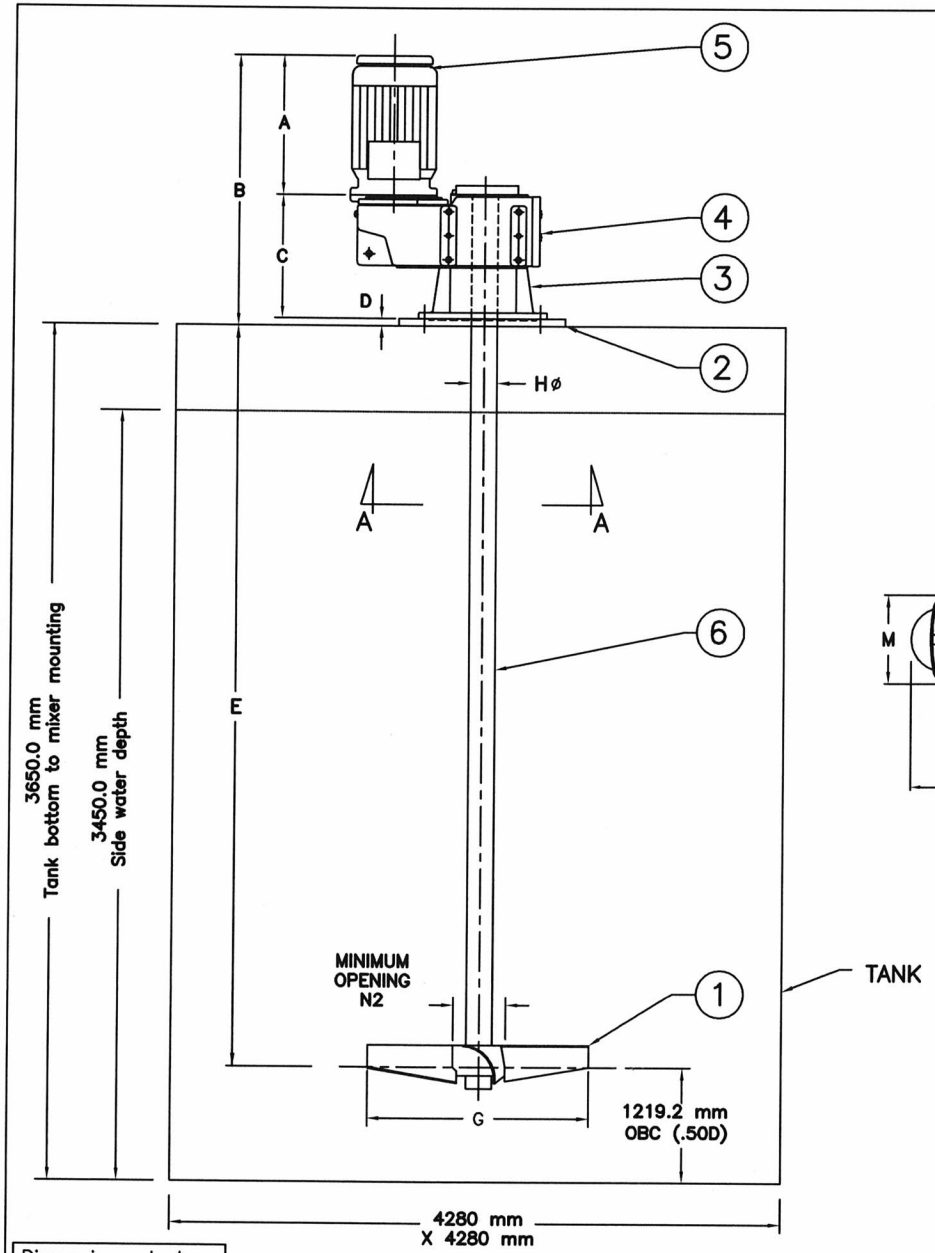


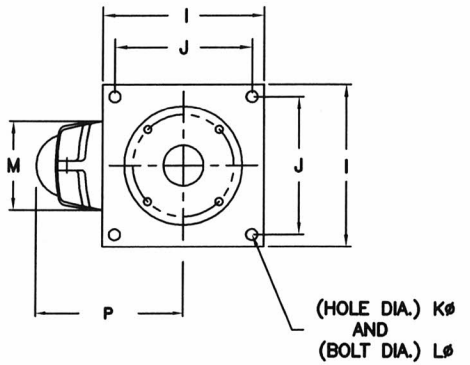


"A–A"

| ITEM | DESCRIPTION | MATERIAL |
|---|---|---|
| 1 | Envirofoil Impeller (F–4) 2438.4 mm (96.0")ø ● 22.0° | 2205 |
| 2 | Base 533.4 mm x 533.4 mm (21.0" x 21.0" ) | Steel |
| 3 | Pedestal c/w dry well (dry well) | |
| 4 | NORD reducer 21.84 RPM | |
| 5 | WEG 5.0 Hp motor, IEEE841, 575/3/60, TEFC | |
| 6 | Shaft: (1) section 2430.8 mm (95.7") ● 3.0"ø | 2205 |

| |
|---|
| APPL'N: RX75 – REACTOR |
| ENVIREQUIP MIXERS |
| MODEL: EVGX6–5.0 |
| 3.73 kW @ 21.84 RPM |
| Rotation: Clockwise |
| Thrust: Down |
| Tag #: AG20–01 |

| |
|---|
| Weight: 1,420 Lbs |
| Mounting Loads |
| Torque reaction = 36,072 in lb |
| Bending moment = 46,105 in lb |

ST-652-RX75-3R2-575-W841-2205-CCWU

LATIS #: CMSPMI334393

Dimensions: Inches

| MOD.: | A | B | C | D | E | E2 | F | Gø | Hø SHAFT | I | J | Kø | Lø | M | N2 | P |
|---|---|---|---|---|---|---|---|---|---|---|---|---|---|---|---|---|
| EVGX6 | 14.61 | 31.53 | 16.05 | .875 | 95.7 | – | – | 96.0 | 3.0 | 21.0 | 18.0 | 1.0 | .875 | 13.8 | 16.0 | 16.02 |

Dimensions: mm

| MOD.: | A | B | C | D | E | E2 | F | Gø | Hø SHAFT | I | J | Kø | Lø | M | N2 | P |
|---|---|---|---|---|---|---|---|---|---|---|---|---|---|---|---|---|
| EVGX6 | 371.1 | 801.0 | 407.7 | 22.2 | 2430.8 | – | – | 2438.4 | 76.2 | 533.4 | 457.2 | 25.4 | 22.2 | 350.5 | 406.4 | 407.0 |

Ce dessin et l'information qu'il contient est la propriété de ENVIREQUIP WTEM Inc. Il est interdit de le copier, le photographier, l'imprimer, le prêter ou de l'utiliser sans la permission de ENVIREQUIP WTEM Inc.

This drawing and the information contained thereon is the property of ENVIREQUIP WTEM Inc. It is not to be printed, photographed, copied, loaned or used without the permission of ENVIREQUIP WTEM Inc.

| NO | DATE | REVISION | P/B |
|---|---|---|---|

PROJET/PROJECT

RX75 – REACTOR

ENVIREQUIP WTEM INC.
490 Bord du Lac – Suite 2
Dorval, QC H9S 2A8
Montreal Tel: (514) 335–1043
RR1 (21494 Little Russell Rd.)
Glen Robertson, Ont K0B 1H0
Ontario Tel: (613) 874–2615
Fax: (613) 874–2629
E–mail: envireqp@glen–net.ca

TITRE/TITLE

ENVIREQUIP MIXERS
Veolia Water Technologies
EVGX SERIES

| | |
|---|---|
| DESSINÉ PAR: DRAWN BY: PJ | DATE JAN 20, 2021 |
| DESS. NO: DWG NO: EVGX | ECH./SCALE N.T.S |
| VÉRIFIÉ PAR: CHECKED BY: PJ | PROJ.NO: |
| APPROUVÉ PAR: APPROVED BY: RJ | REV. 00 |

**This page is intentionally left blank**

# CS-652-RX75 : Identification sheet

| | | | |
|---|---|---|---|
| VWTC PROJECT NUMBER: | 5000220043 | REV: | 1 |
| PROJECT NAME: | AEM MELIADINE-BPC UPGRADE | SUBMITTED TO (COMPANY): | AEM |
| ENGINEER: | EMMANUELLE DORMOY | SUBMITTED TO (RESPONSIBLE): | |
| PROJECT MANAGER: | THOMAS SAVARY / BRUCE BRODES | PROJECT NUM REFERENCE.: | 6526-S-265-605 / OC-989680 |
| PHONE NUMBER: | 514-334-7230 | LOT NUMBER: | |

| SUPPLIER | EQPT CODE | EQPT TAG NO | DIA | DESCRIPTION | INFO 1 | INFO 2 | INFO 3 | APPLIC. | NOTE | REV |
|---|---|---|---|---|---|---|---|---|---|---|
| ENVIREQUIP | CMSPMI334394 | 65AGI68016 | N/A | DECHLORINATION REACTOR AGITATOR #2 | DESCRIPTION RX75-3 (575V) REACTION TANK 2// MODEL: Envirequip MIX-TECH EVGX6-5.0 // Mtl : DUPLEX STAINLESS STEEL 2205 | Impeller Dia : 96.0" // 21.84 RPM // Shaft lg : 95.7" // Direction & thrust: ccw up | WEG Motor 5.0 HP / 575/3/60 // Nord reducer SK6282 AHZ/VL // Gear ratio 80.33:1 // STANDARD IEEE841 | DECHLORINATION REACTOR | | 1 |

**This page is intentionally left blank**

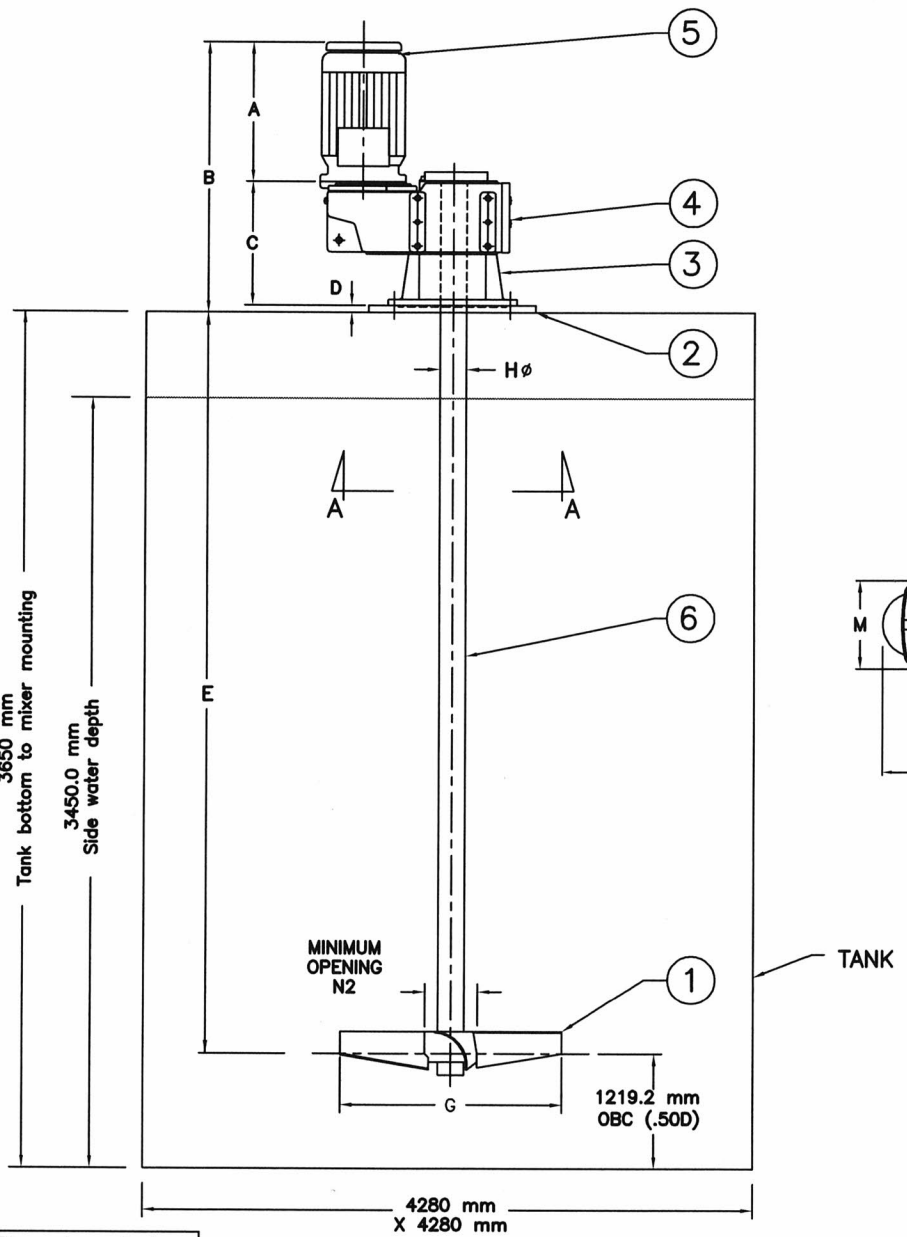


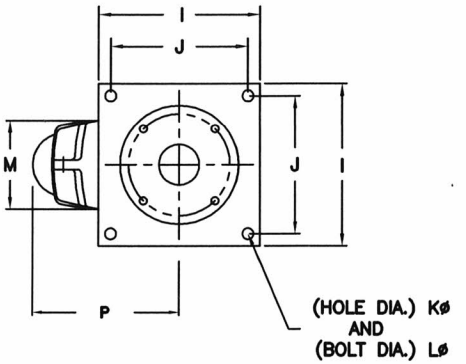


"A–A"

| ITEM | DESCRIPTION | MATERIAL |
|---|---|---|
| 1 | Envirofoil Impeller (F–4) 2438.4 mm (96.0")ø @ 22.0 ° | 2205 |
| 2 | Base 533.4 mm x 533.4 mm (21.0" x 21.0" ) | Steel |
| 3 | Pedestal c/w dry well (dry well) | |
| 4 | NORD reducer 21.84 RPM | |
| 5 | WEG 5.0 Hp motor, IEEE841, 575/3/60, TEFC | |
| 6 | Shaft: (1) section 2430.8 mm (95.7") @ 3.0"ø | 2205 |

APPL'N: RX75 – REACTOR
ENVIREQUIP MIXERS
MODEL: EVGX6–5.0
3.73 kW @ 21.84 RPM
Rotation: Counter Clockwise
Thrust: Up
Tag #: AG20–02

Weight: 1,420 Lbs
Mounting Loads
Torque reaction = 36,072 in lb
Bending moment = 46,105 in lb

S ST-652-RX75-3R1-575-W841-2205-CWD
LATIS #: CMSPMI334394

Dimensions: Inches

| MOD.: | A | B | C | D | E | E2 | F | Gø | Hø SHAFT | I | J | Kø | Lø | M | N2 | P |
|---|---|---|---|---|---|---|---|---|---|---|---|---|---|---|---|---|
| EVGX6 | 14.61 | 31.53 | 16.05 | .875 | 95.7 | – | – | 96.0 | 3.0 | 21.0 | 18.0 | 1.0 | .875 | 13.8 | 16.0 | 16.02 |

Dimensions: mm

| MOD.: | A | B | C | D | E | E2 | F | Gø | Hø SHAFT | I | J | Kø | Lø | M | N2 | P |
|---|---|---|---|---|---|---|---|---|---|---|---|---|---|---|---|---|
| EVGX6 | 371.1 | 801.0 | 407.7 | 22.2 | 2430.8 | – | – | 2438.4 | 76.2 | 533.4 | 457.2 | 25.4 | 22.2 | 350.5 | 406.4 | 407.0 |

Ce dessin et l'information qu'il contient est la propriété de ENVIREQUIP WTEM inc. Il est interdit de le copier, le photographier, l'imprimer, le prêter ou de l'utiliser sans la permission de ENVIREQUIP WTEM inc.

This drawing and the information contained thereon is the property of ENVIREQUIP WTEM inc. It is not to be printed, photographed, copied, loaned or used without the permission of ENVIREQUIP WTEM inc.

| NO | DATE | REVISION | P/B |
|---|---|---|---|

PROJET/PROJECT
RX75 – REACTOR

ENVIREQUIP WTEM INC.
490 Bord du Lac – Suite 2
Dorval, QC H9S 2A8
Montreal Tel: (514) 336-1043
RR1 (21494 Little Russle Rd.)
Glen Robertson, Ont K0B 1H0
Ontario Tel: (613) 874-2516
Fax: (613) 874-2628
E-mail: envireqp@glen-net.ca

TITRE/TITLE
ENVIREQUIP MIXERS
Veolia Water Technologies
EVGX SERIES

| | |
|---|---|
| DESSINE PAR: DRAWN BY: PJ | DATE JAN 20, 2021 |
| DESS. NO: DWG NO: EVGX | ECH./SCALE N.T.S |
| VERIFIE PAR: CHECKED BY: PJ | PROJ.NO: |
| APPROUVE PAR: APPROVED BY: RJ | REV. 00 |

**This page is intentionally left blank**

# CS-652-RX75 : Identification sheet

| | | | |
|---|---|---|---|
| VWTC PROJECT NUMBER: | 5000220043 | REV: | 1 |
| PROJECT NAME: | AEM MELIADINE-BPC UPGRADE | SUBMITTED TO (COMPANY): | AEM |
| ENGINEER: | EMMANUELLE DORMOY | SUBMITTED TO (RESPONSIBLE): | |
| PROJECT MANAGER: | THOMAS SAVARY / BRUCE BRODES | PROJECT NUM REFERENCE.: | 6526-S-265-605 / OC-989680 |
| PHONE NUMBER: | 514-334-7230 | LOT NUMBER: | |

| SUPPLIER | EQPT CODE | EQPT TAG NO | DIA | DESCRIPTION | INFO 1 | INFO 2 | INFO 3 | APPLIC. | NOTE | REV |
|---|---|---|---|---|---|---|---|---|---|---|
| ENVIREQUIP | CMSPMI334395 | 65AGI68017 | N/A | DECHLORINATION REACTOR AGITATOR #3 | DESCRIPTION RX75-3 (575V) REACTION TANK 3// MODEL: Envirequip MIX-TECH EVGX6-5.0 // Mtl : DUPLEX STAINLESS STEEL 2205 | Impeller Dia : 96.0" // 21.84 RPM // Shaft lg : 95.7" // Direction & thrust: cw down | WEG Motor 5.0 HP / 575/3/60 // Nord reducer SK6282 AHZ/VL // Gear ratio 80.33:1 // STANDARD IEEE841 | DECHLORINATION REACTOR | | 1 |

**This page is intentionally left blank**

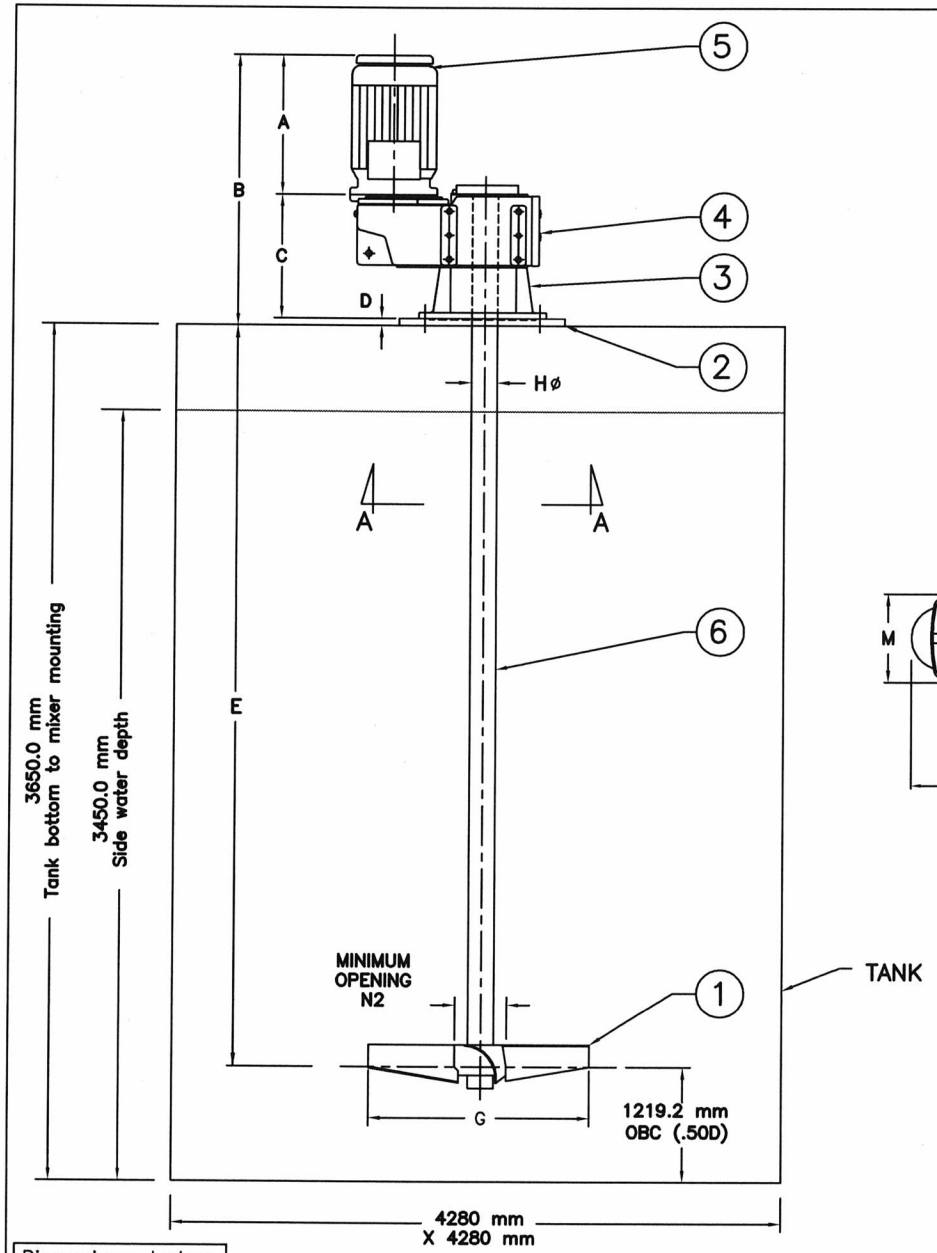


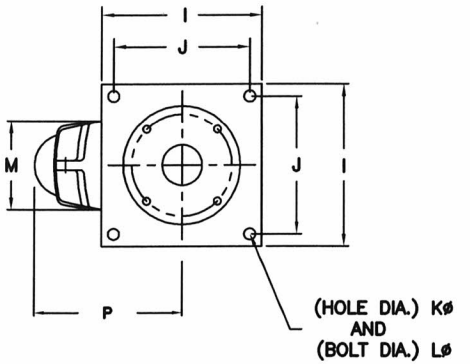


"A–A"

| ITEM | DESCRIPTION | MATERIAL |
|---|---|---|
| 1 | Envirofoil Impeller (F–4) 2438.4 mm (96.0")ø @ 22.0 ° | 2205 |
| 2 | Base 533.4 mm x 533.4 mm (21.0" x 21.0" ) | Steel |
| 3 | Pedestal c/w dry well (dry well) | |
| 4 | NORD reducer 21.84 RPM | |
| 5 | WEG 5.0 Hp motor, IEEE841, 575/3/60, TEFC | |
| 6 | Shaft: (1) section 2430.8 mm (95.7") @ 3.0"ø | 2205 |

APPL'N: RX75 – REACTOR
ENVIREQUIP MIXERS
MODEL: EVGX6–5.0
3.73 kW @ 21.84 RPM
Rotation: Clockwise
Thrust: Down
Tag #: AG20–03

Weight: 1,420 Lbs
Mounting Loads
Torque reaction = 36,072 in lb
Bending moment = 46,105 in lb

ST-652-RX75-3R3-575-W841-2205-CWD
LATIS #: CMSPMI334395

Dimensions: Inches

| MOD.: | A | B | C | D | E | E2 | F | Gø | Hø SHAFT | I | J | Kø | Lø | M | N2 | P |
|---|---|---|---|---|---|---|---|---|---|---|---|---|---|---|---|---|
| EVGX6 | 14.61 | 31.53 | 16.05 | .875 | 95.7 | – | – | 96.0 | 3.0 | 21.0 | 18.0 | 1.0 | .875 | 13.8 | 16.0 | 16.02 |

Dimensions: mm

| MOD.: | A | B | C | D | E | E2 | F | Gø | Hø SHAFT | I | J | Kø | Lø | M | N2 | P |
|---|---|---|---|---|---|---|---|---|---|---|---|---|---|---|---|---|
| EVGX6 | 371.1 | 801.0 | 407.7 | 22.2 | 2430.8 | – | – | 2438.4 | 76.2 | 533.4 | 457.2 | 25.4 | 22.2 | 350.5 | 406.4 | 407.0 |

Ce dessin et l'information qu'il contient est la propriété de ENVIREQUIP WTEM inc. Il est interdit de le copier, le photographier, l'imprimer, le prêter ou de l'utiliser sans la permission de ENVIREQUIP WTEM inc.

This drawing and the information contained thereon is the property of ENVIREQUIP WTEM inc. It is not to be printed, photographed, copied, loaned or used without the permission of ENVIREQUIP WTEM inc.

| NO | DATE | REVISION | P/B |
|---|---|---|---|

PROJET/PROJECT
RX75 REACTOR

ENVIREQUIP WTEM INC.
490 Bord du Lac – Suite 2
Dorval, QC H9S 2A8
Montreal Tel: (514) 336-1043
RR1 (21494 Little Russel Rd.)
Glen Robertson, Ont K0B 1H0
Ontario Tel: (613) 874-2516
Fax: (613) 874-2629
E-mail: enviresqc@glen-net.ca

TITRE/TITLE
ENVIREQUIP MIXERS
Veolia Water Technologies
EVGX SERIES

| | |
|---|---|
| DESSINÉ PAR: DRAWN BY: PJ | DATE: JAN 20, 2021 |
| DESS. NO: DWG NO: EVGX | ÉCH./SCALE: N.T.S |
| VÉRIFIÉ PAR: CHECKED BY: PJ | PROJ.NO: |
| APPROUVÉ PAR: APPROVED BY: RJ | REV.: 00 |

**This page is intentionally left blank**

**Project name:** MELIADINE-BPC UPGRADE

**Project#:** 5000220043

**Document #:** SPK_0004_RX_VWT

**by:** CEK

**chkd:** ED

**appvd:** TS

# DECHLORINATION REACTOR RX75-3 #2

# VALVES

**OIM manual section:** 4.2.2.4

**This page is intentionally left blank**

# CS-315-900 : Identification sheet

| | | | |
|---|---|---|---|
| VWTC PROJECT NUMBER: | 5000220043 | REV: | 1 |
| PROJECT NAME: | AEM MELIADINE-BPC UPGRADE | SUBMITTED TO (COMPANY): | AEM |
| ENGINEER: | EMMANUELLE DORMOY | SUBMITTED TO (RESPONSIBLE) | |
| PROJECT MANAGER: | THOMAS SAVARY / BRUCE BRODES | PROJECT NUM REFERENCE.: | 6526-S-265-605 / OC-989680 |
| PHONE NUMBER: | 514-334-7230 | LOT NUMBER: | |

| SUPPLIER | EQPT CODE | EQPT TAG NO | DIA | DESCRIPTION | INFO 1 | INFO 2 | INFO 3 | APPLIC. | NOTE | REV |
|---|---|---|---|---|---|---|---|---|---|---|
| BRAY | VABFDI364242 | 100-BF99-1113 | 4" (100 mm) | MANUAL DRAIN VALVE | TYPE: BUTTERFLY \| 175 PSI (75 PSI IF DEAD-END SERVICE) / MANUF.: BRAY / MODEL: Serie 31 - Lug// Série 31- à oreilles / CONNECTION TYPE \| SIZE : \| 4" (100 mm) / BODY: DUCTILE IRON / SEAL \| SEAT : EPDM / DISC \| STEM: NYLON 11 COATED DISC \| 416 SS | / ACTUATOR TYPE: Manual \| LEVER / MANUFACTURER: BRAY | / NSF61 | DECHLORINATION REACTOR | | 1 |
| BRAY | VABFDI364242 | 100-BF99-1114 | 4" (100 mm) | MANUAL DRAIN VALVE | TYPE: BUTTERFLY \| 175 PSI (75 PSI IF DEAD-END SERVICE) / MANUF.: BRAY / MODEL: Serie 31 - Lug// Série 31- à oreilles / CONNECTION TYPE \| SIZE : \| 4" (100 mm) / BODY: DUCTILE IRON / SEAL \| SEAT : EPDM / DISC \| STEM: NYLON 11 COATED DISC \| 416 SS | / ACTUATOR TYPE: Manual \| LEVER / MANUFACTURER: BRAY | / NSF61 | DECHLORINATION REACTOR | | 1 |

**This page is intentionally left blank**

## Series 30 Wafer

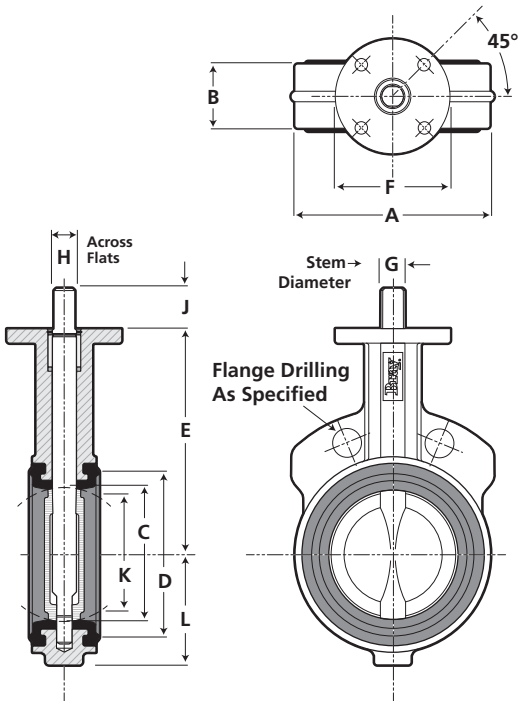


## Series 31 Lug

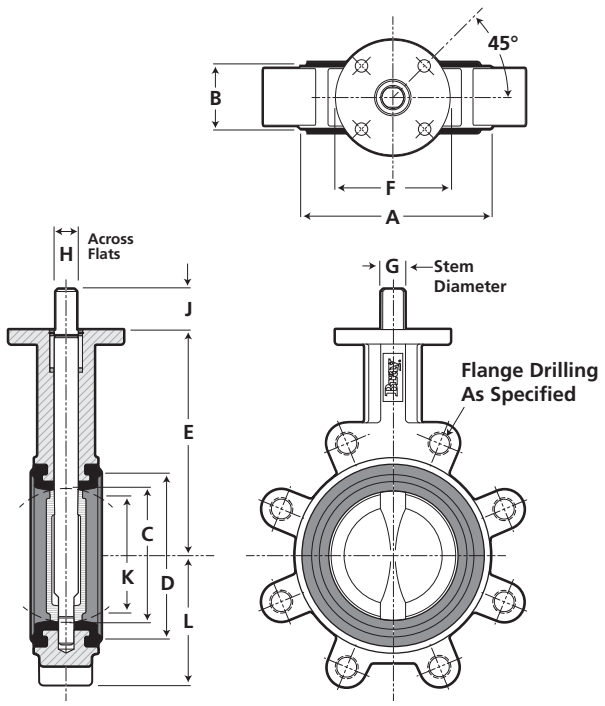


| IMPERIAL DIMENSIONS: Inches | | | | | | | | | | | | | | | | | | | Lug Bolting Data | | |
|---|---|---|---|---|---|---|---|---|---|---|---|---|---|---|---|---|---|---|---|---|---|
| Valve Size | A | B | C | D | E | F | Top Plate Drilling | | | G | H | J | K | L | | Adapter Code | Weight (lbs.) | | Bolt Circle | No of Holes | Threads ISO Coarse |
| | | | | | | | BC | No of Holes | Hole Diameter | | | | | Wafer | Lug | | Wafer | Lug | | | |
| 2 | 3.69 | 1.62 | 2.00 | 2.85 | 5.50 | 3.54 | 2.76 | 4 | .39 | .55 | 39 | 1.25 | 1.32 | 2.22 | 2.30 | A | 5.5 | 7.0 | 4.75 | 4 | 5/8-11 |
| 2 1/2 | 4.19 | 1.75 | 2.50 | 3.36 | 6.00 | 3.54 | 2.76 | 4 | .39 | .55 | .39 | 1.25 | 1.91 | 2.47 | 2.57 | A | 7.0 | 8.0 | 5.50 | 4 | 5/8-11 |
| 3 | 4.88 | 1.75 | 3.00 | 4.15 | 6.25 | 3.54 | 2.76 | 4 | .39 | .55 | .39 | 1.25 | 2.55 | 2.81 | 2.81 | A | 7.5 | 9.0 | 6.00 | 4 | 5/8-11 |
| 4 | 6.06 | 2.00 | 4.00 | 5.16 | 7.00 | 3.54 | 2.76 | 4 | .39 | .63 | .43 | 1.25 | 3.57 | 3.41 | 4.09 | B | 11.5 | 15.0 | 7.50 | 8 | 5/8-11 |
| 5 | 7.06 | 2.12 | 5.00 | 6.16 | 7.50 | 3.54 | 2.76 | 4 | .39 | .75 | .51 | 1.25 | 4.63 | 4.03 | 4.61 | C | 14.0 | 20.0 | 8.50 | 8 | 3/4-10 |
| 6 | 8.12 | 2.12 | 5.75 | 7.02 | 8.00 | 3.54 | 2.76 | 4 | .39 | .75 | .51 | 1.25 | 5.45 | 4.53 | 5.06 | C | 17.0 | 23.0 | 9.50 | 8 | 3/4-10 |
| 8 | 10.50 | 2.50 | 7.75 | 9.47 | 9.50 | 5.91 | 4.92 | 4 | .57 | .87 | .63 | 1.25 | 7.45 | 5.75 | 6.05 | D | 34.0 | 42.0 | 11.75 | 8 | 3/4-10 |
| 10 | 12.75 | 2.50 | 9.75 | 11.47 | 10.72 | 5.91 | 4.92 | 4 | .57 | 1.18 | .87 | 2.00 | 9.53 | 7.12 | 7.69 | E | 49.0 | 66.0 | 14.25 | 12 | 7/8-9 |
| 12 | 14.88 | 3.00 | 11.75 | 13.47 | 12.25 | 5.91 | 4.92 | 4 | .57 | 1.18 | .87 | 2.00 | 11.47 | 8.12 | 9.02 | E | 67.0 | 88.0 | 17.00 | 12 | 7/8-9 |

**Note: K dimension is disc chordal dimension at valve face.**

| METRIC DIMENSIONS: Millimeters | | | | | | | | | | | | | | | | | | | Lug Bolting Data | | |
|---|---|---|---|---|---|---|---|---|---|---|---|---|---|---|---|---|---|---|---|---|---|
| Valve Size | A | B | C | D | E | F | Top Plate Drilling | | | G | H | J | K | L | | Adapter Code | Weight (Kg) | | Bolt Circle | No of Holes | Threads ISO Coarse |
| | | | | | | | BC | No of Holes | Hole Diameter | | | | | Wafer | Lug | | Wafer | Lug | | | |
| 50 | 94 | 41.2 | 51 | 72 | 140 | 90 | 70 | 4 | 10 | 14 | 10 | 32 | 34 | 56 | 58 | A | 2.5 | 3 | 121 | 4 | 5/8-11 |
| 65 | 106 | 44.5 | 64 | 85 | 152 | 90 | 70 | 4 | 10 | 14 | 10 | 32 | 49 | 63 | 65 | A | 3 | 3.5 | 140 | 4 | 5/8-11 |
| 80 | 124 | 44.5 | 76 | 102 | 159 | 90 | 70 | 4 | 10 | 14 | 10 | 32 | 65 | 71 | 71 | A | 3.5 | 4 | 152 | 4 | 5/8-11 |
| 100 | 154 | 50.8 | 102 | 131 | 178 | 90 | 70 | 4 | 10 | 16 | 11 | 32 | 91 | 87 | 104 | B | 5 | 7 | 191 | 8 | 5/8-11 |
| 125 | 181 | 54.0 | 127 | 156 | 190 | 90 | 70 | 4 | 10 | 19 | 13 | 32 | 118 | 102 | 117 | C | 6 | 9 | 216 | 8 | 3/4-10 |
| 150 | 206 | 54.0 | 146 | 178 | 203 | 90 | 70 | 4 | 10 | 19 | 13 | 32 | 138 | 115 | 129 | C | 8 | 10 | 241 | 8 | 3/4-10 |
| 200 | 267 | 63.5 | 197 | 240 | 241 | 150 | 125 | 4 | 14 | 22 | 16 | 32 | 189 | 146 | 154 | D | 15 | 19 | 298 | 8 | 3/4-10 |
| 250 | 324 | 63.5 | 248 | 291 | 273 | 150 | 125 | 4 | 14 | 30 | 22 | 51 | 242 | 181 | 195 | E | 22 | 30 | 362 | 12 | 7/8-9 |
| 300 | 378 | 76.2 | 298 | 342 | 311 | 150 | 125 | 4 | 14 | 30 | 22 | 51 | 291 | 206 | 229 | E | 30 | 40 | 432 | 12 | 7/8-9 |

**Note: K dimension is disc chordal dimension at valve face.**

Drawings are for reference only. Please refer to Bray ES drawings on the Bray website, www.bray.com. Bray reserves the right to change product dimensions without notice.

## SR Drawing #30/31-2/12-in

Inquire/P.O. No.:_____

Customer/Project: _____

Bray Order No.: _____

## Series 30 Wafer

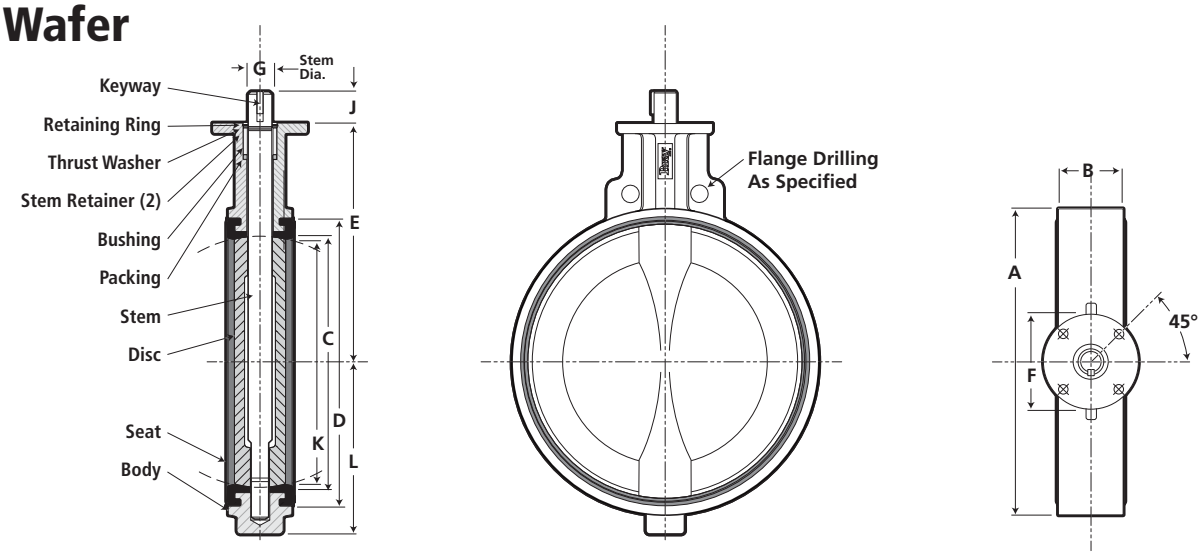


## Series 31 Lug

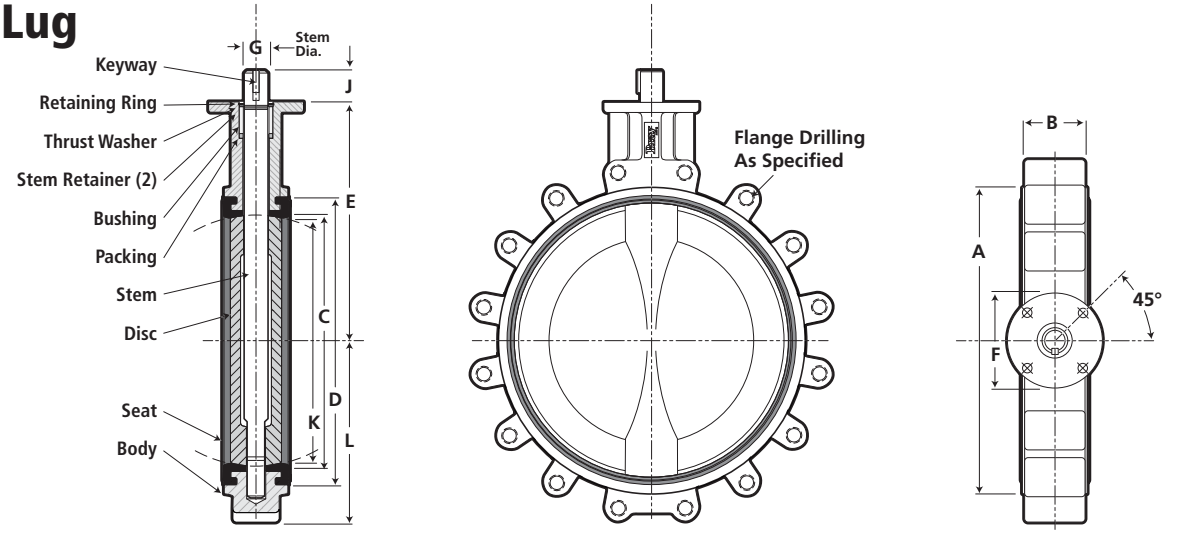


| IMPERIAL DIMENSIONS: Inches | | | | | | | | | | | | | | | | | | | | Lug Bolting Data | | |
|---|---|---|---|---|---|---|---|---|---|---|---|---|---|---|---|---|---|---|---|---|---|---|
| Valve Size | A | B | C | D | E | F | Top Plate Drilling | | | G | J | Key Size | K | L | | Adapter Code | Weight (lbs.) | | Bolt Circle | No of Holes | Threads ISO Coarse |
| | | | | | | | BC | No of Holes | Hole Diameter | | | | | Wafer | Lug | | Wafer | Lug | | | |
| 14 | 17.05 | 3.00 | 13.25 | 15.28 | 13.62 | 5.91 | 4.92 | 4 | .57 | 1.38 | 2.00 | .39x.39 | 13.04 | 9.38 | 9.93 | F | 95 | 114 | 18.75 | 12 | 1-8 |
| 16 | 19.21 | 4.00 | 15.25 | 17.14 | 14.75 | 5.91 | 4.92 | 4 | .57 | 1.38 | 2.00 | .39x.39 | 14.85 | 10.75 | 11.30 | F | 135 | 166 | 21.25 | 16 | 1-8 |
| 18 | 21.12 | 4.25 | 17.25 | 19.47 | 16.00 | 8.27 | 6.50 | 4 | .81 | 1.97 | 2.50 | .47x.39 | 16.85 | 12.00 | 12.15 | G | 200 | 226 | 22.75 | 16 | 1⅛-7 |
| 20 | 23.25 | 5.00 | 19.25 | 21.59 | 17.25 | 8.27 | 6.50 | 4 | .81 | 1.97 | 2.50 | .47x.39 | 18.73 | 14.00 | 14.00 | G | 260 | 305 | 25.00 | 20 | 1⅛-7 |

**Note: K dimension is disc chordal dimension at valve face.**

| METRIC DIMENSIONS: Millimeters | | | | | | | | | | | | | | | | | | | | Lug Bolting Data | | |
|---|---|---|---|---|---|---|---|---|---|---|---|---|---|---|---|---|---|---|---|---|---|---|
| Valve Size | A | B | C | D | E | F | Top Plate Drilling | | | G | J | Key Size | K | L | | Adapter Code | Weight (Kg) | | Bolt Circle | No of Holes | Threads ISO Coarse |
| | | | | | | | BC | No of Holes | Hole Diameter | | | | | Wafer | Lug | | Wafer | Lug | | | |
| 350 | 433 | 76.2 | 337 | 388 | 346 | 150 | 125 | 4 | 14 | 35 | 51 | 10x10 | 331 | 238 | 252 | F | 43 | 52 | 476 | 12 | 1-8 |
| 400 | 488 | 101.6 | 387 | 442 | 375 | 150 | 125 | 4 | 14 | 35 | 51 | 10x10 | 377 | 273 | 287 | F | 61 | 75 | 540 | 16 | 1-8 |
| 450 | 536 | 108.0 | 438 | 495 | 406 | 210 | 165 | 4 | 21 | 50 | 64 | 12x10 | 428 | 305 | 309 | G | 91 | 103 | 578 | 16 | 1⅛-7 |
| 500 | 591 | 127.0 | 489 | 548 | 438 | 210 | 165 | 4 | 21 | 50 | 64 | 12x10 | 476 | 348 | 358 | G | 118 | 138 | 635 | 20 | 1⅛-7 |

**Note: K dimension is disc chordal dimension at valve face.**

Drawings are for reference only. Please refer to Bray ES drawings on the Bray website, www.bray.com. Bray reserves the right to change product dimensions without notice.

## SR Drawing #30/31-14/20-in

Inquire/P.O. No.:_____

Customer/Project: _____

Bray Order No.: _____

# RESILIENT SEATED BUTTERFLY VALVES

## Technical Manual



Bray®

BRAY.COM

THE HIGH PERFORMANCE COMPANY

# Resilient Seated Butterfly Valves

## Technical Manual Table of Contents


Introduction to Torques . . . . . 3

Reduced Disc Diameter Bray Series 30/31/3A Valves . . . . . 6

Seating & Unseating Torques . . . . . 7

- Series 20/21 and 30/31/3A Torques Imperial (Lb-Ins) . . . . . 8
- Series 20/21 and 30/31/3A Torques Metric (Nm) . . . . . 9
- Series 32/33, 35/36 Torques Imperial (Lb-Ins) . . . . . 10
- Series 32/33, 35/36 Torques Metric (Nm) . . . . . 10
- Series 22/23 Torques Imperial (Lb-In) and Metric (Nm) . . . . . 11

Dynamic Torque Factors (Imperial) . . . . . 12

Dynamic Torque Factors (Metric) . . . . . 13

Valve Sizing Coefficients . . . . . 14

- **Series 20/21** - Valve Sizing Coefficient (Cv) . . . . . 15
- **Series 22/23** - Valve Sizing Coefficient (Cv) . . . . . 15
- Series 30/31/31H/3A/3AH/31U - Valve Sizing Coefficient (Cv) . . . . 16
- Series 32/33/35/36/35F/36H - Valve Sizing Coefficient (Cv) . . . . . 16
- Series 20/21 - Valve Sizing Coefficient (Kv) . . . . . 17
- Series 22/23 - Valve Sizing Coefficient (Kv) . . . . . 17
- Series 30/31/31H/3A/3AH/31U - Valve Sizing Coefficient (Kv) . . . . 18
- Series 32/33/35/36/35F/36H - Valve Sizing Coefficient (Kv) . . . . . 18

Examples of Typical Flange to Valve Bolting* . . . . . 19

Flange Bolt Tensioning . . . . . 20

Series 20/21 - Standard Metal Specifications . . . . . 23

- Series 22/23 - Standard Metal Specifications. . . . . 23
- Series 30/31, 31H, 3A/3AH, 31U - Standard Metal Specifications . . 24
- Series 32/33, 35/36, 35F, 36H - Standard Metal Specifications . . . 25





All statements, technical information, and recommendations in this bulletin are for general use only. Consult Bray representatives or factory for the specific requirements and material selection for your intended application. The right to change or modify product design or product without prior notice is reserved.

# Torques

## INTRODUCTION TO TORQUES

There are a number of torques which butterfly valves may experience such as:

- **$T_{su}$ - Seating and Unseating Torque**
- **$T_d$ - Dynamic Torque Resulting from fluid flow**
- **$T_{bf}$ – Bearing Friction Torque**
- **$T_{ss}$ – Stem Seal Friction Torque**
- **$T_e$ – Eccentricity Torque resulting from disc offset from centerline of stem (either single, double or triple offset)**
- **$T_h$ – Hydrostatic Torque**

**Factors which influence the butterfly valve torque values shown above are:**

- Type of Seat and Seat Material
- Interference of Seat I.D. and Disc O.D.
- Shaft Diameter
- Valve Diameter
- Bearing Coefficient of Friction
- Angle of Opening
- Shut-off Pressure
- Fluid Velocity
- Disc Shape and Configuration
- Piping System and Location/Orientation of Valve in Pipe Line
- System Head Characteristics
- Physical Size of Disc/Shaft Obstructing Flow
- Disc Edge Finish

With respect to Butterfly Valves, the two major conditions for determining total valve operating torque ($T_T$) exists as follows:

**CASE I** (Angle = 0° , Disc in Closed Position)

$$T_T = T_h + T_{bf} + T_{ss} + T_{su}$$

**Analyzed**

Total Torque for Case I using a symmetrical disc butterfly valve is the sum of hydrostatic torque, bearing friction torque, stem seal, friction torque, and seating/unseating torque.

### A. Hydrostatic Torque ($T_h$)

We will ignore discussion of the hydrostatic torque values as they are generally insignificant compared to the seating/unseating, bearing friction and stem seal torque values (the safety factor applied to seating/unseating, stem seal friction and bearing friction torque values more than compensates for the hydrostatic torque which is usually less than 2% of these total torques).

### B. Bearing Friction Torque ($T_{bf}$)

Bearing friction torque occurs because pressure forces against the disc are transmitted to the stem. As the stem is forced against the bearing supports, bearing friction torque is created between the stem material and the support material as the stem is turned. Bearing friction torques are normally included in the seating/unseating torque values.

**Bearing friction torques can be determined by using the following equation:**

$$T_{bf} = .785\ C_f\ D_v^2\ (d/2)\ \Delta P$$

**Where:**

- $T_{bf}$ = Bearing Friction Torque
- $C_f$ = Coefficient of Friction (approximately .25 for non-corroded stem to cast iron body) (dimensionless).
- $D_v$ = Valve Diameter (Inches)
- $d$ = Diameter of Shaft (Inches)
- $\Delta P$ = Pressure Differential (psi)

### C. Stem Seal Friction Torque ($T_{ss}$)

For all practical purposes stem seal friction torque values are insignificant when compared to seating/unseating and bearing friction torques. Stem seal friction torques are normally included in the seating/unseating torque values.



All information herein is proprietary and confidential and may not be copied or reproduced without the expressed written consent of BRAY INTERNATIONAL, Inc.
The technical data herein is for general information only. Product suitability should be based solely upon customer's detailed knowledge and experience with their application.

### D. Seating/Unseating Torques ($T_{su}$)

The seating/unseating torque value ($T_{su}$) is a function of the pressure differential, the seat material's coefficient of friction, the finished surface of the disc edge, the amount of interference between the seat I.D. and disc O.D. when flanged in piping, the seat thickness, and the type of service (media) for which the valve is being used. In determining the $T_{su}$ values for Bray resilient seated butterfly valves, Bray has developed Seating/Unseating Torque Charts incorporating all bearing friction and stem seal friction torques for three classes of services for both the valves with standard discs (rated to full pressure) and for valves with reduced diameter discs (rated for 50 psi [3.5 bar]). The three service classes are:

**Class A – Non-Corrosive, Lubricating Service**

**Class B – General Service**

**Class C – Severe Service**

Please review the guidelines for each class in the technical manual when determining which Seating/Unseating Torque Class should be used. Most butterfly valves are used in Class II, General Service applications.

### E. Total Torque ($T_T$)

The total torque values for Bray symmetrical disc valves for Case I applications are shown in the Seating/Unseating Torque Charts within this manual.

## CASE II (Disc in Partial To Full Opening Position)

$$T_T = T_{bf} + T_{ss} + T_d$$

The total Torque for Case II using a symmetrical disc butterfly valve is the summation of bearing friction torque, stem seal friction torque and dynamic torque.

### A. Bearing Friction Torque ($T_{bf}$)

See Case I discussion. This torque value is normally included in the Dynamic Torque Value.

### B. Stem Seal Friction Torque ($T_{ss}$)

See Case I discussion. This torque value is normally included in the Dynamic torque value.

### C. Dynamic Torque ($T_d$)

In a symmetrical disc design, dynamic torque occurs between the closed position, 0° and the full open position, 90°. With the disc in the partially open position, velocity of the fluid passing the leading disc edge is less than the velocity passing the trailing edge. This variance in velocity past the leading disc edge and trailing disc edge results in an unbalanced distribution of pressure forces on the upstream side of the face of the disc. The total pressure forces acting perpendicular to the disc face on the leading edge half of the disc are greater than the total pressure acting perpendicular on the trailing half of the disc. This uneven distribution of pressure on the disc face (exists on both sides of the disc) results in a torsional force which tries to turn the disc to the closed position **(Figure 1)**. This torsional closing force can become greater than the seating/unseating torque value depending on the valve angle of opening and differential pressure.

To determine dynamic torque, the following equation is applied:

$$T_d = C_{dt}\, d^3\, \Delta P$$

**Where:**

- $T_d$ = Dynamic Torque (lbs- in).
- $C_{dt}$ = Coefficient of Dynamic Torque (based on disc shape and angle of opening) (dimensionless)
- $d$ = Diameter of Disc (Inches)
- $\Delta P$ = Pressure Differential Across Valve (psi)

## Figure 1 - Pressure Distribution

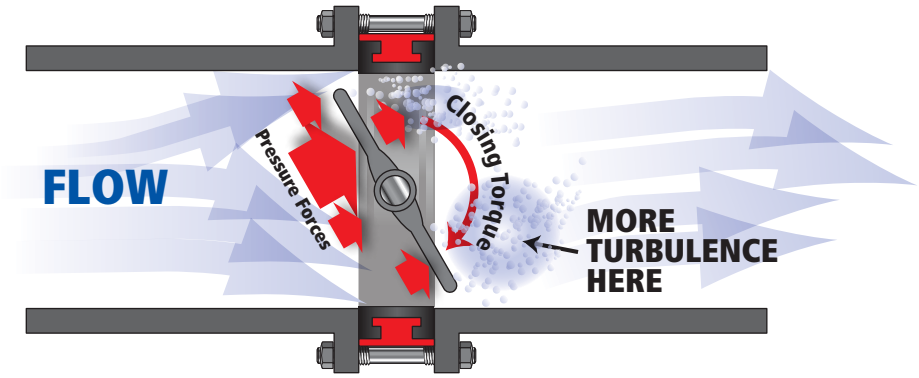




All information herein is proprietary and confidential and may not be copied or reproduced without the expressed written consent of BRAY INTERNATIONAL, Inc.
The technical data herein is for general information only. Product suitability should be based solely upon customer's detailed knowledge and experience with their application.

As shown in **Figure 2**, coefficient of dynamic torque for Bray's symmetrical disc valves is at 0° angle of opening and increases until the angle of opening reaches 75°-80°, where it then decreases to a zero value at full open (90°) (no internal friction factors considered, just dynamic torque only).

One final comment about dynamic torque is that one may minimize the dynamic torque by the orientation of the valve (stem horizontal or vertical) in the pipeline as well as by the location (distance) in the pipeline from elbows, other valves, etc. (See Bray Resilient Seated BFV Operations and Maintenance Manual).

**D. Total Torque ($T_T$)**

The total torque required for operating a Bray symmetrical disc butterfly valve at an angle opening between 0° and 90° is shown in the Dynamic Torque section of this manual. Note that the dynamic torque includes all internal friction torque values.

## CONCLUSION

In most applications for butterfly valves, especially 20˝ (DN 500) or smaller, the maximum torque required to operate the valve will be seating/unseating torque. However, dynamic torque should be considered particularly in:

- Control applications using larger valves (24˝ [DN600] and above) where the disc is maintained in the open position
- Applications using larger valves (24˝ [DN 600] and above) where the velocity is high (16 ft./sec [4.9m/sec]).

### Figure 2 - Angle of Opening

The $C_{dt}$ value for Bray symmetrical disc valves are approximately:

| Angle of Opening | 0° | 10° | 20° | 30° | 40° | 50° | 60° | 70° | 75° | 80° | 90° |
|---|---|---|---|---|---|---|---|---|---|---|---|
| $C_{dt}$ | 0 | 0.0126 | 0.0140 | 0.0251 | 0.0505 | 0.0809 | 0.1394 | 0.2384 | 0.3419 | 0.3400 | 0 |

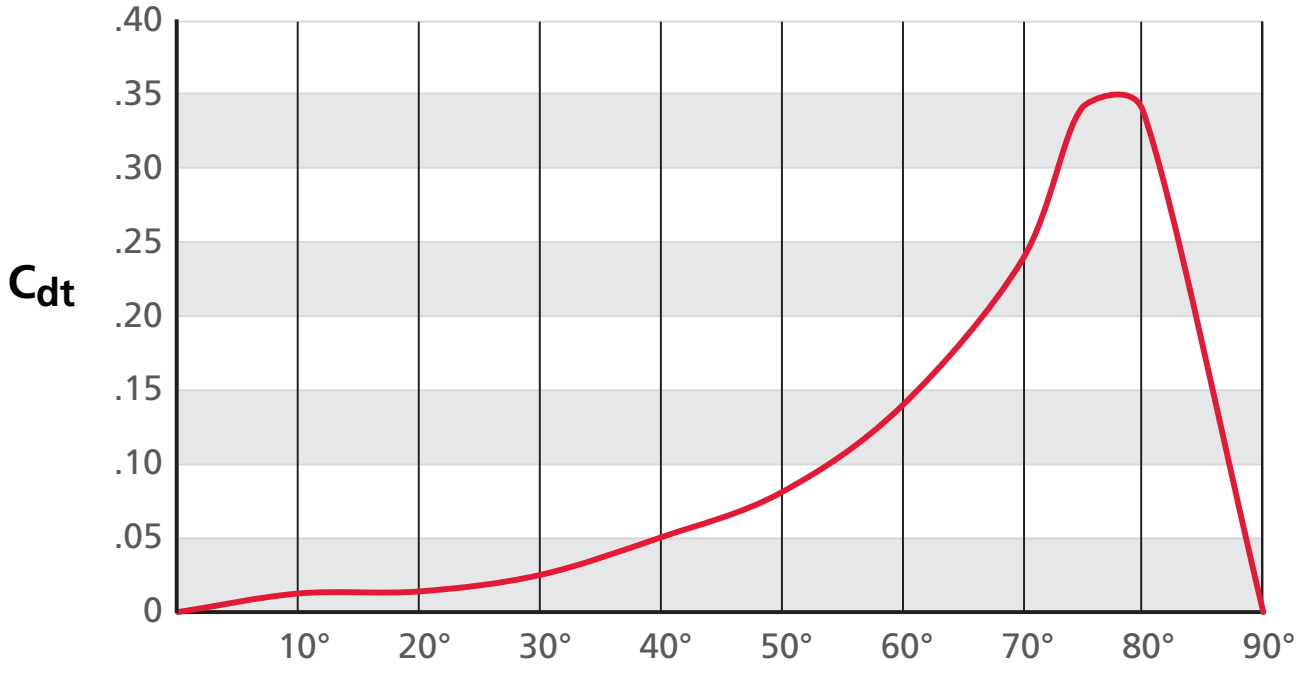




All information herein is proprietary and confidential and may not be copied or reproduced without the expressed written consent of BRAY INTERNATIONAL, Inc.
The technical data herein is for general information only. Product suitability should be based solely upon customer's detailed knowledge and experience with their application.

# REDUCED DISC DIAMETER BRAY SERIES 30/31/3A VALVES

Bray offers a reduced disc diameter for 4"-20" for Series 30, 31 and 3A valves. The purpose of reducing the disc diameter is to decrease the seating/unseating torques and extend the seat life on low pressure applications.

By reducing the disc diameter, the interference between the disc O.D. and seat I.D. is decreased and the valve pressure rating, which is a function of this interference, is reduced to 50 PSI. Less interference between the disc and seat results in reduced seating/unseating torques. Lower seating/unseating torque may allow for the use of a smaller actuator on the valve. In other applications where abrasive dry bulk materials such as cement, sugar, plastic, pellets, flour, etc., are generally pneumatically conveyed at 50 PSI or less, the reduced disc diameter not only reduces the seating/unseating torque but, very importantly, usually significantly increases the service life of the seat.

Bray does the following to differentiate reduced diameter discs from full diameter discs:

**Metal Discs:** An " R " is stamped above the part number

**Nylon 11 Coated Discs:** Discs are differentiated by the color of the Nylon 11:

**Grey** – Full Disc Diameter

**White** – Reduced Disc Diameter



All information herein is proprietary and confidential and may not be copied or reproduced without the expressed written consent of BRAY INTERNATIONAL, Inc.
The technical data herein is for general information only. Product suitability should be based solely upon customer's detailed knowledge and experience with their application.

# SEATING & UNSEATING TORQUES

Bray has developed Seating/Unseating Torque Charts for three Classes of Service for its valves with standard discs (rated for full pressure) and for valves with reduced diameter discs (rated for 50 PSI / 3.5 bar.).

The guidelines for selecting a Class to be used for determining a valve's seating/unseating torque are given below. Each valve application should comply with all five Class characteristics in order to be qualified for that Class.

| Characteristics of Application | **Class A** Non-Corrosive, Lubricating Service | **Class B** General Service | **Class C** Severe Service |
|---|---|---|---|
| **Media Type** | Lubricating hydrocarbons; Aqueous processes and Water (See Note 1) | Water; aqueous processes; all other aqueous liquids including salt water; Lubricating gases | Dry, non-lubricating such as air, dry gas, cement, pneumatic conveying mediums |
| **Corrosion by Media** | Insignificant if any | No major corrosion or deposits from media | Can incur significant corrosion such as Ductile Iron disc in water |
| **Chemical Reactions of Media with Seat** | Insignificant if any | Only minor or insignificant in nature | Reactions causing swelling and hardness occur |
| **Media Temperature** | 45º to 160ºF (7º to 71ºC) | Within seat temperature limits, not near limits | Near or at seat temperature limits |
| **Frequency of Valve Cycling** | Once weekly or more frequently | Minimum once every 3-6 weeks, or more frequently | Infrequently, sometimes not cycled for long periods |

**NOTE:**

1. For aqueous processes and water, Class A torques may be used only if a Nylon 11 coated disc is selected and all other Class A characteristics apply. Otherwise, Class B torques should be used.
2. All the material trims may be classified into Class A, B, or C except Series 20/21 valves with a PTFE Lined Elastomer seat, PTFE molded disc/stem, or rubber molded disc/stem. These trims must always use Class C Seating/Unseating Torque Values unless they are used only in a throttling application. Valves with bonded seats must always be classified as Class C.
3. If a valve is used strictly in a throttling application, that is, it is never put in the closed position but throttled between 20° and 80°, then Class A torques may be used provided you have checked to see that dynamic torques do not exceed the Class A torque values.
4. With the exception of dry, non-lubricating medias, one is usually safe electing to use Class B torques for sizing actuators for all other valve service applications. Seating/Unseating Torque values shown include friction bearing torques for stated differential pressure.
5. Dynamic Torque values are not considered. See the Dynamic Torque chart in this manual for determination of Dynamic Torque.
6. Do not apply a safety factor to torque values when determining actuator output torque requirement.
7. **For 3-way assemblies where one valve is opening and another is closing, multiply torque by a 1.5 factor.**



All information herein is proprietary and confidential and may not be copied or reproduced without the expressed written consent of BRAY INTERNATIONAL, Inc.
The technical data herein is for general information only. Product suitability should be based solely upon customer's detailed knowledge and experience with their application.

## Series 20/21 and 30/31/3A Torques Imperial (Lb-Ins)

| | Valve Size Inches | Valve Differential Pressure (PSIG) | | | | | | |
|---|---|---|---|---|---|---|---|---|
| | | Full Disc | | | | | Reduced Disc | |
| | | 0 psi | 50 psi | 100 psi | 150 psi | 175 psi | 0 psi | 50 psi |
| **Class A** Non-Corrosive, Lubricating Service | 1 | 54 | 59 | 65 | 70 | 73 | 54 | 59 |
| | 1.5 | 81 | 86 | 91 | 97 | 100 | 81 | 86 |
| | 2 | 109 | 114 | 119 | 123 | 128 | 109 | 114 |
| | 2.5 | 169 | 178 | 187 | 196 | 200 | 169 | 178 |
| | 3 | 220 | 236 | 250 | 264 | 273 | 220 | 236 |
| | 4 | 341 | 364 | 387 | 410 | 423 | 225 | 248 |
| | 5 | 510 | 560 | 610 | 660 | 687 | 324 | 374 |
| | 6 | 632 | 712 | 792 | 872 | 912 | 344 | 488 |
| | 8 | 1,182 | 1,341 | 1,500 | 1,660 | 1,741 | 735 | 894 |
| | 10 | 1,764 | 2,018 | 2,272 | 2,526 | 2,653 | 1,204 | 1,358 |
| | 12 | 2,701 | 3,110 | 3,519 | 3,928 | 4,132 | 1,665 | 2,074 |
| | 14 | 3,818 | 4,500 | 5,182 | 5,864 | — | 2,318 | 3,000 |
| | 16 | 4,638 | 5,819 | 7,000 | 8,182 | — | 2,699 | 3,880 |
| | 18 | 5,265 | 7,065 | 8,865 | 10,665 | — | 2,970 | 4,788 |
| | 20 | 7,000 | 9,364 | 11,728 | 14,091 | — | 3,356 | 6,243 |
| **Class B** General Service | 1 | 59 | 65 | 71 | 77 | 80 | 59 | 65 |
| | 1.5 | 89 | 95 | 100 | 106 | 110 | 89 | 95 |
| | 2 | 120 | 125 | 130 | 135 | 140 | 120 | 125 |
| | 2.5 | 185 | 195 | 205 | 215 | 220 | 185 | 195 |
| | 3 | 245 | 260 | 275 | 290 | 297 | 245 | 260 |
| | 4 | 375 | 400 | 425 | 450 | 462 | 252 | 267 |
| | 5 | 560 | 615 | 670 | 725 | 755 | 355 | 410 |
| | 6 | 695 | 783 | 871 | 953 | 1,003 | 427 | 537 |
| | 8 | 1,300 | 1,475 | 1,650 | 1,825 | 1,915 | 808 | 983 |
| | 10 | 1,960 | 2,240 | 2,520 | 2,800 | 2,940 | 1,213 | 1,493 |
| | 12 | 2,970 | 3,420 | 3,870 | 4,320 | 4,545 | 1,830 | 2,280 |
| | 14 | 4,200 | 4,950 | 5,700 | 6,450 | — | 2,550 | 3,300 |
| | 16 | 5,100 | 6,400 | 7,700 | 9,000 | — | 2,967 | 4,267 |
| | 18 | 5,850 | 7,850 | 9,850 | 11,850 | — | 3,267 | 5,267 |
| | 20 | 7,700 | 10,300 | 12,900 | 15,500 | — | 4,267 | 6,867 |
| **Class C** Severe Service | 1 | 74 | 82 | 89 | 97 | 100 | 74 | 82 |
| | 1.5 | 111 | 119 | 125 | 133 | 137 | 111 | 119 |
| | 2 | 151 | 157 | 163 | 169 | 175 | 151 | 157 |
| | 2.5 | 231 | 244 | 257 | 269 | 275 | 231 | 244 |
| | 3 | 306 | 325 | 344 | 363 | 375 | 306 | 325 |
| | 4 | 468 | 500 | 532 | 563 | 582 | 316 | 348 |
| | 5 | 700 | 769 | 838 | 907 | 944 | 444 | 513 |
| | 6 | 870 | 980 | 1,090 | 1,200 | 1,255 | 525 | 672 |
| | 8 | 1,625 | 1,844 | 2,063 | 2,282 | 2,394 | 1,011 | 1,230 |
| | 10 | 2,450 | 2,800 | 3,150 | 3,500 | 3,675 | 1,517 | 1,867 |
| | 12 | 3,712 | 4,275 | 4,838 | 5,400 | 5,682 | 2,287 | 2,850 |
| | 14 | 5,251 | 6,188 | 7,125 | 8,063 | — | 3,189 | 4,126 |
| | 16 | 6,375 | 8,000 | 9,625 | 11,250 | — | 3,709 | 5,334 |
| | 18 | 7,315 | 9,815 | 12,315 | 14,815 | — | 4,084 | 6,584 |
| | 20 | 9,625 | 12,875 | 16,125 | 19,375 | — | 5,334 | 8,584 |



All information herein is proprietary and confidential and may not be copied or reproduced without the expressed written consent of BRAY INTERNATIONAL, Inc.
The technical data herein is for general information only. Product suitability should be based solely upon customer's detailed knowledge and experience with their application.

## Series 20/21 and 30/31/3A Torques Metric (Nm)

| | Valve Size mm | Valve Differential Pressure (bar) | | | | | | |
|---|---|---|---|---|---|---|---|---|
| | | Full Disc | | | | | Reduced Disc | |
| | | 0 bar | 3.4 bar | 7 bar | 10.3 bar | 12 bar | 0 bar | 3.4 bar |
| **Class A** Non-Corrosive, Lubricating Service | 25 | 6 | 7 | 7 | 8 | 8 | 6 | 7 |
| | 40 | 9 | 10 | 10 | 11 | 11 | 9 | 10 |
| | 50 | 12 | 13 | 13 | 14 | 14 | 12 | 13 |
| | 65 | 19 | 20 | 21 | 22 | 23 | 19 | 20 |
| | 80 | 25 | 27 | 28 | 30 | 31 | 25 | 27 |
| | 100 | 39 | 41 | 44 | 46 | 48 | 25 | 28 |
| | 125 | 58 | 63 | 69 | 75 | 78 | 37 | 42 |
| | 150 | 71 | 80 | 89 | 99 | 103 | 39 | 55 |
| | 200 | 134 | 152 | 169 | 188 | 197 | 83 | 101 |
| | 250 | 199 | 228 | 257 | 285 | 300 | 136 | 153 |
| | 300 | 305 | 351 | 398 | 444 | 467 | 188 | 234 |
| | 350 | 431 | 508 | 585 | 663 | — | 262 | 339 |
| | 400 | 524 | 657 | 791 | 924 | — | 305 | 438 |
| | 450 | 595 | 798 | 1,002 | 1,205 | — | 336 | 541 |
| | 500 | 791 | 1,058 | 1,325 | 1,592 | — | 379 | 705 |
| **Class B** General Service | 25 | 7 | 7 | 8 | 9 | 9 | 7 | 7 |
| | 40 | 10 | 11 | 11 | 12 | 12 | 10 | 11 |
| | 50 | 14 | 14 | 15 | 15 | 16 | 14 | 14 |
| | 65 | 21 | 22 | 23 | 24 | 25 | 21 | 22 |
| | 80 | 28 | 29 | 31 | 33 | 34 | 28 | 29 |
| | 100 | 42 | 45 | 48 | 51 | 52 | 28 | 30 |
| | 125 | 63 | 69 | 76 | 82 | 85 | 40 | 46 |
| | 150 | 79 | 88 | 98 | 108 | 113 | 48 | 61 |
| | 200 | 147 | 167 | 186 | 206 | 216 | 91 | 111 |
| | 250 | 221 | 253 | 285 | 316 | 332 | 137 | 169 |
| | 300 | 336 | 386 | 437 | 488 | 514 | 207 | 258 |
| | 350 | 475 | 559 | 644 | 729 | — | 288 | 373 |
| | 400 | 576 | 723 | 870 | 1,017 | — | 335 | 482 |
| | 450 | 661 | 887 | 1,113 | 1,339 | — | 369 | 595 |
| | 500 | 870 | 1,164 | 1,458 | 1,751 | — | 482 | 776 |
| **Class C** Severe Service | 25 | 8 | 9 | 10 | 11 | 11 | 8 | 9 |
| | 40 | 13 | 13 | 14 | 15 | 15 | 13 | 13 |
| | 50 | 17 | 18 | 18 | 19 | 20 | 17 | 18 |
| | 65 | 26 | 28 | 29 | 30 | 31 | 26 | 28 |
| | 80 | 35 | 37 | 39 | 41 | 42 | 35 | 37 |
| | 100 | 53 | 56 | 60 | 64 | 66 | 36 | 39 |
| | 125 | 79 | 87 | 95 | 102 | 107 | 50 | 58 |
| | 150 | 98 | 111 | 123 | 136 | 142 | 59 | 76 |
| | 200 | 184 | 208 | 233 | 258 | 270 | 114 | 139 |
| | 250 | 277 | 316 | 356 | 395 | 415 | 171 | 211 |
| | 300 | 419 | 483 | 547 | 610 | 642 | 258 | 322 |
| | 350 | 593 | 699 | 805 | 911 | — | 360 | 466 |
| | 400 | 720 | 904 | 1,087 | 1,271 | — | 419 | 603 |
| | 450 | 826 | 1,109 | 1,391 | 1,674 | — | 461 | 744 |
| | 500 | 1,087 | 1,455 | 1,822 | 2,189 | — | 603 | 970 |



All information herein is proprietary and confidential and may not be copied or reproduced without the expressed written consent of BRAY INTERNATIONAL, Inc.
The technical data herein is for general information only. Product suitability should be based solely upon customer's detailed knowledge and experience with their application.

## Series 32/33, 35/36 Torques Imperial (Lb-Ins)

| | Valve Size inches | 32, 35 - Max △P = 75 psi | | | | 33, 36 - Max △P = 150 psi | | | |
|---|---|---|---|---|---|---|---|---|---|
| | | 0 psi | 25 psi | 50 psi | 75 psi | 0 psi | 50 psi | 100 psi | 150 psi |
| **Class B** General Service (Imperial) | 22 | 5,450 | 6,350 | 7,250 | 8,150 | 8,100 | 11,700 | 14,700 | 17,700 |
| | 24 | 6,700 | 8,100 | 9,500 | 10,900 | 10,500 | 15,000 | 19,500 | 24,000 |
| | 26 | 7,900 | 9,800 | 11,700 | 13,600 | 12,400 | 18,400 | 24,400 | 30,400 |
| | 28 | 9,200 | 11,600 | 14,000 | 16,400 | 14,200 | 21,700 | 29,200 | 36,700 |
| | 30 | 10,400 | 13,300 | 16,200 | 19,100 | 16,100 | 25,100 | 34,100 | 43,100 |
| | 32 | 11,700 | 15,600 | 19,400 | 23,300 | 18,400 | 29,700 | 41,100 | 52,400 |
| | 34 | 13,500 | 18,500 | 23,500 | 28,500 | 20,950 | 34,750 | 48,600 | 62,400 |
| | 36 | 14,300 | 20,100 | 25,900 | 31,700 | 23,000 | 39,000 | 55,000 | 71,000 |
| | 40 | 18,200 | 26,200 | 34,100 | 42,000 | 24,300 | 46,300 | 68,300 | 90,300 |
| | 42 | 20,200 | 29,200 | 38,200 | 47,200 | 25,000 | 50,000 | 75,000 | 100,000 |
| | 44 | 20,800 | 32,500 | 44,200 | 55,800 | 26,700 | 56,700 | 86,700 | 118,300 |
| | 48 | 22,000 | 39,000 | 56,000 | 73,000 | 30,000 | 70,000 | 110,000 | 150,000 |
| **Class C** | 54 | 41,500 | 73,500 | 105,500 | 138,000 | 56,300 | 131,000 | 173,000 | 282,000 |
| | 60 | 55,500 | 98,200 | 141,000 | 184,800 | 75,100 | 174,500 | 208,000 | 376,000 |
| | 66 | 115,700 | 159,400 | 203,200 | 247,000 | 161,500 | 277,500 | 393,400 | 509,400 |
| | 72 | Consult Factory | | | | | | | |
| | 78 | Consult Factory | | | | | | | |
| | 84 | Consult Factory | | | | | | | |
| | 90 | Consult Factory | | | | | | | |
| | 96 | Consult Factory | | | | | | | |

## Series 32/33, 35/36 Torques Metric (Nm)

| | Valve Size mm | 32, 35, - Max △P = 5 bar | | | | 33, 36 - Max △P = 10.3 bar | | | |
|---|---|---|---|---|---|---|---|---|---|
| | | 0 bar | 1.7 bar | 3.4 bar | 5.2 bar | 0 bar | 3.4 bar | 7 bar | 10.3 bar |
| **Class B** General Service (Metric) | 550 | 616 | 718 | 819 | 921 | 915 | 1,322 | 1,661 | 2,000 |
| | 600 | 757 | 915 | 1,074 | 1,232 | 1,187 | 1,695 | 2,204 | 2,712 |
| | 650 | 893 | 1,107 | 1,322 | 1,537 | 1,401 | 2,079 | 2,757 | 3,435 |
| | 700 | 1,040 | 1,311 | 1,582 | 1,853 | 1,605 | 2,452 | 3,300 | 4,147 |
| | 750 | 1,175 | 1,503 | 1,831 | 2,158 | 1,819 | 2,836 | 3,853 | 4,870 |
| | 800 | 1,322 | 1,763 | 2,192 | 2,633 | 2,079 | 3,356 | 4,644 | 5,921 |
| | 850 | 1,526 | 2,091 | 2,656 | 3,221 | 2,367 | 3,927 | 5,492 | 7,051 |
| | 900 | 1,616 | 2,271 | 2,927 | 3,582 | 2,599 | 4,407 | 6,215 | 8,023 |
| | 1,000 | 2,057 | 2,961 | 3,853 | 4,746 | 2,746 | 5,232 | 7,718 | 10,204 |
| | 1,050 | 2,283 | 3,300 | 4,317 | 5,334 | 2,825 | 5,650 | 8,475 | 11,300 |
| | 1,100 | 2,350 | 3,673 | 4,995 | 6,305 | 3,017 | 6,407 | 9,797 | 13,368 |
| | 1,200 | 2,486 | 4,407 | 6,328 | 8,249 | 3,390 | 7,910 | 12,430 | 16,950 |
| **Class C** | 1,400 | 4,689 | 8,304 | 11,920 | 15,592 | 6,361 | 14,801 | 19,546 | 31,862 |
| | 1,500 | 6,271 | 11,095 | 15,931 | 20,880 | 8,485 | 19,716 | 23,501 | 42,482 |
| | 1,650 | 13,072 | 18,010 | 22,959 | 27,907 | 18,247 | 31,353 | 44,448 | 57,555 |
| | 1,800 | Consult Factory | | | | | | | |
| | 2,000 | Consult Factory | | | | | | | |
| | 2,200 | Consult Factory | | | | | | | |
| | 2,250 | Consult Factory | | | | | | | |
| | 2,400 | Consult Factory | | | | | | | |



All information herein is proprietary and confidential and may not be copied or reproduced without the expressed written consent of BRAY INTERNATIONAL, Inc.
The technical data herein is for general information only. Product suitability should be based solely upon customer's detailed knowledge and experience with their application.

## Series 22/23 Torques Imperial (Lb-In) and Metric (Nm)

| | In. | mm | ΔP = 0-150 psi | ΔP = 0-10.3 bar |
|---|---|---|---|---|
| | | | Lb-In | Nm |
| Valve Size | 2 | 50 | 288 | 33 |
| | 2.5 | 65 | 350 | 40 |
| | 3 | 80 | 560 | 63 |
| | 4 | 100 | 720 | 81 |
| | 5 | 125 | 960 | 108 |
| | 6 | 150 | 1,300 | 147 |
| | 8 | 200 | 2,402 | 271 |
| | 10 | 250 | 3,840 | 434 |
| | 12 | 300 | 5,812 | 657 |
| | 14 | 350 | 8,000 | 904 |
| | 16 | 400 | 11,000 | 1,243 |
| | 18 | 450 | 15,500 | 1,751 |
| | 20 | 500 | 19,300 | 2,181 |
| | 24 | 600 | 30,500 | 3,446 |

1) Torques listed are for PTFE, PFA and UHMWPE trims.
2) All information based on full rated pressure differential.



All information herein is proprietary and confidential and may not be copied or reproduced without the expressed written consent of BRAY INTERNATIONAL, Inc.
The technical data herein is for general information only. Product suitability should be based solely upon customer's detailed knowledge and experience with their application.

# DYNAMIC TORQUE FACTORS (IMPERIAL)

**To Use the Torque Chart, note the following:**

1. Dynamic Torque values include all bearing friction and stem-seal friction torques.
2. Dynamic Torque values are per 1 PSI ΔP. To determine dynamic torque (lb-in) at a desired angle of opening, multiply the pressure drop ΔP at this angle by the appropriate dynamic torque factor in the charts below.
3. Bray recommends sizing control valves between 20° and 70°, with 60° the preferred angle.
4. Dynamic Torque will tend to close all Bray valves whose disc are symmetrical to the stem.

## Series 20/21 and 30/31/3A (Dynamic Torque Factor - lb-in./psi)

| Valve Size in. | Angle of Opening | | | | | | | | | |
|---|---|---|---|---|---|---|---|---|---|---|
| | 10° | 20° | 30° | 40° | 50° | 60° | 70° | 75° | 80° | 90° |
| 2″ | 0.11 | 0.13 | 0.23 | 0.45 | 0.73 | 1.25 | 2.14 | 3.07 | 3.05 | 0.00 |
| 2.5″ | 0.22 | 0.24 | 0.43 | 0.87 | 1.39 | 2.39 | 4.09 | 5.86 | 5.83 | 0.00 |
| 3″ | 0.37 | 0.41 | 0.73 | 1.47 | 2.36 | 4.07 | 6.95 | 9.97 | 9.92 | 0.00 |
| 4″ | 0.86 | 0.95 | 1.70 | 3.43 | 5.49 | 9.45 | 16.17 | 23.19 | 23.07 | 0.00 |
| 5″ | 1.65 | 1.83 | 3.29 | 6.61 | 10.59 | 18.25 | 31.22 | 44.77 | 44.53 | 0.00 |
| 6″ | 2.49 | 2.77 | 4.97 | 10.00 | 16.01 | 27.59 | 47.19 | 67.68 | 67.32 | 0.00 |
| 8″ | 6.60 | 6.74 | 12.08 | 24.30 | 38.93 | 67.07 | 114.71 | 164.51 | 163.64 | 0.00 |
| 10″ | 11.99 | 13.32 | 23.89 | 48.06 | 76.99 | 132.65 | 226.86 | 325.35 | 323.64 | 0.00 |
| 12″ | 20.89 | 23.21 | 41.62 | 83.74 | 134.14 | 231.14 | 395.30 | 566.91 | 563.93 | 0.00 |
| 14″ | 30.04 | 33.38 | 59.84 | 120.40 | 192.87 | 332.34 | 568.37 | 815.12 | 810.83 | 0.00 |
| 16″ | 45.65 | 50.72 | 90.94 | 182.97 | 293.12 | 505.07 | 863.76 | 1238.76 | 1232.24 | 0.00 |
| 18″ | 65.91 | 73.23 | 131.30 | 264.16 | 423.18 | 729.18 | 1247.04 | 1788.44 | 1779.02 | 0.00 |
| 20″ | 91.42 | 101.57 | 182.11 | 366.39 | 586.95 | 1011.37 | 1729.64 | 2480.55 | 2467.50 | 0.00 |

Example: 4″ Valve; 60° Open with a 10 PSI pressure drop: [Td = (9.454)(10) = 94.54 lb-in]

## Series 32/33, 35/36 (Dynamic Torque Factor - lb-in./psi)

| Valve Size in. | Angle of Opening | | | | | | | | | |
|---|---|---|---|---|---|---|---|---|---|---|
| | 10° | 20° | 30° | 40° | 50° | 60° | 70° | 75° | 80° | 90° |
| 24″ | 158.36 | 175.95 | 315.46 | 634.69 | 1016.76 | 1751.99 | 2996.23 | 4297.03 | 4274.40 | 0.00 |
| 30″ | 315.32 | 350.35 | 628.13 | 1263.77 | 2024.54 | 3488.51 | 5966.01 | 8556.12 | 8511.07 | 0.00 |
| 36″ | 551.88 | 613.21 | 1099.39 | 2211.92 | 3543.45 | 6105.77 | 10442.00 | 14975.33 | 14896.49 | 0.00 |
| Larger Size Valves - Consult Factory | | | | | | | | | | |

Example: 24″ Valve; 60° Open with a 10 PSI pressure drop: [Td = (1,751.990)(10) = 17,519.90 lb-in]



All information herein is proprietary and confidential and may not be copied or reproduced without the expressed written consent of BRAY INTERNATIONAL, Inc.
The technical data herein is for general information only. Product suitability should be based solely upon customer's detailed knowledge and experience with their application.

# DYNAMIC TORQUE FACTORS (METRIC)

**To Use the Torque Chart, note the following:**

1. Dynamic Torque values include all bearing friction and stem-seal friction torques.
2. Dynamic Torque values are per 1 bar ΔP. To determine dynamic torque (Nm) at a desired angle of opening, multiply the pressure drop ΔP at this angle by the appropriate dynamic torque factor in the charts below.
3. Bray recommends sizing control valves between 20° and 70°, with 60° the preferred angle.
4. Dynamic Torque will tend to close all Bray valves whose disc are symmetrical to the stem.

## Series 20/21 and 30/31/3A (Dynamic Torque Factor - Nm/bar)

| Valve Size mm. | Angle of Opening | | | | | | | | | |
|---|---|---|---|---|---|---|---|---|---|---|
| | 10° | 20° | 30° | 40° | 50° | 60° | 70° | 75° | 80° | 90° |
| 50 | 0.19 | 0.21 | 0.37 | 0.74 | 1.19 | 2.05 | 3.51 | 5.03 | 5.00 | 0.00 |
| 65 | 0.35 | 0.39 | 0.70 | 1.42 | 2.27 | 3.91 | 6.69 | 9.60 | 9.55 | 0.00 |
| 80 | 0.60 | 0.67 | 1.20 | 2.41 | 3.87 | 6.66 | 11.39 | 16.34 | 16.25 | 0.00 |
| 100 | 1.40 | 1.56 | 2.79 | 5.61 | 8.99 | 15.49 | 26.49 | 38.00 | 37.80 | 0.00 |
| 125 | 2.70 | 3.00 | 5.39 | 10.84 | 17.36 | 29.91 | 51.16 | 73.36 | 72.98 | 0.00 |
| 150 | 4.09 | 4.54 | 8.14 | 16.38 | 26.24 | 45.22 | 77.33 | 110.91 | 110.32 | 0.00 |
| 200 | 10.82 | 11.04 | 19.79 | 39.82 | 63.79 | 109.91 | 187.97 | 269.58 | 268.16 | 0.00 |
| 250 | 19.65 | 21.83 | 39.14 | 78.75 | 126.16 | 217.38 | 371.76 | 533.16 | 530.35 | 0.00 |
| 300 | 34.24 | 38.04 | 68.20 | 137.22 | 219.82 | 378.77 | 647.77 | 929.00 | 924.11 | 0.00 |
| 350 | 49.23 | 54.70 | 98.06 | 197.29 | 316.06 | 544.61 | 931.38 | 1335.74 | 1328.71 | 0.00 |
| 400 | 74.81 | 83.12 | 149.03 | 299.83 | 480.33 | 827.66 | 1415.46 | 2029.97 | 2019.28 | 0.00 |
| 450 | 108.01 | 120.01 | 215.15 | 432.88 | 693.46 | 1194.92 | 2043.53 | 2930.72 | 2915.29 | 0.00 |
| 500 | 149.80 | 166.45 | 298.42 | 600.40 | 961.83 | 1657.34 | 2834.37 | 4064.89 | 4043.50 | 0.00 |

Example: 100 mm Valve; 60° Open with a 10 bar pressure drop: [Td = (15.49)(2) = 30.98 Nm]

## Series 32/33, 35/36 (Dynamic Torque Factor - Nm/bar)

| Valve Size mm | Angle of Opening | | | | | | | | | |
|---|---|---|---|---|---|---|---|---|---|---|
| | 10° | 20° | 30° | 40° | 50° | 60° | 70° | 75° | 80° | 90° |
| 600 | 259.50 | 288.34 | 516.94 | 1040.07 | 1666.17 | 2871.00 | 4909.94 | 7041.56 | 7004.49 | 0.00 |
| 750 | 516.71 | 574.13 | 1029.33 | 2070.95 | 3317.62 | 5716.65 | 9776.53 | 14020.96 | 13947.15 | 0.00 |
| 900 | 904.38 | 1004.86 | 1801.57 | 3624.68 | 5806.67 | 10005.56 | 17111.37 | 24540.17 | 24410.97 | 0.00 |
| Larger Size Valves - Consult Factory | | | | | | | | | | |

Example: 600 mm Valve; 60° Open with a 10 bar pressure drop: [Td = (2871)(2) = 5742.00 Nm]



All information herein is proprietary and confidential and may not be copied or reproduced without the expressed written consent of BRAY INTERNATIONAL, Inc.
The technical data herein is for general information only. Product suitability should be based solely upon customer's detailed knowledge and experience with their application.

# VALVE SIZING COEFFICIENTS

1. **Valve Sizing Coefficients (Cv)**..... Pages 15-16

    1. **Cv** stands for **Valve Sizing Coefficient**, sometimes called the **Flow Rate Coefficient**.
    2. **Cv** varies with the valve size, angle of opening and the manufacturer's valve style.
    3. **Cv** is defined as the volume of water in USGPM that will flow through a given restriction or valve opening with a pressure drop of one (1) psi at room temperature.

2. **Valve Sizing Coefficients (Kv)**..... Pages 17-18

    1. **Kv** stands for **Valve Sizing Coefficient**, sometimes called the **Flow Rate Coefficient**.
    2. **Kv** varies with the valve size, angle of opening and the manufacturer's valve style.
    3. **Kv** is defined as the volume of water in Cubic Meters/Hour ($m^3$/hr) that will flow through a given restriction or valve opening with a pressure drop of one (1) bar at room temperature.



All information herein is proprietary and confidential and may not be copied or reproduced without the expressed written consent of BRAY INTERNATIONAL, Inc.
The technical data herein is for general information only. Product suitability should be based solely upon customer's detailed knowledge and experience with their application.

## Series 20/21 - Valve Sizing Coefficient (Cv)

| Valve Size inches | Disc Position (Degrees) | | | | | | | | |
|---|---|---|---|---|---|---|---|---|---|
| | 10° | 20° | 30° | 40° | 50° | 60° | 70° | 80° | 90° |
| 1 | 0.1 | 1 | 3 | 6 | 11 | 21 | 36 | 56 | 61 |
| 1.5 | 0.2 | 2 | 6 | 11 | 26 | 50 | 87 | 129 | 147 |
| 2 | 0.9 | 7 | 16 | 27 | 45 | 73 | 123 | 172 | 244 |
| 2.5 | 1 | 11 | 25 | 43 | 71 | 115 | 201 | 310 | 439 |
| 3 | 2 | 16 | 35 | 62 | 102 | 165 | 290 | 488 | 691 |
| 4 | 4 | 28 | 63 | 110 | 182 | 294 | 515 | 906 | 1,282 |
| 5 | 6 | 44 | 98 | 172 | 284 | 459 | 805 | 1,416 | 2,070 |
| 6 | 7 | 59 | 130 | 227 | 376 | 607 | 1,065 | 1,873 | 2,786 |
| 8 | 13 | 106 | 244 | 427 | 714 | 1,147 | 1,935 | 3,402 | 5,191 |
| 10 | 21 | 168 | 387 | 675 | 1,130 | 1,815 | 3,062 | 5,385 | 8,238 |
| 12 | 31 | 245 | 562 | 981 | 1,642 | 2,636 | 4,448 | 7,820 | 12,102 |
| 14 | 40 | 307 | 706 | 1,234 | 2,064 | 3,313 | 5,590 | 9,829 | 15,210 |
| 16 | 52 | 403 | 925 | 1,617 | 2,706 | 4,343 | 7,328 | 12,885 | 19,940 |
| 18 | 68 | 528 | 1,213 | 2,121 | 3,549 | 5,695 | 9,610 | 16,898 | 26,150 |
| 20 | 85 | 660 | 1,517 | 2,651 | 4,436 | 7,120 | 12,014 | 21,124 | 32,690 |

## Series 22/23 - Valve Sizing Coefficient (Cv)

| Valve Size inches | Disc Position (Degrees) | | | | | | | | |
|---|---|---|---|---|---|---|---|---|---|
| | 10° | 20° | 30° | 40° | 50° | 60° | 70° | 80° | 90° |
| 2 | 1 | 7 | 16 | 27 | 44 | 62 | 85 | 115 | 146 |
| 2.5 | 1 | 11 | 24 | 43 | 69 | 110 | 176 | 235 | 300 |
| 3 | 2 | 15 | 35 | 61 | 98 | 158 | 286 | 413 | 586 |
| 4 | 3 | 27 | 62 | 109 | 177 | 285 | 503 | 812 | 1,051 |
| 5 | 5 | 43 | 98 | 171 | 276 | 440 | 798 | 1,297 | 1,814 |
| 6 | 6 | 57 | 129 | 226 | 364 | 580 | 1,048 | 1,737 | 2,576 |
| 8 | 12 | 104 | 242 | 424 | 698 | 1,111 | 1,908 | 3,142 | 4,354 |
| 10 | 20 | 165 | 385 | 672 | 1,105 | 1,761 | 3,004 | 4,976 | 6,834 |
| 12 | 29 | 241 | 559 | 975 | 1,604 | 2,591 | 4,420 | 7,392 | 10,090 |
| 14 | 35 | 300 | 720 | 1,280 | 2,100 | 3,300 | 5,700 | 9,350 | 12,880 |
| 16 | 45 | 350 | 850 | 1,650 | 2,750 | 4,400 | 7,500 | 12,320 | 16,900 |
| 18 | 55 | 510 | 1,200 | 2,100 | 3,600 | 5,700 | 9,830 | 15,600 | 21,600 |
| 20 | 80 | 650 | 1,550 | 2,700 | 4,480 | 7,100 | 12,200 | 19,900 | 27,500 |
| 24 | 180 | 1,000 | 2,450 | 4,600 | 7,000 | 11,300 | 18,900 | 28,500 | 34,800 |



All information herein is proprietary and confidential and may not be copied or reproduced without the expressed written consent of BRAY INTERNATIONAL, Inc.
The technical data herein is for general information only. Product suitability should be based solely upon customer's detailed knowledge and experience with their application.

## Series 30/31/31H/3A/3AH/31U - Valve Sizing Coefficient (Cv)

| Valve Size Inches | Disc Position (Degrees) | | | | | | | | |
|---|---|---|---|---|---|---|---|---|---|
| | 10° | 20° | 30° | 40° | 50° | 60° | 70° | 80° | 90° |
| 2 | 0.8 | 7 | 16 | 27 | 43 | 61 | 84 | 114 | 144 |
| 2.5 | 1 | 11 | 24 | 43 | 67 | 107 | 163 | 223 | 282 |
| 3 | 2 | 15 | 35 | 61 | 96 | 154 | 267 | 364 | 461 |
| 4 | 3 | 27 | 62 | 109 | 171 | 274 | 496 | 701 | 841 |
| 5 | 5 | 43 | 98 | 170 | 268 | 428 | 775 | 1,146 | 1,376 |
| 6 | 6 | 56 | 129 | 225 | 354 | 567 | 1,025 | 1,542 | 1,850 |
| 8 | 12 | 102 | 241 | 421 | 680 | 1,081 | 1,862 | 2,842 | 3,316 |
| 10 | 19 | 162 | 382 | 667 | 1,076 | 1,710 | 2,948 | 4,525 | 5,430 |
| 12 | 27 | 235 | 555 | 1,005 | 1,594 | 2,563 | 4,393 | 6,731 | 8,077 |
| 14 | 34 | 299 | 756 | 1,320 | 2,149 | 3,384 | 5,939 | 8,874 | 10,538 |
| 16 | 45 | 397 | 1,001 | 1,749 | 2,847 | 4,483 | 7,867 | 11,761 | 13,966 |
| 18 | 58 | 507 | 1,281 | 2,237 | 3,643 | 5,736 | 10,065 | 14,496 | 17,214 |
| 20 | 72 | 632 | 1,595 | 2,786 | 4,536 | 7,144 | 12,535 | 18,812 | 22,339 |

## Series 32/33/35/36/35F/36H - Valve Sizing Coefficient (Cv)

| Valve Size Inches | Disc Position (Degrees) | | | | | | | | |
|---|---|---|---|---|---|---|---|---|---|
| | 10° | 20° | 30° | 40° | 50° | 60° | 70° | 80° | 90° |
| 22 | 103 | 916 | 2,070 | 3,510 | 5,640 | 9,036 | 14,562 | 22,028 | 27,168 |
| 24 | 259 | 1,028 | 2,387 | 4,244 | 6,962 | 11,040 | 18,235 | 27,186 | 33,154 |
| 26 | 289 | 1,141 | 2,752 | 4,890 | 7,824 | 12,496 | 19,921 | 29,700 | 36,220 |
| 28 | 295 | 1,324 | 3,133 | 5,399 | 8,636 | 13,838 | 22,578 | 34,683 | 41,619 |
| 30 | 420 | 1,652 | 3,986 | 7,080 | 11,328 | 18,090 | 28,844 | 43,003 | 52,443 |
| 32 | 550 | 2,026 | 4,636 | 7,983 | 12,743 | 20,410 | 32,591 | 48,558 | 60,658 |
| 34 | 533 | 2,304 | 5,210 | 8,834 | 14,179 | 22,741 | 36,648 | 55,438 | 68,374 |
| 36 | 740 | 2,775 | 5,936 | 9,790 | 15,572 | 25,053 | 40,086 | 59,667 | 77,089 |
| 40 | 757 | 2,971 | 6,925 | 11,862 | 19,307 | 30,636 | 50,406 | 73,990 | 90,175 |
| 42 | 783 | 3,502 | 7,879 | 12,997 | 21,010 | 35,016 | 54,584 | 83,421 | 102,989 |
| 44 | 904 | 4,066 | 8,698 | 14,346 | 22,818 | 36,712 | 58,740 | 87,430 | 112,960 |
| 48 | 1,023 | 4,651 | 10,365 | 17,010 | 27,242 | 43,853 | 70,431 | 108,968 | 132,888 |
| 52 | Consult Factory | | | | | | | | |
| 54 | 1,299 | 5,904 | 13,158 | 21,594 | 34,583 | 55,671 | 89,411 | 138,334 | 168,700 |
| 60 | 1,480 | 6,400 | 14,500 | 24,500 | 39,400 | 63,200 | 102,000 | 154,000 | 190,000 |
| 66 | 1,650 | 7,110 | 16,100 | 27,300 | 43,800 | 70,200 | 113,000 | 171,000 | 211,000 |
| 72 | 1,900 | 8,220 | 18,600 | 31,500 | 50,700 | 81,200 | 131,000 | 198,000 | 244,000 |
| 78 | 2,290 | 9,910 | 22,400 | 38,000 | 61,000 | 97,800 | 158,000 | 238,000 | 294,000 |
| 84 | 2,290 | 11,390 | 25,800 | 43,700 | 70,200 | 112,400 | 181,000 | 274,000 | 338,000 |
| 90 | Consult Factory | | | | | | | | |
| 96 | Consult Factory | | | | | | | | |



All information herein is proprietary and confidential and may not be copied or reproduced without the expressed written consent of BRAY INTERNATIONAL, Inc.
The technical data herein is for general information only. Product suitability should be based solely upon customer's detailed knowledge and experience with their application.

## Series 20/21 - Valve Sizing Coefficient (Kv)

| Valve Size mm | Disc Position (Degrees) | | | | | | | | |
|---|---|---|---|---|---|---|---|---|---|
| | 10° | 20° | 30° | 40° | 50° | 60° | 70° | 80° | 90° |
| 25 | 0.087 | 0.865 | 2.595 | 5.190 | 9.515 | 18.165 | 31.140 | 48.440 | 52.765 |
| 40 | 0.173 | 1.730 | 5.190 | 9.515 | 22.490 | 43.250 | 75.255 | 111.585 | 127.155 |
| 50 | 0.779 | 6.055 | 13.840 | 23.355 | 38.925 | 63.145 | 106.395 | 148.780 | 211.060 |
| 65 | 0.865 | 9.515 | 21.625 | 37.195 | 61.415 | 99.475 | 173.865 | 268.150 | 379.735 |
| 80 | 1.730 | 13.840 | 30.275 | 53.630 | 88.230 | 142.725 | 250.850 | 422.120 | 597.715 |
| 100 | 3.460 | 24.220 | 54.495 | 95.150 | 157.430 | 254.310 | 445.475 | 783.690 | 1,108.930 |
| 125 | 5.190 | 38.060 | 84.770 | 148.780 | 245.660 | 397.035 | 696.325 | 1,224.840 | 1,790.550 |
| 150 | 6.055 | 51.035 | 112.450 | 196.355 | 325.240 | 525.055 | 921.225 | 1,620.145 | 2,409.890 |
| 200 | 11.245 | 91.690 | 211.060 | 369.355 | 617.610 | 992.155 | 1,673.775 | 2,942.730 | 4,490.215 |
| 250 | 18.165 | 145.320 | 334.755 | 583.875 | 977.450 | 1,569.975 | 2,648.630 | 4,658.025 | 7,125.870 |
| 300 | 26.815 | 211.925 | 486.130 | 848.565 | 1,420.330 | 2,280.140 | 3,847.520 | 6,764.300 | 10,468.230 |
| 350 | 34.600 | 265.555 | 610.690 | 1,067.410 | 1,785.360 | 2,865.745 | 4,835.350 | 8,502.085 | 13,156.650 |
| 400 | 44.980 | 348.595 | 800.125 | 1,398.705 | 2,340.690 | 3,756.695 | 6,338.720 | 11,145.525 | 17,248.100 |
| 450 | 58.820 | 456.720 | 1,049.245 | 1,834.665 | 3,069.885 | 4,926.175 | 8,312.650 | 14,616.770 | 22,619.750 |
| 500 | 73.525 | 570.900 | 1,312.205 | 2,293.115 | 3,837.140 | 6,158.800 | 10,392.110 | 18,272.260 | 28,276.850 |

## Series 22/23 - Valve Sizing Coefficient (Kv)

| Valve Size mm | Disc Position (Degrees) | | | | | | | | |
|---|---|---|---|---|---|---|---|---|---|
| | 10° | 20° | 30° | 40° | 50° | 60° | 70° | 80° | 90° |
| 50 | 0.865 | 6.055 | 13.840 | 23.355 | 38.060 | 53.630 | 73.525 | 99.475 | 126.290 |
| 65 | 0.865 | 9.515 | 20.760 | 37.195 | 59.685 | 95.150 | 152.240 | 203.275 | 259.500 |
| 80 | 1.730 | 12.975 | 30.275 | 52.765 | 84.770 | 136.670 | 247.390 | 357.245 | 506.890 |
| 100 | 2.595 | 23.355 | 53.630 | 94.285 | 153.105 | 246.525 | 435.095 | 702.380 | 909.115 |
| 125 | 4.325 | 37.195 | 84.770 | 147.915 | 238.740 | 380.600 | 690.270 | 1,121.905 | 1,569.110 |
| 150 | 5.190 | 49.305 | 111.585 | 195.490 | 314.860 | 501.700 | 906.520 | 1,502.505 | 2,228.240 |
| 200 | 10.380 | 89.960 | 209.330 | 366.760 | 603.770 | 961.015 | 1,650.420 | 2,717.830 | 3,766.210 |
| 250 | 17.300 | 142.725 | 333.025 | 581.280 | 955.825 | 1,523.265 | 2,598.460 | 4,304.240 | 5,911.410 |
| 300 | 25.085 | 208.465 | 483.535 | 843.375 | 1,387.460 | 2,241.215 | 3,823.300 | 6,394.080 | 8,727.850 |
| 350 | 30.275 | 259.500 | 622.800 | 1,107.200 | 1,816.500 | 2,854.500 | 4,930.500 | 8,087.750 | 11,141.200 |
| 400 | 38.925 | 302.750 | 735.250 | 1,427.250 | 2,378.750 | 3,806.000 | 6,487.500 | 10,656.800 | 14,618.500 |
| 450 | 47.575 | 441.150 | 1,038.000 | 1,816.500 | 3,114.000 | 4,930.500 | 8,502.950 | 13,494.000 | 18,684.000 |
| 500 | 69.200 | 562.250 | 1,340.750 | 2,335.500 | 3,875.200 | 6,141.500 | 10,553.000 | 17,213.500 | 23,787.500 |
| 600 | 155.700 | 865.000 | 2,119.250 | 3,979.000 | 6,055.000 | 9,774.500 | 16,348.500 | 24,652.500 | 30,102.000 |



All information herein is proprietary and confidential and may not be copied or reproduced without the expressed written consent of BRAY INTERNATIONAL, Inc.
The technical data herein is for general information only. Product suitability should be based solely upon customer's detailed knowledge and experience with their application.

## Series 30/31/31H/3A/3AH/31U - Valve Sizing Coefficient (Kv)

| Valve Size mm | Disc Position (Degrees) | | | | | | | | |
|---|---|---|---|---|---|---|---|---|---|
| | 10° | 20° | 30° | 40° | 50° | 60° | 70° | 80° | 90° |
| 50 | 0.692 | 6.055 | 13.840 | 23.355 | 37.195 | 52.765 | 72.660 | 98.610 | 124.560 |
| 65 | 0.865 | 9.515 | 20.760 | 37.195 | 57.955 | 92.555 | 140.995 | 192.895 | 243.930 |
| 80 | 1.730 | 12.975 | 30.275 | 52.765 | 83.040 | 133.210 | 230.955 | 314.860 | 398.765 |
| 100 | 2.595 | 23.355 | 53.630 | 94.285 | 147.915 | 237.010 | 429.040 | 606.365 | 727.465 |
| 125 | 4.325 | 37.195 | 84.770 | 147.050 | 231.820 | 370.220 | 670.375 | 991.290 | 1,190.240 |
| 150 | 5.190 | 48.440 | 111.585 | 194.625 | 306.210 | 490.455 | 886.625 | 1,333.830 | 1,600.250 |
| 200 | 10.380 | 88.230 | 208.465 | 364.165 | 588.200 | 935.065 | 1,610.630 | 2,458.330 | 2,868.340 |
| 250 | 16.435 | 140.130 | 330.430 | 576.955 | 930.740 | 1,479.150 | 2,550.020 | 3,914.125 | 4,696.950 |
| 300 | 23.355 | 203.275 | 480.075 | 869.325 | 1,378.810 | 2,216.995 | 3,799.945 | 5,822.315 | 6,986.605 |
| 350 | 29.410 | 258.635 | 653.940 | 1,141.800 | 1,858.885 | 2,927.160 | 5,137.235 | 7,676.010 | 9,115.370 |
| 400 | 38.925 | 343.405 | 865.865 | 1,512.885 | 2,462.655 | 3,877.795 | 6,804.955 | 10,173.265 | 12,080.590 |
| 450 | 50.170 | 438.555 | 1,108.065 | 1,935.005 | 3,151.195 | 4,961.640 | 8,706.225 | 12,539.040 | 14,890.110 |
| 500 | 62.280 | 546.680 | 1,379.675 | 2,409.890 | 3,923.640 | 6,179.560 | 10,842.775 | 16,272.380 | 19,323.235 |

## Series 32/33/35/36/35F/36H - Valve Sizing Coefficient (Kv)

| Valve Size mm | Disc Position (Degrees) | | | | | | | | |
|---|---|---|---|---|---|---|---|---|---|
| | 10° | 20° | 30° | 40° | 50° | 60° | 70° | 80° | 90° |
| 550 | 89.095 | 792.340 | 1,790.550 | 3,036.150 | 4,878.600 | 7,816.140 | 12,596.130 | 19,054.220 | 23,500.320 |
| 600 | 224.035 | 889.220 | 2,064.755 | 3,671.060 | 6,022.130 | 9,549.600 | 15,773.275 | 23,515.890 | 28,678.210 |
| 650 | 249.985 | 986.965 | 2,380.480 | 4,229.850 | 6,767.760 | 10,809.040 | 17,231.665 | 25,690.500 | 31,330.300 |
| 700 | 255.175 | 1,145.260 | 2,710.045 | 4,670.135 | 7,470.140 | 11,969.870 | 19,529.970 | 30,000.795 | 36,000.435 |
| 750 | 363.300 | 1,428.980 | 3,447.890 | 6,124.200 | 9,798.720 | 15,647.850 | 24,950.060 | 37,197.595 | 45,363.195 |
| 800 | 475.750 | 1,752.490 | 4,010.140 | 6,905.295 | 11,022.695 | 17,654.650 | 28,191.215 | 42,002.670 | 52,469.170 |
| 850 | 461.045 | 1,992.960 | 4,506.650 | 7,641.410 | 12,264.835 | 19,670.965 | 31,700.520 | 47,953.870 | 59,143.510 |
| 900 | 640.100 | 2,400.375 | 5,134.640 | 8,468.350 | 13,469.780 | 21,670.845 | 34,674.390 | 51,611.955 | 66,681.985 |
| 1,000 | 654.805 | 2,569.915 | 5,990.125 | 10,260.630 | 16,700.555 | 26,500.140 | 43,601.190 | 64,001.350 | 78,001.375 |
| 1,050 | 677.295 | 3,029.230 | 6,815.335 | 11,242.405 | 18,173.650 | 30,288.840 | 47,215.160 | 72,159.165 | 89,085.485 |
| 1,100 | 781.960 | 3,517.090 | 7,523.770 | 12,409.290 | 19,737.570 | 31,755.880 | 50,810.100 | 75,626.950 | 97,710.400 |
| 1,200 | 884.895 | 4,023.115 | 8,965.725 | 14,713.650 | 23,564.330 | 37,932.845 | 60,922.815 | 94,257.320 | 114,948.120 |
| 1,300 | Consult Factory | | | | | | | | |
| 1,400 | 1,123.635 | 5,106.960 | 11,381.670 | 18,678.810 | 29,914.295 | 48,155.415 | 77,340.515 | 119,658.910 | 145,925.500 |
| 1,500 | 1,280.200 | 5,536.000 | 12,542.500 | 21,192.500 | 34,081.000 | 54,668.000 | 88,230.000 | 133,210.000 | 164,350.000 |
| 1,650 | 1,427.250 | 6,150.150 | 13,926.500 | 23,614.500 | 37,887.000 | 60,723.000 | 97,745.000 | 147,915.000 | 182,515.000 |
| 1,800 | 1,643.500 | 7,110.300 | 16,089.000 | 27,247.500 | 43,855.500 | 70,238.000 | 113,315.000 | 171,270.000 | 211,060.000 |
| 2,000 | 1,980.850 | 8,572.150 | 19,376.000 | 32,870.000 | 52,765.000 | 84,597.000 | 136,670.000 | 205,870.000 | 254,310.000 |
| 2,200 | 1,980.850 | 9,852.350 | 22,317.000 | 37,800.500 | 60,723.000 | 97,226.000 | 156,565.000 | 237,010.000 | 292,370.000 |
| 2,250 | Consult Factory | | | | | | | | |
| 2,400 | Consult Factory | | | | | | | | |



All information herein is proprietary and confidential and may not be copied or reproduced without the expressed written consent of BRAY INTERNATIONAL, Inc.
The technical data herein is for general information only. Product suitability should be based solely upon customer's detailed knowledge and experience with their application.

# EXAMPLES OF TYPICAL FLANGE TO VALVE BOLTING*

## ** Lug Style Bolting

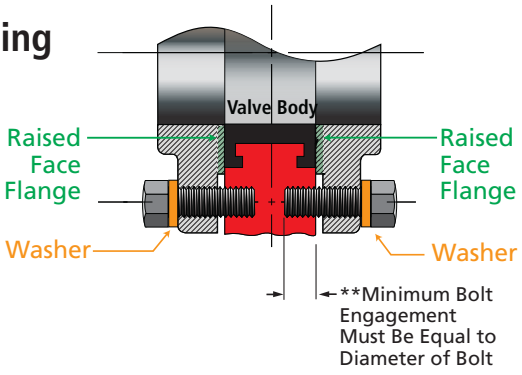


Flange Width Including Raise Face If Applicable + Washer Width + Minimum Bolt Engagement Equal to Bolt Diameter = Bolt Length



## Wafer Style Bolting

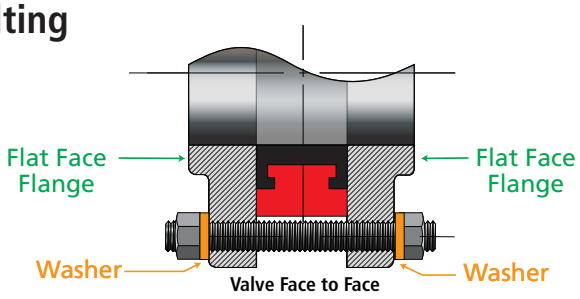


Flange Width x2 Including Raise Face If Applicable + Valve Face to Face + Washer Width x2 + Width of Nut x2 + 4 Threads (2 Per Side) = Overall Length



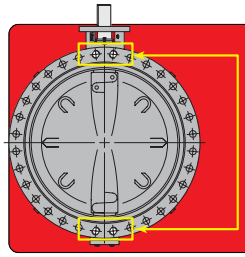

**** Note: Please refer to Appropriate Bray Dimensional Drawings for specific valve drilling information on Wafer and Lug Valves 20" and larger.**

## Please refer to ASME B-16.5 or B-16.47 for Flange and Bolt Dimension Information

* Double flange style bolting not shown.
** Lug threads may be tapped from both sides and therefore tap may not be continuous.



All information herein is proprietary and confidential and may not be copied or reproduced without the expressed written consent of BRAY INTERNATIONAL, Inc.
The technical data herein is for general information only. Product suitability should be based solely upon customer's detailed knowledge and experience with their application.

# FLANGE BOLT TENSIONING
## Bray Butterfly Valves with Metal Mating Flanges

A question frequently asked at Bray is "What torque do I apply to the flange bolts to insure the valve is properly installed?". Initially this seems to be a simple request until all of the factors are analyzed. The installation of a valve requires several components: the valve, mating flanges, nuts, bolts and studs. Each is supplied by different manufacturers and each has different characteristics. The proper torque for one combination may be too much or too little for a second combination. The following is a list of information which needs to be known in order to start calculating the torque requirements.

**Valve**
- Type
- Size
- Materials of construction (Body)
- Surface finishes / Surface conditions

**Flange**
- Type
- Size
- Finish / both sides
- Condition of flange / surface contamination

**Bolt (or Stud)**
- Type
- Materials of Construction
- Surface Conditions

**Nut**
- Type
- Materials of Construction
- Surface Conditions

**Lubrication**
- Type
- Coverage

**General Factors**
- Temperature and relative humidity at the time of installation
- Speed at which bolts are turned

**Note:** The elastomer valve seat manufactured by Bray also acts as the flange gasket. No additional gaskets are required or recommended. Other valve styles which do not have integral gaskets will need to have this component supplied. The characteristics of this component will also need to be considered.

Complete knowledge of all relevant conditions is almost impossible to obtain. As a result, the computation of the exact torque requirement is not practical. No reputable manufacturer can provide accurate information when so many outside factors are present.

The International Fasteners Institute covers some of the details required to "compute" a torque value. Even with this information the use of a torque wrench is only considered to be 25% accurate. Based on the difficulty and inaccuracy of using this method, Bray recommends the use of the "Turn of the nut" method.

**"Turn of the Nut" Tightening**
**(For ANSI Standard Iron and Steel Flanges)**
**For Non-Metallic or non-standard flanges, follow the manufacturers installation procedures.

1. The valve and flange faces must be aligned parallel to each other.

   **Note:** For rubber seated butterfly valves manufactured by Bray, it is required that the valve be fully opened prior to the tightening of the flange bolts.

2. After aligning the holes in a joint, sufficient bolts shall be placed and brought to a 'snug-tight' condition to ensure that the parts of the joint are *brought into full contact* with each other. 'Snug-Tight' is the tightness attained by the full effort of a man using a spud wrench.

3. Following the initial snugging operation, bolts shall be placed in any remaining holes and brought to snug-tightness. Re-snugging may be necessary in large joints.

4. Tighten opposite bolts in sequence to insure even pressure around the entire flange.



All information herein is proprietary and confidential and may not be copied or reproduced without the expressed written consent of BRAY INTERNATIONAL, Inc.
The technical data herein is for general information only. Product suitability should be based solely upon customer's detailed knowledge and experience with their application.

5. When all bolts are snug-tight, each bolt in the joint then shall be tightened additionally by the applicable amount of nut rotation given in Note 1. During tightening there shall be no rotation of the valve or flange.

**Note 1**

For bolt lengths **not exceeding** 8 diameters or 8 inches (203.2 mm) = **1/4 turn**
For bolt lengths **exceeding** 8 diameters or 8 inches (203.2 mm) = **1/2 turn**

**Disclaimer:**
**Bray Controls is issuing these recommendations only as a guide to installation. This recommendation is based on the full compliance of all materials supplied to their appropriate specifications. Since many of the components are not manufactured by Bray we can take no responsibility for any damage caused during installation.**

**Series 20/21 and 30/31 - Flange Bolt Torque Chart**

| Valve Size | | Normal Torque Range | Normal Torque Range |
|---|---|---|---|
| In | mm | Ft-lbs | Nm |
| 2 | 50 | 30 | 40 |
| 2.5 | 65 | 30 | 40 |
| 3 | 80 | 35 | 50 |
| 4 | 100 | 35 - 40 | 50 - 55 |
| 5 | 125 | 35 - 45 | 50 - 60 |
| 6 | 150 | 35 - 50 | 50 - 65 |
| 8 | 200 | 45 - 55 | 60 - 75 |
| 10 | 250 | 55 - 75 | 75 - 100 |
| 12 | 300 | 65 - 110 | 90 - 150 |
| 14 | 350 | 75 - 120 | 100 - 165 |
| 16 | 400 | 75 - 120 | 100 - 165 |
| 18 | 450 | 85 - 130 | 115 - 175 |
| 20 | 500 | 85 - 130 | 115 - 175 |

Please note that the Nm and Ft-lbs values are based on bolt size in respective metric and ANSI flanges, i.e. these values are not a direct conversion between Nm and Ft-lbs.

The values represent average torques needed to ensure full compression of the resilient valves' seats into the valves' bodies when installed in pipeline flanges. The face of both flanges must come into full contact with the valves' metal bodies.

No additional torque is required for proper functioning of the Bray resilient seated valves.

The torque values are based on using new, coarse-threaded, lubricated fasteners. Up to 25% may be added to the Normal Torque Range values when using non-lubricated fasteners.

Torque Values specified by flange manufacturers ***must not be exceeded.***



All information herein is proprietary and confidential and may not be copied or reproduced without the expressed written consent of BRAY INTERNATIONAL, Inc.
The technical data herein is for general information only. Product suitability should be based solely upon customer's detailed knowledge and experience with their application.

**Series 22/23 Installation - Flange Bolt Torque Chart, 150 lb Flanges**

| Valve Size | | Normal Torque Range | | Max Torque Range | |
|---|---|---|---|---|---|
| In | mm | Ft-lbs | Nm | Ft-lbs | Nm |
| 2 | 50 | 30 | 40 | 35 | 50 |
| 2.5 | 65 | 30 | 40 | 35 | 50 |
| 3 | 80 | 35 | 50 | 40 | 55 |
| 4 | 100 | 35 - 40 | 50 - 55 | 40 | 55 |
| 5 | 125 | 35 - 45 | 50 - 60 | 50 | 65 |
| 6 | 150 | 35 - 50 | 50 - 65 | 65 | 90 |
| 8 | 200 | 45 - 55 | 60 - 75 | 80 | 110 |
| 10 | 250 | 55 - 75 | 75 - 100 | 100 | 135 |
| 12 | 300 | 65 - 110 | 90 - 150 | 120 | 165 |
| 14 | 350 | 75 - 120 | 100 - 165 | 140 | 190 |
| 16 | 400 | 75 - 120 | 100 - 165 | 140 | 190 |
| 18 | 450 | 85 - 130 | 115 - 175 | 170 | 230 |
| 20 | 500 | 85 - 130 | 115 - 175 | 180 | 245 |
| 24 | 600 | 100 - 150 | 135 - 205 | 220 | 300 |

The torque values are based on using new, coarse-threaded, lubricated fasteners. Up to 15% may be added to the Normal Torque Range values when using non-lubricated fasteners. However, the maximum torque should not be exceeded.

Flange gaskets are normally not used for installation of S22/23 valves. Flange leakage may be caused by combination of out-of-parallel and/or misaligned flanges, and surface damage on the flange face and/or the face of the valve seat. In such cases, suitable flange gaskets may be used to control flange leakage.

Torque values specified by manufacturers of certain flanges, for example plastic flanges, could be lower than the values specified above. In such cases, the flange manufacturers' torque values must not be exceeded. Use flange gaskets if necessary to secure flange seal.



All information herein is proprietary and confidential and may not be copied or reproduced without the expressed written consent of BRAY INTERNATIONAL, Inc.
The technical data herein is for general information only. Product suitability should be based solely upon customer's detailed knowledge and experience with their application.

## Series 20/21 - Standard Metal Specifications

| Part | | Material | ASTM No. | UNS No. |
|---|---|---|---|---|
| **Body** | | Cast Iron | A126 Class B | |
| | | Ductile Iron | A395 Gr. 60-40-18 | F32800 |
| | | 316 Stainless Steel | A351 CF8M | J92900 |
| | | Aluminum | B26 Class B | |
| **Disc/Stem** 1-12"(25-300mm) One Piece | | 316 Stainless Steel | A351 CF8M | J92900 |
| | | Hastelloy® C22 * | B494 CX2MW | N26022 |
| | | 17-4 ph Stainless Steel | A747 CB7Cu1 Heat Treated | J92180 |
| **Disc/Stem** 14-20" (350-500mm) Fabricated | **Disc** | 316 Stainless Steel | A240 | S31600 |
| | | Hastelloy® C276 * | B575 | N10276 |
| | | 17-4 ph Stainless Steel | A564 630 Heat Treated | S17400 |
| | **Stem** | 316 Stainless Steel | A276 | S31600 |
| | | Hastelloy® C276 * | B575 | N10276 |
| | | 17-4 ph Stainless Steel | A564 630 Heat Treated | S17400 |

## Series 22/23 - Standard Metal Specifications

| Part | Material | ASTM No. | UNS No. |
|---|---|---|---|
| **Body** | Ductile Iron | A395 Gr. 60-40-18 | F32800 |
| | 316 Stainless Steel | A351 CF8M | J92900 |
| | Carbon Steel | A216 WCB | J030002 |
| **Disc** | 316 Stainless Steel | A351 CF8M | J92900 |
| | PTFE/316 SS (2"-12") | A351 CF8M | J92900 |
| | PTFE/17-4 ph SS (14"-24") | A547 CB7Cu1 | J92180 |
| | PFA/316 SS (2"-12") | A351 CF8M | J92900 |
| | PFA/17-4 ph SS (14"-24") | A547 CB7Cu1 | J92180 |
| | UHMWPE/316 SS (2"-6") | A351 CF8M | J92900 |
| | UHMWPE/DI (8"-12") | A536 Gr 65-45-12 | F33100 |
| | Hastelloy® C22 * | B494 CX2MW | N26022 |
| | Titanium | | |
| **Stem** | 17-4 ph Stainless Steel | A564 630 Heat Treated | S17400 |

* Hastelloy® is a registered trademark of Haynes International, Inc.



All information herein is proprietary and confidential and may not be copied or reproduced without the expressed written consent of BRAY INTERNATIONAL, Inc.
The technical data herein is for general information only. Product suitability should be based solely upon customer's detailed knowledge and experience with their application.

## Series 30/31, 31H, 3A/3AH, 31U - Standard Metal Specifications

| Part | Material | ASTM No. | UNS No. | 30/31 | 31H | 3A/3AH | 31U |
|---|---|---|---|---|---|---|---|
| Body | Cast Iron | A126 Class B | | ● | ● | ● | |
| | Ductile Iron | A536 Gr. 65-45-12 | F33100 | ● | ● | ● | |
| | Ductile Iron | A395 | F32800 | | | | ● |
| | Carbon Steel | A216 WCB | J030002 | ● | | ● | ● |
| | Nickel Aluminum Bronze | B148 | C95800 | | | | ● |
| | Aluminum | B26 Class B | | ● | | | |
| Disc | Aluminum Bronze | B148 | C95400 | ● | ● | ● | |
| | Nickel Aluminum Bronze | B148 | C95800 | | | | ● |
| | Nylon Coated Ductile Iron | A536 Gr. 65-45-12 | F33100 | ● | ● | ● | |
| | 316 Stainless Steel | A351 CF8M | J92900 | ● | ● | ● | ● |
| | 304 Stainless Steel | A351 CF8 | J92600 | ● | | ● | |
| | Duplex Stainless Steel | A995 Gr 4A | J92205 | ● | | ● | |
| | Super Duplex Stainless Steel | A995 Gr 5A | J93404 | ● | | ● | |
| | Super Austenitic Stainless Steel (254 SMO™)* | A351 Grade CK3MCuN | S31254 | ● | | ● | |
| | Hastelloy® C-276 * | B575 | N10276 | ● | | ● | |
| Stem | 304 Stainless Steel | A276 | S30400 | ● | | ● | |
| | 316 Stainless Steel | A276 | S31600 | ● | | ● | |
| | 416 Stainless Steel | A582 | S41600 | ● | ● | ● | ● |
| | 17-4 ph Stainless Steel | A564 630 Heat Treated | S17400 | | | | ● |
| | Monel® * | B865 | N05500 | ● | | ● | ● |

* Hastelloy® is a registered trademark of Haynes International, Inc.
Monel® is a registered trademark of International Nickel Company, Inc.
254 SMO™ is a registered trademark of Avesta AB.
AL-6XN® is a registered trademark of ATI Properties, Inc.



All information herein is proprietary and confidential and may not be copied or reproduced without the expressed written consent of BRAY INTERNATIONAL, Inc.
The technical data herein is for general information only. Product suitability should be based solely upon customer's detailed knowledge and experience with their application.

## Series 32/33, 35/36, 35F, 36H - Standard Metal Specifications

| Part | Material | ASTM No. | UNS No. | 32-36 | 36H | 35F |
|---|---|---|---|---|---|---|
| Body | Cast Iron | A126 Class B | | ● | | ● |
| | Ductile Iron | A536 Gr. 65-45-12 | F33100 | ● | ● | ● |
| | Carbon Steel | A216 Gr. WCB | J030002 | ● | | |
| | 316 Stainless Steel | A351 CF8M | J92900 | ● | | |
| Disc | Nickel Aluminum Bronze | B148 | C95800 | ● | ● | |
| | Nylon Coated Ductile Iron | A536 Gr. 65-45-12 | F33100 | ● | ● | |
| | 316 Stainless Steel | A351 CF8M | J92900 | ● | | |
| | 304 Stainless Steel | A351 CF8 | J92600 | ● | | |
| | Hastelloy® C-276 * | B575 | N10276 | CF | | ● |
| | Hastelloy® C-22 * | B494 CX2MW | N26022 | CF | | |
| | Duplex Stainless Steel | A995 Gr 5A | J93404 | ● | ● | ● |
| | Super Austenitic Stainless Steel (254 SMO ™) * | A351 Grade CK3MCuN | S31254 | ● | ● | ● |
| | Monel® * | A494 Grade M-35-1 | N24135 | ● | | |
| Stem | 304 Stainless Steel | A276 | S30400 | ● | | ● |
| | 316 Stainless Steel | A276 | S31600 | ● | | ● |
| | 416 Stainless Steel | A582 | S41600 | ● | | |
| | 17-4 ph Stainless Steel | A564 630 Heat Treated | S17400 | ● | ● | |
| | Austenitic Stainless Steel | A479 | S31651 | ● | | |
| | Super Austenitic Stainless Steel (AL-6XN®) * | A276 | N08367 | ● | ● | |
| | Monel® * | B865 | N05500 | ● | | |

* Hastelloy® is a registered trademark of Haynes International, Inc.
Monel® is a registered trademark of International Nickel Company, Inc.
254 SMO™ is a registered trademark of Avesta AB.
AL-6XN® is a registered trademark of ATI Properties, Inc.



All information herein is proprietary and confidential and may not be copied or reproduced without the expressed written consent of BRAY INTERNATIONAL, Inc.
The technical data herein is for general information only. Product suitability should be based solely upon customer's detailed knowledge and experience with their application.

Bray

BRAY FLOW CONTROL SOLUTIONS ARE
AVAILABLE FOR A VARIETY OF INDUSTRIES.

**ENERGY**
Mining
Oil & Gas
Power
Nuclear Power

**WATER**
Water / Wastewater
Ultra Pure Water
Desalination
Irrigation

**INDUSTRIAL**
Chemical
Pulp & Paper
Textile
Marine

**INFRASTRUCTURE**
Beverage & Food
Transportation
Heating, Ventilation & Air Conditioning (HVAC)

---


**US HEADQUARTERS**
**Bray International, Inc.**
13333 Westland East Blvd.
Houston, Texas 77041
Tel: +1.281.894.5454

**CHINA HEADQUARTERS**
**Bray Controls (ZheJiang) Co. Limited**
98 GaoXin #6 Road
XiaoShan Economic & Development Zone
HangZhou, ZheJiang 311231, P.R. China
Tel: +86.571.8285.2200

**EUROPE HEADQUARTERS**
**Bray Armaturen & Antriebe Europa**
Europark Fichtenhain A 13b
D-47807 Krefeld
Germany
Tel: +49.2151.5336.0

**INDIA HEADQUARTERS**
**Bray Controls India Pvt. Ltd.**
Plot No. H-18 & H-19,
SIPCOT Industrial Park
Vallam Vadagal, Echoor Post,
Sriperumbudur Taluk
Kancheepuram District,
Tami Nadu - 631 604
Tel: +91.44.67170100


---

THE SMART CHOICE FOR FLOW CONTROL SINCE 1986.
WITH MORE THAN 300 LOCATIONS WORLDWIDE,
FIND A REPRESENTATIVE NEAR YOU AT **BRAY.COM**


All statements, technical information, and recommendations in this bulletin are for general use only. Consult Bray representatives or factory for the specific requirements and material selection for your intended application. The right to change or modify product design or product without prior notice is reserved. Patents issued and applied for worldwide.

Bray® is a registered trademark of Bray International, Inc.

© 8/16/09

Bray CONTROLS



# MANUAL OPERATORS

Bray Controls offers three operators for manual control of valve position. All manual operators mount directly to Bray valves, and all are epoxy coated for excellent corrosion, abrasion and impact resistance.

| MANUAL OPERATORS | |
|---|---|
| **SERIES 01 -** Handle | 1"-12" (25mm -300mm) |
| **SERIES 04 -** Gear Operator | 2"-48" (50mm -1200mm) |
| **SERIES 05 -** Declutchable Gear Operator | 2"-36" (50mm -900mm) |

### SERIES 01 - HANDLE & NOTCH PLATE

Bray offers two handles for on-off and throttling service – one for resilient seated valves from 1"-12" (25mm-300mm), and a high torque handle for high pressure valves from 2½"- 8" (65mm-200mm). These quarter turn handles have a locking spring and a directional pointer for valve disc position indication. Bolted notch plates are offered. For resilient seated valves a 10 position plate is standard. For high pressure valves a 9 position plate is standard. Both contain on-off stops to prevent over rotation of the valve. Optionally available are an infinite position plate, a 180° notch plate, a memory stop, a padlock kit, and a 2" square nut version.

### SERIES 04 - GEAR OPERATOR

For heavy duty on-off and throttling service of 2"-48" (50mm-1200mm) valves, the Series 04 is self lubricated for smooth, trouble-free operation. The rugged, cast iron body with O-ring body seals is weatherproof to IP65. A self-locking worm and worm gear drive holds the valve in the desired position. Features include a readily accessible handwheel, a valve position indicator and mechanical travel stops which permit field adjustment of valve movement to specific degrees of rotation. Optionally available are chainwheel accessories, padlock kits and 2" square nut versions. A Gear Operator with a stainless steel housing is also available for valve sizes 1"-16".

### SERIES 05 - DECLUTCHABLE GEAR OPERATOR

Available for 2"-36" (50mm-900mm) valves. This operator is excellent for the safe handling of spring return actuators. During pneumatic operation, the worm of the gear unit is disengaged. Should the valve require opening or closing in the event of power loss, manual rotation of the declutch lever will provide a camming action and engage the worm to the segmented worm gear, allowing rotation of the valve using the handwheel. The Series 05 can be installed in the field with existing Bray pneumatic actuators.

# SERIES 04 OPTIONS

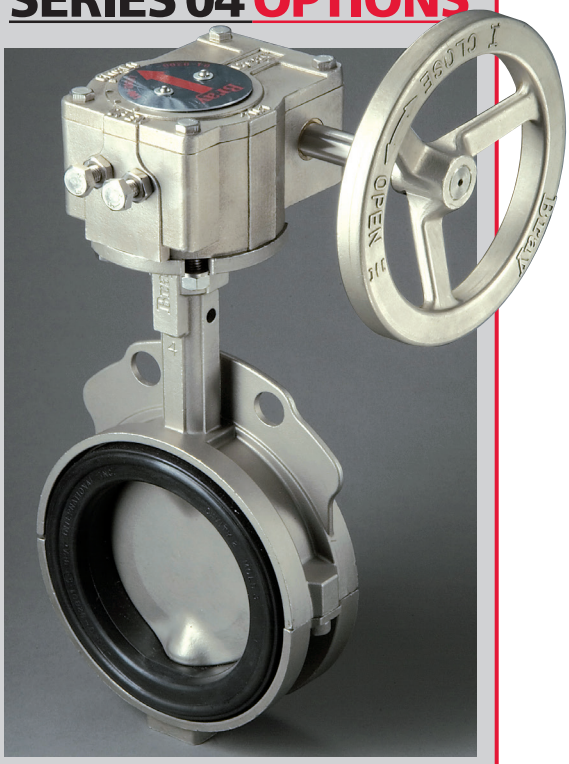

## 316 Stainless Steel
### for sanitary & corrosive applications

Bray Controls proudly offers the Series 04 Stainless Steel Gear Operator for manual operation of quarter turn valves. With stainless steel housings, input shafts and handwheels, the Series 04 is designed for service in highly corrosive environments, sanitary, breweries and pharmaceutical applications. The units are suitable for on-off and throttling service.

Series 04 Stainless Steel Gear Operator units have different gear ratios – providing a torque output range of 2,000 to 24,000 lb-in. The temperature range is -4°F (-20°C) to 250°F (120°C).

These weatherproof gear operators meet NEMA 4, 4x and IP 65 specifications.



**CHAINWHEEL** for remote access to valve positioning when the handwheel is not accessible, such as valves positioned high out of reach.

**A PADLOCK KIT & 2" SQUARE NUT** version for buried service are also available with the Series 04 (not shown).

# SERIES 01

**STANDARD 10 POSITION NOTCH PLATE** has been designed to lock the handle securely in place, preventing position change of disc due to line pressure, vibration or shock. Standard 9 Position Plate for high pressure valves is not shown.



**PADLOCK KIT** allows the customer to lock the valve in the full open or closed position, tamper proofing the valve. By drilling a new hole in the top plate, the handle can be locked in mid travel.



**HANDLE AND 180° NOTCH PLATE** allows the operator to switch the handle to either side without removing the notch plate from the valve.



**INFINITE POSITION NOTCH PLATE** for throttling applications, allows for very precise adjustments of valve disc positioning anywhere from 0° to 90°. Positioning is simply a matter of loosening the set knob, moving the handle, then retightening the knob. For resilient seated valves only.

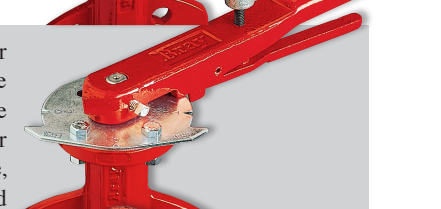

**MEMORY STOP** allows the operator to set the maximum amount the valve can open. When set, this limit will remain fixed until the stop is reset.

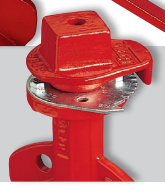

**2" SQUARE NUT** is used where the valve is buried under the surface. To rotate valve disc position, the nut is reached with a T-handle wrench.

# SERIES 05

**DECLUTCHABLE GEAR OPERATOR**

The Series 05 offers the same superior features as the Series 04 gear operator with the added ability to manually override pneumatic actuators or rotate the valve when air pressure is not available.

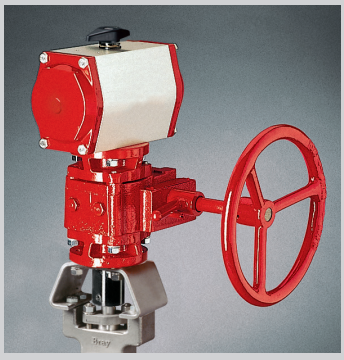

Bray® CONTROLS
A Division of BRAY INTERNATIONAL, Inc.
13333 Westland East Blvd. Houston, Texas 77041
281.894.5454 FAX 281.894.9499 www.bray.com

All statements, technical information, and recommendations in this bulletin are for general use only. Consult Bray representatives or factory for the specific requirements and material selection for your intended application. The right to change or modify product design or product without prior notice is reserved. Patents issued and applied for worldwide.

Bray® is a registered trademark of BRAY INTERNATIONAL, Inc.
© 2010 Bray International. All rights reserved. B-1025_EL_ManualOPS_2014-08

**Project name:** MELIADINE-BPC UPGRADE

**Project#:** 5000220043

**Document #:** SPK_0004_RX_VWT

**by:** CEK

**chkd:** ED

**appvd:** TS

# DECHLORINATION REACTOR RX75-3 #2

# INSTRUMENTS

**OIM manual section:** 4.2.2.5

**This page is intentionally left blank**

# CS-451-100 : Identification sheet

| | | | |
|---|---|---|---|
| VWTC PROJECT NUMBER: | 5000220043 | REV: | 1 |
| PROJECT NAME: | AEM MELIADINE-BPC UPGRADE | SUBMITTED TO (COMPANY): | AEM |
| ENGINEER: | EMMANUELLE DORMOY | SUBMITTED TO (RESPONSIBLE) | |
| PROJECT MANAGER: | THOMAS SAVARY / BRUCE BRODES | PROJECT NUM REFERENCE.: | 6526-S-265-605 / OC-989680 |
| PHONE NUMBER: | 514-334-7230 | LOT NUMBER: | |

| SUPPLIER | EQPT CODE | EQPT TAG NO | DIA | DESCRIPTION | INFO 1 | INFO 2 | INFO 3 | APPLIC. | NOTE | REV |
|---|---|---|---|---|---|---|---|---|---|---|
| XYLEM | IESWLE201156 | 65LSHH6801131 | Diameter: 100 mm, Cable: 13m, Tow release : 62 mm | HIGH LEVEL SWITCH FLOAT | LEVEL SWITCH/MANUFACTURER:FLYGT// MODEL: ENM-10 (13m) | N/A | N/A | DECHLORINATION REACTOR | | 1 |

**This page is intentionally left blank**

xylem
Let's Solve Water

Technical Specification

891480_15.0



# ENM 10

## Level regulator

FLYGT
a xylem brand

# Table of Contents

1 Product Description....2
1.1 Product design....2
1.2 Technical data....2
1.3 Cables....3
1.4 Approvals and standards....3

2 References....5
2.1 Chemical resistance tables....5
2.2 Product range....8

# 1 Product Description

## 1.1 Product design

### Usage

ENM-10 is a level regulator for level control applications. The level regulator starts and stops a pump or activates an alarm device when the liquid level reaches the regulator.

### Materials

| Denomination | Standard version | Ex version |
|---|---|---|
| Regulator casing | Polypropylene | Polypropylene with black conductive casing |
| Bend relief | EPDM rubber | NBR-PVC rubber |
| Cable sheath | PVC | NBR-PVC rubber |

The plastic components are welded and screwed together.

## 1.2 Technical data

### Application limits

| Feature | Value |
|---|---|
| Liquid temperature | Minimum 0°C (32°F)<br>Maximum 60°C (140°F) |
| Liquid density | Minimum 0.65 g/cm$^3$<br>Maximum 1.5 g/cm$^3$ |

### Electrical specifications

| Feature | Value |
|---|---|
| Degree of protection | IP68, 20 m (65 ft), 2 bars |
| Interrupting capacity of micro switch | AC, resistive load, 250 V 10 A<br>AC, inductive load, 250 V 3 A<br>cos ϕ = 0.5<br>DC, 30 V 5 A |
| Interrupting capacity of gold-plated micro switch | AC, resistive load, 250 V 10 A<br>AC, inductive load, 250 V 3 A<br>cos ϕ = 0.5<br>DC, 24 V 10 mA |

Voltage limits are subject to local regulations.

### Density ranges

| Density g/cm$^3$ | Regulator length mm (in.) | Diameter mm (in.) |
|---|---|---|
| 0.65 – 0.80 | 194 (7 10/16) | 100 (4) |
| 0.80 – 0.95 | 177 (7) | 100 (4) |
| 0.95 – 1.10 | 162 (6 3/8) | 100 (4) |
| 1.05 – 1.20 | 142 (5 9/16) | 100 (4) |
| 1.20 – 1.30 | 133 (5 1/4) | 100 (4) |
| 1.30 – 1.40 | 130 (5 2/16) | 100 (4) |

| Density g/cm$^3$ | Regulator length mm (in.) | Diameter mm (in.) |
|---|---|---|
| 1.40 – 1.50 | 126 (5) | 100 (4) |

### Weight

A regulator with standard density and 20 m cable weighs approximately 2 kg (4.5 lb).

## 1.3 Cables

### Lengths

For liquids with specific density between 0.95 and 1.10 g/cm$^3$, the following cables are available:

| Version | Lengths m (ft) |
|---|---|
| Standard | • 6 m (20 ft)<br>• 13 m (42 ft)<br>• 20 m (65 ft)<br>• 30 m (100 ft)<br>• 50 m (167 ft) |
| Ex | • 6 m (20 ft)<br>• 13 m (42 ft)<br>• 20 m (65 ft) |

### Diameter

The cable diameter for all product variants is 6.7 mm (0.26 in), +/- 0.2 mm (0.00787 in).

### Color codes

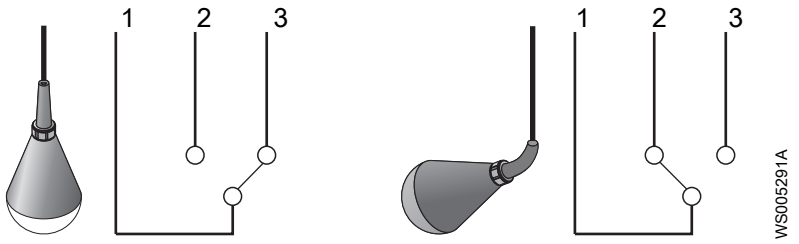


| Cable | 1 | 2 | 3 |
|---|---|---|---|
| Color | Grey | Black | Brown |

## 1.4 Approvals and standards

### Standard approvals

LVD approval according to EN61058
CSA approval: Certificate Number 1330172
Cl. I Zone 0, Gr. IIC
CL.I Div.1 Gr A, B, C and D
Cl.II Gr. E, F, and G

### Ex approvals

IECEx ia IIC T4 Ga: -20°C≤Ta≤60°C
IECEx NEMKO 09.008
ATEX II 1G Ex ia IIC T4
NEMKO 10 ATEX 1082

### Applied standards for ATEX and IEC

- EN 60079-0:2012/IEC 60079-0:2011
- EN 60079-11:2012/IEC 60079-11:2011
- IEC 60079-26:2014

Intrinsically safe circuits are required for the automatic control system. Use a Zener barrier, for example, part number 84 01 07.

The electrical connections must comply with the Ex regulations of the national submitter.



# 2 References

## 2.1 Chemical resistance tables

The tables show the degree of resistance the level regulator has to different chemicals at two different temperatures. The density of the liquid determines the buoyancy of the regulator.

### Acids

| Acid | PVC cable | | NBR/PVC cable | |
|---|---|---|---|---|
| | 20°C (68°F) | 60°C (140°F) | 20°C (68°F) | 60°C (140°F) |
| Acetic acid 50% | 1 | 2 | 0 | 0 |
| Acetic acid 75% | 2 | 2 | 0 | 0 |
| Benzoic acid | 2 | 2 | 0 | 0 |
| Boric acid 5% | 0 | – | 0 | 0 |
| Butyric acid | 2 | 2 | 2 | 2 |
| Chromic acid 10% | 0 | 2 | 2 | 2 |
| Citric acid | 0 | 1 | 0 | 0 |
| Hydrobromic acid 5% | 1 | 2 | 0 | 0 |
| Hydrochloric acid 10% | 0 | 1 | 0 | 1 |
| Hydrochloric acid 37% | 1 | 2 | 0 | 2 |
| Hydrocyanic acid 10% | 0 | 0 | 1 | 2 |
| Hydrofluoric acid 5% | 0 | 2 | 0 | 1 |
| Hypochloric acid | 1 | 2 | 2 | 2 |
| Maleic acid | 2 | 2 | 2 | 2 |
| Nitric acid 5% | 1 | 1 | 1 | 1 |
| Nitric acid 65% | 2 | 2 | 2 | 2 |
| Oleic acid | 1 | 2 | 2 | 2 |
| Oxalic acid 50% | 1 | 1 | 1 | 2 |
| Phosphoric acid 25% | 0 | 0 | 1 | 2 |
| Phosphoric acid 85% | 0 | 0 | 1 | 2 |
| Sulphuric acid 10% | 1 | 2 | 1 | 2 |
| Sulphuric acid 78% | 2 | 2 | 2 | 2 |
| Tannic acid | 0 | 0 | 0 | 0 |
| Tartaric acid | 1 | 1 | 1 | 1 |

0 = No effect. 1 = Minor to moderate effect. 2 = Severe effect. – = No available information.

### Alkalis

| Alkali | PVC cable | | NBR/PVC cable | |
|---|---|---|---|---|
| | 20°C (68°F) | 60°C (140°F) | 20°C (68°F) | 60°C (140°F) |
| Ammonium hydroxide | 0 | – | 0 | 0 |
| Calcium hydroxide | 0 | 0 | 0 | 0 |

| Alkali | PVC cable | | NBR/PVC cable | |
|---|---|---|---|---|
| | 20°C (68°F) | 60°C (140°F) | 20°C (68°F) | 60°C (140°F) |
| Potassium hydroxide | 1 | 2 | 0 | 0 |
| Sodium hydroxide | 1 | 2 | 0 | 0 |

0 = No effect. 1 = Minor to moderate effect. 2 = Severe effect. – = No available information.

## Salts

| Salt | PVC cable | | NBR/PVC cable | |
|---|---|---|---|---|
| | 20°C (68°F) | 60°C (140°F) | 20°C (68°F) | 60°C (140°F) |
| Aluminum chloride | 0 | 0 | 0 | 0 |
| Calcium sulphate | 0 | 0 | 0 | 0 |
| Calcium chloride | 0 | 0 | 0 | 0 |
| Calcium nitrate | 0 | 0 | 0 | 0 |
| Copper chloride | 0 | 0 | 0 | 0 |
| Copper sulphate | 0 | 0 | 0 | 0 |
| Ferric chloride | 0 | 0 | 0 | 0 |
| Ferrous sulphate | 0 | 0 | 0 | 0 |
| Magnesium chloride | 0 | 0 | 0 | 0 |
| Potassium sulphate | 0 | 0 | 0 | 0 |
| Potassium nitrate | 0 | 0 | 0 | 0 |
| Potassium carbonate | 1 | 1 | 1 | 1 |
| Potassium bicarbonate | 0 | 0 | 0 | 0 |
| Sodium sulphate | 0 | 0 | 0 | 0 |
| Sodium chloride | 0 | 0 | 0 | 0 |
| Sodium nitrate | 0 | 0 | 0 | 0 |
| Sodium bicarbonate | 0 | 0 | 0 | 0 |
| Sodium carbonate | 0 | 0 | 0 | 0 |
| Tin chloride | 1 | 1 | 1 | 1 |
| Zinc sulphate | 0 | 0 | 0 | 0 |
| Zinc chloride | 0 | 0 | 0 | 0 |

0 = No effect. 1 = Minor to moderate effect. 2 = Severe effect. – = No available information.

## Oils

| Oil | PVC cable | | NBR/PVC cable | |
|---|---|---|---|---|
| | 20°C (68°F) | 60°C (140°F) | 20°C (68°F) | 60°C (140°F) |
| Castor oil | 1 | 1 | 1 | 1 |
| Coconut oil | 0 | – | 0 | 2 |
| Corn oil | 2 | 2 | 2 | 2 |
| Diesel oil | 2 | 2 | 2 | 2 |
| Linseed oil | 2 | 2 | 2 | 2 |
| Mineral oils | 2 | 2 | 2 | 2 |
| Olive oil | 1 | 1 | 1 | 1 |
| Silicone oils | 0 | 0 | 0 | 0 |

0 = No effect. 1 = Minor to moderate effect. 2 = Severe effect. – = No available information.

### Solvents and miscellaneous

| Chemical | PVC cable | | NBR/PVC cable | |
|---|---|---|---|---|
| | 20°C (68°F) | 60°C (140°F) | 20°C (68°F) | 60°C (140°F) |
| Acetone | 2 | 2 | 2 | 2 |
| Aniline | 2 | 2 | 1 | 2 |
| Benzene | 2 | 2 | 2 | 2 |
| Butyl alcohol | 2 | 2 | 0 | 1 |
| Carbon tetrachloride | 2 | 2 | 2 | 2 |
| Chlorobenzene | 2 | 2 | 2 | 2 |
| Chloroform | 2 | 2 | 2 | 2 |
| Ethyl alcohol | 2 | 2 | 0 | 1 |
| Ethyl ether | 2 | 2 | 2 | 2 |
| Ethyl acetate | 2 | 2 | 2 | 2 |
| Ethylene dichloride | 2 | 2 | 2 | 2 |
| Ethylene chloride | 2 | 2 | 2 | 2 |
| Formaldehyde 37% | 1 | 2 | 0 | 0 |
| Gasoline | 2 | 2 | 2 | 2 |
| Kerosene | 2 | 2 | 2 | 2 |
| Methyl alcohol | 2 | 2 | 0 | 0 |
| Methyl ethyl ketone | 2 | 2 | 2 | 2 |
| Methylene chloride | 2 | 2 | 2 | 2 |
| Nitrobenzene | 2 | 2 | 2 | 2 |
| Phenol | 2 | 2 | 2 | 2 |
| Toluene | 2 | 2 | 2 | 2 |
| Trichlorethylene | 2 | 2 | 2 | 2 |
| Turpentine | 2 | 2 | 2 | 2 |
| Xylene | 2 | 2 | 2 | 2 |

0 = No effect. 1 = Minor to moderate effect. 2 = Severe effect. – = No available information.

### Gases

| Gas | PVC cable | | NBR/PVC cable | |
|---|---|---|---|---|
| | 20°C (68°F) | 60°C (140°F) | 20°C (68°F) | 60°C (140°F) |
| Carbon dioxide | 0 | 0 | 0 | 0 |
| Carbon monoxide | 0 | 0 | 0 | 0 |
| Chlorine – wet | 2 | 2 | 2 | 2 |
| Hydrogen sulfide | 0 | 0 | 1 | 1 |
| Sulphur dioxide – wet | 1 | 1 | 2 | 2 |

0 = No effect. 1 = Minor to moderate effect. 2 = Severe effect. – = No available information.

## 2.2 Product range

| Version | For density (g/cm$^3$) | Color of level switch | Length of cable (m) | Type of cable[1] | Approvals | For market |
|---|---|---|---|---|---|---|
| 582 88 00 | 0.65 - 0.80 | Blue | 20 | 1 | CE | International |
| 582 88 01 | 0.80 - 0.95 | Blue | 20 | 1 | CE | International |
| 582 88 02 | 0.95 - 1.10 | Blue | 6 | 1 | CE | International |
| 582 88 03 | 0.95 - 1.10 | Blue | 13 | 1 | CE | International |
| 582 88 04 | 0.95 - 1.10 | Blue | 20 | 1 | CE | International |
| 582 88 05 | 1.05 - 1.20 | Blue | 20 | 1 | CE | International |
| 582 88 06 | 1.20 - 1.30 | Blue | 20 | 1 | CE | International |
| 582 88 07 | 1.30 - 1.40 | Blue | 20 | 1 | CE | International |
| 582 88 08 | 1.40 - 1.50 | Blue | 20 | 1 | CE | International |
| 582 88 09 | 0.65 - 0.80 | Gray | 20 | 3 | CSA/CE | Canada |
| 582 88 10 | 0.80 - 0.95 | Gray | 20 | 3 | CSA/CE | Canada |
| 582 88 11 | 0.95 - 1.10 | Gray | 6 | 3 | CSA/CE | Canada |
| 582 88 12 | 0.95 - 1.10 | Gray | 13 | 3 | CSA/CE | Canada |
| 582 88 13 | 0.95 - 1.10 | Gray | 20 | 3 | CSA/CE | Canada |
| 582 88 14 | 1.05 - 1.20 | Gray | 20 | 3 | CSA/CE | Canada |
| 582 88 15 | 1.20 - 1.30 | Gray | 20 | 3 | CSA/CE | Canada |
| 582 88 16 | 1.30 - 1.40 | Gray | 20 | 3 | CSA/CE | Canada |
| 582 88 17 | 1.40 - 1.50 | Gray | 20 | 3 | CSA/CE | Canada |
| 582 88 18 | 0.65 - 0.80 | Gray | 20 | 1 | CSA/CE | Canada |
| 582 88 19 | 0.80 - 0.95 | Gray | 20 | 1 | CSA/CE | Canada |
| 582 88 20 | 0.95 - 1.10 | Gray | 6 | 1 | CSA/CE | Canada |
| 582 88 21 | 0.95 - 1.10 | Gray | 13 | 1 | CSA/CE | Canada |
| 582 88 22 | 0.95 - 1.10 | Gray | 20 | 1 | CSA/CE | Canada |
| 582 88 23 | 1.05 - 1.20 | Gray | 20 | 1 | CSA/CE | Canada |
| 582 88 24 | 1.20 - 1.30 | Gray | 20 | 1 | CSA/CE | Canada |
| 582 88 25 | 1.30 - 1.40 | Gray | 20 | 1 | CSA/CE | Canada |
| 582 88 26 | 1.40 - 1.50 | Gray | 20 | 1 | CSA/CE | Canada |
| 582 88 36 | 0.95 - 1.10 | Gray | 30 | 3 | CSA/CE | Canada |
| 582 88 37 | 0.95 - 1.10 | Gray | 50 | 3 | CSA/CE | Canada |
| 582 88 38 | 0.95 - 1.10 | Gray | 100 | 3 | CSA/CE | Canada |
| 582 88 39 | 0.95 - 1.10 | Gray | 150 | 3 | CSA/CE | Canada |
| 582 88 51 | 0.95 - 1.10 | Red | 65 | 2 | CE | International |
| 582 88 52 | 0.95 - 1.10 | Red | 6 | 2 | CE | International |
| 582 88 53 | 0.95 - 1.10 | Red | 13 | 2 | CE | International |
| 582 88 54 | 0.95 - 1.10 | Red | 20 | 2 | CE | International |
| 582 88 57 | 0.95 - 1.10 | Red | 20 | 2 | CE | Canada |
| 582 88 70 | 0.65 - 0.80 | Blue | 20 | 3 | CE | International |
| 582 88 71 | 0.80 - 0.95 | Blue | 20 | 3 | CE | International |
| 582 88 72 | 0.95 - 1.10 | Blue | 6 | 3 | CE | International |
| 582 88 73 | 0.95 - 1.10 | Blue | 13 | 3 | CE | International |

[1] See *Type of cables* on page 9.

| Version | For density (g/cm$^3$) | Color of level switch | Length of cable (m) | Type of cable[1] | Approvals | For market |
|---|---|---|---|---|---|---|
| 582 88 74 | 0.95 - 1.10 | Blue | 20 | 3 | CE | International |
| 582 88 75 | 1.05 - 1.20 | Blue | 20 | 3 | CE | International |
| 582 88 76 | 1.20 - 1.30 | Blue | 20 | 3 | CE | International |
| 582 88 77 | 1.30 - 1.40 | Blue | 20 | 3 | CE | International |
| 582 88 78 | 1.40 - 1.50 | Blue | 20 | 3 | CE | International |
| 582 88 79 | 0.95 - 1.10 | Blue | 65 | 1 | CE | International |
| 582 88 80 | 0.95 - 1.10 | Blue | 30 | 1 | CE | International |
| 582 88 81 | 0.95 - 1.10 | Blue | 50 | 1 | CE | International |
| 582 88 82 | 0.95 - 1.10 | Gray | 30 | 1 | CSA/CE | Canada |
| 582 88 83 | 0.95 - 1.10 | Gray | 50 | 1 | CSA/CE | Canada |
| 582 88 86 | 0.95 - 1.10 | Red | 30 | 2 | CE | International |
| 582 88 87 | 0.95 - 1.10 | Red | 50 | 2 | CE | International |
| 582 88 90 | 0.95 - 1.10 | Blue | 30 | 3 | CE | International |
| 582 88 91 | 0.95 - 1.10 | Blue | 50 | 3 | CE | International |
| 582 88 92 | 0.95 - 1.10 | Red | 6 | 2 | CE | Japan |
| 582 88 93 | 0.95 - 1.10 | Red | 13 | 2 | CE | Japan |
| 582 88 94 | 0.95 - 1.10 | Red | 20 | 2 | CE | Japan |
| 582 88 95 | 0.95 - 1.10 | Blue | 6 | 1 | CE | Japan |
| 582 88 96 | 0.95 - 1.10 | Blue | 13 | 1 | CE | Japan |
| 582 88 98 | 0.95 - 1.10 | Blue | 50 | 1 | CE | Japan |
| 594 79 10 | 0.95 - 1.10 | Blue | 70 | 3 | CE | International |
| 594 79 13 | 0.95 - 1.10 | Blue | 100 | 3 | CE | International |
| 594 79 18 | 0.95 - 1.10 | Blue | 150 | 3 | CE | International |
| 594 79 19[2] | 0.95 - 1.10 | Blue | 20 | 3 | CE | International |
| 594 79 20[2] | 0.95 - 1.10 | Gray | 20 | 3 | CSA/CE | International |
| 594 79 40[2] | 0.95 - 1.10 | Black | 6 | 3 | ATEX/IECEx[3] | International |
| 594 79 41[2] | 0.95 - 1.10 | Black | 13 | 3 | ATEX/IECEx[3] | International |
| 594 79 42[2] | 0.95 - 1.10 | Black | 20 | 3 | ATEX/IECEx[3] | International |
| 594 79 21 [2] | 0.95 - 1.10 | Transparent | 6 | 3 | CE | For demonstration only. |

## Type of cables

| Type of cable | Jacket | Color coding of wires |
|---|---|---|
| 1 | Blue polyvinyl chloride (PVC) | Grey/Brown/Black |
| 2 | Red PVC | Grey/Brown/Black |
| 3 | Black nitrile rubber (NBR)/PVC | Grey/Brown/Black |

1 See *Type of cables* on page 9.
2 Designed for low current, slow movements and oil. Includes micro switch with gold plated contacts.
3 Zener barrier 84 01 07 required.

# Xylem |'zīləm|

1) The tissue in plants that brings water upward from the roots;
2) a leading global water technology company.

We're a global team unified in a common purpose: creating advanced technology solutions to the world's water challenges. Developing new technologies that will improve the way water is used, conserved, and re-used in the future is central to our work. Our products and services move, treat, analyze, monitor and return water to the environment, in public utility, industrial, residential and commercial building services settings. Xylem also provides a leading portfolio of smart metering, network technologies and advanced analytics solutions for water, electric and gas utilities. In more than 150 countries, we have strong, long-standing relationships with customers who know us for our powerful combination of leading product brands and applications expertise with a strong focus on developing comprehensive, sustainable solutions.

For more information on how Xylem can help you, go to www.xylem.com

xylem
Let's Solve Water

Xylem Water Solutions Global Services AB
361 80 Emmaboda
Sweden
Tel: +46-471-24 70 00
Fax: +46-471-24 74 01
http://tpi.xyleminc.com
www.xylemwatersolutions.com/contacts/

Visit our Web site for the latest version of this document and more information

The original instruction is in English. All non-English instructions are translations of the original instruction.

© 2014 Xylem Inc

891480_16.0_en-US_2019-04_TS_ENM 10

**This page is intentionally left blank**

**Project name:** MELIADINE-BPC UPGRADE

**Project#:** 5000220043

**Document #:** SPK_0004_RX_VWT

**by:** CEK

**chkd:** ED

**appvd:** TS

# DECHLORINATION REACTOR RX75-3 #2

# PAINT SPECS

**OIM manual section:** 4.2.2.6

**This page is intentionally left blank**

# TANK CONSTRUCTION SPECIFICATIONS
## & PAINT SPECIFICATIONS
## RAL 7040 TANK WINDOW GREY (EXTERIOR)
## & LIGHT GREY (INTERIOR)

# CC-07-ACP

## 1.0 GENERAL

This specification describes construction elements of the steel welded tank and paint specifications of ACP MK3 product.

## 2.0 MATERIALS

- Carbon steel must conform to CSA 44W, unless otherwise specified (see type on plan);
- Nominal thickness, refer to plan.

## 3.0 CONSTRUCTION

According to the specifications of the referred plan(s):

- Steel plates and sections must conform to Canadian norm G40.21M-300W, except for HSS that must conform to Canadian norm G40.21M-350W;

- Welds will be realized according to the details shown on the referenced plan. All welds must conform to the Canadian norm CSA W59 standard. Remove surface defects and grind all sharp edges. Make sure to completely remove the flux and welding splashes. The fusion welding certifications to produce by the company will be: W47.1, W59;

- Welding process:

    - Flux-Cored Arc Welding (FCAW);
    - MIG welding;
    - Electrodes (SMAW).

- Welds will be brushed and be devoid of spots;

- All modifications to the dimensions or to the quality of materials, and dispositions other than those indicated on the plans, are subject to prior demand to **Veolia Water Technologies Canada Inc's.,** person in charge, and his subsequent written.

## 4.0 STEEL PREPARATION FOR PAINTING

- Tank's interior and exterior surfaces must be perfectly cleaned from grease and all other foreign substance;

- All sharp edges must be grinded;

- All flanged surfaces and threaded connections must be cleaned and protected adequately to avoid paint contact;

- The rough edges, weld splatter, excess metal flux and sharp edges must be removed by grinding.

## 5.0 CONTROL

### 5.1 Welds

Once completed, all tank interior welds must be dye penetrant inspected to verify the quality of the welds. All welds must be water tight, free from porosity, cracks and drains and in accordance with norm CSA W59.
A dye penetrant test control should be done on all interior welds. Exterior welds must be visually inspected only.
All lifting and handling lugs must be subject to magnetic particle testing and report. Quality control from **Veolia Water Technologies Canada Inc.** will verify results of welds control.

### 5.2 Dimensional

The dimensional control will be done by the manufacturer. At the same time, **Veolia Water Technologies Canada Inc.'s** inspector will provide control. Minutes will be written detailing the dimensional and tolerance divergences. These values are noted on the piece's plan, assigned to control.

### 5.3 Documents and Certificates of Material (to Supply)

The manufacturer will supply to **Veolia Water Technologies Canada Inc.'s** inspector at the beginning of work, the following documents:

- Planning of work, with detailed manufacturing stages;
- Supply Bill of Materials;
- Material certificates with copy of the supplier's delivery slip;
- Welding procedures.

## 6.0 TREATMENT

### 6.1 Internal Treatment

- Sandblast as per SSPC-SP-10;
- Brush application on welds and difficult to reach places (inside of holes and openings) of one layer of DURA_PLATE UHS by SHERWIN WILLIAMS, color « light green » and;
- Application of one coat of DURA-PLATE-UHS NSF61 compliant by SHERWIN WILLIAMS, 20 to 28 mils dft (restricted level 5 as per SSPC-PA 2), color « light gray »;
- Important note: **Never dilute** the DURA-PLATE-UHS paint.

- Only if needed, application of one coat of DURA-PLATE UHS PRIMER by SHERWIN WILLIAMS, 4 to 8 mils dft per coat, color “Gold”, if required depending on atmospheric conditions and delays between sandblast and paint.

### 6.2 External Treatment

- Sandblast as per SSPC-SP-6;
- Spacing between intermittent welds should be filled with an hybrid sealant LOXON H-1 by SHERWIN WILLIAMS before the application of the external coating;
- Brush application on welds and difficult to reach places (inside of holes and openings) of one layer of ENVIROLASTIC 940 LV by SHERWIN WILLIAMS, color «  White »;
- Application of one layer of ENVIROLASTIC 940 LV by SHERWIN WILLIAMS, 7.0 to 9.0 mils dft, ( restricted level 5 as per SSPC-PA 2),  color RAL 7040 Window Grey.

### 6.3 Piping Treatment

Identical to the external coating of the works as stated for the tank previously.  There is no internal coating to provide for the nozzles of 3″ diameter or less (should be made from Stainless Steel). Ensure pipe ends and flanges are covered with paint with the exception of the raised face.

### 6.4 Extra Paint to be Supplied

For every equipment, a touch-up paint kit of 1 gallon for both internal and exterior paint must be provided at shipping. Please attach the product label.

### 6.5 Application Procedure

The supplier’s procedure for application must be followed.

### 6.6 Protection of Metallic Parts during Treatment

Threads, tapping, flange joint plans, etc. will be protected before sanding and treatment.

### 6.7 Paint Inspection

All interior surfaces must be inspected by performing a Holiday test in accordance with the standard NACE SP 0188, to verify the presence of discontinuity in the paint.

## 7.0 PACKAGING

- Plastic plug of the male and female threaded end caps;
- Wood plugs on flange sides.

## 8.0 HANDLING OF THE TANKS

- Always install the holding rings and any internal supporting beams before handling tanks.
- The tanks must be raised by chains attached to the holding rings. A minimum angle of 60º must be maintained. (see pictures)
- The lifting should ideally be carried out in two parallel points. (see pictures)

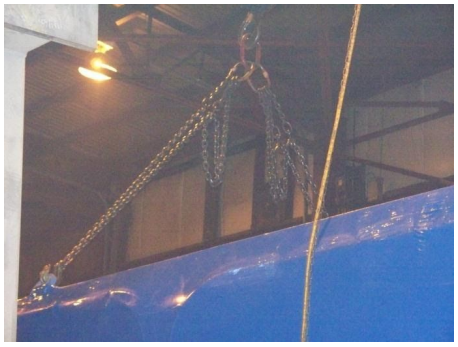



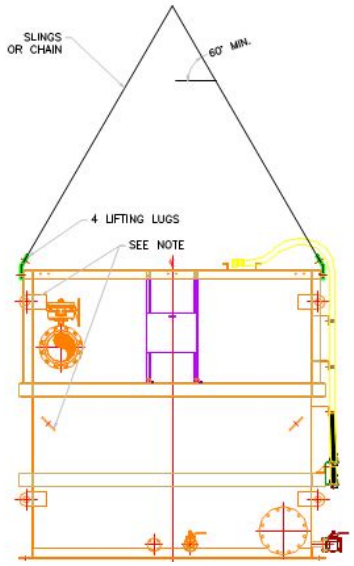


***ATTENTION*: Never use the side rings to lift and /or manipulate the tank. These rings should only be used to attach the tank during transport.**

## Tightening Torque for Lifting Hooks

| Model | Bolt Diam. | TPI | Fastener Coating (Bolt, washer & nut) | SAE & Grade (Bolt, washer & nut) | Torque Value (Lbs-ft) |
|---|---|---|---|---|---|
| **Actiflo** | | | | | |
| ACP-150R/ACP2-15 | 5/8 UNC | 11 | Zinc Plated | SAE J429 – Grade 8 | 190 |
| ACP-300R/ACP2-30 | 5/8 UNC | 11 | Zinc Plated | SAE J429 – Grade 8 | 190 |
| ACP-400R/ACP2-40 | 5/8 UNC | 11 | Zinc Plated | SAE J429 – Grade 8 | 190 |
| ACP-450R/ACP2-45 | 5/8 UNC | 11 | Zinc Plated | SAE J429 – Grade 8 | 190 |
| ACP-550R/ACP2-55 | 1 UNC | 8 | Zinc Plated | SAE J429 – Grade 8 | 818 |
| ACP-600R/ACP2-60 | 1 UNC | 8 | Zinc Plated | SAE J429 – Grade 8 | 818 |
| ACP-700R/ACP2-70 | 1 UNC | 8 | Zinc Plated | SAE J429 – Grade 8 | 818 |
| ACP-750R/ACP2-75 | 1 UNC | 8 | Zinc Plated | SAE J429 – Grade 8 | 818 |

# *4 – DETAILED TECHNICAL DOCUMENTATION*

## *4.2 – SHOP DRAWINGS*

## *4.2.3 – CLARIFIER #1 ACP-700R*

LEFT BLANK

| | |
|---|---|
| **Project name:** | MELIADINE-BPC UPGRADE |
| **Project#:** | 5000220043 / 6526-S-265-605 / OC-989680 |
| **Document #:** | SPK_0002_ACP_VWT |
| **by:** | CEK |
| **chkd:** | ED |
| **appvd:** | TS |

# SUBMITTAL PACKAGE

# CLARIFIER #1 ACP-700R

**REV 4**
**DATE:2021-05-27**

**This page is intentionally left blank**

| | |
|---|---|
| **Project name:** | MELIADINE-BPC UPGRADE |
| **Project#:** | 5000220043 |
| **Document #:** | SPK_0002_ACP_VWT |
| **by:** | CEK |
| **chkd:** | ED |
| **appvd:** | TS |

# CLARIFIER #1 ACP-700R

# PROCESS DATASHEET

**OIM manual section:** 4.2.3.1

**This page is intentionally left blank**

| | | | | | | | |
|---|---|---|---|---|---|---|---|
| VEOLIA | | | | VWT DOC# | PSDS_0002_ACP_VWT | | |
| | | | | PROJECT No | 5000220043 | | |
| | | | | CLIENT PROJECT # | 6526-S-265-605 / OC-989680 | | |
| | | | | Date | 2021-01-11 | | |
| | | | | | **CLARIFIER #1** | | |
| **CLIENT** | **REV** | **DESCRIPTION** | | **DATE** | **By:** | **CHKD** | **APP.** |
| **A.E.M.** | **1** | For Approval | | 2021-01-11 | C.E.K | E.D | T.S |
| | **2** | For Information | | 2021-04-06 | C.E.K | E.D | T.S |
| **PROJECT** | **3** | For Information II | | 2021-04-22 | C.E.K | E.D | T.S |
| **MELIADINE - BPC Upgrade** | **4** | For Information III | | 2021-05-27 | C.E.K | E.D | T.S |
| | **5** | | | | | | |
| | **6** | | | | | | |
| | **7** | | | | | | **REV** |
| **GENERAL INFORMATION** | **Technology** | | | - | ACTIFLO | | |
| | **Number of trains** | | | - | 1 | | |
| | **Type** | | | - | Prefab. Classic Actiflo | | |
| | **Model** | | | | ACP-700R | | |
| | **Number of units** | | | - | 1 | | |
| **ENVIRONMENT CONDITIONS** | **Equipment Location** | | | - | Indoor | | |
| | **Altitude (if blower)** | | | **m** | N/A | | |
| | **Min. Temperature- WATER** | | | **°C** | -4 | | |
| | **Max. Temperature- WATER** | | | **°C** | 12 | | |
| | **Min. Temperature- AIR** | | | **°C** | 7 | | |
| | **Max. Temperature- AIR** | | | **°C** | 35 | | |
| | **Max. Humidity** | | | **%** | 100 | | |
| | **Corrosive atmosphere** | | | - | Corrosive | | |
| | **Freeze conditions** | | | - | Maintain Above freezing temperature | | |
| | **Comments** | | | - | | | |
| **COMPONENTS APPROVAL AND CERTIFICATIONS** | **NSF-61** | | **yes/no** | - | NO | | |
| | **CSA / UL** | | **yes/no** | - | YES | | |
| **SAFETY** | **Electrical Classification (according to NFPA 820)** | | | - | N/A | | |
| | **Province** | | | | NUNAVUT | | |
| **REQUIRED PERFORMANCE** | **Application** | | | - | INDUSTRIAL | | |
| | **Design Capacity** | | | **$m^3/d$** | 7210-13442 | | |
| | **Design Settling Velocity** | | | **m/h** | 40 | | 2 |
| | **Nominal capacity per unit (@40m/h)** | | | **$m^3/d$** | 12500 | | |
| | **Retention time at nominal capacity** | | **Coagulation** | **min** | 2 | | |
| | | | **Injection** | **min** | 2 | | |
| | | | **Maturation** | **min** | 6 | | |
| | **Minimal capacity per unit (@ 20m/h)** | | | **$m^3/d$** | 6250 | | |
| | **Effluent Quality** | | | **Specs reference (specify)** | 15 ppm TSS, Note that the effluent quality depends on the influent quality,for 15 ppm TSS the influent should be at 200 ppm TSS | | 3 |
| **TECHNICAL DESCRIPTION** | **Coagulation** | **Basin Dimensions** | **Length** | **in (mm)** | 99.44 in (2486 mm) | | |
| | | | **Width** | **in (mm)** | 82.88 in (2072 mm) | | |
| | | | **Water Depth** | **in (mm)** | 138 in (3450 mm) | | |
| | | **Mixers** | **Manufacturer** | - | Envirequip W.T.E.M. INC | | |
| | | | **Model** | - | Envirequip MIX-TECH EVGX-4-3,0 | | |
| | | | **Power** | **HP** | 3 HP | | |
| | | | **Weigth** | **lbs (Kg)** | 460 lbs (208 kg) | | |
| | | | **Rotation/direction of thrust** | - | CW Down | | |
| | | | **Material and Grade** | - | DUPLEX 2205 | | |
| | **Injection** | **Basin Dimensions** | **Length** | **in (mm)** | 99.44 in (2486 mm) | | |
| | | | **Width** | **in (mm)** | 82.88 in (2072 mm) | | |
| | | | **Water Depth** | **in (mm)** | 138 in (3450 mm) | | |
| | | **Mixers** | **Manufacturer** | - | Envirequip W.T.E.M. INC | | |
| | | | **Model** | - | Envirequip MIX-TECH EVGX-4-3,0 | | |
| | | | **Power** | **HP** | 3 HP | | |
| | | | **Weigth** | **lbs (Kg)** | 460 lbs (208 kg) | | |
| | | | **Rotation/direction of thrust** | - | CCW UP | | |
| | | | **Material and Grade** | - | DUPLEX 2205 | | |
| | **Maturation** | **Basin Dimensions** | **Length** | **in (mm)** | 146.12 in (3653 mm) | | |
| | | | **Width** | **in (mm)** | 166 in (4150 mm) | | |
| | | | **Water Depth** | **in (mm)** | 138 in (3450 mm) | | |
| | | **Mixers** | **Manufacturer** | - | ENVIREQUIP W.T.E.M. INC | | |
| | | | **Model** | - | Envirequip MIX-TECH EVGX6-5.0 | | |
| | | | **Power** | **HP** | 5 HP | | |
| | | | **Weigth** | **lbs (Kg)** | 1270 lbs (576 kg) | | |
| | | | **Rotation/direction of thrust** | - | CW Down | | |
| | | | **Material and Grade** | - | DUPLEX 2205 | | |

| | | | | | | | |
|---|---|---|---|---|---|---|---|
| VEOLIA | | | | VWT DOC# | PSDS_0002_ACP_VWT | | |
| | | | | PROJECT No | 5000220043 | | |
| | | | | CLIENT PROJECT # | 6526-S-265-605 / OC-989680 | | |
| | | | | Date | 2021-01-11 | | |
| | | | | | **CLARIFIER #1** | | |
| **CLIENT** | **REV** | **DESCRIPTION** | | **DATE** | **By:** | **CHKD** | **APP.** |
| **A.E.M.** | **1** | For Approval | | 2021-01-11 | C.E.K | E.D | T.S |
| | **2** | For Information | | 2021-04-06 | C.E.K | E.D | T.S |
| **PROJECT** | **3** | For Information II | | 2021-04-22 | C.E.K | E.D | T.S |
| **MELIADINE - BPC Upgrade** | **4** | For Information III | | 2021-05-27 | C.E.K | E.D | T.S |
| | **5** | | | | | | |
| | **6** | | | | | | |
| | **7** | | | | | | **REV** |
| **TECHNICAL DESCRIPTION** | **Settling** | **Basin Dimensions** | **Length** | **in (mm)** | 166 in (4150 mm) | | |
| | | | **Width** | **in (mm)** | 166 in (4150 mm) | | |
| | | | **Height** | **in (mm)** | 138 in (3450 mm) | | |
| | | **Scraper** | **Manufacturer - Gear Box** | - | SEW Eurodrive | | |
| | | | **Model - Gear Box** | - | RF97 R57 AR80/W DRN80MK4/C/DH/RI | | |
| | | | **Power** | **HP** | 0.5 HP | | |
| | | | **Rotation** | - | Clockwise | | |
| | | | **Drive tube diameter** | **mm** | 168 mm | | |
| | | | **Material** | - | DUPLEX 2205 | | |
| | | **Settling Tubes** | **Brand/Model** | - | 122X40M | | 4 |
| | | | **Material** | - | EDISTIR R 850E | | 4 |
| | | | **Thickness** | **mils** | 30 | | |
| | | | **Height** | **mm** | 762 | | |
| | | | **Angle** | - | 60 deg. | | |
| | | | **Surface Area Covered** | **$m^2$** | 13.03 | | 3 |
| | | **Troughs** | **Quantity** | - | 4 | | |
| | | | **Material** | - | DUPLEX 2205 | | |
| | **Recirculation** | **Pump** | **Quantity** | - | 2 | | |
| | | | **in service/ standby** | - | 1 in service / 1 in stand by | | |
| | | | **Max. number of pumps in service simultaneoulsy** | | 2 | | |
| | | | **Manufacturer** | - | McLanahan | | |
| | | | **Model** | - | M3H-CR 3/3 | | |
| | | | **% recirculation per pump** | **% vs flow** | min.10%, nom.7% max.3% | | |
| | | | **Power** | **HP** | 15 HP | | |
| | | | **Flow** | **m3/h** | 45 | | |
| | | | **Head** | **m H2O (psi)** | 27m (38,4 psi) | | |
| | | **Hydrocyclones** | **Manufacturer** | - | VWT | | |
| | | | **Model** | | MA40 | | |
| | | | **Quantity** | - | 2 | | |
| | | | **Quantity per Actiflo** | - | 2 per Actiflo | | |
| | | **Hydrocyclones Support** | **Material** | - | 316 stainless steel | | |
| | | **Microsand recirculation piping** | **Diameter** | **mm** | 75/100 (Refer to GA_0002_ACP_VWT) | | |
| | | | **Number of lines** | - | 2 | | |
| | | | **Number of hydrocylone per line** | - | 1 | | |
| | | | **Material** | - | DUPLEX 2205 / HDPE | | |
| | | | **Options** | | | | |
| | | **Effective Size of Microsand** | | **microns** | 135 | | |
| | | **Losses** | | **g/$m^3$ of treated water** | 1 to 3 | | |
| | | **Required Mass For Operation \| Duration** | **First fill mass** | **Kg** | 5 208 | | 2 |
| | | | **Required Mass For Operation \| Duration** | **Kg** | The required mass for operation is usually determined during the comissioning phase and depends on the flow | | 2 |
| | | | **Type of bags \| Quantity** | - | 25 kg bag | - | 2 |
| **AUXILIARIES REQUIREMENTS** | **Service Water for manual cleaning of Lamella tubes** | | **Flow** | **L/min** | 22 | | |
| | | | **Service Pressure** | **PSIG** | 20-30 | | |
| | **Coagulant Dosage** | | **Chemical Product** | - | Hydrex 3267 | | |
| | | | **Concentration as distributed** | **%w/w** | 33 | | 3 |
| | | | **Dosage as dry basis min/average/max** | **mg/L** | 50 / 75 / 25 | | 3 |
| | **Polymer Dosage** | | **Chemical Product** | - | Hydrex 6105 | | |
| | | | **Concentration as distributed** | **%w/w** | 0.2 | | 3 |
| | | | **Dosage as dry basis min/average/max** | **mg/L** | 0.7 /1 / 1.5 | | 3 |
| | **Dosage (others)** | | **Chemical Product** | - | Sodium Thiosulfate | | |
| | | | **Concentration as distributed** | **%w/w** | 20 | | 3 |
| | | | **Dosage as dry basis min/average/max** | **mg/L** | 75/100/ 125 | | 3 |
| **OTHERS CONSTRUCTION MATERIALS** | **Inside walls** | | | | Paint Steel W44 | | |
| | **Anti-rotation Baffle** | | | - | DUPLEX 2205 | | |
| | **Polymer Piping** | | | - | PVC sh 80 | | |
| | **Hardware (immerged)** | | | - | DUPLEX 2205 | | |
| | **Hardware (non-immerged)** | | | - | DUPLEX 2205 | | |

| | | | | | | | |
|---|---|---|---|---|---|---|---|
| VEOLIA | | | | VWT DOC# | PSDS_0002_ACP_VWT | | |
| | | | | PROJECT No | 5000220043 | | |
| | | | | CLIENT PROJECT # | 6526-S-265-605 / OC-989680 | | |
| | | | | Date | 2021-01-11 | | |
| | | | | | **CLARIFIER #1** | | |
| **CLIENT** | **REV** | **DESCRIPTION** | | **DATE** | **By:** | **CHKD** | **APP.** |
| **A.E.M.** | **1** | For Approval | | 2021-01-11 | C.E.K | E.D | T.S |
| | **2** | For Information | | 2021-04-06 | C.E.K | E.D | T.S |
| **PROJECT** | **3** | For Information II | | 2021-04-22 | C.E.K | E.D | T.S |
| **MELIADINE - BPC Upgrade** | **4** | For Information III | | 2021-05-27 | C.E.K | E.D | T.S |
| | **5** | | | | | | |
| | **6** | | | | | | |
| | **7** | | | | | | **REV** |
| **CONNECTIONS** | **Inlet diameter** | | | **in (mm)** | 16 in (400 mm) | | |
| | **Coag. Drain Diameter** | | | **in (mm)** | 4 in (100 mm) | | |
| | **Mat. Drain Diameter** | | | **in (mm)** | 4 in (100 mm) | | |
| | **Partial Drain Diameter** | | | **in (mm)** | 8 in (200 mm) | | |
| | **Outlet diameter** | | | **in (mm)** | 18 in (450 mm) | | |
| **DRAINAGE** | **Sludge Discharge: max (for drain sizing) / design** | | | **m3/h** | 28 | | |
| | **Max. Sludge Discharge** | | | **m³/h** | 50 | | |
| | **Instant max. Flow - Partial Drain** | | | **L/s** | 80 Approx | | |
| **VALVES** | **X** | **Isolation valve - Coagulation Drain** | **Manufacturer** | - | BRAY | | |
| | | | **Valve Type** | - | BUTTERFLY VALVE | | |
| | | | **Model \| Diam.** | - | SERIES 31 | 100 mm | |
| | | | **Quantity** | - | 1 | | |
| | **X** | **Isolation valve - Maturation Drain** | **Manufacturer** | - | BRAY | | |
| | | | **Valve Type** | - | BUTTERFLY VALVE | | |
| | | | **Model \| Diam.** | - | SERIES 31 | 100 mm | |
| | | | **Quantity** | - | 1 | | |
| | **X** | **Isolation valve - Partial Drain** | **Manufacturer** | - | BRAY | | |
| | | | **Valve Type** | - | BUTTERFLY VALVE | | |
| | | | **Model \| Diam.** | - | SERIES 31 | 200 mm | |
| | | | **Quantity** | - | 1 | | |
| | **X** | **Isolation valve - Polymer Injection** | **Manufacturer** | - | CHEMLINE | | |
| | | | **Valve Type** | - | PVC - BALL VALVE | | |
| | | | **Model \| Diam.** | - | TYPE 21 A | 20 mm | |
| | | | **Quantity** | - | 4 | | |
| | **X** | **Isolation valve - Recirculation Line** | **Manufacturer** | - | DURCO | | |
| | | | **Valve Type** | - | PLUG VALVE | | |
| | | | **Model \| Diam.** | - | T4E | 100 mm | |
| | | | **Quantity** | - | 2 | | |
| | **X** | **Isolation valve - Recirc. Line Sampling** | **Manufacturer** | - | CHEMLINE | | |
| | | | **Valve Type** | - | BALL VALVE | | |
| | | | **Model \| Diam.** | - | TYPE 21 A | 20 mm | |
| | | | **Quantity** | - | 4 | | |
| | **X** | **Isolation valve - Recirc. Line Cleaning** | **Manufacturer** | - | CHEMLINE | | 2 |
| | | | **Valve Type** | - | BALL VALVE | | 2 |
| | | | **Model \| Diam.** | - | TYPE 21 A | 25 mm | 2 |
| | | | **Quantity** | - | 3 | | 2 |
| **INSTRUMENTATION** | **X** | **Level Switch (High High)** | **Manufacturer** | - | FLYGT | | |
| | | | **Model \| Diam.** | | ENM10 | 20 mm | |
| | | **Zone : *Non Hazardous*** | **Quantity** | - | 1 | | |
| | **X** | **Turbidimeter Clarified Water** | **Manufacturer** | - | HACH | | |
| | | | **Model** | | TURBIDITY &TSS SENSOR/2983700 | | |
| | | **Zone : *Non Hazardous*** | **Quantity** | - | 1 | | |
| | **X** | **Turbidity Controller (specify of common controller)** | **Manufacturer** | - | HACH | | |
| | | | **Model** | | SC 200 / C/W 2983700 | | |
| | | **Zone : *Non Hazardous*** | **Quantity** | - | 1 | | |
| | **X** | **Pressure gauge (recirculation)** | **Manufacturer** | - | ASHCROFT | | |
| | | | **Model \| Diam.** | | SERIES 1009 C/W SEAL | 2.5 in | |
| | | **Zone : *Non Hazardous*** | **Quantity** | - | 2 | | |
| | | **Comments** | | | | | |
| **METAL WORKS** | **Grating** | | **Dimensions/Type** | - | Refer to GA_0002_ACP_VWT | | |
| | | | **Material** | - | FRP | | |
| | **Handrails** | | **Dimensions/Type** | - | Refer to GA_0002_ACP_VWT | | |
| | | | **Material** | - | Painted Steel W44 | | |
| | | | **Color** | - | Safety Yellow | | 2 |
| | **Access (ladder/stairs/bridge)** | | **Dimensions/Type** | - | Refer to GA_0002_ACP_VWT | | |
| | | | **Material** | - | Painted Steel W44 | | |
| | | | **Color** | - | Safety Yellow | | 2 |
| **POWER FEED** | **Motors** | | | **V/ph/Hz** | 575 / 3 / 60 | | |
| | **Panels** | | | **V/ph/Hz** | N/A | | 2 |
| | **Others** | | | **V/ph/Hz** | N/A | | |
| **DIMENSIONS** | **Tank height** | | | **in (mm)** | Refer to GA_0002_ACP_VWT | | |
| | **Recommended Headroom** | | | **in (mm)** | Refer to GA_0002_ACP_VWT | | |
| | **Recommended overall width** | | | **in (mm)** | Refer to GA_0002_ACP_VWT | | |
| | **Recommended overall length** | | | **in (mm)** | Refer to GA_0002_ACP_VWT | | |
| | **Weight (dry)** | | | **kg** | Refer to GA_0002_ACP_VWT | | |
| | **Weight (full of water)** | | | **kg** | Refer to GA_0002_ACP_VWT | | |
| **COMMENTS** | ALL MOTOR PROVIDED ARE STANDARD IEEE841 EXCEPT THE FRACTIONAL MOTOR OF THE SCRAPER | | | | | | |

**This page is intentionally left blank**

**Project name:** MELIADINE-BPC UPGRADE

**Project#:** 5000220043

**Document #:** SPK_0002_ACP_VWT

**by:** CEK

**chkd:** ED

**appvd:** TS

# CLARIFIER #1 ACP-700R

# GENERAL ARRANGEMENT DRAWING

**OIM manual section:** 4.2.3.2

Refer to 5000220043_GA_0002_ACP_VWT REV 02
Refer to manual section 3.4

**This page is intentionally left blank**

**Project name:** MELIADINE-BPC UPGRADE

**Project#:** 5000220043

**Document #:** SPK_0002_ACP_VWT

**by:** CEK

**chkd:** ED

**appvd:** TS

# CLARIFIER #1 ACP-700R

# FIELD INSTALLATION DRAWING

**OIM manual section:** 4.2.3.3

Refer to 5000220043_FI_0002_ACP_VWT REV 01
Refer to manual section 3.5

**This page is intentionally left blank**

**Project name:** MELIADINE-BPC UPGRADE

**Project#:** 5000220043

**Document #:** SPK_0002_ACP_VWT

**by:** CEK

**chkd:** ED

**appvd:** TS

# CLARIFIER #1 ACP-700R

# HYDRAULIC PROFILE

**OIM manual section:** 4.2.3.4

Refer to 5000220043_HY_0001_GEN_VWT REV 03
Refer to manual section 3.3

**This page is intentionally left blank**

**Project name:** MELIADINE-BPC UPGRADE

**Project#:** 5000220043

**Document #:** SPK_0002_ACP_VWT

**by:** CEK

**chkd:** ED

**appvd:** TS

# CLARIFIER #1 ACP-700R

# MIXERS

**OIM manual section:** 4.2.3.5

**This page is intentionally left blank**

# CS-652-ACP- : Identification sheet

| | | | |
|---|---|---|---|
| VWTC PROJECT NUMBER: | 5000220043 | REV: | 1 |
| PROJECT NAME: | AEM MELIADINE-BPC UPGRADE | SUBMITTED TO (COMPANY): | AEM |
| ENGINEER: | EMMANUELLE DORMOY | SUBMITTED TO (RESPONSIBLE): | |
| PROJECT MANAGER: | THOMAS SAVARY / BRUCE BRODES | PROJECT NUM REFERENCE.: | 6526-S-265-605 / OC-989680 |
| PHONE NUMBER: | 514-334-7230 | LOT NUMBER: | |

| SUPPLIER | EQPT CODE | EQPT TAG NO | DIA | DESCRIPTION | INFO 1 | INFO 2 | INFO 3 | APPLIC. | NOTE | REV |
|---|---|---|---|---|---|---|---|---|---|---|
| ENVIREQUIP | CMSPMI334390 | 65AGI68018 | N/A | CLARIFIER #1 AGITATOR #1 | DESCRIPTION ACP-700R (575V) COAGULATION TANK// MODEL: Envirequip MIX-TECH EVGX4-3.0 // Mtl : DUPLEX STAINLESS STEEL 2205 | Impeller Dia : 49.125" // 66.97 RPM // Shaft lg : 106.86" // Direction & thrust: cw down | WEG Motor 3.0 HP / 575/3/60 // Nord reducer SK4282 AHZ/VL // Gear ratio 26.72:1// STANDARD IEEE841 | CLARIFIER #1 | | 1 |

**This page is intentionally left blank**

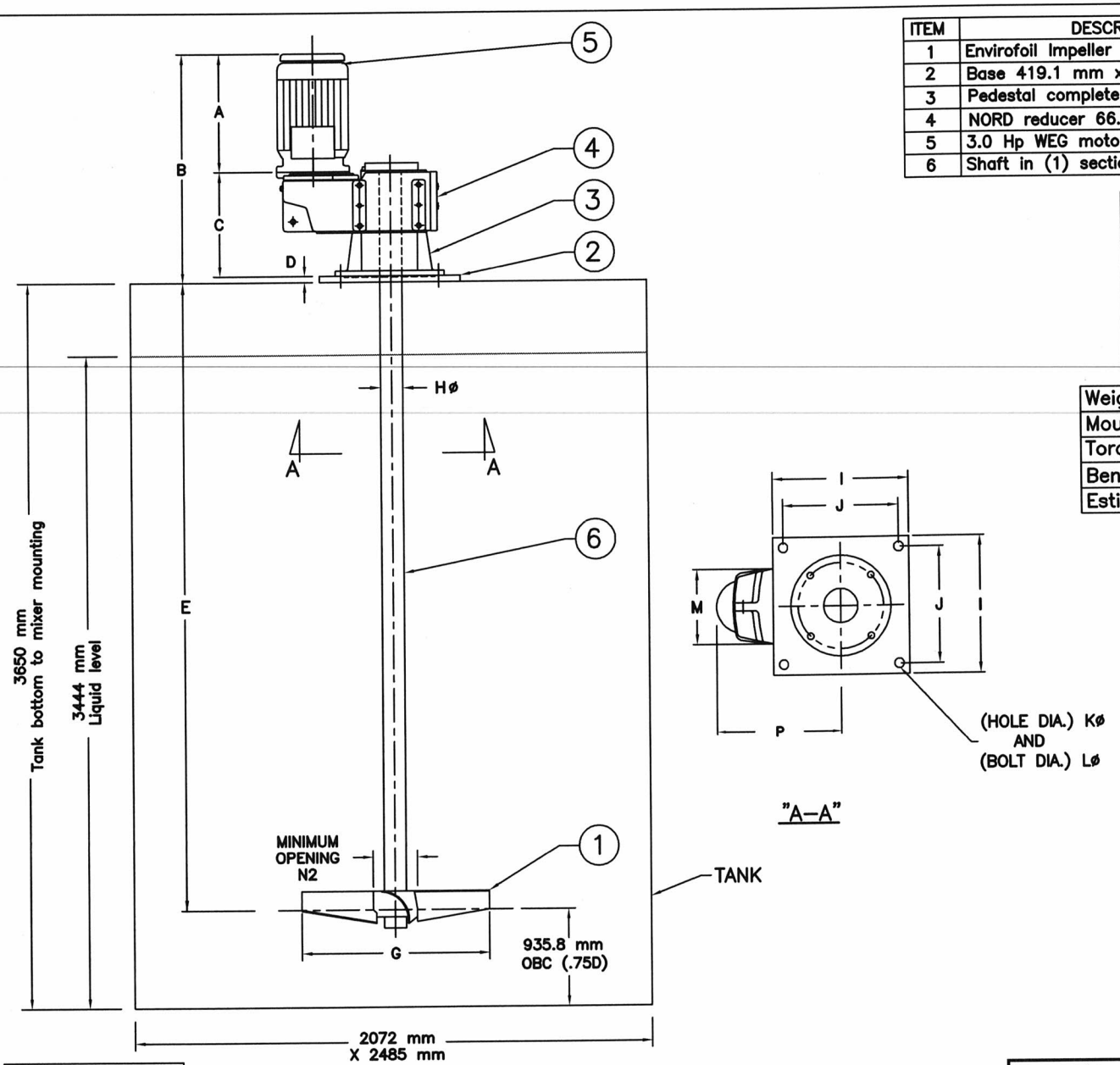





"A–A"

| ITEM | DESCRIPTION | MATERIAL |
|---|---|---|
| 1 | Envirofoil Impeller 1,247.8 mm (49.125") ø ⊙13.5" | 2205 |
| 2 | Base 419.1 mm x 419.1 mm (16.5" x 16.5" ) | STEEL |
| 3 | Pedestal complete with dry well (open tank) | |
| 4 | NORD reducer 66.97 RPM | |
| 5 | 3.0 Hp WEG motor, IEEE841, 575/3/60 | |
| 6 | Shaft in (1) section 2,714.2 mm (106.86") ⊙ 2.25"ø | 2205 |

| |
|---|
| APPL'N: COAGULATION (QTY 1) |
| ENVIREQUIP MIXERS |
| MODEL: EVGX4–3.0 |
| 2.24 kW @ 66.97 RPM |
| Rotation: Clockwise |
| Direction of thrust: Down |
| Tag #: AG20–01 |

| |
|---|
| Weight: 460 Lbs |
| Mounting loads |
| Torque reaction = 7,058 in lb |
| Bending Moment= 19,219 in lb |
| Estimated beam: 7C @ 12.25#/ft upto 10 ft |

| |
|---|
| ST#: 652–ACP–700R1–575–W841–2205 |
| LATIS #: CMSPMI334390 |

**Dimensions: Inches**

| MOD.: | A | B | C | D | E | E2 | F | Gø | Hø SHAFT | I | J | Kø | Lø | M | N2 | P |
|---|---|---|---|---|---|---|---|---|---|---|---|---|---|---|---|---|
| EVGX4 | 12.68 | 24.4 | 11.14 | .625 | 106.86 | – | – | 49.125 | 2.25 | 16.5 | 14.0 | .875 | .75 | 10.0 | 14.0 | 13.03 |

**Dimensions: mm**

| MOD.: | A | B | C | D | E | E2 | F | Gø | Hø SHAFT | I | J | Kø | Lø | M | N2 | P |
|---|---|---|---|---|---|---|---|---|---|---|---|---|---|---|---|---|
| EVGX4 | 322.1 | 620.9 | 283.0 | 15.9 | 2714.2 | – | – | 1247.8 | 57.2 | 419.1 | 355.6 | 22.2 | 19.0 | 254.0 | 355.6 | 331.0 |

Ce dessin et l'information qu'il contient est la propriété de ENVIREQUIP WTEM Inc. Il est interdit de le copier, le photographier, l'imprimer, le prêter ou de l'utiliser sans la permission de ENVIREQUIP WTEM Inc.

This drawing and the information contained thereon is the property of ENVIREQUIP WTEM Inc. It is not to be printed, photographed, copied, loaned or used without the permission of ENVIREQUIP WTEM Inc.

| NO | DATE | REVISION | P/B |
|---|---|---|---|
| | | | |

PROJET/PROJECT
ACP–700R COAGULATION

ENVIREQUIP WTEM INC.
490 Bord du Lac – Suite 2
Dorval, QC H9S 2N8
Montreal Tel: (514) 336–1043
RR1 (21494 Little Russel Rd.)
Glen Robertson, Ont K0B 1H0
Ontario Tel: (613) 874–2516
Fax: (613) 874–2628
E–mail: envireqp@glen–net.ca

TITRE/TITLE
Envirequip Mixers
Veolia Water Technologies
EVGX SERIES

| | |
|---|---|
| DESSINE PAR: DRAWN BY: PJ | DATE: Jan 20, 2021 |
| DESS. NO: DWG NO: EVGX | ÉCH./SCALE: N.T.S |
| VÉRIFIÉ PAR: CHECKED BY: PJ | PROJ.NO: |
| APPROUVÉ PAR: APPROVED BY: RJ | REV. 00 |

**This page is intentionally left blank**

# CS-652-ACP- : Identification sheet

| | | | |
|---|---|---|---|
| VWTC PROJECT NUMBER: | 5000220043 | REV: | 1 |
| PROJECT NAME: | AEM MELIADINE-BPC UPGRADE | SUBMITTED TO (COMPANY): | AEM |
| ENGINEER: | EMMANUELLE DORMOY | SUBMITTED TO (RESPONSIBLE): | |
| PROJECT MANAGER: | THOMAS SAVARY / BRUCE BRODES | PROJECT NUM REFERENCE.: | 6526-S-265-605 / OC-989680 |
| PHONE NUMBER: | 514-334-7230 | LOT NUMBER: | |

| SUPPLIER | EQPT CODE | EQPT TAG NO | DIA | DESCRIPTION | INFO 1 | INFO 2 | INFO 3 | APPLIC. | NOTE | REV |
|---|---|---|---|---|---|---|---|---|---|---|
| ENVIREQUIP | CMSPMI334391 | 65AGI68019 | N/A | CLARIFIER #1 AGITATOR #2 | DESCRIPTION ACP-700R (575V) INJECTION TANK// MODEL: Envirequip MIX-TECH EVGX4-3.0 // Mtl : DUPLEX STAINLESS STEEL 2205 | Impeller Dia : 49.125" // 66.97 RPM // Shaft lg : 106.86" // Direction & thrust: ccw up | WEG Motor 3.0 HP / 575/3/60 // Nord reducer SK4282 AHZ/VL // Gear ratio 26.72:1//STANDARD IEEE841 | CLARIFIER #1 | | 1 |

**This page is intentionally left blank**

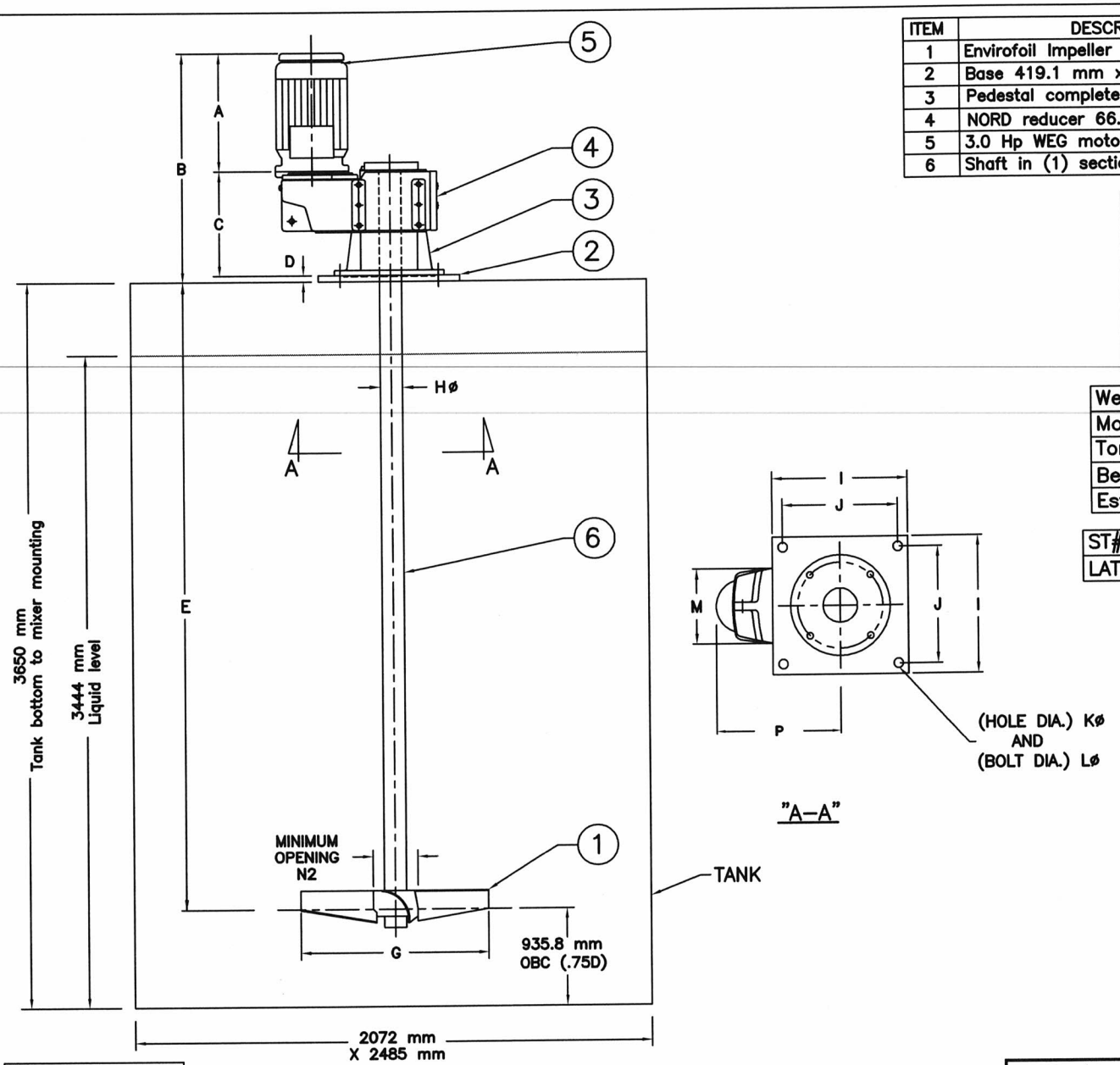





"A–A"

| ITEM | DESCRIPTION | MATERIAL |
|---|---|---|
| 1 | Envirofoil Impeller 1,247.8 mm (49.125") ø ⓞ13.5" | 2205 |
| 2 | Base 419.1 mm x 419.1 mm (16.5" x 16.5" ) | STEEL |
| 3 | Pedestal complete with dry well (open tank) | |
| 4 | NORD reducer 66.97 RPM | |
| 5 | 3.0 Hp WEG motor, IEEE841, 575/3/60 | |
| 6 | Shaft in (1) section 2,714.2 mm (106.86") ⓞ 2.25"ø | 2205 |

| |
|---|
| APPL'N: INJECTION (QTY 1) |
| ENVIREQUIP MIXERS |
| MODEL: EVGX4–3.0 |
| 2.24 kW @ 66.97 RPM |
| Rotation: Counter clockwise |
| Direction of thrust: Up |
| Tag #: AG20–02 |

| |
|---|
| Weight: 460 Lbs |
| Mounting loads |
| Torque reaction = 7,058 in lb |
| Bending Moment= 19,219 in lb |
| Estimated beam: 7C @ 12.25#/ft upto 10 ft |

| |
|---|
| ST#: 652–ACP–700R2–575–W841–2205 |
| LATIS #: CMSPMI334391 |

**Dimensions: Inches**

| MOD.: | A | B | C | D | E | E2 | F | Gø | Hø SHAFT | I | J | Kø | Lø | M | N2 | P |
|---|---|---|---|---|---|---|---|---|---|---|---|---|---|---|---|---|
| EVGX4 | 12.68 | 24.4 | 11.14 | .625 | 106.86 | – | – | 49.125 | 2.25 | 16.5 | 14.0 | .875 | .75 | 10.0 | 14.0 | 13.03 |

**Dimensions: mm**

| MOD.: | A | B | C | D | E | E2 | F | Gø | Hø SHAFT | I | J | Kø | Lø | M | N2 | P |
|---|---|---|---|---|---|---|---|---|---|---|---|---|---|---|---|---|
| EVGX4 | 322.1 | 620.9 | 283.0 | 15.9 | 2714.2 | – | – | 1247.8 | 57.2 | 419.1 | 355.6 | 22.2 | 19.0 | 254.0 | 355.6 | 331.0 |

Ce dessin et l'information qu'il contient est la propriété de ENVIREQUIP WTEM Inc. Il est interdit de le copier, le photographier, l'imprimer, le prêter ou de l'utiliser sans la permission de ENVIREQUIP WTEM Inc.

This drawing and the information contained thereon is the property of ENVIREQUIP WTEM Inc. It is not to be printed, photographed, copied, loaned or used without the permission of ENVIREQUIP WTEM Inc.

| NO | DATE | REVISION | P/B |
|---|---|---|---|
| | | | |

PROJET/PROJECT
ACP–700R INJECTION

ENVIREQUIP WTEM INC.
490 Bord du Lac – Suite 2
Dorval, QC H9S 2A9
Montreal Tel: (514) 336–1043
RR1 (21494 Little Russle Rd.)
Glen Robertson, Ont K0B 1H0
Ontario Tel: (613) 874–2516
Fax: (613) 874–2829
E–mail: envireqp@glen–net.ca

TITRE/TITLE
Envirequip Mixers
Veolia Water Technologies
EVGX SERIES

| | |
|---|---|
| DESSINÉ PAR: DRAWN BY: PJ | DATE Jan 20, 2021 |
| DESS. NO: DWG NO: EVGX | ÉCH./SCALE N.T.S |
| VÉRIFIÉ PAR: CHECKED BY: PJ | PROJ.NO: |
| APPROUVÉ PAR: APPROVED BY: RJ | REV. 00 |

**This page is intentionally left blank**

# CS-652-ACP- : Identification sheet

| | | | |
|---|---|---|---|
| VWTC PROJECT NUMBER: | 5000220043 | REV: | 1 |
| PROJECT NAME: | AEM MELIADINE-BPC UPGRADE | SUBMITTED TO (COMPANY): | AEM |
| ENGINEER: | EMMANUELLE DORMOY | SUBMITTED TO (RESPONSIBLE) | |
| PROJECT MANAGER: | THOMAS SAVARY / BRUCE BRODES | PROJECT NUM REFERENCE.: | 6526-S-265-605 / OC-989680 |
| PHONE NUMBER: | 514-334-7230 | LOT NUMBER: | |

| SUPPLIER | EQPT CODE | EQPT TAG NO | DIA | DESCRIPTION | INFO 1 | INFO 2 | INFO 3 | APPLIC. | NOTE | REV |
|---|---|---|---|---|---|---|---|---|---|---|
| ENVIREQUIP | CMSPMI334392 | 65AGI68020 | N/A | CLARIFIER #1 AGITATOR #3 | DESCRIPTION ACP-700R (575V) MATURATION TANK// MODEL: Envirequip MIX-TECH EVGX6-5.0 // Mtl : DUPLEX STAINLESS STEEL 2205 | Impeller Dia : 89.688" // 21.84 RPM // Shaft lg : 98.86" // Direction & thrust: cw down | WEG Motor 5.0 HP / 575/3/60 // Nord reducer SK6282 AHZ/VL // Gear ratio 80.33:1//STANDARD IEEE841 | CLARIFIER #1 | | 1 |

**This page is intentionally left blank**

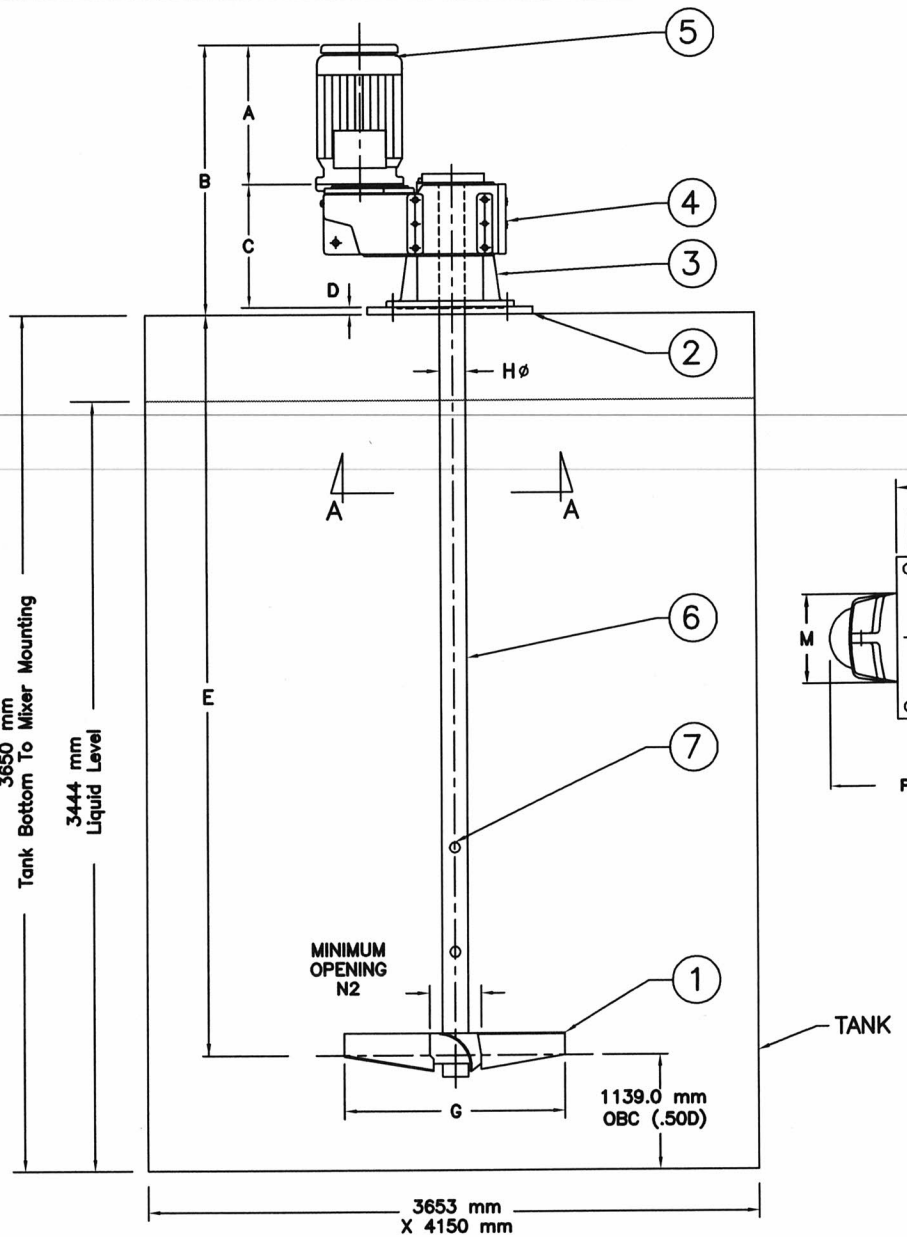


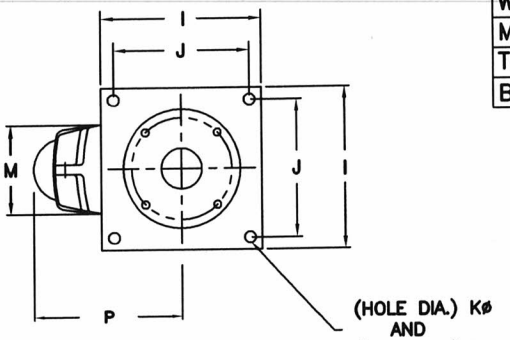


"A–A"

| ITEM | DESCRIPTION | MATERIAL |
|---|---|---|
| 1 | Envirofoil Impeller (F–4) 2278.1 mm (89.688")ø ● 22.0" | 2205 |
| 2 | Base 533.4 mm x 533.4 mm (21.0" x 21.0" ) | STEEL |
| 3 | Pedestal c/w dry well (open tank) | |
| 4 | NORD reducer 21.84 RPM | |
| 5 | WEG 5.0 HP motor, IEEE841, 575/3/60 | |
| 6 | Shaft: (1) section 2511.0 mm (98.86") ● 3.0"ø | 2205 |
| 7 | Three pos'n adjustment: 1/2D, 3/4D and 1.0D | |

| |
|---|
| APPL'N: MATURATION (QTY 1) |
| ENVIREQUIP MIXERS |
| MODEL: EVGX6–5.0 |
| 3.73 kW @ 21.84 RPM |
| Rotation: Clockwise |
| Direction of thrust: Down |
| Tag #: AG20–03 |

| |
|---|
| Weight: 1,270 Lbs |
| Mounting Loads |
| Torque reaction = 36,072 in lb |
| Bending Moment= 37,450 in lb |

| |
|---|
| ST#: 652–ACP–700R3–575–W841–2205 |
| LATIS #: CMSPMI334392 |

| Dimensions: Inches | | | | | | | | | | | | | | | | |
|---|---|---|---|---|---|---|---|---|---|---|---|---|---|---|---|---|
| MOD.: | A | B | C | D | E | E2 | F | Gø | Hø SHAFT | I | J | Kø | Lø | M | N2 | P |
| EVGX6 | 14.61 | 31.53 | 16.05 | .875 | 98.86 | – | – | 89.688 | 3.0 | 21.0 | 18.0 | 1.0 | .875 | 13.8 | 16.0 | 16.02 |

| Dimensions: mm | | | | | | | | | | | | | | | | |
|---|---|---|---|---|---|---|---|---|---|---|---|---|---|---|---|---|
| MOD.: | A | B | C | D | E | E2 | F | Gø | Hø SHAFT | I | J | Kø | Lø | M | N2 | P |
| EVGX6 | 371.1 | 801.0 | 407.7 | 22.2 | 2511.0 | – | – | 2278.1 | 76.2 | 533.4 | 457.2 | 25.4 | 22.2 | 350.5 | 406.4 | 407.0 |

Ce dessin et l'information qu'il contient est la propriété de ENVIREQUIP WTEM Inc. Il est interdit de le copier, le photographier, l'imprimer, le prêter ou de l'utiliser sans la permission de ENVIREQUIP WTEM Inc.

This drawing and the information contained thereon is the property of ENVIREQUIP WTEM Inc. It is not to be printed, photographed, copied, loaned or used without the permission of ENVIREQUIP WTEM Inc.

| NO | DATE | REVISION | P/B |
|---|---|---|---|
| | | | |

PROJET/PROJECT
ACP–700R MATURATION

ENVIREQUIP WTEM INC.
490 Bord du Lac – Suite 2
Dorval, QC H9S 2A8
Montreal Tel: (514) 336–1043
RR1 (21494 Little Russia Rd.)
Glen Robertson, Ont K0B 1H0
Ontario Tel: (613) 874–2616
Fax: (613) 874–2628
E–mail: envireqp@glen–net.ca

TITRE/TITLE
Envirequip Mixers
Veolia Water Technologies Inc
EVGX SERIES

| | |
|---|---|
| DESSINE PAR: DRAWN BY: PJ | DATE: Jan 20 2021 |
| DESS. NO: DWG NO: EVGX | ECH./SCALE: N.T.S |
| VERIFIÉ PAR: CHECKED BY: PJ | PROJ.NO: |
| APPROUVÉ PAR: APPROVED BY: PJ | REV.: 00 |

**This page is intentionally left blank**

**Project name:** MELIADINE-BPC UPGRADE

**Project#:** 5000220043

**Document #:** SPK_0002_ACP_VWT

**by:** CEK

**chkd:** ED

**appvd:** TS

# CLARIFIER #1 ACP-700R

# SCRAPER GEAR BOX

**OIM manual section:** 4.2.3.6

**This page is intentionally left blank**

# CS-670-ACP- : Identification sheet

| | | | |
|---|---|---|---|
| VWTC PROJECT NUMBER: | 5000220043 | REV: | 1 |
| PROJECT NAME: | AEM MELIADINE-BPC UPGRADE | SUBMITTED TO (COMPANY): | AEM |
| ENGINEER: | EMMANUELLE DORMOY | SUBMITTED TO (RESPONSIBLE): | |
| PROJECT MANAGER: | THOMAS SAVARY / BRUCE BRODES | PROJECT NUM REFERENCE.: | 6526-S-265-605 / OC-989680 |
| PHONE NUMBER: | 514-334-7230 | LOT NUMBER: | |

| SUPPLIER | EQPT CODE | EQPT TAG NO | DIA | DESCRIPTION | INFO 1 | INFO 2 | INFO 3 | APPLIC. | NOTE | REV |
|---|---|---|---|---|---|---|---|---|---|---|
| EURODRIVE | ST-670-ACP-MK1-700-575-DRN | 65TRM68002 | | CLARIFIER #1 RAKE | MANUFACTURER: SEW Eurodrive // MODEL: RF97 R57 AR71/W DRN71M4/C/DH/RI (575V) 0.5HP Combination flange mounted full output shaft - 2 stage gear reducer and integral mounted gearmotor with AR coupling arrangement | // reducer rating 3000 Nm // ext. Housing slip torque 1.5 Nm // C/W speed monitor DD2503 for AR coupling // food grade CLP HC-460-NSF-H1 oil // mount position M4 // english nameplate // surface protection OS4 // flange: 350 mm | // total ratio: 1069:1 // output speed: 1.6 RPM | CLARIFIER #1 | | 1 |

**This page is intentionally left blank**

Date: 21.01.2021

| Pos. | Quantity | Part No. | |
|---|---|---|---|
| 02 | Your product No.: | ACP-700 | ACP 700 MK1 575V |

**1 PC**
**Helical gearmotor w/adapter**
**RF97 R57 AR71/W DRN71M4/C/DH/RI**



VEOLIA
EXAMINÉ/EXAMINED
L'examen de ce dessin ne relève en aucune façon l'entrepreneur ou le fournisseur de sa responsabilité quant à l'exactitude de ce dessin ou à sa conformité avec les documents contractuels et les conditions de chantier.
Examination of this drawing will not release in any way the Contractor or Supplier of his responsibilities as of the precision of this drawing or to its compliance with the contract documents and job site conditions.
☒ Procéder tel quel / Proceed as is
☐ Procéder tel qu'annoté / Proceed as noted
☐ Resoumettre / Re-submit
Par / by: pour G. Périn
Date: 2021-01-21

**Remark:**
Colour and technical specifications may vary from the picture shown. The technical specification is according to the following data.

**Links to documentation:**

| | |
|---|---|
| Speed [r/min] | : 1730 / 1.6 |
| Total ratio [i] | : 1069 / infinite |
| Ma max [Nm] | : 3000 |
| Output torque [Nm] | : 1990 |
| Service factor SEW-FB | : 1,50 |
| Mounting position | : M4 |
| Term.box.pos.[°] / cable entry | : 0 (R) / normal |
| Lubricant / -volume [l] | : CLP HC-460-NSF-H1 Oil f.Food / 14,00 / 2,00 |
| Oil manufacturer designation | : Klüberöl 4UH1-460 N |
| Condensation drain hole | : DH - drain hole |
| Corrosion protection | : Yes |
| Special measure | : Contour recesses injected with rubber. |
| Surface protection | : OS4 to technical data sheet 01802__94 |
| Paint coat | : STEEL PLUS CE 316 Epoxy GRAY (10-808A-F1) |

HEAD OFFICE: SIEGE SOCIAL:
SEW-EURODRIVE COMPANY OF CANADA LTD.
SOCIÉTÉ SEW-EURODRIVE DU CANADA LTÉE.
210 Walker Dr.
Bramalea, ON L6T 3W1
Tel: (905) 791-1553
Fax: (905 791-2999

Eastern Plant: Usine de l'est:
SEW-EURODRIVE COMPANY OF CANADA LTD.
SOCIÉTÉ SEW-EURODRIVE DU CANADA LTÉE.
2001 Rue de l'Aviation
Dorval, QC H9P 2X6
Tel: (514) 367-1124
Fax: (514) 367-3677

Western Plant: Usine de l'ouest:
SEW-EURODRIVE COMPANY OF CANADA LTD.
SOCIÉTÉ SEW-EURODRIVE DU CANADA LTÉE.
7188 Honeyman Street
Tilbury Industrial Park
Delta, BC V4G 1G1
Tel: (604) 946-5535
Fax: (604) 946-2513

GST VENDOR: R104809033
QST VENDOR: 1001084841

PROVINCIAL SALES TAX:
QC - M-10-0108-4841-001
BC - 1014-7503

Certified System
ISO 9001

Date: 21.01.2021

| Pos. | Quantity | Part No. |
|---|---|---|

| | |
|---|---|
| Ma max G [Nm] | : 3000 |
| Output shaft end | : 2.375x4.72 inch |
| Output shaft design | : with keyway/with key |
| Flange | : 350mm |
| Documentation no. A | : 25803530<br>29151457 |
| Parts list | : 012621096 |
| | |
| Mounting pos.primary gear unit | : M4 |
| Primary gear unit position [°] | : 90 |
| Parts list | : 012551198 |
| | |
| Ext. housing slip torque [Nm] | : 1,5 |
| Access. feature monitor | : W speed monitor |
| Documentation no. A | : 17036011<br>25835548 |
| Parts list | : 232670599 |
| | |
| Motor power [kW] | : 0.37 |
| Motor power [HP] | : 0.50 |
| Motor frequency [Hz] | : 60 |
| Cyclic duration factor S1-S10 | : S1 |
| Motor voltage [V] / conn. type | : 330/575 delta/star |
| Rated current [A] | : 1,28 / 0,73 |
| cos phi | : 0,62 |
| Wiring diagram | : R13P / 682360011 |
| Connection set at factory | : Star |
| Thermal cl.[°C]/Enclosure[IP] | : 155(F) / 55 |
| Service factor motor | : 1.15 |
| International efficiency class | : IE3 |
| Efficiency<br>at 50/75/100% Pn [%] | : 74,3 / 77,7 / 78,5 |
| CE mark | : Yes |
| Design specification | : Canada (CSA) |
| K.V.A.code | : K |
| Design | : IEC H |
| Fan guard | : Metal fan guard |
| Fan guard element | : C = protection canopy |
| Insulation | : RI = reinforced winding insulation |
| Terminal box | : Terminal box lower part made of aluminum with tapped hole 2xNPT 1/2" |
| CT speed range | : 300-1800rpm |
| Documentation no. A | : 25957074 |

HEAD OFFICE: SIEGE SOCIAL:
SEW-EURODRIVE COMPANY OF CANADA LTD.
SOCIÉTÉ SEW-EURODRIVE DU CANADA LTÉE.
210 Walker Dr.
Bramalea, ON L6T 3W1
Tel: (905) 791-1553
Fax: (905 791-2999

Eastern Plant: Usine de l'est:
SEW-EURODRIVE COMPANY OF CANADA LTD.
SOCIÉTÉ SEW-EURODRIVE DU CANADA LTÉE.
2001 Rue de l'Aviation
Dorval, QC H9P 2X6
Tel: (514) 367-1124
Fax: (514) 367-3677

Western Plant: Usine de l'ouest:
SEW-EURODRIVE COMPANY OF CANADA LTD.
SOCIÉTÉ SEW-EURODRIVE DU CANADA LTÉE.
7188 Honeyman Street
Tilbury Industrial Park
Delta, BC V4G 1G1
Tel: (604) 946-5535
Fax: (604) 946-2513

GST VENDOR: R104809033
QST VENDOR: 1001084841

PROVINCIAL SALES TAX:
QC - M-10-0108-4841-001
BC - 1014-7503

Certified System
ISO 9001

Date: 21.01.2021

| Pos. | Quantity | Part No. |
|---|---|---|

Nameplate : English
Nameplate position : 270°
Opera.instr. A lang./quantity : English / 0
Parts list/language/quantity : English / 0
Commodity code : 85015100

net weight [KG] : approx. 160/PC 160/Pos.

Signature product: ACP-700

HEAD OFFICE: SIEGE SOCIAL:
SEW-EURODRIVE COMPANY OF CANADA LTD.
SOCIÉTÉ SEW-EURODRIVE DU CANADA LTÉE.
210 Walker Dr.
Bramalea, ON L6T 3W1
Tel: (905) 791-1553
Fax: (905 791-2999

Eastern Plant: Usine de l'est:
SEW-EURODRIVE COMPANY OF CANADA LTD.
SOCIÉTÉ SEW-EURODRIVE DU CANADA LTÉE.
2001 Rue de l'Aviation
Dorval, QC H9P 2X6
Tel: (514) 367-1124
Fax: (514) 367-3677

Western Plant: Usine de l'ouest:
SEW-EURODRIVE COMPANY OF CANADA LTD.
SOCIÉTÉ SEW-EURODRIVE DU CANADA LTÉE.
7188 Honeyman Street
Tilbury Industrial Park
Delta, BC V4G 1G1
Tel: (604) 946-5535
Fax: (604) 946-2513

GST VENDOR: R104809033
QST VENDOR: 1001084841

PROVINCIAL SALES TAX:
QC - M-10-0108-4841-001
BC - 1014-7503

Certified System
ISO 9001

**This page is intentionally left blank**

**Project name:** MELIADINE-BPC UPGRADE

**Project#:** 5000220043

**Document #:** SPK_0002_ACP_VWT

**by:** CEK

**chkd:** ED

**appvd:** TS

# CLARIFIER #1 ACP-700R

# SETTLING LAMELLA

**OIM manual section:** 4.2.3.7

**This page is intentionally left blank**

POLIMERI EUROPA

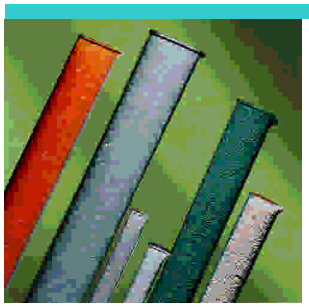

# Edistir® R 850E

## Polystyrene

**TECHNICAL DATA SHEET**

### *Product description*

Super high impact polystyrene with good heat resistance.

Designed for sheet extrusion and thermoforming of deep drawn containers even diluted with high percentage of GP. Suitable for general injection molding of tough medium-walled articles.

Designation: Thermoplastics ISO 2897-PS-I,G,093-03-10-18

### *Applications*

Typical uses are thermoformed food packaging as disposable tumblers, flatwares, yoghurt cups, lids. Injection molding of technical items, shoe heels, reels.

### *Typical processing data*

Extrusion:
- melt temperature 210 - 240°C

Injection molding:
- predrying normally not required
- melt temperature 210 - 260°C
- mold temperature 20 - 60°C

### *General information*

R 850E is certified UL94 HB "all colors" at 1.5 mm (UL file E83071).

This grade in natural version complies by composition with the requirements set by the main Regulations for plastic materials intended for food contact (included the EEC Directive 90/128 and following amendments).

POLIMERI EUROPA

# Edistir® R 850E

## Polystyrene

| Properties | Test conditions | Test methods | Units | Values |
|---|---|---|---|---|
| **General** | | | | |
| Density | | ISO 1183 | g/cm$^3$ | **1.04** |
| Bulk density | | ISO 60 | g/cm$^3$ | **0.65** |
| Water absorption | 24 h - 23°C | ISO 62 | % | **<0.1** |
| **Rheological** | | | | |
| Melt flow rate MFR | 200°C - 5 kg | ISO 1133 | g/10 min | **4** |
| **Mechanical** | | | | |
| Tensile stress at yield | 50 mm/min | ISO 527 | MPa | **21** |
| Tensile stress at break | 50 mm/min | ISO 527 | MPa | **24** |
| Tensile strain at break | 50 mm/min | ISO 527 | % | **60** |
| Tensile modulus | 1 mm/min | ISO 527 | MPa | **1850** |
| Flexural strength | 2 mm/min | ISO 178 | MPa | **38** |
| Izod impact strength, notched | +23°C - thickness 3.2 mm | ISO 180/4A | J/m | **125** |
| | +23°C - thickness 4 mm | ISO 180/1A | kJ/m$^2$ | **10** |
| | -30°C - thickness 4 mm | ISO 180/1A | kJ/m$^2$ | **6.5** |
| Rockwell hardness | L/M scale | ISO 2039/2 | - | **L65** |
| **Thermal** | | | | |
| Vicat softening temperature | 10 N - 50°C/h | ISO 306/A | °C | **99** |
| | 50 N - 50°C/h | ISO 306/B | °C | **91** |
| Deflection temp. under load (annealed) | 1.8 MPa - 120°C/h | ASTM D 648 | °C | **85** |
| Coefficient of linear thermal expansion | | ASTM D 696 | $10^{-5}$/°C | **9** |
| Thermal conductivity | | ISO 8302 | W/(K·m) | **0.17** |
| Moulding shrinkage | | internal | % | **0.4 - 0.7** |
| **Flammability** | | | | |
| Flame behaviour | thickness 1.5 mm | UL 94 | class | **HB** |
| Glow wire test (GWT) | thickness 1.6 mm | IEC 60695-2-1 | °C | **650** |
| **Electrical** | | | | |
| Surface resistivity | | IEC 60093 | ohm | **>1.5·10E+15** |
| Volume resistivity | | IEC 60093 | ohm·cm | **>7·10E+15** |
| Comparative tracking index (CTI) | solution A | IEC 60112 | - | **500** |
| Dielectric strength | | IEC 60243 | kV/mm | **65** |
| Dielectric constant (relative permittivity) | 50 Hz | IEC 60250 | - | **2.5** |
| Dissipation factor | 50 Hz | IEC 60250 | - | **3·10E-4** |

Issue 01/02

All indicated data refer to natural grades.
The data, information and suggestions are provided for guidance purposes only.
The Company accepts no responsibility for the results obtained therefrom, as neither for their utilization in infringement of possible patent rights.
However the Company will provide the guaranteed values for each product on demand.

**Polimeri Europa SRL**
**Divisione Elastomeri e Stirenici**
Piazza Boldrini, 1
I-20097 San Donato Milanese - Milano

e-mail: stir.pst@polimerieuropa.com
www.polimerieuropa.it

**Project name:** MELIADINE-BPC UPGRADE

**Project#:** 5000220043

**Document #:** SPK_0002_ACP_VWT

**by:** CEK

**chkd:** ED

**appvd:** TS

# CLARIFIER #1 ACP-700R

# HYDROCYCLONES

**OIM manual section:** 4.2.3.8

**This page is intentionally left blank**

# CS-999-002 : Identification sheet

| | | | |
|---|---|---|---|
| VWTC PROJECT NUMBER: | 5000220043 | REV: | 1 |
| PROJECT NAME: | AEM MELIADINE-BPC UPGRADE | SUBMITTED TO (COMPANY): | AEM |
| ENGINEER: | EMMANUELLE DORMOY | SUBMITTED TO (RESPONSIBLE) | |
| PROJECT MANAGER: | THOMAS SAVARY / BRUCE BRODES | PROJECT NUM REFERENCE.: | 6526-S-265-605 / OC-989680 |
| PHONE NUMBER: | 514-334-7230 | LOT NUMBER: | |

| SUPPLIER | EQPT CODE | EQPT TAG NO | DIA | DESCRIPTION | INFO 1 | INFO 2 | INFO 3 | APPLIC. | NOTE | REV |
|---|---|---|---|---|---|---|---|---|---|---|
| VWT | ST-999-002 | 65CYC68002A | | CLARIFIER #1 HYDROCYCLONE #1 | DESCRIPTION: HYDROCYCLONE // MANUFACTURER: VWT//MODEL:MA40 // CAPACITY: 35 M3/H @ 1.25 BAR - 60 M3/H @ 3 BAR//FEED INLET: 4" //OVERFLOW/VORTEX FINDER OUTLET: 4" // SERVICE WATER INLET: 3/4" | | | CLARIFIER #1 | | 1 |
| VWT | ST-999-002 | 65CYC68002B | | CLARIFIER #1 HYDROCYCLONE #2 | DESCRIPTION: HYDROCYCLONE // MANUFACTURER: VWT//MODEL:MA40 // CAPACITY: 35 M3/H @ 1.25 BAR - 60 M3/H @ 3 BAR//FEED INLET: 4" //OVERFLOW/VORTEX FINDER OUTLET: 4" // SERVICE WATER INLET: 3/4" | | | CLARIFIER #1 | | 1 |

**This page is intentionally left blank**

# HYDROCYCLONE MA

Separation technology designed for Microsand enhanced clarifier

**The range of Standard Hydrocyclones MA has been specifically developed by Veolia for the separation of microsand and sludge on all the Actiflo Applications.**

**6 models**

**Inlet flow rate from 0.4 $m^3/h$ to 100 $m^3/h$**





## Features & Benefits

- Body made of polyurethane resistant to abrasion
- Material suitable for drinking water applications (WRAS and ACS approved, FDA approval in progress)
- Design specifically for separation of specific microsand used by Veolia
- Possibility to use service water to wash the microsand, reducing largely sludge and bacteria (including E. coli) return into Actiflo Process
- Only design suitable for Actiflo Carb, Soft and HCS applications

## Options

- Different diameters of Vortex finder in order to reduce pressure loss (available for the 3 bigger models only)
- Different diameters of APEX wear part in order to adjust water underflow (available for the 3 bigger models only)

## Applications

- Actiflo Classic
- Actiflo Turbo
- Actiflo HCS
- Actiflo Carb and Twin Carb
- Actiflo Soft

## Markets

- Drinking Water
- Process Water
- Municipal Waste Water
- Industrial Waste Water
- Storm Water

## Related Services

Local after-sales service and support teams offer preventative and corrective maintenance programs to ensure the long-term, efficient operation of installed plant.

## Hydrex™ Chemicals

Hydrex™ 9000 water treatment chemicals from Veolia Water Technologies should be used for optimized operation.

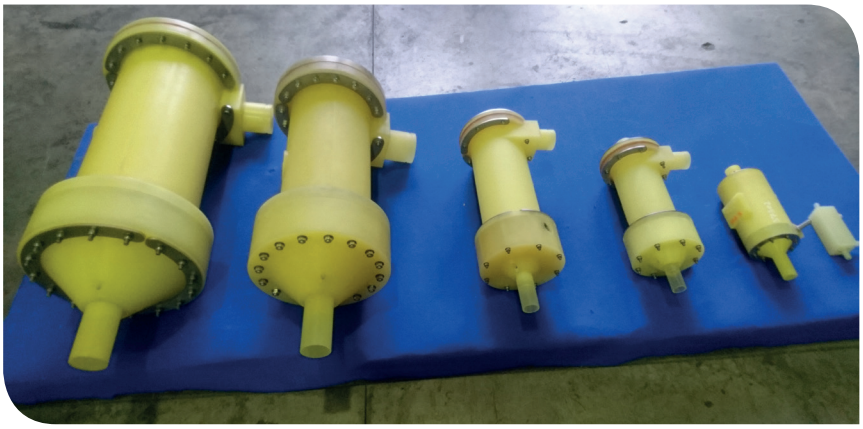

# HYDROCYCLONE MA

## Equipment Performance & Dimensions

| Model | MA1 | MA5 | MA10 | MA20 | MA40 | MA80 |
|---|---|---|---|---|---|---|
| Min inlet flowrate | 0.4 $m^3/h$ | 4 $m^3/h$ | 8 $m^3/h$ | 16 $m^3/h$ | 35 $m^3/h$ | 60 $m^3/h$ |
| Max inlet flowrate | 1 $m^3/h$ | 6 $m^3/h$ | 14 $m^3/h$ | 30 $m^3/h$ | 60 $m^3/h$ | 100 $m^3/h$ |
| Pressure required at minimum inlet flowrate* | 0.5 bar | 0.6 bar | 0.6 bar | 0.6 bar | 1.25 bar | 1 bar |
| Pressure required at maximum inlet flowrate* | 2.5 bar | 1.5 bar | 1.8 bar | 2 bar | 3 bar | 2.3 bar |

* Counter-pressure on overflow to be considered in addition.

## Connections and dimensions

| Model | MA1 | MA5 | MA10 | MA20 | MA40 | MA80 |
|---|---|---|---|---|---|---|
| Feed inlet | 15.8 mm | 1" | 2" | 2" ½ | 4" | 4" |
| Overflow/Vortex finder outlet | 15.8 mm | 1" ½ | 2" | 2" ½ | 4" | 6" |
| Type of connection | Hose Barb | Victaulic | Victaulic | Victaulic | Victaulic | Victaulic |
| Service water inlet | 15.8 mm | ½" | ¾" | ¾" | ¾" | 1" |
| Total height | 224 mm | 445 mm | 606 mm | 796 mm | 1116 mm | 1293 mm |
| Body external width/diameter | 60 mm | 150 mm | 210 mm | 260 mm | 400 mm | 470 mm |
| Empty Weight | 650 g | 6.2 kg | 10.5 kg | 18.2 kg | 76.2 kg | 116 kg |
| Max Operating weight | 750 g | 7.5 kg | 15 kg | 31 kg | 102 kg | 170 kg |

## Service water requirements

| | |
|---|---|
| Quality | 20 µm filtered water |
| Pressure | Sludge/Sand Inlet pressure + 0.5 to 3 bar |
| Flow | 8% to 10% of the inlet flow |
| Type of connection | Hose Barb |

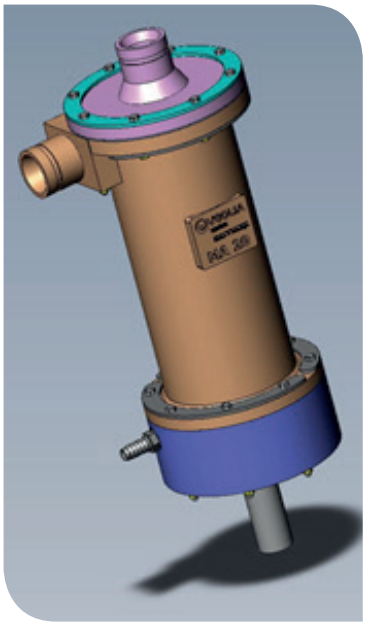

## Inlet sand+sludge requirements

| | |
|---|---|
| Max temperature | 60°C |
| Max TSS | 200 g/l |
| Max particle size | 2 mm |

**Visit our website: www.veoliawatertechnologies.com**

In keeping with the progressive nature of the company, we reserve the right to amend details without notice.

Veolia/Hydrocyclone MA/AQF0000_EN_V1.0/November2016

**Project name:** MELIADINE-BPC UPGRADE

**Project#:** 5000220043

**Document #:** SPK_0002_ACP_VWT

**by:** CEK

**chkd:** ED

**appvd:** TS

# CLARIFIER #1 ACP-700R

# VALVES

**OIM manual section:** 4.2.3.9

**This page is intentionally left blank**

# CS-301-100 : Identification sheet

| | | | |
|---|---|---|---|
| VWTC PROJECT NUMBER: | 5000220043 | REV: | 1 |
| PROJECT NAME: | AEM MELIADINE - BPC UPGRADE | SUBMITTED TO (COMPANY): | AEM |
| ENGINEER: | EMMANUELLE DORMOY | SUBMITTED TO (RESPONSIBLE): | |
| PROJECT MANAGER: | THOMAS SAVARY / BRUCE BORDES | PROJECT NUM REFERENCE.: | 6526-S-265-605 / OC-989680 |
| PHONE NUMBER: | 514-334-7230 | LOT NUMBER: | |

| SUPPLIER | EQPT CODE | EQPT TAG NO | DIA | DESCRIPTION | INFO 1 | INFO 2 | INFO 3 | APPLIC. | NOTE | REV |
|---|---|---|---|---|---|---|---|---|---|---|
| CHEMLINE | VABLPV200243 | 15-BA99-1207 | DIA: 13 mm (1/2") | PRESSURE GAUGE #1 ISOLATION VALVE | TYPE: BALL VALVE//MANUFACTURER : CHEMLINE//MODEL : Type21-A-005-V-C//CONNECTION TYPE : COMBO \| 13 mm (1/2")//BODY : PVC (ASTM D1784)// SEAL \| SEAT :PTFE \| VITON// STEM : PVC | | | CLARIFIER #1 | | 1 |
| CHEMLINE | VABLPV200243 | 15-BA99-1208 | DIA: 13 mm (1/2") | PRESSURE GAUGE #2 ISOLATION VALVE | TYPE: BALL VALVE//MANUFACTURER : CHEMLINE//MODEL : Type21-A-005-V-C//CONNECTION TYPE : COMBO \| 13 mm (1/2")//BODY : PVC (ASTM D1784)// SEAL \| SEAT :PTFE \| VITON// STEM : PVC | | | CLARIFIER #1 | | 1 |
| CHEMLINE | VABLPV200244 | 20-BA99-1209 | DIA: 20 mm (3/4") | SAMPLE BALL VALVE INLET HYDROCYCLONE #1 | TYPE: BALL VALVE//MANUFACTURER : CHEMLINE//MODEL : Type21-A-007-V-C//CONNECTION TYPE : COMBO \| 20 mm (3/4")//BODY : PVC (ASTM D1784)// SEAL \| SEAT :PTFE \| VITON// STEM : PVC | | | CLARIFIER #1 | | 2 |

| SUPPLIER | EQPT CODE | EQPT TAG NO | DIA | DESCRIPTION | INFO 1 | INFO 2 | INFO 3 | APPLIC. | NOTE | REV |
|---|---|---|---|---|---|---|---|---|---|---|
| CHEMLINE | VABLPV200244 | 20-BA99-1210 | DIA: 20 mm (3/4") | SAMPLE BALL VALVE INLET HYDROCYCLONE #2 | TYPE: BALL VALVE//MANUFACTURER : CHEMLINE//MODEL : Type21-A-007-V-C//CONNECTION TYPE : COMBO \| 20 mm (3/4")//BODY : PVC (ASTM D1784)// SEAL \| SEAT :PTFE \| VITON// STEM : PVC | | | CLARIFIER #1 | | 2 |
| CHEMLINE | VABLPV200244 | 20-BA99-1211 | DIA: 20 mm (3/4") | SAMPLE BALL VALVE OUTLET HYDROCYCLONE #1 | TYPE: BALL VALVE//MANUFACTURER : CHEMLINE//MODEL : Type21-A-007-V-C//CONNECTION TYPE : COMBO \| 20 mm (3/4")//BODY : PVC (ASTM D1784)// SEAL \| SEAT :PTFE \| VITON// STEM : PVC | | | CLARIFIER #1 | | 2 |
| CHEMLINE | VABLPV200244 | 20-BA99-1212 | DIA: 20 mm (3/4") | SAMPLE BALL VALVE OUTLET HYDROCYCLONE #2 | TYPE: BALL VALVE//MANUFACTURER : CHEMLINE//MODEL : Type21-A-007-V-C//CONNECTION TYPE : COMBO \| 20 mm (3/4")//BODY : PVC (ASTM D1784)// SEAL \| SEAT :PTFE \| VITON// STEM : PVC | | | CLARIFIER #1 | | 2 |
| CHEMLINE | VABLPV200245 | 25-BA99-1203 | DIA: 25 mm (1") | CLEANING VALVE RECIRCULATION LINE | TYPE: BALL VALVE//MANUFACTURER : CHEMLINE//MODEL : Type21-A-010-V-C//CONNECTION TYPE : COMBO \| 25 mm (1")//BODY : PVC (ASTM D1784)// SEAL \| SEAT :PTFE \| VITON// STEM : PVC | | | CLARIFIER #1 | | 2 |

| SUPPLIER | EQPT CODE | EQPT TAG NO | DIA | DESCRIPTION | INFO 1 | INFO 2 | INFO 3 | APPLIC. | NOTE | REV |
|---|---|---|---|---|---|---|---|---|---|---|
| CHEMLINE | VABLPV200245 | 25-BA99-1214 | DIA: 25 mm (1") | CLEANING VALVE RECIRCULATION LINE #1 | TYPE: BALL VALVE//MANUFACTURER : CHEMLINE//MODEL : Type21-A-010-V-C//CONNECTION TYPE : COMBO \| 25 mm (1")//BODY : PVC (ASTM D1784)// SEAL \| SEAT :PTFE \| VITON// STEM : PVC | | | CLARIFIER #1 | | 2 |
| CHEMLINE | VABLPV200245 | 25-BA99-1215 | DIA: 25 mm (1") | CLEANING VALVE RECIRCULATION LINE #2 | TYPE: BALL VALVE//MANUFACTURER : CHEMLINE//MODEL : Type21-A-010-V-C//CONNECTION TYPE : COMBO \| 25 mm (1")//BODY : PVC (ASTM D1784)// SEAL \| SEAT :PTFE \| VITON// STEM : PVC | | | CLARIFIER #1 | | 2 |
| CHEMLINE | VABLPV200249 | 15-BA99-1219 | DIA: 13 mm (1/2") | POLYMER ISOLATION VALVE | TYPE: BALL VALVE//MANUFACTURER : CHEMLINE//MODEL : Type21-A-005-E-C//CONNECTION TYPE : COMBO \| 13 mm (1/2")//BODY : PVC (ASTM D1784)// SEAL \| SEAT :PTFE \| EPDM// STEM : PVC | | | CLARIFIER #1 | | 1 |
| CHEMLINE | VABLPV200249 | 15-BA99-1220 | DIA: 13 mm (1/2") | POLYMER ISOLATION VALVE | TYPE: BALL VALVE//MANUFACTURER : CHEMLINE//MODEL : Type21-A-005-E-C//CONNECTION TYPE : COMBO \| 13 mm (1/2")//BODY : PVC (ASTM D1784)// SEAL \| SEAT :PTFE \| EPDM// STEM : PVC | | | CLARIFIER #1 | | 1 |

| SUPPLIER | EQPT CODE | EQPT TAG NO | DIA | DESCRIPTION | INFO 1 | INFO 2 | INFO 3 | APPLIC. | NOTE | REV |
|---|---|---|---|---|---|---|---|---|---|---|
| CHEMLINE | VABLPV200249 | 15-BA99-1221 | DIA: 13 mm (1/2") | POLYMER ISOLATION VALVE | TYPE: BALL VALVE//MANUFACTURER : CHEMLINE//MODEL : Type21-A-005-E-C//CONNECTION TYPE : COMBO \| 13 mm (1/2")//BODY : PVC (ASTM D1784)// SEAL \| SEAT :PTFE \| EPDM// STEM : PVC | | | CLARIFIER #1 | | 1 |
| CHEMLINE | VABLPV200249 | 15-BA99-1222 | DIA: 13 mm (1/2") | POLYMER ISOLATION VALVE | TYPE: BALL VALVE//MANUFACTURER : CHEMLINE//MODEL : Type21-A-005-E-C//CONNECTION TYPE : COMBO \| 13 mm (1/2")//BODY : PVC (ASTM D1784)// SEAL \| SEAT :PTFE \| EPDM// STEM : PVC | | | CLARIFIER #1 | | 1 |

PDF Published November 23, 2020

# Type 21 True Union Ball Valves

CHEMLINE PLASTICS
SUPERIOR FLOW SOLUTIONS

The Chemline **Type 21** True Union Ball valve incorporates state of the art features for long term performance. This is a full port, full blocking True Union valve pressure rated at 16 bar (230 psi)[3]. Double stem o-rings and Safety Shear stem design provide for a high degree of safety on hazardous fluid applications. All sizes have an ISO standard actuator mounting platform integral to the valve body. This provides for sturdy and secure mounting of pneumatic or electric actuators.

PVC | CPVC | PP | PVDF

CRN Registered Consult Chemline

NSF[4] Certified to NSF/ANSI 61

SERIES: Type 21

SIZES: 3/8" – 4"

ENDS: Socket, Threaded, Combo[6], Flanged, Butt[1] or ChemFlare™

SEATS: PTFE

SEALS[2]: EPDM, FKM (Viton®)




## features

### Pressure rated to 230 psi[3]
- Provides a high factor of safety

### Integral Actuator Mounting Platform
- Actuation is easy. Electric or pneumatic actuators may be mounted in the field.

### Full Port
- High capacity and low pressure drops

### Fully Blocking
- Downstream union nut may be safely disassembled for piping maintenance while valve is closed off under full system pressure

### Built-In Spanner Wrench
- Top of the handle is designed to be used as a tool for accessing internal parts

### Safety Shear Stem Design
- Stem has double o-rings
- Designed to hold full pressure even if stem breaks due to excessive torque

### High Chemical Resistant Material
- PVC and CPVC compounds have an "A" chemical resistance rating as per ASTM D-1784. They have outperformed other PVC and CPVC compounds on aggressive chemicals.

### CRN Registration numbers by province
- Ontario: OC11045.5
- Newfoundland: OC11045.50
- Saskatchewan/Manitoba/Quebec: OC11045.56
- New Brunswick: OC11045.57
- Nova Scotia: OC11045.58
- P.E.I.: OC11045.59
- British Columbia: not required
- Alberta: not required[5]

[1] Butt ends for fusion to Chemline metric PP, PVDF or ECTFE (Halar®) piping.
[2] Other materials are available.
[3] PVC, CPVC and PVDF 1/2" to 2" are rated at 230 psi; 2-1/2" to 4" and all size PP valves are rated at 150 psi at 20°C.
[4] PVC valves with EPDM or FKM (Viton®) seals are certified under NSF/ANSI Standard 61 for contact with drinking water.
[5] Not required for non-expandable fluids.
[6] PVC and CPVC valves 1/2" to 2" are available as Combo (threaded and socket ends).

11/20 ©Chemline Plastics Limited 2020
Chemline is a registered trade mark of Chemline Plastics Limited

# Type 21 True Union Ball Valves

## Features

**Double Stem O-Rings – Safety Shear Design**

- Upper o-ring groove is deeper than lower. In case of excessive stem torque, stem will shear at the upper groove, leaving the inner o-ring intact to seal against full line pressure.

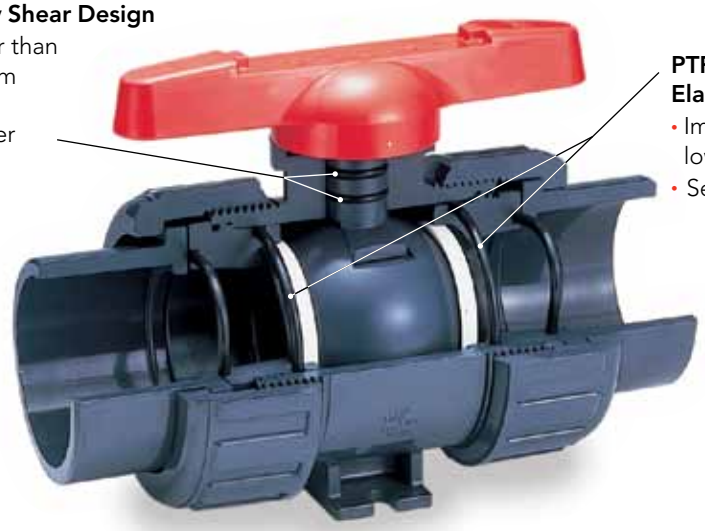

**PTFE Seats have Elastomer Cushions**

- Improved sealing while lowering stem torques
- Self adjusts for seat wear

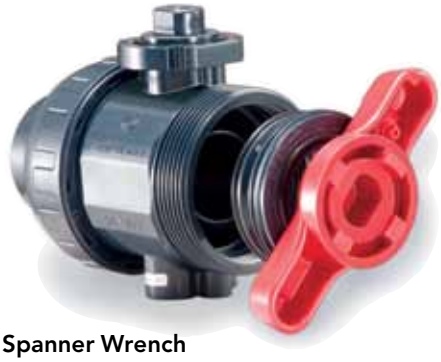

**Built in Spanner Wrench**

- For removing or tightening the seat carrier
- All parts are replaceable



**Integral Actuator Mounting Platform**

- Actuation is easy. Electric or pneumatic actuators may be mounted in the field. Simply pull off the handle to reveal a standard ISO 5211 mounting platform which accepts bolt-on hardware.




**Fully Blocking**

- Downstream pipe may be removed while upstream side is still pressurized. This may be done with valve installed in either direction.



**Base Mounting Pad**

- Optional threaded inserts allow valves to be securely anchored
- Supplied standard with actuated valves

## Options + Accessories



### ChemFlare™ Ends

- For connection to PFA tube. Leak-free connections for difficult services such as sodium hypochlorite



### One-piece moulded PVC and CPVC 6" socket ends

- Allows installation of 4" valve in 6" line
- Factory moulded, elimates cementing separate reducer and coupling
- Fixed to valve mechanically just like the one-piece moulded factory flanges



### Optional Lock-out Handle & Hasp

- To prevent unauthorized operation of the valve during maintenance shut-downs
- Padlocks go through holes in hasp



### Gear Operators

- Deluxe FRP construction
- IP67 enclosure resists short term immersion



### Chain Wheel Operators

- For overhead operation, with 7' of chain drop
- Cast iron or stainless steel

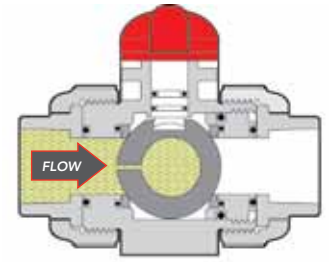


### Vented Ball

- Recommended for all sodium hypochlorite services
- Valve shown in closed position



### Valve Tags

- Stainless steel or plastic



### Different Colour Handles

- Choose a handle colour other than standard red for colour coding different services



### Municipal Operating Nut

- 2" square nut for operating valves below grade using a standard municipal "key"
- Stainless Steel for corrosion resistance



### Manual Limit Switch

- Electrical feedback of manual valve position
- NEMA 4X enclosure, position indicator beacon, 2x SPDT or proximity switches, stainless steel hardware



### Shaft Extensions

- Different materials and lengths are available
- Several designs:
  - with no housing for indoors
  - with waterproofed PVC housing for indoors or outdoors
  - with stainless steel housing for buried or actuated services

# Type 21 True Union Ball Valves

## Electric + Pneumatic Actuation

- A complete range of actuators and control accessories are available, mounted to valves using PPG plastic brackets and stainless steel couplings. Refer to separate data sheets.
- All actuators are CSA approved, have NEMA 4X enclosures, stainless steel hardware and permanently lubricated gear train



**ERS Series Electric**
- Type 21 ball valves up to 2"
- 180 in-lbs torque
- On-Off (3/2-wire), adjustable travel
- Visual feedback

**E Series Electric**
- Type 21 ball valves up to 4"
- Up to 885 in-lbs torque
- On-Off (3/2-wire), adjustable travel. Optional: failsafe, 3 position modulating
- Visual feedback and feedback switches. Optional: extra switches, feedback potentiometer and feedback transmitter



**V Series Electric**
(with optional Local Control Station)
- Type 21 ball valves up to 6"
- up to 8,850 in-lbs torque
- On-Off (2/3-wire), adjustable travel. Optional: failsafe, modulating, BUS
- Visual feedback, 2 feedback switches. Optional: 2 extra feedback switches, feedback potentiometer and feedback transmitter



**PA Series Pneumatic**
- Type 21 ball valves up to 6"
- up to 10,660 in-lbs torque
- industrial process submerged
- bleach/water washdown
- Rilsan-coated aluminum



**PP Series Pneumatic**
- Type 21 ball valves up to 6"
- up to 1,335 in-lbs torque
- industrial process with minimal use of metal
- Glass-filled Polyamide

### OTHER OPTIONS & ACCESSORIES

- **Alternate O-Ring Seals**
- **Stem Extensions** made to any length
- **Limit Switches** – for open and/or closed position indication
- **Municipal Operating Nut**
- **Lubrication-free Valves** – factory clean room assembled
- **Vented Ball** – for sodium hypochlorite applications

# Type 21 True Union Ball Valves

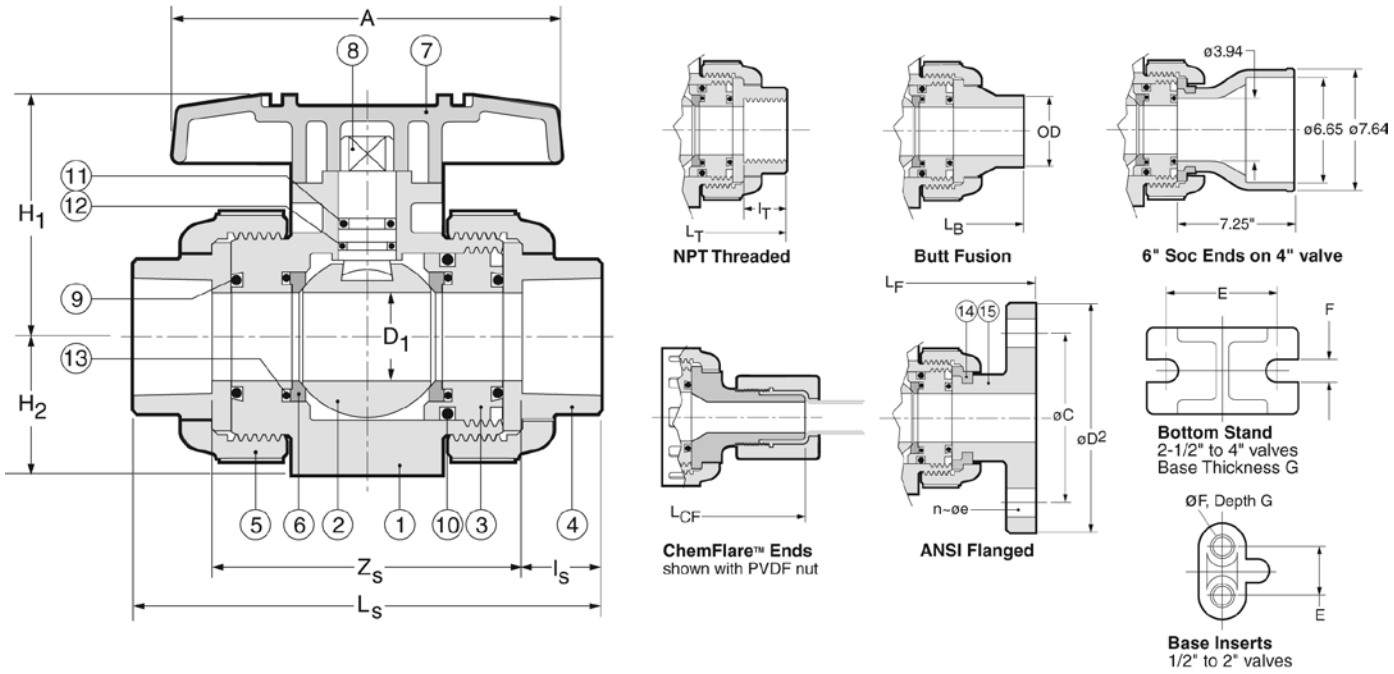


## PARTS

▲ Recommended Spare Parts

| No. | Part | Pcs. | Materials |
|---|---|---|---|
| 1 | Body | 1 | PVC, CPVC, PP, PVDF |
| 2 | Ball | 1 | PVC, CPVC, PP, PVDF |
| 3 | Carrier[1] | 1/2 | PVC, CPVC, PP, PVDF |
| 4 | End Connector | 2 | PVC, CPVC, PP, PVDF |
| 5 | Union Nut | 2 | PVC, CPVC, PP, PVDF |
| 6▲ | Ball Seat | 2 | PTFE |
| 7 | Handle | 1 | ABS |

[1] 1 carrier for sizes 1/2" to 2", 2 carriers for sizes 2-1/2" to 4"
[2] EPDM seals standard with PVC, CPVC, PP; FKM (Viton®) with PVDF valves
[3] 2 pcs 1/2" to 2", 6 pcs 2-1/2" to 4"

## PARTS

▲ Recommended Spare Parts

| No. | Part | Pcs. | Materials |
|---|---|---|---|
| 8 | Stem | 1 | PVC, CPVC, PP, PVDF |
| 9▲ | Face O-Ring[2] | 2 | EPDM, FKM (Viton®) |
| 10▲ | Carrier O-Ring[2] | 2 | EPDM, FKM (Viton®) |
| 11▲ | Upper Thicker Stem O-Ring[2] | 1 | EPDM, FKM (Viton®) |
| 12▲ | Lower Thinner Stem O-Ring[2] | 1 | EPDM, FKM (Viton®) |
| 13 | Seat Cushion[2] | 2 | EPDM, FKM (Viton®) |
| 14 | Flange Retainer[3] | 2/6 | PVDF |
| 15 | Flange | 2 | PVC, CPVC, PP, PVDF |

## DIMENSIONS INCHES

| | | | | | End Connections | | | | | | | | | | | | | | | | |
|---|---|---|---|---|---|---|---|---|---|---|---|---|---|---|---|---|---|---|---|---|---|
| | D | | | | Socket | | | Threaded | | Factory Flanged | | | | | Butt | | ChemFlare™ | | Valve Base | | |
| Size | Bore | A | $H_1$ | $H_2$ | $L_S$ | $Z_S$ | $l_S$ | $l_T$ | $L_T$ | $L_F$ | $D_2$ | C | n | e | $L_B$ | OD | $L_{CF}$ | Tube[4] | E | F[5] | G |
| 1/2" | .59 | 3.6 | 2.03 | 1.14 | 4.45 | 2.70 | .875 | .64 | 4.02 | 5.63 | 3.50 | 2.38 | 4 | .62 | 4.88 | .79 | 6.12 | 1/2" | .75 | .29 | .43 |
| 3/4" | .79 | 3.9 | 2.34 | 1.38 | 5.08 | 3.08 | 1.00 | .65 | 4.72 | 6.77 | 3.88 | 2.75 | 4 | .62 | 5.67 | .98 | 6.52 | 3/4" | .75 | .29 | .43 |
| 1" | .98 | 4.3 | 2.68 | 1.54 | 5.75 | 3.50 | 1.13 | .81 | 5.16 | 7.36 | 4.25 | 3.12 | 4 | .62 | 6.06 | 1.26 | 7.26 | 1" | .75 | .29 | .43 |
| 1-1/4" | 1.22 | 4.8 | 3.17 | 1.85 | 6.46 | 5.21 | 1.25 | .85 | 5.91 | 7.48 | 4.62 | 3.50 | 4 | .62 | 6.85 | 1.57 | 9.58 | 1-1/4" | 1.18 | .35 | .59 |
| 1-1/2" | 1.57 | 5.2 | 3.50 | 2.17 | 7.24 | 4.49 | 1.38 | .85 | 6.42 | 8.35 | 5.00 | 3.88 | 4 | .62 | 7.64 | 1.97 | – | – | 1.18 | .35 | .59 |
| 2" | 2.01 | 6.3 | 4.02 | 2.60 | 8.23 | 5.23 | 1.50 | 1.90 | 7.76 | 9.21 | 6.00 | 4.75 | 4 | .75 | 8.82 | 2.48 | – | – | 1.18 | .35 | .59 |
| 2-1/2" | 2.28 | 7.87 | 4.96 | 2.83 | 9.45 | 5.95 | 1.75 | 1.21 | 8.46 | 10.20 | 7.00 | 5.49 | 4 | .75 | 9.72 | 2.95 | – | – | 1.89 | .35 | .23 |
| 3" | 2.70 | 9.45 | 5.51 | 3.35 | 11.10 | 7.35 | 1.88 | 1.30 | 10.39 | 11.97 | 7.50 | 6.00 | 4 | .75 | 11.61 | 3.54 | – | – | 2.17 | .43 | .28 |
| 4" | 3.54 | 11.81 | 7.01 | 4.33 | 13.88 | 9.87 | 2.00 | 1.38 | 14.17 | 14.65 | 9.00 | 7.50 | 8 | .75 | 14.76 | 4.33 | – | – | 2.56 | .43 | .32 |
| 6"[6] | 3.54 | 11.81 | 7.01 | 4.33 | 23.15 | 17.09 | 3.03 | – | – | – | – | – | – | – | – | – | – | – | 2.56 | .43 | .32 |
| 6"[7] | 3.54 | 11.81 | 7.01 | 4.33 | 27.22 | 21.21 | 3.03 | – | – | – | – | – | – | – | – | – | – | – | 2.56 | .43 | .32 |

[4] ChemFlare™ ends are available for reduced tube sizes down to 1/4"
[5] Optional threaded inserts: 1/2" to 1" valves – UNC 1/4"-20; 1-1/4" to 2" valves – UNC 5/16"-18. 'Recoil' brand inserts require drilling before insertion.
[6] 6" with factory moulded socket ends
[7] 6" with fabricated socket ends

# Type 21 True Union Ball Valves

## WORKING PRESSURES PSI, Water, Non-Shock

## VACUUM RATING • 29.9 inches mercury

| Size | PVC | | | CPVC | | | | | | PP | | | PVDF | | | | |
|---|---|---|---|---|---|---|---|---|---|---|---|---|---|---|---|---|---|
| | 20°C 68°F | 40°C 104°F | 50°C 122°F | 20°C 68°F | 40°C 104°F | 50°C 122°F | 60°C 140°F | 80°C 176°F | 90°C 194°F | 20°C 68°F | 60°C 140°F | 80°C 176°F | 20°C 68°F | 40°C 104°F | 60°C 140°F | 80°C 176°F | 100°C 212°F |
| 1/2"– 2" | 230 | 165 | 150 | 230 | 165 | 150 | 120 | 75 | 55 | 150 | 85 | 55 | 230 | 185 | 150 | 110 | 85 |
| 2-1/2"– 4" | 150 | 150 | 150 | 150 | 150 | 150 | 120 | 75 | 55 | 150 | 70 | 40 | 150 | 150 | 150 | 110 | 85 |

**Temperature Ranges: PVC** 0 to 50°C (32 to 122°F), **CPVC** 0 to 90°C (32 to 194°F), **PP** –20 to 80°C (–4 to 176°F), **PVDF** –20 to 100°C (–20 to 212°F)

## WEIGHTS LB. THREADED or SOCKET

## WEIGHTS LB. FLANGED

| Size | PVC | CPVC | PP | PVDF | PVC | CPVC | PP | PVDF |
|---|---|---|---|---|---|---|---|---|
| 1/2" | 0.4 | 0.4 | 0.4 | 0.4 | 0.9 | 0.9 | 0.7 | 1.1 |
| 3/4" | 0.7 | 0.7 | 0.7 | 0.9 | 1.3 | 1.5 | 1.1 | 1.5 |
| 1" | 0.9 | 1.1 | 0.9 | 1.1 | 1.8 | 2.0 | 1.5 | 2.2 |
| 1-1/4" | 1.5 | 1.5 | 1.3 | 1.8 | 2.6 | 2.9 | 2.0 | 3.3 |
| 1-1/2" | 2.4 | 2.6 | 1.5 | 2.9 | 3.7 | 4.0 | 2.6 | 4.4 |
| 2" | 4.0 | 4.4 | 2.6 | 4.9 | 5.5 | 6.0 | 4.0 | 8.2 |
| 2-1/2" | 5.1 | 5.5 | 3.7 | 6.2 | 7.3 | 7.7 | 5.3 | 8.8 |
| 3" | 8.2 | 8.8 | 5.5 | 9.9 | 10.1 | 11.0 | 7.5 | 12.6 |
| 4" | 19.4 | 21.8 | 13.2 | 24.9 | 21.6 | 23.4 | 15.4 | 26.7 |

## Cv VALUES VS. BALL ANGLE

| Size | 0% | 25% | 50% | 75% | 100% |
|---|---|---|---|---|---|
| 1/2" | 0 | 0.35 | 1.3 | 5.5 | 14. |
| 3/4" | 0 | 0.73 | 2.8 | 11.5 | 29. |
| 1" | 0 | 1.2 | 4.5 | 18.6 | 47. |
| 1-1/4" | 0 | 1.8 | 6.8 | 28.4 | 72. |
| 1-1/2" | 0 | 3.9 | 14.7 | 61.2 | 155. |
| 2" | 0 | 4.8 | 18.0 | 75.0 | 190. |
| 2-1/2" | 0 | 9.1 | 34.7 | 144.0 | 365. |
| 3" | 0 | 10.2 | 39.0 | 162.0 | 410. |
| 4" | 0 | 17.0 | 64.6 | 269.0 | 680. |

## SAMPLE SPECIFICATION

1. All True Union Ball Valves in PVC, CPVC, PP or PVDF shall be Chemline Type 21 or equal sizes 1/2" to 2" in PVC, CPVC, and PVDF rated at 230 psi and in PP 150 psi maximum working pressure. Sizes 2-1/2", 3" and 4" rated at 150 psi maximum working pressure with EPDM or FKM (Viton®) seals. Ball seats shall be PTFE with elastomer cushions for closure with minimum stem torques.
2. All valves will have Safety Shear stem design, blowout-proof with double o-rings for safety. The top o-ring groove shall be deeper so that if the stem breaks off under excessive torque the lower o-ring will remain intact and the valve will hold pressure.
3. All valves shall be full port and two-way blocking design.
4. All valves will be CRN (Canadian Registration Number) registered with TSSA.
5. PVC valves with EPDM or FKM (Viton®) seals shall be certified under NSF/ANSI Standard 61 for contact with drinking water.
6. All valves shall have chemical resistant labels permanently marked with manufacturing number to provide production level traceability.
7. PVC compound shall have an ASTM cell classification 12454-A with a minimum suffix "A" designation for chemical resistance as per ASTM D-1784 (CSA report LO 4000-172).
8. CPVC compound shall have an ASTM cell classification 23567-A with a minimum suffix "A" designation for chemical resistance as per ASTM D-1784.
9. PP material will conform to ASTM D-4101 PP 021 B 67272 material requirements.
10. PVDF material shall be unpigmented conforming to ASTM D-3222 material requirements and to be USDA Title 21 Chapter 1 Part 177. 2510 requirements for contact with food.
11. Socket ends in PVC and CPVC shall be Schedule 80 and conform to ASTM D-2467.
12. Threaded ends shall be Schedule 80 and conform to ASTM D-2464.
13. Butt fusion ends in PP or PVDF will be compatible with Chemline PP or PVDF metric piping systems.
14. Flanged ends shall be ANSI Class 150 one-piece factory moulded (not fabricated) to ensure maximum strength and close tolerance end to end dimensions.

## ORDERING EXAMPLE

| | | | | | for ChemFlare™ ends only | | all other ends |
|---|---|---|---|---|---|---|---|
| **Chemline True Union Ball Valves** | **21** | **A** | **005** | **E** | **V** | **–A** | **8N** | **–1** |
| Body Material | **A** – PVC **B** – PP | **C** – CPVC **K** – PVDF | | | | | | |
| Size[1] | **002** – 1/4" **010** – 1" **025** – 2-1/2" | **003** – 3/8" **012** – 1-1/4" **030** – 3" | **005** – 1/2" **015** – 1-1/2" **040** – 4" | **007** – 3/4" **020** – 2" **060** – 6" | | | | |
| Seals | **E** – EPDM | **V** – FKM (Viton®) | **N** – Nitrile | **A** – Aflas® | | | | |
| ChemFlare™ End Connecters for valves 3/8" to 1-1/4" | | | | | | | | |
| Material | **A** – PVC | **B** – PP | **C** – CPVC | **K** – PVDF | | | | |
| Tube Size[3] | **4N** – 1/4" | **6N** – 3/8" | **8N** – 1/2" | **12N** – 3/4" | **16N** – 1" | **20N** – 1-1/4" | | |
| Tube Nut | **–1** – includes nut | **Blank** – without nut | | | | | | |
| Ends | **S** – Socket | **T** – Threaded | **C** – Combo[2] | **F** – Flanged | **B** – Butt[3] | | | |

**Example:** Chemline Type 21 True Union Ball Valve, PVC, 1/2", with FPM (Viton®) seals, PVC ChemFlare™ end connectors, 1/2" tube size, including nuts.

[1] 1/4" is normally the 3/8" valve reduced. 6" is 4" valve with 6" end connections

[2] PVC and CPVC valves 1/2" to 2" are available as Combo (socket and threaded ends)

[3] Tube size must be equal or smaller than the valve size

[4] PP, PVDF and ECTFE (Halar®) metric butt fusion ends (1/2" to 4") connect to Chemline PP, PVDF and ECTFE (Halar®) piping systems

CHEMLINE PLASTICS
SUPERIOR FLOW SOLUTIONS

55 Guardsman Road, Thornhill, ON, L3T 6L2, Canada | ISO 9001:2015 Certified
1.800.930.2436 (CHEM) | fax.905.889.8553 | request@chemline.com | chemline.com

# CS-312-662 : Identification sheet

| | | | |
|---|---|---|---|
| VWTC PROJECT NUMBER: | 5000220043 | REV: | 1 |
| PROJECT NAME: | AEM MELIADINE-BPC UPGRADE | SUBMITTED TO (COMPANY): | AEM |
| ENGINEER: | EMMANUELLE DORMOY | SUBMITTED TO (RESPONSIBLE): | |
| PROJECT MANAGER: | THOMAS SAVARY / BRUCE BRODES | PROJECT NUM REFERENCE.: | 6526-S-265-605 / OC-989680 |
| PHONE NUMBER: | 514-334-7230 | LOT NUMBER: | |

| SUPPLIER | EQPT CODE | EQPT TAG NO | DIA | DESCRIPTION | INFO 1 | INFO 2 | INFO 3 | APPLIC. | NOTE | REV |
|---|---|---|---|---|---|---|---|---|---|---|
| DURCO | ST-312-664 | 100-PG99-1205 | N/A | RECIRCULATION LINE #1 ISOLATION VALVE | TYPE: PLUG \|250 PSI//MANUFACTURER : Flowserve DURCO//MODEL : 4''T4E11C11D033NW //CONNECTION TYPE : FLANGED #150/\| 100 mm (4")//BODY : FONTE DUCTILE// SEAL \| SEAT :PFA MOLDED PLUG | | | CLARIFIER #1 | | 1 |
| DURCO | ST-312-664 | 100-PG99-1206 | N/A | RECIRCULATION LINE #2 ISOLATION VALVE | TYPE: PLUG \|250 PSI//MANUFACTURER : Flowserve DURCO//MODEL : 4''T4E11C11D033NW //CONNECTION TYPE : FLANGED #150/\| 100 mm (4")//BODY : FONTE DUCTILE// SEAL \| SEAT :PFA MOLDED PLUG | | | CLARIFIER #1 | | 1 |

**This page is intentionally left blank**

FLOWSERVE

# Durco T4E Lined Plug Valves

## Fluoropolymer Lined Valves



*Experience In Motion*

## History

*Flowserve Durco T4E valves have been designed and developed with the latest technology and are the most preferred fluoropolymer lined valves in the global chemical industries.*
*Durco T4E valves provide maximum corrosion resistance and the elimination of product contamination at a reasonable cost.*

## Available in a Broad Size Range and

- ***T4E1*** *ASME Class 150 is available in sizes ½" through 12"*
- ***T4E2*** *DIN PN 16 is available in sizes DN 15 through DN 300*
- ***T4E3*** *ASME Class 300 is available in sizes ½" through 10"*

## Extended Pressure Classes

- ***T4E1 and T4E2*** *rated 180 psi @400 °F (12.4 bar @ 204 °C), 250 psi @ 100 °F (17.2 bar @ 100 °C)*
- ***T4E3*** *rated 320 psi @ 400 °F (22 bar @ 204 °C), 740 psi @ 100 °F (51 bar @ 100 °C)*

*Available with pneumatic or electric actuators for On-Off or modulating control applications.*
*All T4E valve series are rated to 4 Kpa (30 inches Hg) vacuum at ambient temperature.*

# Features

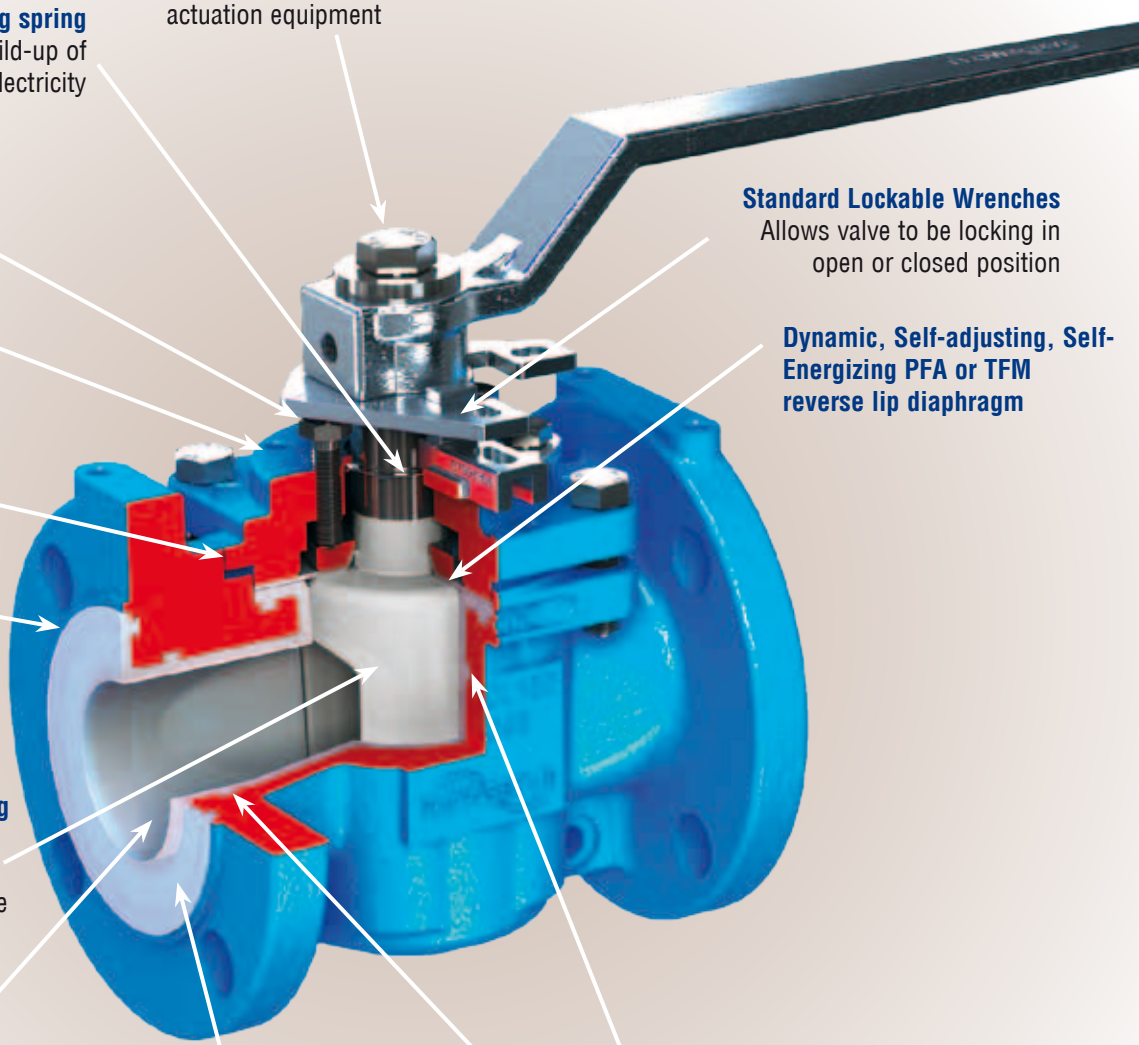

**Double-D plug stem**
accepts most standard actuation equipment

**Grounding spring**
To avoid build-up of static electricity

**Inline adjustment**
Stops thru-line leakage

**ISO 5211 Mounting Pad**
Universal flange for easy actuation mounting

**Anti-Rotation Lugs**
Help to eliminate stress on fasteners during actuation

**Raised Lip**
Prevents cold flow outward

**Standard Lockable Wrenches**
Allows valve to be locking in open or closed position

**Dynamic, Self-adjusting, Self-Energizing PFA or TFM reverse lip diaphragm**

**Solid Encapsulated PFA Molded Plug**
All plug inserts have anchor holes to ensure a strong adhesion of the plug PFA liner material even under extreme cycling conditions

**Large Ports**
Offer good Cv values. Reduced frictional losses & pressure drop

**High Quality PFA Liner**
Protects the body and forms the flange gasket. The PFA liner is resistant against a wide variation of chemical products

**T-Slots in Critical Areas to Lock Liner Against Body Wall**
Advantage will be a tight and perfect fit of the liner and an additional support during vacuum service

# Additional Benefits

## Benefits that give you the extra security which you will appreciate when using the T4E valves

### Body Liner

- A perfectly fixed PFA body liner is well anchored to the body by means of machined T-slots. The plug substrate has anchor holes to ensure that the PFA liner material is securely attached to the plug.
- Due to the selected mode to lock the liner to the valve body and plug, the T4E valve series is very suitable for extreme service conditions including vacuum applications at elevated temperatures.
- The PFA body liner covers all wetted surfaces in the body.
- Due to it's large sealing surface a tight shut-off is assured.
- In addition to the large seating area the valve is fully bi-directional and the seal is totally independent of line pressure.

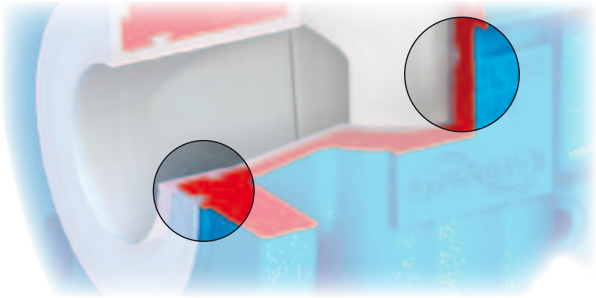

### In-Line Adjustment

- No disassembly required to restore seating; plug can be reseated with a quick and easy in-line adjustment.
- An open end wrench and a few seconds are the extent of your maintenance requirements.

There are:

- No seats to replace
- No lengthy production disruption
- No piping disconnection
- No complicated, time-consuming maintenance procedures
- No hazards to personnel

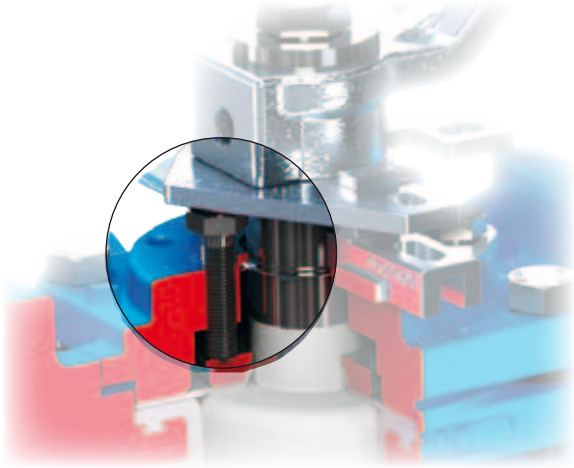

### Secure Sealing

- A dynamic self-adjusting, self energized reverse lip PFA diaphragm seal prevents stem leakage.
- If line pressure forces liquid to the stem seal area, the self-energizing reverse lip PFA diaphragm will be forced against the stem to prevent external leakage.
- A sealing surface as much as 10x greater than other lined valves assures drop tight shut-off.
- In addition to the large sealing area, sealing is both upstream and downstream and is totally independent of line pressure.

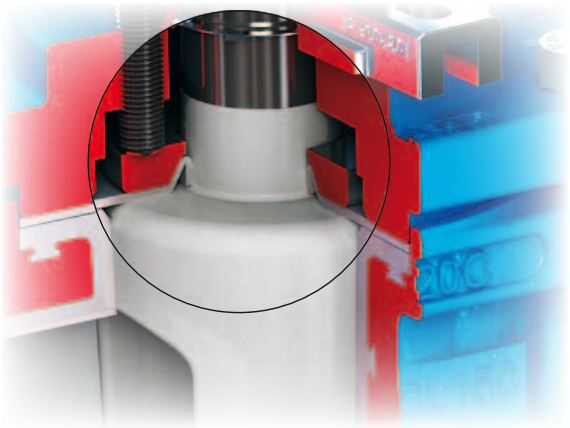

## Weepholes

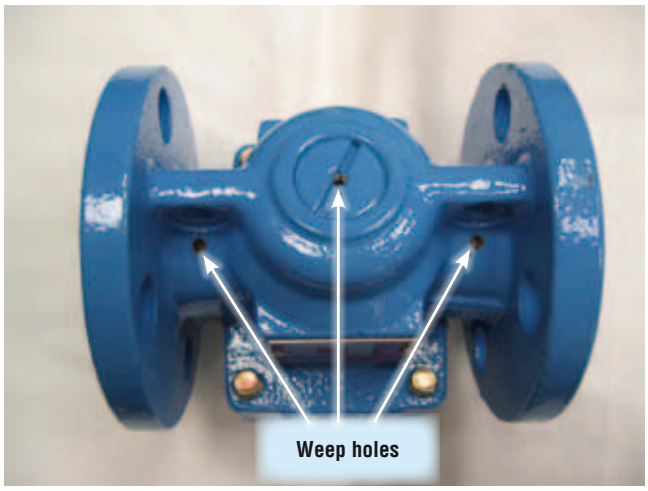


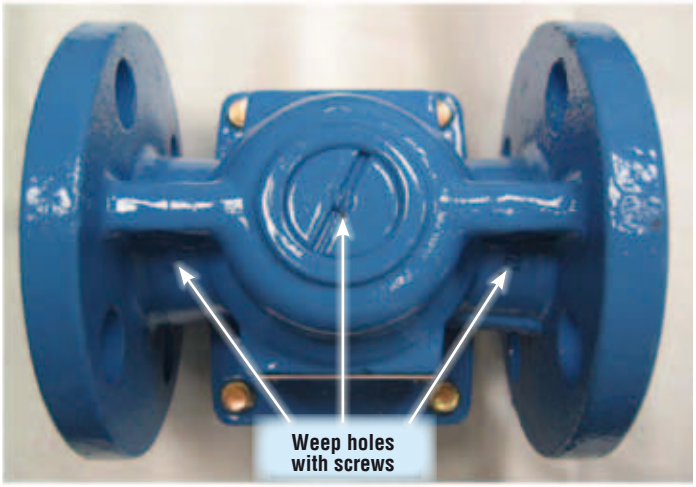


## Weepholes for early leakage detection

Durco T4E valves are supplied with three weepholes that are plugged with screws. The customer has the option to remove the screws. In so doing he is able to detect any leakage of process fluid through the liner and to take appropriate action.

## Pressure-Temperature-Diagram - T4E1 and T4E2

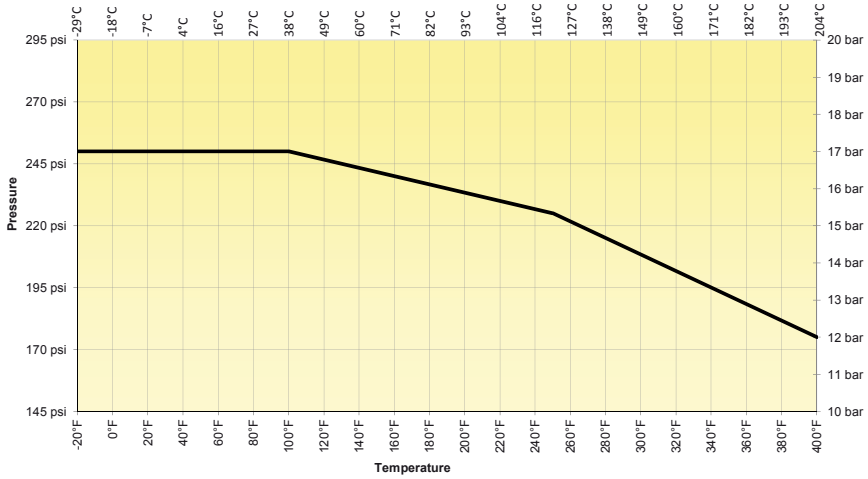


## Pressure-Temperature-Diagram - T4E3

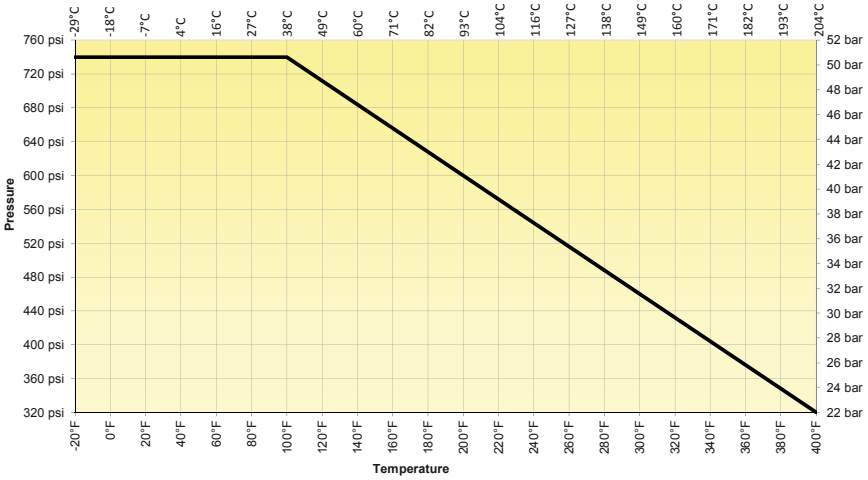

# Durco T4E Automated Valves




*Choose from a complete line of Flowserve Automax Automation Equipment for precise proportioning and On-Off control.....or we'll build a control package to your specification.*

*Flowserve Automax, a specialist in complete automation systems, produces a broad line of rack and pinion, heavy-duty, electric and linear actuators. In addition, a comprehensive line of engineered special control circuits, solenoid valves, limit switches, positioners and actuator mounting kits is offered.*

***Actuator Mounting***

*The body style of the T4E offers a choice of two locations for actuator mounting : an ISO 5200 pattern on the topcap or the flat-top pads of the flanges.*

## Software Capability

*Flowserve offers a state-of-the-art range of software to help in sizing valves and actuation and creating drawings.*

## Modulating Control

*V-port T4E valves are available in 1" (DN 25) through 4" (DN 100) sizes with Cv (Kv) values of 1 through 187 (Kv of 1 through 161). Standard port T4E valves are available in ½" (DN 15) through 12" (DN 300) sizes with Cv (Kv) values from 15 through 3200 (Kv from 13 through 2750).*

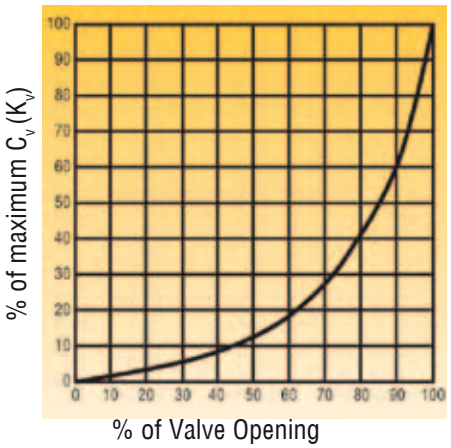


## Control Plugs

| Size | Cv | Kv | Plug Type |
|---|---|---|---|
| 1" | 1 | 1 | slotted plug |
| 1" | 3 | 3 | slotted plug |
| 1" | 8 | 7 | V-port |
| 1" | 13 | 11 | V-port |
| 1" | 25 | 21 | V-port |
| 1½" | 30 | 26 | V-port |
| 2" | 54 | 46 | V-port |
| 3" | 89 | 76 | V-port |
| 4" | 187 | 161 | V-port |

# Material Specification

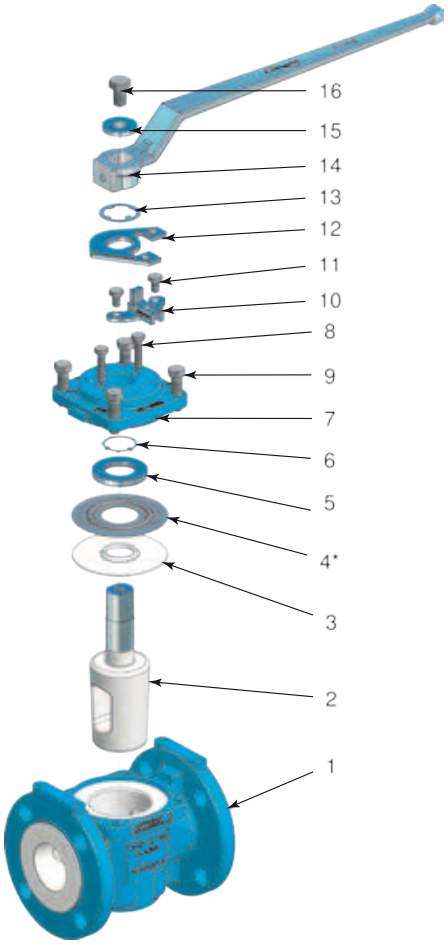


## T4E1, T4E2 and T4E3 (½" - 6")

| No. | Designation | Material |
|---|---|---|
| 1 | Body T4E1 | Ductile cast iron - EN-JS1049/ASTM A395, PFA lined |
| | Body T4E3 | Carbon steel ASTM A216 grade WCB, PFA lined |
| 2 | Plug | Ductile cast iron - EN-JS1049/ASTM A395, PFA lined |
| 3 | Diaphragm | T4E1: TFM (PFA*) \| T4E3: PFA |
| 4* | Metal diaphragm | Stainless steel - 302 |
| 5 | Thrust gland | Machining steel - 1.0718 |
| 6 | Grounding spring | Stainless steel - 302 |
| 7 | Top cap T4E1 | Ductile cast iron - EN-JS1049/ASTM A395 |
| | Top cap T4E3 | Carbon steel ASTM A995 Gr CD4MCuN |
| 8 | Adjuster bolt | ASTM A193 grade B7YC |
| 9 | Top cap bolt | ASTM A193 grade B7YC |
| 10 | Stop | Stainless steel ASTM A351/A744 grade CF-8M (316 SS) |
| 11 | Stop fastener | Stainless steel 1.4301 |
| 12 | Stop collar | Carbon steel, protective plated |
| 13 | Stop collar retainer | Stainless steel - 302 |
| 14 | Wrench | Ductile cast iron - EN-JS1082/ASTM A536 |
| 15 | Washer | Stainless steel - 1.4301 |
| 16 | Hexagon bolt | Stainless steel - 1.4301 |

*Optional

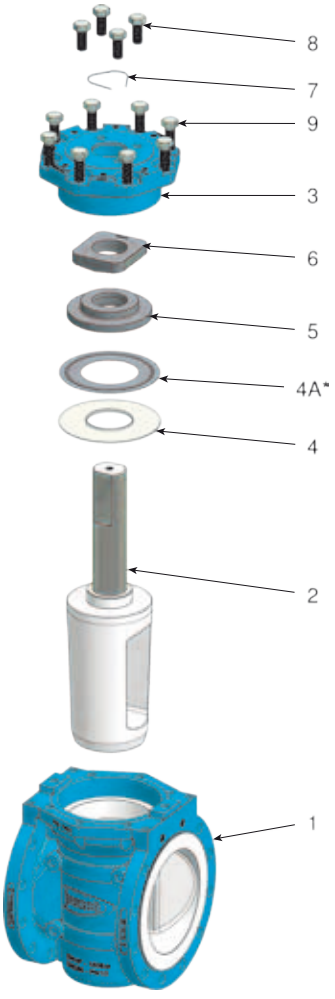


## T4E1 and T4E2 (8" - 12") T4E3 (8" - 10")

| No. | Designation | Material |
|---|---|---|
| 1 | Body T4E1 | Ductile cast iron - EN-JS1049/ASTM A395*, PFA lined |
| | Body T4E3 | Carbon steel ASTM A216 grade WCB, PFA lined |
| 2 | Plug | Ductile cast iron - EN-JS1049/ASTM A395, PFA lined |
| 3 | Top cap T4E1 | Ductile cast iron - EN-JS1049/ASTM A395 |
| | Top cap T4E3 | Carbon steel ASTM A995 grade CD4MCuN |
| 4 | Diaphragm | T4E1: DN8" - TFM (PFA*), DN10"-DN12" - PFA \| T4E3: PFA |
| 4a** | Metal diaphragm | Stainless steel - 302 |
| 5 | Thrust gland | Dupex stainless steel ASTM A995 Gr CD4MCuN |
| 6 | Adjuster | Dupex stainless steel ASTM A995 Gr CD4MCuN |
| 7 | Grounding spring | Stainless steel - 302 |
| 8 | Adjuster bolt | 88YC |
| 9 | Hexagon bolt | 88YC |

* Other materials upon request
** Optional

# Dimensions

## Valve Dimensions

Dimensions are in Inches and millimetres. Weights are in lb. and kg.

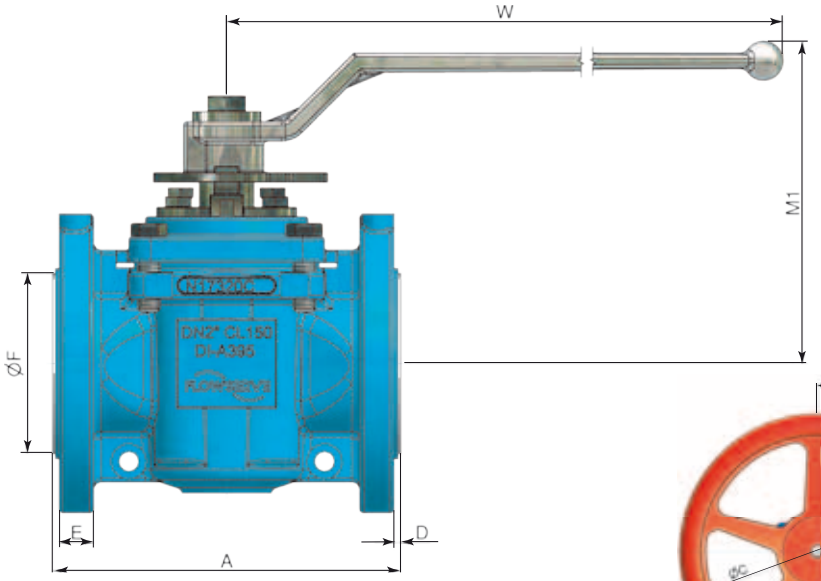


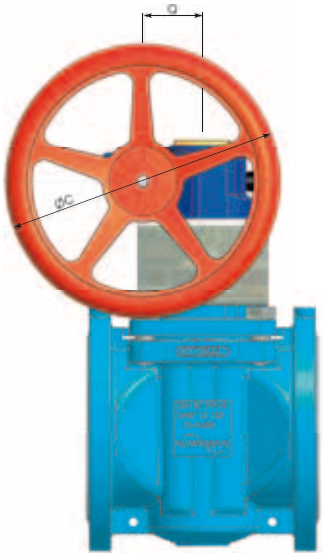


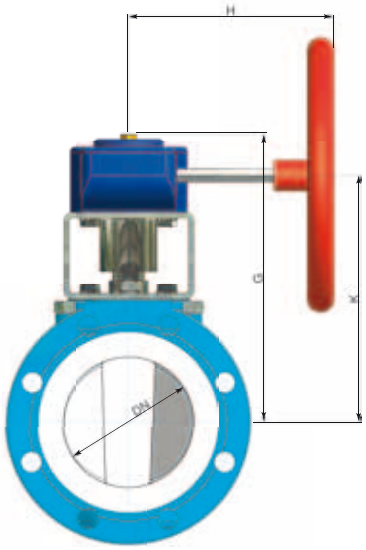


## T4E1, T4E2 and T4E3 ½˝ to 12˝

| Size | Units | A | | | D | | | E | | | ØF | | | W | MI | ØC | H | G | K | Q | Weight | | | |
|---|---|---|---|---|---|---|---|---|---|---|---|---|---|---|---|---|---|---|---|---|---|---|---|---|
| | | 150 | 300 | DIN PN16 | 150 | 300 | DIN PN16 | 150 | 300 | DIN PN16 | 150 | 300 | DIN PN16 | | | | | | | | Units | 150 | 300 | DIN PN16 |
| ½" | inch | 4.3 | 5.5 | 5.1 | 0.12 | 0.16 | 0.24 | 0.43 | 0.51 | 0.47 | 1.4 | 1.4 | 1.65 | 10.2 | 5.5 | | | | | | lb. | 8.2 | 9.9 | 9.3 |
| | mm | 109 | 140 | 130,0 | 3,0 | 4,1 | 6,0 | 11 | 13 | 12 | 36 | 36 | 42 | 259 | 140 | | | | | | kg, | 3,7 | 4,5 | 4,2 |
| ¾" | inch | 4.6 | 6.0 | 5.9 | 0.12 | 0.24 | 0.24 | 0.49 | 0.61 | 0.63 | 1.7 | 1.7 | 2.20 | 10.2 | 5.5 | | | | | | lb. | 9.0 | 12.3 | 10.8 |
| | mm | 117 | 152 | 150,0 | 3,0 | 6,1 | 6,0 | 12 | 15 | 16 | 43 | 43 | 56 | 259 | 140 | | | | | | kg, | 4,1 | 5,6 | 4,9 |
| 1" | inch | 5.0 | 6.5 | 6.3 | 0.12 | 0.26 | 0.26 | 0.5 | 0.63 | 0.55 | 2.0 | 2.0 | 2.56 | 10.2 | 5.5 | | | | | | lb. | 10.8 | 14.3 | 12.8 |
| | mm | 127 | 165 | 160,0 | 3,0 | 6,6 | 6,5 | 13 | 16 | 14 | 51 | 51 | 65 | 259 | 140 | | | | | | kg, | 4,9 | 6,5 | 5,8 |
| 1½" | inch | 6.5 | 7.5 | 7.9 | 0.16 | 0.26 | 0.26 | 0.63 | 0.74 | 0.59 | 2.9 | 2.9 | 3.35 | 10.2 | 5.7 | | | | | | lb. | 16.3 | 22.3 | 20.1 |
| | mm | 165 | 191 | 200,0 | 4,1 | 6,6 | 6,5 | 16 | 19 | 15 | 74 | 74 | 85 | 259 | 145 | | | | | | kg, | 7,4 | 10,1 | 9,1 |
| 2" | inch | 7.0 | 8.5 | 9.1 | 0.14 | 0.26 | 0.26 | 0.69 | 0.86 | 0.67 | 3.6 | 3.6 | 3.86 | 16.1 | 6.5 | | | | | | lb. | 24.9 | 30.9 | 29.1 |
| | mm | 178 | 216 | 230,0 | 3,6 | 6,6 | 6,5 | 18 | 22 | 17 | 91 | 91 | 98 | 409 | 165 | | | | | | kg, | 11,3 | 14,0 | 13,2 |
| 3" | inch | 8.0 | 11.1 | 12.2 | 0.12 | 0.28 | 0.28 | 0.88 | 1.06 | 0.75 | 5.0 | 5.0 | 5.24 | 16.1 | 7.0 | | | | | | lb. | 38.6 | 52.2 | 45.8 |
| | mm | 203 | 282 | 310,0 | 3,0 | 7,1 | 7,0 | 22 | 27 | 19 | 127 | 127 | 133 | 409 | 178 | | | | | | kg, | 17,5 | 23,7 | 20,8 |
| 4" WO | inch | 9.0 | 12 | 13.8 | 0.16 | 0.28 | 0.28 | 0.88 | 1.18 | 0.75 | 6.2 | 6.2 | 5.98 | 26.5 | 8.7 | | | | | | lb. | 68.5 | 93.4 | 76.5 |
| | mm | 229 | 305 | 350,0 | 4,1 | 7,1 | 7,0 | 22 | 30 | 19 | 157 | 157 | 152 | 673 | 221 | | | | | | kg, | 31,1 | 42,4 | 34,7 |
| 4" GO | inch | 9.0 | 12 | 13.8 | 0.16 | 0.28 | 0.28 | 0.88 | 1.18 | 0.75 | 6.2 | 6.2 | 5.98 | | | 9.8 | 9.6 | 11.0 | 9.6 | 2.1 | lb. | 88 | 147 | 191 |
| | mm | 229 | 305 | 350,0 | 4,1 | 7,1 | 7,0 | 22 | 30 | 19 | 157 | 157 | 152 | | | 250 | 245 | 280 | 245 | 54 | kg, | 39,9 | 66,7 | 43,5 |
| 6" | inch | 10.5 | 15.9 | 10.5 | 0.16 | 0.28 | 0.16 | 0.94 | 1.37 | 0.94 | 8.2 | 8.2 | 8.19 | | | 13.8 | 11.2 | 12.2 | 10.8 | 2.6 | lb. | 128 | 187 | 128 |
| | mm | 267 | 404 | 267 | 4,1 | 7,1 | 4,0 | 24 | 35 | 24 | 208 | 208 | 208 | | | 350 | 285 | 309 | 275 | 67 | kg, | 58,1 | 84,8 | 58,1 |
| 8" | inch | 11.5 | 16.5 | 11.5 | 0.16 | 0.16 | 0.16 | 0.92 | 1.53 | 0.92 | 10.3 | 10.3 | 10.3 | | | 19.7 | 12.6 | 20.7 | 18.0 | 3.6 | lb. | 352 | 450 | 352 |
| | mm | 292 | 419 | 292 | 4,1 | 4,1 | 4,1 | 23 | 39 | 23 | 262 | 262 | 262 | | | 500 | 320 | 525 | 457 | 92 | kg, | 160 | 204 | 160 |
| 10 | inch | 13 | 18 | 13 | 0.16 | 0.16 | 0.16 | 1.3 | 1.81 | 1.3 | 12.4 | 12.4 | 12.4 | | | 23.6 | 14.6 | 27.3 | 22.4 | 5.2 | lb. | 522 | 590 | 522 |
| | mm | 330 | 457 | 330 | 4,1 | 4,1 | 4,1 | 33 | 46 | 33 | 315 | 315 | 315 | | | 600 | 370 | 693 | 570 | 132 | kg, | 237 | 268 | 237 |
| 12 | inch | 14 | | 14 | 0.16 | | 0.16 | 1.41 | | 1.41 | 15 | | 15 | | | 23.6 | 14.6 | 28.3 | 26.1 | 5.2 | lb. | 595 | | 595 |
| | mm | 356 | | 356 | 4,1 | | 4,1 | 36 | | 36 | 381 | | 381 | | | 600 | 370 | 720 | 664 | 132 | kg, | 270 | | 270 |

**Note:** All dimensions are approximate and for illustration purposes only. For exact dimensions consult certified dimensional prints
Valve 8"-12" are shown with double D stems which are standard. However spline shafts are also available for these sizes as an option.
All weights include either wrench or gear operator
Face-to-face dimensions comply to ANSI B16.10 and flange connections comply to ANSI B16.5

# T4E - Dimension sheet for actuator mounting

## Top cap mounting acc. to DIN EN ISO 5211

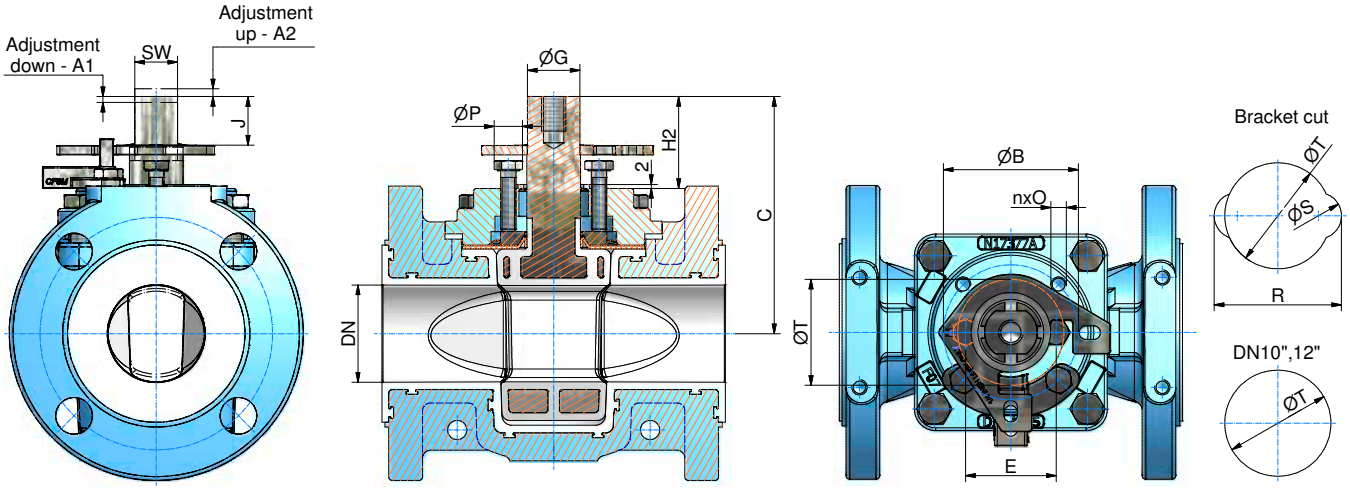


## Flange top mounting

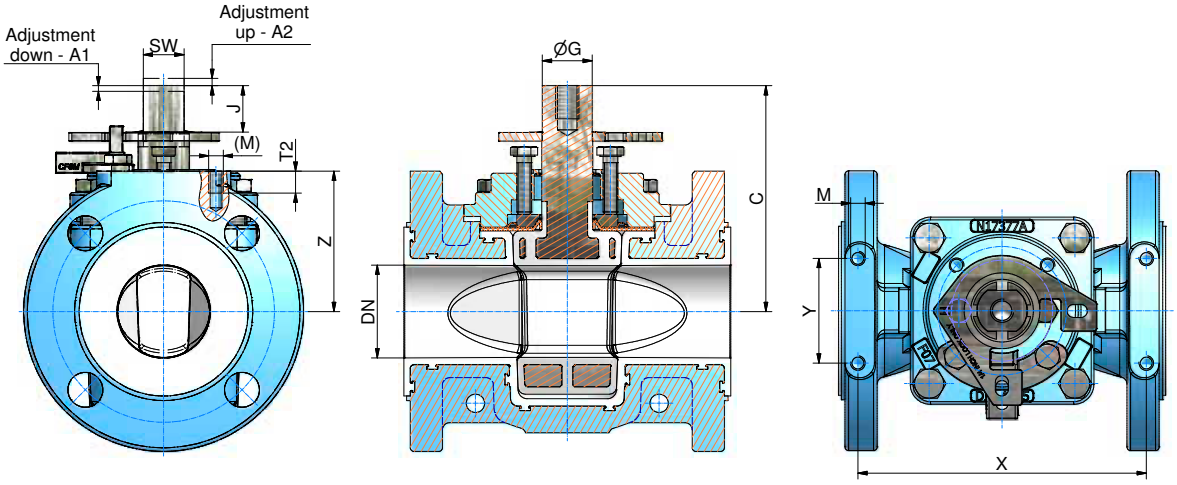


| DN | | SW | ØG | J | H2 | C | Adjustment | | F-Size DIN/ISO 5211 | ØB | nxO | E | ØP | R | ØS | ØT | M (M) | T2 | X | | Z | | Y | |
|---|---|---|---|---|---|---|---|---|---|---|---|---|---|---|---|---|---|---|---|---|---|---|---|---|
| | | | | | | | A1 | A2 | | | | | | | | | | | T4E1 | T4E3 | T4E1 | T4E3 | T4E1 | T4E3 |
| ½" | inch | 0.65 | 0.79 | 0.61 | 1.52 | 3.64 | 0.08 | 0.08 | F05 | 1.97 | 4xM6 | 1.5 | 0.51 | 2.13 | 0.63 | 1.38 | UNC 1/4-20 | 0.35 | 3.56 | 4.65 | 1.83 | 1.97 | 2 | 2 |
| | mm | 16,6 | 20 | 15,5 | 38,5 | 92,5 | 2 | 2 | | 50 | - 8 deep | 38 | 13 | 54 | 16 | 35 | | 9 | 90,5 | 118 | 46,5 | 50 | 50,8 | 50,8 |
| ¾" | inch | 0.65 | 0.79 | 0.61 | 1.52 | 3.64 | 0.08 | 0.08 | F05 | 1.97 | 4xM6 | 1.5 | 0.51 | 2.13 | 0.63 | 1.38 | UNC 1/4-20 | 0.35 | 3.92 | 5 | 2.03 | 2.4 | 2 | 2 |
| | mm | 16,6 | 20 | 15,5 | 38,5 | 92,5 | 2 | 2 | | 50 | - 8 deep | 38 | 13 | 54 | 16 | 35 | | 9 | 99,6 | 127 | 51,5 | 61 | 50,8 | 50,8 |
| 1" | inch | 0.65 | 0.79 | 0.61 | 1.52 | 3.64 | 0.08 | 0.08 | F05 | 1.97 | 4xM6 | 1.5 | 0.59 | 2.28 | 0.79 | 1.38 | UNC 5/16-18 | 0.47 | 4.19 | 5.35 | 2.34 | 2.44 | 1.75 | 1.75 |
| | mm | 16.6 | 20 | 15.5 | 38.7 | 92.5 | 2 | 2 | | 50 | - 8 deep | 38 | 15 | 58 | 20 | 35 | | 12 | 106.4 | 136 | 59.5 | 62 | 44.5 | 44.5 |
| 1½" | inch | 0.65 | 0.79 | 0.75 | 1.48 | 4.02 | 0.08 | 0.08 | F05 | 1.97 | 4xM6 | 1.5 | 0.59 | 2.28 | 0.79 | 1.38 | UNC 5/16-18 | 0.47 | 5.63 | 6.38 | 2.500 | 3.07 | 1.75 | 1.75 |
| | mm | 16,6 | 20 | 19 | 37,7 | 102 | 2 | 2 | | 50 | - 8 deep | 38 | 15 | 58 | 20 | 35 | | 12 | 142,9 | 162 | 63,5 | 78 | 44,5 | 44,5 |
| 2" | inch | 0.87 | 1.07 | 0.99 | 1.93 | 4.84 | 0.08 | 0.08 | F07 | 2.76 | 4xM8 | 1.85 | 0.59 | 2.64 | 0.79 | 2.17 | UNC 5/16-18 | 0.47 | 6.19 | 7.36 | 3.01 | 3.25 | 2.25 | 2.25 |
| | mm | 22,2 | 27,2 | 25,2 | 49 | 123 | 2 | 2 | | 70 | - 12 deep | 47 | 15 | 67 | 20 | 55 | | 12 | 157,2 | 187 | 76,5 | 82,5 | 57,2 | 57,2 |
| 3" | inch | 0.87 | 1.07 | 0.99 | 1.99 | 5.39 | 0.12 | 0.12 | F07 | 2.76 | 4xM8 | 2.13 | 0.87 | 3.15 | 1.02 | 2.17 | UNC 3/8-16 | 0.55 | 7.13 | 9.87 | 3.76 | 4.13 | 3.5 | 3.5 |
| | mm | 22,2 | 27,2 | 25,2 | 50,6 | 137 | 3 | 3 | | 70 | - 12 deep | 54 | 22 | 80 | 26 | 55 | | 14 | 181 | 250,8 | 95,5 | 105 | 88,9 | 88,9 |
| 4" | inch | 1.42 | 1.69 | 1.59 | 2.76 | 6.97 | 0.12 | 0.12 | F10 | 4.02 | 4xM10 | 2.87 | 0.87 | 3.90 | 1.02 | 2.76 | UNC 7/16-14 | 0.63 | 8 | 10.63 | 4.51 | 5.000 | 4 | 4 |
| | mm | 36 | 42,8 | 40,4 | 70,2 | 177 | 3 | 3 | | 102 | - 16 deep | 73 | 22 | 99 | 26 | 70 | | 16 | 203,2 | 269,9 | 114,5 | 127 | 101,6 | 101,6 |
| 6" | inch | 1.42 | 1.69 | 1.59 | 2.67 | 8.23 | 0.16 | 0.16 | F12 | 4.92 | 4xM12 | 3.39 | 1.38 | 4.96 | 1.57 | 3.35 | UNC 7/16-14 | 0.63 | 9.44 | 14.25 | 5.47 | 6.26 | 4 | 4 |
| | mm | 36 | 42,8 | 40,4 | 67,7 | 209 | 4 | 4 | | 125 | - 21 deep | 86 | 35 | 126 | 40 | 85 | | 16 | 239,7 | 362 | 139 | 159 | 101,6 | 101,6 |
| 8" | inch | 1.97 | 2.5 | 3.94 | 6.6 | 15.8 | 0.2 | 0.2 | --- | 7.5 | 8xM16 | 5.25 | 2.1 | 7.48 | 2.20 | 5.12 | M16 | 1.42 | 10.25 | 14.82 | 6.83 | 7.50 | 7.69 | 7.62 |
| | mm | 50 | 63,5 | 100 | 166,6 | 402 | 5 | 5 | | 190,5 | - 26 deep | 133,4 | 53 | 190 | 56 | 130 | | 36 | 260,4 | 376,4 | 173,5 | 190,5 | 195,2 | 193,6 |
| 10" | inch | 2.36 | 3 | 4.92 | 8.46 | 19.49 | 0.2 | 0.2 | F25 | 10 | 8xM16 | 5.13 | 1.46 | --- | --- | 7.87 | M20 | 1.54 | 11.57 | * | 8.43 | * | 7.87 | * |
| | mm | 60 | 76,2 | 125 | 214,8 | 495 | 5 | 5 | | 254 | - 26 deep | 130,2 | 37 | | | 200 | | 39 | 294 | | 214 | | 200 | |
| 12" | inch | 2.36 | 3 | 4.92 | 8.48 | 20.35 | 0.2 | 0.2 | F25 | 10 | 8xM16 | 5.13 | 1.46 | --- | --- | 7.87 | M20 | 1.57 | 12.28 | 17.69 | 9.19 | 10.55 | 7.87 | 6.00 |
| | mm | 60 | 76,2 | 125 | 215,4 | 517 | 5 | 5 | | 254 | -26 deep | 130,2 | 37 | | | 200 | | 40 | 312 | 449,3 | 233,5 | 268 | 200 | 152,4 |

* no actuator mounting for T4E2 valves

FLOWSERVE

# How to Specify T4E Valves

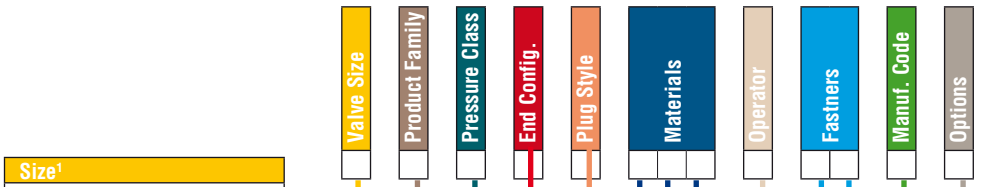


| Size[1] |
|---|
| 0.5 in. |
| 0.75 in. |
| 1.5 in. |
| 2 in. |
| 3 in. |
| 4 in. |
| 6 in. |
| 8 in. |
| 10 in. |
| 12 in. |

| Product Family |
|---|
| T4E = Standard |

| Pressure Class[1] |
|---|
| 1 = ASME Cl. 150 |
| 2 = DIN PN 16 |
| 3 = ASME Cl. 300 |

| End Configuration |
|---|
| 1 = Raised Face Flanges |

| Plug Style | | |
|---|---|---|
| C = 2-Way | | |
| D = Slot | Cv = .8 | 1" |
| E = Vport | Cv = 3 | 1" |
| F = Vport | Cv = 8.3 | 1" |
| G = Vport | Cv = 13 | 1" |
| H = Vport | Cv = 29.6 | 1.5" |
| J = Vport | Cv = 53.6 | 2" |
| K = Vport | Cv = 88.7 | 3" |
| L = Vport | Cv = 187.1 | 4" |

| Options |
|---|
| C = Chlorine Service |
| D = Chlorine Clean Only |
| G = Bottom Vented Plug[8] |
| H = Upstream Vented Plug (side) |
| J = Side/Bottom Vented Plug (upstream) |
| L = Anti-Vibration Clip for Top Cap Bolts |
| M = Side Vent Downstream (requires release from customer in writing) |
| O = Oxygen Cleaning |
| R = Built Dry (no lubrication)[9] |
| S = Silicone Free Lubrication |
| W = No Options |
| @ = DuPont Flouropolymer Material |
| Q = Quality Plan |

| Manufacturers code |
|---|
| N = Internal use |

| Adjuster fastener[7] |
|---|
| 1 = B840 |
| 2 = B9 |
| 3 = B7YC |
| 4 = B7T |
| 5 = C20 |
| 6 = HC |
| 7 = B7 |
| 8 = MKH |
| 9 = B7M |
| 0 = B7MZ |
| E = 88YC |

| Top Cap Fastener[7] |
|---|
| 1 = B840 |
| 2 = B9 |
| 3 = B7YC |
| 4 = B7T |
| 5 = C20 |
| 6 = HC |
| 7 = B7 |
| 8 = MKH |
| 9 = B7M |
| 0 = B7MZ |
| E = 88YC |

| Operator |
|---|
| 0 = Std. Wrench[5] |
| 1 = Gear Cl[6] |
| 2 = Locking Gear Cl |
| 4 = Caustic Gear PF |
| 9 = Bare Stem |
| B = Babbit/Chain |

| Standard Valve Codes | | |
|---|---|---|
| Size | Class 150 | Class 300 |
| 0.5 | .5-T4E-11C11D033NW | .5-T4E-31C210033NW |
| 0.75 | .75-T4E-11C11D033NW | .75-T4E-31C210033NW |
| 1 | 1-T4E-11C11D033NW | 1-T4E-31C210033NW |
| 1.5 | 1.5-T4E-11C11D033NW | 1.5-T4E-31C210033NW |
| 2 | 2-T4E-11C11D033NW | 2-T4E-31C210033NW |
| 3 | 3-T4E-11C11D033NW | 3-T4E-31C210033NW |
| 4 | 4-T4E-11C11D033NW | 4-T4E-31C210033NW |
| 6 | 6-T4E-11C11D033NW | 6-T4E-31C210033NW |
| 8 | 8-T4E-11C11D1EENW | 8-T4E-31C2101EENW |
| 10 | 10-T4E-11C11D1EENW | 10-T4E-31C2101EENW |
| 12 | 12-T4E-11C11D1EENW | |

| Body liner[2] | Plug Alloy[3] | Top Cap Alloy[4] |
|---|---|---|
| 1 = DIPA | 1 = DIPA | D = DCI |
| 2 = DSPA | 2 = D4PA | O = CD4M |
| 3 = D4PA | 3 = CDPA | |

| Codes | |
|---|---|
| DIPA | Ductile iron, PFA lined |
| DSPA | Carbon steel, PFA lined |
| D4PA | 316 SS, PFA lined |
| CDPA | CD4MCuN, PFA lined |

[1] Class 150 valves = ½" thru 12" ductile iron / 8" thru 12" stainless steel
Class 300 valves = ½" thru 10" carbon steel
[2] DIPA body = class 150 valves only
D4PA body = 8", 10" 12" class 150 valves only
DSPA body = class 300 valves only
[3] DIPA plug = ½" thru 12"
CDPA plug = 8", 10" and 12" only
[4] DCI top cap = DIPA valve bodies
CD4M top cap = D4PA and DSPA valve bodies
[5] Locking wrench standard thru 4"
[6] Gear standard 6" and above (also available on smaller sizes)
[7] B7YC = standard for ½" thru 6"
88YC = standard for 8", 10", 12" (Gr. 8.8 yellow chromated)
[8] 8" and larger plugs have bottom vent as standard
[9] No lubrication for valves up to 4"
Built with Krytox for valves 6" and above





## To Access Literature On-line

More information about FLOWSERVE products can be obtained on-line. It's easy to find… it's free… and you do not need a password.

## Do This:

1. Go to www.flowserve.com
2. Click in the box that says "Literature"
3. Enter "Keyword" or literature number and "Filter" as required
4. Click on "Search"

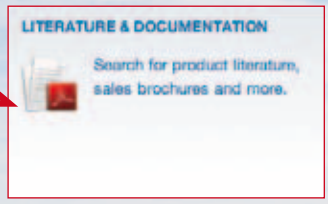


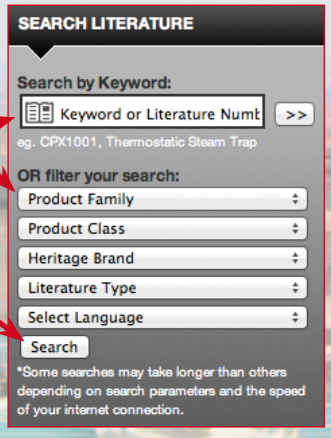


The most recent version of each product bulletin will be available on this site.

Once you have the PDF, you can:

- read it
- print it
- download it
- even e-mail it

## Other Useful Information

In addition to lined plug valves, lined butterfly valves (Document number DVENTB0020) and lined ball valves, check valves and sight glasses (Document number ATENTB0010) are also available.

Finally, a wide variety of metallic and lined rotary valves and actuation equipment is summarized in the Document number DVENBR0001.

To obtain any of these brochures, follow the simple steps on the left of this page and enter the Document number in Step 3.

## Ordering Preprinted Literature

Customers, please contact your Flowserve sales representative to get hard copy of a brochure. Flowserve representatives and distributors can go to www.flowserve.com and click on the "View Literature" link then click on "Log-in to order hard copy literature" and follow the prompts.




## United States
Flow Control
1978 Foreman Drive
Cookeville, Tennessee 38501
USA
Phone: 931 432 4021
Fax: 931 432 3105
www.flowserve.com

## Germany
Von Braun Straße 19a
D-48683 Ahaus
Germany
Phone: +49 2561 686-100
Fax: +49 2561 686-200

## Singapore
12 Tuas Avenue 20
Republic of Singapore 638824
Phone: +65 6879 8900
Fax: +65 6862 4940

## Australia
14 Dalmore Drive, Scoresby, Victoria,
3179, Australia
Phone: +613-97593300

## Brazil
Av. Tocantins 128
Sao Caetano do Sul
SP 09580-130
Brazil
Phone: +55 11 2169 6300
Fax: +55 11 2169 6313

## China
Flowserve Corporation Beijing Office
Room 22A1&A2,HanWei Plaza
No.7 GuangHua Road
Chaoyang District
Beijing, China 100004
Tel: +86-10-59210600
+86-10-59210601
Fax: +86-10-65611899


***To find your local Flowserve representative, visit www.flowserve.com or call USA 1 800 251 6761***

FCD DVENBR0066-01 10/12 Printed in USA.

Flowserve Corporation has established industry leadership in the design and manufacture of its products. When properly selected, this Flowserve product is designed to perform its intended function safely during its useful life. However, the purchaser or user of Flowserve products should be aware that Flowserve products might be used in numerous applications under a wide variety of industrial service conditions. Although Flowserve can (and often does) provide general guidelines, it cannot provide specific data and warnings for all possible applications. The purchaser/user must therefore assume the ultimate responsibility for the proper sizing and selection, installation, operation, and maintenance of Flowserve products. The purchaser/user should read and understand the Installation Operation Maintenance (IOM) instructions included with the product, and train its employees and contractors in the safe use of Flowserve products in connection with the specific application.

While the information and specifications contained in this literature are believed to be accurate, they are supplied for informative purposes only and should not be considered certified or as a guarantee of satisfactory results by reliance thereon. Nothing contained herein is to be construed as a warranty or guarantee, express or implied, regarding any matter with respect to this product. Because Flowserve is continually improving and upgrading its product design, the specifications, dimensions and information contained herein are subject to change without notice. Should any question arise concerning these provisions, the purchaser/user should contact Flowserve Corporation at any one of its worldwide operations or offices.

© 2008 Flowserve Corporation, Irving, Texas, USA. Flowserve is a registered trademark of Flowserve Corporation.

# CS-315-900 : Identification sheet

| | | | |
|---|---|---|---|
| VWTC PROJECT NUMBER: | 5000220043 | REV: | 1 |
| PROJECT NAME: | AEM MELIADINE-BPC UPGRADE | SUBMITTED TO (COMPANY): | AEM |
| ENGINEER: | EMMANUELLE DORMOY | SUBMITTED TO (RESPONSIBLE): | |
| PROJECT MANAGER: | THOMAS SAVARY / BRUCE BRODES | PROJECT NUM REFERENCE.: | 6526-S-265-605 / OC-989680 |
| PHONE NUMBER: | 514-334-7230 | LOT NUMBER: | |

| SUPPLIER | EQPT CODE | EQPT TAG NO | DIA | DESCRIPTION | INFO 1 | INFO 2 | INFO 3 | APPLIC. | NOTE | REV |
|---|---|---|---|---|---|---|---|---|---|---|
| BRAY | VABFDI364242 | 100-BF99-1101 | 4" (100 mm) | MANUAL DRAIN VALVE | TYPE: BUTTERFLY \| 175 PSI (75 PSI IF DEAD-END SERVICE) / MANUF.: BRAY / MODEL: Serie 31 - Lug// Série 31- à oreilles / CONNECTION TYPE \| SIZE : \| 4" (100 mm) / BODY: DUCTILE IRON / SEAL \| SEAT : EPDM / DISC \| STEM: NYLON 11 COATED DISC \| 416 SS | / ACTUATOR TYPE: Manual \| LEVER / MANUFACTURER: BRAY | / NSF61 | CLARIFIER #1 | | 1 |
| BRAY | VABFDI364242 | 100-BF99-1102 | 4" (100 mm) | MANUAL DRAIN VALVE | TYPE: BUTTERFLY \| 175 PSI (75 PSI IF DEAD-END SERVICE) / MANUF.: BRAY / MODEL: Serie 31 - Lug// Série 31- à oreilles / CONNECTION TYPE \| SIZE : \| 4" (100 mm) / BODY: DUCTILE IRON / SEAL \| SEAT : EPDM / DISC \| STEM: NYLON 11 COATED DISC \| 416 SS | / ACTUATOR TYPE: Manual \| LEVER / MANUFACTURER: BRAY | / NSF61 | CLARIFIER #1 | | 1 |
| BRAY | VABFDI364244 | 200-BF99-1204 | 8" (200 mm) | MANUAL PARTIAL DRAIN VALVE | TYPE: BUTTERFLY \| 175 PSI (75 PSI IF DEAD-END SERVICE) / MANUF.: BRAY / MODEL: Serie 31 - Lug// Série 31- à oreilles / CONNECTION TYPE \| SIZE : \| 8" (200 mm) / BODY: DUCTILE IRON / SEAL \| SEAT : EPDM / DISC \| STEM: NYLON 11 COATED DISC \| 416 SS | / ACTUATOR TYPE: Manual \| HANDWHEEL / MANUFACTURER: BRAY | / NSF61 | CLARIFIER #1 | | 1 |

**This page is intentionally left blank**

## Series 30 Wafer

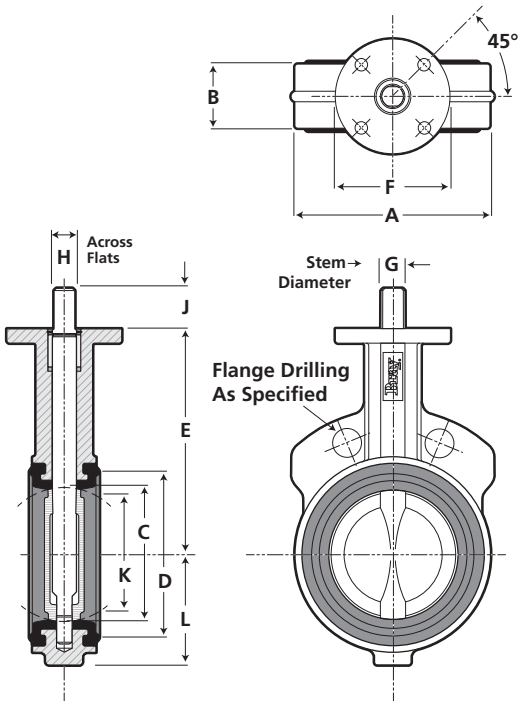


## Series 31 Lug

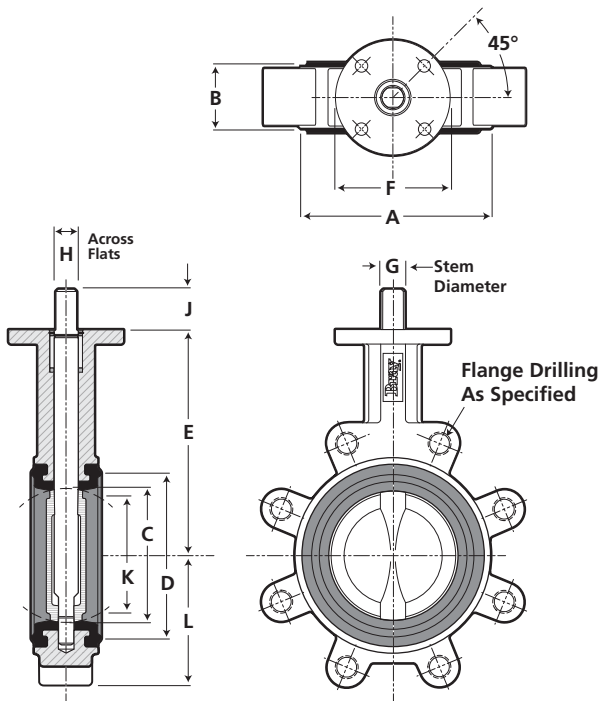


| IMPERIAL DIMENSIONS: Inches | | | | | | | | | | | | | | | | | | | Lug Bolting Data | | |
|---|---|---|---|---|---|---|---|---|---|---|---|---|---|---|---|---|---|---|---|---|---|
| Valve Size | A | B | C | D | E | F | Top Plate Drilling | | | G | H | J | K | L | | Adapter Code | Weight (lbs.) | | Bolt Circle | No of Holes | Threads ISO Coarse |
| | | | | | | | BC | No of Holes | Hole Diameter | | | | | Wafer | Lug | | Wafer | Lug | | | |
| 2 | 3.69 | 1.62 | 2.00 | 2.85 | 5.50 | 3.54 | 2.76 | 4 | .39 | .55 | 39 | 1.25 | 1.32 | 2.22 | 2.30 | A | 5.5 | 7.0 | 4.75 | 4 | 5/8-11 |
| 2 1/2 | 4.19 | 1.75 | 2.50 | 3.36 | 6.00 | 3.54 | 2.76 | 4 | .39 | .55 | .39 | 1.25 | 1.91 | 2.47 | 2.57 | A | 7.0 | 8.0 | 5.50 | 4 | 5/8-11 |
| 3 | 4.88 | 1.75 | 3.00 | 4.15 | 6.25 | 3.54 | 2.76 | 4 | .39 | .55 | .39 | 1.25 | 2.55 | 2.81 | 2.81 | A | 7.5 | 9.0 | 6.00 | 4 | 5/8-11 |
| 4 | 6.06 | 2.00 | 4.00 | 5.16 | 7.00 | 3.54 | 2.76 | 4 | .39 | .63 | .43 | 1.25 | 3.57 | 3.41 | 4.09 | B | 11.5 | 15.0 | 7.50 | 8 | 5/8-11 |
| 5 | 7.06 | 2.12 | 5.00 | 6.16 | 7.50 | 3.54 | 2.76 | 4 | .39 | .75 | .51 | 1.25 | 4.63 | 4.03 | 4.61 | C | 14.0 | 20.0 | 8.50 | 8 | 3/4-10 |
| 6 | 8.12 | 2.12 | 5.75 | 7.02 | 8.00 | 3.54 | 2.76 | 4 | .39 | .75 | .51 | 1.25 | 5.45 | 4.53 | 5.06 | C | 17.0 | 23.0 | 9.50 | 8 | 3/4-10 |
| 8 | 10.50 | 2.50 | 7.75 | 9.47 | 9.50 | 5.91 | 4.92 | 4 | .57 | .87 | .63 | 1.25 | 7.45 | 5.75 | 6.05 | D | 34.0 | 42.0 | 11.75 | 8 | 3/4-10 |
| 10 | 12.75 | 2.50 | 9.75 | 11.47 | 10.72 | 5.91 | 4.92 | 4 | .57 | 1.18 | .87 | 2.00 | 9.53 | 7.12 | 7.69 | E | 49.0 | 66.0 | 14.25 | 12 | 7/8-9 |
| 12 | 14.88 | 3.00 | 11.75 | 13.47 | 12.25 | 5.91 | 4.92 | 4 | .57 | 1.18 | .87 | 2.00 | 11.47 | 8.12 | 9.02 | E | 67.0 | 88.0 | 17.00 | 12 | 7/8-9 |

**Note: K dimension is disc chordal dimension at valve face.**

| METRIC DIMENSIONS: Millimeters | | | | | | | | | | | | | | | | | | | Lug Bolting Data | | |
|---|---|---|---|---|---|---|---|---|---|---|---|---|---|---|---|---|---|---|---|---|---|
| Valve Size | A | B | C | D | E | F | Top Plate Drilling | | | G | H | J | K | L | | Adapter Code | Weight (Kg) | | Bolt Circle | No of Holes | Threads ISO Coarse |
| | | | | | | | BC | No of Holes | Hole Diameter | | | | | Wafer | Lug | | Wafer | Lug | | | |
| 50 | 94 | 41.2 | 51 | 72 | 140 | 90 | 70 | 4 | 10 | 14 | 10 | 32 | 34 | 56 | 58 | A | 2.5 | 3 | 121 | 4 | 5/8-11 |
| 65 | 106 | 44.5 | 64 | 85 | 152 | 90 | 70 | 4 | 10 | 14 | 10 | 32 | 49 | 63 | 65 | A | 3 | 3.5 | 140 | 4 | 5/8-11 |
| 80 | 124 | 44.5 | 76 | 102 | 159 | 90 | 70 | 4 | 10 | 14 | 10 | 32 | 65 | 71 | 71 | A | 3.5 | 4 | 152 | 4 | 5/8-11 |
| 100 | 154 | 50.8 | 102 | 131 | 178 | 90 | 70 | 4 | 10 | 16 | 11 | 32 | 91 | 87 | 104 | B | 5 | 7 | 191 | 8 | 5/8-11 |
| 125 | 181 | 54.0 | 127 | 156 | 190 | 90 | 70 | 4 | 10 | 19 | 13 | 32 | 118 | 102 | 117 | C | 6 | 9 | 216 | 8 | 3/4-10 |
| 150 | 206 | 54.0 | 146 | 178 | 203 | 90 | 70 | 4 | 10 | 19 | 13 | 32 | 138 | 115 | 129 | C | 8 | 10 | 241 | 8 | 3/4-10 |
| 200 | 267 | 63.5 | 197 | 240 | 241 | 150 | 125 | 4 | 14 | 22 | 16 | 32 | 189 | 146 | 154 | D | 15 | 19 | 298 | 8 | 3/4-10 |
| 250 | 324 | 63.5 | 248 | 291 | 273 | 150 | 125 | 4 | 14 | 30 | 22 | 51 | 242 | 181 | 195 | E | 22 | 30 | 362 | 12 | 7/8-9 |
| 300 | 378 | 76.2 | 298 | 342 | 311 | 150 | 125 | 4 | 14 | 30 | 22 | 51 | 291 | 206 | 229 | E | 30 | 40 | 432 | 12 | 7/8-9 |

**Note: K dimension is disc chordal dimension at valve face.**

Drawings are for reference only. Please refer to Bray ES drawings on the Bray website, www.bray.com. Bray reserves the right to change product dimensions without notice.

## SR Drawing #30/31-2/12-in

Inquire/P.O. No.:_____

Customer/Project: _____

Bray Order No.: _____

## Series 30 Wafer

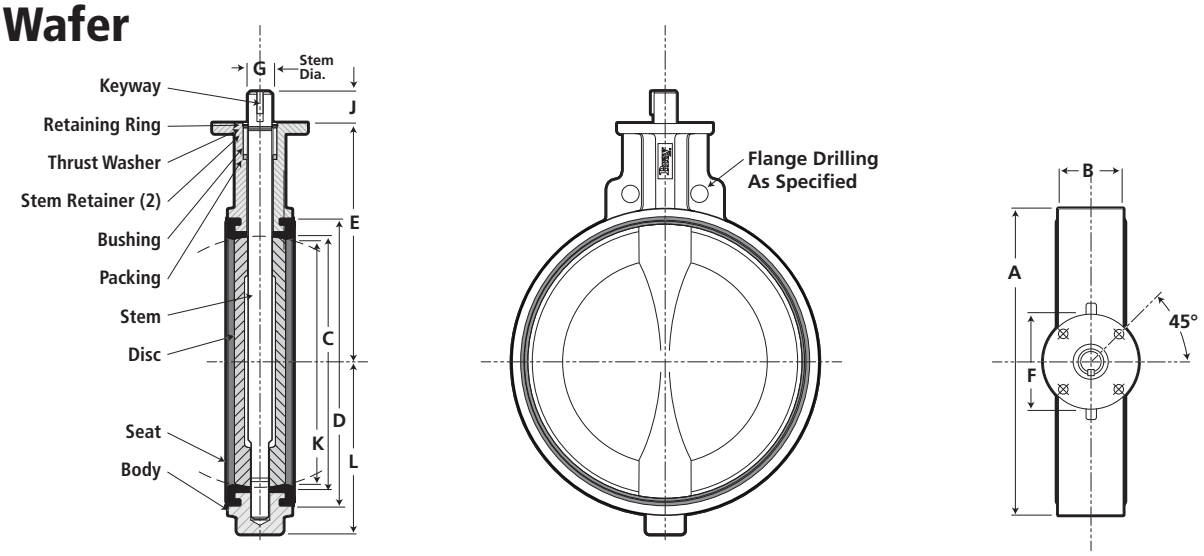


## Series 31 Lug

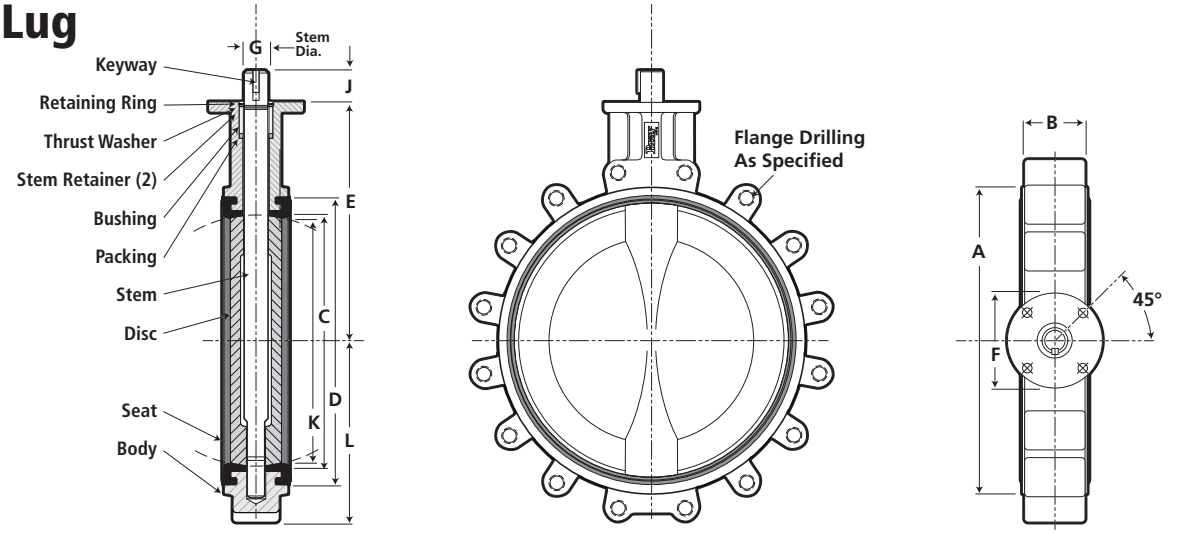


| IMPERIAL DIMENSIONS: Inches | | | | | | | | | | | | | | | | | | | | Lug Bolting Data | | |
|---|---|---|---|---|---|---|---|---|---|---|---|---|---|---|---|---|---|---|---|---|---|---|
| Valve Size | A | B | C | D | E | F | Top Plate Drilling | | | G | J | Key Size | K | L | | Adapter Code | Weight (lbs.) | | Bolt Circle | No of Holes | Threads ISO Coarse |
| | | | | | | | BC | No of Holes | Hole Diameter | | | | | Wafer | Lug | | Wafer | Lug | | | |
| 14 | 17.05 | 3.00 | 13.25 | 15.28 | 13.62 | 5.91 | 4.92 | 4 | .57 | 1.38 | 2.00 | .39x.39 | 13.04 | 9.38 | 9.93 | F | 95 | 114 | 18.75 | 12 | 1-8 |
| 16 | 19.21 | 4.00 | 15.25 | 17.14 | 14.75 | 5.91 | 4.92 | 4 | .57 | 1.38 | 2.00 | .39x.39 | 14.85 | 10.75 | 11.30 | F | 135 | 166 | 21.25 | 16 | 1-8 |
| 18 | 21.12 | 4.25 | 17.25 | 19.47 | 16.00 | 8.27 | 6.50 | 4 | .81 | 1.97 | 2.50 | .47x.39 | 16.85 | 12.00 | 12.15 | G | 200 | 226 | 22.75 | 16 | 1⅛-7 |
| 20 | 23.25 | 5.00 | 19.25 | 21.59 | 17.25 | 8.27 | 6.50 | 4 | .81 | 1.97 | 2.50 | .47x.39 | 18.73 | 14.00 | 14.00 | G | 260 | 305 | 25.00 | 20 | 1⅛-7 |

**Note: K dimension is disc chordal dimension at valve face.**

| METRIC DIMENSIONS: Millimeters | | | | | | | | | | | | | | | | | | | | Lug Bolting Data | | |
|---|---|---|---|---|---|---|---|---|---|---|---|---|---|---|---|---|---|---|---|---|---|---|
| Valve Size | A | B | C | D | E | F | Top Plate Drilling | | | G | J | Key Size | K | L | | Adapter Code | Weight (Kg) | | Bolt Circle | No of Holes | Threads ISO Coarse |
| | | | | | | | BC | No of Holes | Hole Diameter | | | | | Wafer | Lug | | Wafer | Lug | | | |
| 350 | 433 | 76.2 | 337 | 388 | 346 | 150 | 125 | 4 | 14 | 35 | 51 | 10x10 | 331 | 238 | 252 | F | 43 | 52 | 476 | 12 | 1-8 |
| 400 | 488 | 101.6 | 387 | 442 | 375 | 150 | 125 | 4 | 14 | 35 | 51 | 10x10 | 377 | 273 | 287 | F | 61 | 75 | 540 | 16 | 1-8 |
| 450 | 536 | 108.0 | 438 | 495 | 406 | 210 | 165 | 4 | 21 | 50 | 64 | 12x10 | 428 | 305 | 309 | G | 91 | 103 | 578 | 16 | 1⅛-7 |
| 500 | 591 | 127.0 | 489 | 548 | 438 | 210 | 165 | 4 | 21 | 50 | 64 | 12x10 | 476 | 348 | 358 | G | 118 | 138 | 635 | 20 | 1⅛-7 |

**Note: K dimension is disc chordal dimension at valve face.**

Drawings are for reference only. Please refer to Bray ES drawings on the Bray website, www.bray.com. Bray reserves the right to change product dimensions without notice.

## SR Drawing #30/31-14/20-in

Inquire/P.O. No.:_____

Customer/Project: _____

Bray Order No.: _____

# RESILIENT SEATED BUTTERFLY VALVES

## Technical Manual



Bray®

BRAY.COM

THE HIGH PERFORMANCE COMPANY

# Resilient Seated Butterfly Valves

## Technical Manual Table of Contents


Introduction to Torques . . . . . 3

Reduced Disc Diameter Bray Series 30/31/3A Valves . . . . . 6

Seating & Unseating Torques . . . . . 7

- Series 20/21 and 30/31/3A Torques Imperial (Lb-Ins) . . . . . 8
- Series 20/21 and 30/31/3A Torques Metric (Nm) . . . . . 9
- Series 32/33, 35/36 Torques Imperial (Lb-Ins) . . . . . 10
- Series 32/33, 35/36 Torques Metric (Nm) . . . . . 10
- Series 22/23 Torques Imperial (Lb-In) and Metric (Nm) . . . . . 11

Dynamic Torque Factors (Imperial) . . . . . 12

Dynamic Torque Factors (Metric) . . . . . 13

Valve Sizing Coefficients . . . . . 14

- **Series 20/21** - Valve Sizing Coefficient (Cv) . . . . . 15
- **Series 22/23** - Valve Sizing Coefficient (Cv) . . . . . 15
- Series 30/31/31H/3A/3AH/31U - Valve Sizing Coefficient (Cv) . . . . 16
- Series 32/33/35/36/35F/36H - Valve Sizing Coefficient (Cv) . . . . . 16
- Series 20/21 - Valve Sizing Coefficient (Kv) . . . . . 17
- Series 22/23 - Valve Sizing Coefficient (Kv) . . . . . 17
- Series 30/31/31H/3A/3AH/31U - Valve Sizing Coefficient (Kv) . . . . 18
- Series 32/33/35/36/35F/36H - Valve Sizing Coefficient (Kv) . . . . . 18

Examples of Typical Flange to Valve Bolting* . . . . . 19

Flange Bolt Tensioning . . . . . 20

Series 20/21 - Standard Metal Specifications . . . . . 23

- Series 22/23 - Standard Metal Specifications. . . . . 23
- Series 30/31, 31H, 3A/3AH, 31U - Standard Metal Specifications . . 24
- Series 32/33, 35/36, 35F, 36H - Standard Metal Specifications . . . 25





All statements, technical information, and recommendations in this bulletin are for general use only. Consult Bray representatives or factory for the specific requirements and material selection for your intended application. The right to change or modify product design or product without prior notice is reserved.

# Torques

## INTRODUCTION TO TORQUES

There are a number of torques which butterfly valves may experience such as:

- **$T_{su}$ - Seating and Unseating Torque**
- **$T_d$ - Dynamic Torque Resulting from fluid flow**
- **$T_{bf}$ – Bearing Friction Torque**
- **$T_{ss}$ – Stem Seal Friction Torque**
- **$T_e$ – Eccentricity Torque resulting from disc offset from centerline of stem (either single, double or triple offset)**
- **$T_h$ – Hydrostatic Torque**

**Factors which influence the butterfly valve torque values shown above are:**

- Type of Seat and Seat Material
- Interference of Seat I.D. and Disc O.D.
- Shaft Diameter
- Valve Diameter
- Bearing Coefficient of Friction
- Angle of Opening
- Shut-off Pressure
- Fluid Velocity
- Disc Shape and Configuration
- Piping System and Location/Orientation of Valve in Pipe Line
- System Head Characteristics
- Physical Size of Disc/Shaft Obstructing Flow
- Disc Edge Finish

With respect to Butterfly Valves, the two major conditions for determining total valve operating torque ($T_T$) exists as follows:

**CASE I** (Angle = 0° , Disc in Closed Position)

$$T_T = T_h + T_{bf} + T_{ss} + T_{su}$$

**Analyzed**

Total Torque for Case I using a symmetrical disc butterfly valve is the sum of hydrostatic torque, bearing friction torque, stem seal, friction torque, and seating/unseating torque.

### A. Hydrostatic Torque ($T_h$)

We will ignore discussion of the hydrostatic torque values as they are generally insignificant compared to the seating/unseating, bearing friction and stem seal torque values (the safety factor applied to seating/unseating, stem seal friction and bearing friction torque values more than compensates for the hydrostatic torque which is usually less than 2% of these total torques).

### B. Bearing Friction Torque ($T_{bf}$)

Bearing friction torque occurs because pressure forces against the disc are transmitted to the stem. As the stem is forced against the bearing supports, bearing friction torque is created between the stem material and the support material as the stem is turned. Bearing friction torques are normally included in the seating/unseating torque values.

**Bearing friction torques can be determined by using the following equation:**

$$T_{bf} = .785\ C_f\ D_v^2\ (d/2)\ \Delta P$$

**Where:**

- $T_{bf}$ = Bearing Friction Torque
- $C_f$ = Coefficient of Friction (approximately .25 for non-corroded stem to cast iron body) (dimensionless).
- $D_v$ = Valve Diameter (Inches)
- $d$ = Diameter of Shaft (Inches)
- $\Delta P$ = Pressure Differential (psi)

### C. Stem Seal Friction Torque ($T_{ss}$)

For all practical purposes stem seal friction torque values are insignificant when compared to seating/unseating and bearing friction torques. Stem seal friction torques are normally included in the seating/unseating torque values.



All information herein is proprietary and confidential and may not be copied or reproduced without the expressed written consent of BRAY INTERNATIONAL, Inc.
The technical data herein is for general information only. Product suitability should be based solely upon customer's detailed knowledge and experience with their application.

### D. Seating/Unseating Torques ($T_{su}$)

The seating/unseating torque value ($T_{su}$) is a function of the pressure differential, the seat material's coefficient of friction, the finished surface of the disc edge, the amount of interference between the seat I.D. and disc O.D. when flanged in piping, the seat thickness, and the type of service (media) for which the valve is being used. In determining the $T_{su}$ values for Bray resilient seated butterfly valves, Bray has developed Seating/Unseating Torque Charts incorporating all bearing friction and stem seal friction torques for three classes of services for both the valves with standard discs (rated to full pressure) and for valves with reduced diameter discs (rated for 50 psi [3.5 bar]). The three service classes are:

**Class A – Non-Corrosive, Lubricating Service**

**Class B – General Service**

**Class C – Severe Service**

Please review the guidelines for each class in the technical manual when determining which Seating/Unseating Torque Class should be used. Most butterfly valves are used in Class II, General Service applications.

### E. Total Torque ($T_T$)

The total torque values for Bray symmetrical disc valves for Case I applications are shown in the Seating/Unseating Torque Charts within this manual.

## CASE II (Disc in Partial To Full Opening Position)

$$T_T = T_{bf} + T_{ss} + T_d$$

The total Torque for Case II using a symmetrical disc butterfly valve is the summation of bearing friction torque, stem seal friction torque and dynamic torque.

### A. Bearing Friction Torque ($T_{bf}$)

See Case I discussion. This torque value is normally included in the Dynamic Torque Value.

### B. Stem Seal Friction Torque ($T_{ss}$)

See Case I discussion. This torque value is normally included in the Dynamic torque value.

### C. Dynamic Torque ($T_d$)

In a symmetrical disc design, dynamic torque occurs between the closed position, 0° and the full open position, 90°. With the disc in the partially open position, velocity of the fluid passing the leading disc edge is less than the velocity passing the trailing edge. This variance in velocity past the leading disc edge and trailing disc edge results in an unbalanced distribution of pressure forces on the upstream side of the face of the disc. The total pressure forces acting perpendicular to the disc face on the leading edge half of the disc are greater than the total pressure acting perpendicular on the trailing half of the disc. This uneven distribution of pressure on the disc face (exists on both sides of the disc) results in a torsional force which tries to turn the disc to the closed position **(Figure 1)**. This torsional closing force can become greater than the seating/unseating torque value depending on the valve angle of opening and differential pressure.

To determine dynamic torque, the following equation is applied:

$$T_d = C_{dt}\, d^3\, \Delta P$$

**Where:**

- $T_d$ = Dynamic Torque (lbs- in).
- $C_{dt}$ = Coefficient of Dynamic Torque (based on disc shape and angle of opening) (dimensionless)
- $d$ = Diameter of Disc (Inches)
- $\Delta P$ = Pressure Differential Across Valve (psi)

## Figure 1 - Pressure Distribution

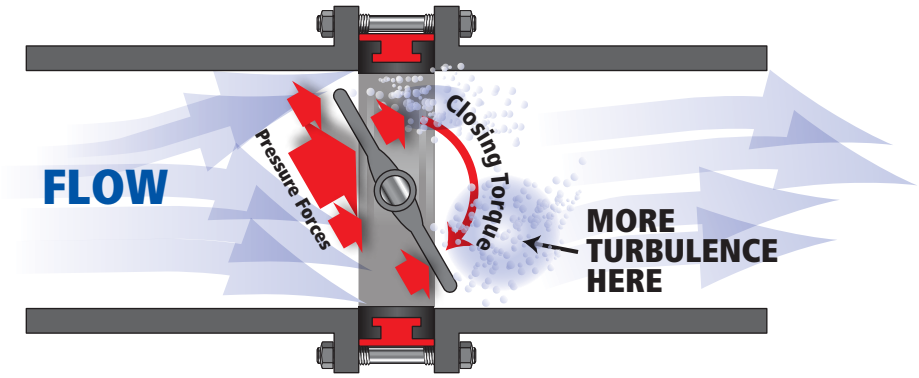




All information herein is proprietary and confidential and may not be copied or reproduced without the expressed written consent of BRAY INTERNATIONAL, Inc.
The technical data herein is for general information only. Product suitability should be based solely upon customer's detailed knowledge and experience with their application.

As shown in **Figure 2**, coefficient of dynamic torque for Bray's symmetrical disc valves is at 0° angle of opening and increases until the angle of opening reaches 75°-80°, where it then decreases to a zero value at full open (90°) (no internal friction factors considered, just dynamic torque only).

One final comment about dynamic torque is that one may minimize the dynamic torque by the orientation of the valve (stem horizontal or vertical) in the pipeline as well as by the location (distance) in the pipeline from elbows, other valves, etc. (See Bray Resilient Seated BFV Operations and Maintenance Manual).

**D. Total Torque ($T_T$)**

The total torque required for operating a Bray symmetrical disc butterfly valve at an angle opening between 0° and 90° is shown in the Dynamic Torque section of this manual. Note that the dynamic torque includes all internal friction torque values.

## CONCLUSION

In most applications for butterfly valves, especially 20˝ (DN 500) or smaller, the maximum torque required to operate the valve will be seating/unseating torque. However, dynamic torque should be considered particularly in:

- Control applications using larger valves (24˝ [DN600] and above) where the disc is maintained in the open position
- Applications using larger valves (24˝ [DN 600] and above) where the velocity is high (16 ft./sec [4.9m/sec]).

### Figure 2 - Angle of Opening

The $C_{dt}$ value for Bray symmetrical disc valves are approximately:

| Angle of Opening | 0° | 10° | 20° | 30° | 40° | 50° | 60° | 70° | 75° | 80° | 90° |
|---|---|---|---|---|---|---|---|---|---|---|---|
| $C_{dt}$ | 0 | 0.0126 | 0.0140 | 0.0251 | 0.0505 | 0.0809 | 0.1394 | 0.2384 | 0.3419 | 0.3400 | 0 |

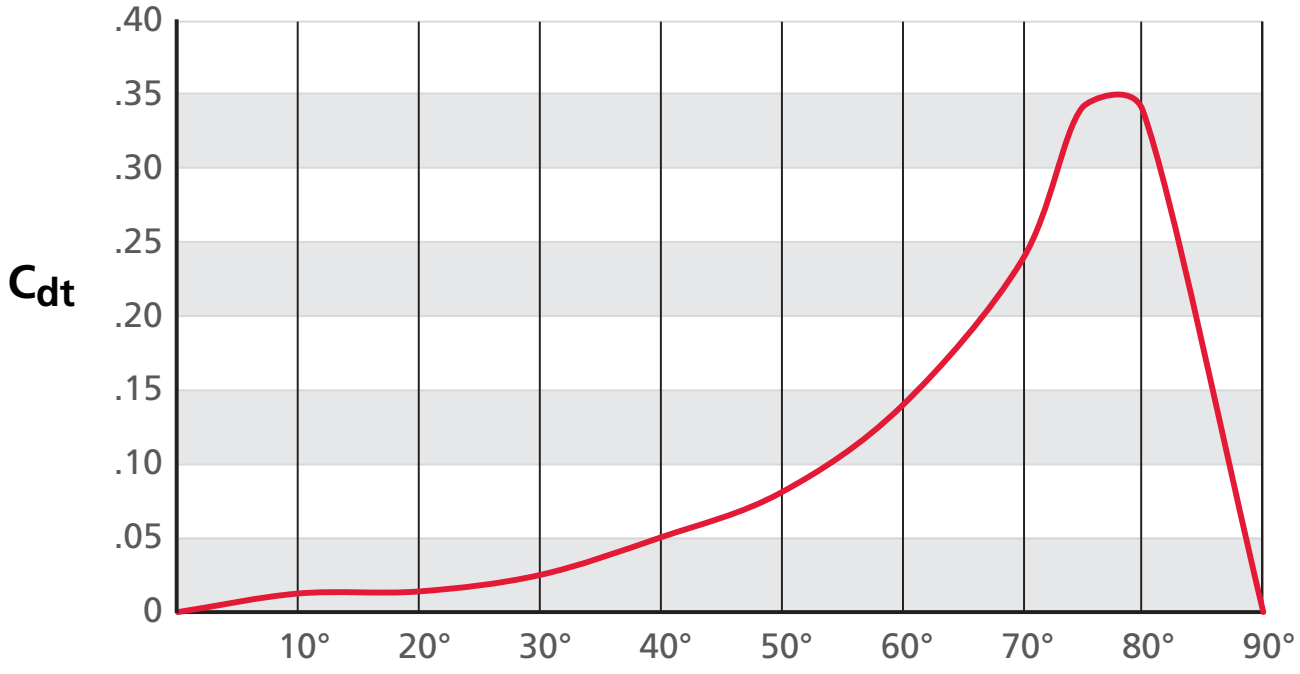




All information herein is proprietary and confidential and may not be copied or reproduced without the expressed written consent of BRAY INTERNATIONAL, Inc.
The technical data herein is for general information only. Product suitability should be based solely upon customer's detailed knowledge and experience with their application.

# REDUCED DISC DIAMETER BRAY SERIES 30/31/3A VALVES

Bray offers a reduced disc diameter for 4"-20" for Series 30, 31 and 3A valves. The purpose of reducing the disc diameter is to decrease the seating/unseating torques and extend the seat life on low pressure applications.

By reducing the disc diameter, the interference between the disc O.D. and seat I.D. is decreased and the valve pressure rating, which is a function of this interference, is reduced to 50 PSI. Less interference between the disc and seat results in reduced seating/unseating torques. Lower seating/unseating torque may allow for the use of a smaller actuator on the valve. In other applications where abrasive dry bulk materials such as cement, sugar, plastic, pellets, flour, etc., are generally pneumatically conveyed at 50 PSI or less, the reduced disc diameter not only reduces the seating/unseating torque but, very importantly, usually significantly increases the service life of the seat.

Bray does the following to differentiate reduced diameter discs from full diameter discs:

**Metal Discs:** An " R " is stamped above the part number

**Nylon 11 Coated Discs:** Discs are differentiated by the color of the Nylon 11:

**Grey** – Full Disc Diameter

**White** – Reduced Disc Diameter



All information herein is proprietary and confidential and may not be copied or reproduced without the expressed written consent of BRAY INTERNATIONAL, Inc.
The technical data herein is for general information only. Product suitability should be based solely upon customer's detailed knowledge and experience with their application.

# SEATING & UNSEATING TORQUES

Bray has developed Seating/Unseating Torque Charts for three Classes of Service for its valves with standard discs (rated for full pressure) and for valves with reduced diameter discs (rated for 50 PSI / 3.5 bar.).

The guidelines for selecting a Class to be used for determining a valve's seating/unseating torque are given below. Each valve application should comply with all five Class characteristics in order to be qualified for that Class.

| Characteristics of Application | **Class A** Non-Corrosive, Lubricating Service | **Class B** General Service | **Class C** Severe Service |
|---|---|---|---|
| **Media Type** | Lubricating hydrocarbons; Aqueous processes and Water (See Note 1) | Water; aqueous processes; all other aqueous liquids including salt water; Lubricating gases | Dry, non-lubricating such as air, dry gas, cement, pneumatic conveying mediums |
| **Corrosion by Media** | Insignificant if any | No major corrosion or deposits from media | Can incur significant corrosion such as Ductile Iron disc in water |
| **Chemical Reactions of Media with Seat** | Insignificant if any | Only minor or insignificant in nature | Reactions causing swelling and hardness occur |
| **Media Temperature** | 45º to 160ºF (7º to 71ºC) | Within seat temperature limits, not near limits | Near or at seat temperature limits |
| **Frequency of Valve Cycling** | Once weekly or more frequently | Minimum once every 3-6 weeks, or more frequently | Infrequently, sometimes not cycled for long periods |

**NOTE:**

1. For aqueous processes and water, Class A torques may be used only if a Nylon 11 coated disc is selected and all other Class A characteristics apply. Otherwise, Class B torques should be used.
2. All the material trims may be classified into Class A, B, or C except Series 20/21 valves with a PTFE Lined Elastomer seat, PTFE molded disc/stem, or rubber molded disc/stem. These trims must always use Class C Seating/Unseating Torque Values unless they are used only in a throttling application. Valves with bonded seats must always be classified as Class C.
3. If a valve is used strictly in a throttling application, that is, it is never put in the closed position but throttled between 20° and 80°, then Class A torques may be used provided you have checked to see that dynamic torques do not exceed the Class A torque values.
4. With the exception of dry, non-lubricating medias, one is usually safe electing to use Class B torques for sizing actuators for all other valve service applications. Seating/Unseating Torque values shown include friction bearing torques for stated differential pressure.
5. Dynamic Torque values are not considered. See the Dynamic Torque chart in this manual for determination of Dynamic Torque.
6. Do not apply a safety factor to torque values when determining actuator output torque requirement.
7. **For 3-way assemblies where one valve is opening and another is closing, multiply torque by a 1.5 factor.**



All information herein is proprietary and confidential and may not be copied or reproduced without the expressed written consent of BRAY INTERNATIONAL, Inc.
The technical data herein is for general information only. Product suitability should be based solely upon customer's detailed knowledge and experience with their application.

## Series 20/21 and 30/31/3A Torques Imperial (Lb-Ins)

| | Valve Size Inches | Valve Differential Pressure (PSIG) | | | | | | |
|---|---|---|---|---|---|---|---|---|
| | | Full Disc | | | | | Reduced Disc | |
| | | 0 psi | 50 psi | 100 psi | 150 psi | 175 psi | 0 psi | 50 psi |
| **Class A** Non-Corrosive, Lubricating Service | 1 | 54 | 59 | 65 | 70 | 73 | 54 | 59 |
| | 1.5 | 81 | 86 | 91 | 97 | 100 | 81 | 86 |
| | 2 | 109 | 114 | 119 | 123 | 128 | 109 | 114 |
| | 2.5 | 169 | 178 | 187 | 196 | 200 | 169 | 178 |
| | 3 | 220 | 236 | 250 | 264 | 273 | 220 | 236 |
| | 4 | 341 | 364 | 387 | 410 | 423 | 225 | 248 |
| | 5 | 510 | 560 | 610 | 660 | 687 | 324 | 374 |
| | 6 | 632 | 712 | 792 | 872 | 912 | 344 | 488 |
| | 8 | 1,182 | 1,341 | 1,500 | 1,660 | 1,741 | 735 | 894 |
| | 10 | 1,764 | 2,018 | 2,272 | 2,526 | 2,653 | 1,204 | 1,358 |
| | 12 | 2,701 | 3,110 | 3,519 | 3,928 | 4,132 | 1,665 | 2,074 |
| | 14 | 3,818 | 4,500 | 5,182 | 5,864 | — | 2,318 | 3,000 |
| | 16 | 4,638 | 5,819 | 7,000 | 8,182 | — | 2,699 | 3,880 |
| | 18 | 5,265 | 7,065 | 8,865 | 10,665 | — | 2,970 | 4,788 |
| | 20 | 7,000 | 9,364 | 11,728 | 14,091 | — | 3,356 | 6,243 |
| **Class B** General Service | 1 | 59 | 65 | 71 | 77 | 80 | 59 | 65 |
| | 1.5 | 89 | 95 | 100 | 106 | 110 | 89 | 95 |
| | 2 | 120 | 125 | 130 | 135 | 140 | 120 | 125 |
| | 2.5 | 185 | 195 | 205 | 215 | 220 | 185 | 195 |
| | 3 | 245 | 260 | 275 | 290 | 297 | 245 | 260 |
| | 4 | 375 | 400 | 425 | 450 | 462 | 252 | 267 |
| | 5 | 560 | 615 | 670 | 725 | 755 | 355 | 410 |
| | 6 | 695 | 783 | 871 | 953 | 1,003 | 427 | 537 |
| | 8 | 1,300 | 1,475 | 1,650 | 1,825 | 1,915 | 808 | 983 |
| | 10 | 1,960 | 2,240 | 2,520 | 2,800 | 2,940 | 1,213 | 1,493 |
| | 12 | 2,970 | 3,420 | 3,870 | 4,320 | 4,545 | 1,830 | 2,280 |
| | 14 | 4,200 | 4,950 | 5,700 | 6,450 | — | 2,550 | 3,300 |
| | 16 | 5,100 | 6,400 | 7,700 | 9,000 | — | 2,967 | 4,267 |
| | 18 | 5,850 | 7,850 | 9,850 | 11,850 | — | 3,267 | 5,267 |
| | 20 | 7,700 | 10,300 | 12,900 | 15,500 | — | 4,267 | 6,867 |
| **Class C** Severe Service | 1 | 74 | 82 | 89 | 97 | 100 | 74 | 82 |
| | 1.5 | 111 | 119 | 125 | 133 | 137 | 111 | 119 |
| | 2 | 151 | 157 | 163 | 169 | 175 | 151 | 157 |
| | 2.5 | 231 | 244 | 257 | 269 | 275 | 231 | 244 |
| | 3 | 306 | 325 | 344 | 363 | 375 | 306 | 325 |
| | 4 | 468 | 500 | 532 | 563 | 582 | 316 | 348 |
| | 5 | 700 | 769 | 838 | 907 | 944 | 444 | 513 |
| | 6 | 870 | 980 | 1,090 | 1,200 | 1,255 | 525 | 672 |
| | 8 | 1,625 | 1,844 | 2,063 | 2,282 | 2,394 | 1,011 | 1,230 |
| | 10 | 2,450 | 2,800 | 3,150 | 3,500 | 3,675 | 1,517 | 1,867 |
| | 12 | 3,712 | 4,275 | 4,838 | 5,400 | 5,682 | 2,287 | 2,850 |
| | 14 | 5,251 | 6,188 | 7,125 | 8,063 | — | 3,189 | 4,126 |
| | 16 | 6,375 | 8,000 | 9,625 | 11,250 | — | 3,709 | 5,334 |
| | 18 | 7,315 | 9,815 | 12,315 | 14,815 | — | 4,084 | 6,584 |
| | 20 | 9,625 | 12,875 | 16,125 | 19,375 | — | 5,334 | 8,584 |



All information herein is proprietary and confidential and may not be copied or reproduced without the expressed written consent of BRAY INTERNATIONAL, Inc.
The technical data herein is for general information only. Product suitability should be based solely upon customer's detailed knowledge and experience with their application.

## Series 20/21 and 30/31/3A Torques Metric (Nm)

| | Valve Size mm | Valve Differential Pressure (bar) | | | | | | |
|---|---|---|---|---|---|---|---|---|
| | | Full Disc | | | | | Reduced Disc | |
| | | 0 bar | 3.4 bar | 7 bar | 10.3 bar | 12 bar | 0 bar | 3.4 bar |
| **Class A** Non-Corrosive, Lubricating Service | 25 | 6 | 7 | 7 | 8 | 8 | 6 | 7 |
| | 40 | 9 | 10 | 10 | 11 | 11 | 9 | 10 |
| | 50 | 12 | 13 | 13 | 14 | 14 | 12 | 13 |
| | 65 | 19 | 20 | 21 | 22 | 23 | 19 | 20 |
| | 80 | 25 | 27 | 28 | 30 | 31 | 25 | 27 |
| | 100 | 39 | 41 | 44 | 46 | 48 | 25 | 28 |
| | 125 | 58 | 63 | 69 | 75 | 78 | 37 | 42 |
| | 150 | 71 | 80 | 89 | 99 | 103 | 39 | 55 |
| | 200 | 134 | 152 | 169 | 188 | 197 | 83 | 101 |
| | 250 | 199 | 228 | 257 | 285 | 300 | 136 | 153 |
| | 300 | 305 | 351 | 398 | 444 | 467 | 188 | 234 |
| | 350 | 431 | 508 | 585 | 663 | — | 262 | 339 |
| | 400 | 524 | 657 | 791 | 924 | — | 305 | 438 |
| | 450 | 595 | 798 | 1,002 | 1,205 | — | 336 | 541 |
| | 500 | 791 | 1,058 | 1,325 | 1,592 | — | 379 | 705 |
| **Class B** General Service | 25 | 7 | 7 | 8 | 9 | 9 | 7 | 7 |
| | 40 | 10 | 11 | 11 | 12 | 12 | 10 | 11 |
| | 50 | 14 | 14 | 15 | 15 | 16 | 14 | 14 |
| | 65 | 21 | 22 | 23 | 24 | 25 | 21 | 22 |
| | 80 | 28 | 29 | 31 | 33 | 34 | 28 | 29 |
| | 100 | 42 | 45 | 48 | 51 | 52 | 28 | 30 |
| | 125 | 63 | 69 | 76 | 82 | 85 | 40 | 46 |
| | 150 | 79 | 88 | 98 | 108 | 113 | 48 | 61 |
| | 200 | 147 | 167 | 186 | 206 | 216 | 91 | 111 |
| | 250 | 221 | 253 | 285 | 316 | 332 | 137 | 169 |
| | 300 | 336 | 386 | 437 | 488 | 514 | 207 | 258 |
| | 350 | 475 | 559 | 644 | 729 | — | 288 | 373 |
| | 400 | 576 | 723 | 870 | 1,017 | — | 335 | 482 |
| | 450 | 661 | 887 | 1,113 | 1,339 | — | 369 | 595 |
| | 500 | 870 | 1,164 | 1,458 | 1,751 | — | 482 | 776 |
| **Class C** Severe Service | 25 | 8 | 9 | 10 | 11 | 11 | 8 | 9 |
| | 40 | 13 | 13 | 14 | 15 | 15 | 13 | 13 |
| | 50 | 17 | 18 | 18 | 19 | 20 | 17 | 18 |
| | 65 | 26 | 28 | 29 | 30 | 31 | 26 | 28 |
| | 80 | 35 | 37 | 39 | 41 | 42 | 35 | 37 |
| | 100 | 53 | 56 | 60 | 64 | 66 | 36 | 39 |
| | 125 | 79 | 87 | 95 | 102 | 107 | 50 | 58 |
| | 150 | 98 | 111 | 123 | 136 | 142 | 59 | 76 |
| | 200 | 184 | 208 | 233 | 258 | 270 | 114 | 139 |
| | 250 | 277 | 316 | 356 | 395 | 415 | 171 | 211 |
| | 300 | 419 | 483 | 547 | 610 | 642 | 258 | 322 |
| | 350 | 593 | 699 | 805 | 911 | — | 360 | 466 |
| | 400 | 720 | 904 | 1,087 | 1,271 | — | 419 | 603 |
| | 450 | 826 | 1,109 | 1,391 | 1,674 | — | 461 | 744 |
| | 500 | 1,087 | 1,455 | 1,822 | 2,189 | — | 603 | 970 |



All information herein is proprietary and confidential and may not be copied or reproduced without the expressed written consent of BRAY INTERNATIONAL, Inc.
The technical data herein is for general information only. Product suitability should be based solely upon customer's detailed knowledge and experience with their application.

## Series 32/33, 35/36 Torques Imperial (Lb-Ins)

| | Valve Size inches | 32, 35 - Max △P = 75 psi | | | | 33, 36 - Max △P = 150 psi | | | |
|---|---|---|---|---|---|---|---|---|---|
| | | 0 psi | 25 psi | 50 psi | 75 psi | 0 psi | 50 psi | 100 psi | 150 psi |
| **Class B** General Service (Imperial) | 22 | 5,450 | 6,350 | 7,250 | 8,150 | 8,100 | 11,700 | 14,700 | 17,700 |
| | 24 | 6,700 | 8,100 | 9,500 | 10,900 | 10,500 | 15,000 | 19,500 | 24,000 |
| | 26 | 7,900 | 9,800 | 11,700 | 13,600 | 12,400 | 18,400 | 24,400 | 30,400 |
| | 28 | 9,200 | 11,600 | 14,000 | 16,400 | 14,200 | 21,700 | 29,200 | 36,700 |
| | 30 | 10,400 | 13,300 | 16,200 | 19,100 | 16,100 | 25,100 | 34,100 | 43,100 |
| | 32 | 11,700 | 15,600 | 19,400 | 23,300 | 18,400 | 29,700 | 41,100 | 52,400 |
| | 34 | 13,500 | 18,500 | 23,500 | 28,500 | 20,950 | 34,750 | 48,600 | 62,400 |
| | 36 | 14,300 | 20,100 | 25,900 | 31,700 | 23,000 | 39,000 | 55,000 | 71,000 |
| | 40 | 18,200 | 26,200 | 34,100 | 42,000 | 24,300 | 46,300 | 68,300 | 90,300 |
| | 42 | 20,200 | 29,200 | 38,200 | 47,200 | 25,000 | 50,000 | 75,000 | 100,000 |
| | 44 | 20,800 | 32,500 | 44,200 | 55,800 | 26,700 | 56,700 | 86,700 | 118,300 |
| | 48 | 22,000 | 39,000 | 56,000 | 73,000 | 30,000 | 70,000 | 110,000 | 150,000 |
| **Class C** | 54 | 41,500 | 73,500 | 105,500 | 138,000 | 56,300 | 131,000 | 173,000 | 282,000 |
| | 60 | 55,500 | 98,200 | 141,000 | 184,800 | 75,100 | 174,500 | 208,000 | 376,000 |
| | 66 | 115,700 | 159,400 | 203,200 | 247,000 | 161,500 | 277,500 | 393,400 | 509,400 |
| | 72 | Consult Factory | | | | | | | |
| | 78 | Consult Factory | | | | | | | |
| | 84 | Consult Factory | | | | | | | |
| | 90 | Consult Factory | | | | | | | |
| | 96 | Consult Factory | | | | | | | |

## Series 32/33, 35/36 Torques Metric (Nm)

| | Valve Size mm | 32, 35, - Max △P = 5 bar | | | | 33, 36 - Max △P = 10.3 bar | | | |
|---|---|---|---|---|---|---|---|---|---|
| | | 0 bar | 1.7 bar | 3.4 bar | 5.2 bar | 0 bar | 3.4 bar | 7 bar | 10.3 bar |
| **Class B** General Service (Metric) | 550 | 616 | 718 | 819 | 921 | 915 | 1,322 | 1,661 | 2,000 |
| | 600 | 757 | 915 | 1,074 | 1,232 | 1,187 | 1,695 | 2,204 | 2,712 |
| | 650 | 893 | 1,107 | 1,322 | 1,537 | 1,401 | 2,079 | 2,757 | 3,435 |
| | 700 | 1,040 | 1,311 | 1,582 | 1,853 | 1,605 | 2,452 | 3,300 | 4,147 |
| | 750 | 1,175 | 1,503 | 1,831 | 2,158 | 1,819 | 2,836 | 3,853 | 4,870 |
| | 800 | 1,322 | 1,763 | 2,192 | 2,633 | 2,079 | 3,356 | 4,644 | 5,921 |
| | 850 | 1,526 | 2,091 | 2,656 | 3,221 | 2,367 | 3,927 | 5,492 | 7,051 |
| | 900 | 1,616 | 2,271 | 2,927 | 3,582 | 2,599 | 4,407 | 6,215 | 8,023 |
| | 1,000 | 2,057 | 2,961 | 3,853 | 4,746 | 2,746 | 5,232 | 7,718 | 10,204 |
| | 1,050 | 2,283 | 3,300 | 4,317 | 5,334 | 2,825 | 5,650 | 8,475 | 11,300 |
| | 1,100 | 2,350 | 3,673 | 4,995 | 6,305 | 3,017 | 6,407 | 9,797 | 13,368 |
| | 1,200 | 2,486 | 4,407 | 6,328 | 8,249 | 3,390 | 7,910 | 12,430 | 16,950 |
| **Class C** | 1,400 | 4,689 | 8,304 | 11,920 | 15,592 | 6,361 | 14,801 | 19,546 | 31,862 |
| | 1,500 | 6,271 | 11,095 | 15,931 | 20,880 | 8,485 | 19,716 | 23,501 | 42,482 |
| | 1,650 | 13,072 | 18,010 | 22,959 | 27,907 | 18,247 | 31,353 | 44,448 | 57,555 |
| | 1,800 | Consult Factory | | | | | | | |
| | 2,000 | Consult Factory | | | | | | | |
| | 2,200 | Consult Factory | | | | | | | |
| | 2,250 | Consult Factory | | | | | | | |
| | 2,400 | Consult Factory | | | | | | | |



All information herein is proprietary and confidential and may not be copied or reproduced without the expressed written consent of BRAY INTERNATIONAL, Inc.
The technical data herein is for general information only. Product suitability should be based solely upon customer's detailed knowledge and experience with their application.

## Series 22/23 Torques Imperial (Lb-In) and Metric (Nm)

| | In. | mm | ΔP = 0-150 psi | ΔP = 0-10.3 bar |
|---|---|---|---|---|
| | | | Lb-In | Nm |
| Valve Size | 2 | 50 | 288 | 33 |
| | 2.5 | 65 | 350 | 40 |
| | 3 | 80 | 560 | 63 |
| | 4 | 100 | 720 | 81 |
| | 5 | 125 | 960 | 108 |
| | 6 | 150 | 1,300 | 147 |
| | 8 | 200 | 2,402 | 271 |
| | 10 | 250 | 3,840 | 434 |
| | 12 | 300 | 5,812 | 657 |
| | 14 | 350 | 8,000 | 904 |
| | 16 | 400 | 11,000 | 1,243 |
| | 18 | 450 | 15,500 | 1,751 |
| | 20 | 500 | 19,300 | 2,181 |
| | 24 | 600 | 30,500 | 3,446 |

1) Torques listed are for PTFE, PFA and UHMWPE trims.
2) All information based on full rated pressure differential.



All information herein is proprietary and confidential and may not be copied or reproduced without the expressed written consent of BRAY INTERNATIONAL, Inc.
The technical data herein is for general information only. Product suitability should be based solely upon customer's detailed knowledge and experience with their application.

# DYNAMIC TORQUE FACTORS (IMPERIAL)

**To Use the Torque Chart, note the following:**

1. Dynamic Torque values include all bearing friction and stem-seal friction torques.
2. Dynamic Torque values are per 1 PSI ΔP. To determine dynamic torque (lb-in) at a desired angle of opening, multiply the pressure drop ΔP at this angle by the appropriate dynamic torque factor in the charts below.
3. Bray recommends sizing control valves between 20° and 70°, with 60° the preferred angle.
4. Dynamic Torque will tend to close all Bray valves whose disc are symmetrical to the stem.

## Series 20/21 and 30/31/3A (Dynamic Torque Factor - lb-in./psi)

| Valve Size in. | Angle of Opening | | | | | | | | | |
|---|---|---|---|---|---|---|---|---|---|---|
| | 10° | 20° | 30° | 40° | 50° | 60° | 70° | 75° | 80° | 90° |
| 2″ | 0.11 | 0.13 | 0.23 | 0.45 | 0.73 | 1.25 | 2.14 | 3.07 | 3.05 | 0.00 |
| 2.5″ | 0.22 | 0.24 | 0.43 | 0.87 | 1.39 | 2.39 | 4.09 | 5.86 | 5.83 | 0.00 |
| 3″ | 0.37 | 0.41 | 0.73 | 1.47 | 2.36 | 4.07 | 6.95 | 9.97 | 9.92 | 0.00 |
| 4″ | 0.86 | 0.95 | 1.70 | 3.43 | 5.49 | 9.45 | 16.17 | 23.19 | 23.07 | 0.00 |
| 5″ | 1.65 | 1.83 | 3.29 | 6.61 | 10.59 | 18.25 | 31.22 | 44.77 | 44.53 | 0.00 |
| 6″ | 2.49 | 2.77 | 4.97 | 10.00 | 16.01 | 27.59 | 47.19 | 67.68 | 67.32 | 0.00 |
| 8″ | 6.60 | 6.74 | 12.08 | 24.30 | 38.93 | 67.07 | 114.71 | 164.51 | 163.64 | 0.00 |
| 10″ | 11.99 | 13.32 | 23.89 | 48.06 | 76.99 | 132.65 | 226.86 | 325.35 | 323.64 | 0.00 |
| 12″ | 20.89 | 23.21 | 41.62 | 83.74 | 134.14 | 231.14 | 395.30 | 566.91 | 563.93 | 0.00 |
| 14″ | 30.04 | 33.38 | 59.84 | 120.40 | 192.87 | 332.34 | 568.37 | 815.12 | 810.83 | 0.00 |
| 16″ | 45.65 | 50.72 | 90.94 | 182.97 | 293.12 | 505.07 | 863.76 | 1238.76 | 1232.24 | 0.00 |
| 18″ | 65.91 | 73.23 | 131.30 | 264.16 | 423.18 | 729.18 | 1247.04 | 1788.44 | 1779.02 | 0.00 |
| 20″ | 91.42 | 101.57 | 182.11 | 366.39 | 586.95 | 1011.37 | 1729.64 | 2480.55 | 2467.50 | 0.00 |

Example: 4″ Valve; 60° Open with a 10 PSI pressure drop: [Td = (9.454)(10) = 94.54 lb-in]

## Series 32/33, 35/36 (Dynamic Torque Factor - lb-in./psi)

| Valve Size in. | Angle of Opening | | | | | | | | | |
|---|---|---|---|---|---|---|---|---|---|---|
| | 10° | 20° | 30° | 40° | 50° | 60° | 70° | 75° | 80° | 90° |
| 24″ | 158.36 | 175.95 | 315.46 | 634.69 | 1016.76 | 1751.99 | 2996.23 | 4297.03 | 4274.40 | 0.00 |
| 30″ | 315.32 | 350.35 | 628.13 | 1263.77 | 2024.54 | 3488.51 | 5966.01 | 8556.12 | 8511.07 | 0.00 |
| 36″ | 551.88 | 613.21 | 1099.39 | 2211.92 | 3543.45 | 6105.77 | 10442.00 | 14975.33 | 14896.49 | 0.00 |
| Larger Size Valves - Consult Factory | | | | | | | | | | |

Example: 24″ Valve; 60° Open with a 10 PSI pressure drop: [Td = (1,751.990)(10) = 17,519.90 lb-in]



All information herein is proprietary and confidential and may not be copied or reproduced without the expressed written consent of BRAY INTERNATIONAL, Inc.
The technical data herein is for general information only. Product suitability should be based solely upon customer's detailed knowledge and experience with their application.

# DYNAMIC TORQUE FACTORS (METRIC)

**To Use the Torque Chart, note the following:**

1. Dynamic Torque values include all bearing friction and stem-seal friction torques.
2. Dynamic Torque values are per 1 bar ΔP. To determine dynamic torque (Nm) at a desired angle of opening, multiply the pressure drop ΔP at this angle by the appropriate dynamic torque factor in the charts below.
3. Bray recommends sizing control valves between 20° and 70°, with 60° the preferred angle.
4. Dynamic Torque will tend to close all Bray valves whose disc are symmetrical to the stem.

## Series 20/21 and 30/31/3A (Dynamic Torque Factor - Nm/bar)

| Valve Size mm. | Angle of Opening | | | | | | | | | |
|---|---|---|---|---|---|---|---|---|---|---|
| | 10° | 20° | 30° | 40° | 50° | 60° | 70° | 75° | 80° | 90° |
| 50 | 0.19 | 0.21 | 0.37 | 0.74 | 1.19 | 2.05 | 3.51 | 5.03 | 5.00 | 0.00 |
| 65 | 0.35 | 0.39 | 0.70 | 1.42 | 2.27 | 3.91 | 6.69 | 9.60 | 9.55 | 0.00 |
| 80 | 0.60 | 0.67 | 1.20 | 2.41 | 3.87 | 6.66 | 11.39 | 16.34 | 16.25 | 0.00 |
| 100 | 1.40 | 1.56 | 2.79 | 5.61 | 8.99 | 15.49 | 26.49 | 38.00 | 37.80 | 0.00 |
| 125 | 2.70 | 3.00 | 5.39 | 10.84 | 17.36 | 29.91 | 51.16 | 73.36 | 72.98 | 0.00 |
| 150 | 4.09 | 4.54 | 8.14 | 16.38 | 26.24 | 45.22 | 77.33 | 110.91 | 110.32 | 0.00 |
| 200 | 10.82 | 11.04 | 19.79 | 39.82 | 63.79 | 109.91 | 187.97 | 269.58 | 268.16 | 0.00 |
| 250 | 19.65 | 21.83 | 39.14 | 78.75 | 126.16 | 217.38 | 371.76 | 533.16 | 530.35 | 0.00 |
| 300 | 34.24 | 38.04 | 68.20 | 137.22 | 219.82 | 378.77 | 647.77 | 929.00 | 924.11 | 0.00 |
| 350 | 49.23 | 54.70 | 98.06 | 197.29 | 316.06 | 544.61 | 931.38 | 1335.74 | 1328.71 | 0.00 |
| 400 | 74.81 | 83.12 | 149.03 | 299.83 | 480.33 | 827.66 | 1415.46 | 2029.97 | 2019.28 | 0.00 |
| 450 | 108.01 | 120.01 | 215.15 | 432.88 | 693.46 | 1194.92 | 2043.53 | 2930.72 | 2915.29 | 0.00 |
| 500 | 149.80 | 166.45 | 298.42 | 600.40 | 961.83 | 1657.34 | 2834.37 | 4064.89 | 4043.50 | 0.00 |

Example: 100 mm Valve; 60° Open with a 10 bar pressure drop: [Td = (15.49)(2) = 30.98 Nm]

## Series 32/33, 35/36 (Dynamic Torque Factor - Nm/bar)

| Valve Size mm | Angle of Opening | | | | | | | | | |
|---|---|---|---|---|---|---|---|---|---|---|
| | 10° | 20° | 30° | 40° | 50° | 60° | 70° | 75° | 80° | 90° |
| 600 | 259.50 | 288.34 | 516.94 | 1040.07 | 1666.17 | 2871.00 | 4909.94 | 7041.56 | 7004.49 | 0.00 |
| 750 | 516.71 | 574.13 | 1029.33 | 2070.95 | 3317.62 | 5716.65 | 9776.53 | 14020.96 | 13947.15 | 0.00 |
| 900 | 904.38 | 1004.86 | 1801.57 | 3624.68 | 5806.67 | 10005.56 | 17111.37 | 24540.17 | 24410.97 | 0.00 |
| Larger Size Valves - Consult Factory | | | | | | | | | | |

Example: 600 mm Valve; 60° Open with a 10 bar pressure drop: [Td = (2871)(2) = 5742.00 Nm]



All information herein is proprietary and confidential and may not be copied or reproduced without the expressed written consent of BRAY INTERNATIONAL, Inc.
The technical data herein is for general information only. Product suitability should be based solely upon customer's detailed knowledge and experience with their application.

# VALVE SIZING COEFFICIENTS

1. **Valve Sizing Coefficients (Cv)**..... Pages 15-16

    1. **Cv** stands for **Valve Sizing Coefficient**, sometimes called the **Flow Rate Coefficient**.
    2. **Cv** varies with the valve size, angle of opening and the manufacturer's valve style.
    3. **Cv** is defined as the volume of water in USGPM that will flow through a given restriction or valve opening with a pressure drop of one (1) psi at room temperature.

2. **Valve Sizing Coefficients (Kv)**..... Pages 17-18

    1. **Kv** stands for **Valve Sizing Coefficient**, sometimes called the **Flow Rate Coefficient**.
    2. **Kv** varies with the valve size, angle of opening and the manufacturer's valve style.
    3. **Kv** is defined as the volume of water in Cubic Meters/Hour ($m^3$/hr) that will flow through a given restriction or valve opening with a pressure drop of one (1) bar at room temperature.



All information herein is proprietary and confidential and may not be copied or reproduced without the expressed written consent of BRAY INTERNATIONAL, Inc.
The technical data herein is for general information only. Product suitability should be based solely upon customer's detailed knowledge and experience with their application.

## Series 20/21 - Valve Sizing Coefficient (Cv)

| Valve Size inches | Disc Position (Degrees) | | | | | | | | |
|---|---|---|---|---|---|---|---|---|---|
| | 10° | 20° | 30° | 40° | 50° | 60° | 70° | 80° | 90° |
| 1 | 0.1 | 1 | 3 | 6 | 11 | 21 | 36 | 56 | 61 |
| 1.5 | 0.2 | 2 | 6 | 11 | 26 | 50 | 87 | 129 | 147 |
| 2 | 0.9 | 7 | 16 | 27 | 45 | 73 | 123 | 172 | 244 |
| 2.5 | 1 | 11 | 25 | 43 | 71 | 115 | 201 | 310 | 439 |
| 3 | 2 | 16 | 35 | 62 | 102 | 165 | 290 | 488 | 691 |
| 4 | 4 | 28 | 63 | 110 | 182 | 294 | 515 | 906 | 1,282 |
| 5 | 6 | 44 | 98 | 172 | 284 | 459 | 805 | 1,416 | 2,070 |
| 6 | 7 | 59 | 130 | 227 | 376 | 607 | 1,065 | 1,873 | 2,786 |
| 8 | 13 | 106 | 244 | 427 | 714 | 1,147 | 1,935 | 3,402 | 5,191 |
| 10 | 21 | 168 | 387 | 675 | 1,130 | 1,815 | 3,062 | 5,385 | 8,238 |
| 12 | 31 | 245 | 562 | 981 | 1,642 | 2,636 | 4,448 | 7,820 | 12,102 |
| 14 | 40 | 307 | 706 | 1,234 | 2,064 | 3,313 | 5,590 | 9,829 | 15,210 |
| 16 | 52 | 403 | 925 | 1,617 | 2,706 | 4,343 | 7,328 | 12,885 | 19,940 |
| 18 | 68 | 528 | 1,213 | 2,121 | 3,549 | 5,695 | 9,610 | 16,898 | 26,150 |
| 20 | 85 | 660 | 1,517 | 2,651 | 4,436 | 7,120 | 12,014 | 21,124 | 32,690 |

## Series 22/23 - Valve Sizing Coefficient (Cv)

| Valve Size inches | Disc Position (Degrees) | | | | | | | | |
|---|---|---|---|---|---|---|---|---|---|
| | 10° | 20° | 30° | 40° | 50° | 60° | 70° | 80° | 90° |
| 2 | 1 | 7 | 16 | 27 | 44 | 62 | 85 | 115 | 146 |
| 2.5 | 1 | 11 | 24 | 43 | 69 | 110 | 176 | 235 | 300 |
| 3 | 2 | 15 | 35 | 61 | 98 | 158 | 286 | 413 | 586 |
| 4 | 3 | 27 | 62 | 109 | 177 | 285 | 503 | 812 | 1,051 |
| 5 | 5 | 43 | 98 | 171 | 276 | 440 | 798 | 1,297 | 1,814 |
| 6 | 6 | 57 | 129 | 226 | 364 | 580 | 1,048 | 1,737 | 2,576 |
| 8 | 12 | 104 | 242 | 424 | 698 | 1,111 | 1,908 | 3,142 | 4,354 |
| 10 | 20 | 165 | 385 | 672 | 1,105 | 1,761 | 3,004 | 4,976 | 6,834 |
| 12 | 29 | 241 | 559 | 975 | 1,604 | 2,591 | 4,420 | 7,392 | 10,090 |
| 14 | 35 | 300 | 720 | 1,280 | 2,100 | 3,300 | 5,700 | 9,350 | 12,880 |
| 16 | 45 | 350 | 850 | 1,650 | 2,750 | 4,400 | 7,500 | 12,320 | 16,900 |
| 18 | 55 | 510 | 1,200 | 2,100 | 3,600 | 5,700 | 9,830 | 15,600 | 21,600 |
| 20 | 80 | 650 | 1,550 | 2,700 | 4,480 | 7,100 | 12,200 | 19,900 | 27,500 |
| 24 | 180 | 1,000 | 2,450 | 4,600 | 7,000 | 11,300 | 18,900 | 28,500 | 34,800 |



All information herein is proprietary and confidential and may not be copied or reproduced without the expressed written consent of BRAY INTERNATIONAL, Inc.
The technical data herein is for general information only. Product suitability should be based solely upon customer's detailed knowledge and experience with their application.

## Series 30/31/31H/3A/3AH/31U - Valve Sizing Coefficient (Cv)

| Valve Size Inches | Disc Position (Degrees) | | | | | | | | |
|---|---|---|---|---|---|---|---|---|---|
| | 10° | 20° | 30° | 40° | 50° | 60° | 70° | 80° | 90° |
| 2 | 0.8 | 7 | 16 | 27 | 43 | 61 | 84 | 114 | 144 |
| 2.5 | 1 | 11 | 24 | 43 | 67 | 107 | 163 | 223 | 282 |
| 3 | 2 | 15 | 35 | 61 | 96 | 154 | 267 | 364 | 461 |
| 4 | 3 | 27 | 62 | 109 | 171 | 274 | 496 | 701 | 841 |
| 5 | 5 | 43 | 98 | 170 | 268 | 428 | 775 | 1,146 | 1,376 |
| 6 | 6 | 56 | 129 | 225 | 354 | 567 | 1,025 | 1,542 | 1,850 |
| 8 | 12 | 102 | 241 | 421 | 680 | 1,081 | 1,862 | 2,842 | 3,316 |
| 10 | 19 | 162 | 382 | 667 | 1,076 | 1,710 | 2,948 | 4,525 | 5,430 |
| 12 | 27 | 235 | 555 | 1,005 | 1,594 | 2,563 | 4,393 | 6,731 | 8,077 |
| 14 | 34 | 299 | 756 | 1,320 | 2,149 | 3,384 | 5,939 | 8,874 | 10,538 |
| 16 | 45 | 397 | 1,001 | 1,749 | 2,847 | 4,483 | 7,867 | 11,761 | 13,966 |
| 18 | 58 | 507 | 1,281 | 2,237 | 3,643 | 5,736 | 10,065 | 14,496 | 17,214 |
| 20 | 72 | 632 | 1,595 | 2,786 | 4,536 | 7,144 | 12,535 | 18,812 | 22,339 |

## Series 32/33/35/36/35F/36H - Valve Sizing Coefficient (Cv)

| Valve Size Inches | Disc Position (Degrees) | | | | | | | | |
|---|---|---|---|---|---|---|---|---|---|
| | 10° | 20° | 30° | 40° | 50° | 60° | 70° | 80° | 90° |
| 22 | 103 | 916 | 2,070 | 3,510 | 5,640 | 9,036 | 14,562 | 22,028 | 27,168 |
| 24 | 259 | 1,028 | 2,387 | 4,244 | 6,962 | 11,040 | 18,235 | 27,186 | 33,154 |
| 26 | 289 | 1,141 | 2,752 | 4,890 | 7,824 | 12,496 | 19,921 | 29,700 | 36,220 |
| 28 | 295 | 1,324 | 3,133 | 5,399 | 8,636 | 13,838 | 22,578 | 34,683 | 41,619 |
| 30 | 420 | 1,652 | 3,986 | 7,080 | 11,328 | 18,090 | 28,844 | 43,003 | 52,443 |
| 32 | 550 | 2,026 | 4,636 | 7,983 | 12,743 | 20,410 | 32,591 | 48,558 | 60,658 |
| 34 | 533 | 2,304 | 5,210 | 8,834 | 14,179 | 22,741 | 36,648 | 55,438 | 68,374 |
| 36 | 740 | 2,775 | 5,936 | 9,790 | 15,572 | 25,053 | 40,086 | 59,667 | 77,089 |
| 40 | 757 | 2,971 | 6,925 | 11,862 | 19,307 | 30,636 | 50,406 | 73,990 | 90,175 |
| 42 | 783 | 3,502 | 7,879 | 12,997 | 21,010 | 35,016 | 54,584 | 83,421 | 102,989 |
| 44 | 904 | 4,066 | 8,698 | 14,346 | 22,818 | 36,712 | 58,740 | 87,430 | 112,960 |
| 48 | 1,023 | 4,651 | 10,365 | 17,010 | 27,242 | 43,853 | 70,431 | 108,968 | 132,888 |
| 52 | Consult Factory | | | | | | | | |
| 54 | 1,299 | 5,904 | 13,158 | 21,594 | 34,583 | 55,671 | 89,411 | 138,334 | 168,700 |
| 60 | 1,480 | 6,400 | 14,500 | 24,500 | 39,400 | 63,200 | 102,000 | 154,000 | 190,000 |
| 66 | 1,650 | 7,110 | 16,100 | 27,300 | 43,800 | 70,200 | 113,000 | 171,000 | 211,000 |
| 72 | 1,900 | 8,220 | 18,600 | 31,500 | 50,700 | 81,200 | 131,000 | 198,000 | 244,000 |
| 78 | 2,290 | 9,910 | 22,400 | 38,000 | 61,000 | 97,800 | 158,000 | 238,000 | 294,000 |
| 84 | 2,290 | 11,390 | 25,800 | 43,700 | 70,200 | 112,400 | 181,000 | 274,000 | 338,000 |
| 90 | Consult Factory | | | | | | | | |
| 96 | Consult Factory | | | | | | | | |



All information herein is proprietary and confidential and may not be copied or reproduced without the expressed written consent of BRAY INTERNATIONAL, Inc.
The technical data herein is for general information only. Product suitability should be based solely upon customer's detailed knowledge and experience with their application.

## Series 20/21 - Valve Sizing Coefficient (Kv)

| Valve Size mm | Disc Position (Degrees) | | | | | | | | |
|---|---|---|---|---|---|---|---|---|---|
| | 10° | 20° | 30° | 40° | 50° | 60° | 70° | 80° | 90° |
| 25 | 0.087 | 0.865 | 2.595 | 5.190 | 9.515 | 18.165 | 31.140 | 48.440 | 52.765 |
| 40 | 0.173 | 1.730 | 5.190 | 9.515 | 22.490 | 43.250 | 75.255 | 111.585 | 127.155 |
| 50 | 0.779 | 6.055 | 13.840 | 23.355 | 38.925 | 63.145 | 106.395 | 148.780 | 211.060 |
| 65 | 0.865 | 9.515 | 21.625 | 37.195 | 61.415 | 99.475 | 173.865 | 268.150 | 379.735 |
| 80 | 1.730 | 13.840 | 30.275 | 53.630 | 88.230 | 142.725 | 250.850 | 422.120 | 597.715 |
| 100 | 3.460 | 24.220 | 54.495 | 95.150 | 157.430 | 254.310 | 445.475 | 783.690 | 1,108.930 |
| 125 | 5.190 | 38.060 | 84.770 | 148.780 | 245.660 | 397.035 | 696.325 | 1,224.840 | 1,790.550 |
| 150 | 6.055 | 51.035 | 112.450 | 196.355 | 325.240 | 525.055 | 921.225 | 1,620.145 | 2,409.890 |
| 200 | 11.245 | 91.690 | 211.060 | 369.355 | 617.610 | 992.155 | 1,673.775 | 2,942.730 | 4,490.215 |
| 250 | 18.165 | 145.320 | 334.755 | 583.875 | 977.450 | 1,569.975 | 2,648.630 | 4,658.025 | 7,125.870 |
| 300 | 26.815 | 211.925 | 486.130 | 848.565 | 1,420.330 | 2,280.140 | 3,847.520 | 6,764.300 | 10,468.230 |
| 350 | 34.600 | 265.555 | 610.690 | 1,067.410 | 1,785.360 | 2,865.745 | 4,835.350 | 8,502.085 | 13,156.650 |
| 400 | 44.980 | 348.595 | 800.125 | 1,398.705 | 2,340.690 | 3,756.695 | 6,338.720 | 11,145.525 | 17,248.100 |
| 450 | 58.820 | 456.720 | 1,049.245 | 1,834.665 | 3,069.885 | 4,926.175 | 8,312.650 | 14,616.770 | 22,619.750 |
| 500 | 73.525 | 570.900 | 1,312.205 | 2,293.115 | 3,837.140 | 6,158.800 | 10,392.110 | 18,272.260 | 28,276.850 |

## Series 22/23 - Valve Sizing Coefficient (Kv)

| Valve Size mm | Disc Position (Degrees) | | | | | | | | |
|---|---|---|---|---|---|---|---|---|---|
| | 10° | 20° | 30° | 40° | 50° | 60° | 70° | 80° | 90° |
| 50 | 0.865 | 6.055 | 13.840 | 23.355 | 38.060 | 53.630 | 73.525 | 99.475 | 126.290 |
| 65 | 0.865 | 9.515 | 20.760 | 37.195 | 59.685 | 95.150 | 152.240 | 203.275 | 259.500 |
| 80 | 1.730 | 12.975 | 30.275 | 52.765 | 84.770 | 136.670 | 247.390 | 357.245 | 506.890 |
| 100 | 2.595 | 23.355 | 53.630 | 94.285 | 153.105 | 246.525 | 435.095 | 702.380 | 909.115 |
| 125 | 4.325 | 37.195 | 84.770 | 147.915 | 238.740 | 380.600 | 690.270 | 1,121.905 | 1,569.110 |
| 150 | 5.190 | 49.305 | 111.585 | 195.490 | 314.860 | 501.700 | 906.520 | 1,502.505 | 2,228.240 |
| 200 | 10.380 | 89.960 | 209.330 | 366.760 | 603.770 | 961.015 | 1,650.420 | 2,717.830 | 3,766.210 |
| 250 | 17.300 | 142.725 | 333.025 | 581.280 | 955.825 | 1,523.265 | 2,598.460 | 4,304.240 | 5,911.410 |
| 300 | 25.085 | 208.465 | 483.535 | 843.375 | 1,387.460 | 2,241.215 | 3,823.300 | 6,394.080 | 8,727.850 |
| 350 | 30.275 | 259.500 | 622.800 | 1,107.200 | 1,816.500 | 2,854.500 | 4,930.500 | 8,087.750 | 11,141.200 |
| 400 | 38.925 | 302.750 | 735.250 | 1,427.250 | 2,378.750 | 3,806.000 | 6,487.500 | 10,656.800 | 14,618.500 |
| 450 | 47.575 | 441.150 | 1,038.000 | 1,816.500 | 3,114.000 | 4,930.500 | 8,502.950 | 13,494.000 | 18,684.000 |
| 500 | 69.200 | 562.250 | 1,340.750 | 2,335.500 | 3,875.200 | 6,141.500 | 10,553.000 | 17,213.500 | 23,787.500 |
| 600 | 155.700 | 865.000 | 2,119.250 | 3,979.000 | 6,055.000 | 9,774.500 | 16,348.500 | 24,652.500 | 30,102.000 |



All information herein is proprietary and confidential and may not be copied or reproduced without the expressed written consent of BRAY INTERNATIONAL, Inc.
The technical data herein is for general information only. Product suitability should be based solely upon customer's detailed knowledge and experience with their application.

## Series 30/31/31H/3A/3AH/31U - Valve Sizing Coefficient (Kv)

| Valve Size mm | Disc Position (Degrees) | | | | | | | | |
|---|---|---|---|---|---|---|---|---|---|
| | 10° | 20° | 30° | 40° | 50° | 60° | 70° | 80° | 90° |
| 50 | 0.692 | 6.055 | 13.840 | 23.355 | 37.195 | 52.765 | 72.660 | 98.610 | 124.560 |
| 65 | 0.865 | 9.515 | 20.760 | 37.195 | 57.955 | 92.555 | 140.995 | 192.895 | 243.930 |
| 80 | 1.730 | 12.975 | 30.275 | 52.765 | 83.040 | 133.210 | 230.955 | 314.860 | 398.765 |
| 100 | 2.595 | 23.355 | 53.630 | 94.285 | 147.915 | 237.010 | 429.040 | 606.365 | 727.465 |
| 125 | 4.325 | 37.195 | 84.770 | 147.050 | 231.820 | 370.220 | 670.375 | 991.290 | 1,190.240 |
| 150 | 5.190 | 48.440 | 111.585 | 194.625 | 306.210 | 490.455 | 886.625 | 1,333.830 | 1,600.250 |
| 200 | 10.380 | 88.230 | 208.465 | 364.165 | 588.200 | 935.065 | 1,610.630 | 2,458.330 | 2,868.340 |
| 250 | 16.435 | 140.130 | 330.430 | 576.955 | 930.740 | 1,479.150 | 2,550.020 | 3,914.125 | 4,696.950 |
| 300 | 23.355 | 203.275 | 480.075 | 869.325 | 1,378.810 | 2,216.995 | 3,799.945 | 5,822.315 | 6,986.605 |
| 350 | 29.410 | 258.635 | 653.940 | 1,141.800 | 1,858.885 | 2,927.160 | 5,137.235 | 7,676.010 | 9,115.370 |
| 400 | 38.925 | 343.405 | 865.865 | 1,512.885 | 2,462.655 | 3,877.795 | 6,804.955 | 10,173.265 | 12,080.590 |
| 450 | 50.170 | 438.555 | 1,108.065 | 1,935.005 | 3,151.195 | 4,961.640 | 8,706.225 | 12,539.040 | 14,890.110 |
| 500 | 62.280 | 546.680 | 1,379.675 | 2,409.890 | 3,923.640 | 6,179.560 | 10,842.775 | 16,272.380 | 19,323.235 |

## Series 32/33/35/36/35F/36H - Valve Sizing Coefficient (Kv)

| Valve Size mm | Disc Position (Degrees) | | | | | | | | |
|---|---|---|---|---|---|---|---|---|---|
| | 10° | 20° | 30° | 40° | 50° | 60° | 70° | 80° | 90° |
| 550 | 89.095 | 792.340 | 1,790.550 | 3,036.150 | 4,878.600 | 7,816.140 | 12,596.130 | 19,054.220 | 23,500.320 |
| 600 | 224.035 | 889.220 | 2,064.755 | 3,671.060 | 6,022.130 | 9,549.600 | 15,773.275 | 23,515.890 | 28,678.210 |
| 650 | 249.985 | 986.965 | 2,380.480 | 4,229.850 | 6,767.760 | 10,809.040 | 17,231.665 | 25,690.500 | 31,330.300 |
| 700 | 255.175 | 1,145.260 | 2,710.045 | 4,670.135 | 7,470.140 | 11,969.870 | 19,529.970 | 30,000.795 | 36,000.435 |
| 750 | 363.300 | 1,428.980 | 3,447.890 | 6,124.200 | 9,798.720 | 15,647.850 | 24,950.060 | 37,197.595 | 45,363.195 |
| 800 | 475.750 | 1,752.490 | 4,010.140 | 6,905.295 | 11,022.695 | 17,654.650 | 28,191.215 | 42,002.670 | 52,469.170 |
| 850 | 461.045 | 1,992.960 | 4,506.650 | 7,641.410 | 12,264.835 | 19,670.965 | 31,700.520 | 47,953.870 | 59,143.510 |
| 900 | 640.100 | 2,400.375 | 5,134.640 | 8,468.350 | 13,469.780 | 21,670.845 | 34,674.390 | 51,611.955 | 66,681.985 |
| 1,000 | 654.805 | 2,569.915 | 5,990.125 | 10,260.630 | 16,700.555 | 26,500.140 | 43,601.190 | 64,001.350 | 78,001.375 |
| 1,050 | 677.295 | 3,029.230 | 6,815.335 | 11,242.405 | 18,173.650 | 30,288.840 | 47,215.160 | 72,159.165 | 89,085.485 |
| 1,100 | 781.960 | 3,517.090 | 7,523.770 | 12,409.290 | 19,737.570 | 31,755.880 | 50,810.100 | 75,626.950 | 97,710.400 |
| 1,200 | 884.895 | 4,023.115 | 8,965.725 | 14,713.650 | 23,564.330 | 37,932.845 | 60,922.815 | 94,257.320 | 114,948.120 |
| 1,300 | Consult Factory | | | | | | | | |
| 1,400 | 1,123.635 | 5,106.960 | 11,381.670 | 18,678.810 | 29,914.295 | 48,155.415 | 77,340.515 | 119,658.910 | 145,925.500 |
| 1,500 | 1,280.200 | 5,536.000 | 12,542.500 | 21,192.500 | 34,081.000 | 54,668.000 | 88,230.000 | 133,210.000 | 164,350.000 |
| 1,650 | 1,427.250 | 6,150.150 | 13,926.500 | 23,614.500 | 37,887.000 | 60,723.000 | 97,745.000 | 147,915.000 | 182,515.000 |
| 1,800 | 1,643.500 | 7,110.300 | 16,089.000 | 27,247.500 | 43,855.500 | 70,238.000 | 113,315.000 | 171,270.000 | 211,060.000 |
| 2,000 | 1,980.850 | 8,572.150 | 19,376.000 | 32,870.000 | 52,765.000 | 84,597.000 | 136,670.000 | 205,870.000 | 254,310.000 |
| 2,200 | 1,980.850 | 9,852.350 | 22,317.000 | 37,800.500 | 60,723.000 | 97,226.000 | 156,565.000 | 237,010.000 | 292,370.000 |
| 2,250 | Consult Factory | | | | | | | | |
| 2,400 | Consult Factory | | | | | | | | |



All information herein is proprietary and confidential and may not be copied or reproduced without the expressed written consent of BRAY INTERNATIONAL, Inc.
The technical data herein is for general information only. Product suitability should be based solely upon customer's detailed knowledge and experience with their application.

# EXAMPLES OF TYPICAL FLANGE TO VALVE BOLTING*

## ** Lug Style Bolting

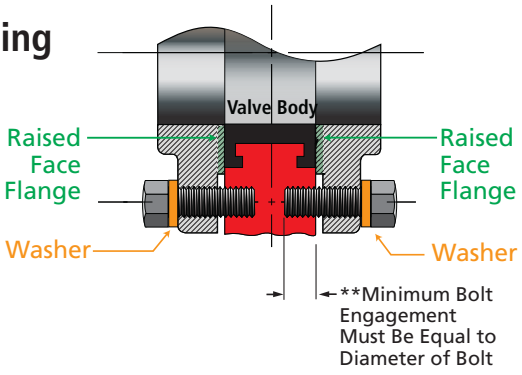


Flange Width Including Raise Face If Applicable + Washer Width + Minimum Bolt Engagement Equal to Bolt Diameter = Bolt Length



## Wafer Style Bolting

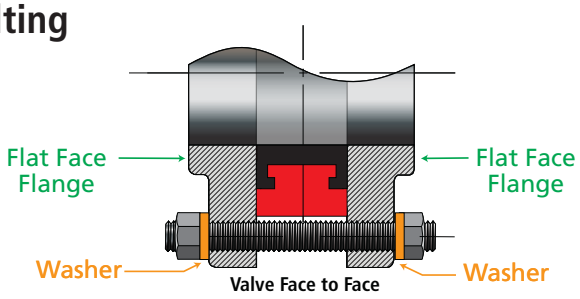


Flange Width x2 Including Raise Face If Applicable + Valve Face to Face + Washer Width x2 + Width of Nut x2 + 4 Threads (2 Per Side) = Overall Length



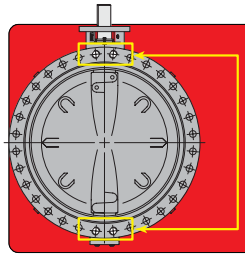

**** Note: Please refer to Appropriate Bray Dimensional Drawings for specific valve drilling information on Wafer and Lug Valves 20" and larger.**

## Please refer to ASME B-16.5 or B-16.47 for Flange and Bolt Dimension Information

* Double flange style bolting not shown.
** Lug threads may be tapped from both sides and therefore tap may not be continuous.



All information herein is proprietary and confidential and may not be copied or reproduced without the expressed written consent of BRAY INTERNATIONAL, Inc.
The technical data herein is for general information only. Product suitability should be based solely upon customer's detailed knowledge and experience with their application.

# FLANGE BOLT TENSIONING
## Bray Butterfly Valves with Metal Mating Flanges

A question frequently asked at Bray is "What torque do I apply to the flange bolts to insure the valve is properly installed?". Initially this seems to be a simple request until all of the factors are analyzed. The installation of a valve requires several components: the valve, mating flanges, nuts, bolts and studs. Each is supplied by different manufacturers and each has different characteristics. The proper torque for one combination may be too much or too little for a second combination. The following is a list of information which needs to be known in order to start calculating the torque requirements.

**Valve**
- Type
- Size
- Materials of construction (Body)
- Surface finishes / Surface conditions

**Flange**
- Type
- Size
- Finish / both sides
- Condition of flange / surface contamination

**Bolt (or Stud)**
- Type
- Materials of Construction
- Surface Conditions

**Nut**
- Type
- Materials of Construction
- Surface Conditions

**Lubrication**
- Type
- Coverage

**General Factors**
- Temperature and relative humidity at the time of installation
- Speed at which bolts are turned

**Note:** The elastomer valve seat manufactured by Bray also acts as the flange gasket. No additional gaskets are required or recommended. Other valve styles which do not have integral gaskets will need to have this component supplied. The characteristics of this component will also need to be considered.

Complete knowledge of all relevant conditions is almost impossible to obtain. As a result, the computation of the exact torque requirement is not practical. No reputable manufacturer can provide accurate information when so many outside factors are present.

The International Fasteners Institute covers some of the details required to "compute" a torque value. Even with this information the use of a torque wrench is only considered to be 25% accurate. Based on the difficulty and inaccuracy of using this method, Bray recommends the use of the "Turn of the nut" method.

**"Turn of the Nut" Tightening**
**(For ANSI Standard Iron and Steel Flanges)**
**For Non-Metallic or non-standard flanges, follow the manufacturers installation procedures.

1. The valve and flange faces must be aligned parallel to each other.

   **Note:** For rubber seated butterfly valves manufactured by Bray, it is required that the valve be fully opened prior to the tightening of the flange bolts.

2. After aligning the holes in a joint, sufficient bolts shall be placed and brought to a 'snug-tight' condition to ensure that the parts of the joint are *brought into full contact* with each other. 'Snug-Tight' is the tightness attained by the full effort of a man using a spud wrench.

3. Following the initial snugging operation, bolts shall be placed in any remaining holes and brought to snug-tightness. Re-snugging may be necessary in large joints.

4. Tighten opposite bolts in sequence to insure even pressure around the entire flange.



All information herein is proprietary and confidential and may not be copied or reproduced without the expressed written consent of BRAY INTERNATIONAL, Inc.
The technical data herein is for general information only. Product suitability should be based solely upon customer's detailed knowledge and experience with their application.

5. When all bolts are snug-tight, each bolt in the joint then shall be tightened additionally by the applicable amount of nut rotation given in Note 1. During tightening there shall be no rotation of the valve or flange.

**Note 1**

For bolt lengths **not exceeding** 8 diameters or 8 inches (203.2 mm) = **1/4 turn**
For bolt lengths **exceeding** 8 diameters or 8 inches (203.2 mm) = **1/2 turn**

**Disclaimer:**
**Bray Controls is issuing these recommendations only as a guide to installation. This recommendation is based on the full compliance of all materials supplied to their appropriate specifications. Since many of the components are not manufactured by Bray we can take no responsibility for any damage caused during installation.**

**Series 20/21 and 30/31 - Flange Bolt Torque Chart**

| Valve Size | | Normal Torque Range | Normal Torque Range |
|---|---|---|---|
| In | mm | Ft-lbs | Nm |
| 2 | 50 | 30 | 40 |
| 2.5 | 65 | 30 | 40 |
| 3 | 80 | 35 | 50 |
| 4 | 100 | 35 - 40 | 50 - 55 |
| 5 | 125 | 35 - 45 | 50 - 60 |
| 6 | 150 | 35 - 50 | 50 - 65 |
| 8 | 200 | 45 - 55 | 60 - 75 |
| 10 | 250 | 55 - 75 | 75 - 100 |
| 12 | 300 | 65 - 110 | 90 - 150 |
| 14 | 350 | 75 - 120 | 100 - 165 |
| 16 | 400 | 75 - 120 | 100 - 165 |
| 18 | 450 | 85 - 130 | 115 - 175 |
| 20 | 500 | 85 - 130 | 115 - 175 |

Please note that the Nm and Ft-lbs values are based on bolt size in respective metric and ANSI flanges, i.e. these values are not a direct conversion between Nm and Ft-lbs.

The values represent average torques needed to ensure full compression of the resilient valves' seats into the valves' bodies when installed in pipeline flanges. The face of both flanges must come into full contact with the valves' metal bodies.

No additional torque is required for proper functioning of the Bray resilient seated valves.

The torque values are based on using new, coarse-threaded, lubricated fasteners. Up to 25% may be added to the Normal Torque Range values when using non-lubricated fasteners.

Torque Values specified by flange manufacturers ***must not be exceeded.***



All information herein is proprietary and confidential and may not be copied or reproduced without the expressed written consent of BRAY INTERNATIONAL, Inc.
The technical data herein is for general information only. Product suitability should be based solely upon customer's detailed knowledge and experience with their application.

**Series 22/23 Installation - Flange Bolt Torque Chart, 150 lb Flanges**

| Valve Size | | Normal Torque Range | | Max Torque Range | |
|---|---|---|---|---|---|
| In | mm | Ft-lbs | Nm | Ft-lbs | Nm |
| 2 | 50 | 30 | 40 | 35 | 50 |
| 2.5 | 65 | 30 | 40 | 35 | 50 |
| 3 | 80 | 35 | 50 | 40 | 55 |
| 4 | 100 | 35 - 40 | 50 - 55 | 40 | 55 |
| 5 | 125 | 35 - 45 | 50 - 60 | 50 | 65 |
| 6 | 150 | 35 - 50 | 50 - 65 | 65 | 90 |
| 8 | 200 | 45 - 55 | 60 - 75 | 80 | 110 |
| 10 | 250 | 55 - 75 | 75 - 100 | 100 | 135 |
| 12 | 300 | 65 - 110 | 90 - 150 | 120 | 165 |
| 14 | 350 | 75 - 120 | 100 - 165 | 140 | 190 |
| 16 | 400 | 75 - 120 | 100 - 165 | 140 | 190 |
| 18 | 450 | 85 - 130 | 115 - 175 | 170 | 230 |
| 20 | 500 | 85 - 130 | 115 - 175 | 180 | 245 |
| 24 | 600 | 100 - 150 | 135 - 205 | 220 | 300 |

The torque values are based on using new, coarse-threaded, lubricated fasteners. Up to 15% may be added to the Normal Torque Range values when using non-lubricated fasteners. However, the maximum torque should not be exceeded.

Flange gaskets are normally not used for installation of S22/23 valves. Flange leakage may be caused by combination of out-of-parallel and/or misaligned flanges, and surface damage on the flange face and/or the face of the valve seat. In such cases, suitable flange gaskets may be used to control flange leakage.

Torque values specified by manufacturers of certain flanges, for example plastic flanges, could be lower than the values specified above. In such cases, the flange manufacturers' torque values must not be exceeded. Use flange gaskets if necessary to secure flange seal.



All information herein is proprietary and confidential and may not be copied or reproduced without the expressed written consent of BRAY INTERNATIONAL, Inc.
The technical data herein is for general information only. Product suitability should be based solely upon customer's detailed knowledge and experience with their application.

## Series 20/21 - Standard Metal Specifications

| Part | | Material | ASTM No. | UNS No. |
|---|---|---|---|---|
| **Body** | | Cast Iron | A126 Class B | |
| | | Ductile Iron | A395 Gr. 60-40-18 | F32800 |
| | | 316 Stainless Steel | A351 CF8M | J92900 |
| | | Aluminum | B26 Class B | |
| **Disc/Stem** 1-12"(25-300mm) One Piece | | 316 Stainless Steel | A351 CF8M | J92900 |
| | | Hastelloy® C22 * | B494 CX2MW | N26022 |
| | | 17-4 ph Stainless Steel | A747 CB7Cu1 Heat Treated | J92180 |
| **Disc/Stem** 14-20" (350-500mm) Fabricated | **Disc** | 316 Stainless Steel | A240 | S31600 |
| | | Hastelloy® C276 * | B575 | N10276 |
| | | 17-4 ph Stainless Steel | A564 630 Heat Treated | S17400 |
| | **Stem** | 316 Stainless Steel | A276 | S31600 |
| | | Hastelloy® C276 * | B575 | N10276 |
| | | 17-4 ph Stainless Steel | A564 630 Heat Treated | S17400 |

## Series 22/23 - Standard Metal Specifications

| Part | Material | ASTM No. | UNS No. |
|---|---|---|---|
| **Body** | Ductile Iron | A395 Gr. 60-40-18 | F32800 |
| | 316 Stainless Steel | A351 CF8M | J92900 |
| | Carbon Steel | A216 WCB | J030002 |
| **Disc** | 316 Stainless Steel | A351 CF8M | J92900 |
| | PTFE/316 SS (2"-12") | A351 CF8M | J92900 |
| | PTFE/17-4 ph SS (14"-24") | A547 CB7Cu1 | J92180 |
| | PFA/316 SS (2"-12") | A351 CF8M | J92900 |
| | PFA/17-4 ph SS (14"-24") | A547 CB7Cu1 | J92180 |
| | UHMWPE/316 SS (2"-6") | A351 CF8M | J92900 |
| | UHMWPE/DI (8"-12") | A536 Gr 65-45-12 | F33100 |
| | Hastelloy® C22 * | B494 CX2MW | N26022 |
| | Titanium | | |
| **Stem** | 17-4 ph Stainless Steel | A564 630 Heat Treated | S17400 |

* Hastelloy® is a registered trademark of Haynes International, Inc.



All information herein is proprietary and confidential and may not be copied or reproduced without the expressed written consent of BRAY INTERNATIONAL, Inc.
The technical data herein is for general information only. Product suitability should be based solely upon customer's detailed knowledge and experience with their application.

## Series 30/31, 31H, 3A/3AH, 31U - Standard Metal Specifications

| Part | Material | ASTM No. | UNS No. | 30/31 | 31H | 3A/3AH | 31U |
|---|---|---|---|---|---|---|---|
| Body | Cast Iron | A126 Class B | | ● | ● | ● | |
| | Ductile Iron | A536 Gr. 65-45-12 | F33100 | ● | ● | ● | |
| | Ductile Iron | A395 | F32800 | | | | ● |
| | Carbon Steel | A216 WCB | J030002 | ● | | ● | ● |
| | Nickel Aluminum Bronze | B148 | C95800 | | | | ● |
| | Aluminum | B26 Class B | | ● | | | |
| Disc | Aluminum Bronze | B148 | C95400 | ● | ● | ● | |
| | Nickel Aluminum Bronze | B148 | C95800 | | | | ● |
| | Nylon Coated Ductile Iron | A536 Gr. 65-45-12 | F33100 | ● | ● | ● | |
| | 316 Stainless Steel | A351 CF8M | J92900 | ● | ● | ● | ● |
| | 304 Stainless Steel | A351 CF8 | J92600 | ● | | ● | |
| | Duplex Stainless Steel | A995 Gr 4A | J92205 | ● | | ● | |
| | Super Duplex Stainless Steel | A995 Gr 5A | J93404 | ● | | ● | |
| | Super Austenitic Stainless Steel (254 SMO™)* | A351 Grade CK3MCuN | S31254 | ● | | ● | |
| | Hastelloy® C-276 * | B575 | N10276 | ● | | ● | |
| Stem | 304 Stainless Steel | A276 | S30400 | ● | | ● | |
| | 316 Stainless Steel | A276 | S31600 | ● | | ● | |
| | 416 Stainless Steel | A582 | S41600 | ● | ● | ● | ● |
| | 17-4 ph Stainless Steel | A564 630 Heat Treated | S17400 | | | | ● |
| | Monel® * | B865 | N05500 | ● | | ● | ● |

* Hastelloy® is a registered trademark of Haynes International, Inc.
Monel® is a registered trademark of International Nickel Company, Inc.
254 SMO™ is a registered trademark of Avesta AB.
AL-6XN® is a registered trademark of ATI Properties, Inc.



All information herein is proprietary and confidential and may not be copied or reproduced without the expressed written consent of BRAY INTERNATIONAL, Inc.
The technical data herein is for general information only. Product suitability should be based solely upon customer's detailed knowledge and experience with their application.

## Series 32/33, 35/36, 35F, 36H - Standard Metal Specifications

| Part | Material | ASTM No. | UNS No. | 32-36 | 36H | 35F |
|---|---|---|---|---|---|---|
| Body | Cast Iron | A126 Class B | | ● | | ● |
| | Ductile Iron | A536 Gr. 65-45-12 | F33100 | ● | ● | ● |
| | Carbon Steel | A216 Gr. WCB | J030002 | ● | | |
| | 316 Stainless Steel | A351 CF8M | J92900 | ● | | |
| Disc | Nickel Aluminum Bronze | B148 | C95800 | ● | ● | |
| | Nylon Coated Ductile Iron | A536 Gr. 65-45-12 | F33100 | ● | ● | |
| | 316 Stainless Steel | A351 CF8M | J92900 | ● | | |
| | 304 Stainless Steel | A351 CF8 | J92600 | ● | | |
| | Hastelloy® C-276 * | B575 | N10276 | CF | | ● |
| | Hastelloy® C-22 * | B494 CX2MW | N26022 | CF | | |
| | Duplex Stainless Steel | A995 Gr 5A | J93404 | ● | ● | ● |
| | Super Austenitic Stainless Steel (254 SMO ™) * | A351 Grade CK3MCuN | S31254 | ● | ● | ● |
| | Monel® * | A494 Grade M-35-1 | N24135 | ● | | |
| Stem | 304 Stainless Steel | A276 | S30400 | ● | | ● |
| | 316 Stainless Steel | A276 | S31600 | ● | | ● |
| | 416 Stainless Steel | A582 | S41600 | ● | | |
| | 17-4 ph Stainless Steel | A564 630 Heat Treated | S17400 | ● | ● | |
| | Austenitic Stainless Steel | A479 | S31651 | ● | | |
| | Super Austenitic Stainless Steel (AL-6XN®) * | A276 | N08367 | ● | ● | |
| | Monel® * | B865 | N05500 | ● | | |

* Hastelloy® is a registered trademark of Haynes International, Inc.
Monel® is a registered trademark of International Nickel Company, Inc.
254 SMO™ is a registered trademark of Avesta AB.
AL-6XN® is a registered trademark of ATI Properties, Inc.



All information herein is proprietary and confidential and may not be copied or reproduced without the expressed written consent of BRAY INTERNATIONAL, Inc.
The technical data herein is for general information only. Product suitability should be based solely upon customer's detailed knowledge and experience with their application.

Bray

BRAY FLOW CONTROL SOLUTIONS ARE
AVAILABLE FOR A VARIETY OF INDUSTRIES.

**ENERGY**
Mining
Oil & Gas
Power
Nuclear Power

**WATER**
Water / Wastewater
Ultra Pure Water
Desalination
Irrigation

**INDUSTRIAL**
Chemical
Pulp & Paper
Textile
Marine

**INFRASTRUCTURE**
Beverage & Food
Transportation
Heating, Ventilation & Air Conditioning (HVAC)

---


**US HEADQUARTERS**
**Bray International, Inc.**
13333 Westland East Blvd.
Houston, Texas 77041
Tel: +1.281.894.5454

**CHINA HEADQUARTERS**
**Bray Controls (ZheJiang) Co. Limited**
98 GaoXin #6 Road
XiaoShan Economic & Development Zone
HangZhou, ZheJiang 311231, P.R. China
Tel: +86.571.8285.2200

**EUROPE HEADQUARTERS**
**Bray Armaturen & Antriebe Europa**
Europark Fichtenhain A 13b
D-47807 Krefeld
Germany
Tel: +49.2151.5336.0

**INDIA HEADQUARTERS**
**Bray Controls India Pvt. Ltd.**
Plot No. H-18 & H-19,
SIPCOT Industrial Park
Vallam Vadagal, Echoor Post,
Sriperumbudur Taluk
Kancheepuram District,
Tami Nadu - 631 604
Tel: +91.44.67170100


---

THE SMART CHOICE FOR FLOW CONTROL SINCE 1986.
WITH MORE THAN 300 LOCATIONS WORLDWIDE,
FIND A REPRESENTATIVE NEAR YOU AT **BRAY.COM**


All statements, technical information, and recommendations in this bulletin are for general use only. Consult Bray representatives or factory for the specific requirements and material selection for your intended application. The right to change or modify product design or product without prior notice is reserved. Patents issued and applied for worldwide.

Bray® is a registered trademark of Bray International, Inc.

© 8/16/09

Bray CONTROLS



# MANUAL OPERATORS

Bray Controls offers three operators for manual control of valve position. All manual operators mount directly to Bray valves, and all are epoxy coated for excellent corrosion, abrasion and impact resistance.

| MANUAL OPERATORS | |
|---|---|
| **SERIES 01 -** Handle | 1"-12" (25mm -300mm) |
| **SERIES 04 -** Gear Operator | 2"-48" (50mm -1200mm) |
| **SERIES 05 -** Declutchable Gear Operator | 2"-36" (50mm -900mm) |

### SERIES 01 - HANDLE & NOTCH PLATE

Bray offers two handles for on-off and throttling service – one for resilient seated valves from 1"-12" (25mm-300mm), and a high torque handle for high pressure valves from 2½"- 8" (65mm-200mm). These quarter turn handles have a locking spring and a directional pointer for valve disc position indication. Bolted notch plates are offered. For resilient seated valves a 10 position plate is standard. For high pressure valves a 9 position plate is standard. Both contain on-off stops to prevent over rotation of the valve. Optionally available are an infinite position plate, a 180° notch plate, a memory stop, a padlock kit, and a 2" square nut version.

### SERIES 04 - GEAR OPERATOR

For heavy duty on-off and throttling service of 2"-48" (50mm-1200mm) valves, the Series 04 is self lubricated for smooth, trouble-free operation. The rugged, cast iron body with O-ring body seals is weatherproof to IP65. A self-locking worm and worm gear drive holds the valve in the desired position. Features include a readily accessible handwheel, a valve position indicator and mechanical travel stops which permit field adjustment of valve movement to specific degrees of rotation. Optionally available are chainwheel accessories, padlock kits and 2" square nut versions. A Gear Operator with a stainless steel housing is also available for valve sizes 1"-16".

### SERIES 05 - DECLUTCHABLE GEAR OPERATOR

Available for 2"-36" (50mm-900mm) valves. This operator is excellent for the safe handling of spring return actuators. During pneumatic operation, the worm of the gear unit is disengaged. Should the valve require opening or closing in the event of power loss, manual rotation of the declutch lever will provide a camming action and engage the worm to the segmented worm gear, allowing rotation of the valve using the handwheel. The Series 05 can be installed in the field with existing Bray pneumatic actuators.

# SERIES 04 OPTIONS

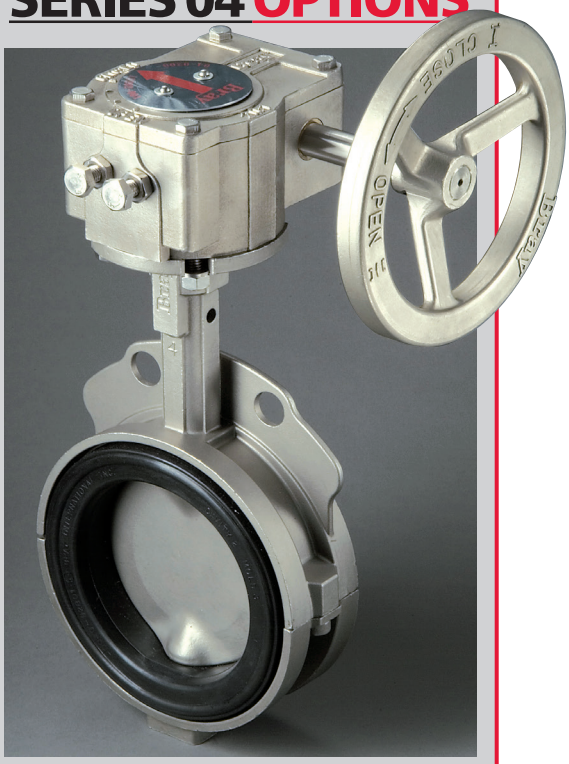

## 316 Stainless Steel
### for sanitary & corrosive applications

Bray Controls proudly offers the Series 04 Stainless Steel Gear Operator for manual operation of quarter turn valves. With stainless steel housings, input shafts and handwheels, the Series 04 is designed for service in highly corrosive environments, sanitary, breweries and pharmaceutical applications. The units are suitable for on-off and throttling service.

Series 04 Stainless Steel Gear Operator units have different gear ratios – providing a torque output range of 2,000 to 24,000 lb-in. The temperature range is -4°F (-20°C) to 250°F (120°C).

These weatherproof gear operators meet NEMA 4, 4x and IP 65 specifications.



**CHAINWHEEL** for remote access to valve positioning when the handwheel is not accessible, such as valves positioned high out of reach.

**A PADLOCK KIT & 2" SQUARE NUT** version for buried service are also available with the Series 04 (not shown).

# SERIES 01

**STANDARD 10 POSITION NOTCH PLATE** has been designed to lock the handle securely in place, preventing position change of disc due to line pressure, vibration or shock. Standard 9 Position Plate for high pressure valves is not shown.



**PADLOCK KIT** allows the customer to lock the valve in the full open or closed position, tamper proofing the valve. By drilling a new hole in the top plate, the handle can be locked in mid travel.



**HANDLE AND 180° NOTCH PLATE** allows the operator to switch the handle to either side without removing the notch plate from the valve.



**INFINITE POSITION NOTCH PLATE** for throttling applications, allows for very precise adjustments of valve disc positioning anywhere from 0° to 90°. Positioning is simply a matter of loosening the set knob, moving the handle, then retightening the knob. For resilient seated valves only.

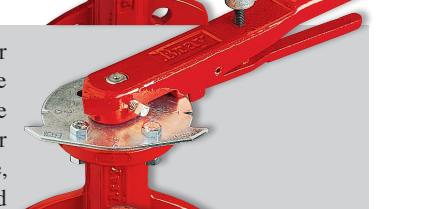

**MEMORY STOP** allows the operator to set the maximum amount the valve can open. When set, this limit will remain fixed until the stop is reset.

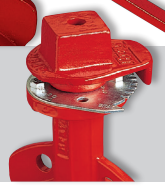

**2" SQUARE NUT** is used where the valve is buried under the surface. To rotate valve disc position, the nut is reached with a T-handle wrench.

# SERIES 05

**DECLUTCHABLE GEAR OPERATOR**

The Series 05 offers the same superior features as the Series 04 gear operator with the added ability to manually override pneumatic actuators or rotate the valve when air pressure is not available.

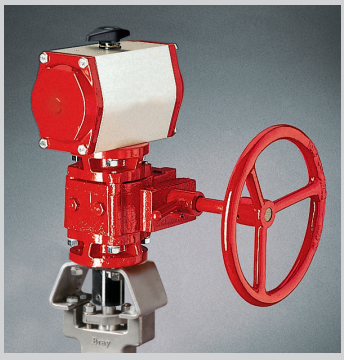

Bray® CONTROLS
A Division of BRAY INTERNATIONAL, Inc.
13333 Westland East Blvd. Houston, Texas 77041
281.894.5454 FAX 281.894.9499 www.bray.com

All statements, technical information, and recommendations in this bulletin are for general use only. Consult Bray representatives or factory for the specific requirements and material selection for your intended application. The right to change or modify product design or product without prior notice is reserved. Patents issued and applied for worldwide.

Bray® is a registered trademark of BRAY INTERNATIONAL, Inc.
© 2010 Bray International. All rights reserved. B-1025_EL_ManualOPS_2014-08

**Project name:** MELIADINE-BPC UPGRADE

**Project#:** 5000220043

**Document #:** SPK_0002_ACP_VWT

**by:** CEK

**chkd:** ED

**appvd:** TS

# CLARIFIER #1 ACP-700R

# INSTRUMENTS

**OIM manual section:** 4.2.3.10

**This page is intentionally left blank**

# CS-413-301 : Identification sheet

| | | | |
|---|---|---|---|
| VWTC PROJECT NUMBER: | 5000220043 | REV: | 1 |
| PROJECT NAME: | AEM MELIADINE-BPC UPGRADE | SUBMITTED TO (COMPANY): | AEM |
| ENGINEER: | EMMANUELLE DORMOY | SUBMITTED TO (RESPONSIBLE) | |
| PROJECT MANAGER: | THOMAS SAVARY / BRUCE BRODES | PROJECT NUM REFERENCE.: | 6526-S-265-605 / OC-989680 |
| PHONE NUMBER: | 514-334-7230 | LOT NUMBER: | |

| SUPPLIER | EQPT CODE | EQPT TAG NO | DIA | DESCRIPTION | INFO 1 | INFO 2 | INFO 3 | APPLIC. | NOTE | REV |
|---|---|---|---|---|---|---|---|---|---|---|
| ASHCROFT | ST-413-393 | 65PI6801226 | 2.5" | RECIRCULATION LINE #1 PRESSURE GAUGE | PRESSURE GAUGE C/W ISOLATOR // MANFUACTURER : ASHCROFT // MODEL : 25-1009-SW-L-02L-60# + 04-310SS-02T-XCG // 25: 2 1/2" DIAL. RANGE : 0/60 PSI //SW: 316SS //L: GLYCERIN FILLED //L: LWR MNT CONN // ISOLATOR - 04: PROCESS CONN: 1/2" MNPT - 310:NO FLUSH PRT | | N/A | CLARIFIER #1 | | 1 |
| ASHCROFT | ST-413-393 | 65PI6801231 | 2.5" | RECIRCULATION LINE #2 PRESSURE GAUGE | PRESSURE GAUGE C/W ISOLATOR // MANFUACTURER : ASHCROFT // MODEL : 25-1009-SW-L-02L-60# + 04-310SS-02T-XCG // 25: 2 1/2" DIAL. RANGE : 0/60 PSI //SW: 316SS //L: GLYCERIN FILLED //L: LWR MNT CONN // ISOLATOR - 04: PROCESS CONN: 1/2" MNPT - 310:NO FLUSH PRT | | N/A | CLARIFIER #1 | | 1 |

**This page is intentionally left blank**

ASHCROFT®
Trust the shield.®

# 1009 Stainless Steel Case Gauge

## FEATURES

- Meets ASME B40.100 specifications
- Corrosion resistant SS case
- Dry gauges are field fillable
- Power***Flex***™ movement provides superior resistance to shock, vibration and pulsation
- True Zero™ reduces reading errors by using "zero box" instead of conventional dial pins
- ***PLUS!***™ performance available for liquid filled performance with a dry gauge
- MSL helium leak tested to 1X10$^{-6}$ scc/s
- Ventable fill plug
- Accessory kits for easy panel mounting

## TYPICAL USES

- Pumps and compressors
- Boilers
- Equipment skids
- Specialized OEM equipment
- Hydraulics and pneumatics
- Severe ambient conditions




## SPECIFICATIONS

| | |
|---|---|
| Accuracy: | ASME B40.100, Grade 1A, ±1% of span (Dry)<br>±1.5% of span (Liquid filled) |
| Dial Sizes: | 2½″ (63mm), 3½″ (100mm) |
| Ranges: | Minimum 0-15 psi, maximum 0-15,000 psi, vacuum and compound |
| **Wetted Materials** | |
| Tube: | 316L SS tube |
| Process Connection: | 316L SS socket (SW)<br>Aluminum bronze socket (AW) |
| **Non Wetted Materials** | |
| Window: | Polycarbonate (Std.), Safety glass (XSG), Polysulfone (XPS) 3½″ Dial only |
| Dial: | Black figures on white background, aluminum |
| Pointer: | Black, aluminum, adjustable (Std.), micrometer (XMP) |
| Movement: | Power***Flex*** movement<br>Bottom plate – 304 SS<br>Upper plate – 304 SS<br>Pin – 304 SS<br>Hairspring assembly – 304 SS<br>Pinion – 304 SS<br>Segment – Glass filled polyester |
| Case: | 304 SS (Std.), 316L SS (XYW) |
| Ring: | 304 SS (Std.), 316L SS (XYW) |
| Process Connection Location: | Lower, Back, Top, 3 o'clock, 9 o'clock |
| Process Connection Sizes: | ⅛ NPT, ¼ NPT (see ordering code for more options) |

## KEY BENEFITS

- **IP65 Rating**
- **NEMA 4X**
- **CRN Approved**
- **PED**
- ***PLUS!***™ **Performance (XLL)**

| | |
|---|---|
| Dampening: | Glycerin case fill (Std. liquid fill), Silicone case fill (XGV), Halocarbon case fill (XGX), ***PLUS!*** Performance (XLL) |
| Weather Protection: | IP65 (Plug closed), IP54 (Plug vented)<br>NEMA 4X (Plug closed) |
| Approvals: | CRN, RoHS, PED |

## MIN/MAX TEMPERATURE LIMITS

| Version | Ambient | Process | Storage |
|---|---|---|---|
| Dry | -40/200°F (-40/93°C) | -40/250°F (-40/121°C) | -40/250°F (-40/121°C) |
| ***PLUS!*** | -40/150°F (-40/66°C) | -40/200°F (-40/93°C) | -40/150°F (-40/66°C) |
| Glycerin Fill | 20/150°F (-7/66°C) | 20/200°F (-7/93°C) | 0/150°F (-18/66°C) |
| Silicone Fill | -40/150°F (-40/66°C) | -40/200°F (-40/93°C) | -40/150°F (-40/66°C) |
| Halocarbon Fill | -40/150°F (-40/66°C) | -40/200°F (-40/93°C) | -40/150°F (-40/66°C) |

All specifications are subject to change without notice.
All sales subject to standard terms and conditions.
©2017 Ashcroft Inc. Ash Bul GS-3 1009 Rev D, 10/17

ashcroft.com
info@ashcroft.com
1.800.328.8258

ASHCROFT®
Trust the shield.®

# 1009 Stainless Steel Case Gauge

## ORDERING CODE

| Example: | 251009 | SW | L | 02 | L | XC4 | 15# |
|---|---|---|---|---|---|---|---|
| **Dial Size/Series Code** | | | | | | | |
| 251009 – SS case | 251009 | | | | | | |
| 351009 – SS case | | | | | | | |
| **System** | | | | | | | |
| AW - 316L SS tube/Aluminum, bronze connection (Max. pressure 1000 psi) | | | | | | | |
| SW - 316L SS tube/316L SS process connection (Max. pressure 15,000 psi) | | SW | | | | | |
| **Case Fill** | | | | | | | |
| Dry, liquid fillable case | | | | | | | |
| L - Liquid filled case (Glycerin standard) | | | L | | | | |
| **Process Connection Sizes** | | | | | | | |
| 01 - ⅛ NPT Male | | | | | | | |
| 02 - ¼ NPT Male | | | | 02 | | | |
| 04 - ½ NPT Male | | | | | | | |
| RW - SAE 7/16 & 20 Straight thread | | | | | | | |
| EJ - 7/16 X 20 UNF-3A 37° flare | | | | | | | |
| KJ - ¼ Straight JIS, BSP - 1009SW | | | | | | | |
| KA - ¼ Tapered JIS, BSP - 1009SW | | | | | | | |
| 13 - G ¼″ DIN | | | | | | | |
| JP - ¼″ Tubing, no throttle plug (max pressure 10,000 psi) | | | | | | | |
| JQ - 6mm Tubing, no throttle plug (max pressure 6,000 psi) | | | | | | | |
| JL - 9/16″ 18 UNF-2A, N/A on 25 1009 lower | | | | | | | |
| **Connection Location** | | | | | | | |
| L - Lower mount connection | | | | | L | | |
| B - Lower back mount connection | | | | | | | |
| D - Side connection (3 o'clock) | | | | | | | |
| E - Side connection (9 o'clock) | | | | | | | |
| T - Top connection | | | | | | | |
| **Options (if choosing an option(s) must include an "X")** | | | | | | X__ | |
| LL - ***PLUS!***™ performance | | | | | | | |
| GV - Silicone case fill | | | | | | | |
| GX - Halocarbon case fill | | | | | | | |
| TU - Throttle plug for ranges up to 1000 psi | | | | | | | |
| TS - Throttle plug for ranges up to 15,000 psi | | | | | | | |
| 6B - Cleaned for oxygen service | | | | | | | |
| SG - Safety glass | | | | | | | |
| PS - Polysulfone window (3½″ dial only) | | | | | | | |
| EO - Adjustable red set hand | | | | | | | |
| SH - Red set hand, stationary | | | | | | | |
| NH - SS tag wired to case | | | | | | | |
| FF - Front flange | | | | | | | |
| FW - Back flange | | | | | | | |
| UC - U-clamp | | | | | | | |
| EA - External zero adjust (3½″ dial only) | | | | | | | |
| C4 - Individual calibration chart in accordance with ASME B40.100:2013. Accuracy traceable to N.I.S.T | | | | | | C4 | |
| SM - All SS movement | | | | | | | |
| YW - 316L SS case and ring | | | | | | | |
| **Range (coding examples only, see range table for all standard ranges)** | | | | | | | |
| Single Scales | | | | | | | |
| 15# - 15 psi | | | | | | | 15# |
| 1BR - 1 bar | | | | | | | |
| 1KSC - 1 kilograms per sq. cm | | | | | | | |
| 100KP - 100 kilopascal | | | | | | | |
| Dual Scales | | | | | | | |
| 15#/BR - 15 psi inner scale, 1 bar outer scale | | | | | | | |
| 1BR/# - 1 bar inner scale, 15 psi outer scale | | | | | | | |

All specifications are subject to change without notice.
All sales subject to standard terms and conditions.
©2017 Ashcroft Inc. Ash Bul GS-3 1009 Rev D, 10/17

ashcroft.com
info@ashcroft.com
1.800.328.8258

ASHCROFT®
Trust the shield.®

# 1009 Stainless Steel Case Gauge

| STANDARD RANGES | | | | |
|---|---|---|---|---|
| psi | bar | kPa | Mpa | kg/cm² |
| 30IMV | -1BR | -100KP | -.1MP | -1KSC |
| – | -1&.6BR | -100&60KP | -.1&.06MP | -1&.6KSC |
| 30IMV&15# | – | – | – | – |
| – | -1&1.5BR | -100&150KP | -.1&.15MP | -1&1.5KSC |
| 30IMV&30# | – | – | – | – |
| – | -1&3BR | -100&300KP | -.1&.3MP | -1&3KSC |
| 30IMV&60# | – | – | – | – |
| – | -1&5BR | -100&500KP | -.1&.5MP | -1&5KSC |
| 30IMV&100# | – | – | – | – |
| – | 1&9BR | -100&900KP | -.1&.9MP | -1&9KSC |
| 15# | 1BR | 100KP | .1MP | 1KSC |
| 20# | – | – | – | – |
| – | 1.6BR | 160KP | .16MP | 1.6KSC |
| 30# | – | – | – | – |
| – | 2.5BR | 250KP | .25MP | 2.5KSC |
| 60# | 4BR | 400KP | .4MP | 4KSC |
| – | 6BR | 600KP | .6MP | 6KSC |
| 100# | – | – | – | – |
| 120# | – | – | – | – |
| – | 10BR | 1,000KP | 1MP | 10KSC |
| 160# | – | – | – | – |
| 200# | – | – | – | – |
| – | 16BR | 1,600KP | 1.6MP | 16KSC |
| 300# | – | – | – | – |
| – | 25BR | 2,500KP | 2.5MP | 25KSC |
| 400# | – | – | – | – |
| 500# | – | – | – | – |
| 600# | 40BR | 4,000KP | 4MP | 40KSC |
| 800# | – | – | – | – |
| – | 60BR | 6,000KP | 6MP | 60KSC |
| 1,000# | – | – | – | – |
| 1,500# | 100BR | 10,000KP | 10MP | 100KSC |
| 2,000# | – | – | – | – |
| – | 160BR | 16,000KP | 16MP | 160KSC |
| 3,000# | – | – | – | – |
| – | 250BR | 25,000KP | 25MP | 250KSC |
| 4,000# | – | – | – | – |
| 5,000# | – | – | – | – |
| 6,000# | 400BR | 40,000KP | 40MP | 400KSC |
| 8,000# | – | – | – | – |
| – | 600BR | 60,000KP | 60MP | 600KSC |
| 10,000# | – | – | – | – |
| 15,000# | 1,000BR | 100,000KP | 100MP | 1,000KSC |

All specifications are subject to change without notice.
All sales subject to standard terms and conditions.
©2017 Ashcroft Inc. Ash Bul GS-3 1009 Rev D, 10/17

ashcroft.com
info@ashcroft.com
1.800.328.8258

ASHCROFT®
Trust the shield.®

# 1009 Stainless Steel Case Gauge

## DIMENSIONS (dimensions in [ ] are millimeters)

### 2½˝ 1009 Lower and Back Connect

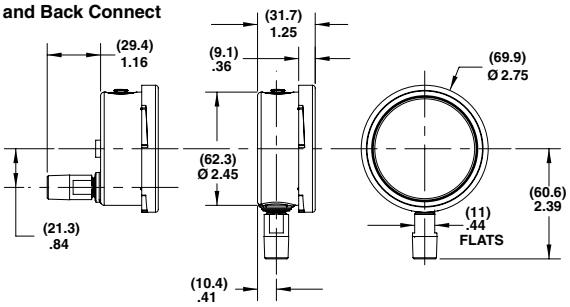


### 3½˝ 1009 Lower and Back Connect

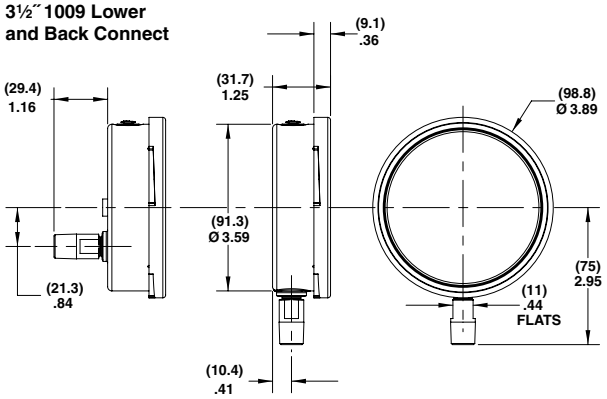


### 2½˝ 1009 Back Connect (XUC)

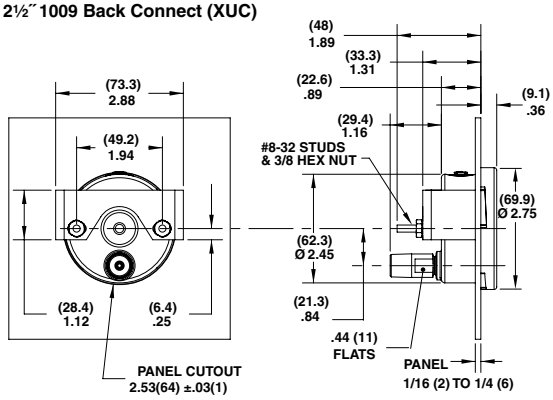


### 3½˝ 1009 Back Connect (XUC)

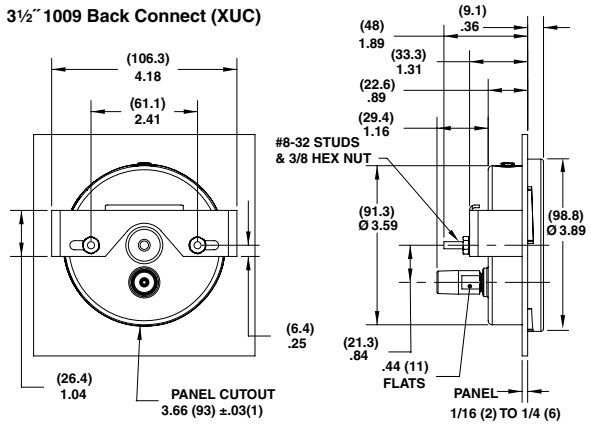


### 2½˝ 1009 Back Connect (XFF)

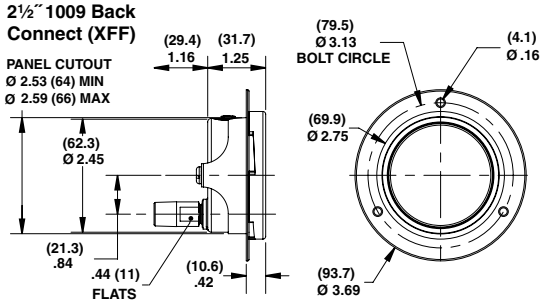


### 3½˝ 1009 Back Connect (XFF)

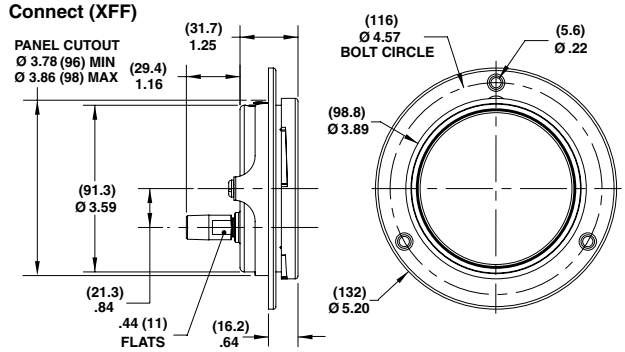


### 2½˝ 1009 Lower and Back Connect (XFW)

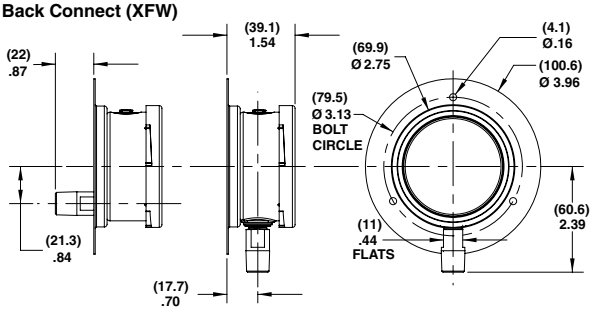


### 3½˝ 1009 Lower and Back Connect (XFW)

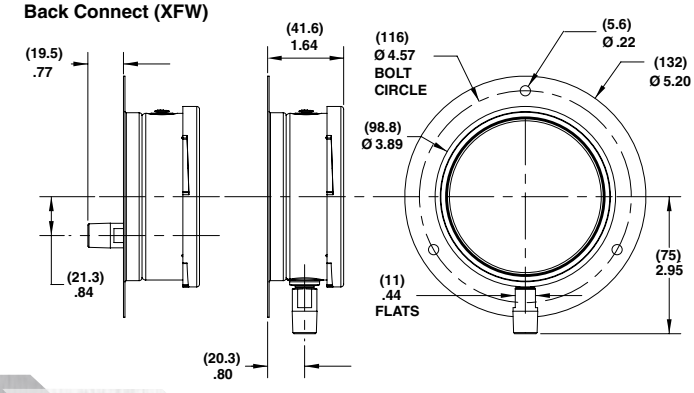


All specifications are subject to change without notice.
All sales subject to standard terms and conditions.
©2017 Ashcroft Inc. Ash Bul GS-3 1009 Rev D, 10/17

ashcroft.com
info@ashcroft.com
1.800.328.8258

ASHCROFT®
Trust the shield.®

# 1009 Stainless Steel Case Gauge with Tubing Connections

## DIMENSIONS (dimensions in [ ] are millimeters)

### 2½˝ 1009 Lower and Back Connect

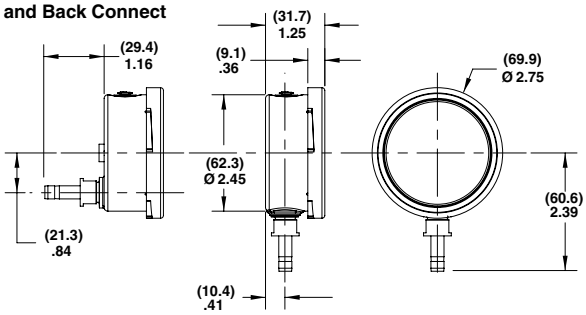


### 3½˝ 1009 Lower and Back Connect

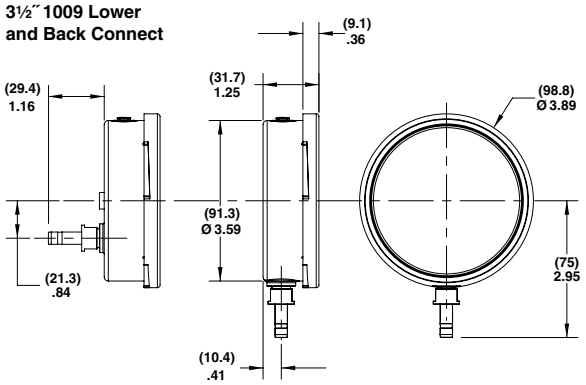


### 2½˝ 1009 Back Connect (XUC)

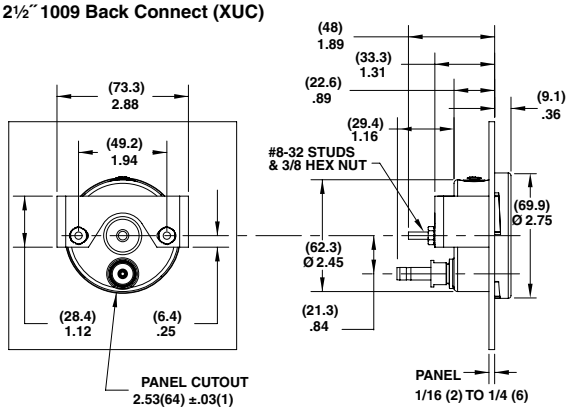


### 3½˝ 1009 Back Connect (XUC)

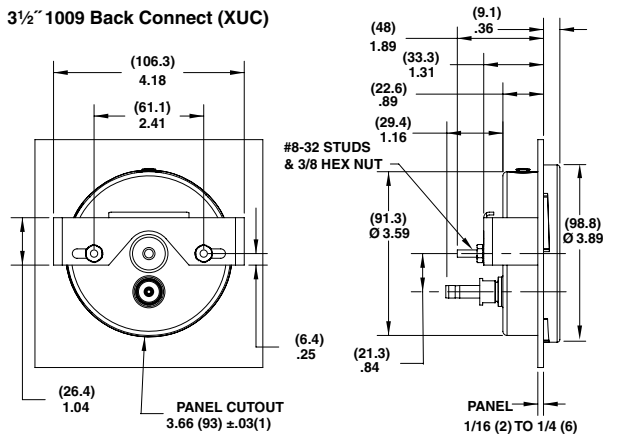


### 2½˝ 1009 Back Connect (XFF)

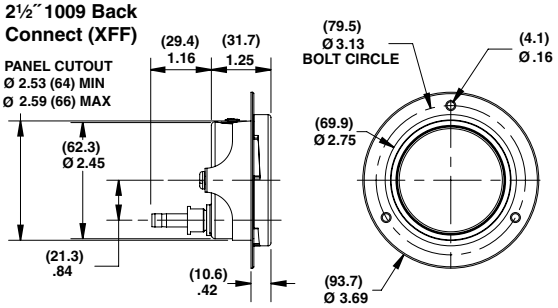


### 3½˝ 1009 Back Connect (XFF)

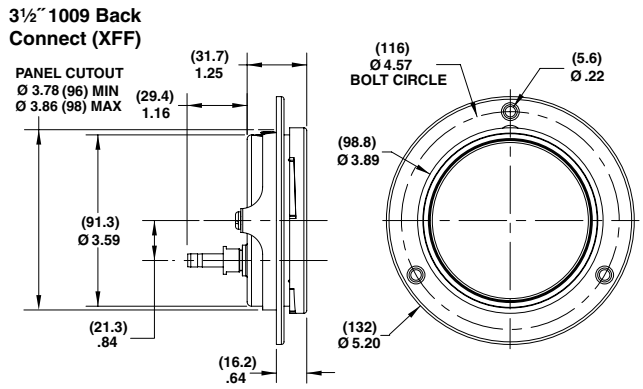


### 2½˝ 1009 Lower and Back Connect (XFW)

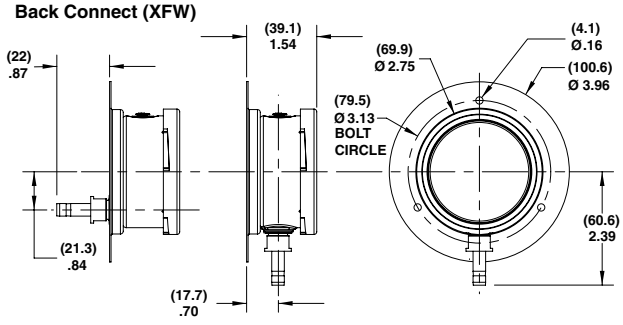


### 3½˝ 1009 Lower and Back Connect (XFW)

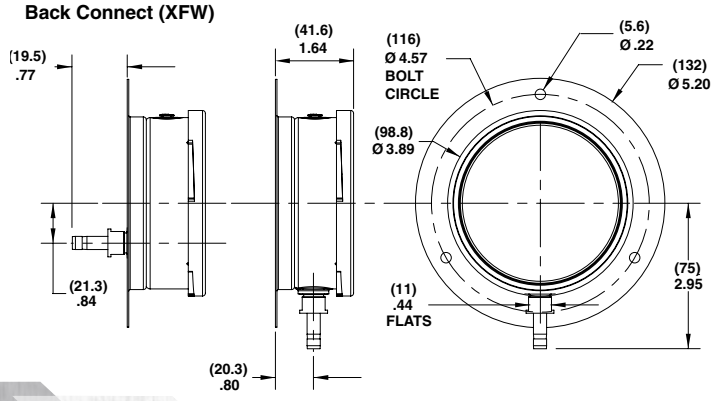


All specifications are subject to change without notice.
All sales subject to standard terms and conditions.
©2017 Ashcroft Inc. Ash Bul GS-3 1009 Rev D, 10/17

ashcroft.com
info@ashcroft.com
1.800.328.8258

**This page is intentionally left blank**

ASHCROFT®
Trust the shield.®

# 310, 315 All-Welded “Mini” Diaphragm Seal

## FEATURES

- No gaskets or bolts
- Available with ⅛ NPT flushing connection
- Designed for use with transducers and 3½″ or smaller gauges

## TYPICAL USES

- Oil and gas
- Chemical processes
- Process equipment




**310**
Threaded Seal

| SPECIFICATIONS | |
|---|---|
| Connection Style: | 310: All-welded<br>315: All-welded with flushing connection |
| Process Connection Size: | 310: ⅛ to 1 NPT Male, ¼ or ½ NPT Female<br>315: ¼ or ½ NPT Female |
| Instrument Connection Size: | ⅛ or ¼ NPT Female |
| Pressure Rating (MAWP): | 2,500 psi |
| Added Tolerance: | ±0.5% typical |
| Wetted Components: | Diaphragm & bottom housing |
| Non-Wetted Components: | Top housing: 316L SS |

| WETTED COMPONENTS | |
|---|---|
| Diaphragm Material | Bottom Housing Material |
| See ordering code on page 2 | See ordering code on page 2 |

| NON-WETTED COMPONENTS |
|---|
| Top Housing |
| 316L SS |

## KEY BENEFITS

- **Protects instrumentation in tight spaces**
- **Eliminates potential leak path with all-welded construction**
- **Low fill volume reduces temperature effects on instrument accuracy**



All specifications are subject to change without notice.
All sales subject to standard terms and conditions.
©2018 Ashcroft Inc. 310-315_seal_ds_RevC_07-18

ashcroft.com
info@ashcroft.com
1.800.328.8258

ASHCROFT®
Trust the shield.®

# 310, 315 All-Welded “Mini” Diaphragm Seal

| ORDERING CODE Example: | 01 | 310 | S | S | 01T | XCK | NH |
|---|---|---|---|---|---|---|---|
| **Process Connection Size** | | | | | | | |
| 01 - ⅛ NPT Male, (available with 310 only) | 01 | | | | | | |
| 02 - ¼ NPT Male, (available with 310 only) | | | | | | | |
| 04 - ½ NPT Male, (available with 310 only) | | | | | | | |
| 06 - ¾ NPT Male, (available with 310 only) | | | | | | | |
| 08 - 1 NPT Male, (available with 310 only) | | | | | | | |
| 25 - ¼ NPT Female | | | | | | | |
| 50 - ½ NPT Female | | | | | | | |
| **Seal Type** | | | | | | | |
| 310 - All-welded Mini seal no flushing port | | 310 | | | | | |
| 315 - All-welded Mini seal with flushing port connection | | | | | | | |
| **Diaphragm Material** | | | | | | | |
| S - 316L SS | | | S | | | | |
| H - Hastelloy® C-276 | | | | | | | |
| U - Tantalum | | | | | | | |
| P - Monel® (Must be ordered with Monel® bottom housing) | | | | | | | |
| **Bottom Housing Material** | | | | | | | |
| S - 316L SS | | | | S | | | |
| H - Hastelloy® C-276 | | | | | | | |
| M - Monel® | | | | | | | |
| G - Hastelloy® B-2 | | | | | | | |
| **Instrument Connection Size** | | | | | | | |
| 01T - ⅛ NPT Female | | | | | 01T | | |
| 02T - ¼ NPT Female | | | | | | | |
| **Options (if choosing an option(s) must include an “X”)** | | | | | | X__ | |
| **Filling Fluid** | | | | | | | |
| CG - Glycerin | | | | | | | |
| CK - Silicon 50cST | | | | | | CK | |
| CF - Halocarbon® | | | | | | | |
| See Filling Fluid Table Below | | | | | | | |
| **Optional Features** | | | | | | | |
| PU - Pipe Plug for flushing connection (Must match bottom housing material; 315 seal only) | | | | | | | |
| NH - SS instrument tag | | | | | | | NH |
| NN - Paper instrument tag | | | | | | | |
| DU - Instrument welded to seal | | | | | | | |
| MQ - Positive material identification | | | | | | | |
| W1 - Dye penetrant testing | | | | | | | |
| 6B - Cleaned for oxygen service | | | | | | | |

## Filling Fluid Table

| Fill | Service | Connection to Instrument | Temperature Range °F | Code |
|---|---|---|---|---|
| Glycerin | Pressure | Direct Only | 0/400 | CG |
| Silicone | Pressure/Vacuum | Direct or Flexible Line | –40/500 | CK |
| Halocarbon® | Pressure/Vacuum in presence of strong oxidizing agent | Direct or Flexible Line | –70/300 | CF |
| Syltherm® | Pressure | Direct or Flexible Line | –40/750 | HA |



All specifications are subject to change without notice.
All sales subject to standard terms and conditions.
©2018 Ashcroft Inc. 310-315_seal_ds_RevC_07-18

ashcroft.com
info@ashcroft.com
1.800.328.8258

# 310, 315 All-Welded “Mini” Diaphragm Seal

## DIMENSIONS in [ ] are millimeters

Drawings are for reference only, consult Ashcroft for specific dimensional drawings.

| | A | | B | | C | |
|---|---|---|---|---|---|---|
| | in | mm | in | mm | in | mm |
| **Type 310** | 1.75 | [38] | .81 | [30] | 1.34 | [34] |
| **Type 315** | 1.73 | [44] | 2.25 | [57.2] | 1.34 | [34] |

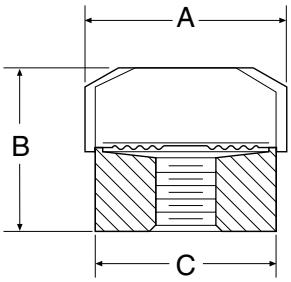


310 mini-seal – Threaded ¼, ½, ¾, NPT

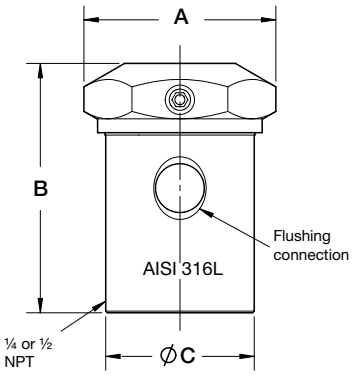


315 mini-seal – Threaded ¼, ½, ¾, NPT



All specifications are subject to change without notice.
All sales subject to standard terms and conditions.
©2018 Ashcroft Inc. 310-315_seal_ds_RevC_07-18

ashcroft.com
info@ashcroft.com
1.800.328.8258

**This page is intentionally left blank**

# CS-451-100 : Identification sheet

| | | | |
|---|---|---|---|
| VWTC PROJECT NUMBER: | 5000220043 | REV: | 1 |
| PROJECT NAME: | AEM MELIADINE-BPC UPGRADE | SUBMITTED TO (COMPANY): | AEM |
| ENGINEER: | EMMANUELLE DORMOY | SUBMITTED TO (RESPONSIBLE): | |
| PROJECT MANAGER: | THOMAS SAVARY / BRUCE BRODES | PROJECT NUM REFERENCE.: | 6526-S-265-605 / OC-989680 |
| PHONE NUMBER: | 514-334-7230 | LOT NUMBER: | |

| SUPPLIER | EQPT CODE | EQPT TAG NO | DIA | DESCRIPTION | INFO 1 | INFO 2 | INFO 3 | APPLIC. | NOTE | REV |
|---|---|---|---|---|---|---|---|---|---|---|
| XYLEM | IESWLE201156 | 65LSHH6801224 | Diameter: 100 mm, Cable: 13m, Tow release : 62 mm | HIGH LEVEL SWITCH FLOAT | LEVEL SWITCH/MANUFACTURER:FLYGT// MODEL: ENM-10 (13m) | N/A | N/A | CLARIFIER #1 | | 1 |

**This page is intentionally left blank**

xylem
Let's Solve Water

Technical Specification

891480_15.0



# ENM 10

## Level regulator

FLYGT
a xylem brand

# Table of Contents

1 Product Description....2
1.1 Product design....2
1.2 Technical data....2
1.3 Cables....3
1.4 Approvals and standards....3

2 References....5
2.1 Chemical resistance tables....5
2.2 Product range....8

# 1 Product Description

## 1.1 Product design

### Usage

ENM-10 is a level regulator for level control applications. The level regulator starts and stops a pump or activates an alarm device when the liquid level reaches the regulator.

### Materials

| Denomination | Standard version | Ex version |
|---|---|---|
| Regulator casing | Polypropylene | Polypropylene with black conductive casing |
| Bend relief | EPDM rubber | NBR-PVC rubber |
| Cable sheath | PVC | NBR-PVC rubber |

The plastic components are welded and screwed together.

## 1.2 Technical data

### Application limits

| Feature | Value |
|---|---|
| Liquid temperature | Minimum 0°C (32°F)<br>Maximum 60°C (140°F) |
| Liquid density | Minimum 0.65 g/cm$^3$<br>Maximum 1.5 g/cm$^3$ |

### Electrical specifications

| Feature | Value |
|---|---|
| Degree of protection | IP68, 20 m (65 ft), 2 bars |
| Interrupting capacity of micro switch | AC, resistive load, 250 V 10 A<br>AC, inductive load, 250 V 3 A<br>cos ϕ = 0.5<br>DC, 30 V 5 A |
| Interrupting capacity of gold-plated micro switch | AC, resistive load, 250 V 10 A<br>AC, inductive load, 250 V 3 A<br>cos ϕ = 0.5<br>DC, 24 V 10 mA |

Voltage limits are subject to local regulations.

### Density ranges

| Density g/cm$^3$ | Regulator length mm (in.) | Diameter mm (in.) |
|---|---|---|
| 0.65 – 0.80 | 194 (7 10/16) | 100 (4) |
| 0.80 – 0.95 | 177 (7) | 100 (4) |
| 0.95 – 1.10 | 162 (6 3/8) | 100 (4) |
| 1.05 – 1.20 | 142 (5 9/16) | 100 (4) |
| 1.20 – 1.30 | 133 (5 1/4) | 100 (4) |
| 1.30 – 1.40 | 130 (5 2/16) | 100 (4) |

| Density g/cm$^3$ | Regulator length mm (in.) | Diameter mm (in.) |
|---|---|---|
| 1.40 – 1.50 | 126 (5) | 100 (4) |

### Weight

A regulator with standard density and 20 m cable weighs approximately 2 kg (4.5 lb).

## 1.3 Cables

### Lengths

For liquids with specific density between 0.95 and 1.10 g/cm$^3$, the following cables are available:

| Version | Lengths m (ft) |
|---|---|
| Standard | • 6 m (20 ft)<br>• 13 m (42 ft)<br>• 20 m (65 ft)<br>• 30 m (100 ft)<br>• 50 m (167 ft) |
| Ex | • 6 m (20 ft)<br>• 13 m (42 ft)<br>• 20 m (65 ft) |

### Diameter

The cable diameter for all product variants is 6.7 mm (0.26 in), +/- 0.2 mm (0.00787 in).

### Color codes

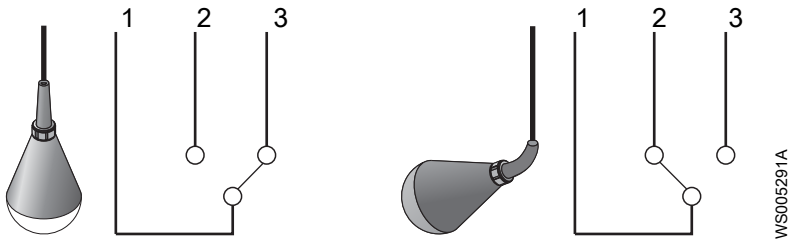


| Cable | 1 | 2 | 3 |
|---|---|---|---|
| Color | Grey | Black | Brown |

## 1.4 Approvals and standards

### Standard approvals

LVD approval according to EN61058
CSA approval: Certificate Number 1330172
Cl. I Zone 0, Gr. IIC
CL.I Div.1 Gr A, B, C and D
Cl.II Gr. E, F, and G

### Ex approvals

IECEx ia IIC T4 Ga: -20°C≤Ta≤60°C
IECEx NEMKO 09.008
ATEX II 1G Ex ia IIC T4
NEMKO 10 ATEX 1082

### Applied standards for ATEX and IEC

- EN 60079-0:2012/IEC 60079-0:2011
- EN 60079-11:2012/IEC 60079-11:2011
- IEC 60079-26:2014

Intrinsically safe circuits are required for the automatic control system. Use a Zener barrier, for example, part number 84 01 07.

The electrical connections must comply with the Ex regulations of the national submitter.



# 2 References

## 2.1 Chemical resistance tables

The tables show the degree of resistance the level regulator has to different chemicals at two different temperatures. The density of the liquid determines the buoyancy of the regulator.

### Acids

| Acid | PVC cable | | NBR/PVC cable | |
|---|---|---|---|---|
| | 20°C (68°F) | 60°C (140°F) | 20°C (68°F) | 60°C (140°F) |
| Acetic acid 50% | 1 | 2 | 0 | 0 |
| Acetic acid 75% | 2 | 2 | 0 | 0 |
| Benzoic acid | 2 | 2 | 0 | 0 |
| Boric acid 5% | 0 | – | 0 | 0 |
| Butyric acid | 2 | 2 | 2 | 2 |
| Chromic acid 10% | 0 | 2 | 2 | 2 |
| Citric acid | 0 | 1 | 0 | 0 |
| Hydrobromic acid 5% | 1 | 2 | 0 | 0 |
| Hydrochloric acid 10% | 0 | 1 | 0 | 1 |
| Hydrochloric acid 37% | 1 | 2 | 0 | 2 |
| Hydrocyanic acid 10% | 0 | 0 | 1 | 2 |
| Hydrofluoric acid 5% | 0 | 2 | 0 | 1 |
| Hypochloric acid | 1 | 2 | 2 | 2 |
| Maleic acid | 2 | 2 | 2 | 2 |
| Nitric acid 5% | 1 | 1 | 1 | 1 |
| Nitric acid 65% | 2 | 2 | 2 | 2 |
| Oleic acid | 1 | 2 | 2 | 2 |
| Oxalic acid 50% | 1 | 1 | 1 | 2 |
| Phosphoric acid 25% | 0 | 0 | 1 | 2 |
| Phosphoric acid 85% | 0 | 0 | 1 | 2 |
| Sulphuric acid 10% | 1 | 2 | 1 | 2 |
| Sulphuric acid 78% | 2 | 2 | 2 | 2 |
| Tannic acid | 0 | 0 | 0 | 0 |
| Tartaric acid | 1 | 1 | 1 | 1 |

0 = No effect. 1 = Minor to moderate effect. 2 = Severe effect. – = No available information.

### Alkalis

| Alkali | PVC cable | | NBR/PVC cable | |
|---|---|---|---|---|
| | 20°C (68°F) | 60°C (140°F) | 20°C (68°F) | 60°C (140°F) |
| Ammonium hydroxide | 0 | – | 0 | 0 |
| Calcium hydroxide | 0 | 0 | 0 | 0 |

| Alkali | PVC cable | | NBR/PVC cable | |
|---|---|---|---|---|
| | 20°C (68°F) | 60°C (140°F) | 20°C (68°F) | 60°C (140°F) |
| Potassium hydroxide | 1 | 2 | 0 | 0 |
| Sodium hydroxide | 1 | 2 | 0 | 0 |

0 = No effect. 1 = Minor to moderate effect. 2 = Severe effect. – = No available information.

## Salts

| Salt | PVC cable | | NBR/PVC cable | |
|---|---|---|---|---|
| | 20°C (68°F) | 60°C (140°F) | 20°C (68°F) | 60°C (140°F) |
| Aluminum chloride | 0 | 0 | 0 | 0 |
| Calcium sulphate | 0 | 0 | 0 | 0 |
| Calcium chloride | 0 | 0 | 0 | 0 |
| Calcium nitrate | 0 | 0 | 0 | 0 |
| Copper chloride | 0 | 0 | 0 | 0 |
| Copper sulphate | 0 | 0 | 0 | 0 |
| Ferric chloride | 0 | 0 | 0 | 0 |
| Ferrous sulphate | 0 | 0 | 0 | 0 |
| Magnesium chloride | 0 | 0 | 0 | 0 |
| Potassium sulphate | 0 | 0 | 0 | 0 |
| Potassium nitrate | 0 | 0 | 0 | 0 |
| Potassium carbonate | 1 | 1 | 1 | 1 |
| Potassium bicarbonate | 0 | 0 | 0 | 0 |
| Sodium sulphate | 0 | 0 | 0 | 0 |
| Sodium chloride | 0 | 0 | 0 | 0 |
| Sodium nitrate | 0 | 0 | 0 | 0 |
| Sodium bicarbonate | 0 | 0 | 0 | 0 |
| Sodium carbonate | 0 | 0 | 0 | 0 |
| Tin chloride | 1 | 1 | 1 | 1 |
| Zinc sulphate | 0 | 0 | 0 | 0 |
| Zinc chloride | 0 | 0 | 0 | 0 |

0 = No effect. 1 = Minor to moderate effect. 2 = Severe effect. – = No available information.

## Oils

| Oil | PVC cable | | NBR/PVC cable | |
|---|---|---|---|---|
| | 20°C (68°F) | 60°C (140°F) | 20°C (68°F) | 60°C (140°F) |
| Castor oil | 1 | 1 | 1 | 1 |
| Coconut oil | 0 | – | 0 | 2 |
| Corn oil | 2 | 2 | 2 | 2 |
| Diesel oil | 2 | 2 | 2 | 2 |
| Linseed oil | 2 | 2 | 2 | 2 |
| Mineral oils | 2 | 2 | 2 | 2 |
| Olive oil | 1 | 1 | 1 | 1 |
| Silicone oils | 0 | 0 | 0 | 0 |

0 = No effect. 1 = Minor to moderate effect. 2 = Severe effect. – = No available information.

### Solvents and miscellaneous

| Chemical | PVC cable | | NBR/PVC cable | |
|---|---|---|---|---|
| | 20°C (68°F) | 60°C (140°F) | 20°C (68°F) | 60°C (140°F) |
| Acetone | 2 | 2 | 2 | 2 |
| Aniline | 2 | 2 | 1 | 2 |
| Benzene | 2 | 2 | 2 | 2 |
| Butyl alcohol | 2 | 2 | 0 | 1 |
| Carbon tetrachloride | 2 | 2 | 2 | 2 |
| Chlorobenzene | 2 | 2 | 2 | 2 |
| Chloroform | 2 | 2 | 2 | 2 |
| Ethyl alcohol | 2 | 2 | 0 | 1 |
| Ethyl ether | 2 | 2 | 2 | 2 |
| Ethyl acetate | 2 | 2 | 2 | 2 |
| Ethylene dichloride | 2 | 2 | 2 | 2 |
| Ethylene chloride | 2 | 2 | 2 | 2 |
| Formaldehyde 37% | 1 | 2 | 0 | 0 |
| Gasoline | 2 | 2 | 2 | 2 |
| Kerosene | 2 | 2 | 2 | 2 |
| Methyl alcohol | 2 | 2 | 0 | 0 |
| Methyl ethyl ketone | 2 | 2 | 2 | 2 |
| Methylene chloride | 2 | 2 | 2 | 2 |
| Nitrobenzene | 2 | 2 | 2 | 2 |
| Phenol | 2 | 2 | 2 | 2 |
| Toluene | 2 | 2 | 2 | 2 |
| Trichlorethylene | 2 | 2 | 2 | 2 |
| Turpentine | 2 | 2 | 2 | 2 |
| Xylene | 2 | 2 | 2 | 2 |

0 = No effect. 1 = Minor to moderate effect. 2 = Severe effect. – = No available information.

### Gases

| Gas | PVC cable | | NBR/PVC cable | |
|---|---|---|---|---|
| | 20°C (68°F) | 60°C (140°F) | 20°C (68°F) | 60°C (140°F) |
| Carbon dioxide | 0 | 0 | 0 | 0 |
| Carbon monoxide | 0 | 0 | 0 | 0 |
| Chlorine – wet | 2 | 2 | 2 | 2 |
| Hydrogen sulfide | 0 | 0 | 1 | 1 |
| Sulphur dioxide – wet | 1 | 1 | 2 | 2 |

0 = No effect. 1 = Minor to moderate effect. 2 = Severe effect. – = No available information.

## 2.2 Product range

| Version | For density (g/cm$^3$) | Color of level switch | Length of cable (m) | Type of cable[1] | Approvals | For market |
|---|---|---|---|---|---|---|
| 582 88 00 | 0.65 - 0.80 | Blue | 20 | 1 | CE | International |
| 582 88 01 | 0.80 - 0.95 | Blue | 20 | 1 | CE | International |
| 582 88 02 | 0.95 - 1.10 | Blue | 6 | 1 | CE | International |
| 582 88 03 | 0.95 - 1.10 | Blue | 13 | 1 | CE | International |
| 582 88 04 | 0.95 - 1.10 | Blue | 20 | 1 | CE | International |
| 582 88 05 | 1.05 - 1.20 | Blue | 20 | 1 | CE | International |
| 582 88 06 | 1.20 - 1.30 | Blue | 20 | 1 | CE | International |
| 582 88 07 | 1.30 - 1.40 | Blue | 20 | 1 | CE | International |
| 582 88 08 | 1.40 - 1.50 | Blue | 20 | 1 | CE | International |
| 582 88 09 | 0.65 - 0.80 | Gray | 20 | 3 | CSA/CE | Canada |
| 582 88 10 | 0.80 - 0.95 | Gray | 20 | 3 | CSA/CE | Canada |
| 582 88 11 | 0.95 - 1.10 | Gray | 6 | 3 | CSA/CE | Canada |
| 582 88 12 | 0.95 - 1.10 | Gray | 13 | 3 | CSA/CE | Canada |
| 582 88 13 | 0.95 - 1.10 | Gray | 20 | 3 | CSA/CE | Canada |
| 582 88 14 | 1.05 - 1.20 | Gray | 20 | 3 | CSA/CE | Canada |
| 582 88 15 | 1.20 - 1.30 | Gray | 20 | 3 | CSA/CE | Canada |
| 582 88 16 | 1.30 - 1.40 | Gray | 20 | 3 | CSA/CE | Canada |
| 582 88 17 | 1.40 - 1.50 | Gray | 20 | 3 | CSA/CE | Canada |
| 582 88 18 | 0.65 - 0.80 | Gray | 20 | 1 | CSA/CE | Canada |
| 582 88 19 | 0.80 - 0.95 | Gray | 20 | 1 | CSA/CE | Canada |
| 582 88 20 | 0.95 - 1.10 | Gray | 6 | 1 | CSA/CE | Canada |
| 582 88 21 | 0.95 - 1.10 | Gray | 13 | 1 | CSA/CE | Canada |
| 582 88 22 | 0.95 - 1.10 | Gray | 20 | 1 | CSA/CE | Canada |
| 582 88 23 | 1.05 - 1.20 | Gray | 20 | 1 | CSA/CE | Canada |
| 582 88 24 | 1.20 - 1.30 | Gray | 20 | 1 | CSA/CE | Canada |
| 582 88 25 | 1.30 - 1.40 | Gray | 20 | 1 | CSA/CE | Canada |
| 582 88 26 | 1.40 - 1.50 | Gray | 20 | 1 | CSA/CE | Canada |
| 582 88 36 | 0.95 - 1.10 | Gray | 30 | 3 | CSA/CE | Canada |
| 582 88 37 | 0.95 - 1.10 | Gray | 50 | 3 | CSA/CE | Canada |
| 582 88 38 | 0.95 - 1.10 | Gray | 100 | 3 | CSA/CE | Canada |
| 582 88 39 | 0.95 - 1.10 | Gray | 150 | 3 | CSA/CE | Canada |
| 582 88 51 | 0.95 - 1.10 | Red | 65 | 2 | CE | International |
| 582 88 52 | 0.95 - 1.10 | Red | 6 | 2 | CE | International |
| 582 88 53 | 0.95 - 1.10 | Red | 13 | 2 | CE | International |
| 582 88 54 | 0.95 - 1.10 | Red | 20 | 2 | CE | International |
| 582 88 57 | 0.95 - 1.10 | Red | 20 | 2 | CE | Canada |
| 582 88 70 | 0.65 - 0.80 | Blue | 20 | 3 | CE | International |
| 582 88 71 | 0.80 - 0.95 | Blue | 20 | 3 | CE | International |
| 582 88 72 | 0.95 - 1.10 | Blue | 6 | 3 | CE | International |
| 582 88 73 | 0.95 - 1.10 | Blue | 13 | 3 | CE | International |

[1] See *Type of cables* on page 9.

| Version | For density (g/cm$^3$) | Color of level switch | Length of cable (m) | Type of cable[1] | Approvals | For market |
|---|---|---|---|---|---|---|
| 582 88 74 | 0.95 - 1.10 | Blue | 20 | 3 | CE | International |
| 582 88 75 | 1.05 - 1.20 | Blue | 20 | 3 | CE | International |
| 582 88 76 | 1.20 - 1.30 | Blue | 20 | 3 | CE | International |
| 582 88 77 | 1.30 - 1.40 | Blue | 20 | 3 | CE | International |
| 582 88 78 | 1.40 - 1.50 | Blue | 20 | 3 | CE | International |
| 582 88 79 | 0.95 - 1.10 | Blue | 65 | 1 | CE | International |
| 582 88 80 | 0.95 - 1.10 | Blue | 30 | 1 | CE | International |
| 582 88 81 | 0.95 - 1.10 | Blue | 50 | 1 | CE | International |
| 582 88 82 | 0.95 - 1.10 | Gray | 30 | 1 | CSA/CE | Canada |
| 582 88 83 | 0.95 - 1.10 | Gray | 50 | 1 | CSA/CE | Canada |
| 582 88 86 | 0.95 - 1.10 | Red | 30 | 2 | CE | International |
| 582 88 87 | 0.95 - 1.10 | Red | 50 | 2 | CE | International |
| 582 88 90 | 0.95 - 1.10 | Blue | 30 | 3 | CE | International |
| 582 88 91 | 0.95 - 1.10 | Blue | 50 | 3 | CE | International |
| 582 88 92 | 0.95 - 1.10 | Red | 6 | 2 | CE | Japan |
| 582 88 93 | 0.95 - 1.10 | Red | 13 | 2 | CE | Japan |
| 582 88 94 | 0.95 - 1.10 | Red | 20 | 2 | CE | Japan |
| 582 88 95 | 0.95 - 1.10 | Blue | 6 | 1 | CE | Japan |
| 582 88 96 | 0.95 - 1.10 | Blue | 13 | 1 | CE | Japan |
| 582 88 98 | 0.95 - 1.10 | Blue | 50 | 1 | CE | Japan |
| 594 79 10 | 0.95 - 1.10 | Blue | 70 | 3 | CE | International |
| 594 79 13 | 0.95 - 1.10 | Blue | 100 | 3 | CE | International |
| 594 79 18 | 0.95 - 1.10 | Blue | 150 | 3 | CE | International |
| 594 79 19[2] | 0.95 - 1.10 | Blue | 20 | 3 | CE | International |
| 594 79 20[2] | 0.95 - 1.10 | Gray | 20 | 3 | CSA/CE | International |
| 594 79 40[2] | 0.95 - 1.10 | Black | 6 | 3 | ATEX/IECEx[3] | International |
| 594 79 41[2] | 0.95 - 1.10 | Black | 13 | 3 | ATEX/IECEx[3] | International |
| 594 79 42[2] | 0.95 - 1.10 | Black | 20 | 3 | ATEX/IECEx[3] | International |
| 594 79 21 [2] | 0.95 - 1.10 | Transparent | 6 | 3 | CE | For demonstration only. |

## Type of cables

| Type of cable | Jacket | Color coding of wires |
|---|---|---|
| 1 | Blue polyvinyl chloride (PVC) | Grey/Brown/Black |
| 2 | Red PVC | Grey/Brown/Black |
| 3 | Black nitrile rubber (NBR)/PVC | Grey/Brown/Black |

1 See *Type of cables* on page 9.
2 Designed for low current, slow movements and oil. Includes micro switch with gold plated contacts.
3 Zener barrier 84 01 07 required.

# Xylem |'zīləm|

1) The tissue in plants that brings water upward from the roots;
2) a leading global water technology company.

We're a global team unified in a common purpose: creating advanced technology solutions to the world's water challenges. Developing new technologies that will improve the way water is used, conserved, and re-used in the future is central to our work. Our products and services move, treat, analyze, monitor and return water to the environment, in public utility, industrial, residential and commercial building services settings. Xylem also provides a leading portfolio of smart metering, network technologies and advanced analytics solutions for water, electric and gas utilities. In more than 150 countries, we have strong, long-standing relationships with customers who know us for our powerful combination of leading product brands and applications expertise with a strong focus on developing comprehensive, sustainable solutions.

For more information on how Xylem can help you, go to www.xylem.com

xylem
Let's Solve Water

Xylem Water Solutions Global Services AB
361 80 Emmaboda
Sweden
Tel: +46-471-24 70 00
Fax: +46-471-24 74 01
http://tpi.xyleminc.com
www.xylemwatersolutions.com/contacts/

Visit our Web site for the latest version of this document and more information

The original instruction is in English. All non-English instructions are translations of the original instruction.

© 2014 Xylem Inc

891480_16.0_en-US_2019-04_TS_ENM 10

**This page is intentionally left blank**

**Project name:** MELIADINE-BPC UPGRADE

**Project#:** 5000220043

**Document #:** SPK_0002_ACP_VWT

**by:** CEK

**chkd:** ED

**appvd:** TS

# CLARIFIER #1 ACP-700R

# RECIRCULATION PUMPS

**OIM manual section:** 4.2.3.11

**This page is intentionally left blank**

# CS-999-001 : Identification sheet

| | | | |
|---|---|---|---|
| VWTC PROJECT NUMBER: | 5000220043 | REV: | 1 |
| PROJECT NAME: | AEM MELIADINE-BPC UPGRADE | SUBMITTED TO (COMPANY): | AEM |
| ENGINEER: | EMMANUELLE DORMOY | SUBMITTED TO (RESPONSIBLE): | |
| PROJECT MANAGER: | THOMAS SAVARY / BRUCE BRODES | PROJECT NUM REFERENCE.: | 6526-S-265-605 / OC-989680 |
| PHONE NUMBER: | 514-334-7230 | LOT NUMBER: | |

| SUPPLIER | EQPT CODE | EQPT TAG NO | DIA | DESCRIPTION | INFO 1 | INFO 2 | INFO 3 | APPLIC. | NOTE | REV |
|---|---|---|---|---|---|---|---|---|---|---|
| MCLANAHAM | ST-999-001 | 65PSR68005A | | CLARIFIER #1 RECIRCULATION PUMP #1 | DESCRIPTION: SPLIT CASING HORIZONTAL CENTRIFUGAL PUMP / 3 x 3 // MANUF.: McLanahan// MODEL: SÉRIE IIIr 75x75 // SUCTION AND DISCHARGE FLANGES: 3" ANSI CLASS 150 B16.5 // DRY GLAND TYPE D // CLOSED VANE IMPELLER // CASINGS: CAST IRON | // LINING: NITRILE // ROTATING SEAL: NITRILE RUBBER // STATIC SEAL: CERAMIC // 15 HP WEG IEEE 841 MOTOR PREMIUM EFFICIENCY 575V/3PH/60HZ // BELTED DRIVE OUTPUT SPEED 1944 RPM AT 60HZ | // SUITABLE FOR ACP, 45M3/H@27 Mh20 TDH // C/W DRIP PAN | CLARIFIER #1 | | 1 |
| MCLANAHAM | ST-999-001 | 65PSR68005B | | CLARIFIER #1 RECIRCULATION PUMP #2 | DESCRIPTION: SPLIT CASING HORIZONTAL CENTRIFUGAL PUMP / 3 x 3 // MANUF.: McLanahan// MODEL: SÉRIE IIIr 75x75 // SUCTION AND DISCHARGE FLANGES: 3" ANSI CLASS 150 B16.5 // DRY GLAND TYPE D // CLOSED VANE IMPELLER // CASINGS: CAST IRON | // LINING: NITRILE // ROTATING SEAL: NITRILE RUBBER // STATIC SEAL: CERAMIC // 15 HP WEG IEEE 841 MOTOR PREMIUM EFFICIENCY 575V/3PH/60HZ // BELTED DRIVE OUTPUT SPEED 1944 RPM AT 60HZ | // SUITABLE FOR ACP, 45M3/H@27 Mh20 TDH // C/W DRIP PAN | CLARIFIER #1 | | 1 |

**This page is intentionally left blank**

INFORMATION CONTAINED WITHIN THIS DOCUMENT IS A TRADE SECRET & ANY USE OF THE INFORMATION, EXCEPT BY ITS INTENDED RECEIVER, IS STRICTLY PROHIBITED. ANY MISAPPROPRIATION OF THE INFORMATION SHALL MAKE THE UNINTENDED RECEIVER LIABLE FOR ANY AND ALL DAMAGES SUFFERED AS A RESULT BY THE MCLANAHAN CORPORATION.

McLanahan

| DESCRIPTION: | DESIGNED BY: | ORIGIN: | DWG SIZE: |
|---|---|---|---|
| GENERAL ARRANGEMENT<br>3" X 3" PUMP ASSEMBLY<br>TYPICAL FOR ALL GLANDS & LININGS<br>TABLE MOUNTED MOTORS (5-30 HP) | BFERRELL | TN | B |
| | DRAWN BY: BFERRELL | DATE: 12/2/2013 | SCALE: AS NOTED |
| | CHECKED BY: BFERRELL | DATE: 12/2/2013 | SHEET#: 1 /1 |
| REFERENCE DWG: N/A | | | |
| PART NUMBER: 3X3GA / WEIGHT: AS NOTED | DRAWING NUMBER: 3X3GA | | REV: 00 |

NOTE: CRANE & CRAWL ASSEMBLY NOT SHOWN HEREIN

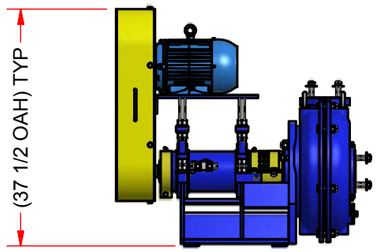


**7.5 - 10 HP MOTORS**
ESTIMATED WEIGHTS:
7.5 HP MOTOR = 899.0 LBS
10 HP MOTOR = 917.0 LBS
SCALE 1:24

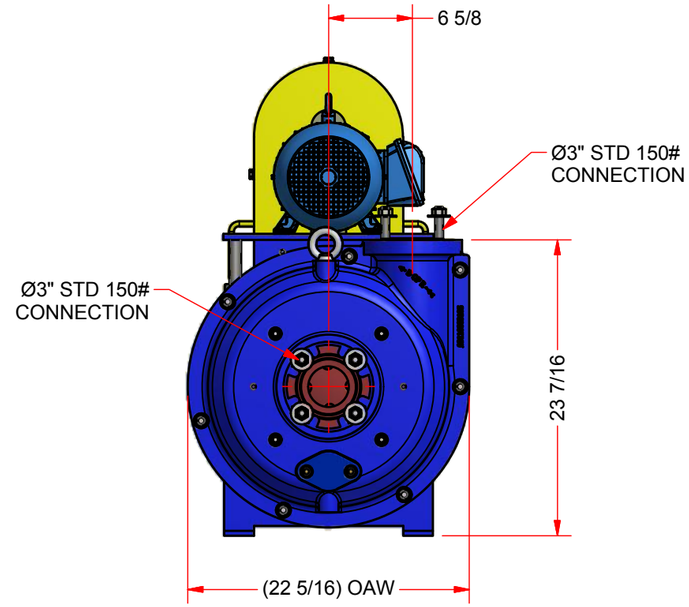


**FRONT**
ESTIMATED WEIGHT: 840.0 LBS
SCALE 1:12

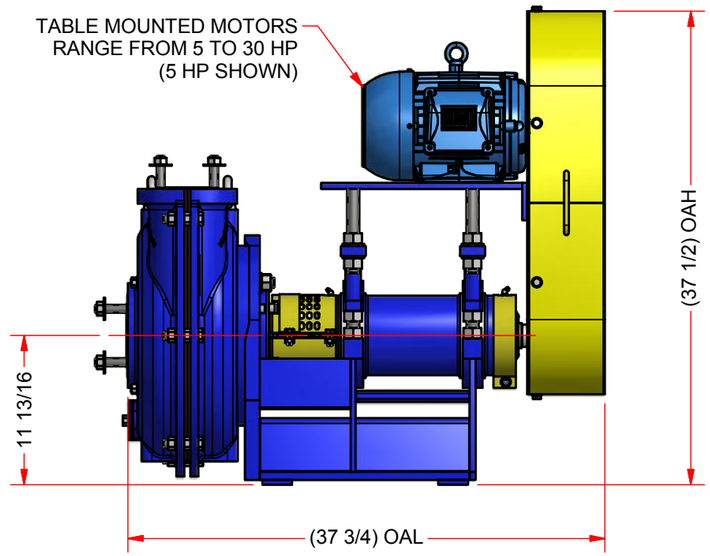


**SIDE**

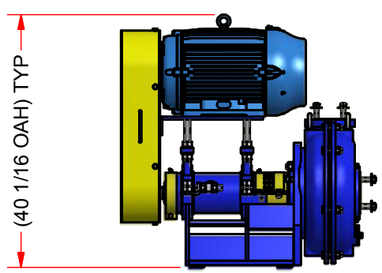


**15 - 30 HP MOTORS**
ESTIMATED WEIGHTS:
15 HP MOTOR = 996.0 LBS
20 HP MOTOR = 1,036.0 LBS
25 HP MOTOR = 1,133.0 LBS
30 HP MOTOR = 1,182.0 LBS
SCALE 1:24

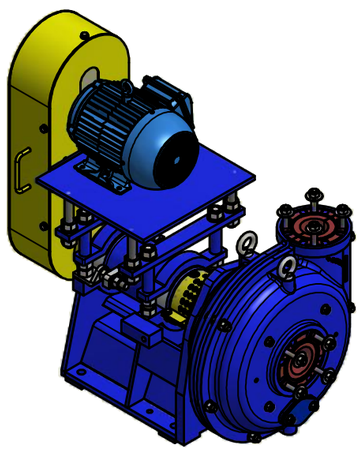

**ISOMETRIC**
NTS

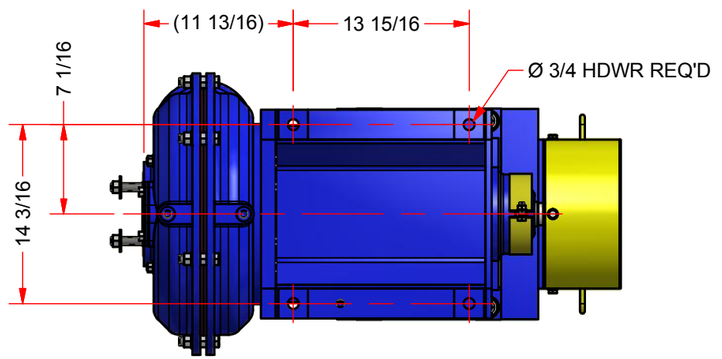


**BOTTOM**
FOOT PRINT

**This page is intentionally left blank**

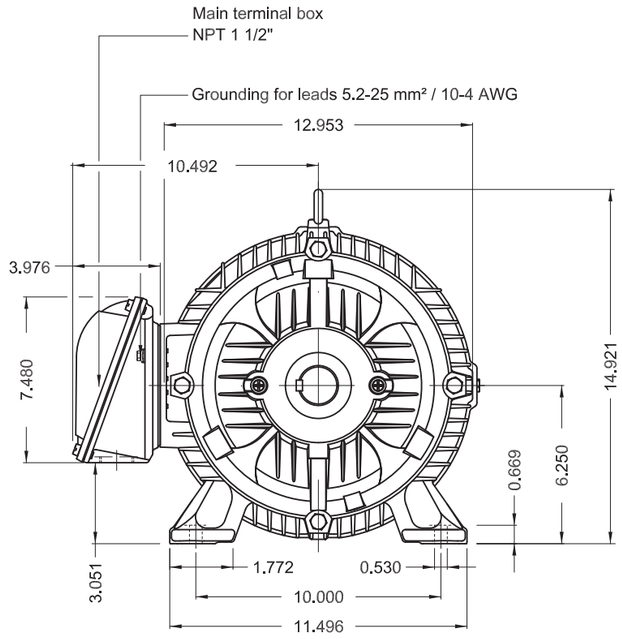


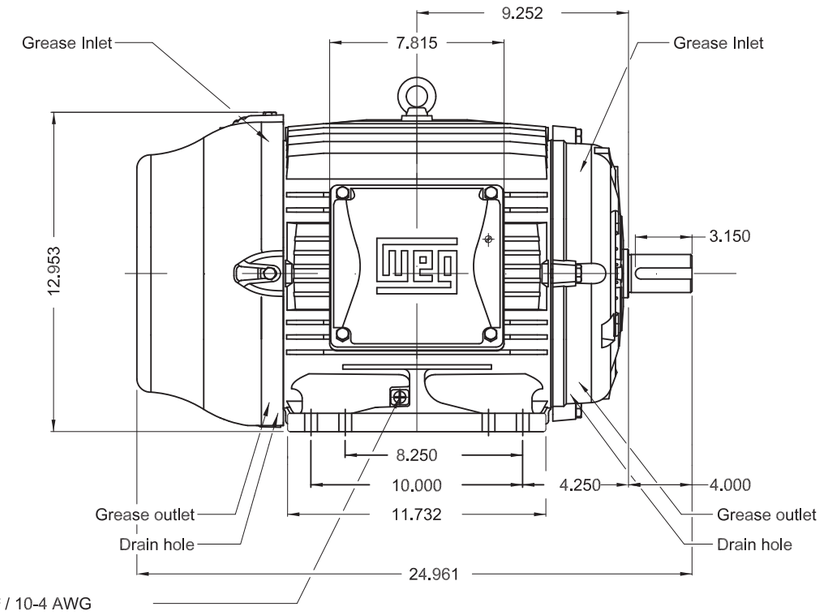


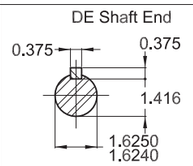


Color RAL 5009

Painting plan 202E

Mounting B3R(D)

15 HP 04 Poles 60Hz | A

| ECM | LOC | SUMMARY OF MODIFICATIONS | EXECUTED | CHECKED | RELEASED | DATE | VER |
|---|---|---|---|---|---|---|---|

| | | | |
|---|---|---|---|
| EXECUTED | PIRWBUSER | THREE PH. W22 NEMA P.EFF MOTOR IEEE841 | PREVIEW |
| CHECKED | | FRAME 254/6T IP55 TEFC | WDD |
| RELEASED | | | |
| REL DT. | | WMO Jaraguá do Sul Product Engineering | SHEET 1 / 1 |

Dimensions in inches

XME A3

WEG's property. Forbidden reproduction without previous authorization.

**This page is intentionally left blank**

# DATA SHEET

## Three Phase Induction Motor - Squirrel Cage

| | |
|---|---|
| Customer | : |

| | | | |
|---|---|---|---|
| Product line | : W22 IEEE 841 NEMA Premium Efficiency Three-Phase | Product code : | 12385110 |
| | | Catalog # : | 01518ST3HIE254T-W22 |

| | | | |
|---|---|---|---|
| Frame | : 254/6T | Locked rotor time | : 30s (cold) 17s (hot) |
| Output | : 15 HP (11 kW) | Temperature rise | : 80 K |
| Poles | : 4 | Duty cycle | : Cont.(S1) |
| Frequency | : 60 Hz | Ambient temperature | : -20°C to +40°C |
| Rated voltage | : 575 V | Altitude | : 1000 m.a.s.l. |
| Rated current | : 14.4 A | Protection degree | : IP55 |
| L. R. Amperes | : 92.2 A | Cooling method | : IC411 - TEFC |
| LRC | : 6.4x(Code G) | Mounting | : F-1 |
| No load current | : 5.44 A | Rotation[1] | : Both (CW and CCW) |
| Rated speed | : 1765 rpm | Noise level[2] | : 64.0 dB(A) |
| Slip | : 1.94 % | Starting method | : Direct On Line |
| Rated torque | : 6.17 kgfm | Approx. weight[3] | : 149 kg |
| Locked rotor torque | : 229 % | | |
| Breakdown torque | : 270 % | | |
| Insulation class | : F | | |
| Service factor | : 1.25 | | |
| Moment of inertia (J) | : 0.1104 kgm² | | |
| Design | : B | | |

| Output | 25% | 50% | 75% | 100% |
|---|---|---|---|---|
| Efficiency (%) | 90.2 | 91.0 | 91.7 | 92.4 |
| Power Factor | 0.44 | 0.68 | 0.78 | 0.83 |

| Foundation loads | |
|---|---|
| Max. traction | : 187 kgf |
| Max. compression | : 336 kgf |

| | | Drive end | Non drive end |
|---|---|---|---|
| Bearing type | : | 6309 C3 | 6209 C3 |
| Sealing | : | Inpro/Seal | Inpro/Seal |
| Lubrication interval | : | 20000 h | 20000 h |
| Lubricant amount | : | 13 g | 9 g |
| Lubricant type | : | Mobil Polyrex EM | |

Notes

This revision replaces and cancel the previous one, which must be eliminated.
(1) Looking the motor from the shaft end.
(2) Measured at 1m and with tolerance of +3dB(A).
(3) Approximate weight subject to changes after manufacturing process.
(4) At 100% of full load.

These are average values based on tests with sinusoidal power supply, subject to the tolerances stipulated in NEMA MG-1.

| Rev. | Changes Summary | Performed | Checked | Date |
|---|---|---|---|---|
| | | | | |

| | | | | |
|---|---|---|---|---|
| Performed by | | | | |
| Checked by | | | Page | Revision |
| Date | 21/01/2021 | | 1 / 6 | |

This document is exclusive property of WEG S/A. Reprinting is not allowed without written authorization of WEG S/A.
Subject to change without notice

**This page is intentionally left blank**

# SLURRY PUMPS

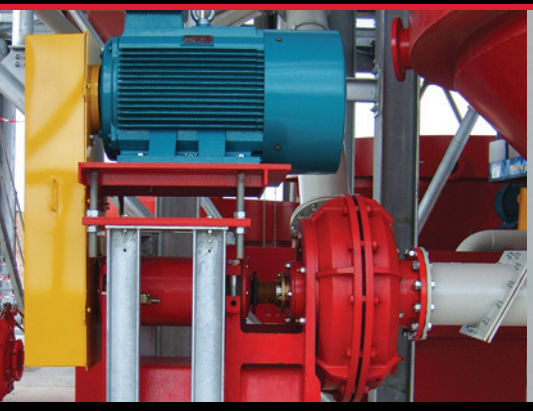

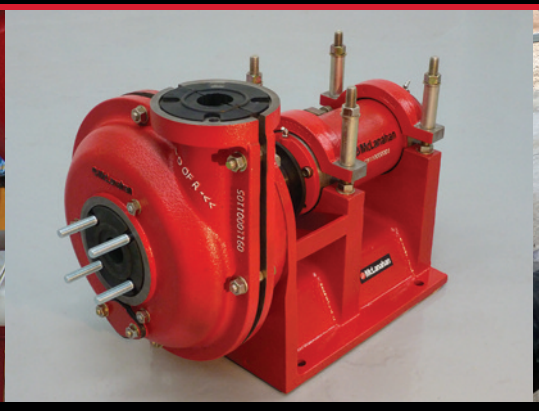



## RELIABLE AND LONG LASTING

McLanahan's centrifugal Slurry Pumps are rubber-lined and abrasion resistant for long lasting service, low lifetime costs and straight forward servicing.

Eight models with discharge port sizes from 35mm to 250mm that can accommodate various options in lining material and gland type choices.

McLanahan®

mclanahan.com

## APPLICATIONS

- Sand & Gravel / Minerals Processing
- Soil Washing / Remediation
- Waste Water Recovery / Disposal
- Concrete Wash-out



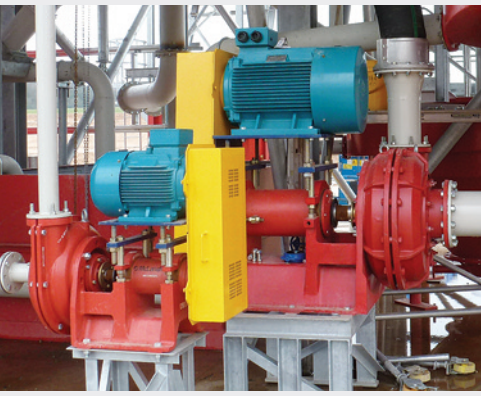

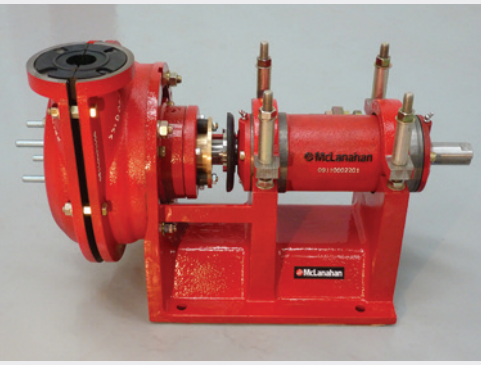

## WETTED PARTS

Standard pumps are equipped with natural rubber liners and impeller. However, bespoke options are available to suit a specific process and include premium natural rubber, Nitrile and food grade rubber. Shaft sleeves are from 304 St, but may be manufactured from other materials or coated to special order.

## GLAND OPTIONS

**D (Dry) Gland**

An abrasion resistant Natural Rubber "Face Seal" riding a "Hard Face" and lubricated naturally by the process fluid. Controlled seepage of process fluid. Optional clean water injection facility.

**H (Hydro) Gland**

Clean water is injected into the inter-space between a pair of gland seals in tandem. Slight dilution – but total containment – of the process fluid. Controlled water seepage to atmosphere.

**P (Packed) Gland**

Gland packing mechanically adjusted to "ride" the shaft sleeve. Highest pressure capability. Some process dilution and water (or lubricating grease) seepage to atmosphere.

## MOTOR AND DRIVE

McLanahan supplies pumps bare-shaft or complete with motor, overhead mounting platform, vee-belt drive and guard. Motors can also be oriented in Z-vee fashion, or side mounted on slide rails.

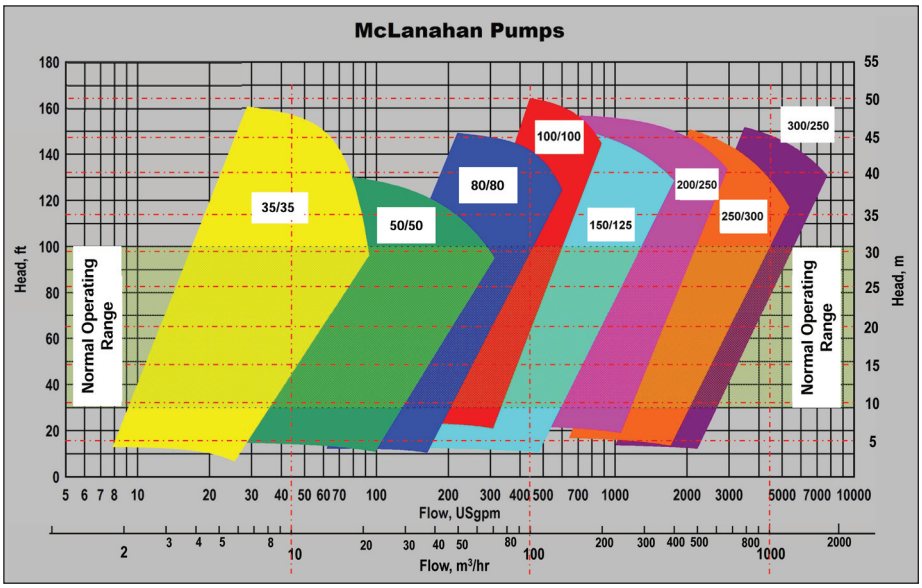


## PUMP SELECTION

Initial pump selection can be determined by using the chart above as a guide. A qualified McLanahan engineer can determine the best pump performance for a specific application.

## SPARES

High quality spare parts are available including moulded rubber Impellers, casing liners and suction bush components. All parts are available in various materials and hardness to suit differing applications. Mechanical spares such as fully assembled bearing housing cartridges and gland parts are available as kits for ease of procurement.


| | | | |
|---|---|---|---|
| **NORTH AMERICA** | CORPORATE HEADQUARTERS | | |
| | Pennsylvania, USA | +1 (814) 695 9807 | sales@mclanahan.com |
| | Florida, USA | +1 (863) 667 2090 | polymers@mclanahan.com |
| | Iowa, USA | +1 (319) 365 0441 | sales@mclanahan.com |
| | Tennessee, USA | +1 (615) 451 4440 | sales@mclanahan.com |
| **AUSTRALIA** | New South Wales | +61 2 4924 8248 | sales@mclanahan.com.au |
| | Queensland | +61 7 4952 3377 | sales@mclanahan.com.au |
| **EUROPE** | England, UK | +44 (0) 1420 542489 | enquiries@mclanahan.uk.com |
| **ASIA** | Hyderabad, India | +91 (40) 2355 4071 | info@mclanahan-nawa.com |


Guards are recommended for safe operation of equipment. In some photos, safety guards may not be shown.

McLanahan

Pump Selection Program

Powered by TAS

### Pump Details

| | | |
|---|---|---|
| Pump Model | M3H-CR 3/3 | |
| Rated Flow | 43.00 | $m^3/hr$ |
| Rated Head | 27.00 | m |
| Efficiency | 41.27 | % |
| QBEP | 47.83 | % |
| Impeller Diameter | 10 | in |
| Pump Speed | 1642 | rpm |
| Minimum Speed | 600 | rpm |
| Maximum Speed | 2100 | rpm |
| Tip speed | 71.60 | ft/s |
| NPSH required | 5.42 | ft |

### Selection Details

| | | |
|---|---|---|
| Required Flow | 43.00 | $m^3/hr$ |
| Required Head | 27.00 | m |
| Static Head | 0.00 | m |
| Friction Head | 27.00 | m |
| Suction Height | 0.00 | m |
| Discharge Height | 0.00 | m |
| Discharge Pressure | 0.00 | kPa |
| Head Ratio | 0.97 | |
| NPSH Available | 0.00 | m |
| No. of pumps | 1 | |
| Power absorbed - Total | 12.00 | hp |

### Slurry Details

| | | |
|---|---|---|
| Solid flow rate | 11.02 | Tons/hr |
| Slurry flow rate | 43.00 | $m^3/hr$ |
| SG solid | 2.70 | |
| SG liquid | 1.00 | |
| SG slurry | 1.14 | |
| % comp. by weight | 20.00 | % |
| % comp by volume | 8.47 | % |
| Ave. particle size | 100.00 | microns |
| Max particle size | 300.00 | microns |
| Widely graded particles | False | |
| Froth factor | 0.00 | |
| Set ER & HR manually | False | |
| Efficiency ratio | 0.975 | |
| Head ratio | 0.975 | |

### Electrical Driver Details

| | | |
|---|---|---|
| Motor | 15.00 | hp |
| Power absorbed - @ Duty | 11.75 | hp |
| Power required | 13.51 | hp |
| Frame size | 254.00 | |
| Temperature rise | 105.00 | °C |
| Insulation class | F | |
| Bearing size D/E | 6309.00 | |
| Bearing size N/D/E | 6209.00 | |
| Weight | 227.00 | |
| Shaft size | 1.63 | |

JMI - 5000220043 /

20210115-011, January 15, 2021

M3H-CR 3/3 , 1642 rpm, 15 hp

©2018-2019 McLanahan. This curve is the property of McLanahan. And must not be reproduced or disclosed without permission in writing. All rights are reserved.

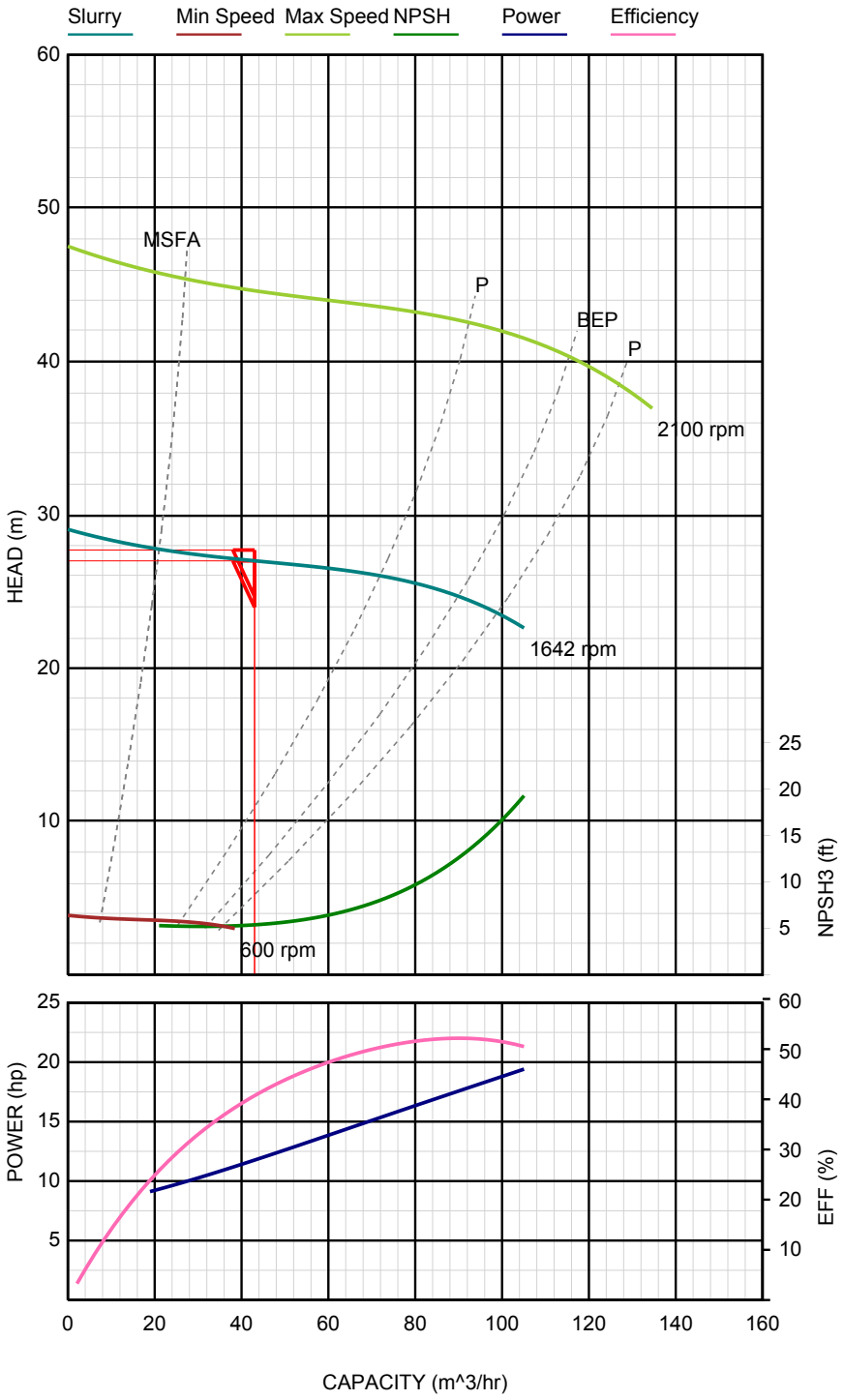


## Pump model: M3H-CR 3/3

| Pump | |
|---|---|
| Pump range | -CR |
| Speed | 1642 rpm |
| Max Speed | 2100 rpm |
| Efficiency @ BEP | 51.41 % |
| No. of pumps | 1 |
| Power absorbed - Total | 12 hp |

| Duty Point | |
|---|---|
| Flow | 43 m^3/hr |
| Static Head | 0 m |
| Total Head | 27 m |
| Efficiency | 41.27 % |
| NPSH required | 12.71 ft |
| % of BEP | 47.83 % |
| Power absorbed - @ Duty | 11.75 hp |
| Motor size | 15 hp |
| Tip Speed | 71.6 ft/s |
| Impeller Diameter | 10 in |
| Speed Head | 27.69 m |

| Slurry Data | |
|---|---|
| Solid flow rate | 11.02 Tons/hr |
| Solid SG | 2.7 |
| Slurry SG | 1.144 |
| % Comp. by Weight | 20 % |
| % comp. by Volume | 8.475 % |
| Ave. Particle size (D50) | 100 microns |
| Max Particle Size | 300 microns |
| Head Ratio | 0.975 |

**Engineer's Notes**

**Project name:** MELIADINE-BPC UPGRADE

**Project#:** 5000220043

**Document #:** SPK_0002_ACP_VWT

**by:** CEK

**chkd:** ED

**appvd:** TS

# CLARIFIER #1 ACP-700R

# PAINT SPECIFICATION

**OIM manual section:** 4.2.3.12

**This page is intentionally left blank**

# TANK CONSTRUCTION SPECIFICATIONS
## & PAINT SPECIFICATIONS
## RAL 7040 TANK WINDOW GREY (EXTERIOR)
## & LIGHT GREY (INTERIOR)

# CC-07-ACP

## 1.0 GENERAL

This specification describes construction elements of the steel welded tank and paint specifications of ACP MK3 product.

## 2.0 MATERIALS

- Carbon steel must conform to CSA 44W, unless otherwise specified (see type on plan);
- Nominal thickness, refer to plan.

## 3.0 CONSTRUCTION

According to the specifications of the referred plan(s):

- Steel plates and sections must conform to Canadian norm G40.21M-300W, except for HSS that must conform to Canadian norm G40.21M-350W;

- Welds will be realized according to the details shown on the referenced plan. All welds must conform to the Canadian norm CSA W59 standard. Remove surface defects and grind all sharp edges. Make sure to completely remove the flux and welding splashes. The fusion welding certifications to produce by the company will be: W47.1, W59;

- Welding process:

    - Flux-Cored Arc Welding (FCAW);
    - MIG welding;
    - Electrodes (SMAW).

- Welds will be brushed and be devoid of spots;

- All modifications to the dimensions or to the quality of materials, and dispositions other than those indicated on the plans, are subject to prior demand to **Veolia Water Technologies Canada Inc's.,** person in charge, and his subsequent written.

## 4.0 STEEL PREPARATION FOR PAINTING

- Tank's interior and exterior surfaces must be perfectly cleaned from grease and all other foreign substance;

- All sharp edges must be grinded;

- All flanged surfaces and threaded connections must be cleaned and protected adequately to avoid paint contact;

- The rough edges, weld splatter, excess metal flux and sharp edges must be removed by grinding.

## 5.0 CONTROL

### 5.1 Welds

Once completed, all tank interior welds must be dye penetrant inspected to verify the quality of the welds. All welds must be water tight, free from porosity, cracks and drains and in accordance with norm CSA W59.
A dye penetrant test control should be done on all interior welds. Exterior welds must be visually inspected only.
All lifting and handling lugs must be subject to magnetic particle testing and report. Quality control from **Veolia Water Technologies Canada Inc.** will verify results of welds control.

### 5.2 Dimensional

The dimensional control will be done by the manufacturer. At the same time, **Veolia Water Technologies Canada Inc.'s** inspector will provide control. Minutes will be written detailing the dimensional and tolerance divergences. These values are noted on the piece's plan, assigned to control.

### 5.3 Documents and Certificates of Material (to Supply)

The manufacturer will supply to **Veolia Water Technologies Canada Inc.'s** inspector at the beginning of work, the following documents:

- Planning of work, with detailed manufacturing stages;
- Supply Bill of Materials;
- Material certificates with copy of the supplier's delivery slip;
- Welding procedures.

## 6.0 TREATMENT

### 6.1 Internal Treatment

- Sandblast as per SSPC-SP-10;
- Brush application on welds and difficult to reach places (inside of holes and openings) of one layer of DURA_PLATE UHS by SHERWIN WILLIAMS, color « light green » and;
- Application of one coat of DURA-PLATE-UHS NSF61 compliant by SHERWIN WILLIAMS, 20 to 28 mils dft (restricted level 5 as per SSPC-PA 2), color « light gray »;
- Important note: **Never dilute** the DURA-PLATE-UHS paint.

- Only if needed, application of one coat of DURA-PLATE UHS PRIMER by SHERWIN WILLIAMS, 4 to 8 mils dft per coat, color “Gold”, if required depending on atmospheric conditions and delays between sandblast and paint.

### 6.2 External Treatment

- Sandblast as per SSPC-SP-6;
- Spacing between intermittent welds should be filled with an hybrid sealant LOXON H-1 by SHERWIN WILLIAMS before the application of the external coating;
- Brush application on welds and difficult to reach places (inside of holes and openings) of one layer of ENVIROLASTIC 940 LV by SHERWIN WILLIAMS, color «  White »;
- Application of one layer of ENVIROLASTIC 940 LV by SHERWIN WILLIAMS, 7.0 to 9.0 mils dft, ( restricted level 5 as per SSPC-PA 2),  color RAL 7040 Window Grey.

### 6.3 Piping Treatment

Identical to the external coating of the works as stated for the tank previously.  There is no internal coating to provide for the nozzles of 3″ diameter or less (should be made from Stainless Steel). Ensure pipe ends and flanges are covered with paint with the exception of the raised face.

### 6.4 Extra Paint to be Supplied

For every equipment, a touch-up paint kit of 1 gallon for both internal and exterior paint must be provided at shipping. Please attach the product label.

### 6.5 Application Procedure

The supplier’s procedure for application must be followed.

### 6.6 Protection of Metallic Parts during Treatment

Threads, tapping, flange joint plans, etc. will be protected before sanding and treatment.

### 6.7 Paint Inspection

All interior surfaces must be inspected by performing a Holiday test in accordance with the standard NACE SP 0188, to verify the presence of discontinuity in the paint.

## 7.0 PACKAGING

- Plastic plug of the male and female threaded end caps;
- Wood plugs on flange sides.

## 8.0 HANDLING OF THE TANKS

- Always install the holding rings and any internal supporting beams before handling tanks.
- The tanks must be raised by chains attached to the holding rings. A minimum angle of 60º must be maintained. (see pictures)
- The lifting should ideally be carried out in two parallel points. (see pictures)

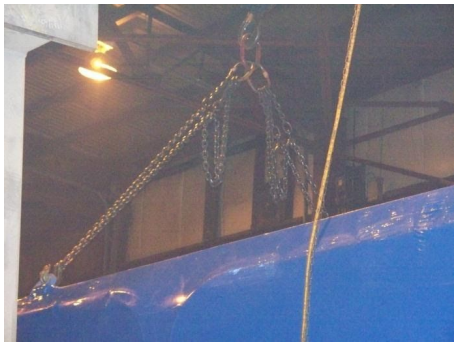



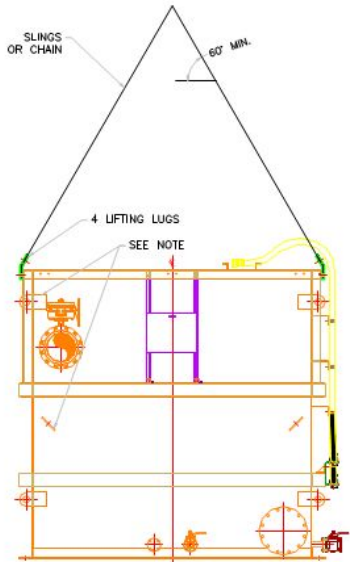


***ATTENTION*: Never use the side rings to lift and /or manipulate the tank. These rings should only be used to attach the tank during transport.**

## Tightening Torque for Lifting Hooks

| Model | Bolt Diam. | TPI | Fastener Coating (Bolt, washer & nut) | SAE & Grade (Bolt, washer & nut) | Torque Value (Lbs-ft) |
|---|---|---|---|---|---|
| **Actiflo** | | | | | |
| ACP-150R/ACP2-15 | 5/8 UNC | 11 | Zinc Plated | SAE J429 – Grade 8 | 190 |
| ACP-300R/ACP2-30 | 5/8 UNC | 11 | Zinc Plated | SAE J429 – Grade 8 | 190 |
| ACP-400R/ACP2-40 | 5/8 UNC | 11 | Zinc Plated | SAE J429 – Grade 8 | 190 |
| ACP-450R/ACP2-45 | 5/8 UNC | 11 | Zinc Plated | SAE J429 – Grade 8 | 190 |
| ACP-550R/ACP2-55 | 1 UNC | 8 | Zinc Plated | SAE J429 – Grade 8 | 818 |
| ACP-600R/ACP2-60 | 1 UNC | 8 | Zinc Plated | SAE J429 – Grade 8 | 818 |
| ACP-700R/ACP2-70 | 1 UNC | 8 | Zinc Plated | SAE J429 – Grade 8 | 818 |
| ACP-750R/ACP2-75 | 1 UNC | 8 | Zinc Plated | SAE J429 – Grade 8 | 818 |

# *4 – DETAILED TECHNICAL DOCUMENTATION*

## *4.2 – SHOP DRAWINGS*

## *4.2.4 – CLARIFIER #2 ACP2-60*

LEFT BLANK

**Project name:** MELIADINE-BPC UPGRADE

**Project#:** 5000220043 / 6526-S-265-605 / OC-989680

**Document #:** SPK_0001_ACP_VWT

**by:** CEK

**chkd:** ED

**appvd:** TS

# SUBMITTAL PACKAGE

# CLARIFIER #2 ACP2-60

**REV 4**
**DATE:2021-05-27**

**This page is intentionally left blank**

**Project name:** MELIADINE-BPC UPGRADE

**Project#:** 5000220043

**Document #:** SPK_0001_ACP_VWT

**by:** CEK

**chkd:** ED

**appvd:** TS

# CLARIFIER #2 ACP2-60

# PROCESS DATASHEET

**OIM manual section:** 4.2.4.1

**This page is intentionally left blank**

| | | | | | | | |
|---|---|---|---|---|---|---|---|
| VEOLIA | | | | VWT DOC# | PSDS_0001_ACP_VWT | | |
| | | | | PROJECT No | 5000220043 | | |
| | | | | CLIENT PROJECT # | 6526-S-265-605 / OC-989680 | | |
| | | | | Date | 2021-01-11 | | |
| | | | | | **CLARIFIER #2** | | |
| **CLIENT** | **REV** | **DESCRIPTION** | | **DATE** | **By:** | **CHKD** | **APP.** |
| **A.E.M** | **1** | For Approval | | 2021-01-11 | C.E.K | E.D | T.S |
| | **2** | For Information | | 2021-02-25 | C.E.K | E.D | T.S |
| **PROJECT** | **3** | For Information II | | 2021-04-22 | C.E.K | E.D | T.S |
| **Meliadine -BPC Upgrade** | **4** | For Information III | | 2021-05-27 | C.E.K | E.D | T.S |
| | **5** | | | | | | |
| | **6** | | | | | | |
| | **7** | | | | | | **REV** |
| **GENERAL INFORMATION** | **Technology** | | | - | ACTIFLO | | |
| | **Number of trains** | | | - | 1 | | |
| | **Type** | | | - | Prefab Actiflo Turbo | | |
| | **Model** | | | | ACP2-60 | | |
| | **Number of units** | | | - | 1 | | |
| **ENVIRONMENT CONDITIONS** | **Equipment Location** | | | - | Indoor | | |
| | **Altitude (if blower)** | | | **m** | N/A | | |
| | **Min. Temperature- WATER** | | | **°C** | -4 | | |
| | **Max. Temperature- WATER** | | | **°C** | 12 | | |
| | **Min. Temperature- AIR** | | | **°C** | 7 | | |
| | **Max. Temperature- AIR** | | | **°C** | 35 | | |
| | **Max. Humidity** | | | **%** | 100 | | |
| | **Corrosive atmosphere** | | | - | Corrosive | | |
| | **freezing conditions** | | | - | Maintain above freezing temperature | | |
| | **Comments** | | | - | | | |
| **COMPONENTS APPROVAL AND CERTIFICATIONS** | **NSF-61** | | **yes/no** | - | NO | | |
| | **CSA/UL** | | **yes/no** | | YES | | |
| **SAFETY** | **Electrical Classification (according to NFPA 820)** | | | - | N/A | | |
| | **Province** | | | | Nunavut | | |
| **REQUIRED PERFORMANCE** | **Application** | | | - | **INDUSTRIAL** | | |
| | **Design Capacity** | | | **$m^3/d$** | 3000-12000 | | 2 |
| | **Design Settling Velocity** | | | **m/h** | 40 | | 3 |
| | **Nominal Capacity per unit (@ 40 m/h)** | | | **$m^3/d$** | 8 000 | | 3 |
| | **Retention time at nominal capacity** | | **Coagulation** | **min** | 2 | | |
| | | | **Injection** | **min** | 2 | | |
| | | | **Maturation** | **min** | 6 | | |
| | **Max. capacity per unit (@ 60 m/h)** | | | **$m^3/d$** | 12000 | | 3 |
| | **Effluent Quality** | | | **Specs reference (specify)** | 15 ppm TSS, Note that the effluent quality depends on the influent quality,for 15 ppm TSS the influent should be at 200 ppm TSS | | 3 |
| **TECHNICAL DESCRIPTION** | **Extended coagulation** | **Basin Dimensions** | **Length** | **in (mm)** | 43.875 in (1114 mm) | | |
| | | | **Width** | **in (mm)** | 66.14 in (1700 mm) | | |
| | | | **Water Depth** | **in (mm)** | 138 in (3450 mm) | | |
| | | **Mixers** | **Manufacturer** | - | ENVIREQUIP W.T.EM. INC | | |
| | | | **Model** | - | Envirequip MIX-TECH EVGX2-2.0 | | |
| | | | **Power** | **HP** | 2 HP | | |
| | | | **Weight** | **lbs (Kg)** | 520 lbs (235 kg) | | |
| | | | **Rotation/direction of thrust** | - | CW Up | | |
| | | | **Material and Grade** | | Duplex | | |
| | **Coagulation** | **Basin Dimensions** | **Length** | **in (mm)** | 43.875 in (1114 mm) | | |
| | | | **Width** | **in (mm)** | 66.14 in (1700 mm) | | |
| | | | **Water Depth** | **in (mm)** | 138 in (3450 mm) | | |
| | | **Mixers** | **Manufacturer** | - | ENVIREQUIP W.T.EM. INC | | |
| | | | **Model** | - | Envirequip MIX-TECH EVGX2-2.0 | | |
| | | | **Power** | **HP** | 2 HP | | |
| | | | **Weight** | **lbs (Kg)** | 520 lbs (235 kg) | | |
| | | | **Rotation/direction of thrust** | - | CCW Down | | |
| | | | **Material and Grade** | - | Duplex | | |
| | **Flocculation** | **Basin Dimensions** | **Length** | **in (mm)** | 80.71 in (2050 mm) | | |
| | | | **Width** | **in (mm)** | 59.06 in (1500 mm) | | |
| | | | **Water Depth** | **in (mm)** | 138 in (3450 mm) | | |
| | | **Mixers** | **Manufacturer** | - | ENVIREQUIP W.T.EM. INC | | |
| | | | **Model** | - | Envirequip MIX-TECH EVGX4-5.0 | | |
| | | | **Power** | **HP** | 5 HP | | |
| | | | **Weight** | **lbs (Kg)** | 520 lbs (235 kg) | | |
| | | | **Rotation/direction of thrust** | - | CW Down | | |
| | | | **Material and Grade** | | Duplex | | |

| | | | | | | | |
|---|---|---|---|---|---|---|---|
| VEOLIA | | | | VWT DOC# | PSDS_0001_ACP_VWT | | |
| | | | | PROJECT No | 5000220043 | | |
| | | | | CLIENT PROJECT # | 6526-S-265-605 / OC-989680 | | |
| | | | | Date | 2021-01-11 | | |
| | | | | | **CLARIFIER #2** | | |
| **CLIENT** | **REV** | **DESCRIPTION** | | **DATE** | **By:** | **CHKD** | **APP.** |
| **A.E.M** | 1 | For Approval | | 2021-01-11 | C.E.K | E.D | T.S |
| | 2 | For Information | | 2021-02-25 | C.E.K | E.D | T.S |
| **PROJECT** | 3 | For Information II | | 2021-04-22 | C.E.K | E.D | T.S |
| **Meliadine -BPC Upgrade** | 4 | For Information III | | 2021-05-27 | C.E.K | E.D | T.S |
| | 5 | | | | | | |
| | 6 | | | | | | |
| | 7 | | | | | | **REV** |
| **TECHNICAL DESCRIPTION** | | **Settling** | **Basin Dimensions** | **Length** | **in (mm)** | 144 in. (3 658 mm) | |
| | | | | **Width** | **in (mm)** | 144 in. (3 658 mm) | |
| | | | | **Water Depth** | **in (mm)** | 138 in (3450 mm) | |
| | | | **Scraper** | **Manufacturer - Gear Box** | - | SEW Eurodrive | |
| | | | | **Model - Gear Box** | - | RF87 R57 AR80/W DRN80MK4/C/DH/RI | |
| | | | | **Power** | **HP** | 0.5 HP | |
| | | | | **Rotation** | - | Clockwise | |
| | | | | **Drive tube diameter** | **mm** | 10 in. ( 250mm) | |
| | | | | **Material** | - | Duplex | |
| | | | **Settling Tubes** | **Brand/Model** | - | 122X40M | 4 |
| | | | | **Material** | - | EDISTIR R 850E | 4 |
| | | | | **Thickness** | **mils** | 30 | |
| | | | | **Height** | **mm** | 610 | |
| | | | | **Angle** | - | 60 deg. | |
| | | | | **Surface Area Covered** | **$m^2$** | 9.67 | 3 |
| | | | **Troughs** | **Quantity** | - | 4 | |
| | | | | **Material** | - | Duplex | |
| | | **Recirculation** | **Pump** | **Quantity** | - | 2 | |
| | | | | **in service/ standby** | - | 1 in service - 1 in stand by | |
| | | | | **Max. number of pumps in service simultaneoulsy** | - | 2 | |
| | | | | **Manufacturer** | - | McLanahan | |
| | | | | **Model** | - | M3H-CRH-2/2 15HP 575V 1563 RPM | |
| | | | | **% recirculation per pump** | **% vs nominal flow** | 10% | |
| | | | | **Power** | **HP** | 7.5 | |
| | | | | **Flow** | **m3/h** | 20 | |
| | | | | **Head** | **m** | 22,0 | |
| | | | **Hydrocyclones** | **Manufacturer** | - | KREBS | |
| | | | | **Model** | | U4B-10-1734 | |
| | | | | **Quantity** | - | 2 | |
| | | | **Hydrocyclones Support** | **Material** | - | 316 stainless steel | |
| | | | **Microsand recirculation piping** | **Diameter** | **mm** | 75 / 50 | |
| | | | | **Number of lines** | - | 2 | |
| | | | | **Number of hydrocylone per line** | - | 1 | |
| | | | | **Material** | - | DUPLEX 2205 / HDPE | |
| | | | | **Options** | | | |
| | | | **Effective Size of Microsand** | | **microns** | 135 | |
| | | | **Losses** | | **g/$m^3$ of treated water** | 1 to 3 | |
| | | | **Required Mass For Operation \| Duration** | **First fill mass** | **kg** | 3 333 | |
| | | | | **Required Mass For Operation \| Duration** | - | The required mass for operation is usually determined during the comissioning phase and depends on the flow | 2 |
| | | | | **Type of bags \| Quantity** | - | 25 kg bag - | 2 |
| **AUXILIARIES REQUIREMENTS** | | **Service Water for manual cleaning of Lamella tubes** | | **Flow** | **L/h** | 22 | |
| | | | | **Service Pressure** | **PSIG** | 20-30 | |
| | | **Coagulant Dosage** | | **Chemical Product** | - | HYDREX 3267 | |
| | | | | **Concentration as distributed** | **%w/w** | 33 | 3 |
| | | | | **Dosage as dry basis min/average/max** | **mg/L** | 50 / 75 / 100 | 3 |
| | | **Polymer Dosage** | | **Chemical Product** | - | HYDREX 6105 | |
| | | | | **Concentration as distributed** | **%w/w** | 0.2 | 3 |
| | | | | **Dosage as dry basis min/average/max** | **mg/L** | 0.5 / 0.7 / 1 | 3 |
| | | **Dosage (others)** | | **Chemical Product** | - | | |
| | | | | **Dosage min/average/max** | **mg/L** | | |
| **OTHERS CONSTRUCTION MATERIALS** | | **Inside walls** | | | | Painted Steel W44 | |
| | | **Anti-rotation Baffle** | | | - | Duplex 2205 | |
| | | **Polymer Piping** | | | - | PVC Sch 80 | |
| | | **Hardware (immerged)** | | | - | Duplex 2205 | |
| | | **Hardware (non-immerged)** | | | - | DUPLEX 2205 / SS304 | |

| | | | | | | | |
|---|---|---|---|---|---|---|---|
| VEOLIA | | | | VWT DOC# | PSDS_0001_ACP_VWT | | |
| | | | | PROJECT No | 5000220043 | | |
| | | | | CLIENT PROJECT # | 6526-S-265-605 / OC-989680 | | |
| | | | | Date | 2021-01-11 | | |
| | | | | | **CLARIFIER #2** | | |
| **CLIENT** | **REV** | **DESCRIPTION** | | **DATE** | **By:** | **CHKD** | **APP.** |
| **A.E.M** | 1 | For Approval | | 2021-01-11 | C.E.K | E.D | T.S |
| | 2 | For Information | | 2021-02-25 | C.E.K | E.D | T.S |
| **PROJECT** | 3 | For Information II | | 2021-04-22 | C.E.K | E.D | T.S |
| **Meliadine -BPC Upgrade** | 4 | For Information III | | 2021-05-27 | C.E.K | E.D | T.S |
| | 5 | | | | | | |
| | 6 | | | | | | |
| | 7 | | | | | | **REV** |
| **CONNECTIONS** | | **Inlet diameter** | | **in (mm)** | 16 in (400 mm) | | |
| | | **Coag. Drain Diameter** | | **in (mm)** | 2 in (50 mm) | | |
| | | **Flocculation Drain Diameter** | | **in (mm)** | 2 in (50 mm) | | |
| | | **Partial Drain Diameter** | | **in (mm)** | 6 in (150 mm) | | |
| | | **Outlet diameter** | | **in (mm)** | 18 in (450 mm) | | |
| **DRAINAGE** | | **Sludge Discharge: max (for drain sizing) / design** | | **m3/h** | 40 | | |
| | | **Max. Sludge Discharge** | | **$m^3/h$** | 50 | | |
| | | **Instant max. Flow - Partial Drain** | | **L/s** | 30 | | |
| **VALVES** | X | **Isolation valve - Coagulation Drain** | **Manufacturer** | - | BRAY | | |
| | | | **Valve Type** | - | BUTTERFLY VALVE | | |
| | | | **Model \| Diam.** | - | SERIES 31 | 50 mm | |
| | | | **Quantity** | - | 1 | | |
| | X | **Isolation valve - Maturation Drain** | **Manufacturer** | - | BRAY | | |
| | | | **Valve Type** | - | BUTTERFLY VALVE | | |
| | | | **Model \| Diam.** | - | SERIES 31 | 50 mm | |
| | | | **Quantity** | - | 1 | | |
| | X | **Isolation valve - Partial Drain** | **Manufacturer** | - | BRAY | | |
| | | | **Valve Type** | - | BUTTERFLY VALVE | | |
| | | | **Model \| Diam.** | - | SERIES 31 | 150 mm | 2 |
| | | | **Quantity** | - | 1 | | |
| | X | **Isolation valve - Polymer Injection** | **Manufacturer** | - | CHEMLINE | | |
| | | | **Valve Type** | - | BALL VALVE | | |
| | | | **Model \| Diam.** | - | Type 21 A | 20 mm | |
| | | | **Quantity** | - | 3 | | |
| | X | **Isolation valve - Recirculation Line** | **Manufacturer** | - | DURCO | | |
| | | | **Valve Type** | - | PLUG VALVE | | |
| | | | **Model \| Diam.** | - | SERIES T4E | 75 mm | |
| | | | **Quantity** | - | 2 | | |
| | X | **Isolation valve - Recirc. Line Sampling** | **Manufacturer** | - | CHEMLINE | | |
| | | | **Valve Type** | - | BALL VALVE | | |
| | | | **Model \| Diam.** | - | Type 21 A | 20 mm | |
| | | | **Quantity** | - | 4 | | 2 |
| | X | **Isolation valve - Recirc. Line Cleaning** | **Manufacturer** | - | CHEMLINE | | 2 |
| | | | **Valve Type** | - | BALL VALVE | | 2 |
| | | | **Model \| Diam.** | - | TYPE 21 A | 25 mm | 2 |
| | | | **Quantity** | - | 3 | | 2 |
| **INSTRUMENTATION** | X | **Level Switch (High High)** | **Manufacturer** | - | XYLEM | | |
| | | | **Model \| Diam.** | | ENM10 (6m) | 4 in | |
| | | **Zone : *Non Hazardous*** | **Quantity** | - | 1 | | |
| | X | **Turbidimeter Clarified Water** | **Manufacturer** | - | HACH | | |
| | | | **Model** | | TURBIDITY &TSS SENSOR/2983700 | | |
| | | **Zone : *Non Hazardous*** | **Quantity** | - | 1 | | |
| | X | **Turbidity Controller (specify if common controller)** | **Manufacturer** | - | HACH | | |
| | | | **Model \| Diam.** | | SC 200 / C/W 2983700 | | |
| | | **Zone : *Non Hazardous*** | **Quantity** | - | 1 | | |
| | X | **Pressure gauge (recirculation)** | **Manufacturer** | - | ASHCROFT | | |
| | | | **Model \| Diam.** | | SERIES 1009 | 4.5 in | |
| | | **Zone : *Non Hazardous*** | **Quantity** | - | 2 | | |
| **METAL WORKS** | | **Grating** | **Dimensions/Type** | - | Refer To GA_0001_ACP_VWT | | |
| | | | **Material** | - | FRP | | |
| | | **Handrails** | **Dimensions/Type** | - | Refer To GA_0001_ACP_VWT | | |
| | | | **Material** | - | Painted Steel W44 | | |
| | | | **Color** | - | Safety Yellow | | 2 |
| | | **Access (ladder/stairs/bridge)** | **Dimensions/Type** | - | Refer To GA_0001_ACP_VWT | | |
| | | | **Material** | - | Painted Steel W44 | | |
| | | | **Color** | - | Safety Yellow | | 2 |
| **POWER FEED** | | **Motors** | | **V/ph/Hz** | 575 / 3 / 60 | | |
| | | **Panels** | | **V/ph/Hz** | N/A | | 2 |
| | | **Others** | | **V/ph/Hz** | N/A | | |
| **DIMENSIONS** | | **Tank height** | | **in (mm)** | Refer To GA_0001_ACP_VWT | | |
| | | **Recommended Headroom** | | **in (mm)** | Refer To GA_0001_ACP_VWT | | |
| | | **Overall width** | | **in (mm)** | Refer To GA_0001_ACP_VWT | | |
| | | **Overall length** | | **in (mm)** | Refer To GA_0001_ACP_VWT | | |
| | | **Weight (dry)** | | **kg** | Refer To GA_0001_ACP_VWT | | |
| | | **Weight (full of water)** | | **kg** | Refer To GA_0001_ACP_VWT | | |
| **COMMENTS** | | ALL MOTORS PROVIDED ARE STANDARD IEEE841 EXCEPT THE FRACTIONAL MOTOR OF THE SCRAPER | | | | | |

**This page is intentionally left blank**

**Project name:** MELIADINE-BPC UPGRADE

**Project#:** 5000220043

**Document #:** SPK_0001_ACP_VWT

**by:** CEK

**chkd:** ED

**appvd:** TS

# CLARIFIER #2 ACP2-60

# GENERAL ARRANGEMENT DRAWING

**OIM manual section:** 4.2.4.2

Refer to 5000220043_GA_0001_ACP_VWT REV 02
Refer to manual section 3.4

**This page is intentionally left blank**

**Project name:** MELIADINE-BPC UPGRADE

**Project#:** 5000220043

**Document #:** SPK_0001_ACP_VWT

**by:** CEK

**chkd:** ED

**appvd:** TS

# CLARIFIER #2 ACP2-60

# FIELD INSTALLATION DRAWING

**OIM manual section:** 4.2.4.3

Refer to 5000220043_FI_0001_ACP_VWT REV 01
Refer to manual section 3.5

**This page is intentionally left blank**

| | |
|---|---|
| **Project name:** | MELIADINE-BPC UPGRADE |
| **Project#:** | 5000220043 |
| **Document #:** | SPK_0001_ACP_VWT |
| **by:** | CEK |
| **chkd:** | ED |
| **appvd:** | TS |

# CLARIFIER #2 ACP2-60

# HYDRAULIC PROFILE

**OIM manual section:** 4.2.4.4

Refer to 5000220043_HY_0001_GEN_VWT REV 03
Refer to manual section 3.3

**This page is intentionally left blank**

**Project name:** MELIADINE-BPC UPGRADE

**Project#:** 5000220043

**Document #:** SPK_0001_ACP_VWT

**by:** CEK

**chkd:** ED

**appvd:** TS

# CLARIFIER #2 ACP2-60

# MIXERS

**OIM manual section:** 4.2.4.5

**This page is intentionally left blank**

# CS-652-ACP2 : Identification sheet

| | | | |
|---|---|---|---|
| VWTC PROJECT NUMBER: | 5000220043 | REV: | 1 |
| PROJECT NAME: | AEM MELIADINE-BPC UPGRADE | SUBMITTED TO (COMPANY): | AEM |
| ENGINEER: | EMMANUELLE DORMOY | SUBMITTED TO (RESPONSIBLE): | |
| PROJECT MANAGER: | THOMAS SAVARY / BRUCE BRODES | PROJECT NUM REFERENCE.: | 6526-S-265-605 / OC-989680 |
| PHONE NUMBER: | 514-334-7230 | LOT NUMBER: | |

| SUPPLIER | EQPT CODE | EQPT TAG NO | DIA | DESCRIPTION | INFO 1 | INFO 2 | INFO 3 | APPLIC. | NOTE | REV |
|---|---|---|---|---|---|---|---|---|---|---|
| ENVIREQUIP | CMSPMI334387 | 65AGI68021 | N/A | CLARIFIER #2 AGITATOR #1 | DESCRIPTION ACP2-60 (575V) EXTENDED COAGULATION TANK// MODEL: Envirequip MIX-TECH EVGX4-2.0 // Mtl : DUPLEX STAINLESS STEEL 2205 | Impeller Dia : 45.625" // 64.75 RPM // Shaft lg : 90.58"// Direction & thrust: cw up | WEG Motor 2.0 HP / 575/3/60 // Nord reducer SK4282 AHZ/VL // Gear ratio 26.72:1 // STANDARD IEEE841 | CLARIFIER #2 | | 1 |

**This page is intentionally left blank**

| ITEM | DESCRIPTION | MATERIAL |
|---|---|---|
| 1 | Envirofoil Impeller 1158.9 mm (45.625") ø ⊙ 13.5° | 2205 |
| 2 | Base 419.1 mm x 419.1 mm (16.5" x 16.5" ) | STEEL |
| 3 | Pedestal c/w dry well (open tank) | |
| 4 | NORD reducer 64.75 RPM | |
| 5 | WEG motor, 2.0 Hp, IEEE841, TEFC, 575/3/60 | |
| 6 | Shaft: (1) section 2300.8 mm (90.58") ⊙ 1.75"ø | 2205 |

| |
|---|
| APPL'N: EXTENDED COAGULATION |
| ENVIREQUIP MIXERS |
| MODEL: EVGX4–2.0 |
| 1.5 kW @ 64.75 RPM |
| Actiflo # 1 |
| Rotation: Clockwise |
| Thrust: Up |
| Tag #: AG21–01 |

| |
|---|
| Weight: 520 Lbs |
| Design loads |
| Torque reaction = 4,867 in lb |
| Bending moment = 11,876 in lb |

| |
|---|
| ST#: 652–ACP2–60R1–575–W841–2205–CWU |
| LATIS #: CMSPMI334387 |

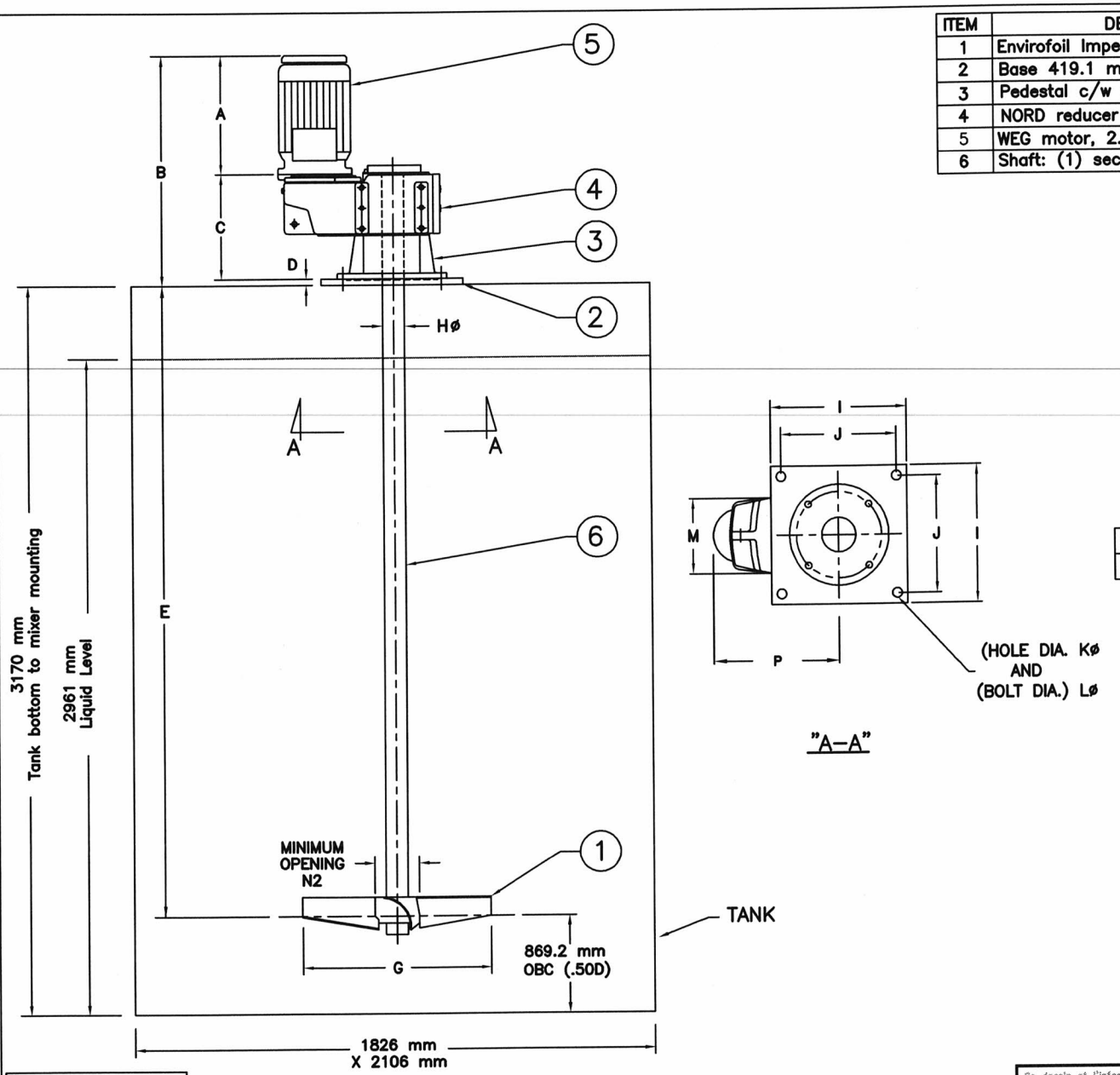





"A–A"

| Dimensions: Inches | | | | | | | | | | | | | | | | |
|---|---|---|---|---|---|---|---|---|---|---|---|---|---|---|---|---|
| MOD.: | A | B | C | D | E | E2 | F | Gø | Hø SHAFT | I | J | Kø | Lø | M | N2 | P |
| EVGX4 | 11.50 | 22.64 | 11.14 | .625 | 90.58 | – | – | 45.625 | 2.0 | 16.5 | 14.0 | .875 | .75 | 10.0 | 14.0 | 13.03 |

| Dimensions: mm | | | | | | | | | | | | | | | | |
|---|---|---|---|---|---|---|---|---|---|---|---|---|---|---|---|---|
| MOD.: | A | B | C | D | E | E2 | F | Gø | Hø SHAFT | I | J | Kø | Lø | M | N2 | P |
| EVGX4 | 292.1 | 575.1 | 283.0 | 15.9 | 2300.8 | – | – | 1158.9 | 50.8 | 419.1 | 355.6 | 22.3 | 19.1 | 254.0 | 355.6 | 331.0 |


Ce dessin et l'information qu'il contient est la propriété de ENVIREQUIP WTEM Inc. Il est interdit de le copier, le photographier, l'imprimer, le prêter ou de l'utiliser sans la permission de ENVIREQUIP WTEM Inc.

This drawing and the information contained thereon is the property of ENVIREQUIP WTEM Inc. It is not to be printed, photographed, copied, loaned or used without the permission of ENVIREQUIP WTEM Inc.


| NO | DATE | REVISION | P/B |
|---|---|---|---|
| | | | |

PROJET/PROJECT

ACP2–60 EXTENDED COAGULATION


ENVIREQUIP WTEM INC.

490 Bord du Lac – Suite 2
Dorval, QC H9S 2A8
Montreal Tel: (514) 336–1045

RR1 (21494 Little Russel Rd.)
Glen Robertson, Ont K0B 1H0
Ontario Tel: (613) 874–2616
Fax: (613) 874–2628
E–mail: envirequip@glen–net.ca


TITRE/TITLE

Envirequip Mixers
Veolia Water Technologies
"EVGX" Series

| | |
|---|---|
| DESSINÉ PAR: DRAWN BY: PJ | DATE: Jan 20, 2021 |
| DESS. NO: DWG NO: EVGX | ÉCH./SCALE: N.T.S |
| VÉRIFIÉ PAR: CHECKED BY: PJ | PROJ.NO: |
| APPROUVÉ PAR: APPROVED BY: RJ | REV. 00 |

**This page is intentionally left blank**

# CS-652-ACP2 : Identification sheet

| | | | |
|---|---|---|---|
| VWTC PROJECT NUMBER: | 5000220043 | REV: | 1 |
| PROJECT NAME: | AEM MELIADINE-BPC UPGRADE | SUBMITTED TO (COMPANY): | AEM |
| ENGINEER: | EMMANUELLE DORMOY | SUBMITTED TO (RESPONSIBLE): | |
| PROJECT MANAGER: | THOMAS SAVARY / BRUCE BRODES | PROJECT NUM REFERENCE.: | 6526-S-265-605 / OC-989680 |
| PHONE NUMBER: | 514-334-7230 | LOT NUMBER: | |

| SUPPLIER | EQPT CODE | EQPT TAG NO | DIA | DESCRIPTION | INFO 1 | INFO 2 | INFO 3 | APPLIC. | NOTE | REV |
|---|---|---|---|---|---|---|---|---|---|---|
| ENVIREQUIP | CMSPMI334388 | 65AGI68022 | N/A | CLARIFIER #2 AGITATOR #2 | DESCRIPTION ACP2-60 (575V) COAGULATION TANK// MODEL: Envirequip MIX-TECH EVGX4-2.0 // Mtl : DUPLEX STAINLESS STEEL 2205 | Impeller Dia : 45.625" // 64.75 RPM // Shaft lg : 90.58" // Direction & thrust: ccw down | WEG Motor 2.0 HP / 575/3/60 // Nord reducer SK4282 AHZ/VL // Gear ratio 26.72:1 //STANDARD IEEE841 | CLARIFIER #2 | | 1 |

**This page is intentionally left blank**

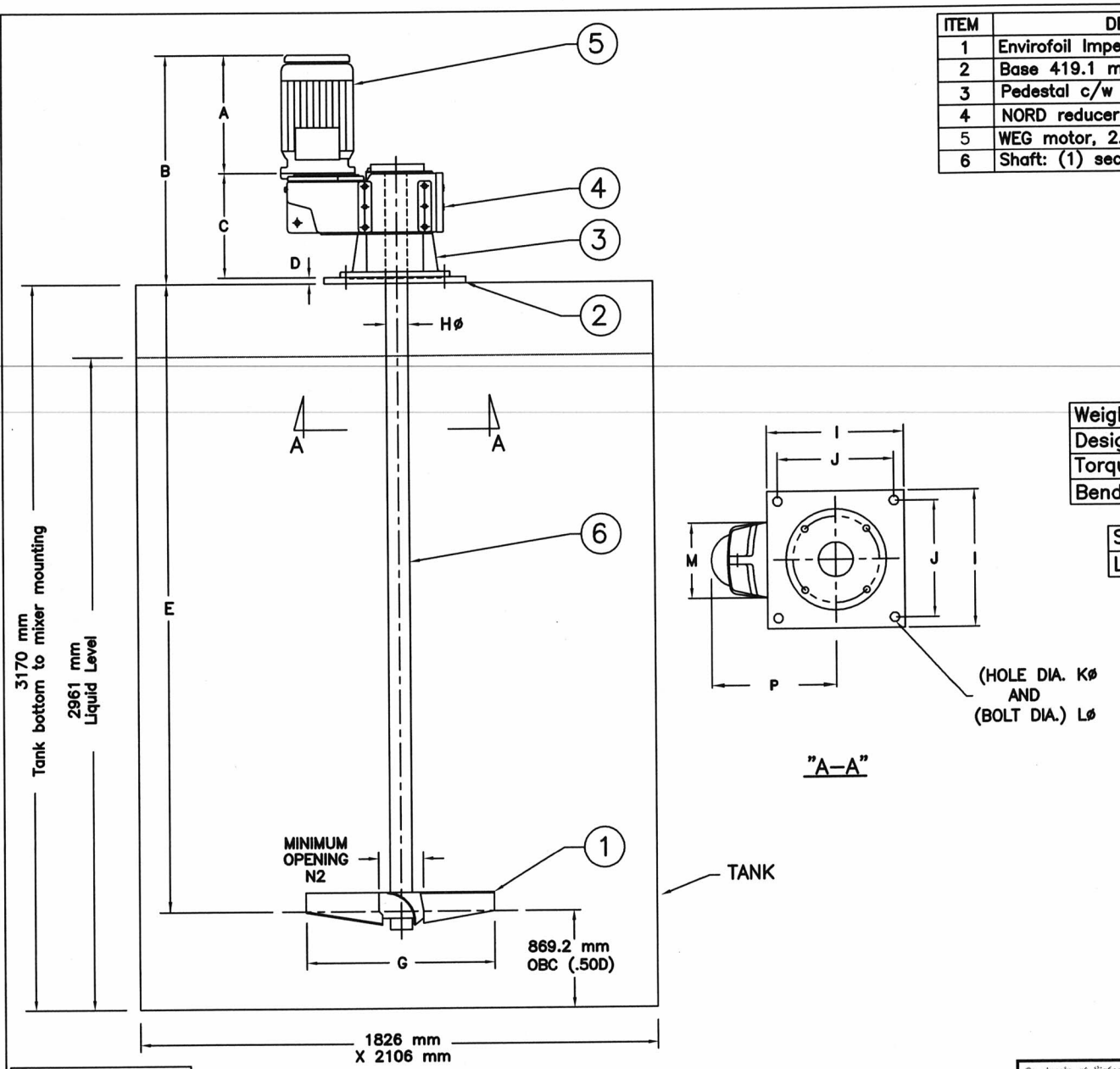





"A–A"

| ITEM | DESCRIPTION | MATERIAL |
|---|---|---|
| 1 | Envirofoil Impeller 1158.9 mm (45.625") ø ⊙ 13.5° | 2205 |
| 2 | Base 419.1 mm x 419.1 mm (16.5" x 16.5" ) | STEEL |
| 3 | Pedestal c/w dry well (open tank) | |
| 4 | NORD reducer 64.75 RPM | |
| 5 | WEG motor, 2.0 Hp, IEEE841, TEFC, 575/3/60 | |
| 6 | Shaft: (1) section 2300.8 mm (90.58") ⊙ 2.0"ø | 2205 |

| |
|---|
| APPL'N: COAGULATION (QTY 1) |
| ENVIREQUIP MIXERS |
| MODEL: EVGX4–2.0 |
| 1.5 kW @ 64.75 RPM |
| Actiflo # 1 |
| Rotation: Counter clockwise |
| Thrust: Down |
| Tag #: AG20–02 |

| |
|---|
| Weight: 520 Lbs |
| Design loads |
| Torque reaction = 4,867 in lb |
| Bending moment = 11,876 in lb |

| |
|---|
| ST#: 652–ACP2–60R2–575–W841–2205–~~CCWD~~ |
| LATIS #: CMSPMI334388 |

**Dimensions: Inches**

| MOD.: | A | B | C | D | E | E2 | F | Gø | Hø SHAFT | I | J | Kø | Lø | M | N2 | P |
|---|---|---|---|---|---|---|---|---|---|---|---|---|---|---|---|---|
| EVGX4 | 11.50 | 22.64 | 11.14 | .625 | 90.58 | – | – | 45.625 | 2.0 | 16.5 | 14.0 | .875 | .75 | 10.0 | 14.0 | 13.03 |

**Dimensions: mm**

| MOD.: | A | B | C | D | E | E2 | F | Gø | Hø SHAFT | I | J | Kø | Lø | M | N2 | P |
|---|---|---|---|---|---|---|---|---|---|---|---|---|---|---|---|---|
| EVGX4 | 292.1 | 575.1 | 283.0 | 15.9 | 2300.8 | – | – | 1158.9 | 50.8 | 419.1 | 355.6 | 22.3 | 19.1 | 254.0 | 355.6 | 331.0 |

Ce dessin et l'information qu'il contient est la propriété de ENVIREQUIP WTEM Inc. Il est interdit de le copier, le photographier, l'imprimer, le prêter ou de l'utiliser sans la permission de ENVIREQUIP WTEM Inc.

This drawing and the information contained thereon is the property of ENVIREQUIP WTEM Inc. It is not to be printed, photographed, copied, loaned or used without the permission of ENVIREQUIP WTEM Inc.

| NO | DATE | REVISION | P/B |
|---|---|---|---|
| | | | |

PROJET/PROJECT
ACP2–60 COAGULATION

ENVIREQUIP WTEM INC.
490 Bord du Lac – Suite 2
Dorval, QC H9S 2W8
Montreal Tel: (514) 336-1045
RR1 (21494 Little Russle Rd.)
Glen Robertson, Ont K0B 1H0
Ontario Tel: (613) 874-2516
Fax: (613) 874-2629
E-mail: envireqp@glen-net.ca

TITRE/TITLE
Envirequip Mixers
Veolia Water Technologies
"EVGX" Series

| | |
|---|---|
| DESSINE PAR: DRAWN BY: PJ | DATE: Jan 20, 2021 |
| DESS. NO: DWG NO: EVGX | ÉCH./SCALE: N.T.S |
| VÉRIFIÉ PAR: CHECKED BY: PJ | PROJ.NO: |
| APPROUVÉ PAR: APPROVED BY: RJ | REV.: 00 |

**This page is intentionally left blank**

# CS-652-ACP2 : Identification sheet

| | | | |
|---|---|---|---|
| VWTC PROJECT NUMBER: | 5000220043 | REV: | 1 |
| PROJECT NAME: | AEM MELIADINE-BPC UPGRADE | SUBMITTED TO (COMPANY): | AEM |
| ENGINEER: | EMMANUELLE DORMOY | SUBMITTED TO (RESPONSIBLE): | |
| PROJECT MANAGER: | THOMAS SAVARY / BRUCE BRODES | PROJECT NUM REFERENCE.: | 6526-S-265-605 / OC-989680 |
| PHONE NUMBER: | 514-334-7230 | LOT NUMBER: | |

| SUPPLIER | EQPT CODE | EQPT TAG NO | DIA | DESCRIPTION | INFO 1 | INFO 2 | INFO 3 | APPLIC. | NOTE | REV |
|---|---|---|---|---|---|---|---|---|---|---|
| ENVIREQUIP | CMSPMI334389 | 65AGI68023 | N/A | CLARIFIER #2 AGITATOR #3 | DESCRIPTION ACP2-60 (575V) FLOCULATION TURBOMIX TANK// MODEL: Envirequip MIX-TECH EVGX4-5.0 // Mtl : DUPLEX STAINLESS STEEL 2205 | Impeller Dia : 59.05" // 45.81 RPM // Shaft lg : 80.51" // Direction & thrust: cw down | WEG Motor 5.0 HP / 575/3/60 // Nord reducer SK4282 AHZ/VL // Gear ratio 38.31:1 // STANDARD IEEE841 | CLARIFIER #2 | | 1 |

**This page is intentionally left blank**

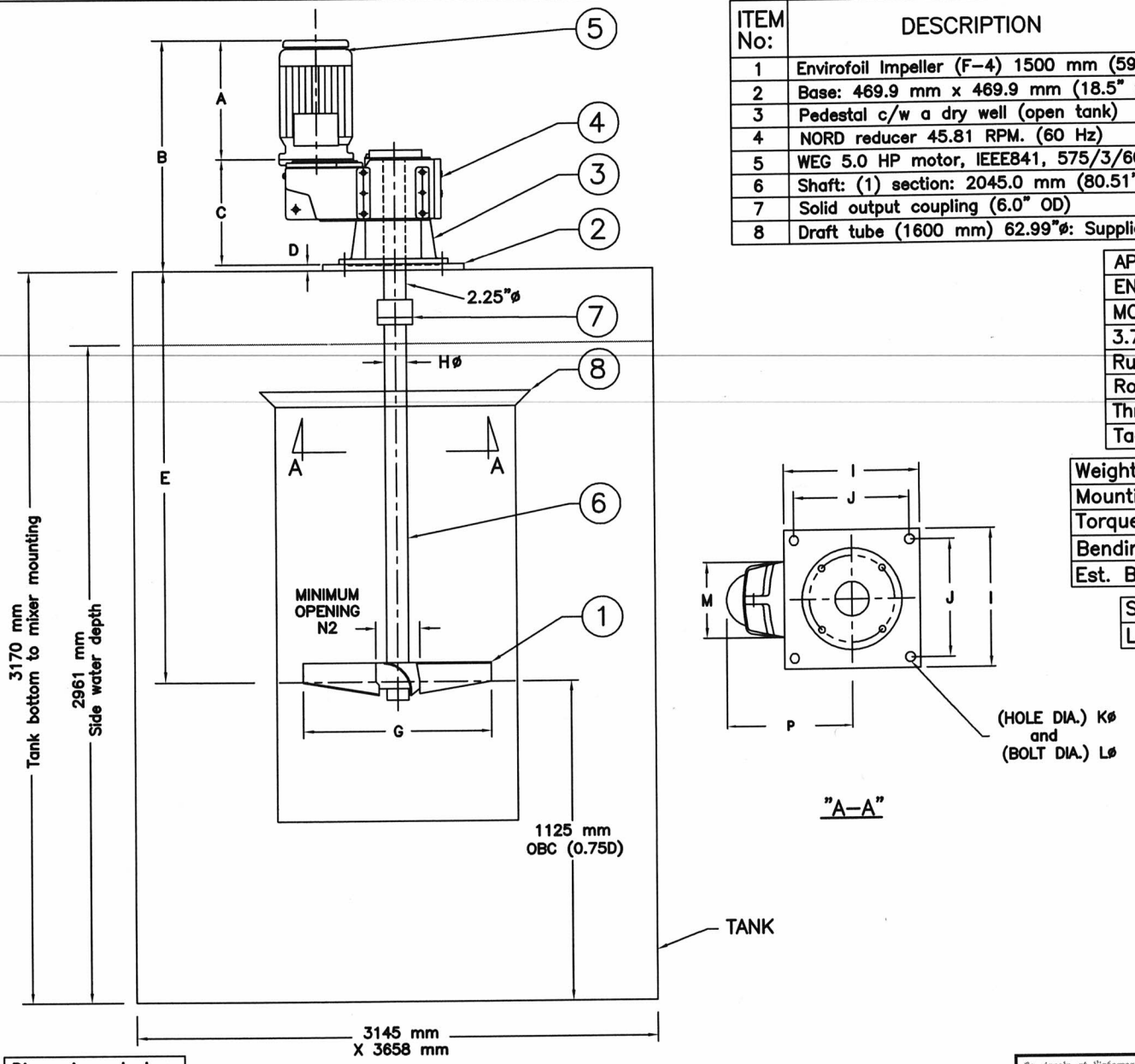





"A–A"

| ITEM No: | DESCRIPTION | MATERIAL |
|---|---|---|
| 1 | Envirofoil Impeller (F–4) 1500 mm (59.05)ø @ 22.0° (25% Wider) | 2205 |
| 2 | Base: 469.9 mm x 469.9 mm (18.5" x 18.5") | STEEL |
| 3 | Pedestal c/w a dry well (open tank) | |
| 4 | NORD reducer 45.81 RPM. (60 Hz) | |
| 5 | WEG 5.0 HP motor, IEEE841, 575/3/60, TEFC | |
| 6 | Shaft: (1) section: 2045.0 mm (80.51") Total, @ 2.25"ø | 2205 |
| 7 | Solid output coupling (6.0" OD) | 2205 |
| 8 | Draft tube (1600 mm) 62.99"ø: Supplied by Veolia | |

| |
|---|
| APPL'N TURBO FLOCCULATION |
| ENVIREQUIP MIXERS |
| MODEL EVGX4–5.0 |
| 3.73 kW @ 45.81 RPM (60 Hz) |
| Run Speed: 42.80 RPM (56.0 Hz) = 0.15m/s |
| Rotation: Clockwise |
| Thrust: Down |
| Tag #: AG20–03 |

| |
|---|
| Weight: 520 Lbs |
| Mounting Loads |
| Torque reaction = 17,197 in lb |
| Bending moment = 24,015 in lb |
| Est. Beam: 8WF @20.0 #/ft upto 15 ft |

| |
|---|
| ST#: 652–ACP2–60R3–575–W841–2205–CWD |
| LATIS #: CMSPMI334389 |

**Dimensions: Inches**

| MOD.: | A | B | C | D | E | E2 | F | Gø | Hø SHAFT | I | J | Kø | Lø | M | N2 | P |
|---|---|---|---|---|---|---|---|---|---|---|---|---|---|---|---|---|
| EVGX4 | 14.61 | 26.5 | 11.14 | .75 | 80.51 | – | – | 59.05 | 2.25 | 18.5 | 16.0 | .875 | .75 | 10.0 | 14.0 | 13.03 |

**Dimensions: mm**

| MOD.: | A | B | C | D | E | E2 | F | Gø | Hø SHAFT | I | J | Kø | Lø | M | N2 | P |
|---|---|---|---|---|---|---|---|---|---|---|---|---|---|---|---|---|
| EVGX4 | 371.1 | 673.1 | 283.0 | 19.1 | 2045.0 | – | – | 1500.0 | 57.2 | 469.9 | 406.4 | 22.2 | 19.1 | 254.0 | 355.6 | 331.0 |

Ce dessin et l'information qu'il contient est la propriété de ENVIREQUIP WTEM Inc. Il est interdit de le copier, le photographier, l'imprimer, le prêter ou de l'utiliser sans la permission de ENVIREQUIP WTEM Inc.

This drawing and the information contained thereon is the property of ENVIREQUIP WTEM Inc. It is not to be printed, photographed, copied, loaned or used without the permission of ENVIREQUIP WTEM Inc.

| NO | DATE | REVISION | P/B |
|---|---|---|---|
| | | | |

PROJET/PROJECT
ACP2–60 TURBO FLOCCUALTION

ENVIREQUIP WTEM INC.
490 Bord du Lac – Suite 2
Dorval, QC H9S 2A9
Montreal Tel: (514) 336–1043
RR1 (21494 Little Russels Rd.)
Glen Robertson, Ont K0B 1H0
Ontario Tel: (613) 874–2516
Fax: (613) 874–2629
E–mail: envireqp@glen–net.ca

TITRE/TITLE
Envirequip Mixers
Veolia Water Technologies Inc
EVGX SERIES

| | |
|---|---|
| DESSINÉ PAR: DRAWN BY: PJ | DATE Jan 20, 2021 |
| DESS. NO: DWG NO: EVGX | ÉCH./SCALE N.T.S |
| VÉRIFIÉ PAR: CHECKED BY: PJ | PROJ.NO: |
| APPROUVÉ PAR: APPROVED BY: RJ | REV. 00 |

**This page is intentionally left blank**

**Project name:** MELIADINE-BPC UPGRADE

**Project#:** 5000220043

**Document #:** SPK_0001_ACP_VWT

**by:** CEK

**chkd:** ED

**appvd:** TS

# CLARIFIER #2 ACP2-60

# SCRAPER GEAR BOX

**OIM manual section:** 4.2.4.6

**This page is intentionally left blank**

# CS-670-ACP- : Identification sheet

| | | | |
|---|---|---|---|
| VWTC PROJECT NUMBER: | 5000220043 | REV: | 1 |
| PROJECT NAME: | AEM MELIADINE-BPC UPGRADE | SUBMITTED TO (COMPANY): | AEM |
| ENGINEER: | EMMANUELLE DORMOY | SUBMITTED TO (RESPONSIBLE): | |
| PROJECT MANAGER: | THOMAS SAVARY / BRUCE BRODES | PROJECT NUM REFERENCE.: | 6526-S-265-605 / OC-989680 |
| PHONE NUMBER: | 514-334-7230 | LOT NUMBER: | |

| SUPPLIER | EQPT CODE | EQPT TAG NO | DIA | DESCRIPTION | INFO 1 | INFO 2 | INFO 3 | APPLIC. | NOTE | REV |
|---|---|---|---|---|---|---|---|---|---|---|
| EURODRIVE | ST-670-ACP-MK1-600-575-DRN | 65TRM68003 | | CLARIFIER #2 RAKE | MANUFACTURER: SEW Eurodrive // MODEL: RF87 R57 AR71/W DRN71M4/C/DH/RI (575V) 0.5HP Combination flange mounted special output shaft (2.125" Dia X 4.72" L) - 2 stage gear reducer and integral mounted gearmotor with AR coupling arrangement | // reducer rating 1550 Nm // ext. Housing slip torque 1.5 Nm // C/W speed monitor DD2503 for AR coupling // food grade CLP HC-460-NSF-H1 oil // mount position M4 // english nameplate // surface protection OS4 // flange: 350 mm | // total ratio: 1037:1 // output speed: 1.7 RPM | CLARIFIER #2 | | 1 |

**This page is intentionally left blank**

Date: 21.01.2021

| Pos. | Quantity | Part No. | | |
|---|---|---|---|---|
| 01 | Your product No.: | ACP-600 | SPECIAL OUTPUT SHAFT: 2.125" X 4.7" | ACP 600 MK1 575V |

**1 PC**
**Helical gearmotor w/adapter**
**RF87 R57 AR71/W DRN71M4/C/DH/RI**



VEOLIA
EXAMINÉ/EXAMINED
L'examen de ce dessin ne relève en aucune façon l'entrepreneur ou le fournisseur de sa responsabilité quant à l'exactitude de ce dessin ou à sa conformité avec les documents contractuels et les conditions de chantier.
Examination of this drawing will not release in any way the Contractor or Supplier of his responsibilities as of the precision of this drawing or to its compliance with the contract documents and job site conditions.
☒ Procéder tel quel / Proceed as is
☐ Procéder tel qu'annoté / Proceed as noted
☐ Resoumettre / Re-submit
Par / by: pour G. Périn
Date: 2021-01-21

**Remark:**
Colour and technical specifications may vary from the picture shown. The technical specification is according to the following data.

**Links to documentation:**

| | |
|---|---|
| Speed [r/min] | : 1730 / 1.7 |
| Total ratio [i] | : 1037 / infinite |
| Ma max [Nm] | : 1550 |
| Output torque [Nm] | : 1840 |
| Service factor SEW-FB | : 0,85 |
| Mounting position | : M4 |
| Term.box.pos.[°] / cable entry | : 0 (R) / normal |
| Lubricant / -volume [l] | : CLP HC-460-NSF-H1 Oil f.Food / 7,20 / 1,80 |
| Oil manufacturer designation | : Klüberöl 4UH1-460 N |
| Condensation drain hole | : DH - drain hole |
| Corrosion protection | : Yes |
| Special measure | : Contour recesses injected with rubber. |
| Surface protection | : OS4 to technical data sheet 01802__94 |
| Paint coat | : STEEL PLUS CE 316 Epoxy GRAY (10-808A-F1) |

HEAD OFFICE: SIEGE SOCIAL:
SEW-EURODRIVE COMPANY OF CANADA LTD.
SOCIÉTÉ SEW-EURODRIVE DU CANADA LTÉE.
210 Walker Dr.
Bramalea, ON L6T 3W1
Tel: (905) 791-1553
Fax: (905 791-2999

Eastern Plant: Usine de l'est:
SEW-EURODRIVE COMPANY OF CANADA LTD.
SOCIÉTÉ SEW-EURODRIVE DU CANADA LTÉE.
2001 Rue de l'Aviation
Dorval, QC H9P 2X6
Tel: (514) 367-1124
Fax: (514) 367-3677

Western Plant: Usine de l'ouest:
SEW-EURODRIVE COMPANY OF CANADA LTD.
SOCIÉTÉ SEW-EURODRIVE DU CANADA LTÉE.
7188 Honeyman Street
Tilbury Industrial Park
Delta, BC V4G 1G1
Tel: (604) 946-5535
Fax: (604) 946-2513

GST VENDOR: R104809033
QST VENDOR: 1001084841

PROVINCIAL SALES TAX:
QC - M-10-0108-4841-001
BC - 1014-7503

Certified System
ISO 9001

Date: 21.01.2021

| Pos. | Quantity | Part No. |
|---|---|---|

| | |
|---|---|
| Ma max G [Nm] | : 1550 |
| Output shaft end | : Special shaft |
| Flange | : 350mm |
| Special unique feature | : As descripted above |
| Special constr. no. EURODRIVE | : 016379 |
| Documentation no. A | : 25803530 |
| | 29151457 |
| Parts list | : 012611096 |
| | |
| Mounting pos.primary gear unit | : M4 |
| Primary gear unit position [°] | : 90 |
| Parts list | : 012551198 |
| | |
| Ext. housing slip torque [Nm] | : 1,5 |
| Access. feature monitor | : W speed monitor |
| Documentation no. A | : 17036011 |
| | 25835548 |
| Parts list | : 232670599 |
| | |
| Motor power [kW] | : 0.37 |
| Motor power [HP] | : 0.50 |
| Motor frequency [Hz] | : 60 |
| Cyclic duration factor S1-S10 | : S1 |
| Motor voltage [V] / conn. type | : 330/575 delta/star |
| Rated current [A] | : 1,28 / 0,73 |
| cos phi | : 0,62 |
| Wiring diagram | : R13P / 682360011 |
| Connection set at factory | : Star |
| Thermal cl.[°C]/Enclosure[IP] | : 155(F) / 55 |
| Service factor motor | : 1.15 |
| International efficiency class | : IE3 |
| Efficiency | |
| at 50/75/100% Pn [%] | : 74,3 / 77,7 / 78,5 |
| CE mark | : Yes |
| Design specification | : Canada (CSA) |
| K.V.A.code | : K |
| Design | : IEC H |
| Fan guard | : Metal fan guard |
| Fan guard element | : C = protection canopy |
| Insulation | : RI = reinforced winding insulation |
| Terminal box | : Terminal box lower part made of aluminum with tapped hole 2xNPT 1/2" |
| CT speed range | : 300-1800rpm |
| Documentation no. A | : 25957074 |

HEAD OFFICE: SIEGE SOCIAL:
SEW-EURODRIVE COMPANY OF CANADA LTD.
SOCIÉTÉ SEW-EURODRIVE DU CANADA LTÉE.
210 Walker Dr.
Bramalea, ON L6T 3W1
Tel: (905) 791-1553
Fax: (905 791-2999

Eastern Plant: Usine de l'est:
SEW-EURODRIVE COMPANY OF CANADA LTD.
SOCIÉTÉ SEW-EURODRIVE DU CANADA LTÉE.
2001 Rue de l'Aviation
Dorval, QC H9P 2X6
Tel: (514) 367-1124
Fax: (514) 367-3677

Western Plant: Usine de l'ouest:
SEW-EURODRIVE COMPANY OF CANADA LTD.
SOCIÉTÉ SEW-EURODRIVE DU CANADA LTÉE.
7188 Honeyman Street
Tilbury Industrial Park
Delta, BC V4G 1G1
Tel: (604) 946-5535
Fax: (604) 946-2513

GST VENDOR: R104809033
QST VENDOR: 1001084841

PROVINCIAL SALES TAX:
QC - M-10-0108-4841-001
BC - 1014-7503

Certified System
ISO 9001

Date: 21.01.2021

| Pos. | Quantity | Part No. |
|---|---|---|

Nameplate : English
Nameplate position : 270°
Nameplate text : SK016379
Opera.instr. A lang./quantity : English / 0
Parts list/language/quantity : English / 0
Commodity code : 85015100

net weight [KG] : approx. 110/PC 110/Pos.

Signature product: ACP-600

HEAD OFFICE: SIEGE SOCIAL:
SEW-EURODRIVE COMPANY OF CANADA LTD.
SOCIÉTÉ SEW-EURODRIVE DU CANADA LTÉE.
210 Walker Dr.
Bramalea, ON L6T 3W1
Tel: (905) 791-1553
Fax: (905 791-2999

Eastern Plant: Usine de l'est:
SEW-EURODRIVE COMPANY OF CANADA LTD.
SOCIÉTÉ SEW-EURODRIVE DU CANADA LTÉE.
2001 Rue de l'Aviation
Dorval, QC H9P 2X6
Tel: (514) 367-1124
Fax: (514) 367-3677

Western Plant: Usine de l'ouest:
SEW-EURODRIVE COMPANY OF CANADA LTD.
SOCIÉTÉ SEW-EURODRIVE DU CANADA LTÉE.
7188 Honeyman Street
Tilbury Industrial Park
Delta, BC V4G 1G1
Tel: (604) 946-5535
Fax: (604) 946-2513

GST VENDOR: R104809033
QST VENDOR: 1001084841

PROVINCIAL SALES TAX:
QC - M-10-0108-4841-001
BC - 1014-7503

Certified System
ISO 9001

**This page is intentionally left blank**

**Project name:** MELIADINE-BPC UPGRADE

**Project#:** 5000220043

**Document #:** SPK_0001_ACP_VWT

**by:** CEK

**chkd:** ED

**appvd:** TS

# CLARIFIER #2 ACP2-60

# SETTLING LAMELLA

**OIM manual section:** 4.2.4.7

**This page is intentionally left blank**

POLIMERI EUROPA

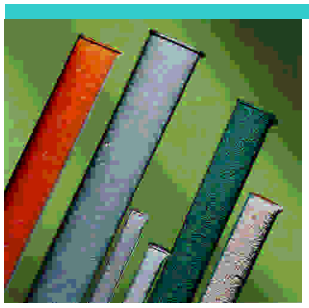

# Edistir® R 850E

## Polystyrene

**TECHNICAL DATA SHEET**

### *Product description*

Super high impact polystyrene with good heat resistance.

Designed for sheet extrusion and thermoforming of deep drawn containers even diluted with high percentage of GP. Suitable for general injection molding of tough medium-walled articles.

Designation: Thermoplastics ISO 2897-PS-I,G,093-03-10-18

### *Applications*

Typical uses are thermoformed food packaging as disposable tumblers, flatwares, yoghurt cups, lids. Injection molding of technical items, shoe heels, reels.

### *Typical processing data*

Extrusion:
- melt temperature 210 - 240°C

Injection molding:
- predrying normally not required
- melt temperature 210 - 260°C
- mold temperature 20 - 60°C

### *General information*

R 850E is certified UL94 HB "all colors" at 1.5 mm (UL file E83071).

This grade in natural version complies by composition with the requirements set by the main Regulations for plastic materials intended for food contact (included the EEC Directive 90/128 and following amendments).

POLIMERI EUROPA

# Edistir® R 850E

## Polystyrene

| Properties | Test conditions | Test methods | Units | Values |
|---|---|---|---|---|
| **General** | | | | |
| Density | | ISO 1183 | g/cm$^3$ | **1.04** |
| Bulk density | | ISO 60 | g/cm$^3$ | **0.65** |
| Water absorption | 24 h - 23°C | ISO 62 | % | **<0.1** |
| **Rheological** | | | | |
| Melt flow rate MFR | 200°C - 5 kg | ISO 1133 | g/10 min | **4** |
| **Mechanical** | | | | |
| Tensile stress at yield | 50 mm/min | ISO 527 | MPa | **21** |
| Tensile stress at break | 50 mm/min | ISO 527 | MPa | **24** |
| Tensile strain at break | 50 mm/min | ISO 527 | % | **60** |
| Tensile modulus | 1 mm/min | ISO 527 | MPa | **1850** |
| Flexural strength | 2 mm/min | ISO 178 | MPa | **38** |
| Izod impact strength, notched | +23°C - thickness 3.2 mm | ISO 180/4A | J/m | **125** |
| | +23°C - thickness 4 mm | ISO 180/1A | kJ/m$^2$ | **10** |
| | -30°C - thickness 4 mm | ISO 180/1A | kJ/m$^2$ | **6.5** |
| Rockwell hardness | L/M scale | ISO 2039/2 | - | **L65** |
| **Thermal** | | | | |
| Vicat softening temperature | 10 N - 50°C/h | ISO 306/A | °C | **99** |
| | 50 N - 50°C/h | ISO 306/B | °C | **91** |
| Deflection temp. under load (annealed) | 1.8 MPa - 120°C/h | ASTM D 648 | °C | **85** |
| Coefficient of linear thermal expansion | | ASTM D 696 | $10^{-5}$/°C | **9** |
| Thermal conductivity | | ISO 8302 | W/(K·m) | **0.17** |
| Moulding shrinkage | | internal | % | **0.4 - 0.7** |
| **Flammability** | | | | |
| Flame behaviour | thickness 1.5 mm | UL 94 | class | **HB** |
| Glow wire test (GWT) | thickness 1.6 mm | IEC 60695-2-1 | °C | **650** |
| **Electrical** | | | | |
| Surface resistivity | | IEC 60093 | ohm | **>1.5·10E+15** |
| Volume resistivity | | IEC 60093 | ohm·cm | **>7·10E+15** |
| Comparative tracking index (CTI) | solution A | IEC 60112 | - | **500** |
| Dielectric strength | | IEC 60243 | kV/mm | **65** |
| Dielectric constant (relative permittivity) | 50 Hz | IEC 60250 | - | **2.5** |
| Dissipation factor | 50 Hz | IEC 60250 | - | **3·10E-4** |

Issue 01/02

All indicated data refer to natural grades.
The data, information and suggestions are provided for guidance purposes only.
The Company accepts no responsibility for the results obtained therefrom, as neither for their utilization in infringement of possible patent rights.
However the Company will provide the guaranteed values for each product on demand.

**Polimeri Europa SRL**
**Divisione Elastomeri e Stirenici**
Piazza Boldrini, 1
I-20097 San Donato Milanese - Milano

e-mail: stir.pst@polimerieuropa.com
www.polimerieuropa.it

**Project name:** MELIADINE-BPC UPGRADE

**Project#:** 5000220043

**Document #:** SPK_0001_ACP_VWT

**by:** CEK

**chkd:** ED

**appvd:** TS

# CLARIFIER #2 ACP2-60

# HYDROCYCLONES

**OIM manual section:** 4.2.4.8

**This page is intentionally left blank**

# CS-904-536 : Identification sheet

| | | | |
|---|---|---|---|
| VWTC PROJECT NUMBER: | 5000220043 | REV: | 1 |
| PROJECT NAME: | AEM MELIADINE-BPC UPGRADE | SUBMITTED TO (COMPANY): | AEM |
| ENGINEER: | EMMANUELLE DORMOY | SUBMITTED TO (RESPONSIBLE) | |
| PROJECT MANAGER: | THOMAS SAVARY / BRUCE BRODES | PROJECT NUM REFERENCE.: | 6526-S-265-605 / OC-989680 |
| PHONE NUMBER: | 514-334-7230 | LOT NUMBER: | |

| SUPPLIER | EQPT CODE | EQPT TAG NO | DIA | DESCRIPTION | INFO 1 | INFO 2 | INFO 3 | APPLIC. | NOTE | REV |
|---|---|---|---|---|---|---|---|---|---|---|
| KREBS | CMSPAI327847 | 65CYC68003A | | CLARIFIER #2 HYDROCYCLONE #1 | KREBS ENGINEERS/ U4B-10-1734 /NON FOOD GRADE URETHANE / INLET AREA 1,25 IN2 / VORTEX FINDER 1,6 IN / APEX 1,25 IN / 20 m3/h @ 27,6psi | | | CLARIFIER #2 | | 1 |
| KREBS | CMSPAI327847 | 65CYC68003B | | CLARIFIER #2 HYDROCYCLONE #2 | KREBS ENGINEERS/ U4B-10-1734 /NON FOOD GRADE URETHANE / INLET AREA 1,25 IN2 / VORTEX FINDER 1,6 IN / APEX 1,25 IN / 20 m3/h @ 27,6psi | | | CLARIFIER #2 | | 1 |

**This page is intentionally left blank**

# KREBS CYCLONE

## MODEL U4B-10-1734

USE WITH PARTS LIST NO. PL 3685-KR-1

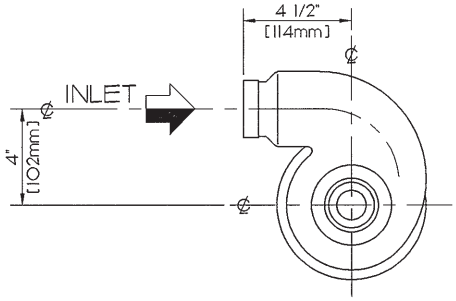


PLAN

(VICTAULIC FITTINGS NOT SHOWN)

VEOLIA

EXAMINÉ/EXAMINED

L'examen de ce dessin ne relève en aucune façon l'entrepreneur ou le fournisseur de sa responsabilité quant à l'exactitude de ce dessin ou à sa conformité avec les documents contractuels et les conditions de chantier. Examination of this drawing will not release in any way the Contractor or Supplier of his responsibilities as of the precision of this drawing or to its compliance with the contract documents and job site conditions.

☒ Procéder tel quel / Proceed as is

☐ Procéder tel qu'annoté / Proceed as noted

☐ Resoumettre / Re-submit

Par / by: pour G. Périn

Date: 2021-01-18

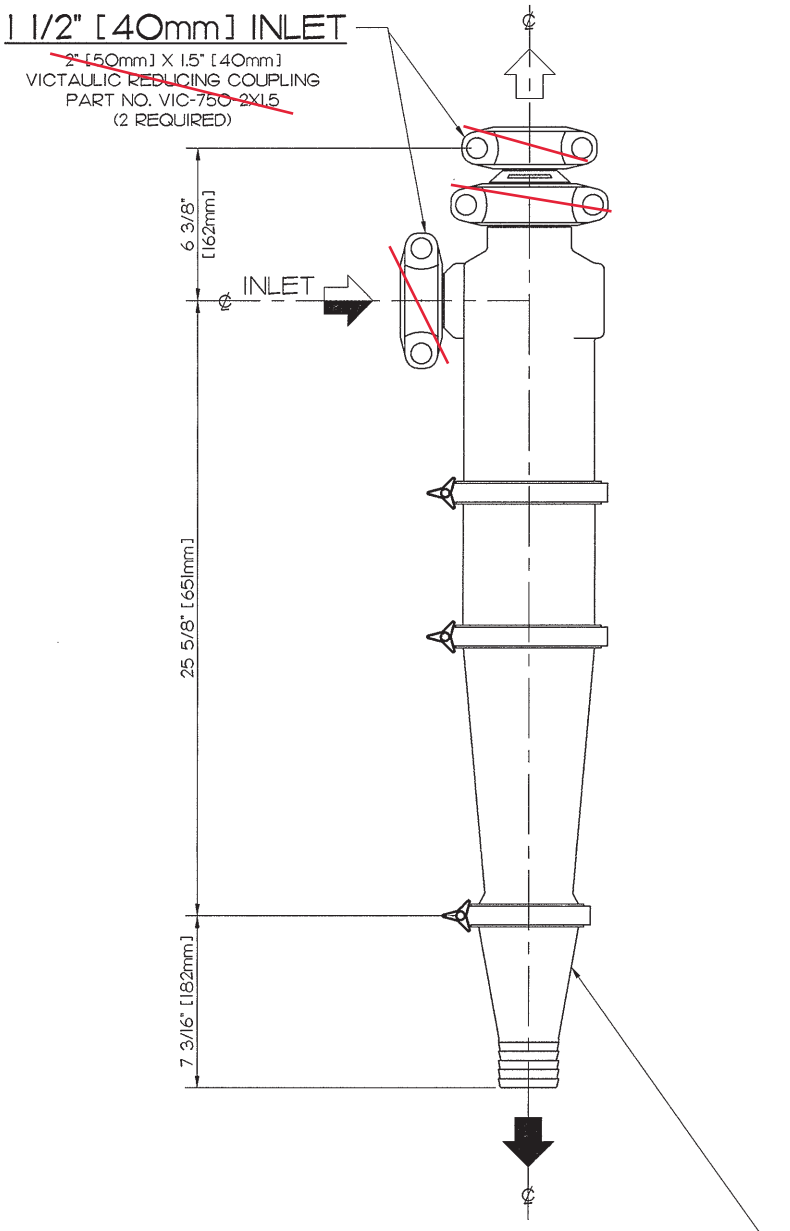


FIXED APEX NO. C1681

| | | |
|---|---|---|
| INLET HEAD | PART NO. | C1723-RU-1.25" |
| VORTEX FINDER | PART NO. | C1717-RU-1.6" |
| APEX ORIFICE | PART NO. | C1681-RU-1.25" |

BARE WEIGHT: SHIPPING WEIGHT:

CERTIFIED FOR_____
P.O. No._____
REQ. No._____ S.O. No._____
QUAN._____ MODEL_____
SERIAL NO._____
BY_____ DATE_____


**KREBS ENGINEERS**
5505 WEST GILLETTE ROAD TUCSON, ARIZONA 85743
PHONE: (520) 744-8200 FAX: (520) 744-8300


| TOLERANCE SCHEDULE: UNLESS OTHERWISE SPECIFIED. | | |
|---|---|---|
| -24"=±1/4" | +24" thru 100"=±1/2" | +100"=±1" |
| [-600mm = ±6mm] | [+600mm thru 2500mm = ±12mm] | [+2500mm = ±25mm] |


THIS SHEET IS THE PROPERTY OF KREBS ENGINEERS, TUCSON, ARIZONA, AND IS LOANED UNDER THE EXPRESS CONDITION THAT IT IS NOT TO BE USED IN ANY MANNER DIRECTLY OR INDIRECTLY DETRIMENTAL TO KREBS ENGINEERS.


| | | | | | |
|---|---|---|---|---|---|
| REVISION STATUS: 4 | KREBS® ENGINEERS | 5505 WEST GILLETTE ROAD TUCSON, AZ 85743 | | | |
| Dwn. By: | | | | | |
| Date: | Scale: ----- | Dwn. By: JJF | Date: 5-07-03 | Apprd. By: SHP | S.O. |
| Apprd. By: | GENERAL ARRANGMENT KREBS CYCLONE - MODEL U4B-10-1734 WITH FIXED APEX NO. C1681 | | | | |
| C | © KREBS ENGINEERS 2003 | DWG. NO. | S1734-KR-1 | | |

**This page is intentionally left blank**

KREBS ENGINEERS

SHEET: 2A

DATE: 07-Jun-19

BY: HMT

Client: Veolia

Problem: Maximum recovery of sand to the underflow with 20% of the feed volume in the underflow

70-85 sand

Number, Model Krebs Cyclones: 1 operating U4B-10

| Orifices: | Inlet Area | Vortex Finder | Apex | Pressure Drop |
|---|---|---|---|---|
| | 1.25 sq. in. | 1.60 in. | 1.25 in. | 27.6 PSI |

Specific Gravity: Solids: 2.650 Liquid: 1.000 Temperature: Amb. °F Viscosity: 1 Cps

| | FEED | OVERFLOW | UNDERFLOW |
|---|---|---|---|
| MTPH Solids | 2.70 | 0.03 | 2.67 |
| MTPH Liquids | 18.98 | 15.99 | 2.99 |
| MTPH Slurry | 21.68 | 16.02 | 5.66 |
| Wt Solids | 12.45 | 0.18 | 47.15 |
| S.G. Slurry | 1.084 | 1.001 | 1.416 |
| Vol% Solids | 5.09 | 0.07 | 25.19 |
| GPM Slurry | 88.06 | 70.44 | 17.61 |
| M3/Hr. Slurry | 20.00 | 16.00 | 4.00 |

~~Ref: 14.5 1.0 53.0*~~

| | | FEED | | | OVERFLOW | | | UNDERFLOW | | | ACT. | |
|---|---|---|---|---|---|---|---|---|---|---|---|---|
| Mesh | Micron | Cum. % + | Ind. % + | MTPH | Cum. % + | Ind. % + | MTPH | Cum. % + | Ind. % + | MTPH | REC. | |
| 40 | 425.0 | 0.16 | 0.16 | 0.0 | 0.00 | 0.00 | 0.0 | 0.16 | 0.16 | 0.0 | 100.0 | |
| 50 | 300.0 | 1.47 | 1.31 | 0.0 | 0.00 | 0.00 | 0.0 | 1.49 | 1.32 | 0.0 | 100.0 | |
| 70 | 212.0 | 5.92 | 4.45 | 0.1 | 0.00 | 0.00 | 0.0 | 5.98 | 4.50 | 0.1 | 100.0 | |
| 100 | 150.0 | 26.60 | 20.68 | 0.6 | 0.09 | 0.09 | 0.0 | 26.89 | 20.91 | 0.6 | 100.0 | |
| 140 | 106.0 | 68.14 | 41.54 | 1.1 | 3.86 | 3.77 | 0.0 | 68.84 | 41.95 | 1.1 | 99.9 | |
| 200 | 75.0 | 91.59 | 23.45 | 0.6 | 21.76 | 17.90 | 0.0 | 92.35 | 23.51 | 0.6 | 99.2 | |
| 270 | 53.0 | 98.19 | 6.60 | 0.2 | 44.34 | 22.58 | 0.0 | 98.78 | 6.43 | 0.2 | 96.3 | |
| -270 | -53.0 | 100.00 | 1.81 | 0.0 | 100.00 | 55.66 | 0.0 | 100.00 | 1.22 | 0.0 | 66.7 | |
| TOTAL | | | | 2.70 | | | 0.03 | | | 2.67 | 98.9 | |

KREBS ENGINEERS
5505 WEST GILLETTE ROAD TUCSON, AZ 85743
TEL: (520) 744-8200 FAX: (520) 744-8300
www.krebs.com

KREBS ENGINEERS

SHEET: 2B

DATE: 17-Jun-19

BY: HMT

Client: Veolia

Problem: Maximum recovery of sand to the underflow with 20% of the feed volume in the underflow

88-85 Sand

Number, Model Krebs Cyclones: 1 operating U4B-10

| Orifices: | Inlet Area | Vortex Finder | Apex | Pressure Drop |
|---|---|---|---|---|
| | 1.25 sq. in. | 1.60 in. | 1.25 in. | 27.6 PSI |

Specific Gravity: Solids: 2.650 Liquid: 1.000 Temperature: Amb. °F Viscosity: 1 Cps

| | FEED | OVERFLOW | UNDERFLOW |
|---|---|---|---|
| MTPH Solids | 2.70 | 0.01 | 2.69 |
| MTPH Liquids | 18.98 | 16.00 | 2.98 |
| MTPH Slurry | 21.68 | 16.01 | 5.67 |
| Wt Solids | 12.45 | 0.07 | 47.40 |
| S.G. Slurry | 1.084 | 1.000 | 1.419 |
| Vol% Solids | 5.09 | 0.03 | 25.38 |
| GPM Slurry | 88.06 | 70.46 | 17.60 |
| M3/Hr. Slurry | 20.00 | 16.00 | 4.00 |

~~Ref: 14.5 1.0 53.0*~~

| | | FEED | | | OVERFLOW | | | UNDERFLOW | | | ACT. | |
|---|---|---|---|---|---|---|---|---|---|---|---|---|
| Mesh | Micron | Cum. % + | Ind. % + | MTPH | Cum. % + | Ind. % + | MTPH | Cum. % + | Ind. % + | MTPH | REC. | |
| 40 | 425.0 | 0.29 | 0.29 | 0.0 | 0.00 | 0.00 | 0.0 | 0.29 | 0.29 | 0.0 | 100.0 | |
| 50 | 300.0 | 1.74 | 1.45 | 0.0 | 0.00 | 0.00 | 0.0 | 1.75 | 1.46 | 0.0 | 100.0 | |
| 70 | 212.0 | 6.89 | 5.15 | 0.1 | 0.00 | 0.00 | 0.0 | 6.92 | 5.17 | 0.1 | 100.0 | |
| 100 | 150.0 | 30.00 | 23.11 | 0.6 | 0.26 | 0.26 | 0.0 | 30.13 | 23.21 | 0.6 | 100.0 | |
| 140 | 106.0 | 78.64 | 48.64 | 1.3 | 11.52 | 11.26 | 0.0 | 78.93 | 48.80 | 1.3 | 99.9 | |
| 200 | 75.0 | 97.30 | 18.66 | 0.5 | 47.86 | 36.34 | 0.0 | 97.51 | 18.58 | 0.5 | 99.2 | |
| 270 | 53.0 | 99.59 | 2.29 | 0.1 | 67.84 | 19.98 | 0.0 | 99.73 | 2.21 | 0.1 | 96.3 | |
| -270 | -53.0 | 100.00 | 0.41 | 0.0 | 100.00 | 32.16 | 0.0 | 100.00 | 0.27 | 0.0 | 66.7 | |
| TOTAL | | | | 2.70 | | | 0.01 | | | 2.69 | 99.6 | |

KREBS ENGINEERS
5505 WEST GILLETTE ROAD TUCSON, AZ 85743
TEL: (520) 744-8200 FAX: (520) 744-8300
www.krebs.com

KREBS ENGINEERS

SHEET: 2

DATE: 07-Jun-19

BY: HMT

Client: Veolia

Problem: Maximum recovery of sand to the underflow with 20% of the feed volume in the underflow sand is 120-135

Number, Model Krebs Cyclones: 1 operating U4B-10

| Orifices: | Inlet Area | Vortex Finder | Apex | Pressure Drop |
|---|---|---|---|---|
| | 1.25 sq. in. | 1.60 in. | 1.25 in. | 27.6 PSI |

Specific Gravity: Solids: 2.650 Liquid: 1.000 Temperature: Amb. °F Viscosity: 1 Cps

| | FEED | OVERFLOW | UNDERFLOW |
|---|---|---|---|
| MTPH Solids | 2.70 | 0.00 | 2.70 |
| MTPH Liquids | 18.98 | 16.00 | 2.98 |
| MTPH Slurry | 21.68 | 16.00 | 5.68 |
| Wt Solids | 12.45 | 0.01 | 47.50 |
| S.G. Slurry | 1.084 | 1.000 | 1.420 |
| Vol% Solids | 5.09 | 0.00 | 25.45 |
| GPM Slurry | 88.06 | 70.45 | 17.61 |
| M3/Hr. Slurry | 20.00 | 16.00 | 4.00 |

~~Ref: 14.5 1.0 53.0*~~

| | | FEED | | | OVERFLOW | | | UNDERFLOW | | | ACT. | |
|---|---|---|---|---|---|---|---|---|---|---|---|---|
| Mesh | Micron | Cum. % + | Ind. % + | MTPH | Cum. % + | Ind. % + | MTPH | Cum. % + | Ind. % + | MTPH | REC. | |
| 40 | 425.0 | 0.65 | 0.65 | 0.0 | 0.00 | 0.00 | 0.0 | 0.65 | 0.65 | 0.0 | 100.0 | |
| 50 | 300.0 | 6.25 | 5.60 | 0.2 | 0.00 | 0.00 | 0.0 | 6.25 | 5.60 | 0.2 | 100.0 | |
| 70 | 212.0 | 32.21 | 25.96 | 0.7 | 0.03 | 0.03 | 0.0 | 32.23 | 25.98 | 0.7 | 100.0 | |
| 100 | 150.0 | 74.85 | 42.64 | 1.2 | 3.22 | 3.19 | 0.0 | 74.90 | 42.67 | 1.2 | 100.0 | |
| 140 | 106.0 | 97.20 | 22.35 | 0.6 | 37.74 | 34.53 | 0.0 | 97.24 | 22.34 | 0.6 | 99.9 | |
| 200 | 75.0 | 99.84 | 2.64 | 0.1 | 72.06 | 34.32 | 0.0 | 99.86 | 2.62 | 0.1 | 99.2 | |
| 270 | 53.0 | 99.96 | 0.12 | 0.0 | 79.05 | 6.99 | 0.0 | 99.97 | 0.12 | 0.0 | 96.3 | |
| -270 | -53.0 | 100.00 | 0.04 | 0.0 | 100.00 | 20.95 | 0.0 | 100.00 | 0.03 | 0.0 | 66.7 | |
| TOTAL | | | | 2.70 | | | 0.00 | | | 2.70 | 99.9 | |

KREBS ENGINEERS
5505 WEST GILLETTE ROAD TUCSON, AZ 85743
TEL: (520) 744-8200 FAX: (520) 744-8300
www.krebs.com

**This page is intentionally left blank**

**Project name:** MELIADINE-BPC UPGRADE

**Project#:** 5000220043

**Document #:** SPK_0001_ACP_VWT

**by:** CEK

**chkd:** ED

**appvd:** TS

# CLARIFIER #2 ACP2-60

# VALVES

**OIM manual section:** 4.2.4.9

**This page is intentionally left blank**

# CS-301-100 : Identification sheet

| | | | |
|---|---|---|---|
| VWTC PROJECT NUMBER: | 5000220043 | REV: | 1 |
| PROJECT NAME: | AEM MELIADINE - BPC UPGRADE | SUBMITTED TO (COMPANY): | AEM |
| ENGINEER: | EMMANUELLE DORMOY | SUBMITTED TO (RESPONSIBLE) | |
| PROJECT MANAGER: | THOMAS SAVARY / BRUCE BORDES | PROJECT NUM REFERENCE.: | 6526-S-265-605 / OC-989680 |
| PHONE NUMBER: | 514-334-7230 | LOT NUMBER: | |

| SUPPLIER | EQPT CODE | EQPT TAG NO | DIA | DESCRIPTION | INFO 1 | INFO 2 | INFO 3 | APPLIC. | NOTE | REV |
|---|---|---|---|---|---|---|---|---|---|---|
| CHEMLINE | VABLPV200243 | 15-BA99-1307 | DIA: 13 mm (1/2") | PRESSURE GAUGE #1 ISOLATION VALVE | TYPE: BALL VALVE//MANUFACTURER : CHEMLINE//MODEL : Type21-A-005-V-C//CONNECTION TYPE : COMBO \| 13 mm (1/2")//BODY : PVC (ASTM D1784)// SEAL \| SEAT :PTFE \| VITON// STEM : PVC | | | CLARIFIER #2 | | 1 |
| CHEMLINE | VABLPV200243 | 15-BA99-1308 | DIA: 13 mm (1/2") | PRESSURE GAUGE #2 ISOLATION VALVE | TYPE: BALL VALVE//MANUFACTURER : CHEMLINE//MODEL : Type21-A-005-V-C//CONNECTION TYPE : COMBO \| 13 mm (1/2")//BODY : PVC (ASTM D1784)// SEAL \| SEAT :PTFE \| VITON// STEM : PVC | | | CLARIFIER #2 | | 1 |
| CHEMLINE | VABLPV200244 | 20-BA99-1313 | DIA: 20 mm (3/4") | SAMPLE BALL VALVE INLET HYDROCYCLONE #1 | TYPE: BALL VALVE//MANUFACTURER : CHEMLINE//MODEL : Type21-A-007-V-C//CONNECTION TYPE : COMBO \| 20 mm (3/4")//BODY : PVC (ASTM D1784)// SEAL \| SEAT :PTFE \| VITON// STEM : PVC | | | CLARIFIER #2 | | 2 |

| SUPPLIER | EQPT CODE | EQPT TAG NO | DIA | DESCRIPTION | INFO 1 | INFO 2 | INFO 3 | APPLIC. | NOTE | REV |
|---|---|---|---|---|---|---|---|---|---|---|
| CHEMLINE | VABLPV200244 | 20-BA99-1314 | DIA: 20 mm (3/4") | SAMPLE BALL VALVE INLET HYDROCYCLONE #2 | TYPE: BALL VALVE//MANUFACTURER : CHEMLINE//MODEL : Type21-A-007-V-C//CONNECTION TYPE : COMBO \| 20 mm (3/4")//BODY : PVC (ASTM D1784)// SEAL \| SEAT :PTFE \| VITON// STEM : PVC | | | CLARIFIER #2 | | 2 |
| CHEMLINE | VABLPV200244 | 20-BA99-1315 | DIA: 20 mm (3/4") | SAMPLE BALL VALVE OUTLET HYDROCYCLONE #1 | TYPE: BALL VALVE//MANUFACTURER : CHEMLINE//MODEL : Type21-A-007-V-C//CONNECTION TYPE : COMBO \| 20 mm (3/4")//BODY : PVC (ASTM D1784)// SEAL \| SEAT :PTFE \| VITON// STEM : PVC | | | CLARIFIER #2 | | 2 |
| CHEMLINE | VABLPV200244 | 20-BA99-1316 | DIA: 20 mm (3/4") | SAMPLE BALL VALVE OUTLET HYDROCYCLONE #2 | TYPE: BALL VALVE//MANUFACTURER : CHEMLINE//MODEL : Type21-A-007-V-C//CONNECTION TYPE : COMBO \| 20 mm (3/4")//BODY : PVC (ASTM D1784)// SEAL \| SEAT :PTFE \| VITON// STEM : PVC | | | CLARIFIER #2 | | 2 |
| CHEMLINE | VABLPV200245 | 25-BA99-1306 | DIA: 25 mm (1") | CLEANING VALVE RECIRCULATION LINE | TYPE: BALL VALVE//MANUFACTURER : CHEMLINE//MODEL : Type21-A-010-V-C//CONNECTION TYPE : COMBO \| 25 mm (1")//BODY : PVC (ASTM D1784)// SEAL \| SEAT :PTFE \| VITON// STEM : PVC | | | CLARIFIER #2 | | 2 |

| SUPPLIER | EQPT CODE | EQPT TAG NO | DIA | DESCRIPTION | INFO 1 | INFO 2 | INFO 3 | APPLIC. | NOTE | REV |
|---|---|---|---|---|---|---|---|---|---|---|
| CHEMLINE | VABLPV200245 | 25-BA99-1309 | DIA: 25 mm (1") | CLEANING VALVE RECIRCULATION LINE #1 | TYPE: BALL VALVE//MANUFACTURER : CHEMLINE//MODEL : Type21-A-010-V-C//CONNECTION TYPE : COMBO \| 25 mm (1")//BODY : PVC (ASTM D1784)// SEAL \| SEAT :PTFE \| VITON// STEM : PVC | | | CLARIFIER #2 | | 2 |
| CHEMLINE | VABLPV200245 | 25-BA99-1310 | DIA: 25 mm (1") | CLEANING VALVE RECIRCULATION LINE #2 | TYPE: BALL VALVE//MANUFACTURER : CHEMLINE//MODEL : Type21-A-010-V-C//CONNECTION TYPE : COMBO \| 25 mm (1")//BODY : PVC (ASTM D1784)// SEAL \| SEAT :PTFE \| VITON// STEM : PVC | | | CLARIFIER #2 | | 2 |
| CHEMLINE | VABLPV200249 | 15-BA99-1317 | DIA: 13 mm (1/2") | POLYMER ISOLATION VALVE | TYPE: BALL VALVE//MANUFACTURER : CHEMLINE//MODEL : Type21-A-005-E-C//CONNECTION TYPE : COMBO \| 13 mm (1/2")//BODY : PVC (ASTM D1784)// SEAL \| SEAT :PTFE \| EPDM// STEM : PVC | | | CLARIFIER #2 | | 1 |
| CHEMLINE | VABLPV200249 | 15-BA99-1318 | DIA: 13 mm (1/2") | POLYMER ISOLATION VALVE | TYPE: BALL VALVE//MANUFACTURER : CHEMLINE//MODEL : Type21-A-005-E-C//CONNECTION TYPE : COMBO \| 13 mm (1/2")//BODY : PVC (ASTM D1784)// SEAL \| SEAT :PTFE \| EPDM// STEM : PVC | | | CLARIFIER #2 | | 1 |

| SUPPLIER | EQPT CODE | EQPT TAG NO | DIA | DESCRIPTION | INFO 1 | INFO 2 | INFO 3 | APPLIC. | NOTE | REV |
|---|---|---|---|---|---|---|---|---|---|---|
| CHEMLINE | VABLPV200249 | 15-BA99-1319 | DIA: 13 mm (1/2") | POLYMER ISOLATION VALVE | TYPE: BALL VALVE//MANUFACTURER : CHEMLINE//MODEL : Type21-A-005-E-C//CONNECTION TYPE : COMBO \| 13 mm (1/2")//BODY : PVC (ASTM D1784)// SEAL \| SEAT :PTFE \| EPDM// STEM : PVC | | | CLARIFIER #2 | | 1 |

PDF Published November 23, 2020

# Type 21 True Union Ball Valves

CHEMLINE PLASTICS
SUPERIOR FLOW SOLUTIONS

The Chemline **Type 21** True Union Ball valve incorporates state of the art features for long term performance. This is a full port, full blocking True Union valve pressure rated at 16 bar (230 psi)[3]. Double stem o-rings and Safety Shear stem design provide for a high degree of safety on hazardous fluid applications. All sizes have an ISO standard actuator mounting platform integral to the valve body. This provides for sturdy and secure mounting of pneumatic or electric actuators.

PVC | CPVC | PP | PVDF

CRN Registered Consult Chemline

NSF[4] Certified to NSF/ANSI 61

SERIES: Type 21

SIZES: 3/8" – 4"

ENDS: Socket, Threaded, Combo[6], Flanged, Butt[1] or ChemFlare™

SEATS: PTFE

SEALS[2]: EPDM, FKM (Viton®)




## features

### Pressure rated to 230 psi[3]
- Provides a high factor of safety

### Integral Actuator Mounting Platform
- Actuation is easy. Electric or pneumatic actuators may be mounted in the field.

### Full Port
- High capacity and low pressure drops

### Fully Blocking
- Downstream union nut may be safely disassembled for piping maintenance while valve is closed off under full system pressure

### Built-In Spanner Wrench
- Top of the handle is designed to be used as a tool for accessing internal parts

### Safety Shear Stem Design
- Stem has double o-rings
- Designed to hold full pressure even if stem breaks due to excessive torque

### High Chemical Resistant Material
- PVC and CPVC compounds have an "A" chemical resistance rating as per ASTM D-1784. They have outperformed other PVC and CPVC compounds on aggressive chemicals.

### CRN Registration numbers by province
- Ontario: OC11045.5
- Newfoundland: OC11045.50
- Saskatchewan/Manitoba/Quebec: OC11045.56
- New Brunswick: OC11045.57
- Nova Scotia: OC11045.58
- P.E.I.: OC11045.59
- British Columbia: not required
- Alberta: not required[5]

[1] Butt ends for fusion to Chemline metric PP, PVDF or ECTFE (Halar®) piping.
[2] Other materials are available.
[3] PVC, CPVC and PVDF 1/2" to 2" are rated at 230 psi; 2-1/2" to 4" and all size PP valves are rated at 150 psi at 20°C.
[4] PVC valves with EPDM or FKM (Viton®) seals are certified under NSF/ANSI Standard 61 for contact with drinking water.
[5] Not required for non-expandable fluids.
[6] PVC and CPVC valves 1/2" to 2" are available as Combo (threaded and socket ends).

11/20 ©Chemline Plastics Limited 2020
Chemline is a registered trade mark of Chemline Plastics Limited

# Type 21 True Union Ball Valves

## Features

**Double Stem O-Rings – Safety Shear Design**

- Upper o-ring groove is deeper than lower. In case of excessive stem torque, stem will shear at the upper groove, leaving the inner o-ring intact to seal against full line pressure.

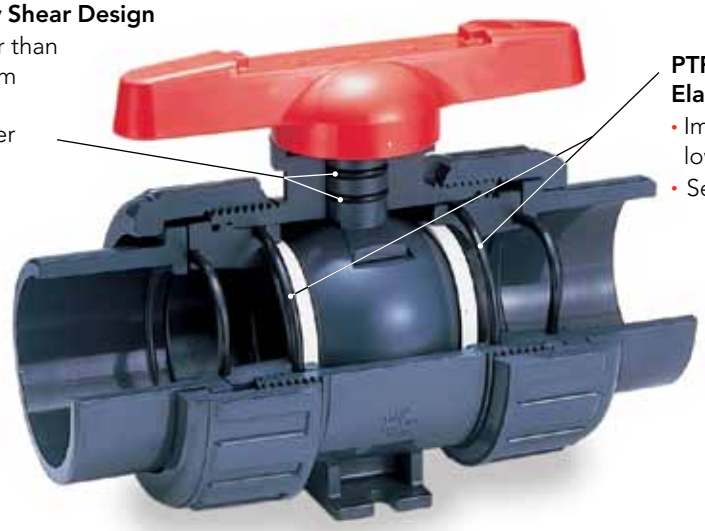

**PTFE Seats have Elastomer Cushions**

- Improved sealing while lowering stem torques
- Self adjusts for seat wear

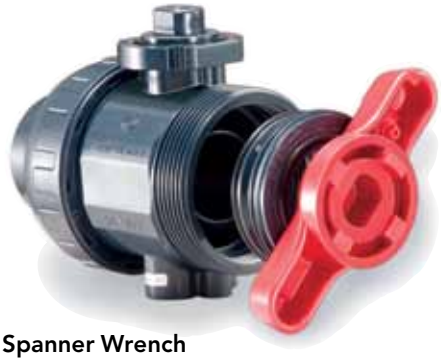

**Built in Spanner Wrench**

- For removing or tightening the seat carrier
- All parts are replaceable



**Integral Actuator Mounting Platform**

- Actuation is easy. Electric or pneumatic actuators may be mounted in the field. Simply pull off the handle to reveal a standard ISO 5211 mounting platform which accepts bolt-on hardware.




**Fully Blocking**

- Downstream pipe may be removed while upstream side is still pressurized. This may be done with valve installed in either direction.



**Base Mounting Pad**

- Optional threaded inserts allow valves to be securely anchored
- Supplied standard with actuated valves

## Options + Accessories



### ChemFlare™ Ends

- For connection to PFA tube. Leak-free connections for difficult services such as sodium hypochlorite



### One-piece moulded PVC and CPVC 6" socket ends

- Allows installation of 4" valve in 6" line
- Factory moulded, elimates cementing separate reducer and coupling
- Fixed to valve mechanically just like the one-piece moulded factory flanges



### Optional Lock-out Handle & Hasp

- To prevent unauthorized operation of the valve during maintenance shut-downs
- Padlocks go through holes in hasp



### Gear Operators

- Deluxe FRP construction
- IP67 enclosure resists short term immersion



### Chain Wheel Operators

- For overhead operation, with 7' of chain drop
- Cast iron or stainless steel

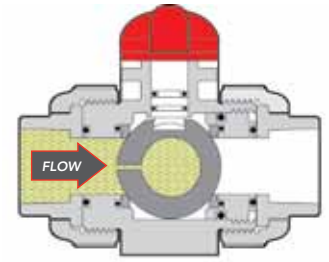


### Vented Ball

- Recommended for all sodium hypochlorite services
- Valve shown in closed position



### Valve Tags

- Stainless steel or plastic



### Different Colour Handles

- Choose a handle colour other than standard red for colour coding different services



### Municipal Operating Nut

- 2" square nut for operating valves below grade using a standard municipal "key"
- Stainless Steel for corrosion resistance



### Manual Limit Switch

- Electrical feedback of manual valve position
- NEMA 4X enclosure, position indicator beacon, 2x SPDT or proximity switches, stainless steel hardware



### Shaft Extensions

- Different materials and lengths are available
- Several designs:
  - with no housing for indoors
  - with waterproofed PVC housing for indoors or outdoors
  - with stainless steel housing for buried or actuated services

# Type 21 True Union Ball Valves

## Electric + Pneumatic Actuation

- A complete range of actuators and control accessories are available, mounted to valves using PPG plastic brackets and stainless steel couplings. Refer to separate data sheets.
- All actuators are CSA approved, have NEMA 4X enclosures, stainless steel hardware and permanently lubricated gear train



**ERS Series Electric**
- Type 21 ball valves up to 2"
- 180 in-lbs torque
- On-Off (3/2-wire), adjustable travel
- Visual feedback

**E Series Electric**
- Type 21 ball valves up to 4"
- Up to 885 in-lbs torque
- On-Off (3/2-wire), adjustable travel. Optional: failsafe, 3 position modulating
- Visual feedback and feedback switches. Optional: extra switches, feedback potentiometer and feedback transmitter



**V Series Electric**
(with optional Local Control Station)
- Type 21 ball valves up to 6"
- up to 8,850 in-lbs torque
- On-Off (2/3-wire), adjustable travel. Optional: failsafe, modulating, BUS
- Visual feedback, 2 feedback switches. Optional: 2 extra feedback switches, feedback potentiometer and feedback transmitter



**PA Series Pneumatic**
- Type 21 ball valves up to 6"
- up to 10,660 in-lbs torque
- industrial process submerged
- bleach/water washdown
- Rilsan-coated aluminum



**PP Series Pneumatic**
- Type 21 ball valves up to 6"
- up to 1,335 in-lbs torque
- industrial process with minimal use of metal
- Glass-filled Polyamide

### OTHER OPTIONS & ACCESSORIES

- **Alternate O-Ring Seals**
- **Stem Extensions** made to any length
- **Limit Switches** – for open and/or closed position indication
- **Municipal Operating Nut**
- **Lubrication-free Valves** – factory clean room assembled
- **Vented Ball** – for sodium hypochlorite applications

# Type 21 True Union Ball Valves

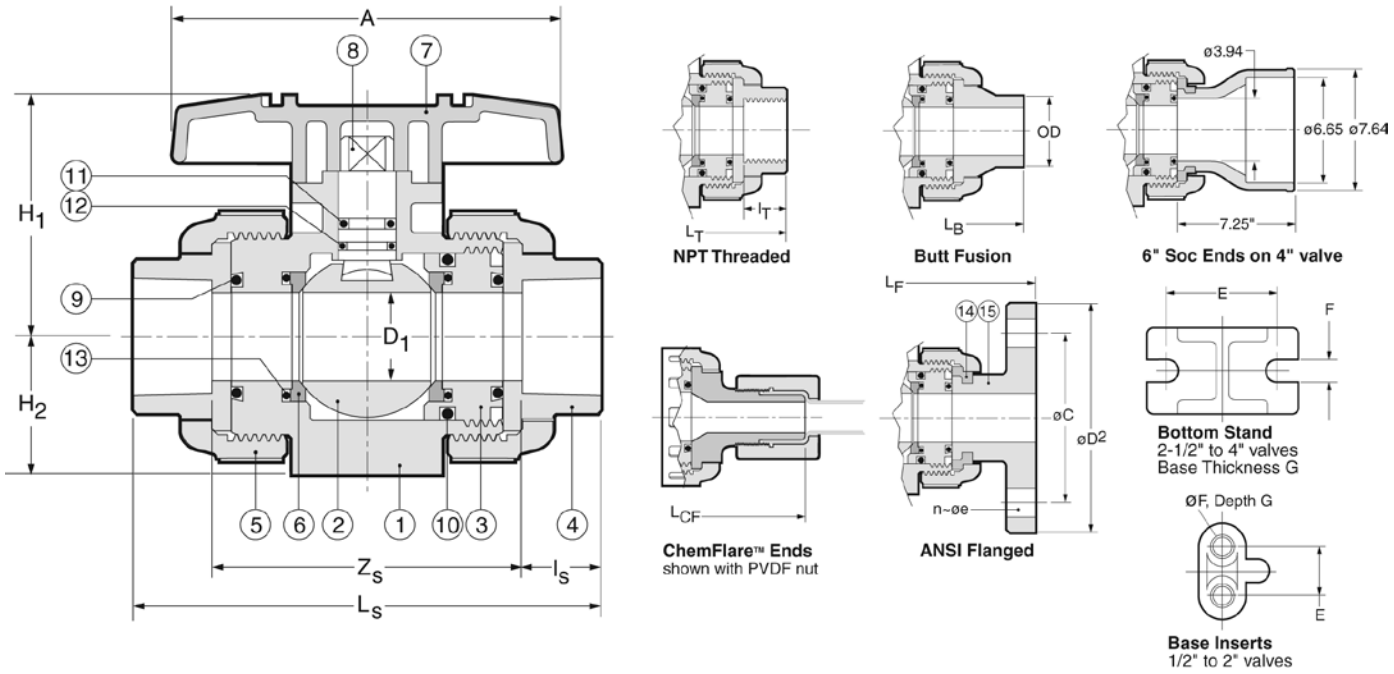


## PARTS

▲ Recommended Spare Parts

| No. | Part | Pcs. | Materials |
|---|---|---|---|
| 1 | Body | 1 | PVC, CPVC, PP, PVDF |
| 2 | Ball | 1 | PVC, CPVC, PP, PVDF |
| 3 | Carrier[1] | 1/2 | PVC, CPVC, PP, PVDF |
| 4 | End Connector | 2 | PVC, CPVC, PP, PVDF |
| 5 | Union Nut | 2 | PVC, CPVC, PP, PVDF |
| 6▲ | Ball Seat | 2 | PTFE |
| 7 | Handle | 1 | ABS |

[1] 1 carrier for sizes 1/2" to 2", 2 carriers for sizes 2-1/2" to 4"
[2] EPDM seals standard with PVC, CPVC, PP; FKM (Viton®) with PVDF valves
[3] 2 pcs 1/2" to 2", 6 pcs 2-1/2" to 4"

## PARTS

▲ Recommended Spare Parts

| No. | Part | Pcs. | Materials |
|---|---|---|---|
| 8 | Stem | 1 | PVC, CPVC, PP, PVDF |
| 9▲ | Face O-Ring[2] | 2 | EPDM, FKM (Viton®) |
| 10▲ | Carrier O-Ring[2] | 2 | EPDM, FKM (Viton®) |
| 11▲ | Upper Thicker Stem O-Ring[2] | 1 | EPDM, FKM (Viton®) |
| 12▲ | Lower Thinner Stem O-Ring[2] | 1 | EPDM, FKM (Viton®) |
| 13 | Seat Cushion[2] | 2 | EPDM, FKM (Viton®) |
| 14 | Flange Retainer[3] | 2/6 | PVDF |
| 15 | Flange | 2 | PVC, CPVC, PP, PVDF |

## DIMENSIONS INCHES

| | | | | | End Connections | | | | | | | | | | | | | | | | |
|---|---|---|---|---|---|---|---|---|---|---|---|---|---|---|---|---|---|---|---|---|---|
| | D | | | | Socket | | | Threaded | | Factory Flanged | | | | | Butt | | ChemFlare™ | | Valve Base | | |
| Size | Bore | A | $H_1$ | $H_2$ | $L_S$ | $Z_S$ | $l_S$ | $l_T$ | $L_T$ | $L_F$ | $D_2$ | C | n | e | $L_B$ | OD | $L_{CF}$ | Tube[4] | E | F[5] | G |
| 1/2" | .59 | 3.6 | 2.03 | 1.14 | 4.45 | 2.70 | .875 | .64 | 4.02 | 5.63 | 3.50 | 2.38 | 4 | .62 | 4.88 | .79 | 6.12 | 1/2" | .75 | .29 | .43 |
| 3/4" | .79 | 3.9 | 2.34 | 1.38 | 5.08 | 3.08 | 1.00 | .65 | 4.72 | 6.77 | 3.88 | 2.75 | 4 | .62 | 5.67 | .98 | 6.52 | 3/4" | .75 | .29 | .43 |
| 1" | .98 | 4.3 | 2.68 | 1.54 | 5.75 | 3.50 | 1.13 | .81 | 5.16 | 7.36 | 4.25 | 3.12 | 4 | .62 | 6.06 | 1.26 | 7.26 | 1" | .75 | .29 | .43 |
| 1-1/4" | 1.22 | 4.8 | 3.17 | 1.85 | 6.46 | 5.21 | 1.25 | .85 | 5.91 | 7.48 | 4.62 | 3.50 | 4 | .62 | 6.85 | 1.57 | 9.58 | 1-1/4" | 1.18 | .35 | .59 |
| 1-1/2" | 1.57 | 5.2 | 3.50 | 2.17 | 7.24 | 4.49 | 1.38 | .85 | 6.42 | 8.35 | 5.00 | 3.88 | 4 | .62 | 7.64 | 1.97 | – | – | 1.18 | .35 | .59 |
| 2" | 2.01 | 6.3 | 4.02 | 2.60 | 8.23 | 5.23 | 1.50 | 1.90 | 7.76 | 9.21 | 6.00 | 4.75 | 4 | .75 | 8.82 | 2.48 | – | – | 1.18 | .35 | .59 |
| 2-1/2" | 2.28 | 7.87 | 4.96 | 2.83 | 9.45 | 5.95 | 1.75 | 1.21 | 8.46 | 10.20 | 7.00 | 5.49 | 4 | .75 | 9.72 | 2.95 | – | – | 1.89 | .35 | .23 |
| 3" | 2.70 | 9.45 | 5.51 | 3.35 | 11.10 | 7.35 | 1.88 | 1.30 | 10.39 | 11.97 | 7.50 | 6.00 | 4 | .75 | 11.61 | 3.54 | – | – | 2.17 | .43 | .28 |
| 4" | 3.54 | 11.81 | 7.01 | 4.33 | 13.88 | 9.87 | 2.00 | 1.38 | 14.17 | 14.65 | 9.00 | 7.50 | 8 | .75 | 14.76 | 4.33 | – | – | 2.56 | .43 | .32 |
| 6"[6] | 3.54 | 11.81 | 7.01 | 4.33 | 23.15 | 17.09 | 3.03 | – | – | – | – | – | – | – | – | – | – | – | 2.56 | .43 | .32 |
| 6"[7] | 3.54 | 11.81 | 7.01 | 4.33 | 27.22 | 21.21 | 3.03 | – | – | – | – | – | – | – | – | – | – | – | 2.56 | .43 | .32 |

[4] ChemFlare™ ends are available for reduced tube sizes down to 1/4"
[5] Optional threaded inserts: 1/2" to 1" valves – UNC 1/4"-20; 1-1/4" to 2" valves – UNC 5/16"-18. 'Recoil' brand inserts require drilling before insertion.
[6] 6" with factory moulded socket ends
[7] 6" with fabricated socket ends

# Type 21 True Union Ball Valves

## WORKING PRESSURES PSI, Water, Non-Shock

## VACUUM RATING • 29.9 inches mercury

| Size | PVC | | | CPVC | | | | | | PP | | | PVDF | | | | |
|---|---|---|---|---|---|---|---|---|---|---|---|---|---|---|---|---|---|
| | 20°C 68°F | 40°C 104°F | 50°C 122°F | 20°C 68°F | 40°C 104°F | 50°C 122°F | 60°C 140°F | 80°C 176°F | 90°C 194°F | 20°C 68°F | 60°C 140°F | 80°C 176°F | 20°C 68°F | 40°C 104°F | 60°C 140°F | 80°C 176°F | 100°C 212°F |
| 1/2"– 2" | 230 | 165 | 150 | 230 | 165 | 150 | 120 | 75 | 55 | 150 | 85 | 55 | 230 | 185 | 150 | 110 | 85 |
| 2-1/2"– 4" | 150 | 150 | 150 | 150 | 150 | 150 | 120 | 75 | 55 | 150 | 70 | 40 | 150 | 150 | 150 | 110 | 85 |

**Temperature Ranges: PVC** 0 to 50°C (32 to 122°F), **CPVC** 0 to 90°C (32 to 194°F), **PP** –20 to 80°C (–4 to 176°F), **PVDF** –20 to 100°C (–20 to 212°F)

## WEIGHTS LB. THREADED or SOCKET

## WEIGHTS LB. FLANGED

| Size | PVC | CPVC | PP | PVDF | PVC | CPVC | PP | PVDF |
|---|---|---|---|---|---|---|---|---|
| 1/2" | 0.4 | 0.4 | 0.4 | 0.4 | 0.9 | 0.9 | 0.7 | 1.1 |
| 3/4" | 0.7 | 0.7 | 0.7 | 0.9 | 1.3 | 1.5 | 1.1 | 1.5 |
| 1" | 0.9 | 1.1 | 0.9 | 1.1 | 1.8 | 2.0 | 1.5 | 2.2 |
| 1-1/4" | 1.5 | 1.5 | 1.3 | 1.8 | 2.6 | 2.9 | 2.0 | 3.3 |
| 1-1/2" | 2.4 | 2.6 | 1.5 | 2.9 | 3.7 | 4.0 | 2.6 | 4.4 |
| 2" | 4.0 | 4.4 | 2.6 | 4.9 | 5.5 | 6.0 | 4.0 | 8.2 |
| 2-1/2" | 5.1 | 5.5 | 3.7 | 6.2 | 7.3 | 7.7 | 5.3 | 8.8 |
| 3" | 8.2 | 8.8 | 5.5 | 9.9 | 10.1 | 11.0 | 7.5 | 12.6 |
| 4" | 19.4 | 21.8 | 13.2 | 24.9 | 21.6 | 23.4 | 15.4 | 26.7 |

## Cv VALUES VS. BALL ANGLE

| Size | 0% | 25% | 50% | 75% | 100% |
|---|---|---|---|---|---|
| 1/2" | 0 | 0.35 | 1.3 | 5.5 | 14. |
| 3/4" | 0 | 0.73 | 2.8 | 11.5 | 29. |
| 1" | 0 | 1.2 | 4.5 | 18.6 | 47. |
| 1-1/4" | 0 | 1.8 | 6.8 | 28.4 | 72. |
| 1-1/2" | 0 | 3.9 | 14.7 | 61.2 | 155. |
| 2" | 0 | 4.8 | 18.0 | 75.0 | 190. |
| 2-1/2" | 0 | 9.1 | 34.7 | 144.0 | 365. |
| 3" | 0 | 10.2 | 39.0 | 162.0 | 410. |
| 4" | 0 | 17.0 | 64.6 | 269.0 | 680. |

## SAMPLE SPECIFICATION

1. All True Union Ball Valves in PVC, CPVC, PP or PVDF shall be Chemline Type 21 or equal sizes 1/2" to 2" in PVC, CPVC, and PVDF rated at 230 psi and in PP 150 psi maximum working pressure. Sizes 2-1/2", 3" and 4" rated at 150 psi maximum working pressure with EPDM or FKM (Viton®) seals. Ball seats shall be PTFE with elastomer cushions for closure with minimum stem torques.
2. All valves will have Safety Shear stem design, blowout-proof with double o-rings for safety. The top o-ring groove shall be deeper so that if the stem breaks off under excessive torque the lower o-ring will remain intact and the valve will hold pressure.
3. All valves shall be full port and two-way blocking design.
4. All valves will be CRN (Canadian Registration Number) registered with TSSA.
5. PVC valves with EPDM or FKM (Viton®) seals shall be certified under NSF/ANSI Standard 61 for contact with drinking water.
6. All valves shall have chemical resistant labels permanently marked with manufacturing number to provide production level traceability.
7. PVC compound shall have an ASTM cell classification 12454-A with a minimum suffix "A" designation for chemical resistance as per ASTM D-1784 (CSA report LO 4000-172).
8. CPVC compound shall have an ASTM cell classification 23567-A with a minimum suffix "A" designation for chemical resistance as per ASTM D-1784.
9. PP material will conform to ASTM D-4101 PP 021 B 67272 material requirements.
10. PVDF material shall be unpigmented conforming to ASTM D-3222 material requirements and to be USDA Title 21 Chapter 1 Part 177. 2510 requirements for contact with food.
11. Socket ends in PVC and CPVC shall be Schedule 80 and conform to ASTM D-2467.
12. Threaded ends shall be Schedule 80 and conform to ASTM D-2464.
13. Butt fusion ends in PP or PVDF will be compatible with Chemline PP or PVDF metric piping systems.
14. Flanged ends shall be ANSI Class 150 one-piece factory moulded (not fabricated) to ensure maximum strength and close tolerance end to end dimensions.

## ORDERING EXAMPLE

| | | | | | for ChemFlare™ ends only | | all other ends |
|---|---|---|---|---|---|---|---|
| **Chemline True Union Ball Valves** | **21** | **A** | **005** | **E** | **V** | **–A** | **8N** | **–1** |
| Body Material | **A** – PVC **B** – PP | **C** – CPVC **K** – PVDF | | | | | | |
| Size[1] | **002** – 1/4" **010** – 1" **025** – 2-1/2" | **003** – 3/8" **012** – 1-1/4" **030** – 3" | **005** – 1/2" **015** – 1-1/2" **040** – 4" | **007** – 3/4" **020** – 2" **060** – 6" | | | | |
| Seals | **E** – EPDM | **V** – FKM (Viton®) | **N** – Nitrile | **A** – Aflas® | | | | |
| ChemFlare™ End Connecters for valves 3/8" to 1-1/4" | | | | | | | | |
| Material | **A** – PVC | **B** – PP | **C** – CPVC | **K** – PVDF | | | | |
| Tube Size[3] | **4N** – 1/4" | **6N** – 3/8" | **8N** – 1/2" | **12N** – 3/4" | **16N** – 1" | **20N** – 1-1/4" | | |
| Tube Nut | **–1** – includes nut | **Blank** – without nut | | | | | | |
| Ends | **S** – Socket | **T** – Threaded | **C** – Combo[2] | **F** – Flanged | **B** – Butt[3] | | | |

**Example:** Chemline Type 21 True Union Ball Valve, PVC, 1/2", with FPM (Viton®) seals, PVC ChemFlare™ end connectors, 1/2" tube size, including nuts.

[1] 1/4" is normally the 3/8" valve reduced. 6" is 4" valve with 6" end connections

[2] PVC and CPVC valves 1/2" to 2" are available as Combo (socket and threaded ends)

[3] Tube size must be equal or smaller than the valve size

[4] PP, PVDF and ECTFE (Halar®) metric butt fusion ends (1/2" to 4") connect to Chemline PP, PVDF and ECTFE (Halar®) piping systems

CHEMLINE PLASTICS
SUPERIOR FLOW SOLUTIONS

55 Guardsman Road, Thornhill, ON, L3T 6L2, Canada | ISO 9001:2015 Certified
1.800.930.2436 (CHEM) | fax.905.889.8553 | request@chemline.com | chemline.com

# CS-312-662 : Identification sheet

| | | | |
|---|---|---|---|
| VWTC PROJECT NUMBER: | 5000220043 | REV: | 2 |
| PROJECT NAME: | AEM MELIADINE - BPC UPGRADE | SUBMITTED TO (COMPANY): | AEM |
| ENGINEER: | EMMANUELLE DORMOY | SUBMITTED TO (RESPONSIBLE): | |
| PROJECT MANAGER: | THOMAS SAVARY / BRUCE BORDES | PROJECT NUM REFERENCE.: | 6526-S-265-605 / OC-989680 |
| PHONE NUMBER: | 514-334-7230 | LOT NUMBER: | |

| SUPPLIER | EQPT CODE | EQPT TAG NO | DIA | DESCRIPTION | INFO 1 | INFO 2 | INFO 3 | APPLIC. | NOTE | REV |
|---|---|---|---|---|---|---|---|---|---|---|
| DURCO | ST-312-663 | 80-GL99-1304 | N/A | RECIRCULATION LINE #1 ISOLATION VALVE | TYPE: PLUG \|150 PSI//MANUFACTURER : Flowserve DURCO//MODEL : 3''T4E1 1C11D033NW//CONNECTION TYPE : FLANGED class150/\| 75 mm (3")//BODY : FONTE DUCTILE// SEAL \| SEAT :PFA molded Plug | | | CLARIFIER #2 | | 2 |
| DURCO | ST-312-663 | 80-GL99-1305 | N/A | RECIRCULATION LINE #2 ISOLATION VALVE | TYPE: PLUG \|150 PSI//MANUFACTURER : Flowserve DURCO//MODEL : 3''T4E1 1C11D033NW//CONNECTION TYPE : FLANGED class150/\| 75 mm (3")//BODY : FONTE DUCTILE// SEAL \| SEAT :PFA molded Plug | | | CLARIFIER #2 | | 2 |

**This page is intentionally left blank**

FLOWSERVE

# Durco T4E Lined Plug Valves

## Fluoropolymer Lined Valves



*Experience In Motion*

## History

*Flowserve Durco T4E valves have been designed and developed with the latest technology and are the most preferred fluoropolymer lined valves in the global chemical industries.*
*Durco T4E valves provide maximum corrosion resistance and the elimination of product contamination at a reasonable cost.*

## Available in a Broad Size Range and

- ***T4E1*** *ASME Class 150 is available in sizes ½" through 12"*
- ***T4E2*** *DIN PN 16 is available in sizes DN 15 through DN 300*
- ***T4E3*** *ASME Class 300 is available in sizes ½" through 10"*

## Extended Pressure Classes

- ***T4E1 and T4E2*** *rated 180 psi @400 °F (12.4 bar @ 204 °C), 250 psi @ 100 °F (17.2 bar @ 100 °C)*
- ***T4E3*** *rated 320 psi @ 400 °F (22 bar @ 204 °C), 740 psi @ 100 °F (51 bar @ 100 °C)*

*Available with pneumatic or electric actuators for On-Off or modulating control applications.*
*All T4E valve series are rated to 4 Kpa (30 inches Hg) vacuum at ambient temperature.*

# Features

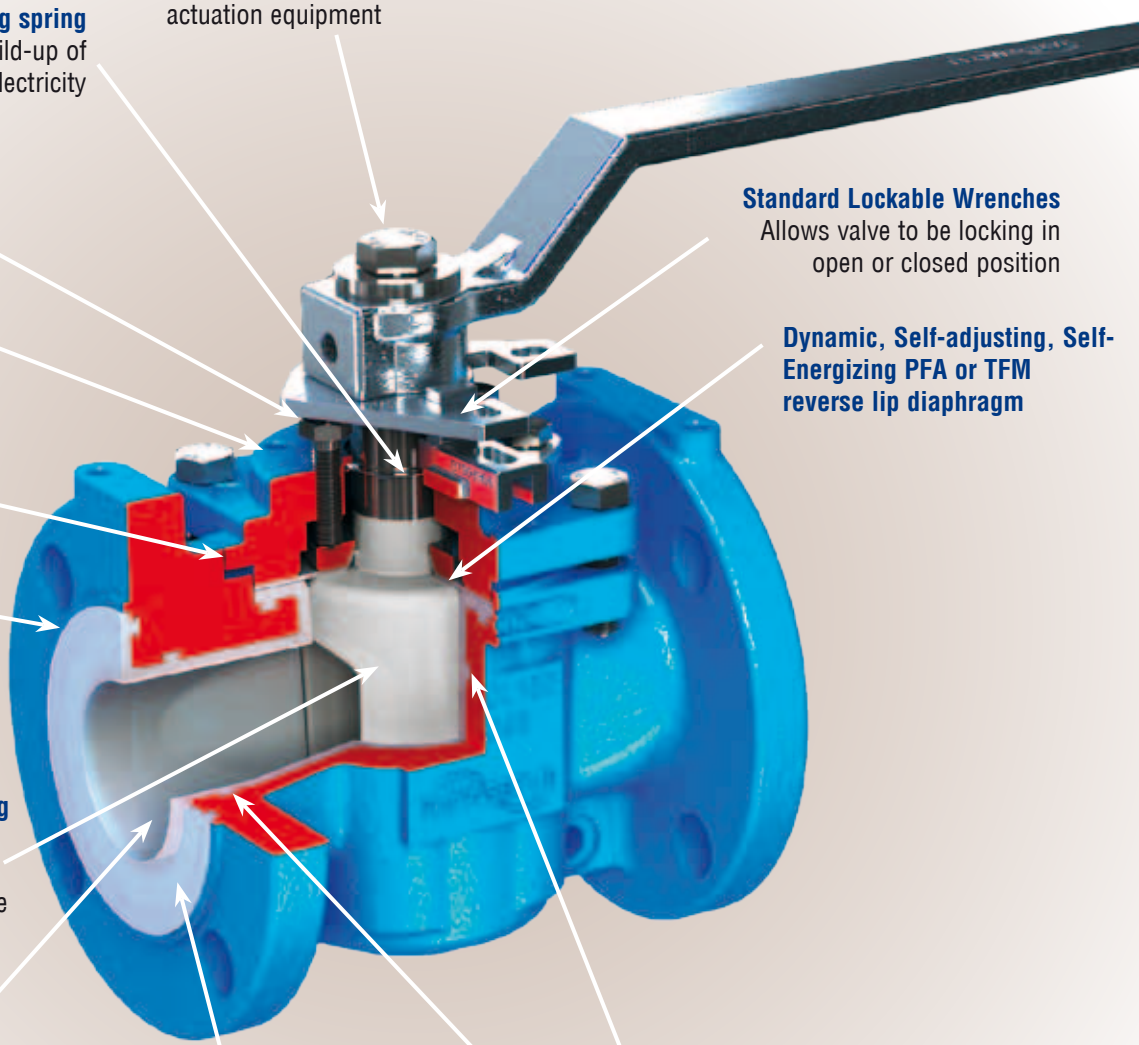

**Double-D plug stem**
accepts most standard actuation equipment

**Grounding spring**
To avoid build-up of static electricity

**Inline adjustment**
Stops thru-line leakage

**ISO 5211 Mounting Pad**
Universal flange for easy actuation mounting

**Anti-Rotation Lugs**
Help to eliminate stress on fasteners during actuation

**Raised Lip**
Prevents cold flow outward

**Standard Lockable Wrenches**
Allows valve to be locking in open or closed position

**Dynamic, Self-adjusting, Self-Energizing PFA or TFM reverse lip diaphragm**

**Solid Encapsulated PFA Molded Plug**
All plug inserts have anchor holes to ensure a strong adhesion of the plug PFA liner material even under extreme cycling conditions

**Large Ports**
Offer good Cv values. Reduced frictional losses & pressure drop

**High Quality PFA Liner**
Protects the body and forms the flange gasket. The PFA liner is resistant against a wide variation of chemical products

**T-Slots in Critical Areas to Lock Liner Against Body Wall**
Advantage will be a tight and perfect fit of the liner and an additional support during vacuum service

# Additional Benefits

## Benefits that give you the extra security which you will appreciate when using the T4E valves

### Body Liner

- A perfectly fixed PFA body liner is well anchored to the body by means of machined T-slots. The plug substrate has anchor holes to ensure that the PFA liner material is securely attached to the plug.
- Due to the selected mode to lock the liner to the valve body and plug, the T4E valve series is very suitable for extreme service conditions including vacuum applications at elevated temperatures.
- The PFA body liner covers all wetted surfaces in the body.
- Due to it's large sealing surface a tight shut-off is assured.
- In addition to the large seating area the valve is fully bi-directional and the seal is totally independent of line pressure.

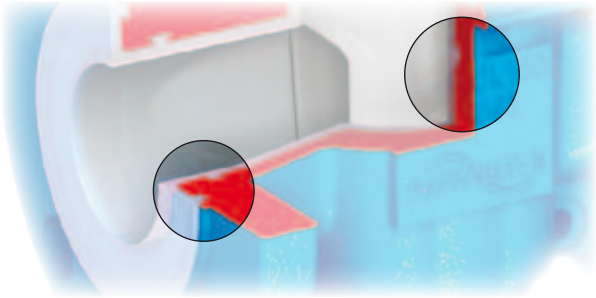

### In-Line Adjustment

- No disassembly required to restore seating; plug can be reseated with a quick and easy in-line adjustment.
- An open end wrench and a few seconds are the extent of your maintenance requirements.

There are:

- No seats to replace
- No lengthy production disruption
- No piping disconnection
- No complicated, time-consuming maintenance procedures
- No hazards to personnel

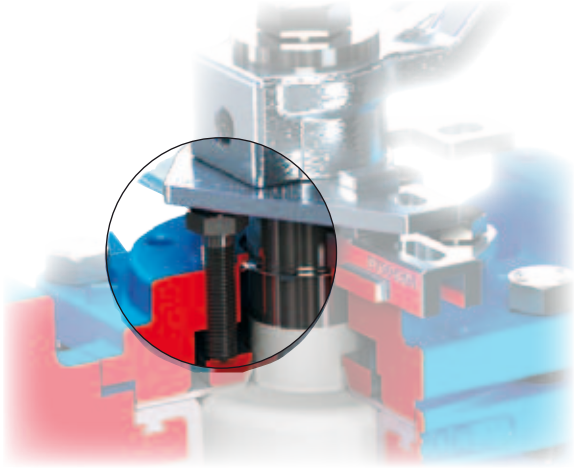

### Secure Sealing

- A dynamic self-adjusting, self energized reverse lip PFA diaphragm seal prevents stem leakage.
- If line pressure forces liquid to the stem seal area, the self-energizing reverse lip PFA diaphragm will be forced against the stem to prevent external leakage.
- A sealing surface as much as 10x greater than other lined valves assures drop tight shut-off.
- In addition to the large sealing area, sealing is both upstream and downstream and is totally independent of line pressure.

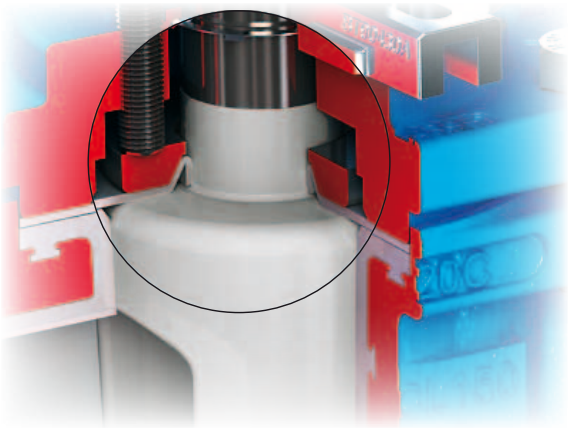

## Weepholes

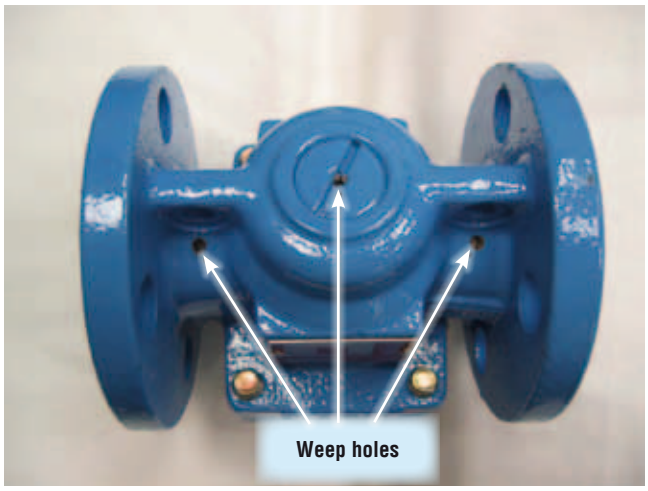


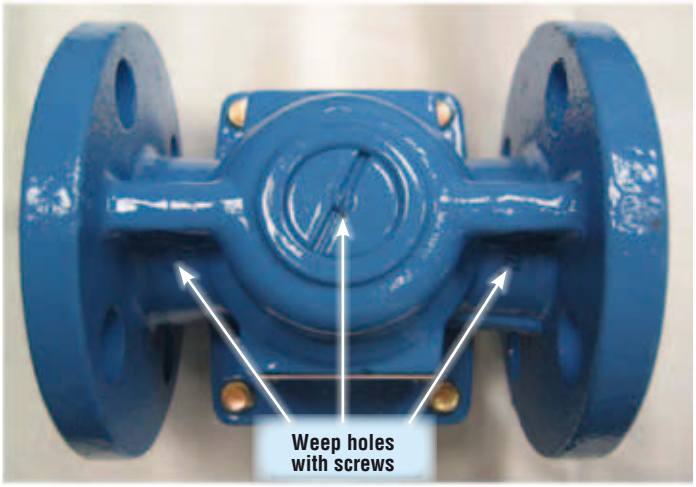


## Weepholes for early leakage detection

Durco T4E valves are supplied with three weepholes that are plugged with screws. The customer has the option to remove the screws. In so doing he is able to detect any leakage of process fluid through the liner and to take appropriate action.

## Pressure-Temperature-Diagram - T4E1 and T4E2

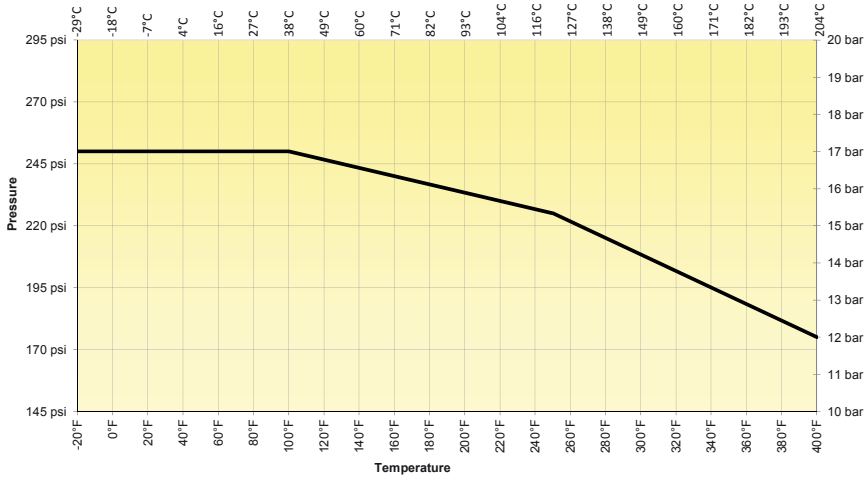


## Pressure-Temperature-Diagram - T4E3

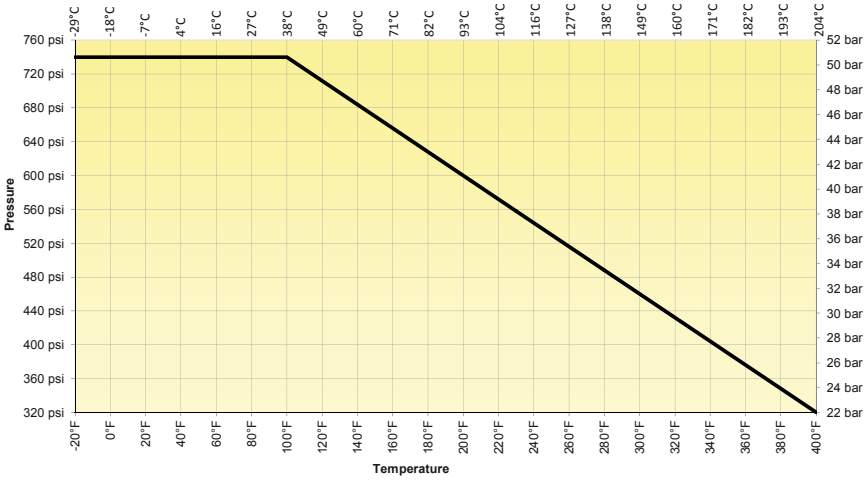

# Durco T4E Automated Valves




*Choose from a complete line of Flowserve Automax Automation Equipment for precise proportioning and On-Off control.....or we'll build a control package to your specification.*

*Flowserve Automax, a specialist in complete automation systems, produces a broad line of rack and pinion, heavy-duty, electric and linear actuators. In addition, a comprehensive line of engineered special control circuits, solenoid valves, limit switches, positioners and actuator mounting kits is offered.*

***Actuator Mounting***

*The body style of the T4E offers a choice of two locations for actuator mounting : an ISO 5200 pattern on the topcap or the flat-top pads of the flanges.*

## Software Capability

*Flowserve offers a state-of-the-art range of software to help in sizing valves and actuation and creating drawings.*

## Modulating Control

*V-port T4E valves are available in 1" (DN 25) through 4" (DN 100) sizes with Cv (Kv) values of 1 through 187 (Kv of 1 through 161). Standard port T4E valves are available in ½" (DN 15) through 12" (DN 300) sizes with Cv (Kv) values from 15 through 3200 (Kv from 13 through 2750).*

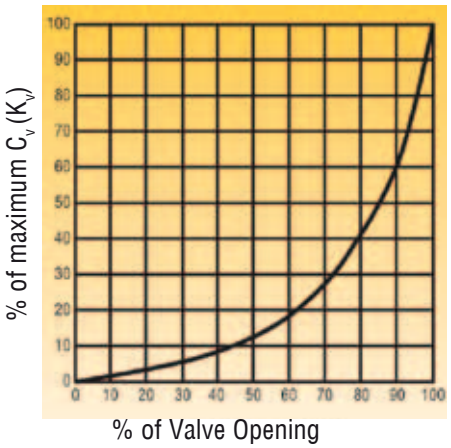


## Control Plugs

| Size | Cv | Kv | Plug Type |
|---|---|---|---|
| 1" | 1 | 1 | slotted plug |
| 1" | 3 | 3 | slotted plug |
| 1" | 8 | 7 | V-port |
| 1" | 13 | 11 | V-port |
| 1" | 25 | 21 | V-port |
| 1½" | 30 | 26 | V-port |
| 2" | 54 | 46 | V-port |
| 3" | 89 | 76 | V-port |
| 4" | 187 | 161 | V-port |

# Material Specification

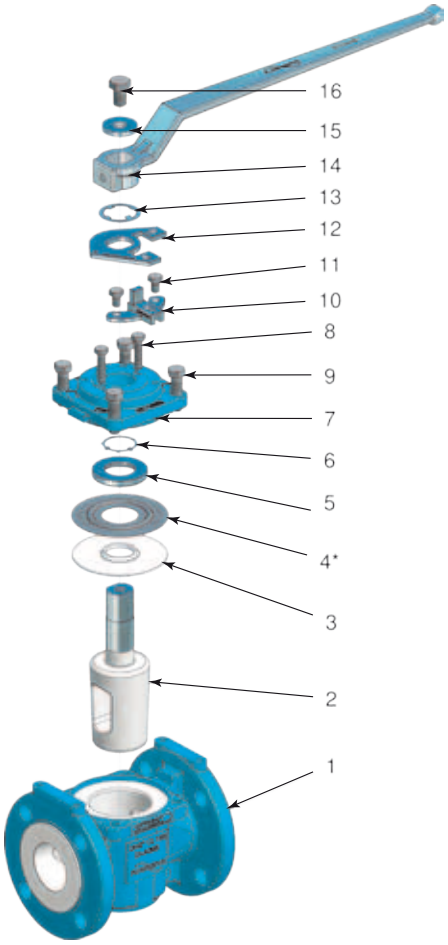


## T4E1, T4E2 and T4E3 (½" - 6")

| No. | Designation | Material |
|---|---|---|
| 1 | Body T4E1 | Ductile cast iron - EN-JS1049/ASTM A395, PFA lined |
| | Body T4E3 | Carbon steel ASTM A216 grade WCB, PFA lined |
| 2 | Plug | Ductile cast iron - EN-JS1049/ASTM A395, PFA lined |
| 3 | Diaphragm | T4E1: TFM (PFA*) \| T4E3: PFA |
| 4* | Metal diaphragm | Stainless steel - 302 |
| 5 | Thrust gland | Machining steel - 1.0718 |
| 6 | Grounding spring | Stainless steel - 302 |
| 7 | Top cap T4E1 | Ductile cast iron - EN-JS1049/ASTM A395 |
| | Top cap T4E3 | Carbon steel ASTM A995 Gr CD4MCuN |
| 8 | Adjuster bolt | ASTM A193 grade B7YC |
| 9 | Top cap bolt | ASTM A193 grade B7YC |
| 10 | Stop | Stainless steel ASTM A351/A744 grade CF-8M (316 SS) |
| 11 | Stop fastener | Stainless steel 1.4301 |
| 12 | Stop collar | Carbon steel, protective plated |
| 13 | Stop collar retainer | Stainless steel - 302 |
| 14 | Wrench | Ductile cast iron - EN-JS1082/ASTM A536 |
| 15 | Washer | Stainless steel - 1.4301 |
| 16 | Hexagon bolt | Stainless steel - 1.4301 |

*Optional

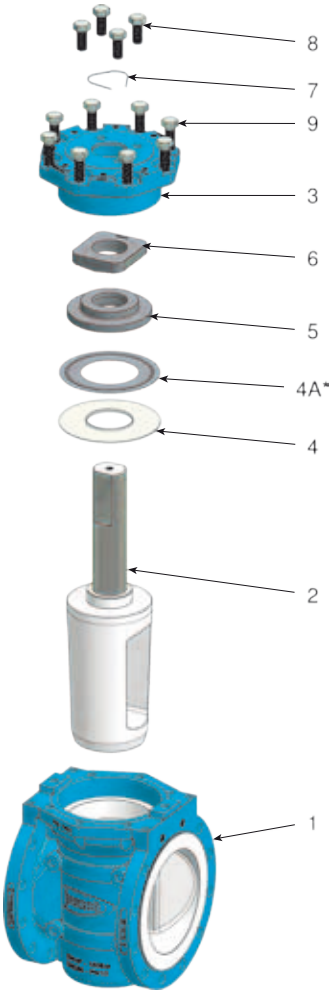


## T4E1 and T4E2 (8" - 12") T4E3 (8" - 10")

| No. | Designation | Material |
|---|---|---|
| 1 | Body T4E1 | Ductile cast iron - EN-JS1049/ASTM A395*, PFA lined |
| | Body T4E3 | Carbon steel ASTM A216 grade WCB, PFA lined |
| 2 | Plug | Ductile cast iron - EN-JS1049/ASTM A395, PFA lined |
| 3 | Top cap T4E1 | Ductile cast iron - EN-JS1049/ASTM A395 |
| | Top cap T4E3 | Carbon steel ASTM A995 grade CD4MCuN |
| 4 | Diaphragm | T4E1: DN8" - TFM (PFA*), DN10"-DN12" - PFA \| T4E3: PFA |
| 4a** | Metal diaphragm | Stainless steel - 302 |
| 5 | Thrust gland | Dupex stainless steel ASTM A995 Gr CD4MCuN |
| 6 | Adjuster | Dupex stainless steel ASTM A995 Gr CD4MCuN |
| 7 | Grounding spring | Stainless steel - 302 |
| 8 | Adjuster bolt | 88YC |
| 9 | Hexagon bolt | 88YC |

* Other materials upon request
** Optional

# Dimensions

## Valve Dimensions

Dimensions are in Inches and millimetres. Weights are in lb. and kg.

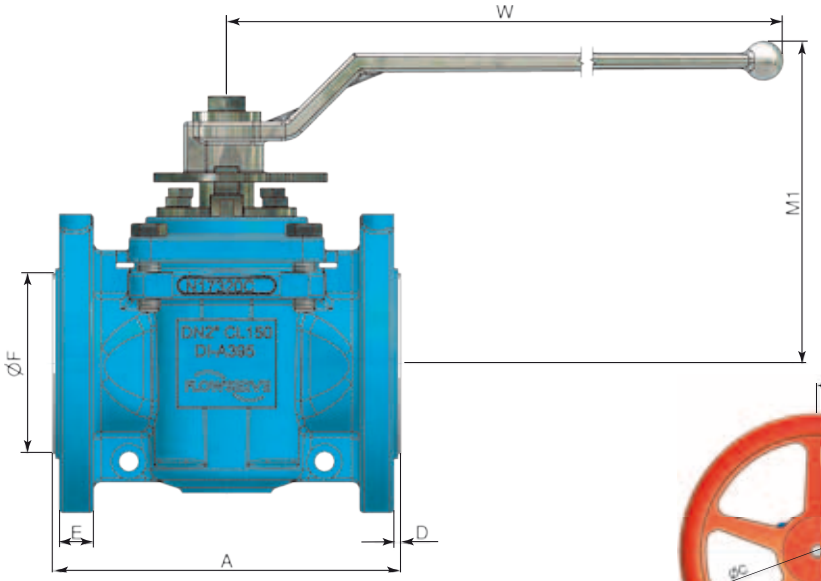


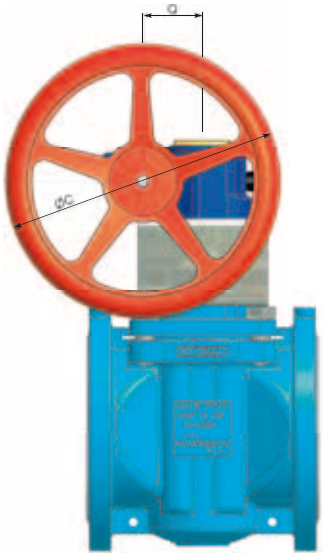


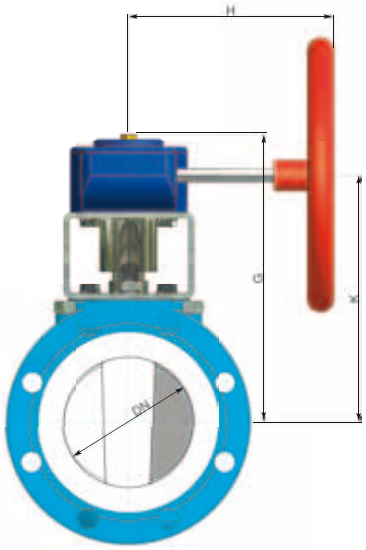


## T4E1, T4E2 and T4E3 ½˝ to 12˝

| Size | Units | A | | | D | | | E | | | ØF | | | W | MI | ØC | H | G | K | Q | Weight | | | |
|---|---|---|---|---|---|---|---|---|---|---|---|---|---|---|---|---|---|---|---|---|---|---|---|---|
| | | 150 | 300 | DIN PN16 | 150 | 300 | DIN PN16 | 150 | 300 | DIN PN16 | 150 | 300 | DIN PN16 | | | | | | | | Units | 150 | 300 | DIN PN16 |
| ½" | inch | 4.3 | 5.5 | 5.1 | 0.12 | 0.16 | 0.24 | 0.43 | 0.51 | 0.47 | 1.4 | 1.4 | 1.65 | 10.2 | 5.5 | | | | | | lb. | 8.2 | 9.9 | 9.3 |
| | mm | 109 | 140 | 130,0 | 3,0 | 4,1 | 6,0 | 11 | 13 | 12 | 36 | 36 | 42 | 259 | 140 | | | | | | kg, | 3,7 | 4,5 | 4,2 |
| ¾" | inch | 4.6 | 6.0 | 5.9 | 0.12 | 0.24 | 0.24 | 0.49 | 0.61 | 0.63 | 1.7 | 1.7 | 2.20 | 10.2 | 5.5 | | | | | | lb. | 9.0 | 12.3 | 10.8 |
| | mm | 117 | 152 | 150,0 | 3,0 | 6,1 | 6,0 | 12 | 15 | 16 | 43 | 43 | 56 | 259 | 140 | | | | | | kg, | 4,1 | 5,6 | 4,9 |
| 1" | inch | 5.0 | 6.5 | 6.3 | 0.12 | 0.26 | 0.26 | 0.5 | 0.63 | 0.55 | 2.0 | 2.0 | 2.56 | 10.2 | 5.5 | | | | | | lb. | 10.8 | 14.3 | 12.8 |
| | mm | 127 | 165 | 160,0 | 3,0 | 6,6 | 6,5 | 13 | 16 | 14 | 51 | 51 | 65 | 259 | 140 | | | | | | kg, | 4,9 | 6,5 | 5,8 |
| 1½" | inch | 6.5 | 7.5 | 7.9 | 0.16 | 0.26 | 0.26 | 0.63 | 0.74 | 0.59 | 2.9 | 2.9 | 3.35 | 10.2 | 5.7 | | | | | | lb. | 16.3 | 22.3 | 20.1 |
| | mm | 165 | 191 | 200,0 | 4,1 | 6,6 | 6,5 | 16 | 19 | 15 | 74 | 74 | 85 | 259 | 145 | | | | | | kg, | 7,4 | 10,1 | 9,1 |
| 2" | inch | 7.0 | 8.5 | 9.1 | 0.14 | 0.26 | 0.26 | 0.69 | 0.86 | 0.67 | 3.6 | 3.6 | 3.86 | 16.1 | 6.5 | | | | | | lb. | 24.9 | 30.9 | 29.1 |
| | mm | 178 | 216 | 230,0 | 3,6 | 6,6 | 6,5 | 18 | 22 | 17 | 91 | 91 | 98 | 409 | 165 | | | | | | kg, | 11,3 | 14,0 | 13,2 |
| 3" | inch | 8.0 | 11.1 | 12.2 | 0.12 | 0.28 | 0.28 | 0.88 | 1.06 | 0.75 | 5.0 | 5.0 | 5.24 | 16.1 | 7.0 | | | | | | lb. | 38.6 | 52.2 | 45.8 |
| | mm | 203 | 282 | 310,0 | 3,0 | 7,1 | 7,0 | 22 | 27 | 19 | 127 | 127 | 133 | 409 | 178 | | | | | | kg, | 17,5 | 23,7 | 20,8 |
| 4" WO | inch | 9.0 | 12 | 13.8 | 0.16 | 0.28 | 0.28 | 0.88 | 1.18 | 0.75 | 6.2 | 6.2 | 5.98 | 26.5 | 8.7 | | | | | | lb. | 68.5 | 93.4 | 76.5 |
| | mm | 229 | 305 | 350,0 | 4,1 | 7,1 | 7,0 | 22 | 30 | 19 | 157 | 157 | 152 | 673 | 221 | | | | | | kg, | 31,1 | 42,4 | 34,7 |
| 4" GO | inch | 9.0 | 12 | 13.8 | 0.16 | 0.28 | 0.28 | 0.88 | 1.18 | 0.75 | 6.2 | 6.2 | 5.98 | | | 9.8 | 9.6 | 11.0 | 9.6 | 2.1 | lb. | 88 | 147 | 191 |
| | mm | 229 | 305 | 350,0 | 4,1 | 7,1 | 7,0 | 22 | 30 | 19 | 157 | 157 | 152 | | | 250 | 245 | 280 | 245 | 54 | kg, | 39,9 | 66,7 | 43,5 |
| 6" | inch | 10.5 | 15.9 | 10.5 | 0.16 | 0.28 | 0.16 | 0.94 | 1.37 | 0.94 | 8.2 | 8.2 | 8.19 | | | 13.8 | 11.2 | 12.2 | 10.8 | 2.6 | lb. | 128 | 187 | 128 |
| | mm | 267 | 404 | 267 | 4,1 | 7,1 | 4,0 | 24 | 35 | 24 | 208 | 208 | 208 | | | 350 | 285 | 309 | 275 | 67 | kg, | 58,1 | 84,8 | 58,1 |
| 8" | inch | 11.5 | 16.5 | 11.5 | 0.16 | 0.16 | 0.16 | 0.92 | 1.53 | 0.92 | 10.3 | 10.3 | 10.3 | | | 19.7 | 12.6 | 20.7 | 18.0 | 3.6 | lb. | 352 | 450 | 352 |
| | mm | 292 | 419 | 292 | 4,1 | 4,1 | 4,1 | 23 | 39 | 23 | 262 | 262 | 262 | | | 500 | 320 | 525 | 457 | 92 | kg, | 160 | 204 | 160 |
| 10 | inch | 13 | 18 | 13 | 0.16 | 0.16 | 0.16 | 1.3 | 1.81 | 1.3 | 12.4 | 12.4 | 12.4 | | | 23.6 | 14.6 | 27.3 | 22.4 | 5.2 | lb. | 522 | 590 | 522 |
| | mm | 330 | 457 | 330 | 4,1 | 4,1 | 4,1 | 33 | 46 | 33 | 315 | 315 | 315 | | | 600 | 370 | 693 | 570 | 132 | kg, | 237 | 268 | 237 |
| 12 | inch | 14 | | 14 | 0.16 | | 0.16 | 1.41 | | 1.41 | 15 | | 15 | | | 23.6 | 14.6 | 28.3 | 26.1 | 5.2 | lb. | 595 | | 595 |
| | mm | 356 | | 356 | 4,1 | | 4,1 | 36 | | 36 | 381 | | 381 | | | 600 | 370 | 720 | 664 | 132 | kg, | 270 | | 270 |

**Note:** All dimensions are approximate and for illustration purposes only. For exact dimensions consult certified dimensional prints
Valve 8"-12" are shown with double D stems which are standard. However spline shafts are also available for these sizes as an option.
All weights include either wrench or gear operator
Face-to-face dimensions comply to ANSI B16.10 and flange connections comply to ANSI B16.5

# T4E - Dimension sheet for actuator mounting

## Top cap mounting acc. to DIN EN ISO 5211

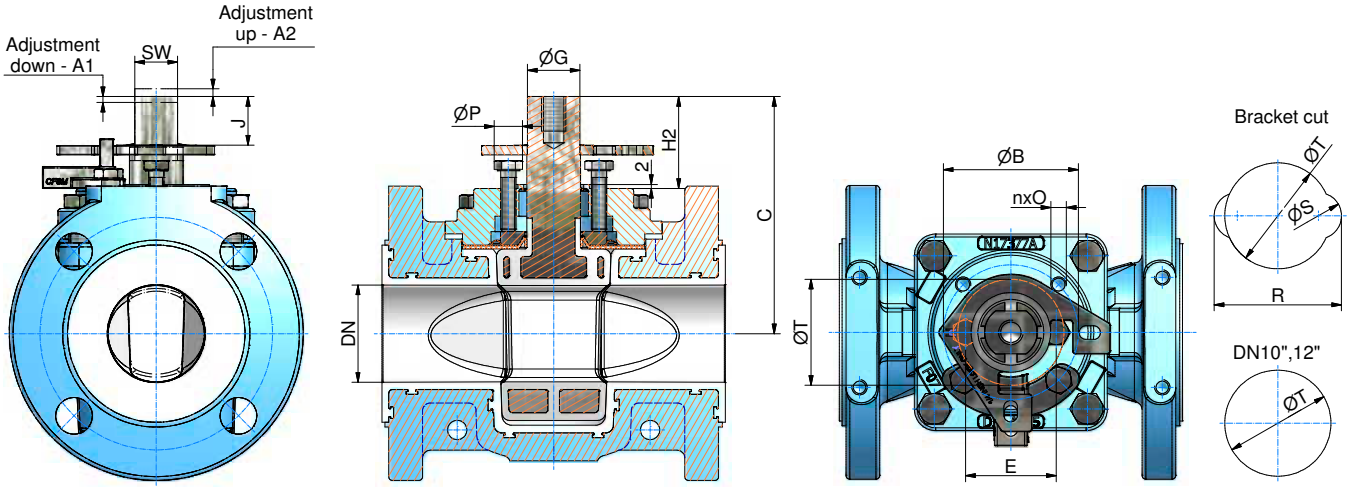


## Flange top mounting

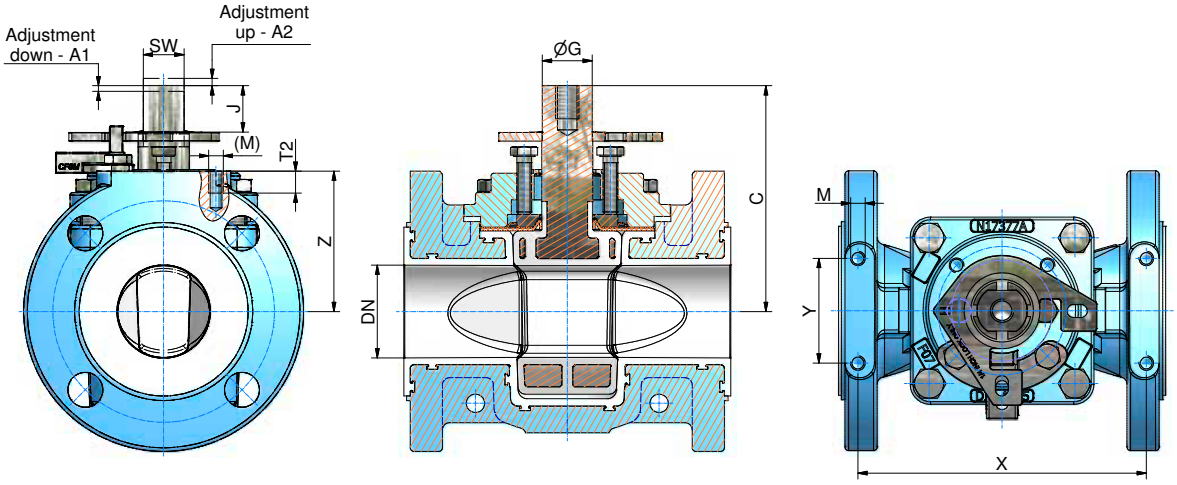


| DN | | SW | ØG | J | H2 | C | Adjustment | | F-Size DIN/ISO 5211 | ØB | nxO | E | ØP | R | ØS | ØT | M (M) | T2 | X | | Z | | Y | |
|---|---|---|---|---|---|---|---|---|---|---|---|---|---|---|---|---|---|---|---|---|---|---|---|---|
| | | | | | | | A1 | A2 | | | | | | | | | | | T4E1 | T4E3 | T4E1 | T4E3 | T4E1 | T4E3 |
| ½" | inch | 0.65 | 0.79 | 0.61 | 1.52 | 3.64 | 0.08 | 0.08 | F05 | 1.97 | 4xM6 | 1.5 | 0.51 | 2.13 | 0.63 | 1.38 | UNC 1/4-20 | 0.35 | 3.56 | 4.65 | 1.83 | 1.97 | 2 | 2 |
| | mm | 16,6 | 20 | 15,5 | 38,5 | 92,5 | 2 | 2 | | 50 | - 8 deep | 38 | 13 | 54 | 16 | 35 | | 9 | 90,5 | 118 | 46,5 | 50 | 50,8 | 50,8 |
| ¾" | inch | 0.65 | 0.79 | 0.61 | 1.52 | 3.64 | 0.08 | 0.08 | F05 | 1.97 | 4xM6 | 1.5 | 0.51 | 2.13 | 0.63 | 1.38 | UNC 1/4-20 | 0.35 | 3.92 | 5 | 2.03 | 2.4 | 2 | 2 |
| | mm | 16,6 | 20 | 15,5 | 38,5 | 92,5 | 2 | 2 | | 50 | - 8 deep | 38 | 13 | 54 | 16 | 35 | | 9 | 99,6 | 127 | 51,5 | 61 | 50,8 | 50,8 |
| 1" | inch | 0.65 | 0.79 | 0.61 | 1.52 | 3.64 | 0.08 | 0.08 | F05 | 1.97 | 4xM6 | 1.5 | 0.59 | 2.28 | 0.79 | 1.38 | UNC 5/16-18 | 0.47 | 4.19 | 5.35 | 2.34 | 2.44 | 1.75 | 1.75 |
| | mm | 16.6 | 20 | 15.5 | 38.7 | 92.5 | 2 | 2 | | 50 | - 8 deep | 38 | 15 | 58 | 20 | 35 | | 12 | 106.4 | 136 | 59.5 | 62 | 44.5 | 44.5 |
| 1½" | inch | 0.65 | 0.79 | 0.75 | 1.48 | 4.02 | 0.08 | 0.08 | F05 | 1.97 | 4xM6 | 1.5 | 0.59 | 2.28 | 0.79 | 1.38 | UNC 5/16-18 | 0.47 | 5.63 | 6.38 | 2.500 | 3.07 | 1.75 | 1.75 |
| | mm | 16,6 | 20 | 19 | 37,7 | 102 | 2 | 2 | | 50 | - 8 deep | 38 | 15 | 58 | 20 | 35 | | 12 | 142,9 | 162 | 63,5 | 78 | 44,5 | 44,5 |
| 2" | inch | 0.87 | 1.07 | 0.99 | 1.93 | 4.84 | 0.08 | 0.08 | F07 | 2.76 | 4xM8 | 1.85 | 0.59 | 2.64 | 0.79 | 2.17 | UNC 5/16-18 | 0.47 | 6.19 | 7.36 | 3.01 | 3.25 | 2.25 | 2.25 |
| | mm | 22,2 | 27,2 | 25,2 | 49 | 123 | 2 | 2 | | 70 | - 12 deep | 47 | 15 | 67 | 20 | 55 | | 12 | 157,2 | 187 | 76,5 | 82,5 | 57,2 | 57,2 |
| 3" | inch | 0.87 | 1.07 | 0.99 | 1.99 | 5.39 | 0.12 | 0.12 | F07 | 2.76 | 4xM8 | 2.13 | 0.87 | 3.15 | 1.02 | 2.17 | UNC 3/8-16 | 0.55 | 7.13 | 9.87 | 3.76 | 4.13 | 3.5 | 3.5 |
| | mm | 22,2 | 27,2 | 25,2 | 50,6 | 137 | 3 | 3 | | 70 | - 12 deep | 54 | 22 | 80 | 26 | 55 | | 14 | 181 | 250,8 | 95,5 | 105 | 88,9 | 88,9 |
| 4" | inch | 1.42 | 1.69 | 1.59 | 2.76 | 6.97 | 0.12 | 0.12 | F10 | 4.02 | 4xM10 | 2.87 | 0.87 | 3.90 | 1.02 | 2.76 | UNC 7/16-14 | 0.63 | 8 | 10.63 | 4.51 | 5.000 | 4 | 4 |
| | mm | 36 | 42,8 | 40,4 | 70,2 | 177 | 3 | 3 | | 102 | - 16 deep | 73 | 22 | 99 | 26 | 70 | | 16 | 203,2 | 269,9 | 114,5 | 127 | 101,6 | 101,6 |
| 6" | inch | 1.42 | 1.69 | 1.59 | 2.67 | 8.23 | 0.16 | 0.16 | F12 | 4.92 | 4xM12 | 3.39 | 1.38 | 4.96 | 1.57 | 3.35 | UNC 7/16-14 | 0.63 | 9.44 | 14.25 | 5.47 | 6.26 | 4 | 4 |
| | mm | 36 | 42,8 | 40,4 | 67,7 | 209 | 4 | 4 | | 125 | - 21 deep | 86 | 35 | 126 | 40 | 85 | | 16 | 239,7 | 362 | 139 | 159 | 101,6 | 101,6 |
| 8" | inch | 1.97 | 2.5 | 3.94 | 6.6 | 15.8 | 0.2 | 0.2 | --- | 7.5 | 8xM16 | 5.25 | 2.1 | 7.48 | 2.20 | 5.12 | M16 | 1.42 | 10.25 | 14.82 | 6.83 | 7.50 | 7.69 | 7.62 |
| | mm | 50 | 63,5 | 100 | 166,6 | 402 | 5 | 5 | | 190,5 | - 26 deep | 133,4 | 53 | 190 | 56 | 130 | | 36 | 260,4 | 376,4 | 173,5 | 190,5 | 195,2 | 193,6 |
| 10" | inch | 2.36 | 3 | 4.92 | 8.46 | 19.49 | 0.2 | 0.2 | F25 | 10 | 8xM16 | 5.13 | 1.46 | --- | --- | 7.87 | M20 | 1.54 | 11.57 | * | 8.43 | * | 7.87 | * |
| | mm | 60 | 76,2 | 125 | 214,8 | 495 | 5 | 5 | | 254 | - 26 deep | 130,2 | 37 | | | 200 | | 39 | 294 | | 214 | | 200 | |
| 12" | inch | 2.36 | 3 | 4.92 | 8.48 | 20.35 | 0.2 | 0.2 | F25 | 10 | 8xM16 | 5.13 | 1.46 | --- | --- | 7.87 | M20 | 1.57 | 12.28 | 17.69 | 9.19 | 10.55 | 7.87 | 6.00 |
| | mm | 60 | 76,2 | 125 | 215,4 | 517 | 5 | 5 | | 254 | -26 deep | 130,2 | 37 | | | 200 | | 40 | 312 | 449,3 | 233,5 | 268 | 200 | 152,4 |

* no actuator mounting for T4E2 valves

FLOWSERVE

# How to Specify T4E Valves

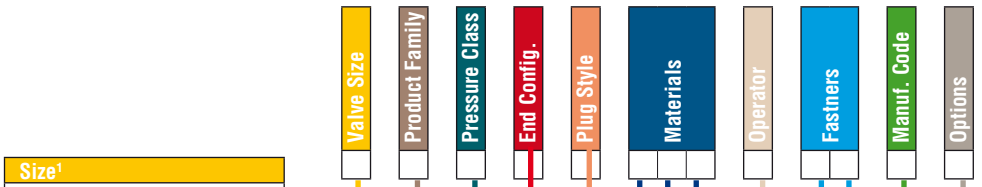


| Size[1] |
|---|
| 0.5 in. |
| 0.75 in. |
| 1.5 in. |
| 2 in. |
| 3 in. |
| 4 in. |
| 6 in. |
| 8 in. |
| 10 in. |
| 12 in. |

| Product Family |
|---|
| T4E = Standard |

| Pressure Class[1] |
|---|
| 1 = ASME Cl. 150 |
| 2 = DIN PN 16 |
| 3 = ASME Cl. 300 |

| End Configuration |
|---|
| 1 = Raised Face Flanges |

| Plug Style | | |
|---|---|---|
| C = 2-Way | | |
| D = Slot | Cv = .8 | 1" |
| E = Vport | Cv = 3 | 1" |
| F = Vport | Cv = 8.3 | 1" |
| G = Vport | Cv = 13 | 1" |
| H = Vport | Cv = 29.6 | 1.5" |
| J = Vport | Cv = 53.6 | 2" |
| K = Vport | Cv = 88.7 | 3" |
| L = Vport | Cv = 187.1 | 4" |

| Options |
|---|
| C = Chlorine Service |
| D = Chlorine Clean Only |
| G = Bottom Vented Plug[8] |
| H = Upstream Vented Plug (side) |
| J = Side/Bottom Vented Plug (upstream) |
| L = Anti-Vibration Clip for Top Cap Bolts |
| M = Side Vent Downstream (requires release from customer in writing) |
| O = Oxygen Cleaning |
| R = Built Dry (no lubrication)[9] |
| S = Silicone Free Lubrication |
| W = No Options |
| @ = DuPont Flouropolymer Material |
| Q = Quality Plan |

| Manufacturers code |
|---|
| N = Internal use |

| Adjuster fastener[7] |
|---|
| 1 = B840 |
| 2 = B9 |
| 3 = B7YC |
| 4 = B7T |
| 5 = C20 |
| 6 = HC |
| 7 = B7 |
| 8 = MKH |
| 9 = B7M |
| 0 = B7MZ |
| E = 88YC |

| Top Cap Fastener[7] |
|---|
| 1 = B840 |
| 2 = B9 |
| 3 = B7YC |
| 4 = B7T |
| 5 = C20 |
| 6 = HC |
| 7 = B7 |
| 8 = MKH |
| 9 = B7M |
| 0 = B7MZ |
| E = 88YC |

| Operator |
|---|
| 0 = Std. Wrench[5] |
| 1 = Gear Cl[6] |
| 2 = Locking Gear Cl |
| 4 = Caustic Gear PF |
| 9 = Bare Stem |
| B = Babbit/Chain |

| Standard Valve Codes | | |
|---|---|---|
| Size | Class 150 | Class 300 |
| 0.5 | .5-T4E-11C11D033NW | .5-T4E-31C210033NW |
| 0.75 | .75-T4E-11C11D033NW | .75-T4E-31C210033NW |
| 1 | 1-T4E-11C11D033NW | 1-T4E-31C210033NW |
| 1.5 | 1.5-T4E-11C11D033NW | 1.5-T4E-31C210033NW |
| 2 | 2-T4E-11C11D033NW | 2-T4E-31C210033NW |
| 3 | 3-T4E-11C11D033NW | 3-T4E-31C210033NW |
| 4 | 4-T4E-11C11D033NW | 4-T4E-31C210033NW |
| 6 | 6-T4E-11C11D033NW | 6-T4E-31C210033NW |
| 8 | 8-T4E-11C11D1EENW | 8-T4E-31C2101EENW |
| 10 | 10-T4E-11C11D1EENW | 10-T4E-31C2101EENW |
| 12 | 12-T4E-11C11D1EENW | |

| Body liner[2] | Plug Alloy[3] | Top Cap Alloy[4] |
|---|---|---|
| 1 = DIPA | 1 = DIPA | D = DCI |
| 2 = DSPA | 2 = D4PA | O = CD4M |
| 3 = D4PA | 3 = CDPA | |

| Codes | |
|---|---|
| DIPA | Ductile iron, PFA lined |
| DSPA | Carbon steel, PFA lined |
| D4PA | 316 SS, PFA lined |
| CDPA | CD4MCuN, PFA lined |

[1] Class 150 valves = ½" thru 12" ductile iron / 8" thru 12" stainless steel
Class 300 valves = ½" thru 10" carbon steel
[2] DIPA body = class 150 valves only
D4PA body = 8", 10" 12" class 150 valves only
DSPA body = class 300 valves only
[3] DIPA plug = ½" thru 12"
CDPA plug = 8", 10" and 12" only
[4] DCI top cap = DIPA valve bodies
CD4M top cap = D4PA and DSPA valve bodies
[5] Locking wrench standard thru 4"
[6] Gear standard 6" and above (also available on smaller sizes)
[7] B7YC = standard for ½" thru 6"
88YC = standard for 8", 10", 12" (Gr. 8.8 yellow chromated)
[8] 8" and larger plugs have bottom vent as standard
[9] No lubrication for valves up to 4"
Built with Krytox for valves 6" and above





## To Access Literature On-line

More information about FLOWSERVE products can be obtained on-line. It's easy to find… it's free… and you do not need a password.

## Do This:

1. Go to www.flowserve.com
2. Click in the box that says "Literature"
3. Enter "Keyword" or literature number and "Filter" as required
4. Click on "Search"

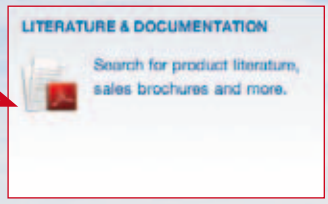


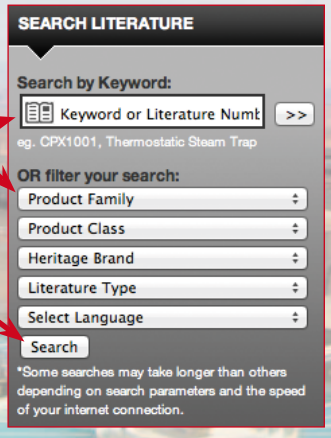


The most recent version of each product bulletin will be available on this site.

Once you have the PDF, you can:

- read it
- print it
- download it
- even e-mail it

## Other Useful Information

In addition to lined plug valves, lined butterfly valves (Document number DVENTB0020) and lined ball valves, check valves and sight glasses (Document number ATENTB0010) are also available.

Finally, a wide variety of metallic and lined rotary valves and actuation equipment is summarized in the Document number DVENBR0001.

To obtain any of these brochures, follow the simple steps on the left of this page and enter the Document number in Step 3.

## Ordering Preprinted Literature

Customers, please contact your Flowserve sales representative to get hard copy of a brochure. Flowserve representatives and distributors can go to www.flowserve.com and click on the "View Literature" link then click on "Log-in to order hard copy literature" and follow the prompts.




## United States
Flow Control
1978 Foreman Drive
Cookeville, Tennessee 38501
USA
Phone: 931 432 4021
Fax: 931 432 3105
www.flowserve.com

## Germany
Von Braun Straße 19a
D-48683 Ahaus
Germany
Phone: +49 2561 686-100
Fax: +49 2561 686-200

## Singapore
12 Tuas Avenue 20
Republic of Singapore 638824
Phone: +65 6879 8900
Fax: +65 6862 4940

## Australia
14 Dalmore Drive, Scoresby, Victoria,
3179, Australia
Phone: +613-97593300

## Brazil
Av. Tocantins 128
Sao Caetano do Sul
SP 09580-130
Brazil
Phone: +55 11 2169 6300
Fax: +55 11 2169 6313

## China
Flowserve Corporation Beijing Office
Room 22A1&A2,HanWei Plaza
No.7 GuangHua Road
Chaoyang District
Beijing, China 100004
Tel: +86-10-59210600
+86-10-59210601
Fax: +86-10-65611899


***To find your local Flowserve representative, visit www.flowserve.com or call USA 1 800 251 6761***

FCD DVENBR0066-01 10/12 Printed in USA.

Flowserve Corporation has established industry leadership in the design and manufacture of its products. When properly selected, this Flowserve product is designed to perform its intended function safely during its useful life. However, the purchaser or user of Flowserve products should be aware that Flowserve products might be used in numerous applications under a wide variety of industrial service conditions. Although Flowserve can (and often does) provide general guidelines, it cannot provide specific data and warnings for all possible applications. The purchaser/user must therefore assume the ultimate responsibility for the proper sizing and selection, installation, operation, and maintenance of Flowserve products. The purchaser/user should read and understand the Installation Operation Maintenance (IOM) instructions included with the product, and train its employees and contractors in the safe use of Flowserve products in connection with the specific application.

While the information and specifications contained in this literature are believed to be accurate, they are supplied for informative purposes only and should not be considered certified or as a guarantee of satisfactory results by reliance thereon. Nothing contained herein is to be construed as a warranty or guarantee, express or implied, regarding any matter with respect to this product. Because Flowserve is continually improving and upgrading its product design, the specifications, dimensions and information contained herein are subject to change without notice. Should any question arise concerning these provisions, the purchaser/user should contact Flowserve Corporation at any one of its worldwide operations or offices.

© 2008 Flowserve Corporation, Irving, Texas, USA. Flowserve is a registered trademark of Flowserve Corporation.

# CS-315-900 : Identification sheet

| | | | |
|---|---|---|---|
| VWTC PROJECT NUMBER: | 5000220043 | REV: | 1 |
| PROJECT NAME: | AEM MELIADINE-BPC UPGRADE | SUBMITTED TO (COMPANY): | AEM |
| ENGINEER: | EMMANUELLE DORMOY | SUBMITTED TO (RESPONSIBLE): | |
| PROJECT MANAGER: | THOMAS SAVARY / BRUCE BRODES | PROJECT NUM REFERENCE.: | 6526-S-265-605 / OC-989680 |
| PHONE NUMBER: | 514-334-7230 | LOT NUMBER: | |

| SUPPLIER | EQPT CODE | EQPT TAG NO | DIA | DESCRIPTION | INFO 1 | INFO 2 | INFO 3 | APPLIC. | NOTE | REV |
|---|---|---|---|---|---|---|---|---|---|---|
| BRAY | VABFDI364240 | 50-BF99-1301 | 2" (50 mm) | MANUAL DRAIN VALVE | TYPE: BUTTERFLY \| 175 PSI (75 PSI IF DEAD-END SERVICE) / MANUF.: BRAY / MODEL: Serie 31 - Lug// Série 31- à oreilles / CONNECTION TYPE \| SIZE : \| 2" (50 mm) / BODY: DUCTILE IRON / SEAL \| SEAT : EPDM / DISC \| STEM: NYLON 11 COATED DISC \| 416 SS | / ACTUATOR TYPE: Manual \| LEVER / MANUFACTURER: BRAY | / NSF61 | CLARIFIER #2 | | 1 |
| BRAY | VABFDI364240 | 50-BF99-1302 | 2" (50 mm) | MANUAL DRAIN VALVE | TYPE: BUTTERFLY \| 175 PSI (75 PSI IF DEAD-END SERVICE) / MANUF.: BRAY / MODEL: Serie 31 - Lug// Série 31- à oreilles / CONNECTION TYPE \| SIZE : \| 2" (50 mm) / BODY: DUCTILE IRON / SEAL \| SEAT : EPDM / DISC \| STEM: NYLON 11 COATED DISC \| 416 SS | / ACTUATOR TYPE: Manual \| LEVER / MANUFACTURER: BRAY | / NSF61 | CLARIFIER #2 | | 1 |
| BRAY | VABFDI376221 | 150-BF99-1303 | 6" (150 mm) | MANUAL PARTIAL DRAIN VALVE | TYPE: BUTTERFLY \| 175 PSI (75 PSI IF DEAD-END SERVICE) / MANUF.: BRAY / MODEL: Serie 31 - Lug// Série 31- à oreilles / CONNECTION TYPE \| SIZE : \| 6" (150 mm) / BODY: DUCTILE IRON / SEAL \| SEAT : \| EPDM / DISC \| STEM: NYLON 11 COATED DISC \| 416 SS | / ACTUATOR TYPE: Manual \| Lever / MANUFACTURER: BRAY | / | CLARIFIER #2 | | 1 |

**This page is intentionally left blank**

## Series 30 Wafer

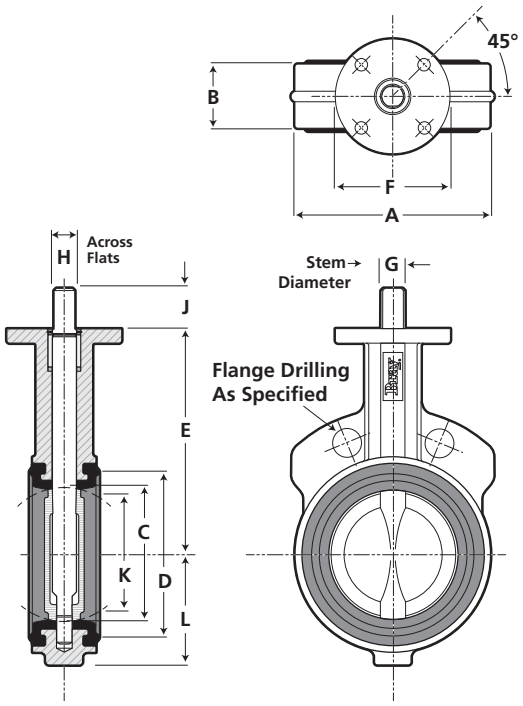


## Series 31 Lug

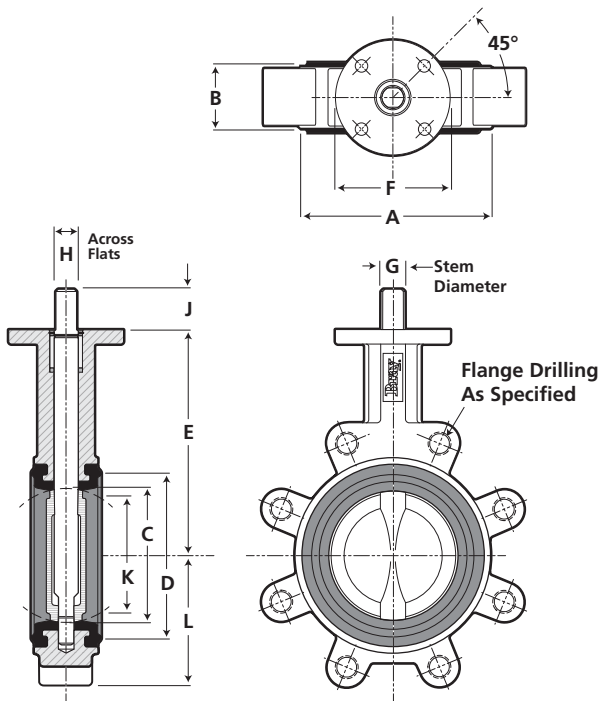


| IMPERIAL DIMENSIONS: Inches | | | | | | | | | | | | | | | | | | | Lug Bolting Data | | |
|---|---|---|---|---|---|---|---|---|---|---|---|---|---|---|---|---|---|---|---|---|---|
| Valve Size | A | B | C | D | E | F | Top Plate Drilling | | | G | H | J | K | L | | Adapter Code | Weight (lbs.) | | Bolt Circle | No of Holes | Threads ISO Coarse |
| | | | | | | | BC | No of Holes | Hole Diameter | | | | | Wafer | Lug | | Wafer | Lug | | | |
| 2 | 3.69 | 1.62 | 2.00 | 2.85 | 5.50 | 3.54 | 2.76 | 4 | .39 | .55 | 39 | 1.25 | 1.32 | 2.22 | 2.30 | A | 5.5 | 7.0 | 4.75 | 4 | 5/8-11 |
| 2 1/2 | 4.19 | 1.75 | 2.50 | 3.36 | 6.00 | 3.54 | 2.76 | 4 | .39 | .55 | .39 | 1.25 | 1.91 | 2.47 | 2.57 | A | 7.0 | 8.0 | 5.50 | 4 | 5/8-11 |
| 3 | 4.88 | 1.75 | 3.00 | 4.15 | 6.25 | 3.54 | 2.76 | 4 | .39 | .55 | .39 | 1.25 | 2.55 | 2.81 | 2.81 | A | 7.5 | 9.0 | 6.00 | 4 | 5/8-11 |
| 4 | 6.06 | 2.00 | 4.00 | 5.16 | 7.00 | 3.54 | 2.76 | 4 | .39 | .63 | .43 | 1.25 | 3.57 | 3.41 | 4.09 | B | 11.5 | 15.0 | 7.50 | 8 | 5/8-11 |
| 5 | 7.06 | 2.12 | 5.00 | 6.16 | 7.50 | 3.54 | 2.76 | 4 | .39 | .75 | .51 | 1.25 | 4.63 | 4.03 | 4.61 | C | 14.0 | 20.0 | 8.50 | 8 | 3/4-10 |
| 6 | 8.12 | 2.12 | 5.75 | 7.02 | 8.00 | 3.54 | 2.76 | 4 | .39 | .75 | .51 | 1.25 | 5.45 | 4.53 | 5.06 | C | 17.0 | 23.0 | 9.50 | 8 | 3/4-10 |
| 8 | 10.50 | 2.50 | 7.75 | 9.47 | 9.50 | 5.91 | 4.92 | 4 | .57 | .87 | .63 | 1.25 | 7.45 | 5.75 | 6.05 | D | 34.0 | 42.0 | 11.75 | 8 | 3/4-10 |
| 10 | 12.75 | 2.50 | 9.75 | 11.47 | 10.72 | 5.91 | 4.92 | 4 | .57 | 1.18 | .87 | 2.00 | 9.53 | 7.12 | 7.69 | E | 49.0 | 66.0 | 14.25 | 12 | 7/8-9 |
| 12 | 14.88 | 3.00 | 11.75 | 13.47 | 12.25 | 5.91 | 4.92 | 4 | .57 | 1.18 | .87 | 2.00 | 11.47 | 8.12 | 9.02 | E | 67.0 | 88.0 | 17.00 | 12 | 7/8-9 |

**Note: K dimension is disc chordal dimension at valve face.**

| METRIC DIMENSIONS: Millimeters | | | | | | | | | | | | | | | | | | | Lug Bolting Data | | |
|---|---|---|---|---|---|---|---|---|---|---|---|---|---|---|---|---|---|---|---|---|---|
| Valve Size | A | B | C | D | E | F | Top Plate Drilling | | | G | H | J | K | L | | Adapter Code | Weight (Kg) | | Bolt Circle | No of Holes | Threads ISO Coarse |
| | | | | | | | BC | No of Holes | Hole Diameter | | | | | Wafer | Lug | | Wafer | Lug | | | |
| 50 | 94 | 41.2 | 51 | 72 | 140 | 90 | 70 | 4 | 10 | 14 | 10 | 32 | 34 | 56 | 58 | A | 2.5 | 3 | 121 | 4 | 5/8-11 |
| 65 | 106 | 44.5 | 64 | 85 | 152 | 90 | 70 | 4 | 10 | 14 | 10 | 32 | 49 | 63 | 65 | A | 3 | 3.5 | 140 | 4 | 5/8-11 |
| 80 | 124 | 44.5 | 76 | 102 | 159 | 90 | 70 | 4 | 10 | 14 | 10 | 32 | 65 | 71 | 71 | A | 3.5 | 4 | 152 | 4 | 5/8-11 |
| 100 | 154 | 50.8 | 102 | 131 | 178 | 90 | 70 | 4 | 10 | 16 | 11 | 32 | 91 | 87 | 104 | B | 5 | 7 | 191 | 8 | 5/8-11 |
| 125 | 181 | 54.0 | 127 | 156 | 190 | 90 | 70 | 4 | 10 | 19 | 13 | 32 | 118 | 102 | 117 | C | 6 | 9 | 216 | 8 | 3/4-10 |
| 150 | 206 | 54.0 | 146 | 178 | 203 | 90 | 70 | 4 | 10 | 19 | 13 | 32 | 138 | 115 | 129 | C | 8 | 10 | 241 | 8 | 3/4-10 |
| 200 | 267 | 63.5 | 197 | 240 | 241 | 150 | 125 | 4 | 14 | 22 | 16 | 32 | 189 | 146 | 154 | D | 15 | 19 | 298 | 8 | 3/4-10 |
| 250 | 324 | 63.5 | 248 | 291 | 273 | 150 | 125 | 4 | 14 | 30 | 22 | 51 | 242 | 181 | 195 | E | 22 | 30 | 362 | 12 | 7/8-9 |
| 300 | 378 | 76.2 | 298 | 342 | 311 | 150 | 125 | 4 | 14 | 30 | 22 | 51 | 291 | 206 | 229 | E | 30 | 40 | 432 | 12 | 7/8-9 |

**Note: K dimension is disc chordal dimension at valve face.**

Drawings are for reference only. Please refer to Bray ES drawings on the Bray website, www.bray.com. Bray reserves the right to change product dimensions without notice.

## SR Drawing #30/31-2/12-in

Inquire/P.O. No.:_____

Customer/Project: _____

Bray Order No.: _____

## Series 30 Wafer

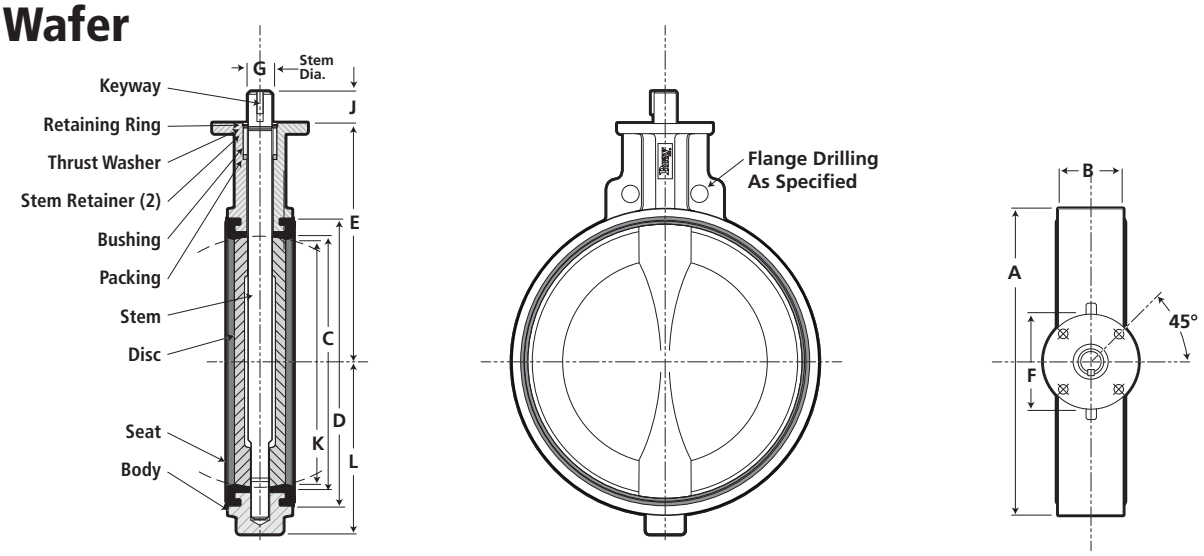


## Series 31 Lug

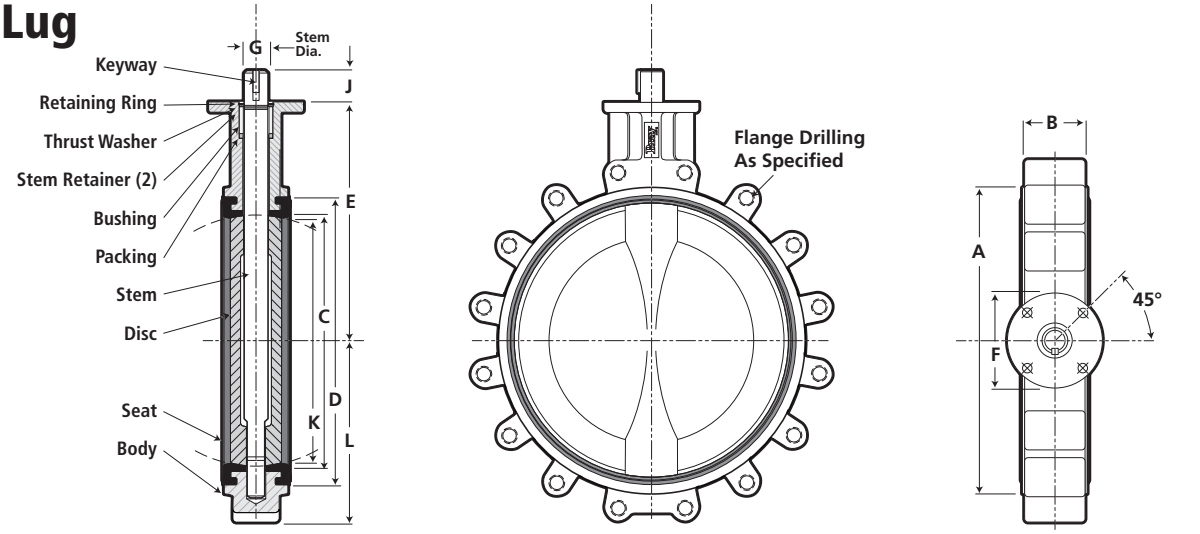


| IMPERIAL DIMENSIONS: Inches | | | | | | | | | | | | | | | | | | | | Lug Bolting Data | | |
|---|---|---|---|---|---|---|---|---|---|---|---|---|---|---|---|---|---|---|---|---|---|---|
| Valve Size | A | B | C | D | E | F | Top Plate Drilling | | | G | J | Key Size | K | L | | Adapter Code | Weight (lbs.) | | Bolt Circle | No of Holes | Threads ISO Coarse |
| | | | | | | | BC | No of Holes | Hole Diameter | | | | | Wafer | Lug | | Wafer | Lug | | | |
| 14 | 17.05 | 3.00 | 13.25 | 15.28 | 13.62 | 5.91 | 4.92 | 4 | .57 | 1.38 | 2.00 | .39x.39 | 13.04 | 9.38 | 9.93 | F | 95 | 114 | 18.75 | 12 | 1-8 |
| 16 | 19.21 | 4.00 | 15.25 | 17.14 | 14.75 | 5.91 | 4.92 | 4 | .57 | 1.38 | 2.00 | .39x.39 | 14.85 | 10.75 | 11.30 | F | 135 | 166 | 21.25 | 16 | 1-8 |
| 18 | 21.12 | 4.25 | 17.25 | 19.47 | 16.00 | 8.27 | 6.50 | 4 | .81 | 1.97 | 2.50 | .47x.39 | 16.85 | 12.00 | 12.15 | G | 200 | 226 | 22.75 | 16 | 1⅛-7 |
| 20 | 23.25 | 5.00 | 19.25 | 21.59 | 17.25 | 8.27 | 6.50 | 4 | .81 | 1.97 | 2.50 | .47x.39 | 18.73 | 14.00 | 14.00 | G | 260 | 305 | 25.00 | 20 | 1⅛-7 |

**Note: K dimension is disc chordal dimension at valve face.**

| METRIC DIMENSIONS: Millimeters | | | | | | | | | | | | | | | | | | | | Lug Bolting Data | | |
|---|---|---|---|---|---|---|---|---|---|---|---|---|---|---|---|---|---|---|---|---|---|---|
| Valve Size | A | B | C | D | E | F | Top Plate Drilling | | | G | J | Key Size | K | L | | Adapter Code | Weight (Kg) | | Bolt Circle | No of Holes | Threads ISO Coarse |
| | | | | | | | BC | No of Holes | Hole Diameter | | | | | Wafer | Lug | | Wafer | Lug | | | |
| 350 | 433 | 76.2 | 337 | 388 | 346 | 150 | 125 | 4 | 14 | 35 | 51 | 10x10 | 331 | 238 | 252 | F | 43 | 52 | 476 | 12 | 1-8 |
| 400 | 488 | 101.6 | 387 | 442 | 375 | 150 | 125 | 4 | 14 | 35 | 51 | 10x10 | 377 | 273 | 287 | F | 61 | 75 | 540 | 16 | 1-8 |
| 450 | 536 | 108.0 | 438 | 495 | 406 | 210 | 165 | 4 | 21 | 50 | 64 | 12x10 | 428 | 305 | 309 | G | 91 | 103 | 578 | 16 | 1⅛-7 |
| 500 | 591 | 127.0 | 489 | 548 | 438 | 210 | 165 | 4 | 21 | 50 | 64 | 12x10 | 476 | 348 | 358 | G | 118 | 138 | 635 | 20 | 1⅛-7 |

**Note: K dimension is disc chordal dimension at valve face.**

Drawings are for reference only. Please refer to Bray ES drawings on the Bray website, www.bray.com. Bray reserves the right to change product dimensions without notice.

## SR Drawing #30/31-14/20-in

Inquire/P.O. No.:_____

Customer/Project: _____

Bray Order No.: _____

# RESILIENT SEATED BUTTERFLY VALVES

## Technical Manual



Bray®

BRAY.COM

THE HIGH PERFORMANCE COMPANY

# Resilient Seated Butterfly Valves

## Technical Manual Table of Contents


Introduction to Torques . . . . . 3

Reduced Disc Diameter Bray Series 30/31/3A Valves . . . . . 6

Seating & Unseating Torques . . . . . 7

- Series 20/21 and 30/31/3A Torques Imperial (Lb-Ins) . . . . . 8
- Series 20/21 and 30/31/3A Torques Metric (Nm) . . . . . 9
- Series 32/33, 35/36 Torques Imperial (Lb-Ins) . . . . . 10
- Series 32/33, 35/36 Torques Metric (Nm) . . . . . 10
- Series 22/23 Torques Imperial (Lb-In) and Metric (Nm) . . . . . 11

Dynamic Torque Factors (Imperial) . . . . . 12

Dynamic Torque Factors (Metric) . . . . . 13

Valve Sizing Coefficients . . . . . 14

- **Series 20/21** - Valve Sizing Coefficient (Cv) . . . . . 15
- **Series 22/23** - Valve Sizing Coefficient (Cv) . . . . . 15
- Series 30/31/31H/3A/3AH/31U - Valve Sizing Coefficient (Cv) . . . . 16
- Series 32/33/35/36/35F/36H - Valve Sizing Coefficient (Cv) . . . . . 16
- Series 20/21 - Valve Sizing Coefficient (Kv) . . . . . 17
- Series 22/23 - Valve Sizing Coefficient (Kv) . . . . . 17
- Series 30/31/31H/3A/3AH/31U - Valve Sizing Coefficient (Kv) . . . . 18
- Series 32/33/35/36/35F/36H - Valve Sizing Coefficient (Kv) . . . . . 18

Examples of Typical Flange to Valve Bolting* . . . . . 19

Flange Bolt Tensioning . . . . . 20

Series 20/21 - Standard Metal Specifications . . . . . 23

- Series 22/23 - Standard Metal Specifications. . . . . 23
- Series 30/31, 31H, 3A/3AH, 31U - Standard Metal Specifications . . 24
- Series 32/33, 35/36, 35F, 36H - Standard Metal Specifications . . . 25





All statements, technical information, and recommendations in this bulletin are for general use only. Consult Bray representatives or factory for the specific requirements and material selection for your intended application. The right to change or modify product design or product without prior notice is reserved.

# Torques

## INTRODUCTION TO TORQUES

There are a number of torques which butterfly valves may experience such as:

- **$T_{su}$ - Seating and Unseating Torque**
- **$T_d$ - Dynamic Torque Resulting from fluid flow**
- **$T_{bf}$ – Bearing Friction Torque**
- **$T_{ss}$ – Stem Seal Friction Torque**
- **$T_e$ – Eccentricity Torque resulting from disc offset from centerline of stem (either single, double or triple offset)**
- **$T_h$ – Hydrostatic Torque**

**Factors which influence the butterfly valve torque values shown above are:**

- Type of Seat and Seat Material
- Interference of Seat I.D. and Disc O.D.
- Shaft Diameter
- Valve Diameter
- Bearing Coefficient of Friction
- Angle of Opening
- Shut-off Pressure
- Fluid Velocity
- Disc Shape and Configuration
- Piping System and Location/Orientation of Valve in Pipe Line
- System Head Characteristics
- Physical Size of Disc/Shaft Obstructing Flow
- Disc Edge Finish

With respect to Butterfly Valves, the two major conditions for determining total valve operating torque ($T_T$) exists as follows:

**CASE I** (Angle = 0° , Disc in Closed Position)

$$T_T = T_h + T_{bf} + T_{ss} + T_{su}$$

**Analyzed**

Total Torque for Case I using a symmetrical disc butterfly valve is the sum of hydrostatic torque, bearing friction torque, stem seal, friction torque, and seating/unseating torque.

### A. Hydrostatic Torque ($T_h$)

We will ignore discussion of the hydrostatic torque values as they are generally insignificant compared to the seating/unseating, bearing friction and stem seal torque values (the safety factor applied to seating/unseating, stem seal friction and bearing friction torque values more than compensates for the hydrostatic torque which is usually less than 2% of these total torques).

### B. Bearing Friction Torque ($T_{bf}$)

Bearing friction torque occurs because pressure forces against the disc are transmitted to the stem. As the stem is forced against the bearing supports, bearing friction torque is created between the stem material and the support material as the stem is turned. Bearing friction torques are normally included in the seating/unseating torque values.

**Bearing friction torques can be determined by using the following equation:**

$$T_{bf} = .785\ C_f\ D_v^2\ (d/2)\ \Delta P$$

**Where:**

- $T_{bf}$ = Bearing Friction Torque
- $C_f$ = Coefficient of Friction (approximately .25 for non-corroded stem to cast iron body) (dimensionless).
- $D_v$ = Valve Diameter (Inches)
- $d$ = Diameter of Shaft (Inches)
- $\Delta P$ = Pressure Differential (psi)

### C. Stem Seal Friction Torque ($T_{ss}$)

For all practical purposes stem seal friction torque values are insignificant when compared to seating/unseating and bearing friction torques. Stem seal friction torques are normally included in the seating/unseating torque values.



All information herein is proprietary and confidential and may not be copied or reproduced without the expressed written consent of BRAY INTERNATIONAL, Inc.
The technical data herein is for general information only. Product suitability should be based solely upon customer's detailed knowledge and experience with their application.

### D. Seating/Unseating Torques ($T_{su}$)

The seating/unseating torque value ($T_{su}$) is a function of the pressure differential, the seat material's coefficient of friction, the finished surface of the disc edge, the amount of interference between the seat I.D. and disc O.D. when flanged in piping, the seat thickness, and the type of service (media) for which the valve is being used. In determining the $T_{su}$ values for Bray resilient seated butterfly valves, Bray has developed Seating/Unseating Torque Charts incorporating all bearing friction and stem seal friction torques for three classes of services for both the valves with standard discs (rated to full pressure) and for valves with reduced diameter discs (rated for 50 psi [3.5 bar]). The three service classes are:

**Class A – Non-Corrosive, Lubricating Service**

**Class B – General Service**

**Class C – Severe Service**

Please review the guidelines for each class in the technical manual when determining which Seating/Unseating Torque Class should be used. Most butterfly valves are used in Class II, General Service applications.

### E. Total Torque ($T_T$)

The total torque values for Bray symmetrical disc valves for Case I applications are shown in the Seating/Unseating Torque Charts within this manual.

## CASE II (Disc in Partial To Full Opening Position)

$$T_T = T_{bf} + T_{ss} + T_d$$

The total Torque for Case II using a symmetrical disc butterfly valve is the summation of bearing friction torque, stem seal friction torque and dynamic torque.

### A. Bearing Friction Torque ($T_{bf}$)

See Case I discussion. This torque value is normally included in the Dynamic Torque Value.

### B. Stem Seal Friction Torque ($T_{ss}$)

See Case I discussion. This torque value is normally included in the Dynamic torque value.

### C. Dynamic Torque ($T_d$)

In a symmetrical disc design, dynamic torque occurs between the closed position, 0° and the full open position, 90°. With the disc in the partially open position, velocity of the fluid passing the leading disc edge is less than the velocity passing the trailing edge. This variance in velocity past the leading disc edge and trailing disc edge results in an unbalanced distribution of pressure forces on the upstream side of the face of the disc. The total pressure forces acting perpendicular to the disc face on the leading edge half of the disc are greater than the total pressure acting perpendicular on the trailing half of the disc. This uneven distribution of pressure on the disc face (exists on both sides of the disc) results in a torsional force which tries to turn the disc to the closed position **(Figure 1)**. This torsional closing force can become greater than the seating/unseating torque value depending on the valve angle of opening and differential pressure.

To determine dynamic torque, the following equation is applied:

$$T_d = C_{dt}\, d^3\, \Delta P$$

**Where:**

- $T_d$ = Dynamic Torque (lbs- in).
- $C_{dt}$ = Coefficient of Dynamic Torque (based on disc shape and angle of opening) (dimensionless)
- $d$ = Diameter of Disc (Inches)
- $\Delta P$ = Pressure Differential Across Valve (psi)

## Figure 1 - Pressure Distribution

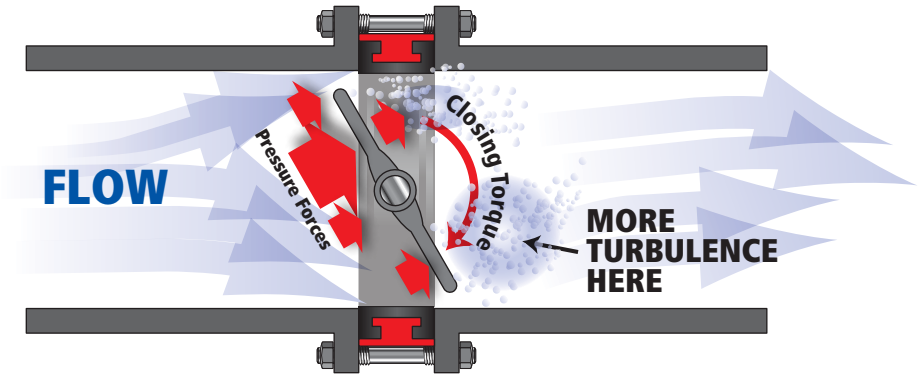




All information herein is proprietary and confidential and may not be copied or reproduced without the expressed written consent of BRAY INTERNATIONAL, Inc.
The technical data herein is for general information only. Product suitability should be based solely upon customer's detailed knowledge and experience with their application.

As shown in **Figure 2**, coefficient of dynamic torque for Bray's symmetrical disc valves is at 0° angle of opening and increases until the angle of opening reaches 75°-80°, where it then decreases to a zero value at full open (90°) (no internal friction factors considered, just dynamic torque only).

One final comment about dynamic torque is that one may minimize the dynamic torque by the orientation of the valve (stem horizontal or vertical) in the pipeline as well as by the location (distance) in the pipeline from elbows, other valves, etc. (See Bray Resilient Seated BFV Operations and Maintenance Manual).

**D. Total Torque ($T_T$)**

The total torque required for operating a Bray symmetrical disc butterfly valve at an angle opening between 0° and 90° is shown in the Dynamic Torque section of this manual. Note that the dynamic torque includes all internal friction torque values.

## CONCLUSION

In most applications for butterfly valves, especially 20˝ (DN 500) or smaller, the maximum torque required to operate the valve will be seating/unseating torque. However, dynamic torque should be considered particularly in:

- Control applications using larger valves (24˝ [DN600] and above) where the disc is maintained in the open position
- Applications using larger valves (24˝ [DN 600] and above) where the velocity is high (16 ft./sec [4.9m/sec]).

### Figure 2 - Angle of Opening

The $C_{dt}$ value for Bray symmetrical disc valves are approximately:

| Angle of Opening | 0° | 10° | 20° | 30° | 40° | 50° | 60° | 70° | 75° | 80° | 90° |
|---|---|---|---|---|---|---|---|---|---|---|---|
| $C_{dt}$ | 0 | 0.0126 | 0.0140 | 0.0251 | 0.0505 | 0.0809 | 0.1394 | 0.2384 | 0.3419 | 0.3400 | 0 |

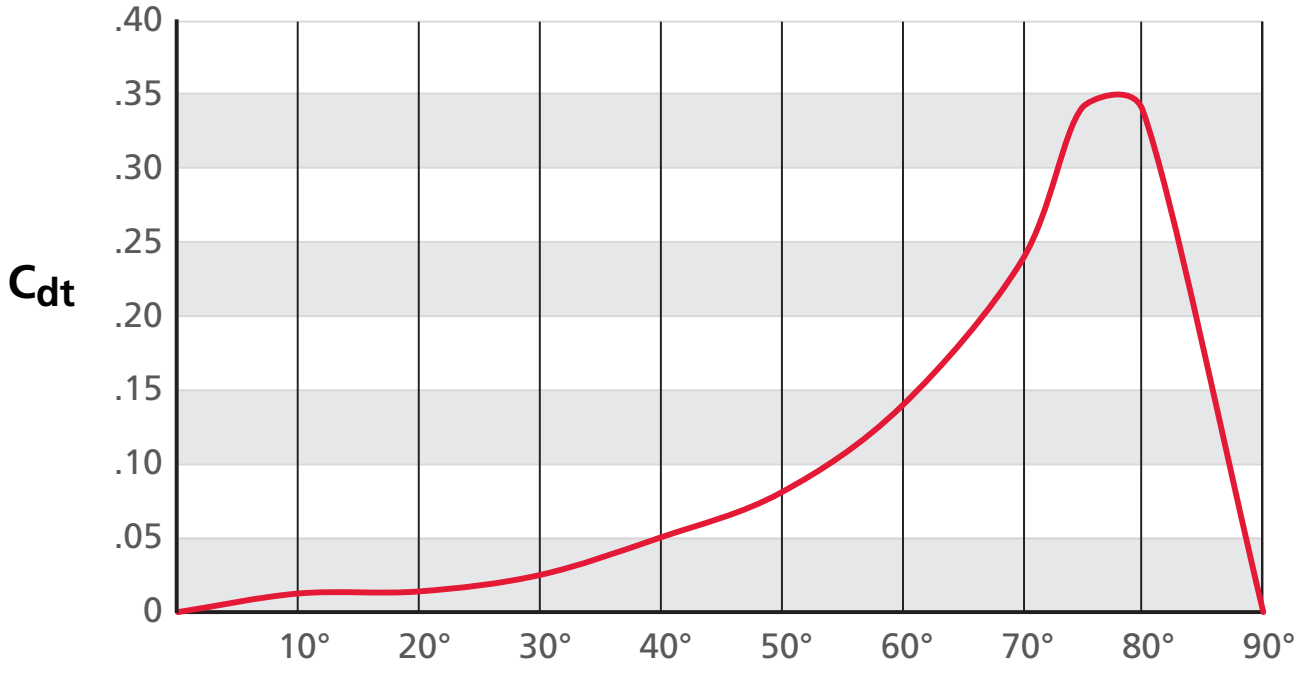




All information herein is proprietary and confidential and may not be copied or reproduced without the expressed written consent of BRAY INTERNATIONAL, Inc.
The technical data herein is for general information only. Product suitability should be based solely upon customer's detailed knowledge and experience with their application.

# REDUCED DISC DIAMETER BRAY SERIES 30/31/3A VALVES

Bray offers a reduced disc diameter for 4"-20" for Series 30, 31 and 3A valves. The purpose of reducing the disc diameter is to decrease the seating/unseating torques and extend the seat life on low pressure applications.

By reducing the disc diameter, the interference between the disc O.D. and seat I.D. is decreased and the valve pressure rating, which is a function of this interference, is reduced to 50 PSI. Less interference between the disc and seat results in reduced seating/unseating torques. Lower seating/unseating torque may allow for the use of a smaller actuator on the valve. In other applications where abrasive dry bulk materials such as cement, sugar, plastic, pellets, flour, etc., are generally pneumatically conveyed at 50 PSI or less, the reduced disc diameter not only reduces the seating/unseating torque but, very importantly, usually significantly increases the service life of the seat.

Bray does the following to differentiate reduced diameter discs from full diameter discs:

**Metal Discs:** An " R " is stamped above the part number

**Nylon 11 Coated Discs:** Discs are differentiated by the color of the Nylon 11:

**Grey** – Full Disc Diameter

**White** – Reduced Disc Diameter



All information herein is proprietary and confidential and may not be copied or reproduced without the expressed written consent of BRAY INTERNATIONAL, Inc.
The technical data herein is for general information only. Product suitability should be based solely upon customer's detailed knowledge and experience with their application.

# SEATING & UNSEATING TORQUES

Bray has developed Seating/Unseating Torque Charts for three Classes of Service for its valves with standard discs (rated for full pressure) and for valves with reduced diameter discs (rated for 50 PSI / 3.5 bar.).

The guidelines for selecting a Class to be used for determining a valve's seating/unseating torque are given below. Each valve application should comply with all five Class characteristics in order to be qualified for that Class.

| Characteristics of Application | **Class A** Non-Corrosive, Lubricating Service | **Class B** General Service | **Class C** Severe Service |
|---|---|---|---|
| **Media Type** | Lubricating hydrocarbons; Aqueous processes and Water (See Note 1) | Water; aqueous processes; all other aqueous liquids including salt water; Lubricating gases | Dry, non-lubricating such as air, dry gas, cement, pneumatic conveying mediums |
| **Corrosion by Media** | Insignificant if any | No major corrosion or deposits from media | Can incur significant corrosion such as Ductile Iron disc in water |
| **Chemical Reactions of Media with Seat** | Insignificant if any | Only minor or insignificant in nature | Reactions causing swelling and hardness occur |
| **Media Temperature** | 45º to 160ºF (7º to 71ºC) | Within seat temperature limits, not near limits | Near or at seat temperature limits |
| **Frequency of Valve Cycling** | Once weekly or more frequently | Minimum once every 3-6 weeks, or more frequently | Infrequently, sometimes not cycled for long periods |

**NOTE:**

1. For aqueous processes and water, Class A torques may be used only if a Nylon 11 coated disc is selected and all other Class A characteristics apply. Otherwise, Class B torques should be used.
2. All the material trims may be classified into Class A, B, or C except Series 20/21 valves with a PTFE Lined Elastomer seat, PTFE molded disc/stem, or rubber molded disc/stem. These trims must always use Class C Seating/Unseating Torque Values unless they are used only in a throttling application. Valves with bonded seats must always be classified as Class C.
3. If a valve is used strictly in a throttling application, that is, it is never put in the closed position but throttled between 20° and 80°, then Class A torques may be used provided you have checked to see that dynamic torques do not exceed the Class A torque values.
4. With the exception of dry, non-lubricating medias, one is usually safe electing to use Class B torques for sizing actuators for all other valve service applications. Seating/Unseating Torque values shown include friction bearing torques for stated differential pressure.
5. Dynamic Torque values are not considered. See the Dynamic Torque chart in this manual for determination of Dynamic Torque.
6. Do not apply a safety factor to torque values when determining actuator output torque requirement.
7. **For 3-way assemblies where one valve is opening and another is closing, multiply torque by a 1.5 factor.**



All information herein is proprietary and confidential and may not be copied or reproduced without the expressed written consent of BRAY INTERNATIONAL, Inc.
The technical data herein is for general information only. Product suitability should be based solely upon customer's detailed knowledge and experience with their application.

## Series 20/21 and 30/31/3A Torques Imperial (Lb-Ins)

| | Valve Size Inches | Valve Differential Pressure (PSIG) | | | | | | |
|---|---|---|---|---|---|---|---|---|
| | | Full Disc | | | | | Reduced Disc | |
| | | 0 psi | 50 psi | 100 psi | 150 psi | 175 psi | 0 psi | 50 psi |
| **Class A** Non-Corrosive, Lubricating Service | 1 | 54 | 59 | 65 | 70 | 73 | 54 | 59 |
| | 1.5 | 81 | 86 | 91 | 97 | 100 | 81 | 86 |
| | 2 | 109 | 114 | 119 | 123 | 128 | 109 | 114 |
| | 2.5 | 169 | 178 | 187 | 196 | 200 | 169 | 178 |
| | 3 | 220 | 236 | 250 | 264 | 273 | 220 | 236 |
| | 4 | 341 | 364 | 387 | 410 | 423 | 225 | 248 |
| | 5 | 510 | 560 | 610 | 660 | 687 | 324 | 374 |
| | 6 | 632 | 712 | 792 | 872 | 912 | 344 | 488 |
| | 8 | 1,182 | 1,341 | 1,500 | 1,660 | 1,741 | 735 | 894 |
| | 10 | 1,764 | 2,018 | 2,272 | 2,526 | 2,653 | 1,204 | 1,358 |
| | 12 | 2,701 | 3,110 | 3,519 | 3,928 | 4,132 | 1,665 | 2,074 |
| | 14 | 3,818 | 4,500 | 5,182 | 5,864 | — | 2,318 | 3,000 |
| | 16 | 4,638 | 5,819 | 7,000 | 8,182 | — | 2,699 | 3,880 |
| | 18 | 5,265 | 7,065 | 8,865 | 10,665 | — | 2,970 | 4,788 |
| | 20 | 7,000 | 9,364 | 11,728 | 14,091 | — | 3,356 | 6,243 |
| **Class B** General Service | 1 | 59 | 65 | 71 | 77 | 80 | 59 | 65 |
| | 1.5 | 89 | 95 | 100 | 106 | 110 | 89 | 95 |
| | 2 | 120 | 125 | 130 | 135 | 140 | 120 | 125 |
| | 2.5 | 185 | 195 | 205 | 215 | 220 | 185 | 195 |
| | 3 | 245 | 260 | 275 | 290 | 297 | 245 | 260 |
| | 4 | 375 | 400 | 425 | 450 | 462 | 252 | 267 |
| | 5 | 560 | 615 | 670 | 725 | 755 | 355 | 410 |
| | 6 | 695 | 783 | 871 | 953 | 1,003 | 427 | 537 |
| | 8 | 1,300 | 1,475 | 1,650 | 1,825 | 1,915 | 808 | 983 |
| | 10 | 1,960 | 2,240 | 2,520 | 2,800 | 2,940 | 1,213 | 1,493 |
| | 12 | 2,970 | 3,420 | 3,870 | 4,320 | 4,545 | 1,830 | 2,280 |
| | 14 | 4,200 | 4,950 | 5,700 | 6,450 | — | 2,550 | 3,300 |
| | 16 | 5,100 | 6,400 | 7,700 | 9,000 | — | 2,967 | 4,267 |
| | 18 | 5,850 | 7,850 | 9,850 | 11,850 | — | 3,267 | 5,267 |
| | 20 | 7,700 | 10,300 | 12,900 | 15,500 | — | 4,267 | 6,867 |
| **Class C** Severe Service | 1 | 74 | 82 | 89 | 97 | 100 | 74 | 82 |
| | 1.5 | 111 | 119 | 125 | 133 | 137 | 111 | 119 |
| | 2 | 151 | 157 | 163 | 169 | 175 | 151 | 157 |
| | 2.5 | 231 | 244 | 257 | 269 | 275 | 231 | 244 |
| | 3 | 306 | 325 | 344 | 363 | 375 | 306 | 325 |
| | 4 | 468 | 500 | 532 | 563 | 582 | 316 | 348 |
| | 5 | 700 | 769 | 838 | 907 | 944 | 444 | 513 |
| | 6 | 870 | 980 | 1,090 | 1,200 | 1,255 | 525 | 672 |
| | 8 | 1,625 | 1,844 | 2,063 | 2,282 | 2,394 | 1,011 | 1,230 |
| | 10 | 2,450 | 2,800 | 3,150 | 3,500 | 3,675 | 1,517 | 1,867 |
| | 12 | 3,712 | 4,275 | 4,838 | 5,400 | 5,682 | 2,287 | 2,850 |
| | 14 | 5,251 | 6,188 | 7,125 | 8,063 | — | 3,189 | 4,126 |
| | 16 | 6,375 | 8,000 | 9,625 | 11,250 | — | 3,709 | 5,334 |
| | 18 | 7,315 | 9,815 | 12,315 | 14,815 | — | 4,084 | 6,584 |
| | 20 | 9,625 | 12,875 | 16,125 | 19,375 | — | 5,334 | 8,584 |



All information herein is proprietary and confidential and may not be copied or reproduced without the expressed written consent of BRAY INTERNATIONAL, Inc.
The technical data herein is for general information only. Product suitability should be based solely upon customer's detailed knowledge and experience with their application.

## Series 20/21 and 30/31/3A Torques Metric (Nm)

| | Valve Size mm | Valve Differential Pressure (bar) | | | | | | |
|---|---|---|---|---|---|---|---|---|
| | | Full Disc | | | | | Reduced Disc | |
| | | 0 bar | 3.4 bar | 7 bar | 10.3 bar | 12 bar | 0 bar | 3.4 bar |
| **Class A** Non-Corrosive, Lubricating Service | 25 | 6 | 7 | 7 | 8 | 8 | 6 | 7 |
| | 40 | 9 | 10 | 10 | 11 | 11 | 9 | 10 |
| | 50 | 12 | 13 | 13 | 14 | 14 | 12 | 13 |
| | 65 | 19 | 20 | 21 | 22 | 23 | 19 | 20 |
| | 80 | 25 | 27 | 28 | 30 | 31 | 25 | 27 |
| | 100 | 39 | 41 | 44 | 46 | 48 | 25 | 28 |
| | 125 | 58 | 63 | 69 | 75 | 78 | 37 | 42 |
| | 150 | 71 | 80 | 89 | 99 | 103 | 39 | 55 |
| | 200 | 134 | 152 | 169 | 188 | 197 | 83 | 101 |
| | 250 | 199 | 228 | 257 | 285 | 300 | 136 | 153 |
| | 300 | 305 | 351 | 398 | 444 | 467 | 188 | 234 |
| | 350 | 431 | 508 | 585 | 663 | — | 262 | 339 |
| | 400 | 524 | 657 | 791 | 924 | — | 305 | 438 |
| | 450 | 595 | 798 | 1,002 | 1,205 | — | 336 | 541 |
| | 500 | 791 | 1,058 | 1,325 | 1,592 | — | 379 | 705 |
| **Class B** General Service | 25 | 7 | 7 | 8 | 9 | 9 | 7 | 7 |
| | 40 | 10 | 11 | 11 | 12 | 12 | 10 | 11 |
| | 50 | 14 | 14 | 15 | 15 | 16 | 14 | 14 |
| | 65 | 21 | 22 | 23 | 24 | 25 | 21 | 22 |
| | 80 | 28 | 29 | 31 | 33 | 34 | 28 | 29 |
| | 100 | 42 | 45 | 48 | 51 | 52 | 28 | 30 |
| | 125 | 63 | 69 | 76 | 82 | 85 | 40 | 46 |
| | 150 | 79 | 88 | 98 | 108 | 113 | 48 | 61 |
| | 200 | 147 | 167 | 186 | 206 | 216 | 91 | 111 |
| | 250 | 221 | 253 | 285 | 316 | 332 | 137 | 169 |
| | 300 | 336 | 386 | 437 | 488 | 514 | 207 | 258 |
| | 350 | 475 | 559 | 644 | 729 | — | 288 | 373 |
| | 400 | 576 | 723 | 870 | 1,017 | — | 335 | 482 |
| | 450 | 661 | 887 | 1,113 | 1,339 | — | 369 | 595 |
| | 500 | 870 | 1,164 | 1,458 | 1,751 | — | 482 | 776 |
| **Class C** Severe Service | 25 | 8 | 9 | 10 | 11 | 11 | 8 | 9 |
| | 40 | 13 | 13 | 14 | 15 | 15 | 13 | 13 |
| | 50 | 17 | 18 | 18 | 19 | 20 | 17 | 18 |
| | 65 | 26 | 28 | 29 | 30 | 31 | 26 | 28 |
| | 80 | 35 | 37 | 39 | 41 | 42 | 35 | 37 |
| | 100 | 53 | 56 | 60 | 64 | 66 | 36 | 39 |
| | 125 | 79 | 87 | 95 | 102 | 107 | 50 | 58 |
| | 150 | 98 | 111 | 123 | 136 | 142 | 59 | 76 |
| | 200 | 184 | 208 | 233 | 258 | 270 | 114 | 139 |
| | 250 | 277 | 316 | 356 | 395 | 415 | 171 | 211 |
| | 300 | 419 | 483 | 547 | 610 | 642 | 258 | 322 |
| | 350 | 593 | 699 | 805 | 911 | — | 360 | 466 |
| | 400 | 720 | 904 | 1,087 | 1,271 | — | 419 | 603 |
| | 450 | 826 | 1,109 | 1,391 | 1,674 | — | 461 | 744 |
| | 500 | 1,087 | 1,455 | 1,822 | 2,189 | — | 603 | 970 |



All information herein is proprietary and confidential and may not be copied or reproduced without the expressed written consent of BRAY INTERNATIONAL, Inc.
The technical data herein is for general information only. Product suitability should be based solely upon customer's detailed knowledge and experience with their application.

## Series 32/33, 35/36 Torques Imperial (Lb-Ins)

| | Valve Size inches | 32, 35 - Max △P = 75 psi | | | | 33, 36 - Max △P = 150 psi | | | |
|---|---|---|---|---|---|---|---|---|---|
| | | 0 psi | 25 psi | 50 psi | 75 psi | 0 psi | 50 psi | 100 psi | 150 psi |
| **Class B** General Service (Imperial) | 22 | 5,450 | 6,350 | 7,250 | 8,150 | 8,100 | 11,700 | 14,700 | 17,700 |
| | 24 | 6,700 | 8,100 | 9,500 | 10,900 | 10,500 | 15,000 | 19,500 | 24,000 |
| | 26 | 7,900 | 9,800 | 11,700 | 13,600 | 12,400 | 18,400 | 24,400 | 30,400 |
| | 28 | 9,200 | 11,600 | 14,000 | 16,400 | 14,200 | 21,700 | 29,200 | 36,700 |
| | 30 | 10,400 | 13,300 | 16,200 | 19,100 | 16,100 | 25,100 | 34,100 | 43,100 |
| | 32 | 11,700 | 15,600 | 19,400 | 23,300 | 18,400 | 29,700 | 41,100 | 52,400 |
| | 34 | 13,500 | 18,500 | 23,500 | 28,500 | 20,950 | 34,750 | 48,600 | 62,400 |
| | 36 | 14,300 | 20,100 | 25,900 | 31,700 | 23,000 | 39,000 | 55,000 | 71,000 |
| | 40 | 18,200 | 26,200 | 34,100 | 42,000 | 24,300 | 46,300 | 68,300 | 90,300 |
| | 42 | 20,200 | 29,200 | 38,200 | 47,200 | 25,000 | 50,000 | 75,000 | 100,000 |
| | 44 | 20,800 | 32,500 | 44,200 | 55,800 | 26,700 | 56,700 | 86,700 | 118,300 |
| | 48 | 22,000 | 39,000 | 56,000 | 73,000 | 30,000 | 70,000 | 110,000 | 150,000 |
| **Class C** | 54 | 41,500 | 73,500 | 105,500 | 138,000 | 56,300 | 131,000 | 173,000 | 282,000 |
| | 60 | 55,500 | 98,200 | 141,000 | 184,800 | 75,100 | 174,500 | 208,000 | 376,000 |
| | 66 | 115,700 | 159,400 | 203,200 | 247,000 | 161,500 | 277,500 | 393,400 | 509,400 |
| | 72 | Consult Factory | | | | | | | |
| | 78 | Consult Factory | | | | | | | |
| | 84 | Consult Factory | | | | | | | |
| | 90 | Consult Factory | | | | | | | |
| | 96 | Consult Factory | | | | | | | |

## Series 32/33, 35/36 Torques Metric (Nm)

| | Valve Size mm | 32, 35, - Max △P = 5 bar | | | | 33, 36 - Max △P = 10.3 bar | | | |
|---|---|---|---|---|---|---|---|---|---|
| | | 0 bar | 1.7 bar | 3.4 bar | 5.2 bar | 0 bar | 3.4 bar | 7 bar | 10.3 bar |
| **Class B** General Service (Metric) | 550 | 616 | 718 | 819 | 921 | 915 | 1,322 | 1,661 | 2,000 |
| | 600 | 757 | 915 | 1,074 | 1,232 | 1,187 | 1,695 | 2,204 | 2,712 |
| | 650 | 893 | 1,107 | 1,322 | 1,537 | 1,401 | 2,079 | 2,757 | 3,435 |
| | 700 | 1,040 | 1,311 | 1,582 | 1,853 | 1,605 | 2,452 | 3,300 | 4,147 |
| | 750 | 1,175 | 1,503 | 1,831 | 2,158 | 1,819 | 2,836 | 3,853 | 4,870 |
| | 800 | 1,322 | 1,763 | 2,192 | 2,633 | 2,079 | 3,356 | 4,644 | 5,921 |
| | 850 | 1,526 | 2,091 | 2,656 | 3,221 | 2,367 | 3,927 | 5,492 | 7,051 |
| | 900 | 1,616 | 2,271 | 2,927 | 3,582 | 2,599 | 4,407 | 6,215 | 8,023 |
| | 1,000 | 2,057 | 2,961 | 3,853 | 4,746 | 2,746 | 5,232 | 7,718 | 10,204 |
| | 1,050 | 2,283 | 3,300 | 4,317 | 5,334 | 2,825 | 5,650 | 8,475 | 11,300 |
| | 1,100 | 2,350 | 3,673 | 4,995 | 6,305 | 3,017 | 6,407 | 9,797 | 13,368 |
| | 1,200 | 2,486 | 4,407 | 6,328 | 8,249 | 3,390 | 7,910 | 12,430 | 16,950 |
| **Class C** | 1,400 | 4,689 | 8,304 | 11,920 | 15,592 | 6,361 | 14,801 | 19,546 | 31,862 |
| | 1,500 | 6,271 | 11,095 | 15,931 | 20,880 | 8,485 | 19,716 | 23,501 | 42,482 |
| | 1,650 | 13,072 | 18,010 | 22,959 | 27,907 | 18,247 | 31,353 | 44,448 | 57,555 |
| | 1,800 | Consult Factory | | | | | | | |
| | 2,000 | Consult Factory | | | | | | | |
| | 2,200 | Consult Factory | | | | | | | |
| | 2,250 | Consult Factory | | | | | | | |
| | 2,400 | Consult Factory | | | | | | | |



All information herein is proprietary and confidential and may not be copied or reproduced without the expressed written consent of BRAY INTERNATIONAL, Inc.
The technical data herein is for general information only. Product suitability should be based solely upon customer's detailed knowledge and experience with their application.

## Series 22/23 Torques Imperial (Lb-In) and Metric (Nm)

| | In. | mm | ΔP = 0-150 psi | ΔP = 0-10.3 bar |
|---|---|---|---|---|
| | | | Lb-In | Nm |
| Valve Size | 2 | 50 | 288 | 33 |
| | 2.5 | 65 | 350 | 40 |
| | 3 | 80 | 560 | 63 |
| | 4 | 100 | 720 | 81 |
| | 5 | 125 | 960 | 108 |
| | 6 | 150 | 1,300 | 147 |
| | 8 | 200 | 2,402 | 271 |
| | 10 | 250 | 3,840 | 434 |
| | 12 | 300 | 5,812 | 657 |
| | 14 | 350 | 8,000 | 904 |
| | 16 | 400 | 11,000 | 1,243 |
| | 18 | 450 | 15,500 | 1,751 |
| | 20 | 500 | 19,300 | 2,181 |
| | 24 | 600 | 30,500 | 3,446 |

1) Torques listed are for PTFE, PFA and UHMWPE trims.
2) All information based on full rated pressure differential.



All information herein is proprietary and confidential and may not be copied or reproduced without the expressed written consent of BRAY INTERNATIONAL, Inc.
The technical data herein is for general information only. Product suitability should be based solely upon customer's detailed knowledge and experience with their application.

# DYNAMIC TORQUE FACTORS (IMPERIAL)

**To Use the Torque Chart, note the following:**

1. Dynamic Torque values include all bearing friction and stem-seal friction torques.
2. Dynamic Torque values are per 1 PSI ΔP. To determine dynamic torque (lb-in) at a desired angle of opening, multiply the pressure drop ΔP at this angle by the appropriate dynamic torque factor in the charts below.
3. Bray recommends sizing control valves between 20° and 70°, with 60° the preferred angle.
4. Dynamic Torque will tend to close all Bray valves whose disc are symmetrical to the stem.

## Series 20/21 and 30/31/3A (Dynamic Torque Factor - lb-in./psi)

| Valve Size in. | Angle of Opening | | | | | | | | | |
|---|---|---|---|---|---|---|---|---|---|---|
| | 10° | 20° | 30° | 40° | 50° | 60° | 70° | 75° | 80° | 90° |
| 2″ | 0.11 | 0.13 | 0.23 | 0.45 | 0.73 | 1.25 | 2.14 | 3.07 | 3.05 | 0.00 |
| 2.5″ | 0.22 | 0.24 | 0.43 | 0.87 | 1.39 | 2.39 | 4.09 | 5.86 | 5.83 | 0.00 |
| 3″ | 0.37 | 0.41 | 0.73 | 1.47 | 2.36 | 4.07 | 6.95 | 9.97 | 9.92 | 0.00 |
| 4″ | 0.86 | 0.95 | 1.70 | 3.43 | 5.49 | 9.45 | 16.17 | 23.19 | 23.07 | 0.00 |
| 5″ | 1.65 | 1.83 | 3.29 | 6.61 | 10.59 | 18.25 | 31.22 | 44.77 | 44.53 | 0.00 |
| 6″ | 2.49 | 2.77 | 4.97 | 10.00 | 16.01 | 27.59 | 47.19 | 67.68 | 67.32 | 0.00 |
| 8″ | 6.60 | 6.74 | 12.08 | 24.30 | 38.93 | 67.07 | 114.71 | 164.51 | 163.64 | 0.00 |
| 10″ | 11.99 | 13.32 | 23.89 | 48.06 | 76.99 | 132.65 | 226.86 | 325.35 | 323.64 | 0.00 |
| 12″ | 20.89 | 23.21 | 41.62 | 83.74 | 134.14 | 231.14 | 395.30 | 566.91 | 563.93 | 0.00 |
| 14″ | 30.04 | 33.38 | 59.84 | 120.40 | 192.87 | 332.34 | 568.37 | 815.12 | 810.83 | 0.00 |
| 16″ | 45.65 | 50.72 | 90.94 | 182.97 | 293.12 | 505.07 | 863.76 | 1238.76 | 1232.24 | 0.00 |
| 18″ | 65.91 | 73.23 | 131.30 | 264.16 | 423.18 | 729.18 | 1247.04 | 1788.44 | 1779.02 | 0.00 |
| 20″ | 91.42 | 101.57 | 182.11 | 366.39 | 586.95 | 1011.37 | 1729.64 | 2480.55 | 2467.50 | 0.00 |

Example: 4″ Valve; 60° Open with a 10 PSI pressure drop: [Td = (9.454)(10) = 94.54 lb-in]

## Series 32/33, 35/36 (Dynamic Torque Factor - lb-in./psi)

| Valve Size in. | Angle of Opening | | | | | | | | | |
|---|---|---|---|---|---|---|---|---|---|---|
| | 10° | 20° | 30° | 40° | 50° | 60° | 70° | 75° | 80° | 90° |
| 24″ | 158.36 | 175.95 | 315.46 | 634.69 | 1016.76 | 1751.99 | 2996.23 | 4297.03 | 4274.40 | 0.00 |
| 30″ | 315.32 | 350.35 | 628.13 | 1263.77 | 2024.54 | 3488.51 | 5966.01 | 8556.12 | 8511.07 | 0.00 |
| 36″ | 551.88 | 613.21 | 1099.39 | 2211.92 | 3543.45 | 6105.77 | 10442.00 | 14975.33 | 14896.49 | 0.00 |
| Larger Size Valves - Consult Factory | | | | | | | | | | |

Example: 24″ Valve; 60° Open with a 10 PSI pressure drop: [Td = (1,751.990)(10) = 17,519.90 lb-in]



All information herein is proprietary and confidential and may not be copied or reproduced without the expressed written consent of BRAY INTERNATIONAL, Inc.
The technical data herein is for general information only. Product suitability should be based solely upon customer's detailed knowledge and experience with their application.

# DYNAMIC TORQUE FACTORS (METRIC)

**To Use the Torque Chart, note the following:**

1. Dynamic Torque values include all bearing friction and stem-seal friction torques.
2. Dynamic Torque values are per 1 bar ΔP. To determine dynamic torque (Nm) at a desired angle of opening, multiply the pressure drop ΔP at this angle by the appropriate dynamic torque factor in the charts below.
3. Bray recommends sizing control valves between 20° and 70°, with 60° the preferred angle.
4. Dynamic Torque will tend to close all Bray valves whose disc are symmetrical to the stem.

## Series 20/21 and 30/31/3A (Dynamic Torque Factor - Nm/bar)

| Valve Size mm. | Angle of Opening | | | | | | | | | |
|---|---|---|---|---|---|---|---|---|---|---|
| | 10° | 20° | 30° | 40° | 50° | 60° | 70° | 75° | 80° | 90° |
| 50 | 0.19 | 0.21 | 0.37 | 0.74 | 1.19 | 2.05 | 3.51 | 5.03 | 5.00 | 0.00 |
| 65 | 0.35 | 0.39 | 0.70 | 1.42 | 2.27 | 3.91 | 6.69 | 9.60 | 9.55 | 0.00 |
| 80 | 0.60 | 0.67 | 1.20 | 2.41 | 3.87 | 6.66 | 11.39 | 16.34 | 16.25 | 0.00 |
| 100 | 1.40 | 1.56 | 2.79 | 5.61 | 8.99 | 15.49 | 26.49 | 38.00 | 37.80 | 0.00 |
| 125 | 2.70 | 3.00 | 5.39 | 10.84 | 17.36 | 29.91 | 51.16 | 73.36 | 72.98 | 0.00 |
| 150 | 4.09 | 4.54 | 8.14 | 16.38 | 26.24 | 45.22 | 77.33 | 110.91 | 110.32 | 0.00 |
| 200 | 10.82 | 11.04 | 19.79 | 39.82 | 63.79 | 109.91 | 187.97 | 269.58 | 268.16 | 0.00 |
| 250 | 19.65 | 21.83 | 39.14 | 78.75 | 126.16 | 217.38 | 371.76 | 533.16 | 530.35 | 0.00 |
| 300 | 34.24 | 38.04 | 68.20 | 137.22 | 219.82 | 378.77 | 647.77 | 929.00 | 924.11 | 0.00 |
| 350 | 49.23 | 54.70 | 98.06 | 197.29 | 316.06 | 544.61 | 931.38 | 1335.74 | 1328.71 | 0.00 |
| 400 | 74.81 | 83.12 | 149.03 | 299.83 | 480.33 | 827.66 | 1415.46 | 2029.97 | 2019.28 | 0.00 |
| 450 | 108.01 | 120.01 | 215.15 | 432.88 | 693.46 | 1194.92 | 2043.53 | 2930.72 | 2915.29 | 0.00 |
| 500 | 149.80 | 166.45 | 298.42 | 600.40 | 961.83 | 1657.34 | 2834.37 | 4064.89 | 4043.50 | 0.00 |

Example: 100 mm Valve; 60° Open with a 10 bar pressure drop: [Td = (15.49)(2) = 30.98 Nm]

## Series 32/33, 35/36 (Dynamic Torque Factor - Nm/bar)

| Valve Size mm | Angle of Opening | | | | | | | | | |
|---|---|---|---|---|---|---|---|---|---|---|
| | 10° | 20° | 30° | 40° | 50° | 60° | 70° | 75° | 80° | 90° |
| 600 | 259.50 | 288.34 | 516.94 | 1040.07 | 1666.17 | 2871.00 | 4909.94 | 7041.56 | 7004.49 | 0.00 |
| 750 | 516.71 | 574.13 | 1029.33 | 2070.95 | 3317.62 | 5716.65 | 9776.53 | 14020.96 | 13947.15 | 0.00 |
| 900 | 904.38 | 1004.86 | 1801.57 | 3624.68 | 5806.67 | 10005.56 | 17111.37 | 24540.17 | 24410.97 | 0.00 |
| Larger Size Valves - Consult Factory | | | | | | | | | | |

Example: 600 mm Valve; 60° Open with a 10 bar pressure drop: [Td = (2871)(2) = 5742.00 Nm]



All information herein is proprietary and confidential and may not be copied or reproduced without the expressed written consent of BRAY INTERNATIONAL, Inc.
The technical data herein is for general information only. Product suitability should be based solely upon customer's detailed knowledge and experience with their application.

# VALVE SIZING COEFFICIENTS

1. **Valve Sizing Coefficients (Cv)**..... Pages 15-16

    1. **Cv** stands for **Valve Sizing Coefficient**, sometimes called the **Flow Rate Coefficient**.
    2. **Cv** varies with the valve size, angle of opening and the manufacturer's valve style.
    3. **Cv** is defined as the volume of water in USGPM that will flow through a given restriction or valve opening with a pressure drop of one (1) psi at room temperature.

2. **Valve Sizing Coefficients (Kv)**..... Pages 17-18

    1. **Kv** stands for **Valve Sizing Coefficient**, sometimes called the **Flow Rate Coefficient**.
    2. **Kv** varies with the valve size, angle of opening and the manufacturer's valve style.
    3. **Kv** is defined as the volume of water in Cubic Meters/Hour ($m^3$/hr) that will flow through a given restriction or valve opening with a pressure drop of one (1) bar at room temperature.



All information herein is proprietary and confidential and may not be copied or reproduced without the expressed written consent of BRAY INTERNATIONAL, Inc.
The technical data herein is for general information only. Product suitability should be based solely upon customer's detailed knowledge and experience with their application.

## Series 20/21 - Valve Sizing Coefficient (Cv)

| Valve Size inches | Disc Position (Degrees) | | | | | | | | |
|---|---|---|---|---|---|---|---|---|---|
| | 10° | 20° | 30° | 40° | 50° | 60° | 70° | 80° | 90° |
| 1 | 0.1 | 1 | 3 | 6 | 11 | 21 | 36 | 56 | 61 |
| 1.5 | 0.2 | 2 | 6 | 11 | 26 | 50 | 87 | 129 | 147 |
| 2 | 0.9 | 7 | 16 | 27 | 45 | 73 | 123 | 172 | 244 |
| 2.5 | 1 | 11 | 25 | 43 | 71 | 115 | 201 | 310 | 439 |
| 3 | 2 | 16 | 35 | 62 | 102 | 165 | 290 | 488 | 691 |
| 4 | 4 | 28 | 63 | 110 | 182 | 294 | 515 | 906 | 1,282 |
| 5 | 6 | 44 | 98 | 172 | 284 | 459 | 805 | 1,416 | 2,070 |
| 6 | 7 | 59 | 130 | 227 | 376 | 607 | 1,065 | 1,873 | 2,786 |
| 8 | 13 | 106 | 244 | 427 | 714 | 1,147 | 1,935 | 3,402 | 5,191 |
| 10 | 21 | 168 | 387 | 675 | 1,130 | 1,815 | 3,062 | 5,385 | 8,238 |
| 12 | 31 | 245 | 562 | 981 | 1,642 | 2,636 | 4,448 | 7,820 | 12,102 |
| 14 | 40 | 307 | 706 | 1,234 | 2,064 | 3,313 | 5,590 | 9,829 | 15,210 |
| 16 | 52 | 403 | 925 | 1,617 | 2,706 | 4,343 | 7,328 | 12,885 | 19,940 |
| 18 | 68 | 528 | 1,213 | 2,121 | 3,549 | 5,695 | 9,610 | 16,898 | 26,150 |
| 20 | 85 | 660 | 1,517 | 2,651 | 4,436 | 7,120 | 12,014 | 21,124 | 32,690 |

## Series 22/23 - Valve Sizing Coefficient (Cv)

| Valve Size inches | Disc Position (Degrees) | | | | | | | | |
|---|---|---|---|---|---|---|---|---|---|
| | 10° | 20° | 30° | 40° | 50° | 60° | 70° | 80° | 90° |
| 2 | 1 | 7 | 16 | 27 | 44 | 62 | 85 | 115 | 146 |
| 2.5 | 1 | 11 | 24 | 43 | 69 | 110 | 176 | 235 | 300 |
| 3 | 2 | 15 | 35 | 61 | 98 | 158 | 286 | 413 | 586 |
| 4 | 3 | 27 | 62 | 109 | 177 | 285 | 503 | 812 | 1,051 |
| 5 | 5 | 43 | 98 | 171 | 276 | 440 | 798 | 1,297 | 1,814 |
| 6 | 6 | 57 | 129 | 226 | 364 | 580 | 1,048 | 1,737 | 2,576 |
| 8 | 12 | 104 | 242 | 424 | 698 | 1,111 | 1,908 | 3,142 | 4,354 |
| 10 | 20 | 165 | 385 | 672 | 1,105 | 1,761 | 3,004 | 4,976 | 6,834 |
| 12 | 29 | 241 | 559 | 975 | 1,604 | 2,591 | 4,420 | 7,392 | 10,090 |
| 14 | 35 | 300 | 720 | 1,280 | 2,100 | 3,300 | 5,700 | 9,350 | 12,880 |
| 16 | 45 | 350 | 850 | 1,650 | 2,750 | 4,400 | 7,500 | 12,320 | 16,900 |
| 18 | 55 | 510 | 1,200 | 2,100 | 3,600 | 5,700 | 9,830 | 15,600 | 21,600 |
| 20 | 80 | 650 | 1,550 | 2,700 | 4,480 | 7,100 | 12,200 | 19,900 | 27,500 |
| 24 | 180 | 1,000 | 2,450 | 4,600 | 7,000 | 11,300 | 18,900 | 28,500 | 34,800 |



All information herein is proprietary and confidential and may not be copied or reproduced without the expressed written consent of BRAY INTERNATIONAL, Inc.
The technical data herein is for general information only. Product suitability should be based solely upon customer's detailed knowledge and experience with their application.

## Series 30/31/31H/3A/3AH/31U - Valve Sizing Coefficient (Cv)

| Valve Size Inches | Disc Position (Degrees) | | | | | | | | |
|---|---|---|---|---|---|---|---|---|---|
| | 10° | 20° | 30° | 40° | 50° | 60° | 70° | 80° | 90° |
| 2 | 0.8 | 7 | 16 | 27 | 43 | 61 | 84 | 114 | 144 |
| 2.5 | 1 | 11 | 24 | 43 | 67 | 107 | 163 | 223 | 282 |
| 3 | 2 | 15 | 35 | 61 | 96 | 154 | 267 | 364 | 461 |
| 4 | 3 | 27 | 62 | 109 | 171 | 274 | 496 | 701 | 841 |
| 5 | 5 | 43 | 98 | 170 | 268 | 428 | 775 | 1,146 | 1,376 |
| 6 | 6 | 56 | 129 | 225 | 354 | 567 | 1,025 | 1,542 | 1,850 |
| 8 | 12 | 102 | 241 | 421 | 680 | 1,081 | 1,862 | 2,842 | 3,316 |
| 10 | 19 | 162 | 382 | 667 | 1,076 | 1,710 | 2,948 | 4,525 | 5,430 |
| 12 | 27 | 235 | 555 | 1,005 | 1,594 | 2,563 | 4,393 | 6,731 | 8,077 |
| 14 | 34 | 299 | 756 | 1,320 | 2,149 | 3,384 | 5,939 | 8,874 | 10,538 |
| 16 | 45 | 397 | 1,001 | 1,749 | 2,847 | 4,483 | 7,867 | 11,761 | 13,966 |
| 18 | 58 | 507 | 1,281 | 2,237 | 3,643 | 5,736 | 10,065 | 14,496 | 17,214 |
| 20 | 72 | 632 | 1,595 | 2,786 | 4,536 | 7,144 | 12,535 | 18,812 | 22,339 |

## Series 32/33/35/36/35F/36H - Valve Sizing Coefficient (Cv)

| Valve Size Inches | Disc Position (Degrees) | | | | | | | | |
|---|---|---|---|---|---|---|---|---|---|
| | 10° | 20° | 30° | 40° | 50° | 60° | 70° | 80° | 90° |
| 22 | 103 | 916 | 2,070 | 3,510 | 5,640 | 9,036 | 14,562 | 22,028 | 27,168 |
| 24 | 259 | 1,028 | 2,387 | 4,244 | 6,962 | 11,040 | 18,235 | 27,186 | 33,154 |
| 26 | 289 | 1,141 | 2,752 | 4,890 | 7,824 | 12,496 | 19,921 | 29,700 | 36,220 |
| 28 | 295 | 1,324 | 3,133 | 5,399 | 8,636 | 13,838 | 22,578 | 34,683 | 41,619 |
| 30 | 420 | 1,652 | 3,986 | 7,080 | 11,328 | 18,090 | 28,844 | 43,003 | 52,443 |
| 32 | 550 | 2,026 | 4,636 | 7,983 | 12,743 | 20,410 | 32,591 | 48,558 | 60,658 |
| 34 | 533 | 2,304 | 5,210 | 8,834 | 14,179 | 22,741 | 36,648 | 55,438 | 68,374 |
| 36 | 740 | 2,775 | 5,936 | 9,790 | 15,572 | 25,053 | 40,086 | 59,667 | 77,089 |
| 40 | 757 | 2,971 | 6,925 | 11,862 | 19,307 | 30,636 | 50,406 | 73,990 | 90,175 |
| 42 | 783 | 3,502 | 7,879 | 12,997 | 21,010 | 35,016 | 54,584 | 83,421 | 102,989 |
| 44 | 904 | 4,066 | 8,698 | 14,346 | 22,818 | 36,712 | 58,740 | 87,430 | 112,960 |
| 48 | 1,023 | 4,651 | 10,365 | 17,010 | 27,242 | 43,853 | 70,431 | 108,968 | 132,888 |
| 52 | Consult Factory | | | | | | | | |
| 54 | 1,299 | 5,904 | 13,158 | 21,594 | 34,583 | 55,671 | 89,411 | 138,334 | 168,700 |
| 60 | 1,480 | 6,400 | 14,500 | 24,500 | 39,400 | 63,200 | 102,000 | 154,000 | 190,000 |
| 66 | 1,650 | 7,110 | 16,100 | 27,300 | 43,800 | 70,200 | 113,000 | 171,000 | 211,000 |
| 72 | 1,900 | 8,220 | 18,600 | 31,500 | 50,700 | 81,200 | 131,000 | 198,000 | 244,000 |
| 78 | 2,290 | 9,910 | 22,400 | 38,000 | 61,000 | 97,800 | 158,000 | 238,000 | 294,000 |
| 84 | 2,290 | 11,390 | 25,800 | 43,700 | 70,200 | 112,400 | 181,000 | 274,000 | 338,000 |
| 90 | Consult Factory | | | | | | | | |
| 96 | Consult Factory | | | | | | | | |



All information herein is proprietary and confidential and may not be copied or reproduced without the expressed written consent of BRAY INTERNATIONAL, Inc.
The technical data herein is for general information only. Product suitability should be based solely upon customer's detailed knowledge and experience with their application.

## Series 20/21 - Valve Sizing Coefficient (Kv)

| Valve Size mm | Disc Position (Degrees) | | | | | | | | |
|---|---|---|---|---|---|---|---|---|---|
| | 10° | 20° | 30° | 40° | 50° | 60° | 70° | 80° | 90° |
| 25 | 0.087 | 0.865 | 2.595 | 5.190 | 9.515 | 18.165 | 31.140 | 48.440 | 52.765 |
| 40 | 0.173 | 1.730 | 5.190 | 9.515 | 22.490 | 43.250 | 75.255 | 111.585 | 127.155 |
| 50 | 0.779 | 6.055 | 13.840 | 23.355 | 38.925 | 63.145 | 106.395 | 148.780 | 211.060 |
| 65 | 0.865 | 9.515 | 21.625 | 37.195 | 61.415 | 99.475 | 173.865 | 268.150 | 379.735 |
| 80 | 1.730 | 13.840 | 30.275 | 53.630 | 88.230 | 142.725 | 250.850 | 422.120 | 597.715 |
| 100 | 3.460 | 24.220 | 54.495 | 95.150 | 157.430 | 254.310 | 445.475 | 783.690 | 1,108.930 |
| 125 | 5.190 | 38.060 | 84.770 | 148.780 | 245.660 | 397.035 | 696.325 | 1,224.840 | 1,790.550 |
| 150 | 6.055 | 51.035 | 112.450 | 196.355 | 325.240 | 525.055 | 921.225 | 1,620.145 | 2,409.890 |
| 200 | 11.245 | 91.690 | 211.060 | 369.355 | 617.610 | 992.155 | 1,673.775 | 2,942.730 | 4,490.215 |
| 250 | 18.165 | 145.320 | 334.755 | 583.875 | 977.450 | 1,569.975 | 2,648.630 | 4,658.025 | 7,125.870 |
| 300 | 26.815 | 211.925 | 486.130 | 848.565 | 1,420.330 | 2,280.140 | 3,847.520 | 6,764.300 | 10,468.230 |
| 350 | 34.600 | 265.555 | 610.690 | 1,067.410 | 1,785.360 | 2,865.745 | 4,835.350 | 8,502.085 | 13,156.650 |
| 400 | 44.980 | 348.595 | 800.125 | 1,398.705 | 2,340.690 | 3,756.695 | 6,338.720 | 11,145.525 | 17,248.100 |
| 450 | 58.820 | 456.720 | 1,049.245 | 1,834.665 | 3,069.885 | 4,926.175 | 8,312.650 | 14,616.770 | 22,619.750 |
| 500 | 73.525 | 570.900 | 1,312.205 | 2,293.115 | 3,837.140 | 6,158.800 | 10,392.110 | 18,272.260 | 28,276.850 |

## Series 22/23 - Valve Sizing Coefficient (Kv)

| Valve Size mm | Disc Position (Degrees) | | | | | | | | |
|---|---|---|---|---|---|---|---|---|---|
| | 10° | 20° | 30° | 40° | 50° | 60° | 70° | 80° | 90° |
| 50 | 0.865 | 6.055 | 13.840 | 23.355 | 38.060 | 53.630 | 73.525 | 99.475 | 126.290 |
| 65 | 0.865 | 9.515 | 20.760 | 37.195 | 59.685 | 95.150 | 152.240 | 203.275 | 259.500 |
| 80 | 1.730 | 12.975 | 30.275 | 52.765 | 84.770 | 136.670 | 247.390 | 357.245 | 506.890 |
| 100 | 2.595 | 23.355 | 53.630 | 94.285 | 153.105 | 246.525 | 435.095 | 702.380 | 909.115 |
| 125 | 4.325 | 37.195 | 84.770 | 147.915 | 238.740 | 380.600 | 690.270 | 1,121.905 | 1,569.110 |
| 150 | 5.190 | 49.305 | 111.585 | 195.490 | 314.860 | 501.700 | 906.520 | 1,502.505 | 2,228.240 |
| 200 | 10.380 | 89.960 | 209.330 | 366.760 | 603.770 | 961.015 | 1,650.420 | 2,717.830 | 3,766.210 |
| 250 | 17.300 | 142.725 | 333.025 | 581.280 | 955.825 | 1,523.265 | 2,598.460 | 4,304.240 | 5,911.410 |
| 300 | 25.085 | 208.465 | 483.535 | 843.375 | 1,387.460 | 2,241.215 | 3,823.300 | 6,394.080 | 8,727.850 |
| 350 | 30.275 | 259.500 | 622.800 | 1,107.200 | 1,816.500 | 2,854.500 | 4,930.500 | 8,087.750 | 11,141.200 |
| 400 | 38.925 | 302.750 | 735.250 | 1,427.250 | 2,378.750 | 3,806.000 | 6,487.500 | 10,656.800 | 14,618.500 |
| 450 | 47.575 | 441.150 | 1,038.000 | 1,816.500 | 3,114.000 | 4,930.500 | 8,502.950 | 13,494.000 | 18,684.000 |
| 500 | 69.200 | 562.250 | 1,340.750 | 2,335.500 | 3,875.200 | 6,141.500 | 10,553.000 | 17,213.500 | 23,787.500 |
| 600 | 155.700 | 865.000 | 2,119.250 | 3,979.000 | 6,055.000 | 9,774.500 | 16,348.500 | 24,652.500 | 30,102.000 |



All information herein is proprietary and confidential and may not be copied or reproduced without the expressed written consent of BRAY INTERNATIONAL, Inc.
The technical data herein is for general information only. Product suitability should be based solely upon customer's detailed knowledge and experience with their application.

## Series 30/31/31H/3A/3AH/31U - Valve Sizing Coefficient (Kv)

| Valve Size mm | Disc Position (Degrees) | | | | | | | | |
|---|---|---|---|---|---|---|---|---|---|
| | 10° | 20° | 30° | 40° | 50° | 60° | 70° | 80° | 90° |
| 50 | 0.692 | 6.055 | 13.840 | 23.355 | 37.195 | 52.765 | 72.660 | 98.610 | 124.560 |
| 65 | 0.865 | 9.515 | 20.760 | 37.195 | 57.955 | 92.555 | 140.995 | 192.895 | 243.930 |
| 80 | 1.730 | 12.975 | 30.275 | 52.765 | 83.040 | 133.210 | 230.955 | 314.860 | 398.765 |
| 100 | 2.595 | 23.355 | 53.630 | 94.285 | 147.915 | 237.010 | 429.040 | 606.365 | 727.465 |
| 125 | 4.325 | 37.195 | 84.770 | 147.050 | 231.820 | 370.220 | 670.375 | 991.290 | 1,190.240 |
| 150 | 5.190 | 48.440 | 111.585 | 194.625 | 306.210 | 490.455 | 886.625 | 1,333.830 | 1,600.250 |
| 200 | 10.380 | 88.230 | 208.465 | 364.165 | 588.200 | 935.065 | 1,610.630 | 2,458.330 | 2,868.340 |
| 250 | 16.435 | 140.130 | 330.430 | 576.955 | 930.740 | 1,479.150 | 2,550.020 | 3,914.125 | 4,696.950 |
| 300 | 23.355 | 203.275 | 480.075 | 869.325 | 1,378.810 | 2,216.995 | 3,799.945 | 5,822.315 | 6,986.605 |
| 350 | 29.410 | 258.635 | 653.940 | 1,141.800 | 1,858.885 | 2,927.160 | 5,137.235 | 7,676.010 | 9,115.370 |
| 400 | 38.925 | 343.405 | 865.865 | 1,512.885 | 2,462.655 | 3,877.795 | 6,804.955 | 10,173.265 | 12,080.590 |
| 450 | 50.170 | 438.555 | 1,108.065 | 1,935.005 | 3,151.195 | 4,961.640 | 8,706.225 | 12,539.040 | 14,890.110 |
| 500 | 62.280 | 546.680 | 1,379.675 | 2,409.890 | 3,923.640 | 6,179.560 | 10,842.775 | 16,272.380 | 19,323.235 |

## Series 32/33/35/36/35F/36H - Valve Sizing Coefficient (Kv)

| Valve Size mm | Disc Position (Degrees) | | | | | | | | |
|---|---|---|---|---|---|---|---|---|---|
| | 10° | 20° | 30° | 40° | 50° | 60° | 70° | 80° | 90° |
| 550 | 89.095 | 792.340 | 1,790.550 | 3,036.150 | 4,878.600 | 7,816.140 | 12,596.130 | 19,054.220 | 23,500.320 |
| 600 | 224.035 | 889.220 | 2,064.755 | 3,671.060 | 6,022.130 | 9,549.600 | 15,773.275 | 23,515.890 | 28,678.210 |
| 650 | 249.985 | 986.965 | 2,380.480 | 4,229.850 | 6,767.760 | 10,809.040 | 17,231.665 | 25,690.500 | 31,330.300 |
| 700 | 255.175 | 1,145.260 | 2,710.045 | 4,670.135 | 7,470.140 | 11,969.870 | 19,529.970 | 30,000.795 | 36,000.435 |
| 750 | 363.300 | 1,428.980 | 3,447.890 | 6,124.200 | 9,798.720 | 15,647.850 | 24,950.060 | 37,197.595 | 45,363.195 |
| 800 | 475.750 | 1,752.490 | 4,010.140 | 6,905.295 | 11,022.695 | 17,654.650 | 28,191.215 | 42,002.670 | 52,469.170 |
| 850 | 461.045 | 1,992.960 | 4,506.650 | 7,641.410 | 12,264.835 | 19,670.965 | 31,700.520 | 47,953.870 | 59,143.510 |
| 900 | 640.100 | 2,400.375 | 5,134.640 | 8,468.350 | 13,469.780 | 21,670.845 | 34,674.390 | 51,611.955 | 66,681.985 |
| 1,000 | 654.805 | 2,569.915 | 5,990.125 | 10,260.630 | 16,700.555 | 26,500.140 | 43,601.190 | 64,001.350 | 78,001.375 |
| 1,050 | 677.295 | 3,029.230 | 6,815.335 | 11,242.405 | 18,173.650 | 30,288.840 | 47,215.160 | 72,159.165 | 89,085.485 |
| 1,100 | 781.960 | 3,517.090 | 7,523.770 | 12,409.290 | 19,737.570 | 31,755.880 | 50,810.100 | 75,626.950 | 97,710.400 |
| 1,200 | 884.895 | 4,023.115 | 8,965.725 | 14,713.650 | 23,564.330 | 37,932.845 | 60,922.815 | 94,257.320 | 114,948.120 |
| 1,300 | Consult Factory | | | | | | | | |
| 1,400 | 1,123.635 | 5,106.960 | 11,381.670 | 18,678.810 | 29,914.295 | 48,155.415 | 77,340.515 | 119,658.910 | 145,925.500 |
| 1,500 | 1,280.200 | 5,536.000 | 12,542.500 | 21,192.500 | 34,081.000 | 54,668.000 | 88,230.000 | 133,210.000 | 164,350.000 |
| 1,650 | 1,427.250 | 6,150.150 | 13,926.500 | 23,614.500 | 37,887.000 | 60,723.000 | 97,745.000 | 147,915.000 | 182,515.000 |
| 1,800 | 1,643.500 | 7,110.300 | 16,089.000 | 27,247.500 | 43,855.500 | 70,238.000 | 113,315.000 | 171,270.000 | 211,060.000 |
| 2,000 | 1,980.850 | 8,572.150 | 19,376.000 | 32,870.000 | 52,765.000 | 84,597.000 | 136,670.000 | 205,870.000 | 254,310.000 |
| 2,200 | 1,980.850 | 9,852.350 | 22,317.000 | 37,800.500 | 60,723.000 | 97,226.000 | 156,565.000 | 237,010.000 | 292,370.000 |
| 2,250 | Consult Factory | | | | | | | | |
| 2,400 | Consult Factory | | | | | | | | |



All information herein is proprietary and confidential and may not be copied or reproduced without the expressed written consent of BRAY INTERNATIONAL, Inc.
The technical data herein is for general information only. Product suitability should be based solely upon customer's detailed knowledge and experience with their application.

# EXAMPLES OF TYPICAL FLANGE TO VALVE BOLTING*

## ** Lug Style Bolting

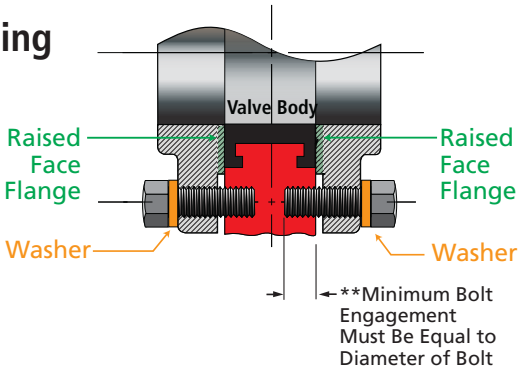


Flange Width Including Raise Face If Applicable + Washer Width + Minimum Bolt Engagement Equal to Bolt Diameter = Bolt Length



## Wafer Style Bolting

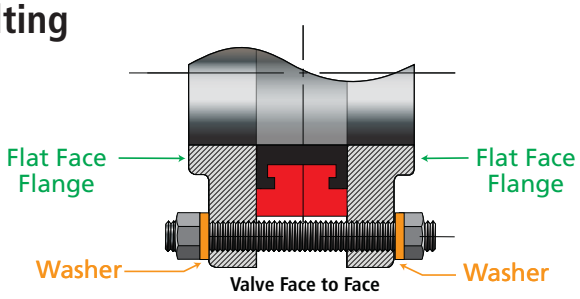


Flange Width x2 Including Raise Face If Applicable + Valve Face to Face + Washer Width x2 + Width of Nut x2 + 4 Threads (2 Per Side) = Overall Length



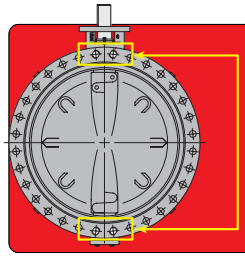

**** Note: Please refer to Appropriate Bray Dimensional Drawings for specific valve drilling information on Wafer and Lug Valves 20" and larger.**

## Please refer to ASME B-16.5 or B-16.47 for Flange and Bolt Dimension Information

* Double flange style bolting not shown.
** Lug threads may be tapped from both sides and therefore tap may not be continuous.



All information herein is proprietary and confidential and may not be copied or reproduced without the expressed written consent of BRAY INTERNATIONAL, Inc.
The technical data herein is for general information only. Product suitability should be based solely upon customer's detailed knowledge and experience with their application.

# FLANGE BOLT TENSIONING
## Bray Butterfly Valves with Metal Mating Flanges

A question frequently asked at Bray is "What torque do I apply to the flange bolts to insure the valve is properly installed?". Initially this seems to be a simple request until all of the factors are analyzed. The installation of a valve requires several components: the valve, mating flanges, nuts, bolts and studs. Each is supplied by different manufacturers and each has different characteristics. The proper torque for one combination may be too much or too little for a second combination. The following is a list of information which needs to be known in order to start calculating the torque requirements.

**Valve**
- Type
- Size
- Materials of construction (Body)
- Surface finishes / Surface conditions

**Flange**
- Type
- Size
- Finish / both sides
- Condition of flange / surface contamination

**Bolt (or Stud)**
- Type
- Materials of Construction
- Surface Conditions

**Nut**
- Type
- Materials of Construction
- Surface Conditions

**Lubrication**
- Type
- Coverage

**General Factors**
- Temperature and relative humidity at the time of installation
- Speed at which bolts are turned

**Note:** The elastomer valve seat manufactured by Bray also acts as the flange gasket. No additional gaskets are required or recommended. Other valve styles which do not have integral gaskets will need to have this component supplied. The characteristics of this component will also need to be considered.

Complete knowledge of all relevant conditions is almost impossible to obtain. As a result, the computation of the exact torque requirement is not practical. No reputable manufacturer can provide accurate information when so many outside factors are present.

The International Fasteners Institute covers some of the details required to "compute" a torque value. Even with this information the use of a torque wrench is only considered to be 25% accurate. Based on the difficulty and inaccuracy of using this method, Bray recommends the use of the "Turn of the nut" method.

**"Turn of the Nut" Tightening**
**(For ANSI Standard Iron and Steel Flanges)**
**For Non-Metallic or non-standard flanges, follow the manufacturers installation procedures.

1. The valve and flange faces must be aligned parallel to each other.

   **Note:** For rubber seated butterfly valves manufactured by Bray, it is required that the valve be fully opened prior to the tightening of the flange bolts.

2. After aligning the holes in a joint, sufficient bolts shall be placed and brought to a 'snug-tight' condition to ensure that the parts of the joint are *brought into full contact* with each other. 'Snug-Tight' is the tightness attained by the full effort of a man using a spud wrench.

3. Following the initial snugging operation, bolts shall be placed in any remaining holes and brought to snug-tightness. Re-snugging may be necessary in large joints.

4. Tighten opposite bolts in sequence to insure even pressure around the entire flange.



All information herein is proprietary and confidential and may not be copied or reproduced without the expressed written consent of BRAY INTERNATIONAL, Inc.
The technical data herein is for general information only. Product suitability should be based solely upon customer's detailed knowledge and experience with their application.

5. When all bolts are snug-tight, each bolt in the joint then shall be tightened additionally by the applicable amount of nut rotation given in Note 1. During tightening there shall be no rotation of the valve or flange.

**Note 1**

For bolt lengths **not exceeding** 8 diameters or 8 inches (203.2 mm) = **1/4 turn**
For bolt lengths **exceeding** 8 diameters or 8 inches (203.2 mm) = **1/2 turn**

**Disclaimer:**
**Bray Controls is issuing these recommendations only as a guide to installation. This recommendation is based on the full compliance of all materials supplied to their appropriate specifications. Since many of the components are not manufactured by Bray we can take no responsibility for any damage caused during installation.**

**Series 20/21 and 30/31 - Flange Bolt Torque Chart**

| Valve Size | | Normal Torque Range | Normal Torque Range |
|---|---|---|---|
| In | mm | Ft-lbs | Nm |
| 2 | 50 | 30 | 40 |
| 2.5 | 65 | 30 | 40 |
| 3 | 80 | 35 | 50 |
| 4 | 100 | 35 - 40 | 50 - 55 |
| 5 | 125 | 35 - 45 | 50 - 60 |
| 6 | 150 | 35 - 50 | 50 - 65 |
| 8 | 200 | 45 - 55 | 60 - 75 |
| 10 | 250 | 55 - 75 | 75 - 100 |
| 12 | 300 | 65 - 110 | 90 - 150 |
| 14 | 350 | 75 - 120 | 100 - 165 |
| 16 | 400 | 75 - 120 | 100 - 165 |
| 18 | 450 | 85 - 130 | 115 - 175 |
| 20 | 500 | 85 - 130 | 115 - 175 |

Please note that the Nm and Ft-lbs values are based on bolt size in respective metric and ANSI flanges, i.e. these values are not a direct conversion between Nm and Ft-lbs.

The values represent average torques needed to ensure full compression of the resilient valves' seats into the valves' bodies when installed in pipeline flanges. The face of both flanges must come into full contact with the valves' metal bodies.

No additional torque is required for proper functioning of the Bray resilient seated valves.

The torque values are based on using new, coarse-threaded, lubricated fasteners. Up to 25% may be added to the Normal Torque Range values when using non-lubricated fasteners.

Torque Values specified by flange manufacturers ***must not be exceeded.***



All information herein is proprietary and confidential and may not be copied or reproduced without the expressed written consent of BRAY INTERNATIONAL, Inc.
The technical data herein is for general information only. Product suitability should be based solely upon customer's detailed knowledge and experience with their application.

**Series 22/23 Installation - Flange Bolt Torque Chart, 150 lb Flanges**

| Valve Size | | Normal Torque Range | | Max Torque Range | |
|---|---|---|---|---|---|
| In | mm | Ft-lbs | Nm | Ft-lbs | Nm |
| 2 | 50 | 30 | 40 | 35 | 50 |
| 2.5 | 65 | 30 | 40 | 35 | 50 |
| 3 | 80 | 35 | 50 | 40 | 55 |
| 4 | 100 | 35 - 40 | 50 - 55 | 40 | 55 |
| 5 | 125 | 35 - 45 | 50 - 60 | 50 | 65 |
| 6 | 150 | 35 - 50 | 50 - 65 | 65 | 90 |
| 8 | 200 | 45 - 55 | 60 - 75 | 80 | 110 |
| 10 | 250 | 55 - 75 | 75 - 100 | 100 | 135 |
| 12 | 300 | 65 - 110 | 90 - 150 | 120 | 165 |
| 14 | 350 | 75 - 120 | 100 - 165 | 140 | 190 |
| 16 | 400 | 75 - 120 | 100 - 165 | 140 | 190 |
| 18 | 450 | 85 - 130 | 115 - 175 | 170 | 230 |
| 20 | 500 | 85 - 130 | 115 - 175 | 180 | 245 |
| 24 | 600 | 100 - 150 | 135 - 205 | 220 | 300 |

The torque values are based on using new, coarse-threaded, lubricated fasteners. Up to 15% may be added to the Normal Torque Range values when using non-lubricated fasteners. However, the maximum torque should not be exceeded.

Flange gaskets are normally not used for installation of S22/23 valves. Flange leakage may be caused by combination of out-of-parallel and/or misaligned flanges, and surface damage on the flange face and/or the face of the valve seat. In such cases, suitable flange gaskets may be used to control flange leakage.

Torque values specified by manufacturers of certain flanges, for example plastic flanges, could be lower than the values specified above. In such cases, the flange manufacturers' torque values must not be exceeded. Use flange gaskets if necessary to secure flange seal.



All information herein is proprietary and confidential and may not be copied or reproduced without the expressed written consent of BRAY INTERNATIONAL, Inc.
The technical data herein is for general information only. Product suitability should be based solely upon customer's detailed knowledge and experience with their application.

## Series 20/21 - Standard Metal Specifications

| Part | | Material | ASTM No. | UNS No. |
|---|---|---|---|---|
| **Body** | | Cast Iron | A126 Class B | |
| | | Ductile Iron | A395 Gr. 60-40-18 | F32800 |
| | | 316 Stainless Steel | A351 CF8M | J92900 |
| | | Aluminum | B26 Class B | |
| **Disc/Stem** 1-12"(25-300mm) One Piece | | 316 Stainless Steel | A351 CF8M | J92900 |
| | | Hastelloy® C22 * | B494 CX2MW | N26022 |
| | | 17-4 ph Stainless Steel | A747 CB7Cu1 Heat Treated | J92180 |
| **Disc/Stem** 14-20" (350-500mm) Fabricated | **Disc** | 316 Stainless Steel | A240 | S31600 |
| | | Hastelloy® C276 * | B575 | N10276 |
| | | 17-4 ph Stainless Steel | A564 630 Heat Treated | S17400 |
| | **Stem** | 316 Stainless Steel | A276 | S31600 |
| | | Hastelloy® C276 * | B575 | N10276 |
| | | 17-4 ph Stainless Steel | A564 630 Heat Treated | S17400 |

## Series 22/23 - Standard Metal Specifications

| Part | Material | ASTM No. | UNS No. |
|---|---|---|---|
| **Body** | Ductile Iron | A395 Gr. 60-40-18 | F32800 |
| | 316 Stainless Steel | A351 CF8M | J92900 |
| | Carbon Steel | A216 WCB | J030002 |
| **Disc** | 316 Stainless Steel | A351 CF8M | J92900 |
| | PTFE/316 SS (2"-12") | A351 CF8M | J92900 |
| | PTFE/17-4 ph SS (14"-24") | A547 CB7Cu1 | J92180 |
| | PFA/316 SS (2"-12") | A351 CF8M | J92900 |
| | PFA/17-4 ph SS (14"-24") | A547 CB7Cu1 | J92180 |
| | UHMWPE/316 SS (2"-6") | A351 CF8M | J92900 |
| | UHMWPE/DI (8"-12") | A536 Gr 65-45-12 | F33100 |
| | Hastelloy® C22 * | B494 CX2MW | N26022 |
| | Titanium | | |
| **Stem** | 17-4 ph Stainless Steel | A564 630 Heat Treated | S17400 |

* Hastelloy® is a registered trademark of Haynes International, Inc.



All information herein is proprietary and confidential and may not be copied or reproduced without the expressed written consent of BRAY INTERNATIONAL, Inc.
The technical data herein is for general information only. Product suitability should be based solely upon customer's detailed knowledge and experience with their application.

## Series 30/31, 31H, 3A/3AH, 31U - Standard Metal Specifications

| Part | Material | ASTM No. | UNS No. | 30/31 | 31H | 3A/3AH | 31U |
|---|---|---|---|---|---|---|---|
| Body | Cast Iron | A126 Class B | | ● | ● | ● | |
| | Ductile Iron | A536 Gr. 65-45-12 | F33100 | ● | ● | ● | |
| | Ductile Iron | A395 | F32800 | | | | ● |
| | Carbon Steel | A216 WCB | J030002 | ● | | ● | ● |
| | Nickel Aluminum Bronze | B148 | C95800 | | | | ● |
| | Aluminum | B26 Class B | | ● | | | |
| Disc | Aluminum Bronze | B148 | C95400 | ● | ● | ● | |
| | Nickel Aluminum Bronze | B148 | C95800 | | | | ● |
| | Nylon Coated Ductile Iron | A536 Gr. 65-45-12 | F33100 | ● | ● | ● | |
| | 316 Stainless Steel | A351 CF8M | J92900 | ● | ● | ● | ● |
| | 304 Stainless Steel | A351 CF8 | J92600 | ● | | ● | |
| | Duplex Stainless Steel | A995 Gr 4A | J92205 | ● | | ● | |
| | Super Duplex Stainless Steel | A995 Gr 5A | J93404 | ● | | ● | |
| | Super Austenitic Stainless Steel (254 SMO™)* | A351 Grade CK3MCuN | S31254 | ● | | ● | |
| | Hastelloy® C-276 * | B575 | N10276 | ● | | ● | |
| Stem | 304 Stainless Steel | A276 | S30400 | ● | | ● | |
| | 316 Stainless Steel | A276 | S31600 | ● | | ● | |
| | 416 Stainless Steel | A582 | S41600 | ● | ● | ● | ● |
| | 17-4 ph Stainless Steel | A564 630 Heat Treated | S17400 | | | | ● |
| | Monel® * | B865 | N05500 | ● | | ● | ● |

* Hastelloy® is a registered trademark of Haynes International, Inc.
Monel® is a registered trademark of International Nickel Company, Inc.
254 SMO™ is a registered trademark of Avesta AB.
AL-6XN® is a registered trademark of ATI Properties, Inc.



All information herein is proprietary and confidential and may not be copied or reproduced without the expressed written consent of BRAY INTERNATIONAL, Inc.
The technical data herein is for general information only. Product suitability should be based solely upon customer's detailed knowledge and experience with their application.

## Series 32/33, 35/36, 35F, 36H - Standard Metal Specifications

| Part | Material | ASTM No. | UNS No. | 32-36 | 36H | 35F |
|---|---|---|---|---|---|---|
| Body | Cast Iron | A126 Class B | | ● | | ● |
| | Ductile Iron | A536 Gr. 65-45-12 | F33100 | ● | ● | ● |
| | Carbon Steel | A216 Gr. WCB | J030002 | ● | | |
| | 316 Stainless Steel | A351 CF8M | J92900 | ● | | |
| Disc | Nickel Aluminum Bronze | B148 | C95800 | ● | ● | |
| | Nylon Coated Ductile Iron | A536 Gr. 65-45-12 | F33100 | ● | ● | |
| | 316 Stainless Steel | A351 CF8M | J92900 | ● | | |
| | 304 Stainless Steel | A351 CF8 | J92600 | ● | | |
| | Hastelloy® C-276 * | B575 | N10276 | CF | | ● |
| | Hastelloy® C-22 * | B494 CX2MW | N26022 | CF | | |
| | Duplex Stainless Steel | A995 Gr 5A | J93404 | ● | ● | ● |
| | Super Austenitic Stainless Steel (254 SMO ™) * | A351 Grade CK3MCuN | S31254 | ● | ● | ● |
| | Monel® * | A494 Grade M-35-1 | N24135 | ● | | |
| Stem | 304 Stainless Steel | A276 | S30400 | ● | | ● |
| | 316 Stainless Steel | A276 | S31600 | ● | | ● |
| | 416 Stainless Steel | A582 | S41600 | ● | | |
| | 17-4 ph Stainless Steel | A564 630 Heat Treated | S17400 | ● | ● | |
| | Austenitic Stainless Steel | A479 | S31651 | ● | | |
| | Super Austenitic Stainless Steel (AL-6XN®) * | A276 | N08367 | ● | ● | |
| | Monel® * | B865 | N05500 | ● | | |

* Hastelloy® is a registered trademark of Haynes International, Inc.
Monel® is a registered trademark of International Nickel Company, Inc.
254 SMO™ is a registered trademark of Avesta AB.
AL-6XN® is a registered trademark of ATI Properties, Inc.



All information herein is proprietary and confidential and may not be copied or reproduced without the expressed written consent of BRAY INTERNATIONAL, Inc.
The technical data herein is for general information only. Product suitability should be based solely upon customer's detailed knowledge and experience with their application.

Bray

BRAY FLOW CONTROL SOLUTIONS ARE
AVAILABLE FOR A VARIETY OF INDUSTRIES.

**ENERGY**
Mining
Oil & Gas
Power
Nuclear Power

**WATER**
Water / Wastewater
Ultra Pure Water
Desalination
Irrigation

**INDUSTRIAL**
Chemical
Pulp & Paper
Textile
Marine

**INFRASTRUCTURE**
Beverage & Food
Transportation
Heating, Ventilation & Air Conditioning (HVAC)

---


**US HEADQUARTERS**
**Bray International, Inc.**
13333 Westland East Blvd.
Houston, Texas 77041
Tel: +1.281.894.5454

**CHINA HEADQUARTERS**
**Bray Controls (ZheJiang) Co. Limited**
98 GaoXin #6 Road
XiaoShan Economic & Development Zone
HangZhou, ZheJiang 311231, P.R. China
Tel: +86.571.8285.2200

**EUROPE HEADQUARTERS**
**Bray Armaturen & Antriebe Europa**
Europark Fichtenhain A 13b
D-47807 Krefeld
Germany
Tel: +49.2151.5336.0

**INDIA HEADQUARTERS**
**Bray Controls India Pvt. Ltd.**
Plot No. H-18 & H-19,
SIPCOT Industrial Park
Vallam Vadagal, Echoor Post,
Sriperumbudur Taluk
Kancheepuram District,
Tami Nadu - 631 604
Tel: +91.44.67170100


---

THE SMART CHOICE FOR FLOW CONTROL SINCE 1986.
WITH MORE THAN 300 LOCATIONS WORLDWIDE,
FIND A REPRESENTATIVE NEAR YOU AT **BRAY.COM**


All statements, technical information, and recommendations in this bulletin are for general use only. Consult Bray representatives or factory for the specific requirements and material selection for your intended application. The right to change or modify product design or product without prior notice is reserved. Patents issued and applied for worldwide.

Bray® is a registered trademark of Bray International, Inc.

© 8/16/09

Bray CONTROLS



# MANUAL OPERATORS

Bray Controls offers three operators for manual control of valve position. All manual operators mount directly to Bray valves, and all are epoxy coated for excellent corrosion, abrasion and impact resistance.

| MANUAL OPERATORS | |
|---|---|
| **SERIES 01 -** Handle | 1"-12" (25mm -300mm) |
| **SERIES 04 -** Gear Operator | 2"-48" (50mm -1200mm) |
| **SERIES 05 -** Declutchable Gear Operator | 2"-36" (50mm -900mm) |

### SERIES 01 - HANDLE & NOTCH PLATE

Bray offers two handles for on-off and throttling service – one for resilient seated valves from 1"-12" (25mm-300mm), and a high torque handle for high pressure valves from 2½"- 8" (65mm-200mm). These quarter turn handles have a locking spring and a directional pointer for valve disc position indication. Bolted notch plates are offered. For resilient seated valves a 10 position plate is standard. For high pressure valves a 9 position plate is standard. Both contain on-off stops to prevent over rotation of the valve. Optionally available are an infinite position plate, a 180° notch plate, a memory stop, a padlock kit, and a 2" square nut version.

### SERIES 04 - GEAR OPERATOR

For heavy duty on-off and throttling service of 2"-48" (50mm-1200mm) valves, the Series 04 is self lubricated for smooth, trouble-free operation. The rugged, cast iron body with O-ring body seals is weatherproof to IP65. A self-locking worm and worm gear drive holds the valve in the desired position. Features include a readily accessible handwheel, a valve position indicator and mechanical travel stops which permit field adjustment of valve movement to specific degrees of rotation. Optionally available are chainwheel accessories, padlock kits and 2" square nut versions. A Gear Operator with a stainless steel housing is also available for valve sizes 1"-16".

### SERIES 05 - DECLUTCHABLE GEAR OPERATOR

Available for 2"-36" (50mm-900mm) valves. This operator is excellent for the safe handling of spring return actuators. During pneumatic operation, the worm of the gear unit is disengaged. Should the valve require opening or closing in the event of power loss, manual rotation of the declutch lever will provide a camming action and engage the worm to the segmented worm gear, allowing rotation of the valve using the handwheel. The Series 05 can be installed in the field with existing Bray pneumatic actuators.

# SERIES 04 OPTIONS

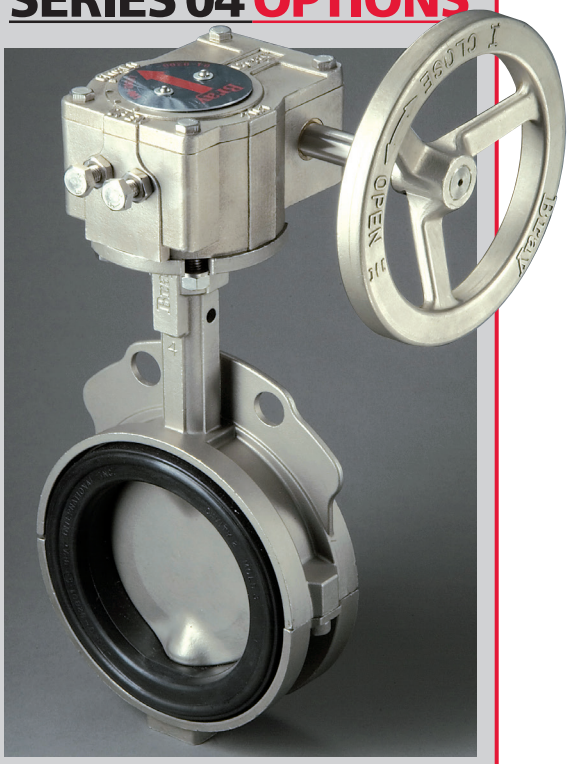

## 316 Stainless Steel
### for sanitary & corrosive applications

Bray Controls proudly offers the Series 04 Stainless Steel Gear Operator for manual operation of quarter turn valves. With stainless steel housings, input shafts and handwheels, the Series 04 is designed for service in highly corrosive environments, sanitary, breweries and pharmaceutical applications. The units are suitable for on-off and throttling service.

Series 04 Stainless Steel Gear Operator units have different gear ratios – providing a torque output range of 2,000 to 24,000 lb-in. The temperature range is -4°F (-20°C) to 250°F (120°C).

These weatherproof gear operators meet NEMA 4, 4x and IP 65 specifications.



**CHAINWHEEL** for remote access to valve positioning when the handwheel is not accessible, such as valves positioned high out of reach.

**A PADLOCK KIT & 2" SQUARE NUT** version for buried service are also available with the Series 04 (not shown).

# SERIES 01

**STANDARD 10 POSITION NOTCH PLATE** has been designed to lock the handle securely in place, preventing position change of disc due to line pressure, vibration or shock. Standard 9 Position Plate for high pressure valves is not shown.



**PADLOCK KIT** allows the customer to lock the valve in the full open or closed position, tamper proofing the valve. By drilling a new hole in the top plate, the handle can be locked in mid travel.



**HANDLE AND 180° NOTCH PLATE** allows the operator to switch the handle to either side without removing the notch plate from the valve.



**INFINITE POSITION NOTCH PLATE** for throttling applications, allows for very precise adjustments of valve disc positioning anywhere from 0° to 90°. Positioning is simply a matter of loosening the set knob, moving the handle, then retightening the knob. For resilient seated valves only.

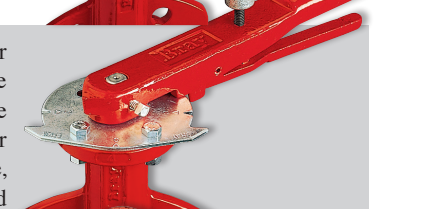

**MEMORY STOP** allows the operator to set the maximum amount the valve can open. When set, this limit will remain fixed until the stop is reset.

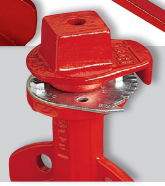

**2" SQUARE NUT** is used where the valve is buried under the surface. To rotate valve disc position, the nut is reached with a T-handle wrench.

# SERIES 05

**DECLUTCHABLE GEAR OPERATOR**

The Series 05 offers the same superior features as the Series 04 gear operator with the added ability to manually override pneumatic actuators or rotate the valve when air pressure is not available.

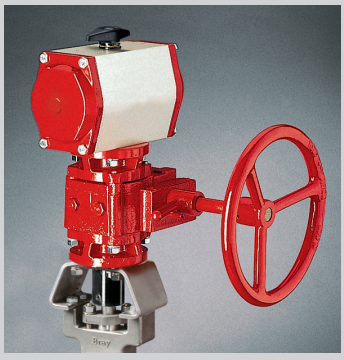

Bray® CONTROLS
A Division of BRAY INTERNATIONAL, Inc.
13333 Westland East Blvd. Houston, Texas 77041
281.894.5454 FAX 281.894.9499 www.bray.com

All statements, technical information, and recommendations in this bulletin are for general use only. Consult Bray representatives or factory for the specific requirements and material selection for your intended application. The right to change or modify product design or product without prior notice is reserved. Patents issued and applied for worldwide.

Bray® is a registered trademark of BRAY INTERNATIONAL, Inc.
© 2010 Bray International. All rights reserved. B-1025_EL_ManualOPS_2014-08

**Project name:** MELIADINE-BPC UPGRADE

**Project#:** 5000220043

**Document #:** SPK_0001_ACP_VWT

**by:** CEK

**chkd:** ED

**appvd:** TS

# CLARIFIER #2 ACP2-60

# INSTRUMENTS

**OIM manual section:** 4.2.4.10

**This page is intentionally left blank**

# CS-413-301 : Identification sheet

| | | | |
|---|---|---|---|
| VWTC PROJECT NUMBER: | 5000220043 | REV: | 1 |
| PROJECT NAME: | AEM MELIADINE-BPC UPGRADE | SUBMITTED TO (COMPANY): | AEM |
| ENGINEER: | EMMANUELLE DORMOY | SUBMITTED TO (RESPONSIBLE) | |
| PROJECT MANAGER: | THOMAS SAVARY / BRUCE BRODES | PROJECT NUM REFERENCE.: | 6526-S-265-605 / OC-989680 |
| PHONE NUMBER: | 514-334-7230 | LOT NUMBER: | |

| SUPPLIER | EQPT CODE | EQPT TAG NO | DIA | DESCRIPTION | INFO 1 | INFO 2 | INFO 3 | APPLIC. | NOTE | REV |
|---|---|---|---|---|---|---|---|---|---|---|
| ASHCROFT | ST-413-393 | 65PI6801346 | 2.5" | RECIRCULATION LINE #1 PRESSURE GAUGE | PRESSURE GAUGE C/W ISOLATOR // MANFUACTURER : ASHCROFT // MODEL : 25-1009-SW-L-02L-60# + 04-310SS-02T-XCG // 25: 2 1/2" DIAL. RANGE : 0/60 PSI //SW: 316SS //L: GLYCERIN FILLED //L: LWR MNT CONN // ISOLATOR - 04: PROCESS CONN: 1/2" MNPT - 310:NO FLUSH PRT | | N/A | CLARIFIER #2 | | 1 |
| ASHCROFT | ST-413-393 | 65PI6801351 | 2.5" | RECIRCULATION LINE #2 PRESSURE GAUGE | PRESSURE GAUGE C/W ISOLATOR // MANFUACTURER : ASHCROFT // MODEL : 25-1009-SW-L-02L-60# + 04-310SS-02T-XCG // 25: 2 1/2" DIAL. RANGE : 0/60 PSI //SW: 316SS //L: GLYCERIN FILLED //L: LWR MNT CONN // ISOLATOR - 04: PROCESS CONN: 1/2" MNPT - 310:NO FLUSH PRT | | N/A | CLARIFIER #2 | | 1 |

**This page is intentionally left blank**

ASHCROFT®
Trust the shield.®

# 1009 Stainless Steel Case Gauge

## FEATURES

- Meets ASME B40.100 specifications
- Corrosion resistant SS case
- Dry gauges are field fillable
- Power***Flex***™ movement provides superior resistance to shock, vibration and pulsation
- True Zero™ reduces reading errors by using "zero box" instead of conventional dial pins
- ***PLUS!***™ performance available for liquid filled performance with a dry gauge
- MSL helium leak tested to 1X10$^{-6}$ scc/s
- Ventable fill plug
- Accessory kits for easy panel mounting

## TYPICAL USES

- Pumps and compressors
- Boilers
- Equipment skids
- Specialized OEM equipment
- Hydraulics and pneumatics
- Severe ambient conditions




## SPECIFICATIONS

| | |
|---|---|
| Accuracy: | ASME B40.100, Grade 1A, ±1% of span (Dry)<br>±1.5% of span (Liquid filled) |
| Dial Sizes: | 2½″ (63mm), 3½″ (100mm) |
| Ranges: | Minimum 0-15 psi, maximum 0-15,000 psi, vacuum and compound |
| **Wetted Materials** | |
| Tube: | 316L SS tube |
| Process Connection: | 316L SS socket (SW)<br>Aluminum bronze socket (AW) |
| **Non Wetted Materials** | |
| Window: | Polycarbonate (Std.), Safety glass (XSG), Polysulfone (XPS) 3½″ Dial only |
| Dial: | Black figures on white background, aluminum |
| Pointer: | Black, aluminum, adjustable (Std.), micrometer (XMP) |
| Movement: | Power***Flex*** movement<br>Bottom plate – 304 SS<br>Upper plate – 304 SS<br>Pin – 304 SS<br>Hairspring assembly – 304 SS<br>Pinion – 304 SS<br>Segment – Glass filled polyester |
| Case: | 304 SS (Std.), 316L SS (XYW) |
| Ring: | 304 SS (Std.), 316L SS (XYW) |
| Process Connection Location: | Lower, Back, Top, 3 o'clock, 9 o'clock |
| Process Connection Sizes: | ⅛ NPT, ¼ NPT (see ordering code for more options) |

## KEY BENEFITS

- **IP65 Rating**
- **NEMA 4X**
- **CRN Approved**
- **PED**
- ***PLUS!***™ **Performance (XLL)**

| | |
|---|---|
| Dampening: | Glycerin case fill (Std. liquid fill), Silicone case fill (XGV), Halocarbon case fill (XGX), ***PLUS!*** Performance (XLL) |
| Weather Protection: | IP65 (Plug closed), IP54 (Plug vented)<br>NEMA 4X (Plug closed) |
| Approvals: | CRN, RoHS, PED |

## MIN/MAX TEMPERATURE LIMITS

| Version | Ambient | Process | Storage |
|---|---|---|---|
| Dry | -40/200°F (-40/93°C) | -40/250°F (-40/121°C) | -40/250°F (-40/121°C) |
| ***PLUS!*** | -40/150°F (-40/66°C) | -40/200°F (-40/93°C) | -40/150°F (-40/66°C) |
| Glycerin Fill | 20/150°F (-7/66°C) | 20/200°F (-7/93°C) | 0/150°F (-18/66°C) |
| Silicone Fill | -40/150°F (-40/66°C) | -40/200°F (-40/93°C) | -40/150°F (-40/66°C) |
| Halocarbon Fill | -40/150°F (-40/66°C) | -40/200°F (-40/93°C) | -40/150°F (-40/66°C) |

All specifications are subject to change without notice.
All sales subject to standard terms and conditions.
©2017 Ashcroft Inc. Ash Bul GS-3 1009 Rev D, 10/17

ashcroft.com
info@ashcroft.com
1.800.328.8258

ASHCROFT®
Trust the shield.®

# 1009 Stainless Steel Case Gauge

## ORDERING CODE

| Example: | 251009 | SW | L | 02 | L | XC4 | 15# |
|---|---|---|---|---|---|---|---|
| **Dial Size/Series Code** | | | | | | | |
| 251009 – SS case | 251009 | | | | | | |
| 351009 – SS case | | | | | | | |
| **System** | | | | | | | |
| AW - 316L SS tube/Aluminum, bronze connection (Max. pressure 1000 psi) | | | | | | | |
| SW - 316L SS tube/316L SS process connection (Max. pressure 15,000 psi) | | SW | | | | | |
| **Case Fill** | | | | | | | |
| Dry, liquid fillable case | | | | | | | |
| L - Liquid filled case (Glycerin standard) | | | L | | | | |
| **Process Connection Sizes** | | | | | | | |
| 01 - ⅛ NPT Male | | | | | | | |
| 02 - ¼ NPT Male | | | | 02 | | | |
| 04 - ½ NPT Male | | | | | | | |
| RW - SAE 7/16 & 20 Straight thread | | | | | | | |
| EJ - 7/16 X 20 UNF-3A 37° flare | | | | | | | |
| KJ - ¼ Straight JIS, BSP - 1009SW | | | | | | | |
| KA - ¼ Tapered JIS, BSP - 1009SW | | | | | | | |
| 13 - G ¼″ DIN | | | | | | | |
| JP - ¼″ Tubing, no throttle plug (max pressure 10,000 psi) | | | | | | | |
| JQ - 6mm Tubing, no throttle plug (max pressure 6,000 psi) | | | | | | | |
| JL - 9/16″ 18 UNF-2A, N/A on 25 1009 lower | | | | | | | |
| **Connection Location** | | | | | | | |
| L - Lower mount connection | | | | | L | | |
| B - Lower back mount connection | | | | | | | |
| D - Side connection (3 o'clock) | | | | | | | |
| E - Side connection (9 o'clock) | | | | | | | |
| T - Top connection | | | | | | | |
| **Options (if choosing an option(s) must include an "X")** | | | | | | X__ | |
| LL - ***PLUS!***™ performance | | | | | | | |
| GV - Silicone case fill | | | | | | | |
| GX - Halocarbon case fill | | | | | | | |
| TU - Throttle plug for ranges up to 1000 psi | | | | | | | |
| TS - Throttle plug for ranges up to 15,000 psi | | | | | | | |
| 6B - Cleaned for oxygen service | | | | | | | |
| SG - Safety glass | | | | | | | |
| PS - Polysulfone window (3½″ dial only) | | | | | | | |
| EO - Adjustable red set hand | | | | | | | |
| SH - Red set hand, stationary | | | | | | | |
| NH - SS tag wired to case | | | | | | | |
| FF - Front flange | | | | | | | |
| FW - Back flange | | | | | | | |
| UC - U-clamp | | | | | | | |
| EA - External zero adjust (3½″ dial only) | | | | | | | |
| C4 - Individual calibration chart in accordance with ASME B40.100:2013. Accuracy traceable to N.I.S.T | | | | | | C4 | |
| SM - All SS movement | | | | | | | |
| YW - 316L SS case and ring | | | | | | | |
| **Range (coding examples only, see range table for all standard ranges)** | | | | | | | |
| Single Scales | | | | | | | |
| 15# - 15 psi | | | | | | | 15# |
| 1BR - 1 bar | | | | | | | |
| 1KSC - 1 kilograms per sq. cm | | | | | | | |
| 100KP - 100 kilopascal | | | | | | | |
| Dual Scales | | | | | | | |
| 15#/BR - 15 psi inner scale, 1 bar outer scale | | | | | | | |
| 1BR/# - 1 bar inner scale, 15 psi outer scale | | | | | | | |

All specifications are subject to change without notice.
All sales subject to standard terms and conditions.
©2017 Ashcroft Inc. Ash Bul GS-3 1009 Rev D, 10/17

ashcroft.com
info@ashcroft.com
1.800.328.8258

ASHCROFT®
Trust the shield.®

# 1009 Stainless Steel Case Gauge

| STANDARD RANGES | | | | |
|---|---|---|---|---|
| psi | bar | kPa | Mpa | kg/cm² |
| 30IMV | -1BR | -100KP | -.1MP | -1KSC |
| – | -1&.6BR | -100&60KP | -.1&.06MP | -1&.6KSC |
| 30IMV&15# | – | – | – | – |
| – | -1&1.5BR | -100&150KP | -.1&.15MP | -1&1.5KSC |
| 30IMV&30# | – | – | – | – |
| – | -1&3BR | -100&300KP | -.1&.3MP | -1&3KSC |
| 30IMV&60# | – | – | – | – |
| – | -1&5BR | -100&500KP | -.1&.5MP | -1&5KSC |
| 30IMV&100# | – | – | – | – |
| – | 1&9BR | -100&900KP | -.1&.9MP | -1&9KSC |
| 15# | 1BR | 100KP | .1MP | 1KSC |
| 20# | – | – | – | – |
| – | 1.6BR | 160KP | .16MP | 1.6KSC |
| 30# | – | – | – | – |
| – | 2.5BR | 250KP | .25MP | 2.5KSC |
| 60# | 4BR | 400KP | .4MP | 4KSC |
| – | 6BR | 600KP | .6MP | 6KSC |
| 100# | – | – | – | – |
| 120# | – | – | – | – |
| – | 10BR | 1,000KP | 1MP | 10KSC |
| 160# | – | – | – | – |
| 200# | – | – | – | – |
| – | 16BR | 1,600KP | 1.6MP | 16KSC |
| 300# | – | – | – | – |
| – | 25BR | 2,500KP | 2.5MP | 25KSC |
| 400# | – | – | – | – |
| 500# | – | – | – | – |
| 600# | 40BR | 4,000KP | 4MP | 40KSC |
| 800# | – | – | – | – |
| – | 60BR | 6,000KP | 6MP | 60KSC |
| 1,000# | – | – | – | – |
| 1,500# | 100BR | 10,000KP | 10MP | 100KSC |
| 2,000# | – | – | – | – |
| – | 160BR | 16,000KP | 16MP | 160KSC |
| 3,000# | – | – | – | – |
| – | 250BR | 25,000KP | 25MP | 250KSC |
| 4,000# | – | – | – | – |
| 5,000# | – | – | – | – |
| 6,000# | 400BR | 40,000KP | 40MP | 400KSC |
| 8,000# | – | – | – | – |
| – | 600BR | 60,000KP | 60MP | 600KSC |
| 10,000# | – | – | – | – |
| 15,000# | 1,000BR | 100,000KP | 100MP | 1,000KSC |

All specifications are subject to change without notice.
All sales subject to standard terms and conditions.
©2017 Ashcroft Inc. Ash Bul GS-3 1009 Rev D, 10/17

ashcroft.com
info@ashcroft.com
1.800.328.8258

ASHCROFT®
Trust the shield.®

# 1009 Stainless Steel Case Gauge

## DIMENSIONS (dimensions in [ ] are millimeters)

### 2½˝ 1009 Lower and Back Connect

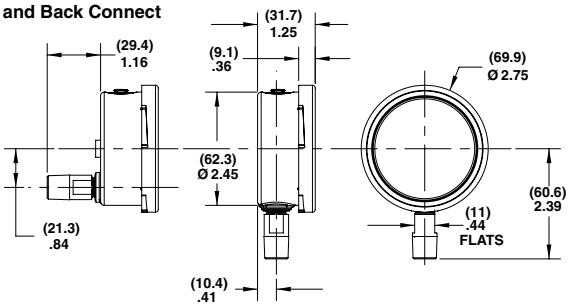


### 3½˝ 1009 Lower and Back Connect

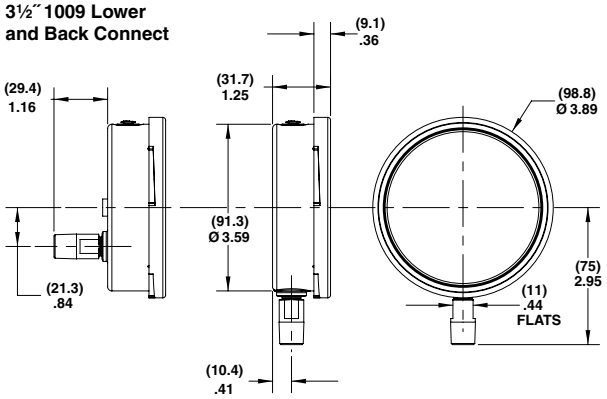


### 2½˝ 1009 Back Connect (XUC)

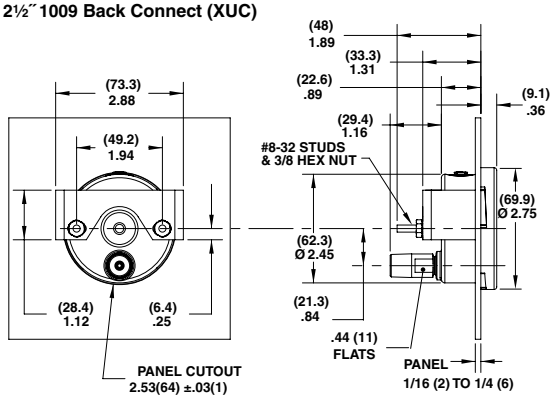


### 3½˝ 1009 Back Connect (XUC)

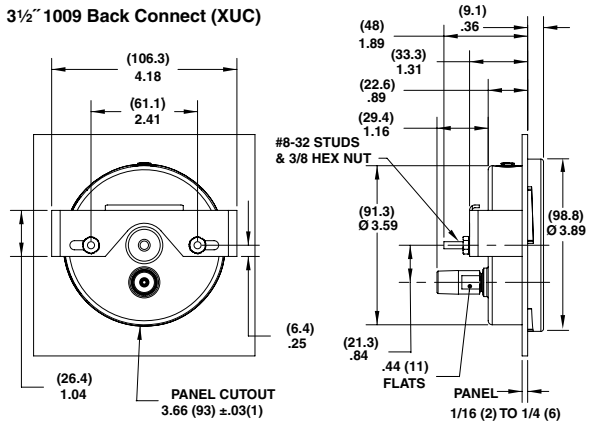


### 2½˝ 1009 Back Connect (XFF)

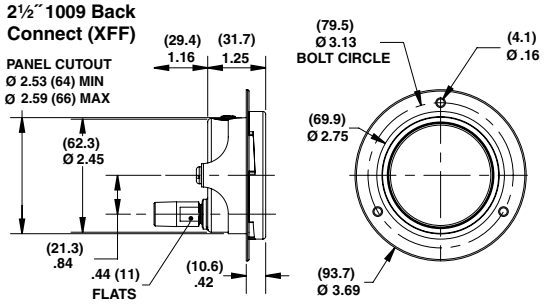


### 3½˝ 1009 Back Connect (XFF)

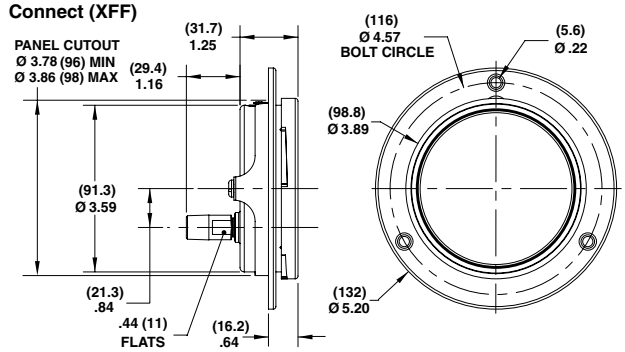


### 2½˝ 1009 Lower and Back Connect (XFW)

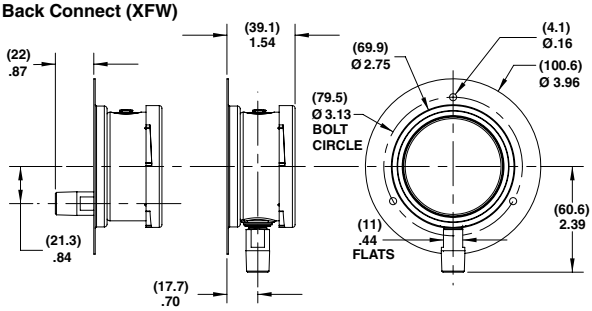


### 3½˝ 1009 Lower and Back Connect (XFW)

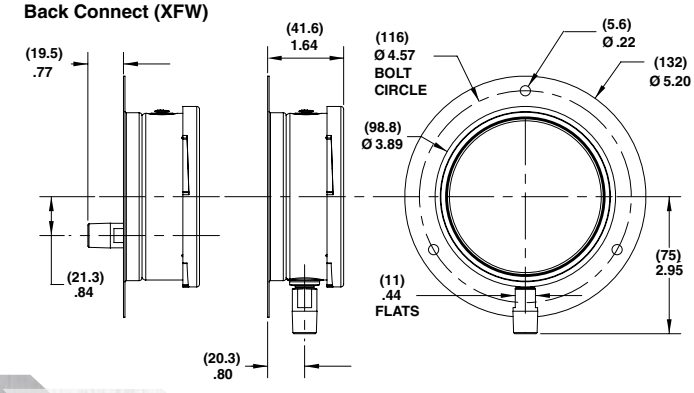


All specifications are subject to change without notice.
All sales subject to standard terms and conditions.
©2017 Ashcroft Inc. Ash Bul GS-3 1009 Rev D, 10/17

ashcroft.com
info@ashcroft.com
1.800.328.8258

ASHCROFT®
Trust the shield.®

# 1009 Stainless Steel Case Gauge with Tubing Connections

## DIMENSIONS (dimensions in [ ] are millimeters)

### 2½˝ 1009 Lower and Back Connect

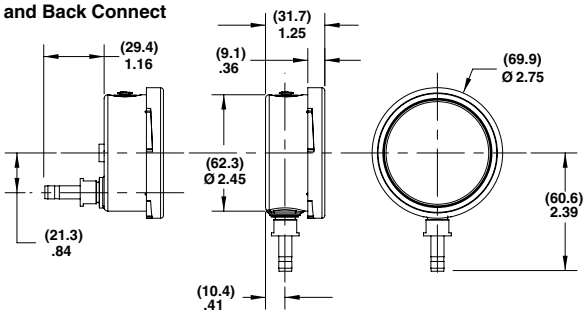


### 3½˝ 1009 Lower and Back Connect

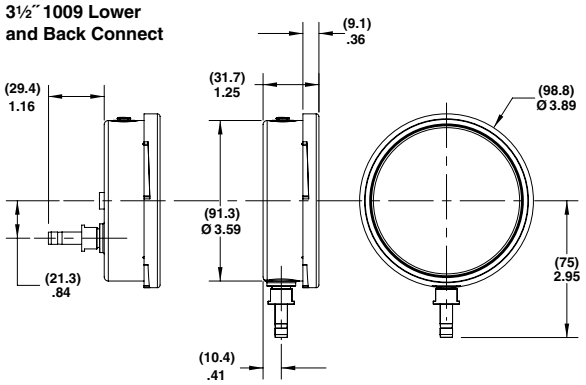


### 2½˝ 1009 Back Connect (XUC)

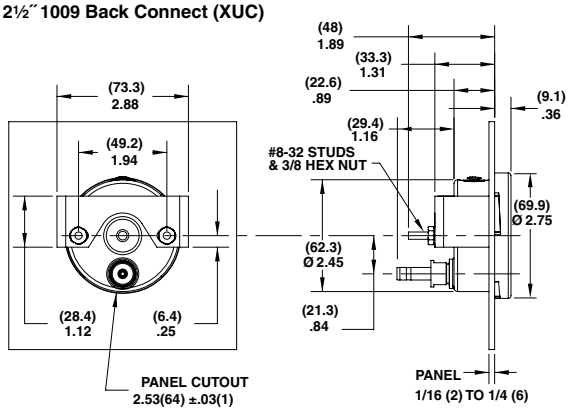


### 3½˝ 1009 Back Connect (XUC)

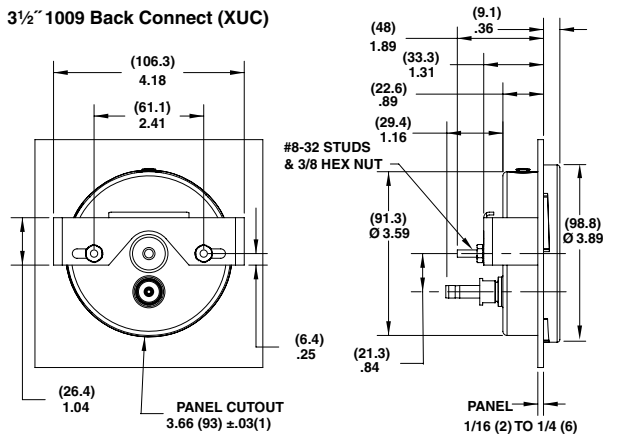


### 2½˝ 1009 Back Connect (XFF)

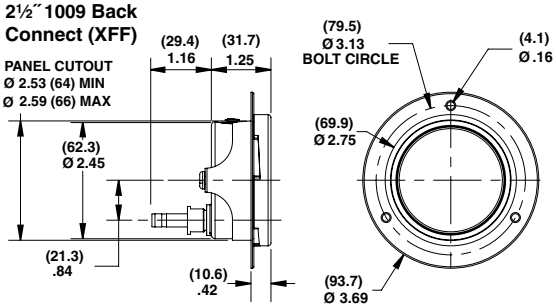


### 3½˝ 1009 Back Connect (XFF)

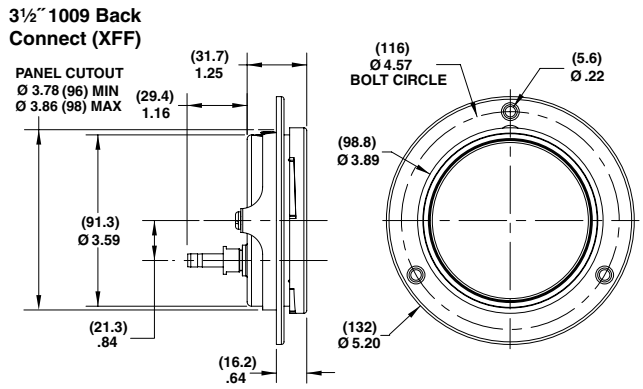


### 2½˝ 1009 Lower and Back Connect (XFW)

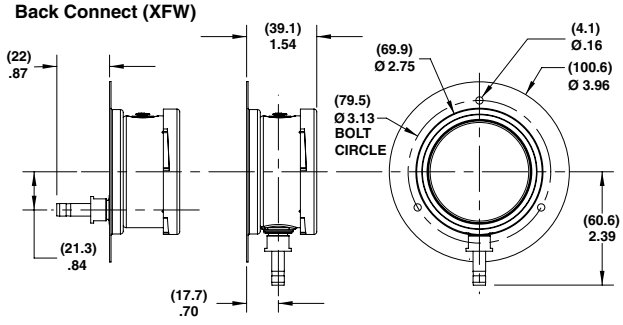


### 3½˝ 1009 Lower and Back Connect (XFW)

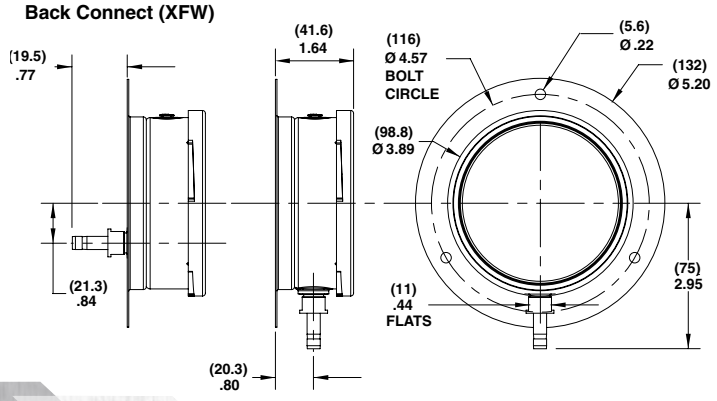


All specifications are subject to change without notice.
All sales subject to standard terms and conditions.
©2017 Ashcroft Inc. Ash Bul GS-3 1009 Rev D, 10/17

ashcroft.com
info@ashcroft.com
1.800.328.8258

**This page is intentionally left blank**

ASHCROFT®
Trust the shield.®

# 310, 315 All-Welded “Mini” Diaphragm Seal

## FEATURES

- No gaskets or bolts
- Available with ⅛ NPT flushing connection
- Designed for use with transducers and 3½″ or smaller gauges

## TYPICAL USES

- Oil and gas
- Chemical processes
- Process equipment




**310**
Threaded Seal

| SPECIFICATIONS | |
|---|---|
| Connection Style: | 310: All-welded<br>315: All-welded with flushing connection |
| Process Connection Size: | 310: ⅛ to 1 NPT Male, ¼ or ½ NPT Female<br>315: ¼ or ½ NPT Female |
| Instrument Connection Size: | ⅛ or ¼ NPT Female |
| Pressure Rating (MAWP): | 2,500 psi |
| Added Tolerance: | ±0.5% typical |
| Wetted Components: | Diaphragm & bottom housing |
| Non-Wetted Components: | Top housing: 316L SS |

| WETTED COMPONENTS | |
|---|---|
| Diaphragm Material | Bottom Housing Material |
| See ordering code on page 2 | See ordering code on page 2 |

| NON-WETTED COMPONENTS |
|---|
| Top Housing |
| 316L SS |

## KEY BENEFITS

- **Protects instrumentation in tight spaces**
- **Eliminates potential leak path with all-welded construction**
- **Low fill volume reduces temperature effects on instrument accuracy**



All specifications are subject to change without notice.
All sales subject to standard terms and conditions.
©2018 Ashcroft Inc. 310-315_seal_ds_RevC_07-18

ashcroft.com
info@ashcroft.com
1.800.328.8258

ASHCROFT®
Trust the shield.®

# 310, 315 All-Welded “Mini” Diaphragm Seal

| ORDERING CODE Example: | 01 | 310 | S | S | 01T | XCK | NH |
|---|---|---|---|---|---|---|---|
| **Process Connection Size** | | | | | | | |
| 01 - ⅛ NPT Male, (available with 310 only) | 01 | | | | | | |
| 02 - ¼ NPT Male, (available with 310 only) | | | | | | | |
| 04 - ½ NPT Male, (available with 310 only) | | | | | | | |
| 06 - ¾ NPT Male, (available with 310 only) | | | | | | | |
| 08 - 1 NPT Male, (available with 310 only) | | | | | | | |
| 25 - ¼ NPT Female | | | | | | | |
| 50 - ½ NPT Female | | | | | | | |
| **Seal Type** | | | | | | | |
| 310 - All-welded Mini seal no flushing port | | 310 | | | | | |
| 315 - All-welded Mini seal with flushing port connection | | | | | | | |
| **Diaphragm Material** | | | | | | | |
| S - 316L SS | | | S | | | | |
| H - Hastelloy® C-276 | | | | | | | |
| U - Tantalum | | | | | | | |
| P - Monel® (Must be ordered with Monel® bottom housing) | | | | | | | |
| **Bottom Housing Material** | | | | | | | |
| S - 316L SS | | | | S | | | |
| H - Hastelloy® C-276 | | | | | | | |
| M - Monel® | | | | | | | |
| G - Hastelloy® B-2 | | | | | | | |
| **Instrument Connection Size** | | | | | | | |
| 01T - ⅛ NPT Female | | | | | 01T | | |
| 02T - ¼ NPT Female | | | | | | | |
| **Options (if choosing an option(s) must include an “X”)** | | | | | | X__ | |
| **Filling Fluid** | | | | | | | |
| CG - Glycerin | | | | | | | |
| CK - Silicon 50cST | | | | | | CK | |
| CF - Halocarbon® | | | | | | | |
| See Filling Fluid Table Below | | | | | | | |
| **Optional Features** | | | | | | | |
| PU - Pipe Plug for flushing connection (Must match bottom housing material; 315 seal only) | | | | | | | |
| NH - SS instrument tag | | | | | | | NH |
| NN - Paper instrument tag | | | | | | | |
| DU - Instrument welded to seal | | | | | | | |
| MQ - Positive material identification | | | | | | | |
| W1 - Dye penetrant testing | | | | | | | |
| 6B - Cleaned for oxygen service | | | | | | | |

## Filling Fluid Table

| Fill | Service | Connection to Instrument | Temperature Range °F | Code |
|---|---|---|---|---|
| Glycerin | Pressure | Direct Only | 0/400 | CG |
| Silicone | Pressure/Vacuum | Direct or Flexible Line | –40/500 | CK |
| Halocarbon® | Pressure/Vacuum in presence of strong oxidizing agent | Direct or Flexible Line | –70/300 | CF |
| Syltherm® | Pressure | Direct or Flexible Line | –40/750 | HA |



All specifications are subject to change without notice.
All sales subject to standard terms and conditions.
©2018 Ashcroft Inc. 310-315_seal_ds_RevC_07-18

ashcroft.com
info@ashcroft.com
1.800.328.8258

# 310, 315 All-Welded “Mini” Diaphragm Seal

## DIMENSIONS in [ ] are millimeters

Drawings are for reference only, consult Ashcroft for specific dimensional drawings.

| | A | | B | | C | |
|---|---|---|---|---|---|---|
| | in | mm | in | mm | in | mm |
| **Type 310** | 1.75 | [38] | .81 | [30] | 1.34 | [34] |
| **Type 315** | 1.73 | [44] | 2.25 | [57.2] | 1.34 | [34] |

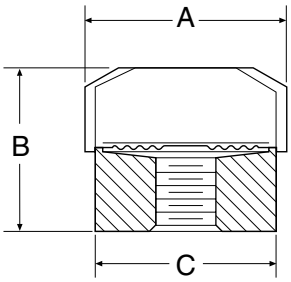


310 mini-seal – Threaded ¼, ½, ¾, NPT

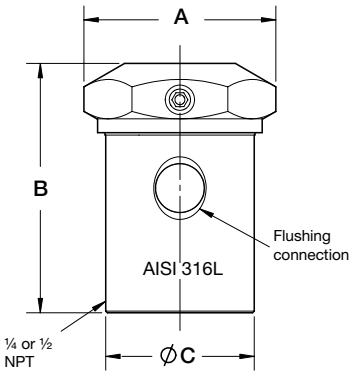


315 mini-seal – Threaded ¼, ½, ¾, NPT



All specifications are subject to change without notice.
All sales subject to standard terms and conditions.
©2018 Ashcroft Inc. 310-315_seal_ds_RevC_07-18

ashcroft.com
info@ashcroft.com
1.800.328.8258

**This page is intentionally left blank**

# CS-451-100 : Identification sheet

| | | | |
|---|---|---|---|
| VWTC PROJECT NUMBER: | 5000220043 | REV: | 1 |
| PROJECT NAME: | AEM MELIADINE-BPC UPGRADE | SUBMITTED TO (COMPANY): | AEM |
| ENGINEER: | EMMANUELLE DORMOY | SUBMITTED TO (RESPONSIBLE): | |
| PROJECT MANAGER: | THOMAS SAVARY / BRUCE BRODES | PROJECT NUM REFERENCE.: | 6526-S-265-605 / OC-989680 |
| PHONE NUMBER: | 514-334-7230 | LOT NUMBER: | |

| SUPPLIER | EQPT CODE | EQPT TAG NO | DIA | DESCRIPTION | INFO 1 | INFO 2 | INFO 3 | APPLIC. | NOTE | REV |
|---|---|---|---|---|---|---|---|---|---|---|
| XYLEM | IESWLE201156 | 65LSHH6801324 | Diameter: 100 mm, Cable: 13m, Tow release : 62 mm | HIGH LEVEL SWITCH FLOAT | LEVEL SWITCH/MANUFACTURER:FLYGT// MODEL: ENM-10 (13m) | N/A | N/A | CLARIFIER #2 | | 1 |

**This page is intentionally left blank**

xylem
Let's Solve Water

Technical Specification

891480_15.0



# ENM 10

## Level regulator

FLYGT
a xylem brand

# Table of Contents

1 Product Description....2
1.1 Product design....2
1.2 Technical data....2
1.3 Cables....3
1.4 Approvals and standards....3

2 References....5
2.1 Chemical resistance tables....5
2.2 Product range....8

# 1 Product Description

## 1.1 Product design

### Usage

ENM-10 is a level regulator for level control applications. The level regulator starts and stops a pump or activates an alarm device when the liquid level reaches the regulator.

### Materials

| Denomination | Standard version | Ex version |
|---|---|---|
| Regulator casing | Polypropylene | Polypropylene with black conductive casing |
| Bend relief | EPDM rubber | NBR-PVC rubber |
| Cable sheath | PVC | NBR-PVC rubber |

The plastic components are welded and screwed together.

## 1.2 Technical data

### Application limits

| Feature | Value |
|---|---|
| Liquid temperature | Minimum 0°C (32°F)<br>Maximum 60°C (140°F) |
| Liquid density | Minimum 0.65 g/cm$^3$<br>Maximum 1.5 g/cm$^3$ |

### Electrical specifications

| Feature | Value |
|---|---|
| Degree of protection | IP68, 20 m (65 ft), 2 bars |
| Interrupting capacity of micro switch | AC, resistive load, 250 V 10 A<br>AC, inductive load, 250 V 3 A<br>cos ϕ = 0.5<br>DC, 30 V 5 A |
| Interrupting capacity of gold-plated micro switch | AC, resistive load, 250 V 10 A<br>AC, inductive load, 250 V 3 A<br>cos ϕ = 0.5<br>DC, 24 V 10 mA |

Voltage limits are subject to local regulations.

### Density ranges

| Density g/cm$^3$ | Regulator length mm (in.) | Diameter mm (in.) |
|---|---|---|
| 0.65 – 0.80 | 194 (7 10/16) | 100 (4) |
| 0.80 – 0.95 | 177 (7) | 100 (4) |
| 0.95 – 1.10 | 162 (6 3/8) | 100 (4) |
| 1.05 – 1.20 | 142 (5 9/16) | 100 (4) |
| 1.20 – 1.30 | 133 (5 1/4) | 100 (4) |
| 1.30 – 1.40 | 130 (5 2/16) | 100 (4) |

| Density g/cm$^3$ | Regulator length mm (in.) | Diameter mm (in.) |
|---|---|---|
| 1.40 – 1.50 | 126 (5) | 100 (4) |

### Weight

A regulator with standard density and 20 m cable weighs approximately 2 kg (4.5 lb).

## 1.3 Cables

### Lengths

For liquids with specific density between 0.95 and 1.10 g/cm$^3$, the following cables are available:

| Version | Lengths m (ft) |
|---|---|
| Standard | • 6 m (20 ft)<br>• 13 m (42 ft)<br>• 20 m (65 ft)<br>• 30 m (100 ft)<br>• 50 m (167 ft) |
| Ex | • 6 m (20 ft)<br>• 13 m (42 ft)<br>• 20 m (65 ft) |

### Diameter

The cable diameter for all product variants is 6.7 mm (0.26 in), +/- 0.2 mm (0.00787 in).

### Color codes

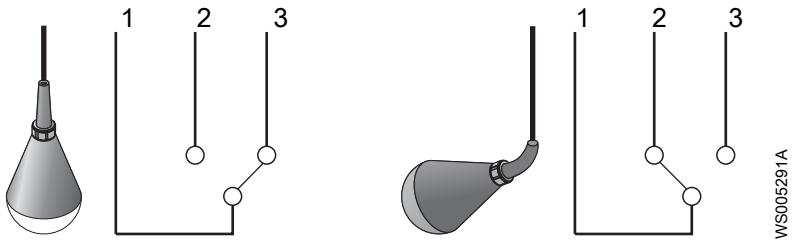


| Cable | 1 | 2 | 3 |
|---|---|---|---|
| Color | Grey | Black | Brown |

## 1.4 Approvals and standards

### Standard approvals

LVD approval according to EN61058
CSA approval: Certificate Number 1330172
Cl. I Zone 0, Gr. IIC
CL.I Div.1 Gr A, B, C and D
Cl.II Gr. E, F, and G

### Ex approvals

IECEx ia IIC T4 Ga: -20°C≤Ta≤60°C
IECEx NEMKO 09.008
ATEX II 1G Ex ia IIC T4
NEMKO 10 ATEX 1082

### Applied standards for ATEX and IEC

- EN 60079-0:2012/IEC 60079-0:2011
- EN 60079-11:2012/IEC 60079-11:2011
- IEC 60079-26:2014

Intrinsically safe circuits are required for the automatic control system. Use a Zener barrier, for example, part number 84 01 07.

The electrical connections must comply with the Ex regulations of the national submitter.



# 2 References

## 2.1 Chemical resistance tables

The tables show the degree of resistance the level regulator has to different chemicals at two different temperatures. The density of the liquid determines the buoyancy of the regulator.

### Acids

| Acid | PVC cable | | NBR/PVC cable | |
|---|---|---|---|---|
| | 20°C (68°F) | 60°C (140°F) | 20°C (68°F) | 60°C (140°F) |
| Acetic acid 50% | 1 | 2 | 0 | 0 |
| Acetic acid 75% | 2 | 2 | 0 | 0 |
| Benzoic acid | 2 | 2 | 0 | 0 |
| Boric acid 5% | 0 | – | 0 | 0 |
| Butyric acid | 2 | 2 | 2 | 2 |
| Chromic acid 10% | 0 | 2 | 2 | 2 |
| Citric acid | 0 | 1 | 0 | 0 |
| Hydrobromic acid 5% | 1 | 2 | 0 | 0 |
| Hydrochloric acid 10% | 0 | 1 | 0 | 1 |
| Hydrochloric acid 37% | 1 | 2 | 0 | 2 |
| Hydrocyanic acid 10% | 0 | 0 | 1 | 2 |
| Hydrofluoric acid 5% | 0 | 2 | 0 | 1 |
| Hypochloric acid | 1 | 2 | 2 | 2 |
| Maleic acid | 2 | 2 | 2 | 2 |
| Nitric acid 5% | 1 | 1 | 1 | 1 |
| Nitric acid 65% | 2 | 2 | 2 | 2 |
| Oleic acid | 1 | 2 | 2 | 2 |
| Oxalic acid 50% | 1 | 1 | 1 | 2 |
| Phosphoric acid 25% | 0 | 0 | 1 | 2 |
| Phosphoric acid 85% | 0 | 0 | 1 | 2 |
| Sulphuric acid 10% | 1 | 2 | 1 | 2 |
| Sulphuric acid 78% | 2 | 2 | 2 | 2 |
| Tannic acid | 0 | 0 | 0 | 0 |
| Tartaric acid | 1 | 1 | 1 | 1 |

0 = No effect. 1 = Minor to moderate effect. 2 = Severe effect. – = No available information.

### Alkalis

| Alkali | PVC cable | | NBR/PVC cable | |
|---|---|---|---|---|
| | 20°C (68°F) | 60°C (140°F) | 20°C (68°F) | 60°C (140°F) |
| Ammonium hydroxide | 0 | – | 0 | 0 |
| Calcium hydroxide | 0 | 0 | 0 | 0 |

| Alkali | PVC cable | | NBR/PVC cable | |
|---|---|---|---|---|
| | 20°C (68°F) | 60°C (140°F) | 20°C (68°F) | 60°C (140°F) |
| Potassium hydroxide | 1 | 2 | 0 | 0 |
| Sodium hydroxide | 1 | 2 | 0 | 0 |

0 = No effect. 1 = Minor to moderate effect. 2 = Severe effect. – = No available information.

## Salts

| Salt | PVC cable | | NBR/PVC cable | |
|---|---|---|---|---|
| | 20°C (68°F) | 60°C (140°F) | 20°C (68°F) | 60°C (140°F) |
| Aluminum chloride | 0 | 0 | 0 | 0 |
| Calcium sulphate | 0 | 0 | 0 | 0 |
| Calcium chloride | 0 | 0 | 0 | 0 |
| Calcium nitrate | 0 | 0 | 0 | 0 |
| Copper chloride | 0 | 0 | 0 | 0 |
| Copper sulphate | 0 | 0 | 0 | 0 |
| Ferric chloride | 0 | 0 | 0 | 0 |
| Ferrous sulphate | 0 | 0 | 0 | 0 |
| Magnesium chloride | 0 | 0 | 0 | 0 |
| Potassium sulphate | 0 | 0 | 0 | 0 |
| Potassium nitrate | 0 | 0 | 0 | 0 |
| Potassium carbonate | 1 | 1 | 1 | 1 |
| Potassium bicarbonate | 0 | 0 | 0 | 0 |
| Sodium sulphate | 0 | 0 | 0 | 0 |
| Sodium chloride | 0 | 0 | 0 | 0 |
| Sodium nitrate | 0 | 0 | 0 | 0 |
| Sodium bicarbonate | 0 | 0 | 0 | 0 |
| Sodium carbonate | 0 | 0 | 0 | 0 |
| Tin chloride | 1 | 1 | 1 | 1 |
| Zinc sulphate | 0 | 0 | 0 | 0 |
| Zinc chloride | 0 | 0 | 0 | 0 |

0 = No effect. 1 = Minor to moderate effect. 2 = Severe effect. – = No available information.

## Oils

| Oil | PVC cable | | NBR/PVC cable | |
|---|---|---|---|---|
| | 20°C (68°F) | 60°C (140°F) | 20°C (68°F) | 60°C (140°F) |
| Castor oil | 1 | 1 | 1 | 1 |
| Coconut oil | 0 | – | 0 | 2 |
| Corn oil | 2 | 2 | 2 | 2 |
| Diesel oil | 2 | 2 | 2 | 2 |
| Linseed oil | 2 | 2 | 2 | 2 |
| Mineral oils | 2 | 2 | 2 | 2 |
| Olive oil | 1 | 1 | 1 | 1 |
| Silicone oils | 0 | 0 | 0 | 0 |

0 = No effect. 1 = Minor to moderate effect. 2 = Severe effect. – = No available information.

### Solvents and miscellaneous

| Chemical | PVC cable | | NBR/PVC cable | |
|---|---|---|---|---|
| | 20°C (68°F) | 60°C (140°F) | 20°C (68°F) | 60°C (140°F) |
| Acetone | 2 | 2 | 2 | 2 |
| Aniline | 2 | 2 | 1 | 2 |
| Benzene | 2 | 2 | 2 | 2 |
| Butyl alcohol | 2 | 2 | 0 | 1 |
| Carbon tetrachloride | 2 | 2 | 2 | 2 |
| Chlorobenzene | 2 | 2 | 2 | 2 |
| Chloroform | 2 | 2 | 2 | 2 |
| Ethyl alcohol | 2 | 2 | 0 | 1 |
| Ethyl ether | 2 | 2 | 2 | 2 |
| Ethyl acetate | 2 | 2 | 2 | 2 |
| Ethylene dichloride | 2 | 2 | 2 | 2 |
| Ethylene chloride | 2 | 2 | 2 | 2 |
| Formaldehyde 37% | 1 | 2 | 0 | 0 |
| Gasoline | 2 | 2 | 2 | 2 |
| Kerosene | 2 | 2 | 2 | 2 |
| Methyl alcohol | 2 | 2 | 0 | 0 |
| Methyl ethyl ketone | 2 | 2 | 2 | 2 |
| Methylene chloride | 2 | 2 | 2 | 2 |
| Nitrobenzene | 2 | 2 | 2 | 2 |
| Phenol | 2 | 2 | 2 | 2 |
| Toluene | 2 | 2 | 2 | 2 |
| Trichlorethylene | 2 | 2 | 2 | 2 |
| Turpentine | 2 | 2 | 2 | 2 |
| Xylene | 2 | 2 | 2 | 2 |

0 = No effect. 1 = Minor to moderate effect. 2 = Severe effect. – = No available information.

### Gases

| Gas | PVC cable | | NBR/PVC cable | |
|---|---|---|---|---|
| | 20°C (68°F) | 60°C (140°F) | 20°C (68°F) | 60°C (140°F) |
| Carbon dioxide | 0 | 0 | 0 | 0 |
| Carbon monoxide | 0 | 0 | 0 | 0 |
| Chlorine – wet | 2 | 2 | 2 | 2 |
| Hydrogen sulfide | 0 | 0 | 1 | 1 |
| Sulphur dioxide – wet | 1 | 1 | 2 | 2 |

0 = No effect. 1 = Minor to moderate effect. 2 = Severe effect. – = No available information.

## 2.2 Product range

| Version | For density (g/cm$^3$) | Color of level switch | Length of cable (m) | Type of cable[1] | Approvals | For market |
|---|---|---|---|---|---|---|
| 582 88 00 | 0.65 - 0.80 | Blue | 20 | 1 | CE | International |
| 582 88 01 | 0.80 - 0.95 | Blue | 20 | 1 | CE | International |
| 582 88 02 | 0.95 - 1.10 | Blue | 6 | 1 | CE | International |
| 582 88 03 | 0.95 - 1.10 | Blue | 13 | 1 | CE | International |
| 582 88 04 | 0.95 - 1.10 | Blue | 20 | 1 | CE | International |
| 582 88 05 | 1.05 - 1.20 | Blue | 20 | 1 | CE | International |
| 582 88 06 | 1.20 - 1.30 | Blue | 20 | 1 | CE | International |
| 582 88 07 | 1.30 - 1.40 | Blue | 20 | 1 | CE | International |
| 582 88 08 | 1.40 - 1.50 | Blue | 20 | 1 | CE | International |
| 582 88 09 | 0.65 - 0.80 | Gray | 20 | 3 | CSA/CE | Canada |
| 582 88 10 | 0.80 - 0.95 | Gray | 20 | 3 | CSA/CE | Canada |
| 582 88 11 | 0.95 - 1.10 | Gray | 6 | 3 | CSA/CE | Canada |
| 582 88 12 | 0.95 - 1.10 | Gray | 13 | 3 | CSA/CE | Canada |
| 582 88 13 | 0.95 - 1.10 | Gray | 20 | 3 | CSA/CE | Canada |
| 582 88 14 | 1.05 - 1.20 | Gray | 20 | 3 | CSA/CE | Canada |
| 582 88 15 | 1.20 - 1.30 | Gray | 20 | 3 | CSA/CE | Canada |
| 582 88 16 | 1.30 - 1.40 | Gray | 20 | 3 | CSA/CE | Canada |
| 582 88 17 | 1.40 - 1.50 | Gray | 20 | 3 | CSA/CE | Canada |
| 582 88 18 | 0.65 - 0.80 | Gray | 20 | 1 | CSA/CE | Canada |
| 582 88 19 | 0.80 - 0.95 | Gray | 20 | 1 | CSA/CE | Canada |
| 582 88 20 | 0.95 - 1.10 | Gray | 6 | 1 | CSA/CE | Canada |
| 582 88 21 | 0.95 - 1.10 | Gray | 13 | 1 | CSA/CE | Canada |
| 582 88 22 | 0.95 - 1.10 | Gray | 20 | 1 | CSA/CE | Canada |
| 582 88 23 | 1.05 - 1.20 | Gray | 20 | 1 | CSA/CE | Canada |
| 582 88 24 | 1.20 - 1.30 | Gray | 20 | 1 | CSA/CE | Canada |
| 582 88 25 | 1.30 - 1.40 | Gray | 20 | 1 | CSA/CE | Canada |
| 582 88 26 | 1.40 - 1.50 | Gray | 20 | 1 | CSA/CE | Canada |
| 582 88 36 | 0.95 - 1.10 | Gray | 30 | 3 | CSA/CE | Canada |
| 582 88 37 | 0.95 - 1.10 | Gray | 50 | 3 | CSA/CE | Canada |
| 582 88 38 | 0.95 - 1.10 | Gray | 100 | 3 | CSA/CE | Canada |
| 582 88 39 | 0.95 - 1.10 | Gray | 150 | 3 | CSA/CE | Canada |
| 582 88 51 | 0.95 - 1.10 | Red | 65 | 2 | CE | International |
| 582 88 52 | 0.95 - 1.10 | Red | 6 | 2 | CE | International |
| 582 88 53 | 0.95 - 1.10 | Red | 13 | 2 | CE | International |
| 582 88 54 | 0.95 - 1.10 | Red | 20 | 2 | CE | International |
| 582 88 57 | 0.95 - 1.10 | Red | 20 | 2 | CE | Canada |
| 582 88 70 | 0.65 - 0.80 | Blue | 20 | 3 | CE | International |
| 582 88 71 | 0.80 - 0.95 | Blue | 20 | 3 | CE | International |
| 582 88 72 | 0.95 - 1.10 | Blue | 6 | 3 | CE | International |
| 582 88 73 | 0.95 - 1.10 | Blue | 13 | 3 | CE | International |

[1] See *Type of cables* on page 9.

| Version | For density (g/cm$^3$) | Color of level switch | Length of cable (m) | Type of cable[1] | Approvals | For market |
|---|---|---|---|---|---|---|
| 582 88 74 | 0.95 - 1.10 | Blue | 20 | 3 | CE | International |
| 582 88 75 | 1.05 - 1.20 | Blue | 20 | 3 | CE | International |
| 582 88 76 | 1.20 - 1.30 | Blue | 20 | 3 | CE | International |
| 582 88 77 | 1.30 - 1.40 | Blue | 20 | 3 | CE | International |
| 582 88 78 | 1.40 - 1.50 | Blue | 20 | 3 | CE | International |
| 582 88 79 | 0.95 - 1.10 | Blue | 65 | 1 | CE | International |
| 582 88 80 | 0.95 - 1.10 | Blue | 30 | 1 | CE | International |
| 582 88 81 | 0.95 - 1.10 | Blue | 50 | 1 | CE | International |
| 582 88 82 | 0.95 - 1.10 | Gray | 30 | 1 | CSA/CE | Canada |
| 582 88 83 | 0.95 - 1.10 | Gray | 50 | 1 | CSA/CE | Canada |
| 582 88 86 | 0.95 - 1.10 | Red | 30 | 2 | CE | International |
| 582 88 87 | 0.95 - 1.10 | Red | 50 | 2 | CE | International |
| 582 88 90 | 0.95 - 1.10 | Blue | 30 | 3 | CE | International |
| 582 88 91 | 0.95 - 1.10 | Blue | 50 | 3 | CE | International |
| 582 88 92 | 0.95 - 1.10 | Red | 6 | 2 | CE | Japan |
| 582 88 93 | 0.95 - 1.10 | Red | 13 | 2 | CE | Japan |
| 582 88 94 | 0.95 - 1.10 | Red | 20 | 2 | CE | Japan |
| 582 88 95 | 0.95 - 1.10 | Blue | 6 | 1 | CE | Japan |
| 582 88 96 | 0.95 - 1.10 | Blue | 13 | 1 | CE | Japan |
| 582 88 98 | 0.95 - 1.10 | Blue | 50 | 1 | CE | Japan |
| 594 79 10 | 0.95 - 1.10 | Blue | 70 | 3 | CE | International |
| 594 79 13 | 0.95 - 1.10 | Blue | 100 | 3 | CE | International |
| 594 79 18 | 0.95 - 1.10 | Blue | 150 | 3 | CE | International |
| 594 79 19[2] | 0.95 - 1.10 | Blue | 20 | 3 | CE | International |
| 594 79 20[2] | 0.95 - 1.10 | Gray | 20 | 3 | CSA/CE | International |
| 594 79 40[2] | 0.95 - 1.10 | Black | 6 | 3 | ATEX/IECEx[3] | International |
| 594 79 41[2] | 0.95 - 1.10 | Black | 13 | 3 | ATEX/IECEx[3] | International |
| 594 79 42[2] | 0.95 - 1.10 | Black | 20 | 3 | ATEX/IECEx[3] | International |
| 594 79 21 [2] | 0.95 - 1.10 | Transparent | 6 | 3 | CE | For demonstration only. |

## Type of cables

| Type of cable | Jacket | Color coding of wires |
|---|---|---|
| 1 | Blue polyvinyl chloride (PVC) | Grey/Brown/Black |
| 2 | Red PVC | Grey/Brown/Black |
| 3 | Black nitrile rubber (NBR)/PVC | Grey/Brown/Black |

1 See *Type of cables* on page 9.
2 Designed for low current, slow movements and oil. Includes micro switch with gold plated contacts.
3 Zener barrier 84 01 07 required.

# Xylem |'zīləm|

1) The tissue in plants that brings water upward from the roots;
2) a leading global water technology company.

We're a global team unified in a common purpose: creating advanced technology solutions to the world's water challenges. Developing new technologies that will improve the way water is used, conserved, and re-used in the future is central to our work. Our products and services move, treat, analyze, monitor and return water to the environment, in public utility, industrial, residential and commercial building services settings. Xylem also provides a leading portfolio of smart metering, network technologies and advanced analytics solutions for water, electric and gas utilities. In more than 150 countries, we have strong, long-standing relationships with customers who know us for our powerful combination of leading product brands and applications expertise with a strong focus on developing comprehensive, sustainable solutions.

For more information on how Xylem can help you, go to www.xylem.com

xylem
Let's Solve Water

Xylem Water Solutions Global Services AB
361 80 Emmaboda
Sweden
Tel: +46-471-24 70 00
Fax: +46-471-24 74 01
http://tpi.xyleminc.com
www.xylemwatersolutions.com/contacts/

Visit our Web site for the latest version of this document and more information

The original instruction is in English. All non-English instructions are translations of the original instruction.

© 2014 Xylem Inc

891480_16.0_en-US_2019-04_TS_ENM 10

**This page is intentionally left blank**

**Project name:** MELIADINE-BPC UPGRADE

**Project#:** 5000220043

**Document #:** SPK_0001_ACP_VWT

**by:** CEK

**chkd:** ED

**appvd:** TS

# CLARIFIER #2 ACP2-60

# RECIRCULATION PUMPS

**OIM manual section:** 4.2.4.11

**This page is intentionally left blank**

# CS-607-ACP- : Identification sheet

| | | | |
|---|---|---|---|
| VWTC PROJECT NUMBER: | 5000220043 | REV: | 2 |
| PROJECT NAME: | AEM MELIADINE - BPC UPGRADE | SUBMITTED TO (COMPANY): | AEM |
| ENGINEER: | EMMANUELLE DORMOY | SUBMITTED TO (RESPONSIBLE): | |
| PROJECT MANAGER: | THOMAS SAVARY / BRUCE BORDES | PROJECT NUM REFERENCE.: | 6526-S-265-605 / OC-989680 |
| PHONE NUMBER: | 514-334-7230 | LOT NUMBER: | |

| SUPPLIER | EQPT CODE | EQPT TAG NO | DIA | DESCRIPTION | INFO 1 | INFO 2 | INFO 3 | APPLIC. | NOTE | REV |
|---|---|---|---|---|---|---|---|---|---|---|
| MCLANAHAN | ST-607-ACP-CRD20-7.5-575-1944-841 | 65PSR68006A | N/A | CLARIFIER #2 RECIRCULATION PUMP #1 | DESCRIPTION: SPLIT CASING HORIZONTAL CENTRIFUGAL PUMP / 2 x 2 // MANUF.: McLanahan// MODEL: SÉRIE IIIr 50x50 // SUCTION AND DISCHARGE FLANGES: 2" ANSI CLASS 150 B16.5 // DRY GLAND TYPE D // CLOSED VANE IMPELLER // CASINGS: CAST IRON | // LINING: NATURAL RUBBER // ROTATING SEAL: NATURAL RUBBER // STATIC SEAL: CERAMIC // 7.5 HP WEG IEEE 841 MOTOR PREMIUM EFFICIENCY 575V/3PH/60HZ // BELTED DRIVE OUTPUT SPEED 1944 RPM AT 60HZ | // SUITABLE FOR ACP DUTY POINTS ACP #21, 22M3/H@23.89 mH20 TDH // C/W DRIP PAN | CLARIFIER #2 | | 2 |
| MCLANAHAN | ST-607-ACP-CRD20-7.5-575-1944-841 | 65PSR68006B | N/A | CLARIFIER #2 RECIRCULATION PUMP #2 | DESCRIPTION: SPLIT CASING HORIZONTAL CENTRIFUGAL PUMP / 2 x 2 // MANUF.: McLanahan// MODEL: SÉRIE IIIr 50x50 // SUCTION AND DISCHARGE FLANGES: 2" ANSI CLASS 150 B16.5 // DRY GLAND TYPE D // CLOSED VANE IMPELLER // CASINGS: CAST IRON | // LINING: NATURAL RUBBER // ROTATING SEAL: NATURAL RUBBER // STATIC SEAL: CERAMIC // 7.5 HP WEG IEEE 841 MOTOR PREMIUM EFFICIENCY 575V/3PH/60HZ // BELTED DRIVE OUTPUT SPEED 1944 RPM AT 60HZ | // SUITABLE FOR ACP DUTY POINTS ACP #21, 22M3/H@23.89 mH20 TDH // C/W DRIP PAN | CLARIFIER #2 | | 2 |

**This page is intentionally left blank**

INFORMATION CONTAINED WITHIN THIS DOCUMENT IS A TRADE SECRET & ANY USE OF THE INFORMATION, EXCEPT BY ITS INTENDED RECEIVER, IS STRICTLY PROHIBITED. ANY MISAPPROPRIATION OF THE INFORMATION SHALL MAKE THE UNINTENDED RECEIVER LIABLE FOR ANY AND ALL DAMAGES SUFFERED AS A RESULT BY THE MCLANAHAN CORPORATION.

McLanahan

| DESCRIPTION: | WEIGHT: | DWG SIZE: | SCALE: |
|---|---|---|---|
| GENERAL ARRANGEMENT<br>PUMP, 2X2, ALL GLANDS<br>ALL LINING TYPES &<br>5 HP THRU 15 HP DRIVE PACKS | 455-611 LBS | B | 1:12 |
| | PART NUMBER: | ORIGIN: | SHEET#: |
| | 2X2 (5-15 HP) | TN | 1 /1 |

| DESIGNER: | DATE: | CHECKER: | DATE: | DRAWING NUMBER: | REV: |
|---|---|---|---|---|---|
| TSCHROEDER | 3/19/2013 | TSCHROEDER | 3/20/2013 | 2X2 (5-15 HP) | 00 |

ST #: ST-607-ACP-CRD20-7.5-575-1944-841
M3H-CRD 2/2 C/W WEG IEEE841 MOTOR 7.5HP 575V, 1944 RPM AT 60 HZ

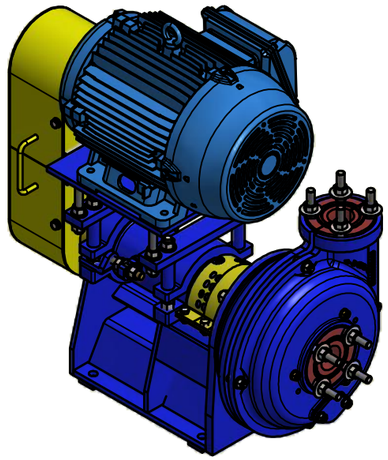

**ISOMETRIC**
(15 HP MOTOR SHOWN)

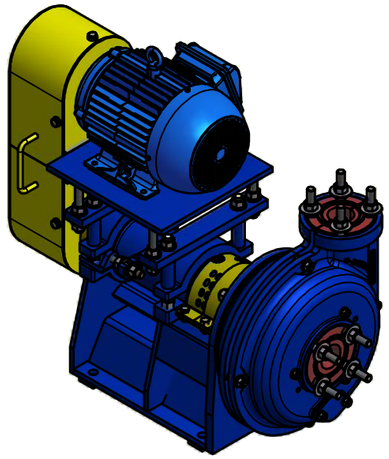

**ISOMETRIC**
(5 HP MOTOR SHOWN)

VEOLIA
EXAMINÉ/EXAMINED
L'examen de ce dessin ne relève en aucune façon l'entrepreneur ou le fournisseur de sa responsabilité quant à l'exactitude de ce dessin ou à sa conformité avec les documents contractuels et les conditions de chantier. Examination of this drawing will not release in any way the Contractor or Supplier of his responsibilities as of the precision of this drawing or its compliance with the contract documents and job site conditions.
☒ Procéder tel quel / Proceed as is
☐ Procéder tel qu'annoté / Proceed as noted
☐ Resoumettre / Re-submit
Par / by: pour G. Périn
Date: 2021-02-15

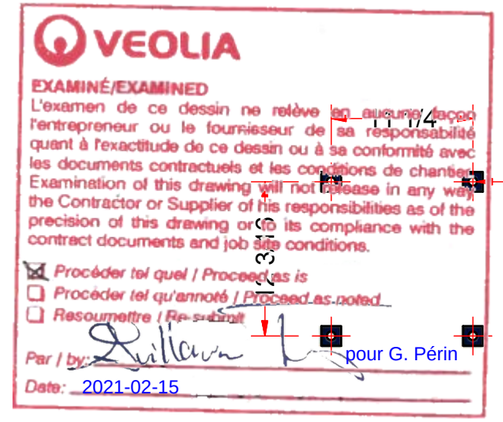


**SECTION B-B**
SCALE 1:12

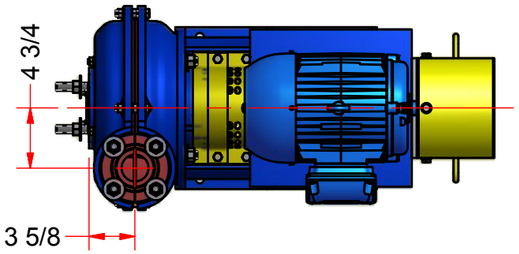


**TOP**

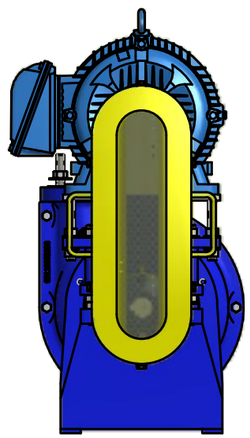

**REAR**
(15 HP MOTOR SHOWN)

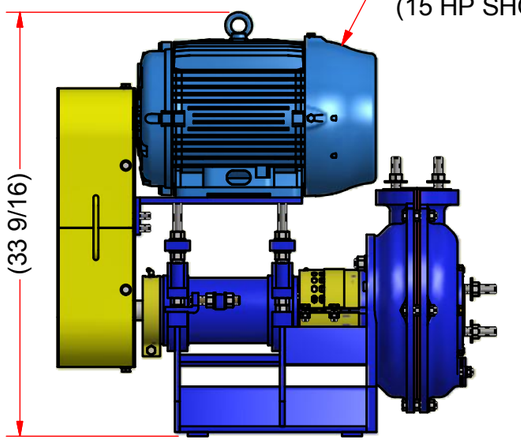


**LEFT**
(15 HP MOTOR SHOWN)

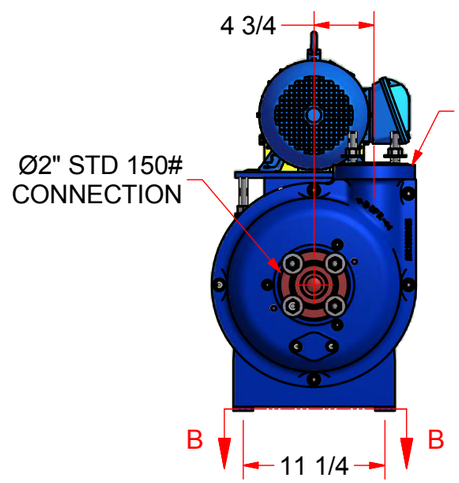


**FRONT**
(5 HP MOTOR SHOWN)

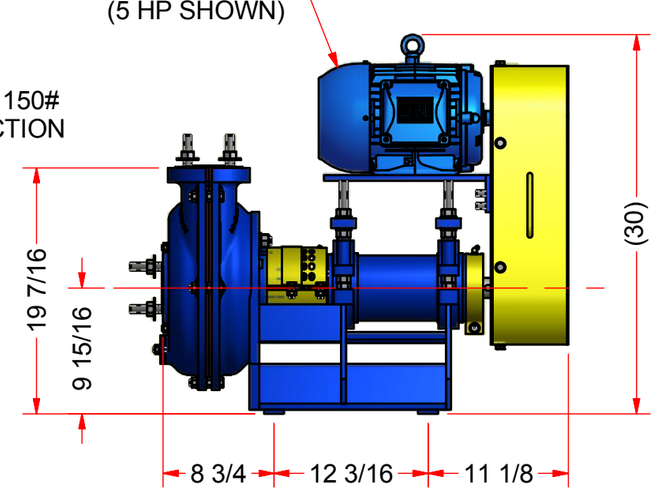


**RIGHT**
(5 HP MOTOR SHOWN)

**This page is intentionally left blank**

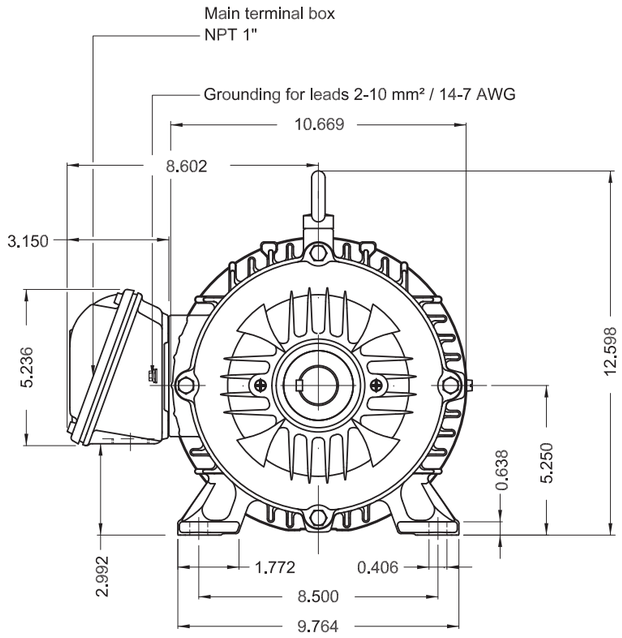


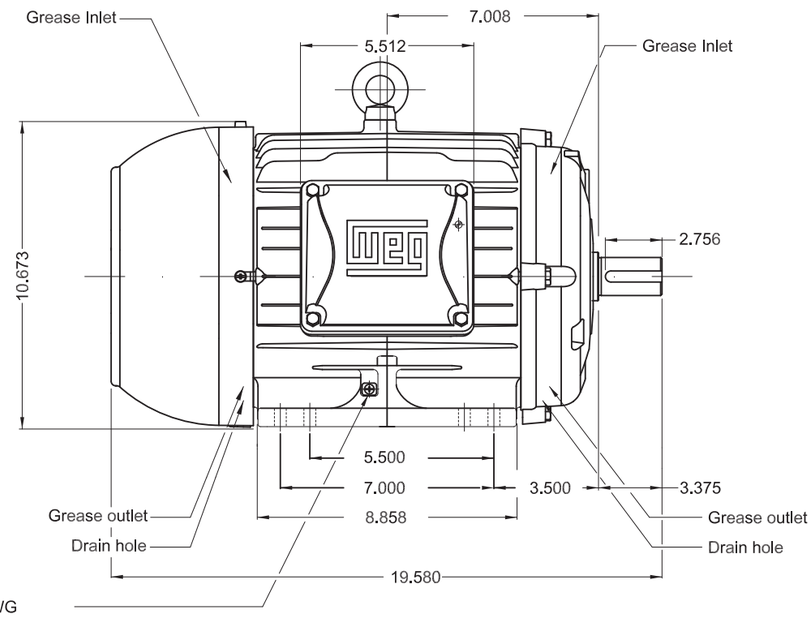


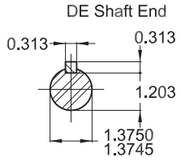


Color RAL 5009
Painting plan 202E
Mounting NEMA F-1
Mounting B3R(D)

7.5 HP 04 Poles 60Hz | A

| ECM | LOC | SUMMARY OF MODIFICATIONS | EXECUTED | CHECKED | RELEASED | DATE | VER |
|---|---|---|---|---|---|---|---|

| | |
|---|---|
| EXECUTED | PIRWBUSER |
| CHECKED | |
| RELEASED | |
| REL DT. | |

THREE PH. W22 NEMA P.EFF MOTOR IEEE841
FRAME 213/5T IP55 TEFC

PREVIEW
WDD

WMO Jaragua do Sul Product Engineering

SHEET 1 / 1

Dimensions in inches
XME A3

WEG's property. Forbidden reproduction without previous authorization.

**This page is intentionally left blank**

# DATA SHEET

## Three Phase Induction Motor - Squirrel Cage

| | |
|---|---|
| Customer | : |

| | | | |
|---|---|---|---|
| Product line | : W22 IEEE 841 NEMA Premium Efficiency Three-Phase | Product code : | 13516376 |
| | | Catalog # : | 00718ST3HIE213T-W22 |

| | | | |
|---|---|---|---|
| Frame | : 213/5T | Locked rotor time | : 36s (cold) 20s (hot) |
| Output | : 7.5 HP (5.5 kW) | Temperature rise | : 80 K |
| Poles | : 4 | Duty cycle | : Cont.(S1) |
| Frequency | : 60 Hz | Ambient temperature | : -20°C to +40°C |
| Rated voltage | : 575 V | Altitude | : 1000 m.a.s.l. |
| Rated current | : 7.34 A | Protection degree | : IP55 |
| L. R. Amperes | : 52.1 A | Cooling method | : IC411 - TEFC |
| LRC | : 7.1x(Code H) | Mounting | : F-1 |
| No load current | : 3.52 A | Rotation[1] | : Both (CW and CCW) |
| Rated speed | : 1765 rpm | Noise level[2] | : 58.0 dB(A) |
| Slip | : 1.94 % | Starting method | : Direct On Line |
| Rated torque | : 22.3 ft.lb | Approx. weight[3] | : 176 lb |
| Locked rotor torque | : 220 % | | |
| Breakdown torque | : 310 % | | |
| Insulation class | : F | | |
| Service factor | : 1.25 | | |
| Moment of inertia (J) | : 1.34 sq.ft.lb | | |
| Design | : B | | |

| Output | 25% | 50% | 75% | 100% |
|---|---|---|---|---|
| Efficiency (%) | 88.6 | 89.5 | 91.0 | 91.7 |
| Power Factor | 0.40 | 0.66 | 0.76 | 0.82 |

Foundation loads

| | |
|---|---|
| Max. traction | : 302 lb |
| Max. compression | : 478 lb |

| | | Drive end | Non drive end |
|---|---|---|---|
| Bearing type | : | 6308 C3 | 6207 C3 |
| Sealing | : | Inpro/Seal | Inpro/Seal |
| Lubrication interval | : | 20000 h | 20000 h |
| Lubricant amount | : | 11 g | 7 g |
| Lubricant type | : | Mobil Polyrex EM | |

Notes

This revision replaces and cancel the previous one, which must be eliminated.
(1) Looking the motor from the shaft end.
(2) Measured at 1m and with tolerance of +3dB(A).
(3) Approximate weight subject to changes after manufacturing process.
(4) At 100% of full load.

These are average values based on tests with sinusoidal power supply, subject to the tolerances stipulated in NEMA MG-1.

| Rev. | Changes Summary | Performed | Checked | Date |
|---|---|---|---|---|
| | | | | |

| | | | | |
|---|---|---|---|---|
| Performed by | | | | |
| Checked by | | | Page | Revision |
| Date | 21/01/2021 | | 1 / 6 | |

This document is exclusive property of WEG S/A. Reprinting is not allowed without written authorization of WEG S/A.
Subject to change without notice

**This page is intentionally left blank**

# SLURRY PUMPS

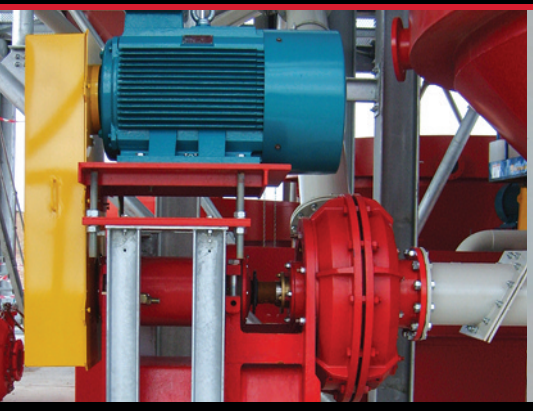

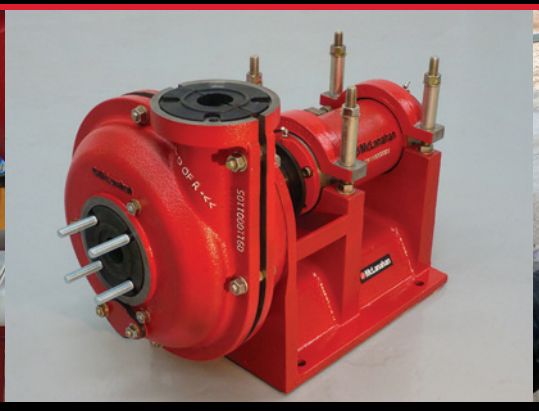



## RELIABLE AND LONG LASTING

McLanahan's centrifugal Slurry Pumps are rubber-lined and abrasion resistant for long lasting service, low lifetime costs and straight forward servicing.

Eight models with discharge port sizes from 35mm to 250mm that can accommodate various options in lining material and gland type choices.

McLanahan®

mclanahan.com

## APPLICATIONS

- Sand & Gravel / Minerals Processing
- Soil Washing / Remediation
- Waste Water Recovery / Disposal
- Concrete Wash-out



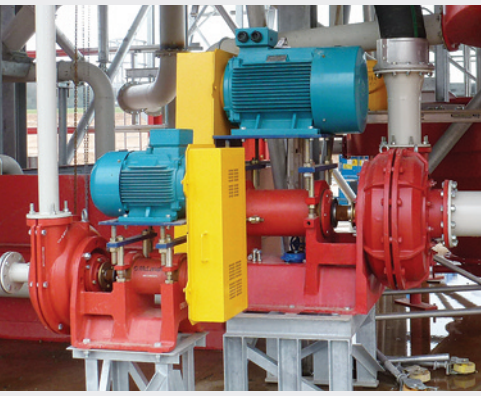

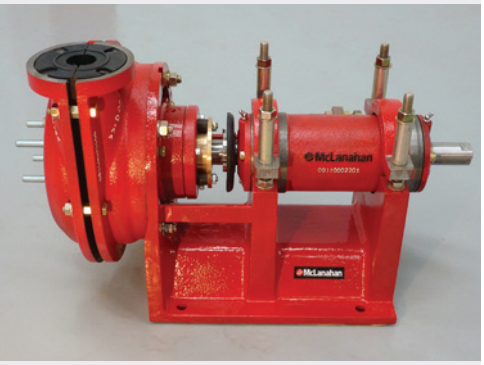

## WETTED PARTS

Standard pumps are equipped with natural rubber liners and impeller. However, bespoke options are available to suit a specific process and include premium natural rubber, Nitrile and food grade rubber. Shaft sleeves are from 304 St, but may be manufactured from other materials or coated to special order.

## GLAND OPTIONS

**D (Dry) Gland**

An abrasion resistant Natural Rubber "Face Seal" riding a "Hard Face" and lubricated naturally by the process fluid. Controlled seepage of process fluid. Optional clean water injection facility.

**H (Hydro) Gland**

Clean water is injected into the inter-space between a pair of gland seals in tandem. Slight dilution – but total containment – of the process fluid. Controlled water seepage to atmosphere.

**P (Packed) Gland**

Gland packing mechanically adjusted to "ride" the shaft sleeve. Highest pressure capability. Some process dilution and water (or lubricating grease) seepage to atmosphere.

## MOTOR AND DRIVE

McLanahan supplies pumps bare-shaft or complete with motor, overhead mounting platform, vee-belt drive and guard. Motors can also be oriented in Z-vee fashion, or side mounted on slide rails.

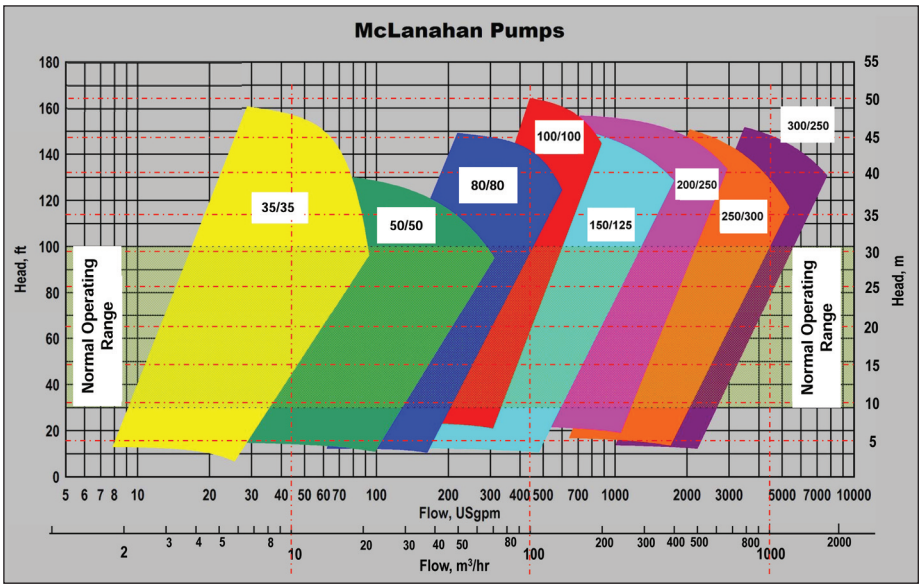


## PUMP SELECTION

Initial pump selection can be determined by using the chart above as a guide. A qualified McLanahan engineer can determine the best pump performance for a specific application.

## SPARES

High quality spare parts are available including moulded rubber Impellers, casing liners and suction bush components. All parts are available in various materials and hardness to suit differing applications. Mechanical spares such as fully assembled bearing housing cartridges and gland parts are available as kits for ease of procurement.


| | | | |
|---|---|---|---|
| **NORTH AMERICA** | CORPORATE HEADQUARTERS | | |
| | Pennsylvania, USA | +1 (814) 695 9807 | sales@mclanahan.com |
| | Florida, USA | +1 (863) 667 2090 | polymers@mclanahan.com |
| | Iowa, USA | +1 (319) 365 0441 | sales@mclanahan.com |
| | Tennessee, USA | +1 (615) 451 4440 | sales@mclanahan.com |
| **AUSTRALIA** | New South Wales | +61 2 4924 8248 | sales@mclanahan.com.au |
| | Queensland | +61 7 4952 3377 | sales@mclanahan.com.au |
| **EUROPE** | England, UK | +44 (0) 1420 542489 | enquiries@mclanahan.uk.com |
| **ASIA** | Hyderabad, India | +91 (40) 2355 4071 | info@mclanahan-nawa.com |


Guards are recommended for safe operation of equipment. In some photos, safety guards may not be shown.

# TECHNICAL INFORMATION - M3H-CR 2/2 PUMP

## CLOSED VANE IMPELLER; 'D' TYPE GLAND; c/w 7.5HP IEEE841 Motor;

### General Operating Conditions

| | |
|---|---|
| Installation: | Inside building |
| Ambient Temperature: | 20° C / 70° F |
| Humidity: | Up to 75% |
| Application type: | Continuous – 24/7 |
| Electrical Supply: | 3ph/60Hz/575V |

---

### Surface Treatment

| | |
|---|---|
| Coating System: | McLanahan standard system - Powder Coating |

---

### Fabrication

| | |
|---|---|
| Pedestal | Cast Iron |
| Casings | Cast Iron |
| Bearing Housing | Cast Iron |
| Motor Table | Fabricated Steel |
| Drive | V-Belt |
| Guards | Steel Fabrications |
| Lining | Natural Rubber |
| Impeller | Natural Rubber (Closed Vane) |
| Suction Flange | 2" ANSI Class 150 B16.5 |
| Discharge Flange | 2" ANSI Class 150 B16.5 |
| Flange type | Integral; self gasketed; with studs, nuts, washers |
| Orientation | Vertical discharge |

---

### Gland

| | |
|---|---|
| Type | 'D' Type, Self Lubricating |
| Shaft Sleeve | Stainless Steel |
| Rotating Seal | Natural rubber |
| Static Seal | Ceramic |
| Housing | Nitrile Rubber lined Cast Iron |
| Lubrication Water | N/A |
| Drip Pan | Included |

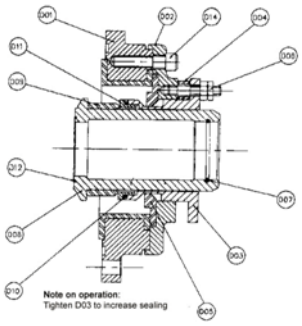


---

### Bearings – Grease Lubricated

| | |
|---|---|
| Drive End | Double row, self-aligning spherical roller bearing |
| Non-Drive End | Roller bearing |
| Seals | Grease |

# Belted Drives Selection Tool

## Duty 21 CVI Revised SF

### Selection Number

1830047766 (Created on 10/31/2019)

| Drive Requirements | Input | Actual |
|---|---|---|
| Motor Speed | 1,750 rpm | 1,750 rpm |
| Motor Power | 7.50 hp | 7.50 hp |
| Service Factor | 1.2 | 2.25 |
| Output Speed | 1,869 - 1,985 rpm | 1,944 rpm |
| Center Distance | 11.75 - 13.75 in | 12.54 in |

### Technical Data

| | | | |
|---|---|---|---|
| Speed Ratio | 0.90 | Facewidth | 1.50 in |
| Belt Speed | 2,268 ft/min | Driver Pitch Diameter | 4.95 in |
| Belt Pull | 190 lbs | Driven Pitch Diameter | 4.45 in |
| Static Shaft Load | 185 lbs | Install/Take-up Center Distance Range | 12.04 - 13.54 in |

### Tensioning

#### Sonic Tension Meter Data

| | |
|---|---|
| Tension Frequency | 69 - 84 Hz |
| Belt Mass Constant | 72.0 g/m |
| Span Length | 318.5 mm |
| # of Belts | 3 |

#### Force Deflection Method

| | |
|---|---|
| Span Length | 12.54 in |
| Belt Deflection Distance | 0.20 in |
| Belt Deflection Force | 3.0 - 3.1 lbs |

**NOTE:** Values shown are for new belts.

### Selection

| Product | Part Number | Description | Weight (lbs) | Qty. | List Price (USD) |
|---|---|---|---|---|---|
| Driver Sheave | 112206 | 3-3V5.0-1610 SHEAVE | 4.3 | 1 | |
| Driver Bushing | 119225 | 1610 X 1 3/8-IK BUSHING | 0.6 | 1 | |
| Driven Sheave | 112204 | 3-3V4.5-1610 SHEAVE | 3.4 | 1 | |
| Driven Bushing | 119606 | 1610 X 40MM-KW BUSHING | 0.4 | 1 | |
| Belt(s) | 102788 | 3V400 BELT | 1.0 | 3 | |

| | |
|---|---|
| **Quantity:** | 1 |
| **List Price:** | |
| **Net Total Weight:** | 11.7 lbs |

**NOTE:** Product selections are dependent upon user inputs. Performance of the combined products is dependent upon the exclusive use of the ABB part numbers defined on this selection. Modifications, substitutions, or interchanges to other parts, vendors, or inputs may affect reliability and/or performance, therefore user assumes full liability for any changes. User is responsible for system considerations such as, but not limited to, space limitations, shaft engagement, and proper installation and maintenance.

Veolia North America / 22 m3 / 23.26m TDH

Veolia NA Blanket, September 17, 2019

M3H-CR 2/2 , 1927 rpm, 7.5 hp

©2019-2020 Mclanahan. This datasheet is the property of Mclanahan. And must not be reproduced or disclosed without permission in writing. All rights are reserved.

DUTY #21 CVI

| Pump Details | |
|---|---|
| Pump Model | M3H-CR 2/2 |
| Rated Flow | 22 m^3/hr |
| Rated Head | 23.89 m |
| Efficiency | 31.75 % |
| QBEP | 54.86 % |
| Impeller Diameter | 200 mm |
| Pump Speed | 1927 rpm |
| Minimum Speed | 800 rpm |
| Maximum Speed | 2600 rpm |
| Tip speed | 20.05 m/s |
| NPSH required | 2.475 m |

| Selection Details | |
|---|---|
| Required Flow | 22 m^3/hr |
| Required Head | 23.89 m |
| Static Head | 0 m |
| Friction Head | 23.89 m |
| Suction Height | 0 m |
| Discharge Height | 0 m |
| Discharge Pressure | 0 m |
| Head Ratio | 0.986 |
| NPSH Available | 0 m |
| No. of pumps | 1 |
| Power absorbed - Total | 4.89 kW |

| Slurry Details | |
|---|---|
| Solid flow rate | 3.324 Tons/hr |
| Slurry flow rate | 22 m^3/hr |
| SG solid | 2.65 |
| SG liquid | 1 |
| SG slurry | 1.084 |
| % comp. by weight | 12.45 % |
| % comp by volume | 5.093 % |
| Ave. particle size | 100 microns |
| Max particle size | 500 microns |
| Widely graded particles | True |
| Froth factor | 0 |
| Set ER & HR manually | False |
| Efficiency ratio | 0.986 |
| Head ratio | 0.986 |

| Electrical Driver Details | |
|---|---|
| Motor | 7.5 hp |
| Power absorbed - @ Duty | 4.886 kW |
| Power required | 7.5 hp |
| Frame size | 215T |
| Temperature rise | 0 |
| Insulation class | |
| Bearing size D/E | 6308 ZZ |
| Bearing size N/D/E | |
| Weight | 154 |
| Shaft size | 1.375 |

Veolia North America / 22 m3 / 23.26m TDH

Veolia NA Blanket, September 17, 2019 M3H-CR 2/2 , 1927 rpm, 7.5 hp

DUTY #21 CVI

©2018-2019 Mclanahan. This curve is the property of Mclanahan. And must not be reproduced or disclosed without permission in writing. All rights are reserved.

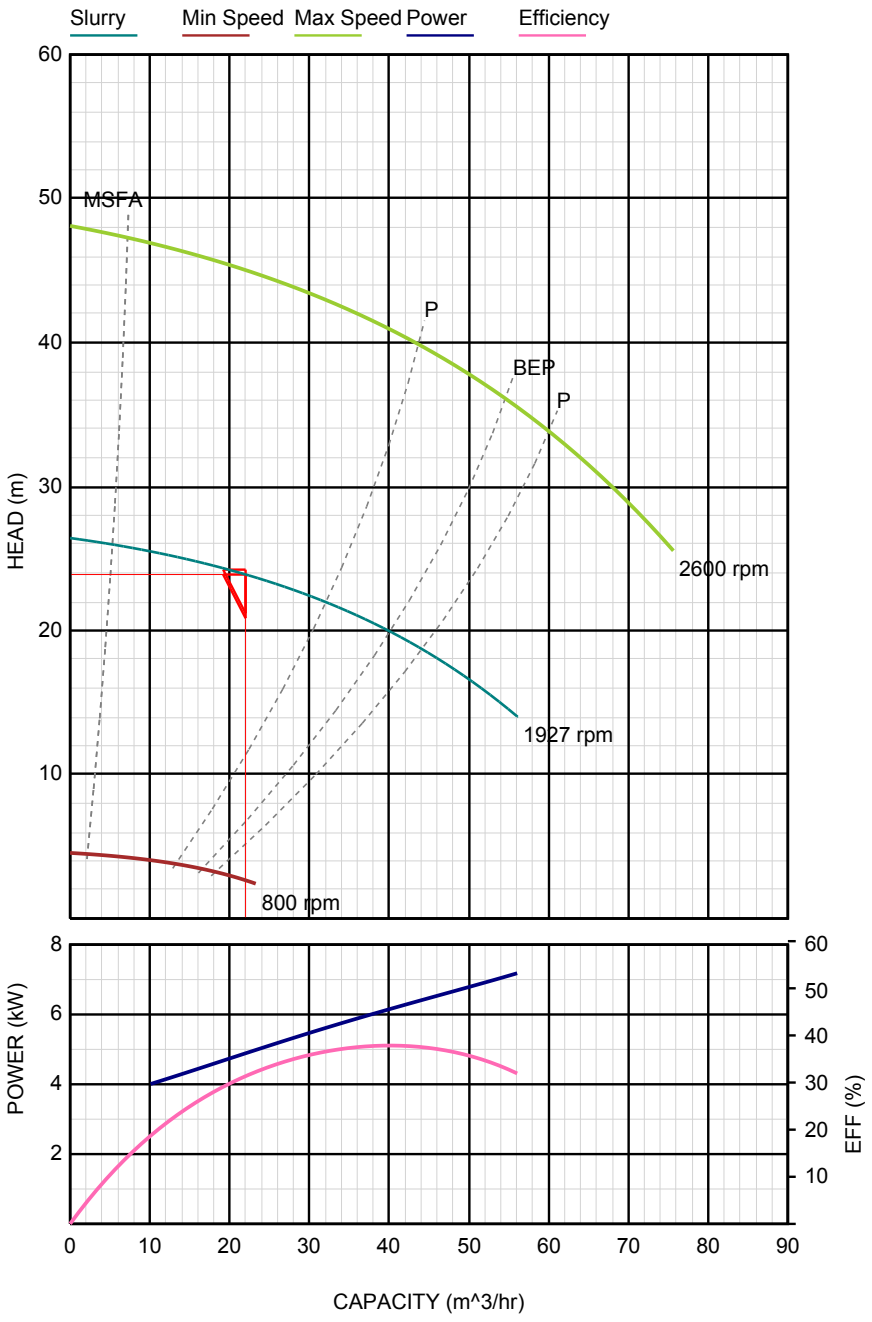


## Pump model: M3H-CR 2/2

| Pump | |
|---|---|
| Pump range | -CR 1927 |
| Speed | rpm 2600 |
| Max Speed | rpm 38.28 |
| Efficiency @ BEP | %1 |
| No. of pumps | 5 kW |
| Power absorbed - Total | |

| Duty Point | |
|---|---|
| Flow | 22 m^3/hr |
| Static Head | 0 m |
| Total Head | 23.89 m |
| Efficiency | 31.75 % |
| NPSH required | 3.81 m |
| % of BEP | 54.86 % |
| Power absorbed - @ Duty | 4.886 kW |
| Motor size | 7.5 hp |
| Tip Speed | 20.05 m/s |
| Impeller Diameter | 200 mm |
| Speed Head | 24.23 m |

| Slurry Data | |
|---|---|
| Solid flow rate | 3.324 Tons/hr |
| Solid SG | 2.65 |
| Slurry SG | 1.084 |
| % Comp. by Weight | 12.45 % |
| % comp. by Volume | 5.093 % |
| Ave. Particle size (D50) | 100 microns |
| Max Particle Size | 500 microns |
| Head Ratio | 0.986 |

**Engineer's Notes**

**Project name:** MELIADINE-BPC UPGRADE

**Project#:** 5000220043

**Document #:** SPK_0001_ACP_VWT

**by:** CEK

**chkd:** ED

**appvd:** TS

# CLARIFIER #2 ACP2-60

# PAINT SPECIFICATION

**OIM manual section:** 4.2.4.12

**This page is intentionally left blank**

# TANK CONSTRUCTION SPECIFICATIONS
## & PAINT SPECIFICATIONS
## RAL 7040 TANK WINDOW GREY (EXTERIOR)
## & LIGHT GREY (INTERIOR)

# CC-07-ACP

## 1.0 GENERAL

This specification describes construction elements of the steel welded tank and paint specifications of ACP MK3 product.

## 2.0 MATERIALS

- Carbon steel must conform to CSA 44W, unless otherwise specified (see type on plan);
- Nominal thickness, refer to plan.

## 3.0 CONSTRUCTION

According to the specifications of the referred plan(s):

- Steel plates and sections must conform to Canadian norm G40.21M-300W, except for HSS that must conform to Canadian norm G40.21M-350W;

- Welds will be realized according to the details shown on the referenced plan. All welds must conform to the Canadian norm CSA W59 standard. Remove surface defects and grind all sharp edges. Make sure to completely remove the flux and welding splashes. The fusion welding certifications to produce by the company will be: W47.1, W59;

- Welding process:

    - Flux-Cored Arc Welding (FCAW);
    - MIG welding;
    - Electrodes (SMAW).

- Welds will be brushed and be devoid of spots;

- All modifications to the dimensions or to the quality of materials, and dispositions other than those indicated on the plans, are subject to prior demand to **Veolia Water Technologies Canada Inc's.,** person in charge, and his subsequent written.

## 4.0 STEEL PREPARATION FOR PAINTING

- Tank's interior and exterior surfaces must be perfectly cleaned from grease and all other foreign substance;

- All sharp edges must be grinded;

- All flanged surfaces and threaded connections must be cleaned and protected adequately to avoid paint contact;

- The rough edges, weld splatter, excess metal flux and sharp edges must be removed by grinding.

## 5.0 CONTROL

### 5.1 Welds

Once completed, all tank interior welds must be dye penetrant inspected to verify the quality of the welds. All welds must be water tight, free from porosity, cracks and drains and in accordance with norm CSA W59.
A dye penetrant test control should be done on all interior welds. Exterior welds must be visually inspected only.
All lifting and handling lugs must be subject to magnetic particle testing and report. Quality control from **Veolia Water Technologies Canada Inc.** will verify results of welds control.

### 5.2 Dimensional

The dimensional control will be done by the manufacturer. At the same time, **Veolia Water Technologies Canada Inc.'s** inspector will provide control. Minutes will be written detailing the dimensional and tolerance divergences. These values are noted on the piece's plan, assigned to control.

### 5.3 Documents and Certificates of Material (to Supply)

The manufacturer will supply to **Veolia Water Technologies Canada Inc.'s** inspector at the beginning of work, the following documents:

- Planning of work, with detailed manufacturing stages;
- Supply Bill of Materials;
- Material certificates with copy of the supplier's delivery slip;
- Welding procedures.

## 6.0 TREATMENT

### 6.1 Internal Treatment

- Sandblast as per SSPC-SP-10;
- Brush application on welds and difficult to reach places (inside of holes and openings) of one layer of DURA_PLATE UHS by SHERWIN WILLIAMS, color « light green » and;
- Application of one coat of DURA-PLATE-UHS NSF61 compliant by SHERWIN WILLIAMS, 20 to 28 mils dft (restricted level 5 as per SSPC-PA 2), color « light gray »;
- Important note: **Never dilute** the DURA-PLATE-UHS paint.

- Only if needed, application of one coat of DURA-PLATE UHS PRIMER by SHERWIN WILLIAMS, 4 to 8 mils dft per coat, color “Gold”, if required depending on atmospheric conditions and delays between sandblast and paint.

### 6.2 External Treatment

- Sandblast as per SSPC-SP-6;
- Spacing between intermittent welds should be filled with an hybrid sealant LOXON H-1 by SHERWIN WILLIAMS before the application of the external coating;
- Brush application on welds and difficult to reach places (inside of holes and openings) of one layer of ENVIROLASTIC 940 LV by SHERWIN WILLIAMS, color «  White »;
- Application of one layer of ENVIROLASTIC 940 LV by SHERWIN WILLIAMS, 7.0 to 9.0 mils dft, ( restricted level 5 as per SSPC-PA 2),  color RAL 7040 Window Grey.

### 6.3 Piping Treatment

Identical to the external coating of the works as stated for the tank previously.  There is no internal coating to provide for the nozzles of 3″ diameter or less (should be made from Stainless Steel). Ensure pipe ends and flanges are covered with paint with the exception of the raised face.

### 6.4 Extra Paint to be Supplied

For every equipment, a touch-up paint kit of 1 gallon for both internal and exterior paint must be provided at shipping. Please attach the product label.

### 6.5 Application Procedure

The supplier’s procedure for application must be followed.

### 6.6 Protection of Metallic Parts during Treatment

Threads, tapping, flange joint plans, etc. will be protected before sanding and treatment.

### 6.7 Paint Inspection

All interior surfaces must be inspected by performing a Holiday test in accordance with the standard NACE SP 0188, to verify the presence of discontinuity in the paint.

## 7.0 PACKAGING

- Plastic plug of the male and female threaded end caps;
- Wood plugs on flange sides.

## 8.0 HANDLING OF THE TANKS

- Always install the holding rings and any internal supporting beams before handling tanks.
- The tanks must be raised by chains attached to the holding rings. A minimum angle of 60º must be maintained. (see pictures)
- The lifting should ideally be carried out in two parallel points. (see pictures)

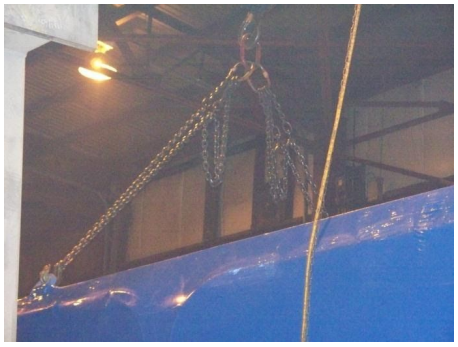



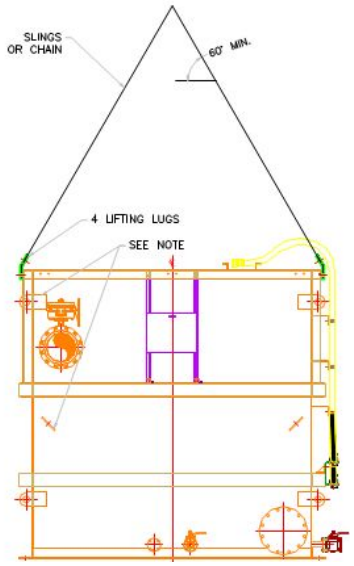


***ATTENTION*: Never use the side rings to lift and /or manipulate the tank. These rings should only be used to attach the tank during transport.**

## Tightening Torque for Lifting Hooks

| Model | Bolt Diam. | TPI | Fastener Coating (Bolt, washer & nut) | SAE & Grade (Bolt, washer & nut) | Torque Value (Lbs-ft) |
|---|---|---|---|---|---|
| **Actiflo** | | | | | |
| ACP-150R/ACP2-15 | 5/8 UNC | 11 | Zinc Plated | SAE J429 – Grade 8 | 190 |
| ACP-300R/ACP2-30 | 5/8 UNC | 11 | Zinc Plated | SAE J429 – Grade 8 | 190 |
| ACP-400R/ACP2-40 | 5/8 UNC | 11 | Zinc Plated | SAE J429 – Grade 8 | 190 |
| ACP-450R/ACP2-45 | 5/8 UNC | 11 | Zinc Plated | SAE J429 – Grade 8 | 190 |
| ACP-550R/ACP2-55 | 1 UNC | 8 | Zinc Plated | SAE J429 – Grade 8 | 818 |
| ACP-600R/ACP2-60 | 1 UNC | 8 | Zinc Plated | SAE J429 – Grade 8 | 818 |
| ACP-700R/ACP2-70 | 1 UNC | 8 | Zinc Plated | SAE J429 – Grade 8 | 818 |
| ACP-750R/ACP2-75 | 1 UNC | 8 | Zinc Plated | SAE J429 – Grade 8 | 818 |

# *4 – DETAILED TECHNICAL DOCUMENTATION*

## *4.2 – SHOP DRAWINGS*

## *4.2.5 – HYDRA-CARB ACTIVATED CARBON PREPARATION SYSTEM*

LEFT BLANK

# TECHNICAL DOCUMENTATION

**This page is intentionally left blank**

| | |
|---|---|
| **Project name:** | MELIADINE-BPC UPGRADE |
| **Project#:** | 5000220043 |
| **Document #:** | SPK_0005_SKG_VWT |
| **by:** | GM |
| **chkd:** | ED |
| **appvd:** | TS |

# SUBMITTAL PACKAGE

# HYDRACARB

**This page is intentionally left blank**

| | |
|---|---|
| **Project name:** | MELIADINE-BPC UPGRADE |
| **Project#:** | 5000220043 |
| **Document #:** | SPK_0005_SKG_VWT |
| **by:** | GM |
| **chkd:** | ED |
| **appvd:** | TS |

# HYDRACARB

# PROCESS DATASHEET

**OIM manual section:** 4.2.5.1

**This page is intentionally left blank**

| | | | | | | | | | |
|---|---|---|---|---|---|---|---|---|---|
| 1 | | | | | | | **VWTC #** | PSDS_0005_PCH | |
| 2 | | VEOLIA | | | | | **Project #** | 5000220043 | |
| 3 | | | | | | | **Date** | 2021-07-19 | |
| 4 | | | | | | | **Activated Carbon Preparation System** | | |
| 5 | **CLIENT:** | **REV** | **DATE** | **BY** | **CHK'D** | **APP'D** | **DESCRIPTION** | | |
| 6 | AEM | **1** | 2021-01-11 | GM | ED | BB | For approval | | |
| 7 | | **2** | 2021-07-19 | GM | GP | BB | For approval | | |
| 8 | | **3** | | | | | | | |
| 9 | **PROJECT:** | **4** | | | | | | | |
| 10 | MELIADINE - BPC UPGRADE<br>6526-S-265-605 / OC-989680 | **5** | | | | | | | |
| 11 | | **6** | | | | | | | |
| 12 | | **7** | | | | | | | **REV** |
| 13 | **GENERAL** | **Tag** | | TBC | | Sheet 14 & 15 | **Vessel/Line** | N/A | |
| 14 | | **Service** | | Activated Carbon Preparation | | | **Fluid** | Activated Carbon | |
| 15 | | **Manufacturer** | | VEOLIA WATER TECHNOLOGIES CANADA | | | | | |
| 16 | | **Model Series** | | HYDRACARB | | | | | |
| 17 | | **Veolia Model Number** | | **HYDC** | | | | | |
| 18 | **PARAMETER** | | | | **UNITS** | **VALUE** | **NOTES** | | |
| 19 | **PROCESS DATA** | **CAP Dosage** | | **min** | **mg/L** | 150 | Total value to be dosed by both preparation systems | | |
| 20 | | | | **avg** | **mg/L** | 250 | Total value to be dosed by both preparation systems | | |
| 21 | | | | **max** | **mg/L** | 300 | Total value to be dosed by both preparation systems | | |
| 22 | | **CAP massic flowrate** | | **min** | **kg/d** | 586 | Total value to be dosed by both preparation systems | | |
| 23 | | | | **avg** | **kg/d** | 1552 | Total value to be dosed by both preparation systems | | |
| 24 | | | | **max** | **kg/d** | 3627 | Total value to be dosed by both preparation systems | | |
| 25 | **POWDER<br>GENERAL CHARACTERISTICS** | **Bulk density** | | | **kg/m3** | **330 to 505** | | | |
| 26 | | **Mesh size** | | | | **<100 mesh** | | | |
| 27 | | **Packaging** | | | | | **Polypropylene liner-free bulk bag, 1100 lb net** | | |
| 28 | **DOSING SYSTEM** | **Model** | | | - | - | MBF-073 | | |
| 29 | | **Manufacturer** | | | - | - | WAM | | |
| 30 | | **Maximum capacity** | | | **L/min** | TBD | | | |
| 31 | | | | | **m3/d** | TBD | | | |
| 32 | | | | | **kg/d** | TBD | | | |
| 33 | | **Dosing Screw Motor** | | | - | - | TBC | | |
| 34 | | **Power** | | | **HP** | 0,5 | | | |
| 35 | | **Voltage** | | | **V-PH-HZ** | 575 / 3 / 60 | | | |
| 36 | | **Classification** | | | - | - | Class 2 Div 1 gr F | | |
| 37 | | **Blending Screw Motor** | | | - | - | TBC | | |
| 38 | | **Power** | | | **HP** | 0,75 | | | |
| 39 | | **Voltage** | | | **V-PH-HZ** | 575 / 3 / 60 | | | |
| 40 | | **Classification** | | | - | - | Class 2 Div 1 Gr F | | |
| 41 | | **Unloader type** | | | - | - | Bulk Bag , Forklift Style | | |
| 42 | **HOIST & TROLLEY** | **Model** | | | - | - | N/A | | 2 |
| 43 | | **Manufacturer** | | | - | - | N/A | | 2 |
| 44 | | **Hoist type** | | | | - | N/A | | 2 |
| 45 | | **Lift Weight** | | | **tons** | 1 | | | |
| 46 | | **Lift Height** | | | **m** | 4 | | | |
| 47 | | **Notes** | | | | | | | |
| 48 | **VALVES** | **Check Valve** | | | - | - | | | |
| 49 | | **Outlet** | | | **Ø (in)** | 2 1/2 " NPT | PFA LINED CHECK VALVE | | 2 |
| 50 | | **Solenoid Valve** | | | - | - | | | |
| 51 | | **Inlet** | | | **Ø (in)** | 2" NPT | 1 x 8210G100, 2-way solenoid valve,<br>Normally Closed (NC), 120 VAC, Brass | | |
| 52 | | **Compr. Air Cylinder** | | | **Ø (in)** | 1/2" NPT | 1 x Series 63, Solenoid valve, 120 VAC | | |
| 53 | | **Ball Valve** | | | - | - | | | |
| 54 | | **Service water inlet** | | | **Ø (in)** | 2" Socket | 1 x PVC Chemline 21 A 020 E S | | |
| 55 | | **Upstream eductor** | | | **Ø (in)** | 2" Socket | 1 x PVC Chemline 21 A 020 E S | | |
| 56 | | **Washdown** | | | **Ø (in)** | 1-1/2" Socket | 1 x PVC Chemline 21 A 005 E S | | |
| 57 | | **Isolation pressure gauge upstream eductor** | | | **Ø (in)** | 1/2" Socket | 1 x PVC Chemline 21 A 005 E S | | |
| 58 | | **Isolation pressure gauge downstream eductor** | | | **Ø (in)** | 1/2" Socket | TBC | | |
| 59 | | **Globe Valve** | | | - | - | | | |
| 60 | | **Washdown** | | | **Ø (in)** | 1-1/2" NPT | 1 x PVC Chemline GVA015T | | |
| 61 | **INSTRUMENTATION** | **Pressure Gauge** | | | - | - | 2 x 25-1009SW-02L-160#/BR<br>C/W SEAL 04-310HH-02T-XCG | | |
| 62 | | **Pressure Switch** | | | **Ø (in)** | 1/2" NPT | ALLEN BRADLEY// MODEL: 836T-T253J | | |
| 63 | | **Level Switch** | | | | 1-1/2" NPT | Endress & Hauser // FTL50-SGM2AA5E4A+Z1 // CSA C/US IS Cl I,II,III Div.1 Gr.A-G | | |
| 64 | | **High Level Switch** | | | | 1-1/2" NPT | Endress & Hauser // FTM20-DN46A, 24 VDC or 120 VAC, FM DIP+ CSA DIP Cl.II,III<br>Div.1+ 2 Gr.E-G, zone 21,22 | | |
| 65 | | **Eductor** | | | | | | | |
| 66 | | **Rotameter** | | | **Ø (in)** | | | | |
| 67 | **CONSTRUCTION** | Structure | | | | 1" & 1-1/2" NPT | NCTLST5, 1" FNPT Inlet, 1-1/2" FNPT suction & discharge | | |
| 68 | | Paint | | | | 1.5" NPT | 1 x PVC Chemline FSA03000 | | |
| 69 | **POWER SUPPLY** | Control system and panel | | | | | Remote control panel + Local emergency stop | | |
| 70 | **OTHER ACCESSORIES** | | | | | | | | |
| 71 | | | | | | | | | |
| 72 | **APPROVALS** | | | | | | CUL / CSA | | |
| 73 | **WATER CONSUMPTION** | Instantaneous flow for input to solution | | | L/h | | 15 500 | | 2 |
| 74 | | Pressure | | | Psig | | 75 | | |

**This page is intentionally left blank**

**Project name:** MELIADINE-BPC UPGRADE

**Project#:** 5000220043

**Document #:** SPK_0005_SKG_VWT

**by:** GM

**chkd:** ED

**appvd:** TS

# HYDRACARB

# GENERAL ARRANGEMENT DRAWING

**OIM manual section:** 4.2.5.2

Please refer to document #5000220043_GA_0005_SKG_VWT

**This page is intentionally left blank**

**Project name:** MELIADINE-BPC UPGRADE

**Project#:** 5000220043

**Document #:** SPK_0005_SKG_VWT

**by:** GM

**chkd:** ED

**appvd:** TS

# HYDRACARB

# FEEDER

**OIM manual section:** 4.2.5.3

**This page is intentionally left blank**

# CS-999-013 : Identification sheet

| | | | |
|---|---|---|---|
| VWTC PROJECT NUMBER: | 5000220043 | REV: | 1 |
| PROJECT NAME: | AEM MELIADINE - BPC UPGRADE | SUBMITTED TO (COMPANY): | AEM |
| ENGINEER: | EMMANUELLE DORMOY | SUBMITTED TO (RESPONSIBLE): | |
| PROJECT MANAGER: | THOMAS SAVARY / BRUCE BORDES | PROJECT NUM REFERENCE.: | 6526-S-265-605 / OC-989680 |
| PHONE NUMBER: | 514-334-7230 | LOT NUMBER: | |

| SUPPLIER | EQPT CODE | EQPT TAG NO | DIA | DESCRIPTION | INFO 1 | INFO 2 | INFO 3 | APPLIC. | NOTE | REV |
|---|---|---|---|---|---|---|---|---|---|---|
| WAM | ST-999-013 | 65CVI68002 | | ACTIVATED CARBON SCREW FEEDER | CARBON DOSING SYSTEM // MANUFACTURER: WAM // MODEL: MBF/073.A/TT/UD4.SST.UO2 // MTL: SS304 // FEEDING RATE: 233.1 LPH @ 42RPM | BLENDING TOOL // MOTOR BALDOR 575V/60Hz/0.75HP // INVERTER DUTY // CL2/DIV1/GRP F | FEEDING SCREW // MOTOR BALDOR 575V/60Hz/0.5HP // INVERTER DUTY // CL2/DIV1/GRP F | ACTIVATED CARBON PREPATION SYSTEM #1 | | 1 |
| WAM | ST-999-013 | 65CVI68003 | | ACTIVATED CARBON SCREW FEEDER | CARBON DOSING SYSTEM // MANUFACTURER: WAM // MODEL: MBF/073.A/TT/UD4.SST.UO2 // MTL: SS304 // FEEDING RATE: 233.1 LPH @ 42RPM | BLENDING TOOL // MOTOR BALDOR 575V/60Hz/0.75HP // INVERTER DUTY // CL2/DIV1/GRP F | FEEDING SCREW // MOTOR BALDOR 575V/60Hz/0.5HP // INVERTER DUTY // CL2/DIV1/GRP F | ACTIVATED CARBON PREPATION SYSTEM #2 | | 1 |

**This page is intentionally left blank**

EN

# MBF

## *MICRO-BATCH FEEDERS*

1

# TECHNICAL CATALOGUE

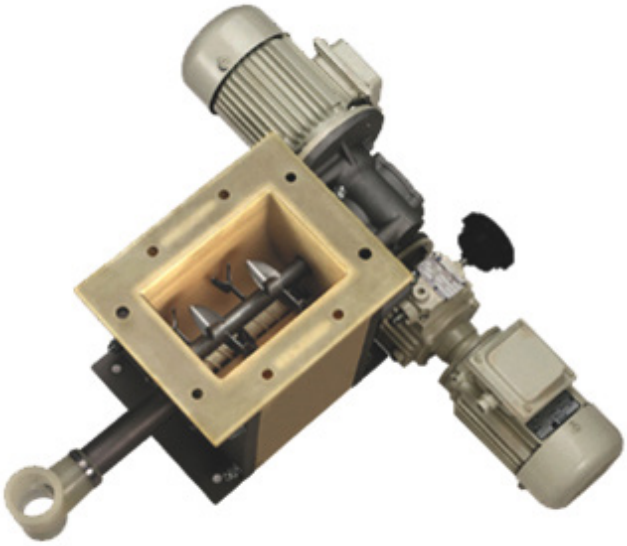

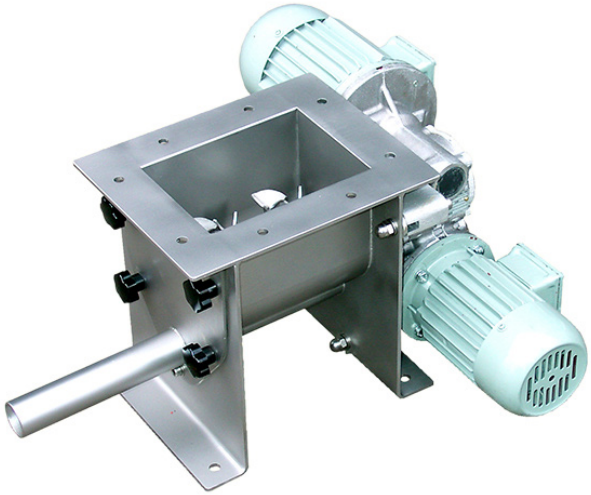


**Manual No. VAL.MBF.-.T.A2.0420.EN** **Issue: A2**
**Latest Update: April 2020**

**ORIGINAL INSTRUCTIONS IN ENGLISH**



**WAMGROUP S.p.A.**
Via Cavour, 338
41030 Ponte Motta
Cavezzo (MO) - ITALY

☎ + 39 / 0535 / 618111
**fax** + 39 / 0535 / 618226
**e-mail** info@wamgroup.com
**internet** www.wamgroup.com


WAMGROUP®

WAM®

All the products described in this catalogue are manufactured according to **WAMGROUP S.p.A. Quality System procedures**. The Company's Quality System, certified in July 1994 according to International Standards **UNI EN ISO 9002** and extended to the latest release of **UNI EN ISO 9001**, ensures that the entire production process, starting from the processing of the order to the technical service after delivery, is carried out in a controlled manner that guarantees the quality standard of the product.

**This publication cancels and replaces any previous edition and revision.**
**We reserve the right to implement modifications without notice.**
**This catalogue cannot be reproduced, even partially, without prior written consent by the Manufacturer.**

## SUMMARY

**1.0** DESCRIPTION AND TECHNICAL CHARACTERISTICS ..... 1
**2.0** APPLICATION ..... 15
**3.0** ACCESSORIES ..... 16
**4.0** OPERATION AND MAINTENANCE ..... 27
**5.0** INQUIRY AND ORDER FORM ..... 28
**6.0** ORDER CODES ..... 29

The MBF Micro-Batch Feeder for continuous volumetric feeding of powdery or granular materials consists of a steel-reinforced SINT engineering polymer body (optionally body entirely manufactured from stainless steel), a horizontally mounted rotating agitator tool, a feeder screw beneath the agitator tool, a feeder pipe enclosing the protruding feeder screw, one drive unit each for agitator and feeder screw.

Tests on product flow and material stress were carried out to establish optimum body geometry. Agitator and feeder tool geometry and materials were tested, too, before choosing an optimal steel and SINT engineering polymer composite.

On request, MBF series Micro-Batch Feeders are supplied in food-grade versions with both FDA and EN- approval.

MBF series Micro-Batch Feeders for powder and granular material feeding are particularly suitable for poorly flowing materials which tend to clog, along with adhesive materials.

Depending on the user's individual requirements and on material characteristics, MBF Micro-Batch Feeders can be supplied with alternative feeder screws and blending tools, with the addition of various accessories.

For more than four decades, MBF Micro-Batch Feeders have been successfully operating among others in the following industries: foods, building materials, plastics, chemicals, packaging, as well as in environmental technology.

*CODES*

| MBF | Micro batch feeder | Machine |
|---|---|---|
| MDXCR | Round cover | Accesories |
| MDXGS | Cutter grille for square hopper | |
| MDXSV/C | Vertical spout | |
| MDXTR | Round hopper | |
| MDXTS | Square hopper | |
| UTD | Metering screw | Components |
| UTO | Blending tool | |
| MBT | Seal | |
| MBTP | Extendend pipe | |
| MBPR | Linerfeeder pipe | |
| MBPI | STD inspection hatch | |
| MBPIP | Inspection hatch with extended tube | |

*SELECTION CRITERIA*

**CF** = [$dm^3$/ J] = theoretical capacity per hour at 1 RPM

**CE** = [$dm^3$/ h] = real capacity of MBF

**CR** = [$dm^3$/ h] requested capacity

**CT** = [$dm^3$/ h] theoretical capacity

**N** = [RPM] = metering screw speed.

**mvs** = material efficiency

Given:

- the characteristics of the material to be handled, the application and the feeding system into the microbatch feeder;
- CR (=capacity requested by customer), in order to choose correct MBF type proceed as follows:
- Check from material table mvs and all other important characteristics (e.g. metering screw type, accessories, others)
- Calculate real capacity CE of standard MBF (with fixed or variable speed as required by customer)

**CE** = **CT** x mvs
where for CT refer to page T.10.

If difference between CE and CT is too big (that is, if customer does not accept standard MBF) it is necessary to find correct MBF speed in order to obtain the requested capacity, using the following formula:

$$N = \frac{CR}{CF \times mvs}$$

Subsequently, select ratio nearest to specific requirements (see page T.11). In carrying out these calculations it has to be born in mind that mvs given in materials table is empirical. The real value depends on a number of factors which may be difficult to control, such as the condition of the material, atmospheric conditions, height of material column inside the hopper, speed of rotation etc.

For material efficiency mvs see pag. T10.

*DIMENSIONS*

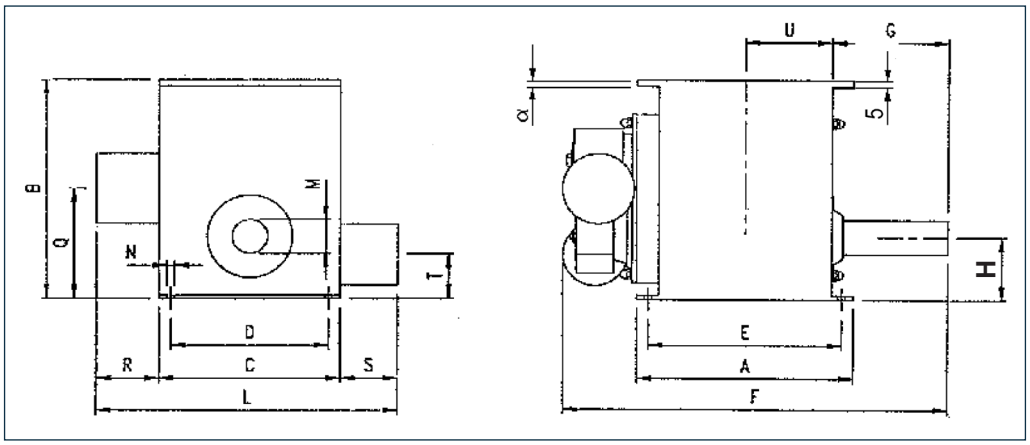


| MBF | A | B | C | D | E | F | G | H | L* | M | N | Q | R* | S** | T | U | α*** | dm³ | kg |
|---|---|---|---|---|---|---|---|---|---|---|---|---|---|---|---|---|---|---|---|
| **042** | 310 | 295 | 250 | 200 | 260 | 595 | 200 | 100 | 535 | 42 | 12.5 | 235 | 160 | 125 | 100 | 105 | 12 | 5 | 20 |
| **073** | 464 | 486 | 390 | 305 | 410 | 855 | 250 | 135 | 600 | 76 | 12.5 | 240 | 135 | 75 | 95 | 185 | 15 | 28 | 60 |
| **114** | 464 | 486 | 390 | 305 | 410 | 855 | 250 | 135 | 600 | 114 | 12.5 | 259 | 135 | 75 | 95 | 185 | 15 | 35 | 65 |

* Without variable speed reducer
** According to IEC - Standards
*** SINT version

**MBF 042**

TOP FLANGE

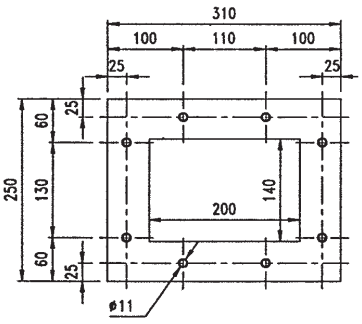


BOTTOM FLANGE

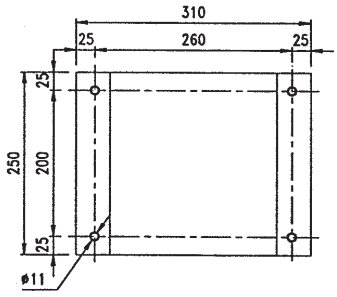


**MBF 073**

**MBF 114**

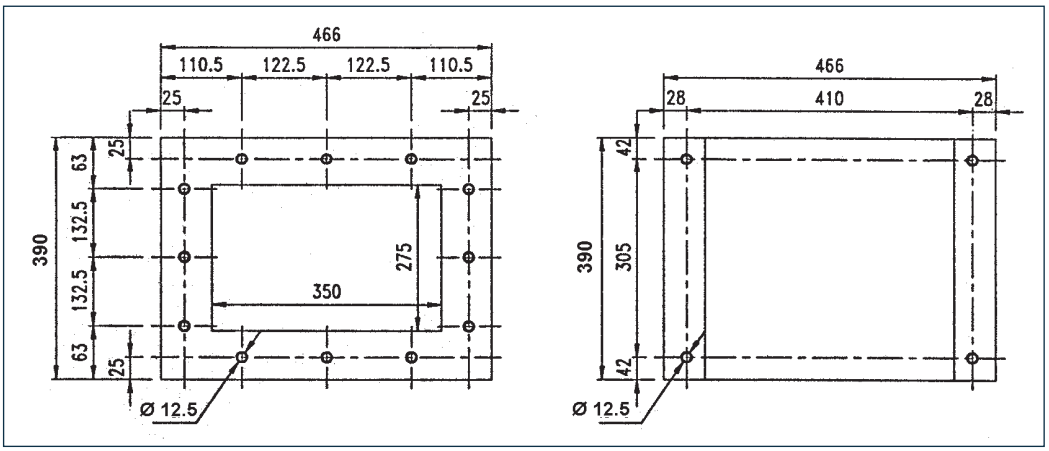

*MAIN COMPONENTS*

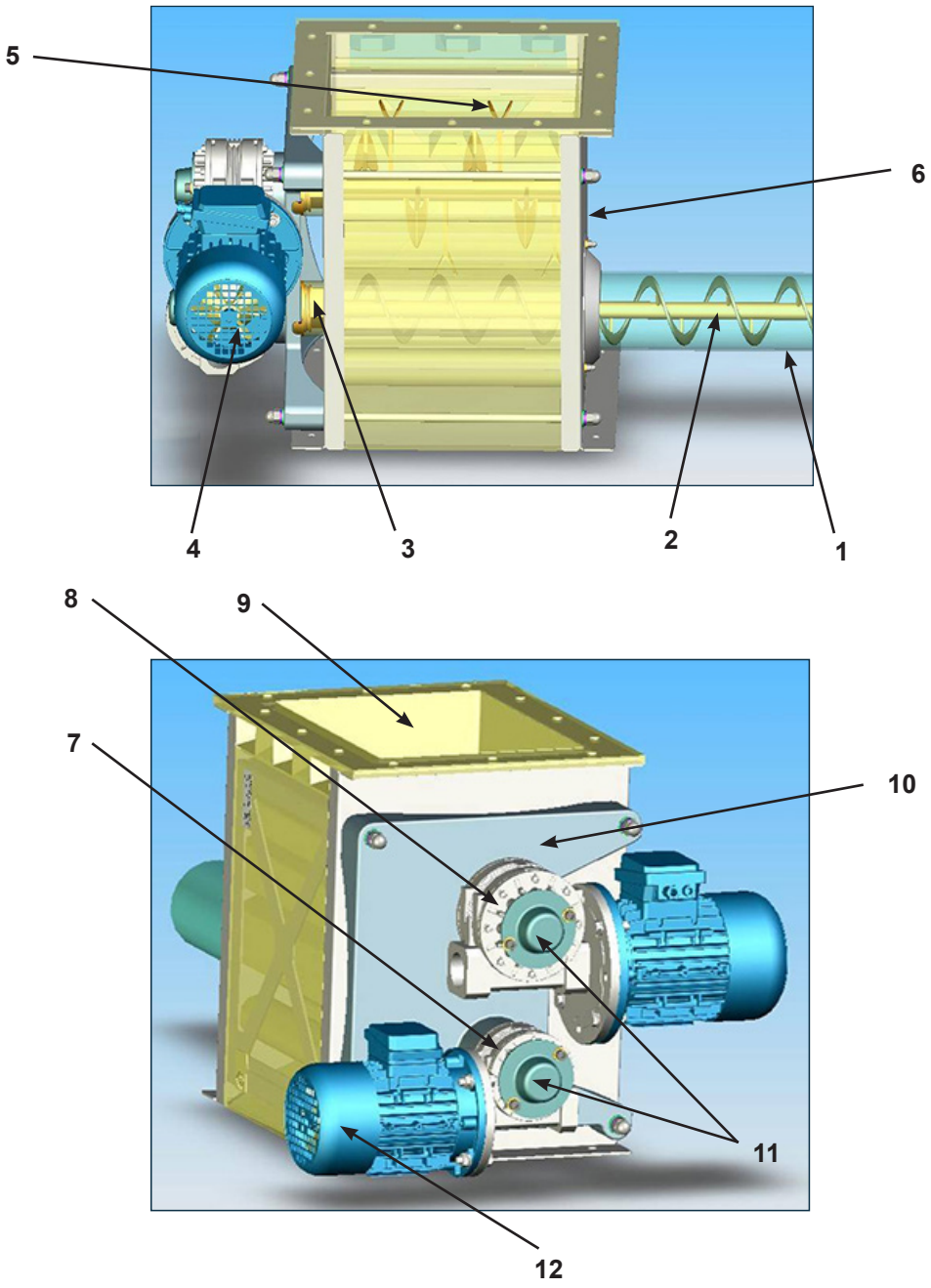


| | | | |
|---|---|---|---|
| **1** | Metering screw | **8** | Blending tool reducer |
| **2** | Blending tool | **9** | Drive support |
| **3** | Elastomer trough | **10** | Feeder pipe |
| **4** | End plate | **11** | Seals |
| **5** | Agitator motor | **12** | Reducer |
| **6** | Metering screw motor | **13** | Cover |
| **7** | Metering screw reducer | | |

**N.B.:** Item 4 in the stainless steel version, front panel can be opened for inspection.

The batch feeder must not be starded before the screw conveyor itself, as well as the plant it is going to be installed in, have been declared in conformity with the European Directive 14/06/1982 (89/392/EEC).

It is the plant designer's / plant fitter's responsability to design and install all necessary protection in order to avoid that breaking and / or yielding of the equipment or of parts of it might damage people and / or parts of the plant (e.g. adequate protection against falling down of the motor etc.).

For dangerous materials, i.e. those that must not get in contact with the human body or be inhaled, for flammable, explosive and bacteriologically dangerous materials the plant manufacturer or fitter must provide for the required safety devices and measures.

## *THEORETICAL STANDARD FEED RATES*

**TAB. 1**

| | MBF | | THEORETICAL STANDARD FEED RATES | | CT |
|---|---|---|---|---|---|
| | Metering screws | Hourly feed rate at 1 rpm | Fixed speed feed rate 93 rpm | Feed rate with variable speed 13 - 67 rpm | Capacity whit diff. variator 4 - 60 rpm |
| | Type | $dm^3$ / h | $dm^3$ / h | $dm^3$ / h | $dm^3$ / h |
| **042** | 1 - 4 - D - 2 - B<br>3<br>5<br>7 | 0.7<br>0.6<br>0.64<br>0.95 | 65<br>56<br>60<br>88 | 9 - 48<br>8 - 40<br>8 - 45<br>12 - 64 | |
| **073** | 1 - 2 - B<br>3<br>4 - 5 - D - E | 5.7<br>4.4<br>7.4 | 530<br>410<br>688 | 74 - 382<br>57 - 295<br>96 - 496 | 23 - 342<br>18 - 264<br>31 - 421 |
| **114** | 1 - 2 - B<br>3<br>4 - 5 - D- E | 26<br>13.6<br>29.7 | 2418<br>1265<br>2762 | 338 - 1742<br>177 - 911<br>386 - 1990 | 104 - 1560<br>55 - 816<br>130 - 1930 |

N.B.: The theoretical feed rate has to be multiplied by the efficient factor which depends on the type of feeder screw and on the material fed.

## *GENERAL EFFICIENCY COEFFICIENT MVS DEPENEDING ON FEEDER SCREW USED*

**TAB. 3**

| UTD. 12<br>UTD. 32 | UTD. 22<br>UTD. B2 | UTD. 42<br>UTD. D2 | UTD. 5<br>UTD. G<br>UTD. E |
|---|---|---|---|
| 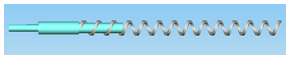 | 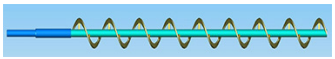 | 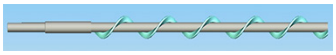 |  |
| **Efficiency: 1.1** | **Wirkungsgrad: 0.6** | **Coefficient: 0.75** | **Efficienza: 0.7** |

The theoretical feeds rate (pag.T.11)has to be multiplied by the efficient factor which depends on the type of feeder screw fed.

**NOTE:** The efficiency factor can vary due to grain size, bulk density, degree of humidity and all the other material properties that have an influence on handling the material.

*THEORETICAL CAPACITIES SPC*

**TAB. 2**

| | | MBF | | THEORETICAL FEED RATES | | | CT |
|---|---|---|---|---|---|---|---|
| | Metering screws | Hourly feed rate at 1 rpm | Gear ratios | Fixed speed feed rate | Feed rate with variable speed | | Capacity with diff. variator |
| | Type | dm³ / h | 1 / .. | dm³ / h | dm³ / h MIN | dm³ / h MAX | dm³ / h |
| 42 | 1-2-4-B-D | 0.70 | 10<br>15<br>28<br>40(std) | 98<br>65<br>35<br>24 | 14<br>9<br>5<br>3 | 70<br>47<br>25<br>17 | |
| | 3 | 0.6 | 10<br>15<br>28<br>40 (std) | 82<br>55<br>29<br>20 | 11<br>8<br>4<br>3 | 59<br>39<br>21<br>15 | |
| | 5-E | 0.64 | 10<br>15<br>28<br>40(std) | 90<br>60<br>32<br>22 | 12<br>8<br>4<br>3 | 64<br>43<br>23<br>16 | |
| | 7-G | 0.95 | 10<br>15<br>28<br>40 (std) | 133<br>89<br>48<br>33 | 19<br>12<br>7<br>5 | 95<br>63<br>34<br>24 | |
| 73 | 1-2-B | 5.7 | 10<br>15<br>20<br>28<br>40 (std)<br>70 | 798<br>532<br>399<br>285<br>199<br>114 | 111<br>74<br>56<br>40<br>28<br>16 | 570<br>380<br>285<br>203<br>142<br>81 | 33-513<br>22-342<br>17-256<br>12-183<br>8-128<br>5-73 |
| | 3 | 4.4 | 10<br>15<br>20<br>28<br>40 (std)<br>70 | 616<br>411<br>308<br>220<br>154<br>88 | 86<br>57<br>43<br>31<br>21<br>12 | 440<br>293<br>220<br>157<br>110<br>63 | 26-396<br>17-264<br>13-198<br>9-141<br>6-99<br>4-57 |
| | 4-5-D-E | 7.4 | 10<br>15<br>20<br>28<br>40(std)<br>70 | 1,036<br>691<br>518<br>370<br>259<br>148 | 144<br>96<br>72<br>52<br>36<br>21 | 740<br>493<br>370<br>264<br>185<br>106 | 43-66<br>29-444<br>21-333<br>15-238<br>11-167<br>6-95 |
| 114 | 1-2-B | 26 | 10<br>15<br>20<br>28<br>40 (std)<br>70 | 3,640<br>2,427<br>1,820<br>1,300<br>910<br>520 | 507<br>338<br>254<br>181<br>127<br>72 | 2,600<br>1,733<br>1,300<br>929<br>650<br>371 | 151-2,340<br>101-1,560<br>75-1,170<br>54-836<br>38-585<br>22-334 |
| | 3 | 13.6 | 10<br>15<br>20<br>28<br>40 (std)<br>70 | 1,904<br>1,269<br>952<br>680<br>476<br>272 | 265<br>177<br>133<br>95<br>66<br>38 | 1,360<br>907<br>680<br>486<br>340<br>194 | 79-1,224<br>53-816<br>39-612<br>28-437<br>20-306<br>11-175 |
| | 4-5-D-E | 29.7 | 10<br>15<br>20<br>28<br>40 (std)<br>70 | 4,158<br>2,772<br>2,079<br>1,485<br>1,040<br>594 | 579<br>386<br>290<br>207<br>145<br>83 | 2,970<br>1,980<br>1,485<br>1,061<br>743<br>424 | 172-2,673<br>115-1,782<br>86-1,337<br>62-955<br>43-668<br>25-382 |

**N.B.:** The theoretical feed rate has to be multiplied by the efficient factor which depends on the type of feeder screw and on the material fed. (See tab. 3 pag. T.10)

## *FIXED SPEED DRIVES*

| | | | | | |
|---|---|---|---|---|---|
| **MBF 042** | **METERING SCREW** | | | | |
| | **RPM** | **STANDARD** | **SPECIAL** | | |
| | | 93 | 140 | 50 | 35 |
| | Ratio | 1:15 | 1:10 | 1:28 | 1:40 |
| | Gear red. | RW BB ØØ | RW AA ØØ | RW DA ØØ | RW EA ØØ |
| | Motors | **0.12 kW 4P 50 Hz 63A B5 (std)** (0.18 kW/0.25 kW 4P 50 Hz 63b/63c B5) | | | |
| | **BLENDING TOOL** | | | | |
| | **RPM** | 35 | | | |
| | Ratio | 1:40 | | | |
| | Motors | **0.25 kW 4P 50 Hz 71A B5 (std)** (0.37 kW 4P 50 Hz 71B B5) | | | |

| | | | | | | | |
|---|---|---|---|---|---|---|---|
| **MBF 073 114** | **METERING SCREW** | | | | | | |
| | **RPM** | **STANDARD** | **SPECIAL** | | | | |
| | | 93 | 140 | 70 | 50 | 35 | 20 |
| | Ratio | 1:15 | 1:10 | 1:20 | 1:28 | 1:40 | 1:70 |
| | Gear red. | B5 PAM 71 Ø Flange = 160 mm Ø M* = 14 mm Ø U* = 24 mm | | | | | |
| | Motors | **0.25 kW 4P 50 Hz 71A B5 (std)** (0.37 kW 4P 50 Hz 71B B5) | | | | | |
| | **BLENDING TOOL** | | | | | | |
| | **RPM** | **STANDARD** | **SPECIAL** | | | | |
| | | 35 | 14 | | | | |
| | Ratio | 1:40 | 1:100 | | | | |
| | Gearbox | B5bi PAM 80 Ø Flange = 200 mm Ø M* = 19 mm Ø U* = 25 mm | | | | | |
| | Motors | **0.55 kW 4P 50 Hz 80A B5 (std)** (0.75 kW 4P 50 Hz 80B B5) | | | | | |

* **ØM** = Ø Electric motor shaft
* **ØU** = Ø Screw shaft

## *VARIABLE SPEED DRIVES*

| | | | | | |
|---|---|---|---|---|---|
| **MBF 042** | **METERING SCREW** | | | | |
| | **RPM** | **STANDARD** | **SPECIAL** | | |
| | | 93 | 140 | 50 | 35 |
| | Ratio | 1:15 | 1:10 | 1:28 | 1:40 |
| | Gear red. | RW NB ØØ | RW MA ØØ | RW QA ØØ | RW RA ØØ |
| | Variator | B5/B5 PAM 63/63 n° 190-910 rpm Ø Flange 140/140 mm Ø M* = 11 mm Ø U* = 11 mm | | | |
| | Motors | **0.12 kW 4P 50 Hz 63C B5 (std)**<br>**(0.18 kW/0.25 kW 4P 50 Hz 63b/63c B5)** | | | |
| | **BLENDING TOOL** | | | | |
| | **RPM** | 35 | | | |
| | Ratio | 1:40 | | | |
| | Motors | **0.25 kW 4P 50 Hz 71A B5 (std)**<br>(0.37 kW 4P 50 Hz 71B B5) | | | |

**N.B.:** The motors provided on the speed variator are special and can therefore be 0.22-0.25 kW, depending on the supplier.

| | | | | | | | |
|---|---|---|---|---|---|---|---|
| **MBF 073 114** | **METERING SCREW** | | | | | | |
| | **RPM** | **STANDARD** | **SPECIAL** | | | | |
| | | 93 | 140 | 70 | 50 | 35 | 20 |
| | Ratio | 1:15 | 1:10 | 1:20 | 1:28 | 1:40 | 1:70 |
| | Gear red. | B5/B5 PAM 71 Ø Flange = 160 mm Ø M* = 14 mm Ø U* = 24 mm | | | | | |
| | Variator | B5/B5 PAM 71/71 n° 190-1000 rpm Ø Flange 160/160 mm Ø M* =14 mm Ø U* =14 mm | | | | | |
| | Different | B5/B5 PAM 71/71 n° 0-1000 rpm Ø Flange 160/160 mm Ø M* =14 mm Ø U* =14 mm | | | | | |
| | Motors | **0.25 kW 4P 50 Hz 71A B5 (std)**<br>(0.37 kW 4P 50 Hz 71B B5) | | | | | |
| | **BLENDING TOOL** | | | | | | |
| | **RPM** | **STANDARD** | **SPECIAL** | | | | |
| | | 35 | 14 | | | | |
| | Ratio | 1:40 | 1:100 | | | | |
| | Gear red. | B5bi PAM 80 Ø Flange = 200 mm Ø M* = 19 mm Ø U* = 25 mm | | | | | |
| | Motors | **0.55 kW 4P 50 Hz 80A B5 (std)**<br>(0.75 kW 4P 50 Hz 80B B5) | | | | | |

* **ØM** = Ø Electric motor shaft
* **ØU** = Ø Screw shaft

## *FINISHING*

| | |
|---|---|
| End plate | **St. St. 304** |
| Drive support | **ALUMINIUM** |
| Reducer | **ALUMINIUM** |
| Speed variator | **RAL 5010** |
| Motor | **RAL 7001** |

*STD BLENDING TOOLS*

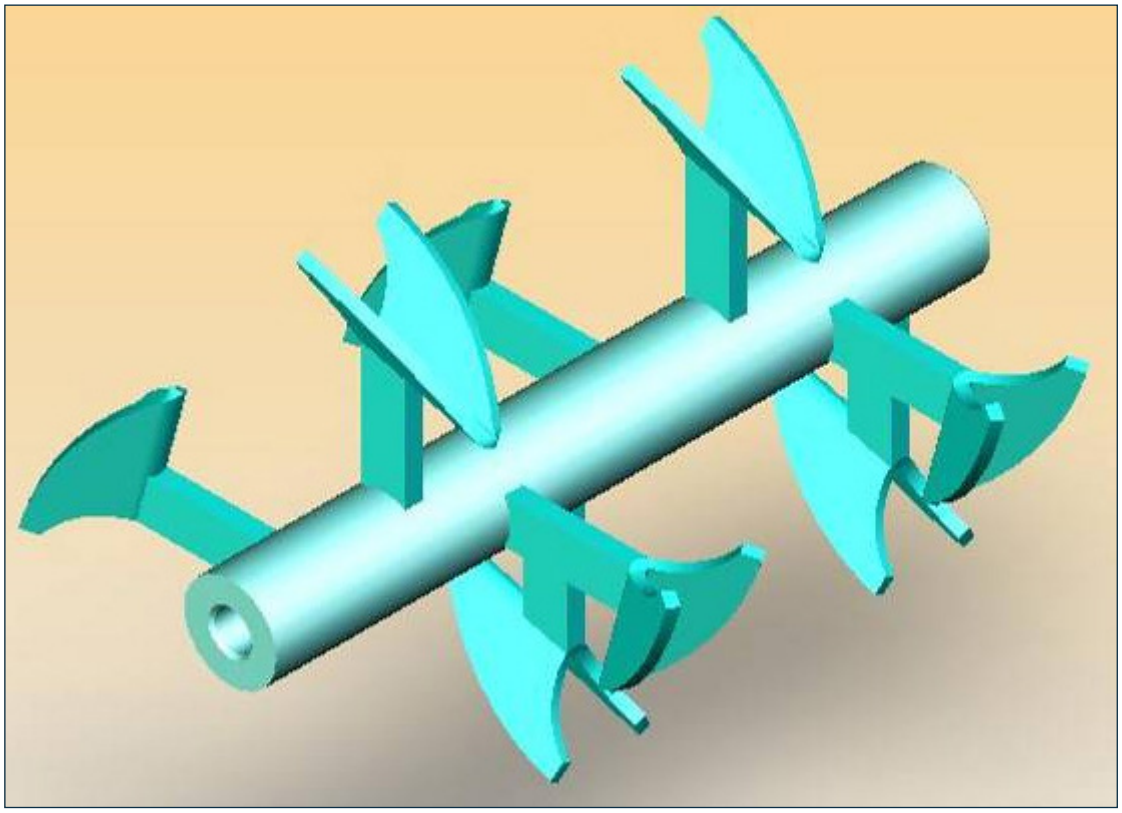

**TYPE 2**

| MBF | Code | A | B | C | D | E | kg |
|---|---|---|---|---|---|---|---|
| **042** | **UTO 22** | 130 | 199 | 25 | 25 | M 12 | 1 |
| **073** | **UTO 23** | 269 | 349 | 35 | 35 | M 16 | 3.5 |
| **114** | **UTO 24** | 269 | 349 | 35 | 35 | M 16 | 3.5 |

*STANDARDS SEALS*




**SINT®ER**

| MBF | Code | A | B |
|---|---|---|---|
| **042** | **MBT N2** | 54 | 60 |
| **073** | **MBT N3** | 57 | 80 |
| **114** | **MBT N4** | 57 | 80 |

*SPECIAL METERING SCREWS*

| | | 42 | | 73 | | 114 | |
|---|---|---|---|---|---|---|---|
| | | STD | EXTEND-ED | STD | EX-TENDED | STD | EXTEND-ED |
| 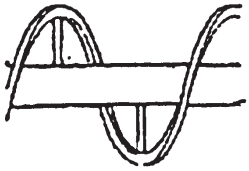 | **UTD. 2 TYPE 2**<br>**RIBBON SPIRAL ON PIPE**<br>Heavy sticky materials, heavy oxides, clay | | | | | | |
|  | **UTD. 3 TYPE 3**<br>**ROUND SECTION SPIRAL WITHOUT CENTRE PIPE**<br>Light materials, granular products, pellets, PVC, polymers in pellets. | | | | | | |
| 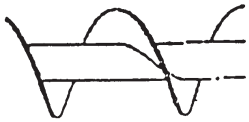 | **UTD. 4 TYPE 4**<br>**STANDARD SCREW**<br>Heavy fluid materials metallic granules. | | | | | | |
|  | **UTD. 5 TYPE 5**<br>**HELICOID SCREW ON TAPERED PIPE MADE FROM SINT®ER OR SINT®AL**<br>Whenever even metering on the entire surface along with mixing of materials with different particle size, bulk density and/or fluency is required. | | | | | | |

*SPECIAL SHAFT SEAL*







| MBF | Code | A | B | kg |
|---|---|---|---|---|
| **042** | **MBTX2** | 54 | 60 | 0.35 |
| **073** | **MBTX3** | 57 | 80 | 0.5 |
| **114** | **MBTX4** | 57 | 80 | 0.5 |

*SPECIAL SHAFT SEAL WITH GREASING*




| MBF | Code | A | B | kg |
|---|---|---|---|---|
| **042** | MBTT2 | 54 | 60 | 0.35 |
| **073** | MBTT3 | 57 | 80 | 0.5 |
| **114** | MBTT4 | 57 | 80 | 0.5 |

N.B. : The MBTT seal is standard with stainless steel version only

MBF micro-batch feeders are used in gravimetric and volumetric dosing plants for powders and granular materials of various kinds. The body is made of WAM®'s engineering polymers SINT®, SINT®AL for food application or AISI 304L/316L, while all other feeder parts including nuts and bolts are made of staimless steel 304.

On request micro-batch feeders are supplied in a food-grade version.

Unless otherwise specified, all the dimensions are given in millimetres.

*FINISHING*

| | SINT | ST STEEL |
|---|---|---|
| End plate | **AISI 304L** | |
| Drive support | **ALUMINIUM** | |
| Reducer | **ALUMINIUM** | |
| Speed variator | **RAL 5010 or ALUMINIUM** | |
| Motor | **RAL7001** | |

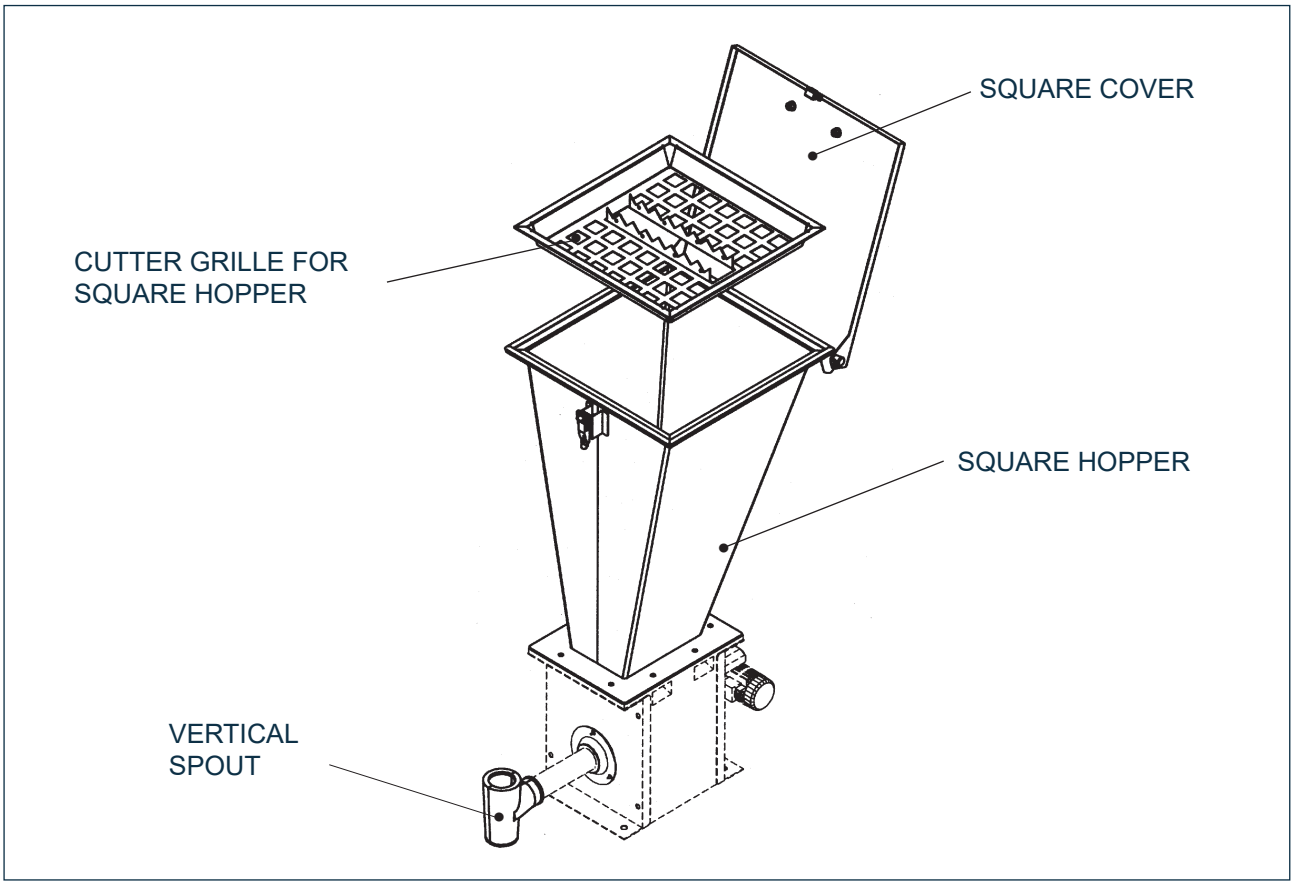
SQUARE COVER
CUTTER GRILLE FOR
SQUARE HOPPER
SQUARE HOPPER
VERTICAL
SPOUT

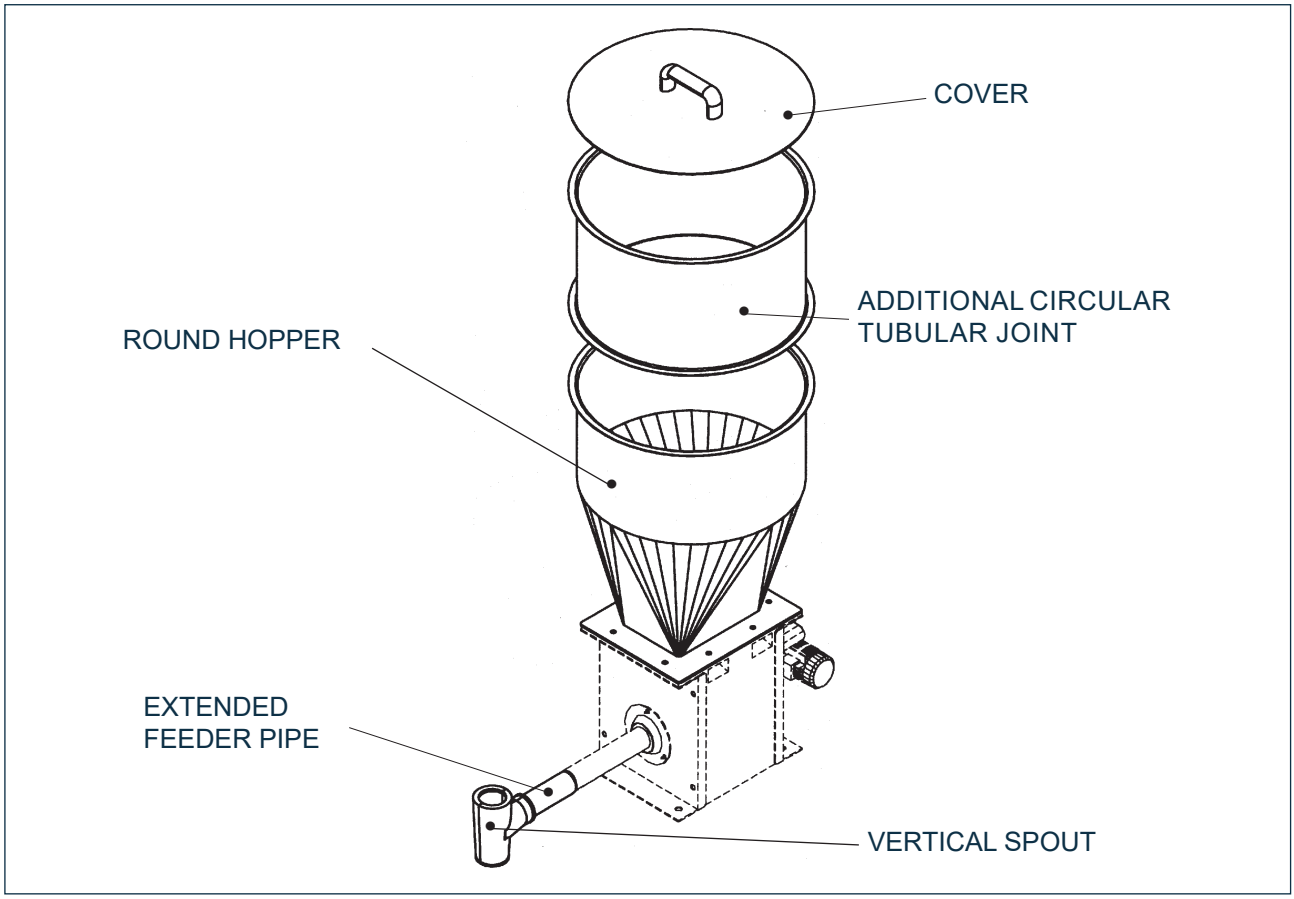
COVER
ADDITIONAL CIRCULAR
TUBULAR JOINT
ROUND HOPPER
EXTENDED
FEEDER PIPE
VERTICAL SPOUT

## *SQUARE HOPPER*

| M | D | X | T | S | 1 | 2 |
|---|---|---|---|---|---|---|

**2:** Stainless steel 304

Type hopper

| | |
|---|---|
| **1** | MBF 042 |
| **2** | MBF 073 -114 |

Square hopper

Micro batch feeder accessories

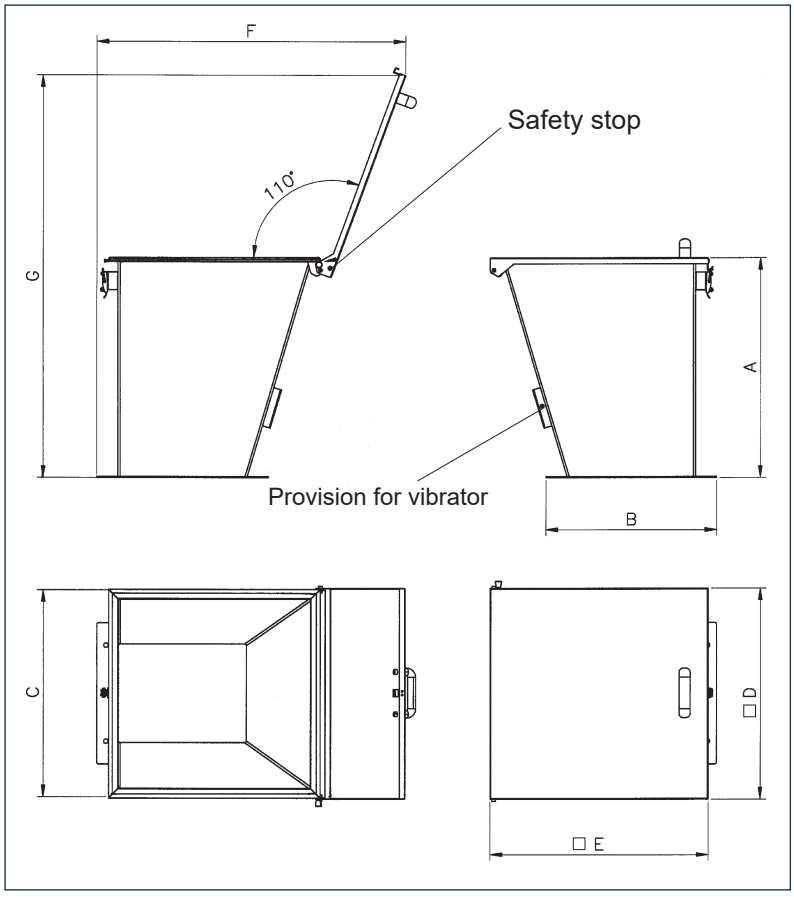


| MDXTS | Suitable for MBF | A | B | C | □ D | □ E | F | G | dm³ | kg |
|---|---|---|---|---|---|---|---|---|---|---|
| **12** | 042 | 600 | 310 | 428 | 434 | 445 | 640 | 980 | 46 | 12 |
| **22** | 073 - 114 | 600 | 466 | 575 | 582 | 595 | 840 | 1120 | 105 | 19 |

## *ROUND HOPPER*

| M | D | X | T | R | 1 | 2 |
|---|---|---|---|---|---|---|

**2:** Stainless steel 304

Type hopper

| | |
|---|---|
| **1** | MBF 042 |
| **2** | MBF 073 -114 |

Round hopper

Micro batch feeder accessories

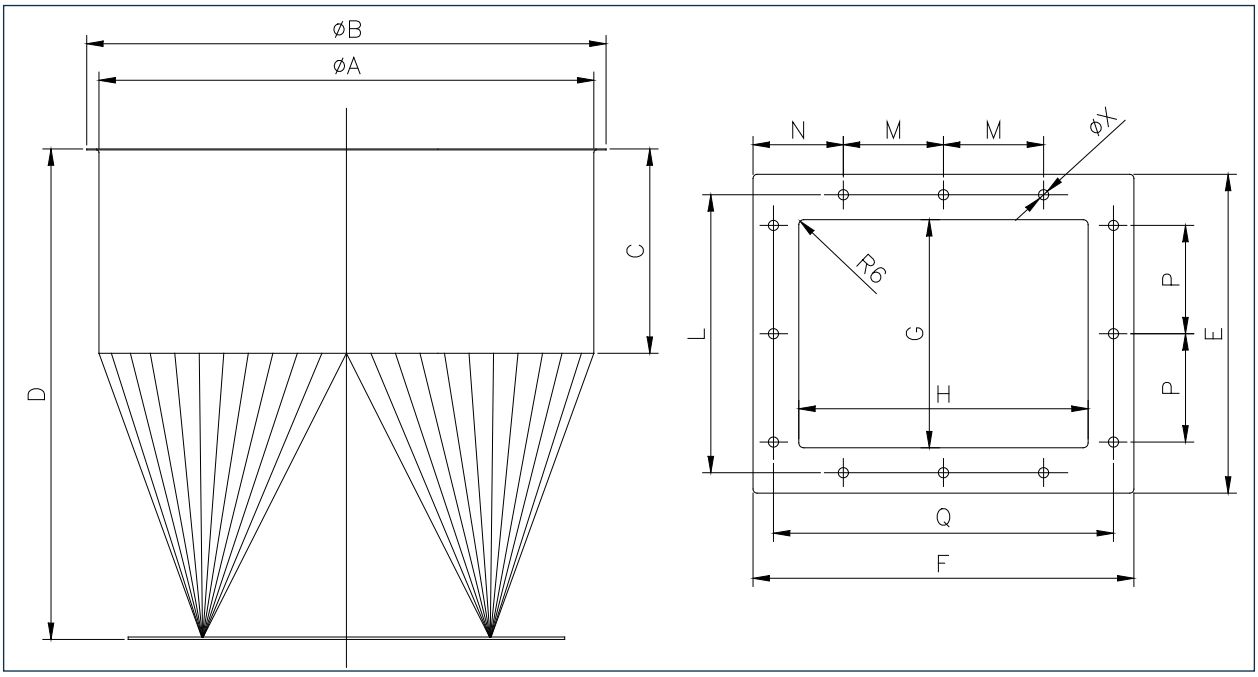


| MDXTR | Suitable for MBF | Ø A | Ø B | C | D | E | F | G | H | L | M | N | P | Q | Holes X | | dm³ | kg |
|---|---|---|---|---|---|---|---|---|---|---|---|---|---|---|---|---|---|---|
| | | | | | | | | | | | | | | | Ø | n° | | |
| **12** | 042 | 408 | 436 | 200 | 500 | 250 | 310 | 140 | 200 | 200 | 110 | 100 | 130 | 260 | 9 | 8 | 52 | 12 |
| **22** | 073 - 114 | 630 | 636 | 250 | 600 | 390 | 466 | 279 | 354 | 340 | 122.5 | 110.5 | 132.5 | 416 | 12.5 | 12 | 120 | 20 |

## *ADDITIONAL CIRCULAR TUBULAR JOINT*

| M | D | X | A | R | 1 | 2 |
|---|---|---|---|---|---|---|

**2:** Stainless steel 304

Type hopper

| | |
|---|---|
| **1** | MBF 042 |
| **2** | MBF 073 -114 |

Additional circular tubular joint

Micro batch feeder accessories

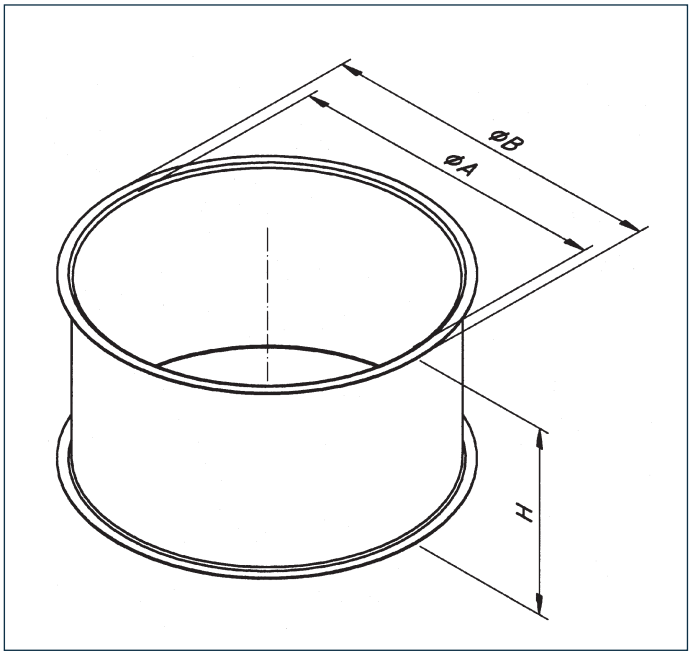


| MDXAR | Suitable for MBF | Ø A | Ø B | H | dm³ |
|---|---|---|---|---|---|
| 12 | 042 | 406 | 436 | 200 | 25 |
| 22 | 073-114 | 605 | 635 | 180 | 50 |

## *CUTTER GRILLE FOR SQUARE HOPPER*

| M | D | X | G | S | 1 | 2 |
|---|---|---|---|---|---|---|

**2:** Stainless steel 304

Type hopper

| | |
|---|---|
| **1** | MBF 042 |
| **2** | MBF 073 -114 |

Type hopper cutter grille

Micro batch feeder accessories

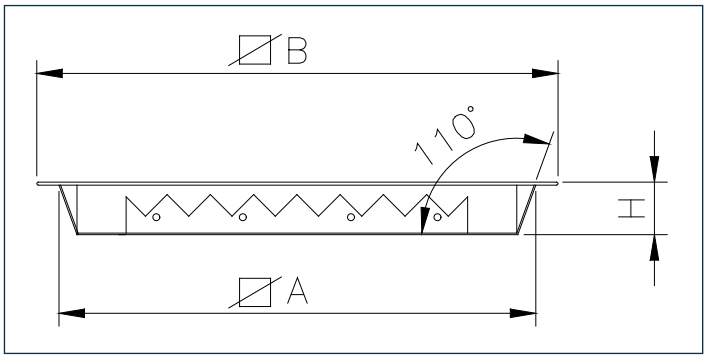


| MDXGS | Suitable for MBF | □ A | □ B | H | kg |
|---|---|---|---|---|---|
| **12** | 042 | 345 | 410 | 40 | 2 |
| **22** | 073 - 114 | 495 | 555 | 40 | 3 |

**FLANGES**

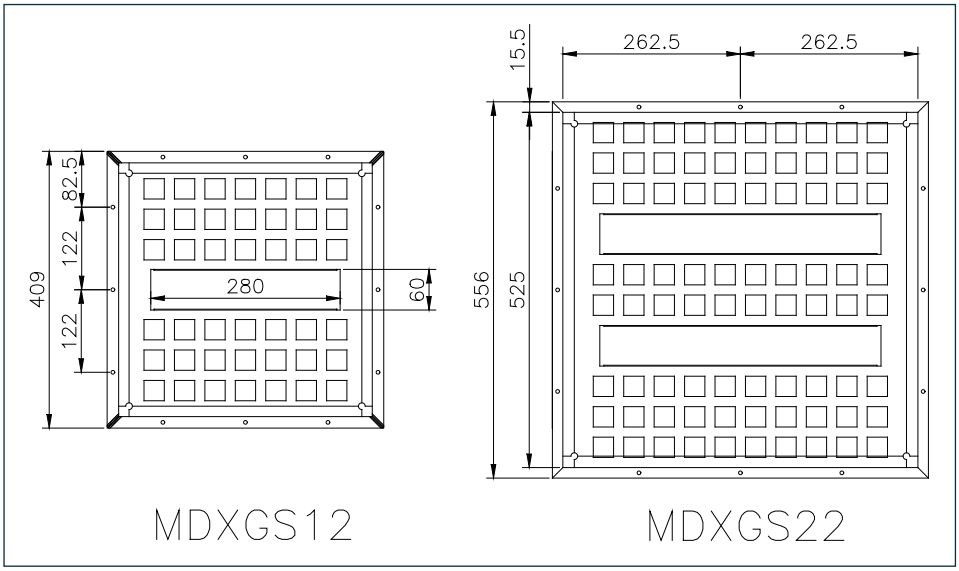

*ROUND COVER*

| M | D | X | C | R | 1 | 2 |
|---|---|---|---|---|---|---|

**2:** Stainless steel 304

Type hopper

| | |
|---|---|
| **1** | MBF 042 |
| **2** | MBF 073 -114 |

Round cover

Micro- batch fedeer accessories

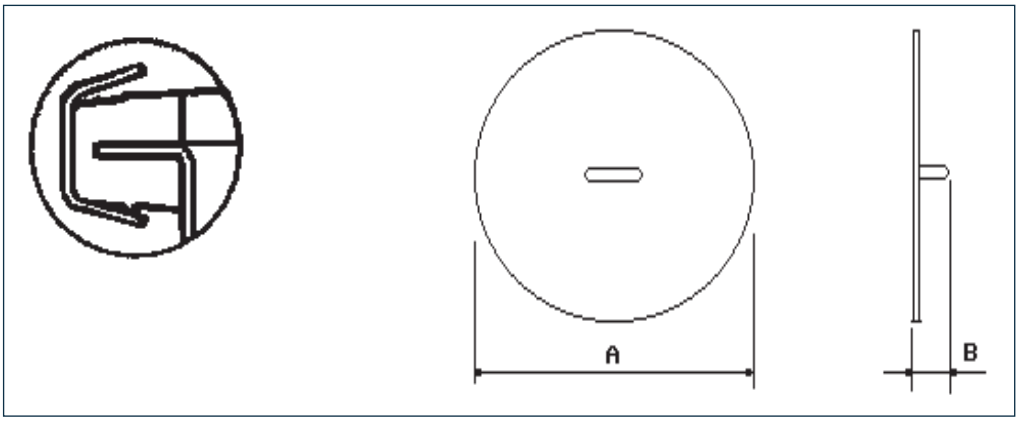


| MDXCR | Suitable for MBF | A | B | kg |
|---|---|---|---|---|
| **12** | 042 | 436 | 50 | 2 |
| **22** | 073 - 114 | 635 | 50 | 3 |

*PNEUMATIC BALL VIBRATORS*



## Dimensions

| Type | A | | B | | C | | D | | E | | F | | G | | H | kg | |
|---|---|---|---|---|---|---|---|---|---|---|---|---|---|---|---|---|---|
| | mm | in | mm | in | mm | in | mm | in | mm | in | mm | in | mm | in | | kg | lbs |
| MDS 20 | 80 | 3.15 | 128 | 5.04 | 33 | 1.30 | 104 | 4.09 | 60 | 2.36 | 16 | 0.63 | 9 | 0.35 | 1/4¨ | 0.53 | 1.17 |
| MDS 25 | | | | | 38 | 1.50 | | | | | | | | | | 0.63 | 1.39 |

## Performance data

| Type | Vibrations min | | | Fc max. kg | | | | | | Air consumption l/min | | | | | |
|---|---|---|---|---|---|---|---|---|---|---|---|---|---|---|---|
| | 2 bar 29 psi | 4 bar 58 psi | 6 bar 87 psi | 2 bar = 29 psi | | 4 bar = 58 psi | | 6 bar = 87 psi | | 2 bar = 29 psi | | 4 bar = 58 psi | | 62 bar = 87psi | |
| | | | | kg | lbs | kg | lbs | kg | lbs | $dm^3$ | cf | $dm^3$ | cf | $dm^3$ | cf |
| MDS 20 | 10.500 | 14.500 | 16.500 | 72 | 162 | 122 | 275 | 172 | 387 | 130 | 4.6 | 230 | 81 | 340 | 12.0 |
| MDS 25 | 9.200 | 12.200 | 14.000 | 93 | 209 | 157 | 353 | 205 | 461 | 160 | 5.6 | 290 | 10.2 | 425 | 15.0 |

*ELECTRIC EXTERNAL MOTOVIBRATORS*



| Type | Max. power W | | Max. current A | | RPM | | Centrifugal force kg | | Weight |
|---|---|---|---|---|---|---|---|---|---|
| | 50 Hz | 60 Hz | 220 V 50 Hz | 115 V 60 Hz | 50 Hz | 60 Hz | 50 Hz | 60 Hz | kg |
| **MVE 20** | 32 | 36 | 0.10 | 0.23 | 2750 | 3300 | 0-22 | 0-32 | 1.5 |

## TECNICAL FEATURES

- Adjustable Centrifugal Force
- Protection IP 65
- Insulation Class “F”
- Continuous Duty

*SPECIAL BLENDING TOOLS*

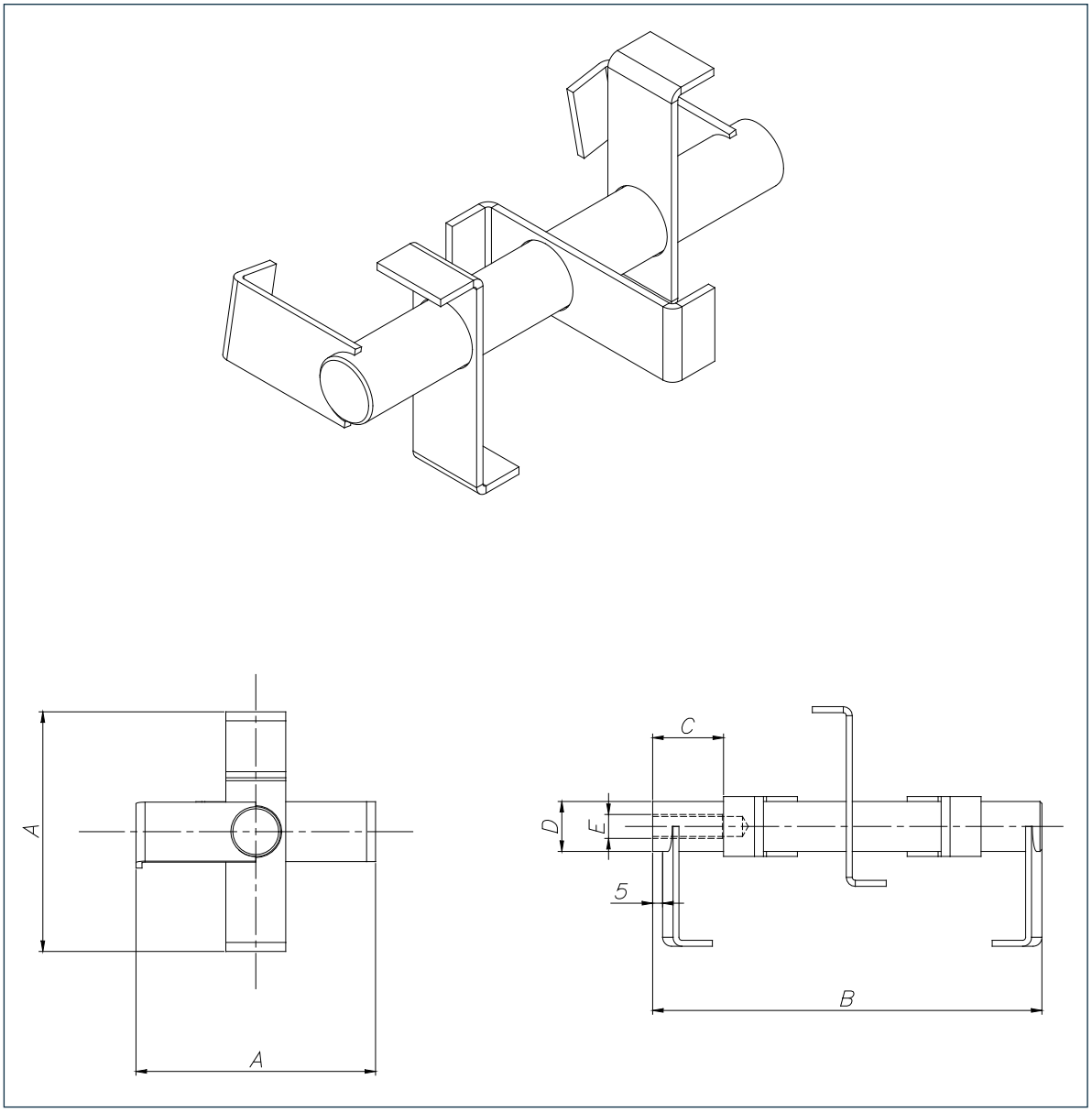


**TYPE1**

| MBF | Code | A | B | D | E | kg |
|---|---|---|---|---|---|---|
| **042** | **UTO 12** | 130 | 199 | 25 | M 12 | 1 |
| **073** | **UTO 13** | 260 | 349 | 35 | M 16 | 3.5 |
| **114** | **UTO 13** | 260 | 349 | 35 | M 16 | 3.5 |

## *VERTICAL SPOUT*

| M | D | X | S | V | 2 | 4 |
|---|---|---|---|---|---|---|

**4:** SINT®ER
**5:** SINT®AL

2 = MBF 042
3 = MBF 073
4 = MBF 114

Vertical spout

Micro-batch fedeer accessories

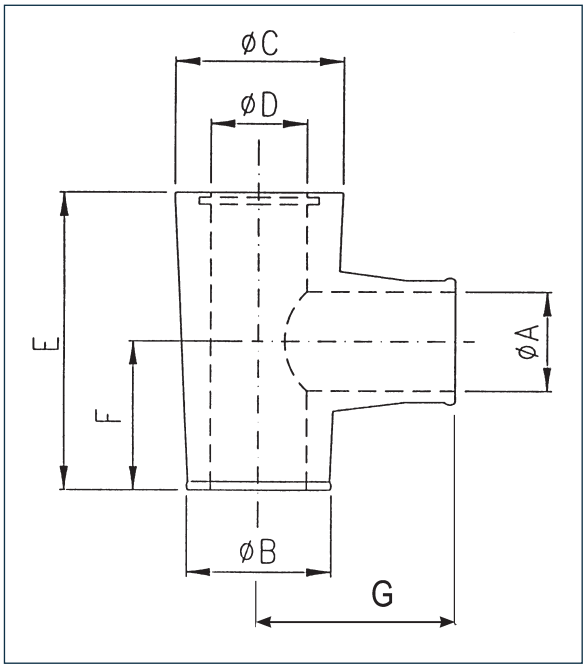


| MDXSV | Suitable for MBF | Ø A | Ø B | Ø C | Ø D | E | F | G | kg |
|---|---|---|---|---|---|---|---|---|---|
| **2.** | 042 | 42 | 60 | 70 | 50 | 126 | 63 | 81 | 0.27 |
| **3.** | 073 | 75 | 121 | 130 | 100 | 187.5 | 95 | 143.5 | 1.3 |
| **4.** | 114 | 114 | 175 | 190 | 150 | 230 | 115 | 191 | 3 |

| | |
|---|---|
| 4 | SINT®ER |
| 5 | SINT®AL |

## *VERTICAL SPOUT WITH PNEUMATIC CLOSURE*

| M | D | X | S | C | 2 | 4 |
|---|---|---|---|---|---|---|

**4:** SINT®ER
**5:** SINT®AL

2 = MBF 042
3 = MBF 073
4 = MBF 114

Vertical spout with pneumatic cover

Micro-batch fedeer accessories

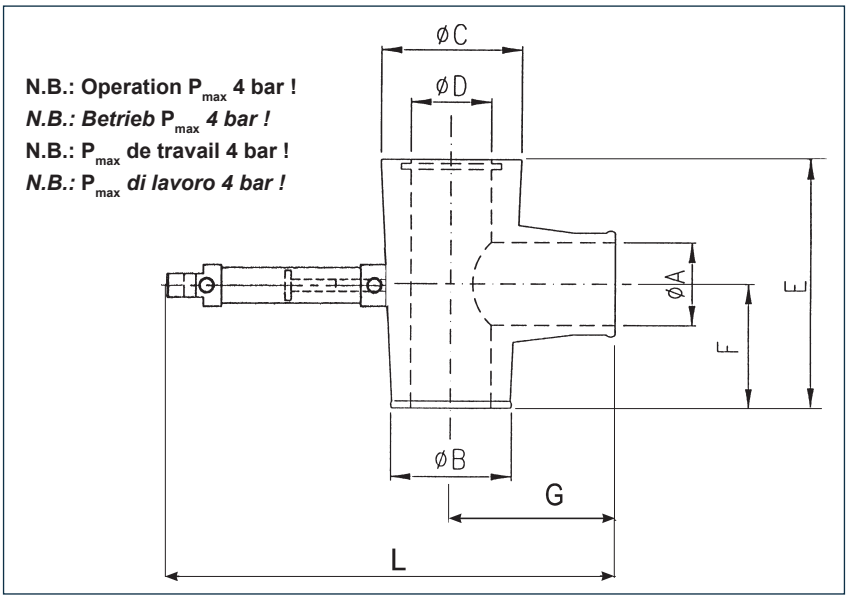


The solenoid valve (V5V80) and the coil (BOB) for the cylinder management are not included in the supply; they have to be ordered separately.

| MDXSC | Suitable for MBF | Ø A | Ø B | Ø C | Ø D | E | F | G | L | kg |
|---|---|---|---|---|---|---|---|---|---|---|
| **2.** | 042 | 42 | 60 | 70 | 50 | 126 | 63 | 81 | 214.5 | 0.5 |
| **3.** | 073 | 75 | 121 | 130 | 100 | 187.5 | 95 | 143.5 | 353.5 | 2.8 |
| **4.** | 114 | 114 | 175 | 190 | 150 | 230 | 115 | 191 | 472 | 4.5 |

| | |
|---|---|
| 4 | SINT®ER |
| 5 | SINT®AL |

Note: Microcylinder ISO 6432

## *MAGENTIC SENSOR KIT FOR MICRO-CYLINDER*

| KXM | Suitable for MBF |
|---|---|
| 16 | MDXSC2 |
| 20 | MDXSC3 |
| 25 | MDXSC4 |

*AUTOMATIC LUBRICATOR*
*CARTRIDGE GREASE NIPPLE LIT*

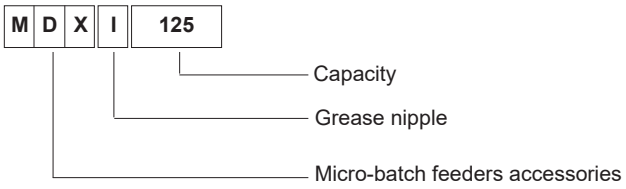


| TECHNICAL SPECIFICATIONS | |
|---|---|
| **Capacity** | 125 ml |
| **Operating period** | Adjustable at 1-12 months |
| **Operating temperature** | -20°C a + 55°C° |
| **Max. operating pressure** | 5 bar** |
| **Activation mechanism** | Hydrogen gas release battery (H2) |
| **Threading** | G 1/4 |
| **Recommended storage temperature** | +20°C |
| **Storage period** | 2 years*** |
| **Weight** | Approx. 190g (including grease) |
| **Appellative** | LAGD 125/WA (filled with SKF LGWA 2 grease) LAGD 125/"lubricant" |

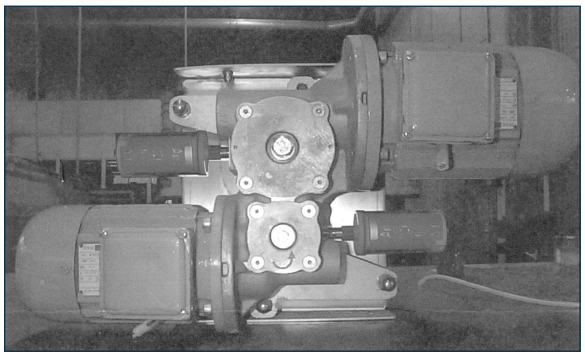

**Fig.1 -** SKF assembly on Batch feeder

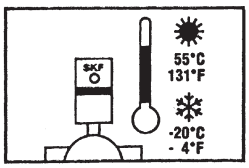


Operatin temperature

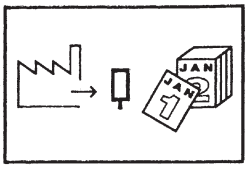


Production date



**MATERIAL TO DOSE**
**PHYSICAL AND CHEMICAL CHARACTERISTICS**

☐☐ ☐☐ DENSITY
☐☐☐☐ GRANULOMETRY
☐ FLUIDITY
☐ ABRASIVITY
☐ BUILDS UP AND HARDENS
☐ STATIC ELECTRICITY GENERATOR
☐ DECOMPOSITION - DAMAGING
☐ FLAMMABILITY
☐ PLASTICITY - TENDENCY TO SOFTEN
☐ DUSTINESS
☐ AIRATED - FLUIDITY
☐ EXPLOSIVITY
☐ VISCOSITY - ADHESIVENENESS
☐ CONTAMINABILITY
☐ DEGRADABILITY
☐ PRESENCE OF TOXIC GAS
☐ HIGH CORROSIVITY
☐ MEDIUM CORROSIVITY
☐ HYGROSCOPICITY
☐ FORMATION OF GRANULES
☐ INTERLOCKS, AGGLOMERATES
☐ PRESENCE OF OILS AND GREASE
☐ TENDENCY TO COMPACT UNDER PRESSURE
☐ LIGHT AND SOFT
☐ HIGH TEMPERATURE

REQUEST CAPACITY ($dm^3/h$) ☐☐☐☐ (kg/h) ☐☐☐☐

TOLERANCE ☐ ☐

LOADING AND HOPPER CAPACITY

MBW MODEL

FEED SCREW AND AGITATOR ☐ ☐ R ☐

ACCESSORIES

MOTORS V Hz

NOTES

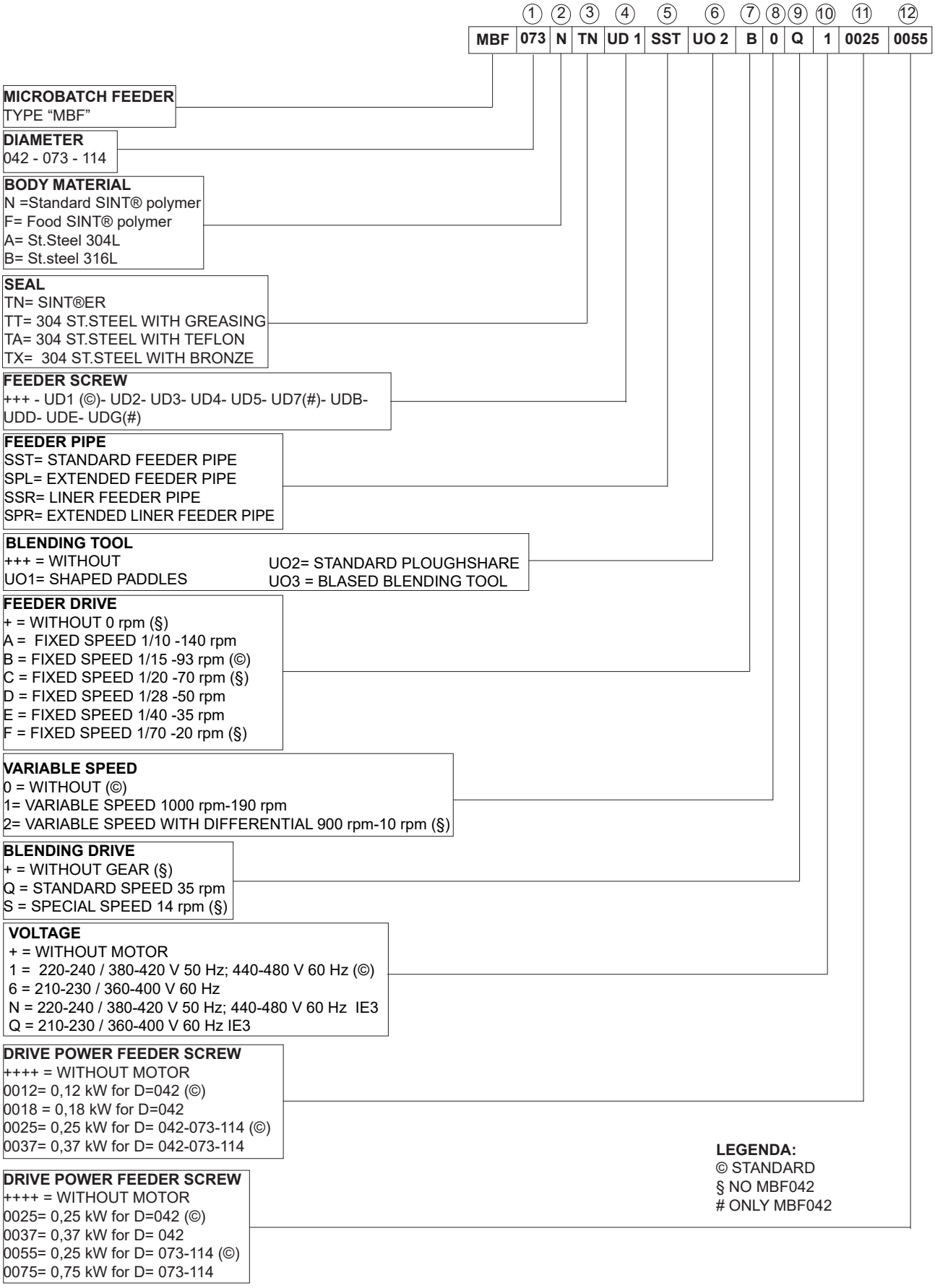
① ② ③ ④ ⑤ ⑥ ⑦ ⑧ ⑨ ⑩ ⑪ ⑫
MBF 073 N TN UD 1 SST UO 2 B 0 Q 1 0025 0055
MICROBATCH FEEDER
TYPE “MBF”
DIAMETER
042 - 073 - 114
BODY MATERIAL
N =Standard SINT® polymer
F= Food SINT® polymer
A= St.Steel 304L
B= St.steel 316L
SEAL
TN= SINT®ER
TT= 304 ST.STEEL WITH GREASING
TA= 304 ST.STEEL WITH TEFLON
TX= 304 ST.STEEL WITH BRONZE
FEEDER SCREW
+++ - UD1 (©)- UD2- UD3- UD4- UD5- UD7(#)- UDB-
UDD- UDE- UDG(#)
FEEDER PIPE
SST= STANDARD FEEDER PIPE
SPL= EXTENDED FEEDER PIPE
SSR= LINER FEEDER PIPE
SPR= EXTENDED LINER FEEDER PIPE
BLENDING TOOL
+++ = WITHOUT
UO1= SHAPED PADDLES
UO2= STANDARD PLOUGHSHARE
UO3 = BLASED BLENDING TOOL
FEEDER DRIVE
+ = WITHOUT 0 rpm (§)
A = FIXED SPEED 1/10 -140 rpm
B = FIXED SPEED 1/15 -93 rpm (©)
C = FIXED SPEED 1/20 -70 rpm (§)
D = FIXED SPEED 1/28 -50 rpm
E = FIXED SPEED 1/40 -35 rpm
F = FIXED SPEED 1/70 -20 rpm (§)
VARIABLE SPEED
0 = WITHOUT (©)
1= VARIABLE SPEED 1000 rpm-190 rpm
2= VARIABLE SPEED WITH DIFFERENTIAL 900 rpm-10 rpm (§)
BLENDING DRIVE
+ = WITHOUT GEAR (§)
Q = STANDARD SPEED 35 rpm
S = SPECIAL SPEED 14 rpm (§)
VOLTAGE
+ = WITHOUT MOTOR
1 = 220-240 / 380-420 V 50 Hz; 440-480 V 60 Hz (©)
6 = 210-230 / 360-400 V 60 Hz
N = 220-240 / 380-420 V 50 Hz; 440-480 V 60 Hz IE3
Q = 210-230 / 360-400 V 60 Hz IE3
DRIVE POWER FEEDER SCREW
++++ = WITHOUT MOTOR
0012= 0,12 kW for D=042 (©)
0018 = 0,18 kW for D=042
0025= 0,25 kW for D= 042-073-114 (©)
0037= 0,37 kW for D= 042-073-114
DRIVE POWER FEEDER SCREW
++++ = WITHOUT MOTOR
0025= 0,25 kW for D=042 (©)
0037= 0,37 kW for D= 042
0055= 0,25 kW for D= 073-114 (©)
0075= 0,75 kW for D= 073-114
LEGENDA:
© STANDARD
§ NO MBF042
# ONLY MBF042

**Project name:** MELIADINE-BPC UPGRADE

**Project#:** 5000220043

**Document #:** SPK_0005_SKG_VWT

**by:** GM

**chkd:** ED

**appvd:** TS

# HYDRACARB

# HOIST

**OIM manual section:** 4.2.5.4

REMOVED

**This page is intentionally left blank**

**Project name:** MELIADINE-BPC UPGRADE

**Project#:** 5000220043

**Document #:** SPK_0005_SKG_VWT

**by:** GM

**chkd:** ED

**appvd:** TS

# HYDRACARB

# EDUCTOR

**OIM manual section:** 4.2.5.5

**This page is intentionally left blank**

# CS-999-014 : Identification sheet

| | | | |
|---|---|---|---|
| VWTC PROJECT NUMBER: | 5000220043 | REV: | 1 |
| PROJECT NAME: | AEM MELIADINE - BPC UPGRADE | SUBMITTED TO (COMPANY): | AEM |
| ENGINEER: | EMMANUELLE DORMOY | SUBMITTED TO (RESPONSIBLE): | |
| PROJECT MANAGER: | THOMAS SAVARY / BRUCE BORDES | PROJECT NUM REFERENCE.: | 6526-S-265-605 / OC-989680 |
| PHONE NUMBER: | 514-334-7230 | LOT NUMBER: | |

| SUPPLIER | EQPT CODE | EQPT TAG NO | DIA | DESCRIPTION | INFO 1 | INFO 2 | INFO 3 | APPLIC. | NOTE | REV |
|---|---|---|---|---|---|---|---|---|---|---|
| ELMRIDGE | ST-999-014 | 65EQM68002 | | ACTIVATED CARBON EDUCTOR | EDUCTOR // Manuf.: ELMRIDGE // Model : NCTLST5 Liqui-Jet Solids Eductor | 316L SS Body I 416H* SS Nozzle & Diffuser | | ACTIVATED CARBON PREPATION SYSTEM #1 | | 1 |
| ELMRIDGE | ST-999-014 | 65EQM68003 | | ACTIVATED CARBON EDUCTOR | EDUCTOR // Manuf.: ELMRIDGE // Model : NCTLST5 Liqui-Jet Solids Eductor | 316L SS Body I 416H* SS Nozzle & Diffuser | | ACTIVATED CARBON PREPATION SYSTEM #2 | | 1 |

**This page is intentionally left blank**

NOTE: NBTLST & NCTLST EDUCTORS HAVE THE SAME OPERATING CHARACTERISTICS

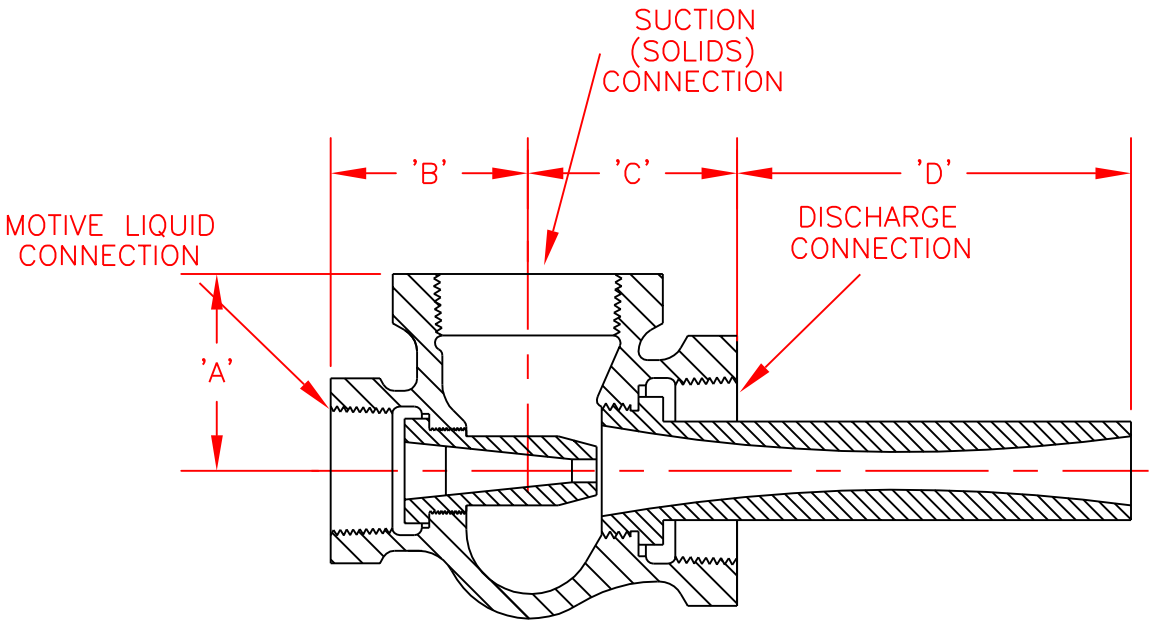


| CAPACITY FACTOR | MODEL | DIM. A | DIM. B | DIM. C | DIM. D | PRESSURE CONNECTION | SUCTION & DISCHARGE CONNECTION |
|---|---|---|---|---|---|---|---|
| 0.091 | NCTLST1 | 1-1/4" | 1-1/4" | 1-1/2" | 1-1/16" | 3/8" NPT | 1/2" NPT |
| 0.165 | NCTLST2 | 1-3/8" | 1-7/16" | 1-1/2" | 1-7/8" | 1/2" NPT | 3/4" NPT |
| 0.30 | NCTLST3 | 1-1/2" | 1-9/16" | 1-11/16" | 2-3/4" | 3/4" NPT | 1" NPT |
| 0.55 | NCTLST4 | 2" | 2" | 2-1/8" | 4-1/16" | 1" NPT | 1-1/2" NPT |
| 1.00 | NCTLST5 | 2" | 2" | 2-1/8" | 5-3/4" | 1" NPT | 1-1/2" NPT |
| 1.80 | NCTLST6 | 2-1/2" | 2-3/8" | 2-3/4" | 7-7/8" | 1-1/2" NPT | 2" NPT |
| 3.24 | NCTLST7 | 3-1/2" | 3-1/8" | 3-3/4" | 11-1/16" | 2" NPT | 3" NPT |
| 4.30 | NCTLST8 | 3-1/2" | 3-1/8" | 3-3/4" | 12" | 2" NPT | 3" NPT |
| 5.71 | NCTLST9 | 4-1/2" | 4" | 4-13/16" | 13-5/8" | 3" NPT | 4" NPT |
| 7.57 | NCTLST10 | 4-1/2" | 4" | 4-13/16" | 16-1/8" | 3" NPT | 4" NPT |

PRELIMINARY

DO NOT SCALE

DIMENSIONS AND SPECIFICATIONS ARE SUBJECT TO CHANGE WITHOUT NOTICE

| NO. | DATE | REVISION | BY |
|---|---|---|---|
| | | | |

ELMRIDGE JET APPARATUS
TORONTO, ONTARIO CANADA
LIVONIA, MICHIGAN USA

PROJECT : Liqui-Jet Solids Eductors

PART : NCTLST Dimensions

MATERIAL : QTY.:

UNLESS OTHERWISE SPECIFIED, GENERAL TOLERANCES:
X/X = ± 1/32"
.XX = ± .010
.XXX = ± .002
DEG. = ± 1/2 °

SCALE : None
DRAWN BY : B.W.
APPROVED BY :
RELEASE DATE :
DATE : 8/4/95
DATE :

NOTE : TLS-NCTLST-B-D

DRAWING NUMBER 2066 — A
REV.NO. 1.1

**This page is intentionally left blank**

**Project name:** MELIADINE-BPC UPGRADE

**Project#:** 5000220043

**Document #:** SPK_0005_SKG_VWT

**by:** GM

**chkd:** ED

**appvd:** TS

# HYDRACARB

# VALVES

**OIM manual section:** 4.2.5.6

**This page is intentionally left blank**

# CS-301-100 : Identification sheet

| | | | |
|---|---|---|---|
| VWTC PROJECT NUMBER: | 5000220043 | REV: | 1 |
| PROJECT NAME: | AEM MELIADINE - BPC UPGRADE | SUBMITTED TO (COMPANY): | AEM |
| ENGINEER: | EMMANUELLE DORMOY | SUBMITTED TO (RESPONSIBLE): | |
| PROJECT MANAGER: | THOMAS SAVARY / BRUCE BORDES | PROJECT NUM REFERENCE.: | 6526-S-265-605 / OC-989680 |
| PHONE NUMBER: | 514-334-7230 | LOT NUMBER: | |

| SUPPLIER | EQPT CODE | EQPT TAG NO | DIA | DESCRIPTION | INFO 1 | INFO 2 | INFO 3 | APPLIC. | NOTE | REV |
|---|---|---|---|---|---|---|---|---|---|---|
| CHEMLINE | VABLPV200253 | 40-BA99-1605 | DIA: 38 mm (1-1/2") | WASHDOWN LINE ISOLATION VALVE | TYPE: BALL VALVE//MANUFACTURER : CHEMLINE//MODEL : Type21-A-015-E-C//CONNECTION TYPE : COMBO \| 38 mm (1-1/2")//BODY : PVC (ASTM D1784)// SEAL \| SEAT :PTFE \| EPDM// STEM : PVC | | | ACTIVATED CARBON PREPATION SYSTEM #1 | | 1 |
| CHEMLINE | VABLPV200253 | 40-BA99-1617 | DIA: 38 mm (1-1/2") | WASHDOWN LINE ISOLATION VALVE | TYPE: BALL VALVE//MANUFACTURER : CHEMLINE//MODEL : Type21-A-015-E-C//CONNECTION TYPE : COMBO \| 38 mm (1-1/2")//BODY : PVC (ASTM D1784)// SEAL \| SEAT :PTFE \| EPDM// STEM : PVC | | | ACTIVATED CARBON PREPATION SYSTEM #2 | | 1 |
| CHEMLINE | VABLPV200254 | 50-BA99-1601 | DIA: 50 mm (2") | SERVICE WATER INLET ISOLATION VALVE | TYPE: BALL VALVE//MANUFACTURER : CHEMLINE//MODEL : Type21-A-020-E-C//CONNECTION TYPE : COMBO \| 50 mm (2")//BODY : PVC (ASTM D1784)// SEAL \| SEAT :PTFE \| EPDM// STEM : PVC | | | ACTIVATED CARBON PREPATION SYSTEM #1 | | 1 |

| SUPPLIER | EQPT CODE | EQPT TAG NO | DIA | DESCRIPTION | INFO 1 | INFO 2 | INFO 3 | APPLIC. | NOTE | REV |
|---|---|---|---|---|---|---|---|---|---|---|
| CHEMLINE | VABLPV200254 | 50-BA99-1603 | DIA: 50 mm (2") | SERVICE WATER ISOLATION VALVE | TYPE: BALL VALVE//MANUFACTURER : CHEMLINE//MODEL : Type21-A-020-E-C//CONNECTION TYPE : COMBO \| 50 mm (2")//BODY : PVC (ASTM D1784)// SEAL \| SEAT :PTFE \| EPDM// STEM : PVC | | | ACTIVATED CARBON PREPATION SYSTEM #1 | | 1 |
| CHEMLINE | VABLPV200254 | 50-BA99-1613 | DIA: 50 mm (2") | SERVICE WATER INLET ISOLATION VALVE | TYPE: BALL VALVE//MANUFACTURER : CHEMLINE//MODEL : Type21-A-020-E-C//CONNECTION TYPE : COMBO \| 50 mm (2")//BODY : PVC (ASTM D1784)// SEAL \| SEAT :PTFE \| EPDM// STEM : PVC | | | ACTIVATED CARBON PREPATION SYSTEM #2 | | 1 |
| CHEMLINE | VABLPV200254 | 50-BA99-1615 | DIA: 50 mm (2") | SERVICE WATER ISOLATION VALVE | TYPE: BALL VALVE//MANUFACTURER : CHEMLINE//MODEL : Type21-A-020-E-C//CONNECTION TYPE : COMBO \| 50 mm (2")//BODY : PVC (ASTM D1784)// SEAL \| SEAT :PTFE \| EPDM// STEM : PVC | | | ACTIVATED CARBON PREPATION SYSTEM #2 | | 1 |

PDF Published November 23, 2020

# Type 21 True Union Ball Valves

CHEMLINE PLASTICS
SUPERIOR FLOW SOLUTIONS

The Chemline **Type 21** True Union Ball valve incorporates state of the art features for long term performance. This is a full port, full blocking True Union valve pressure rated at 16 bar (230 psi)[3]. Double stem o-rings and Safety Shear stem design provide for a high degree of safety on hazardous fluid applications. All sizes have an ISO standard actuator mounting platform integral to the valve body. This provides for sturdy and secure mounting of pneumatic or electric actuators.

PVC | CPVC | PP | PVDF

CRN Registered Consult Chemline

NSF[4] Certified to NSF/ANSI 61

SERIES: Type 21

SIZES: 3/8" – 4"

ENDS: Socket, Threaded, Combo[6], Flanged, Butt[1] or ChemFlare™

SEATS: PTFE

SEALS[2]: EPDM, FKM (Viton®)




## features

### Pressure rated to 230 psi[3]
- Provides a high factor of safety

### Integral Actuator Mounting Platform
- Actuation is easy. Electric or pneumatic actuators may be mounted in the field.

### Full Port
- High capacity and low pressure drops

### Fully Blocking
- Downstream union nut may be safely disassembled for piping maintenance while valve is closed off under full system pressure

### Built-In Spanner Wrench
- Top of the handle is designed to be used as a tool for accessing internal parts

### Safety Shear Stem Design
- Stem has double o-rings
- Designed to hold full pressure even if stem breaks due to excessive torque

### High Chemical Resistant Material
- PVC and CPVC compounds have an "A" chemical resistance rating as per ASTM D-1784. They have outperformed other PVC and CPVC compounds on aggressive chemicals.

### CRN Registration numbers by province
- Ontario: OC11045.5
- Newfoundland: OC11045.50
- Saskatchewan/Manitoba/Quebec: OC11045.56
- New Brunswick: OC11045.57
- Nova Scotia: OC11045.58
- P.E.I.: OC11045.59
- British Columbia: not required
- Alberta: not required[5]

[1] Butt ends for fusion to Chemline metric PP, PVDF or ECTFE (Halar®) piping.
[2] Other materials are available.
[3] PVC, CPVC and PVDF 1/2" to 2" are rated at 230 psi; 2-1/2" to 4" and all size PP valves are rated at 150 psi at 20°C.
[4] PVC valves with EPDM or FKM (Viton®) seals are certified under NSF/ANSI Standard 61 for contact with drinking water.
[5] Not required for non-expandable fluids.
[6] PVC and CPVC valves 1/2" to 2" are available as Combo (threaded and socket ends).

11/20 ©Chemline Plastics Limited 2020
Chemline is a registered trade mark of Chemline Plastics Limited

# Type 21 True Union Ball Valves

## Features

**Double Stem O-Rings – Safety Shear Design**

- Upper o-ring groove is deeper than lower. In case of excessive stem torque, stem will shear at the upper groove, leaving the inner o-ring intact to seal against full line pressure.

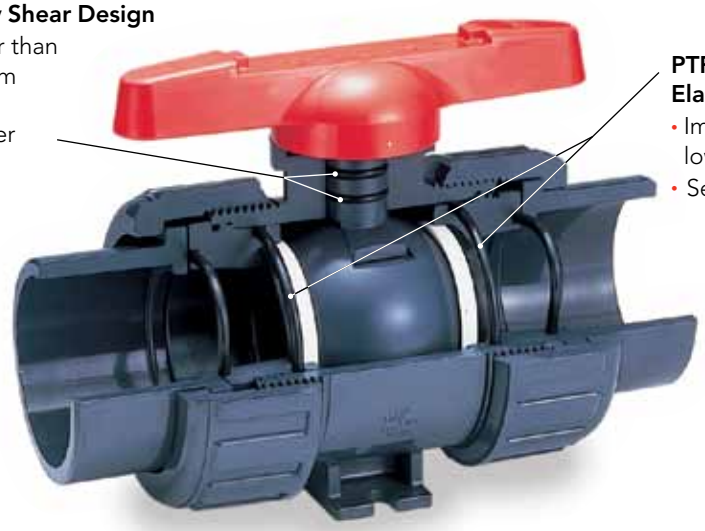

**PTFE Seats have Elastomer Cushions**

- Improved sealing while lowering stem torques
- Self adjusts for seat wear

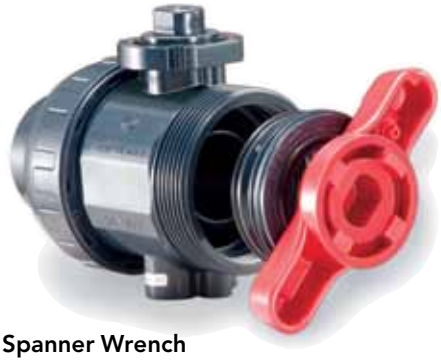

**Built in Spanner Wrench**

- For removing or tightening the seat carrier
- All parts are replaceable



**Integral Actuator Mounting Platform**

- Actuation is easy. Electric or pneumatic actuators may be mounted in the field. Simply pull off the handle to reveal a standard ISO 5211 mounting platform which accepts bolt-on hardware.




**Fully Blocking**

- Downstream pipe may be removed while upstream side is still pressurized. This may be done with valve installed in either direction.



**Base Mounting Pad**

- Optional threaded inserts allow valves to be securely anchored
- Supplied standard with actuated valves

## Options + Accessories



### ChemFlare™ Ends

- For connection to PFA tube. Leak-free connections for difficult services such as sodium hypochlorite



### One-piece moulded PVC and CPVC 6" socket ends

- Allows installation of 4" valve in 6" line
- Factory moulded, elimates cementing separate reducer and coupling
- Fixed to valve mechanically just like the one-piece moulded factory flanges



### Optional Lock-out Handle & Hasp

- To prevent unauthorized operation of the valve during maintenance shut-downs
- Padlocks go through holes in hasp



### Gear Operators

- Deluxe FRP construction
- IP67 enclosure resists short term immersion



### Chain Wheel Operators

- For overhead operation, with 7' of chain drop
- Cast iron or stainless steel

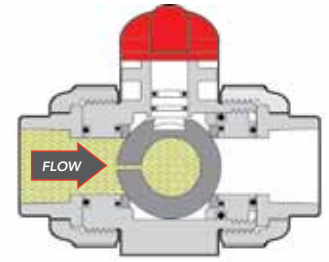


### Vented Ball

- Recommended for all sodium hypochlorite services
- Valve shown in closed position



### Valve Tags

- Stainless steel or plastic



### Different Colour Handles

- Choose a handle colour other than standard red for colour coding different services



### Municipal Operating Nut

- 2" square nut for operating valves below grade using a standard municipal "key"
- Stainless Steel for corrosion resistance



### Manual Limit Switch

- Electrical feedback of manual valve position
- NEMA 4X enclosure, position indicator beacon, 2x SPDT or proximity switches, stainless steel hardware



### Shaft Extensions

- Different materials and lengths are available
- Several designs:
  - with no housing for indoors
  - with waterproofed PVC housing for indoors or outdoors
  - with stainless steel housing for buried or actuated services

# Type 21 True Union Ball Valves

## Electric + Pneumatic Actuation

- A complete range of actuators and control accessories are available, mounted to valves using PPG plastic brackets and stainless steel couplings. Refer to separate data sheets.
- All actuators are CSA approved, have NEMA 4X enclosures, stainless steel hardware and permanently lubricated gear train



**ERS Series Electric**
- Type 21 ball valves up to 2"
- 180 in-lbs torque
- On-Off (3/2-wire), adjustable travel
- Visual feedback

**E Series Electric**
- Type 21 ball valves up to 4"
- Up to 885 in-lbs torque
- On-Off (3/2-wire), adjustable travel. Optional: failsafe, 3 position modulating
- Visual feedback and feedback switches. Optional: extra switches, feedback potentiometer and feedback transmitter



**V Series Electric**
(with optional Local Control Station)
- Type 21 ball valves up to 6"
- up to 8,850 in-lbs torque
- On-Off (2/3-wire), adjustable travel. Optional: failsafe, modulating, BUS
- Visual feedback, 2 feedback switches. Optional: 2 extra feedback switches, feedback potentiometer and feedback transmitter



**PA Series Pneumatic**
- Type 21 ball valves up to 6"
- up to 10,660 in-lbs torque
- industrial process submerged
- bleach/water washdown
- Rilsan-coated aluminum



**PP Series Pneumatic**
- Type 21 ball valves up to 6"
- up to 1,335 in-lbs torque
- industrial process with minimal use of metal
- Glass-filled Polyamide

### OTHER OPTIONS & ACCESSORIES

- **Alternate O-Ring Seals**
- **Stem Extensions** made to any length
- **Limit Switches** – for open and/or closed position indication
- **Municipal Operating Nut**
- **Lubrication-free Valves** – factory clean room assembled
- **Vented Ball** – for sodium hypochlorite applications

# Type 21 True Union Ball Valves

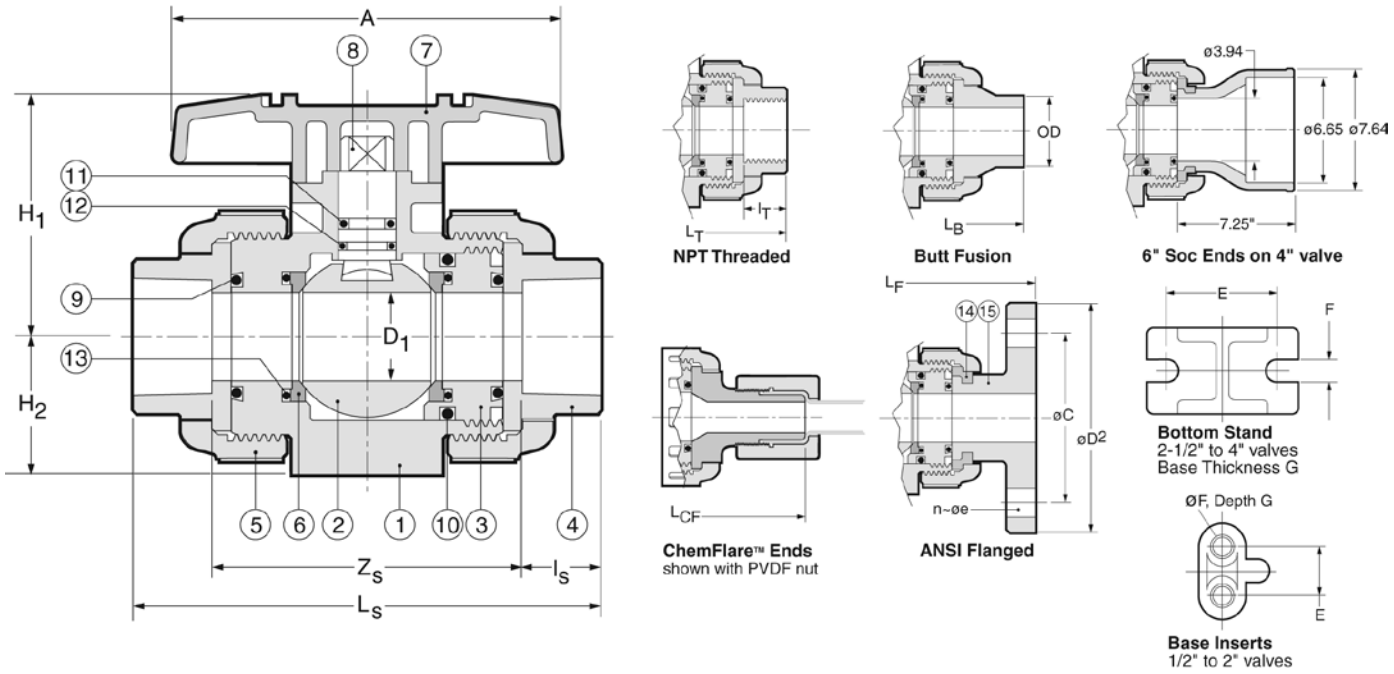


## PARTS

▲ Recommended Spare Parts

| No. | Part | Pcs. | Materials |
|---|---|---|---|
| 1 | Body | 1 | PVC, CPVC, PP, PVDF |
| 2 | Ball | 1 | PVC, CPVC, PP, PVDF |
| 3 | Carrier[1] | 1/2 | PVC, CPVC, PP, PVDF |
| 4 | End Connector | 2 | PVC, CPVC, PP, PVDF |
| 5 | Union Nut | 2 | PVC, CPVC, PP, PVDF |
| 6▲ | Ball Seat | 2 | PTFE |
| 7 | Handle | 1 | ABS |

[1] 1 carrier for sizes 1/2" to 2", 2 carriers for sizes 2-1/2" to 4"
[2] EPDM seals standard with PVC, CPVC, PP; FKM (Viton®) with PVDF valves
[3] 2 pcs 1/2" to 2", 6 pcs 2-1/2" to 4"

## PARTS

▲ Recommended Spare Parts

| No. | Part | Pcs. | Materials |
|---|---|---|---|
| 8 | Stem | 1 | PVC, CPVC, PP, PVDF |
| 9▲ | Face O-Ring[2] | 2 | EPDM, FKM (Viton®) |
| 10▲ | Carrier O-Ring[2] | 2 | EPDM, FKM (Viton®) |
| 11▲ | Upper Thicker Stem O-Ring[2] | 1 | EPDM, FKM (Viton®) |
| 12▲ | Lower Thinner Stem O-Ring[2] | 1 | EPDM, FKM (Viton®) |
| 13 | Seat Cushion[2] | 2 | EPDM, FKM (Viton®) |
| 14 | Flange Retainer[3] | 2/6 | PVDF |
| 15 | Flange | 2 | PVC, CPVC, PP, PVDF |

## DIMENSIONS INCHES

| | | | | | End Connections | | | | | | | | | | | | | | | | |
|---|---|---|---|---|---|---|---|---|---|---|---|---|---|---|---|---|---|---|---|---|---|
| | D | | | | Socket | | | Threaded | | Factory Flanged | | | | | Butt | | ChemFlare™ | | Valve Base | | |
| Size | Bore | A | $H_1$ | $H_2$ | $L_S$ | $Z_S$ | $l_S$ | $l_T$ | $L_T$ | $L_F$ | $D_2$ | C | n | e | $L_B$ | OD | $L_{CF}$ | Tube[4] | E | F[5] | G |
| 1/2" | .59 | 3.6 | 2.03 | 1.14 | 4.45 | 2.70 | .875 | .64 | 4.02 | 5.63 | 3.50 | 2.38 | 4 | .62 | 4.88 | .79 | 6.12 | 1/2" | .75 | .29 | .43 |
| 3/4" | .79 | 3.9 | 2.34 | 1.38 | 5.08 | 3.08 | 1.00 | .65 | 4.72 | 6.77 | 3.88 | 2.75 | 4 | .62 | 5.67 | .98 | 6.52 | 3/4" | .75 | .29 | .43 |
| 1" | .98 | 4.3 | 2.68 | 1.54 | 5.75 | 3.50 | 1.13 | .81 | 5.16 | 7.36 | 4.25 | 3.12 | 4 | .62 | 6.06 | 1.26 | 7.26 | 1" | .75 | .29 | .43 |
| 1-1/4" | 1.22 | 4.8 | 3.17 | 1.85 | 6.46 | 5.21 | 1.25 | .85 | 5.91 | 7.48 | 4.62 | 3.50 | 4 | .62 | 6.85 | 1.57 | 9.58 | 1-1/4" | 1.18 | .35 | .59 |
| 1-1/2" | 1.57 | 5.2 | 3.50 | 2.17 | 7.24 | 4.49 | 1.38 | .85 | 6.42 | 8.35 | 5.00 | 3.88 | 4 | .62 | 7.64 | 1.97 | – | – | 1.18 | .35 | .59 |
| 2" | 2.01 | 6.3 | 4.02 | 2.60 | 8.23 | 5.23 | 1.50 | 1.90 | 7.76 | 9.21 | 6.00 | 4.75 | 4 | .75 | 8.82 | 2.48 | – | – | 1.18 | .35 | .59 |
| 2-1/2" | 2.28 | 7.87 | 4.96 | 2.83 | 9.45 | 5.95 | 1.75 | 1.21 | 8.46 | 10.20 | 7.00 | 5.49 | 4 | .75 | 9.72 | 2.95 | – | – | 1.89 | .35 | .23 |
| 3" | 2.70 | 9.45 | 5.51 | 3.35 | 11.10 | 7.35 | 1.88 | 1.30 | 10.39 | 11.97 | 7.50 | 6.00 | 4 | .75 | 11.61 | 3.54 | – | – | 2.17 | .43 | .28 |
| 4" | 3.54 | 11.81 | 7.01 | 4.33 | 13.88 | 9.87 | 2.00 | 1.38 | 14.17 | 14.65 | 9.00 | 7.50 | 8 | .75 | 14.76 | 4.33 | – | – | 2.56 | .43 | .32 |
| 6"[6] | 3.54 | 11.81 | 7.01 | 4.33 | 23.15 | 17.09 | 3.03 | – | – | – | – | – | – | – | – | – | – | – | 2.56 | .43 | .32 |
| 6"[7] | 3.54 | 11.81 | 7.01 | 4.33 | 27.22 | 21.21 | 3.03 | – | – | – | – | – | – | – | – | – | – | – | 2.56 | .43 | .32 |

[4] ChemFlare™ ends are available for reduced tube sizes down to 1/4"
[5] Optional threaded inserts: 1/2" to 1" valves – UNC 1/4"-20; 1-1/4" to 2" valves – UNC 5/16"-18. 'Recoil' brand inserts require drilling before insertion.
[6] 6" with factory moulded socket ends
[7] 6" with fabricated socket ends

# Type 21 True Union Ball Valves

## WORKING PRESSURES PSI, Water, Non-Shock

## VACUUM RATING • 29.9 inches mercury

| Size | PVC | | | CPVC | | | | | | PP | | | PVDF | | | | |
|---|---|---|---|---|---|---|---|---|---|---|---|---|---|---|---|---|---|
| | 20°C 68°F | 40°C 104°F | 50°C 122°F | 20°C 68°F | 40°C 104°F | 50°C 122°F | 60°C 140°F | 80°C 176°F | 90°C 194°F | 20°C 68°F | 60°C 140°F | 80°C 176°F | 20°C 68°F | 40°C 104°F | 60°C 140°F | 80°C 176°F | 100°C 212°F |
| 1/2"– 2" | 230 | 165 | 150 | 230 | 165 | 150 | 120 | 75 | 55 | 150 | 85 | 55 | 230 | 185 | 150 | 110 | 85 |
| 2-1/2"– 4" | 150 | 150 | 150 | 150 | 150 | 150 | 120 | 75 | 55 | 150 | 70 | 40 | 150 | 150 | 150 | 110 | 85 |

**Temperature Ranges: PVC** 0 to 50°C (32 to 122°F), **CPVC** 0 to 90°C (32 to 194°F), **PP** –20 to 80°C (–4 to 176°F), **PVDF** –20 to 100°C (–20 to 212°F)

## WEIGHTS LB. THREADED or SOCKET

## WEIGHTS LB. FLANGED

| Size | PVC | CPVC | PP | PVDF | PVC | CPVC | PP | PVDF |
|---|---|---|---|---|---|---|---|---|
| 1/2" | 0.4 | 0.4 | 0.4 | 0.4 | 0.9 | 0.9 | 0.7 | 1.1 |
| 3/4" | 0.7 | 0.7 | 0.7 | 0.9 | 1.3 | 1.5 | 1.1 | 1.5 |
| 1" | 0.9 | 1.1 | 0.9 | 1.1 | 1.8 | 2.0 | 1.5 | 2.2 |
| 1-1/4" | 1.5 | 1.5 | 1.3 | 1.8 | 2.6 | 2.9 | 2.0 | 3.3 |
| 1-1/2" | 2.4 | 2.6 | 1.5 | 2.9 | 3.7 | 4.0 | 2.6 | 4.4 |
| 2" | 4.0 | 4.4 | 2.6 | 4.9 | 5.5 | 6.0 | 4.0 | 8.2 |
| 2-1/2" | 5.1 | 5.5 | 3.7 | 6.2 | 7.3 | 7.7 | 5.3 | 8.8 |
| 3" | 8.2 | 8.8 | 5.5 | 9.9 | 10.1 | 11.0 | 7.5 | 12.6 |
| 4" | 19.4 | 21.8 | 13.2 | 24.9 | 21.6 | 23.4 | 15.4 | 26.7 |

## Cv VALUES VS. BALL ANGLE

| Size | 0% | 25% | 50% | 75% | 100% |
|---|---|---|---|---|---|
| 1/2" | 0 | 0.35 | 1.3 | 5.5 | 14. |
| 3/4" | 0 | 0.73 | 2.8 | 11.5 | 29. |
| 1" | 0 | 1.2 | 4.5 | 18.6 | 47. |
| 1-1/4" | 0 | 1.8 | 6.8 | 28.4 | 72. |
| 1-1/2" | 0 | 3.9 | 14.7 | 61.2 | 155. |
| 2" | 0 | 4.8 | 18.0 | 75.0 | 190. |
| 2-1/2" | 0 | 9.1 | 34.7 | 144.0 | 365. |
| 3" | 0 | 10.2 | 39.0 | 162.0 | 410. |
| 4" | 0 | 17.0 | 64.6 | 269.0 | 680. |

## SAMPLE SPECIFICATION

1. All True Union Ball Valves in PVC, CPVC, PP or PVDF shall be Chemline Type 21 or equal sizes 1/2" to 2" in PVC, CPVC, and PVDF rated at 230 psi and in PP 150 psi maximum working pressure. Sizes 2-1/2", 3" and 4" rated at 150 psi maximum working pressure with EPDM or FKM (Viton®) seals. Ball seats shall be PTFE with elastomer cushions for closure with minimum stem torques.
2. All valves will have Safety Shear stem design, blowout-proof with double o-rings for safety. The top o-ring groove shall be deeper so that if the stem breaks off under excessive torque the lower o-ring will remain intact and the valve will hold pressure.
3. All valves shall be full port and two-way blocking design.
4. All valves will be CRN (Canadian Registration Number) registered with TSSA.
5. PVC valves with EPDM or FKM (Viton®) seals shall be certified under NSF/ANSI Standard 61 for contact with drinking water.
6. All valves shall have chemical resistant labels permanently marked with manufacturing number to provide production level traceability.
7. PVC compound shall have an ASTM cell classification 12454-A with a minimum suffix "A" designation for chemical resistance as per ASTM D-1784 (CSA report LO 4000-172).
8. CPVC compound shall have an ASTM cell classification 23567-A with a minimum suffix "A" designation for chemical resistance as per ASTM D-1784.
9. PP material will conform to ASTM D-4101 PP 021 B 67272 material requirements.
10. PVDF material shall be unpigmented conforming to ASTM D-3222 material requirements and to be USDA Title 21 Chapter 1 Part 177. 2510 requirements for contact with food.
11. Socket ends in PVC and CPVC shall be Schedule 80 and conform to ASTM D-2467.
12. Threaded ends shall be Schedule 80 and conform to ASTM D-2464.
13. Butt fusion ends in PP or PVDF will be compatible with Chemline PP or PVDF metric piping systems.
14. Flanged ends shall be ANSI Class 150 one-piece factory moulded (not fabricated) to ensure maximum strength and close tolerance end to end dimensions.

## ORDERING EXAMPLE

| | | | | | | for ChemFlare™ ends only | | all other ends |
|---|---|---|---|---|---|---|---|---|
| **Chemline True Union Ball Valves** | **21** | **A** | **005** | **E** | **V** | **–A** | **8N** | **–1** |
| Body Material | **A** – PVC **B** – PP | **C** – CPVC **K** – PVDF | | | | | | |
| Size[1] | **002** – 1/4" **010** – 1" **025** – 2-1/2" | **003** – 3/8" **012** – 1-1/4" **030** – 3" | **005** – 1/2" **015** – 1-1/2" **040** – 4" | **007** – 3/4" **020** – 2" **060** – 6" | | | | |
| Seals | **E** – EPDM | **V** – FKM (Viton®) | **N** – Nitrile | **A** – Aflas® | | | | |
| ChemFlare™ End Connecters for valves 3/8" to 1-1/4" | | | | | | | | |
| Material | **A** – PVC | **B** – PP | **C** – CPVC | **K** – PVDF | | | | |
| Tube Size[3] | **4N** – 1/4" | **6N** – 3/8" | **8N** – 1/2" | **12N** – 3/4" | **16N** – 1" | **20N** – 1-1/4" | | |
| Tube Nut | **–1** – includes nut | **Blank** – without nut | | | | | | |
| Ends | **S** – Socket | **T** – Threaded | **C** – Combo[2] | **F** – Flanged | **B** – Butt[3] | | | |

**Example:** Chemline Type 21 True Union Ball Valve, PVC, 1/2", with FPM (Viton®) seals, PVC ChemFlare™ end connectors, 1/2" tube size, including nuts.

[1] 1/4" is normally the 3/8" valve reduced. 6" is 4" valve with 6" end connections

[2] PVC and CPVC valves 1/2" to 2" are available as Combo (socket and threaded ends)

[3] Tube size must be equal or smaller than the valve size

[4] PP, PVDF and ECTFE (Halar®) metric butt fusion ends (1/2" to 4") connect to Chemline PP, PVDF and ECTFE (Halar®) piping systems

CHEMLINE PLASTICS
SUPERIOR FLOW SOLUTIONS

55 Guardsman Road, Thornhill, ON, L3T 6L2, Canada | ISO 9001:2015 Certified
1.800.930.2436 (CHEM) | fax.905.889.8553 | request@chemline.com | chemline.com

# CS-301-400 : Identification sheet

| | | | |
|---|---|---|---|
| VWTC PROJECT NUMBER: | 5000220043 | REV: | 1 |
| PROJECT NAME: | AEM MELIADINE - BPC UPGRADE | SUBMITTED TO (COMPANY): | AEM |
| ENGINEER: | EMMANUELLE DORMOY | SUBMITTED TO (RESPONSIBLE): | |
| PROJECT MANAGER: | THOMAS SAVARY / BRUCE BORDES | PROJECT NUM REFERENCE.: | 6526-S-265-605 / OC-989680 |
| PHONE NUMBER: | 514-334-7230 | LOT NUMBER: | |

| SUPPLIER | EQPT CODE | EQPT TAG NO | DIA | DESCRIPTION | INFO 1 | INFO 2 | INFO 3 | APPLIC. | NOTE | REV |
|---|---|---|---|---|---|---|---|---|---|---|
| PMP | ST-301-1002 | 15-BA99-1604 | DIA: 13 mm (1/2") | PRESSURE GAUGE ISOLATION VALVE | TYPE: BALL VALVE//MANUFACTURER : PMP//MODEL : A201 (1/2")//CONNECTION TYPE : THREADED \| 13 mm (1/2")//BODY : ASTM 351 GR. CF8M// SEAL \| SEAT :RPTFE \| PTFE// STEM : SS 316 | | | ACTIVATED CARBON PREPATION SYSTEM #1 | | 1 |
| PMP | ST-301-1002 | 15-BA99-1608 | DIA: 13 mm (1/2") | PRESSURE GAUGE ISOLATION VALVE | TYPE: BALL VALVE//MANUFACTURER : PMP//MODEL : A201 (1/2")//CONNECTION TYPE : THREADED \| 13 mm (1/2")//BODY : ASTM 351 GR. CF8M// SEAL \| SEAT :RPTFE \| PTFE// STEM : SS 316 | | | ACTIVATED CARBON PREPATION SYSTEM #1 | | 1 |
| PMP | ST-301-1002 | 15-BA99-1611 | DIA: 13 mm (1/2") | AIR ISOLATION VALVE | TYPE: BALL VALVE//MANUFACTURER : PMP//MODEL : A201 (1/2")//CONNECTION TYPE : THREADED \| 13 mm (1/2")//BODY : ASTM 351 GR. CF8M// SEAL \| SEAT :RPTFE \| PTFE// STEM : SS 316 | | | ACTIVATED CARBON PREPATION SYSTEM #1 | | 1 |

| SUPPLIER | EQPT CODE | EQPT TAG NO | DIA | DESCRIPTION | INFO 1 | INFO 2 | INFO 3 | APPLIC. | NOTE | REV |
|---|---|---|---|---|---|---|---|---|---|---|
| PMP | ST-301-1002 | 15-BA99-1613 | DIA: 13 mm (1/2") | AIR ISOLATION VALVE | TYPE: BALL VALVE//MANUFACTURER : PMP//MODEL : A201 (1/2")//CONNECTION TYPE : THREADED \| 13 mm (1/2")//BODY : ASTM 351 GR. CF8M// SEAL \| SEAT :RPTFE \| PTFE// STEM : SS 316 | | | ACTIVATED CARBON PREPATION SYSTEM #1 | | 1 |
| PMP | ST-301-1002 | 15-BA99-1616 | DIA: 13 mm (1/2") | PRESSURE GAUGE ISOLATION VALVE | TYPE: BALL VALVE//MANUFACTURER : PMP//MODEL : A201 (1/2")//CONNECTION TYPE : THREADED \| 13 mm (1/2")//BODY : ASTM 351 GR. CF8M// SEAL \| SEAT :RPTFE \| PTFE// STEM : SS 316 | | | ACTIVATED CARBON PREPATION SYSTEM #2 | | 1 |
| PMP | ST-301-1002 | 15-BA99-1620 | DIA: 13 mm (1/2") | PRESSURE GAUGE ISOLATION VALVE | TYPE: BALL VALVE//MANUFACTURER : PMP//MODEL : A201 (1/2")//CONNECTION TYPE : THREADED \| 13 mm (1/2")//BODY : ASTM 351 GR. CF8M// SEAL \| SEAT :RPTFE \| PTFE// STEM : SS 316 | | | ACTIVATED CARBON PREPATION SYSTEM #2 | | 1 |
| PMP | ST-301-1002 | 15-BA99-1623 | DIA: 13 mm (1/2") | AIR ISOLATION VALVE | TYPE: BALL VALVE//MANUFACTURER : PMP//MODEL : A201 (1/2")//CONNECTION TYPE : THREADED \| 13 mm (1/2")//BODY : ASTM 351 GR. CF8M// SEAL \| SEAT :RPTFE \| PTFE// STEM : SS 316 | | | ACTIVATED CARBON PREPATION SYSTEM #2 | | 1 |

| SUPPLIER | EQPT CODE | EQPT TAG NO | DIA | DESCRIPTION | INFO 1 | INFO 2 | INFO 3 | APPLIC. | NOTE | REV |
|---|---|---|---|---|---|---|---|---|---|---|
| PMP | ST-301-1002 | 15-BA99-1624 | DIA: 13 mm (1/2") | AIR ISOLATION VALVE | TYPE: BALL VALVE//MANUFACTURER : PMP//MODEL : A201 (1/2")//CONNECTION TYPE : THREADED \| 13 mm (1/2")//BODY : ASTM 351 GR. CF8M// SEAL \| SEAT :RPTFE \| PTFE// STEM : SS 316 | | | ACTIVATED CARBON PREPATION SYSTEM #2 | | 1 |

**This page is intentionally left blank**

# 2 Piece Ball Valve
# Full Port

**A201**
1000 WOG
1/4” – 3” NPT




**Adjustable PTFE Packing**

**Investment Cast Body CF8M Body**

**PTFE Body Seal**

**Full Bore Design**

**Stainless Steel Latch Lock Handle**

**Blow-out Proof Stem**

**Solid Ball & Stem**

**Bi-Directional RPTFE Seats**

**Pressure Rating**

- 1/4” – 2” 1000 WOG
- 2-1/2” – 3” 800 WOG

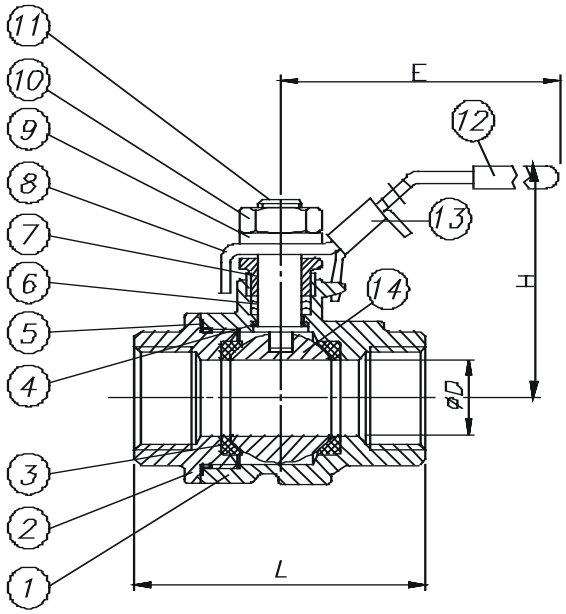


| NO | PART NAME | QTY | SPECIFICATION | |
|---|---|---|---|---|
| 1 | BODY | 1 | WCB | CF8M |
| 2 | END CAP | 1 | WCB | CF8M |
| 3 | SEATS | 2 | RPTFE | RPTFE |
| 4 | THRUST WASHER | 1 | PTFE | PTFE |
| 5 | BODY GASKET | 1 | PTFE | PTFE |
| 6 | STEM PACKING | 3 | PTFE | PTFE |
| 7 | PACKING GLAND | 1 | SS304 | SS304 |
| 8 | HANDLE | 1 | C.S. | SS304 |
| 9 | HANDLE WASHER | 1 | C.S. | SS304 |
| 10 | HANDLE NUT | 1 | C.S. | SS304 |
| 11 | STEM | 1 | SS304 | SS316 |
| 12 | HANDLE SLEEVE | 1 | PLASTIC | PLASTIC |
| 13 | LOCKING DEVICE | 1 | C.S. | SS304 |
| 14 | BALL | 1 | SS304 | SS316 |

| SIZE | | 1/4" | 3/8" | 1/2" | 3/4" | 1" | 1-1/4" | 1-1/2" | 2" | 2-1/2" | 3" |
|---|---|---|---|---|---|---|---|---|---|---|---|
| D | in | 0.46 | 0.50 | 0.50 | 0.75 | 1.00 | 1.25 | 1.50 | 2.00 | 2.50 | 3.00 |
| | mm | 10 | 12 | 15 | 20 | 25 | 32 | 40 | 50 | 65 | 80 |
| L | in | 2.13 | 2.13 | 2.68 | 3.03 | 3.58 | 3.98 | 4.25 | 4.88 | 7.28 | 8.07 |
| | mm | 54 | 54 | 68 | 77 | 91 | 101 | 108 | 124 | 185 | 205 |
| H | in | 2.32 | 2.32 | 2.36 | 2.91 | 3.03 | 3.43 | 3.66 | 4.21 | 5.71 | 6.10 |
| | mm | 59 | 59 | 60 | 74 | 77 | 87 | 93 | 107 | 145 | 155 |
| E | in | 4.49 | 4.49 | 4.49 | 5.43 | 5.43 | 7.28 | 7.68 | 7.68 | 10.24 | 10.24 |
| | mm | 114 | 114 | 114 | 138 | 138 | 185 | 195 | 195 | 260 | 260 |

PMP Precision Valve Company Ltd. Is a progressive supplier of current products. The features, materials of construction and dimensional data as detailed in this bulletin are intended for your reference only, and should not be relied upon unless confirmed in writing by PMP Precision Valve Co. Ltd.. Certified dimensional drawings are available upon order receipt.

**This page is intentionally left blank**

# CS-302-200 : Identification sheet

| | | | |
|---|---|---|---|
| VWTC PROJECT NUMBER: | 5000220043 | REV: | 1 |
| PROJECT NAME: | AEM MELIADINE - BPC UPGRADE | SUBMITTED TO (COMPANY): | AEM |
| ENGINEER: | EMMANUELLE DORMOY | SUBMITTED TO (RESPONSIBLE) | |
| PROJECT MANAGER: | THOMAS SAVARY / BRUCE BORDES | PROJECT NUM REFERENCE.: | 6526-S-265-605 / OC-989680 |
| PHONE NUMBER: | 514-334-7230 | LOT NUMBER: | |

| SUPPLIER | EQPT CODE | EQPT TAG NO | DIA | DESCRIPTION | INFO 1 | INFO 2 | INFO 3 | APPLIC. | NOTE | REV |
|---|---|---|---|---|---|---|---|---|---|---|
| CLA-VAL | ST-302-384 | 65-CK99-1608 | | ACTIVATED CARBON SLURRY CHECK VALVE | INLINE CHECK VALVE // Manuf : CLA-VAL // MODEL : RF-DBJ-C-NR-125-2.5" // Elastomer : Natural Rubber - Body : Coated Cast Iron // Flanged cl 150 | n/a | n/a | ACTIVATED CARBON PREPATION SYSTEM #1 | | 1 |
| CLA-VAL | ST-302-384 | 65-CK99-1619 | | ACTIVATED CARBON SLURRY CHECK VALVE | INLINE CHECK VALVE // Manuf : CLA-VAL // MODEL : RF-DBJ-C-NR-125-2.5" // Elastomer : Natural Rubber - Body : Coated Cast Iron // Flanged cl 150 | n/a | n/a | ACTIVATED CARBON PREPATION SYSTEM #2 | | 1 |

**This page is intentionally left blank**

CLA-VAL®

# Series 584

# Flex-Check Valve



- **Full Pipe Size Flow Area**
- **Drip Tight Seating**
- **Non-Slam Closure**
- **NSF/ANSI 61 Fusion Bonded Epoxy Coating**
- **Available with Integral Surge Protector, Position Indicator and Backflushing features**
- **Sizes 2 through 24 inches available**
- **Meets the Federal Mandate Limiting Lead in Drinking Water**

The Cla-Val Seriesl 584 Flex-Check Valve has a full-flow area body with integral seat at 45° angle to reduce head loss. This minimizes disc travel to 35° degrees for improved non-slam check action and for reliable vertical up flow operation even on slurry applications. Body and Cover are NSF/ANSI 61 fusion bonded epoxy coated for long service life on potable and non-potable systems. Unique one-piece steel and nylon reinforced BUNA-N rubber flapper flexes to eliminate traditional metal hinge problems. During system flowing conditions the flapper flexes up to the open position allowing unrestricted flow through the valve. When system reverse flow conditions occur the flapper flexes down to the closed position for drop-tight seal preventing reverse flow. The flapper reliability is test-proven to over one million cycles. The optional Return Flow Actuator offers manual opening for pump priming, back flushing, draining lines, or system testing needs and is easy to field install.

**Model 584BF Backflushing Flex-Check Valve - Sizes 3" - 24"**

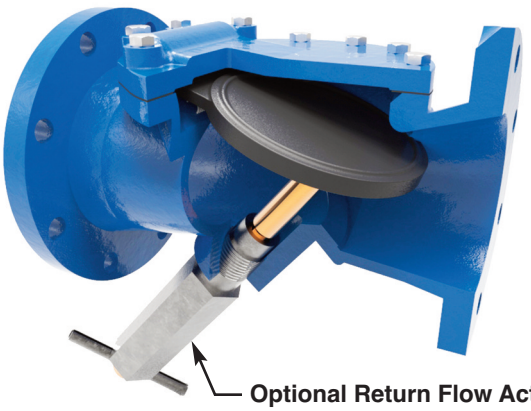

**Optional Return Flow Actuator 3-inches and larger**

## Typical Applications

- Water Systems
- Industrial Waste
- Erosive Services
- Acid Lines
- Light Slurries
- Leaching Lines
- Brine & Salt Water Systems
- Raw Sewage
- Chemical Lines
- Ash Service
- Tailings Systems
- Corrosive Services
- Scrubbers

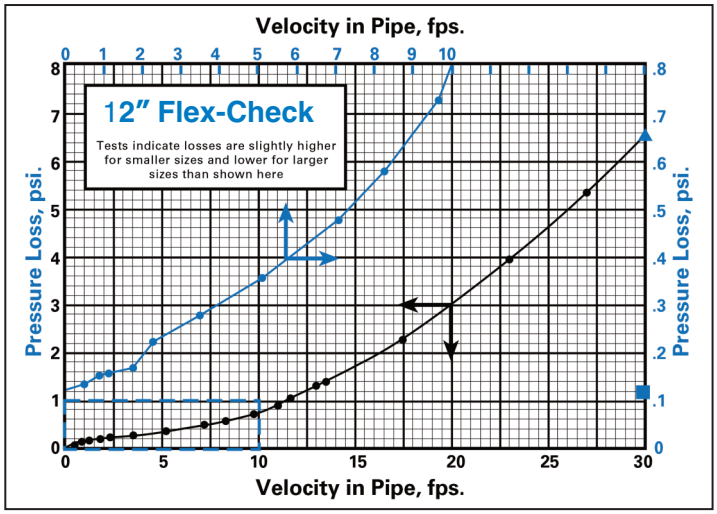

# Series 584 Flex-Check Valve Technical Data

| Size (inches) | A | C | D | E | F | G | # of Bolts | Bolt Hole Size | Weight (lbs.) |
|---|---|---|---|---|---|---|---|---|---|
| 2 | 8.00 | 0.69 | 5.18 | 4.75 | 6.00 | 3.38 | 4 | 0.75 | 19 |
| 2.5 | 8.50 | 0.75 | 5.18 | 5.50 | 7.00 | 3.38 | 4 | .0.75 | 20 |
| 3 | 9.50 | 0.81 | 7.50 | 6.00 | 7.50 | 5.13 | 4 | 0.75 | 21 |
| 4 | 11.50 | 0.75 | 8.25 | 7.50 | 9.00 | 5.75 | 8 | 0.75 | 38 |
| 6 | 14.00 | 0.75 | 11.12 | 9.50 | 11.00 | 6.88 | 8 | 0.88 | 100 |
| 8 | 19.50 | 0.88 | 16.00 | 11.75 | 13.50 | 8.38 | 8 | 0.88 | 185 |
| 10 | 24.50 | 1.18 | 21.00 | 14.25 | 16.00 | 10.75 | 12 | 1.00 | 335 |
| 12 | 27.50 | 1.25 | 24.00 | 17.00 | 19.00 | 12.50 | 12 | 1.00 | 475 |
| 14 | 31.00 | 1.38 | 23.25 | 18.75 | 21.00 | 13.00 | 12 | 1.12 | 640 |
| 16 | 36.00 | 1.43 | 25.25 | 21.25 | 23.50 | 14.25 | 16 | 1.12 | 950 |
| 18 | 40.00 | 1.56 | 28.25 | 22.75 | 25.00 | 15.25 | 16 | 1.25 | 1250 |
| 20 | 40.00 | 1.68 | 30.63 | 25.00 | 27.50 | 16.88 | 20 | 1.25 | 1550 |
| 24 | 48.00 | 1.88 | 36.00 | 29.50 | 32.00 | 19.25 | 20 | 1.38 | 2000 |

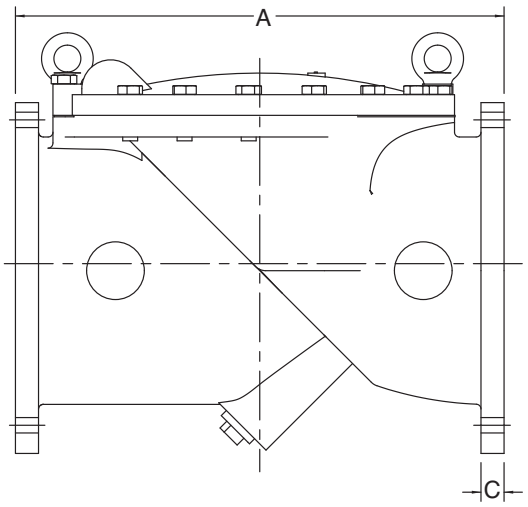


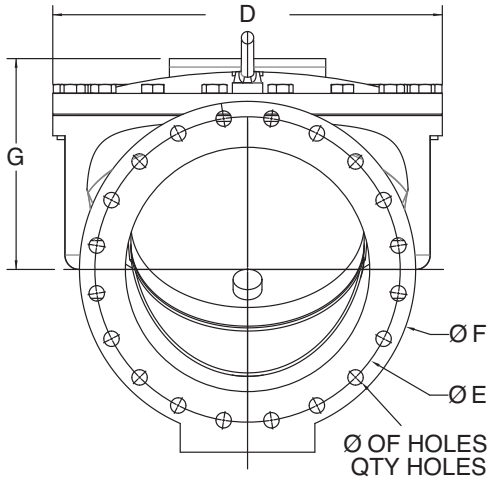


## Valve Materials of Construction

**Valve Body & Cover:** Ductile Iron - ASTM 536 65-45-12
**Flapper Options:** BUNA-N, Neoprene, Hypalon & Viton™
**Lining Options:** Natural Rubber, Neoprene & Hypalon *

| * Operating Temperatures for Liner & Flapper Materials | |
|---|---|
| Material | °F |
| BUNA-N | - 70 to 250 |
| Rubber | - 40 to 180 |
| Neoprene | - 20 to 250 |
| Hypalon | - 40 to 195 |
| Viton™ | - 40 to 450 |
| Other Liner & Flapper materials available | |

| Standard Rubber Hardness Durometer of Flapper to be Determined by Operating Pressure | | |
|---|---|---|
| Valve Size | Operating Pressure, PSI | |
| | 10 to 80 | 81 to 175 |
| 2-inches to 8-inches | 45 Durometer | 70 Durometer |
| 10-inches to 24-inches | 70 Durometer | |


CLA-VAL

1701 Placentia Avenue • Costa Mesa, CA 92627
800-942-6326 • Fax: 949-548-5441 • www.cla-val.com • info@cla-val.com

**CLA-VAL CANADA**
4687 Christie Drive
Beamsville, Ontario
Canada L0R 1B4
Phone: 905-563-4963
Fax: 905-563-4040
E-mail sales@cla-val.ca

**CLA-VAL EUROPE**
Chemin des Mésanges 1
CH-1032 Romanel/
Lausanne, Switzerland
Phone: 41-21-643-15-55
E-mail: cla-val@cla-val.ch

**CLA-VAL UK**
Dainton House, Goods Station Road
Tunbridge Wells
Kent TN1 2 DH England
Phone: 44-1892-514-400
E-mail: info@cla-val.co.uk

**CLA-VAL FRANCE**
Porte du Grand Lyon 1
ZAC du Champ du Périer
France - 01700 Neyron
Phone: 33-4-72-25-92-93
E-mail: cla-val@cla-val.fr




©COPYRIGHT CLA-VAL 2020 Printed in USA Specifications subject to change without notice.

# CS-304-100 : Identification sheet

| | | | |
|---|---|---|---|
| VWTC PROJECT NUMBER: | 5000220043 | REV: | 1 |
| PROJECT NAME: | AEM MELIADINE - BPC UPGRADE | SUBMITTED TO (COMPANY): | AEM |
| ENGINEER: | EMMANUELLE DORMOY | SUBMITTED TO (RESPONSIBLE): | |
| PROJECT MANAGER: | THOMAS SAVARY / BRUCE BORDES | PROJECT NUM REFERENCE.: | 6526-S-265-605 / OC-989680 |
| PHONE NUMBER: | 514-334-7230 | LOT NUMBER: | |

| SUPPLIER | EQPT CODE | EQPT TAG NO | DIA | DESCRIPTION | INFO 1 | INFO 2 | INFO 3 | APPLIC. | NOTE | REV |
|---|---|---|---|---|---|---|---|---|---|---|
| ASCO | ST-304-111 | 65FY6801602 | N/A | SERVICE WATER INLET SOLENOID VALVE | TYPE: SOLENOID VALVE//MANUFACTURER : ASCO//MODEL : 8210G100-120VAC//CONNECTION TYPE : THREADED \| 50 mm (2") \| 50 mm (2")//BODY : BRASS// SEAL \| SEAT : \| // STEM : N/A | ACTING : PILOT | NORMALLY : FERMÉ/CLOSED | ACTIVATED CARBON PREPATION SYSTEM #1 | | 1 |
| ASCO | ST-304-111 | 65FY6801622 | N/A | SERVICE WATER INLET SOLENOID VALVE | TYPE: SOLENOID VALVE//MANUFACTURER : ASCO//MODEL : 8210G100-120VAC//CONNECTION TYPE : THREADED \| 50 mm (2") \| 50 mm (2")//BODY : BRASS// SEAL \| SEAT : \| // STEM : N/A | ACTING : PILOT | NORMALLY : FERMÉ/CLOSED | ACTIVATED CARBON PREPATION SYSTEM #2 | | 1 |

**This page is intentionally left blank**

## Features

- Wide range of pressure ratings, sizes, and resilient materials provide long service life and low internal leakage
- High flow valves for liquid, corrosive, and air/inert gas service
- Industrial applications include:
  - Car wash
  - Laundry equipment
  - Air compressors
  - Industrial water control
  - Pumps

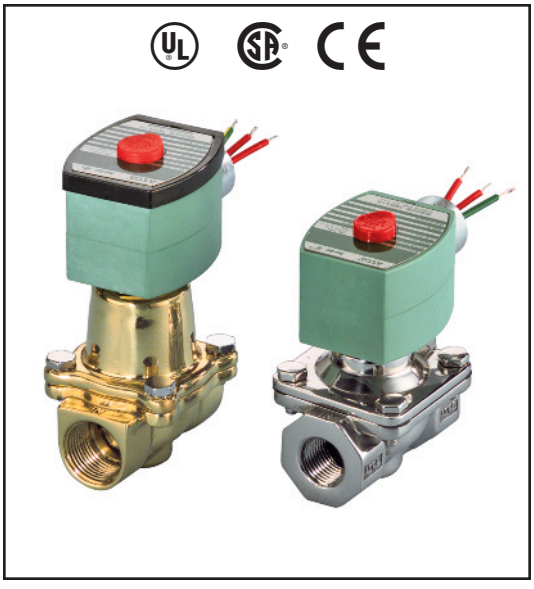

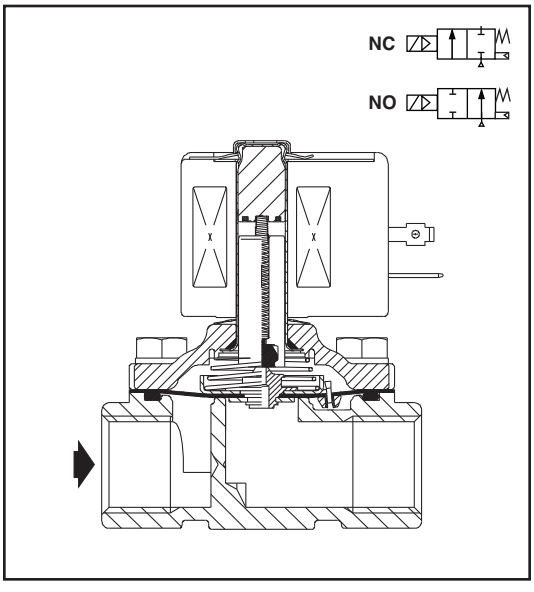


## Construction

| Valve Parts in Contact with Fluids | | |
|---|---|---|
| **Body** | Brass | 304 Stainless Steel* |
| **Seals and Discs** | NBR or PTFE | |
| **Disc-Holder** | PA | |
| **Core Tube** | 305 Stainless Steel | |
| **Core and Plugnut** | 430F Stainless Steel | |
| **Springs** | 302 Stainless Steel | |
| **Shading Coil** | Copper | Silver |

*Catalog Numbers 8210G127, 8210G129, 8210G132, 8210G133 have 316L Stainless Steel bodies.

## Electrical

| Standard Coil and Class of Insulation | Watt Rating and Power Consumption | | | | Spare Coil Part Number | | | |
|---|---|---|---|---|---|---|---|---|
| | | AC | | | General Purpose | | Explosionproof | |
| | DC Watts | Watts | VA Holding | VA Inrush | AC | DC | AC | DC |
| F | - | 6.1 | 16 | 40 | 238210 | - | 238214 | - |
| F | 11.6 | 10.1 | 25 | 70 | 238610 | 238710 | 238614 | 238714 |
| F | 16.8 | 16.1 | 35 | 180 | 272610 | 97617 | 272614 | 97617 |
| F | - | 17.1 | 40 | 93 | 238610 | - | 238614 | - |
| F | - | 20 | 43 | 240 | 99257 | - | 99257 | - |
| F | - | 20.1 | 48 | 240 | 272610 | - | 272614 | - |
| F | 30.8 | - | - | - | - | 501695 | - | 501696 |
| H | 40.6 | - | - | - | - | 238910 | - | 238914 |

**Standard Voltages:** 24, 120, 240, 480 volts AC, 60 Hz (or 110, 220 volts AC, 50 Hz). 6, 12, 24, 120, 240 volts DC. Must be specified when ordering.
Other voltages available when required.

## Solenoid Enclosures

**Standard:** RedHat II - Watertight, Types 1, 2, 3, 3S, 4, and 4X; RedHat - Type I.

**Optional:** RedHat II - Explosionproof and Watertight, Types 3, 3S, 4, 4X, 6, 6P, 7, and 9; Red-Hat - Explosionproof and Watertight, Types 3, 4, 4X, 7, and 9.

(To order, add prefix "EF" to catalog number, except Catalog Numbers 8210B057, 8210B058, and 8210B059, which are not available with Explosionproof enclosures.)
*See Optional Features Section for other available options.*

## Nominal Ambient Temp. Ranges

RedHat II/RedHat AC: 32°F to 125°F (0°C to 52°C)
RedHat II DC: 32°F to 104°F (0°C to 40°C)
RedHat DC: 32°F to 77°F (0°C to 25°C)
(104°F/40°C occasionally)
8210G227 AC: 32°F to 130°F (0°C to 54°C)
DC: 32°F to 90°F (0°C to 32°C)
*Refer to Engineering Section for details.*

## Approvals

UL listed as indicated. CSA certified.
RedHat II meets applicable CE directives.
*Refer to Engineering Section for details.*

ATEX/IECEx certified with prefix "EV" as listed. *Refer to Optional Features Electrical Section for details.*

# 2/2 SERIES 8210

ASCO®

## Specifications (English units)

| Pipe Size (in) | Orifice Size (in) | Cv Flow Factor | Operating Pressure Differential (psi) | | | | | | | Max. Fluid Temp. °F | | Brass Body | | | Stainless Steel Body | | | Watt Rating/ Class of Coil Insulation ⑦ | |
|---|---|---|---|---|---|---|---|---|---|---|---|---|---|---|---|---|---|---|---|
| | | | | Max. AC | | | Max. DC | | | | | | | | | | | | |
| | | | Min. | Air-Inert Gas | Water | Light Oil @ 300 SSU | Air-Inert Gas | Water | Light Oil @ 300 SSU | AC | DC | Catalog Number | Const. Ref. ④ | UL ⑤ Listing | Catalog Number | Const. Ref. ④ | UL ⑤ Listing | AC | DC |
| **NORMALLY CLOSED (Closed when de-energized), NBR or PTFE ② Seating** | | | | | | | | | | | | | | | | | | | |
| 3/8 | 3/8 | 1.5 | ① | 150 | 125 | - | 40 | 40 | - | 180 | 150 | 8210G073 ③ | 1P | ● | 8210G036 ③ | 1P | ● | 6.1/F | 11.6/F |
| 3/8 | 5/8 | 3 | 0 | 150 | 150 | - | 40 | 40 | - | 180 | 150 | 8210G093 | 5D | ❍ | - | - | - | 10.1/F | 11.6/F |
| 3/8 | 5/8 | 3 | 5 | 200 | 150 | 135 | 125 | 100 | 100 | 180 | 150 | 8210G001 ▼ | 6D | ❍ | - | - | - | 6.1/F | 11.6/F |
| 3/8 | 5/8 | 3 | 5 | 300 | 300 | 300 | - | - | - | 175 | - | 8210G006 ✓ | 5D | ❍ | - | - | - | 17.1/F | - |
| 1/2 | 7/16 | 2.2 | ① | 150 | 125 | - | 40 | 40 | - | 180 | 150 | 8210G015 ③ | 2P | ● | 8210G037 ③ | 2P | ● | 6.1/F | 11.6/F |
| 1/2 | 5/8 | 4 | 0 | 150 | 150 | - | 40 | 40 | - | 180 | 150 | 8210G094 ✓ | 5D | ❍ | - | - | - | 10.1/F | 11.6/F |
| 1/2 | 5/8 | 4 | 0 | 150 | 150 | 125 | 40 | 40 | - | 175 | 150 | - | - | - | 8210G087 ✓ | 7D | ● | 17.1/F | 11.6/F |
| 1/2 | 5/8 | 4 | 5 | 200 | 150 | 135 | 125 | 100 | 100 | 180 | 150 | 8210G002 ▼ | 6D | ❍ | - | - | - | 6.1/F | 11.6/F |
| 1/2 | 5/8 | 4 | 5 | 300 | 300 | 300 | - | - | - | 175 | - | 8210G007 | 5D | ❍ | - | - | - | 17.1/F | - |
| 1/2 | 3/4 | 4 | 5 | - | 300 | - | - | 300 | - | 130 | 90 | 8210G227 | 5D | ❍ † | - | - | - | 17.1/F | 40.6/H |
| 3/4 | 5/8 | 4.5 | 0 | 150 | 150 | 125 | 40 | 40 | - | 175 | 150 | - | - | - | 8210G088 ✓ | 7D | ● | 17.1/F | 11.6/F |
| 3/4 | 3/4 | 5 | 5 | 125 | 125 | 125 | 100 | 90 | 75 | 180 | 150 | 8210G009 ▼ | 9D | ❍ | - | - | - | 6.1/F | 11.6/F |
| 3/4 | 3/4 | 5 | 0 | 150 | 150 | - | 40 | 40 | - | 180 | 150 | 8210G095 ✓ | 8D | ❍ | - | - | - | 10.1/F | 11.6/F |
| 3/4 | 3/4 | 6.5 | 5 | 250 | 150 | 100 | 125 | 125 | 125 | 180 | 150 | 8210G003 ▼ | 11D | ❍ | - | - | - | 6.1/F | 11.6/F |
| 3/4 | 3/4 | 6 | 0 | 350 | 300 | 200 | 200 | 200 | 200 | 200 | 180 | 8210G026 ② ‡ ◆ | 40P/10D | ● | - | - | - | 16.1F | 30.8/F |
| 1 | 1 | 13 | 0 | 150 | 125 | 125 | 135 | 120 | 120 | 180 | 180 | 8210G054 ‡ ◆ | 41D/31D | ● | 8210G089 ‡ ◆ | 45D/15D | ● | 16.1/F | 30.8/F |
| 1 | 1 | 13 | 5 | 150 | 150 | 100 | 125 | 125 | 125 | 180 | 150 | 8210G004 ▼ | 12D | ❍ | - | - | - | 6.1/F | 11.6/F |
| 1 | 1 | 13.5 | 0 | 300 | 225 | 115 | - | - | - | 200 | - | 8210G027 ‡ | 42P | ● | - | - | - | 20.1/F | - |
| 1 | 1 | 13.5 | 10 | 300 | 300 | 300 | - | - | - | 175 | - | 8210G078 ② | 13P | - | - | - | - | 17.1/F | - |
| 1 1/4 | 1 1/8 | 15 | 0 | 150 | 125 | 125 | 135 | 120 | 120 | 180 | 180 | 8210G055 ‡ ◆ | 43D/32D | ● | - | - | - | 16.1/F | 30.8/F |
| 1 1/4 | 1 1/8 | 15 | 5 | 150 | 150 | 100 | 125 | 125 | 125 | 180 | 150 | 8210G008 ▼ | 16D | ❍ | - | - | - | 6.1/F | 11.6/F |
| 1 1/2 | 1 1/4 | 22.5 | 0 | 150 | 125 | 125 | 135 | 120 | 120 | 180 | 180 | 8210G056 ‡ ◆ | 44D/33D | ● | - | - | - | 16.1/F | 30.8/F |
| 1 1/2 | 1 1/4 | 22.5 | 5 | 150 | 150 | 100 | 125 | 125 | 125 | 180 | 150 | 8210G022 ▼ | 18D | ● | 8210G127 | - | - | 6.1/F | 11.6/F |
| 2 | 1 3/4 | 43 | 5 | 150 | 125 | 90 | 50 | 50 | 50 | 180 | 150 | 8210G100 | 20P | ● | 8210G129 | - | - | 6.1/F | 11.6/F |
| 2 1/2 | 1 3/4 | 45 | 5 | 150 | 125 | 90 | 50 | 50 | 50 | 180 | 150 | 8210G101 | 21P | ● | - | - | - | 6.1/F | 11.6/F |
| **NORMALLY OPEN (Open when de-energized), NBR Seating (PA Disc-Holder, except as noted)** | | | | | | | | | | | | | | | | | | | |
| 3/8 | 5/8 | 3 | 0 | 150 | 150 | 125 | 125 | 125 | 80 | 180 | 150 | 8210G033 | 23D | ● | - | - | - | 10.1/F | 11.6/F |
| 3/8 | 5/8 | 3 | 5 | 250 | 200 | 200 | 250 | 200 | 200 | 180 | 180 | 8210G011 ⑧ ⑨ | 39D | ● | - | - | - | 10.1/F | 11.6/F |
| 1/2 | 5/8 | 4 | 0 | 150 | 150 | 125 | 125 | 125 | 80 | 180 | 150 | 8210G034 ✓ | 23D | ● | - | - | - | 10.1/F | 11.6/F |
| 1/2 | 5/8 | 3 | 0 | 150 | 150 | 100 | 125 | 125 | 80 | 180 | 150 | - | - | - | 8210G030 ✓ | 37D | ● | 10.1/F | 11.6/F |
| 1/2 | 5/8 | 4 | 5 | 250 | 200 | 200 | 250 | 200 | 200 | 180 | 180 | 8210G012 ⑧ ⑨ | 39D | ● | - | - | - | 10.1/F | 11.6/F |
| 3/4 | 3/4 | 5.5 | 0 | 150 | 150 | 125 | 125 | 125 | 80 | 180 | 150 | 8210G035 ✓ | 25D | ● | - | - | - | 10.1/F | 11.6/F |
| 3/4 | 5/8 | 3 | 0 | 150 | 150 | 100 | 125 | 125 | 80 | 180 | 150 | - | - | - | 8210G038 ✓ | 38D | ● | 10.1/F | 11.6/F |
| 3/4 | 3/4 | 6.5 | 5 | - | - | - | 250 | 200 | 200 | - | 180 | 8210C013 | 24D | ● | - | - | - | - | 16.8/F |
| 3/4 | 3/4 | 6.5 | 5 | 250 | 200 | 200 | - | - | - | 180 | - | 8210G013 | 46D | ● | - | - | - | 16.1/F | - |
| 1 | 1 | 13 | 0 | 125 | 125 | 125 | - | - | - | 180 | - | 8210B057 ⑥ ⑩ | 34D | ● | - | - | - | 20/F | - |
| 1 | 1 | 13 | 5 | - | - | - | 125 | 125 | 125 | - | 180 | 8210D014 | 26D | ● | - | - | - | - | 16.8/F |
| 1 | 1 | 13 | 5 | 150 | 150 | 125 | - | - | - | 180 | - | 8210G014 | 47D | ● | - | - | - | 16.1/F | - |
| 1 1/4 | 1 1/8 | 15 | 0 | 125 | 125 | 125 | - | - | - | 180 | - | 8210B058 ⑥ ⑩ | 35D | ● | - | - | - | 20/F | - |
| 1 1/4 | 1 1/8 | 15 | 5 | - | - | - | 125 | 125 | 125 | - | 180 | 8210D018 | 28D | ● | - | - | - | - | 16.8/F |
| 1 1/4 | 1 1/8 | 15 | 5 | 150 | 150 | 125 | - | - | - | 180 | - | 8210G018 | 48D | ● | - | - | - | 16.1/F | - |
| 1 1/2 | 1 1/4 | 22.5 | 0 | 125 | 125 | 125 | - | - | - | 180 | - | 8210B059 ⑥ ⑩ | 36D | ● | - | - | - | 20/F | - |
| 1 1/2 | 1 1/4 | 22.5 | 5 | - | - | - | 125 | 125 | 125 | - | 180 | 8210D032 | 29D | ● | - | - | - | - | 16.8/F |
| 1 1/2 | 1 1/4 | 22.5 | 5 | 150 | 150 | 125 | - | - | - | 180 | - | 8210G032 | 49D | ● | 8210G132 | - | - | 16.1/F | - |
| 2 | 1 3/4 | 43 | 5 | - | - | - | 125 | 125 | 125 | - | 150 | 8210 103 | 30P | ● | - | - | - | - | 16.8/F |
| 2 | 1 3/4 | 43 | 5 | 125 | 125 | 125 | - | - | - | 180 | - | 8210G103 | 50P | ● | 8210G133 | - | - | 16.1/F | - |
| 2 1/2 | 1 3/4 | 45 | 5 | - | - | - | 125 | 125 | 125 | - | 150 | 8210 104 | 27P | ● | - | - | - | - | 16.8/F |
| 2 1/2 | 1 3/4 | 45 | 5 | 125 | 125 | 125 | - | - | - | 180 | - | 8210G104 | 51P | ● | - | | | 16.1/F | - |

① 5 psi on Air; 1 psi on Water.
② Valve provided with PTFE main disc.
③ Valve includes Ultem (G.E. trademark) piston.
④ Letter "D" denotes diaphragm construction; "P" denotes piston construction.
⑤ ❍ Safety Shutoff Valve; ● General Purpose Valve.
*Refer to Engineering Section (Approvals) for details.*
⑥ Valves not available with Explosionproof enclosures.
⑦ On 50 hertz service, the watt rating for the 6.1/F solenoid is 8.1 watts.
⑧ AC construction also has PA seating.
⑨ No disc-holder.
⑩ Stainless steel disc-holder.
† UL listed for fire protection systems per UL429A.
‡ DC constructions must have solenoid mounted vertical and upright.
✓ ATEX/IECEx certified with prefix "EV".
▼ ATEX/IECEx certified for DC only with prefix "EV".
◆ Not available in 6 Volt DC. EF and HB prefix only.

## Specifications (Metric units)

| Pipe Size (in) | Orifice Size (mm) | Kv Flow Factor ($m^3$/hr) | Operating Pressure Differential (bar) | | | | | | | Max. Fluid Temp. °C | | Brass Body | | | Stainless Steel Body | | | Watt Rating/ Class of Coil Insulation ⑦ | |
|---|---|---|---|---|---|---|---|---|---|---|---|---|---|---|---|---|---|---|---|
| | | | | Max. AC | | | Max. DC | | | | | | | | | | | | |
| | | | Min. | Air-Inert Gas | Water | Light Oil @ 300 SSU | Air-Inert Gas | Water | Light Oil @ 300 SSU | AC | DC | Catalog Number | Const. Ref. ④ | UL ⑤ Listing | Catalog Number | Const. Ref. ④ | UL ⑤ Listing | AC | DC |
| **NORMALLY CLOSED (Closed when de-energized), NBR or PTFE ② Seating** | | | | | | | | | | | | | | | | | | | |
| 3/8 | 10 | 1.3 | ① | 10 | 9 | - | 3 | 3 | - | 82 | 65 | 8210G073 ③ | 1P | ● | 8210G036 ③ | 1P | ● | 6.1/F | 11.6/F |
| 3/8 | 16 | 2.6 | 0 | 10 | 10 | - | 3 | 3 | - | 82 | 65 | 8210G093 | 5D | ❍ | - | - | - | 10.1/F | 11.6/F |
| 3/8 | 16 | 2.6 | 0.3 | 14 | 10 | 9 | 9 | 7 | 7 | 82 | 65 | 8210G001 ▼ | 6D | ❍ | - | - | - | 6.1/F | 11.6/F |
| 3/8 | 16 | 2.6 | 0.3 | 21 | 21 | 21 | - | - | - | 79 | - | 8210G006 ✓ | 5D | ❍ | - | - | - | 17.1/F | - |
| 1/2 | 11 | 1.9 | ① | 10 | 9 | - | 3 | 3 | - | 82 | 65 | 8210G015 ③ | 2P | ● | 8210G037 ③ | 2P | ● | 6.1/F | 11.6/F |
| 1/2 | 16 | 3.4 | 0 | 10 | 10 | - | 3 | 3 | - | 82 | 65 | 8210G094 ✓ | 5D | ❍ | - | - | - | 10.1/F | 11.6/F |
| 1/2 | 16 | 3.4 | 0 | 10 | 10 | 9 | 3 | 3 | - | 79 | 65 | - | - | - | 8210G087 ✓ | 7D | ● | 17.1/F | 11.6/F |
| 1/2 | 16 | 3.4 | 0.3 | 14 | 10 | 9 | 9 | 7 | 7 | 82 | 65 | 8210G002 ▼ | 6D | ❍ | - | - | - | 6.1/F | 11.6/F |
| 1/2 | 16 | 3.4 | 0.3 | 21 | 21 | 21 | - | - | - | 79 | - | 8210G007 | 5D | ❍ | - | - | - | 17.1/F | - |
| 1/2 | 19 | 3.4 | 0.3 | - | 21 | - | - | 21 | - | 54 | 32 | 8210G227 | 5D | ❍ † | - | - | - | 17.1/F | 40.6H |
| 3/4 | 16 | 3.9 | 0 | 10 | 10 | 9 | 3 | 3 | - | 79 | 65 | - | - | - | 8210G088 ✓ | 7D | ● | 17.1/F | 11.6/F |
| 3/4 | 19 | 4.3 | 0.3 | 9 | 9 | 9 | 7 | 6 | 5 | 82 | 65 | 8210G009 ▼ | 9D | ❍ | - | - | - | 6.1/F | 11.6/F |
| 3/4 | 19 | 4.3 | 0 | 10 | 10 | - | 3 | 3 | - | 82 | 65 | 8210G095 ✓ | 8D | ❍ | - | - | - | 10.1/F | 11.6/F |
| 3/4 | 19 | 5.6 | 0.3 | 17 | 10 | 7 | 9 | 9 | 9 | 82 | 65 | 8210G003 ▼ | 11D | ❍ | - | - | - | 6.1/F | 11.6/F |
| 3/4 | 19 | 5.1 | 0 | 24 | 21 | 14 | 14 | 14 | 14 | 93 | 82 | 8210G026 ② ‡ ◆ | 40P/10D | ● | - | - | - | 16.1F | 30.8/F |
| 1 | 25 | 11 | 0 | 10 | 9 | 9 | 9 | 8 | 8 | 82 | 82 | 8210G054 ‡ ◆ | 41D/31D | ● | 8210G089 ‡ ◆ | 45D/15D | ● | 16.1/F | 30.8/F |
| 1 | 25 | 11 | 0.3 | 10 | 10 | 7 | 9 | 9 | 9 | 82 | 65 | 8210G004 ▼ | 12D | ❍ | - | - | - | 6.1/F | 11.6/F |
| 1 | 25 | 11.5 | 0 | 21 | 16 | 8 | - | - | - | 93 | - | 8210G027 ‡ | 42P | ● | - | - | - | 20.1/F | - |
| 1 | 25 | 11.5 | 0.7 | 21 | 21 | 21 | - | - | - | 79 | - | 8210G078 ② | 13P | - | - | - | - | 17.1/F | - |
| 1 1/4 | 29 | 13 | 0 | 10 | 9 | 9 | 9 | 8 | 8 | 82 | 82 | 8210G055 ‡ ◆ | 43D/32D | ● | - | - | - | 16.1/F | 30.8/F |
| 1 1/4 | 29 | 13 | 0.3 | 10 | 10 | 7 | 9 | 9 | 9 | 82 | 65 | 8210G008 ▼ | 16D | ❍ | - | - | - | 6.1/F | 11.6/F |
| 1 1/2 | 32 | 19.5 | 0 | 10 | 9 | 9 | 9 | 8 | 8 | 82 | 82 | 8210G056 ‡ ◆ | 44D/33D | ● | - | - | - | 16.1/F | 30.8/F |
| 1 1/2 | 32 | 19.5 | 0.3 | 10 | 10 | 7 | 9 | 9 | 9 | 82 | 65 | 8210G022 ▼ | 18D | ● | 8210G127 | - | - | 6.1/F | 11.6/F |
| 2 | 44 | 37 | 0.3 | 10 | 9 | 6 | 3 | 3 | 3 | 82 | 65 | 8210G100 | 20P | ● | 8210G129 | - | - | 6.1/F | 11.6/F |
| 2 1/2 | 44 | 39 | 0.3 | 10 | 9 | 6 | 3 | 3 | 3 | 82 | 65 | 8210G101 | 21P | ● | - | - | - | 6.1/F | 11.6/F |
| **NORMALLY OPEN (Open when de-energized), NBR Seating (PA Disc-Holder, except as noted)** | | | | | | | | | | | | | | | | | | | |
| 3/8 | 16 | 2.6 | 0.0 | 10 | 10 | 9 | 9 | 9 | 6 | 82 | 65 | 8210G033 | 23D | ● | - | - | - | 10.1/F | 11.6/F |
| 3/8 | 16 | 2.6 | 0.3 | 17 | 14 | 14 | 17 | 14 | 14 | 82 | 82 | 8210G011 ⑧ ⑨ | 39D | ● | - | - | - | 10.1/F | 11.6/F |
| 1/2 | 16 | 3.4 | 0 | 10 | 10 | 9 | 9 | 9 | 6 | 82 | 65 | 8210G087 ✓ | 7D | ● | - | - | - | 10.1/F | 11.6/F |
| 1/2 | 16 | 2.6 | 0 | 10 | 10 | 7 | 9 | 9 | 6 | 82 | 65 | - | - | - | 8210G087 ✓ | 7D | ● | 10.1/F | 11.6/F |
| 1/2 | 16 | 3.4 | 0.3 | 17 | 14 | 14 | 17 | 14 | 14 | 82 | 82 | 8210G012 ⑧ ⑨ | 39D | ● | - | - | - | 10.1/F | 11.6/F |
| 3/4 | 19 | 4.7 | 0 | 10 | 10 | 9 | 9 | 9 | 6 | 82 | 65 | 8210G087 ✓ | 7D | ● | - | - | - | 10.1/F | 11.6/F |
| 3/4 | 16 | 2.6 | 0 | 10 | 10 | 7 | 9 | 9 | 6 | 82 | 65 | - | - | - | 8210G087 ✓ | 7D | ● | 10.1/F | 11.6/F |
| 3/4 | 19 | 5.6 | 0.3 | - | - | - | 17 | 14 | 14 | - | 82 | 8210C013 | 24D | ● | - | - | - | - | 16.8/F |
| 3/4 | 19 | 5.6 | 0.3 | 17 | 14 | 14 | - | - | - | 82 | - | 8210G013 | 46D | ● | - | - | - | 16.1/F | - |
| 1 | 25 | 11 | 0 | 9 | 9 | 9 | - | - | - | 82 | - | 8210B057 ⑥ ⑩ | 34D | ● | - | - | - | 20/F | - |
| 1 | 25 | 11 | 0.3 | - | - | - | 9 | 9 | 9 | - | 82 | 8210D014 | 26D | ● | - | - | - | - | 16.8/F |
| 1 | 25 | 11 | 0.3 | 10 | 10 | 9 | - | - | - | 82 | - | 8210G014 | 47D | ● | - | - | - | 16.1/F | - |
| 1 1/4 | 29 | 13 | 0 | 9 | 9 | 9 | - | - | - | 82 | - | 8210B058 ⑥ ⑩ | 35D | ● | - | - | - | 20/F | - |
| 1 1/4 | 29 | 13 | 0.3 | - | - | - | 9 | 9 | 9 | - | 82 | 8210D018 | 28D | ● | - | - | - | - | 16.8/F |
| 1 1/4 | 29 | 13 | 0.3 | 10 | 10 | 9 | - | - | - | 82 | - | 8210G018 | 48D | ● | - | - | - | 16.1/F | - |
| 1 1/2 | 32 | 19.5 | 0 | 9 | 9 | 9 | - | - | - | 82 | - | 8210B059 ⑥ ⑩ | 36D | ● | - | - | - | 20/F | - |
| 1 1/2 | 32 | 19.5 | 0.3 | - | - | - | 9 | 9 | 9 | - | 82 | 8210D032 | 29D | ● | - | - | - | - | 16.8/F |
| 1 1/2 | 32 | 19.5 | 0.3 | 10 | 10 | 9 | - | - | - | 82 | - | 8210G032 | 49D | ● | 8210G132 | - | - | 16.1/F | - |
| 2 | 44 | 37 | 0.3 | - | - | - | 9 | 9 | 9 | - | 65 | 8210 103 | 30P | ● | - | - | - | - | 16.8/F |
| 2 | 44 | 37 | 0.3 | 9 | 9 | 9 | - | - | - | 82 | - | 8210G103 | 50P | ● | 8210G133 | - | - | 16.1/F | - |
| 2 1/2 | 44 | 39 | 0.3 | - | - | - | 9 | 9 | 9 | - | 65 | 8210 104 | 27P | ● | - | - | - | - | 16.8/F |
| 2 1/2 | 44 | 39 | 0.3 | 9 | 9 | 9 | - | - | - | 82 | - | 8210G104 | 51P | ● | - | - | - | 16.1/F | - |

① 0.3 bar on Air; 0.0 bar on Water.
② Valve provided with PTFE main disc.
③ Valve includes ULtem (G.E. trademark) piston.
④ Letter "D" denotes diaphragm construction; "P" denotes piston construction.
⑤ ❍ Safety Shutoff Valve; ● General Purpose Valve.
*Refer to Engineering Section (Approvals) for details.*
⑥ Valves not available with Explosionproof enclosures.
⑦ On 50 hertz service, the watt rating for the 6.1/F solenoid is 8.1 watts.
⑧ AC construction also has PA seating.
⑨ No disc-holder.
⑩ Stainless steel disc-holder.
† UL listed for fire protection systems per UL429A.
‡ DC constructions must have solenoid mounted vertical and upright.
✓ ATEX/IECEx certified with prefix "EV".
▼ ATEX/IECEx certified for DC only with prefix "EV".
◆ Not available in 6 Volt DC. EF and HB prefix only.

## Dimensions: inches (mm)

| Const. Ref. | | H | K | L | P | W |
|---|---|---|---|---|---|---|
| 1* | in | 3.85 | 3.00 | 1.91 | 3.41 | 1.69 |
| | mm | 98 | 76 | 49 | 87 | 43 |
| 2* | in | 4.17 | 3.25 | 2.28 | 3.63 | 1.69 |
| | mm | 106 | 83 | 58 | 92 | 43 |
| 5 | in | 3.84 | 2.31 | 2.75 | 3.28 | 2.28 |
| | mm | 98 | 59 | 70 | 83 | 58 |
| 6* | in | 3.38 | 1.94 | 2.75 | 2.80 | 2.28 |
| | mm | 86 | 49 | 70 | 71 | 58 |
| 7 | in | 4.19 | 2.50 | 2.81 | 3.47 | 2.39 |
| | mm | 106 | 64 | 71 | 88 | 61 |
| 8 | in | 4.13 | 2.47 | 2.81 | 3.44 | 2.29 |
| | mm | 105 | 63 | 71 | 87 | 58 |
| 9* | in | 3.66 | 2.10 | 2.81 | 2.96 | 2.28 |
| | mm | 93 | 53 | 71 | 75 | 58 |
| 10* | in | 5.20 | 3.40 | 2.80 | 4.50 | 2.50 |
| | mm | 131 | 86 | 71 | 114 | 62 |
| 11* | in | 4.16 | 2.66 | 3.84 | 3.52 | 2.75 |
| | mm | 106 | 68 | 98 | 89 | 70 |
| 12 | in | 5.64 | 3.15 | 3.75 | 4.01 | 3.36 |
| | mm | 143 | 80 | 95 | 102 | 85 |
| 13 | in | 4.44 | 3.22 | 3.75 | 4.19 | 5.81 |
| | mm | 113 | 82 | 95 | 106 | 147 |
| 15* | in | 5.20 | 3.30 | 3.80 | 4.40 | 3.80 |
| | mm | 133 | 83 | 98 | 111 | 98 |
| 16 | in | 5.64 | 3.15 | 3.66 | 4.01 | 3.56 |
| | mm | 143 | 80 | 93 | 102 | 90 |
| 18* | in | 6.11 | 3.30 | 4.38 | 4.16 | 3.92 |
| | mm | 155 | 84 | 111 | 106 | 100 |
| 20* | in | 7.33 | 3.71 | 5.06 | 4.57 | 4.87 |
| | mm | 186 | 94 | 129 | 116 | 124 |
| 21* | in | 7.33 | 3.71 | 5.50 | 4.57 | 4.87 |
| | mm | 186 | 94 | 140 | 116 | 124 |
| 23 | in | 4.35 | 2.65 | 2.75 | 3.79 | 2.28 |
| | mm | 110 | 67 | 70 | 96 | 58 |
| 24 | in | 5.06 | X | 3.78 | 4.44 | 2.75 |
| | mm | 129 | X | 96 | 113 | 70 |
| 25 | in | 4.64 | 2.81 | 2.81 | 3.94 | 2.28 |
| | mm | 118 | 71 | 71 | 100 | 58 |
| 26 | in | 6.53 | X | 3.75 | 4.91 | 3.19 |
| | mm | 166 | X | 95 | 125 | 81 |
| 27 | in | 8.22 | X | 5.50 | 5.47 | 4.87 |
| | mm | 209 | X | 140 | 139 | 124 |
| 28 | in | 6.53 | X | 3.66 | 4.91 | 3.19 |
| | mm | 166 | X | 93 | 125 | 81 |
| 29 | in | 7.03 | X | 4.38 | 5.06 | 4.40 |
| | mm | 179 | X | 111 | 129 | 112 |

* DC dimensions slightly larger.
**IMPORTANT:** Valves may be mounted in any position, except as noted in specifications table.

### Const. Ref. 1, 2

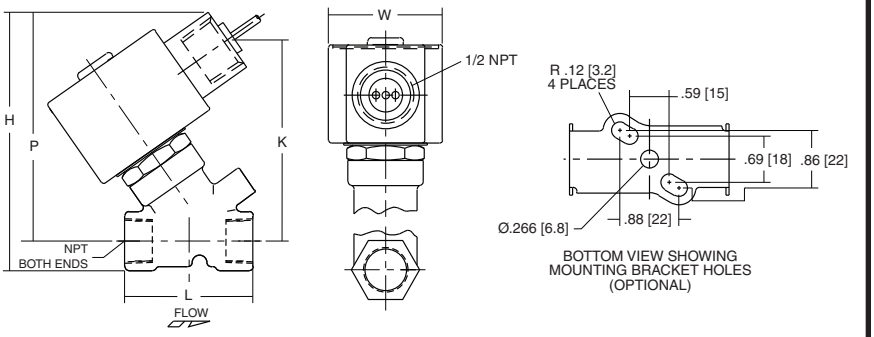


### Const. Ref. 13

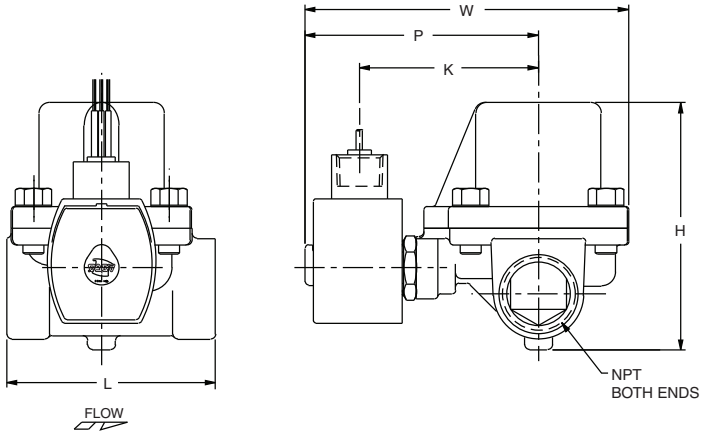


### Const. Ref. 5-9, 11, 23 , 25, 37,38, 40-46

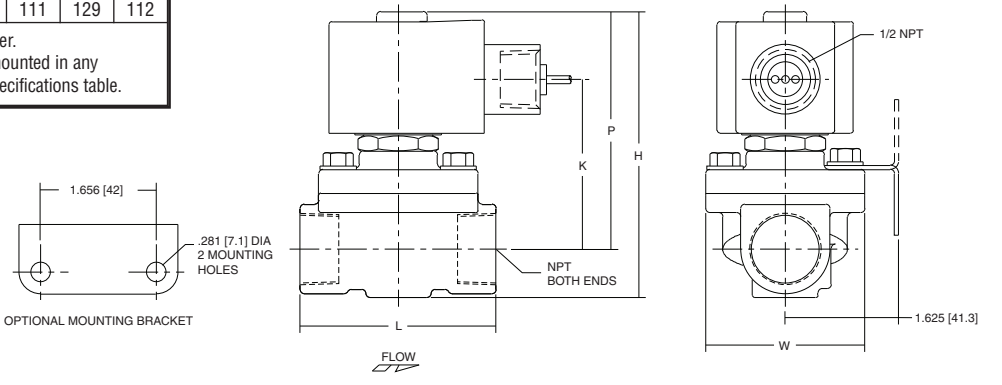

## Dimensions: inches (mm)

| Const. Ref. | | H | K | L | P | W |
|---|---|---|---|---|---|---|
| 30 | in | 8.22 | X | 5.06 | 5.47 | 4.87 |
| | mm | 209 | X | 129 | 139 | 124 |
| 31 | in | 5.13 | 3.19 | 3.76 | 4.32 | 3.27 |
| | mm | 130 | 81 | 95 | 110 | 83 |
| 32 | in | 5.60 | 3.44 | 3.66 | 4.57 | 3.27 |
| | mm | 142 | 87 | 93 | 116 | 83 |
| 33 | in | 5.92 | 3.66 | 4.51 | 4.80 | 3.89 |
| | mm | 150 | 93 | 115 | 122 | 99 |
| 34 | in | 6.91 | X | 3.75 | 6.09 | 3.25 |
| | mm | 176 | X | 95 | 155 | 83 |
| 35 | in | 7.34 | X | 3.66 | 6.34 | 3.25 |
| | mm | 186 | X | 93 | 161 | 83 |
| 36 | in | 7.66 | X | 4.38 | 6.56 | 3.91 |
| | mm | 1.95 | X | 111 | 167 | 99 |
| 37 | in | 4.61 | 2.75 | 2.81 | 3.89 | 2.39 |
| | mm | 117 | 70 | 71 | 99 | 61 |
| 38 | in | 4.61 | 2.75 | 2.81 | 3.89 | 2.39 |
| | mm | 117 | 70 | 71 | 99 | 61 |
| 39 | in | 5.42 | 2.31 | 2.75 | 4.86 | 3.80 |
| | mm | 138 | 59 | 70 | 123 | 97 |
| 40 | in | 5.20 | 3.29 | 2.81 | 4.50 | 2.28 |
| | mm | 132 | 83 | 71 | 114 | 58 |
| 41 | in | 5.13 | 3.10 | 3.75 | 4.32 | 3.25 |
| | mm | 130 | 79 | 95 | 110 | 83 |
| 42 | in | 6.43 | 4.40 | 3.93 | 5.62 | 3.25 |
| | mm | 163 | 112 | 100 | 143 | 83 |
| 43 | in | 5.57 | 3.35 | 3.66 | 4.57 | 3.25 |
| | mm | 142 | 85 | 93 | 116 | 83 |
| 44 | in | 5.90 | 3.57 | 4.38 | 4.79 | 3.91 |
| | mm | 150 | 91 | 111 | 122 | 99 |
| 45 | in | 5.26 | 3.17 | 3.75 | 4.38 | 3.84 |
| | mm | 134 | 81 | 95 | 111 | 98 |
| 46 | in | 4.95 | 3.10 | 3.84 | 4.31 | 2.75 |
| | mm | 126 | 79 | 98 | 110 | 70 |
| 47 | in | 6.43 | 3.59 | 3.75 | 4.81 | 3.52 |
| | mm | 163 | 91 | 95 | 122 | 90 |
| 48 | in | 6.43 | 3.59 | 3.66 | 4.81 | 3.73 |
| | mm | 163 | 91 | 93 | 122 | 95 |
| 49 | in | 6.91 | 3.75 | 4.38 | 4.96 | 4.40 |
| | mm | 176 | 95 | 111 | 126 | 112 |
| 50 | in | 8.13 | 4.15 | 5.06 | 5.37 | 4.87 |
| | mm | 207 | 105 | 129 | 136 | 124 |
| 51 | in | 8.13 | 4.15 | 5.50 | 5.37 | 5.18 |
| | mm | 207 | 105 | 140 | 136 | 132 |

**IMPORTANT:** Valves may be mounted in any position, except as noted in specifications table.

### Const. Ref. 10, 15, 31, 32, 33

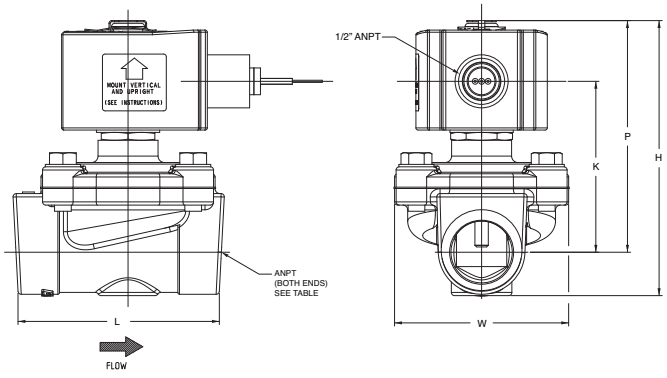


### Const. Ref. 24, 34, 35, 36

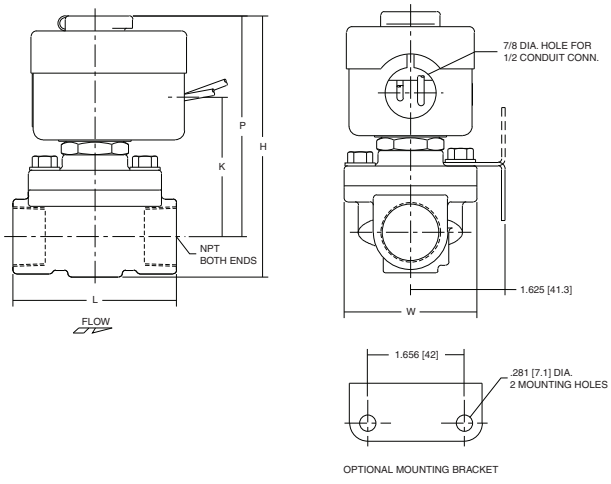


### Const. Ref. 12, 16, 26, 28, 47, 48

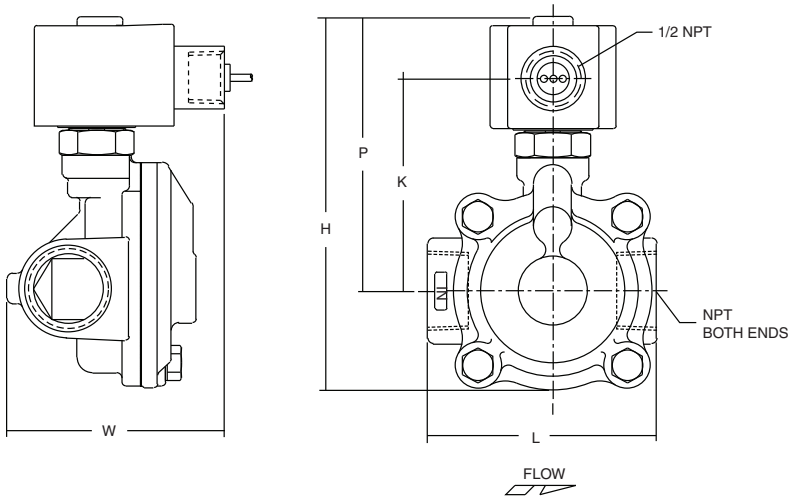

## Dimensions: inches (mm)

### Const. Ref. 39

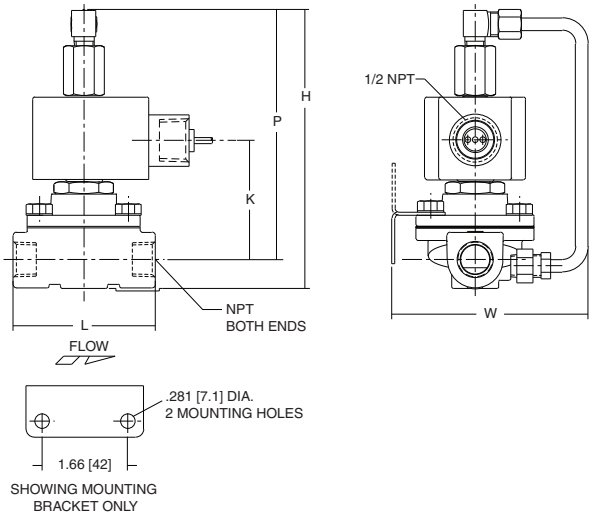


### Const. Ref. 18, 29, 49

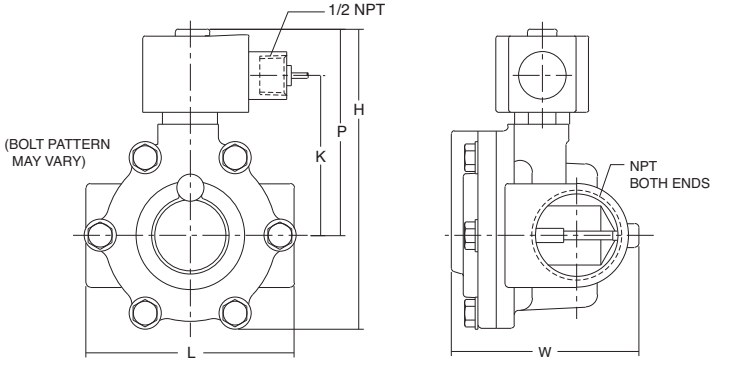


### Const. Ref. 20, 21, 27, 30, 50, 51

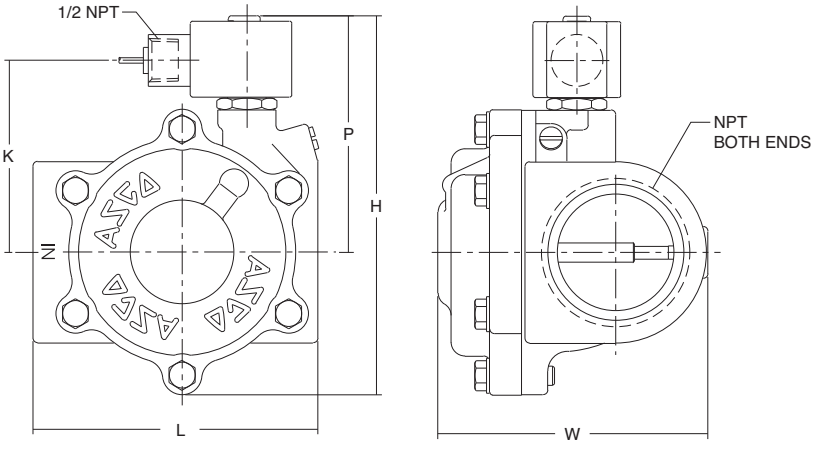

# CS-304-700 : Identification sheet

| | | | |
|---|---|---|---|
| VWTC PROJECT NUMBER: | 5000220043 | REV: | 1 |
| PROJECT NAME: | AEM MELIADINE - BPC UPGRADE | SUBMITTED TO (COMPANY): | AEM |
| ENGINEER: | EMMANUELLE DORMOY | SUBMITTED TO (RESPONSIBLE): | |
| PROJECT MANAGER: | THOMAS SAVARY / BRUCE BORDES | PROJECT NUM REFERENCE.: | 6526-S-265-605 / OC-989680 |
| PHONE NUMBER: | 514-334-7230 | LOT NUMBER: | |

| SUPPLIER | EQPT CODE | EQPT TAG NO | DIA | DESCRIPTION | INFO 1 | INFO 2 | INFO 3 | APPLIC. | NOTE | REV |
|---|---|---|---|---|---|---|---|---|---|---|
| ASCO | ST-304-700 | 65FY6801613 | N/A | AIR SOLENOID VALVE | TYPE: SOLENOID VALVE// MANUF. : BRAY//MODEL : S 63 N4, 120 VAC/60Hz C/w Speed Control 55,Singleway, 1/4 NPTF | N/A | N/A | ACTIVATED CARBON PREPATION SYSTEM #1 | | 1 |
| ASCO | ST-304-700 | 65FY6801633 | N/A | AIR SOLENOID VALVE | TYPE: SOLENOID VALVE// MANUF. : BRAY//MODEL : S 63 N4, 120 VAC/60Hz C/w Speed Control 55,Singleway, 1/4 NPTF | N/A | N/A | ACTIVATED CARBON PREPATION SYSTEM #2 | | 1 |

**This page is intentionally left blank**

# Series 63 Solenoid Valve

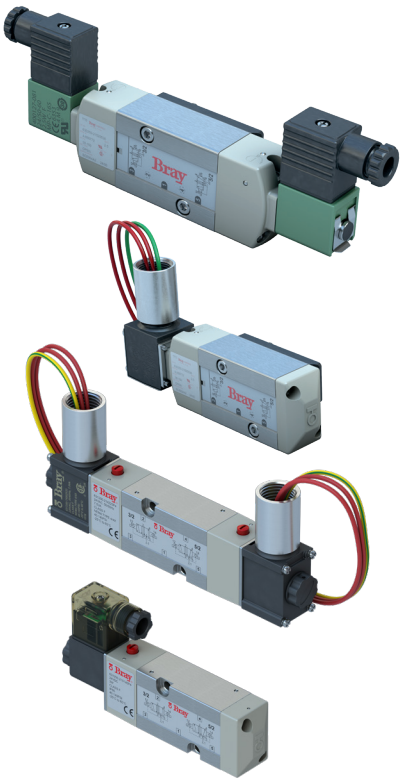

## FEATURES

- Compact and modular design
- Pilot operated spool control valve
- Convertible from 3-way (3/2) to 4-way (5/2)
- Mechanical manual override

## TECHNICAL DATA

| | | |
|---|---|---|
| **Materials of Construction** | | |
| Body | Anodized Aluminum | |
| Spring | Phosphate treated black steel | |
| Shading Coil | Copper | |
| Seals | NBR + PUR | |
| Core / Tube | Stainless / Brass | |
| End Covers & Plate | 6/6 glass filled polyamide (PA/FV) | |
| Spool | Aluminum | |
| Internal Parts | Zamak, Steel, Acetal | |
| **General Specifications** | | |
| Mounting | NAMUR VDI/VDE 3845, hardware included | |
| Pneumatic Ports | 1/4" NPT<br>G1/4 available for DIN Models | |
| Media | Filtered Air or Inert Gas | |
| Connections | NPT flying leads or DIN Form B Type I connections offered, both available with single and dual coils | |
| Electrical Connections | NEMA Housings: 1/2" NPT connection and flying leads | |
| | DIN Housing: Cable Gland PG9 and M15 threaded connector | |
| Coil Temperature Rating | Insulation Class "F", Max. 311°F [155°C] | |
| General Purpose (watertight) | NEMA 4, 4X (Flying Leads) | |
| | IP65 (DIN coil) | |
| **Model Specifications** | **High-flow** | **UL-Recognized** |
| Hazardous Locations (Optional) | — | NEMA 7, 9<br>Class I, Division 1 (Groups A-D)<br>Class II, Division 1 (Groups E-G) |
| Temperature Range | -13°F to +140°F [-25°C to +60°C] | AC: -13°F to +140°F [-25°C to +60°C] |
| | | DC: -13°F to +77°F [-25°C to +25°C] |
| Coil Voltage | Flying Leads & DIN<br>24, 110, 220 VAC, 50-60 HZ;<br>12, 24 VDC | Flying Leads: 24, 120, 220 VAC, 50-60 HZ;<br>12, 24 VDC |
| | | DIN: 24, 120, 240 VAC, 50-60 HZ;<br>24 VDC |
| Nominal Power | 4.5VA (24VAC); 6VA (110VAC);<br>7.5VA (220VAC);<br>4.5W (12 VDC); 3W (24VDC) | Flying Leads: 7VA (AC); 6.9W (DC) |
| | | DIN: 3.5VA (AC); 3.0W (DC) |
| Flow Coefficient (1/4" pipe) | Cv=1.4 | Cv=0.7 |
| Operating Pressure | Min. 22 psi [1.5 bar]<br>Max. 130 psi [9 bar] | Min. 30 psi [2 bar]<br>Max. 130 psi [9 bar] |
| Operating Speed | 5 cycles per minute | 10 cycles per minute |
| Certifications | cCSAus (Flying Leads), CE (DIN coil) | UL, CSA, CE (DIN coil) |

## DIMENSIONS

### DIN Solenoid

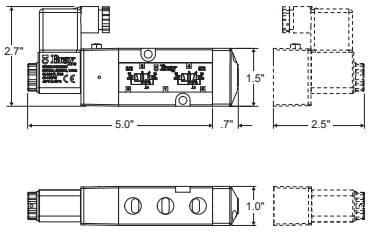


### NEMA Solenoid

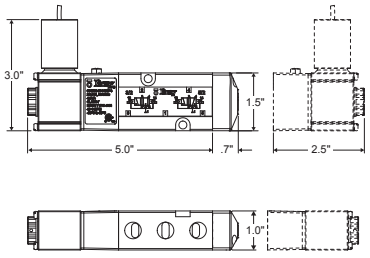


Note: Some dimensions may vary depending on model.

All information herein is proprietary, confidential, and may not be copied or reproduced without the expressed written consent of BRAY INTERNATIONAL, Inc.
The technical data herein is for general information only. Product suitability should be based solely upon customer's detailed knowledge and experience with their application.

## PNEUMATIC SCHEMATICS

### 3/2 Operation

Single Coil

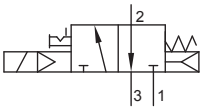


Dual Coil

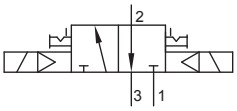


### 5/2 Operation

Single Coil

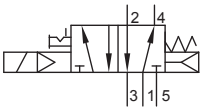


Dual Coil

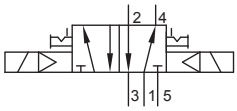


## ELECTRICAL CONNECTION

### DIN 43650B

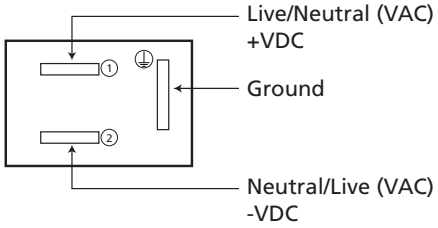


### Flying Leads

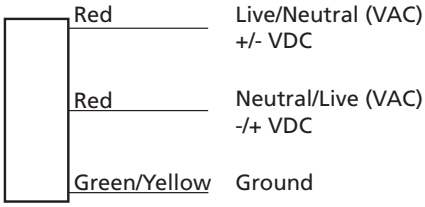


## ACCESSORIES

| Connector | Description |
|---|---|
| 600250-71106533 | Form B Type I Plug Connector (DIN 43650) with Cable Gland PG9 |
| 600500-71106533 | Form B Type I Plug Connector (DIN 43650) with 1/2" NPT Female Connection |
| 090004-76146533 | Form B Type I Plug Connector (DIN 43650), LED and Surge Protected 110-220 VAC, to Flying Leads, 4 meters |
| 090004-76147533 | Form B Type I Plug Connector (DIN 43650), LED and Surge Protected 24-30 VDC, to Flying Leads, 4 meters |
| 600250-23663536 | Y-Connector Cordset - Form B Type I Plug Connector (DIN 43650) to M12 female straight connector (4-pin sensor side) AND M12 male straight connector (5-pin system side) |
| 600250-23667536 | Y-Connector Cordset - Form B Type I Plug Connector (DIN 43650) to 7/8" female straight connector (5- pin sensor side) AND 7/8" male straight connector (6-pin system side) |
| 090001-76159882 | S-Connector Cordset - Form B Type I Plug Connector (DIN 43650) to M12 male right angle (2-pins + PE), 0.6 meters |

HEADQUARTERS
**Bray International, Inc.**
13333 Westland East Blvd.
Houston, Texas 77041
Tel: 281.894.5454
bray.com

All statements, technical information, and recommendations in this bulletin are for general use only. Consult Bray representatives or factory for the specific requirements and material selection for your intended application. The right to change or modify product design or product without prior notice is reserved. Patents issued and applied for worldwide.

Bray® is a registered trademark of Bray International, Inc.

© 2020 Bray International, Inc. All rights reserved.

# CS-309-900 : Identification sheet

| | | | |
|---|---|---|---|
| VWTC PROJECT NUMBER: | 5000220043 | REV: | 1 |
| PROJECT NAME: | AEM MELIADINE - BPC UPGRADE | SUBMITTED TO (COMPANY): | AEM |
| ENGINEER: | EMMANUELLE DORMOY | SUBMITTED TO (RESPONSIBLE): | |
| PROJECT MANAGER: | THOMAS SAVARY / BRUCE BORDES | PROJECT NUM REFERENCE.: | 6526-S-265-605 / OC-989680 |
| PHONE NUMBER: | 514-334-7230 | LOT NUMBER: | |

| SUPPLIER | EQPT CODE | EQPT TAG NO | DIA | DESCRIPTION | INFO 1 | INFO 2 | INFO 3 | APPLIC. | NOTE | REV |
|---|---|---|---|---|---|---|---|---|---|---|
| WATTS | ST-309-900 | 15-RV99-1612 | DIA: 1/2" | AIR PRESSURE REGULATING VALVE | TYPE: PRESSURE REDUCING \| 300 PSI//MANUFACTURER : WATTS//MODEL : R-119-04C//CONNECTION TYPE : NPT \| 1/2"//BODY : ZINC// SEAL \| SEAT :BUNA N \| // STEM : N/A | | | ACTIVATED CARBON PREPATION SYSTEM #1 | | 1 |
| WATTS | ST-309-900 | 15-RV99-1625 | DIA: 1/2" | AIR PRESSURE REGULATING VALVE | TYPE: PRESSURE REDUCING \| 300 PSI//MANUFACTURER : WATTS//MODEL : R-119-04C//CONNECTION TYPE : NPT \| 1/2"//BODY : ZINC// SEAL \| SEAT :BUNA N \| // STEM : N/A | | | ACTIVATED CARBON PREPATION SYSTEM #2 | | 1 |

**This page is intentionally left blank**

# R119 Standard Regulators

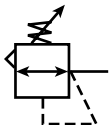



## Features

- High Flow Performance Featuring Rugged Design for the Most Demanding Applications
- Ideal for Those Installations Calling for Constant Pressure with Wide Variation in Flow
- Diaphragm Operated Design with Balanced Poppet Design for Quick and Accurate Regulation
- Secondary Aspiration Plus Balanced Poppet Provides Quick Response and Accurate Pressure Regulation
- Heavy Duty Tee Handle Adjustment
- Reverse Flow Version Available
- Panel Mount Version Available
- High Flow: 1/4" - 100 SCFM
  3/8" - 110 SCFM
  1/2" - 150 SCFM§

§ SCFM = Standard cubic feet per minute at 100 PSIG inlet, 75 PSIG no flow secondary setting, and 20 PSIG pressure drop.

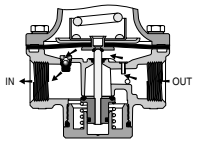


**X80 Reverse Flow Option**

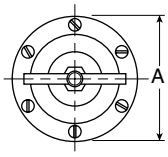


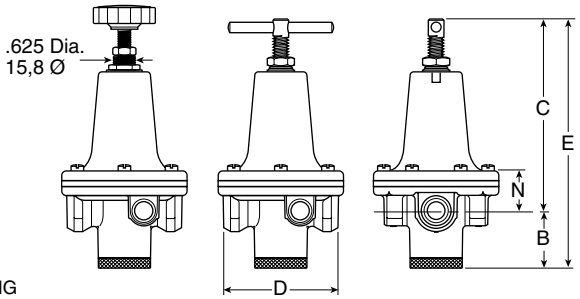


**Panel Mount Version**

| Port Size | NPT | BSPP |
|---|---|---|
| | Relieving | Relieving |
| **Without Gauge 0-125 PSIG Reduced Pressure** | | |
| 1/4" | **R119-02C** | R119G02C |
| 3/8" | **R119-03C** | R119G03C |
| 1/2" | **R119-04C** | R119G04C |
| **With Gauge 0-125 PSIG Reduced Pressure** | | |
| 1/4" | **R119-02CG** | — |
| 3/8" | **R119-03CG** | — |
| 1/2" | **R119-04CG** | — |

**Standard part numbers shown bold.**
**For other models refer to ordering information below.**

| R119 Regulator Dimensions | | | | | |
|---|---|---|---|---|---|
| **A** | **B** | **C** | **D** | **E** | **N** |
| **R119-02C, R119-03C** | | | | | |
| 3.00 (76) | 1.38 (35) | 4.60 (117) | 2.74 (705) | 5.98 (152) | 0.96 (24) |
| **R119-04C** | | | | | |
| 3.56 (90) | 1.56 (40) | 5.20 (132) | 3.25 (83) | 6.76 (172) | 1.27 (32) |

inches
(mm)

**⚠ WARNING**
**Do not connect regulator to bottled gas.**
**Do not exceed maximum primary pressure rating.**
**Product rupture can cause serious injury.**

## Ordering Information

| R | 119 | — | 02 | C | | /** |
|---|---|---|---|---|---|---|

**Port Threads**
- **— NPT**
- G BSPP

**Port Size**
- **02 1/4 Inch**
- **03 3/8 Inch**
- **04 1/2 Inch**

**Reduced Pressure Range**
- A 0-25 PSIG
- B 0-60 PSIG
- **C 0-125 PSIG**
- D 0-250 PSIG

**Options**
- G Gauge
- K Non-Relieving
- P Panel Mount Version
- X64 Fluorocarbon O-Rings and Diaphragm
- X80 Reverse Flow*

* Reverse flow for use downstream of control valves.

**Engineering Change Designator**

Will be entered at factory.

## CAUTION:

**REGULATOR PRESSURE ADJUSTMENT –** The working range of knob adjustment is designed to permit outlet pressures within their full range. Pressure adjustment beyond this range is also possible because the knob is not a limiting device. This is a common characteristic of most industrial regulators, and limiting devices may be obtained only by special design.

**NOTE: BOLD OPTIONS ARE STANDARD.**

## Technical Information

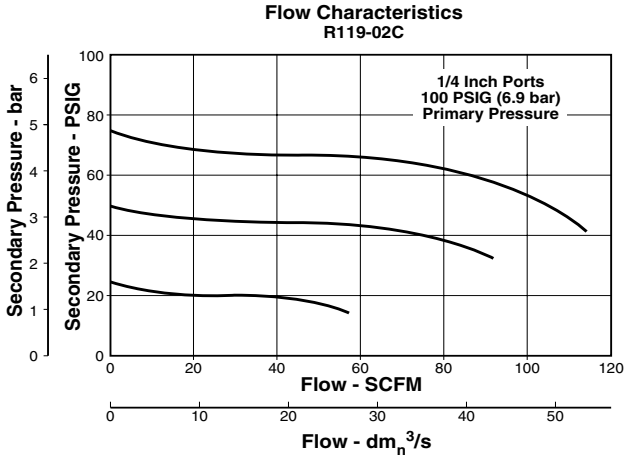


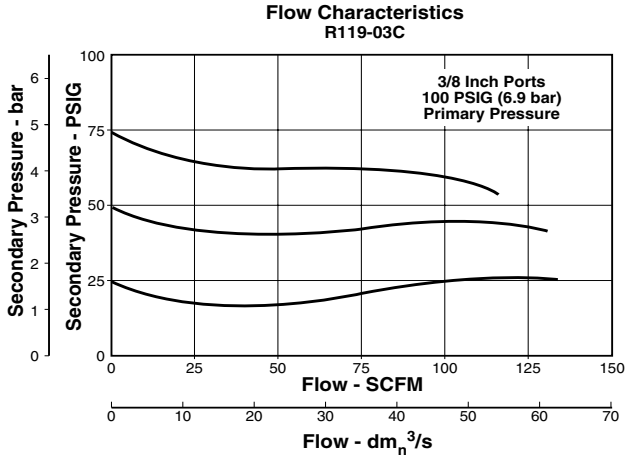


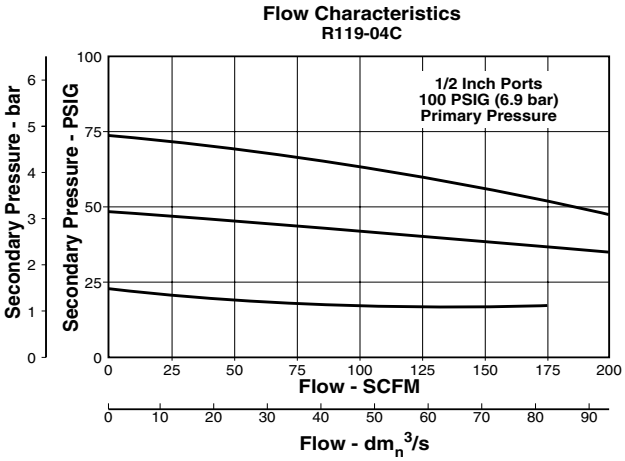


## R119 Regulator Kits & Accessories

**Gauges –**

2" Dial Size, 1/4" Back Connection
0 to 60 PSIG (0 to 400 kPa) ..... 275Y60S

2" Dial Size, 1/4" Back Connection
0 to 160 PSIG (0 to 1100 kPa) ..... 275Y160S

2" Dial Size, 1/4" Back Connection
0 to 300 PSIG (0 to 2068 kPa) ..... 275Y300S

**Mounting Bracket Kit –**

1/4", 3/8" ..... SA15Y57
1/2" ..... 18A57

**Panel Mount Conversion Kit –**

1/4", 3/8" ..... 4202
1/2" ..... 4204

**Repair Kits –**

Non-Relieving Diaphragm,
Valve Assembly (1/4", 3/8"; All PSIG) ..... RK118Y

Relieving Diaphragm,
Valve Assembly (1/4", 3/8"; All PSIG) ..... RK119Y

Non-Relieving Diaphragm,
Valve Assembly (1/2"; 25, 60, 125 PSIG) ..... RK118A

Non-Relieving Diaphragm,
Valve Assembly (1/2"; 250 PSIG) ..... RK118A250

Relieving Diaphragm,
Valve Assembly (1/2"; 25, 60, 125 PSIG) ..... RK119A

Relieving Diaphragm,
Valve Assembly (1/2"; 250 PSIG) ..... RK119A250

For Fluorocarbon Repair Kits, add X64 to Kit Number suffix.

## Specifications

**Gauge Ports (2)** ..... 1/4 Inch

**Port Threads** ..... 1/4, 3/8, 1/2 Inch

**Reduced Pressure Range** ..... 2 to 125 PSIG (0.15 to 8.5 bar)

**Supply Pressure** ..... 300 PSIG Maximum (20.4 bar)

**Temperature Rating** ..... 40°F to 125°F (4.4°C to 52°C)

**Weight –**

R119-02, R119-03 ..... 1.8 lb. (0.82 kg) / Unit
26 lb. (11.79 kg) / 12-Unit Master Pack

R119-04 ..... 3.2 lb. (1.45 kg) / Unit
27 lb. (12.25 kg) / 8-Unit Master Pack

## Materials of Construction

**Adjusting Screw, Springs** ..... Steel

**Body, Spring Cage** ..... Zinc

**Bottom Plug, Innervalve** ..... Brass

**Seals** ..... Buna N

# R119 Standard Regulators

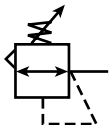



## Features

- High Flow Performance Featuring Rugged Design for the Most Demanding Applications
- Ideal for Those Installations Calling for Constant Pressure with Wide Variation in Flow
- Diaphragm Operated Design with Balanced Poppet Design for Quick and Accurate Regulation
- Secondary Aspiration Plus Balanced Poppet Provides Quick Response and Accurate Pressure Regulation
- Heavy Duty Tee Handle Adjustment
- Reverse Flow Version Available
- High Flow: 3/4" - 300 SCFM
  1" - 400 SCFM
  1-1/4" & 1-1/2" - 500 SCFM§

§ SCFM = Standard cubic feet per minute at 100 PSIG inlet, 75 PSIG no flow secondary setting, and 20 PSIG pressure drop.

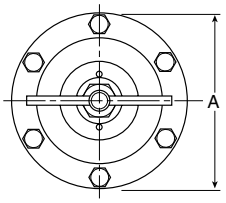


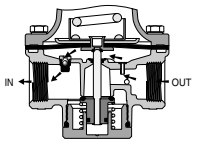


**X80 Reverse Flow Option**

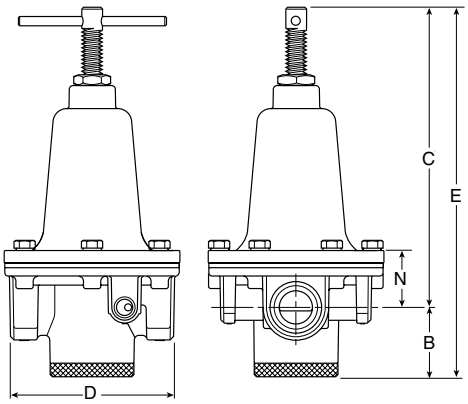


| Port Size | NPT | BSPP |
|---|---|---|
| | Relieving | Relieving |
| **Without Gauge 0-125 PSIG Reduced Pressure** | | |
| 3/4" | **R119-06C** | R119G06C |
| 1" | **R119-08C** | R119G08C |
| 1-1/4" | **R119-10C** | R119G10C |
| 1-1/2" | **R119-12C** | R119G12C |
| **With Gauge 0-125 PSIG Reduced Pressure** | | |
| 3/4" | **R119-06CG** | — |
| 1" | **R119-08CG** | — |
| 1-1/4" | **R119-10CG** | — |
| 1-1/2" | **R119-12CG** | — |

**Standard part numbers shown bold.**
**For other models refer to ordering information below.**

| R119 Regulator Dimensions | | | | | |
|---|---|---|---|---|---|
| **A** | **B** | **C** | **D** | **E** | **N** |
| **R119-06C, R119-08C** | | | | | |
| 4.69 (119) | 1.87 (47) | 8.15 (207) | 4.38 (111) | 10.02 (255) | 1.61 (41) |
| **R119-10C, R119-12C** | | | | | |
| 4.94 (125) | 1.81 (46) | 8.53 (217) | 4.94 (125) | 10.34 (263) | 1.99 (50.6) |

inches
(mm)

**⚠ WARNING**
**Do not connect regulator to bottled gas.**
**Do not exceed maximum primary pressure rating.**
**Product rupture can cause serious injury.**

## Ordering Information

| R | 119 | — | 06 | C | | /** |
|---|---|---|---|---|---|---|

**Port Threads**
- **— NPT**
- G BSPP

**Port Size**
- **06 3/4 Inch**
- **08 1 Inch**
- **10 1-1/4 Inch**
- **12 1-1/2 Inch**

**Reduced Pressure Range**
- **C 0-125 PSIG**
- D 0-250 PSIG

**Options**
- G Gauge
- K Non-Relieving
- X64 Fluorocarbon O-Rings and Diaphragm
- X80 Reverse Flow*

* Reverse flow for use downstream of control valves.

**Engineering Change Designator**

Will be entered at factory.

## CAUTION

**REGULATOR PRESSURE ADJUSTMENT –** The working range of knob adjustment is designed to permit outlet pressures within their full range. Pressure adjustment beyond this range is also possible because the knob is not a limiting device. This is a common characteristic of most industrial regulators, and limiting devices may be obtained only by special design.

**NOTE: BOLD OPTIONS ARE STANDARD.**

## Technical Information

**Flow Characteristics**
**R119-06C**

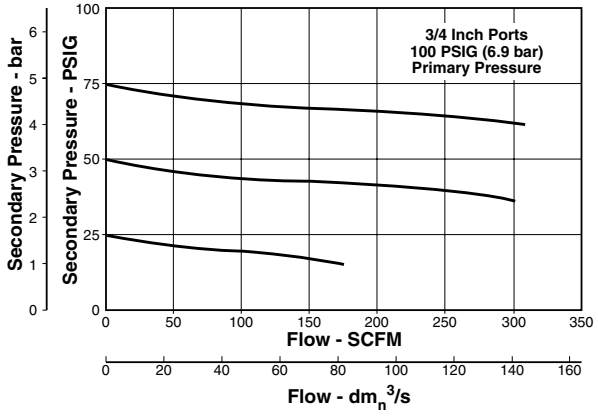


**Flow Characteristics**
**R119-08C**

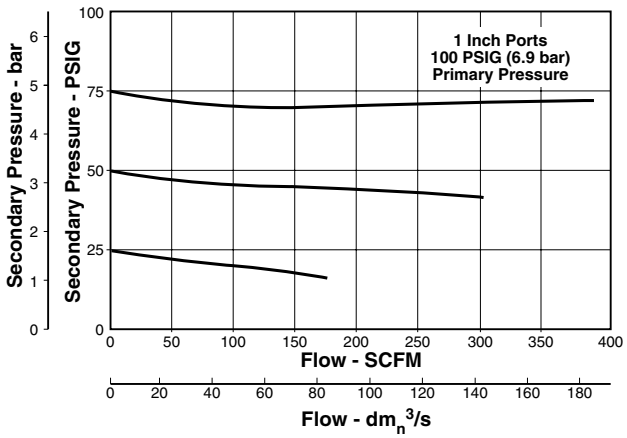


**Flow Characteristics**
**R119-10C**

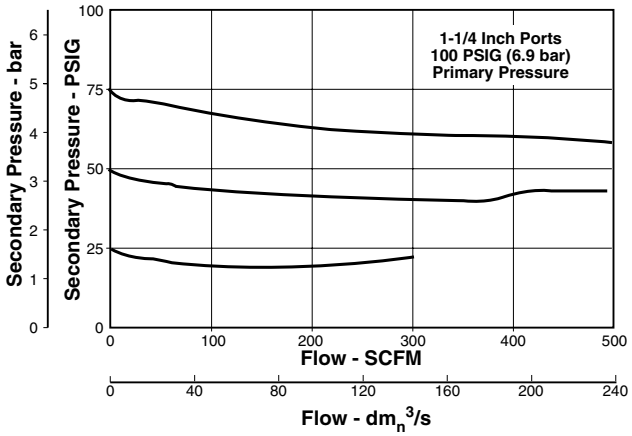


**Flow Characteristics**
**R119-12C**

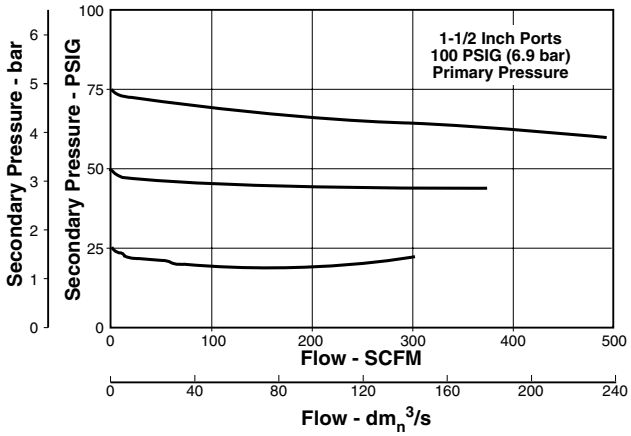


## R119 Regulator Kits & Accessories

**Gauges –**

2" Dial Size, 1/4" Back Connection
0 to 60 PSIG (0 to 400 kPa) ..... 275Y60S

2" Dial Size, 1/4" Back Connection
0 to 160 PSIG (0 to 1100 kPa) ..... 275Y160S

2" Dial Size, 1/4" Back Connection
0 to 300 PSIG (0 to 2068 kPa) ..... 275Y300S

**Mounting Bracket Kit** ..... 18B57

**Repair Kits –**

Non-Relieving Diaphragm,
Valve Assembly (3/4", 1") ..... RK118B

Non-Relieving Diaphragm,
Valve Assembly (1-1/4", 1-1/2") ..... RK118D

Relieving Diaphragm,
Valve Assembly (3/4", 1") ..... RK119B

Relieving Diaphragm,
Valve Assembly (1-1/4", 1-1/2") ..... RK119D

For Fluorocarbon Repair Kits, add X64 to Kit Number suffix.

## Specifications

**Gauge Ports (2)** ..... 1/4 Inch

**Port Threads** ..... 3/4, 1, 1-1/4, 1-1/2 Inch

**Reduced Pressure Range** ..... 2 to 125 PSIG (0.15 to 8.5 bar)

**Supply Pressure** ..... 300 PSIG Maximum (20.4 bar)

**Temperature Rating** ..... 40°F to 125°F (4.4°C to 52°C)

**Weight –**

R119-06, R119-08 ..... 6.2 lb. (2.81 kg) / Unit
25 lb. (11.34 kg) / 4-Unit Master Pack

R119-10, R119-12 ..... 7.2 lb. (3.27 kg) / Unit
29 lb. (13.15 kg) / 4-Unit Master Pack

## Materials of Construction

**Adjusting Screw, Springs** ..... Steel

**Body, Spring Cage** ..... Zinc

**Bottom Plug, Innervalve** ..... Brass

**Seals** ..... Buna N

# CS-314-100 : Identification sheet

| | | | |
|---|---|---|---|
| VWTC PROJECT NUMBER: | 5000220043 | REV: | 1 |
| PROJECT NAME: | AEM MELIADINE - BPC UPGRADE | SUBMITTED TO (COMPANY): | AEM |
| ENGINEER: | EMMANUELLE DORMOY | SUBMITTED TO (RESPONSIBLE): | |
| PROJECT MANAGER: | THOMAS SAVARY / BRUCE BORDES | PROJECT NUM REFERENCE.: | 6526-S-265-605 / OC-989680 |
| PHONE NUMBER: | 514-334-7230 | LOT NUMBER: | |

| SUPPLIER | EQPT CODE | EQPT TAG NO | DIA | DESCRIPTION | INFO 1 | INFO 2 | INFO 3 | APPLIC. | NOTE | REV |
|---|---|---|---|---|---|---|---|---|---|---|
| CHEMLINE | VAGLPV301163 | 15-GL99-1606 | 38 mm (1-1/2") | WASHDOWN LINE GLOBE VALVE | TYPE: GLOBE VALVE \| 150 PSI//MANUFACTURER : CHEMLINE//MODEL : GVA015ET//CONNECTION TYPE : THREADED \| 38 mm (1-1/2")//BODY : PVC// SEAL \| SEAT :EPDM \| N/A// STEM : PVC | ACTUATOR TYPE : MANUAL HANDWHEEL// MANUFACTURER : N/A// MODEL # :N/A// | | ACTIVATED CARBON PREPATION SYSTEM #1 | | 1 |
| CHEMLINE | VAGLPV301163 | 15-GL99-1618 | 38 mm (1-1/2") | WASHDOWN LINE GLOBE VALVE | TYPE: GLOBE VALVE \| 150 PSI//MANUFACTURER : CHEMLINE//MODEL : GVA015ET//CONNECTION TYPE : THREADED \| 38 mm (1-1/2")//BODY : PVC// SEAL \| SEAT :EPDM \| N/A// STEM : PVC | ACTUATOR TYPE : MANUAL HANDWHEEL// MANUFACTURER : N/A// MODEL # :N/A// | | ACTIVATED CARBON PREPATION SYSTEM #2 | | 1 |

**This page is intentionally left blank**

PDF Published March 1, 2013

# Globe Valves

CHEMLINE PLASTICS
SUPERIOR FLOW SOLUTIONS

The Chemline Globe Valve is an economical throttling valve. Its heavy duty design provides for long service life. The in-line globe design causes relatively high pressure drops, however this is a desirable valve due to its economy and reliability.

PVC PP

CRN Registered Consult Chemline

SERIES: GV

SIZES: 1/2" – 4"

ENDS: Socket, Threaded[1], Flanged

SEALS: EPDM[2]

## features

- **Slow Closing**
  – Prevents water hammer in PVC piping
- **Heavy Duty Construction**
  – Long service life
- **An economical throttling valve**

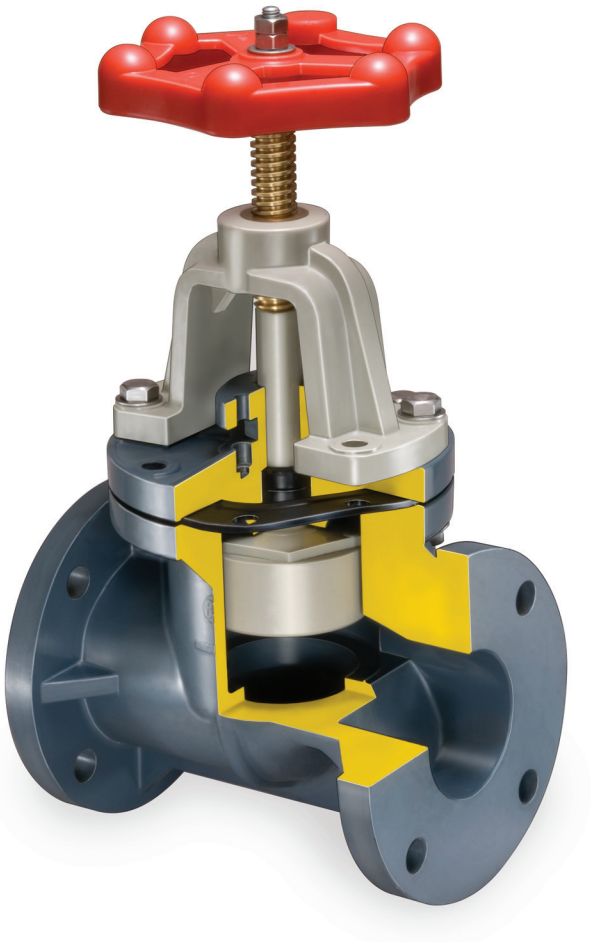

**2-1/2" – 4" Outside Spindle and Yolk Type**



**Union Bonnet Design 1/2" – 2"**

[1] Socket ends are available custom basis.
[2] Other seal materials are available special order.

03/13 ©Chemline Plastics Limited 2013
Chemline is a registered trade mark of Chemline Plastics Limited

# Globe Valves

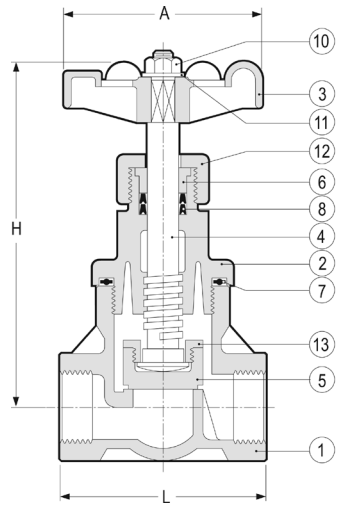


1/2" – 2" Valves

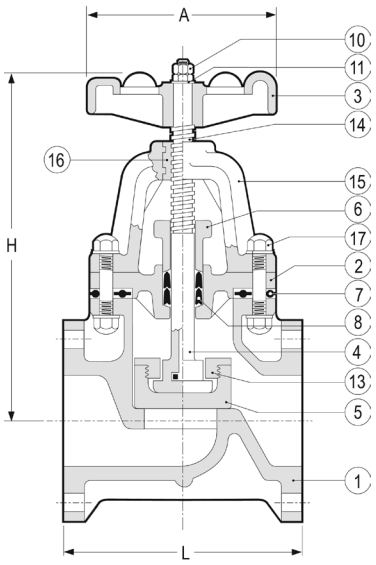


2-1/2" – 4" Valves

## PARTS

▲ Recommended Spare Parts

| No. | Part | Pcs. | Materials |
|---|---|---|---|
| 1 | Body | 1 | PVC, PP |
| 2 | Bonnet | 1 | PVC, PP |
| 3 | Handwheel | 1 | PP |
| 4 | Stem | 1 | PVC, PP |
| 5 | Disc | 1 | PP |
| 6 | Gland | 1 | PVC, PP |
| 7▲ | Bonnet Seal | 1 | EPDM |
| 8▲ | Stem Packing | 2 | EPDM |
| 10 | Nut | 1 | PVC |
| 11 | Washer | 1 | PVC |
| 12 | Gland Nut | 1 | PVC, PP |
| 13 | Disc Retainer | 1 | PP |
| 14 | Stem Top[1] | 1 | Brass, 400 SS |
| 15 | Yolk | 1 | PP |
| 16 | Yolk Sleeve | 1 | Bronze |
| 17 | Bolt & Nut | 8 sets | 304 SS |
| 18 | Stud & Nut | 2 sets | 304 SS |

[1] Stem top for valves up to 2" stem are brass. For valves 2-1/2" to 4" stem tops are 400 SS.

## DIMENSIONS INCHES

## Cv VALUES VS % OPEN

## WEIGHTS LB.

| Size | A | L Soc | L[2] Thd | L[3] Flg | H Open | Valve Opening (%) 20 | 40 | 60 | 80 | 100 | No. Turns to Open | PVC Soc/Thd | PVC Flg | PP Thd | PP Flg |
|---|---|---|---|---|---|---|---|---|---|---|---|---|---|---|---|
| 1/2" | 2.6 | 4.33 | 3.35 | 5.3 | 5.3 | 2.6 | 3.5 | 3.9 | 4.0 | 4.1 | 2.75 | 0.64 | 1.0 | 0.37 | 0.66 |
| 3/4" | 2.6 | 5.12 | 3.74 | 6.0 | 5.5 | 4.0 | 5.5 | 6.1 | 6.3 | 6.4 | 3.25 | 1.1 | 1.3 | 0.55 | 0.84 |
| 1" | 3.6 | 5.19 | 4.33 | 6.8 | 6.4 | 6.1 | 8.4 | 9.2 | 9.5 | 9.7 | 3.25 | 1.1 | 2.2 | 0.77 | 1.3 |
| 1-1/4" | 3.6 | – | 5.32 | 8.2 | 6.6 | 11.3 | 15.5 | 17.1 | 17.7 | 18.0 | 2.50 | 1.3 | 2.9 | – | – |
| 1-1/2" | 5.3 | – | 5.51 | 8.4 | 9.1 | 13.8 | 19.0 | 20.9 | 21.6 | 22.0 | 3.75 | 2.6 | 4.6 | – | 2.9 |
| 2" | 5.3 | – | 7.09 | 11.0 | 9.9 | 18.2 | 25.0 | 27.5 | 28.5 | 29.0 | 3.25 | 3.5 | 5.7 | – | 3.5 |
| 2-1/2" | 7.3 | – | – | 8.7 | 13.6 | 35.7 | 49.2 | 54.1 | 56.1 | 57.0 | 7.50 | – | 13.0 | – | 11.0 |
| 3" | 7.3 | – | – | 9.5 | 14.1 | 48.9 | 67.3 | 74.1 | 76.7 | 78.0 | 7.50 | – | 15.0 | – | 11.0 |
| 4" | 7.3 | – | – | 11.4 | 16.5 | 72.1 | 99.2 | 109.0 | 113.0 | 115.0 | 8.50 | – | 22.0 | – | 18.0 |

**Note:** 1-1/4" size is not available in PP. [2]**Threaded** ends are available in PVC 1/2" to 2" and PP 1/2" to 1".
[3]**L Flanged** is for fabricated flanged valves normally supplied 1/2" to 2". Solid flanged (special order) 1/2" to 2" valves have shorter dimensions. Consult Chemline.

## WORKING PRESSURES PSI

| Size | PVC 0-20°C 32-68°F | PVC 40°C 104°F | PVC 50°C 122°F | Polypropylene –20-20°C –4-68°F | Polypropylene 60°C 140°F | Polypropylene 80°C 176°F |
|---|---|---|---|---|---|---|
| 1/2" – 1-1/2" | 150 | 105 | 105 | 105 | 90 | 65 |
| 2" | 150 | 105 | 90 | 105 | 70 | 40 |
| 2-1/2" – 3" | 150 | 105 | 90 | 105 | 60 | 35 |
| 4" | 150 | 80 | 65 | 105 | 60 | 35 |

**Temperature Ranges: PVC** 0 to 60°C (32 to 140°F), **PP** –20 to 90°C (–4 to 194°F).

## VACUUM RATING

- 29.9 inches mercury

## ACCESSORY

- Handwheel lockout

## ORDERING EXAMPLE

| Chemline Globe Valves | GV | A | 015 | T |
|---|---|---|---|---|
| Body Material | **A** – PVC **B** – Polypropylene | | | |
| Size | **005** – 1/2" **007** – 3/4" **010** – 1" **012** – 1-1/4" **015** – 1-1/2" **020** – 2" **025** – 2-1/2" **030** – 3" **040** – 4" | | | |
| Ends | **S** – Socket **T** – Threaded **F** – Flanged | | | |

**Example:** Chemline Globe Valve, PVC, 1-1/2", threaded ends.

CHEMLINE PLASTICS
SUPERIOR FLOW SOLUTIONS

55 Guardsman Road, Thornhill, ON, L3T 6L2, Canada | ISO 9001:2008 Certified
tel.905.889.7890 | fax.905.889.8553 | request@chemline.com | chemline.com

# CS-910-405 : Identification sheet

| | | | |
|---|---|---|---|
| VWTC PROJECT NUMBER: | 5000220043 | REV: | 1 |
| PROJECT NAME: | AEM MELIADINE - BPC UPGRADE | SUBMITTED TO (COMPANY): | AEM |
| ENGINEER: | EMMANUELLE DORMOY | SUBMITTED TO (RESPONSIBLE): | |
| PROJECT MANAGER: | THOMAS SAVARY / BRUCE BORDES | PROJECT NUM REFERENCE.: | 6526-S-265-605 / OC-989680 |
| PHONE NUMBER: | 514-334-7230 | LOT NUMBER: | |

| SUPPLIER | EQPT CODE | EQPT TAG NO | DIA | DESCRIPTION | INFO 1 | INFO 2 | INFO 3 | APPLIC. | NOTE | REV |
|---|---|---|---|---|---|---|---|---|---|---|
| WAM | CMSPGU320683 | dd-GA99-1609 | | HOPPER ISOLATION VALVE | SLIDE GATE VALVE // Manuf : WAM // Model : VLC0250P3/CMG0250 stainless 304, inlet section made of Polyurethane Incl. Hand wheel | 10” slide gate with round inlet, frame and knife blade made of SS 304 | Inlet section made of Polyurethane Incl. Hand wheel | ACTIVATED CARBON PREPATION SYSTEM #1 | | 1 |
| WAM | CMSPGU320683 | dd-GA99-1621 | | HOPPER ISOLATION VALVE | SLIDE GATE VALVE // Manuf : WAM // Model : VLC0250P3/CMG0250 stainless 304, inlet section made of Polyurethane Incl. Hand wheel | 10” slide gate with round inlet, frame and knife blade made of SS 304 | Inlet section made of Polyurethane Incl. Hand wheel | ACTIVATED CARBON PREPATION SYSTEM #2 | | 1 |

**This page is intentionally left blank**

Bulk Solids Handling Equipment Bulk Solids Handling Equipment Bulk Solids Handling Equipment Bulk Solids Handling Equipment Bulk Solids Handling Equipment

# VL

**Slide Gate Valves**

*Flachschieber*

*Vannes Guillotine*

*Valvole a Ghigliottina*

**INTERNATIONAL PATENT**

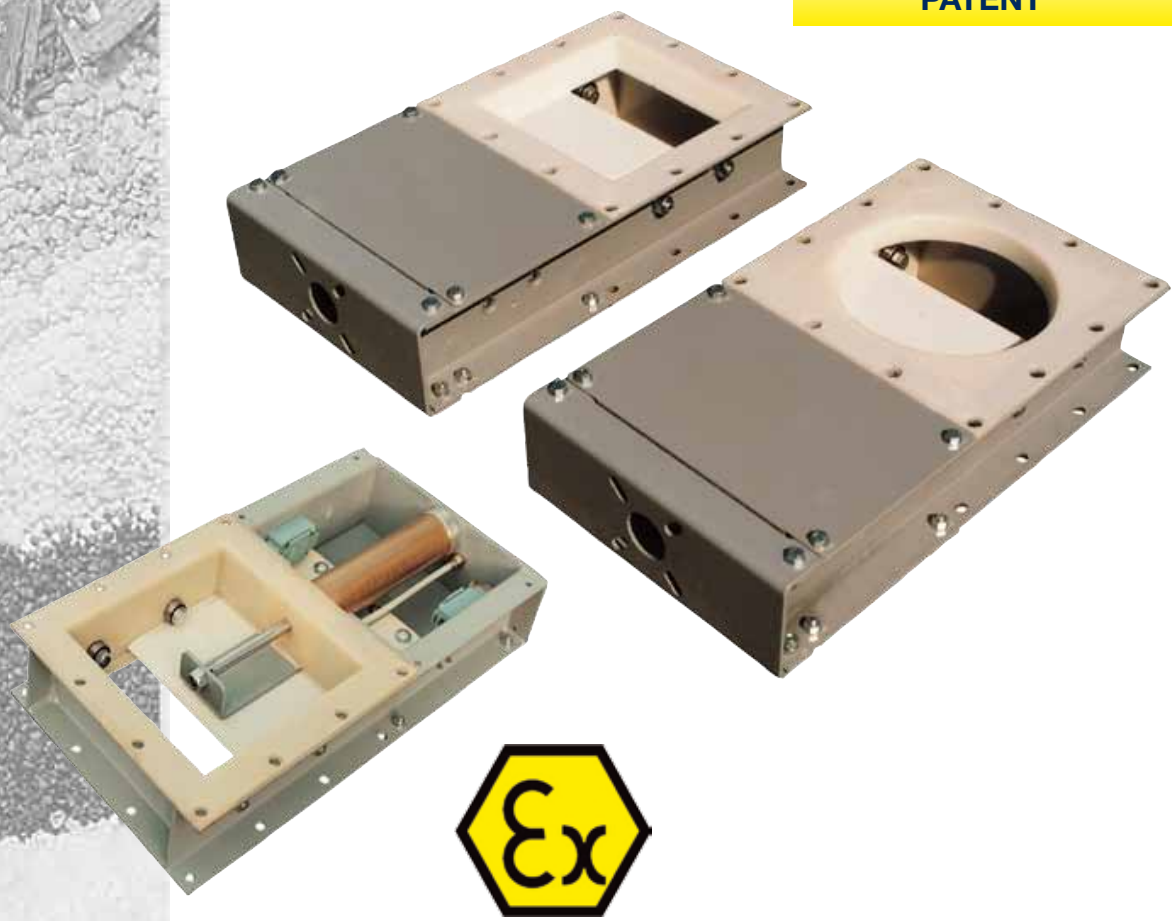

WAMGROUP

WAM®

VL Slide Valves are used where the flow of a bulk solid caused by gravity or transport has to be intercepted. Valves may be fitted to hopper or silo outlets, to the inlets and outlets of mechanical conveyors and to the inlet of telescopic loading spouts.
VL-type Slide Valves consist of a two piece carbon or stainless steel frame, which is partly coated with WAM's unique SINT™ engineering polymer composite, and a sliding blade manufactured either in the same material or in stainless steel. The use of SINT™ engineering polymer considerably increases resistance to abrasion compared to traditional valves.
The special geometry of the Valve and the different options of blade design enable its application in virtually every sector including the food industry.

*VL-Flachschieber finden überall dort Verwendung, wo ein durch Schwerkraft oder Förderung verursachter Schüttgutfluß unterbrochen werden soll. VL-Flachschieber können unter Silo- oder Trichterausläufen, über den Einläufen bzw. unter den Ausläufen von mechanischen Stetigförderern oder über dem Einlauf von Teleskop-Verladegarnituren eingebaut werden. VL-Flachschieber bestehen aus einem zweiteiligen, teilweise mit SINT™-Polymer ausgekleideten Stahl- oder Edelstahlrahmen und einem mit dem gleichen Polymer beschichteten oder aber ganz aus Edelstahl bestehenden Schieberblech. Die Verwendung von SINT™-Polymer erhöht die Abrasionsresistenz gegenüber traditionellen Flachschiebern beträchtlich.*
*Die spezielle Geomterie dieser Baureihe und diverse Schieberblechoptionen ermöglichen den Einsatz in allen industriellen Anwendungen inklusive der Nahrungsmittelindustrie.*

*Les Vannes Guillotine VL sont utilisées pour sectionner l'écoulement d'un flux de matériau vrac. Les Vannes Guillotine VL peuvent être installées sous silos ou trémies, au-dessus des bouches d'entrée et au-dessous des bouches de sortie des transporteurs mécaniques ou en tête des goulottes télescopiques.*
*Les Vannes Guillotine VL sont composées d'un châssis en deux parties qui est partiellement revêtu en polymère technique SINT™ et d'une lame revêtue du même matériau ou entièrement en acier inox. L'utilisation de SINT™ augmente considérablement la résistance à l'abrasion par rapport aux vannes de type traditionnel.*
*La géométrie spéciale de cette gamme et lesdiverses options de lames rendent possible leur utilisation dans toutes les industries y compris celles de l'alimentaire.*

*Le Valvole a Ghigliottina VL sono utilizzate laddove un flusso di materiale alla rinfusa causato o dalla gravità o da un trasporto deve essere intercettato. Le Valvole a Ghigliottina VL possono essere installate sotto le bocche di scarico di sili o tramogge, sulle bocche di carico e scarico dei trasportatori meccanici o sulle bocche di carico degli scaricatori telescopici.*
*Le Valvole a Ghigliottina VL sono costituite da un telaio in due pezzi che è parzialmente rivestito del tecnopolimero SINT™ e da una lama rivestita dello stesso materiale o interamente in acciaio inossidabile. L'utilizzo del SINT™ aumenta considerevolmente la resistenza all'abrasione rispetto alle valvole ti tipo tradizionale.*
*La speciale geometria di questa gamma e le diverse opzioni di lame rendono possibile la loro applicazione in tutte le industrie compresa quella alimentare.*

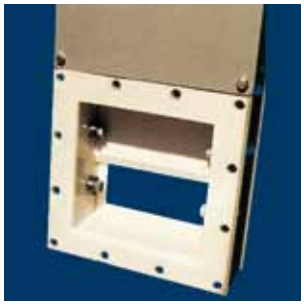

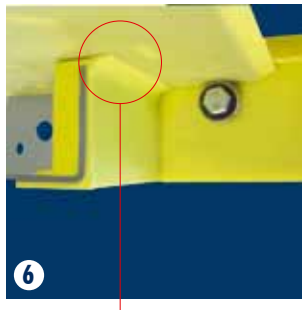


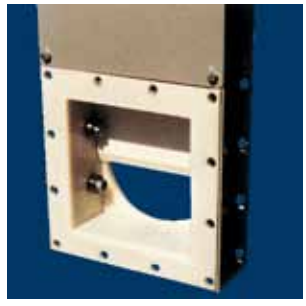

VLQ - VLR - VLS

VLC

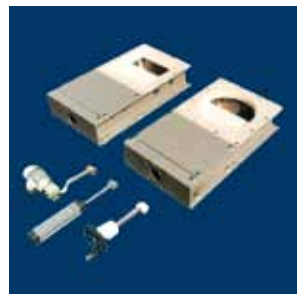

3 interchangeable actuators for valve types VLQ-VLC-VLR

*3 Antriebsvarianten bei gleichem Schieberrahmen, Typ VLQ-VLC-VLR*

*3 actionneurs interchangeables pour les vannes VLQ-VLC-VLR*

*3 attuatori intercambiabili per tipi di valvole VLQ-VLC-VLR*

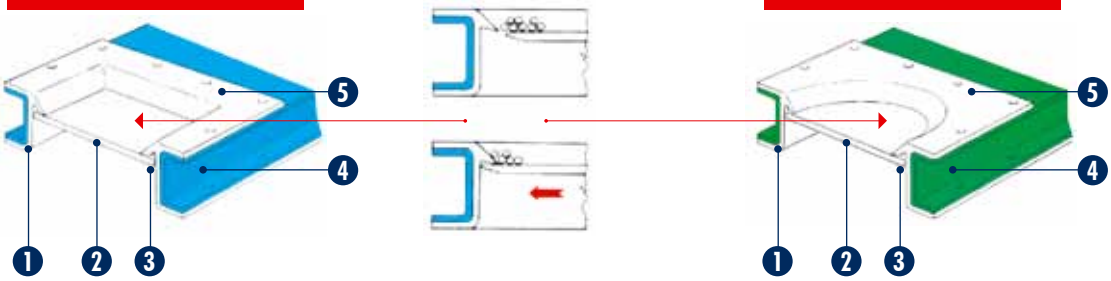


1. Valve body coated with SINT™MC or SINT™AL in order to avoid contact between product and body.
2. Heavy-duty blade (SINT™MC / SINT™AL, carbon steel, 304 st.st.)
3. Minimum friction contact
4. No additional lateral seals required
5. Dry food quality (coating in SINT™AL)
6. Dustproof (scraper included)

1. *Schieberrahmen komplett mit SINT™MC bzw. SINT™AL ummantelt, damit Medium niemals direkt mit dem Rahmen in Kontakt treten kann.*
2. *Robustes Schieberblech (SINT™MC / SINT™AL, Stahl, Edelstahl 1.4301)*
3. *Reibungsarmer Werkstoffkontakt*
4. *Keine zusätzlichen seitlichen Abdichtungen erforderlich*
5. *Auf Wunsch auch in nahrungsmitteltauglicher Ausführung (mit SINT™AL ummantelt)*
6. *Staubdicht (inkl. Abstreifer)*

1. *Vanne complètement revêtue en SINT™MC ou SINT™AL pour éviter le contact entre le produit et le corps.*
2. *Lame de forte épaisseur (SINT®MC / SINT™AL, acier au carbone, acier inox 304)*
3. *Résistance par friction minimum*
4. *Aucun système d'étanchéité supplémentaire latéral*
5. *Apte pour produits alimentaires secs (revêtements en SINT™AL)*
6. *Etanche à la poussière (muni de racleur)*

1. *Valvola completamente rivestita in SINT™MC o SINT™AL al fine di evitare il contatto tra il prodotto e il corpo.*
2. *Lama a grosso spessore con smusso per invito (SINT™MC / SINT™AL, acciaio al carbonio, AISI 304).*
3. *Contatto con minimo attrito*
4. *Tenuta laterale non necessaria*
5. *Idonea a prodotti alimentari secchi (rivestimento in SINT™AL)*
6. *Tenuta polvere (provvista di raschiatore)*

### User Benefits
- Easy to handle
- Ex-stock delivery
- Highly abrasion-resistant
- Easy to fit
- Time-saving maintenance

### Options
- Valve manufactured in carbon steel lined and coated with SINT™MC.
- Valve in 304 stainless steel lined and coated with SINT™AL (FDA-approved)

### *Vorteile für den Anwender*
- *Einfaches Handling*
- *Ab Lager lieferbar*
- *Besonders verschleißresistent*
- *Einfacher Einbau*
- *Extrem wartungsfreundlich*

### *Optionen*
- *Schieber aus Stahl, ausgekleidet mit SINT™MC.*
- *Schieber aus Edelstahl 1.4301, ausgekleidet mit SINT™AL (mit FDA-Zulassung)*

### *Avantages pour l'utilisateur*
- *Légèreté et facilité de manutention*
- *Matériel disponible en stock*
- *Résistance élevée à l'usure*
- *Facilité d'installation*
- *Rapidité d'entretien*

### *Options*
- *Vanne en acier au carbone revêtue en SINT™MC*
- *Vanne en inox 304 revêtue en SINT™AL (approuvée FDA )*

### *Vantaggi per l'utilizzatore*
- *Leggerezza e facilità di movimentazione*
- *Materiale disponibile a magazzino*
- *Elevata resistenza all'usura*
- *Facilità di installazione*
- *Rapidità di manutenzione*

### *Opzioni*
- *Valvola in acciaio al carbonio rivestita in SINT™MC.*
- *Valvola in AISI 304 rivestita in SINT™AL (approvata FDA )*

# VLS

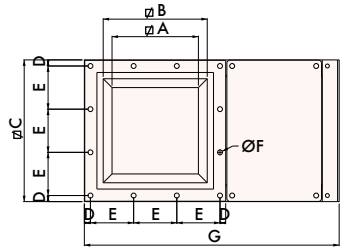


Slide Valve With Internal Actuator
*Flachschieber mit innenliegendem Pneumatikantrieb*
*Vanne à Guillottine avec Vérin Incorporé*
*Valvola Ghigliottina con Cilindro Interno*




| TYPE | A | B | C | D | E | N°E | Ø F | Bolts Schrauben Boulons Bulloni | G | H | kg |
|---|---|---|---|---|---|---|---|---|---|---|---|
| VLS0150.. | 120 | 175 | 261 | 15,5 | 115,0 | 2 | 12,5 | M10 | 455 | 113 | 16,5 |
| VLS0200.. | 170 | 225 | 311 | 15,5 | 93,3 | 3 | 12,5 | M10 | 555 | 113 | 21,0 |
| VLS0250.. | 220 | 275 | 361 | 15,5 | 110,0 | 3 | 12,5 | M10 | 650 | 113 | 25,5 |
| VLS0300.. | 270 | 325 | 431 | 23,0 | 128,3 | 3 | 12,5 | M10 | 765 | 113 | 34,0 |

1 Carbon Steel / *Stahl / Acier au carbone / Acciaio al carbonio*
3 304 Stainless Steel / *Edelstahl 1.4301 / Acier inox 304 / Acciaio inox AISI 304*

Valve with single type of actuator (pneumatic cylinder Ø 63 mm) mounted inside the valve frame.

*Schieber mit innenliegendem Pneumatikantrieb (Pneumatikzylinder Ø 63 mm) (nur ein Modell)*

*Vanne commandée par un seul type d'actionneur (cylindre pneumatique Ø 63 mm) monté à l'intérieur du corps.*

*Valvola azionata da un solo tipo di.comando (cilindro pneumatico Ø 63 mm) situato internamente al corpo stesso.*

## Pneumatic Actuator Compatibility - *Kombinationen mit Pneumatikantrieb - Accouplements électropneumatiques - Abbinamenti elettropneumatici*

No headload allowed!
*Keine Schieberlechbelastung gestattet!*
*Sans charge!*
*Senza battente!*

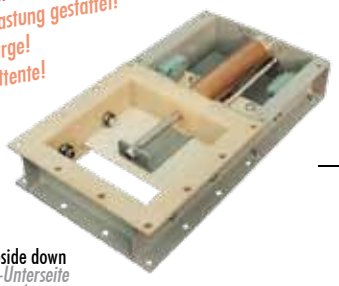

Valve viewed upside down
*Ansicht Schieber-Unterseite*
*Vanne renversée*
*Valvola rovesciata*

- VLS 0150 . .
- VLS 0200 . .
- VLS 0250 . .
- VLS 0300 . .

- V5VV8 + 2 BOB
- V5V8 + 1 BOB

- • BOB 02450
- • BOB 04850
- • BOB 11050
- • BOB 22050
- Δ BOB 024CC
- Δ BOB 048CC
- Δ BOB 110CC
- Δ BOB 220CC

• ALTERNATING CURRENT
• *WECHSELSTROM*
• *COURANT ALTERNATIF*
• *CORRENTE ALTERNATA*

Δ DIRECT CURRENT
Δ *GLEICHSTROM*
Δ *COURANT CONTINU*
Δ *CORRENTE CONTINUA*







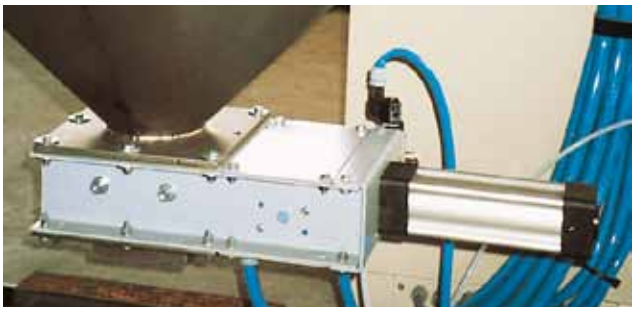

## VLQ

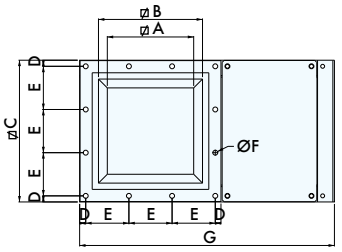


**Square Cross Section Valves**
*Schieber mit quadratischem Querschnitt*
*Vannes à Section Carrée*
*Valvole con Sezione Quadrata*




| TYPE | A | B | C | D | E | N°E | Ø F | Bolts Schrauben Boulons Bulloni | G | H | kg |
|---|---|---|---|---|---|---|---|---|---|---|---|
| VLQ0150.. | 120 | 175 | 261 | 15,5 | 115,0 | 2 | 12,5 | M10 | 455 | 113 | 14 |
| VLQ0200.. | 170 | 225 | 311 | 15,5 | 93,3 | 3 | 12,5 | M10 | 555 | 113 | 18 |
| VLQ0250.. | 220 | 275 | 361 | 15,5 | 110,0 | 3 | 12,5 | M10 | 650 | 113 | 22 |
| VLQ0300.. | 270 | 325 | 431 | 23,0 | 128,3 | 3 | 12,5 | M10 | 765 | 113 | 30 |
| VLQ0350.. | 320 | 375 | 481 | 18,0 | 89,0 | 5 | 12,5 | M10 | 900 | 125 | 40 |
| VLQ0400.. | 370 | 425 | 531 | 15,5 | 100,0 | 5 | 12,5 | M10 | 1.000 | 125 | 46 |

1 Carbon Steel / *Stahl / Acier au carbone / Acciaio al carbonio*
3 304 Stainless Steel / *Edelstahl 1.4301 / Acier inox 304 / Acciaio inox AISI 304*

## VLC

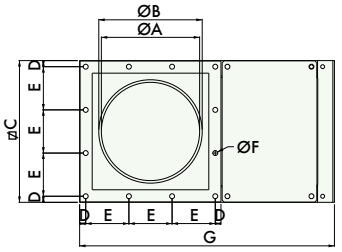


**Round Cross Section Valves**
*Schieber mit rundem Querschnitt*
*Vannes à Section Circulaire*
*Valvole a Sezione Circolare*

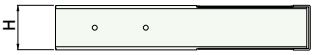


| TYPE | A | Ø B | Ø C | D | E | N°E | Ø F | Screw Schrauben Boulons Bulloni | G | H | kg |
|---|---|---|---|---|---|---|---|---|---|---|---|
| VLC0150.. | 150 | 165 | 261 | 15,5 | 115,0 | 2 | 12,5 | M10 | 455 | 113 | 14 |
| VLC0200.. | 200 | 215 | 311 | 15,5 | 93,3 | 3 | 12,5 | M10 | 555 | 113 | 18 |
| VLC0250.. | 250 | 265 | 361 | 15,5 | 110,0 | 3 | 12,5 | M10 | 650 | 113 | 22 |
| VLC0300.. | 300 | 315 | 431 | 23,0 | 128,3 | 3 | 12,5 | M10 | 765 | 113 | 30 |
| VLC0350.. | 350 | 365 | 481 | 18,0 | 89,0 | 5 | 12,5 | M10 | 900 | 125 | 40 |
| VLC0400.. | 400 | 415 | 531 | 15,5 | 100,0 | 5 | 12,5 | M10 | 1.000 | 125 | 46 |

1 Carbon Steel / *Stahl / Acier au carbone / Acciaio al carbonio*
3 304 Stainless Steel / *Edelstahl 1.4301 / Acier inox 304 / Acciaio inox AISI 304*

## VLR

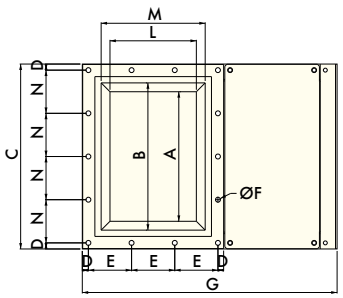


**Rectangular Cross Section Valves**
*Schieber mit rechteckigem Querschnitt*
*Vannes à Section Rectangulaire*
*Valvole a Sezione Rettangolare*

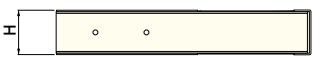


| TYPE | A | B | C | D | E | N°E | Ø F | Bolts Schrauben Boulons Bulloni | G | H | L | M | N | N°N | kg |
|---|---|---|---|---|---|---|---|---|---|---|---|---|---|---|---|
| * VLR0150.. | 204 | 260 | 346 | 15,5 | 115,0 | 2 | 12,5 | M10 | 455 | 109 | 119 | 175 | 105 | 3 | 18 |
| * VLR0200.. | 281 | 337 | 423 | 15,5 | 93,3 | 3 | 12,5 | M10 | 555 | 109 | 169 | 225 | 98 | 4 | 25 |
| * VLR0250.. | 353 | 409 | 495 | 15,5 | 110,0 | 3 | 12,5 | M10 | 650 | 109 | 219 | 275 | 116 | 4 | 30 |
| VLR0300.. | 428 | 484 | 592 | 23,0 | 128,3 | 3 | 12,5 | M10 | 765 | 109 | 269 | 325 | 136 | 4 | 40 |

1 Carbon Steel / *Stahl / Acier au carbone / Acciaio al carbonio*
3 304 Stainless Steel / *Edelstahl 1.4301 / Acier inox 304 / Acciaio inox AISI 304*

* Not yet in production / *Z. Z. nicht lieferbar / Pas encore en production / Non ancora in produzione*

## HAND WHEEL COMPATIBILY
*KOMBINATIONSMÖGLICHKEITEN MIT HANDRAD*
*ACCOUPLEMENTS D'ACTIONNEUR MANUEL*
*ABBINAMENTI DI ATTUATORE MANUALE*

| | | |
|---|---|---|
| VLQ - VLC 0150 . . | - | CMG0150 I. |
| VLQ - VLC 0200 . . | - | CMG0200 I. |
| VLQ - VLC 0250 . . | - | CMG0250 I. |
| VLQ - VLR-VLC 0300 . . | - | CMG0300 I. |
| VLQ - VLC 0350 . . | - | CMG0350 I. |
| VLQ - VLC 0400 . . | - | CMG0400 I. |



## PNEUMATIC ACTUATOR COMPATIBILY
*KOMBINATIOSMÖGLICHKEITEN MIT PNEUMATIKANTRIEB*
*ACCOUPLEMENTS D'ACTIONNEUR ELECTROPNEUMATIQUE*
*ABBINAMENTI DI ATTUATORE ELETTROPNEUMATICO*

| | | | |
|---|---|---|---|
| VLQ - VLC 0150 . . | ◑ P.N. CYL. Ø 63 | KCP 063 1525 - V5V80 - LSM6 | • BOB 02450 |
| VLQ - VLC 0200 . . | ◑ P.N. CYL. Ø 80 | KCP 080 1530 - V5V80 - LSM6 | • BOB 04850 |
| VLQ - VLC 0250 . . | ◑ P.N. CYL. Ø 80 | KCP 080 1530 - V5V80 - LSM6 | • BOB 11050 |
| VLQ - VLR-VLC 0300 . . | ◑ P.N. CYL. Ø 80 | KCP 080 1530 - V5V80 - LSM6 | • BOB 22050 |
| VLQ - VLC 0350 . . | ◑ P.N. CYL. Ø 100 | KCP 100 3540 - V5V40 - LSM6 | Δ BOB 024CC |
| VLQ - VLC 0400 . . | ◑ P.N. CYL. Ø 100 | KCP 100 3540 - V5V40 - LSM6 | Δ BOB 048CC |
| | | | Δ BOB 110CC |
| | | | Δ BOB 220CC |



- • ALTERNATING CURRENT
- • *WECHSELSTROM*
- • *COURANT ALTERNATIF*
- • *CORRENTE ALTERNATA*

- Δ DIRECT CURRENT
- Δ *GLEICHSTROM*
- Δ *COURANT CONTINU*
- Δ *CORRENTE CONTINUA*

◑ No WAM supply
*Fremdfabrikat beizustellen*
*Hors fourniture WAM*
*Non fornitura WAM*

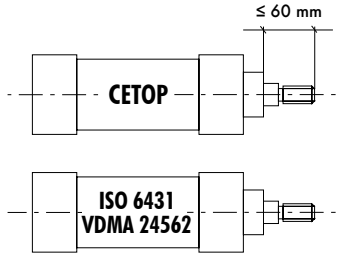


## GEAR MOTOR COMPATIBILY
*KOMBINATIONSMÖGLICHKEITEN MIT GETRIEBEMOTOR*
*ACCOUPLEMENTS D'ACTIONNEUR ELECTRIQUE*
*ABBINAMENTI DI ATTUATORE CON MOTORIDUTTORE*

| | | | |
|---|---|---|---|
| VLQ - VLC 0150 . . | - | CRG010A150 I | LSM6 * |
| VLQ - VLC 0200 . . | - | CRG010A200 I | LSM6 * |
| VLQ - VLC 0250 . . | - | CRG010B250 I | LSM6 * |
| VLQ - VLR - VLC 0300 . . | - | CRG010B300 I | LSM6 * |
| VLQ - VLC 0350 . . | - | CRG010B350 I | LSM6 * |
| VLQ - VLC 0400 . . | - | CRG010B400 I | LSM6 * |

* Signalling system obligatory
*Positionsanzeige erforderlich*
*Systeme de signalation indispensable*
*Sistema indispensabile di segnalazione*

063001508 September 2012 Rights reserved to modify technical specifications

Further Products - Weitere Produkte - Autre production - Altra produzione

063001436



063001487



063001505



063001513



063001410



063001519



063001591



Bulk Solids Handling Equipment Bulk Solids Handling Equipment Bulk Solids Handling Equipment Bulk Solids Handling Equipment Bulk Solids Handling Equipment

WAM®

UNI EN ISO 9001
Certified Company

www.wamgroup.com

**Project name:** MELIADINE-BPC UPGRADE

**Project#:** 5000220043

**Document #:** SPK_0005_SKG_VWT

**by:** GM

**chkd:** ED

**appvd:** TS

# HYDRACARB

# INSTRUMENTS

**OIM manual section:** 4.2.5.7

**This page is intentionally left blank**

# CS-413-300 : Identification sheet

| | | | |
|---|---|---|---|
| VWTC PROJECT NUMBER: | 5000220043 | REV: | 1 |
| PROJECT NAME: | AEM MELIADINE - BPC UPGRADE | SUBMITTED TO (COMPANY): | AEM |
| ENGINEER: | EMMANUELLE DORMOY | SUBMITTED TO (RESPONSIBLE): | |
| PROJECT MANAGER: | THOMAS SAVARY / BRUCE BORDES | PROJECT NUM REFERENCE.: | 6526-S-265-605 / OC-989680 |
| PHONE NUMBER: | 514-334-7230 | LOT NUMBER: | |

| SUPPLIER | EQPT CODE | EQPT TAG NO | DIA | DESCRIPTION | INFO 1 | INFO 2 | INFO 3 | APPLIC. | NOTE | REV |
|---|---|---|---|---|---|---|---|---|---|---|
| ASHCROFT | ST-413-394 | 65PI6801606 | 2.5" | SERVICE WATER PRESSURE GAUGE | PRESSURE GAUGE // MANFUACTURER : ASHCROFT // MODEL : 25-1009-SW-L-04L-160# // 25: 2 1/2" DIAL. RANGE : 0/160 PSI //SW: 316SS //L: GLYCERIN FILLED //L: LWR MNT CONN // 04: PROCESS CONN: 1/2" MNPT | | N/A | ACTIVATED CARBON PREPATION SYSTEM #1 | | 1 |
| ASHCROFT | ST-413-394 | 65PI6801626 | 2.5" | SERVICE WATER PRESSURE GAUGE | PRESSURE GAUGE // MANFUACTURER : ASHCROFT // MODEL : 25-1009-SW-L-04L-160# // 25: 2 1/2" DIAL. RANGE : 0/160 PSI //SW: 316SS //L: GLYCERIN FILLED //L: LWR MNT CONN // 04: PROCESS CONN: 1/2" MNPT | | N/A | ACTIVATED CARBON PREPATION SYSTEM #2 | | 1 |

**This page is intentionally left blank**

ASHCROFT®
Trust the shield.®

# 1009 Stainless Steel Case Gauge

## FEATURES

- Meets ASME B40.100 specifications
- Corrosion resistant SS case
- Dry gauges are field fillable
- Power***Flex***™ movement provides superior resistance to shock, vibration and pulsation
- True Zero™ reduces reading errors by using "zero box" instead of conventional dial pins
- ***PLUS!***™ performance available for liquid filled performance with a dry gauge
- MSL helium leak tested to 1X10$^{-6}$ scc/s
- Ventable fill plug
- Accessory kits for easy panel mounting

## TYPICAL USES

- Pumps and compressors
- Boilers
- Equipment skids
- Specialized OEM equipment
- Hydraulics and pneumatics
- Severe ambient conditions




## SPECIFICATIONS

| | |
|---|---|
| Accuracy: | ASME B40.100, Grade 1A, ±1% of span (Dry)<br>±1.5% of span (Liquid filled) |
| Dial Sizes: | 2½″ (63mm), 3½″ (100mm) |
| Ranges: | Minimum 0-15 psi, maximum 0-15,000 psi, vacuum and compound |
| **Wetted Materials** | |
| Tube: | 316L SS tube |
| Process Connection: | 316L SS socket (SW)<br>Aluminum bronze socket (AW) |
| **Non Wetted Materials** | |
| Window: | Polycarbonate (Std.), Safety glass (XSG), Polysulfone (XPS) 3½″ Dial only |
| Dial: | Black figures on white background, aluminum |
| Pointer: | Black, aluminum, adjustable (Std.), micrometer (XMP) |
| Movement: | Power***Flex*** movement<br>Bottom plate – 304 SS<br>Upper plate – 304 SS<br>Pin – 304 SS<br>Hairspring assembly – 304 SS<br>Pinion – 304 SS<br>Segment – Glass filled polyester |
| Case: | 304 SS (Std.), 316L SS (XYW) |
| Ring: | 304 SS (Std.), 316L SS (XYW) |
| Process Connection Location: | Lower, Back, Top, 3 o'clock, 9 o'clock |
| Process Connection Sizes: | ⅛ NPT, ¼ NPT (see ordering code for more options) |

## KEY BENEFITS

- **IP65 Rating**
- **NEMA 4X**
- **CRN Approved**
- **PED**
- ***PLUS!***™ **Performance (XLL)**

| | |
|---|---|
| Dampening: | Glycerin case fill (Std. liquid fill), Silicone case fill (XGV), Halocarbon case fill (XGX), ***PLUS!*** Performance (XLL) |
| Weather Protection: | IP65 (Plug closed), IP54 (Plug vented)<br>NEMA 4X (Plug closed) |
| Approvals: | CRN, RoHS, PED |

## MIN/MAX TEMPERATURE LIMITS

| Version | Ambient | Process | Storage |
|---|---|---|---|
| Dry | -40/200°F (-40/93°C) | -40/250°F (-40/121°C) | -40/250°F (-40/121°C) |
| ***PLUS!*** | -40/150°F (-40/66°C) | -40/200°F (-40/93°C) | -40/150°F (-40/66°C) |
| Glycerin Fill | 20/150°F (-7/66°C) | 20/200°F (-7/93°C) | 0/150°F (-18/66°C) |
| Silicone Fill | -40/150°F (-40/66°C) | -40/200°F (-40/93°C) | -40/150°F (-40/66°C) |
| Halocarbon Fill | -40/150°F (-40/66°C) | -40/200°F (-40/93°C) | -40/150°F (-40/66°C) |

All specifications are subject to change without notice.
All sales subject to standard terms and conditions.
©2017 Ashcroft Inc. Ash Bul GS-3 1009 Rev D, 10/17

ashcroft.com
info@ashcroft.com
1.800.328.8258

ASHCROFT®
Trust the shield.®

# 1009 Stainless Steel Case Gauge

## ORDERING CODE

| Example: | 251009 | SW | L | 02 | L | XC4 | 15# |
|---|---|---|---|---|---|---|---|
| **Dial Size/Series Code** | | | | | | | |
| 251009 – SS case | 251009 | | | | | | |
| 351009 – SS case | | | | | | | |
| **System** | | | | | | | |
| AW - 316L SS tube/Aluminum, bronze connection (Max. pressure 1000 psi) | | | | | | | |
| SW - 316L SS tube/316L SS process connection (Max. pressure 15,000 psi) | | SW | | | | | |
| **Case Fill** | | | | | | | |
| Dry, liquid fillable case | | | | | | | |
| L - Liquid filled case (Glycerin standard) | | | L | | | | |
| **Process Connection Sizes** | | | | | | | |
| 01 - ⅛ NPT Male | | | | | | | |
| 02 - ¼ NPT Male | | | | 02 | | | |
| 04 - ½ NPT Male | | | | | | | |
| RW - SAE 7/16 & 20 Straight thread | | | | | | | |
| EJ - 7/16 X 20 UNF-3A 37° flare | | | | | | | |
| KJ - ¼ Straight JIS, BSP - 1009SW | | | | | | | |
| KA - ¼ Tapered JIS, BSP - 1009SW | | | | | | | |
| 13 - G ¼″ DIN | | | | | | | |
| JP - ¼″ Tubing, no throttle plug (max pressure 10,000 psi) | | | | | | | |
| JQ - 6mm Tubing, no throttle plug (max pressure 6,000 psi) | | | | | | | |
| JL - 9/16″ 18 UNF-2A, N/A on 25 1009 lower | | | | | | | |
| **Connection Location** | | | | | | | |
| L - Lower mount connection | | | | | L | | |
| B - Lower back mount connection | | | | | | | |
| D - Side connection (3 o'clock) | | | | | | | |
| E - Side connection (9 o'clock) | | | | | | | |
| T - Top connection | | | | | | | |
| **Options (if choosing an option(s) must include an "X")** | | | | | | X__ | |
| LL - ***PLUS!***™ performance | | | | | | | |
| GV - Silicone case fill | | | | | | | |
| GX - Halocarbon case fill | | | | | | | |
| TU - Throttle plug for ranges up to 1000 psi | | | | | | | |
| TS - Throttle plug for ranges up to 15,000 psi | | | | | | | |
| 6B - Cleaned for oxygen service | | | | | | | |
| SG - Safety glass | | | | | | | |
| PS - Polysulfone window (3½″ dial only) | | | | | | | |
| EO - Adjustable red set hand | | | | | | | |
| SH - Red set hand, stationary | | | | | | | |
| NH - SS tag wired to case | | | | | | | |
| FF - Front flange | | | | | | | |
| FW - Back flange | | | | | | | |
| UC - U-clamp | | | | | | | |
| EA - External zero adjust (3½″ dial only) | | | | | | | |
| C4 - Individual calibration chart in accordance with ASME B40.100:2013. Accuracy traceable to N.I.S.T | | | | | | C4 | |
| SM - All SS movement | | | | | | | |
| YW - 316L SS case and ring | | | | | | | |
| **Range (coding examples only, see range table for all standard ranges)** | | | | | | | |
| Single Scales | | | | | | | |
| 15# - 15 psi | | | | | | | 15# |
| 1BR - 1 bar | | | | | | | |
| 1KSC - 1 kilograms per sq. cm | | | | | | | |
| 100KP - 100 kilopascal | | | | | | | |
| Dual Scales | | | | | | | |
| 15#/BR - 15 psi inner scale, 1 bar outer scale | | | | | | | |
| 1BR/# - 1 bar inner scale, 15 psi outer scale | | | | | | | |

All specifications are subject to change without notice.
All sales subject to standard terms and conditions.
©2017 Ashcroft Inc. Ash Bul GS-3 1009 Rev D, 10/17

ashcroft.com
info@ashcroft.com
1.800.328.8258

ASHCROFT®
Trust the shield.®

# 1009 Stainless Steel Case Gauge

| STANDARD RANGES | | | | |
|---|---|---|---|---|
| psi | bar | kPa | Mpa | kg/cm² |
| 30IMV | -1BR | -100KP | -.1MP | -1KSC |
| – | -1&.6BR | -100&60KP | -.1&.06MP | -1&.6KSC |
| 30IMV&15# | – | – | – | – |
| – | -1&1.5BR | -100&150KP | -.1&.15MP | -1&1.5KSC |
| 30IMV&30# | – | – | – | – |
| – | -1&3BR | -100&300KP | -.1&.3MP | -1&3KSC |
| 30IMV&60# | – | – | – | – |
| – | -1&5BR | -100&500KP | -.1&.5MP | -1&5KSC |
| 30IMV&100# | – | – | – | – |
| – | 1&9BR | -100&900KP | -.1&.9MP | -1&9KSC |
| 15# | 1BR | 100KP | .1MP | 1KSC |
| 20# | – | – | – | – |
| – | 1.6BR | 160KP | .16MP | 1.6KSC |
| 30# | – | – | – | – |
| – | 2.5BR | 250KP | .25MP | 2.5KSC |
| 60# | 4BR | 400KP | .4MP | 4KSC |
| – | 6BR | 600KP | .6MP | 6KSC |
| 100# | – | – | – | – |
| 120# | – | – | – | – |
| – | 10BR | 1,000KP | 1MP | 10KSC |
| 160# | – | – | – | – |
| 200# | – | – | – | – |
| – | 16BR | 1,600KP | 1.6MP | 16KSC |
| 300# | – | – | – | – |
| – | 25BR | 2,500KP | 2.5MP | 25KSC |
| 400# | – | – | – | – |
| 500# | – | – | – | – |
| 600# | 40BR | 4,000KP | 4MP | 40KSC |
| 800# | – | – | – | – |
| – | 60BR | 6,000KP | 6MP | 60KSC |
| 1,000# | – | – | – | – |
| 1,500# | 100BR | 10,000KP | 10MP | 100KSC |
| 2,000# | – | – | – | – |
| – | 160BR | 16,000KP | 16MP | 160KSC |
| 3,000# | – | – | – | – |
| – | 250BR | 25,000KP | 25MP | 250KSC |
| 4,000# | – | – | – | – |
| 5,000# | – | – | – | – |
| 6,000# | 400BR | 40,000KP | 40MP | 400KSC |
| 8,000# | – | – | – | – |
| – | 600BR | 60,000KP | 60MP | 600KSC |
| 10,000# | – | – | – | – |
| 15,000# | 1,000BR | 100,000KP | 100MP | 1,000KSC |

All specifications are subject to change without notice.
All sales subject to standard terms and conditions.
©2017 Ashcroft Inc. Ash Bul GS-3 1009 Rev D, 10/17

ashcroft.com
info@ashcroft.com
1.800.328.8258

ASHCROFT®
Trust the shield.®

# 1009 Stainless Steel Case Gauge

## DIMENSIONS (dimensions in [ ] are millimeters)

### 2½˝ 1009 Lower and Back Connect

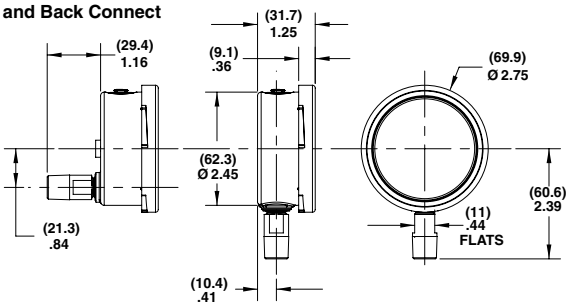


### 3½˝ 1009 Lower and Back Connect

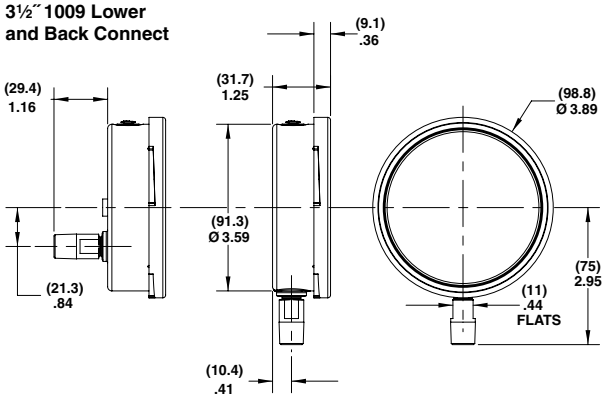


### 2½˝ 1009 Back Connect (XUC)

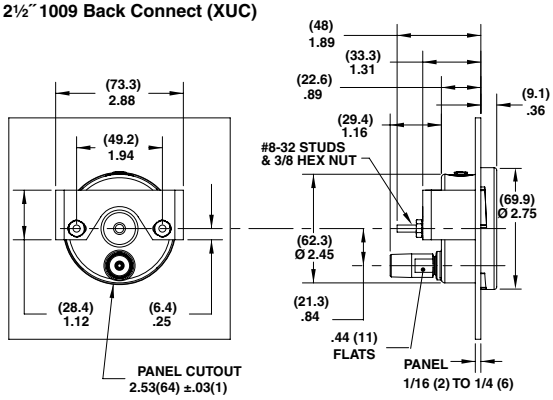


### 3½˝ 1009 Back Connect (XUC)

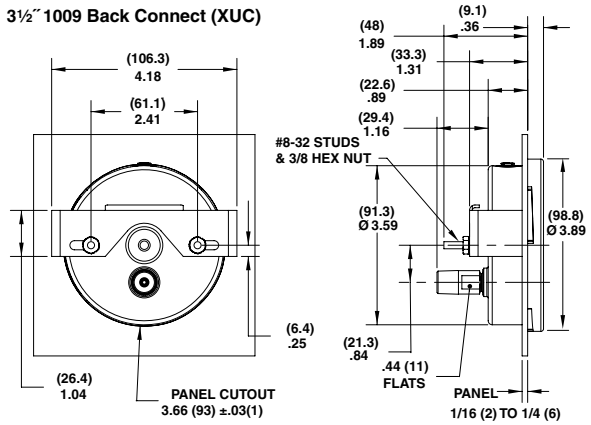


### 2½˝ 1009 Back Connect (XFF)

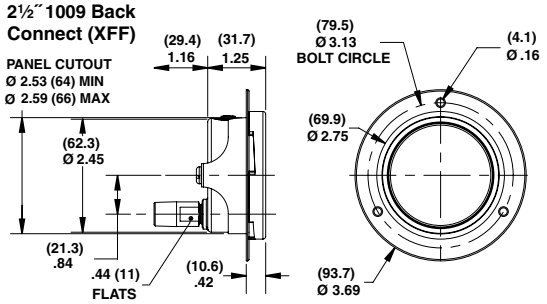


### 3½˝ 1009 Back Connect (XFF)

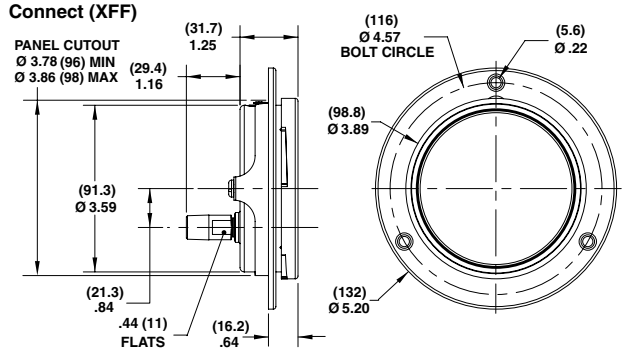


### 2½˝ 1009 Lower and Back Connect (XFW)

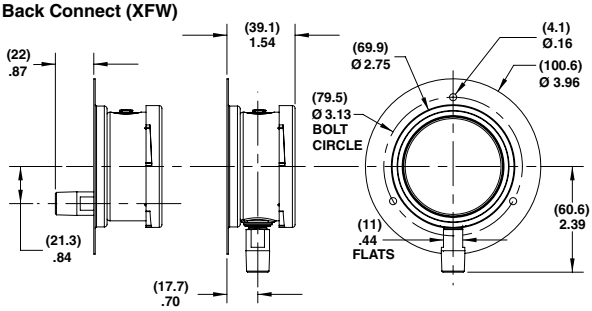


### 3½˝ 1009 Lower and Back Connect (XFW)

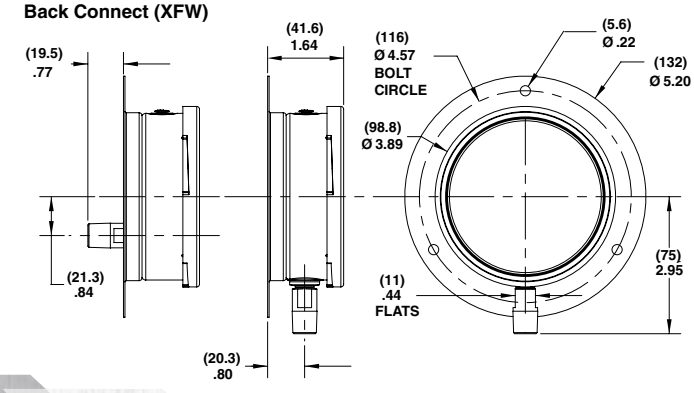


All specifications are subject to change without notice.
All sales subject to standard terms and conditions.
©2017 Ashcroft Inc. Ash Bul GS-3 1009 Rev D, 10/17

ashcroft.com
info@ashcroft.com
1.800.328.8258

ASHCROFT®
Trust the shield.®

# 1009 Stainless Steel Case Gauge with Tubing Connections

## DIMENSIONS (dimensions in [ ] are millimeters)

### 2½˝ 1009 Lower and Back Connect

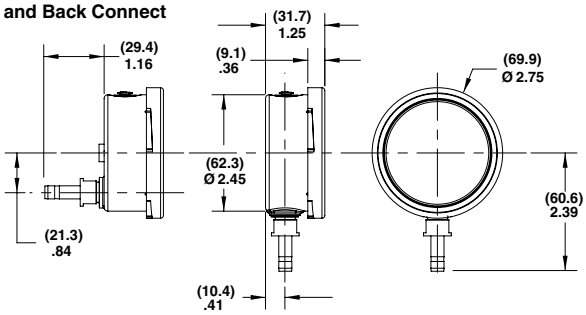


### 3½˝ 1009 Lower and Back Connect

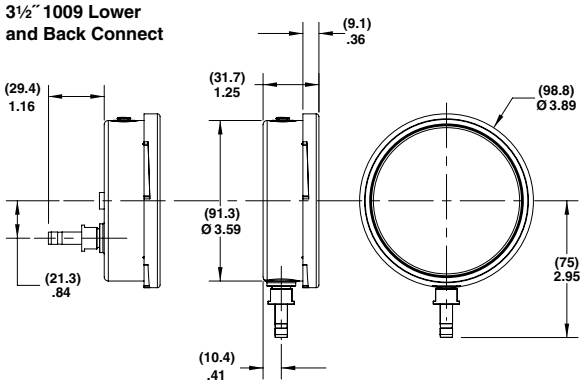


### 2½˝ 1009 Back Connect (XUC)

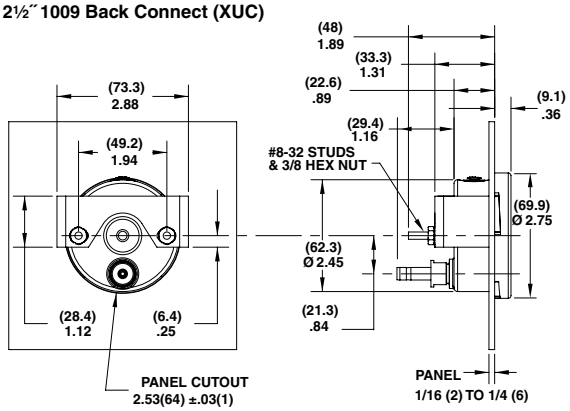


### 3½˝ 1009 Back Connect (XUC)

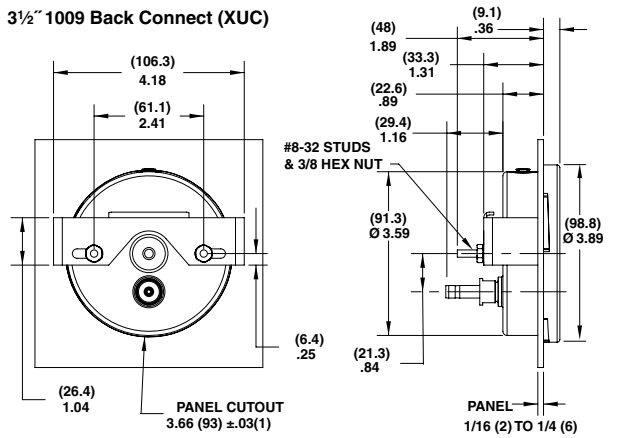


### 2½˝ 1009 Back Connect (XFF)

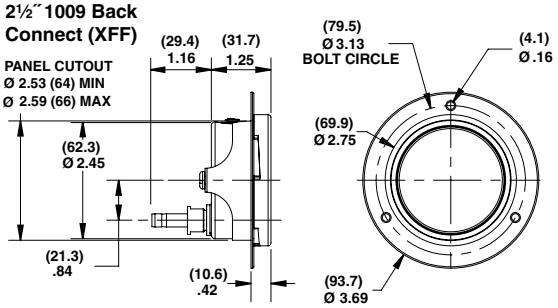


### 3½˝ 1009 Back Connect (XFF)

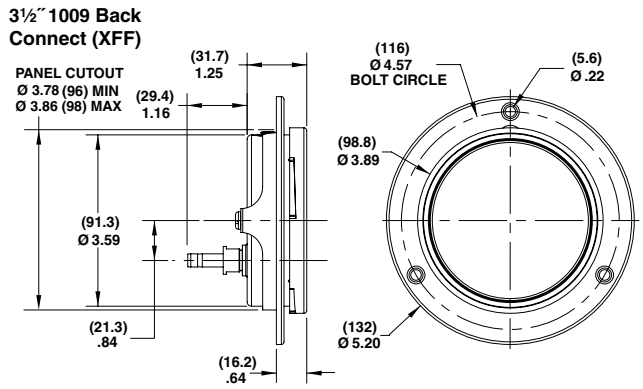


### 2½˝ 1009 Lower and Back Connect (XFW)

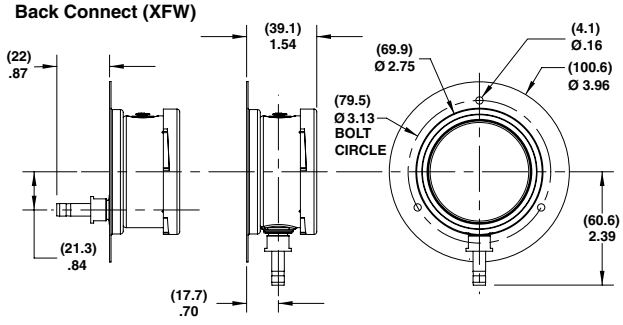


### 3½˝ 1009 Lower and Back Connect (XFW)

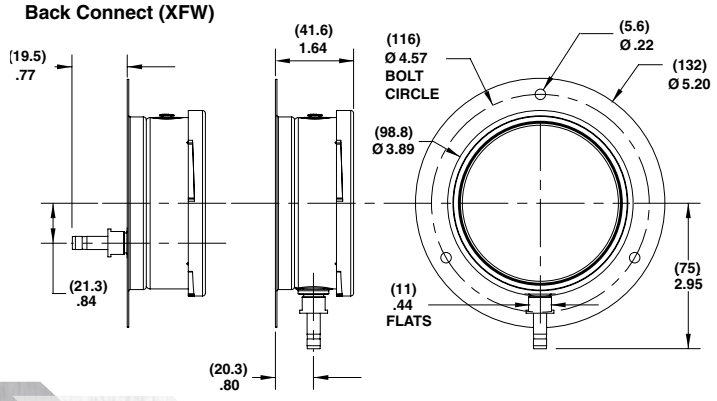


All specifications are subject to change without notice.
All sales subject to standard terms and conditions.
©2017 Ashcroft Inc. Ash Bul GS-3 1009 Rev D, 10/17

ashcroft.com
info@ashcroft.com
1.800.328.8258

**This page is intentionally left blank**

# CS-413-301 : Identification sheet

| | | | |
|---|---|---|---|
| VWTC PROJECT NUMBER: | 5000220043 | REV: | 1 |
| PROJECT NAME: | AEM MELIADINE - BPC UPGRADE | SUBMITTED TO (COMPANY): | AEM |
| ENGINEER: | EMMANUELLE DORMOY | SUBMITTED TO (RESPONSIBLE): | |
| PROJECT MANAGER: | THOMAS SAVARY / BRUCE BORDES | PROJECT NUM REFERENCE.: | 6526-S-265-605 / OC-989680 |
| PHONE NUMBER: | 514-334-7230 | LOT NUMBER: | |

| SUPPLIER | EQPT CODE | EQPT TAG NO | DIA | DESCRIPTION | INFO 1 | INFO 2 | INFO 3 | APPLIC. | NOTE | REV |
|---|---|---|---|---|---|---|---|---|---|---|
| ASHCROFT | IMPSGG315787 | 65PI6801613 | 2.5" | ACTIVATED CARBON SLURRY PRESSURE GAUGE | PRESSURE GAUGE C/W ISOLATOR // MANFUACTURER : ASHCROFT // MODEL : 25-1009-SW-L-02L-160# + 04-310SS-02T-XCG // 25: 2 1/2" DIAL. RANGE : 0/160 PSI //SW: 316SS //L: GLYCERIN FILLED //L: LWR MNT CONN // ISOLATOR - 04: PROCESS CONN: 1/2" MNPT-310:NO FLUSH PRT | | N/A | ACTIVATED CARBON PREPATION SYSTEM #1 | | 1 |
| ASHCROFT | IMPSGG315787 | 65PI68016313 | 2.5" | ACTIVATED CARBON SLURRY PRESSURE GAUGE | PRESSURE GAUGE C/W ISOLATOR // MANFUACTURER : ASHCROFT // MODEL : 25-1009-SW-L-02L-160# + 04-310SS-02T-XCG // 25: 2 1/2" DIAL. RANGE : 0/160 PSI //SW: 316SS //L: GLYCERIN FILLED //L: LWR MNT CONN // ISOLATOR - 04: PROCESS CONN: 1/2" MNPT-310:NO FLUSH PRT | | N/A | ACTIVATED CARBON PREPATION SYSTEM #2 | | 1 |

**This page is intentionally left blank**

ASHCROFT®
Trust the shield.®

# 1009 Stainless Steel Case Gauge

## FEATURES

- Meets ASME B40.100 specifications
- Corrosion resistant SS case
- Dry gauges are field fillable
- Power***Flex***™ movement provides superior resistance to shock, vibration and pulsation
- True Zero™ reduces reading errors by using "zero box" instead of conventional dial pins
- ***PLUS!***™ performance available for liquid filled performance with a dry gauge
- MSL helium leak tested to 1X10$^{-6}$ scc/s
- Ventable fill plug
- Accessory kits for easy panel mounting

## TYPICAL USES

- Pumps and compressors
- Boilers
- Equipment skids
- Specialized OEM equipment
- Hydraulics and pneumatics
- Severe ambient conditions




## SPECIFICATIONS

| | |
|---|---|
| Accuracy: | ASME B40.100, Grade 1A, ±1% of span (Dry)<br>±1.5% of span (Liquid filled) |
| Dial Sizes: | 2½″ (63mm), 3½″ (100mm) |
| Ranges: | Minimum 0-15 psi, maximum 0-15,000 psi, vacuum and compound |
| **Wetted Materials** | |
| Tube: | 316L SS tube |
| Process Connection: | 316L SS socket (SW)<br>Aluminum bronze socket (AW) |
| **Non Wetted Materials** | |
| Window: | Polycarbonate (Std.), Safety glass (XSG), Polysulfone (XPS) 3½″ Dial only |
| Dial: | Black figures on white background, aluminum |
| Pointer: | Black, aluminum, adjustable (Std.), micrometer (XMP) |
| Movement: | Power***Flex*** movement<br>Bottom plate – 304 SS<br>Upper plate – 304 SS<br>Pin – 304 SS<br>Hairspring assembly – 304 SS<br>Pinion – 304 SS<br>Segment – Glass filled polyester |
| Case: | 304 SS (Std.), 316L SS (XYW) |
| Ring: | 304 SS (Std.), 316L SS (XYW) |
| Process Connection Location: | Lower, Back, Top, 3 o'clock, 9 o'clock |
| Process Connection Sizes: | ⅛ NPT, ¼ NPT (see ordering code for more options) |

## KEY BENEFITS

- **IP65 Rating**
- **NEMA 4X**
- **CRN Approved**
- **PED**
- ***PLUS!***™ **Performance (XLL)**

| | |
|---|---|
| Dampening: | Glycerin case fill (Std. liquid fill), Silicone case fill (XGV), Halocarbon case fill (XGX), ***PLUS!*** Performance (XLL) |
| Weather Protection: | IP65 (Plug closed), IP54 (Plug vented)<br>NEMA 4X (Plug closed) |
| Approvals: | CRN, RoHS, PED |

## MIN/MAX TEMPERATURE LIMITS

| Version | Ambient | Process | Storage |
|---|---|---|---|
| Dry | -40/200°F (-40/93°C) | -40/250°F (-40/121°C) | -40/250°F (-40/121°C) |
| ***PLUS!*** | -40/150°F (-40/66°C) | -40/200°F (-40/93°C) | -40/150°F (-40/66°C) |
| Glycerin Fill | 20/150°F (-7/66°C) | 20/200°F (-7/93°C) | 0/150°F (-18/66°C) |
| Silicone Fill | -40/150°F (-40/66°C) | -40/200°F (-40/93°C) | -40/150°F (-40/66°C) |
| Halocarbon Fill | -40/150°F (-40/66°C) | -40/200°F (-40/93°C) | -40/150°F (-40/66°C) |

All specifications are subject to change without notice.
All sales subject to standard terms and conditions.
©2017 Ashcroft Inc. Ash Bul GS-3 1009 Rev D, 10/17

ashcroft.com
info@ashcroft.com
1.800.328.8258

ASHCROFT®
Trust the shield.®

# 1009 Stainless Steel Case Gauge

## ORDERING CODE

| Example: | 251009 | SW | L | 02 | L | XC4 | 15# |
|---|---|---|---|---|---|---|---|
| **Dial Size/Series Code** | | | | | | | |
| 251009 – SS case | 251009 | | | | | | |
| 351009 – SS case | | | | | | | |
| **System** | | | | | | | |
| AW - 316L SS tube/Aluminum, bronze connection (Max. pressure 1000 psi) | | | | | | | |
| SW - 316L SS tube/316L SS process connection (Max. pressure 15,000 psi) | | SW | | | | | |
| **Case Fill** | | | | | | | |
| Dry, liquid fillable case | | | | | | | |
| L - Liquid filled case (Glycerin standard) | | | L | | | | |
| **Process Connection Sizes** | | | | | | | |
| 01 - ⅛ NPT Male | | | | | | | |
| 02 - ¼ NPT Male | | | | 02 | | | |
| 04 - ½ NPT Male | | | | | | | |
| RW - SAE 7/16 & 20 Straight thread | | | | | | | |
| EJ - 7/16 X 20 UNF-3A 37° flare | | | | | | | |
| KJ - ¼ Straight JIS, BSP - 1009SW | | | | | | | |
| KA - ¼ Tapered JIS, BSP - 1009SW | | | | | | | |
| 13 - G ¼″ DIN | | | | | | | |
| JP - ¼″ Tubing, no throttle plug (max pressure 10,000 psi) | | | | | | | |
| JQ - 6mm Tubing, no throttle plug (max pressure 6,000 psi) | | | | | | | |
| JL - 9/16″ 18 UNF-2A, N/A on 25 1009 lower | | | | | | | |
| **Connection Location** | | | | | | | |
| L - Lower mount connection | | | | | L | | |
| B - Lower back mount connection | | | | | | | |
| D - Side connection (3 o'clock) | | | | | | | |
| E - Side connection (9 o'clock) | | | | | | | |
| T - Top connection | | | | | | | |
| **Options (if choosing an option(s) must include an "X")** | | | | | | X__ | |
| LL - ***PLUS!***™ performance | | | | | | | |
| GV - Silicone case fill | | | | | | | |
| GX - Halocarbon case fill | | | | | | | |
| TU - Throttle plug for ranges up to 1000 psi | | | | | | | |
| TS - Throttle plug for ranges up to 15,000 psi | | | | | | | |
| 6B - Cleaned for oxygen service | | | | | | | |
| SG - Safety glass | | | | | | | |
| PS - Polysulfone window (3½″ dial only) | | | | | | | |
| EO - Adjustable red set hand | | | | | | | |
| SH - Red set hand, stationary | | | | | | | |
| NH - SS tag wired to case | | | | | | | |
| FF - Front flange | | | | | | | |
| FW - Back flange | | | | | | | |
| UC - U-clamp | | | | | | | |
| EA - External zero adjust (3½″ dial only) | | | | | | | |
| C4 - Individual calibration chart in accordance with ASME B40.100:2013. Accuracy traceable to N.I.S.T | | | | | | C4 | |
| SM - All SS movement | | | | | | | |
| YW - 316L SS case and ring | | | | | | | |
| **Range (coding examples only, see range table for all standard ranges)** | | | | | | | |
| Single Scales | | | | | | | |
| 15# - 15 psi | | | | | | | 15# |
| 1BR - 1 bar | | | | | | | |
| 1KSC - 1 kilograms per sq. cm | | | | | | | |
| 100KP - 100 kilopascal | | | | | | | |
| Dual Scales | | | | | | | |
| 15#/BR - 15 psi inner scale, 1 bar outer scale | | | | | | | |
| 1BR/# - 1 bar inner scale, 15 psi outer scale | | | | | | | |

All specifications are subject to change without notice.
All sales subject to standard terms and conditions.
©2017 Ashcroft Inc. Ash Bul GS-3 1009 Rev D, 10/17

ashcroft.com
info@ashcroft.com
1.800.328.8258

ASHCROFT®
Trust the shield.®

# 1009 Stainless Steel Case Gauge

| STANDARD RANGES | | | | |
|---|---|---|---|---|
| psi | bar | kPa | Mpa | kg/cm² |
| 30IMV | -1BR | -100KP | -.1MP | -1KSC |
| – | -1&.6BR | -100&60KP | -.1&.06MP | -1&.6KSC |
| 30IMV&15# | – | – | – | – |
| – | -1&1.5BR | -100&150KP | -.1&.15MP | -1&1.5KSC |
| 30IMV&30# | – | – | – | – |
| – | -1&3BR | -100&300KP | -.1&.3MP | -1&3KSC |
| 30IMV&60# | – | – | – | – |
| – | -1&5BR | -100&500KP | -.1&.5MP | -1&5KSC |
| 30IMV&100# | – | – | – | – |
| – | 1&9BR | -100&900KP | -.1&.9MP | -1&9KSC |
| 15# | 1BR | 100KP | .1MP | 1KSC |
| 20# | – | – | – | – |
| – | 1.6BR | 160KP | .16MP | 1.6KSC |
| 30# | – | – | – | – |
| – | 2.5BR | 250KP | .25MP | 2.5KSC |
| 60# | 4BR | 400KP | .4MP | 4KSC |
| – | 6BR | 600KP | .6MP | 6KSC |
| 100# | – | – | – | – |
| 120# | – | – | – | – |
| – | 10BR | 1,000KP | 1MP | 10KSC |
| 160# | – | – | – | – |
| 200# | – | – | – | – |
| – | 16BR | 1,600KP | 1.6MP | 16KSC |
| 300# | – | – | – | – |
| – | 25BR | 2,500KP | 2.5MP | 25KSC |
| 400# | – | – | – | – |
| 500# | – | – | – | – |
| 600# | 40BR | 4,000KP | 4MP | 40KSC |
| 800# | – | – | – | – |
| – | 60BR | 6,000KP | 6MP | 60KSC |
| 1,000# | – | – | – | – |
| 1,500# | 100BR | 10,000KP | 10MP | 100KSC |
| 2,000# | – | – | – | – |
| – | 160BR | 16,000KP | 16MP | 160KSC |
| 3,000# | – | – | – | – |
| – | 250BR | 25,000KP | 25MP | 250KSC |
| 4,000# | – | – | – | – |
| 5,000# | – | – | – | – |
| 6,000# | 400BR | 40,000KP | 40MP | 400KSC |
| 8,000# | – | – | – | – |
| – | 600BR | 60,000KP | 60MP | 600KSC |
| 10,000# | – | – | – | – |
| 15,000# | 1,000BR | 100,000KP | 100MP | 1,000KSC |

All specifications are subject to change without notice.
All sales subject to standard terms and conditions.
©2017 Ashcroft Inc. Ash Bul GS-3 1009 Rev D, 10/17

ashcroft.com
info@ashcroft.com
1.800.328.8258

ASHCROFT®
Trust the shield.®

# 1009 Stainless Steel Case Gauge

## DIMENSIONS (dimensions in [ ] are millimeters)

### 2½˝ 1009 Lower and Back Connect

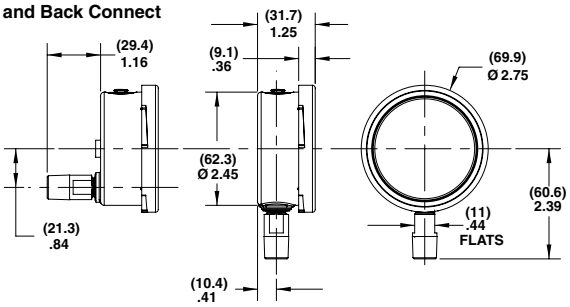


### 3½˝ 1009 Lower and Back Connect

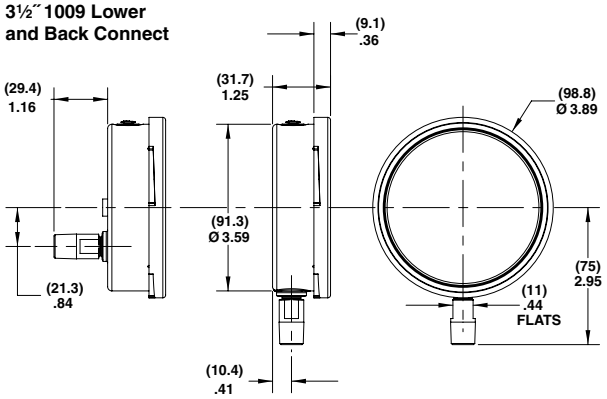


### 2½˝ 1009 Back Connect (XUC)

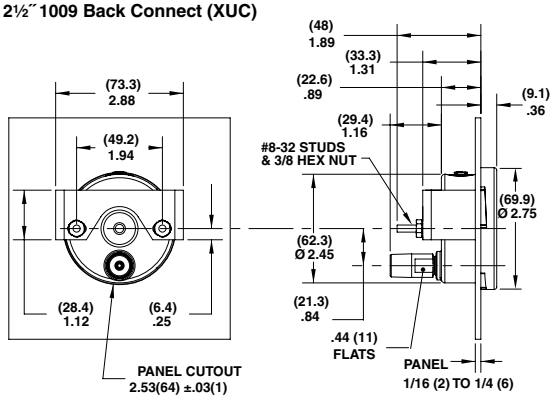


### 3½˝ 1009 Back Connect (XUC)

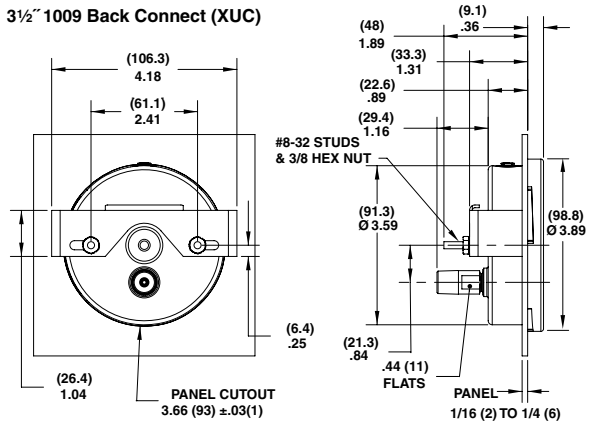


### 2½˝ 1009 Back Connect (XFF)

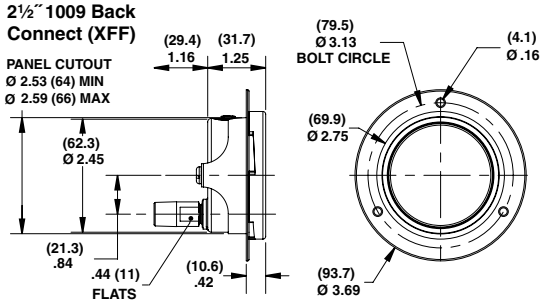


### 3½˝ 1009 Back Connect (XFF)

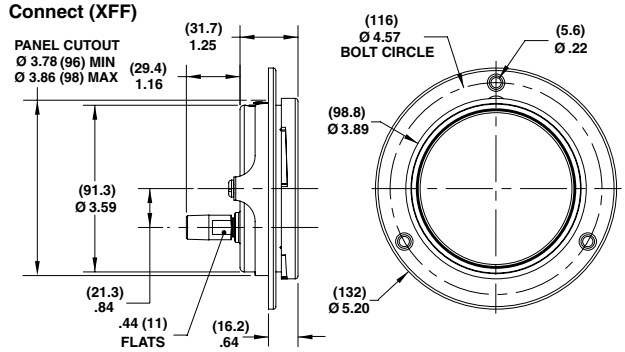


### 2½˝ 1009 Lower and Back Connect (XFW)

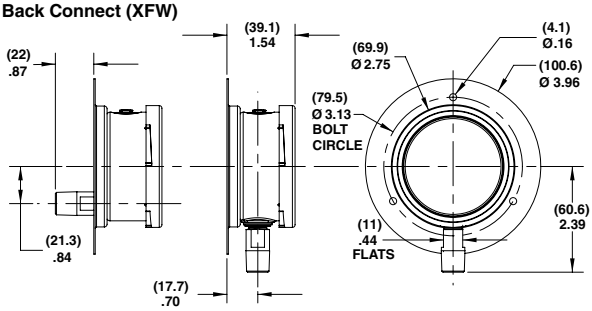


### 3½˝ 1009 Lower and Back Connect (XFW)

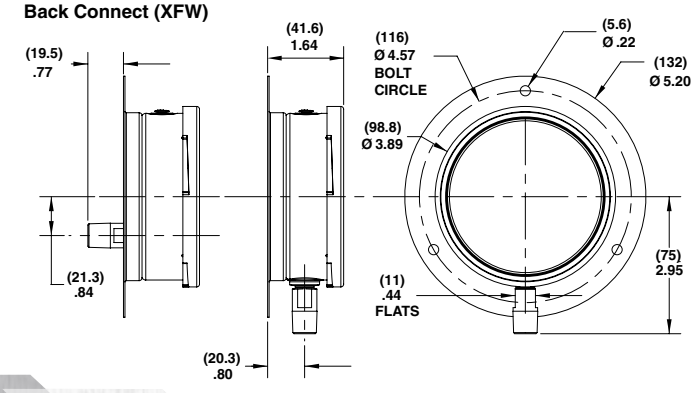


All specifications are subject to change without notice.
All sales subject to standard terms and conditions.
©2017 Ashcroft Inc. Ash Bul GS-3 1009 Rev D, 10/17

ashcroft.com
info@ashcroft.com
1.800.328.8258

ASHCROFT®
Trust the shield.®

# 1009 Stainless Steel Case Gauge with Tubing Connections

## DIMENSIONS (dimensions in [ ] are millimeters)

### 2½˝ 1009 Lower and Back Connect

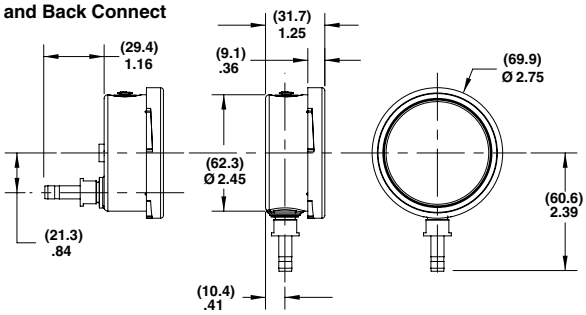


### 3½˝ 1009 Lower and Back Connect

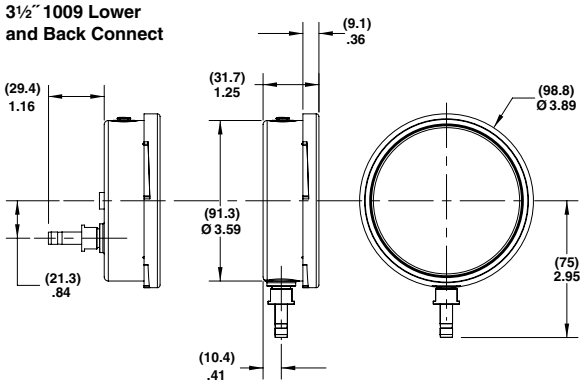


### 2½˝ 1009 Back Connect (XUC)

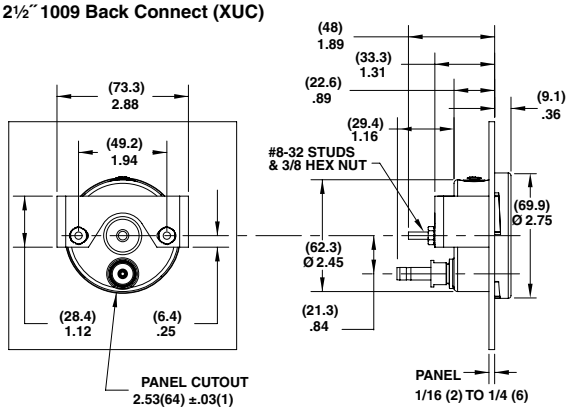


### 3½˝ 1009 Back Connect (XUC)

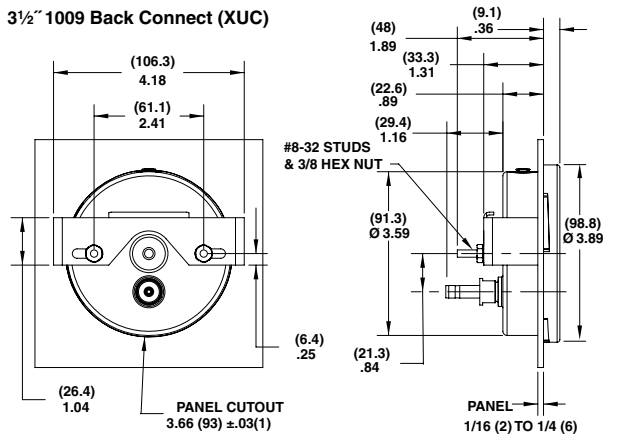


### 2½˝ 1009 Back Connect (XFF)

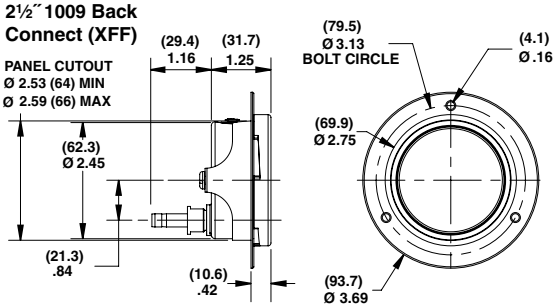


### 3½˝ 1009 Back Connect (XFF)

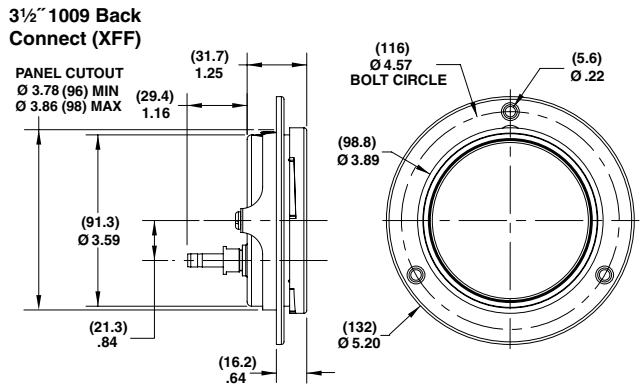


### 2½˝ 1009 Lower and Back Connect (XFW)

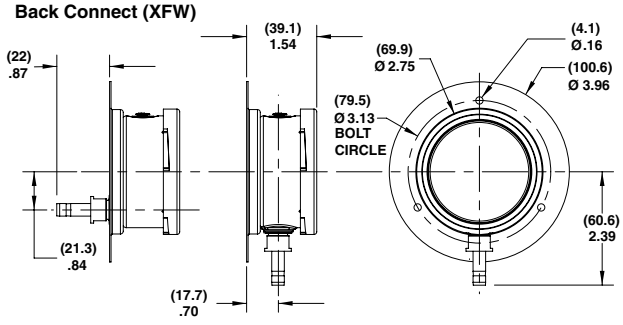


### 3½˝ 1009 Lower and Back Connect (XFW)

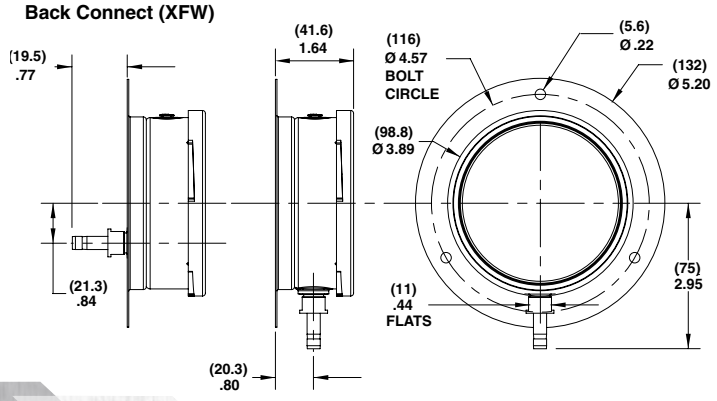


All specifications are subject to change without notice.
All sales subject to standard terms and conditions.
©2017 Ashcroft Inc. Ash Bul GS-3 1009 Rev D, 10/17

ashcroft.com
info@ashcroft.com
1.800.328.8258

ASHCROFT®
Trust the shield.®

# 310, 315 All-Welded “Mini” Diaphragm Seal

## FEATURES

- No gaskets or bolts
- Available with ⅛ NPT flushing connection
- Designed for use with transducers and 3½″ or smaller gauges

## TYPICAL USES

- Oil and gas
- Chemical processes
- Process equipment




**310**
Threaded Seal

| SPECIFICATIONS | |
|---|---|
| Connection Style: | 310: All-welded<br>315: All-welded with flushing connection |
| Process Connection Size: | 310: ⅛ to 1 NPT Male, ¼ or ½ NPT Female<br>315: ¼ or ½ NPT Female |
| Instrument Connection Size: | ⅛ or ¼ NPT Female |
| Pressure Rating (MAWP): | 2,500 psi |
| Added Tolerance: | ±0.5% typical |
| Wetted Components: | Diaphragm & bottom housing |
| Non-Wetted Components: | Top housing: 316L SS |

| WETTED COMPONENTS | |
|---|---|
| Diaphragm Material | Bottom Housing Material |
| See ordering code on page 2 | See ordering code on page 2 |

| NON-WETTED COMPONENTS |
|---|
| Top Housing |
| 316L SS |

## KEY BENEFITS

- **Protects instrumentation in tight spaces**
- **Eliminates potential leak path with all-welded construction**
- **Low fill volume reduces temperature effects on instrument accuracy**



All specifications are subject to change without notice.
All sales subject to standard terms and conditions.
©2018 Ashcroft Inc. 310-315_seal_ds_RevC_07-18

ashcroft.com
info@ashcroft.com
1.800.328.8258

ASHCROFT®
Trust the shield.®

# 310, 315 All-Welded “Mini” Diaphragm Seal

| ORDERING CODE Example: | 01 | 310 | S | S | 01T | XCK | NH |
|---|---|---|---|---|---|---|---|
| **Process Connection Size** | | | | | | | |
| 01 - ⅛ NPT Male, (available with 310 only) | 01 | | | | | | |
| 02 - ¼ NPT Male, (available with 310 only) | | | | | | | |
| 04 - ½ NPT Male, (available with 310 only) | | | | | | | |
| 06 - ¾ NPT Male, (available with 310 only) | | | | | | | |
| 08 - 1 NPT Male, (available with 310 only) | | | | | | | |
| 25 - ¼ NPT Female | | | | | | | |
| 50 - ½ NPT Female | | | | | | | |
| **Seal Type** | | | | | | | |
| 310 - All-welded Mini seal no flushing port | | 310 | | | | | |
| 315 - All-welded Mini seal with flushing port connection | | | | | | | |
| **Diaphragm Material** | | | | | | | |
| S - 316L SS | | | S | | | | |
| H - Hastelloy® C-276 | | | | | | | |
| U - Tantalum | | | | | | | |
| P - Monel® (Must be ordered with Monel® bottom housing) | | | | | | | |
| **Bottom Housing Material** | | | | | | | |
| S - 316L SS | | | | S | | | |
| H - Hastelloy® C-276 | | | | | | | |
| M - Monel® | | | | | | | |
| G - Hastelloy® B-2 | | | | | | | |
| **Instrument Connection Size** | | | | | | | |
| 01T - ⅛ NPT Female | | | | | 01T | | |
| 02T - ¼ NPT Female | | | | | | | |
| **Options (if choosing an option(s) must include an “X”)** | | | | | | X__ | |
| **Filling Fluid** | | | | | | | |
| CG - Glycerin | | | | | | | |
| CK - Silicon 50cST | | | | | | CK | |
| CF - Halocarbon® | | | | | | | |
| See Filling Fluid Table Below | | | | | | | |
| **Optional Features** | | | | | | | |
| PU - Pipe Plug for flushing connection (Must match bottom housing material; 315 seal only) | | | | | | | |
| NH - SS instrument tag | | | | | | | NH |
| NN - Paper instrument tag | | | | | | | |
| DU - Instrument welded to seal | | | | | | | |
| MQ - Positive material identification | | | | | | | |
| W1 - Dye penetrant testing | | | | | | | |
| 6B - Cleaned for oxygen service | | | | | | | |

## Filling Fluid Table

| Fill | Service | Connection to Instrument | Temperature Range °F | Code |
|---|---|---|---|---|
| Glycerin | Pressure | Direct Only | 0/400 | CG |
| Silicone | Pressure/Vacuum | Direct or Flexible Line | –40/500 | CK |
| Halocarbon® | Pressure/Vacuum in presence of strong oxidizing agent | Direct or Flexible Line | –70/300 | CF |
| Syltherm® | Pressure | Direct or Flexible Line | –40/750 | HA |



All specifications are subject to change without notice.
All sales subject to standard terms and conditions.
©2018 Ashcroft Inc. 310-315_seal_ds_RevC_07-18

ashcroft.com
info@ashcroft.com
1.800.328.8258

# 310, 315 All-Welded “Mini” Diaphragm Seal

## DIMENSIONS in [ ] are millimeters

Drawings are for reference only, consult Ashcroft for specific dimensional drawings.

| | A | | B | | C | |
|---|---|---|---|---|---|---|
| | in | mm | in | mm | in | mm |
| **Type 310** | 1.75 | [38] | .81 | [30] | 1.34 | [34] |
| **Type 315** | 1.73 | [44] | 2.25 | [57.2] | 1.34 | [34] |

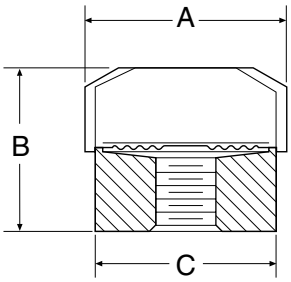


310 mini-seal – Threaded ¼, ½, ¾, NPT

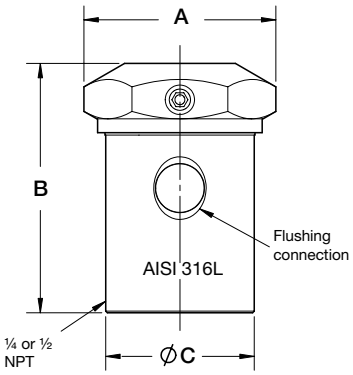


315 mini-seal – Threaded ¼, ½, ¾, NPT



All specifications are subject to change without notice.
All sales subject to standard terms and conditions.
©2018 Ashcroft Inc. 310-315_seal_ds_RevC_07-18

ashcroft.com
info@ashcroft.com
1.800.328.8258

# CS-434-100 : Identification sheet

| | | | |
|---|---|---|---|
| VWTC PROJECT NUMBER: | 5000220043 | REV: | 1 |
| PROJECT NAME: | AEM MELIADINE - BPC UPGRADE | SUBMITTED TO (COMPANY): | AEM |
| ENGINEER: | EMMANUELLE DORMOY | SUBMITTED TO (RESPONSIBLE): | |
| PROJECT MANAGER: | THOMAS SAVARY / BRUCE BORDES | PROJECT NUM REFERENCE.: | 6526-S-265-605 / OC-989680 |
| PHONE NUMBER: | 514-334-7230 | LOT NUMBER: | |

| SUPPLIER | EQPT CODE | EQPT TAG NO | DIA | DESCRIPTION | INFO 1 | INFO 2 | INFO 3 | APPLIC. | NOTE | REV |
|---|---|---|---|---|---|---|---|---|---|---|
| ALLEN BRADLEY | ST-434-102 | 65PSL6801601 | N/A | SERVICE WATER PRESSURE SWITCH | PRESSURE SWITCH/MANUFACTURER: ALLEN BRADLEY// MODEL: 836T-T253J | 1/4" FNPT female pipe connection | Adjustable Range : 12-150 psi | ACTIVATED CARBON PREPATION SYSTEM #1 | | 1 |
| ALLEN BRADLEY | ST-434-102 | 65PSL6801621 | N/A | SERVICE WATER PRESSURE SWITCH | PRESSURE SWITCH/MANUFACTURER: ALLEN BRADLEY// MODEL: 836T-T253J | 1/4" FNPT female pipe connection | Adjustable Range : 12-150 psi | ACTIVATED CARBON PREPATION SYSTEM #2 | | 1 |

**This page is intentionally left blank**



## Bulletin 836T Pressure Controls

- Operating ranges from 30 in. Hg vacuum…5000 psi
- Independently adjustable range and differential
- Copper alloy and stainless steel bellows
- 2- and 4-Circuit contact block
- Pressure difference controls available
- 1/4 in. and 3/8 in. N.P.T. and O-ring straight thread connections
- Type 4 & 13 and Type 7 & 9 and 4 & 13 combination enclosures

## Table of Contents

Product Overview ..... this page
Technical Data ..... 13-26
Product Selection ..... 13-34
Modifications ..... 13-41
Accessories ..... 13-42
Conversion Kits ..... 13-43
Factory Options ..... 13-44
Wiring Diagrams ..... 13-45
Approximate Dimensions ..... 13-48

## Standards Compliance and Certification

(For file and guide numbers, see page 13-44)

## Product Overview

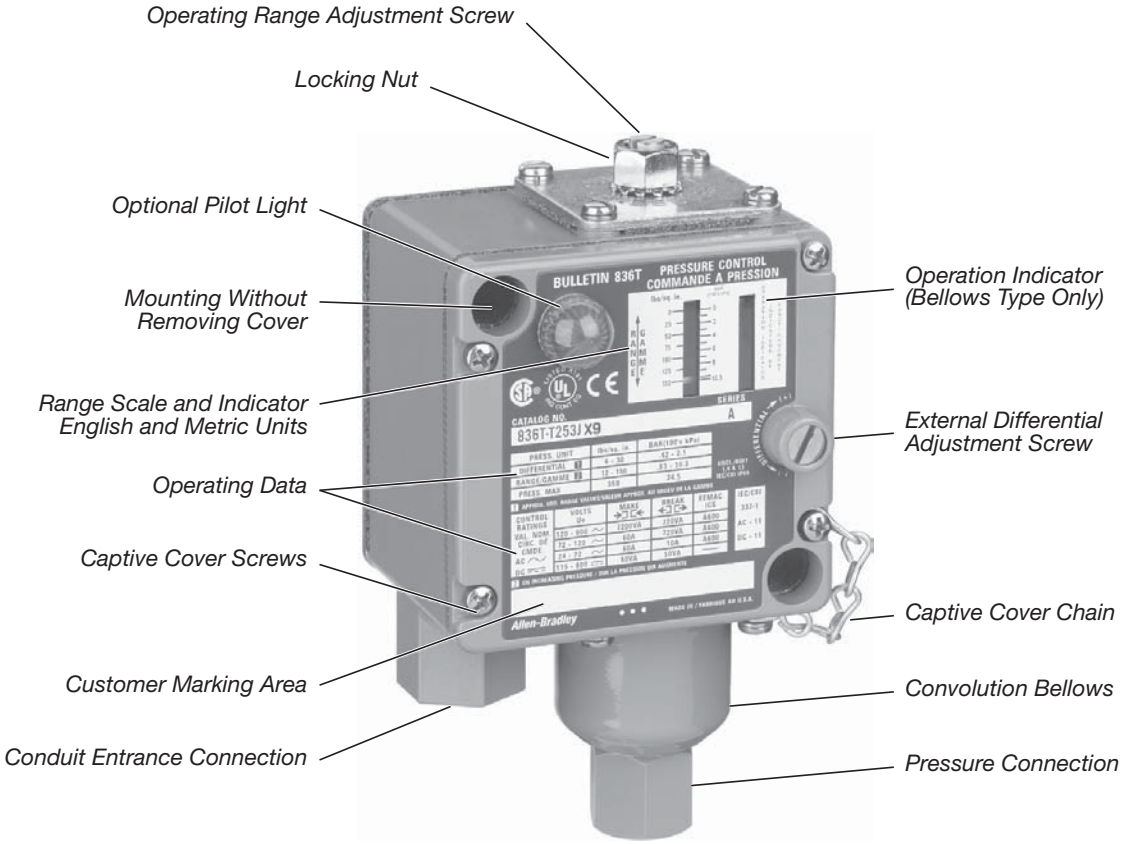


***Bulletin 836T Style T Bellows Type Enclosure Type 1, 4 & 13, IEC IP66***

## Description

Bulletin 836T Pressure Controls are control circuit devices designed to meet the traditional requirements of the transportation, machine tool, and other heavy-duty industries. Allen-Bradley Bulletin 836T Pressure Controls can be used in pneumatic and hydraulic applications. The copper alloy bellows actuators can be used with air, water, oil, vapor, and other non-corrosive gases and liquids. Type 316 stainless steel bellows are available for more corrosive gases, vapors, and fluids.

A rugged stainless steel cylinder and stainless steel piston assembly is used for the higher-pressure coolant and hydraulic oil applications. May also be used with water and water-based fluids. The controls feature snap-action precision switches equipped with silver contacts. A relatively friction-free mechanism provides consistent operation regardless of mounting position. Devices are designed to allow easy adjustment of pressure settings.

Allen-Bradley Bulletin 836T Pressure Controls are used in many types of applications with adjustable ranges from 30 in. Hg vacuum…5000 psi. They can be used to control pneumatic systems and maintain a pressure tank within a preset and constant pressure range. They can be used to detect over-pressures of gases and liquids to prevent damage to valuable equipment. Pressure controls can also detect low pressure to protect equipment from loss of coolants and lubrication.

Bulletin 836T Pressure Controls are offered in a variety of styles to fit a wide range of applications. The devices are available with either a Type 1, 4 & 13, or 7 & 9 and 4 & 13 combined enclosure. They are available with two-circuit or four-circuit contact blocks. Accessories and modifications are available to tailor the devices to meet most application requirements.

## Applications

- Machine tools
- Machine hydraulic pressures
- Material clamping fixtures
- Lubricant and coolant pressures
- Compactor ram pressures
- Air compressors

## Style T — Pressure Control

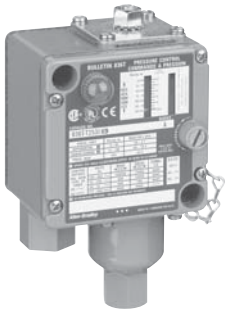

### Style T

- Independently adjustable operating range and differential
- Single bellows or piston operation

### Copper Alloy Bellows

- 1/4 in. N.P.T. female pipe connection
- Adjustable operating range — 30 in. Hg vacuum…650 psi
- Maximum line pressure — up to 1300 psi
- Occasional surge pressure — up to 1600 psi

### Type 316 Stainless Steel Bellows

- 1/4 in. N.P.T. female pipe connection
- Adjustable operating range — 30 in. Hg vacuum…375 psi
- Maximum line pressure — up to 600 psi
- Occasional surge pressure — up to 600 psi

### Piston

- 3/8 in. N.P.T. female pipe connection
- SAE 7/16-20 UNF-2B thread O-ring boss seal
- SAE 9/16-18 UNF-2B thread O-ring boss seal
- Adjustable operating range — 40…5000 psi
- Occasional surge pressure — up to 15,000 psi

## Style D — Pressure Difference Control



### Style D

- Independently adjustable system difference range and differential
- Two-bellows operation, one bellows connected to each system

### Copper Alloy Bellows

- 1/4 in. N.P.T. female pipe connection
- Adjustable system difference range — 1…70 psi
- Maximum line pressure — up to 600 psi
- Occasional surge pressure — up to 650 psi

### Type 316 Stainless Steel Bellows

- 1/4 in. N.P.T. female pipe connection
- Adjustable system difference range — 1…70 psi
- Maximum line pressure — up to 500 psi
- Occasional surge pressure — up to 500 psi

## Technical Terms

**Adjustable operating range —** Total span within which the contacts can be adjusted to trip and reset.

**Trip setting —** Higher pressure setting at which value the contacts transfer from their normal state to a change state.

**Reset setting —** Lower pressure setting at which value the contacts return to their normal state.

**Adjustable differential —** Difference between the trip and reset values

**Minimum differential —** When the differential is set to the lowest possible difference between trip and reset.

**Maximum differential —** When the differential is set to the highest possible difference between trip and reset.

**Max. occasional surge pressure —** Maximum surge pressure that can be applied to the actuator. Surges or ransients can occur during start-up and shut-down of a machine or system. Expressed in milliseconds, complex electronic instrumentation is required to measure the varying amplitude, frequency, and duration of this wave form. Extreme surges that occur approximately 8 times in a 24-hour period are negligible.

**Maximum line pressure —** Maximum sustained pressure that can be applied to the actuator without permanent damage. The control should not be cycled at this pressure. **Note:** Does not apply to piston type controls.

**psi —** Pounds per square inch gauge (positive pressure). Devices listed are in gauge pressure units which use atmospheric pressure as a reference. Atmospheric pressure at sea level is approximately 14.7 psi or 30 in. Hg.

**Vacuum —** Inches of mercury (in. Hg) vacuum (negative pressure).

**Operating range adjustment screw —** This screw is used to adjust the trip setting by varying the force of the main spring.

**Differential adjustment screw —** This screw is used to adjust reset setting by varying the force of the differential blade spring.

**Pressure media —** There are many types of pressure media that can be controlled. Examples include air, water, hydraulic fluids, and other types of gases and liquids. The type of media and the maximum system pressure will determine the type of actuator used for the pressure control application. See page 13-33.

**Pressure connection —** Common standard types of pressure connections used in control systems are 1/4 in. and 3/8 in. N.P.T. female pipe threads. SAE 7/16 and SAE 9/16 O-ring boss seals are also available (piston versions only).

**Contact configuration —** Bulletin 836T controls are available with either a 2-circuit or 4-circuit contact block. See page 13-31.

### Style D

**Style D — pressure difference controls adjustable system difference range —** The adjustable operating range for a pressure difference control.

**System difference pressure bushing —** This bushing is used to adjust the trip setting by varying the force on the main spring.

**Trip setting —** Desired difference in pressure between the two bellows at which value the contacts transfer from their normal state to a changed state. This occurs in one of the following conditions:

- The pressure in the bottom bellows is higher than the pressure in the top bellows by a value equal to the trip setting.
- The pressure in the bottom bellows remains constant and the pressure in the top bellows decreases by a value equal to the trip setting.

**Reset setting —** Predetermined normal difference in pressure between the two bellows, at which value the contacts return to their normal state. This occurs in one of the following conditions:

- The pressure in the bottom bellows is lower than the top bellows.
- The pressure in the bottom bellows remains constant and the pressure in the top bellows increases.

Figure 1
Graphics to illustrate technical terms

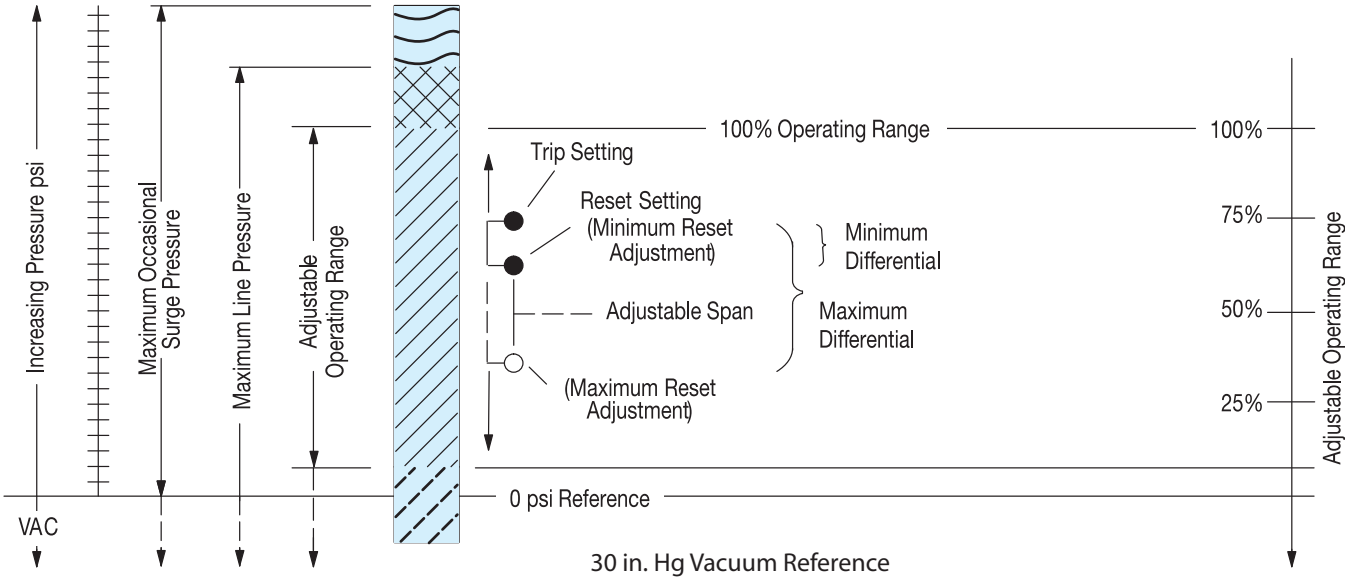




Visit our website: www.ab.com/catalogs
Preferred availability cat. nos. are printed in **bold**

Allen-Bradley

## Theory of Operation

Bulletin 836T Pressure Controls are designed to open or close electrical circuits in response to changes in pneumatic (air or gas) or hydraulic (oil or non-corrosive liquids) pressure. Piston controls are not intended for use with air or water. Figure 2 shows the basic operating mechanism.

Pressure is applied to the actuator which can be either a bellows or piston type. As pressure rises, the actuator exerts force on the main spring. When the threshold force of the main spring is overcome, levers transfer the motion to the contact block, displacing the contacts — this is referred to as the trip setting. The unique lever design amplifies the actuator motion, providing shorter stroke, which results in maximizing bellows life.

The lever assembly also includes a virtually friction-free over-center toggle arrangement, providing positive snap action to the contact block for long contact life. As pressure falls, force on the differential spring increases and contacts return to their normal state — this is referred to as reset setting. Varying the force of the main spring (by turning the operating range adjustment screw) determines when the contacts will trip. Varying the force of the differential spring (by turning the differential adjustment screw) determines when the contacts will reset. Setting trip and reset values determines the operating parameters of the application.

**Figure 2**
**Basic mechanical structure**

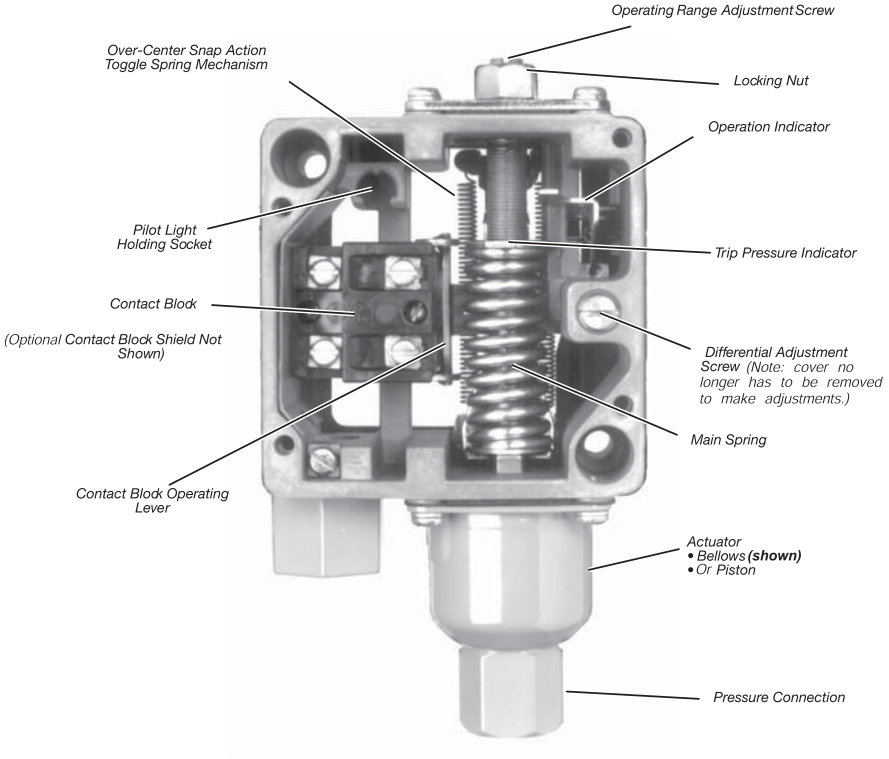


## Applications for Control

Pressure controls can be used to either control or monitor a machine or process. Figure 3 shows a typical control application. Here, pressure is controlled within predetermined high and low values. Figure 4 shows a typical monitoring application. Here, pressure is monitored between a high and low value, signaling when a preset limit has been exceeded.

**Figure 3**
**Typical control application**

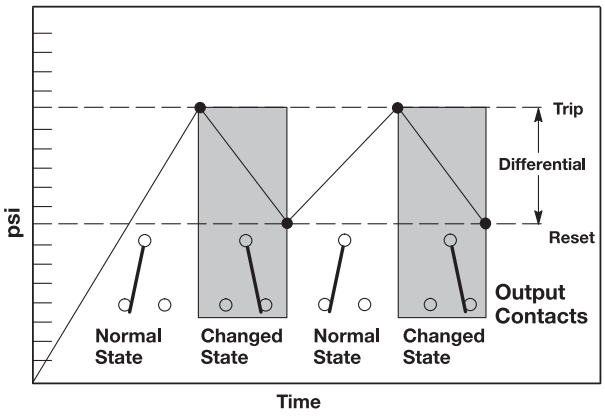


**Figure 4**
**Typical monitoring application**

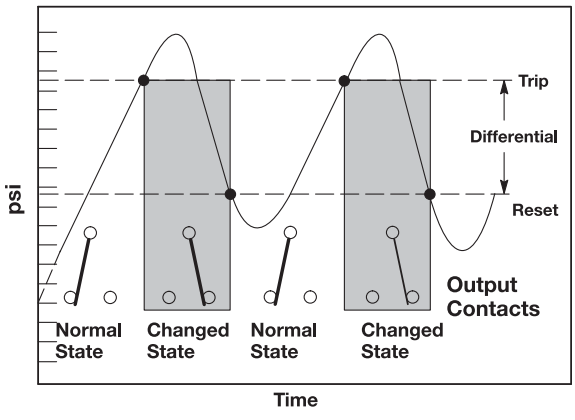

## Control Setting — Style T Pressure Controls

Allen-Bradley controls are designed for ease of setting to help minimize installation time. Standard pressure controls shipped from the factory are set at the maximum operating range and minimum differential. By using a pressure gauge and following these simple directions, the control can be set to the specific requirements for each application. See Figure 5.

**Step 1 — Adjust trip setting**
The trip setting is controlled by the operating range adjustment screw and is adjusted externally. After loosening the lock nut, the trip setting is set by turning the operating range adjustment screw counterclockwise to lower the trip setting or clockwise to raise the trip setting. The approximate trip setting is shown on the indicating scale. When the proper setting is reached, simply tighten the lock nut.
**Note:** Turning the operating range adjustment screw will cause both the trip and reset settings to change in virtually equal increments.

**Step 2 — Adjust reset setting**
The reset setting is controlled by an external differential adjustment screw. The reset setting is set by turning the differential adjustment screw clockwise to increase the differential or counterclockwise to decrease the differential.
**Note:** Adjusting the differential has little or no affect on the trip setting.

Figure 5
Trip and reset adjustment for pressure controls

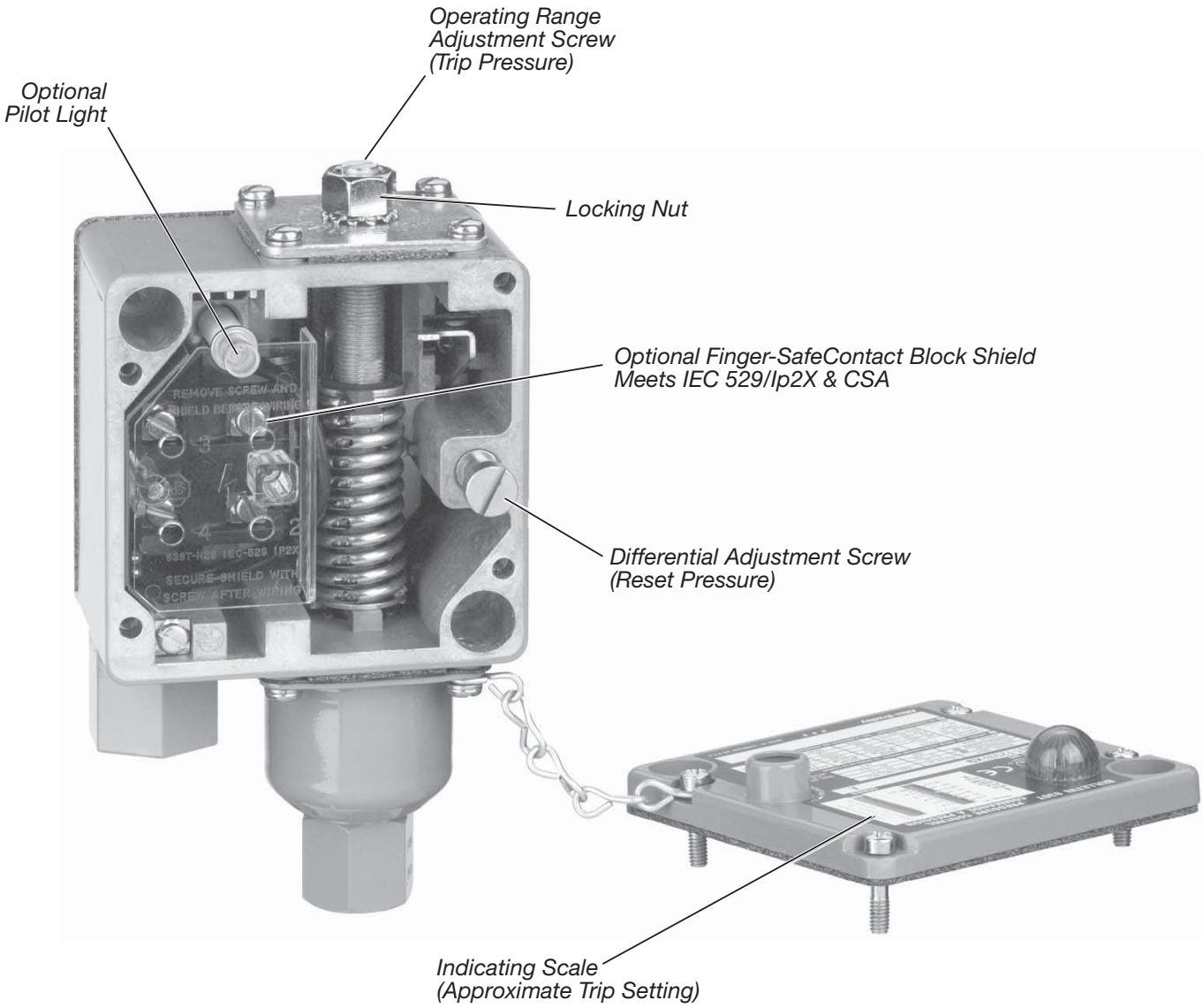

## Control Setting — Style D Pressure Difference Controls

Standard pressure difference controls shipped from the factory are set at the maximum adjustable difference range and minimum differential. Remove the front cover and use a pressure gauge to make the following adjustments. See Figure 6.

### Step 1 — Adjust trip setting (difference pressure)

The trip setting is controlled by the system difference pressure bushing and is adjusted internally. With no pressure (open to atmosphere) applied to top bellows, apply a constant pressure to bottom bellows equal to the desired difference in pressure at which the contacts are to trip. Insert a 1/8 in. diameter rod into a hole in the bushing and turn bushing to the left. Continue to turn bushing until the mechanism trips; circuit 1-2 will open. At this value, the trip setting is set at the pressure which is being applied to the bottom bellows.
**Note:** Turning the system difference pressure bushing will cause both the trip and reset settings to change in virtually equal increments.

### Step 2 — Adjust reset setting (differential pressure)

The reset setting is controlled by differential adjustment screw (this adjustment can be made with the cover on). The reset setting is adjusted by turning the differential adjustment screw clockwise to increase the differential or counterclockwise to decrease the differential.
**Note:** Adjusting the differential has little or no affect upon the trip setting (difference pressure).

**Figure 6**
**Trip and reset adjustment for pressure difference controls — 4-circuit contact block**

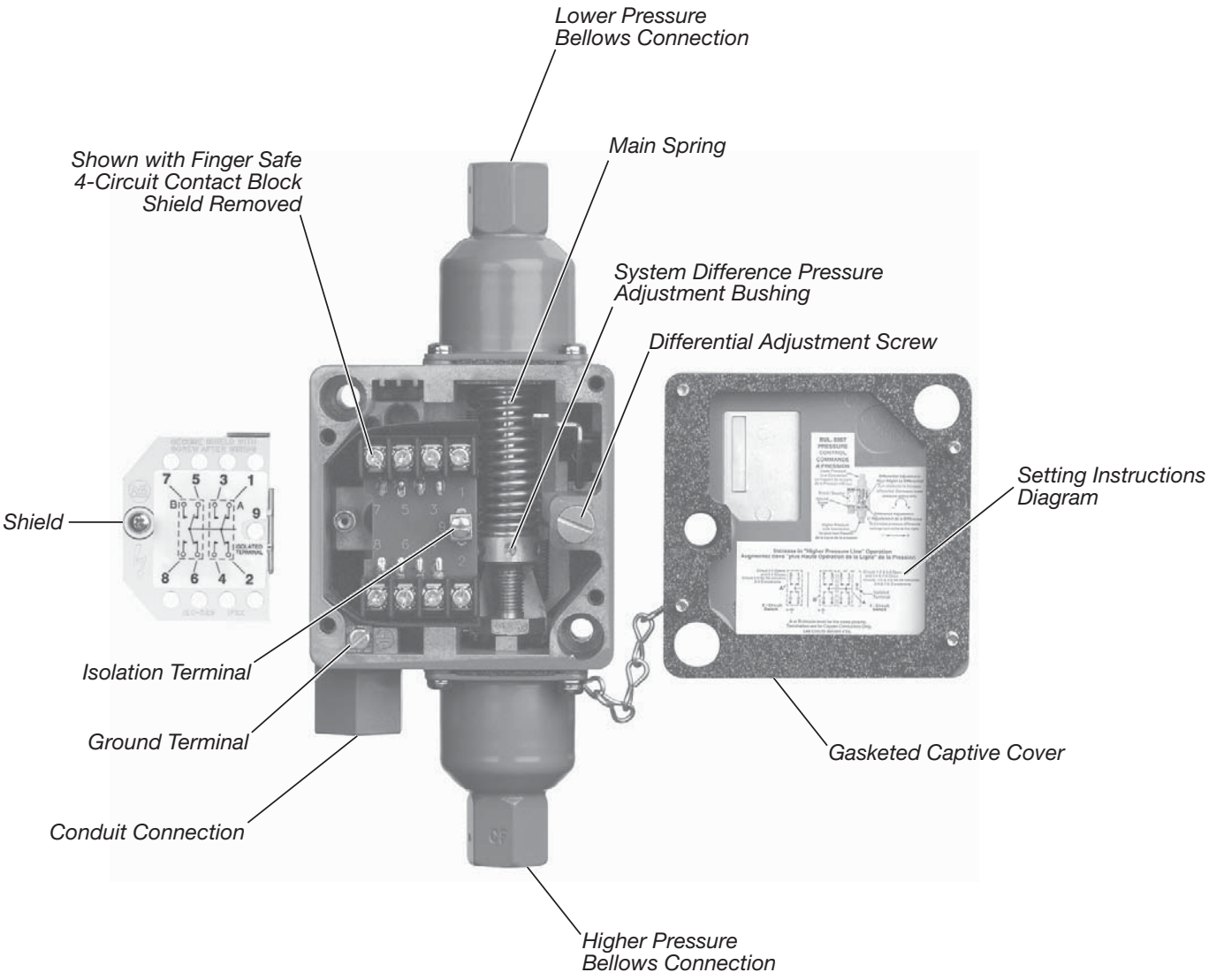

## Repeat Accuracy and Mechanical Life

The design and construction of Bulletin 836T Pressure Controls provide a typical repeat accuracy equal to or better than the values shown in the repeat accuracy table below. Repeat accuracy is based on percent of maximum range, evaluated from test data and calculated using the formula per ICS 2-225 standards. Repeat accuracy and mechanical life of bellows type controls is graphically illustrated in Figure 7. The life curve does not apply to piston type controls.

For general applications, controls selected where the contacts operate between 30% and 80% of the operating range and where the maximum line and surge pressures do not exceed the specified values will provide excellent life and repeat accuracy. For more specific applications, it is important to note that the controls are designed to operate below or above these values. However, there may be a small trade-off between the factors of repeat accuracy and mechanical life.

**Figure 7**
**Repeat accuracy versus mechanical life graph**

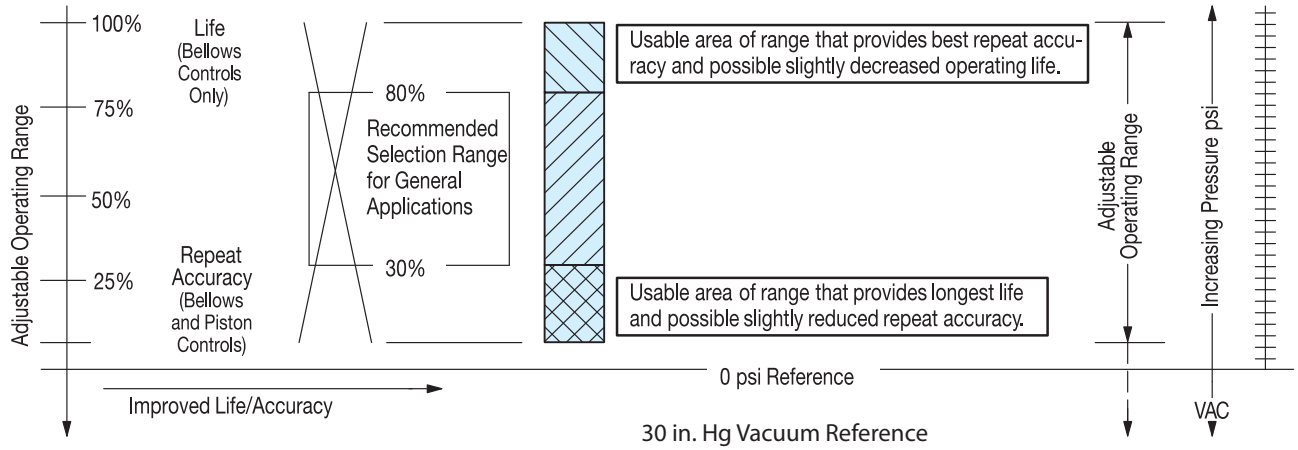


### Repeat Accuracy

| Type | Typical Characteristics (% of Maximum Range) ✶ |
|---|---|
| Bellows | ± 1% |
| Piston with seal | ± 5% ❄ |
| Piston without seal | ± 3% |

✶ Evaluation made from test data and calculated using formula per ICS 2-225 standards.

❄ Seal adds additional friction and value shown takes into consideration initial breakaway frictional force incurred during start-up or infrequent cycle operation. On continual cycle operation the repeat accuracy approaches ±3%.

## Conversion Factors (Rounded)

psi x 703.1 = mm$H_2O$
psi x 27.68 = in. $H_2O$
psi x 51.71 = mm/Hg
psi x 2.036 = in. Hg
psi x 0.0703 = kg/cm$^2$
psi x 0.0689 = bar
psi x 68.95 = mbar
psi x 6895 = Pa
psi x 6.895 = kPa

**Note:** psi - pounds per square inch (gauge).
$H_2O$ at 39.2 °F
Hg at 32 °F

## Mounting without Removing Cover

Bulletin 836T controls can be mounted without removing the front cover. This helps prevent foreign materials from entering the opened enclosure during the interval between mounting and wiring of the control.

## Factory Set Pressure Controls

Rockwell Automation will factory set pressure controls to customer specified values. Unspecified pressure controls shipped from the factory are set at the maximum operating range and minimum differential. See Factory-Set Pressure Controls, page 13-44.

## Temperature Range

The temperature range at +32 °F (0 °C) or below is based on the absence of freezing moisture, water, or other fluids that may solidify and impede the operation of the control. Temperature ratings:

Operating: –22… +150 °F (–30…+66 °C)
Storage: –22…+200 °F (–30…+93 °C)

## Contacts

Bulletin 836T controls feature 2- and 4-circuit contact blocks for added control circuit flexibility. Two-circuit contact blocks have one normally open contact and one normally closed contact and may be arranged for single-pole double-throw operation or separate circuit operation having the same polarity. Four-circuit contact blocks may be arranged for double-pole double-throw operation or separate circuit operation having the same polarity.

### 2-Circuit Contact Ratings — NEMA A600 (ICS 2-125)

| AC | | | | | | DC | |
|---|---|---|---|---|---|---|---|
| Maximum AC Voltage | A | | Continuous Carrying Current | VA | | Maximum Voltage | [A] |
| | Make | Break | | Make | Break | | |
| 120 | 60 | 6.00 | 10 | 7200 | 720 | 115…125 | 0.4 |
| 240 | 30 | 3.00 | 10 | 7200 | 720 | 230…250 | 0.2 |
| 480 | 15 | 1.50 | 10 | 7200 | 720 | 550…600 | 0.1 |
| 600 | 12 | 1.20 | 10 | 7200 | 720 | — | — |

| IEC 337-1 | | | | | |
|---|---|---|---|---|---|
| Maximum Operational Voltage $U_e$ | Utilization Category | Maximum Continuous Current $I_{th}$ | Volts $U_e$ | Rated Operational Current Make | Rated Operational Current Break |
| AC600 | AC-11 | 10 | 120…600 AC | 7200 VA | 720 VA |
| | | 10 | 72…120 AC | 60 A | 720 VA |
| DC600 | DC-11 | 10 | 24…72 AC | 60 A | 10 A |
| | | — | 115…600 DC | 50 VA | 50 VA |

### 4-Circuit Contact Ratings — NEMA B150 (ICS 2-125)

| AC | | | | | | DC | |
|---|---|---|---|---|---|---|---|
| Maximum AC Voltage | A | | Continuous Carrying Current | VA | | Maximum Voltage | [A] |
| | Make | Break | | Make | Break | | |
| 120 | 30 | 3.00 | 5 | 3600 | 360 | 115…120 | 0.33 |
| 240 | 27.5 | 2.80 | 5 | 6600 | 660 | 230…240 | 0.17 |

| IEC 337-1 | | | | | |
|---|---|---|---|---|---|
| Maximum Operational Voltage $U_e$ | Utilization Category | Maximum Continuous Current $I_{th}$ | Volts $U_e$ | Rated Operational Current Make | Rated Operational Current Break |
| AC150 | AC-11 | 5 | 72…120 AC | 30 A | 360 VA |
| | | 5 | 24…72 AC | 30 A | 3 A |
| DC150 | DC-11 | — | 115…240 DC | 40 VA | 40 VA |

**Note:** NEMA does not rate contacts to switch low voltage and current. Bulletin 836T Styles T and D Pressure Controls are supplied with silver contacts. The devices are designed to deliver high force snap action to the contacts. This provides exceptional contact fidelity at 24V DC I/O card current level entry when the integrity of the enclosure is maintained.

## Contact Wiring Configurations

### 2-Circuit Contact Blocks

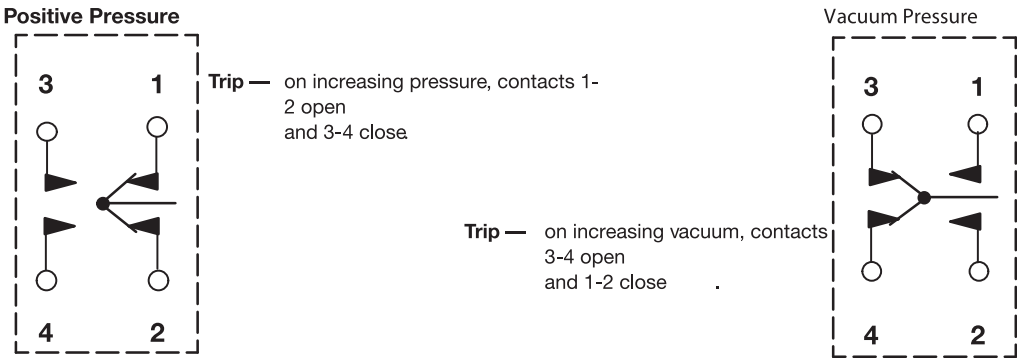


### 4-Circuit Contact Blocks

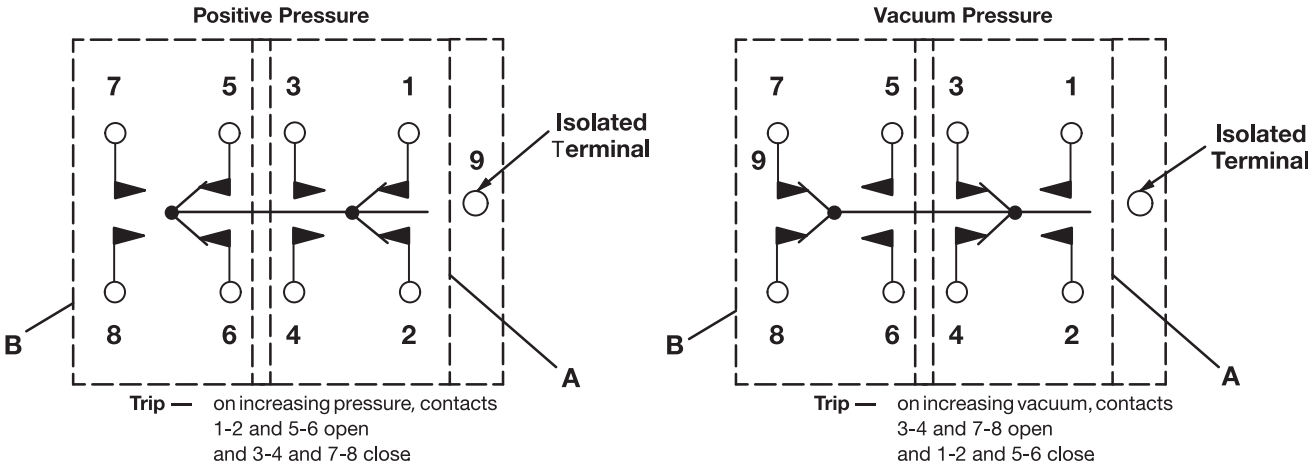


**Note:** Circuits A and B are electrically isolated from one another.
**A or B circuits must be the same polarity.**

## Nameplate with Removable Paint Mask

The masks are convenient for the many users who repaint controls to match the machine or color code equipment. Saves costly time-consuming hand masking necessary so as not to conceal product functional specifications and approval listings. This feature is standard on most controls at no additional cost. The paint mask feature cannot be supplied on controls with pilot lights. They are also not available on those devices where it is necessary to remove the mask and add suffix modifications to the catalog number or specific customer identification in the space provided.

Figure 8
Removable paint mask




*Cover with Transparent Mask and Instruction Label in Place*




*Cover with Mask Partially Removed*

## Pressure Control Selection

The selection table below is an overview of the five types of Bulletin 836T Pressure Controls Rockwell Automation offers. Each type of control is suitable for use on many types of applications. Pressure ranges, pressure connections, enclosure types, and the compatibility of the actulator with different types of pressure media are given to assist in the selection of which type of control to use.

| 836T | | | | |
|---|---|---|---|---|
| Actuator Type | Copper Alloy Bellows | Type 316 Stainless Steel Bellows | Piston Type Without Seal | Piston Type With Seal |
| Adjustable operating ranges | 30 in. Hg vacuum…650 psi | 30 in. Hg vacuum…375 psi | 40…5000 psi | 80…5000 psi |
| Adjustable differentials | 2…125 psi | 2…90 psi | 20…650 psi | 40…650 psi |
| Maximum line pressures | up to 1300 psi | up to 600 psi | — | — |
| Occasional surge pressures | up to 1600 psi | up to 600 psi | up to 15,000 psi | up to 15,000 psi |
| **Pressure Media** | | | | |
| Air | • | • | | |
| Water | • | • | • | • |
| Hydraulic fluids | • | • | • | • |
| Corrosive liquids ∗ | | • | | |
| Non-corrosive liquids | • | • | • | • |
| Corrosive gases ∗ | | • | | |
| Non-corrosive gases | • | • | | |
| **Enclosures** | | | | |
| Type 1, 4 & 13 | • | • | • | • |
| Type 7 & 9 and 4 & 13, IP66 | • | • | • | • |
| **Pipe Connections** | | | | |
| Standard pressure connection | 1/4 in. N.P.T. female pipe thread | 1/4 in. N.P.T. female pipe thread | 3/8 in. N.P.T. female pipe thread<br>SAE 7/16-20 UNF-2B thread O-ring boss seal<br>SAE 9/16-18 UNF-2B thread O-ring boss seal | 3/8 in. N.P.T. female pipe thread<br>SAE 7/16-20 UNF-2B thread O-ring boss seal<br>SAE 9/16-18 UNF-2B thread O-ring boss seal |

∗ Corrosive liquids and gases must be compatible with Type 316 Stainless Steel Bellows.

**Note:** Pressure difference controls are supplied with either copper alloy or stainless steel bellows. See Product Selection on page 13-39 and page 13-40 for details.

## Ordering Bulletin 836T Pressure Controls

When ordering Bulletin 836T Pressure Controls, consider the following:

- Device style
- Adjustable operating range
- Adjustable differential
- Maximum line pressure
- Occasional surge pressure
- Pressure media
- Enclosure type
- Pressure connection

## How to Order

**Step 1: Basic Device**
Select a catalog number for the basic device.....**See pages 13-35…13-40.**

**Step 2: Modifications**
If required, add the appropriate modification suffix code(s) to the catalog number of the basic device.....**See page 13-41.**

**Step 3: Accessories**
If required, order accessories.....**See page 13-42.**

**Step 4: Factory Options**
Factory-set pressure controls.....**See page 13-44 .**

## Catalog Number Explanation

**Note:** Catalog number must not include blank spaces.

| 836T – | T | 25 | 1 | J | X40 | X15 |
|---|---|---|---|---|---|---|
| | *a* | *b* | *c* | *d* | *e* | *f* |

### *a*

| Style of Device | |
|---|---|
| Code | Description |
| T | Pressure control |
| D | Pressure difference control |

### *b*

| Operator Type | | |
|---|---|---|
| Code | Style | Description |
| 25 | T | Copper alloy bellows |
| 26 | T | Type 316 stainless steel bellows |
| 30 | T | Piston without seal |
| 35 | T | Piston with seal |
| 40 | T | Piston with seal (independent trip and reset adjustment) |
| 45 | D | Copper alloy bellows |
| 46 | D | Type 316 stainless steel bellows |

### *c*

| Pressure Specifications |
|---|
| See “Pressure Specifications” on pages 13-35…13-40 |

### *d*

| Enclosure Type | |
|---|---|
| Code | Description |
| J | 1, 4 & 13 Industrial use |
| E | 7 & 9 and 4 & 13 Combined hazardous locations |

### *e*

| Contact Block Type | |
|---|---|
| Code | Description |
| None | 2-circuit contact block - standard |
| X40 | 4-circuit contact block |

### *f*

| Modification 1 |
|---|
| Add suffix codes in descending order whenever possible. (Optional. See page 13-41.) |

## Product Selection



*Style T — Type 1, 4 & 13 with Pilot Light Option*



*Style T — Type 1, 4 & 13 with Pilot Light, Range Locking Cap, and 5-Pin Mini-Receptacle*

### Style T Pressure Controls with Copper Alloy Bellows∗ — S.P.D.T. 2-Circuit Contact Block

Standard Pressure Controls shipped from the factory are set at the maximum operating range and minimum differential.

| Pressure Specifications | | | | Enclosure Type | |
|---|---|---|---|---|---|
| | Adjustable Differential [psi] (Approximate Mid-Range Values) | Maximum psi | | Type 1, 4 & 13 | Type 7 & 9 and 4 & 13 ‡ |
| Adjustable Operating Range [psi] | | Line Pressure | Occasional Surge Pressure❄ | Cat. No. | Cat. No. |
| 30 in. Hg vacuum…35 | 2…7 | 80 | 90 | **836T-T251J** | 836T-T251E |
| 6…75 | 3…15 | 200 | 220 | **836T-T252J** | 836T-T252E |
| 12…150 | 6…30 | 350 | 450 | **836T-T253J** | 836T-T253E |
| 20…300 | 10…55 | 600 | 750 | **836T-T254J** | 836T-T254E |
| 40…450 | 20…90 | 900 | 1200 | **836T-T255J** | 836T-T255E |
| 60…650 | 30…125 | 1300 | 1600 | **836T-T256J** | 836T-T256E |

### Style T Pressure Controls with Copper Alloy Bellows∗ — D.P.D.T. 4-Circuit Contact Block

Standard Pressure Controls shipped from the factory are set at the maximum operating range and minimum differential.

| Pressure Specifications | | | | Enclosure Type | |
|---|---|---|---|---|---|
| | Adjustable Differential [psi] (Approximate Mid-Range Values) | Maximum psi | | Type 1, 4 & 13 | Type 7 & 9 and 4 & 13 ‡ |
| Adjustable Operating Range [psi] | | Line Pressure | Occasional Surge Pressure❄ | Cat. No. | Cat. No. |
| 30 in. Hg vacuum…35 | 2.2…7 | 80 | 90 | 836T-T251JX40 | 836T-T251EX40 |
| 6…75 | 4.5…15 | 200 | 220 | **836T-T252JX40** | 836T-T252EX40 |
| 12…150 | 9…30 | 350 | 450 | **836T-T253JX40** | 836T-T253EX40 |
| 20…300 | 15…55 | 600 | 750 | 836T-T254JX40 | 836T-T254EX40 |
| 40…450 | 30…90 | 900 | 1200 | 836T-T255JX40 | 836T-T255EX40 |
| 60…650 | 45…125 | 1300 | 1600 | 836T-T256JX40 | 836T-T256EX40 |

∗ Copper alloy bellows may be used on water or air, and other liquids or gases not corrosive to this alloy.

❄ Transients (pulses) can occur in a system prior to reaching a steady-state condition. Surge pressures within published values generated during startup or shutdown of a machine or system, not exceeding eight times in a 24-hour period, are negligible.

‡ The combined Type 7 & 9 and 4 & 13 hazardous gas and dust service enclosure is supplied with special gasket and O-ring seal to diminish/exclude moisture, fluids, and dust from entering the enclosure. Enclosure is rated for the following environments:
CLASS I Groups C,D
CLASS II Groups E,F,G
CLASS III

## Ordering Modifications

Modifications are ordered by adding the appropriate modification suffix code to the catalog number of the basic device. Add suffix codes to the catalog number in descending order.

| Item | Description | Suffix Code |
|---|---|---|
| Oxygen/nitrous oxide service | Bellows and fittings specially prepared for oxygen and nitrous oxide service. Devices tested with pure oxygen, bellows plugged for protection from contamination and a tag warning against contamination is applied. | X2 |
| External adjustment sealed | The 836T external adjustment is sealed, requiring cover removal to adjust differential (includes contact block shield) | X3 |
| Tamper resistant setting | Range and differential adjustments are factory sealed. Price includes factory setting charge.∗ | X4 |
| SAE 7/16-20 UNF thread O-ring boss seal (piston type pressure control) | Female SAE straight thread O-ring seal designed to prevent leaks and minimize loss of hydraulic fluids. | X6 |
| SAE 9/16-18 UNF thread O-ring boss seal (piston type pressure control) | | X7 |
| Neon pilot light 120V AC | A high-intensity neon pilot light for 120V AC, 60 Hz applications is available and can be wired for ON or OFF operation. The current rating is 1.0 mA.❄ | X9 |
| Red LED pilot light 24V DC | A high-intensity LED 24V DC pilot light is available to meet the requirements of the automotive, machine tool builders, and other industries. The current rating is 22 mA and can be wired for ON or OFF operation.❄ | X15 |
| Green LED pilot light 24V DC | | X18 |
| Special diaphragm assembly (piston type pressure control) | Diaphragm is made of Viton® and Nomex® fabric. Required when phosphate ester base and other adverse hydraulic fluids are present. Use on Catalog Numbers **836T-T300J** through **836T-T303J** series controls. | X25 |
| Special diaphragm and O-ring assembly (piston type pressure control) | Diaphragm is made of Viton® and Nomex® fabric, O-ring is made of Viton® . Required when phosphate esterbase and other adverse hydraulic fluids are present. Use on Catalog Numbers **836T-T350J, -T351J, -T352J, -T353J** and **-T400J** series controls. | X26 |
| Viton® enclosure gaskets | Special enclosure gaskets made of Viton® are available for applications where the standard gasket materials are not fluid compatible. Viton® is generally specified by the user for use with existing and newly developed coolants and hydraulic fluids to maintain enclosure integrity. These include cover, backplate, cover, and bellows or piston gaskets. **Note**: Viton® enclosure gaskets are often used with special diaphragm assemblies **(X25 or X26)**. See description above. | X29 |
| 5-Pin mini-type receptacle without pilot light❄ | Select the desired pin wiring configuration from the diagrams on pages 13-45…13-47. Rated at 8 A, 600V. | See pages 13-45…13-47. |
| 5-Pin mini-type receptacle with prewired pilot light❄ | Select the desired pin wiring, pilot light wiring, and voltage from the diagrams on pages 13-45…13-47. Includes receptacle and pilot light. Rated at 8 A, 600V. | See pages 13-45…13-47. |
| 5-Pin micro-connect receptacle without pilot light❄ | Select the desired pin wiring configuration from the diagrams on pages 13-45…13-47. Add number "1" to the suffix number immediately following the letter "X." **Example: "X19" becomes "X119."** Rated at 3 A, 300V. Pin/Wiring Code: 1 – Red with white tracer, 2 – Red, 3 – Green (Gnd), 4 – Red with yellow tracer, 5 – Red with Black Tracer | See pages 13-45…13-47. |
| 5-Pin micro-connect receptacle with prewired pilot light❄ | Select the desired pin wiring configuration and pilot light (X9 or X15, see above for specifications) from the diagrams on pages 13-45…13-47. Add number "1" to the Suffix Number immediately following the letter "X." **Example: "X12X9" becomes "X121X9."** Rated at 3 A, 300V. Pin/Wiring Code: 1 – Red with white tracer, 2 – Red, 3 – Green (Gnd), 4 – Red with yellow tracer, 5 – Red with black tracer | See pages 13-45…13-47. |
| Additional optional receptacles and wiring❄ | For assistance, please consult your local Rockwell Automation sales office or Allen-Bradley distributor. | |

∗ See paragraph entitled “Factory-Set Pressure Controls” on page 13-44.
❄ Not available on the Type 7 & 9 and 4 & 13 combined enclosed devices.

## Ordering Accessories

Accessories are ordered as separate catalog numbers. Select the required accessories from the accessories table below.

| Item | Description | Type | Cat. No. |
|---|---|---|---|
| External fixed pulsation snubbers | Controls are supplied as standard with an internal pulsation snubber. However, a control properly selected and used within the adjustable range values, yet having a short bellows life, is a good indication of the presence of extreme surge pressures. External fixed pulsation snubbers are available to provide **additional** dampening when extreme pulsations or surges are present. Recommended if more than eight line surges occur in a 24-hour time period. | Snubber for bellows control 1/4-18 N.P.T. thread | **836-N7** |
| | | Snubber for piston control 3/8-18 N.P.T. thread | **836T-N8** |
| Selectable element pulsation snubbers | Controls are supplied as standard with an internal pulsation snubber. However, a control properly selected and used within the adjustable range values, yet having a short bellows life, is a good indication of the presence of extreme surge pressures. Selectable element pulsation snubbers are supplied with five different elements to provide a selectable balance between maximizing pressure control life and minimizing control response time. Pulsation snubbers are supplied with the mid-range element already mounted and four other color-coded porosity elements included in the package. See "Selectable Pulsation Snubber Porosity Elements" table on this page for porosity specifications. | Snubber for bellows control 1/4-18 N.P.T. thread | **836-N40** |
| | | Snubber for piston control 3/8-18 N.P.T. thread | **836T-N41** |
| | Female SAE straight thread O-ring seal designed to prevent leaks and minimize loss of hydraulic fluids. Use on applications with a pressure range of 550…5000 psi. | SAE 7/16-20 UNF-2B thread O-ring boss seal for piston controls | 836T-N49 |
| | | SAE 9/16-18 UNF-2B thread O-ring boss seal for piston controls | **836T-N50** |
| Selectable pulsation snubber porosity elements | Package consists of five porosity elements and complete instructions. Elements are color-coded for easy identification. Elements are available in five different porosities for a wide range of applications. See selectable pulsation snubber porosity elements table. | | See Table on this page |
| Locking cap | Deters unauthorized tampering of range setting. Once installed, the locking cap can be removed with a screwdriver to re-adjust the control. | — | **836T-N13** |
| Isolation trap with two 1/4 in. male pipe fittings | An isolation trap is available for high-temperature media applications from 150…600 °F or corrosive applications compatible with Type 316 stainless steel tubing and fittings. The isolation coil is inserted between the bellows of the pressure control and the elevated temperature line of the system. The isolation trap will fill with condensed water or can be filled with water or suitable fluid when installed. A silicone buffer fluid is available in a convenient dispenser. Copper alloy lower and higher pressure range bellows can be applied to many applications using the isolation trap. The silicone buffer fluid is used to isolate many corrosive substances from coming in contact with the bellows. The isolation trap is rated at 3000 psi working pressure. Not available for piston-type controls. See photo on this page. | | 836-N25 |
| Isolation trap with one 1/4 in. male and one 1/4 in. female pipe fittings | | | 836-N26 |
| 2 oz. of buffer fluid to fill bellows and tubing | | | 836-N27 |
| Metric electrical entry conduit adapters | BS 20 mm thread adapter | | **836T-N36** |
| | Pg 13.5 thread adapter | | 836T-N37 |

## Selectable Pulsation Snubber Porosity Elements

| Recommended Type of Service | Color Code | Porosity | Cat. No. |
|---|---|---|---|
| Viscous fluids (over 500 SSU)* | None | Coarser | 836-N43 |
| Medium type oils (225…500 SSU)* | Black |  | **836-N44** |
| Water and light oils (30… 225 SSU)* | Brown | | **836-N45** |
| Low viscosity fluids (under 30 SSU)* | Green | | **836-N46** |
| Air and other gases | Red | Finer | **836-N47** |
| One of each of the above | — | Assorted | 836-N48 |

* Saybolt Seconds Universal (SSU) — units of viscosity measurement.

**Note:** Color code is located on end of element.



*Isolation Trap and Silicone Buffer Fluid*

*Fixed Pulsation Snubbers*



*Male/Female Pipe Threads*

*Selectable Element Pulsation Snubbers*



*Male/Female Pipe Threads*

***Pulsation Snubbers***

## Conversion Kits

### Ordering Conversion Kits

Conversion Kits are ordered by adding the appropriate suffix code to the catalog number of the basic device. Select the required conversion kits from the table below.

#### Conversion Kits

| Item | Description | Suffix Code |
|---|---|---|
| Neon pilot light conversion kit | Converts standard control to control with 120V AC neon pilot light. Not available on Type 7 & 9 devices. Kit includes pilot light and cover assembly. | N9 |
| Red LED pilot light conversion kit | Converts standard control to control with 24V DC LED pilot light; has a 22 mA current rating. Not available on Type 7 & 9 devices. Kit includes pilot light and cover assembly. | N15 |
| Green LED pilot light conversion kit | Converts standard control to control with 24V DC LED pilot light; has a 22 mA current rating. Not available on Type 7 & 9 devices. Kit includes pilot light and cover assembly. | N18 |

**Example:**
To convert a **Cat. No. 836T-T301J** to a **Cat. No. 836T-T301JX15**, order **Cat. No. 836T-T301JN15**.

## Renewal Parts

### Ordering Renewal Parts

Renewal Parts are ordered as separate catalog numbers. Select the required renewal parts from the table below.

#### Renewal Parts

| Item | Description | Cat. No. |
|---|---|---|
| 2-Circuit contact block renewal kit | Allows renewal of worn contacts for Bulletin 836T controls. | **836T-N1** |
| 4-Circuit contact block renewal kit | Allows renewal of worn contacts for Bulletin 836T controls. | 836T-N2 |
| Renewal seals for piston-type controls | For use on Cat. No. 836T-T350J. | 836T-N20 |
| | For use on Cat. No. 836T-T351J. | 836T-N21 |
| | For use on Cat. No. 836T-T352J and 836T-T400J. | 836T-N22 |
| | For use on Cat. No. 836T-T353J. | 836T-N23 |

## Factory-Set Pressure Controls

### Ordering factory-set pressure controls

- When a specific factory setting is requested, the specific terminal connections must be specified — e.g., N.O. or N.C. It must also be specified whether the contact operation is occurring on either increasing or decreasing pressure. For example:

**Normally Closed (N.C.) contacts to open at∗ psi increasing pressure and close at∗ psi decreasing pressure.**

—OR—

**Normally Open (N.O.) contacts to close at∗ psi increasing pressure and open at∗ psi decreasing pressure.**

- If minimum differential is not critical and the inherent minimum differential satisfies the application, specify the factory setting as follows:

**Normally Closed (N.C.) contacts to open at∗ psi increasing pressure minimum differential.**

—OR—

**Normally Open (N.O.) contacts to close at∗ psi increasing pressure minimum differential.**

Quality analog test gauges§ are used when applying requested factory settings to these rugged industrial grade pressure controls. (Gauges are calibrated and accuracy is traceable to the The National Institute of Standards and Technology.)

The actual requested setting is applied to the control by reading the set point directly from the test gauge being used. However, traceable gauge tolerance variance between source and user, and possible severe shock during shipping and installation, may contribute to the factory settings deviating slightly from the specified values. Slight recalibration can easily be accomplished upon final installation to meet specific requirements for the more demanding applications.

When installed, the controls will perform with a repeat accuracy as established in the paragraph entitled “Repeat Accuracy" (see page 13-54). Special service is available to factory-set controls on digital laboratory instruments, up to 600 psi, when required for more critical applications. An additional charge may be added for this service contingent upon setting tolerance and quantity. Please contact your local Rockwell Automation sales office or Allen-Bradley distributor.

∗ Specify psi (pounds per square inch) or, in. Hg vac (inches of mercury vacuum).

❄ Per ANSI B40.1 Grade 2A (0.5% accuracy full scale), Grade 3A (0.25% accuracy full scale).

If not specified, setting tolerances will be as shown in the table below.

| Pressure Range | Tolerance |
|---|---|
| 30 in. Hg Vac....0 | +/- 1 in. Hg vac. |
| > 0...100 psi | +/- 1 psi |
| > 100...300 psi | +/- 2 psi |
| > 300...500 psi | +/- 5 psi |
| > 500...1000 psi | +/- 10 psi |
| > 1000...5000 psi | +/- 50 psi |

## Standards Compliance

- UL508
- CSA 22,2 No. 14
- UL698, 1604 (Haz. Loc.)
- NEMA ICS-2

## Certifications

### File and Guide Numbers

| | UL | | CSA | |
|---|---|---|---|---|
| | File Number | Guide Number | File Number | Class |
| Bulletin 836T | E14842 | NKPZ | LR1234 | 3211-03 |
| | E53048 (Haz. Loc.) | NOWT | LR11924 (Haz. Loc.) | 3218-05 |
| | Hazardous Location enclosure devices are not CE compliant. All other enclosed devices are CE compliant. | | | |

## Approximate Dimensions and Shipping Weights

Dimensions in inches (millimeters). Dimensions are not intended to be used for manufacturing purposes.

### Type 4 & 13 (Bellows)

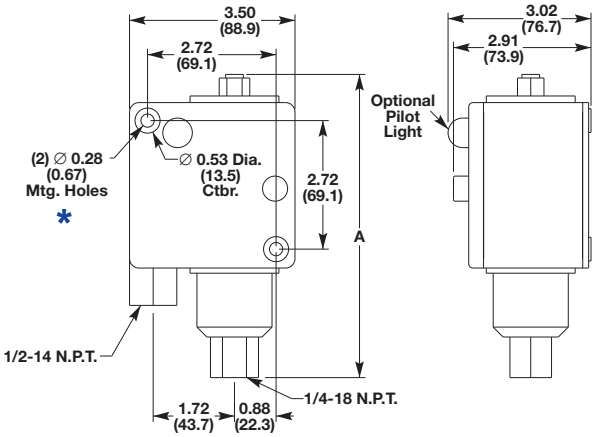


*Approximate Shipping Weight 3-1/2 lbs. (1.6 kg)*

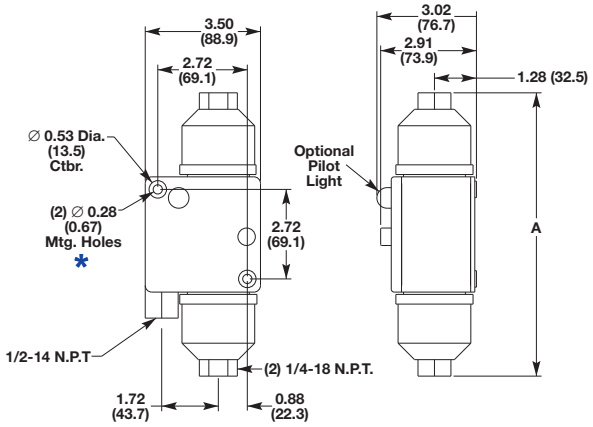


*Approximate Shipping Weight 4 lbs. (1.8 kg)*

| Cat. No. | A Dimensions | Cat. No. | A Dimensions | Cat. No. | A Dimensions | Cat. No. | A Dimensions |
|---|---|---|---|---|---|---|---|
| **836T-T251J** | 6.65 (169) | **836T-T254J** | 6.95 (176) | **836T-D450J** | 8.60 (218) | 836T-D460J | 8.60 (218) |
| **836T-T260J** | | **836T-T255J** | | | | | |
| — | — | **836T-T256J** | 7.09 (180) | **836T-D451J** | 8.14 (207) | | |
| **836T-T252J** | 6.41(163) | **836T-T262J** | 7.33 (186) | **836T-D452J** | | **836T-T252J** | 8.5 (216) |
| **836T-T253J** | | **836T-T263J** | 7.25 (184) | | | 836T-D463J | 10.06 (256) |
| **836T-T261J** | | | | **836T-D453J** | 9.5 (241) | | |

### Type 4 & 13 (Piston)

(Does not include Dual Bellows Devices)

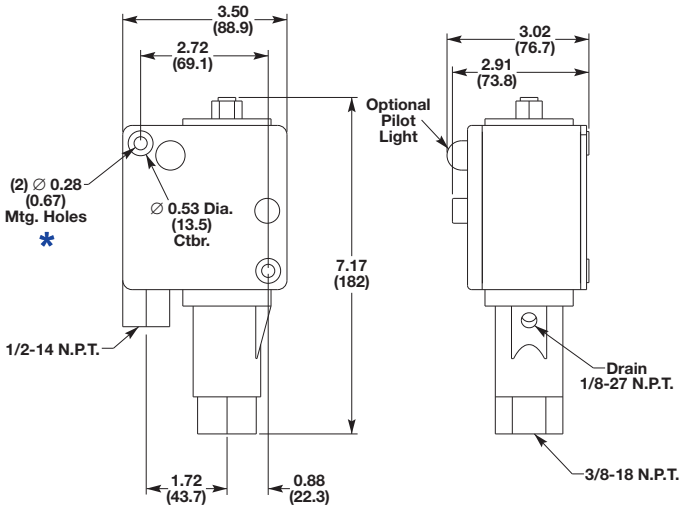


*Approximate Shipping Weight 4.5 lbs. (2.0 kg)*

### Type 4 & 13 and 7 & 9 Bellows and Piston Type

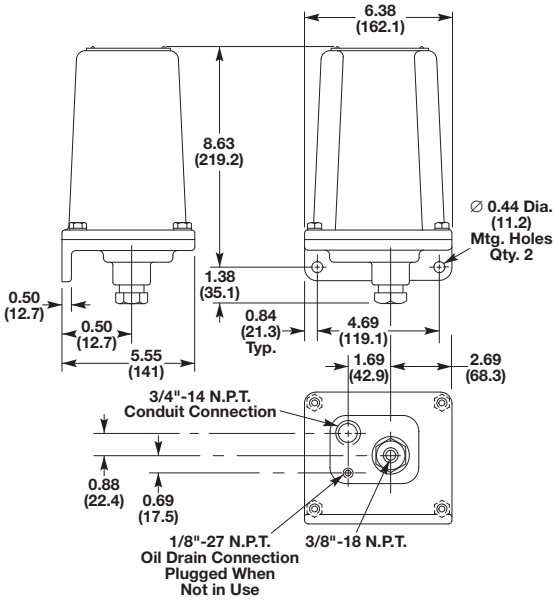


*Approximate Shipping Weight 10 lbs. (4.5 kg)*

∗ (2) mounting screws are required: 3/16 x 20 x 2 in. Counterbore depth is 1-1/8 in. Overall depth of mtg hole (front to back) is 2-1/4 in.

| Cat. No. | |
|---|---|
| 836T-T300J | 836T-T350J |
| | 836T-T351J |
| 836T-T301J | 836T-T352J |
| 836T-T302J | 836T-T353J |
| 836T-T303J | 836T-T400J |

**This page is intentionally left blank**

# CS-449-100 : Identification sheet

| | | | |
|---|---|---|---|
| VWTC PROJECT NUMBER: | 5000220043 | REV: | 1 |
| PROJECT NAME: | AEM MELIADINE - BPC UPGRADE | SUBMITTED TO (COMPANY): | AEM |
| ENGINEER: | EMMANUELLE DORMOY | SUBMITTED TO (RESPONSIBLE): | |
| PROJECT MANAGER: | THOMAS SAVARY / BRUCE BORDES | PROJECT NUM REFERENCE.: | 6526-S-265-605 / OC-989680 |
| PHONE NUMBER: | 514-334-7230 | LOT NUMBER: | |

| SUPPLIER | EQPT CODE | EQPT TAG NO | DIA | DESCRIPTION | INFO 1 | INFO 2 | INFO 3 | APPLIC. | NOTE | REV |
|---|---|---|---|---|---|---|---|---|---|---|
| CHEMLINE | ST-449-158 | 65FI6801607 | 1 | WASHDOWN LINE FLOWMETER | VARIABLE AREA FLOWMETER/MANUFACTURER: CHEMLINE/ MODEL: FSA03000 | N/A | N/A | ACTIVATED CARBON PREPATION SYSTEM #1 | | 1 |
| CHEMLINE | ST-449-158 | 65FI6801627 | 1 | WASHDOWN LINE FLOWMETER | VARIABLE AREA FLOWMETER/MANUFACTURER: CHEMLINE/ MODEL: FSA03000 | N/A | N/A | ACTIVATED CARBON PREPATION SYSTEM #2 | | 1 |

**This page is intentionally left blank**

PDF Published March 1, 2013

# Variable Area Flow Meters

CHEMLINE PLASTICS
SUPERIOR FLOW SOLUTIONS

Chemline F Series Variable Area Flow Meters are ideal for plastic piping. They provide a combination of accurate visual flow rate measurement and clear flow indication from a distance. Optional limit switches allow the units to signal a low or high flow alarm. An optional flow transmitter provides a 4 to 20 mA signal output. These flow meters must be installed vertically with flow upward.

PVC | PA | PSU | PVDF — Tube

PVC | CPVC | PP | PVDF — Ends

CRN Registered Consult Chemline

SERIES: FC – Compact – 5" Single Scale
FS – Full Size – 7" Dual Scale[1]

MATERIALS: Tube: Clear PVC, Polyamide (PA), Polysulfone (PSU) or PVDF[2]
Float: PVDF
Ends: PVC, CPVC, PP, PVDF, Socket, Threaded, Flanged, Butt or ChemFlare™[3]

O-RINGS: EPDM, FPM (Viton®)

CAPACITIES: Up to 220 USGPM (50,000 litres per hour)




## features

### Clear Visual Indication

- Large orange float is visible from a distance
- Range indicators slide along dovetail track

### Easy Installation and Maintenance

- Just unscrew union nuts and tube slides out of line

### Choice of Four Tube Materials for Many Applications:

- ***Clear PVC*** – For Water or Chemicals up to 60°C (140°F) – High Chemical resistance at low cost
- ***Polyamide (PA)*** – For Water or Air up to 75°C (167°F) – High impact strength and optical clarity
- ***Polysulfone (PSU)*** – For Chemicals and Gases up to 100°C (212°F) – High impact strength and good chemical resistance
- ***PVDF[2]*** – For Chemicals and Ultrapure fluids up to 110°C (230°F) – High impact strength and excellent chemical resistance.

### Ideal for All Types of Plastic Piping

- All types of end connections in PVC, CPVC, PP & PVDF

- **Low Pressure Drop**

### Good Measuring Accuracy – Class IV

- ± 3% of indicated value, plus ± 1% of full scale. – Read scale at top (largest diameter) of float

### Non Fouling

- Float is self supporting in the flow. No guide rod (which can cause the float to jam) is necessary.

[1] USGPM and litres per hour (water) scale is supplied as standard on full size meters.
[2] Because PVDF is translucent, a magnetic float and limit switches are usually used.
[3] For ChemFlare™ end connectors, consult Chemline.

03/13 ©Chemline Plastics Limited 2013
Chemline is a registered trade mark of Chemline Plastics Limited

# Variable Area Flow Meters

**NOTES:**

**PVDF** flow meters are available in all sizes. Change third letter in item number to **K**.

[1] △P = Pressure loss through flow meter with water at 20°C (68°F).

[2] Dimension **L** is for PVC Socket ends.

## FC SERIES – COMPACT SIZE – 5″ SCALE

Single USGPM (water) scale is supplied standard

| End Conn. Size | Item Number | | | Flow Range (water) | | Dimensions (inches) | | | Pressure Drop (psi)[1] | |
|---|---|---|---|---|---|---|---|---|---|---|
| | PVC Tube | Polyamide Tube | Polysulfone Tube | USGPM | Litres per hour | A | L[2] | D | Water | Air |
| 3/8″ | FCA00020 | FCT00020 | FCP00020 | 0.0132 – 0.106 | 3 – 24 | 6.50 | 8.2 | 1.38 | 0.05 | 0.07 |
| | FCA00060 | FCT00060 | FCP00060 | 0.022 – 0.264 | 5 – 60 | 6.50 | 8.2 | 1.38 | 0.05 | 0.07 |
| | FCA00100 | FCT00100 | FCP00100 | 0.04 – 0.44 | 10 – 100 | 6.50 | 8.2 | 1.38 | 0.05 | 0.07 |
| | FCA00250 | FCT00250 | FCP00250 | 0.11 – 1.10 | 25 – 250 | 6.50 | 8.2 | 1.38 | 0.05 | 0.07 |
| 1/2″ | FCA00051 | FCT00051 | FCP00051 | 0.02 – 0.22 | 5 – 50 | 6.69 | 8.7 | 1.69 | 0.04 | 0.06 |
| | FCA00151 | FCT00151 | FCP00151 | 0.07 – 0.66 | 15 – 150 | 6.69 | 8.7 | 1.69 | 0.04 | 0.06 |
| | FCA00251 | FCT00251 | FCP00251 | 0.11 – 1.10 | 25 – 250 | 6.69 | 8.7 | 1.69 | 0.04 | 0.06 |
| | FCA00401 | FCT00401 | FCP00401 | 0.18 – 1.76 | 40 – 400 | 6.69 | 8.7 | 1.69 | 0.04 | 0.06 |
| 3/4″ | FCA00152 | FCT00152 | FCP00152 | 0.07 – 0.66 | 15 – 150 | 7.28 | 9.6 | 2.09 | 0.09 | 0.12 |
| | FCA00402 | FCT00402 | FCP00402 | 0.22 – 1.76 | 40 – 400 | 7.28 | 9.6 | 2.09 | 0.09 | 0.12 |
| | FCA00602 | FCT00602 | FCP00602 | 0.26 – 2.64 | 60 – 600 | 7.28 | 9.6 | 2.09 | 0.09 | 0.12 |
| | FCA01002 | FCT01002 | FCP01002 | 0.44 – 4.40 | 100 – 1,000 | 7.28 | 9.6 | 2.09 | 0.09 | 0.12 |
| 1″ | FCA00253 | FCT00253 | FCP00253 | 0.11 – 1.10 | 25 – 250 | 7.87 | 10.5 | 2.36 | 0.09 | 0.12 |
| | FCA00403 | FCT00403 | FCP00403 | 0.18 – 1.76 | 40 – 400 | 7.87 | 10.5 | 2.36 | 0.09 | 0.12 |
| | FCA01003 | FCT01003 | FCP01003 | 0.44 – 4.40 | 100 – 1,000 | 7.87 | 10.5 | 2.36 | 0.09 | 0.12 |
| | FCA01503 | FCT01503 | FCP01503 | 0.66 – 6.60 | 150 – 1,500 | 7.87 | 10.5 | 2.36 | 0.09 | 0.12 |

## FS SERIES – STANDARD FULL SIZE – 7″ SCALE

Dual USGPM (water) and litres per hour scales are supplied standard

| End Conn. Size | Item Number | | | Flow Range (water) | | Dimensions (inches) | | | Pressure Drop (psi)[1] | |
|---|---|---|---|---|---|---|---|---|---|---|
| | PVC Tube | Polyamide Tube | Polysulfone Tube | USGPM | Litres per hour | A | L[2] | D | Water | Air |
| 1″ | FSA00600 | FST00600 | FSP00600 | 0.26 – 2.64 | 60 – 600 | 13.78 | 16.3 | 2.36 | 0.18 | 0.23 |
| | FSA01000 | FST01000 | FSP01000 | 0.44 – 4.40 | 100 – 1,000 | 13.78 | 16.3 | 2.36 | 0.18 | 0.23 |
| 1-1/4″ | FSA01500 | FST01500 | FSP01500 | 0.66 – 6.60 | 150 – 1,500 | 13.78 | 16.6 | 2.83 | 0.18 | 0.23 |
| | FSA02500 | FST02500 | FSP02500 | 1.10 – 11.00 | 250 – 2,500 | 13.78 | 16.6 | 2.83 | 0.18 | 0.23 |
| 1-1/2″ | FSA02000 | FST02000 | FSP02000 | 0.88 – 8.80 | 200 – 2,000 | 13.78 | 16.8 | 3.27 | 0.18 | 0.23 |
| | FSA03000 | FST03000 | FSP03000 | 1.32 – 13.20 | 300 – 3,000 | 13.78 | 16.8 | 3.27 | 0.18 | 0.23 |
| 2″ | FSA04000 | FST04000 | FSP04000 | 1.76 – 17.60 | 400 – 4,000 | 13.78 | 17.2 | 4.06 | 0.32 | 0.39 |
| | FSA06000 | FST06000 | FSP06000 | 2.64 – 26.40 | 600 – 6,000 | 13.78 | 17.2 | 4.06 | 0.32 | 0.39 |
| | FSA10000 | FST10000 | FSP10000 | 4.40 – 44.00 | 1,000 – 10,000 | 13.78 | 17.2 | 4.06 | 0.32 | 0.39 |
| 2-1/2″ | FSA15000 | FST15000 | FSP15000 | 6.60 – 66.00 | 1,500 – 15,000 | 13.78 | 17.7 | 4.80 | 0.49 | 0.58 |
| | FSA25000 | FST25000 | FSP25000 | 11.00 – 110.00 | 2,500 – 25,000 | 13.78 | 17.7 | 4.80 | 0.49 | 0.58 |
| | FSA50000 | FST50000 | FSP50000 | 44.00 – 220.00 | 10,000 – 50,000 | 13.78 | 17.7 | 4.80 | 0.49 | 0.58 |

## CONVERSION CHART – FLOW UNITS

| From To | $m^3/hr$ | litres/hr | USGPM | ImpGPM | $ft^3/min$ |
|---|---|---|---|---|---|
| $m^3/hr$ | 1 | 1000 | 4.4029 | 3.6662 | 0.5886 |
| litres/hr | 0.001 | 1 | .004403 | .003666 | .000589 |
| USGPM | 0.2271 | 227.12 | 1 | 0.8327 | 0.1337 |
| ImpGPM | 0.2728 | 272.77 | 1.2009 | 1 | 0.1605 |
| $ft^3/min$ | 1.6990 | 1699 | 7.4806 | 6.2289 | 1 |

Values based on water at 20°C (68°F).

# Variable Area Flow Meters

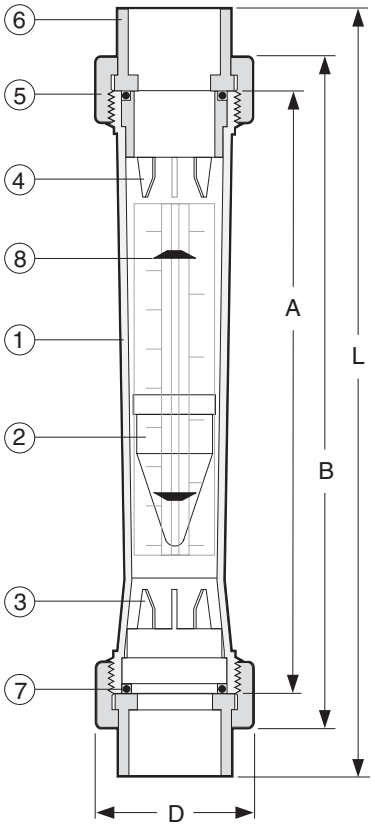


## PARTS

▲ Recommended Spare Parts

| No. | Part | Pcs. | Materials |
|---|---|---|---|
| 1 | Tube | 1 | Polyamide (PA), Polysulfone (PSU), Clear PVC, PVDF |
| 2 | Float | 1 | PVDF (standard or magnetic) |
| 3 | Lower Float Stop | 1 | PVDF |
| 4 | Upper Float Stop | 1 | PVDF |
| 5 | Union Nut | 2 | PVC, PPG, PVDF |
| 6 | End Connector | 2 | PVC, CPVC, PP or PVDF |
| 7▲ | O-Rings | 2 | EPDM, FPM(Viton®) |
| 8▲ | Range Indicator | 2 | ABS |

## ACCESSORIES

- **Limit Switches** – One switch for both maximum or minimum. A magnetic float is required.
- **Switch Ratings** – P (max) = 10 VA, E (max) = 470VAC, I (max) = 0.5A
- **Throttling Valve** for flow control
- **4–20 mA Output Signal Unit** must be factory calibrated for specific service

## OPTIONS

- **Custom Direct Reading Scale** for services other than water
- **Alternate O-Rings** – ie. FPM (Viton®)
- **End Size Reduction** – Accuracy is not significantly affected by end reduction
- **Other Ends** – Threaded, socket or flanged end connections in PVC, CPVC, PP or PVDF. Butt ends in PP or PVDF.

## MAXIMUM WORKING PRESSURES AND TEMPERATURE RANGES

| Construction (‡ = Optional Materials) | | | | Maximum | |
|---|---|---|---|---|---|
| Tube | O-Rings | Union Nuts | Ends | Pressure[2] | Temperature Range |
| PVC | EPDM | PVC | PVC | 150 psi | 0 to 60°C (32 to 140°F) |
| Polyamide (PA) | EPDM | PVC | PVC | 150 psi | 0 to 60°C (32 to 140°F) |
| Polyamide (PA) | EPDM | PPG‡ | PP or CPVC‡ | 150 psi | 0 to 75°C (32 to 167°F) |
| Polysulfone (PSU) | EPDM | PVC | PVC | 150 psi | 0 to 60°C (32 to 140°F) |
| Polysulfone (PSU) | EPDM | PPG‡ | PP or CPVC‡ | 150 psi | 0 to 90°C (32 to 194°F) |
| PVDF | FPM(Viton®) | PVDF | PVDF | 150 psi | –40 to 110°C (–40 to 230°F) |

[2] 150 psi is not recommended at maximum temperatures. Consult Chemline.

## flow meter sizing – liquid flow

Standard Scale values are for clean water flow at 20°C (68°F). For liquids with densities and viscosities similar to water (ie. specific gravity of 1.0 and viscosities between 0.5 cP and 1.3 cP) the standard water scale will be accurate enough.

The table below shows correction factors to be applied for liquids with specific gravities other then 1.0. Multiply the correction factor by the water scale value to obtain actual flow rate. Example: For a liquid of specific gravity of 1.66, the correction factor is 0.740. For water flow range of 100 to 1000 litres/hr, corrected range becomes 74 to 740 litres/hr. Viscosity should be between 0.5 cP and 1.3 cP for standard scales to be accurate.

For "sizing" liquid flows ie. determining actual flow range of a tube, please advise the **chemical name, concentration, temperature, specific gravity** and **viscosity.** Custom direct reading scales in any units are available special order.

## SCALE CORRECTION FACTORS – FOR LIQUIDS WITH SPECIFIC GRAVITIES OTHER THAN 1.00

| Specific Gravity | .00 | .01 | .02 | .03 | .04 | .05 | .06 | .07 | .08 | .09 |
|---|---|---|---|---|---|---|---|---|---|---|
| | Scale Correction Factor | | | | | | | | | |
| 0.4 | 1.647 | 1.626 | 1.605 | 1.585 | 1.565 | 1.548 | 1.529 | 1.513 | 1.495 | 1.479 |
| 0.5 | 1.462 | 1.447 | 1.433 | 1.418 | 1.404 | 1.391 | 1.377 | 1.364 | 1.351 | 1.339 |
| 0.6 | 1.326 | 1.316 | 1.304 | 1.292 | 1.282 | 1.271 | 1.259 | 1.250 | 1.239 | 1.229 |
| 0.7 | 1.220 | 1.211 | 1.202 | 1.192 | 1.183 | 1.175 | 1.167 | 1.157 | 1.149 | 1.142 |
| 0.8 | 1.134 | 1.125 | 1.117 | 1.111 | 1.104 | 1.096 | 1.089 | 1.082 | 1.075 | 1.068 |
| 0.9 | 1.062 | 1.055 | 1.048 | 1.042 | 1.035 | 1.030 | 1.024 | 1.017 | 1.011 | 1.005 |
| 1.0 | 1.000 | 0.994 | 0.988 | 0.982 | 0.978 | 0.972 | 0.967 | 0.962 | 0.956 | 0.951 |
| 1.1 | 0.947 | 0.943 | 0.936 | 0.932 | 0.927 | 0.923 | 0.917 | 0.913 | 0.909 | 0.904 |
| 1.2 | 0.900 | 0.895 | 0.891 | 0.887 | 0.883 | 0.878 | 0.874 | 0.870 | 0.866 | 0.862 |
| 1.3 | 0.858 | 0.854 | 0.850 | 0.846 | 0.842 | 0.838 | 0.835 | 0.831 | 0.827 | 0.824 |
| 1.4 | 0.820 | 0.818 | 0.814 | 0.810 | 0.806 | 0.803 | 0.800 | 0.797 | 0.794 | 0.791 |
| 1.5 | 0.787 | 0.784 | 0.781 | 0.778 | 0.776 | 0.773 | 0.770 | 0.767 | 0.764 | 0.759 |
| 1.6 | 0.756 | 0.754 | 0.751 | 0.748 | 0.745 | 0.742 | 0.740 | 0.737 | 0.734 | 0.730 |
| 1.7 | 0.728 | 0.726 | 0.723 | 0.720 | 0.717 | 0.714 | 0.712 | 0.709 | 0.706 | 0.704 |
| 1.8 | 0.701 | 0.699 | 0.696 | 0.694 | 0.691 | 0.689 | 0.686 | 0.684 | 0.682 | 0.679 |
| 1.9 | 0.677 | 0.674 | 0.672 | 0.669 | 0.667 | 0.665 | 0.663 | 0.661 | 0.658 | 0.657 |
| 2.0 | 0.654 | 0.652 | 0.650 | 0.648 | 0.646 | 0.644 | 0.641 | 0.604 | 0.637 | 0.636 |

## flow meter sizing – gas flow

**FLOW RANGES FOR AIR** – AT STANDARD CONDITIONS (atmospheric pressure 14.7 psia/20°C).

**FC SERIES – COMPACT SIZE** – 5" SCALE

| Flow Meter Item No. | Normal $m_3$/hr | Standard CFM |
|---|---|---|
| FCT00020 | 0.2 – 1.0 | 0.1 – 0.6 |
| FCT00060 | 0.2 – 2.5 | 0.1 – 1.5 |
| FCT00100 | 0.6 – 3.6 | 0.4 – 2.1 |
| FCT00250 | 0.5 – 9.0 | 0.3 – 5.3 |
| FCT00051 | 0.4 – 2.8 | 0.2 – 1.6 |
| FCT00151 | 0.8 – 6.2 | 0.5 – 3.6 |
| FCT00251 | 0.9 – 9.5 | 0.5 – 5.6 |
| FCT00401 | 2.0 – 15.0 | 1.2 – 8.8 |
| FCT00152 | 0.5 – 5.5 | 0.3 – 3.2 |
| FCT00402 | 2.0 – 14.0 | 1.2 – 8.2 |
| FCT00602 | 2.5 – 22.0 | 1.5 – 12.9 |
| FCT01002 | 4.0 – 34.0 | 2.4 – 20.0 |
| FCT00253 | 1.0 – 8.0 | 0.6 – 4.7 |
| FCT00403 | 2.0 – 14.0 | 1.2 – 8.2 |
| FCT01003 | 4.0 – 34.0 | 2.4 – 20.0 |
| FCT01503 | 5.0 – 50.0 | 2.9 – 29.4 |

**FS SERIES – STANDARD FULL SIZE** – 7" SCALE

| Flow Meter Item No. | Normal $m_3$/hr | Standard CFM |
|---|---|---|
| FST00600 | 2.5 – 20 | 1.5 – 12 |
| FST01000 | 4 – 34 | 2.4 – 20 |
| FST01500 | 5 – 50 | 2.9 – 29 |
| FST02000 | 8.5 – 76 | 5.0 – 45 |
| FST02500 | 8 – 70 | 4.7 – 41 |
| FST03000 | 10 – 90 | 5.9 – 53 |
| FST04000 | 14 – 125 | 8.2 – 74 |
| FST06000 | 22 – 190 | 13 – 112 |
| FST10000 | 35 – 300 | 21 – 177 |
| FST15000 | 50 – 500 | 29 – 294 |
| FST25000 | 80 – 720 | 47 – 424 |
| FST50000 | 400 – 1,500 | 234 – 883 |

**SCALE CORRECTION FACTORS** – FOR AIR AT NON-STANDARD TEMPERATURES AND PRESSURES

Air density is dependent on the actual pressure and temperature.
Calculate the Scale Correction Factor using either Method 1 or 2. Multiply the standard air flow ranges above by the Factor to obtain actual flow rates.

### Method 1

Calculate the Factor with the following formula.

$$\text{Factor} = \frac{1}{3.7005}\sqrt{\frac{\text{psia}}{(1+0.00367t)}}$$

psia = pressure of the air absolute
= psig + 14.7 (atmospheric pressure = 14.7 psia)
t = temperature of the air °C

### Method 2

Calculate the density of the air at conditions and find factor from the chart below.

$$\text{Air Density (g/ml)} = \frac{\text{psia}}{11{,}360\,(1+0.00367t)}$$

psia = pressure of the air absolute
= psig + 14.7 (atmospheric pressure = 14.7 psia)
t = temperature of the air °C

**Air Density vs. Flow Factor**




**Temperature vs. Pressure**

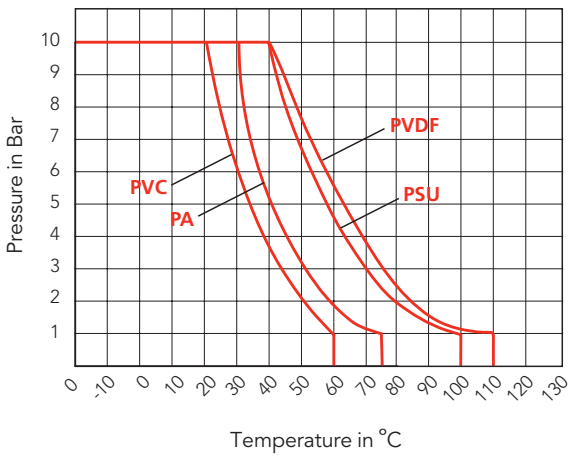




55 Guardsman Road, Thornhill, ON, L3T 6L2, Canada | ISO 9001:2008 Certified
tel.905.889.7890 | fax.905.889.8553 | request@chemline.com | chemline.com

# LSFLO Reed Limit Switch

## for FC & FS flow meters

The **LSFLO** limit switches serve as switches for minimum or maximum flow values. The normally open latching reed switch closes when the float in the measuring tube reaches and exceedes the switching position. The switch condition is maintained as long as the float is above the limit switch and will open when the float in the tube drops below the switch.

Normally closed switches are available on request.



## technical

- **Operating voltage:** maximum 230 VAC
- **Operating current:** maximum 0.5 A
- **Constant current when switched:** maximum 1 A
- **Rupturing capacity:** maximum 10 W/10 VA
- **Closed resistance:** < 150 mΩ
- **Open resistance:** > $10^{10}$ Ω
- **Operating temperature:** 0°C(32°F) to 55°C(131°F)
- **Protection:** IP 65 (DIN EN 60528)
- **Hysteresis (switch on and off point):** 3 mm
- **Protection:** IP 65 (DIN EN 60528)
- **Dimensions:** 34 x 17 x 41 mm
- **Weight (with plug):** 40 g
- **Connections:** the polarity of the connections has no influence on the function

### INSTALLATION

Screw clamps are used to fit the LSFLO on the dovetail guide of the flow meter.

### CONNECTIONS

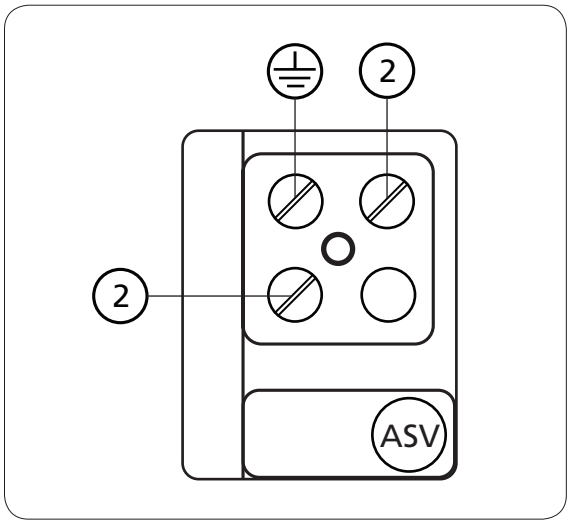


### START-UP

Prior to the first start up it is important that the float passes the LSFLO switch three times to ensure the electronics inside recognize the magnetic field from the floats properly.

CHEMLINE PLASTICS
SUPERIOR FLOW SOLUTIONS

55 Guardsman Road, Thornhill, ON, L3T 6L2, Canada | ISO 9001:2008 Certified
tel.905.889.7890 | fax.905.889.8553 | request@chemline.com | chemline.com

# ZE3000 Flow Transmitters

## for FS flow meters

The **ZE300**0 flow transmitter provides a 4–20 mA output signal, generated by detection of the position of the magnetic float.

**IMPORTANT:** This micro-processor controlled unit is factory calibrated and unique to each flowmeter model. Flowmeter model must be advised when ordering.



## technical

- **2-Wire technology**
- **4–20 mA analog output** (4-20.1 for 8 VDC supply; 4-22.0 for 28 VDC supply
- **8–28 VDC input**
- **Factory calibrated (flow meter to be specified when ordering)**
- **11 point calibration**
- **Non-volatile value storage**
- **0 Button to compensate for the surrounding magnetic influences**
- **Factory setting of the lower limit value (low-cut-off) 0-99% according to customer's specificaitons**
- **Factory time lag (low-pass filter) 0.1-2.5 sec. according to customer's specifications**
- **Measuring accuracy:** < 0.5%
- **Temperature range:** –30°C(–20°F) to 65°C(150°F)

### INSTALLATION

Screw clamps are used to fit the ZE3000 on the dovetail guide of the flow meter.

During installation, ensure that the notch of the ZE3000 coincides with the 50% mark on the flow meter scale.

Following this, proceed with the wiring according to the diagram.

### DIMENSIONS

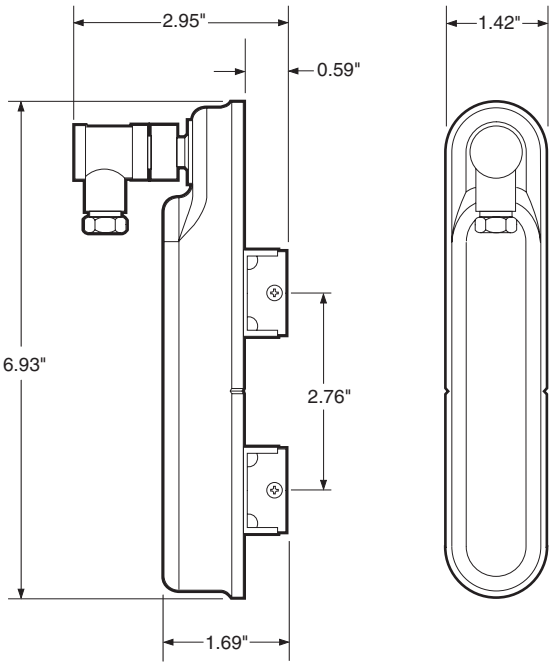


### WIRING

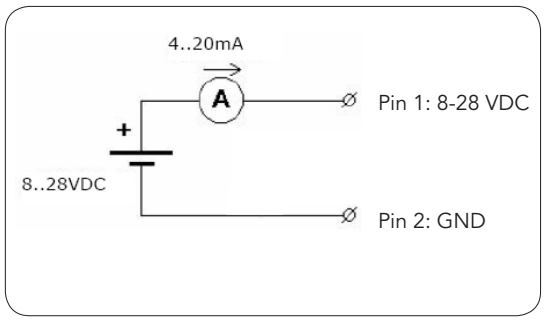


### START-UP

After installation and wiring, press the 0 button for at least 2 sec. to compensate for possible electro-magnetic interference. During this time make sure the float is at the bottom of the flowmeter (ie. no flow condition).

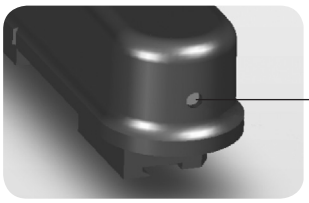


**Note:**
Do not press button during normal operation.

CHEMLINE PLASTICS
SUPERIOR FLOW SOLUTIONS

55 Guardsman Road, Thornhill, ON, L3T 6L2, Canada | ISO 9001:2008 Certified
tel.905.889.7890 | fax.905.889.8553 | request@chemline.com | chemline.com

# ZE3075 Flow Transmitters

## for FC flow meters

The **ZE3075** flow transmitter provides a 2- wire 4–20 mA output signal omit generated by precise detection of the position of the magnetic float.

The magnetic float travels along the reed chain of switches activating them.

This micro-processor controlled unit is field calibrated.

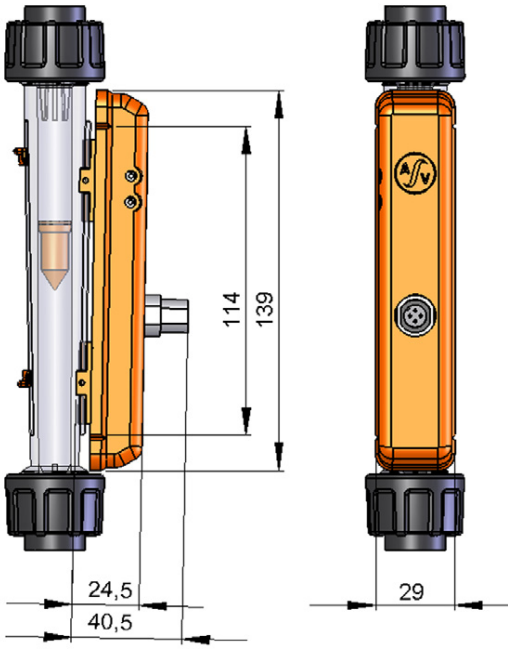


## technical

- **2-Wire technology**
- **4–20 mA analog output** (4-20.1 for 8 VDC supply; 4-22.0 for 28 VDC supply
- **18–30 VDC input**
- **Field calibration**
- **Non-volatile value storage**
- **Measuring length:** 114 mm (4.5")
- **Measuring resolution:** 3.5 mm (0.138")
- **Measuring accuracy:** 3%
- **Temperature range:** –20°C(–4°F) to 70°C(158°F)

### INSTALLATION

Screw clamps are used to fit the ZE3075 on the dovetail guide of the flow meter.

During installation, ensure that the top and bottom notches of the ZE3075 coincide with the 10% and 100% marks on the flow meter scale.

Following this, proceed with the wiring according to the diagram.

### COMPONENTS

1. Alignment notches for the proper location of the transmitter
2. Potentiometer for the upper limit value of the output signal
3. Potentiometer for the lower limit value of the output signal
4. Plug connector

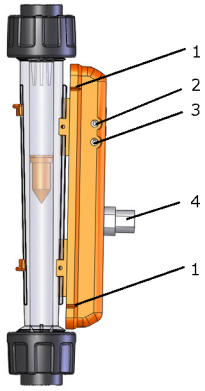


### WIRING

The unit is connected with a commercially available unshielded cable.

Where electro-magnetic interference is to be expected, we recommend the use of a shielded cable.

Cable cross section: max. 0.75 mm² cable outer diameter: 6 to 8 mm.

**Flange Connector**

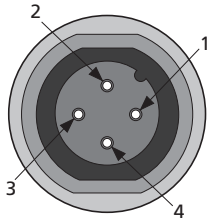


1. Signal (+)
2. Signal (+)
3. n.c.
4. n.c.

**Circuit Diagram**

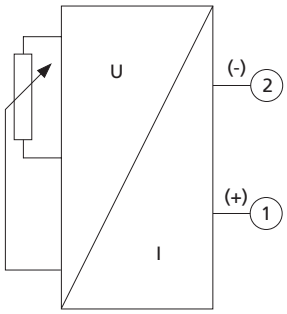


### CALIBRATION

Compensation between the non-linear scaling of the flowmeter and the linear output signal of the flow data sensor must be performed by adjusting, preferably between 20% and 80% of the flow rate.

20% corresponds to 7.2mA and 80% to 16.8mA.

- Connect the ampermeter and the respective voltage supply to the flow data sensor
- Allow 20% of the flow to pass through the FC flow meter
- Set the min. trimmer potentiometer (3) such that the corresponding current (7.2mA) is shown in the ampermeter
- Allow 80% of the flow to pass through the FC flow meter
- Set the max. trimmer potentiometer (3) such that the corresponding current (16.8mA) is shown in the ampermeter
- Check the values at 20% and 80% several times and repeat the adjustment, if required

CHEMLINE PLASTICS
SUPERIOR FLOW SOLUTIONS

55 Guardsman Road, Thornhill, ON, L3T 6L2, Canada | ISO 9001:2008 Certified
tel.905.889.7890 | fax.905.889.8553 | request@chemline.com | chemline.com

**This page is intentionally left blank**

# CS-451-200 : Identification sheet

| | | | |
|---|---|---|---|
| VWTC PROJECT NUMBER: | 5000220043 | REV: | 1 |
| PROJECT NAME: | AEM MELIADINE - BPC UPGRADE | SUBMITTED TO (COMPANY): | AEM |
| ENGINEER: | EMMANUELLE DORMOY | SUBMITTED TO (RESPONSIBLE): | |
| PROJECT MANAGER: | THOMAS SAVARY / BRUCE BORDES | PROJECT NUM REFERENCE.: | 6526-S-265-605 / OC-989680 |
| PHONE NUMBER: | 514-334-7230 | LOT NUMBER: | |

| SUPPLIER | EQPT CODE | EQPT TAG NO | DIA | DESCRIPTION | INFO 1 | INFO 2 | INFO 3 | APPLIC. | NOTE | REV |
|---|---|---|---|---|---|---|---|---|---|---|
| ENDRESS+HAUSER | ST-451-201 | 65LSL6801611 | ENCLOSURE: 110 x 218 mm, SHAFT: 2000mm, PADDLE: 80 x | HOPPER LOW LEVEL SWITCH | LEVEL SWITCH // MANUF: E&H// MODEL :FTE31-C2D111 Soliswitch FTE31, thread NPT Level limit switch, Paddel. Solid >= 100 g/dm3. 1x relay double pole change over switch. | Housing: Plastics PBT, IP65 NEMA4 Rod: steel 1.4305 (303). 1x Cable entry NPT 1/2. Appval:C CSA DIP Cl. II,III, Div.1, Gr.EFG Power : 2 115VAC, relay 250VAC, 100mA -10A Proc. Conn.:D Thread NPT 1-1/2, 316L Version:1 Shaft 75mm | Paddel; Additional Option:1 316Ti; basic version Version:1 Basic version B Marking: 71072711: TAG on device | ACTIVATED CARBON PREPATION SYSTEM #1 | | 1 |
| ENDRESS+HAUSER | ST-451-201 | 65LSL6801631 | ENCLOSURE: 110 x 218 mm, SHAFT: 2000mm, PADDLE: 80 x | HOPPER LOW LEVEL SWITCH | LEVEL SWITCH // MANUF: E&H// MODEL :FTE31-C2D111 Soliswitch FTE31, thread NPT Level limit switch, Paddel. Solid >= 100 g/dm3. 1x relay double pole change over switch. | Housing: Plastics PBT, IP65 NEMA4 Rod: steel 1.4305 (303). 1x Cable entry NPT 1/2. Appval:C CSA DIP Cl. II,III, Div.1, Gr.EFG Power : 2 115VAC, relay 250VAC, 100mA -10A Proc. Conn.:D Thread NPT 1-1/2, 316L Version:1 Shaft 75mm | Paddel; Additional Option:1 316Ti; basic version Version:1 Basic version B Marking: 71072711: TAG on device | ACTIVATED CARBON PREPATION SYSTEM #2 | | 1 |

**This page is intentionally left blank**

Level | Pressure | Flow | Temperature | Liquid Analysis | Registration | Systems Components | Services | Solutions

Technical Information

# Soliswitch FTE31

## Level Limit Switch
## Economical paddle limit switch
## For application in dust hazardous explosive areas



**Application areas**
The universal paddle level limit switch FTE 31 is used as a full, empty and demand alarm on silos containing solids. Its construction and materials make the unit suitable for use in the food industry.
The unit is suitable as a level limit switch in dust explosion hazardous areas.
Typical applications are level detection in:
- Cereals
- Sugar
- Cacao
- Animal feeds
- Washing powders
- Chalk
- Dry plaster
- Cement
- Granulates
- Wood chips

**Features and benefits**
- Simple operation
- Proven principle
- Slip clutch
- Ingress protection to IP 65 / NEMA 4x / Type 4x

TI068R/09/en
51002384

Endress+Hauser
People for Process Automation

# Function and system construction

**Measurement principle**

The shaft and paddle are driven using a reduction gear and synchronous motor. If the paddle is stopped by material covering it, the hinged motor in the housing moves from the rest to the switch position. This movement operates two switch contacts, the first is for external level indication and the second switches the power off to the motor.
The paddle starts to rotate once the medium level falls below the paddle, the hinged motor returns to its rest position and the two contacts switch to normal operation. Intermittent loads that operate against or even in the same direction of rotation are evened out by using a slip clutch.

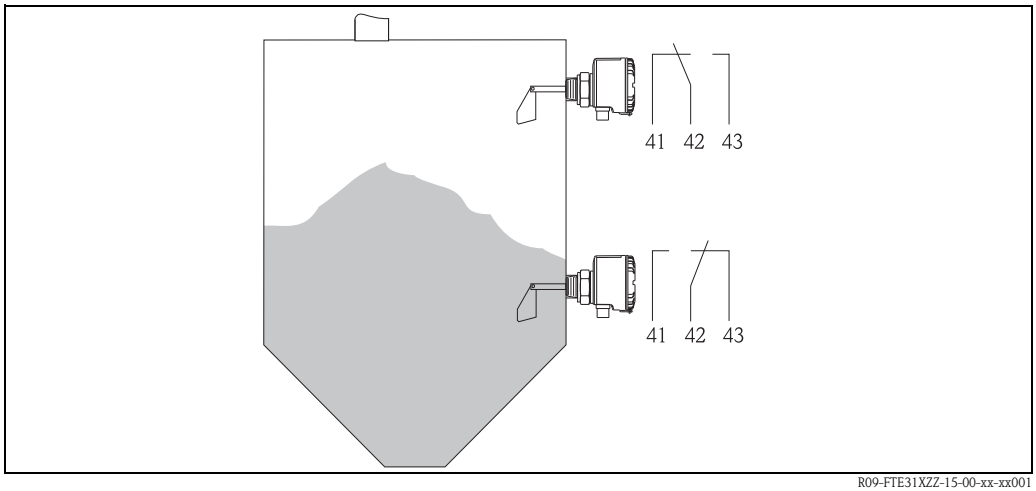


*Level measurement changeover contact*

**System**

Complete level measurement limit switch, paddle, shaft with synchronous motor and slip clutch, single pole double throw switch.

# Input values

**Measurement value**

Level of solids

**Range**

Variable types dependent on:
- Installation point
- Length of shaft or rope

# Output values

**Output signal**

Binary, once the set level is reached the micro switch contact changes.

**Output circuit**

Connectable load:
≤ 250 VAC, 10 A nominal current, 3 A on motor

**Switch output**

Potential free changeover contact (SPDT)

**Switch delay**

Approx. 2 seconds

**Mechanical life time**

min. 500 000 switch cycles

# Power supply

**Electrical connection**

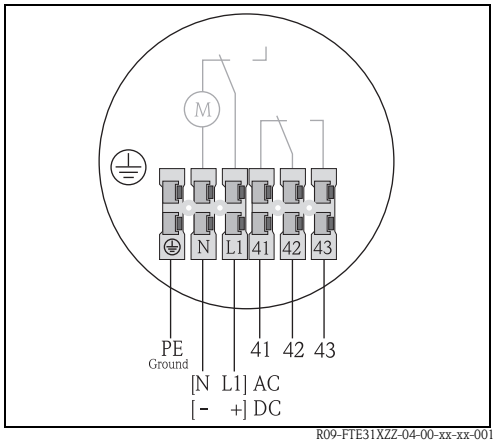


*Terminal layout FTE31*

| AC | DC | |
|---|---|---|
| **PE** | | Earth (ground) connection |
| **N** | - | Power connection |
| **L** | + | Power connection |
| **41** | | Normally closed contact |
| **42** | | Common contact |
| **43** | | Normally open contact |

**Cable entry**

Power supply and signal cable (in-/output):
- Thread for cable gland [½" NPT]

**Power supply**

Standard:
- 230 V AC, 50/60 Hz (±10%)

Option:
- 115 V AC, 50/60 Hz (±10%)
- 20...28 V DC

**Power consumption**

AC: P < 4,5 VA; DC: P < 3,5 W

**Current requirement**

DC: $I_{max} \leq 66$ mA

# Installation conditions

**Installation hints**

Installation position:
- horizontal up to shaft length > 300 mm (11.8") or vertical (see diagram)
- side load on the shaft max. 60 N
- Load on the rope max. 1500 N

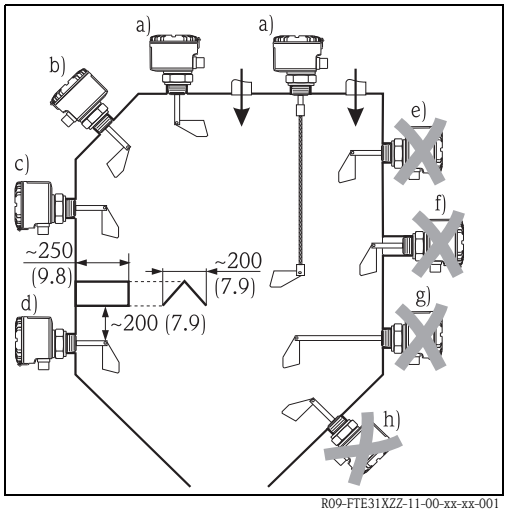


*Installation of the FTE31 paddle level limit switch, dimensions in mm (inch).*

| Correct installation | Incorrect installation |
|---|---|
| a) Vertical from top of silo | e) In dierction of solids flow |
| b) Angled from the top | f) Installation coupling too long |
| c) From the side | g) Horizontal with shaft length > 300 mm |
| d) With protective cover against falling solids | h) Angled from below |

The FTE31 paddle limit switch can be installed in solids silos as shown under points a, b, c and d.

# Environment conditions

| | |
|---|---|
| **Ambient temperature** | - 20 °C ... + 60 °C (-4 °F ... + 140 °F) |
| **Storage temperature** | - 20 °C ... + 60 °C (-4 °F ... + 140 °F) |
| **Ingress protection** | ■ IP 65 / NEMA 4x / Type 4x with closed cover<br>■ IP 20 / NEMA 1 with open cover |
| **Vibration protection** | IEC 654-3, dimension V.S.1 (v<3 mm/s, 1<f<150 Hz) |
| **EMC** | To EN 61 326, Class B |
| **Protection class** | I |
| **Over voltage protection category** | II |
| **Altitude** | Up to 2000 m (6560 ft) above sea level. |

# Process conditions

| | |
|---|---|
| **Material temperature range** | - 20 °C ... + 80 °C (-4 °F ... 176 °F) |
| **Operating pressure range** | 0.5 bar ... 1.8 bar (7.25 PSI ... 26.1 PSI) |
| **Material conditions** | Solids - grain size ≤ 50 mm (1.97") |
| **Product density (solids weight)** | 100 g/l |

# Mechanical construction

**Model/dimensions**

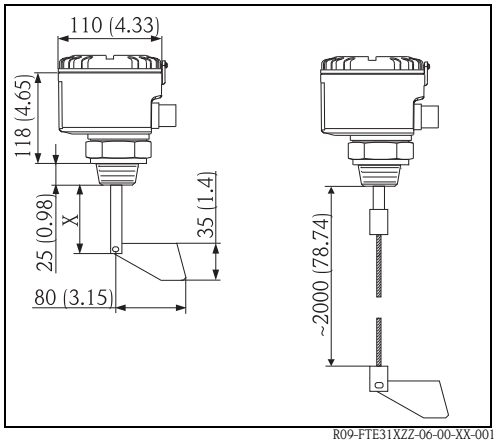


*Construction of the compact unit - dimensions in mm (inch).*

**Shaft variations:**

Standard shaft X = 75 mm (2.95")
Special length X:
100 mm (3.94"), 200 mm (7.87"), 300 mm (11.8"), 400 mm (15.75"), 500 mm (19.7"), 600 mm (23.6")

**Rope version:**

Rope length approx. 2000 mm (78.7"), can be shortened.

**Caution!**
If the shaft length is > 300 mm (11.8") the FTE31 can only be installed vertically downwards.

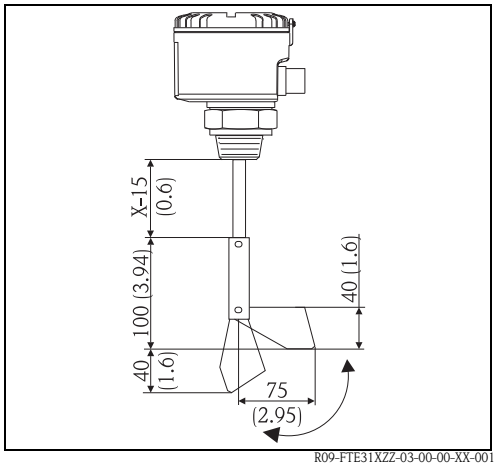


*Hinged paddle - dimensions in mm (inch)*

**Option hinged paddle:**

The paddle is hinged so that it can be easily mounted through a threaded mounting boss. Because it is spring loaded the paddle retuns to its normal operation once inside the vessel. Removal of the unit is always possible.

The hinged paddle can be mounted to both the solid shaft as well as the rope extension versions.

| | |
|---|---|
| **Weight** | approx. 1 kg (2.2 lb) |
| **Materials** | Housing, cover and process connection:<br>– VALOX 553 plastic with 30% fibre glass.<br>Shaft:<br>– Corrosion resistant steel 1.4435<br>Paddle:<br>– Corrosion reseitant steel 1.4435<br>Option:<br>– Process connection - corrosion resistant steel 1.4435<br>– Rope extension- corrosion resistant1.4571 with corrosion resistant steel 1.4305 weight<br>– Hinged paddle - corrosion resistant steel 1.4435<br>O-ring seal:<br>– NBR<br>Shaft sealing ring:<br>– NBR Perbunan<br>Cable entries NPT ½":<br>– Nickel plated brass |
| **Shaft bearing** | High performance friction bearing - maintenance free |
| **Shaft revolution** | approx. 1 revolution per minute |
| **Process connection** | Threaded boss - thread NPT 1¼" or NPT 1½" |
| **Electrical connection** | Plug-in terminals 2.5 $mm^2$ (14 AWG) solid core, 1.5 $mm^2$ (16 AWG) stranded with ferrule |

# Certification

| | |
|---|---|
| **CE approval** | The measurement system fulfils the requirements demanded by the EU regulations.<br>Endress+Hauser acknowledges successful unit testing by adding the CE mark. |
| **FM** | DIP Class II, Div. 1+2, Groups E, F, G and Class III |
| **CSA** | DIP Class II, Div. 1+2, Groups E, F, G and Class III |

# Ordering information

Soliswitch FTE31, Thread NPT

| | | | | | | | |
|---|---|---|---|---|---|---|---|
| **Approval:** | | | | | | | |
| **A** | Non-hazardous area | | | | | | |
| **B** | FM DIP Cl. II, III, Div. 1, Gr. EFG | | | | | | |
| **C** | CSA DIP Cl. II, III, Div. 1, Gr. EFG | | | | | | |
| | **Power supply:** | | | | | | |
| | **1** | 230 V AC, relay 250 V AC, 100 mA-10 A | | | | | |
| | **2** | 115 V AC, relay 250 V AC, 100 mA-10 A | | | | | |
| | **3** | 20...28 V DC, relay 250 V AC, 100 mA-10 A | | | | | |
| | **4** | 230 V AC, relay PLC 48 V DC, 10 mA-100 mA | | | | | |
| | **5** | 115 V AC, relay PLC 48 V DC, 10 mA-100 mA | | | | | |
| | **6** | 20...28 V DC, relay PLC 48 V DC, 10 mA-100 mA | | | | | |
| | | **Process connection:** | | | | | |
| | | **A** | Thread NPT 1¼", Valox553 (PBT) | | | | |
| | | **B** | Thread NPT 1¼", 316L | | | | |
| | | **C** | Thread NPT 1½", Valox553 (PBT) | | | | |
| | | **D** | Thread NPT 1½", 316L | | | | |
| | | | **Version:** | | | | |
| | | | **A** | Shaft 100 mm | | | |
| | | | **B** | Shaft 200 mm | | | |
| | | | **C** | Shaft 300 mm | | | |
| | | | **D** | Shaft 400 mm, vertical installation | | | |
| | | | **E** | Shaft 500 mm, vertical installation | | | |
| | | | **F** | Shaft 600 mm, vertical installation | | | |
| | | | **Y** | Other | | | |
| | | | **1** | Shaft 75 mm, compact | | | |
| | | | **2** | Rope 2 m, 316, shortable | | | |
| | | | | **Paddle; Additionla option:** | | | |
| | | | | **1** | 316Ti; basic version | | |
| | | | | **2** | 316L; fold-away, w/o signal lamp | | |
| **FTE31-** | | | | | | ⇐ **Ordercode** | |

This ordering information can give an overview about the available order options. The Endress+Hauser sales organization can provide detailed ordering information and information on the order code.

**Accessories**

Hinged paddle for retro-fitting
**Order no.** 50089768

**Further documentation**

Short form operating manual KA094R/09/a3

## Instruments International

Endress+Hauser
Instruments International AG
Kaegenstrasse 2
4153 Reinach
Switzerland

Tel. +41 61 715 81 00
Fax +41 61 715 25 00
www.endress.com
info@ii.endress.com

Endress+Hauser
People for Process Automation

TI068R/09/en/03.10
51002384
FM+SGML 6.0

# CS-451-500 : Identification sheet

| | | | | | |
|---|---|---|---|---|---|
| VWTC PROJECT NUMBER: | 5000220043 | | | REV: | 1 |
| PROJECT NAME: | AEM MELIADINE - BPC UPGRADE | SUBMITTED TO (COMPANY): | AEM | | |
| ENGINEER: | EMMANUELLE DORMOY | SUBMITTED TO (RESPONSIBLE): | | | |
| PROJECT MANAGER: | THOMAS SAVARY / BRUCE BORDES | PROJECT NUM REFERENCE.: | 6526-S-265-605 / OC-989680 | | |
| PHONE NUMBER: | 514-334-7230 | LOT NUMBER: | | | |

| SUPPLIER | EQPT CODE | EQPT TAG NO | DIA | DESCRIPTION | INFO 1 | INFO 2 | INFO 3 | APPLIC. | NOTE | REV |
|---|---|---|---|---|---|---|---|---|---|---|
| ENDRESS+HAUSER | ST-451-405 | 65LSH6801612 | | WETTING CONE HIGH LEVEL SWITCH | LEVEL SWITCH (VIBRONIC) // MANUF: E&H//MODEL :FTL50-SGM2AA5E4A+Z1Approval: S CSA C/US IS Cl I,II,III Div.1 Gr.A-G Process Connection:GM2 Thread ANSI NPT3/4, 316L Probe Length; Type: AA Compact; Ra<3.2um/126uin | Electronics; Output: 5 FEL55; SIL 8/16mA, 11-36VDC Housing; Cable Entry: E4 F16 NEMA Type 4X Encl. Polyester; NPT1/2 thread Additional Option: A Basic version | Z1 Tagging (TAG) | ACTIVATED CARBON PREPATION SYSTEM #1 | | 1 |
| ENDRESS+HAUSER | ST-451-405 | 65LSH6801632 | | WETTING CONE HIGH LEVEL SWITCH | LEVEL SWITCH (VIBRONIC) // MANUF: E&H//MODEL :FTL50-SGM2AA5E4A+Z1Approval: S CSA C/US IS Cl I,II,III Div.1 Gr.A-G Process Connection:GM2 Thread ANSI NPT3/4, 316L Probe Length; Type: AA Compact; Ra<3.2um/126uin | Electronics; Output: 5 FEL55; SIL 8/16mA, 11-36VDC Housing; Cable Entry: E4 F16 NEMA Type 4X Encl. Polyester; NPT1/2 thread Additional Option: A Basic version | Z1 Tagging (TAG) | ACTIVATED CARBON PREPATION SYSTEM #2 | | 1 |

**This page is intentionally left blank**

Technical Information

# Liquiphant M
# FTL50, FTL51, FTL50H, FTL51H

Vibronic



## Point level switch for all kinds of liquids

**Application**

- Process temperatures from −50 °C to 150 °C (-58 to 302 °F)
- Pressures up to 100 bar (1450 psi)
- Viscosities up to 10,000 $mm^2/s$ (cSt)
- For liquids with densities ≥ 0.5 $g/cm^3$(SGU)

FTL50: Compact design
FTL51: Extension pipe up to 3 m (9.8 ft) and up to 6 m (20 ft) on request
FTL50H, FTL51H: Certified for the food and pharmaceutical industries

Ideal substitute for float switches, as reliable function not affected by flow, turbulence, bubbles, foam, vibration, solids content or buildup.

**Your benefits**

- Recommended for safety systems requiring functional safety to SIL2/SIL3 as per IEC 61508/IEC 61511-1
- Design in accordance with ASME B31.3
- Recommended for use in sterile applications in the life science industry (design in accordance with ASME BPE)
- No adjustment: quick, low-cost startup
- No mechanically moving parts: no maintenance, no wear, long operating life
- Functional safety: Monitoring of tuning fork for damage
- Compact stainless steel housing (optional): the IP69K protection rating guarantees that the unit remains impermeable, even in the event of intensive cleaning or flooding for several hours.

Endress+Hauser
People for Process Automation

# Table of contents


**Application . . . . . 4**
Point level detection . . . . . 4

**Function and system design . . . . . 4**
Measuring principle . . . . . 4
Modularity . . . . . 4
Electronic versions . . . . . 5
Electronics for continuous density measurement . . . . . 5
Galvanic isolation . . . . . 5
Design . . . . . 5

**Input . . . . . 5**
Measured variable . . . . . 5
Measuring range (detection range) . . . . . 5
Density . . . . . 5

**Electronic insert FEL51 (AC 2-wire) . . . . . 6**
Power supply . . . . . 6
Electrical connection . . . . . 6
Output signal . . . . . 6
Signal on alarm . . . . . 6
Connectable load . . . . . 6

**Electronics FEL51 (AC, in compact housing) . . . . . 8**
Power supply . . . . . 8
Electrical connection . . . . . 8
Output signal . . . . . 8
Signal on alarm . . . . . 8
Connectable load . . . . . 8

**Electronic insert FEL52 (DC PNP) . . . . . 10**
Power supply . . . . . 10
Electrical connection . . . . . 10
Output signal . . . . . 10
Signal on alarm . . . . . 10
Connectable load . . . . . 10

**Electronics FEL52 (DC PNP, in compact housing) . . 11**
Power supply . . . . . 11
Electrical connection . . . . . 11
Output signal . . . . . 11
Signal on alarm . . . . . 12
Connectable load . . . . . 12

**Electronic insert FEL54 (AC/DC with relay output). 13**
Power supply . . . . . 13
Electrical connection . . . . . 13
Output signal . . . . . 13
Signal on alarm . . . . . 13
Connectable load . . . . . 13

**Electronic insert FEL55 (8/16 mA) . . . . . 14**
Power supply . . . . . 14
Electrical connection . . . . . 14
Output signal . . . . . 14
Signal on alarm . . . . . 14
Connectable load . . . . . 14

**Electronic insert FEL56 (NAMUR L-H edge) . . . . . 15**
Power supply . . . . . 15
Electrical connection . . . . . 15
Output signal . . . . . 15
Signal on alarm . . . . . 15
Connectable load . . . . . 15

**Electronic insert FEL58 (NAMUR H-L edge) . . . . . 16**
Power supply . . . . . 16
Electrical connection . . . . . 16
Output signal . . . . . 16
Signal on alarm . . . . . 16
Connectable load . . . . . 16

**Electronics FEL58 (NAMUR H-L edge, in compact housing) . . . . . 17**
Power supply . . . . . 17
Electrical connection . . . . . 17
Output signal . . . . . 17
Signal on alarm . . . . . 17
Connectable load . . . . . 17

**Electronic insert FEL57 (PFM) . . . . . 18**
Power supply . . . . . 18
Electrical connection . . . . . 18
Output signal . . . . . 19
Signal on alarm . . . . . 19
Connectable load . . . . . 19

**Electronic insert FEL50A (PROFIBUS PA) . . . . . 20**
Power supply . . . . . 20
Electrical connection . . . . . 20
Output signal . . . . . 21
Signal on alarm . . . . . 21

**Electronic insert FEL50D (density) . . . . . 22**
Power supply . . . . . 22
Electrical connection . . . . . 22
Signal on alarm . . . . . 22
Adjustment . . . . . 22
Operating principle . . . . . 23
Light signals . . . . . 23

**Connection and function . . . . . 24**
Connecting cables . . . . . 24
Safety mode . . . . . 24
Switching time . . . . . 24
Switch-on behavior . . . . . 24

**Performance characteristics . . . . . 24**
Reference operating conditions . . . . . 24
Maximum measured error . . . . . 24
Repeatability . . . . . 24
Hysteresis . . . . . 24

Influence of medium temperature . . . . . 24
Influence of medium density . . . . . 24
Influence of medium pressure . . . . . 24

**Operating conditions . . . . . 25**
Installation . . . . . 25
Examples of mounting . . . . . 25
Orientation . . . . . 27

**Environment . . . . . 27**
Ambient temperature range . . . . . 27
Storage temperature . . . . . 27
Installation height as per IEC61010-1 Ed.3 . . . . . 27
Climate class . . . . . 27
Degree of protection . . . . . 28
Vibration resistance . . . . . 28
Electromagnetic compatibility . . . . . 28

**Medium conditions . . . . . 29**
Medium temperature . . . . . 29
Thermal shock . . . . . 29
Medium pressure pe . . . . . 29
Test pressure . . . . . 29
State of aggregation . . . . . 29
Density . . . . . 29
Viscosity . . . . . 29
Solids content . . . . . 29
Lateral loading capacity . . . . . 29

**Mechanical construction . . . . . 30**
Design . . . . . 30
Dimensions . . . . . 31
Weights . . . . . 36
Materials and surfaces . . . . . 36
Process connections . . . . . 37

**Human interface . . . . . 38**
Electronic inserts . . . . . 38
Compact housing . . . . . 39
Operating concept . . . . . 41

**Certificates and approvals . . . . . 41**
CE mark . . . . . 41
C-tick mark . . . . . 41
General approvals . . . . . 41
CRN approval . . . . . 42
Process seal according to ANSI/ISA 12.27.01 . . . . . 42
Other certificates . . . . . 42
Manufacturer declarations . . . . . 42
Use in hazardous zones . . . . . 42
ASME B 31.3 . . . . . 43
Pressure equipment directive . . . . . 43

**Ordering information . . . . . 43**
Liquiphant M FTL50, FTL51 product structure . . . . . 43
Liquiphant M FTL50H, FTL51H product structure . . . . . 47

**Accessories . . . . . 50**
Weld-in adapter . . . . . 50
Weather protection cover . . . . . 52
Lap joint flange . . . . . 52
Lap joint flanges . . . . . 53
Sliding sleeves for unpressurized operation . . . . . 53
High pressure sliding sleeves . . . . . 54
Cover with sight glass . . . . . 55
Cover with sight glass . . . . . 55
Circular connector . . . . . 55

**Documentation . . . . . 56**
Operating Instructions . . . . . 56
Technical Information . . . . . 57
Functional safety (SIL) . . . . . 57
Safety Instructions (ATEX) . . . . . 58
Safety Instructions (NEPSI) . . . . . 58
Control Drawings . . . . . 58
System information . . . . . 58

# Application

**Point level detection**

Maximum or minimum detection in tanks or pipes containing all kinds of liquids, including use in hazardous areas, food and pharmaceuticals.

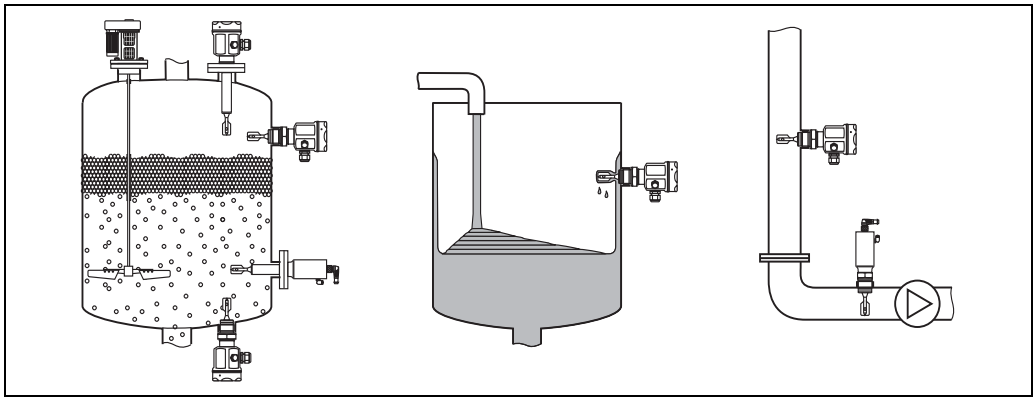

L00-FTL5xxxx-11-05-xx-xx-000

# Function and system design

**Measuring principle**

The sensor's fork vibrates at its intrinsic frequency. This frequency is reduced when covered with liquid. This change in frequency causes the point level switch to switch.

**Modularity**

**Point level switch**
Liquiphant M FTL with electronic versions
FEL51, FEL52, FEL54

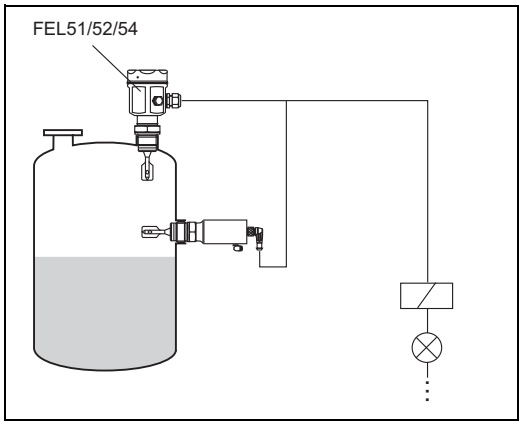


L00-FTL5xxxx-15-05-xx-xx-000

**Point level switch**
Liquiphant M FTL with electronic versions
FEL55, FEL56, FEL57, FEL58
for connecting to a separate switching unit
or an isolating amplifier FEL50A
for connecting to a PROFIBUS PA segment

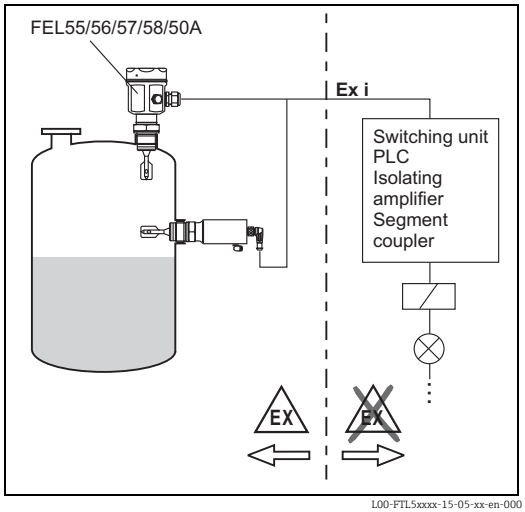


L00-FTL5xxxx-15-05-xx-en-000

| | |
|---|---|
| **Electronic versions** | FEL51:<br>Two-wire AC version;<br>Switches the load directly into the power supply circuit via an electronic switch.<br><br>FEL52:<br>Three-wire DC version;<br>Switches the load via the transistor (PNP) and separate connection e.g. in conjunction with programmable logic controllers (PLCs), DI modules as per EN 61131-2.<br><br>FEL54:<br>Universal current version with relay output;<br>Switches the loads via 2 floating change-over contacts.<br><br>FEL55:<br>Signal transmission 16/8 mA on two-wire cabling e.g. in conjunction with programmable logic controllers (PLCs), AI modules 4 to 20 mA as per EN 61131-2.<br><br>FEL56:<br>For separate switching unit; signal transmission L-H edge 0.6 to 1.0 / 2.2 to 2.8 mA to EN 50227 (NAMUR) on two-wire cabling.<br><br>FEL58:<br>For separate switching unit; signal transmission H-L edge 2.2 to 3.5 / 0.6 to 1.0 mA to EN 50227 (NAMUR) on two-wire cabling.<br>Checking of connecting cabling and other devices by pressing a key on the electronic insert.<br><br>FEL57:<br>For separate switching unit; PFM signal transmission;<br>Current pulses superposed on the power supply along the two-wire cabling.<br>Proof test from the switching unit without changing levels.<br><br>FEL50A:<br>For connecting to PROFIBUS PA;<br>Cyclic and acyclic data exchange acc. to PROFIBUS-PA Profile 3.0<br>Discrete Input |
| **Electronics for continuous density measurement** | FEL50D:<br>For connecting to Density Computer FML621 |
| **Galvanic isolation** | FEL51, FEL52, FEL50A: between sensor and power supply<br><br>FEL54: between sensor and power supply and load<br><br>FEL55, FEL56, FEL57, FEL58, FEL50D: see connected switching unit |
| **Design** | FTL50: Compact<br><br>FTL51: With extension pipe<br><br>FTL50H: Compact, with polished tuning fork and hygienic process connections<br><br>FTL51H: With extension pipe, polished tuning fork and hygienic process connections |

# Input

| | |
|---|---|
| **Measured variable** | Level (limit value) |
| **Measuring range (detection range)** | FTL50: dependent on mounting point<br><br>FTL51: dependent on mounting point and the extension pipe ordered.<br>Standard extension pipe up to 3 m (9.8 ft) and up to 6 m (20 ft) on request. |
| **Density** | Setting on the electronic insert > 0.5 g/cm³ (SGU) or > 0.7 g/cm³ (SGU) (others on request) |

# Electronic insert FEL51 (AC 2-wire)

**Power supply**

Supply voltage: AC 19 to 253 V
Power consumption: < 0.83 W
Residual current consumption: < 3.8 mA
Short-circuit protection
Overvoltage protection FEL51: overvoltage category III

**Electrical connection**

**Two-wire AC connection**

Switches the load directly into the power supply circuit via an electronic switch.

Always connect in series with a load!

Check the following:
- The residual current in blocked state (up to 3.8 mA)
- That for low voltage
  - the voltage drop across the load is such that the minimum terminal voltage at the electronic insert (19 V) when blocked is not undershot.
  - the voltage drop across the electronics when switched through is observed (up to 12 V)
- That a relay cannot de-energize with holding power below 3.8 mA.
  If this is the case, a resistor should be connected parallel to the relay. An RC module is available under the part number: 71107226
- When selecting the relay, pay attention to the holding power / rated power (see "Connectable load")

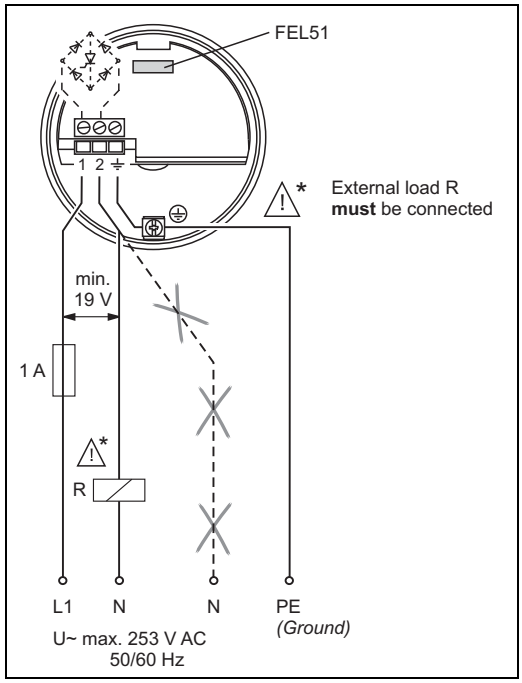


L00-FTL5xxxx-04-05-xx-en-007

**Output signal**

$I_L$ = load current (switched through)

< 3.8 mA = residual current (blocked)

☼ = lit

● = unlit

L00-FTL2xxxx-07-05-xx-xx-000

| Safety mode | Level | Output signal | LEDs green | LEDs red |
|---|---|---|---|---|
| Max. | | 1 —$I_L$→ 2 | ☼ | ● |
| | | 1 - - < 3.8 mA - - → 2 | ☼ | ☼ |
| Min. | | 1 —$I_L$→ 2 | ☼ | ● |
| | | 1 - - < 3.8 mA - - → 2 | ☼ | ☼ |

L00-FTL5xxxx-04-05-xx-xx-001

**Signal on alarm**

Output signal on power failure or in the event of damaged sensor: < 3.8 mA

**Connectable load**

- Voltage drop via FEL51 ≤ 12 V
- Residual current if electrical switch is blocked: ≤ 3.8 mA
- Load switched directly into the power supply circuit via the thyristor.
  Transient (40 ms) ≤ 1.5 A, ≤ 375 VA at 253 V or ≤ 36 VA at 24 V (not short-circuit-proof)

The load is switched via an electronic switch directly in the power circuit.
Always connect in series with a load!
Not suitable for connection to low-voltage PLC inputs!

**Selection guide for relays**

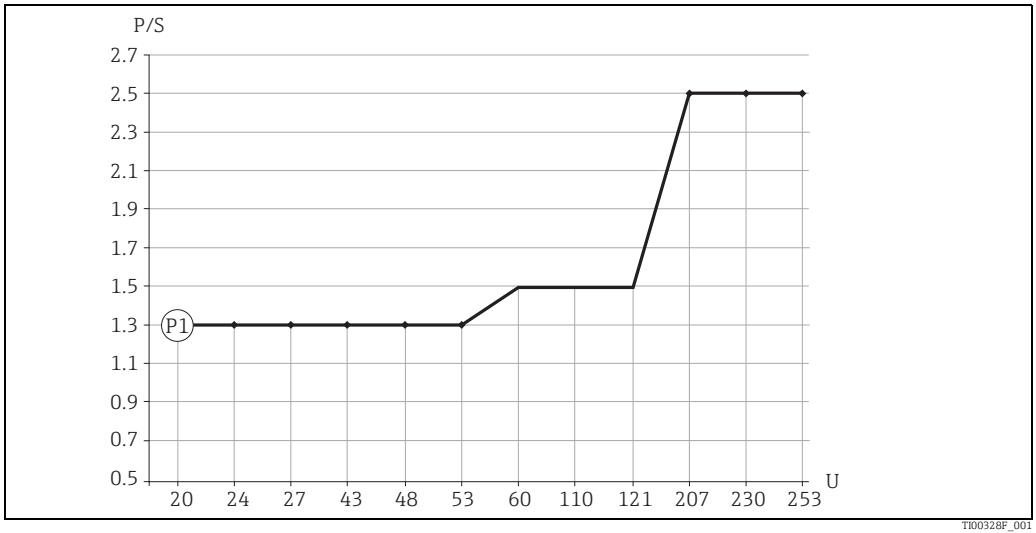


*Minimum nominal power of load*
*P/S nominal power in [W] / [VA]*
*U operating voltage in [V]*

| Position | Operating voltage | Nominal power | |
|---|---|---|---|
| | | min. | max. |
| P1 | 24 V | > 1.3 VA | < 6 VA |
| AC operation | 110 V | > 1.5 VA | < 27.5 VA |
| | 230 V | > 2.5 VA | < 57.5 VA |

Relays with less nominal power can be operated via an RC module connected in parallel (optional).

# Electronics FEL51 (AC, in compact housing)

**Power supply**

Supply voltage: AC 19 to 253 V
Power consumption: < 0.83 W
Residual current consumption: < 3.8 mA
Short-circuit protection
Overvoltage protection FEL51: overvoltage category III

**Electrical connection**

**Two-wire AC connection**

Switches the load directly into the power supply circuit via an electronic switch.

Always connect in series with a load!

Check the following:
- The residual current in blocked state (up to 3.8 mA)
- That for low voltage
  - the voltage drop across the load is such that the minimum terminal voltage at the electronic insert (19 V) when blocked is not undershot.
  - the voltage drop across the electronics when switched through is observed (up to 12 V)

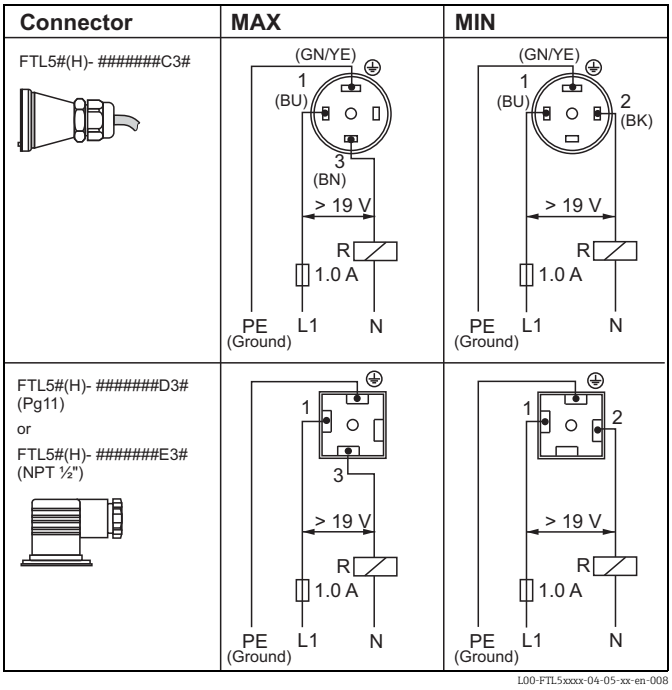


- That a relay cannot de-energize with holding power below 3.8 mA.
  If this is the case, a resistor should be connected parallel to the relay (e.g. RC module: part number 71107226).

**Output signal**

$I_L$ = load current (switched through)

< 3.8 mA = residual current (blocked)

☼ = lit

● = unlit

L00-FTL2xxxx-07-05-xx-xx-000

| Safety mode | Level | Output signal | LEDs green | LEDs red |
|---|---|---|---|---|
| Max. | | 1 —$I_L$→ 3 | ☼ | ● |
| | | 1 --< 3.8 mA--> 3 | ☼ | ☼ |
| Min. | | 1 —$I_L$→ 2 | ☼ | ● |
| | | 1 --< 3.8 mA--> 2 | ☼ | ☼ |

L00-FTL5xxxx-04-05-xx-xx-001a

**Signal on alarm**

Output signal on power failure or in the event of damaged sensor: < 3.8 mA

**Connectable load**

- Voltage drop via FEL51 ≤ 12 V
- Residual current if electrical switch is blocked: ≤ 3.8 mA
- Load switched directly into the power supply circuit via the thyristor.
  Transient (40 ms) ≤ 1.5 A, ≤ 375 VA at 253 V or ≤ 36 VA at 24 V (not short-circuit-proof)

The load is switched via an electronic switch directly in the power circuit.
Always connect in series with a load!
Not suitable for connection to low-voltage PLC inputs!

**Selection guide for relays**

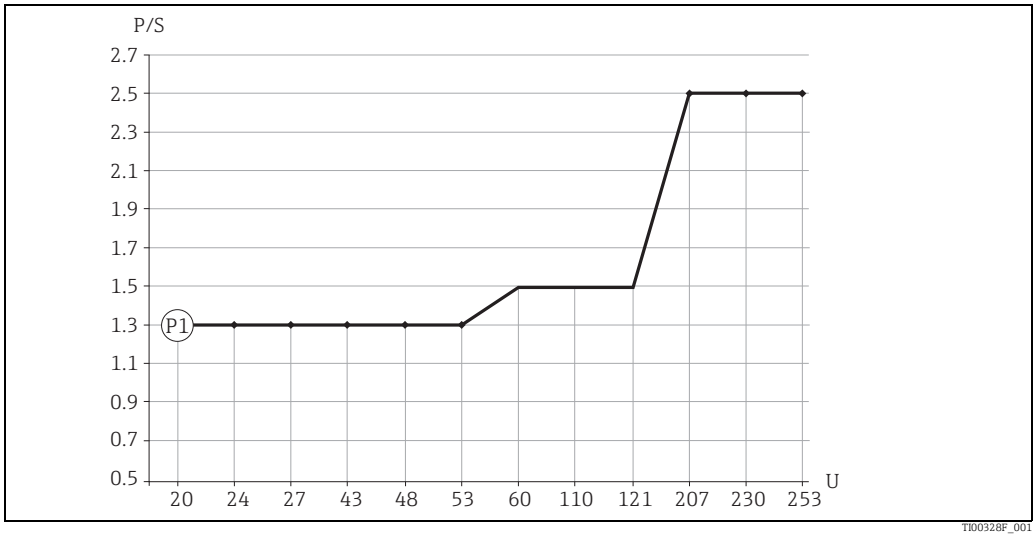


*Minimum nominal power of load*
*P/S nominal power in [W] / [VA]*
*U operating voltage in [V]*

| Position | Operating voltage | Nominal power | |
|---|---|---|---|
| | | min. | max. |
| P1<br>AC operation | 24 V | > 1.3 VA | < 6 VA |
| | 110 V | > 1.5 VA | < 27.5 VA |
| | 230 V | > 2.5 VA | < 57.5 VA |

Relays with less nominal power can be operated via an RC module connected in parallel (optional).

# Electronic insert FEL52 (DC PNP)

**Power supply**

Supply voltage: DC 10 to 55 V
Ripple: ≤ 1.7 V, 0 to 400 Hz
Current consumption: ≤ 15 mA
Power consumption: ≤ 0.83 W
Reverse polarity protection
Overvoltage protection FEL52: overvoltage category III

**Electrical connection**

**Three-wire DC connection**

Switches the load via the transistor (PNP) and separate connection.
Preferably used with programmable logic controllers (PLC),
DI modules as per EN 61131-2.
Positive signal at switching output of the electronics (PNP); Output blocked on reaching point level.

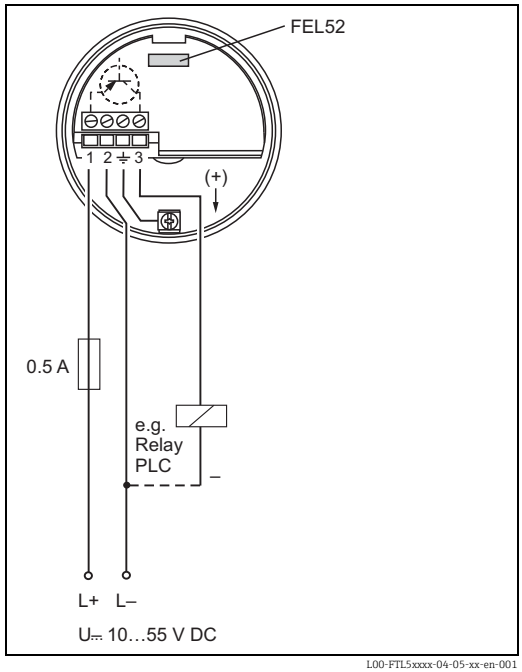


L00-FTL5xxxx-04-05-xx-en-001

**Output signal**

$I_L$ = load current (switched through)

< 100 µA = residual current (blocked)

☼ = lit

● = unlit

L00-FTL2xxxx-07-05-xx-xx-000

| Safety mode | Level | Output signal | LEDs green | LEDs red |
|---|---|---|---|---|
| Max. | | L+ 1 → $I_L$ → + 3 | ☼ | ● |
| | | 1 - - - < 100 µA → 3 | ☼ | ☼ |
| Min. | | L+ 1 → $I_L$ → + 3 | ☼ | ● |
| | | 1 - - - < 100 µA → 3 | ☼ | ☼ |

L00-FTL5xxxx-04-05-xx-xx-004

**Signal on alarm**

Output signal on power failure or in the event of damaged sensor: < 100 µA

**Connectable load**

- Load switched via the transistor and separate PNP connection, ≤ DC 55 V
- Load current ≤ 350 mA (pulsed overload and short-circuit protection)
- Residual current < 100 µA (with transistor blocked).
- Capacitance load ≤ 0.5 µF at 55 V, ≤ 1.0 µF at 24 V
- Residual voltage < 3 V (with transistor switched through);

# Electronics FEL52 (DC PNP, in compact housing)

**Power supply**

Supply voltage: DC 10 to 55 V
Ripple: ≤ 1.7 V, 0 to 400 Hz
Current consumption: ≤ 15 mA
Power consumption: ≤ 0.83 W
Reverse polarity protection
Overvoltage protection FEL52: overvoltage category III

**Electrical connection**

**Three-wire DC connection**

Preferably used with programmable logic controllers (PLC), DI module as per EN 61131-2. Positive signal at switching output of the electronics (PNP); Output blocked on reaching point level.

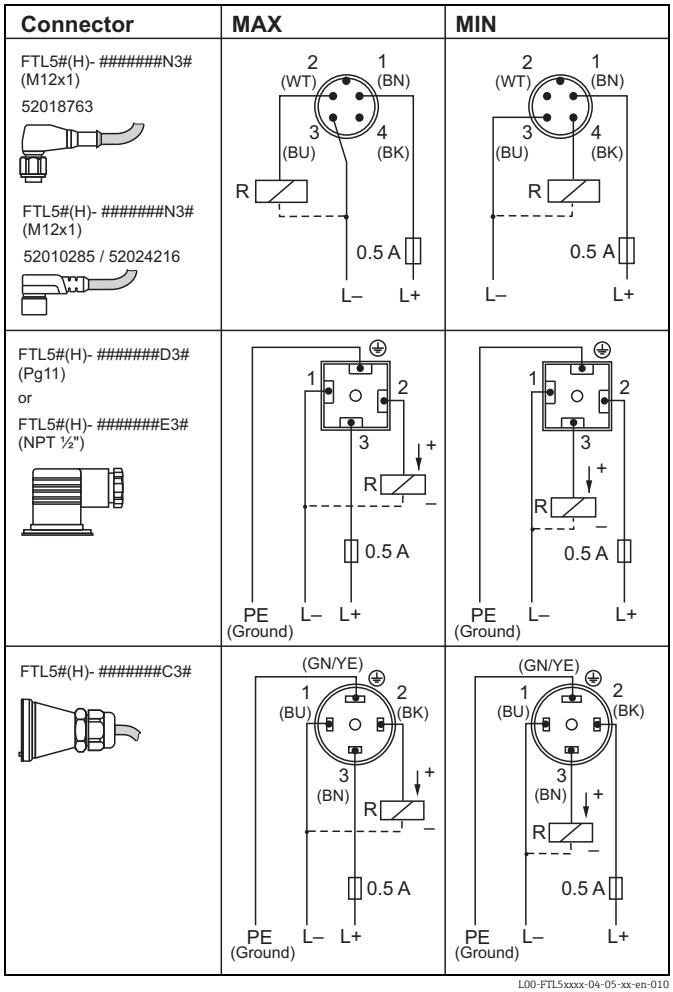


L00-FTL5xxxx-04-05-xx-en-010

**Output signal**

**With valve connector or cable tail**

$I_L$ = load current (switched through)

< 100 µA = residual current (blocked)

☼ = lit

● = unlit

L00-FTL2xxxx-07-05-xx-xx-000

| Safety mode | Level | Output signal | LEDs green | LEDs red |
|---|---|---|---|---|
| Max. | | L+ 3 → $I_L$ → + 2 | ☼ | ● |
| | | L+ 3 - - < 100 µA → + 2 | ☼ | ☼ |
| Min. | | L+ 2 → $I_L$ → + 3 | ☼ | ● |
| | | L+ 2 - - < 100 µA → + 3 | ☼ | ☼ |

L00-FTL5xxxx-04-05-xx-xx-004a

**With M12x1 connector 52010285 / 52024216 (without LEDs)**




L00-FTL5xxxx-16-05-xx-xx-002

$I_L$ = load current (switched through)

< 100 µA = residual current (blocked)

☼ = lit

● = unlit

L00-FTL2xxxx-07-05-xx-xx-000

| Safety mode | Level | Output signal | LEDs |
|---|---|---|---|
| Max. | 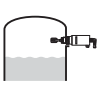 | L+ 1 —$I_L$→ 2 | ☼ ● |
| | 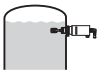 | L+ 1 - - < 100 µA → 2 | ☼ ☼ ● |
| Min. | 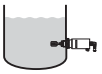 | L+ 1 —$I_L$→ 4 | ☼ ☼ ● |
| |  | L+ 1 - - < 100 µA → 4 | ☼ ● |

L00-FTL5xxxx-04-05-xx-xx-010

**With M12x1 connector 52018763 (with LEDs)**

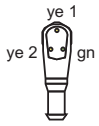


L00-FTL5xxxx-16-05-xx-xx-001

$I_L$ = load current (switched through)

< 100 µA = residual current (blocked)

☼ = lit

● = unlit

L00-FTL2xxxx-07-05-xx-xx-000

| Safety mode | Level | Output signal | LEDs |
|---|---|---|---|
| Max. | 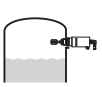 | L+ 1 —$I_L$→ 2 | ● ☼ |
| | 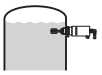 | L+ 1 - - < 100 µA → 2 | ☼ ☼ |
| Min. | 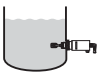 | L+ 1 —$I_L$→ 4 | ● ☼ |
| |  | L+ 1 - - < 100 µA → 4 | ● ☼ |

L00-FTL5xxxx-04-05-xx-xx-011

**Signal on alarm**

Output signal on power failure or in the event of damaged sensor: < 100 µA

**Connectable load**

- Load switched via the transistor and separate PNP connection, ≤ DC 55 V
- Load current ≤ 350 mA (pulsed overload and short-circuit protection)
- Residual current < 100 µA (with transistor blocked).
- Capacitance load ≤ 0.5 µF at 55 V, ≤ 1.0 µF at 24 V
- Residual voltage < 3 V (with transistor switched through);

# Electronic insert FEL54 (AC/DC with relay output)

**Power supply**

Supply voltage: AC 19 to 253 V, 50/60 Hz or DC 19 to 55 V
Power consumption: ≤ 1.3 W
Reverse polarity protection
Overvoltage protection FEL54: overvoltage category III

**Electrical connection**

**Universal current connection with relay output**

Power supply:
Please note the different voltage ranges for AC and DC.

Output:
When connecting an instrument with high inductance, provide a spark arrester to protect the relay contact.
A fine-wire fuse (depending on the load connected) protects the relay contact on short-circuiting.
Both relay contacts switch simultaneously.

* When jumpered, the relay output works with NPN logic.

** See "Connectable load"

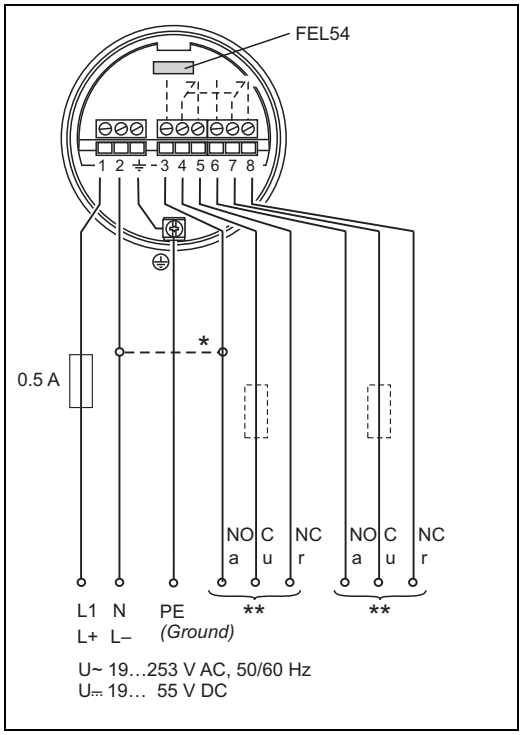


L00-FTL5xxxx-04-05-xx-xx-002

**Output signal**

= relay energized
= relay de-energized
= lit
= unlit

L00-FTL2xxxx-07-05-xx-xx-001

| Safety mode | Level | Output signal | LEDs green | LEDs red |
|---|---|---|---|---|
| Max. | 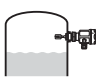 |  3 4 5 6 7 8 | ☼ | ● |
| | 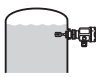 | 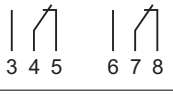 3 4 5 6 7 8 | ☼ | ☼ |
| Min. | 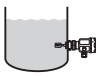 |  3 4 5 6 7 8 | ☼ | ● |
| | 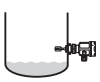 |  3 4 5 6 7 8 | ☼ | ☼ |

L00-FTL5xxxx-04-05-xx-xx-005

**Signal on alarm**

Output signal on power failure or in the event of damaged sensor: relay de-energized

**Connectable load**

- Loads switched via 2 floating change-over contacts (DPDT).
- I~ ≤ 6 A (Ex de 4 A), U~ ≤ AC 253 V; P~ ≤ 1500 VA, cos φ = 1, P~ ≤ 750 VA, cos φ > 0.7
- I⎓ ≤ 6 A (Ex de 4 A) to DC 30 V , I⎓ ≤ 0.2 A to 125 V
- When connecting a low-voltage circuit with double insulation according to IEC 1010, the following applies: the sum of the voltages of the relay output and power supply is ≤ 300 V
- The electronic insert FEL52 DC-PNP is preferred for low DC load currents (e.g. when connecting to a PLC)
- Relay contact material: silver/nickel AgNi 90/10

# Electronic insert FEL55 (8/16 mA)

**Power supply**

Supply voltage: DC 11 to 36 V
Power consumption: < 600 mW
Reverse polarity protection
Overvoltage protection FEL55: overvoltage category III

**Electrical connection**

**Two-wire connection for separate switching unit**

For separate switching unit.
Signal transmission 16/8 mA on two-wire cabling.
For connection to programmable logic controllers (PLCs) for example,
AI module 4 to 20 mA to EN 61131-2.
Output signal jump from high to low current on point level.

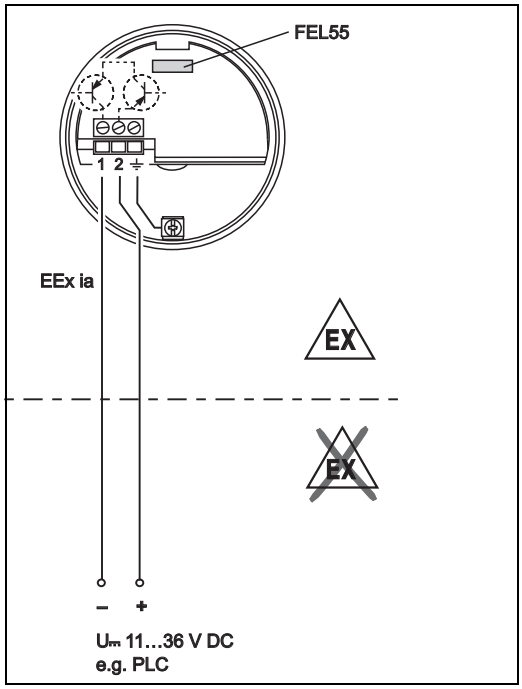


L00-FTL5xxxx-04-05-xx-en-000

**Output signal**

~ 16 mA = 16 mA ± 5 %

~ 8 mA = 8 mA ± 6 %

☼ = lit

● = unlit

L00-FTL2xxxx-07-05-xx-xx-000

| Safety mode | Level | Output signal | LEDs green | LEDs red |
|---|---|---|---|---|
| Max. | | + 2 ~16 mA 1 | ☼ | ● |
| | | + 2 ~8 mA 1 | ☼ | ☼ |
| Min. | | + 2 ~16 mA 1 | ☼ | ● |
| | | + 2 ~8 mA 1 | ☼ | ☼ |

L00-FTL5xxxx-04-05-xx-xx-006

**Signal on alarm**

Output signal on power failure or in the event of damaged sensor: < 3.6 mA

**Connectable load**

- R = (U - 11 V) : 16.8 mA
- U = connection voltage: DC 11 to 36 V

Example: PLC with 250 Ω with 2-wire version

250 Ω = (U – 11V) / 16.8 mA
4.2 [Ω /A] = U – 11 V
U = 15.2 V

# Electronic insert FEL56 (NAMUR L-H edge)

**Power supply**

Power consumption: < 6 mW at I < 1 mA; < 38 mW at I = 2.8 mA
Connection data interface: IEC 60947-5-6

**Electrical connection**

**Two-wire connection for separate switching unit**

For connecting to isolating amplifiers acc. to NAMUR (IEC 60947-5-6), e.g. FTL325N, FTL375N from Endress+Hauser.
Output signal jump from low to high current on point level.

**(L–H edge)**

Connecting to multiplexer:
Set clock time to min. 2 s.

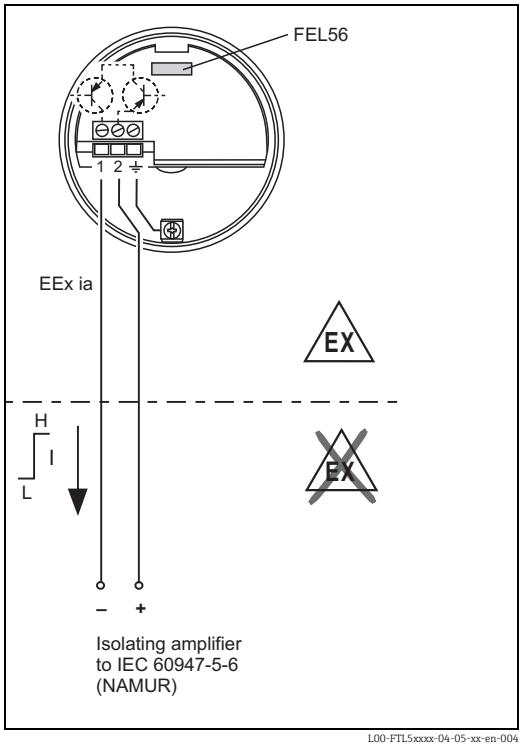


L00-FTL5xxxx-04-05-xx-en-004

**Output signal**

= lit
= flashes
= unlit

L00-FTL5xxxx-07-05-xx-xx-002

| Safety mode | Level | Output signal | LEDs green | LEDs red |
|---|---|---|---|---|
| Max. | | + 2 → 1 : 0.6 … 1.0 mA | ☼ | ● |
| | | + 2 → 1 : 2.2 … 2.8 mA | ☼ | ☀ |
| Min. | | + 2 → 1 : 0.6 … 1.0 mA | ☼ | ● |
| | | + 2 → 1 : 2.2 … 2.8 mA | ☼ | ☀ |

L00-FTL5xxxx-04-05-xx-xx-003

**Signal on alarm**

Output signal in the event of damaged sensor: > 2.2 mA

**Connectable load**

- See Technical Data of the isolating amplifier connected according to IEC 60947–5–6 (NAMUR)

# Electronic insert FEL58 (NAMUR H-L edge)

**Power supply**

Power consumption: < 6 mW at I < 1 mA; < 38 mW at I = 3.5 mA
Connection data interface: IEC 60947-5-6

**Electrical connection**

**Two-wire connection for separate switching unit**

For connecting to isolating amplifiers as per NAMUR (IEC 60947-5-6), e.g. FTL325N, FTL375N from Endress+Hauser.
Output signal jump from high to low current on point level.

**(H–L edge)**

Additional function:
Test key on the electronic insert.
Pressing the key breaks the connection to the isolating amplifier.

✎ Note!
In Ex–d applications, the additional function can only be used if the housing is not exposed to an explosive atmosphere.

Connecting to multiplexer:
Set clock time to min. 2 s.

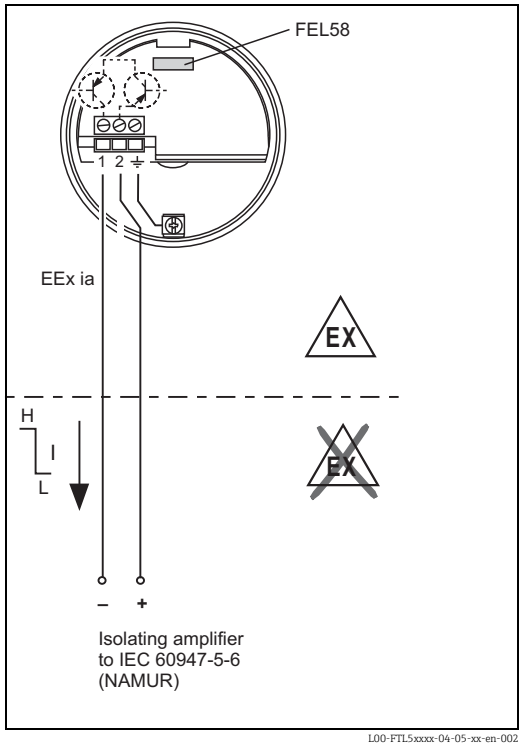


L00-FTL5xxxx-04-05-xx-en-002

**Output signal**

☼ = lit
◪ = flashes
● = unlit

L00-FTL5xxxx-07-05-xx-xx-002

| Safety mode | Level | Output signal | LEDs green | LEDs yellow |
|---|---|---|---|---|
| Max. | | + 2 → 1 2.2 … 3.5 mA | ◪ | ☼ |
| | | + 2 → 1 0.6 … 1.0 mA | ◪ | ● |
| Min. | | + 2 → 1 2.2 … 3.5 mA | ◪ | ☼ |
| | | + 2 → 1 0.6 … 1.0 mA | ◪ | ● |

L00-FTL5xxxx-04-05-xx-xx-007

**Signal on alarm**

Output signal in the event of damaged sensor: < 1.0 mA

**Connectable load**

- See Technical Data of the isolating amplifier connected according to IEC 60947–5–6 (NAMUR)
- Connection also to isolating amplifiers which have special safety circuits (I > 3.0 mA)

# Electronics FEL58 (NAMUR H-L edge, in compact housing)

**Power supply**

Power consumption: < 6 mW at I < 1 mA; < 38 mW at I = 3.5 mA
Connection data interface: IEC 60947-5-6

**Electrical connection**

**Two-wire connection for separate switching unit**

For connecting to isolating amplifiers acc. to NAMUR (IEC 60947-5-6), e.g. FTL325N, FTL375N from Endress+Hauser. Output signal jump from high to low current on point level.

**(H–L edge)**

Additional function:
If the test magnet is held against the marking on the nameplate, the output signal is inverted.

Connecting to multiplexer:
Set clock time to min. 3 s.

The NAMUR interface has a defined power consumption rate. Thus, it is not possible to use the M12 connector with an integrated LED (52018763).

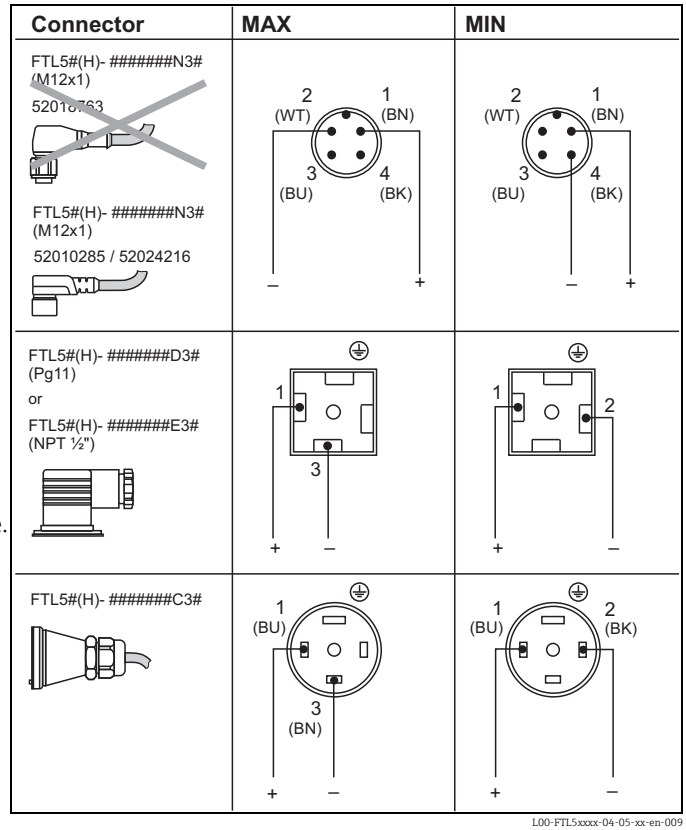


L00-FTL5xxxx-04-05-xx-en-009

**Output signal**

= lit

= flashes

= unlit

L00-FTL5xxxx-07-05-xx-xx-002

| Safety mode | Level | Output signal | LEDs green | LEDs yellow |
|---|---|---|---|---|
| Max. | | + 1 → 2.2… 3.5 mA → – 3 | ☼ | ☼ |
| | | + 1 → 0.6… 1.0 mA → – 3 | ◪ | ● |
| Min. | | + 1 → 2.2… 3.5 mA → – 2 | ☼ | ☼ |
| | | + 1 → 0.6… 1.0 mA → – 2 | ◪ | ● |

L00-FTL5xxxx-04-05-xx-xx-007a

**Signal on alarm**

Output signal in the event of damaged sensor: < 1.0 mA

**Connectable load**

- See Technical Data of the isolating amplifier connected according to IEC 60947–5–6 (NAMUR)
- Connection also to isolating amplifiers which have special safety circuits (I > 3.0 mA)

# Electronic insert FEL57 (PFM)

**Power supply**

Supply voltage: DC 9.5 to 12.5 V
Current consumption: 10 to 13 mA
Power consumption: < 150 mW
Reverse polarity protection

**Electrical connection**

**Two-wire connection for separate switching unit**

For connecting to Endress+Hauser switching units Nivotester FTL320, FTL325P, FTL370, FTL372, FTL375P (also with proof test).

Output signal jump of the PFM signal from high to low frequency when sensor is covered. Switching between minimum/maximum safety in the Nivotester.

Additional function “proof test”:
After interruption of the power supply, a test cycle is activated which checks the sensor and electronics without any change in level.
Approved for overfill protection acc. to WHG (German Water Resources Act).
The following can be switched at the electronic insert:

- **Standard (STD):**
  Corrosion of the fork unlikely;
  simulation approx. 8 s
  tuning fork exposed – covered – exposed.
  For proof testing, the Nivotester tests the sensor's level notification function.
- **Extended (EXT)**:
  Corrosion of the fork possible;
  Simulation approx. 41 s: tuning fork exposed – covered – corroded – exposed.
  For proof testing, the Nivotester tests the sensor's level notification function and fault notification (alarm) function.

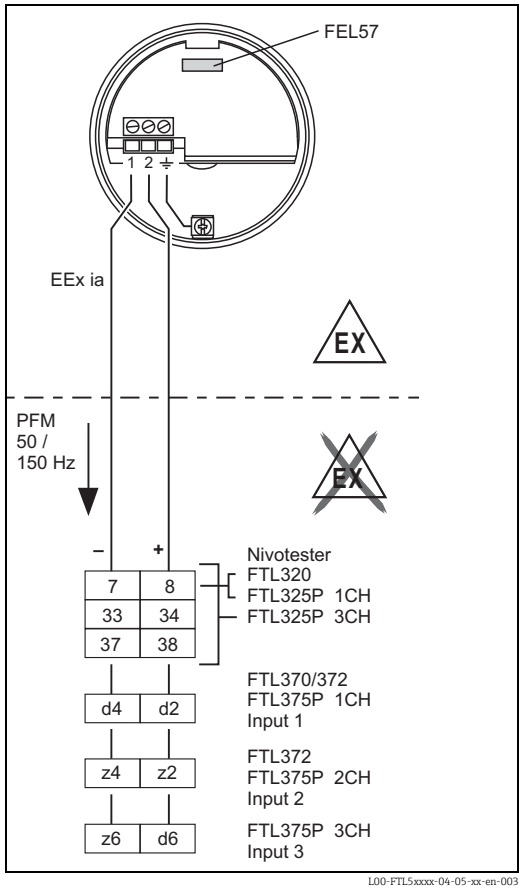


The check is activated and monitored at the switching unit.

The twin-core connecting cable (instrument cable) with a cable resistance of ≤ 25 Ω per core is connected to the screw terminals (conductor cross-sections 0.5 to 2.5 mm / 0.02 to 0.1 in) in the connection compartment. Protective circuits against reverse polarity, HF influences and overvoltage peaks are installed.
Maximum cable length up to 1000 m (3281 ft).

A shielded connecting cable is recommended in the event of strong electromagnetic interference. Here the shielding must be connected to the sensor and the power supply.

**Switching behavior of the connected device:**

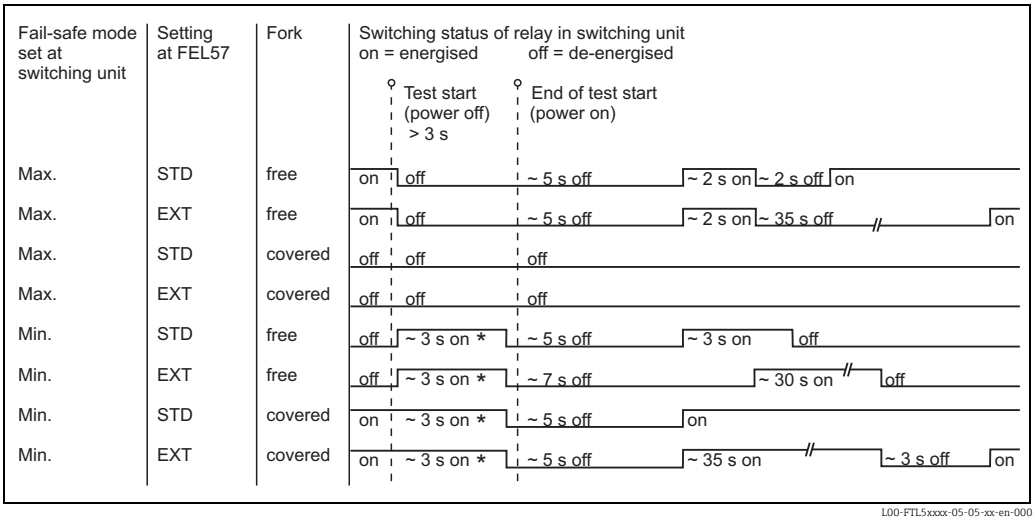


* De-energized on power supply failure

Please note this switching response and function of the plant especially when replacing a Liquiphant incorporating electronic insert EL17Z or FEL37 with a Liquiphant M incorporating electronic insert FEL57.

**Output signal**

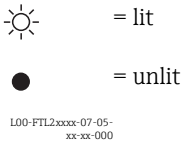


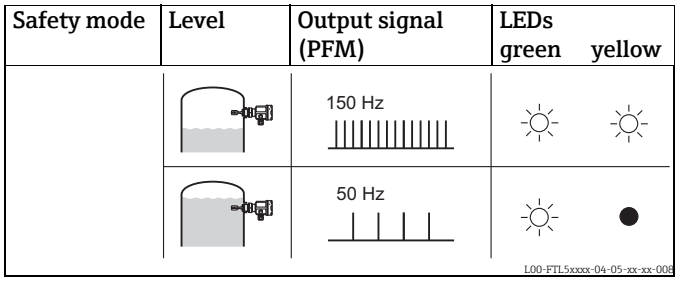


**Signal on alarm**

Output signal on power failure or in the event of damaged sensor: 0 Hz

**Connectable load**

- Floating relay contacts in the connected switching unit Nivotester FTL320, FTL325P, FTL370, FTL372, FTL375P
- For contact load, see the Technical Data of the switching unit.

# Electronic insert FEL50A (PROFIBUS PA)

**Power supply**

Bus voltage: DC 9 to 32 V
Bus current:
- 12.5 mA +/– 1.0 mA (software version: 01.03.00, hardware version: 02.00)
- 10.5 mA +/– 1.0 mA (software version: 01.03.00, hardware version: 01.00)

**Electrical connection**

**Two-wire connection for power supply and data transfer**

For connecting to PROFIBUS PA

Additional functions:

– Digital communication enables the representation, reading and editing of the following parameters: Fork frequency, switch-on frequency, switch-off frequency, switch-on time and switch-off time, status, measured value, density switch.

– Matrix locking possible
– Switch to WHG mode possible (WHG approval)
– For a detailed description, see BA198F

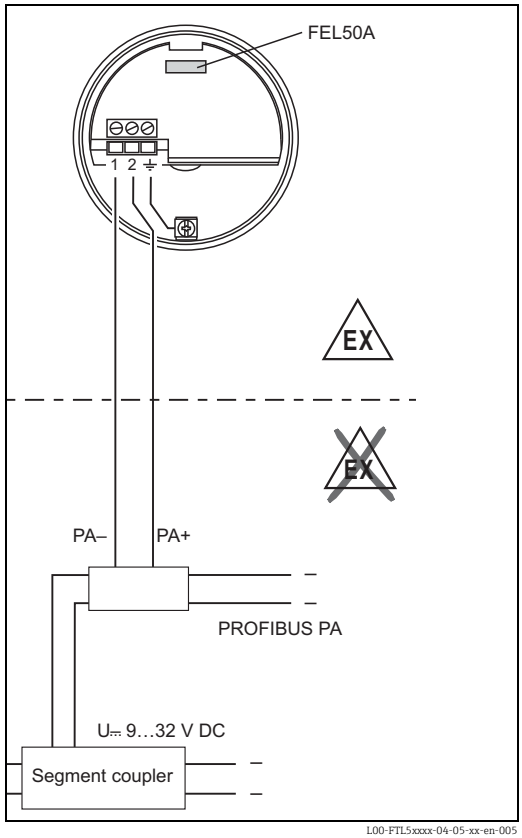


L00-FTL5xxxx-04-05-xx-en-005

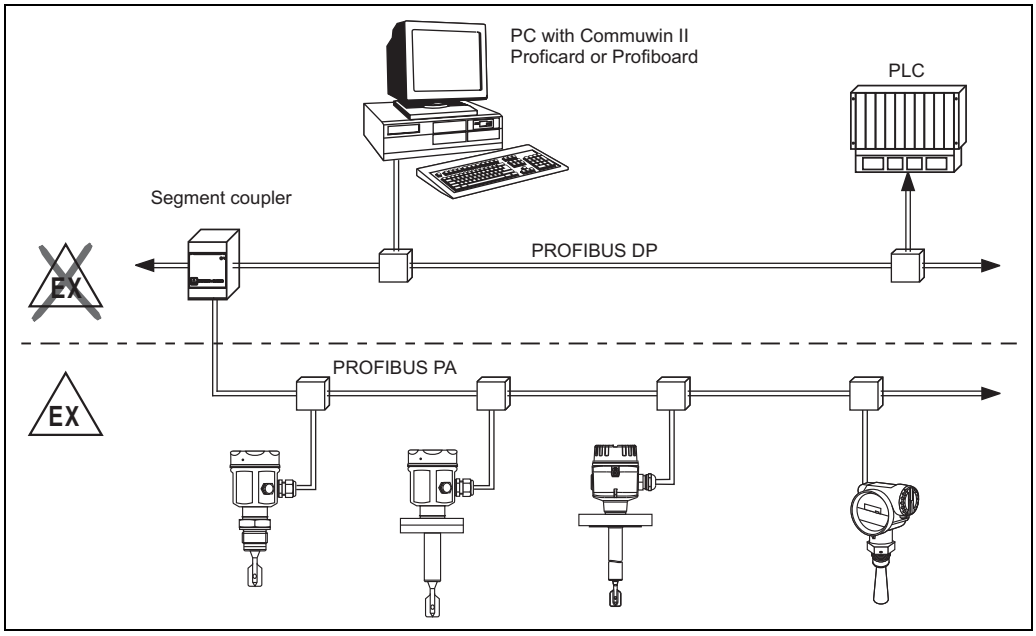


L00-FTL5xxxx-04-05-xx-en-006

**Output signal**

☼ = lit

● = unlit

L00-FTL2xxxx-07-05-xx-xx-000

| Setting | Level | LEDs green | LEDs yellow | FEL50A |
|---|---|---|---|---|
| not inverted |  | ☼ | ● | OUT_D = 0<br>PA bus signal |
| |  | ☼ | ☼ | OUT_D = 1<br>PA bus signal |
| inverted |  | ☼ | ☼ | OUT_D = 0<br>PA bus signal |
| |  | ☼ | ● | OUT_D = 1<br>PA bus signal |

L00-FTL5xxxx-04-05-xx-xx-009

**Signal on alarm**

- Failure information can be opened using the following interfaces:
  Yellow LED flashing, status code, diagnostic code; see BA00198F

# Electronic insert FEL50D (density)

**Power supply**

Frequency range: 300 to 1500 Hz
Signal level: 4 mA
Pulse height: 16 mA
Pulse width: 20 µS

**Electrical connection**

**Two-wire connection at Density Computer FML621**
For connecting to the density and concentration computer
FML621.

The output signal is based on pulse technology. With the aid of this signal, the fork frequency is constantly
forwarded to the switching unit.

Caution!
Operation with other switching units, such as FTL325P, is not permitted.
This electronic insert cannot be installed in devices that were originally used as a point level switch.

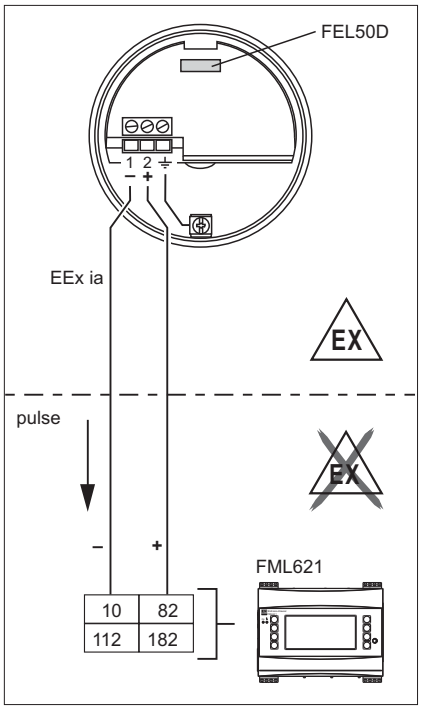


TI420Fen004

**Signal on alarm**

Output signal on power failure or in the event of damaged sensor: 0 Hz

**Adjustment**

In the Liquiphant M modular system, the option of an adjustment is also provided in addition to the electronics (see feature 60: "Accessories").

There are three types of adjustment:

**Standard adjustment** (see ordering information for additional option, basic version A)
- Here, two fork parameters are determined to describe the sensor characteristics, indicated in the adjustment report and provided with the product.
  These parameters must be transmitted to the Density Computer FML621.

**Special adjustment** (see ordering information for additional option, special adjustment, density $H_2O$ (K) or special adjustment, density $H_2O$ with 3.1 certificate (L))
- Here, three fork parameters are determined to describe the sensor characteristics, indicated in the adjustment report and provided with the product.
  These parameters must be transmitted to the Density Computer FML621.
  Greater accuracy is achieved with this type of adjustment (see also "Performance characteristics").

**Field Adjustment**
- During field adjustment, a density value actually determined by the customer is entered and the system is automatically adjusted to this value (wet adjustment).

Note!
More information on Liquiphant M Density is available in Technical Information TI00420F. This can be downloaded from www.endress.com => Download.

**Operating principle**

Measuring the density of a liquid medium in pipes and tanks. Also suitable for use in hazardous areas, and preferably for applications in the chemical and food industry.

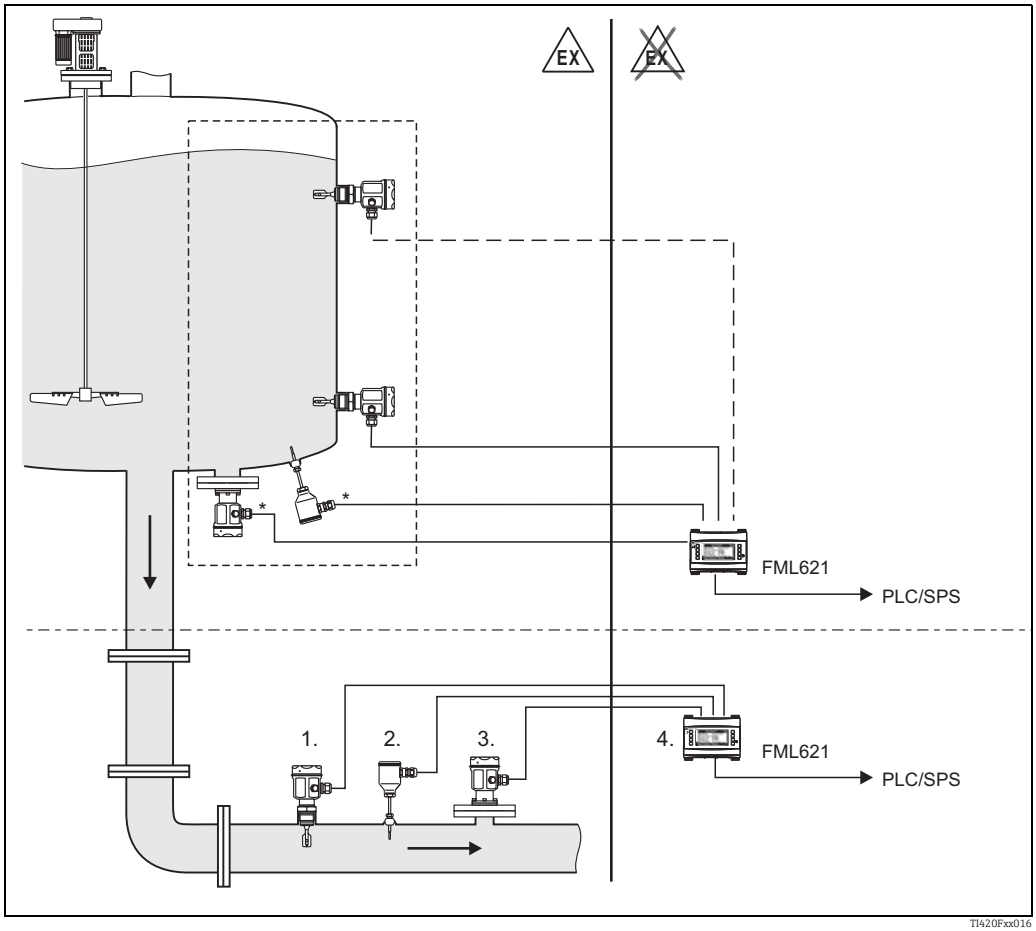


** Pressure and temperature information required depending on the application.*
*1. Liquiphant M sensor with electronic insert FEL50D (pulse output);*
*2. Temperature sensor (e.g. 4 to 20 mA output);*
*3. Pressure transmitter (4 to 20 mA output);*
*4. Liquiphant density and concentration computer FML621 with display and operating unit*

**Light signals**

| LED | Symbol | Information |
|---|---|---|
| Yellow | | Measurement valid |
| | | Unstable process situation |
| | | Maintenance required |
| Green | | Power on |
| | | Power off |
| Red | | No fault |
| | | Maintenance required |
| | | Device failure |

# Connection and function

**Connecting cables**

- Electronic inserts: cross-section ≤ 2.5 mm² (14 AWG); strand in ferrule as per DIN 46228
- Protective ground in housing: cross-section ≤ 2.5 mm² (14 AWG)
- External equipotential bonding connection on housing: cross-section ≤ 4 mm² (12 AWG)

**Safety mode**

Minimum/maximum residual current safety selectable on electronic insert.
(with FEL57 on Nivotester only)

MAX = maximum safety:
The output switches to the power fail response when the fork is covered
For use with overfill protection for example

MIN = minimum safety:
The output switches to the power fail response when the fork is exposed
For use with dry running protection for example

**Switching time**

When fork is covered: approx. 0.5 s
When fork is exposed: approx. 1.0 s
Additionally configurable for PROFIBUS PA:
0.5-60 s

Other switching times available on request.

**Switch-on behavior**

When switching on the power supply, the output assumes the alarm signal.
After ≤ 3 s it assumes the correct switching mode (exception: FEL57)

# Performance characteristics

**Reference operating conditions**

Ambient temperature: 23 °C (73 °F)

Medium temperature: 23 °C (73 °F)

Medium density (water): 1 g/cm³ (SGU)

Medium viscosity: 1 mm²/s (cSt)

Medium pressure $p_e$: 0 bar (0 psi)

Sensor mounting: vertical from above

Density switch: to > 0.7 g/cm³ (SGU)

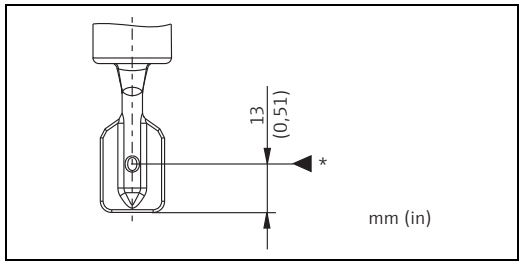


L00-FTL5xxxx-06-05-xx-xx-031

** Switch point under reference operating conditions*

**Maximum measured error**

Under reference operating conditions: max. +/−1 mm (0.04 in)

**Repeatability**

0.1 mm (0.004 in)

**Hysteresis**

approx. 2 mm (0.08 in)

**Influence of medium temperature**

max. +1.8 to −2.8 mm (−50 to +150 °C / -58 to 302 °F)

**Influence of medium density**

max. +4.8 to −3.5 mm ((0.5 to 1.5 g/cm³ (SGU))
max. +0.19 to -0.14 in

**Influence of medium pressure**

max. 0 to −2.5 mm (−1 to 64 bar (-14.5 to 928 psi))
max. 0 to -0.1 in

# Operating conditions

## Installation

### Installation instructions

Switch points on the sensor depend on the mounting position, with reference to water,

Density 1 g/cm³ (SGU), 23 °C (73 °F), $p_e$ 0 bar (0 psi).

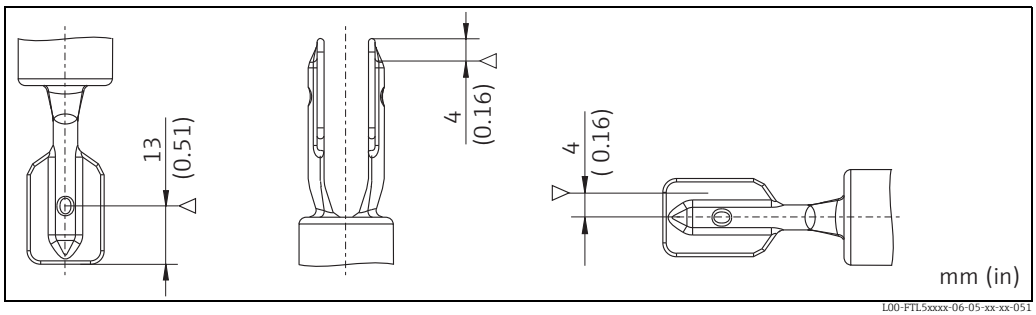


*Mounting from above* *Mounting from below* *Mounting from the side*

Note!
The switch points of the Liquiphant **M** are at other positions to those of the previous version Liquiphant **II**.

## Examples of mounting

Examples of mounting with regard to the viscosity ν of the liquid and the tendency to form buildup

**Optimum mounting, without problem even with high viscosity:**

Position the fork so that the narrow edge of the tines is vertical to ensure that the liquid can run off easily.

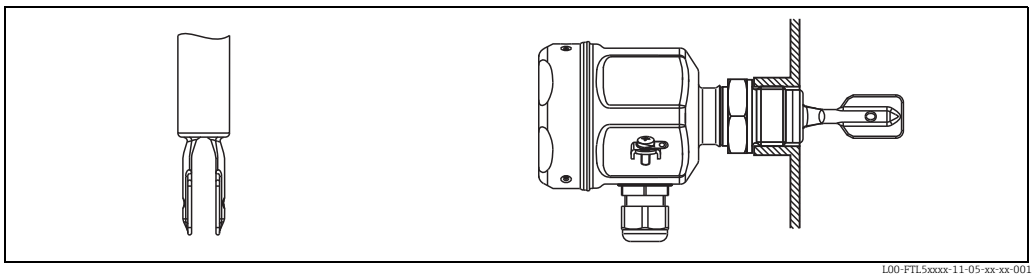


*Vertical from above* *Flush-mounted from the side*

**With buildup on the tank walls:**

* Ensure that there is sufficient distance between the buildup expected on the tank wall and the fork.

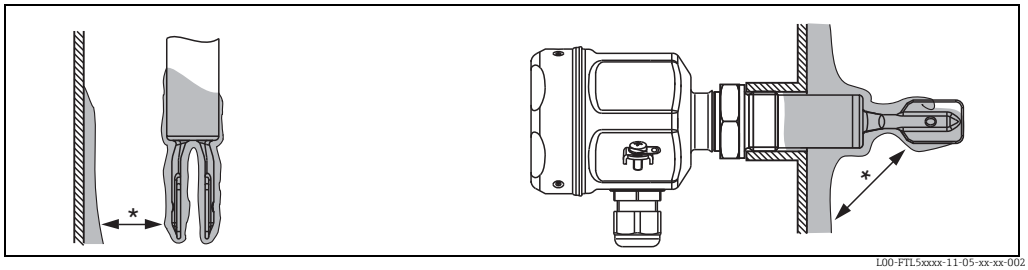


*Vertical from above* *Protruding into the tank from the side*

**Mounting positions in the case of low viscosity up to 2000 mm²/s (cSt):**

* Deburr the nozzle surfaces

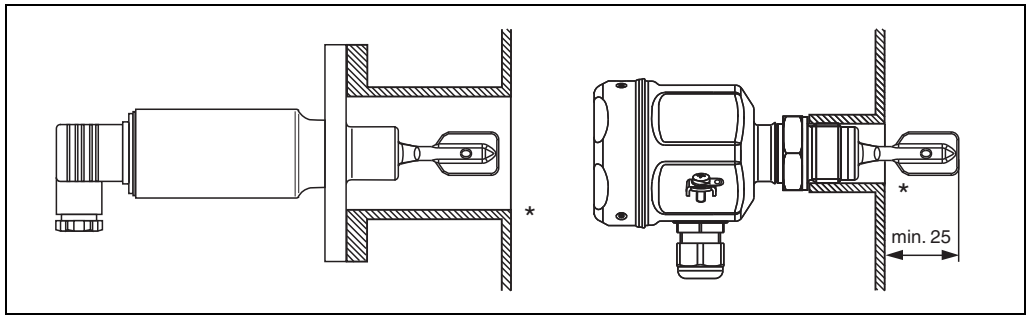


L00-FTL5xxxx-11-05-xx-en-003

**Mounting in piping from 2"**

Flow velocities up to 5 m/s for viscosity of 1 mm²/s (cSt) and density 1 g/cm³ (SGU).
(Check the function for other medium conditions.)

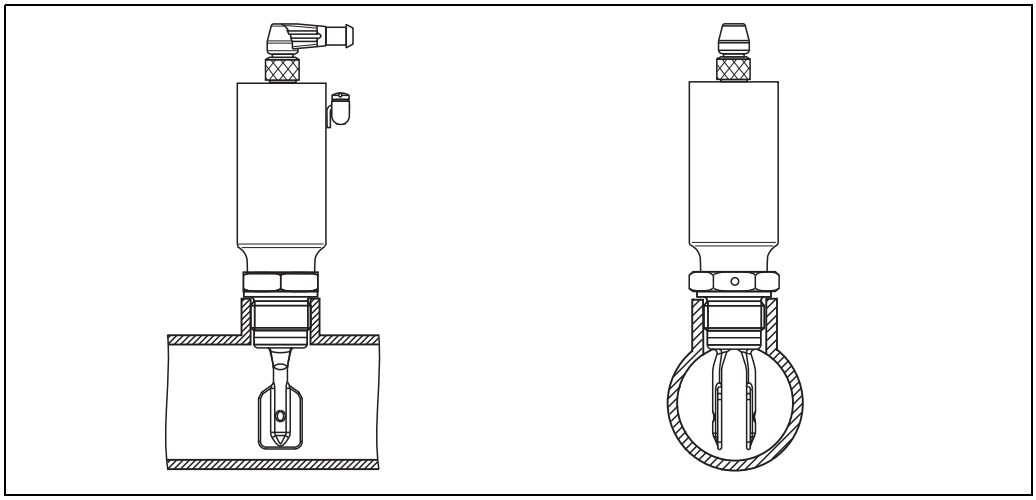

L00-FTL5xxxx-11-05-xx-xx-004

**Dynamic load**

Support the Liquiphant M FTL51(H) in the event of a severe dynamic load.

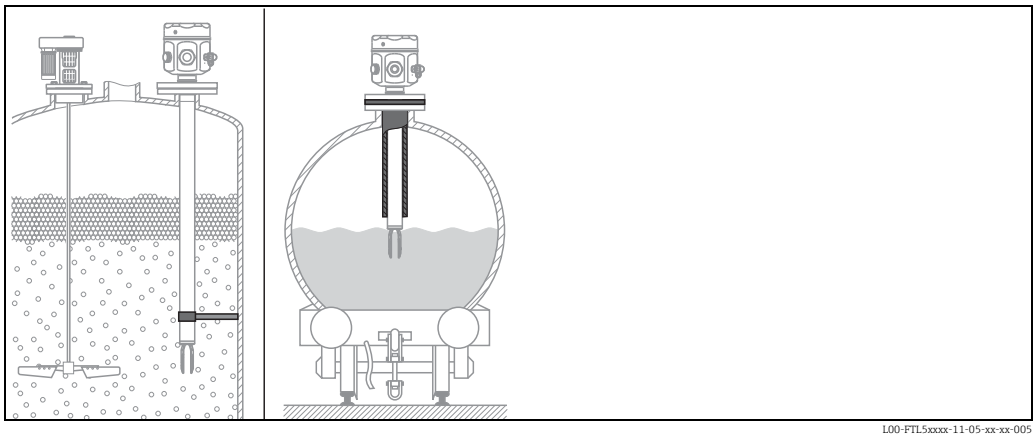

L00-FTL5xxxx-11-05-xx-xx-005

Ensure adequate space outside the tank for mounting, connection and configuration.

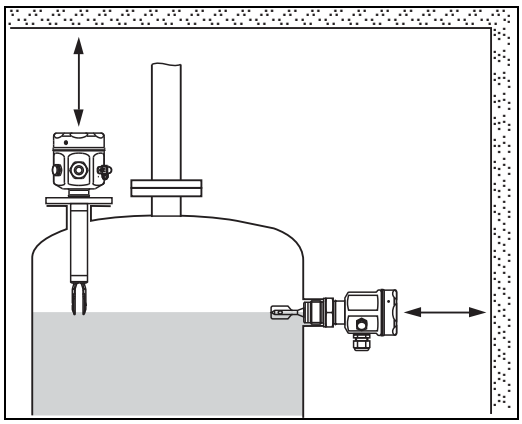

L00-FTL5xxxx-11-05-xx-xx-006

**Orientation**

- FTL50(H) and FTL51(H) with short pipe up to approx. 500 mm (19.7 in): any position
- FTL51(H) with long pipe: vertical

# Environment

**Ambient temperature range**

Permitted ambient temperature $T_a$ at the housing depending on the medium temperature $T_p$ in the tank:

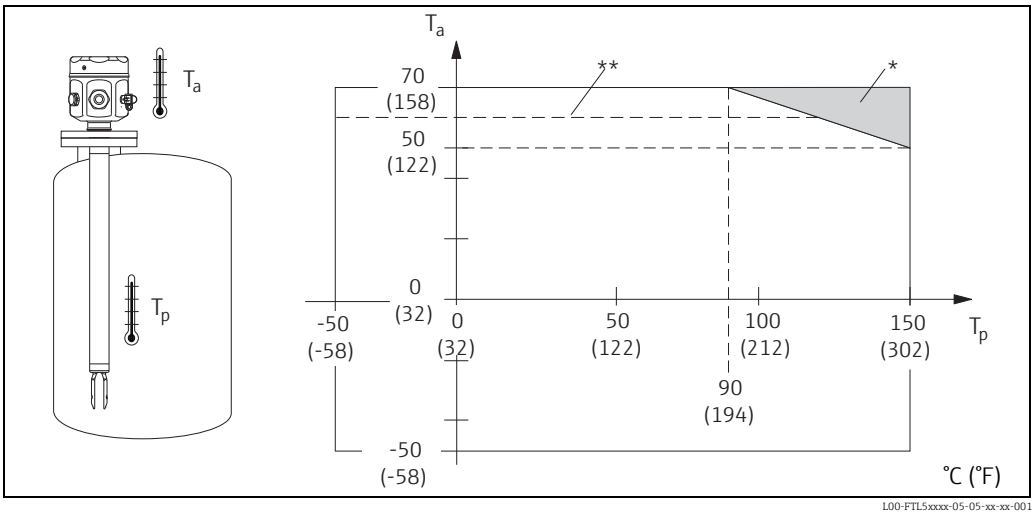


L00-FTL5xxxx-05-05-xx-xx-001

* Additional temperature range for devices with a temperature spacer or pressure-tight feedthrough.
** Maximum ambient temperature with FEL50D/FEL50A in hazardous areas.

**Storage temperature**

−50 to +80 °C (-58 to 176 °F)

**Installation height as per IEC61010-1 Ed.3**

Up to 2000 m (6600 ft) above sea level.

Can be extended up to 3000 m (9800 ft) above sea level if overvoltage protection is used, for example HAW562 or HAW569.

**Climate class**

Climate protection to IEC 68, Part 2-38, Fig. 2a

**Degree of protection**

| Types of housing | IP65 | IP66* | IP67* | IP68* | IP69k | NEMA type** |
|---|---|---|---|---|---|---|
| Compact housing with valve connector Pg11/NPT ½ | X | – | – | – | – | – |
| Compact housing with 5 m (16 ft) cable tail | – | X | – | X | – | – |
| Compact housing with M12x1 connector (52010285) 316L (metal) | – | X | – | X | – | – |
| Compact housing with elbowed connector (52024216) / L= 5 m (16 ft), without integrated LEDs | – | X | – | X | X | – |
| Compact housing with elbowed connector (52018763) / L= 5 m (16 ft), with integrated LEDs | – | X | – | X | X | – |
| Polyester housing F16 | – | X | X | – | – | 4X |
| Stainless steel housing F15 | – | X | X | – | – | 4X |
| Aluminum housing F17 | – | X | X | – | – | 4X |
| Aluminum housing F13**** | – | X | – | X*** | – | 4X/6P |
| Stainless steel housing F27 | – | X | – | X | – | 4X/6P |
| Aluminum housing T13 with separate connection compartment (Ex d) | – | X | – | X*** | – | 4X/6P |

* As per EN60529
** As per NEMA 250
*** only with M20 cable entry or G1/2 thread
**** F13 housing only in conjunction with XP or Ex d approval

**Vibration resistance**

As per IEC 68, parts 2-6 (10 to 55 Hz, 0.15 mm (0.01 in), 100 cycles)
In the event of increased vibrations, the following additional option is recommended: feature "060" version "P" 100 bar (1450 psi) process pressure.

**Electromagnetic compatibility**

Interference emission to EN 61326, Electrical Equipment Class B
Interference immunity to EN 61326; Annex A (Industrial) and NAMUR Recommendation NE 21 (EMC)

# Medium conditions

**Medium temperature**

−50 to +150 °C (-58 to 302 °F); for exceptions, see "Process connections"

**Thermal shock**

≤ 120 °C/s (248 °F/s)

**Medium pressure $p_e$**

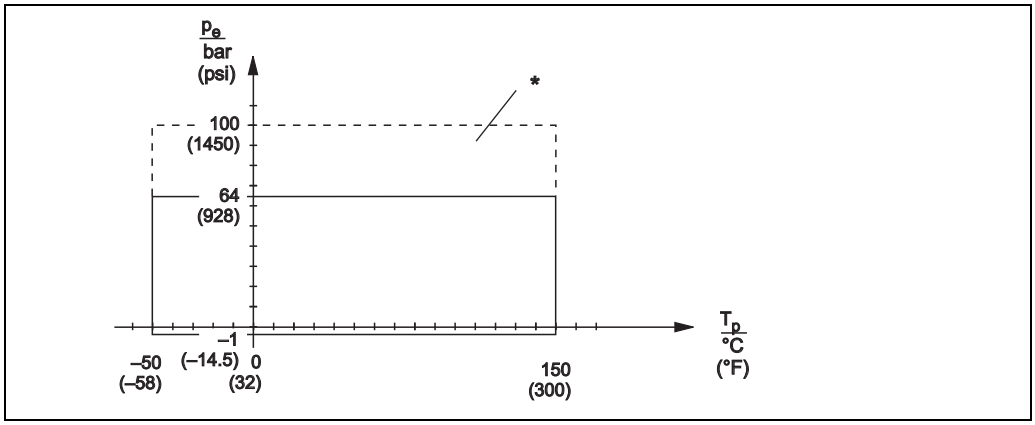


L00-FTL5xxxx-05-05-xx-xx-003

* Permitted pressure rating when the "100 bar (1450 psi)" option is selected (see "Product structure FTL51", feature 060, from → 43).
See "Process connections" → 33 for exceptions.
Canadian CRN approval: Additional details on maximum pressure values are available in the download area of the product page at "www.endress.com".

Please refer to the standards listed for the permitted pressure values of the flanges at higher temperatures:

- pR EN 1092-1: 2005
  With regard to their stability-temperature property, the materials 1.4435 and 1.4404 are identical and are grouped together in EN 1092-1 Tab. 18 under 13E0. The chemical composition of the two materials can be identical.
- ASME B 16.5 - 2013 Tab. 2-2.2 F316
- ASME B 16.5 - 2013 Tab. 2-3.8 N10276
- JIS B 2220

The lowest value from the derating curves of the device and selected flange applies in each case.

**Test pressure**

$p_e$ = 64 bar (928 psi):
- ≤ 100 bar (1450 psi) or 1.5 times the medium pressure $p_e$
- Sensor burst pressure at 200 bar (2900 psi)

$p_e$ = 100 bar (1450 psi):
- ≤ 150 bar (2175 psi) or 1.5 times the medium pressure $p_e$)
- Sensor burst pressure at 400 bar (5800 psi)

Note!
The device function is restricted during pressure testing.

**State of aggregation**

Liquid

**Density**

0.7 g/cm³ (SGU) = delivery status

0.5 g/cm³* (SGU) can be adjusted via switches

* Density settings for the compact housing on request

**Viscosity**

≤ 10,000 mm²/s (cSt)

**Solids content**

≤ ø5 mm (0.2 in)

**Lateral loading capacity**

≤ 75 Nm

# Mechanical construction

**Design**

**Summary of all electrical and mechanical versions**

*Housing*



L00-FTL5xxxx-03-05-xx-xx-019

**Compact**
Pipe housing (316L)

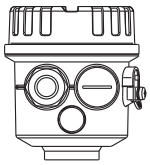

L00-FTL5xxxx-03-05-xx-xx-001

**F16**
Polyester (PBT)

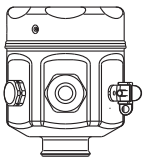

L00-FTL5xxxx-03-05-xx-xx-002

**F15**
Stainless steel (316L)

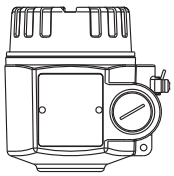

L00-FTL5xxxx-03-05-xx-xx-031

**F17**
Aluminum
Housing coated

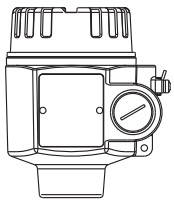

L00-FTL5xxxx-03-05-xx-xx-033

**F27**
Stainless steel (316L)
**F13**
Aluminum
(also for Ex d/XP),
housing coated

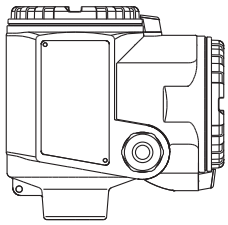

L00-FTL5xxxx-03-05-xx-xx-004

**T13**
Aluminum with separate connection compartment (also Ex de and Ex d), housing coated

*Plug-in electronic inserts to mount in the housing*



L00-FTL5xxxx-03-05-xx-xx-000

| | |
|---|---|
| FEL51*: | Two-wire AC connection |
| FEL52*: | Three-wire DC connection PNP |
| FEL54: | Universal current connection, 2 relay outputs |
| FEL55: | Output 16/8 mA for separate switching unit |
| FEL56: | Output 0.6 to 1.0 / 2.2 to 2.8 mA for separate switching unit (NAMUR) |
| FEL58*: | Output 2.2 to 3.5 / 0.6 to 1.0 mA for separate switching unit (NAMUR) |
| FEL57: | Output 150/50 Hz, PFM, for separate switching unit (Nivotester) |
| FEL50A: | Digital communication PROFIBUS PA |
| FEL50D: | Pulse output for Density Computer FML621 |

* Electronics also available as compact housing. The electronics cannot be exchanged!

*Bushing*s (optional)

Temperature spacer and pressure-tight feedthrough

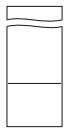

L00-FTL5xxxx-03-05-xx-xx-005

*Process connections*

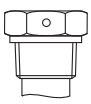

L00-FTL5xxxx-03-05-xx-xx-006

G ¾, DIN ISO 228/I
R ¾, EN10226
NPT ¾, ASME B 1.20.1
(AF 32)

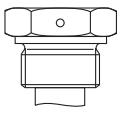

L00-FTL5xxxx-03-05-xx-xx-007

G 1, DIN ISO 228/I
R 1, EN10226
NPT 1, ASME B 1.20.1
(AF 41)

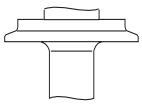

L00-FTL5xxxx-03-05-xx-xx-008

Diverse
hygienic and
aseptic
connections

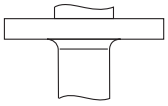

L00-FTL5xxxx-03-05-xx-xx-009

Flanges as per DIN,
ASME,
JIS
from DN 25 / 1"

*Sensors*

| Compact, with extension pipe up to 3 m (up to 6 m on request) or special "length L II" (see → 33ff.) | Compact II | Length L | Length L |
|---|---|---|---|
| | 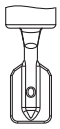 | 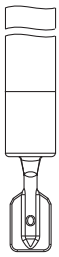 | 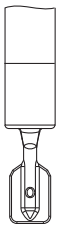 |
| $p_e$ = bar/psi | 64/928 | 64/928<br>100/1450 | 64/928<br>100/1450 |

L00-FTL5xxxx-03-05-xx-xx-018

**Dimensions**

Dimensions in mm (in)!

**Housing FTL50(H), FTL51(H) with sensor FTL50(H)**

*Compact housing, primarily for hygiene applications*

c

1. 5 m cable
2. M12 connector
3. Pg11/NPT ½ connector

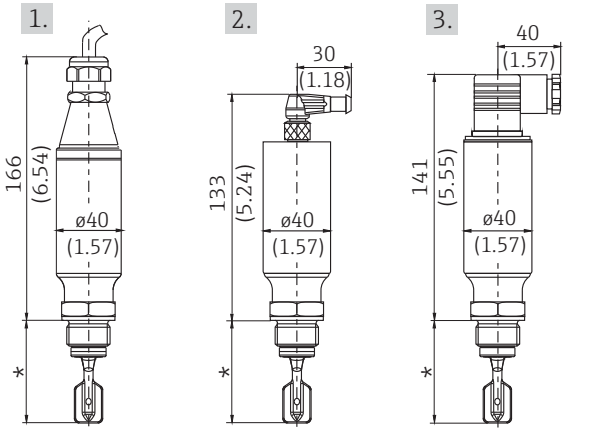


L00-FTL5xxxx-06-05-xx-xx-085

*Polyester housing F16*

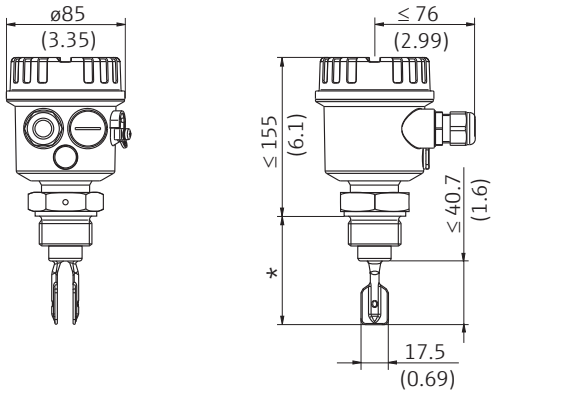


L00-FTL5xxxx-06-05-xx-xx-086

*F15 stainless steel housing primarily for hygiene applications*

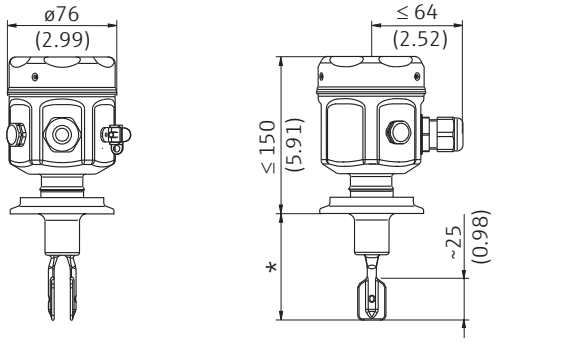


L00-FTL5xxxx-06-05-xx-xx-087

*Aluminum housing F17*

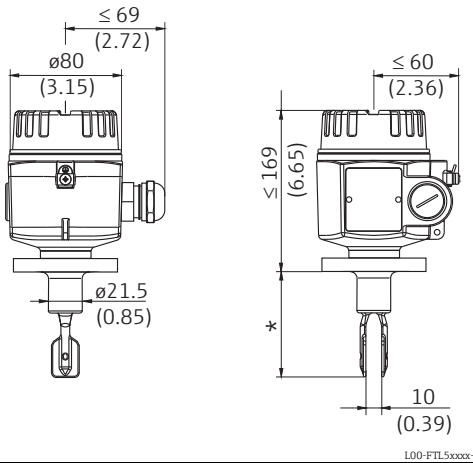


L00-FTL5xxxx-06-05-xx-xx-088

*Stainless steel housing (316L) F27*
*Aluminum housing F13*

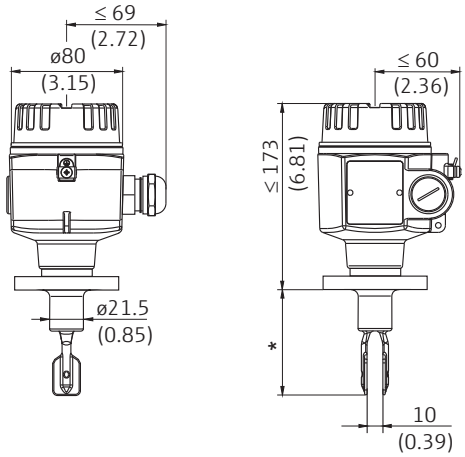


L00-FTL5xxxx-06-05-xx-xx-089

*Aluminum housing T13*
*with separate connection compartment*

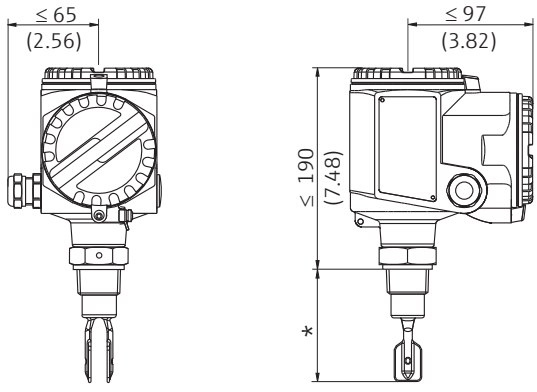


L00-FTL5xxxx-06-05-xx-xx-090

* See "Process connections"

Note!
The switch points of the Liquiphant **M** are at other positions to those of the previous version Liquiphant **II**.

Bushings: temperature spacer, pressure-tight feedthrough

**Temperature spacer**
Provides sealed insulation for the vessel and normal ambient temperatures for the housing.

**Pressure-tight feedthrough**
Protects the housing from pressures up to 100 bar (1450 psi) if the sensor is damaged. Provides sealed insulation for the vessel and normal ambient temperatures for the housing.

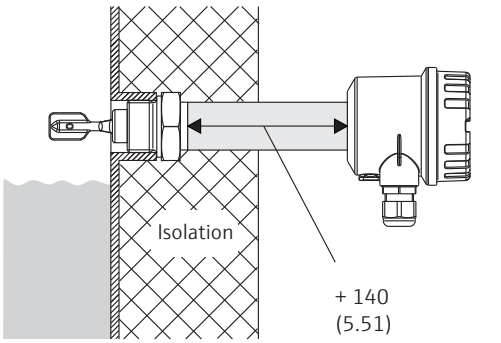

L00-FTL5xxxx-06-05-xx-xx-091

**Process connections for FTL50(H) and FTL51(H)**

| Process connection | | Dimensions | Accessories | Pressure<br>Temperature |
|---|---|---|---|---|
| **G ¾**<br>DIN ISO 228/1<br>with defined<br>thread start;<br>Flat seal to DIN 7603:<br>supplied | GQ2<br>GQ6 | 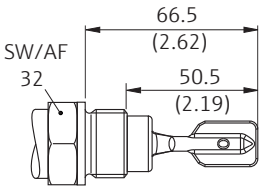 L00-FTL5xxxx-06-05-xx-xx-092 | | ≤ 100 bar / only FTL51<br>(≤ 1450 psi)<br><br>≤ 150 °C (302 °F) |
| **G ¾**<br>DIN ISO 228/1<br>with defined<br>thread start<br><br>for flush-mounted<br>installation in<br>weld-in adapter | GQ2<br>GQ6 | 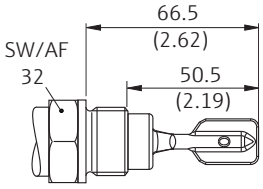 L00-FTL5xxxx-06-05-xx-xx-093 | **Weld-in adapter**<br>(with defined<br>thread start)<br>with silicone O-ring<br>only FTL50, FTL50H<br><br>See "Accessories"<br>In conformity with<br>FDA* | ≤ 25 bar (363 psi)<br>≤ 150 °C (302 °F)<br><br>≤ 40 bar (580 psi)<br>≤ 100 °C (212 °F) |
| **G 1**<br>DIN ISO 228/1<br><br>Flat seal to DIN 7603:<br>supplied | GR2<br>GR6 | 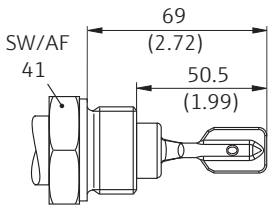 L00-FTL5xxxx-06-05-xx-xx-094 | | ≤ 100 bar / only FTL51<br>(1450 psi)<br><br>≤ 150 °C (302 °F) |
| **G 1**<br>DIN ISO 228/1<br>with defined<br>thread start<br><br>With seal surface<br>for flush-mounted<br>installation in<br>weld-in adapter | GW2 | 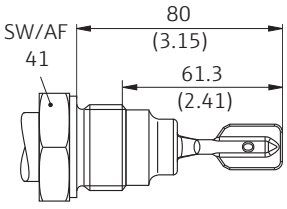 L00-FTL5xxxx-06-05-xx--095 | **Weld-in adapter**<br>(with defined<br>thread start)<br>with silicone O-ring<br><br>See "Accessories"<br>In conformity with<br>FDA* | ≤ 25 bar (363 psi)<br>≤ 150 °C (302 °F)<br><br>≤ 40 bar (580 psi)<br>≤ 100 °C (212 °F) |
| **NPT ¾**<br>ASME B 1.20.1<br><br>or<br><br>**R ¾**<br>DIN/EN 10226 | GM2<br>GM6<br><br>GE2<br>GE6 | 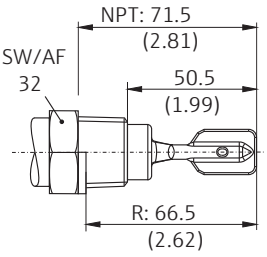 L00-FTL5xxxx-06-05-xx-xx-096 | | ≤ 100 bar / only FTL51<br>(1450 psi)<br><br>≤ 150 °C (302 °F) |

| Process connection | | Dimensions | Accessories | Pressure<br>Temperature |
|---|---|---|---|---|
| **NPT1**<br>ASME B 1.20.1<br><br>or<br><br>**R 1**<br>DIN/EN 10226 | GN2<br>GN6<br><br><br>GF2<br>GF6 | 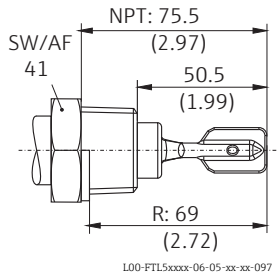 | | ≤ 100 bar / only FTL51<br>(1450 psi)<br><br>≤ 150 °C (302 °F) |
| * FDA-compliant material in accordance with 21 CFR Part 177.2600 (silicone) | | | | |
| **Flanges**<br>ASME B 16.5<br>EN 1092-1<br>(DIN 2527 B)<br>JIS B2220 | A##<br>B##<br>C##<br>F##<br>N##<br>K## | 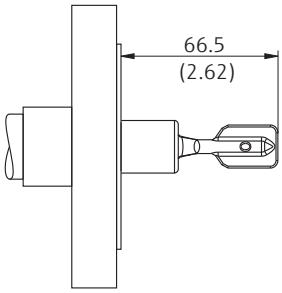 | Seal<br>depending on design<br>installed on site | See nominal pressure<br>of flange, however<br>≤ 100 bar (1450 psi)<br>(only FTL51)<br>≤ 150 °C (302 °F) |
| | For higher chemical-resistance, AlloyC22-plated flanges are available. The flange carrier material is made of 316L and is welded with a 2 to 3 mm (0.08 to 0.12 in) thick AlloyC22 disk. | | | |
| **Tri-Clamp**<br>ISO 2852 DN25-38<br>(1 to 1 ½")<br>DIN 32676 DN25-40<br>ø D = 50.5 mm<br>(1.99 in)<br><br>ISO 2852 DN40-51<br>(2")<br>DIN 32676 DN50<br>ø D = 64.0 mm<br>(2.52 in) | TC2<br>TE2 | 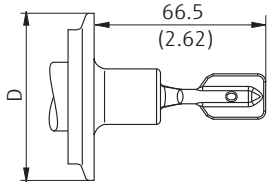 | Clamping ring and<br>front seal<br>installed on site** | ≤ 25 bar (363 psi)<br>≤ 150 °C (302 °F) |
| | Mounting with NA connector only in conjunction with T13, F13 and compact housing. Other housings on request. | | | |
| **Threaded pipe joint**<br>DN 32<br>DN 40<br>DN 50<br>DIN 11851<br><br>with thread adapter nut | MA2<br>MC2<br>ME2 | 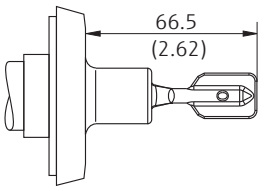 | Sealing ring with<br>collar,<br>installed on site** | DN 32, DN 40:<br>≤ 40 bar (580 psi) up to<br>100 °C (212 °F)<br>≤ 25 bar (363 psi) up to<br>140 °C (284 °F)<br><br>DN 50:<br>≤ 25 bar (363 psi)<br>≤ 140 °C (284 °F) |
| **Flush-mounted for weld-in adapter**<br>Factory standard<br>Endress+Hauser with<br>silicone seal<br>and thread adapter nut:<br>supplied | EE2 | 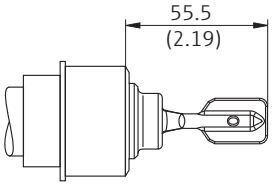 | **Weld-in adapter**<br>(fork can be<br>positioned)<br><br>See "Accessories"<br>In conformity with<br>FDA* | ≤ 40 bar (580 psi)<br>≤ 100 °C (212 °F)<br><br>≤ 25 bar (363 psi)<br>≤ 150 °C (302 °F) |
| **Aseptic**<br>DN 50<br>DIN 11864-1<br>Form A<br>for pipe DIN 11850<br>with thread adapter nut | HE2 | 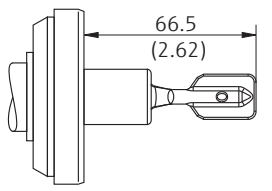 | sealing ring installed<br>on site** | ≤ 25 bar (363 psi)<br>≤ 140 °C (284 °F) |

| Process connection | | Dimensions | Accessories | Pressure<br>Temperature |
|---|---|---|---|---|
| **DRD**<br>With clamped flange | PE2 | 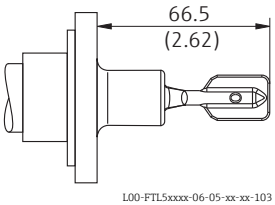 <br>L00-FTL5xxxx-06-05-xx-xx-103 | Welding flange with PTFE flat seal (fork can be positioned)<br><br>See "Accessories" (or installed on site)**<br><br>In conformity with FDA* | ≤ 40 bar (580 psi)<br>≤ 100 °C (212 °F)<br><br>≤ 25 bar (363 psi)<br>≤ 150 °C (302 °F) |
| * FDA-compliant material in accordance with 21 CFR Part 177/2600 (silicone), 21 CFR Part 177.1550 (PTFE)<br>** The maximum temperature and the maximum pressure are dependent on the clamping ring used and the seal used. The lowest value applies in each case. | | | | |
| **SMS**<br>2"<br>(DN 51)<br>with thread adapter nut | UE2 | 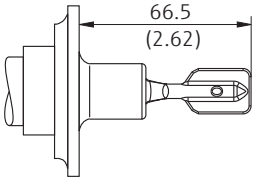 <br>L00-FTL5xxxx-06-05-xx-xx-104 | sealing ring installed on site** | ≤ 25 bar (363 psi)<br>≤ 140 °C (284 °F) |
| **Varivent**<br>for piping<br>≥ DN 65<br>≥ O.D. 3"<br>≥ I.P.S. 3" | WE2 | 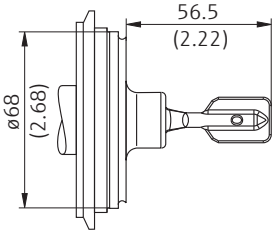 <br>L00-FTL5xxxx-06-05-xx-xx-105 | Clamping ring and O-ring seal, installed on site** | However, see specification as per Tuchenhagen VARIVENT-Inline housing:<br><br>≤ 25 bar (363 psi)<br>≤ 150 °C (302 °F) |
| **Ingold fitting**<br><br>DN 25<br>Fitting length 46 mm (2.52 in)<br><br>Thread adapter nut<br>G 1 ¼<br><br>with O-ring seal, EPDM (FDA-compliant, USP Class VI*) | TT2 | 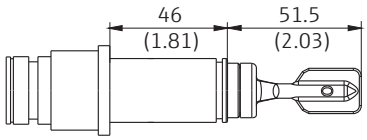 <br>L00-FTL5xxxx-06-05-xx-xx-106 | | ≤ 16 bar (232 psi)<br>≤ 150 °C (302 °F) |
| * FDA-compliant material in accordance with 21 CFR Part 177/2600 (EPDM)<br>** The maximum temperature and the maximum pressure are dependent on the clamping ring used and the seal used. The lowest value applies in each case. | | | | |

Sensor length L for FTL51 and FTL51H, depending on process connection

| Thread: G ¾ G 1 | Thread: NPT ¾ NPT1 R ¾ R 1 | Flanges and flange-like process connections |
|---|---|---|
| 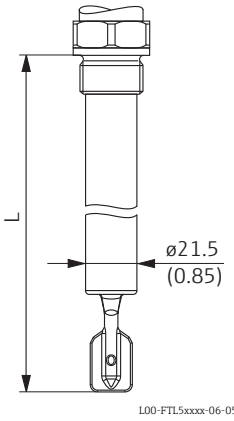 | 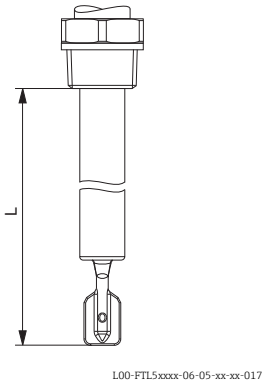 | 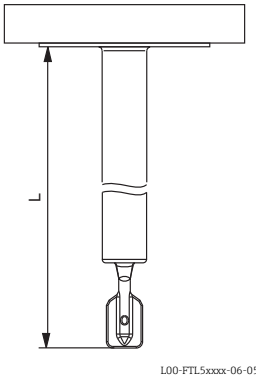 |
| From seal surface of thread adapter | From lower edge of thread | |

Customized length L:
- 148 mm to 3000 mm (6 to 115in); special version (TSP) on request up to 6000 mm (235 in)
- Length tolerances L: < 1 m (–5 mm), 1 to 3 m (–10 mm) / < 3.3 ft (-0.2 in), 3.3 to 9.8 ft (-0.39 in)

Note!
The switch points of the Liquiphant M are at other positions to those of the previous version Liquiphant **II**.
Special length "L II":
With vertical mounting from above the same switch point as for the Liquiphant II
FTL360, FTL365, FDL30, FDL35

*"L II" depends on process connection:*

L = 115 mm (4.53 in) for flanges and flange-like process connections
L = 99 mm (3.9 in) for threads NPT and R (BSPT)
L = 118 mm (4.65 in) for threads G1 (BSP 1)
L = 115 mm (4.53 in) for threads G ¾ (BSP ¾)
L = 104 mm (4.09 in) for flush-mounted 1" (Endress+Hauser)

**Weights**

See "Ordering information" → 📄 43ff

**Materials and surfaces**

Material specifications as per AISI and DIN-EN.

**Parts in contact with process**

- Process connection and extension pipe:
  - FTL5x → 316L (1.4404 or 1.4435) optional 2.4602 (AlloyC22)
  - FTL5xH → 316L (1.4435)
- Tuning fork: 316L (1.4435) optional 2.4602 (AlloyC22)
- Flanges: 316L (1.4404)
- Flange plating: AlloyC22
- Flat seal for process connection G ¾ or G 1: elastomer fiber, asbestos-free

*Surface roughness*

Choice of mechanically polished surface roughness (version → probe length → type):

- Ra < 1.5 µm (59.1 µin), with EHEDG approval
- Ra < 0.3 µm (11.8 µin), 3-A and EHEDG approval and CoC-ASME-BPE

Note!
The surface is electropolished if the additional option "B"
(CoC - ASME BPE) is selected in addition to surface roughness quality Ra < 0.3 µm (11.8 µin). The

surface roughness is then: Ra < 0.38 µm (15.0 µin).
With this combination, the wetted parts are made of 316L (1.4435) in accordance with BN2 (delta-ferrite content < 1 %).

**Parts with no process contact**

- Tuning fork/housing seal: EPDM
- Temperature spacer: 316 L (1.4435)
- Pressure-tight feedthrough: 316L (1.4435)
- Ground terminal on housing (external): 316L (1.4404)
- Cable glands
  - Housing F13, F15, F16, F17: polyamide (PA)
    With B or C approval (→ 📄 43 ordering information): nickel-plated brass
  - Housing F27: polyamide PA, with approval "B" or "C" 316L (1.4435)
  - Housing T13: nickel-plated brass
- Polyester housing F16: PBT-FR with PBT-FR cover or with PA12 transparent cover
  - Cover seal: EPDM
  - Nameplate glued: polyester film (PET)
  - Pressure compensation filter: PBT-GF20
- Stainless steel housing F15: 316L (1.4404)
  - Cover seal: silicone
  - Safety claw: 304 (1.4301)
  - Pressure compensation filter: PBT-GF20, PA
- Aluminum housing F17/F13: EN-AC-AlSi10Mg, plastic-coated
  - Nameplate: aluminum, anodized
  - Cover seal: EPDM
  - Safety claw: nickel-plated brass
  - Pressure compensation filter: silicone
- Stainless steel housing F27: 316L
  - Nameplate: 316L (1.4404)
  - Cover seal: FVMQ (optional: EPDM seal available as spare part)
  - Safety claw: 316L (1.4435)
- Aluminum housing T13: EN-AC-AlSi10Mg, plastic-coated,
  - Nameplate: aluminum, anodized
  - Cover seal: EPDM
  - Safety claw: nickel-plated brass
- Compact housing (valve connector or M12 connector): 316L (1.4435)

**Process connections**

- Parallel thread G ¾, G 1 to DIN ISO 228/I with flat seal to DIN 7603
- Tapered thread R ¾, R 1 to EN10226
- Tapered thread ¾ -14 NPT, 1 - 11½ NPT as per ASME B 1.20.1
- Flush-mounted installation with weld-in adapter to factory standard Endress+Hauser (G ¾, G 1)
- Flush-mounted installation with weld-in adapter to factory standard Endress+Hauser (1"), sensor can be positioned
- Tri-Clamp 1½", 2" to ISO 2852
- Threaded pipe joint DN 32, 40, 50 to DIN 11851
- Aseptic connection DN 50 to DIN 11864-1
  Form A for pipe DIN 11850
- SMS connection 2" (DN 51)
- DRD flange
- Varivent® DN 50 (50/40) to factory standard Tuchenhagen
- Flanges: as per EN/DIN 1092-1 from DN 25, as per ASME B 16.5 from 1", as per JIS B2220 (RF)
- Ingold DN25 fitting length 46 mm (1.81 in) with thread adapter nut G1 ¼

Further details at Ordering information → 📄 43.

# Human interface

## Electronic inserts

**With FEL51, FEL52, FEL54, FEL55:**

- 2 switches for safety mode and density change
- green LED to indicate operational status
- red LED to indicate the switching status, flashes in the event of corrosion damage on sensor or if the electronics are defective

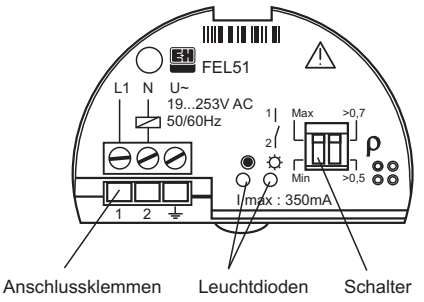


L00-FTL5xxxx-03-05-xx-en-001

**With FEL56:**

- 2 switches for safety mode and density change
- green LED flashes to indicate operational status
- red LED to indicate the switching status, flashes in the event of corrosion damage on sensor or if the electronics are defective

**With FEL57:**

- 2 switches for density change and Testing
- green LED to indicate operational status
- yellow LED to indicate the covered status, flashes in the event of corrosion damage on sensor or if the electronics are defective



L00-FTL5xxxx-03-05-xx-xx-013

**With FEL58:**

- 2 switches for safety mode and density change
- green LED
  - flashes quickly to indicate operational status,
  - flashes slowly in the event of corrosion damage to the sensor of if the electronics are defective
- yellow LED to indicate the switching status, Test key – breaks the cable connection

**With FEL50A:**

- 8 switches for configuring the device address
- green LED to indicate operational status, pulsing to indicate communication;
- yellow LED to indicate the switching status, flashes in the event of corrosion damage on sensor or if the electronics are defective

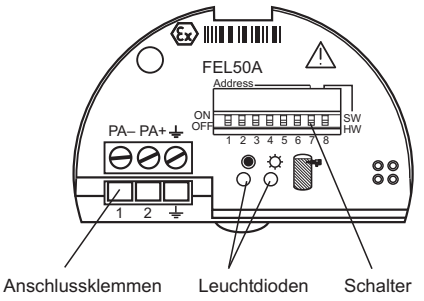


L00-FTL5xxxx-03-05-xx-en-002

**With FEL50D:**

- yellow LED: to indicate the validation of the measurement
- green LED: to indicate the operational status
- red LED: to indicate faults

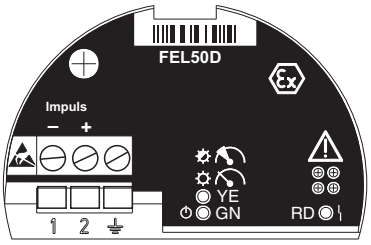


TI328Fxx004

**Compact housing**

**Function test with test magnet**

*Versions AC, DC-PNP and NAMUR:*

During the test, the current state of the electronic switch is reversed.

Hold the test magnet against the marking on the nameplate: The switching status is changed.

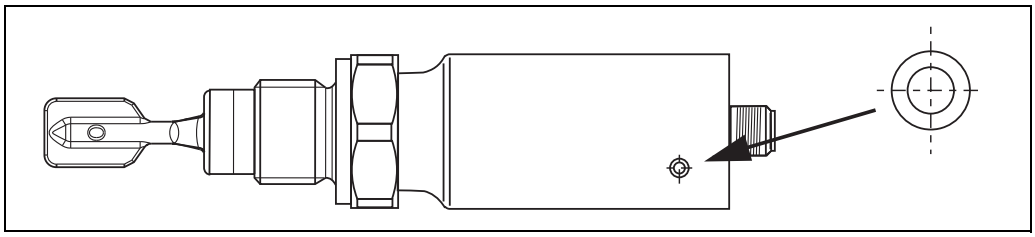

L00-FTL5xxxx-19-05-xx-xx-001

**Light signals**

*Versions AC and DC-PNP with valve connector or cable tail*

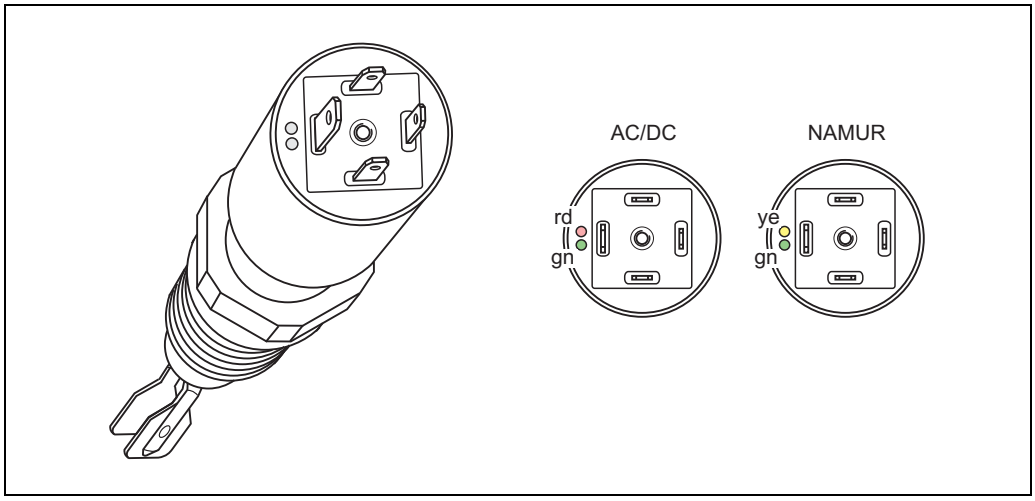


L00-FTL5xxxx-07-05-xx-xx-005

**Green light (gn) lights up (AC/DC):**

Liquiphant M is connected to the power supply and is operational.

**Green light (gn) flashing (NAMUR):**

Liquiphant M is connected to the power supply and is operational.

**Red light (rd) lights up (AC/DC):**

MAX application mode (overfill protection): sensor is immersed in liquid.
MIN application mode (dry running protection): sensor is not immersed in liquid.

**Yellow light (ye) lights up (NAMUR):**

MAX application mode (overfill protection): sensor is not immersed in liquid.
MIN application mode (dry running protection): sensor is immersed in liquid.

**Red light (rd) flashing (AC/DC):**

Liquiphant M has detected a fault.

*Version NAMUR and DC-PNP with M12x1 round connector 316L*

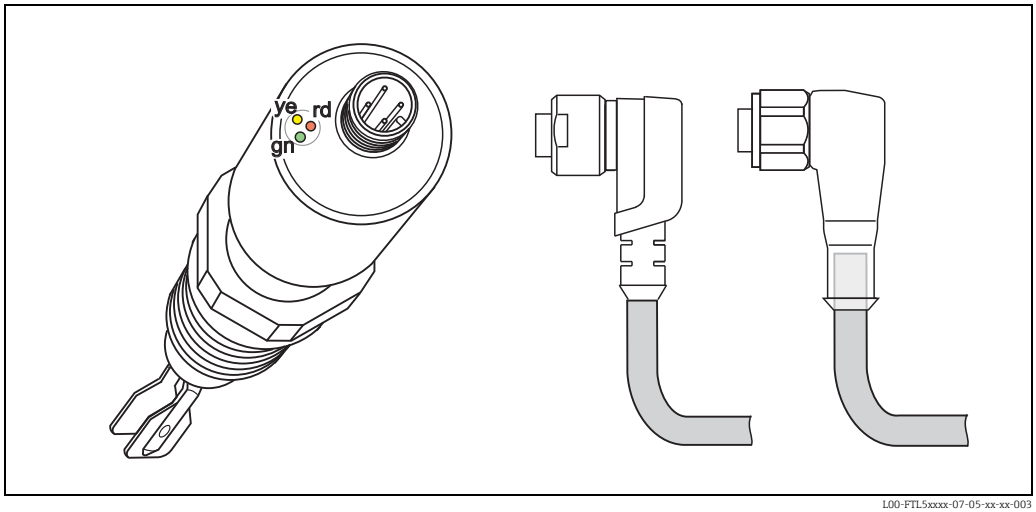


L00-FTL5xxxx-07-05-xx-xx-003

**Green light (gn) lights up (DC-PNP):**

Liquiphant M is connected to the power supply and is operational.

**Green light (gn) flashing with 1 Hz (NAMUR):**

Liquiphant M is connected to the power supply and is operational.

**Yellow light (ye) lights up (DC-PNP):**

Sensor is immersed in liquid.

**Yellow light (ye) lights up (NAMUR):**

MAX application mode (overfill protection): sensor is not immersed in liquid.
MIN application mode (dry running protection): sensor is immersed in liquid.

**Red light (rd) flashing (DC-PNP):**

Liquiphant M has detected a fault.

**Green light (gn) flashing with 0.3 Hz (NAMUR):**

Liquiphant M has detected a fault.

*Version DC-PNP with M12x1 round connector 316L*

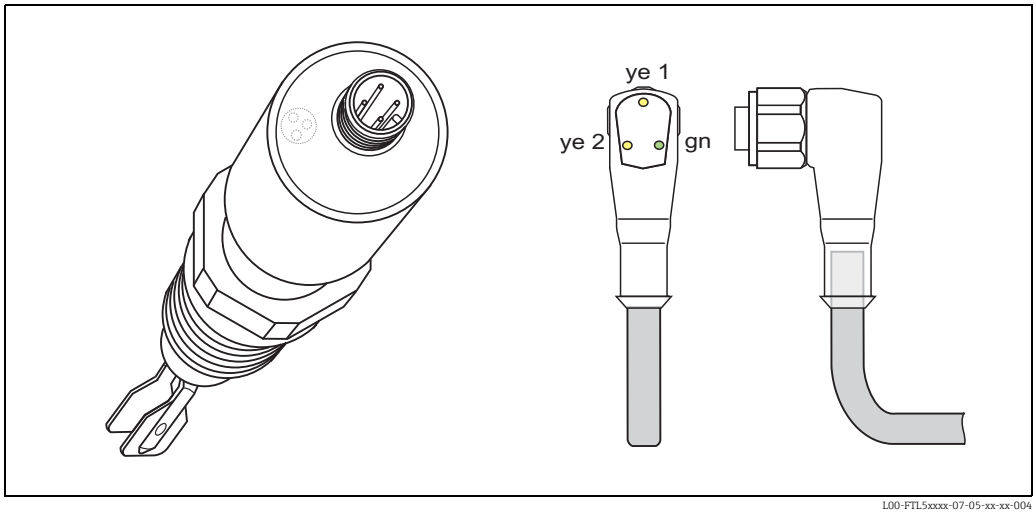


L00-FTL5xxxx-07-05-xx-xx-004

**Green light (gn) lights up:**

Liquiphant M is connected to the power supply and is operational.

**Yellow light (ye 1) lights up:**

MAX application mode (overfill protection): sensor is not immersed in liquid.
MIN application mode (dry running protection): sensor is not immersed in liquid.

**Yellow light (ye 2) lights up:**

MAX application mode (overfill protection): sensor is immersed in liquid.
MIN application mode (dry running protection): sensor is immersed in liquid.

**Green light (gn) lights up, both yellow lights (ye 1+2) do not light up:**

Liquiphant M has detected a fault.

**Operating concept**

Onsite configuration

# Certificates and approvals

**CE mark**

The measuring system meets the legal requirements of the applicable EC Directives. These are listed in the corresponding EC Declaration of Conformity along with the standards applied.
Endress+Hauser confirms successful testing of the device by affixing to it the CE mark.

**C-tick mark**

The measuring system complies with the EMC requirements of the "Australian Communications and Media Authority (ACMA)".

**General approvals**

The following approvals are available for Liquiphant M FTL50H, FTL51H:

- EHEDG: certification (from TNO, The Netherlands), Report No. V99.394:
- 3A: 3A certificate (USA), Authorization no. 459: 74-06 Sensors and Sensor Fittings and Connections
- Certificate of Compliance as per ASME BPE-2012. (Order code: additional option = B)

| Process connections | Order code | EHEDG + 3A | | ASME BPE + CoC | |
|---|---|---|---|---|---|
| | | | | Ra (µm) | |
| | | | | < 0.38 | < 1.5 |
| Thread ISO228 G3/4, 316L, installation<br>Thread ISO228 G1, 316L, installation<br>Accessories: weld-in adapter | GQ2<br>GW2 | X | X | – | X |
| Tri-Clamp ISO2852 DN25-38 (1 to 1-1/2"), 316L<br>Tri-Clamp ISO2852 DN40-51 (2"), 316L | TC2<br>TE2 | X | X | X | X |
| DIN11851 DN32 PN25 slotted nut, 316L<br>DIN11851 DN40 PN25 slotted nut, 316L<br>DIN11851 DN50 PN25 slotted nut, 316L | MA2<br>MC2<br>ME2 | X | X | X | X |
| Flush-mounted, 316L, installation<br>Accessories, weld-in adapter | EE2 | X | X | X | X |
| DIN11864-1 A DN50 pipe DIN11850,<br>Slotted nut, 316L | HE2 | X | X | X | X |
| DRD 65mm, 316L | PE2 | X | – | – | X |
| SMS 2" PN25, 316L | UE2 | X | X | X | X |
| Varivent N pipe DN65-162 PN10, 316L | WE2 | X | X | X | X |
| Ingold fitting 25x46mm, 316L | TT2 | – | – | X | – |



Warning!
To avoid risk of contamination, install according to the "Hygienic Equipment Design Criteria (HDC)" as stated in the Subgroup Design Principles of the EHEDG, Doc. 8, July 1993.
The flow of liquid during cleaning is important and should be in compliance with the HDC.



Note!
- For CIP (Clean in Place) and SIP (Sterilize in Place) processes the pressure and temperature specifications of the process connections must be observed.
- Suitable fittings and seals must be used to ensure hygiene-compliant design according to 3A, EHEDG, ASME BPE etc.
- Surfaces with ASME-BPE option: Ra < 0.38 µm (< 15 µin) electropolished and passivated or Ra < 1.5 µm (59 µin) mechanically polished.

**CRN approval**

Versions with a CRN approval (Canadian Registration Number) are marked with a "*" in ordering information feature 20 "process connection" (s. Seite 43 ff.). CRN-approved devices are assigned the registration number 0F10525.5C on the nameplate.

**Process seal according to ANSI/ISA 12.27.01**

Practice in North America for the installation of process seals
Endress+Hauser devices are designed as either single seal or dual seal devices with an alarm in accordance with ANSI/ISA 12.27.01. This means that the user does need to install for an external secondary process seal in the thermowell which is required in ANSI/NFPA 70 (NEC) and CSA 22.1 (CEC). These devices comply with installation practice in North America and enable very safe, low-cost installation in pressurized applications with hazardous media.
Further information is provided in the Safety Instructions (XA) for the specific device → 58 ff.

| Product | Type | Max. process pressure | Marking | Listing |
|---|---|---|---|---|
| Liquiphant M | FTL50-S/T##...<br>FTL50-P/Q/R##... | 64 bar (928 psi) | Single Seal | CSA/FM |
| | FTL51-S/T##...<br>FTL51-P/Q/R##... | 64/100 bar<br>(928/1450 psi) | Single Seal | CSA/FM |
| | FTL50H-S/T##...<br>FTL50H-P/Q/R##... | 64 bar (928 psi) | Single Seal | CSA/FM |
| | FTL51H-S/T##...<br>FTL51H-P/Q/R##... | 64 bar (928 psi) | Single Seal | CSA/FM |

**Other certificates**

- Material certificate as per EN 10204/3.1 for all wetted parts NACE MR0175/MR0103, AD2000
- Leak detection system in conjunction with WHG approval
  Approval number: Z–65.40–446 (see also "Ordering information" s. Seite 43 ff.)
- TSE Certificate of Suitability
  The following applies to wetted device components:
  – They do not contain any materials derived from animals.
  – No additives or operating materials derived from animals are used in production or processing.



Note!
Wetted device components are listed in the "Mechanical construction" (→ 30 ff.) and "Ordering information" (→ 43 ff.) sections.

**Manufacturer declarations**

The following documents are optionally available to order with the device:

- FDA conformity
- TSE-free: Materials not derived from animals
- Regulation (EC) no. 2023/2006 (GMP)
- Regulation (EC) No. 1935/2004 materials in contact with food

The applicable European guidelines and standards can be found in the relevant EU Declarations of Conformity.

Regulation (EC) no. 10/2011: The regulation on plastic materials does not apply to the Liquiphant FTL5x, as the wetted materials are made exclusively of stainless steel.
The silicone seals supplied comply with BFR recommendation XV (commodities based on silicones from the Federal Institute for Risk Assessment - BFR), and the EPDM seals provided comply with BFR recommendation XXI (commodities based on natural and synthetic rubber).

**Use in hazardous zones**

Pay particular attention to the information provided in the documentation: Safety Instructions, Control Drawings etc. → 58

**ASME B 31.3**

Design and materials in accordance with ASME B31.3 The welding seals are through-penetration welded and comply with ASME Boiler and Pressure Vessel Code Section IX and EN ISO 15614-1.

**Pressure equipment directive**

The pressure equipment directive 97/23/EC does not apply to the Liquiphant FTL5x, as it does not have a pressurized housing in accordance with Article 1, Paragraph 2.1.4 of the directive.

# Ordering information

Note!
Versions that are mutually exclusive are not indicated in this list.

**Liquiphant M FTL50, FTL51 product structure**

| **Design** | | *Basic weight* |
|---|---|---|
| FTL50 | Compact | 0.6 kg |
| FTL51 | With extension pipe | 0.6 kg |

| **10** | **Approval:** |
|---|---|
| A | Non-hazardous area |
| B | ATEX II 3G Ex nC IIC T6, WHG, ATEX II 3D Ex tc IIIC T85°C, NEPSI II 3G Ex nC IIC T6 |
| C | ATEX II 3G Ex nA IIC T6, WHG, ATEX II 3D Ex tc IIIC T85°C, NEPSI II 3G Ex nA IIC T6 |
| D | Non-hazardous area, WHG |
| E | ATEX II 1/2G Ex de IIC T6, WHG |
| F | ATEX II 1/2GD Ex ia IIC T6, WHG/IECEx |
| G | ATEX II 1/2GD Ex ia IIC T6/IECEx Zone0/1 |
| H | ATEX II 1G Ex ia IIC T6 |
| I | ATEX II 1/2G Ex de IIC T6/IECEx Zone0/1 |
| J | ATEX II 1G Ex ia IIC T6, WHG |
| K | ATEX II 1/2G Ex d IIC T6/IECEx Zone0/1 |
| L | ATEX II 1/2G Ex d IIC T6, WHG |
| M | NEPSI Ex ia IIC T6 |
| N | NEPSI Ex d IIC T6 |
| P | FM IS Cl.I,II,III Div.1 Gr.A-G, Zone 0,1,2,20,21,22 |
| Q | FM XP Cl.I,II,III Div.1 Gr.B-G, Gr.A-G if E5 housing selected, Zone 1,2 |
| R | FM NI Cl.I Div.2 Gr.A-D, Zone 0,1,2,20,21,22 |
| S | CSA C/US IS Cl I,II,III Div.1 Gr.A-G, Zone 0,1,2 |
| T | CSA C/US XP Cl I,II,III Div.1 Gr.A-G, Zone 1,2 |
| U | CSA C/US General Purpose |
| V | TIIS Ex ia IIC T3 |
| W | TIIS Ex d IIB T3 |
| 7 | TIIS Ex d IIC T3 |
| 8 | TIIS Ex d IIC T6 |
| 1 | INMETRO Ex ia IIC T6 Ga/Gb |
| 2 | INMETRO Ex d IIC T6 Ga/Gb |
| 3 | INMETRO Ex de IIC T6 Ga/Gb |
| Y | Special version, TSP-No. to be spec. |

| **20** | **Process connection:** | | | *Additional weight* |
|---|---|---|---|---|
| Note! For 100 bar (1450 psi) process pressure, select the appropriate option under "Additional option" | | | | |
| GQ2 | G ¾ | 316L | Thread ISO 228 | |
| | Installation > accessories: weld-in adapter | | | |
| GQ6 | G ¾ | AlloyC22 | Thread ISO 228 | |
| GR2 | G 1 | 316L | Thread ISO 228 | 0.2 kg |
| GR6 | G 1 | AlloyC22 | Thread ISO 228 | 0.2 kg |
| GW2* | G 1 | 316L | Thread ISO 228 | 0.2 kg |
| | Installation > accessories: weld-in adapter | | | |
| GM2* | NPT ¾ | 316L | Thread ASME | |
| GM6 | NPT ¾ | AlloyC22 | Thread ASME | |
| GN2* | NPT1 | 316L | Thread ASME | 0.2 kg |
| GN6 | NPT1 | AlloyC22 | Thread ASME | 0.2 kg |
| GE2 | R ¾ | 316L | Thread EN10226 | |
| GE6 | R ¾ | AlloyC22 | Thread EN10226 | |
| GF2 | R 1 | 316L | Thread EN10226 | 0.2 kg |

| 20 | | Process connection: | | | | | | | *Additional weight* |
|---|---|---|---|---|---|---|---|---|---|
| | | GF6 | R 1 | | | AlloyC22 | | Thread EN10226 | 0.2 kg |
| | | BA2 | DN32 | PN6 A | | 316L | | Flange EN 1092-1 (DIN 2527 B) | 1.2 kg |
| | | BB2 | DN32 | PN25/40 A | | 316L | | Flange EN 1092-1 (DIN 2527 B) | 2.0 kg |
| | | BC2 | DN40 | PN6 A | | 316L | | Flange EN 1092-1 (DIN 2527 B) | 1.4 kg |
| | | BD2 | DN40 | PN25/40 A | | 316L | | Flange EN 1092-1 (DIN 2527 B) | 2.4 kg |
| | | BE2 | DN50 | PN6 A | | 316L | | Flange EN 1092-1 (DIN 2527 B) | 1.6 kg |
| | | BG2 | DN50 | PN25/40 A | | 316L | | Flange EN 1092-1 (DIN 2527 B) | 3.2 kg |
| | | BH2 | DN65 | PN6 A | | 316L | | Flange EN 1092-1 (DIN 2527 B) | 2.4 kg |
| | | BJ2 | DN50 | PN100 A | | 316L | (FTL51) | Flange EN 1092-1 (DIN 2527 B) | |
| | | BK2 | DN65 | PN25/40 A | | 316L | | Flange EN 1092-1 (DIN 2527 B) | 4.3 kg |
| | | BM2 | DN80 | PN10/16 A | | 316L | | Flange EN 1092-1 (DIN 2527 B) | 4.8 kg |
| | | BN2 | DN80 | PN25/40 A | | 316L | | Flange EN 1092-1 (DIN 2527 B) | 5.9 kg |
| | | BQ2 | DN100 | PN10/16 A | | 316L | | Flange EN 1092-1 (DIN 2527 B) | 5.6 kg |
| | | BR2 | DN100 | PN25/40 A | | 316L | | Flange EN 1092-1 (DIN 2527 B) | 7.5 kg |
| | | B12 | DN80 | PN100 A | | 316L | (FTL51) | Flange EN 1092-1 (DIN 2527 B) | |
| | | B82 | DN25 | PN25/40 A | | 316L | | Flange EN 1092-1 (DIN 2527 B) | 1.4 kg |
| | | CA2 | DN32 | PN6 B1 | | 316L | | Flange EN 1092-1 (DIN 2527 C) | 1.1 kg |
| | | CA6 | DN32 | PN6 B1 | | AlloyC22 >316L | | Flange EN 1092-1 (DIN 2527) | 1.1 kg |
| | | CE2 | DN50 | PN6 B1 | | 316L | | Flange EN 1092-1 (DIN 2527 C) | 1.5 kg |
| | | CE6 | DN50 | PN6 B1 | | AlloyC22 >316L | | Flange EN 1092-1 (DIN 2527) | 1.5 kg |
| | | CG2 | DN50 | PN25/40 B1 | | 316L | | Flange EN 1092-1 (DIN 2527 C) | 2.9 kg |
| | | CG6 | DN50 | PN25/40 B1 | | AlloyC22 >316L | | Flange EN 1092-1 (DIN 2527) | 2.9 kg |
| | | CJ2 | DN50 | PN100 B2 | | 316L | (FTL51) | Flange EN 1092-1 (DIN 2527) | |
| | | CN2 | DN80 | PN25/40 B1 | | 316L | | Flange EN 1092-1 (DIN 2527 C) | 5.2 kg |
| | | CN6 | DN80 | PN25/40 B1 | | AlloyC22 >316L | | Flange EN 1092-1 (DIN 2527) | 5.2 kg |
| | | CQ2 | DN100 | PN10/16 B1 | | 316L | | Flange EN 1092-1 (DIN 2527 C) | 5.3 kg |
| | | CQ6 | DN100 | PN10/16 B1 | | AlloyC22 >316L | | Flange EN 1092-1 (DIN 2527) | 5.3 kg |
| | | C12 | DN80 | PN100 B2 | | 316L | (FTL51) | Flange EN 1092-1 (DIN 2527) | |
| | | C82 | DN25 | PN25/40 B1 | | 316L | | Flange EN 1092-1 (DIN 2527 C) | 1.3 kg |
| | | C86 | DN25 | PN25/40 B1 | | AlloyC22 >316L | | Flange EN 1092-1 (DIN 2527) | 1.3 kg |
| | | DG2 | DN50 | PN40 B1 | | 316L | | Flange EN 1092-1 (DIN 2526 D) | |
| | | DN2 | DN80 | PN40 B1 | | 316L | | Flange EN 1092-1 (DIN 2526 D) | |
| | | D82 | DN25 | PN40 B1 | | 316L | | Flange EN 1092-1 (DIN 2526 D) | |
| | | EG2 | DN50 | PN25/40 E | | 316L | | Flange EN 1092-1 | 2.6 kg |
| | | FG2 | DN50 | PN40 C | | 316L | | Flange EN 1092-1 (DIN 2512 F) | 2.6 kg |
| | | NG2 | DN50 | PN40 D | | 316L | | Flange EN 1092-1 (DIN 2512 N) | 2.9 kg |
| | | AA2* | 1¼" | 150 lbs | RF | 316/316L | | Flange ASME B16.5 | 1.2 kg |
| | | AB2* | 1¼" | 300 lbs | RF | 316/316L | (FTL51) | Flange ASME B16.5 | 2.0 kg |
| | | AC2* | 1½" | 150 lbs | RF | 316/316L | | Flange ASME B16.5 | 1.5 kg |
| | | AD2* | 1½" | 300 lbs | RF | 316/316L | (FTL51) | Flange ASME B16.5 | 2.7 kg |

| 20 | Process connection: | | | | | | *Additional weight* |
|---|---|---|---|---|---|---|---|
| | AE2* | 2" | 150 lbs | RF | 316/316L | Flange ASME B16.5 | 2.4 kg |
| | AE6 | 2" | 150 lbs | RF | AlloyC22 >316/316L | Flange ASME B16.5 | 2.4 kg |
| | AF2* | 2" | 300 lbs | RF | 316/316L | Flange ASME B16.5 | 3.2 kg |
| | AG2* | 2" | 600 lbs | RF | 316/316L (FTL51) | Flange ASME B16.5 | 4.2 kg |
| | AJ2* | 2½" | 300 lbs | RF | 316/316L (FTL51) | Flange ASME B16.5 | 4.8 kg |
| | AL2* | 3" | 150 lbs | RF | 316/316L | Flange ASME B16.5 | 4.9 kg |
| | AM2* | 3" | 300 lbs | RF | 316/316L (FTL51) | Flange ASME B16.5 | 6.8 kg |
| | AM6 | 3" | 300 lbs | RF | AlloyC22 >316/316L | Flange ASME B16.5 | 6.8 kg |
| | AN2* | 3" | 600 lbs | RF | 316/316L (FTL51) | Flange ASME B16.5 | |
| | AP2* | 4" | 150 lbs | RF | 316/316L | Flange ASME B16.5 | 7.0 kg |
| | AQ2* | 4" | 300 lbs | RF | 316/316L (FTL51) | Flange ASME B16.5 | 11.5 kg |
| | AQ6 | 4" | 300 lbs | RF | AlloyC22 >316/316L | Flange ASME B16.5 | 11.5 kg |
| | AR2* | 4" | 600 lbs | RF | 316/316L (FTL51) | Flange ASME B16.5 | 17.3 kg |
| | A82* | 1" | 150 lbs | RF | 316/316L | Flange ASME B16.5 | 1.0 kg |
| | KA2 | 10 K 25 A | | RF | 316L | Flange JIS B2220 | |
| | KC2 | 10 K 40 A | | RF | 316L | Flange JIS B2220 | |
| | KE2 | 10 K 50 A | | RF | 316L | Flange JIS B2220 | 1.7 kg |
| | KE6 | 10 K 50 A | | RF | AlloyC22 >316L | Flange JIS B2220 | 1.7 kg |
| | KL2 | 10 K 80 A | | RF | 316L | Flange JIS B2220 | |
| | KP2 | 10 K 100 A | | RF | 316L | Flange JIS B2220 | |
| | TC2* | DN25-38 (1 to 1½") | | | 316L | ISO 2852 Tri-Clamp | |
| | TE2* | DN40-51 (2") | | | 316L | ISO 2852 Tri-Clamp | 0.1 kg |
| | YY9 | Special version | | | | | |
| | | * With CRN approval. | | | | | |

| 30 | Probe length; Type: | | | | |
|---|---|---|---|---|---|
| | FTL50 | | | | |
| | AA | Compact; | | Ra <3.2 µm/126 µin | |
| | IA | Compact; | | Temperature spacer | 0.6 kg |
| | QA | Compact; | | Pressure-tight feedthrough | 0.7 kg |
| | FTL51 | | | | |
| | BB | ..... mm; | 316L** | Ra <3.2 µm/126 µin | |
| | BE | ..... mm; | Alloy** | Ra <3.2 µm/126 µin | |
| | CB | ..... inch; | 316L** | Ra <3.2 µm/126 µin | |
| | CE | ..... inch; | Alloy** | Ra <3.2 µm/126 µin | 2.3 kg/100 in |
| | DB | Length: type II*; | 316L | Ra <3.2 µm/126 µin | 0.1 kg |
| | DE | Length: type II*; | Alloy | Ra <3.2 µm/126 µin | 0.1 kg |
| | JB | ..... mm; | 316L** | + Temperature spacer | 0.9 kg/m +0.6 kg |
| | JE | ..... mm; | Alloy** | + Temperature spacer | 0.9 kg/m +0.6 kg |
| | KB | ..... inch; | 316L** | + Temperature spacer | 2.3 kg/100 in +0.6 kg |
| | KE | ..... inch; | Alloy** | + Temperature spacer | 2.3 kg/100 in +0.6 kg |
| | LB | Length: type II*; | 316L | + Temperature spacer | 0.1 kg +0.6 kg |
| | LE | Length: type II*; | Alloy | + Temperature spacer | 0.1 kg +0.6 kg |
| | RB | ..... mm; | 316L** | + Pressure-tight feedthrough | 0.9 kg/m +0.7 kg |
| | RE | ..... mm; | Alloy** | + Pressure-tight feedthrough | 0.9 kg/m +0.7 kg |
| | SB | ..... inch; | 316L** | + Pressure-tight feedthrough | 2.3 kg/100 in +0.7 kg |
| | SE | ..... inch; | Alloy** | + Pressure-tight feedthrough | 2.3 kg/100 in +0.7 kg |
| | TB | Length: type II*; | 316L | + Pressure-tight feedthrough | 0.1 kg +0.7 kg |
| | TE | Length: type II*; | Alloy | + Pressure-tight feedthrough | 0.1 kg +0.7 kg |
| | YY | Special version | | | |
| | | *) Replacing devices: when vertically mounting a Liquiphant **M** FTL51 with length II, the switch point is at the same height as for a Liquiphant **II** FTL360, FTL365, FDL30, FDL35. See also Seite 36 "L II" depends on process connection. | | | |
| | | **) Order 3001 to 6000 mm (116 to 235 in) via yy | | | |

| 40 | Electronics; output: | | |
|---|---|---|---|
| | A | FEL50A | PROFIBUS PA |
| | D | FEL50D | Density/concentration without WHG approval (Germany) |
| | 1 | FEL51* | 2-wire, AC 19 to 253 V |
| | 2 | FEL52* | 3-wire PNP, DC 10 to 55 V |
| | 4 | FEL54 | Relay DPDT, AC 19 to 253 V, DC 19 to 55 V |
| | 5 | FEL55 | 8/16 mA, DC 11 to 36 V |
| | 6 | FEL56 | NAMUR (L-H signal) |
| | 7 | FEL57 | 2-wire PFM |
| | 8 | FEL58* | NAMUR + test keys (H-L signal) |
| | 9 | Special version | |
| | | *) Also available in compact housing | |

| 50 | Housing; cable entry: | | | | | |
|---|---|---|---|---|---|---|
| | C3 | Compact 316L | IP66/68; | Cable 5 m | | |
| | D3 | Compact 316L | IP65; | Plug Pg11 | ISO4400 | |
| | E1 | F27 316L | NEMA 4X/6P; | Thread NPT ¾ | | |
| | E3 | Compact 316L Hygiene | NEMA4X; | Plug NPT ½ | ISO4400 | |
| | N3 | Compact 316L Hygiene | IP66/68; | M12 connector | | |
| | E4 | F16 Polyester | NEMA4X; | Thread NPT ½ | | |
| | E5 | F13 Alu<br>F17 Alu | NEMA4X/6P;<br>NEMA4X | Thread NPT ¾ | | 0.5 kg |
| | E6 | F15 316L hygiene | NEMA4X; | Thread NPT ½ | | 0.1 kg |
| | E7 | T13 Alu | NEMA4X/6P; | Thread NPT ¾ | | 0.9 kg |
| | | Separate connection compartment | | | | |
| | F1 | F27 316L | IP66/68 | Thread G1/2 | | |
| | F4 | F16 Polyester | IP66/67; | Thread G ½ | | |
| | F5 | F13 Alu<br>F17 Alu | IP66/68;<br>IP66/67; | Thread G ½ | | 0.5 kg |
| | F6 | F15 316L Hygiene | IP66/67; | Thread G ½ | | 0.1 kg |
| | F7 | T13 Alu | coated IP66/68; thread G ½ | | | 0.9 kg |
| | | Separate connection compartment | | | | |
| | G1 | F27 316L | IP66/68; | M20 threaded joint | | |
| | | Ex d > M20 thread | | | | |
| | G4 | F16 Polyester | IP66/67; | M20 threaded joint | | |
| | G5 | F13 Alu<br>F17 Alu | IP66/68;<br>IP66/67; | M20 threaded joint | | 0.5 kg |
| | | | | Ex d > thread M20 | | |
| | G6 | F15 316L Hygiene | IP66/67; | M20 threaded joint | | 0.1 kg |
| | G7 | T13 Alu | coated IP66/68; | M20 threaded joint | | 0.9 kg |
| | | Separate connection compartment | | Ex d > thread M20 | | |
| | N4 | F16 Polyester | IP66/67; | M12 connector | | |
| | N5 | F13 Alu<br>F17 Alu | IP66/68;<br>IP66/67; | M12 connector | | |
| | N6 | F15 316L hygiene | IP66/67; | M12 connector | | |
| | Y9 | Special version | | | | |

| 60 | Additional option | |
|---|---|---|
| | A | Basic version |
| | B | PWIS-free, PWIS = paint-wetting impairment substances, max 2000 mm (78.7 in) |
| | C | EN 10204 - 3.1 material (316L wetted) inspection certificate |
| | D | EN10204-3.1 AD2000 material, wetted, apart from cast parts, inspection certificate |
| | K | Special adjustment, density H20 |
| | L | Special adjustment, density H20, EN10204-3.1, material (wetted), inspection certificate |
| | N | EN 10204 - 3.1 material, NACE MR0175 (316L wetted) Inspection certificate |
| | P | 100 bar (1450 psi) process pressure (FTL51) |
| | R | 100 bar (1450 psi) process pressure, EN 10204 - 3.1 material, NACE MR0175 (316L wetted) Inspection certificate (FTL51) |
| | S | GL/ABS marine approval for FTL51: ≤ 1600 mm (63 in) |
| | Y | Special version |

| 580 | | | | | | | Test, certificate: |
|---|---|---|---|---|---|---|---|
| | | | | | | KD | Helium leak test, internal procedure, inspection certificate |
| | | | | | | KE | Pressure test, internal procedure, inspection certificate |
| | | | | | | KG | PMI test (XRF), internal procedure, wetted metal parts, EN10204-3.1 inspection certificate |
| | | | | | | KP | Dye penetration test AD2000-HP5-3(PT), wetted/pressurized metal parts, inspection certificate |
| | | | | | | KQ | Dye penetration test ISO23277-1 (PT), wetted/pressurized metal parts, inspection certificate |
| | | | | | | KR | Dye penetration test ASME VIII-1 (PT), wetted/pressurized metal parts, inspection certificate |
| | | | | | | KS | Welding documentation, wetted/pressurized seams |
| | | | | | | KV | Declaration of Conformity ASME B31.3 |
| | | | | | | K9 | Special version, TSP-No. to be spec. |

| | | | | | | | | |
|---|---|---|---|---|---|---|---|---|
| FTL5x – | | | | | | | | Complete product designation |

Note!
The basic weight includes the compact sensor, thread adapter G ¾, electronic insert, polyester housing

## Liquiphant M FTL50H, FTL51H product structure

| Design | | *Basic weight* |
|---|---|---|
| FTL50H | Compact | 0.7 kg |
| FTL51H | With extension pipe | 0.7 kg |

| 10 | | Approval: |
|---|---|---|
| | A | Non-hazardous area |
| | B | ATEX II 3G Ex nC IIC T6, WHG, ATEX II 3D Ex tc IIIC T85°C, NEPSI II 3G Ex nC IIC T6 |
| | C | ATEX II 3G Ex nA IIC T6, WHG, ATEX II 3D Ex tc IIIC T85°C, NEPSI II 3G Ex nA IIC T6 |
| | D | Non-hazardous area, WHG |
| | E | ATEX II 1/2G Ex de IIC T6, WHG |
| | F | ATEX II 1/2GD Ex ia IIC T6, WHG/IECEx |
| | G | ATEX II 1/2GD Ex ia IIC T6/IECEx Zone0/1 |
| | H | ATEX II 1G Ex ia IIC T6 |
| | I | ATEX II 1/2G Ex de IIC T6/IECEx Zone0/1 |
| | J | ATEX II 1G Ex ia IIC T6, WHG |
| | K | ATEX II 1/2G Ex d IIC T6/IECEx Zone0/1 |
| | L | ATEX II 1/2G Ex d IIC T6, WHG |
| | M | NEPSI Ex ia IIC T6 |
| | N | NEPSI Ex d IIC T6 |
| | P | FM IS Cl.I,II,III Div.1 Gr.A-G, Zone 0,1,2,20,21,22 |
| | Q | FM XP Cl.I,II,III Div.1 Gr.B-G, Gr.A-G if E5 housing selected, Zone 1,2 |
| | R | FM NI Cl.I Div.2 Gr.A-D, Zone 0,1,2,20,21,22 |
| | S | CSA C/US IS Cl I,II,III Div.1 Gr.A-G, Zone 0,1,2 |
| | T | CSA C/US XP Cl I,II,III Div.1 Gr.A-G, Zone 1,2 |
| | U | CSA C/US General Purpose |
| | V | TIIS Ex ia IIC T3 |
| | W | TIIS Ex d IIB T3 |
| | 7 | TIIS Ex d IIC T3 |
| | 8 | TIIS Ex d IIC T6 |
| | 1 | INMETRO Ex ia IIC T6 Ga/Gb |
| | 2 | INMETRO Ex d IIC T6 Ga/Gb |
| | 3 | INMETRO Ex de IIC T6 Ga/Gb |
| | Y | Special version, TSP-No. to be spec. |

| 20 | | Process connection: | | | | | *Additional weight* |
|---|---|---|---|---|---|---|---|
| | GQ2 | G ¾ | | 316L | (FTL50H) | Thread ISO 228 | |
| | | Installation > accessories: weld-in adapter | | | | | |
| | GW2* | G 1 | | 316L | | Thread ISO 228 | 0.2 kg |
| | | Installation > accessories: weld-in adapter | | | | | |
| | BA2 | DN32 | PN6 A | 316L | | Flange EN 1092-1 (DIN 2527 B) | 1.2 kg |
| | BB2 | DN32 | PN25/40 A | 316L | | Flange EN 1092-1 (DIN 2527 B) | 2.0 kg |
| | BC2 | DN40 | PN6 A | 316L | | Flange EN 1092-1 (DIN 2527 B) | 1.4 kg |
| | BD2 | DN40 | PN25/40 A | 316L | | Flange EN 1092-1 (DIN 2527 B) | 2.4 kg |
| | BE2 | DN50 | PN6 A | 316L | | Flange EN 1092-1 (DIN 2527 B) | 1.6 kg |

| 20 | | Process connection: | | | | | | *Additional weight* |
|---|---|---|---|---|---|---|---|---|
| | | BG2 | DN50 | PN25/40 A | | 316L | Flange EN 1092-1 (DIN 2527 B) | 3.2 kg |
| | | BH2 | DN65 | PN6 A | | 316L | Flange EN 1092-1 (DIN 2527 B) | 2.4 kg |
| | | BK2 | DN65 | PN25/40 A | | 316L | Flange EN 1092-1 (DIN 2527 B) | 4.3 kg |
| | | BM2 | DN80 | PN10/16 A | | 316L | Flange EN 1092-1 (DIN 2527 B) | 4.8 kg |
| | | BN2 | DN80 | PN25/40 A | | 316L | Flange EN 1092-1 (DIN 2527 B) | 5.9 kg |
| | | BQ2 | DN100 | PN10/16 A | | 316L | Flange EN 1092-1 (DIN 2527 B) | 5.6 kg |
| | | BR2 | DN100 | PN25/40 A | | 316L | Flange EN 1092-1 (DIN 2527 B) | 7.5 kg |
| | | B82 | DN25 | PN25/40 A | | 316L | Flange EN 1092-1 (DIN 2527 B) | 1.4 kg |
| | | CG2 | DN50 | PN25/40 B1 | | 316L | Flange EN 1092-1 (DIN 2527 C) | 3.2 kg |
| | | CN2 | DN80 | PN25/40 B1 | | 316L | Flange EN 1092-1 (DIN 2527 C) | 5.9 kg |
| | | CQ2 | DN100 | PN10/16 B1 | | 316L | Flange EN 1092-1 (DIN 2527 C) | 5.6 kg |
| | | EE2 | 1" flush-mounted (52001047) | | | 316L | | 0.3 kg |
| | | | Installation > accessories: weld-in adapter | | | | | |
| | | HE2 | DN50 | Pipe DIN 11850 slotted nut | | 316L | DIN 11864-1 A | 0.3 kg |
| | | AA2* | 1¼" | 150 lbs | RF | 316/316L | Flange ASME B16.5 | 1.2 kg |
| | | AC2* | 1½" | 150 lbs | RF | 316/316L | Flange ASME B16.5 | 1.5 kg |
| | | AE2* | 2" | 150 lbs | RF | 316/316L | Flange ASME B16.5 | 2.4 kg |
| | | AF2* | 2" | 300 lbs | RF | 316/316L | Flange ASME B16.5 | 3.2 kg |
| | | AJ2* | 2½" | 300 lbs | RF | 316/316L (FTL51H) | Flange ASME B16.5 | 4.8 kg |
| | | AL2* | 3" | 150 lbs | RF | 316/316L | Flange ASME B16.5 | 4.9 kg |
| | | AM2 | 3" | 300 lbs | RF | 316/316L (FTL51H) | Flange ASME B16.5 | 6.8 kg |
| | | AP2* | 4" | 150 lbs | RF | 316/316L | Flange ASME B16.5 | 7.0 kg |
| | | AQ2* | 4" | 300 lbs | RF | 316/316L (FTL51H) | Flange ASME B16.5 | 11.5 kg |
| | | A82* | 1" | 150 lbs | RF | 316/316L | Flange ASME B16.5 | 1.0 kg |
| | | KA2 | 10 K 25 | | RF | 316L | Flange JIS B2220 | |
| | | KC2 | 10 K 40 | | RF | 316L | Flange JIS B2220 | |
| | | KE2 | 10 K 50 | | RF | 316L | Flange JIS B2220 | 1.7 kg |
| | | KL2 | 10 K 80 | | RF | 316L | Flange JIS B2220 | |
| | | KP2 | 10 K 100 | | RF | 316L | Flange JIS B2220 | |
| | | MA2 | DN32 | PN25 | | 316L | DIN 11851 | 0.1 kg |
| | | MC2 | DN40 | PN25 | | 316L | DIN 11851 | 0.2 kg |
| | | ME2 | DN50 | PN25 | | 316L | DIN 11851 | 0.3 kg |
| | | PE2 | DRD | 65 mm | | 316L | | 0.3 kg |
| | | TC2* | DN25-38 (1 to 1½") | | | 316L | ISO 2852 Tri-Clamp | |
| | | TE2* | DN40-51 (2") | | | 316L | ISO 2852 Tri-Clamp | 0.1 kg |
| | | TT2 | Ingold fitting 25x46mm | | | 316L | | |
| | | UE2 | SMS 2" | PN25 | | 316L | | 0.2 kg |
| | | WE2* | DN65-162 PN10 | | | 316L | Varivent N pipe | 0.5 kg |
| | | YY9 | Special version | | | | | |
| | | | * CRN approval | | | | | |

| 30 | | | Probe length; Type: | | |
|---|---|---|---|---|---|
| | | | FTL50H | | |
| | | AC | Compact; | Ra <1.5 µm/59 µin | |
| | | AD | Compact; | Ra <0.3 µm/12 µin | |
| | | AF | Compact; | Ra<0.76 µm/30 µin | |
| | | IC | Compact; | Ra <1.5 µm/59 µin + temperature spacer | 0.6 kg |
| | | ID | Compact; | Ra <0.3 µm/12 µin / A3 + temperature spacer | 0.6 kg |
| | | QC | Compact; | Ra <1.5 µm/59 µin + pressure-tight feedthrough | 0.7 kg |
| | | QD | Compact; | Ra <0.3 µm/12 µin / A3 + pressure-tight feedthrough | 0.7 kg |
| | | | FTL51H | | |
| | | BC | ..... mm; | Ra <1.5 µm/59 µin | 0.9 kg/m |
| | | BD | ..... mm; | Ra <0.3 µm/12 µin / A3 | 0.9 kg/m |
| | | BF | .....mm; | Ra<0.76 µm/30 µin | 0.9 kg/m |
| | | CC | ..... inch; | Ra <1.5 µm/59 µin | 2.3 kg/100 in |
| | | CD | ..... inch; | Ra <0.3 µm/12 µin / A3 | 2.3 kg/100 in |
| | | cf | .....inch; | Ra<0.76 µm/30 µin | 2.3 kg/100 in |

| 30 | | | Probe length; Type: | | | |
|---|---|---|---|---|---|---|
| | | | DC | Length: type II*; | Ra <1.5 µm/59 µin | 0.1 kg |
| | | | DD | Length: type II*; | Ra <0.3 µm/12 µin / A3 | 0.1 kg |
| | | | JC | ..... mm; | Ra <1.5 µm/59 µin<br>+ Temperature spacer | 0.9 kg/m<br>+0.6 kg |
| | | | JD | ..... mm; | Ra <0.3 µm/12 µin<br>+ Temperature spacer | 0.9 kg/m<br>+0.6 kg |
| | | | KC | ..... inch; | Ra <1.5 µm/59 µin<br>+ Temperature spacer | 2.3 kg/100 in<br>+0.6 kg |
| | | | KD | ..... inch; | Ra <0.3 µm/12 µin<br>+ Temperature spacer | 2.3 kg/100 in<br>+0.6 kg |
| | | | LC | Length: type II*; | Ra <1.5 µm/59 µin<br>+ Temperature spacer | 0.1 kg<br>+0.6 kg |
| | | | LD | Length: type II*; | Ra <0.3 µm/12 µin<br>+ Temperature spacer, | 0.1 kg<br>+0.6 kg |
| | | | RC | ..... mm; | Ra <1.5 µm/59 µin<br>+ Pressure-tight feedthrough | 0.9 kg/m<br>+0.7 kg |
| | | | RD | ..... mm; | Ra <0.3 µm/12 µin<br>+ Pressure-tight feedthrough | 0.9 kg/m<br>+0.7 kg |
| | | | SC | ..... inch; | Ra <1.5 µm/59 µin<br>+ Pressure-tight feedthrough | 2.3 kg/100 in<br>+0.7 kg |
| | | | SD | ..... inch; | Ra <0.3 µm/12 µin<br>+ Pressure-tight feedthrough | 2.3 kg/100 in<br>+0.7 kg |
| | | | TC | Length: type II*; | Ra <1.5 µm/59 µin<br>+ Pressure-tight feed through, | 0.1 kg<br>+0.7 kg |
| | | | TD | Length: type II*; | Ra <0.3 µm/12 µin<br>+ Pressure-tight feed through, | 0.1 kg<br>+0.7 kg |
| | | | YY | Special version | | |
| | | | | *) Replacing devices: when vertically mounting a Liquiphant **M** FTL51H with length II, the switch point is at the same height as for a Liquiphant **II** FTL360, FTL365, FDL30, FDL35. See also Seite 36 "L II" depends on process connection. | | |

| 40 | | | | Electronics; output: | | |
|---|---|---|---|---|---|---|
| | | | A | FEL50A | PROFIBUS PA | |
| | | | D | FEL50D | Density/concentration without WHG approval (Germany) | |
| | | | 1 | FEL51* | 2-wire, | AC 19 to 253 V |
| | | | 2 | FEL52* | 3-wire PNP, | DC 10 to 55 V |
| | | | 4 | FEL54 | Relay DPDT, | AC 19 to 253 V, DC 19 to 55 V |
| | | | 5 | FEL55 | 8/16 mA, | DC 11 to 36 V |
| | | | 6 | FEL56 | NAMUR (L-H signal) | |
| | | | 7 | FEL57 | 2-wire PFM | |
| | | | 8 | FEL58* | NAMUR + test keys (H-L signal) | |
| | | | 9 | Special version | | |
| | | | | *) Also available in compact housing | | |

| 50 | | | | | Housing; cable entry: | | | | | |
|---|---|---|---|---|---|---|---|---|---|---|
| | | | | | C3 | Compact 316L | IP66/68; | Cable 5 m | | |
| | | | | | D3 | Compact 316L | IP65; | Plug Pg11 | ISO4400 | |
| | | | | | E3 | Compact 316L Hygiene | NEMA4X; | Plug NPT ½ | ISO4400 | |
| | | | | | N3 | Compact 316L Hygiene | IP66/68; | M12 connector | | |
| | | | | | E4 | F16 Polyester | NEMA4X; | Thread NPT ½ | | |
| | | | | | E5 | F13 Alu<br>F17 Alu | NEMA4X/6P;<br>NEMA4X | Thread NPT ¾ | | 0.5 kg |
| | | | | | E6 | F15 316L Hygiene | NEMA4X; | Thread NPT ½ | | 0.1 kg |
| | | | | | E7 | T13 Alu | NEMA4X/6P; | Thread NPT ¾ | | 0.9 kg |
| | | | | | | Separate connection compartment | | | | |
| | | | | | F4 | F16 Polyester | IP66/67; | Thread G ½ | | |
| | | | | | F5 | F13 Alu<br>F17 Alu | IP66/68;<br>IP66/67; | Thread G ½ | | 0.5 kg |
| | | | | | F6 | F15 316L hygiene | IP66/67; | Thread G ½ | | 0.1 kg |
| | | | | | F7 | T13 Alu | coated IP66/68; thread G ½ | | | 0.9 kg |
| | | | | | | Separate connection compartment | | | | |
| | | | | | | Ex d > M20 thread | | | | |
| | | | | | G4 | F16 Polyester | IP66/67; | M20 threaded joint | | |
| | | | | | G5 | F13 Alu<br>F17 Alu | IP66/68;<br>IP66/67; | M20 threaded joint | | 0.5 kg |
| | | | | | | | | Ex d > thread M20 | | |
| | | | | | G6 | F15 316L Hygiene | IP66/67; | M20 threaded joint | | 0.1 kg |
| | | | | | G7 | T13 Alu | coated IP66/68; | M20 threaded joint | | 0.9 kg |

| | | | | | | | | |
|---|---|---|---|---|---|---|---|---|
| **50** | | | | | **Housing; cable entry:** | | | |
| | | | | | | Separate connection compartment | | Ex d > thread M20 |
| | | | | | N4 | F16 Polyester | IP66/67; | M12 connector |
| | | | | | N5 | F13 Alu<br>F17 Alu | IP66/68;<br>IP66/67; | M12 connector |
| | | | | | N6 | F15 316L hygiene | IP66/67; | M12 connector |
| | | | | | Y9 | Special version | | |

| | | | | | | | |
|---|---|---|---|---|---|---|---|
| **60** | | | | | | **Additional option** | |
| | | | | | | A | Basic version |
| | | | | | | B | CoC-ASME BPE, EN10204-3.1 material (316L wetted)<br>Inspection certificate |
| | | | | | | C | EN 10204 - 3.1 material (316L wetted),<br>Inspection certificate |
| | | | | | | D | EN10204-3.1 AD2000 material, wetted, apart from cast parts,<br>inspection certificate |
| | | | | | | K | Special adjustment, density H2O |
| | | | | | | L | Special adjustment, density H2O, EN10204-3.1 (316L wetted) inspection certificate |
| | | | | | | S | GL/ABS marine approval for FTL51H: ≤ 1600 mm (63 in) |
| | | | | | | Y | Special version |
| FTL5#H - | | | | | | | Complete product designation |

Note!
Basic weight = compact sensor, thread adapter G ¾, electronic insert, stainless steel housing

# Accessories

Note!
- All dimensions in mm (in)!
- For additional information on weld-in adapters, refer to TI00426F.
- The tolerance of the thread start between the weld-in adapter and sensor is ± 15°.

**Weld-in adapter** **Overview**

| | 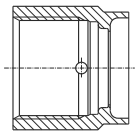 <br>a0008246 | 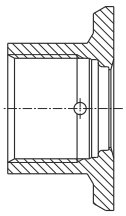 <br>a0008251 | 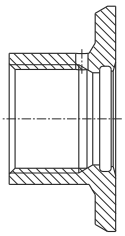 <br>a0008256 | 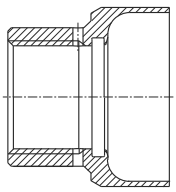 <br>a0011924 | 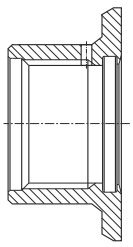 <br>a0008248 | 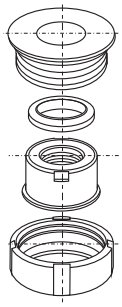 <br>a0008253 |
|---|---|---|---|---|---|---|
| | **G¾, d=29 (1.14) without flange** | **G¾, d=50 (1.97) with flange** | **G¾, d=55 (2.17) with flange** | **G1, d=53 (2.09) without flange** | **G1, d=60 (2.36) with flange** | **G1 can be positioned** |
| Material<br>roughness µm (µin) | 316L<br>1.5 (59.1) | 316L<br>0.8 (31.5) | 316L<br>0.8 (31.5) | 316L<br>0.8 (31.5) | 316L<br>0.8 (31.5) | 316L<br>0.8 (31.5) |
| Without inspection certificate<br>EN10204-3.1 material | 71258357 | 71258355 | 52001052[3)] | 71258358 | 52001051[1), 3)] | 52001221[2), 3)] |
| With inspection certificate<br>EN10204-3.1 material | 52028295[3)] | 52018765[3)] | 52011897[3)] | 71093129[1), 3)] | 52011896[1), 3)] | 52011898[2), 3)] |
| Seal (replacement part: set of 5) | Silicone O-ring<br>52021717 | Silicone O-ring<br>52021717 | Silicone O-ring<br>52014473 | Silicone O-ring<br>52014472 | Silicone O-ring<br>52014472 | Silicone profile gasket<br>52014424) |
| Weld-in dummy | – | – | 71168889 | 71166879 | 71166879 | 71181945 |

| | | 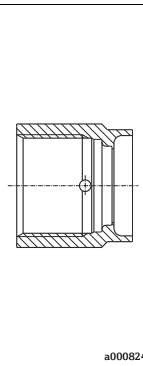 a0008246 | 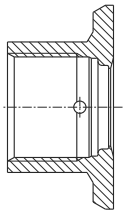 a0008251 | 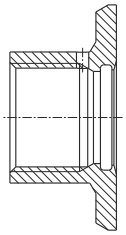 a0008256 | 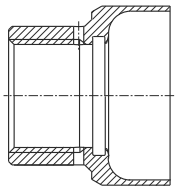 a0011924 | 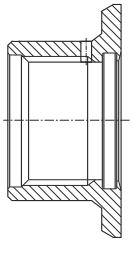 a0008248 | 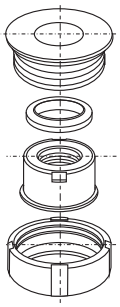 a0008253 |
|---|---|---|---|---|---|---|---|
| | | **G¾, d=29 (1.14) without flange** | **G¾, d=50 (1.97) with flange** | **G¾, d=55 (2.17) with flange** | **G1, d=53 (2.09) without flange** | **G1, d=60 (2.36) with flange** | **G1 can be positioned** |
| **Liquiphant M** | Feature | **Version** | | | | | |
| FTL50 | 020 | | | GQ2 | | | |
| FTL5x | | | | | GW2 | GW2 | GW2 |
| FTL50H | | | | GQ2 | | | |
| FTL5xH | | | | | GW2 | GW2 | GW2 |

1) This weld-in adapter replaces the weld-in adapter with the order number 917969-1000.

2) This weld-in adapter replaces the weld-in adapter with the order number 215159-0000.

3) A seal is included in the delivery.

| | | 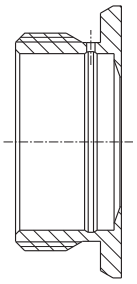 a0008252 |  a0008254 |
|---|---|---|---|
| | | **RD52** | **DRD DN50 65 (2.56) (welding flange)** |
| Material<br>roughness µm (µin), process side | | 316L<br>0.8 (31.5) | 316L/304<br>0.8 (31.5) |
| Without inspection certificate<br>EN10204-3.1 material | | 52001047 [1), 2)] | 52002041[2)]/<br>916743-0000 |
| With inspection certificate<br>EN10204-3.1 material | | 52006909 [1), 2)] | 52011899[2)]/ – |
| Seal (replacement part: set of 5) | | Silicone<br>profile gasket<br>52014424 | PTFE<br>flat seal<br>52024228 |
| Weld-in dummy | | M40167 | – |
| **Device** | Feature | **Version** | |
| **Liquiphant M** | | | |
| FTL5xH | 020 | EE2 | PE2 |

1) This weld-in adapter replaces the weld-in adapter with the order number 942329-0001.

2) A seal is included in the delivery.

Note!
All the weld-in adapters available are described in document TI00426F.
www.endress.com --> Download -->Advanced--> Documentation code --> TI00426F.

**Weather protection cover**

For F16 housing

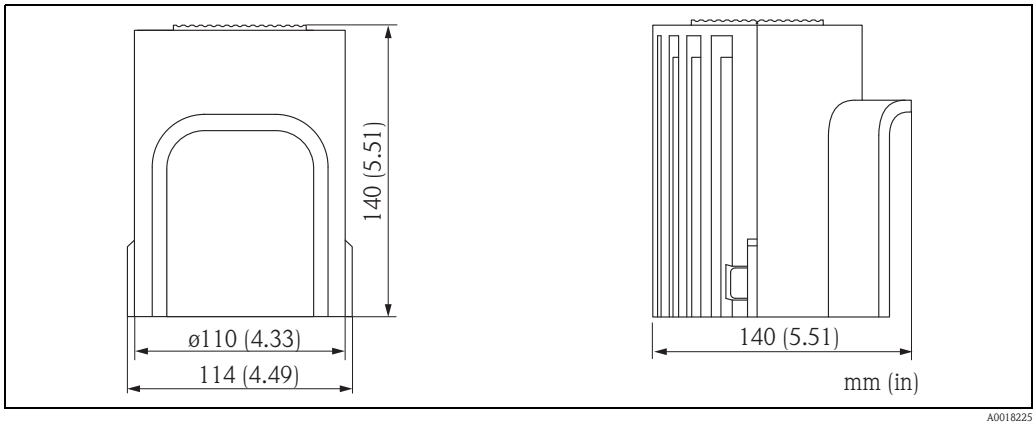


| Material | Order No. | Weight |
|---|---|---|
| PBT, gray | 71127760 | 240 g (8.46 oz) |

For F13, F17 and F27 housing

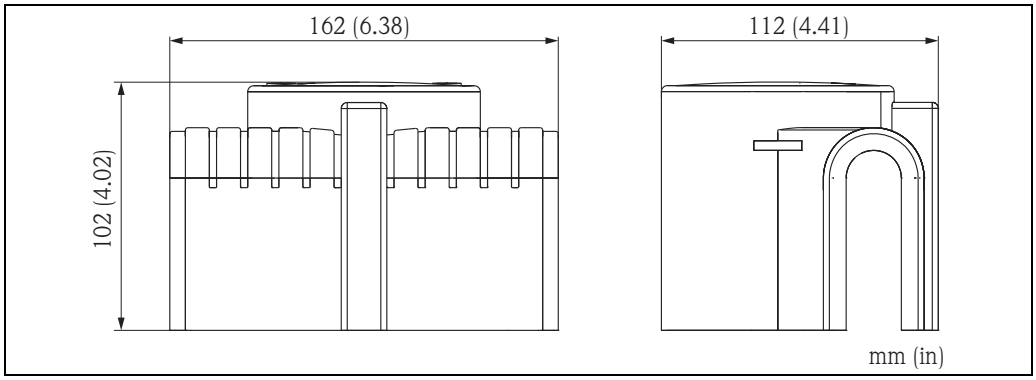


| Material | Order No. | Weight |
|---|---|---|
| PA6, gray | 71040497 | 300 g (10.58 oz) |

**Lap joint flange**

Order number: 918158-0000
With G 1 thread for mounting
a Liquiphant FTL50, FTL51
with process connection GR2

Pressure up to 40 bar (580 psi)

Material: corrosion-resistant steel
1.4301 (AISI 304)

Weight: 0.54 kg (1.19 lbs)

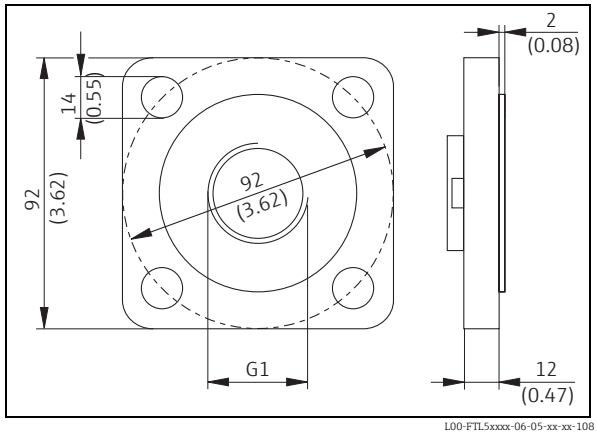

**Lap joint flanges**

With G 1 thread for mounting
a Liquiphant FTL50, FTL51
with process connection GR2

Material: corrosion-resistant steel
1.4571 (AISI 316Ti)

- Order number: 918143-0000
  Flange DN50 PN40, EN 1092-1
  Weight: 3.11 kg (6.86 lbs)
- Order number: 918144-0000
  Flange ASME 2", 150 psi, RF
  Weight: 2.38 kg (5.25 lbs)

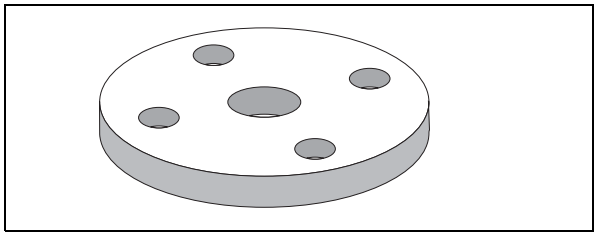

L00-FTL5xxxx-03-05-xx-xx-015

**Sliding sleeves for unpressurized operation**

Switch point infinitely variable for
Liquiphant M FTL51

Material: corrosion-resistant steel
1.4435 (AISI 316 L)

Weight for G 1, NPT 1: 0.21 kg (0.46 lbs)
Weight for G 1½, NPT 1½: 0.54 kg (1.19 lbs)

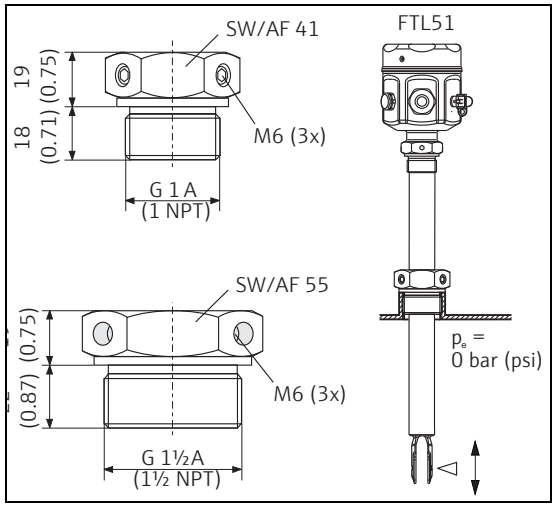


L00-FTL5xxxx-06-05-xx-xx-109

| Thread | Standard | Material | Order number | Approval |
|---|---|---|---|---|
| G 1 | DIN ISO 228/I | 1.4435 (AISI 316 L) | 52003978 | |
| G 1 | DIN ISO 228/I | 1.4435 (AISI 316 L) | 52011888 | With inspection certificate EN 10204 - 3.1 material |
| NPT1 | ASME B 1.20.1 | 1.4435 (AISI 316 L) | 52003979 | |
| NPT1 | ASME B 1.20.1 | 1.4435 (AISI 316 L) | 52011889 | With inspection certificate EN 10204 - 3.1 material |
| G 1½ | DIN ISO 228/I | 1.4435 (AISI 316 L) | 52003980 | |
| G 1½ | DIN ISO 228/I | 1.4435 (AISI 316 L) | 52011890 | With inspection certificate EN 10204 - 3.1 material |
| NPT1½ | ASME B 1.20.1 | 1.4435 (AISI 316 L) | 52003981 | |
| NPT1½ | ASME B 1.20.1 | 1.4435 (AISI 316 L) | 52011891 | With inspection certificate EN 10204 - 3.1 material |

**High pressure sliding sleeves**

For continuous adjustment of the switch point of a Liquiphant M FTL51.
Also for use in hazardous areas. For further information → 📄 58ff. (ATEX, NEPSI).

Material: corrosion-resistant steel 1.4435 (AISI 316L) or AlloyC22

Weight for G 1, NPT 1: 1.13 kg (2.49 lbs)
Weight for G 1½, NPT 1½: 1.32 kg (2.91 lbs)

Seal package made of graphite

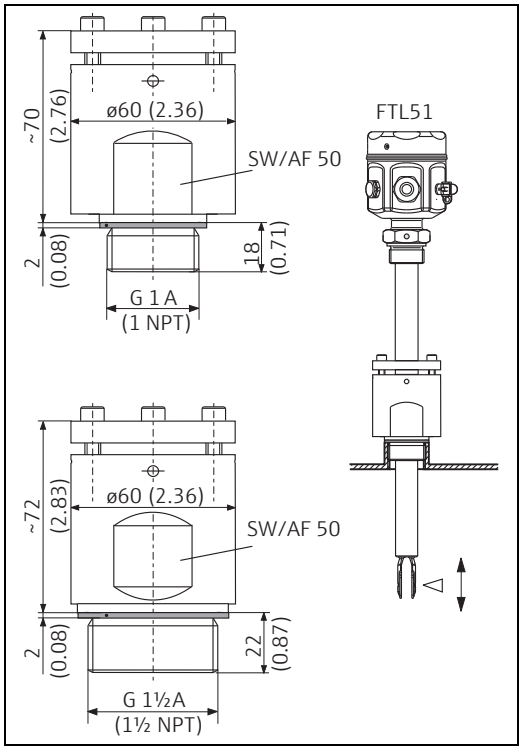


L00-FTL5xxxx-06-05-xx-xx-110

| Thread | Standard | Material | Order number | Approval |
|---|---|---|---|---|
| G 1 | DIN ISO 228/1 | 1.4435 (AISI 316 L) | 52003663 | |
| G 1 | DIN ISO 228/1 | 1.4435 (AISI 316 L) | 52011880 | With inspection certificate EN 10204 - 3.1 material |
| G 1 | DIN ISO 228/1 | AlloyC22 | 71118691 | With inspection certificate EN 10204 - 3.1 material |
| NPT1 | ASME B 1.20.1 | 1.4435 (AISI 316 L) | 52003667 | |
| NPT1 | ASME B 1.20.1 | 1.4435 (AISI 316 L) | 52011881 | With inspection certificate EN 10204 - 3.1 material |
| NPT1 | ASME B 1.20.1 | AlloyC22 | 71118694 | With inspection certificate EN 10204 - 3.1 material |
| G 1½ | DIN ISO 228/1 | 1.4435 (AISI 316 L) | 52003665 | |
| G 1½ | DIN ISO 228/1 | 1.4435 (AISI 316 L) | 52011882 | With inspection certificate EN 10204 - 3.1 material |
| G 1½ | DIN ISO 228/1 | AlloyC22 | 71118693 | With inspection certificate EN 10204 - 3.1 material |
| NPT1½ | ASME B 1.20.1 | 1.4435 (AISI 316 L) | 52003669 | |
| NPT1½ | ASME B 1.20.1 | 1.4435 (AISI 316 L) | 52011883 | With inspection certificate EN 10204 - 3.1 material |
| NPT1½ | ASME B 1.20.1 | AlloyC22 | 71118695 | With inspection certificate EN 10204 - 3.1 material |

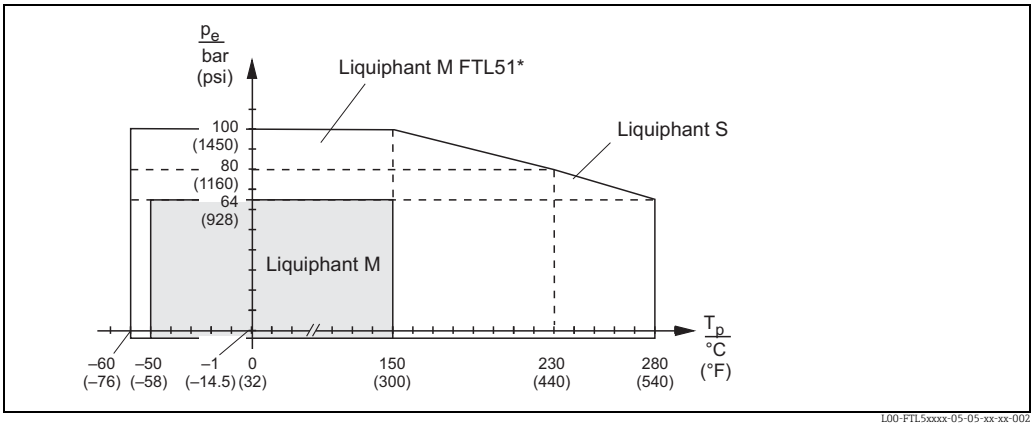


L00-FTL5xxxx-05-05-xx-xx-002

** FTL51 with high-pressure sliding sleeve (100 bar (1450 psi)). See "Additional option" Seite 43 ff. option "P" or "R".l*

**Cover with sight glass**

Order number: 943461-0001
for polyester housing F16

Material: PA 12

Weight: 0.04 kg (0.09 lbs)

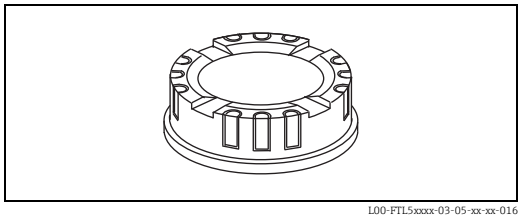

L00-FTL5xxxx-03-05-xx-xx-016

**Cover with sight glass**

For stainless steel housing F15

Material: AISI 316L

Weight: 0.16 kg (0.35 lbs)

- Order number: 52027002
  With glass sight glass
- Order number: 52028207
  With PC sight glass
  (Not for CSA, General Purpose)

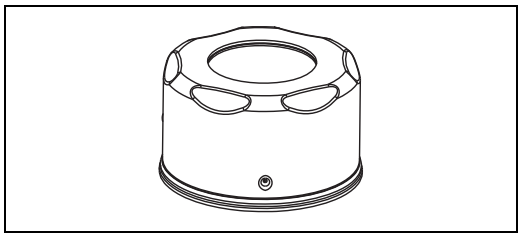

L00-FTL5xxxx-03-05-xx-xx-017

**Circular connector**

Order number: 52010285

4x0.34 M12 socket

Cable: PVC (gray) 5 m (16 ft)

Body: PUR (blue)

Thread adapter nut: Cu Sn/Ni

Degree of protection: IP67

Temperature range: –25 to +70 °C (-13 to +158 °F)

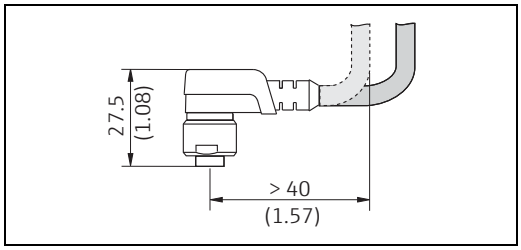


L00-FTL5xxxx-06-05-xx-xx-111

Order number: 52024216

4x0.34 M12 socket

Cable: PVC (orange) 5 m (16 ft)

Body: PVC (orange)

Thread adapter nut: 316L

Degree of protection: IP69K (fully locked)

Temperature range: –25 to +70 °C (-13 to +158 °F)

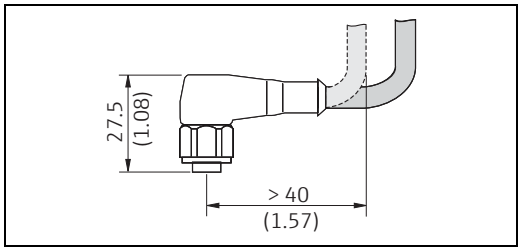


L00-FTL5xxxx-06-05-xx-xx-112

Order number: 52018763

4x0.34 M12 socket with integrated LEDs

Cable: PVC (orange) 5 m (16 ft)

Body: PVC (transparent)

Thread adapter nut: 316L

Degree of protection: IP69K (fully locked)

Temperature range: –25 to +70 °C (-13 to +158 °F)

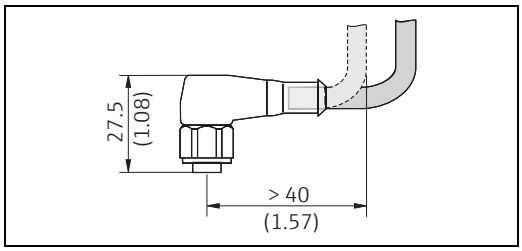


# Documentation

Note!
You can find supplementary documentation on the product pages at www.endress.com

**Operating Instructions**

Electronic insert FEL50A for Liquiphant M, PROFIBUS PA
BA00141F

Liquiphant M Density, Density Computer FML621
BA00335F

Liquiphant M FTL50, FTL51
KA00143F

Liquiphant M FTL50(H), FTL51(H)
KA00144F

Liquiphant M FTL51C
KA00162F

Liquiphant M FTL50-####### # 7 #, FTL51-####### # 7 #
KA00163F

Liquiphant M FTL50H-######## 7 #, FTL51H-######## 7 #
KA00164F

Liquiphant M FTL51C-######## 7 ##
KA00165F

Liquiphant M FTL5#-# ### ## # #3 #, FTL5#H-# ### ## # #3 #
KA00220F

Electronic insert FEL50D for Liquiphant M Density FTL50, FTL51
KA00284F

Electronic insert FEL50D for Liquiphant M Density FTL50H, FTL51H
KA00285F

Electronic insert: FEL50D for Liquiphant M Density FTL51C
KA00286F

Liquiphant M Sliding Sleeve for FTL51, G 1, NPT 1
KA00151F

Liquiphant M Sliding Sleeve for FTL51, G 1½, NPT 1½
KA00152F

Liquiphant M High-pressure Sliding Sleeve for FTL51, G 1, NPT 1
KA00153F

Liquiphant M High-pressure Sliding Sleeve for FTL51, G 1½, NPT 1½
KA00154F

| | |
|---|---|
| **Technical Information** | General instructions for electromagnetic compatibility (Test procedure, installation recommendation)<br>TI00241F |
| | Liquiphant M FTL51C, wetted parts with highly corrosion-resistant ECTFE, PFA or enamel coating<br>TI00347F |
| | Isolating amplifier FTL325P,<br>1 or 3-channel switching units for top-hat rail mounting<br>for Liquiphant M with electronic insert FEL57<br>TI00350F |
| | Isolating amplifier FTL325N,<br>1 or 3-channel switching units for top-hat rail mounting<br>for Liquiphant M with electronic insert FEL56, FEL58<br>TI00353F |
| | Liquiphant S FTL70/71, for medium temperatures up to 280 °C (536 °F)<br>TI00354F |
| | Isolating amplifier FTL375P,<br>1 to 3-channel switching units for top-hat rail mounting<br>for Liquiphant M with electronic insert FEL57<br>TI00360F |
| | Liquiphant M Density, Density Calculator FML621<br>TI00420F |
| | Weld-in adapter,<br>TI00426F |
| **Functional safety (SIL)** | Liquiphant M with electronic insert FEL51 (MAX)<br>SD00164F |
| | Liquiphant M with electronic insert FEL51 (MIN)<br>SD00185F |
| | Liquiphant M with electronic insert FEL52 (MAX)<br>SD00163F |
| | Liquiphant M with electronic insert FEL52 (MIN)<br>SD00186F |
| | Liquiphant M with electronic insert FEL54 (MAX)<br>SD00162F |
| | Liquiphant M with electronic insert FEL54 (MIN)<br>SD00187F |
| | Liquiphant M with electronic insert FEL55 (MAX)<br>SD00167F |
| | Liquiphant M with electronic insert FEL55 (MIN)<br>SD00279F |
| | Liquiphant M with electronic insert FEL57 + Nivotester FTL325P (MAX)<br>SD00111F |
| | Liquiphant M with electronic insert FEL57 + Nivotester FTL325P (MIN)<br>SD00231F |
| | Liquiphant M with electronic insert FEL57+ Nivotester FTL375P (MAX)<br>SD00113F |
| | Liquiphant M with electronic insert FEL56 + Nivotester FTL325N (MAX)<br>SD00168F |
| | Liquiphant M with electronic insert FEL56 + Nivotester FTL325N (MIN)<br>SD00188F |
| | Liquiphant M with electronic insert FEL58 + Nivotester FTL325N (MAX)<br>SD00161F |
| | Liquiphant M with electronic insert FEL58 + Nivotester FTL325N (MIN)<br>SD00170F |

**Safety Instructions (ATEX)**

CE ⟨Ex⟩ II 1/2 G, Ex d IIC/B (KEMA 99 ATEX 1157)
XA00031F/00/a3

CE ⟨Ex⟩ II 1/2 G, Ex ia/ib IIC/B (KEMA 99 ATEX 0523)
XA00063F/00/a3

CE ⟨Ex⟩ II 1 G, Ex ia IIC/B (KEMA 99 ATEX 5172 X)
XA00064F/00/a3

CE ⟨Ex⟩ II 1/2 G, Ex de IIC/B (KEMA 00 ATEX 2035)
XA00108F/00/a3

CE ⟨Ex⟩ II 3 G, Ex nA/nC II (EG 01 007-a)
XA00182F/00/a3

**Safety Instructions (NEPSI)**

Ex d IIC/IIB T3-T6 , Ex d IIC T2-T6
(NEPSI GYJ06424)
XA00401F/00/B2

Ex ia IIC T2-T6, Ex ia IIB T3-T6
(NEPSI GYJ05556, NEPSI GYJ06464),
XC00009F/00/b2

Ex nA II T3-T6, Ex nC/nL IIC T3-T6
(NEPSI GYJ04360, NEPSI GYJ071414)
XC00010F/00/b2

**Control Drawings**

Liquiphant M (IS and NI) Current output PFM, NAMUR Entity installation
Class I, Div. 1, 2, Groups A, B, C, D
Class I, Zone 0
Class II, Div. 1, 2, Groups E, F, G
Class III
ZD00041F

Liquiphant M, Liquiphant S (cCSAus / IS)
Class I, Div. 1, Groups A, B, C, D Ex ia IIC T6
Class II, Div. 1, Groups E, F, G
Class III
ZD00042F

Liquiphant M (NI), FTL50(H), FTL51(H), FTL51C, FTL70, FTL71
Class I, Div. 2, Groups A, B, C, D
Class II, Div. 2, Groups F, G
Class III
ZD00043F

Liquiphant M, Liquiphant S (cCSAus / XP)
Class I, Groups A, B, C, D
Class II, Groups E, F, G
Class III
ZD00240F

Liquiphant M (IS and NI) PROFIBUS PA, FOUNDATION Fieldbus Class I, Zone 0, IIC
Class I, Division 1, 2, Groups A, B, C, D
Class II, Division 1, 2, Groups E, F, G
Class III
ZD00244F

**System information**

Liquiphant M
SI00040F




www.addresses.endress.com

Endress+Hauser

People for Process Automation

**This page is intentionally left blank**

**Project name:** MELIADINE-BPC UPGRADE

**Project#:** 5000220043

**Document #:** SPK_0005_SKG_VWT

**by:** GM

**chkd:** ED

**appvd:** TS

# HYDRACARB

# MISC.

**OIM manual section:** 4.2.5.8

**This page is intentionally left blank**

# CS-502-000 : Identification sheet

| | | | |
|---|---|---|---|
| VWTC PROJECT NUMBER: | 5000220043 | REV: | 1 |
| PROJECT NAME: | AEM MELIADINE - BPC UPGRADE | SUBMITTED TO (COMPANY): | AEM |
| ENGINEER: | EMMANUELLE DORMOY | SUBMITTED TO (RESPONSIBLE): | |
| PROJECT MANAGER: | THOMAS SAVARY / BRUCE BORDES | PROJECT NUM REFERENCE.: | 6526-S-265-605 / OC-989680 |
| PHONE NUMBER: | 514-334-7230 | LOT NUMBER: | |

| SUPPLIER | EQPT CODE | EQPT TAG NO | DIA | DESCRIPTION | INFO 1 | INFO 2 | INFO 3 | APPLIC. | NOTE | REV |
|---|---|---|---|---|---|---|---|---|---|---|
| PRIMARY FLUID | ST-502-001 | 15-CK99-1602 | N/A | COAGULANT INJECTION QUILL | INJECTION QUILL/MANUFACTURER: PRIMARY FLUID// MODEL: IQ-56-PVC | N/A | N/A | ACTIVATED CARBON PREPATION SYSTEM #1 | | 1 |
| PRIMARY FLUID | ST-502-001 | 15-CK99-1614 | N/A | COAGULANT INJECTION QUILL | INJECTION QUILL/MANUFACTURER: PRIMARY FLUID// MODEL: IQ-56-PVC | N/A | N/A | ACTIVATED CARBON PREPATION SYSTEM #2 | | 1 |

**This page is intentionally left blank**

# PFS Injection Quills



***PFS Injection Quills have been developed to allow chemical injection into the center stream of the flow. This ensures the dispersion of chemical in a more uniform manner, providing for a more homogenous mix in the pipeline.***

***Standard features include:***

- 6 materials of construction
- 2 standard sizes available 6"or 8"
- threaded or socket connections
- built in spring loaded check valve
- pressure range to 3000 PSIG
- temperatures to 260°C (500°F)
- custom materials and sizes available on request
- standard 1/8" orifice discharge and optional 1/4" for higher flow

***For detailed product information visit our website: primaryfluid.com***

PRIMARY FLUID SYSTEMS INC.
Call Toll Free 1-800-776-6580
Tel (905) 333-8743 Fax (905) 333-8746
E-Mail: primary@primary fluid.com
www.primaryfluid.com

# PFS Injection Quills

*For detailed product information visit our website: primaryfluid.com*
*CRN certification available. Contact factory.*

## Sizing and Ordering Information

| Model | Size (length) | Body Material | Ball Check Material | Check Spring Material | Pressure* Max. PSIG | Temperature Max. |
|---|---|---|---|---|---|---|
| IQ-56-PVC | 6" | PVC | Ceramic | 316S/S | 150 | 140°F(60°C) |
| IQ-56-CPVC | 6" | CPVC | Ceramic | 316S/S | 150 | 210°F(98°C) |
| IQ-56-PP | 6" | PP | Ceramic | 316S/S | 150 | 195°F(90°C) |
| IQ-56-PVDF | 6" | PVDF | Ceramic | 316S/S | 150 | 260°F(125°C) |
| IQ-56-316S/S | 6" | 316S/S | 316S/S | 316S/S | 3000 | 500°F(260°C) |
| IQ-56-HastC | 6" | Hastelloy | Hastelloy | Hastelloy | 3000 | 500°F(260°C) |
| IQ-58-PVC | 8" | PVC | Ceramic | 316S/S | 150 | 140°F(60°C) |
| IQ-58-CPVC | 8" | CPVC | Ceramic | 316S/S | 150 | 210°F(98°C) |
| IQ-58-PP | 8" | PP | Ceramic | 316S/S | 150 | 195°F(90°C) |
| IQ-58-PVDF | 8" | PVDF | Ceramic | 316S/S | 150 | 260°F(125°C) |
| IQ-58-316S/S | 8" | 316S/S | 316S/S | 316S/S | 3000 | 500°F(260°C) |
| IQ-58-HastC | 8" | Hastelloy | Hastelloy | Hastelloy | 3000 | 500°F(260°C) |

### Notes and Options:

* maximum pressure @ 70°F(21°C) working temperature

**Hastelloy C springs** available. Suffix model number with -H for this option (e.g. IQ-56-PVC-H)

**Hastelloy C ball check** available. Suffix model -I (e.g. IQ-56-PVC-I)

**PVDF ball check** available. Suffix model -K (e.g. IQ-56-PVC-K)

**TFE ball check** available Suffix model -T (e.g. IQ-56-PVC-T)

***CRN certification, other materials of construction and bubble tight/resilient seat check valves available on request. Please contact factory.***

## Dimensional Information

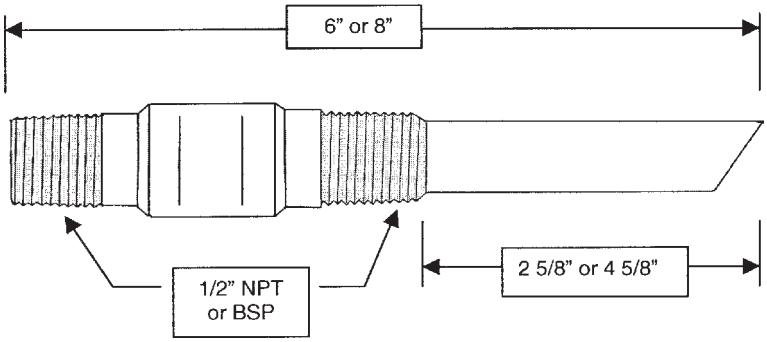


## Capacities at Given Pressure (US and Metric)

| Pressure | | Flow Rate | | | |
|---|---|---|---|---|---|
| | | 1/8" Bore | | 1/4" Bore | |
| *psi* | *kPa* | *USGPM* | *LPM* | *USGPM* | *LPM* |
| 20 | 138 | 0.05 | 0.19 | 2.62 | 9.92 |
| 30 | 207 | 1.25 | 4.73 | 3.98 | 15.07 |
| 40 | 276 | 1.55 | 5.87 | 4.77 | 18.06 |
| 50 | 345 | 1.90 | 7.19 | 5.59 | 21.14 |
| 60 | 414 | 2.20 | 8.33 | 6.39 | 24.19 |
| 70 | 483 | 2.48 | 9.39 | 7.30 | 27.63 |
| 80 | 552 | 2.72 | 10.30 | 8.10 | 30.66 |
| 90 | 621 | 2.97 | 11.24 | 8.82 | 33.39 |
| 100 | 689 | 3.21 | 12.15 | 9.48 | 35.87 |

**Note:** Quills have standard 1/8" discharge orifice for high velocity discharge. Optional 1/4" discharge orifice available for higher capacity flow.

## Typical Metering Pump System

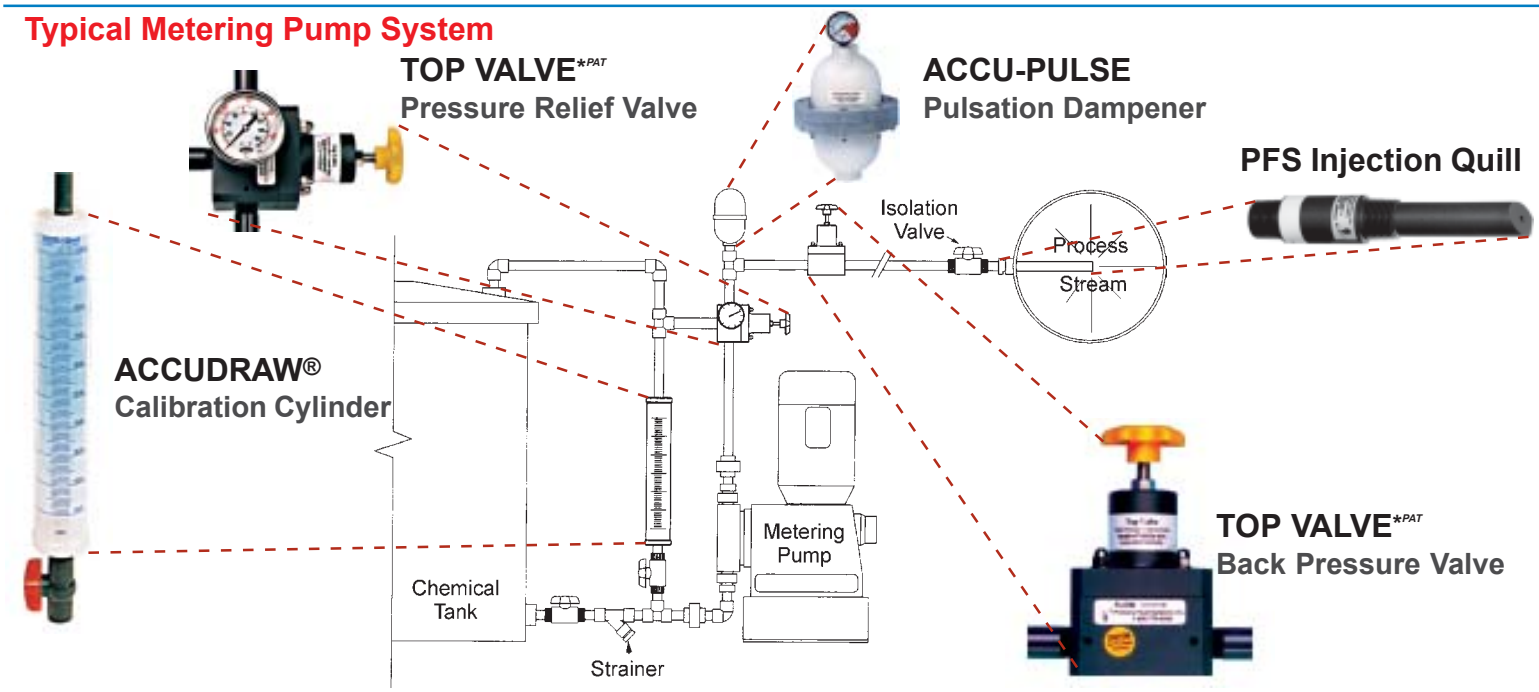


**Distributed By:**

PRIMARY FLUID SYSTEMS INC.

**Call Toll Free 1-800-776-6580**
Tel: (905) 333-8743
Fax: (905) 333-8746
*E:Mail: primary@primaryfluid.com*
*www.primaryfluid.com*

**Distribution Territories Available**

*PAT 5,857,486/5,944,050
® Registered Trade Mark of Primary Fluid Systems

# CS-910-406 : Identification sheet

| | | | |
|---|---|---|---|
| VWTC PROJECT NUMBER: | 5000220043 | REV: | 1 |
| PROJECT NAME: | AEM MELIADINE - BPC UPGRADE | SUBMITTED TO (COMPANY): | AEM |
| ENGINEER: | EMMANUELLE DORMOY | SUBMITTED TO (RESPONSIBLE): | |
| PROJECT MANAGER: | THOMAS SAVARY / BRUCE BORDES | PROJECT NUM REFERENCE.: | 6526-S-265-605 / OC-989680 |
| PHONE NUMBER: | 514-334-7230 | LOT NUMBER: | |

| SUPPLIER | EQPT CODE | EQPT TAG NO | DIA | DESCRIPTION | INFO 1 | INFO 2 | INFO 3 | APPLIC. | NOTE | REV |
|---|---|---|---|---|---|---|---|---|---|---|
| WAM | CMSPGU320685 | 65HOP68003 | | SUPER SACK CONE | CONE FOR SUPERSACK // Manuf: WAM // Model : SBB/Cone 304 | Cone for Super Sack unloading station type SBB 1250M made of SS304, Discharge size D=273mm | with flange matching to WAM VLC250 slide gate. With stub for flexible hose connection. Comes with black rubber seal, without vibration motor Finish internal + external microshot blasted | ACTIVATED CARBON PREPATION SYSTEM #2 | | 1 |
| WAM | CMSPGU320685 | 65HOP68007 | | SUPER SACK CONE | CONE FOR SUPERSACK // Manuf: WAM // Model : SBB/Cone 304 | Cone for Super Sack unloading station type SBB 1250M made of SS304, Discharge size D=273mm | with flange matching to WAM VLC250 slide gate. With stub for flexible hose connection. Comes with black rubber seal, without vibration motor Finish internal + external microshot blasted | ACTIVATED CARBON PREPATION SYSTEM #1 | | 1 |

**This page is intentionally left blank**

Bulk Solids Handling Equipment Bulk Solids Handling Equipment Bulk Solids Handling Equipment Bulk Solids Handling Equipment

# FIBC Dischargers

*Big-Bag - Entleerstationen*
*Déchargeuses de Big-Bag*
*Svuota Big-Bag*

# SBB



WAMGROUP

EXTRAC®

When discharging an FIBC the following problems can be encountered:

- Dust is produced when the bag is opened;
- Difficulties occur when trying to remove substances from the bag which have been compressed during transportation or storage;
- Substances remain trapped in the corners of the bag, making it necessary for the subsequent discharging to be carried out by hand.

*Beim Entleeren von Big-Bags treten oft Probleme auf wie:*

- *Staubentwicklung beim Öffnen des Big-Bags;*
- *Big-Bag lässt sich nicht vollständig entleeren, weil sich der Inhalt durch Transport oder längere Lagerung stark verdichtet hat;*
- *In den Ecken des Big-Bags befinden sich Produktreste, die von Hand entfernt werden müssen.*

*Au moment de la vidange des Big-Bags, il se posent généralement les problèmes suivants:*

- *Dégagement des poussières à l'ouverture du sac;*
- *Extraction difficile des produits dûe au tassement généré par le transport ou le stockage;*
- *Opération manuelle supplémentaire pour vider complètement les sacs du produit restant dans les angles.*

*Alcuni dei problemi che si manifestano durante le fasi di svuotamento dei Big-Bag sono:*

- *Emissione di polvere durante l'apertura della bocca;*
- *Estrazione difficile del prodotto dovuto alla sua compattazione in seguito allo stoccaggio e a trasporto del Big-Bag;*
- *Svuotamento parziale dei sacconi che contengono prodotti compattati.*

In order to avoid such problems we suggest you use our modular FIBC Discharging System.

Our systems can be extended and a range of accessories is available to satisfy every individual requirement with unrivalled efficiency, simplicity and cost.

Standard material: carbon steel.

On request: 304 or 316 stainless steel.

*Bei Big-Bag-Entleerstationen vom Typ SBB werden diese Probleme dank eines Konzepts, welches stark auf individuelle Kundenbedürfnisse ausgerichtet ist, bereits im Vorfeld vermieden.*

*Die Modulbauweise und eine breite Auswahl an Zubehör bieten effiziente und wirtschaftliche, vor allem aber anwenderfreundliche Lösungen.*

*Standardausführung aus Stahl.*

*Auf Wunsch Ausführungen aus Edelstahl 1.4301 oder 1.4401.*

*Pour éliminer ces inconvénients, nous vous proposons un système de déchargement modulaire et expansible, accompagné de toute une gamme d'accessoires qui permettent de satisfaire aux demandes spécifiques.*

*Ce système est efficace, simple et économique.*

*Fabrication de série: en acier au carbone.*

*Sur demande: en inox AISI 304-316.*

*Al fine di evitare gli inconvenienti sopra esposti proponiamo un sistema di svuotamento modulare ed espandibile completo di una gamma di accessori che consente di soddisfare richieste specifiche con ineguagliabile efficienza, semplicità ed economicità.*

*Esecuzione standard: acciaio al carbonio*

*A richiesta: AISI 304-316*

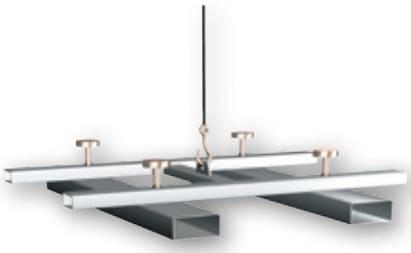

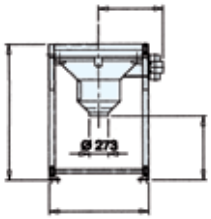




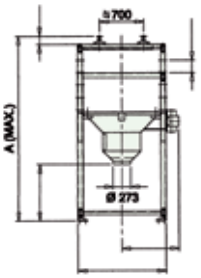




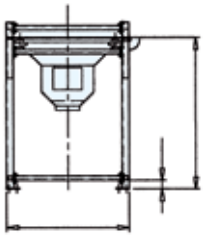

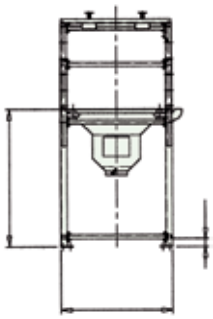

Type C
*Typ C*
*Type C*
*Tipo C*

Type S
*Typ S*
*Type S*
*Tipo S*

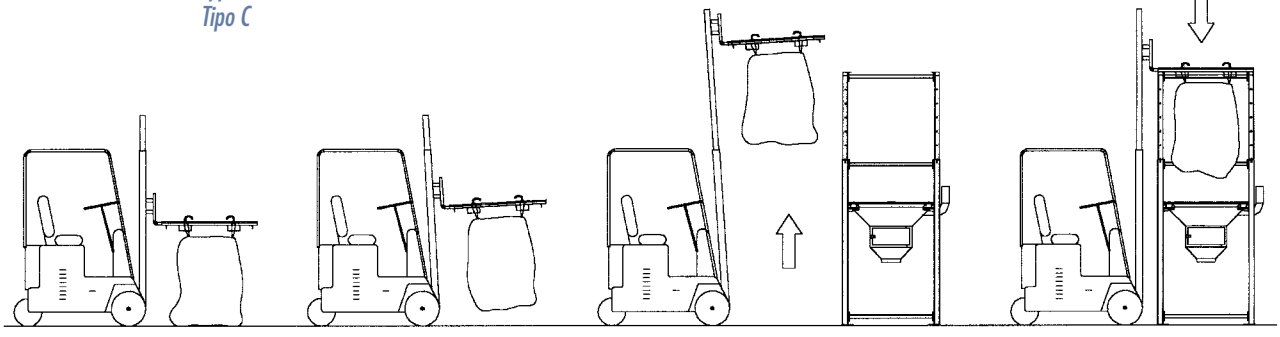

| Type | A | B | C | E | F |
|---|---|---|---|---|---|
| SBB. 125. C | 1.914 | 1.400 | 832 | 100 | 1.734 |
| SBB. 150. C | 2.490 | 1.800 | 1.047 | 160 | 1.880 |

*Dimensions in mm*

| Type | A max. | B | C | D | E | F |
|---|---|---|---|---|---|---|
| SBB. 125. S | 3.960 | 1.400 | 832 | 130 | 100 | 1.734 |
| SBB. 150. S | 4.307 | 1.800 | 1.047 | 180 | 160 | 1.800 |

*Dimensions in mm*

## Accessories
*Zubehör*
*Accessoires*
*Accessori*

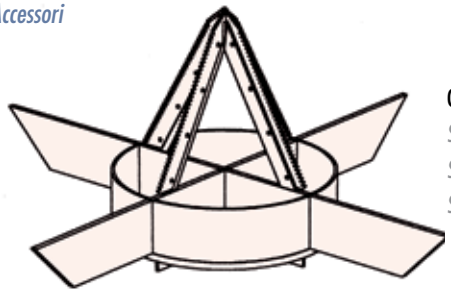

**Cutting System**
*Schnittvorrichtung*
*Système de coupe*
*Sistema di taglio*



**Pneumatic Shaking System**
*Pneumatische Schüttelvorrichtung*
*Système pneumatique de secouement*
*Sistema di scuotimento pneumatico*

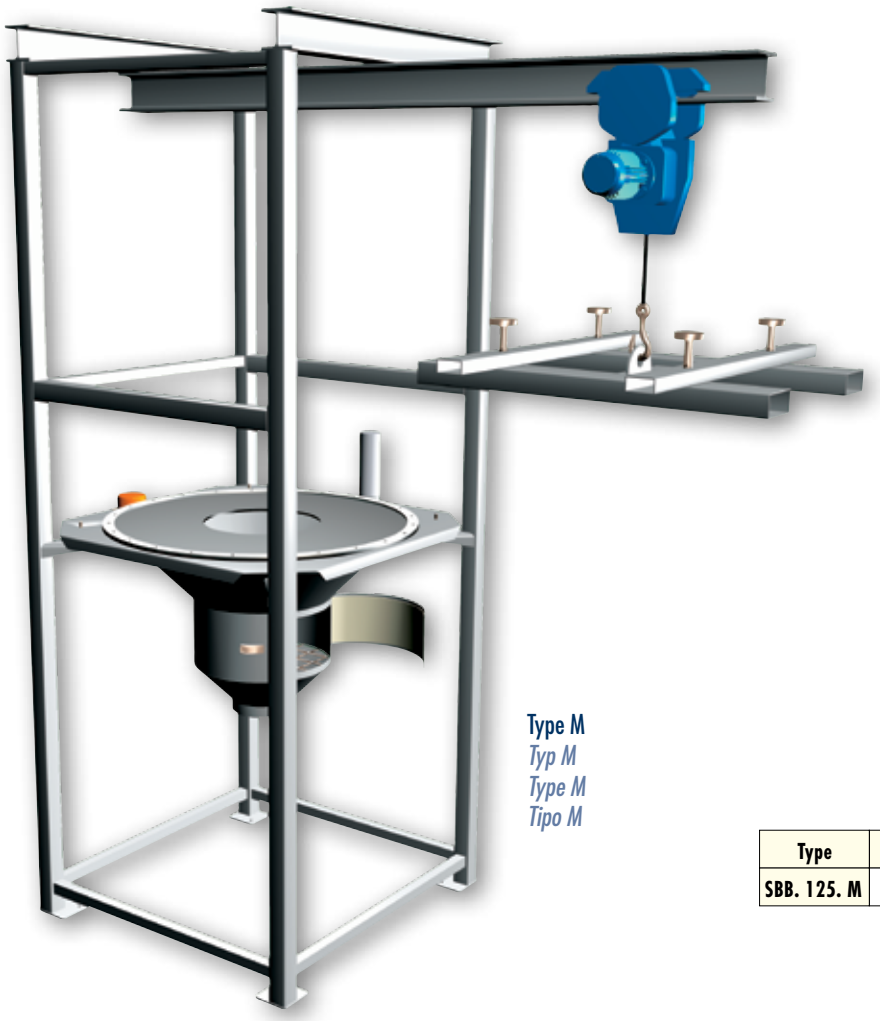

**Type M**
*Typ M*
*Type M*
*Tipo M*

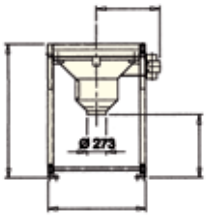


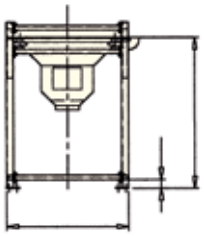

| Type | A | B | C | E | F | G | H | L |
|---|---|---|---|---|---|---|---|---|
| SBB. 125. M | 4.810 | 1.400 | 832 | 160 | 1.734 | 2.150 | 750 | 3.765 |

*Dimensions in mm*



**With Rotary Valve**
*Mit Zellenradschleuse*
*Avec sas alvéolaire*
*Con rotovalvola*



**With Pneumatic Conveying System**
*Mit pneumatischem Fördersystem*
*Avec transport pneumatique*
*Con trasporto pneumatico*



**With Micro-Batch Feeder**
*Mit Mikrodosierer*
*Avec microdoseur*
*Con microdosatore*

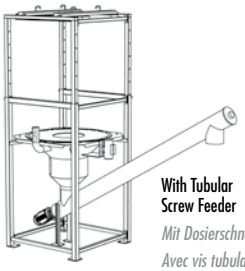

**With Tubular Screw Feeder**
*Mit Dosierschnecke*
*Avec vis tubulaire*
*Con coclea tubolare*



**With Flexible Helix Conveyor**
*Mit flexibler Schnecke*
*Avec vis flexible*
*Con coclea flessibile*

063001479 September 2012 Rights reserved to modify technical specifications

Further Products - Outra produção - Otros Productos - Altra produzione

063001569



063001499



063001436



063001963



063001505



063001508



063002238



Bulk Solids Handling Equipment Bulk Solids Handling Equipment Bulk Solids Handling Equipment Bulk Solids Handling Equipment

EXTRAC®

UNI EN ISO 9001
Certified Company

www.wamgroup.com

# *4 – DETAILED TECHNICAL DOCUMENTATION*

## *4.2 – SHOP DRAWINGS*

## *4.2.6 – SLUDGE TANK*

LEFT BLANK




# TECHNICAL DOCUMENTATION

**This page is intentionally left blank**

| | |
|---|---|
| **Project name:** | MELIADINE-BPC UPGRADE |
| **Project#:** | 5000220043 |
| **Document #:** | SPK_0006_PSTT_VWT |
| **by:** | GM |
| **chkd:** | ED |
| **appvd:** | TS |

# SUBMITTAL PACKAGE

# SLUDGE TANK

**This page is intentionally left blank**

| | |
|---|---|
| **Project name:** | MELIADINE-BPC UPGRADE |
| **Project#:** | 5000220043 |
| **Document #:** | SPK_0006_PSTT_VWT |
| **by:** | GM |
| **chkd:** | ED |
| **appvd:** | TS |

# SLUDGE TANK

# PROCESS DATASHEET

**OIM manual section:** 4.2.6.1

**This page is intentionally left blank**

| | | | | | | | | | |
|---|---|---|---|---|---|---|---|---|---|
| 1 | VEOLIA | | | | | | VWT CANADA # | PSDS_0001_PSTT_VWT | |
| 2 | | | | | | | Project # | 5000220043 | |
| 3 | | | | | | | Date | 2021-04-12 | |
| 4 | | | | | | | Sludge Tank | | |
| 5 | CLIENT | REV | DATE | BY | CHK'D | APP'D | DESCR. | | |
| 6 | AEM | 1 | 1/29/2021 | GM | ED | TS | For approval | | |
| 7 | | 2 | 3/26/2021 | GM | ED | TS | | | |
| 8 | | 3 | 4/12/2021 | GM | ED | TS | | | |
| 9 | PROJECT | 4 | | | | | | | |
| 10 | MELIADINE - BPC UPGRADE<br>6526-S-265-605 / OC-989680 | 5 | | | | | | | |
| 11 | | 6 | | | | | | | |
| 12 | | 7 | | | | | | | REV |
| 13 | GENERAL | Tag: | 65CUV68005 | | | | P&ID: | Sheet 10 | |
| 14 | | Service: | Sludge Tank | | | | Fluid: | Sludge | |
| 15 | PROCESS DATA | Name of substance stored | | | | | Sludge from splitter boxes | | |
| 16 | | Number of tanks | | | | | 1 | | |
| 17 | | Liquid temperature, max / min. | | | | (°C) | 20 / -4 | | |
| 18 | | Pressure | | | | (psig) | Atmospheric | | |
| 19 | | Indoor or outdoor installation | | | | | Indoor | | |
| 20 | | Density | | | | (kg/m3) | ca. 1000 | | |
| 21 | | Viscosity | | | | (cP) | [0.8 - 1.3] | | |
| 22 | | pH max | | | | - | - | | |
| 23 | | pH min | | | | - | - | | |
| 24 | | Conductivity | | | | (mS/cm) | - | | |
| 25 | | Sulfide | | | | (mg/L) | - | | |
| 26 | | Tank design volume | | | | (m3) | 15,5 | | |
| 27 | | Tank operating volume | | | | (m3) | 13,7 | | |
| 28 | | Normal operating level | | | | (m) | 3,335 | | |
| 29 | | Design level | | | | (m) | 3,585 | | |
| 30 | | Free board | | | | (m) | 0,2 | | |
| 31 | | Shell height | | | | (m) | 3,785 | | |
| 32 | | Nominal diameter | | | | (m) | 2,286 | | |
| 33 | | Internal piping | | | | | No | | |
| 34 | | Overflow | | | | | Yes | | |
| 35 | | Mixer/agitator required | | | | | Yes | | |
| 36 | | Baffles required | | | | | No | | |
| 37 | | Vortex breaker | | | | | No | | |
| 38 | | Unique external loads to tank: | | | | | No | | |
| 39 | SITE CONDITIONS | Erection location | | | | | Meliadine Mine (Nunavut) | | |
| 40 | | Seismic zone | | | | | No | | |
| 41 | MECHANICAL DATA | Shell type | | | | | HDPE | | |
| 42 | | Shell thickness | | | | | TBC | | |
| 43 | | Roof type | | | | | Dish Top | | |
| 44 | | Roof plate thickness | | | | | TBC | | |
| 45 | | Bottom type | | | | | Flat | | |
| 46 | | Bottom plate thickness | | | | | TBC | | |
| 47 | | Applicable specifications: | | | | | N/A | | |
| 48 | | Wind loading | | | | | Indoor | | |
| 49 | | Applicable design codes | | | | | ASTM-D-1998 | | |
| 50 | | Vessel weight (empty) | | | | kg | TBD | | |
| 51 | | Vessel weight (filled) | | | | kg | TBD | | |
| 52 | MATERIALS AND TYPES OF CONSTRUCTION | Shell | | | | Yes | HDPE | | |
| 53 | | Tank top | | | | Yes | HDPE | | |
| 54 | | Nozzles | | | | Yes | HDPE (See Nozzles schedule) | | |
| 55 | | Nozzles flanges | | | | Yes | Spuncast | | |
| 56 | | Internal / external piping | | | | Yes | by others | | |
| 57 | | UV protection | | | | No | | | |
| 58 | | Insulation | | | | No | N/A | | |
| 59 | | Hold down lugs | | | | Yes | 4 (@ 60°, 150°, 240° & 330°) | | 2 |
| 60 | | Lifting lugs | | | | No | | | |
| 61 | | Bolting | | | | No | Anchor bolts - Supplied by others | | |
| 62 | | Gaskets | | | | Yes | EPDM | | |
| 63 | | Sight glass | | | | No | N/A | | |
| 64 | | Baffles | | | | No | N/A | | |
| 65 | | Guardrails | | | | No | | | |
| 66 | | Ladder | | | | No | | | |
| 67 | | Clips /pipe supports | | | | No | | | |
| 68 | | Leak detection | | | | No | | | |

| | | | | | | | | | | | |
|---|---|---|---|---|---|---|---|---|---|---|---|
| 69 | | **MARK** | **QTY** | **Conn. Type** | **RATING** | **SIZE** | **CL Elevation/ CL distance from center** | **CL orientation** | **Location** | **Function** | |
| 70 | | N01 | 1 | Spuncast Flange | Cl.150 | NPS 2" | 3735 | 90° | Shell | Extracted Sludge from BPC | |
| 71 | | N02 | 1 | Spuncast Flange | Cl.150 | NPS 2" | 3735 | 270° | Shell | Extracted Sludge from By-Pass | |
| 72 | | N03 | 1 | Spuncast Flange | Cl.150 | NPS 4" | 3635 | 180° | Shell | Overflow | |
| 73 | | N04 | 1 | FNPT | | NPS 1-1/2" | 150 | 30° | Shell | Drain | 2 |
| 74 | **NOZZLES & MANHOLES** | N05 | 1 | Spuncast Flange | Cl.150 | NPS 4" | 400 | 330° | Shell | Outlet #1 | 3 |
| | | N10 | 1 | Spuncast Flange | Cl.150 | NPS 4" | 400 | 15° | Shell | Outlet #2 | 2 |
| 76 | | N06 | 1 | Spuncast Flange | Cl.150 | NPS 4" | 750 | 90° | Dome | LIT #1 | |
| 77 | | N07 | 1 | FNPT | | NPS 1-1/2" | 150 | 120° | Shell | LIT #2 | 2 |
| 78 | | N08 | 1 | Spuncast Flange | Cl.150 | NPS 3" | 200 | 300° | Shell | Sludge Pump Return | 2 |
| 79 | | N09 | 1 | Drilled Hole | | 12" | 419 | 270° | Dome | Mixer | 2 |
| 80 | | M01 | 1 | Lid with locking lever strap | | 21" | TBC | 180° | Dome | Manway | |
| 81 | | **Corrosion liner** | | N/A | | | Cathodic protection | | | N/A | |
| 82 | **COATINGS** | **Structural** | | N/A | | | | | | | |
| 83 | | **Ladder & Platform** | | N/A | | | | | | | |
| 84 | **NOTES** | | | | | | | | | | |

**Project name:** MELIADINE-BPC UPGRADE

**Project#:** 5000220043

**Document #:** SPK_0006_PSTT_VWT

**by:** GM

**chkd:** ED

**appvd:** TS

# SLUDGE TANK

# GENERAL ARRANGEMENT DRAWING

**OIM manual section:** 4.2.6.2

Refer to document #5000220043_GA_0006_PSTT_VWT
Refer to manual section3.4

**This page is intentionally left blank**

**Project name:** MELIADINE-BPC UPGRADE

**Project#:** 5000220043

**Document #:** SPK_0006_PSTT_VWT

**by:** GM

**chkd:** ED

**appvd:** TS

# SLUDGE TANK

# MIXER

**OIM manual section:** 4.2.6.3

**This page is intentionally left blank**

# CS-999-007 : Identification sheet

| | | | |
|---|---|---|---|
| VWTC PROJECT NUMBER: | 5000220043 | REV: | 1 |
| PROJECT NAME: | AEM MELIADINE - BPC UPGRADE | SUBMITTED TO (COMPANY): | AEM |
| ENGINEER: | EMMANUELLE DORMOY | SUBMITTED TO (RESPONSIBLE): | |
| PROJECT MANAGER: | THOMAS SAVARY / BRUCE BORDES | PROJECT NUM REFERENCE.: | 6526-S-265-605 / OC-989680 |
| PHONE NUMBER: | 514-334-7230 | LOT NUMBER: | |

| SUPPLIER | EQPT CODE | EQPT TAG NO | DIA | DESCRIPTION | INFO 1 | INFO 2 | INFO 3 | APPLIC. | NOTE | REV |
|---|---|---|---|---|---|---|---|---|---|---|
| ENVIREQUIP | ST-999-007 | 65AGI68024 | | SLUDGE TANK AGITATOR | DESCRIPTION SLUDGE TANK MIXER// MODEL: Envirequip EVGX4-3.0 // Mtl : DUPLEX STAINLESS STEEL 2205 | 2x Impeller Dia : 51.0" // 34 RPM // Shaft lg : 142.5" // Direction & thrust: cw down | WEG Motor 3.0 HP / 575/3/60 // Nord reducer SK3282 AHZ/VL // Gear ratio 48.04:1 // STANDARD IEEE841 | SLUDGE TANK | | 1 |

**This page is intentionally left blank**

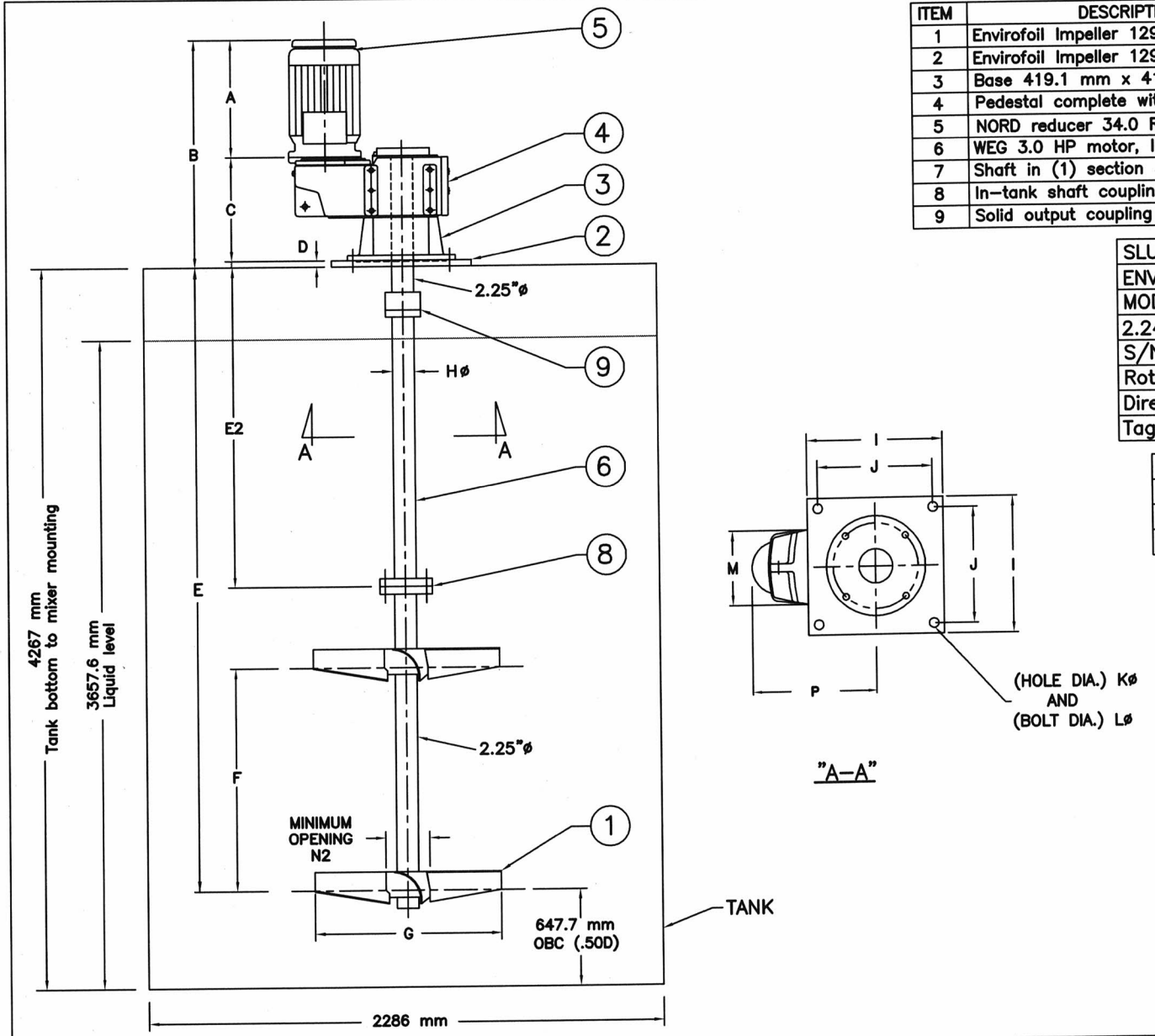





"A–A"

| ITEM | DESCRIPTION | MATERIAL |
|---|---|---|
| 1 | Envirofoil Impeller 1295.4 mm (51.0") ø ● 22° | 2205 |
| 2 | Envirofoil Impeller 1295.4 mm (51.0") ø ● 22° | 2205 |
| 3 | Base 419.1 mm x 419.1 mm (16.5" x 16.5" ) | STEEL |
| 4 | Pedestal complete with dry well (open tank) | |
| 5 | NORD reducer 34.0 RPM | |
| 6 | WEG 3.0 HP motor, IEEE841, 575/3/60 | |
| 7 | Shaft in (1) section 3619.2 mm (142.49") ● 2.25"ø | 2205 |
| 8 | In–tank shaft coupling 2.0"–150# (6.0" OD) | 2205 |
| 9 | Solid output coupling (6.0" OD) | 2205 |

| |
|---|
| SLUDGE WITH MICROSAND (QTY 1) |
| ENVIREQUIP MIXERS |
| MODEL: EVGX4–3.0 |
| 2.24 kW @ 34.0 RPM (60 hZ) |
| S/N: 05075 |
| Rotation: Clockwise |
| Direction of thrust: Down |
| Tag #: 65AGI68024 |

| |
|---|
| Weight: 600 Lbs |
| Mounting loads |
| Torque reaction = 13,903 in lb |
| Bending Moment= 23,778 in lb |

**Dimensions: Inches**

| MOD.: | A | B | C | D | E | E2 | F | Gø | Hø SHAFT | I | J | Kø | Lø | M | N2 | P |
|---|---|---|---|---|---|---|---|---|---|---|---|---|---|---|---|---|
| EVGX4 | 12.68 | 24.45 | 11.14 | .625 | 142.49 | tbd | 66.0 | 51.0 | 2.25 | 16.5 | 14.0 | .875 | .75 | 10.0 | 14.0 | 13.03 |

**Dimensions: mm**

| MOD.: | A | B | C | D | E | E2 | F | Gø | Hø SHAFT | I | J | Kø | Lø | M | N2 | P |
|---|---|---|---|---|---|---|---|---|---|---|---|---|---|---|---|---|
| EVGX4 | 322.1 | 620.9 | 283.0 | 15.9 | 3619.2 | tbd | 1676.4 | 1295.4 | 57.2 | 419.1 | 355.6 | 22.2 | 19.0 | 254.0 | 355.6 | 331.0 |

Ce dessin et l'information qu'il contient est la propriété de ENVIREQUIP WTEM Inc. Il est interdit de le copier, le photographier, l'imprimer, le prêter ou de l'utiliser sans la permission de ENVIREQUIP WTEM Inc.

This drawing and the information contained thereon is the property of ENVIREQUIP WTEM Inc. It is not to be printed, photographed, copied, loaned or used without the permission of ENVIREQUIP WTEM Inc.

| NO | DATE | REVISION | P/B |
|---|---|---|---|
| | | | |

PROJET/PROJECT

MELIADINE

ENVIREQUIP WTEM INC.
490 Bord du Lac – Suite 2
Dorval, QC H9S 2N8
Montreal Tel: (514) 336–1043
RR1 (21494 Little Russel Rd.)
Glen Robertson, Ont K0B 1H0
Ontario Tel: (613) 874–2516
Fax: (613) 874–2629
E–mail: envirequip@glen–net.ca

TITRE/TITLE

Envirequip Mixers
Veolia Water Technologies
EVGX SERIES

| | |
|---|---|
| DESSINE PAR: DRAWN BY: PJ | DATE: Jan 27, 2021 |
| DESS. NO: DWG NO: EVGX | ECH./SCALE: N.T.S |
| VERIFIE PAR: CHECKED BY: PJ | PROJ.NO: |
| APPROUVE PAR: APPROVED BY: RJ | REV.: 00 |

**This page is intentionally left blank**

**ENVIREQUIP** (Division 6445772 Canada Inc)

| | | | |
|---|---|---|---|
| **JOB** | VWTC - Meliadine | Date | January 27, 2021 |
| **JOB Quotation Number** | 05075 | | |
| **Application** | Sludge with microsand | | |
| Quantity of Units | 1 | | |
| Manufacturer | Envirequip | | |
| Model (MIX-TECH) | EVGX - 4 - 3.0 | | |
| Power Used Continuous Duty | 1.31 hp | 0.98 | kw |
| Loading on Motor < 100 % | 43.82 % | | |
| Tank Diameter | 90.00 inch | 2,286.0 | mm |
| Liquid Depth | 144.00 inch | 3,657.6 | mm |
| Tank Liquid Volume | 3,966 usg | 15.0 | cu m |
| **Information Liquid** | Water | | |
| Temperature | 32 F | 0.0 | C |
| Viscosity | 1.778 cp | | |
| Liquid Specific Gravity | 1.007 | | |
| **Number of Impeller(s)** | 2 | | |
| Impeller Type | Envirefoil (F4) Bladed Design | | |
| Material of Construction | Stainless Steel 2205 | | |
| Angle of Attack | 22 degrees | | |
| Power Number / Pumping Number | Np = 0.733 & Nq = 0.72 | | |
| Diameter | 51 inch | 1,295.4 | mm |
| Bottom Clearance | 25.5 inch | 647.7 | mm |
| Peripheral Tip Speed | 7.57 ft / sec | 2.31 | m / sec |
| D / T Ratio | 0.567 | | |
| Rotation / Direction of Thrust | CW/DN | | |
| Spacing for 2 nd Impeller Up | 66 inch | 1676.4 | mm |
| Spacing for 3 rd Impeller Up | 0 inch | 0 | mm |
| **Shaft Cantilevered** | Stainless Steel 2205 | | |
| Number of Sections | 2 | | |
| Shaft Diameter | 2.25 inch | 57.15 | mm |
| Length of Shaft | 142.49 inch | 3,619.3 | mm |
| Output Shaft Coupling | With coupling | | |
| Harmonic Frequency / Critical Speed | 98.3 rpm | | |
| Percent on 1 st Critical Speed | 34.58 % | | |
| Bending Moment Stress - Tensile | 8,732 psi | 613.9 | kg sq cm |
| Shear Stress - Torsion | 4,434 psi | 311.7 | kg sq cm |
| Twist Based on BHP | 0.718 Degree | | |

**ENVIREQUIP** (Division 6445772 Canada Inc)

| | | | |
|---|---|---|---|
| **JOB** | VWTC - Meliadine | Date | January 27, 2021 |
| **JOB Quotation Number** | 05075 | | |
| **Application** | Sludge with microsand | | |
| **Gear Reducer** | Nord with parallel gears | | |
| Model | SK 4282 AHZ/VL | | |
| Output Impeller Speed | 34.00 rpm | | |
| Service Factor | 2.800 | | |
| Bearing B10 Life | 100,000 hours | | |
| Oil | Food Grade | | |
| Type / Gearing / Efficiency | Parallel Gears: AGMA 11 (LS) & 13 (HS) AGMA | / 98.5 % / stage | |
| Reduction Ratio on Gear Reducer | 52.21 to 1 | | |
| **Motor ( Manufacturer) Type** | WEG IEEE841 | | |
| Type / Invertor Duty | Squirrel Cage / NEMA MG1. Part 31 Invertor Service | | |
| Motor Efficiency | 89.5 % | | |
| Motor Frame and Size | 182 TC | | |
| Motor Speed | 34.0 rpm | TEFC / IP 55 / Class F insulation | |
| Absorbed Power Full Load | 3 hp | 2.24 kw | |
| Motor Amps | 3.13 amps | | |
| Power Supply | 575-3-60 | | |
| **Pumping Capacity on Volume** | 28,115 usgpm | 1.774 cu m / sec | |
| Bulk Fluid Velocity per Zone | 42.54 ft / min | 21.61 cm / sec | |
| Mixing Intensity (Scale 1 to 10) | 7.09 | | |
| Velocity Gradient (G factor) | 198.61 sec-1 | | |
| Turnovers in Tank | 7.089 minutes | | |
| BHP per 1000 usg | 0.3315 bhp / 1000 usg | | |
| Torque per usg | 0.6145 in lb / usg | | |
| Reynolds Number | 535,861 | | |
| **Mounting (Steel Base Dimensions)** | 16.5 sq in | 419 sq mm | |
| Weight of Complete System | 380 lbs | 172 kg | |
| Thrust Add if pumping up | 57 lbs | 26 kg | |
| Bending Moment | 23,778 in lb | 27,390 kg cm | |
| Torque Reaction | 13,903 in lb | 16,014 kg cm | |
| Beam Size (Estimated) | 8 C at 11.5 # / ft inch | | |
| Beam Span (Estimated) | 8 feet | 2.438 meters | |

# DATA SHEET

## Three Phase Induction Motor - Squirrel Cage

| | |
|---|---|
| Customer | : |

| | | | |
|---|---|---|---|
| Product line | : W22 IEEE 841 NEMA Premium Efficiency Three-Phase | Product code : | 13533095 |
| | | Catalog # : | IE003504W22CIS |

| | | | |
|---|---|---|---|
| Frame | : 182/4TC | Locked rotor time | : 41s (cold) 23s (hot) |
| Output | : 3 HP (2.2 kW) | Temperature rise | : 80 K |
| Poles | : 4 | Duty cycle | : Cont.(S1) |
| Frequency | : 60 Hz | Ambient temperature | : -20°C to +40°C |
| Rated voltage | : 575 V | Altitude | : 1000 m.a.s.l. |
| Rated current | : 3.13 A | Protection degree | : IP55 |
| L. R. Amperes | : 25.3 A | Cooling method | : IC411 - TEFC |
| LRC | : 8.1x(Code K) | Mounting | : F-1 |
| No load current | : 1.60 A | Rotation[1] | : Both (CW and CCW) |
| Rated speed | : 1760 rpm | Noise level[2] | : 56.0 dB(A) |
| Slip | : 2.22 % | Starting method | : Direct On Line |
| Rated torque | : 8.95 ft.lb | Approx. weight[3] | : 103 lb |
| Locked rotor torque | : 229 % | | |
| Breakdown torque | : 340 % | | |
| Insulation class | : F | | |
| Service factor | : 1.25 | | |
| Moment of inertia (J) | : 0.3401 sq.ft.lb | | |
| Design | : B | | |

| Output | 25% | 50% | 75% | 100% |
|---|---|---|---|---|
| Efficiency (%) | 86.4 | 87.5 | 88.5 | 89.5 |
| Power Factor | 0.36 | 0.61 | 0.73 | 0.79 |

Foundation loads

| | |
|---|---|
| Max. traction | : 143 lb |
| Max. compression | : 246 lb |

| | | Drive end | Non drive end |
|---|---|---|---|
| Bearing type | : | 6207 C3 | 6206 C3 |
| Sealing | : | Inpro/Seal | Inpro/Seal |
| Lubrication interval | : | 20000 h | 20000 h |
| Lubricant amount | : | 7 g | 5 g |
| Lubricant type | : | Mobil Polyrex EM | |

Notes

This revision replaces and cancel the previous one, which must be eliminated.
(1) Looking the motor from the shaft end.
(2) Measured at 1m and with tolerance of +3dB(A).
(3) Approximate weight subject to changes after manufacturing process.
(4) At 100% of full load.

These are average values based on tests with sinusoidal power supply, subject to the tolerances stipulated in NEMA MG-1.

| Rev. | Changes Summary | Performed | Checked | Date |
|---|---|---|---|---|
| | | | | |

| | | | | |
|---|---|---|---|---|
| Performed by | | | | |
| Checked by | | | Page | Revision |
| Date | 26/01/2021 | | 1 / 1 | |

This document is exclusive property of WEG S/A. Reprinting is not allowed without written authorization of WEG S/A.
Subject to change without notice

**This page is intentionally left blank**

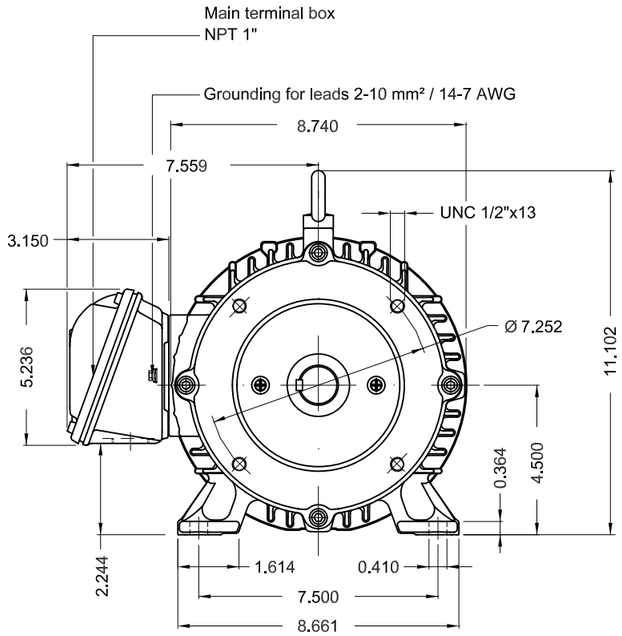


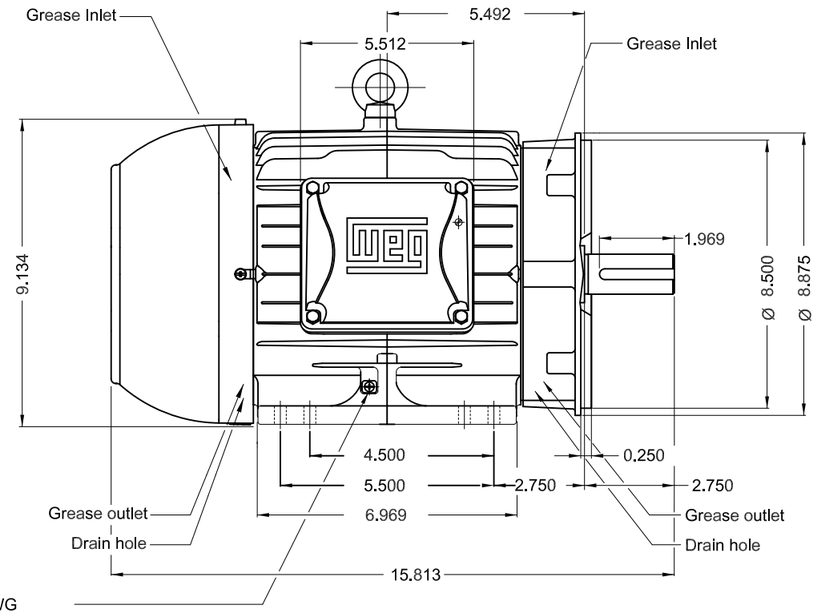


Grounding for leads 2-10 mm² / 14-7 AWG

DE Shaft End

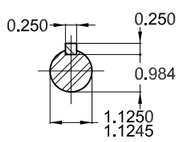


Color RAL 5009
Painting plan 202E
Mounting NEMA F-1
Mounting B34R(D)

3 HP 04 Poles 60Hz | A

| ECM | LOC | SUMMARY OF MODIFICATIONS | EXECUTED | CHECKED | RELEASED | DATE | VER |
|---|---|---|---|---|---|---|---|

| | | | |
|---|---|---|---|
| EXECUTED | PIRWBUSER | THREE PH. W22 NEMA P.EFF MOTOR IEEE841 | PREVIEW |
| CHECKED | | FRAME 182/4TC IP55 TEFC | WDD |
| RELEASED | | | |
| REL DT. | | WMO Jaragua do Sul Product Engineering | SHEET 1 / 1 |

Dimensions in inches

XME A3

WEG's property. Forbidden reproduction without previous authorization.

LEFT BLANK

# *4 – DETAILED TECHNICAL DOCUMENTATION*

## *4.2 – SHOP DRAWINGS*

## *4.2.7 – BACKWASH TANK*

LEFT BLANK




# TECHNICAL DOCUMENTATION

**This page is intentionally left blank**

| | |
|---|---|
| **Project name:** | MELIADINE-BPC UPGRADE |
| **Project#:** | 5000220043 |
| **Document #:** | SPK_0007_PSTT_VWT |
| **by:** | GM |
| **chkd:** | ED |
| **appvd:** | TS |

# SUBMITTAL PACKAGE

# BACKWASH TANK

**This page is intentionally left blank**

| | |
|---|---|
| **Project name:** | MELIADINE-BPC UPGRADE |
| **Project#:** | 5000220043 |
| **Document #:** | SPK_0007_PSTT_VWT |
| **by:** | GM |
| **chkd:** | ED |
| **appvd:** | TS |

# BACKWASH TANK

# PROCESS DATASHEET

**OIM manual section:** 4.2.7.1

**This page is intentionally left blank**

| | | | | | | | | | |
|---|---|---|---|---|---|---|---|---|---|
| 1 | | | | | | | VWT CANADA # | PSDS_0002_PSTT_VWT | |
| 2 | VEOLIA | | | | | | Project # | 5000220043 | |
| 3 | | | | | | | Date | 2021-01-29 | |
| 4 | | | | | | | Backwash Tank | | |
| 5 | CLIENT | REV | DATE | BY | CHK'D | APP'D | DESCR. | | |
| 6 | AEM | 1 | 1/29/2021 | GM | ED | BB | For approval | | |
| 7 | | 2 | | | | | | | |
| 8 | | 3 | | | | | | | |
| 9 | PROJECT | 4 | | | | | | | |
| 10 | MELIADINE - BPC UPGRADE<br>6526-S-265-605 / OC-989680 | 5 | | | | | | | |
| 11 | | 6 | | | | | | | |
| 12 | | 7 | | | | | | | REV |
| 13 | GENERAL | Tag: | TBC | | | | P&ID: | Sheet 13 | |
| 14 | | Service: | Backwash Tank | | | | Fluid: | Backwash water | |
| 15 | PROCESS DATA | Name of substance stored | | | | | Backwash water from discfilter | | |
| 16 | | Number of tanks | | | | | 1 | | |
| 17 | | Liquid temperature, max / min. | | | | (°C) | 20 / -4 | | |
| 18 | | Pressure | | | | (psig) | Atmospheric | | |
| 19 | | Indoor or outdoor installation | | | | | Indoor | | |
| 20 | | Density | | | | (kg/m3) | ca. 1000 | | |
| 21 | | Viscosity | | | | (cP) | [0.8 - 1.3] | | |
| 22 | | pH max | | | | - | - | | |
| 23 | | pH min | | | | - | - | | |
| 24 | | Conductivity | | | | (mS/cm) | - | | |
| 25 | | Sulfide | | | | (mg/L) | - | | |
| 26 | | Tank design volume | | | | (m3) | 7,9 | | |
| 27 | | Tank operating volume | | | | (m3) | 6,4 | | |
| 28 | | Normal operating level | | | | (m) | 1,721 | | |
| 29 | | Design level | | | | (m) | 1,971 | | |
| 30 | | Free board | | | | (m) | 0,15 | | |
| 31 | | Shell height | | | | (m) | 2,121 | | |
| 32 | | Nominal diameter | | | | (m) | 2,184 | | |
| 33 | | Internal piping | | | | | No | | |
| 34 | | Overflow | | | | | Yes | | |
| 35 | | Mixer/agitator required | | | | | No | | |
| 36 | | Baffles required | | | | | No | | |
| 37 | | Vortex breaker | | | | | No | | |
| 38 | | Unique external loads to tank: | | | | | No | | |
| 39 | SITE CONDITIONS | Erection location | | | | | Meliadine Mine (Nunavut) | | |
| 40 | | Seismic zone | | | | | No | | |
| 41 | MECHANICAL DATA | Shell type | | | | | HDPE | | |
| 42 | | Shell thickness | | | | | TBC | | |
| 43 | | Roof type | | | | | Dish Top | | |
| 44 | | Roof plate thickness | | | | | TBC | | |
| 45 | | Bottom type | | | | | Flat | | |
| 46 | | Bottom plate thickness | | | | | TBC | | |
| 47 | | Applicable specifications: | | | | | N/A | | |
| 48 | | Wind loading | | | | | Indoor | | |
| 49 | | Applicable design codes | | | | | ASTM-D-1998 | | |
| 50 | | Vessel weight (empty) | | | | kg | TBD | | |
| 51 | | Vessel weight (filled) | | | | kg | TBD | | |
| 52 | MATERIALS AND TYPES OF CONSTRUCTION | Shell | | | | Yes | HDPE | | |
| 53 | | Tank top | | | | Yes | HDPE | | |
| 54 | | Nozzles | | | | Yes | HDPE (See Nozzles schedule) | | |
| 55 | | Nozzles flanges | | | | Yes | Spuncast | | |
| 56 | | Internal / external piping | | | | Yes | by others | | |
| 57 | | UV protection | | | | No | | | |
| 58 | | Insulation | | | | No | N/A | | |
| 59 | | Hold down lugs | | | | Yes | TBD | | |
| 60 | | Lifting lugs | | | | No | | | |
| 61 | | Bolting | | | | No | Anchor bolts - Supplied by others (TBC) | | |
| 62 | | Gaskets | | | | Yes | EPDM | | |
| 63 | | Sight glass | | | | No | N/A | | |
| 64 | | Baffles | | | | No | N/A | | |
| 65 | | Guardrails | | | | No | | | |
| 66 | | Ladder | | | | No | | | |
| 67 | | Clips /pipe supports | | | | No | | | |
| 68 | | Leak detection | | | | No | | | |

| | | | | | | | | | | | |
|---|---|---|---|---|---|---|---|---|---|---|---|
| 69 | | **MARK** | **QTY** | **Conn. Type** | **RATING** | **SIZE** | **CL Elevation/ CL distance from center** | **CL orientation** | **Location** | **Function** | |
| 70 | | N01 | 1 | Spuncast Flange | Cl.150 | NPS 6" | 1750 | 90° | Shell | Backwash water from discfilter | 2 |
| 71 | | N02 | 1 | Spuncast Flange | Cl.150 | NPS 4" | 500 | 0° | Dome | Vent | |
| 72 | | N03 | 1 | Spuncast Flange | Cl.150 | NPS 3" | 1700 | 45° | Shell | Overflow | |
| 73 | **NOZZLES & MANHOLES** | N04 | 1 | FNPT | | NPS 1-1/2" | 150 | 45° | Shell | Drain | |
| 74 | | N05 | 1 | Spuncast Flange | Cl.150 | NPS 3" | 400 | 164° | Shell | Outlet #1 | 2 |
| 75 | | N06 | 1 | Spuncast Flange | Cl.150 | NPS 4" | 0 | 0° | Dome | LIT #1 | |
| 76 | | N07 | 1 | FNPT | | NPS 1-1/2" | 150 | 90 | Shell | LIT #2 | |
| 77 | | N08 | 1 | Spuncast Flange | Cl.150 | NPS 3" | 400 | 196° | Shell | Outlet #2 | 2 |
| 78 | | M01 | 1 | Lid with locking lever strap | | 16" | TBC | 180° | Dome | Manway | |
| 79 | | **Corrosion liner** | | N/A | | | Cathodic protection | | | N/A | |
| 80 | **COATINGS** | **Structural** | | N/A | | | | | | | |
| 81 | | **Ladder & Platform** | | N/A | | | | | | | |
| 82 | **NOTES** | | | | | | | | | | |

| | |
|---|---|
| **Project name:** | MELIADINE-BPC UPGRADE |
| **Project#:** | 5000220043 |
| **Document #:** | SPK_0007_PSTT_VWT |
| **by:** | GM |
| **chkd:** | ED |
| **appvd:** | TS |

# BACKWASH TANK

# GENERAL ARRANGEMENT DRAWING

**OIM manual section:** 4.2.7.2

Please refer to document #5000220043_GA_0007_PSTT_VWT
Refer to manual section 3.4

**This page is intentionally left blank**

**Project name:** MELIADINE-BPC UPGRADE

**Project#:** 5000220043

**Document #:** SPK_0007_PSTT_VWT

**by:** GM

**chkd:** ED

**appvd:** TS

# BACKWASH TANK

# PUMP

**OIM manual section:** 4.2.7.3

**This page is intentionally left blank**

# CS-999-008 : Identification sheet

| | | | |
|---|---|---|---|
| VWTC PROJECT NUMBER: | 5000220043 | REV: | 1 |
| PROJECT NAME: | AEM MELIADINE - BPC UPGRADE | SUBMITTED TO (COMPANY): | AEM |
| ENGINEER: | EMMANUELLE DORMOY | SUBMITTED TO (RESPONSIBLE): | |
| PROJECT MANAGER: | THOMAS SAVARY / BRUCE BORDES | PROJECT NUM REFERENCE.: | 6526-S-265-605 / OC-989680 |
| PHONE NUMBER: | 514-334-7230 | LOT NUMBER: | |

| SUPPLIER | EQPT CODE | EQPT TAG NO | DIA | DESCRIPTION | INFO 1 | INFO 2 | INFO 3 | APPLIC. | NOTE | REV |
|---|---|---|---|---|---|---|---|---|---|---|
| MUNSCH | ST-999-008 | 65PSR68009A | | BACKWASH PUMP #1 | DESCRIPTION: CENTRIFUGAL PUMPS // MANUF: MUNSCH // MODEL: NP65-50-160 // SUCTION: 2-1/2" / DISCHARGE: 2" | 575V/3PH/60HZ | | BACKWASH WASTEWATER TANK | | 1 |
| MUNSCH | ST-999-008 | 65PSR68009B | | BACKWASH PUMP #2 | DESCRIPTION: CENTRIFUGAL PUMPS // MANUF: MUNSCH // MODEL: NP65-50-160 // SUCTION: 2-1/2" / DISCHARGE: 2" | 575V/3PH/60HZ | | BACKWASH WASTEWATER TANK | | 1 |

**This page is intentionally left blank**

# Data Sheet
# Munsch Chemical-Pump

MUNSCH

Serial-No's:

| | | | |
|---|---|---|---|
| 01 | Customer: **KSB Pumps Inc.** | Designation: **Standardized Chemical Pump** | |
| 02 | Customer-No.: **19164** | Type/ Size: **NP 65- 50-160** | |
| 03 | Enquiry-No. **414014488** | Main Material: **PP** | MUNSCH-Order-No.: |
| 04 | Date: **11.01.2021** | Delivery: **with baseplate** | Quantity: **2** |
| 05 | Reference: **Backwash water pump** | | Revision: of |
| 06 | Name: | | |
| 07 | Customer-Item-No.: **Backwash Water Pump** | | |

## Site / Environment

| | | | |
|---|---|---|---|
| 08 | Installation: **Indoor** | Altitude: m | Site condition: **-** |
| 09 | Details: | Ex-zone:- | Ambient temperature min/max.: / °C |

## Liquid

| | | | |
|---|---|---|---|
| 10 | Liquid: **Description** | Description: **Backwash Water** | |
| 11 | Components: | Solids: **-** | Operating temperature: **20.0** °C |
| 12 | 1 **Chlroide** % **20** g/l | Solid content: % g/l | Operat. temp. min/max: / °C |
| 13 | 2 % g/l | Solid size: mm | Density: **1.00** kg/dm³ |
| 14 | 3 % g/l | | Vapour pressure: bar |
| 15 | pH-value at top: min: max | | Dynamic viscosity: mPas |

## Operating conditions

| | | | |
|---|---|---|---|
| 16 | Flow rated: **20.0** m³/h | Total head rated: **10.0** m | Design speed: **1750** 1/min |
| 17 | Flow min./max.: **6.0** / **25.0** m³/h | Total head min./max.: m m | Rotation (1): **cw** |
| 18 | Flow min.required: m³/h | Inlet gauge pressure: bar | Power consumption P: **1.20** kW |
| 19 | NPSH available: m | Outlet gauge pressure: bar | Efficiency: **45.36** % |
| 20 | NPSH required: **3.0** m | Differential pressure: bar | $P_{max}$ at rated Impeller-$\phi$: **1.50** kW |
| 21 | Frequency inverter operation: **-** | | $P_{max}$ at max. Impeller-$\phi$: **1.80** kW |

## Construction features

| | | | | | |
|---|---|---|---|---|---|
| 22 | Flange connection: **ANSI, Class 150, metric** | Impeller design: **closed A1** | | | Bearing bracket: **L 16 A** |
| 23 | Inlet flange: **DN 65 / 2 1/2"** | Impeller-$\phi$ min./max.: **140.0** / **176.0** mm | | | Bearing lubrication: **Grease** |
| 24 | Outlet flange: **DN 50 / 2"** | Impeller-$\phi$ rated: **160.0** actual: mm | | | Radial bearing: **NU 2209 ECP** |
| 25 | Pump Casing (seal): **O-ring** | Balancing hole(s): **with** | | | Axial bearing: **6309** |
| 26 | Drain connection: **-** | Back vanes: **-** | | | **For magnetically coupled pumps only:** |
| 27 | Mechanical Seal: **Single mechanical seal** | Flushing holes (casing cover): **-** | | | Magnetic coupling: |
| 28 | Seal type: **MUNSCH-REA-F** | Flushing | Rate | Pressure | |
| 29 | **Spring chamber flushing** | Spring chamber: | l/min | **0.0** bar | Ext. flushing of plain bearing (1): |
| 30 | Pump interior: **-** | Pump interior: | l/min | bar | Connection: |

## Accessories

| | | | | | |
|---|---|---|---|---|---|
| 31 | Coupling: **With spacer piece** | Coupling guard: **step-proof** | | **160L** | Foundation fixing: **-** |
| 32 | Type: **Flender N-Eupex** | Base plate: **3** | | **Cast iron** | Anchor bolts: **-** |
| 33 | Size: **H 80** Spacer length: **100** mm | Earthing lugs: **-** | | | Foundation bolts: **-** |
| 34 | UV-protection casing: **-** | Levelling bolts: **-** | | | Priming pot: **-** |
| 35 | | Drip pan: **-** | | | Add. name plate: **-** |

## Materials

| | | | | | |
|---|---|---|---|---|---|
| 36 | Pump casing: **PP** | Secondary seals: **FPM** | | | Connecting bolts: **Stainless steel** |
| 37 | Casing cover: **PP** | Casing seal (O-Ring): **FPM** | | | Studs: **Stainless steel** |
| 38 | Impeller: **PP** | Impeller screw: **FPM** | | | Mechanical Seal |
| 39 | Pump shaft: **C-Steel** | O-Rings Mechanical Seal | | | Stationary / rotating seal ring Product: **SSIC /SSIC** |
| 40 | Intermediate lantern: **Cast iron** | dynamic (412.2): **FPM** | | | Stationary / rotating seal ring Atm.: **-** |
| 41 | Material compl. with FDA: | static (412.3): **FPM** | | | Shaft sleeve Product side: **SS, PVDF coated** |
| 42 | Coupling guard: **Steel** | | | | Shaft sleeve Atmos. side: **SS, PVDF coated** |

## Driver

| | | | | | |
|---|---|---|---|---|---|
| 43 | Delivery: | Nominal power: | **3** HP | | Nominal current at 400 V: A |
| 44 | - supplied by: **KSB Canada** | Nominal speed: | **1750** 1/min | | Start-up current: A |
| 45 | - mounted by: | Frequency: | **60** Hz | | cos $\varphi$: |
| 46 | Manufacturer: **-** | Voltage: | **400** V | | Enclosure: **IP 55** |
| 47 | Standard: **NEMA** | Thermistors: | **-** | | Insulation class: **F** |
| 48 | Hazard designation: **-** | VIK-design: | **-** | | Anticondensation heaters: **-** |
| 49 | Design: **IM B3** | Efficiency class: | **IE3** | | Located bearing: **-** |
| 50 | Frame size: **182 T** | Location terminal box(2): | **top** | | Sound pressure level: db(A) |

## Painting specification

| | | | | | |
|---|---|---|---|---|---|
| 51 | Painting on 2-component epoxy basis, 2-3 layers | Pump: **RAL 2003** | | | Coupling guard: **RAL 1003** |
| 52 | Total dry-film thickness: **130 - 150** µm | Motor: **-** | | | Base plate: **RAL 2003** |

Special painting, special documentation and additional tests are possible upon request

Remarks:

(1) viewed from driver to pump (2) viewed from pump to driver

# Dimension Drawing
# Munsch Chemical-Pump

Serial-No's:

| | | | |
|---|---|---|---|
| 53 | Customer: **KSB Pumps Inc.** | Designation: **Standardized Chemical Pump** | |
| 54 | Enquiry-No. **414014488** | Type / Size: **NP 65- 50-160** | |
| 55 | Reference: **Backwash water pump** | Main Material: **PP** | Quantity: **2** |
| 56 | Name: | | Revision: of |
| 57 | Customer-Item-No.: **Backwash Water Pump** | | Nominal power: **3** HP Speed: **1750**1/min |

## Connection Dimensions

| | | | | | | |
|---|---|---|---|---|---|---|
| 58 | Connection: **ANSI, Class 150, metric** | | | Priming pot | | |
| 59 | DNs: **DN 65 / 2 1/2"** | DNd: **DN 50 / 2"** | | DNs2 | - | |
| 60 | z1: **4** | z2: **4** | | z3: | | |
| 61 | p1: **M 16** | p2: **M 16** | | p3: | | |
| 62 | ks: **139.7** mm | kd: **120.7** mm | | ks2: | mm | |
| 63 | ss: **11.5** mm | sd: **5.0** mm | | Ds: | mm | |
| 64 | sl: **70.0** mm | dl: **60.0** mm | | h4: | mm | |
| 65 | Studs are dimensioned for backing rings and stub ends acc. to DIN 16 962 / 16 963 part 4 | | | | | |

## Forces and Moments

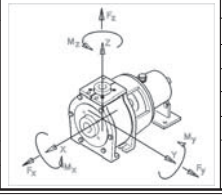

| DN | Fx [N] | Fy [N] | Fz [N] | ΣF [N] |
|---|---|---|---|---|
| **DN 65** | **735** | **650** | **595** | **1145** |
| **DN 50** | **525** | **470** | **580** | **915** |
| | Mx [Nm] | My [Nm] | Mz [Nm] | ΣM [Nm] |
| **DN 65** | **525** | **385** | **420** | **775** |
| **DN 50** | **490** | **350** | **405** | **725** |

Forces and moments from pipe system to pump are to be kept as low as possible. They must not exceed the values.

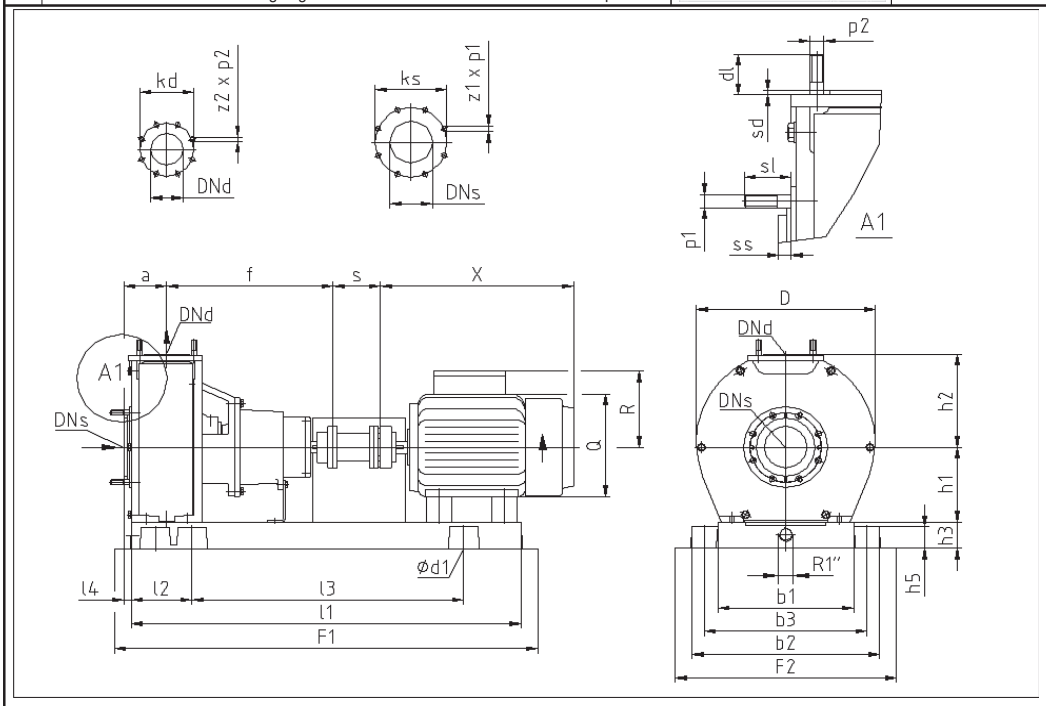


h1P: **132.0** mm
h1M: **114.3** mm
The motor will be supported by distance blocks

Remarks Baseplate:
-

Motor is not part of delivery

Dimensions l1, b1, b2 according to tolerances of DIN ISO 8062 CT9

Picture: **14201400000**

## Main Dimensions (Tolerances of connection dimensions of the pump according to EN 735)

| | | | | | Close-coupled Pump | | Motor | | Bareshaft pump | | |
|---|---|---|---|---|---|---|---|---|---|---|---|
| 66 | a: | **80.0** mm | n1: | mm | v1: | mm | Q: | mm | w: | mm | b4: mm |
| 67 | f: | **385.0** mm | n2: | mm | v2: | mm | R: | mm | ød: | mm | h6: mm |
| 68 | D: | **265.0** mm | m1: | mm | vb: | mm | X: | mm | l: | mm | n3: mm |
| 69 | h1: | **132.0** mm | m2: | mm | vd: | mm | øF: | mm | pb: | mm | S2: mm |
| 70 | h2: | **160.0** mm | S1: | mm | v: | mm | Motor dimensions similar to european standard | | u: | mm | sf1: mm |
| 71 | ts: | mm | h7: | mm | | | | | | | sf2: mm |
| 72 | td: | mm | Re: | - | | | | | | | |
| 73 | | | y: | mm | | | | | | | |

## Accessories

| | Base plate | | | | Coupling | | Priming pot | Installation | Anchor bolts |
|---|---|---|---|---|---|---|---|---|---|
| 74 | | | | | | | | | - / - |
| 75 | l1: | **900.0** mm | b1: | **300.0** mm | sp: | mm | a1: mm | | Foundation bolts |
| 76 | l2: | **150.0** mm | b2: | **390.0** mm | s: | **100.0** mm | a2: mm | | - |
| 77 | l3: | **600.0** mm | b3: | **350.0** mm | ød P: | **24.0** mm | d4: mm | | Leveling elements |
| 78 | l4: | **15.5** mm | h3: | **65.0** mm | ød M: | **28.6** mm | H: mm | | d2: mm |
| 79 | ød1: | **19.0** mm | h5: | **55.0** mm | | | h8: mm | | hn: - mm |
| 80 | F1: | **1100.0** mm | F2: | **590.0** mm | | | av: mm | | hnmax: mm |
| 81 | A: | mm | bn: | mm | | | h1.V: mm | | |

## Flushing connection

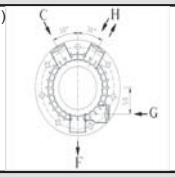


| | | | | |
|---|---|---|---|---|
| 82 | Seal type: | **MUNSCH-REA-F** | | |
| 83 | Spring chamber | **Spring chamber flushing** | | |
| 84 | Inlet: **H** | Connection: | **Fitting for hose DN 19** | |
| 85 | Outlet: **F** | Connection: | **G 1/2"** | |
| 86 | Pump interior: | | - | |
| 87 | Inlet: **-** | Connection: | - | |
| 88 | | | | |

## Special Measures, Remarks

-

## Weights

| | | | | | | |
|---|---|---|---|---|---|---|
| 89 | Pump: | **55.00** kg | Coupling: | **2.80** kg | Length: | **974.0** mm |
| 90 | Motor: | kg | Priming pot: | kg | Width: | **390.0** mm |
| 91 | Baseplate: | **39.00** kg | Total weight: | **96.80** kg | Height: | **412.0** mm |

P2Plus 4.2
Technical and dimensional details may be subject to changes.

(1) viewed from driver to pump (2) viewed from pump to driver

| Angebots-Nr./Offer-No./No. de l'offre | Projekt-Namen/Projectname/Nom de project |
|---|---|
| P077098 | Standard-Projekt |
| Bearbeiter/Originator/Nom | Datum/Date/Date |
| CHS | 13.01.2021 |
| Position/Position/Position | Bezeichnung/Remark/Remarque |
| 10 | |
| Pumpentyp/Pumptype/Type de la pompe | Pumpenname/Pumpname/Nom de la pompe |
| NP 65-50-160 | |
| Laufrad/Impeller/Impeller | Drehzahl/Speed/Vitesse |
| geschlossen | 1750 [1/min] |

**MUNSCH**
**Kunststoff-Pumpen für aggressive Medien**

Munsch Chemie-Pumpen GmbH
Im Staudchen, D-56235 Ransbach-Baumbach
Tel.: (02623) 898-0, Fax: (02623) 898-21

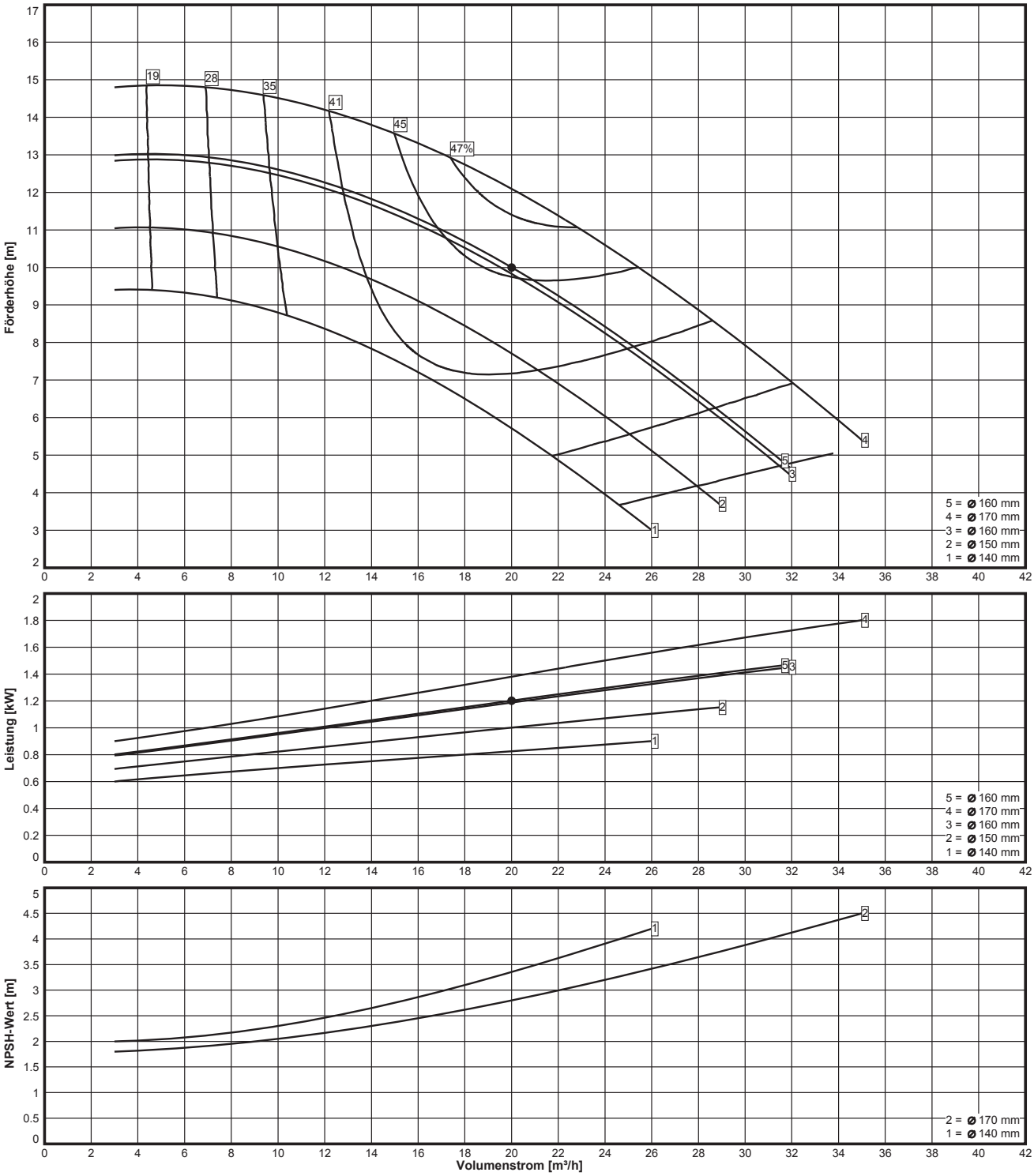


| Betriebspunkt/Point of work/Point de travail |
|---|
| Q=20.00m³/h, H=10.00m, P=1.20kW, P*(1.00kg/dm³)=1.20kW, Eta=45.4%, NPSH=2.95m |
| Kennlinien-Id/Identity of Data/Identité des dates |
| A04032 |

Leistungsdaten bezogen auf Wasser bei Raumtemperatur/Performance data refer to water at ambient temperature/Courbes valables pour de l'eau à température ambiante
Technische Änderungen vorbehalten/Performance data are subject to alteration/Sous réserve de modification technique

LEFT BLANK

# *4 – DETAILED TECHNICAL DOCUMENTATION*

## *4.2 – SHOP DRAWINGS*

## *4.2.8 – SPLITTER BOX CLARIFIER #1*

LEFT BLANK




# TECHNICAL DOCUMENTATION

**This page is intentionally left blank**

| | |
|---|---|
| **Project name:** | MELIADINE-BPC UPGRADE |
| **Project#:** | 5000220043 |
| **Document #:** | SPK_0110_MISC_VWT |
| **by:** | GM |
| **chkd:** | ED |
| **appvd:** | TS |

# SUBMITTAL PACKAGE

# SPLITTER BOX CLARIFIER #1

**This page is intentionally left blank**

**Project name:** MELIADINE-BPC UPGRADE

**Project#:** 5000220043

**Document #:** SPK_0110_MISC_VWT

**by:** GM

**chkd:** ED

**appvd:** TS

# SPLITTER BOX CLARIFIER #1

# GENERAL ARRANGEMENT DRAWING

**OIM manual section:** 4.2.8.1

Please refer to document #5000220043_GA_0110_MISC_VWT

**This page is intentionally left blank**

# CS-999-009 : Identification sheet

| | | | |
|---|---|---|---|
| VWTC PROJECT NUMBER: | 5000220043 | REV: | 1 |
| PROJECT NAME: | AEM MELIADINE - BPC UPGRADE | SUBMITTED TO (COMPANY): | AEM |
| ENGINEER: | EMMANUELLE DORMOY | SUBMITTED TO (RESPONSIBLE): | |
| PROJECT MANAGER: | THOMAS SAVARY / BRUCE BORDES | PROJECT NUM REFERENCE.: | 6526-S-265-605 / OC-989680 |
| PHONE NUMBER: | 514-334-7230 | LOT NUMBER: | |

| SUPPLIER | EQPT CODE | EQPT TAG NO | DIA | DESCRIPTION | INFO 1 | INFO 2 | INFO 3 | APPLIC. | NOTE | REV |
|---|---|---|---|---|---|---|---|---|---|---|
| VWTC | ST-999-009 | 65TNK68019 | | SLUDGE SPLITTER TANK #1 | SPLITTER BOX CLARIFIER #1 | Refer to GA Drawing 5000220043_GA_0110_MISC_ VWT | | CLARIFIER #1 SLUDGE SPLITTER TANK | | 1 |

**This page is intentionally left blank**

**Project name:** MELIADINE-BPC UPGRADE

**Project#:** 5000220043

**Document #:** SPK_0110_MISC_VWT

**by:** GM

**chkd:** ED

**appvd:** TS

# SPLITTER BOX CLARIFIER #1

# PUMP

**OIM manual section:** 4.2.8.2

**This page is intentionally left blank**

# CS-999-006 : Identification sheet

| | | | |
|---|---|---|---|
| VWTC PROJECT NUMBER: | 5000220043 | REV: | 1 |
| PROJECT NAME: | AEM MELIADINE - BPC UPGRADE | SUBMITTED TO (COMPANY): | AEM |
| ENGINEER: | EMMANUELLE DORMOY | SUBMITTED TO (RESPONSIBLE): | |
| PROJECT MANAGER: | THOMAS SAVARY / BRUCE BORDES | PROJECT NUM REFERENCE.: | 6526-S-265-605 / OC-989680 |
| PHONE NUMBER: | 514-334-7230 | LOT NUMBER: | |

| SUPPLIER | EQPT CODE | EQPT TAG NO | DIA | DESCRIPTION | INFO 1 | INFO 2 | INFO 3 | APPLIC. | NOTE | REV |
|---|---|---|---|---|---|---|---|---|---|---|
| MCLANAHAN | ST-999-006 | 65PSR68007A | | SLUDGE SPLITTER TANK PUMP #1 | DESCRIPTION: SPLIT CASING HORIZONTAL CENTRIFUGAL PUMP / 3 x 3 // MANUF.: McLanahan// MODEL: SÉRIE IIIr 75x75 // SUCTION AND DISCHARGE FLANGES: 3" ANSI CLASS 150 B16.5 // DRY GLAND TYPE D // CLOSED VANE IMPELLER // CASINGS: CAST IRON | // LINING: NITRILE // ROTATING SEAL: NITRILE RUBBER // STATIC SEAL: CERAMIC // 5 HP WEG IEEE 841 MOTOR PREMIUM EFFICIENCY 575V/3PH/60HZ // BELTED DRIVE OUTPUT SPEED 736 RPM AT 60HZ | 40M3/H@5 Mh20 TDH // C/W DRIP PAN | CLARIFIER #1 SLUDGE SPLITTER TANK | | 1 |
| MCLANAHAN | ST-999-006 | 65PSR68007C | | SLUDGE SPLITTER TANK PUMP #3 | DESCRIPTION: SPLIT CASING HORIZONTAL CENTRIFUGAL PUMP / 3 x 3 // MANUF.: McLanahan// MODEL: SÉRIE IIIr 75x75 // SUCTION AND DISCHARGE FLANGES: 3" ANSI CLASS 150 B16.5 // DRY GLAND TYPE D // CLOSED VANE IMPELLER // CASINGS: CAST IRON | // LINING: NITRILE // ROTATING SEAL: NITRILE RUBBER // STATIC SEAL: CERAMIC // 5 HP WEG IEEE 841 MOTOR PREMIUM EFFICIENCY 575V/3PH/60HZ // BELTED DRIVE OUTPUT SPEED 736 RPM AT 60HZ | 40M3/H@5 Mh20 TDH // C/W DRIP PAN | SLUDGE SPLITTER TANK SPARE PUMP | | 1 |

**This page is intentionally left blank**

INFORMATION CONTAINED WITHIN THIS DOCUMENT IS A TRADE SECRET & ANY USE OF THE INFORMATION, EXCEPT BY ITS INTENDED RECEIVER, IS STRICTLY PROHIBITED. ANY MISAPPROPRIATION OF THE INFORMATION SHALL MAKE THE UNINTENDED RECEIVER LIABLE FOR ANY AND ALL DAMAGES SUFFERED AS A RESULT BY THE MCLANAHAN CORPORATION.

| DESCRIPTION: | DESIGNED BY: | ORIGIN: | DWG SIZE: |
|---|---|---|---|
| GENERAL ARRANGEMENT<br>3" X 3" PUMP ASSEMBLY<br>TYPICAL FOR ALL GLANDS & LININGS<br>TABLE MOUNTED MOTORS (5-30 HP) | BFERRELL | TN | B |
| | DRAWN BY: BFERRELL | DATE: 12/2/2013 | SCALE: AS NOTED |
| | CHECKED BY: BFERRELL | DATE: 12/2/2013 | SHEET#: 1 /1 |
| REFERENCE DWG: N/A | | | |
| PART NUMBER: 3X3GA / WEIGHT: AS NOTED | DRAWING NUMBER: 3X3GA | | REV: 00 |

NOTE: CRANE & CRAWL ASSEMBLY NOT SHOWN HEREIN

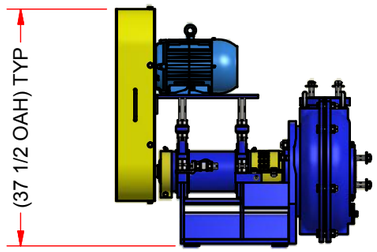


**7.5 - 10 HP MOTORS**
ESTIMATED WEIGHTS:
7.5 HP MOTOR = 899.0 LBS
10 HP MOTOR = 917.0 LBS
SCALE 1:24

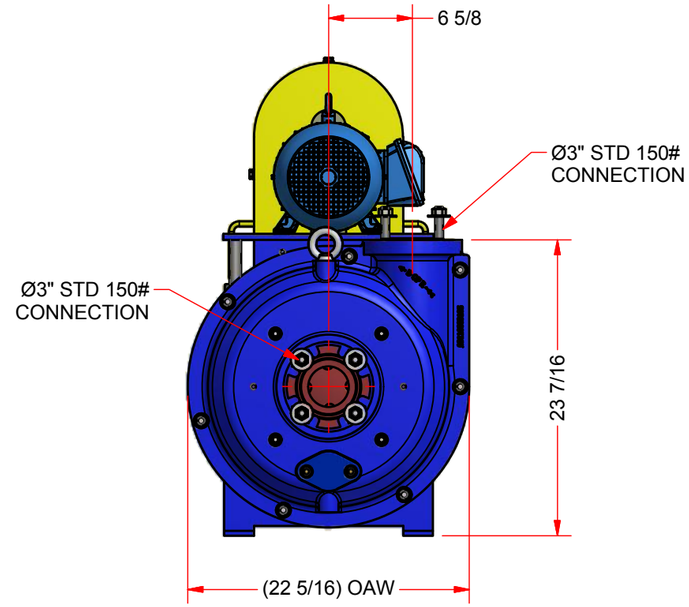


**FRONT**
ESTIMATED WEIGHT: 840.0 LBS
SCALE 1:12

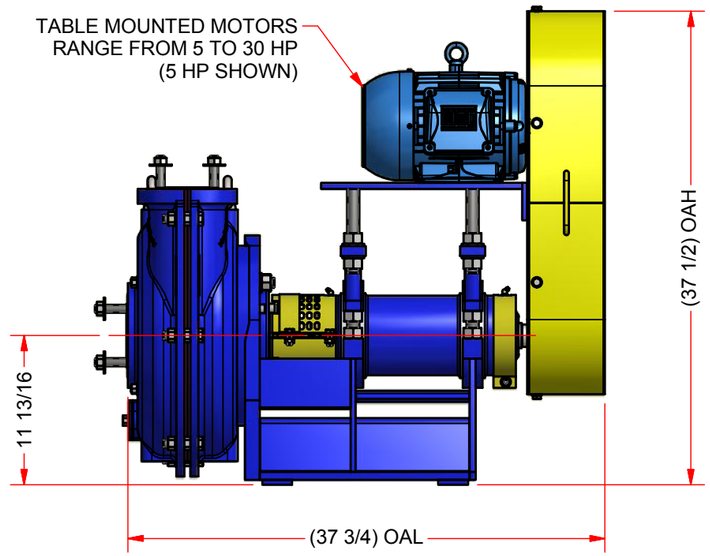


**SIDE**

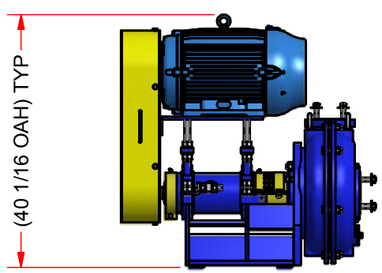


**15 - 30 HP MOTORS**
ESTIMATED WEIGHTS:
15 HP MOTOR = 996.0 LBS
20 HP MOTOR = 1,036.0 LBS
25 HP MOTOR = 1,133.0 LBS
30 HP MOTOR = 1,182.0 LBS
SCALE 1:24

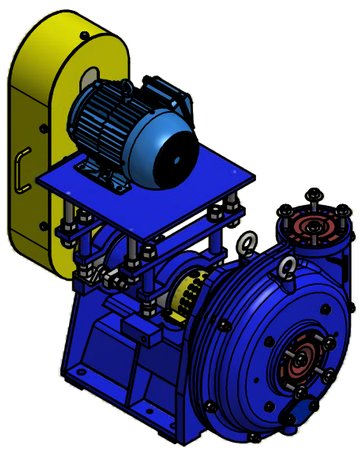

**ISOMETRIC**
NTS

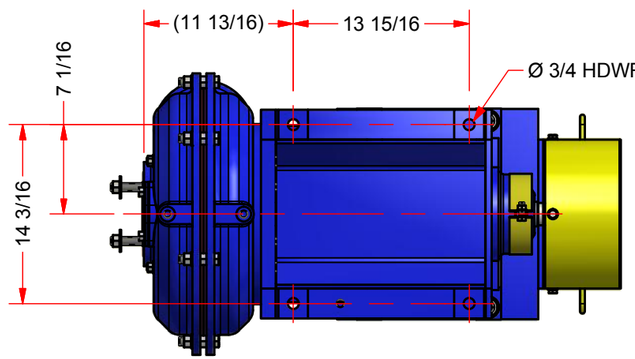


**BOTTOM**
FOOT PRINT

**This page is intentionally left blank**

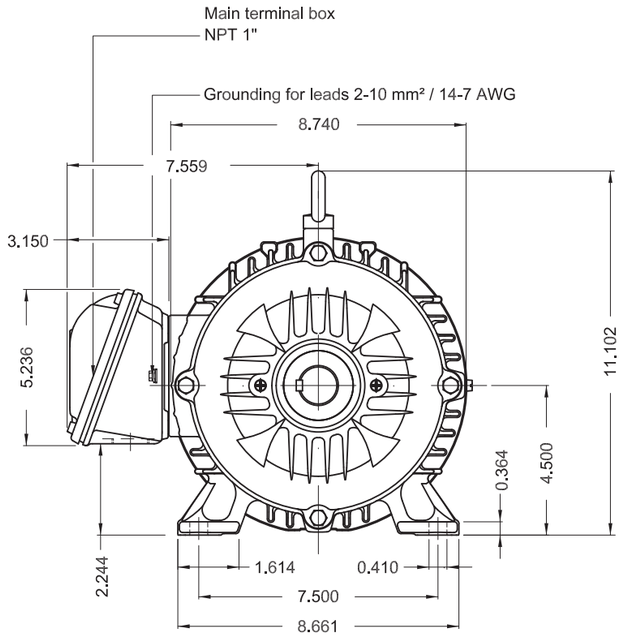


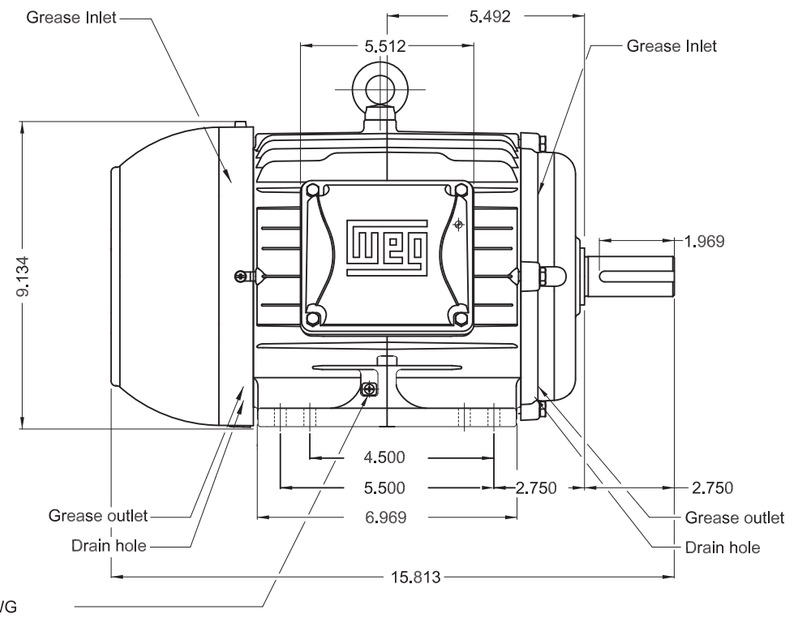


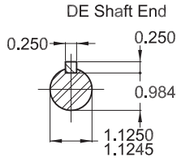


Color RAL 5009

Painting plan 202E

Mounting B3R(D)

5 HP 04 Poles 60Hz | A

| ECM | LOC | SUMMARY OF MODIFICATIONS | EXECUTED | CHECKED | RELEASED | DATE | VER |
|---|---|---|---|---|---|---|---|

| | |
|---|---|
| EXECUTED | PIRWBUSER |
| CHECKED | |
| RELEASED | |
| REL DT. | |

THREE PH. W22 NEMA P.EFF MOTOR IEEE841
FRAME 182/4T IP55 TEFC

PREVIEW

WDD

WMO Jaragua do Sul Product Engineering

SHEET 1 / 1

Dimensions in inches

XME A3

WEG's property. Forbidden reproduction without previous authorization.

**This page is intentionally left blank**

# DATA SHEET

## Three Phase Induction Motor - Squirrel Cage

| | |
|---|---|
| Customer | : |

| | | | |
|---|---|---|---|
| Product line | : W22 IEEE 841 NEMA Premium Efficiency Three-Phase | Product code : | 11433808 |
| | | Catalog # : | 00518ST3HIE184T-W22 |

| | | | |
|---|---|---|---|
| Frame | : 182/4T | Locked rotor time | : 27s (cold) 15s (hot) |
| Output | : 5 HP (3.7 kW) | Temperature rise | : 80 K |
| Poles | : 4 | Duty cycle | : Cont.(S1) |
| Frequency | : 60 Hz | Ambient temperature | : -20°C to +40°C |
| Rated voltage | : 575 V | Altitude | : 1000 m.a.s.l. |
| Rated current | : 5.16 A | Protection degree | : IP55 |
| L. R. Amperes | : 38.7 A | Cooling method | : IC411 - TEFC |
| LRC | : 7.5x(Code J) | Mounting | : F-1 |
| No load current | : 2.56 A | Rotation[1] | : Both (CW and CCW) |
| Rated speed | : 1755 rpm | Noise level[2] | : 56.0 dB(A) |
| Slip | : 2.50 % | Starting method | : Direct On Line |
| Rated torque | : 2.07 kgfm | Approx. weight[3] | : 49.9 kg |
| Locked rotor torque | : 229 % | | |
| Breakdown torque | : 320 % | | |
| Insulation class | : F | | |
| Service factor | : 1.25 | | |
| Moment of inertia (J) | : 0.0169 kgm² | | |
| Design | : B | | |

| Output | 25% | 50% | 75% | 100% |
|---|---|---|---|---|
| Efficiency (%) | 88.2 | 88.5 | 89.5 | 89.5 |
| Power Factor | 0.37 | 0.62 | 0.74 | 0.80 |

| Foundation loads | |
|---|---|
| Max. traction | : 113 kgf |
| Max. compression | : 163 kgf |

| | | Drive end | Non drive end |
|---|---|---|---|
| Bearing type | : | 6207 C3 | 6206 C3 |
| Sealing | : | Inpro/Seal | Inpro/Seal |
| Lubrication interval | : | 20000 h | 20000 h |
| Lubricant amount | : | 7 g | 5 g |
| Lubricant type | : | Mobil Polyrex EM | |

Notes

This revision replaces and cancel the previous one, which must be eliminated.
(1) Looking the motor from the shaft end.
(2) Measured at 1m and with tolerance of +3dB(A).
(3) Approximate weight subject to changes after manufacturing process.
(4) At 100% of full load.

These are average values based on tests with sinusoidal power supply, subject to the tolerances stipulated in NEMA MG-1.

| Rev. | Changes Summary | Performed | Checked | Date |
|---|---|---|---|---|
| | | | | |

| | | | | |
|---|---|---|---|---|
| Performed by | | | | |
| Checked by | | | Page | Revision |
| Date | 21/01/2021 | | 1 / 6 | |

This document is exclusive property of WEG S/A. Reprinting is not allowed without written authorization of WEG S/A.
Subject to change without notice

**This page is intentionally left blank**

# SLURRY PUMPS

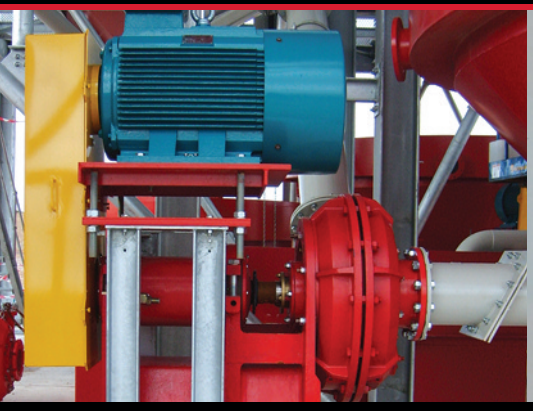

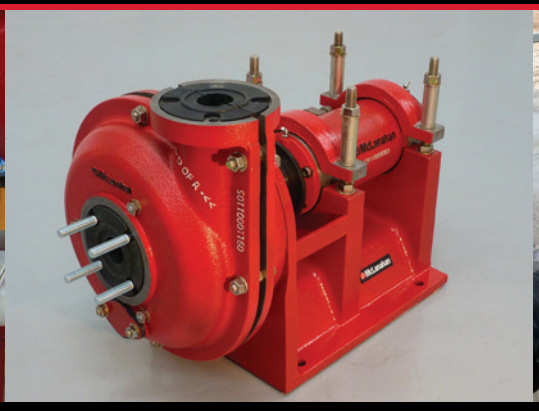



## RELIABLE AND LONG LASTING

McLanahan's centrifugal Slurry Pumps are rubber-lined and abrasion resistant for long lasting service, low lifetime costs and straight forward servicing.

Eight models with discharge port sizes from 35mm to 250mm that can accommodate various options in lining material and gland type choices.

McLanahan®

mclanahan.com

## APPLICATIONS

- Sand & Gravel / Minerals Processing
- Soil Washing / Remediation
- Waste Water Recovery / Disposal
- Concrete Wash-out



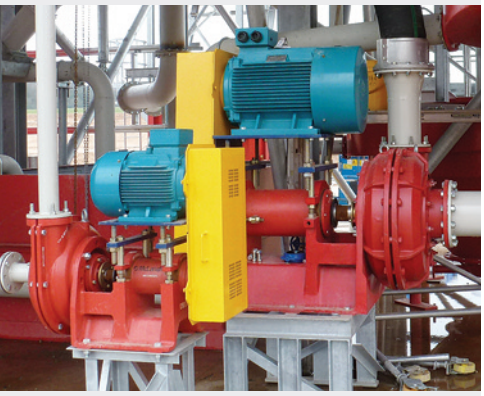

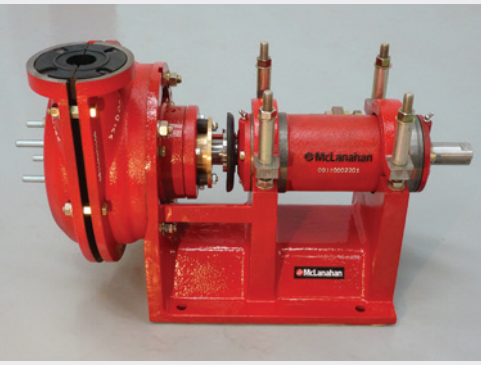

## WETTED PARTS

Standard pumps are equipped with natural rubber liners and impeller. However, bespoke options are available to suit a specific process and include premium natural rubber, Nitrile and food grade rubber. Shaft sleeves are from 304 St, but may be manufactured from other materials or coated to special order.

## GLAND OPTIONS

**D (Dry) Gland**

An abrasion resistant Natural Rubber "Face Seal" riding a "Hard Face" and lubricated naturally by the process fluid. Controlled seepage of process fluid. Optional clean water injection facility.

**H (Hydro) Gland**

Clean water is injected into the inter-space between a pair of gland seals in tandem. Slight dilution – but total containment – of the process fluid. Controlled water seepage to atmosphere.

**P (Packed) Gland**

Gland packing mechanically adjusted to "ride" the shaft sleeve. Highest pressure capability. Some process dilution and water (or lubricating grease) seepage to atmosphere.

## MOTOR AND DRIVE

McLanahan supplies pumps bare-shaft or complete with motor, overhead mounting platform, vee-belt drive and guard. Motors can also be oriented in Z-vee fashion, or side mounted on slide rails.

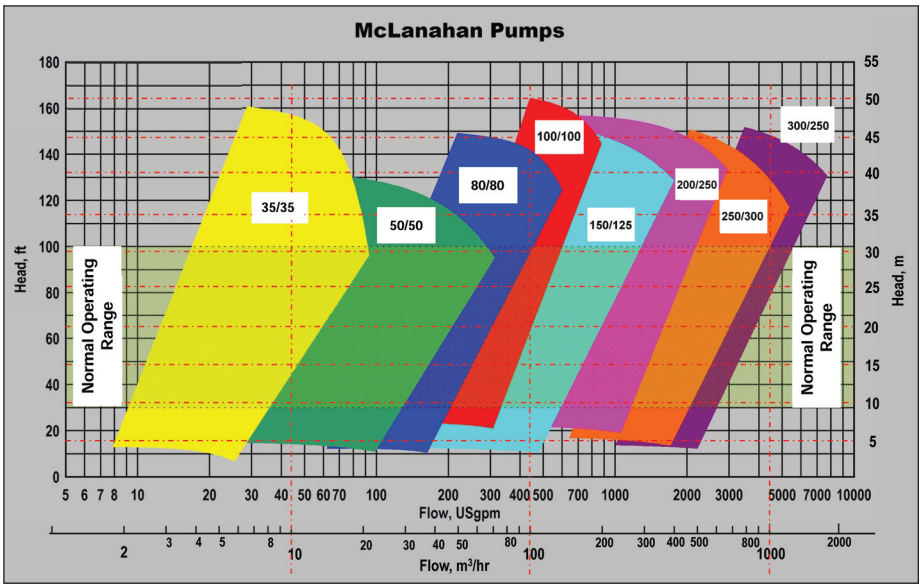


## PUMP SELECTION

Initial pump selection can be determined by using the chart above as a guide. A qualified McLanahan engineer can determine the best pump performance for a specific application.

## SPARES

High quality spare parts are available including moulded rubber Impellers, casing liners and suction bush components. All parts are available in various materials and hardness to suit differing applications. Mechanical spares such as fully assembled bearing housing cartridges and gland parts are available as kits for ease of procurement.


| | | | |
|---|---|---|---|
| **NORTH AMERICA** | CORPORATE HEADQUARTERS | | |
| | Pennsylvania, USA | +1 (814) 695 9807 | sales@mclanahan.com |
| | Florida, USA | +1 (863) 667 2090 | polymers@mclanahan.com |
| | Iowa, USA | +1 (319) 365 0441 | sales@mclanahan.com |
| | Tennessee, USA | +1 (615) 451 4440 | sales@mclanahan.com |
| **AUSTRALIA** | New South Wales | +61 2 4924 8248 | sales@mclanahan.com.au |
| | Queensland | +61 7 4952 3377 | sales@mclanahan.com.au |
| **EUROPE** | England, UK | +44 (0) 1420 542489 | enquiries@mclanahan.uk.com |
| **ASIA** | Hyderabad, India | +91 (40) 2355 4071 | info@mclanahan-nawa.com |


Guards are recommended for safe operation of equipment. In some photos, safety guards may not be shown.

McLanahan

Pump Selection Program

Powered by TAS

### Pump Details

| | | |
|---|---|---|
| Pump Model | M3H-CR 3/3 | |
| Rated Flow | 40.00 | m^3/hr |
| Rated Head | 5.00 | m |
| Efficiency | 52.82 | % |
| QBEP | 99.10 | % |
| Impeller Diameter | 10 | in |
| Pump Speed | 736 | rpm |
| Minimum Speed | 600 | rpm |
| Maximum Speed | 2100 | rpm |
| Tip speed | 32.09 | ft/s |
| NPSH required | 5.58 | ft |

### Selection Details

| | | |
|---|---|---|
| Required Flow | 40.00 | m^3/hr |
| Required Head | 5.00 | m |
| Static Head | 0.00 | m |
| Friction Head | 5.00 | m |
| Suction Height | 0.00 | m |
| Discharge Height | 0.00 | m |
| Discharge Pressure | 0.00 | kPa |
| Head Ratio | 0.97 | |
| NPSH Available | 0.00 | m |
| No. of pumps | 1 | |
| Power absorbed - Total | 2.00 | hp |

### Slurry Details

| | | |
|---|---|---|
| Solid flow rate | 10.25 | Tons/hr |
| Slurry flow rate | 40.00 | m^3/hr |
| SG solid | 2.70 | |
| SG liquid | 1.00 | |
| SG slurry | 1.14 | |
| % comp. by weight | 20.00 | % |
| % comp by volume | 8.47 | % |
| Ave. particle size | 100.00 | microns |
| Max particle size | 300.00 | microns |
| Widely graded particles | False | |
| Froth factor | 0.00 | |
| Set ER & HR manually | False | |
| Efficiency ratio | 0.975 | |
| Head ratio | 0.975 | |

### Electrical Driver Details

| | | |
|---|---|---|
| Motor | 5.00 | hp |
| Power absorbed - @ Duty | 1.58 | hp |
| Power required | 1.82 | hp |
| Frame size | 184.00 | |
| Temperature rise | 105.00 | °C |
| Insulation class | F | |
| Bearing size D/E | 6207.00 | |
| Bearing size N/D/E | 6206.00 | |
| Weight | 92.60 | |
| Shaft size | 1.13 | |

JMI - 5000220043 /

20210115-013, January 21, 2021

M3H-CR 3/3 , 736 rpm, 5 hp

©2018-2019 McLanahan. This curve is the property of McLanahan. And must not be reproduced or disclosed without permission in writing. All rights are reserved.

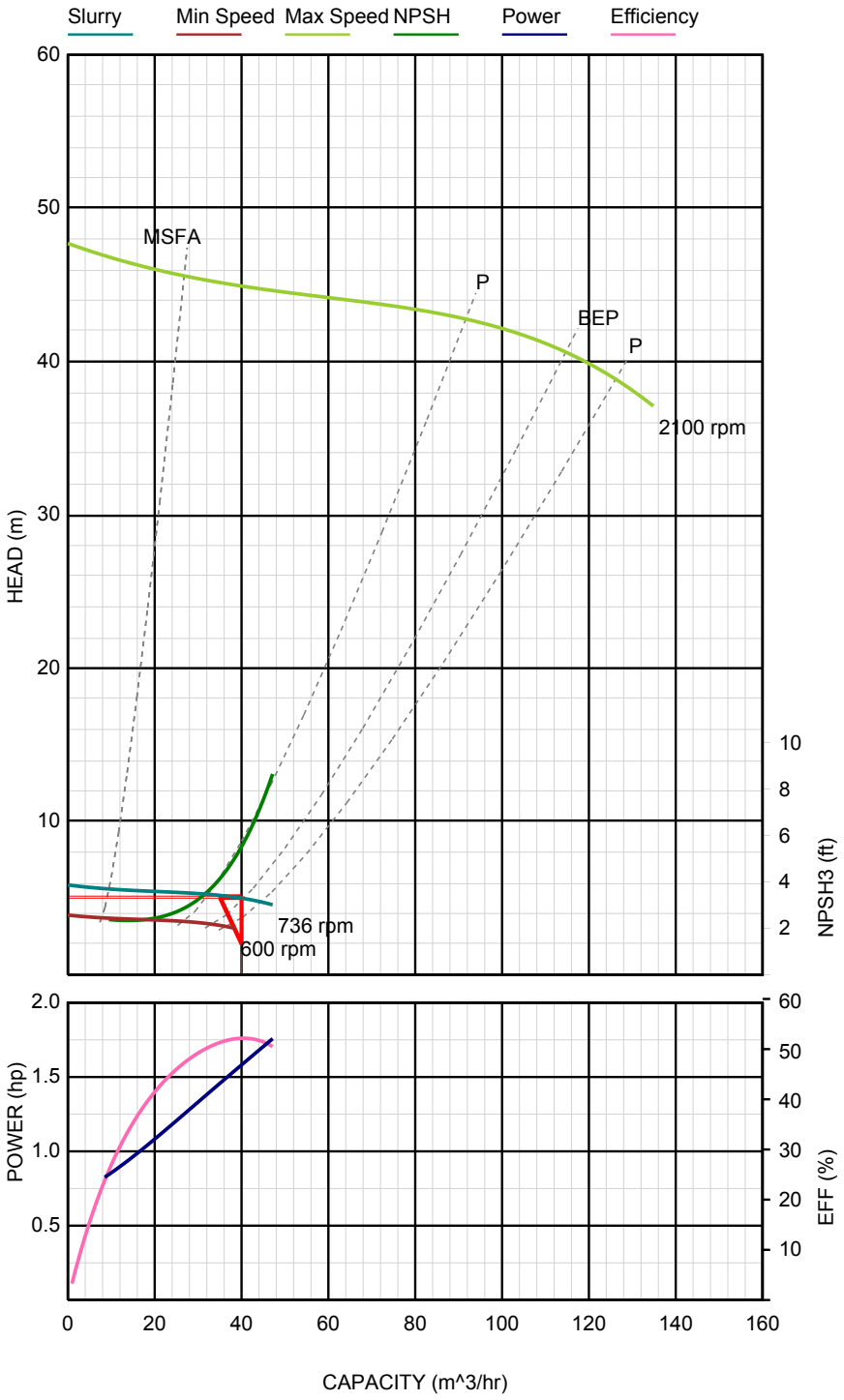


## Pump model: M3H-CR 3/3

| Pump | |
|---|---|
| Pump range | -CR |
| Speed | 736 rpm |
| Max Speed | 2100 rpm |
| Efficiency @ BEP | 51.41 % |
| No. of pumps | 1 |
| Power absorbed - Total | 2 hp |

| Duty Point | |
|---|---|
| Flow | 40 m^3/hr |
| Static Head | 0 m |
| Total Head | 5 m |
| Efficiency | 52.82 % |
| NPSH required | 5.705 ft |
| % of BEP | 99.1 % |
| Power absorbed - @ Duty | 1.582 hp |
| Motor size | 5 hp |
| Tip Speed | 32.09 ft/s |
| Impeller Diameter | 10 in |
| Speed Head | 5.128 m |

| Slurry Data | |
|---|---|
| Solid flow rate | 10.25 Tons/hr |
| Solid SG | 2.7 |
| Slurry SG | 1.144 |
| % Comp. by Weight | 20 % |
| % comp. by Volume | 8.475 % |
| Ave. Particle size (D50) | 100 microns |
| Max Particle Size | 300 microns |
| Head Ratio | 0.975 |

**Engineer's Notes**

**Project name:** MELIADINE-BPC UPGRADE

**Project#:** 5000220043

**Document #:** SPK_0110_MISC_VWT

**by:** GM

**chkd:** ED

**appvd:** TS

# SPLITTER BOX CLARIFIER #1

# VALVES

**OIM manual section:** 4.2.8.3

**This page is intentionally left blank**

# CS-312-662 : Identification sheet

| | | | | | |
|---|---|---|---|---|---|
| VWTC PROJECT NUMBER: | 5000220043 | | | REV: | 1 |
| PROJECT NAME: | AEM MELIADINE - BPC UPGRADE | SUBMITTED TO (COMPANY): | AEM | | |
| ENGINEER: | EMMANUELLE DORMOY | SUBMITTED TO (RESPONSIBLE): | | | |
| PROJECT MANAGER: | THOMAS SAVARY / BRUCE BORDES | PROJECT NUM REFERENCE.: | 6526-S-265-605 / OC-989680 | | |
| PHONE NUMBER: | 514-334-7230 | LOT NUMBER: | | | |

| SUPPLIER | EQPT CODE | EQPT TAG NO | DIA | DESCRIPTION | INFO 1 | INFO 2 | INFO 3 | APPLIC. | NOTE | REV |
|---|---|---|---|---|---|---|---|---|---|---|
| DURCO | ST-312-664 | 100-PG99-1405 | N/A | PUMP #1 INLET ISOLATION VALVE | TYPE: PLUG \|150 PSI//MANUFACTURER : Flowserve DURCO//MODEL : 4''T4E11C11D033NW //CONNECTION TYPE : FLANGED #150/\| 100 mm (4")//BODY : FONTE DUCTILE// SEAL \| SEAT :PFA MOLDED PLUG | | | CLARIFIER #1 SLUDGE SPLITTER TANK | | 1 |
| DURCO | ST-312-664 | 100-PG99-1407 | N/A | PUMP #1 OUTLET ISOLATION VALVE | TYPE: PLUG \|150 PSI//MANUFACTURER : Flowserve DURCO//MODEL : 4''T4E11C11D033NW //CONNECTION TYPE : FLANGED #150/\| 100 mm (4")//BODY : FONTE DUCTILE// SEAL \| SEAT :PFA MOLDED PLUG | | | CLARIFIER #1 SLUDGE SPLITTER TANK | | 1 |
| DURCO | ST-312-664 | 100-PG99-1404 | N/A | RECIRCULATION ISOLATION VALVE | TYPE: PLUG \|150 PSI//MANUFACTURER : Flowserve DURCO//MODEL : 4''T4E11C11D033NW //CONNECTION TYPE : FLANGED #150/\| 100 mm (4")//BODY : FONTE DUCTILE// SEAL \| SEAT :PFA MOLDED PLUG | | | CLARIFIER #1 SLUDGE SPLITTER TANK | | 1 |

**This page is intentionally left blank**

FLOWSERVE

# Durco T4E Lined Plug Valves

## Fluoropolymer Lined Valves



*Experience In Motion*

## History

*Flowserve Durco T4E valves have been designed and developed with the latest technology and are the most preferred fluoropolymer lined valves in the global chemical industries.*
*Durco T4E valves provide maximum corrosion resistance and the elimination of product contamination at a reasonable cost.*

## Available in a Broad Size Range and

- ***T4E1*** *ASME Class 150 is available in sizes ½" through 12"*
- ***T4E2*** *DIN PN 16 is available in sizes DN 15 through DN 300*
- ***T4E3*** *ASME Class 300 is available in sizes ½" through 10"*

## Extended Pressure Classes

- ***T4E1 and T4E2*** *rated 180 psi @400 °F (12.4 bar @ 204 °C), 250 psi @ 100 °F (17.2 bar @ 100 °C)*
- ***T4E3*** *rated 320 psi @ 400 °F (22 bar @ 204 °C), 740 psi @ 100 °F (51 bar @ 100 °C)*

*Available with pneumatic or electric actuators for On-Off or modulating control applications.*
*All T4E valve series are rated to 4 Kpa (30 inches Hg) vacuum at ambient temperature.*

# Features

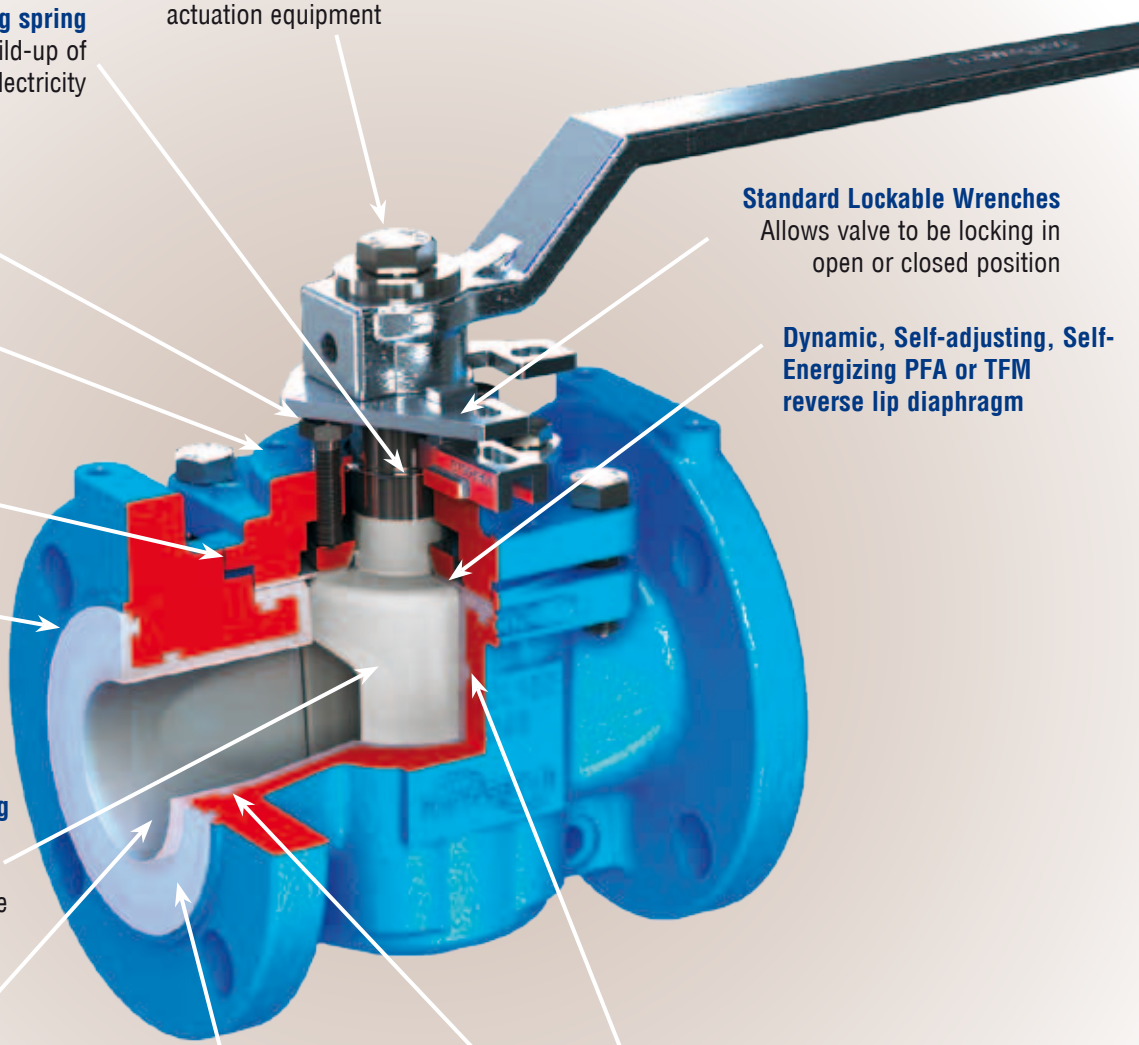

**Double-D plug stem**
accepts most standard actuation equipment

**Grounding spring**
To avoid build-up of static electricity

**Inline adjustment**
Stops thru-line leakage

**ISO 5211 Mounting Pad**
Universal flange for easy actuation mounting

**Anti-Rotation Lugs**
Help to eliminate stress on fasteners during actuation

**Raised Lip**
Prevents cold flow outward

**Standard Lockable Wrenches**
Allows valve to be locking in open or closed position

**Dynamic, Self-adjusting, Self-Energizing PFA or TFM reverse lip diaphragm**

**Solid Encapsulated PFA Molded Plug**
All plug inserts have anchor holes to ensure a strong adhesion of the plug PFA liner material even under extreme cycling conditions

**Large Ports**
Offer good Cv values. Reduced frictional losses & pressure drop

**High Quality PFA Liner**
Protects the body and forms the flange gasket. The PFA liner is resistant against a wide variation of chemical products

**T-Slots in Critical Areas to Lock Liner Against Body Wall**
Advantage will be a tight and perfect fit of the liner and an additional support during vacuum service

# Additional Benefits

## Benefits that give you the extra security which you will appreciate when using the T4E valves

### Body Liner

- A perfectly fixed PFA body liner is well anchored to the body by means of machined T-slots. The plug substrate has anchor holes to ensure that the PFA liner material is securely attached to the plug.
- Due to the selected mode to lock the liner to the valve body and plug, the T4E valve series is very suitable for extreme service conditions including vacuum applications at elevated temperatures.
- The PFA body liner covers all wetted surfaces in the body.
- Due to it's large sealing surface a tight shut-off is assured.
- In addition to the large seating area the valve is fully bi-directional and the seal is totally independent of line pressure.

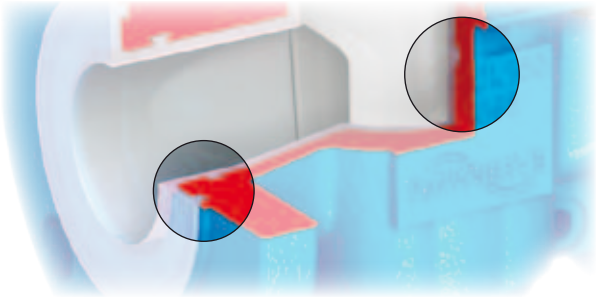

### In-Line Adjustment

- No disassembly required to restore seating; plug can be reseated with a quick and easy in-line adjustment.
- An open end wrench and a few seconds are the extent of your maintenance requirements.

There are:

- No seats to replace
- No lengthy production disruption
- No piping disconnection
- No complicated, time-consuming maintenance procedures
- No hazards to personnel

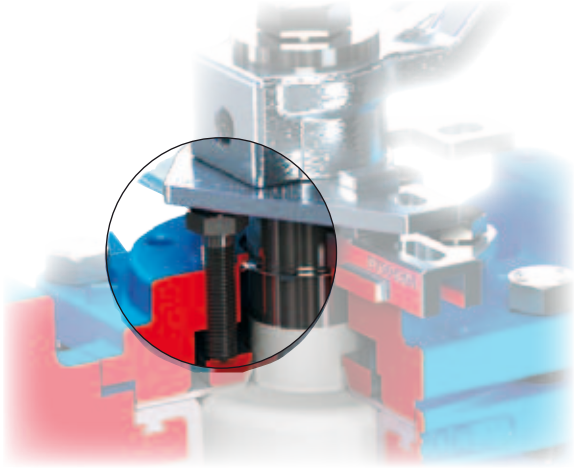

### Secure Sealing

- A dynamic self-adjusting, self energized reverse lip PFA diaphragm seal prevents stem leakage.
- If line pressure forces liquid to the stem seal area, the self-energizing reverse lip PFA diaphragm will be forced against the stem to prevent external leakage.
- A sealing surface as much as 10x greater than other lined valves assures drop tight shut-off.
- In addition to the large sealing area, sealing is both upstream and downstream and is totally independent of line pressure.

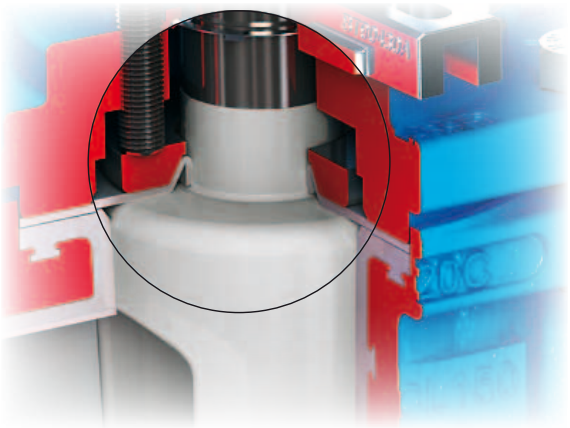

## Weepholes

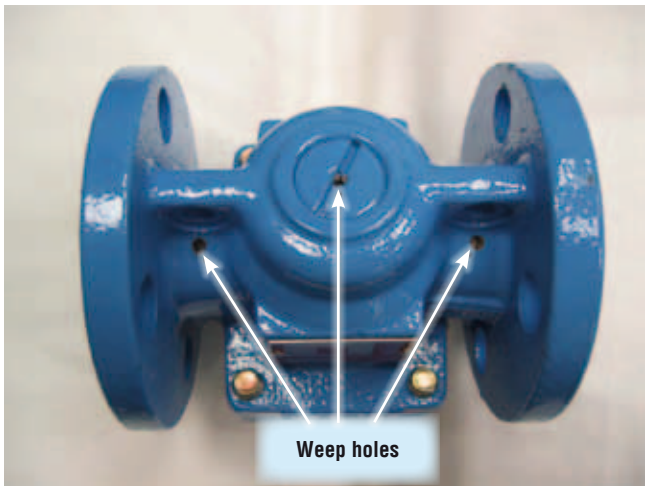


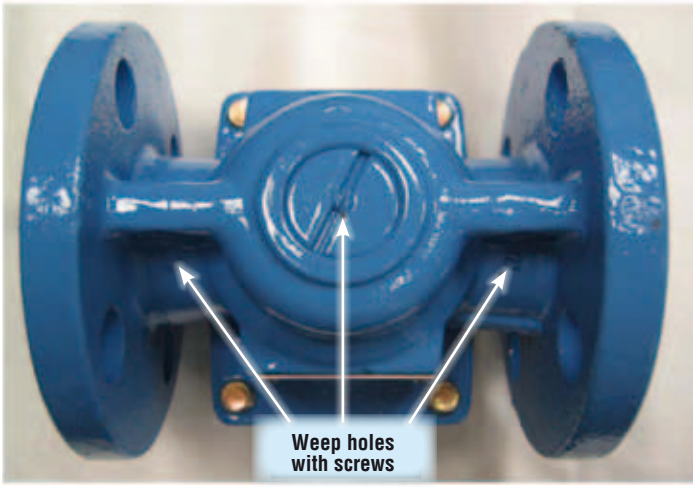


## Weepholes for early leakage detection

Durco T4E valves are supplied with three weepholes that are plugged with screws. The customer has the option to remove the screws. In so doing he is able to detect any leakage of process fluid through the liner and to take appropriate action.

## Pressure-Temperature-Diagram - T4E1 and T4E2

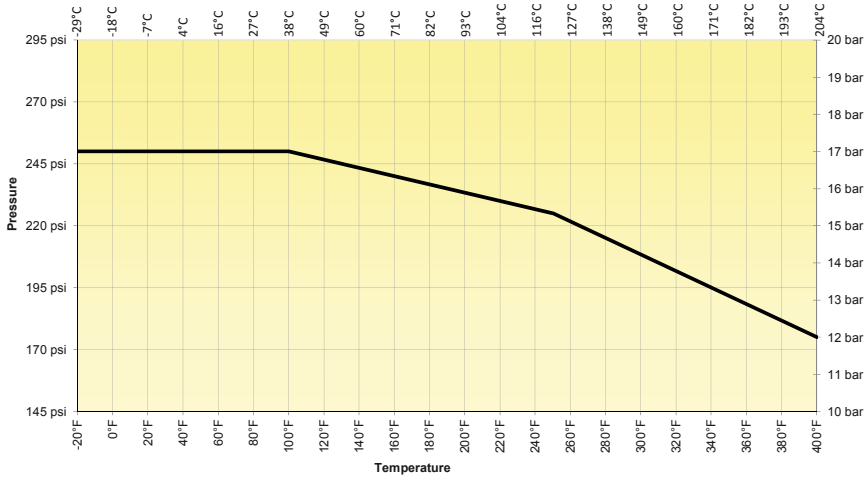


## Pressure-Temperature-Diagram - T4E3

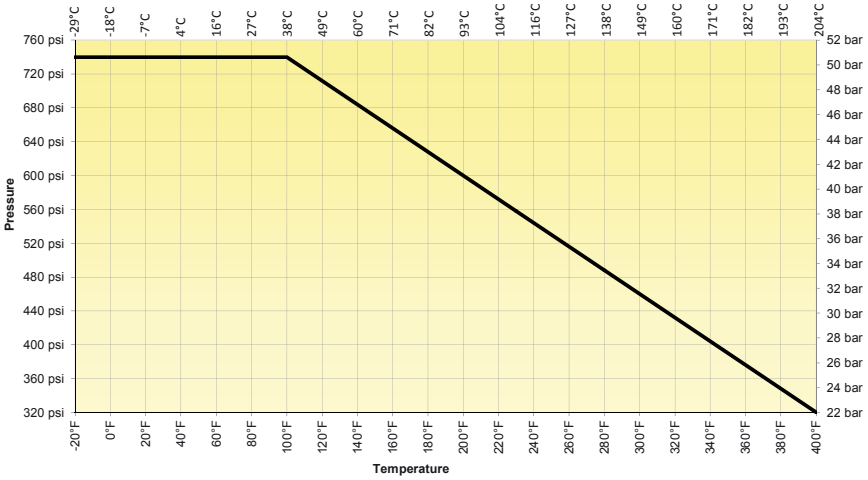

# Durco T4E Automated Valves




*Choose from a complete line of Flowserve Automax Automation Equipment for precise proportioning and On-Off control.....or we'll build a control package to your specification.*

*Flowserve Automax, a specialist in complete automation systems, produces a broad line of rack and pinion, heavy-duty, electric and linear actuators. In addition, a comprehensive line of engineered special control circuits, solenoid valves, limit switches, positioners and actuator mounting kits is offered.*

***Actuator Mounting***

*The body style of the T4E offers a choice of two locations for actuator mounting : an ISO 5200 pattern on the topcap or the flat-top pads of the flanges.*

## Software Capability

*Flowserve offers a state-of-the-art range of software to help in sizing valves and actuation and creating drawings.*

## Modulating Control

*V-port T4E valves are available in 1" (DN 25) through 4" (DN 100) sizes with Cv (Kv) values of 1 through 187 (Kv of 1 through 161). Standard port T4E valves are available in ½" (DN 15) through 12" (DN 300) sizes with Cv (Kv) values from 15 through 3200 (Kv from 13 through 2750).*

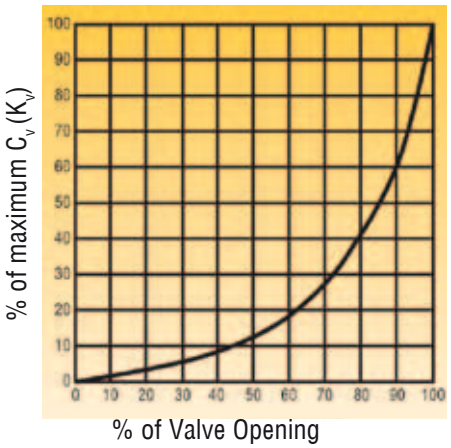


## Control Plugs

| Size | Cv | Kv | Plug Type |
|---|---|---|---|
| 1" | 1 | 1 | slotted plug |
| 1" | 3 | 3 | slotted plug |
| 1" | 8 | 7 | V-port |
| 1" | 13 | 11 | V-port |
| 1" | 25 | 21 | V-port |
| 1½" | 30 | 26 | V-port |
| 2" | 54 | 46 | V-port |
| 3" | 89 | 76 | V-port |
| 4" | 187 | 161 | V-port |

# Material Specification

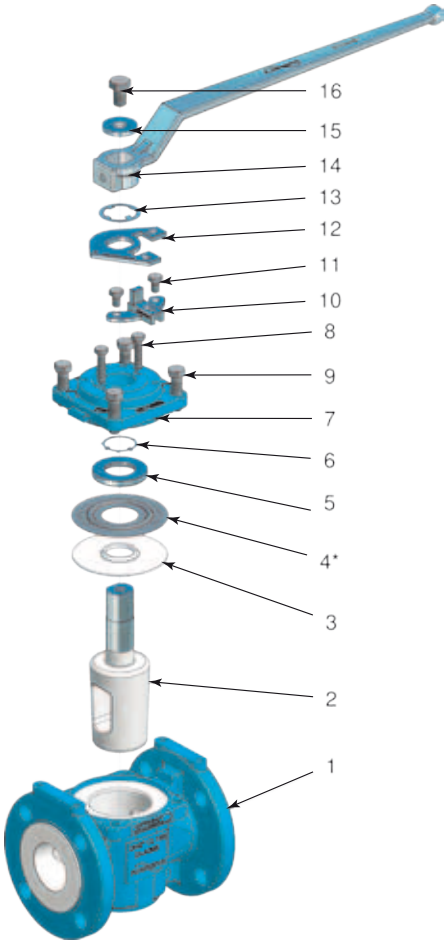


## T4E1, T4E2 and T4E3 (½" - 6")

| No. | Designation | Material |
|---|---|---|
| 1 | Body T4E1 | Ductile cast iron - EN-JS1049/ASTM A395, PFA lined |
| | Body T4E3 | Carbon steel ASTM A216 grade WCB, PFA lined |
| 2 | Plug | Ductile cast iron - EN-JS1049/ASTM A395, PFA lined |
| 3 | Diaphragm | T4E1: TFM (PFA*) \| T4E3: PFA |
| 4* | Metal diaphragm | Stainless steel - 302 |
| 5 | Thrust gland | Machining steel - 1.0718 |
| 6 | Grounding spring | Stainless steel - 302 |
| 7 | Top cap T4E1 | Ductile cast iron - EN-JS1049/ASTM A395 |
| | Top cap T4E3 | Carbon steel ASTM A995 Gr CD4MCuN |
| 8 | Adjuster bolt | ASTM A193 grade B7YC |
| 9 | Top cap bolt | ASTM A193 grade B7YC |
| 10 | Stop | Stainless steel ASTM A351/A744 grade CF-8M (316 SS) |
| 11 | Stop fastener | Stainless steel 1.4301 |
| 12 | Stop collar | Carbon steel, protective plated |
| 13 | Stop collar retainer | Stainless steel - 302 |
| 14 | Wrench | Ductile cast iron - EN-JS1082/ASTM A536 |
| 15 | Washer | Stainless steel - 1.4301 |
| 16 | Hexagon bolt | Stainless steel - 1.4301 |

*Optional

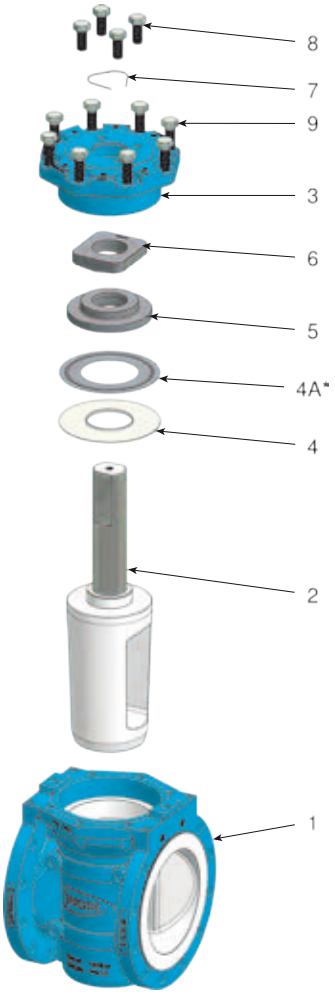


## T4E1 and T4E2 (8" - 12") T4E3 (8" - 10")

| No. | Designation | Material |
|---|---|---|
| 1 | Body T4E1 | Ductile cast iron - EN-JS1049/ASTM A395*, PFA lined |
| | Body T4E3 | Carbon steel ASTM A216 grade WCB, PFA lined |
| 2 | Plug | Ductile cast iron - EN-JS1049/ASTM A395, PFA lined |
| 3 | Top cap T4E1 | Ductile cast iron - EN-JS1049/ASTM A395 |
| | Top cap T4E3 | Carbon steel ASTM A995 grade CD4MCuN |
| 4 | Diaphragm | T4E1: DN8" - TFM (PFA*), DN10"-DN12" - PFA \| T4E3: PFA |
| 4a** | Metal diaphragm | Stainless steel - 302 |
| 5 | Thrust gland | Dupex stainless steel ASTM A995 Gr CD4MCuN |
| 6 | Adjuster | Dupex stainless steel ASTM A995 Gr CD4MCuN |
| 7 | Grounding spring | Stainless steel - 302 |
| 8 | Adjuster bolt | 88YC |
| 9 | Hexagon bolt | 88YC |

* Other materials upon request
** Optional

# Dimensions

## Valve Dimensions

Dimensions are in Inches and millimetres. Weights are in lb. and kg.

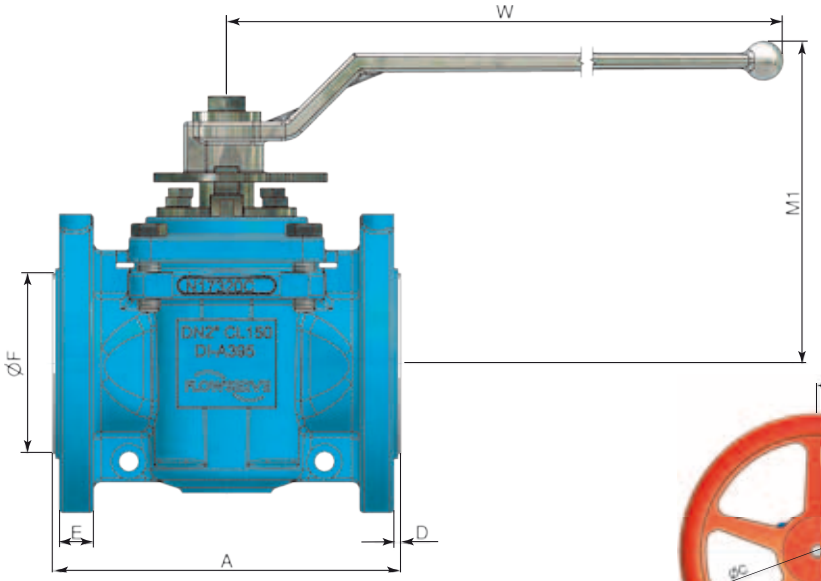


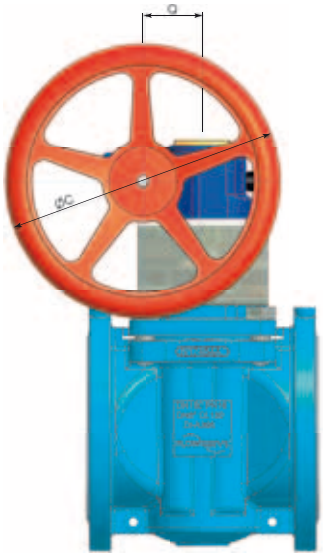


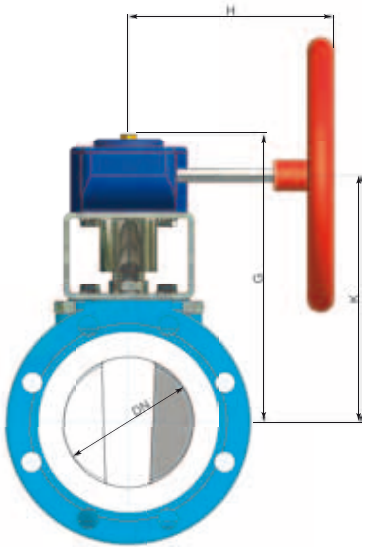


## T4E1, T4E2 and T4E3 ½˝ to 12˝

| Size | Units | A | | | D | | | E | | | ØF | | | W | MI | ØC | H | G | K | Q | Weight | | | |
|---|---|---|---|---|---|---|---|---|---|---|---|---|---|---|---|---|---|---|---|---|---|---|---|---|
| | | 150 | 300 | DIN PN16 | 150 | 300 | DIN PN16 | 150 | 300 | DIN PN16 | 150 | 300 | DIN PN16 | | | | | | | | Units | 150 | 300 | DIN PN16 |
| ½" | inch | 4.3 | 5.5 | 5.1 | 0.12 | 0.16 | 0.24 | 0.43 | 0.51 | 0.47 | 1.4 | 1.4 | 1.65 | 10.2 | 5.5 | | | | | | lb. | 8.2 | 9.9 | 9.3 |
| | mm | 109 | 140 | 130,0 | 3,0 | 4,1 | 6,0 | 11 | 13 | 12 | 36 | 36 | 42 | 259 | 140 | | | | | | kg, | 3,7 | 4,5 | 4,2 |
| ¾" | inch | 4.6 | 6.0 | 5.9 | 0.12 | 0.24 | 0.24 | 0.49 | 0.61 | 0.63 | 1.7 | 1.7 | 2.20 | 10.2 | 5.5 | | | | | | lb. | 9.0 | 12.3 | 10.8 |
| | mm | 117 | 152 | 150,0 | 3,0 | 6,1 | 6,0 | 12 | 15 | 16 | 43 | 43 | 56 | 259 | 140 | | | | | | kg, | 4,1 | 5,6 | 4,9 |
| 1" | inch | 5.0 | 6.5 | 6.3 | 0.12 | 0.26 | 0.26 | 0.5 | 0.63 | 0.55 | 2.0 | 2.0 | 2.56 | 10.2 | 5.5 | | | | | | lb. | 10.8 | 14.3 | 12.8 |
| | mm | 127 | 165 | 160,0 | 3,0 | 6,6 | 6,5 | 13 | 16 | 14 | 51 | 51 | 65 | 259 | 140 | | | | | | kg, | 4,9 | 6,5 | 5,8 |
| 1½" | inch | 6.5 | 7.5 | 7.9 | 0.16 | 0.26 | 0.26 | 0.63 | 0.74 | 0.59 | 2.9 | 2.9 | 3.35 | 10.2 | 5.7 | | | | | | lb. | 16.3 | 22.3 | 20.1 |
| | mm | 165 | 191 | 200,0 | 4,1 | 6,6 | 6,5 | 16 | 19 | 15 | 74 | 74 | 85 | 259 | 145 | | | | | | kg, | 7,4 | 10,1 | 9,1 |
| 2" | inch | 7.0 | 8.5 | 9.1 | 0.14 | 0.26 | 0.26 | 0.69 | 0.86 | 0.67 | 3.6 | 3.6 | 3.86 | 16.1 | 6.5 | | | | | | lb. | 24.9 | 30.9 | 29.1 |
| | mm | 178 | 216 | 230,0 | 3,6 | 6,6 | 6,5 | 18 | 22 | 17 | 91 | 91 | 98 | 409 | 165 | | | | | | kg, | 11,3 | 14,0 | 13,2 |
| 3" | inch | 8.0 | 11.1 | 12.2 | 0.12 | 0.28 | 0.28 | 0.88 | 1.06 | 0.75 | 5.0 | 5.0 | 5.24 | 16.1 | 7.0 | | | | | | lb. | 38.6 | 52.2 | 45.8 |
| | mm | 203 | 282 | 310,0 | 3,0 | 7,1 | 7,0 | 22 | 27 | 19 | 127 | 127 | 133 | 409 | 178 | | | | | | kg, | 17,5 | 23,7 | 20,8 |
| 4" WO | inch | 9.0 | 12 | 13.8 | 0.16 | 0.28 | 0.28 | 0.88 | 1.18 | 0.75 | 6.2 | 6.2 | 5.98 | 26.5 | 8.7 | | | | | | lb. | 68.5 | 93.4 | 76.5 |
| | mm | 229 | 305 | 350,0 | 4,1 | 7,1 | 7,0 | 22 | 30 | 19 | 157 | 157 | 152 | 673 | 221 | | | | | | kg, | 31,1 | 42,4 | 34,7 |
| 4" GO | inch | 9.0 | 12 | 13.8 | 0.16 | 0.28 | 0.28 | 0.88 | 1.18 | 0.75 | 6.2 | 6.2 | 5.98 | | | 9.8 | 9.6 | 11.0 | 9.6 | 2.1 | lb. | 88 | 147 | 191 |
| | mm | 229 | 305 | 350,0 | 4,1 | 7,1 | 7,0 | 22 | 30 | 19 | 157 | 157 | 152 | | | 250 | 245 | 280 | 245 | 54 | kg, | 39,9 | 66,7 | 43,5 |
| 6" | inch | 10.5 | 15.9 | 10.5 | 0.16 | 0.28 | 0.16 | 0.94 | 1.37 | 0.94 | 8.2 | 8.2 | 8.19 | | | 13.8 | 11.2 | 12.2 | 10.8 | 2.6 | lb. | 128 | 187 | 128 |
| | mm | 267 | 404 | 267 | 4,1 | 7,1 | 4,0 | 24 | 35 | 24 | 208 | 208 | 208 | | | 350 | 285 | 309 | 275 | 67 | kg, | 58,1 | 84,8 | 58,1 |
| 8" | inch | 11.5 | 16.5 | 11.5 | 0.16 | 0.16 | 0.16 | 0.92 | 1.53 | 0.92 | 10.3 | 10.3 | 10.3 | | | 19.7 | 12.6 | 20.7 | 18.0 | 3.6 | lb. | 352 | 450 | 352 |
| | mm | 292 | 419 | 292 | 4,1 | 4,1 | 4,1 | 23 | 39 | 23 | 262 | 262 | 262 | | | 500 | 320 | 525 | 457 | 92 | kg, | 160 | 204 | 160 |
| 10 | inch | 13 | 18 | 13 | 0.16 | 0.16 | 0.16 | 1.3 | 1.81 | 1.3 | 12.4 | 12.4 | 12.4 | | | 23.6 | 14.6 | 27.3 | 22.4 | 5.2 | lb. | 522 | 590 | 522 |
| | mm | 330 | 457 | 330 | 4,1 | 4,1 | 4,1 | 33 | 46 | 33 | 315 | 315 | 315 | | | 600 | 370 | 693 | 570 | 132 | kg, | 237 | 268 | 237 |
| 12 | inch | 14 | | 14 | 0.16 | | 0.16 | 1.41 | | 1.41 | 15 | | 15 | | | 23.6 | 14.6 | 28.3 | 26.1 | 5.2 | lb. | 595 | | 595 |
| | mm | 356 | | 356 | 4,1 | | 4,1 | 36 | | 36 | 381 | | 381 | | | 600 | 370 | 720 | 664 | 132 | kg, | 270 | | 270 |

**Note:** All dimensions are approximate and for illustration purposes only. For exact dimensions consult certified dimensional prints
Valve 8"-12" are shown with double D stems which are standard. However spline shafts are also available for these sizes as an option.
All weights include either wrench or gear operator
Face-to-face dimensions comply to ANSI B16.10 and flange connections comply to ANSI B16.5

# T4E - Dimension sheet for actuator mounting

## Top cap mounting acc. to DIN EN ISO 5211

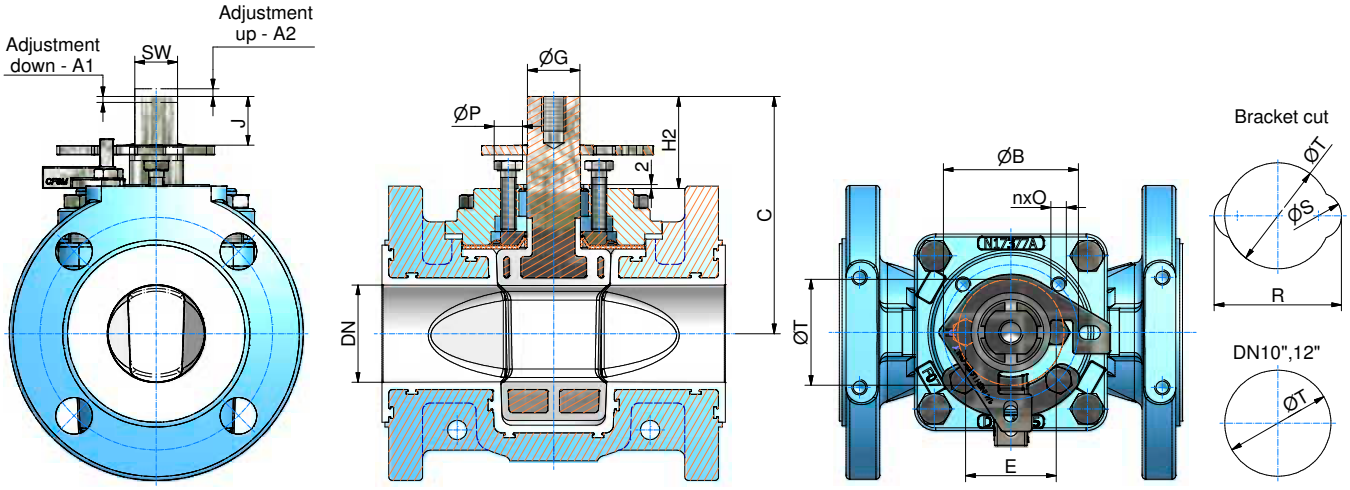


## Flange top mounting

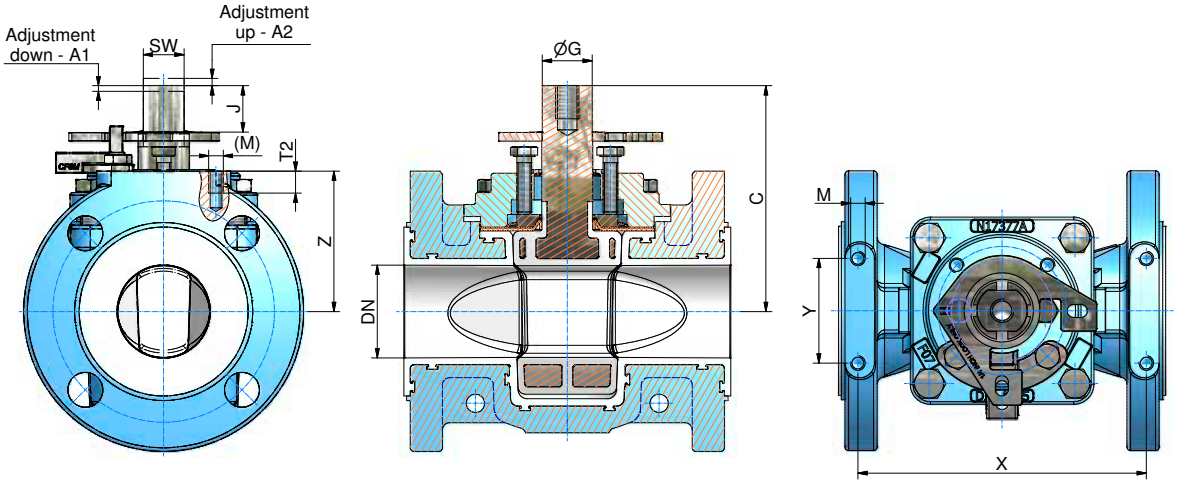


| DN | | SW | ØG | J | H2 | C | Adjustment | | F-Size DIN/ISO 5211 | ØB | nxO | E | ØP | R | ØS | ØT | M (M) | T2 | X | | Z | | Y | |
|---|---|---|---|---|---|---|---|---|---|---|---|---|---|---|---|---|---|---|---|---|---|---|---|---|
| | | | | | | | A1 | A2 | | | | | | | | | | | T4E1 | T4E3 | T4E1 | T4E3 | T4E1 | T4E3 |
| ½" | inch | 0.65 | 0.79 | 0.61 | 1.52 | 3.64 | 0.08 | 0.08 | F05 | 1.97 | 4xM6 | 1.5 | 0.51 | 2.13 | 0.63 | 1.38 | UNC 1/4-20 | 0.35 | 3.56 | 4.65 | 1.83 | 1.97 | 2 | 2 |
| | mm | 16,6 | 20 | 15,5 | 38,5 | 92,5 | 2 | 2 | | 50 | - 8 deep | 38 | 13 | 54 | 16 | 35 | | 9 | 90,5 | 118 | 46,5 | 50 | 50,8 | 50,8 |
| ¾" | inch | 0.65 | 0.79 | 0.61 | 1.52 | 3.64 | 0.08 | 0.08 | F05 | 1.97 | 4xM6 | 1.5 | 0.51 | 2.13 | 0.63 | 1.38 | UNC 1/4-20 | 0.35 | 3.92 | 5 | 2.03 | 2.4 | 2 | 2 |
| | mm | 16,6 | 20 | 15,5 | 38,5 | 92,5 | 2 | 2 | | 50 | - 8 deep | 38 | 13 | 54 | 16 | 35 | | 9 | 99,6 | 127 | 51,5 | 61 | 50,8 | 50,8 |
| 1" | inch | 0.65 | 0.79 | 0.61 | 1.52 | 3.64 | 0.08 | 0.08 | F05 | 1.97 | 4xM6 | 1.5 | 0.59 | 2.28 | 0.79 | 1.38 | UNC 5/16-18 | 0.47 | 4.19 | 5.35 | 2.34 | 2.44 | 1.75 | 1.75 |
| | mm | 16.6 | 20 | 15.5 | 38.7 | 92.5 | 2 | 2 | | 50 | - 8 deep | 38 | 15 | 58 | 20 | 35 | | 12 | 106.4 | 136 | 59.5 | 62 | 44.5 | 44.5 |
| 1½" | inch | 0.65 | 0.79 | 0.75 | 1.48 | 4.02 | 0.08 | 0.08 | F05 | 1.97 | 4xM6 | 1.5 | 0.59 | 2.28 | 0.79 | 1.38 | UNC 5/16-18 | 0.47 | 5.63 | 6.38 | 2.500 | 3.07 | 1.75 | 1.75 |
| | mm | 16,6 | 20 | 19 | 37,7 | 102 | 2 | 2 | | 50 | - 8 deep | 38 | 15 | 58 | 20 | 35 | | 12 | 142,9 | 162 | 63,5 | 78 | 44,5 | 44,5 |
| 2" | inch | 0.87 | 1.07 | 0.99 | 1.93 | 4.84 | 0.08 | 0.08 | F07 | 2.76 | 4xM8 | 1.85 | 0.59 | 2.64 | 0.79 | 2.17 | UNC 5/16-18 | 0.47 | 6.19 | 7.36 | 3.01 | 3.25 | 2.25 | 2.25 |
| | mm | 22,2 | 27,2 | 25,2 | 49 | 123 | 2 | 2 | | 70 | - 12 deep | 47 | 15 | 67 | 20 | 55 | | 12 | 157,2 | 187 | 76,5 | 82,5 | 57,2 | 57,2 |
| 3" | inch | 0.87 | 1.07 | 0.99 | 1.99 | 5.39 | 0.12 | 0.12 | F07 | 2.76 | 4xM8 | 2.13 | 0.87 | 3.15 | 1.02 | 2.17 | UNC 3/8-16 | 0.55 | 7.13 | 9.87 | 3.76 | 4.13 | 3.5 | 3.5 |
| | mm | 22,2 | 27,2 | 25,2 | 50,6 | 137 | 3 | 3 | | 70 | - 12 deep | 54 | 22 | 80 | 26 | 55 | | 14 | 181 | 250,8 | 95,5 | 105 | 88,9 | 88,9 |
| 4" | inch | 1.42 | 1.69 | 1.59 | 2.76 | 6.97 | 0.12 | 0.12 | F10 | 4.02 | 4xM10 | 2.87 | 0.87 | 3.90 | 1.02 | 2.76 | UNC 7/16-14 | 0.63 | 8 | 10.63 | 4.51 | 5.000 | 4 | 4 |
| | mm | 36 | 42,8 | 40,4 | 70,2 | 177 | 3 | 3 | | 102 | - 16 deep | 73 | 22 | 99 | 26 | 70 | | 16 | 203,2 | 269,9 | 114,5 | 127 | 101,6 | 101,6 |
| 6" | inch | 1.42 | 1.69 | 1.59 | 2.67 | 8.23 | 0.16 | 0.16 | F12 | 4.92 | 4xM12 | 3.39 | 1.38 | 4.96 | 1.57 | 3.35 | UNC 7/16-14 | 0.63 | 9.44 | 14.25 | 5.47 | 6.26 | 4 | 4 |
| | mm | 36 | 42,8 | 40,4 | 67,7 | 209 | 4 | 4 | | 125 | - 21 deep | 86 | 35 | 126 | 40 | 85 | | 16 | 239,7 | 362 | 139 | 159 | 101,6 | 101,6 |
| 8" | inch | 1.97 | 2.5 | 3.94 | 6.6 | 15.8 | 0.2 | 0.2 | --- | 7.5 | 8xM16 | 5.25 | 2.1 | 7.48 | 2.20 | 5.12 | M16 | 1.42 | 10.25 | 14.82 | 6.83 | 7.50 | 7.69 | 7.62 |
| | mm | 50 | 63,5 | 100 | 166,6 | 402 | 5 | 5 | | 190,5 | - 26 deep | 133,4 | 53 | 190 | 56 | 130 | | 36 | 260,4 | 376,4 | 173,5 | 190,5 | 195,2 | 193,6 |
| 10" | inch | 2.36 | 3 | 4.92 | 8.46 | 19.49 | 0.2 | 0.2 | F25 | 10 | 8xM16 | 5.13 | 1.46 | --- | --- | 7.87 | M20 | 1.54 | 11.57 | * | 8.43 | * | 7.87 | * |
| | mm | 60 | 76,2 | 125 | 214,8 | 495 | 5 | 5 | | 254 | - 26 deep | 130,2 | 37 | | | 200 | | 39 | 294 | | 214 | | 200 | |
| 12" | inch | 2.36 | 3 | 4.92 | 8.48 | 20.35 | 0.2 | 0.2 | F25 | 10 | 8xM16 | 5.13 | 1.46 | --- | --- | 7.87 | M20 | 1.57 | 12.28 | 17.69 | 9.19 | 10.55 | 7.87 | 6.00 |
| | mm | 60 | 76,2 | 125 | 215,4 | 517 | 5 | 5 | | 254 | -26 deep | 130,2 | 37 | | | 200 | | 40 | 312 | 449,3 | 233,5 | 268 | 200 | 152,4 |

* no actuator mounting for T4E2 valves

FLOWSERVE

# How to Specify T4E Valves

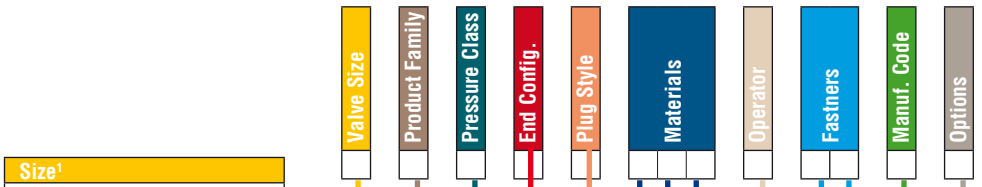


| Size[1] |
|---|
| 0.5 in. |
| 0.75 in. |
| 1.5 in. |
| 2 in. |
| 3 in. |
| 4 in. |
| 6 in. |
| 8 in. |
| 10 in. |
| 12 in. |

| Product Family |
|---|
| T4E = Standard |

| Pressure Class[1] |
|---|
| 1 = ASME Cl. 150 |
| 2 = DIN PN 16 |
| 3 = ASME Cl. 300 |

| End Configuration |
|---|
| 1 = Raised Face Flanges |

| Plug Style | | |
|---|---|---|
| C = 2-Way | | |
| D = Slot | Cv = .8 | 1" |
| E = Vport | Cv = 3 | 1" |
| F = Vport | Cv = 8.3 | 1" |
| G = Vport | Cv = 13 | 1" |
| H = Vport | Cv = 29.6 | 1.5" |
| J = Vport | Cv = 53.6 | 2" |
| K = Vport | Cv = 88.7 | 3" |
| L = Vport | Cv = 187.1 | 4" |

| Options |
|---|
| C = Chlorine Service |
| D = Chlorine Clean Only |
| G = Bottom Vented Plug[8] |
| H = Upstream Vented Plug (side) |
| J = Side/Bottom Vented Plug (upstream) |
| L = Anti-Vibration Clip for Top Cap Bolts |
| M = Side Vent Downstream (requires release from customer in writing) |
| O = Oxygen Cleaning |
| R = Built Dry (no lubrication)[9] |
| S = Silicone Free Lubrication |
| W = No Options |
| @ = DuPont Flouropolymer Material |
| Q = Quality Plan |

| Manufacturers code |
|---|
| N = Internal use |

| Adjuster fastener[7] |
|---|
| 1 = B840 |
| 2 = B9 |
| 3 = B7YC |
| 4 = B7T |
| 5 = C20 |
| 6 = HC |
| 7 = B7 |
| 8 = MKH |
| 9 = B7M |
| 0 = B7MZ |
| E = 88YC |

| Top Cap Fastener[7] |
|---|
| 1 = B840 |
| 2 = B9 |
| 3 = B7YC |
| 4 = B7T |
| 5 = C20 |
| 6 = HC |
| 7 = B7 |
| 8 = MKH |
| 9 = B7M |
| 0 = B7MZ |
| E = 88YC |

| Operator |
|---|
| 0 = Std. Wrench[5] |
| 1 = Gear Cl[6] |
| 2 = Locking Gear Cl |
| 4 = Caustic Gear PF |
| 9 = Bare Stem |
| B = Babbit/Chain |

| Standard Valve Codes | | |
|---|---|---|
| Size | Class 150 | Class 300 |
| 0.5 | .5-T4E-11C11D033NW | .5-T4E-31C210033NW |
| 0.75 | .75-T4E-11C11D033NW | .75-T4E-31C210033NW |
| 1 | 1-T4E-11C11D033NW | 1-T4E-31C210033NW |
| 1.5 | 1.5-T4E-11C11D033NW | 1.5-T4E-31C210033NW |
| 2 | 2-T4E-11C11D033NW | 2-T4E-31C210033NW |
| 3 | 3-T4E-11C11D033NW | 3-T4E-31C210033NW |
| 4 | 4-T4E-11C11D033NW | 4-T4E-31C210033NW |
| 6 | 6-T4E-11C11D033NW | 6-T4E-31C210033NW |
| 8 | 8-T4E-11C11D1EENW | 8-T4E-31C2101EENW |
| 10 | 10-T4E-11C11D1EENW | 10-T4E-31C2101EENW |
| 12 | 12-T4E-11C11D1EENW | |

| Body liner[2] | Plug Alloy[3] | Top Cap Alloy[4] |
|---|---|---|
| 1 = DIPA | 1 = DIPA | D = DCI |
| 2 = DSPA | 2 = D4PA | O = CD4M |
| 3 = D4PA | 3 = CDPA | |

| Codes | |
|---|---|
| DIPA | Ductile iron, PFA lined |
| DSPA | Carbon steel, PFA lined |
| D4PA | 316 SS, PFA lined |
| CDPA | CD4MCuN, PFA lined |

[1] Class 150 valves = ½" thru 12" ductile iron / 8" thru 12" stainless steel
Class 300 valves = ½" thru 10" carbon steel
[2] DIPA body = class 150 valves only
D4PA body = 8", 10" 12" class 150 valves only
DSPA body = class 300 valves only
[3] DIPA plug = ½" thru 12"
CDPA plug = 8", 10" and 12" only
[4] DCI top cap = DIPA valve bodies
CD4M top cap = D4PA and DSPA valve bodies
[5] Locking wrench standard thru 4"
[6] Gear standard 6" and above (also available on smaller sizes)
[7] B7YC = standard for ½" thru 6"
88YC = standard for 8", 10", 12" (Gr. 8.8 yellow chromated)
[8] 8" and larger plugs have bottom vent as standard
[9] No lubrication for valves up to 4"
Built with Krytox for valves 6" and above





## To Access Literature On-line

More information about FLOWSERVE products can be obtained on-line. It's easy to find… it's free… and you do not need a password.

## Do This:

1. Go to www.flowserve.com
2. Click in the box that says "Literature"
3. Enter "Keyword" or literature number and "Filter" as required
4. Click on "Search"

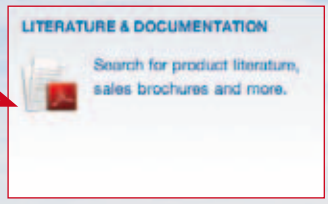


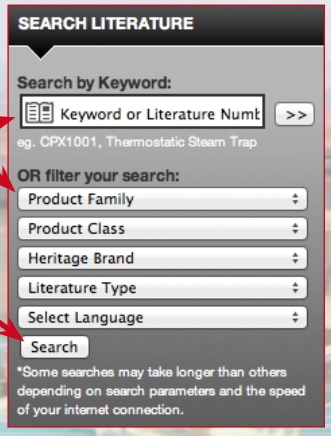


The most recent version of each product bulletin will be available on this site.

Once you have the PDF, you can:

- read it
- print it
- download it
- even e-mail it

## Other Useful Information

In addition to lined plug valves, lined butterfly valves (Document number DVENTB0020) and lined ball valves, check valves and sight glasses (Document number ATENTB0010) are also available.

Finally, a wide variety of metallic and lined rotary valves and actuation equipment is summarized in the Document number DVENBR0001.

To obtain any of these brochures, follow the simple steps on the left of this page and enter the Document number in Step 3.

## Ordering Preprinted Literature

Customers, please contact your Flowserve sales representative to get hard copy of a brochure. Flowserve representatives and distributors can go to www.flowserve.com and click on the "View Literature" link then click on "Log-in to order hard copy literature" and follow the prompts.




## United States
Flow Control
1978 Foreman Drive
Cookeville, Tennessee 38501
USA
Phone: 931 432 4021
Fax: 931 432 3105
www.flowserve.com

## Germany
Von Braun Straße 19a
D-48683 Ahaus
Germany
Phone: +49 2561 686-100
Fax: +49 2561 686-200

## Singapore
12 Tuas Avenue 20
Republic of Singapore 638824
Phone: +65 6879 8900
Fax: +65 6862 4940

## Australia
14 Dalmore Drive, Scoresby, Victoria,
3179, Australia
Phone: +613-97593300

## Brazil
Av. Tocantins 128
Sao Caetano do Sul
SP 09580-130
Brazil
Phone: +55 11 2169 6300
Fax: +55 11 2169 6313

## China
Flowserve Corporation Beijing Office
Room 22A1&A2,HanWei Plaza
No.7 GuangHua Road
Chaoyang District
Beijing, China 100004
Tel: +86-10-59210600
+86-10-59210601
Fax: +86-10-65611899


***To find your local Flowserve representative, visit www.flowserve.com or call USA 1 800 251 6761***

FCD DVENBR0066-01 10/12 Printed in USA.

Flowserve Corporation has established industry leadership in the design and manufacture of its products. When properly selected, this Flowserve product is designed to perform its intended function safely during its useful life. However, the purchaser or user of Flowserve products should be aware that Flowserve products might be used in numerous applications under a wide variety of industrial service conditions. Although Flowserve can (and often does) provide general guidelines, it cannot provide specific data and warnings for all possible applications. The purchaser/user must therefore assume the ultimate responsibility for the proper sizing and selection, installation, operation, and maintenance of Flowserve products. The purchaser/user should read and understand the Installation Operation Maintenance (IOM) instructions included with the product, and train its employees and contractors in the safe use of Flowserve products in connection with the specific application.

While the information and specifications contained in this literature are believed to be accurate, they are supplied for informative purposes only and should not be considered certified or as a guarantee of satisfactory results by reliance thereon. Nothing contained herein is to be construed as a warranty or guarantee, express or implied, regarding any matter with respect to this product. Because Flowserve is continually improving and upgrading its product design, the specifications, dimensions and information contained herein are subject to change without notice. Should any question arise concerning these provisions, the purchaser/user should contact Flowserve Corporation at any one of its worldwide operations or offices.

© 2008 Flowserve Corporation, Irving, Texas, USA. Flowserve is a registered trademark of Flowserve Corporation.

**Project name:** MELIADINE-BPC UPGRADE

**Project#:** 5000220043

**Document #:** SPK_0110_MISC_VWT

**by:** GM

**chkd:** ED

**appvd:** TS

# SPLITTER BOX CLARIFIER #1

# INSTRUMENTS

**OIM manual section:** 4.2.8.4

For analytical instruments, please refer to document #5000220043_SPK_0001_MISC_VWT

**This page is intentionally left blank**

# CS-413-301 : Identification sheet

| | | | |
|---|---|---|---|
| VWTC PROJECT NUMBER: | 5000220043 | REV: | 1 |
| PROJECT NAME: | AEM MELIADINE - BPC UPGRADE | SUBMITTED TO (COMPANY): | AEM |
| ENGINEER: | EMMANUELLE DORMOY | SUBMITTED TO (RESPONSIBLE): | |
| PROJECT MANAGER: | THOMAS SAVARY / BRUCE BORDES | PROJECT NUM REFERENCE.: | 6526-S-265-605 / OC-989680 |
| PHONE NUMBER: | 514-334-7230 | LOT NUMBER: | |

| SUPPLIER | EQPT CODE | EQPT TAG NO | DIA | DESCRIPTION | INFO 1 | INFO 2 | INFO 3 | APPLIC. | NOTE | REV |
|---|---|---|---|---|---|---|---|---|---|---|
| ASHCROFT | ST-413-393 | 65PI6801416 | 2.5" | PRESSURE GAUGE | PRESSURE GAUGE C/W ISOLATOR // MANFUACTURER : ASHCROFT // MODEL : 25-1009-SW-L-02L-60# + 04-310SS-02T-XCG // 25: 2 1/2" DIAL. RANGE : 0/60 PSI //SW: 316SS //L: GLYCERIN FILLED //L: LWR MNT CONN // ISOLATOR - 04: PROCESS CONN: 1/2" MNPT - 310:NO FLUSH PRT | | N/A | CLARIFIER #1 SLUDGE SPLITTER TANK | | 1 |

**This page is intentionally left blank**

ASHCROFT®
Trust the shield.®

# 1009 Stainless Steel Case Gauge

## FEATURES

- Meets ASME B40.100 specifications
- Corrosion resistant SS case
- Dry gauges are field fillable
- Power***Flex***™ movement provides superior resistance to shock, vibration and pulsation
- True Zero™ reduces reading errors by using "zero box" instead of conventional dial pins
- ***PLUS!***™ performance available for liquid filled performance with a dry gauge
- MSL helium leak tested to 1X10$^{-6}$ scc/s
- Ventable fill plug
- Accessory kits for easy panel mounting

## TYPICAL USES

- Pumps and compressors
- Boilers
- Equipment skids
- Specialized OEM equipment
- Hydraulics and pneumatics
- Severe ambient conditions




## SPECIFICATIONS

| | |
|---|---|
| Accuracy: | ASME B40.100, Grade 1A, ±1% of span (Dry)<br>±1.5% of span (Liquid filled) |
| Dial Sizes: | 2½″ (63mm), 3½″ (100mm) |
| Ranges: | Minimum 0-15 psi, maximum 0-15,000 psi, vacuum and compound |
| **Wetted Materials** | |
| Tube: | 316L SS tube |
| Process Connection: | 316L SS socket (SW)<br>Aluminum bronze socket (AW) |
| **Non Wetted Materials** | |
| Window: | Polycarbonate (Std.), Safety glass (XSG), Polysulfone (XPS) 3½″ Dial only |
| Dial: | Black figures on white background, aluminum |
| Pointer: | Black, aluminum, adjustable (Std.), micrometer (XMP) |
| Movement: | Power***Flex*** movement<br>Bottom plate – 304 SS<br>Upper plate – 304 SS<br>Pin – 304 SS<br>Hairspring assembly – 304 SS<br>Pinion – 304 SS<br>Segment – Glass filled polyester |
| Case: | 304 SS (Std.), 316L SS (XYW) |
| Ring: | 304 SS (Std.), 316L SS (XYW) |
| Process Connection Location: | Lower, Back, Top, 3 o'clock, 9 o'clock |
| Process Connection Sizes: | ⅛ NPT, ¼ NPT (see ordering code for more options) |

## KEY BENEFITS

- **IP65 Rating**
- **NEMA 4X**
- **CRN Approved**
- **PED**
- ***PLUS!***™ **Performance (XLL)**

| | |
|---|---|
| Dampening: | Glycerin case fill (Std. liquid fill), Silicone case fill (XGV), Halocarbon case fill (XGX), ***PLUS!*** Performance (XLL) |
| Weather Protection: | IP65 (Plug closed), IP54 (Plug vented)<br>NEMA 4X (Plug closed) |
| Approvals: | CRN, RoHS, PED |

## MIN/MAX TEMPERATURE LIMITS

| Version | Ambient | Process | Storage |
|---|---|---|---|
| Dry | -40/200°F (-40/93°C) | -40/250°F (-40/121°C) | -40/250°F (-40/121°C) |
| ***PLUS!*** | -40/150°F (-40/66°C) | -40/200°F (-40/93°C) | -40/150°F (-40/66°C) |
| Glycerin Fill | 20/150°F (-7/66°C) | 20/200°F (-7/93°C) | 0/150°F (-18/66°C) |
| Silicone Fill | -40/150°F (-40/66°C) | -40/200°F (-40/93°C) | -40/150°F (-40/66°C) |
| Halocarbon Fill | -40/150°F (-40/66°C) | -40/200°F (-40/93°C) | -40/150°F (-40/66°C) |

All specifications are subject to change without notice.
All sales subject to standard terms and conditions.
©2017 Ashcroft Inc. Ash Bul GS-3 1009 Rev D, 10/17

ashcroft.com
info@ashcroft.com
1.800.328.8258

ASHCROFT®
Trust the shield.®

# 1009 Stainless Steel Case Gauge

## ORDERING CODE

| Example: | 251009 | SW | L | 02 | L | XC4 | 15# |
|---|---|---|---|---|---|---|---|
| **Dial Size/Series Code** | | | | | | | |
| 251009 – SS case | 251009 | | | | | | |
| 351009 – SS case | | | | | | | |
| **System** | | | | | | | |
| AW - 316L SS tube/Aluminum, bronze connection (Max. pressure 1000 psi) | | | | | | | |
| SW - 316L SS tube/316L SS process connection (Max. pressure 15,000 psi) | | SW | | | | | |
| **Case Fill** | | | | | | | |
| Dry, liquid fillable case | | | | | | | |
| L - Liquid filled case (Glycerin standard) | | | L | | | | |
| **Process Connection Sizes** | | | | | | | |
| 01 - ⅛ NPT Male | | | | | | | |
| 02 - ¼ NPT Male | | | | 02 | | | |
| 04 - ½ NPT Male | | | | | | | |
| RW - SAE 7/16 & 20 Straight thread | | | | | | | |
| EJ - 7/16 X 20 UNF-3A 37° flare | | | | | | | |
| KJ - ¼ Straight JIS, BSP - 1009SW | | | | | | | |
| KA - ¼ Tapered JIS, BSP - 1009SW | | | | | | | |
| 13 - G ¼″ DIN | | | | | | | |
| JP - ¼″ Tubing, no throttle plug (max pressure 10,000 psi) | | | | | | | |
| JQ - 6mm Tubing, no throttle plug (max pressure 6,000 psi) | | | | | | | |
| JL - 9/16″ 18 UNF-2A, N/A on 25 1009 lower | | | | | | | |
| **Connection Location** | | | | | | | |
| L - Lower mount connection | | | | | L | | |
| B - Lower back mount connection | | | | | | | |
| D - Side connection (3 o'clock) | | | | | | | |
| E - Side connection (9 o'clock) | | | | | | | |
| T - Top connection | | | | | | | |
| **Options (if choosing an option(s) must include an "X")** | | | | | | X__ | |
| LL - ***PLUS!***™ performance | | | | | | | |
| GV - Silicone case fill | | | | | | | |
| GX - Halocarbon case fill | | | | | | | |
| TU - Throttle plug for ranges up to 1000 psi | | | | | | | |
| TS - Throttle plug for ranges up to 15,000 psi | | | | | | | |
| 6B - Cleaned for oxygen service | | | | | | | |
| SG - Safety glass | | | | | | | |
| PS - Polysulfone window (3½″ dial only) | | | | | | | |
| EO - Adjustable red set hand | | | | | | | |
| SH - Red set hand, stationary | | | | | | | |
| NH - SS tag wired to case | | | | | | | |
| FF - Front flange | | | | | | | |
| FW - Back flange | | | | | | | |
| UC - U-clamp | | | | | | | |
| EA - External zero adjust (3½″ dial only) | | | | | | | |
| C4 - Individual calibration chart in accordance with ASME B40.100:2013. Accuracy traceable to N.I.S.T | | | | | | C4 | |
| SM - All SS movement | | | | | | | |
| YW - 316L SS case and ring | | | | | | | |
| **Range (coding examples only, see range table for all standard ranges)** | | | | | | | |
| Single Scales | | | | | | | |
| 15# - 15 psi | | | | | | | 15# |
| 1BR - 1 bar | | | | | | | |
| 1KSC - 1 kilograms per sq. cm | | | | | | | |
| 100KP - 100 kilopascal | | | | | | | |
| Dual Scales | | | | | | | |
| 15#/BR - 15 psi inner scale, 1 bar outer scale | | | | | | | |
| 1BR/# - 1 bar inner scale, 15 psi outer scale | | | | | | | |

All specifications are subject to change without notice.
All sales subject to standard terms and conditions.
©2017 Ashcroft Inc. Ash Bul GS-3 1009 Rev D, 10/17

ashcroft.com
info@ashcroft.com
1.800.328.8258

ASHCROFT®
Trust the shield.®

# 1009 Stainless Steel Case Gauge

| STANDARD RANGES | | | | |
|---|---|---|---|---|
| psi | bar | kPa | Mpa | kg/cm² |
| 30IMV | -1BR | -100KP | -.1MP | -1KSC |
| – | -1&.6BR | -100&60KP | -.1&.06MP | -1&.6KSC |
| 30IMV&15# | – | – | – | – |
| – | -1&1.5BR | -100&150KP | -.1&.15MP | -1&1.5KSC |
| 30IMV&30# | – | – | – | – |
| – | -1&3BR | -100&300KP | -.1&.3MP | -1&3KSC |
| 30IMV&60# | – | – | – | – |
| – | -1&5BR | -100&500KP | -.1&.5MP | -1&5KSC |
| 30IMV&100# | – | – | – | – |
| – | 1&9BR | -100&900KP | -.1&.9MP | -1&9KSC |
| 15# | 1BR | 100KP | .1MP | 1KSC |
| 20# | – | – | – | – |
| – | 1.6BR | 160KP | .16MP | 1.6KSC |
| 30# | – | – | – | – |
| – | 2.5BR | 250KP | .25MP | 2.5KSC |
| 60# | 4BR | 400KP | .4MP | 4KSC |
| – | 6BR | 600KP | .6MP | 6KSC |
| 100# | – | – | – | – |
| 120# | – | – | – | – |
| – | 10BR | 1,000KP | 1MP | 10KSC |
| 160# | – | – | – | – |
| 200# | – | – | – | – |
| – | 16BR | 1,600KP | 1.6MP | 16KSC |
| 300# | – | – | – | – |
| – | 25BR | 2,500KP | 2.5MP | 25KSC |
| 400# | – | – | – | – |
| 500# | – | – | – | – |
| 600# | 40BR | 4,000KP | 4MP | 40KSC |
| 800# | – | – | – | – |
| – | 60BR | 6,000KP | 6MP | 60KSC |
| 1,000# | – | – | – | – |
| 1,500# | 100BR | 10,000KP | 10MP | 100KSC |
| 2,000# | – | – | – | – |
| – | 160BR | 16,000KP | 16MP | 160KSC |
| 3,000# | – | – | – | – |
| – | 250BR | 25,000KP | 25MP | 250KSC |
| 4,000# | – | – | – | – |
| 5,000# | – | – | – | – |
| 6,000# | 400BR | 40,000KP | 40MP | 400KSC |
| 8,000# | – | – | – | – |
| – | 600BR | 60,000KP | 60MP | 600KSC |
| 10,000# | – | – | – | – |
| 15,000# | 1,000BR | 100,000KP | 100MP | 1,000KSC |

All specifications are subject to change without notice.
All sales subject to standard terms and conditions.
©2017 Ashcroft Inc. Ash Bul GS-3 1009 Rev D, 10/17

ashcroft.com
info@ashcroft.com
1.800.328.8258

ASHCROFT®
Trust the shield.®

# 1009 Stainless Steel Case Gauge

## DIMENSIONS (dimensions in [ ] are millimeters)

### 2½˝ 1009 Lower and Back Connect

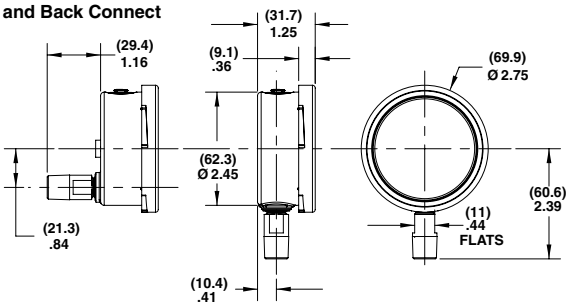


### 3½˝ 1009 Lower and Back Connect

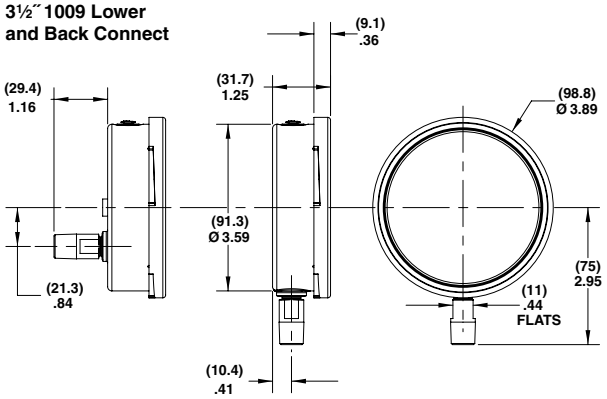


### 2½˝ 1009 Back Connect (XUC)

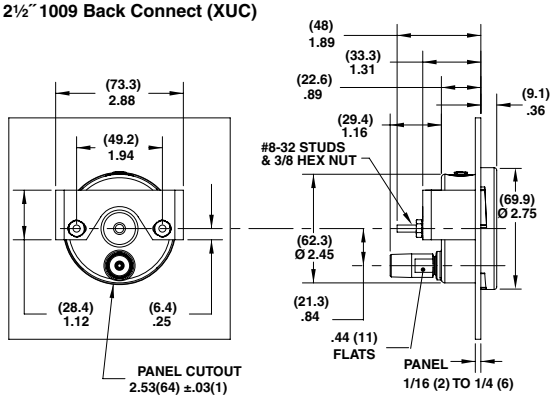


### 3½˝ 1009 Back Connect (XUC)

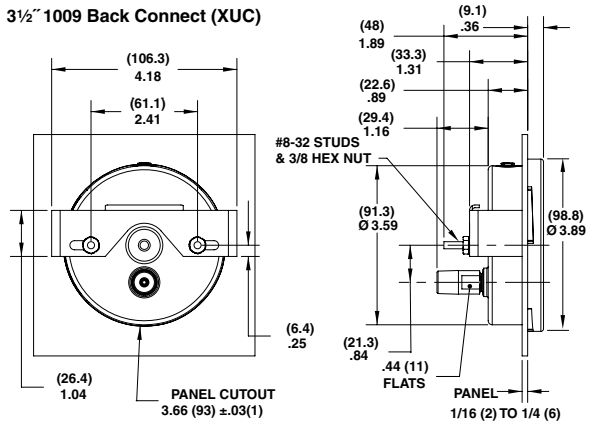


### 2½˝ 1009 Back Connect (XFF)

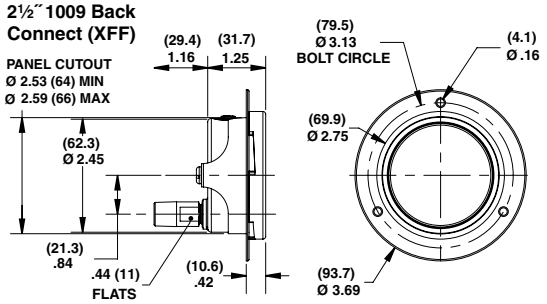


### 3½˝ 1009 Back Connect (XFF)

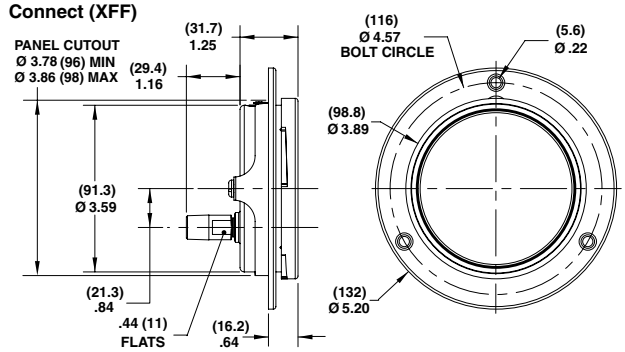


### 2½˝ 1009 Lower and Back Connect (XFW)

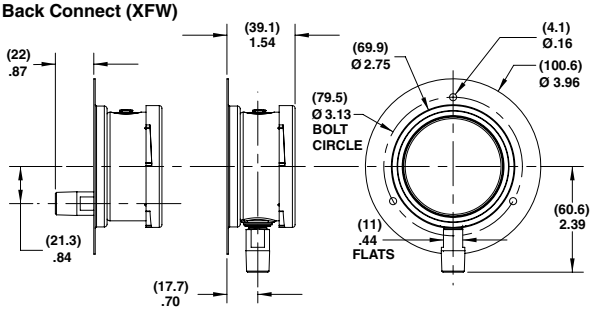


### 3½˝ 1009 Lower and Back Connect (XFW)

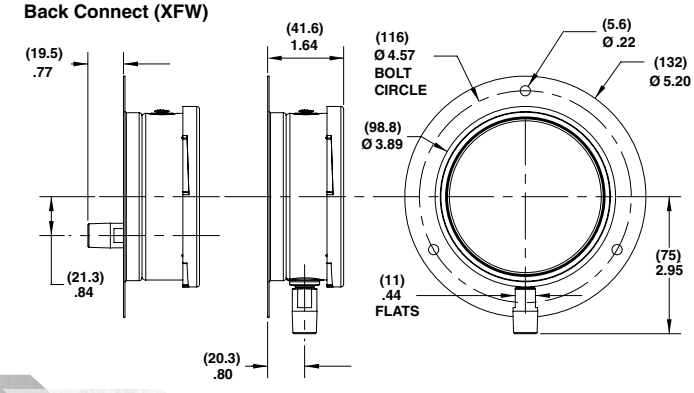


All specifications are subject to change without notice.
All sales subject to standard terms and conditions.
©2017 Ashcroft Inc. Ash Bul GS-3 1009 Rev D, 10/17

ashcroft.com
info@ashcroft.com
1.800.328.8258

ASHCROFT®
Trust the shield.®

# 1009 Stainless Steel Case Gauge with Tubing Connections

## DIMENSIONS (dimensions in [ ] are millimeters)

### 2½˝ 1009 Lower and Back Connect

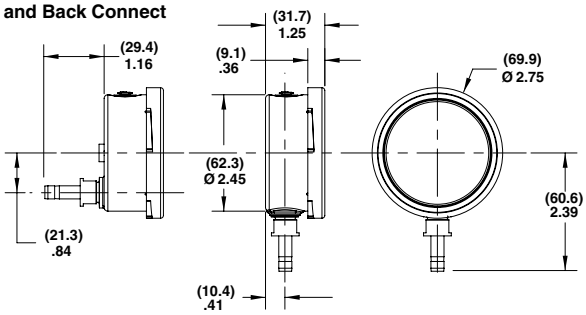


### 3½˝ 1009 Lower and Back Connect

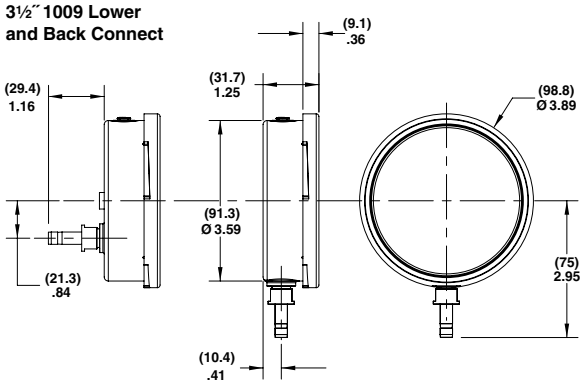


### 2½˝ 1009 Back Connect (XUC)

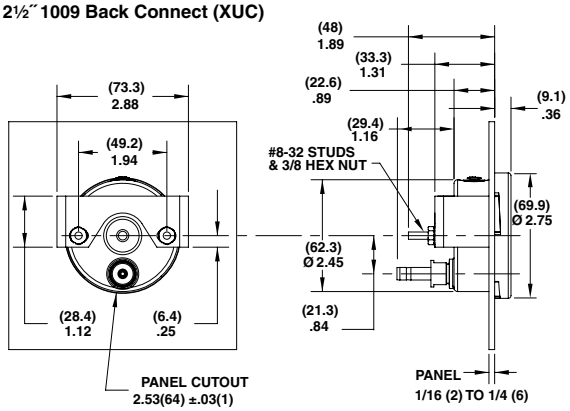


### 3½˝ 1009 Back Connect (XUC)

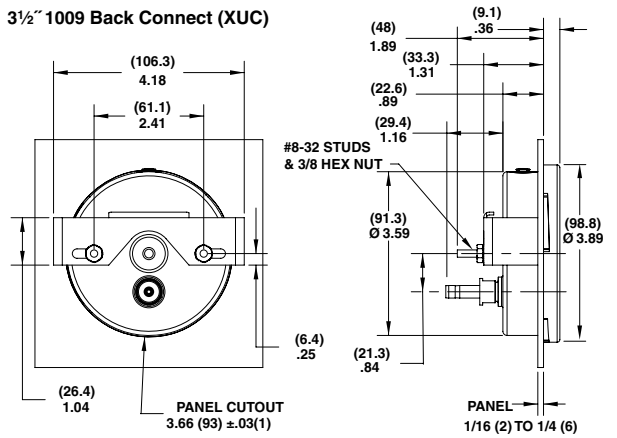


### 2½˝ 1009 Back Connect (XFF)

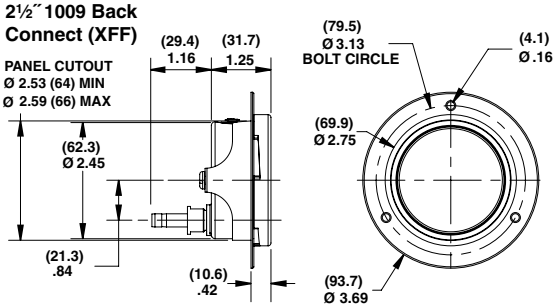


### 3½˝ 1009 Back Connect (XFF)

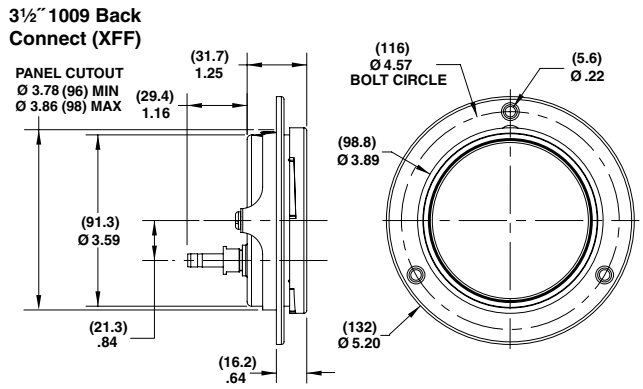


### 2½˝ 1009 Lower and Back Connect (XFW)

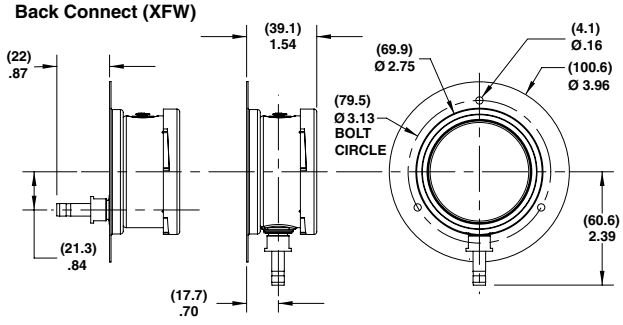


### 3½˝ 1009 Lower and Back Connect (XFW)

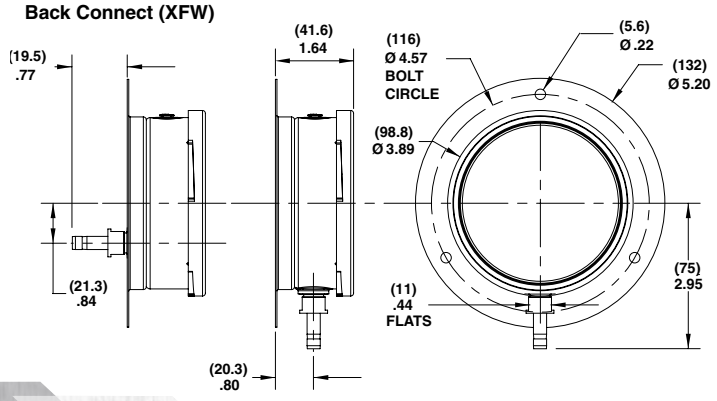


All specifications are subject to change without notice.
All sales subject to standard terms and conditions.
©2017 Ashcroft Inc. Ash Bul GS-3 1009 Rev D, 10/17

ashcroft.com
info@ashcroft.com
1.800.328.8258

**This page is intentionally left blank**

ASHCROFT®
Trust the shield.®

# 310, 315 All-Welded “Mini” Diaphragm Seal

## FEATURES

- No gaskets or bolts
- Available with ⅛ NPT flushing connection
- Designed for use with transducers and 3½″ or smaller gauges

## TYPICAL USES

- Oil and gas
- Chemical processes
- Process equipment




**310**
Threaded Seal

| SPECIFICATIONS | |
|---|---|
| Connection Style: | 310: All-welded<br>315: All-welded with flushing connection |
| Process Connection Size: | 310: ⅛ to 1 NPT Male, ¼ or ½ NPT Female<br>315: ¼ or ½ NPT Female |
| Instrument Connection Size: | ⅛ or ¼ NPT Female |
| Pressure Rating (MAWP): | 2,500 psi |
| Added Tolerance: | ±0.5% typical |
| Wetted Components: | Diaphragm & bottom housing |
| Non-Wetted Components: | Top housing: 316L SS |

| WETTED COMPONENTS | |
|---|---|
| Diaphragm Material | Bottom Housing Material |
| See ordering code on page 2 | See ordering code on page 2 |

| NON-WETTED COMPONENTS |
|---|
| Top Housing |
| 316L SS |

## KEY BENEFITS

- **Protects instrumentation in tight spaces**
- **Eliminates potential leak path with all-welded construction**
- **Low fill volume reduces temperature effects on instrument accuracy**



All specifications are subject to change without notice.
All sales subject to standard terms and conditions.
©2018 Ashcroft Inc. 310-315_seal_ds_RevC_07-18

ashcroft.com
info@ashcroft.com
1.800.328.8258

ASHCROFT®
Trust the shield.®

# 310, 315 All-Welded “Mini” Diaphragm Seal

| ORDERING CODE Example: | 01 | 310 | S | S | 01T | XCK | NH |
|---|---|---|---|---|---|---|---|
| **Process Connection Size** | | | | | | | |
| 01 - ⅛ NPT Male, (available with 310 only) | 01 | | | | | | |
| 02 - ¼ NPT Male, (available with 310 only) | | | | | | | |
| 04 - ½ NPT Male, (available with 310 only) | | | | | | | |
| 06 - ¾ NPT Male, (available with 310 only) | | | | | | | |
| 08 - 1 NPT Male, (available with 310 only) | | | | | | | |
| 25 - ¼ NPT Female | | | | | | | |
| 50 - ½ NPT Female | | | | | | | |
| **Seal Type** | | | | | | | |
| 310 - All-welded Mini seal no flushing port | | 310 | | | | | |
| 315 - All-welded Mini seal with flushing port connection | | | | | | | |
| **Diaphragm Material** | | | | | | | |
| S - 316L SS | | | S | | | | |
| H - Hastelloy® C-276 | | | | | | | |
| U - Tantalum | | | | | | | |
| P - Monel® (Must be ordered with Monel® bottom housing) | | | | | | | |
| **Bottom Housing Material** | | | | | | | |
| S - 316L SS | | | | S | | | |
| H - Hastelloy® C-276 | | | | | | | |
| M - Monel® | | | | | | | |
| G - Hastelloy® B-2 | | | | | | | |
| **Instrument Connection Size** | | | | | | | |
| 01T - ⅛ NPT Female | | | | | 01T | | |
| 02T - ¼ NPT Female | | | | | | | |
| **Options (if choosing an option(s) must include an “X”)** | | | | | | X__ | |
| **Filling Fluid** | | | | | | | |
| CG - Glycerin | | | | | | | |
| CK - Silicon 50cST | | | | | | CK | |
| CF - Halocarbon® | | | | | | | |
| See Filling Fluid Table Below | | | | | | | |
| **Optional Features** | | | | | | | |
| PU - Pipe Plug for flushing connection (Must match bottom housing material; 315 seal only) | | | | | | | |
| NH - SS instrument tag | | | | | | | NH |
| NN - Paper instrument tag | | | | | | | |
| DU - Instrument welded to seal | | | | | | | |
| MQ - Positive material identification | | | | | | | |
| W1 - Dye penetrant testing | | | | | | | |
| 6B - Cleaned for oxygen service | | | | | | | |

## Filling Fluid Table

| Fill | Service | Connection to Instrument | Temperature Range °F | Code |
|---|---|---|---|---|
| Glycerin | Pressure | Direct Only | 0/400 | CG |
| Silicone | Pressure/Vacuum | Direct or Flexible Line | –40/500 | CK |
| Halocarbon® | Pressure/Vacuum in presence of strong oxidizing agent | Direct or Flexible Line | –70/300 | CF |
| Syltherm® | Pressure | Direct or Flexible Line | –40/750 | HA |



All specifications are subject to change without notice.
All sales subject to standard terms and conditions.
©2018 Ashcroft Inc. 310-315_seal_ds_RevC_07-18

ashcroft.com
info@ashcroft.com
1.800.328.8258

# 310, 315 All-Welded “Mini” Diaphragm Seal

## DIMENSIONS in [ ] are millimeters

Drawings are for reference only, consult Ashcroft for specific dimensional drawings.

| | A | | B | | C | |
|---|---|---|---|---|---|---|
| | in | mm | in | mm | in | mm |
| **Type 310** | 1.75 | [38] | .81 | [30] | 1.34 | [34] |
| **Type 315** | 1.73 | [44] | 2.25 | [57.2] | 1.34 | [34] |

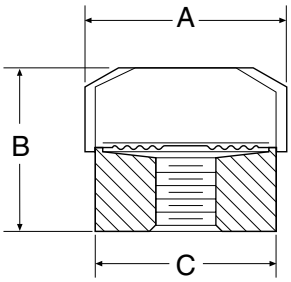


310 mini-seal – Threaded ¼, ½, ¾, NPT

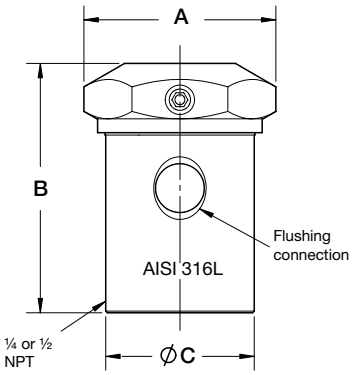


315 mini-seal – Threaded ¼, ½, ¾, NPT



All specifications are subject to change without notice.
All sales subject to standard terms and conditions.
©2018 Ashcroft Inc. 310-315_seal_ds_RevC_07-18

ashcroft.com
info@ashcroft.com
1.800.328.8258

LEFT BLANK

# *4 – DETAILED TECHNICAL DOCUMENTATION*

## *4.2 – SHOP DRAWINGS*

## *4.2.9 – SPLITTER BOX CLARIFIER #2*

LEFT BLANK




# TECHNICAL DOCUMENTATION

**This page is intentionally left blank**

| | |
|---|---|
| **Project name:** | MELIADINE-BPC UPGRADE |
| **Project#:** | 5000220043 |
| **Document #:** | SPK_0111_MISC_VWT |
| **by:** | GM |
| **chkd:** | ED |
| **appvd:** | TS |

# SUBMITTAL PACKAGE

# SPLITTER BOX CLARIFIER #2

**This page is intentionally left blank**

**Project name:** MELIADINE-BPC UPGRADE

**Project#:** 5000220043

**Document #:** SPK_0111_MISC_VWT

**by:** GM

**chkd:** ED

**appvd:** TS

# SPLITTER BOX CLARIFIER #2

# GENERAL ARRANGEMENT DRAWING

**OIM manual section:** 4.2.9.1

Please refer to document #5000220043_GA_0111_MISC_VWT

**This page is intentionally left blank**

# CS-999-010 : Identification sheet

| | | | |
|---|---|---|---|
| VWTC PROJECT NUMBER: | 5000220043 | REV: | 1 |
| PROJECT NAME: | AEM MELIADINE - BPC UPGRADE | SUBMITTED TO (COMPANY): | AEM |
| ENGINEER: | EMMANUELLE DORMOY | SUBMITTED TO (RESPONSIBLE): | |
| PROJECT MANAGER: | THOMAS SAVARY / BRUCE BORDES | PROJECT NUM REFERENCE.: | 6526-S-265-605 / OC-989680 |
| PHONE NUMBER: | 514-334-7230 | LOT NUMBER: | |

| SUPPLIER | EQPT CODE | EQPT TAG NO | DIA | DESCRIPTION | INFO 1 | INFO 2 | INFO 3 | APPLIC. | NOTE | REV |
|---|---|---|---|---|---|---|---|---|---|---|
| VWTC | ST-999-010 | 65TNK68020 | | SLUDGE SPLITTER TANK #2 | SPLITTER BOX CLARIFIER #2 | Refer to GA Drawing 5000220043_GA_0111_MISC_ VWT | | CLARIFIER #2 SLUDGE SPLITTER TANK | | 1 |

**This page is intentionally left blank**

**Project name:** MELIADINE-BPC UPGRADE

**Project#:** 5000220043

**Document #:** SPK_0111_MISC_VWT

**by:** GM

**chkd:** ED

**appvd:** TS

# SPLITTER BOX CLARIFIER #2

# PUMP

**OIM manual section:** 4.2.9.2

**This page is intentionally left blank**

# CS-999-006 : Identification sheet

| | | | |
|---|---|---|---|
| VWTC PROJECT NUMBER: | 5000220043 | REV: | 1 |
| PROJECT NAME: | AEM MELIADINE - BPC UPGRADE | SUBMITTED TO (COMPANY): | AEM |
| ENGINEER: | EMMANUELLE DORMOY | SUBMITTED TO (RESPONSIBLE): | |
| PROJECT MANAGER: | THOMAS SAVARY / BRUCE BORDES | PROJECT NUM REFERENCE.: | 6526-S-265-605 / OC-989680 |
| PHONE NUMBER: | 514-334-7230 | LOT NUMBER: | |

| SUPPLIER | EQPT CODE | EQPT TAG NO | DIA | DESCRIPTION | INFO 1 | INFO 2 | INFO 3 | APPLIC. | NOTE | REV |
|---|---|---|---|---|---|---|---|---|---|---|
| MCLANAHAN | ST-999-006 | 65PSR68007B | | SLUDGE SPLITTER TANK PUMP #2 | DESCRIPTION: SPLIT CASING HORIZONTAL CENTRIFUGAL PUMP / 3 x 3 // MANUF.: McLanahan// MODEL: SÉRIE IIIr 75x75 // SUCTION AND DISCHARGE FLANGES: 3" ANSI CLASS 150 B16.5 // DRY GLAND TYPE D // CLOSED VANE IMPELLER // CASINGS: CAST IRON | // LINING: NITRILE // ROTATING SEAL: NITRILE RUBBER // STATIC SEAL: CERAMIC // 5 HP WEG IEEE 841 MOTOR PREMIUM EFFICIENCY 575V/3PH/60HZ // BELTED DRIVE OUTPUT SPEED 736 RPM AT 60HZ | 40M3/H@5 Mh20 TDH // C/W DRIP PAN | CLARIFIER #2 SLUDGE SPLITTER TANK | | 1 |

**This page is intentionally left blank**

INFORMATION CONTAINED WITHIN THIS DOCUMENT IS A TRADE SECRET & ANY USE OF THE INFORMATION, EXCEPT BY ITS INTENDED RECEIVER, IS STRICTLY PROHIBITED. ANY MISAPPROPRIATION OF THE INFORMATION SHALL MAKE THE UNINTENDED RECEIVER LIABLE FOR ANY AND ALL DAMAGES SUFFERED AS A RESULT BY THE MCLANAHAN CORPORATION.

McLanahan

| DESCRIPTION: | DESIGNED BY: | ORIGIN: | DWG SIZE: |
|---|---|---|---|
| GENERAL ARRANGEMENT<br>3" X 3" PUMP ASSEMBLY<br>TYPICAL FOR ALL GLANDS & LININGS<br>TABLE MOUNTED MOTORS (5-30 HP) | BFERRELL | TN | B |
| | DRAWN BY: BFERRELL | DATE: 12/2/2013 | SCALE: AS NOTED |
| | CHECKED BY: BFERRELL | DATE: 12/2/2013 | SHEET#: 1 /1 |
| REFERENCE DWG: N/A | | | |
| PART NUMBER: 3X3GA / WEIGHT: AS NOTED | DRAWING NUMBER: 3X3GA | | REV: 00 |

NOTE: CRANE & CRAWL ASSEMBLY NOT SHOWN HEREIN

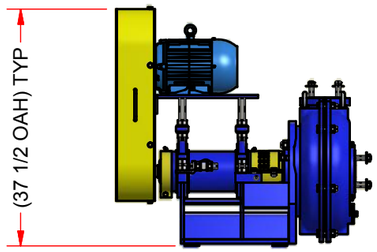


**7.5 - 10 HP MOTORS**
ESTIMATED WEIGHTS:
7.5 HP MOTOR = 899.0 LBS
10 HP MOTOR = 917.0 LBS
SCALE 1:24

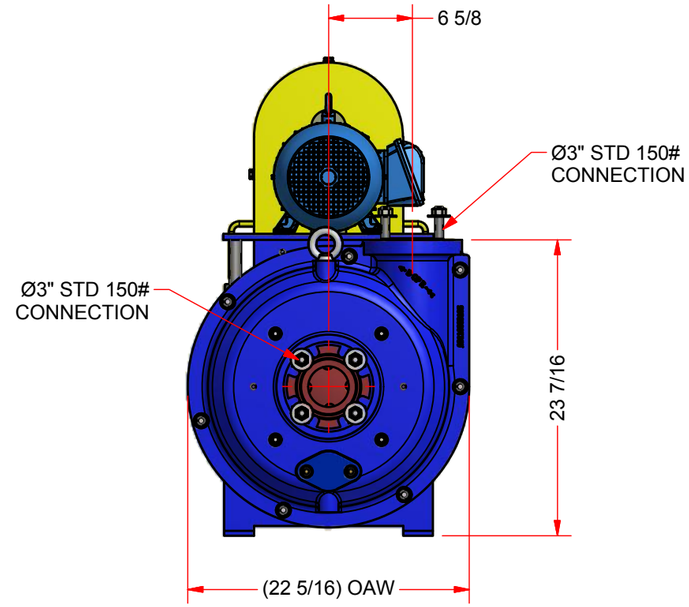


**FRONT**
ESTIMATED WEIGHT: 840.0 LBS
SCALE 1:12

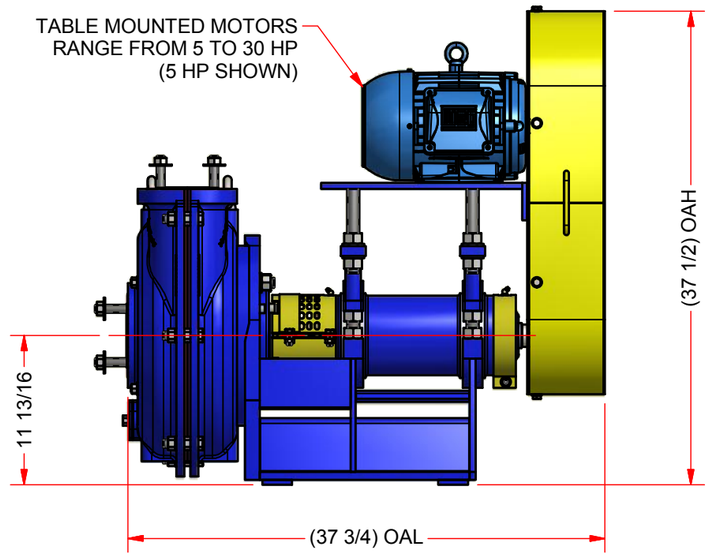


**SIDE**

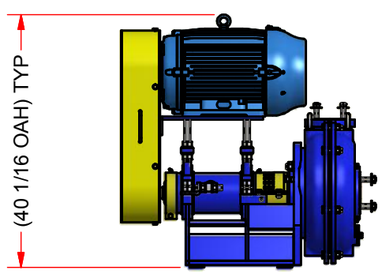


**15 - 30 HP MOTORS**
ESTIMATED WEIGHTS:
15 HP MOTOR = 996.0 LBS
20 HP MOTOR = 1,036.0 LBS
25 HP MOTOR = 1,133.0 LBS
30 HP MOTOR = 1,182.0 LBS
SCALE 1:24

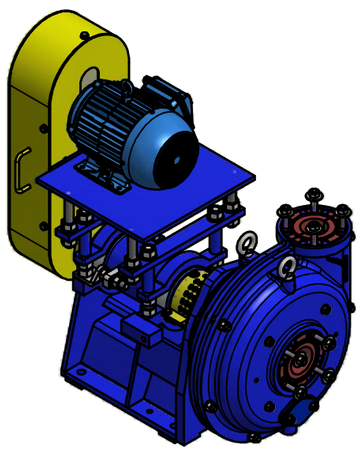

**ISOMETRIC**
NTS

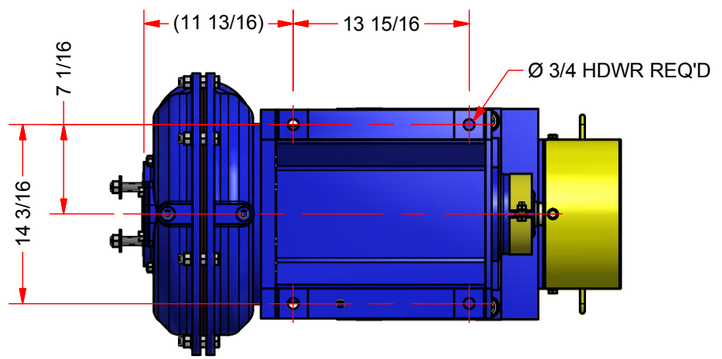


**BOTTOM**
FOOT PRINT

**This page is intentionally left blank**

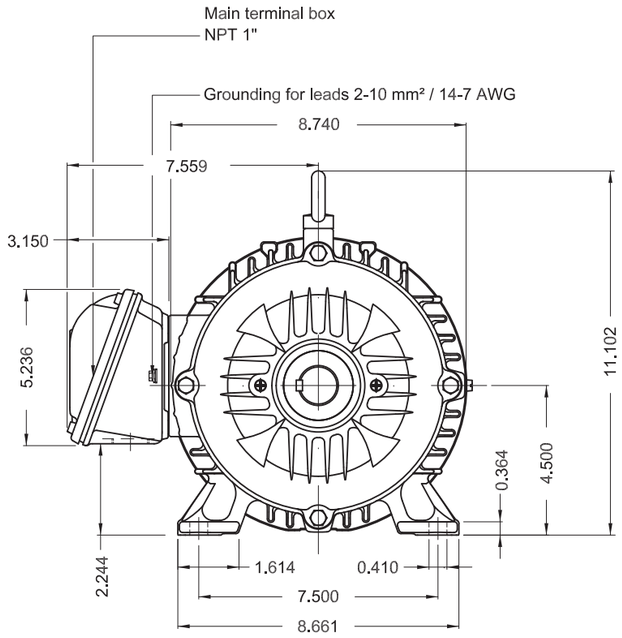


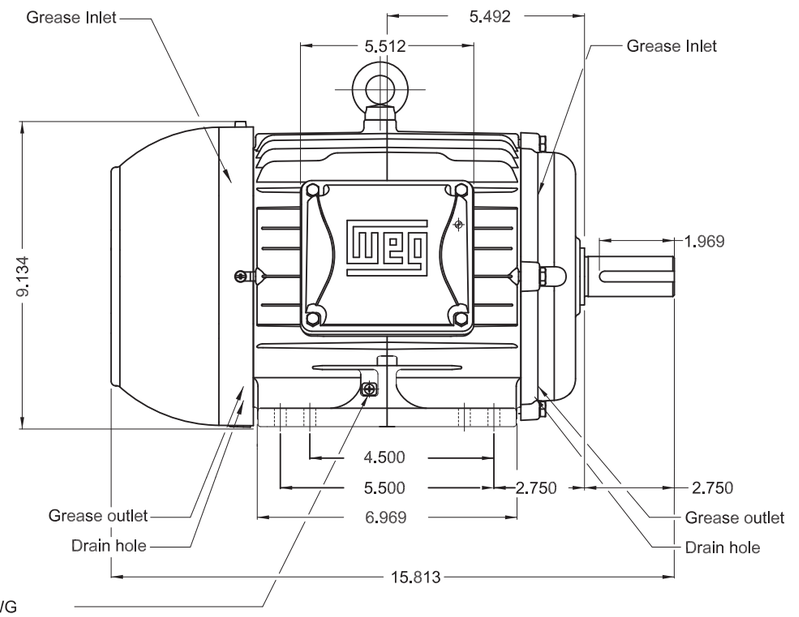


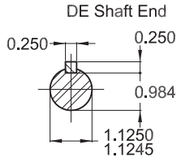


Color RAL 5009

Painting plan 202E

Mounting B3R(D)

5 HP 04 Poles 60Hz | A

| ECM | LOC | SUMMARY OF MODIFICATIONS | EXECUTED | CHECKED | RELEASED | DATE | VER |
|---|---|---|---|---|---|---|---|

| | |
|---|---|
| EXECUTED | PIRWBUSER |
| CHECKED | |
| RELEASED | |
| REL DT. | |

THREE PH. W22 NEMA P.EFF MOTOR IEEE841
FRAME 182/4T IP55 TEFC

PREVIEW

WDD

WMO Jaragua do Sul Product Engineering

SHEET 1 / 1

Dimensions in inches

XME A3

WEG's property. Forbidden reproduction without previous authorization.

**This page is intentionally left blank**

# DATA SHEET

## Three Phase Induction Motor - Squirrel Cage

| | |
|---|---|
| Customer | : |

| | | | |
|---|---|---|---|
| Product line | : W22 IEEE 841 NEMA Premium Efficiency Three-Phase | Product code : | 11433808 |
| | | Catalog # : | 00518ST3HIE184T-W22 |

| | | | |
|---|---|---|---|
| Frame | : 182/4T | Locked rotor time | : 27s (cold) 15s (hot) |
| Output | : 5 HP (3.7 kW) | Temperature rise | : 80 K |
| Poles | : 4 | Duty cycle | : Cont.(S1) |
| Frequency | : 60 Hz | Ambient temperature | : -20°C to +40°C |
| Rated voltage | : 575 V | Altitude | : 1000 m.a.s.l. |
| Rated current | : 5.16 A | Protection degree | : IP55 |
| L. R. Amperes | : 38.7 A | Cooling method | : IC411 - TEFC |
| LRC | : 7.5x(Code J) | Mounting | : F-1 |
| No load current | : 2.56 A | Rotation[1] | : Both (CW and CCW) |
| Rated speed | : 1755 rpm | Noise level[2] | : 56.0 dB(A) |
| Slip | : 2.50 % | Starting method | : Direct On Line |
| Rated torque | : 2.07 kgfm | Approx. weight[3] | : 49.9 kg |
| Locked rotor torque | : 229 % | | |
| Breakdown torque | : 320 % | | |
| Insulation class | : F | | |
| Service factor | : 1.25 | | |
| Moment of inertia (J) | : 0.0169 kgm² | | |
| Design | : B | | |

| Output | 25% | 50% | 75% | 100% |
|---|---|---|---|---|
| Efficiency (%) | 88.2 | 88.5 | 89.5 | 89.5 |
| Power Factor | 0.37 | 0.62 | 0.74 | 0.80 |

| Foundation loads | |
|---|---|
| Max. traction | : 113 kgf |
| Max. compression | : 163 kgf |

| | | Drive end | Non drive end |
|---|---|---|---|
| Bearing type | : | 6207 C3 | 6206 C3 |
| Sealing | : | Inpro/Seal | Inpro/Seal |
| Lubrication interval | : | 20000 h | 20000 h |
| Lubricant amount | : | 7 g | 5 g |
| Lubricant type | : | Mobil Polyrex EM | |

Notes

This revision replaces and cancel the previous one, which must be eliminated.
(1) Looking the motor from the shaft end.
(2) Measured at 1m and with tolerance of +3dB(A).
(3) Approximate weight subject to changes after manufacturing process.
(4) At 100% of full load.

These are average values based on tests with sinusoidal power supply, subject to the tolerances stipulated in NEMA MG-1.

| Rev. | Changes Summary | Performed | Checked | Date |
|---|---|---|---|---|
| | | | | |

| | | | | |
|---|---|---|---|---|
| Performed by | | | | |
| Checked by | | | Page | Revision |
| Date | 21/01/2021 | | 1 / 6 | |

This document is exclusive property of WEG S/A. Reprinting is not allowed without written authorization of WEG S/A.
Subject to change without notice

**This page is intentionally left blank**

# SLURRY PUMPS

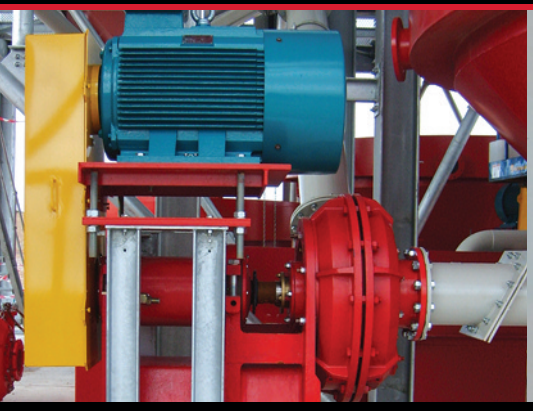

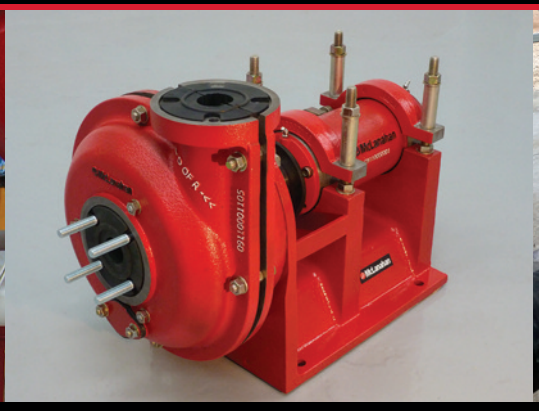



## RELIABLE AND LONG LASTING

McLanahan's centrifugal Slurry Pumps are rubber-lined and abrasion resistant for long lasting service, low lifetime costs and straight forward servicing.

Eight models with discharge port sizes from 35mm to 250mm that can accommodate various options in lining material and gland type choices.

McLanahan®

mclanahan.com

## APPLICATIONS

- Sand & Gravel / Minerals Processing
- Soil Washing / Remediation
- Waste Water Recovery / Disposal
- Concrete Wash-out



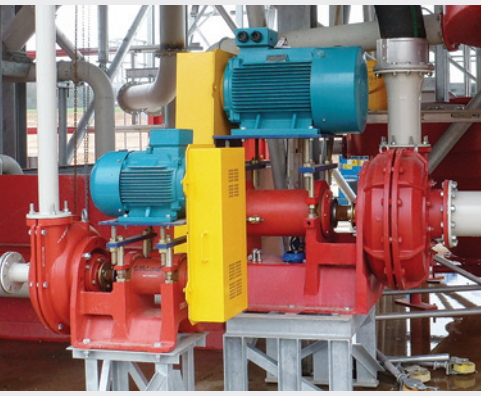

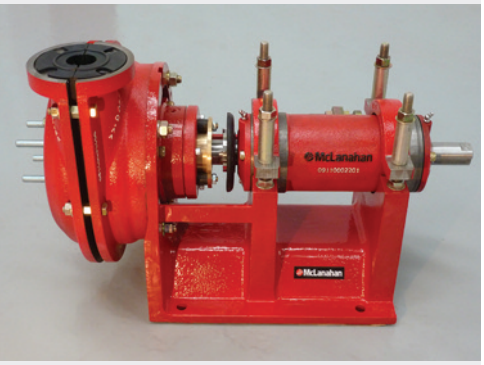

## WETTED PARTS

Standard pumps are equipped with natural rubber liners and impeller. However, bespoke options are available to suit a specific process and include premium natural rubber, Nitrile and food grade rubber. Shaft sleeves are from 304 St, but may be manufactured from other materials or coated to special order.

## GLAND OPTIONS

**D (Dry) Gland**

An abrasion resistant Natural Rubber "Face Seal" riding a "Hard Face" and lubricated naturally by the process fluid. Controlled seepage of process fluid. Optional clean water injection facility.

**H (Hydro) Gland**

Clean water is injected into the inter-space between a pair of gland seals in tandem. Slight dilution – but total containment – of the process fluid. Controlled water seepage to atmosphere.

**P (Packed) Gland**

Gland packing mechanically adjusted to "ride" the shaft sleeve. Highest pressure capability. Some process dilution and water (or lubricating grease) seepage to atmosphere.

## MOTOR AND DRIVE

McLanahan supplies pumps bare-shaft or complete with motor, overhead mounting platform, vee-belt drive and guard. Motors can also be oriented in Z-vee fashion, or side mounted on slide rails.

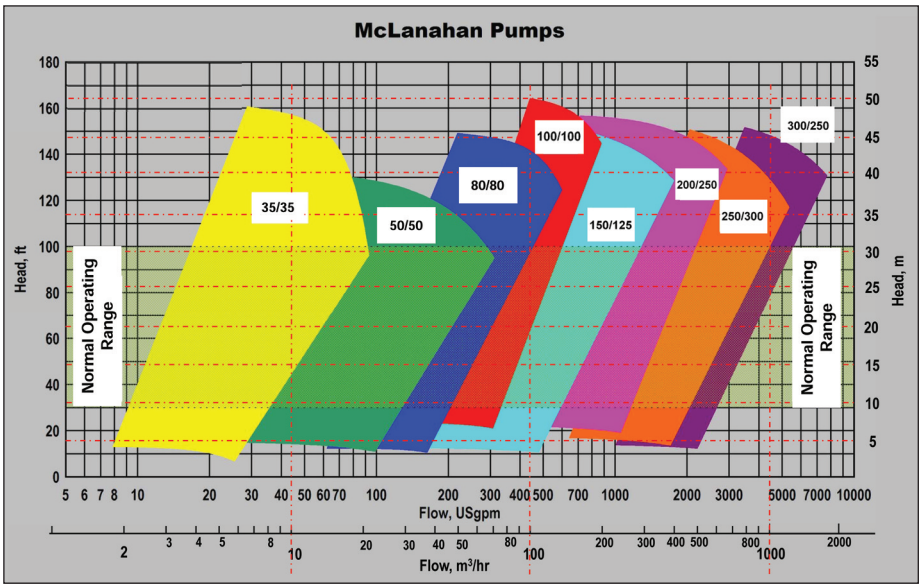


## PUMP SELECTION

Initial pump selection can be determined by using the chart above as a guide. A qualified McLanahan engineer can determine the best pump performance for a specific application.

## SPARES

High quality spare parts are available including moulded rubber Impellers, casing liners and suction bush components. All parts are available in various materials and hardness to suit differing applications. Mechanical spares such as fully assembled bearing housing cartridges and gland parts are available as kits for ease of procurement.


| | | | |
|---|---|---|---|
| **NORTH AMERICA** | CORPORATE HEADQUARTERS | | |
| | Pennsylvania, USA | +1 (814) 695 9807 | sales@mclanahan.com |
| | Florida, USA | +1 (863) 667 2090 | polymers@mclanahan.com |
| | Iowa, USA | +1 (319) 365 0441 | sales@mclanahan.com |
| | Tennessee, USA | +1 (615) 451 4440 | sales@mclanahan.com |
| **AUSTRALIA** | New South Wales | +61 2 4924 8248 | sales@mclanahan.com.au |
| | Queensland | +61 7 4952 3377 | sales@mclanahan.com.au |
| **EUROPE** | England, UK | +44 (0) 1420 542489 | enquiries@mclanahan.uk.com |
| **ASIA** | Hyderabad, India | +91 (40) 2355 4071 | info@mclanahan-nawa.com |


Guards are recommended for safe operation of equipment. In some photos, safety guards may not be shown.

McLanahan

Pump Selection Program

Powered by TAS

### Pump Details

| | | |
|---|---|---|
| Pump Model | M3H-CR 3/3 | |
| Rated Flow | 40.00 | m^3/hr |
| Rated Head | 5.00 | m |
| Efficiency | 52.82 | % |
| QBEP | 99.10 | % |
| Impeller Diameter | 10 | in |
| Pump Speed | 736 | rpm |
| Minimum Speed | 600 | rpm |
| Maximum Speed | 2100 | rpm |
| Tip speed | 32.09 | ft/s |
| NPSH required | 5.58 | ft |

### Selection Details

| | | |
|---|---|---|
| Required Flow | 40.00 | m^3/hr |
| Required Head | 5.00 | m |
| Static Head | 0.00 | m |
| Friction Head | 5.00 | m |
| Suction Height | 0.00 | m |
| Discharge Height | 0.00 | m |
| Discharge Pressure | 0.00 | kPa |
| Head Ratio | 0.97 | |
| NPSH Available | 0.00 | m |
| No. of pumps | 1 | |
| Power absorbed - Total | 2.00 | hp |

### Slurry Details

| | | |
|---|---|---|
| Solid flow rate | 10.25 | Tons/hr |
| Slurry flow rate | 40.00 | m^3/hr |
| SG solid | 2.70 | |
| SG liquid | 1.00 | |
| SG slurry | 1.14 | |
| % comp. by weight | 20.00 | % |
| % comp by volume | 8.47 | % |
| Ave. particle size | 100.00 | microns |
| Max particle size | 300.00 | microns |
| Widely graded particles | False | |
| Froth factor | 0.00 | |
| Set ER & HR manually | False | |
| Efficiency ratio | 0.975 | |
| Head ratio | 0.975 | |

### Electrical Driver Details

| | | |
|---|---|---|
| Motor | 5.00 | hp |
| Power absorbed - @ Duty | 1.58 | hp |
| Power required | 1.82 | hp |
| Frame size | 184.00 | |
| Temperature rise | 105.00 | °C |
| Insulation class | F | |
| Bearing size D/E | 6207.00 | |
| Bearing size N/D/E | 6206.00 | |
| Weight | 92.60 | |
| Shaft size | 1.13 | |

JMI - 5000220043 /

20210115-013, January 21, 2021

M3H-CR 3/3 , 736 rpm, 5 hp

©2018-2019 McLanahan. This curve is the property of McLanahan. And must not be reproduced or disclosed without permission in writing. All rights are reserved.

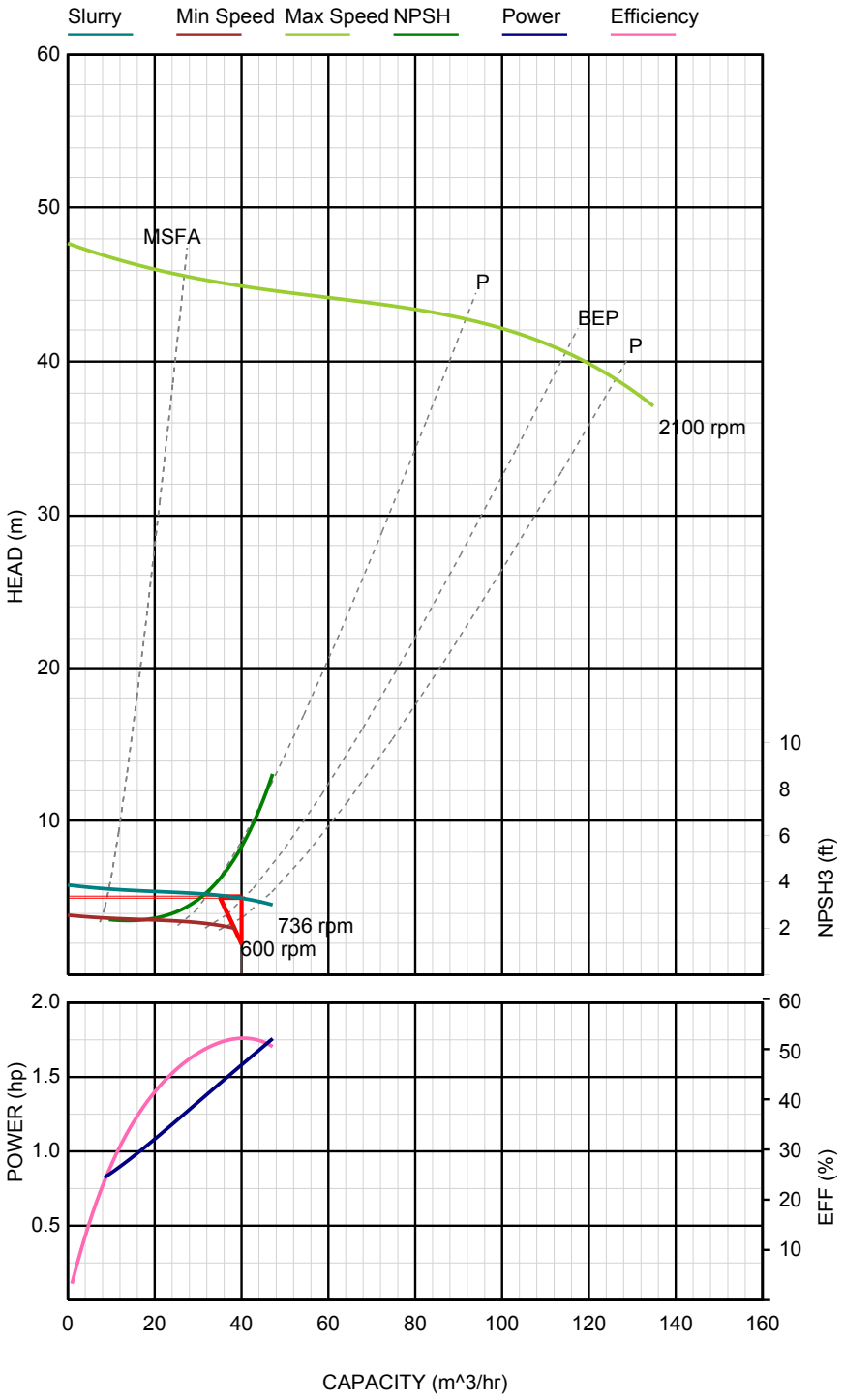


## Pump model: M3H-CR 3/3

| Pump | |
|---|---|
| Pump range | -CR |
| Speed | 736 rpm |
| Max Speed | 2100 rpm |
| Efficiency @ BEP | 51.41 % |
| No. of pumps | 1 |
| Power absorbed - Total | 2 hp |

| Duty Point | |
|---|---|
| Flow | 40 m^3/hr |
| Static Head | 0 m |
| Total Head | 5 m |
| Efficiency | 52.82 % |
| NPSH required | 5.705 ft |
| % of BEP | 99.1 % |
| Power absorbed - @ Duty | 1.582 hp |
| Motor size | 5 hp |
| Tip Speed | 32.09 ft/s |
| Impeller Diameter | 10 in |
| Speed Head | 5.128 m |

| Slurry Data | |
|---|---|
| Solid flow rate | 10.25 Tons/hr |
| Solid SG | 2.7 |
| Slurry SG | 1.144 |
| % Comp. by Weight | 20 % |
| % comp. by Volume | 8.475 % |
| Ave. Particle size (D50) | 100 microns |
| Max Particle Size | 300 microns |
| Head Ratio | 0.975 |

**Engineer's Notes**

**Project name:** MELIADINE-BPC UPGRADE

**Project#:** 5000220043

**Document #:** SPK_0111_MISC_VWT

**by:** GM

**chkd:** ED

**appvd:** TS

# SPLITTER BOX CLARIFIER #2

# VALVES

**OIM manual section:** 4.2.9.3

**This page is intentionally left blank**

# CS-312-662 : Identification sheet

| | | | | | |
|---|---|---|---|---|---|
| VWTC PROJECT NUMBER: | 5000220043 | | | REV: | 1 |
| PROJECT NAME: | AEM MELIADINE - BPC UPGRADE | SUBMITTED TO (COMPANY): | AEM | | |
| ENGINEER: | EMMANUELLE DORMOY | SUBMITTED TO (RESPONSIBLE): | | | |
| PROJECT MANAGER: | THOMAS SAVARY / BRUCE BORDES | PROJECT NUM REFERENCE.: | 6526-S-265-605 / OC-989680 | | |
| PHONE NUMBER: | 514-334-7230 | LOT NUMBER: | | | |

| SUPPLIER | EQPT CODE | EQPT TAG NO | DIA | DESCRIPTION | INFO 1 | INFO 2 | INFO 3 | APPLIC. | NOTE | REV |
|---|---|---|---|---|---|---|---|---|---|---|
| DURCO | ST-312-664 | 100-PG99-1418 | N/A | PUMP #2 INLET ISOLATION VALVE | TYPE: PLUG \|150 PSI//MANUFACTURER : Flowserve DURCO//MODEL : 4''T4E11C11D033NW //CONNECTION TYPE : FLANGED #150/\| 100 mm (4")//BODY : FONTE DUCTILE// SEAL \| SEAT :PFA MOLDED PLUG | | | CLARIFIER #2 SLUDGE SPLITTER TANK | | 1 |
| DURCO | ST-312-664 | 100-PG99-1420 | N/A | PUMP #2 OUTLET ISOLATION VALVE | TYPE: PLUG \|150 PSI//MANUFACTURER : Flowserve DURCO//MODEL : 4''T4E11C11D033NW //CONNECTION TYPE : FLANGED #150/\| 100 mm (4")//BODY : FONTE DUCTILE// SEAL \| SEAT :PFA MOLDED PLUG | | | CLARIFIER #2 SLUDGE SPLITTER TANK | | 1 |
| DURCO | ST-312-664 | 100-PV99-1417 | N/A | RECIRCULATION ISOLATION VALVE | TYPE: PLUG \|150 PSI//MANUFACTURER : Flowserve DURCO//MODEL : 4''T4E11C11D033NW //CONNECTION TYPE : FLANGED #150/\| 100 mm (4")//BODY : FONTE DUCTILE// SEAL \| SEAT :PFA MOLDED PLUG | | | CLARIFIER #2 SLUDGE SPLITTER TANK | | 1 |

**This page is intentionally left blank**

FLOWSERVE

# Durco T4E Lined Plug Valves

## Fluoropolymer Lined Valves



*Experience In Motion*

## History

*Flowserve Durco T4E valves have been designed and developed with the latest technology and are the most preferred fluoropolymer lined valves in the global chemical industries.*
*Durco T4E valves provide maximum corrosion resistance and the elimination of product contamination at a reasonable cost.*

## Available in a Broad Size Range and

- ***T4E1*** *ASME Class 150 is available in sizes ½" through 12"*
- ***T4E2*** *DIN PN 16 is available in sizes DN 15 through DN 300*
- ***T4E3*** *ASME Class 300 is available in sizes ½" through 10"*

## Extended Pressure Classes

- ***T4E1 and T4E2*** *rated 180 psi @400 °F (12.4 bar @ 204 °C), 250 psi @ 100 °F (17.2 bar @ 100 °C)*
- ***T4E3*** *rated 320 psi @ 400 °F (22 bar @ 204 °C), 740 psi @ 100 °F (51 bar @ 100 °C)*

*Available with pneumatic or electric actuators for On-Off or modulating control applications.*
*All T4E valve series are rated to 4 Kpa (30 inches Hg) vacuum at ambient temperature.*

# Features

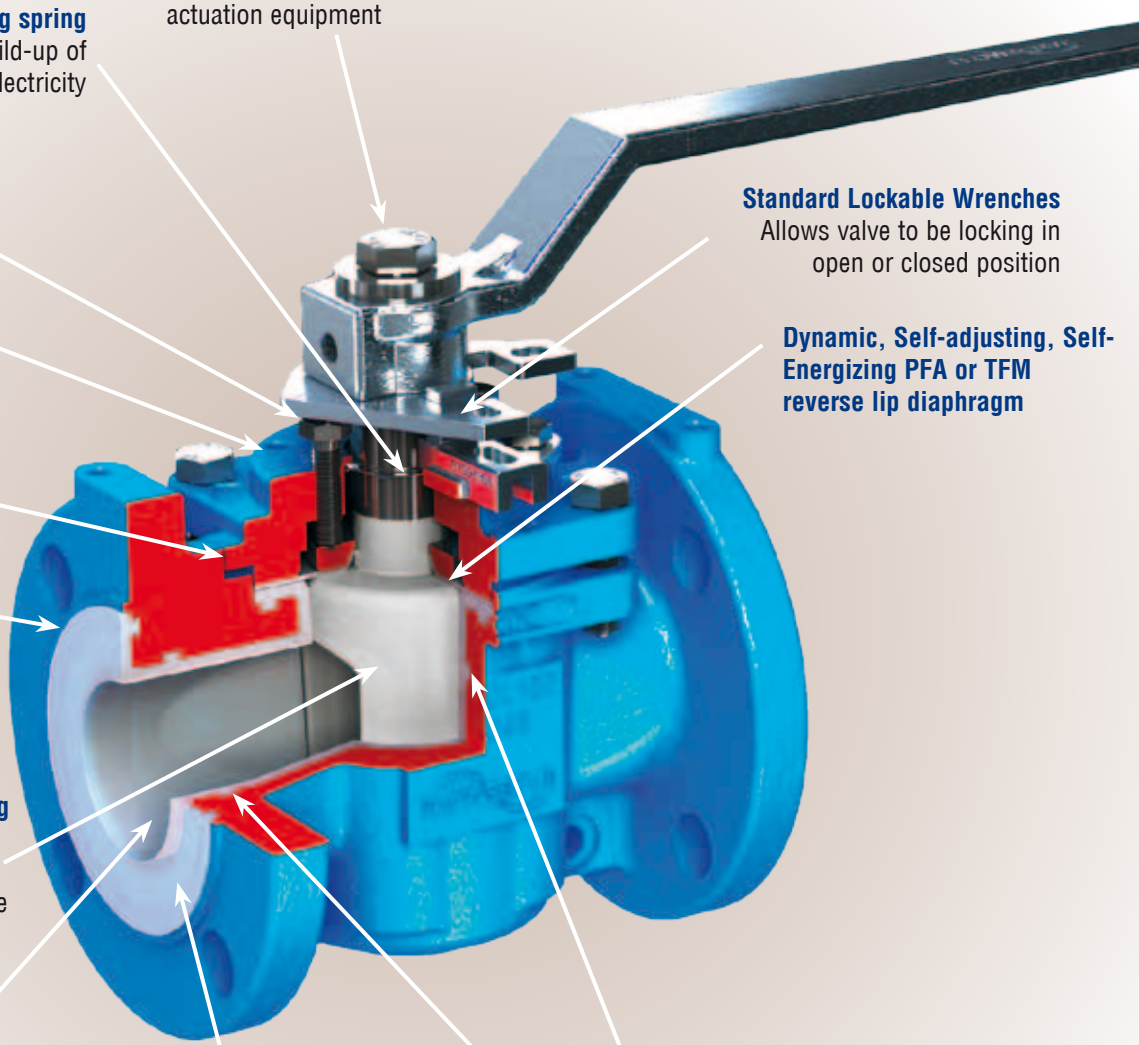

**Double-D plug stem**
accepts most standard actuation equipment

**Grounding spring**
To avoid build-up of static electricity

**Inline adjustment**
Stops thru-line leakage

**ISO 5211 Mounting Pad**
Universal flange for easy actuation mounting

**Anti-Rotation Lugs**
Help to eliminate stress on fasteners during actuation

**Raised Lip**
Prevents cold flow outward

**Standard Lockable Wrenches**
Allows valve to be locking in open or closed position

**Dynamic, Self-adjusting, Self-Energizing PFA or TFM reverse lip diaphragm**

**Solid Encapsulated PFA Molded Plug**
All plug inserts have anchor holes to ensure a strong adhesion of the plug PFA liner material even under extreme cycling conditions

**Large Ports**
Offer good Cv values. Reduced frictional losses & pressure drop

**High Quality PFA Liner**
Protects the body and forms the flange gasket. The PFA liner is resistant against a wide variation of chemical products

**T-Slots in Critical Areas to Lock Liner Against Body Wall**
Advantage will be a tight and perfect fit of the liner and an additional support during vacuum service

# Additional Benefits

## Benefits that give you the extra security which you will appreciate when using the T4E valves

### Body Liner

- A perfectly fixed PFA body liner is well anchored to the body by means of machined T-slots. The plug substrate has anchor holes to ensure that the PFA liner material is securely attached to the plug.
- Due to the selected mode to lock the liner to the valve body and plug, the T4E valve series is very suitable for extreme service conditions including vacuum applications at elevated temperatures.
- The PFA body liner covers all wetted surfaces in the body.
- Due to it's large sealing surface a tight shut-off is assured.
- In addition to the large seating area the valve is fully bi-directional and the seal is totally independent of line pressure.

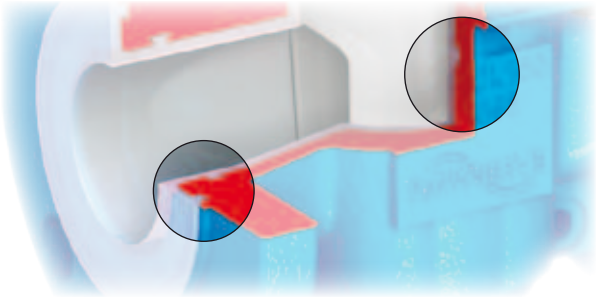

### In-Line Adjustment

- No disassembly required to restore seating; plug can be reseated with a quick and easy in-line adjustment.
- An open end wrench and a few seconds are the extent of your maintenance requirements.

There are:

- No seats to replace
- No lengthy production disruption
- No piping disconnection
- No complicated, time-consuming maintenance procedures
- No hazards to personnel

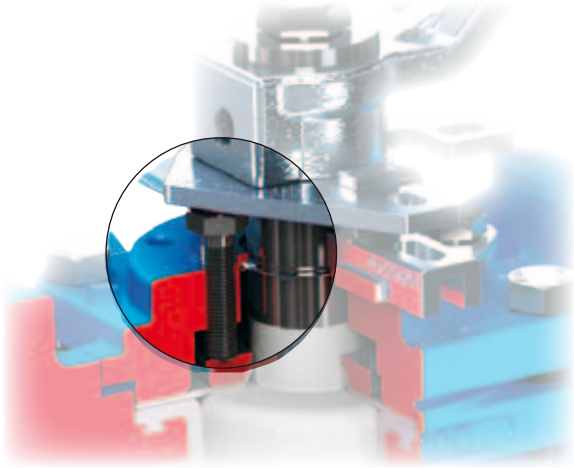

### Secure Sealing

- A dynamic self-adjusting, self energized reverse lip PFA diaphragm seal prevents stem leakage.
- If line pressure forces liquid to the stem seal area, the self-energizing reverse lip PFA diaphragm will be forced against the stem to prevent external leakage.
- A sealing surface as much as 10x greater than other lined valves assures drop tight shut-off.
- In addition to the large sealing area, sealing is both upstream and downstream and is totally independent of line pressure.

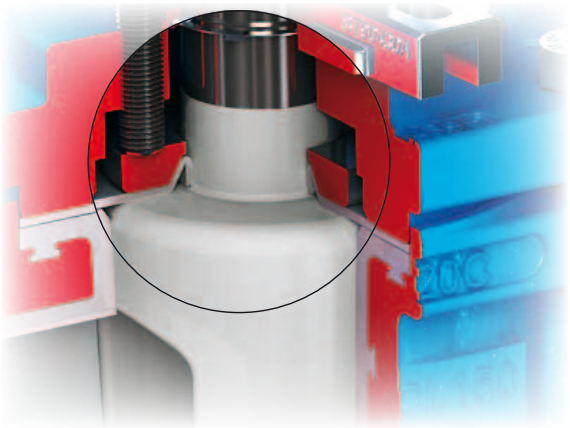

## Weepholes

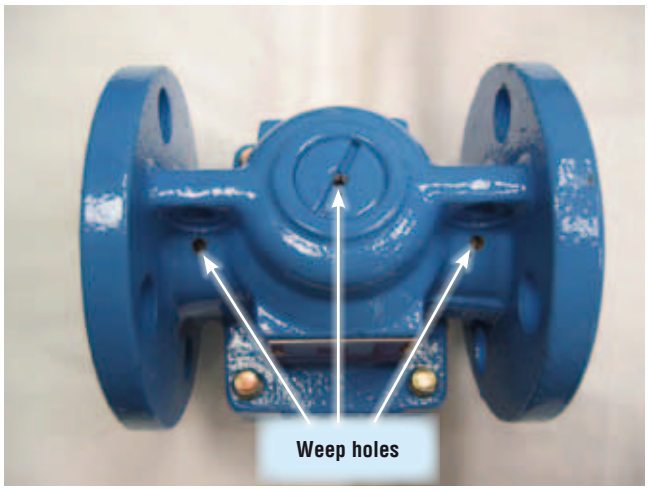


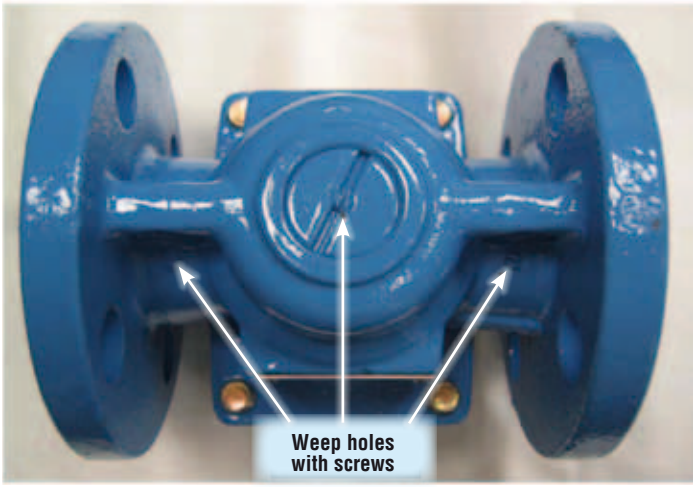


## Weepholes for early leakage detection

Durco T4E valves are supplied with three weepholes that are plugged with screws. The customer has the option to remove the screws. In so doing he is able to detect any leakage of process fluid through the liner and to take appropriate action.

## Pressure-Temperature-Diagram - T4E1 and T4E2

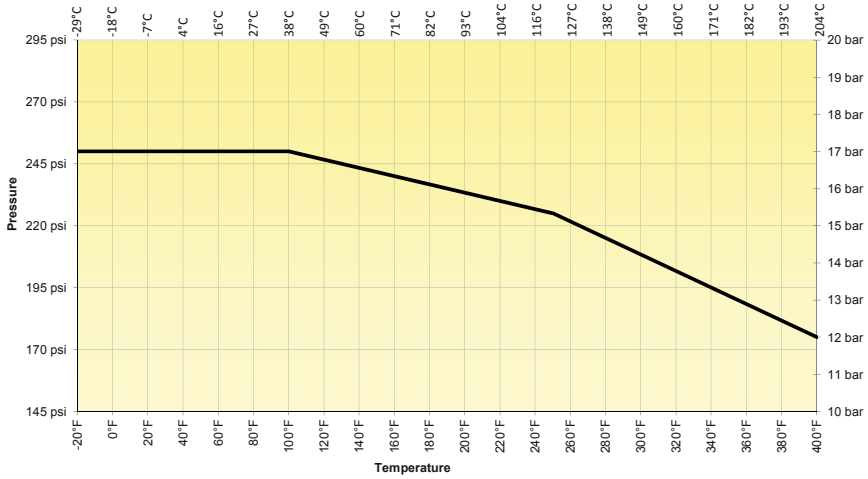


## Pressure-Temperature-Diagram - T4E3

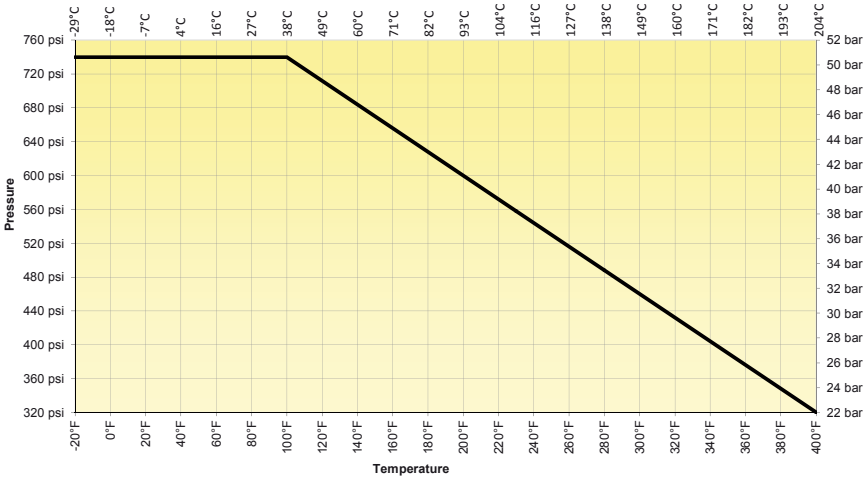

# Durco T4E Automated Valves




*Choose from a complete line of Flowserve Automax Automation Equipment for precise proportioning and On-Off control.....or we'll build a control package to your specification.*

*Flowserve Automax, a specialist in complete automation systems, produces a broad line of rack and pinion, heavy-duty, electric and linear actuators. In addition, a comprehensive line of engineered special control circuits, solenoid valves, limit switches, positioners and actuator mounting kits is offered.*

***Actuator Mounting***

*The body style of the T4E offers a choice of two locations for actuator mounting : an ISO 5200 pattern on the topcap or the flat-top pads of the flanges.*

## Software Capability

*Flowserve offers a state-of-the-art range of software to help in sizing valves and actuation and creating drawings.*

## Modulating Control

*V-port T4E valves are available in 1" (DN 25) through 4" (DN 100) sizes with Cv (Kv) values of 1 through 187 (Kv of 1 through 161). Standard port T4E valves are available in ½" (DN 15) through 12" (DN 300) sizes with Cv (Kv) values from 15 through 3200 (Kv from 13 through 2750).*

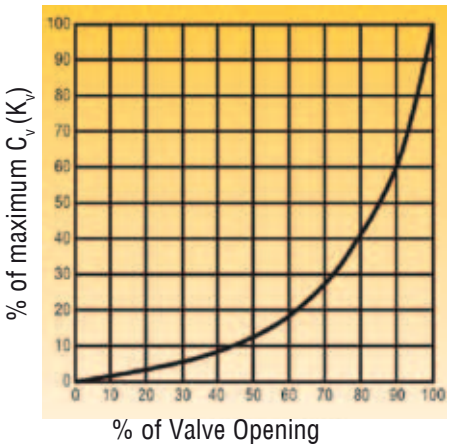


## Control Plugs

| Size | Cv | Kv | Plug Type |
|---|---|---|---|
| 1" | 1 | 1 | slotted plug |
| 1" | 3 | 3 | slotted plug |
| 1" | 8 | 7 | V-port |
| 1" | 13 | 11 | V-port |
| 1" | 25 | 21 | V-port |
| 1½" | 30 | 26 | V-port |
| 2" | 54 | 46 | V-port |
| 3" | 89 | 76 | V-port |
| 4" | 187 | 161 | V-port |

# Material Specification

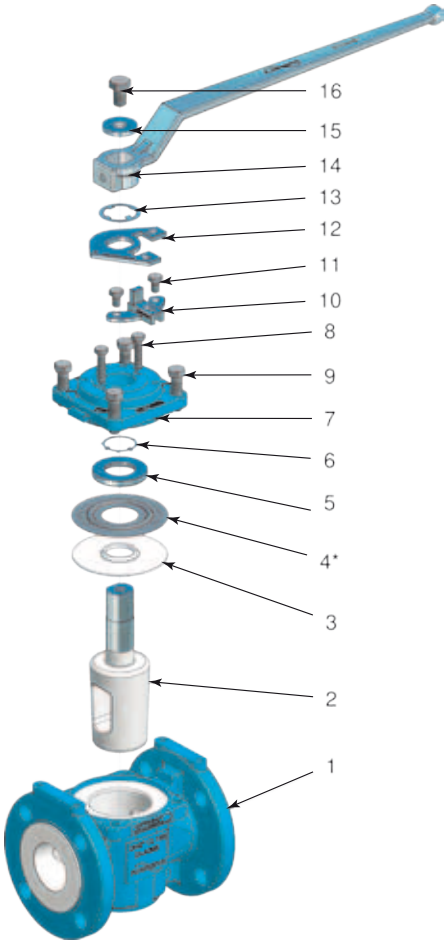


## T4E1, T4E2 and T4E3 (½" - 6")

| No. | Designation | Material |
|---|---|---|
| 1 | Body T4E1 | Ductile cast iron - EN-JS1049/ASTM A395, PFA lined |
| | Body T4E3 | Carbon steel ASTM A216 grade WCB, PFA lined |
| 2 | Plug | Ductile cast iron - EN-JS1049/ASTM A395, PFA lined |
| 3 | Diaphragm | T4E1: TFM (PFA*) \| T4E3: PFA |
| 4* | Metal diaphragm | Stainless steel - 302 |
| 5 | Thrust gland | Machining steel - 1.0718 |
| 6 | Grounding spring | Stainless steel - 302 |
| 7 | Top cap T4E1 | Ductile cast iron - EN-JS1049/ASTM A395 |
| | Top cap T4E3 | Carbon steel ASTM A995 Gr CD4MCuN |
| 8 | Adjuster bolt | ASTM A193 grade B7YC |
| 9 | Top cap bolt | ASTM A193 grade B7YC |
| 10 | Stop | Stainless steel ASTM A351/A744 grade CF-8M (316 SS) |
| 11 | Stop fastener | Stainless steel 1.4301 |
| 12 | Stop collar | Carbon steel, protective plated |
| 13 | Stop collar retainer | Stainless steel - 302 |
| 14 | Wrench | Ductile cast iron - EN-JS1082/ASTM A536 |
| 15 | Washer | Stainless steel - 1.4301 |
| 16 | Hexagon bolt | Stainless steel - 1.4301 |

*Optional

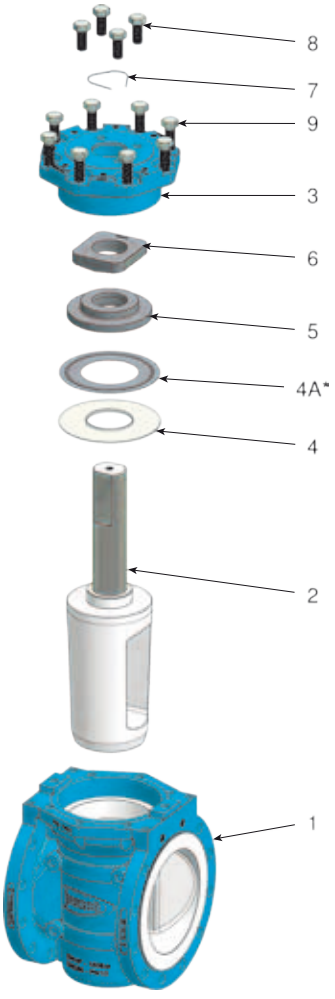


## T4E1 and T4E2 (8" - 12") T4E3 (8" - 10")

| No. | Designation | Material |
|---|---|---|
| 1 | Body T4E1 | Ductile cast iron - EN-JS1049/ASTM A395*, PFA lined |
| | Body T4E3 | Carbon steel ASTM A216 grade WCB, PFA lined |
| 2 | Plug | Ductile cast iron - EN-JS1049/ASTM A395, PFA lined |
| 3 | Top cap T4E1 | Ductile cast iron - EN-JS1049/ASTM A395 |
| | Top cap T4E3 | Carbon steel ASTM A995 grade CD4MCuN |
| 4 | Diaphragm | T4E1: DN8" - TFM (PFA*), DN10"-DN12" - PFA \| T4E3: PFA |
| 4a** | Metal diaphragm | Stainless steel - 302 |
| 5 | Thrust gland | Dupex stainless steel ASTM A995 Gr CD4MCuN |
| 6 | Adjuster | Dupex stainless steel ASTM A995 Gr CD4MCuN |
| 7 | Grounding spring | Stainless steel - 302 |
| 8 | Adjuster bolt | 88YC |
| 9 | Hexagon bolt | 88YC |

* Other materials upon request
** Optional

# Dimensions

## Valve Dimensions

Dimensions are in Inches and millimetres. Weights are in lb. and kg.

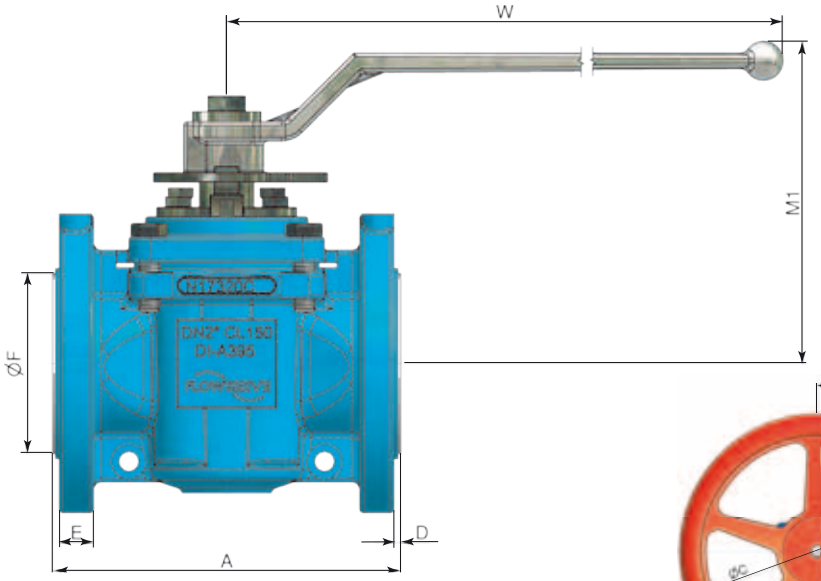


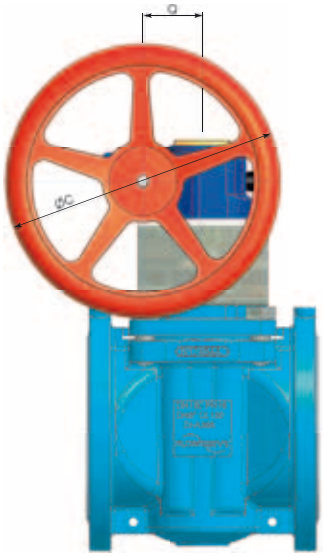


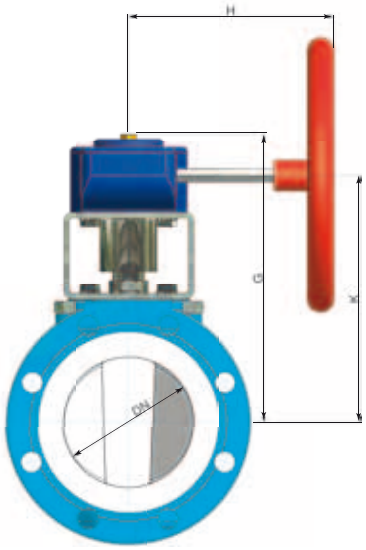


## T4E1, T4E2 and T4E3 ½˝ to 12˝

| Size | Units | A | | | D | | | E | | | ØF | | | W | MI | ØC | H | G | K | Q | Weight | | | |
|---|---|---|---|---|---|---|---|---|---|---|---|---|---|---|---|---|---|---|---|---|---|---|---|---|
| | | 150 | 300 | DIN PN16 | 150 | 300 | DIN PN16 | 150 | 300 | DIN PN16 | 150 | 300 | DIN PN16 | | | | | | | | Units | 150 | 300 | DIN PN16 |
| ½" | inch | 4.3 | 5.5 | 5.1 | 0.12 | 0.16 | 0.24 | 0.43 | 0.51 | 0.47 | 1.4 | 1.4 | 1.65 | 10.2 | 5.5 | | | | | | lb. | 8.2 | 9.9 | 9.3 |
| | mm | 109 | 140 | 130,0 | 3,0 | 4,1 | 6,0 | 11 | 13 | 12 | 36 | 36 | 42 | 259 | 140 | | | | | | kg, | 3,7 | 4,5 | 4,2 |
| ¾" | inch | 4.6 | 6.0 | 5.9 | 0.12 | 0.24 | 0.24 | 0.49 | 0.61 | 0.63 | 1.7 | 1.7 | 2.20 | 10.2 | 5.5 | | | | | | lb. | 9.0 | 12.3 | 10.8 |
| | mm | 117 | 152 | 150,0 | 3,0 | 6,1 | 6,0 | 12 | 15 | 16 | 43 | 43 | 56 | 259 | 140 | | | | | | kg, | 4,1 | 5,6 | 4,9 |
| 1" | inch | 5.0 | 6.5 | 6.3 | 0.12 | 0.26 | 0.26 | 0.5 | 0.63 | 0.55 | 2.0 | 2.0 | 2.56 | 10.2 | 5.5 | | | | | | lb. | 10.8 | 14.3 | 12.8 |
| | mm | 127 | 165 | 160,0 | 3,0 | 6,6 | 6,5 | 13 | 16 | 14 | 51 | 51 | 65 | 259 | 140 | | | | | | kg, | 4,9 | 6,5 | 5,8 |
| 1½" | inch | 6.5 | 7.5 | 7.9 | 0.16 | 0.26 | 0.26 | 0.63 | 0.74 | 0.59 | 2.9 | 2.9 | 3.35 | 10.2 | 5.7 | | | | | | lb. | 16.3 | 22.3 | 20.1 |
| | mm | 165 | 191 | 200,0 | 4,1 | 6,6 | 6,5 | 16 | 19 | 15 | 74 | 74 | 85 | 259 | 145 | | | | | | kg, | 7,4 | 10,1 | 9,1 |
| 2" | inch | 7.0 | 8.5 | 9.1 | 0.14 | 0.26 | 0.26 | 0.69 | 0.86 | 0.67 | 3.6 | 3.6 | 3.86 | 16.1 | 6.5 | | | | | | lb. | 24.9 | 30.9 | 29.1 |
| | mm | 178 | 216 | 230,0 | 3,6 | 6,6 | 6,5 | 18 | 22 | 17 | 91 | 91 | 98 | 409 | 165 | | | | | | kg, | 11,3 | 14,0 | 13,2 |
| 3" | inch | 8.0 | 11.1 | 12.2 | 0.12 | 0.28 | 0.28 | 0.88 | 1.06 | 0.75 | 5.0 | 5.0 | 5.24 | 16.1 | 7.0 | | | | | | lb. | 38.6 | 52.2 | 45.8 |
| | mm | 203 | 282 | 310,0 | 3,0 | 7,1 | 7,0 | 22 | 27 | 19 | 127 | 127 | 133 | 409 | 178 | | | | | | kg, | 17,5 | 23,7 | 20,8 |
| 4" WO | inch | 9.0 | 12 | 13.8 | 0.16 | 0.28 | 0.28 | 0.88 | 1.18 | 0.75 | 6.2 | 6.2 | 5.98 | 26.5 | 8.7 | | | | | | lb. | 68.5 | 93.4 | 76.5 |
| | mm | 229 | 305 | 350,0 | 4,1 | 7,1 | 7,0 | 22 | 30 | 19 | 157 | 157 | 152 | 673 | 221 | | | | | | kg, | 31,1 | 42,4 | 34,7 |
| 4" GO | inch | 9.0 | 12 | 13.8 | 0.16 | 0.28 | 0.28 | 0.88 | 1.18 | 0.75 | 6.2 | 6.2 | 5.98 | | | 9.8 | 9.6 | 11.0 | 9.6 | 2.1 | lb. | 88 | 147 | 191 |
| | mm | 229 | 305 | 350,0 | 4,1 | 7,1 | 7,0 | 22 | 30 | 19 | 157 | 157 | 152 | | | 250 | 245 | 280 | 245 | 54 | kg, | 39,9 | 66,7 | 43,5 |
| 6" | inch | 10.5 | 15.9 | 10.5 | 0.16 | 0.28 | 0.16 | 0.94 | 1.37 | 0.94 | 8.2 | 8.2 | 8.19 | | | 13.8 | 11.2 | 12.2 | 10.8 | 2.6 | lb. | 128 | 187 | 128 |
| | mm | 267 | 404 | 267 | 4,1 | 7,1 | 4,0 | 24 | 35 | 24 | 208 | 208 | 208 | | | 350 | 285 | 309 | 275 | 67 | kg, | 58,1 | 84,8 | 58,1 |
| 8" | inch | 11.5 | 16.5 | 11.5 | 0.16 | 0.16 | 0.16 | 0.92 | 1.53 | 0.92 | 10.3 | 10.3 | 10.3 | | | 19.7 | 12.6 | 20.7 | 18.0 | 3.6 | lb. | 352 | 450 | 352 |
| | mm | 292 | 419 | 292 | 4,1 | 4,1 | 4,1 | 23 | 39 | 23 | 262 | 262 | 262 | | | 500 | 320 | 525 | 457 | 92 | kg, | 160 | 204 | 160 |
| 10 | inch | 13 | 18 | 13 | 0.16 | 0.16 | 0.16 | 1.3 | 1.81 | 1.3 | 12.4 | 12.4 | 12.4 | | | 23.6 | 14.6 | 27.3 | 22.4 | 5.2 | lb. | 522 | 590 | 522 |
| | mm | 330 | 457 | 330 | 4,1 | 4,1 | 4,1 | 33 | 46 | 33 | 315 | 315 | 315 | | | 600 | 370 | 693 | 570 | 132 | kg, | 237 | 268 | 237 |
| 12 | inch | 14 | | 14 | 0.16 | | 0.16 | 1.41 | | 1.41 | 15 | | 15 | | | 23.6 | 14.6 | 28.3 | 26.1 | 5.2 | lb. | 595 | | 595 |
| | mm | 356 | | 356 | 4,1 | | 4,1 | 36 | | 36 | 381 | | 381 | | | 600 | 370 | 720 | 664 | 132 | kg, | 270 | | 270 |

**Note:** All dimensions are approximate and for illustration purposes only. For exact dimensions consult certified dimensional prints
Valve 8"-12" are shown with double D stems which are standard. However spline shafts are also available for these sizes as an option.
All weights include either wrench or gear operator
Face-to-face dimensions comply to ANSI B16.10 and flange connections comply to ANSI B16.5

# T4E - Dimension sheet for actuator mounting

## Top cap mounting acc. to DIN EN ISO 5211

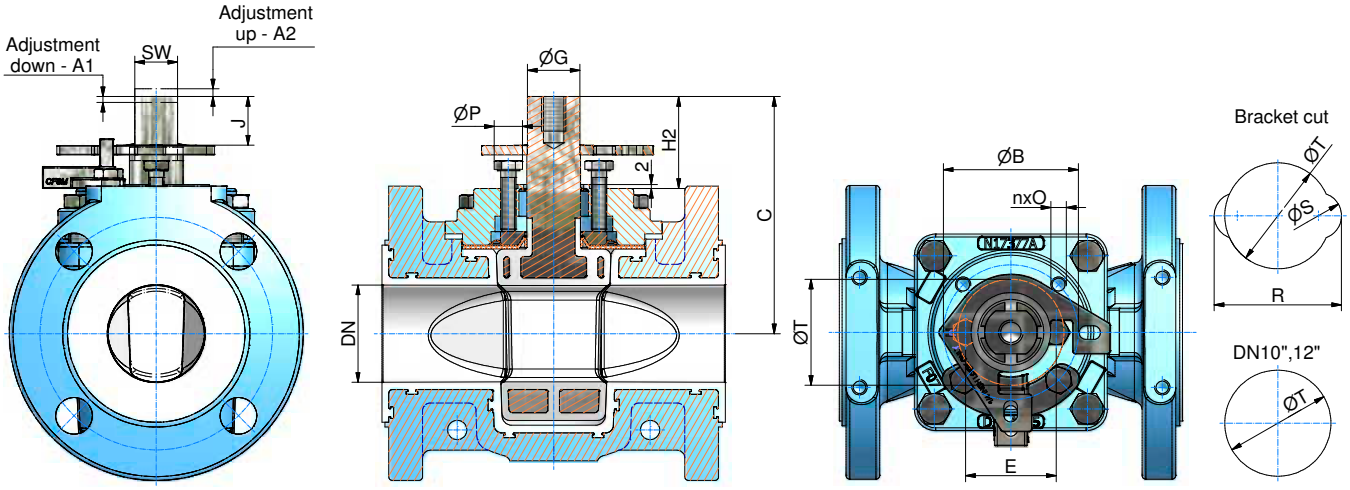


## Flange top mounting

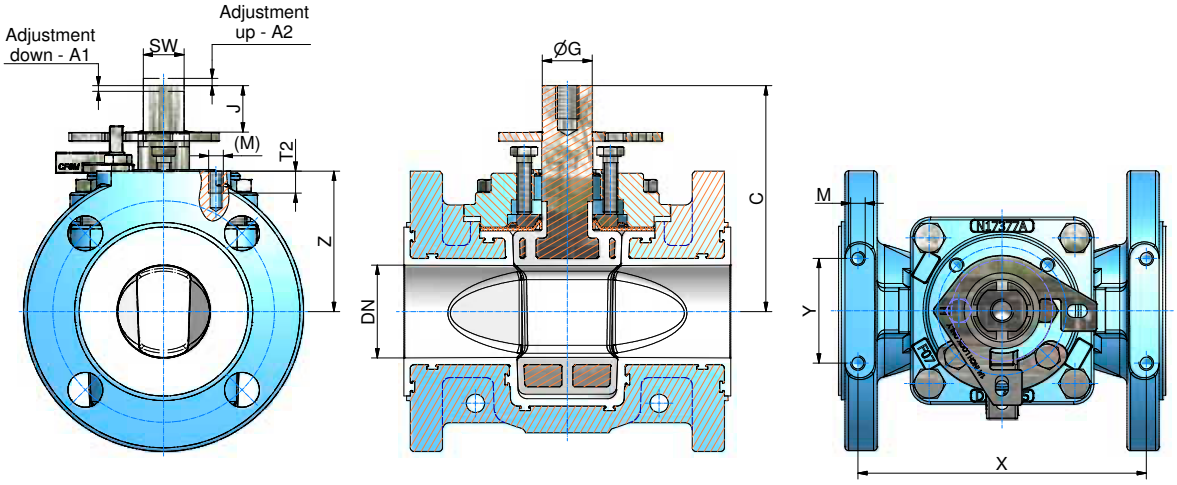


| DN | | SW | ØG | J | H2 | C | Adjustment | | F-Size DIN/ISO 5211 | ØB | nxO | E | ØP | R | ØS | ØT | M (M) | T2 | X | | Z | | Y | |
|---|---|---|---|---|---|---|---|---|---|---|---|---|---|---|---|---|---|---|---|---|---|---|---|---|
| | | | | | | | A1 | A2 | | | | | | | | | | | T4E1 | T4E3 | T4E1 | T4E3 | T4E1 | T4E3 |
| ½" | inch | 0.65 | 0.79 | 0.61 | 1.52 | 3.64 | 0.08 | 0.08 | F05 | 1.97 | 4xM6 | 1.5 | 0.51 | 2.13 | 0.63 | 1.38 | UNC 1/4-20 | 0.35 | 3.56 | 4.65 | 1.83 | 1.97 | 2 | 2 |
| | mm | 16,6 | 20 | 15,5 | 38,5 | 92,5 | 2 | 2 | | 50 | - 8 deep | 38 | 13 | 54 | 16 | 35 | | 9 | 90,5 | 118 | 46,5 | 50 | 50,8 | 50,8 |
| ¾" | inch | 0.65 | 0.79 | 0.61 | 1.52 | 3.64 | 0.08 | 0.08 | F05 | 1.97 | 4xM6 | 1.5 | 0.51 | 2.13 | 0.63 | 1.38 | UNC 1/4-20 | 0.35 | 3.92 | 5 | 2.03 | 2.4 | 2 | 2 |
| | mm | 16,6 | 20 | 15,5 | 38,5 | 92,5 | 2 | 2 | | 50 | - 8 deep | 38 | 13 | 54 | 16 | 35 | | 9 | 99,6 | 127 | 51,5 | 61 | 50,8 | 50,8 |
| 1" | inch | 0.65 | 0.79 | 0.61 | 1.52 | 3.64 | 0.08 | 0.08 | F05 | 1.97 | 4xM6 | 1.5 | 0.59 | 2.28 | 0.79 | 1.38 | UNC 5/16-18 | 0.47 | 4.19 | 5.35 | 2.34 | 2.44 | 1.75 | 1.75 |
| | mm | 16.6 | 20 | 15.5 | 38.7 | 92.5 | 2 | 2 | | 50 | - 8 deep | 38 | 15 | 58 | 20 | 35 | | 12 | 106.4 | 136 | 59.5 | 62 | 44.5 | 44.5 |
| 1½" | inch | 0.65 | 0.79 | 0.75 | 1.48 | 4.02 | 0.08 | 0.08 | F05 | 1.97 | 4xM6 | 1.5 | 0.59 | 2.28 | 0.79 | 1.38 | UNC 5/16-18 | 0.47 | 5.63 | 6.38 | 2.500 | 3.07 | 1.75 | 1.75 |
| | mm | 16,6 | 20 | 19 | 37,7 | 102 | 2 | 2 | | 50 | - 8 deep | 38 | 15 | 58 | 20 | 35 | | 12 | 142,9 | 162 | 63,5 | 78 | 44,5 | 44,5 |
| 2" | inch | 0.87 | 1.07 | 0.99 | 1.93 | 4.84 | 0.08 | 0.08 | F07 | 2.76 | 4xM8 | 1.85 | 0.59 | 2.64 | 0.79 | 2.17 | UNC 5/16-18 | 0.47 | 6.19 | 7.36 | 3.01 | 3.25 | 2.25 | 2.25 |
| | mm | 22,2 | 27,2 | 25,2 | 49 | 123 | 2 | 2 | | 70 | - 12 deep | 47 | 15 | 67 | 20 | 55 | | 12 | 157,2 | 187 | 76,5 | 82,5 | 57,2 | 57,2 |
| 3" | inch | 0.87 | 1.07 | 0.99 | 1.99 | 5.39 | 0.12 | 0.12 | F07 | 2.76 | 4xM8 | 2.13 | 0.87 | 3.15 | 1.02 | 2.17 | UNC 3/8-16 | 0.55 | 7.13 | 9.87 | 3.76 | 4.13 | 3.5 | 3.5 |
| | mm | 22,2 | 27,2 | 25,2 | 50,6 | 137 | 3 | 3 | | 70 | - 12 deep | 54 | 22 | 80 | 26 | 55 | | 14 | 181 | 250,8 | 95,5 | 105 | 88,9 | 88,9 |
| 4" | inch | 1.42 | 1.69 | 1.59 | 2.76 | 6.97 | 0.12 | 0.12 | F10 | 4.02 | 4xM10 | 2.87 | 0.87 | 3.90 | 1.02 | 2.76 | UNC 7/16-14 | 0.63 | 8 | 10.63 | 4.51 | 5.000 | 4 | 4 |
| | mm | 36 | 42,8 | 40,4 | 70,2 | 177 | 3 | 3 | | 102 | - 16 deep | 73 | 22 | 99 | 26 | 70 | | 16 | 203,2 | 269,9 | 114,5 | 127 | 101,6 | 101,6 |
| 6" | inch | 1.42 | 1.69 | 1.59 | 2.67 | 8.23 | 0.16 | 0.16 | F12 | 4.92 | 4xM12 | 3.39 | 1.38 | 4.96 | 1.57 | 3.35 | UNC 7/16-14 | 0.63 | 9.44 | 14.25 | 5.47 | 6.26 | 4 | 4 |
| | mm | 36 | 42,8 | 40,4 | 67,7 | 209 | 4 | 4 | | 125 | - 21 deep | 86 | 35 | 126 | 40 | 85 | | 16 | 239,7 | 362 | 139 | 159 | 101,6 | 101,6 |
| 8" | inch | 1.97 | 2.5 | 3.94 | 6.6 | 15.8 | 0.2 | 0.2 | --- | 7.5 | 8xM16 | 5.25 | 2.1 | 7.48 | 2.20 | 5.12 | M16 | 1.42 | 10.25 | 14.82 | 6.83 | 7.50 | 7.69 | 7.62 |
| | mm | 50 | 63,5 | 100 | 166,6 | 402 | 5 | 5 | | 190,5 | - 26 deep | 133,4 | 53 | 190 | 56 | 130 | | 36 | 260,4 | 376,4 | 173,5 | 190,5 | 195,2 | 193,6 |
| 10" | inch | 2.36 | 3 | 4.92 | 8.46 | 19.49 | 0.2 | 0.2 | F25 | 10 | 8xM16 | 5.13 | 1.46 | --- | --- | 7.87 | M20 | 1.54 | 11.57 | * | 8.43 | * | 7.87 | * |
| | mm | 60 | 76,2 | 125 | 214,8 | 495 | 5 | 5 | | 254 | - 26 deep | 130,2 | 37 | | | 200 | | 39 | 294 | | 214 | | 200 | |
| 12" | inch | 2.36 | 3 | 4.92 | 8.48 | 20.35 | 0.2 | 0.2 | F25 | 10 | 8xM16 | 5.13 | 1.46 | --- | --- | 7.87 | M20 | 1.57 | 12.28 | 17.69 | 9.19 | 10.55 | 7.87 | 6.00 |
| | mm | 60 | 76,2 | 125 | 215,4 | 517 | 5 | 5 | | 254 | -26 deep | 130,2 | 37 | | | 200 | | 40 | 312 | 449,3 | 233,5 | 268 | 200 | 152,4 |

* no actuator mounting for T4E2 valves

FLOWSERVE

# How to Specify T4E Valves

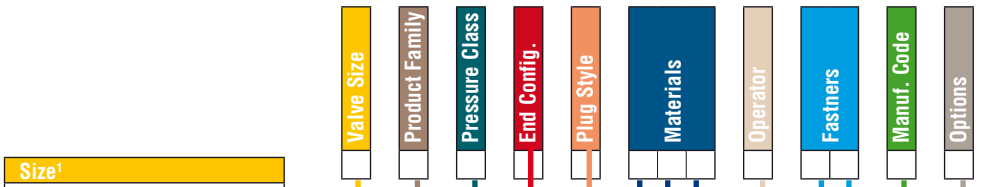


| Size[1] |
|---|
| 0.5 in. |
| 0.75 in. |
| 1.5 in. |
| 2 in. |
| 3 in. |
| 4 in. |
| 6 in. |
| 8 in. |
| 10 in. |
| 12 in. |

| Product Family |
|---|
| T4E = Standard |

| Pressure Class[1] |
|---|
| 1 = ASME Cl. 150 |
| 2 = DIN PN 16 |
| 3 = ASME Cl. 300 |

| End Configuration |
|---|
| 1 = Raised Face Flanges |

| Plug Style | | |
|---|---|---|
| C = 2-Way | | |
| D = Slot | Cv = .8 | 1" |
| E = Vport | Cv = 3 | 1" |
| F = Vport | Cv = 8.3 | 1" |
| G = Vport | Cv = 13 | 1" |
| H = Vport | Cv = 29.6 | 1.5" |
| J = Vport | Cv = 53.6 | 2" |
| K = Vport | Cv = 88.7 | 3" |
| L = Vport | Cv = 187.1 | 4" |

| Options |
|---|
| C = Chlorine Service |
| D = Chlorine Clean Only |
| G = Bottom Vented Plug[8] |
| H = Upstream Vented Plug (side) |
| J = Side/Bottom Vented Plug (upstream) |
| L = Anti-Vibration Clip for Top Cap Bolts |
| M = Side Vent Downstream (requires release from customer in writing) |
| O = Oxygen Cleaning |
| R = Built Dry (no lubrication)[9] |
| S = Silicone Free Lubrication |
| W = No Options |
| @ = DuPont Flouropolymer Material |
| Q = Quality Plan |

| Manufacturers code |
|---|
| N = Internal use |

| Adjuster fastener[7] |
|---|
| 1 = B840 |
| 2 = B9 |
| 3 = B7YC |
| 4 = B7T |
| 5 = C20 |
| 6 = HC |
| 7 = B7 |
| 8 = MKH |
| 9 = B7M |
| 0 = B7MZ |
| E = 88YC |

| Top Cap Fastener[7] |
|---|
| 1 = B840 |
| 2 = B9 |
| 3 = B7YC |
| 4 = B7T |
| 5 = C20 |
| 6 = HC |
| 7 = B7 |
| 8 = MKH |
| 9 = B7M |
| 0 = B7MZ |
| E = 88YC |

| Operator |
|---|
| 0 = Std. Wrench[5] |
| 1 = Gear Cl[6] |
| 2 = Locking Gear Cl |
| 4 = Caustic Gear PF |
| 9 = Bare Stem |
| B = Babbit/Chain |

| Standard Valve Codes | | |
|---|---|---|
| Size | Class 150 | Class 300 |
| 0.5 | .5-T4E-11C11D033NW | .5-T4E-31C210033NW |
| 0.75 | .75-T4E-11C11D033NW | .75-T4E-31C210033NW |
| 1 | 1-T4E-11C11D033NW | 1-T4E-31C210033NW |
| 1.5 | 1.5-T4E-11C11D033NW | 1.5-T4E-31C210033NW |
| 2 | 2-T4E-11C11D033NW | 2-T4E-31C210033NW |
| 3 | 3-T4E-11C11D033NW | 3-T4E-31C210033NW |
| 4 | 4-T4E-11C11D033NW | 4-T4E-31C210033NW |
| 6 | 6-T4E-11C11D033NW | 6-T4E-31C210033NW |
| 8 | 8-T4E-11C11D1EENW | 8-T4E-31C2101EENW |
| 10 | 10-T4E-11C11D1EENW | 10-T4E-31C2101EENW |
| 12 | 12-T4E-11C11D1EENW | |

| Body liner[2] | Plug Alloy[3] | Top Cap Alloy[4] |
|---|---|---|
| 1 = DIPA | 1 = DIPA | D = DCI |
| 2 = DSPA | 2 = D4PA | O = CD4M |
| 3 = D4PA | 3 = CDPA | |

| Codes | |
|---|---|
| DIPA | Ductile iron, PFA lined |
| DSPA | Carbon steel, PFA lined |
| D4PA | 316 SS, PFA lined |
| CDPA | CD4MCuN, PFA lined |

[1] Class 150 valves = ½" thru 12" ductile iron / 8" thru 12" stainless steel
Class 300 valves = ½" thru 10" carbon steel
[2] DIPA body = class 150 valves only
D4PA body = 8", 10" 12" class 150 valves only
DSPA body = class 300 valves only
[3] DIPA plug = ½" thru 12"
CDPA plug = 8", 10" and 12" only
[4] DCI top cap = DIPA valve bodies
CD4M top cap = D4PA and DSPA valve bodies
[5] Locking wrench standard thru 4"
[6] Gear standard 6" and above (also available on smaller sizes)
[7] B7YC = standard for ½" thru 6"
88YC = standard for 8", 10", 12" (Gr. 8.8 yellow chromated)
[8] 8" and larger plugs have bottom vent as standard
[9] No lubrication for valves up to 4"
Built with Krytox for valves 6" and above





## To Access Literature On-line

More information about FLOWSERVE products can be obtained on-line. It's easy to find… it's free… and you do not need a password.

## Do This:

1. Go to www.flowserve.com
2. Click in the box that says "Literature"
3. Enter "Keyword" or literature number and "Filter" as required
4. Click on "Search"

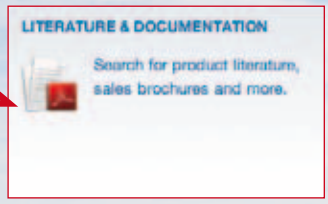


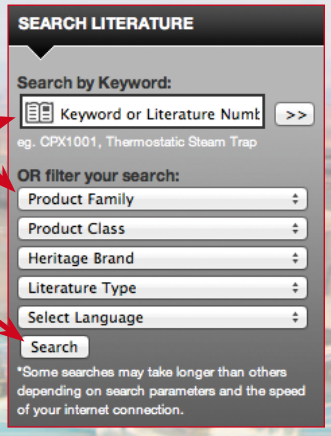


The most recent version of each product bulletin will be available on this site.

Once you have the PDF, you can:

- read it
- print it
- download it
- even e-mail it

## Other Useful Information

In addition to lined plug valves, lined butterfly valves (Document number DVENTB0020) and lined ball valves, check valves and sight glasses (Document number ATENTB0010) are also available.

Finally, a wide variety of metallic and lined rotary valves and actuation equipment is summarized in the Document number DVENBR0001.

To obtain any of these brochures, follow the simple steps on the left of this page and enter the Document number in Step 3.

## Ordering Preprinted Literature

Customers, please contact your Flowserve sales representative to get hard copy of a brochure. Flowserve representatives and distributors can go to www.flowserve.com and click on the "View Literature" link then click on "Log-in to order hard copy literature" and follow the prompts.




## United States
Flow Control
1978 Foreman Drive
Cookeville, Tennessee 38501
USA
Phone: 931 432 4021
Fax: 931 432 3105
www.flowserve.com

## Germany
Von Braun Straße 19a
D-48683 Ahaus
Germany
Phone: +49 2561 686-100
Fax: +49 2561 686-200

## Singapore
12 Tuas Avenue 20
Republic of Singapore 638824
Phone: +65 6879 8900
Fax: +65 6862 4940

## Australia
14 Dalmore Drive, Scoresby, Victoria,
3179, Australia
Phone: +613-97593300

## Brazil
Av. Tocantins 128
Sao Caetano do Sul
SP 09580-130
Brazil
Phone: +55 11 2169 6300
Fax: +55 11 2169 6313

## China
Flowserve Corporation Beijing Office
Room 22A1&A2,HanWei Plaza
No.7 GuangHua Road
Chaoyang District
Beijing, China 100004
Tel: +86-10-59210600
+86-10-59210601
Fax: +86-10-65611899


***To find your local Flowserve representative, visit www.flowserve.com or call USA 1 800 251 6761***

FCD DVENBR0066-01 10/12 Printed in USA.

Flowserve Corporation has established industry leadership in the design and manufacture of its products. When properly selected, this Flowserve product is designed to perform its intended function safely during its useful life. However, the purchaser or user of Flowserve products should be aware that Flowserve products might be used in numerous applications under a wide variety of industrial service conditions. Although Flowserve can (and often does) provide general guidelines, it cannot provide specific data and warnings for all possible applications. The purchaser/user must therefore assume the ultimate responsibility for the proper sizing and selection, installation, operation, and maintenance of Flowserve products. The purchaser/user should read and understand the Installation Operation Maintenance (IOM) instructions included with the product, and train its employees and contractors in the safe use of Flowserve products in connection with the specific application.

While the information and specifications contained in this literature are believed to be accurate, they are supplied for informative purposes only and should not be considered certified or as a guarantee of satisfactory results by reliance thereon. Nothing contained herein is to be construed as a warranty or guarantee, express or implied, regarding any matter with respect to this product. Because Flowserve is continually improving and upgrading its product design, the specifications, dimensions and information contained herein are subject to change without notice. Should any question arise concerning these provisions, the purchaser/user should contact Flowserve Corporation at any one of its worldwide operations or offices.

© 2008 Flowserve Corporation, Irving, Texas, USA. Flowserve is a registered trademark of Flowserve Corporation.

**Project name:** MELIADINE-BPC UPGRADE

**Project#:** 5000220043

**Document #:** SPK_0111_MISC_VWT

**by:** GM

**chkd:** ED

**appvd:** TS

# SPLITTER BOX CLARIFIER #2

# INSTRUMENTS

**OIM manual section:** 4.2.9.4

For analytical instruments, please refer to document #5000220043_SPK_0001_MISC_VWT

**This page is intentionally left blank**

# CS-413-301 : Identification sheet

| | | | |
|---|---|---|---|
| VWTC PROJECT NUMBER: | 5000220043 | REV: | 1 |
| PROJECT NAME: | AEM MELIADINE - BPC UPGRADE | SUBMITTED TO (COMPANY): | AEM |
| ENGINEER: | EMMANUELLE DORMOY | SUBMITTED TO (RESPONSIBLE): | |
| PROJECT MANAGER: | THOMAS SAVARY / BRUCE BORDES | PROJECT NUM REFERENCE.: | 6526-S-265-605 / OC-989680 |
| PHONE NUMBER: | 514-334-7230 | LOT NUMBER: | |

| SUPPLIER | EQPT CODE | EQPT TAG NO | DIA | DESCRIPTION | INFO 1 | INFO 2 | INFO 3 | APPLIC. | NOTE | REV |
|---|---|---|---|---|---|---|---|---|---|---|
| ASHCROFT | ST-413-393 | 65PI6801426 | 2.5" | PRESSURE GAUGE | PRESSURE GAUGE C/W ISOLATOR // MANFUACTURER : ASHCROFT // MODEL : 25-1009-SW-L-02L-60# + 04-310SS-02T-XCG // 25: 2 1/2" DIAL. RANGE : 0/60 PSI //SW: 316SS //L: GLYCERIN FILLED //L: LWR MNT CONN // ISOLATOR - 04: PROCESS CONN: 1/2" MNPT - 310:NO FLUSH PRT | | N/A | CLARIFIER #2 SLUDGE SPLITTER TANK | | 1 |

**This page is intentionally left blank**

ASHCROFT®
Trust the shield.®

# 1009 Stainless Steel Case Gauge

## FEATURES

- Meets ASME B40.100 specifications
- Corrosion resistant SS case
- Dry gauges are field fillable
- Power***Flex***™ movement provides superior resistance to shock, vibration and pulsation
- True Zero™ reduces reading errors by using "zero box" instead of conventional dial pins
- ***PLUS!***™ performance available for liquid filled performance with a dry gauge
- MSL helium leak tested to 1X10$^{-6}$ scc/s
- Ventable fill plug
- Accessory kits for easy panel mounting

## TYPICAL USES

- Pumps and compressors
- Boilers
- Equipment skids
- Specialized OEM equipment
- Hydraulics and pneumatics
- Severe ambient conditions




## SPECIFICATIONS

| | |
|---|---|
| Accuracy: | ASME B40.100, Grade 1A, ±1% of span (Dry)<br>±1.5% of span (Liquid filled) |
| Dial Sizes: | 2½″ (63mm), 3½″ (100mm) |
| Ranges: | Minimum 0-15 psi, maximum 0-15,000 psi, vacuum and compound |
| **Wetted Materials** | |
| Tube: | 316L SS tube |
| Process Connection: | 316L SS socket (SW)<br>Aluminum bronze socket (AW) |
| **Non Wetted Materials** | |
| Window: | Polycarbonate (Std.), Safety glass (XSG), Polysulfone (XPS) 3½″ Dial only |
| Dial: | Black figures on white background, aluminum |
| Pointer: | Black, aluminum, adjustable (Std.), micrometer (XMP) |
| Movement: | Power***Flex*** movement<br>Bottom plate – 304 SS<br>Upper plate – 304 SS<br>Pin – 304 SS<br>Hairspring assembly – 304 SS<br>Pinion – 304 SS<br>Segment – Glass filled polyester |
| Case: | 304 SS (Std.), 316L SS (XYW) |
| Ring: | 304 SS (Std.), 316L SS (XYW) |
| Process Connection Location: | Lower, Back, Top, 3 o'clock, 9 o'clock |
| Process Connection Sizes: | ⅛ NPT, ¼ NPT (see ordering code for more options) |

## KEY BENEFITS

- **IP65 Rating**
- **NEMA 4X**
- **CRN Approved**
- **PED**
- ***PLUS!***™ **Performance (XLL)**

| | |
|---|---|
| Dampening: | Glycerin case fill (Std. liquid fill), Silicone case fill (XGV), Halocarbon case fill (XGX), ***PLUS!*** Performance (XLL) |
| Weather Protection: | IP65 (Plug closed), IP54 (Plug vented)<br>NEMA 4X (Plug closed) |
| Approvals: | CRN, RoHS, PED |

## MIN/MAX TEMPERATURE LIMITS

| Version | Ambient | Process | Storage |
|---|---|---|---|
| Dry | -40/200°F (-40/93°C) | -40/250°F (-40/121°C) | -40/250°F (-40/121°C) |
| ***PLUS!*** | -40/150°F (-40/66°C) | -40/200°F (-40/93°C) | -40/150°F (-40/66°C) |
| Glycerin Fill | 20/150°F (-7/66°C) | 20/200°F (-7/93°C) | 0/150°F (-18/66°C) |
| Silicone Fill | -40/150°F (-40/66°C) | -40/200°F (-40/93°C) | -40/150°F (-40/66°C) |
| Halocarbon Fill | -40/150°F (-40/66°C) | -40/200°F (-40/93°C) | -40/150°F (-40/66°C) |

All specifications are subject to change without notice.
All sales subject to standard terms and conditions.
©2017 Ashcroft Inc. Ash Bul GS-3 1009 Rev D, 10/17

ashcroft.com
info@ashcroft.com
1.800.328.8258

ASHCROFT®
Trust the shield.®

# 1009 Stainless Steel Case Gauge

## ORDERING CODE

| Example: | 251009 | SW | L | 02 | L | XC4 | 15# |
|---|---|---|---|---|---|---|---|
| **Dial Size/Series Code** | | | | | | | |
| 251009 – SS case | 251009 | | | | | | |
| 351009 – SS case | | | | | | | |
| **System** | | | | | | | |
| AW - 316L SS tube/Aluminum, bronze connection (Max. pressure 1000 psi) | | | | | | | |
| SW - 316L SS tube/316L SS process connection (Max. pressure 15,000 psi) | | SW | | | | | |
| **Case Fill** | | | | | | | |
| Dry, liquid fillable case | | | | | | | |
| L - Liquid filled case (Glycerin standard) | | | L | | | | |
| **Process Connection Sizes** | | | | | | | |
| 01 - ⅛ NPT Male | | | | | | | |
| 02 - ¼ NPT Male | | | | 02 | | | |
| 04 - ½ NPT Male | | | | | | | |
| RW - SAE 7/16 & 20 Straight thread | | | | | | | |
| EJ - 7/16 X 20 UNF-3A 37° flare | | | | | | | |
| KJ - ¼ Straight JIS, BSP - 1009SW | | | | | | | |
| KA - ¼ Tapered JIS, BSP - 1009SW | | | | | | | |
| 13 - G ¼″ DIN | | | | | | | |
| JP - ¼″ Tubing, no throttle plug (max pressure 10,000 psi) | | | | | | | |
| JQ - 6mm Tubing, no throttle plug (max pressure 6,000 psi) | | | | | | | |
| JL - 9/16″ 18 UNF-2A, N/A on 25 1009 lower | | | | | | | |
| **Connection Location** | | | | | | | |
| L - Lower mount connection | | | | | L | | |
| B - Lower back mount connection | | | | | | | |
| D - Side connection (3 o'clock) | | | | | | | |
| E - Side connection (9 o'clock) | | | | | | | |
| T - Top connection | | | | | | | |
| **Options (if choosing an option(s) must include an "X")** | | | | | | X__ | |
| LL - ***PLUS!***™ performance | | | | | | | |
| GV - Silicone case fill | | | | | | | |
| GX - Halocarbon case fill | | | | | | | |
| TU - Throttle plug for ranges up to 1000 psi | | | | | | | |
| TS - Throttle plug for ranges up to 15,000 psi | | | | | | | |
| 6B - Cleaned for oxygen service | | | | | | | |
| SG - Safety glass | | | | | | | |
| PS - Polysulfone window (3½″ dial only) | | | | | | | |
| EO - Adjustable red set hand | | | | | | | |
| SH - Red set hand, stationary | | | | | | | |
| NH - SS tag wired to case | | | | | | | |
| FF - Front flange | | | | | | | |
| FW - Back flange | | | | | | | |
| UC - U-clamp | | | | | | | |
| EA - External zero adjust (3½″ dial only) | | | | | | | |
| C4 - Individual calibration chart in accordance with ASME B40.100:2013. Accuracy traceable to N.I.S.T | | | | | | C4 | |
| SM - All SS movement | | | | | | | |
| YW - 316L SS case and ring | | | | | | | |
| **Range (coding examples only, see range table for all standard ranges)** | | | | | | | |
| Single Scales | | | | | | | |
| 15# - 15 psi | | | | | | | 15# |
| 1BR - 1 bar | | | | | | | |
| 1KSC - 1 kilograms per sq. cm | | | | | | | |
| 100KP - 100 kilopascal | | | | | | | |
| Dual Scales | | | | | | | |
| 15#/BR - 15 psi inner scale, 1 bar outer scale | | | | | | | |
| 1BR/# - 1 bar inner scale, 15 psi outer scale | | | | | | | |

All specifications are subject to change without notice.
All sales subject to standard terms and conditions.
©2017 Ashcroft Inc. Ash Bul GS-3 1009 Rev D, 10/17

ashcroft.com
info@ashcroft.com
1.800.328.8258

ASHCROFT®
Trust the shield.®

# 1009 Stainless Steel Case Gauge

| STANDARD RANGES | | | | |
|---|---|---|---|---|
| psi | bar | kPa | Mpa | kg/cm² |
| 30IMV | -1BR | -100KP | -.1MP | -1KSC |
| – | -1&.6BR | -100&60KP | -.1&.06MP | -1&.6KSC |
| 30IMV&15# | – | – | – | – |
| – | -1&1.5BR | -100&150KP | -.1&.15MP | -1&1.5KSC |
| 30IMV&30# | – | – | – | – |
| – | -1&3BR | -100&300KP | -.1&.3MP | -1&3KSC |
| 30IMV&60# | – | – | – | – |
| – | -1&5BR | -100&500KP | -.1&.5MP | -1&5KSC |
| 30IMV&100# | – | – | – | – |
| – | 1&9BR | -100&900KP | -.1&.9MP | -1&9KSC |
| 15# | 1BR | 100KP | .1MP | 1KSC |
| 20# | – | – | – | – |
| – | 1.6BR | 160KP | .16MP | 1.6KSC |
| 30# | – | – | – | – |
| – | 2.5BR | 250KP | .25MP | 2.5KSC |
| 60# | 4BR | 400KP | .4MP | 4KSC |
| – | 6BR | 600KP | .6MP | 6KSC |
| 100# | – | – | – | – |
| 120# | – | – | – | – |
| – | 10BR | 1,000KP | 1MP | 10KSC |
| 160# | – | – | – | – |
| 200# | – | – | – | – |
| – | 16BR | 1,600KP | 1.6MP | 16KSC |
| 300# | – | – | – | – |
| – | 25BR | 2,500KP | 2.5MP | 25KSC |
| 400# | – | – | – | – |
| 500# | – | – | – | – |
| 600# | 40BR | 4,000KP | 4MP | 40KSC |
| 800# | – | – | – | – |
| – | 60BR | 6,000KP | 6MP | 60KSC |
| 1,000# | – | – | – | – |
| 1,500# | 100BR | 10,000KP | 10MP | 100KSC |
| 2,000# | – | – | – | – |
| – | 160BR | 16,000KP | 16MP | 160KSC |
| 3,000# | – | – | – | – |
| – | 250BR | 25,000KP | 25MP | 250KSC |
| 4,000# | – | – | – | – |
| 5,000# | – | – | – | – |
| 6,000# | 400BR | 40,000KP | 40MP | 400KSC |
| 8,000# | – | – | – | – |
| – | 600BR | 60,000KP | 60MP | 600KSC |
| 10,000# | – | – | – | – |
| 15,000# | 1,000BR | 100,000KP | 100MP | 1,000KSC |

All specifications are subject to change without notice.
All sales subject to standard terms and conditions.
©2017 Ashcroft Inc. Ash Bul GS-3 1009 Rev D, 10/17

ashcroft.com
info@ashcroft.com
1.800.328.8258

ASHCROFT®
Trust the shield.®

# 1009 Stainless Steel Case Gauge

## DIMENSIONS (dimensions in [ ] are millimeters)

### 2½˝ 1009 Lower and Back Connect

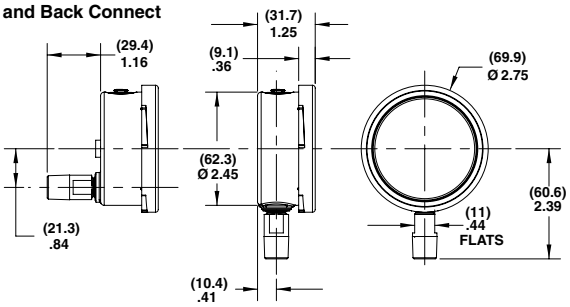


### 3½˝ 1009 Lower and Back Connect

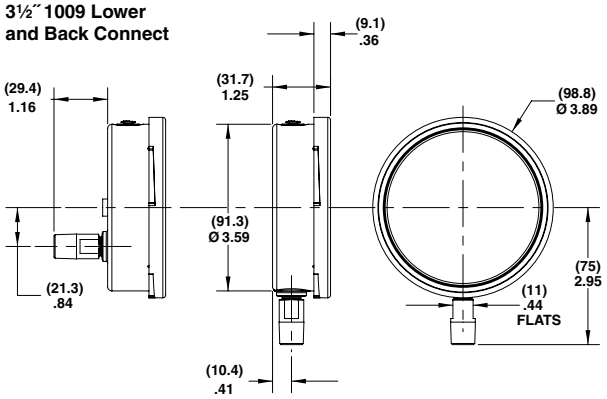


### 2½˝ 1009 Back Connect (XUC)

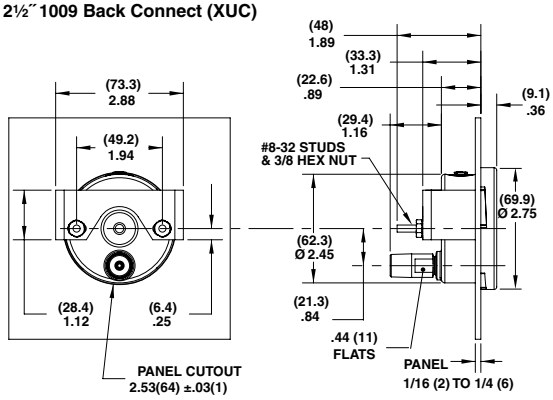


### 3½˝ 1009 Back Connect (XUC)

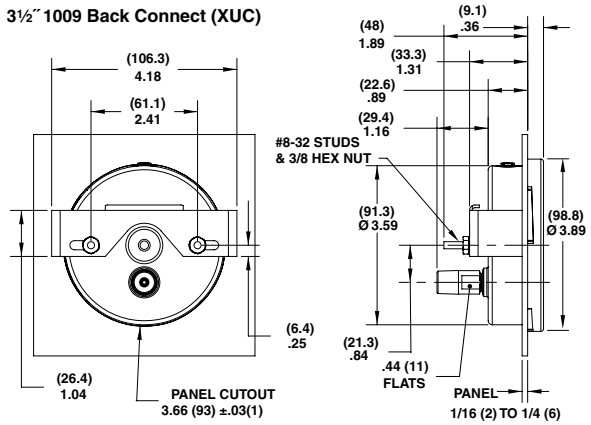


### 2½˝ 1009 Back Connect (XFF)

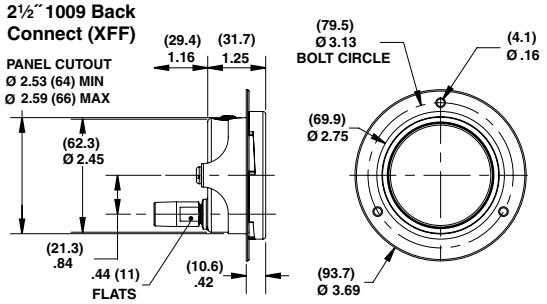


### 3½˝ 1009 Back Connect (XFF)

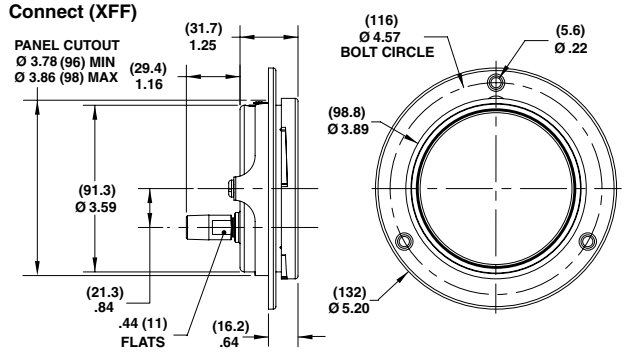


### 2½˝ 1009 Lower and Back Connect (XFW)

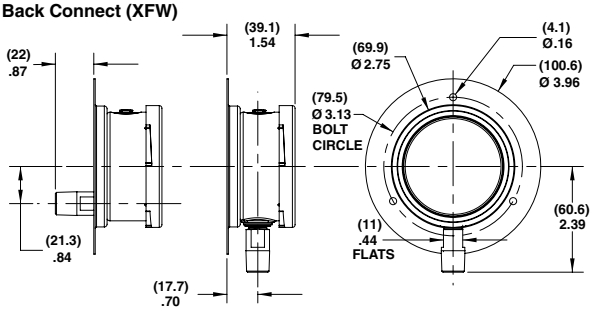


### 3½˝ 1009 Lower and Back Connect (XFW)

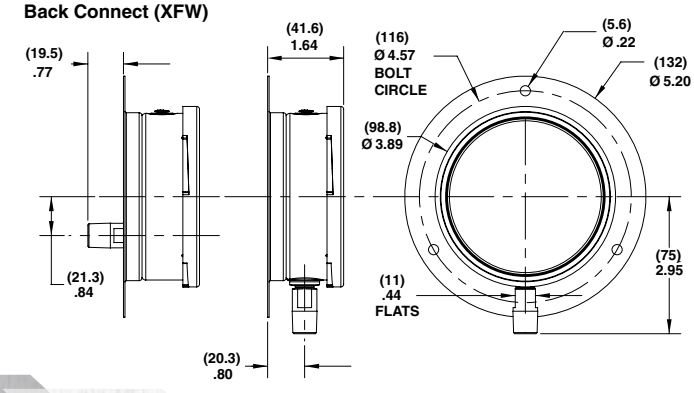


All specifications are subject to change without notice.
All sales subject to standard terms and conditions.
©2017 Ashcroft Inc. Ash Bul GS-3 1009 Rev D, 10/17

ashcroft.com
info@ashcroft.com
1.800.328.8258

ASHCROFT®
Trust the shield.®

# 1009 Stainless Steel Case Gauge with Tubing Connections

## DIMENSIONS (dimensions in [ ] are millimeters)

### 2½˝ 1009 Lower and Back Connect

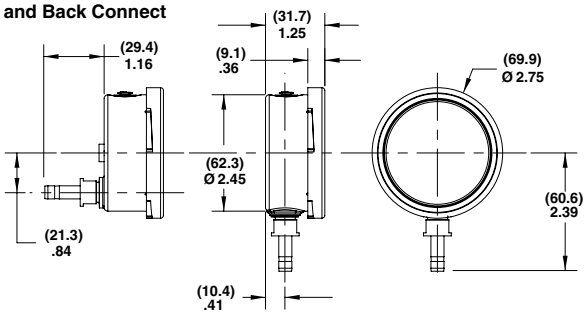


### 3½˝ 1009 Lower and Back Connect

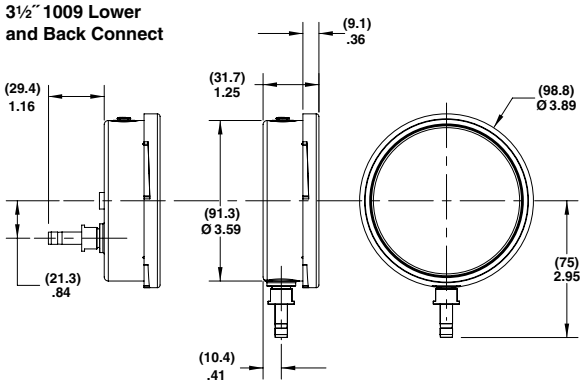


### 2½˝ 1009 Back Connect (XUC)

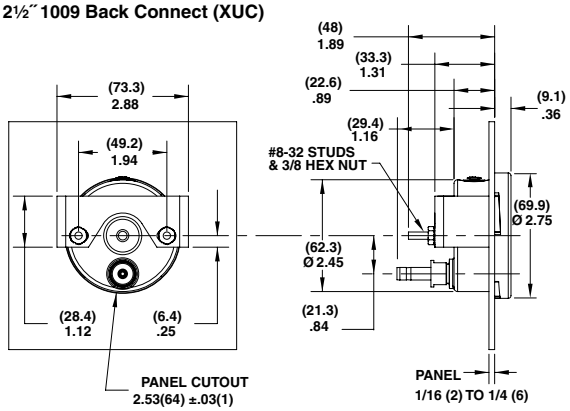


### 3½˝ 1009 Back Connect (XUC)

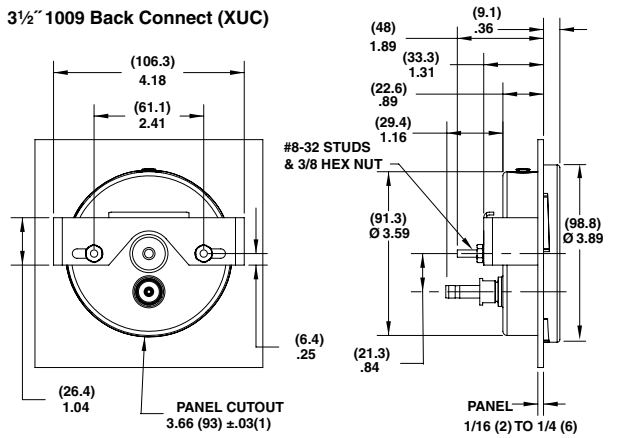


### 2½˝ 1009 Back Connect (XFF)

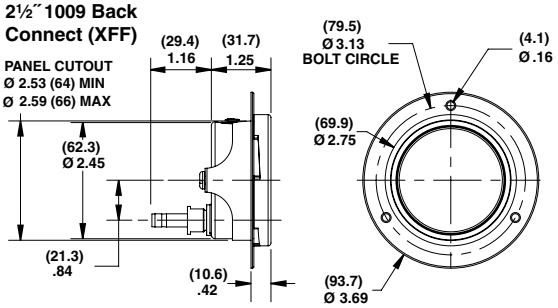


### 3½˝ 1009 Back Connect (XFF)

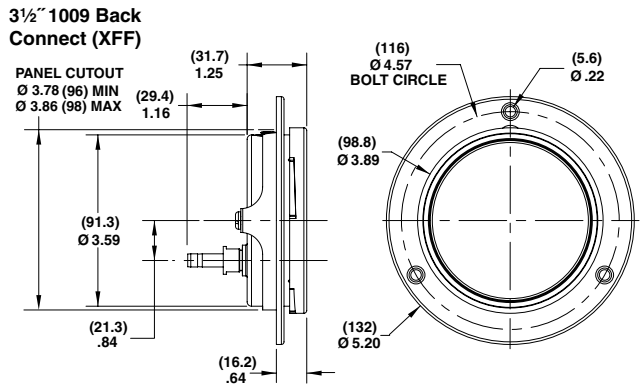


### 2½˝ 1009 Lower and Back Connect (XFW)

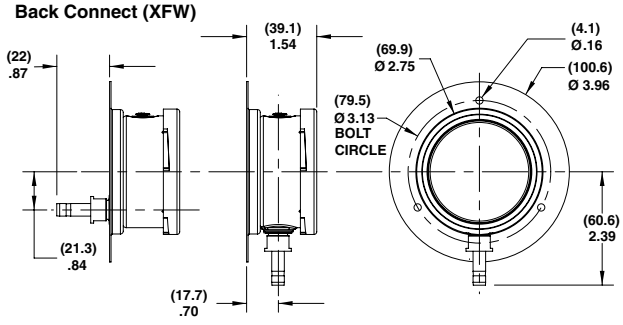


### 3½˝ 1009 Lower and Back Connect (XFW)

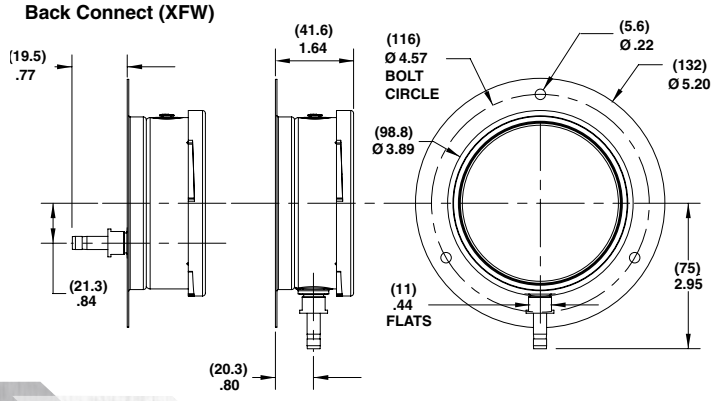


All specifications are subject to change without notice.
All sales subject to standard terms and conditions.
©2017 Ashcroft Inc. Ash Bul GS-3 1009 Rev D, 10/17

ashcroft.com
info@ashcroft.com
1.800.328.8258

**This page is intentionally left blank**

ASHCROFT®
Trust the shield.®

# 310, 315 All-Welded “Mini” Diaphragm Seal

## FEATURES

- No gaskets or bolts
- Available with ⅛ NPT flushing connection
- Designed for use with transducers and 3½″ or smaller gauges

## TYPICAL USES

- Oil and gas
- Chemical processes
- Process equipment




**310**
Threaded Seal

| SPECIFICATIONS | |
|---|---|
| Connection Style: | 310: All-welded<br>315: All-welded with flushing connection |
| Process Connection Size: | 310: ⅛ to 1 NPT Male, ¼ or ½ NPT Female<br>315: ¼ or ½ NPT Female |
| Instrument Connection Size: | ⅛ or ¼ NPT Female |
| Pressure Rating (MAWP): | 2,500 psi |
| Added Tolerance: | ±0.5% typical |
| Wetted Components: | Diaphragm & bottom housing |
| Non-Wetted Components: | Top housing: 316L SS |

| WETTED COMPONENTS | |
|---|---|
| Diaphragm Material | Bottom Housing Material |
| See ordering code on page 2 | See ordering code on page 2 |

| NON-WETTED COMPONENTS |
|---|
| Top Housing |
| 316L SS |

## KEY BENEFITS

- **Protects instrumentation in tight spaces**
- **Eliminates potential leak path with all-welded construction**
- **Low fill volume reduces temperature effects on instrument accuracy**



All specifications are subject to change without notice.
All sales subject to standard terms and conditions.
©2018 Ashcroft Inc. 310-315_seal_ds_RevC_07-18

ashcroft.com
info@ashcroft.com
1.800.328.8258

ASHCROFT®
Trust the shield.®

# 310, 315 All-Welded “Mini” Diaphragm Seal

| ORDERING CODE Example: | 01 | 310 | S | S | 01T | XCK | NH |
|---|---|---|---|---|---|---|---|
| **Process Connection Size** | | | | | | | |
| 01 - ⅛ NPT Male, (available with 310 only) | 01 | | | | | | |
| 02 - ¼ NPT Male, (available with 310 only) | | | | | | | |
| 04 - ½ NPT Male, (available with 310 only) | | | | | | | |
| 06 - ¾ NPT Male, (available with 310 only) | | | | | | | |
| 08 - 1 NPT Male, (available with 310 only) | | | | | | | |
| 25 - ¼ NPT Female | | | | | | | |
| 50 - ½ NPT Female | | | | | | | |
| **Seal Type** | | | | | | | |
| 310 - All-welded Mini seal no flushing port | | 310 | | | | | |
| 315 - All-welded Mini seal with flushing port connection | | | | | | | |
| **Diaphragm Material** | | | | | | | |
| S - 316L SS | | | S | | | | |
| H - Hastelloy® C-276 | | | | | | | |
| U - Tantalum | | | | | | | |
| P - Monel® (Must be ordered with Monel® bottom housing) | | | | | | | |
| **Bottom Housing Material** | | | | | | | |
| S - 316L SS | | | | S | | | |
| H - Hastelloy® C-276 | | | | | | | |
| M - Monel® | | | | | | | |
| G - Hastelloy® B-2 | | | | | | | |
| **Instrument Connection Size** | | | | | | | |
| 01T - ⅛ NPT Female | | | | | 01T | | |
| 02T - ¼ NPT Female | | | | | | | |
| **Options (if choosing an option(s) must include an “X”)** | | | | | | X__ | |
| **Filling Fluid** | | | | | | | |
| CG - Glycerin | | | | | | | |
| CK - Silicon 50cST | | | | | | CK | |
| CF - Halocarbon® | | | | | | | |
| See Filling Fluid Table Below | | | | | | | |
| **Optional Features** | | | | | | | |
| PU - Pipe Plug for flushing connection (Must match bottom housing material; 315 seal only) | | | | | | | |
| NH - SS instrument tag | | | | | | | NH |
| NN - Paper instrument tag | | | | | | | |
| DU - Instrument welded to seal | | | | | | | |
| MQ - Positive material identification | | | | | | | |
| W1 - Dye penetrant testing | | | | | | | |
| 6B - Cleaned for oxygen service | | | | | | | |

## Filling Fluid Table

| Fill | Service | Connection to Instrument | Temperature Range °F | Code |
|---|---|---|---|---|
| Glycerin | Pressure | Direct Only | 0/400 | CG |
| Silicone | Pressure/Vacuum | Direct or Flexible Line | –40/500 | CK |
| Halocarbon® | Pressure/Vacuum in presence of strong oxidizing agent | Direct or Flexible Line | –70/300 | CF |
| Syltherm® | Pressure | Direct or Flexible Line | –40/750 | HA |



All specifications are subject to change without notice.
All sales subject to standard terms and conditions.
©2018 Ashcroft Inc. 310-315_seal_ds_RevC_07-18

ashcroft.com
info@ashcroft.com
1.800.328.8258

# 310, 315 All-Welded “Mini” Diaphragm Seal

## DIMENSIONS in [ ] are millimeters

Drawings are for reference only, consult Ashcroft for specific dimensional drawings.

| | A | | B | | C | |
|---|---|---|---|---|---|---|
| | in | mm | in | mm | in | mm |
| **Type 310** | 1.75 | [38] | .81 | [30] | 1.34 | [34] |
| **Type 315** | 1.73 | [44] | 2.25 | [57.2] | 1.34 | [34] |

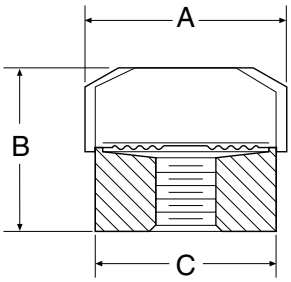


310 mini-seal – Threaded ¼, ½, ¾, NPT

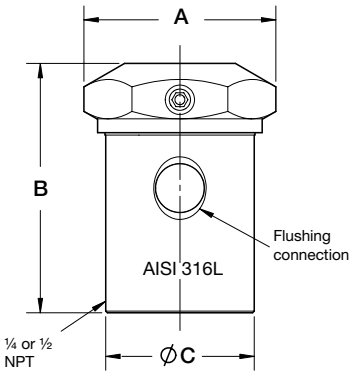


315 mini-seal – Threaded ¼, ½, ¾, NPT



All specifications are subject to change without notice.
All sales subject to standard terms and conditions.
©2018 Ashcroft Inc. 310-315_seal_ds_RevC_07-18

ashcroft.com
info@ashcroft.com
1.800.328.8258

LEFT BLANK

# *4 – DETAILED TECHNICAL DOCUMENTATION*

## *4.2 – SHOP DRAWINGS*

## *4.2.10 – DISCFILTER*

LEFT BLANK




# TECHNICAL DOCUMENTATION

**This page is intentionally left blank**

| | |
|---|---|
| **Project name:** | MELIADINE-BPC UPGRADE |
| **Project#:** | 5000220043 |
| **Document #:** | SPK_0001_HSF_VWT |
| **by:** | GM |
| **chkd:** | ED |
| **appvd:** | TS |

# SUBMITTAL PACKAGE

# DISCFILTER

**This page is intentionally left blank**

**Project name:** MELIADINE-BPC UPGRADE

**Project#:** 5000220043

**Document #:** SPK_0001_HSF_VWT

**by:** GM

**chkd:** ED

**appvd:** TS

# DISCFILTER

# PROCESS DATASHEET

**OIM manual section:** 4.2.10.1

**This page is intentionally left blank**

| | | | | | | | | | |
|---|---|---|---|---|---|---|---|---|---|
| 1 | | | | | | VWT CANADA # | | PSDS_0001_HSF | |
| 2 | | | | | | Project # | | 5000220043 | |
| 3 | | | | | | Date | | 2020-02-04 | |
| 4 | | | | | | Hydrotech Discfilters HSF 2224 | | | |
| 5 | CLIENT | REV | DESCRIPTION | | | DATE | BY | CHK'D | APP'D |
| 6 | AEM | 1 | For approval | | | 2021-02-04 | G.M. | E.D. | T.S. |
| 7 | | 2 | | | | | | | |
| 8 | | 3 | | | | | | | |
| 9 | PROJECT | 4 | | | | | | | |
| 10 | MELIADINE - BPC UPGRADE<br>6526-S-265-605 / OC-989680 | 5 | | | | | | | |
| 11 | | 6 | | | | | | | |
| 12 | | 7 | | | | | | | REV |
| 13 | GENERAL | Quantity | | | | | 1 | | |
| 14 | | Model ref. | | | | | HPF 2218-1F | | |
| 15 | | Design peak flow | | | | m³/d | 20 000 | | |
| 16 | ENVIRONMENT | Equipment Location | | | | | Indoor | | |
| 17 | | Min. Temperature | | | | °C | 7 | | |
| 18 | | Max . Temperature | | | | °C | 35 | | |
| 19 | | Max. Humidity | | | | % | 100 | | |
| 20 | | Corrosive Atmosphere | | | | | Corrosive | | |
| 21 | | Freeze | | | | | N/A | | |
| 22 | | Comments | | | | | | | |
| 23 | SAFETY | Electrical Classification | | | | | Non Hazardous | | |
| 24 | | Province/State | | | | | Nunavut | | |
| 25 | TECHNICAL DESCRIPTION | Building Material | | | Tank | | Duplex 2205 | | |
| 26 | | | | | Drum | | Duplex 2205 | | |
| 27 | | | | | Frame | | Duplex 2205 | | |
| 28 | | | | | Disc segment | | ABS Plastic | | |
| 29 | | | | | Cover | | GRP | | |
| 30 | | | | | Lids | | GRP | | |
| 31 | | | | | Filter panel Frame | | PPG | | |
| 32 | | | | | Filter cloth | | Polyester | | |
| 33 | | Filter element | | Discs | Filter Cloth Opening Size | µm | 10 | | |
| 34 | | | | | Number of discs installed | | 18 | | |
| 35 | | | | | Total gross area | m2 | 110,9 | | |
| 36 | | | | | Total net filter area | m2 | 85,4 | | |
| 37 | | | | | Disc diameter | m | 2,2 | | |
| 38 | | | | Gear motor | Manufacturer | | SEW EURODRIVE | | |
| 39 | | | | | Type | | Helical Worm | | |
| 40 | | | | | Model | | S77 DRN90S-4 | | |
| 41 | | | | | Speed (disc rotation) | rpm | 3.3 @ 60Hz | | |
| 42 | | | | | Power | kW | 1,10 | | |
| 43 | | | | | Voltage | | 575 V / 3 ph / 60 Hz | | |
| 44 | | | | Chain drive | Model | | H78-2205 / Plastic | | |
| 45 | | Backwash system | | Nozzles | Number of backwash spray nozzles | | 252 | | |
| 46 | | | | | Number of chemical spray nozzles | | 36 | | |
| 47 | | | | Backwash Pump | Manufacturer | | Grundfos | | |
| 48 | | | | | Model | | 2 x CRT16-5 | | |
| 49 | | | | | Flow | l/s | 2 x 4.75 | | |
| 50 | | | | | Head of pump | psi | 109,0 | | |
| 51 | | | | | Power | kW | 2 x 7.5 | | |
| 52 | | | | | Voltage | | 575 V/3 ph/60 Hz | | |
| 53 | | Chemical Trolley | | Pump | Manufacturer | | Iwaki | | |
| 54 | | | | | Model | | MX-403H | | |
| 55 | | | | | Flow | l/min | 265 (max) | | |
| 56 | | | | | Head of pump | psi | 41 | | |
| 57 | | | | | Power | HP | 3 | | |
| 58 | | | | | Voltage | N/A | 575 V/3 ph/60 Hz | | |
| 59 | | | | | FLA | Amp | 2,9 | | |
| 60 | | | | | Note | | Outlet Plug located on panel | | |
| 61 | | Misc. | | Strainer | Mesh | µm | 200 | | |
| 62 | | | | Pressure gauge | Model | N/A | Nuova Fima MGS18 | | |
| 63 | | | | | Diameter | cm | 6.3 | | |
| 64 | | | | | Location | | Backwash Pump Discharge | | |
| 65 | | | | Pressure switch | Model | | Nautilus XML A010A2S11 | | |
| 66 | | | | | Voltage | | 120 VAC | | |
| 67 | | | | | Location | | Pump Discharge | | |
| 68 | | | | Level switch | Model | | Conductive Level switch c w/ relay type Carlo Gavazzi | | |
| 69 | | | | | Voltage | | 24 VDC | | |
| 70 | | | | | Location | | Inlet chamber | | |
| 71 | | Pump | | | Material in wetted parts | | Titanium | | |
| 72 | | Pump piping | | | Discharge of pump | | Duplex 2205 | | |
| 73 | Design Criteria | Hydraulic profile | | | Emergency bypass weir height | mm | 1 420 | | |
| 74 | | | | | Level weir height | mm | 1 060 | | |
| 75 | | | | | Maximum water level during bypass | mm | 1 510 | | |
| 76 | | | | | Maximum Operational level influent side | mm | 1 400 | | |

| | | | | | | |
|---|---|---|---|---|---|---|
| 77 | CONNECTIONS | Inlet | Diameter (NPS) | in | 24" | |
| 78 | | | Type | | ANSI Flange | |
| 79 | | Outlet | Diameter (NPS) | in | 20" | |
| 80 | | | Type | | ANSI Flange | |
| 81 | | Sludge outlet | Diameter (NPS) | in | 6" | |
| 82 | | | Type | | ANSI Flange | |
| 83 | | Separate bypass | Diameter (NPS) | in | 24" | |
| 84 | | | Type | | ANSI Flange | |
| 85 | | Drain | Diameter (NPS) | in | 4" | |
| 86 | | | Type | | ANSI Flange | |
| 87 | ANCHORS | Anchors | Qty | | 4 | |
| 88 | | | Supply | | By Others | |
| 89 | CODE, APPROVAL & CERTIFICATIONS | Code | | | CSA/Curus | |
| 90 | OVERALL DIMENSIONS AND WEIGTH | Weight (dry) | | kg | 3 700 | |
| 91 | | Weight (operationnal) | | kg | 16 200 | |
| 92 | | Overall Length | | mm | 5 090 | |
| 93 | | Overall Width | | mm | 2 286 | |
| 94 | | Overall Heigth | | mm | 2 490 | |

**Project name:** MELIADINE-BPC UPGRADE

**Project#:** 5000220043

**Document #:** SPK_0001_HSF_VWT

**by:** GM

**chkd:** ED

**appvd:** TS

# DISCFILTER

# GENERAL ARRANGEMENT DRAWING

**OIM manual section:** 4.2.10.2

Refer to document #5000220043_GA_0001_HSF_VWT
Refer to manual section 3.4

**This page is intentionally left blank**

**Project name:** MELIADINE-BPC UPGRADE

**Project#:** 5000220043

**Document #:** SPK_0001_HSF_VWT

**by:** GM

**chkd:** ED

**appvd:** TS

# DISCFILTER

# DISCFILTER

**OIM manual section:** 4.2.10.3

**This page is intentionally left blank**

# CS-999-011 : Identification sheet

| | | | |
|---|---|---|---|
| VWTC PROJECT NUMBER: | 5000220043 | REV: | 1 |
| PROJECT NAME: | AEM MELIADINE - BPC UPGRADE | SUBMITTED TO (COMPANY): | AEM |
| ENGINEER: | EMMANUELLE DORMOY | SUBMITTED TO (RESPONSIBLE): | |
| PROJECT MANAGER: | THOMAS SAVARY / BRUCE BORDES | PROJECT NUM REFERENCE.: | 6526-S-265-605 / OC-989680 |
| PHONE NUMBER: | 514-334-7230 | LOT NUMBER: | |

| SUPPLIER | EQPT CODE | EQPT TAG NO | DIA | DESCRIPTION | INFO 1 | INFO 2 | INFO 3 | APPLIC. | NOTE | REV |
|---|---|---|---|---|---|---|---|---|---|---|
| HYDROTECH | ST-999-011 | 65FIL68001 | | DISCFILTER HPF2218-1F | DISCFILTER HPF 2218-1F | | | DISCFILTER | | 1 |

**This page is intentionally left blank**

HYDROTECH

TECHNICAL SPECIFICATION

# HPF

2218 – 2228-1F

REV. 20180827



## Hydrotech™ Discfilter

The Hydrotech Performance Discfilter “HPF” is a mechanical and self-cleaning filter unit that offers the most compact filter area per footprint on the market. Introducing our trademarked PAGUS technology we are able to offer a faster particle extraction during the cleaning process that improves the filtration rate over the Discfilter. This design is superior to any filtration in fine solids removal and product recovery within woven media filtration. The compact design of this Discfilter makes this system a perfect choice for effluent polishing of wastewater, recirculation systems, filtration of intake water and other applications where a space saving filter with small openings and large filter area is required. Recommended filter openings range between 10—100 µm.

The Discfilter unit is equipped and delivered complete as a turn key system, which includes fully assembled backwash system, complete with pump, piping and patented spray nozzles. The Hydrotech patented moving spray bar design ensures an efficient cleaning of the filter media, increased life time of the filter media and 20% savings of rinse water consumption. Since march 2011, Hydrotech has been ISO9001 certified which is an additional step in reassuring a high quality product and the best possible support to our clients.

The Discfilter is delivered according to EC Machinery Directive and welding is performed in accordance with European standards with ASME welding as an option.

| Filter model | HPF2218-1F | HPF2220-1F | HPF2222-1F |
|---|---|---|---|
| Number of discs installed | 18 | 20 | 22 |
| Filter area ($m^2$) | 110,9 | 123,2 | 135,5 |
| Number of filter panels | 432 | 480 | 528 |
| Number of backwash spray nozzles | 252 | 280 | 308 |
| Number of chemical spray nozzles | 36 | 40 | 44 |
| Hydraulic capacity (l/s) | 360 | 400 | 440 |
| Backwash pump Grundfos, 50Hz (60Hz) | MTR32-11/6 (32-11/3) | MTR45-10/4 (32-11/4) | MTR45-10/4 (32-11/4) |
| Backwash pump motor, kW 50Hz (60Hz) | 11 (11) | 15 (15) | 15 (15) |
| Backwash water flow at 6.5 bar (l/s) | 9,5 | 10,5 | 11,6 |
| Installed power kW 50Hz (60Hz) | 12,1 (12,1) | 16,1 (16,1) | 16,1 (16,1) |
| Dry weight w. PPG panels (kg) | 3 700 | 3 900 | 4 050 |
| Operational weight w. PPG panels (kg) | 16 200 | 17 100 | 17 900 |
| Appox. power consumotion, kW (backwash 30%) | 2,54 | 3,38 | 3,38 |

# HPF2218 – 2228-1F

| Filter model | HPF2224-1F | HPF2226-1F | HPF2228-1F |
|---|---|---|---|
| Number of discs installed | 24 | 26 | 28 |
| Filter area ($m^2$) | 147,8 | 160,2 | 172,5 |
| Number of filter panels | 576 | 624 | 672 |
| Number of backwash spray nozzles | 336 | 364 | 392 |
| Number of chemical spray nozzles | 48 | 52 | 56 |
| Hydraulic capacity (l/s) | 480 | 500 | 500 |
| Backwash pump Grundfos, 50Hz (60Hz) | MTR45-10/4 (45-10/3) | MTR45-10/4 (45-10/3-2) | MTR64-10/3 (45-10/3) |
| Backwash pump motor, kW 50Hz (60Hz) | 15 (18,5) | 15 (18,5) | 18,5 (18,5) |
| Backwash water flow at 6.5 bar (l/s) | 12,7 | 13,7 | 14,8 |
| Installed power kW 50Hz (60Hz) | 16,1 (19,6) | 16,1 (19,6) | 19,6 (19,6) |
| Dry weight w. PPG panels (kg) | 4 200 | 4 350 | 4 500 |
| Operational weight w. PPG panels (kg) | 18 800 | 19 700 | 20 500 |
| Appox. power consumotion, kW (backwash 30%) | 3,38 | 3,38 | 4,12 |

| General data | |
|---|---|
| Disc diameter (m) | 2,2 |
| SEW drive motor model | S77DRN90S4 |
| Drive motor, installed power (kW) 50/60Hz | 1,1 |
| Transmission | Helical-worm gear |
| Chain drive | H78 2205/plastic |
| Backwash pressure (bar) | 6,5 |
| Backwash pump protection class | IP55 |
| Backwash spray nozzles, material | Ceramic/plastic |
| Chemical spray nozzles, material | Plastic |
| Discs rotation speed (rpm) | Variable, 3,3 at 50/60 Hz |
| Water level detection | Conductivity sensor |
| Dry running protection for backwash pump | Telemecanique pressure switch |
| Pressure gauge | Nuova Fima analog pressure gauge |
| Ambient temperature °C (Others on reguest) | 0 - 40 |
| Stainless steel quality according to quote or order confirmation | |

**Hydrotech - Veolia Water Technologies**
Mejselgatan 6 • 235 32 Vellinge • Sweden
tel. +46 (0)40 429530 • mailbox@hydrotech.se
**www.hydrotech.se**

by VEOLIA Water Technologies

## Catalog designation

S77 DRN90S4
Helical-worm gear units S + AC motors DRN.. (IE3)

## Further information online on https://www.sew-eurodrive.se

## Product data



| | |
|---|---|
| Speed [r/min] | : 1762 / 9.3 |
| Total ratio [i] | : 189,09 / infinite |
| Ma max [Nm] | : 1.240 |
| Output torque [Nm] | : 840 |
| Service factor SEW-FB | : 1,45 |
| Mounting position | : M1A |
| Term.box.pos.[°] / cable entry | : 270 (T) / normal |
| Lubricant / -volume [l] | : CLP HC 460 Synth.Oil / 1,90 |
| Surface protection | : OS1 to technical data sheet 01802__94 |
| Paint coat | : Top coat RAL7031 (blue gray) |
| Output shaft end | : 45x90mm lg. |
| Output shaft design | : with keyway/with key |
| Design | : Foot-mounted version |
| Documentation no. A | : 25803581 |
| | : 29151511 |
| Parts list | : 022550996 |
| Motor power [kW] | : 1.1 |
| Motor frequency [Hz] | : 60 |
| Cyclic duration factor S1-S10 | : S1 |
| Motor voltage [V] / conn. type | : 330/575 delta/star |
| Rated current [A] | : 3,20 / 1,85 |
| cos phi | : 0,69 |
| Wiring diagram | : R13 / 680010306 |
| Thermal cl.[°C]/Enclosure[IP] | : 155(F) / 55 |
| Service factor motor | : 1.0 |
| International efficiency class | : IE3 |
| Efficiency | |
| at 50/75/100% Pn [%] | : 83,5 / 86,1 / 86,5 |
| CE mark | : Yes |
| Design specification | : Canada (CSA) |
| K.V.A.code | : M |
| Design | : IEC H |
| Terminal box | : Terminal box lower part made of aluminum |
| | : with tapped hole 2xNPT 1/2" |
| CT speed range | : 300-1800RPM |
| Documentation no. A | : 25957120 |
| Spare parts list | : You can find the SWPL (spare and wearing |
| | : parts list) under the serial number in |
| | : the Online Support. |
| Nameplate | : English |
| Nameplate position | : 180° |
| Nameplate language 2nd set | : English |
| Nameplate position 2nd set | : 0° |
| Nameplate text | : 1025524 |

The present product information does not represent a quotation in legal terms. Technical data must be confirmed in a final technical verification. This verification is performed when creating the quotation/order. A legally binding contract requires an order issued by the ordering party and an order confirmation issued by SEW-EURODRIVE GmbH & Co KG.
Created on: 1/27/2021 7:33:29 AM CEST / Harri Rantonen / HARRI.RANTONEN@VEOLIA.COM

| | |
|---|---|
| Opera.instr. A lang./quantity | : Swedish / 0 |
| Parts list/language/quantity | : Swedish / 0 |
| Commodity code | : 85015220 |
| Weight | : 64.00 KG |

The present product information does not represent a quotation in legal terms. Technical data must be confirmed in a final technical verification. This verification is performed when creating the quotation/order. A legally binding contract requires an order issued by the ordering party and an order confirmation issued by SEW-EURODRIVE GmbH & Co KG.
Created on: 1/27/2021 7:33:29 AM CEST / Harri Rantonen / HARRI.RANTONEN@VEOLIA.COM

Grundfos

**r d Annika**

**D** 19/01/2021

| | **D r** |
|---|---|
| 1 | **RT E DQQE** |



Product No.: Uppdateras med 575 V, 60 Hz motor ABB
Vertical, non-self-priming, multistage, in-line, centrifugal pump for installation in pipe systems and mounting on a foundation.

The pump has the following characteristics:

- Impellers, intermediate chambers and outer

Impeller: sleeve are made of Titanium.
Pump housing: - Pump head cover and base are made of Titanium.
- The shaft seal has assembly length according to EN 12756.
- Power transmission is via cast iron split coupling.
Flange standard: - Pipework connection is via PJE flanges/couplings.

Phase: The motor is a 3-phase AC motor.

Liquid:

| | |
|---|---|
| Pumped liquid: | Water |
| Liquid temperature range: | -20 .. 120 °C |
| Selected liquid temperature: | 20 °C |
| Density: | 998.2 kg/m³ |

Technical:

| | |
|---|---|
| Pump speed on which pump data are based: | 3500 rpm |
| Rated flow: | 300 l/min |
| Rated head: | 85.6 m |
| Primary shaft seal: | AUUE |
| Approvals on nameplate: | CE,TR |
| Curve tolerance: | ISO9906:2012 3B |

Materials:

| | |
|---|---|
| Pump housing: | Titanium<br>ASTM B 265 |
| Impeller: | Titanium<br>ASTM B 265 |
| Bush material: | NONE |

Installation:

| | |
|---|---|
| Maximum ambient temperature: | 60 °C |
| Max pressure at stated temp: | 25 bar / 120 °C<br>25 bar / -20 °C |
| Flange standard: | PJE |
| Pipe connection: | 60,3 mm |
| Flange size for motor: | FF265 |

Electrical data:

**D r**

| | |
|---|---|
| Motor type: | 132SB |
| IE Efficiency class: | IE2 - IE3 |
| Rated power - P2: | 7.5 kW |
| Power (P2) required by pump: | 7.5 kW |
| | 7.5 kW |
| Mains frequency: | 60 Hz |
| Rated voltage: | 3 x 220-277D/380-480Y V |
| Rated current: | 24,6-20,8/14,2-12,0 A |
| Starting current: | 680-1050 % |
| Cos phi - power factor: | 0.90-0.82 |
| Rated speed: | 3490-3530 rpm |
| Efficiency: | IE2 89,5% - IE3 90,2% |
| Motor efficiency at full load: | 89.5-90.2 % |
| Motor efficiency at 3/4 load: | 90.8 % |
| Motor efficiency at 1/2 load: | 90.8 % |
| Number of poles: | 2 |
| Enclosure class (IEC 34-5): | 55 Dust/Jetting |
| Insulation class (IEC 85): | F |
| Motor No: | 85U07522 |

Others:

| | |
|---|---|
| Minimum efficiency index, MEI â‰¥: | 0.69 |
| Net weight: | 88 kg |
| Gross weight: | 98 kg |

# RT E E

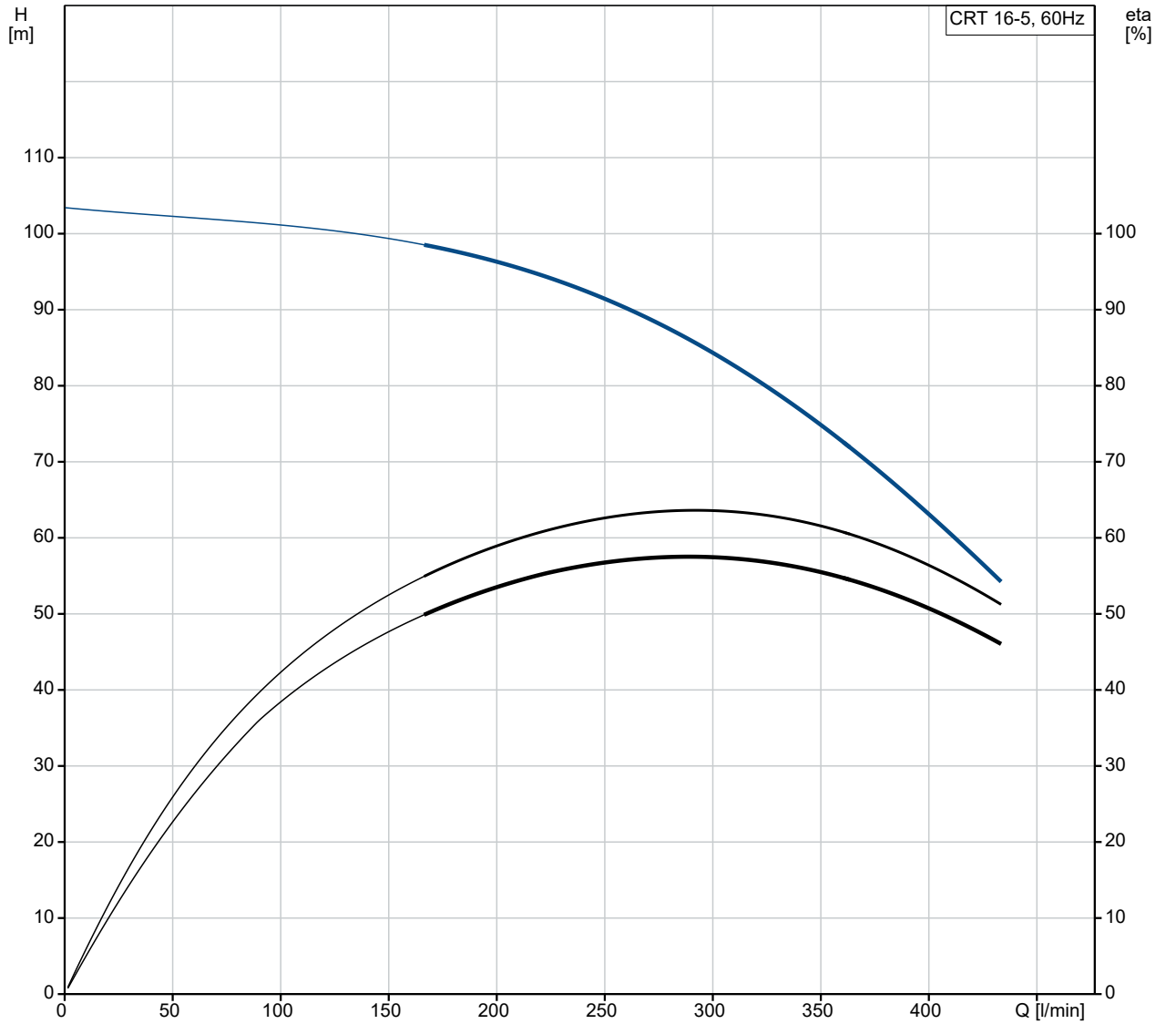
H
[m]
CRT 16-5, 60Hz
eta
[%]
110
100
90
80
70
60
50
40
30
20
10
0
0
50
100
150
200
250
300
350
400
Q [l/min]

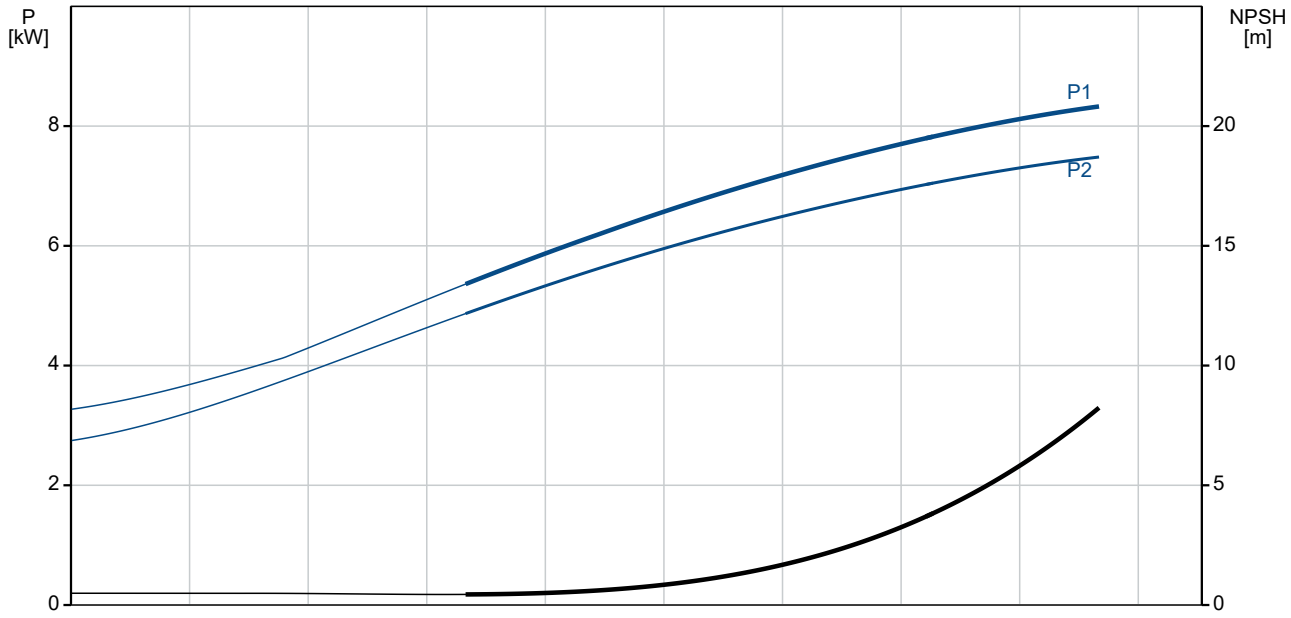
P
[kW]
NPSH
[m]
P1
P2
8
6
4
2
0
20
15
10
5
0

GRUNDFOS

r d

D 19/01/2021

# RT E E

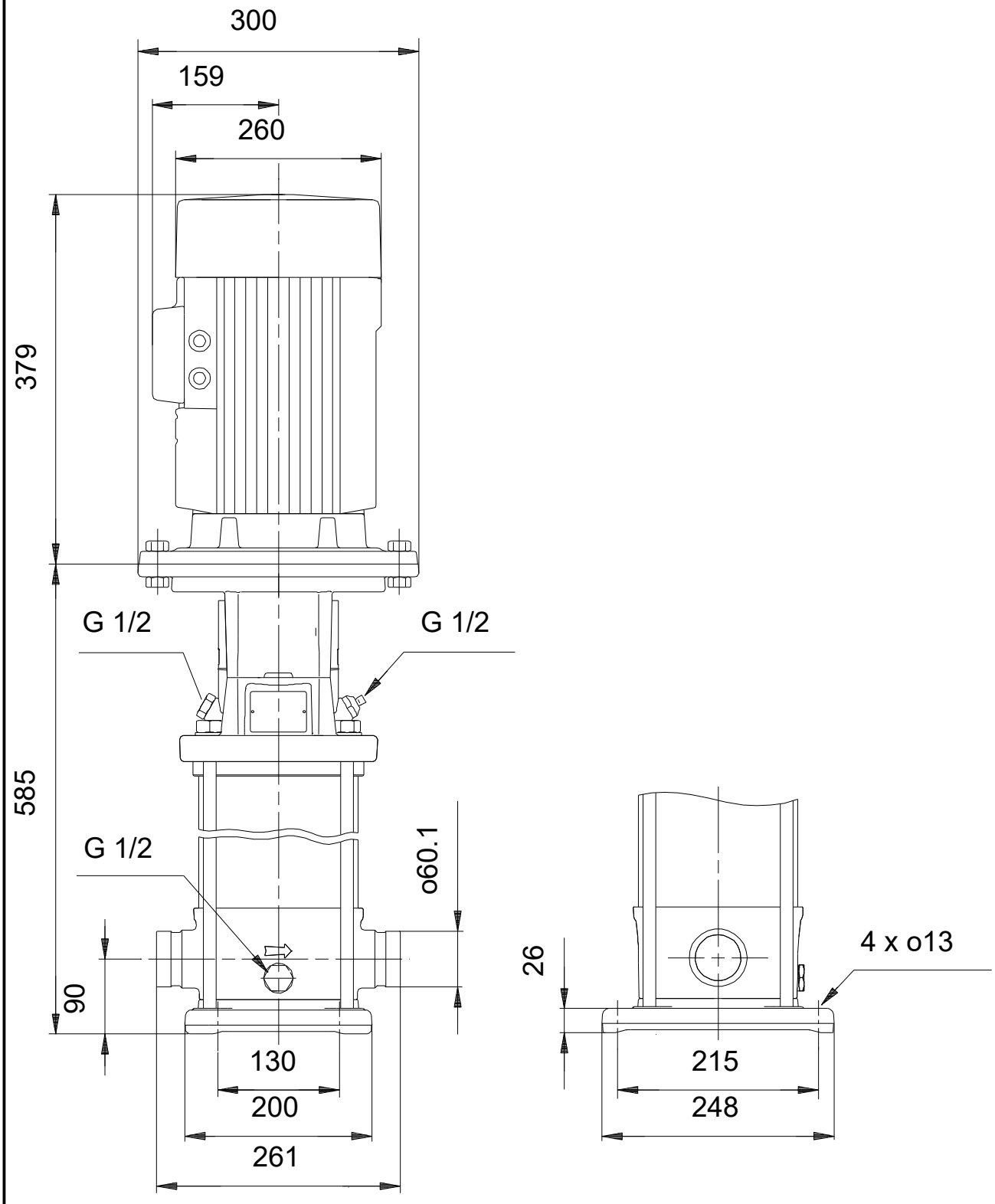


Note! All units are in [mm] unless others are stated.
Disclaimer: This simplified dimensional drawing does not show all details.

# RT E E

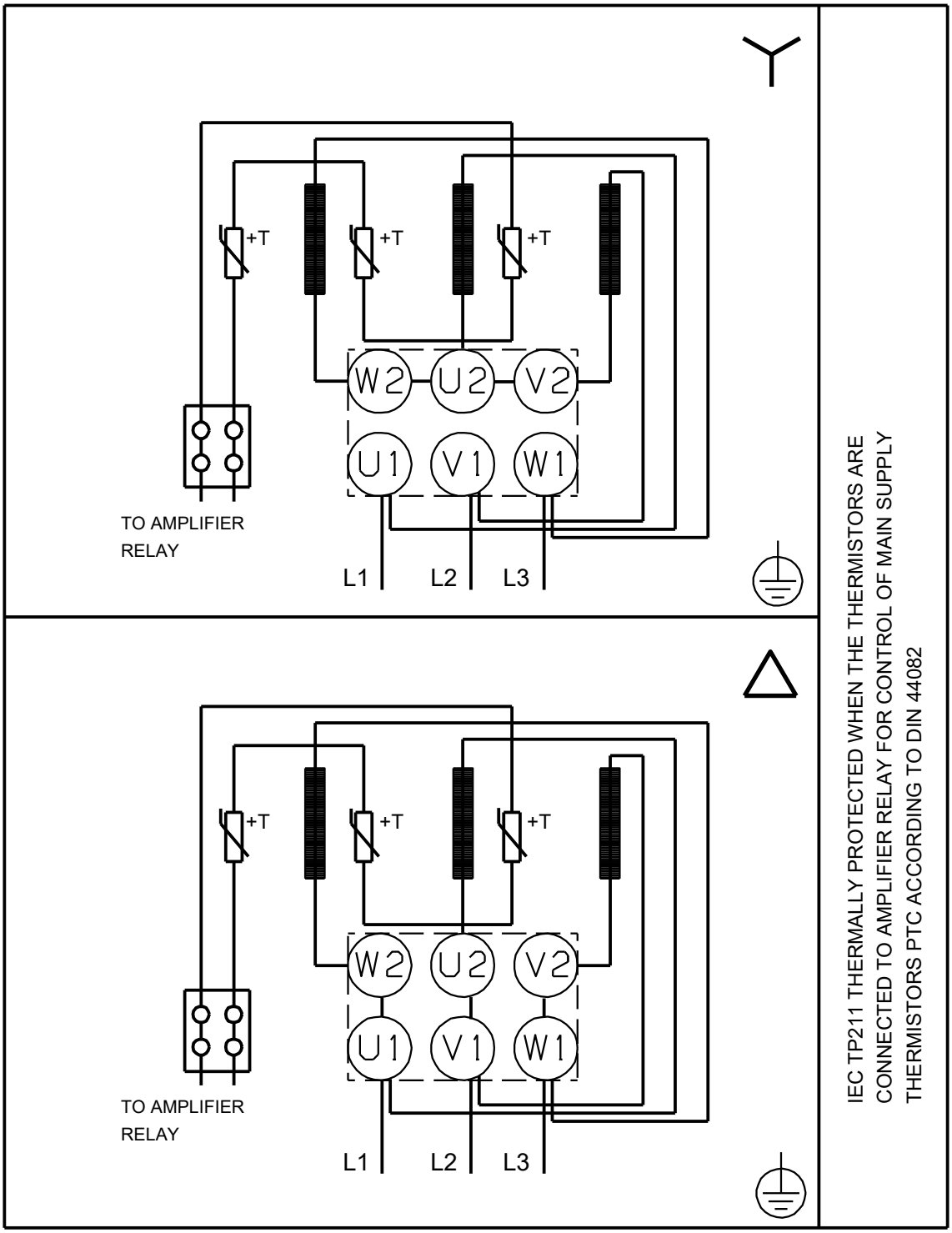


Note! All units are in [mm] unless others are stated.

**This page is intentionally left blank**

| IEC LV Motors | Technical Data Sheet - DOL | | | |
|---|---|---|---|---|
| | Project | | Location | |
| Department/Author | Customer name | | Customer ref | Item name **1,00001** |
| Our ref. | Rev/Changed by **A** | Date of issue **02-10-2021** | Saving ident **untitled.xlsm** | Pages **1(3)** |

| No. | Definition | Data | Unit | Remarks | |
|---|---|---|---|---|---|
| 1 | Product | ***TEFC, 3-phase, squirrel cage induction motor*** | | | |
| 2 | Product code | ***3GAA 131 130-BEK*** | | Calc. ref. | 3GZF021013-895 |
| 3 | Type/Frame | ***M3AA 132SC 2*** | | | |
| 4 | Mounting | ***IM3011, V1(flange)*** | | | |
| 5 | Rated output $P_N$ | ***7,5*** | kW | | |
| 6 | Service factor | ***1*** | | | |
| 7 | Type of duty | ***S1(IEC) 100%*** | | | |
| 8 | Rated voltage $U_N$ | ***575*** | VD | ± 5 % (IEC 60034-1) | |
| 9 | Rated frequency $f_N$ | ***60*** | Hz | ± 2 % (IEC 60034-1) | |
| 10 | Rated speed $n_N$ | ***3524*** | r/min | | |
| 11 | Rated current $I_N$ | ***9,1*** | A | | |
| 12 | No-load current | ***2,5*** | A | | |
| 13 | Starting current $I_s/I_N$ | ***9,6*** | | Meet IEC 60034-12, N | |
| 14 | Nominal torque $T_N$ | ***20,3*** | Nm | | |
| 15 | Locked rotor torque $T_S/T_N$ | ***3,1*** | | | |
| 16 | Maximum torque $T_{max}/T_N$ | ***4,5*** | | | |
| 17 | Minimum torque $T_{min}/T_N$ | ***2,7*** | | | |
| 18 | Speed at minimum torque | ***576*** | r/min | | |

| | Load characteristics (IEC 60034-2-1:2014) | Load % | Current A | Efficiency % | Power factor |
|---|---|---|---|---|---|
| 19 | PLL determined from residual loss | *100* | **9,1** | **90,2 / IE3** | **0,9** |
| 20 | | *75* | **7,2** | **90,7** | **0,87** |
| 21 | | *50* | **5,2** | **90** | **0,8** |
| 22 | | *Start* | **87** | | **0,5** |

| | | | | |
|---|---|---|---|---|
| 23 | Maximum starting time from hot | ***10*** | s | |
| 24 | Maximum starting time from cold | ***18*** | s | |
| 25 | Insulation class / Temperature class | ***F / B*** | | |
| 26 | Ambient temperature | ***40*** | °C | |
| 27 | Altitude | ***1000*** | m.a.s.l. | |
| 28 | Enclosure | ***IP55*** | | |
| 29 | Cooling system | ***IC411 self ventilated*** | | |
| 30 | Bearing DE/NDE | ***6208-2Z/C3 - 6206-2Z/C3*** | | |
| 31 | Type of Grease | | | |
| 32 | Sound pressure level (LP dB(A) 1m) | ***73*** | dB(A) | at load |
| 33 | Moment of inertia J = ¼ GD2 | ***0,0173*** | kg-m2 | |
| 34 | Balancing | | | |
| 35 | Vibration class | | | |
| 36 | Position of terminal box | ***Top*** | | |
| 37 | Terminal box entries; no, dimens. | | | |
| 38 | Number of power terminals | | | |
| 39 | Direction of rotation | ***CW or CCW*** | | |
| 40 | Weight of rotor | ***14*** | kg | |
| 41 | Total weight of motor | ***63*** | kg | |
| 42 | Dimension drawing no. | | | |
| 43 | | | | |
| 44 | | | | |
| 45 | | | | |
| Ex-motors | | | | |
| 46 | | | | |
| 47 | | | | |
| 48 | | | | |

| Option | Variant Codes / Definition |
|---|---|
| 49 | +066 Modified for non-standard mounting position |
| 50 | |
| 51 | |
| 52 | |

Remarks:

Data based on situation 14-12-2019
All data subject to tolerances in accordance with IEC
Guaranteed values on request

| IEC LV Motors | Load Curves | | |
|---|---|---|---|
| | Project | Location | |
| Department/Author | Customer name | Customer ref | Item name **1,00001** |
| Our ref. | Rev/Changed by Date of issue **A** **02-10-2021** | Saving ident **untitled.xlsm** | Pages **2(3)** |

| | | | |
|---|---|---|---|
| Product | **TEFC, 3-phase, squirrel cage induction motor** | | |
| Type/Frame | **M3AA 132SC 2** | Calc. ref. | **3GZF021013-895** |
| Product code | **3GAA 131 130-BEK** | | |
| Rated output $P_N$ | **7,5** kW | | |
| Type of duty | **S1(IEC) 100%** | | |

| | | | | | |
|---|---|---|---|---|---|
| Voltage (V) | **575** | Current $I_N$ (A) | **9,1** | Power factor at $P_N$ | **0,9** |
| Frequency (Hz) | **60** | Speed (r/min) | **3524** | Efficiency (%) at $P_N$ | **90,2** |

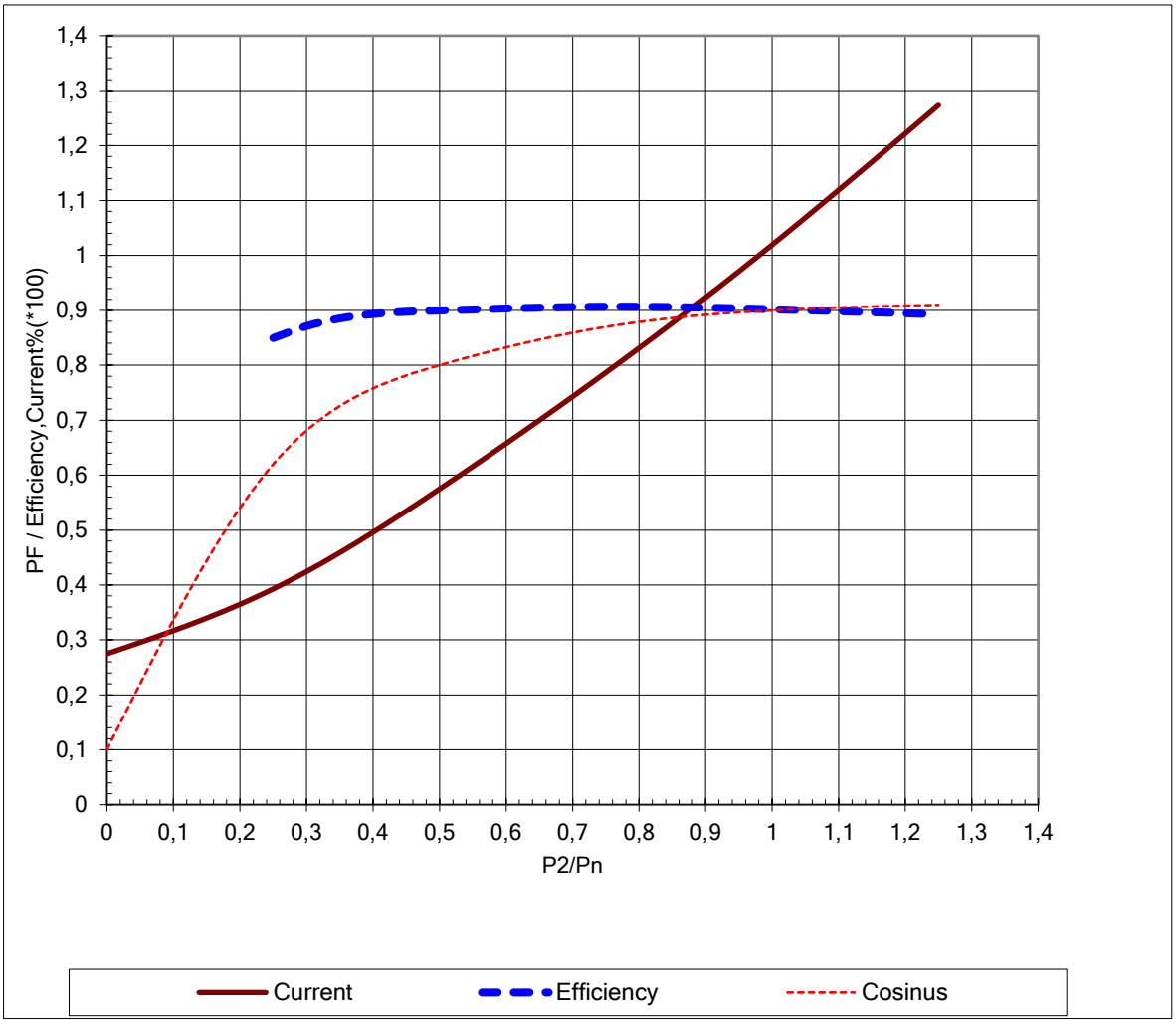


Load characteristics (IEC 60034-2-1:2014)
Data based on situation 14-12-2019

All data subject to tolerances in accordance with IEC

| IEC LV Motors | Starting Curves | | |
|---|---|---|---|
| | Project | Location | |
| Department/Author | Customer name | Customer ref | Item name **1,00001** |
| Our ref. | Rev/Changed b Date of issue | Saving ident | Pages |
| | **A** **02-10-2021** | **untitled.xlsm** | **3(3)** |

| | | | | | |
|---|---|---|---|---|---|
| Type of product | **TEFC, 3-phase, squirrel cage induction motor** | | | | |
| Type/Frame | **M3AA 132SC 2** | | Calc. ref. | 3GZF021013-895 | |
| Product code | **3GAA 131 130-BEK** | | Frequency (Hz) | **60** | |
| Rated output $P_N$ | **7,5** kW | | Rated current $I_N$ | **9,1** | A |
| Type of duty | **S1(IEC) 100%** | | | | |

| | | | | | |
|---|---|---|---|---|---|
| $J_{motor}$ (kgm2) | **0,0173** | Voltage (V) 100% | ***575*** | Voltage (V) | ***575V(100%)*** |
| $J_{load}$ (kgm2) | | $T_{start}/T_N$ | ***3,1*** | $T_{start}/T_N$ | ***3,1*** |
| Speed (r/min) | **3524** | Starting time (s) | | Starting time (s) | |
| $T_N$ (Nm) | **20,3** | Speed (r/min) | | Speed (r/min) | |
| $T_{load}$ (Nm) | | $I_s/I_n$ | ***9,6*** | $I_s/I_n$ | ***9,6*** |
| Nbr. of Consecutive Starts at UN | | $T_{max}/T_n$ | ***4,5*** | $T_{max}/T_n$ | ***4,5*** |

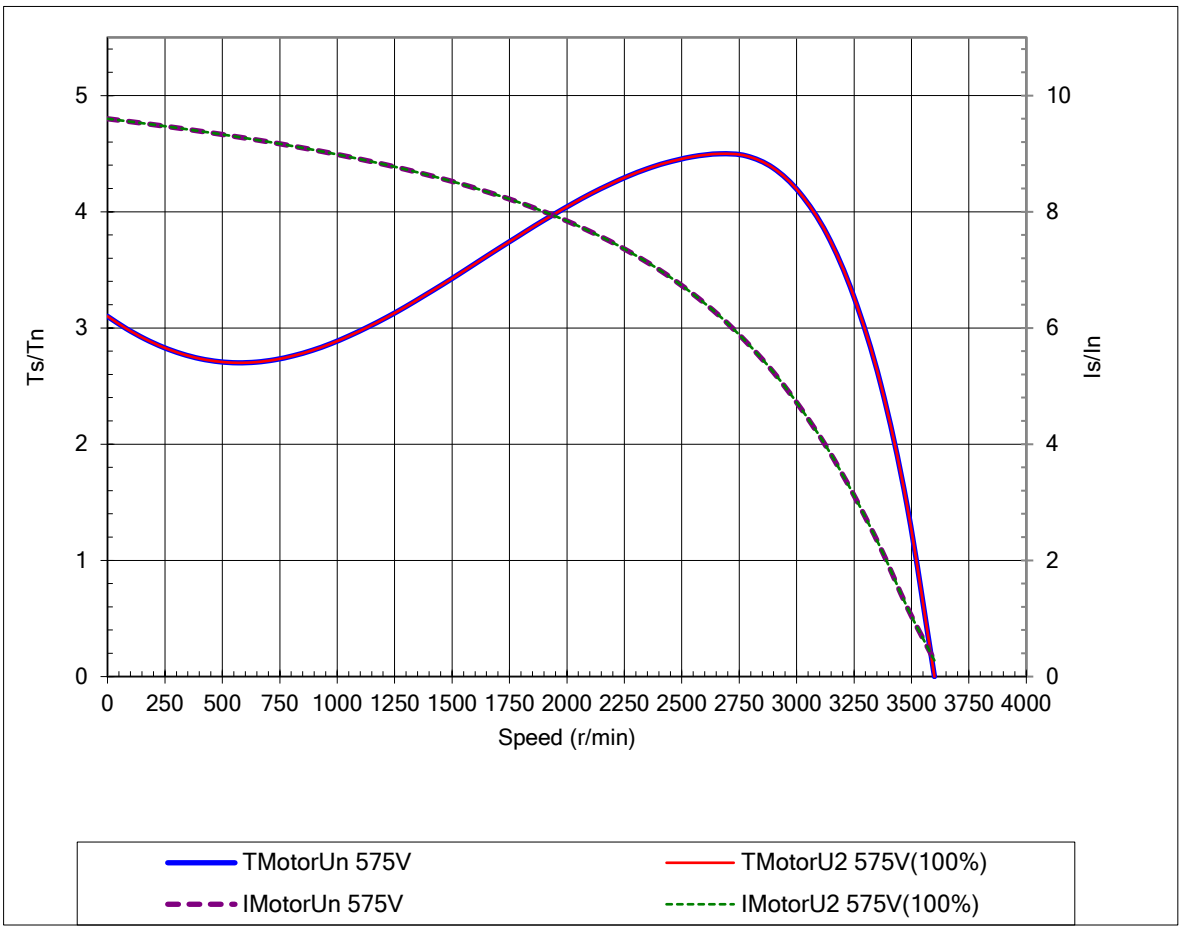


Load characteristics (IEC 60034-2-1:2014)
Data based on situation 14-12-2019

All data subject to tolerances in accordance with IEC

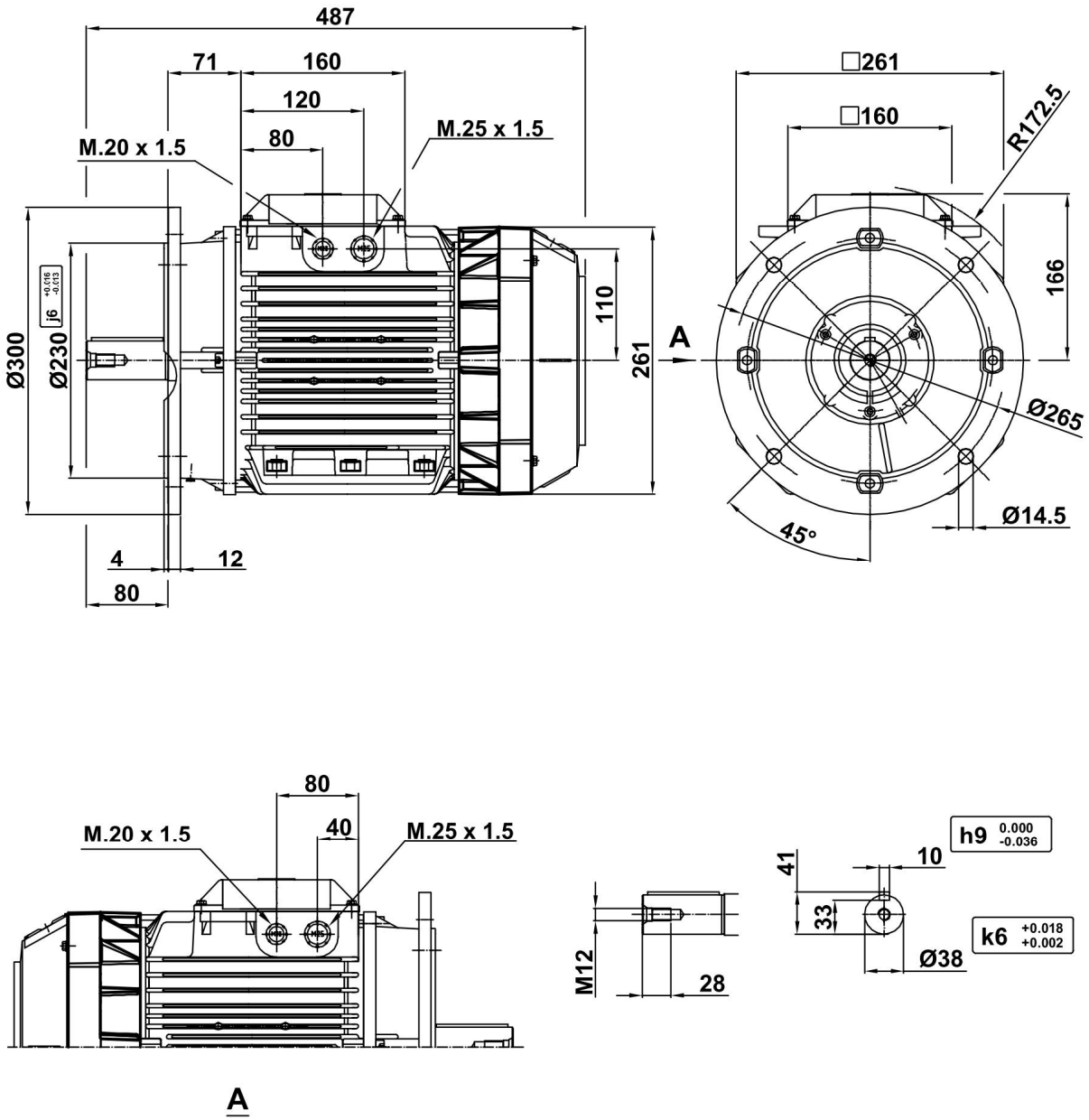


Additional information:

| | | |
|---|---|---|
| **Dimension Print** | Motor Type: M3AA (K) 132 B5, V1, V3 | Document No: 3GZW500613-36 A<br>13 AA 132 A |
| Description: SQUIRREL CAGE MOTOR | | |
| Unit: Motors and Generators<br>Date: 05.01.2017 | Issued by: G.Borg<br>Approved by: G.Borg | Replaces:<br>Replaced by: |
| **ABB AB** | Customer Reference: | |

# CERTIFICATE OF COMPLIANCE

| | |
|---|---|
| **Certificate Number** | 20150727-E473868 |
| **Report Reference** | E473868-20150722 |
| **Issue Date** | 2015-JULY-27 |
| **Issued to:** | ABB Oy, Motors and Generators<br>Strömbergin Puistotie 5A<br>FIN-65320 Vaasa FINLAND |
| **This is to certify that representative samples of** | MOTORS & MOTORS, INVERTER DUTY<br>See addendum page for models |
| | Have been investigated by UL in accordance with the Standard(s) indicated on this Certificate. |
| **Standard(s) for Safety:** | UL 1004-1 Rotating Electrical Machines – General Requirements<br>UL 1004-8 Inverter Duty Motors<br>CSA C22.2 No. 100-14 Motors and Generators |
| **Additional Information:** | See the UL Online Certifications Directory at www.ul.com/database for additional information |

Only those products bearing the UL Certification Mark should be considered as being covered by UL's Certification and Follow-Up Service.

Look for the UL Certification Mark on the product.

Bruce Mahrenholz, Director North American Certification Program

UL LLC

Any information and documentation involving UL Mark services are provided on behalf of UL LLC (UL) or any authorized licensee of UL. For questions, please contact a local UL Customer Service Representative at http://ul.com/aboutul/locations/

# CERTIFICATE OF COMPLIANCE

| | |
|---|---|
| **Certificate Number** | 20150727-E473868 |
| **Report Reference** | E473868-20150722 |
| **Issue Date** | 2015-JULY-27 |

This is to certify that representative samples of the product as specified on this certificate were tested according to the current UL requirements.

Models

USL, CNL - Motor series M3BP, M3BPW, M3BPV, M3BC, M3BL, M3BJ, M3LJ, M3LP, and M3RP followed by 71, 80, 90, 100, 112, 132, 160, 180, 200, 225, 250, 280, 315, 355, 400, or 450 followed by letters e.g. S, SM, M or ML etc., may be followed by A to Z, followed by 2 to 16 or A to Z, followed by additional numbers or letters. See NOMENCLATURE EXPLANATION page 2 for details.

USL, CNL - Motor series M3BN followed by 40x, 44x, 58x, 68x, or 72x (where x is 0 to 9), followed by letters e.g. K, KH etc., may be followed by A to Z, followed by 2 to 16 or A to Z, followed by additional numbers or letters. See NOMENCLATURE EXPLANATION page 2 for details.

USL, CNL – Inverter Duty Motor series M3BC, M3BP, M3BPW, M3BL, M3BJ, M3LJ, M3LP and M3RP followed by 71, 80, 90, 100, 112, 132, 160, 180, 200, 225, 250, 280, 315, 355, 400, or 450 followed by letters e.g. S, SM, M or ML etc., may be followed by A to Z, followed by 2 to 16 or A to Z, followed by additional numbers or letters. See NOMENCLATURE EXPLANATION page 2 for details.

USL, CNL - Inverter Duty Motor series M3BN followed by 40x, 44x, 58x, 68x, or 72x (where x is 0 to 9), followed by letters e.g. S, SM, M or ML etc., may be followed by A to Z, followed by 2 to 16 or A to Z, followed by additional numbers or letters. See NOMENCLATURE EXPLANATION page 2 for details.

Motors covered by this Report may additionally be designated for “Smoke Extraction Duty” per EN 12101-3.



**Bruce Mahrenholz, Director North American Certification Program**

**UL LLC**

**Any information and documentation involving UL Mark services are provided on behalf of UL LLC (UL) or any authorized licensee of UL. For questions, please contact a local UL Customer Service Representative at http://ul.com/aboutul/locations/**

**XML-A010A2S11**

# Electromechanical pressure and vacuum switches

Nautilus®

For control circuits, type XML

## Presentation

Pressure and vacuum switches type **XML** are switches for control circuits.
They are used to control the pressure of hydraulic oils, fresh water, sea water, air, steam, corrosive fluids or viscous products, up to 500 bar.

**XML A** pressure and vacuum switches have a fixed differential and are for detection of a single threshold. They incorporate a 1 C/O single-pole contact.
**XML B** pressure and vacuum switches have an adjustable differential and are for regulation between 2 thresholds. They incorporate a 1 C/O single-pole contact.
**XML C** pressure and vacuum switches have an adjustable differential and are for regulation between 2 thresholds. They incorporate 2 C/O single-pole contacts.
**XML D** pressure and vacuum switches are dual stage switches, each stage with a fixed differential, and are for detection at each threshold. They incorporate 2 C/O single-pole contacts (one per stage).

## Setting

When setting pressure and vacuum switches XML, adjust the switching point on rising pressure (PH) first and then the switching point on falling pressure (PB).

### Pressure and vacuum switches with fixed differential, type XML A

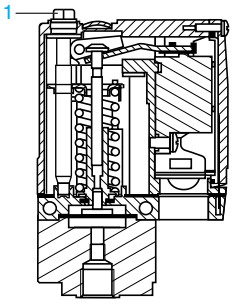


**Switching point on rising pressure**
The switching point on rising pressure (PH) is set by adjusting the red screw 1.

**Switching point on falling pressure**
The switching point on falling pressure (PB) is not adjustable.
The difference between the tripping and resetting points of the contact is the natural differential of the switch (contact differential, friction, etc.).

### Pressure and vacuum switches with adjustable differential, types XML B and XML C

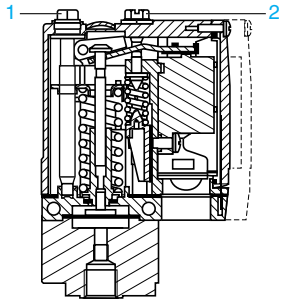


**Switching point on rising pressure**
The switching point on rising pressure (PH) is set by adjusting the red screw 1.

**Switching point on falling pressure**
The switching point on falling pressure (PB) is set by adjusting the green screw 2.

### Dual stage pressure and vacuum switches with fixed differential for each threshold, type XML D

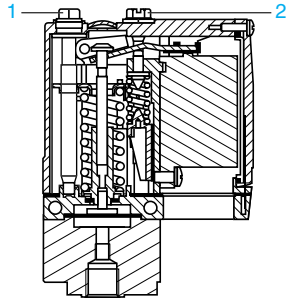


**Switching point on rising pressure of stage 1 and stage 2**
The first stage switching point on rising pressure (PH1) is set by adjusting the red screw 1.
The second stage switching point on rising pressure (PH2) is set by adjusting the blue screw 2.

**Switching point on falling pressure**
The switching points on falling pressure (PB1 and PB2) are not adjustable.
The difference between the tripping and resetting points of each contact is the natural differential of the switch (contact differential, friction, etc.).

# Electromechanical pressure and vacuum switches

Nautilus®

For control circuits, type XML

## Environmental characteristics

| | | |
|---|---|---|
| **Conformity to standards** | | CE, IEC/EN 60947-5-1, UL 508, CSA C22-2 n° 14 |
| **Product certifications** | | UL, CSA, CCC, BV, LROS, RINA, GL, DNV, VIT-SEPRO |
| **Protective treatment** | | Standard version “TC”. Special version “TH” |
| **Ambient air temperature** | **°C** | For operation: - 25…+ 70. For storage: - 40 …+ 70 |
| **Fluids or products controlled** | | Hydraulic oils, air, fresh water, sea water (0…+ 160 °C), depending on model<br>Steam, corrosive fluids, viscous products (0…+ 160 °C), depending on model |
| **Materials** | | Case: zinc alloy<br>Component materials in contact with fluid: see pages 6/128 and 6/129 |
| **Operating position** | | All positions |
| **Vibration resistance** | | 4 gn (30...500 Hz) conforming to IEC 68-2-6 except **XML ●L35●●●●●**, **XML ●001●●●●●** and **XML BM03●●●●●**: 2 gn |
| **Shock resistance** | | 50 gn conforming to IEC 68-2-27 except **XML ●L35●●●●●**, **XML ●001●●●●●** and **XML BM03●●●●●**: 30 gn |
| **Electric shock protection** | | Class I conforming to IEC 1140, IEC 536 and NF C 20-030 |
| **Degree of protection** | | Screw terminal models: IP 66 conforming to IEC/EN 60529<br>Connector models: IP 65 conforming to IEC/EN 60529 |
| **Operating rate** | **Op. cycles/ min** | Piston version switches: ≤ 60 (for temperature > 0 °C)<br>Diaphragm version switches: ≤ 120 (for temperature > 0 °C) |
| **Repeat accuracy** | | < 2% |
| **Fluid connection** | | G 1/4 (BSP female) conforming to NF E 03-005, ISO 228 or 1/4” NPTF (consult your Regional Sales Office) |
| **Electrical connection** | | Screw terminal models: ISO M20 x 1.5 tapped entry<br>For an entry tapped for n° 13 (DIN Pg 13.5) cable gland, replace the last number of the reference by 1 (example: **XML A010A2S12** becomes **XML A010A2S11**)<br>For an entry tapped 1/2” NPT, please consult your Regional Sales Office<br>Connector models (either type DIN 43650 A or M12): please consult your Regional Sales Office |

## Contact block characteristics

| | | |
|---|---|---|
| **Rated operational characteristics** | | ~ AC-15; B300 (Ue = 240 V, Ie = 1.5 A - Ue = 120 V, Ie = 3 A)<br>⎓ DC-13; R300 (Ue = 250 V, Ie = 0.1 A) conforming to IEC 947-5-1 Appendix A, EN 60 947-5-1 |
| **Rated insulation voltage** | | Ui = 500 V conforming to IEC/EN 60947-1<br>Ui = 300 V conforming to UL 508, CSA C22-2 n° 14 |
| **Rated impulse withstand voltage** | | U imp = 6 kV conforming to IEC/EN 60947-1 |
| **Type of contacts** | | Silver tipped contacts<br>**XML A** and **XML B**: 1 C/O single-pole contact (4 terminal), snap action<br>**XML C**: 2 C/O single-pole contacts (8 terminal), simultaneous, snap action<br>**XML D**: 2 C/O single-pole contacts (8 terminal), staggered, snap action |
| **Resistance across terminals** | **mΩ** | < 25 conforming to NF C 93-050 method A or IEC 255-7 category 3 |
| **Terminal referencing** | | Conforming to CENELEC EN 50013 |
| **Short-circuit protection** | | 10 A cartridge fuse type gG (gl) |
| **Connection** | | Screw clamp terminals.<br>Clamping capacity, min: 1 x 0.2 mm², max: 2 x 2.5 mm² |

**Electrical durability**
Conforming to IEC/EN 60947-5-1 Appendix C
Utilisation categories AC-15 and DC-13

Operating rate: 3600 operating cycles/hour
Load factor: 0.5

**XML A** and **XML B**
**a.c. supply** ~ 50/60 Hz
Inductive circuit, Ithe = 10 A

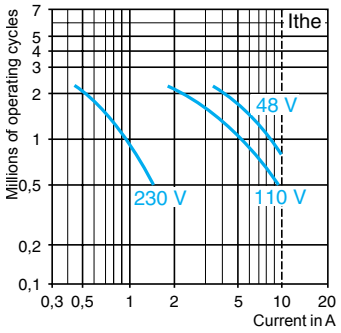


**d.c. supply** ⎓
Power broken in W
for 1 million operating cycles

| Voltage | V | **24** | **48** | **120** |
|---|---|---|---|---|
| | W | 31 | 29 | 26 |

**XML C** and **XML D**
**a.c. supply** ~ 50/60 Hz
Inductive circuit, Ithe = 10 A

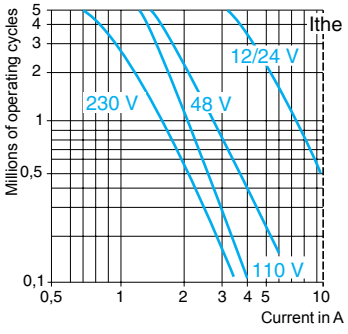


**d.c. supply** ⎓
Power broken in W
for 5 million operating cycles

| Voltage | V | **24** | **48** | **120** |
|---|---|---|---|---|
| | W | 10 | 7 | 4 |

6

# Electromechanical pressure switches

Nautilus® type XML
Size 10 bar (145 psi)
Fixed differential, for detection of a single threshold
Switches with 1 C/O single-pole contact
Fluid connection 1/4" BSP

| Pressure switches type XML A | With setting scale | | Without setting scale | |
|---|---|---|---|---|
| | 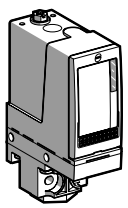 | 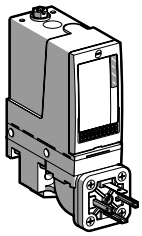 | 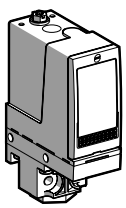 | 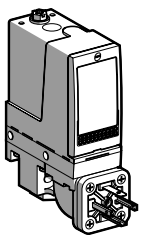 |

| | | | | | |
|---|---|---|---|---|---|
| **Adjustable range of switching point (PH)** (Rising pressure) | | **0.6…10 bar (8.7…145 psi)** | | | |
| **Electrical connection** | | Terminals | DIN connector | Terminals | DIN connector |
| **References** *(1)* | | | | | |
| **Fluids controlled** *(2)* | Hydraulic oils, fresh water, sea water, air, up to + 70 °C | **XML A010A2S12** | **XML A010A2C11** | **XML A010A1S12** | **XML A010A1C11** |
| | Hydraulic oils, fresh water, sea water, air, up to + 160 °C | **XML A010B2S12** | **XML A010B2C11** | **XML A010B1S12** | **XML A010B1C11** |
| | Corrosive fluids, up to + 160 °C | **XML A010C2S12** | **XML A010C2C11** | **XML A010C1S12** | **XML A010C1C11** |
| | Viscous products, up to + 160 °C (G1¼" fluid connection) | **XML A010P2S12** | **XML A010P2C11** | **XML A010P1S12** | **XML A010P1C11** |
| **Weight (kg)** | | 0.685 | 0.715 | 0.685 | 0.715 |

## Complementary characteristics not shown under general characteristics (page 6/69)

| | | |
|---|---|---|
| **Natural differential** (subtract from PH to give PB) | At low setting *(3)* | 0.5 bar (7.25 psi) |
| | At high setting *(3)* | 0.5 bar (7.25 psi) |
| **Maximum permissible pressure** | Per cycle | 12.5 bar (181.25 psi) |
| | Accidental | 22.5 bar (326.25 psi) |
| **Destruction pressure** | | 45 bar (652.5 psi) |
| **Mechanical life** | | 5 x $10^6$ operating cycles |
| **Cable entry for terminal models** | | 1 entry tapped M20 x 1.5 mm for ISO cable gland, clamping capacity 7 to 13 mm |
| **Connector type for connector models** | | DIN 43650A, 4-pin male. For suitable female connector, see page 6/122 |
| **Pressure switch type** | | Diaphragm |

*(1) For 1 entry tapped for n° 13 cable gland, replace **S12** by **S11** (example: **XML A010A2S12** becomes **XML A010A2S11**).*
*(2) Component materials of units in contact with the fluid, see pages 6/128 and 6/129.*
*(3) Deviation of the differential at high and low setting points for switches of the same size: ± 0.05 bar (± 0.72 psi).*

## Operating curves

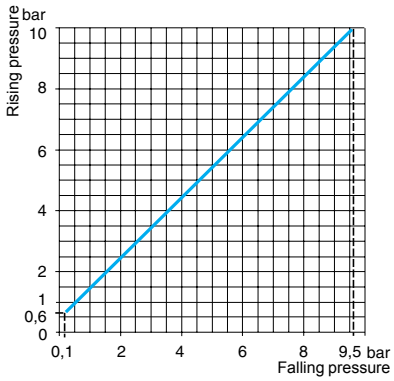


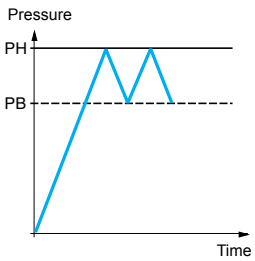


— Adjustable value
--- Non adjustable value

## Connection

**Terminal model**




**Connector model**

**Pressure switch connector pin view**

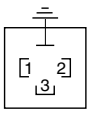


1 → 11 and 13
2 → 12
3 → 14

**Other versions**

Pressure switches with alternative tapped cable entries: NPT etc.
Please consult your Regional Sales Office.

Accessories: page 6/122
Dimensions: pages 6/123 to 6/125

**This page is intentionally left blank**

# IIT208

## Inductive sensor

IIB3022-BPKG/M/V4A/10M/WH

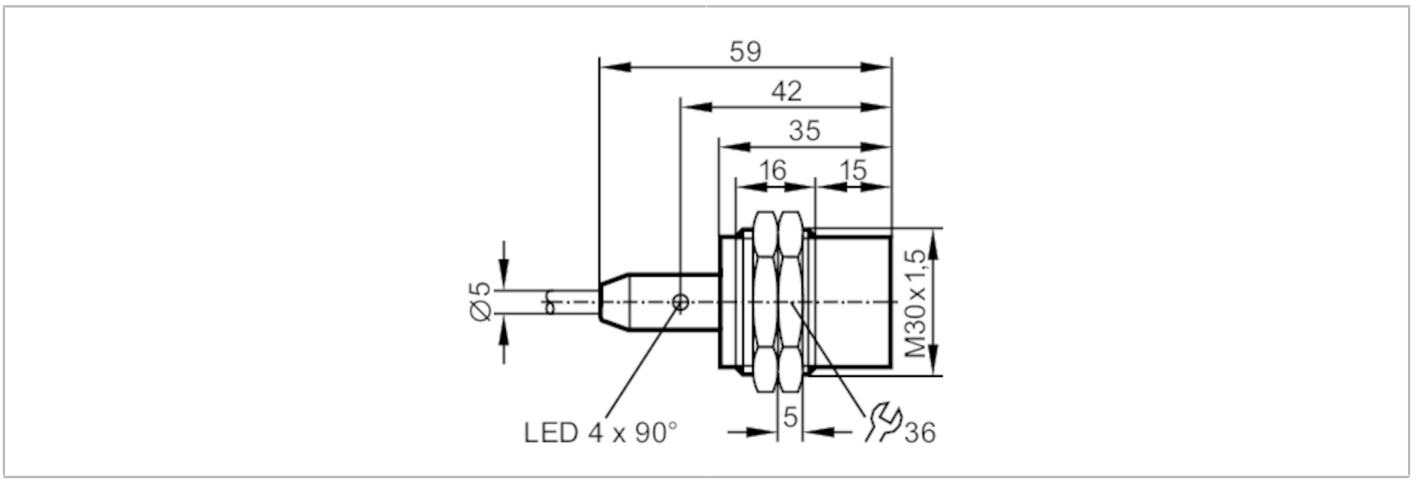


EC 1935/2004

| | | |
|---|---|---|
| **Product characteristics** | | |
| Electrical design | | PNP |
| Output function | | normally open |
| Sensing range | [mm] | 22 |
| Housing | | Threaded type |
| Dimensions | [mm] | M30 x 1.5 / L = 59 |
| **Application** | | |
| System | | Increased sensing range |
| Application | | regular cleaning processes |
| **Electrical data** | | |
| Operating voltage | [V] | 10...36 DC |
| Current consumption | [mA] | 10;  (24 V) |
| Protection class | | II |
| Reverse polarity protection | | yes |
| **Outputs** | | |
| Electrical design | | PNP |
| Output function | | normally open |
| Max. voltage drop switching output DC | [V] | 2.5 |
| Permanent current rating of switching output DC | [mA] | 100 |
| Switching frequency DC | [Hz] | 100 |
| Short-circuit protection | | yes |
| Type of short-circuit protection | | yes (non-latching) |
| Overload protection | | yes |

# IIT208

## Inductive sensor

IIB3022-BPKG/M/V4A/10M/WH

| | | | |
|---|---|---|---|
| **Monitoring range** | | | |
| Sensing range | [mm] | 22 | |
| Real sensing range Sr | [mm] | 22 ± 10 % | |
| Operating distance | [mm] | 0...17.82 | |
| Increased sensing range | | yes | |
| **Accuracy / deviations** | | | |
| Correction factor | | steel: 1 / stainless steel: 0.7 / brass: 0.5 / aluminum: 0.4 / copper: 0.3 | |
| Hysteresis | [% of Sr] | 3...15 | |
| Switch-point drift | [% of Sr] | -10...10 | |
| **Operating conditions** | | | |
| Ambient temperature | [°C] | 0...100 | |
| Protection | | IP 68; IP 69K | |
| **Tests / approvals** | | | |
| EMC | | EN 61000-4-2 ESD | 4 kV CD / 8 kV AD |
| | | EN 61000-4-3 HF radiated | 10 V/m |
| | | EN 61000-4-4 Burst | 2 kV |
| | | EN 61000-4-6 HF conducted | 10 V |
| | | EN 55011 | class B |
| MTTF | [years] | 1594 | |
| UL approval | | Ta | 0...40 °C |
| | | Enclosure type | Type 1 |
| | | voltage supply | Limited Voltage/Current |
| | | File number UL | E174191 |
| **Mechanical data** | | | |
| Weight | [g] | 428.2 | |
| Housing | | Threaded type | |
| Mounting | | non-flush mountable | |
| Dimensions | [mm] | M30 x 1.5 / L = 59 | |
| Thread designation | | M30 x 1.5 | |
| Material | | stainless steel (1.4404 / 316L); sensing face: PEEK | |
| **Displays / operating elements** | | | |
| Display | | Switching status | 4 x 90° LED, yellow |
| **Accessories** | | | |
| Items supplied | | lock nuts: 2 | |
| **Remarks** | | | |
| Pack quantity | | 1 pcs. | |

# IIT208

## Inductive sensor

**IIB3022-BPKG/M/V4A/10M/WH**

### Electrical connection

Cable: 10 m, PVC; 3 x 0.34 mm²

### Connection

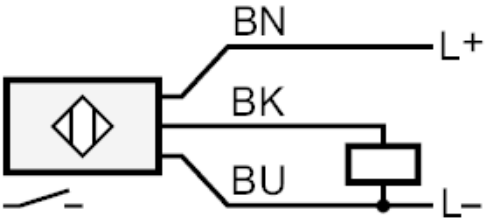


| | |
|---|---|
| | Core colors : |
| BK = | black |
| BN = | brown |
| BU = | blue |

**This page is intentionally left blank**

FMX21-CD121CGD15A-CSA-approved

# Technical Information
# **Waterpilot FMX21**

Hydrostatic level measurement



## Compact transmitter for level measurement

### Application

The Waterpilot FMX21 is a pressure sensor for hydrostatic level measurement.

Endress+Hauser offers three different versions of the device:
- FMX21 with a stainless steel housing, external diameter of 22 mm (0.87 in): This version is excellently suited to drinking water applications and for use in bore holes and wells with small diameters
- FMX21 with a stainless steel housing, external diameter of 42 mm (1.65 in): Heavy-duty version and easy to clean thanks to flush-mounted process isolating diaphragm, ideally suited to wastewater and wastewater treatment plants
- FMX21 with plastic insulation, external diameter of 29 mm (1.14 in): Robust version for use in salt water and excellently suited to applications on ships (e.g. ballast water tanks)

### Your benefits

- High resistance to overload
- High-precision, robust ceramic measuring cell with long-term stability
- Climate proofed sensor thanks to completely potted electronics and 2-filter pressure compensation system
- Simultaneous measurement of level and temperature with optionally integrated Pt100 temperature sensor
- Accuracy
  - Standard reference accuracy ±0.2 %
  - PLATINUM version ±0.1 %
- Automatic density compensation to increase accuracy
- Usage in drinking water: KTW, NSF, ACS
- Approvals: ATEX, FM, CSA
- Marine approvals: GL, ABS, BV, DNV
- Extensive range of accessories provides complete measuring point solutions

Endress+Hauser
People for Process Automation

# Table of contents


**About this document** . . . . . 4
Document function . . . . . 4
Symbols used . . . . . 4
Supplementary documentation . . . . . 5
Terms and abbreviations . . . . . 6
Turn down calculation . . . . . 7

**Function and system design** . . . . . 8
Device version . . . . . 8
Measuring principle . . . . . 9
Measuring system . . . . . 10
Level measurement with absolute pressure probe and external pressure signal for FMX21 4 to 20 mA HART . . . . 12
Density compensation with the Pt100 temperature sensor for FMX21 4 to 20 mA HART . . . . . 12
Communication protocol . . . . . 13
System integration . . . . . 13

**Input** . . . . . 14
Measured variable . . . . . 14
Measuring range . . . . . 14
Input signal . . . . . 15

**Output** . . . . . 16
Output signal . . . . . 16
Signal range . . . . . 16
Maximum load for FMX21 4 to 20 mA Analog . . . . . 16
Maximum load for FMX21 4 to 20 mA HART . . . . . 16
Damping for FMX21 4 to 20 mA HART . . . . . 17
Protocol-specific data for FMX21 4 to 20 mA HART . . . . . 18

**Power supply** . . . . . 19
Supply voltage . . . . . 19
Power consumption . . . . . 19
Current consumption . . . . . 19
Connecting the device . . . . . 19
Terminals in the terminal box . . . . . 23
Probe cable . . . . . 24
Cable resistance . . . . . 24
Cable specifications . . . . . 24
Residual ripple for FMX21 4 to 20 mA Analog . . . . . 24
Residual ripple for FMX21 4 to 20 mA HART . . . . . 24

**Performance characteristics** . . . . . 25
Reference operating conditions . . . . . 25
Reference accuracy . . . . . 25
Resolution . . . . . 25
Long-term stability . . . . . 26
Influence of medium temperature . . . . . 26
Warm-up period . . . . . 26
Response time . . . . . 26

**Installation** . . . . . 27
Installation instructions . . . . . 27
Additional installation instructions . . . . . 27
Cable length . . . . . 28
Technical data for cable . . . . . 29
Cable marking . . . . . 29
Cable shortening kit . . . . . 30

**Environment** . . . . . 31
Ambient temperature range . . . . . 31
Storage temperature range . . . . . 31
Degree of protection . . . . . 31
Electromagnetic compatibility (EMC) . . . . . 32
Overvoltage protection . . . . . 32

**Process** . . . . . 33
Medium temperature range . . . . . 33
Medium temperature limit . . . . . 33
Pressure specifications . . . . . 34

**Mechanical construction** . . . . . 35
Dimensions of the level probe . . . . . 35
Dimensions of the mounting clamp . . . . . 36
Dimensions of cable mounting screw . . . . . 36
Dimensions of terminal box IP66, IP67 with filter . . . . . 37
Dimensions of the TMT181 temperature head transmitter for FMX21 4 to 20 mA Analog . . . . . 38
Dimensions of the TMT182 temperature head transmitter for FMX21 4 to 20 mA HART . . . . . 38
Terminal box with integrated TMT181 temperature head transmitter for FMX21 4 to 20 mA Analog . . . . . 39
Terminal box with integrated TMT182 temperature head transmitter for FMX21 4 to 20 mA HART . . . . . 39
Additional weight . . . . . 40
Testing adapter . . . . . 40
RIA15 in the field housing . . . . . 41
HART communication resistor . . . . . 41
Weight . . . . . 42
Materials . . . . . 43

**Operability** . . . . . 46
FMX21 4 to 20 mA Analog . . . . . 46
FMX21 4 to 20 mA HART . . . . . 46
RIA15 . . . . . 46

**Certificates and approvals** . . . . . 47
CE mark . . . . . 47
RCM-Tick marking . . . . . 47
Ex approvals . . . . . 47
EAC conformity . . . . . 47
Drinking water approval . . . . . 47
Marine approval . . . . . 47
Other standards and guidelines . . . . . 48
Calibration . . . . . 48
Pressure Equipment Directive 2014/68/EU (PED) . . . . . 48
Calibration unit . . . . . 48
Service . . . . . 49
Downloading the Declaration of Conformity . . . . . 49

**Ordering information** . . . . . 50
Scope of delivery . . . . . 50
Configuration data sheet . . . . . 50

**Accessories** . . . . . **52**
Service-specific accessories . . . . . 53

**Supplementary documentation** . . . . . **54**
Field of Activities . . . . . 54
Technical Information . . . . . 54
Operating Instructions . . . . . 54
Brief Operating Instructions . . . . . 54
Safety Instructions (XA) . . . . . 54
Drinking water approval . . . . . 54

**Registered trademarks** . . . . . **54**
GORE-TEX® . . . . . 54
TEFLON® . . . . . 54
HART® . . . . . 54
FieldCare® . . . . . 55
DeviceCare® . . . . . 55
iTEMP® . . . . . 55

# About this document

**Document function**

The document contains all the technical data on the device and provides an overview of the accessories and other products that can be ordered for the device.

**Symbols used**

## Safety symbols

| Symbol | Meaning |
|---|---|
| DANGER | **DANGER!**<br>This symbol alerts you to a dangerous situation. Failure to avoid this situation will result in serious or fatal injury. |
| WARNING | **WARNING!**<br>This symbol alerts you to a dangerous situation. Failure to avoid this situation can result in serious or fatal injury. |
| CAUTION | **CAUTION!**<br>This symbol alerts you to a dangerous situation. Failure to avoid this situation can result in minor or medium injury. |
| NOTICE | **NOTE!**<br>This symbol contains information on procedures and other facts which do not result in personal injury. |

## Electrical symbols

| Symbol | Meaning | Symbol | Meaning |
|---|---|---|---|
| ⎓ | Direct current | ~ | Alternating current |
| ⎓ ~ | Direct current and alternating current | ⏚ | **Ground connection**<br>A grounded terminal which, as far as the operator is concerned, is grounded via a grounding system. |
| ⏚ | **Protective ground connection**<br>A terminal which must be connected to ground prior to establishing any other connections. | ⏚ | **Equipotential connection**<br>A connection that has to be connected to the plant grounding system: This may be a potential equalization line or a star grounding system depending on national or company codes of practice. |

## Symbols for certain types of information

| Symbol | Meaning |
|---|---|
| ✓ | **Permitted**<br>Procedures, processes or actions that are permitted. |
| ✓✓ | **Preferred**<br>Procedures, processes or actions that are preferred. |
| ✗ | **Forbidden**<br>Procedures, processes or actions that are forbidden. |
| i | **Tip**<br>Indicates additional information. |
| | Reference to documentation |
| | Reference to page |
| | Reference to graphic |
| | Visual inspection |

### Symbols in graphics

| Symbol | Meaning |
|---|---|
| 1, 2, 3 ... | Item numbers |
| 1., 2., 3. ... | Series of steps |
| A, B, C, ... | Views |
| A-A, B-B, C-C, ... | Sections |

## Supplementary documentation

The document types listed are available:
In the Download Area of the Endress+Hauser Internet site: www.endress.com → Download

### Brief Operating Instructions (KA): getting the 1st measured value quickly

FMX21 4 to 20 mA Analog - KA01244P:

FMX21 4 to 20 mA HART - KA01189P:

The Brief Operating Instructions contain all the essential information from incoming acceptance to initial commissioning.

### Operating Instructions (BA): your comprehensive reference

FMX21 4 to 20 mA Analog - BA01605P:

FMX21 4 to 20 mA HART - BA00380P:

RIA15 - BA01170K:

These Operating Instructions contain all the information that is required in various phases of the life cycle of the device: from product identification, incoming acceptance and storage, to mounting, connection, operation and commissioning through to troubleshooting, maintenance and disposal.

### Safety Instructions (XA)

Depending on the approval, the following Safety Instructions (XA) are supplied with the device. They are an integral part of the Operating Instructions.

| Directive | Type of protection | Category | Documentation | Option [1] |
|---|---|---|---|---|
| ATEX | Ex ia IIC | II 2 G | XA00454P | BD |
| ATEX | Ex nA IIC | II 3 G | XA00485P | BE |
| IECEx | Ex ia IIC | n/a | XA00455P | IC |
| CSA C/US | Ex ia IIC | n/a | ZD00232P (960008976) | CE |
| FM | AEx ia IIC | n/a | ZD00231P (960008975) | FE |
| NEPSI | Ex ia IIC | n/a | XA00456P | NA |
| INMETRO | Ex ia IIC | n/a | XA01066P | MA |

1) Product Configurator order code for "Approval"

The nameplate indicates the Safety Instructions (XA) that are relevant to the device.

## Terms and abbreviations

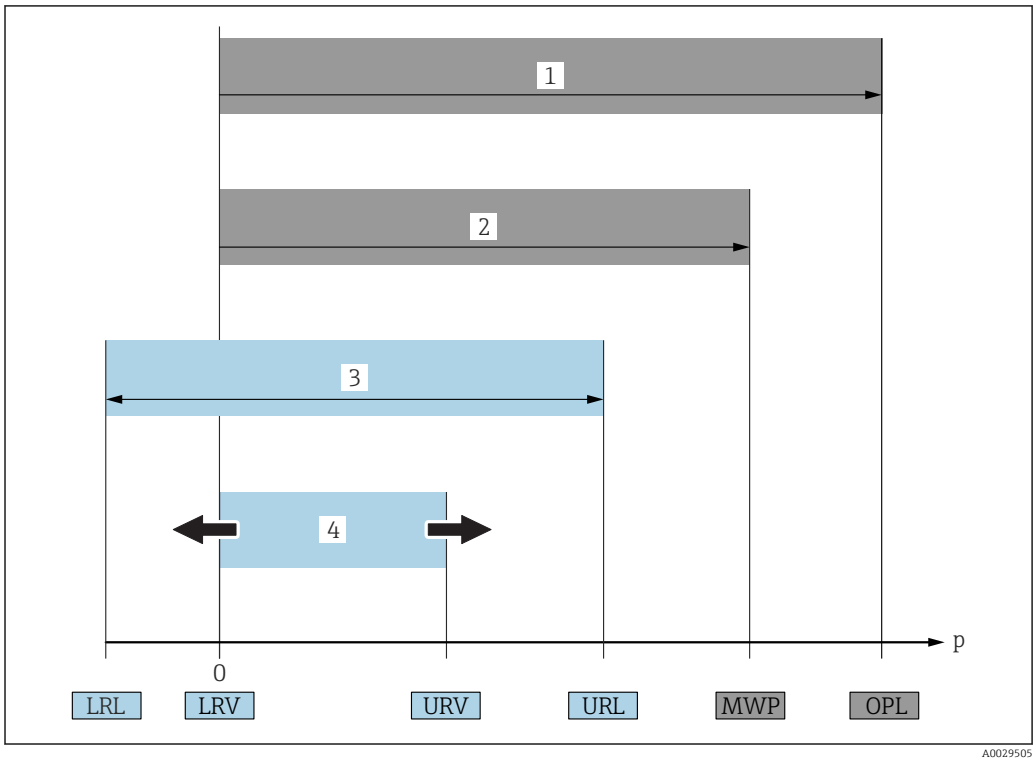


| Item | Term/abbreviation | Explanation |
|---|---|---|
| 1 | OPL | The OPL (over pressure limit = sensor overload limit) for the measuring device depends on the lowest-rated element, with regard to pressure, of the selected components, i.e. the process connection has to be taken into consideration in addition to the measuring cell. Also observe pressure-temperature dependency.<br>The OPL may only be applied for a limited period of time. |
| 2 | MWP | The MWP (maximum working pressure) for the sensors depends on the lowest-rated element, with regard to pressure, of the selected components, i.e. the process connection has to be taken into consideration in addition to the measuring cell. Also observe pressure-temperature dependency.<br>The MWP may be applied at the device for an unlimited period.<br>The MWP can also be found on the nameplate. |
| 3 | Maximum sensor measuring range | Span between LRL and URL<br>This sensor measuring range is equivalent to the maximum calibratable/adjustable span. |
| 4 | Calibrated/adjusted span | Span between LRV and URV<br>Factory setting: 0 to URL<br>Other calibrated spans can be ordered as customized spans. |
| p | - | Pressure |
| - | LRL | Lower range limit |
| - | URL | Upper range limit |
| - | LRV | Lower range value |
| - | URV | Upper range value |
| - | TD (turn down) | Turn down<br>Example - see the following section. |
| - | PE | Polyethylene |
| - | FEP | Fluorinated ethylene propylene |
| - | PUR | Polyurethane |

## Turn down calculation

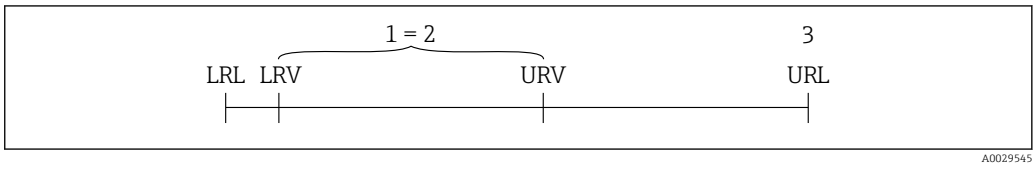


*1 Calibrated/adjusted span*
*2 Zero point-based span (4 to 20 mA Analog: customer-specific span can only be set at the factory when ordered)*
*3 URL sensor*

**Example**

- Sensor:10 bar (150 psi)
- Upper range value (URL) = 10 bar (150 psi)
- Calibrated/adjusted span: 0 to 5 bar (0 to 75 psi)
- Lower range value (LRV) = 0 bar (0 psi)
- Upper range value (URV) = 5 bar (75 psi)

Turn down (TD):

$$TD = \frac{URL}{|URV - LRV|}$$

$$TD = \frac{10\ \text{bar (150 psi)}}{|5\ \text{bar (75 psi)} - 0\ \text{bar (0 psi)}|} = 2$$

In this example, the TD is 2:1.
This span is based on the zero point.

# Function and system design

**Device version**

| Outer diameter | 22 mm (0.87 in) | 42 mm (1.65 in) | Max. 29 mm (1.14 in) |
|---|---|---|---|
| |  A0018640 |  A0018641 |  A0018642 |
| Field of application | Hydrostatic level measurement in deep wells e.g. drinking water | Hydrostatic level measurement in wastewater | Hydrostatic level measurement in saltwater |
| | **NOTICE**<br>**The Waterpilot is not suitable for use in biogas plants since the gases can diffuse through the elastomers (seals, cable).**<br>▶ For applications involving biogas, Endress+Hauser offers the Deltapilot level measuring device. | | |
| Process connection | ▪ Suspension clamp<br>▪ Cable mounting screw with G 1½" A or NPT 1½" thread | | |
| Extension cable | PE, PUR, FEP → 🖹 45 | | |
| Seals | ▪ FKM Viton<br>▪ EPDM [1] | FKM Viton | ▪ FKM Viton<br>▪ EPDM [1] |
| Measuring ranges | ▪ Relative pressure: 0 to 0.1 bar (0 to 1.5 psi) to 0 to 20 bar (0 to 300 psi)<br>▪ Absolute pressure: 0 to 2 bar (0 to 30 psi) to 0 to 20 bar (0 to 300 psi) | | ▪ Relative pressure: 0 to 0.1 bar (0 to 1.5 psi) to 0 to 4 bar (0 to 60 psi)<br>▪ Absolute pressure: 0 to 2 bar (0 to 30 psi) to 0 to 4 bar (0 to 60 psi) |
| | ▪ Customer-specific measuring ranges; factory-calibrated.<br>▪ The following output units can be configured: %, mbar, bar, kPa, MPa, $mmH_2O$, $mH_2O$, $inH_2O$, $ftH_2O$, psi and numerous level units. | | |
| Overload | to 40 bar (600 psi) | | to 25 bar (375 psi) |
| Process temperature range | −10 to +70 °C (+14 to +158 °F) | | 0 to +50 °C (+32 to +122 °F) |
| Reference accuracy | ▪ ±0.2 % of the set span<br>▪ Optional: ±0.1 % of set span (PLATINUM version) | | |
| Supply voltage | 10.5 to 35 V DC, Ex: 10.5 to 30 V DC | | |
| Output | ▪ 4 to 20 mA Analog<br>▪ 4 to 20 mA HART (can be inverted) with superimposed digital communication protocol HART 6.0, 2-wire | | |
| Options | Drinking water approval | – | |
| | ▪ Wide range of approvals, including ATEX, FM, CSA<br>▪ Numerous accessories<br>▪ Integrated Pt100 temperature sensor and TMT181 temperature head transmitter (4 to 20 mA)<br>▪ Integrated Pt100 temperature sensor and TMT182 temperature head transmitter (4 to 20 mA HART)<br>▪ Marine approval | | |
| Specialties | ▪ High-precision, robust ceramic measuring cell with long-term stability<br>▪ Automatic density compensation<br>▪ Customer-specific cable marking | | |

1) Recommended for drinking water applications, not suitable for use in hazardous areas.

**Measuring principle**

The ceramic measuring cell is a dry measuring cell i.e. the pressure acts directly on the robust, ceramic process isolating diaphragm of the Waterpilot FMX21. Changes in air pressure are guided via a pressure compensation tube through the extension cable to the rear of the ceramic process isolating diaphragm and are compensated for. A pressure-dependent change in capacitance, caused by the movement of the process isolating diaphragm, is measured at the electrodes of the ceramic carrier. The electronics unit then converts this to a signal that is proportional to the pressure and linear to the level.

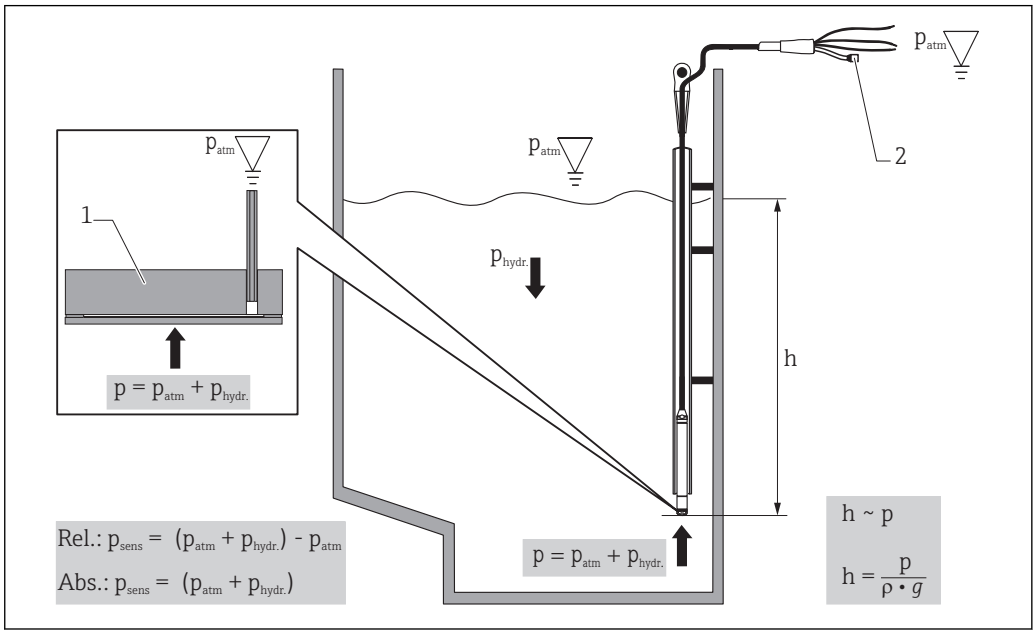


*1 Ceramic measuring cell*
*2 Pressure compensation tube*
*h Height level*
*p Total pressure = atmospheric pressure + hydrostatic pressure*
*ρ Density of the medium*
*g Acceleration due to gravity*
*$P_{hydr.}$ Hydrostatic pressure*
*$P_{atm}$ Atmospheric pressure*
*$P_{sens}$ Pressure displayed on the sensor*

### Temperature measurement with optional Pt100 resistance thermometer [1)]

For simultaneous measurement of level and temperature, Endress+Hauser offers the Waterpilot FMX21 with an optional 4-wire Pt100 resistance thermometer → 🖹 52. The Pt100 is categorized as Accuracy Class B as per DIN EN 60751.

### Temperature measurement with optional Pt100 and TMT181 temperature head transmitter for FMX21 4 to 20 mA Analog [1)]

To convert the temperature signal to an analog, scalable 4 to 20 mA output signal, Endress+Hauser also offers the TMT181 temperature head transmitter.

Ordering information: → 🖹 50; "Accessories" → 🖹 52. Technical Information TI00070R.

### Temperature measurement with optional Pt100 and TMT182 temperature head transmitter for FMX21 4 to 20 mA HART [1)]

Endress+Hauser also offers the TMT182 temperature head transmitter with HART protocol for converting the temperature signal to an analog, scalable 4 to 20 mA output signal superimposed with HART 6.0. See also: "Density compensation with Pt100 temperature sensor" → 🖹 12

Ordering information: → 🖹 50; "Accessories" → 🖹 52. Technical Information TI00078R.

1) Not for use in hazardous areas.

## Measuring system

### Application examples

As standard, the complete measuring system consists of a Waterpilot FMX21 and a transmitter power supply unit with a supply voltage of 10.5 to 30 V DC (hazardous areas) or 10.5 to 35 V DC (non-hazardous areas).

Possible measuring point solutions with a transmitter and evaluation units from Endress+Hauser:

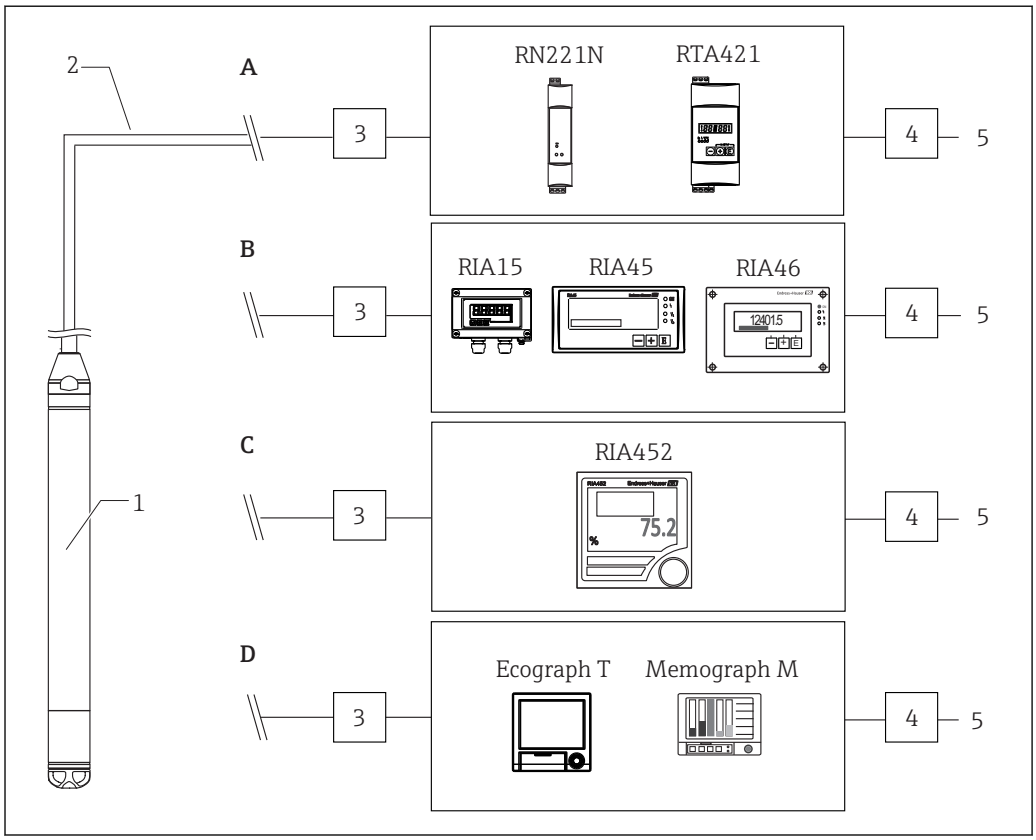


A0018644

*1 Waterpilot FMX21*
*2 4 to 20 mA or 4 to 20 mA HART*
*3+4 Overvoltage protection, e.g. HAW from Endress+Hauser (not for use in hazardous areas) HAW562; for DIN rail: HAW562/intrinsically safe HAW562Z. Selection in accordance with supply voltage.*
*5 Power supply*

**A:** Easy and cost-effective measuring point solution: power supplied to the Waterpilot in hazardous and non-hazardous areas via the RN221N active barrier. Power supply and additional control of two appliances, such as pumps, via the RTA421 limit value switch with local display.

**B:** The RIA45 evaluation unit (for panel mounting) or the RIA46 evaluation unit (for field installation) offers power supply, local display and two switch outputs. If the RIA15 is used, the basic settings for the FMX21 HART can be made via the display module.

**C:** If several pumps are used, the pump service life can be prolonged by alternate switching. With alternating pump control, the pump which was out of service for the longest period of time is switched on. The RIA452 evaluation unit (for panel mounting) offers this option in addition to numerous other functions.

**D:** State-of-the-art recording technology with graphic display recorders from Endress+Hauser, such as Ecograph T, Memograph M for documentation, monitoring, visualization and archiving purposes.

### Application examples with the Pt100

As standard, the complete measuring system consists of a Waterpilot FMX21 and a transmitter power supply unit with a supply voltage of 10.5 to 30 V DC (hazardous areas) or 10.5 to 35 V DC (non-hazardous areas).

Possible measuring point solutions with a transmitter and evaluation units from Endress+Hauser:

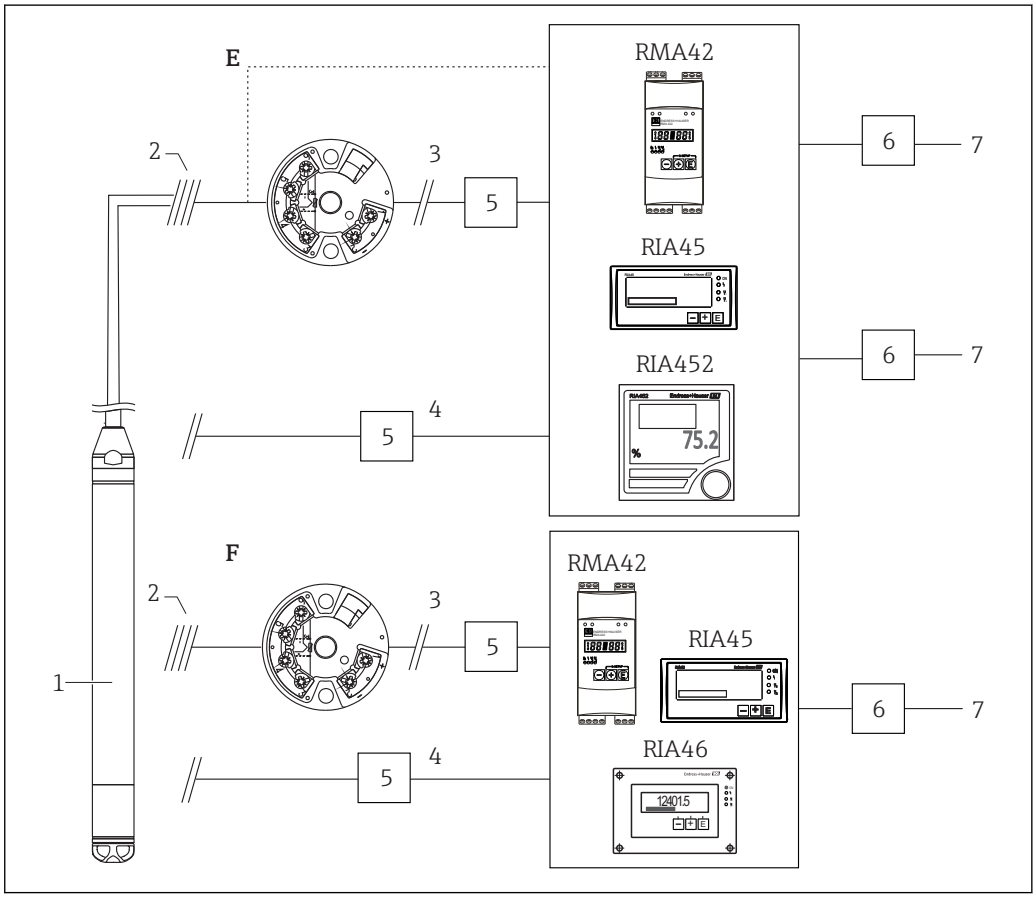


1 *Waterpilot FMX21*
2 *Connection for integrated Pt100 in the FMX21*
3 *Temperature for 4 to 20 mA or 4 to 20 mA HART*
4 *Level for 4 to 20 mA or 4 to 20 mA HART*
5 *Overvoltage protection, e.g. HAW from Endress+Hauser (not for use in hazardous areas) on the sensor side for field installation: HAW569; for DIN rail: HAW562/intrinsically safe HAW562Z. Selection in accordance with supply voltage.*
6 *Overvoltage protection, e.g. HAW from Endress+Hauser (not for use in hazardous areas) on the supply side for DIN rail: HAW561 (115/230 V) and HAW561K (24/48 V AC/DC). Selection in accordance with supply voltage.*
7 *Power supply*

**E:** If you wish to measure, display and evaluate the temperature as well as the level, e.g. to monitor the temperature in fresh water for the purpose of detecting temperature limits for germ formation, the options available to you include the following: The optionally available TMT182 temperature head transmitter can convert the Pt100 signal to a 4 to 20 mA signal or a 4 to 20 mA HART signal and transfer it to any commonly used evaluation unit. The RMA42, RIA45 and RIA452 evaluation units also offer a direct input for the Pt100 signal.

**F:** If you wish to record and evaluate the level and temperature measured value with one device, use the RMA42, RIA45 and RIA46 evaluation units with two inputs. It is even possible to mathematically link the input signals with this unit. These evaluation units are HART-compatible.

**Level measurement with absolute pressure probe and external pressure signal for FMX21 4 to 20 mA HART**

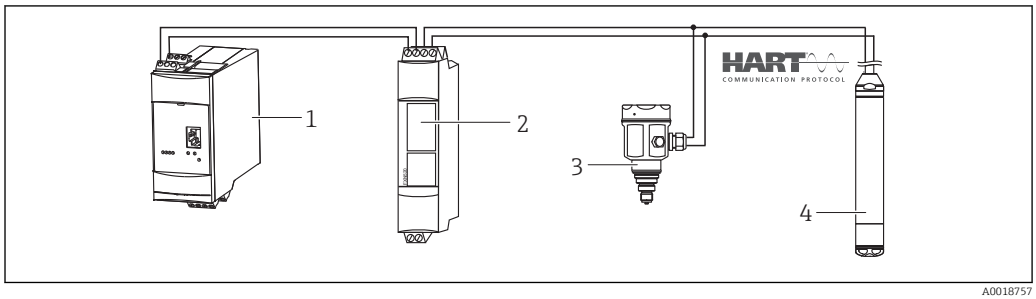


*1 Fieldgate FXA520*
*2 Multidrop Connector FXN520*
*3 Cerabar*
*4 Waterpilot FMX21 4 to 20 mA HART*

It is advisable to use an absolute pressure probe for applications in which condensation can occur. For level measurement using an absolute pressure probe, the measured value is affected by fluctuations in the ambient pressure. To correct the resulting measured error, you can connect an external absolute pressure sensor (e.g. Cerabar) to the HART signal line, switch the Waterpilot to burst mode and operate the Cerabar in the "Electr. Delta P" mode. The external absolute pressure sensor then calculates the difference between the two pressure signals and can thus determine the level precisely. Only one level measured value can be corrected in this way.

If using intrinsically safe devices, the regulations for interconnecting intrinsically safe circuits as stipulated in IEC60079-14 (proof of intrinsic safety) must be observed.

**Density compensation with the Pt100 temperature sensor for FMX21 4 to 20 mA HART**

The Waterpilot FMX21 4 to 20 mA HART can correct measured errors that result from fluctuations in the density of the water caused by temperature. Users can choose from the following options:

**Use the internally measured sensor temperature of the FMX21**

The internally measured sensor temperature is calculated in the Waterpilot FMX21 4 to 20 mA HART for density compensation. The level signal is thus corrected according to the density characteristic line of water.

**Use the optional internal temperature sensor for density compensation in a suitable HART master (e.g. PLC)**

The Waterpilot FMX21 4 to 20 mA HART is optionally available with a Pt100 temperature sensor. To convert the Pt100 signal to a 4 to 20 mA HART signal, Endress+Hauser also offers the TMT182 temperature head transmitter.

The temperature and pressure signals are queried by a HART master (e.g. PLC), where a corrected level value can be generated using a stored linearization table or density function (of a chosen medium).

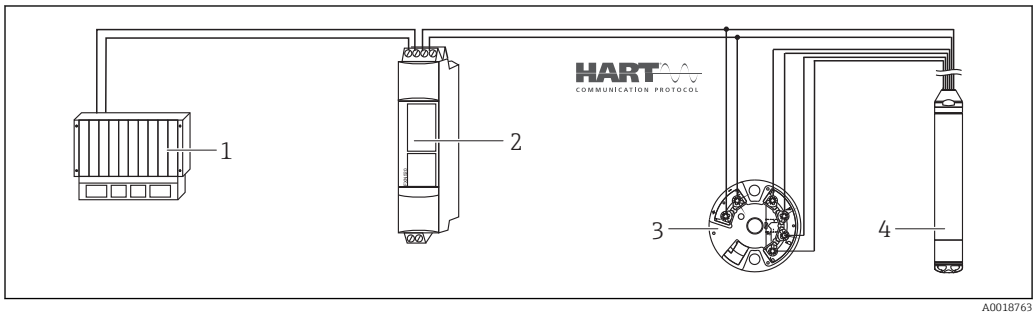


*1 HART master, e.g. PLC (programmable logic controller)*
*2 FXN520 Multidrop Connector*
*3 TMT182 temperature head transmitter*
*4 Waterpilot FMX21 4 to 20 mA HART*

**Use an external temperature signal, which is transmitted to the FMX21 4 to 20 mA HART via the HART burst mode**

The Waterpilot FMX21 4 to 20 mA HART is optionally available with a Pt100 temperature sensor. With this option, the signal of the Pt100 is evaluated with a HART-compliant temperature transmitter (min. HART 5.0) that supports the BURST mode. The temperature signal can thus be transmitted to the FMX21 4 to 20 mA HART. The FMX21 4 to 20 mA HART uses this signal for density correction of the level signal.

The TMT182 temperature head transmitter is not suitable for this configuration.

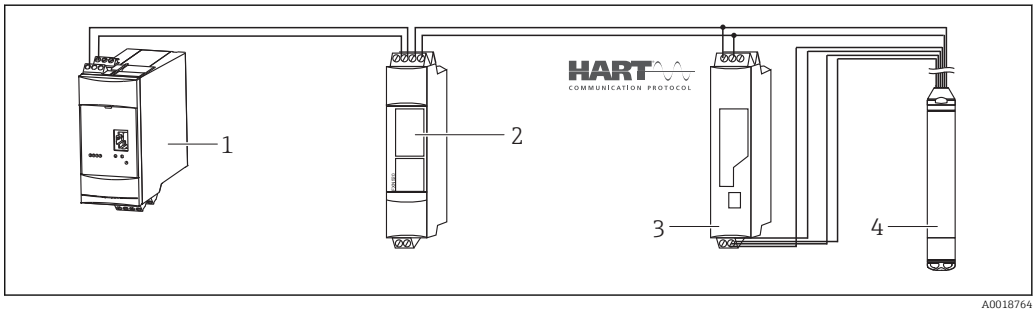


*1 Fieldgate FXA520*
*2 Multidrop Connector FXN520*
*3 HART-compatible temperature transmitter (e.g. TMT82)*
*4 Waterpilot FMX21 4 to 20 mA HART*

Without additional compensation due to the anomaly of water, errors of up to 4% may occur at a temperature of 70 °C (158 °F), for example. With density compensation, this error can be decreased to 0.5 % in the entire temperature range from 0 to +70 °C (+32 to +158 °F).

More information can be found in the Technical Information:

- TI01010T: TMT82 temperature transmitter (4 to 20 mA HART)
- TI00369F: Fieldgate FXA520
- TI00400F: Multidrop Connector FXN520

**Communication protocol**

- 4 to 20 mA Analog
  Ordering information: Product Configurator order code for "Output", option "1"
- 4...20 mA HART
  Ordering information: Product Configurator order code for "Output", option "2"

**System integration**

The device can be given a tag name.

Ordering information: Product Configurator order code for "Identification", option "Z1"

# Input

## Measured variable

**FMX21 + Pt100 (optional)**

- Hydrostatic pressure of a liquid
- Pt100: Temperature

**TMT181 temperature head transmitter (optional) for FMX21 4 to 20 mA Analog**

Temperature

**TMT182 temperature head transmitter (optional) for FMX21 4 to 20 mA HART**

Temperature

## Measuring range

- Customer-specific measuring ranges or calibration that has been preset in the factory
- Temperature measurement of −10 to +70 °C (+14 to +158 °F) with Pt100 (optional)

**Relative pressure**

| Sensor measuring range [bar (psi)] | Lowest calibratable span [1] [bar (psi)] | Vacuum resistance [$bar_{abs}$ ($psi_{abs}$)] | Option [2] |
|---|---|---|---|
| 0.1 (1.5) | 0.01 (0.15) | 0.3 (4.5) | 1C |
| 0.2 (3.0) | 0.02 (0.3) | 0.3 (4.5) | 1D |
| 0.4 (6.0) | 0.04 (1.0) | 0 | 1F |
| 0.6 (9.0) | 0.06 (1.0) | 0 | 1G |
| 1.0 (15.0) | 0.1 (1.5) | 0 | 1H |
| 2.0 (30.0) | 0.2 (3.0) | 0 | 1K |
| 4.0 (60.0) | 0.4 (6.0) | 0 | 1M |
| 10.0 (150) [3] | 1.0 (15) | 0 | 1P |
| 20.0 (300) [3] | 2.0 (30) | 0 | 1Q |

1) Largest turn down that can be configured at the factory: 10:1, higher turn down can be configured on request or in the device (for FMX21 4 to 20 mA HART).
2) Product Configurator order code for "Sensor range"
3) These measuring ranges are not available for the special version with plastic insulation, external diameter of 29 mm (1.14 in).

**Absolute pressure**

| Sensor measuring range [bar (psi)] | Lowest calibratable span [1] [bar (psi)] | Vacuum resistance [$bar_{abs}$ ($psi_{abs}$)] | Option [2] |
|---|---|---|---|
| 2.0 (30.0) | 0.2 (3.0) | 0 | 2K |
| 4.0 (60.0) | 0.4 (6.0) | 0 | 2M |
| 10.0 (150) [3] | 1.0 (15) | 0 | 2P |
| 20.0 (300) [3] | 2.0 (30) | 0 | 2Q |

1) Largest turn down that can be configured at the factory: 10:1, higher turn down can be configured on request or in the device (for FMX21 4 to 20 mA HART).
2) Product Configurator order code for "Sensor range"
3) These measuring ranges are not available for the special version with plastic insulation, external diameter of 29 mm (1.14 in).

**Input signal**

**FMX21 + Pt100 (optional)**

- Change in capacitance
- Pt100: Change in resistance

**TMT181 temperature head transmitter (optional) for FMX21 4 to 20 mA Analog**

Pt100 resistance signal, 4 wire

**TMT182 temperature head transmitter (optional) for FMX21 4 to 20 mA HART**

Pt100 resistance signal, 4 wire

# Output

**Output signal**

**FMX21 + Pt100 (optional)**

- 4 to 20 mA Analog, 2-wire for hydrostatic pressure measured value.
  Ordering information: Product Configurator order code for "Output", option "1"
- 4 to 20 mA HART with superimposed digital communication protocol HART 6.0, 2-wire for hydrostatic pressure measured value.
  Ordering information: Product Configurator order code for "Output", option "2"
  Options:
  - Max. alarm (factory setting 22mA): can be set from 21 to 23 mA
  - Hold measured value: last measured value is held
  - Min. alarm: 3.6 mA
- Pt100: temperature-dependent resistance value

**TMT181 temperature head transmitter (optional) for FMX21 4 to 20 mA Analog**

4 to 20 mA Analog for temperature measured value, 2-wire

**TMT182 temperature head transmitter (optional) for FMX21 4 to 20 mA HART**

4 to 20 mA HART with superimposed digital communication protocol HART 5.0 for temperature measured value, 2-wire

**Signal range**

3.8 mA to 20.5 mA

**Maximum load for FMX21 4 to 20 mA Analog**

The maximum load resistance depends on the supply voltage (U) and must be determined individually for each current loop, see formula and diagrams for FMX21 and temperature head transmitter. The total resistance resulting from the resistances of the connected devices, the connecting cable and, where applicable, the resistance of the extension cable may not exceed the load resistance value.

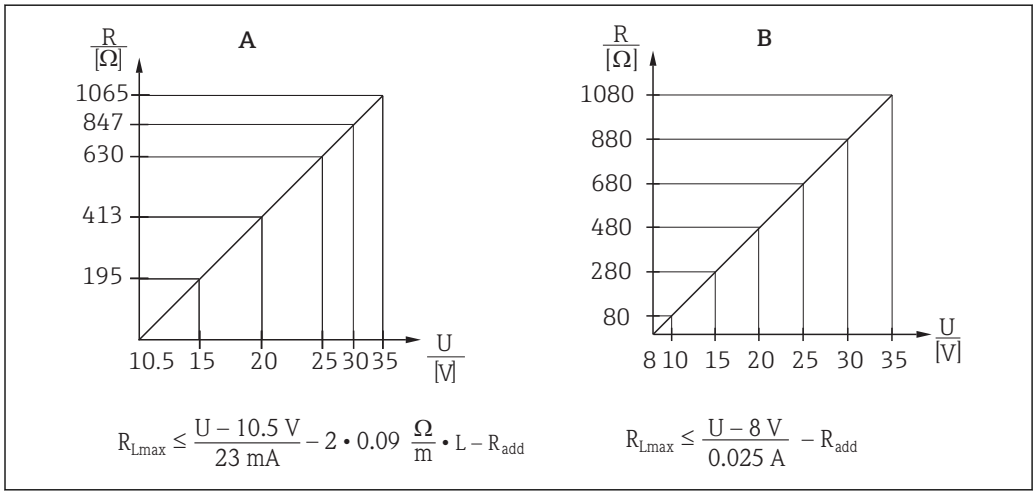


A0030561-EN

*A FMX21 4 to 20 mA Analog load chart for estimating the load resistance. Additional resistances, such as the resistance of the extension cable, have to be subtracted from the value calculated as shown in the equation.*
*B Load diagram for TMT181 temperature head transmitter for estimating the load resistance. Additional resistances must be subtracted from the value calculated as shown in the equation*
*$R_{Lmax}$ Max. load resistance [Ω]*
*$R_{add}$ Additional resistances such as resistance of evaluating device and/or display unit, cable resistance [Ω]*
*U Supply voltage [V]*
*L Basic length of extension cable [m] (cable resistance per wire 0.09 Ω/m)*

When using the measuring device in hazardous areas, installation must comply with the corresponding national standards and regulations and the Safety Instructions or Installation or Control Drawings (XA).

**Maximum load for FMX21 4 to 20 mA HART**

The maximum load resistance depends on the supply voltage (U) and must be determined individually for each current loop, see formula and diagrams for FMX21 and temperature head

transmitter. The total resistance resulting from the resistances of the connected devices, the connecting cable and, where applicable, the resistance of the extension cable may not exceed the load resistance value.

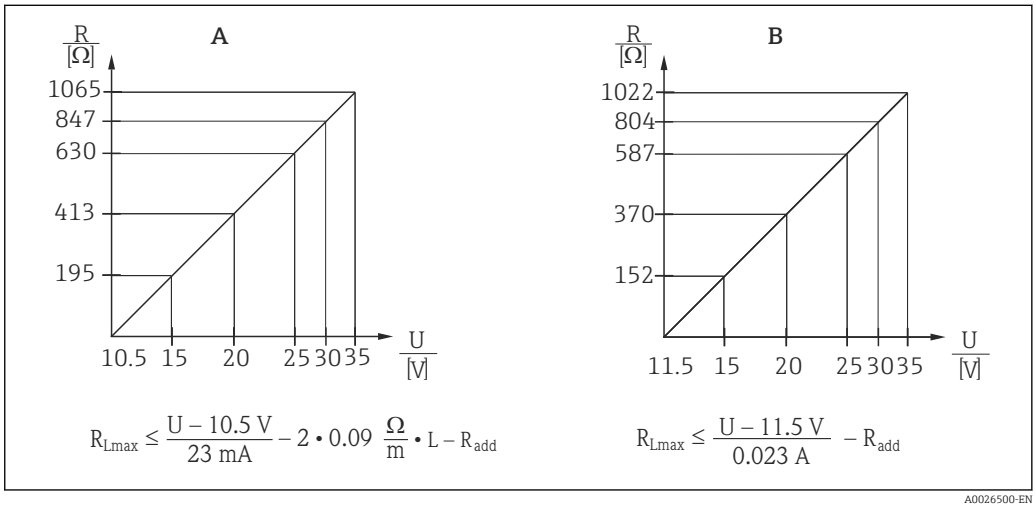


*A FMX21 4 to 20 mA HART load chart for estimating the load resistance. Additional resistances, such as the resistance of the extension cable, have to be subtracted from the value calculated as shown in the equation.*
*B Load diagram for TMT182 temperature head transmitter for estimating the load resistance. Additional resistances must be subtracted from the value calculated as shown in the equation*
*$R_{Lmax}$ Max. load resistance [Ω]*
*$R_{add}$ Additional resistances such as resistance of evaluating device and/or display unit, cable resistance [Ω]*
*U Supply voltage [V]*
*L Basic length of extension cable [m] (cable resistance per wire 0.09 Ω/m)*

- When using the measuring device in hazardous areas, installation must comply with the corresponding national standards and regulations and the Safety Instructions or Installation or Control Drawings (XA).
- When operating via a handheld terminal or via a PC with an operating program, a minimum communication resistance of 250 Ω must be taken into account.

**Damping for FMX21 4 to 20 mA HART**

- Via HART handheld device or PC with operating program: continuous from 0 to 999 s
- Factory setting: 2 s

**Protocol-specific data for FMX21 4 to 20 mA HART**

| | |
|---|---|
| Manufacturer ID | 17 (11 hex) |
| Device type code | 25 (19 hex) |
| Device revision | 01 (01 hex) - SW version 01.00.zz |
| HART specification | 6 |
| DD revision | 01 |
| Device description files (DTM, DD) | Information and files under:<br>▪ www.endress.com<br>▪ www.fieldcommgroup.org |
| HART load | Min. 250 Ω |
| HART device variables | The dynamic variables SV, TV and QV may be assigned to any device variable:<br>**Standard process values for SV, TV (second and third device variable) are dependent on the measuring mode:**<br>▪ Pressure<br>▪ Level<br>**Standard process value for QV (fourth device variable) is the sensor temperature:**<br>Temperature<br>**Measured values for PV (first device variable) are dependent on the measuring mode:**<br>▪ Pressure<br>▪ Level<br>▪ Tank content |
| Supported functions | ▪ Burst mode<br>▪ Additional transmitter status<br>▪ Device locking<br>▪ Alternative measuring modes<br>▪ Catch variable<br>▪ Long tag |

# Power supply

**⚠ WARNING**

**Electrical safety is compromised by an incorrect connection!**

- When using the measuring device in a hazardous area, the relevant national standards and guidelines as well as the Safety Instructions (XAs) or installation or control drawings (ZDs) must be adhered to. All data relating to explosion protection can be found in separate documentation which is available on request. This documentation is supplied with the devices as standard → 🖹 5

## Supply voltage

**FMX21 + Pt100 (optional)**

- 10.5 to 35 V (not hazardous areas)
- 10.5 to 30 V (hazardous areas)

**TMT181 temperature head transmitter (optional) for FMX21 4 to 20 mA Analog**

8 to 35 V DC

**TMT182 temperature head transmitter (optional) for FMX21 4 to 20 mA HART**

11.5 to 35 V DC

## Power consumption

**FMX21 + Pt100 (optional)**

- ≤ 0.805 W at 35 V DC (non-hazardous area)
- ≤ 0.690 W at 30 V DC (hazardous area)

**TMT181 temperature head transmitter (optional) for FMX21 4 to 20 mA Analog**

≤ 0.875 W at 35 V DC

**TMT182 temperature head transmitter (optional) for FMX21 4 to 20 mA HART**

≤ 0.805 W at 35 V DC

## Current consumption

**FMX21 + Pt100 (optional)**

Max. current consumption: ≤ 23 mA
Min. current consumption: ≥ 3.6 mA

**TMT181 temperature head transmitter (optional) for FMX21 4 to 20 mA Analog**

- Max. current consumption: ≤ 25 mA
- Min. current consumption: ≥ 3.5 mA

**TMT182 temperature head transmitter (optional) for FMX21 4 to 20 mA HART**

- Max. current consumption: ≤ 23 mA
- Min. current consumption: ≥ 3.5 mA

## Connecting the device

- Waterpilot
  Reverse polarity protection is integrated in the Waterpilot FMX21 and the temperature head transmitter. Changing the polarities will not result in damage to the devices.
- The cable must end in a dry room or a suitable terminal box. The terminal box (IP66/IP67) with GORE-TEX® filter from Endress+Hauser is suitable for outdoor installation. The terminal box may be ordered as an accessory using the order code for the FMX21, Product Configurator order code for "Accessories enclosed", option "PS".

The electrical connection is established with the corresponding wires of the probe cable and with the optional use of the terminal box → 🖹 37 and a power supply (e.g. RN221N active barrier → 🖹 10).

**Waterpilot with Pt100**

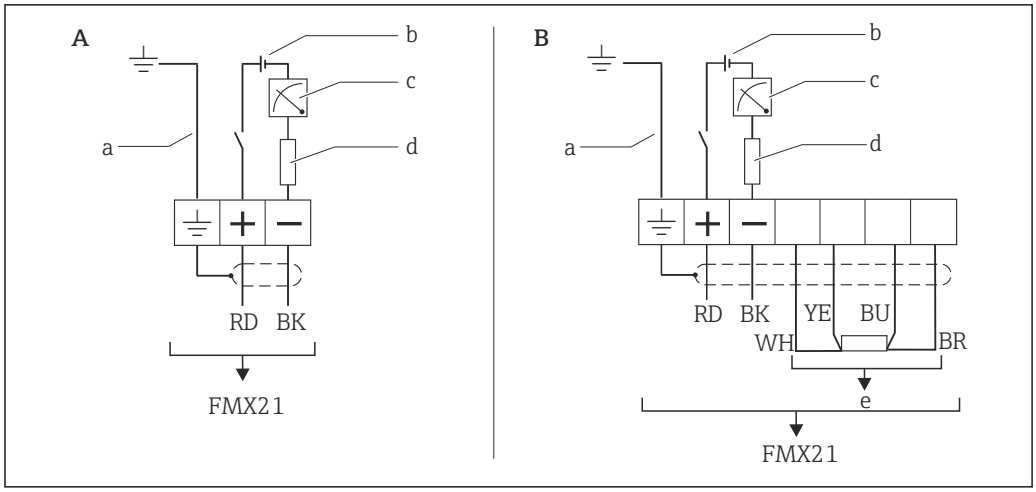


*A Waterpilot FMX21*
*B Waterpilot FMX21 with Pt100 (not for use in hazardous areas); option "NB", Product Configurator order code for "Accessories"*
*a Not for the FMX21 with external diameter of 29 mm (1.14 in)*
*b 10.5 to 30 V DC (hazardous area), 10.5 to 35 V DC*
*c 4...20 mA*
*d Resistance ($R_L$)*
*e Pt100*

**Waterpilot with Pt100 and TMT181 temperature head transmitter for FMX21 4 to 20 mA Analog**

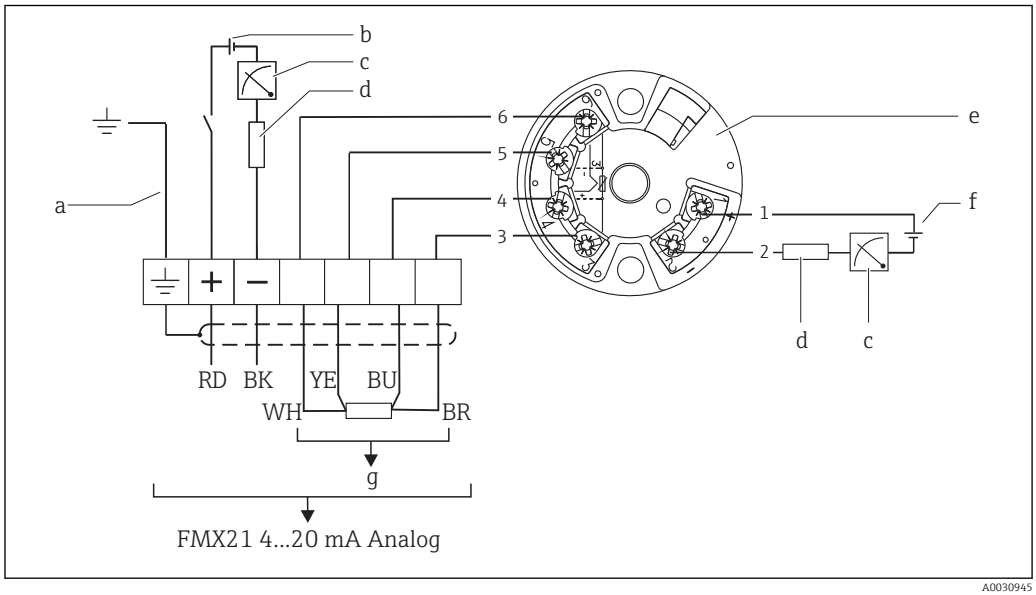


*a Not for the FMX21 with external diameter of 29 mm (1.14 in)*
*b 10.5 to 35 V DC*
*c 4...20 mA*
*d Resistance ($R_L$)*
*e TMT181 temperature head transmitter (4 to 20 mA) (not for use in hazardous areas)*
*f 8 to 35 V DC*
*g Pt100*
*1...6 Pin assignment*

Ordering information:

Pt100: Product Configurator order code for "Accessories mounted", option "NB"

TMT181: Product Configurator order code for "Accessories enclosed", option "PX"

**Waterpilot with Pt100 and TMT182 temperature head transmitter for FMX21 4 to 20 mA HART**

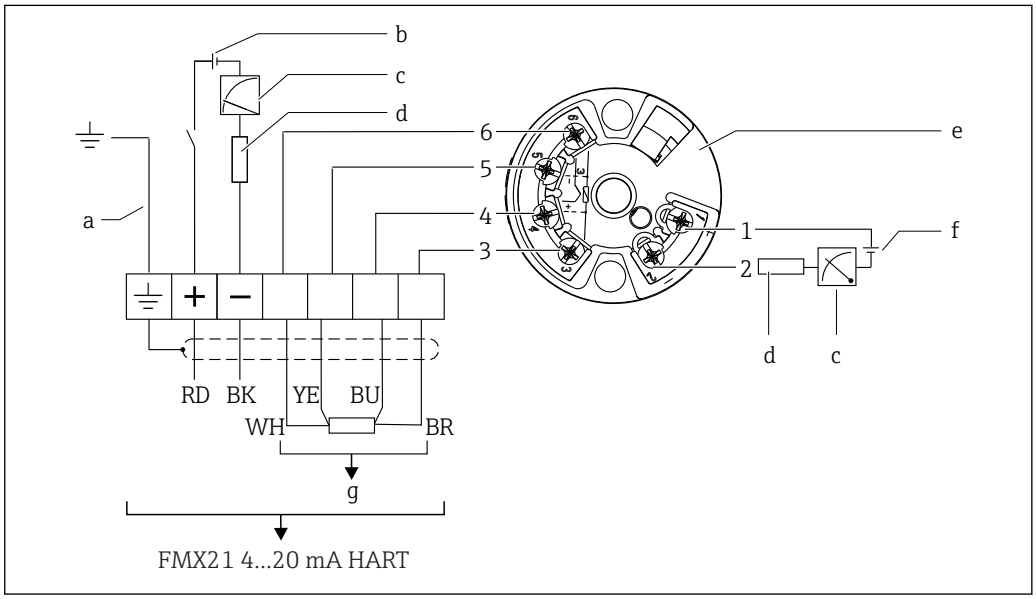


*a Not for the FMX21 with external diameter of 29 mm (1.14 in)*
*b 10.5 to 35 V DC*
*c 4...20 mA*
*d Resistance ($R_L$)*
*e TMT182 temperature head transmitter (4 to 20 mA) (not for use in hazardous areas)*
*f 11.5 to 35 V DC*
*g Pt100*
*1...6 Pin assignment*

Ordering information:

Pt100: Product Configurator order code for "Accessories mounted", option "NB"

TMT182: Product Configurator order code for "Accessories enclosed", option "PT"

### Waterpilot FMX21 with RIA15

The RIA15 remote display can be ordered together with the device.

**Product structure, feature 620 "Accessory enclosed":**
- Option R4 "Remote display RIA15 non-hazardous area, field housing"
- Option R5 "Remote display RIA15 Ex= explosion protection approval, field housing"

Compensation of the atmospheric pressure must be ensured for the installation. A black, vented cable gland is supplied for this purpose.

The RIA15 process display unit is loop-powered and does not require any external power supply.

**The voltage drop to be taken into account is:**
- ≤1 V in the standard version with 4 to 20 mA communication
- ≤1.9 V with HART communication
- and an additional 2.9 V if display light is used

| | Circuit diagram / Description |
|---|---|
| Waterpilot FMX21 connection, HART communication and RIA15 **without** backlight | 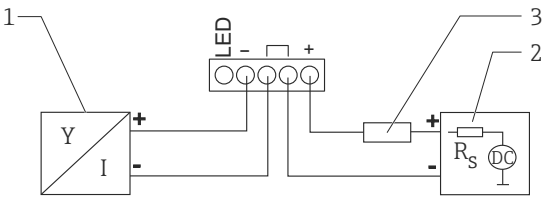 <br>A0019567<br>*1 Waterpilot FMX21 block diagram, HART with RIA15 process display unit without light*<br>*1 Waterpilot FMX21*<br>*2 Power supply*<br>*3 HART resistance* |
| Waterpilot FMX21 connection, HART communication and RIA15 **with** backlight | 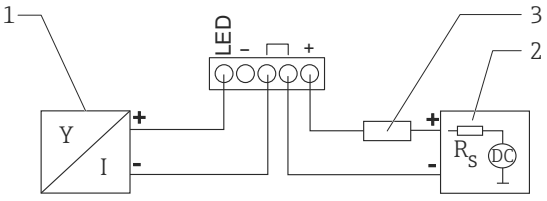 <br>A0019568<br>*2 Waterpilot FMX21 block diagram, HART with RIA15 process display unit with light*<br>*1 Waterpilot FMX21*<br>*2 Power supply*<br>*3 HART resistance* |

**Waterpilot FMX21, RIA15 with installed HART communication resistor module**

The HART communication module for installation in the RIA15 can be ordered together with the device.

**Product structure, feature 620 "Accessory enclosed":**
- Option R6 "HART communication resistor hazardous / non-hazardous area"
- The **voltage drop** to be taken into account is max. **7 V**

Compensation of the atmospheric pressure must be ensured for the installation. A black, vented cable gland is supplied for this purpose.

| | **Circuit diagram / Description** |
|---|---|
| Waterpilot FMX21 connection and RIA15 **without** backlight | 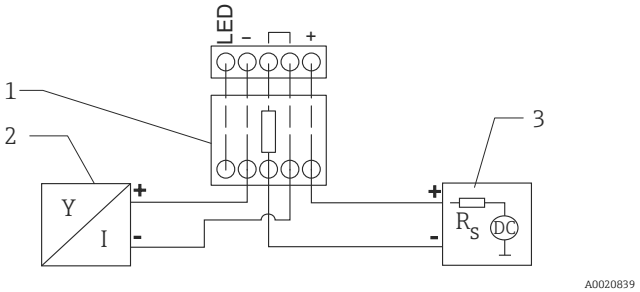 <br>3 *Waterpilot FMX21 block diagram, RIA15 without light, HART communication resistor module*<br>*1 HART communication resistor module*<br>*2 Waterpilot FMX21*<br>*3 Power supply* |
| Waterpilot FMX21 connection and RIA15 **with** backlight | 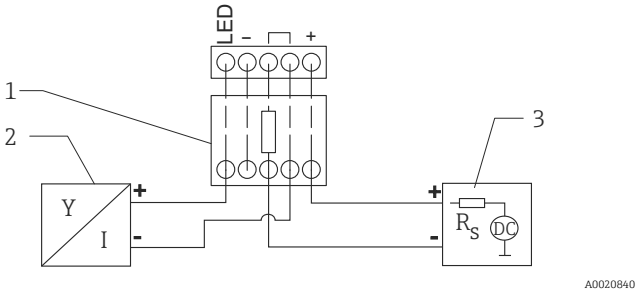 <br>4 *Waterpilot FMX21 block diagram, RIA15 with light, HART communication resistor module*<br>*1 HART communication resistor module*<br>*2 Waterpilot FMX21*<br>*3 Power supply* |

### Wire colors

RD = red, BK = black, WH = white, YE = yellow, BU = blue, BR = brown

### Connection data

Connection classification as per IEC 61010-1:
- Overvoltage category 1
- Pollution level 1

*Connection data in the hazardous area*

See relevant XA.

**Terminals in the terminal box**

- Three terminals as standard in the terminal box (terminal box can optionally be ordered as an enclosed accessory → 52)
- 4-terminal strip can be ordered as an accessory, order number: 52008938 cable cross-section 0.08 to 2.5 mm² (28 to 14 AWG)

The 4-terminal strip is not designed for use in hazardous areas incl. CSA GP.

**Probe cable**

- Overall external diameter: 8 mm (0.31 in) ±0.25 mm (0.01 in)
- Pressure compensation tube with Teflon filter: External diameter of 2.5 mm (0.1 in), internal diameter of 1.5 mm (0.06 in)

**Cross-section**

- FMX21: 3 x 0.2 $mm^2$ (3 x 26 AWG) + pressure compensation tube with Teflon filter
- FMX21 with Pt100 (optional): 7 x 0.2 $mm^2$ (7 x 26 AWG) + pressure compensation tube with Teflon filter

**Cable resistance**

per wire: ≤ 0.09 Ω/m

**Cable specifications**

Endress+Hauser recommends using shielded, twisted-pair two-wire cables.

The probe cables are shielded for device versions with outer diameters of 22 mm (0.87 in) and 42 mm (1.65 in).

**FMX21 + Pt100 (optional)**

- Commercially available instrument cable
- Terminals, terminal box: 0.08 to 2.5 $mm^2$ (28 to 14 AWG)

**TMT181 temperature head transmitter (optional) for FMX21 4 to 20 mA Analog**

- Commercially available instrument cable
- Terminals, terminal box: 0.08 to 2.5 $mm^2$ (28 to 14 AWG)
- Transmitter connection: max. 1.75 $mm^2$ (15 AWG)

**TMT182 temperature head transmitter (optional) for FMX21 4 to 20 mA HART**

- Commercially available instrument cable
- Terminals, terminal box: 0.08 to 2.5 $mm^2$ (28 to 14 AWG)
- Transmitter connection: max. 1.75 $mm^2$ (15 AWG)

**Residual ripple for FMX21 4 to 20 mA Analog**

**FMX21 + Pt100 (optional)**

No impact on the 4 to 20 mA signal up to ±5 % residual ripple within the permitted voltage range.

**TMT181 temperature head transmitter (optional)**

$U_{ss}$ ≥ 5 V at U ≥ 13 V, $f_{max.}$ = 1 kHz

**Residual ripple for FMX21 4 to 20 mA HART**

**FMX21 + Pt100 (optional)**

No impact on the 4 to 20 mA signal up to ±5 % residual ripple within the permitted voltage range (according to HART Hardware Specification HCF_SPEC-54 (DIN IEC 60381-1)).

**TMT182 temperature head transmitter (optional)**

$U_{ss}$ ≥ 3 V at U ≥ 13 V, $f_{max.}$ = 1 kHz

# Performance characteristics

**Reference operating conditions**

**FMX21 + Pt100 (optional)**

- As per IEC 60770
- Ambient temperature $T_U$ = constant, in the range of +21 to +33 °C (+70 to +91 °F)
- Humidity φ = constant, in the range of 20 to 80 % rH
- Ambient pressure $p_U$ = constant, in the range of 860 to 1060 mbar (12.47 to 15.37 psi)
- Position of measuring cell constant, vertical in the range of ±1°
- Input of LOW SENSOR TRIM and HIGH SENSOR TRIM for lower range value and upper range value (only for HART)
- Supply voltage constant: 21 V DC to 27 V DC
- Load with HART: 250 Ω
- Pt100: DIN EN 60770, $T_U$ = +25 °C (+77 °F)

**TMT181 temperature head transmitter (optional) for FMX21 4 to 20 mA Analog**

Calibration temperature +23 °C (+73 °F) ±5 K

**TMT182 temperature head transmitter (optional) for FMX21 4 to 20 mA HART**

Calibration temperature +25 °C (+77 °F) ±5 K

**Reference accuracy**

**FMX21 + Pt100 (optional)**

The reference accuracy comprises the non-linearity after limit point configuration, hysteresis and non-reproducibility in accordance IEC 60770.

Standard version [2]:
Setting ±0.2 %
– to TD 5:1: < 0.2 % of set span
– from TD 5:1 to TD 20:1 ±(0.02 x TD+0.1)

Platinum version [3]:
- Setting ±0.1 % (optional)
  – to TD 5:1: < 0.1 % of set span
  – from TD 5:1 to TD 20:1 ±(0.02 x TD)
- Class B as per DIN EN 60751
  Pt100: max. ±1 K

**TMT181 temperature head transmitter (optional) for FMX21 4 to 20 mA Analog**

- ±0.2 K
- With Pt100: max. ±0.9 K

**TMT182 temperature head transmitter (optional) for FMX21 4 to 20 mA HART**

- ±0.2 K
- With Pt100: max. ±0.9 K

**Resolution**

Current output: 1 µA

**Reading cycle**

HART commands: on average 2 to 3 per second

2) Ordering information: Product Configurator order code for "Reference accuracy", option "G"
3) Ordering information: Product Configurator order code for "Reference accuracy", option "D"

**Long-term stability**

**FMX21 + Pt100 (optional)**

- ≤ 0.1 % of URL/year
- ≤ 0.25 % of URL/5 years

**TMT181 temperature head transmitter (optional) for FMX21 4 to 20 mA Analog**

≤ 0.1 K per year

**TMT182 temperature head transmitter (optional) for FMX21 4 to 20 mA HART**

≤ 0.1 K per year

**Influence of medium temperature**

- Thermal change in the zero output and the output span:
  0 to +30 °C (+32 to +86 °F): < (0.15 + 0.15 x TD)% of set span
  −10 to +70 °C (+14 to +158 °F): < (0.4 + 0.4 x TD)% of set span
- Temperature coefficient ($T_K$) of the zero output and the output span
  −10 to +70 °C (+14 to +158 °F): 0.1 % / 10 K of URL

**Warm-up period**

**FMX21 + Pt100 (optional)**

- FMX21: < 6 s
- Pt100: 300 s

**TMT181 temperature head transmitter (optional) for FMX21 4 to 20 mA Analog**

4 s

**TMT182 temperature head transmitter (optional) for FMX21 4 to 20 mA HART**

4 s

**Response time**

**FMX21 + Pt100 (optional)**

- FMX21: 400 ms (T90 time), 500 ms (T99 time)
- Pt100: 160 s (T90 time), 300 s (T99 time)

# Installation

## Installation instructions

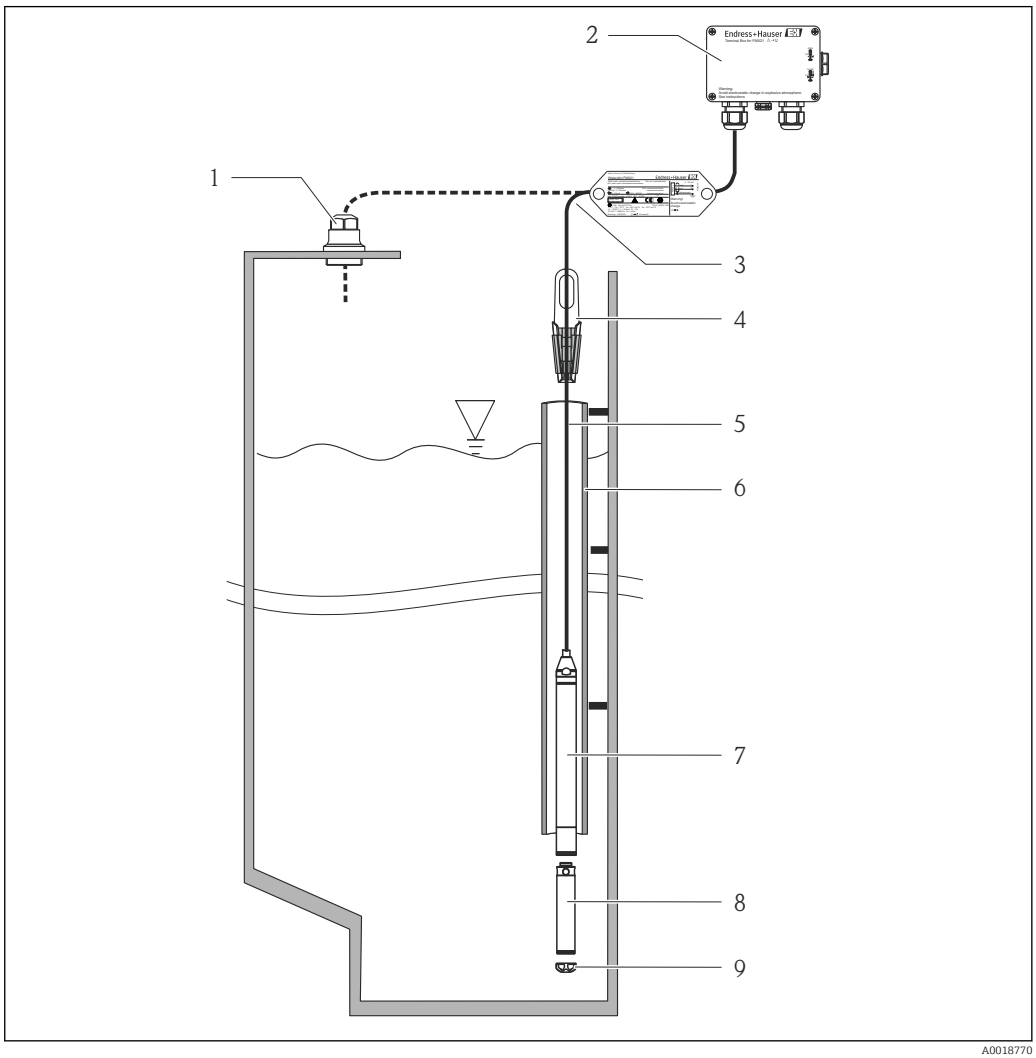


1 *Cable mounting screw can be ordered via the order code or as an accessory → 52*
2 *Terminal box can be ordered via the order code or as an accessory → 52*
3 *Bending radius of extension cable > 120 mm (4.72 in)*
4 *Mounting clamp can be ordered via the order code or as an accessory → 52*
5 *Extension cable, cable length → 28*
6 *Guide tube*
7 *Waterpilot FMX21*
8 *Additional weight can be ordered as an accessory for the FMX21 with external diameter of 22 mm (0.87 in) and 29 mm (1.14 in)→ 52*
9 *Protection cap*

## Additional installation instructions

- Sideways movement of the level probe can result in measuring errors. For this reason, install the probe at a point free from flow and turbulence, or use a guide tube. The internal diameter of the guide tube should be at least 1 mm (0.04 in) greater than the external diameter of the selected FMX21.
- To avoid mechanical damage to the measuring cell, the device is equipped with a protection cap.
- The cable must end in a dry room or a suitable terminal box. The terminal box from Endress +Hauser provides humidity and climatic protection and is suitable for installation outdoors → 52.
- Cable length tolerance: < 5 m (16 ft): ±17.5 mm (0.69 in); > 5 m (16 ft): ±0.2 %
- If the cable is shortened, the filter at the pressure compensation tube must be reattached. Endress +Hauser offers a cable shortening kit for this purpose → 52 (documentation SD00552P/00/A6).

- Endress+Hauser recommends using twisted, shielded cable.
- In shipbuilding applications, measures are required to restrict the spread of fire along cable looms.
- The length of the extension cable depends on the intended level zero point. The height of the protection cap must be taken into consideration when designing the layout of the measuring point. The level zero point (E) corresponds to the position of the process isolating diaphragm. Level zero point = E; tip of probe = L (see the following diagram).
  For dimensions, see "Mechanical construction" section.

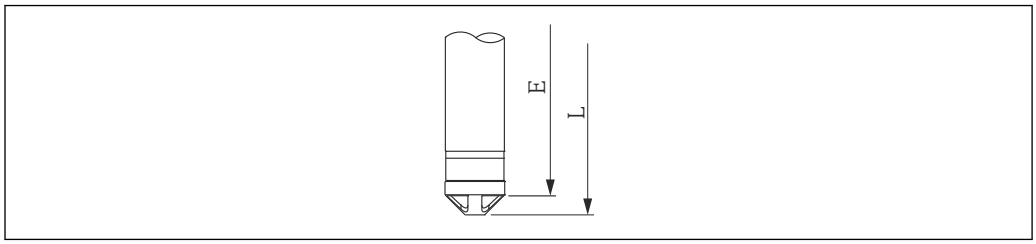


A0026013

**Cable length**

- Pay attention to the "Load"
- Cable lengths available for order
  - Customer-specific in meters or feet
  - Limited cable length when performing installation with freely suspended device with cable mounting screw or mounting clamp, as well as for Ex approval: max. 300 m (984 ft).

When using the measuring device in hazardous areas, installation must comply with the corresponding national standards and regulations and the Safety Instructions or Installation or Control Drawings.

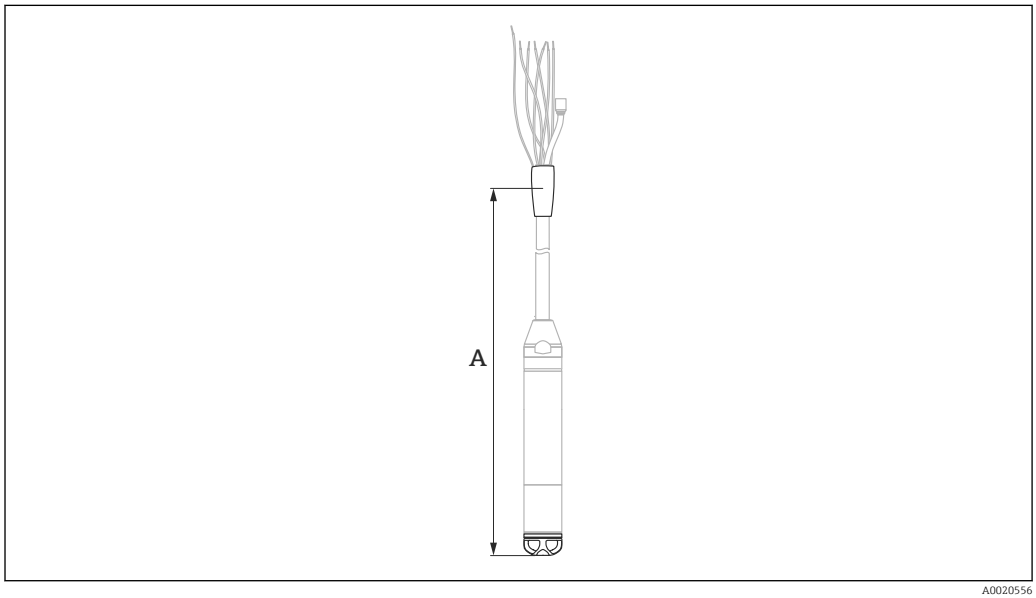


A0020556

*A Length of extension cable*

| Cable | Option [1] |
|---|---|
| 10 m cable, can be shortened, PE | 10 |
| 20 m cable, can be shortened, PE | 11 |
| ..... m cable, can be shortened, PE | 15 |
| 30 ft cable, can be shortened, PE | 20 |
| 60 ft cable, can be shortened, PE | 21 |
| ..... ft cable, can be shortened, PE | 25 |
| 10 m cable, can be shortened, FEP | 30 |
| 20 m cable, can be shortened, FEP | 31 |

| Cable | Option [1] |
|---|---|
| ..... m cable, can be shortened, FEP | 35 |
| 30 ft cable, can be shortened, FEP | 40 |
| 60 ft cable, can be shortened, FEP | 41 |
| ..... ft cable, can be shortened, FEP | 45 |
| 10 m cable, can be shortened, PUR | 50 |
| 20 m cable, can be shortened, PUR | 51 |
| ..... m cable, can be shortened, PUR | 55 |
| 30 ft cable, can be shortened, PUR | 60 |
| 60 ft cable, can be shortened, PUR | 61 |
| ..... ft cable, can be shortened, PUR | 65 |

1) Ordering information: Product Configurator order code for "Probe connection"

**Technical data for cable**

- Minimum bending radius: 120 mm (4.72 in)
- Tensile strength: max. 950 N (213.56 lbf)
- Cable extraction force (= tensile force required to extract the cable from the probe):
  - PE, FEP: typically ≥ 400 N (89.92 lbf), PUR: typically ≥ 150 N (33.72 lbf)
  - when used in hazardous area: ≥ 100 N (73.75 lbf)
- UV-resistant (UV = ultraviolet)
- PE: For use in drinking water

**Cable marking**

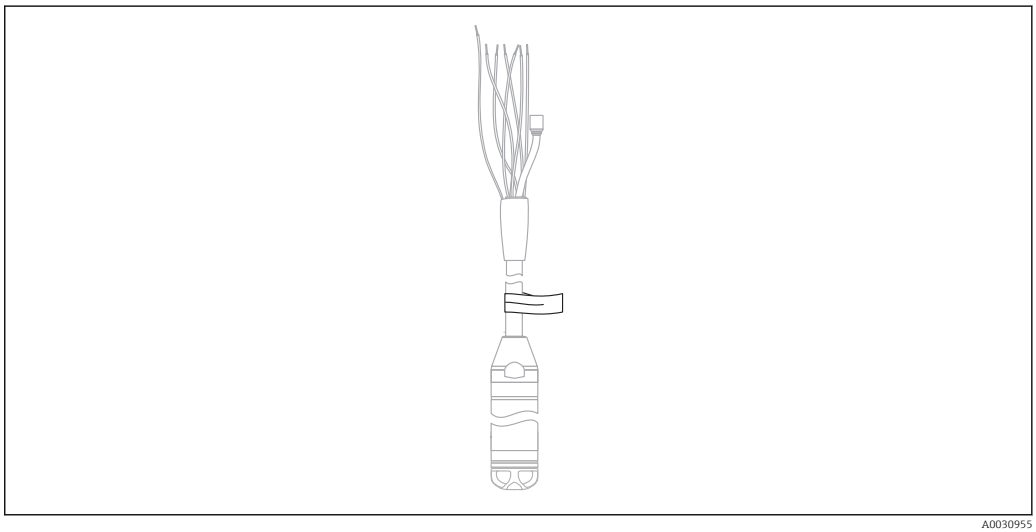

A0030955

- To make installation easier, Endress+Hauser marks the extension cable if a customer-specific length has been ordered.
  Ordering information: Product Configurator order code for "Service", option "IR" or "IS".
- Cable marking tolerance (distance to lower end of level probe):
  Cable length < 5 m (16 ft): ±17.5 mm (0.69 in)
  Cable length > 5 m (16 ft): ±0.2 %
- Material: PET, stick-on label: acrylic
- Immunity to temperature change: −30 to +100 °C (−22 to +212 °F)

NOTICE

**The marking is used exclusively for installation purposes.**

- ▶ The mark must be thoroughly removed without trace in the case of devices with drinking water approval. The extension cable must not be damaged in the process.

Not for use of the FMX21 in hazardous areas.

## Cable shortening kit

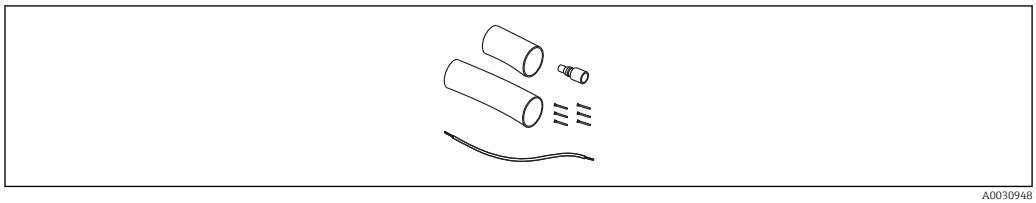

A0030948

The cable shortening kit is used to shorten a cable easily and professionally.

The cable shortening kit is not designed for the FMX21 with FM/CSA approval.

- Ordering information: Product Configurator order code for "Accessories enclosed", option "PW"
- Associated documentation SD00552P/00/A6.

# Environment

**Ambient temperature range**

**FMX21 + Pt100 (optional)**

- With external diameter of 22 mm (0.87 in) and 42 mm (1.65 in):
  −10 to +70 °C (+14 to +158 °F) (= medium temperature)
- With external diameter of29 mm (1.14 in):
  0 to +50 °C (+32 to +122 °F) (= medium temperature)

**Cable**

(when mounted in a fixed position)
- With PE: −30 to +70 °C (−22 to +158 °F)
- With FEP: −40 to +70 °C (−40 to +158 °F)
- With PUR: −40 to +70 °C (−40 to +158 °F)

**Terminal box**

−40 to +80 °C (−40 to +176 °F)

**TMT181 temperature head transmitter (optional) for FMX21 4 to 20 mA Analog**

−40 to +85 °C (−40 to +185 °F)

Temperature head transmitter 2-wire, configured for a measuring range of
−20 to +80 °C (−4 to +176 °F). This configuration offers a temperature range of 100 K which can be easily mapped. Please note that the Pt100 resistance temperature detector is suitable for a temperature range of −10 to +70 °C (14 to +158 °F)

The TMT181 temperature head transmitter is not designed for use in hazardous areas incl. CSA GP.

**TMT182 temperature head transmitter (optional) for FMX21 4 to 20 mA HART**

−40 to +85 °C (−40 to +185 °F)

Temperature head transmitter 2-wire, configured for a measuring range of
−20 to +80 °C (−4 to +176 °F). This configuration offers a temperature range of 100 K which can be easily mapped. Please note that the Pt100 resistance temperature detector is suitable for a temperature range of −10 to +70 °C (14 to +158 °F)

The TMT182 temperature head transmitter is not designed for use in hazardous areas incl. CSA GP.

**Storage temperature range**

**FMX21 + Pt100 (optional)**

−40 to +80 °C (−40 to +176 °F)

**Cable**

(when mounted in a fixed position)
- With PE: −30 to +70 °C (−22 to +158 °F)
- With FEP: −30 to +80 °C (−22 to +176 °F)
- With PUR: −40 to +80 °C (−40 to +176 °F)

**Terminal box**

−40 to +80 °C (−40 to +176 °F)

**TMT181 temperature head transmitter (optional) for FMX21 4 to 20 mA Analog**

−40 to +100 °C (−40 to +212 °F)

**TMT182 temperature head transmitter (optional) for FMX21 4 to 20 mA HART**

−40 to +100 °C (−40 to +212 °F)

**Degree of protection**

**FMX21 + Pt100 (optional)**

IP68, permanently hermetically sealed at 20 bar (290 psi) (~200 m $H_2O$)

**Terminal box (optional)**

IP66, IP67

**TMT181 temperature head transmitter (optional) for FMX21 4 to 20 mA Analog**

IP00, condensation permitted

When installed in the optional terminal boxes: IP66/IP67

**TMT182 temperature head transmitter (optional) for FMX21 4 to 20 mA HART**

IP00, condensation permitted

**Electromagnetic compatibility (EMC)**

**FMX21 + Pt100 (optional)**

- EMC in accordance with all relevant requirements of EN 61326 series. For details, refer to the Declaration of Conformity.
- Maximum deviation: < 0.5 % of span.

**TMT181 temperature head transmitter (optional) for FMX21 4 to 20 mA Analog**

Interference emission to EN 61326 Class B equipment, interference immunity to EN 61326 Appendix A (Industrial). For details, refer to the Declaration of Conformity.

**TMT182 temperature head transmitter (optional) for FMX21 4 to 20 mA HART**

EMC in accordance with all relevant requirements of EN 61326 series. For details, refer to the Declaration of Conformity.

**Overvoltage protection**

**FMX21 + Pt100 (optional)**

- Integrated overvoltage protection as per EN 61000-4-5 (500 V symmetrical/1000 V asymmetrical)
- Overvoltage protection ≥ 1.0 kV, external if necessary

**TMT181 temperature head transmitter (optional) for FMX21 4 to 20 mA Analog**

Provide overvoltage protection, externally if necessary → 🖹 10.

**TMT182 temperature head transmitter (optional) for FMX21 4 to 20 mA HART**

Provide overvoltage protection, externally if necessary → 🖹 10.

# Process

**Medium temperature range**

**FMX21 + Pt100 (optional)**

- With external diameter of 22 mm (0.87 in) and 42 mm (1.65 in):
  −10 to +70 °C (+14 to +158 °F)
- With external diameter of 29 mm (1.14 in):
  0 to +50 °C (+32 to +122 °F)

**TMT181 temperature head transmitter (optional) for FMX21 4 to 20 mA Analog**

−40 to +85 °C (−40 to +185 °F)

(= ambient temperature), install temperature head transmitter outside the medium.

Temperature head transmitter 2-wire, configured for a measuring range of −20 to +80 °C (−4 to +176 °F). This configuration offers a temperature range of 100 K which can be easily mapped. Please note that the Pt100 resistance temperature detector is suitable for a temperature range of −10 to +70 °C (14 to +158 °F)

The TMT181 temperature head transmitter is not designed for use in hazardous areas incl. CSA GP.

**TMT181 temperature head transmitter (optional) for FMX21 4 to 20 mA HART**

−40 to +85 °C (−40 to +185 °F)

(= ambient temperature), install temperature head transmitter outside the medium.

Temperature head transmitter 2-wire, configured for a measuring range of −20 to +80 °C (−4 to +176 °F). This configuration offers a temperature range of 100 K which can be easily mapped. Please note that the Pt100 resistance temperature detector is suitable for a temperature range of −10 to +70 °C (14 to +158 °F)

The TMT182 temperature head transmitter is not designed for use in hazardous areas incl. CSA GP.

**Medium temperature limit**

**FMX21 + Pt100 (optional)**

With external diameter of 22 mm (0.87 in) and 42 mm (1.65 in):
−20 to +70 °C (−4 to +158 °F)

In hazardous areas incl. CSA GP, the medium temperature limit is −10 to +70 °C (+14 to +158 °F).

With external diameter of29 mm (1.14 in): 0 to +50 °C (+32 to +122 °F)

The FMX21 may be operated in this temperature range. The specification values, such as accuracy, may be exceeded.

**Pressure specifications**

**⚠ WARNING**

**The maximum pressure for the measuring device depends on the lowest-rated element with regard to pressure.**

- For pressure specifications, see the "Measuring range" section and the "Mechanical construction" section.
- The measuring device must be operated only within the specified limits!
- The Pressure Equipment Directive (2014/68/EU) uses the abbreviation "PS". The abbreviation "PS" corresponds to the MWP (maximum working pressure) of the measuring device.
- MWP (maximum working pressure): The MWP (maximum working pressure) is specified on the nameplate. This value refers to a reference temperature of +20 °C (+68 °F) and may be applied to the device for an unlimited time. Observe temperature dependency of the MWP.
- OPL (Over Pressure Limit = sensor overload limit): The test pressure corresponds to the over pressure limit of the sensor and may only be applied for a limited time period to ensure measurement within specification and in order to avoid permanent damage. In the case of sensor range and process connections where the over pressure limit (OPL) of the process connection is smaller than the nominal value of the sensor, the device is set at the factory, at the very maximum, to the OPL value of the process connection. If you want to use the entire sensor range, select a process connection with a higher OPL value.
- avoid steam hammering! Steam hammering can cause zero point drifts. Recommendation: Residue (such as condensation or drops of water) can remain on the process isolating diaphragm after CIP cleaning and lead to local steam hammering if steam cleaning is performed again. In practice, drying the process isolating diaphragm (e.g. by blowing) has proved to prevent steam hammering.

# Mechanical construction

**Dimensions of the level probe**

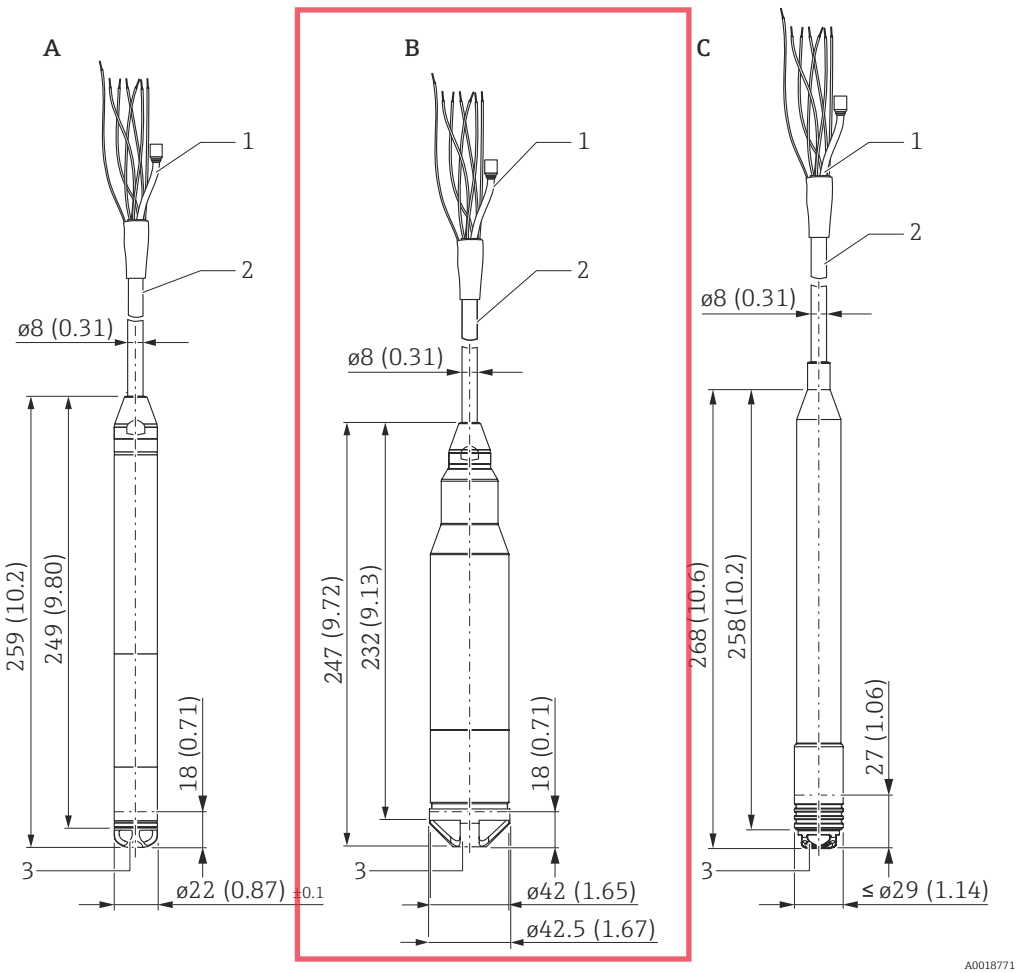


*A Product Configurator order code for "Probe tube", option "1" or "Accessories"*
*B Product Configurator order code for "Probe tube", option "2"*
*C Product Configurator order code for "Probe tube", option "5"*
*1 Pressure compensation tube*
*2 Extension cable (length, see → 28*
*3 Protection cap*

Engineering unit mm (in)

**Dimensions of the mounting clamp**

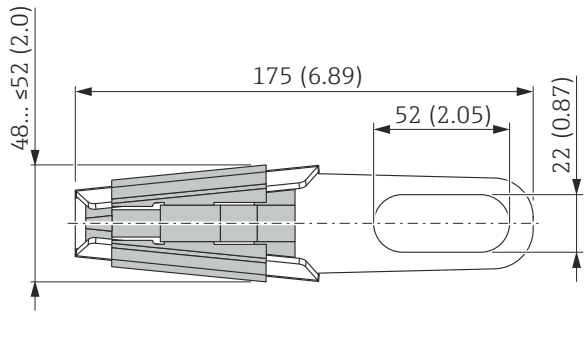


Engineering unit mm (in)

Ordering information: Product Configurator order code for "Accessories", option "PO" → 52

**Dimensions of cable mounting screw**

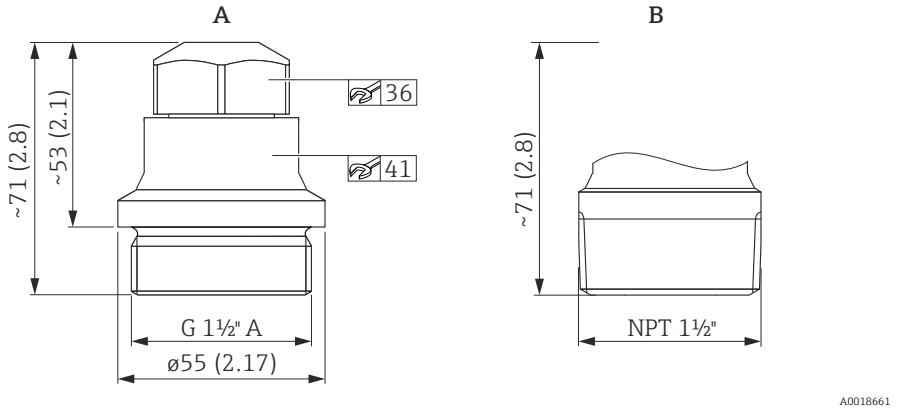


*A G 1½" A: Product Configurator order code for "Accessories", option "PQ" → 52*
*B NPT 1½": Product Configurator order code for "Accessories", option "PR" → 52*

Engineering unit mm (in)

Use only in unpressurized vessels.

**Dimensions of terminal box IP66, IP67 with filter**

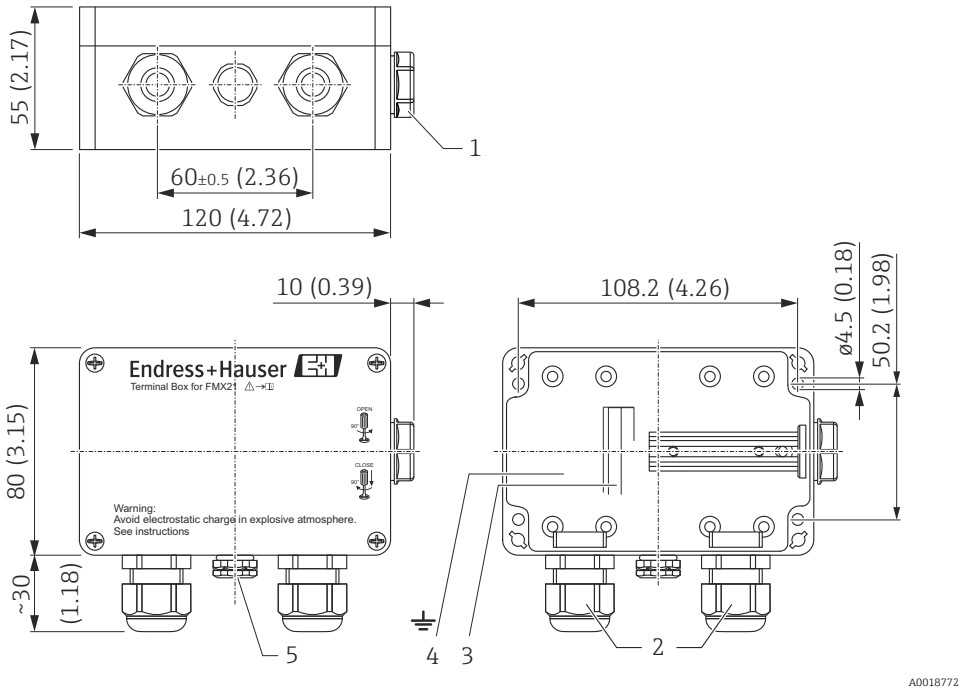


1 *Dummy plug M20x1.5*
2 *Cable gland M20x1.5*
3 *4 to 20 mA; terminals for 0.08 to 2.5 mm (28 to 14 AWG)0.08 to.2.5 mm²*
4 *Ground connection; terminals for 0.08 to 2.5 mm (28 to 14 AWG)0.08 to 2.5 mm²*
5 *GORE-TEX® filter*

Engineering unit mm (in)

Terminal box IP66/IP67 with GORE-TEX® filter incl. 3 integrated terminals. The terminal box is also suitable for the installation of a temperature head transmitter or four other terminals

Ordering information:
- Terminal box: Product Configurator order code for "Accessories enclosed", option "PS" → 52
- TMT181: Product Configurator order code for "Accessories enclosed", option "PX" → 52
- TMT182: Product Configurator order code for "Accessories enclosed", option "PT" → 52

The terminal box is not designed for the FMX21 with type of protection Ex nA in hazardous areas. If the terminal box is used in a hazardous area, the Safety Instructions of the relevant device must be observed, as well as the applicable regulations for explosion protection.

If the FMX21 with optional Pt100 is supplied, a terminal strip is provided with the terminal box for the purpose of wiring the Pt100.

The 4-terminal strip is not designed for use in hazardous areas incl. CSA GP.

**Dimensions of the TMT181 temperature head transmitter for FMX21 4 to 20 mA Analog**

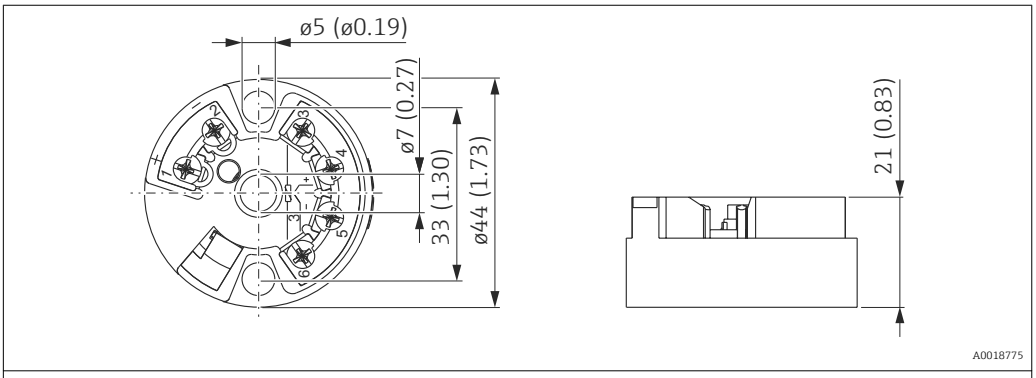


Engineering unit mm (in)

Ordering information:

Product Configurator order code for "Accessories enclosed", option "PX" → 🖹 52

**Dimensions of the TMT182 temperature head transmitter for FMX21 4 to 20 mA HART**

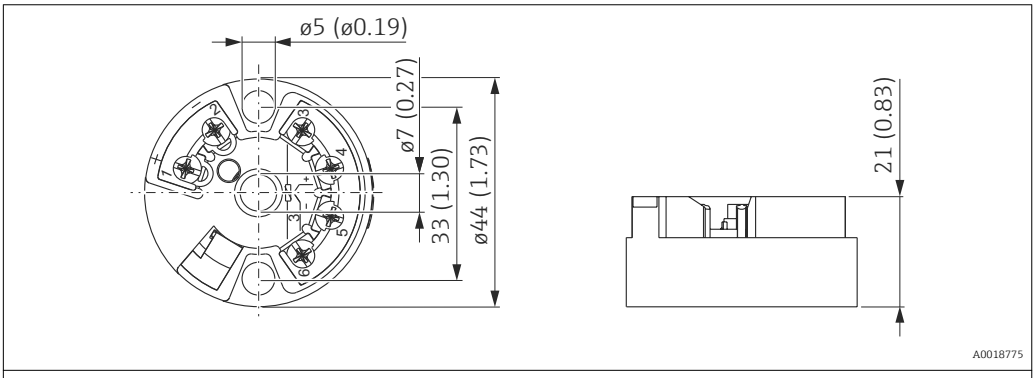


Engineering unit mm (in)

Ordering information:

Product Configurator order code for "Accessories enclosed", option "PT" → 🖹 52

**Terminal box with integrated TMT181 temperature head transmitter for FMX21 4 to 20 mA Analog**

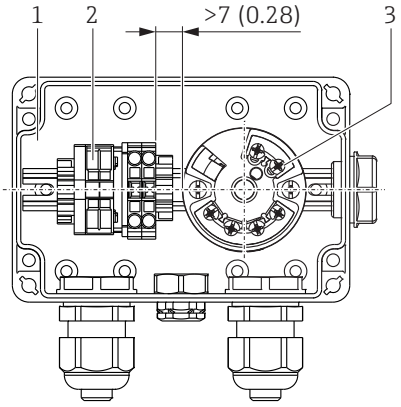


*1 Terminal box*
*2 Terminal strip/terminals*
*3 TMT181 temperature head transmitter*

Engineering unit mm (in)

A distance of > 7 mm (0.28 in) must be maintained between the terminal strip and the TMT181 temperature head transmitter.

**Terminal box with integrated TMT182 temperature head transmitter for FMX21 4 to 20 mA HART**

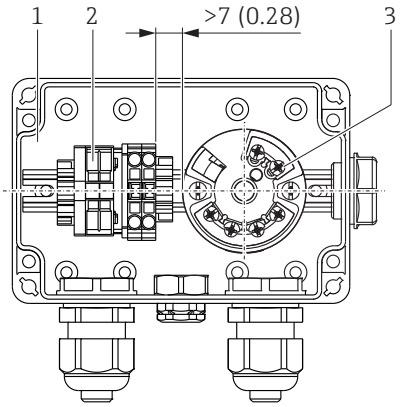


*1 Terminal box*
*2 Terminal strip/terminals*
*3 TMT182 temperature head transmitter*

Engineering unit mm (in)

A distance of > 7 mm (0.28 in) must be maintained between the terminal strip and the TMT182 temperature head transmitter.

## Additional weight

**For FMX21 with external diameter of 22 mm (0.87 in) or 29 mm (1.14 in)**

- Endress+Hauser offers additional weights to prevent sideways movement that results in measuring errors, or to make it easier to lower the device in a guide tube. You can screw several weights together. The weights are screwed directly onto the FMX21. For the FMX21 with external diameter of 29 mm (1.14 in), a maximum of 5 weights may be screwed on. In conjunction with the Ex nA approval, a maximum of one additional weight is permitted for the FMX21 with external diameter of 29 mm (1.14 in).
- Order number: 52006153 Ordering information: Product Configurator order code for "Accessories enclosed", option "PU"

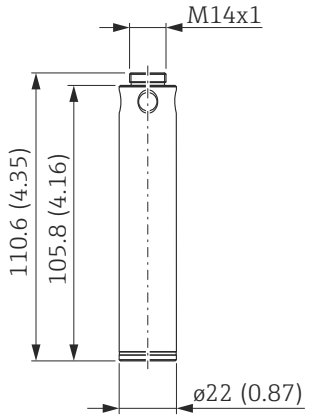


Engineering unit mm (in)

## Testing adapter

**For FMX21 with external diameter of 22 mm (0.87 in) or 29 mm (1.14 in)**

- Endress+Hauser offers a testing adapter to ease function-testing of the level probes.
- Observe the maximum pressure for compressed air hose and maximum overload for level probe → 14
- Maximum pressure for the quick coupling piece provided: 10 bar (145 psi)
- Adapter material: 304 (1.4301)
- Material of quick coupling piece: anodized aluminum
- Order number 52011868
  Ordering information: Product Configurator order code for "Accessories enclosed", option "PV"

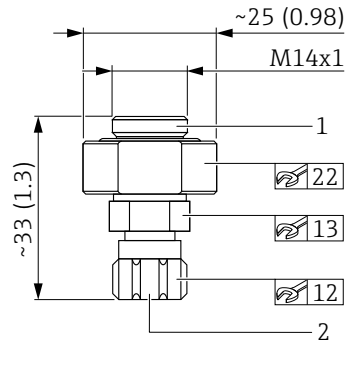


*1 FMX21 level probe connection*
*2 Compressed air hose connection, internal diameter, quick coupling piece 4 mm (0.16 in)*

Engineering unit mm (in)

### RIA15 in the field housing

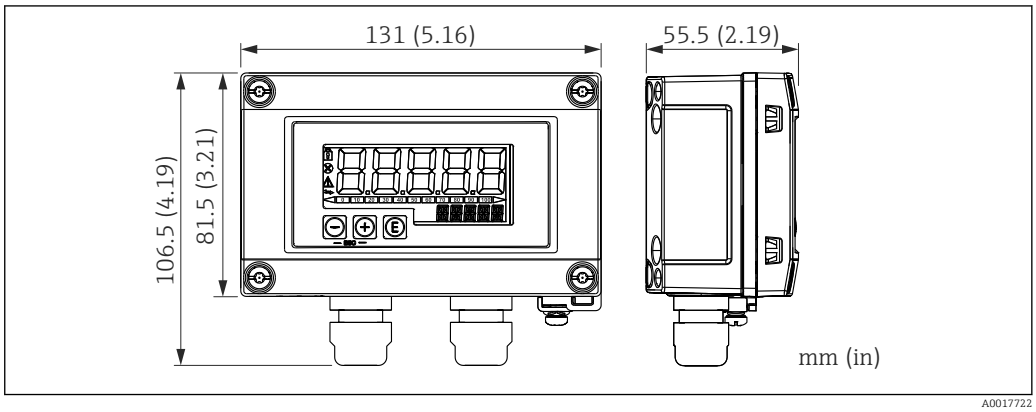


5 *Dimensions of RIA15 in field housing, engineering unit: mm (in)*

The RIA15 remote display can be ordered together with the device. Product structure, feature 620 "Accessories enclosed":

- Option R4 "Remote display RIA15 non-hazardous area, field housing"
- Option R5 "Remote display RIA15 Ex= explosion protection approval, field housing"

Alternatively available as an accessory, for details see Technical Information TI01043K and Operating Instructions BA01170K

### HART communication resistor

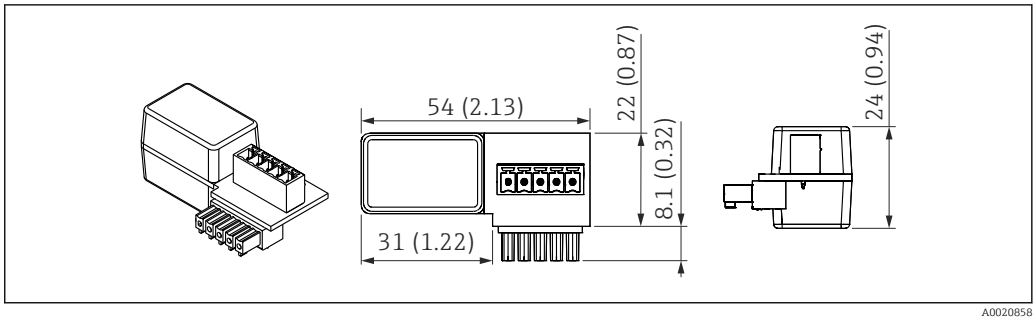


6 *Dimensions of HART communication resistor, engineering unit: mm (in)*

A communication resistor is required for HART communication. If this is not already present (e.g. in the power supply RMA, RN221N, RNS221, ...), it can be ordered with the device via the product structure, feature 620 "Accessories enclosed": option R6 "HART communication resistor hazardous / non-hazardous area".

Alternatively available as an accessory, for details see Technical Information TI01043K and Operating Instructions BA01170K

The HART communication resistor is specially designed for use with the RIA15 and can be attached easily.

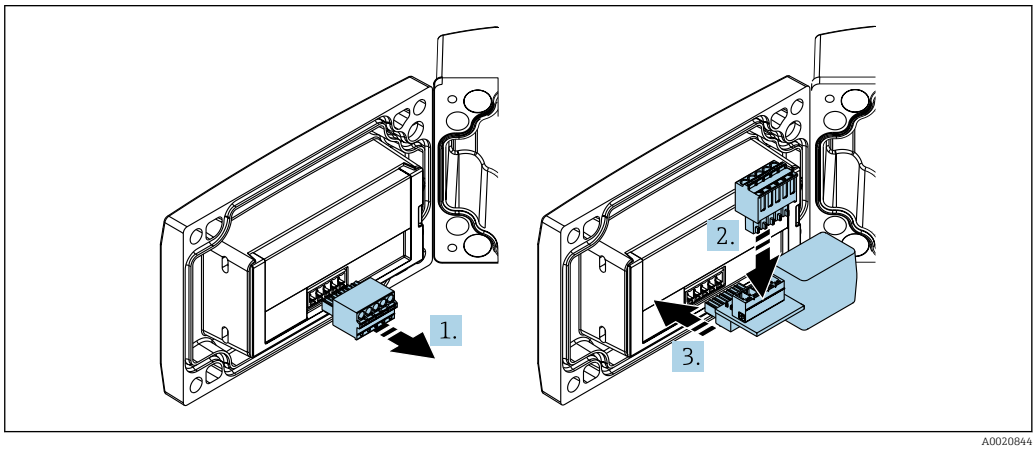

1. Disconnect plug-in terminal block.
2. Insert the terminal block into the slot provided on the HART communication resistor module.
3. Insert the HART communication resistor in the slot in the housing.

## Weight

| Component part | | Weight |
|---|---|---|
| Level probe, external diameter of 22 mm (0.87 in) | | 344 g (12.133 oz) |
| Level probe, external diameter of 42 mm (1.65 in) | | 1376 g (48.532 oz) |
| Level probe, external diameter of 29 mm (1.14 in) | | 394 g (13.896 oz) |
| Extension cable | PE | 52 g/m (0.035 lbs/1 ft) |
| | PUR | 60 g/m (0.040 lbs/1 ft) |
| | FEP | 108 g/m (0.072 lbs/1 ft) |
| Suspension clamp | | 170 g (5.996 oz) |
| Cable mounting screw G 1½" A | | 770 g (27.158 oz) |
| Cable mounting screw NPT 1½" | | 724 g (25.535 oz) |
| Terminal box | | 235 g (8.288 oz) |
| TMT181 temperature head transmitter | | 40 g (1.411 oz) |
| TMT182 temperature head transmitter | | 40 g (1.411 oz) |
| Additional weight | | 300 g (10.581 oz) |
| Testing adapter | | 39 g (1.376 oz) |

## Materials

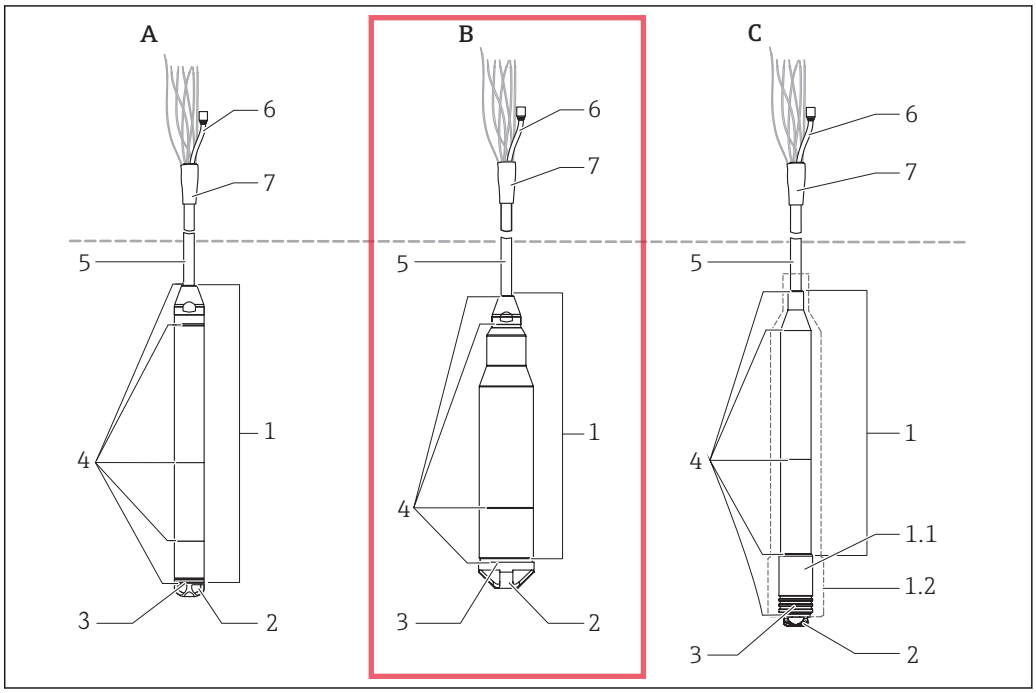


### Materials in contact with process

| Item number | Component part | Material |
|---|---|---|
| 1 | ▪ A: Level probe, external diameter of 22 mm (0.87 in)<br>▪ B: Level probe, external diameter of 42 mm (1.65 in)<br>▪ C: Level probe, max. external diameter of 29 mm (1.14 in) | 316L (1.4404/1.4435) [1] |
| 1.1 | Sensor sleeve | PPS (Polyphenylene sulfide) |
| 1.2 | Heat-shrink tube | Polyolefin and hot melt adhesive |
| | The heat-shrink tube around the level probe acts as insulation. It prevents electrical contact between the level probe and the tank. Electrochemical corrosion is thus avoided. | |
| 2 | Protection cap for A and C: with outer diameter 22 mm (0.87 in) and 29 mm (1.14 in) (order number: 52008999) | POM |
| | Protection cap for B: device with outer diameter 42 mm (1.65 in) (order number: 917755-0000) | PFA |
| 3 | Process ceramic | $Al_2O_3$ (Aluminum oxide ceramic) |
| 4 | Seal | EPDM [2] |
| | | FKM Viton [3] |
| 5 | Extension cable insulation<br>Additional information | Choose from:<br>▪ PE-LD (Low-density polyethylene)<br>▪ FEP (Fluorinated ethylene propylene)<br>▪ PUR (Polyurethane) |

1) Material 316L (1.4404/1.4435) is not in contact with the process in the case of level probe C
2) Product Configurator order code for "Seal", option "H"
3) Product Configurator order code for "Seal", option "A"

### Materials not in contact with process

| Item number | Component part | Material |
|---|---|---|
| 6 | Pressure compensation tube | PA |
| 7 | Heat-shrink tube | Polyolefin |

### Terminal box (not in contact with process)

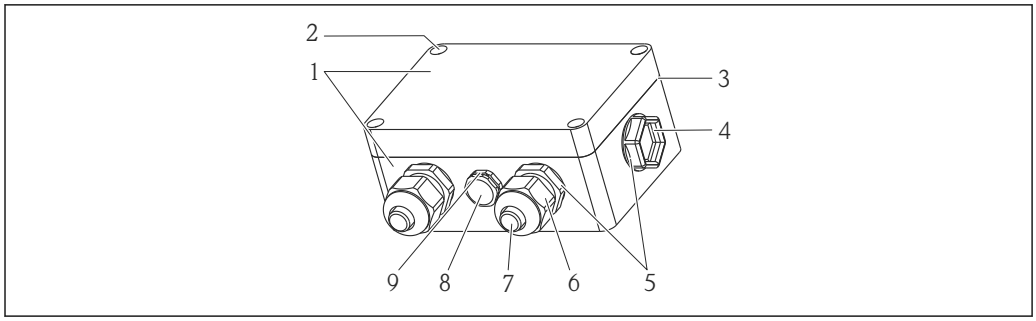


A0018917

| Item number | Component part | Material |
|---|---|---|
| 1 | Housing | PC |
| 2 | Mounting screws (4 x) | A2 |
| 3 | Seal | CR (Chloroprene rubber) |
| 4 | Dummy plug M20x1.5 | PBT-GF30 |
| 5 | Cable gland M20x1.5 | PE-HD |
| 6 | | PA6 |
| 7 | | PA6-GF30 |
| 8 | Pressure compensation filter | PA6-GF10, ePTFE |
| 9 | Pressure compensation filter, O-ring | Silicone (VMQ) |

### Cable mounting screw (not in contact with process)

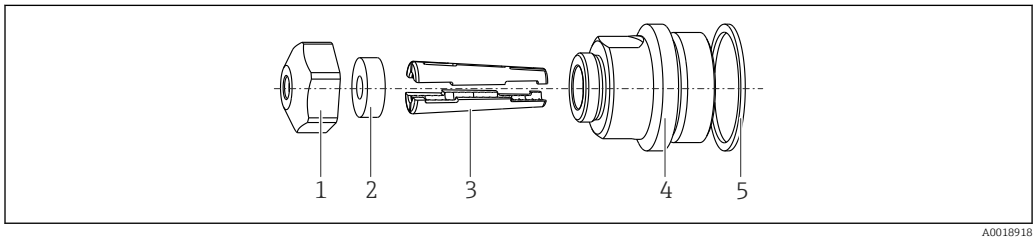


A0018918

| Item number | Component part | Material |
|---|---|---|
| 1 | Cover for cable mounting screw | 304 (1.4301) |
| 2 | Sealing ring | NBR |
| 3 | Clamping sleeves | PA66-GF35 |
| 4 | Adapter for cable mounting screw G 1½" A, NPT 1½" | 304 (1.4301) |
| 5 | Seal ® Only for G 1½" A | EPDM |

### Suspension clamp

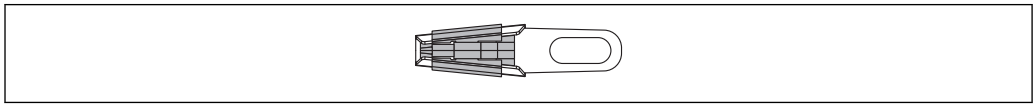

A0030950

Material: 316L (1.4404) and fiber-glass reinforced PA (polyamide)

**Additional weight**

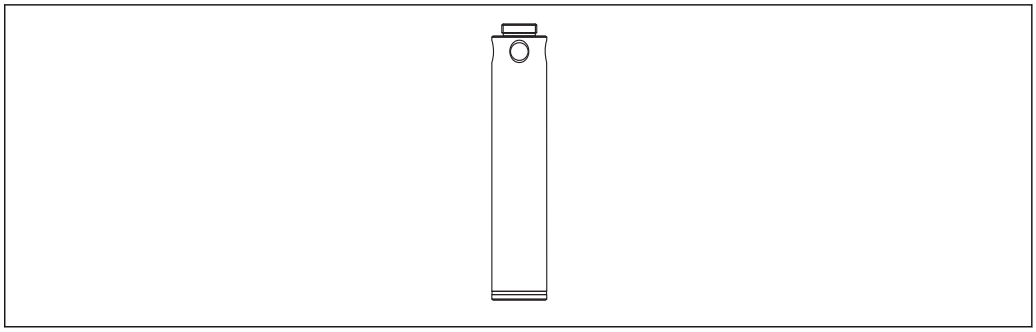

A0030954

Material: 316L (1.4435)

**Testing adapter for FMX21 with outer diameter 22 mm (0.87 in) or 29 mm (1.14 in)**

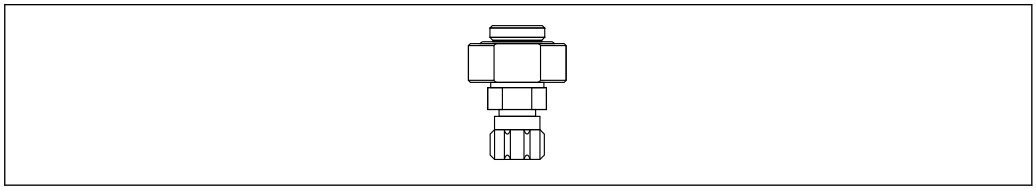

A0030956

Adapter material: 304 (1.4301)

Material of quick coupling piece: anodized aluminum

**Testing adapter for FMX21 with outer diameter 42 mm (1.65 in)**

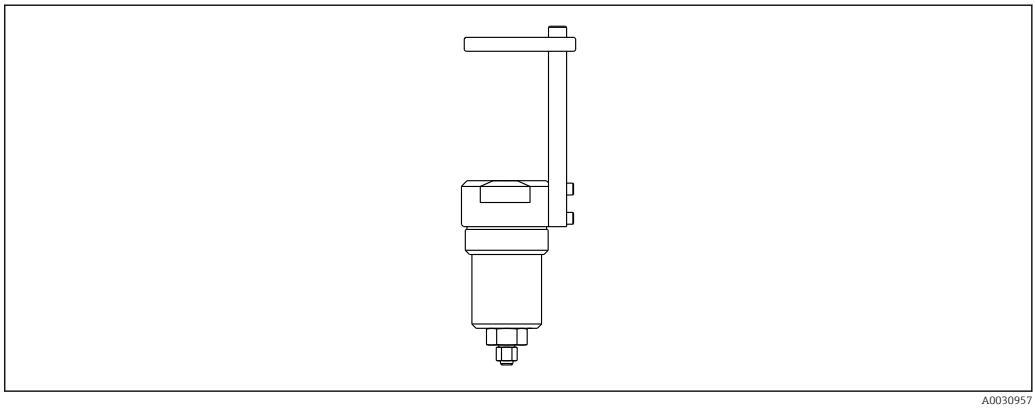

A0030957

Adapter material: 304 (1.4301)

Material of quick coupling piece: anodized aluminum

**Extension cable**

| PE | PUR | FEP |
|---|---|---|
| ▪ Abrasion-resistant extension cable with strain-relief members made of high-strength PE fibers<br>▪ Shielded (aluminum)<br>▪ Insulated with polyethylene (PE), black<br>▪ Copper wires, twisted<br>▪ Pressure compensation tube with Teflon filter | ▪ Abrasion-resistant extension cable with strain-relief members made of high-strength PE fibers<br>▪ Shielded (aluminum)<br>▪ Insulated with polyurethane (PUR), black<br>▪ Copper wires, twisted<br>▪ Pressure compensation tube with Teflon filter | ▪ Abrasion-resistant extension cable<br>▪ Shielded with galvanized steel wire netting<br>▪ Insulated with fluorinated ethylene propylene (FEP), black<br>▪ Copper wires, twisted<br>▪ Pressure compensation tube with Teflon filter |

# Operability

**FMX21 4 to 20 mA Analog**

No display or other operation facility is required to operate the device. However, the measured values can be read out with optional evaluation units.

**FMX21 4 to 20 mA HART**

**FieldCare**

FieldCare is an Endress+Hauser asset management tool based on FDT technology. With FieldCare, you can configure all Endress+Hauser devices as well as devices from other manufacturers that support the FDT standard.

FieldCare supports the following functions:
- Configuration of transmitters in online and offline mode
- Loading and saving device data (upload/download)
- Documentation of the measuring point

Connection options:
- Via Commubox FXA195 and the USB interface of a computer
- Via Fieldgate FXA520

For additional information and free download of FieldCare, see → www.de.endress.com → Download → Text Search: FieldCare

**DeviceCare**

*Function scope*

Tool for connecting and configuring Endress+Hauser field devices.

The fastest way to configure Endress+Hauser field devices is with the dedicated "DeviceCare" tool. Together with the device type managers (DTMs) it presents a convenient, comprehensive solution.

For details, see Innovation brochure IN01047S

**Field Xpert SFX**

Field Xpert SFX is an industrial PDA with integrated 3.5" touchscreen from Endress+Hauser based on Windows Mobile. It offers wireless communication via the optional VIATOR® Bluetooth ® modem as a point-to-point connection to a HART device, or via WiFi and Endress+Hauser's Fieldgate FXA520 to one or more HART devices. Field Xpert also works as a stand-alone device for asset management applications. For details, refer to BA00060S/04/EN.

**RIA15**

The RIA15 can be used as a local display unit and for the basic commissioning of the Waterpilot FMX21 hydrostatic level sensor via HART.

# Certificates and approvals

**CE mark**

The device meets the legal requirements of the relevant EC directives. Endress+Hauser confirms that the device has been successfully tested by applying the CE mark.

**RCM-Tick marking**

The supplied product or measuring system meets the ACMA (Australian Communications and Media Authority) requirements for network integrity, interoperability, performance characteristics as well as health and safety regulations. Here, especially the regulatory arrangements for electromagnetic compatibility are met. The products are labelled with the RCM- Tick marking on the name plate.



A0029561

**Ex approvals**

- ATEX
- CSA C/US
- FM
- IEC
- NEPSI
- INMETRO

- The approvals apply exclusively to the Waterpilot FMX21 without Pt100 and without TMT181/TMT182.
- Waterpilot FMX21 is only available for use in hazardous areas with the FKM Viton seal.
- All explosion protection data are given in separate documentation which is available upon request. The Ex documentation is supplied as standard with all Ex-systems → 📄 5.

**EAC conformity**

The measuring system meets the legal requirements of the applicable EAC guidelines. These are listed in the corresponding EAC Declaration of Conformity together with the standards applied.

Endress+Hauser confirms successful testing of the device by affixing to it the EAC mark.

**Drinking water approval**

For FMX21 with an external diameter of 22 mm (0.87 in) with EPDM seal

| Designation | Option [1] |
|---|---|
| KTW | LQ |
| NSF61 | LR |
| ACS | LS |

1) Product Configurator order code for "Additional ordering information (optional)"

**Marine approval**

For FMX21 with outer diameter 22 mm (0.87 in).

| Designation | Option [1] |
|---|---|
| GL | LE |
| ABS | LF |
| BV | LH |
| DNV | LI |

1) Product Configurator order code for "Additional ordering information (optional)"

**Other standards and guidelines**

The applicable European guidelines and standards can be found in the relevant EU Declarations of Conformity. The following were also applied:

**DIN EN 60770 (IEC 60770):**

Transmitters for use in industrial process control systems Part 1: Methods for performance evaluation

Methods for evaluating the performance of transmitters for control and regulation in industrial process control systems.

**DIN 16086:**

Electrical pressure measuring instruments, pressure sensors, pressure transmitters, pressure measuring instruments, concepts, specifications on data sheets

Procedure for writing specifications in data sheets for electrical pressure measuring instruments, pressure sensors and pressure transmitters.

**EN 61326:**

Electrical equipment for measurement, control and laboratory use – EMC requirements

**EN 61010-1 (IEC 61010-1):**

Protection Measures for Electrical Equipment for Measurement, Control, Regulation and Laboratory Procedures

**EN 60529:**

Degrees of protection provided by enclosures (IP code)

**Calibration**

| Designation | Option [1] |
|---|---|
| Factory calibration certificate, 5-point | F1 |

1) Product Configurator order code for "Calibration"

**Pressure Equipment Directive 2014/68/EU (PED)**

**Pressure equipment with allowable pressure ≤ 200 bar (2 900 psi)**

Pressure equipment (with a maximum allowable pressure PS ≤ 200 bar (2 900 psi)) can be classified as pressure accessories in accordance with Pressure Equipment Directive 2014/68/EU. If the maximum allowable pressure is ≤ 200 bar (2 900 psi) and the pressurized volume of the pressure equipment is ≤ 0.1 l, the pressure equipment is subject to the Pressure Equipment Directive (cf. Pressure Equipment Directive 2014/68/EU, Article 4, point 3). The Pressure Equipment Directive only requires that the pressure equipment shall be designed and manufactured in accordance with the "sound engineering practice of a Member State".

*Reasons:*

- Pressure Equipment Directive (PED) 2014/68/EU Article 4, point 3
- Pressure equipment directive 2014/68/EU, Commission's Working Group "Pressure", Guideline A-05 + A-06

*Note:*

A partial examination shall be performed for pressure instruments that are part of safety equipment for the protection of a pipe or vessel from exceeding allowable limits (safety accessory in accordance with Pressure Equipment Directive 2014/68/EU, Article 2, point 4).

**Calibration unit**

| Designation | Option [1] |
|---|---|
| Sensor range; % | A |
| Sensor range; mbar/bar | B |
| Sensor range; kPa/MPa | C |
| Sensor range; mm/m H2O | D |
| Sensor range; in H2O/ft H2O | E |

| Designation | Option [1] |
|---|---|
| Sensor range; psi | F |
| Customized pressure; see additional specification | J |
| Customized level; see additional specification | K |

1) Product Configurator order code for "Calibration; unit"

**Service**

| Designation | Option [1] |
|---|---|
| Configured min alarm current | IA |
| Adjusted HART Burst Mode PV | IB |
| Adjusted density compensation | IC |
| ... m cable marking>installation | IR |
| ... ft cable marking>installation | IS |
| Special version | I9 |

1) Product Configurator order code for "Service"'

**Downloading the Declaration of Conformity**

http://www.endress.com/en/download




1. Select "Approvals & Certificates"
2. Select "Manufact. Declaration"
3. Enter the required product code
4. Click "Search"

The available downloads are displayed.

# Ordering information

Detailed ordering information is available from the following sources:
- In the Product Configurator on the Endress+Hauser website: www.endress.com -> Click "Corporate" -> Select your country -> Click "Products" -> Select the product using the filters and search field -> Open product page -> The "Configure" button to the right of the product image opens the Product Configurator.
- From your Endress+Hauser Sales Center: www.addresses.endress.com

**Product Configurator - the tool for individual product configuration**
- Up-to-the-minute configuration data
- Depending on the device: Direct input of measuring point-specific information such as measuring range or operating language
- Automatic verification of exclusion criteria
- Automatic creation of the order code and its breakdown in PDF or Excel output format
- Ability to order directly from the Endress+Hauser Online Shop

## Scope of delivery

- Measuring device
- Optional accessories
- Brief Operating Instructions
- Certificates

## Configuration data sheet

**Level**

The following configuration data sheet must be completed and included with the order if option "K: customized level" has been selected for order code "090: Calibration; unit" in the product structure.

**Pressure unit**

❑ mbar ❑ $mmH_2O$ ❑ mmHg ❑ Pa
❑ bar ❑ $mH_2O$ ❑ kPa
❑ $ftH_2O$ ❑ MPa
❑ psi ❑ $inH_2O$ ❑ $kgf/cm^2$

**Output unit (scaled unit)**

| Mass | Lengths | Volume | Volume | Percent |
|---|---|---|---|---|
| ❑ kg | ❑ m | ❑ l | ❑ gal | ❑ % |
| ❑ t | ❑ dm | ❑ hl | ❑ Igal | |
| ❑ lb | ❑ cm | | | |
| | ❑ mm | ❑ $m^3$ | | |
| | | ❑ $ft^3$ | | |
| | ❑ ft | ❑ $in^3$ | | |
| | ❑ inch | | | |

Empty calibration [a]:
Low pressure value (empty) _____ [pressure engineering unit]

Empty calibration [a]:
Low pressure value (empty) _____ [scaled unit]

Full calibration [b]:
High pressure value (full) _____ [pressure engineering unit]

Full calibration [b]:
High measured value (full) _____ [scaled unit]

**Damping**

Damping: _____ sec

### Pressure

The following configuration data sheet must be completed and included with the order if option "J: customized pressure" has been selected for order code "090: Calibration; unit" in the product structure.

| Pressure unit | | | |
|---|---|---|---|
| ❑ mbar | ❑ $mmH_2O$ | ❑ mmHg | ❑ Pa |
| ❑ bar | ❑ $mH_2O$ | | ❑ kPa |
| | ❑ $ftH_2O$ | | ❑ MPa |
| ❑ psi | ❑ $inH_2O$ | ❑ $kgf/cm^2$ | |

| Calibration range / Output | | |
|---|---|---|
| Lower-range value (LRV): | _____ | [pressure engineering unit] |
| Upper-range value (URV): | _____ | [pressure engineering unit] |

| Damping | | |
|---|---|---|
| Damping: | _____ | sec |

# Accessories

**⚠ CAUTION**

**Observe the additional information in the individual sections!**

► For additional information, see the sections "Mechanical construction" → 🖹 35 , "Environment", → 🖹 31, "Process" → 🖹 33 and "Installation" → 🖹 27.

| Designation | Diagram | Description | Order number / ordering information |
|---|---|---|---|
| Suspension clamp | 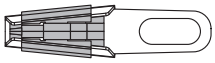 A0030950 | For easy installation of the FMX21, Endress+Hauser offers a mounting clamp . | ▪ 52006151<br>▪ Product Configurator order code for "Accessory enclosed", option "PO" |
| Terminal box | 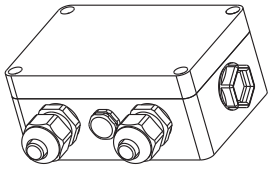 A0030967 | Terminal box for terminal strip, temperature head transmitter and Pt100. | ▪ 52006152<br>▪ Product Configurator order code for "Accessories enclosed", option "PS" |
| 4-terminal strip/terminals | 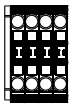 A0030951 | 4-terminal strip for wiring | 52008938 |
| TMT181 temperature head transmitter for FMX21 4 to 20 mA Analog | 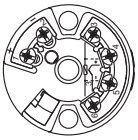 A0030952 | PC-programmable (PCP) temperature head transmitter for the conversion of various input signals | ▪ 52008794<br>▪ Product Configurator order code for "Accessories enclosed", option "PX" |
| TMT182 temperature head transmitter for FMX21 4 to 20 mA HART | 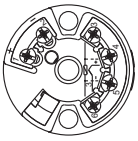 A0030952 | PC-programmable (PCP) temperature head transmitter for the conversion of various input signals | ▪ 51001023<br>▪ Product Configurator order code for "Accessories enclosed", option "PT" |
| Cable mounting screws | A B 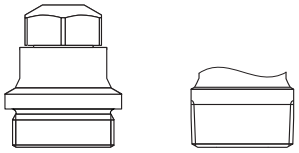 A0030953<br>*A G 1½" A*<br>*B NPT 1½"* | Endress+Hauser offers a cable mounting screw for easy FMX21 mounting and to seal the measuring aperture. | ▪ G 1½" A<br>– 52008264<br>– Product Configurator order code for "Accessories enclosed", option "PQ"<br>▪ NPT 1½"<br>– 52009311<br>– Product Configurator order code for "Accessories enclosed", option "PR" |
| Additional weight for FMX21 with outer diameter 22 mm (0.87 in) or 29 mm (1.14 in) |  A0030954 | Endress+Hauser offers additional weights to prevent sideways movement that results in measuring errors, or to make it easier to lower the device in a guide tube. | ▪ 52006153<br>▪ Product Configurator order code for "Accessories enclosed", option "PU" |

| Designation | Diagram | Description | Order number / ordering information |
|---|---|---|---|
| Cable shortening kit | 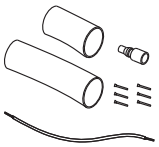 A0030948 | The cable shortening kit is used to shorten a cable easily and professionally. | ▪ 71222671<br>▪ Product Configurator order code for "Accessories enclosed", option "PW" |
| Testing adapter for FMX21 with outer diameter 22 mm (0.87 in) or 29 mm (1.14 in) | 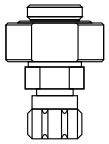 A0030956 | Endress+Hauser offers a testing adapter to ease function-testing of the level probes. | ▪ 52011868<br>▪ Product Configurator order code for "Accessories enclosed", option "PV" |
| Testing adapter for FMX21 with outer diameter 42 mm (1.65 in) | 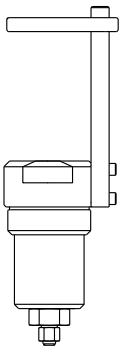 A0030957 | Endress+Hauser offers a testing adapter to ease function-testing of the level probes.<br>▪ Observe the maximum pressure for compressed air hose and maximum overload for level probe<br>▪ Maximum pressure for the quick coupling piece provided: 10 bar (145 psi) | 71110310 |
| RIA15 in the field housing | 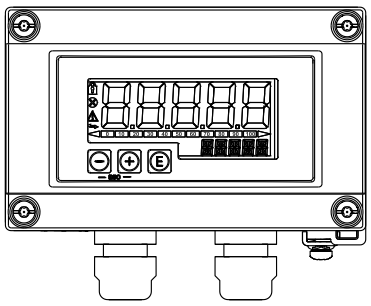 A0036164 | Remote display RIA15 non-hazardous | Product structure, feature 620 "Accessory enclosed", option R4 "Remote display RIA15 non-hazardous area, field housing" |
| | | Remote display RIA15 hazardous | Product structure, feature 620 "Accessory enclosed", option R5 "Remote display RIA15 Ex= explosion protection approval, field housing" |
| HART communication resistor | 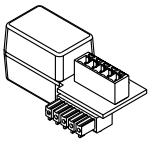 A0036165 | HART communication resistor, hazardous / non-hazardous area, for use with RIA15 | Product structure, feature 620 "Accessory enclosed", option R6 "HART communication resistor hazardous / non-hazardous area" |

## Service-specific accessories

| Accessories | Description |
|---|---|
| DeviceCare SFE100 | Configuration tool for HART, PROFIBUS and FOUNDATION Fieldbus field devices<br>Technical Information TI01134S<br>DeviceCare is available for download at www.software-products.endress.com. You need to register in the Endress+Hauser software portal to download the application. |
| FieldCare SFE500 | FDT-based plant asset management tool<br>FieldCare can configure all smart field units in your plant and helps you manage them. By using the status information, FieldCare is also a simple but effective way of checking the status and condition of the field devices.<br>Technical Information TI00028S |

# Supplementary documentation

The following document types are also available in the Downloads area of the Endress+Hauser website: www.endress.com → Downloads

**Field of Activities**

- Pressure measurement: FA00004P/00/EN
- Recording technology: FA00014R/09/EN
- System components: FA00016K/09/EN

**Technical Information**

- Deltapilot M: TI00437P/00/EN
- Temperature head transmitter iTEMP TMT181: TI00070R/09/EN
- Temperature head transmitter iTEMP HART TMT182: TI00078R/09/EN
- RIA15: TI01043K/09/EN

**Operating Instructions**

- Waterpilot FMX21 4 to 20 mA Analog: BA01605P/00/EN
- Waterpilot FMX21 4 to 20 mA HART: BA00380P/00/EN
- RIA15: BA01170K/09/EN
- Cable shortening kit: SD00552P/00/A6
- Field Xpert: BA01211S/04/EN

**Brief Operating Instructions**

- Waterpilot FMX21 4 to 20 mA Analog: KA01244P/00/EN - Brief Operating Instructions for the device
- Waterpilot FMX21 4 to 20 mA HART: KA01189P/00/EN - Brief Operating Instructions for the device

**Safety Instructions (XA)**

Depending on the approval, the following Safety Instructions (XA) are supplied with the device. They are an integral part of the Operating Instructions.

| Directive | Type of protection | Category | Documentation | Option [1] |
|---|---|---|---|---|
| ATEX | Ex ia IIC | II 2 G | XA00454P | BD |
| ATEX | Ex nA IIC | II 3 G | XA00485P | BE |
| IECEx | Ex ia IIC | n/a | XA00455P | IC |
| CSA C/US | Ex ia IIC | n/a | ZD00232P (960008976) | CE |
| FM | AEx ia IIC | n/a | ZD00231P (960008975) | FE |
| NEPSI | Ex ia IIC | n/a | XA00456P | NA |
| INMETRO | Ex ia IIC | n/a | XA01066P | MA |

1) Product Configurator order code for "Approval"

The nameplate indicates the Safety Instructions (XA) that are relevant to the device.

**Drinking water approval**

- SD00289P/00/A3 (NSF)
- SD00319P/00/A3 (KTW)
- SD00320P/00/A3 (ACS)

# Registered trademarks

**GORE-TEX®** Trademark of W.L. Gore & Associates, Inc., USA.

**TEFLON®** Trademark of E.I. Du Pont de Nemours & Co., Wilmington, USA.

**HART®** Registered trademark of the FieldComm Group, Austin, USA

| | |
|---|---|
| **FieldCare®** | Trademark of Endress+Hauser Process Solutions AG. |
| **DeviceCare®** | Trademark of Endress+Hauser Process Solutions AG. |
| **iTEMP®** | Trademark of Endress+Hauser Wetzer GmbH + Co. KG, Nesselwang, D.. |




www.addresses.endress.com

Endress+Hauser

People for Process Automation

PRODUCT DATA SHEET

# ACTUATOR LA36

**Features:**

- *12, 24 or 36 V DC Permanent magnetic motor (IC only 12/24 V DC, IECEx/ATEX only 24 V DC)*
- *Thrust from 500 N - 10,000 N depending on gear ratio and spindle pitch*
- *Max. speed up to 160 mm/sec. depending on load and spindle pitch*
- *Non rotating piston rod eye*
- *Protection class: IP66 (dynamic) and IP69K (static)*

**Options in general:**

- *Built in endstop switches*
- *Hall effect sensor*
- *iFLEX options including:*
  - *IC - Integrated Controller (H-bridge),*
  - *Integrated Parallel Controller*
  - *Modbus and LINbus communication*
  - *Analogue or digital feedback for precise positioning*
  - *Endstop signals*
  - *PC configuration tool*
- *Mechanical potentiometer (not with IC)*
- *Exchangeable cables in different lengths*
- *IECEx/ATEX certified for Zone 21*

**Usage:**

- *Duty cycle at max. load from 5 -20% depending on load and stroke length. Ambient operating temperature -30°C to +65°C, full performance from +5°C to +40°C*




The actuator LA36 is one of the most solid and powerful LINAK actuators, designed to operate under extreme conditions. The LA36 is a maintenance-free product with a long lifetime and a high IP degree. This high-quality actuator offers a very strong alternative to hydraulic solutions.

iFLEX Integrated Flexibility

iFLEX is a descriptive term under which every **TECHLINE®** actuator with built-in intelligence is unified.

*For more information on iFLEX, please see: www.linak.com/techline*

LINAK®

WE IMPROVE YOUR LIFE

**Contents**


**Chapter 1**

Specifications ..... 3
Technical specifications ..... 4
LA36 Load versus Stroke Length ..... 5
Stroke tolerance ..... 5
LA36 Dimensions ..... 6
Built-in dimensions ..... 7
LA36 Piston Rod Eyes ..... 8-9
LA36 Back fixtures ..... 10-11
LA36 Back fixture orientation ..... 12
Manual hand crank ..... 13
Cable dimensions ..... 13-14
- Y-cable dimensions ..... 13
- Power cable dimensions ..... 14
- Signal cable dimensions ..... 14

Speed and current curves ..... 15-17

**Chapter 2**

I/O specifications:
- Actuator without feedback ..... 18
- Actuator with:
  - Endstop signal output ..... 18
  - Endstop signals and relative positioning - Dual Hall ..... 19
  - Endstop signals and relative positioning -Single Hall ..... 20
  - Endstop signals and absolute positioning - Analogue feedback ..... 21
  - Endstop signals and absolute positioning - Mechanical potentiometer feedback ..... 22
  - Endstop signals and absolute positioning - PWM ..... 23
  - IC Basic ..... 24
  - IC Advanced - with BusLink ..... 25-26
  - Parallel ..... 27

**Chapter 3**

Environmental tests - Climatic ..... 28-29
Environmental tests - Mechanical ..... 30
Environmental tests - Electrical ..... 31

# Chapter 1

**Specifications**

| | |
|---|---|
| Motor: | Permanent magnet motor 12, 24, or 36V * |
| Cable: | Motor: 2 x 14 AWG PVC cable<br>Control: 6 x 20 AWG PVC cable ** |
| Gear ratio: | 6 different gear ratios available in steel<br>(500 N, 1,700/2,600 N, 4,500 N, and 6,800/10,000 N) |
| Slip clutch: | Mechanical overload protection through an integrated slip clutch |
| Brake: | Integrated brake ensures a high self-locking ability.<br>The brake is deactivated when the actuator is powered in order to obtain a high efficiency |
| Hand crank: | As a standard feature the actuator can be operated manually |
| Housing: | The housing is made of casted aluminium, coated for outdoor use and in harsh conditions |
| Spindle part: | Outer tube: Extruded aluminium anodised<br>Inner tube: Stainless steel AISi304/SS2333<br>Acme spindle: Trapezoidal spindle with high efficiency |
| Temperature range: | - 30° C to +65° C<br>- 22° F to +149° F<br>Full performance +5° C to +40° C |
| End play: | 2 mm maximum |
| Weather protection: | Rated IP66 for outdoor use. Furthermore, the actuator can be washed down with a high-pressure cleaner (IP69K). |
| Noise level: | 73dB (A) measuring method DS/EN ISO 8746 actuator not loaded. |

* Modbus actuators only 24V - please see the
**Modbus installation guide http://www.linak.com/techline/?id3=2363**.

** Special control cabels for the Modbus actuator - please see the
**Modbus installation guide http://www.linak.com/techline/?id3=2363**.

Be aware of the following two symbols throughout this product data sheet:



**Recommendations**
Failing to follow these instructions can result in the actuator suffering damage or being ruined.



**Additional information**
Usage tips or additional information that is important in connection with the use of the actuator.

## Technical specifications

### LA36 with 12V motor

| Order number | Push max. (N) | Pull max. (N) | *Self-lock min. (N) Push | *Self-lock min. (N) Pull | Pitch (mm/spindle rev.) | Typical speed (mm/s) Load | | Standard stroke lengths (mm) In steps of 50 mm | Typical amp. (A) 12 V | |
|---|---|---|---|---|---|---|---|---|---|---|
| | | | | | | No | Full | | No load | Full load |
| 36080xxxxxxAxxxxHxxxxxxxxxxx | 10000 | 10000 | 13000 | 13000 | 8 | 11 | 7 | 100 - 999* | 4.5 | 22 |
| 36120xxxxxxAxxxxFxxxxxxxxxxx | 2600 | 2600 | 3400 | 3400 | 12 | 40.7 | 30.6 | 100 - 999 | 4.5 | 21 |
| 36120xxxxxxAxxxxGxxxxxxxxxxx | 4500 | 4500 | 5800 | 5800 | 12 | 23.1 | 17.8 | 100 - 999* | 4.5 | 20.7 |
| 36120xxxxxxAxxxxHxxxxxxxxxxx | 6800 | 6800 | 8800 | 8800 | 12 | 15.5 | 11.9 | 100 - 999* | 4.5 | 21 |
| 36200xxxxxxAxxxxFxxxxxxxxxxx | 1700 | 1700 | 2200 | 2200 | 20 | 68 | 52 | 100 - 999 | 4.5 | 22 |
| 36200xxxxxxAxxxxExxxxxxxxxxx | 500** | 500** | 1000 | 1000 | 20 | 160 | 135 | 100 - 999 | 4.5 | 20 |

### LA36 with 24V motor

| Order number | Push max. (N) | Pull max. (N) | *Self-lock min. (N) Push | *Self-lock min. (N) Pull | Pitch (mm/spindle rev.) | Typical speed (mm/s) Load | | Standard stroke lengths (mm) In steps of 50 mm | Typical amp. (A) 24 V | |
|---|---|---|---|---|---|---|---|---|---|---|
| | | | | | | No | Full | | No load | Full load |
| 36080xxxxxxBxxxxHxxxxxxxxxxx | 10000 | 10000 | 13000 | 13000 | 8 | 11 | 7 | 100 - 999* | 2.4 | 10.4 |
| 36120xxxxxxBxxxxFxxxxxxxxxxx | 2600 | 2600 | 3400 | 3400 | 12 | 41 | 32.3 | 100 - 999 | 2.4 | 10.4 |
| 36120xxxxxxBxxxxGxxxxxxxxxxx | 4500 | 4500 | 5800 | 5800 | 12 | 23.3 | 18.9 | 100 - 999* | 2.4 | 10.2 |
| 36120xxxxxxBxxxxHxxxxxxxxxxx | 6800 | 6800 | 8800 | 8800 | 12 | 15.7 | 12.7 | 100 - 999* | 2.4 | 10.3 |
| 36200xxxxxxBxxxxFxxxxxxxxxxx | 1700 | 1700 | 2200 | 2200 | 20 | 68 | 52 | 100 - 999 | 2.4 | 10.3 |
| 36200xxxxxxBxxxxExxxxxxxxxxx | 500** | 500** | 1000 | 1000 | 20 | 160 | 135 | 100 - 999 | 2.4 | 10.0 |

Spray bar Cover

### LA36 with 36V motor

| Order number | Push max. (N) | Pull max. (N) | *Self-lock min. (N) Push | *Self-lock min. (N) Pull | Pitch (mm/spindle rev.) | Typical speed (mm/s) Load | | Standard stroke lengths (mm) In steps of 50 mm | Typical amp. (A) 36 V | |
|---|---|---|---|---|---|---|---|---|---|---|
| | | | | | | No | Full | | No load | Full load |
| 36080xxxxxxCxxxxHxxxxxxxxxxx | 10000 | 10000 | 13000 | 13000 | 8 | 11 | 7 | 100 - 999* | 2.0 | 8.0 |
| 36120xxxxxxCxxxxFxxxxxxxxxxx | 2600 | 2600 | 3400 | 3400 | 12 | 41 | 33.5 | 100 - 999 | 2.0 | 8.0 |
| 36120xxxxxxCxxxxGxxxxxxxxxxx | 4500 | 4500 | 5800 | 5800 | 12 | 23.3 | 19.1 | 100 - 999* | 2.0 | 8.0 |
| 36120xxxxxxCxxxxHxxxxxxxxxxx | 6800 | 6800 | 8800 | 8800 | 12 | 15.7 | 12.8 | 100 - 999* | 2.0 | 8.0 |
| 36200xxxxxxCxxxxFxxxxxxxxxxx | 1700 | 1700 | 2200 | 2200 | 20 | 68 | 52 | 100 - 999 | 2.0 | 8.0 |
| 36200xxxxxxCxxxxExxxxxxxxxxx | 500** | 500** | 1000 | 1000 | 20 | 160 | 135 | 100 - 999 | 2.0 | 8.0 |

* There are limitations on the stroke length if you need full load, please see " LA36 Load v. Stroke Length"

** Note: Fully loaded actuators need a softstart in order to prevent the clutch from slipping when starting (see curves).

**LA36 Load versus Stroke Length**

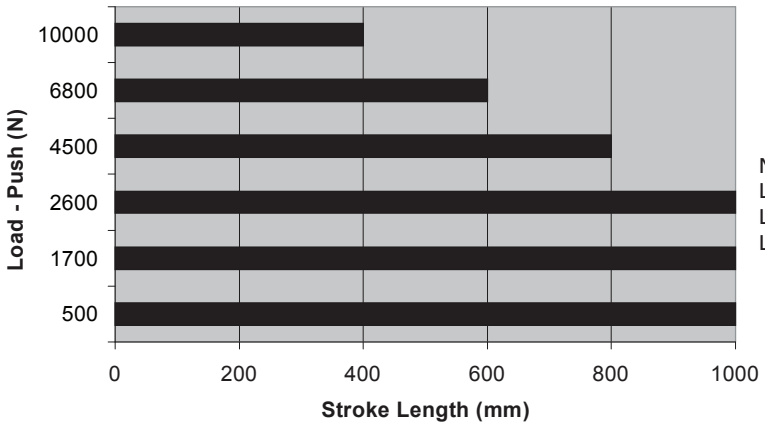


N.B.
LA36 500 - 1.700 N is with 20 mm spindle pitch
LA36 500 - 6.800 N is with 12 mm spindle pitch
LA36 500 - 10.000 N is with 8 mm spindle pitch

- For applications that only operate in pull the limitations are 999 mm stroke and 10,000 N load
- **The Piston Rod Eye is only allowed to turn 0-90 degrees**
- Safety factor 2

**Stroke tolerance:**

| **End stop options**<br>E.g. 36XXXX+**?**XXXXXXX | **Descriptions** | **Typical stroke tolerance** | **Example for 200mm stroke** |
|---|---|---|---|
| ? = 0 | Without endstop switches<br>Mechanical endstop | +/- 2mm | 198 to 202mm |
| ? = 1 to 4 | With built-in limit switches | +0/-4mm | 196mm |
| ? = 7, 8, 9, A, B | Integrated controller<br>Modbus<br>Linbus | +0/-5mm | 195mm |

**LA36 Dimensions:**

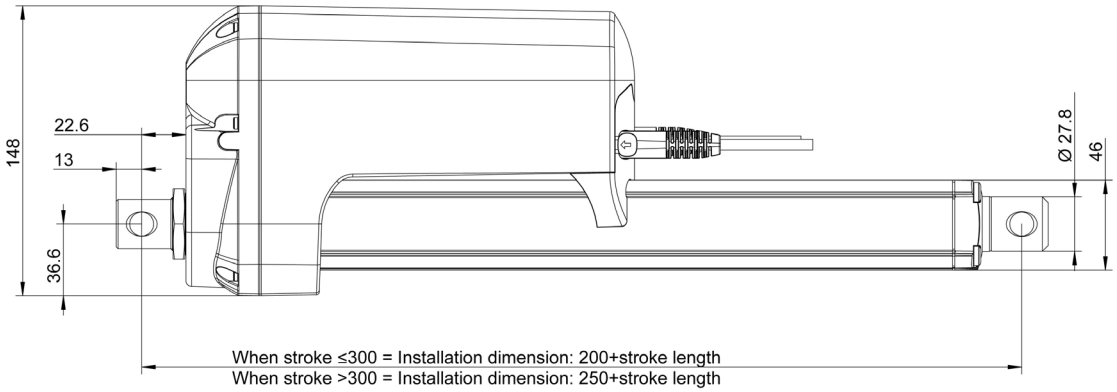


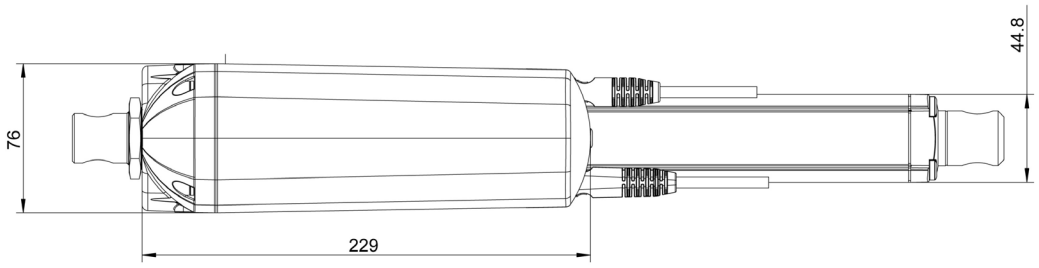

**Built-in dimensions**

| Piston rod | "0" /from the surface | | "1" / to the centre of the hole | | "2" / to the centre of the hole | | "3" / from the surface | |
|---|---|---|---|---|---|---|---|---|
| **Back fixture** | Stroke <=300 | Stroke > 300 | Stroke <=300 | Stroke > 300 | Stroke <=300 | Stroke > 300 | Stroke <=300 | Stroke > 300 |
| "0" / from the surface | 189 | 239 | 194 | 244 | 194 | 244 | 181 | 231 |
| "1" and "2" / to the centre of the hole | 195 | 245 | 200 | 250 | 200 | 250 | 187 | 237 |
| "3" and "4" / to the centre of the hole | 195 | 245 | 200 | 250 | 200 | 250 | 187 | 237 |
| "5" / from the surface | 180 | 230 | 185 | 235 | 185 | 235 | 173 | 223 |
| "6" / from the surface | 180 | 230 | 185 | 235 | 185 | 235 | 173 | 223 |
| "7" and "8" / to the centre of the hole | 195 | 245 | 200 | 250 | 200 | 250 | 187 | 237 |
| "A" and "B" / to the centre of the hole | 195 | 245 | 200 | 250 | 200 | 250 | 187 | 237 |
| "C" and "D" / to the centre of the hole | 195 | 245 | 200 | 250 | 200 | 250 | 187 | 237 |

| Piston rod | "4" /from the surface | | "5" / to the centre of the hole | | "C" / to the centre of the hole | | "D" / from the surface | |
|---|---|---|---|---|---|---|---|---|
| **Back fixture** | Stroke <=300 | Stroke > 300 | Stroke <=300 | Stroke > 300 | Stroke <=300 | Stroke > 300 | Stroke <=300 | Stroke > 300 |
| "0" / from the surface | 181 | 231 | 194 | 244 | 209 | 259 | 209 | 259 |
| "1" and "2" / to the centre of the hole | 187 | 237 | 200 | 250 | 215 | 265 | 215 | 265 |
| "3" and "4" / to the centre of the hole | 187 | 237 | 200 | 250 | 215 | 265 | 215 | 265 |
| "5" / from the surface | 172 | 222 | 185 | 235 | 200 | 250 | 200 | 250 |
| "6" / from the surface | 172* | 222* | 185 | 235 | 200 | 250 | 200 | 250 |
| "7" and "8" / to the centre of the hole | 187 | 237 | 200 | 250 | 215 | 265 | 215 | 265 |
| "A" and "B" / to the centre of the hole | 187 | 237 | 200 | 250 | 215 | 265 | 215 | 265 |
| "C" and "D" / to the centre of the hole | 187 | 237 | 200 | 250 | 215 | 265 | 215 | 265 |

* These built-in dimensions are measured according to the illustration below.

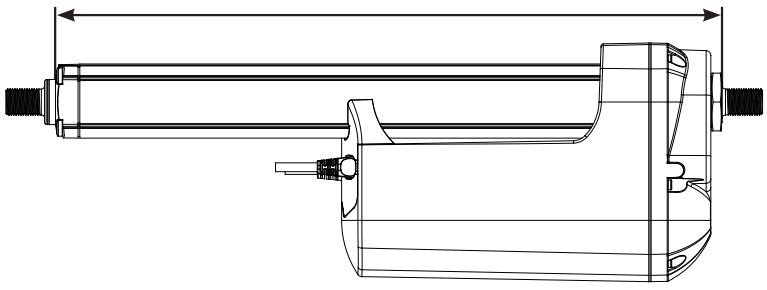

**LA36 Piston Rod Eyes**

When ordering AISI (304 and up) piston rod eye and back fixture, stainless steel screws are automatically included.

Option "0"
AISI 303

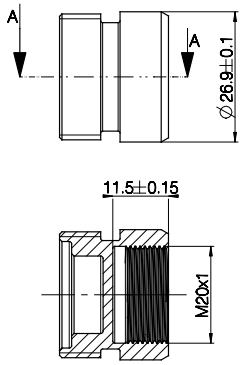


SECTION A-A

Option "1"
Free cutting steel galvanised surface

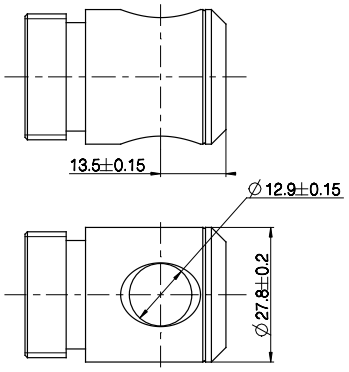


Option "2"
Free cutting steel galvanised surface

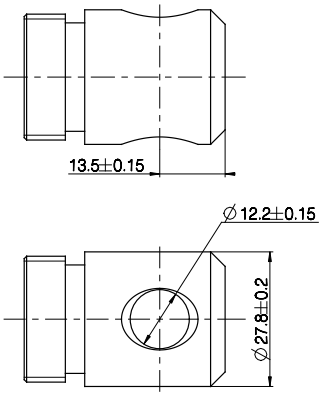


Option "3"
AISI 303

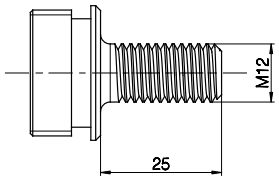


Option "4"
AISI 303

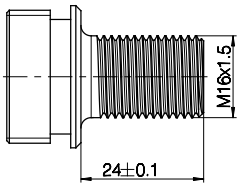


Option "5"
Free cutting steel galvanised surface

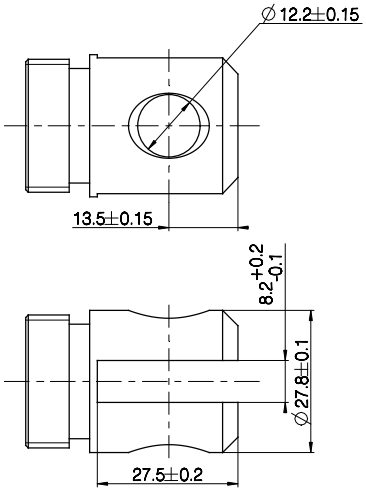

**LA36 Piston Rod Eyes**

Option “A”
AISI 304

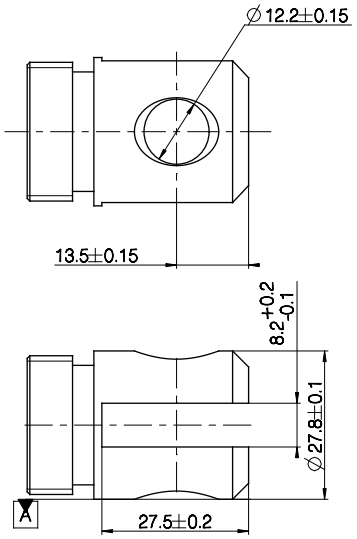


Option “B”
AISI 304

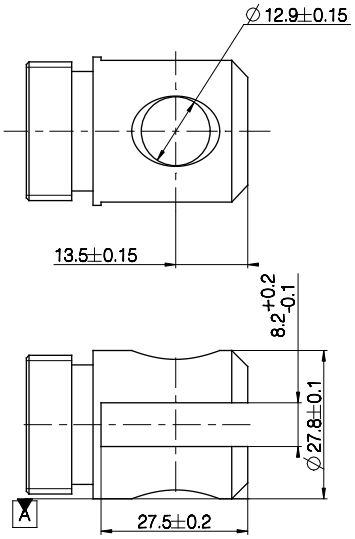


Option “C”
10KN = Max. load 6800 N in pull
AISI 304

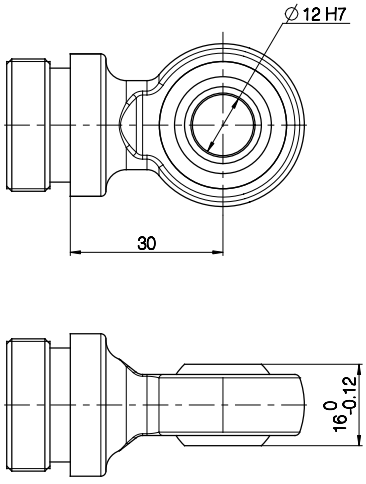


Option “D”
AISI 304

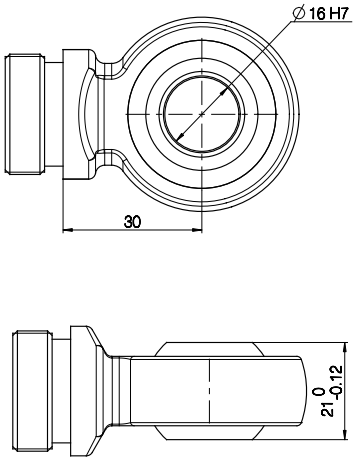

**LA36 Back fixtures**

Option “0”
AISI 303

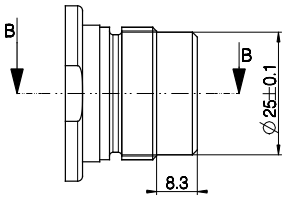


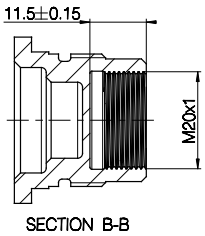


Option “1” and “2”
Free cutting steel galvanised surface

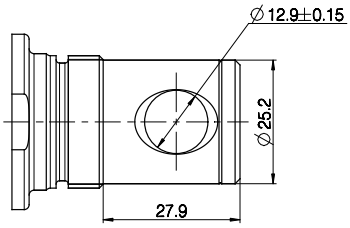


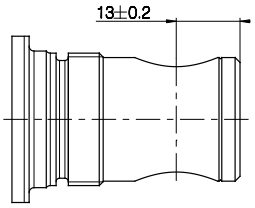


Option “3” and “4”
Free cutting steel galvanised surface

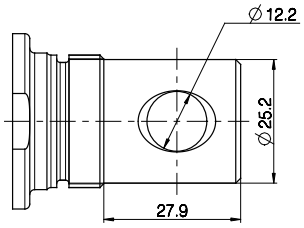


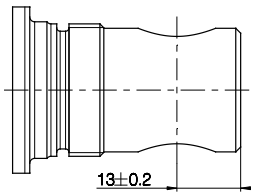


Option “5”
AISI 303

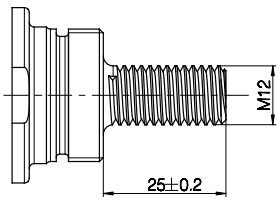

**LA36 Back fixtures**

Option “6”
AISI 303

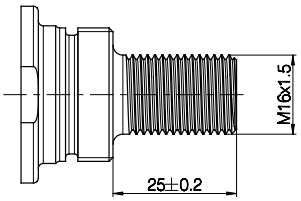


Option “7” and “8”
Free cutting steel galvanised surface

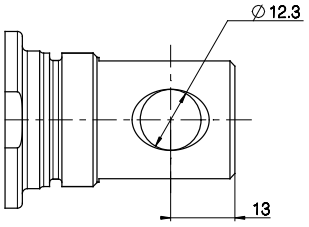


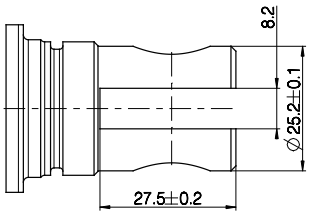


Option “A” and “B”
AISI 304

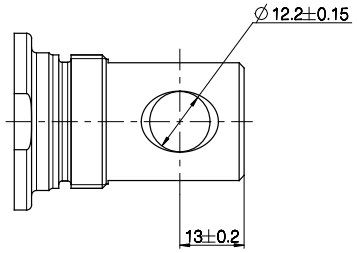


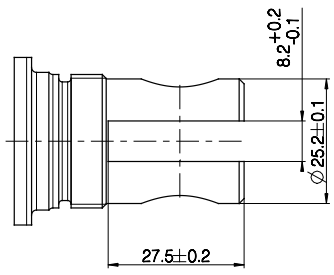


Option “C” and “D”
AISI 304

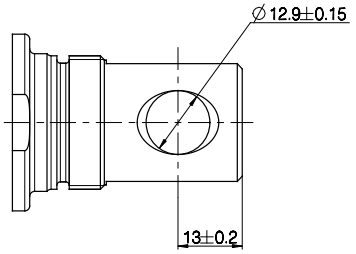


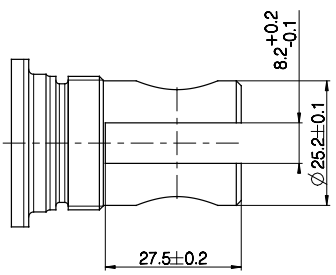

**LA36 Back fixture orientation**

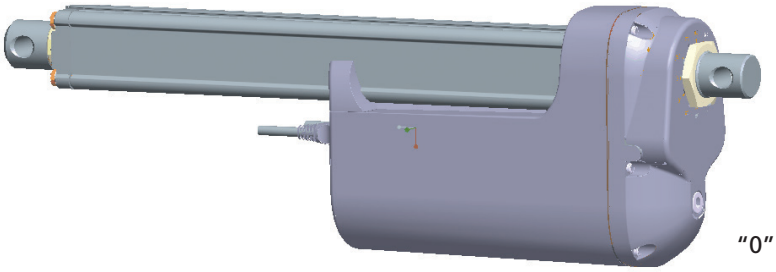

"0" Degrees

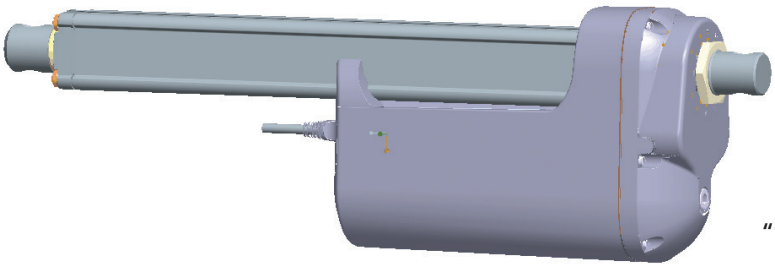

"90" Degrees



"30" Degrees



"60" Degrees



"120" Degrees



"150" Degrees

NB. All with tolerance of ±4°

**Manual hand crank:**

The manual hand crank can be used in the case of power failure.

The cover over the Allen Key socket must be unscrewed before the Allen Key can be inserted and the Hand Crank operated.

Hand Crank Torque: 6-8 Nm

Piston Rod movement per turn

| | 8 mm | 12 mm | 20 mm |
|---|---|---|---|
| Gear A | - | 11 mm | 18 mm |
| Gear B | - | 6 mm | 10 mm |
| Gear C | 3 mm | 4 mm | 7 mm |
| Gear F | - | - | 27 mm |



6 mm Allen key

**Note:**

- The power supply has to be disconnected during manual operation.
- If the actuator is operated as a Hand crank, it must be operated by hand or carefully by machine, otherwise there is a potential risk of overloading and hereby damaging the actuator. LA36 with CS or Modbus options only operate by hand.
- With stainless steel screws: 5 mm Allen Key

**Cable dimensions**

Y-cable dimensions:

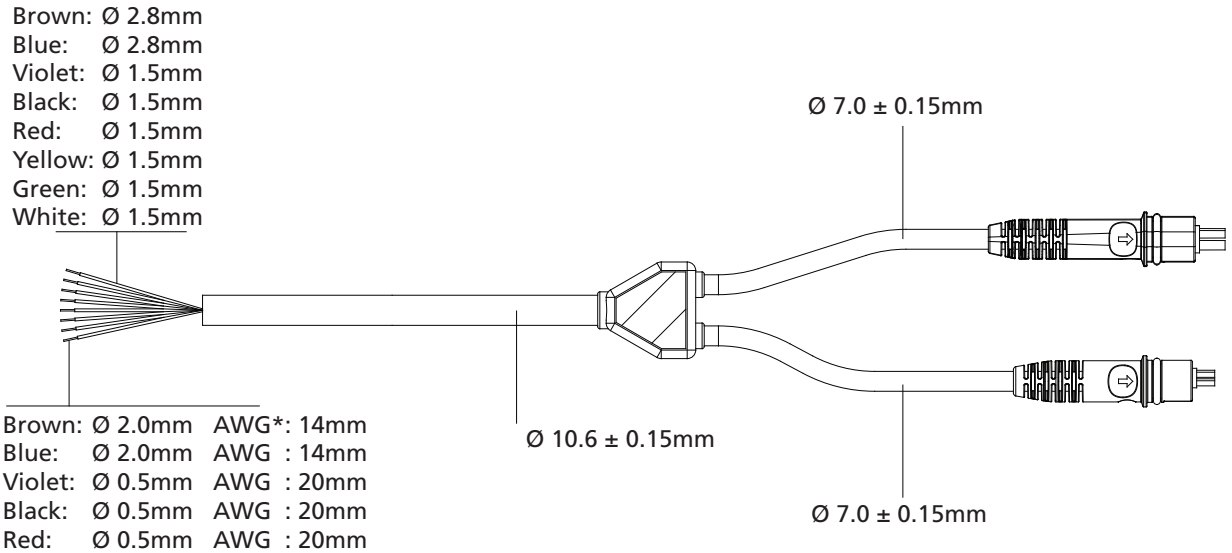


Brown: Ø 2.0mm AWG*: 14mm
Blue: Ø 2.0mm AWG : 14mm
Violet: Ø 0.5mm AWG : 20mm
Black: Ø 0.5mm AWG : 20mm
Red: Ø 0.5mm AWG : 20mm
Yellow: Ø 0.5mm AWG : 20mm
Green: Ø 0.5mm AWG : 20mm
White: Ø 0.5mm AWG : 20mm

*AWG: American Wire Gauge

**Power cable dimensions:**

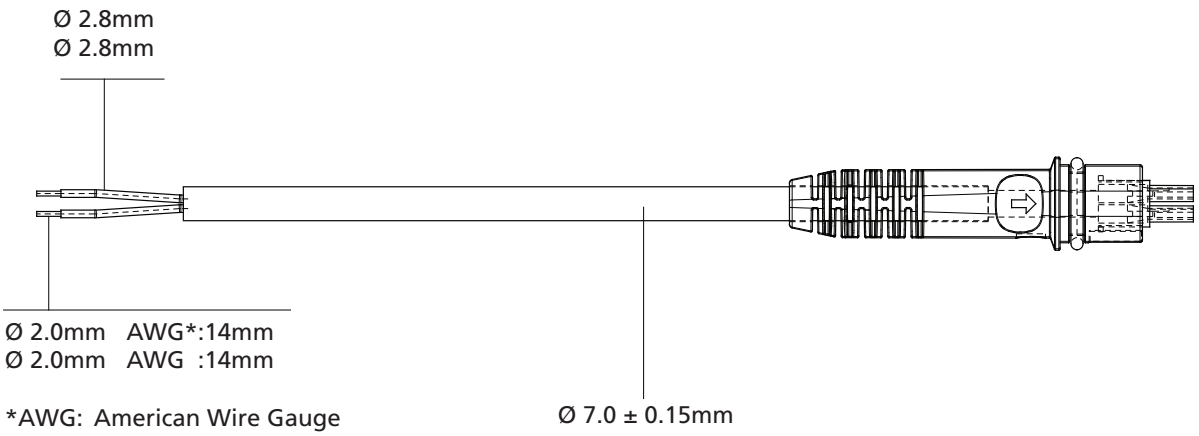


**Signal cable dimensions:**

Violet: Ø 1.5mm
Black: Ø 1.5mm
Red: Ø 1.5mm
Yellow: Ø 1.5mm
Green: Ø 1.5mm
White: Ø 1.5mm

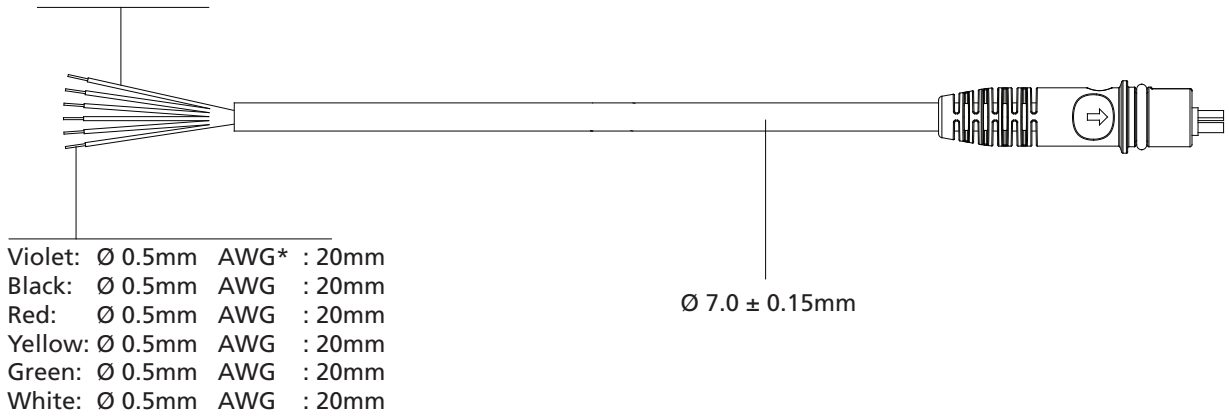

**Speed and current curves - 12V motor**

The values below are typical values and made with a stable power supply and an ambient temperature of 20˚C.

**LA36 12V motor current vs. load**

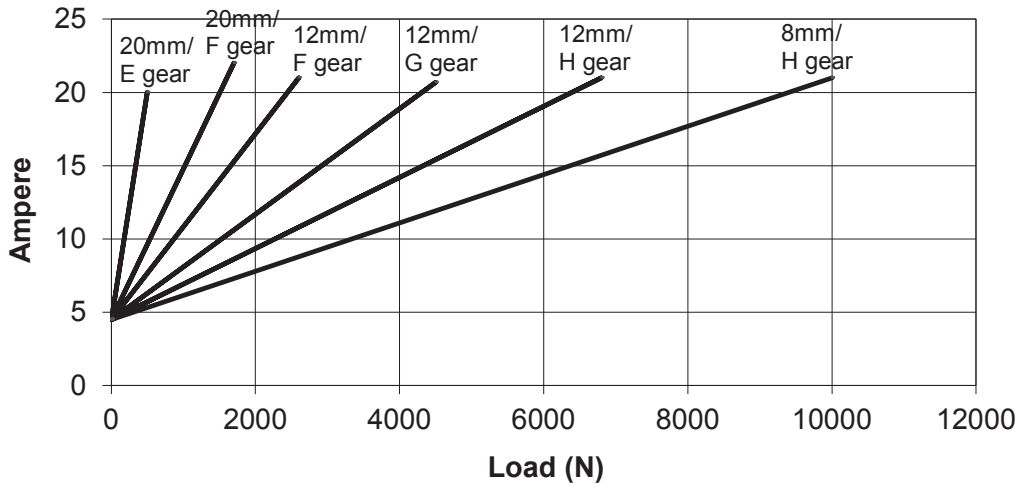


**LA36 12V motor speed vs. load**

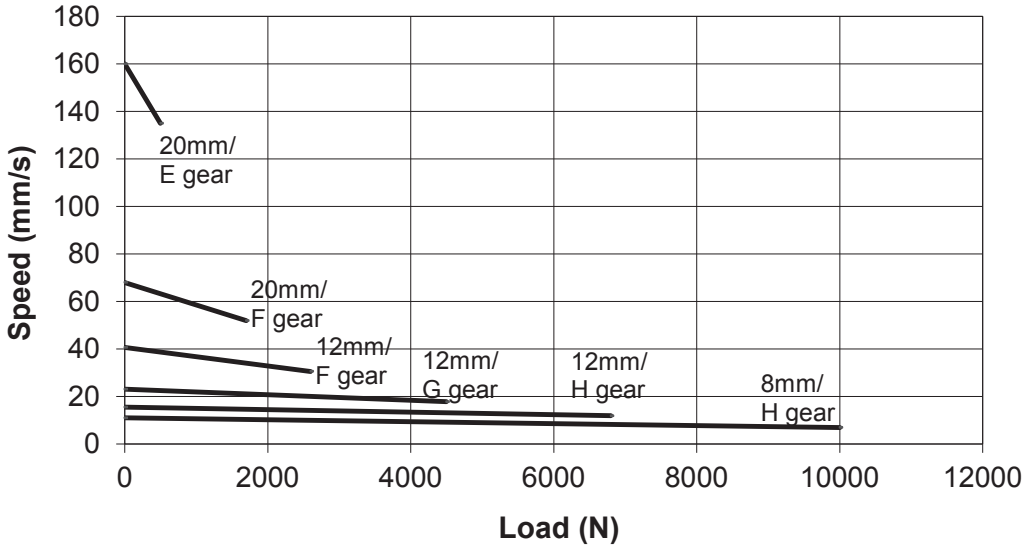


All measurements above describe the spindle pitch (e.g. 20mm) and the gear type (e.g. E gear) of the actuator.

Speed and current are based on a nominal power supply of 12, 24, 36VDC.

**Speed and current curves - 24V motor**

The values below are typical values and made with a stable power supply and an ambient temperature of 20˚C.

**LA36 24V motor current vs. load**

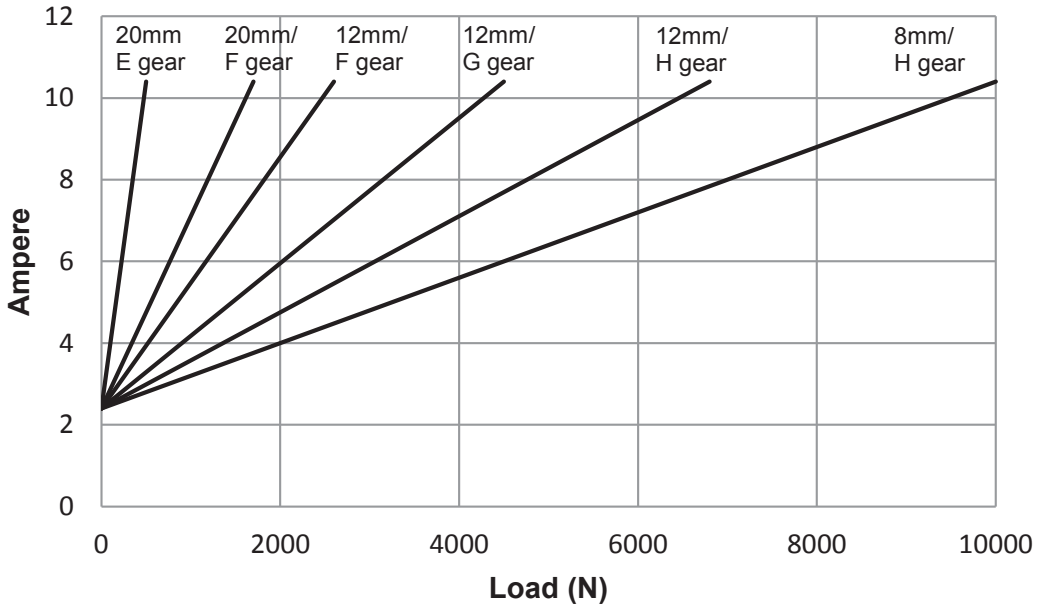


**LA36 24V motor speed vs. load**

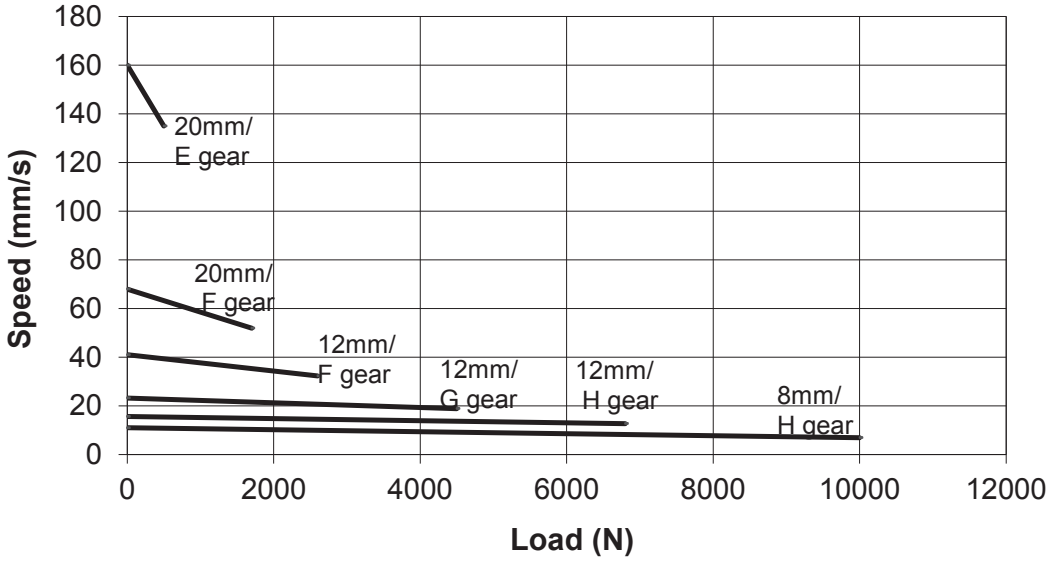


All measurements above describe the spindle pitch (e.g. 20mm) and the gear type (e.g. E gear) of the actuator.

Speed and current are based on a nominal power supply of 12, 24, 36VDC.

**Speed and current curves - 36V motor**

The values below are typical values and made with a stable power supply and an ambient temperature of 20˚C.

**LA36 36V motor current vs. load**

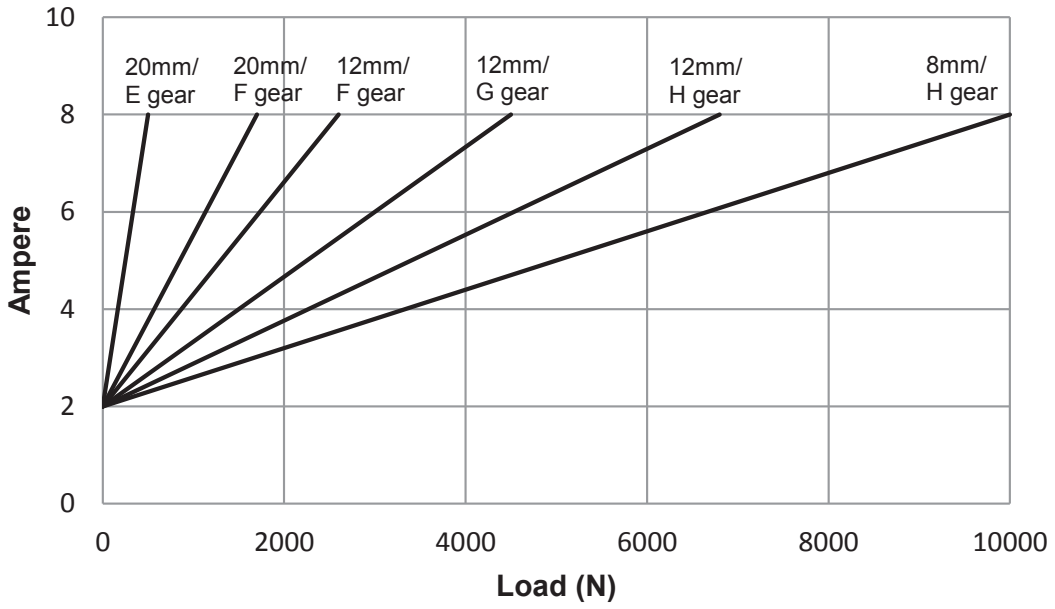


**LA36 36V motor speed vs. load**

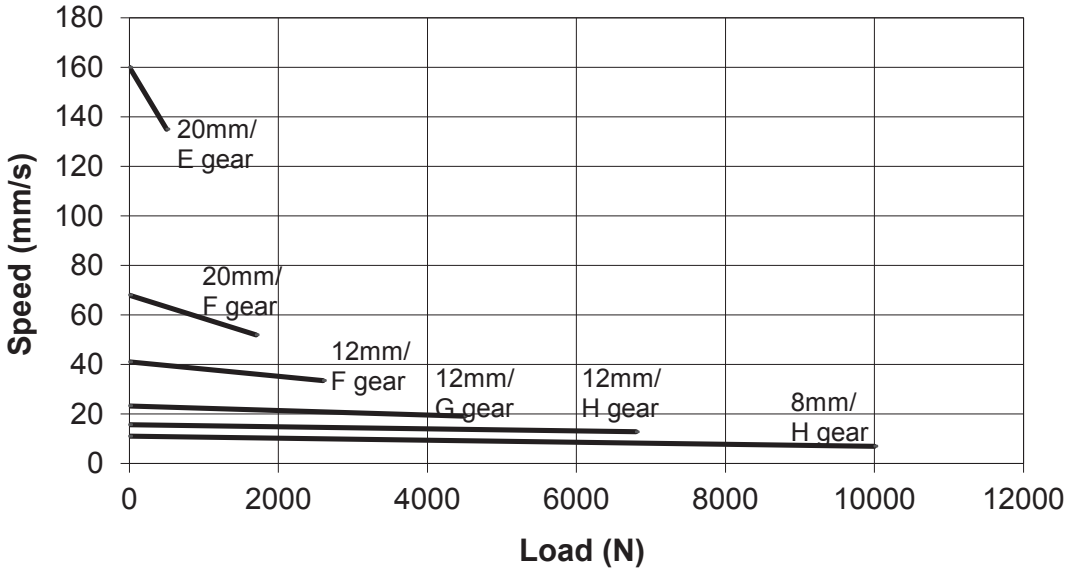


All measurements above describe the spindle pitch (e.g. 20mm) and the gear type (e.g. E gear) of the actuator.

Speed and current are based on a nominal power supply of 12, 24, 36VDC.

## Chapter 2

**I/O specifications: Actuator without feedback**

| Input/Output | Specification | Comments |
|---|---|---|
| Description | Permanent magnetic DC motor. |  |
| Brown | 12, 24 or 36VDC (+/-)<br>12V ± 20%<br>24V ± 10%<br>36V ± 10% | To extend actuator:<br>Connect Brown to positive<br>To retract actuator:<br>Connect Brown to negative |
| Blue | Under normal conditions:<br>12V, max. 26A depending on load<br>24V, max. 13A depending on load<br>36V, max. 10A depending on load | To extend actuator:<br>Connect Blue to negative<br>To retract actuator:<br>Connect Blue to positive |
| Red | Not to be connected | |
| Black | Not to be connected | |
| Green | Not to be connected | |
| Yellow | Not to be connected | |
| Violet | Not to be connected | |
| White | Not to be connected | |

**I/O specifications: Actuator with endstop signal output**

| Input/Output | Specification | Comments |
|---|---|---|
| Description | The actuator can be equipped with electronically controlled endstop signals out. |  |
| Brown | 12, 24 or 36VDC (+/-)<br>12V ± 20%<br>24V ± 10%<br>36V ± 10% | To extend actuator:<br>Connect Brown to positive<br>To retract actuator:<br>Connect Brown to negative |
| Blue | Under normal conditions:<br>12V, max. 26A depending on load<br>24V, max. 13A depending on load<br>36V, max. 10A depending on load | To extend actuator:<br>Connect Blue to negative<br>To retract actuator:<br>Connect Blue to positive |
| Red | Signal power supply (+)<br>12-24VDC | Current consumption:<br>Max. 40mA, also when the actuator is not running |
| Black | Signal power supply GND (-) | |
| Green | Endstop signal out | Output voltage min. $V_{IN}$ - 1V<br>Source current max. 100mA<br>NOT potential free |
| Yellow | Endstop signal in | |
| Violet | Not to be connected | |
| White | Not to be connected | |

**I/O specifications: Actuator with endstop signals and relative positioning - Dual Hall**

<table>
<tr><th>Input/Output</th><th colspan="2">Specification</th><th>Comments</th></tr>
<tr><td>Description</td><td colspan="2">The actuator can be equipped with Dual Hall that gives a relative positioning feedback signal when the actuator moves.</td><td> 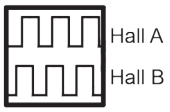
</td></tr>
<tr><td>Brown</td><td colspan="2">12, 24 or 36VDC (+/-)<br>12V ± 20%<br>24V ± 10%<br>36V ± 10%</td><td>To extend actuator:<br>Connect Brown to positive<br>To retract actuator:<br>Connect Brown to negative</td></tr>
<tr><td>Blue</td><td colspan="2">Under normal conditions:<br>12V, max. 26A depending on load<br>24V, max. 13A depending on load<br>36V, max. 10A depending on load</td><td>To extend actuator:<br>Connect Blue to negative<br>To retract actuator:<br>Connect Blue to positive</td></tr>
<tr><td>Red</td><td colspan="2">Signal power supply (+)<br>12-24VDC</td><td rowspan="2">Current consumption:<br>Max. 40mA, also when the actuator is not running</td></tr>
<tr><td>Black</td><td colspan="2">Signal power supply GND (-)</td></tr>
<tr><td>Green</td><td>Hall B</td><td rowspan="2">Movement per single hall pulse:<br>LA362C Actuator = 0.4 mm per pulse<br>LA363C Actuator = 0.7 mm per pulse<br>LA363B Actuator = 1.0 mm per pulse<br>LA363A Actuator = 1.7 mm per pulse<br>LA365A Actuator = 2.9 mm per pulse</td><td rowspan="2">The Hall sensor signals are generated by the turning of the actuator gearing. These signals can be fed into a PLC (Programmable Logic Controller). In the PLC the quadrature signals can be used to register the direction and position of the piston rod.<br>Output voltage:<br>12V : 11V ± 1V<br>24V : 23V ± 1V<br>36V : 23V ± 1V<br>Current output 12mA<br>Overvoltage on the motor can result in shorter pulses.<br>N.B. For more precise measurements, please contact LINAK A/S.</td></tr>
<tr><td>Yellow</td><td>Hall A</td></tr>
<tr><td>Violet</td><td colspan="2">Endstop signal in</td><td rowspan="2">Output voltage min. $V_{IN}$ - 1V<br>Source current max. 30mA<br>NOT potential free</td></tr>
<tr><td>White</td><td colspan="2">Endstop signal out</td></tr>
<tr><td>Diagram of Dual Hall:</td><td colspan="3"> 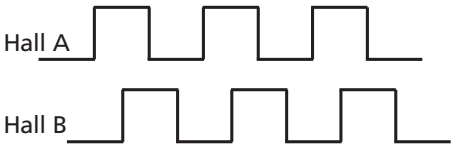

Fig. 1</td></tr>
</table>

**I/O specifications: Actuator with endstop signals and relative positioning - Single Hall**

<table>
<tr><th>Input/Output</th><th>Specification</th><th>Comments</th></tr>
<tr><td>Description</td><td>The actuator can be equipped with Single Hall that gives a relative positioning feedback signal when the actuator moves.</td><td> 
</td></tr>
<tr><td>Brown</td><td rowspan="2">12, 24 or 36VDC (+/-)<br>12V ± 20%<br>24V ± 10%<br>36V ± 10%<br><br>Under normal conditions:<br>12V, max. 26A depending on load<br>24V, max. 13A depending on load<br>36V, max. 10A depending on load</td><td>To extend actuator:<br>Connect Brown to positive<br><br>To retract actuator:<br>Connect Brown to negative</td></tr>
<tr><td>Blue</td><td>To extend actuator:<br>Connect Blue to negative<br><br>To retract actuator:<br>Connect Blue to positive</td></tr>
<tr><td>Red</td><td>Signal power supply (+)<br>12-24VDC</td><td rowspan="2">Current consumption:<br>Max. 40mA, also when the actuator is not running</td></tr>
<tr><td>Black</td><td>Signal power supply GND (-)</td></tr>
<tr><td>Green</td><td>Endstop signal out</td><td rowspan="2">Output voltage min. $V_{IN}$ - 1V<br>Source current max. 100mA<br>NOT potential free</td></tr>
<tr><td>Yellow</td><td>Endstop signal in</td></tr>
<tr><td rowspan="2">Violet</td><td>Single Hall output (PNP)<br><br>Movement per Single Hall pulse:<br>LA362C: Actuator = 0.1 mm per count<br>LA363C: Actuator = 0.2 mm per count<br>LA363B: Actuator = 0.3 mm per count<br>LA363A: Actuator = 0.4 mm per count<br>LA365A: Actuator = 0.7 mm per count<br><br>Frequency:<br>Frequency is 30-125 Hz on Single Hall output depending on load and spindle. Overvoltage on motor can result in shorter pulses.</td><td>Output voltage min. $V_{IN}$ - 1V<br>Max. current output: 12mA<br>Max. 680nF<br><br>N.B. For more precise measurements, please contact<br>LINAK A/S.<br><br>Low frequency with a high load.<br>Higher frequency with no load.</td></tr>
<tr><td colspan="2">Diagram of Single Hall:<br> 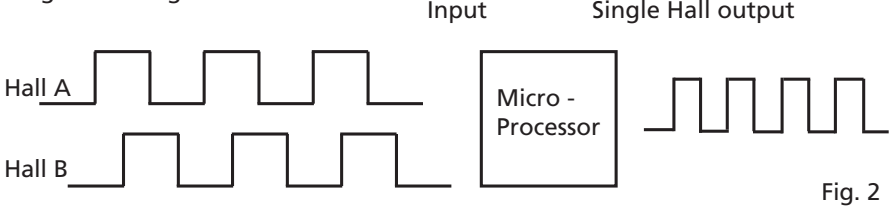

Fig. 2</td></tr>
<tr><td>White</td><td colspan="2">Not to be connected</td></tr>
</table>

**I/O specifications: Actuator with endstop signals and absolute positioning - Analogue feedback**

<table>
<tr><th>Input/Output</th><th>Specification</th><th>Comments</th></tr>
<tr><td>Description</td><td>The actuator can be equipped with electronic circuit that gives an analogue feedback signal when the actuator moves.</td><td> 
</td></tr>
<tr><td>Brown</td><td rowspan="2">12, 24 or 36VDC (+/-)<br>12V ± 20%<br>24V ± 10%<br>36V ± 10%<br><br>Under normal conditions:<br>12V, max. 26A depending on load<br>24V, max. 13A depending on load<br>36V, max. 10A depending on load</td><td>To extend actuator:<br>Connect Brown to positive<br>To retract actuator:<br>Connect Brown to negative</td></tr>
<tr><td>Blue</td><td>To extend actuator:<br>Connect Blue to negative<br>To retract actuator:<br>Connect Blue to positive</td></tr>
<tr><td>Red</td><td>Signal power supply (+)<br>12-24VDC</td><td rowspan="2">Current consumption:<br>Max. 60mA, also when the actuator is not running</td></tr>
<tr><td>Black</td><td>Signal power supply GND (-)</td></tr>
<tr><td>Green</td><td>Endstop signal out</td><td rowspan="2">Output voltage min. $V_{IN}$ - 1V<br>Source current max. 100mA<br>NOT potential free</td></tr>
<tr><td>Yellow</td><td>Endstop signal in</td></tr>
<tr><td>Violet</td><td>Analogue feedback<br>0-10V<br>0.5-4.5V</td><td>Tolerances +/- 0.2V<br>Max. current output: 1mA<br>Ripple max. 200mV<br>Transaction delay 20ms<br>Linear feedback 0.5%<br><br>It is recommendable to have the actuator to activate its limit switches on a regular basis, to ensure more precise positioning</td></tr>
<tr><td>White</td><td colspan="2">Not to be connected</td></tr>
</table>

**I/O specifications: Actuator with endstop signals and absolute positioning - Mechanical potentiometer feedback:**

| Input/Output | Specification | Comments |
|---|---|---|
| Description | The actuator can be equipped with a mechanical potentiometer, 10 kohm. |  <br>Bourns 0-10 kohm, 5%, 10-Turn<br>Type: 3540 Wirewound |
| Brown | 12, 24 or 36VDC (+/-)<br>12V ± 20%<br>24V ± 10%<br>36V ± 10%<br>Under normal conditions:<br>12V, max. 26A depending on load<br>24V, max. 13A depending on load<br>36V, max. 10A depending on load | To extend actuator:<br>Connect Brown to positive<br>To retract actuator:<br>Connect Brown to negative |
| Blue | | To extend actuator:<br>Connect Blue to negative<br>To retract actuator:<br>Connect Blue to positive |
| Red | Signal power supply (+)<br>12-24VDC | For endstop signals |
| Black | Signal power supply GND (-) | |
| Green | Endstop signal out | Output voltage min. $V_{IN}$ - 1V<br>Source current max. 100mA<br>NOT potential free |
| Yellow | Endstop signal in | |
| Violet | Mechanical potentiometer output<br>Output range with 8mm spindle pitch:<br>0 kohm = 0mm stroke<br>10 kohm = 333mm stroke<br>Output range with 12mm spindle pitch:<br>0 kohm = 0mm stroke<br>10 kohm = 500mm stroke<br>Output range with 20mm spindle pitch:<br>0 kohm = 0mm stroke<br>10 kohm = 833mm stroke | +10V or other value<br>Output protection:<br>1 kohm protection resistor<br>Linearity: ± 0.25% |
| White | VCC+ to POT<br>10VDC or other values | |

Please note that Potentiometer is not possible on variants with fast gear (Spindle pitch 20mm, H Gear).

**I/O specifications: Actuator with endstop signals and absolute positioning - PWM**

| Input/Output | Specification | Comments |
|---|---|---|
| Description | The actuator can be equipped with electronic circuit that gives an analogue feedback signal when the actuator moves. |  |
| Brown | 12, 24 or 36VDC (+/-)<br>12V ± 20%<br>24V ± 10%<br>36V ± 10% | To extend actuator:<br>Connect Brown to positive<br>To retract actuator:<br>Connect Brown to negative |
| Blue | Under normal conditions:<br>12V, max. 26A depending on load<br>24V, max. 13A depending on load<br>36V, max. 10A depending on load | To extend actuator:<br>Connect Blue to negative<br>To retract actuator:<br>Connect Blue to positive |
| Red | Signal power supply (+)<br>12-24VDC | Current consumption:<br>Max. 60mA, also when the actuator is not running |
| Black | Signal power supply GND (-) | |
| Green | Endstop signal out | Output voltage min. $V_{IN}$ - 1V<br>Source current max. 100mA<br>NOT potential free |
| Yellow | Endstop signal in | |
| Violet | Digital output feedback (PNP)<br>10-90%<br>20-80% | Output voltage min. $V_{IN}$ - 1V<br>Tolerances +/- 2%<br>Max. current output: 12mA<br>Frequency: 75Hz<br>It is recommendable to have the actuator to activate its limit switches on a regular basis, to ensure more precise positioning |
| White | Not to be connected | |

**I/O specifications: Actuator with IC Basic**

| Input/Output | Specification | Comments |
|---|---|---|
| Description | Easy to use interface with integrated power electronics (H-bridge).<br>The actuator can also be equipped with electronic circuit that gives an absolute or relative feedback signal.<br>The version with "IC option" cannot be operated with PWM (power supply). | 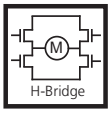 |
| Brown | 12-24VDC + (VCC)<br>Connect Brown to positive<br>12V ± 20%<br>24V ± 10%<br>12V, current limit 25A<br>24V, current limit 13A | Note: Do not change the power supply polarity on the brown and blue wires!<br>Power supply GND (-) is electrically connected to the housing |
| Blue | 12-24VDC - (GND)<br>Connect Blue to negative<br>12V ± 20%<br>24V ± 10%<br>12V, current limit 25A<br>24V, current limit 13A | |
| Red | Extends the actuator | On/off voltages:<br>> 67% of $V_{IN}$ = ON<br>< 33% of $V_{IN}$ = OFF<br>Input current: 10mA |
| Black | Retracts the actuator | |
| Green | Not to be connected | |
| Yellow | Not to be connected | |
| Violet | Analogue feedback<br>0-10V | Standby power consumption:<br>12V, 60mA<br>24V, 45 mA<br>Ripple max. 200mV<br>Transaction delay 20ms<br>Linear feedback 0.5%<br>Max. current output: 1mA<br>It is recommendable to have the actuator to activate its limit switches on a regular basis, to ensure more precise positioning |
| | Single Hall output (PNP) | Output voltage min. $V_{IN}$ - 1V<br>Max. current output: 12mA<br>For more information see fig. 2, page 20 |
| White | Signal GND | |

## I/O specifications: Actuator with IC Advanced - with BusLink

| Input/Output | Specification | Comments |
|---|---|---|
| Description | Easy to use interface with integrated power electronics (H-bridge).<br>The actuator can also be equipped with electronic circuit that gives an absolute or relative feedback signal.<br>IC Advanced provides a wide range of possibilities for customisation.<br>The version with "IC option" cannot be operated with PWM (power supply). | 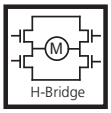 |
| Brown | 12-24VDC + (VCC)<br>Connect Brown to positive<br>12V ± 20%<br>24V ± 10%<br>12V, current limit 25A<br>24V, current limit 13A | Note: Do not change the power supply polarity on the brown and blue wires!<br>Power supply GND (-) is electrically connected to the housing<br>Current limit levels can be adjusted through BusLink |
| Blue | 12-24VDC - (GND)<br>Connect Blue to negative<br>12V ± 20%<br>24V ± 10%<br>12V, current limit 25A<br>24V, current limit 13A | |
| Red | Extends the actuator | On/off voltages:<br>> 67% of $V_{IN}$ = ON<br>< 33% of $V_{IN}$ = OFF<br>Input current: 10mA |
| Black | Retracts the actuator | |
| Green | Endstop signal out | Output voltage min. $V_{IN}$ - 1V<br>Source current max. 100mA<br>Endstop signals are NOT potential free. Endstop signals can be configured with BusLink software according to any position needed. Only use one virtual endstop - keep one end open for initialisation. (See I/O specifications for endstop on page 18). |
| Yellow | Endstop signal in | |

**I/O specifications: Actuator with IC Advanced - with BusLink**

| Input/Output | Specification | Comments |
|---|---|---|
| Violet | Analogue feedback (Hall Pot):<br>Configure any high/low combination between 0-10V | Ripple max. 200mV<br>Transaction delay 20ms<br>Linear feedback 0.5%<br>Max. current output. 1mA |
| | Single Hall output (PNP) | Output voltage min. $V_{IN}$ - 1V Max. current output: 12mA<br>Please be aware that when choosing single hall, feedback position readout and virtual endstops are not available in BusLink.<br>For more information, see fig. 2, page 20 |
| | Digital output feedback PWM:<br>Configure any high/low combination between 0-100% | Output voltage min. $V_{IN}$ - 1V Frequency: 75Hz ± 10Hz as standard, but this can be customised.<br>Duty cycle: Any low/high combination between 0 and 100 percent.<br>Open drain source current max. 12mA |
| | Analogue feedback (4-20mA):<br>Configure any high/low combination between 4-20mA | Transaction delay 20ms<br>Linear feedback 0.5%<br>Output: Source<br>Serial resistance:<br>12V max. 300 ohm<br>24V max. 900 ohm |
| | All absolute value feedbacks (Hall Pot, PWM and 4-20mA) | Standby power consumption:<br>12V, 60mA<br>24V, 45mA<br>It is recommendable to have the actuator to activate its limit switches on a regular basis, to ensure more precise positioning |
| White | Signal GND | |

**BusLink is available for IC Advanced and can be used for:**
Diagnostics, manual run and configuration

Please note that the BusLink cables must be purchased separately from the actuator!

Item numbers for BusLink cables: USB2LIN: USB2LIN05, USB2LIN06 and onwards
Adaptor cable: 0964826-A

**I/O specifications: Actuator with Parallel**

| Input/Output | Specification | Comments |
|---|---|---|
| Description | Self-configurable option that allows for parallel drive of up to 8 actuators. A master actuator with an integrated H-bridge controller controls up to 7 slaves.<br>The version with "IC option" cannot be operated with PWM (power supply). | 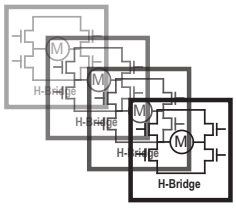 |
| Brown | 12-24VDC + (VCC)<br>Connect Brown to positive<br>12V ± 20%<br>24V ± 10%<br>12V, current limit 25A<br>24V, current limit 13A | Note: Do not change the power supply polarity on the brown and blue wires!<br>The parallel actuators can run on one OR separate power supplies |
| Blue | 12-24VDC - (GND)<br>Connect Blue to negative<br>12V ± 20%<br>24V ± 10%<br>12V, current limit 25A<br>24V, current limit 13A | Power supply GND (-) is electrically connected to the housing<br>Current limit levels can be adjusted through BusLink (only one actuator at a time for parallel) |
| Red | Extends the actuator | On/off voltages:<br>> 67% of $V_{IN}$ = ON<br>< 33% of $V_{IN}$ = OFF<br>Input current: 10mA<br>It does not matter where the in/out signals are applied. You can either choose to connect the signal cable to one actuator OR you can choose to connect the signal cable to each actuator on the line. Either way this will ensure parallel drive |
| Black | Retracts the actuator | |
| Green | Endstop signal out | Output voltage min. $V_{IN}$ - 1V<br>Source current max. 100mA<br>NOT potential free |
| Yellow | Endstop signal in | |
| Violet | Parallel communication:<br>Violet cords must be connected together | Standby power consumption:<br>12V, 60mA<br>24V, 45mA<br>No feedback available during parallel drive |
| White | Signal GND:<br>White cords must be connected together | |

**BusLink is available for Parallel and can be used for:**

- Diagnostics
- Service counter is available with Parallel
- Parallel actuator configurations can be changed through BusLink, but all actuators need the same configurations!

Please note that the BusLink cables must be purchased separately from the actuator!

Item numbers for BusLink cables: USB2LIN: USB2LIN05, USB2LIN06 and onwards
Adaptor cable: 0964826-A

# Chapter 3

**Environmental tests - Climatic**

| Test | Specification | Comment | TRD number |
|---|---|---|---|
| Cold test | EN60068-2-1 (Ab) | Storage at low temperature:<br>Temperature: -40°C<br>Duration: 72h<br>Not connected<br>Tested at room temperature. | TRD0509 |
| | EN60068-2-1 (Ad) | Storage at low temperature:<br>Temperature: -30°C<br>Duration: 2h<br>Actuator is not activated/connected<br>Tested at low temperature. | TRD0509 |
| Dry Heat | EN60068-2-2 (Bb) | Storage at high temperature:<br>Temperature: +90°C<br>Duration: 72h<br>Actuator is not activated/connected.<br>Tested at room temperature | TRD0510 |
| | | Storage at high temperature:<br>Temperature: +70°C<br>Duration: 1000h<br>Actuator is not activated/connected<br>Tested at high temperature. | TRD0507 |
| | EN60068-2-2 (Bd) | Operating at high temperature:<br>Temperature: +60°C<br>Int. max. 17%<br>Duration:700h<br>Actuator is activated<br>Tested at high temperature. | |
| Change of temperature | EN60068-2-14 (Na) | Rapid change of temperature:<br>High temperature: +100°C in 60 minutes.<br>Low temperature: -30°C in 60 minutes.<br>Transition time:<10 seconds<br>Duration: 100 cycles<br>Actuator is not activated/connected.<br>Tested at room temperature. | TRD0501 |
| | EN60068-2-14 (Nb) | Controlled change of temperature:<br>Temperature change 5°C pr. minute<br>High temperature: +70°C in 60 minutes.<br>Low temperature: -30°C in 30 minutes.<br>130 minutes pr. Cycle.<br>Duration: 1.000 cycles (90days)<br>Actuator is not activated/connected.<br><br>Tested at 250, 500 and 1,000 cycles at low and high temperatures. | TRD0508 |
| Damp heat | EN60068-2-30 (Db) | Damp heat, Cyclic:<br>Relative humidity: 93-98%<br>High temperature: +55°C in 12 hours<br>Low temperature: +25°C in 12 hours<br>Duration: 21cycles * 24hours<br>Actuator is not activated/connected<br>Tested within 1 hour after condensation,<br>That means after upper temperature has been reached. | TRD0505 |
| | EN60068-2-3 (Ca) | Damp heat, Steady state:<br>Relative humidity: 93-95%<br>Temperature: +40 ±2°C<br>Duration: 56 days<br>Actuator is not activated/connected.<br>Tested within one hour after exposure. | TRD0518 |
| Salt mist. | EN60068-2-52 (Kb) | Salt spray test:<br>Salt solution: 5% sodium chloride (NaCl)<br>4 spraying periods, each of 2 hours.<br>Humidity storage 7 days after each.<br>Actuator not activated/connected.<br>Exposure time: 500 hours | TRD0506 |

| | | | |
|---|---|---|---|
| Degrees of protection | EN60529 – IP66 | <u>IP6X - Dust:</u><br>Dust-tight, No ingress of dust.<br>Actuator is not activated. | TRD0514 |
| | | <u>IPX6 – Water:</u><br>Ingress of water in quantities causing harmful effects is not allowed.<br>Duration: 100 litres pr. minute in 3 minutes<br>Actuator is not activated. | TRD0513 |
| | | <u>IPX6 –Connected actuator:</u><br>Actuator is driving out and in for 3 min.<br>100(l/min) jet of water is placed at the wiper ring for 3 (min). | TRD0513 |
| | DIN40050 – IP69K | <u>IPX6 –Connected actuator and push 6800 (N)</u><br>Actuator is driving out and in for 3 min. and<br>Push 6800(N) at the end-pos.<br>100 (l/min.) jet of water is placed at the wiper ring for 3 min. | TRD0513 |
| | | <u>High pressure cleaner:</u><br>Water temperature: +80°C<br>Water pressure: 80 bar<br>Spray angle: 45°<br>Spray distance: 100mm<br>Duration: From any direction 10 seconds of spraying followed by 10 seconds rest.<br>Actuator is not activated.<br>Ingress of water in quantities causing harmful effects is not allowed. | TRD0512 |
| | DUNK test | The actuator has been warmed up to 115°C for 20 hours.<br>After this it is cooled down in 20°C saltwater.<br>Cooling time: 5 minutes<br>Opened for checking salt deposit and water. | TRD0515 |
| Chemicals | BS7691 / 96hours | Diesel 100%<br>Hydraulic oil 100%<br>Ethylene Glucol 50%<br>Urea Nitrogen saturated solution<br>Liquid lime 10% (Super- Cal)<br>NPK Fertilizer (NPK 16-4-12) saturated<br>Tested for corrosion. | TRD0525 |

**Environmental tests - Mechanical:**

| Test | Specification | Comment | TRD number |
|---|---|---|---|
| Free fall | | Free fall from all sides:<br>Height of fall: 0.4 meter onto steel.<br>Actuator not activated/connected. | TRD0511 |
| Vibration | EN60068-2-36 (Fdb) | Random vibration:<br>Short time test:6.29g RMS<br>Actuator is not connected<br>Long time test:<br>7.21g RMS<br>Actuator is not connected<br>Duration: 2 hours in each direction | TRD0502 |
| | EN 60068-2-6 (Fc) | Sinus vibration:<br>Frequency 5-25Hz: Amplitude = 3.3mm pp<br>Frequency 25-200Hz: Acceleration 4g<br>Number of directions: 3 (X-Z-Y)<br>Duration: 2 hours in each direction.<br>Actuator is not activated | TRD0517 |
| Bump | EN60068-2-29 (Eb) | Bump test:<br>Level: 40g<br>Duration: 6 milliseconds<br>Number of bumps: 500 shocks in each of 6 directions.<br>Actuator is not connected. | TRD0503 |
| Shock | EN60068-2-27 (Ea) | Shock test:<br>Level: 100g<br>Duration: 6 milliseconds<br>Number of bumps: 3 shocks in each of 6 directions.<br>Actuator is not connected. | TRD0504 |

**Environmental tests - Electrical:**

| Test | Specification | Comment | TRD number |
|---|---|---|---|
| Power supply | ASAE EP455 (1990) | Operating voltages +10V - +16V<br>Over voltage +26(V) / 5min.<br>Reverse polarity –26(V) / 5min.<br>Short circuit to ground 16 (V) / 5 min.<br>Short circuit to supply 16(V) / 5 min. | TRD0522 |
| HF-immunity | EN61000-6-2 | Level: 30 V/m. at 26 MHz – 1000 mHz<br>80% 1 KHz | TRD0516 |
| Emission | EN61000-6-4 | Level is inside limits for 12 V motor | TRD0516 |
| Automotive transients | ISO 7637 | Load dump test only accepted on motor power connection. | TRD0521 |

For actuator junction box details
Please refer to document #5000220043_EPL_0003_AU_VWT

Copyright © LINAK 2015.01 . MA M9-02-148-S . Chapter 5.12

**Terms of use**
The user is responsible for determining the suitability of LINAK products for specific application.
LINAK takes great care in providing accurate and up-to-date information on its products.
However, due to continuous development in order to improve its products, LINAK products are subject to frequent modifications and changes without prior notice. Therefore, LINAK cannot guarantee the correct and actual status of said information on its products.
While LINAK uses its best efforts to fulfil orders, LINAK cannot, for the same reasons as mentioned above, guarantee the availability of any particular product. Therefore, LINAK reserves the right to discontinue the sale of any product displayed on its website or listed in its catalogues or other written material drawn up by LINAK.
All sales are subject to the Standard Terms of Sale and Delivery for LINAK. For a copy hereof, please contact LINAK.

# New type of LA36 liner actuator

## Due to changes on the electrical connections on the LA36 liner actuator done by the supplier the following has to be considered when replacing an actuator of this type delivered before the year 2016.

On the previous model of actuator the end stop signals have a separate power supply, which the new model hasn't. This is important if you have different supplies for power and control voltage to the actuators. On the new model of actuators there is only one power supply.

Also please notice that the wiring colors have changed.

**Actuators delivered before 2016**

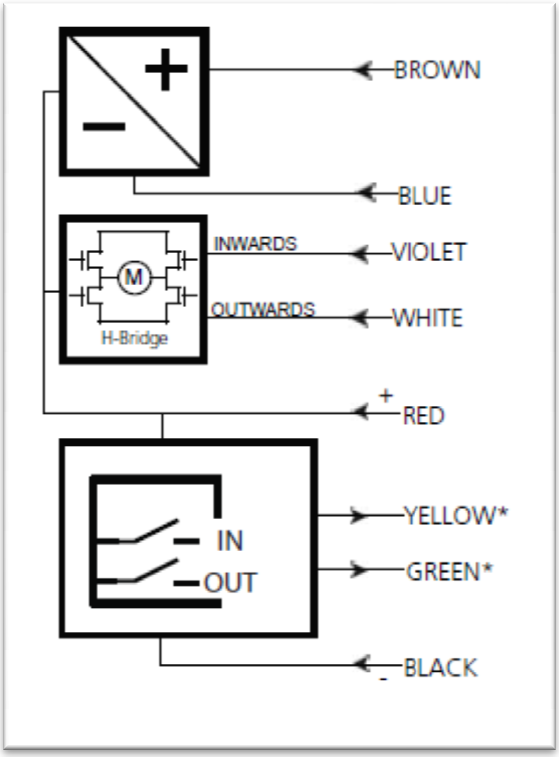


**Actuators delivered 2016 and after**

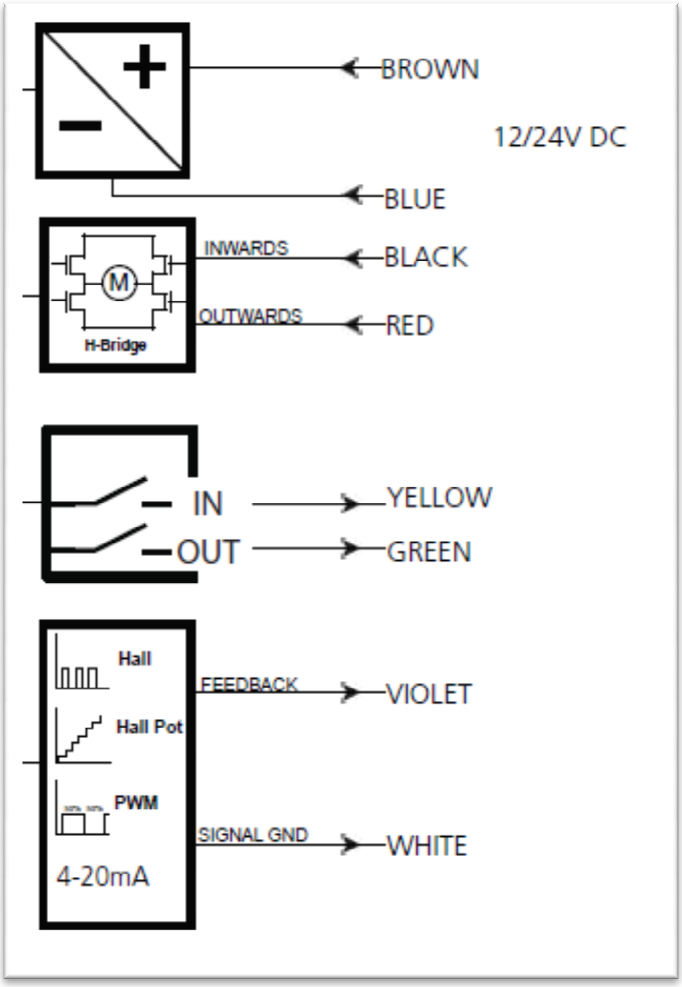


**Veolia Water Technologies AB – Hydrotech**
Mejselgatan 6, SE 235 32 Vellinge, Sweden
Phone +46 40 429530, Fax. +46 40 429531, mailbox@hydrotech.se
Org. Nummer : 556273-8582
www.hydrotech.se

**This page is intentionally left blank**

**Project name:** MELIADINE-BPC UPGRADE

**Project#:** 5000220043

**Document #:** SPK_0001_HSF_VWT

**by:** GM

**chkd:** ED

**appvd:** TS

# DISCFILTER

# CHEMICAL TROLLEY

**OIM manual section:** 4.2.10.4

**This page is intentionally left blank**

## CONNECTION POINTS

| TIE-POINT # | DESCRIPTION | DIMENSION / TYPE |
|---|---|---|
| TP1110 | CLEAN WATER CONNECTION CAP 1" X 1" FEMALE ADAPTOR | Ø1" QUICK CONNECT C/W CAP (PVDF) |
| TP1111 | CHEMICAL INLET / DRAIN | Ø3/4" QUICK CONNECT C/W CAP (PVDF) |

ELECTRICAL CONNECTIONS:
- ONE (1) M12 CONNECTOR FOR SEQUENCE STARTUP (10m)
- ONE (1) SOOW 12/4 CONNECTOR FOR POWER (10m)

PIPING CONNECTION:
- ONE (1) FLEXIBLE HOSE FOR CHEMICAL OUTLET TO DISCFILTER (6m)

NOTES:
- WEIGHT: 180 KG (398 Lbs). EMPTY
- WEIGHT: 372 KG (820 Lbs). FULL

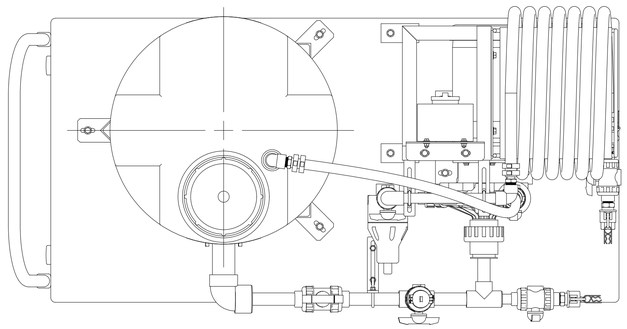

TOP VIEW

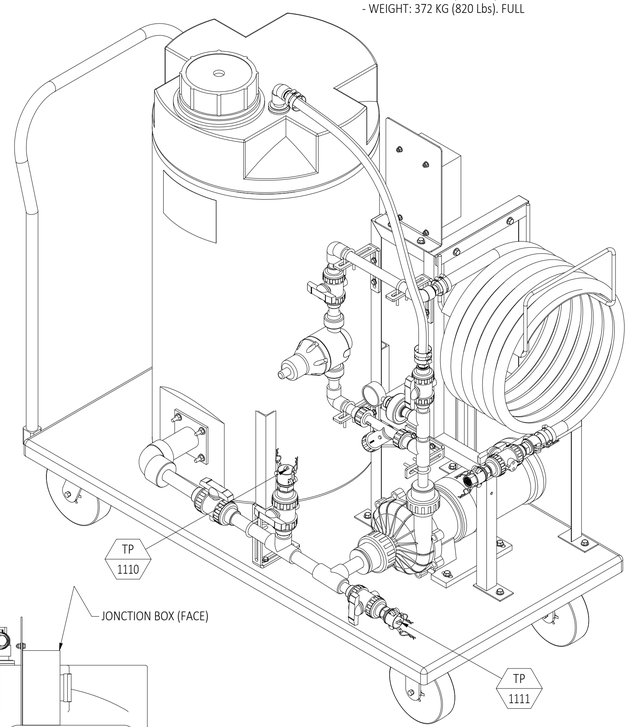


ISOMETRIC VIEW

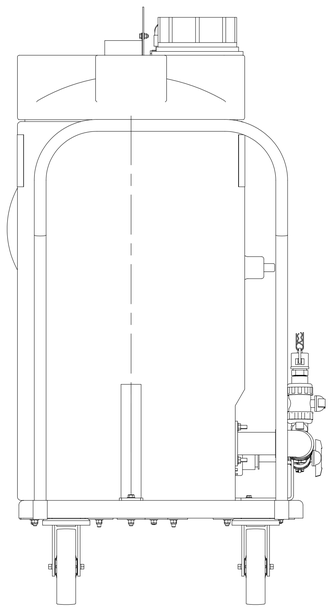

LEFT SIDE VIEW

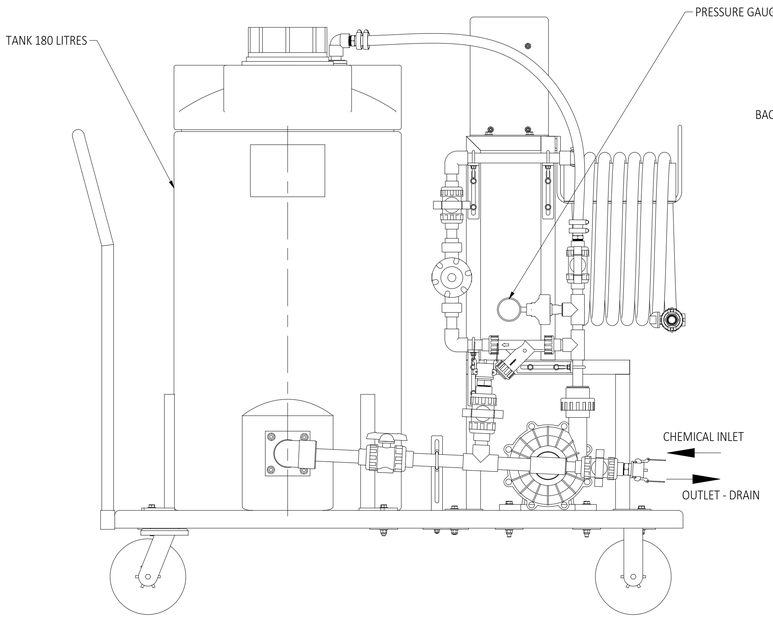


FRONT VIEW

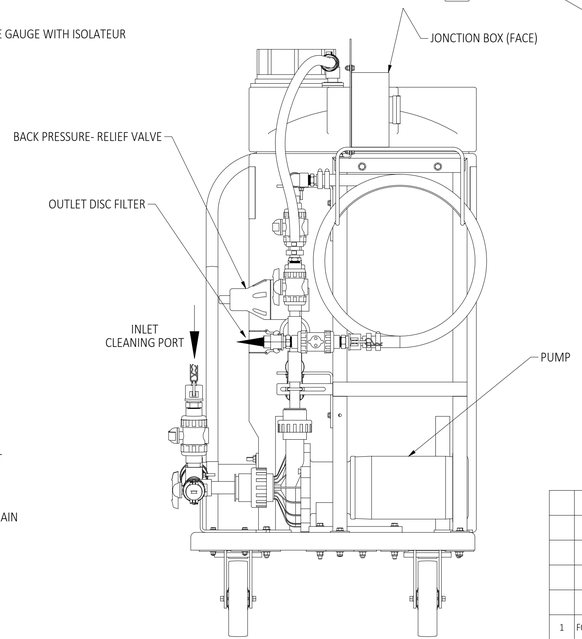


RIGHT SIDE VIEW

| RÉV. / REV. | DESCRIPTION | DATE | DESSINÉ PAR/ DRAWN BY | PRÉPARÉ PAR/ PREPARED BY | VÉRIFIÉ PAR/ CHECKED BY |
|---|---|---|---|---|---|
| 1 | FOR INFORMATION | 2021-03-09 | H.H. | G.M. | E.D. |

VEOLIA WATER TECHNOLOGIES

DESSINÉ PAR/DRAWN BY: N.L. DATE: 2018-12-18
PRÉPARÉ PAR/PREPARED BY: GUILLAUME MUNSCH DATE: 2018-12-18
VÉRIFIÉ PAR/CHECKED BY: EMMANUELLE DORMOY DATE: 2018-12-18

CLIENT: AEC MELIADINE-BPC

TITRE / TITLE:
CHEMICAL TROLLEY
CLEANING SKID
GENERAL ARRANGEMENT

ÉCHELLE / SCALE: 1:10

| PROJET / PROJECT - DESSIN No / DRAWING No | INTERNE / INTERNAL | FEUILLET / SHEET | RÉV/REV |
|---|---|---|---|
| 5000220043 - GA500501 | PCH | 1 / 1 | 1 |

Ce document est la propriété de VEOLIA et ne peut être reproduit sans son autorisation écrite.
This document is the property of VEOLIA and cannot be reproduced without its written authorization.

REF: ANSI D

**This page is intentionally left blank**

# MX-403H 3 HP

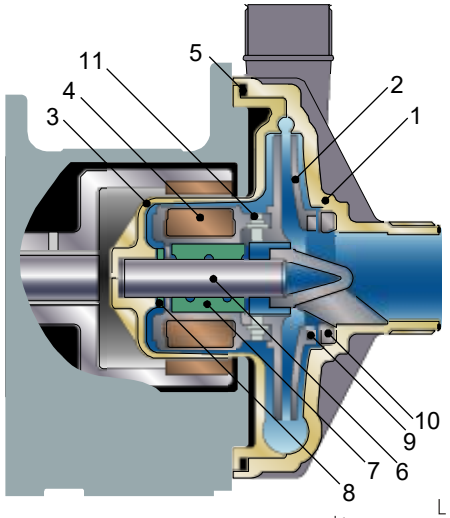


| Model | MX-403H | |
|---|---|---|
| Mark | CV(CE) | RV (RE) |
| 1 Front Casing | GFRPP | |
| 2 Impeller | GFRPP | |
| 3 Rear Casing | GFRPP | |
| 4 Magnet capsule | PP | |
| 5 O-ring | FKM[1] | |
| 6 Spindle | Alumina Ceramic | |
| 7 Bearing | Carbon | PTFE |
| 8 Rear thrust | CFRPEEK | |
| 9 Mouth ring | PTFE | |
| 10 Thrust/Liner ring | Alumina Ceramic | |
| 11 Lock pin | GFRPPS | |

1 EPDM and AFLAS® o-ring also available

- **Engineered to meet the most severe operating conditions.**
- **When fitted with a carbon bearing, the MX will allow for brief periods of dry running.**
- **The MX Series is the first resin magnet pump that uses a Split Volute Pump Casing that forms a vortex chamber.**
- **Patented Self-radiating structure – Heat dispersion holes force the liquid to circulate around the spindle and bearing .**

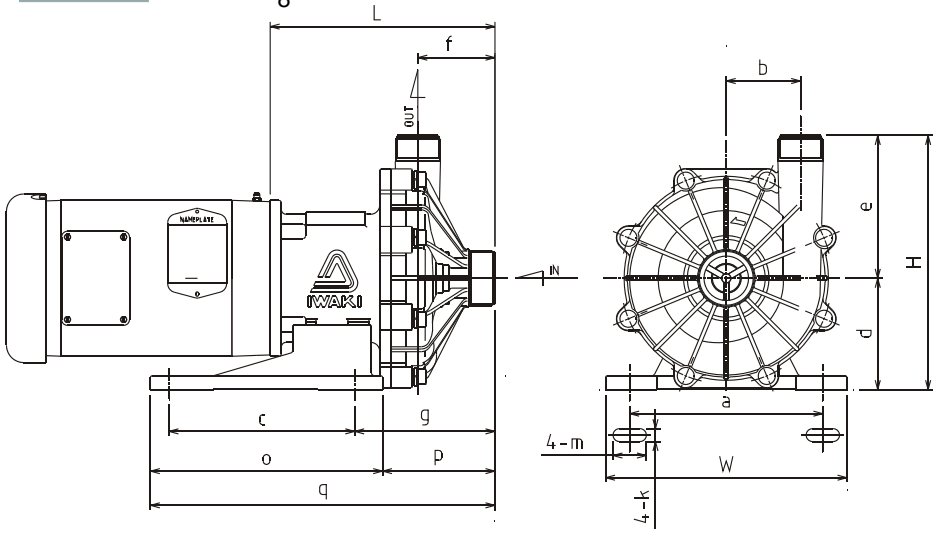


Dimensions (in inches)

| a | b | c | d | e | f | g | k | m | o | p | q | W | H | L |
|---|---|---|---|---|---|---|---|---|---|---|---|---|---|---|
| 8.19 | 3.15 | 7.87 | 4.72 | 6.06 | 3.27 | 5.94 | 0.47 | 1.42 | 9.84 | 4.76 | 14.61 | 10.24 | 10.78 | 9.53 |

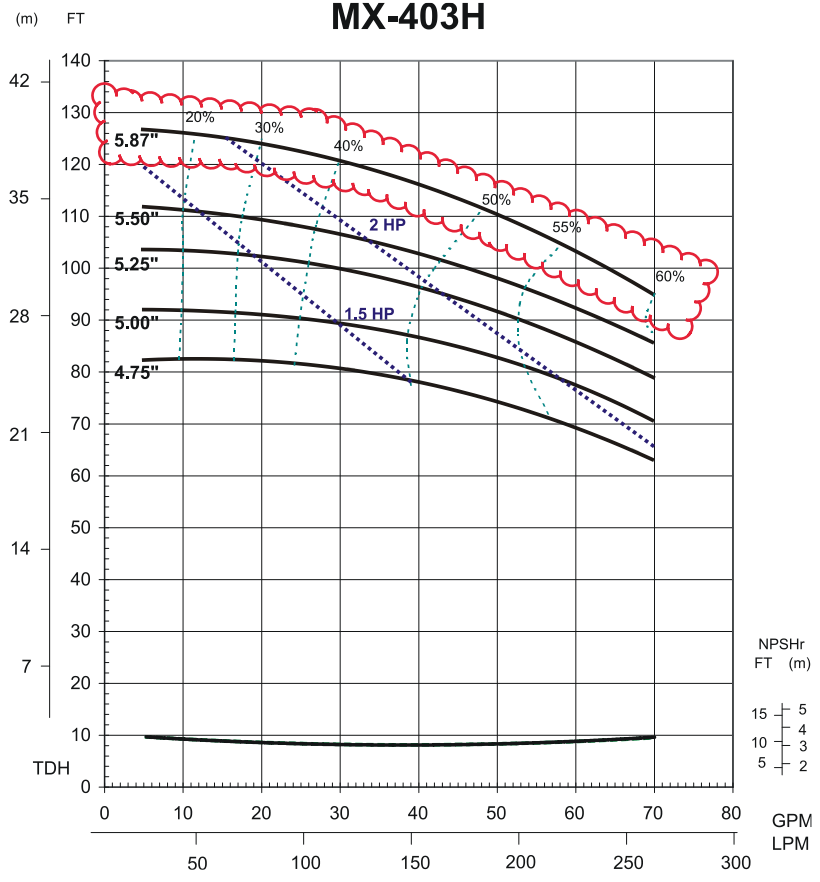


Specifications

| Suction x Discharge | Max Discharge pressure | Max Flow | Specific gravity | Weight (less motor) |
|---|---|---|---|---|
| 2” x 1.5” | 126 FT | 70 GPM | 1.2 | 32 lbs |

5 Boynton Road Hopping Brook Park Holliston, MA 01746-1446 USA
Tel: 508-429-1440 www.iwakiamerica.com P/N IF20545.D 3/6/2015

**This page is intentionally left blank**

# W01 Rolled Steel NEMA Premium Eff. Motors
## TEFC

### Standard Features

- Motors are compliant with DOE and NRCAN
- Three-phase, 2, 4 and 6 pole, 60Hz
- Voltage: 230/460V, 575V
- Totally Enclosed Fan Cooled - TEFC (IP55) waterproof as per NEMA MG1 1.26.6 “Waterproof Machine”
- Die cast aluminum squirrel cage rotor
- V’Ring sealing
- Ball bearings
- 1045 heat treated and stress relieved carbon steel shaft
- Class “F” insulation for all frames. Temperature rise limited to Class “B” (80K)
- 575V rated motors have Spike Resistant WISE wire.
  - Protects against IGBT voltage spikes up to 2400V.
  - Exceeds NEMA MG1 Part 31.4.4.2
- Dip and Bake Insulation system
- NEMA design “B”
- 1.15 Service Factor
- Continuous duty (S1)
- 104ºF (40ºC) ambient temperature
- Altitude: 3300 ft (1000m)
- Double Gasketed terminal box
- Paint: Synthetic enamel alkyd resin base
- Paint Plan:
  - 207N - Frame 143/5T
  - 207A - Frame 182/4T & 213/5T
  - 203A - Frame 254/6T
- Color: Munsell N1 - Flat Black
- All frames have dual mounting



Class I, Div 2, Groups A,B,C & D
Class I, Zone 2, IIC

| Inverter Ratings | | | | |
|---|---|---|---|---|
| Frames | Poles | Constant Torque | Variable Torque | VFD |
| 143/5T - 254/6T | 2 Pole | 10:1 | 1000:1 | Any |
| | 4 Pole | 4:1 | | |
| See page 7.6 for details | | | | |

### Optional Features

- 50Hz
- Special voltages
- Special shafts
- Oil Seal, Lip Seal
- Thermostats, Thermistors, RTD’s (PT100)
- Drip cover (canopy) for shaft down applications
- NEMA C flange for all ratings
- Special paint
- Shaft grounding (Aegis or WEG). Not for Hazloc.
- Forced ventilation
- No feet

**This page is intentionally left blank**

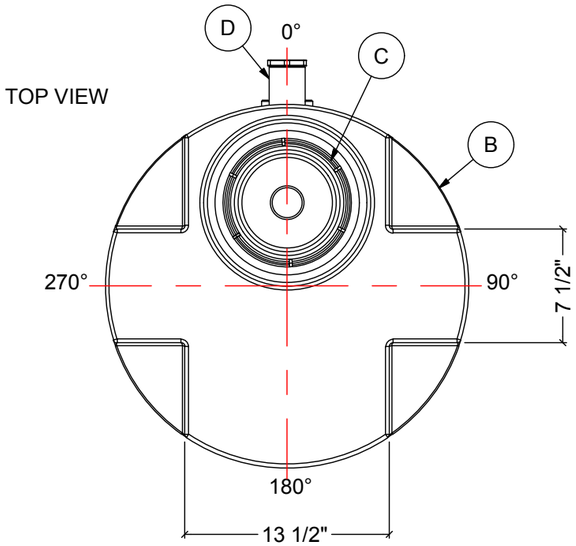


NOTES:

1. TANK IS MANUFACTURED FROM HDPE. (1.9 SG)
2. TANK IS MANUFACTURED TO ASTM-D-1998 STANDARD.
3. ALL FITTING GASKETS ARE EPDM.

| MATERIALS LIST | | |
|---|---|---|
| ITEMS | DESCRIPTION | NOTES |
| A | DMT-40 OUTSIDE TANK | |
| B | DMT-40 INSIDE TANK | |
| C | 6" THREADED LID | |
| D | 2" SS-316 DOUBLE MALE BOLTED THRU-CONTAINMENT FITTING WITH EXTERNAL 2" TO 1" REDUCER AND INTERNAL PVC SIPHON ELBOW ASSEMBLY | |

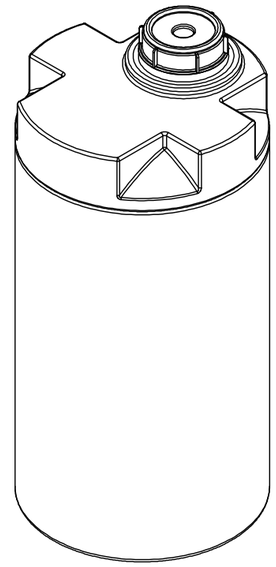

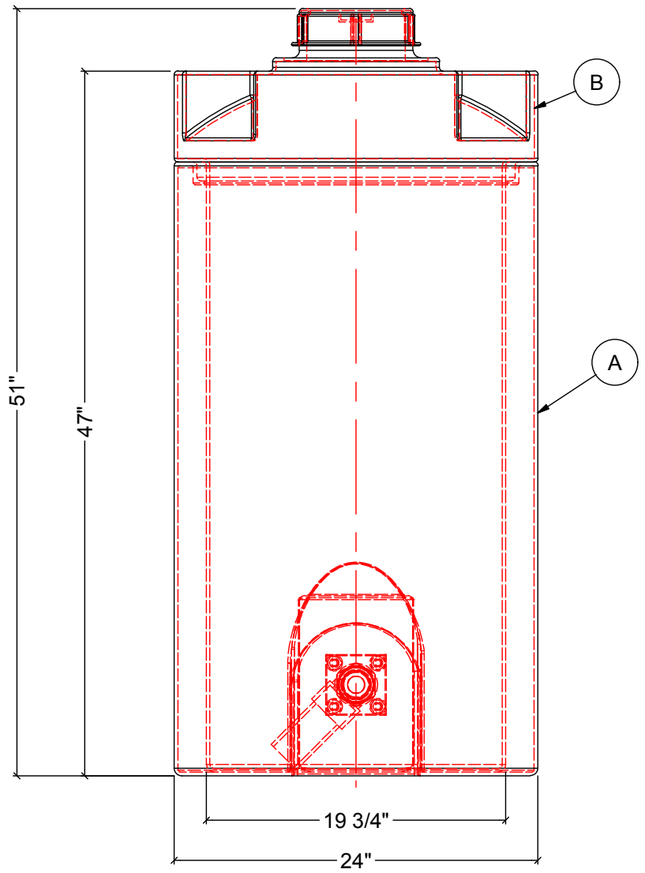


FRONT VIEW

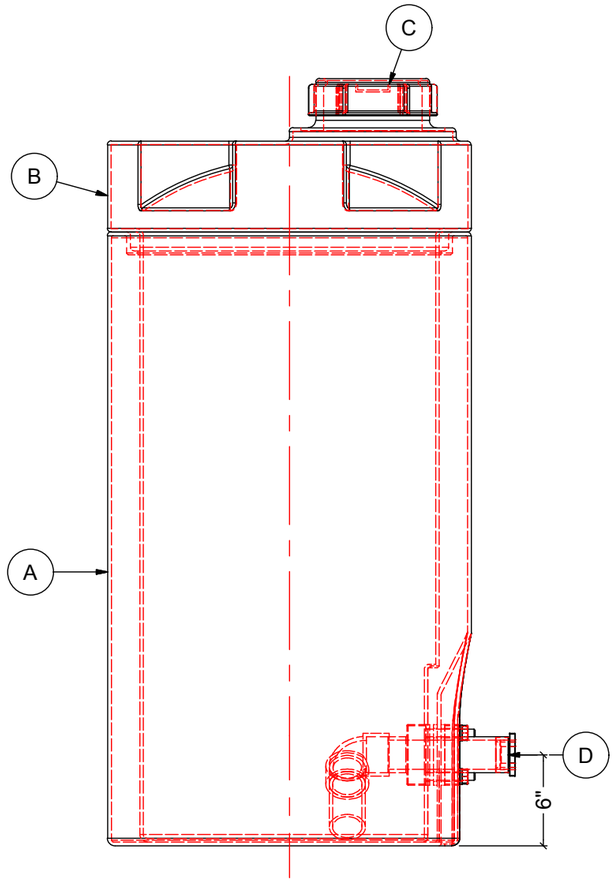


SIDE VIEW

| REV | DATE | DESCRIPTION | BY | APPD | REVD |
|---|---|---|---|---|---|
| 1 | 04-25-17 | ADDED SIPHON AND REDUCER | WM | | |

REVISIONS

CUSTOMER: VEOLIA

TITLE: 40 IG DOUBLE WALL TANK WITH 2" OUTLET FITTING

ACO JOB NO: 70947
PURCHASE ORDER NO: 17000961 HD 05000
PURCHASER'S EQUIP. NO:

THIS DRAWING IS THE PROPERTY OF ROTOPLAST INC. AND SHALL NOT BE COPIED OR TRANSFERRED WITHOUT THE WRITTEN CONSENT OF ROTOPLAST INC.

ENGINEERS SEAL

ACO CONTAINER SYSTEMS
DIVISION OF ROTOPLAST INC.
PICKERING - ONTARIO - CANADA

ACO CONTAINER SYSTEMS
DIVISION OF ROTOPLAST INC.
794 MCKAY RD.
PICKERING, ONTARIO, CANADA
TEL. 905-683-8222
FAX 905-683-2969

| | |
|---|---|
| DESIGNED | |
| DRAWN | WM |
| CHECKED | |
| APPROVED | |
| SCALE | N.T.S. |
| DATE | 04-24-17 |

DWG No: DMT-40-70947
REV: 1

**This page is intentionally left blank**

PDF Published December 21, 2018

# Type 21 True Union Ball Valves

CHEMLINE PLASTICS
SUPERIOR FLOW SOLUTIONS

The Chemline **Type 21** True Union Ball valve incorporates state of the art features for long term performance. This is a full port, full blocking True Union valve pressure rated at 16 bar (230 psi)[3]. Double stem o-rings and Safety Shear stem design provide for a high degree of safety on hazardous fluid applications. All sizes have an ISO standard actuator mounting platform integral to the valve body. This provides for sturdy and secure mounting of pneumatic or electric actuators.

PVC | CPVC | PP | PVDF

CRN Registered Consult Chemline

NSF[4] Certified to NSF/ANSI 61

| | |
|---|---|
| SERIES: | Type 21 |
| SIZES: | 3/8" – 4" |
| ENDS: | Socket, Threaded, Combo[6], Flanged, Butt[1] or ChemFlare™ |
| SEATS: | PTFE |
| SEALS[2]: | EPDM, FKM (Viton®) |




## features

### Pressure rated to 230 psi[3]
- Provides a high factor of safety

### Integral Actuator Mounting Platform
- Actuation is easy. Electric or pneumatic actuators may be mounted in the field.

### Full Port
- High capacity and low pressure drops

### Fully Blocking
- Downstream union nut may be safely disassembled for piping maintenance while valve is closed off under full system pressure

### Built-In Spanner Wrench
- Top of the handle is designed to be used as a tool for accessing internal parts

### Safety Shear Stem Design
- Stem has double o-rings
- Designed to hold full pressure even if stem breaks due to excessive torque

### High Chemical Resistant Material
- PVC and CPVC compounds have an "A" chemical resistance rating as per ASTM D-1784. They have outperformed other PVC and CPVC compounds on aggressive chemicals.

### CRN Registration numbers by province
- Ontario: OC11045.5
- Newfoundland: OC11045.50
- Saskatchewan/Manitoba/Quebec: OC11045.56
- New Brunswick: OC11045.57
- Nova Scotia: OC11045.58
- P.E.I.: OC11045.59
- British Columbia: not required
- Alberta: not required[5]

[1] Butt ends for fusion to Chemline metric PP, PVDF or ECTFE (Halar®) piping.
[2] Other materials are available.
[3] PVC, CPVC and PVDF 1/2" to 2" are rated at 230 psi; 2-1/2" to 4" and all size PP valves are rated at 150 psi at 20°C.
[4] PVC valves with EPDM or FKM (Viton®) seals are certified under NSF/ANSI Standard 61 for contact with drinking water.
[5] Not required for non-expandable fluids.
[6] PVC and CPVC valves 1/2" to 2" are available as Combo (threaded and socket ends).

12/18 ©Chemline Plastics Limited 2018
Chemline is a registered trade mark of Chemline Plastics Limited

# Type 21 True Union Ball Valves

## Features

**Double Stem O-Rings – Safety Shear Design**

- Upper o-ring groove is deeper than lower. In case of excessive stem torque, stem will shear at the upper groove, leaving the inner o-ring intact to seal against full line pressure.

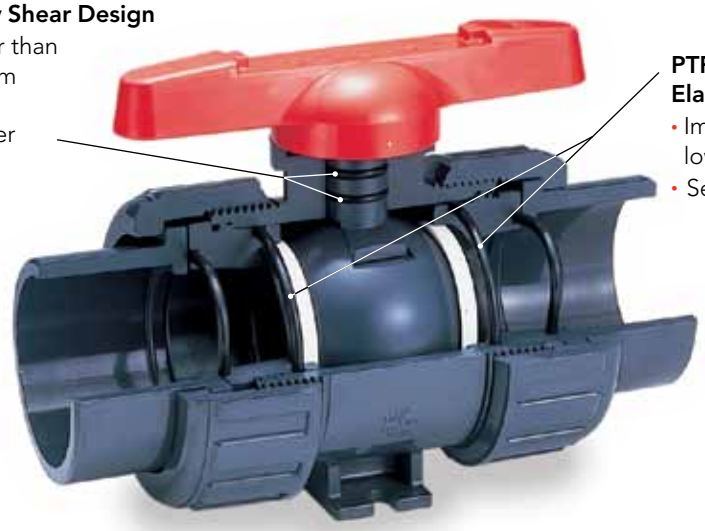

**PTFE Seats have Elastomer Cushions**

- Improved sealing while lowering stem torques
- Self adjusts for seat wear

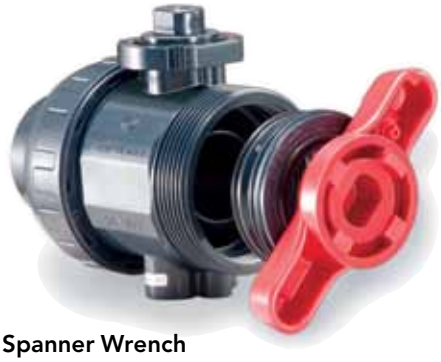

**Built in Spanner Wrench**

- For removing or tightening the seat carrier
- All parts are replaceable



**Integral Actuator Mounting Platform**

- Actuation is easy. Electric or pneumatic actuators may be mounted in the field. Simply pull off the handle to reveal a standard ISO 5211 mounting platform which accepts bolt-on hardware.




**Fully Blocking**

- Downstream pipe may be removed while upstream side is still pressurized. This may be done with valve installed in either direction.



**Base Mounting Pad**

- Optional threaded inserts allow valves to be securely anchored
- Supplied standard with actuated valves

# Type 21 True Union Ball Valves

## Options + Accessories



### ChemFlare™ Ends

- For connection to PFA tube. Leak-free connections for difficult services such as sodium hypochlorite



### One-piece moulded PVC and CPVC 6" socket ends

- Allows installation of 4" valve in 6" line
- Factory moulded, not fabricated with couplings and reducers cemented together
- Fixed to valve mechanically just like the one-piece moulded factory flanges

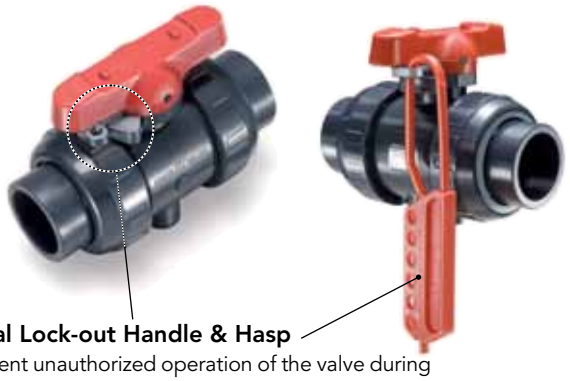

### Optional Lock-out Handle & Hasp

- To prevent unauthorized operation of the valve during maintenance shut-downs
- Padlocks go through holes in hasp



### Gear Operators

- Deluxe FRP construction
- IP67 enclosure resists short term immersion



### Chain Wheel Operators

- For overhead operation, with 7' of chain drop
- Cast iron or stainless steel

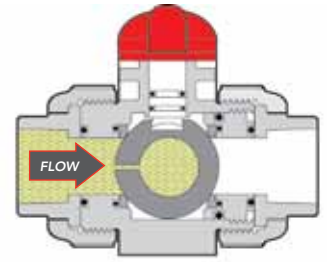


### Vented Ball

- Recommended for all sodium hypochlorite services
- Valve shown in closed position



### Valve Tags

- Stainless steel or plastic



### Different Colour Handles

- Choose a handle colour other than standard red for colour coding different services



### Municipal Operating Nut

- 2" square nut for operating valves below grade using a standard municipal "key"
- Stainless Steel for corrosion resistance



### Manual Limit Switch

- Electrical feedback of manual valve position
- NEMA 4X enclosure, position indicator beacon, 2x SPDT or proximity switches, stainless steel hardware



### Shaft Extensions

- Different materials and lengths are available
- Several designs:
  - with no housing for indoors
  - with waterproofed PVC housing for indoors or outdoors
  - with stainless steel housing for buried or actuated services

# Type 21 True Union Ball Valves

## Electric + Pneumatic Actuation

**Pneumatic and Electric Actuators**

- A complete range of actuators and control accessories are available, mounted to valves using PPG plastic brackets and stainless steel couplings. Refer to separate data sheets.
- All actuators are CSA approved, have NEMA 4X enclosures, stainless steel hardware and permanently lubricated gear train



### ERS Series Electric

- Type 21 ball valves up to 2”
- 180 in-lbs torque
- On-Off (3 wire, 2-wire)
- Visual feedback

### E Series Electric

- Type 21 ball valves up to 4”
- Up to 885 in-lbs torque
- On-Off (3 wire, 2 wire); optional failsafe, modulating
- Visual feedback and feedback switches; optional extra switches, feedback potentiometer and feedback transmitter



### Q Series Electric

- Type 21 ball valves up to 3”
- 300 in-lbs torque
- On-Off (3 wire) adjustable travel, optional On-Off (2 wire), failsafe 3-position, modulating
- Visual feedback, optional 2 feedback switches, feedback potentiometer and feedback transmitter



### A Series Electric

- Type 21 ball valves up to 6”
- up to 2,000 in-lbs torque
- On-Off (3 wire) adjustable travel, optional On-Off (2 wire), failsafe multi-turn, 3 position modulating, BUS
- Visual feedback, optional 2 feedback switches, feedback potentiometer and feedback transmitter



### V Series Electric

with Local Control Station

- Type 21 ball valves up to 6”
- up to 8,850 in-lbs torque
- On-Off (2/3 wire) adjustable travel, optional failsafe, modulating, BUS
- Visual feedback, 2 feedback switches, optional 2 extra feedback switches, feedback potentiometer and feedback transmitter



### PA Series Pneumatic

- Type 21 ball valves up to 6”
- up to 10,660 in-lbs torque
- industrial process submerged
- bleach/water washdown
- Rilsan-coated aluminum



### PP Series Pneumatic

- Type 21 ball valves up to 6”
- up to 1,335 in-lbs torque
- industrial process with minimal use of metal
- Glass-filled Polyamide

# Type 21 True Union Ball Valves

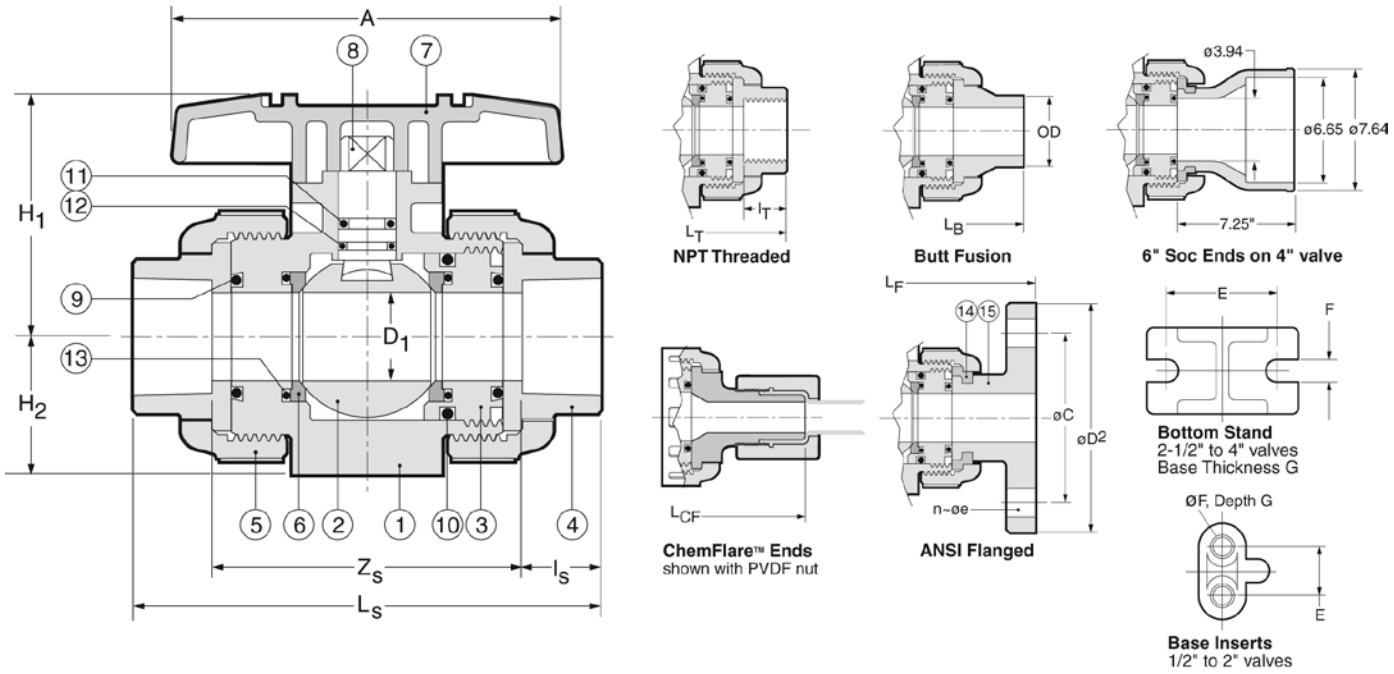


## PARTS

▲ Recommended Spare Parts

| No. | Part | Pcs. | Materials |
|---|---|---|---|
| 1 | Body | 1 | PVC, CPVC, PP, PVDF |
| 2 | Ball | 1 | PVC, CPVC, PP, PVDF |
| 3 | Carrier[1] | 1/2 | PVC, CPVC, PP, PVDF |
| 4 | End Connector | 2 | PVC, CPVC, PP, PVDF |
| 5 | Union Nut | 2 | PVC, CPVC, PP, PVDF |
| 6▲ | Ball Seat | 2 | PTFE |
| 7 | Handle | 1 | ABS |

[1] 1 carrier for sizes 1/2" to 2", 2 carriers for sizes 2-1/2" to 4"
[2] EPDM seals standard with PVC, CPVC, PP; FKM (Viton®) with PVDF valves
[3] 2 pcs 1/2" to 2", 6 pcs 2-1/2" to 4"

## PARTS

▲ Recommended Spare Parts

| No. | Part | Pcs. | Materials |
|---|---|---|---|
| 8 | Stem | 1 | PVC, CPVC, PP, PVDF |
| 9▲ | Face O-Ring[2] | 2 | EPDM, FKM (Viton®) |
| 10▲ | Carrier O-Ring[2] | 2 | EPDM, FKM (Viton®) |
| 11▲ | Upper Thicker Stem O-Ring[2] | 1 | EPDM, FKM (Viton®) |
| 12▲ | Lower Thinner Stem O-Ring[2] | 1 | EPDM, FKM (Viton®) |
| 13 | Seat Cushion[2] | 2 | EPDM, FKM (Viton®) |
| 14 | Flange Retainer[3] | 2/6 | PVDF |
| 15 | Flange | 2 | PVC, CPVC, PP, PVDF |

## DIMENSIONS INCHES

| | | | | | End Connections | | | | | | | | | | | | | | | | |
|---|---|---|---|---|---|---|---|---|---|---|---|---|---|---|---|---|---|---|---|---|---|
| | D | | | | Socket | | | Threaded | | Factory Flanged | | | | | Butt | | ChemFlare™ | | Valve Base | | |
| Size | Bore | A | $H_1$ | $H_2$ | $L_S$ | $Z_S$ | $l_S$ | $l_T$ | $L_T$ | $L_F$ | $D_2$ | C | n | e | $L_B$ | OD | $L_{CF}$ | Tube[4] | E | F[5] | G |
| 1/2" | .59 | 3.6 | 2.03 | 1.14 | 4.45 | 2.70 | .875 | .64 | 4.02 | 5.63 | 3.50 | 2.38 | 4 | .62 | 4.88 | .79 | 6.12 | 1/2" | .75 | .29 | .43 |
| 3/4" | .79 | 3.9 | 2.34 | 1.38 | 5.08 | 3.08 | 1.00 | .65 | 4.72 | 6.77 | 3.88 | 2.75 | 4 | .62 | 5.67 | .98 | 6.52 | 3/4" | .75 | .29 | .43 |
| 1" | .98 | 4.3 | 2.68 | 1.54 | 5.75 | 3.50 | 1.13 | .81 | 5.16 | 7.36 | 4.25 | 3.12 | 4 | .62 | 6.06 | 1.26 | 7.26 | 1" | .75 | .29 | .43 |
| 1-1/4" | 1.22 | 4.8 | 3.17 | 1.85 | 6.46 | 5.21 | 1.25 | .85 | 5.91 | 7.48 | 4.62 | 3.50 | 4 | .62 | 6.85 | 1.57 | 9.58 | 1-1/4" | 1.18 | .35 | .59 |
| 1-1/2" | 1.57 | 5.2 | 3.50 | 2.17 | 7.24 | 4.49 | 1.38 | .85 | 6.42 | 8.35 | 5.00 | 3.88 | 4 | .62 | 7.64 | 1.97 | – | – | 1.18 | .35 | .59 |
| 2" | 2.01 | 6.3 | 4.02 | 2.60 | 8.23 | 5.23 | 1.50 | 1.90 | 7.76 | 9.21 | 6.00 | 4.75 | 4 | .75 | 8.82 | 2.48 | – | – | 1.18 | .35 | .59 |
| 2-1/2" | 2.28 | 7.87 | 4.96 | 2.83 | 9.45 | 5.95 | 1.75 | 1.21 | 8.46 | 10.20 | 7.00 | 5.49 | 4 | .75 | 9.72 | 2.95 | – | – | 1.89 | .35 | .23 |
| 3" | 2.70 | 9.45 | 5.51 | 3.35 | 11.10 | 7.35 | 1.88 | 1.30 | 10.39 | 11.97 | 7.50 | 6.00 | 4 | .75 | 11.61 | 3.54 | – | – | 2.17 | .43 | .28 |
| 4" | 3.54 | 11.81 | 7.01 | 4.33 | 13.88 | 9.87 | 2.00 | 1.38 | 14.17 | 14.65 | 9.00 | 7.50 | 8 | .75 | 14.76 | 4.33 | – | – | 2.56 | .43 | .32 |
| 6"[6] | 3.54 | 11.81 | 7.01 | 4.33 | 23.15 | 17.09 | 3.03 | – | – | – | – | – | – | – | – | – | – | – | 2.56 | .43 | .32 |
| 6"[7] | 3.54 | 11.81 | 7.01 | 4.33 | 27.22 | 21.21 | 3.03 | – | – | – | – | – | – | – | – | – | – | – | 2.56 | .43 | .32 |

[4] ChemFlare™ ends are available for reduced tube sizes down to 1/4"
[5] Optional threaded inserts: 1/2" to 1" valves – UNC 1/4"-20; 1-1/4" to 2" valves – UNC 5/16"-18. 'Recoil' brand inserts require drilling before insertion.
[6] 6" with factory moulded socket ends
[7] 6" with fabricated socket ends

# Type 21 True Union Ball Valves

## WORKING PRESSURES PSI, Water, Non-Shock

## VACUUM RATING • 29.9 inches mercury

| Size | PVC | | | CPVC | | | | | | PP | | | PVDF | | | | |
|---|---|---|---|---|---|---|---|---|---|---|---|---|---|---|---|---|---|
| | 20°C 68°F | 40°C 104°F | 50°C 122°F | 20°C 68°F | 40°C 104°F | 50°C 122°F | 60°C 140°F | 80°C 176°F | 90°C 194°F | 20°C 68°F | 60°C 140°F | 80°C 176°F | 20°C 68°F | 40°C 104°F | 60°C 140°F | 80°C 176°F | 100°C 212°F |
| 1/2"– 2" | 230 | 165 | 150 | 230 | 165 | 150 | 120 | 75 | 55 | 150 | 85 | 55 | 230 | 185 | 150 | 110 | 85 |
| 2-1/2"– 4" | 150 | 150 | 150 | 150 | 150 | 150 | 120 | 75 | 55 | 150 | 70 | 40 | 150 | 150 | 150 | 110 | 85 |

**Temperature Ranges: PVC** 0 to 50°C (32 to 122°F), **CPVC** 0 to 90°C (32 to 194°F), **PP** –20 to 80°C (–4 to 176°F), **PVDF** –20 to 100°C (–20 to 212°F)

## WEIGHTS LB. THREADED or SOCKET

## WEIGHTS LB. FLANGED

| Size | PVC | CPVC | PP | PVDF | PVC | CPVC | PP | PVDF |
|---|---|---|---|---|---|---|---|---|
| 1/2" | 0.4 | 0.4 | 0.4 | 0.4 | 0.9 | 0.9 | 0.7 | 1.1 |
| 3/4" | 0.7 | 0.7 | 0.7 | 0.9 | 1.3 | 1.5 | 1.1 | 1.5 |
| 1" | 0.9 | 1.1 | 0.9 | 1.1 | 1.8 | 2.0 | 1.5 | 2.2 |
| 1-1/4" | 1.5 | 1.5 | 1.3 | 1.8 | 2.6 | 2.9 | 2.0 | 3.3 |
| 1-1/2" | 2.4 | 2.6 | 1.5 | 2.9 | 3.7 | 4.0 | 2.6 | 4.4 |
| 2" | 4.0 | 4.4 | 2.6 | 4.9 | 5.5 | 6.0 | 4.0 | 8.2 |
| 2-1/2" | 5.1 | 5.5 | 3.7 | 6.2 | 7.3 | 7.7 | 5.3 | 8.8 |
| 3" | 8.2 | 8.8 | 5.5 | 9.9 | 10.1 | 11.0 | 7.5 | 12.6 |
| 4" | 19.4 | 21.8 | 13.2 | 24.9 | 21.6 | 23.4 | 15.4 | 26.7 |

## Cv VALUES VS. BALL ANGLE

| Size | 0% | 25% | 50% | 75% | 100% |
|---|---|---|---|---|---|
| 1/2" | 0 | 0.35 | 1.3 | 5.5 | 14. |
| 3/4" | 0 | 0.73 | 2.8 | 11.5 | 29. |
| 1" | 0 | 1.2 | 4.5 | 18.6 | 47. |
| 1-1/4" | 0 | 1.8 | 6.8 | 28.4 | 72. |
| 1-1/2" | 0 | 3.9 | 14.7 | 61.2 | 155. |
| 2" | 0 | 4.8 | 18.0 | 75.0 | 190. |
| 2-1/2" | 0 | 9.1 | 34.7 | 144.0 | 365. |
| 3" | 0 | 10.2 | 39.0 | 162.0 | 410. |
| 4" | 0 | 17.0 | 64.6 | 269.0 | 680. |

## SAMPLE SPECIFICATION

1. All True Union Ball Valves in PVC, CPVC, PP or PVDF shall be Chemline Type 21 or equal sizes 1/2" to 2" in PVC, CPVC, and PVDF rated at 230 psi and in PP 150 psi maximum working pressure. Sizes 2-1/2", 3" and 4" rated at 150 psi maximum working pressure with EPDM or FKM (Viton®) seals. Ball seats shall be PTFE with elastomer cushions for closure with minimum stem torques.
2. All valves will have Safety Shear stem design, blowout-proof with double o-rings for safety. The top o-ring groove shall be deeper so that if the stem breaks off under excessive torque the lower o-ring will remain intact and the valve will hold pressure.
3. All valves shall be full port and two-way blocking design.
4. All valves will be CRN (Canadian Registration Number) registered with TSSA.
5. PVC valves with EPDM or FKM (Viton®) seals shall be certified under NSF/ANSI Standard 61 for contact with drinking water.
6. All valves shall have chemical resistant labels permanently marked with manufacturing number to provide production level traceability.
7. PVC compound shall have an ASTM cell classification 12454-A with a minimum suffix "A" designation for chemical resistance as per ASTM D-1784 (CSA report LO 4000-172).
8. CPVC compound shall have an ASTM cell classification 23567-A with a minimum suffix "A" designation for chemical resistance as per ASTM D-1784.
9. PP material will conform to ASTM D-4101 PP 021 B 67272 material requirements.
10. PVDF material shall be unpigmented conforming to ASTM D-3222 material requirements and to be USDA Title 21 Chapter 1 Part 177. 2510 requirements for contact with food.
11. Socket ends in PVC and CPVC shall be Schedule 80 and conform to ASTM D-2467.
12. Threaded ends shall be Schedule 80 and conform to ASTM D-2464.
13. Butt fusion ends in PP or PVDF will be compatible with Chemline PP or PVDF metric piping systems.
14. Flanged ends shall be ANSI Class 150 one-piece factory moulded (not fabricated) to ensure maximum strength and close tolerance end to end dimensions.

## ORDERING EXAMPLE

| **Chemline True Union Ball Valves** | **21** | **A** | **020** | **E** | **S** |
|---|---|---|---|---|---|
| Body Material | **A** – PVC **B** – PP | **C** – CPVC **K** – PVDF | | | |
| Size[1] | **002** – 1/4" **010** – 1" **025** – 2-1/2" | **003** – 3/8" **012** – 1-1/4" **030** – 3" | **005** – 1/2" **015** – 1-1/2" **040** – 4" | **007** – 3/4" **020** – 2" **060** – 6" | |
| Seals | **E** – EPDM | **V** – FKM (Viton®) | **N** – Nitrile | **A** – Aflas® | |
| Ends | **S** – Socket | **T** – Threaded | **C** – Combo[2] | **F** – Flanged | **B** – Butt[3] **CF** – ChemFlare™ |

**Example:** Chemline Type 21 True Union Ball Valve, PVC, 2", with EPDM seals, socket ends.

[1] 1/4" is normally the 3/8" valve reduced. 6" is 4" valve with 6" end connections.

[2] PVC and CPVC valves 1/2" to 2" are available as Combo (socket and threaded ends).

[3] PP, PVDF and ECTFE (Halar®) metric butt fusion ends (1/2" to 4") connect to Chemline PP, PVDF and ECTFE (Halar®) piping systems.

## OTHER OPTIONS & ACCESSORIES

- **Alternate O-Ring Seals**
- **Stem Extensions** made to any length
- **Limit Switches** – For open and/or closed position indication
- **Municipal Operating Nut**
- **Lubrication-free Valves** – Factory clean room assembled
- **Vented Ball** – For sodium hypochlorite applications

CHEMLINE PLASTICS
SUPERIOR FLOW SOLUTIONS

55 Guardsman Road, Thornhill, ON, L3T 6L2, Canada | ISO 9001:2015 Certified
1.800.930.2436 (CHEM) | fax.905.889.8553 | request@chemline.com | chemline.com

PDF Published June 11, 2008

# Gauge Isolators

Chemline SG Series Gauge Isolators allow inexpensive pressure gauges, or any other pressure instrument to be used in corrosive services. The upper chamber (gauge side) is filled with a stable fluid such as glycol or glycerine‡. A diaphragm separates it from the lower chamber which receives the media under pressure.

The 1/2" gauge connection allows use of the popular 4" and 4-1/2" diameter gauges. Pressure switches or transmitters may also be installed. Customers can easily fill isolators and install their own gauges.

CHEMLINE Plastics Limited

*Your Pipeline To Quality*

## PVC, PP, PVDF

**SERIES:** SG

**INLET CONNECTION:** 1/4" or 1/2" Threaded†

**INSTRUMENT CONNECTION:** 1/4" or 1/2" Threaded

**DIAPHRAGM:** Teflon®

## Isolate Pressure Instruments from Corrosive Media

## Teflon® Diaphragm

### *Features*

**Easy to Mount Gauges**
- It is easy to fill an isolator and field mount a gauge. No special equipment is required.
- Will accept popular 4" and 4-1/2" diameter gauges

**Provision for Fill Port**
- Housing may be drilled and tapped by Chemline or customer for a threaded fill port. This is used for filling isolator using a vacuum filling station

**High Chemical Resistance**
- Choice of body materials for a wide range of applications
- Teflon® PTFE bonded EPDM dished diaphragm for high chemical resistance and sensitivity

**Heavy Duty Design for Safety**
- PPG* top chamber
- Heavy wall connection ports

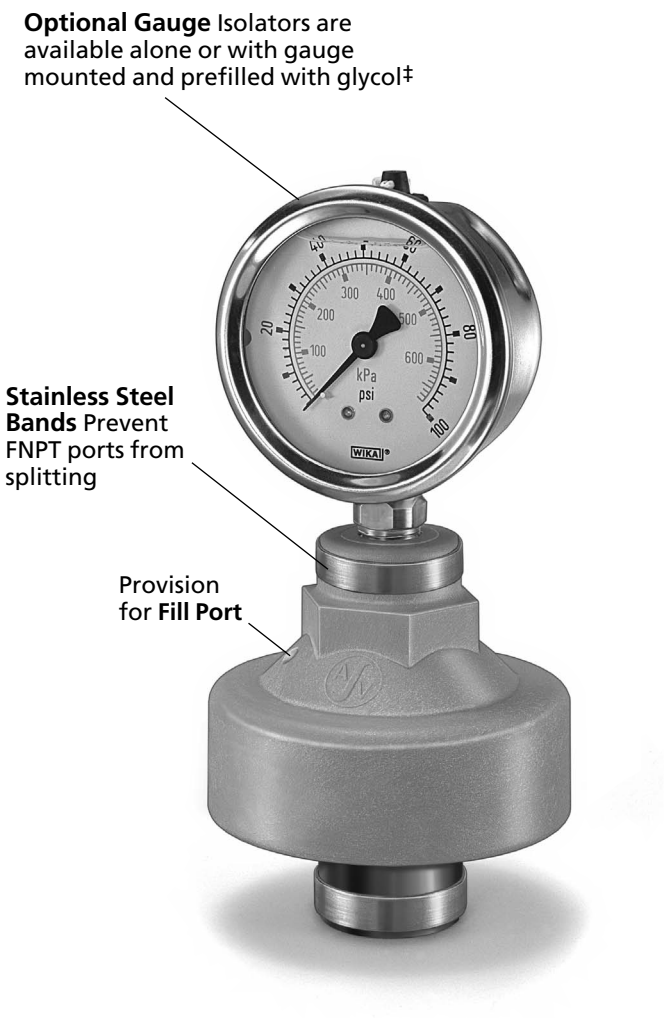


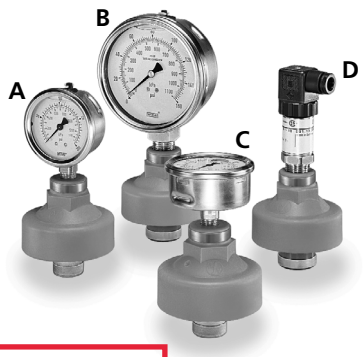


**A** With 2" gauge
**B** With 4-1/2" gauge
**C** With 2" back mount gauge
**D** With pressure transmitter

† Other available inlet connections are 1/2" socket or 1/2" to 1" flanged.
‡ Other fluids are available for special applications such as chlorine service.
* Glass reinforced polypropylene.

06/08 ©Chemline Plastics Limited 2008
Chemline is a registered trade mark of Chemline Plastics Limited

# Gauge Isolators

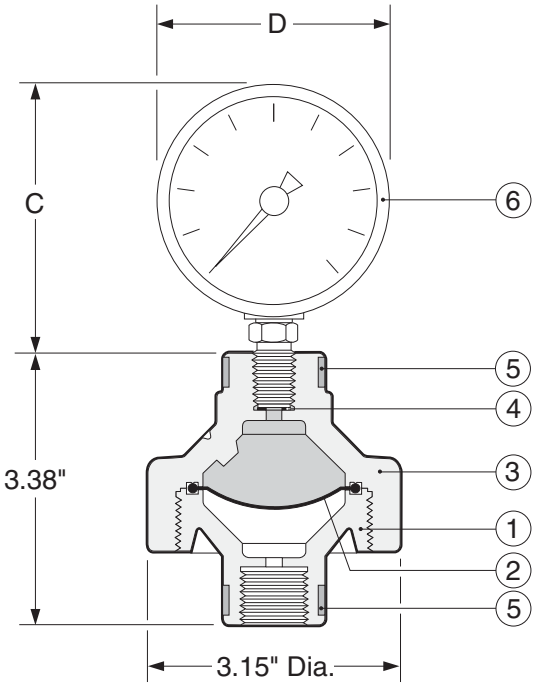


## PARTS

▲Recommended Spare Parts

| No. | Part | Pcs. | Materials |
|---|---|---|---|
| 1 | Body | 1 | PVC, PP, PVDF |
| 2▲ | Diaphragm | 1 | Teflon® PTFE |
| 3 | Bonnet | 1 | PPG |
| 4 | Gasket | 1 | EPDM |
| 5 | Stainless Steel Bands | 2 | 304 SS |
| 6 | Optional Gauge | 1 | See below |

PPG = Glass reinforced polypropylene

## OPTIONAL GAUGES

- Chemline offers the gauges listed below mounted to isolator and prefilled with glycol, glycerine or special fluid for chlorine applications. These gauges have dials and cases filled with either glycol (standard), glycerine or silicon for corrosion resistance and dampening.

## OTHER OPTIONS

- **Flanged** inlet connections
- **Threaded Fill Port** – drilled, tapped and plugged
- Chemline will mount any pressure instrument supplied free issue by customer

## DIMENSIONS INCHES

| Gauge Diameter | Item No. | Gauge Connection | Housing | Bourdon Tube | Window | Accuracy | Dimensions C | Dimensions D(max.) |
|---|---|---|---|---|---|---|---|---|
| 2-1/2" | P025-xx | 1/4" | 316 SS | Brass | Polycarbonate | ±1.5% of span | 3.1 | 2.5 |
| 2-1/2" | P025-xx-SS | 1/4" | 316 SS | 316 SS | Polycarbonate | ±1.5% of span | 3.1 | 2.5 |
| 2-1/2" Back Mount | P025-xx-SS/BM | 1/4" | 316 SS | 316 SS | Polycarbonate | ±1.5% of span | 1.6 | 2.5 |
| 2-1/2" Back Mount | P025-xx-BM | 1/4" | 316 SS | Brass | Polycarbonate | ±1.5% of span | 1.6 | 2.5 |
| 4" | P040-xx-SS | 1/2" | 316 SS | 316 SS | Safety Glass | ±1% of span | 4.5 | 4.0 |
| 4-1/2" | P045-xx-SS | 1/2" | PBTP Plastic[1] | 316 SS | Acrylic | ±0.5% of span | 6.3 | 5.8 |

**xx** denotes the maximum gauge pressure i.e., 30, 60, 100, 160 or 200 psi. See data page for recommended working pressures.
[1] PBTP = glass filled polyester.

## WORKING PRESSURES PSI

## WEIGHTS

| Material | 10 – 20°C 50 – 68°F | 30°C 86°F | 40°C 104°F | 50°C 122°F | 60°C 140°F | 70°C 158°F | 80°C 176°F | 90°C 194°F | 100°C 212°F | 120°C 248°F | Net Weights Pounds* |
|---|---|---|---|---|---|---|---|---|---|---|---|
| **PVC** | 150 | 100 | 80 | 45 | 15 | – | – | – | – | – | 1.0 |
| **PP** | 150 | 125 | 100 | 80 | 65 | 45 | – | – | – | – | 0.7 |
| **PVDF** | 150 | 150 | 150 | 125 | 105 | 85 | 70 | 60 | 45 | 30 | 1.3 |

**Temperature Ranges: PVC** –10 to 60°C (14 to 140°F), **PP:** 8 to 80°C (46 to 176°F), **PVDF:** –30 to 120°C (–22 to 248°F).
**NR** = Not Recommended. * Weights are for unfilled 1/2" x 1/2" isolators without gauges. 1/2" x 1/4" isolators are 20% lighter.

## ORDERING EXAMPLE

| Chemline Gauge Isolators | SG | A | 005- | 002 | P | G |
|---|---|---|---|---|---|---|
| Body Material | **A** – PVC | **B** – PP | **K** – PVDF | | | |
| Inlet Size | **002** – 1/4" | **005** – 1/2" (Standard) | | | | |
| Instrument Connection | **002** – 1/4" | **005** – 1/2" | | | | |
| Diaphragm | **P** – Teflon® PTFE bonded EPDM | | | | | |
| Filling & Mounting | **G** – Add only if isolator is supplied filled with glycol and gauge or pressure instrument is mounted by Chemline. Separate gauge item numbers are listed above. | | | | | |

**Example:** Chemline SG Series Gauge Isolator, PVC, 1/2" x 1/4" FNPT inlet x instrument connections, Teflon®.

CHEMLINE Plastics Limited
55 Guardsman Road, Thornhill, Ontario, Canada, L3T 6L2
**Tel:** 905-889-7890 request@chemline.com
**Fax:** 905-889-8553 www.chemline.com

ISO 9001:2000 Certified

*Your Pipeline To Quality Valves, Piping, Flow Meters and Controls*

PDF Published May 5, 2014

# Y Sediment Strainers

CHEMLINE PLASTICS
SUPERIOR FLOW SOLUTIONS

The Chemline YSA Series Y Sediment Strainer is a safety filtration device designed to entrap occasional solid impurities in the line. This is to protect equipment with small orifices such as solenoid valves, and prevent damage to pumps or control valves, etc. The easily replaceable filter screen comes in a choice of meshes. The new YSA Series True Union models have greatly increased filtration areas. Pressure drops are lower and less frequent cleaning is required.

PVC [1]

CRN Registered Consult Chemline

NSF [4] Certified to NSF/ANSI 61

SERIES: YSA

SIZES: 1/2" – 4"

ENDS: True Union, Threaded, Socket, Flanged or ChemFlare™ [2]

SEALS: EPDM, FKM (Viton®) [3]

**True Union Design**
Body slips out of line.
No need for flanges.

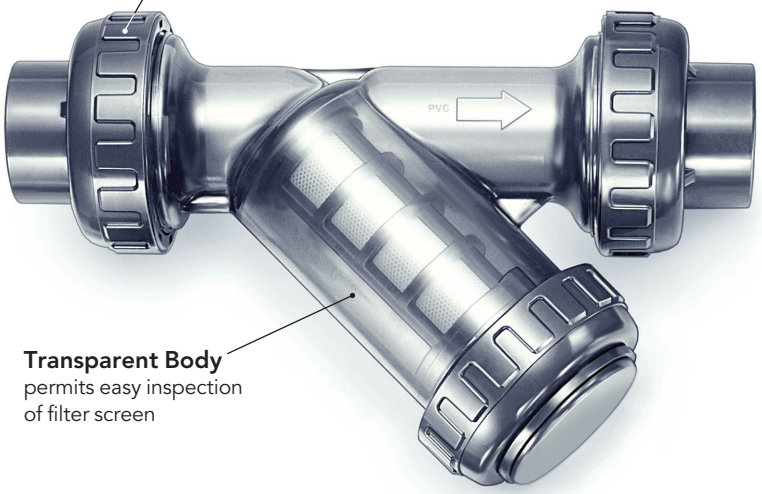

**Transparent Body**
permits easy inspection
of filter screen

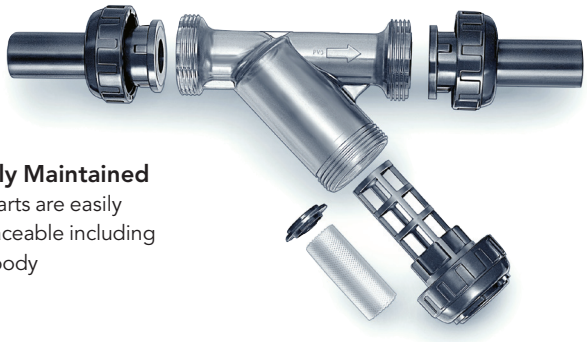

- **Easily Maintained**
  All parts are easily replaceable including the body

## features

- **High Capacity**
- **Transparent Body**

### Large Filtration Capacity Low Pressure Drops

- Diameter of screens are full pipe bore. The effective filtering area is in some sizes twice the filtering area of other makes. This results in larger filtration capacities and lower pressure drops.

### Replaceable Filter Screens

- Available with choice of PVC 24, 35 or 55 mesh filter screens
- 316 SS screens are also available

### Dual Socket and Threaded Ends

- Sizes 1/2" to 2" in PVC are supplied with socket ends plus two free threaded ends in each box

### CRN Registration numbers by province

- Ontario: OE10926.5
- Newfoundland: OE10926.50
- British Columbia: OE10926.51
- Saskatchewan/Manitoba/Quebec: OE10926.56
- New Brunswick: OE10926.57
- Nova Scotia: OE10926.58
- P.E.I.: OE10926.59
- Alberta: not required [5]

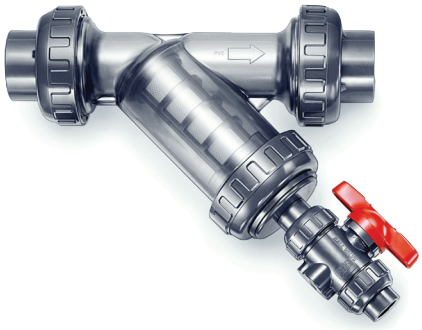

- **Optional Flush Valve**

[1] Polypropylene and PVDF Strainers are available special order.
[2] For ChemFlare™ end connectors, consult Chemline.
[3] Other seal materials are available special order.
[4] PVC valves with EPDM or FKM (Viton®) seals are certified under NSF/ANSI Standard 61 for contact with drinking water.
[5] Not required for non-expandable fluids.

05/14 ©Chemline Plastics Limited 2014
Chemline is a registered trade mark of Chemline Plastics Limited

# Y Sediment Strainers

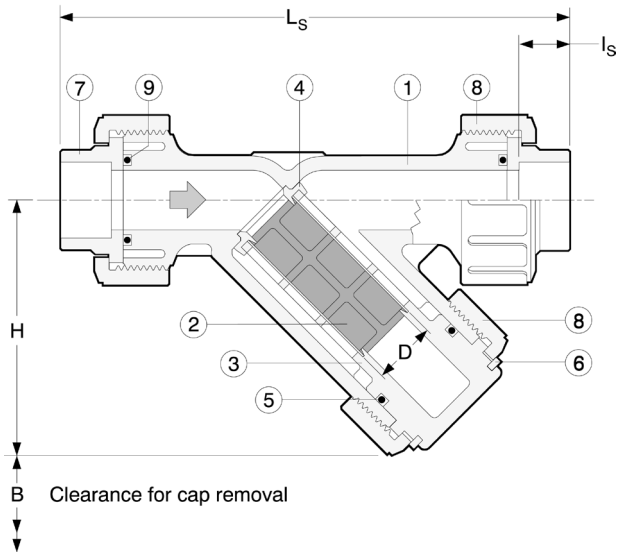


## PARTS

▲ Recommended Spare Parts

| No. | Part | Pcs. | Materials |
|---|---|---|---|
| 1 | Body | 1 | PVC |
| 2▲ | Filter Screen | 1 | PVC, 316SS |
| 3 | Cap/Filter Cage | 1 | PVC |
| 4▲ | Screen Retainer | 1 | PVC |
| 5▲ | Cap O-Ring | 1 | EPDM, FKM (Viton®) |
| 6 | Split Ring | 1 | PVC |
| 7 | End Connector | 2 | PVC |
| 8 | Union Nut | 3 | PVC |
| 9▲ | Face O-Ring | 2 | EPDM, FKM (Viton®) |

## DIMENSIONS INCHES

| Size | B | D | H (Closed) | $L_T$ Threaded | $L_S$ Socket | $L_F$ Flanged | $l_S$ Socket | Exposed Screen Area ($in^2$) |
|---|---|---|---|---|---|---|---|---|
| 1/2" | 3. | 0.63 | 2.8 | 6.50 | 6.93 | 8.1 | 0.87 | 2.71 |
| 3/4" | 4. | 0.83 | 3.7 | ~~7.95~~ | 8.30 | ~~10.0~~ | ~~1.00~~ | 4.57 |
| 1" | 5. | 1.1 | 4.0 | 8.82 | 9.37 | 11.1 | 1.12 | 5.98 |
| 1-1/2" | 6. | 1.6 | 5.7 | 11.30 | 12.13 | 13.2 | 1.38 | 13.8 |
| 2" | 7. | 2.0 | 6.6 | 12.76 | 13.31 | 14.2 | 1.50 | 20.0 |
| 3" | 8. | 3.1 | 7.5 | 17.2 | 17.80 | 18.8 | 1.87 | 34.0 |
| 4" | 11. | 3.9 | 10.1 | 23.5 | 23.54 | 23.9 | 2.25 | 54.7 |

## NET WEIGHTS LB.

| Size | Threaded Socket | Flanged |
|---|---|---|
| 1/2" | 0.5 | 1.0 |
| 3/4" | 1.0 | 1.6 |
| 1" | 1.5 | 2.4 |
| 1-1/2" | 3.4 | 4.6 |
| 2" | 4.3 | 6.0 |
| 3" | 12.7 | 14.7 |
| 4" | 30.8 | 35.1 |

## WORKING PRESSURES PSI

| 0-50°C 32-122°F |
|---|
| 150 |
| 150 |
| 150 |
| 150 |
| 150 |
| 150 |
| 85 |
| 85 |

**Temperature Range**
0 to 60°C (32 to 140°F)

## Cv VALUES

| USGPM Flow at 1 PSI Pressure Drop |
|---|
| 5.2 |
| 7.5 |
| 14. |
| 34. |
| 50. |
| 110. |
| 165. |

With clean 24 mesh screen

## FILTER SCREEN DATA

| Equiv. Mesh | Micron Filtration | Hole Area ($in^2$) | Holes per $in^2$ | % Open Area |
|---|---|---|---|---|
| 24 | 690 | .00114 | 135 | 15.4 |
| 35 | 490 | .00053 | 258 | 13.7 |
| 55 | 250 | .00011 | 774 | 8.5 |

24 mesh is supplied as standard, 35 or 55 mesh supplied on request.

**Micron filtration** is the smallest diameter of a sphere which will be retained by the mesh.

## ORDERING EXAMPLE

| Chemline PVC Y Strainers | YSA | 020 | E | S |
|---|---|---|---|---|
| Size | **005** – 1/2" **007** – 3/4" **010** – 1" **012** – 1-1/4" **015** – 1-1/2" **020** – 2 **030** – 3" **040** – 4" **060** – 6"[1] | | | |
| Seals | **E** – EPDM **V** – FKM (Viton®) **C** – CPE[2] **B** – Nitrile[3] **A** – Aflas® | | | |
| Ends | **S** – Socket **T** – Threaded **F** – Flanged **CF** – ChemFlare™ | | | |

**Example:** Chemline PVC Y Strainer, 2", EPDM o-rings, socket ends.

[1] 6" is 4" strainer with 6" end connections
[2] CPE=Chlorinated Polyethylene
[3] Nitrile is also called "Buna-N"

## OPTIONS

- **Alternate O-Ring materials**
- **Flush out valve installed in cap**
- **316 Stainless Steel Screens** if greater open area is required
- **Polypropylene or PVDF Construction**
  – Design is different from YSA Series. Consult Chemline.

CHEMLINE PLASTICS
SUPERIOR FLOW SOLUTIONS

55 Guardsman Road, Thornhill, ON, L3T 6L2, Canada | ISO 9001:2008 Certified
tel.905.889.7890 | fax.905.889.8553 | request@chemline.com | chemline.com

PDF Published September 17, 2014

# SB12 Series Back Pressure/Relief Valves

CHEMLINE PLASTICS
SUPERIOR FLOW SOLUTIONS

PVC PP PVDF

CRN Registered as Category C Fittings Consult Chemline

NSF[3] Certified to NSF/ANSI 61

SERIES: SB12

SIZES: 3/8" – 4"

ENDS: True Union Socket, Threaded or ChemFlare™[1] Spigot[2] Bodies with Plain, Socket, Threaded or Flanged ends

DIAPHRAGM: PTFE Bonded EPDM

SEALS: EPDM, FKM (Viton®)




The Chemline SB Series Back Pressure/ Relief Valve has two functions. As a ***back pressure valve***, installed in-line downstream of a pump, the back pressure below the metering pump is maintained. When installed in the branch of a tee it is a ***pressure relief valve***. The valve stays closed until inlet pressure reaches the set pressure which is adjusted by turning the spring tensioning bolt. Inlet pressure acts upward against the piston allowing excess pressure to flow upwards through the orifice.

The SB12 Series has a built-in check valve function, desirable for dosing applications. It is not so sensitive as to open with every pulsation from a metering pump.

## features

### True Union Ends

- Easy installation and maintenance
- Eliminate chemical leakage problems common with old fashioned threaded connections

### Long Cycling Life

- Dynamic seal is PTFE bonded EPDM for high chemical resistance
- This moulded diaphragm is designed for superior sealing and flex life

### Superior Performance in Dosing Systems

- Valves are hydraulically designed for very low hysteresis ("backlash") and to eliminate chatter
- Built-in check (non-return) function
- Valve opening depends on inlet pressure only and is uneffected by changes in downstream (back) pressure

### CRN Registration numbers by province

- Ontario: OC10134.5
- Newfoundland: OC10134.50
- Alberta: OC10134.52
- Saskatchewan/Manitoba/Quebec: OC10134.56
- New Brunswick: OC10134.57
- Nova Scotia: OC10134.58
- P.E.I.: OC10134.59
- British Columbia: not required

## technical

### Set Pressure Ranges

- 1/2" to 2" – 5 to 150 psi
- 2-1/2" and 3" – 7.5 to 150 psi
- 2-1/2" to 4" – 4 to 60 psi (optional)
- 4" – 7.5 to 90 psi

### Maximum Viscosity

- 120cP is maximum recommended service viscosity

[1] For ChemFlare™ end connectors, consult Chemline.
[2] PP and PVDF spigot ends have DIN dimensions and will butt fuse directly to Chemline PP and PVDF piping systems.
[3] PVC valves with EPDM or FKM (Viton®) seals are certified under NSF/ANSI Standard 61 for contact with drinking water.

09/14 ©Chemline Plastics Limited 2014
Chemline is a registered trade mark of Chemline Plastics Limited

# SB12 Series Back Pressure/Relief Valves 1/2" to 2"

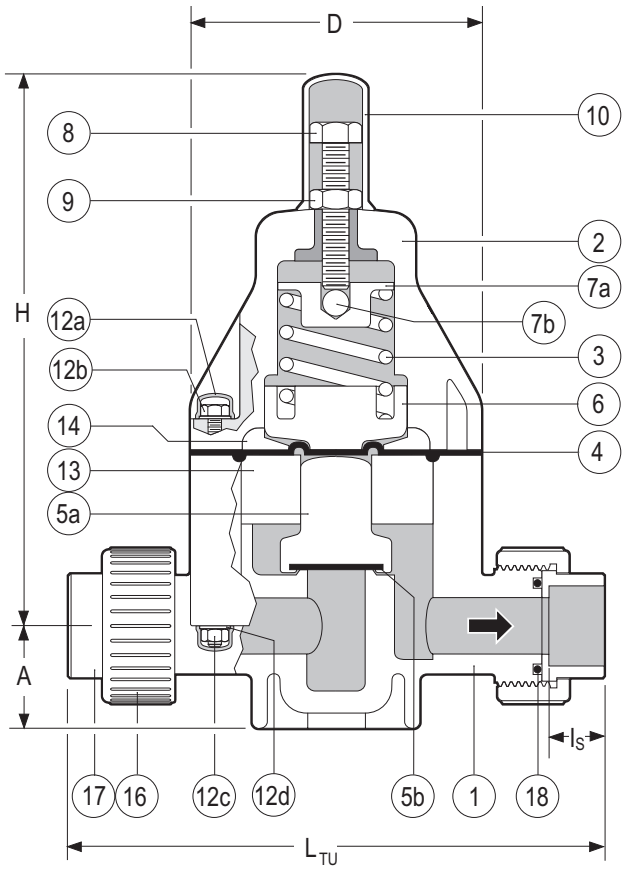


True Union Body

## PARTS

▲ Recommended Spare Parts

| No. | Part | Pcs. | Materials |
|---|---|---|---|
| 1 | Body | 1 | PVC, PP, PVDF |
| 2 | Bonnet | 1 | PPG |
| 3 | Spring | 1 | Galvanized Steel |
| 4▲ | Control Diaphragm | 1 | PTFE bonded EPDM |
| 5a▲ | Piston | 1 | PVC, PP, PVDF |
| 5b▲ | Seat | 1 | EPDM, FPM(Viton®) |
| 6 | Lower Spring Retainer | 1 | PPG |
| 7a | Upper Spring Retainer | 1 | Cad. Plated Steel |
| 7b | Ball | 1 | 304 SS |
| 8 | Spring Tensioning Bolt | 1 | 304 SS |
| 9 | Lock Nut | 1 | 304 SS |
| 10 | Spring Bolt Cap | 1 | PE |
| 12a | Bolt/Nut Cap | 8/12[1] | PE |
| 12b | Hex Bolt | 4/6[1] | 304 SS |
| 12c | Hex Nut | 4/6[1] | 304 SS |
| 12d | Washer | 8/12[1] | 304 SS |
| 13 | Spacer Disc | 1 | PVC, PP, PVDF |
| 14 | Pressure Plate | 1 | PP |
| 16 | Union Nut | 2 | PVC, PP, PVDF |
| 17 | End Connector | 2 | PVC, PP, PVDF |
| 18▲ | Face O-Ring | 2 | EPDM, FPM(Viton®) |

[1] 1/2" size / 3/4" to 2" sizes

## OTHER ENDS

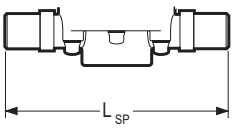


Spigot Body

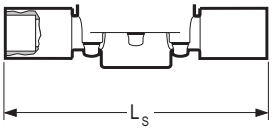


Socket

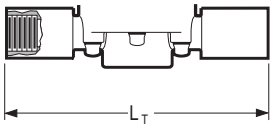


Threaded

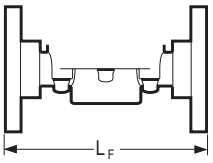


Flanged

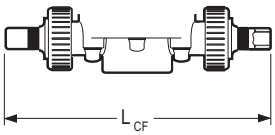


ChemFlare™

## DIMENSIONS INCHES

## WEIGHTS LB.

## Cv VALUES

| Size | D | H | PVC A | PVC $I_S$ | PVC $L_{TU}$[2] | PVC $L_{SP}$[3] | PVC $L_S$ | PVC $L_T$ | PVC $L_F$ | PVC $L_{CF}$ | PP and PVDF A | PP and PVDF $L_{SP}$[3] | PP and PVDF $L_{TU}$[2] | PVC | PP | PVDF | USGPM Flow at 1 psi △P |
|---|---|---|---|---|---|---|---|---|---|---|---|---|---|---|---|---|---|
| 3/8" | 3.2 | 6.9 | 1.0 | 0.6 | 6.5 | 5.7 | 7.4 | 7.2 | 4.5 | 8.2 | 0.9 | 5.7 | ** | 1.8 | 1.5 | 2.2 | 2.1 |
| 1/2" | 3.2 | 6.9 | 1.0 | 0.6 | 6.8 | 5.7 | 8.0 | 7.8 | 6.3 | 8.3[4] | 0.9 | 5.7 | 7.1 | 1.9 | 1.6 | 2.4 | 3.0 |
| 3/4" | 4.2 | 8.0 | 1.5 | 0.7 | 8.3 | 6.9 | 9.3 | 8.9 | 7.4 | 9.7 | ~~1.4~~ | ~~6.9~~ | ~~8.4~~ | 4.1 | ~~3.5~~ | ~~4.6~~ | 6.6 |
| 1" | 4.2 | 8.0 | 1.5 | 0.9 | 8.5 | 6.9 | 9.6 | 9.3 | 7.4 | 10.2 | 1.4 | 6.9 | 8.7 | 4.2 | 3.5 | 4.7 | 8.7 |
| 1-1/4" | 5.8 | 10.3 | 2.2 | 1.0 | 10.9 | 8.8 | 11.6 | 11.2 | 9.2 | 13.5 | 2.1 | 8.8 | 10.9 | 11.0 | 9.0 | 12.0 | 18.0 |
| 1-1/2" | 5.8 | 10.3 | 2.2 | 1.2 | 11.1 | 8.8 | 12.2 | 11.5 | 9.5 | – | 2.1 | 8.8 | 11.2 | 11.2 | 9.2 | 12.2 | 20.0 |
| 2" | 5.8 | 10.3 | 2.2 | 1.5 | 11.3 | 9.6 | 12.9 | 12.0 | 10.0 | – | 2.1 | 8.8 | 13.2 | 11.4 | 9.4 | 12.4 | 21.4 |

[2] True Union bodies come standard with socket ends. Threaded union ends are available. ** Consult Chemline.
[3] Spigot bodies are used for non union socket, threaded or flanged ends. All spigot ends have metric dimensions and the PP and PVDF spigots butt fuse directly to Chemline PP and PVDF piping. [4] Tube size can be reduced to 1/4" tube, LCF = 7.74" for 1/4", 8.26" for 3/8".

## MAXIMUM PRESSURES PSI

| Size | PVC 20°C 68°F | PVC 30°C 86°F | PVC 40°C 104°F | PVC 50°C 122°F | PP 30°C 86°F | PP 40°C 104°F | PP 50°C 122°F | PP 60°C 140°F | PP 70°C 158°F | PVDF 30°C 86°F | PVDF 50°C 122°F | PVDF 70°C 158°F | PVDF 80°C 176°F | PVDF 90°C 194°F | PVDF 100°C 212°F |
|---|---|---|---|---|---|---|---|---|---|---|---|---|---|---|---|
| 1/2"– 2" | 150 | 105 | 60 | 15 | 150 | 90 | 60 | 37.5 | 15 | 150 | 100 | 60 | 45 | 30 | 15 |

**Temperature Ranges: PVC** 0 to 50°C (32 to 122°F), **PP** 10 to 70°C (50 to 158°F), **PVDF** –30 to 100°C (–22 to 212°F).

# SB12 Series Back Pressure/Relief Valves 1/2” to 2”

## pressure loss nomogram for SB12 valves 3/8” to 2”

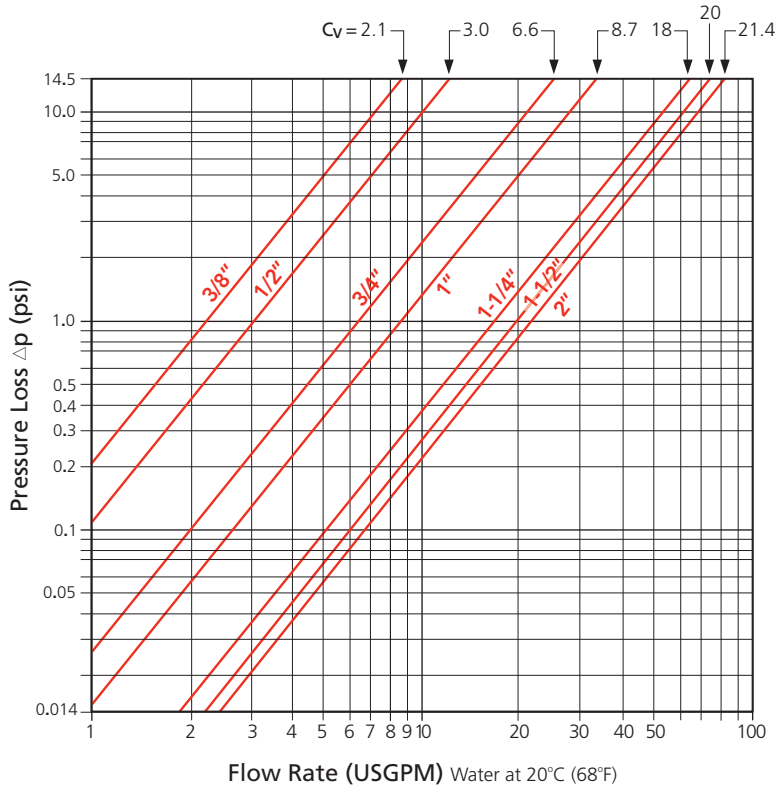


## typical dosing system schematic

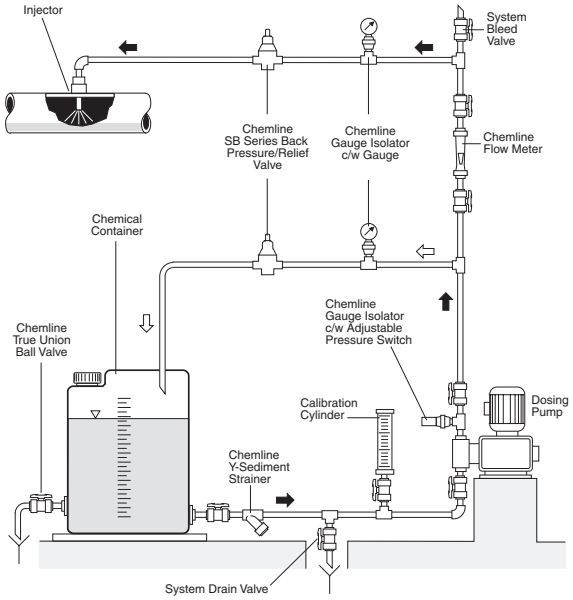


## application of pressure relief valves

### Constant System Pressure

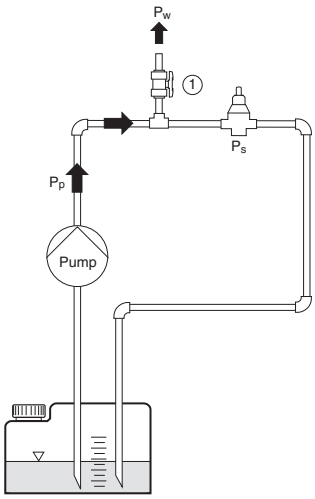


$P_p \geq P_w$
$P_p \geq P_s$ → valve opens
$P_p \leq P_s$ → valve closed

### Consumer 1 and/or 2 Open, Valve Closes

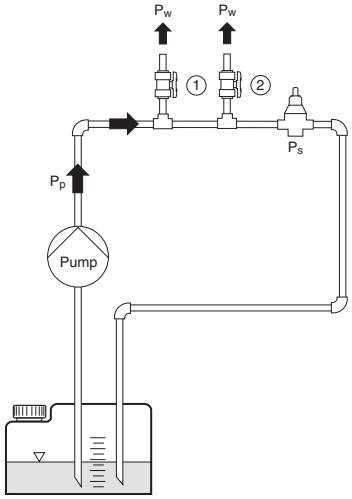


$P_p \geq P_s$ → valve opens
$P_p \leq P_s$ → valve closed

### Non-Return Valve

Container 1 is located above the pump

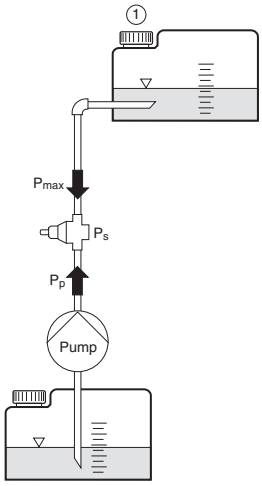


$P_s \geq P_{max}$
$P_p \geq P_s$ → valve opens
$P_p \leq P_s$ → valve closed

### Overflow Valve

Pressure of container or application system should not exceed the maximum pressure value

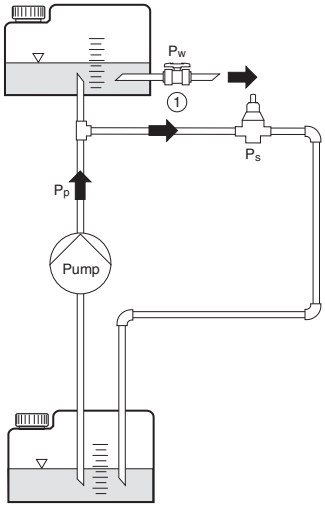


$P_s \leq P_w$
$P_p \geq P_s$ → valve opens
$P_p \leq P_s$ → valve closed

$P_w$ = Working Pressure
$P_p$ = Pump Pressure
$P_s$ = Set Pressure

# SB12 Series Back Pressure/Relief Valves 1/2" to 2"

## working pressure vs. flow rate

The curves show the relationship between the working pressure and the approximate flow rate through the valve for water at 20°C (68°F) . These values will vary depending on:

- The configuration of the piping and the pressure losses associated with it
- The fluid if not water at 20°C (68°F)
- Whether the pressure is rising or falling, hysteresis is approximately 4 psi for 1/2" to 2" valves. For valves 2-1/2" to 4", hysteresis is approximately 14.5 psi.

## operation examples

1. The valve is set closed at 100 psi. At a pressure increase of 10 psi, a flow of approximately 1.0 USGPM will be reached.
   - set pressure = 100 psi
   - working pressure = 110 psi
   - opening pressure = approximately 104 psi
2. The valve is set closed at 50 psi. At a pressure increase of 10 psi, a flow of approximately 1.0 USGPM will be reached.
   - set pressure = 50 psi
   - working pressure = 60 psi
   - opening pressure = approximately 54 psi

### 3/8" Valves

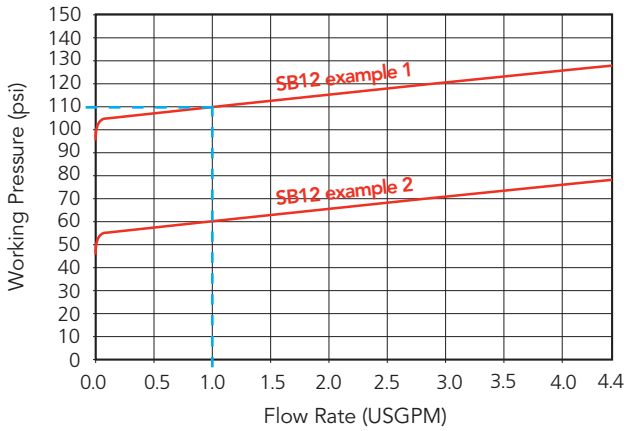


### 1/2" Valves

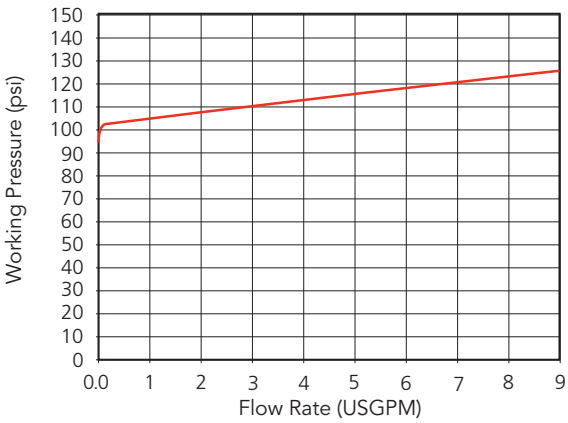


### 3/4" Valves

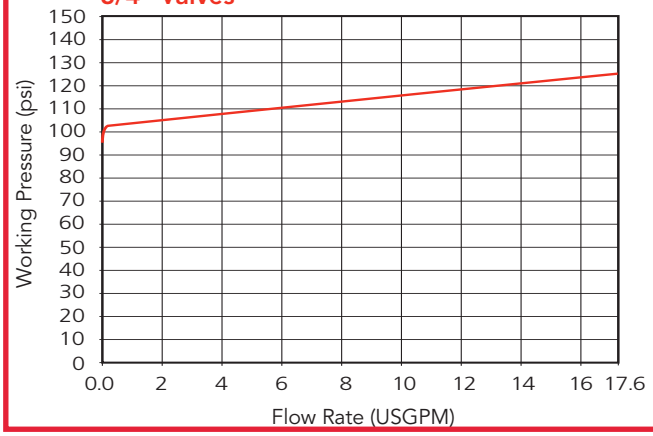


### 1" Valves

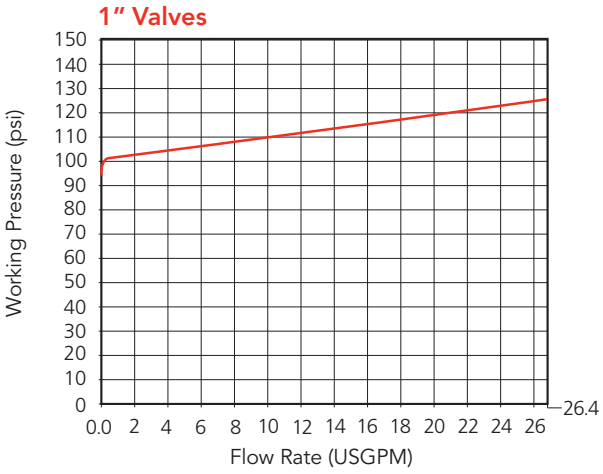


### 1-1/4" Valves

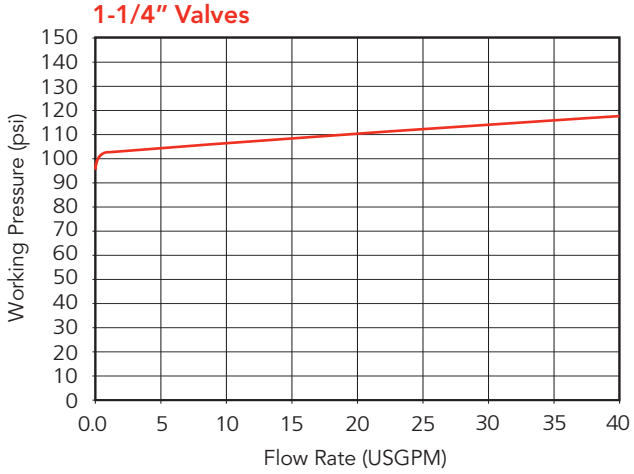


### 1-1/2" Valves

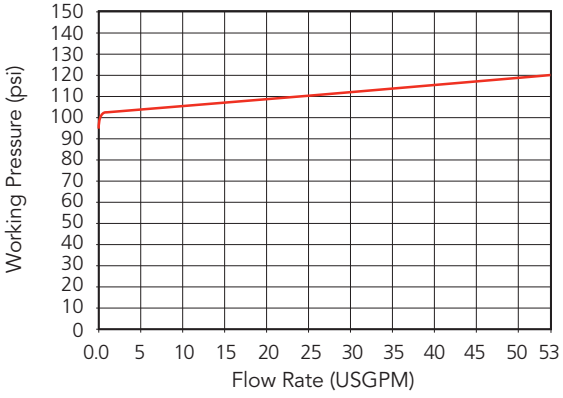


### 2" Valves

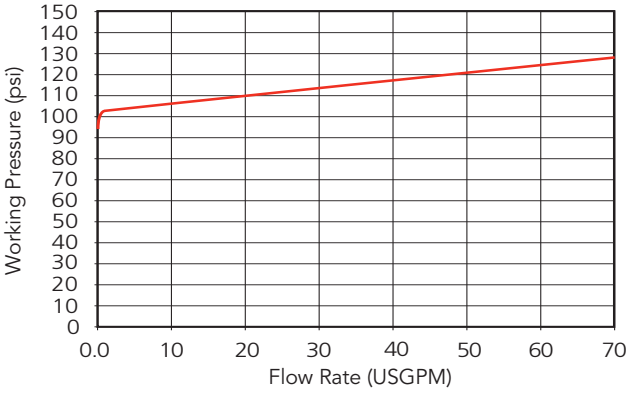

# SB12 Series Back Pressure/Relief Valves 2-1/2" to 4"

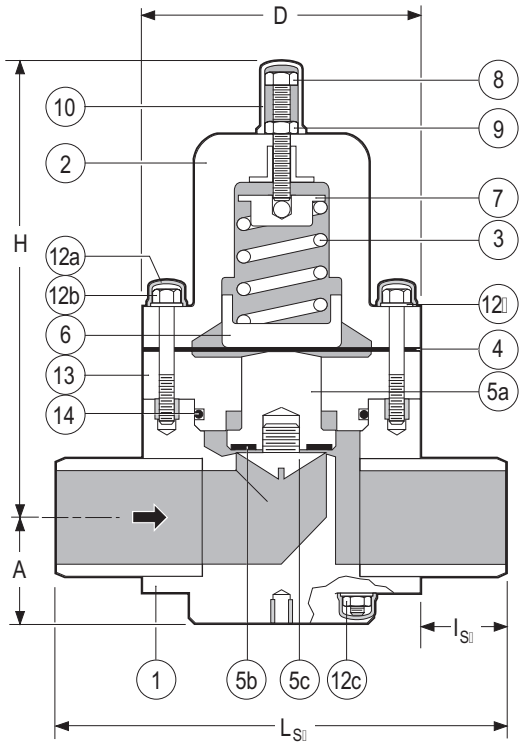


Spigot Body

## PARTS

▲ Recommended Spare Parts

| No. | Part | Pcs. | Materials |
|---|---|---|---|
| 1 | Body | 1 | PVC, PP, PVDF |
| 2 | Bonnet | 1 | PPG |
| 3 | Spring | 1 | Galvanized Steel |
| 4▲ | Control Diaphragm | 1 | PTFE bonded EPDM |
| 5a▲ | Piston | 2 | PVC, PP, PVDF |
| 5b▲ | Seat | 1 | EPDM, FPM(Viton®) |
| 5c▲ | Seat Retainer | 1 | PVC, PP, PVDF |
| 6 | Lower Spring Retainer | 1 | PPG |
| 7 | Upper Spring Retauner | 1 | 304 SS |
| 8 | Spring Tensioning Bolt | 1 | 304 SS |
| 9 | Lock Nut | 1 | 304 SS |
| 10 | Spring Bolt Cap | 1 | PE |
| 12a | Hex Bolt/Nut Cap | 20 | PE |
| 12b | Hex Bolt/Stud | 12[1] | 304 SS |
| 12c | Hex Nut | 20 | 304 SS |
| 12d | Washer | 20 | 304 SS |
| 13 | Spacer Disc | 1 | PVC, PP, PVDF |
| 14 | Spacer O ring | 1 | EPDM, FPM(Viton®) |

[1] 2 large upper bolts, 2 shorter lower bolts, 8 studs

## OTHER ENDS

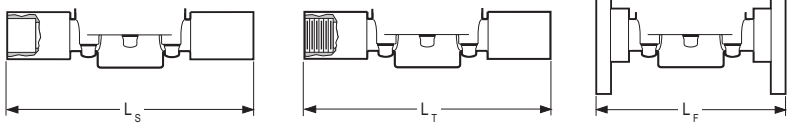


Socket | Threaded | Flanged



**ChemFlare™ Ends**
- For connection to PFA tube. Leak-free connections for difficult services such as sodium hypochlorite

## DIMENSIONS INCHES

## WEIGHTS LB.

## Cv VALUES

| Size | PVC, PP & PVDF A | D | H | $L_{SP}$[2] | $I_{SP}$ | PVC $L_F$ | WEIGHTS PVC | PP | PVDF | Cv VALUES USGPM Flow at 1 psi △P |
|---|---|---|---|---|---|---|---|---|---|---|
| 2-1/2" | 2.7 | 6.9 | 11.1 | 11.2 | 2.1 | 12.2 | 20.9 | ~~15.4~~ | ~~24.6~~ | 41 |
| 3" | 3.0 | 7.9 | 12.2 | 14.2 | 3.1 | 15.0 | 26.4 | 23.8 | 30.8 | 63 |
| 4" | 3.7 | 9.8 | 14.2 | 16.5 | 3.3 | 16.9 | 33.0 | 26.4 | 37.4 | 98 |

[2] Plain spigot ends in PP & PVDF may be butt fused directly to Chemline PP & PVDF piping systems.

Weights based on spigot bodies.

## MAXIMUM PRESSURES PSI

| Size | PVC 20°C 68°F | 30°C 86°F | 40°C 104°F | 50°C 122°F | PP 20°C 68°F | 30°C 86°F | 40°C 104°F | 50°C 122°F | 60°C 140°F | 70°C 158°F | PVDF 30°C 86°F | 50°C 122°F | 70°C 158°F | 80°C 176°F | 90°C 194°F | 100°C 212°F |
|---|---|---|---|---|---|---|---|---|---|---|---|---|---|---|---|---|
| 2-1/2"– 4" | 150 | 90 | 44 | 15 | 150 | 116 | 90 | 60 | 37.5 | 15 | 150 | 90 | 55 | 40 | 30 | 15 |

**Temperature Ranges: PVC** 0 to 50°C (32 to 122°F), **PP** 10 to 70°C (50 to 158°F), **PVDF** –30 to 100°C (–22 to 212°F).

## ORDERING EXAMPLE

| Chemline Back Pressure/ Relief Valves | SB12 | A | 005 | V | U |
|---|---|---|---|---|---|
| Body Material | **A** – PVC | **B** – PP | **K** – PVDF | | |
| Size | **003** – 3/8" **010** – 1" **020** – 2" | **005** – 1/2" **012** – 1-1/4" **025** – 2-1/2" | **007** – 3/4" **015** – 1-1/2" **030** – 3" | **040** – 4" | | |
| Elastomers | **E** – EPDM | **V** – FPM (Viton®) | | | | |
| Ends | **S** – Socket **CFx** – ChemFlare™ | **T** – Threaded | **F** – Flanged **Blank** – Spigot (Butt) | **U** – Union Socket | | |

**Example:** Chemline SB 12 Series, PVC, 1/2" diameter, FPM (Viton®) seals, Union socket ends.
**x = 4** for 1/4", **6** for 3/8", **8** for 1/2", **12** for 1" ID tube connections.

## OPTIONS

- 4 to 60 psi Pressure Range springs for 2-1/2" to 4" valves
- **Integral Pressure Gauge** – for inlet and/or outlet
- Bodies in 316 Stainless Steel and PTFE



**Optional Pressure Gauge**
- For inlet and/or outlet

# SB12 Series Back Pressure/Relief Valves 2-1/2" to 4"

## working pressure vs. flow rate

• Whether the pressure is rising or falling, hysteresis is approximately 14.5 psi for 2-1/2" to 4" valves

### 2-1/2" Valves / 4 to 60 psi set pressure range

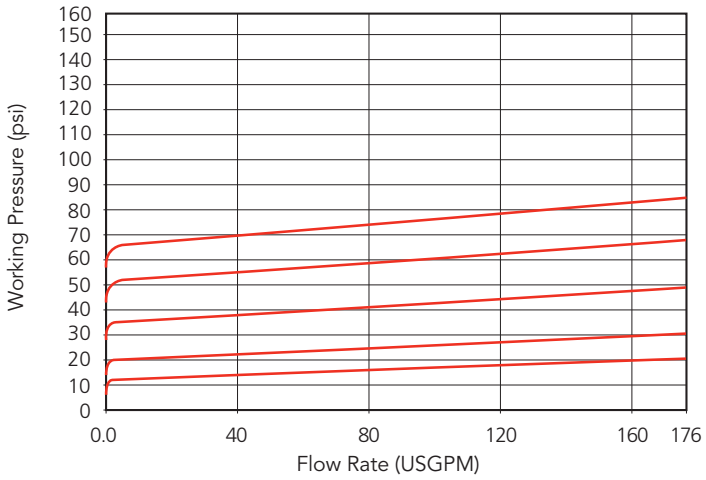


### 2-1/2" Valves / 7.5 to 150 psi set pressure range

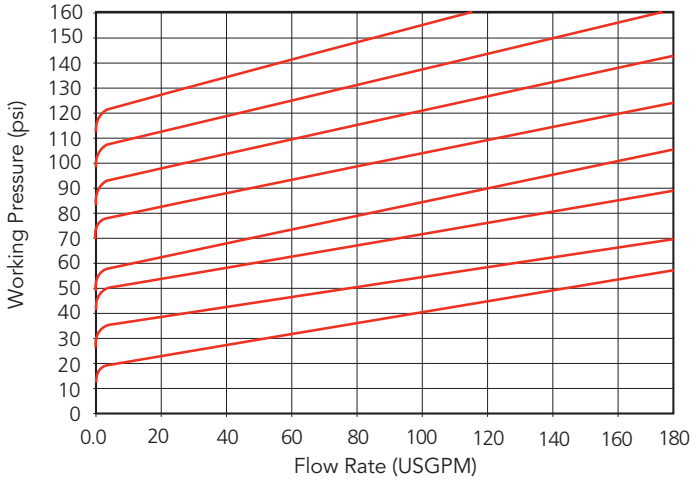


### 3" Valves / 4 to 60 psi set pressure range

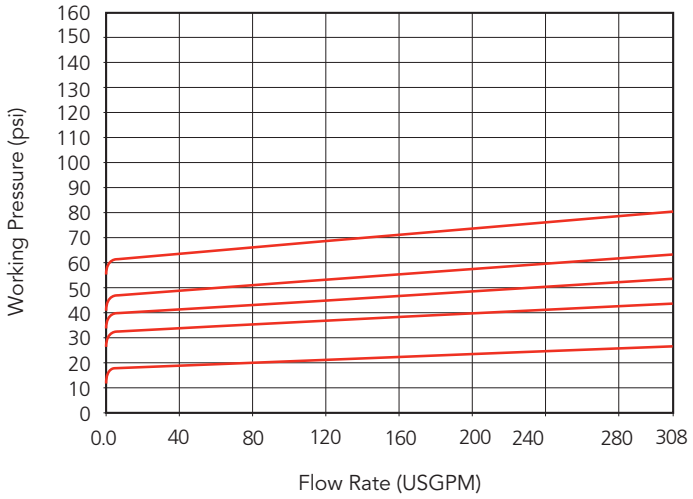


### 3" Valves / 7.5 to 150 psi set pressure range

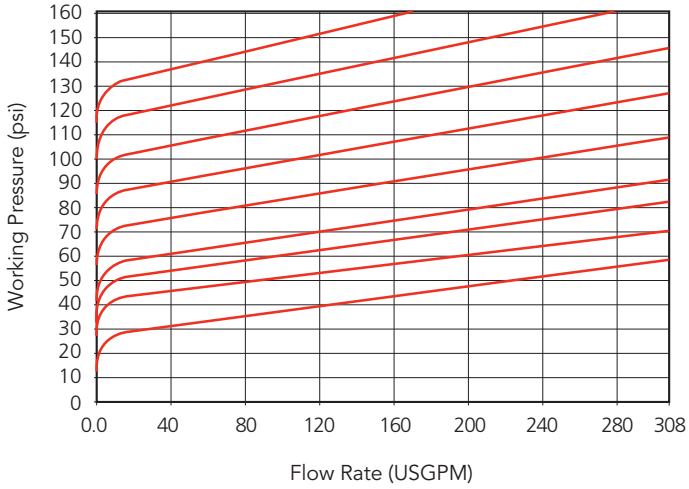


### 4" Valves / 4 to 60 psi set pressure range

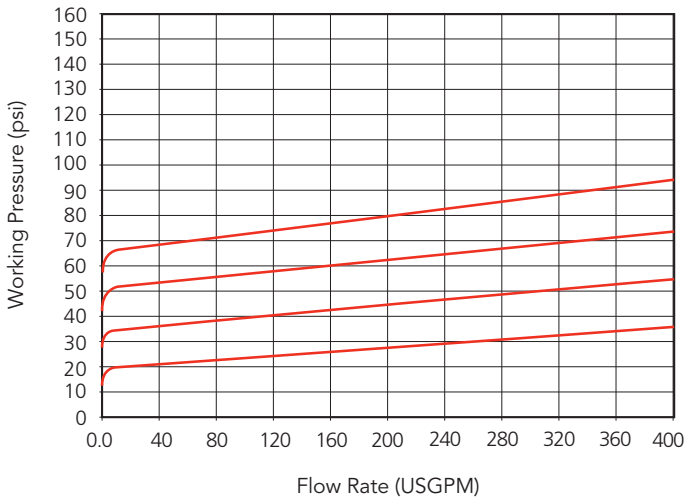


### 4" Valves / 7.5 to 90 psi set pressure range

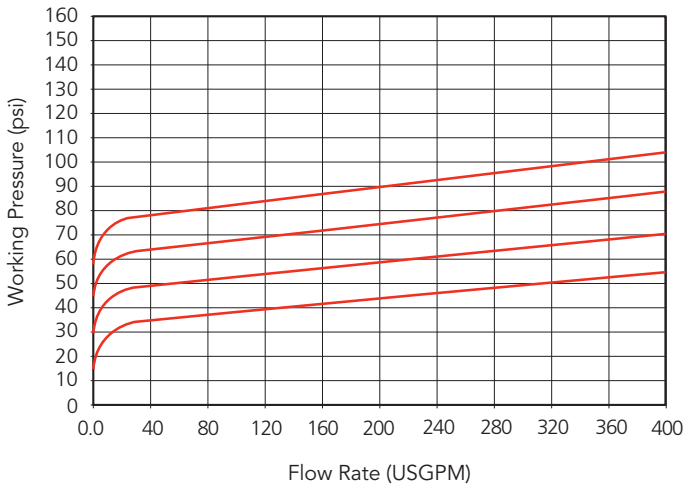




55 Guardsman Road, Thornhill, ON, L3T 6L2, Canada | ISO 9001:2008 Certified
tel.905.889.7890 | fax.905.889.8553 | request@chemline.com | chemline.com

# *4 – DETAILED TECHNICAL DOCUMENTATION*

## *4.2 – SHOP DRAWINGS*

## *4.2.11 – INSTRUMENTATION*

LEFT BLANK

| | |
|---|---|
| **Project name:** | MELIADINE-BPC UPGRADE |
| **Project#:** | 5000220043 / 6526-S-265-605 / OC-989680 |
| **Document #:** | SPK_0001_MISC_VWT |
| **by:** | CEK |
| **chkd:** | MDG |
| **appvd:** | TS |

# SUBMITTAL PACKAGE

# INSTRUMENTATION

**REV 4**
**DATE:2021-07-09**

**This page is intentionally left blank**

**Project name:** MELIADINE-BPC UPGRADE

**Project#:** 5000220043

**Document #:** SPK_0001_MISC_VWT

**by:** CEK

**chkd:** MDG

**appvd:** TS

# INSTRUMENTATION

# AMMONIA ANALYZER

**OIM manual section:** 4.2.11.1

**This page is intentionally left blank**

# CS-445-200 : Identification sheet

| | | | | | |
|---|---|---|---|---|---|
| VWTC PROJECT NUMBER: | 5000220043 | | | REV: | 1 |
| PROJECT NAME: | AEM MELIADINE - BPC UPGRADE | SUBMITTED TO (COMPANY): | AEM | | |
| ENGINEER: | EMMANUELLE DORMOY | SUBMITTED TO (RESPONSIBLE) | | | |
| PROJECT MANAGER: | THOMAS SAVARY / BRUCE BORDES | PROJECT NUM REFERENCE.: | 6526-S-265-605 / OC-989680 | | |
| PHONE NUMBER: | 514-334-7230 | LOT NUMBER: | | | |

| SUPPLIER | EQPT CODE | EQPT TAG NO | DIA | DESCRIPTION | INFO 1 | INFO 2 | INFO 3 | APPLIC. | NOTE | REV |
|---|---|---|---|---|---|---|---|---|---|---|
| TETHYS | ST-445-200 | 65AE6801101 | | AMMONIA ANALYZER | TETHYS UV 500 WATER NH4 ANALYZER// MANUFACTURER: TETHYS// SUPPLIER: AVENSYS// BASIC UNIT:COLOR GRAPHIC DISPLAY 640x320 WITH TOUCH SCREEN//SAMPLE FLOW: 0-0.5 L/min// SAMPLE PRESSURE: 0-0.5 Bar// SAMPLE TEMPERATURE: 0-30 C// WET PART MATERIAL: PHARMED,GLASS | MEASURING TIME: 3 sec// RANGE FOR NH4: 0-100mg/l //USB PORT// AUTO. CLEANING SYST.// 90-260 VAC 50-60 Hz// IP65 NEMA4X// SS 316// DIM: 525Hx345Wx260Dmm// MOUNTING LEGS FOR WALL// CE, EN 61010-1, EN 61326 | C/W BUILT IN SAMPLING PUMP P-SPL-MO-2//SPECTRO500 SPECTROGRAPH: 180-750 nm//STRIP500 FOR UV ABSORPTION IN GAS PHASE NH4-500: 0-100PPM NH4+// OUT4-20-500:4-20mA OUTPUT MODULE//RELAY500: RELAY MODULE | CHLORINATION REACTOR | | 1 |

**This page is intentionally left blank**

# UV500
## Online Water Analyser




TETHYS INSTRUMENTS

Specialist Of UV Spectroscopy

Crédits photos :
*© Tethys Instruments*
*Couverture : © Sonchai Jongmeesuk / agence 123rf*

# > UV500 Online Water Analyser

***The UV500** is a on-line water analyser based on a high resolution UV-visible spectrograph.*

It allows to monitor simultaneously many different parameters for waste water treatment plants or river monitoring stations with an excellent stability and low operating cost.

The same spectrograph can measure organic matter, nitrate, colour, turbidity, phosphate, ammonia and hydrogen sulphide. A complementary UV-visible fluorescence module allows the measurement of aromatics hydrocarbons (PAH). Nephelometric turbidity by visible or infra-red laser diode is also available.

The full UV-visible spectrum can also be used to monitor specific chemical process making the UV500 a ideal instrument for chemical plants. Different materials are available for the flow cell and hydraulic parts depending on the matrix chemical compatibility.

External probes can be added for physicochemical parameters like pH, ORP, dissolved oxygen, conductivity and turbidity.

Thanks to its automatic cleaning system and its extremely long life time lamp, the maintenance is roughly limited to the periodic refill of the inexpensive cleaning solution and eventually reagents depending on the parameters.




TETHYS INSTRUMENTS

## ***UV-visible Spectroscopy*** *on liquid and gas phase : a unique method*

- A 2048 pixels high resolution spectrograph scanning wavelengths from 180 nm to 750 nm is the master part of the UV500. Direct absorbance measurement for UV254, COD, BOD, TOC, NO3, Colour PO4 and Cr VI brings fast and stable measurements with a simple hydraulic circuit. Factory predefined or local multi-point calibration allows to get readings of COD, BOD and TOC under the UV alternative method for compatible applications. UV spectroscopy brings faster results than conventional methods like COD, BOD, TOC with much less maintenance once the correlation is dertermined.
- An additional circuit allows the measurement of ammonia and hydrogen sulphide on the gas phase after a stripping step. This unique method allows measurements on extremely turbid or coloured samples like activated sludge as the gas phase is not affected. A fast Fourier transform (FFT) brings an exceptional selectivity and no interference has never been reported after years of operation on many different applications.
- The patented flow cell allows very high level of suspended solid without clogging. The turbidity is automatically compensated by a dual-wavelength method.
- The UV source is a xenon flash lamp specified for $10^9$ flashes that corresponds to more than 10 years of life time with one measurement every minute.
- Physico-chemical measurements like pH, ORP, dissolved oxygen, conductivity can be added to the internal measurements by using external probes. The dissolved oxygen probe is based on fluorescence method for a lower maintenance and higher stability.

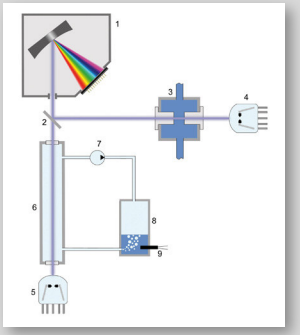


1: spectrograph,
2 : beam splitter,
3 : patented water flow cell,
4&5 : xenon lamps,
6 : gas flow cell ,
7 : gas pump,
8 : stripping pot,
9 : temperature probe

Measuring principle by absorbance
(liquid and gas phase)

1: Xenon lamp,
2 : excitation filter,
3 : flow cell,
4 : emission filter,
5 : photomultiplier,
6 : reference photo detector.

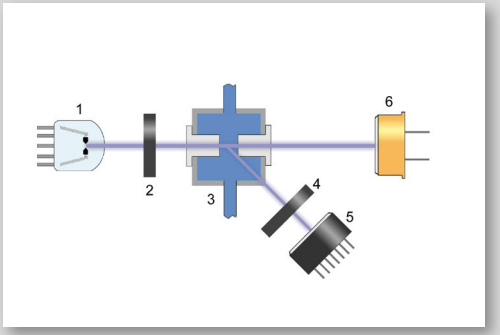


UV fluorescence principle

## ***Robust*** *Industrial Probes*

All the probes are specially designed for harsh environments with high level of suspended solid.

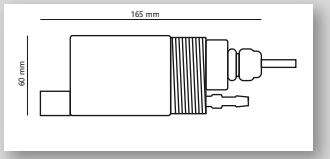


Turbidity Probe Low Range

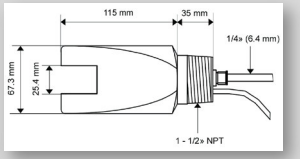


Turbidity Probe Medium Range

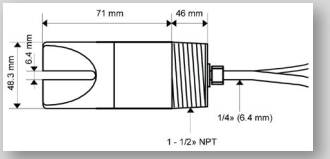


Turbidity Probe High Range

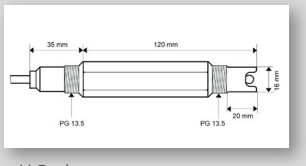


pH Probe

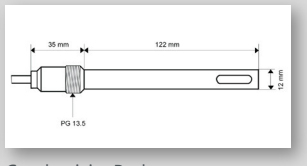


Conductivity Probe

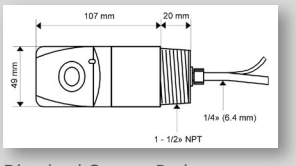


Dissolved Oxygen Probe

## ***Communication***

*The RS232 port supports the MODBUS protocol to transmit each measuring channel value to a SCADA system*

Additional parameters are available like status code, error code, calibration values and pumps run time.

Basic 4-20 mA output modules can be plugged on the main board for each measuring channel, in the limit of 12 modules. A USB port enables to download on any USB key the last 5000 recorded measurements as well as a diagnostic file containing the configuration and useful information for remote troubleshooting.

The recorded measurements file can be imported to Excel for graphs or other treatments.
The software of the analyser can be upgraded by connecting a USB key.



## ***Multiplexing*** *system*

When different streams need to be analysed, for example inlet and outlet of a plant, an optional multiplexing system delivers relay contacts to control external electric-valves or external pumps.

### *Up to 6 different streams can be selected*

The measuring channels can be either duplicated (each one having its own 4-20mA output or MODBUS register), or measured sequentially to fit with the maximum of 16 measuring channels (a MODBUS register tells which stream is currently being measured).

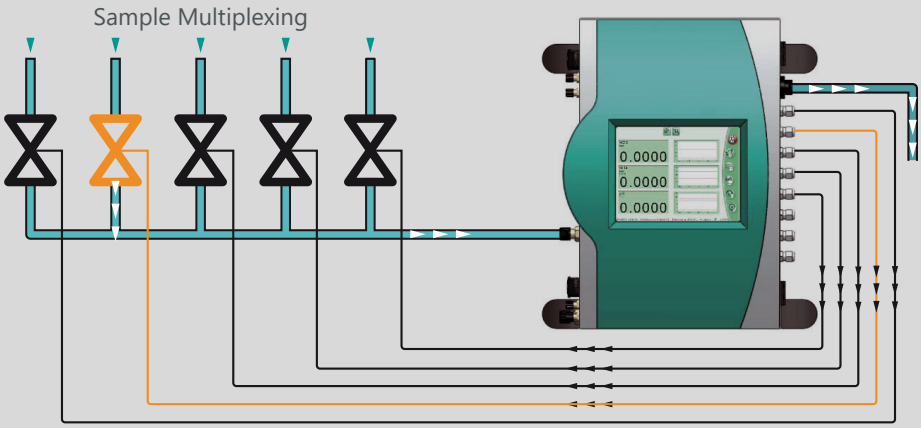


## *User-Friendly* ***Interface***

The colour touch screen and intuitive interface available in 9 different languages (Chinese, English, French, German, Hungarian, Italian, Portuguese, Spanish, Turkish) makes very easy to test or configure the analyser.

Many test functions allows to test and troubleshoot each element of the analysers (light signal, pumps, solenoid valves, etc...) to setup quickly a maintenance diagnostic.

An acid resistant protection film on the screen assumes an efficient long term protection.

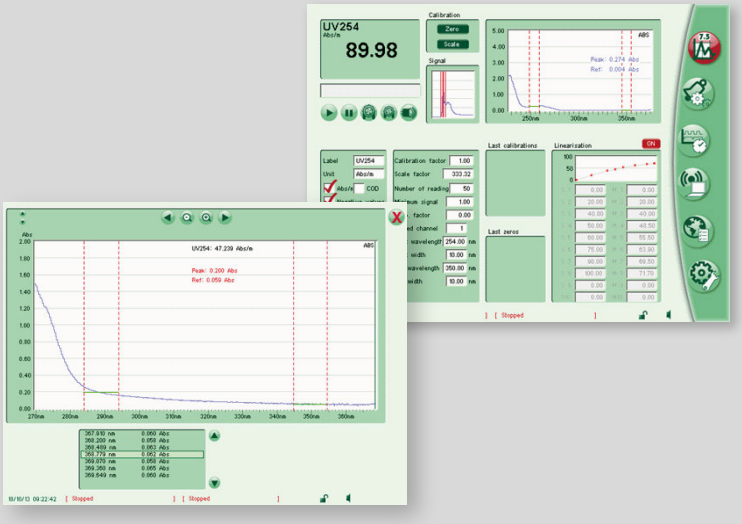


## ***Sampling System***

*The UV500 can adapt to many different kind of sampling depending of the application : surface water, drinking water, process water or wastewater.*

If the water is already pressurized, the sample can be admitted directly inside the analyser with a maximal pressure of 4 bars. Otherwise an optional built-in peristaltic pump, synchronised with the measurement to extend the tubing life time, allows to take the sample directly from a tank located up to 6 meters below the analyser.

For demanding applications with long distances, another peristaltic pump in a separate enclosure is proposed as an option.

For some applications on river water or wastewater where two sampling pumps are necessary, the UV500 delivers a relay contact to synchronise the primary pump. The delay and running time of each pump can be adjusted easily in the parameters menu of the analyser.

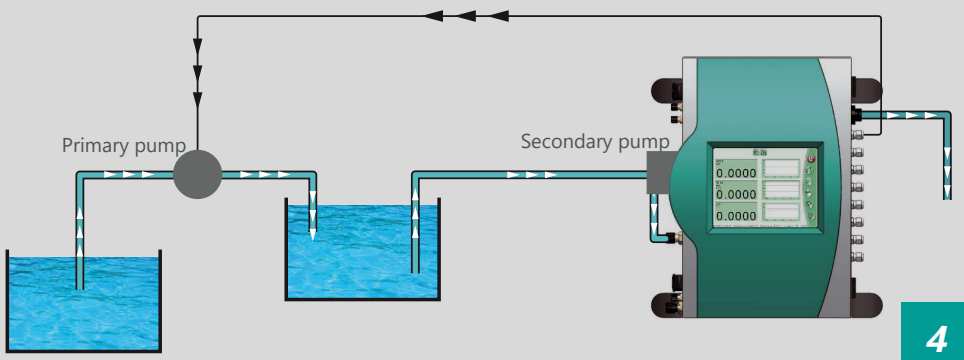

# > UV500 Parameters Specifications

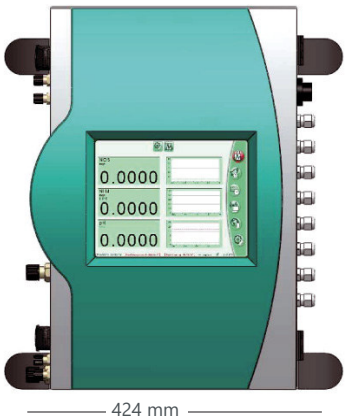


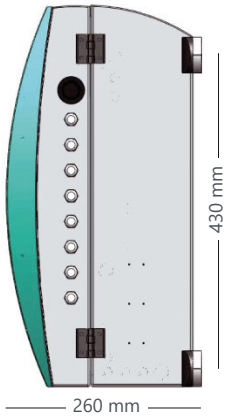


| Parameter | Standard range<br>Other ranges on request | Typical Repeatability<br>for low values <10% FS | Accuracy<br>On standard solution |
|---|---|---|---|
| UV254 | 0-200 Abs/m<br>0-600 Abs/m<br>0-2000 Abs/m | +/- 0.05 Abs/m<br>+/- 0.15 Abs/m<br>+/- 0.5 Abs/m | +/- 2% |
| COD by UV correlation | 0-100 mg/l COD<br>0-2000 mg/l COD<br>0-20000 mg/l COD | +/- 0.05 mg/l COD<br>+/- 1 mg/l COD<br>+/- 10 mg/l COD | +/- 2% |
| BOD by UV correlation | 0-100 mg/l BOD<br>0-1000 mg/l BOD<br>0-10000 mg/l BOD | +/- 0.05 mg/l BOD<br>+/- 0.5 mg/l BOD<br>+/- 5 mg/l BOD | +/- 2% |
| TOC by UV correlation | 0-100 mg/l TOC<br>0-1000 mg/l TOC<br>0-10000 mg/l TOC | +/- 0.05 mg/l TOC<br>+/- 0.5 mg/l TOC<br>+/- 5 mg/l TOC | +/- 2% |
| Ammonia | 0-100 mg/l NH4 | +/- 0.2 mg/l NH4 | +/- 5% |
| Nitrate | 0-100 mg/l NO3 | +/- 0.1 mg/l NO3 | +/- 2% |
| Colour | 0-100 pt/Co<br>0-1000 pt/Co | +/- 0.2 Pt-Co<br>+/- 2 Pt-Co | +/- 2% |
| PAH (aromatics) | 0-10 mg/l C6H6 | +/- 0.01 mg/l C6H6 | +/- 2% |
| Oil in water | 0-100 ppm OIW<br>0-1000 ppm OIW | +/- 0.1 ppm OIW<br>+/- 1 ppm OIW | +/- 2% |
| Phosphate | 0-2 mg/l P-PO4<br>0-20 mg/l P-PO4 | +/- 0.01 mg/l P-PO4<br>+/- 0.1 mg/l P-PO4 | +/- 2% |
| Hydrogen sulphide | 0-20 mg/l H2S | +/- 1 mg/l H2S | +/- 2% |
| Chromium VI | 0-2 mg/l Cr VI | +/- 0.04 mg/l Cr VI | +/- 2% |
| Turbidity<br>(TSS by correlation) | 0-10 NTU<br>0-100 NTU<br>0-1000 NTU | +/- 0.01 NTU<br>+/- 0.1 NTU<br>+/- 1 NTU | +/- 2% |
| pH | 0-14 | +/- 0.01 pH | +/- 2% |
| ORP | +/- 2000 mV | +/- 1 mV | +/- 2% |
| Dissolved oxygen | 0-25 mg/l O2 | +/- 0.1 mg/l O2 | +/- 2% |
| Conductivity | 0-2000 µS | +/- 1 µS | +/- 2% |
| External turbidity<br>(TSS by correlation) | 0-4 NTU<br>0-40 NTU<br>0-400 NTU | | +/- 2%<br>+/- 2%<br>+/- 2% |
| External TSS | 0-1500 mg/l TSS<br>0-30000 mg/l TSS | +/- 1% of reading or +/- 2 mg/l TSS<br>+/- 1% of reading or +/- 2 mg/l TSS | |
| Temperature | 0-80°C | +/- 0.1 °C | +/- 2% |

# > UV500 General Specifications

| | |
|---|---|
| Sample flow | Recommended: 0 - 5 l/min<br>0 - 0.5 l/min for NH4 or H2S |
| Sample pressure | 0 - 4 Bar (0 - 1 Bar with sampling peristaltic pump)<br>0 - 0.5 Bar for NH4 or H2S |
| Sample temperature | 0 - 80 °C<br>0 - 30 °C for NH4 or H2S |
| Wet parts materials | Quartz, Polypropylene, Polyethylene, FPM (viton), PMMA<br>(+ Pharmed and glass for NH4 or H2S) |
| Measuring time | 5 sec (except PO4, NH4, H2S : 3 min) |
| Measurement interval | 1 min to 720 min<br>Physicochemical parameters may be continuous |
| Memory | 5000 lines of measurements (up to 16 channels) with date and time |
| Consumption | Cleaning solution (5% sulfuric acid): 220 ml/day<br>Reagent for PO4: 2 ml per measurement<br>NaOH 10% for NH4: 2 ml per measurement<br>HCl 10% for H2S: 2 ml per measurement |
| Maintenance interval | Recommended: 6 months to 1 year (except for refilling) |
| Power supply | 90 - 264 VAC 50/60 Hz 80 VA |
| Screen | Colour TFT LCD 640x480 pixels with LED backlight |
| Communication | RS232 with MODBUS protocol<br>RS485 for external probes (DO, TSS)<br><br>USB<br>WI-FI (IEEE802.11B) optional<br>Ethernet (IEEE802.3) optional |
| Certifications | CE,  EN 61010-1, EN 61326 |
| Enclosure | Stainless steel with epoxy coating, IP65, wall mounting brackets |
| Dimensions | 525x345x260 mm |
| Weight | 20 to 30 kg depending on the configuration |

*The manufacturer reserves the right to modify and/or change any specifications, dimensions, design or drawing at any time without prior notice*

# > UV500 Parts references

## Basic unit

**UV500** — ***Basic unit (no measurement included)***

Color graphic display 640x320 pixels with touch screen
Built-in data logger, memory 5000 measurements for each parameter
12 sockets for input and output modules (not included, refer to options)
7 available glands for inputs / outputs
RS232 included (Sub-D 9 ways female connector) with 2 meters cable for PC
RS485 included for communication with MODBUS protocol
USB port included for USB key connection
Automatic cleaning system with 2-litres tank
Power supply 90-260 VAC 47-63 Hz with power cord 2 meters
Enclosure IP65/Nema4x stainless steel 316 525x345x260 mm (HxWxD) / 20 to 30 kg
Mounting lugs for wall

## Sampling pump

**P** — ***Sampling peristaltic pump for unpressurized water***

*Built-in on the left side of the enclosure*
*Flow of about 600 ml/min*
*Discontinuous operating to increase tube lifetime*

**P-EXT** — ***External Peristaltic sampling pump for unpressurized water***

*Flow of about 940 ml/min*
*Heavy duty brushless motor*
*Discontinuous operating to increase tube lifetime*

## *Spectrograph* (required for UV254, COD, BOD, TOC, NO3, Colour, PO4, Cr VI, NH4 and H2S measurements)

**SPECTRO500** — ***UV-Visible spectrograph***

*Range: 180 – 750 nm*
*Resolution 0.29 nm*
*2048 pixels*

## *Absorbance flow cell and xenon lamp* (required for UV254, COD, BOD, TOC, NO3, Colour, PO4, Cr VI measurements)

**ABS500** — ***Flow cell and xenon lamp for absorbance measurements***

*Optical path: 1 or 3 or 10 mm*
*Lamp lifetime: 1 E 9 flashes*
*Wet materials: PMMA, Viton, Quartz*

## *Configuration and calibration for measurements by absorbance* (require SPECTRO500 and ABS500 modules)

**COD-H-500** — ***Organic matter high range***

*high range: 0 – 2,000 Abs/m*
*(equivalent to approx. 20,000 mg/l COD on municipal waste water)*

**COD-M-500** — ***Organic matter Medium range***

*medium range: 0 – 600 Abs/m*

**COD-L-500** — ***Organic matter low range***

*low range: 0 – 200 Abs/m*
*(equivalent to 100 mg/l COD on river water)*

**NO3-500** — ***Nitrate***

*Range: 0 – 100 mg/l NO3 (0 – 25 mg/l N of NO3)*
*Measurement possible until 250 mg/l NO3 (60 mg/l N-NO3)*

**CO-H-500** — ***Colour high range***

*Range: 0 – 1000 Pt-Co unit*

**CO-L-500** — ***Colour low range***

*Range: 0 – 100 Pt-Co unit*

## *Measurement by UV fluorescence* (required for PAH and OIW measurements)

**PAH-500** — ***Poly-aromatic hydrocarbons***

*Range: 0 – 10 ppm phenol*
*Range: 0 – 100 ppm OIW*
*(equivalent to approx. 0 – 100 ppm oil with 10% aromatic ratio)*

## *Measurement module by colorimetric method* (require SPECTRO500 and ABS500 module)

**PO4-H-500** — ***Phosphate high range***

*High range: 0 – 20 mg/l P (60 mg/l PO4)*
*Sampling peristaltic pump included*

**PO4-L-500** — ***Phosphate low range***

*Low range: 0 – 2 mg/l P (6 mg/l PO4)*
*Sampling peristaltic pump included*

**CR6-500** — ***Hexavalent chromium (VI)***

*Range: 0 – 2 mg/l Cr VI*
*Measurement possible until 5 mg/l Cr VI*

## *Measurement by nephelometry*

**IRTURB-H-500** — ***Internal turbidity sensor high range***

*High range: 0 – 1,000 NTU*
*Nephelometric method by laser diode at 650 nm (850 nm on request)*

**IRTURB-M-500** — ***Internal turbidity sensor medium range***

*Low range: 0 – 100 NTU*
*Nephelometric method by laser diode at 650 nm (850 nm on request)*

**IRTURB-L-500** — ***Internal turbidity sensor low range***

*Low range: 0 – 10 NTU*
*Nephelometric method by laser diode at 650 nm (850 nm on request)*

# > UV500 Parts references

## Measurements by optical method

**DO-F** — ***Dissolved oxygen probe by fluorescence***
*Range: 0 - 25 mg/l O2*
*7 meters of cable*

**EXT-TURB-H** — ***Turbidity probes high range***
*High range: 0 – 30,000 mg/l TSS*
*7 meters cable*

**EXT-TURB-L** — ***Turbidity probes low range***
*Low range: 0 – 1500 mg/l TSS*
*7 meters cable*

## Measurement by UV absorption in gas phase

⚠ ***The spectrograph option SPECTRO must be included***

**STRIP500** — ***Stripping system***
*Include xenon lamp, flow cell, glassware, air pump, air filter and solenoid valve*

**NH4-500** — ***Ammonia***
*Range: 0 – 100 ppm NH4+*

**H2S-500** — ***Hydrogen sulfide***
*Range: 0 – 20 ppm H2S*

## Measurements by electrode *(external)*

**PH500** — ***pH/ORP module***
*pH Range: 0 – 14*
*ATC input for platinum RTD 100 Ohm or 1000 Ohm*
*ORP Range: -2000 mV to +2000 mV*

**ELPH** — ***pH on-line electrode***
*Range: 0 – 14*
*5 meters of cable (10 meters in option)*
*Built-in ATC RTD 100 Ohm*

**ELORP** — ***ORP on-line electrode***
*Range: -2000 mV to +2000 mV*
*5 meters of cable (10 meters in option)*
*Built-in ATC RTD 100 Ohm*

**COND500** — ***Conductivity module***
*Range: 0 – 100 µS to 0 – 100 mS*
*ATC input for platinum RTD 100 Ohm*

**ELCOND** — ***Conductivity on-line electrode***
*Range: 0 – 10 mS*
*Cell constant k=1.0 cm-1 (medium range)*
*5 meters of cable (10 meters in option)*
*Built-in ATC RTD 100 Ohm*

**ICOND** — ***Inductive conductivity online probe***
*Range: 0 – 100 mS*
*3 meters of cable*
*Built-in temperature compensation at 2.2%/°C*
*Requires a IN4-20-500 module instead of COND500 module*

**EXT-TURBNEPH-H** — ***Nephelometric turbidity probes high range***
*Range: 0 – 400 NTU*
*10 meters cable*

**EXT-TURBNEPH-M** — ***Nephelometric turbidity probes medium range***
*Range: 0 – 40 NTU*
*10 meters cable*

**EXT-TURBNEPH-L** — ***Nephelometric turbidity probes low range***
*Range: 0 – 4 NTU*
*10 meters cable*

## Input modules

**IN4-20-500** — ***4-20 mA input module***
*Isolated 4-20 mA input*
*Impedance: 100 Ohm*

**LOGIC500** — ***Double logical inputs module***
*Input no 1 : external pulse command for measurement*
*Input no 2 : measurements inhibition*
*Isolated 0 – 48 V DC inputs*
*Impedance: >10 Kohm*

## Output modules

**OUT4-20-500** — ***4-20 mA output module***
*Isolated 4-20 mA output*
*Active output, Max load 500 Ohm*

**RELAY500** — ***Relay module***
*Contact rating: 2A/220V*

## Communications

**WIFI500** — ***Wifi Interface***
*Connection to wireless WIFI network*
*Secured data transfer (WEP keys)*

**ETHER500** — ***Ethernet interface***
*Ethernet 10 base-T (IEEE 802.3)*

**MTI133** — ***Phone modem***
*Industrial modem 33,6 Kb/s V34+*
*DIN rail Mounting*
*Power supply 24V from the analyser*

**GSM** — ***GSM modem***
*Dual band (EGSM 900/1800 MHz)*
*Integral SIM card reader*
*R & TTE approved*

## Recommanded consumables for 2 years :

***P-ACI-HD1 :*** *Head of cleaning pump (x1)*
***P-RGT-HD1 :*** *Head of reagent pump (x1) (only for NH4 or H2S)*
***T-PHAR-1 :*** *Tubing 6.4x9.6 mm (if optional sampling pump) (x2 to x8 depending on sampling pump use)*

***Cleaning solution and reagents (if any) are not provided***

*The manufacturer reserves the right to modify and/or change any specifications, dimensions, design or drawing at any time without prior notice*

**TETHYS Instruments**
57, Chemin du vieux Chêne, 38240 MEYLAN -France-

**Tel : +33 4 76 41 86 39 - Fax : +33 4 76 41 92 27**
**Mail :** sales@tethys-instruments.com
**Web :** www.tethys-instruments.com

TÜVRheinland CERTIFIÉ
Management System ISO 9001:2008
www.tuv.com ID 9105083475

**Project name:** MELIADINE-BPC UPGRADE

**Project#:** 5000220043

**Document #:** SPK_0001_MISC_VWT

**by:** CEK

**chkd:** ED

**appvd:** TS

# INSTRUMENTATION

# FREE/TOTAL CHLORINE ANALYZER

**OIM manual section:** 4.2.11.2

**This page is intentionally left blank**

# CS-490-300 : Identification sheet

| | | | |
|---|---|---|---|
| VWTC PROJECT NUMBER: | 5000220043 | REV: | 2 |
| PROJECT NAME: | AEM MELIADINE - BPC UPGRADE | SUBMITTED TO (COMPANY): | AEM |
| ENGINEER: | EMMANUELLE DORMOY | SUBMITTED TO (RESPONSIBLE) | |
| PROJECT MANAGER: | THOMAS SAVARY / BRUCE BORDES | PROJECT NUM REFERENCE.: | 6526-S-265-605 / OC-989680 |
| PHONE NUMBER: | 514-334-7230 | LOT NUMBER: | |

| SUPPLIER | EQPT CODE | EQPT TAG NO | DIA | DESCRIPTION | INFO 1 | INFO 2 | INFO 3 | APPLIC. | NOTE | REV |
|---|---|---|---|---|---|---|---|---|---|---|
| SWAN | ST-490-300 | 65AIT6801116 | 400Lx850Hx200Dmm | FREE CHLORINE ANALYZER | FREE CHLORINE ANALYZER// MANUFACTURER: SWAN// MODEL: MONITOR AMI CODES-II #A-25.441.100.0// RANGE: 0-5 ppm// ELECTRONIC CASING: CAST ALUMINIUM// CASING: PVC// IP66/NEMA4X | OP. TEMP.: -25 to 65C// POWER SUPPLY: 100-240VAC/24VDC// 1 ALARM RELAY// 1 INPUT// 2 RELAY OUTPUTS//2 SIGNAL OUTPUTS// HART INTERFACE: A-81.420.060// MANUAL: A-96.250.571 | WATER CONSUMPTION: min 10l/h// WATER PRESSURE INLET: 2 TO 30 PSI | CHLORINATION REACTOR | | 2 |
| SWAN | ST-490-300 | 65AIT6801141 | 400Lx850Hx200Dmm | FREE CHLORINE ANALYZER | FREE CHLORINE ANALYZER// MANUFACTURER: SWAN// MODEL: MONITOR AMI CODES-II #A-25.441.100.0// RANGE: 0-5 ppm// ELECTRONIC CASING: CAST ALUMINIUM// CASING: PVC// IP66/NEMA4X | OP. TEMP.: -25 to 65C// POWER SUPPLY: 100-240VAC/24VDC// 1 ALARM RELAY// 1 INPUT// 2 RELAY OUTPUTS//2 SIGNAL OUTPUTS// HART INTERFACE: A-81.420.060// MANUAL: A-96.250.571 | WATER CONSUMPTION: min 10l/h// WATER PRESSURE INLET: 2 TO 30 PSI | DECHLORINATION REACTOR | | 2 |

**This page is intentionally left blank**

SWAN Analytische Instrumente AG
CH-8340 Hinwil/Switzerland
Tel. +41 44 943 63 00
swan@swan.ch · www.swan.ch

# Monitor AMI Codes-II

Data sheet no. DenA254411000

Complete monitoring system for the automatic, continuous measurement of chlorine and other disinfectants (e.g. monochloramine) in potable water, swimming pools, cooling water, hot water loops and effluent.

## Monitor AMI Codes-II

- For the continuous online determination of disinfectants based on the DPD colorimetric method (EN ISO 7393-2; APHA 4500 Cl-G).
- Measurement values : free chlorine / chlorine dioxide / iodine or bromine using DPD+Buffer or monochloramine / ozone using DPD+Buffer&KI, flow and if installed pH and temperature.
- Also applicable for water containing additives like cyanuric acid.
- Complete system including measurement and control electronics, photometer, flow indicator, reaction chamber, reagent dosing system and reagent containers.
- Integrated pH measurement with temperature compensation (available as option).
- All usual dosing devices for disinfectants and pH control can be connected either through relays or analog output signals. Two independent controllers can operate simultaneously.
- Dosing of disinfectant can be interrupted automatically with an external signal, e.g. during sample flow interruption or filter backwashing.
- Two (optionally three) selectable measurement values are available as analog output signals.
- Alarm display and activation of alarm relay when user defined, critical limits for a measurement value are reached.
- Continuous, automatic monitoring of main instrument functions (dirty photometer, sample flow, reagents).
- Large back-lit LCD display showing all measured values and status information simultaneously.
- Factory tested, ready for installation and operation.

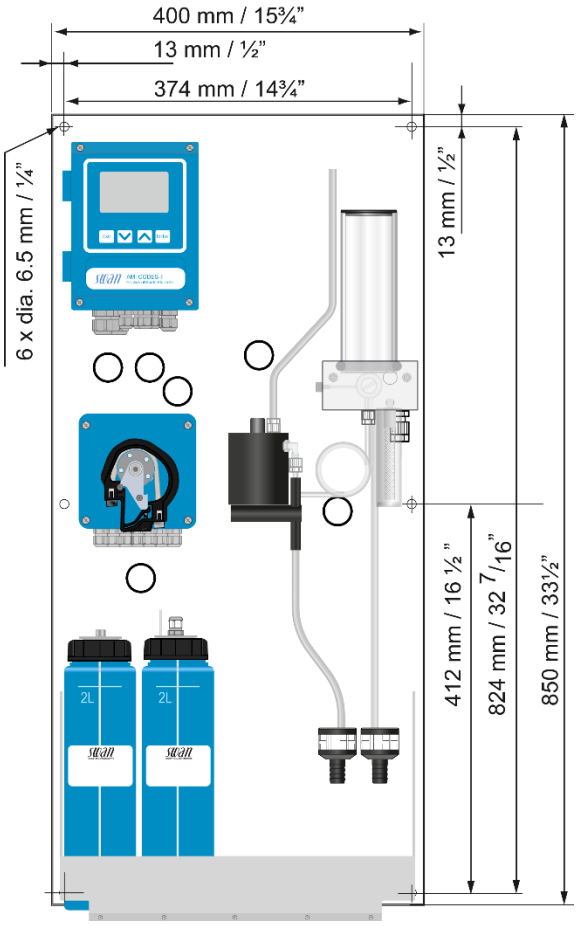


**Options**:
- Communication interface
- pH option containing pH sensor, temperature sensor, cables and electronics board.

**Accessory**:
- Chemical cleaning module. For details please see separate data sheet no. DenA82312000.

| Order Nr. | Monitor AMI Codes-II | A–25.441.100.0 |
|---|---|---|
| Option: | [ ] 3rd current signal output (0/4 – 20mA) | A-81.420.050 |
| | [ ] Profibus DP & Modbus RTU interface (RS-485) | A-81.420.020 |
| | [ ] USB interface | A-81.420.042 |
| | [ ] HART interface | A-81.420.060 |
| Option: | [ ] pH and temperature measurement | A-87.127.020 |

SWAN Analytische Instrumente AG
CH-8340 Hinwil/Switzerland
Tel. +41 44 943 63 00
swan@swan.ch · www.swan.ch

# Monitor AMI Codes-II

Data sheet no. DenA254411000

## Disinfectant measurement

| Measuring range: | Accuracy: |
|---|---|
| **Ozone** | |
| 0.05 – 1.00 ppm | ± 0.01 ppm |
| **HOCl, free chlorine, monochloramine** | |
| 0.00 – 1.00 ppm | ± 0.01 ppm |
| 1.00 – 3.00 ppm | ± 0.06 ppm |
| 3.00 – 5.00 ppm | ± 0.2 ppm |
| **Chlorine dioxide, iodine, bromine** | |
| 0.00 – 2.00 ppm | ± 0.02 ppm |
| 2.00 – 6.00 ppm | ± 0.12 ppm |

**Response time:**
90% of change of excessive Cl in 60 seconds after sample entered flow cell.

Cycle time free chlorine: 1 – 12 min.

**pH (option):**
Measuring range: pH 2 - 12
Resolution: 0.01 pH

**Temperature measurement (Option)**
with Nt5k sensor
Measuring range : -30 to +100 °C
Resolution : 0.1 °C

## Transmitter Specifications and Functionality

Electronics case: Cast aluminum
Protection degree: IP 66 / NEMA 4X
Display: backlit LCD, 75 x 45 mm
Electrical connectors: screw clamps
Ambient temperature: -10 to +50 °C
Limit range of operation: -25 to +65 °C
Storage and transport: -30 to +85 °C
Humidity: 10 to 90 % relative, non condensing

**Power supply**
Voltage: 100 - 240 VAC (± 10 %), 50/60 Hz (± 5 %) or 24 VDC (± 10 %)
Power consumption: max. 30 VA

**Operation**
Easy operation based on separate menus for “Messages”, “Diagnostics”, “Maintenance”, “Operation” and “Installation”.
User menus in English, German, French and Spanish
Separate, menu specific password protection.
Display of process value, alarm status and time during operation.
Storage of event log, and alarm log and calibration history.
Storage of the last 1’500 data records in logger with selectable time interval.

**Safety features**
No data loss after power failure, all data is saved in non-volatile memory. Over-voltage protection of in- and outputs.
Galvanic separation of measuring inputs and signal outputs.

**Transmitter temperature monitoring**
With programmable high/low alarm limits.

## Electrical Connection Scheme

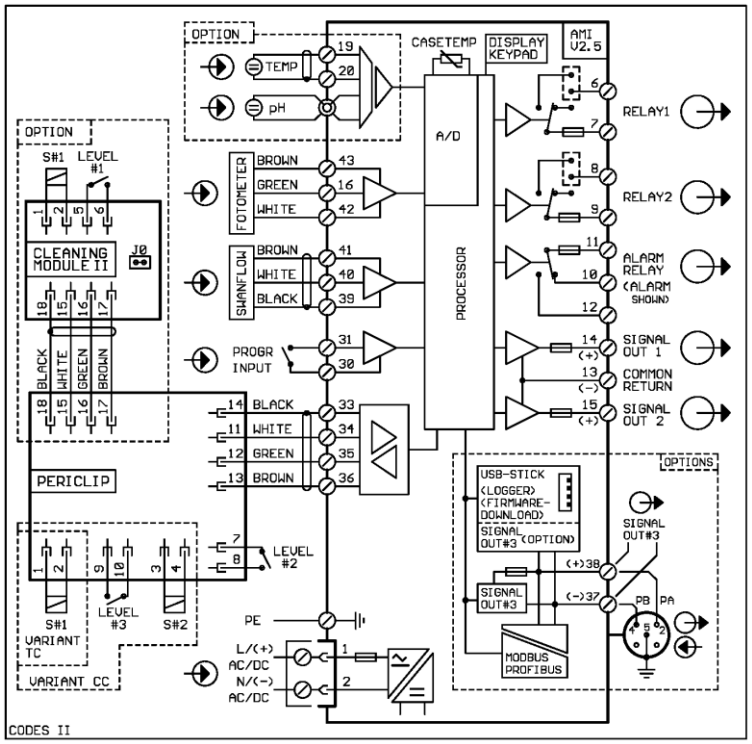


**Real-time clock with calendar**
For action time stamp and preprogrammed actions.

**1 Alarm relay**
One potential free contact for summary alarm indication for programmable alarm values and instrument faults.
Maximum load: 1A / 250 VAC

**1 Input**
One input for potential-free contact. Programmable hold or remote off function.

**2 Relay outputs**
Two potential-free contacts programmable as limit switches for measuring values, controllers or timer with automatic hold function.
Rated load: 1A / 250 VAC

**2 Signal outputs (3rd optional)**
Two programmable signal outputs for measured values (freely scaleable, linear or bilinear) or as continuous control outputs (control parameters programmable) as current source. 3rd signal output selectable as current source or current sink.
Current loop: 0/4 - 20 mA
Maximum burden: 510 Ω

**Control functions**
Relays or current outputs programmable for 1 or 2 pulse dosing pumps, solenoid valves or for one motor valve.
Programmable P, PI, PID or PD control parameters.

**1 Communication interface (option)**
- RS485 interface (galvanically separated) with Fieldbus protocol Modbus RTU or Profibus DP
- 3rd Signal output
- USB interface
- HART interface

## Monitor Data

**Sample conditions**
Water consumption: min. 10 l/h
Water inlet pressure 0.15 to 2 bar
Sample temperature: 5 to 50 °C

**Flow cell and connections**
Made of acrylic glass with water inlet filter and needle valve.
Openings for pH and temperature sensors.
Inlet tubing: 6 x 8 mm
Outlet pressure: atmospheric drain
Outlet tubing: 15 x 20 mm (1/2")

**Panel**
Panel dimensions: 400 x 850 x 200 mm
Panel material: PVC
Weight: 12.0 kg

# CS-490-301 : Identification sheet

| | | | |
|---|---|---|---|
| VWTC PROJECT NUMBER: | 5000220043 | REV: | 4 |
| PROJECT NAME: | AEM MELIADINE - BPC UPGRADE | SUBMITTED TO (COMPANY): | AEM |
| ENGINEER: | CHRIS EL KHAZAKA | SUBMITTED TO (RESPONSIBLE): | |
| PROJECT MANAGER: | THOMAS SAVARY / BRUCE BORDES | PROJECT NUM REFERENCE.: | 6526-S-265-605 / OC-989680 |
| PHONE NUMBER: | 514-334-7230 | LOT NUMBER: | |

| SUPPLIER | EQPT CODE | EQPT TAG NO | DIA | DESCRIPTION | INFO 1 | INFO 2 | INFO 3 | APPLIC. | NOTE | REV |
|---|---|---|---|---|---|---|---|---|---|---|
| SWAN | IECNDF315375 | 65AIT6801117 | 400Lx850Hx200Dmm | TOTAL CHLORINE ANALYZER | TOTAL CHLORINE ANALYZER// MANUFACTURER: SWAN// MODEL: MONITOR AMI CODES-II TC AC #A-25.441.600.0// RANGE: 0.0 - 5.00 ppm (STANDARD RANGE) 0-10 ppm (EXTENDED RANGE)// ELECTRONIC CASING: ALUMINIUM// CASING: PVC// IP66/NEMA4X | OP. TEMP.: -25 to 65C// POWER SUPPLY: 100-240VAC// 1 ALARM RELAY// 1 INPUT// 2 RELAY OUTPUTS// 2 SIGNAL OUTPUTS// MANUAL: A-96.250.631 | WATER CONSUMPTION: min 10l/h// WATER PRESSURE INLET: 2 TO 30 PSI | CHLORINE DILUTION SKID #1601 | | 2 |
| SWAN | IECNDF315375 | 65AIT6801142 | 400Lx850Hx200Dmm | TOTAL CHLORINE ANALYZER | TOTAL CHLORINE ANALYZER// MANUFACTURER: SWAN// MODEL: MONITOR AMI CODES-II TC AC #A-25.441.600.0// RANGE: 0.0 - 5.00 ppm (STANDARD RANGE) 0-10 ppm (EXTENDED RANGE)// ELECTRONIC CASING: ALUMINIUM// CASING: PVC// IP66/NEMA4X | OP. TEMP.: -25 to 65C// POWER SUPPLY: 100-240VAC// 1 ALARM RELAY// 1 INPUT// 2 RELAY OUTPUTS// 2 SIGNAL OUTPUTS// MANUAL: A-96.250.631 | WATER CONSUMPTION: min 10l/h// WATER PRESSURE INLET: 2 TO 30 PSI | CHLORINE DILUTION SKID #1701 | | 2 |
| SWAN | IECNDF315375 | 65AIT6930533 | 400Lx850Hx200Dmm | TREATED WATER TOTAL CHLORINE ANALYZER | TOTAL CHLORINE ANALYZER// MANUFACTURER: SWAN// MODEL: MONITOR AMI CODES-II TC AC #A-25.441.600.0// RANGE: 0.0 - 5.00 ppm (STANDARD RANGE) 0-10 ppm (EXTENDED RANGE)// ELECTRONIC CASING: ALUMINIUM// CASING: PVC// IP66/NEMA4X | OP. TEMP.: -25 to 65C// POWER SUPPLY: 100-240VAC// 1 ALARM RELAY// 1 INPUT// 2 RELAY OUTPUTS// 2 SIGNAL OUTPUTS// MANUAL: A-96.250.631 | WATER CONSUMPTION: min 10l/h// WATER PRESSURE INLET: 2 TO 30 PSI | FINAL PH CORRECTION TANK | | 2 |

**This page is intentionally left blank**

SWAN Analytische Instrumente AG
CH-8340 Hinwil/Switzerland
Tel. +41 44 943 63 00
swan@swan.ch · www.swan.ch

# Monitor AMI Codes-II TC

Data sheet no. DenA254416000

Complete monitoring system for the automatic, continuous measurement of total chlorine in potable water, sanitary water, cooling water and effluent.

## Monitor AMI Codes-II TC

- For the continuous online determination of disinfectants based on the DPD colorimetric method (EN ISO 7393-2; APHA 4500-Cl G).
- Measurement values : total chlorine 1, total chlorine 2, calculated dichloramine, flow and if installed pH and temperature.
- Complete system including measurement and control electronics, photometer, flow indicator, reaction chamber, reagent dosing system and reagent containers.
- Integrated pH measurement with temperature compensation (available as option).
- All usual dosing devices for disinfectants and pH control can be connected either through relays or analog output signals. Two independent controllers can operate simultaneously.
- Dosing of disinfectant can be interrupted automatically with an external signal, e.g. during sample flow interruption or filter backwashing.
- Two (optionally three) selectable measurement values are available as analog output signals.
- Alarm display and activation of alarm relay when user defined, critical limits for a measurement value are reached.
- Continuous, automatic monitoring of main instrument functions (dirty photometer, sample flow, reagents).
- Large back-lit LCD display showing all measured values and status information simultaneously.
- Factory tested, ready for installation and operation.

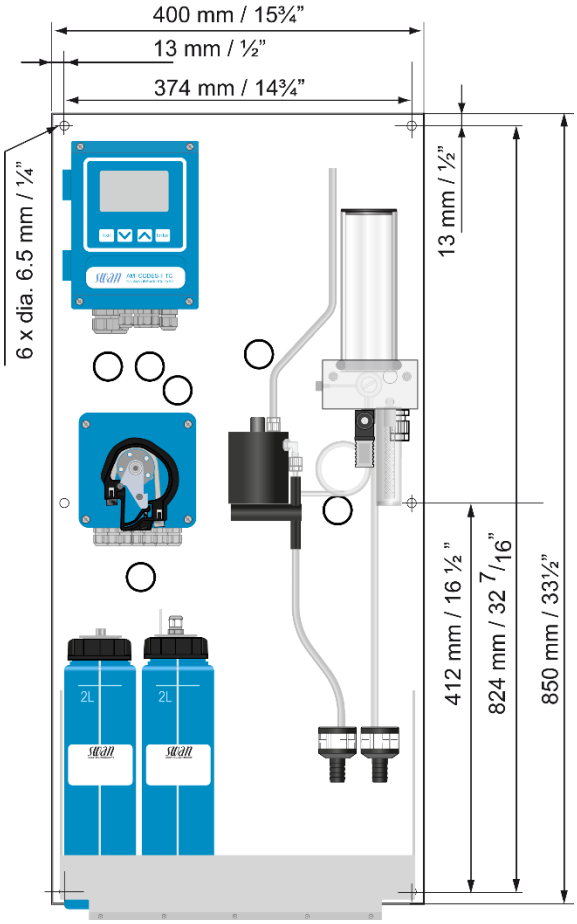


**Options**:

- Communication interface
- pH option containing pH sensor, temperature sensor, cables and electronics board.

**Accessory**:

- Chemical cleaning module. For details please see separate data sheet no. DenA82312000.

| Order Nr. | Monitor AMI Codes-II TC | A–25.441.600.0 |
|---|---|---|
| Option: | [ ] 3rd current signal output (0/4 – 20mA) | A-81.420.050 |
| | [ ] Profibus DP & Modbus RTU interface (RS-485) | A-81.420.020 |
| | [ ] USB interface | A-81.420.042 |
| Option: | [ ] pH and temperature measurement | A-87.127.020 |

SWAN Analytische Instrumente AG
CH-8340 Hinwil/Switzerland
Tel. +41 44 943 63 00
swan@swan.ch · www.swan.ch

# Monitor AMI Codes-II TC

Data sheet no. DenA254416000

## Disinfectant measurement

**Total chlorine (tc1 & tc2) measurement**

| Measuring range (Standard) | Accuracy |
|---|---|
| 0.00 - 1.00 ppm | ± 0.01 ppm |
| 1.00 - 3.00 ppm | ± 0.06 ppm |
| 3.00 - 5.00 ppm | ± 0.2 ppm |

| Measuring range (Extended) | Accuracy |
|---|---|
| 0.0 – 10 ppm | ± 10% |

| | |
|---|---|
| Measurement time tc1: | 3-5 sec. |
| Measurement time tc2: | 2 min. |
| Cycle time: | 3 - 60 min. |

tc1: measurement 3-5 seconds after injection of DPD & KI
tc2: measurement 2 minutes after injection of DPD & KI

**Dichloramine**: calculated by the difference of tc1 and tc2.

**pH measurement (option)**

| | |
|---|---|
| Measuring range: | pH 2 - 12 |
| Resolution: | 0.01 pH |

**Temperature measurement (Option)**
with Nt5k sensor

| | |
|---|---|
| Measuring range : | -30 to +100 °C |
| Resolution : | 0.1 °C |

## Transmitter Specifications and Functionality

| | |
|---|---|
| Electronics case: | Aluminum |
| Protection degree: | IP 66 / NEMA 4X |
| Display: | backlit LCD, 75 x 45 mm |
| Electrical connectors: | screw clamps |
| Ambient temperature: | -10 to +50 °C |
| Limit range of operation: | -25 to +65 °C |
| Storage and transport: | -30 to +85 °C |
| Humidity: | 10 to 90 % relative, non condensing |

**Power supply**

| | |
|---|---|
| Voltage: | 100 - 240 VAC (± 10 %), 50/60 Hz (± 5 %) or 24 VDC (± 10 %) |
| Power consumption: | max. 30 VA |

**Operation**
Easy operation based on separate menus for “Messages”, “Diagnostics”, “Maintenance”, “Operation” and “Installation”.
User menus in English, German, French and Spanish
Separate, menu specific password protection.
Display of process value, alarm status and time during operation.
Storage of event log, and alarm log and calibration history.
Storage of the last 1’500 data records in logger with selectable time interval.

**Safety features**
No data loss after power failure, all data is saved in non-volatile memory. Over-voltage protection of in- and outputs. Galvanic separation of measuring inputs and signal outputs.

**Transmitter temperature monitoring**
With programmable high/low alarm limits.

## Electrical Connection Scheme

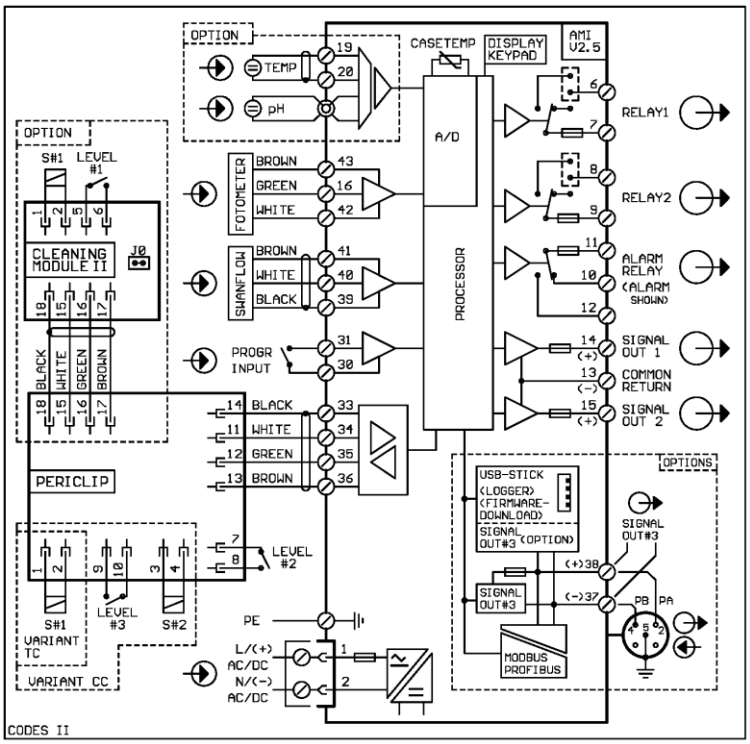


**Real-time clock with calendar**
For action time stamp and preprogrammed actions.

**1 Alarm relay**
One potential free contact for summary alarm indication for programmable alarm values and instrument faults.

| | |
|---|---|
| Maximum load: | 1A / 250 VAC |

**1 Input**
One input for potential-free contact. Programmable hold or remote off function.

**2 Relay outputs**
Two potential-free contacts programmable as limit switches for measuring values, controllers or timer with automatic hold function.

| | |
|---|---|
| Rated load: | 1A / 250 VAC |

**2 Signal outputs (3rd optional)**
Two programmable signal outputs for measured values (freely scaleable, linear or bilinear) or as continuous control outputs (control parameters programmable) as current source. 3rd signal output selectable as current source or current sink.

| | |
|---|---|
| Current loop: | 0/4 - 20 mA |
| Maximum burden: | 510 Ω |

**Control functions**
Relays or current outputs programmable for 1 or 2 pulse dosing pumps, solenoid valves or for one motor valve.
Programmable P, PI, PID or PD control parameters.

**1 Communication interface (option)**
- RS485 interface (galvanically separated) with Fieldbus protocol Modbus RTU or Profibus DP
- 3rd Signal output
- USB interface

## Monitor Data

**Sample conditions**

| | |
|---|---|
| Water consumption: | min. 10 l/h |
| Water inlet pressure | 0.15 to 2 bar |
| Sample temperature: | 5 to 50 °C |

**Flow cell and connections**
Made of acrylic glass with water inlet filter and needle valve.
Openings for pH and temperature sensors.

| | |
|---|---|
| Inlet tubing: | 6 x 8 mm |
| Outlet pressure: | atmospheric drain |
| Outlet tubing: | 15 x 20 mm (1/2") |

**Panel**

| | |
|---|---|
| Panel dimensions: | 400 x 850 x 200 mm |
| Panel material: | PVC |
| Weight: | 12.0 kg |

**Project name:** MELIADINE-BPC UPGRADE

**Project#:** 5000220043

**Document #:** SPK_0001_MISC_VWT

**by:** CEK

**chkd:** ED

**appvd:** TS

# INSTRUMENTATION

# TSS & TURBIDITY ANALYZER

**OIM manual section:** 4.2.11.3

**This page is intentionally left blank**

# CS-400-120 : Identification sheet

| | | | |
|---|---|---|---|
| VWTC PROJECT NUMBER: | 5000220043 | REV: | 4 |
| PROJECT NAME: | AEM MELIADINE - BPC UPGRADE | SUBMITTED TO (COMPANY): | AEM |
| ENGINEER: | CHRIS EL KHAZAKA | SUBMITTED TO (RESPONSIBLE) | |
| PROJECT MANAGER: | THOMAS SAVARY / BRUCE BORDES | PROJECT NUM REFERENCE.: | 6526-S-265-605 / OC-989680 |
| PHONE NUMBER: | 514-334-7230 | LOT NUMBER: | |

| SUPPLIER | EQPT CODE | EQPT TAG NO | DIA | DESCRIPTION | INFO 1 | INFO 2 | INFO 3 | APPLIC. | NOTE | REV |
|---|---|---|---|---|---|---|---|---|---|---|
| HACH | IEPOTB200853 | 65AE6801102 | Immersion sensor : 60 x 200 mm (2.4 x 7.9 in.); | RAW WATER TSS/TURBISITY SENSOR | SOLITAX IMMERSION SENSOR FOR TURBIDITY AND INLINE SC sc PVC WITH WIPER 0.001-4000 NTU, 0.001 mg/L - 50 g/L/MANUFACTURER: HACH/ MODEL: LXV423.99.10100 | N/A | N/A | CHLORINATION REACTOR | | 1 |
| HACH | IEPOTB200853 | 65AE6801222 | Immersion sensor : 60 x 200 mm (2.4 x 7.9 in.); | TSS/TURBISITY SENSOR | SOLITAX IMMERSION SENSOR FOR TURBIDITY AND INLINE SC sc PVC WITH WIPER 0.001-4000 NTU, 0.001 mg/L - 50 g/L/MANUFACTURER: HACH/ MODEL: LXV423.99.10100 | N/A | N/A | CLARIFIER #1 | | 1 |
| HACH | IEPOTB200853 | 65AE6801322 | Immersion sensor : 60 x 200 mm (2.4 x 7.9 in.); | TSS/TURBISITY SENSOR | SOLITAX IMMERSION SENSOR FOR TURBIDITY AND INLINE SC sc PVC WITH WIPER 0.001-4000 NTU, 0.001 mg/L - 50 g/L/MANUFACTURER: HACH/ MODEL: LXV423.99.10100 | N/A | N/A | CLARIFIER #2 | | 1 |

| SUPPLIER | EQPT CODE | EQPT TAG NO | DIA | DESCRIPTION | INFO 1 | INFO 2 | INFO 3 | APPLIC. | NOTE | REV |
|---|---|---|---|---|---|---|---|---|---|---|
| HACH | IEPOTB200853 | 65AE6801417 | Immersion sensor: 60 x 200 mm (2.4 x 7.9 in.); | TSS/TURBISITY SENSOR | SOLITAX IMMERSION SENSOR FOR TURBIDITY AND INLINE SC sc PVC WITH WIPER 0.001-4000 NTU, 0.001 mg/L - 50 g/L/MANUFACTURER: HACH/ MODEL: LXV423.99.10100 | N/A | N/A | CLARIFIER #1 SLUDGE SPLITTER TANK | | 1 |
| HACH | IEPOTB200853 | 65AE6801427 | Immersion sensor: 60 x 200 mm (2.4 x 7.9 in.); | TSS/TURBISITY SENSOR | SOLITAX IMMERSION SENSOR FOR TURBIDITY AND INLINE SC sc PVC WITH WIPER 0.001-4000 NTU, 0.001 mg/L - 50 g/L/MANUFACTURER: HACH/ MODEL: LXV423.99.10100 | N/A | N/A | CLARIFIER #2 SLUDGE SPLITTER TANK | | 1 |
| HACH | IEPOTB200853 | 65AE6930532 | Immersion sensor: 60 x 200 mm (2.4 x 7.9 in.); | TREATED WATER TSS/TURBISITY SENSOR | SOLITAX IMMERSION SENSOR FOR TURBIDITY AND INLINE SC sc PVC WITH WIPER 0.001-4000 NTU, 0.001 mg/L - 50 g/L/MANUFACTURER: HACH/ MODEL: LXV423.99.10100 | N/A | N/A | FINAL PH CORRECTION TANK | | 2 |

# SOLITAX®sc TURBIDITY & SUSPENDED SOLIDS SENSORS

**Applications**

- Drinking Water
- Wastewater
- Beverage
- Industrial Water
- Power




PROGNOSYS™ READY

## Accurate, color-independent suspended solids and turbidity measurements.

### Greater Accuracy, Less Maintenance

Hach SOLITAX sc sensors provide accurate, color-independent measurement of turbidity and suspended solids in drinking water, wastewater and industrial process applications. A self-cleaning device prevents biological growth and interference of gas bubbles. This system's reliable performance and full data communication capability help improve process control and reduce treatment costs associated with polymer use, digester volume, and sludge handling.

### Excellent Correlation to Laboratory Analysis

SOLITAX sc sensors show an exceptional correlation to laboratory analysis. On-line measurement not only saves time on manual analysis, but also provides critical real-time measurements that can be used to operate the plant more efficiently.

### Fully Serviceable Sensors

Conventional turbidity and suspended solids sensors are potted and are discarded when they no longer function. SOLITAX sc sensors are fully serviceable, which often doubles the useful life of the sensor.

### Easy One-point Calibration

Factory calibrated in conformity with DIN EN ISO 7027 for long-term calibration stability. Calibration is easy with a simple correction factor procedure.

### Multi-channel, Multi-parameter System

Any two SOLITAX sc sensors can be installed on one Hach sc200 Controller. The same controller can also accommodate any combination of parameters. All of Hach's model sc sensors are "plug and play" with no complicated wiring or set-up procedure necessary.

HACH®
Be Right™

## Specifications*

| | For insertion in pipes | | For immersion in open tanks | | |
|---|---|---|---|---|---|
| **Model** | INSERTION inline sc | INSERTION highline sc | IMMERSION t-line sc | IMMERSION ts-line sc | IMMERSION hs-line sc |
| **Parameter** | Suspended Solids, Turbidity | Hight Range Suspended Solids, Turbidity | Turbidity | Suspended Solids, Turbidity | Hight Range Suspended Solids, Turbidity |
| **Measuring Range Turbidity** | 0.001 to 4000 NTU | 0.001 to 4000 NTU | 0.001 to 4000 NTU | 0.001 to 4000 NTU | 0.001 to 4000 NTU |
| **Measuring Range TSS-Content** | 0.001 mg/L to 50 g/L | 0.001 mg/L to 500 g/L | | 0.001 mg/L to 50 g/L | 0.001 mg/L to 500 g/L |
| **Unit** | Turbidity: User selectable—NTU, FNU, or TE/F<br>Suspended Solids: User selectable—g/L, mg/L, ppm, or % solids | | | | |
| **Accuracy** | Turbidity up to 1000 NTU; without calibration < 5% of the measured value ±0.01 NTU;<br>with calibration < 1% of the measured value ±0.01 NTU | | | | |
| **Repeatability** | Suspended solids content: < 3 % | | | | |
| | Turbidity: < 1 % | | | | |
| **Response Time** | 1 s < T90 < 300 s (adjustable) | | | | |
| **Calibration Method** | Turbidity: Formazin or STABLCAL Standard (at 800 NTU).<br>Suspended Solids: Sample specific, based on gravimetric TSS analysis with a correction factor procedure. | | | | |
| **Certifications** | CE certified to EN 61326-1, EN 61326/A1, EN 61326/A2, EN 61010-1 | | | | |
| **Flow** | Max. 3 m/s (the presence of air bubbles affects the measurement) | | | | |
| **Operating Temperature Range** | 0 to 40 °C (32 to 104°F) | | | | |
| **Pressure Limit** | Stainless steel: 6 bar or 60 m (87 psi)<br>PVC: 1 bar or 10 m (14.5 psi) Stainless steel: 6 bar or 60 m (87 psi)<br>PVC: 1 bar or 10 m (14.5 psi) | | | | |
| **Material** | Optics Carrier and Sleeve: stainless steel 1.4571 or black PVC<br>Wiper Arm: stainless steel 1.4581;<br>Wiper Blade: silicone (standard)<br>Optional: Viton (LZX578);<br>Wiper Shaft: stainless steel 1.4571<br>Threaded cable fitting: stainless steel 1.4305 or white PVC | | Optics Carrier and Sleeve: stainless steel 1.4571 or black PVC<br>Wiper Arm: stainless steel 1.4581;<br>Wiper Blade: silicone (standard) Optional: Viton (LZX578);<br>Wiper Shaft: stainless steel 1.4571<br>Threaded cable fitting: stainless steel 1.4305 or white PVC | |
| **Weight Sensor** | Insertion stainless steel: 2.4 kg (5.29 lb.) | | Immersion stainless steel: 1.38 kg (3.0 lb.)<br>Immersion PVC: 0.52 kg (1.2 lb.) | | |
| **Cable Length** | 10 m (optional extension cables available) | | | | |
| | | | | | *Subject to change without notice* |

## Principle of Operation

SOLITAX sc ts-line sensor with dual-beam optics and added backscatter detector

- Dual infrared light beams. LED light source transmits light at 45° to sensor face.
- Nephelometric photoreceptors detect light at 90° to the transmitted light beam.
- Backscatter photoreceptor (included on all models except the SOLITAX sc t-line) detects light at 140° to the transmitted light beam to measure suspended solids in heavily loaded sample streams.
- Self-cleaning wiper, optional.
- T-line probes measure turbidity only. TS, HS, inline, and highline sensors measure either turbidity or suspended solids.

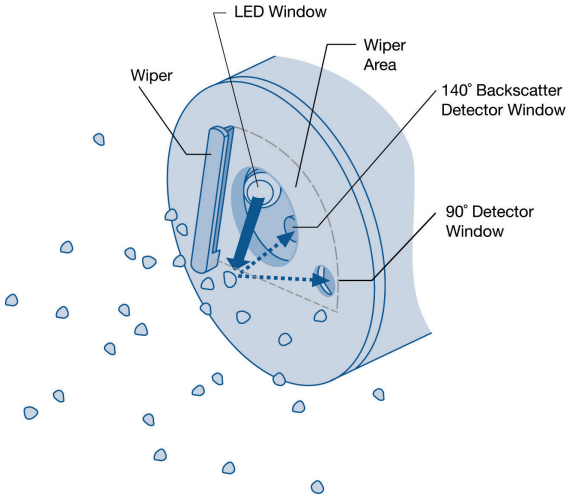


## Dimensions

Hach SOLITAX sc sensors can be fixed to the rim of the tank for immersion applications or inserted directly through the sidewall of a pipeline for insertion applications. A variety of installation kits are available.

*SOLITAX sc Insertion Probe*

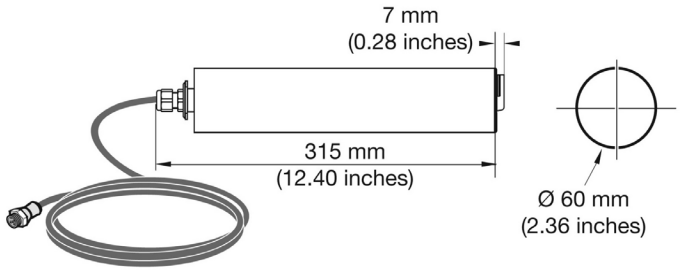


*SOLITAX sc Immersion Probe*

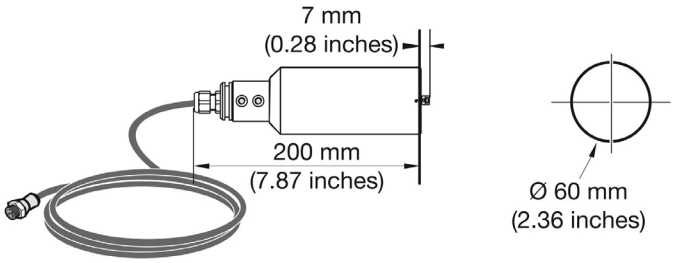


## Installation / Mounting

*Installation for mounting SOLITAX sc for immersion in open tanks. (Stainless steel pole mount kit, Prod. No. LZY714.99.53120)*

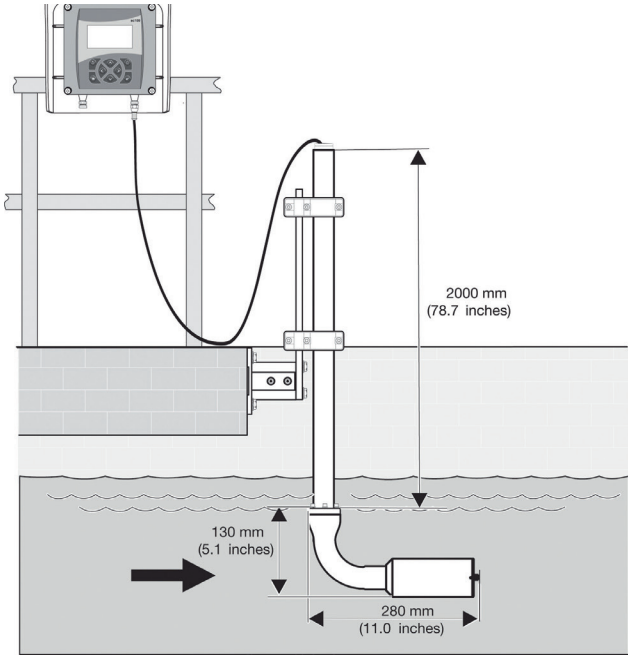


*Fixture with ball valve for mounting SOLITAX sc models inline and highline sensors in pipes., minimum pipe size 100 mm (4-in.) (Prod. No. LZX337, max pressure 6 bar; Prod. No. 936, max. pressure 1 bar.*

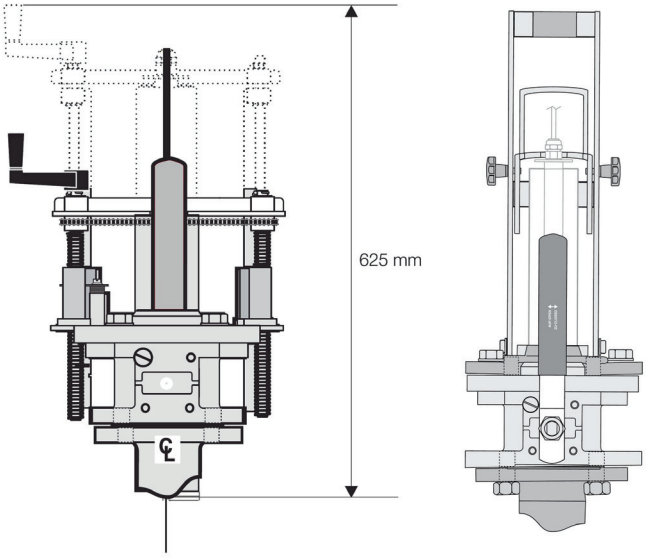

# Ordering Information

## Common Configurations: SOLITAX sc Turbidity and Suspended Solids Analyzers with sc200 controller and sensors shown

### Immersion in Open Tanks Applications

| | |
|---|---|
| **2983400** | Turbidity Analyzer, t-line sc, stainless steel with wiper (0.001 to 4000 NTU) |
| **2983500** | Turbidity and Suspended Solids Analyzer, ts-line sc, stainless steel with wiper (0.001 to 4000 NTU, 0.001 mg/L to 50 g/L) |
| **2983600** | Turbidity and High Range Suspended Solids Analyzer, hs-line sc, stainless steel with wiper (0.001 to 4000 NTU, 0.001 mg/L to 500 g/L) |

### Insertion in Pipes Applications (includes insertion mounting kit)

| | |
|---|---|
| **2983700** | Turbidity and Suspended Solids Analyzer, inline sc, stainless steel with wiper (0.001 to 4000 NTU, 0.001 mg/L to 50 g/L) |
| **2983900** | Turbidity and High Range Suspended Solids Analyzer, highline sc, stainless steel with wiper (0.001 to 4000 NTU, 0.001 mg/L to 500 g/L) |

*NOTE:*
1. *Power Cords must be ordered separately.*
2. *Fixed point installation kit or handrail mount kit must be ordered separately for all immersion analyzers.*

## Individual SOLITAX sc Sensors

### Immersion Sensors

| | |
|---|---|
| **LXV423.99.10000** | Turbidity, t-line sc, PVC with wiper (0.001 to 4000 NTU) |
| **LXV423.99.12000** | Turbidity, t-line sc, PVC without wiper (0.001 to 4000 NTU) |
| **LXV423.99.10100** | Turbidity and Suspended Solids, ts-line sc, PVC with wiper (0.001 to 4000 NTU, 0.001 mg/L to 50 g/L) |
| **LXV423.99.12100** | Turbidity and Suspended Solids, ts-line sc, PVC without wiper (0.001 to 4000 NTU, 0.001 mg/L to 50 g/L) |
| **LXV423.99.00100** | Turbidity and Suspended Solids, ts-line sc, stainless steel with wiper (0.001 to 4000 NTU, 0.001 mg/L to 50 g/L) |
| **LXV423.99.02100** | Turbidity and Suspended Solids, ts-line sc, stainless steel without wiper (0.001 to 4000 NTU, 0.001 mg/L to 50 g/L) |
| **LXV423.99.10200** | Turbidity and Suspended Solids, hs-line sc, PVC with wiper (0.001 to 4000 NTU, 0.001 mg/L to 500 g/L) |
| **LXV423.99.12200** | Turbidity and Suspended Solids, hs-line sc, PVC without wiper (0.001 to 4000 NTU, 0.001 mg/L to 500 g/L) |
| **LXV423.99.00200** | Turbidity and Suspended Solids, hs-line sc, stainless steel with wiper (0.001 to 4000 NTU, 0.001 mg/L to 500 g/L) |
| **LXV423.99.02200** | Turbidity and Suspended Solids, hs-line sc, stainless steel without wiper (0.001 to 4000 NTU, 0.001 mg/L to 500 g/L) |

### Insertion Sensors

| | |
|---|---|
| **LXV424.99.00100** | Turbidity and Suspended Solids, inline sc, stainless steel with wiper (0.001 to 4000 NTU, 0.001 mg/L to 50 g/L) |
| **LXV424.99.02100** | Turbidity and Suspended Solids, inline sc, stainless steel without wiper (0.001 to 4000 NTU, 0.001 mg/L to 50 g/L) |
| **LXV424.99.00200** | Turbidity and Suspended Solids, highline sc, stainless steel with wiper (0.001 to 4000 NTU, 0.001 mg/L to 500 g/L) |
| **LXV424.99.02200** | Turbidity and Suspended Solids, highline sc, stainless steel without wiper (0.001 to 4000 NTU, 0.001 mg/L to 500 g/L) |

## Installation Accessories

| | |
|---|---|
| **LZY714.99.53120** | Stainless Steel pole mount kit for SOLITAX t-line, ts-line, and hs-line immersion sensors, including 10 cm base and 2 m pole with sensor adapter |
| **5738400** | Insertion Mounting Kit for inline and highline insertion sensors (ball valve safety armature and extraction system). Kit includes a 4 inch pre-coped Carbon Steel Flange. Non-coped flanges are available |
| **AHA033NPT** | Sensor Adapter, straight 1-1/2 FNPT |
| **AHA034NPT** | Sensor Adapter, elbow 1-1/2 FNPT 90° |
| **MH236B00Z** | Handrail Mounting Kit (for sensor to be used with either adapter above) includes 1.5-inch diameter by 7.5-ft long CPVC pipe and swivel/pivot/ pipe clamp assembly |
| **LZX337** | Stainless steel ball valve safety armature/ extraction fitting for in-line and hi-line probes w/o welding flange, maximum operating pressure 6 bar/87 psi |
| **LZX936** | Stainless steel ball valve armature, maximum operation pressure 1 bar/14.5 psi |
| **LZX660** | Non-coped stainless steel welding flange for insertion kit |
| **LZX661** | Non-coped carbon steel welding flange for insertion kit |


## HACH COMPANY World Headquarters: Loveland, Colorado USA

United States: 800-227-4224 tel 970-669-2932 fax orders@hach.com
Outside United States: 970-669-3050 tel 970-461-3939 fax int@hach.com
**hach.com**


LIT2472 Rev 8
C15 Printed in U.S.A.
©Hach Company, 2015. All rights reserved.
*In the interest of improving and updating its equipment, Hach Company reserves the right to alter specifications to equipment at any time.*

Be Right™

# CS-490-100 : Identification sheet

| | | | |
|---|---|---|---|
| VWTC PROJECT NUMBER: | 5000220043 | REV: | 4 |
| PROJECT NAME: | AEM MELIADINE - BPC UPGRADE | SUBMITTED TO (COMPANY): | AEM |
| ENGINEER: | CHRIS EL KHAZAKA | SUBMITTED TO (RESPONSIBLE) | |
| PROJECT MANAGER: | THOMAS SAVARY / BRUCE BORDES | PROJECT NUM REFERENCE.: | 6526-S-265-605 / OC-989680 |
| PHONE NUMBER: | 514-334-7230 | LOT NUMBER: | |

| SUPPLIER | EQPT CODE | EQPT TAG NO | DIA | DESCRIPTION | INFO 1 | INFO 2 | INFO 3 | APPLIC. | NOTE | REV |
|---|---|---|---|---|---|---|---|---|---|---|
| HACH | IECNGU301374 | 65AIT6801102 | | RAW WATER TSS/TURBISITY TRANSMITTER | SC200 UNIVERSAL CONTROLLER: 100-240 VAC WITH ONE DIGITAL SENSOR INPUT AND TWO 4-20 MA OUTPUTS // MODEL # LXV404.99.00502 // OPERATING TEMPERATURE RANGE: -20 - 60 °C AT 0 - 95% RH (NON-CONDENSING) // | POWER REQUIREMENTS (HZ): 50 - 60 HZ POWER REQUIREMENTS (VOLTAGE): 100-240VAC // SENSOR INPUT #1: DIGITAL // CLASS I, DIV. 2 (GROUPS. A, B, C, AND D) | | CHLORINATION REACTOR | | 1 |
| HACH | IECNGU301374 | 65AIT6801222 | | TSS/TURBISITY TRANSMITTER | SC200 UNIVERSAL CONTROLLER: 100-240 VAC WITH ONE DIGITAL SENSOR INPUT AND TWO 4-20 MA OUTPUTS // MODEL # LXV404.99.00502 // OPERATING TEMPERATURE RANGE: -20 - 60 °C AT 0 - 95% RH (NON-CONDENSING) // | POWER REQUIREMENTS (HZ): 50 - 60 HZ POWER REQUIREMENTS (VOLTAGE): 100-240VAC // SENSOR INPUT #1: DIGITAL // CLASS I, DIV. 2 (GROUPS. A, B, C, AND D) | | CLARIFIER #1 | | 1 |
| HACH | IECNGU301374 | 65AIT6801322 | | TSS/TURBISITY TRANSMITTER | SC200 UNIVERSAL CONTROLLER: 100-240 VAC WITH ONE DIGITAL SENSOR INPUT AND TWO 4-20 MA OUTPUTS // MODEL # LXV404.99.00502 // OPERATING TEMPERATURE RANGE: -20 - 60 °C AT 0 - 95% RH (NON-CONDENSING) // | POWER REQUIREMENTS (HZ): 50 - 60 HZ POWER REQUIREMENTS (VOLTAGE): 100-240VAC // SENSOR INPUT #1: DIGITAL // CLASS I, DIV. 2 (GROUPS. A, B, C, AND D) | | CLARIFIER #2 | | 1 |

| SUPPLIER | EQPT CODE | EQPT TAG NO | DIA | DESCRIPTION | INFO 1 | INFO 2 | INFO 3 | APPLIC. | NOTE | REV |
|---|---|---|---|---|---|---|---|---|---|---|
| HACH | IECNGU301374 | 65AIT6801417 | | TSS/TURBISITY TRANSMITTER | SC200 UNIVERSAL CONTROLLER: 100-240 VAC WITH ONE DIGITAL SENSOR INPUT AND TWO 4-20 MA OUTPUTS // MODEL # LXV404.99.00502 // OPERATING TEMPERATURE RANGE: -20 - 60 °C AT 0 - 95% RH (NON-CONDENSING) // | POWER REQUIREMENTS (HZ): 50 - 60 HZ POWER REQUIREMENTS (VOLTAGE): 100-240VAC // SENSOR INPUT #1: DIGITAL // CLASS I, DIV. 2 (GROUPS. A, B, C, AND D) | | CLARIFIER #1 SLUDGE SPLITTER TANK | | 1 |
| HACH | IECNGU301374 | 65AIT6801427 | | TSS/TURBISITY TRANSMITTER | SC200 UNIVERSAL CONTROLLER: 100-240 VAC WITH ONE DIGITAL SENSOR INPUT AND TWO 4-20 MA OUTPUTS // MODEL # LXV404.99.00502 // OPERATING TEMPERATURE RANGE: -20 - 60 °C AT 0 - 95% RH (NON-CONDENSING) // | POWER REQUIREMENTS (HZ): 50 - 60 HZ POWER REQUIREMENTS (VOLTAGE): 100-240VAC // SENSOR INPUT #1: DIGITAL // CLASS I, DIV. 2 (GROUPS. A, B, C, AND D) | | CLARIFIER #2 SLUDGE SPLITTER TANK | | 1 |
| HACH | IECNGU301374 | 65AIT6930532 | | TREATED WATER TSS/TURBISITY TRANSMITTER | SC200 UNIVERSAL CONTROLLER: 100-240 VAC WITH ONE DIGITAL SENSOR INPUT AND TWO 4-20 MA OUTPUTS // MODEL # LXV404.99.00502 // OPERATING TEMPERATURE RANGE: -20 - 60 °C AT 0 - 95% RH (NON-CONDENSING) // | POWER REQUIREMENTS (HZ): 50 - 60 HZ POWER REQUIREMENTS (VOLTAGE): 100-240VAC // SENSOR INPUT #1: DIGITAL // CLASS I, DIV. 2 (GROUPS. A, B, C, AND D) | | FINAL PH CORRECTIO N TANK | | 2 |

# sc200™ UNIVERSAL CONTROLLER

**Applications**
- Drinking Water
- Wastewater
- Industrial Water
- Power




## One Controller for the Broadest Range of Sensors.

Choose from 30 digital and analog sensor families for up to 17 different parameters.

### Maximum Versatility

The sc200 controller allows the use of digital and analog sensors, either alone or in combination, to provide compatibility with Hach's broad range of sensors, eliminating the need for dedicated, parameter-specific controllers.

### Ease of Use and Confidence in Results

Large, high-resolution, transreflective display provides optimal viewing resolution in any lighting condition. Guided calibration procedures in 19 languages minimize complexity and reduce operator error. Password-protected SD card reader offers a simple solution for data download and transfer. Visual warning system provides critical alerts.

### Wide Variety of Communication Options

Utilize two to five analog outputs to transmit primary and secondary values for each sensor, or integrate Hach sensors and analyzers into MODBUS RS232/RS485, Profibus® DP, and HART networks.




*Password protected SD card reader offers a simple solution for data download and transfer, and sc200 and digital sensor configuration file duplication and backup.*

HACH®
Be Right™

## Controller Comparison







| Features | Previous Models sc100™ Controller | Previous Models GLI53 Controller | sc200™ Controller | Benefits |
|---|---|---|---|---|
| **Display** | 64 x 128 pixels<br>33 x 66 mm<br>(1.3 x 2.6 in.) | 64 x 128 pixels<br>33 x 66 mm<br>(1.3 x 2.6 in.) | 160 x 240 pixels<br>48 x 68 mm<br>(1.89 x 2.67 in.)<br>Transreflective | • Improved user interface—50% bigger<br>• Easier to read in daylight and sunlight |
| **Data Management** | irDA Port/PDA<br>Service Cable | N/A | SD Card<br>Service Cable | • Simplifies data transfer<br>• Standardized accessories/max compatibility |
| **Sensor Inputs** | 2 Max<br>Direct Digital<br>Analog via<br>External Gateway | 2 Max<br>Analog<br>Depending on<br>Parameter | 2 Max<br>Digital and/or Analog<br>with Sensor Card | • Simplifies analog sensor connections<br>• Works with analog and digital sensors |
| **Analog Inputs** | N/A | N/A | 1 Analog Input Signal<br>Analog 4-20mA Card | • Enables non-sc analyzer monitoring<br>• Accepts mA signals from other analyzers for local display<br>• Consolidates analog mA signals to a digital output |
| **4-20 mA Outputs** | 2 Standard | 2 Standard | 2 Standard<br>Optional 3 Additional | • Total of five (5) 4-20 mA outputs allows multiple mA outputs per sensor input |
| **Digital Communication** | MODBUS RS232/RS485<br>Profibus DP V1.0 | HART | MODBUS RS232/RS485<br>Profibus DP V1.0<br>HART 7.2 | • Unprecedented combination of sensor breadth and digital communication options |

## Choose from Hach's Broad Range of Digital and Analog Sensors

| Parameter | Sensor | Digital or Analog |
|---|---|---|
| Ammonia | AMTAX™ sc, NH4D sc, AISE sc, AN-ISE sc | ● |
| Chlorine | CLF10 sc, CLT10 sc, 9184 sc | ● |
| Chlorine Dioxide | 9185 sc | ● |
| Conductivity | GLI 3400 Contacting, GLI 3700 Inductive | △ |
| Dissolved Oxygen | LDO® Model 2, 5740 sc | ● |
| Dissolved Oxygen | 5500 | △ |
| Flow | U53, F53 Sensors | △ |
| Nitrate | NITRATAX™ sc, NO3D sc, NISE sc, AN-ISE sc | ● |
| Oil in Water | FP360 sc | ● |
| Organics | UVAS sc | ● |
| Ozone | 9187 sc | ● |
| pH/ORP | pHD | ● |
| pH/ORP | pHD, pH Combination, LCP | △ |
| Phosphate | PHOSPHAX™ sc | ● |
| Sludge Level | SONATAX™ sc | ● |
| Suspended Solids | SOLITAX™ sc, TSS sc | ● |
| Turbidity | 1720E, FT660 sc, SS7 sc, ULTRATURB sc, SOLITAX sc, TSS sc | ● |
| Ultra Pure Conductivity | 8310, 8311, 8312, 8315, 8316, 8317 Contacting | △ |
| Ultra Pure pH/ORP | 8362 | △ |

● = Digital △ = Analog

Connect up to two of any of the sensors listed above, in any combination, to meet your application needs. The diagrams below demonstrate the potential configurations. Operation of analog sensors requires the controller to be equipped with the appropriate sensor module. Contact Hach Technical Support for help with selecting the appropriate module.

**2 Channel Configurations**

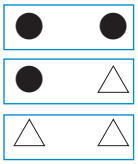

**1 Channel Configurations**

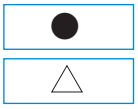

## Specifications*

| | |
|---|---|
| **Dimensions (H x W x D)** | 5.7 in x 5.7 in x 7.1 in (144 mm x 144 mm x 181 mm) |
| **Display** | Graphic dot matrix LCD with LED backlighting, transreflective |
| **Display Size** | 1.9 x 2.7 in. (48 mm x 68 mm) |
| **Display Resolution** | 240 x 160 pixels |
| **Weight** | 3.75 lbs. (1.70 kg) |
| **Power Requirements (Voltage)** | 100 - 240 V AC, 24 V DC |
| **Power Requirements (Hz)** | 50/60 Hz |
| **Operating Temperature Range** | -20 to 60 °C , 0 to 95% RH non-condensing |
| **Analog Outputs** | Two (Five with optional expansion module) to isolated current outputs, max 550 Ω , Accuracy: ± 0.1% of FS (20mA) at 25 °C, ± 0.5% of FS over -20 °C to 60 °C range<br><br>Operational Mode: measurement or calculated value |
| **Analog Output Functional Mode** | Linear, Logarithmic, Bi-linear, PID |
| **Security Levels** | 2 password-protected levels |
| **Mounting Configurations** | Wall, pole, and panel mounting |
| **Enclosure Rating** | NEMA 4X/IP66 |
| **Conduit Openings** | 1/2 in NPT Conduit |
| **Relay: Operational Mode** | Primary or secondary measurement, calculated value (dual channel only) or timer |
| **Relay Functions** | Scheduler (Timer), Alarm, Feeder Control, Event Control, Pulse Width Modulation, Frequency Control, and Warning |
| **Relays** | Four electromechanical SPDT (Form C) contacts, 1200 W, 5 A |
| **Communication** | MODBUS RS232/RS485, PROFIBUS DPV1, or HART 7.2 optional |
| **Memory Backup** | Flash memory |
| **Electrical Certifications** | EMC<br><br>CE compliant for conducted and radiated emissions:<br><br>- CISPR 11 (Class A limits)<br><br>- EMC Immunity EN 61326-1 (Industrial limits)<br><br>Safety<br><br>cETLus safety mark for:<br><br>- General Locations per ANSI/UL 61010-1 & CAN/CSA C22.2. No. 61010-1<br><br>- Hazardous Location Class I, Division 2, Groups A,B,C & D (Zone 2, Group IIC) per FM 3600 / FM 3611 & CSA C22.2 No. 213 M1987 with approved options and appropriately rated Class I, Division 2 or Zone 2 sensors<br><br>cULus safety mark<br><br>- General Locations per UL 61010-1 & CAN/CSA C22.2. No. 61010-1 |

*Subject to change without notice.*

# Dimensions

## *Surface Mounting Dimensions*

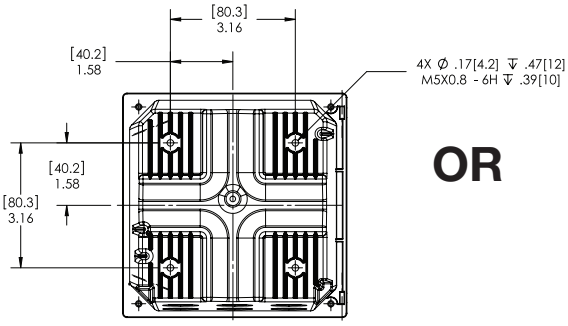


Mounting Dimensions
(Rear View)

**OR**

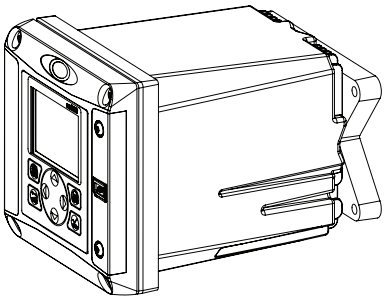

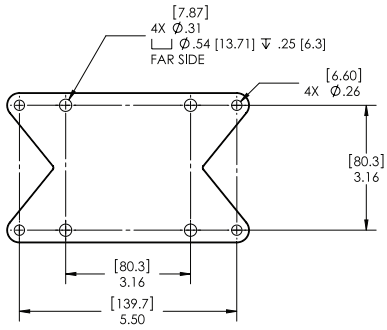


Bracket (supplied) for Surface Mounting
(Not compatible with Weather and Sun Shield p/n 9220600 when surface mounting.)

## *Panel Mounting Dimensions*

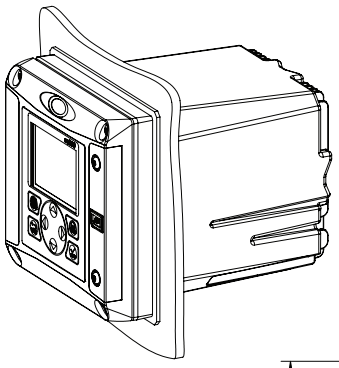

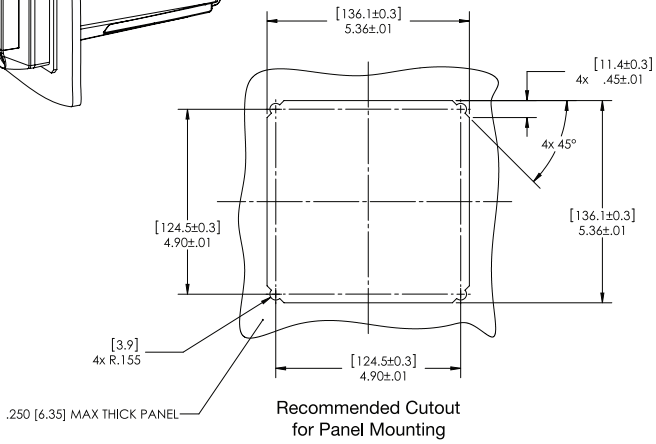


Recommended Cutout
for Panel Mounting

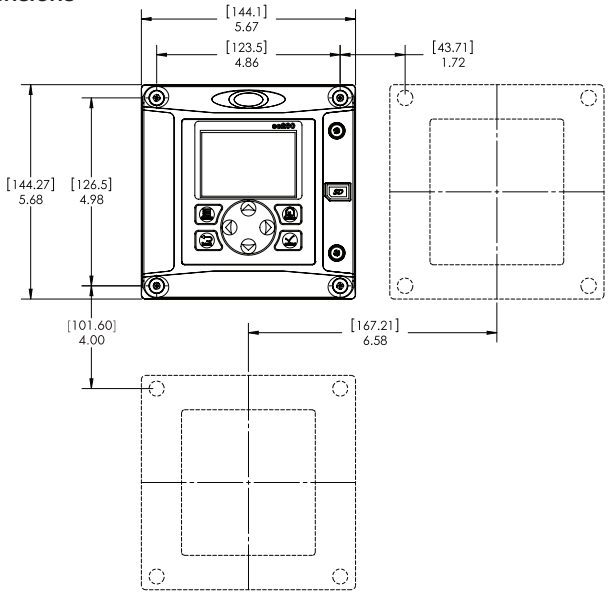


Minimum Spacing Dimensions
for Group Mounting

## *Top and Bottom Views*

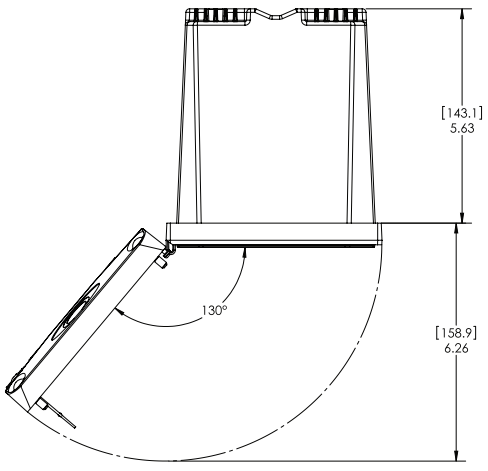


Door Opening Details

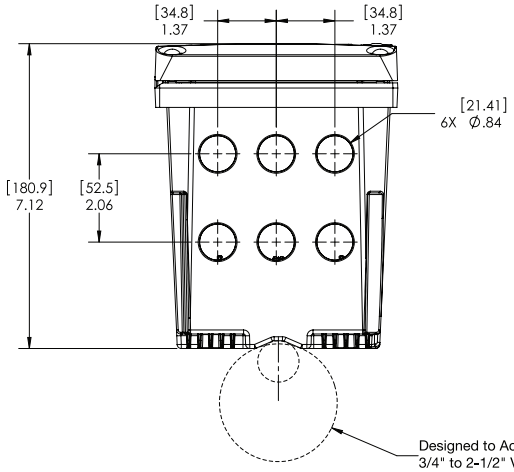

# Ordering Information

## sc200 for Hach Digital and Analog Sensors

| | |
|---|---|
| **LXV404.99.00552** | sc200 controller, 2 channels, digital |
| **LXV404.99.00502** | sc200 controller, 1 channel, digital |
| **LXV404.99.00102** | sc200 controller, 1 channel, pH/DO |
| **LXV404.99.00202** | sc200 controller, 1 channel, Conductivity |
| **LXV404.99.01552** | sc200 controller, 2 channels, digital, Modbus RS232/RS485 |
| **LXV404.99.00112** | sc200 controller, 2 channel, pH/DO |

Note: Other Sensor combinations are available. Please contact Hach Technical Support or your Hach representative.

Note: Communication options (MODBUS, Profibus DPV1, and HART) are available. Please contact Hach Technical Support or your Hach representative.




## sc200 for Ultrapure Sensors

| | |
|---|---|
| **9500.99.00602** | sc200 controller, 1 channel, ultrapure conductivity |
| **9500.99.00702** | sc200 controller, 1 channel, ultrapure pH |
| **9500.99.00662** | sc200 controller, 2 channel, ultrapure conductivity |
| **9500.99.00772** | sc200 controller, 2 channel, ultrapure pH |




## Sensor and Communication Modules

| | |
|---|---|
| **9012900** | Analog pH/ORP and DO module for GLI Sensors |
| **9013000** | Analog Conductivity module for GLI Sensors |
| **9012700** | Flow module |
| **9012800** | 4-20 mA Input Module |
| **9525700** | Analog pH/ORP Module for Polymetron Sensors |
| **9525800** | Analog Conductivity Module for Polymetron Sensors |
| **9013200** | Modbus 232/485 Module |
| **9173900** | Profibus DP Module |
| **9328100** | HART Module |
| **9334600** | 4-20 mA Output Module (Provides 3 additional mA Outputs) |

## Accessories

| | |
|---|---|
| **9220600** | sc200 Weather and Sun Shield with UV Protection Screen |
| **8809200** | sc200 UV Protection Screen |
| **9218200** | SD card reader (USB) for connection to PC |
| **9218100** | 4 GB SD card |

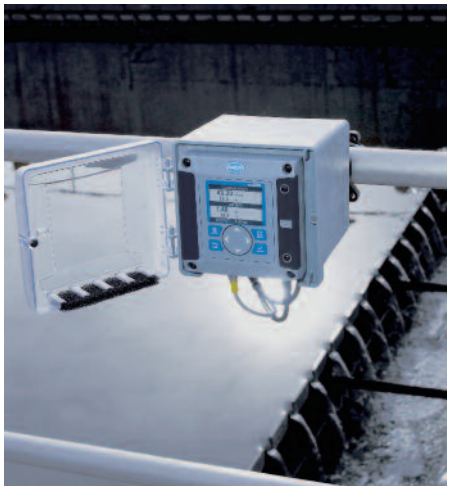

**HACH COMPANY World Headquarters: Loveland, Colorado USA**

United States: 800-227-4224 tel 970-669-2932 fax orders@hach.com
Outside United States: 970-669-3050 tel 970-461-3939 fax int@hach.com
**hach.com**

**LIT2665 Rev 7**
**K13 Printed in U.S.A.**
**©Hach Company, 2013. All rights reserved.**
*In the interest of improving and updating its equipment,*
*Hach Company reserves the right to alter specifications to equipment at any time.*

HACH®
*Be Right™*

**Project name:** MELIADINE-BPC UPGRADE

**Project#:** 5000220043

**Document #:** SPK_0001_MISC_VWT

**by:** CEK

**chkd:** ED

**appvd:** TS

# INSTRUMENTATION

# CHLORINE DILUTION SKID #1601 / #1701

**OIM manual section:** 4.2.11.4

NOTE: THE FLOWMETERS ON THESE SKIDS WILL BE SUPPLIED BY OTHERS
ROSEMOUNT MODEL:8711AHA15FU1N0G1 c/a 8732EMT1A1N6M4

REFER TO 5000220043_GA_0008_SKG_VWT

**This page is intentionally left blank**

# CS-301-100 : Identification sheet

| | | | |
|---|---|---|---|
| VWTC PROJECT NUMBER: | 5000220043 | REV: | 4 |
| PROJECT NAME: | AEM MELIADINE - BPC UPGRADE | SUBMITTED TO (COMPANY): | AEM |
| ENGINEER: | CHRIS EL KHAZAKA | SUBMITTED TO (RESPONSIBLE) | |
| PROJECT MANAGER: | THOMAS SAVARY / BRUCE BORDES | PROJECT NUM REFERENCE.: | 6526-S-265-605 / OC-989680 |
| PHONE NUMBER: | 514-334-7230 | LOT NUMBER: | |

| SUPPLIER | EQPT CODE | EQPT TAG NO | DIA | DESCRIPTION | INFO 1 | INFO 2 | INFO 3 | APPLIC. | NOTE | REV |
|---|---|---|---|---|---|---|---|---|---|---|
| CHEMLINE | VABLPV200243 | 15-BA99-1183 | DIA: 13 mm (1/2") | SERVICE WATER ISOLATION VALVE #1 | TYPE: BALL VALVE//MANUFACTURER : CHEMLINE//MODEL : Type21-A-005-V-C//CONNECTION TYPE : COMBO \| 13 mm (1/2")//BODY : PVC (ASTM D1784)// SEAL \| SEAT :PTFE \| VITON// STEM : PVC | | | CHLORINE DILUTION SKID #1601 | | 3 |
| CHEMLINE | VABLPV200243 | 15-BA99-1184 | DIA: 13 mm (1/2") | SERVICE WATER ISOLATION VALVE #2 | TYPE: BALL VALVE//MANUFACTURER : CHEMLINE//MODEL : Type21-A-005-V-C//CONNECTION TYPE : COMBO \| 13 mm (1/2")//BODY : PVC (ASTM D1784)// SEAL \| SEAT :PTFE \| VITON// STEM : PVC | | | CHLORINE DILUTION SKID #1601 | | 3 |
| CHEMLINE | VABLPV200243 | 15-BA99-1185 | DIA: 13 mm (1/2") | SERVICE WATER ISOLATION VALVE #1 | TYPE: BALL VALVE//MANUFACTURER : CHEMLINE//MODEL : Type21-A-005-V-C//CONNECTION TYPE : COMBO \| 13 mm (1/2")//BODY : PVC (ASTM D1784)// SEAL \| SEAT :PTFE \| VITON// STEM : PVC | | | CHLORINE DILUTION SKID #1701 | | 3 |

| SUPPLIER | EQPT CODE | EQPT TAG NO | DIA | DESCRIPTION | INFO 1 | INFO 2 | INFO 3 | APPLIC. | NOTE | REV |
|---|---|---|---|---|---|---|---|---|---|---|
| CHEMLINE | VABLPV200243 | 15-BA99-1186 | DIA: 13 mm (1/2") | SERVICE WATER ISOLATION VALVE #2 | TYPE: BALL VALVE//MANUFACTURER : CHEMLINE//MODEL : Type21-A-005-V-C//CONNECTION TYPE : COMBO \| 13 mm (1/2")//BODY : PVC (ASTM D1784)// SEAL \| SEAT :PTFE \| VITON// STEM : PVC | | | CHLORINE DILUTION SKID #1701 | | 3 |
| CHEMLINE | VABLPV200243 | 15-BA99-1187 | DIA: 13 mm (1/2") | SAMPLE ISOLATION VALVE #1 | TYPE: BALL VALVE//MANUFACTURER : CHEMLINE//MODEL : Type21-A-005-V-C//CONNECTION TYPE : COMBO \| 13 mm (1/2")//BODY : PVC (ASTM D1784)// SEAL \| SEAT :PTFE \| VITON// STEM : PVC | | | CHLORINE DILUTION SKID #1601 | | 3 |
| CHEMLINE | VABLPV200243 | 15-BA99-1188 | DIA: 13 mm (1/2") | SAMPLE ISOLATION VALVE #1 | TYPE: BALL VALVE//MANUFACTURER : CHEMLINE//MODEL : Type21-A-005-V-C//CONNECTION TYPE : COMBO \| 13 mm (1/2")//BODY : PVC (ASTM D1784)// SEAL \| SEAT :PTFE \| VITON// STEM : PVC | | | CHLORINE DILUTION SKID #1701 | | 3 |
| CHEMLINE | VABLPV200243 | 15-BA99-1189 | DIA: 13 mm (1/2") | SAMPLE ISOLATION VALVE #2 | TYPE: BALL VALVE//MANUFACTURER : CHEMLINE//MODEL : Type21-A-005-V-C//CONNECTION TYPE : COMBO \| 13 mm (1/2")//BODY : PVC (ASTM D1784)// SEAL \| SEAT :PTFE \| VITON// STEM : PVC | | | CHLORINE DILUTION SKID #1601 | | 3 |

| SUPPLIER | EQPT CODE | EQPT TAG NO | DIA | DESCRIPTION | INFO 1 | INFO 2 | INFO 3 | APPLIC. | NOTE | REV |
|---|---|---|---|---|---|---|---|---|---|---|
| CHEMLINE | VABLPV200243 | 15-BA99-1190 | DIA: 13 mm (1/2") | SAMPLE ISOLATION VALVE #2 | TYPE: BALL VALVE//MANUFACTURER : CHEMLINE//MODEL : Type21-A-005-V-C//CONNECTION TYPE : COMBO \| 13 mm (1/2")//BODY : PVC (ASTM D1784)// SEAL \| SEAT :PTFE \| VITON// STEM : PVC | | | CHLORINE DILUTION SKID #1701 | | 3 |
| CHEMLINE | VABLPV200244 | 20-BA99-1191 | DIA: 20 mm (3/4") | SETTLING DRAIN ISOLATION VALVE | TYPE: BALL VALVE//MANUFACTURER : CHEMLINE//MODEL : Type21-A-007-V-C//CONNECTION TYPE : COMBO \| 20 mm (3/4")//BODY : PVC (ASTM D1784)// SEAL \| SEAT :PTFE \| VITON// STEM : PVC | | | CHLORINE DILUTION SKID #1601 | | 3 |
| CHEMLINE | VABLPV200244 | 20-BA99-1192 | DIA: 20 mm (3/4") | SETTLING DRAIN ISOLATION VALVE | TYPE: BALL VALVE//MANUFACTURER : CHEMLINE//MODEL : Type21-A-007-V-C//CONNECTION TYPE : COMBO \| 20 mm (3/4")//BODY : PVC (ASTM D1784)// SEAL \| SEAT :PTFE \| VITON// STEM : PVC | | | CHLORINE DILUTION SKID #1701 | | 3 |

**This page is intentionally left blank**

PDF Published November 23, 2020

# Type 21 True Union Ball Valves

CHEMLINE PLASTICS
SUPERIOR FLOW SOLUTIONS

The Chemline **Type 21** True Union Ball valve incorporates state of the art features for long term performance. This is a full port, full blocking True Union valve pressure rated at 16 bar (230 psi)[3]. Double stem o-rings and Safety Shear stem design provide for a high degree of safety on hazardous fluid applications. All sizes have an ISO standard actuator mounting platform integral to the valve body. This provides for sturdy and secure mounting of pneumatic or electric actuators.

PVC | CPVC | PP | PVDF

CRN Registered Consult Chemline

NSF[4] Certified to NSF/ANSI 61

SERIES: Type 21

SIZES: 3/8" – 4"

ENDS: Socket, Threaded, Combo[6], Flanged, Butt[1] or ChemFlare™

SEATS: PTFE

SEALS[2]: EPDM, FKM (Viton®)




## features

### Pressure rated to 230 psi[3]
- Provides a high factor of safety

### Integral Actuator Mounting Platform
- Actuation is easy. Electric or pneumatic actuators may be mounted in the field.

### Full Port
- High capacity and low pressure drops

### Fully Blocking
- Downstream union nut may be safely disassembled for piping maintenance while valve is closed off under full system pressure

### Built-In Spanner Wrench
- Top of the handle is designed to be used as a tool for accessing internal parts

### Safety Shear Stem Design
- Stem has double o-rings
- Designed to hold full pressure even if stem breaks due to excessive torque

### High Chemical Resistant Material
- PVC and CPVC compounds have an "A" chemical resistance rating as per ASTM D-1784. They have outperformed other PVC and CPVC compounds on aggressive chemicals.

### CRN Registration numbers by province
- Ontario: OC11045.5
- Newfoundland: OC11045.50
- Saskatchewan/Manitoba/Quebec: OC11045.56
- New Brunswick: OC11045.57
- Nova Scotia: OC11045.58
- P.E.I.: OC11045.59
- British Columbia: not required
- Alberta: not required[5]

[1] Butt ends for fusion to Chemline metric PP, PVDF or ECTFE (Halar®) piping.
[2] Other materials are available.
[3] PVC, CPVC and PVDF 1/2" to 2" are rated at 230 psi; 2-1/2" to 4" and all size PP valves are rated at 150 psi at 20°C.
[4] PVC valves with EPDM or FKM (Viton®) seals are certified under NSF/ANSI Standard 61 for contact with drinking water.
[5] Not required for non-expandable fluids.
[6] PVC and CPVC valves 1/2" to 2" are available as Combo (threaded and socket ends).

11/20 ©Chemline Plastics Limited 2020
Chemline is a registered trade mark of Chemline Plastics Limited

# Type 21 True Union Ball Valves

## Features

**Double Stem O-Rings – Safety Shear Design**

- Upper o-ring groove is deeper than lower. In case of excessive stem torque, stem will shear at the upper groove, leaving the inner o-ring intact to seal against full line pressure.

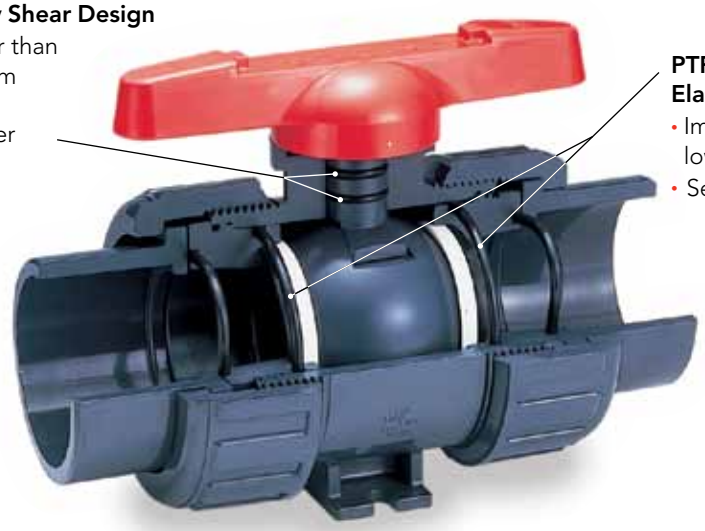

**PTFE Seats have Elastomer Cushions**

- Improved sealing while lowering stem torques
- Self adjusts for seat wear

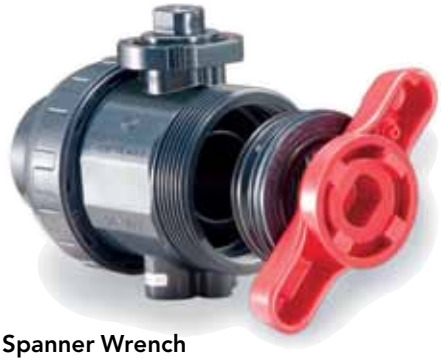

**Built in Spanner Wrench**

- For removing or tightening the seat carrier
- All parts are replaceable



**Integral Actuator Mounting Platform**

- Actuation is easy. Electric or pneumatic actuators may be mounted in the field. Simply pull off the handle to reveal a standard ISO 5211 mounting platform which accepts bolt-on hardware.




**Fully Blocking**

- Downstream pipe may be removed while upstream side is still pressurized. This may be done with valve installed in either direction.



**Base Mounting Pad**

- Optional threaded inserts allow valves to be securely anchored
- Supplied standard with actuated valves

## Options + Accessories



### ChemFlare™ Ends

- For connection to PFA tube. Leak-free connections for difficult services such as sodium hypochlorite



### One-piece moulded PVC and CPVC 6" socket ends

- Allows installation of 4" valve in 6" line
- Factory moulded, elimates cementing separate reducer and coupling
- Fixed to valve mechanically just like the one-piece moulded factory flanges



### Optional Lock-out Handle & Hasp

- To prevent unauthorized operation of the valve during maintenance shut-downs
- Padlocks go through holes in hasp



### Gear Operators

- Deluxe FRP construction
- IP67 enclosure resists short term immersion



### Chain Wheel Operators

- For overhead operation, with 7' of chain drop
- Cast iron or stainless steel

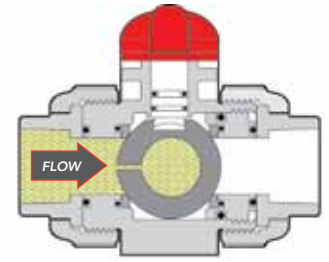


### Vented Ball

- Recommended for all sodium hypochlorite services
- Valve shown in closed position



### Valve Tags

- Stainless steel or plastic



### Different Colour Handles

- Choose a handle colour other than standard red for colour coding different services



### Municipal Operating Nut

- 2" square nut for operating valves below grade using a standard municipal "key"
- Stainless Steel for corrosion resistance



### Manual Limit Switch

- Electrical feedback of manual valve position
- NEMA 4X enclosure, position indicator beacon, 2x SPDT or proximity switches, stainless steel hardware



### Shaft Extensions

- Different materials and lengths are available
- Several designs:
  - with no housing for indoors
  - with waterproofed PVC housing for indoors or outdoors
  - with stainless steel housing for buried or actuated services

# Type 21 True Union Ball Valves

## Electric + Pneumatic Actuation

- A complete range of actuators and control accessories are available, mounted to valves using PPG plastic brackets and stainless steel couplings. Refer to separate data sheets.
- All actuators are CSA approved, have NEMA 4X enclosures, stainless steel hardware and permanently lubricated gear train



**ERS Series Electric**
- Type 21 ball valves up to 2"
- 180 in-lbs torque
- On-Off (3/2-wire), adjustable travel
- Visual feedback

**E Series Electric**
- Type 21 ball valves up to 4"
- Up to 885 in-lbs torque
- On-Off (3/2-wire), adjustable travel. Optional: failsafe, 3 position modulating
- Visual feedback and feedback switches. Optional: extra switches, feedback potentiometer and feedback transmitter



**V Series Electric**
(with optional Local Control Station)
- Type 21 ball valves up to 6"
- up to 8,850 in-lbs torque
- On-Off (2/3-wire), adjustable travel. Optional: failsafe, modulating, BUS
- Visual feedback, 2 feedback switches. Optional: 2 extra feedback switches, feedback potentiometer and feedback transmitter



**PA Series Pneumatic**
- Type 21 ball valves up to 6"
- up to 10,660 in-lbs torque
- industrial process submerged
- bleach/water washdown
- Rilsan-coated aluminum



**PP Series Pneumatic**
- Type 21 ball valves up to 6"
- up to 1,335 in-lbs torque
- industrial process with minimal use of metal
- Glass-filled Polyamide

### OTHER OPTIONS & ACCESSORIES

- **Alternate O-Ring Seals**
- **Stem Extensions** made to any length
- **Limit Switches** – for open and/or closed position indication
- **Municipal Operating Nut**
- **Lubrication-free Valves** – factory clean room assembled
- **Vented Ball** – for sodium hypochlorite applications

# Type 21 True Union Ball Valves

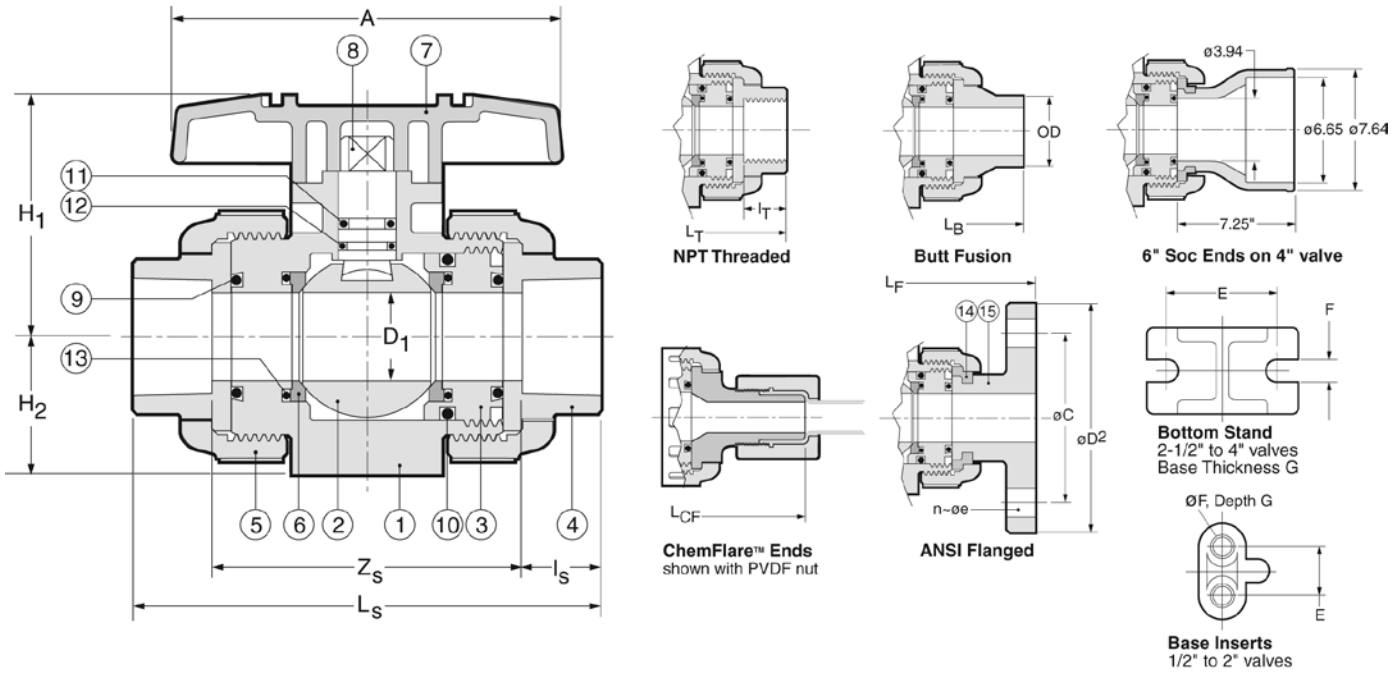


## PARTS

▲ Recommended Spare Parts

| No. | Part | Pcs. | Materials |
|---|---|---|---|
| 1 | Body | 1 | PVC, CPVC, PP, PVDF |
| 2 | Ball | 1 | PVC, CPVC, PP, PVDF |
| 3 | Carrier[1] | 1/2 | PVC, CPVC, PP, PVDF |
| 4 | End Connector | 2 | PVC, CPVC, PP, PVDF |
| 5 | Union Nut | 2 | PVC, CPVC, PP, PVDF |
| 6▲ | Ball Seat | 2 | PTFE |
| 7 | Handle | 1 | ABS |

[1] 1 carrier for sizes 1/2" to 2", 2 carriers for sizes 2-1/2" to 4"
[2] EPDM seals standard with PVC, CPVC, PP; FKM (Viton®) with PVDF valves
[3] 2 pcs 1/2" to 2", 6 pcs 2-1/2" to 4"

## PARTS

▲ Recommended Spare Parts

| No. | Part | Pcs. | Materials |
|---|---|---|---|
| 8 | Stem | 1 | PVC, CPVC, PP, PVDF |
| 9▲ | Face O-Ring[2] | 2 | EPDM, FKM (Viton®) |
| 10▲ | Carrier O-Ring[2] | 2 | EPDM, FKM (Viton®) |
| 11▲ | Upper Thicker Stem O-Ring[2] | 1 | EPDM, FKM (Viton®) |
| 12▲ | Lower Thinner Stem O-Ring[2] | 1 | EPDM, FKM (Viton®) |
| 13 | Seat Cushion[2] | 2 | EPDM, FKM (Viton®) |
| 14 | Flange Retainer[3] | 2/6 | PVDF |
| 15 | Flange | 2 | PVC, CPVC, PP, PVDF |

## DIMENSIONS INCHES

| | | | | | End Connections | | | | | | | | | | | | | | | | |
|---|---|---|---|---|---|---|---|---|---|---|---|---|---|---|---|---|---|---|---|---|---|
| | D | | | | Socket | | | Threaded | | Factory Flanged | | | | | Butt | | ChemFlare™ | | Valve Base | | |
| Size | Bore | A | $H_1$ | $H_2$ | $L_S$ | $Z_S$ | $l_S$ | $l_T$ | $L_T$ | $L_F$ | $D_2$ | C | n | e | $L_B$ | OD | $L_{CF}$ | Tube[4] | E | F[5] | G |
| 1/2" | .59 | 3.6 | 2.03 | 1.14 | 4.45 | 2.70 | .875 | .64 | 4.02 | 5.63 | 3.50 | 2.38 | 4 | .62 | 4.88 | .79 | 6.12 | 1/2" | .75 | .29 | .43 |
| 3/4" | .79 | 3.9 | 2.34 | 1.38 | 5.08 | 3.08 | 1.00 | .65 | 4.72 | 6.77 | 3.88 | 2.75 | 4 | .62 | 5.67 | .98 | 6.52 | 3/4" | .75 | .29 | .43 |
| 1" | .98 | 4.3 | 2.68 | 1.54 | 5.75 | 3.50 | 1.13 | .81 | 5.16 | 7.36 | 4.25 | 3.12 | 4 | .62 | 6.06 | 1.26 | 7.26 | 1" | .75 | .29 | .43 |
| 1-1/4" | 1.22 | 4.8 | 3.17 | 1.85 | 6.46 | 5.21 | 1.25 | .85 | 5.91 | 7.48 | 4.62 | 3.50 | 4 | .62 | 6.85 | 1.57 | 9.58 | 1-1/4" | 1.18 | .35 | .59 |
| 1-1/2" | 1.57 | 5.2 | 3.50 | 2.17 | 7.24 | 4.49 | 1.38 | .85 | 6.42 | 8.35 | 5.00 | 3.88 | 4 | .62 | 7.64 | 1.97 | – | – | 1.18 | .35 | .59 |
| 2" | 2.01 | 6.3 | 4.02 | 2.60 | 8.23 | 5.23 | 1.50 | 1.90 | 7.76 | 9.21 | 6.00 | 4.75 | 4 | .75 | 8.82 | 2.48 | – | – | 1.18 | .35 | .59 |
| 2-1/2" | 2.28 | 7.87 | 4.96 | 2.83 | 9.45 | 5.95 | 1.75 | 1.21 | 8.46 | 10.20 | 7.00 | 5.49 | 4 | .75 | 9.72 | 2.95 | – | – | 1.89 | .35 | .23 |
| 3" | 2.70 | 9.45 | 5.51 | 3.35 | 11.10 | 7.35 | 1.88 | 1.30 | 10.39 | 11.97 | 7.50 | 6.00 | 4 | .75 | 11.61 | 3.54 | – | – | 2.17 | .43 | .28 |
| 4" | 3.54 | 11.81 | 7.01 | 4.33 | 13.88 | 9.87 | 2.00 | 1.38 | 14.17 | 14.65 | 9.00 | 7.50 | 8 | .75 | 14.76 | 4.33 | – | – | 2.56 | .43 | .32 |
| 6"[6] | 3.54 | 11.81 | 7.01 | 4.33 | 23.15 | 17.09 | 3.03 | – | – | – | – | – | – | – | – | – | – | – | 2.56 | .43 | .32 |
| 6"[7] | 3.54 | 11.81 | 7.01 | 4.33 | 27.22 | 21.21 | 3.03 | – | – | – | – | – | – | – | – | – | – | – | 2.56 | .43 | .32 |

[4] ChemFlare™ ends are available for reduced tube sizes down to 1/4"
[5] Optional threaded inserts: 1/2" to 1" valves – UNC 1/4"-20; 1-1/4" to 2" valves – UNC 5/16"-18. 'Recoil' brand inserts require drilling before insertion.
[6] 6" with factory moulded socket ends
[7] 6" with fabricated socket ends

# Type 21 True Union Ball Valves

## WORKING PRESSURES PSI, Water, Non-Shock

## VACUUM RATING • 29.9 inches mercury

| Size | PVC | | | CPVC | | | | | | PP | | | PVDF | | | | |
|---|---|---|---|---|---|---|---|---|---|---|---|---|---|---|---|---|---|
| | 20°C 68°F | 40°C 104°F | 50°C 122°F | 20°C 68°F | 40°C 104°F | 50°C 122°F | 60°C 140°F | 80°C 176°F | 90°C 194°F | 20°C 68°F | 60°C 140°F | 80°C 176°F | 20°C 68°F | 40°C 104°F | 60°C 140°F | 80°C 176°F | 100°C 212°F |
| 1/2"– 2" | 230 | 165 | 150 | 230 | 165 | 150 | 120 | 75 | 55 | 150 | 85 | 55 | 230 | 185 | 150 | 110 | 85 |
| 2-1/2"– 4" | 150 | 150 | 150 | 150 | 150 | 150 | 120 | 75 | 55 | 150 | 70 | 40 | 150 | 150 | 150 | 110 | 85 |

**Temperature Ranges: PVC** 0 to 50°C (32 to 122°F), **CPVC** 0 to 90°C (32 to 194°F), **PP** –20 to 80°C (–4 to 176°F), **PVDF** –20 to 100°C (–20 to 212°F)

## WEIGHTS LB. THREADED or SOCKET

## WEIGHTS LB. FLANGED

| Size | PVC | CPVC | PP | PVDF | PVC | CPVC | PP | PVDF |
|---|---|---|---|---|---|---|---|---|
| 1/2" | 0.4 | 0.4 | 0.4 | 0.4 | 0.9 | 0.9 | 0.7 | 1.1 |
| 3/4" | 0.7 | 0.7 | 0.7 | 0.9 | 1.3 | 1.5 | 1.1 | 1.5 |
| 1" | 0.9 | 1.1 | 0.9 | 1.1 | 1.8 | 2.0 | 1.5 | 2.2 |
| 1-1/4" | 1.5 | 1.5 | 1.3 | 1.8 | 2.6 | 2.9 | 2.0 | 3.3 |
| 1-1/2" | 2.4 | 2.6 | 1.5 | 2.9 | 3.7 | 4.0 | 2.6 | 4.4 |
| 2" | 4.0 | 4.4 | 2.6 | 4.9 | 5.5 | 6.0 | 4.0 | 8.2 |
| 2-1/2" | 5.1 | 5.5 | 3.7 | 6.2 | 7.3 | 7.7 | 5.3 | 8.8 |
| 3" | 8.2 | 8.8 | 5.5 | 9.9 | 10.1 | 11.0 | 7.5 | 12.6 |
| 4" | 19.4 | 21.8 | 13.2 | 24.9 | 21.6 | 23.4 | 15.4 | 26.7 |

## Cv VALUES VS. BALL ANGLE

| Size | 0% | 25% | 50% | 75% | 100% |
|---|---|---|---|---|---|
| 1/2" | 0 | 0.35 | 1.3 | 5.5 | 14. |
| 3/4" | 0 | 0.73 | 2.8 | 11.5 | 29. |
| 1" | 0 | 1.2 | 4.5 | 18.6 | 47. |
| 1-1/4" | 0 | 1.8 | 6.8 | 28.4 | 72. |
| 1-1/2" | 0 | 3.9 | 14.7 | 61.2 | 155. |
| 2" | 0 | 4.8 | 18.0 | 75.0 | 190. |
| 2-1/2" | 0 | 9.1 | 34.7 | 144.0 | 365. |
| 3" | 0 | 10.2 | 39.0 | 162.0 | 410. |
| 4" | 0 | 17.0 | 64.6 | 269.0 | 680. |

## SAMPLE SPECIFICATION

1. All True Union Ball Valves in PVC, CPVC, PP or PVDF shall be Chemline Type 21 or equal sizes 1/2" to 2" in PVC, CPVC, and PVDF rated at 230 psi and in PP 150 psi maximum working pressure. Sizes 2-1/2", 3" and 4" rated at 150 psi maximum working pressure with EPDM or FKM (Viton®) seals. Ball seats shall be PTFE with elastomer cushions for closure with minimum stem torques.
2. All valves will have Safety Shear stem design, blowout-proof with double o-rings for safety. The top o-ring groove shall be deeper so that if the stem breaks off under excessive torque the lower o-ring will remain intact and the valve will hold pressure.
3. All valves shall be full port and two-way blocking design.
4. All valves will be CRN (Canadian Registration Number) registered with TSSA.
5. PVC valves with EPDM or FKM (Viton®) seals shall be certified under NSF/ANSI Standard 61 for contact with drinking water.
6. All valves shall have chemical resistant labels permanently marked with manufacturing number to provide production level traceability.
7. PVC compound shall have an ASTM cell classification 12454-A with a minimum suffix "A" designation for chemical resistance as per ASTM D-1784 (CSA report LO 4000-172).
8. CPVC compound shall have an ASTM cell classification 23567-A with a minimum suffix "A" designation for chemical resistance as per ASTM D-1784.
9. PP material will conform to ASTM D-4101 PP 021 B 67272 material requirements.
10. PVDF material shall be unpigmented conforming to ASTM D-3222 material requirements and to be USDA Title 21 Chapter 1 Part 177. 2510 requirements for contact with food.
11. Socket ends in PVC and CPVC shall be Schedule 80 and conform to ASTM D-2467.
12. Threaded ends shall be Schedule 80 and conform to ASTM D-2464.
13. Butt fusion ends in PP or PVDF will be compatible with Chemline PP or PVDF metric piping systems.
14. Flanged ends shall be ANSI Class 150 one-piece factory moulded (not fabricated) to ensure maximum strength and close tolerance end to end dimensions.

## ORDERING EXAMPLE

| | | | | | | for ChemFlare™ ends only | | all other ends |
|---|---|---|---|---|---|---|---|---|
| **Chemline True Union Ball Valves** | **21** | **A** | **005** | **E** | **V** | **–A** | **8N** | **–1** |
| Body Material | **A** – PVC **B** – PP | **C** – CPVC **K** – PVDF | | | | | | |
| Size[1] | **002** – 1/4" **010** – 1" **025** – 2-1/2" | **003** – 3/8" **012** – 1-1/4" **030** – 3" | **005** – 1/2" **015** – 1-1/2" **040** – 4" | **007** – 3/4" **020** – 2" **060** – 6" | | | | |
| Seals | **E** – EPDM | **V** – FKM (Viton®) | **N** – Nitrile | **A** – Aflas® | | | | |
| ChemFlare™ End Connecters for valves 3/8" to 1-1/4" | | | | | | | | |
| Material | **A** – PVC | **B** – PP | **C** – CPVC | **K** – PVDF | | | | |
| Tube Size[3] | **4N** – 1/4" | **6N** – 3/8" | **8N** – 1/2" | **12N** – 3/4" | **16N** – 1" | **20N** – 1-1/4" | | |
| Tube Nut | **–1** – includes nut | **Blank** – without nut | | | | | | |
| Ends | **S** – Socket | **T** – Threaded | **C** – Combo[2] | **F** – Flanged | **B** – Butt[3] | | | |

**Example:** Chemline Type 21 True Union Ball Valve, PVC, 1/2", with FPM (Viton®) seals, PVC ChemFlare™ end connectors, 1/2" tube size, including nuts.

[1] 1/4" is normally the 3/8" valve reduced. 6" is 4" valve with 6" end connections

[2] PVC and CPVC valves 1/2" to 2" are available as Combo (socket and threaded ends)

[3] Tube size must be equal or smaller than the valve size

[4] PP, PVDF and ECTFE (Halar®) metric butt fusion ends (1/2" to 4") connect to Chemline PP, PVDF and ECTFE (Halar®) piping systems

CHEMLINE PLASTICS
SUPERIOR FLOW SOLUTIONS

55 Guardsman Road, Thornhill, ON, L3T 6L2, Canada | ISO 9001:2015 Certified
1.800.930.2436 (CHEM) | fax.905.889.8553 | request@chemline.com | chemline.com

# CS-303-100 : Identification sheet

| | | | |
|---|---|---|---|
| VWTC PROJECT NUMBER: | 5000220043 | REV: | 4 |
| PROJECT NAME: | AEM MELIADINE - BPC UPGRADE | SUBMITTED TO (COMPANY): | AEM |
| ENGINEER: | CHRIS EL KHAZAKA | SUBMITTED TO (RESPONSIBLE) | |
| PROJECT MANAGER: | THOMAS SAVARY / BRUCE BORDES | PROJECT NUM REFERENCE.: | 6526-S-265-605 / OC-989680 |
| PHONE NUMBER: | 514-334-7230 | LOT NUMBER: | |

| SUPPLIER | EQPT CODE | EQPT TAG NO | DIA | DESCRIPTION | INFO 1 | INFO 2 | INFO 3 | APPLIC. | NOTE | REV |
|---|---|---|---|---|---|---|---|---|---|---|
| CHEMLINE | VARFPV309378 | 15-BRP99-1167 | DIA: 13 mm (1/2") | BACK PRESSURE VALVE | TYPE: RELIEF VALVE \| 150#//MANUFACTURER : CHEMLINE//MODEL : SB12A005VU//CONNECTION TYPE : UNION SOCKET \| 13 mm (1/2")//BODY : PVC// SEAL \| SEAT :VITON \| VITON// STEM : N/A | | | CHLORINE DILUTION SKID #1601 | | 3 |
| CHEMLINE | VARFPV309378 | 15-BRP99-1168 | DIA: 13 mm (1/2") | BACK PRESSURE VALVE | TYPE: RELIEF VALVE \| 150#//MANUFACTURER : CHEMLINE//MODEL : SB12A005VU//CONNECTION TYPE : UNION SOCKET \| 13 mm (1/2")//BODY : PVC// SEAL \| SEAT :VITON \| VITON// STEM : N/A | | | CHLORINE DILUTION SKID #1701 | | 3 |

**This page is intentionally left blank**

PDF Published November 20, 2020

# SB12 Series Back Pressure/Relief Valves

CHEMLINE PLASTICS
SUPERIOR FLOW SOLUTIONS

PVC PP PVDF

CRN Registered as Category C Fittings Consult Chemline

NSF[3] Certified to NSF/ANSI 61

SERIES: SB12

SIZES: 3/8" – 4"

ENDS: True Union Socket, Threaded or ChemFlare™[1] Spigot[2] Bodies with Plain, Socket, Threaded or Flanged ends

DIAPHRAGM: PTFE Bonded EPDM

SEALS: EPDM, FKM (Viton®)






**ChemFlare™ Ends**
For connection to PFA tube. Leak-free connections for difficult services such as sodium hypochlorite.



**Optional Pressure Gauge**
For inlet and/or outlet

The Chemline **SB Series** Back Pressure/ Relief Valve has two functions. As a ***back pressure valve***, installed in-line downstream of a pump, the back pressure below the metering pump is maintained. When installed in the branch of a tee it is a ***pressure relief valve***. The valve stays closed until inlet pressure reaches the set pressure which is adjusted by turning the spring tensioning bolt. Inlet pressure acts upward against the piston allowing excess pressure to flow upwards through the orifice.

The SB12 Series has a built-in check valve function, desirable for dosing applications. It is not so sensitive as to open with every pulsation from a metering pump. It is designed for ***clean fluids only***.

## features

### True Union Ends
- Easy installation and maintenance
- Eliminate chemical leakage problems common with old fashioned threaded connections

### Long Cycling Life
- Dynamic seal is PTFE bonded EPDM for high chemical resistance
- This moulded diaphragm is designed for superior sealing and flex life

### Superior Performance in Dosing Systems
- Valves are hydraulically designed for very low hysteresis ("backlash") and to eliminate chatter
- Built-in check (non-return) function
- Valve opening depends on inlet pressure only and is uneffected by changes in downstream (back) pressure

### CRN Registration numbers by province
- Ontario: OC10134.5
- Newfoundland: OC10134.50
- Alberta: OC10134.52
- Saskatchewan/Manitoba/Quebec: OC10134.56
- New Brunswick: OC10134.57
- Nova Scotia: OC10134.58
- P.E.I.: OC10134.59
- British Columbia: not required

## technical

### Set Pressure Ranges
- 1/2" to 2" – 5 to 150 psi
- 2-1/2" and 3" – 7.5 to 150 psi
- 2-1/2" to 4" – 5 to 60 psi (optional)
- 4" – 7.5 to 90 psi

### Maximum Viscosity
- 120cP is maximum recommended service viscosity

[1] For ChemFlare™ end connectors, consult Chemline
[2] PP and PVDF spigot ends have DIN dimensions and will butt fuse directly to Chemline PP and PVDF piping systems
[3] PVC valves with EPDM or FKM (Viton®) seals are certified under NSF/ANSI Standard 61 for contact with drinking water

11/20 ©Chemline Plastics Limited 2020
Chemline is a registered trade mark of Chemline Plastics Limited

# SB12 Series Back Pressure/Relief Valves 1/2" to 2"

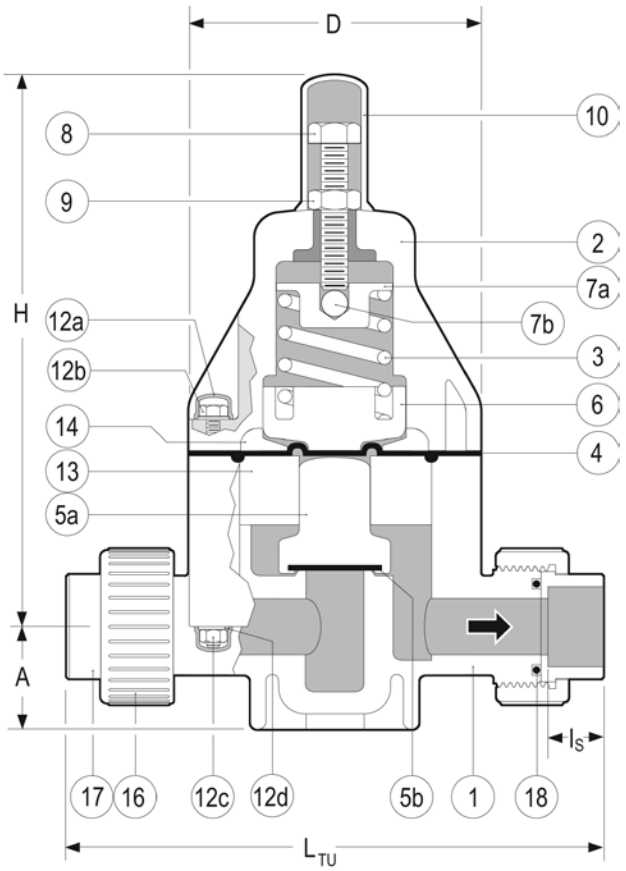


True Union Body

## PARTS

▲ Recommended Spare Parts

| No. | Part | Pcs. | Materials |
|---|---|---|---|
| 1 | Body | 1 | PVC, PP, PVDF |
| 2 | Bonnet | 1 | PPG |
| 3 | Spring | 1 | Galvanized Steel |
| 4▲ | Control Diaphragm | 1 | PTFE bonded EPDM |
| 5a▲ | Piston | 1 | PVC, PP, PVDF |
| 5b▲ | Seat | 1 | EPDM, FPM(Viton®) |
| 6 | Lower Spring Retainer | 1 | PPG |
| 7a | Upper Spring Retainer | 1 | Cad. Plated Steel |
| 7b | Ball | 1 | 304 SS |
| 8 | Spring Tensioning Bolt | 1 | 304 SS |
| 9 | Lock Nut | 1 | 304 SS |
| 10 | Spring Bolt Cap | 1 | PE |
| 12a | Bolt/Nut Cap | 8/12[1] | PE |
| 12b | Hex Bolt | 4/6[1] | 304 SS |
| 12c | Hex Nut | 4/6[1] | 304 SS |
| 12d | Washer | 8/12[1] | 304 SS |
| 13 | Spacer Disc | 1 | PVC, PP, PVDF |
| 14 | Pressure Plate | 1 | PP |
| 16 | Union Nut | 2 | PVC, PP, PVDF |
| 17 | End Connector | 2 | PVC, PP, PVDF |
| 18▲ | Face O-Ring | 2 | EPDM, FPM(Viton®) |

[1] 1/2" size / 3/4" to 2" sizes

## OTHER ENDS

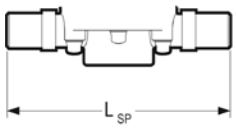


Spigot Body

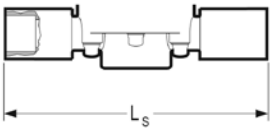


Socket

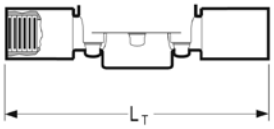


Threaded

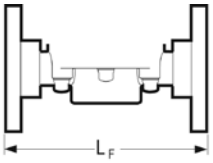


Flanged

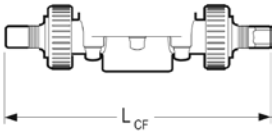


ChemFlare™

## DIMENSIONS INCHES

## WEIGHTS LB.

## Cv VALUES

| Size | D | H | PVC A | PVC $I_S$ | PVC $L_{TU}$[2] | PVC $L_{SP}$[3] | PVC $L_S$ | PVC $L_T$ | PVC $L_F$ | PVC $L_{CF}$ | PP and PVDF A | PP and PVDF $L_{SP}$[3] | PP and PVDF $L_{TU}$[2] | PVC | PP | PVDF | USGPM Flow at 1 psi △P |
|---|---|---|---|---|---|---|---|---|---|---|---|---|---|---|---|---|---|
| 3/8" | 3.2 | 6.9 | 1.0 | 0.6 | 6.5 | 5.7 | 7.4 | 7.2 | 4.5 | 8.2 | 0.9 | 5.7 | ** | 1.8 | 1.5 | 2.2 | 2.1 |
| 1/2" | 3.2 | 6.9 | 1.0 | 0.6 | 6.2 | 5.7 | 8.0 | 7.8 | 6.3 | 8.3[4] | 0.9 | 5.7 | 7.1 | 1.9 | 1.6 | 2.4 | 3.0 |
| 3/4" | 4.2 | 8.0 | 1.5 | 0.7 | 8.3 | 6.9 | 9.3 | 8.9 | 7.4 | 9.7 | 1.4 | 6.9 | 8.4 | 4.1 | 3.5 | 4.6 | 6.6 |
| 1" | 4.2 | 8.0 | 1.5 | 0.9 | 8.5 | 6.9 | 9.6 | 9.3 | 7.4 | 10.2 | 1.4 | 6.9 | 8.7 | 4.2 | 3.5 | 4.7 | 8.7 |
| 1-1/4" | 5.8 | 10.3 | 2.2 | 1.0 | 10.9 | 8.8 | 11.6 | 11.2 | 9.2 | 13.5 | 2.1 | 8.8 | 10.9 | 11.0 | 9.0 | 12.0 | 18.0 |
| 1-1/2" | 5.8 | 10.3 | 2.2 | 1.2 | 11.1 | 8.8 | 12.2 | 11.5 | 9.5 | – | 2.1 | 8.8 | 11.2 | 11.2 | 9.2 | 12.2 | 20.0 |
| 2" | 5.8 | 10.3 | 2.2 | 1.5 | 11.3 | 9.6 | 12.9 | 12.0 | 10.0 | – | 2.1 | 8.8 | 13.2 | 11.4 | 9.4 | 12.4 | 21.4 |

[2] True Union bodies come standard with socket ends. Threaded union ends are available. ** Consult Chemline.
[3] Spigot bodies are used for non union socket, threaded or flanged ends. All spigot ends have metric dimensions and the PP and PVDF spigots butt fuse directly to Chemline PP and PVDF piping. [4] Tube size can be reduced to 1/4" tube, LCF = 7.74" for 1/4", 8.26" for 3/8".

## MAXIMUM PRESSURES PSI

| Size | PVC 20°C 68°F | PVC 30°C 86°F | PVC 40°C 104°F | PVC 50°C 122°F | PP 30°C 86°F | PP 40°C 104°F | PP 50°C 122°F | PP 60°C 140°F | PP 70°C 158°F | PVDF 30°C 86°F | PVDF 50°C 122°F | PVDF 70°C 158°F | PVDF 80°C 176°F | PVDF 90°C 194°F | PVDF 100°C 212°F |
|---|---|---|---|---|---|---|---|---|---|---|---|---|---|---|---|
| 1/2"– 2" | 150 | 105 | 60 | 15 | 150 | 90 | 60 | 37.5 | 15 | 150 | 100 | 60 | 45 | 30 | 15 |

**Temperature Ranges: PVC** 0 to 50°C (32 to 122°F), **PP** 10 to 70°C (50 to 158°F), **PVDF** –30 to 100°C (–22 to 212°F).

# SB12 Series Back Pressure/Relief Valves 1/2" to 2"

## pressure loss nomogram for SB12 valves 3/8" to 2"

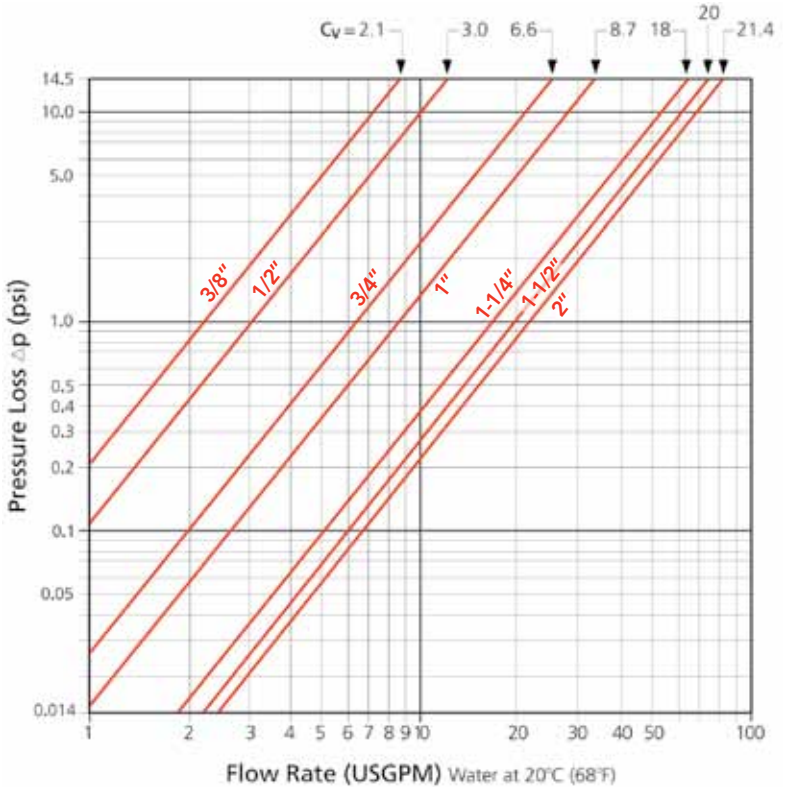


## typical dosing system schematic

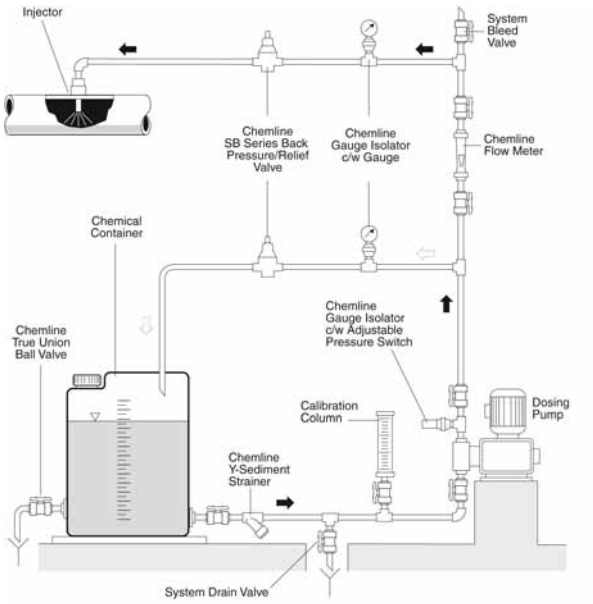


## application of pressure relief valves

**Constant System Pressure**

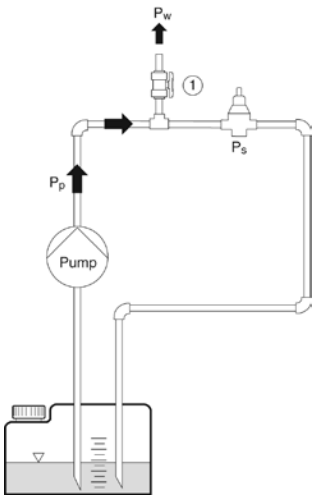


$P_p \geq P_w$
$P_p \geq P_s$ → valve opens
$P_p \leq P_s$ → valve closed

$P_w$ = Working Pressure
$P_p$ = Pump Pressure
$P_s$ = Set Pressure

**Consumer 1 and/or 2 Open, Valve Closes**

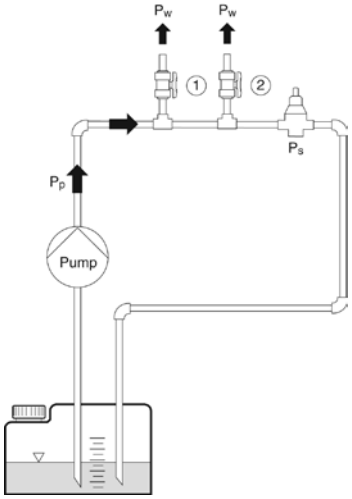


$P_p \geq P_s$ → valve opens
$P_p \leq P_s$ → valve closed

**Non-Return Valve**
Container 1 is located above the pump

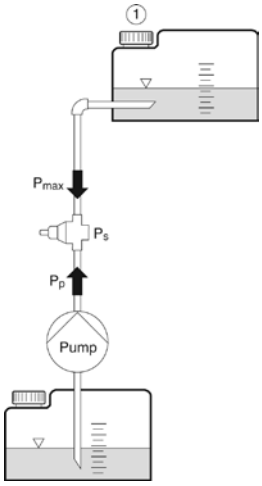


$P_s \geq P_{max}$
$P_p \geq P_s$ → valve opens
$P_p \leq P_s$ → valve closed

**Overflow Valve**
Pressure of container or application system should not exceed the maximum pressure value

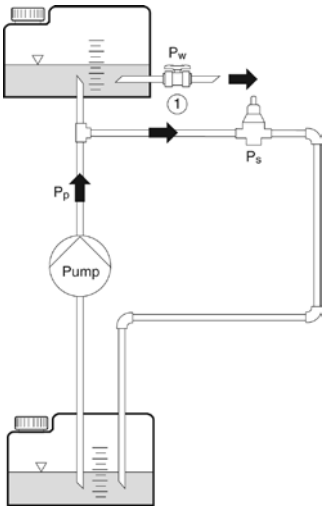


$P_s \leq P_w$
$P_p \geq P_s$ → valve opens
$P_p \leq P_s$ → valve closed

# SB12 Series Back Pressure/Relief Valves 1/2" to 2"

## working pressure vs. flow rate

The curves show the relationship between the working pressure and the approximate flow rate through the valve for water at 20°C (68°F) . These values will vary depending on:

- The configuration of the piping and the pressure losses associated with it
- The fluid if not water at 20°C (68°F)
- Whether the pressure is rising or falling, hysteresis is approximately 4 psi for 1/2" to 2" valves. For valves 2-1/2" to 4", hysteresis is approximately 14.5 psi.

## operation examples

1. The valve is set closed at 100 psi. At a pressure increase of 10 psi, a flow of approximately 1.0 USGPM will be reached.
   - set pressure = 100 psi
   - working pressure = 110 psi
   - opening pressure = approximately 104 psi
2. The valve is set closed at 50 psi. At a pressure increase of 10 psi, a flow of approximately 1.0 USGPM will be reached.
   - set pressure = 50 psi
   - working pressure = 60 psi
   - opening pressure = approximately 54 psi

### 3/8" Valves

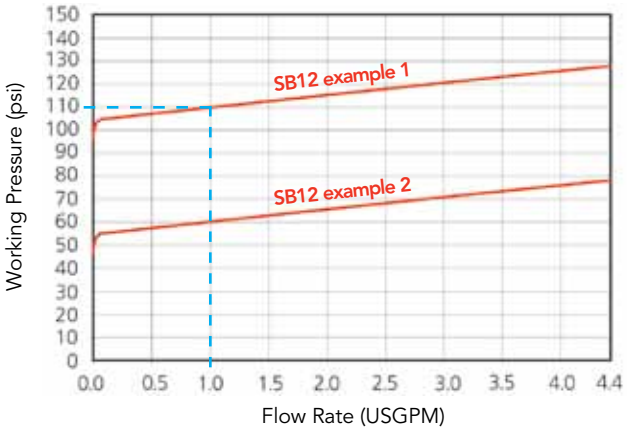


### 1/2" Valves

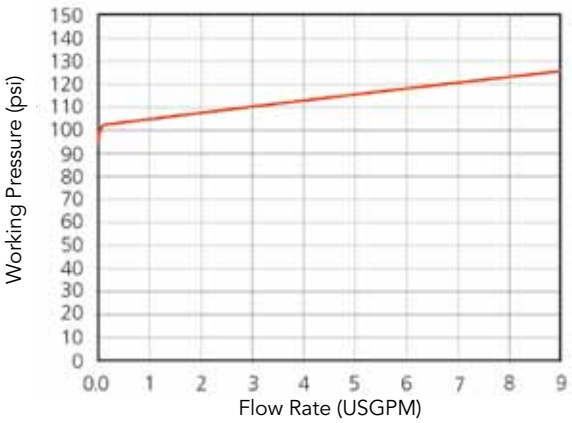


### 3/4" Valves

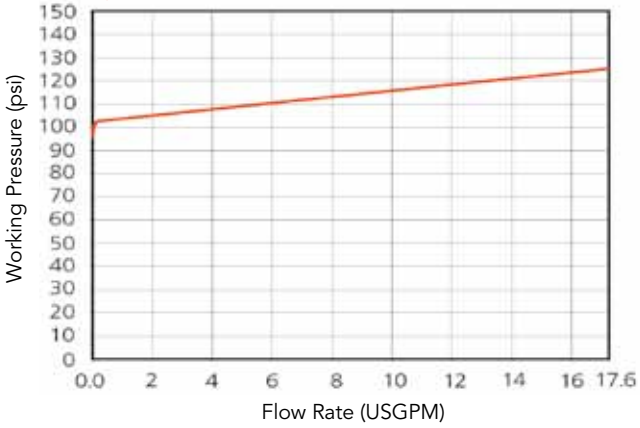


### 1" Valves

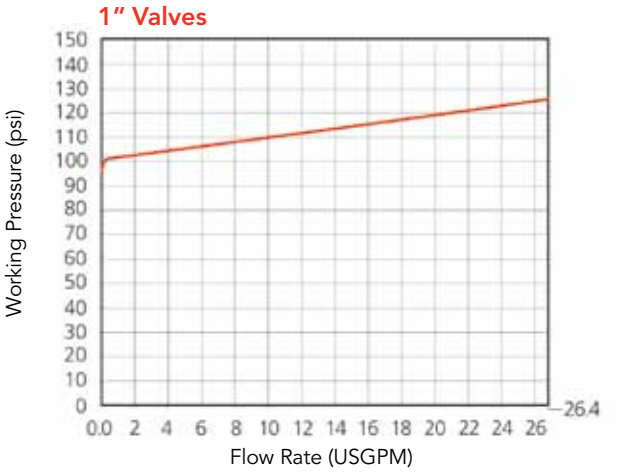


### 1-1/4" Valves

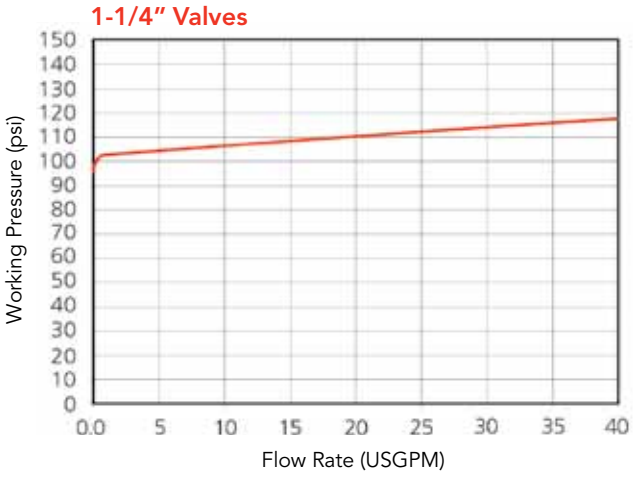


### 1-1/2" Valves

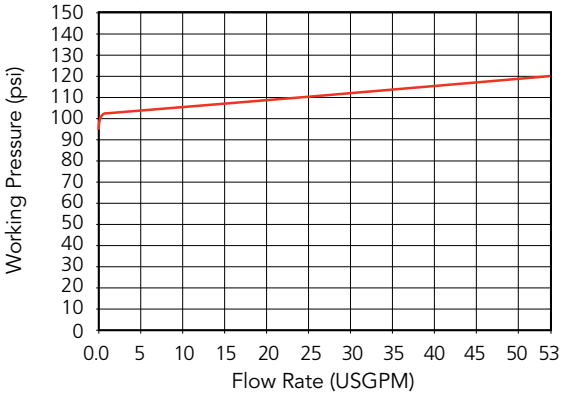


### 2" Valves

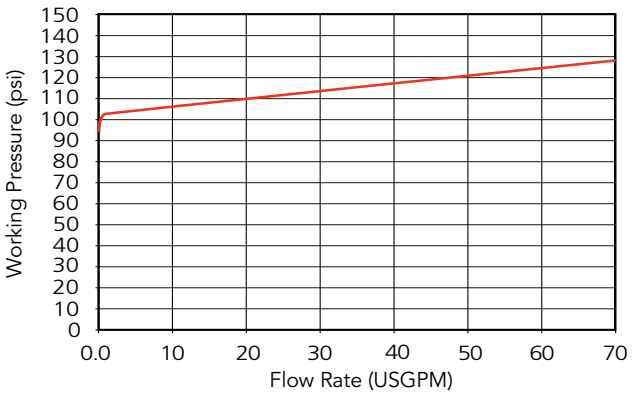

# SB12 Series Back Pressure/Relief Valves 2-1/2" to 4"

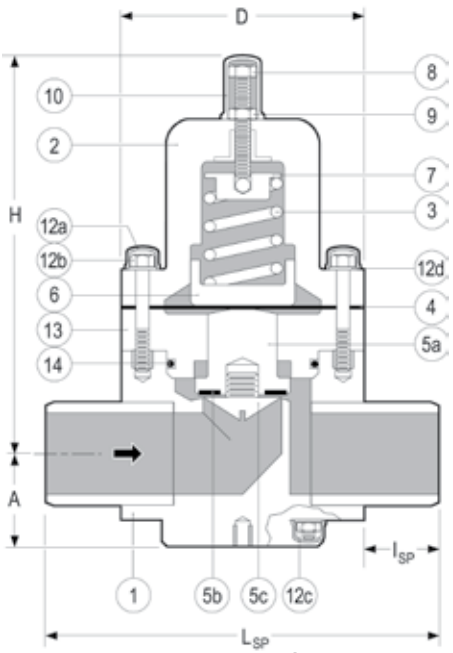


Spigot Body

## OTHER ENDS

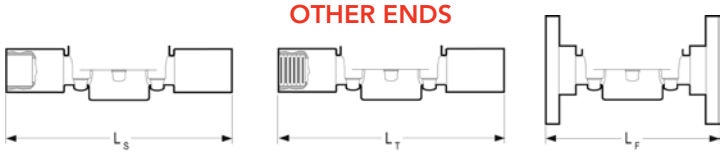


Socket Threaded Flanged

## PARTS

▲ Recommended Spare Parts

| No. | Part | Pcs. | Materials |
|---|---|---|---|
| 1 | Body | 1 | PVC, PP, PVDF |
| 2 | Bonnet | 1 | PPG |
| 3 | Spring | 1 | Galvanized Steel |
| 4▲ | Control Diaphragm | 1 | PTFE bonded EPDM |
| 5a▲ | Piston | 2 | PVC, PP, PVDF |
| 5b▲ | Seat | 1 | EPDM, FPM(Viton®) |
| 5c▲ | Seat Retainer | 1 | PVC, PP, PVDF |
| 6 | Lower Spring Retainer | 1 | PPG |
| 7 | Upper Spring Retauner | 1 | 304 SS |
| 8 | Spring Tensioning Bolt | 1 | 304 SS |
| 9 | Lock Nut | 1 | 304 SS |
| 10 | Spring Bolt Cap | 1 | PE |
| 12a | Hex Bolt/Nut Cap | 20 | PE |
| 12b | Hex Bolt/Stud | 12[1] | 304 SS |
| 12c | Hex Nut | 20 | 304 SS |
| 12d | Washer | 20 | 304 SS |
| 13 | Spacer Disc | 1 | PVC, PP, PVDF |
| 14 | Spacer O-Ring | 1 | EPDM, FPM(Viton®) |

[1] 2 large upper bolts, 2 shorter lower bolts, 8 studs

## OPTIONS

- 5 to 60 psi Pressure Range springs for 2-1/2" to 4" valves
- **Integral Pressure Gauge** – for inlet and/or outlet
- Bodies in 316 Stainless Steel and PTFE

## DIMENSIONS INCHES

## WEIGHTS LB.

## Cv VALUES

| Size | PVC, PP & PVDF A | D | H | $L_{SP}$[2] | $I_{SP}$ | PVC $L_F$ | WEIGHTS PVC | PP | PVDF | Cv VALUES USGPM Flow at 1 psi △P |
|---|---|---|---|---|---|---|---|---|---|---|
| 2-1/2" | 2.7 | 6.9 | 11.1 | 11.2 | 2.1 | 12.2 | 20.9 | 15.4 | 24.6 | 41 |
| 3" | 3.0 | 7.9 | 12.2 | 14.2 | 3.1 | 15.0 | 26.4 | 23.8 | 30.8 | 63 |
| 4" | 3.7 | 9.8 | 14.2 | 16.5 | 3.3 | 16.9 | 33.0 | 26.4 | 37.4 | 98 |

[2] Plain spigot ends in PP & PVDF may be butt fused directly to Chemline PP & PVDF piping systems. Weights based on spigot bodies.

## MAXIMUM PRESSURES PSI

| Size | PVC 20°C 68°F | 30°C 86°F | 40°C 104°F | 50°C 122°F | PP 20°C 68°F | 30°C 86°F | 40°C 104°F | 50°C 122°F | 60°C 140°F | 70°C 158°F | PVDF 30°C 86°F | 50°C 122°F | 70°C 158°F | 80°C 176°F | 90°C 194°F | 100°C 212°F |
|---|---|---|---|---|---|---|---|---|---|---|---|---|---|---|---|---|
| 2-1/2"– 3" | 150 | 90 | 44 | 15 | 150 | 116 | 90 | 60 | 37.5 | 15 | 150 | 90 | 55 | 40 | 30 | 15 |
| 4" | 90 | 50 | 30 | 15 | 90 | 72.5 | 55 | 40 | 25 | 15 | 90 | 72.5 | 35 | 30 | 20 | 15 |

**Temperature Ranges: PVC** 0 to 50°C (32 to 122°F), **PP** 10 to 70°C (50 to 158°F), **PVDF** –30 to 100°C (–22 to 212°F).

## ORDERING EXAMPLE

| | | | | for ChemFlare™ ends only | | all other ends |
|---|---|---|---|---|---|---|
| **Chemline Back Pressure/ Relief Valves** | **SB12** | **A** | **005** | **V** | **–A** | **8N** | **–1** |

Body Material **A** – PVC **B** – PP **K** – PVDF

Size **003** – 3/8" **005** – 1/2" **007** – 3/4" **010** – 1" **012** – 1-1/4"
**015** – 1-1/2" **020** – 2" **025** – 2-1/2" **030** – 3" **040** – 4"

Elastomers **E** – EPDM **V** – FPM (Viton®)

ChemFlare™ End Connecters for valves 3/8" to 1-1/4"

Material **A** – PVC **B** – PP **C** – CPVC **K** – PVDF

Tube Size[3] **4N** – 1/4" **6N** – 3/8" **8N** – 1/2" **12N** – 3/4" **16N** – 1" **20N** – 1-1/4"

Tube Nut **–1** – includes nut **Blank** – without nut

Ends **S** – Socket **T** – Threaded **F** – Flanged **U** – Union Socket **Blank** – Spigot (Butt)

**Example:** Chemline SB12 Series, PVC, 1/2" diameter, FPM (Viton®) seals, PVC ChemFlare™ end connectors, 1/2" tube size, including nuts.

[3] Tube size must be equal or smaller than the valve size.

# SB12 Series Back Pressure/Relief Valves 2-1/2" to 4"

## working pressure vs. flow rate

- Whether the pressure is rising or falling, hysteresis is approximately 14.5 psi for 2-1/2" to 4" valves

### 2-1/2" Valves / 5 to 60 psi set pressure range

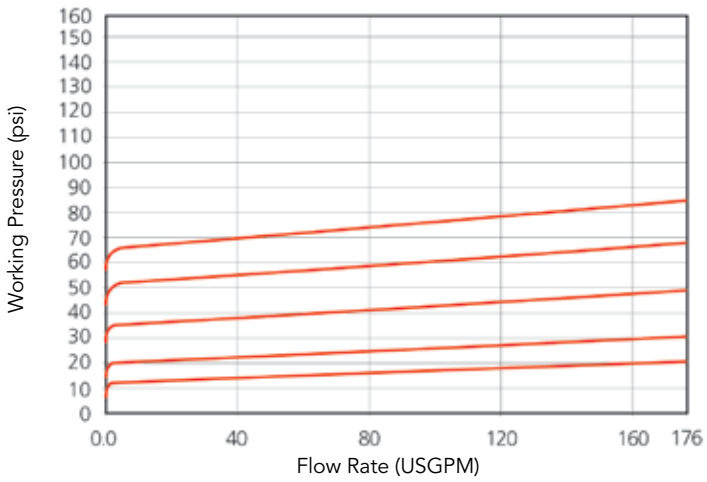


### 2-1/2" Valves / 7.5 to 150 psi set pressure range

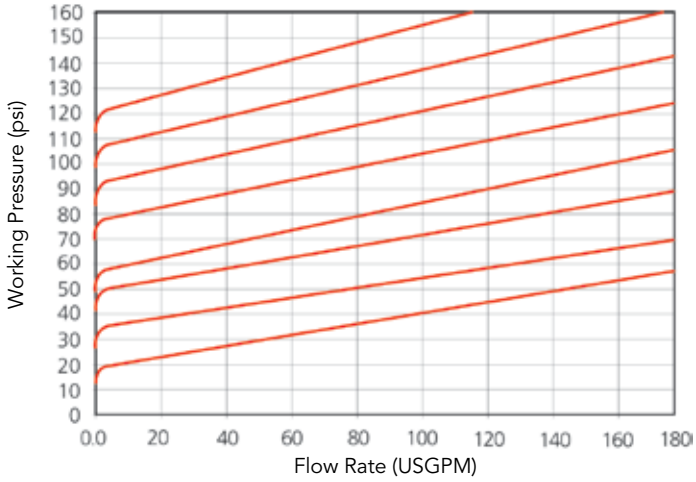


### 3" Valves / 5 to 60 psi set pressure range

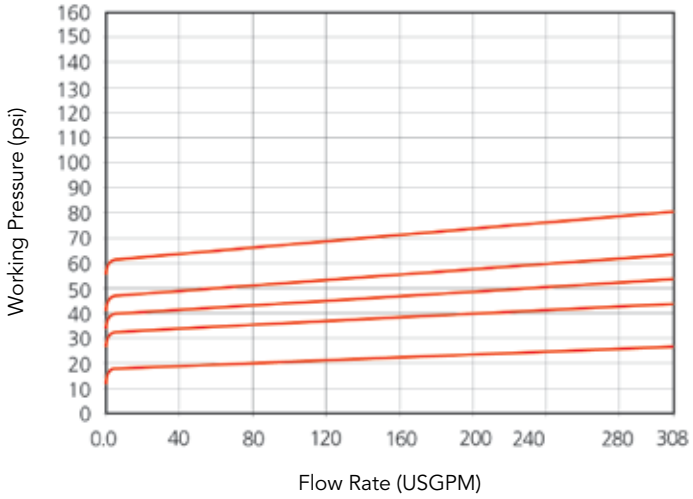


### 3" Valves / 7.5 to 150 psi set pressure range

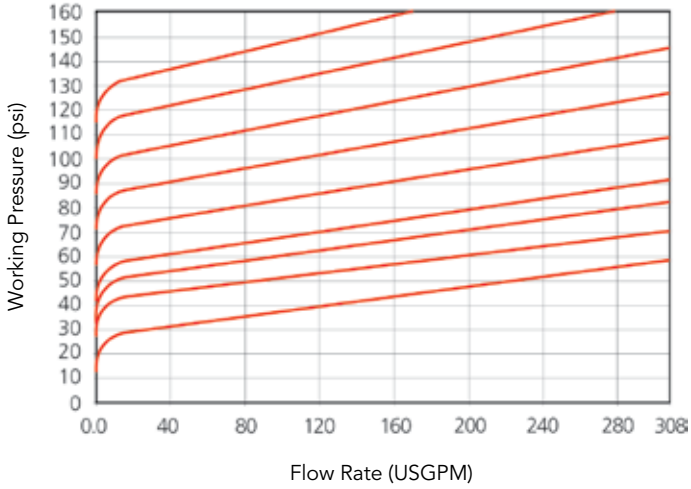


### 4" Valves / 5 to 60 psi set pressure range

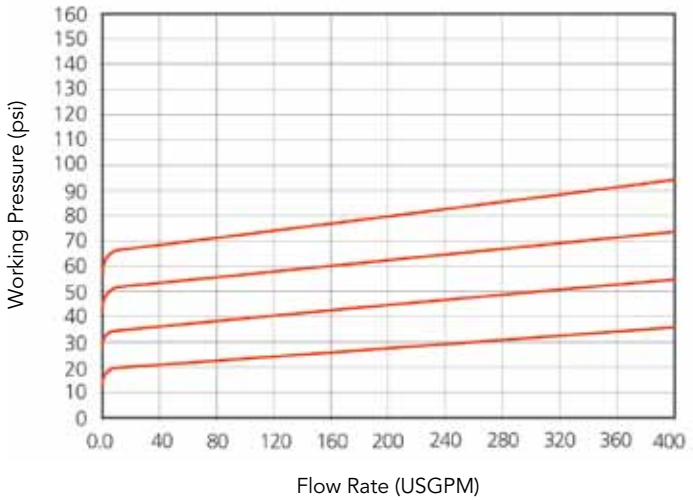


### 4" Valves / 7.5 to 90 psi set pressure range

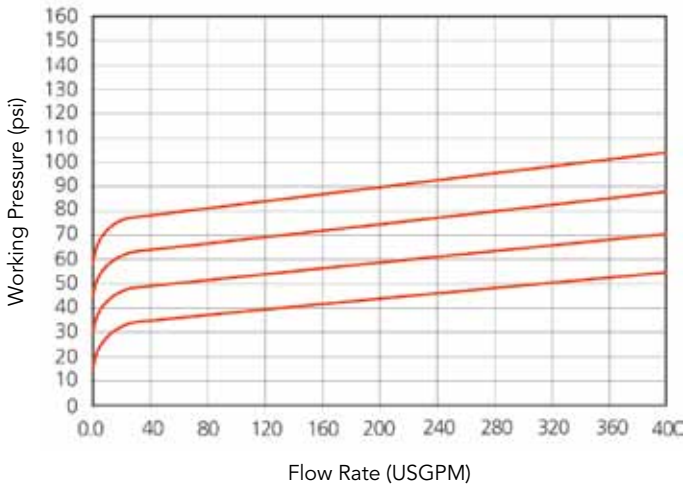


CHEMLINE PLASTICS
SUPERIOR FLOW SOLUTIONS

55 Guardsman Road, Thornhill, ON, L3T 6L2, Canada | ISO 9001:2015 Certified
1.800.930.2436 (CHEM) | fax.905.889.8553 | request@chemline.com | chemline.com

# CS-308-200 : Identification sheet

| | | | |
|---|---|---|---|
| VWTC PROJECT NUMBER: | 5000220043 | REV: | 4 |
| PROJECT NAME: | AEM MELIADINE - BPC UPGRADE | SUBMITTED TO (COMPANY): | AEM |
| ENGINEER: | CHRIS EL KHAZAKA | SUBMITTED TO (RESPONSIBLE): | |
| PROJECT MANAGER: | THOMAS SAVARY / BRUCE BORDES | PROJECT NUM REFERENCE.: | 6526-S-265-605 / OC-989680 |
| PHONE NUMBER: | 514-334-7230 | LOT NUMBER: | |

| SUPPLIER | EQPT CODE | EQPT TAG NO | DIA | DESCRIPTION | INFO 1 | INFO 2 | INFO 3 | APPLIC. | NOTE | REV |
|---|---|---|---|---|---|---|---|---|---|---|
| CHEMLINE | VANEPV300121 | 15-NV99-1179 | DIA: 13 mm (1/2") | SERVICE WATER CONTROL VALVE #1 | TYPE: NEEDLE VALVE \| 150 PSI, TEMP DEPENDENT//MANUFACTURER : CHEMLINE//MODEL : NGA005//CONNECTION TYPE : THREADED \| 13 mm (1/2")//BODY : PVC// SEAL \| SEAT :PTFE \| N/A// STEM : N/A | | | CHLORINE DILUTION SKID #1601 | | 3 |
| CHEMLINE | VANEPV300121 | 15-NV99-1180 | DIA: 13 mm (1/2") | SERVICE WATER CONTROL VALVE #2 | TYPE: NEEDLE VALVE \| 150 PSI, TEMP DEPENDENT//MANUFACTURER : CHEMLINE//MODEL : NGA005//CONNECTION TYPE : THREADED \| 13 mm (1/2")//BODY : PVC// SEAL \| SEAT :PTFE \| N/A// STEM : N/A | | | CHLORINE DILUTION SKID #1601 | | 3 |
| CHEMLINE | VANEPV300121 | 15-NV99-1181 | DIA: 13 mm (1/2") | SERVICE WATER CONTROL VALVE #1 | TYPE: NEEDLE VALVE \| 150 PSI, TEMP DEPENDENT//MANUFACTURER : CHEMLINE//MODEL : NGA005//CONNECTION TYPE : THREADED \| 13 mm (1/2")//BODY : PVC// SEAL \| SEAT :PTFE \| N/A// STEM : N/A | | | CHLORINE DILUTION SKID #1701 | | 3 |

| SUPPLIER | EQPT CODE | EQPT TAG NO | DIA | DESCRIPTION | INFO 1 | INFO 2 | INFO 3 | APPLIC. | NOTE | REV |
|---|---|---|---|---|---|---|---|---|---|---|
| CHEMLINE | VANEPV300121 | 15-NV99-1182 | DIA: 13 mm (1/2") | SERVICE WATER CONTROL VALVE #2 | TYPE: NEEDLE VALVE \| 150 PSI, TEMP DEPENDENT//MANUFACTURER : CHEMLINE//MODEL : NGA005//CONNECTION TYPE : THREADED \| 13 mm (1/2")//BODY : PVC// SEAL \| SEAT :PTFE \| N/A// STEM : N/A | | | CHLORINE DILUTION SKID #1701 | | 3 |

PDF Published March 1, 2013

# Needle Valves

CHEMLINE PLASTICS
SUPERIOR FLOW SOLUTIONS

Chemline N Series Needle Valves are designed for fine throttling of corrosive and ultrapure fluids at low flow rates. Because the seal material is PTFE, these valves are suitable for aggressive chemicals where similar valves with elastomer seals will not stand up.

PVC | CPVC | PPG[1]

SERIES: NG – Globe Body
NA – Angle Body

SIZES: 1/4", 3/8" & 1/2"

ENDS: Female NPT

STEM SEALS: PTFE

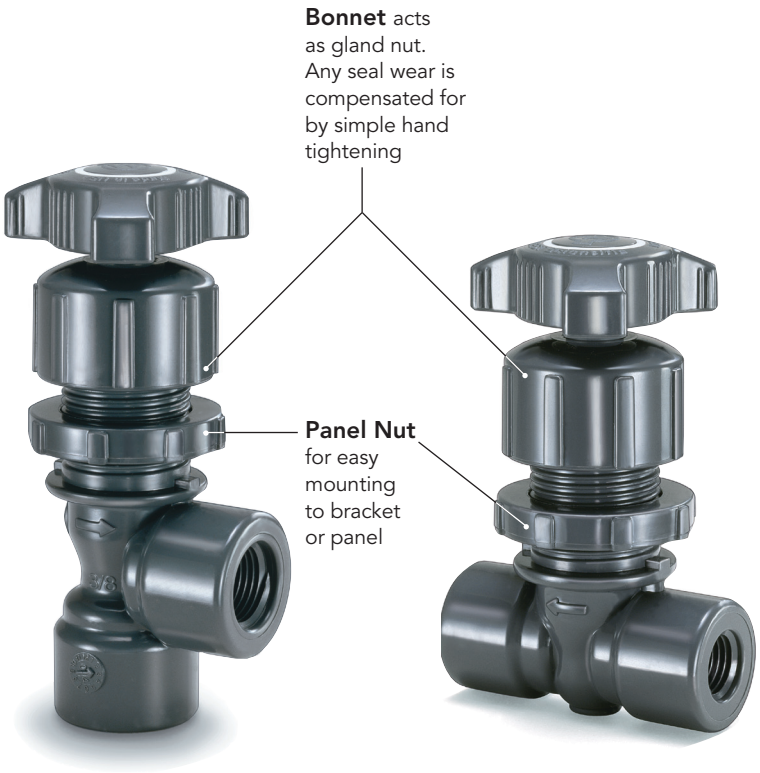


**Angle Body** **Globe Body**

## features

### Precise Control with Fine Adjustment

- Precision machined seat and matching ground needle tip along with a 24 pitch fine thread stem (five turns from closed to full-open) provides for excellent flow control. Better control of reagents can mean significant cost savings.

### High Chemical Resistance

- All parts are plastic or PTFE. No elastomers or metal parts are used.

### Lubrication Free

- No silicone or other lubricants are used

### Easy Maintenance

- Seal wear is compensated for by hand tightening the cap (gland). Valve can be serviced in-line. Simply unscrew bonnet to remove complete topworks for inspection or disassembly.

### Heavy Duty Construction

- Thick stems

[1] PPG=Glass Reinforced Polypropylene.

03/13 ©Chemline Plastics Limited 2013
Chemline is a registered trade mark of Chemline Plastics Limited

# Needle Valves

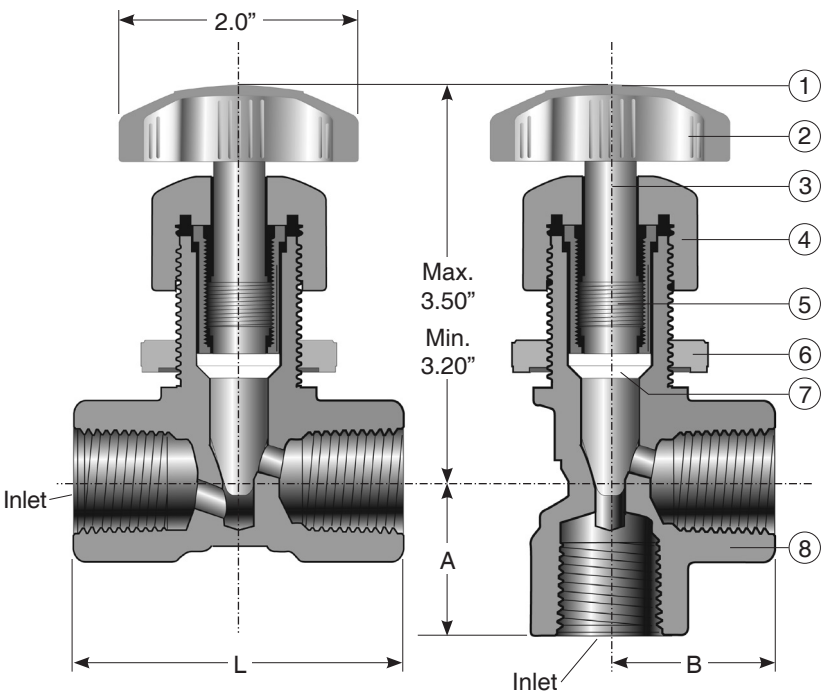


**Globe Body** **Angle Body**

## PARTS

| No. | Part | Pcs. | Materials |
|---|---|---|---|
| 1 | Ring Insert[1] | 1 | PVC |
| 2 | Handle | 1 | PVC, CPVC, PPG |
| 3 | Stem/Needle | 1 | PVC, CPVC, PPG |
| 4 | Bonnet | 1 | PVC, CPVC, PPG |
| 5 | Thread Insert | 1 | Nylon[2], PPG |
| 6 | Panel Nut | 1 | PVC, CPVC, PPG |
| 7 | Seal | 1 | PTFE |
| 8 | Body | 1 | PVC, CPVC, PPG |

[1] Standard colour for Ring Inserts: PVC=white, CPVC=black, PP=blue.
[2] Threaded insert is reinforced Nylon for PVC and CPVC valves, PPG for PPG valves.

## DIMENSIONS INCHES

## NET WEIGHTS LB.

## Cv VALUES

| Size | L | A | B | Globe | Angle | Outlet Orifice | PVC | CPVC | PPG | Globe Body | Angle Body |
|---|---|---|---|---|---|---|---|---|---|---|---|
| 1/4” | 2.31 | 1.16 | 1.17 | .187 | .250 | .187 | .25 | .27 | .27 | .31 | .43 |
| 3/8” | 2.39 | 1.19 | 1.21 | .187 | .250 | .187 | .25 | .27 | .27 | .31 | .43 |
| 1/2” | 2.65 | 1.31 | 1.32 | .218 | .250 | .218 | .25 | .27 | .27 | .62 | .78 |

## WORKING PRESSURES PSI

| | PVC | CPVC | | | PPG | | |
|---|---|---|---|---|---|---|---|
| Size | 0-50°C 32-122°F | 0-65°C 32-149°F | 80°C 176°F | 90°C 194°F | –20-30°C –4-86°F | 60°C 140°F | 75°C 167°F |
| 1/4” | 150 | 150 | 100 | 60 | 150 | 100 | 60 |
| 3/8” | 150 | 150 | 100 | 60 | 150 | 100 | 60 |
| 1/2” | 150 | 150 | 100 | 60 | 150 | 100 | 60 |

**Temperature Ranges: PVC** 0 to 60°C (32 to 140°F), **CPVC** 0 to 95°C (32 to 203°F), **PPG** –20 to 75°C (–4 to 167°F)

## Sample Specification

All (PVC/CPVC/PPG) Needle Valves 1/4” to 1/2” shall be Chemline N Series (Globe/Angle) body with PTFE seal and no elastomers. Valves will have 24 pitch stem threads for fine control and have panel mounting capability.

## ORDERING EXAMPLE

| Chemline Needle Valves | | | N | G | A | 005 |
|---|---|---|---|---|---|---|
| Body Pattern | **G** – Globe | **A** – Angle | | | | |
| Valve Material | **A** – PVC | **B** – PPG | **C** – CPVC | | | |
| Size | **002** – 1/4” | **003** – 3/8” | **005** – 1/2” | | | |

**Example:** Needle Valve, Globe Pattern, PVC, 1/2”, threaded ends.

## VACUUM RATING

- 29.9 inches mercury

## OPTIONS

- Black, white, blue or red rings are available for colour coding

CHEMLINE PLASTICS
SUPERIOR FLOW SOLUTIONS

55 Guardsman Road, Thornhill, ON, L3T 6L2, Canada | ISO 9001:2008 Certified
tel.905.889.7890 | fax.905.889.8553 | request@chemline.com | chemline.com

# CS-314-100 : Identification sheet

| | | | |
|---|---|---|---|
| VWTC PROJECT NUMBER: | 5000220043 | REV: | 4 |
| PROJECT NAME: | AEM MELIADINE - BPC UPGRADE | SUBMITTED TO (COMPANY): | AEM |
| ENGINEER: | CHRIS EL KHAZAKA | SUBMITTED TO (RESPONSIBLE): | |
| PROJECT MANAGER: | THOMAS SAVARY / BRUCE BORDES | PROJECT NUM REFERENCE.: | 6526-S-265-605 / OC-989680 |
| PHONE NUMBER: | 514-334-7230 | LOT NUMBER: | |

| SUPPLIER | EQPT CODE | EQPT TAG NO | DIA | DESCRIPTION | INFO 1 | INFO 2 | INFO 3 | APPLIC. | NOTE | REV |
|---|---|---|---|---|---|---|---|---|---|---|
| CHEMLINE | VAGLPV308518 | 15-GV99-1171 | 13 mm (1/2") | SAMPLE CONTROL VALVE #1 | TYPE: GLOBE VALVE \| 150 PSI//MANUFACTURER : CHEMLINE//MODEL : GVA005T//CONNECTION TYPE : THREADED \| 13 mm (1/2")//BODY : PVC// SEAL \| SEAT :EPDM \| N/A// STEM : PVC | ACTUATOR TYPE : MANUAL HANDWHEEL// MANUFACTURER : N/A// MODEL # :N/A// | | CHLORINE DILUTION SKID #1601 | | 3 |
| CHEMLINE | VAGLPV308518 | 15-GV99-1172 | 13 mm (1/2") | SAMPLE CONTROL VALVE #2 | TYPE: GLOBE VALVE \| 150 PSI//MANUFACTURER : CHEMLINE//MODEL : GVA005T//CONNECTION TYPE : THREADED \| 13 mm (1/2")//BODY : PVC// SEAL \| SEAT :EPDM \| N/A// STEM : PVC | ACTUATOR TYPE : MANUAL HANDWHEEL// MANUFACTURER : N/A// MODEL # :N/A// | | CHLORINE DILUTION SKID #1601 | | 3 |
| CHEMLINE | VAGLPV308518 | 15-GV99-1173 | 13 mm (1/2") | SAMPLE CONTROL VALVE #1 | TYPE: GLOBE VALVE \| 150 PSI//MANUFACTURER : CHEMLINE//MODEL : GVA005T//CONNECTION TYPE : THREADED \| 13 mm (1/2")//BODY : PVC// SEAL \| SEAT :EPDM \| N/A// STEM : PVC | ACTUATOR TYPE : MANUAL HANDWHEEL// MANUFACTURER : N/A// MODEL # :N/A// | | CHLORINE DILUTION SKID #1701 | | 3 |

| SUPPLIER | EQPT CODE | EQPT TAG NO | DIA | DESCRIPTION | INFO 1 | INFO 2 | INFO 3 | APPLIC. | NOTE | REV |
|---|---|---|---|---|---|---|---|---|---|---|
| CHEMLINE | VAGLPV308518 | 15-GV99-1174 | 13 mm (1/2") | SAMPLE CONTROL VALVE #2 | TYPE: GLOBE VALVE \| 150 PSI//MANUFACTURER : CHEMLINE//MODEL : GVA005T//CONNECTION TYPE : THREADED \| 13 mm (1/2")//BODY : PVC// SEAL \| SEAT :EPDM \| N/A// STEM : PVC | ACTUATOR TYPE : MANUAL HANDWHEEL// MANUFACTURER : N/A// MODEL # :N/A// | | CHLORINE DILUTION SKID #1701 | | 3 |

PDF Published March 1, 2013

# Globe Valves

CHEMLINE PLASTICS
SUPERIOR FLOW SOLUTIONS

The Chemline Globe Valve is an economical throttling valve. Its heavy duty design provides for long service life. The in-line globe design causes relatively high pressure drops, however this is a desirable valve due to its economy and reliability.

PVC PP

CRN Registered Consult Chemline

SERIES: GV

SIZES: 1/2" – 4"

ENDS: Socket, Threaded[1], Flanged

SEALS: EPDM[2]

## features

- **Slow Closing**
  – Prevents water hammer in PVC piping
- **Heavy Duty Construction**
  – Long service life
- **An economical throttling valve**

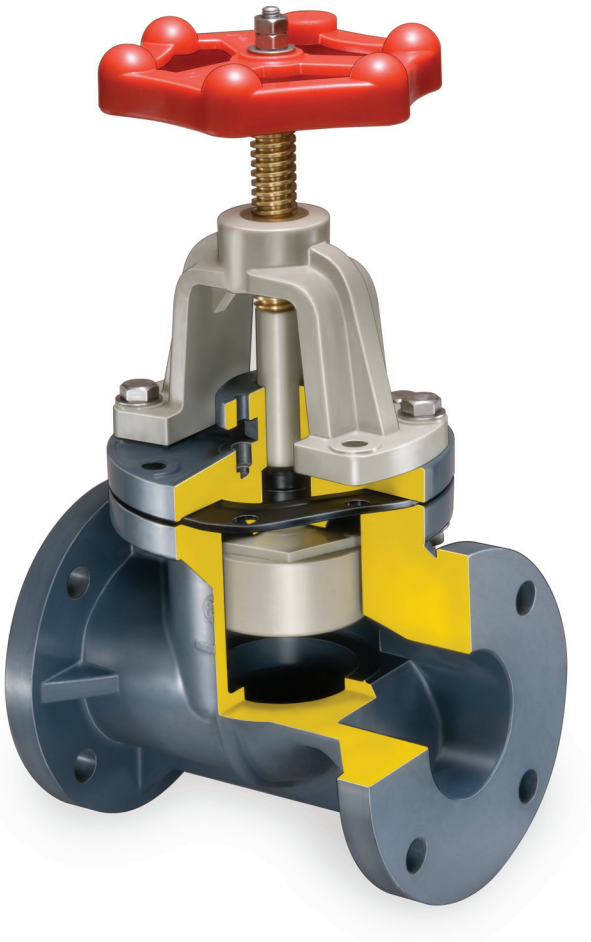

**2-1/2" – 4" Outside Spindle and Yolk Type**



**Union Bonnet Design 1/2" – 2"**

[1] Socket ends are available custom basis.
[2] Other seal materials are available special order.

03/13 ©Chemline Plastics Limited 2013
Chemline is a registered trade mark of Chemline Plastics Limited

# Globe Valves

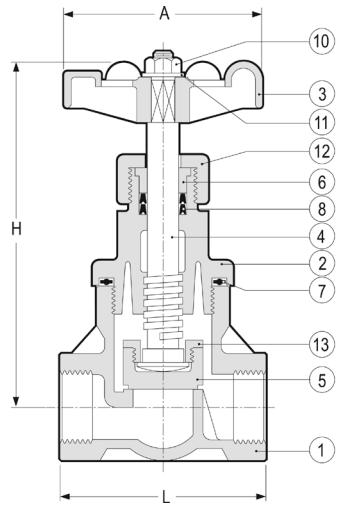


1/2" – 2" Valves

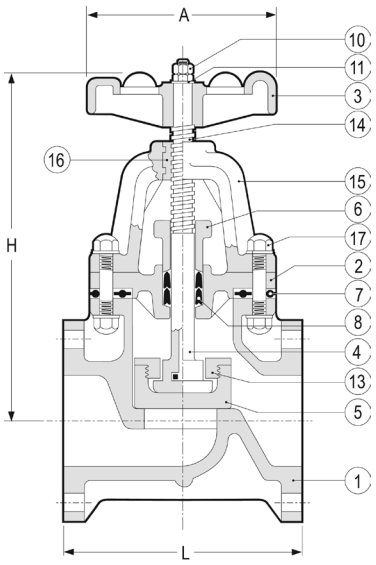


2-1/2" – 4" Valves

## PARTS

▲ Recommended Spare Parts

| No. | Part | Pcs. | Materials |
|---|---|---|---|
| 1 | Body | 1 | PVC, PP |
| 2 | Bonnet | 1 | PVC, PP |
| 3 | Handwheel | 1 | PP |
| 4 | Stem | 1 | PVC, PP |
| 5 | Disc | 1 | PP |
| 6 | Gland | 1 | PVC, PP |
| 7▲ | Bonnet Seal | 1 | EPDM |
| 8▲ | Stem Packing | 2 | EPDM |
| 10 | Nut | 1 | PVC |
| 11 | Washer | 1 | PVC |
| 12 | Gland Nut | 1 | PVC, PP |
| 13 | Disc Retainer | 1 | PP |
| 14 | Stem Top[1] | 1 | Brass, 400 SS |
| 15 | Yolk | 1 | PP |
| 16 | Yolk Sleeve | 1 | Bronze |
| 17 | Bolt & Nut | 8 sets | 304 SS |
| 18 | Stud & Nut | 2 sets | 304 SS |

[1] Stem top for valves up to 2" stem are brass. For valves 2-1/2" to 4" stem tops are 400 SS.

## DIMENSIONS INCHES

## Cv VALUES VS % OPEN

## WEIGHTS LB.

| Size | A | L Soc | L[2] Thd | L[3] Flg | H Open | Valve Opening (%) 20 | 40 | 60 | 80 | 100 | No. Turns to Open | PVC Soc/Thd | PVC Flg | PP Thd | PP Flg |
|---|---|---|---|---|---|---|---|---|---|---|---|---|---|---|---|
| 1/2" | 2.6 | 4.33 | 3.35 | 5.3 | 5.3 | 2.6 | 3.5 | 3.9 | 4.0 | 4.1 | 2.75 | 0.64 | 1.0 | 0.37 | 0.66 |
| 3/4" | 2.6 | 5.12 | 3.74 | 6.0 | 5.5 | 4.0 | 5.5 | 6.1 | 6.3 | 6.4 | 3.25 | 1.1 | 1.3 | 0.55 | 0.84 |
| 1" | 3.6 | 5.19 | 4.33 | 6.8 | 6.4 | 6.1 | 8.4 | 9.2 | 9.5 | 9.7 | 3.25 | 1.1 | 2.2 | 0.77 | 1.3 |
| 1-1/4" | 3.6 | – | 5.32 | 8.2 | 6.6 | 11.3 | 15.5 | 17.1 | 17.7 | 18.0 | 2.50 | 1.3 | 2.9 | – | – |
| 1-1/2" | 5.3 | – | 5.51 | 8.4 | 9.1 | 13.8 | 19.0 | 20.9 | 21.6 | 22.0 | 3.75 | 2.6 | 4.6 | – | 2.9 |
| 2" | 5.3 | – | 7.09 | 11.0 | 9.9 | 18.2 | 25.0 | 27.5 | 28.5 | 29.0 | 3.25 | 3.5 | 5.7 | – | 3.5 |
| 2-1/2" | 7.3 | – | – | 8.7 | 13.6 | 35.7 | 49.2 | 54.1 | 56.1 | 57.0 | 7.50 | – | 13.0 | – | 11.0 |
| 3" | 7.3 | – | – | 9.5 | 14.1 | 48.9 | 67.3 | 74.1 | 76.7 | 78.0 | 7.50 | – | 15.0 | – | 11.0 |
| 4" | 7.3 | – | – | 11.4 | 16.5 | 72.1 | 99.2 | 109.0 | 113.0 | 115.0 | 8.50 | – | 22.0 | – | 18.0 |

**Note:** 1-1/4" size is not available in PP. [2]**Threaded** ends are available in PVC 1/2" to 2" and PP 1/2" to 1".
[3]**L Flanged** is for fabricated flanged valves normally supplied 1/2" to 2". Solid flanged (special order) 1/2" to 2" valves have shorter dimensions. Consult Chemline.

## WORKING PRESSURES PSI

| Size | PVC 0-20°C 32-68°F | PVC 40°C 104°F | PVC 50°C 122°F | Polypropylene –20-20°C –4-68°F | Polypropylene 60°C 140°F | Polypropylene 80°C 176°F |
|---|---|---|---|---|---|---|
| 1/2" – 1-1/2" | 150 | 105 | 105 | 105 | 90 | 65 |
| 2" | 150 | 105 | 90 | 105 | 70 | 40 |
| 2-1/2" – 3" | 150 | 105 | 90 | 105 | 60 | 35 |
| 4" | 150 | 80 | 65 | 105 | 60 | 35 |

**Temperature Ranges: PVC** 0 to 60°C (32 to 140°F), **PP** –20 to 90°C (–4 to 194°F).

## VACUUM RATING

- 29.9 inches mercury

## ACCESSORY

- Handwheel lockout

## ORDERING EXAMPLE

| Chemline Globe Valves | GV | A | 015 | T |
|---|---|---|---|---|
| Body Material | **A** – PVC **B** – Polypropylene | | | |
| Size | **005** – 1/2" **007** – 3/4" **010** – 1" **012** – 1-1/4" **015** – 1-1/2" **020** – 2" **025** – 2-1/2" **030** – 3" **040** – 4" | | | |
| Ends | **S** – Socket **T** – Threaded **F** – Flanged | | | |

**Example:** Chemline Globe Valve, PVC, 1-1/2", threaded ends.

CHEMLINE PLASTICS
SUPERIOR FLOW SOLUTIONS

55 Guardsman Road, Thornhill, ON, L3T 6L2, Canada | ISO 9001:2008 Certified
tel.905.889.7890 | fax.905.889.8553 | request@chemline.com | chemline.com

# CS-449-100 : Identification sheet

| | | | |
|---|---|---|---|
| VWTC PROJECT NUMBER: | 5000220043 | REV: | 4 |
| PROJECT NAME: | AEM MELIADINE - BPC UPGRADE | SUBMITTED TO (COMPANY): | AEM |
| ENGINEER: | CHRIS EL KHAZAKA | SUBMITTED TO (RESPONSIBLE) | |
| PROJECT MANAGER: | THOMAS SAVARY / BRUCE BORDES | PROJECT NUM REFERENCE.: | 6526-S-265-605 / OC-989680 |
| PHONE NUMBER: | 514-334-7230 | LOT NUMBER: | |

| SUPPLIER | EQPT CODE | EQPT TAG NO | DIA | DESCRIPTION | INFO 1 | INFO 2 | INFO 3 | APPLIC. | NOTE | REV |
|---|---|---|---|---|---|---|---|---|---|---|
| CHEMLINE | IMFWGG305925 | 65-FI99-1175 | 3/8" | SAMPLE ROTOMETER #1 | VARIABLE AREA FLOWMETER/MANUFACTURER: CHEMLINE/ MODEL: FCA00020 | N/A | N/A | CHLORINE DILUTION SKID #1601 | | 3 |
| CHEMLINE | IMFWGG305925 | 65-FI99-1176 | 3/8" | SAMPLE ROTOMETER #2 | VARIABLE AREA FLOWMETER/MANUFACTURER: CHEMLINE/ MODEL: FCA00020 | N/A | N/A | CHLORINE DILUTION SKID #1601 | | 3 |
| CHEMLINE | IMFWGG305925 | 65-FI99-1177 | 3/8" | SAMPLE ROTOMETER #1 | VARIABLE AREA FLOWMETER/MANUFACTURER: CHEMLINE/ MODEL: FCA00020 | N/A | N/A | CHLORINE DILUTION SKID #1701 | | 3 |

| SUPPLIER | EQPT CODE | EQPT TAG NO | DIA | DESCRIPTION | INFO 1 | INFO 2 | INFO 3 | APPLIC. | NOTE | REV |
|---|---|---|---|---|---|---|---|---|---|---|
| CHEMLINE | IMFWGG305925 | 65-FI99-1178 | 3/8" | SAMPLE ROTOMETER #2 | VARIABLE AREA FLOWMETER/MANUFACTURER: CHEMLINE/ MODEL: FCA00020 | N/A | N/A | CHLORINE DILUTION SKID #1701 | | 3 |

PDF Published March 1, 2013

# Variable Area Flow Meters

CHEMLINE PLASTICS
SUPERIOR FLOW SOLUTIONS

Chemline F Series Variable Area Flow Meters are ideal for plastic piping. They provide a combination of accurate visual flow rate measurement and clear flow indication from a distance. Optional limit switches allow the units to signal a low or high flow alarm. An optional flow transmitter provides a 4 to 20 mA signal output. These flow meters must be installed vertically with flow upward.

PVC | PA | PSU | PVDF — Tube

PVC | CPVC | PP | PVDF — Ends

CRN Registered Consult Chemline

SERIES: FC – Compact – 5" Single Scale
FS – Full Size – 7" Dual Scale[1]

MATERIALS: Tube: Clear PVC, Polyamide (PA), Polysulfone (PSU) or PVDF[2]
Float: PVDF
Ends: PVC, CPVC, PP, PVDF, Socket, Threaded, Flanged, Butt or ChemFlare™[3]

O-RINGS: EPDM, FPM (Viton®)

CAPACITIES: Up to 220 USGPM (50,000 litres per hour)




## features

### Clear Visual Indication

- Large orange float is visible from a distance
- Range indicators slide along dovetail track

### Easy Installation and Maintenance

- Just unscrew union nuts and tube slides out of line

### Choice of Four Tube Materials for Many Applications:

- ***Clear PVC*** – For Water or Chemicals up to 60°C (140°F) – High Chemical resistance at low cost
- ***Polyamide (PA)*** – For Water or Air up to 75°C (167°F) – High impact strength and optical clarity
- ***Polysulfone (PSU)*** – For Chemicals and Gases up to 100°C (212°F) – High impact strength and good chemical resistance
- ***PVDF[2]*** – For Chemicals and Ultrapure fluids up to 110°C (230°F) – High impact strength and excellent chemical resistance.

### Ideal for All Types of Plastic Piping

- All types of end connections in PVC, CPVC, PP & PVDF

- **Low Pressure Drop**

### Good Measuring Accuracy – Class IV

- ± 3% of indicated value, plus ± 1% of full scale. – Read scale at top (largest diameter) of float

### Non Fouling

- Float is self supporting in the flow. No guide rod (which can cause the float to jam) is necessary.

[1] USGPM and litres per hour (water) scale is supplied as standard on full size meters.
[2] Because PVDF is translucent, a magnetic float and limit switches are usually used.
[3] For ChemFlare™ end connectors, consult Chemline.

03/13 ©Chemline Plastics Limited 2013
Chemline is a registered trade mark of Chemline Plastics Limited

# Variable Area Flow Meters

**NOTES:**

**PVDF** flow meters are available in all sizes. Change third letter in item number to **K**.

[1] △P = Pressure loss through flow meter with water at 20°C (68°F).

[2] Dimension **L** is for PVC Socket ends.

## FC SERIES – COMPACT SIZE – 5″ SCALE

Single USGPM (water) scale is supplied standard

| End Conn. Size | Item Number | | | Flow Range (water) | | Dimensions (inches) | | | Pressure Drop (psi)[1] | |
|---|---|---|---|---|---|---|---|---|---|---|
| | PVC Tube | Polyamide Tube | Polysulfone Tube | USGPM | Litres per hour | A | L[2] | D | Water | Air |
| 3/8″ | FCA00020 | FCT00020 | FCP00020 | 0.0132 – 0.106 | 3 – 24 | 6.50 | 8.2 | 1.38 | 0.05 | 0.07 |
| | FCA00060 | FCT00060 | FCP00060 | 0.022 – 0.264 | 5 – 60 | 6.50 | 8.2 | 1.38 | 0.05 | 0.07 |
| | FCA00100 | FCT00100 | FCP00100 | 0.04 – 0.44 | 10 – 100 | 6.50 | 8.2 | 1.38 | 0.05 | 0.07 |
| | FCA00250 | FCT00250 | FCP00250 | 0.11 – 1.10 | 25 – 250 | 6.50 | 8.2 | 1.38 | 0.05 | 0.07 |
| 1/2″ | FCA00051 | FCT00051 | FCP00051 | 0.02 – 0.22 | 5 – 50 | 6.69 | 8.7 | 1.69 | 0.04 | 0.06 |
| | FCA00151 | FCT00151 | FCP00151 | 0.07 – 0.66 | 15 – 150 | 6.69 | 8.7 | 1.69 | 0.04 | 0.06 |
| | FCA00251 | FCT00251 | FCP00251 | 0.11 – 1.10 | 25 – 250 | 6.69 | 8.7 | 1.69 | 0.04 | 0.06 |
| | FCA00401 | FCT00401 | FCP00401 | 0.18 – 1.76 | 40 – 400 | 6.69 | 8.7 | 1.69 | 0.04 | 0.06 |
| 3/4″ | FCA00152 | FCT00152 | FCP00152 | 0.07 – 0.66 | 15 – 150 | 7.28 | 9.6 | 2.09 | 0.09 | 0.12 |
| | FCA00402 | FCT00402 | FCP00402 | 0.22 – 1.76 | 40 – 400 | 7.28 | 9.6 | 2.09 | 0.09 | 0.12 |
| | FCA00602 | FCT00602 | FCP00602 | 0.26 – 2.64 | 60 – 600 | 7.28 | 9.6 | 2.09 | 0.09 | 0.12 |
| | FCA01002 | FCT01002 | FCP01002 | 0.44 – 4.40 | 100 – 1,000 | 7.28 | 9.6 | 2.09 | 0.09 | 0.12 |
| 1″ | FCA00253 | FCT00253 | FCP00253 | 0.11 – 1.10 | 25 – 250 | 7.87 | 10.5 | 2.36 | 0.09 | 0.12 |
| | FCA00403 | FCT00403 | FCP00403 | 0.18 – 1.76 | 40 – 400 | 7.87 | 10.5 | 2.36 | 0.09 | 0.12 |
| | FCA01003 | FCT01003 | FCP01003 | 0.44 – 4.40 | 100 – 1,000 | 7.87 | 10.5 | 2.36 | 0.09 | 0.12 |
| | FCA01503 | FCT01503 | FCP01503 | 0.66 – 6.60 | 150 – 1,500 | 7.87 | 10.5 | 2.36 | 0.09 | 0.12 |

## FS SERIES – STANDARD FULL SIZE – 7″ SCALE

Dual USGPM (water) and litres per hour scales are supplied standard

| End Conn. Size | Item Number | | | Flow Range (water) | | Dimensions (inches) | | | Pressure Drop (psi)[1] | |
|---|---|---|---|---|---|---|---|---|---|---|
| | PVC Tube | Polyamide Tube | Polysulfone Tube | USGPM | Litres per hour | A | L[2] | D | Water | Air |
| 1″ | FSA00600 | FST00600 | FSP00600 | 0.26 – 2.64 | 60 – 600 | 13.78 | 16.3 | 2.36 | 0.18 | 0.23 |
| | FSA01000 | FST01000 | FSP01000 | 0.44 – 4.40 | 100 – 1,000 | 13.78 | 16.3 | 2.36 | 0.18 | 0.23 |
| 1-1/4″ | FSA01500 | FST01500 | FSP01500 | 0.66 – 6.60 | 150 – 1,500 | 13.78 | 16.6 | 2.83 | 0.18 | 0.23 |
| | FSA02500 | FST02500 | FSP02500 | 1.10 – 11.00 | 250 – 2,500 | 13.78 | 16.6 | 2.83 | 0.18 | 0.23 |
| 1-1/2″ | FSA02000 | FST02000 | FSP02000 | 0.88 – 8.80 | 200 – 2,000 | 13.78 | 16.8 | 3.27 | 0.18 | 0.23 |
| | FSA03000 | FST03000 | FSP03000 | 1.32 – 13.20 | 300 – 3,000 | 13.78 | 16.8 | 3.27 | 0.18 | 0.23 |
| 2″ | FSA04000 | FST04000 | FSP04000 | 1.76 – 17.60 | 400 – 4,000 | 13.78 | 17.2 | 4.06 | 0.32 | 0.39 |
| | FSA06000 | FST06000 | FSP06000 | 2.64 – 26.40 | 600 – 6,000 | 13.78 | 17.2 | 4.06 | 0.32 | 0.39 |
| | FSA10000 | FST10000 | FSP10000 | 4.40 – 44.00 | 1,000 – 10,000 | 13.78 | 17.2 | 4.06 | 0.32 | 0.39 |
| 2-1/2″ | FSA15000 | FST15000 | FSP15000 | 6.60 – 66.00 | 1,500 – 15,000 | 13.78 | 17.7 | 4.80 | 0.49 | 0.58 |
| | FSA25000 | FST25000 | FSP25000 | 11.00 – 110.00 | 2,500 – 25,000 | 13.78 | 17.7 | 4.80 | 0.49 | 0.58 |
| | FSA50000 | FST50000 | FSP50000 | 44.00 – 220.00 | 10,000 – 50,000 | 13.78 | 17.7 | 4.80 | 0.49 | 0.58 |

## CONVERSION CHART – FLOW UNITS

| From To | $m^3/hr$ | litres/hr | USGPM | ImpGPM | $ft^3/min$ |
|---|---|---|---|---|---|
| $m^3/hr$ | 1 | 1000 | 4.4029 | 3.6662 | 0.5886 |
| litres/hr | 0.001 | 1 | .004403 | .003666 | .000589 |
| USGPM | 0.2271 | 227.12 | 1 | 0.8327 | 0.1337 |
| ImpGPM | 0.2728 | 272.77 | 1.2009 | 1 | 0.1605 |
| $ft^3/min$ | 1.6990 | 1699 | 7.4806 | 6.2289 | 1 |

Values based on water at 20°C (68°F).

# Variable Area Flow Meters

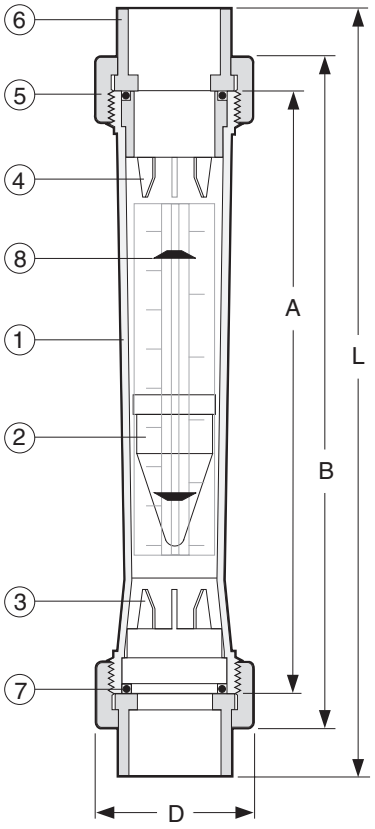


## PARTS

▲ Recommended Spare Parts

| No. | Part | Pcs. | Materials |
|---|---|---|---|
| 1 | Tube | 1 | Polyamide (PA), Polysulfone (PSU), Clear PVC, PVDF |
| 2 | Float | 1 | PVDF (standard or magnetic) |
| 3 | Lower Float Stop | 1 | PVDF |
| 4 | Upper Float Stop | 1 | PVDF |
| 5 | Union Nut | 2 | PVC, PPG, PVDF |
| 6 | End Connector | 2 | PVC, CPVC, PP or PVDF |
| 7▲ | O-Rings | 2 | EPDM, FPM(Viton®) |
| 8▲ | Range Indicator | 2 | ABS |

## ACCESSORIES

- **Limit Switches** – One switch for both maximum or minimum. A magnetic float is required.
- **Switch Ratings** – P (max) = 10 VA, E (max) = 470VAC, I (max) = 0.5A
- **Throttling Valve** for flow control
- **4–20 mA Output Signal Unit** must be factory calibrated for specific service

## OPTIONS

- **Custom Direct Reading Scale** for services other than water
- **Alternate O-Rings** – ie. FPM (Viton®)
- **End Size Reduction** – Accuracy is not significantly affected by end reduction
- **Other Ends** – Threaded, socket or flanged end connections in PVC, CPVC, PP or PVDF. Butt ends in PP or PVDF.

## MAXIMUM WORKING PRESSURES AND TEMPERATURE RANGES

| Construction (‡ = Optional Materials) | | | | Maximum | |
|---|---|---|---|---|---|
| Tube | O-Rings | Union Nuts | Ends | Pressure[2] | Temperature Range |
| PVC | EPDM | PVC | PVC | 150 psi | 0 to 60°C (32 to 140°F) |
| Polyamide (PA) | EPDM | PVC | PVC | 150 psi | 0 to 60°C (32 to 140°F) |
| Polyamide (PA) | EPDM | PPG‡ | PP or CPVC‡ | 150 psi | 0 to 75°C (32 to 167°F) |
| Polysulfone (PSU) | EPDM | PVC | PVC | 150 psi | 0 to 60°C (32 to 140°F) |
| Polysulfone (PSU) | EPDM | PPG‡ | PP or CPVC‡ | 150 psi | 0 to 90°C (32 to 194°F) |
| PVDF | FPM(Viton®) | PVDF | PVDF | 150 psi | –40 to 110°C (–40 to 230°F) |

[2] 150 psi is not recommended at maximum temperatures. Consult Chemline.

## flow meter sizing – liquid flow

Standard Scale values are for clean water flow at 20°C (68°F). For liquids with densities and viscosities similar to water (ie. specific gravity of 1.0 and viscosities between 0.5 cP and 1.3 cP) the standard water scale will be accurate enough.

The table below shows correction factors to be applied for liquids with specific gravities other then 1.0. Multiply the correction factor by the water scale value to obtain actual flow rate. Example: For a liquid of specific gravity of 1.66, the correction factor is 0.740. For water flow range of 100 to 1000 litres/hr, corrected range becomes 74 to 740 litres/hr. Viscosity should be between 0.5 cP and 1.3 cP for standard scales to be accurate.

For "sizing" liquid flows ie. determining actual flow range of a tube, please advise the **chemical name, concentration, temperature, specific gravity** and **viscosity.** Custom direct reading scales in any units are available special order.

## SCALE CORRECTION FACTORS – FOR LIQUIDS WITH SPECIFIC GRAVITIES OTHER THAN 1.00

| Specific Gravity | .00 | .01 | .02 | .03 | .04 | .05 | .06 | .07 | .08 | .09 |
|---|---|---|---|---|---|---|---|---|---|---|
| | Scale Correction Factor | | | | | | | | | |
| 0.4 | 1.647 | 1.626 | 1.605 | 1.585 | 1.565 | 1.548 | 1.529 | 1.513 | 1.495 | 1.479 |
| 0.5 | 1.462 | 1.447 | 1.433 | 1.418 | 1.404 | 1.391 | 1.377 | 1.364 | 1.351 | 1.339 |
| 0.6 | 1.326 | 1.316 | 1.304 | 1.292 | 1.282 | 1.271 | 1.259 | 1.250 | 1.239 | 1.229 |
| 0.7 | 1.220 | 1.211 | 1.202 | 1.192 | 1.183 | 1.175 | 1.167 | 1.157 | 1.149 | 1.142 |
| 0.8 | 1.134 | 1.125 | 1.117 | 1.111 | 1.104 | 1.096 | 1.089 | 1.082 | 1.075 | 1.068 |
| 0.9 | 1.062 | 1.055 | 1.048 | 1.042 | 1.035 | 1.030 | 1.024 | 1.017 | 1.011 | 1.005 |
| 1.0 | 1.000 | 0.994 | 0.988 | 0.982 | 0.978 | 0.972 | 0.967 | 0.962 | 0.956 | 0.951 |
| 1.1 | 0.947 | 0.943 | 0.936 | 0.932 | 0.927 | 0.923 | 0.917 | 0.913 | 0.909 | 0.904 |
| 1.2 | 0.900 | 0.895 | 0.891 | 0.887 | 0.883 | 0.878 | 0.874 | 0.870 | 0.866 | 0.862 |
| 1.3 | 0.858 | 0.854 | 0.850 | 0.846 | 0.842 | 0.838 | 0.835 | 0.831 | 0.827 | 0.824 |
| 1.4 | 0.820 | 0.818 | 0.814 | 0.810 | 0.806 | 0.803 | 0.800 | 0.797 | 0.794 | 0.791 |
| 1.5 | 0.787 | 0.784 | 0.781 | 0.778 | 0.776 | 0.773 | 0.770 | 0.767 | 0.764 | 0.759 |
| 1.6 | 0.756 | 0.754 | 0.751 | 0.748 | 0.745 | 0.742 | 0.740 | 0.737 | 0.734 | 0.730 |
| 1.7 | 0.728 | 0.726 | 0.723 | 0.720 | 0.717 | 0.714 | 0.712 | 0.709 | 0.706 | 0.704 |
| 1.8 | 0.701 | 0.699 | 0.696 | 0.694 | 0.691 | 0.689 | 0.686 | 0.684 | 0.682 | 0.679 |
| 1.9 | 0.677 | 0.674 | 0.672 | 0.669 | 0.667 | 0.665 | 0.663 | 0.661 | 0.658 | 0.657 |
| 2.0 | 0.654 | 0.652 | 0.650 | 0.648 | 0.646 | 0.644 | 0.641 | 0.604 | 0.637 | 0.636 |

## flow meter sizing – gas flow

**FLOW RANGES FOR AIR** – AT STANDARD CONDITIONS (atmospheric pressure 14.7 psia/20°C).

**FC SERIES – COMPACT SIZE** – 5" SCALE

| Flow Meter Item No. | Normal $m_3$/hr | Standard CFM |
|---|---|---|
| FCT00020 | 0.2 – 1.0 | 0.1 – 0.6 |
| FCT00060 | 0.2 – 2.5 | 0.1 – 1.5 |
| FCT00100 | 0.6 – 3.6 | 0.4 – 2.1 |
| FCT00250 | 0.5 – 9.0 | 0.3 – 5.3 |
| FCT00051 | 0.4 – 2.8 | 0.2 – 1.6 |
| FCT00151 | 0.8 – 6.2 | 0.5 – 3.6 |
| FCT00251 | 0.9 – 9.5 | 0.5 – 5.6 |
| FCT00401 | 2.0 – 15.0 | 1.2 – 8.8 |
| FCT00152 | 0.5 – 5.5 | 0.3 – 3.2 |
| FCT00402 | 2.0 – 14.0 | 1.2 – 8.2 |
| FCT00602 | 2.5 – 22.0 | 1.5 – 12.9 |
| FCT01002 | 4.0 – 34.0 | 2.4 – 20.0 |
| FCT00253 | 1.0 – 8.0 | 0.6 – 4.7 |
| FCT00403 | 2.0 – 14.0 | 1.2 – 8.2 |
| FCT01003 | 4.0 – 34.0 | 2.4 – 20.0 |
| FCT01503 | 5.0 – 50.0 | 2.9 – 29.4 |

**FS SERIES – STANDARD FULL SIZE** – 7" SCALE

| Flow Meter Item No. | Normal $m_3$/hr | Standard CFM |
|---|---|---|
| FST00600 | 2.5 – 20 | 1.5 – 12 |
| FST01000 | 4 – 34 | 2.4 – 20 |
| FST01500 | 5 – 50 | 2.9 – 29 |
| FST02000 | 8.5 – 76 | 5.0 – 45 |
| FST02500 | 8 – 70 | 4.7 – 41 |
| FST03000 | 10 – 90 | 5.9 – 53 |
| FST04000 | 14 – 125 | 8.2 – 74 |
| FST06000 | 22 – 190 | 13 – 112 |
| FST10000 | 35 – 300 | 21 – 177 |
| FST15000 | 50 – 500 | 29 – 294 |
| FST25000 | 80 – 720 | 47 – 424 |
| FST50000 | 400 – 1,500 | 234 – 883 |

**SCALE CORRECTION FACTORS** – FOR AIR AT NON-STANDARD TEMPERATURES AND PRESSURES

Air density is dependent on the actual pressure and temperature.
Calculate the Scale Correction Factor using either Method 1 or 2. Multiply the standard air flow ranges above by the Factor to obtain actual flow rates.

### Method 1

Calculate the Factor with the following formula.

$$\text{Factor} = \frac{1}{3.7005}\sqrt{\frac{\text{psia}}{(1+0.00367t)}}$$

psia = pressure of the air absolute
= psig + 14.7 (atmospheric pressure = 14.7 psia)
t = temperature of the air °C

### Method 2

Calculate the density of the air at conditions and find factor from the chart below.

$$\text{Air Density (g/ml)} = \frac{\text{psia}}{11{,}360\,(1+0.00367t)}$$

psia = pressure of the air absolute
= psig + 14.7 (atmospheric pressure = 14.7 psia)
t = temperature of the air °C

**Air Density vs. Flow Factor**




**Temperature vs. Pressure**

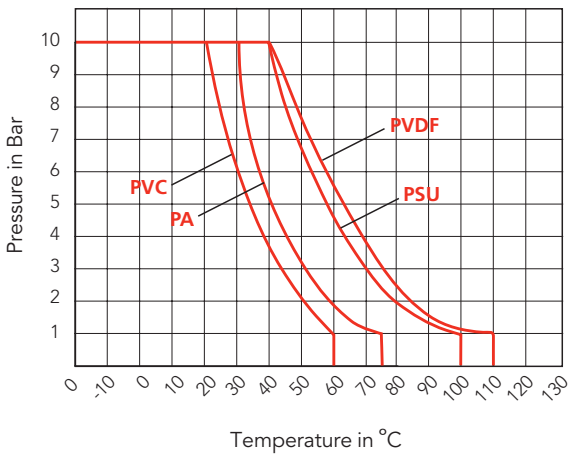




55 Guardsman Road, Thornhill, ON, L3T 6L2, Canada | ISO 9001:2008 Certified
tel.905.889.7890 | fax.905.889.8553 | request@chemline.com | chemline.com

# LSFLO Reed Limit Switch

## for FC & FS flow meters

The **LSFLO** limit switches serve as switches for minimum or maximum flow values. The normally open latching reed switch closes when the float in the measuring tube reaches and exceedes the switching position. The switch condition is maintained as long as the float is above the limit switch and will open when the float in the tube drops below the switch.

Normally closed switches are available on request.



## technical

- **Operating voltage:** maximum 230 VAC
- **Operating current:** maximum 0.5 A
- **Constant current when switched:** maximum 1 A
- **Rupturing capacity:** maximum 10 W/10 VA
- **Closed resistance:** < 150 mΩ
- **Open resistance:** > $10^{10}$ Ω
- **Operating temperature:** 0°C(32°F) to 55°C(131°F)
- **Protection:** IP 65 (DIN EN 60528)
- **Hysteresis (switch on and off point):** 3 mm
- **Protection:** IP 65 (DIN EN 60528)
- **Dimensions:** 34 x 17 x 41 mm
- **Weight (with plug):** 40 g
- **Connections:** the polarity of the connections has no influence on the function

### INSTALLATION

Screw clamps are used to fit the LSFLO on the dovetail guide of the flow meter.

### CONNECTIONS

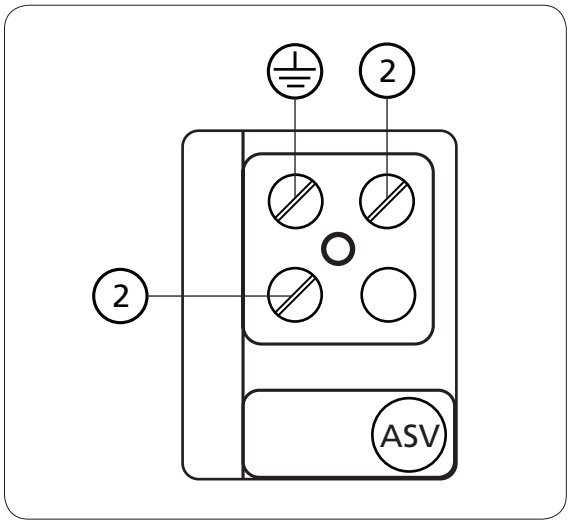


### START-UP

Prior to the first start up it is important that the float passes the LSFLO switch three times to ensure the electronics inside recognize the magnetic field from the floats properly.

CHEMLINE PLASTICS
SUPERIOR FLOW SOLUTIONS

55 Guardsman Road, Thornhill, ON, L3T 6L2, Canada | ISO 9001:2008 Certified
tel.905.889.7890 | fax.905.889.8553 | request@chemline.com | chemline.com

# ZE3000 Flow Transmitters

## for FS flow meters

The **ZE300**0 flow transmitter provides a 4–20 mA output signal, generated by detection of the position of the magnetic float.

**IMPORTANT:** This micro-processor controlled unit is factory calibrated and unique to each flowmeter model. Flowmeter model must be advised when ordering.



## technical

- **2-Wire technology**
- **4–20 mA analog output** (4-20.1 for 8 VDC supply; 4-22.0 for 28 VDC supply
- **8–28 VDC input**
- **Factory calibrated (flow meter to be specified when ordering)**
- **11 point calibration**
- **Non-volatile value storage**
- **0 Button to compensate for the surrounding magnetic influences**
- **Factory setting of the lower limit value (low-cut-off) 0-99% according to customer's specificaitons**
- **Factory time lag (low-pass filter) 0.1-2.5 sec. according to customer's specifications**
- **Measuring accuracy:** < 0.5%
- **Temperature range:** –30°C(–20°F) to 65°C(150°F)

### INSTALLATION

Screw clamps are used to fit the ZE3000 on the dovetail guide of the flow meter.

During installation, ensure that the notch of the ZE3000 coincides with the 50% mark on the flow meter scale.

Following this, proceed with the wiring according to the diagram.

### DIMENSIONS

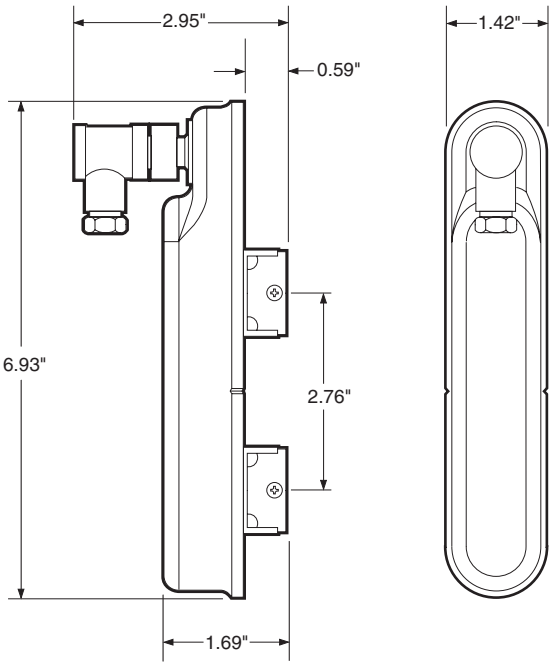


### WIRING

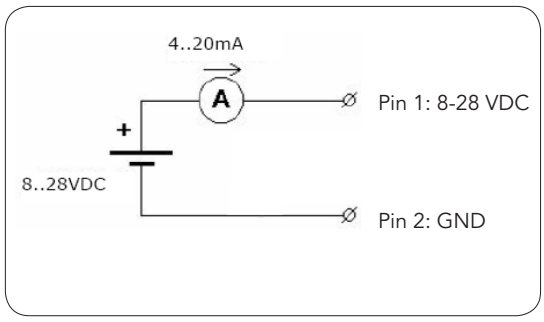


### START-UP

After installation and wiring, press the 0 button for at least 2 sec. to compensate for possible electro-magnetic interference. During this time make sure the float is at the bottom of the flowmeter (ie. no flow condition).

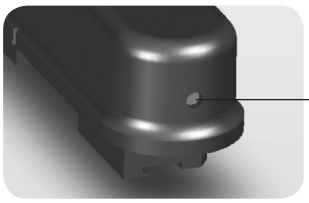


**Note:**
Do not press button during normal operation.

CHEMLINE PLASTICS
SUPERIOR FLOW SOLUTIONS

55 Guardsman Road, Thornhill, ON, L3T 6L2, Canada | ISO 9001:2008 Certified
tel.905.889.7890 | fax.905.889.8553 | request@chemline.com | chemline.com

# ZE3075 Flow Transmitters

## for FC flow meters

The **ZE3075** flow transmitter provides a 2- wire 4–20 mA output signal omit generated by precise detection of the position of the magnetic float.

The magnetic float travels along the reed chain of switches activating them.

This micro-processor controlled unit is field calibrated.

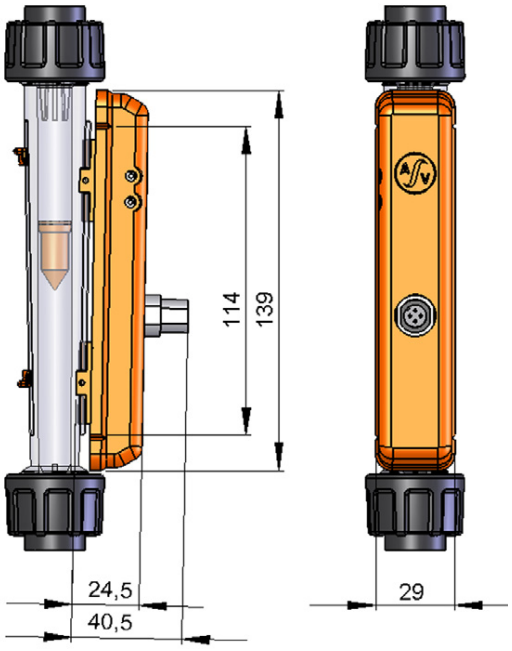


## technical

- **2-Wire technology**
- **4–20 mA analog output** (4-20.1 for 8 VDC supply; 4-22.0 for 28 VDC supply
- **18–30 VDC input**
- **Field calibration**
- **Non-volatile value storage**
- **Measuring length:** 114 mm (4.5")
- **Measuring resolution:** 3.5 mm (0.138")
- **Measuring accuracy:** 3%
- **Temperature range:** –20°C(–4°F) to 70°C(158°F)

### INSTALLATION

Screw clamps are used to fit the ZE3075 on the dovetail guide of the flow meter.

During installation, ensure that the top and bottom notches of the ZE3075 coincide with the 10% and 100% marks on the flow meter scale.

Following this, proceed with the wiring according to the diagram.

### COMPONENTS

1. Alignment notches for the proper location of the transmitter
2. Potentiometer for the upper limit value of the output signal
3. Potentiometer for the lower limit value of the output signal
4. Plug connector

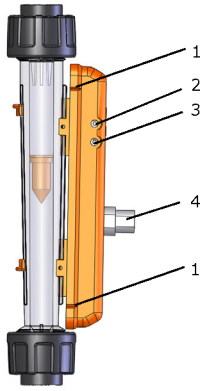


### WIRING

The unit is connected with a commercially available unshielded cable.

Where electro-magnetic interference is to be expected, we recommend the use of a shielded cable.

Cable cross section: max. 0.75 mm² cable outer diameter: 6 to 8 mm.

**Flange Connector**

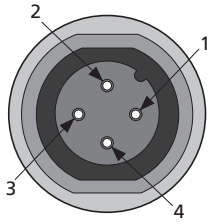


1. Signal (+)
2. Signal (+)
3. n.c.
4. n.c.

**Circuit Diagram**

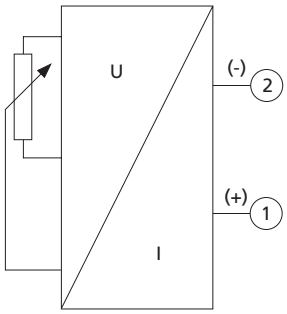


### CALIBRATION

Compensation between the non-linear scaling of the flowmeter and the linear output signal of the flow data sensor must be performed by adjusting, preferably between 20% and 80% of the flow rate.

20% corresponds to 7.2mA and 80% to 16.8mA.

- Connect the ampermeter and the respective voltage supply to the flow data sensor
- Allow 20% of the flow to pass through the FC flow meter
- Set the min. trimmer potentiometer (3) such that the corresponding current (7.2mA) is shown in the ampermeter
- Allow 80% of the flow to pass through the FC flow meter
- Set the max. trimmer potentiometer (3) such that the corresponding current (16.8mA) is shown in the ampermeter
- Check the values at 20% and 80% several times and repeat the adjustment, if required

CHEMLINE PLASTICS
SUPERIOR FLOW SOLUTIONS

55 Guardsman Road, Thornhill, ON, L3T 6L2, Canada | ISO 9001:2008 Certified
tel.905.889.7890 | fax.905.889.8553 | request@chemline.com | chemline.com

**This page is intentionally left blank**

# CS-602-670 : Identification sheet

| | | | |
|---|---|---|---|
| VWTC PROJECT NUMBER: | 5000220043 | REV: | 4 |
| PROJECT NAME: | AEM MELIADINE - BPC UPGRADE | SUBMITTED TO (COMPANY): | AEM |
| ENGINEER: | CHRIS EL KHAZAKA | SUBMITTED TO (RESPONSIBLE) | |
| PROJECT MANAGER: | THOMAS SAVARY / BRUCE BORDES | PROJECT NUM REFERENCE.: | 6526-S-265-605 / OC-989680 |
| PHONE NUMBER: | 514-334-7230 | LOT NUMBER: | |

| SUPPLIER | EQPT CODE | EQPT TAG NO | DIA | DESCRIPTION | INFO 1 | INFO 2 | INFO 3 | APPLIC. | NOTE | REV |
|---|---|---|---|---|---|---|---|---|---|---|
| IWAKI | PUCGPP354049 | 65PWA68011 | SUCTION SIZE: 1/2" NPT/ DISCHARGE SIZE: 1/2 " NPT | TRANSFER PUMP | CENTRIFUGAL PUMP / MAG-DRIVE // MANUFACTURER: IWAKI // MODEL: MD-15RT-115NL //SUCTION 1/2" MNPT / DISCHARGE 1/2" MNPT // MOTOR:115V(50/60 Hz)// BODY: GFRPPE | MAX CAPACITY: 5 GPM (18.93 L/MIN) @ 11.1 FT( 3.38MH20) | N/A | CHLORINE DILUTION SKID #1601 | | 3 |
| IWAKI | PUCGPP354049 | 65PWA68012 | SUCTION SIZE: 1/2" NPT/ DISCHARGE SIZE: 1/2 " NPT | TRANSFER PUMP | CENTRIFUGAL PUMP / MAG-DRIVE // MANUFACTURER: IWAKI // MODEL: MD-15RT-115NL //SUCTION 1/2" MNPT / DISCHARGE 1/2" MNPT // MOTOR:115V(50/60 Hz)// BODY: GFRPPE | MAX CAPACITY: 5 GPM (18.93 L/MIN) @ 11.1 FT( 3.38MH20) | N/A | CHLORINE DILUTION SKID #1701 | | 3 |

**This page is intentionally left blank**

IWAKI

MD
series

# Magnetic Drive Pump



Iwaki America, the world leader in small magnetically coupled centrifugal pump technology, offers the premier line of non-metallic centrifugal pumps.

- **Excellent chemical compatibility** - Manufactured from the most corrosion-resistant materials including Polypropylene, ETFE, SiC, or Alumina Ceramic to handle your most aggressive chemicals and high purity applications.
- **Motor options** - Choice of premium, high efficiency motors in AC and DC voltages.
- **Multiple impeller options** - Choose from enclosed, open or semi-open impellers to ensure a perfect hydraulic fit for your application.
- **Dual bearing system** - Leads to longer pump life.
- **Rotating spindle** - Reduces friction and heat generation.
- **Dynamically balanced drive magnet** - Reduces unbalanced loads on the motor shaft leading to longer motor life.
- **Unique internal cooling loop** - Allows for lower pump operating temperature.
- **Impeller balance holes** - Minimize axial thrust for better hydraulics.

# MD series

## Model Code

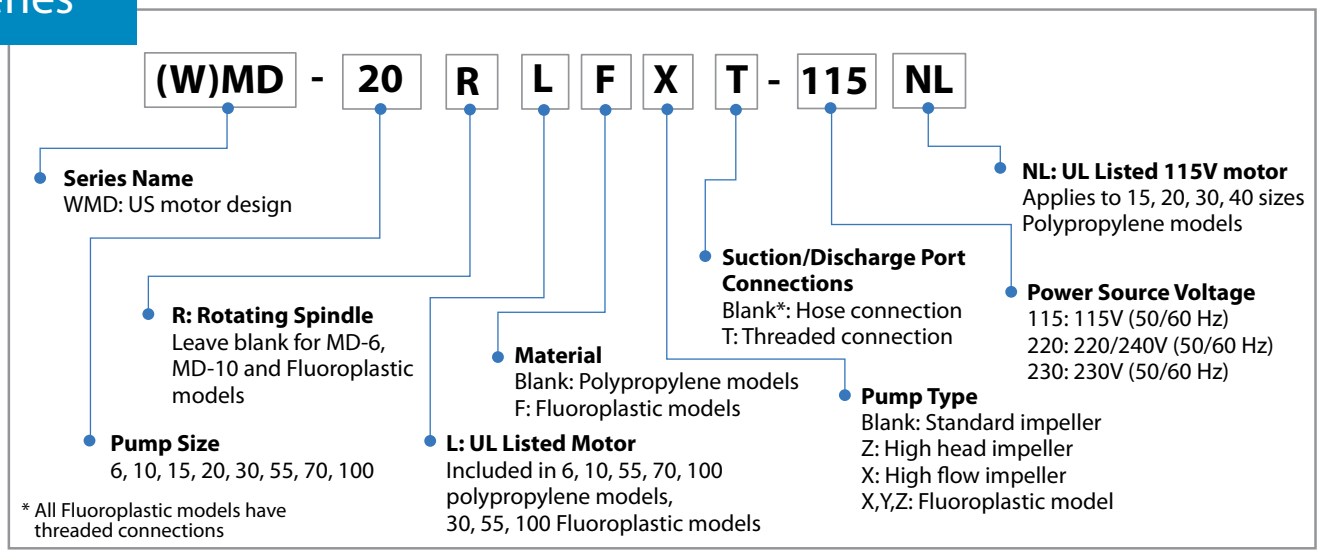


## Specifications

* Varies with motor

| Polypropylene Model | Connections | | Motor Output (HP) | Motor Speed (RPM) | Current (Amps) | Max Flow (GPM) | Max Head (Ft) | Max Sys. Pressure (PSI) | Specific Gravity | Weight (Lbs) |
|---|---|---|---|---|---|---|---|---|---|---|
| | Hose | NPT | | | | | | | | |
| MD-6 | 1/2 | --- | 1/250 | 3100 | 0.25 | 2.3 | 4.5 | 2.80 | 1.2 | 1.8 |
| MD-10 | 1/2 | --- | 1/125 | 2900 | 0.40 | 3.1 | 6.8 | 4.30 | 1.1 | 1.6 |
| MD-15R(T) | 1/2 | 1/2 | 1/75 | 3100 | 0.29 | 5.0 | 11.1 | 7.20 | 1.3 | 3.5 |
| WMD-15R(T) | 1/2 | 1/2 | 1/38 | 3100 | 0.82 | 5.0 | 11.1 | 7.20 | 1.3 | 6.0 |
| MD-20RT(T) | 5/8 | 3/4 | 1/38 | 3100 | 0.48 | 8.2 | 14.1 | 9.95 | 1.1 | 4.4 |
| WMD-20R(T) | 5/8 | 3/4 | 1/38 | 3100 | 0.48 | 8.2 | 14.1 | 9.95 | 1.1 | 7.0 |
| MD-20RX(T) | 1 | 1 | 1/38 | 3100 | 0.50 | 13.7 | 8.2 | 5.69 | 1.3 | 4.4 |
| WMD-20RX | 1 | 1 | 1/38 | 3100 | 0.50 | 13.7 | 8.2 | 5.69 | 1.3 | 7.0 |
| MD-20RZ | 5/8 | 3/4 | 1/38 | 3100 | 0.53 | 2.9 | 22.6 | 14.22 | 1.1 | 4.4 |
| WMD-20RZ | 5/8 | 3/4 | 1/38 | 3100 | 0.53 | 2.9 | 22.6 | 14.22 | 1.1 | 7.0 |
| MD-30R | 3/4 | 3/4 | 1/16 | 3150 | 0.80 | 10.0 | 17.7 | 11.60 | 1.3 | 7.7 |
| WMD-30R | 3/4 | 3/4 | 1/16 | 3150 | 1.00 | 10.0 | 17.7 | 11.60 | 1.3 | 9.0 |
| MD-30RX | 1 | 1 | 1/16 | 3150 | 1.10 | 19.0 | 13.5 | 8.54 | 1.1 | 7.7 |
| WMD-30RX | 1 | 1 | 1/16 | 3150 | 1.00 | 19.0 | 13.5 | 8.54 | 1.1 | 9.0 |
| MD-30RZ | 5/8 | 3/4 | 1/16 | 3150 | 1.10 | 4.5 | 36.1 | 24.18 | 1.0 | 7.7 |
| WMD-30RZ | 5/8 | 3/4 | 1/16 | 3150 | 1.00 | 4.5 | 36.1 | 24.20 | 1.0 | 9.0 |
| MD-40R | 3/4 | 3/4 | 1/12 | 3200 | 1.30 | 13.7 | 21.3 | 14.22 | 1.1 | 8.6 |
| WMD-40R | 3/4 | 3/4 | 1/12 | 3200 | 1.90 | 13.7 | 21.3 | 14.22 | 1.1 | 10.0 |
| MD-40RX | 1 | 1 | 1/12 | 3200 | 1.20 | 22.4 | 15.4 | 9.95 | 1.1 | 8.6 |
| WMD-40RX | 1 | 1 | 1/12 | 3200 | 1.90 | 22.4 | 15.4 | 9.95 | 1.1 | 10.0 |
| MD-55R | 1 | 1 | 1/8 | 3400 | 1.60 | 18.4 | 26.9 | 17.06 | 1.2 | 10.1 |
| MD-70R | 1 | 1 | 1/4 | 3400 | 2.80 | 25.6 | 31.8 | 21.33 | 1.0 | 13.2 |
| MD-70RZ | 3/4 | 3/4 | 2/7 | 3400 | 3.80 | 11.4 | 66.6 | 42.70 | 1.0 | 13.2 |
| MD-100R | 1 | 1 | 1/3 | 3300 | 3.40 | 35.6 | 39.0 | 25.60 | 1.2 | 18.7 |
| WMD-100R | 1 | 1 | 1/3 | 3400 | * | 35.6 | 39.0 | 25.60 | 1.2 | * |

| Fluoroplastic Model | Connections | | Motor Output (HP) | Motor Speed (RPM) | Current (Amps) | Max Flow (GPM) | Max Head (Ft) | Max Sys. Pressure (PSI) | Specific Gravity | Weight (Lbs) |
|---|---|---|---|---|---|---|---|---|---|---|
| | Hose | NPT | | | | | | | | |
| WMD-30FX | --- | 1/2 | 1/16 | 3200 | 0.9 | 3.2 | 35.2 | 17.0 | 1.3 (1.5) | 9.0 |
| WMD-30FY | --- | 1/2 | 1/16 | 3200 | 0.9 | 3.2 | 26.0 | 17.0 | 1.5 (1.8) | 9.0 |
| WMD-30FZ | --- | 1/2 | 1/16 | 3200 | 0.9 | 2.6 | 24.0 | 21.3 | 1.9 (2.1) | 9.0 |
| MD-55FY | --- | 1 | 1/8 | 3300 | 1.9 | 17.1 | 25.6 | 21.3 | 1.3 (1.5) | 11.9 |
| MD-55FZ | --- | 1 | 1/8 | 3300 | 1.6 | 13.0 | 19.0 | 31.2 | 2.0 (2.2) | 11.9 |
| WMD-100FY | --- | 1 | 1/3 | 3450 | * | 36.0 | 38.0 | 31.2 | 1.3 (1.6) | * |
| MD-100FY | --- | 1 | 1/3 | 3300 | 3.4 | 35.7 | 37.7 | 31.2 | 1.3 (1.6) | 18.7 |
| WMD-100FZ | --- | 1 | 1/3 | 3450 | * | 28.0 | 27.2 | 31.2 | 1.9 (2.2) | * |
| MD-100FZ | --- | 1 | 1/3 | 3300 | 3.4 | 28.0 | 27.2 | 31.2 | 1.9 (2.2) | 18.7 |

Pumps with "T" in the model number have NPT connections, models without "T" have hose barb connections.
GFRPP pumps rated to 80°C max. liquid temperature.
Metric threads available upon request. Please call Iwaki America for details.

Consult factory for available DC motor options.

**MD**
series

## Polypropylene Models

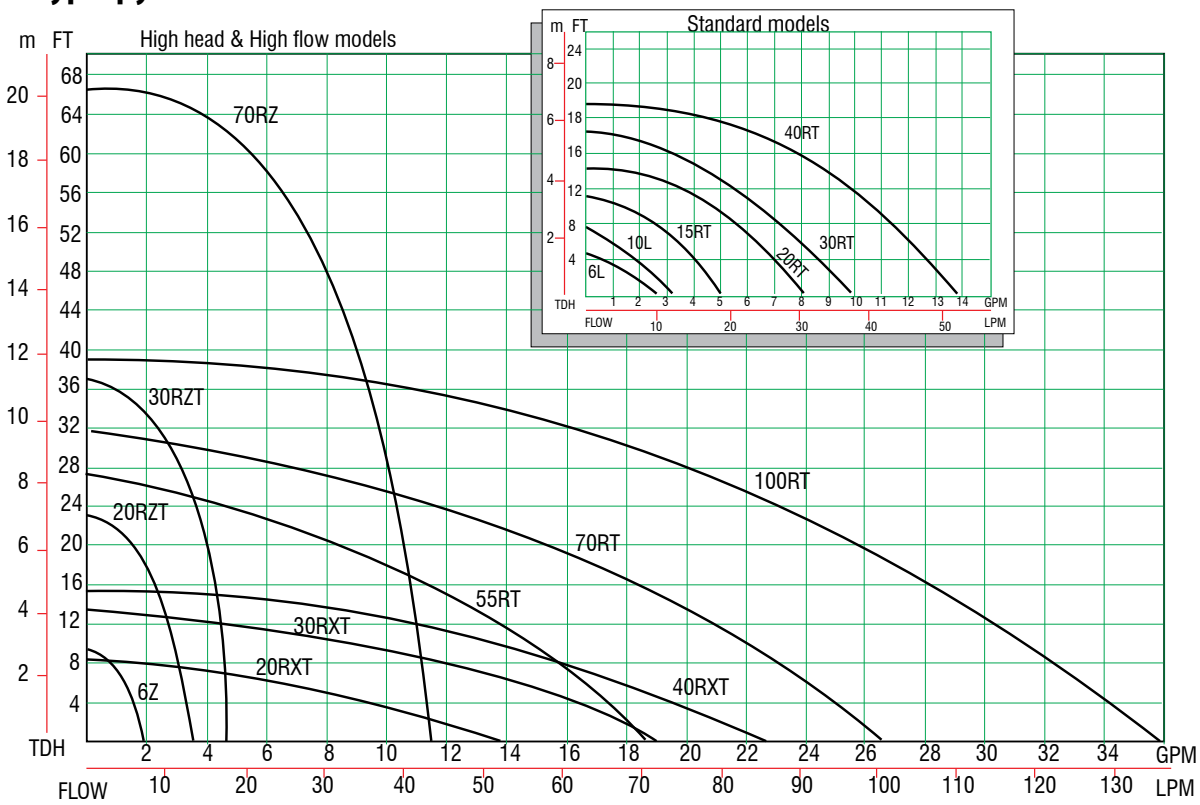


## Fluoroplastic Models

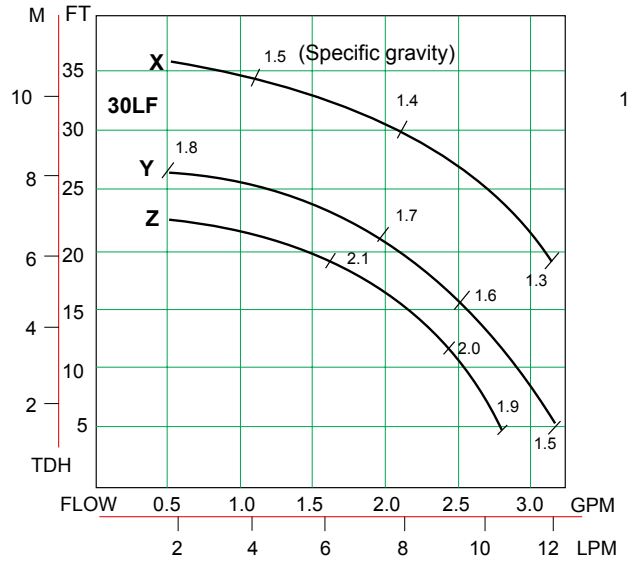


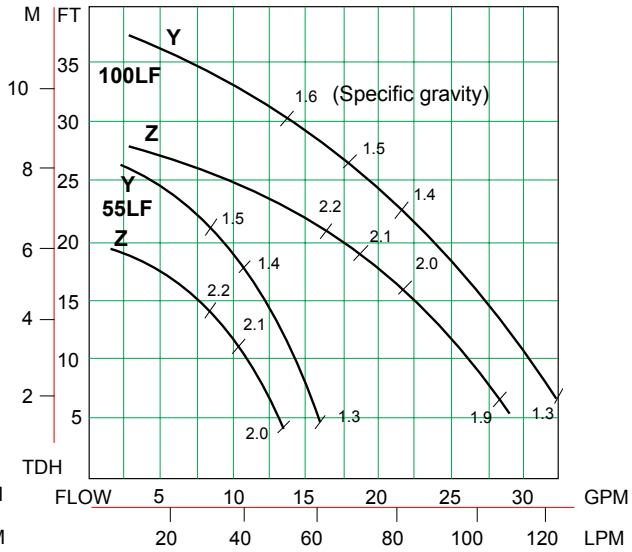


## Wet End Materials

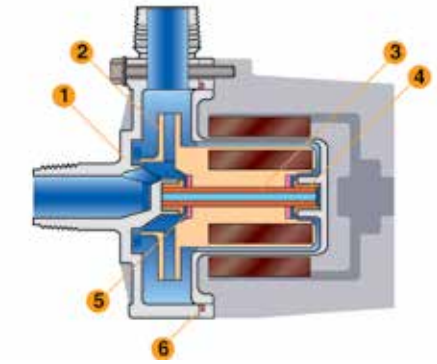


| | Part | Polypropylene | Fluoroplastic |
|---|---|---|---|
| 1 | Casing | GFRPP | CFRETFE |
| 2 | Impeller | GFRPP or CFRPP | CFRETFE |
| 3 | Spindle | Alumina Ceramic | Silicon carbide |
| 4 | Bearing | PTFE or PPS | Silicon carbide |
| 5 | Thrust ring | Alumina Ceramic or PE | Silicon carbide |
| 6 | O-ring* | FKM or EPDM | FKM |

* Other materials available upon request

## Dimensions

MD-6/10

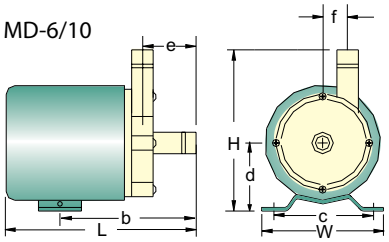


(W)MD-15/20/30/40

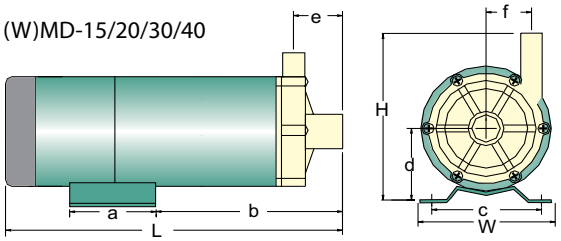


(W)MD-55/70/100

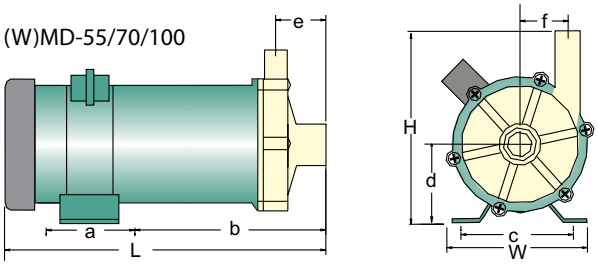


(W)MD-30/100 Fluoroplastic

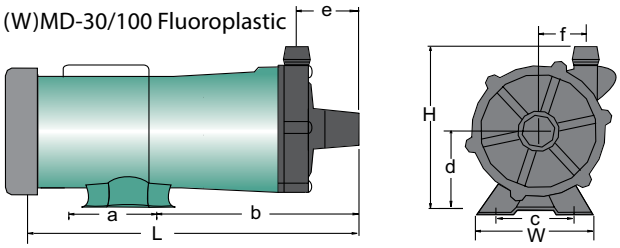


| Model | Connections | | W | H | L | a | b | c | d | e | f |
|---|---|---|---|---|---|---|---|---|---|---|---|
| | Hose | NPTM | | | | | | | | | |
| **POLYPROPYLENE (MD-115V shown)** | | | | | | | | | | | |
| MD-6/10 | 1/2 | --- | 2.91 | 3.62 | 4.09 | 1.18 | 2.87 | 2.36 | 1.77 | 1.22 | 0.67 |
| WMD-15R(T) | 1/2 | 1/2 | 3.50 | 4.26 | 9.46 | 2.37 | 4.15 | 2.50 | 1.94 | 1.52 | 0.85 |
| MD-15R(T) | 1/2 | 1/2 | 3.74 | 4.39 | 7.05 | 1.97 | 4.59 | 3.35 | 2.17 | 1.52 | 0.85 |
| WMD-20R(T) | 5/8 | 3/4 | 3.50 | 4.35 | 9.70 | 2.37 | 4.39 | 2.50 | 1.94 | 1.30 | 1.12 |
| MD-20R(T) | 5/8 | 3/4 | 4.17 | 4.19 | 7.99 | 1.73 | 4.05 | 3.54 | 1.77 | 1.52 | 1.12 |
| WMD-20RX(T) | 1 | 1 | 3.50 | 4.95 | 10.37 | 2.37 | 5.06 | 2.50 | 1.94 | 1.83 | 40° |
| MD-20RX(T) | 1 | 1 | 4.17 | 4.75 | 8.66 | 1.73 | 4.45 | 3.54 | 1.74 | 1.83 | 40° |
| WMD-20RZ(T) | 5/8 | 3/4 | 3.50 | 4.70 | 9.98 | 2.37 | 4.67 | 2.50 | 1.94 | 1.56 | 1.52 |
| MD-20RZ(T) | 5/8 | 3/4 | 4.17 | 4.92 | 8.31 | 1.73 | 4.17 | 3.54 | 2.17 | 1.56 | 1.52 |
| WMD-30R(T) | 3/4 | 3/4 | 3.50 | 4.70 | 11.65 | 2.37 | 5.72 | 2.50 | 1.94 | 1.89 | 1.22 |
| MD-30R(T) | 3/4 | 3/4 | 4.72 | 5.12 | 9.76 | 1.57 | 5.87 | 3.94 | 2.36 | 1.89 | 1.22 |
| WMD-30RX(T) | 1 | 1 | 3.50 | 5.09 | 11.89 | 2.37 | 5.96 | 2.50 | 1.94 | 1.97 | 40° |
| MD-30RX(T) | 1 | 1 | 4.72 | 5.51 | 10.00 | 1.57 | 6.10 | 3.94 | 2.36 | 1.97 | 40° |
| WMD-30RZ(T) | 5/8 | 3/4 | 3.50 | 4.70 | 10.97 | 2.37 | 5.04 | 2.50 | 1.94 | 1.56 | 1.53 |
| MD-30RZ(T) | 5/8 | 3/4 | 4.72 | 5.12 | 9.05 | 1.57 | 5.16 | 3.94 | 2.36 | 1.56 | 1.53 |
| WMD-40R(T) | 3/4 | 3/4 | 4.38 | 4.84 | 11.34 | 3.09 | 6.66 | 3.37 | 2.08 | 1.89 | 1.22 |
| MD-40R(T) | 3/4 | 3/4 | 4.72 | 5.12 | 9.85 | 1.57 | 5.87 | 3.94 | 2.36 | 1.89 | 1.22 |
| WMD-40RX(T) | 1 | 1 | 4.38 | 5.23 | 11.30 | 3.09 | 7.02 | 3.37 | 2.08 | 1.97 | 43° |
| MD-40RX(T) | 1 | 1 | 4.72 | 5.51 | 10.08 | 1.57 | 6.10 | 3.94 | 2.36 | 1.97 | 43° |
| MD-55R (T) | 1 | 1 | 4.72 | 6.10 | 10.77 | 1.57 | 7.05 | 3.94 | 2.36 | 2.42 | 1.57 |
| MD-70R(T) | 1 | 1 | 5.63 | 6.11 | 10.18 | 2.76 | 5.71 | 4.25 | 2.56 | 2.07 | 1.70 |
| MD-70RZ (T) | 3/4 | 3/4 | 5.63 | 6.50 | 9.72 | 2.76 | 5.24 | 4.25 | 2.56 | 1.65 | 1.87 |
| MD-100R(T) | 1 | 1 | 6.14 | 6.89 | 12.67 | 2.76 | 6.38 | 4.33 | 2.95 | 2.55 | 1.71 |
| WMD-100R(T) | 1 | 1 | * | 7.44 | * | 3.00 | 10.43 | 4.87 | 3.50 | 2.55 | 1.71 |
| **FLUOROPLASTIC (MD-115V shown)** | | | | | | | | | | | |
| WMD-30F(X,Y,Z) | --- | 1/2 | 3.50 | 4.69 | 11.00 | 2.37 | 5.07 | 2.50 | 1.94 | 1.54 | 1.52 |
| MD-30(X,Y,Z) | --- | 1/2 | 4.72 | 5.12 | 9.09 | 1.57 | 6.77 | 3.94 | 2.36 | 1.53 | 1.52 |
| MD-55F (Y,Z) | --- | 1 | 4.72 | 6.11 | 10.53 | 1.57 | 6.61 | 3.94 | 2.56 | 2.30 | 1.56 |
| WMD-100F (Y,Z) | --- | 1 | * | 6.80 | * | 3.00 | 12.05 | 4.88 | 3.56 | 2.55 | 1.71 |
| MD-100F (Y,Z) | --- | 1 | 6.14 | 6.89 | 12.67 | 2.76 | 6.38 | 4.33 | 2.95 | 2.55 | 1.71 |

* Varies with motor manufacturer

# CS-701-140 : Identification sheet

| | | | |
|---|---|---|---|
| VWTC PROJECT NUMBER: | 5000220043 | REV: | 4 |
| PROJECT NAME: | AEM MELIADINE - BPC UPGRADE | SUBMITTED TO (COMPANY): | AEM |
| ENGINEER: | CHRIS EL KHAZAKA | SUBMITTED TO (RESPONSIBLE) | |
| PROJECT MANAGER: | THOMAS SAVARY / BRUCE BORDES | PROJECT NUM REFERENCE.: | 6526-S-265-605 / OC-989680 |
| PHONE NUMBER: | 514-334-7230 | LOT NUMBER: | |

| SUPPLIER | EQPT CODE | EQPT TAG NO | DIA | DESCRIPTION | INFO 1 | INFO 2 | INFO 3 | APPLIC. | NOTE | REV |
|---|---|---|---|---|---|---|---|---|---|---|
| CHEMLINE | FPSTPV300161 | 25-BA99-1169 | N/A | Y-STRAINER | Y STRAINER / MANUFACTURER : CHEMLINE // MODEL : YSA010VC-24//BODY: PVC // FILTER SCREEN: PVC, 24 MESH// SEALS: FKM VITON // CONNECTION: 25 mm (1") COMBO | N/A | N/A | CHLORINE DILUTION SKID #1601 | | 3 |
| CHEMLINE | FPSTPV300161 | 25-BA99-1170 | N/A | Y-STRAINER | Y STRAINER / MANUFACTURER : CHEMLINE // MODEL : YSA010VC-24//BODY: PVC // FILTER SCREEN: PVC, 24 MESH// SEALS: FKM VITON // CONNECTION: 25 mm (1") COMBO | N/A | N/A | CHLORINE DILUTION SKID #1701 | | 3 |

**This page is intentionally left blank**

PDF Published March 1, 2013

# Y Sediment Strainers

CHEMLINE PLASTICS
SUPERIOR FLOW SOLUTIONS

The Chemline YSA Series Y Sediment Strainer is a safety filtration device designed to entrap occasional solid impurities in the line. This is to protect equipment with small orifices such as solenoid valves, and prevent damage to pumps or control valves, etc. The easily replaceable filter screen comes in a choice of meshes. The new YSA Series True Union models have greatly increased filtration areas. Pressure drops are lower and less frequent cleaning is required.

PVC [1]

CRN Registered Consult Chemline

NSF [4] Certified to NSF/ANSI 61

SERIES: YSA

SIZES: 1/2" – 4"

ENDS: True Union, Threaded, Socket, Flanged or ChemFlare™ [2]

SEALS: EPDM, FKM (Viton®) [3]

**True Union Design**
Body slips out of line.
No need for flanges.

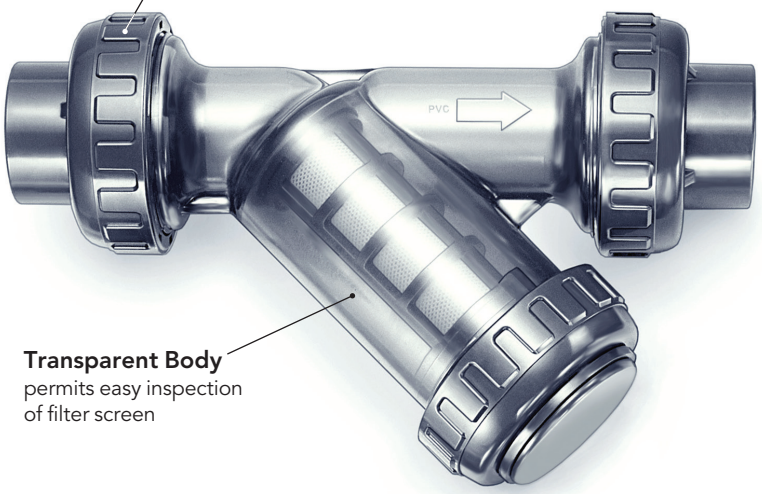

**Transparent Body**
permits easy inspection of filter screen

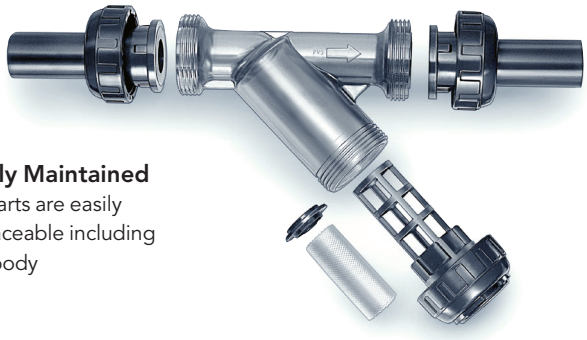

- **Easily Maintained**
  All parts are easily replaceable including the body

## features

- **High Capacity**
- **Transparent Body**
- **Large Filtration Capacity Low Pressure Drops**
  – Diameter of screens are full pipe bore. The effective filtering area is in some sizes twice the filtering area of other makes. This results in larger filtration capacities and lower pressure drops.
- **Replaceable Filter Screens**
  – Available with choice of PVC 24, 35 or 55 mesh filter screens
  – 316 SS screens are also available
- **Dual Socket and Threaded Ends**
  – Sizes 1/2" to 2" in PVC are supplied with socket ends plus two free threaded ends in each box

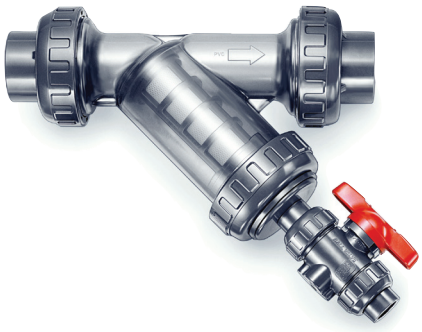

- **Optional Flush Valve**

[1] Polypropylene and PVDF Strainers are available special order.
[2] For ChemFlare™ end connectors, consult Chemline.
[3] Other seal materials are available special order.
[4] PVC valves with EPDM or FKM (Viton®) seals are certified under NSF/ANSI Standard 61 for contact with drinking water.

03/13 ©Chemline Plastics Limited 2013
Chemline is a registered trade mark of Chemline Plastics Limited

# Y Sediment Strainers

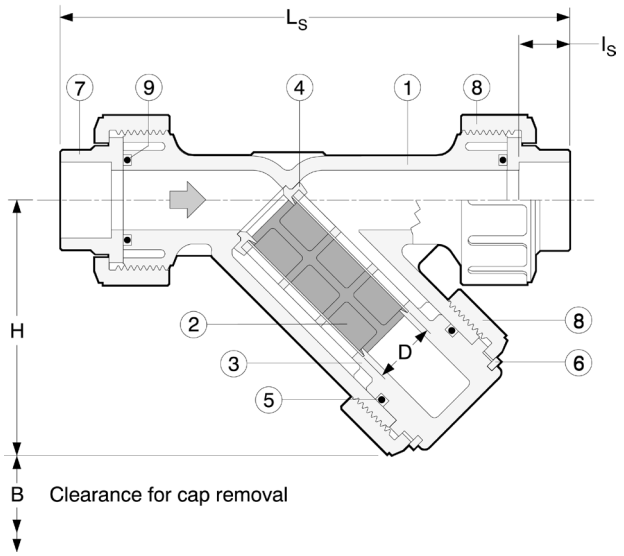


## PARTS

▲ Recommended Spare Parts

| No. | Part | Pcs. | Materials |
|---|---|---|---|
| 1 | Body | 1 | PVC |
| 2▲ | Filter Screen | 1 | PVC, 316SS |
| 3 | Cap/Filter Cage | 1 | PVC |
| 4▲ | Screen Retainer | 1 | PVC |
| 5▲ | Cap O-Ring | 1 | EPDM, FKM (Viton®) |
| 6 | Split Ring | 1 | PVC |
| 7 | End Connector | 2 | PVC |
| 8 | Union Nut | 3 | PVC |
| 9▲ | Face O-Ring | 2 | EPDM, FKM (Viton®) |

## DIMENSIONS INCHES

| Size | B | D | H (Closed) | $L_T$ Threaded | $L_S$ Socket | $L_F$ Flanged | $l_S$ Socket | Exposed Screen Area (in²) |
|---|---|---|---|---|---|---|---|---|
| 1/2″ | 3. | 0.63 | 2.8 | 6.50 | 6.93 | 8.1 | 0.87 | 2.71 |
| 3/4″ | 4. | 0.83 | 3.7 | 7.95 | 8.30 | 10.0 | 1.00 | 4.57 |
| 1″ | 5. | 1.1 | 4.0 | 8.82 | 9.37 | 11.1 | 1.12 | 5.98 |
| 1-1/2″ | 6. | 1.6 | 5.7 | 11.30 | 12.13 | 13.2 | 1.38 | 13.8 |
| 2″ | 7. | 2.0 | 6.6 | 12.76 | 13.31 | 14.2 | 1.50 | 20.0 |
| 3″ | 8. | 3.1 | 7.5 | 17.2 | 17.80 | 18.8 | 1.87 | 34.0 |
| 4″ | 11. | 3.9 | 10.1 | 23.5 | 23.54 | 23.9 | 2.25 | 54.7 |

## NET WEIGHTS LB. / WORKING PRESSURES PSI / Cv VALUES

| Size | Threaded Socket | Flanged | 0-50°C 32-122°F | USGPM Flow at 1 PSI Pressure Drop |
|---|---|---|---|---|
| 1/2″ | 0.5 | 1.0 | 150 | 5.2 |
| 3/4″ | 1.0 | 1.6 | 150 | 7.5 |
| 1″ | 1.5 | 2.4 | 150 | 14. |
| 1-1/2″ | 3.4 | 4.6 | 150 | 34. |
| 2″ | 4.3 | 6.0 | 150 | 50. |
| 3″ | 12.7 | 14.7 | 85 | 110. |
| 4″ | 30.8 | 35.1 | 85 | 165. |

**Temperature Range**
0 to 60°C (32 to 140°F)

With clean 24 mesh screen

## FILTER SCREEN DATA

| Equiv. Mesh | Micron Filtration | Hole Area (in²) | Holes per in² | % Open Area |
|---|---|---|---|---|
| 24 | 690 | .00114 | 135 | 15.4 |
| 35 | 490 | .00053 | 258 | 13.7 |
| 55 | 250 | .00011 | 774 | 8.5 |

24 mesh is supplied as standard, 35 or 55 mesh supplied on request.

**Micron filtration** is the smallest diameter of a sphere which will be retained by the mesh.

## ORDERING EXAMPLE

| Chemline PVC Y Strainers YSA | 020 | E | S |
|---|---|---|---|
| Size | **005** – 1/2″ **007** – 3/4″ **010** – 1″ **012** – 1-1/4″ **015** – 1-1/2″ **020** – 2″ **030** – 3″ **040** – 4″ **060** – 6″[1] | | |
| Seals | **E** – EPDM **V** – FKM (Viton®) **C** – CPE[2] **B** – Nitrile[3] **A** – Aflas® | | |
| Ends | **S** – Socket **T** – Threaded **F** – Flanged **CF** – ChemFlare™ | | |

**Example:** Chemline PVC Y Strainer, 2″, EPDM o-rings, socket ends.

[1] 6″ is 4″ strainer with 6″ end connections

[2] CPE=Chlorinated Polyethylene

[3] Nitrile is also called "Buna-N"

## OPTIONS

- **Alternate O-Ring materials**
- **Flush out valve installed in cap**
- **316 Stainless Steel Screens** if greater open area is required
- **Polypropylene or PVDF Construction**
  - Design is different from YSA Series. Consult Chemline.


CHEMLINE PLASTICS
SUPERIOR FLOW SOLUTIONS

55 Guardsman Road, Thornhill, ON, L3T 6L2, Canada | ISO 9001:2008 Certified
tel.905.889.7890 | fax.905.889.8553 | request@chemline.com | chemline.com

**Project name:** MELIADINE-BPC UPGRADE

**Project#:** 5000220043

**Document #:** SPK_0001_MISC_VWT

**by:** CEK

**chkd:** ED

**appvd:** TS

# INSTRUMENTATION

# PH INSTRUMENTATION SKID #0504/#1202

**OIM manual section:** 4.2.11.5

REFER TO 5000220043_GA_0008_SKG_VWT

**This page is intentionally left blank**

# CS-301-100 : Identification sheet

| | | | |
|---|---|---|---|
| VWTC PROJECT NUMBER: | 5000220043 | REV: | 4 |
| PROJECT NAME: | AEM MELIADINE - BPC UPGRADE | SUBMITTED TO (COMPANY): | AEM |
| ENGINEER: | CHRIS EL KHAZAKA | SUBMITTED TO (RESPONSIBLE) | |
| PROJECT MANAGER: | THOMAS SAVARY / BRUCE BORDES | PROJECT NUM REFERENCE.: | 6526-S-265-605 / OC-989680 |
| PHONE NUMBER: | 514-334-7230 | LOT NUMBER: | |

| SUPPLIER | EQPT CODE | EQPT TAG NO | DIA | DESCRIPTION | INFO 1 | INFO 2 | INFO 3 | APPLIC. | NOTE | REV |
|---|---|---|---|---|---|---|---|---|---|---|
| CHEMLINE | VABLPV200249 | 15-BA99-0591 | DIA: 13 mm (1/2") | SKID INLET ISOLATION VALVE | TYPE: BALL VALVE//MANUFACTURER : CHEMLINE//MODEL : Type21-A-005-E-C//CONNECTION TYPE : COMBO \| 13 mm (1/2")//BODY : PVC (ASTM D1784)// SEAL \| SEAT :PTFE \| EPDM// STEM : PVC | | | PH INSTRUMENTATION SKID #1202 | | 3 |
| CHEMLINE | VABLPV200249 | 15-BA99-0593 | DIA: 13 mm (1/2") | SKID OUTLET ISOLATION VALVE | TYPE: BALL VALVE//MANUFACTURER : CHEMLINE//MODEL : Type21-A-005-E-C//CONNECTION TYPE : COMBO \| 13 mm (1/2")//BODY : PVC (ASTM D1784)// SEAL \| SEAT :PTFE \| EPDM// STEM : PVC | | | PH INSTRUMENTATION SKID #1202 | | 3 |
| CHEMLINE | VABLPV200249 | 15-BA99-1193 | DIA: 13 mm (1/2") | SKID INLET ISOLATION VALVE | TYPE: BALL VALVE//MANUFACTURER : CHEMLINE//MODEL : Type21-A-005-E-C//CONNECTION TYPE : COMBO \| 13 mm (1/2")//BODY : PVC (ASTM D1784)// SEAL \| SEAT :PTFE \| EPDM// STEM : PVC | | | PH INSTRUMENTATION SKID #0504 | | 3 |

| SUPPLIER | EQPT CODE | EQPT TAG NO | DIA | DESCRIPTION | INFO 1 | INFO 2 | INFO 3 | APPLIC. | NOTE | REV |
|---|---|---|---|---|---|---|---|---|---|---|
| CHEMLINE | VABLPV200249 | 15-BA99-1195 | DIA: 13 mm (1/2") | SKID OUTLET ISOLATION VALVE | TYPE: BALL VALVE//MANUFACTURER : CHEMLINE//MODEL : Type21-A-005-E-C//CONNECTION TYPE : COMBO \| 13 mm (1/2")//BODY : PVC (ASTM D1784)// SEAL \| SEAT :PTFE \| EPDM// STEM : PVC | | | PH INSTRUMENTATION SKID #0504 | | 3 |

PDF Published November 23, 2020

# Type 21 True Union Ball Valves

CHEMLINE PLASTICS
SUPERIOR FLOW SOLUTIONS

The Chemline **Type 21** True Union Ball valve incorporates state of the art features for long term performance. This is a full port, full blocking True Union valve pressure rated at 16 bar (230 psi)[3]. Double stem o-rings and Safety Shear stem design provide for a high degree of safety on hazardous fluid applications. All sizes have an ISO standard actuator mounting platform integral to the valve body. This provides for sturdy and secure mounting of pneumatic or electric actuators.

PVC | CPVC | PP | PVDF

CRN Registered Consult Chemline

NSF[4] Certified to NSF/ANSI 61

SERIES: Type 21

SIZES: 3/8" – 4"

ENDS: Socket, Threaded, Combo[6], Flanged, Butt[1] or ChemFlare™

SEATS: PTFE

SEALS[2]: EPDM, FKM (Viton®)




## features

### Pressure rated to 230 psi[3]
- Provides a high factor of safety

### Integral Actuator Mounting Platform
- Actuation is easy. Electric or pneumatic actuators may be mounted in the field.

### Full Port
- High capacity and low pressure drops

### Fully Blocking
- Downstream union nut may be safely disassembled for piping maintenance while valve is closed off under full system pressure

### Built-In Spanner Wrench
- Top of the handle is designed to be used as a tool for accessing internal parts

### Safety Shear Stem Design
- Stem has double o-rings
- Designed to hold full pressure even if stem breaks due to excessive torque

### High Chemical Resistant Material
- PVC and CPVC compounds have an "A" chemical resistance rating as per ASTM D-1784. They have outperformed other PVC and CPVC compounds on aggressive chemicals.

### CRN Registration numbers by province
- Ontario: OC11045.5
- Newfoundland: OC11045.50
- Saskatchewan/Manitoba/Quebec: OC11045.56
- New Brunswick: OC11045.57
- Nova Scotia: OC11045.58
- P.E.I.: OC11045.59
- British Columbia: not required
- Alberta: not required[5]

[1] Butt ends for fusion to Chemline metric PP, PVDF or ECTFE (Halar®) piping.
[2] Other materials are available.
[3] PVC, CPVC and PVDF 1/2" to 2" are rated at 230 psi; 2-1/2" to 4" and all size PP valves are rated at 150 psi at 20°C.
[4] PVC valves with EPDM or FKM (Viton®) seals are certified under NSF/ANSI Standard 61 for contact with drinking water.
[5] Not required for non-expandable fluids.
[6] PVC and CPVC valves 1/2" to 2" are available as Combo (threaded and socket ends).

11/20 ©Chemline Plastics Limited 2020
Chemline is a registered trade mark of Chemline Plastics Limited

# Type 21 True Union Ball Valves

## Features

**Double Stem O-Rings – Safety Shear Design**

- Upper o-ring groove is deeper than lower. In case of excessive stem torque, stem will shear at the upper groove, leaving the inner o-ring intact to seal against full line pressure.

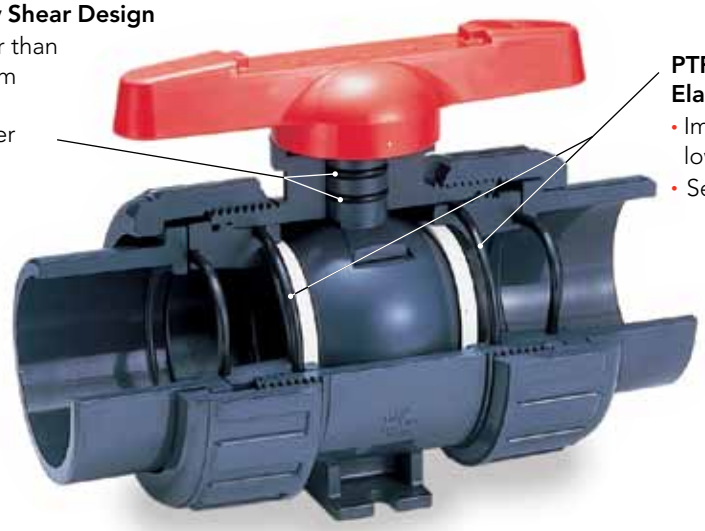

**PTFE Seats have Elastomer Cushions**

- Improved sealing while lowering stem torques
- Self adjusts for seat wear

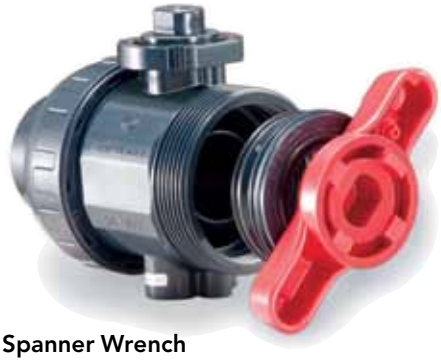

**Built in Spanner Wrench**

- For removing or tightening the seat carrier
- All parts are replaceable



**Integral Actuator Mounting Platform**

- Actuation is easy. Electric or pneumatic actuators may be mounted in the field. Simply pull off the handle to reveal a standard ISO 5211 mounting platform which accepts bolt-on hardware.




**Fully Blocking**

- Downstream pipe may be removed while upstream side is still pressurized. This may be done with valve installed in either direction.



**Base Mounting Pad**

- Optional threaded inserts allow valves to be securely anchored
- Supplied standard with actuated valves

## Options + Accessories



### ChemFlare™ Ends

- For connection to PFA tube. Leak-free connections for difficult services such as sodium hypochlorite



### One-piece moulded PVC and CPVC 6" socket ends

- Allows installation of 4" valve in 6" line
- Factory moulded, elimates cementing separate reducer and coupling
- Fixed to valve mechanically just like the one-piece moulded factory flanges



### Optional Lock-out Handle & Hasp

- To prevent unauthorized operation of the valve during maintenance shut-downs
- Padlocks go through holes in hasp



### Gear Operators

- Deluxe FRP construction
- IP67 enclosure resists short term immersion



### Chain Wheel Operators

- For overhead operation, with 7' of chain drop
- Cast iron or stainless steel

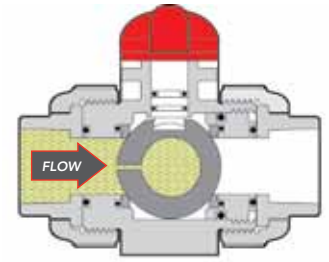


### Vented Ball

- Recommended for all sodium hypochlorite services
- Valve shown in closed position



### Valve Tags

- Stainless steel or plastic



### Different Colour Handles

- Choose a handle colour other than standard red for colour coding different services



### Municipal Operating Nut

- 2" square nut for operating valves below grade using a standard municipal "key"
- Stainless Steel for corrosion resistance



### Manual Limit Switch

- Electrical feedback of manual valve position
- NEMA 4X enclosure, position indicator beacon, 2x SPDT or proximity switches, stainless steel hardware



### Shaft Extensions

- Different materials and lengths are available
- Several designs:
  - with no housing for indoors
  - with waterproofed PVC housing for indoors or outdoors
  - with stainless steel housing for buried or actuated services

# Type 21 True Union Ball Valves

## Electric + Pneumatic Actuation

- A complete range of actuators and control accessories are available, mounted to valves using PPG plastic brackets and stainless steel couplings. Refer to separate data sheets.
- All actuators are CSA approved, have NEMA 4X enclosures, stainless steel hardware and permanently lubricated gear train



**ERS Series Electric**
- Type 21 ball valves up to 2"
- 180 in-lbs torque
- On-Off (3/2-wire), adjustable travel
- Visual feedback

**E Series Electric**
- Type 21 ball valves up to 4"
- Up to 885 in-lbs torque
- On-Off (3/2-wire), adjustable travel. Optional: failsafe, 3 position modulating
- Visual feedback and feedback switches. Optional: extra switches, feedback potentiometer and feedback transmitter



**V Series Electric**
(with optional Local Control Station)
- Type 21 ball valves up to 6"
- up to 8,850 in-lbs torque
- On-Off (2/3-wire), adjustable travel. Optional: failsafe, modulating, BUS
- Visual feedback, 2 feedback switches. Optional: 2 extra feedback switches, feedback potentiometer and feedback transmitter



**PA Series Pneumatic**
- Type 21 ball valves up to 6"
- up to 10,660 in-lbs torque
- industrial process submerged
- bleach/water washdown
- Rilsan-coated aluminum



**PP Series Pneumatic**
- Type 21 ball valves up to 6"
- up to 1,335 in-lbs torque
- industrial process with minimal use of metal
- Glass-filled Polyamide

### OTHER OPTIONS & ACCESSORIES

- **Alternate O-Ring Seals**
- **Stem Extensions** made to any length
- **Limit Switches** – for open and/or closed position indication
- **Municipal Operating Nut**
- **Lubrication-free Valves** – factory clean room assembled
- **Vented Ball** – for sodium hypochlorite applications

# Type 21 True Union Ball Valves

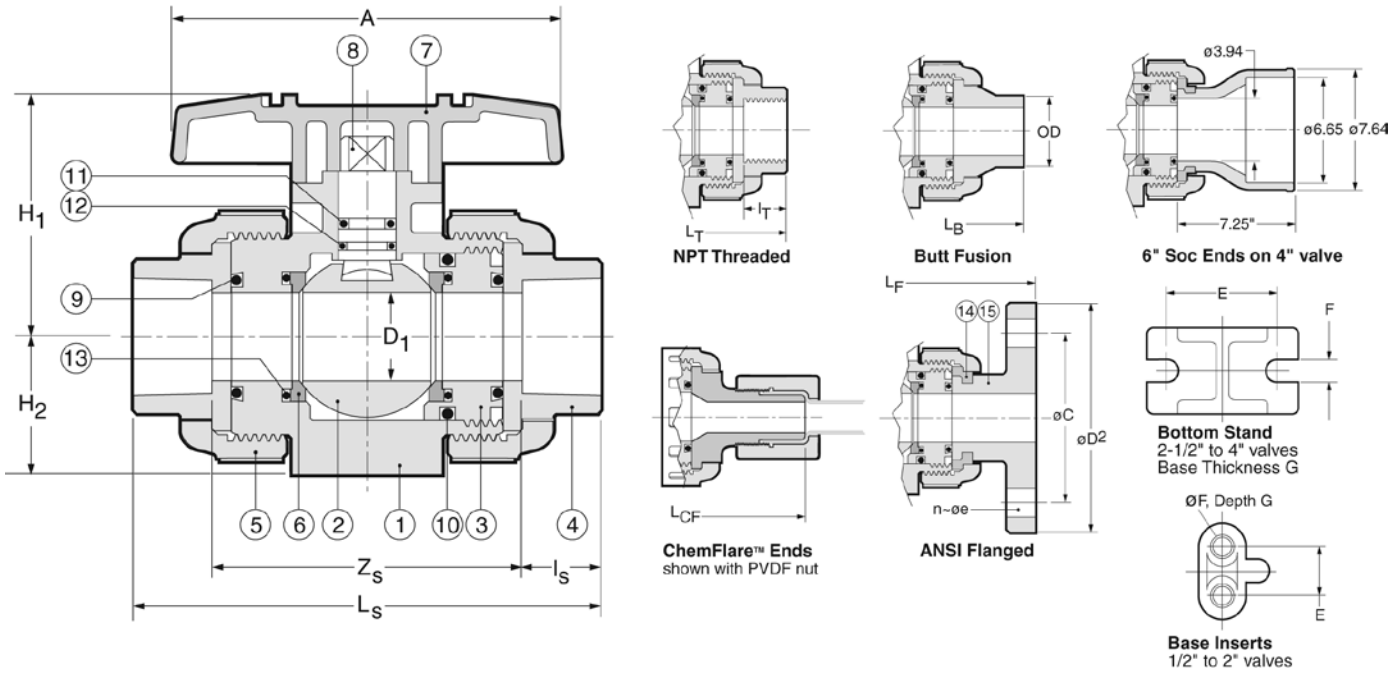


## PARTS

▲ Recommended Spare Parts

| No. | Part | Pcs. | Materials |
|---|---|---|---|
| 1 | Body | 1 | PVC, CPVC, PP, PVDF |
| 2 | Ball | 1 | PVC, CPVC, PP, PVDF |
| 3 | Carrier[1] | 1/2 | PVC, CPVC, PP, PVDF |
| 4 | End Connector | 2 | PVC, CPVC, PP, PVDF |
| 5 | Union Nut | 2 | PVC, CPVC, PP, PVDF |
| 6▲ | Ball Seat | 2 | PTFE |
| 7 | Handle | 1 | ABS |

[1] 1 carrier for sizes 1/2" to 2", 2 carriers for sizes 2-1/2" to 4"
[2] EPDM seals standard with PVC, CPVC, PP; FKM (Viton®) with PVDF valves
[3] 2 pcs 1/2" to 2", 6 pcs 2-1/2" to 4"

## PARTS

▲ Recommended Spare Parts

| No. | Part | Pcs. | Materials |
|---|---|---|---|
| 8 | Stem | 1 | PVC, CPVC, PP, PVDF |
| 9▲ | Face O-Ring[2] | 2 | EPDM, FKM (Viton®) |
| 10▲ | Carrier O-Ring[2] | 2 | EPDM, FKM (Viton®) |
| 11▲ | Upper Thicker Stem O-Ring[2] | 1 | EPDM, FKM (Viton®) |
| 12▲ | Lower Thinner Stem O-Ring[2] | 1 | EPDM, FKM (Viton®) |
| 13 | Seat Cushion[2] | 2 | EPDM, FKM (Viton®) |
| 14 | Flange Retainer[3] | 2/6 | PVDF |
| 15 | Flange | 2 | PVC, CPVC, PP, PVDF |

## DIMENSIONS INCHES

| | | | | | End Connections | | | | | | | | | | | | | | | | |
|---|---|---|---|---|---|---|---|---|---|---|---|---|---|---|---|---|---|---|---|---|---|
| | D | | | | Socket | | | Threaded | | Factory Flanged | | | | | Butt | | ChemFlare™ | | Valve Base | | |
| Size | Bore | A | $H_1$ | $H_2$ | $L_S$ | $Z_S$ | $l_S$ | $l_T$ | $L_T$ | $L_F$ | $D_2$ | C | n | e | $L_B$ | OD | $L_{CF}$ | Tube[4] | E | F[5] | G |
| 1/2" | .59 | 3.6 | 2.03 | 1.14 | 4.45 | 2.70 | .875 | .64 | 4.02 | 5.63 | 3.50 | 2.38 | 4 | .62 | 4.88 | .79 | 6.12 | 1/2" | .75 | .29 | .43 |
| 3/4" | .79 | 3.9 | 2.34 | 1.38 | 5.08 | 3.08 | 1.00 | .65 | 4.72 | 6.77 | 3.88 | 2.75 | 4 | .62 | 5.67 | .98 | 6.52 | 3/4" | .75 | .29 | .43 |
| 1" | .98 | 4.3 | 2.68 | 1.54 | 5.75 | 3.50 | 1.13 | .81 | 5.16 | 7.36 | 4.25 | 3.12 | 4 | .62 | 6.06 | 1.26 | 7.26 | 1" | .75 | .29 | .43 |
| 1-1/4" | 1.22 | 4.8 | 3.17 | 1.85 | 6.46 | 5.21 | 1.25 | .85 | 5.91 | 7.48 | 4.62 | 3.50 | 4 | .62 | 6.85 | 1.57 | 9.58 | 1-1/4" | 1.18 | .35 | .59 |
| 1-1/2" | 1.57 | 5.2 | 3.50 | 2.17 | 7.24 | 4.49 | 1.38 | .85 | 6.42 | 8.35 | 5.00 | 3.88 | 4 | .62 | 7.64 | 1.97 | – | – | 1.18 | .35 | .59 |
| 2" | 2.01 | 6.3 | 4.02 | 2.60 | 8.23 | 5.23 | 1.50 | 1.90 | 7.76 | 9.21 | 6.00 | 4.75 | 4 | .75 | 8.82 | 2.48 | – | – | 1.18 | .35 | .59 |
| 2-1/2" | 2.28 | 7.87 | 4.96 | 2.83 | 9.45 | 5.95 | 1.75 | 1.21 | 8.46 | 10.20 | 7.00 | 5.49 | 4 | .75 | 9.72 | 2.95 | – | – | 1.89 | .35 | .23 |
| 3" | 2.70 | 9.45 | 5.51 | 3.35 | 11.10 | 7.35 | 1.88 | 1.30 | 10.39 | 11.97 | 7.50 | 6.00 | 4 | .75 | 11.61 | 3.54 | – | – | 2.17 | .43 | .28 |
| 4" | 3.54 | 11.81 | 7.01 | 4.33 | 13.88 | 9.87 | 2.00 | 1.38 | 14.17 | 14.65 | 9.00 | 7.50 | 8 | .75 | 14.76 | 4.33 | – | – | 2.56 | .43 | .32 |
| 6"[6] | 3.54 | 11.81 | 7.01 | 4.33 | 23.15 | 17.09 | 3.03 | – | – | – | – | – | – | – | – | – | – | – | 2.56 | .43 | .32 |
| 6"[7] | 3.54 | 11.81 | 7.01 | 4.33 | 27.22 | 21.21 | 3.03 | – | – | – | – | – | – | – | – | – | – | – | 2.56 | .43 | .32 |

[4] ChemFlare™ ends are available for reduced tube sizes down to 1/4"
[5] Optional threaded inserts: 1/2" to 1" valves – UNC 1/4"-20; 1-1/4" to 2" valves – UNC 5/16"-18. 'Recoil' brand inserts require drilling before insertion.
[6] 6" with factory moulded socket ends
[7] 6" with fabricated socket ends

# Type 21 True Union Ball Valves

## WORKING PRESSURES PSI, Water, Non-Shock

## VACUUM RATING • 29.9 inches mercury

| Size | PVC | | | CPVC | | | | | | PP | | | PVDF | | | | |
|---|---|---|---|---|---|---|---|---|---|---|---|---|---|---|---|---|---|
| | 20°C 68°F | 40°C 104°F | 50°C 122°F | 20°C 68°F | 40°C 104°F | 50°C 122°F | 60°C 140°F | 80°C 176°F | 90°C 194°F | 20°C 68°F | 60°C 140°F | 80°C 176°F | 20°C 68°F | 40°C 104°F | 60°C 140°F | 80°C 176°F | 100°C 212°F |
| 1/2"– 2" | 230 | 165 | 150 | 230 | 165 | 150 | 120 | 75 | 55 | 150 | 85 | 55 | 230 | 185 | 150 | 110 | 85 |
| 2-1/2"– 4" | 150 | 150 | 150 | 150 | 150 | 150 | 120 | 75 | 55 | 150 | 70 | 40 | 150 | 150 | 150 | 110 | 85 |

**Temperature Ranges: PVC** 0 to 50°C (32 to 122°F), **CPVC** 0 to 90°C (32 to 194°F), **PP** –20 to 80°C (–4 to 176°F), **PVDF** –20 to 100°C (–20 to 212°F)

## WEIGHTS LB. THREADED or SOCKET

## WEIGHTS LB. FLANGED

| Size | PVC | CPVC | PP | PVDF | PVC | CPVC | PP | PVDF |
|---|---|---|---|---|---|---|---|---|
| 1/2" | 0.4 | 0.4 | 0.4 | 0.4 | 0.9 | 0.9 | 0.7 | 1.1 |
| 3/4" | 0.7 | 0.7 | 0.7 | 0.9 | 1.3 | 1.5 | 1.1 | 1.5 |
| 1" | 0.9 | 1.1 | 0.9 | 1.1 | 1.8 | 2.0 | 1.5 | 2.2 |
| 1-1/4" | 1.5 | 1.5 | 1.3 | 1.8 | 2.6 | 2.9 | 2.0 | 3.3 |
| 1-1/2" | 2.4 | 2.6 | 1.5 | 2.9 | 3.7 | 4.0 | 2.6 | 4.4 |
| 2" | 4.0 | 4.4 | 2.6 | 4.9 | 5.5 | 6.0 | 4.0 | 8.2 |
| 2-1/2" | 5.1 | 5.5 | 3.7 | 6.2 | 7.3 | 7.7 | 5.3 | 8.8 |
| 3" | 8.2 | 8.8 | 5.5 | 9.9 | 10.1 | 11.0 | 7.5 | 12.6 |
| 4" | 19.4 | 21.8 | 13.2 | 24.9 | 21.6 | 23.4 | 15.4 | 26.7 |

## Cv VALUES VS. BALL ANGLE

| Size | 0% | 25% | 50% | 75% | 100% |
|---|---|---|---|---|---|
| 1/2" | 0 | 0.35 | 1.3 | 5.5 | 14. |
| 3/4" | 0 | 0.73 | 2.8 | 11.5 | 29. |
| 1" | 0 | 1.2 | 4.5 | 18.6 | 47. |
| 1-1/4" | 0 | 1.8 | 6.8 | 28.4 | 72. |
| 1-1/2" | 0 | 3.9 | 14.7 | 61.2 | 155. |
| 2" | 0 | 4.8 | 18.0 | 75.0 | 190. |
| 2-1/2" | 0 | 9.1 | 34.7 | 144.0 | 365. |
| 3" | 0 | 10.2 | 39.0 | 162.0 | 410. |
| 4" | 0 | 17.0 | 64.6 | 269.0 | 680. |

## SAMPLE SPECIFICATION

1. All True Union Ball Valves in PVC, CPVC, PP or PVDF shall be Chemline Type 21 or equal sizes 1/2" to 2" in PVC, CPVC, and PVDF rated at 230 psi and in PP 150 psi maximum working pressure. Sizes 2-1/2", 3" and 4" rated at 150 psi maximum working pressure with EPDM or FKM (Viton®) seals. Ball seats shall be PTFE with elastomer cushions for closure with minimum stem torques.
2. All valves will have Safety Shear stem design, blowout-proof with double o-rings for safety. The top o-ring groove shall be deeper so that if the stem breaks off under excessive torque the lower o-ring will remain intact and the valve will hold pressure.
3. All valves shall be full port and two-way blocking design.
4. All valves will be CRN (Canadian Registration Number) registered with TSSA.
5. PVC valves with EPDM or FKM (Viton®) seals shall be certified under NSF/ANSI Standard 61 for contact with drinking water.
6. All valves shall have chemical resistant labels permanently marked with manufacturing number to provide production level traceability.
7. PVC compound shall have an ASTM cell classification 12454-A with a minimum suffix "A" designation for chemical resistance as per ASTM D-1784 (CSA report LO 4000-172).
8. CPVC compound shall have an ASTM cell classification 23567-A with a minimum suffix "A" designation for chemical resistance as per ASTM D-1784.
9. PP material will conform to ASTM D-4101 PP 021 B 67272 material requirements.
10. PVDF material shall be unpigmented conforming to ASTM D-3222 material requirements and to be USDA Title 21 Chapter 1 Part 177. 2510 requirements for contact with food.
11. Socket ends in PVC and CPVC shall be Schedule 80 and conform to ASTM D-2467.
12. Threaded ends shall be Schedule 80 and conform to ASTM D-2464.
13. Butt fusion ends in PP or PVDF will be compatible with Chemline PP or PVDF metric piping systems.
14. Flanged ends shall be ANSI Class 150 one-piece factory moulded (not fabricated) to ensure maximum strength and close tolerance end to end dimensions.

## ORDERING EXAMPLE

| | | | | | | for ChemFlare™ ends only | | all other ends |
|---|---|---|---|---|---|---|---|---|
| **Chemline True Union Ball Valves** | **21** | **A** | **005** | **E** | **V** | **–A** | **8N** | **–1** |
| Body Material | **A** – PVC **B** – PP | **C** – CPVC **K** – PVDF | | | | | | |
| Size[1] | **002** – 1/4" **010** – 1" **025** – 2-1/2" | **003** – 3/8" **012** – 1-1/4" **030** – 3" | **005** – 1/2" **015** – 1-1/2" **040** – 4" | **007** – 3/4" **020** – 2" **060** – 6" | | | | |
| Seals | **E** – EPDM | **V** – FKM (Viton®) | **N** – Nitrile | **A** – Aflas® | | | | |
| ChemFlare™ End Connecters for valves 3/8" to 1-1/4" | | | | | | | | |
| Material | **A** – PVC | **B** – PP | **C** – CPVC | **K** – PVDF | | | | |
| Tube Size[3] | **4N** – 1/4" | **6N** – 3/8" | **8N** – 1/2" | **12N** – 3/4" | **16N** – 1" | **20N** – 1-1/4" | | |
| Tube Nut | **–1** – includes nut | **Blank** – without nut | | | | | | |
| Ends | **S** – Socket | **T** – Threaded | **C** – Combo[2] | **F** – Flanged | **B** – Butt[3] | | | |

**Example:** Chemline Type 21 True Union Ball Valve, PVC, 1/2", with FPM (Viton®) seals, PVC ChemFlare™ end connectors, 1/2" tube size, including nuts.

[1] 1/4" is normally the 3/8" valve reduced. 6" is 4" valve with 6" end connections

[2] PVC and CPVC valves 1/2" to 2" are available as Combo (socket and threaded ends)

[3] Tube size must be equal or smaller than the valve size

[4] PP, PVDF and ECTFE (Halar®) metric butt fusion ends (1/2" to 4") connect to Chemline PP, PVDF and ECTFE (Halar®) piping systems

CHEMLINE PLASTICS
SUPERIOR FLOW SOLUTIONS

55 Guardsman Road, Thornhill, ON, L3T 6L2, Canada | ISO 9001:2015 Certified
1.800.930.2436 (CHEM) | fax.905.889.8553 | request@chemline.com | chemline.com

# CS-308-200 : Identification sheet

| | | | |
|---|---|---|---|
| VWTC PROJECT NUMBER: | 5000220043 | REV: | 4 |
| PROJECT NAME: | AEM MELIADINE - BPC UPGRADE | SUBMITTED TO (COMPANY): | AEM |
| ENGINEER: | CHRIS EL KHAZAKA | SUBMITTED TO (RESPONSIBLE) | |
| PROJECT MANAGER: | THOMAS SAVARY / BRUCE BORDES | PROJECT NUM REFERENCE.: | 6526-S-265-605 / OC-989680 |
| PHONE NUMBER: | 514-334-7230 | LOT NUMBER: | |

| SUPPLIER | EQPT CODE | EQPT TAG NO | DIA | DESCRIPTION | INFO 1 | INFO 2 | INFO 3 | APPLIC. | NOTE | REV |
|---|---|---|---|---|---|---|---|---|---|---|
| CHEMLINE | VANEPV300121 | 15-BA99-0592 | DIA: 13 mm (1/2") | MANUAL CONTROL VALVE | TYPE: NEEDLE VALVE \| 150 PSI, TEMP DEPENDENT//MANUFACTURER : CHEMLINE//MODEL : NGA005//CONNECTION TYPE : THREADED \| 13 mm (1/2")//BODY : PVC// SEAL \| SEAT :PTFE \| N/A// STEM : N/A | | | PH INSTRUMENTATION SKID #1202 | | 3 |
| CHEMLINE | VANEPV300121 | 15-BA99-1194 | DIA: 13 mm (1/2") | MANUAL CONTROL VALVE | TYPE: NEEDLE VALVE \| 150 PSI, TEMP DEPENDENT//MANUFACTURER : CHEMLINE//MODEL : NGA005//CONNECTION TYPE : THREADED \| 13 mm (1/2")//BODY : PVC// SEAL \| SEAT :PTFE \| N/A// STEM : N/A | | | PH INSTRUMENTATION SKID #0504 | | 3 |

**This page is intentionally left blank**

PDF Published March 1, 2013

# Needle Valves

CHEMLINE PLASTICS
SUPERIOR FLOW SOLUTIONS

Chemline N Series Needle Valves are designed for fine throttling of corrosive and ultrapure fluids at low flow rates. Because the seal material is PTFE, these valves are suitable for aggressive chemicals where similar valves with elastomer seals will not stand up.

PVC | CPVC | PPG[1]

SERIES: NG – Globe Body
NA – Angle Body

SIZES: 1/4", 3/8" & 1/2"

ENDS: Female NPT

STEM SEALS: PTFE

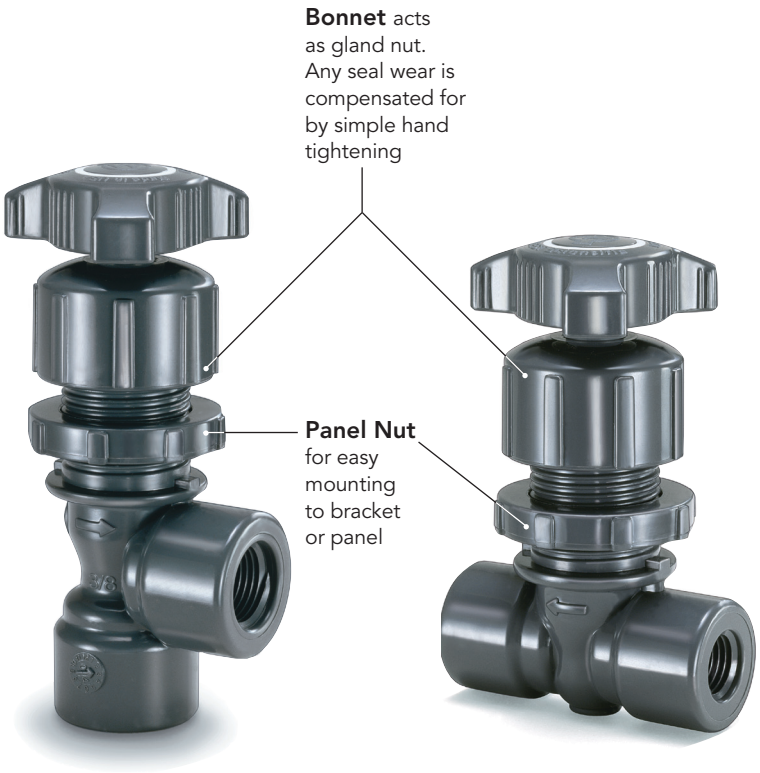


**Angle Body** **Globe Body**

## features

### Precise Control with Fine Adjustment

- Precision machined seat and matching ground needle tip along with a 24 pitch fine thread stem (five turns from closed to full-open) provides for excellent flow control. Better control of reagents can mean significant cost savings.

### High Chemical Resistance

- All parts are plastic or PTFE. No elastomers or metal parts are used.

### Lubrication Free

- No silicone or other lubricants are used

### Easy Maintenance

- Seal wear is compensated for by hand tightening the cap (gland). Valve can be serviced in-line. Simply unscrew bonnet to remove complete topworks for inspection or disassembly.

### Heavy Duty Construction

- Thick stems

[1] PPG=Glass Reinforced Polypropylene.

03/13 ©Chemline Plastics Limited 2013
Chemline is a registered trade mark of Chemline Plastics Limited

# Needle Valves

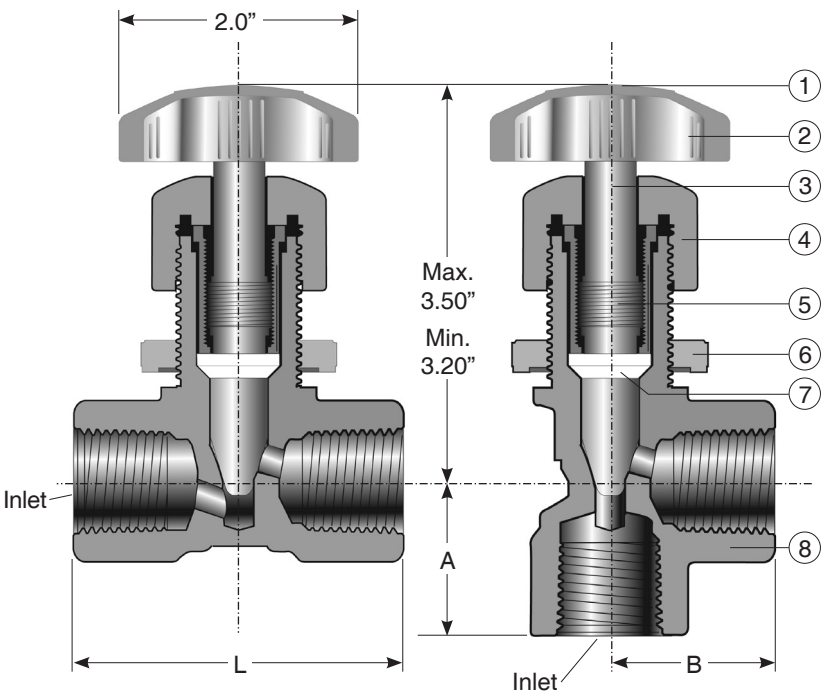


**Globe Body** **Angle Body**

## PARTS

| No. | Part | Pcs. | Materials |
|---|---|---|---|
| 1 | Ring Insert[1] | 1 | PVC |
| 2 | Handle | 1 | PVC, CPVC, PPG |
| 3 | Stem/Needle | 1 | PVC, CPVC, PPG |
| 4 | Bonnet | 1 | PVC, CPVC, PPG |
| 5 | Thread Insert | 1 | Nylon[2], PPG |
| 6 | Panel Nut | 1 | PVC, CPVC, PPG |
| 7 | Seal | 1 | PTFE |
| 8 | Body | 1 | PVC, CPVC, PPG |

[1] Standard colour for Ring Inserts: PVC=white, CPVC=black, PP=blue.
[2] Threaded insert is reinforced Nylon for PVC and CPVC valves, PPG for PPG valves.

## DIMENSIONS INCHES

## NET WEIGHTS LB.

## Cv VALUES

| Size | L | A | B | Globe | Angle | Outlet Orifice | PVC | CPVC | PPG | Globe Body | Angle Body |
|---|---|---|---|---|---|---|---|---|---|---|---|
| 1/4” | 2.31 | 1.16 | 1.17 | .187 | .250 | .187 | .25 | .27 | .27 | .31 | .43 |
| 3/8” | 2.39 | 1.19 | 1.21 | .187 | .250 | .187 | .25 | .27 | .27 | .31 | .43 |
| 1/2” | 2.65 | 1.31 | 1.32 | .218 | .250 | .218 | .25 | .27 | .27 | .62 | .78 |

## WORKING PRESSURES PSI

| | PVC | CPVC | | | PPG | | |
|---|---|---|---|---|---|---|---|
| Size | 0-50°C 32-122°F | 0-65°C 32-149°F | 80°C 176°F | 90°C 194°F | –20-30°C –4-86°F | 60°C 140°F | 75°C 167°F |
| 1/4” | 150 | 150 | 100 | 60 | 150 | 100 | 60 |
| 3/8” | 150 | 150 | 100 | 60 | 150 | 100 | 60 |
| 1/2” | 150 | 150 | 100 | 60 | 150 | 100 | 60 |

**Temperature Ranges: PVC** 0 to 60°C (32 to 140°F), **CPVC** 0 to 95°C (32 to 203°F), **PPG** –20 to 75°C (–4 to 167°F)

## Sample Specification

All (PVC/CPVC/PPG) Needle Valves 1/4” to 1/2” shall be Chemline N Series (Globe/Angle) body with PTFE seal and no elastomers. Valves will have 24 pitch stem threads for fine control and have panel mounting capability.

## ORDERING EXAMPLE

| Chemline Needle Valves | | | N | G | A | 005 |
|---|---|---|---|---|---|---|
| Body Pattern | **G** – Globe | **A** – Angle | | | | |
| Valve Material | **A** – PVC | **B** – PPG | **C** – CPVC | | | |
| Size | **002** – 1/4” | **003** – 3/8” | **005** – 1/2” | | | |

**Example:** Needle Valve, Globe Pattern, PVC, 1/2”, threaded ends.

## VACUUM RATING

- 29.9 inches mercury

## OPTIONS

- Black, white, blue or red rings are available for colour coding

CHEMLINE PLASTICS
SUPERIOR FLOW SOLUTIONS

55 Guardsman Road, Thornhill, ON, L3T 6L2, Canada | ISO 9001:2008 Certified
tel.905.889.7890 | fax.905.889.8553 | request@chemline.com | chemline.com

| | |
|---|---|
| **Project name:** | MELIADINE-BPC UPGRADE |
| **Project#:** | 5000220043 |
| **Document #:** | SPK_0001_MISC_VWT |
| **by:** | CEK |
| **chkd:** | ED |
| **appvd:** | TS |

# INSTRUMENTATION

# TURBIDITY INSTRUMENTATION SKID #0503/#0901/#0902

**OIM manual section:** 4.2.11.6

REFER TO 5000220043_GA_0008_SKG_VWT

**This page is intentionally left blank**

# CS-301-100 : Identification sheet

| | | | |
|---|---|---|---|
| VWTC PROJECT NUMBER: | 5000220043 | REV: | 4 |
| PROJECT NAME: | AEM MELIADINE - BPC UPGRADE | SUBMITTED TO (COMPANY): | AEM |
| ENGINEER: | CHRIS EL KHAZAKA | SUBMITTED TO (RESPONSIBLE) | |
| PROJECT MANAGER: | THOMAS SAVARY / BRUCE BORDES | PROJECT NUM REFERENCE.: | 6526-S-265-605 / OC-989680 |
| PHONE NUMBER: | 514-334-7230 | LOT NUMBER: | |

| SUPPLIER | EQPT CODE | EQPT TAG NO | DIA | DESCRIPTION | INFO 1 | INFO 2 | INFO 3 | APPLIC. | NOTE | REV |
|---|---|---|---|---|---|---|---|---|---|---|
| CHEMLINE | VABLPV200249 | 15-BA99-1196 | DIA: 13 mm (1/2") | SKID INLET ISOLATION VALVE | TYPE: BALL VALVE//MANUFACTURER : CHEMLINE//MODEL : Type21-A-005-E-C//CONNECTION TYPE : COMBO \| 13 mm (1/2")//BODY : PVC (ASTM D1784)// SEAL \| SEAT :PTFE \| EPDM// STEM : PVC | | | TURBIDITY INSTRUMENTATION SKID #0503 | | 3 |
| CHEMLINE | VABLPV200249 | 15-BA99-1198 | DIA: 13 mm (1/2") | SKID OUTLET ISOLATION VALVE | TYPE: BALL VALVE//MANUFACTURER : CHEMLINE//MODEL : Type21-A-005-E-C//CONNECTION TYPE : COMBO \| 13 mm (1/2")//BODY : PVC (ASTM D1784)// SEAL \| SEAT :PTFE \| EPDM// STEM : PVC | | | TURBIDITY INSTRUMENTATION SKID #0503 | | 3 |
| CHEMLINE | VABLPV200249 | 15-BA99-1492 | DIA: 13 mm (1/2") | SKID INLET ISOLATION VALVE | TYPE: BALL VALVE//MANUFACTURER : CHEMLINE//MODEL : Type21-A-005-E-C//CONNECTION TYPE : COMBO \| 13 mm (1/2")//BODY : PVC (ASTM D1784)// SEAL \| SEAT :PTFE \| EPDM// STEM : PVC | | | TURBIDITY INSTRUMENTATION SKID #0901 | | 3 |

| SUPPLIER | EQPT CODE | EQPT TAG NO | DIA | DESCRIPTION | INFO 1 | INFO 2 | INFO 3 | APPLIC. | NOTE | REV |
|---|---|---|---|---|---|---|---|---|---|---|
| CHEMLINE | VABLPV200249 | 15-BA99-1494 | DIA: 13 mm (1/2") | SKID OUTLET ISOLATION VALVE | TYPE: BALL VALVE//MANUFACTURER : CHEMLINE//MODEL : Type21-A-005-E-C//CONNECTION TYPE : COMBO \| 13 mm (1/2")//BODY : PVC (ASTM D1784)// SEAL \| SEAT :PTFE \| EPDM// STEM : PVC | | | TURBIDITY INSTRUMENTATION SKID #0901 | | 3 |
| CHEMLINE | VABLPV200249 | 15-BA99-1496 | DIA: 13 mm (1/2") | SKID INLET ISOLATION VALVE | TYPE: BALL VALVE//MANUFACTURER : CHEMLINE//MODEL : Type21-A-005-E-C//CONNECTION TYPE : COMBO \| 13 mm (1/2")//BODY : PVC (ASTM D1784)// SEAL \| SEAT :PTFE \| EPDM// STEM : PVC | | | TURBIDITY INSTRUMENTATION SKID #0902 | | 3 |
| CHEMLINE | VABLPV200249 | 15-BA99-1498 | DIA: 13 mm (1/2") | SKID OUTLET ISOLATION VALVE | TYPE: BALL VALVE//MANUFACTURER : CHEMLINE//MODEL : Type21-A-005-E-C//CONNECTION TYPE : COMBO \| 13 mm (1/2")//BODY : PVC (ASTM D1784)// SEAL \| SEAT :PTFE \| EPDM// STEM : PVC | | | TURBIDITY INSTRUMENTATION SKID #0902 | | 3 |

PDF Published November 23, 2020

# Type 21 True Union Ball Valves

CHEMLINE PLASTICS
SUPERIOR FLOW SOLUTIONS

The Chemline **Type 21** True Union Ball valve incorporates state of the art features for long term performance. This is a full port, full blocking True Union valve pressure rated at 16 bar (230 psi)[3]. Double stem o-rings and Safety Shear stem design provide for a high degree of safety on hazardous fluid applications. All sizes have an ISO standard actuator mounting platform integral to the valve body. This provides for sturdy and secure mounting of pneumatic or electric actuators.

PVC | CPVC | PP | PVDF

CRN Registered Consult Chemline

NSF[4] Certified to NSF/ANSI 61

SERIES: Type 21

SIZES: 3/8" – 4"

ENDS: Socket, Threaded, Combo[6], Flanged, Butt[1] or ChemFlare™

SEATS: PTFE

SEALS[2]: EPDM, FKM (Viton®)




## features

### Pressure rated to 230 psi[3]
- Provides a high factor of safety

### Integral Actuator Mounting Platform
- Actuation is easy. Electric or pneumatic actuators may be mounted in the field.

### Full Port
- High capacity and low pressure drops

### Fully Blocking
- Downstream union nut may be safely disassembled for piping maintenance while valve is closed off under full system pressure

### Built-In Spanner Wrench
- Top of the handle is designed to be used as a tool for accessing internal parts

### Safety Shear Stem Design
- Stem has double o-rings
- Designed to hold full pressure even if stem breaks due to excessive torque

### High Chemical Resistant Material
- PVC and CPVC compounds have an "A" chemical resistance rating as per ASTM D-1784. They have outperformed other PVC and CPVC compounds on aggressive chemicals.

### CRN Registration numbers by province
- Ontario: OC11045.5
- Newfoundland: OC11045.50
- Saskatchewan/Manitoba/Quebec: OC11045.56
- New Brunswick: OC11045.57
- Nova Scotia: OC11045.58
- P.E.I.: OC11045.59
- British Columbia: not required
- Alberta: not required[5]

[1] Butt ends for fusion to Chemline metric PP, PVDF or ECTFE (Halar®) piping.
[2] Other materials are available.
[3] PVC, CPVC and PVDF 1/2" to 2" are rated at 230 psi; 2-1/2" to 4" and all size PP valves are rated at 150 psi at 20°C.
[4] PVC valves with EPDM or FKM (Viton®) seals are certified under NSF/ANSI Standard 61 for contact with drinking water.
[5] Not required for non-expandable fluids.
[6] PVC and CPVC valves 1/2" to 2" are available as Combo (threaded and socket ends).

11/20 ©Chemline Plastics Limited 2020
Chemline is a registered trade mark of Chemline Plastics Limited

# Type 21 True Union Ball Valves

## Features

**Double Stem O-Rings – Safety Shear Design**

- Upper o-ring groove is deeper than lower. In case of excessive stem torque, stem will shear at the upper groove, leaving the inner o-ring intact to seal against full line pressure.

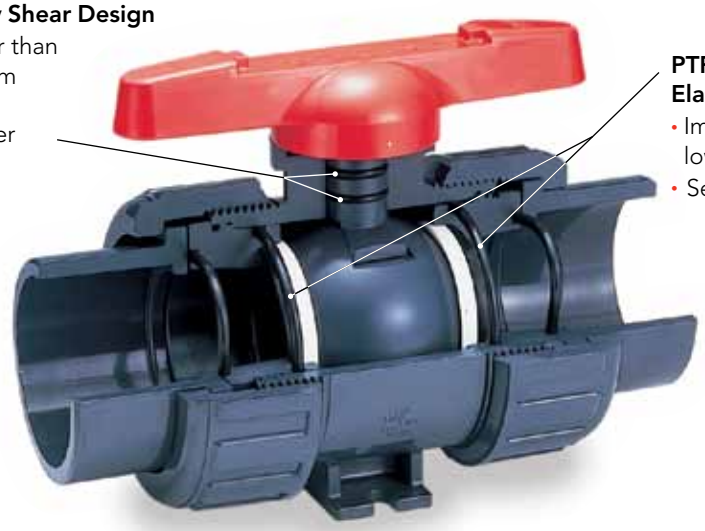

**PTFE Seats have Elastomer Cushions**

- Improved sealing while lowering stem torques
- Self adjusts for seat wear

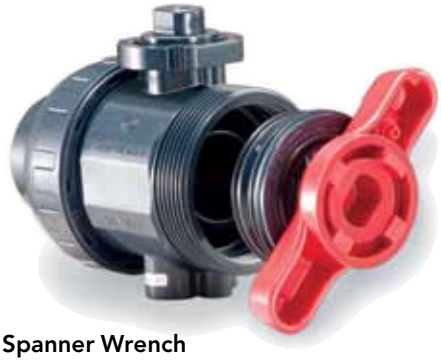

**Built in Spanner Wrench**

- For removing or tightening the seat carrier
- All parts are replaceable



**Integral Actuator Mounting Platform**

- Actuation is easy. Electric or pneumatic actuators may be mounted in the field. Simply pull off the handle to reveal a standard ISO 5211 mounting platform which accepts bolt-on hardware.




**Fully Blocking**

- Downstream pipe may be removed while upstream side is still pressurized. This may be done with valve installed in either direction.



**Base Mounting Pad**

- Optional threaded inserts allow valves to be securely anchored
- Supplied standard with actuated valves

## Options + Accessories



### ChemFlare™ Ends

- For connection to PFA tube. Leak-free connections for difficult services such as sodium hypochlorite



### One-piece moulded PVC and CPVC 6" socket ends

- Allows installation of 4" valve in 6" line
- Factory moulded, elimates cementing separate reducer and coupling
- Fixed to valve mechanically just like the one-piece moulded factory flanges



### Optional Lock-out Handle & Hasp

- To prevent unauthorized operation of the valve during maintenance shut-downs
- Padlocks go through holes in hasp



### Gear Operators

- Deluxe FRP construction
- IP67 enclosure resists short term immersion



### Chain Wheel Operators

- For overhead operation, with 7' of chain drop
- Cast iron or stainless steel

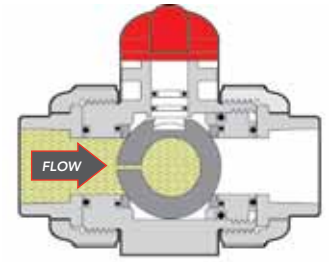


### Vented Ball

- Recommended for all sodium hypochlorite services
- Valve shown in closed position



### Valve Tags

- Stainless steel or plastic



### Different Colour Handles

- Choose a handle colour other than standard red for colour coding different services



### Municipal Operating Nut

- 2" square nut for operating valves below grade using a standard municipal "key"
- Stainless Steel for corrosion resistance



### Manual Limit Switch

- Electrical feedback of manual valve position
- NEMA 4X enclosure, position indicator beacon, 2x SPDT or proximity switches, stainless steel hardware



### Shaft Extensions

- Different materials and lengths are available
- Several designs:
  - with no housing for indoors
  - with waterproofed PVC housing for indoors or outdoors
  - with stainless steel housing for buried or actuated services

# Type 21 True Union Ball Valves

## Electric + Pneumatic Actuation

- A complete range of actuators and control accessories are available, mounted to valves using PPG plastic brackets and stainless steel couplings. Refer to separate data sheets.
- All actuators are CSA approved, have NEMA 4X enclosures, stainless steel hardware and permanently lubricated gear train



**ERS Series Electric**
- Type 21 ball valves up to 2"
- 180 in-lbs torque
- On-Off (3/2-wire), adjustable travel
- Visual feedback

**E Series Electric**
- Type 21 ball valves up to 4"
- Up to 885 in-lbs torque
- On-Off (3/2-wire), adjustable travel. Optional: failsafe, 3 position modulating
- Visual feedback and feedback switches. Optional: extra switches, feedback potentiometer and feedback transmitter



**V Series Electric**
(with optional Local Control Station)
- Type 21 ball valves up to 6"
- up to 8,850 in-lbs torque
- On-Off (2/3-wire), adjustable travel. Optional: failsafe, modulating, BUS
- Visual feedback, 2 feedback switches. Optional: 2 extra feedback switches, feedback potentiometer and feedback transmitter



**PA Series Pneumatic**
- Type 21 ball valves up to 6"
- up to 10,660 in-lbs torque
- industrial process submerged
- bleach/water washdown
- Rilsan-coated aluminum



**PP Series Pneumatic**
- Type 21 ball valves up to 6"
- up to 1,335 in-lbs torque
- industrial process with minimal use of metal
- Glass-filled Polyamide

### OTHER OPTIONS & ACCESSORIES

- **Alternate O-Ring Seals**
- **Stem Extensions** made to any length
- **Limit Switches** – for open and/or closed position indication
- **Municipal Operating Nut**
- **Lubrication-free Valves** – factory clean room assembled
- **Vented Ball** – for sodium hypochlorite applications

# Type 21 True Union Ball Valves

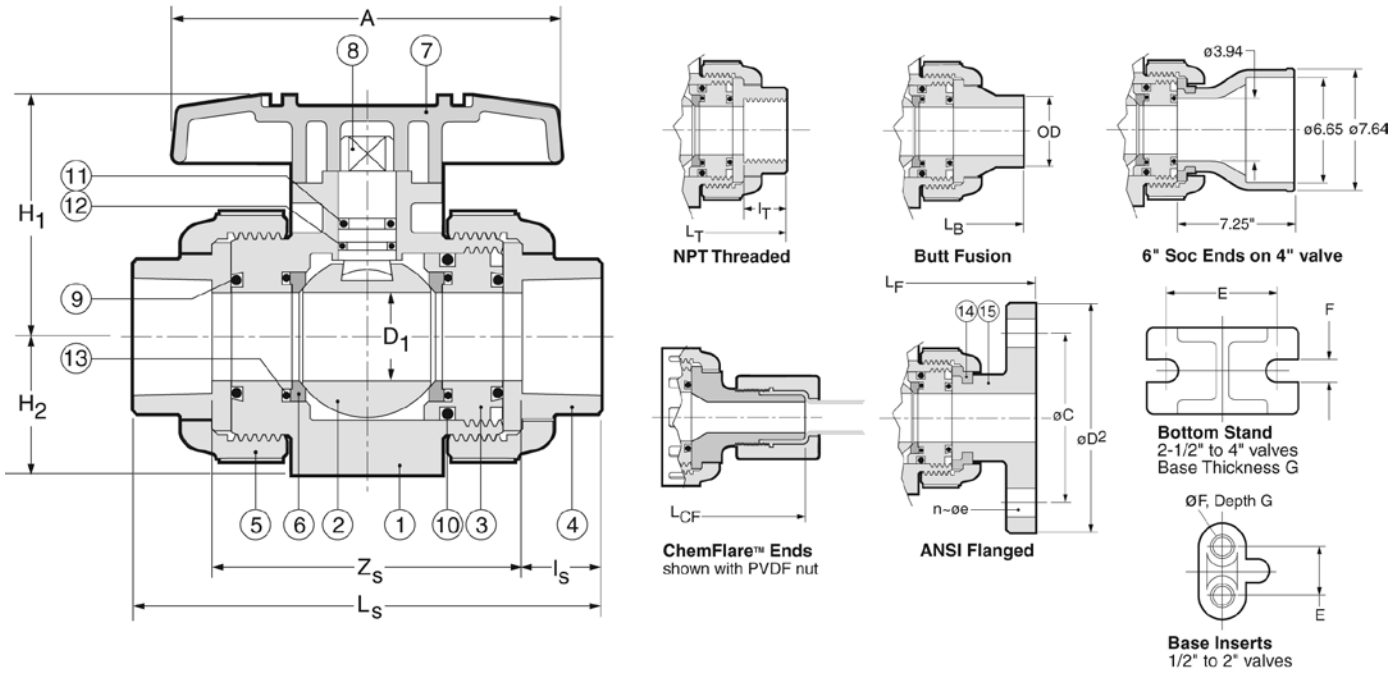


## PARTS

▲ Recommended Spare Parts

| No. | Part | Pcs. | Materials |
|---|---|---|---|
| 1 | Body | 1 | PVC, CPVC, PP, PVDF |
| 2 | Ball | 1 | PVC, CPVC, PP, PVDF |
| 3 | Carrier[1] | 1/2 | PVC, CPVC, PP, PVDF |
| 4 | End Connector | 2 | PVC, CPVC, PP, PVDF |
| 5 | Union Nut | 2 | PVC, CPVC, PP, PVDF |
| 6▲ | Ball Seat | 2 | PTFE |
| 7 | Handle | 1 | ABS |

[1] 1 carrier for sizes 1/2" to 2", 2 carriers for sizes 2-1/2" to 4"
[2] EPDM seals standard with PVC, CPVC, PP; FKM (Viton®) with PVDF valves
[3] 2 pcs 1/2" to 2", 6 pcs 2-1/2" to 4"

## PARTS

▲ Recommended Spare Parts

| No. | Part | Pcs. | Materials |
|---|---|---|---|
| 8 | Stem | 1 | PVC, CPVC, PP, PVDF |
| 9▲ | Face O-Ring[2] | 2 | EPDM, FKM (Viton®) |
| 10▲ | Carrier O-Ring[2] | 2 | EPDM, FKM (Viton®) |
| 11▲ | Upper Thicker Stem O-Ring[2] | 1 | EPDM, FKM (Viton®) |
| 12▲ | Lower Thinner Stem O-Ring[2] | 1 | EPDM, FKM (Viton®) |
| 13 | Seat Cushion[2] | 2 | EPDM, FKM (Viton®) |
| 14 | Flange Retainer[3] | 2/6 | PVDF |
| 15 | Flange | 2 | PVC, CPVC, PP, PVDF |

## DIMENSIONS INCHES

| | | | | | End Connections | | | | | | | | | | | | | | | | |
|---|---|---|---|---|---|---|---|---|---|---|---|---|---|---|---|---|---|---|---|---|---|
| | D | | | | Socket | | | Threaded | | Factory Flanged | | | | | Butt | | ChemFlare™ | | Valve Base | | |
| Size | Bore | A | $H_1$ | $H_2$ | $L_S$ | $Z_S$ | $l_S$ | $l_T$ | $L_T$ | $L_F$ | $D_2$ | C | n | e | $L_B$ | OD | $L_{CF}$ | Tube[4] | E | F[5] | G |
| 1/2" | .59 | 3.6 | 2.03 | 1.14 | 4.45 | 2.70 | .875 | .64 | 4.02 | 5.63 | 3.50 | 2.38 | 4 | .62 | 4.88 | .79 | 6.12 | 1/2" | .75 | .29 | .43 |
| 3/4" | .79 | 3.9 | 2.34 | 1.38 | 5.08 | 3.08 | 1.00 | .65 | 4.72 | 6.77 | 3.88 | 2.75 | 4 | .62 | 5.67 | .98 | 6.52 | 3/4" | .75 | .29 | .43 |
| 1" | .98 | 4.3 | 2.68 | 1.54 | 5.75 | 3.50 | 1.13 | .81 | 5.16 | 7.36 | 4.25 | 3.12 | 4 | .62 | 6.06 | 1.26 | 7.26 | 1" | .75 | .29 | .43 |
| 1-1/4" | 1.22 | 4.8 | 3.17 | 1.85 | 6.46 | 5.21 | 1.25 | .85 | 5.91 | 7.48 | 4.62 | 3.50 | 4 | .62 | 6.85 | 1.57 | 9.58 | 1-1/4" | 1.18 | .35 | .59 |
| 1-1/2" | 1.57 | 5.2 | 3.50 | 2.17 | 7.24 | 4.49 | 1.38 | .85 | 6.42 | 8.35 | 5.00 | 3.88 | 4 | .62 | 7.64 | 1.97 | – | – | 1.18 | .35 | .59 |
| 2" | 2.01 | 6.3 | 4.02 | 2.60 | 8.23 | 5.23 | 1.50 | 1.90 | 7.76 | 9.21 | 6.00 | 4.75 | 4 | .75 | 8.82 | 2.48 | – | – | 1.18 | .35 | .59 |
| 2-1/2" | 2.28 | 7.87 | 4.96 | 2.83 | 9.45 | 5.95 | 1.75 | 1.21 | 8.46 | 10.20 | 7.00 | 5.49 | 4 | .75 | 9.72 | 2.95 | – | – | 1.89 | .35 | .23 |
| 3" | 2.70 | 9.45 | 5.51 | 3.35 | 11.10 | 7.35 | 1.88 | 1.30 | 10.39 | 11.97 | 7.50 | 6.00 | 4 | .75 | 11.61 | 3.54 | – | – | 2.17 | .43 | .28 |
| 4" | 3.54 | 11.81 | 7.01 | 4.33 | 13.88 | 9.87 | 2.00 | 1.38 | 14.17 | 14.65 | 9.00 | 7.50 | 8 | .75 | 14.76 | 4.33 | – | – | 2.56 | .43 | .32 |
| 6"[6] | 3.54 | 11.81 | 7.01 | 4.33 | 23.15 | 17.09 | 3.03 | – | – | – | – | – | – | – | – | – | – | – | 2.56 | .43 | .32 |
| 6"[7] | 3.54 | 11.81 | 7.01 | 4.33 | 27.22 | 21.21 | 3.03 | – | – | – | – | – | – | – | – | – | – | – | 2.56 | .43 | .32 |

[4] ChemFlare™ ends are available for reduced tube sizes down to 1/4"
[5] Optional threaded inserts: 1/2" to 1" valves – UNC 1/4"-20; 1-1/4" to 2" valves – UNC 5/16"-18. 'Recoil' brand inserts require drilling before insertion.
[6] 6" with factory moulded socket ends
[7] 6" with fabricated socket ends

# Type 21 True Union Ball Valves

## WORKING PRESSURES PSI, Water, Non-Shock

## VACUUM RATING • 29.9 inches mercury

| Size | PVC | | | CPVC | | | | | | PP | | | PVDF | | | | |
|---|---|---|---|---|---|---|---|---|---|---|---|---|---|---|---|---|---|
| | 20°C 68°F | 40°C 104°F | 50°C 122°F | 20°C 68°F | 40°C 104°F | 50°C 122°F | 60°C 140°F | 80°C 176°F | 90°C 194°F | 20°C 68°F | 60°C 140°F | 80°C 176°F | 20°C 68°F | 40°C 104°F | 60°C 140°F | 80°C 176°F | 100°C 212°F |
| 1/2"– 2" | 230 | 165 | 150 | 230 | 165 | 150 | 120 | 75 | 55 | 150 | 85 | 55 | 230 | 185 | 150 | 110 | 85 |
| 2-1/2"– 4" | 150 | 150 | 150 | 150 | 150 | 150 | 120 | 75 | 55 | 150 | 70 | 40 | 150 | 150 | 150 | 110 | 85 |

**Temperature Ranges: PVC** 0 to 50°C (32 to 122°F), **CPVC** 0 to 90°C (32 to 194°F), **PP** –20 to 80°C (–4 to 176°F), **PVDF** –20 to 100°C (–20 to 212°F)

## WEIGHTS LB. THREADED or SOCKET

## WEIGHTS LB. FLANGED

| Size | PVC | CPVC | PP | PVDF | PVC | CPVC | PP | PVDF |
|---|---|---|---|---|---|---|---|---|
| 1/2" | 0.4 | 0.4 | 0.4 | 0.4 | 0.9 | 0.9 | 0.7 | 1.1 |
| 3/4" | 0.7 | 0.7 | 0.7 | 0.9 | 1.3 | 1.5 | 1.1 | 1.5 |
| 1" | 0.9 | 1.1 | 0.9 | 1.1 | 1.8 | 2.0 | 1.5 | 2.2 |
| 1-1/4" | 1.5 | 1.5 | 1.3 | 1.8 | 2.6 | 2.9 | 2.0 | 3.3 |
| 1-1/2" | 2.4 | 2.6 | 1.5 | 2.9 | 3.7 | 4.0 | 2.6 | 4.4 |
| 2" | 4.0 | 4.4 | 2.6 | 4.9 | 5.5 | 6.0 | 4.0 | 8.2 |
| 2-1/2" | 5.1 | 5.5 | 3.7 | 6.2 | 7.3 | 7.7 | 5.3 | 8.8 |
| 3" | 8.2 | 8.8 | 5.5 | 9.9 | 10.1 | 11.0 | 7.5 | 12.6 |
| 4" | 19.4 | 21.8 | 13.2 | 24.9 | 21.6 | 23.4 | 15.4 | 26.7 |

## Cv VALUES VS. BALL ANGLE

| Size | 0% | 25% | 50% | 75% | 100% |
|---|---|---|---|---|---|
| 1/2" | 0 | 0.35 | 1.3 | 5.5 | 14. |
| 3/4" | 0 | 0.73 | 2.8 | 11.5 | 29. |
| 1" | 0 | 1.2 | 4.5 | 18.6 | 47. |
| 1-1/4" | 0 | 1.8 | 6.8 | 28.4 | 72. |
| 1-1/2" | 0 | 3.9 | 14.7 | 61.2 | 155. |
| 2" | 0 | 4.8 | 18.0 | 75.0 | 190. |
| 2-1/2" | 0 | 9.1 | 34.7 | 144.0 | 365. |
| 3" | 0 | 10.2 | 39.0 | 162.0 | 410. |
| 4" | 0 | 17.0 | 64.6 | 269.0 | 680. |

## SAMPLE SPECIFICATION

1. All True Union Ball Valves in PVC, CPVC, PP or PVDF shall be Chemline Type 21 or equal sizes 1/2" to 2" in PVC, CPVC, and PVDF rated at 230 psi and in PP 150 psi maximum working pressure. Sizes 2-1/2", 3" and 4" rated at 150 psi maximum working pressure with EPDM or FKM (Viton®) seals. Ball seats shall be PTFE with elastomer cushions for closure with minimum stem torques.
2. All valves will have Safety Shear stem design, blowout-proof with double o-rings for safety. The top o-ring groove shall be deeper so that if the stem breaks off under excessive torque the lower o-ring will remain intact and the valve will hold pressure.
3. All valves shall be full port and two-way blocking design.
4. All valves will be CRN (Canadian Registration Number) registered with TSSA.
5. PVC valves with EPDM or FKM (Viton®) seals shall be certified under NSF/ANSI Standard 61 for contact with drinking water.
6. All valves shall have chemical resistant labels permanently marked with manufacturing number to provide production level traceability.
7. PVC compound shall have an ASTM cell classification 12454-A with a minimum suffix "A" designation for chemical resistance as per ASTM D-1784 (CSA report LO 4000-172).
8. CPVC compound shall have an ASTM cell classification 23567-A with a minimum suffix "A" designation for chemical resistance as per ASTM D-1784.
9. PP material will conform to ASTM D-4101 PP 021 B 67272 material requirements.
10. PVDF material shall be unpigmented conforming to ASTM D-3222 material requirements and to be USDA Title 21 Chapter 1 Part 177. 2510 requirements for contact with food.
11. Socket ends in PVC and CPVC shall be Schedule 80 and conform to ASTM D-2467.
12. Threaded ends shall be Schedule 80 and conform to ASTM D-2464.
13. Butt fusion ends in PP or PVDF will be compatible with Chemline PP or PVDF metric piping systems.
14. Flanged ends shall be ANSI Class 150 one-piece factory moulded (not fabricated) to ensure maximum strength and close tolerance end to end dimensions.

## ORDERING EXAMPLE

| | | | | | | for ChemFlare™ ends only | | all other ends |
|---|---|---|---|---|---|---|---|---|
| **Chemline True Union Ball Valves** | **21** | **A** | **005** | **E** | **V** | **–A** | **8N** | **–1** |
| Body Material | **A** – PVC **B** – PP | **C** – CPVC **K** – PVDF | | | | | | |
| Size[1] | **002** – 1/4" **010** – 1" **025** – 2-1/2" | **003** – 3/8" **012** – 1-1/4" **030** – 3" | **005** – 1/2" **015** – 1-1/2" **040** – 4" | **007** – 3/4" **020** – 2" **060** – 6" | | | | |
| Seals | **E** – EPDM | **V** – FKM (Viton®) | **N** – Nitrile | **A** – Aflas® | | | | |
| ChemFlare™ End Connecters for valves 3/8" to 1-1/4" | | | | | | | | |
| Material | **A** – PVC | **B** – PP | **C** – CPVC | **K** – PVDF | | | | |
| Tube Size[3] | **4N** – 1/4" | **6N** – 3/8" | **8N** – 1/2" | **12N** – 3/4" | **16N** – 1" | **20N** – 1-1/4" | | |
| Tube Nut | **–1** – includes nut | **Blank** – without nut | | | | | | |
| Ends | **S** – Socket | **T** – Threaded | **C** – Combo[2] | **F** – Flanged | **B** – Butt[3] | | | |

**Example:** Chemline Type 21 True Union Ball Valve, PVC, 1/2", with FPM (Viton®) seals, PVC ChemFlare™ end connectors, 1/2" tube size, including nuts.

[1] 1/4" is normally the 3/8" valve reduced. 6" is 4" valve with 6" end connections

[2] PVC and CPVC valves 1/2" to 2" are available as Combo (socket and threaded ends)

[3] Tube size must be equal or smaller than the valve size

[4] PP, PVDF and ECTFE (Halar®) metric butt fusion ends (1/2" to 4") connect to Chemline PP, PVDF and ECTFE (Halar®) piping systems

CHEMLINE PLASTICS
SUPERIOR FLOW SOLUTIONS

55 Guardsman Road, Thornhill, ON, L3T 6L2, Canada | ISO 9001:2015 Certified
1.800.930.2436 (CHEM) | fax.905.889.8553 | request@chemline.com | chemline.com

# CS-308-200 : Identification sheet

| | | | |
|---|---|---|---|
| VWTC PROJECT NUMBER: | 5000220043 | REV: | 4 |
| PROJECT NAME: | AEM MELIADINE - BPC UPGRADE | SUBMITTED TO (COMPANY): | AEM |
| ENGINEER: | CHRIS EL KHAZAKA | SUBMITTED TO (RESPONSIBLE) | |
| PROJECT MANAGER: | THOMAS SAVARY / BRUCE BORDES | PROJECT NUM REFERENCE.: | 6526-S-265-605 / OC-989680 |
| PHONE NUMBER: | 514-334-7230 | LOT NUMBER: | |

| SUPPLIER | EQPT CODE | EQPT TAG NO | DIA | DESCRIPTION | INFO 1 | INFO 2 | INFO 3 | APPLIC. | NOTE | REV |
|---|---|---|---|---|---|---|---|---|---|---|
| CHEMLINE | VANEPV300121 | 15-BA99-1197 | DIA: 13 mm (1/2") | MANUAL CONTROL VALVE | TYPE: NEEDLE VALVE \| 150 PSI, TEMP DEPENDENT//MANUFACTURER : CHEMLINE//MODEL : NGA005//CONNECTION TYPE : THREADED \| 13 mm (1/2")//BODY : PVC// SEAL \| SEAT :PTFE \| N/A// STEM : N/A | | | TURBIDITY INSTRUMENTATION SKID #0503 | | 3 |
| CHEMLINE | VANEPV300121 | 15-BA99-1493 | DIA: 13 mm (1/2") | MANUAL CONTROL VALVE | TYPE: NEEDLE VALVE \| 150 PSI, TEMP DEPENDENT//MANUFACTURER : CHEMLINE//MODEL : NGA005//CONNECTION TYPE : THREADED \| 13 mm (1/2")//BODY : PVC// SEAL \| SEAT :PTFE \| N/A// STEM : N/A | | | TURBIDITY INSTRUMENTATION SKID #0901 | | 3 |
| CHEMLINE | VANEPV300121 | 15-BA99-1497 | DIA: 13 mm (1/2") | MANUAL CONTROL VALVE | TYPE: NEEDLE VALVE \| 150 PSI, TEMP DEPENDENT//MANUFACTURER : CHEMLINE//MODEL : NGA005//CONNECTION TYPE : THREADED \| 13 mm (1/2")//BODY : PVC// SEAL \| SEAT :PTFE \| N/A// STEM : N/A | | | TURBIDITY INSTRUMENTATION SKID #0902 | | 3 |

**This page is intentionally left blank**

PDF Published March 1, 2013

# Needle Valves

CHEMLINE PLASTICS
SUPERIOR FLOW SOLUTIONS

Chemline N Series Needle Valves are designed for fine throttling of corrosive and ultrapure fluids at low flow rates. Because the seal material is PTFE, these valves are suitable for aggressive chemicals where similar valves with elastomer seals will not stand up.

PVC | CPVC | PPG[1]

SERIES: NG – Globe Body
NA – Angle Body

SIZES: 1/4", 3/8" & 1/2"

ENDS: Female NPT

STEM SEALS: PTFE

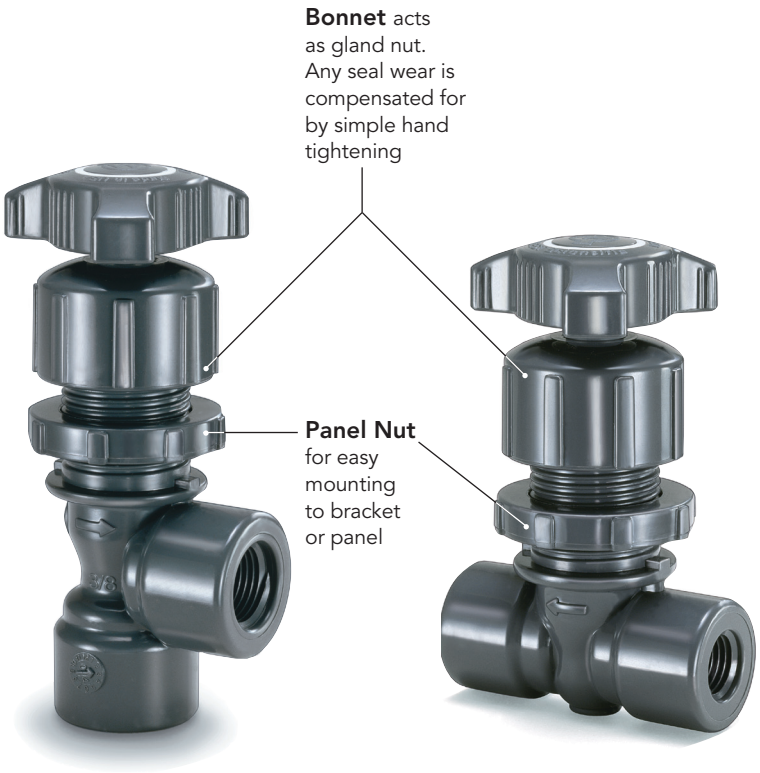


**Angle Body** **Globe Body**

## features

### Precise Control with Fine Adjustment

- Precision machined seat and matching ground needle tip along with a 24 pitch fine thread stem (five turns from closed to full-open) provides for excellent flow control. Better control of reagents can mean significant cost savings.

### High Chemical Resistance

- All parts are plastic or PTFE. No elastomers or metal parts are used.

### Lubrication Free

- No silicone or other lubricants are used

### Easy Maintenance

- Seal wear is compensated for by hand tightening the cap (gland). Valve can be serviced in-line. Simply unscrew bonnet to remove complete topworks for inspection or disassembly.

### Heavy Duty Construction

- Thick stems

[1] PPG=Glass Reinforced Polypropylene.

03/13 ©Chemline Plastics Limited 2013
Chemline is a registered trade mark of Chemline Plastics Limited

# Needle Valves

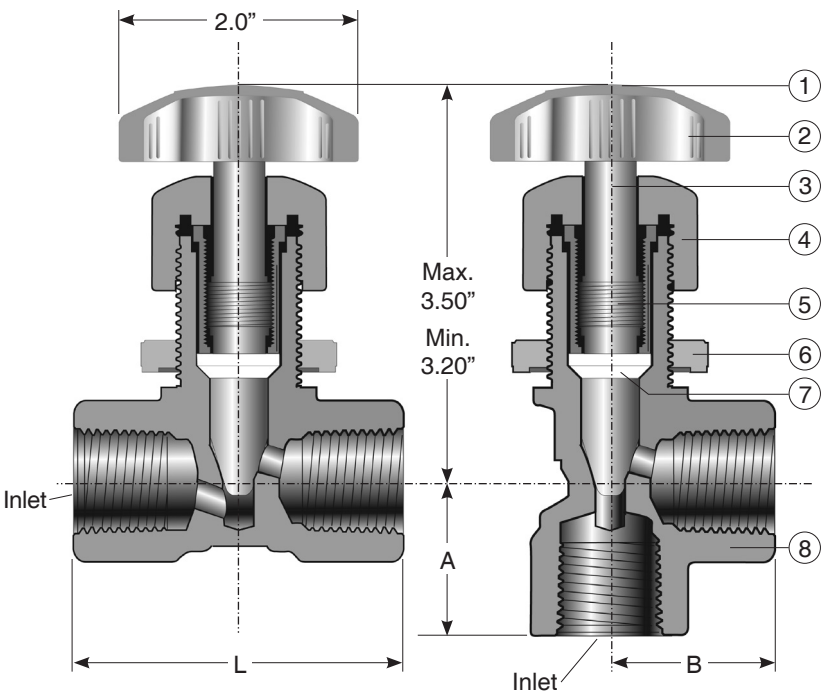


**Globe Body** **Angle Body**

## PARTS

| No. | Part | Pcs. | Materials |
|---|---|---|---|
| 1 | Ring Insert[1] | 1 | PVC |
| 2 | Handle | 1 | PVC, CPVC, PPG |
| 3 | Stem/Needle | 1 | PVC, CPVC, PPG |
| 4 | Bonnet | 1 | PVC, CPVC, PPG |
| 5 | Thread Insert | 1 | Nylon[2], PPG |
| 6 | Panel Nut | 1 | PVC, CPVC, PPG |
| 7 | Seal | 1 | PTFE |
| 8 | Body | 1 | PVC, CPVC, PPG |

[1] Standard colour for Ring Inserts: PVC=white, CPVC=black, PP=blue.
[2] Threaded insert is reinforced Nylon for PVC and CPVC valves, PPG for PPG valves.

## DIMENSIONS INCHES

## NET WEIGHTS LB.

## Cv VALUES

| Size | L | A | B | Globe | Angle | Outlet Orifice | PVC | CPVC | PPG | Globe Body | Angle Body |
|---|---|---|---|---|---|---|---|---|---|---|---|
| 1/4” | 2.31 | 1.16 | 1.17 | .187 | .250 | .187 | .25 | .27 | .27 | .31 | .43 |
| 3/8” | 2.39 | 1.19 | 1.21 | .187 | .250 | .187 | .25 | .27 | .27 | .31 | .43 |
| 1/2” | 2.65 | 1.31 | 1.32 | .218 | .250 | .218 | .25 | .27 | .27 | .62 | .78 |

## WORKING PRESSURES PSI

| | PVC | CPVC | | | PPG | | |
|---|---|---|---|---|---|---|---|
| Size | 0-50°C 32-122°F | 0-65°C 32-149°F | 80°C 176°F | 90°C 194°F | –20-30°C –4-86°F | 60°C 140°F | 75°C 167°F |
| 1/4” | 150 | 150 | 100 | 60 | 150 | 100 | 60 |
| 3/8” | 150 | 150 | 100 | 60 | 150 | 100 | 60 |
| 1/2” | 150 | 150 | 100 | 60 | 150 | 100 | 60 |

**Temperature Ranges: PVC** 0 to 60°C (32 to 140°F), **CPVC** 0 to 95°C (32 to 203°F), **PPG** –20 to 75°C (–4 to 167°F)

## Sample Specification

All (PVC/CPVC/PPG) Needle Valves 1/4” to 1/2” shall be Chemline N Series (Globe/Angle) body with PTFE seal and no elastomers. Valves will have 24 pitch stem threads for fine control and have panel mounting capability.

## ORDERING EXAMPLE

| Chemline Needle Valves | | | N | G | A | 005 |
|---|---|---|---|---|---|---|
| Body Pattern | **G** – Globe | **A** – Angle | | | | |
| Valve Material | **A** – PVC | **B** – PPG | **C** – CPVC | | | |
| Size | **002** – 1/4” | **003** – 3/8” | **005** – 1/2” | | | |

**Example:** Needle Valve, Globe Pattern, PVC, 1/2”, threaded ends.

## VACUUM RATING

- 29.9 inches mercury

## OPTIONS

- Black, white, blue or red rings are available for colour coding

CHEMLINE PLASTICS
SUPERIOR FLOW SOLUTIONS

55 Guardsman Road, Thornhill, ON, L3T 6L2, Canada | ISO 9001:2008 Certified
tel.905.889.7890 | fax.905.889.8553 | request@chemline.com | chemline.com

# CS-309-400 : Identification sheet

| | | | |
|---|---|---|---|
| VWTC PROJECT NUMBER: | 5000220043 | REV: | 4 |
| PROJECT NAME: | AEM MELIADINE - BPC UPGRADE | SUBMITTED TO (COMPANY): | AEM |
| ENGINEER: | CHRIS EL KHAZAKA | SUBMITTED TO (RESPONSIBLE) | |
| PROJECT MANAGER: | THOMAS SAVARY / BRUCE BORDES | PROJECT NUM REFERENCE.: | 6526-S-265-605 / OC-989680 |
| PHONE NUMBER: | 514-334-7230 | LOT NUMBER: | |

| SUPPLIER | EQPT CODE | EQPT TAG NO | DIA | DESCRIPTION | INFO 1 | INFO 2 | INFO 3 | APPLIC. | NOTE | REV |
|---|---|---|---|---|---|---|---|---|---|---|
| CHEMLINE | VAPSPV303450 | 15-PRV99-1199 | DIA: 1/2" | PRESSURE REGULATING VALVE | TYPE: PRESSURE REDUCING//MANUFACTURER : CHEMLINE//MODEL : SR50-A-005-E-U//CONNECTION TYPE : UNION SOCKET \| 1/2"//BODY : PVC// SEAL \| SEAT :EPDM \| // STEM : N/A | | | TURBIDITY INSTRUMENTATION SKID #0503 | | 3 |
| CHEMLINE | VAPSPV303450 | 15-PRV99-1495 | DIA: 1/2" | PRESSURE REGULATING VALVE | TYPE: PRESSURE REDUCING//MANUFACTURER : CHEMLINE//MODEL : SR50-A-005-E-U//CONNECTION TYPE : UNION SOCKET \| 1/2"//BODY : PVC// SEAL \| SEAT :EPDM \| // STEM : N/A | | | TURBIDITY INSTRUMENTATION SKID #0901 | | 3 |
| CHEMLINE | VAPSPV303450 | 15-PRV99-1499 | DIA: 1/2" | PRESSURE REGULATING VALVE | TYPE: PRESSURE REDUCING//MANUFACTURER : CHEMLINE//MODEL : SR50-A-005-E-U//CONNECTION TYPE : UNION SOCKET \| 1/2"//BODY : PVC// SEAL \| SEAT :EPDM \| // STEM : N/A | | | TURBIDITY INSTRUMENTATION SKID #0902 | | 3 |

**This page is intentionally left blank**

PDF Published December 14, 2020

# SR50 Series Pressure Regulating (Reducing) Valves

CHEMLINE PLASTICS
SUPERIOR FLOW SOLUTIONS

The Chemline **SR 50 Series** Pressure Regulating (Reducing) valves maintains a set downstream pressure independent of higher variable upstream pressures. As downstream pressure increases reaching the set pressure, the valve closes. It opens as soon as the downstream pressure decreases below set pressure.

The SR 50 is sensitive and provides precise control. One application is to protect filters from damaging pressure surges.

PVC PP PVDF

CRN Registered as Category C Fittings Consult Chemline

NSF[3] Certified to NSF/ANSI 61

SERIES: SR50

SIZES: 3/8" – 3"

ENDS: True Union Socket, Threaded or ChemFlare™[1] Spigot[2] Bodies with Plain, Socket, Threaded or Flanged ends

DIAPHRAGM: PTFE Bonded EPDM

SEALS: EPDM, FKM (Viton®)






**ChemFlare™ Ends**
For connection to PFA tube. Leak-free connections for difficult services such as sodium hypochlorite.



**Optional Pressure Gauge**
For inlet and/or outlet

## features

### True Union Ends
- Easy installation and maintenance
- Eliminate chemical leakage problems common with old fashioned threaded connections

### Long Cycling Life
- Dynamic seal is PTFE bonded EPDM for high chemical resistance
- This moulded diaphragm is designed for superior sealing and flex life

### Designed for Superior Performance
- Designed for minimum hysteresis
- Seat is hydraulically designed to eliminate chatter

### CRN Registration numbers by province
- Ontario: OC10134.5
- Newfoundland: OC10134.50
- Alberta: OC10134.52
- Saskatchewan/Manitoba/Quebec: OC10134.56
- New Brunswick: OC10134.57
- Nova Scotia: OC10134.58
- P.E.I.: OC10134.59
- British Columbia: not required

## technical

### Downstream Set Pressure Ranges
- 1/2" to 2" – 15 to 130 psi
- 2-1/2" and 3" – 15 to 90 psi

### Maximum Viscosity
- 120cP is maximum recommended service viscosity

[1] For ChemFlare™ end connectors, consult Chemline
[2] PP and PVDF spigot ends have DIN dimensions and will butt fuse directly to Chemline PP and PVDF piping systems
[3] PVC valves with EPDM or FKM (Viton®) seals are certified under NSF/ANSI Standard 61 for contact with drinking water

12/20 ©Chemline Plastics Limited 2020
Chemline is a registered trade mark of Chemline Plastics Limited

# Pressure Regulating (Reducing) Valves

## how they work

The SR50 controls downstream pressure, which must always be below the inlet pressure. It is normally open until the downstream pressure (which acts on the control diaphragm) reaches the set pressure, adjustable with the spring tensioning bolt. At this point the valve closes. It opens again as soon as downstream pressure decreases slightly below the set pressure.

The large diaphragm provides for sensitive and precise control. The valve seat opens and closes until a balance is achieved between the spring force (set pressure) and the downstream pressure.

## working pressure vs. flow rate

The curves show the relationship between the ***working pressure*** and the flow rate through the valve for water at 20°C (68°F). These values will vary depending on:

- the configuration of the piping and the pressure losses associated with it
- the fluid if not water at 20°C (68°F)
- whether the pressure is rising or falling, ***hysteresis*** is approximately 1.5 to 6 psi.

## configuration example

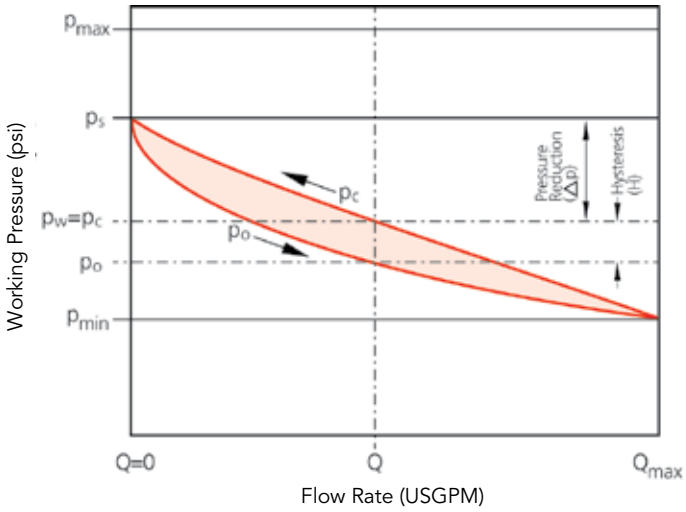


$p_s$ = set pressure
$p_w$ = working pressure
$p_o$ = opening pressure
$p_c$ = closing pressure
$p_p$ = pump pressure
H = $p_o - p_c$ = hysteresis
Δp = $p_w - p_s$ = flow dependent pressure reduction
Q = flow

## application of pressure regulating valves

### Secondary Pressure – System Dynamically Flowing

If the ball valve is closed, the working pressure $P_W$ rises by the amount of the closing pressure $P_C$

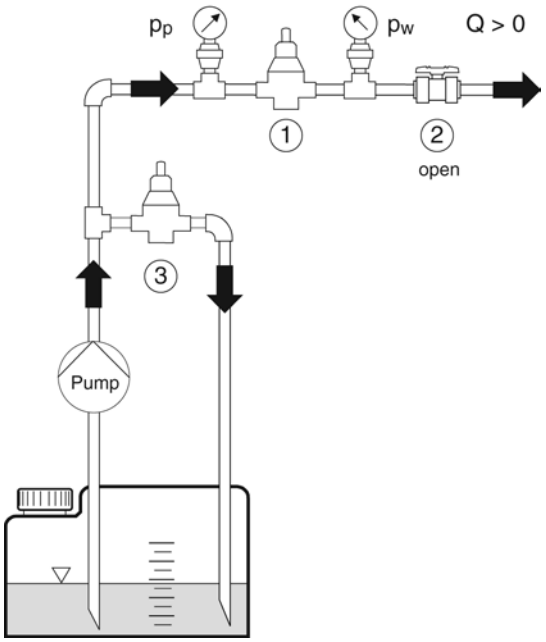


### Secondary Pressure – System Closed

If the ball valve is opened, the working pressure $P_W$ drops by the amount of the opening pressure $P_O$

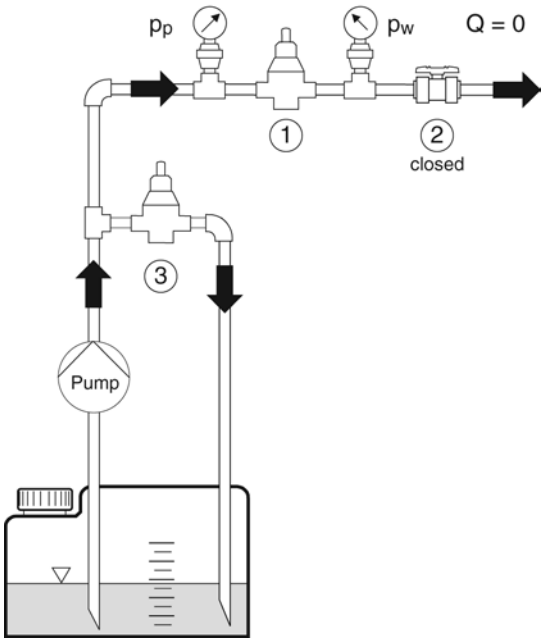


① = pressure reducing valve
② = ball valve
③ = pressure relief valve

# Pressure Regulating (Reducing) Valves 3/8" to 2"

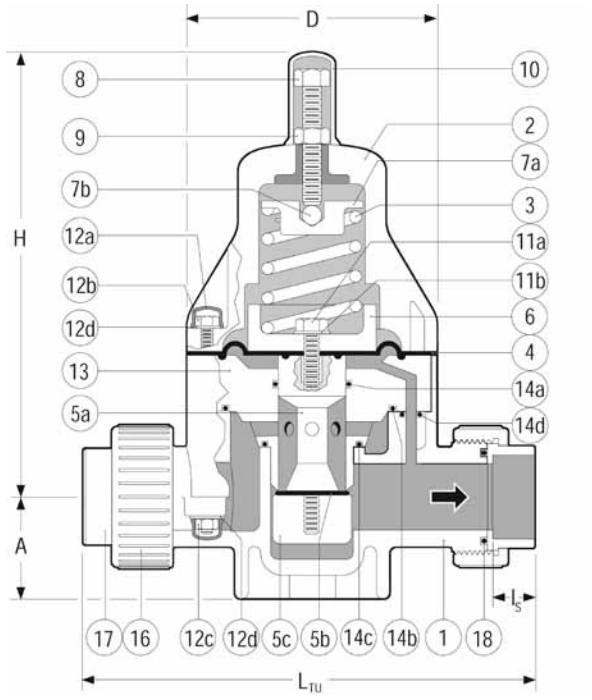


True Union Body

## OTHER ENDS

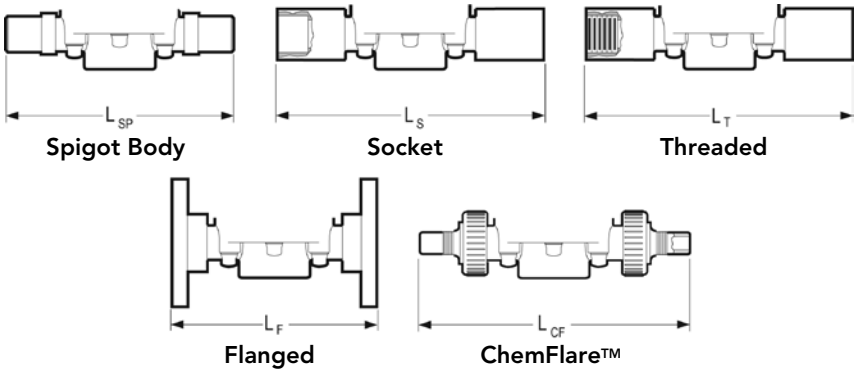


Spigot Body | Socket | Threaded | Flanged | ChemFlare™

## PARTS

▲ Recommended Spare Parts

| No. | Part | Pcs. | Materials |
|---|---|---|---|
| 1 | Body | 1 | PVC, PP, PVDF |
| 2 | Bonnet | 1 | PPG |
| 3 | Spring | 1 | Galvanized Steel |
| 4▲ | Control Diaphragm | 1 | PTFE bonded EPDM |
| 5a▲ | Piston | 1 | PVC, PP, PVDF |
| 5b▲ | Seat | 1 | EPDM, FPM(Viton®) |
| 5c▲ | Seat Retainer | 1 | PVC, PP, PVDF |
| 6 | Lower Spring Retainer | 1 | PPG |
| 7a | Upper Spring Retainer | 1 | Cad. Plated Steel |
| 7b | Ball | 1 | 304 SS |
| 8 | Spring Tensioning Bolt | 1 | 304 SS |
| 9 | Lock Nut | 1 | 304 SS |
| 10 | Spring Bolt Cap | 1 | PE |
| 11a | Piston Bolt | 1 | 304 SS |
| 11b | Piston Bolt Washer | 1 | 304 SS |
| 12a | Bolt/Nut Caps | 8/12[1] | PE |
| 12b | Hex Bolt | 4/6[1] | 304 SS |
| 12c | Hex Nut | 4/6[1] | 304 SS |
| 12d | Washer | 8/12[1] | 304 SS |
| 13 | Piston Guide | 1 | PVC, PP, PVDF |
| 14a▲ | Small Guide O-Ring | 1 | EPDM, FPM(Viton®) |
| 14b▲ | Large Guide O-Ring | 1 | EPDM, FPM(Viton®) |
| 14c▲ | Med. Guide O-Ring | 1 | EPDM, FPM(Viton®) |
| 14d▲ | Pilot Port O-Ring | 1 | EPDM, FPM(Viton®) |
| 16 | Union Nut | 2 | PVC, PP, PVDF |
| 17 | End Connector | 2 | PVC, PP, PVDF |
| 18▲ | Face O-Ring | 2 | EPDM, FPM(Viton®) |

[1] 1/2" size / 3/4" to 2" sizes.

## DIMENSIONS INCHES

## WEIGHTS LB.

| Size | D | H | PVC A | PVC $I_S$ | PVC $L_{TU}$[2] | PVC $L_{SP}$[3] | PVC $L_S$ | PVC $L_T$ | PVC $L_F$ | PVC $L_{CF}$ | PP and PVDF A | PP and PVDF $L_{SP}$[3] | PP and PVDF $L_{TU}$[2] | PVC | PP | PVDF |
|---|---|---|---|---|---|---|---|---|---|---|---|---|---|---|---|---|
| 3/8" | 3.2 | 6.9 | 1.0 | 0.6 | 6.5 | 5.7 | 7.4 | 7.2 | 4.5 | – | 0.9 | 5.7 | ** | 1.8 | 1.5 | 2.2 |
| 1/2" | 3.2 | 6.9 | 1.0 | 0.6 | 6.8 | 5.7 | 8.0 | 7.8 | 6.3 | 8.3[4] | 0.9 | 5.7 | 7.1 | 1.9 | 1.6 | 2.4 |
| 3/4" | 4.2 | 8.0 | 1.5 | 0.7 | 8.3 | 6.9 | 9.3 | 8.9 | 7.4 | 9.7 | 1.4 | 6.9 | 8.4 | 4.1 | 3.5 | 4.6 |
| 1" | 4.2 | 8.0 | 1.5 | 0.9 | 8.5 | 6.9 | 9.6 | 9.3 | 7.4 | 10.2 | 1.4 | 6.9 | 8.7 | 4.2 | 3.5 | 4.7 |
| 1-1/4" | 5.8 | 10.3 | 2.2 | 1.0 | 10.9 | 8.8 | 11.6 | 11.2 | 9.2 | – | 2.1 | 8.8 | 10.9 | 11.0 | 9.0 | 12.0 |
| 1-1/2" | 5.8 | 10.3 | 2.2 | 1.2 | 11.1 | 8.8 | 12.2 | 11.5 | 9.5 | – | 2.1 | 8.8 | 11.2 | 11.2 | 9.2 | 12.2 |
| 2" | 5.8 | 10.3 | 2.2 | 1.5 | 11.3 | 9.6 | 12.9 | 12.0 | 10.0 | – | 2.1 | 9.6 | 13.2 | 11.4 | 9.4 | 12.4 |

[2] True Union bodies come standard with socket ends. Threaded union ends are available. ** Consult Chemline.
[3] Spigot bodies are used for non union socket, threaded or flanged ends. All spigot ends have metric dimensions and the PP and PVDF spigots butt fuse directly to Chemline PP and PVDF piping. [4] Tube size can be reduced to 1/4" tube, LCF = 7.74" for 1/4", 8.26" for 3/8".

## MAXIMUM PRESSURES PSI

| Size | PVC 20°C 68°F | PVC 30°C 86°F | PVC 40°C 104°F | PVC 50°C 122°F | PP 30°C 86°F | PP 40°C 104°F | PP 50°C 122°F | PP 60°C 140°F | PP 70°C 158°F | PVDF 30°C 86°F | PVDF 50°C 122°F | PVDF 70°C 158°F | PVDF 80°C 176°F | PVDF 90°C 194°F | PVDF 100°C 212°F |
|---|---|---|---|---|---|---|---|---|---|---|---|---|---|---|---|
| 1/2"– 2" | 150 | 105 | 60 | 15 | 150 | 90 | 60 | 37.5 | 15 | 150 | 100 | 60 | 45 | 30 | 15 |

**Temperature Ranges: PVC** 0 to 50°C (–32 to 122°F), **PP** 10 to 70°C (50 to 158°F), **PVDF** –30 to 100°C (–22 to 212°F).

# Pressure Regulating (Reducing) Valves 2-1/2", 3"

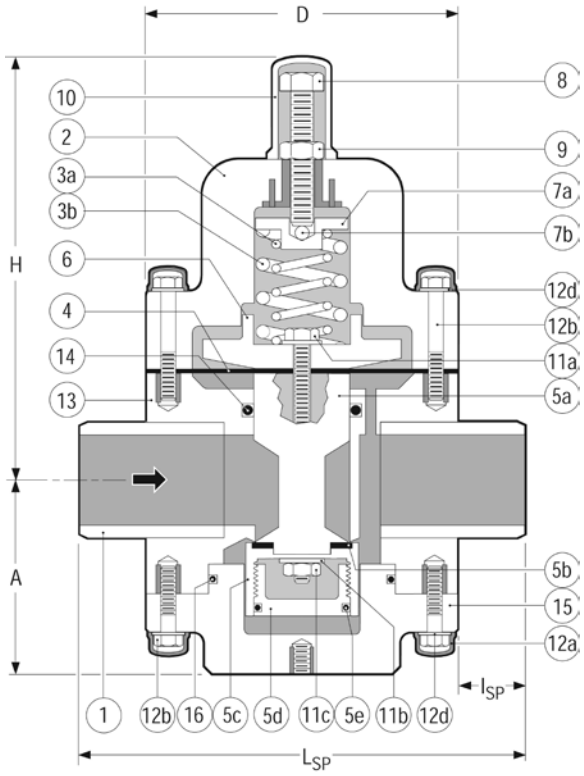


**Spigot Body**

## NON UNION ENDS

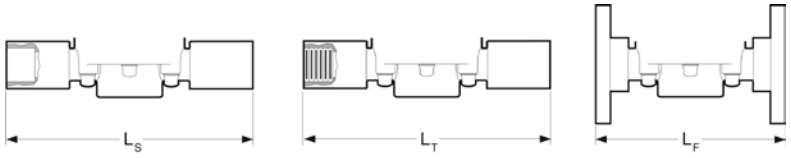


**Socket** **Threaded** **Flanged**

## PARTS

▲ Recommended Spare Parts

| No. | Part | Pcs. | Materials |
|---|---|---|---|
| 1 | Body | 1 | PVC, PP, PVDF |
| 2 | Bonnet | 1 | PPG |
| 3a/3b | Spring Set | 2 | Galvanized Steel |
| 4▲ | Control Diaphragm | 1 | PTFE bonded EPDM |
| 5a▲ | Piston | 1 | PVC, PP, PVDF |
| 5b▲ | Seat | 1 | EPDM, FPM(Viton®) |
| 5c▲ | Seat Retainer | 1 | PVC, PP, PVDF |
| 5d▲ | Retainer Plug | 1 | PVC, PP, PVDF |
| 5e▲ | Plug O-Ring | 1 | EPDM, FPM(Viton®) |
| 6 | Lower Spring Retainer | 1 | PPG |
| 7a | Upper Spring Retainer | 1 | Cad. Plated Steel |
| 7b | Ball | 1 | 304 SS |
| 8 | Tensioning Bolt | 1 | 304 SS |
| 9 | Lock Nut | 1 | 304 SS |
| 10 | Spring Bolt Cap | 1 | PE |
| 11a | Piston Bolt | 1 | 304 SS |
| 11b | Piston Bolt Washer | 1 | 304 SS |
| 11c | Piston Nut | 1 | 304 SS |
| 12a | Bolt/Nut Cap | 20 | PE |
| 12b | Bolt/Stud Set | 12[1] | 304 SS |
| 12c | Hex Nut | 16 | 304 SS |
| 12d | Washer | 20 | 304 SS |
| 13 | Piston Guide | 1 | PVC, PP, PVDF |
| 14▲ | Guide O-Ring | 1 | EPDM, FPM(Viton®) |
| 15 | Base | 1 | PVC, PP, PVDF |
| 16 | Base O-Ring | 1 | EPDM, FPM(Viton®) |

[1] 2 large upper bolts, 2 shorter lower bolts, 8 studs

## DIMENSIONS INCHES

| Size | PVC, PP & PVDF A | D | H | $L_{SP}$[2] | $l_{SP}$ | PVC $L_S$ | $L_T$ | $L_F$ |
|---|---|---|---|---|---|---|---|---|
| 2-1/2" | 4.8 | 7.7 | 10.4 | 11.2 | 1.7 | 14.5 | 14.0 | 12.2 |
| 3" | 5.6 | 9.8 | 13.4 | 14.2 | 2.2 | 16.0 | 15.5 | 15.0 |

[2] Plain spigot ends in PP and PVDF may be butt fused directly to Chemline PP and PVDF piping systems.

## WEIGHTS LB.

| Size | PVC | PP | PVDF |
|---|---|---|---|
| 2-1/2" | 27.5 | 26.2 | 31.0 |
| 3" | 33.0 | 29.7 | 37.8 |

Weights based on spigot bodies.

## ORDERING EXAMPLE

| | | | | | for ChemFlare™ ends only | | all other ends |
|---|---|---|---|---|---|---|---|
| **Chemline Pressure Regulating Valves** | **SR50** | **A** | **005** | **V** | **–A** | **8N** | **–1** |

Body Material **A** – PVC **B** – PP **K** – PVDF

Size **003** – 3/8" **005** – 1/2" **007** – 3/4" **010** – 1" **012** – 1-1/4" **015** – 1-1/2" **020** – 2" **025** – 2-1/2" **030** – 3"

Elastomers **E** – EPDM **V** – FPM (Viton®)

ChemFlare™ End Connecters for valves 3/8" to 1-1/4"

Material **A** – PVC **B** – PP **C** – CPVC **K** – PVDF

Tube Size[3] **4N** – 1/4" **6N** – 3/8" **8N** – 1/2" **12N** – 3/4" **16N** – 1" **20N** – 1-1/4"

Tube Nut **–1** – includes nut **Blank** – without nut

Ends **S** – Socket **T** – Threaded **F** – Flanged **U** – Union Socket **Blank** – Spigot (Butt)

**Example:** Chemline SR50 Series, PVC, 1/2" diameter, FPM (Viton®) seals, PVC ChemFlare™ end connectors, 1/2" tube size, including nuts.

[3] Tube size must be equal or smaller than the valve size.

# Pressure Regulating (Reducing) Valves 3/8" to 2"

### 3/8" Valves

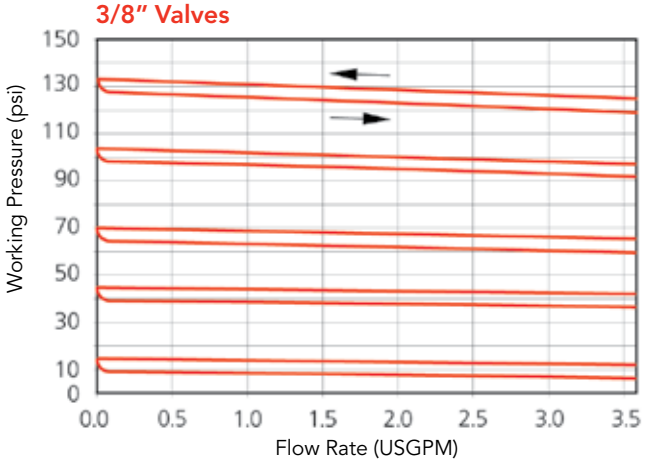


### 1/2" Valves

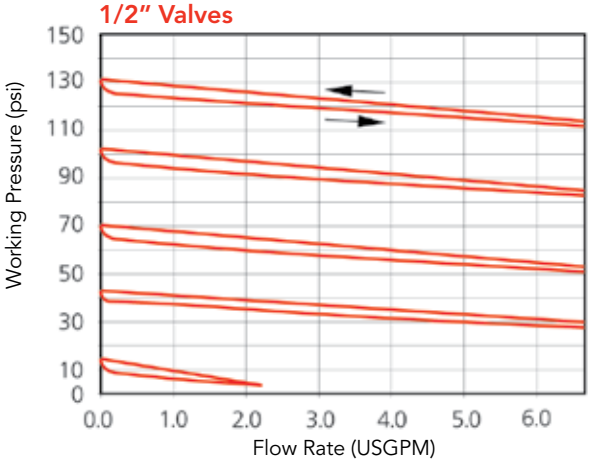


### 3/4" Valves

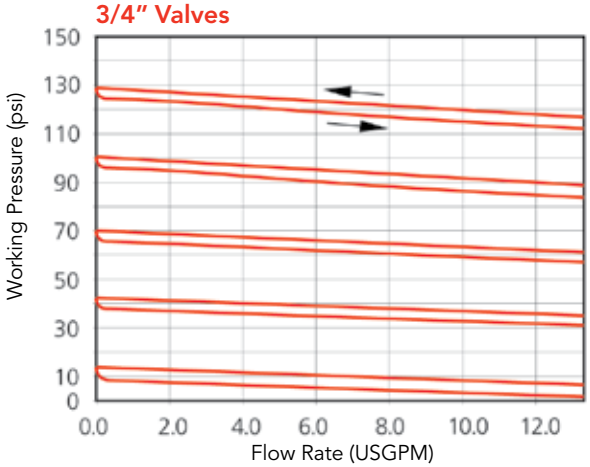


### 1" Valves

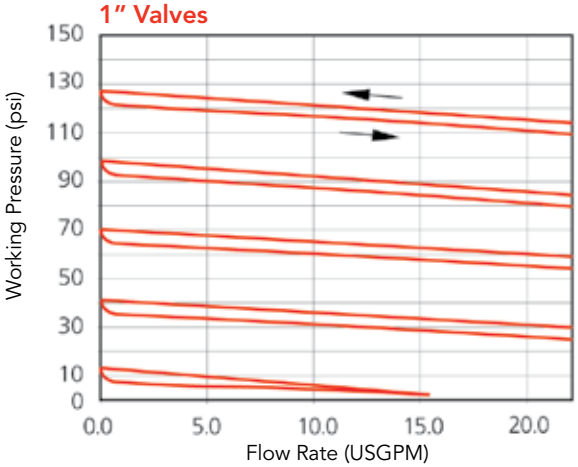


### 1-1/4" Valves

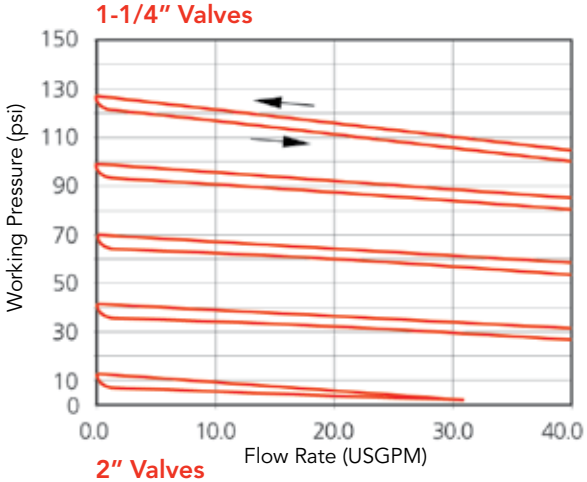


### 1-1/2" Valves

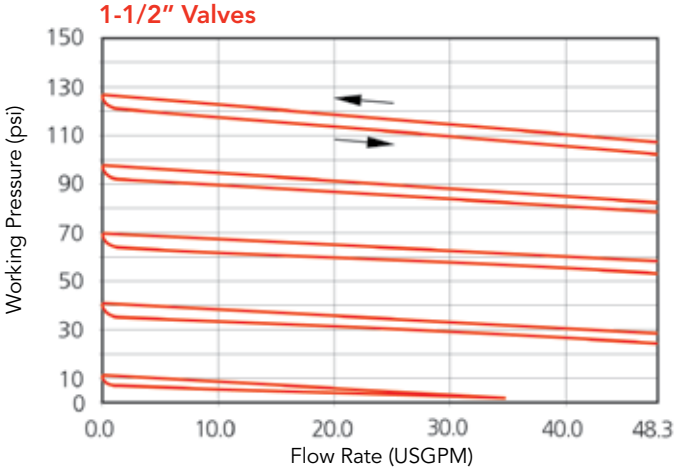


### 2" Valves

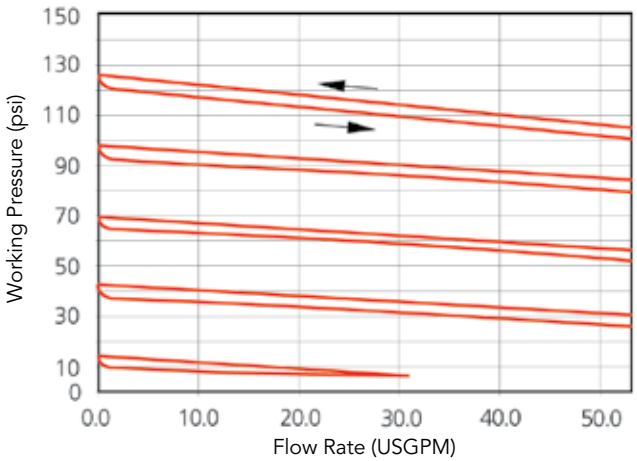

# Pressure Regulating (Reducing) Valves 2-1/2", 3"

## MAXIMUM PRESSURES PSI

| Size | PVC | | | | PP | | | | | | PVDF | | | | | |
|---|---|---|---|---|---|---|---|---|---|---|---|---|---|---|---|---|
| | 20°C 68°F | 30°C 86°F | 40°C 104°F | 50°C 122°F | 20°C 68°F | 30°C 86°F | 40°C 104°F | 50°C 122°F | 60°C 140°F | 70°C 158°F | 30°C 86°F | 50°C 122°F | 70°C 158°F | 80°C 176°F | 90°C 194°F | 100°C 212°F |
| 2-1/2" – 3" | 150 | 90 | 45 | 15 | 150 | 115 | 90 | 60 | 37.5 | 15 | 150 | 95 | 55 | 35 | 25 | 15 |

**Temperature Ranges: PVC** 0 to 50°C (–32 to 122°F), **PP** 10 to 70°C (50 to 158°F), **PVDF** –30 to 100°C (–22 to 212°F).

## working pressures vs. flow rate

### 2-1/2" Valves

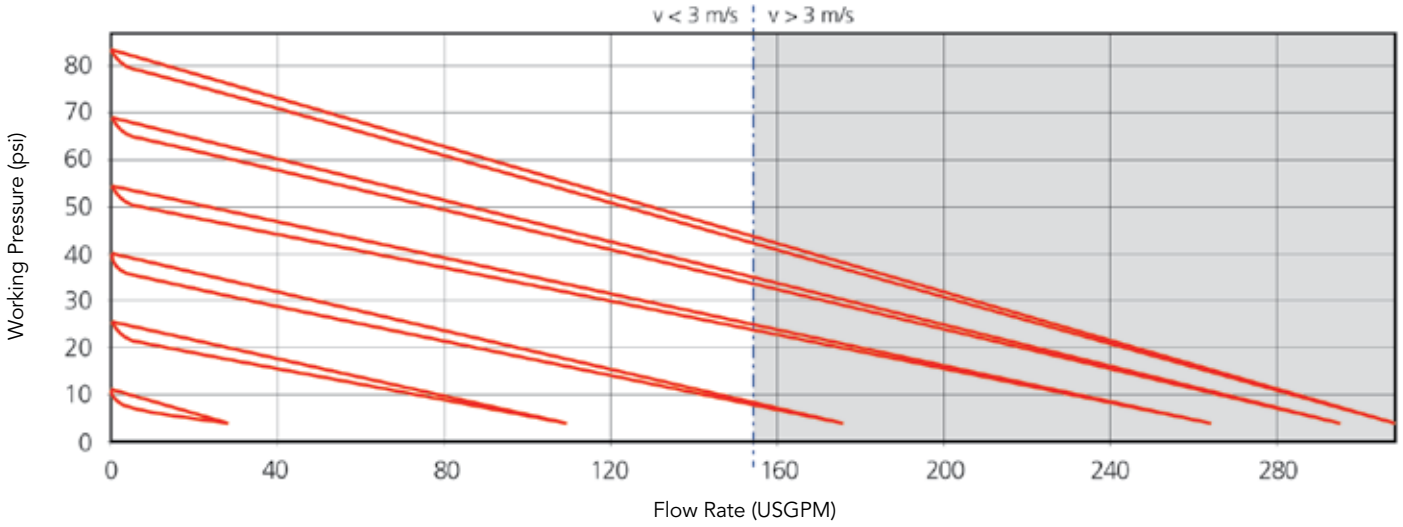


### 3" Valves

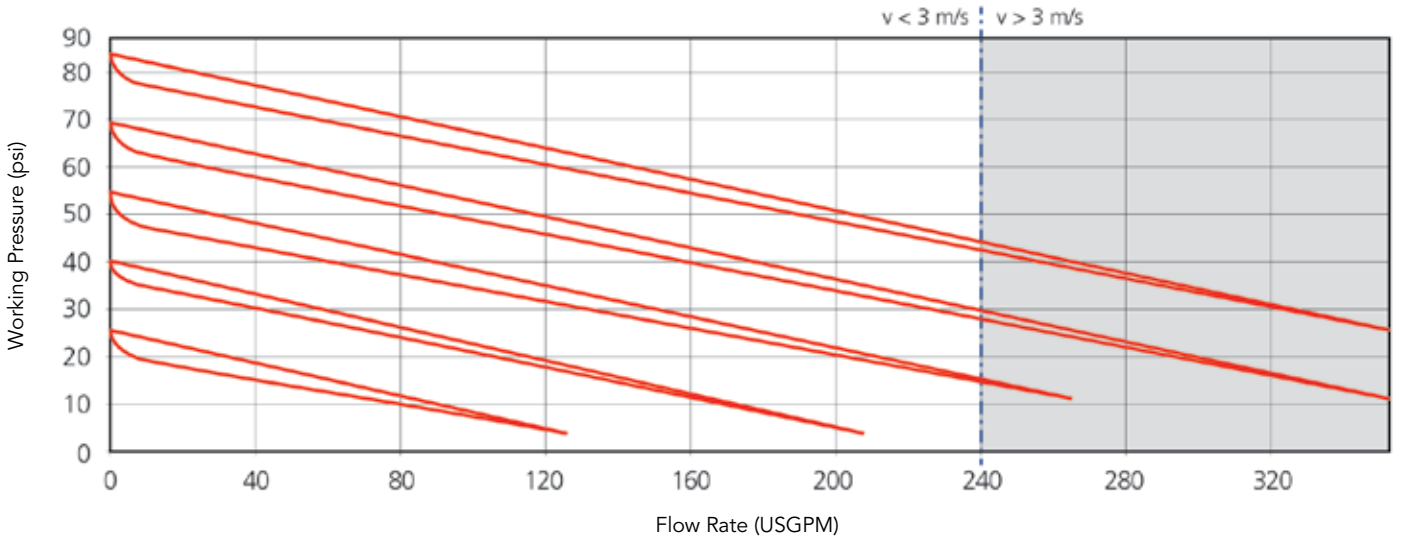




55 Guardsman Road, Thornhill, ON, L3T 6L2, Canada | ISO 9001:2015 Certified
1.800.930.2436 (CHEM) | fax.905.889.8553 | request@chemline.com | chemline.com

**Project name:** MELIADINE-BPC UPGRADE

**Project#:** 5000220043

**Document #:** SPK_0001_MISC_VWT

**by:** CEK

**chkd:** ED

**appvd:** TS

# INSTRUMENTATION

# TURBIDITY + CHLORINE INSTRUMENTATION SKID #1201

**OIM manual section:** 4.2.11.7

REFER TO 5000220043_GA_0008_SKG_VWT

**This page is intentionally left blank**

# CS-301-100 : Identification sheet

| | | | |
|---|---|---|---|
| VWTC PROJECT NUMBER: | 5000220043 | REV: | 4 |
| PROJECT NAME: | AEM MELIADINE - BPC UPGRADE | SUBMITTED TO (COMPANY): | AEM |
| ENGINEER: | CHRIS EL KHAZAKA | SUBMITTED TO (RESPONSIBLE) | |
| PROJECT MANAGER: | THOMAS SAVARY / BRUCE BORDES | PROJECT NUM REFERENCE.: | 6526-S-265-605 / OC-989680 |
| PHONE NUMBER: | 514-334-7230 | LOT NUMBER: | |

| SUPPLIER | EQPT CODE | EQPT TAG NO | DIA | DESCRIPTION | INFO 1 | INFO 2 | INFO 3 | APPLIC. | NOTE | REV |
|---|---|---|---|---|---|---|---|---|---|---|
| CHEMLINE | VABLPV200249 | 15-BA99-0594 | DIA: 13 mm (1/2") | SKID INLET ISOLATION VALVE | TYPE: BALL VALVE//MANUFACTURER : CHEMLINE//MODEL : Type21-A-005-E-C//CONNECTION TYPE : COMBO \| 13 mm (1/2")//BODY : PVC (ASTM D1784)// SEAL \| SEAT :PTFE \| EPDM// STEM : PVC | | | TURBIDITY + SWAN INSTRUMENTATION SKID | | 3 |
| CHEMLINE | VABLPV200249 | 15-BA99-0595 | DIA: 13 mm (1/2") | SKID OUTLET ISOLATION VALVE | TYPE: BALL VALVE//MANUFACTURER : CHEMLINE//MODEL : Type21-A-005-E-C//CONNECTION TYPE : COMBO \| 13 mm (1/2")//BODY : PVC (ASTM D1784)// SEAL \| SEAT :PTFE \| EPDM// STEM : PVC | | | TURBIDITY + SWAN INSTRUMENTATION SKID | | 3 |

**This page is intentionally left blank**

PDF Published November 23, 2020

# Type 21 True Union Ball Valves

CHEMLINE PLASTICS
SUPERIOR FLOW SOLUTIONS

The Chemline **Type 21** True Union Ball valve incorporates state of the art features for long term performance. This is a full port, full blocking True Union valve pressure rated at 16 bar (230 psi)[3]. Double stem o-rings and Safety Shear stem design provide for a high degree of safety on hazardous fluid applications. All sizes have an ISO standard actuator mounting platform integral to the valve body. This provides for sturdy and secure mounting of pneumatic or electric actuators.

PVC | CPVC | PP | PVDF

CRN Registered Consult Chemline

NSF[4] Certified to NSF/ANSI 61

SERIES: Type 21

SIZES: 3/8" – 4"

ENDS: Socket, Threaded, Combo[6], Flanged, Butt[1] or ChemFlare™

SEATS: PTFE

SEALS[2]: EPDM, FKM (Viton®)




## features

### Pressure rated to 230 psi[3]
- Provides a high factor of safety

### Integral Actuator Mounting Platform
- Actuation is easy. Electric or pneumatic actuators may be mounted in the field.

### Full Port
- High capacity and low pressure drops

### Fully Blocking
- Downstream union nut may be safely disassembled for piping maintenance while valve is closed off under full system pressure

### Built-In Spanner Wrench
- Top of the handle is designed to be used as a tool for accessing internal parts

### Safety Shear Stem Design
- Stem has double o-rings
- Designed to hold full pressure even if stem breaks due to excessive torque

### High Chemical Resistant Material
- PVC and CPVC compounds have an "A" chemical resistance rating as per ASTM D-1784. They have outperformed other PVC and CPVC compounds on aggressive chemicals.

### CRN Registration numbers by province
- Ontario: OC11045.5
- Newfoundland: OC11045.50
- Saskatchewan/Manitoba/Quebec: OC11045.56
- New Brunswick: OC11045.57
- Nova Scotia: OC11045.58
- P.E.I.: OC11045.59
- British Columbia: not required
- Alberta: not required[5]

[1] Butt ends for fusion to Chemline metric PP, PVDF or ECTFE (Halar®) piping.
[2] Other materials are available.
[3] PVC, CPVC and PVDF 1/2" to 2" are rated at 230 psi; 2-1/2" to 4" and all size PP valves are rated at 150 psi at 20°C.
[4] PVC valves with EPDM or FKM (Viton®) seals are certified under NSF/ANSI Standard 61 for contact with drinking water.
[5] Not required for non-expandable fluids.
[6] PVC and CPVC valves 1/2" to 2" are available as Combo (threaded and socket ends).

11/20 ©Chemline Plastics Limited 2020
Chemline is a registered trade mark of Chemline Plastics Limited

# Type 21 True Union Ball Valves

## Features

**Double Stem O-Rings – Safety Shear Design**

- Upper o-ring groove is deeper than lower. In case of excessive stem torque, stem will shear at the upper groove, leaving the inner o-ring intact to seal against full line pressure.

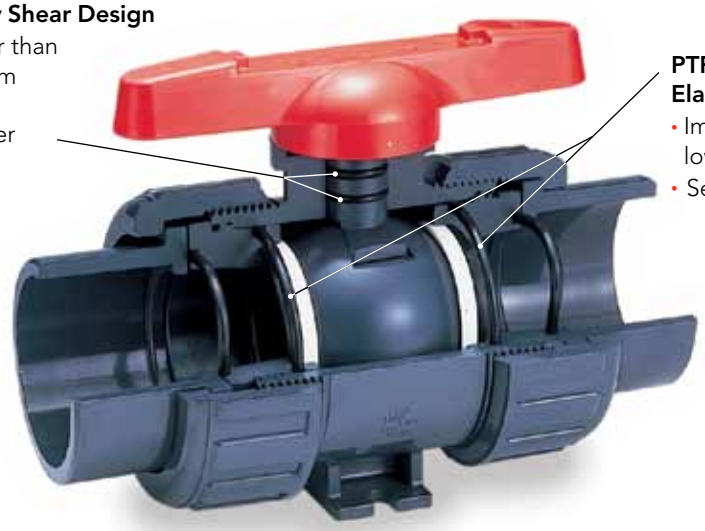

**PTFE Seats have Elastomer Cushions**

- Improved sealing while lowering stem torques
- Self adjusts for seat wear

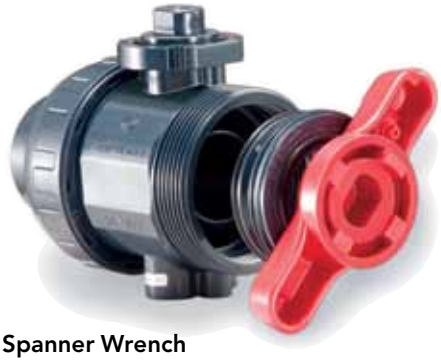

**Built in Spanner Wrench**

- For removing or tightening the seat carrier
- All parts are replaceable



**Integral Actuator Mounting Platform**

- Actuation is easy. Electric or pneumatic actuators may be mounted in the field. Simply pull off the handle to reveal a standard ISO 5211 mounting platform which accepts bolt-on hardware.




**Fully Blocking**

- Downstream pipe may be removed while upstream side is still pressurized. This may be done with valve installed in either direction.



**Base Mounting Pad**

- Optional threaded inserts allow valves to be securely anchored
- Supplied standard with actuated valves

## Options + Accessories



### ChemFlare™ Ends

- For connection to PFA tube. Leak-free connections for difficult services such as sodium hypochlorite



### One-piece moulded PVC and CPVC 6" socket ends

- Allows installation of 4" valve in 6" line
- Factory moulded, elimates cementing separate reducer and coupling
- Fixed to valve mechanically just like the one-piece moulded factory flanges



### Optional Lock-out Handle & Hasp

- To prevent unauthorized operation of the valve during maintenance shut-downs
- Padlocks go through holes in hasp



### Gear Operators

- Deluxe FRP construction
- IP67 enclosure resists short term immersion



### Chain Wheel Operators

- For overhead operation, with 7' of chain drop
- Cast iron or stainless steel

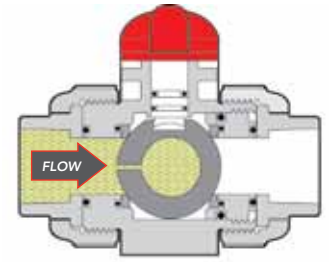


### Vented Ball

- Recommended for all sodium hypochlorite services
- Valve shown in closed position



### Valve Tags

- Stainless steel or plastic



### Different Colour Handles

- Choose a handle colour other than standard red for colour coding different services



### Municipal Operating Nut

- 2" square nut for operating valves below grade using a standard municipal "key"
- Stainless Steel for corrosion resistance



### Manual Limit Switch

- Electrical feedback of manual valve position
- NEMA 4X enclosure, position indicator beacon, 2x SPDT or proximity switches, stainless steel hardware



### Shaft Extensions

- Different materials and lengths are available
- Several designs:
  - with no housing for indoors
  - with waterproofed PVC housing for indoors or outdoors
  - with stainless steel housing for buried or actuated services

# Type 21 True Union Ball Valves

## Electric + Pneumatic Actuation

- A complete range of actuators and control accessories are available, mounted to valves using PPG plastic brackets and stainless steel couplings. Refer to separate data sheets.
- All actuators are CSA approved, have NEMA 4X enclosures, stainless steel hardware and permanently lubricated gear train



**ERS Series Electric**
- Type 21 ball valves up to 2"
- 180 in-lbs torque
- On-Off (3/2-wire), adjustable travel
- Visual feedback

**E Series Electric**
- Type 21 ball valves up to 4"
- Up to 885 in-lbs torque
- On-Off (3/2-wire), adjustable travel. Optional: failsafe, 3 position modulating
- Visual feedback and feedback switches. Optional: extra switches, feedback potentiometer and feedback transmitter



**V Series Electric**
(with optional Local Control Station)
- Type 21 ball valves up to 6"
- up to 8,850 in-lbs torque
- On-Off (2/3-wire), adjustable travel. Optional: failsafe, modulating, BUS
- Visual feedback, 2 feedback switches. Optional: 2 extra feedback switches, feedback potentiometer and feedback transmitter



**PA Series Pneumatic**
- Type 21 ball valves up to 6"
- up to 10,660 in-lbs torque
- industrial process submerged
- bleach/water washdown
- Rilsan-coated aluminum



**PP Series Pneumatic**
- Type 21 ball valves up to 6"
- up to 1,335 in-lbs torque
- industrial process with minimal use of metal
- Glass-filled Polyamide

### OTHER OPTIONS & ACCESSORIES

- **Alternate O-Ring Seals**
- **Stem Extensions** made to any length
- **Limit Switches** – for open and/or closed position indication
- **Municipal Operating Nut**
- **Lubrication-free Valves** – factory clean room assembled
- **Vented Ball** – for sodium hypochlorite applications

# Type 21 True Union Ball Valves

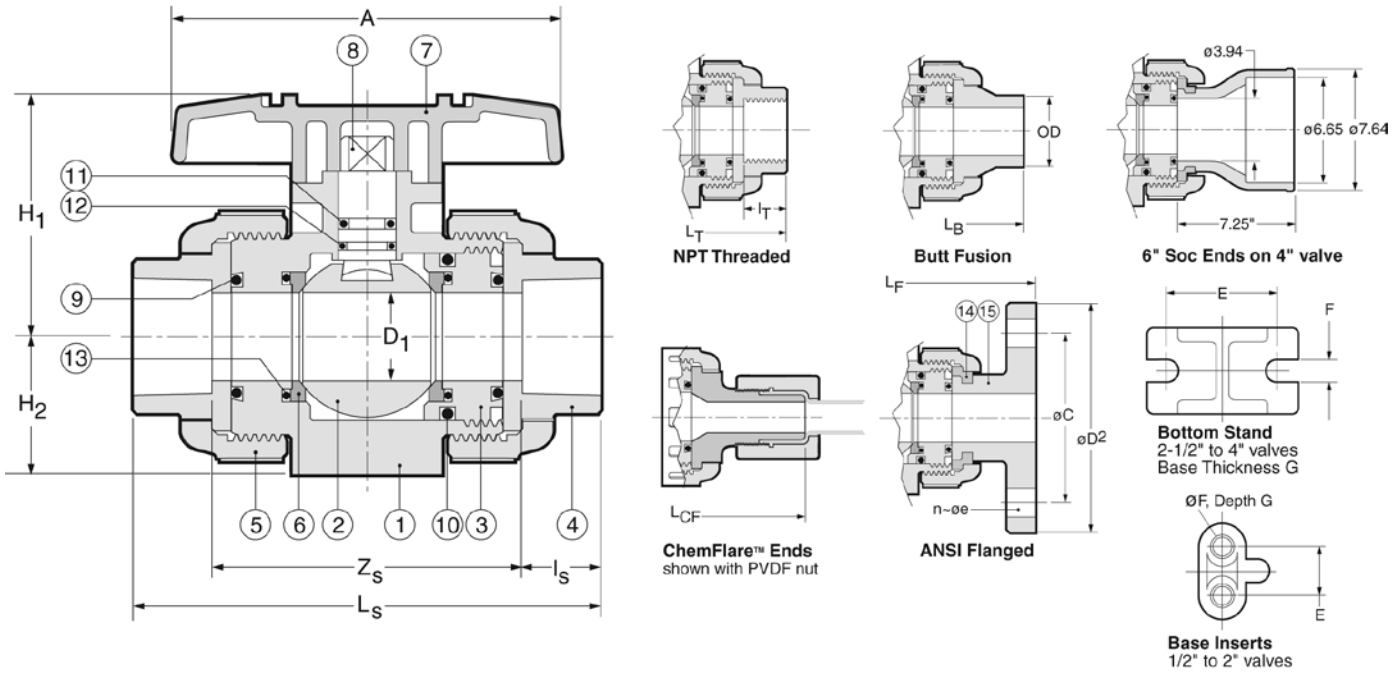


## PARTS

▲ Recommended Spare Parts

| No. | Part | Pcs. | Materials |
|---|---|---|---|
| 1 | Body | 1 | PVC, CPVC, PP, PVDF |
| 2 | Ball | 1 | PVC, CPVC, PP, PVDF |
| 3 | Carrier[1] | 1/2 | PVC, CPVC, PP, PVDF |
| 4 | End Connector | 2 | PVC, CPVC, PP, PVDF |
| 5 | Union Nut | 2 | PVC, CPVC, PP, PVDF |
| 6▲ | Ball Seat | 2 | PTFE |
| 7 | Handle | 1 | ABS |

[1] 1 carrier for sizes 1/2" to 2", 2 carriers for sizes 2-1/2" to 4"
[2] EPDM seals standard with PVC, CPVC, PP; FKM (Viton®) with PVDF valves
[3] 2 pcs 1/2" to 2", 6 pcs 2-1/2" to 4"

## PARTS

▲ Recommended Spare Parts

| No. | Part | Pcs. | Materials |
|---|---|---|---|
| 8 | Stem | 1 | PVC, CPVC, PP, PVDF |
| 9▲ | Face O-Ring[2] | 2 | EPDM, FKM (Viton®) |
| 10▲ | Carrier O-Ring[2] | 2 | EPDM, FKM (Viton®) |
| 11▲ | Upper Thicker Stem O-Ring[2] | 1 | EPDM, FKM (Viton®) |
| 12▲ | Lower Thinner Stem O-Ring[2] | 1 | EPDM, FKM (Viton®) |
| 13 | Seat Cushion[2] | 2 | EPDM, FKM (Viton®) |
| 14 | Flange Retainer[3] | 2/6 | PVDF |
| 15 | Flange | 2 | PVC, CPVC, PP, PVDF |

## DIMENSIONS INCHES

| | | | | | End Connections | | | | | | | | | | | | | | | | |
|---|---|---|---|---|---|---|---|---|---|---|---|---|---|---|---|---|---|---|---|---|---|
| | D | | | | Socket | | | Threaded | | Factory Flanged | | | | | Butt | | ChemFlare™ | | Valve Base | | |
| Size | Bore | A | $H_1$ | $H_2$ | $L_S$ | $Z_S$ | $l_S$ | $l_T$ | $L_T$ | $L_F$ | $D_2$ | C | n | e | $L_B$ | OD | $L_{CF}$ | Tube[4] | E | F[5] | G |
| 1/2" | .59 | 3.6 | 2.03 | 1.14 | 4.45 | 2.70 | .875 | .64 | 4.02 | 5.63 | 3.50 | 2.38 | 4 | .62 | 4.88 | .79 | 6.12 | 1/2" | .75 | .29 | .43 |
| 3/4" | .79 | 3.9 | 2.34 | 1.38 | 5.08 | 3.08 | 1.00 | .65 | 4.72 | 6.77 | 3.88 | 2.75 | 4 | .62 | 5.67 | .98 | 6.52 | 3/4" | .75 | .29 | .43 |
| 1" | .98 | 4.3 | 2.68 | 1.54 | 5.75 | 3.50 | 1.13 | .81 | 5.16 | 7.36 | 4.25 | 3.12 | 4 | .62 | 6.06 | 1.26 | 7.26 | 1" | .75 | .29 | .43 |
| 1-1/4" | 1.22 | 4.8 | 3.17 | 1.85 | 6.46 | 5.21 | 1.25 | .85 | 5.91 | 7.48 | 4.62 | 3.50 | 4 | .62 | 6.85 | 1.57 | 9.58 | 1-1/4" | 1.18 | .35 | .59 |
| 1-1/2" | 1.57 | 5.2 | 3.50 | 2.17 | 7.24 | 4.49 | 1.38 | .85 | 6.42 | 8.35 | 5.00 | 3.88 | 4 | .62 | 7.64 | 1.97 | – | – | 1.18 | .35 | .59 |
| 2" | 2.01 | 6.3 | 4.02 | 2.60 | 8.23 | 5.23 | 1.50 | 1.90 | 7.76 | 9.21 | 6.00 | 4.75 | 4 | .75 | 8.82 | 2.48 | – | – | 1.18 | .35 | .59 |
| 2-1/2" | 2.28 | 7.87 | 4.96 | 2.83 | 9.45 | 5.95 | 1.75 | 1.21 | 8.46 | 10.20 | 7.00 | 5.49 | 4 | .75 | 9.72 | 2.95 | – | – | 1.89 | .35 | .23 |
| 3" | 2.70 | 9.45 | 5.51 | 3.35 | 11.10 | 7.35 | 1.88 | 1.30 | 10.39 | 11.97 | 7.50 | 6.00 | 4 | .75 | 11.61 | 3.54 | – | – | 2.17 | .43 | .28 |
| 4" | 3.54 | 11.81 | 7.01 | 4.33 | 13.88 | 9.87 | 2.00 | 1.38 | 14.17 | 14.65 | 9.00 | 7.50 | 8 | .75 | 14.76 | 4.33 | – | – | 2.56 | .43 | .32 |
| 6"[6] | 3.54 | 11.81 | 7.01 | 4.33 | 23.15 | 17.09 | 3.03 | – | – | – | – | – | – | – | – | – | – | – | 2.56 | .43 | .32 |
| 6"[7] | 3.54 | 11.81 | 7.01 | 4.33 | 27.22 | 21.21 | 3.03 | – | – | – | – | – | – | – | – | – | – | – | 2.56 | .43 | .32 |

[4] ChemFlare™ ends are available for reduced tube sizes down to 1/4"
[5] Optional threaded inserts: 1/2" to 1" valves – UNC 1/4"-20; 1-1/4" to 2" valves – UNC 5/16"-18. 'Recoil' brand inserts require drilling before insertion.
[6] 6" with factory moulded socket ends
[7] 6" with fabricated socket ends

# Type 21 True Union Ball Valves

## WORKING PRESSURES PSI, Water, Non-Shock

## VACUUM RATING • 29.9 inches mercury

| Size | PVC | | | CPVC | | | | | | PP | | | PVDF | | | | |
|---|---|---|---|---|---|---|---|---|---|---|---|---|---|---|---|---|---|
| | 20°C 68°F | 40°C 104°F | 50°C 122°F | 20°C 68°F | 40°C 104°F | 50°C 122°F | 60°C 140°F | 80°C 176°F | 90°C 194°F | 20°C 68°F | 60°C 140°F | 80°C 176°F | 20°C 68°F | 40°C 104°F | 60°C 140°F | 80°C 176°F | 100°C 212°F |
| 1/2"– 2" | 230 | 165 | 150 | 230 | 165 | 150 | 120 | 75 | 55 | 150 | 85 | 55 | 230 | 185 | 150 | 110 | 85 |
| 2-1/2"– 4" | 150 | 150 | 150 | 150 | 150 | 150 | 120 | 75 | 55 | 150 | 70 | 40 | 150 | 150 | 150 | 110 | 85 |

**Temperature Ranges: PVC** 0 to 50°C (32 to 122°F), **CPVC** 0 to 90°C (32 to 194°F), **PP** –20 to 80°C (–4 to 176°F), **PVDF** –20 to 100°C (–20 to 212°F)

## WEIGHTS LB. THREADED or SOCKET

## WEIGHTS LB. FLANGED

| Size | PVC | CPVC | PP | PVDF | PVC | CPVC | PP | PVDF |
|---|---|---|---|---|---|---|---|---|
| 1/2" | 0.4 | 0.4 | 0.4 | 0.4 | 0.9 | 0.9 | 0.7 | 1.1 |
| 3/4" | 0.7 | 0.7 | 0.7 | 0.9 | 1.3 | 1.5 | 1.1 | 1.5 |
| 1" | 0.9 | 1.1 | 0.9 | 1.1 | 1.8 | 2.0 | 1.5 | 2.2 |
| 1-1/4" | 1.5 | 1.5 | 1.3 | 1.8 | 2.6 | 2.9 | 2.0 | 3.3 |
| 1-1/2" | 2.4 | 2.6 | 1.5 | 2.9 | 3.7 | 4.0 | 2.6 | 4.4 |
| 2" | 4.0 | 4.4 | 2.6 | 4.9 | 5.5 | 6.0 | 4.0 | 8.2 |
| 2-1/2" | 5.1 | 5.5 | 3.7 | 6.2 | 7.3 | 7.7 | 5.3 | 8.8 |
| 3" | 8.2 | 8.8 | 5.5 | 9.9 | 10.1 | 11.0 | 7.5 | 12.6 |
| 4" | 19.4 | 21.8 | 13.2 | 24.9 | 21.6 | 23.4 | 15.4 | 26.7 |

## Cv VALUES VS. BALL ANGLE

| Size | 0% | 25% | 50% | 75% | 100% |
|---|---|---|---|---|---|
| 1/2" | 0 | 0.35 | 1.3 | 5.5 | 14. |
| 3/4" | 0 | 0.73 | 2.8 | 11.5 | 29. |
| 1" | 0 | 1.2 | 4.5 | 18.6 | 47. |
| 1-1/4" | 0 | 1.8 | 6.8 | 28.4 | 72. |
| 1-1/2" | 0 | 3.9 | 14.7 | 61.2 | 155. |
| 2" | 0 | 4.8 | 18.0 | 75.0 | 190. |
| 2-1/2" | 0 | 9.1 | 34.7 | 144.0 | 365. |
| 3" | 0 | 10.2 | 39.0 | 162.0 | 410. |
| 4" | 0 | 17.0 | 64.6 | 269.0 | 680. |

## SAMPLE SPECIFICATION

1. All True Union Ball Valves in PVC, CPVC, PP or PVDF shall be Chemline Type 21 or equal sizes 1/2" to 2" in PVC, CPVC, and PVDF rated at 230 psi and in PP 150 psi maximum working pressure. Sizes 2-1/2", 3" and 4" rated at 150 psi maximum working pressure with EPDM or FKM (Viton®) seals. Ball seats shall be PTFE with elastomer cushions for closure with minimum stem torques.
2. All valves will have Safety Shear stem design, blowout-proof with double o-rings for safety. The top o-ring groove shall be deeper so that if the stem breaks off under excessive torque the lower o-ring will remain intact and the valve will hold pressure.
3. All valves shall be full port and two-way blocking design.
4. All valves will be CRN (Canadian Registration Number) registered with TSSA.
5. PVC valves with EPDM or FKM (Viton®) seals shall be certified under NSF/ANSI Standard 61 for contact with drinking water.
6. All valves shall have chemical resistant labels permanently marked with manufacturing number to provide production level traceability.
7. PVC compound shall have an ASTM cell classification 12454-A with a minimum suffix "A" designation for chemical resistance as per ASTM D-1784 (CSA report LO 4000-172).
8. CPVC compound shall have an ASTM cell classification 23567-A with a minimum suffix "A" designation for chemical resistance as per ASTM D-1784.
9. PP material will conform to ASTM D-4101 PP 021 B 67272 material requirements.
10. PVDF material shall be unpigmented conforming to ASTM D-3222 material requirements and to be USDA Title 21 Chapter 1 Part 177. 2510 requirements for contact with food.
11. Socket ends in PVC and CPVC shall be Schedule 80 and conform to ASTM D-2467.
12. Threaded ends shall be Schedule 80 and conform to ASTM D-2464.
13. Butt fusion ends in PP or PVDF will be compatible with Chemline PP or PVDF metric piping systems.
14. Flanged ends shall be ANSI Class 150 one-piece factory moulded (not fabricated) to ensure maximum strength and close tolerance end to end dimensions.

## ORDERING EXAMPLE

| | | | | | | for ChemFlare™ ends only | | all other ends |
|---|---|---|---|---|---|---|---|---|
| **Chemline True Union Ball Valves** | **21** | **A** | **005** | **E** | **V** | **–A** | **8N** | **–1** |
| Body Material | **A** – PVC **B** – PP | **C** – CPVC **K** – PVDF | | | | | | |
| Size[1] | **002** – 1/4" **010** – 1" **025** – 2-1/2" | **003** – 3/8" **012** – 1-1/4" **030** – 3" | **005** – 1/2" **015** – 1-1/2" **040** – 4" | **007** – 3/4" **020** – 2" **060** – 6" | | | | |
| Seals | **E** – EPDM | **V** – FKM (Viton®) | **N** – Nitrile | **A** – Aflas® | | | | |
| ChemFlare™ End Connecters for valves 3/8" to 1-1/4" | | | | | | | | |
| Material | **A** – PVC | **B** – PP | **C** – CPVC | **K** – PVDF | | | | |
| Tube Size[3] | **4N** – 1/4" | **6N** – 3/8" | **8N** – 1/2" | **12N** – 3/4" | **16N** – 1" | **20N** – 1-1/4" | | |
| Tube Nut | **–1** – includes nut | **Blank** – without nut | | | | | | |
| Ends | **S** – Socket | **T** – Threaded | **C** – Combo[2] | **F** – Flanged | **B** – Butt[3] | | | |

**Example:** Chemline Type 21 True Union Ball Valve, PVC, 1/2", with FPM (Viton®) seals, PVC ChemFlare™ end connectors, 1/2" tube size, including nuts.

[1] 1/4" is normally the 3/8" valve reduced. 6" is 4" valve with 6" end connections

[2] PVC and CPVC valves 1/2" to 2" are available as Combo (socket and threaded ends)

[3] Tube size must be equal or smaller than the valve size

[4] PP, PVDF and ECTFE (Halar®) metric butt fusion ends (1/2" to 4") connect to Chemline PP, PVDF and ECTFE (Halar®) piping systems

CHEMLINE PLASTICS
SUPERIOR FLOW SOLUTIONS

55 Guardsman Road, Thornhill, ON, L3T 6L2, Canada | ISO 9001:2015 Certified
1.800.930.2436 (CHEM) | fax.905.889.8553 | request@chemline.com | chemline.com

# CS-308-200 : Identification sheet

| | | | |
|---|---|---|---|
| VWTC PROJECT NUMBER: | 5000220043 | REV: | 4 |
| PROJECT NAME: | AEM MELIADINE - BPC UPGRADE | SUBMITTED TO (COMPANY): | AEM |
| ENGINEER: | CHRIS EL KHAZAKA | SUBMITTED TO (RESPONSIBLE) | |
| PROJECT MANAGER: | THOMAS SAVARY / BRUCE BORDES | PROJECT NUM REFERENCE.: | 6526-S-265-605 / OC-989680 |
| PHONE NUMBER: | 514-334-7230 | LOT NUMBER: | |

| SUPPLIER | EQPT CODE | EQPT TAG NO | DIA | DESCRIPTION | INFO 1 | INFO 2 | INFO 3 | APPLIC. | NOTE | REV |
|---|---|---|---|---|---|---|---|---|---|---|
| CHEMLINE | VANEPV300121 | 15-BA99-0596 | DIA: 13 mm (1/2") | MANUAL CONTROL VALVE | TYPE: NEEDLE VALVE \| 150 PSI, TEMP DEPENDENT//MANUFACTURER : CHEMLINE//MODEL : NGA005//CONNECTION TYPE : THREADED \| 13 mm (1/2")//BODY : PVC// SEAL \| SEAT :PTFE \| N/A// STEM : N/A | | | TURBIDITY + SWAN INSTRUMENTATION SKID | | 3 |
| CHEMLINE | VANEPV300121 | 15-BA99-0597 | DIA: 13 mm (1/2") | MANUAL CONTROL VALVE | TYPE: NEEDLE VALVE \| 150 PSI, TEMP DEPENDENT//MANUFACTURER : CHEMLINE//MODEL : NGA005//CONNECTION TYPE : THREADED \| 13 mm (1/2")//BODY : PVC// SEAL \| SEAT :PTFE \| N/A// STEM : N/A | | | TURBIDITY + SWAN INSTRUMENTATION SKID | | 3 |
| CHEMLINE | VANEPV300121 | 15-BA99-0598 | DIA: 13 mm (1/2") | MANUAL CONTROL VALVE | TYPE: NEEDLE VALVE \| 150 PSI, TEMP DEPENDENT//MANUFACTURER : CHEMLINE//MODEL : NGA005//CONNECTION TYPE : THREADED \| 13 mm (1/2")//BODY : PVC// SEAL \| SEAT :PTFE \| N/A// STEM : N/A | | | TURBIDITY + SWAN INSTRUMENTATION SKID | | 3 |

**This page is intentionally left blank**

PDF Published March 1, 2013

# Needle Valves

CHEMLINE PLASTICS
SUPERIOR FLOW SOLUTIONS

Chemline N Series Needle Valves are designed for fine throttling of corrosive and ultrapure fluids at low flow rates. Because the seal material is PTFE, these valves are suitable for aggressive chemicals where similar valves with elastomer seals will not stand up.

PVC | CPVC | PPG[1]

SERIES: NG – Globe Body
NA – Angle Body

SIZES: 1/4", 3/8" & 1/2"

ENDS: Female NPT

STEM SEALS: PTFE

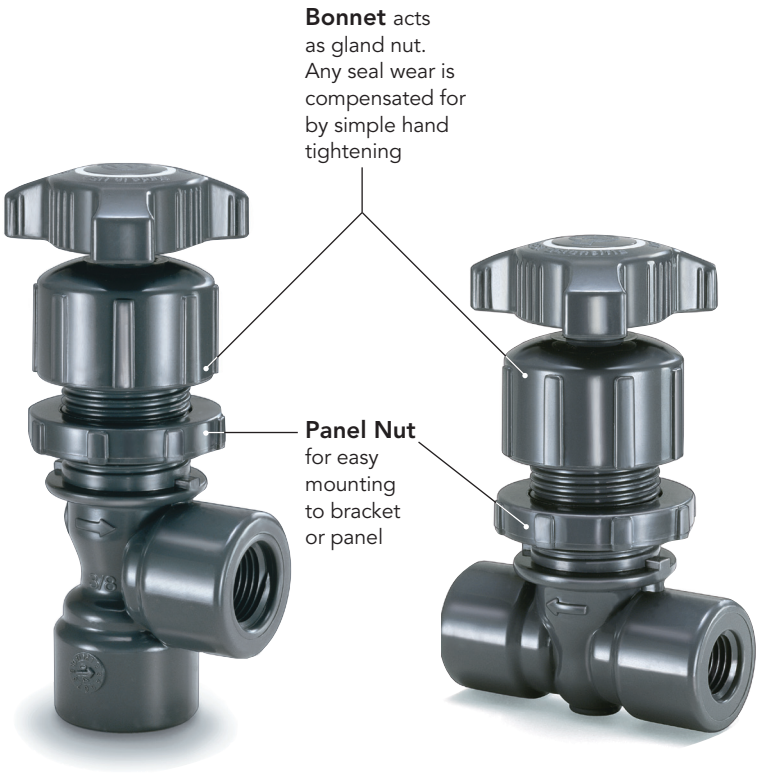


**Angle Body** **Globe Body**

## features

### Precise Control with Fine Adjustment

- Precision machined seat and matching ground needle tip along with a 24 pitch fine thread stem (five turns from closed to full-open) provides for excellent flow control. Better control of reagents can mean significant cost savings.

### High Chemical Resistance

- All parts are plastic or PTFE. No elastomers or metal parts are used.

### Lubrication Free

- No silicone or other lubricants are used

### Easy Maintenance

- Seal wear is compensated for by hand tightening the cap (gland). Valve can be serviced in-line. Simply unscrew bonnet to remove complete topworks for inspection or disassembly.

### Heavy Duty Construction

- Thick stems

[1] PPG=Glass Reinforced Polypropylene.

03/13 ©Chemline Plastics Limited 2013
Chemline is a registered trade mark of Chemline Plastics Limited

# Needle Valves

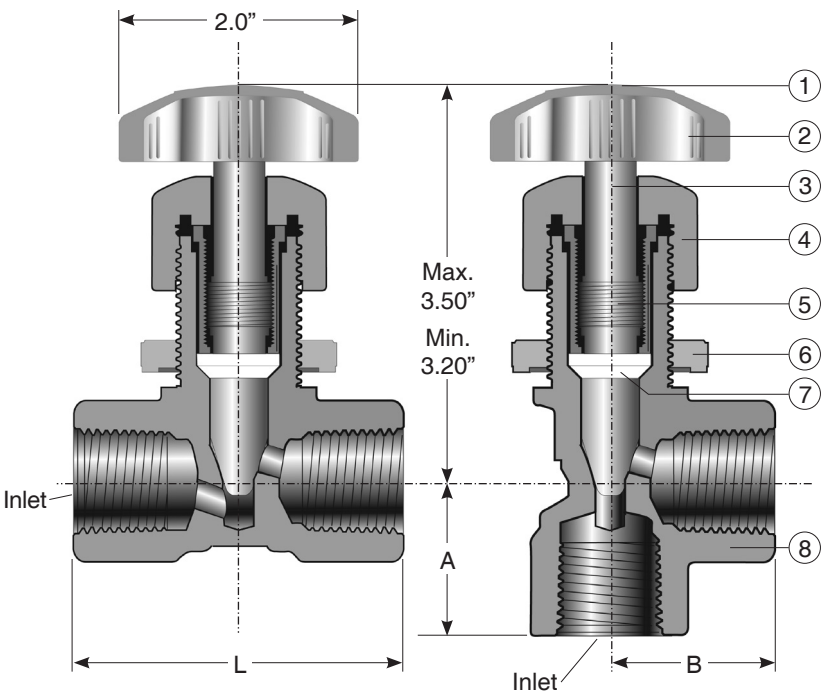


**Globe Body** **Angle Body**

## PARTS

| No. | Part | Pcs. | Materials |
|---|---|---|---|
| 1 | Ring Insert[1] | 1 | PVC |
| 2 | Handle | 1 | PVC, CPVC, PPG |
| 3 | Stem/Needle | 1 | PVC, CPVC, PPG |
| 4 | Bonnet | 1 | PVC, CPVC, PPG |
| 5 | Thread Insert | 1 | Nylon[2], PPG |
| 6 | Panel Nut | 1 | PVC, CPVC, PPG |
| 7 | Seal | 1 | PTFE |
| 8 | Body | 1 | PVC, CPVC, PPG |

[1] Standard colour for Ring Inserts: PVC=white, CPVC=black, PP=blue.
[2] Threaded insert is reinforced Nylon for PVC and CPVC valves, PPG for PPG valves.

## DIMENSIONS INCHES

## NET WEIGHTS LB.

## Cv VALUES

| Size | L | A | B | Globe | Angle | Outlet Orifice | PVC | CPVC | PPG | Globe Body | Angle Body |
|---|---|---|---|---|---|---|---|---|---|---|---|
| 1/4” | 2.31 | 1.16 | 1.17 | .187 | .250 | .187 | .25 | .27 | .27 | .31 | .43 |
| 3/8” | 2.39 | 1.19 | 1.21 | .187 | .250 | .187 | .25 | .27 | .27 | .31 | .43 |
| 1/2” | 2.65 | 1.31 | 1.32 | .218 | .250 | .218 | .25 | .27 | .27 | .62 | .78 |

## WORKING PRESSURES PSI

| | PVC | CPVC | | | PPG | | |
|---|---|---|---|---|---|---|---|
| Size | 0-50°C 32-122°F | 0-65°C 32-149°F | 80°C 176°F | 90°C 194°F | –20-30°C –4-86°F | 60°C 140°F | 75°C 167°F |
| 1/4” | 150 | 150 | 100 | 60 | 150 | 100 | 60 |
| 3/8” | 150 | 150 | 100 | 60 | 150 | 100 | 60 |
| 1/2” | 150 | 150 | 100 | 60 | 150 | 100 | 60 |

**Temperature Ranges: PVC** 0 to 60°C (32 to 140°F), **CPVC** 0 to 95°C (32 to 203°F), **PPG** –20 to 75°C (–4 to 167°F)

## Sample Specification

All (PVC/CPVC/PPG) Needle Valves 1/4” to 1/2” shall be Chemline N Series (Globe/Angle) body with PTFE seal and no elastomers. Valves will have 24 pitch stem threads for fine control and have panel mounting capability.

## ORDERING EXAMPLE

| Chemline Needle Valves | | | N | G | A | 005 |
|---|---|---|---|---|---|---|
| Body Pattern | **G** – Globe | **A** – Angle | | | | |
| Valve Material | **A** – PVC | **B** – PPG | **C** – CPVC | | | |
| Size | **002** – 1/4” | **003** – 3/8” | **005** – 1/2” | | | |

**Example:** Needle Valve, Globe Pattern, PVC, 1/2”, threaded ends.

## VACUUM RATING

- 29.9 inches mercury

## OPTIONS

- Black, white, blue or red rings are available for colour coding

CHEMLINE PLASTICS
SUPERIOR FLOW SOLUTIONS

55 Guardsman Road, Thornhill, ON, L3T 6L2, Canada | ISO 9001:2008 Certified
tel.905.889.7890 | fax.905.889.8553 | request@chemline.com | chemline.com

# CS-309-400 : Identification sheet

| | | | |
|---|---|---|---|
| VWTC PROJECT NUMBER: | 5000220043 | REV: | 4 |
| PROJECT NAME: | AEM MELIADINE - BPC UPGRADE | SUBMITTED TO (COMPANY): | AEM |
| ENGINEER: | CHRIS EL KHAZAKA | SUBMITTED TO (RESPONSIBLE) | |
| PROJECT MANAGER: | THOMAS SAVARY / BRUCE BORDES | PROJECT NUM REFERENCE.: | 6526-S-265-605 / OC-989680 |
| PHONE NUMBER: | 514-334-7230 | LOT NUMBER: | |

| SUPPLIER | EQPT CODE | EQPT TAG NO | DIA | DESCRIPTION | INFO 1 | INFO 2 | INFO 3 | APPLIC. | NOTE | REV |
|---|---|---|---|---|---|---|---|---|---|---|
| CHEMLINE | VAPSPV303450 | 15-PRV99-0599 | DIA: 1/2" | PRESSURE REGULATING VALVE | TYPE: PRESSURE REDUCING//MANUFACTURER : CHEMLINE//MODEL : SR50-A-005-E-U//CONNECTION TYPE : UNION SOCKET \| 1/2"//BODY : PVC// SEAL \| SEAT :EPDM \| // STEM : N/A | | | TURBIDITY + SWAN INSTRUMENTATION SKID | | 4 |

**This page is intentionally left blank**

PDF Published December 14, 2020

# SR50 Series Pressure Regulating (Reducing) Valves

CHEMLINE PLASTICS
SUPERIOR FLOW SOLUTIONS

The Chemline **SR 50 Series** Pressure Regulating (Reducing) valves maintains a set downstream pressure independent of higher variable upstream pressures. As downstream pressure increases reaching the set pressure, the valve closes. It opens as soon as the downstream pressure decreases below set pressure.

The SR 50 is sensitive and provides precise control. One application is to protect filters from damaging pressure surges.

PVC PP PVDF

CRN Registered as Category C Fittings Consult Chemline

NSF[3] Certified to NSF/ANSI 61

SERIES: SR50

SIZES: 3/8" – 3"

ENDS: True Union Socket, Threaded or ChemFlare™[1] Spigot[2] Bodies with Plain, Socket, Threaded or Flanged ends

DIAPHRAGM: PTFE Bonded EPDM

SEALS: EPDM, FKM (Viton®)






**ChemFlare™ Ends**
For connection to PFA tube. Leak-free connections for difficult services such as sodium hypochlorite.



**Optional Pressure Gauge**
For inlet and/or outlet

## features

### True Union Ends
- Easy installation and maintenance
- Eliminate chemical leakage problems common with old fashioned threaded connections

### Long Cycling Life
- Dynamic seal is PTFE bonded EPDM for high chemical resistance
- This moulded diaphragm is designed for superior sealing and flex life

### Designed for Superior Performance
- Designed for minimum hysteresis
- Seat is hydraulically designed to eliminate chatter

### CRN Registration numbers by province
- Ontario: OC10134.5
- Newfoundland: OC10134.50
- Alberta: OC10134.52
- Saskatchewan/Manitoba/Quebec: OC10134.56
- New Brunswick: OC10134.57
- Nova Scotia: OC10134.58
- P.E.I.: OC10134.59
- British Columbia: not required

## technical

### Downstream Set Pressure Ranges
- 1/2" to 2" – 15 to 130 psi
- 2-1/2" and 3" – 15 to 90 psi

### Maximum Viscosity
- 120cP is maximum recommended service viscosity

[1] For ChemFlare™ end connectors, consult Chemline
[2] PP and PVDF spigot ends have DIN dimensions and will butt fuse directly to Chemline PP and PVDF piping systems
[3] PVC valves with EPDM or FKM (Viton®) seals are certified under NSF/ANSI Standard 61 for contact with drinking water

12/20 ©Chemline Plastics Limited 2020
Chemline is a registered trade mark of Chemline Plastics Limited

# Pressure Regulating (Reducing) Valves

## how they work

The SR50 controls downstream pressure, which must always be below the inlet pressure. It is normally open until the downstream pressure (which acts on the control diaphragm) reaches the set pressure, adjustable with the spring tensioning bolt. At this point the valve closes. It opens again as soon as downstream pressure decreases slightly below the set pressure.

The large diaphragm provides for sensitive and precise control. The valve seat opens and closes until a balance is achieved between the spring force (set pressure) and the downstream pressure.

## working pressure vs. flow rate

The curves show the relationship between the ***working pressure*** and the flow rate through the valve for water at 20°C (68°F). These values will vary depending on:

- the configuration of the piping and the pressure losses associated with it
- the fluid if not water at 20°C (68°F)
- whether the pressure is rising or falling, ***hysteresis*** is approximately 1.5 to 6 psi.

## configuration example

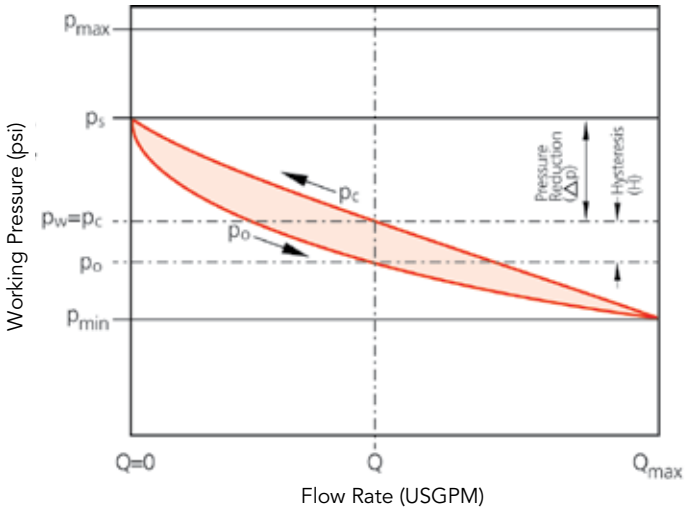


$p_s$ = set pressure
$p_w$ = working pressure
$p_o$ = opening pressure
$p_c$ = closing pressure
$p_p$ = pump pressure
H = $p_o - p_c$ = hysteresis
Δp = $p_w - p_s$ = flow dependent pressure reduction
Q = flow

## application of pressure regulating valves

### Secondary Pressure – System Dynamically Flowing

If the ball valve is closed, the working pressure $P_W$ rises by the amount of the closing pressure $P_C$

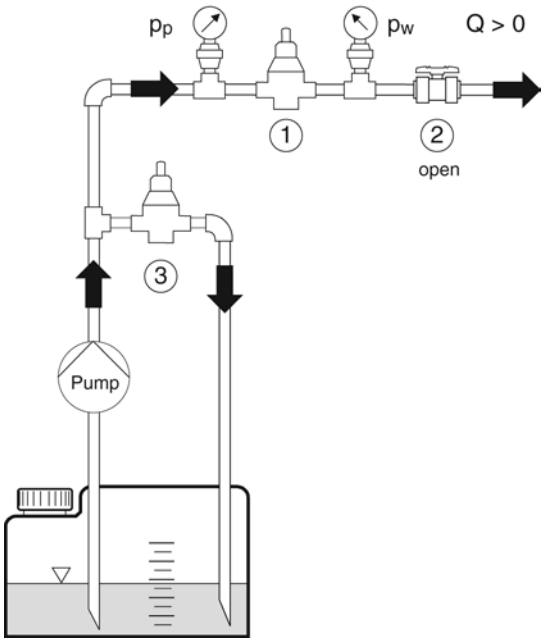


### Secondary Pressure – System Closed

If the ball valve is opened, the working pressure $P_W$ drops by the amount of the opening pressure $P_O$

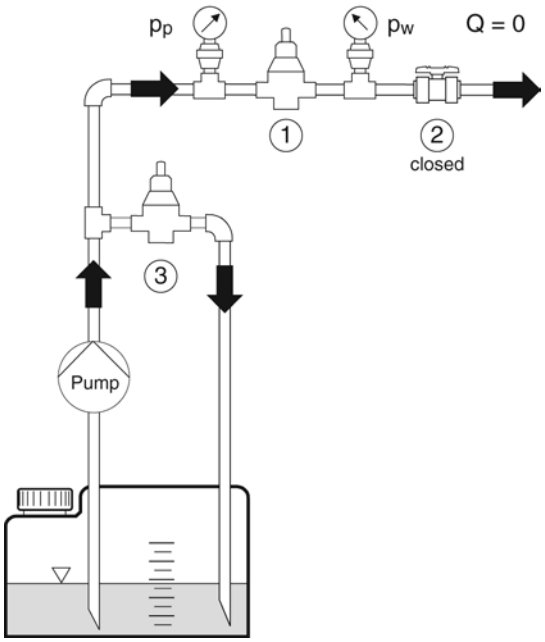


① = pressure reducing valve
② = ball valve
③ = pressure relief valve

# Pressure Regulating (Reducing) Valves 3/8" to 2"

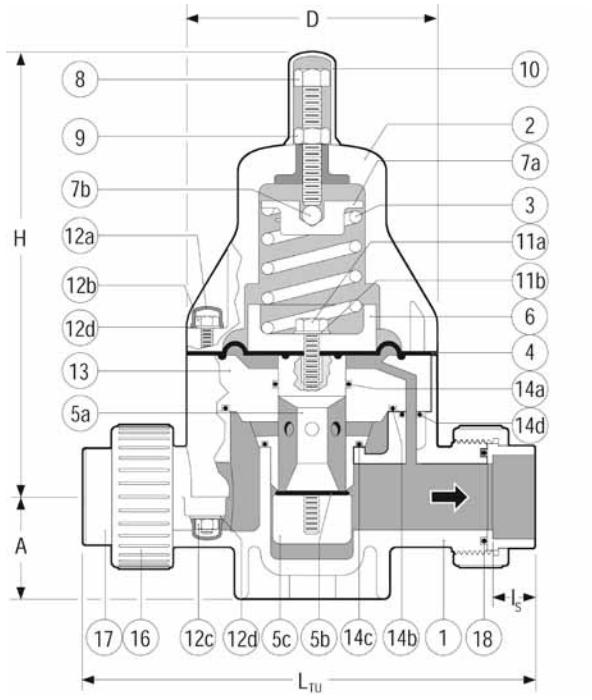


True Union Body

## OTHER ENDS

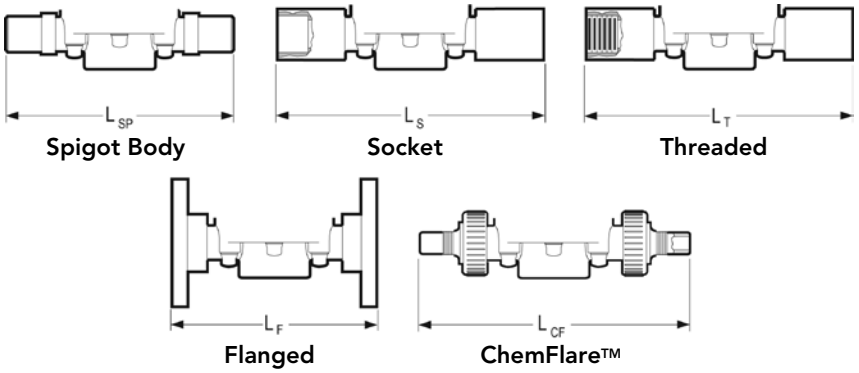


Spigot Body | Socket | Threaded | Flanged | ChemFlare™

## PARTS

▲ Recommended Spare Parts

| No. | Part | Pcs. | Materials |
|---|---|---|---|
| 1 | Body | 1 | PVC, PP, PVDF |
| 2 | Bonnet | 1 | PPG |
| 3 | Spring | 1 | Galvanized Steel |
| 4▲ | Control Diaphragm | 1 | PTFE bonded EPDM |
| 5a▲ | Piston | 1 | PVC, PP, PVDF |
| 5b▲ | Seat | 1 | EPDM, FPM(Viton®) |
| 5c▲ | Seat Retainer | 1 | PVC, PP, PVDF |
| 6 | Lower Spring Retainer | 1 | PPG |
| 7a | Upper Spring Retainer | 1 | Cad. Plated Steel |
| 7b | Ball | 1 | 304 SS |
| 8 | Spring Tensioning Bolt | 1 | 304 SS |
| 9 | Lock Nut | 1 | 304 SS |
| 10 | Spring Bolt Cap | 1 | PE |
| 11a | Piston Bolt | 1 | 304 SS |
| 11b | Piston Bolt Washer | 1 | 304 SS |
| 12a | Bolt/Nut Caps | 8/12[1] | PE |
| 12b | Hex Bolt | 4/6[1] | 304 SS |
| 12c | Hex Nut | 4/6[1] | 304 SS |
| 12d | Washer | 8/12[1] | 304 SS |
| 13 | Piston Guide | 1 | PVC, PP, PVDF |
| 14a▲ | Small Guide O-Ring | 1 | EPDM, FPM(Viton®) |
| 14b▲ | Large Guide O-Ring | 1 | EPDM, FPM(Viton®) |
| 14c▲ | Med. Guide O-Ring | 1 | EPDM, FPM(Viton®) |
| 14d▲ | Pilot Port O-Ring | 1 | EPDM, FPM(Viton®) |
| 16 | Union Nut | 2 | PVC, PP, PVDF |
| 17 | End Connector | 2 | PVC, PP, PVDF |
| 18▲ | Face O-Ring | 2 | EPDM, FPM(Viton®) |

[1] 1/2" size / 3/4" to 2" sizes.

## DIMENSIONS INCHES

## WEIGHTS LB.

| Size | D | H | PVC A | PVC $I_S$ | PVC $L_{TU}$[2] | PVC $L_{SP}$[3] | PVC $L_S$ | PVC $L_T$ | PVC $L_F$ | PVC $L_{CF}$ | PP and PVDF A | PP and PVDF $L_{SP}$[3] | PP and PVDF $L_{TU}$[2] | PVC | PP | PVDF |
|---|---|---|---|---|---|---|---|---|---|---|---|---|---|---|---|---|
| 3/8" | 3.2 | 6.9 | 1.0 | 0.6 | 6.5 | 5.7 | 7.4 | 7.2 | 4.5 | – | 0.9 | 5.7 | ** | 1.8 | 1.5 | 2.2 |
| 1/2" | 3.2 | 6.9 | 1.0 | 0.6 | 6.8 | 5.7 | 8.0 | 7.8 | 6.3 | 8.3[4] | 0.9 | 5.7 | 7.1 | 1.9 | 1.6 | 2.4 |
| 3/4" | 4.2 | 8.0 | 1.5 | 0.7 | 8.3 | 6.9 | 9.3 | 8.9 | 7.4 | 9.7 | 1.4 | 6.9 | 8.4 | 4.1 | 3.5 | 4.6 |
| 1" | 4.2 | 8.0 | 1.5 | 0.9 | 8.5 | 6.9 | 9.6 | 9.3 | 7.4 | 10.2 | 1.4 | 6.9 | 8.7 | 4.2 | 3.5 | 4.7 |
| 1-1/4" | 5.8 | 10.3 | 2.2 | 1.0 | 10.9 | 8.8 | 11.6 | 11.2 | 9.2 | – | 2.1 | 8.8 | 10.9 | 11.0 | 9.0 | 12.0 |
| 1-1/2" | 5.8 | 10.3 | 2.2 | 1.2 | 11.1 | 8.8 | 12.2 | 11.5 | 9.5 | – | 2.1 | 8.8 | 11.2 | 11.2 | 9.2 | 12.2 |
| 2" | 5.8 | 10.3 | 2.2 | 1.5 | 11.3 | 9.6 | 12.9 | 12.0 | 10.0 | – | 2.1 | 9.6 | 13.2 | 11.4 | 9.4 | 12.4 |

[2] True Union bodies come standard with socket ends. Threaded union ends are available. ** Consult Chemline.
[3] Spigot bodies are used for non union socket, threaded or flanged ends. All spigot ends have metric dimensions and the PP and PVDF spigots butt fuse directly to Chemline PP and PVDF piping. [4] Tube size can be reduced to 1/4" tube, LCF = 7.74" for 1/4", 8.26" for 3/8".

## MAXIMUM PRESSURES PSI

| Size | PVC 20°C 68°F | PVC 30°C 86°F | PVC 40°C 104°F | PVC 50°C 122°F | PP 30°C 86°F | PP 40°C 104°F | PP 50°C 122°F | PP 60°C 140°F | PP 70°C 158°F | PVDF 30°C 86°F | PVDF 50°C 122°F | PVDF 70°C 158°F | PVDF 80°C 176°F | PVDF 90°C 194°F | PVDF 100°C 212°F |
|---|---|---|---|---|---|---|---|---|---|---|---|---|---|---|---|
| 1/2"– 2" | 150 | 105 | 60 | 15 | 150 | 90 | 60 | 37.5 | 15 | 150 | 100 | 60 | 45 | 30 | 15 |

**Temperature Ranges: PVC** 0 to 50°C (–32 to 122°F), **PP** 10 to 70°C (50 to 158°F), **PVDF** –30 to 100°C (–22 to 212°F).

# Pressure Regulating (Reducing) Valves 2-1/2", 3"

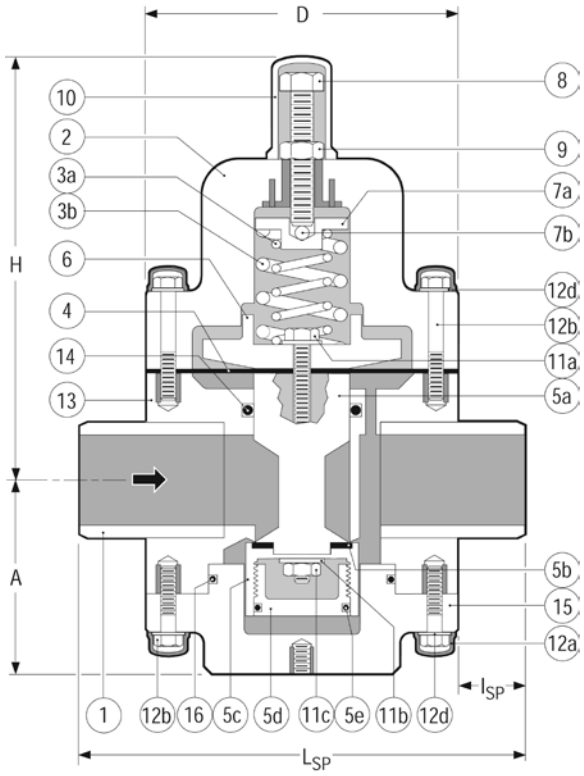


**Spigot Body**

## NON UNION ENDS

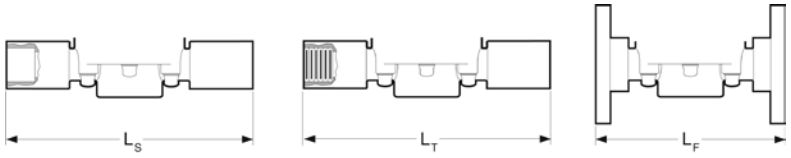


**Socket** **Threaded** **Flanged**

## PARTS

▲ Recommended Spare Parts

| No. | Part | Pcs. | Materials |
|---|---|---|---|
| 1 | Body | 1 | PVC, PP, PVDF |
| 2 | Bonnet | 1 | PPG |
| 3a/3b | Spring Set | 2 | Galvanized Steel |
| 4▲ | Control Diaphragm | 1 | PTFE bonded EPDM |
| 5a▲ | Piston | 1 | PVC, PP, PVDF |
| 5b▲ | Seat | 1 | EPDM, FPM(Viton®) |
| 5c▲ | Seat Retainer | 1 | PVC, PP, PVDF |
| 5d▲ | Retainer Plug | 1 | PVC, PP, PVDF |
| 5e▲ | Plug O-Ring | 1 | EPDM, FPM(Viton®) |
| 6 | Lower Spring Retainer | 1 | PPG |
| 7a | Upper Spring Retainer | 1 | Cad. Plated Steel |
| 7b | Ball | 1 | 304 SS |
| 8 | Tensioning Bolt | 1 | 304 SS |
| 9 | Lock Nut | 1 | 304 SS |
| 10 | Spring Bolt Cap | 1 | PE |
| 11a | Piston Bolt | 1 | 304 SS |
| 11b | Piston Bolt Washer | 1 | 304 SS |
| 11c | Piston Nut | 1 | 304 SS |
| 12a | Bolt/Nut Cap | 20 | PE |
| 12b | Bolt/Stud Set | 12[1] | 304 SS |
| 12c | Hex Nut | 16 | 304 SS |
| 12d | Washer | 20 | 304 SS |
| 13 | Piston Guide | 1 | PVC, PP, PVDF |
| 14▲ | Guide O-Ring | 1 | EPDM, FPM(Viton®) |
| 15 | Base | 1 | PVC, PP, PVDF |
| 16 | Base O-Ring | 1 | EPDM, FPM(Viton®) |

[1] 2 large upper bolts, 2 shorter lower bolts, 8 studs

## DIMENSIONS INCHES

| Size | PVC, PP & PVDF A | D | H | $L_{SP}$[2] | $l_{SP}$ | PVC $L_S$ | $L_T$ | $L_F$ |
|---|---|---|---|---|---|---|---|---|
| 2-1/2" | 4.8 | 7.7 | 10.4 | 11.2 | 1.7 | 14.5 | 14.0 | 12.2 |
| 3" | 5.6 | 9.8 | 13.4 | 14.2 | 2.2 | 16.0 | 15.5 | 15.0 |

[2] Plain spigot ends in PP and PVDF may be butt fused directly to Chemline PP and PVDF piping systems.

## WEIGHTS LB.

| Size | PVC | PP | PVDF |
|---|---|---|---|
| 2-1/2" | 27.5 | 26.2 | 31.0 |
| 3" | 33.0 | 29.7 | 37.8 |

Weights based on spigot bodies.

## ORDERING EXAMPLE

| | | | | | for ChemFlare™ ends only | | all other ends |
|---|---|---|---|---|---|---|---|
| **Chemline Pressure Regulating Valves** | **SR50** | **A** | **005** | **V** | **–A** | **8N** | **–1** |

Body Material **A** – PVC **B** – PP **K** – PVDF

Size **003** – 3/8" **005** – 1/2" **007** – 3/4" **010** – 1" **012** – 1-1/4" **015** – 1-1/2" **020** – 2" **025** – 2-1/2" **030** – 3"

Elastomers **E** – EPDM **V** – FPM (Viton®)

ChemFlare™ End Connecters for valves 3/8" to 1-1/4"

Material **A** – PVC **B** – PP **C** – CPVC **K** – PVDF

Tube Size[3] **4N** – 1/4" **6N** – 3/8" **8N** – 1/2" **12N** – 3/4" **16N** – 1" **20N** – 1-1/4"

Tube Nut **–1** – includes nut **Blank** – without nut

Ends **S** – Socket **T** – Threaded **F** – Flanged **U** – Union Socket **Blank** – Spigot (Butt)

**Example:** Chemline SR50 Series, PVC, 1/2" diameter, FPM (Viton®) seals, PVC ChemFlare™ end connectors, 1/2" tube size, including nuts.

[3] Tube size must be equal or smaller than the valve size.

# Pressure Regulating (Reducing) Valves 3/8" to 2"

### 3/8" Valves

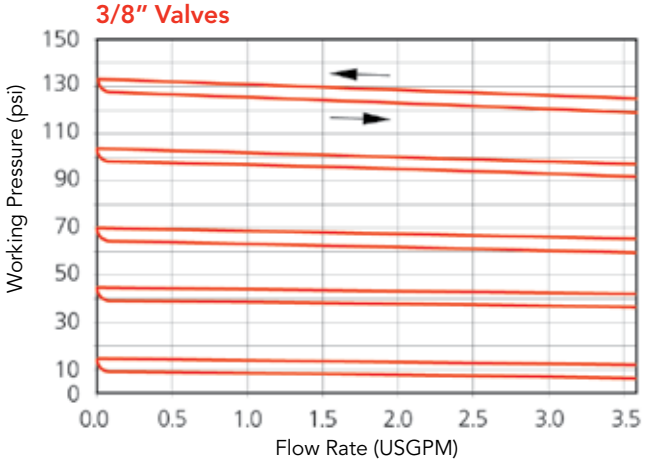


### 1/2" Valves

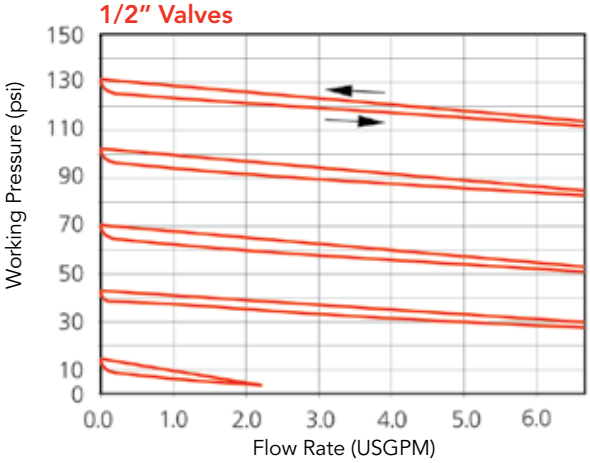


### 3/4" Valves

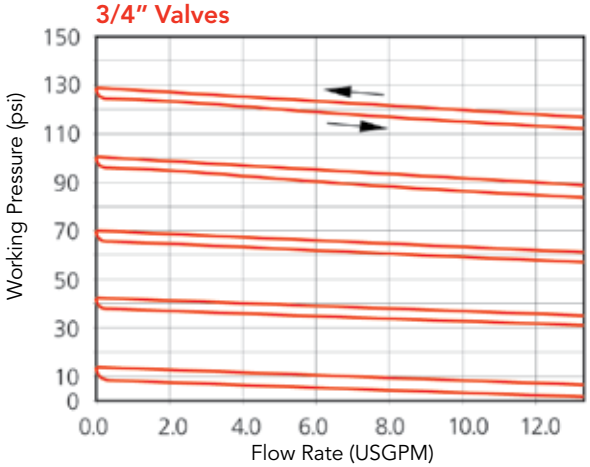


### 1" Valves

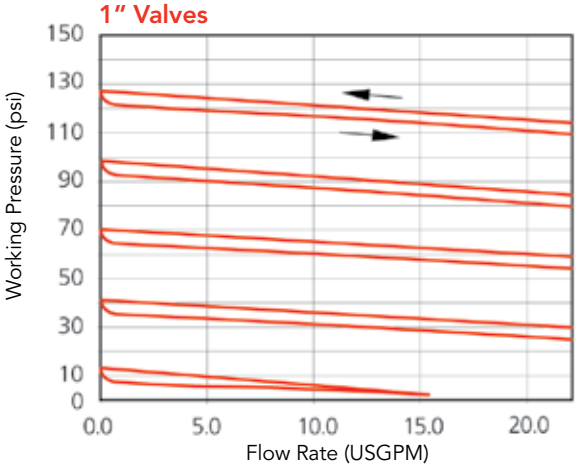


### 1-1/4" Valves

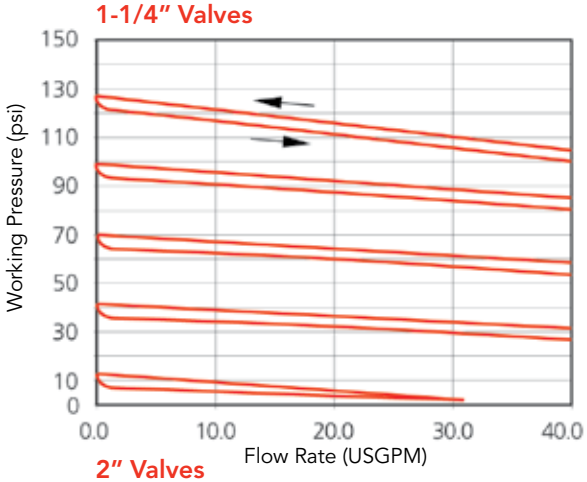


### 1-1/2" Valves

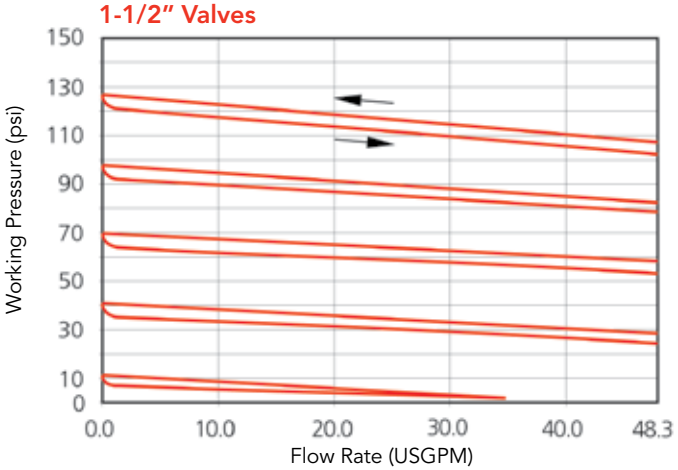


### 2" Valves

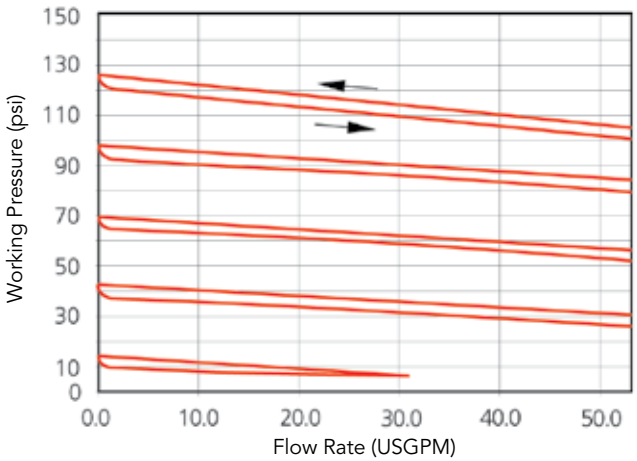

# Pressure Regulating (Reducing) Valves 2-1/2", 3"

## MAXIMUM PRESSURES PSI

| Size | PVC | | | | PP | | | | | | PVDF | | | | | |
|---|---|---|---|---|---|---|---|---|---|---|---|---|---|---|---|---|
| | 20°C 68°F | 30°C 86°F | 40°C 104°F | 50°C 122°F | 20°C 68°F | 30°C 86°F | 40°C 104°F | 50°C 122°F | 60°C 140°F | 70°C 158°F | 30°C 86°F | 50°C 122°F | 70°C 158°F | 80°C 176°F | 90°C 194°F | 100°C 212°F |
| 2-1/2" – 3" | 150 | 90 | 45 | 15 | 150 | 115 | 90 | 60 | 37.5 | 15 | 150 | 95 | 55 | 35 | 25 | 15 |

**Temperature Ranges: PVC** 0 to 50°C (–32 to 122°F), **PP** 10 to 70°C (50 to 158°F), **PVDF** –30 to 100°C (–22 to 212°F).

## working pressures vs. flow rate

### 2-1/2" Valves

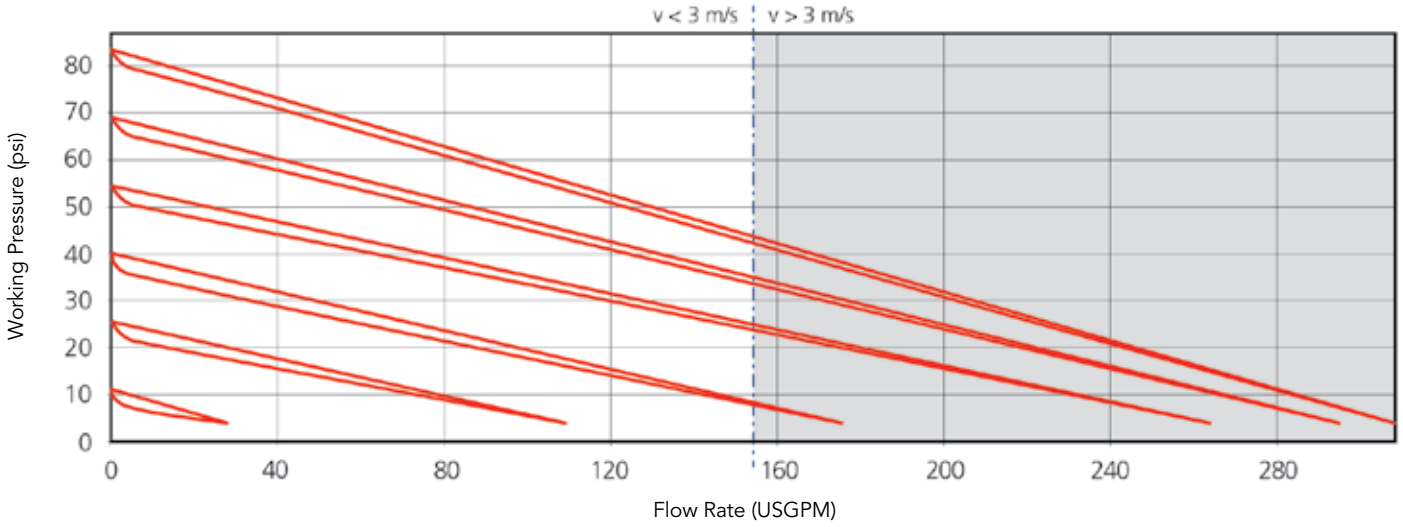


### 3" Valves

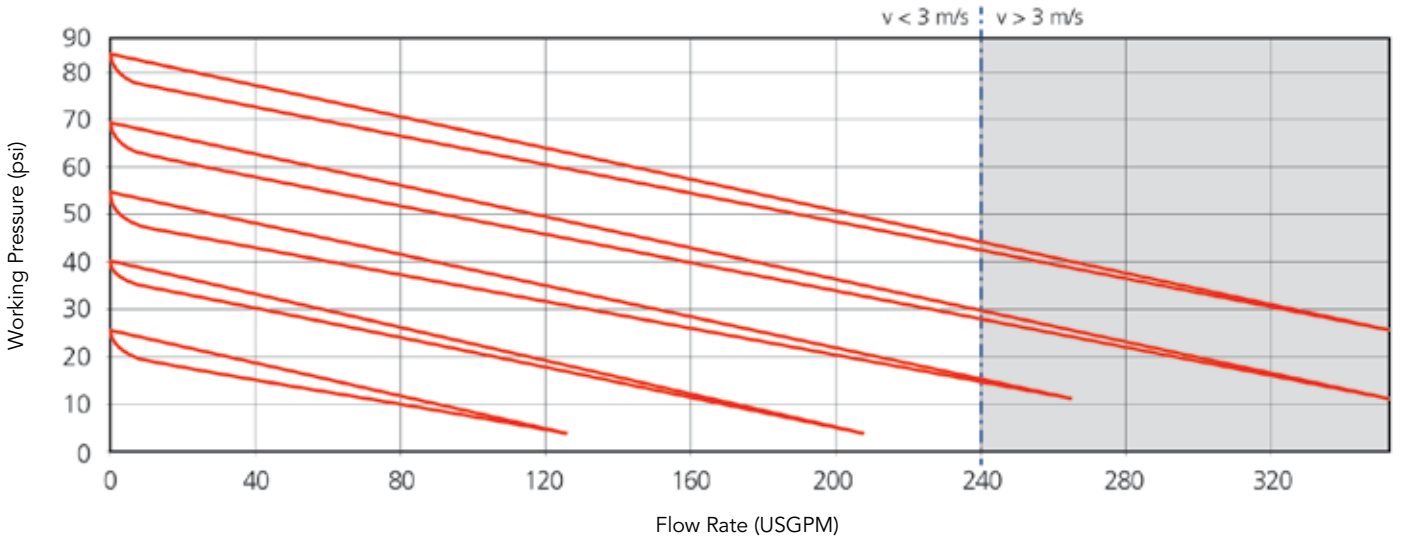




55 Guardsman Road, Thornhill, ON, L3T 6L2, Canada | ISO 9001:2015 Certified
1.800.930.2436 (CHEM) | fax.905.889.8553 | request@chemline.com | chemline.com

# *4 – DETAILED TECHNICAL DOCUMENTATION*

## *4.2 – SHOP DRAWINGS*

## *4.2.12 – CATHODIC PROTECTION SYSTEM*

LEFT BLANK

| | |
|---|---|
| **Project name:** | MELIADINE-BPC UPGRADE |
| **Project#:** | 5000220043 / 6526-S-265-605 / OC-989680 |
| **Document #:** | SPK_0008_SKG_VWT |
| **by:** | CEK |
| **chkd:** | ED |
| **appvd:** | TS |

# SUBMITTAL PACKAGE

# CATHODIC PROTECTION SYSTEM

**REV 2**
**DATE:2021-05-27**

**This page is intentionally left blank**

# Pier, Piling, and Ballast Tank

## Cast Aluminum Anodes

### Corrosion Control In Saltwater Environments

Aluminum anodes are used more often than any other type of galvanic material in saltwater environments due to their relatively low consumption rate of approximately 7 lbs. per amp.-year. To meet the demand for this effective anode material, Corrpro manufactures an extensive array of aluminum anodes in two different alloys. The anodes are cast in a variety of weights and configurations to address numerous installation possibilities. Steel cores cast into each anode allow for electrical connection. The cores are available in bolt-on, eyebolt, pie, rod, or weld-on configurations, and can also be provided with lead wire upon request.

Because alloy composition is so important to the performance of galvanic anodes, Corrpro performs a number of quality control tests to ensure its aluminum anodes conform to the proper alloying specifications. The firm conducts atomic absorption, inductive coupled plasma, or Baird spectrovac optical emission tests to confirm chemical composition. The results of these tests are obtained using traceable standards developed by the National Institute of Standards and Technology.

### Typical Applications

Aluminum anodes produced by Corrpro are designed for superior performance in saltwater environments. The first alloy, which has an open circuit potential of 1.05 volts (with respect to an Ag/AgCl reference cell), contains a nominal amount of mercury, and is recommended for use only in free-flowing saltwater environments. The second anode has an open circuit potential of 1.10 volts, and produces a higher ampacity and better performance than the previous alloy in lower chloride water and saline mud electrolytes.

### CHEMICAL COMPOSITION

| Element | Content % | |
|---|---|---|
| | Alloy 1 | Alloy 2 |
| Zn | 0.35-0.50 | 2.8-3.5 |
| Si | 0.14-0.21 max | 0.08-0.20 max |
| Hg | 0.035-0.048 | – |
| In | – | 0.01-0.02 |
| Aluminum | Remainder | Remainder |





### Ordering Procedure

Corrpro aluminum anodes are manufactured in a variety of dimensions and weights, and are offered with several different core types. To order the required anode for your structure, indicate that you need an aluminum pier, piling, or ballast tank anode, and specify the quantity desired, alloy grade, anode type, and core configuration. All anodes are shipped without lead wire unless otherwise specified. An example is provided to help illustrate this process.

CORRPRO COMPANIES INC
For Every Corner of Your World

1090 Enterprise Drive / Medina, OH 44256
Tel: 1-330-723-5082 / Fax: 1-330-723-0694
http://www.corrpro.com

# Pier, Piling, and Ballast Tank

## Cast Aluminum Anodes

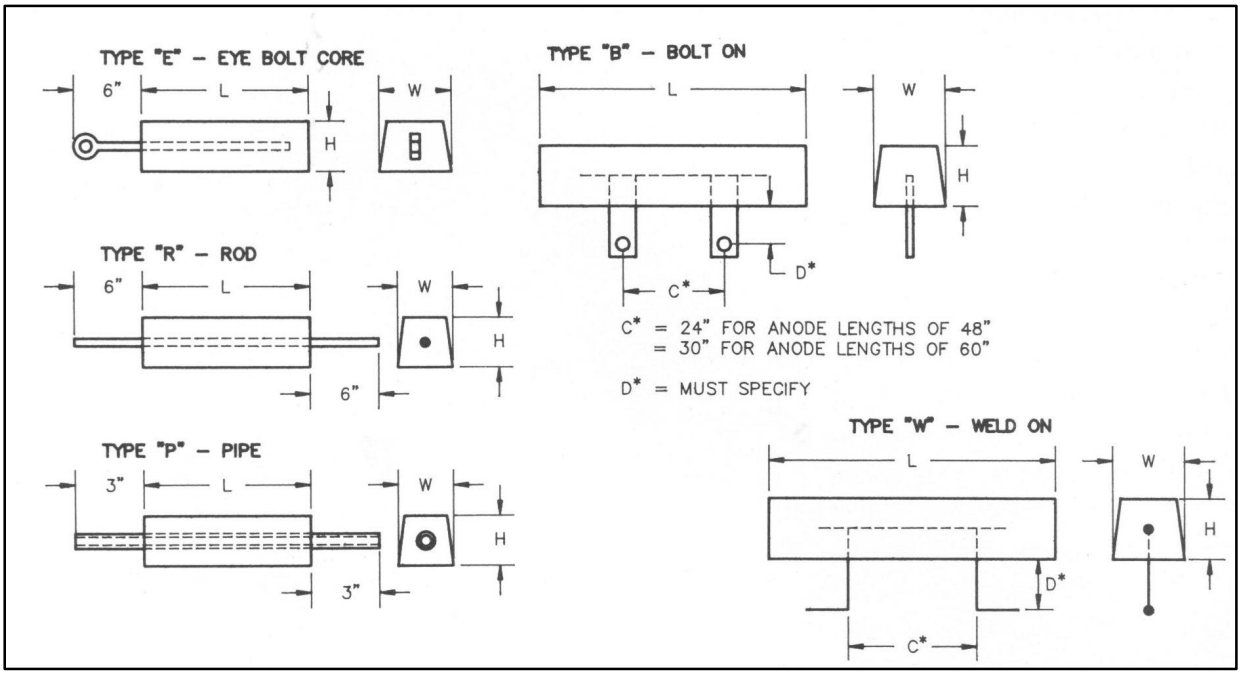


| Standard Dimensions and Shipping Weights | | | | | |
|---|---|---|---|---|---|
| ANODE TYPE | NOMINAL DIMENSIONS | | | NOMINAL WT. | CORE AVAILABILITY |
| | L in. (mm) | W in. (mm) | H in. (mm) | lbs. (kg) | (by type) |
| H43 | 48 (1219) | 2 (51) | 2 (51) | 21 (9.5) | B, R, W |
| H44 | 60 (1524) | 2 (51) | 2 (51) | 26 (11.8) | B, R, W |
| H63 | 48 (1219) | 2.5 (64) | 2.5 (64) | 30 (13.6) | B, R, W |
| H30 | 34 (864) | 3 (76) | 3 (76) | 30 (13.6) | E, P, R |
| *H64* | *60 (1524)* | *2.5 (64)* | *2.5 (64)* | *39 (17.7)* | *B, R, W* |
| H93 | 48 (1219) | 3 (76) | 3 (76) | 48 (21.8) | B, R, W |
| H60-0 | 12 (305) | 7 (178) | 7 (178) | 60 (27.2) | E, P, R |
| H60-1 | 24 (610) | 5 (127) | 5 (127) | 60 (27.2) | E, P, R |
| H60-2 | 38 (965) | 4 (102) | 4 (102) | 60 (27.2) | E, P, R |
| H90-0 | 18 (457) | 7 (178) | 7 (178) | 90 (40.8) | E, P, R |
| H90-1 | 36 (914) | 5 (127) | 5 (127) | 90 (40.8) | E, P, R |
| H100 | 60 (1524) | 4 (102) | 4 (102) | 100 (45.4) | E, P, R |
| H120-0 | 12 (305) | 10 (254) | 10 (254) | 120 (54.4) | E, P, R |
| H120-1 | 24 ((610) | 7 (178) | 7 (178) | 120 (54.4) | E, P, R |
| H120-2 | 489 (1219) | 5 (127) | 5 (127) | 120 (54.4) | E, P, R |
| H175 | 36 (914) | 7 (178) | 7 (178) | 175 (79.4) | E, P, R |
| H240 | 24 (610) | 10 (254) | 10 (254) | 240 (108.9) | E, P, R |

*Available in other dimensions upon request*

| Ordering Procedure Example | |
|---|---|
| **ITEM** | **EXAMPLE** |
| **Quantity** | *200* |
| **Anode Material** | *Aluminum Pier, Piling, Ballast Tank* |
| **Alloy Composition** | *Alloy 2* |
| **Anode Type** | *H64* |
| **Core Type** | *R* |

CORRPRO COMPANIES INC
For Every Corner of Your World

1090 Enterprise Drive / Medina, OH 44256
Tel: 1-330-723-5082 / Fax: 1-330-723-0694
http://www.corrpro.com

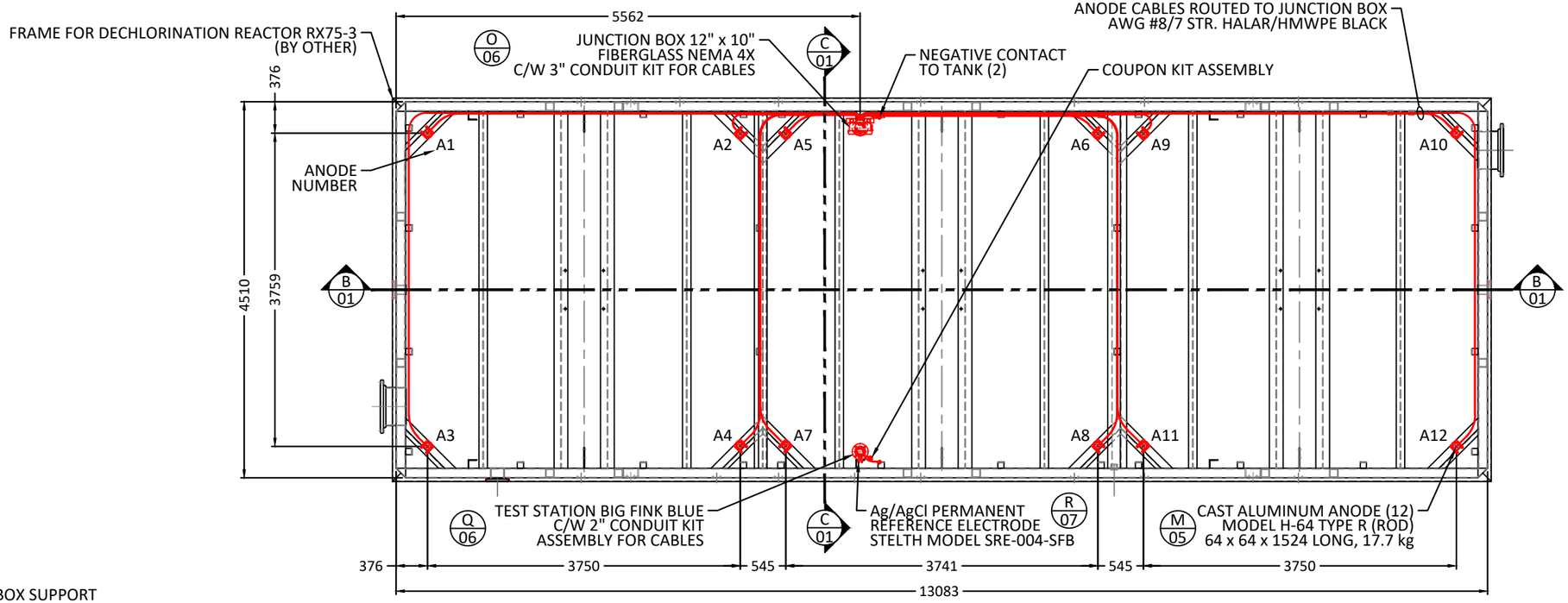


A 01 PLAN VIEW - DECHLORINATION REACTOR RX75-3
LOCATION OF CATHODIC PROTECTION EQUIPMENT

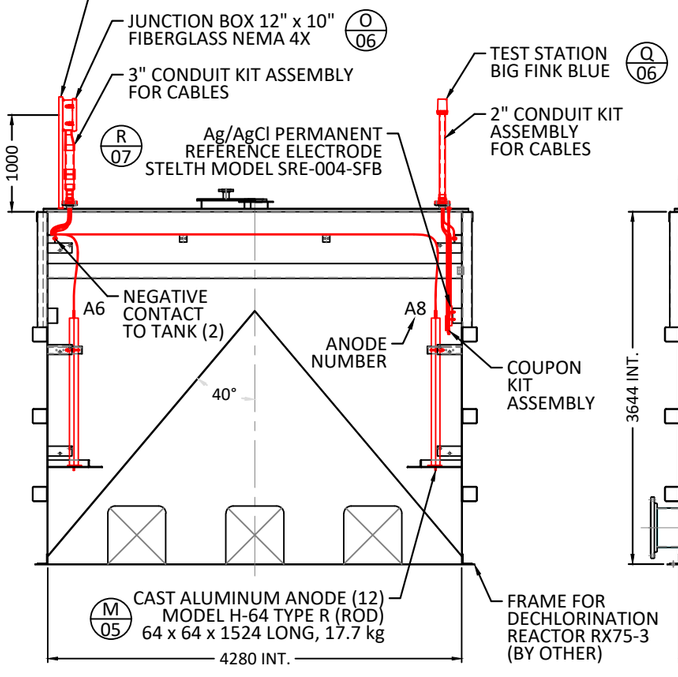


C 01 SECTION VIEW
DECHLORINATION REACTOR RX75-3

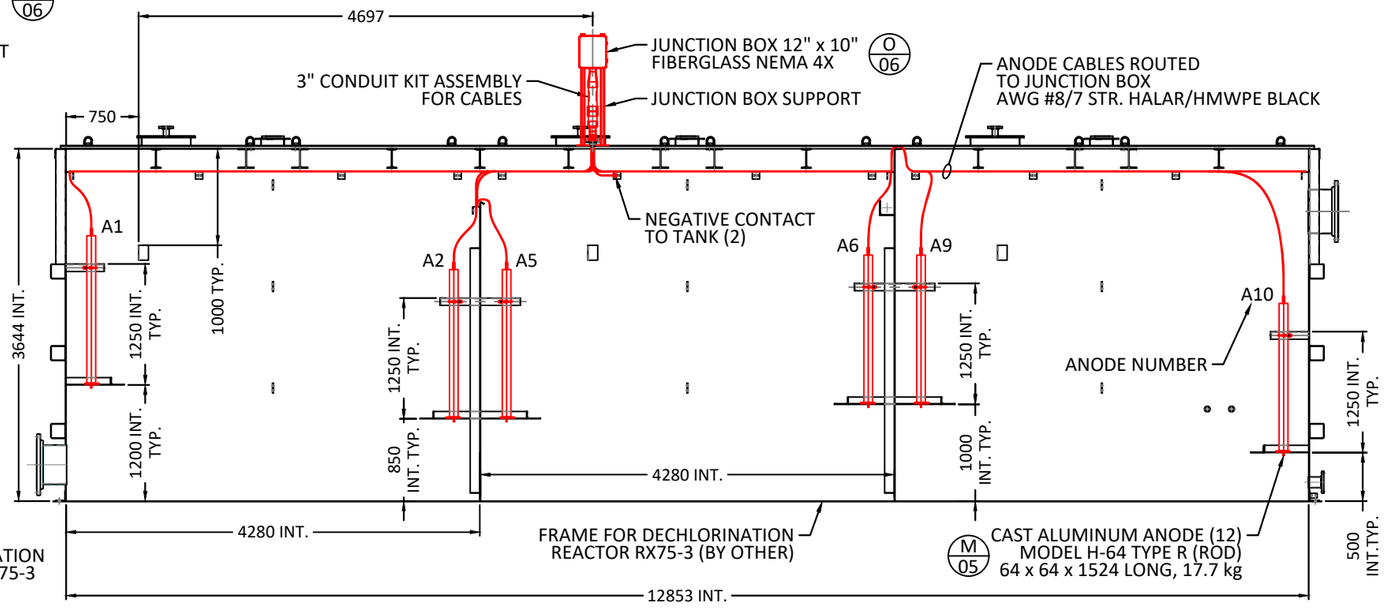


B 01 SECTION VIEW
DECHLORINATION REACTOR RX75-3

CATHODIC PROTECTION DESIGN
REFERENCE STANDARD:
NACE SP0196-2015

FOR APPROVAL

| REV. | DATE | DESCRIPTION | BY |
|---|---|---|---|
| | | | |
| | | | |
| | | | |

A 01 DETAIL NUMBER / DRAWING REFERENCE

corrpro
an AEGION™ company
T: 514.636.0085 - F: 514.636.8671
1985, 55th Avenue, Dorval QC Canada H9P 1G9

CLIENT:
VEOLIA Water Technologies
SAINT-LAURENT, QUEBEC

PROJECT:
AEM Meliadine-BPC
PROJECT #5000220043
CATHODIC PROTECTION SYSTEM
4 MINE WATER TREATMENT TANKS

TITLE:
CHLORINATION REACTOR RX75-3 (WITH COVER)
PLAN & SECTION VIEWS
LOCATION OF CATHODIC PROTECTION EQUIPMENT

| DRAWN BY: | CHECKED BY: | DESIGNED BY: |
|---|---|---|
| E.B. | S.M. | S.M. |
| DATE (M/D/Y): | SCALE: | UNITS: |
| 4/19/2021 | N.T.S. | S.I. |

DRAWING NO.: 348170642-01
REVISION: 00

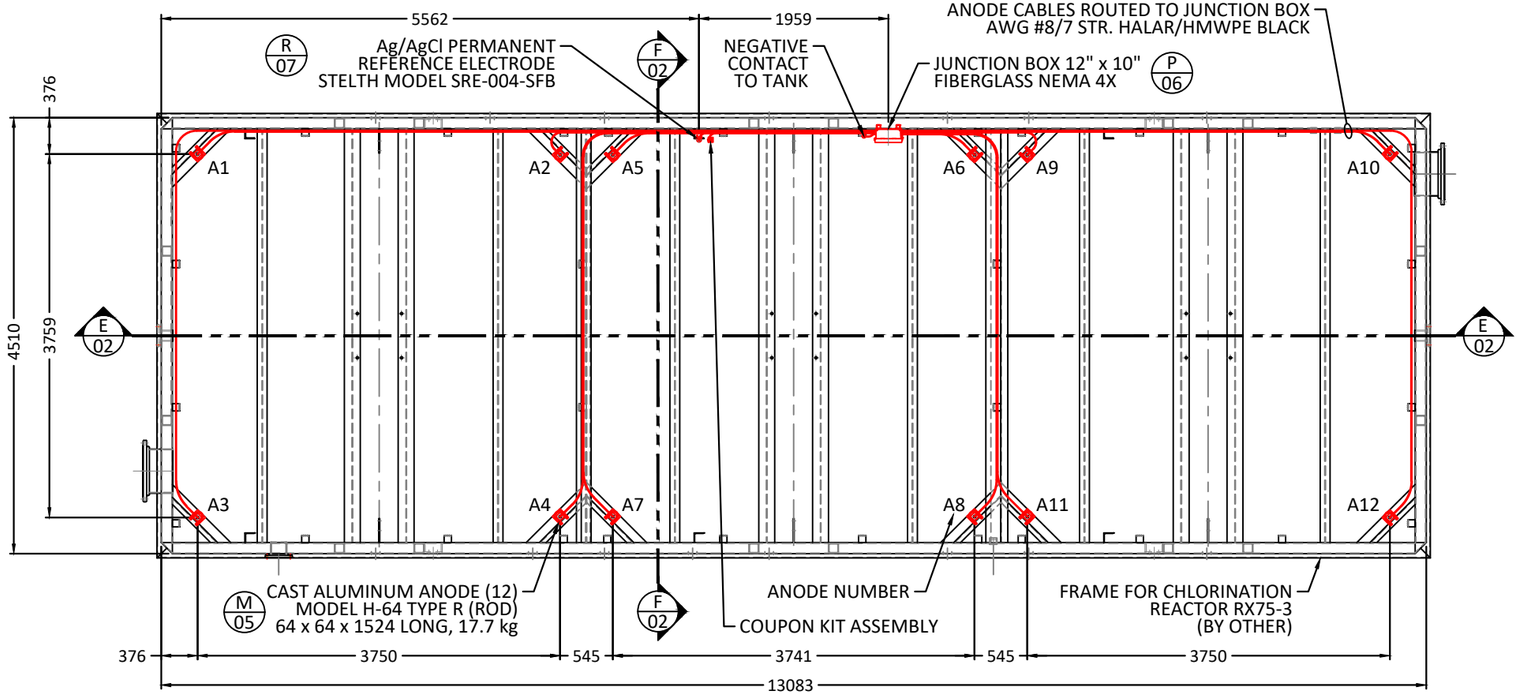


D — PLAN VIEW - CHLORINATION REACTOR RX75-3
LOCATION OF CATHODIC PROTECTION EQUIPMENT

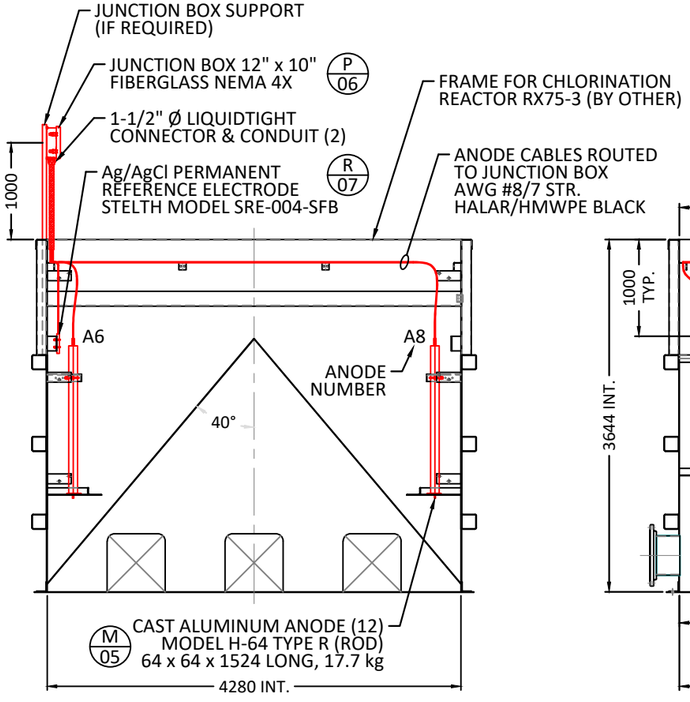


F 02 — SECTION VIEW
CHLORINATION REACTOR RX75-3

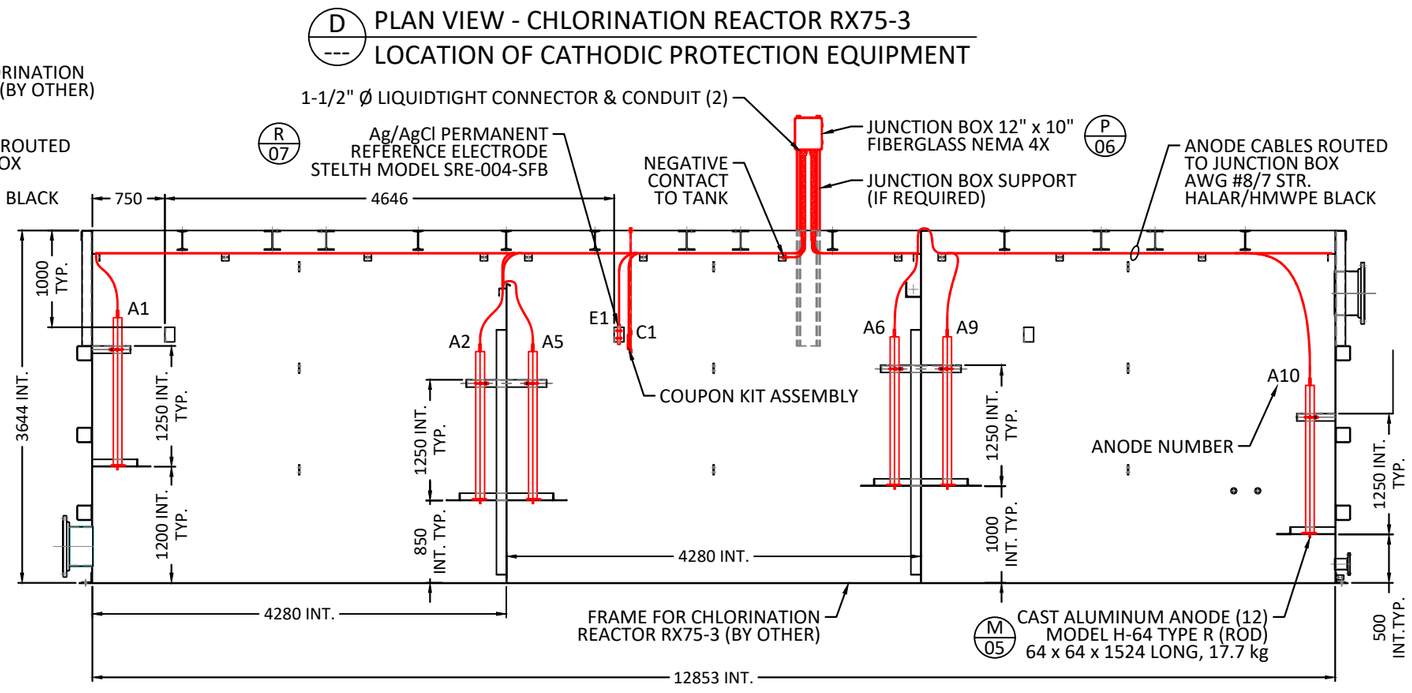


E 02 — SECTION VIEW
CHLORINATION REACTOR RX75-3

CATHODIC PROTECTION DESIGN
REFERENCE STANDARD:
NACE SP0196-2015

FOR APPROVAL

| REV. | DATE | DESCRIPTION | BY |
|---|---|---|---|
| | | | |

A / 01 — DETAIL NUMBER / DRAWING REFERENCE

corrpro
an AEGION™ company
T: 514.636.0085 - F: 514.636.8671
1985, 55th Avenue, Dorval QC Canada H9P 1G9

CLIENT:
VEOLIA Water Technologies
SAINT-LAURENT, QUEBEC

PROJECT:
AEM Meliadine-BPC
PROJECT #5000220043
CATHODIC PROTECTION SYSTEM
4 MINE WATER TREATMENT TANKS

TITLE:
DECHLORINATION REACTOR RX75-3 (WITHOUT COVER)
PLAN & SECTION VIEWS
LOCATION OF CATHODIC PROTECTION EQUIPMENT

| DRAWN BY: | CHECKED BY: | DESIGNED BY: |
|---|---|---|
| E.B. | S.M. | S.M. |
| DATE (M/D/Y): | SCALE: | UNITS: |
| 4/19/2021 | N.T.S. | S.I. |

DRAWING NO.: 348170642-02
REVISION: 00

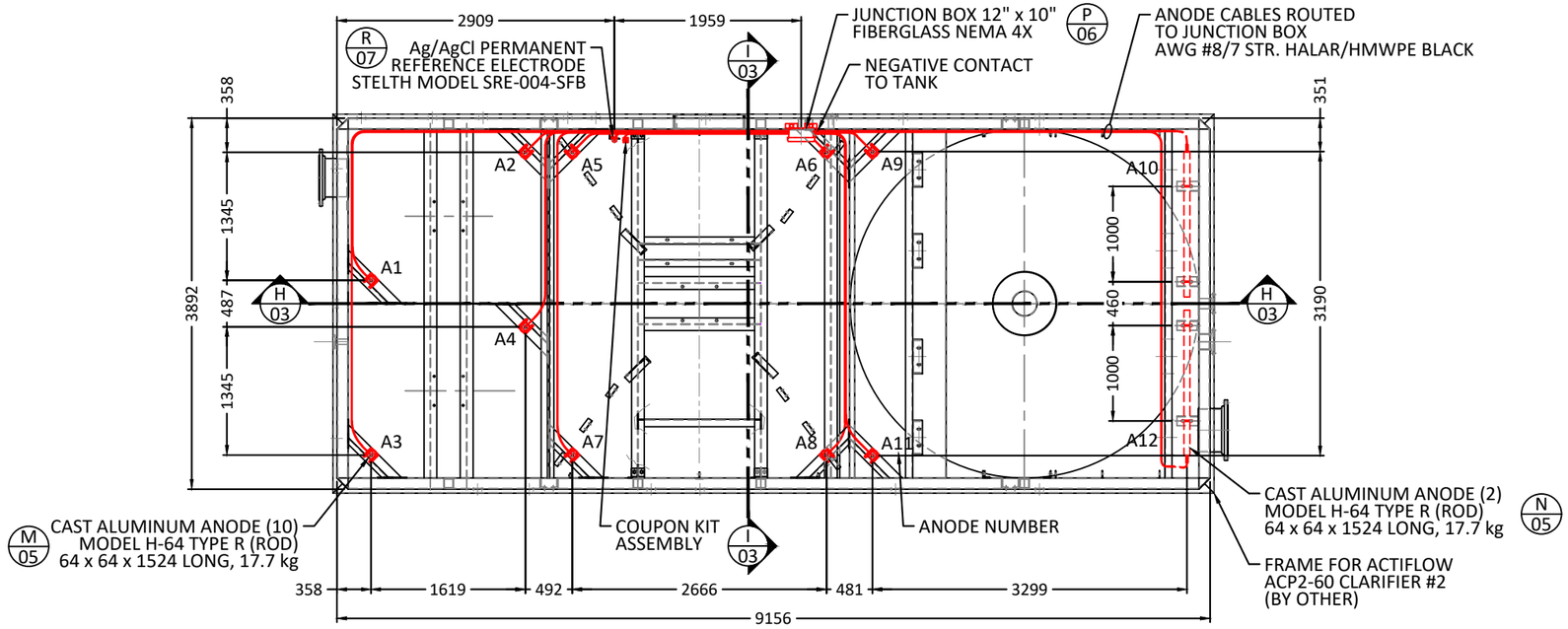


G / --- PLAN VIEW - ACTIFLOW ACP2-60 - CLARIFIER #2
LOCATION OF CATHODIC PROTECTION EQUIPMENT

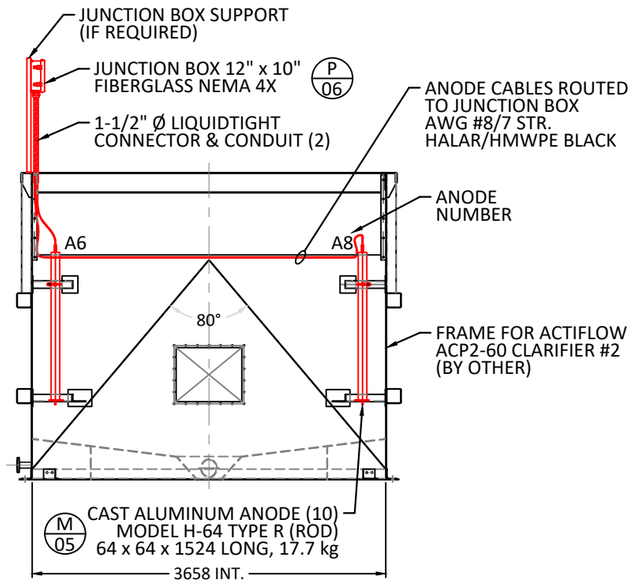


I / 03 SECTION VIEW
ACTIFLOW ACP2-60

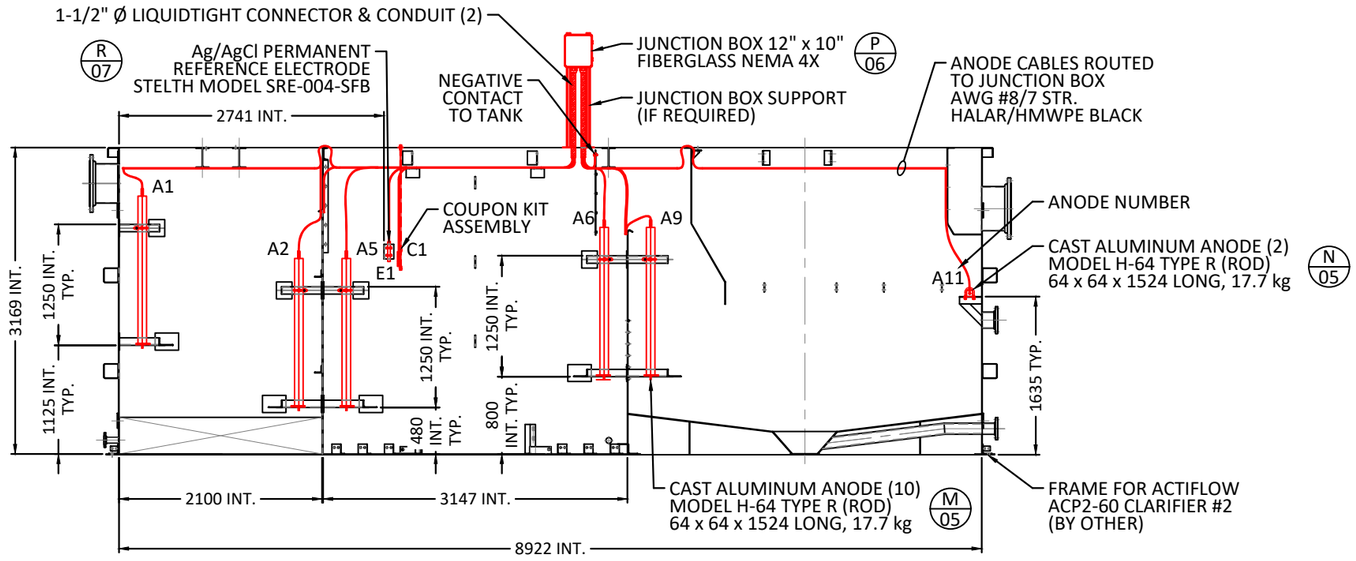


H / 03 SECTION VIEW
ACTIFLOW ACP2-60

CATHODIC PROTECTION DESIGN
REFERENCE STANDARD:
NACE SP0196-2015

FOR APPROVAL

| REV. | DATE | DESCRIPTION | BY |
|---|---|---|---|
| | | | |

A / 01 DETAIL NUMBER / DRAWING REFERENCE

corrpro
an AEGION™ company
T: 514.636.0085 - F: 514.636.8671
1985, 55th Avenue, Dorval QC Canada H9P 1G9

CLIENT:
VEOLIA Water Technologies
SAINT-LAURENT, QUEBEC

PROJECT:
AEM Meliadine-BPC
PROJECT #5000220043
CATHODIC PROTECTION SYSTEM
4 MINE WATER TREATMENT TANKS

TITLE:
CLARIFIER #2 ACP2-60
PLAN & SECTION VIEWS
LOCATION OF CATHODIC PROTECTION EQUIPMENT

| DRAWN BY: | CHECKED BY: | DESIGNED BY: |
|---|---|---|
| E.B. | S.M. | S.M. |
| DATE (M/D/Y): | SCALE: | UNITS: |
| 4/19/2021 | N.T.S. | S.I. |

DRAWING NO.: 348170642-03
REVISION: 00

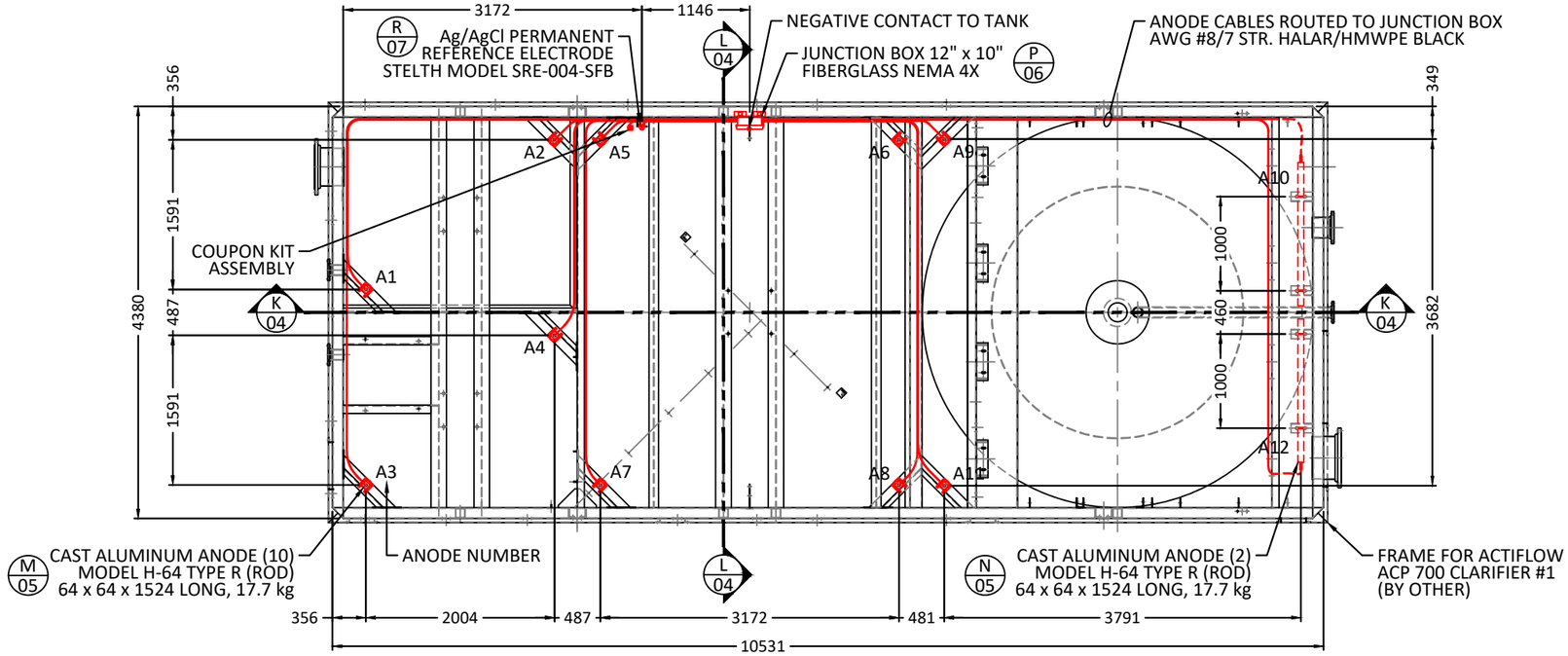


J / --- PLAN VIEW - ACTIFLOW ACP 700R - CLARIFIER #1
LOCATION OF CATHODIC PROTECTION EQUIPMENT

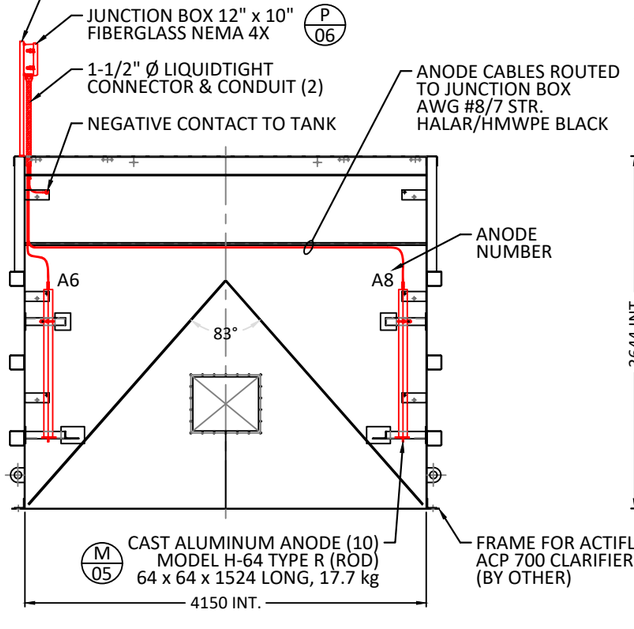


L 04 SECTION VIEW
ACTIFLOW ACP 700R

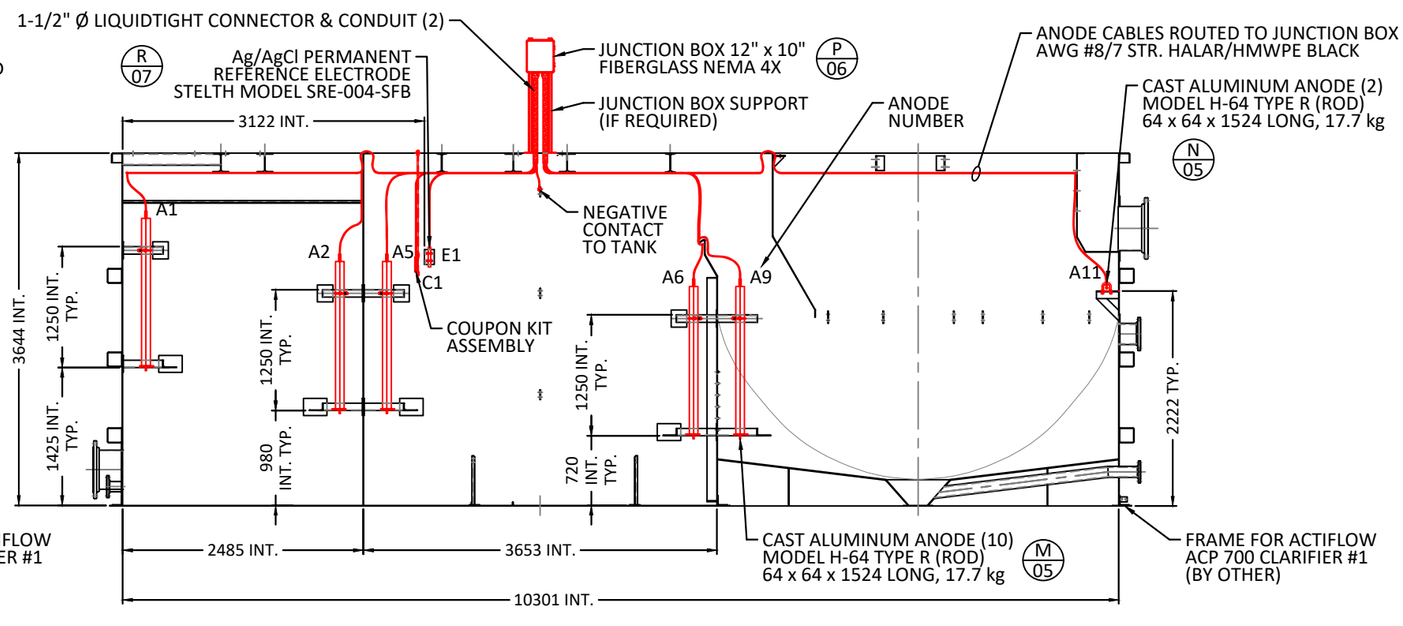


K 04 SECTION VIEW
ACTIFLOW ACP 700R

CATHODIC PROTECTION DESIGN
REFERENCE STANDARD:
NACE SP0196-2015

FOR APPROVAL

| REV. | DATE | DESCRIPTION | BY |
|---|---|---|---|
| | | | |

A / 01 DETAIL NUMBER / DRAWING REFERENCE

corrpro
an AEGION™ company
T: 514.636.0085 - F: 514.636.8671
1985, 55th Avenue, Dorval QC Canada H9P 1G9

CLIENT:
VEOLIA Water Technologies
SAINT-LAURENT, QUEBEC

PROJECT:
AEM Meliadine-BPC
PROJECT #5000220043
CATHODIC PROTECTION SYSTEM
4 MINE WATER TREATMENT TANKS

TITLE:
CLARIFIER #1 ACP 700R
PLAN & SECTION VIEWS
LOCATION OF CATHODIC PROTECTION EQUIPMENT

| DRAWN BY: | CHECKED BY: | DESIGNED BY: |
|---|---|---|
| E.B. | S.M. | S.M. |
| DATE (M/D/Y): | SCALE: | UNITS: |
| 4/19/2021 | N.T.S. | S.I. |

| DRAWING NO.: | REVISION: |
|---|---|
| 348170642-04 | 00 |

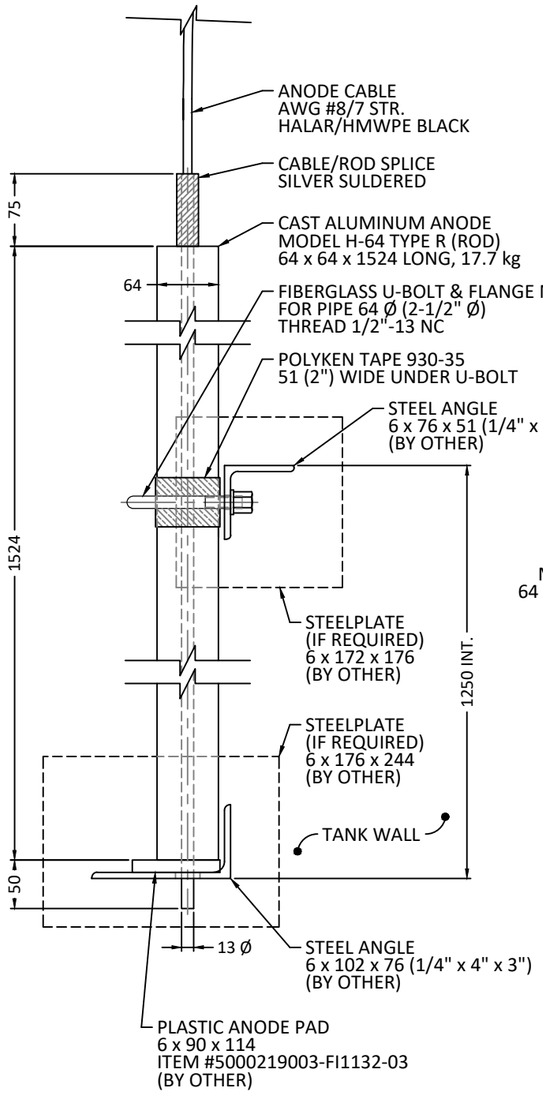


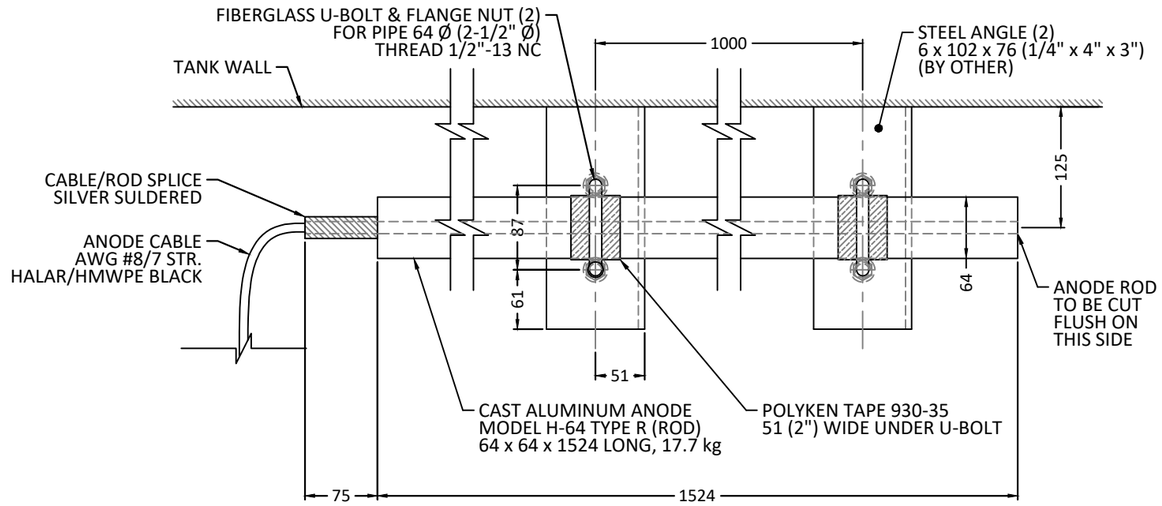


TOP VIEW

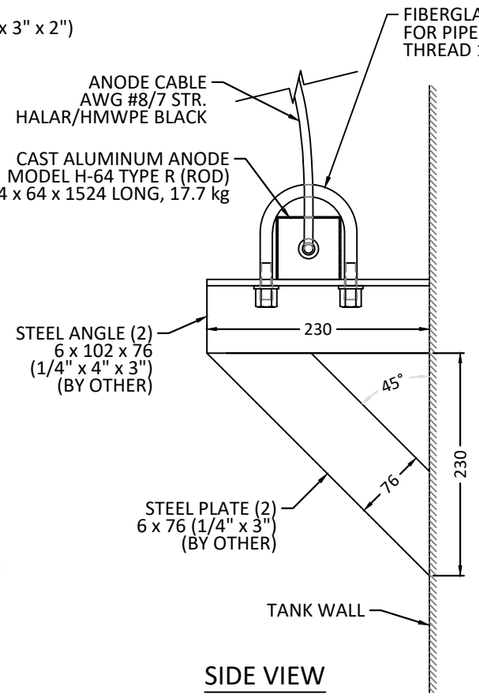


SIDE VIEW

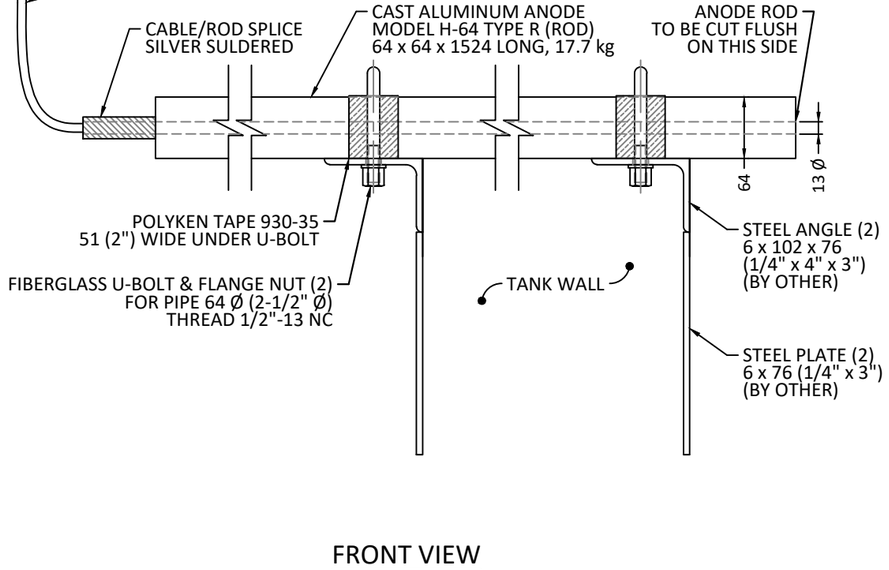


FRONT VIEW

M
01@04 TYPICAL VERTICAL INSTALLATION DETAIL
CAST ALUMINUM ANODE

N
03-04 TYPICAL HORIZONTAL INSTALLATION DETAIL
CAST ALUMINUM ANODE

CATHODIC PROTECTION DESIGN
REFERENCE STANDARD:
NACE SP0196-2015

FOR APPROVAL

| REV. | DATE | DESCRIPTION | BY |
|---|---|---|---|
| | | | |

A
01
DETAIL NUMBER
DRAWING REFERENCE

corrpro
an AEGION™ company
T: 514.636.0085 - F: 514.636.8671
1985, 55th Avenue, Dorval QC Canada H9P 1G9

CLIENT:
VEOLIA Water Technologies
SAINT-LAURENT, QUEBEC

PROJECT:
AEM Meliadine-BPC
PROJECT #5000220043
CATHODIC PROTECTION SYSTEM
4 MINE WATER TREATMENT TANKS

TITLE:
TYPICAL VERTICAL & HORIZONTAL INSTALLATION DETAILS
CAST ALUMINUM ANODE

| DRAWN BY: | CHECKED BY: | DESIGNED BY: |
|---|---|---|
| E.B. | S.M. | S.M. |
| DATE (M/D/Y): | SCALE: | UNITS: |
| 4/19/2021 | N.T.S. | S.I. |

| DRAWING NO.: | REVISION: |
|---|---|
| 348170642-05 | 00 |

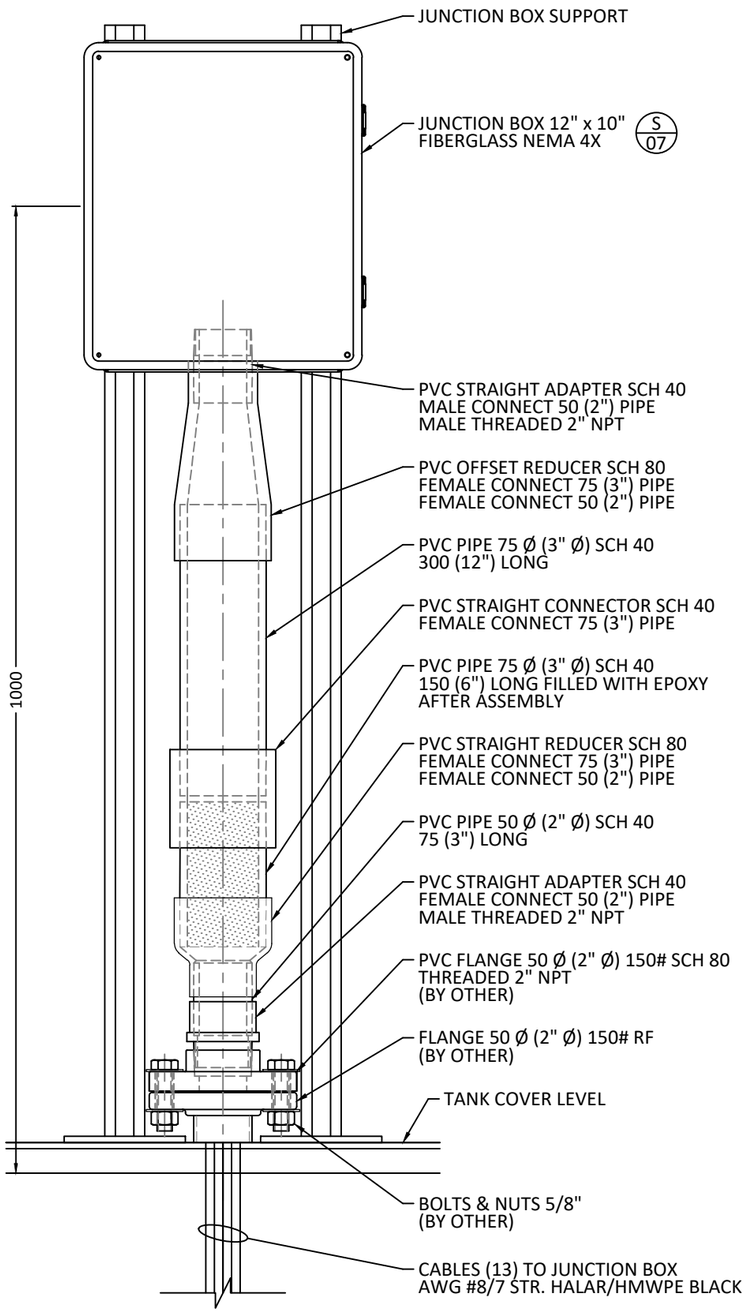


O 01 INSTALLATION DETAIL
JUNCTION BOX WITH 3" CONDUIT KIT ASSEMBLY

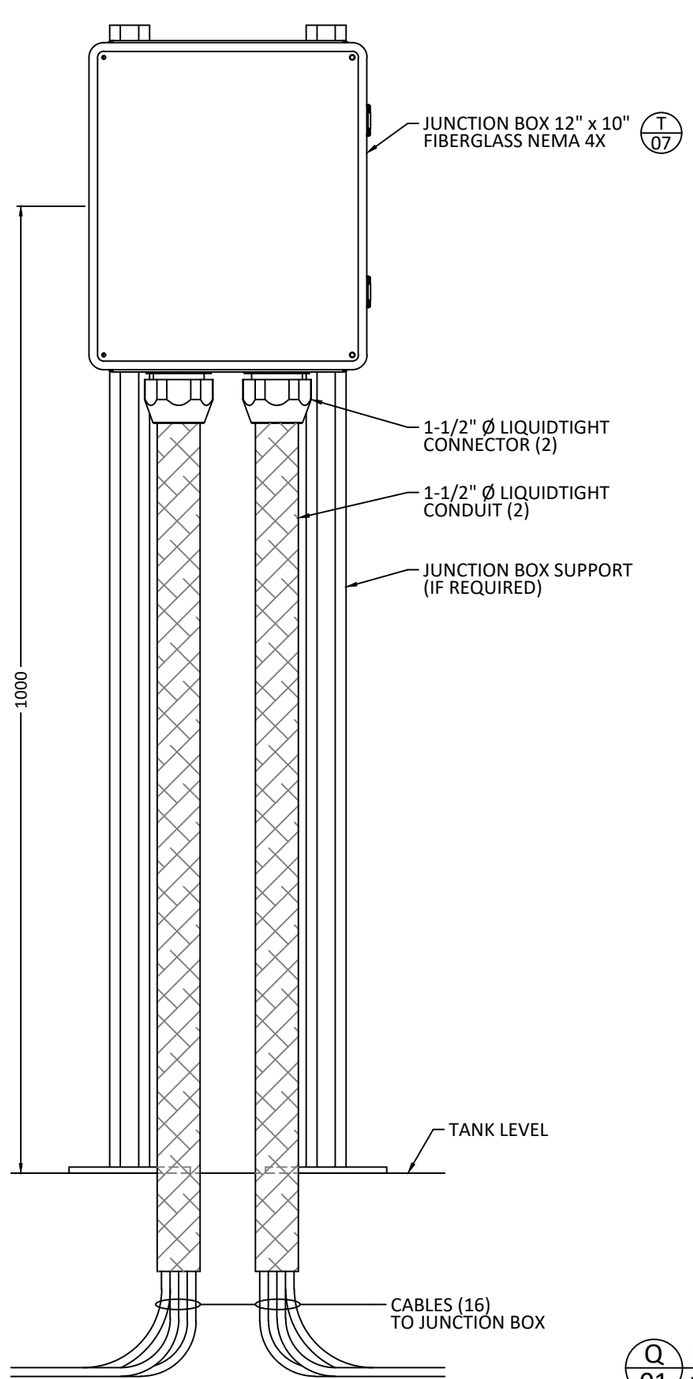


P 02@04 INSTALLATION DETAIL
JUNCTION BOX WITH LIQUIDTIGHT CONDUITS

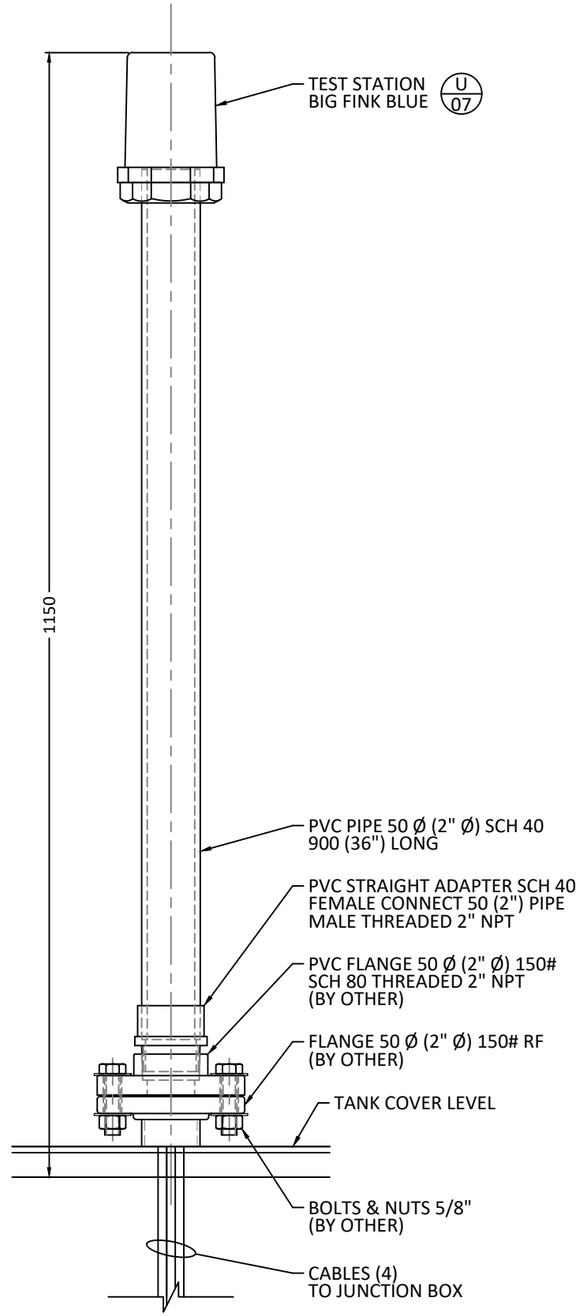


Q 01 INSTALLATION DETAIL
TEST STATION WITH 2" CONDUIT KIT ASSEMBLY

CATHODIC PROTECTION DESIGN
REFERENCE STANDARD:
NACE SP0196-2015

FOR APPROVAL

| REV. | DATE | DESCRIPTION | BY |
|---|---|---|---|
| | | | |
| | | | |
| | | | |

A 01 DETAIL NUMBER / DRAWING REFERENCE


corrpro
an AEGION™ company
T: 514.636.0085 - F: 514.636.8671
1985, 55th Avenue, Dorval QC Canada H9P 1G9


CLIENT:
VEOLIA Water Technologies
SAINT-LAURENT, QUEBEC

PROJECT:
AEM Meliadine-BPC
PROJECT #5000220043
CATHODIC PROTECTION SYSTEM
4 MINE WATER TREATMENT TANKS

TITLE:
INSTALLATION DETAILS
JUNCTION BOXES WITH 3" CONDUIT & LIQUIDTIGHT CONDUITS
TEST STATION WITH 2" 2" CONDUIT

| DRAWN BY: | CHECKED BY: | DESIGNED BY: |
|---|---|---|
| E.B. | S.M. | S.M. |
| DATE (M/D/Y): | SCALE: | UNITS: |
| 4/19/2021 | N.T.S. | S.I. |

| DRAWING NO.: | REVISION: |
|---|---|
| 348170642-06 | 00 |

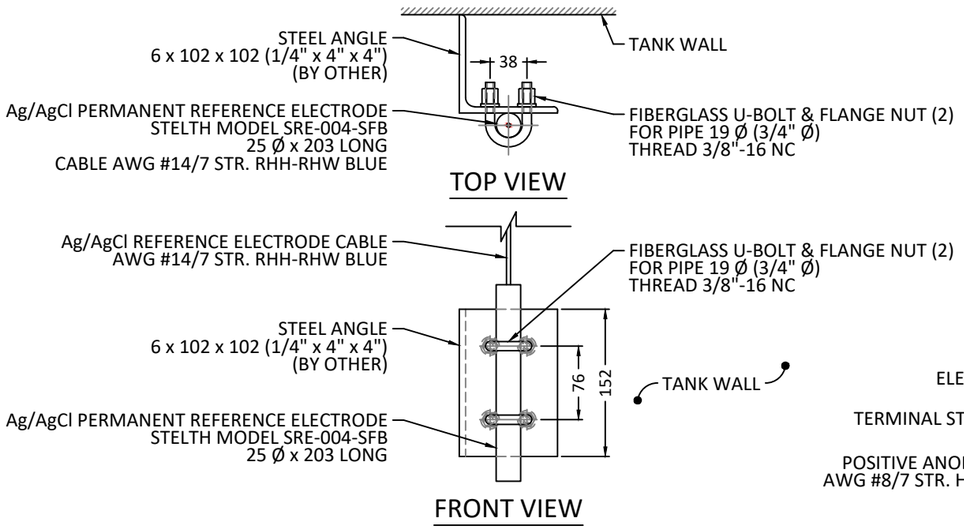


R
01@04
INSTALLATION DETAIL
Ag/AgCl REFERENCE ELECTRODE

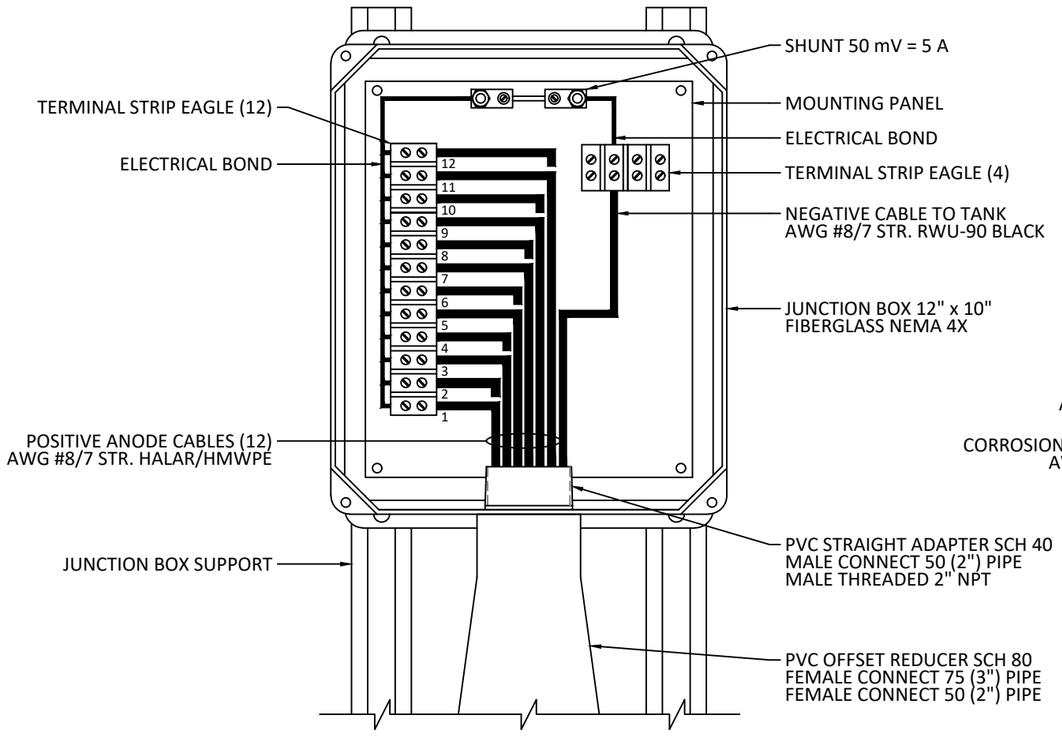


S
06
CONNECTION DETAIL
JUNCTION BOX

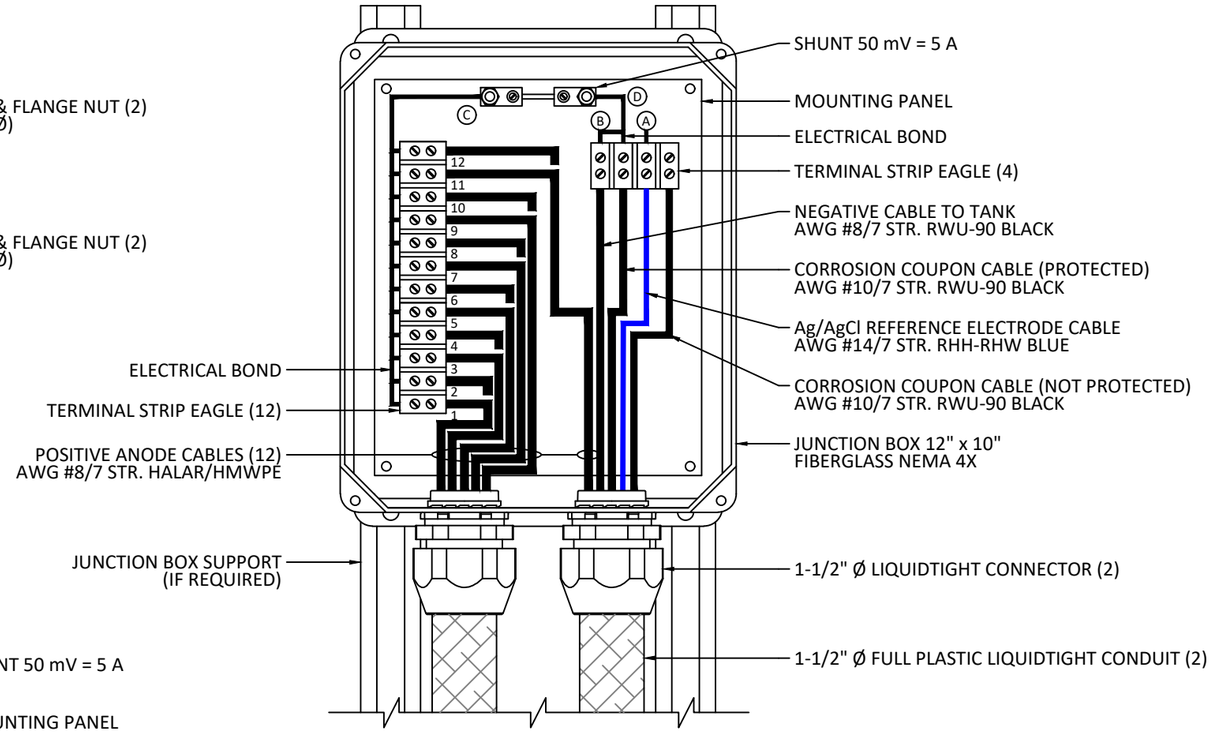


T
06
CONNECTION DETAIL
JUNCTION BOX

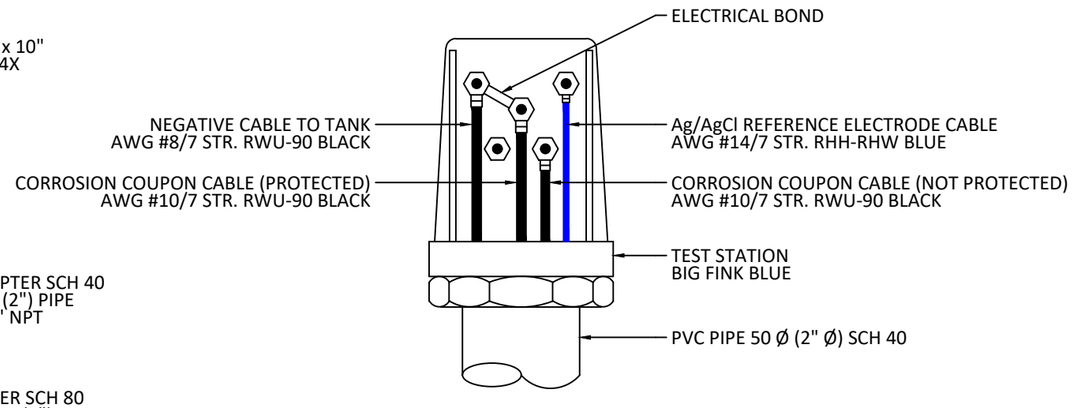


U
06
CONNECTION DETAIL
TEST STATION

CATHODIC PROTECTION DESIGN
REFERENCE STANDARD:
NACE SP0196-2015

FOR APPROVAL

| REV. | DATE | DESCRIPTION | BY |
|---|---|---|---|
| | | | |

A
01
DETAIL NUMBER
DRAWING REFERENCE

corrpro
an AEGION™ company
T: 514.636.0085 - F: 514.636.8671
1985, 55th Avenue, Dorval QC Canada H9P 1G9

CLIENT:
VEOLIA Water Technologies
SAINT-LAURENT, QUEBEC

PROJECT:
AEM Meliadine-BPC
PROJECT #5000220043
CATHODIC PROTECTION SYSTEM
4 MINE WATER TREATMENT TANKS

TITLE:
INSTALLATION DETAIL
Ag/AgCl REFERENCE ELECTRODE
CONNECTION DETAILS
IN JUNCTION BOXES &
TEST STATION

| DRAWN BY: | CHECKED BY: | DESIGNED BY: |
|---|---|---|
| E.B. | S.M. | S.M. |
| DATE (M/D/Y): | SCALE: | UNITS: |
| 4/19/2021 | N.T.S. | S.I. |

| DRAWING NO.: | REVISION: |
|---|---|
| 348170642-07 | 00 |

LEFT BLANK

# *4 – DETAILED TECHNICAL DOCUMENTATION*

## *4.3 – LIST OF SUPPLIERS*

LEFT BLANK

# LIST OF SUPPLIERS

| SUPPLIER | ADDRESS | LOCATION | TELEPHONE |
|---|---|---|---|
| ABB INC | 800 HYMUS | ST-LAURENT | 514-856-6266 |
| ACO CONTAINER SYSTEMS | 794 MCKAY ROAD | PICKERING | 1-800-542-9942 |
| AVENSYS INC. | 178 RUE MERIZZI | SAINT-LAURENT | 514-428-6766 |
| BRAY CONTROLES CANADA CORP | 3299 J.B. DESCHAMPS | LACHINE | 514-344-2729 |
| CHEMLINE PLASTICS LTD | 55 GUARDSMAN ROAD | THORNILL | 905-889-7890 |
| CONVAL QUEBEC | 9485 TRANS CANADA HWY | MONTREAL | 905-828-9900 |
| CORRPRO CANADA INC | 1985 55E AVE | DORVAL | 514-636-0085 |
| D.M. VALVE ET CONTROLES INC | 3540 BLVD POIRIER | ST-LAURENT | 514-332-4260 |
| ELMRIDGE ENGINEERING INC | 15 ALLAURA BLVD | AURORA | 416-749-7730 |
| ENDRESS & HAUSER CANADA (ST-LAURENT) | 6800 COTE DE LIESSE | ST-LAURENT | 514-733-0254 |
| ENVIREQUIP | 21494 LITTLE RUSSIA RD | GLEN ROBERTSON | 613-874-2616 |
| ENVITECH AUTOMATION INC | 5710 BLVD THIMENS | ST-LAURENT | 514-333-5700 |
| FIBERGRATE | 95 SUNRAY STREET | WHITBY | 905-430-3333 |
| FINAXO ENVIRONNEMENT | 12 ALLÉE DES MISSIONS | FISMES | 3332-648-0147 |
| FLSMIDTH KREBS | 5505 W GILLETTE RD | TUCSON | 520-744-8200 |
| GEORG FISCHER PIPING SYSTEMS | 41 KEYS CT-UNIT1 | WOODBRIDGE, ON | 905-670-8005 |
| HACH SALES & SERVICES CANADA | 3020 GORE ROAD | LONDON | 800-665-7635 |
| KSB PUMPS INC | 5205 TOMKEN ROAD | MISSISSAUGA | 514-631-2355 |
| MCLANAHAN CORPORATION | 200 WALL STREET | HOLLIDAYSBURG | 814-695-9807 |
| PLASTEC VENTILATION INC | 2012 58TH AVENUE CIRCLE EAST | BRADENTON, FL | 941-751-7596 |
| SCHNEIDER ELECTRIC CANADA | 825 RUE BANCROFT | POINTE-CLAIRE | 514-697-4790 |
| SEW EURODRIVE DU CANADA LTEE | 2555 LEGER | LASALLE | 514-367-1124 |
| SOLYS - VWS SSP AQUAFAB (SR185/002) | CALLE BUJIA 2-4 | MADRID | |
| SWAN ANALYTICAL USA INC | 225 LARKIN DR | WHEELING | 847-229-1290 |
| V.J. PAMENSKY CANADA INC | 189 BOUL BRUNSWICK | POINTE-CLAIRE | 514-341-5950 |
| VEOLIA (SR043/1801 - HYDROTECH) | MEJSELGATAN 6 | VELLINGE | |
| WAM USA INC | 75 BOULDERBROOK CIRCLE | LAWRENCEVILLE | 770-339-6767 |
| XYLEM CANADA CO | 300 AVENUE LABROSSE | POINTE-CLAIRE | 514-695-0133 |

LEFT BLANK

# *4 – DETAILED TECHNICAL DOCUMENTATION*

## *4.4 – CONTROL NARRATIVE*

LEFT BLANK

# PROCESS FUNCTIONAL DESCRIPTION

## Agnico Eagle Mines Limited

## WATER TREATMENT PLANT- AMMONIA REMOVAL USING BREAKPOINT CHLORINATION

Rev. 2

**VEOLIA WATER TECHNOLOGIES CANADA**

www.veoliawatertechnologies.com

*WATER TECHNOLOGIES*

# REVISION STATUS

| Issue | Date | Created | Reviewed | Approved | Description of Changes |
|---|---|---|---|---|---|
| 1 | 2021/03/08 | ED | GP | GP | First Issue |
| 2 | 2021/04/23 | GM | ED | ED | Revision of Appendix D |
| | | | | | |
| | | | | | |
| | | | | | |

# TABLE OF CONTENTS


**1 INTRODUCTION ..... 8**

1.1 PROJECT DEFINITION ..... 8

1.2 PROCESS SUMMARY ..... 8

*1.2.1 Breakpoint Chlorination for Ammonia Removal ..... 8*

*1.2.2 Dechlorination Using Activated Carbon ..... 9*

*1.2.3 Breakpoint Chlorination Actiflo ..... 10*

*1.2.4 Secondary Actiflo ..... 11*

*1.2.5 Discfilter Filtration ..... 12*

*1.2.6 Backwash tank ..... 12*

*1.2.7 Sludge tank ..... 12*

1.3 LIST OF RELATED DOCUMENTS ..... 13

1.4 LIST OF ABBREVIATIONS ..... 13

1.5 LIST OF UNITS ..... 13

**2 OVERALL PLANT CONTROL ..... 14**

2.1 OVERVIEW ..... 14

2.2 PLANT OVERALL CONTROL ..... 14

**3 INLET FLOWRATE DISTRIBUTION ..... 16**

3.1 DESCRIPTION ..... 16

3.2 CONTROLS ..... 17

*3.2.1 Flow rates calculation ..... 17*

*3.2.2 Flow control mode ..... 20*

3.3 FAULT RESPONSE ..... 20

**4 CHLORINATION TANK ..... 21**

4.1 DESCRIPTION ..... 21
4.2 CONTROLS ..... 21
*4.2.1 Chlorination tank Start/Stop/Auto function ..... 21*
*4.2.2 Alkali pH control loop ..... 22*
*4.2.3 Acid pH control loop ..... 22*
*4.2.4 Ammonia and chlorine residual control ..... 23*
4.3 SYSTEM AVAILABILITY CONDITIONS ..... 24
4.4 FAULT RESPONSE ..... 24
4.5 INTERLOCKS ..... 25
**5 DECHLORINATION TANK ..... 26**
5.1 DESCRIPTION ..... 26
5.2 CONTROLS ..... 26
*5.2.1 Dechlorination tank Start/Stop/Auto function ..... 26*
*5.2.2 Chlorine residual control ..... 27*
*5.2.3 Coagulant dosage ..... 27*
5.3 SYSTEM AVAILABILITY CONDITIONS ..... 27
5.4 FAULT RESPONSE ..... 27
5.5 INTERLOCKS ..... 28
**6 BREAKPOINT CHLORINATION ACTIFLO ..... 29**
6.1 DESCRIPTION ..... 29
6.2 CONTROLS ..... 30
*6.2.1 Acticarb Start/Stop/Auto function ..... 30*
*6.2.2 Sodium thiosulfate dosage ..... 30*
6.3 FAULT RESPONSE ..... 31

6.4 INTERLOCKS. ..... 32
**7 SECONDARY ACTIFLO ..... 33**
7.1 CONTROLS ..... 34
*7.1.1 Actiflo® Start/Stop/Auto function ..... 34*
*7.1.2 Sludge recirculation/extraction control ..... 34*
7.2 FAULT RESPONSE ..... 35
7.3 INTERLOCKS. ..... 35
**8 DISCFILTER ..... 36**
8.1 DESCRIPTION ..... 36
8.2 CONTROLS ..... 37
8.3 FAULT RESPONSE ..... 37
8.4 INTERLOCKS. ..... 37
**9 HYDRACARB ..... 38**
9.1 DESCRIPTION ..... 38
9.2 CONTROLS ..... 38
9.3 FAULT RESPONSE ..... 38
9.4 INTERLOCKS. ..... 38
**10 SAMPLING AND ANALYSES UNIT ..... 39**
10.1 PROCESS OVERVIEW ..... 39
10.2 CONTROLS ..... 39
*10.2.1 Calculation of the chlorine concentration ..... 39*
*10.2.2 Pump control ..... 40*
10.2.2.1 Dilution flow control ..... 40
10.2.2.2 Chlorine residual control ..... 40
10.3 SYSTEM AVAILABILITY CONDITIONS ..... 40

10.4 FAULT RESPONSE ..... 40

**11 TREATED WATER ..... 42**

11.1 DESCRIPTION ..... 42

11.2 CONTROLS ..... 42

FAULT RESPONSE ..... 43

11.3 ..... 43

11.4 INTERLOCK ..... 43

**12 BACKWASH TANK ..... 44**

12.1 DESCRIPTION ..... 44

12.2 CONTROLS ..... 44

*12.2.1 Level control ..... 44*

*12.2.2 Backwash tank transfer pumps' Logic ..... 45*

12.3 FAULT RESPONSE ..... 46

12.4 INTERLOCK ..... 46

**13 SLUDGE TANK ..... 47**

13.1 DESCRIPTION ..... 47

13.2 CONTROLS ..... 47

*13.2.1 Level control ..... 47*

*13.2.2 Sludge tank mixing ..... 48*

13.3 FAULT RESPONSE ..... 48

13.4 INTERLOCK ..... 48

**14 SUMMARY OF INTERLOCKS THAT TRIGGER WTP TRIP ..... 49**

**15 TRENDS ..... 51**

15.1 GRAPHIC PAGES ..... 51

15.2 DISPLAY AND INDICATIONS ..... 51

15.3 FAULTS AND ALARMS ....51
15.4 COMPILED DATA ....52
15.5 TRENDS ....52
15.6 ALARM MANAGEMENT ....52
**APPENDIX A ....53**
**APPENDIX B ....54**
**APPENDIX C ....55**
**APPENDIX D ....56**
**APPENDIX E ....57**

# 1 INTRODUCTION

## 1.1 Project Definition

Veolia Water Technologies Canada (VWTC) was contracted by Agnico Eagles Mines (A.E.M.) to supply the equipment for a mining effluent treatment.

VWTC is responsible for the supply of mechanical equipment.

This control narrative shall be read in conjunction with the related documents as listed in Section 1.3.

## 1.2 Process Summary

The treatment system proposed will consist of the following steps:

- Breakpoint chlorination for ammonia removal
- Dechlorination using activated carbon
- Breakpoint chlorination Actiflo
- Secondary Actiflo
- Discfilter filtration
- Backwash tank
- Sludge tank

### 1.2.1 Breakpoint Chlorination for Ammonia Removal

Part of the raw water, which is composed of a mix of underground saline water and surface water, is sent to a closed-top reaction tank where a hypochlorite source and an alkali (NaOH) are added. The hypochlorite is a compound added to oxidize the ammonia ($NH_{4+}$) into mainly nitrogen gas ($N_2$) through breakpoint chlorination and ammonia and nitrite ($NO_{2-}$) into nitrates ($NO_{3-}$) through simple oxidation. The hypochlorite dosage is adjusted according to the dissolved organic carbon (DOC), nitrites and ammonia concentrations in the raw water as all of these compounds will consume the added chlorine.

The hypochlorite injected in the water produces hypochlorous acid (HOCl). The hypochlorous acid is a weak acid, and part of the hypochlorous acid is decomposed in water into hypochlorite ions ($OCl_-$) depending of the pH. The pH can be adjusted to optimize the hypochlorite ion concentration in the reactor, therefore optimizing the chlorine dosage. The control of the pH also prevents the release of chlorine gas, which can be observed in acidic pH and which is a safety and corrosion issue.

The hypochlorous acid and hypochlorite ions in solution will first be consumed by reducing agents and organic matter contained in the water. When more chlorine is added in solution and there is a presence of ammonia, the ammonia will react to form chloramines, specifically monochloramines ($NH_2Cl$). When the

quantity of chlorine is sufficient, the monochloramine will be destroyed, and depending of the concentration, will be transformed in dichloramines ($NHCl_2$) or trichloramines ($NCl_3$) and then, finally, in nitrogen ($N_2$). If the quantity of chlorine injected is sufficient, a breakpoint is reached where all chloramines and ammonia are converted into nitrogen. The raw water is sent to a reaction tank where calcium hypochlorite and an alkali are added. The calcium hypochlorite is a compound added to oxidize the ammonia ($NH_4^+$) into nitrogen ($N_2$). The calcium hypochlorite feed is added as a function of nitrites ($NO_2^-$) and ammonia concentration in the raw water.

The Figure 1.1 below presents a typical curve showing chlorination breakpoint

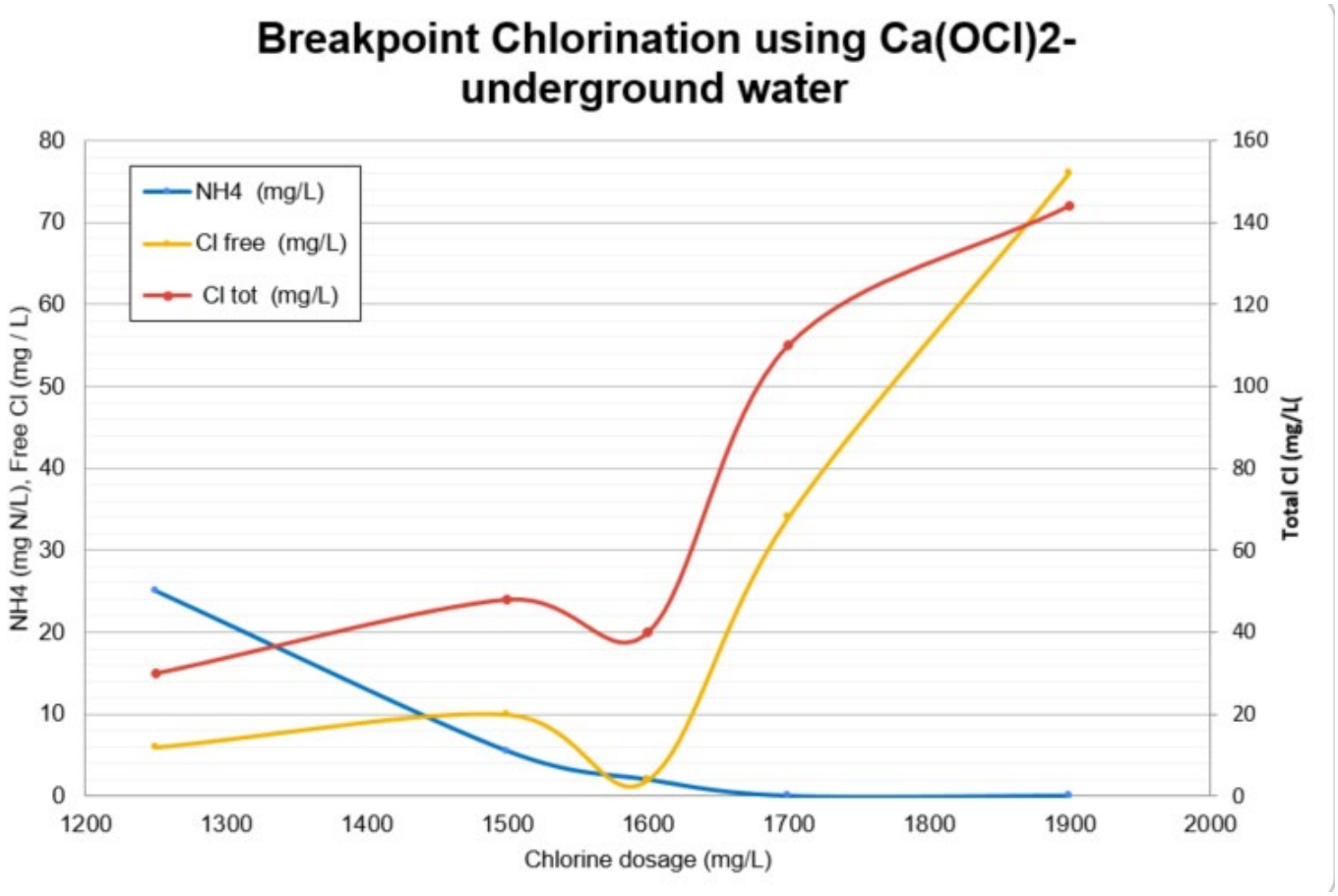


Figure 1: Breakpoint chlorination determination

It is important to notice that once the breakpoint is passed, ammonia concentration is still low but free and combined chlorine are climbing up again. Accurate management of ammonia but also chlorine residual out of the chlorination tank is required to not exhaust the downstream Powder Activated Carbon (PAC) - see Section 1.2.3.

### 1.2.2 Dechlorination Using Activated Carbon

The chlorinated water, containing chlorine residual, flows to the dechlorination reactor for chlorine destruction. The dechlorination process aims to ensure the destruction of the residual chlorine, which is

acutely lethal to aquatic life. Traditional breakpoint chlorination, which is already in place on site, uses powder activated carbon (PAC) for the chlorine destruction. Since the use of calcium hypochlorite causes inactivation issues on the PAC, powdered activated carbon (PAC) is used for chlorine destruction instead.

The PAC is dosed in the dechlorination reactor in two steps (in the first two compartments), to allow a sufficient contact time for complete chlorine destruction and provide fresh activated carbon along the dechlorination process. Continuous automatic dosing systems are used to add fresh PAC to the dechlorination step. Some recirculated PAC, from the ACTIFLO ballasted flocculation system, is also added to the dechlorination reactor. This allows a slight reduction of the PAC requirement and higher efficiency for the chlorine destruction.

Since the proposed water treatment chain will be operating in cold water conditions, coagulant addition is also done in the dechlorination reactor, which provides high reaction time for the activation of the coagulant and coagulation of the colloids particles. The coagulant acts as a destabilization agent to agglomerate TSS particles contained in the raw water for further removal.

### 1.2.3 Breakpoint Chlorination Actiflo

The Breakpoint chlorination Actiflo receives two streams.

In the first stream, the water is charged with PAC, destabilized TSS and with a slight chlorine residual flows to the ACTIFLO clarifier. The proposed ACTIFLO is designed to remove suspended solids presents in the water and the PAC dosed for chlorine destruction.

In the second stream, the water, bypassed from the two RX, goes directly to the breakpoint chlorination ACTIFLO. For this reason, a security coagulant dosage point is added to address possible by-passed water and increase the coagulant efficiency.

Sand-ballasted settling is a high-rate coagulation/flocculation/ sedimentation process that utilizes microsand as a seed for floc formation. The microsand provides a surface area that enhances flocculation and acts as a ballast or weight. The resulting floc settles very fast, allowing for compact clarifier designs compared to conventional clarifiers, with high overflow rates and short detention times. The use of microsand also permits the unit to perform well under dramatically changing flow rates without impacting final effluent quality

The ACTIFLO has three active chambers. The slurry flows through the first chamber, to break bubbles formed during the chlorine destruction, which could affect the settling efficiency. Within the Breakpoint chlorination ACTIFLO, sodium thiosulfate, a quenching agent, is also dosed to the first chamber of the ACTIFLO to destroy any residual chlorine coming from the dechlorination reactor. The slurry, bubble-free and chlorine residual free, flows to the second chamber, the maturation tank, where anionic polymeric flocculant and microsand are added to initiate floc formation. These serve as a “seed” for floc formation and development in the next process step.

The sand-sludge-PAC mixture settles to the bottom of the clarifier. Scrapers force the sludge collected at the bottom of the clarifier into a centre cone from which it is continuously withdrawn and pumped to a

cyclone where sludge and microsand are separated by centrifugal force. After separation, the higher density microsand is discharged from the bottom of the cyclone and reinjected into the process for re-use.

The sludge from the breakpoint chlorination ACTIFLO, coming from the hydrocyclone overflow, flows by gravity to a dedicated Splitter Box where part of the sludge flows back in the reaction tank. The sludge splitter box from the breakpoint Chlorination ACTIFLO is used for homogenization of the sludge quality over time, providing some thickening up to 20 g/L of the sludge. In addition, it promotes the reuse of the PAC in the ACTIFLO, the sludge is partly recirculated to the dechlorination reactor, thus reducing the PAC requirement for dechlorination. The excess sludge is sent to a common sludge holding tank thus mixing spend PAC from the breakpoint chlorination ACTIFLO and the partially thickened sludge from the bypass ACTIFLO.

### 1.2.4 Secondary Actiflo

The secondary Actiflo receives the third stream composed of the underground water and surface water. It is designed to remove suspended solids present in the raw water. A coagulant is dosed within the first chamber to provide coagulation of the colloids particles. The coagulant then acts as a destabilization agent to agglomerate TSS particles contained in the raw water for further removal.

The ACTIFLO has three active chambers. A coagulant is dosed within the first chamber to provide coagulation of the colloids particles. The coagulant then acts as a destabilization agent to agglomerate TSS particles contained in the raw water for further removal. The water then flows into the second chamber, the injection tank, where an anionic polymeric flocculant and microsand is added to initiate floc formation. These serve as a “seed” for floc formation and development in the next process step. From the injection tank, the water underflows to a third tank section called the maturation tank.

In this tank, a TURBOMIX® mixer provides ideal conditions for bridging between the microsand and the destabilized suspended solids. The fully formed ballasted floc enters into the third and final tank, the settling tank, equipped with a lamella, which provides the rapid and effective removal of the microsand/sludge floc. The clarified water exits the system via a weir and flows to a clarified water holding tank.

The sand-sludge-PAC mixture settles to the bottom of the clarifier. Scrapers force the sludge collected at the bottom of the clarifier into a centre cone from which it is continuously withdrawn and pumped to a cyclone where sludge and microsand are separated by centrifugal force. After separation, the higher density microsand is discharged from the bottom of the cyclone and reinjected into the process for re-use. The sludge from the secondary ACTIFLO, coming from the hydrocyclone overflow, flows by gravity to a dedicated Splitter Box where part of the sludge flows back in the first chamber of the secondary ACTIFLO. The sludge splitter boxes from the secondary ACTIFLO is used for homogenization of the sludge quality over time, providing some thickening up to 20 g/L of the sludge.

### 1.2.5 Discfilter Filtration

Water from both ACTIFLO process flows by gravity to the DISCFILTER filtration process. The DISCFILTER is used as a polishing step to reduce the suspended solids at the clarified water aiming further reduction of metal at the final effluent. The DISCFILTER utilizes a filter cloth mounted on filter panels. These panels stem from a central drum where inlet water is admitted into the unit for treatment. Water is filtered in inside-out mode, flowing from the centre tube to the open base of the filter discs, through the polyester cloth before reaching the DISCFILTER water collection tank. The DISCFILTER water collection tank is part of the DISCFILTER and contains the filters and the filtered water. Particulate matter presents in the DISCFILTER inlet water is retained by the filter media on the inside of the filter panels, eventually leading to solids built-up on the filter media. Consequently, the head loss across the DISCFILTER increases, resulting in increased water level at the inlet of the unit. The unit includes an integral high level switch that initiates a backwash cycle, which rotates the filter discs in order to expose clean filter media to the water flow path, while subjecting the dirty filter media to the cleaning action of the backwash spray tips. Filtered water stored in the DISCFILTER water collection tank is pumped to feed the series of spray tips strategically installed on the moving arms of the backwash system. This serves to clean the entire surface of the filter media while limiting the use of filtered water in the process. An outlet weir integral to the DISCFILTER water collection tank is used to maintain the water. The backwash water will be directed to a dirty water holding tank to be pumped back to the ACTIFLO process. Filtered water flows over the weir of the tank and out of the unit. A chemical trolley is available with the DISCFILTER unit in the case of chemical scaling due to high calcium concentration in the water (possibility to use an acidic wash to wash down any calcite that might precipitate on the discs cloth). The water then flows to a treated water tank and is pumped to discharge. Online TSS and Total Chlorine will be monitored at the outlet for discharge compliance.

### 1.2.6 Backwash tank

The Backwash tank collects the dirty backwash water that flows out of the DISCFILTER unit. The backwash waste is pumped from the holding tank to the secondary ACTIFLO (for TSS removal only). The flow of the backwash watse must be considered in the hydraulic of the ACTIFLO in order not to exceed the maximum flow to the bypass ACTIFLO.

### 1.2.7 Sludge tank

The sludge holding tank is required for sludge management. Sludge is pumped from the two sludge splitter boxes to the sludge holding tank, which will be mixed to prevent any settling and accumulation within the sludge tank.

## 1.3 List of related documents

This document is to be read in conjunction with the following documents:

- P&IDs (5000220043_PI0001)
- Equipment List
- Table of setpoint and alarms
- All GA drawings

## 1.4 List of abbreviations

The following abbreviations are used in the text of this document.

HMI: Human/Machine Interface
PLC: Programmable Logic Controller
SCADA: Supervisory Control and Data Acquisition
VFD: Variable Frequency Drive
VWTC: Veolia Water Technologies Canada

## 1.5 List of Units

The following lists the parameters referred to in this document and the units they are measured in unless otherwise specified.

Concentration (in general): mg/L
Flowrate (main process): $m^3/h$
Flowrate (chemical dosing): LPH
Level in tank: %
pH: -
Pressure: PSIg
Temperature: ° C
Turbidity: NTU
TSS: mg/L

# 2 Overall Plant Control

In this section, only the automatic control sequences are described.

## 2.1 Overview

The process includes the following unit operations:

- One (1) Chlorination Tank, mixing and instrumentation
- One (1) Dechlorination Tank, mixing and instrumentation
- One (1) Breakpoint Chlorination Actiflo and instrumentation
- One (1) Secondary Actiflo and instrumentation
- One (1) Discfilter
- One (1) Powder activated Carbon preparation and dosing system
- Two (2) Total Chlorine analyzer and associated flowmeter
- Two (2) Free Chlorine analyzer and associated flowmeter
- Two (2) Splitter Boxes

The WTP will receive an influent flow rate up to 20 000 m3/d.

## 2.2 Plant overall control

The inlet water flowrate is controlled from a setpoint adjustable by the operator, using two (2) modes: Program or Local.

The program modes calculate the breakpoint chlorination flowrate using the ammonia concentration value at the inlet, the ammonia concentration setpoint at the outlet and the inlet water flowrate. The remaining flowrate is then distributed between the breakpoint chlorination bypass and the secondary Actiflo.

The effluent flows to the whole treatment chain by gravity. Both streams coming from Each Actiflo are combined together and feeds the Discfilter.

Sludge produced by each actiflo is either recirculated or extracted to the sludge discharge line depending on a timer with feedback on TSS concentration in the sludge.

Backwash water from Discfilter is collected into a backwash tank and evacuated gradually using backwash pumps back to the secondary Actiflo.

Chemicals are dosed proportionally to flow with correction factors to take into account pH or ammonia values for final effluent quality adjustment and oxidation efficiency.

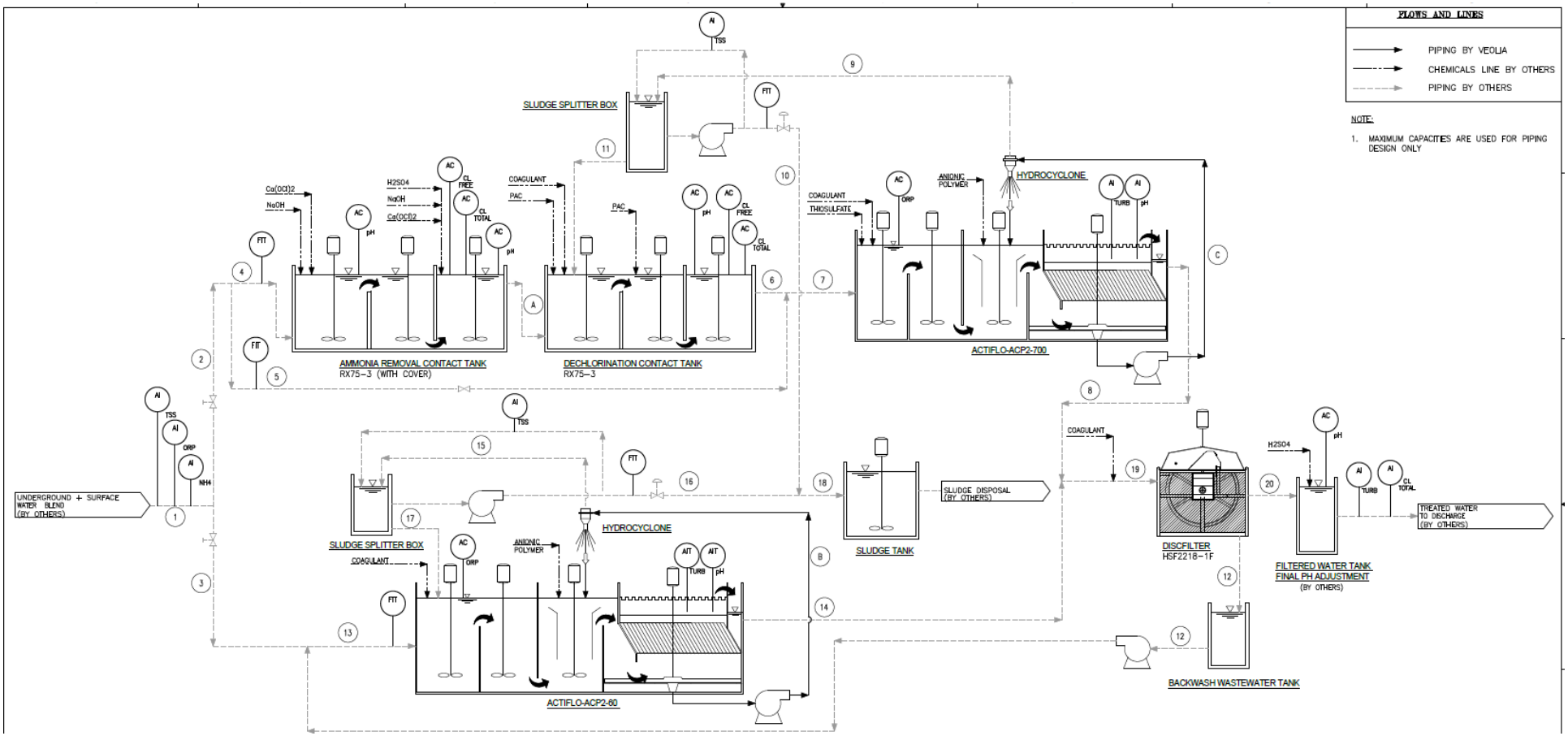
FLOWS AND LINES
PIPING BY VEOLIA
CHEMICALS LINE BY OTHERS
PIPING BY OTHERS
NOTE:
1. MAXIMUM CAPACITIES ARE USED FOR PIPING DESIGN ONLY
SLUDGE SPLITTER BOX
AMMONIA REMOVAL CONTACT TANK
RX75-3 (WITH COVER)
DECHLORINATION CONTACT TANK
RX75-3
HYDROCYCLONE
ACTIFLO-ACP2-700
SLUDGE SPLITTER BOX
HYDROCYCLONE
ACTIFLO-ACP2-60
SLUDGE TANK
SLUDGE DISPOSAL (BY OTHERS)
DISCFILTER
HSF2218-1F
FILTERED WATER TANK
FINAL PH ADJUSTMENT
(BY OTHERS)
TREATED WATER TO DISCHARGE (BY OTHERS)
BACKWASH WASTEWATER TANK
UNDERGROUND + SURFACE WATER BLEND (BY OTHERS)
Ca(OCl)2
NaOH
H2SO4
COAGULANT
PAC
ANIONIC POLYMER
THIOSULFATE

# 3 Inlet Flowrate Distribution

## 3.1 Description

The inlet flowrate distribution can be done following two (2) modes:

In Local mode, operator will manually enter the desired water flowrates on the PID loop pop-up page.

In Program mode, the flowrate setpoints are calculated as described below.

The ammonia concentration at the outlet and total inlet Flowrate are two fixed value entered by the operator on the HMI. Using these values and the ammonia concentration measured at the inlet, the minimum ammonia load to be removed is calculated and the breakpoint chlorination flowrate is deducted. The remaining flowrate is then calculated and compared to the minimum allowable flow rates of each Actiflo (using a settling rate of 20 m/h).

*Table 3-1: Inlet control devices*

| SKID | P&ID TAG | DESCRIPTION | COMMENTS |
|---|---|---|---|
| | 65AIT6801102 | Inlet TSS meter | |
| | 65AIT6801101 | Inlet NH3 analyzer | |
| | 65AIT680110X | Inlet ORP analyzer | |
| | 65AIT680110X | Inlet PH analyzer | |
| | 65FI6801102 | Inlet Breakpoint Chlorination flowmeter | |
| | 65FCV6801102 | Inlet Breakpoint Chlorination modulating valve | |
| | 65FIXX | Bypass Breakpoint Chlorination flowmeter | |
| | 65FCVxx | Bypass Breakpoint Chlorination modulating valve | |
| | 65FI6801301 | Secondary flowmeter | |
| | 65FCV6801302 | Secondary modulating valve | |

## 3.2 Controls

### 3.2.1 Flow rates calculation

The raw inlet flowrate Qin is entered by the operator on the HMI. It is then distributed among the three streams as per the following equation:

**Qin = QBPC + QBPBPC + QSec**

Where :

Qin : inlet flowrate in m3/d

QBPC : Flow going to chlorination tank (breakpoint chlorination) in m3/d

QBPBPC : : Flow by-passing the breakpoint chlorination but being treated by the breakpoint chlorination Actiflo in m3/d

QSec : Flow by-passing the breakpoint chlorination to the secondary ACTIFLO unit in m3/d

**QBPTOT = QBPBPC + QSec**

Where ;

QBPTOT : Total flow by-passing the breakpoint chlorination step (going to one or the other ACTIFLO unit) in m3/d

The ammonia concentration measured at the inlet determines the usage of the breakpoint chlorination treatment chain. The following equation presents the calculation of the Breakpoint chlorination flow rate :

**QBPC= Qin*(NH4 in – SP NH4 out)/(NH4 in – NH4 outBPC)**

Where :

NH4 in: Ammonia in raw water. The value of NH4 as measured by the ammonia analyzer. The operator selects one of the three modes : Local (concentration entered by the operator in mg/L), Remote 1 (direct usage of the ammonia analyzer 65AIT6801101 signal ), Remote 2 (Calculated mobile average concentration measured by ammonia analyzer 65AIT6801101 refreshed every 4 hours – adjustable delay).

SP NH4 out : Targeted concentration at final discharge. Can be modified, but restricted access (in case of law modification in the future). Will be initially set at 40 mg N/L.

NH4 outBPC : Ammonia concentration out of the BPC process. Can be modified, but with restricted access (after better understanding of optimal operation on site). Will be initially set at 5 mg N/L.

The decision diagram below presents the calculation steps of the breakpoint chlorination flowrate (QBPC) and the total flow bypassing the BPC treatment chain (QBPTOT)

*Figure 3.1 : Breakpoint chlorination flowrate Flowchart*

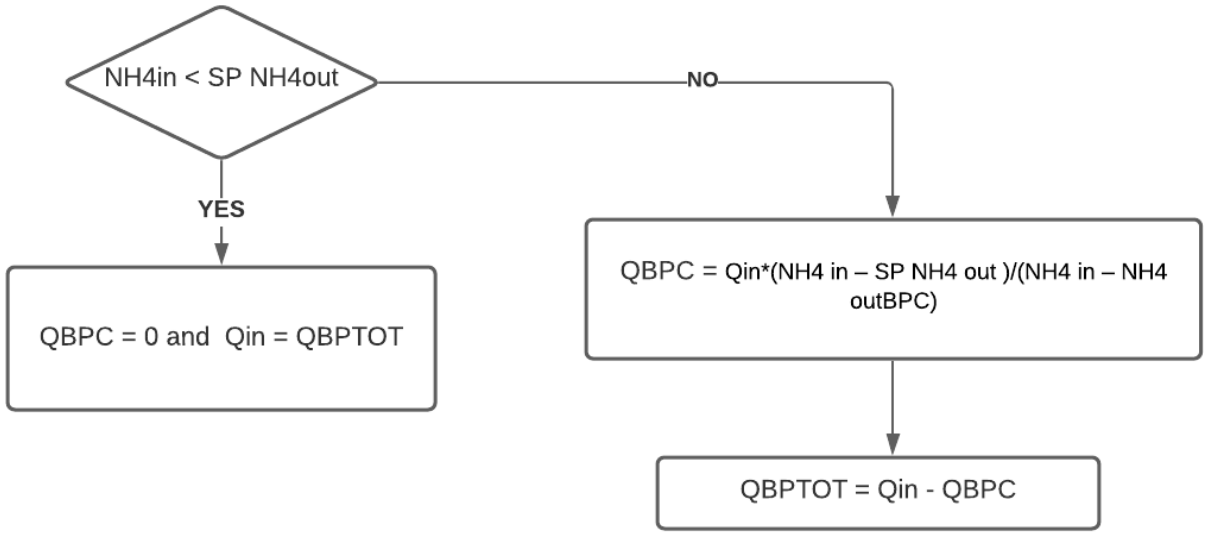


The next figure presents the calculation steps of the Bypass flowrate (QBPBPC and Qsec)

*Figure 3.2 : Bypass flowrate Flowchart*

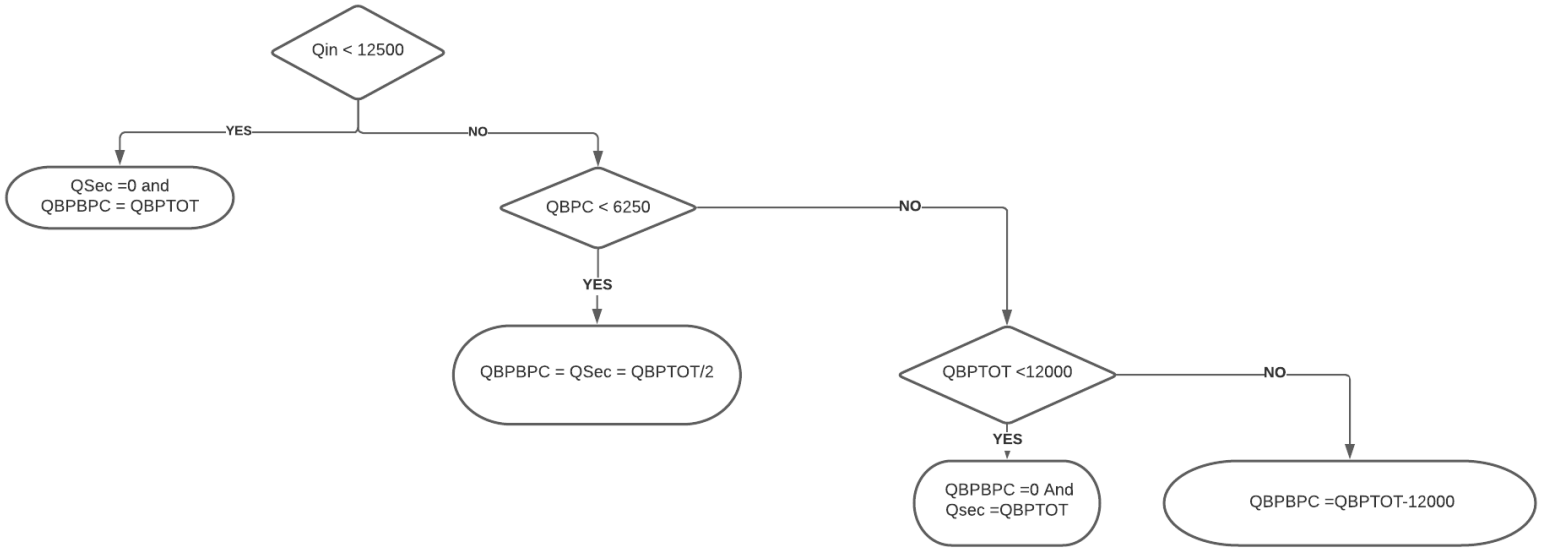


An overview page presents the flowrates for each stream, the ammonia load removed, the ammonia concentration at the inlet, the targeted ammonia concentration at the outlet and the ammonia concentration out of the BPC process.

### 3.2.2 Flow control mode

The calculated flowrate is used as a setpoint. PID loop controls the modulating valve opening accordingly, using the flowrate from each flowmeter as a process value and the valve opening as a manipulated variable.

In either mode (Program or local), priority of the flow control loop shall be assigned in the following order:

1. Breakpoint chlorination flow control
2. Secondary flowrate (if active)

The breakpoint chlorination (B.C.) bypass flow control is not activated in that case and is used as an exhaust of the system in order to avoid a fight between the different flow control loop.

## 3.3 Fault response

**Ammonia Analyzer out of range**

Tag: 65AIT6801101

The ammonia analyzer is used for inlet distribution flow rate calculation. If the instrument fails, a FATAL alarm is displayed on the screen and the last value recorded is used for calculation. The operator can override the value on the screen.

**Flowmeter out of range**

Tag: 65FIT6801102, 65FIT XX, 65FIT6801301

The flowmeters are used for the flow control of the modulating valves. If one of the three flowmeter falls out of range, a FATAL alarm is displayed on the screen and the openings of the valves are held in last position. . The flow calculation is disabled until the fault is acknowledged on the HMI. The flow control is used in local mode.

**Flow control valve Fault**

Tag: 65FCVXX, 65FCV6801302, 65FCV6801102
If one of the three fow control valve falls out of range, a FATAL alarm is displayed on the screen. . The flow calculation is disabled until the fault is acknowledged on the HMI.

# 4 Chlorination tank

## 4.1 Description

In the chlorination tank, the chlorine level and pH control is achieved by the following control devices and instruments:

*Table 4-1: Chlorination tank devices*

| SKID | P&ID TAG | DESCRIPTION | COMMENTS |
|---|---|---|---|
| | 65LSHH6801106 | HIGH HIGH LEVEL SWITCH | |
| | 65AIT6801107 | INLET PH METER | |
| | 65AIT6801111 | OUTLET PH METER | |
| | 65AGI68012 | MIXER #1 | |
| | 65AGI68013 | MIXER #2 | |
| | 65AGI68014 | MIXER #3 | |
| | 65FAN68005 | FAN | |
| | 65AIT6801117 | TOTAL CHLORINE ANALYZER | |
| | 65AIT6801116 | FREE CHLORINE ANALYZER | |

## 4.2 Controls

### 4.2.1 Chlorination tank Start/Stop/Auto function

By activating the Auto function, the Chlorination tank is set in Auto start mode and is ready to start. If all the system availability conditions are satisfied, it starts only after receiving the automatic start command.

A start and a stop button will be displayed on the HMI.

- By activating the Start function, the chlorination tank starts the fan and then the three mixers after a delay adjustable on the HMI whatever the automatic start command status.
- By activating the Stop function on the HMI, the chlorination tank stops the three mixers and then the fan after a delay adjustable on the HMI.

If required equipment is in manual and not running when the chlorination tank Auto function is triggered, automatic starting command cannot be activated.

### 4.2.2 Alkali pH control loop

The alkali is dosed in the first compartment proportionally to the calculated flowrate, but the dosage is modulated to maintain a pH at an adjustable setpoint entered by the operator on the interface.

A PID loop controls dosing setpoint accordingly, using the pH meter 65AIT6801107 as a process value and the dosing rate as a manipulated process value to maintain a constant pH.

If the pH value as read by the pH meter 65AIT6801107 is below the pH setpoint, the dosing rate is incremented.

If the pH value as read by the pH meter 65AIT6801107 is above the pH setpoint, the dosing rate is decreased.

The changes are capped by an adjustable range to prevent overdose or underdose of alkali.

If the pH meter is out of range, the PID loop is deactivated and only dosing setpoint is taken into account.

A button on the interface also allows the operator to select the pH control or disable it (in case of pH sensor malfunction).

### 4.2.3 Acid pH control loop

The sulfuric acid is dosed in the last compartment of the chlorination tak. The dosage is modulated to maintain a pH at an adjustable setpoint entered by the operator on the interface.

A PID loop controls dosing setpoint accordingly. The control loop uses the pH meter 65AIT680111 as a feedforward process value, the pH meter 65AIT680136 (located in the dechlorination tank) as feedback value and the dosing rate as a manipulated process value to maintain a constant pH.

If the pH value as read by the pH meter 65AIT680111 is below the pH setpoint, the dosing rate is incremented.

If the pH value as read by the pH meter 65AIT680111 is above the pH setpoint, the dosing rate is decreased.

The changes are capped by an adjustable range to prevent overdose or underdose of sulfuric acid.

If the pH meter is out of range, the PID loop is deactivated and only dosing setpoint is taken into account.

A button on the interface also allows the operator to select the pH control or disable it (in case of pH sensor malfunction).

### 4.2.4 Ammonia and chlorine residual control

The calcium hypochlorite is dosed proportionally to the calculated flowrate as described. But the dosage is modulated to maintain a fixed outlet ammonia concentration. The outlet ammonia concentration is an adjustable setpoint entered by the operator on the interface.

The operator has two options for the hypochlorite dosing:

**Option 1: Stoichiometric dosage with free chlorine residual correction**

The required dosage concentration $RC_{HYPO}$ when expressed in mg/L is calculated as follows:

$RC_{HYPO}$= 7.6 x ([NH4 inf]-[NH4 eff]) + Correction factor 1

Where NH4inf is the ammonia concentration in mg/L as given by ammonia analyzer 65AIT6801101 at the raw water inlet and NH4 eff the required ammonia concentration at the outlet.

The correction factor 1 can be modulated by the operator to control the free chlorine residual as measured by 65AIT6801116 and is clamped by an adjustable range to avoid underdosing or overdosing of calcium hypochlorite.

A free chlorine setpoint is adjustable by the operator on the HMI. A volumic PI loop controls dosing manipulated process value accordingly, using the free chlorine analyzer 65AIT6801116 (when reading chlorination tank effluent) as a process value and the free chlorine setpoint as target value to optimize calcium hypochlorite dosages. The volumic integral pH control loop applies a correction to the calculated required dosage. It considers the volume between the dosing point and the measurement (hydraulic retention time) and the pH setpoint Vs the actual pH value (Error). A Gain applies a factor on the error. The loop is tuned by adjusting the gain and the volume.

If the residual free chlorine value as read by the free chlorine analyzer 65AIT6801116 is above the free chlorine setpoint, the calcium hypochlorite dosing setpoint is decreased.

If the residual free chlorine value as read by the free chlorine analyzer 65AIT6801116 is below the free chlorine setpoint, the calcium hypochlorite dosing setpoint is increased.

**Option 2: Dosage entry**

If chorine analysers falls out of range, the operator can enter the required calcium hypochlorite dosage $RC_{HYPO}$ in mg/L or µL/L on the interface.

## 4.3 System Availability Conditions

The automatic start sequence will be activated when the automatic start command is true and the following conditions are met:

- At least two mixers are in PROGRAM mode
- No major fault

## 4.4 Fault response

The following are the possible major faults associated with the contact reactor.

1. Chlorination tank high high level switch
2. Multiple chlorination tank mixers fault
3. Fan fault

A major fault on the chlorination tank stops the associated alkali pumps, sulfuric acid pump and calcium hypochlorite pumps.

**Chlorination tank high high level switch**

Tag: 65LSHH6801106

A float in the chlorination tank is used as a high high Level switch. It is a major fault. Stop the Plant according to the automatic stop sequence when the switch is activated.

Fail safe mode:

The floats are to be wired so that the when no current is detected, the float fault alarm is activated.

**Chlorination tank mixer fault**

Tag: 65AGI68012/65AGI68013/65AGI68014

If one Chlorination tank mixer faults (1 of 3), the treatment train is not stopped. An alarm is activated, signalling to the operator there is a fault, but treatment continues. If more than one contact reactor mixer faults it is considered a major fault and the Plant is stopped according to the automatic stop sequence.

**Fan fault**

Tag : 65FAN68005

The Fan fault is a major fault and the plant is stopped according to the automatic stop sequence.

## 4.5 Interlocks

The faults that stop and prevent the Chlorination tank to start are as follows:

- The feeding pumps (by others) are in fault.
- The inlet breakpoint chlorination flowmeter 65FI6801102 is in out of range fault
- Dechlorination tank in major fault
- Breakpoint chlorination Actiflo is in major fault

# 5 Dechlorination tank

## 5.1 Description

In the dechlorination tank, PAC is added in the first section and in the third one. Each addition is done by a disctinct PAC preparation system. The chlorine level is monitored at the outlet in order to manually adjust the PAC dosage. Chlorine removal is achieved by the following control devices and instruments

*Table 4-1: Dechlorination tank devices*

| SKID | P&ID TAG | DESCRIPTION | COMMENTS |
|---|---|---|---|
| | 65LSHH6801131 | HIGH HIGH LEVEL SWITCH | |
| | 65AIT6801136 | OUTLET PH METER | |
| | 65AGI68015 | MIXER #1 | |
| | 65AGI68016 | MIXER #2 | |
| | 65AGI68017 | MIXER #3 | |
| | 65AIT6801142 | TOTAL CHLORINE ANALYZER | |
| | 65AIT6801141 | FREE CHLORINE ANALYZER | |

## 5.2 Controls

### 5.2.1 Dechlorination tank Start/Stop/Auto function

By activating the Auto function, the Dechlorination tank is set in Auto start mode and is ready to start. If all the system availability conditions are satisfied, it starts only after receiving the automatic start command.

A start and a stop button will be displayed on the HMI.

- by activating the Start function, the dechlorination tank starts the three mixers whatever the automatic start command status.
- by activating the Stop function on the HMI, the dechlorination tank stops the three mixers.

If required equipment is in manual and not running when the dechlorination tank Auto function is triggered, automatic starting command cannot be activated.

### 5.2.2 Chlorine residual control

Free chlorine concentration and total chlorine concentrations are continuously monitored. The PAC dosages are manually adjusted on the HMI accordingly by the operator. See functional description in appendix E.

### 5.2.3 Coagulant dosage

Coagulant is dosed proportionally to the Breakpoint chlorination water flow rate indicated by 65FI6801102.

The coagulant dosage in mg/L is entered by the operator on the HMI.

## 5.3 System Availability Conditions

The automatic start sequence will be activated when the automatic start command is true and the following conditions are met:

- At least two mixers are in PROGRAM mode
- No major fault

## 5.4 Fault response

The following are the possible major faults associated with the contact reactor.

- Dechlorination tank high high level switch
- Multiple dechlorination tank mixers fault

A major fault on the dechlorination tank stops the associated pac dosages and coagulant pump,

**Dechlorination tank high high level switch**

Tag: 65LSHH6801131

A float in the dechlorination tank is used as a high high Level switch. It is a major fault. Stop the Plant according to the automatic stop sequence when the switch is activated.

Fail safe mode:

The floats are to be wired so that the when no current is detected, the float fault alarm is activated.

**Dechlorination tank mixer fault**

Tag: 65AGI68015/65AGI68016/65AGI68017

If one Dechlorination tank mixer faults (1 of 3), the treatment train is not stopped. An alarm is activated, signalling to the operator there is a fault, but treatment continues. If more than one contact reactor mixer faults it is considered a major fault and the Plant is stopped according to the automatic stop sequence.

## 5.5 Interlocks

The faults that stop and prevent the Chlorination tank to start are as follows:

- The feeding pumps (by others) are in fault.
- The inlet breakpoint chlorination flowmeter 65FI6801102 is in out of range fault
- Chlorination tank in major fault
- Breakpoint chlorination Actiflo is in major fault

# 6 Breakpoint Chlorination Actiflo

## 6.1 Description

The dechlorination effluent enters the Breakpoint chlorination Actiflo (Acticarb).

A quenching agent (sodium thiosulfate) is dosed in the coagulation chamber in order to remove any remaining chlorine. The sodium thiosulfate dosage is controlled with a Volumic PID loop using the ORP analyzer as a process value

The clarified water is collected by throughs and gets mixed with the secondary Actiflo clarified effluent prior to Discfilter filtration. Part of the sludge produced by the Acticarb is directed to the dechlorination tank. The remaining sludge is pumped to the sludge tank.

The detailed Acticarb process functional description is presented in Appendix B.

The Acticarb unit and its Activated Carbon Extraction/Recirculation consists on the following control devices and instruments:

*Table 6-1: Acticarb control devices*

| SKID | P&ID TAG | DESCRIPTION | COMMENTS |
|---|---|---|---|
| | 65AGI68018 | Coagulation mixer | |
| | 65AGI68019 | Injection mixer | |
| | 65AGI68020 | Maturation mixer | VFD |
| | 65TRM68001 | Scraper | |
| | 65LSHH6801224 | High High level switch | |
| | 65AIT6801221 | pH meter | |
| | 65AIT6801201 | ORP meter | |
| | 65AIT6801222 | Turbidity meter | |
| | 65FY6801242 | Injection water solenoid valve hydrocyclone #1 | |
| | 65FY6801237 | Injection water solenoid valve hydrocyclone #2 | |
| | 65AIT6801417 | TSS meter sludge | |

| | |
|---|---|
| 65PSR68005A | Recirculation pump #1 |
| 65PSR68005B | Recirculation pump #2 |
| 65AIT6801417 | TSS meter sludge |
| 65FIT6801432 | Extracted sludge flowmeter |
| 65LSHH6801406 | Splitter box High high level switch |
| 65LSLL6801406 | Splitter box Low low level switch |
| 65PSR68007A | Activated carbon extraction pump |
| 65FCV6801433 | Activated carbon extraction control valve |
| 65PSR68005A | Recirculation pump #1 |

## 6.2 Controls

### 6.2.1 Acticarb Start/Stop/Auto function

By activating the Auto function, the Acticarb is set in Auto start mode and is ready to start. If all start sequence conditions are satisfied, it starts only after receiving the automatic start command.

By deactivating the Auto mode, the Acticarb stops following the automatic stopping sequence and a start and a stop button will be displayed on the HMI.

- by activating the Start function, the Acticarb starts following the automatic starting sequence whatever the automatic start command status.
- by activating the Stop function on the HMI, the Acticarb stops following the automatic stopping sequence.

If required equipment is in manual and not running when the Acticarb Auto function is triggered, starting sequence cannot be activated.

### 6.2.2 Sodium thiosulfate dosage

The sodium thiosulfate is dosed in the coagulation chamber proportionally to the calculated flowrate and the free chlorine value measured at the outlet of the dechlorination tank. The dosage is corrected to maintain an ORP at an adjustable setpoint entered by the operator on the interface.

The required dosage concentration $RC_{ST}$ when expressed in mg/L is calculated as follows:

$RC_{ST}$= A x ([FCl meas]-[FCl SP]) + Correction factor 1

Where:

A : is a stoichiometric factor determined with lab tests

[FCl meas] : is the free chlorine concentration as measured with 65AIT6801141

[FCl SP] : is the free chlorine setpoint

A volumic PI loop controls dosing setpoint according to the value read by 65AIT6801141 (FFW), using the ORP meter 65AIT6801201 as a (FB) process value and the dosing rate as a manipulated process value to maintain a constant ORP.

If the ORP value as read by the ORP meter 65AIT6801201 is below the ORP setpoint, the dosing rate is incremented.

If the ORP value as read by the ORP meter 65AIT680120 is above the ORP setpoint, the dosing rate is decreased.

The changes are capped by an adjustable range to prevent overdose or underdose of sodium thiosulfate.

If the ORP meter is out of range, the feedback is disabled and the sodium thiosulfate is controlled with an open PID loop.

A button on the interface also allows the operator to select the ORP control or disable it (in case of ORP sensor malfunction).

## 6.3 Fault response

If a fault occurs on one activated carbon extraction pump, the Acticarb is stopped according to emergency shutdown sequence.(Emergency)
If the sludge valve 65FCV6801433 falls in fault, an alarm is generated. (Warning)

If the sludge flowmeter 65FIT6801432are in out of range fault, an alarm is generated. (Warning)

If the sludge flowmeter 65FIT6801432 is in deviation alarm and the valve 65FCV6801433 is closed, an alarm is generated, a major fault is generated and the Actiflo is stopped according to automatic shutdown sequence to prevent pump or line blockage. (Fatal)

If the sludge flowmeter 65FIT6801432 is in low low alarm and the valve 65FCV6801433 is open, but the 65FIT6801432 value is above the low low alarm, an alarm is generated. If the fault is not reset after an adjustable delay, the Actiflo is stopped according to automatic shutdown sequence to prevent line blockage. (Emergency).

Specific Acticarb faults are detailed in Acticarb FD in Appendix C

## 6.4 Interlocks.

The faults that stop and prevent the Acticarb to start are as follows:

- Sludge extraction pump is in fault
- The feeding pumps (by others) are in fault.
- The inlet flowmeter 65FI6801102 is in out of range fault
- Chlorination tank in major fault
- Dechlorination tank in major fault

# 7 Secondary Actiflo

The secondary Actiflo receives the third stream composed of the underground water and surface water. It is designed to remove suspended solids present in the raw water. The secondary flowrate is defined as explained in section 1.

A coagulant is dosed within the first chamber to provide coagulation of the colloids particles. The coagulant then acts as a destabilization agent to agglomerate TSS particles contained in the raw water for further removal.

The sludge from the secondary ACTIFLO, coming from the hydrocyclone overflow, flows by gravity to a dedicated Splitter Box where part of the sludge flows back in the first chamber of the secondary. The remaining sludge is pumped to the sludge tank. The flow rate to the sludge storage tank is controlled through a control valve and a turbidity control loop.

A recirculation loop on the sludge splitter box prevents sludge from settling. The sludge recirculation loop is equipped with a turbidity mete.

The clarified water is collected by throughs and gets mixed with the breakpoint chlorination Actiflo clarified effluent prior to Discfilter filtration. Part of the sludge produced by the Acticarb is directed to the dechlorination tank.

The detailed Actiflo process functional description is presented in Appendix C

The Actiflo unit and its Actiflo Extraction/Recirculation splitter box consists on the following control devices and instruments:

*Table 7-1: Actiflo control devices*

| SKID | P&ID TAG | DESCRIPTION | COMMENTS |
|---|---|---|---|
| | 65AGI68021 | Coagulation mixer | |
| | 65AGI68022 | Injection mixer | |
| | 65AGI68023 | Maturation mixer | VFD |
| | 65TRM68003 | Scraper | |
| | 65LSHH6801324 | High High level switch | |
| | 65AIT6801321 | pH meter | |

| | |
|---|---|
| 65AIT6801322 | Turbidity meter |
| SSL20-01 | High High Torque detection |
| 65PSR68006A | Recirculation pump #1 |
| 65PSR68006B | Recirculation pump #2 |
| 65AIT6801427 | TSS meter sludge |
| 65FIT6801437 | Extracted sludge flowmeter |
| 65LSHH6801411 | Splitter box High high level switch |
| 65LSLL6801411 | Splitter box Low low level switch |
| 65PSR68007C | Sludge extraction pump |
| 65FCV6801437 | Sludge extraction control valve |

## 7.1 Controls

### 7.1.1 Actiflo® Start/Stop/Auto function

By activating the Auto function, the Actiflo® is set in Auto start mode and is ready to start. If all start sequence conditions are satisfied, it starts only after receiving the automatic start command.

By deactivating the Auto mode, the Actiflo® stops following the automatic stopping sequence and a start and a stop button will be displayed on the HMI.

- by activating the Start function, the Actiflo® starts following the automatic starting sequence whatever the automatic start command status.
- by activating the Stop function on the HMI, the Actiflo® stops following the automatic stopping sequence.

If required equipment is in manual and not running when the Actiflo® Auto function is triggered, starting sequence cannot be activated.

### 7.1.2 Sludge recirculation/extraction control

The TSS control loop will act on the opening of the splitter box outlet flow control valve to adjust the sludge flow rate being recirculated back to the coagulation chamber.

A TSS set point will be entered by the operator. If the TSS measured by 65AIT6801427 is below the set point, the control loop will close 65FCV6801437. This will increase the sludge recirculation to the coagulation chamber and increase the turbidity.

On the contrary, if the measured TSS is above the set point, the control loop will open 65FCV6801437. This will decrease the sludge recirculation to the coagulation chamber and increase the sludge flow rate going to the sludge storage tank.

If the TSS analyzer is in fault, an alarm is generated and the sludge valve 65FCV6801437 opens to prevent sludge build-up in the Actiflo process.

If the fault is not reset after an adjustable delay, the Actiflo is stopped according to automatic shutdown sequence.

## 7.2 Fault response

If a fault occurs on one sludge extraction pump, the Actiflo is stopped according to emergency shutdown sequence.(Emergency)
If the sludge valve 65FCV6801437 falls in fault, an alarm is generated. (Warning)

If the sludge flowmeter 65FIT6801437are in out of range fault, an alarm is generated. (Warning)

If the sludge flowmeter 65FIT6801437 is in deviation alarm and the valve 65FCV6801437 is closed, an alarm is generated, a major fault is generated and the Actiflo is stopped according to automatic shutdown sequence to prevent pump or line blockage. (Fatal)

If the sludge flowmeter 65FIT6801437 is in low low alarm and the valve 65FCV6801437 is open, but the 65FIT6801437 value is above the low low alarm, an alarm is generated. If the fault is not reset after an adjustable delay, the Actiflo is stopped according to automatic shutdown sequence to prevent line blockage. (Emergency).

Specific Actiflo faults are detailed in Actiflo FD in Appendix C

## 7.3 Interlocks.

The faults that stop and prevent the Actiflo to start are as follows:

- Sludge extraction pumps is in fault
- The feeding pumps (by others) are in fault.
- The secondary flowmeter 65FI6801301 is in out of range fault

Specific Actiflo interlocks are detailed in Actiflo FD in Appendix C.

# 8 Discfilter

## 8.1 Description

Water from both ACTIFLO process flows by gravity to the DISCFILTER filtration process. The DISCFILTER is used as a polishing step to reduce the suspended solids at the clarified water aiming further reduction of metal at the final effluent.

The DISCFILTER utilizes a filter cloth mounted on filter panels. These panels stem from a central drum where inlet water is admitted into the unit for treatment. Water is filtered in inside-out mode, flowing from the centre tube to the open base of the filter discs, through the polyester cloth before reaching the DISCFILTER water collection tank. The DISCFILTER water collection tank is part of the DISCFILTER and contains the filters and the filtered water. Particulate matter presents in the DISCFILTER inlet water is retained by the filter media on the inside of the filter panels, eventually leading to solids built-up on the filter media. Consequently, the head loss across the DISCFILTER increases, resulting in increased water level at the inlet of the unit.

The unit includes an integral two level transmitters located upstream and downstream. The differential level initiates a backwash cycle, which rotates the filter discs in order to expose clean filter media to the water flow path, while subjecting the dirty filter media to the cleaning action of the backwash spray tips.

Filtered water stored in the DISCFILTER water collection tank is pumped to feed the series of spray tips strategically installed on the moving arms of the backwash system. This serves to clean the entire surface of the filter media while limiting the use of filtered water in the process. An outlet weir integral to the DISCFILTER water collection tank is used to maintain the water level. The backwash water will be directed to backwash tank to be pumped back to the secondary ACTIFLO. Filtered water flows over the weir of the tank and out of the unit.

A chemical trolley is available with the DISCFILTER unit in the case of chemical scaling due to high calcium concentration in the water (possibility to use an acidic wash to wash down any calcite that might precipitate on the discs cloth). The water then flows to a treated water tank and is pumped to discharge. Online TSS and Total Chlorine will be monitored at the outlet for discharge compliance.

*Table 7-1: Discfilter ® control devices*

| SKID | P&ID TAG | DESCRIPTION | COMMENTS |
|---|---|---|---|
| | 65LIT6801502A | Upstream level transmitter | |
| | 65LIT6801502B | Downstream level transmitter | |
| | PSL-8165 | Pressure switch low | |

| | | |
|---|---|---|
| 65PSR68008A | Discfilter Backwash pump #1 | |
| 65PSR68008B | Discfilter Backwash pump #2 | |
| MTXX | Motor drive | |
| XXX | Discfilter cover actuator #1 | VFD |
| XXX | Discfilter cover actuator #2 | |
| XXx | Discfilter spray arm actuator | |
| XXX | Chemical cleaning pump | |

## 8.2 Controls

See Discfilter FD in Appendix D

## 8.3 Fault response

See Discfilter FD in Appendix D

## 8.4 Interlocks.

See Discfilter FD in Appendix D

# 9 Hydracarb

## 9.1 Description

Two Powder activated preparation and dosing systems are supplied. Each system is provided with its dedicated control panel. Based on the lab test, the operator calculates the total PAC dosage requirement in mg/L and enters the value on the HMI.

*Table 9-1: Hydracarb® control devices*

| SKID | P&ID TAG | DESCRIPTION | COMMENTS |
|---|---|---|---|
| | 65LSH6801612 | Wetting cone high Level switch #1 | |
| | 65LSH6801632 | Wetting cone high Level switch #2 | |
| | 65LSL6801611 | Hopper Low level Switch #1 | |
| | 65LSL6801631 | Hopper Low level Switch #2 | |
| | 65PSL6801621 | Service Water Pressure Switch #1 | |
| | 65PSL6801621 | Service Water Pressure Switch #2 | |
| | 65FY6801613 | Air Solenoid valve #1 | |
| | 65FY6801633 | Air Solenoid valve #2 | |
| | 65FY6801602 | Service Water Inlet Solenoid Valve | |
| | 65FY6801622 | Service Water Inlet Solenoid Valve | |

## 9.2 Controls

See Hydracarb FD in Appendix E

## 9.3 Fault response

See Hydracarb FD in Appendix E

## 9.4 Interlocks.

See Hydracarb FD in Appendix E

# 10 Sampling and analyses unit

## 10.1 Process overview

The free / total chlorine analysers skid is connected to the third compartment of each of the chlorination and dechlorination tank, a sample flow will be directed into the skid through gravity. A gravity settling system will allow the separation of the PAC particles and any other solids present in the sampled water. Then the effluent of the settling system is pumped into the dilution system of the skid. The pumped effluent is diluted with service water. In addition, both pumped effluent and service water flowrates are measured by a rotameter and a magnetic flowmeter respectively and controlled by controlling valves, therefore to meet the dilution ratio required to fit the analysers measuring ranges.

*Table 9.1: Free / Total Chlorine Analysers Skid devices*

| SKID | P&ID TAG | DESCRIPTION | COMMENTS |
|---|---|---|---|
| | 65PSRXXX | SAMPLE PUMP | |
| | 15-BA99-XXX | SAMPLE CONTROL VALVE #1 | |
| | 65FIXXX | SAMPLE ROTAMETER #1 | Not controlled |
| | 15-BA99-XXX | SAMPLE CONTROL VALVE #2 | |
| | 65FIXXX | SAMPLE ROTAMETER #2 | Not controlled |
| | 15-BA99-XXX | SERVICE WATER – CONTROL VALVE #1 | |
| | 65FITXXX | SERVICE WATER – FLOWMETER #1 | |
| | 15-BA99-XXX | SERVICE WATER – CONTROL VALVE #2 | |
| | 65FITXXX | SERVICE WATER – FLOWMETER #2 | |
| | 65AIT6801142 / 65AIT6801117 | TOTAL CHLORINE ANALYSER | |
| | 65AIT6801141 / 65AIT6801116 | FREE CHLORINE ANALYSER | |

## 10.2 Controls

### 10.2.1 Calculation of the chlorine concentration

The equations below calculates the initial chlorine concentration using the different flowrates measured :

$[CLfree_0] = [CLfree_m] . (Q_{dil} + Qp_1) / (Qp1)$

Where

$[CLfree_0]$ : is the initial free chlorine concentration measured in the chlorination/dechlorination tank

$[CLfree_m]$ : is the free chlorine concentration measure by the free chlorine analyzer

Qdil : is dilution flow rate measured by the flowmeter 65FITXXX

QP1 : is the pumped flow rate entered by the operator and measured with the rotameter.

The same equation applies for the total chlorine.

### 10.2.2 Pump control

Prior to operating the pump, its priming should be done by keeping both sample control valves #1 and #2 at the discharge section closed and opening the isolation valve at the suction section. When the suction line is filled, the pump can be started. All the listed valves are controlled manually.

#### 10.2.2.1 Dilution flow control

For an efficient free chlorine and total chlorine concentration monitoring, the dilution process should be done adequately. Without the appropriate service water and sample flows, this can't be achieved. This control is done by monitoring the service water flowmeters #1 / #2 and the sample rotameters #1 / #2 of each dilution line per the listed set points.

#### 10.2.2.2 Chlorine residual control

The free / total chlorine residual is measured by the analysers and it is controlled by a range of set points to avoid overdosing or underdosing of calcium hypochlorite and PAC dosages.

## 10.3 System Availability Conditions

For the system to run the following conditions should be met:

- Successful manual pump priming
- There is no major fault on the system

## 10.4 Fault Response

The following are the possible major faults associated with the sampling and analyses units:

1. Pump fault
2. Low low service water flow
3. Chlorine analysers out of range fault

**Pump Fault**

Tag: 65PSRXXX

Failure in priming the pump prior to its operation will result in a pump fault, the pump should be stopped and the skid should be isolated.

**Low Low Service Water Flow**

Tag: 65FITXXX

If service flowmeters indicate a low flow fault, a fatal alarm is signaled. The operator should give this major fault immediate attention in order to regulate the control valve 15-BA99-XXX upstream of the flowmeters 65FITXXX in order to avoid erroneous measures by the analysers.

**Chlorine Analysers Out of Range Fault**

Tag: 65AIT6801142 / 65AIT6801117 / 65AIT6801141 / 65AIT6801116

If analysers fall in out of range fault, a fatal alarm is generated. It will impact the calcium hypochlorite and PAC dosages. If fault persists, the operator can enter the required calcium hypochlorite and PAC dosages on the interface.

# 11 Treated water

## 11.1 Description

Water is pumped from treated water tank prior to discharge.
The treated water monitoring is composed of the following control devices and instruments.

*Table 11.1: treated water system control devices*

| SKID | P&ID TAG | DESCRIPTION | COMMENTS |
|---|---|---|---|
| | pH | pH analyzer | |
| | AITXXX | Total Chlorine analyzer | |
| | AITXXX | TSS Analyzer | |

## 11.2 Controls

In order to discharge effluent within effluent criteria, chlorine analyzer , TSS and pH analyzer are installed on the effluent line, prior to discharge.

The allowed discharge effluent setpoints ($TSS_{max}$, $pH_{min}$, $pH_{max}$, $Chlorine_{max}$) is entered by the operator at the interface.

When the transfer pump from treated water tank starts, the discharge valve (treated water valve by others) opens.

During the initial start-up of the plant, alarms are disabled for an adjustable period to enable enough time for complete on-line water analysis. After this adjustable delay, if all the effluent values are lower than the setpoints (including an adjustable hysteresis to prevent frequent opening and closing of the valve) for an adjustable delay, the treated water valve stays open.

When at least one of the values is above the corresponding setpoint (or below for $pH_{min}$) for an adjustable delay, , the off spec valve (by others) will open to allow water to be directed back to treatment chain inlet through to the off-spec line and discharge valve (by others) will close once the opening status of the off-spec valve is confirmed.

The raw water pumps will be stopped to prevent more water to enter the off-spec water loop. The chemical dosages will be adapted depending on the source of the non-compliance.

When all of the values are below the corresponding setpoint (or above $pH_{min}$) for an adjustable delay, the discharge valve will open to allow water to be directed to the treated water line and off-spec valve will close once the opening status of the discharge valve is confirmed.

The raw water pumps will then restart in automatic mode to provide water to the treatment plant.

## 11.3 Fault response

The following faults will stop the raw water pumps :

1. opening/closing fault from discharge valve (treated water valve)

If one of the analyzer (pH, TSS, chlorine ) is in fault, an alarm is generated and the off-spec valve opens and discharge valve closes to prevent off-spec water to be discharged to the treated water line.

## 11.4 Interlock

No interlock.

# 12 Backwash tank

## 12.1 Description

The backwash tank collects water from the discfilter. Two transfer pumps (duty / assist) are used to recirculate the backwash effluent to the head of the secondary Actiflo.

The backwash tank is made up of the following control devices and instruments:

*Table 6.1: Backwash tank control devices*

| SKID | P&ID TAG | DESCRIPTION | COMMENTS |
|---|---|---|---|
| | LITXX/LITXX | Level transmitters | |
| | 65PSR68009A | Backwash tank pump #1 | |
| | 65PSR68009B | Backwash tank pump #2 | |

## 12.2 Controls

### 12.2.1 Level control

The backwash tank is equipped with two redundant level transmitters, LITXX and LITXX and two transfer pumps.

Level transmitters can be set with priority. The two level transmitters operate in a duty/standby configuration

The level transmitter priority (lead /lag) is changed manually by the operator. The priority is changed automatically when one transmitter is in out of range fault.

The transfer pumps are equipped with VFD. A loop controls the Pump VFD accordingly, using the lead level transmitter as a process value and the speed of the pumps as setpoints.

If the level in this tank increases, the flow rate pumped from the tank should also increase. If the level in the tank is lower, the pump will slowly decrease speed until stop level is reached.

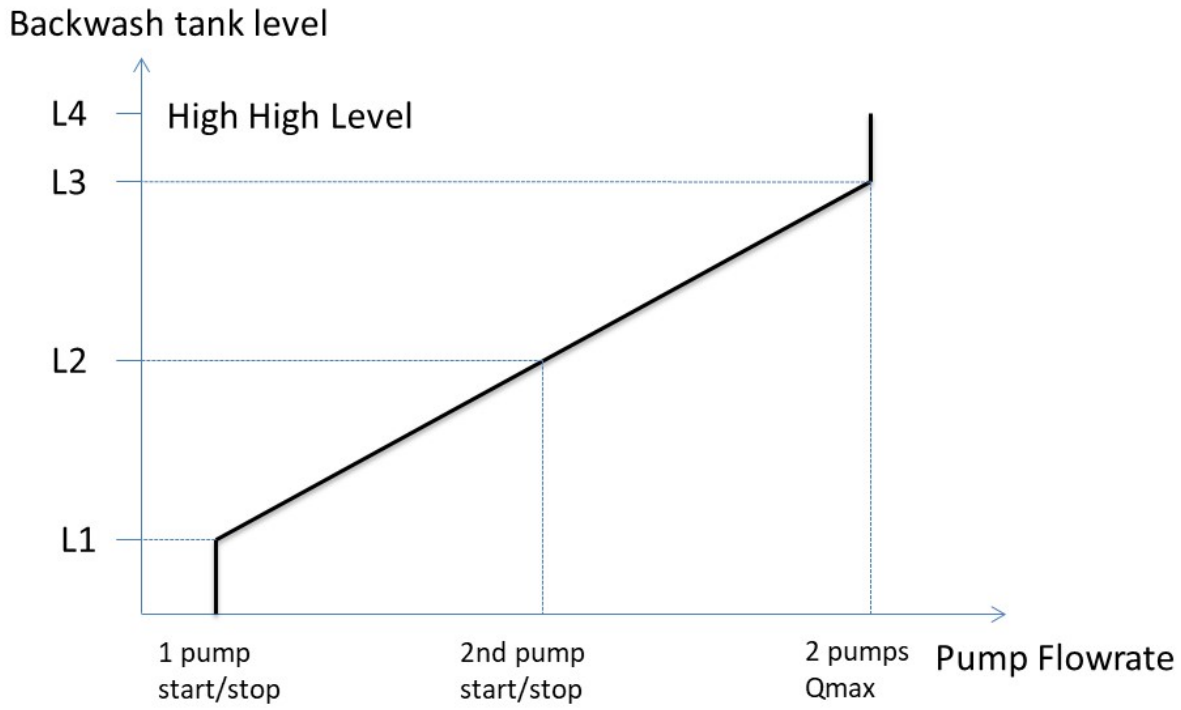


*Figure 6-1 backwash tank level control*

The following three (3) set points must be entered by the operator to properly control the flow and number of operating pumps.

Duty pump start level (LT_SP1);
Assist pump start level (LT_SP2);
Maximum speed pumps (LT_SP3);

When two pumps are operated at the same time, the pumps VFD setpoints are equal.

### 12.2.2 Backwash tank transfer pumps' Logic

In normal operation, only one transfer pump needs to run. The operator selects the assist pump on the interface.

Each time the running pump is stopped, the other pump starts at the next start sequence. If the pump is in manual or in fault, the second pump starts.

A button on the HMI permits to alternate manually the priority.

## 12.3 Fault Response

When the duty pump is in fault or not running and the secondary actiflo unit is in operation, the assist pump starts. If the second pump is in fault or in manual (not running) an alarm is generated and a message is displayed to warn the operator.

If low low level alarm on duty LITXX is activated, transfer pump is stopped until operator is able to reset the alarm.

If the two transmitters readings have discrepancy higher than an adjustable deviation value, an alarm is generated.

If the duty level transmitter is out of range, the priority is automatically transferred to the stand-by level transmitter. If both level transmitters are out of range, an alarm is generated and message is displayed to warn the operator about risk of overflow during discfilter backwash. The backwash pumps and discfilter are stopped.

## 12.4 Interlock

The interlocks that prevent the backwash tank pumps to start are:

- Low low level in backwash tank from duty level transmitter
- Both level transmitters out of range
- Secondary ACtiflo not running

# 13 Sludge tank

## 13.1 Description

The excess sludge from the two splitter boxes is pumped to a sludge holding tank. The sludge will be mixed to prevent any settling and accumulation within the sludge tank.

The sludge tank is made up of the following control devices and instruments:

*Table 6.1: Sludge tank control devices*

| SKID | P&ID TAG | DESCRIPTION | COMMENTS |
|---|---|---|---|
| | LITXX/65LIT6801441 | Level transmitters | |
| | 65PSR68009A | Sludge tank pump #1 | |
| | 65PSR68009B | Backwash tank pump #2 | |
| | 65AGI68024 | Mixer | |

## 13.2 Controls

### 13.2.1 Level control

The Sludge tank is equipped with two redundant level transmitters, LITXX and 65LIT6801441 and one transfer pump (by others).

Level transmitters can be set with priority. The two level transmitters operate in a duty/standby configuration

The level transmitter priority (lead /lag) is changed manually by the operator. The priority is changed automatically when one transmitter is in out of range fault.

The transfer pumps shall be equipped with VFD. A loop controls the Pump VFD accordingly, using the lead level transmitter as a process value and the speed of the pumps as setpoints.

If the level in this tank increases, the flow rate pumped from the tank should also increase. If the level in the tank is lower, the pump will slowly decrease speed until stop level is reached.

### 13.2.2 Sludge tank mixing

The mixer starts when the sludge level is above the low Level.

## 13.3 Fault Response

If low low level alarm on duty LITXX is activated, transfer pump and mixer are stopped until operator is able to reset the alarm.

If the two transmitters readings have discrepancy higher than an adjustable deviation value, an alarm is generated.

If the duty level transmitter is out of range, the priority is automatically transferred to the stand-by level transmitter. If both level transmitters are out of range, an alarm is generated and message is displayed to warn the operator about risk of overflow. The Sludge extraction pumps and the sludge pump are stopped.

If the mixer is in fault or in manual (not running) a fatal alarm is generated and a message is displayed to warn the operator

## 13.4 Interlock

The interlocks that prevent the Sludge tank pumps to start and stop the mixer are:

- Low low level in Sludge tank from duty level transmitter
- Both level transmitters out of range

# 14 Summary of Interlocks that trigger WTP trip

- BREAKPOINT CHLORINATION FLOWMETER OUT OF RANGE
- BYPASS BREAKPOINT CHLORINATION FLOWMETER OUT OF RANGE
- SECONDARY FLOWMETER OUT OF RANGE
- BREAKPOINT CHLORINATION FLOWMETER LOW LOW FLOWRATE
- BYPASS BREAKPOINT CHLORINATION FLOWMETER LOW LOW FLOWRATE
- SECONDARY FLOWMETER LOW LOW FLOWRATE
- BREAKPOINT CHLORINATION FLOWMETER HIGH HIGH FLOWRATE
- BYPASS BREAKPOINT CHLORINATION FLOWMETER HIGH HIGH FLOWRATE
- SECONDARY FLOWMETER HIGH HIGH FLOWRATE
- HIGH HIGH ACTICARB TURBIDITY
- HIGH HIGH ACTIFLO TURBIDITY
- DECHLORINATION TANK HIGH HIGH LEVEL
- CHLORINATION TANK HIGH HIGH LEVEL
- ACTIFLO HIGH HIGH LEVEL
- ACTICARB HIGH HIGH LEVEL
- B.C. SPLITTER BOX HIGH HIGH LEVEL
- SECONDARY SPLITTER BOX HIGH HIGH LEVEL
- HIGH HIGH ACTIFLO SCRAPER TORQUE
- HIGH HIGH ACTICARB SCRAPER TORQUE
- CHLORINATION TANK AGITATOR FAULT
- DECHLORINATION TANK AGITATOR FAULT
- ACTIFLO TANK AGITATOR FAULT
- ACTICARB TANK AGITATOR FAULT
- ACTIFLO SCRAPER FAULT
- ACTICARB SCRAPER FAULT
- ACTIFLO BOTH SLUDGE PUMPS FAULT
- ACTICARB BOTH SLUDGE PUMPS FAULT
- CHLORINATION TANK HIGH HIGH LEVEL
- BOTH BACKWASH TANK LEVEL METERS IN FAULT
- BOTH SLUDGE TANK LEVEL METERS IN FAULT
- SLUDGE MIXER IN FAULT
- BACKWASH PUMPS NOT READY /FAULT
- SLUDGE EXTRACTION PUMPS NOT READY /FAULT
- COAGULANT DOSING SYSTEM IN FAULT
- POLYMER DOSING SYSTEM IN FAULT

- SODIUM THISOULFATE DOSING SYSTEM IN FAULT
- SULFURIC ACID SYSTEM PUMPS IN FAULT
- CALCIUM HYPOCHLORITE SYSTEM PUMPS IN FAULT
- ALKALI SYSTEM IN FAULT
- HYDRACARB IN FAULT

# 15 Trends

## 15.1 Graphic pages

The Contractor must provide the graphic pages necessary for the proper operation of the system. The following list is not exhaustive and should correspond to the requirements of the plans and specifications:

1. One page on the entire operation of the treatment station and one page for each P & ID page;
2. Real time data;
3. Alarms graphic page;
4. Graphical page of trend curves (flow, on-line analyzers);
5. Graphical equipment calibration page.

## 15.2 Display and indications

• State:

1. State of the breakpoint chlorination treatment plant;
2. Operating condition of each pump or motorized equipment;
3. Indication of flow rates;
4. Indication of all analytical values (pH, NH4, Chlorine, TSS, turbidity)
5. Operating status of chemical dosing systems
6. Operating pressure of operating systems;
7. Measurement of tanks levels;
8. Operation of VFDs;
9. Equipment running time.

## 15.3 Faults and alarms

Failure of motorized equipment and instruments;

Alarms according to the table of setpoints, parameters and alarms.

## 15.4 Compiled data

1. Measurement and compilation of all flows;
2. Cumulative run times of each pump and equipment;
3. Number of departures per day for the last five days for each pump;
4. Daily, weekly, monthly and annual average of influent flow, sludge discharge flow, off-spec flow and treated water flow.

## 15.5 Trends

1. Trends can be analog points or the internal result.
2. Trend curves will be recorded on a 30-day possibility.

## 15.6 Alarm management

1. Alarm management is required to inform the operator of the status of the water treatment system. All alarms will be compiled into a register for later reference.
2. The alarms will be transmitted to the operator via a communication system integrated into the supervision software.
3. The combined alarm will operate a strobe light/horn outside the building (TBC).

# APPENDIX A

# Set point table

**This page is intentionally left blank**

| | | | |
|---|---|---|---|
| **Project :** | MELIADINE | 5000220043 | **APPENDIX A: SET POINTS, ALARMS AND PARAMETERS** |
| **By :** | E.D./C.E.K. | | |
| **Chkd :** | E.D. | | |
| **Appvd :** | T.S. | | |
| **Rev :** | 01 | | |

| Process | From or is | Parameters or Set-Points | | | Units | Value | Range | Delay (s) | Action/Comment | Rev |
|---|---|---|---|---|---|---|---|---|---|---|
| | | Name | Control Philosophy Tag | Program Tag* | | | | | | |
| **GENERAL** | DELAY | Maximum time for opening or closing valve automatic valves | | | N/A | N/A | N/A | 30 | FAULT | **1** |
| **RAW WATER** | 65AIT6801102 | Raw water - TSSmeter - Out of range | AAOR | | N/A | N/A | N/A | 60 | ALARM | **1** |
| | | Raw water - TSSmeter - Low low | AALL | | g/L | - | 0.001-50 | 60 | DISMISSED | **1** |
| | | Raw water - TSSmeter - Low | AAL | | g/L | - | 0.001-50 | 60 | DISMISSED | **1** |
| | | Raw water - TSSmeter - High | AAH | | g/L | 0.25 | 0.001-50 | 60 | ALARM | **1** |
| | | Raw water - TSSmeter - High High | AAHH | | g/L | 0.3 | 0.001-50 | 60 | ALARM | **1** |
| | 65AIT6801101 | Raw water - NH3 analyzer- Out of range | AAOR | | N/A | N/A | N/A | 60 | ALARM | **1** |
| | | Raw water - NH3 analyzer - Low low | AALL | | mg/L | - | 0-100 | 60 | DISMISSED | **1** |
| | | Raw water - NH3 analyzer - Low | AAL | | mg/L | - | 0-100 | 60 | DISMISSED | **1** |
| | | Raw water - NH3 analyzer - High | AAH | | mg/L | 90 | 0-100 | 60 | ALARM | **1** |
| | | Raw water - NH3 analyzer - High High | AAHH | | mg/L | 150 | 0-100 | 60 | ALARM | **1** |
| | | Raw water - NH3 analyzer - Setpoint | SP | | mg/L | TBD | 0-100 | 60 | ALARM | **1** |
| | 65AIT680110X | Raw water - ORP analyzer- Out of range | AAOR | | N/A | N/A | N/A | 60 | ALARM | **1** |
| | | Raw water - ORP analyzer- Low low | AALL | | mV | TBD | BY CLIENT | 60 | DISMISSED | **1** |
| | | Raw water - ORP analyzer- Low | AAL | | mV | TBD | BY CLIENT | 60 | DISMISSED | **1** |
| | | Raw water - ORP analyzer - High | AAH | | mV | TBD | BY CLIENT | 60 | ALARM | **1** |
| | | Raw water - ORP analyzer - High High | AAHH | | mV | TBD | BY CLIENT | 60 | ALARM | **1** |
| | 65AIT680110X | Raw water - pH analyzer- Out of range | AAOR | | N/A | N/A | N/A | 60 | ALARM | **1** |
| | | Raw water - pH analyzer- Low low | AALL | | _ | 5.5 | BY CLIENT | 60 | ALARM | **1** |
| | | Raw water - pH analyzer- Low | AAL | | _ | 6 | BY CLIENT | 60 | ALARM | **1** |
| | | Raw water - pH analyzer - High | AAH | | _ | 8 | BY CLIENT | 60 | ALARM | **1** |
| | | Raw water - pH analyzer - High High | AAHH | | _ | 8.5 | BY CLIENT | 60 | ALARM | **1** |
| | | Raw water - pH analyzer - Setpoint | SP | | pH | TBD | BY CLIENT | 60 | ALARM | **1** |
| | set point | Treated water - NH3 concentration | SP | | mg/L | TDB | 0-100 | 30 | used for calculation | **1** |
| | set point | Raw Water - Total inlet Flow rate | SP | | m3/h | TBD | BY CLIENT | 30 | | **1** |
| | Calculations | Ammonia Load to be removed | CALC | | kg/h | TBD | | 30 | | **1** |
| | Calculations | Inlet + Bypass Breakpoint Chlorination Flowmeters - Low low | LL | | $m^3/d$ | 4700 | BY CLIENT | 60 | ALARM-START SHUT DOWN SEQUENCE | **1** |
| | | Inlet + Bypass Breakpoint Chlorination Flowmeters - Low | L | | $m^3/d$ | 6250 | BY CLIENT | 60 | ALARM | **1** |
| | | Inlet + Bypass Breakpoint Chlorination Flowmeters - High | H | | $m^3/d$ | 12500 | BY CLIENT | 60 | ALARM | **1** |
| | | Inlet + Bypass Breakpoint Chlorination Flowmeters - High high | HH | | $m^3/d$ | 15600 | BY CLIENT | 60 | ALARM - START SHUT DOWN SEQUENCE | **1** |
| | 65FIT6801102 | Inlet Breakpoint Chlorination Flowmeter - Fault | OR | | N/A | N/A | N/A | 0 | ALARM - START SHUT DOWN SEQUENCE | **1** |
| | | Inlet Breakpoint Chlorination Flowmeter - Setpoint | SP | | $m^3/d$ | TBD | BY CLIENT | | Calculated | **1** |
| | 65FIT XX | Bypass Breakpoint Chlorination Flowmeter - Setpoint | SP | | $m^3/d$ | TBD | BY CLIENT | | Calculated | **1** |
| | | Bypass Breakpoint Chlorination Flowmeter - Fault | OR | | N/A | N/A | N/A | 0 | ALARM - START SHUT DOWN SEQUENCE | **1** |
| | 65FCV6801102 | Inlet Breakpoint Chlorination valve - Fault | OR | | N/A | N/A | N/A | 0 | ALARM - START SHUT DOWN SEQUENCE | **1** |
| | 65FCVXX | Bypass Breakpoint Chlorination valve - fixed opening | SP | | % | TBD | BY CLIENT | 0 | Used when bypass BC flow control loop not active | **1** |
| | | Bypass Breakpoint Chlorination valve - Fault | OR | | N/A | N/A | N/A | 0 | ALARM - START SHUT DOWN SEQUENCE | **1** |
| | 65FIT6801301 | Secondary Flowmeter - Fault | OR | | N/A | N/A | N/A | 0 | ALARM - START SHUT DOWN SEQUENCE | **1** |
| | | Secondary Flowmeter - Low low | LL | | $m^3/d$ | 3000 | BY CLIENT | 60 | ALARM - START SHUT DOWN SEQUENCE | **1** |
| | | Secondary Flowmeter - Low | L | | $m^3/d$ | 5600 | BY CLIENT | 60 | ALARM | **1** |
| | | Secondary Flowmeter - High | H | | $m^3/d$ | 12000 | BY CLIENT | 60 | ALARM | **1** |
| | | Secondary Flowmeter - High high | HH | | $m^3/d$ | 14000 | BY CLIENT | 60 | ALARM - START SHUT DOWN SEQUENCE | **1** |
| | | Secondary Flowmeter - Setpoint | SP | | $m^3/d$ | TBD | BY CLIENT | | Calculated | **1** |

| | | | |
|---|---|---|---|
| **Project :** | MELIADINE | 5000220043 | **APPENDIX A: SET POINTS, ALARMS AND PARAMETERS** |
| **By :** | E.D./C.E.K. | | |
| **Chkd :** | E.D. | | |
| **Appvd :** | T.S. | | |
| **Rev :** | 01 | | |

| Process | From or is | Parameters or Set-Points | | | Units | Value | Range | Delay (s) | Action/Comment | Rev |
|---|---|---|---|---|---|---|---|---|---|---|
| | | Name | Control Philosophy Tag | Program Tag* | | | | | | |
| | 65FCV6801302 | Secondary valve - fixed opening | SP | | % | TBD | BY CLIENT | 0 | Used when bypass BC flow control loop not active | 1 |
| | | Secondary valve - Fault | OR | | N/A | N/A | N/A | 0 | ALARM - START SHUT DOWN SEQUENCE | 1 |
| CHLORINATION TANK | 65LSHH6801106 | Chlorination tank - Level - High High | LAHH | | Inches/ top | 3 | N/A | 5 | ALARM - START SHUT DOWN SEQUENCE | 1 |
| | 65AIT6801107 | Chlorination Tank inlet - pHmeter - Out of range | AAOR | | N/A | N/A | N/A | 0 | ALARM | 1 |
| | | Chlorination Tank inlet- pHmeter - High High | AAHH | | pH | 8.5 | BY CLIENT | 60 | ALARM | 1 |
| | | Chlorination Tank inlet- pHmeter - High | AAH | | pH | 8 | BY CLIENT | 60 | ALARM | 1 |
| | | Chlorination Tank inlet- pHmeter - Low | AAL | | pH | 6 | BY CLIENT | 60 | ALARM | 1 |
| | | Chlorination Tank inlet- pHmeter - Low Low | AALL | | pH | 5.5 | BY CLIENT | 60 | ALARM | |
| | | Chlorination Tank inlet- pHmeter - Setpoint | SP | | pH | TBD | BY CLIENT | 60 | ALARM | 1 |
| | 65AIT6801111 | Chlorination Tank outlet- pHmeter - Out of range | AAOR | | N/A | N/A | N/A | 0 | ALARM | 1 |
| | | Chlorination Tank outlet- pHmeter - High High | AAHH | | pH | 8.5 | BY CLIENT | 60 | ALARM | 1 |
| | | Chlorination Tank outlet- pHmeter - High | AAH | | pH | 8 | BY CLIENT | 60 | ALARM | 1 |
| | | Chlorination Tank outlet- pHmeter - Low | AAL | | pH | 6 | BY CLIENT | 60 | ALARM | 1 |
| | | Chlorination Tank outlet- pHmeter - Low Low | AALL | | pH | 5.5 | BY CLIENT | 60 | ALARM | 1 |
| | | Chlorination Tank inlet- pHmeter - Setpoint | SP | | pH | TBD | BY CLIENT | 60 | ALARM | 1 |
| | 65AIT6801117 | Chlorination Tank - Total chlorine analyzer - Out of range | AAOR | | N/A | N/A | N/A | 0 | ALARM | 1 |
| | | Chlorination Tank - Total chlorine analyzer - High High | AAHH | | PPM | 10 | 0-20.00 | 60 | ALARM | 1 |
| | | Chlorination Tank - Total chlorine analyzer - High | AAH | | PPM | 8 | 0-20.00 | 60 | ALARM | 1 |
| | | Chlorination Tank - Total chlorine analyzer - Low | AAL | | PPM | 2 | 0-20.00 | 60 | ALARM | 1 |
| | | Chlorination Tank - Total chlorine analyzer - Low Low | AALL | | PPM | 2.5 | 0-20.00 | 60 | ALARM | 1 |
| | | Chlorination Tank - Free chlorine analyzer -Setpoint | SP | | PPM | TBD | 0-20.00 | 60 | SETPOINT | 1 |
| | 65AIT6801116 | Chlorination Tank - Free chlorine analyzer - Out of range | AAOR | | N/A | N/A | N/A | 0 | ALARM | 1 |
| | | Chlorination Tank - Free chlorine analyzer - High High | AAHH | | PPM | 5 | 0-10,00 | 60 | ALARM | 1 |
| | | Chlorination Tank - Free chlorine analyzer - High | AAH | | PPM | 4.5 | 0-10,00 | 60 | ALARM | 1 |
| | | Chlorination Tank - Free chlorine analyzer - Low | AAL | | PPM | 2 | 0-10,00 | 60 | ALARM | 1 |
| | | Chlorination Tank - Free chlorine analyzer - Low Low | AALL | | PPM | 1.25 | 0-10,00 | 60 | ALARM | 1 |
| | | Chlorination Tank - Free chlorine analyzer -Setpoint | SP | | PPM | TBD | 0-10.00 | 60 | SETPOINT | 1 |
| | 65FITXX | Chlorination Tank - Free chlorine - dilution flowmter | PV | | dm3/min | 0.2 | 0-0.5 | 60 | PPROCESS VALUE USED FOR CALCULATION OF FREE CHLORINE CONCENTRATION | 1 |
| | 65FITXX | Chlorination Tank - Total chlorine - dilution flowmter | PV | | dm3/min | 0.5 | 0-0.5 | 60 | PROCESS VALUE USED FOR CALCULATION OF TOTAL CHLORINE CONCENTRATION | 1 |
| | PARAMETER | Required calcium hypochlorite dosage concentration | PAR | | mg/L | TBD | BY CLIENT | 30 | PARAMETER INSERTED BY THE OPERATOR | 1 |

| | | | |
|---|---|---|---|
| **Project :** | MELIADINE | 5000220043 | **APPENDIX A: SET POINTS, ALARMS AND PARAMETERS** |
| **By :** | E.D./C.E.K. | | |
| **Chkd :** | E.D. | | |
| **Appvd :** | T.S. | | |
| **Rev :** | 01 | | |

| Process | From or is | Parameters or Set-Points | | | Units | Value | Range | Delay (s) | Action/Comment | Rev |
|---|---|---|---|---|---|---|---|---|---|---|
| | | Name | Control Philosophy Tag | Program Tag* | | | | | | |
| DECHLORINATION TANK | 65LSHH6801131 | Dechlorination tank - Level - High High | LAHH | | Inches/ top | 3 | N/A | 5 | ALARM - START SHUT DOWN SEQUENCE | **1** |
| | 65AIT6801136 | Dechlorination Tank outlet- pHmeter - Out of range | AAOR | | N/A | N/A | N/A | 0 | ALARM | **1** |
| | | Dechlorination Tank outlet- pHmeter - High High | AAHH | | pH | 8.5 | 0-14.00 | 60 | ALARM | **1** |
| | | Dechlorination Tank outlet- pHmeter - High | AAH | | pH | 8 | 0-14.00 | 60 | ALARM | **1** |
| | | Dechlorination Tank outlet- pHmeter - Low | AAL | | pH | 6 | 0-14.00 | 60 | ALARM | **1** |
| | | Dechlorination Tank outlet- pHmeter - Low Low | AALL | | pH | 5.5 | 0-14.00 | 60 | ALARM | **1** |
| | | Dechlorination Tank outlet- pHmeter - set point | SP | | pH | TBD | 0-14.00 | 60 | ALARM | **1** |
| | 65AIT6801142 | Dechlorination Tank - Total chlorine analyzer - Out of range | AAOR | | N/A | N/A | N/A | 0 | ALARM | **1** |
| | | Dechlorination Tank - Total chlorine analyzer - High High | AAHH | | PPM | 10 | 0-20.00 | 60 | ALARM | **1** |
| | | Dechlorination Tank - Total chlorine analyzer - High | AAH | | PPM | 8 | 0-20.00 | 60 | ALARM | **1** |
| | | Dechlorination Tank - Total chlorine analyzer - Low | AAL | | PPM | 2 | 0-20.00 | 60 | ALARM | **1** |
| | | Dechlorination Tank - Total chlorine analyzer - Low Low | AALL | | PPM | 2.5 | 0-20.00 | 60 | ALARM | **1** |
| | | Dechlorination Tank - Free chlorine analyzer -Setpoint | SP | | PPM | TBD | 0-20.00 | 60 | SET POINT | **1** |
| | 65AIT6801141 | Dechlorination Tank - Free chlorine analyzer - Out of range | AAOR | | N/A | N/A | N/A | 0 | ALARM | **1** |
| | | Dechlorination Tank - Free chlorine analyzer - High High | AAHH | | PPM | 5 | 0-10,00 | 60 | ALARM | **1** |
| | | Dechlorination Tank - Free chlorine analyzer - High | AAH | | PPM | 4.5 | 0-10,00 | 60 | ALARM | **1** |
| | | Dechlorination Tank - Free chlorine analyzer - Low | AAL | | PPM | 2 | 0-10,00 | 60 | ALARM | **1** |
| | | Dechlorination Tank - Free chlorine analyzer - Low Low | AALL | | PPM | 1.25 | 0-10,00 | 60 | ALARM | **1** |
| | | DEchlorination Tank - Free chlorine analyzer -Setpoint | SP | | PPM | TBD | 0-10.00 | 60 | SETPOINT | **1** |
| | 65FITXX | Dechlorination Tank - Free chlorine - dilution flowmeter | PV | | dm3/min | 0.2 | 0-0.5 | 60 | PPROCESS VALUE USED FOR CALCULATION OF FREE CHLORINE CONCENTRATION | **1** |
| | 65FITXX | Dechlorination Tank - Total chlorine - dilution flowmeter | PV | | dm3/min | 0.5 | 0-0.5 | 60 | PROCESS VALUE USED FOR CALCULATION OF TOTAL CHLORINE CONCENTRATION | **1** |
| BREAKPOINT CHLORINATION ACTIFLO | 65LSHH6801224 | B.C. Actiflo - Level - High High | LAHH | | Inches/ top | 3 | N/A | 5 | ALARM -START SHUT DOWN SEQUENCE | **1** |
| | 65AIT6801222 | Clarified water Turbidity - B.C. Actiflo- Out of range | AAOR | | N/A | N/A | N/A | 60 | ALARM | **1** |
| | | Clarified water Turbidity - B.C. Actiflo- Low low | AALL | | g/L | - | 0.001-50 | - | DISMISSED | **1** |
| | | Clarified water Turbidity - B.C. Actiflo- Low | AAL | | g/L | - | 0.001-50 | - | DISMISSED | **1** |
| | | Clarified water Turbidity - B.C. Actiflo- High | AAH | | g/L | 0.02 | 0.001-50 | 60 | ALARM | **1** |
| | | Clarified water Turbidity - B.C. Actiflo- High High | AAHH | | g/L | 0.03 | 0.001-50 | 60 | ALARM | **1** |
| | | Clarified water Turbidity - B.C. Actiflo- Setpoint | SP | | g/l | 0.012 | 0.001-50 | 60 | ALARM | **1** |
| | 65AIT6801221 | Clarified water pH - B.C. Actiflo- Out of range | AAOR | | N/A | N/A | N/A | 60 | ALARM | **1** |
| | | Clarified water pH - B.C. Actiflo- Low low | AALL | | pH | 5.5 | BY CLIENT | - | DISMISSED | **1** |
| | | Clarified water pH - B.C. Actiflo- Low | AAL | | pH | 6 | BY CLIENT | - | DISMISSED | **1** |
| | | Clarified water pH - B.C. Actiflo- High | AAH | | pH | 8 | BY CLIENT | 60 | ALARM | **1** |
| | | Clarified water pH - B.C. Actiflo- High High | AAHH | | pH | 8.5 | BY CLIENT | 60 | ALARM | **1** |
| | | Clarified water pH - B.C. Actiflo- set point | SP | | pH | TBD | BY CLIENT | 60 | ALARM | **1** |
| | 65AIT6801201 | ORP - B.C. Actiflo- Out of range | AAOR | | N/A | N/A | N/A | 60 | ALARM | **1** |
| | | ORP - B.C. Actiflo- Low low | AALL | | mV | TBD | BY CLIENT | - | DISMISSED | **1** |
| | | ORP - B.C. Actiflo- Low | AAL | | mV | TBD | BY CLIENT | - | DISMISSED | **1** |
| | | ORP - B.C. Actiflo- High | AAH | | mV | TBD | BY CLIENT | 60 | ALARM | **1** |
| | | ORP - B.C. Actiflo- High High | AAHH | | mV | TBD | BY CLIENT | 60 | ALARM | **1** |
| | | ORP - B.C. Actiflo- Setpoint | SP | | mV | TBD | BY CLIENT | 60 | ALARM | **1** |

| | | | |
|---|---|---|---|
| **Project :** | MELIADINE | 5000220043 | **APPENDIX A: SET POINTS, ALARMS AND PARAMETERS** |
| **By :** | E.D./C.E.K. | | |
| **Chkd :** | E.D. | | |
| **Appvd :** | T.S. | | |
| **Rev :** | 01 | | |

| Process | From or is | Parameters or Set-Points | | | Units | Value | Range | Delay (s) | Action/Comment | Rev |
|---|---|---|---|---|---|---|---|---|---|---|
| | | Name | Control Philosophy Tag | Program Tag* | | | | | | |
| | SA20-03 | High Torque detection | AAHH | | rpm | To be set on site | N/A | 30 | ALARM - START SHUT DOWN SEQUENCE | **1** |
| **BREAKPOINT CHLORINATION SPLITTER BOX** | 65LSHH6801406 | Splitter Box- B.C. Actiflo - Level - High High | LAHH | | Inches/ top | 3 | N/A | 5 | ALARM - START SHUT DOWN SEQUENCE | **1** |
| | 65LSLL6801406 | Splitter Box- B.C. Actiflo - Level - Low Low | LALL | | Inches/ bottom | 3 | N/A | 5 | ALARM - START SHUT DOWN SEQUENCE | **1** |
| | 65FCV6801433 | Splitter Box - B.C. Actiflo- Discharge valve - Fault | OR | | N/A | N/A | N/A | 0 | ALARM - START SHUT DOWN SEQUENCE | **1** |
| | 65AIT6801417 | Splitter Box - B.C. Actiflo -TSSmeter - Out of range | AAOR | | N/A | N/A | N/A | 60 | ALARM | **1** |
| | | Splitter Box - B.C. Actiflo -TSSmeter - Low low | AALL | | g/L | - | 0.001-50 | - | DISMISSED | **1** |
| | | Splitter Box - B.C. Actiflo -TSSmeter - Low | AAL | | g/L | - | 0.001-50 | - | DISMISSED | **1** |
| | | Splitter Box - B.C. Actiflo -TSSmeter - High | AAH | | g/L | 25 | 0.001-50 | 60 | ALARM - START DISCHARGE TIMER | **1** |
| | | Splitter Box - B.C. Actiflo -TSSmeter - High High | AAHH | | g/L | 30 | 0.001-50 | 60 | ALARM - RESTART DISCHARGE TIMER | **1** |
| | 65FIT6801432 | Splitter Box - B.C. Actiflo - Discharge Flowmeter - Fault | OR | | N/A | N/A | N/A | 0 | ALARM - START SHUT DOWN SEQUENCE | **1** |
| | | Splitter Box - B.C. Actiflo - Discharge Flowmeter - Low low | LL | | $m^3/h$ | TBD | BY CLIENT | - | ALARM - START SHUT DOWN SEQUENCE | **1** |
| | | Splitter Box - B.C. Actiflo - Discharge Flowmeter - Low | L | | $m^3/h$ | TBD | BY CLIENT | - | ALARM | **1** |
| | | Splitter Box - B.C. Actiflo - Discharge Flowmeter - High | H | | $m^3/h$ | SP: FOR OPENING OF 65FCV6801433 | BY CLIENT | 20 | ALARM | **1** |
| | | Splitter Box - B.C. Actiflo - Discharge Flowmeter - High high | HH | | $m^3/h$ | 5.9 | BY CLIENT | 30 | ALARM - START SHUT DOWN SEQUENCE | **1** |
| **SECONDARY ACTIFLO** | 65LSHH6801324 | Secondary Actiflo - Level - High High | LAHH | | Inches/ top | 3 | N/A | 5 | ALARM - START SHUT DOWN SEQUENCE | **1** |
| | 65AIT6801427 | Clarified water Turbidity - Secondary Actiflo- Out of range | AAOR | | N/A | N/A | N/A | 60 | ALARM | **1** |
| | | Clarified water Turbidity - Secondary Actiflo- Low low | AALL | | g/L | - | 0.001-50 | - | DISMISSED | **1** |
| | | Clarified water Turbidity - Secondary Actiflo- Low | AAL | | g/L | - | 0.001-50 | - | DISMISSED | **1** |
| | | Clarified water Turbidity - Secondary Actiflo- High | AAH | | g/L | 0.025 | 0.001-50 | 60 | ALARM | **1** |
| | | Clarified water Turbidity - Secondary Actiflo- High High | AAHH | | g/L | 0.03 | 0.001-50 | 60 | ALARM | **1** |
| | | Clarified water Turbidity - Secondary Actiflo- Setpoint | SP | | g/l | 0.01 | 0.001-50 | 60 | ALARM | **1** |
| | 65AIT6801321 | Clarified water pH - Secondary Actiflo- Out of range | AAOR | | N/A | N/A | N/A | 60 | ALARM | **1** |
| | | Clarified water pH - Secondary Actiflo- Low low | AALL | | pH | 5.5 | BY CLIENT | - | ALARM | **1** |
| | | Clarified water pH - Secondary Actiflo- Low | AAL | | pH | 6 | BY CLIENT | - | ALARM | **1** |
| | | Clarified water pH - Secondary Actiflo- High | AAH | | pH | 8 | BY CLIENT | 60 | ALARM | **1** |
| | | Clarified water pH - Secondary Actiflo- High High | AAHH | | pH | 8.5 | BY CLIENT | 60 | ALARM | **1** |
| | | Clarified water pH - Secondary Actiflo- Setpoint | SP | | pH | TBD | BY CLIENT | 60 | ALARM | **1** |
| | SA20-03 | High Torque detection | AAHH | | rpm | To be set on site | N/A | 60 | ALARM - START SHUT DOWN SEQUENCE | **1** |

| | | |
|---|---|---|
| **Project :** | MELIADINE | 5000220043 |
| **By :** | E.D./C.E.K. | |
| **Chkd :** | E.D. | |
| **Appvd :** | T.S. | |
| **Rev :** | 01 | |

**APPENDIX A: SET POINTS, ALARMS AND PARAMETERS**

VEOLIA

| Process | From or is | Parameters or Set-Points | | | Units | Value | Range | Delay (s) | Action/Comment | Rev |
|---|---|---|---|---|---|---|---|---|---|---|
| | | Name | Control Philosophy Tag | Program Tag* | | | | | | |
| SECONDARY SPLITTER BOX | 65LSHH6801411 | Splitter Box- Secondary Actiflo - Level - High High | LAHH | | Inches/ top | 3 | N/A | 5 | ALARM - START SHUT DOWN SEQUENCE | 1 |
| | 65LSLL6801411 | Splitter Box- Secondary Actiflo - Level - Low Low | LALL | | Inches/ bottom | 3 | N/A | 5 | ALARM - START SHUT DOWN SEQUENCE | 1 |
| | 65FCV6801438 | Splitter Box - Secondary Actiflo- Discharge valve - Fault | OR | | N/A | N/A | N/A | 0 | ALARM - START SHUT DOWN SEQUENCE | 1 |
| | 65AIT6801427 | Splitter Box - Secondary Actiflo -TSSmeter - Out of range | AAOR | | N/A | N/A | N/A | 60 | ALARM - START SHUT DOWN SEQUENCE | 1 |
| | | Splitter Box - Secondary Actiflo -TSSmeter - Low low | AALL | | g/L | - | 0.001-50 | - | ALARM | 1 |
| | | Splitter Box - Secondary Actiflo -TSSmeter - Low | AAL | | g/L | - | 0.001-50 | - | ALARM | 1 |
| | | Splitter Box - Secondary Actiflo -TSSmeter - High | AAH | | g/L | 25 | 0.001-50 | 60 | ALARM - START DISCHARGE TIMER | 1 |
| | | Splitter Box - Secondary Actiflo -TSSmeter - High High | AAHH | | g/L | 30 | 0.001-50 | 60 | ALARM - RESTART DISCHARGE TIMER | 1 |
| | | Splitter Box - Secondary Actiflo -TSSmeter - Setpoint | SP | | g/L | 20 | 0.001-50 | 60 | | 1 |
| | 65FIT6801437 | Splitter Box - Secondary Actiflo - Discharge Flowmeter - Fault | OR | | N/A | N/A | N/A | 0 | ALARM | 1 |
| | | Splitter Box - Secondary Actiflo - Discharge Flowmeter - Low low | LL | | $m^3/h$ | - | BY CLIENT | - | DISMISSED | 1 |
| | | Splitter Box - Secondary Actiflo - Discharge Flowmeter - Low | L | | $m^3/h$ | - | BY CLIENT | - | DISMISSED | 1 |
| | | Splitter Box - Secondary Actiflo - Discharge Flowmeter - High | H | | $m^3/h$ | SP: FOR OPENING OF 65FCV6801438 | BY CLIENT | 20 | ALARM | 1 |
| | | Splitter Box - Secondary Actiflo - Discharge Flowmeter - High high | HH | | $m^3/h$ | 2.5 | BY CLIENT | 30 | ALARM | 1 |
| BACKWASH TANK | | Backwash Tank level transmitter - Setpoint | SP | | | | | | Setpoint used with priority level transmitter for BW pump control | 1 |
| | 65LITXXX | Backwash Tank level transmitter #1 - Out of range | LAOR | | N/A | N/A | N/A | 0 | ALARM | 1 |
| | | Backwash Tank level transmitter #1 - High High | LAHH | | Inches/top | To be set on site | BY CLIENT | 5 | ALARM - 65PSR68002A/B start | 1 |
| | | Backwash Tank level transmitter #1 - High | LAH | | Inches/top | To be set on site | BY CLIENT | 30 | ALARM | 1 |
| | | Backwash Tank level transmitter #1 - Low | LAL | | Inches/top | To be set on site | BY CLIENT | 30 | ALARM | 1 |
| | | Backwash Tank level transmitter #1 - Low Low | LALL | | Inches/top | To be set on site | BY CLIENT | 5 | ALARM - 65PSR68002A/B are stopped | 1 |
| | 65LITXXX | Backwash Tank level transmitter #2 - Out of range | LAOR | | N/A | N/A | N/A | 0 | ALARM | 1 |
| | | Backwash Tank level transmitter #2 - High High | LAHH | | Inches/bottom | To be set on site | BY CLIENT | 5 | ALARM - 65PSR68002A/B start | 1 |
| | | Backwash Tank level transmitter #2 - High | LAH | | Inches/bottom | To be set on site | BY CLIENT | 30 | ALARM | 1 |
| | | Backwash Tank level transmitter #2 - Low | LAL | | Inches/bottom | To be set on site | BY CLIENT | 30 | ALARM | 1 |
| | | Backwash Tank level transmitter #2 - Low Low | LALL | | Inches/bottom | To be set on site | BY CLIENT | 5 | ALARM - 65PSR68002A/B are stopped | 1 |
| | 65PSR68009A | Backwash Tank pump #1 - Leak | XS | | N/A | N/A | N/A | 0 | INTERLOCK- 65PSR68009A is stopped | 1 |
| | 65PSR68009B | Backwash Tank pump #2 - Leak | XS | | N/A | N/A | N/A | 0 | INTERLOCK - 65PSR68009B is stopped | 1 |
| SLUDGE TANK | 65LIT6801441 | Sludge Tank level transmitter #1 - Out of range | LAOR | | N/A | N/A | N/A | 0 | ALARM | 1 |
| | | Sludge Tank level transmitter #1 - High High | LAHH | | Inches/top | To be set on site | BY CLIENT | 5 | ALARM | 1 |
| | | Sludge Tank level transmitter #1 - High | LAH | | Inches/bottom | To be set on site | BY CLIENT | 30 | ALARM | 1 |
| | | Sludge Tank level transmitter #1 - Low | LAL | | Inches/bottom | To be set on site | BY CLIENT | 30 | ALARM | 1 |
| | | Sludge Tank level transmitter #1 - Low Low | LALL | | Inches/bottom | To be set on site | BY CLIENT | 5 | ALARM | 1 |
| | LIT3-012 | Sludge Tank level transmitter #2 - Out of range | LAOR | | N/A | N/A | N/A | 0 | ALARM | 1 |
| | | Sludge Tank level transmitter #2 - High High | LAHH | | Inches/top | To be set on site | BY CLIENT | 5 | ALARM | 1 |
| | | Sludge Tank level transmitter #2 - High | LAH | | Inches/bottom | To be set on site | BY CLIENT | 30 | ALARM | 1 |
| | | Sludge Tank level transmitter #2 - Low | LAL | | Inches/bottom | To be set on site | BY CLIENT | 30 | ALARM | 1 |
| | | Sludge Tank level transmitter #2 - Low Low | LALL | | Inches/bottom | To be set on site | BY CLIENT | 5 | ALARM | 1 |

| | | | |
|---|---|---|---|
| **Project :** | MELIADINE | 5000220043 | **APPENDIX A: SET POINTS, ALARMS AND PARAMETERS** |
| **By :** | E.D./C.E.K. | | |
| **Chkd :** | E.D. | | |
| **Appvd :** | T.S. | | |
| **Rev :** | 01 | | |

| Process | From or is | Parameters or Set-Points | | | Units | Value | Range | Delay (s) | Action/Comment | Rev |
|---|---|---|---|---|---|---|---|---|---|---|
| | | Name | Control Philosophy Tag | Program Tag* | | | | | | |
| DISCFILTER | 65PSL8165 | Discfilter Pressure switch - Low Low | LALL | | N/A | Detection | N/A | 2 | ALARM - Backwash pumps are stopped | 1 |
| | 65LIT6801502A | Discfilter - Upstream level transmitter - Out of range | LAOR | | N/A | N/A | N/A | 0 | ALARM | 1 |
| | | Discfilter - Upstream level transmitter - High High | LAHH | | mm | To be set on site | BY CLIENT | 5 | ALARM - Overflow by the by-pass weir | 1 |
| | | Discfilter - Upstream level transmitter - High | LAH | | mm | To be set on site | BY CLIENT | 30 | ALARM | 1 |
| | | Discfilter - Upstream level transmitter - Low | LAL | | mm | N/A | N/A | N/A | | 1 |
| | | Discfilter - Upstream level transmitter - Low Low | LALL | | mm | N/A | N/A | N/A | | 1 |
| | 65LIT6801502B | Discfilter - Downstream level transmitter - Out of range | LAOR | | N/A | N/A | N/A | 0 | ALARM | 1 |
| | | Discfilter - Downstream level transmitter - High High | LAHH | | mm | N/A | N/A | N/A | | 1 |
| | | Discfilter - Downstream level transmitter - High | LAH | | mm | N/A | N/A | N/A | | 1 |
| | | Discfilter - Downstream level transmitter - Low | LAL | | mm | To be set on site | BY CLIENT | 30 | ALARM | 1 |
| | | Discfilter - Downstream level transmitter - Low Low | LALL | | mm | To be set on site | BY CLIENT | 5 | ALARM - Backwash pumps are stopped | 1 |
| | CALC | Discfilter- Differential level - BW - High High | LAHH | | mm | 300 | 0-1000 | 30 | WARNING " HIGH DIFFERENCE LEVEL" | 1 |
| | ZSC | Discfilter cover - Limit switch Closed | | | | | | | | 1 |
| | ZSO | Discfilter cover - Limit switch Open | | | | | | | WARNING " COVER NOT CLOSED" | 1 |
| | ZSC | Discfilter - sprayarm #1 Limit switch Closed | | | | | | | TBC | 1 |
| | ZSO | Discfilter - sprayarm #1 Limit switch Open | | | | | | | TBC | 1 |
| | | Drum start delay | | | s | 2 | 0-10 | N/A | | 1 |
| | | Backwash stop delay | | | s | 20 | 0-400 | N/A | | 1 |
| | | Timed backwash interval | | | min | 30 | 0-240 | N/A | | 1 |
| | | Drum speed | | | Hz | To be set on site | 0-60 | N/A | | 1 |
| | | Number of cleaning cycles | | | N/A | 1 | 1-10 | N/A | | 1 |
| | | Drum start delay chemical cleaning | | | s | 5 | 0-60 | N/A | | 1 |
| | | Chemical spraying timer | | | s | 13 | 1-30 | N/A | | 1 |
| | | Chemical soaking timer | | | s | 120 | 1-600 | N/A | | 1 |
| | | Chemical cleaning drum speed | | | Hz | 15 | 0-60 | N/A | | 1 |
| | | Rotations per chemical cleaning cycle | | | N/A | 5 | 1-10 | N/A | | 1 |
| | | Rinsing backwash timer | | | s | 300 | 1-600 | N/A | | 1 |
| TREATED WATER | 65AIT6801603 | Treated water - TSSmeter - Out of range | AAOR | | N/A | N/A | N/A | 0 | ALARM | 1 |
| | | Treated water - TSSmeter - Low low | AALL | | g/L | 0.001 | 0.001-50 | - | ALARM | 1 |
| | | Treated water - TSSmeter - Low | AAL | | g/L | 0.015 | 0.001-50 | - | ALARM | 1 |
| | | Treated water - TSSmeter - High | AAH | | g/L | 0.01 | 0.001-50 | 60 | ALARM | 1 |
| | | Treated water - TSSmeter - High High | AAHH | | g/L | 0.015 | 0.001-50 | 60 | ALARM | 1 |
| | 65AIT6801604 | Treated Water - Total chlorine analyzer - Out of range | AAOR | | N/A | N/A | N/A | 0 | ALARM | 1 |
| | | Treated Water - Total chlorine analyzer - High High | AAHH | | PPM | 1.5 | 0-10.00 | 60 | ALARM | 1 |
| | | Treated Water - Total chlorine analyzer - High | AAH | | PPM | 1 | 0-10.00 | 60 | ALARM | 1 |
| | | Treated Water - Total chlorine analyzer - Low | AAL | | PPM | 0.5 | 0-10.00 | 60 | ALARM | 1 |
| | | Treated Water - Total chlorine analyzer - Low Low | AALL | | PPM | 0 | 0-10.00 | 60 | ALARM | 1 |
| | 65AITXXX | Treated water pH - Out of range | AAOR | | N/A | N/A | N/A | 60 | ALARM | 1 |
| | | Treated water pH - Low low | AALL | | pH | 5.5 | BY CLIENT | 60 | ALARM | 1 |
| | | Treated water pH - Low | AAL | | pH | 6 | BY CLIENT | 60 | ALARM | 1 |
| | | Treated water pH - High | AAH | | pH | 9 | BY CLIENT | 60 | ALARM | 1 |
| | | Treated water pH - High High | AAHH | | pH | 9.5 | BY CLIENT | 60 | ALARM | 1 |

| | | | |
|---|---|---|---|
| **Project :** | MELIADINE | 5000220043 | **APPENDIX A: SET POINTS, ALARMS AND PARAMETERS** |
| **By :** | E.D./C.E.K. | | |
| **Chkd :** | E.D. | | |
| **Appvd :** | T.S. | | |
| **Rev :** | 01 | | |

| **Process** | **From or is** | **Parameters or Set-Points** | | | **Units** | **Value** | **Range** | **Delay (s)** | **Action/Comment** | **Rev** |
|---|---|---|---|---|---|---|---|---|---|---|
| | | **Name** | **Control Philosophy Tag** | **Program Tag*** | | | | | | |
| **HYDRACARB #1** | 65LSL6801611 | Hydracarb #1 Hopper - Level -Low Low | LALL | | Inches/ bottom | Parameters integrated in standard program | N/A | Parameters integrated in standard program | Parameters integrated in standard program | **1** |
| | 65PSL6801601 | Hydracarb #1 - Pressure - Low Low | LALL | | PSI | | -14.5-145 | | | **1** |
| **HYDRACARB #2** | 65LSL6801631 | Hydracarb #1 Hopper - Level -Low Low | LALL | | Inches/ bottom | Parameters integrated in standard program | N/A | Parameters integrated in standard program | Parameters integrated in standard program | **1** |
| | 65PSL6801621 | Hydracarb #1 - Pressure - Low Low | LALL | | PSI | | -14.5-145 | | | **1** |

**This page is intentionally left blank**

# APPENDIX B

# ACTICARB®

# Functional Description

**This page is intentionally left blank**

# ACTICARB® – ACP

## PROCESS CONTROL DESCRIPTION

**VEOLIA WATER TECHNOLOGIES CANADA**
www.veoliawatertechnologies.com

# REVISION STATUS

| Issue | Date | Created | Reviewed | Approved | Description of Changes |
|---|---|---|---|---|---|
| 1 | 2021/03/11 | CEK | ED | TS | First Issue |
| | | | | | |
| | | | | | |
| | | | | | |
| | | | | | |

# TABLE OF CONTENT

**1 INTRODUCTION ..... 5**

1.1 Reference Documents ..... 5

1.2 Process Overview ..... 5

1.3 List of Abbreviations ..... 6

1.4 List of Units ..... 6

**2 ACTICARB® CONTROL DESCRIPTION ..... 7**

2.1 Equipment and Instrument ..... 7

2.2 Operating Modes Overview ..... 8

2.3 Permissive ..... 9

2.4 Semi-Auto Train Response to Equipment Conditions ..... 9

2.4.1 Equipment Removed From Auto PLC Response ..... 9

2.4.2 Equipment Failure PLC Response ..... 9

2.5 Recirculation Pumps Logic ..... 10

2.5.1 Duty/Standby Orientation ..... 10

2.6 SEQUENCES OF FUNCTIONS ..... 11

2.6.1 Start-up Sequence ..... 11

2.6.2 Shutdown Sequence ..... 12

2.7 Alarm/Failure Conditions and PLC Responses ..... 15

2.7.1 Alarm Priorities ..... 15

2.7.2 Alarm and Set Point Table ..... 15

2.8 Safety ..... 16

2.8.1 Emergency Stop ..... 16

2.8.2 Control Power Failure PLC Response ..... 16

2.9 System Available Conditions ..... 17

2.9.1 Conditions for automatic Start sequence ..... 17

2.9.2 Conditions for automatic stop sequence ..... 17

2.10 ACTICARB® Fault Responses ..... 17

2.11 Controls ..... 18

2.11.1 General ..... 18

2.11.2 Recirculation pumps logic ..... 19

2.11.3 Maturation Mixer Speed ..... 19
2.11.4 ACTICARB® High Level Switch ..... 19
2.11.5 Activated Carbon Extraction Control ..... 20
2.11.6 Activated Carbon Concentration ..... 20
2.11.7 Solids Residence Time ..... 21
2.11.8 Activated Carbon Extraction Valve ..... 21
2.12 Activated Carbon Extraction/ Recirculation System Fault Response ..... 22
2.13 Calculated Parameters ..... 23
2.13.1 Flow Pace Control ..... 23
2.14 Interlocks ..... 24
2.14.1 ACTICARB® High Level Switch ..... 24
2.14.2 High Scraper Torque ..... 24
2.14.3 Activated Carbon Extraction Pump ..... 24
2.14.4 Maturation Mixer ..... 24
**3 APPENDIX A – ALARMS, PARAMETERS AND SET POINTS ..... 25**

# 1 INTRODUCTION

## 1.1 Reference Documents

| Document Number | Name | Revision |
|---|---|---|
| 5000220043_PI_0001_GEN_VWT | PI001 _Process and Instrumentation diagram | 1 |
| | | |
| | | |

## 1.2 Process Overview

The ACTICARB® clarifier are based on the ballasted flocculation process. The key feature of this process is that very fine sand (85 µm or 130 µm size), termed “microsand” is added to the pre coagulated effluent loaded with PAC. A polymer is also added that binds the microsand to the floc, creating a ballasted floc with greatly increased effective density. The ballasted flocculation process is capable of being shut down when treatment capacity is not needed and then rapidly restarted when needed.

The flocs settle in the clarifier portion of the system where they are collected by a rake mechanism. A percentage of the unit’s design raw water flow is continuously withdrawn from the clarifier and pumped to a hydrocyclone system which separates the microsand from the sludge. The recovered microsand (typically 20% of the recycled flow) is reused in the process. A small quantity of the microsand is not recovered by the hydrocyclones and is discharged with the sludge. The lost microsand needs to be replaced periodically by adding more of it to the process (typically 1 to 3 mg/L). After sand separation, the sludge is rejected to another set of reactors, from which a portion will be recirculated to upstream points in the treatment train, and the remainder extracted.

A tank downstream of the ACTICARB® unit accepts the sludge removed in the ACTICARB® clarification process. This tank splits the rejected mix of activated carbon and flocs into two streams. A fraction is pumped and rejected into the sludge tank unit in order to be extracted from the process. The remaining fraction is recirculated by gravity into the contact reactor in order to increase the activated carbon contact time in the process. The flowrate of the pumped fraction is controlled by a flowrate control loop. The flowrate is measured by a flowmeter and controlled by a modulating valve (pinch valve).

## 1.3 List of Abbreviations

The following abbreviations are used in the text of this document.

- HMI: Human/Machine Interface
- H-O-A: Hand-Off-Auto
- PLC: Programmable Logic Controller
- LCP: Local Control Panel
- VFD: Variable Frequency Drive
- VWT: Veolia Water Technologies Canada

## 1.4 List of Units

The following lists the parameters referred to in this document and the units they are measured in unless otherwise specified.

- Concentration (in general): mg/L
- Dosing rate: mL/L
- Flow rate (main process): $m^3/h$
- Flow rate (chemical dosing): LPH
- Level in the tanks: %
- pH: -
- Pressure: PSIg
- Temperature: °C
- Turbidity: mg/L or NTU

# 2 ACTICARB® CONTROL DESCRIPTION

## 2.1 Equipment and Instrument

This section connects the tags from the P&ID and the terminology used throughout Equipment and Instrument Schedules

| P&ID TAG | DESCRIPTION |
|---|---|
| 65FIT6801102 | Inlet Breakpoint Chlorination Flowmeter |
| 65FCV6801102 | Inlet Breakpoint Chlorination valve |
| 65AGI68018 | Coagulation mixer |
| 65AGI68019 | Injection mixer |
| 65AGI68020 | Maturation mixer |
| 65TRM68002 | Scraper |
| SSL20-03 | High Torque detector |
| 65PSR68005A | Recirculation pump #1 |
| 65PSR68005B | Recirculation pump #2 |
| 65AIT6801221 | pH meter |
| 65AIT6801222 | Turbidity meter |
| 65LSHH6801224 | High high level switch |
| 65AIT6801201 | ORP meter |
| N/A | Pressure transmitter first recirculation line |
| N/A | Pressure transmitter second recirculation line |
| 65FY6801242 | Injection water solenoid valve hydrocyclone #1 |
| 65FY6801237 | Injection water solenoid valve hydrocyclone #2 |
| 65FIT6801432 | Activated carbon extraction flowmeter |
| 65LSHH6801406 | Splitter box High high level switch |
| 65LSLL6801406 | Splitter box Low low level switch |
| 65PSR68007A | Activated carbon extraction pump |
| 65FCV68011433 | Activated carbon extraction control valve |

## 2.2 Operating Modes Overview

There are two primary modes for each ACTICARB®: Manual and Semi-Automatic. The Manual mode is designed for operation of individual equipment. The Semi-Auto mode is designed for operation of the ACTICARB® system as a whole.

**HMI manual mode**

Manual operation from the HMI provides the same equipment protection and alarming as Semi-Auto.

**Semi-Auto**

Semi-Auto mode allows the operator to initiate the ACTICARB® system start-up and shutdown sequences from HMI or remotely.

**NOTE: Train equipment cannot be controlled manually while in Semi-Auto operation.**

The coagulation mixer or injection mixer, maturation mixer, scraper, and at least one recirculation pump H-O-As must be in Auto to enable Semi-Automatic control of all respective equipment at the HMI All start-up sequences are described below. Each ACTICARB® train and its associated equipment are controlled as an independent system by the PLC.

The table below presents the control modes summary.

*Table 1: Summary of Control Modes*

| | HMI Manual | Semi-Auto |
|---|---|---|
| Control Functions | N/A | Allowed (PLC) |
| Initiation of Semi-Automatic functions | N/A | Operator or Remote Start-up Initiation Required |
| HMI Operation of Individual Equipment | Allowed (virtual HOA on HMI) | Not Allowed |

## 2.3 Permissive

Permissive to allow initiation of the Semi-Automatic start sequence are:

- H-O-A selector switches for mixers, scraper and at least one recirculation pump, are in Auto at the HMI.
- Mixers whichever is in Auto at HMI, scraper, and the above mentioned recirculation pump do not have existing equipment alarms.
- Aforementioned equipment alarms must be manually reset.

## 2.4 Semi-Auto Train Response to Equipment Conditions

### 2.4.1 Equipment Removed From Auto PLC Response

If the mixers and the scraper are removed from Auto while the PLC is running in Semi-Automatic control of the ACTICARB® system, the PLC will initiate a Shutdown Sequence as described in section 2.6.2.

Since the scraper will not be operational, the Shutdown Sequence will consist of the recirculation pump running for the durations indicated in section 2.6.2.

If the lead recirculation pump is removed from Auto, the PLC will sequentially initiate operation of the next available pump. If all recirculation pumps are removed from Auto or no additional pumps are available, the PLC will initiate an emergency shutdown of all equipment.

**NOTE: No alarm will be generated if an ACTICARB® system shutdown is initiated due to a piece of equipment being removed from Auto by the operator.**

### 2.4.2 Equipment Failure PLC Response

If the coagulation mixer fails during Semi-Automatic control of the ACTICARB® system, the system will continue to run.

Should the injection mixer or the maturation mixer fail at any time during Semi-Automatic control of the ACTICARB® system, the PLC will issue an equipment alarm and will initiate a Shutdown Sequence as described in section 2.6.2.

Should the scraper fail at any time during operation or start-up, the PLC will issue an equipment alarm and will initiate a Shutdown Sequence as described in section 2.6.2 .Since the scraper will not be operational, the Shutdown Sequence will consist of the recirculation pumps running for the durations indicated in section 2.6.2.

Should lead recirculation pump fail, the PLC will issue an equipment alarm and sequentially initiate operation of the next available pump. If all recirculation pumps fail or no additional pumps are available, the PLC will initiate an emergency shutdown of all equipment.

**NOTE: An AVAILABLE recirculation pump is defined as one that is placed in Auto and does not have any existing un-reset alarm conditions.**

## 2.5 Recirculation Pumps Logic

### 2.5.1 Duty/Standby Orientation

When two recirculation lines are provided they can be set with priority. The two recirculation pumps operate in a Duty / standby orientation. If all recirculation pumps are in “auto” but not running, the pump set as priority (duty) will start when the start condition will be met.

The recirculation pumps priority (duty/standby) is changed manually by the operator anytime or is changed automatically when the plant stops.

## 2.6 SEQUENCES OF FUNCTIONS

### 2.6.1 Start-up Sequence

If all permissive conditions are present and no respective equipment alarms exist, the HMI will display **"Train Ready"**. The Start-up Sequence can now be initiated via the HMI or remotely. Refer to table 2 for more information.

**NOTE: To prevent damage to the equipment, the Train must have water in the tanks above the mixer impeller elevations prior to Start-up (to be checked by the operator).**

To start the train when "Train Ready" is displayed on the HMI, the operator presses the "Train Start" pushbutton. A starting system displays "Train Starting" at the HMI. The start-up sequence automatically cycles through the steps listed below.

1. System Start-up Initiated:
    a. **Start duty recirculation pump**
    b. **Open injection water solenoid valve**
    c. **Start activated carbon extraction pump**

If a failure occurs, the duty pump will be locked out in the PLC and the next available pump will be assigned as the lead pump. The PLC will then attempt to continue operation. This cycle will occur until a recirculation pump starts or all recirculation pumps have been locked out. If all sand pumps are locked out, the PLC will immediately abort the start-up.

2. Delay 30 seconds (adjustable):
    a. **Start the Scraper**

If a Scraper failure occurs initiate a Shutdown Sequence.

3. Delay 10 seconds (adjustable):
    a. **Start the mixers**. These mixers start are respectively staggered by 5 seconds.

If a maturation Mixer failure occurs initiate a Shutdown Sequence.

4. Delay 10 seconds (adjustable):
    a. **Start the chemical feed pumps**
    b. **Start activated carbon flow control loop**
    c. HMI will display **"Train Started"**

If any Duty Chemical Feed Pump is not available while in operation, the Stand-by pump shall be initiated. The duty pump will not be locked out so when the pump is placed back into Semi-Auto, it will resume operation. Duty chemical feed pump alternation is manual and available only at the HMI.

The Operator can terminate the start-up at any point in the sequence by pressing the "Train Stop" pushbutton. If any pertinent equipment fails during the start-up sequence, the PLC will initiate a train shutdown. The operator can correct the failure, and then resume the start-up sequence from the current shutdown sequence step by pressing the "Train Start" pushbutton.

### 2.6.2 Shutdown Sequence

When in Semi-Automatic mode, the operator may implement the Shutdown Sequence at any time from the HMI or remotely. During shutdown, the HMI will display “Train Stopping”. Refer to table 3 for more information

The shutdown sequence automatically cycles through the steps listed below.

1. System Shutdown Initiated:
    a. **Close the inlet breakpoint chlorination valve**
    b. **Shutdown the Chemical Feed Pumps**
    c. **Shutdown the mixers**
    d. **Stop Water Polymer Carrier Solenoid valve.**
2. Delay (Operator Adjustable) (10-30 minutes):
    a. **Shutdown the scraper**
3. Delay 5 minutes:
    a. **Shutdown the duty recirculation pump**
    b. **Close injection water solenoid valves**

**NOTE: This delay allows purging of sand and sludge contained in the settling tank and piping and re-deposits it back into the Maturation tank.**

The operator can initiate the Train start-up sequence from the current shutdown sequence step by pressing the “Train Start” pushbutton without stopping the equipment already started.

## Start-up Sequence

*Table 1: ACTICARB® automatic start sequence*

| Step # | STEP NAME | ACTION | STEP CHANGE CONDITION | Recirculation pumps | Coagulation mixer | Injection mixer | Maturation Mixer | Dosage & raw water flow | Scraper | Injection Water Valve | Activated carbon extraction pump | Activated carbon extraction valve | Status light | Status output |
|---|---|---|---|---|---|---|---|---|---|---|---|---|---|---|
| **0** | FULL STOP | Stopped | | S | S | S | S | C | S | S | S | C | Off | U |
| | | | Start Condition Sequence | | | | | | | | | | | |
| **1** | START SEQUENCE | Start recirculation pump<br>Open Injection Water Solenoid Valve<br>Start Activated Carbon Extraction Pump. | | R | S | S | S | C | S | O | R | O | Off | U |
| | | | Delay (DEL-STA-MOT 0 to 30 sec.) | | | | | | | | | | | |
| **2** | START SEQUENCE | Start scraper | | R | S | S | S | C | R | O | R | O | RF | U |
| | | | Delay (DEL-STA-MOT 0 to 10 sec.) | | | | | | | | | | | |
| **3** | START SEQUENCE | Start coagulation mixer | | R | R | S | S | C | R | O | R | O | RF | U |
| | | | Delay (DEL-STA-MOT 0 to 5 sec.) | | | | | | | | | | | |
| **4** | START SEQUENCE | Start injection mixer | | R | R | R | S | C | R | O | R | O | RF | U |
| | | | Delay (DEL-STA-MOT 0 to 5 sec.) | | | | | | | | | | | |
| **5** | NORMAL AUTOMATED OPERATION | Start maturation mixer / start chemical dosage / Start Activated Carbon Flow ctrl loop | | R | R | R | R | O | R | O | R | O | On | A |

***LEGEND:*** R=RUNNING S= STOPPED O= OPEN C=CLOSED RF=RAPID BLINK A=AVAILABLE U= UNAVAILABLE

## Shutdown Sequence

*Table 3: ACTICARB® automatic start sequence*

| Step # | STEP NAME | ACTION | STEP CHANGE CONDITION | Recirculation pumps | Coagulation mixer | Injection mixer | Maturation mixer | Dosage & raw water flow | Scraper | Injection Water Valve | Activated carbon extraction pump | Activated carbon extraction valve | Status light | Status output |
|---|---|---|---|---|---|---|---|---|---|---|---|---|---|---|
| | | | Stop Sequence conditions | | | | | | | | | | | |
| 1 | STOP SEQUENCE | Stop Activated Carbon extraction pump<br>Close Activated Carbon extraction valve<br>Stop maturation mixer<br>Stop injection mixer<br>Stop coagulation mixer<br>Stop chemical dosage (polymer pumps)<br>Close polymer service water transport valves | | R | S | S | S | S | R | C | S | C | SF | U |
| | | | Delay (DEL-STO-SCR 0 to 30 min.) | | | | | | | | | | | |
| 2 | STOP SEQUENCE | Stop scraper | | R | S | S | S | S | S | O | S | C | SF | U |
| | | | Delay (DEL-STO-PRS 0 to 30 min.) | | | | | | | | | | | |
| 3 | STOP SEQUENCE | Stop recirculation pumps<br>Close injection water solenoid valves | | S | S | S | S | S | S | C | S | C | SF | U |
| | | | Delay (1 sec) | | | | | | | | | | | |
| 4 | STOP SEQUENCE | ACTICARB stopped | | S | S | S | S | S | S | C | S | C | SF | U |

***LEGEND:*** R=RUNNING S= STOPPED O= OPEN C=CLOSED RF=RAPID BLINK A=AVAILABLE U= UNAVAILABLE

## 2.7 Alarm/Failure Conditions and PLC Responses

### 2.7.1 Alarm Priorities

Alarms are grouped in to 3 priority levels for various attention requirements:

**Emergency alarms:**

1. Needs immediate operator attention.
2. The ACTICARB® unit will initiate the emergency shutdown sequence.

**Fatal alarms:**

1. Needs immediate operator attention.
2. The ACTICARB® unit will initiate the stop sequence.

**Warning alarms:**

1. Does not need immediate operator attention.

If the ACTICARB® unit was stopped by an Emergency alarm or fatal alarm, it will not restart automatically. The operator must remove alarm condition and reset the alarm. Then press the start button on the operator interface will restart the unit if all automatic start sequence conditions are satisfied. In case of remote control, the system will wait for rising edge of the remote start signal.

### 2.7.2 Alarm and Set Point Table

Refer to Appendix A.

## 2.8 Safety

### 2.8.1 Emergency Stop

**Emergency stop actions**

When an emergency stop button is activated, an alarm is triggered. The fault associated with this alarm will latch.

During emergency stop, many stopping actions are initiated on equipment. These actions are presented in sections describing the relevant equipment.

**Recovery after emergency stop**

When all emergency stop buttons are back into normal position, the fault associated with an alarm is maintained until the operator presses the reset button.

### 2.8.2 Control Power Failure PLC Response

Should control power fail at any time during Semi-Automatic control of the ACTICARB® system, the PLC will issue an alarm and will initiate a Shutdown Sequence as described in this document. Systems with an Uninterruptable Power Supply (UPS) will see the alarm as the condition occurs. Systems without an UPS will see the alarm upon restoration of power. There is a ten (10) second delay upon restoring power, and then the train will enter the Shutdown Sequence as described in this document. If the restored power does not include the actual motor controls, a run status will not be received by the PLC and equipment (pumps and scraper) will shut down immediately without a re-inventory of the sand to the maturation tank. If the unit is configured to resume via the HMI, it will automatically resume to the last known state. Otherwise the unit will remain in Stop.

## 2.9 System Available Conditions

### 2.9.1 Conditions for automatic Start sequence

The automatic start sequence will be activated when the automatic start command is true and the following conditions are met:

1. If delay for power return is elapsed;
2. If remote run request bit is activated;
3. ACTICARB® in Auto start mode.

### 2.9.2 Conditions for automatic stop sequence

The automatic stop sequence will be activated when any of the following conditions are met:

1. The ACTICARB® Auto start mode is deactivated on the interface or one of the following occurs:
   a. If a major fault is active;
   b. If remote contact is not activated;
2. The ACTICARB® automatic start command is false.

## 2.10 ACTICARB® Fault Responses

*Table 4: ACTICARB® major faults*

| MAJOR FAULT | ALARM TYPE |
|---|---|
| Coagulation mixer | FATAL |
| Injection mixer | FATAL |
| Maturation mixer | EMERGENCY |
| Scraper High High torque | EMERGENCY |
| Recirculation pumps | EMERGENCY |
| High High clarified water turbidity | FATAL |
| High high water level | EMERGENCY |
| Activated carbon extraction system | FATAL |
| Coagulant dosing system | FATAL |
| Polymer dosing system | FATAL |
| Power failure | EMERGENCY |

If the ACTICARB was stopped by a major fault, it will not restart automatically. The operator must fix the problem on the operator interface. The ACTICARB will restart if all automatic start sequence conditions are satisfied.

## 2.11 Controls

### 2.11.1 General

1. ACTICARB® Start/Stop push button function:
   - By pushing the Start/Stop push button, the ACTICARB® will be set in Auto start mode and will be ready to start. If all automatic start sequence conditions are satisfied, it will start only after receiving the automatic start command.
   - If the ACTICARB® is in Auto start mode and it is running or on starting sequence, pushing the Start/Stop push button will activate the stopping sequence and deactivate the Auto start mode. Pushing the Start/Stop push button again will restart the ACTICARB® if the automatic start command is still true.

2. If an essential equipment is in manual and not running when the ACTICARB® Start/Stop push button is pressed to activate the Auto mode, Auto start mode cannot be activated.
   The essential ACTICARB equipment's to be in Auto are:
   - Coagulation mixer
   - Injection mixer
   - Maturation mixer
   - Scraper
   - Recirculation pumps

3. If a major fault occurs while the ACTICARB® is in start sequence or is running, the ACTICARB® is forced into a stop sequence and the ACTICARB® major fault is set.

4. The operator may set/reset the ACTICARB® in Auto start mode by pressing the Start/Stop push button from the HMI.
   The conditions to activate the Auto mode are the followings:
   - No major faults;
   - All equipment in Auto on HMI or running;
   - No Polymer system fault
   - No sludge recirculation pump fault

Pressing on the ACTICARB® Start/Stop push button on the operator interface for 3 seconds when the ACTICARB® is stopped and will enable forced start mode if all the conditions to activate the Auto mode are true the forced start mode will become active. The unit will then start all the drives and request to open the raw water valve, bypassing the auto start sequence commands.

### 2.11.2 Recirculation pumps logic

**Pump Fault**
The pump is in fault when:

- The command is present and the status is not for a short delay

When the duty pump is in fault, and the ACTICARB® unit is in operation the standby pump will start, the ACTICARB® will not stop, a WARNING alarm is activated and a message is displayed. If the second pump was in fault or in manual (not running), a FATAL alarm is activated, a message will be displayed and the ACTICARB® unit will stop.

**Pump Priority**
Each time the running pump is stopped, the other pump will start at the next ACTICARB® start sequence. If the other pump is in manual or in fault, the first pump will restart.

### 2.11.3 Maturation Mixer Speed

The maturation mixer motor is powered by a variable speed drive (VFD). The speed of the mixer will be set on the PLC during the process start-up of the system to get an optimal mixing. Thereafter, the speed usually does not need any further adjustment.

### 2.11.4 ACTICARB® High Level Switch

A float over the settling tank is used as a High Level switch. When the switch is activated, stop the corresponding ACTICARB® unit according to the automatic stop sequence.

### 2.11.5 Activated Carbon Extraction Control

Several parameters affect the performance of PAC in the treatment (mixing, injection point, concentration, residence time, temperature etc.).
The required concentration and the time of contact are a function of the characteristics and the concentration of the chlorine to be eliminated. An insufficient time of contact requires more PAC for a same removal rate.

The dechlorination tank will provide a minimum Hydraulic Residence Time of 20 minutes at the max flowrate for the fresh PAC Slurry. During this time the fresh powder will remove chlorine. Its removal rate will decrease in the process due to the addition of coagulant and polymers into the ACTICARB®. However some active remaining sites will be used by recirculating the sludge extracted from the ACTICARB® Clarifier. The effective Residence Time of the powder in the process is called the Solids Residence Time (SRT).

The concentration and the Solids Residence Time will be adjusted by the operators with the molecules removal rates measured by a laboratory.

### 2.11.6 Activated Carbon Concentration

The sample of Activated Carbon will be taken by the operator at the bottom of the splitter box. The measure of the concentration with a thermal weighing scale will be the exact value of the extracted activated carbon ($C_{acext}$) in g/m3.

With the following equation, the operator will know the activated carbon concentration in the ACTICARB® and the dechlorination tank ($C_{acdt}$).

$$\mathbf{C_{acdt} = (C_{acext}.\ Q_{recir}.f_{hydr}) / (Q_{indt})}$$

Where:

**$C_{acdt}$**= activated carbon concentration in the process (g/m$^3$)

**$C_{acext}$**= extracted activated carbon concentration (g/m$^3$)

**$Q_{recir}$** = Total flowrate of the ACTICARB recirculation pump (m$^3$/h)

**$f_{hydr}$** = Hydrocyclones hydraulic split ratio. Entered with a value < 1. Ex: 0,8 for 80%

**$Q_{indt}$** = Inlet Breakpoint chlorination flowrate incoming into the dechlorination tank.

**$Q_{indt}$** = Inlet Breakpoint chlorination flowrate (65FIT6801102) + Chemicals Flowrate (calcium hypochlorite) - Extracted Activated Carbon (65FIT6801432) + hydrocyclone overflow flowrate (m$^3$/h) The operator will enter the overflow flowrate of each hydrocyclone on the interface.

### 2.11.7 Solids Residence Time

The Solids Residence Time is calculated by the equation:

Solids Residence Time = Activated Carbon Mass in the dechlorination tank (g) / Extracted Activated Carbon Massic Flowrate (g/h)

Or:

$$\mathbf{SRT = m_{acdt} / Q_{macext}}$$

With:

$$\mathbf{m_{acdt} = V_{dt} \,.\, C_{acdt}}$$

$$\mathbf{Q_{macext} = Q_{vacext} \,.\, C_{acext}}$$

And where:

**SRT** = Solids Residence Time (h)

$\mathbf{m_{acdt}}$= Activated Carbon Mass in the dechlorination tank (g)

$\mathbf{V_{dtx}}$ = dechlorination tank Volume ($m^3$)

$\mathbf{C_{acdt}}$= activated carbon concentration in the process ($g/m^3$). See above.

$\mathbf{C_{acext}}$= extracted activated carbon concentration ($g/m^3$). See above.

$\mathbf{Q_{macext}}$ = Activated Carbon Massic Flowrate (g/h)

$\mathbf{Q_{vacext}}$ = Activated Carbon Volumic Flowrate ($m^3/h$). Process value of 65FIT6801432.

### 2.11.8 Activated Carbon Extraction Valve

The extraction valve has two available operation modes:

- **Normal mode:** the valve is controlled with a PID loop and its opening is used as a manipulated variable to reach the flow set point.
- **Pulse mode:** as very low flow rates can be difficult to achieve with the valve, a pulse mode shall be programmed. Parameters such as opening duration and opening frequency shall be entered by the operator on the HMI. The extracted volume is totalized over time by the flowmeter.

## 2.12 Activated Carbon Extraction/ Recirculation System Fault Response

The following are the major faults associated with the activated carbon recirculation and extraction system.

1. **Activated Carbon splitter box tank high high level**

   The ACTICARB® unit falls on major fault and is stopped according to the automatic stop sequence.

2. **Activated Carbon splitter box tank low low level**

   The ACTICARB® unit falls on major fault and is stopped according to the automatic stop sequence.

3. **Sludge tank high high level**

   The ACTICARB® unit falls on major fault and is stopped according to the automatic stop sequence.

4. **Activated Carbon Extraction pump fault**

   The ACTICARB® unit falls on major fault and is stopped according to the automatic stop sequence.

5. **Extraction modulating valve open failure**

   The ACTICARB® unit falls on major fault and is stopped according to the automatic stop sequence.

## 2.13 Calculated Parameters

The following sections explain the main calculations made in the control of the ACTICARB® system.

The PLC calculates the chemical feed rates and controls the chemical metering pumps using the following procedure. The chemical feed rate is based on:

1. The influent raw water flow rate
2. The chemical dose
3. The physical properties of the chemicals
4. The capacity and settings of the metering pump
5. The raw water turbidity

The influent raw water flow rate is obtained through the raw water flow meter, which sends a signal to the PLC.

The influent raw water turbidity rate is obtained through the raw water turbidity meter.

The chemical dose, physical properties and metering pump capacity are input by the user/operator at the HMI.

The basic equation for the chemical feed rate is:

$$\text{Chemical feed rate} = \frac{\text{influent flow rate} \times \text{chemical dose}}{\text{stock chemical concentration}}$$

This equation is the general form for all chemical feed rates that use flow pacing control, including coagulant and polymer.

### 2.13.1 Flow Pace Control

The way the PLC uses these calculations to determine the chemical metering pump output is:

1. The chemical feed rate equations are programmed into the PLC.
2. The user/operator inputs the chemical dose, physical properties, and maximum chemical metering pump capacity at the HMI on the ACTICARB® control panel. The PLC calculates the specific chemical feed rate based on the user/operator inputs and the influent (raw water) flow to the train.
3. The calculated feed rate is then converted by the PLC into a percent speed, based on the maximum capacity of the metering pumps. This signal is then sent to the metering pump.

## 2.14 Interlocks

### 2.14.1 ACTICARB® High Level Switch

A float over the settling tank is used as a High Level switch. When the switch is activated, stop the corresponding ACTICARB® unit according to the automatic stop sequence

### 2.14.2 High Scraper Torque

The torque detector/alarm is independent from the PLC. So it is enabled (will stop the scraper) through a hardwired interlock to the scraper starter in the corresponding ACTICARB® control panel.

A high torque alarm is activated when the torque is higher than the adjustable set point for more than the adjustable delay.

When the alarm is activated, the scraper is stopped and then the ACTICARB® is stopped according to the automatic stop sequence.

### 2.14.3 Activated Carbon Extraction Pump

The activated carbon extraction pump cannot be started if the low level switch has been activated. If the pump is in operation and the low level switch is activated the pump is stopped by interlock.

### 2.14.4 Maturation Mixer

The maturation mixer cannot run if the scraper is not running.

# 3 APPENDIX A – ALARMS, PARAMETERS AND SET POINTS

**This page is intentionally left blank**

# APPENDIX C

# Actiflo®

# Functional Description

**This page is intentionally left blank**

# Actiflo® – ACP

## PROCESS CONTROL DESCRIPTION

**VEOLIA WATER TECHNOLOGIES CANADA**
www.veoliawatertechnologies.com

# REVISION STATUS

| Issue | Date | Created | Reviewed | Approved | Description of Changes |
|---|---|---|---|---|---|
| 1 | 2021/03/11 | CEK | ED | TS | First Issue |
| | | | | | |
| | | | | | |
| | | | | | |
| | | | | | |

# TABLE OF CONTENT

**1 INTRODUCTION ..... 5**
1.1 Reference Documents ..... 5
1.2 Process Overview ..... 5
1.3 List of Abbreviations ..... 6
1.4 List of Units ..... 6
**2 ACTIFLO® CONTROL DESCRIPTION ..... 7**
2.1 Equipment and Instrument ..... 7
2.2 Operating Modes Overview ..... 8
2.3 Permissive ..... 9
2.4 Semi-Auto Train Response To Equipment Conditions ..... 9
2.4.1 Equipment Removed From Auto PLC Response ..... 9
2.4.2 Equipment Failure PLC Response ..... 9
2.5 Recirculation Pumps Logic ..... 10
2.5.1 Duty/Stand by Orientation ..... 10
2.6 Sequences Of Functions ..... 11
2.6.1 Start-up Sequence ..... 11
2.6.2 Shutdown Sequence ..... 12
2.7 Alarm/Failure Conditions and PLC Responses ..... 15
2.7.1 Alarm Priorities ..... 15
2.7.2 Alarm and Set Point Table ..... 15
2.8 Safety ..... 16
2.8.1 Emergency Stop ..... 16
2.8.2 Control Power Failure PLC Response ..... 16
2.9 System Availability Conditions ..... 17
2.9.1 Conditions for automatic Start sequence ..... 17
2.9.2 Conditions for automatic stop sequence ..... 17
2.10 Actiflo® Fault Responses ..... 17

2.11 Controls ..... 18
2.11.1 General ..... 18
2.11.2 Recirculation pumps logic ..... 19
2.11.3 Maturation Mixer Speed ..... 19
2.11.4 ACTIFLO® High Level Switch ..... 19
2.11.5 Sludge Extraction Control ..... 20
2.11.6 Sludge Extraction Valve ..... 20
2.12 Sludge Extraction/Recirculation System Fault response ..... 21
2.13 Calculated Parameters ..... 22
2.13.1 Flow Pace Control ..... 22
2.14 Interlocks ..... 23
2.14.1 Actiflo® High Level Switch ..... 23
2.14.2 High Scraper Torque ..... 23
2.14.3 Sludge Extraction Pump ..... 23
2.14.4 Maturation Mixer ..... 23
**3 Appendix A – Alarms, parameters and set points ..... 24**

# 1 INTRODUCTION

## 1.1 REFERENCE DOCUMENTS

| Document Number | Name | Revision |
|---|---|---|
| 5000220043_PI_0001_GEN_VWT | PI001 _Process and Instrumentation diagram | 1 |
| | | |
| | | |

## 1.2 PROCESS OVERVIEW

ACTIFLO® units are based on the ballasted flocculation process. The key feature of this process is that very fine sand (85 µm or 130 µm size), termed “microsand” is added to the raw water following coagulant addition. A polymer is also added that binds the microsand to the floc, creating a ballasted floc with greatly increased effective density. The ballasted flocculation process is capable of being shut down when treatment capacity is not needed and then rapidly restarted when needed.

Ballasted flocculation works with most types of waters but is most advantageous with raw waters that either experience high turbidity raw water conditions (up to 2 500 NTU) and/or rapidly changing raw water turbidity conditions. It is also suitable for low turbidity, highly colored raw waters.

It consists of a coagulation basin, an injection basin, a maturation basin, and a lamella tube clarifier. Coagulant is added at the inlet and subsequent formation of microfloc takes place in the coagulant basin prior to addition of microsand and polymer in the injection basin. The water then flows into the maturation tank where bridging between the microsand and the destabilized suspended solids occurs.

The ballasted flocs settle in the clarifier portion of the system where they are collected by a rake mechanism. Typically 3% to 6% of the unit’s design raw water flow is continuously withdrawn from the clarifier and pumped to a hydrocyclone system which separates the microsand from the sludge. The recovered microsand (typically 20% of the recycled flow) is reused in the process. A small quantity of the microsand is not recovered by the hydrocyclones and is discharged with the sludge. Thus the lost microsand needs to be made up by periodically adding it to the process (typically 1 to 3 mg/L). After sand separation, sludge are partially wasted and recycled with the sludge withdrawn from the clarifier. Approximately 1% to 2,4% of flow becomes waste or residuals stream.

A tank downstream of the ACTIFLO® unit accepts the sludge removed in the ACTIFLO® clarification process. This tank splits the rejected mix of activated carbon and flocs into two streams. A fraction is pumped and rejected into the sludge tank unit in order to be extracted from the process. The remaining fraction is recirculated by gravity into the contact reactor in order to increase the activated carbon contact time in the process. The flowrate of the pumped fraction is controlled by a flowrate control loop. The flowrate is measured by a flowmeter and controlled by a modulating valve (pinch valve).

## 1.3 List of Abbreviations

The following abbreviations are used in the text of this document.

- HMI: Human/Machine Interface
- H-O-A: Hand-Off-Auto
- PLC: Programmable Logic Controller
- LCP: Local Control Panel
- VFD: Variable Frequency Drive
- VWT: Veolia Water Technologies Canada

## 1.4 List of Units

The following lists the parameters referred to in this document and the units they are measured in unless otherwise specified.

- Concentration (in general): mg/L
- Dosing rate: mL/L
- Flow rate (main process): $m^3/h$
- Flow rate (chemical dosing): LPH
- Level in the tanks: %
- pH: -
- Pressure: PSIg
- Temperature: °C
- Turbidity: mg/L or NTU

# 2 ACTIFLO® CONTROL DESCRIPTION

## 2.1 EQUIPMENT AND INSTRUMENT

This section connects the tags from the P&ID and the terminology used throughout Equipment and Instrument Schedules.

| Project Tag No | Description |
|---|---|
| 65AGI68021 | Coagulation mixer |
| 65AGI68022 | Injection mixer |
| 65AGI68023 | Maturation mixer |
| 65TRM68003 | Scraper |
| 65LSHH6801324 | High High level switch |
| 65AIT6801322 | Turbidity meter |
| 65AIT6801321 | pH meter |
| SSL20-03 | High Torque detector |
| 65PSR68006A | Recirculation pump #1 |
| 65PSR68006B | Recirculation pump #2 |
| 65FIT6801437 | Sludge extraction flowmeter |
| 65LSHH6801411 | Splitter box High high level switch |
| 65LSLL6801411 | Splitter box Low low level switch |
| 65AIT6801427 | TSS meter sludge |
| 65PSR68007C | Sludge extraction pump |
| 65FCV6801438 | Sludge extraction control valve |

## 2.2 OPERATING MODES OVERVIEW

There are two primary modes for each ACTIFLO®: Manual and Semi-Automatic. The Manual mode is designed for operation of individual equipment. The Semi-Auto mode is designed for operation of the ACTIFLO® system as a whole.

**HMI manual mode**

Manual operation from the HMI provides the same equipment protection and alarming as Semi-Auto.

**Semi-Auto**

Semi-Auto mode allows the operator to initiate the ACTIFLO® system start-up and shutdown sequences from HMI or remotely.

**NOTE: Train equipment cannot be controlled manually while in Semi-Auto operation.**

The coagulation mixer or injection mixer, maturation mixer, scraper, and at least one sand pump H-O-As must be in Auto to enable Semi-Automatic control of all respective equipment at the HMI. All startup sequences are described below. Each ACTIFLO® train and its associated equipment are controlled as an independent system by the PLC.

The table below presents the control modes summary.

*Table 1: Summary of Control Modes*

| | HMI Manual | Semi-Auto |
|---|---|---|
| Control Functions | N/A | Allowed (PLC) |
| Initiation of Semi-Automatic functions | N/A | Operator or Remote Start-up Initiation Required |
| HMI Operation of Individual Equipment | Allowed (virtual HOA on HMI) | Not Allowed |

## 2.3 PERMISSIVE

Permissive to allow initiation of the Semi-Automatic start sequence are:

- H-O-A selector switches for mixers, scraper and at least one recirculation pump, are in Auto at the HMI.
- Mixers whichever is in Auto at HMI, scraper, and the above mentioned recirculation pump do not have existing equipment alarms.
- Aforementioned equipment alarms must be manually reset.

## 2.4 SEMI-AUTO TRAIN RESPONSE TO EQUIPMENT CONDITIONS

### 2.4.1 Equipment Removed From Auto PLC Response

If the mixers and the scraper are removed from Auto while the PLC is running in Semi-Automatic control of the ACTIFLO® system, the PLC will initiate a Shutdown Sequence as described in section 2.6.2.

Since the scraper will not be operational, the Shutdown Sequence will consist of the recirculation pump running for the durations indicated in section 2.6.2.

If the lead recirculation pump is removed from Auto, the PLC will sequentially initiate operation of the next available pump. If all sand pumps are removed from Auto or no additional pumps are available, the PLC will initiate an emergency shutdown of all equipment.

**NOTE: No alarm will be generated if an ACTIFLO® system shutdown is initiated due to a piece of equipment being removed from Auto by the operator.**

### 2.4.2 Equipment Failure PLC Response

If the coagulation mixer fails during Semi-Automatic control of the ACTIFLO® system, the system will continue to run.

Should the injection mixer or the maturation mixer fail at any time during Semi-Automatic control of the ACTIFLO® system, the PLC will issue an equipment alarm and will initiate a Shutdown Sequence as described in section 2.6.2.

Should the scraper fail at any time during operation or start-up, the PLC will issue an equipment alarm and will initiate a Shutdown Sequence as described in section 2.6.2. Since the scraper will not be operational, the Shutdown Sequence will consist of the sand recirculation pumps running for the durations indicated in section 2.6.2.

Should lead recirculation pump fail, the PLC will issue an equipment alarm and sequentially initiate operation of the next available pump. If all sand pumps fail or no additional pumps are available, the PLC will initiate an emergency shutdown of all equipment.

**NOTE: An AVAILABLE sand pump is defined as one that is placed in Auto at the LCP and does not have any existing un-reset alarm conditions.**

## 2.5 RECIRCULATION PUMPS LOGIC

### 2.5.1 Duty/Stand by Orientation

When two recirculation lines are provided they can be set with priority. The two recirculation pumps operate in a Duty / Stand by orientation. If all recirculation pumps are in “auto” but not running, the pump set as priority (duty) will start when the start condition will be met.

The recirculation pumps priority (duty or stand by) is changed manually by the operator anytime or is changed automatically when the plant stops.

## 2.6 SEQUENCES OF FUNCTIONS

### 2.6.1 Start-up Sequence

If all permissive conditions are present and no respective equipment alarms exist, the HMI will display **"Train Ready"**. The Start-up Sequence can now be initiated via the HMI or remotely. Refer to table 2 for more information.

**NOTE: To prevent damage to the equipment, the Train must have water in the tanks above the mixer impeller elevations prior to Start-up (to be checked by the operator).**

To start the train when "Train Ready" is displayed on the HMI, the operator presses the "Train Start" pushbutton. A starting system displays "Train Starting" at the HMI. The start-up sequence automatically cycles through the steps listed below.

1. System Start-up Initiated:
    a. **Start duty recirculation pump**
    b. **Start sludge extraction pump**

If a failure occurs, the duty pump will be locked out in the PLC and the next available pump will be assigned as the lead pump. The PLC will then attempt to continue operation. This cycle will occur until a recirculation pump starts or all recirculation pumps have been locked out. If all sand pumps are locked out, the PLC will immediately abort the start-up.

2. Delay 30 seconds (adjustable):
    a. **Start the Scraper**

If a Scraper failure occurs initiate a Shutdown Sequence.

3. Delay 10 seconds (adjustable):
    a. **Start the mixers**. These mixers start are respectively staggered by 5 seconds.

If a maturation Mixer failure occurs initiate a Shutdown Sequence.

4. Delay 10 seconds (adjustable):
    a. **Start the Chemical Feed Pumps**
    b. **Open Raw water Valve. Open Water Polymer Carrier Solenoid valve**
    c. **Start sludge flow control loop**
    d. HMI will display **"Train Started"**

If any Duty Chemical Feed Pump is not available while in operation, the Stand-by pump shall be initiated. The duty pump will not be locked out so when the pump is placed back into Semi-Auto, it will resume operation. Duty chemical feed pump alternation is manual and available only at the HMI.

The Operator can terminate the start-up at any point in the sequence by pressing the "Train Stop" pushbutton. If any pertinent equipment fails during the start-up sequence, the PLC will

initiate a train shutdown. The operator can correct the failure, and then resume the start-up sequence from the current shutdown sequence step by pressing the “Train Start” pushbutton.

### 2.6.2 Shutdown Sequence

When in Semi-Automatic mode, the operator may implement the Shutdown Sequence at any time from the HMI or remotely. During shutdown, the HMI will display “Train Stopping”. Refer to table 3 for more information.

The shutdown sequence automatically cycles through the steps listed below.

1. System Shutdown Initiated:
    a. **Close the secondary valve**
    b. **Shutdown the Chemical Feed Pumps**
    c. **Shutdown the mixers**
    d. **Stop Water Polymer Carrier Solenoid valve.**
2. Delay an (Operator Adjustable) (10-30 minutes):
    a. **Shutdown the Scraper**
3. Delay 5 minutes:
    a. **Shutdown the duty recirculation pump**

**NOTE: This delay allows purging of sand and sludge contained in the settling tank and piping and re-deposits it back into the Maturation tank.**

The operator can initiate the Train start-up sequence from the current shutdown sequence step by pressing the “Train Start” pushbutton without stopping the equipment already started.

## Start-up Sequence

*Table 1: ACTIFLO® automatic start sequence*

| Step # | STEP NAME | ACTION | STEP CHANGE CONDITION | Recirculation pumps | Coagulation mixer | Injection mixer | Maturation Mixer | Dosage & raw water flow | Scraper | Injection Water Valve | Sludge extraction pump | Sludge extraction valve | Status light | Status output |
|---|---|---|---|---|---|---|---|---|---|---|---|---|---|---|
| **0** | FULL STOP | Stopped | | S | S | S | S | C | S | S | S | C | Off | U |
| | | | Start Condition Sequence | | | | | | | | | | | |
| **1** | START SEQUENCE | Start recirculation pump<br>Open Injection Water Solenoid Valve<br>Start Sludge Extraction Pump. | | R | S | S | S | C | S | O | R | O | Off | U |
| | | | Delay (DEL-STA-MOT 0 to 30 sec.) | | | | | | | | | | | |
| **2** | START SEQUENCE | Start scraper | | R | S | S | S | C | R | O | R | O | RF | U |
| | | | Delay (DEL-STA-MOT 0 to 10 sec.) | | | | | | | | | | | |
| **3** | START SEQUENCE | Start coagulation mixer | | R | R | S | S | C | R | O | R | O | RF | U |
| | | | Delay (DEL-STA-MOT 0 to 5 sec.) | | | | | | | | | | | |
| **4** | START SEQUENCE | Start injection mixer | | R | R | R | S | C | R | O | R | O | RF | U |
| | | | Delay (DEL-STA-MOT 0 to 5 sec.) | | | | | | | | | | | |
| **5** | NORMAL AUTOMATED OPERATION | Start maturation mixer / start chemical dosage /Start Sludge Flow ctrl loop | | R | R | R | R | O | R | O | R | O | On | A |

***LEGEND:*** R=RUNNING S= STOPPED O= OPEN C=CLOSED RF=RAPID BLINK A=AVAILABLE U= UNAVAILABLE

## Shutdown Sequence

*Table 3: ACTIFLO® automatic start sequence*

| Step # | STEP NAME | ACTION | STEP CHANGE CONDITION | Recirculation pumps | Coagulation mixer | Injection mixer | Maturation mixer | Dosage & raw water flow | Scraper | Injection Water Valve | Sludge extraction pump | Sludge extraction valve | Status light | Status output |
|---|---|---|---|---|---|---|---|---|---|---|---|---|---|---|
| | | | Stop Sequence conditions | | | | | | | | | | | |
| 1 | STOP SEQUENCE | Stop sludge extraction pump<br>Close sludge extraction valve if open<br>Stop maturation mixer<br>Stop injection mixer<br>Stop coagulation mixer<br>Stop chemical dosage (polymer pumps)<br>Close polymer service water transport valves | | R | S | S | S | S | R | C | S | C | SF | U |
| | | | Delay (DEL-STO-SCR 0 to 30 min.) | | | | | | | | | | | |
| 2 | STOP SEQUENCE | Stop scraper | | R | S | S | S | S | S | O | S | C | SF | U |
| | | | Delay (DEL-STO-PRS 0 to 30 min.) | | | | | | | | | | | |
| 3 | STOP SEQUENCE | Stop recirculation pumps<br>Close injection water solenoid valves | | S | S | S | S | S | S | C | S | C | SF | U |
| | | | Delay (1 sec) | | | | | | | | | | | |
| 4 | STOP SEQUENCE | ACTIFLO stopped | | S | S | S | S | S | S | C | S | C | SF | U |

***LEGEND:*** R=RUNNING S= STOPPED O= OPEN C=CLOSED RF=RAPID BLINK A=AVAILABLE U= UNAVAILABLE

## 2.7 ALARM/FAILURE CONDITIONS AND PLC RESPONSES

### 2.7.1 Alarm Priorities

Alarms are grouped in to 3 priority levels for various attention requirements:

**Emergency alarms:**

1. Needs immediate operator attention.
2. The ACTIFLO® unit will initiate the emergency shutdown sequence.

**Fatal alarms:**

1. Needs immediate operator attention.
2. The ACTIFLO® unit will initiate the stop sequence.

**Warning alarms:**

1. Does not need immediate operator attention.

If the ACTIFLO® unit was stopped by an Emergency alarm or fatal alarm, it will not restart automatically. The operator must remove alarm condition and reset the alarm. Then press the start button on the operator interface will restart the unit if all automatic start sequence conditions are satisfied. In case of remote control, the system will wait for rising edge of the remote start signal.

### 2.7.2 Alarm and Set Point Table

Refer to Appendix A.

## 2.8 SAFETY

### 2.8.1 Emergency Stop

**Emergency stop actions**

When an emergency stop button is activated, an alarm is triggered. The fault associated with this alarm will latch.

During emergency stop, many stopping actions are initiated on equipment. These actions are presented in sections describing the relevant equipment.

**Recovery after emergency stop**

When all emergency stop buttons are back into normal position, the fault associated with an alarm is maintained until the operator presses the reset button.

### 2.8.2 Control Power Failure PLC Response

Should control power fail at any time during Semi-Automatic control of the ACTIFLO® system, the PLC will issue an alarm and will initiate a Shutdown Sequence as described in this document. Systems with an Uninterruptable Power Supply (UPS) will see the alarm as the condition occurs. Systems without an UPS will see the alarm upon restoration of power. There is a ten (10) second delay upon restoring power, and then the train will enter the Shutdown Sequence as described in this document. If the restored power does not include the actual motor controls, a run status will not be received by the PLC and equipment (pumps and scraper) will shut down immediately without a re-inventory of the sand to the maturation tank. If the unit is configured to resume via the HMI, it will automatically resume to the last known state. Otherwise the unit will remain in Stop.

## 2.9 System Availability Conditions

### 2.9.1 Conditions for automatic Start sequence

The automatic start sequence will be activated when the automatic start command is true and the following conditions are met:

1. If delay for power return is elapsed;
2. If remote run request bit is activated;
3. ACTIFLO® in Auto start mode.

### 2.9.2 Conditions for automatic stop sequence

The automatic stop sequence will be activated when any of the following conditions are met:

1. The ACTIFLO® Auto start mode is deactivated on the interface or one of the following occurs:
   a. If a major fault is active;
   b. If remote contact is not activated;
2. The ACTIFLO® automatic start command is false.

## 2.10 ACTIFLO® Fault Responses

*Table 4: ACTIFLO® major faults*

| MAJOR FAULT | ALARM TYPE |
|---|---|
| Coagulation mixer | FATAL |
| Injection mixer | FATAL |
| Maturation mixer | EMERGENCY |
| Scraper High High torque | EMERGENCY |
| Recirculation pumps | EMERGENCY |
| High High clarified water turbidity | FATAL |
| High high water level | EMERGENCY |
| Sludge extraction system | FATAL |
| Coagulant dosing system | FATAL |
| Polymer dosing system | FATAL |
| Power failure | EMERGENCY |

If the ACTIFLO® was stopped by a major fault, it will not restart automatically. The operator must fix the problem on the operator interface. The ACTIFLO® will restart if all automatic start sequence conditions are satisfied.

## 2.11 CONTROLS

### 2.11.1 General

1. ACTIFLO® Start/Stop push button function:
   - By pushing the Start/Stop push button, the ACTIFLO® will be set in Auto start mode and will be ready to start. If all automatic start sequence conditions are satisfied, it will start only after receiving the automatic start command.
   - If the ACTIFLO® is in Auto start mode and it is running or on starting sequence, pushing the Start/Stop push button will activate the stopping sequence and deactivate the Auto start mode. Pushing the Start/Stop push button again will restart the ACTIFLO® if the automatic start command is still true.

2. If an essential equipment is in manual and not running when the ACTIFLO® Start/Stop push button is pressed to activate the Auto mode, Auto start mode cannot be activated.
   The essential ACTIFLO® equipment's to be in Auto are:
   - Coagulation mixer
   - Injection mixer
   - Maturation mixer
   - Scraper
   - Recirculation pumps

3. If a major fault occurs while the ACTIFLO® is in start sequence or is running, the ACTIFLO® is forced into a stop sequence and the ACTIFLO® major fault is set.

4. The operator may set/reset the ACTIFLO® in Auto start mode by pressing the Start/Stop push button from the HMI.
   The conditions to activate the Auto mode are the followings:
   - No major faults;
   - All equipment in Auto on HMI or running;
   - No Polymer system fault
   - No sludge recirculation pump fault

Pressing on the ACTIFLO® Start/Stop push button on the operator interface for 3 seconds when the ACTIFLO® is stopped and will enable forced start mode if all the conditions to activate the Auto mode are true the forced start mode will become active. The unit will then start all the drives and request to open the raw water valve, bypassing the auto start sequence commands.

### 2.11.2 Recirculation pumps logic

#### 2.11.2.1 Pump Fault

The pump is in fault when:

- The command is present and the status is not for a short delay

When the duty pump is in fault, and the ACTIFLO® unit is in operation the standby pump will start, the ACTIFLO® will not stop, a WARNING alarm is activated and a message is displayed. If the second pump was in fault or in manual (not running), a FATAL alarm is activated, a message will be displayed and the ACTIFLO® unit will stop.

#### 2.11.2.2 Pump Priority

Each time the running pump is stopped, the other pump will start at the next ACTIFLO® start sequence. If the other pump is in manual or in fault, the first pump will restart.

### 2.11.3 Maturation Mixer Speed

The maturation mixer motor is powered by a variable speed drive (VFD). The speed of the mixer will be set on the PLC during the process start-up of the system to get an optimal mixing. Thereafter, the speed usually does not need any further adjustment.

### 2.11.4 ACTIFLO® High Level Switch

A float over the settling tank is used as a High Level switch. When the switch is activated, stop the corresponding ACTIFLO® unit according to the automatic stop sequence.

### 2.11.5 Sludge Extraction Control

The TSS control loop will act on the opening of the splitter box outlet flow control valve to adjust the sludge flow rate being recirculated back to the coagulation chamber.

A TSS set point will be entered by the operator. If the TSS measured by 65AIT6801427 is below the set point, the control loop will close 65FCV6801437. This will increase the sludge recirculation to the coagulation chamber and increase the turbidity.

On the contrary, if the measured TSS is above the set point, the control loop will open 65FCV6801437. This will decrease the sludge recirculation to the coagulation chamber and increase the sludge flow rate going to the sludge storage tank.

If the TSS analyzer is in fault, an alarm is generated and the sludge valve 65FCV6801437 opens to prevent sludge build-up in the ACTIFLO® process.

If the fault is not reset after an adjustable delay, the ACTIFLO® is stopped according to automatic shutdown sequence.

### 2.11.6 Sludge Extraction Valve

The extraction valve has two available operation modes:

- **Normal mode:** the valve is controlled with a PID loop and its opening is used as a manipulated variable to reach the flow set point.
- **Pulse mode:** as very low flow rates can be difficult to achieve with the valve, a pulse mode shall be programmed. Parameters such as opening duration and opening frequency shall be entered by the operator on the HMI. The extracted volume is totalized over time by the flowmeter.

## 2.12 SLUDGE EXTRACTION/RECIRCULATION SYSTEM FAULT RESPONSE

The following are the major faults associated with the Sludge recirculation and extraction system.

1. **Sludge splitter box tank high high level**

   The ACTIFLO® unit falls on major fault and is stopped according to the automatic stop sequence.

2. **Sludge splitter box tank low low level**

   The ACTIFLO® unit falls on major fault and is stopped according to the automatic stop sequence.

3. **Sludge tank high high level**

   The ACTIFLO® unit falls on major fault and is stopped according to the automatic stop sequence.

4. **Sludge Extraction pump fault**

   The ACTIFLO® unit falls on major fault and is stopped according to the automatic stop sequence.

5. **Extraction modulating valve open failure**

   The corresponding ACTIFLO® unit falls on major fault and is stopped according to the automatic stop sequence.

## 2.13 CALCULATED PARAMETERS

The following sections explain the main calculations made in the control of the ACTIFLO® system.

The PLC calculates the chemical feed rates and controls the chemical metering pumps using the following procedure. The chemical feed rate is based on:

1. The influent raw water flow rate
2. The chemical dose
3. The physical properties of the chemicals
4. The capacity and settings of the metering pump
5. The raw water turbidity

The influent raw water flow rate is obtained through the raw water flow meter, which sends a signal to the PLC.

The influent raw water turbidity rate is obtained through the raw water turbidity meter.

The chemical dose, physical properties and metering pump capacity are input by the user/operator at the HMI.

The basic equation for the chemical feed rate is:

$$\text{Chemical feed rate} = \frac{\text{influent flow rate} \times \text{chemical dose}}{\text{stock chemical concentration}}$$

This equation is the general form for all chemical feed rates that use flow pacing control, including coagulant and polymer.

### 2.13.1 Flow Pace Control

The way the PLC uses these calculations to determine the chemical metering pump output is:

1. The chemical feed rate equations are programmed into the PLC.
2. The user/operator inputs the chemical dose, physical properties, and maximum chemical metering pump capacity at the HMI on the ACTIFLO® control panel. The PLC calculates the specific chemical feed rate based on the user/operator inputs and the influent (raw water) flow to the train.

3. The calculated feed rate is then converted by the PLC into a percent speed, based on the maximum capacity of the metering pumps. This signal is then sent to the metering pump.

## 2.14 INTERLOCKS

### 2.14.1 Actiflo® High Level Switch

A float over the settling tank is used as a High Level switch. When the switch is activated, stop the corresponding Actiflo® unit according to the automatic stop sequence.

### 2.14.2 High Scraper Torque

The torque detector/alarm is independent from the PLC. So it is enabled (will stop the scraper) through a hardwired interlock to the scraper starter in the corresponding Actiflo® control panel.

A high torque alarm is activated when the torque is higher than the adjustable set point for more than the adjustable delay.

When the alarm is activated, the scraper is stopped and then the Actiflo® is stopped according to the automatic stop sequence.

### 2.14.3 Sludge Extraction Pump

The sludge extraction pump cannot be started if the low level switch has been activated. If the pump is in operation and the low level switch is activated the pump is stopped by interlock.

### 2.14.4 Maturation Mixer

The maturation mixer cannot run if the scraper is not running.

# 3 APPENDIX A – ALARMS, PARAMETERS AND SET POINTS

# APPENDIX D

# Discfilter

# Functional Description

**This page is intentionally left blank**

# Hydrotech® – DISCFILTER

## PROCESS CONTROL DESCRIPTION

**VEOLIA WATER TECHNOLOGIES CANADA**
www.veoliawatertechnologies.com

# REVISION STATUS

| Issue | Date | Created | Reviewed | Approved | Description of Changes |
|---|---|---|---|---|---|
| 1 | 2021/03/16 | GM | ED | TS | First Issue |
| 2 | 2021/04/21 | GM | ED | TS | Added cover actuators |
| | | | | | |
| | | | | | |
| | | | | | |

# TABLE OF CONTENT

**1 INTRODUCTION ..... 5**

1.1 Reference Documents ..... 5

1.2 Process Overview ..... 5

1.3 List of Abbreviations ..... 6

1.4 List of Units ..... 6

**2 HYDROTECH® CONTROL DESCRIPTION ..... 7**

2.1 Equipment and Instrument ..... 7

2.1.1 Backwash Pump ..... 7

2.1.2 Drum Drive ..... 7

2.1.3 VFD (by others) ..... 7

2.1.4 Level Sensor/Level transmitter (Inlet box) ..... 8

2.1.5 Low Level Sensor Probe/Low Level transmitter (Effluent side) ..... 8

2.2 Operating Modes Overview ..... 9

2.3 Permissive ..... 10

2.4 Auto Train Response To Equipment Conditions ..... 11

2.4.1 Equipment Removed From Auto PLC Response ..... 11

2.4.2 Equipment Failure PLC Response ..... 11

2.5 Sequences Of Functions ..... 11

2.5.1 Discfilter functions ..... 11

*Filtration* ..... 11

*Level Initiated Backwash* ..... 12

*Timed Backwash* ..... 12

*Manual ("Hand") Backwash* ..... 12

2.5.2 Operating Sequence ..... 12

2.5.3 Chemical Cleaning ..... 12

**Chemical Cleaning Sequence ..... 13**

2.6 Alarm/Failure Conditions and PLC Responses ..... 14

2.6.1 Major faults ..... 14

2.6.2 Alarm Table ..... 14

2.7 Safety ..... 15
2.7.1 Emergency Stop ..... 15
2.7.2 Control Power Failure PLC Response ..... 15
2.8 Calculated Parameters ..... 16
2.8.1 Setpoints Table ..... 16
2.9 Interlocks ..... 17
2.9.1 Effluent Side Level transmitter ..... 17
2.9.2 Backwash pump low Pressure Switch ..... 17

# 1 INTRODUCTION

## 1.1 REFERENCE DOCUMENTS

| Document Number | Name | Revision |
|---|---|---|
| 5000220043_PI_0001_GEN_VWT | Piping & Instrumentation Diagram | 1 |
| | | |
| | | |

## 1.2 PROCESS OVERVIEW

The Discfilter is a mechanical and self-cleaning filter unit that offers a large filter area on a small footprint. This design is superior to any filtration in fine solids removal and product recovery within micro screens.

The water flows by gravity into the center of the drum and into the filter segments. The disc filter unit remains stationary under normal filtration. Solids are separated from the water by the micro screen cloth mounted on two sides of the disc segments. The buildup of captured solids increases the head loss across the Discfilter and as a result the inlet water level rises. At a predetermined level a backwash cycle is initiated which results in Discfilter rotation presenting clean filter elements in to the flow path and at the same time cleaning the filter elements with high-pressure water jets. The backwash water is collected in a trough within the center of the Discfilter and flows away by gravity. When the inlet water level falls under the set point, the backwash sequence continues for approximately 20 seconds (controlled by a timer and adjusted during commissioning to reflect local conditions).

Once the timed over-run is elapsed, the disc filter drive and backwash pump stop. The disc filter unit returns to a stationary state until the next backwash cycle is initiated. Filtration is continuous even during the backwash cycle and the effluent water quality is also the same throughout the backwash cycle. The operational head loss across the unit varies from zero to approximately 250mm.

## 1.3 LIST OF ABBREVIATIONS

The following abbreviations are used in the text of this document.

- HMI: Human/Machine Interface
- H-O-A: Hand-Off-Auto
- PLC: Programmable Logic Controller
- LCP: Local Control Panel
- VFD: Variable Frequency Drive
- VWT: Veolia Water Technologies Canada

## 1.4 LIST OF UNITS

The following lists the parameters referred to in this document and the units they are measured in unless otherwise specified.

- Concentration (in general): mg/L
- Dosing rate: mL/L
- Flow rate (main process): $m^3/h$
- Flow rate (chemical dosing): LPH
- Level in the tanks: %
- pH: -
- Pressure: PSIg
- Temperature: °C
- Turbidity: mg/L or NTU

# 2 HYDROTECH® CONTROL DESCRIPTION

## 2.1 EQUIPMENT AND INSTRUMENT

This section connects the tags from the P&ID and the terminology used throughout Equipment and Instrument Schedules.

| Project Tag No | Standard Tag-No. | Description |
|---|---|---|
| 65PSL8165 | PS4-031 | Pressure switch backwash pump |
| 65LIT6801502A | LT3-031 | Level transmitter inlet channel |
| 65LIT6801502B | LT3-032 | Level transmitter effluent channel |
| 65FIL68001 | M4-001 | Drum motor Disc |
| 65PSR68008A / 65PSR68008B | P4-001 | Backwash pump #1/#2 |

### 2.1.1 Backwash Pump

Number of Pieces: 2 per unit
Operation: On/Off
Indication: Run status in local and SCADA
Control: The pump runs intermittently or continuous and is initiated during the backwash operation.

### 2.1.2 Drum Drive

Number of Pieces: 1 per unit
Operation: On/Off
Indication: Run status in local and SCADA
Control: The drum motor/drive runs intermittently or continuous and is initiated during the backwash operation.

### 2.1.3 VFD (by others)

Number of Pieces: 1 per unit
Operation: Open/Close
Indication: Run status in local and SCADA
Control: The VFD controls the drum motor/drive. It ramps up the drive motor to operating speed and runs a long as required by the backwash operation.

### 2.1.4 Level Sensor/Level transmitter (Inlet box)

Number of Pieces: 1 located in discfilter inlet box
Indication: Local and SCADA
Control: Main unit used in process control to calculate the backwash elevation setting and high water alarm setting. This calculated parameter is used for control actions and alarms.

### 2.1.5 Low Level Sensor Probe/Low Level transmitter (Effluent side)

Number of Pieces: 1 per Unit
Indication: Local and SCADA
Control: Used in process control to calculate the backwash elevation and to prevent the backwash pump from dry operation during the backwash initiation. This parameter is used for control actions and alarms.

### 2.1.6 Cover Actuator

Number of Pieces: 2 per Unit
Operation: Open/Close
Indication: Local and SCADA
Control: Used to open and close cover panels of the discfilter to access nozzles and media panels.

### 2.1.7 Spray Bar Actuator

Number of Pieces: 1 per Unit
Operation: Open/Close
Indication: Local and SCADA
Control: Used to raise spray bar of backwash nozzles.

## 2.2 OPERATING MODES OVERVIEW

There are two primary modes for each Hydrotech®: Manual and Automatic. The Manual mode is designed for operation of individual equipment. The Auto mode is designed for operation of the Hydrotech® system as a whole.

Manual mode

In manual Mode, the operator can operate individual equipment.

Equipment can be started manually at the LCP using the Hand position of the H-O-A.
In the manual operating mode, the drum rotation and backwash are started manually.
The backwash nozzles spray backwash water on the outside of the filter panels.
When the backwash pump and drum drive are placed in HAND, the Discfilter operates in a continuous backwash.
The solid particles that accumulate are washed from the filter panels to the sludge channel, at the same time as the drum rotates.
The removed particles and backwash water flow with gravity out of the filter.
The H-O-A switch is placed in the OFF position to prevent the respective piece of equipment from operating.

Automatic mode

Auto mode allows the operator to initiate the Hydrotech® system sequence from HMI or remotely.

**NOTE: Train equipment cannot be controlled manually while in Semi-Auto operation.**

The drum motor, and backwash pump H-O-As must be in Auto to enable Automatic control of all respective equipment at the HMI and at the LCP. The automatic sequence is described below. Each Hydrotech® train and its associated equipment are controlled as an independent system by the PLC.

The table below presents the control modes summary.

*Table 1: Summary of Control Modes*

| | Manual | | Auto |
|---|---|---|---|
| | **Local (HOA Selector)** | **HMI Manual** | |
| Control Functions | N/A | N/A | Allowed (PLC), Backwash sequence |
| Initiation of Automatic functions | N/A | N/A | Operator or Remote Start-up Initiation Required |
| HMI Operation of Individual Equipment | N/A | Allowed (virtual HOA on HMI) | Not Allowed |
| Local Operation of Individual Equipment | Allowed By HOA on LCP | N/A | Not Allowed |

## 2.3 PERMISSIVE

Permissive to allow initiation of the Automatic start sequence are:

- H-O-A selector switches for drum motor and backwash pump, are in Auto at the HMI and at the LCP.
- Motor (whichever is in Auto at HMI and LCP) and the backwash pump do not have existing equipment alarms.
- Aforementioned equipment alarms must be manually reset.
- No interlocking conditions are present to prevent the backwash pump from starting.
- Remote request run bit is activated.
- E-stop not activated.

## 2.4 AUTO TRAIN RESPONSE TO EQUIPMENT CONDITIONS

In the automatic operating mode, the solid particles that accumulate on the inside of the filter media gradually reduce the water flow through the filter panel.
The water level on the inside of the drum begins to rise ultimately triggering the backwash sequence.

### 2.4.1 Equipment Removed From Auto PLC Response

If the drum motor and the pump are removed from Auto at the LCP while the PLC is running in Automatic control of the Hydrotech® system, the system will be paused.

Since the Discfilter will not be operational, the water level will rise and trigger the high level alarm. An alarm will be sent to operator and influent water will overflow into the backwash waste tank.

**NOTE: No alarm will be generated if an Hydrotech® system shutdown is initiated due to a piece of equipment being removed from Auto by the operator.**

### 2.4.2 Equipment Failure PLC Response

Should the drum motor fail at any time during Automatic control of the Hydrotech® system, the PLC will issue an equipment alarm and the system will be paused.

Should the backwash pump fail at any time during backwash sequence, the PLC will issue an equipment alarm and the system will be paused.

## 2.5 SEQUENCES OF FUNCTIONS

### 2.5.1 Discfilter functions

Discfilter operation consists of four (4) functions:

- Filtration
- Level Initiated Backwash
- Time Initiated Backwash
- Manual (“Hand”) Backwash

***FILTRATION***
The Discfilter system is filtering any time water is passing through the media. Even in static (non-backwash) conditions, the filter units are filtering the water, provided they are not hydraulically isolated from the influent flow (i.e an inlet valve or gate is closed).

***LEVEL INITIATED BACKWASH***

Water level difference is calculated using inlet box and effluent side level transmitters. This differential elevation is then used to trigger a backwash cycle when it reaches a predefined setpoint. When that happens, the PLC controller starts the backwash cycle of the filter. The backwash pump and drum motor are started. Once the backwash begins and the inlet box water level drops and the differential elevation decreases below the setpoint, the backwash process will stop after a predefined timer. With the standard settings, ¾ of a rotation (based on time) is done to ensure all clogged media panels have been taken through backwash nozzles spray. This will reset the timed backwash timer.

***TIMED BACKWASH***

If the Discfilter system is static without any backwash due to low flow or no flow, the backwash cycle will be initiated with a predefined timer. This operation will prevent solids from drying onto the media. The timed backwash is also useful for outdoor installations in cold weather conditions to prevent icing in the backwash piping by initiating a frequent backwash during low flow periods.

***MANUAL ("HAND") BACKWASH***

A manual backwash can be triggered with a button at any given time. This will reset the timed backwash timer.

### 2.5.2 Operating Sequence

If all permissive conditions are present and no respective equipment alarms exist, the HMI will display **"Filtration"**.

### 2.5.3 Chemical Cleaning

If the backwash frequency is increasing or if the inlet box level does not decrease during backwash cycle, there is a possibility of long term clogging, which may be caused by, among others, iron and calcium precipitates or organic fouling.
It might then be necessary to chemically clean the filter media. The small frequency of chemical cleanings is estimated to 1 to 3 times per year according to needs.

The chemical cleanings are planned to be conducted as the Discfilter is in operation and filtering. It will start a sequence during which the chemical solution is dosed onto the part of the filter above the water level, while the submerged part continues to filter. A time is allowed for chemical reaction and then the chemically cleaned filters are rinsed as the discs rotate and cleaned filters become submerged. Please refer to operation manual for chemical selection.

The automatic chemical cleaning procedure is fully automated once the HCT has been filled with the cleaning chemical to be used, connected to the filter and control cabinet and the operation of the filter is changed to cleaning mode. For the automatic chemical cleaning to start, the operator has to press the buttons manually. Consequently, the chemical cleaning requires someone to be on site to make sure that it is safe to start the chemical cleaning. The cleaning procedure takes approximately 20 minutes. The procedure is as follows.

- Fill the container with the chemical to be used.
- Connect the HCT to the filter and the PLC
- Change to the cleaning mode in the HMI.
- When the panels are clean, disconnect the HCT from the filter unit and the PLC.
- Change to the standard operation mode in the HMI.

## Chemical Cleaning Sequence

The chemical cleaning is controlled by the Discfilter control panel and will be started manually from the HMI.

- The chemical pump starts.
- After a set time, the drum start delay, when the pressure in the chemical spray bar has built up and the spray pattern is right, the filter drum starts to rotate at the set drum dispersing speed.
- The drum rotates for a set time, the drum dispersing time, during which 2-3 segments are sprayed with the cleaning chemicals.
- When the drum dispersing time has elapsed, a stop signal is sent to the drum motor, which ramps down the rotation of the drum. Due to the time it will take to slow down and stop the filter drum, a chemical pump stop delay is used, in order to make sure the chemicals are evenly applied to all of the filter segments.
- After the chemical pump and the drum has stopped, the segments sprayed with cleaning chemicals will soak during a soaking time of, usually, 300-600 s.
- After the soaking time, the whole cleaning sequence (steps 1-5 above) is repeated on the other segments, until all of the filter segments have been cleaned. The number of repetitions will depend on the filter model. As an example, a disc filter from the HSF2600-series has 14 segments and requires a minimum of 5 index steps to clean the whole filter discs. It is recommended, however, to clean the filter in 6-8 index steps to ensure that the filter segments are completely covered by cleaning chemicals. For other filter models and placements of the chemical spray bar, other settings might be needed.
- When all of the filter segments have been sprayed and left soaking with cleaning chemicals, the chemical cleaning sequence is finished by backwashing of the filter for a rinsing time of approximately 5 minutes, to remove the cleaning chemicals from the filter media.

It is strongly recommended during commissioning of the filters that all of the above settings are evaluated, and if necessary adjusted, by using tap water. This should be done by having manometers installed on the chemical spray bar and the filter lid kept open, to be able to inspect the performance.
The key is to verify the spray pattern from the chemical nozzles (spray pressure >3 bar) before the filter starts to rotate, that the filter stops before the treated segments enter the water, that the treated segments are left soaking long enough and that the cleaning of the filter segments overlap to avoid untreated sections.

## 2.6 ALARM/FAILURE CONDITIONS AND PLC RESPONSES

### 2.6.1 Major faults

The following are the major faults associated with the Discfilter:

- Discfilter High High level (bypass alarm)
  The Hydrotech® discfilter is in major fault.
- Backwash pump in fault
  The Hydrotech® discfilter is in major fault
- Discfilter motor in fault
  The Hydrotech® discfilter is in major fault

### 2.6.2 Alarm Table

Refer to Project Alarm and setpoint Table for specific values. Table 2 below presents the typical alarm list.

*Table 2: List of alarms*

| Description | Alarm Type | Alarm Delay | System Action | Equipment Action / Alarm Action |
|---|---|---|---|---|
| Control Panel Power Failure | Discrete | NA | Alarm, | Shutdown |
| | | | | |
| Backwash Pump Overload Condition | Discrete | NA | Alarm, | Shutdown |
| Backwash pump Fail to Start (No Run Status) | Discrete | NA | Alarm, | Shutdown |
| | | | | |
| Drum Drive Fail Condition | Discrete | NA | Alarm, | Shutdown |
| Drum Drive Fail To Start | Discrete | NA | Alarm, | Shutdown |
| | | | | |
| Backwash Pump Low Level (Dry Run Protection) | Discrete | NA | Alarm, | Interlock of Backwash pumps / Operator Reset |
| | | | | |
| Inlet Box High Level (Bypass Level) | Discrete | NA | Alarm, | NA |

## 2.7 SAFETY

### 2.7.1 Emergency Stop

**Emergency stop actions**

When an emergency stop button is activated, an alarm is triggered. The fault associated with this alarm will latch.
During emergency stop, many stopping actions are initiated on equipment. These actions are presented in sections describing the relevant equipment.

**Recovery after emergency stop**

When all emergency stop buttons are back into normal position, the fault associated with an alarm is maintained until the operator presses the reset button.

### 2.7.2 Control Power Failure PLC Response

Should control power fail at any time during Automatic control of the Hydrotech® system, the PLC will issue an alarm. Systems with an Uninterruptable Power Supply (UPS) will see the alarm as the condition occurs. Systems without an UPS will see the alarm upon restoration of power. There is a ten (10) second delay upon restoring power, and then the train will resume to the last known state

## 2.8 CALCULATED PARAMETERS

The following sections explain the main calculations made in the control of the Discfilter® system.

**Backwash frequency**

This parameter is calculated using this equation

$$BF = t_B * 100 / (t_S + t_B)$$

With:

BF: Backwash frequency [%]

$t_B$: Time of the last backwash sequence [s]

$t_S$: Time in Filtration mode before last backwash [s]

This parameter should be available on history trend to assess chemical cleaning requirement.

### 2.8.1 Setpoints Table

The Table 3 presents the list of the main process setpoints.

*Table 3: List of operator setpoint*

| Name | Controller Actions | Increment Setting | Typical Settings |
|---|---|---|---|
| Drum Start Delay ($t_1$) | The drum delay setpoint delays drum rotation until the backwash pump is operating at full pressure. | 1 to 10 seconds | 1-2 seconds |
| Backwash Stop Delay ($t_2$) | The backwash Stop Delay time is initiated after the water falls away from the backwash level threshold to ensure the drum rotates at least ¾ of a rotation for complete media panel cleaning. | 10 to 400 seconds | Approximately 20 seconds |
| Timed Backwash Interval ($t_3$) | Initiates a backwash after preset period of static time with no backwash events. This mode prevents solids from drying onto the media from a prolonged period of static operation. | 5 to 240 minutes | 30 minutes |
| Drum Speed | Drum rotation speed during backwash sequence | 0 to 60 Hz | Adjust to have 2.85 RPM |
| **Chemical Cleaning Sequence** | | | |
| Number of cleaning cycles | Number of chemical cleaning cycles to be performed when starting the chemical cleaning sequence | 1 to 5 | 1 |

| | | | |
|---|---|---|---|
| Drum Start Delay Chemical Cleaning | The drum delay setpoint delays drum rotation until the chemical cleaning system is operating at full pressure. | 1 to 60 seconds | 1-5 seconds |
| Chemical Spraying Timer | Duration of the spraying phase for each chemical cleaning segment | 1 to 30 seconds | 13 seconds |
| Chemical Soaking Timer | Duration of the soaking phase for each chemical cleaning segment | 1 to 600 seconds | 120 seconds |
| Chemical Cleaning Drum Speed | Drum rotation speed during the chemical cleaning sequence | 0 to 60 Hz | 10-20 Hz |
| Rotations Per Chemical Cleaning Cycle | Number of spraying/soaking steps to repeat during one cycle of chemical cleaning | 1 to 10 | Adjust to ensure all panels are sprayed during one cycle |
| Rinsing Backwash Timer | Duration of the backwash sequence performed after chemical cleaning to rinse the panels | 1 to 600 seconds | 300 seconds |

## 2.9 INTERLOCKS

### 2.9.1 Effluent Side Level transmitter

Tag: 65LIT6801502B

- Dry running protection

A low level switch or low low level alarm (transmitter option) prevents the backwash pump from running dry. Dry running is reset with a reset button.

### 2.9.2 Backwash pump low Pressure Switch

Tag: 65PSL8165

- Low pressure protection

A pressure sensor is preset at 2-4 bar and pressure must be obtained within a time limit preset otherwise the backwash sequence shuts down and gives an alarm “Pump low pressure”. Low pressure is reset with a reset button. The backwash sequence is stopped and system returns to static mode.

### 2.9.3 Cover proximity switch

- Spray bar opening protection

A proximity switch prevent the spray bar to be raised if the cover is not open.

- Rotating equipment protection

A proximity switch prevent the rotation of the filter drum when the cover is open. An override of this interlock must be programmed for commissioning and troubleshooting of the backwash and chemical cleaning sequences.

# APPENDIX E

# Hydracarb®

# Functional Description

**This page is intentionally left blank**

# HYDRACARB® –

## PROCESS CONTROL DESCRIPTION

**VEOLIA WATER TECHNOLOGIES CANADA**
www.veoliawatertechnologies.com

# REVISION STATUS

| Issue | Date | Created | Reviewed | Approved | Description of Changes |
|---|---|---|---|---|---|
| 1 | 2021/03/11 | CEK/GM | ED | TS | First Issue |
| | | | | | |
| | | | | | |
| | | | | | |
| | | | | | |

# TABLE OF CONTENT

1 INTRODUCTION ..... 4
1.1 Reference Documents ..... 4
1.2 Process Overview ..... 4
1.3 List of Abbreviations ..... 5
1.4 List of Units ..... 5
2 ACTICARB® CONTROL DESCRIPTION ..... 6
2.1 Equipment and Instrument ..... 6
2.2 Controls ..... 7
2.2.1 Continuous dosing ..... 7
2.2.2 Discharge Pipe rinsing ..... 7
2.3 System Availability Conditions ..... 9
2.3.1 Conditions for automatic sequence ..... 9
2.4 Fault response ..... 9
2.5 Interlocks ..... 9
2.5.1 Service Water Inlet Pressure Switch ..... 9
2.5.2 Wetting Cone High Level Switch ..... 9

# 1 INTRODUCTION

## 1.1 Reference Documents

| Document Number | Name | Revision |
|---|---|---|
| 5000220043_PI_0001_GEN_VWT | PI001 _Process and Instrumentation diagram | 1 |
| | | |
| | | |

## 1.2 Process Overview

Powder activated carbon (PAC) will be received in 550 kg bags. Since this chemical is classified as a solid product that can easily ignite (CSA Class 2, Div. 1, Gr. F), make-up system is a classified area. Also, PAC is a hydroscopic solid, so it as to be stored in a dry and warm environment to avoid plugging in the dosing system. The dry powder will be dosed using a solid-liquid system consisting of a volumetric feeder dosing powder into a high energy eductor.

The principle is to use fresh water under pressure through a converging nozzle in the eductor and produces a high velocity jet. This creates a vacuum in the body of the eductor which causes the material to be drawn into the solids inlet and entrained by the liquid. Both the motive liquid and the entrained material are intimately mixed in the throat of the educator and discharged against some backpressure as a slurry.

This PAC slurry can be easily carried to the Dechlorination tank Reactor in order to renew the extracted activated carbon powder. The suction in the eductor must be well established before dosing activated carbon. A rinse sequence will be initiated after each screw stop.

## 1.3 List of Abbreviations

The following abbreviations are used in the text of this document.

- HMI: Human/Machine Interface
- H-O-A: Hand-Off-Auto
- PLC: Programmable Logic Controller
- LCP: Local Control Panel
- VFD: Variable Frequency Drive
- VWT: Veolia Water Technologies Canada

## 1.4 List of Units

The following lists the parameters referred to in this document and the units they are measured in unless otherwise specified.

- Concentration (in general): mg/L
- Dosing rate: mL/L
- Flow rate (main process): $m^3/h$
- Flow rate (chemical dosing): LPH
- Level in the tanks: %
- pH: -
- Pressure: PSIg
- Temperature: °C
- Turbidity: mg/L or NTU

# 2 ACTICARB® CONTROL DESCRIPTION

## 2.1 Equipment and Instrument

This section connects the tags from the P&ID and the terminology used throughout Equipment and Instrument Schedules

| P&ID TAG | DESCRIPTION |
|---|---|
| 65LSH6801612<br>65LSH6801632 | Wetting cone high Level switch |
| 65LSL6801611<br>65LSL6801631 | Hopper Low level Switch |
| 65PSL6801601<br>65PSL6801621 | Service Water Pressure Switch |
| 65FY6801613<br>65FY6801633 | Air Solenoid valve |
| 65FY6801602<br>65FY6801622 | Service Water Inlet Solenoid Valve |

## 2.2 Controls

### 2.2.1 Continuous dosing

Dosing is continuous with the dosing screw and the required dosing flowrate is adjusted using the VFD of the dosing screw motor. The calculation of the dosage percentage is done by integrating calibration values retrieved from the dosing screw.

$$(QP_{PAC}) = (CF_{PAC}) * (Q_{RW}) \ / \ (SG_{PAC}) * 1000$$

Where:
**$QP_{PAC}$** = Required PAC Dosing Flowrate (L/h)
**$CF_{PAC}$** = Required Chemicals Concentration in the process (mg/L)
**$Q_{RW}$** = Raw Water Flowrate (m3/h). Process Value given by the inlet raw water flowmeter.
**$SG_{PAC}$** = Chemical Specific Gravity (kg/L) see 5000220043_PSDS_0001_SKG_VWT

### 2.2.2 Discharge Pipe rinsing

The piping of the activated carbon injection line must be flushed with service water to prevent build-up every times that the dosing screw shuts downs. Service water should be flushed through the lines for 1.5 times the transit time the flushing water takes to pass through the pipes.

*Table 1: Activated Carbon automatic sequence*

| Step # | Step name | Actions<br>Transition conditions | Dosing screw | Service water valve | Powder Supply Valve | Blending tool |
|---|---|---|---|---|---|---|
| 0 | Stand-by | Equipment shut off | S | C | C | S |
| | | | | | | |
| 1 | Open injection line | Open injection valve<br>Open Powder Supply valve | S | C | O | S |
| | | Valve delay has elapsed | | | | |
| 2 | Vacuum | Open Service water Inlet | S | O | O | S |
| | | 20 s delay | | | | |
| 3 | Dosing | Start hopper agitator cycle<br>Start dosing screw<br>Active coagulant metering pump | R | O | O | R |
| | | Normal Stop condition | | | | |
| 4 | Rinsing | Stop the feeder<br>Stop blending tool<br>Close Powder Supply Valve | S | O | C | S |
| | | Rinsing delay elapsed (45 sec) | | | | |
| 5 | End | Close the Service water inlet valve | S | C | C | S |
| | | Go to Step 0 at end of normal sequence and reset timers<br>Go to Step 7 at end of sequence if a fault occurs | | | | |
| 6 | Sequence stopped on a fault | Stop the feeder<br>Stop blending tool<br>Close the powder supply valve<br>Close the Service water inlet valve<br>Wait for fault reset | S | C | C | S |
| | | Go to Step 1 | | | | |

***Legend***

| ***Motor*** | ***Valve*** | ***Cycle*** |
|---|---|---|
| *S: Stop* | *C: Closed* | *D : Deactivate* |
| *R: Running* | *O: Open* | *A : Activate* |

***Note: if there is a power outage before the completed preparation confirmation is active, repeat at Step 1 when the power returns.***

## 2.3 System Availability Conditions

### 2.3.1 Conditions for automatic sequence

The automatic start sequence will be activated when the automatic start command is true and the following conditions are met:

1. If delay for power return is elapsed;
2. If remote run request bit is activated (exchange table);
3. Activated Carbon dosing system components are in Auto start mode.
4. Service Water System components are in Auto start mode (exchange table);
5. Low Pressure Switch is not activated
6. Low level switch is not activated

## 2.4 Fault response

The major faults associated with the make-up sequence are:

1. Dosing screw motor fault
2. Blending tool motor fault

## 2.5 Interlocks

### 2.5.1 Service Water Inlet Pressure Switch

If the low pressure switch on the service water inlet is activated when the system is running, it will stop the sequence on a fault as per table 1. The Interlock is active in automatic mode and interface manual mode.

When the service water inlet valve is closed, the signal of the pressure switch is disabled.

### 2.5.2 Wetting Cone High Level Switch

If the high level switch on the wetting cone is activated when the system is running, it will stop the sequence on a fault as per table 1. The Interlock is active in automatic mode and interface manual mode.

LEFT BLANK

# *4 – DETAILED TECHNICAL DOCUMENTATION*

## *4.5 – COMMISSIONING AND PERFORMANCE TEST PROTOCOLS*

LEFT BLANK

DOCUMENT PROVIDED LATER

LEFT BLANK

# *4 – DETAILED TECHNICAL DOCUMENTATION*

## *4.6 – COMMISSIONING AND PERFORMANCE TEST REPORTS*

LEFT BLANK

DOCUMENT PROVIDED AFTER PROCESS STARTUP

LEFT BLANK

# *5 – ELECTRICITY AND CONTROL*

## *5.1 – ELECTRICAL DRAWINGS*

LEFT BLANK

# CONTROL/POWER PANEL
# HYDRACARB #1
# 65PLC68003

| REV | DESCRIPTION | DATE | REVD | CHKD | APVD | ECN |
|---|---|---|---|---|---|---|
| | | | | | | |
| | | | | | | |
| 4 | AS BUILT | 2021-06-21 | EH | RA | – | – |
| 3 | FOR FABRICATION | 2021-04-28 | EH | RA | – | – |
| 2 | FOR APPROVAL | 2021-04-12 | EH | RA | – | – |
| 1 | FOR APPROVAL | 2021-03-17 | EH | RA | – | – |

**CONFIDENTIALITY AND INTELLECTUAL PROPERTY NOTICE**
ALL INFORMATION CONTAINED IN THIS DOCUMENT IS THE SOLE PROPERTY OF VEOLIA WATER TECHNOLOGIES CANADA INC. AND IS PROTECTED BY ALL APPLICABLE LAWS, INCLUDING BUT NOT LIMITED TO COPYRIGHT AND OTHER INTELLECTUAL PROPERTY LAWS. THE DESIGN CONCEPTS AND INFORMATION CONTAINED HEREIN ARE PROPRIETARY TO V.W.T AND ARE SUBMITTED IN CONFIDENCE. THEY ARE NOT TRANSFERABLE. THEY MUST BE USED ONLY FOR THE PURPOSE FOR WHICH THE DOCUMENT IS EXPRESSLY SUBMITTED AND NO IMPLICIT LICENCE IS GRANTED OTHERWISE BY THE SUBMISSION OF THIS DOCUMENT. THEY ARE CONFIDENTIAL AND PRIVILEGED INFORMATION OF V.W.T. AND THEY MUST NOT BE DISCLOSED, REPRODUCED, LOANED, REMITTED OR USED IN ANY OTHER MANNER WITHOUT THE EXPRESS WRITTEN CONSENT OF V.W.T. V.W.T. ASSUMES NO RESPONSIBILITY OR LIABILITY FOR THE USE OF THIS DOCUMENT OR THE DESIGN CONCEPTS AND INFORMATION CONTAINED HEREIN FOR ANOTHER PROJECT, OR IN A MANNER THAT DOES NOT RELATE TO THE FITNESS OR PURPOSE OF THIS DOCUMENT. IN NO EVENT SHALL THIS DOCUMENT OR THE DESIGN CONCEPTS AND INFORMATION CONTAINED HEREIN BE USED IN A MANNER DETRIMENTAL TO THE INTEREST OF V.W.T. ALL COPYRIGHT, PATENT AND OTHER INTELLECTUAL PROPERTY RIGHTS ARE RESERVED. ACCEPTANCE OF THE DELIVERY OF THIS DOCUMENT CONSTITUTES AGREEMENT TO THESE TERMS AND CONDITIONS.

| | |
|---|---|
| DESIGNER | DATE |
| CHECKER | DATE |
| ENGINEER | DATE |
| SCALE: | |

TITLE: HYDRACARB #1 65PLC68003 TITLE PAGE

CLIENT: MELIADINE

VEOLIA WATER TECHNOLOGIES CANADA INC. 4105 Sartelon, Saint-Laurent, Qc, Canada. Tel: (514) 334-7230

| PROJECT DRAWING | INTERNAL | SHEET | REV |
|---|---|---|---|
| 5000220043 – EPL-0001-AU-VWT | | 01 OF 06 | 4 |

BAR = 1" AT PLOT SCALE
REF: A7281A
STD: "B" 11x17
Jul 12, 2021 10:55:53 – G:\Projets A72XX\A7281A – VEOLIA – Projet 5000220043 AS BUILT\A7281A-5000220043-0001-EPL.dwg – ehorwood
5000220043 A-E Meliadine (HydraCarb 1)\DOC\DESSIN\000-DESSINS\0001\REV4 –

| DESCRIPTION | DRAWING NUMBER |
|---|---|
| TITLE PAGE | 5000220043-EPL-0001-AU-VWT-01 |
| LEGEND & DRAWING LIST | 5000220043-EPL-0001-AU-VWT-02 |
| EXTERNAL LAYOUT & LOCAL STATION | 5000220043-EPL-0001-AU-VWT-03 |
| INTERNAL LAYOUT | 5000220043-EPL-0001-AU-VWT-04 |
| BILL OF MATERIAL | 5000220043-EPL-0001-AU-VWT-05 |
| TERMINAL LAYOUT | 5000220043-EPL-0001-AU-VWT-06 |
| | |
| ELECTRICAL SCHEMATIC (DISTRIBUTION 600VAC) | 5000220043-ELD-0001-AU-VWT-01 |
| ELECTRICAL SCHEMATIC (DISTRIBUTION 600VAC) | 5000220043-ELD-0001-AU-VWT-02 |
| ELECTRICAL SCHEMATIC (DISTRIBUTION 120VAC) | 5000220043-ELD-0001-AU-VWT-03 |
| ELECTRICAL SCHEMATIC (DISTRIBUTION 24VDC) | 5000220043-ELD-0001-AU-VWT-04 |
| ELECTRICAL SCHEMATIC (ETHERNET CONNECTION) | 5000220043-ELD-0001-AU-VWT-05 |
| ELECTRICAL SCHEMATIC (PLC DI) | 5000220043-ELD-0001-AU-VWT-06 |
| ELECTRICAL SCHEMATIC (PLC DI) | 5000220043-ELD-0001-AU-VWT-07 |
| ELECTRICAL SCHEMATIC (PLC DO) | 5000220043-ELD-0001-AU-VWT-08 |
| ELECTRICAL SCHEMATIC (PLC DO) | 5000220043-ELD-0001-AU-VWT-09 |
| ELECTRICAL SCHEMATIC (PLC AO) | 5000220043-ELD-0001-AU-VWT-09 |

## LEGEND

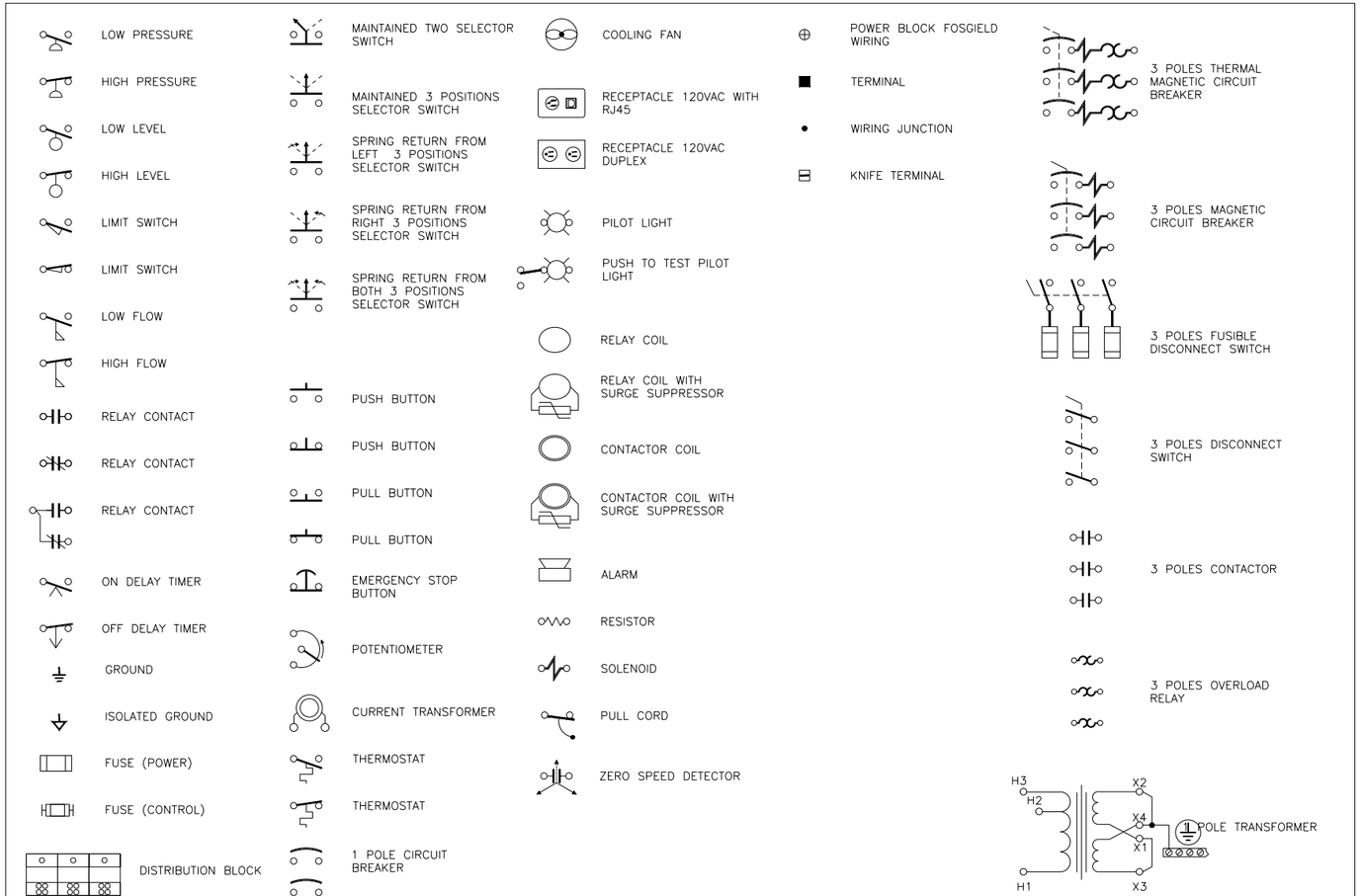


### WIRE NUMBER

XX XX XX
- LINE NUMBER
- PAGE NUMBER
- PANEL NUMBER

### WIRE COLOR CODE

| MINIMAL 16AWG GAUGE | |
|---|---|
| 3 PHASE (600VAC) | BLACK |
| POWER 120VAC | BLACK |
| CONTROL 120VAC | RED |
| NEUTRAL | WHITE |
| 24VDC | BLUE |
| 0VDC | BLUE/WHITE |
| DRY CONTRACT | YELLOW |
| NON-ISOLATED GROUND | GREEN |
| ISOLATED GROUND | GREEN/YELLOW |
| TWISTED PAIR | (+) RED & (-) BLACK |

| REV | DESCRIPTION | DATE | REVD | CHKD | APVD | ECN |
|---|---|---|---|---|---|---|
| 4 | AS BUILT | 2021-06-21 | EH | RA | – | – |
| 3 | FOR FABRICATION | 2021-04-28 | EH | RA | – | – |
| 2 | FOR APPROVAL | 2021-04-12 | EH | RA | – | – |
| 1 | FOR APPROVAL | 2021-03-17 | EH | RA | – | – |

**CONFIDENTIALITY AND INTELLECTUAL PROPERTY NOTICE**
ALL INFORMATION CONTAINED IN THIS DOCUMENT IS THE SOLE PROPERTY OF VEOLIA WATER TECHNOLOGIES CANADA INC. AND IS PROTECTED BY ALL APPLICABLE LAWS, INCLUDING BUT NOT LIMITED TO COPYRIGHT AND OTHER INTELLECTUAL PROPERTY LAWS. THE DESIGN CONCEPTS AND INFORMATION CONTAINED HEREIN ARE PROPRIETARY TO V.W.T AND ARE SUBMITTED IN CONFIDENCE. THEY ARE NOT TRANSFERABLE. THEY MUST BE USED ONLY FOR THE PURPOSE FOR WHICH THE DOCUMENT IS EXPRESSLY SUBMITTED AND NO IMPLICIT LICENCE IS GRANTED OTHERWISE BY THE SUBMISSION OF THIS DOCUMENT. THEY ARE CONFIDENTIAL AND PRIVILEGED INFORMATION OF V.W.T. AND THEY MUST NOT BE DISCLOSED, REPRODUCED, LOANED, REMITTED OR USED IN ANY OTHER MANNER WITHOUT THE EXPRESS WRITTEN CONSENT OF V.W.T. V.W.T. ASSUMES NO RESPONSIBILITY OR LIABILITY FOR THE USE OF THIS DOCUMENT OR THE DESIGN CONCEPTS AND INFORMATION CONTAINED HEREIN FOR ANOTHER PROJECT, OR IN A MANNER THAT DOES NOT RELATE TO THE FITNESS OR PURPOSE OF THIS DOCUMENT. IN NO EVENT SHALL THIS DOCUMENT OR THE DESIGN CONCEPTS AND INFORMATION CONTAINED HEREIN BE USED IN A MANNER DETRIMENTAL TO THE INTEREST OF V.W.T. ALL COPYRIGHT, PATENT AND OTHER INTELLECTUAL PROPERTY RIGHTS ARE RESERVED. ACCEPTANCE OF THE DELIVERY OF THIS DOCUMENT CONSTITUTES AGREEMENT TO THESE TERMS AND CONDITIONS.

| | | |
|---|---|---|
| DESIGNER | DATE | |
| CHECKER | DATE | |
| ENGINEER | DATE | |
| SCALE: | | |

TITLE: HYDRACARB #1
65PLC68003
LEGEND & DRAWING LIST

CLIENT: MELIADINE

VEOLIA
VEOLIA WATER TECHNOLOGIES CANADA INC. 4105 Sartelon, Saint-Laurent, Qc, Canada. Tel: (514) 334-7230

| PROJECT DRAWING | INTERNAL | SHEET | REV |
|---|---|---|---|
| 5000220043 – EPL-0001-AU-VWT | | 02 OF 06 | 4 |

BAR = 1" AT PLOT SCALE
REF: 2
STD: "B" 11x17
Jul 12, 2021 10:55:53 – G:\Projets A72XX\A7281A – VEOLIA – Projet 5000220043 A-E Meliadine (HydroCarb 1)\DOC\DESSIN\000-DESSINS\0001\REV4 – AS BUILT\A7281A-5000220043-0001-EPL.dwg – ehorwood

ENLCOSURE : 48(H)X36(W)X12(D)''
PROTECTION : NEMA 12
APPROVAL : CSA

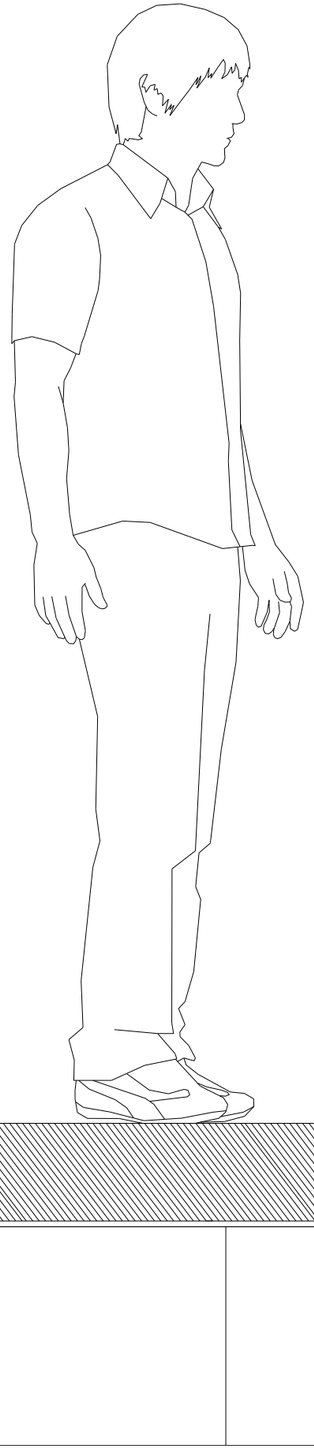

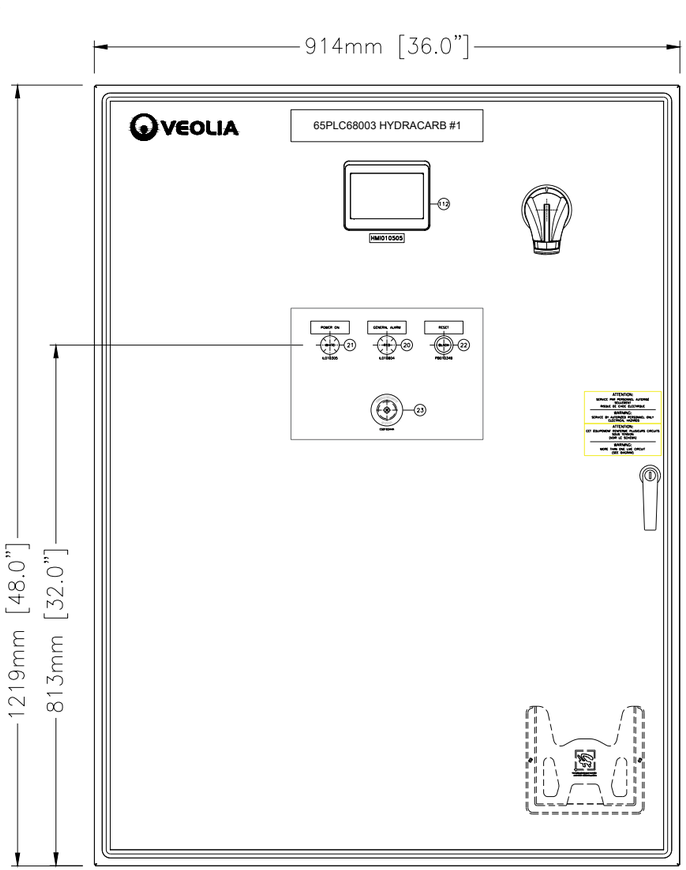


LOCAL STATION
INDOOR USE
CL1 DIV1, NEMA 9

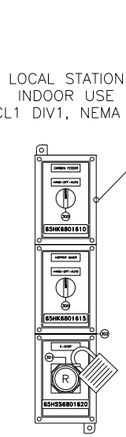


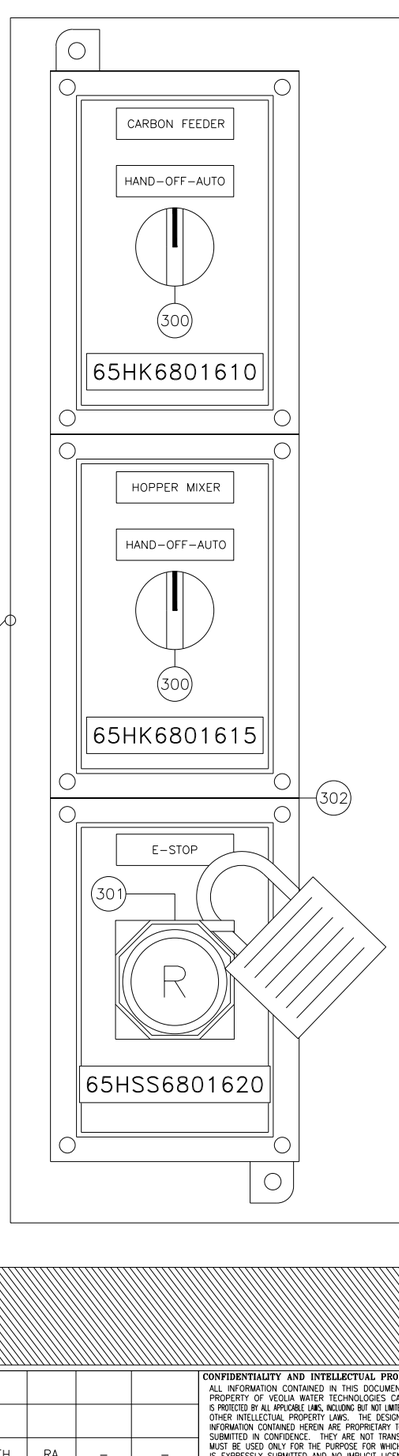


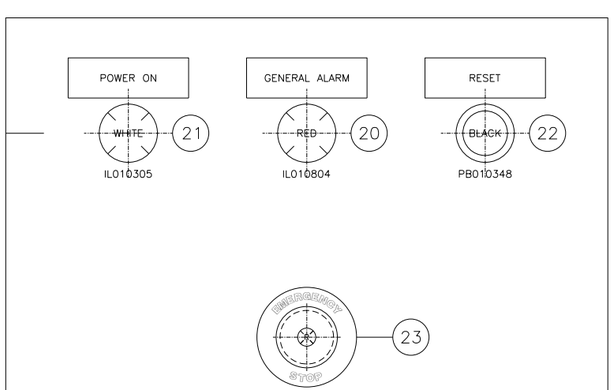


ATTENTION:
SERVICE PAR PERSONNEL AUTORISÉ SEULEMENT
RISQUE DE CHOC ÉLECTRIQUE

WARNING:
SERVICE BY AUTORIZED PERSONNEL ONLY
ELECTRICAL HAZARDS

ATTENTION:
CET ÉQUIPEMENT RENFERME PLUSIEURS CIRCUITS SOUS TENSION
(VOIR LE SCHÉMA)

WARNING:
MORE THAN ONE LIVE CIRCUIT
(SEE DIAGRAM)

| REV | DESCRIPTION | DATE | REVD | CHKD | APVD | ECN |
|---|---|---|---|---|---|---|
| 4 | AS BUILT | 2021-06-21 | EH | RA | – | – |
| 3 | FOR FABRICATION | 2021-04-28 | EH | RA | – | – |
| 2 | FOR APPROVAL | 2021-04-12 | EH | RA | – | – |
| 1 | FOR APPROVAL | 2021-03-17 | EH | RA | – | – |

**CONFIDENTIALITY AND INTELLECTUAL PROPERTY NOTICE**
ALL INFORMATION CONTAINED IN THIS DOCUMENT IS THE SOLE PROPERTY OF VEOLIA WATER TECHNOLOGIES CANADA INC. AND IS PROTECTED BY ALL APPLICABLE LAWS, INCLUDING BUT NOT LIMITED TO COPYRIGHT AND OTHER INTELLECTUAL PROPERTY LAWS. THE DESIGN CONCEPTS AND INFORMATION CONTAINED HEREIN ARE PROPRIETARY TO V.W.T AND ARE SUBMITTED IN CONFIDENCE. THEY ARE NOT TRANSFERABLE. THEY MUST BE USED ONLY FOR THE PURPOSE FOR WHICH THE DOCUMENT IS EXPRESSLY SUBMITTED AND NO IMPLICIT LICENCE IS GRANTED OTHERWISE BY THE SUBMISSION OF THIS DOCUMENT. THEY ARE CONFIDENTIAL AND PRIVILEGED INFORMATION OF V.W.T. AND THEY MUST NOT BE DISCLOSED, REPRODUCED, LOANED, REMITTED OR USED IN ANY OTHER MANNER WITHOUT THE EXPRESS WRITTEN CONSENT OF V.W.T. V.W.T. ASSUMES NO RESPONSIBILITY OR LIABILITY FOR THE USE OF THIS DOCUMENT OR THE DESIGN CONCEPTS AND INFORMATION CONTAINED HEREIN FOR ANOTHER PROJECT, OR IN A MANNER THAT DOES NOT RELATE TO THE FITNESS OR PURPOSE OF THIS DOCUMENT. IN NO EVENT SHALL THIS DOCUMENT OR THE DESIGN CONCEPTS AND INFORMATION CONTAINED HEREIN BE USED IN A MANNER DETRIMENTAL TO THE INTEREST OF V.W.T. ALL COPYRIGHT, PATENT AND OTHER INTELLECTUAL PROPERTY RIGHTS ARE RESERVED. ACCEPTANCE OF THE DELIVERY OF THIS DOCUMENT CONSTITUTES AGREEMENT TO THESE TERMS AND CONDITIONS.

| | |
|---|---|
| DESIGNER | DATE |
| CHECKER | DATE |
| ENGINEER | DATE |
| SCALE: | |

TITLE: HYDRACARB #1
65PLC68003
EXTERNAL LAYOUT & LOCAL STATION

CLIENT: MELIADINE

VEOLIA
VEOLIA WATER TECHNOLOGIES CANADA INC. 4105 Sartelon, Saint-Laurent, Qc, Canada. Tel: (514) 334-7230

| PROJECT | DRAWING | INTERNAL | SHEET | REV |
|---|---|---|---|---|
| 5000220043 – EPL–0001–AU–VWT | | | 03 OF 06 | 4 |

BAR = 1" AT PLOT SCALE
REF: A7281A
STD: "B" 11x17
Jul 12, 2021 10:55:53 – G:\Projets A72XX\A7281A – VEOLIA – Projet 5000220043 A–E Meliadine (HydroCarb 1)\DOC\DESSIN\000–DESSINS\0001\REV4 – AS BUILT\A7281A–5000220043–0001–EPL.dwg – ehorwood

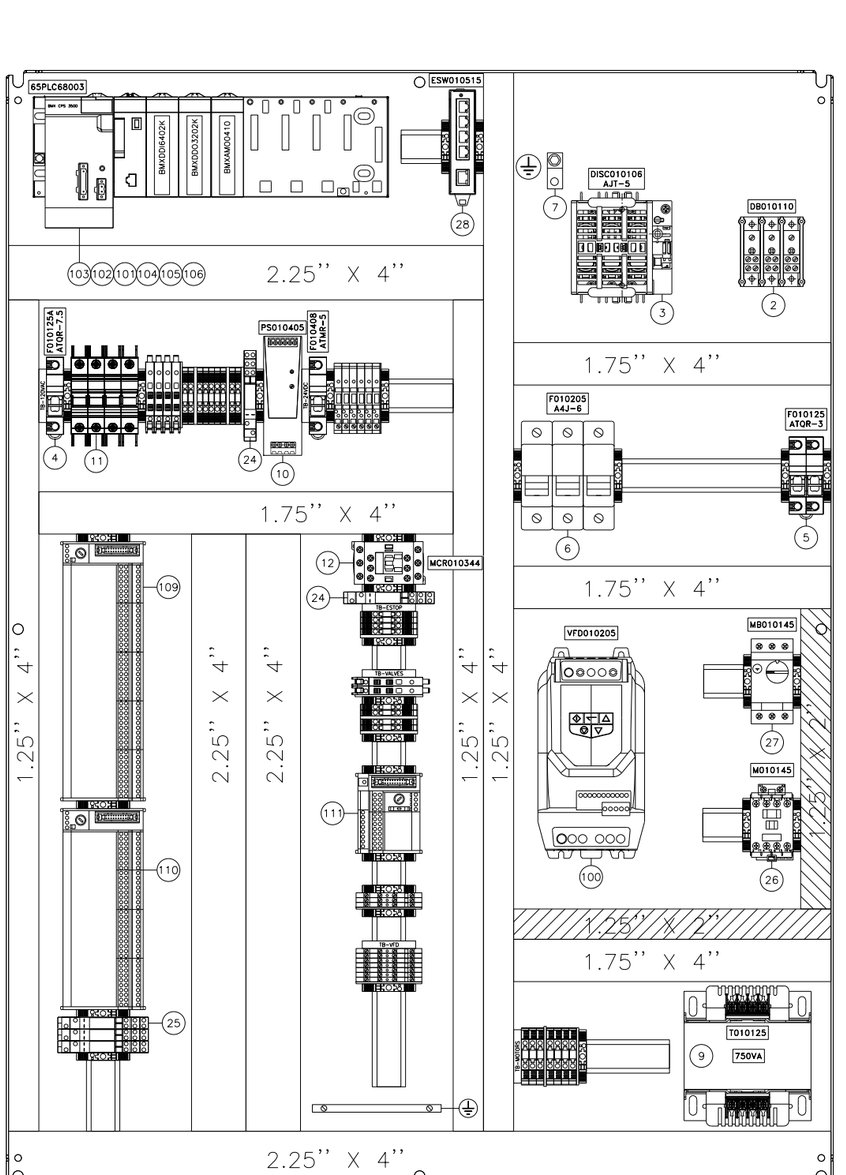


| REV | DESCRIPTION | DATE | REVD | CHKD | APVD | ECN |
|---|---|---|---|---|---|---|
| | | | | | | |
| | | | | | | |
| 4 | AS BUILT | 2021-06-21 | EH | RA | – | – |
| 3 | FOR FABRICATION | 2021-04-28 | EH | RA | – | – |
| 2 | FOR APPROVAL | 2021-04-12 | EH | RA | – | – |
| 1 | FOR APPROVAL | 2021-03-17 | EH | RA | – | – |

**CONFIDENTIALITY AND INTELLECTUAL PROPERTY NOTICE**
ALL INFORMATION CONTAINED IN THIS DOCUMENT IS THE SOLE PROPERTY OF VEOLIA WATER TECHNOLOGIES CANADA INC. AND IS PROTECTED BY ALL APPLICABLE LAWS, INCLUDING BUT NOT LIMITED TO COPYRIGHT AND OTHER INTELLECTUAL PROPERTY LAWS. THE DESIGN CONCEPTS AND INFORMATION CONTAINED HEREIN ARE PROPRIETARY TO V.W.T AND ARE SUBMITTED IN CONFIDENCE. THEY ARE NOT TRANSFERABLE. THEY MUST BE USED ONLY FOR THE PURPOSE FOR WHICH THE DOCUMENT IS EXPRESSLY SUBMITTED AND NO IMPLICIT LICENCE IS GRANTED OTHERWISE BY THE SUBMISSION OF THIS DOCUMENT. THEY ARE CONFIDENTIAL AND PRIVILEGED INFORMATION OF V.W.T. AND THEY MUST NOT BE DISCLOSED, REPRODUCED, LOANED, REMITTED OR USED IN ANY OTHER MANNER WITHOUT THE EXPRESS WRITTEN CONSENT OF V.W.T. V.W.T. ASSUMES NO RESPONSIBILITY OR LIABILITY FOR THE USE OF THIS DOCUMENT OR THE DESIGN CONCEPTS AND INFORMATION CONTAINED HEREIN FOR ANOTHER PROJECT, OR IN A MANNER THAT DOES NOT RELATE TO THE FITNESS OR PURPOSE OF THIS DOCUMENT. IN NO EVENT SHALL THIS DOCUMENT OR THE DESIGN CONCEPTS AND INFORMATION CONTAINED HEREIN BE USED IN A MANNER DETRIMENTAL TO THE INTEREST OF V.W.T. ALL COPYRIGHT, PATENT AND OTHER INTELLECTUAL PROPERTY RIGHTS ARE RESERVED. ACCEPTANCE OF THE DELIVERY OF THIS DOCUMENT CONSTITUTES AGREEMENT TO THESE TERMS AND CONDITIONS.

| | |
|---|---|
| DESIGNER | DATE |
| CHECKER | DATE |
| ENGINEER | DATE |
| SCALE: | |

TITLE: HYDRACARB #1
65PLC68003
INTERNAL LAYOUT

CLIENT: MELIADINE

VEOLIA WATER TECHNOLOGIES CANADA INC. 4105 Sartelon, Saint-Laurent, Qc, Canada. Tel: (514) 334-7230

| PROJECT | DRAWING | INTERNAL | SHEET | REV |
|---|---|---|---|---|
| 5000220043 | EPL-0001-AU-VWT | | 04 OF 06 | 4 |

Jul 12, 2021 10:55:53 – G:\Projets A72XX\A7281A – VEOLIA – Projet 5000220043 A-E Meliadine (HydraCarb 1)\DOC\DESSIN\000-DESSINS\0001\REV4 – AS BUILT\A7281A-5000220043-0001-EPL.dwg – ehorwood

BAR = 1" AT PLOT SCALE
REF: A7281A
STD: "B" 11x17

| ITEM | DESCRIPTION | PART | MANUF. | QTE | BY |
|---|---|---|---|---|---|
| 1 | ENCLOSURE NEMA 12/4, 48 x 36 x 12" (HWD)<br>C/W EP4836, EZPMFHD, PKT99 | EN4SD483612GY | HAMMOND | 1 | ENV |
| 2 | DISTRIBUTION BLOCK, 3 POLES, 1 IN – 4 OUT, 115A<br>C/W PROTECTIVE COVER 1492–PBC9 | 1492–PDM3141 | ALLEN–BRADLEY | 1 | ENV |
| 3 | DISCONNECT SWITCH 600VCA, 3 PÔLES, 30 AMPS<br>C/W HANDLE GS2AH110 AND EXTENSION ROD GS2AE81 | GS1DU3 | SCHNEIDER | 1 | ENV |
| 4 | FUSE HOLDER, 600VAC, 1P, 30 AMP, CC TYPE<br>C/A FUSES | E91/30CCS | ABB | 2 | ENV |
| 5 | FUSE HOLDER, 600VAC, 2P, 30 AMP, CC TYPE<br>C/A FUSES | E92/30CCS | ABB | 1 | ENV |
| 6 | FUSE HOLDER, 600VAC, 3P, 30 AMP, J TYPE<br>C/A FUSES | E93/30J | ABB | 1 | ENV |
| 7 | GROUND LUG | SLU70 | – | 1 | ENV |
| 8 | COPPER GROUND BAR, 5FEET, #4–14AWG | 4C–190 | NSI INDUSTRIES | A/R | ENV |
| 9 | TRANSFORMER, 600VAC TO 120VAC, 750VA<br>C/W 2X SPFG | SP750ACP | HAMMOND | 1 | ENV |
| 10 | POWER SUPPLY 24VDC, 120W, 5AMP | 1469480000 | WEIDMULLER | 1 | ENV |
| 11 | BREAKER, MULTI9, C CURVE<br>EX. M9F421XX (XX AMP) | M9F421XX | SCHNEIDER | A/R | ENV |
| 12 | SAFETY CONTACTOR 5 NO, 10A COIL, 120VAC<br>C/W AUX. CONTACT LADN22 | CAD50G7 | SCHNEIDER | 1 | ENV |
| 13 | TERMINAL 600VAC/DC, 30A WDU 4<br>C/W END PLATE 1050000000 | 1020100000 | WEIDMULLER | A/R | ENV |
| 14 | TERMINAL 600VAC/DC, 50A WDU 6<br>C/W END PLATE 1050000000 OR SEPERATOR 1050100000 | 1020200000 | WEIDMULLER | A/R | ENV |
| 15 | –<br>– | – | – | – | – |
| 16 | FUSE TERMINAL 2 LEVEL 5x20mm, 300VAC/DC, 10A, KDKS 1/EN4<br>C/W END PLATE 9503330000 | 9503350000 | WEIDMULLER | A/R | ENV |
| 17 | TERMINAL 2 LEVEL 300VAC/DC, 10A, WDK 2.5<br>C/W END PLATE 1059100000 | 1021500000 | WEIDMULLER | A/R | ENV |
| 18 | FUSE TERMINAL ¼ X 1¼, 300VAC/DC, 15A, WSI 4/2<br>C/W END PLATE 1880450000 | 1880430000 | WEIDMULLER | A/R | ENV |
| 19 | END STOPPER WEW 35/2 | 1061200000 | WEIDMULLER | A/R | ENV |
| 20 | PILOT LENS RED FOR LED MODULE 22MM<br>C/W RED LED 24VDC AND BASE ZB4BVB4 | ZB4BV043 | SCHNEIDER | 1 | ENV |
| 21 | PILOT LENS WHITE FOR LED MODULE 22MM<br>C/W WHITE LED AND BASE ZB4BVG1 | ZB4BV013 | SCHNEIDER | 1 | ENV |
| 22 | BLACK PB, FLUSH HEAD, 22MM<br>C/W BASE ZB4BZ009 + NO ZBE101 | ZB4BA2 | SCHNEIDER | 1 | ENV |
| 23 | ESTOP BUTTON RED, TURN TO RELEASE, 40mm<br>C/W ZBY9320 | ZB4BS844 | SCHNEIDER | 1 | ENV |
| 24 | 2 POLES RELAY, 120VAC COIL<br>C/W BASE 700–HN222 | 700–HK32A1 | ALLEN–BRADLEY | A/R | ENV |
| 25 | 2 POLES RELAY, 24VDC COIL<br>C/W BASE 700–HN222 | 700–HK32Z24 | ALLEN BRADLEY | A/R | ENV |
| 26 | CONTACTOR 3P 600VAC 9A COIL 24VDC<br>C/W LADN11 | LC1D09BD | SCHNEIDER | 1 | ENV |
| 27 | MOTOR CIRCUIT BREAKER, 3P, 0.63–1A, THERMAL MAGNETIC<br>C/W GVAE11 | GV2PE05 | SCHNEIDER | 1 | ENV |
| 28 | ETHERNET SWITCH 5 PORTS | 2891001 | PHOENIX | 1 | ENV |
| 29 | 2 POLE RELAY, 24VDC COIL<br>C/W BASE 700–HN222 | 700–HK32Z24 | ALLEN–BRADLEY | A/R | ENV |

| ITEM | DESCRIPTION | PART | MANUF. | QTE | BY |
|---|---|---|---|---|---|
| 100 | DRIVE AC, 600V, 1HP, 2.1AMPS | ACS255–03U–02A1–6 | ABB | 1 | VEO |
| 101 | MODICON M340 PROCESSOR | BMXP342020 | SCHNEIDER | 1 | VEO |
| 102 | POWER SUPPLY MODULE | BMXCPS3500 | SCHNEIDER | 1 | VEO |
| 103 | RACK 8 SLOTS FOR PLC MODULES | BMEXBP0800 | SCHNEIDER | 1 | VEO |
| 104 | DIGITAL INPUT MODULE, 64 DI | BMXDDI6402K | SCHNEIDER | 1 | VEO |
| 105 | DIGITAL OUTPUT MODULE, 32 DO | BMXDDO3202K | SCHNEIDER | 1 | VEO |
| 106 | ANALOG OUTPUT MODULE, 4 AO | BMXAMO0410 | SCHNEIDER | 1 | VEO |
| 107 | CONNECTOR CABLE FOR I/O MODULES, 1m | BMXFCC103 | SCHNEIDER | 2 | VEO |
| 108 | CONNECTOR CABLE FOR I/O MODULES, 1.5m | BMXFCA152 | SCHNEIDER | 1 | VEO |
| 109 | TELEFAST 16 CHANNELS FOR DI<br>C/W ABS7EC3B2, ABE7BV10 (2X) | ABE7P16F310 | SCHNEIDER | 1 | VEO |
| 110 | TELEFAST 16 CHANNELS FOR DO<br>C/W ABR7S21, ABE7BV10 (1X) | ABE7P16T210 | SCHNEIDER | 1 | VEO |
| 111 | TELEFAST 4 CHANNELS FOR AO<br>C/W ABE7BV10 (1X) | ABE7CPA21 | SCHNEIDER | 1 | VEO |
| 112 | 4"W touch panel display, 1COM,<br>1Ethernet, USB host&device, 24VDC | HMIGTO1310 | SCHNEIDER | 1 | VEO |

LOCAL STATION PARTS LIST

| ITEM | DESCRIPTION | PART NUMBER | MANUF. | QTY | BY |
|---|---|---|---|---|---|
| 300 | 3 POSITION SELECTOR<br>30mm, C/W CONTACT 800T–XA(1X) | 800H–JP2KB7AXXX | ALLEN–BRADLEY | 2 | ENV |
| 301 | RED EMERGENCY PUSH BUTTON<br>C/W 800H–NP4 | 800H–FPX6D4 | ALLEN–BRADLEY | 1 | ENV |
| 302 | NEMA 7/9 LOCAL STATION 3 HOLES<br>C/W COVER 800H–NP30 (3X) | 800H–3HYX7 | ALLEN–BRADLEY | 1 | ENV |

| REV | DESCRIPTION | DATE | REVD | CHKD | APVD | ECN |
|---|---|---|---|---|---|---|
| | | | | | | |
| | | | | | | |
| 4 | AS BUILT | 2021–06–21 | EH | RA | – | – |
| 3 | FOR FABRICATION | 2021–04–28 | EH | RA | – | – |
| 2 | FOR APPROVAL | 2021–04–12 | EH | RA | – | – |
| 1 | FOR APPROVAL | 2021–03–17 | EH | RA | – | – |

**CONFIDENTIALITY AND INTELLECTUAL PROPERTY NOTICE**
ALL INFORMATION CONTAINED IN THIS DOCUMENT IS THE SOLE PROPERTY OF VEOLIA WATER TECHNOLOGIES CANADA INC. AND IS PROTECTED BY ALL APPLICABLE LAWS, INCLUDING BUT NOT LIMITED TO COPYRIGHT AND OTHER INTELLECTUAL PROPERTY LAWS. THE DESIGN CONCEPTS AND INFORMATION CONTAINED HEREIN ARE PROPRIETARY TO V.W.T AND ARE SUBMITTED IN CONFIDENCE. THEY ARE NOT TRANSFERABLE. THEY MUST BE USED ONLY FOR THE PURPOSE FOR WHICH THE DOCUMENT IS EXPRESSLY SUBMITTED AND NO IMPLICIT LICENCE IS GRANTED OTHERWISE BY THE SUBMISSION OF THIS DOCUMENT. THEY ARE CONFIDENTIAL AND PRIVILEGED INFORMATION OF V.W.T. AND THEY MUST NOT BE DISCLOSED, REPRODUCED, LOANED, REMITTED OR USED IN ANY OTHER MANNER WITHOUT THE EXPRESS WRITEN CONSENT OF V.W.T. V.W.T. ASSUMES NO RESPONSIBILITY OR LIABILITY FOR THE USE OF THIS DOCUMENT OR THE DESIGN CONCEPTS AND INFORMATION CONTAINED HEREIN FOR ANOTHER PROJECT, OR IN A MANNER THAT DOES NOT RELATE TO THE FITNESS OR PURPOSE OF THIS DOCUMENT. IN NO EVENT SHALL THIS DOCUMENT OR THE DESIGN CONCEPTS AND INFORMATION CONTAINED HEREIN BE USED IN A MANNER DETRIMENTAL TO THE INTEREST OF V.W.T. ALL COPYRIGHT, PATENT AND OTHER INTELLECTUAL PROPERTY RIGHTS ARE RESERVED. ACCEPTANCE OF THE DELIVERY OF THIS DOCUMENT CONSTITUTES AGREEMENT TO THESE TERMS AND CONDITIONS.

| | |
|---|---|
| DESIGNER | DATE |
| CHECKER | DATE |
| ENGINEER | DATE |
| SCALE: | |

TITLE: HYDRACARB #1
65PLC68003
BILL OF MATERIALS

CLIENT: MELIADINE

VEOLIA

VEOLIA WATER TECHNOLOGIES CANADA INC. 4105 Sartelon, Saint-Laurent, Qc, Canada. Tel: (514) 334-7230

| PROJECT DRAWING | INTERNAL | SHEET | REV |
|---|---|---|---|
| 5000220043 – EPL–0001–AU–VWT | | 05 OF 06 | 4 |

BAR = 1" AT PLOT SCALE
REF: A7281A
STD: "B" 11x17
AS BUILT\A7281A-5000220043-0001-EPL.dwg – ehorwood Jul 12, 2021 10:55:55 – G:\Projets A72XX\A7281A – VEOLIA – Projet 5000220043 A–E Meliadine (HydroCarb 1)\DOC\DESSIN\000–DESSINS\0001\REV4 –

BAR = 1" AT PLOT SCALE
REF: A7281A
STD: "B" 11x17

Jul 12, 2021 10:55:55 – G:\Projets A72XX\A7281A – VEOLIA – Projet 5000220043 A-E Meliadine (HydraCarb 1)\DOC\DESSIN\000-DESSINS\0001\REV4 – AS BUILT\A7281A-5000220043-0001-EPL.dwg – ehorwood

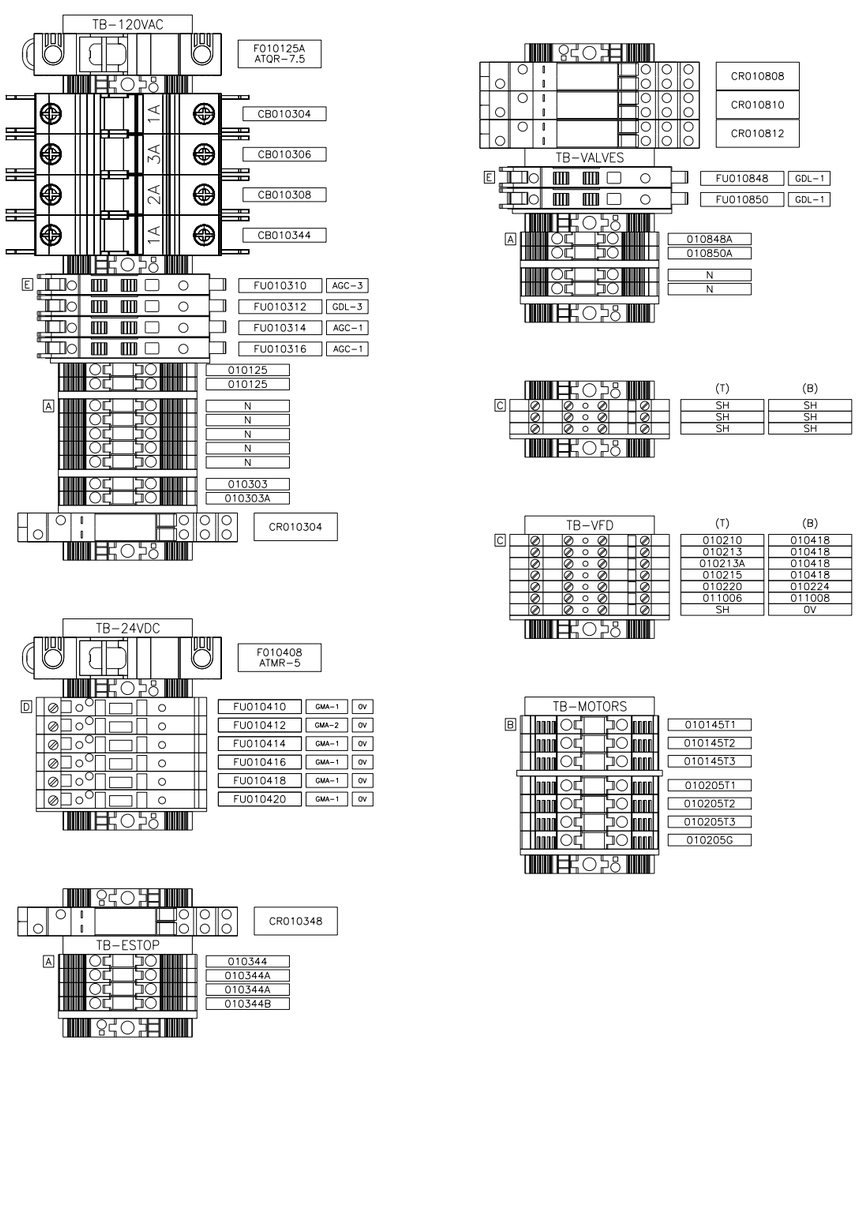


LEGEND :

| | |
|---|---|
| 1 LEVEL, WDU4 | A |
| 1 LEVEL, WDU6 | B |
| 2 LEVEL, WDK2.5 | C |
| 2 LEVEL FUSE TERMINAL 5X20 | D |
| PORTE FUSIBLE 1"X1.25" | E |

| REV | DESCRIPTION | DATE | REVD | CHKD | APVD | ECN |
|---|---|---|---|---|---|---|
| | | | | | | |
| | | | | | | |
| 4 | AS BUILT | 2021-06-21 | EH | RA | – | – |
| 3 | FOR FABRICATION | 2021-04-28 | EH | RA | – | – |
| 2 | FOR APPROVAL | 2021-04-12 | EH | RA | – | – |
| 1 | FOR APPROVAL | 2021-03-17 | EH | RA | – | – |

**CONFIDENTIALITY AND INTELLECTUAL PROPERTY NOTICE**
ALL INFORMATION CONTAINED IN THIS DOCUMENT IS THE SOLE PROPERTY OF VEOLIA WATER TECHNOLOGIES CANADA INC. AND IS PROTCED BY ALL APPLICABLE LAWS, INCLUDING BUT NOT LIMITED TO COPYRIGHT AND OTHER INTELLECTUAL PROPERTY LAWS. THE DESIGN CONCEPTS AND INFORMATION CONTAINED HEREIN ARE PROPRIETARY TO V.W.T AND ARE SUBMITTED IN CONFIDENCE. THEY ARE NOT TRANSFERABLE. THEY MUST BE USED ONLY FOR THE PURPOSE FOR WHICH THE DOCUMENT IS EXPRESSLY SUBMITTED AND NO IMPLICIT LICENCE IS GRANTED OTHERWISE BY THE SUBMISSION OF THIS DOCUMENT. THEY ARE CONFIDENTIAL AND PRIVILEGED INFORMATION OF V.W.T. AND THEY MUST NOT BE DISCLOSED, REPRODUCED, LOANED, REMITTED OR USED IN ANY OTHER MANNER WITHOUT THE EXPRESS WRITTEN CONSENT OF V.W.T. V.W.T. ASSUMES NO RESPONSIBILITY OR LIABILITY FOR THE USE OF THIS DOCUMENT OR THE DESIGN CONCEPTS AND INFORMATION CONTAINED HEREIN FOR ANOTHER PROJECT, OR IN A MANNER THAT DOES NOT RELATE TO THE FITNESS OR PURPOSE OF THIS DOCUMENT. IN NO EVENT SHALL THIS DOCUMENT OR THE DESIGN CONCEPTS AND INFORMATION CONTAINED HEREIN BE USED IN A MANNER DETRIMENTAL TO THE INTEREST OF V.W.T. ALL COPYRIGHT, PATENT AND OTHER INTELLECTUAL PROPERTY RIGHTS ARE RESERVED. ACCEPTANCE OF THE DELIVERY OF THIS DOCUMENT CONSTITUTES AGREEMENT TO THESE TERMS AND CONDITIONS.

| | |
|---|---|
| DESIGNER | DATE |
| CHECKER | DATE |
| ENGINEER | DATE |
| SCALE: | |

TITLE
HYDRACARB #1
65PLC68003
TERMINAL LAYOUT

CLIENT
MELIADINE

VEOLIA
VEOLIA WATER TECHNOLOGIES CANADA INC. 4105 Sartelon, Saint-Laurent, Qc, Canada. Tel: (514) 334-7230

| PROJECT DRAWING | INTERNAL | SHEET | REV |
|---|---|---|---|
| 5000220043 – EPL-0001-AU-VWT | | 06 OF 06 | 4 |

BAR = 1" AT PLOT SCALE
REF: A7281A
STD: "B" 11x17

AS BUILT\A7281A-5000220043-0001-ELD.dwg - ehorwood Jul 12, 2021 10:55:58 - G:\Projets A72XX\A7281A - VEOLIA - Projet 5000220043 A-E Meliadine (HydroCarb 1)\DOC\DESSIN\000-DESSINS\0001\REV4 -

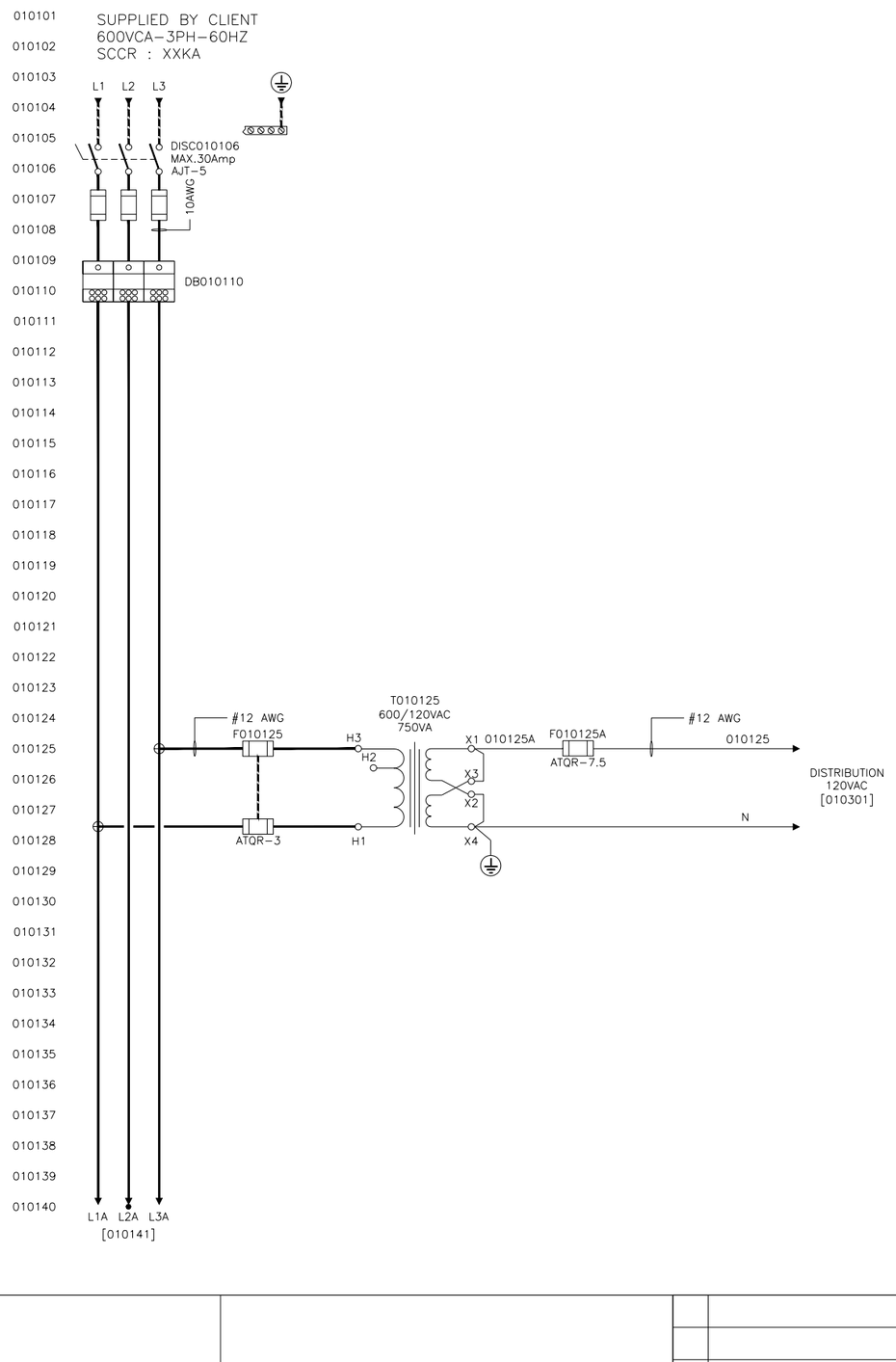


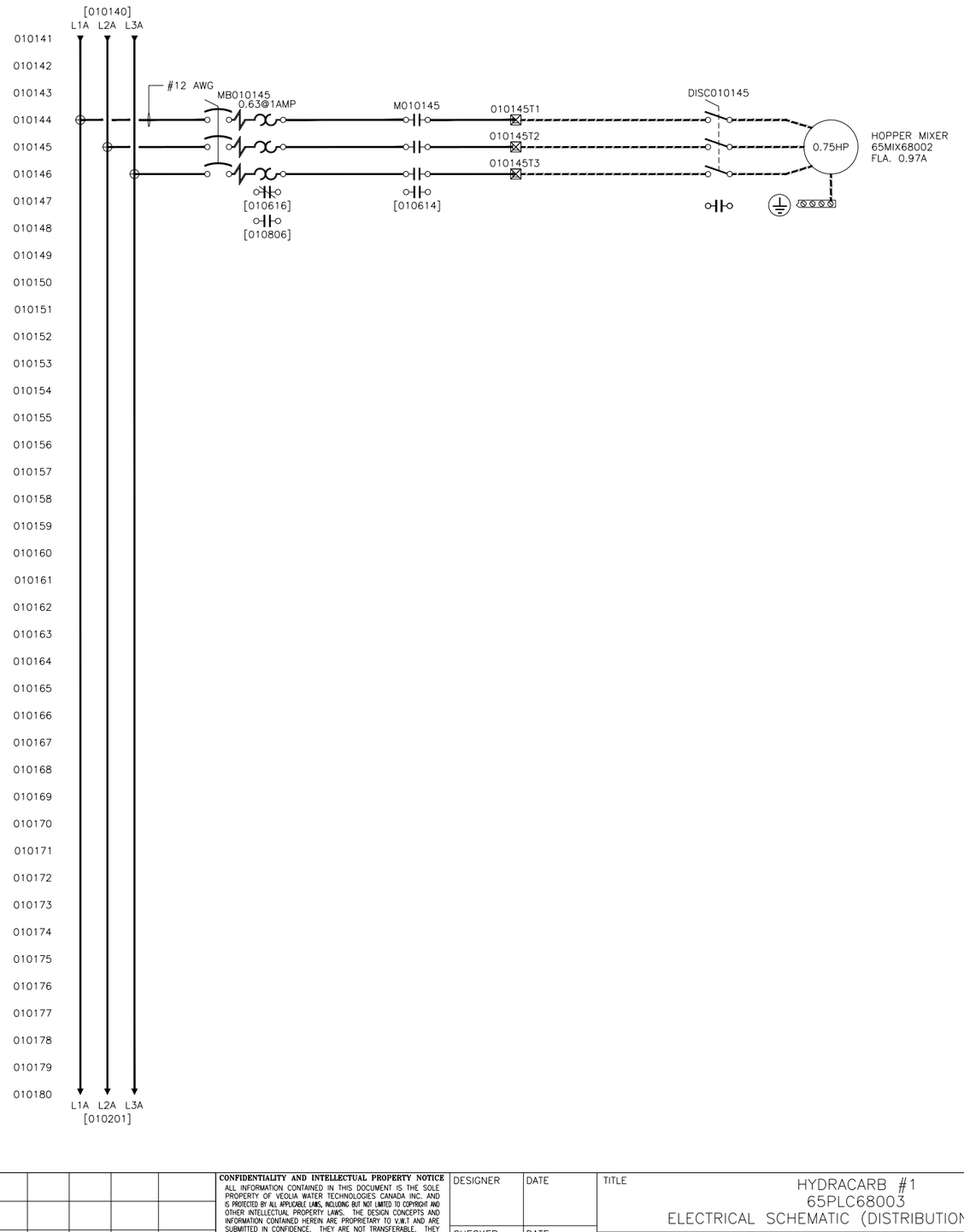


| REV | DESCRIPTION | DATE | REVD | CHKD | APVD | ECN |
|---|---|---|---|---|---|---|
| | | | | | | |
| | | | | | | |
| 4 | AS BUILT | 2021-06-21 | EH | RA | – | – |
| 3 | FOR FABRICATION | 2021-04-28 | EH | RA | – | – |
| 2 | FOR APPROVAL | 2021-04-12 | EH | RA | – | – |
| 1 | FOR APPROVAL | 2021-03-17 | EH | RA | – | – |

**CONFIDENTIALITY AND INTELLECTUAL PROPERTY NOTICE**
ALL INFORMATION CONTAINED IN THIS DOCUMENT IS THE SOLE PROPERTY OF VEOLIA WATER TECHNOLOGIES CANADA INC. AND IS PROTECTED BY ALL APPLICABLE LAWS, INCLUDING BUT NOT LIMITED TO COPYRIGHT AND OTHER INTELLECTUAL PROPERTY LAWS. THE DESIGN CONCEPTS AND INFORMATION CONTAINED HEREIN ARE PROPRIETARY TO V.W.T AND ARE SUBMITTED IN CONFIDENCE. THEY ARE NOT TRANSFERABLE. THEY MUST BE USED ONLY FOR THE PURPOSE FOR WHICH THE DOCUMENT IS EXPRESSLY SUBMITTED AND NO IMPLICIT LICENCE IS GRANTED OTHERWISE BY THE SUBMISSION OF THIS DOCUMENT. THEY ARE CONFIDENTIAL AND PRIVILEGED INFORMATION OF V.W.T. AND THEY MUST NOT BE DISCLOSED, REPRODUCED, LOANED, REMITTED OR USED IN ANY OTHER MANNER WITHOUT THE EXPRESS WRITTEN CONSENT OF V.W.T. V.W.T. ASSUMES NO RESPONSIBILITY OR LIABILITY FOR THE USE OF THIS DOCUMENT OR THE DESIGN CONCEPTS AND INFORMATION CONTAINED HEREIN FOR ANOTHER PROJECT, OR IN A MANNER THAT DOES NOT RELATE TO THE FITNESS OR PURPOSE OF THIS DOCUMENT. IN NO EVENT SHALL THIS DOCUMENT OR THE DESIGN CONCEPTS AND INFORMATION CONTAINED HEREIN BE USED IN A MANNER DETRIMENTAL TO THE INTEREST OF V.W.T. ALL COPYRIGHT, PATENT AND OTHER INTELLECTUAL PROPERTY RIGHTS ARE RESERVED. ACCEPTANCE OF THE DELIVERY OF THIS DOCUMENT CONSTITUTES AGREEMENT TO THESE TERMS AND CONDITIONS.

| | |
|---|---|
| DESIGNER | DATE |
| CHECKER | DATE |
| ENGINEER | DATE |
| SCALE: | |

TITLE
# HYDRACARB #1
# 65PLC68003
# ELECTRICAL SCHEMATIC (DISTRIBUTION 600VAC)

CLIENT
MELIADINE

VEOLIA WATER TECHNOLOGIES CANADA INC. 4105 Sartelon, Saint-Laurent, Qc, Canada. Tel: (514) 334-7230

| PROJECT DRAWING | INTERNAL | SHEET | REV |
|---|---|---|---|
| 5000220043 – ELD-0001-AU-VWT | | 01 OF 10 | 4 |

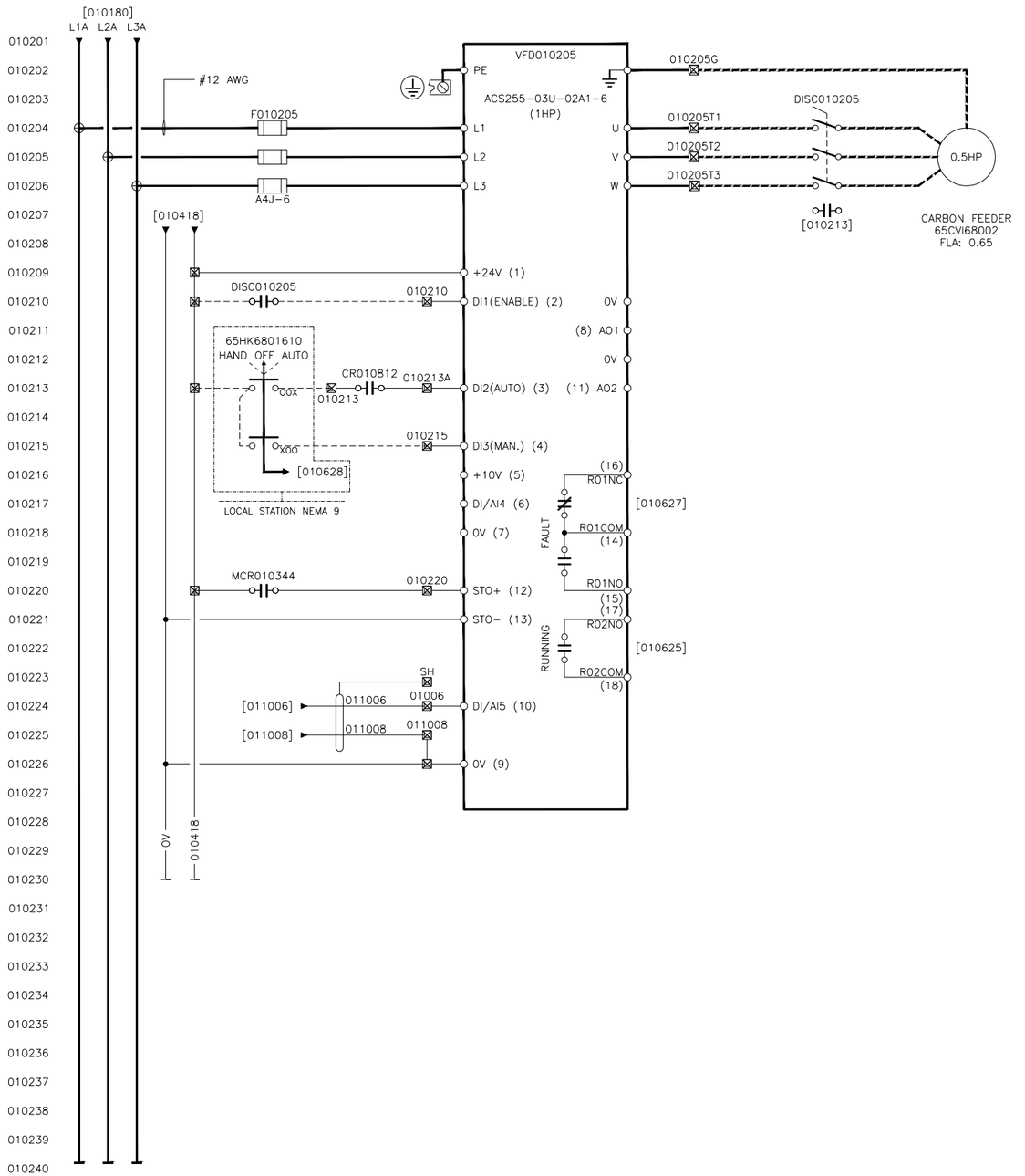


| REV | DESCRIPTION | DATE | REVD | CHKD | APVD | ECN |
|---|---|---|---|---|---|---|
| | | | | | | |
| | | | | | | |
| 4 | AS BUILT | 2021-06-21 | EH | RA | – | – |
| 3 | FOR FABRICATION | 2021-04-28 | EH | RA | – | – |
| 2 | FOR APPROVAL | 2021-04-12 | EH | RA | – | – |
| 1 | FOR APPROVAL | 2021-03-17 | EH | RA | – | – |

**CONFIDENTIALITY AND INTELLECTUAL PROPERTY NOTICE**
ALL INFORMATION CONTAINED IN THIS DOCUMENT IS THE SOLE PROPERTY OF VEOLIA WATER TECHNOLOGIES CANADA INC. AND IS PROTECTED BY ALL APPLICABLE LAWS, INCLUDING BUT NOT LIMITED TO COPYRIGHT AND OTHER INTELLECTUAL PROPERTY LAWS. THE DESIGN CONCEPTS AND INFORMATION CONTAINED HEREIN ARE PROPRIETARY TO V.W.T AND ARE SUBMITTED IN CONFIDENCE. THEY ARE NOT TRANSFERABLE. THEY MUST BE USED ONLY FOR THE PURPOSE FOR WHICH THE DOCUMENT IS EXPRESSLY SUBMITTED AND NO IMPLICIT LICENCE IS GRANTED OTHERWISE BY THE SUBMISSION OF THIS DOCUMENT. THEY ARE CONFIDENTIAL AND PRIVILEGED INFORMATION OF V.W.T. AND THEY MUST NOT BE DISCLOSED, REPRODUCED, LOANED, REMITTED OR USED IN ANY OTHER MANNER WITHOUT THE EXPRESS WRITTEN CONSENT OF V.W.T. V.W.T. ASSUMES NO RESPONSIBILITY OR LIABILITY FOR THE USE OF THIS DOCUMENT OR THE DESIGN CONCEPTS AND INFORMATION CONTAINED HEREIN FOR ANOTHER PROJECT, OR IN A MANNER THAT DOES NOT RELATE TO THE FITNESS OR PURPOSE OF THIS DOCUMENT. IN NO EVENT SHALL THIS DOCUMENT OR THE DESIGN CONCEPTS AND INFORMATION CONTAINED HEREIN BE USED IN A MANNER DETRIMENTAL TO THE INTEREST OF V.W.T. ALL COPYRIGHT, PATENT AND OTHER INTELLECTUAL PROPERTY RIGHTS ARE RESERVED. ACCEPTANCE OF THE DELIVERY OF THIS DOCUMENT CONSTITUTES AGREEMENT TO THESE TERMS AND CONDITIONS.

| | |
|---|---|
| DESIGNER | DATE |
| CHECKER | DATE |
| ENGINEER | DATE |
| SCALE: | |

TITLE: HYDRACARB #1
65PLC68003
ELECTRICAL SCHEMATIC (DISTRIBUTION 600VAC)

CLIENT: MELIADINE

VEOLIA
VEOLIA WATER TECHNOLOGIES CANADA INC. 4105 Sartelon, Saint-Laurent, Qc, Canada. Tel: (514) 334-7230

| PROJECT | DRAWING | INTERNAL | SHEET | REV |
|---|---|---|---|---|
| 5000220043 | ELD-0001-AU-VWT | | 02 OF 10 | 4 |

BAR = 1" AT PLOT SCALE
REF: A7281A
STD: "B" 11x17

AS BUILT\A7281A-5000220043-0001-ELD.dwg - ehorwood
Jul 12, 2021 10:55:58 - G:\Projets A72XX\A7281A - VEOLIA - Projet 5000220043 A-E Meliadine (HydroCarb 1)\DOC\DESSIN\000-DESSINS\0001\REV4 -

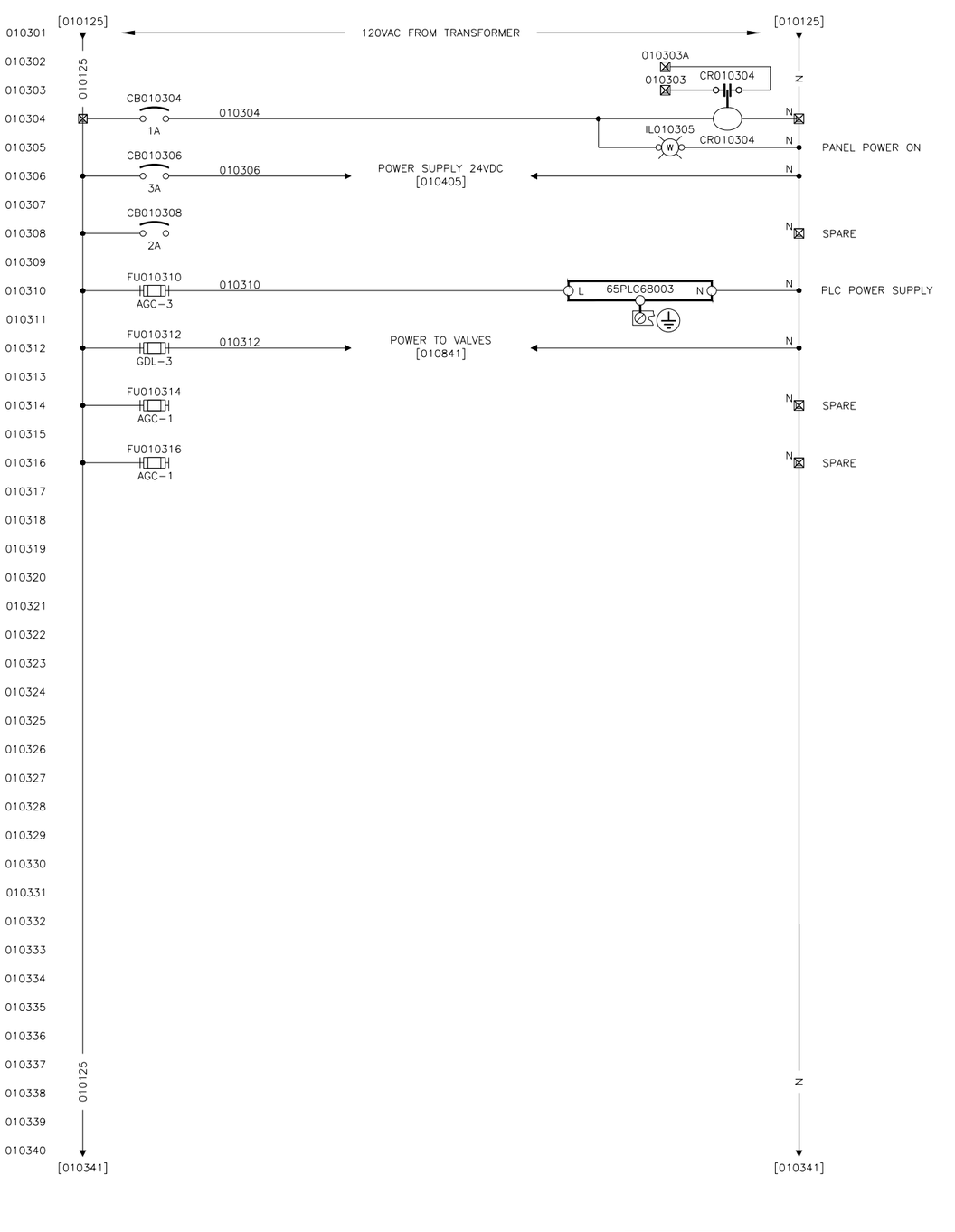


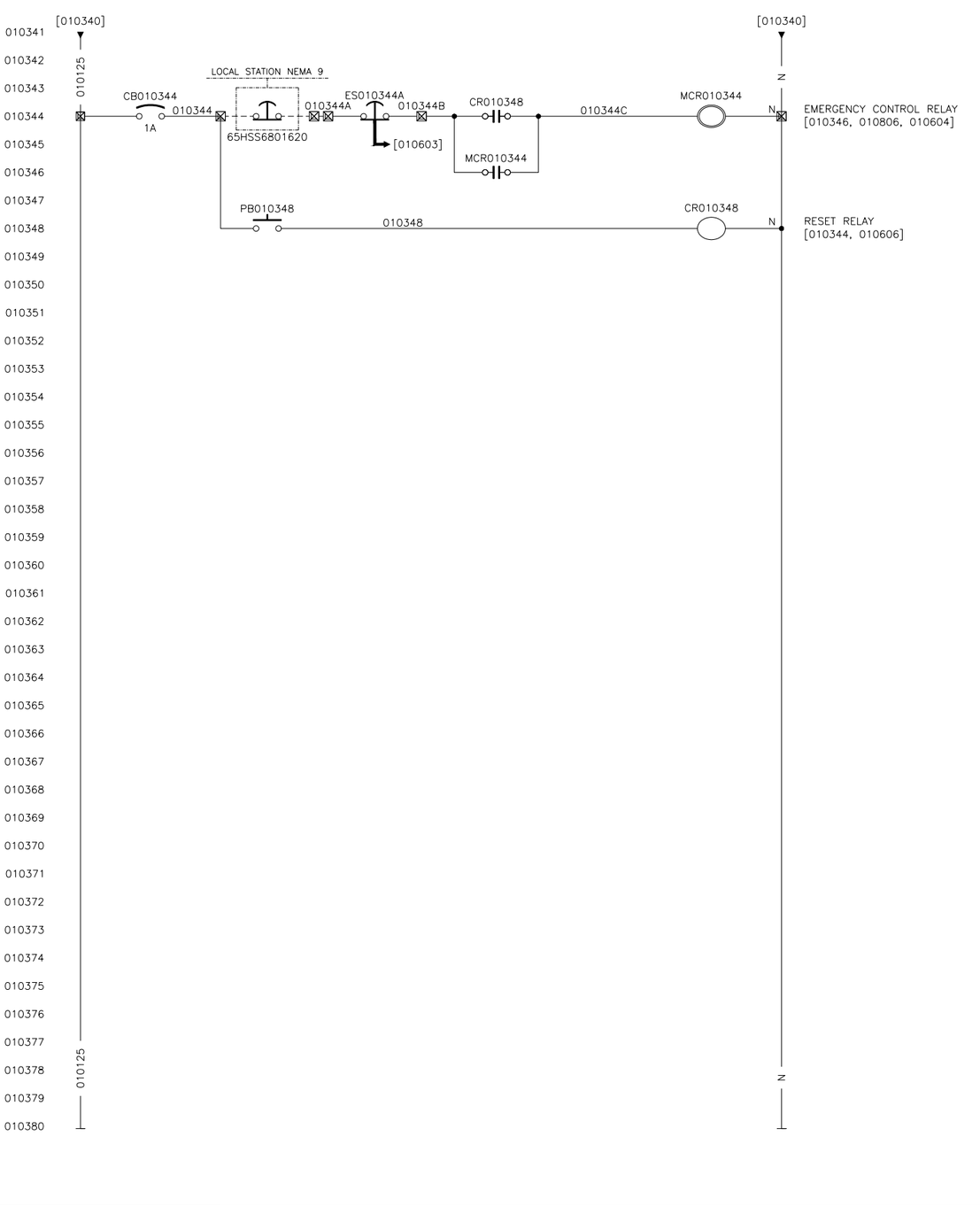


BAR = 1" AT PLOT SCALE

REF: A7281A

STD: "B" 11x17

| REV | DESCRIPTION | DATE | REVD | CHKD | APVD | ECN |
|---|---|---|---|---|---|---|
| | | | | | | |
| | | | | | | |
| 4 | AS BUILT | 2021-06-21 | EH | RA | – | – |
| 3 | FOR FABRICATION | 2021-04-28 | EH | RA | – | – |
| 2 | FOR APPROVAL | 2021-04-12 | EH | RA | – | – |
| 1 | FOR APPROVAL | 2021-03-17 | EH | RA | – | – |

**CONFIDENTIALITY AND INTELLECTUAL PROPERTY NOTICE**
ALL INFORMATION CONTAINED IN THIS DOCUMENT IS THE SOLE PROPERTY OF VEOLIA WATER TECHNOLOGIES CANADA INC. AND IS PROTECTED BY ALL APPLICABLE LAWS, INCLUDING BUT NOT LIMITED TO COPYRIGHT AND OTHER INTELLECTUAL PROPERTY LAWS. THE DESIGN CONCEPTS AND INFORMATION CONTAINED HEREIN ARE PROPRIETARY TO V.W.T AND ARE SUBMITTED IN CONFIDENCE. THEY ARE NOT TRANSFERABLE. THEY MUST BE USED ONLY FOR THE PURPOSE FOR WHICH THE DOCUMENT IS EXPRESSLY SUBMITTED AND NO IMPLICIT LICENCE IS GRANTED OTHERWISE BY THE SUBMISSION OF THIS DOCUMENT. THEY ARE CONFIDENTIAL AND PRIVILEGED INFORMATION OF V.W.T. AND THEY MUST NOT BE DISCLOSED, REPRODUCED, LOANED, REMITTED OR USED IN ANY OTHER MANNER WITHOUT THE EXPRESS WRITTEN CONSENT OF V.W.T. V.W.T. ASSUMES NO RESPONSIBILITY OR LIABILITY FOR THE USE OF THIS DOCUMENT OR THE DESIGN CONCEPTS AND INFORMATION CONTAINED HEREIN FOR ANOTHER PROJECT, OR IN A MANNER THAT DOES NOT RELATE TO THE FITNESS OR PURPOSE OF THIS DOCUMENT. IN NO EVENT SHALL THIS DOCUMENT OR THE DESIGN CONCEPTS AND INFORMATION CONTAINED HEREIN BE USED IN A MANNER DETRIMENTAL TO THE INTEREST OF V.W.T. ALL COPYRIGHT, PATENT AND OTHER INTELLECTUAL PROPERTY RIGHTS ARE RESERVED. ACCEPTANCE OF THE DELIVERY OF THIS DOCUMENT CONSTITUTES AGREEMENT TO THESE TERMS AND CONDITIONS.

| | |
|---|---|
| DESIGNER | DATE |
| CHECKER | DATE |
| ENGINEER | DATE |
| SCALE: | |

TITLE
# HYDRACARB #1
# 65PLC68003
# ELECTRICAL SCHEMATIC (DISTRIBUTION 120VAC)

CLIENT
MELIADINE

VEOLIA WATER TECHNOLOGIES CANADA INC. 4105 Sartelon, Saint-Laurent, Qc, Canada. Tel: (514) 334-7230

| PROJECT | DRAWING | INTERNAL | SHEET | REV |
|---|---|---|---|---|
| 5000220043 | – ELD-0001-AU-VWT | | 03 OF 10 | 4 |

Jul 12, 2021 10:55:58 – G:\Projets A72XX\A7281A – VEOLIA – Projet 5000220043 A-E Meliadine (HydraCarb 1)\DOC\DESSIN\000-DESSINS\0001\REV4 – AS BUILT\A7281A-5000220043-0001-ELD.dwg – ehorwood

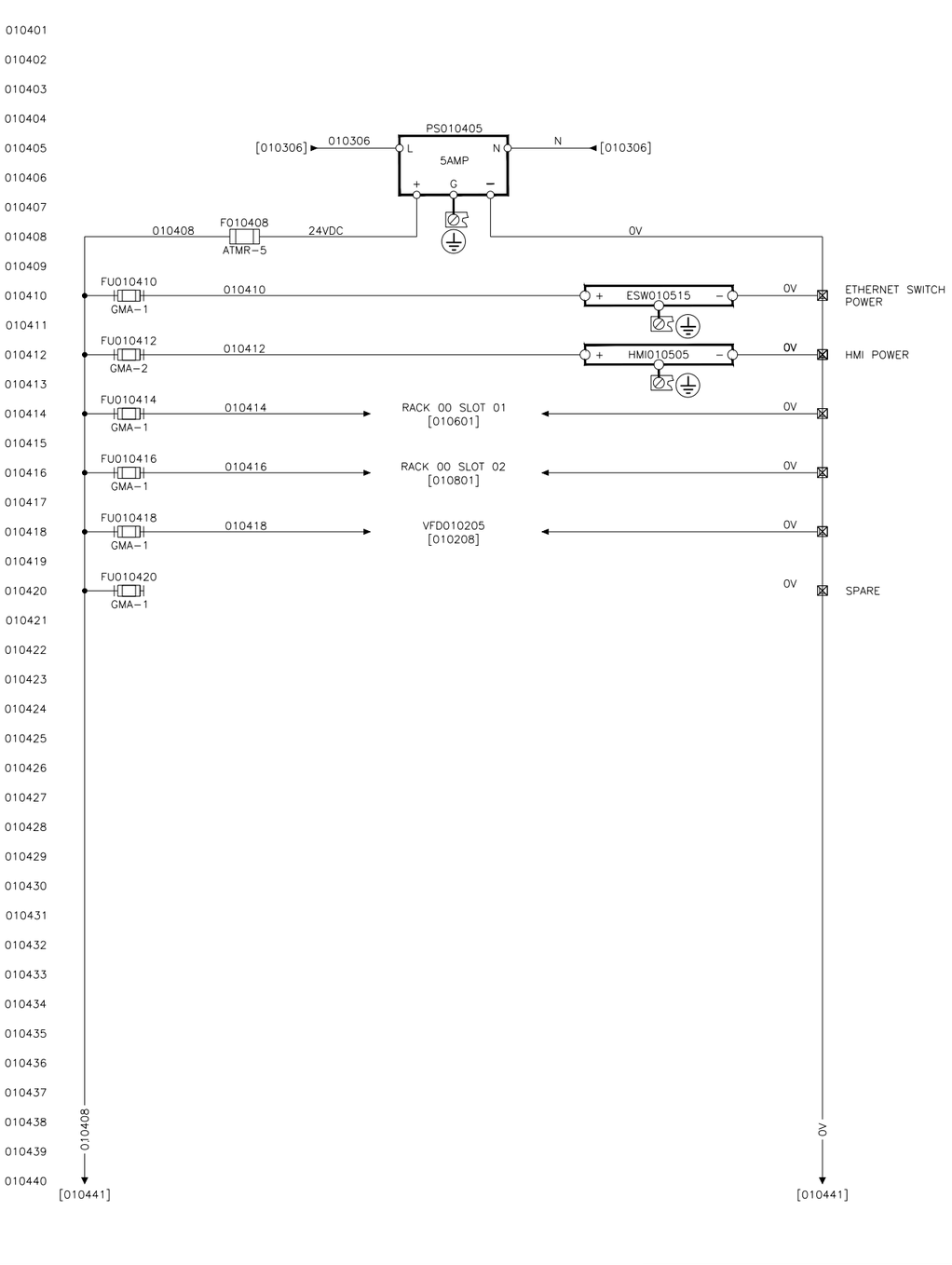


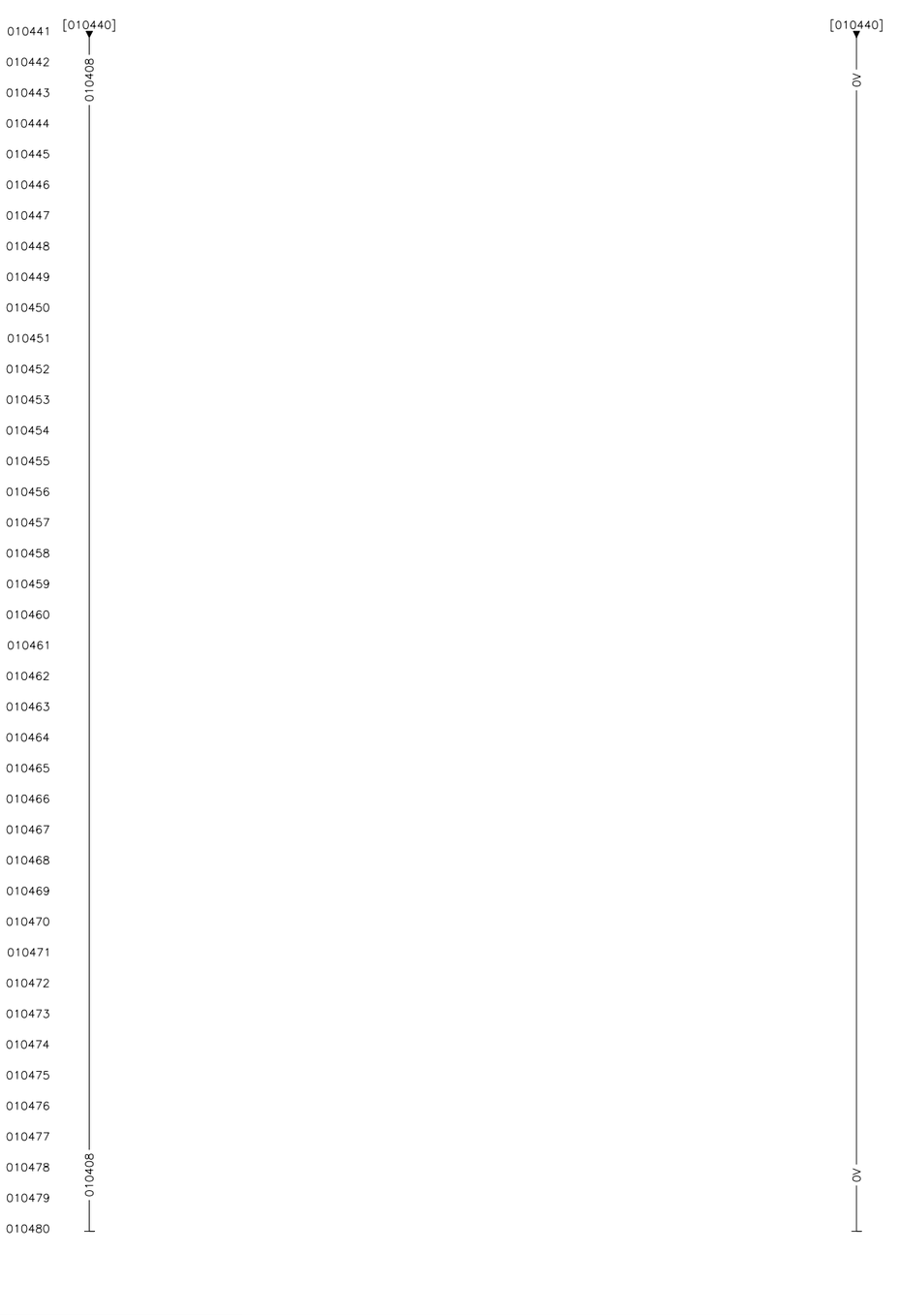


BAR = 1" AT PLOT SCALE

REF: A7281A

STD: "B" 11x17

| REV | DESCRIPTION | DATE | REVD | CHKD | APVD | ECN |
|---|---|---|---|---|---|---|
| | | | | | | |
| | | | | | | |
| 4 | AS BUILT | 2021-06-21 | EH | RA | – | – |
| 3 | FOR FABRICATION | 2021-04-28 | EH | RA | – | – |
| 2 | FOR APPROVAL | 2021-04-12 | EH | RA | – | – |
| 1 | FOR APPROVAL | 2021-03-17 | EH | RA | – | – |

**CONFIDENTIALITY AND INTELLECTUAL PROPERTY NOTICE**
ALL INFORMATION CONTAINED IN THIS DOCUMENT IS THE SOLE PROPERTY OF VEOLIA WATER TECHNOLOGIES CANADA INC. AND IS PROTECTED BY ALL APPLICABLE LAWS, INCLUDING BUT NOT LIMITED TO COPYRIGHT AND OTHER INTELLECTUAL PROPERTY LAWS. THE DESIGN CONCEPTS AND INFORMATION CONTAINED HEREIN ARE PROPRIETARY TO V.W.T AND ARE SUBMITTED IN CONFIDENCE. THEY ARE NOT TRANSFERABLE. THEY MUST BE USED ONLY FOR THE PURPOSE FOR WHICH THE DOCUMENT IS EXPRESSLY SUBMITTED AND NO IMPLICIT LICENCE IS GRANTED OTHERWISE BY THE SUBMISSION OF THIS DOCUMENT. THEY ARE CONFIDENTIAL AND PRIVILEGED INFORMATION OF V.W.T. AND THEY MUST NOT BE DISCLOSED, REPRODUCED, LOANED, REMITTED OR USED IN ANY OTHER MANNER WITHOUT THE EXPRESS WRITTEN CONSENT OF V.W.T. V.W.T. ASSUMES NO RESPONSIBILITY OR LIABILITY FOR THE USE OF THIS DOCUMENT OR THE DESIGN CONCEPTS AND INFORMATION CONTAINED HEREIN FOR ANOTHER PROJECT, OR IN A MANNER THAT DOES NOT RELATE TO THE FITNESS OR PURPOSE OF THIS DOCUMENT. IN NO EVENT SHALL THIS DOCUMENT OR THE DESIGN CONCEPTS AND INFORMATION CONTAINED HEREIN BE USED IN A MANNER DETRIMENTAL TO THE INTEREST OF V.W.T. ALL COPYRIGHT, PATENT AND OTHER INTELLECTUAL PROPERTY RIGHTS ARE RESERVED. ACCEPTANCE OF THE DELIVERY OF THIS DOCUMENT CONSTITUTES AGREEMENT TO THESE TERMS AND CONDITIONS.

| | |
|---|---|
| DESIGNER | DATE |
| CHECKER | DATE |
| ENGINEER | DATE |
| SCALE: | |

TITLE
# HYDRACARB #1
# 65PLC68003
# ELECTRICAL SCHEMATIC (DISTRIBUTION 24VDC)

CLIENT
MELIADINE

VEOLIA WATER TECHNOLOGIES CANADA INC. 4105 Sartelon, Saint-Laurent, Qc, Canada. Tel: (514) 334-7230

| PROJECT | DRAWING | INTERNAL | SHEET | REV |
|---|---|---|---|---|
| 5000220043 | – ELD–0001–AU–VWT | | 04 OF 10 | 4 |

AS BUILT\A7281A-5000220043-0001-ELD.dwg – ehorwood
Jul 12, 2021 10:55:58 – G:\Projets A72XX\A7281A – VEOLIA – Projet 5000220043 A–E Meliadine (HydraCarb 1)\DOC\DESSIN\000–DESSINS\0001\REV4

BAR = 1" AT PLOT SCALE
REF: A7281A
STD: "B" 11x17

010501
010502
010503
010504
010505
010506
010507
010508
010509
010510
010511
010512
010513
010514
010515
010516
010517
010518
010519
010520
010521
010522
010523
010524
010525
010526
010527
010528
010529
010530
010531
010532
010533
010534
010535
010536
010537
010538
010539
010540

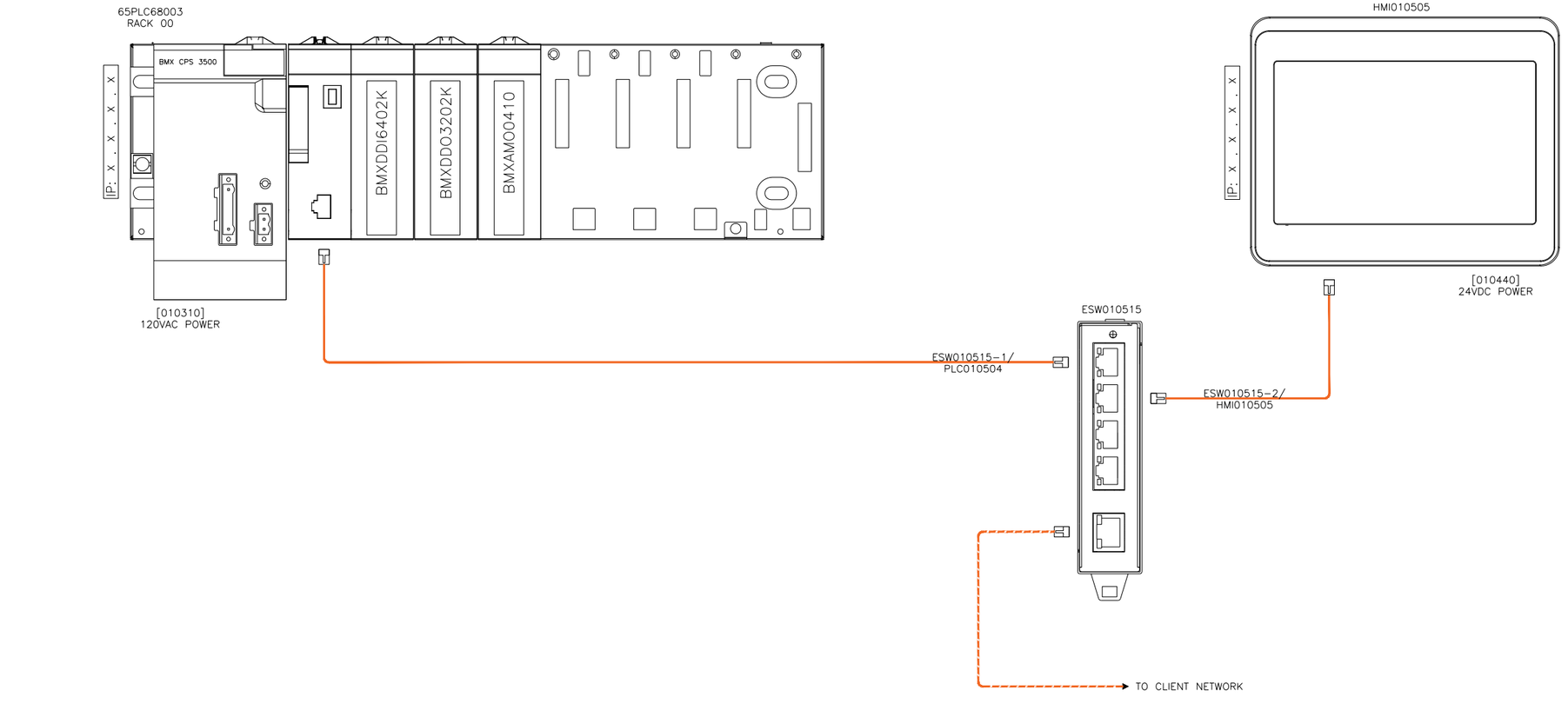


| REV | DESCRIPTION | DATE | REVD | CHKD | APVD | ECN |
|---|---|---|---|---|---|---|
| | | | | | | |
| | | | | | | |
| 4 | AS BUILT | 2021-06-21 | EH | RA | – | – |
| 3 | FOR FABRICATION | 2021-04-28 | EH | RA | – | – |
| 2 | FOR APPROVAL | 2021-04-12 | EH | RA | – | – |
| 1 | FOR APPROVAL | 2021-03-17 | EH | RA | – | – |

**CONFIDENTIALITY AND INTELLECTUAL PROPERTY NOTICE**
ALL INFORMATION CONTAINED IN THIS DOCUMENT IS THE SOLE PROPERTY OF VEOLIA WATER TECHNOLOGIES CANADA INC. AND IS PROTECTED BY ALL APPLICABLE LAWS, INCLUDING BUT NOT LIMITED TO COPYRIGHT AND OTHER INTELLECTUAL PROPERTY LAWS. THE DESIGN CONCEPTS AND INFORMATION CONTAINED HEREIN ARE PROPRIETARY TO V.W.T AND ARE SUBMITTED IN CONFIDENCE. THEY ARE NOT TRANSFERABLE. THEY MUST BE USED ONLY FOR THE PURPOSE FOR WHICH THE DOCUMENT IS EXPRESSLY SUBMITTED AND NO IMPLICIT LICENCE IS GRANTED OTHERWISE BY THE SUBMISSION OF THIS DOCUMENT. THEY ARE CONFIDENTIAL AND PRIVILEGED INFORMATION OF V.W.T. AND THEY MUST NOT BE DISCLOSED, REPRODUCED, LOANED, REMITTED OR USED IN ANY OTHER MANNER WITHOUT THE EXPRESS WRITTEN CONSENT OF V.W.T. V.W.T. ASSUMES NO RESPONSIBILITY OR LIABILITY FOR THE USE OF THIS DOCUMENT OR THE DESIGN CONCEPTS AND INFORMATION CONTAINED HEREIN FOR ANOTHER PROJECT, OR IN A MANNER THAT DOES NOT RELATE TO THE FITNESS OR PURPOSE OF THIS DOCUMENT. IN NO EVENT SHALL THIS DOCUMENT OR THE DESIGN CONCEPTS AND INFORMATION CONTAINED HEREIN BE USED IN A MANNER DETRIMENTAL TO THE INTEREST OF V.W.T. ALL COPYRIGHT, PATENT AND OTHER INTELLECTUAL PROPERTY RIGHTS ARE RESERVED. ACCEPTANCE OF THE DELIVERY OF THIS DOCUMENT CONSTITUTES AGREEMENT TO THESE TERMS AND CONDITIONS.

| | |
|---|---|
| DESIGNER | DATE |
| CHECKER | DATE |
| ENGINEER | DATE |
| SCALE: | |

TITLE
HYDRACARB #1
65PLC68003
ELECTRICAL SCHEMATIC (ETHERNET CONNECTION)

CLIENT
MELIADINE

VEOLIA
VEOLIA WATER TECHNOLOGIES CANADA INC. 4105 Sartelon, Saint-Laurent, Qc, Canada. Tel: (514) 334-7230

| PROJECT DRAWING | INTERNAL | SHEET | REV |
|---|---|---|---|
| 5000220043 – ELD-0001-AU-VWT | | 05 OF 10 | 4 |

AS BUILT\A7281A-5000220043-0001-ELD.dwg – ehorwood Jul 12, 2021 10:56:00 – G:\Projets A72XX\A7281A – VEOLIA – Projet 5000220043 A-E Meliadine (HydroCarb 1)\DOC\DESSIN\000-DESSINS\0001\REV4 –

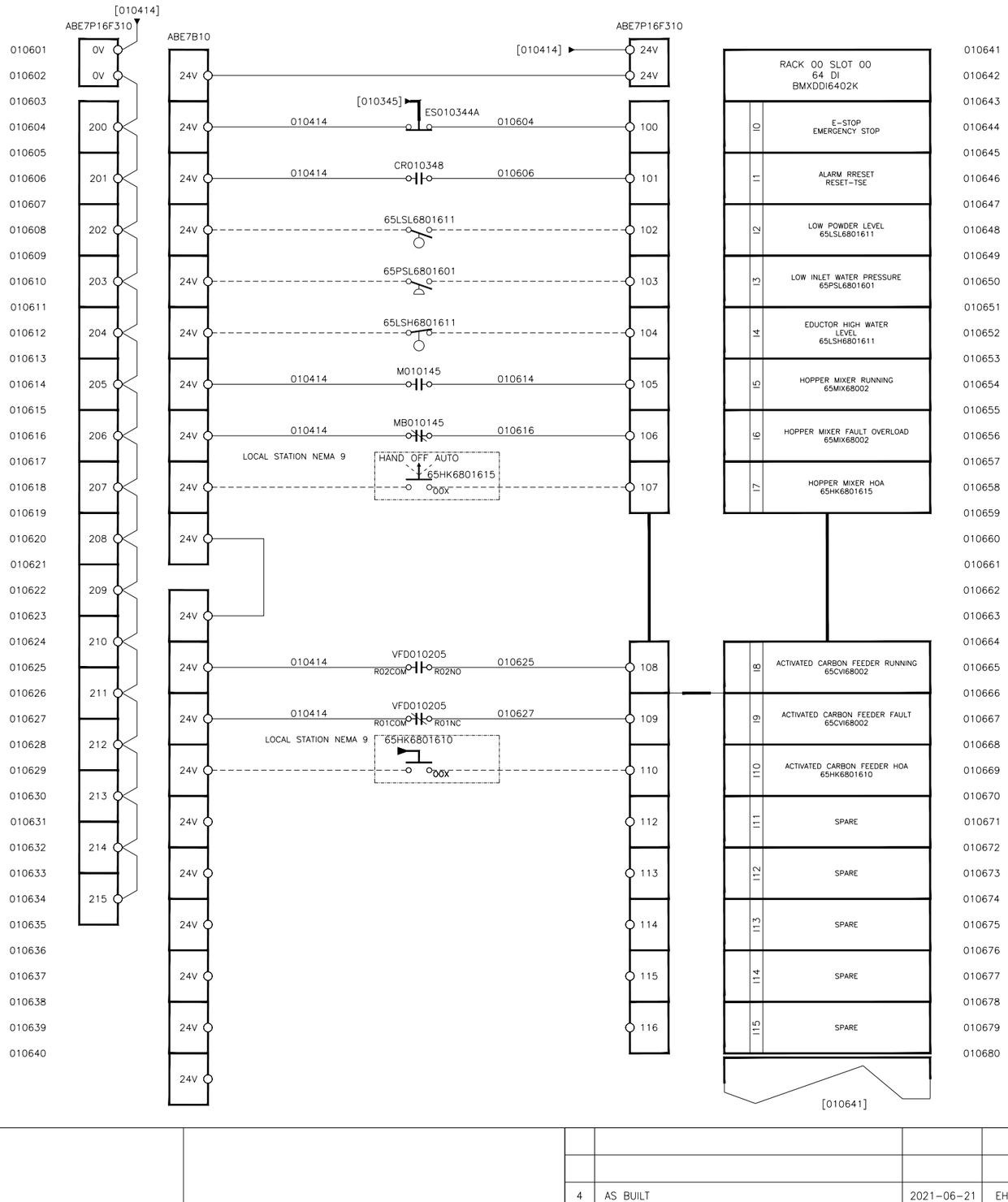


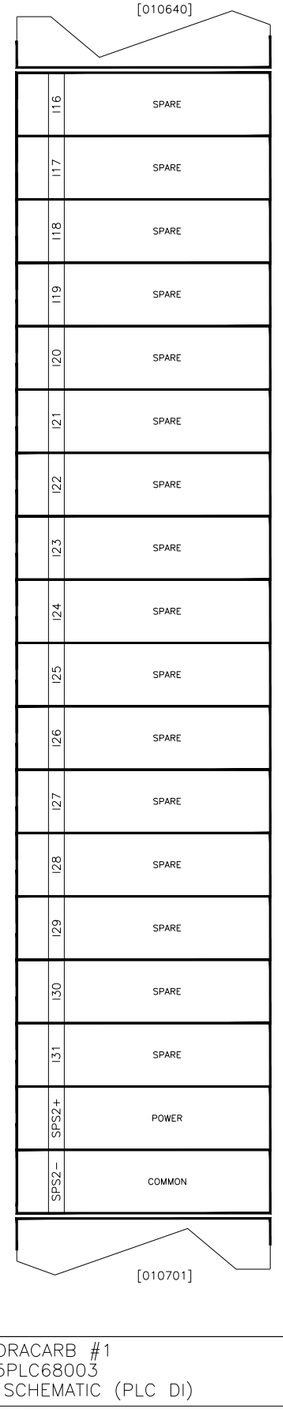


| REV | DESCRIPTION | DATE | REVD | CHKD | APVD | ECN |
|---|---|---|---|---|---|---|
| | | | | | | |
| | | | | | | |
| 4 | AS BUILT | 2021-06-21 | EH | RA | – | – |
| 3 | FOR FABRICATION | 2021-04-28 | EH | RA | – | – |
| 2 | FOR APPROVAL | 2021-04-12 | EH | RA | – | – |
| 1 | FOR APPROVAL | 2021-03-17 | EH | RA | – | – |

**CONFIDENTIALITY AND INTELLECTUAL PROPERTY NOTICE**
ALL INFORMATION CONTAINED IN THIS DOCUMENT IS THE SOLE PROPERTY OF VEOLIA WATER TECHNOLOGIES CANADA INC. AND IS PROTECTED BY ALL APPLICABLE LAWS, INCLUDING BUT NOT LIMITED TO COPYRIGHT AND OTHER INTELLECTUAL PROPERTY LAWS. THE DESIGN CONCEPTS AND INFORMATION CONTAINED HEREIN ARE PROPRIETARY TO V.W.T AND ARE SUBMITTED IN CONFIDENCE. THEY ARE NOT TRANSFERABLE. THEY MUST BE USED ONLY FOR THE PURPOSE FOR WHICH THE DOCUMENT IS EXPRESSLY SUBMITTED AND NO IMPLICIT LICENCE IS GRANTED OTHERWISE BY THE SUBMISSION OF THIS DOCUMENT. THEY ARE CONFIDENTIAL AND PRIVILEGED INFORMATION OF V.W.T. AND THEY MUST NOT BE DISCLOSED, REPRODUCED, LOANED, REMITTED OR USED IN ANY OTHER MANNER WITHOUT THE EXPRESS WRITTEN CONSENT OF V.W.T. V.W.T. ASSUMES NO RESPONSIBILITY OR LIABILITY FOR THE USE OF THIS DOCUMENT OR THE DESIGN CONCEPTS AND INFORMATION CONTAINED HEREIN FOR ANOTHER PROJECT, OR IN A MANNER THAT DOES NOT RELATE TO THE FITNESS OR PURPOSE OF THIS DOCUMENT. IN NO EVENT SHALL THIS DOCUMENT OR THE DESIGN CONCEPTS AND INFORMATION CONTAINED HEREIN BE USED IN A MANNER DETRIMENTAL TO THE INTEREST OF V.W.T. ALL COPYRIGHT, PATENT AND OTHER INTELLECTUAL PROPERTY RIGHTS ARE RESERVED. ACCEPTANCE OF THE DELIVERY OF THIS DOCUMENT CONSTITUTES AGREEMENT TO THESE TERMS AND CONDITIONS.

DESIGNER | DATE
CHECKER | DATE
ENGINEER | DATE
SCALE:

TITLE
HYDRACARB #1
65PLC68003
ELECTRICAL SCHEMATIC (PLC DI)

CLIENT
MELIADINE

VEOLIA
VEOLIA WATER TECHNOLOGIES CANADA INC. 4105 Sartelon, Saint-Laurent, Qc, Canada. Tel: (514) 334-7230

| PROJECT | DRAWING | INTERNAL | SHEET | REV |
|---|---|---|---|---|
| 5000220043 – | ELD-0001-AU-VWT | | 06 OF 10 | 4 |

AS BUILT\A7281A-5000220043-0001-ELD.dwg – ehorwood Jul 12, 2021 10:56:01 – G:\Projets A72XX\A7281A – VEOLIA – Projet 5000220043 A-E Meliadine (HydroCarb 1)\DOC\DESSIN\000-DESSINS\0001\REV4 –
BAR = 1" AT PLOT SCALE
REF: A7281A
STD: "B" 11x17

Jul 12, 2021 10:56:01 – G:\Projets A72XX\A7281A – VEOLIA – Projet 5000220043 A-E Meliadine (HydraCarb 1)\DOC\DESSIN\000-DESSINS\0001\REV4 – AS BUILT\A7281A-5000220043-0001-ELD.dwg – ehorwood

BAR = 1" AT PLOT SCALE
REF: A7281A
STD: "B" 11x17

010701
010702
010703
010704
010705
010706
010707
010708
010709
010710
010711
010712
010713
010714
010715
010716
010717
010718
010719
010720
010721
010722
010723
010724
010725
010726
010727
010728
010729
010730
010731
010732
010733
010734
010735
010736
010737
010738
010739
010740

[010680]

| | |
|---|---|
| I32 | SPARE |
| I33 | SPARE |
| I34 | SPARE |
| I35 | SPARE |
| I36 | SPARE |
| I37 | SPARE |
| I38 | SPARE |
| I39 | SPARE |
| I40 | SPARE |
| I41 | SPARE |
| I42 | SPARE |
| I43 | SPARE |
| I44 | SPARE |
| I45 | SPARE |
| I46 | SPARE |
| I47 | SPARE |
| SPS3+ | POWER |
| SPS3– | COMMON |

[010741]

010741
010742
010743
010744
010745
010746
010747
010748
010749
010750
010751
010752
010753
010754
010755
010756
010757
010758
010759
010760
010761
010762
010763
010764
010765
010766
010767
010768
010769
010770
010771
010772
010773
010774
010775
010776
010777
010778
010779
010780

[010740]

| | |
|---|---|
| I48 | SPARE |
| I49 | SPARE |
| I50 | SPARE |
| I51 | SPARE |
| I52 | SPARE |
| I53 | SPARE |
| I54 | SPARE |
| I55 | SPARE |
| I56 | SPARE |
| I57 | SPARE |
| I58 | SPARE |
| I59 | SPARE |
| I60 | SPARE |
| I61 | SPARE |
| I62 | SPARE |
| I63 | SPARE |
| SPS4+ | POWER |
| SPS4– | COMMON |

| REV | DESCRIPTION | DATE | REVD | CHKD | APVD | ECN |
|---|---|---|---|---|---|---|
| | | | | | | |
| | | | | | | |
| 4 | AS BUILT | 2021-06-21 | EH | RA | – | – |
| 3 | FOR FABRICATION | 2021-04-28 | EH | RA | – | – |
| 2 | FOR APPROVAL | 2021-04-12 | EH | RA | – | – |
| 1 | FOR APPROVAL | 2021-03-17 | EH | RA | – | – |

**CONFIDENTIALITY AND INTELLECTUAL PROPERTY NOTICE**
ALL INFORMATION CONTAINED IN THIS DOCUMENT IS THE SOLE PROPERTY OF VEOLIA WATER TECHNOLOGIES CANADA INC. AND IS PROTECTED BY ALL APPLICABLE LAWS, INCLUDING BUT NOT LIMITED TO COPYRIGHT AND OTHER INTELLECTUAL PROPERTY LAWS. THE DESIGN CONCEPTS AND INFORMATION CONTAINED HEREIN ARE PROPRIETARY TO V.W.T AND ARE SUBMITTED IN CONFIDENCE. THEY ARE NOT TRANSFERABLE. THEY MUST BE USED ONLY FOR THE PURPOSE FOR WHICH THE DOCUMENT IS EXPRESSLY SUBMITTED AND NO IMPLICIT LICENCE IS GRANTED OTHERWISE BY THE SUBMISSION OF THIS DOCUMENT. THEY ARE CONFIDENTIAL AND PRIVILEGED INFORMATION OF V.W.T. AND THEY MUST NOT BE DISCLOSED, REPRODUCED, LOANED, REMITTED OR USED IN ANY OTHER MANNER WITHOUT THE EXPRESS WRITTEN CONSENT OF V.W.T. V.W.T. ASSUMES NO RESPONSIBILITY OR LIABILITY FOR THE USE OF THIS DOCUMENT OR THE DESIGN CONCEPTS AND INFORMATION CONTAINED HEREIN FOR ANOTHER PROJECT, OR IN A MANNER THAT DOES NOT RELATE TO THE FITNESS OR PURPOSE OF THIS DOCUMENT. IN NO EVENT SHALL THIS DOCUMENT OR THE DESIGN CONCEPTS AND INFORMATION CONTAINED HEREIN BE USED IN A MANNER DETRIMENTAL TO THE INTEREST OF V.W.T. ALL COPYRIGHT, PATENT AND OTHER INTELLECTUAL PROPERTY RIGHTS ARE RESERVED. ACCEPTANCE OF THE DELIVERY OF THIS DOCUMENT CONSTITUTES AGREEMENT TO THESE TERMS AND CONDITIONS.

| | |
|---|---|
| DESIGNER | DATE |
| CHECKER | DATE |
| ENGINEER | DATE |
| SCALE: | |

TITLE
HYDRACARB #1
65PLC68003
ELECTRICAL SCHEMATIC (PLC DI)

CLIENT
MELIADINE

VEOLIA
VEOLIA WATER TECHNOLOGIES CANADA INC. 4105 Sartelon, Saint-Laurent, Qc, Canada. Tel: (514) 334-7230

| PROJECT | DRAWING | INTERNAL | SHEET | REV |
|---|---|---|---|---|
| 5000220043 | ELD-0001-AU-VWT | | 07 OF 10 | 4 |

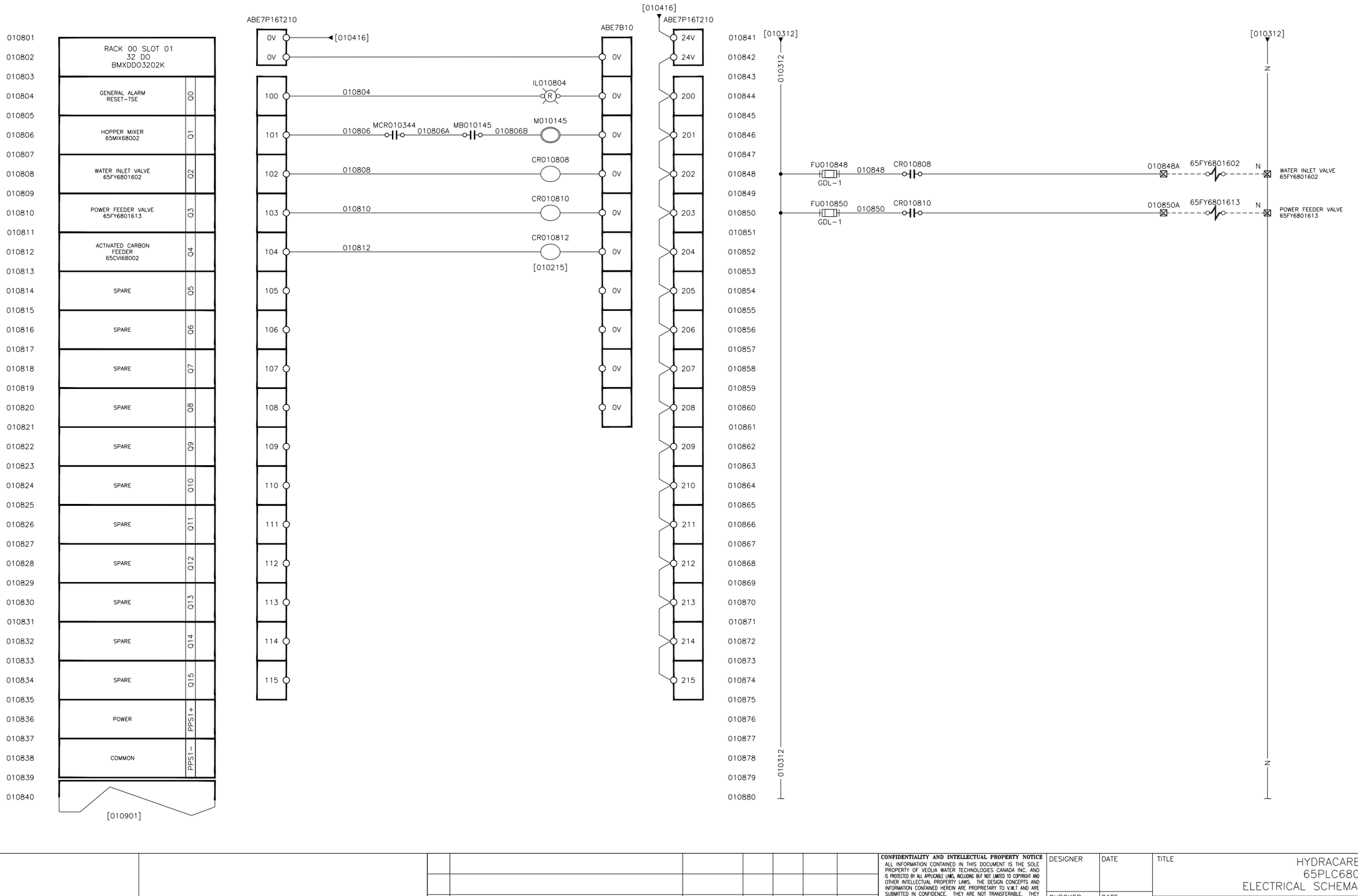


| REV | DESCRIPTION | DATE | REVD | CHKD | APVD | ECN |
|---|---|---|---|---|---|---|
| | | | | | | |
| | | | | | | |
| 4 | AS BUILT | 2021-06-21 | EH | RA | – | – |
| 3 | FOR FABRICATION | 2021-04-28 | EH | RA | – | – |
| 2 | FOR APPROVAL | 2021-04-12 | EH | RA | – | – |
| 1 | FOR APPROVAL | 2021-03-17 | EH | RA | – | – |

**CONFIDENTIALITY AND INTELLECTUAL PROPERTY NOTICE**
ALL INFORMATION CONTAINED IN THIS DOCUMENT IS THE SOLE PROPERTY OF VEOLIA WATER TECHNOLOGIES CANADA INC. AND IS PROTECTED BY ALL APPLICABLE LAWS, INCLUDING BUT NOT LIMITED TO COPYRIGHT AND OTHER INTELLECTUAL PROPERTY LAWS. THE DESIGN CONCEPTS AND INFORMATION CONTAINED HEREIN ARE PROPRIETARY TO V.W.T AND ARE SUBMITTED IN CONFIDENCE. THEY ARE NOT TRANSFERABLE. THEY MUST BE USED ONLY FOR THE PURPOSE FOR WHICH THE DOCUMENT IS EXPRESSLY SUBMITTED AND NO IMPLICIT LICENCE IS GRANTED OTHERWISE BY THE SUBMISSION OF THIS DOCUMENT. THEY ARE CONFIDENTIAL AND PRIVILEGED INFORMATION OF V.W.T. AND THEY MUST NOT BE DISCLOSED, REPRODUCED, LOANED, REMITTED OR USED IN ANY OTHER MANNER WITHOUT THE EXPRESS WRITTEN CONSENT OF V.W.T. V.W.T. ASSUMES NO RESPONSIBILITY OR LIABILITY FOR THE USE OF THIS DOCUMENT OR THE DESIGN CONCEPTS AND INFORMATION CONTAINED HEREIN FOR ANOTHER PROJECT, OR IN A MANNER THAT DOES NOT RELATE TO THE FITNESS OR PURPOSE OF THIS DOCUMENT. IN NO EVENT SHALL THIS DOCUMENT OR THE DESIGN CONCEPTS AND INFORMATION CONTAINED HEREIN BE USED IN A MANNER DETRIMENTAL TO THE INTEREST OF V.W.T. ALL COPYRIGHT, PATENT AND OTHER INTELLECTUAL PROPERTY RIGHTS ARE RESERVED. ACCEPTANCE OF THE DELIVERY OF THIS DOCUMENT CONSTITUTES AGREEMENT TO THESE TERMS AND CONDITIONS.

| | |
|---|---|
| DESIGNER | DATE |
| CHECKER | DATE |
| ENGINEER | DATE |
| SCALE: | |

TITLE
HYDRACARB #1
65PLC68003
ELECTRICAL SCHEMATIC (PLC DO)

CLIENT
MELIADINE

VEOLIA

VEOLIA WATER TECHNOLOGIES CANADA INC. 4105 Sartelon, Saint-Laurent, Qc, Canada. Tel: (514) 334-7230

| PROJECT DRAWING | INTERNAL | SHEET | REV |
|---|---|---|---|
| 5000220043 – ELD-0001-AU-VWT | | 08 OF 10 | 4 |

BAR = 1" AT PLOT SCALE
REF: A7281A
STD: "B" 11x17

AS BUILT\A7281A-5000220043-0001-ELD.dwg – ehorwood
Jul 12, 2021 10:56:02 – G:\Projets A72XX\A7281A – VEOLIA – Projet 5000220043 A-E Meliadine (HydroCarb 1)\DOC\DESSIN\000-DESSINS\0001\REV4 –

BAR = 1" AT PLOT SCALE
REF: A7281A
STD: "B" 11x17

Jul 12, 2021 10:56:02 – G:\Projets A72XX\A7281A – VEOLIA – Projet 5000220043 A-E Meliadine (HydroCarb 1)\DOC\DESSIN\000-DESSINS\0001\REV4 – AS BUILT\A7281A-5000220043-0001-ELD.dwg – ehorwood

| | | |
|---|---|---|
| 010901 | [010640] | |
| 010902 | | |
| 010903 | | |
| 010904 | SPARE | Q16 |
| 010905 | | |
| 010906 | SPARE | Q17 |
| 010907 | | |
| 010908 | SPARE | Q18 |
| 010909 | | |
| 010910 | SPARE | Q19 |
| 010911 | | |
| 010912 | SPARE | Q20 |
| 010913 | | |
| 010914 | SPARE | Q21 |
| 010915 | | |
| 010916 | SPARE | Q22 |
| 010917 | | |
| 010918 | SPARE | Q23 |
| 010919 | | |
| 010920 | SPARE | Q24 |
| 010921 | | |
| 010922 | SPARE | Q25 |
| 010923 | | |
| 010924 | SPARE | Q26 |
| 010925 | | |
| 010926 | SPARE | Q27 |
| 010927 | | |
| 010928 | SPARE | Q28 |
| 010929 | | |
| 010930 | SPARE | Q29 |
| 010931 | | |
| 010932 | SPARE | Q30 |
| 010933 | | |
| 010934 | SPARE | Q31 |
| 010935 | | |
| 010936 | POWER | PPS2+ |
| 010937 | | |
| 010938 | COMMON | PPS2– |
| 010939 | | |
| 010940 | | |

| | | |
|---|---|---|
| 010941 | [010840] | |
| 010942 | 0V | 010416 |
| 010943 | | |
| 010944 | | |
| 010945 | | |
| 010946 | | |
| 010947 | | |
| 010948 | | |
| 010949 | | |
| 010950 | | |
| 010951 | | |
| 010952 | | |
| 010953 | | |
| 010954 | | |
| 010955 | | |
| 010956 | | |
| 010957 | | |
| 010958 | | |
| 010959 | | |
| 010960 | | |
| 010961 | | |
| 010962 | | |
| 010963 | | |
| 010964 | | |
| 010965 | | |
| 010966 | | |
| 010967 | | |
| 010968 | | |
| 010969 | | |
| 010970 | | |
| 010971 | | |
| 010972 | | |
| 010973 | | |
| 010974 | | |
| 010975 | | |
| 010976 | | |
| 010977 | | |
| 010978 | | |
| 010979 | | |
| 010980 | | |

| REV | DESCRIPTION | DATE | REVD | CHKD | APVD | ECN |
|---|---|---|---|---|---|---|
| | | | | | | |
| | | | | | | |
| 4 | AS BUILT | 2021-06-21 | EH | RA | – | – |
| 3 | FOR FABRICATION | 2021-04-28 | EH | RA | – | – |
| 2 | FOR APPROVAL | 2021-04-12 | EH | RA | – | – |
| 1 | FOR APPROVAL | 2021-03-17 | EH | RA | – | – |

**CONFIDENTIALITY AND INTELLECTUAL PROPERTY NOTICE**
ALL INFORMATION CONTAINED IN THIS DOCUMENT IS THE SOLE PROPERTY OF VEOLIA WATER TECHNOLOGIES CANADA INC. AND IS PROTECTED BY ALL APPLICABLE LAWS, INCLUDING BUT NOT LIMITED TO COPYRIGHT AND OTHER INTELLECTUAL PROPERTY LAWS. THE DESIGN CONCEPTS AND INFORMATION CONTAINED HEREIN ARE PROPRIETARY TO V.W.T AND ARE SUBMITTED IN CONFIDENCE. THEY ARE NOT TRANSFERABLE. THEY MUST BE USED ONLY FOR THE PURPOSE FOR WHICH THE DOCUMENT IS EXPRESSLY SUBMITTED AND NO IMPLICIT LICENCE IS GRANTED OTHERWISE BY THE SUBMISSION OF THIS DOCUMENT. THEY ARE CONFIDENTIAL AND PRIVILEGED INFORMATION OF V.W.T, AND THEY MUST NOT BE DISCLOSED, REPRODUCED, LOANED, REMITTED OR USED IN ANY OTHER MANNER WITHOUT THE EXPRESS WRITTEN CONSENT OF V.W.T. V.W.T. ASSUMES NO RESPONSIBILITY OR LIABILITY FOR THE USE OF THIS DOCUMENT OR THE DESIGN CONCEPTS AND INFORMATION CONTAINED HEREIN FOR ANOTHER PROJECT, OR IN A MANNER THAT DOES NOT RELATE TO THE FITNESS OR PURPOSE OF THIS DOCUMENT. IN NO EVENT SHALL THIS DOCUMENT OR THE DESIGN CONCEPTS AND INFORMATION CONTAINED HEREIN BE USED IN A MANNER DETRIMENTAL TO THE INTEREST OF V.W.T. ALL COPYRIGHT, PATENT AND OTHER INTELLECTUAL PROPERTY RIGHTS ARE RESERVED. ACCEPTANCE OF THE DELIVERY OF THIS DOCUMENT CONSTITUTES AGREEMENT TO THESE TERMS AND CONDITIONS.

| | |
|---|---|
| DESIGNER | DATE |
| CHECKER | DATE |
| ENGINEER | DATE |
| SCALE: | |

TITLE
# HYDRACARB #1
# 65PLC68003
# ELECTRICAL SCHEMATIC (PLC DO)

CLIENT
MELIADINE

VEOLIA WATER TECHNOLOGIES CANADA INC. 4105 Sartelon, Saint-Laurent, Qc, Canada. Tel: (514) 334-7230

| PROJECT | DRAWING | INTERNAL | SHEET | REV |
|---|---|---|---|---|
| 5000220043 | ELD-0001-AU-VWT | | 09 OF 10 | 4 |

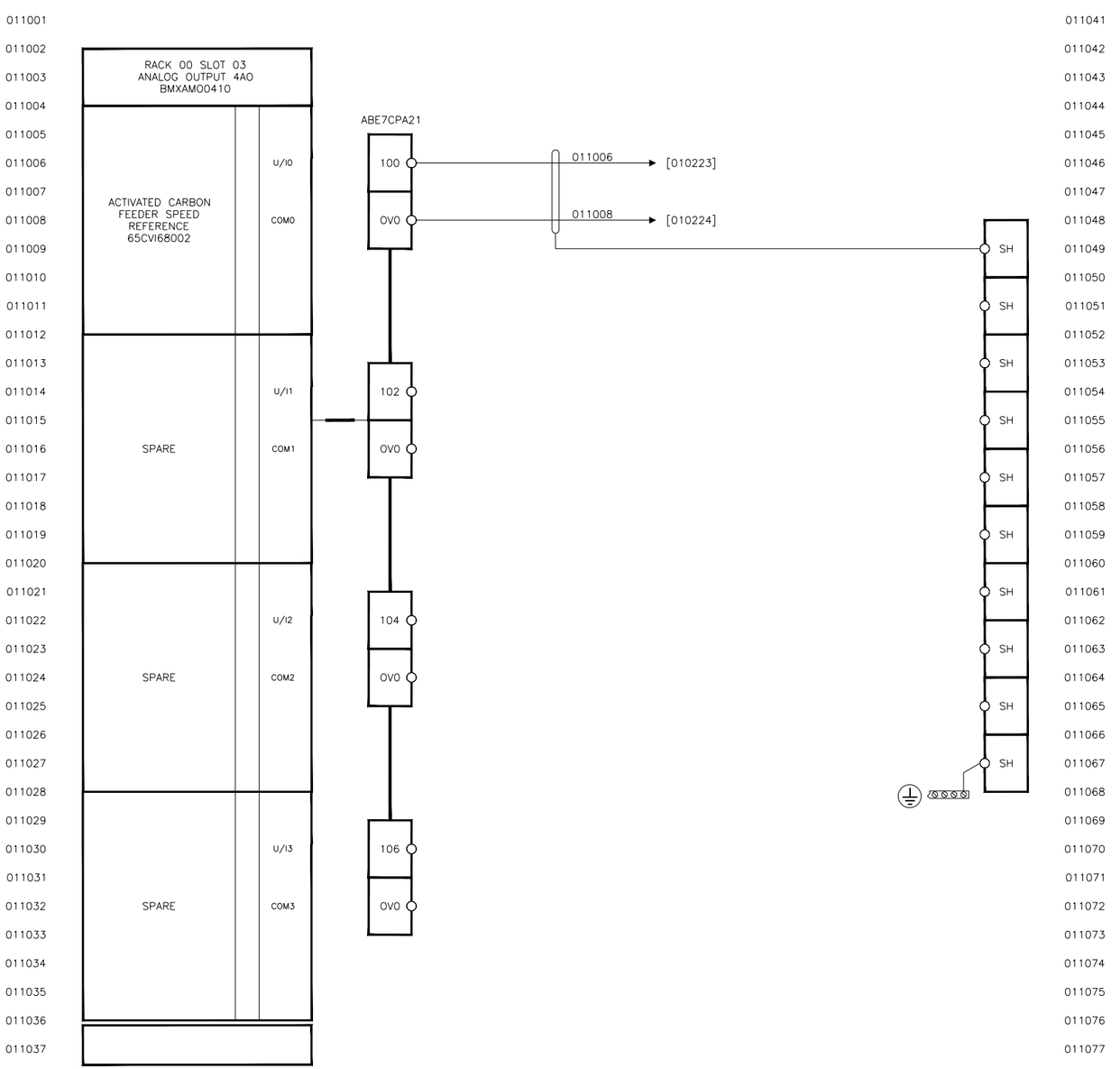


| REV | DESCRIPTION | DATE | REVD | CHKD | APVD | ECN |
|---|---|---|---|---|---|---|
| | | | | | | |
| | | | | | | |
| 4 | AS BUILT | 2021-06-21 | EH | RA | – | – |
| 3 | FOR FABRICATION | 2021-04-28 | EH | RA | – | – |
| 2 | FOR APPROVAL | 2021-04-12 | EH | RA | – | – |
| 1 | FOR APPROVAL | 2021-03-17 | EH | RA | – | – |

**CONFIDENTIALITY AND INTELLECTUAL PROPERTY NOTICE**
ALL INFORMATION CONTAINED IN THIS DOCUMENT IS THE SOLE PROPERTY OF VEOLIA WATER TECHNOLOGIES CANADA INC. AND IS PROTECTED BY ALL APPLICABLE LAWS, INCLUDING BUT NOT LIMITED TO COPYRIGHT AND OTHER INTELLECTUAL PROPERTY LAWS. THE DESIGN CONCEPTS AND INFORMATION CONTAINED HEREIN ARE PROPRIETARY TO V.W.T AND ARE SUBMITTED IN CONFIDENCE. THEY ARE NOT TRANSFERABLE. THEY MUST BE USED ONLY FOR THE PURPOSE FOR WHICH THE DOCUMENT IS EXPRESSLY SUBMITTED AND NO IMPLICIT LICENCE IS GRANTED OTHERWISE BY THE SUBMISSION OF THIS DOCUMENT. THEY ARE CONFIDENTIAL AND PRIVILEGED INFORMATION OF V.W.T. AND THEY MUST NOT BE DISCLOSED, REPRODUCED, LOANED, REMITTED OR USED IN ANY OTHER MANNER WITHOUT THE EXPRESS WRITTEN CONSENT OF V.W.T. V.W.T. ASSUMES NO RESPONSIBILITY OR LIABILITY FOR THE USE OF THIS DOCUMENT OR THE DESIGN CONCEPTS AND INFORMATION CONTAINED HEREIN FOR ANOTHER PROJECT, OR IN A MANNER THAT DOES NOT RELATE TO THE FITNESS OR PURPOSE OF THIS DOCUMENT. IN NO EVENT SHALL THIS DOCUMENT OR THE DESIGN CONCEPTS AND INFORMATION CONTAINED HEREIN BE USED IN A MANNER DETRIMENTAL TO THE INTEREST OF V.W.T. ALL COPYRIGHT, PATENT AND OTHER INTELLECTUAL PROPERTY RIGHTS ARE RESERVED. ACCEPTANCE OF THE DELIVERY OF THIS DOCUMENT CONSTITUTES AGREEMENT TO THESE TERMS AND CONDITIONS.

| | |
|---|---|
| DESIGNER | DATE |
| CHECKER | DATE |
| ENGINEER | DATE |
| SCALE: | |

TITLE
HYDRACARB #1
65PLC68003
ELECTRICAL SCHEMATIC (PLC AO)

CLIENT
MELIADINE

VEOLIA
VEOLIA WATER TECHNOLOGIES CANADA INC. 4105 Sartelon, Saint-Laurent, Qc, Canada. Tel: (514) 334-7230

| PROJECT | DRAWING | INTERNAL | SHEET | REV |
|---|---|---|---|---|
| 5000220043 | ELD-0001-AU-VWT | | 10 OF 10 | 4 |

BAR = 1" AT PLOT SCALE
REF: A7281A
STD: "B" 11x17

AS BUILT\A7281A-5000220043-0001-ELD.dwg - ehorwood
Jul 12, 2021 10:56:03 - G:\Projets A72XX\A7281A - VEOLIA - Projet 5000220043 A-E Meliadine (HydraCarb 1)\DOC\DESSIN\000-DESSINS\0001\REV4 -

BAR = 1" AT PLOT SCALE
REF: A7281A
STD: "B" 11x17

# CONTROL/POWER PANEL
# HYDRACARB #2
# 65PLC68004

| REV | DESCRIPTION | DATE | REVD | CHKD | APVD | ECN |
|---|---|---|---|---|---|---|
| | | | | | | |
| | | | | | | |
| 4 | AS BUILT | 2021-06-21 | EH | RA | – | – |
| 3 | FOR FABRICATION | 2021-05-18 | EH | RA | – | – |
| 2 | FOR APPROVAL | 2021-04-12 | EH | RA | – | – |
| 1 | FOR APPROVAL | 2021-03-17 | EH | RA | – | – |

**CONFIDENTIALITY AND INTELLECTUAL PROPERTY NOTICE**
ALL INFORMATION CONTAINED IN THIS DOCUMENT IS THE SOLE PROPERTY OF VEOLIA WATER TECHNOLOGIES CANADA INC. AND IS PROTECTED BY ALL APPLICABLE LAWS, INCLUDING BUT NOT LIMITED TO COPYRIGHT AND OTHER INTELLECTUAL PROPERTY LAWS. THE DESIGN CONCEPTS AND INFORMATION CONTAINED HEREIN ARE PROPRIETARY TO V.W.T AND ARE SUBMITTED IN CONFIDENCE. THEY ARE NOT TRANSFERABLE. THEY MUST BE USED ONLY FOR THE PURPOSE FOR WHICH THE DOCUMENT IS EXPRESSLY SUBMITTED AND NO IMPLICIT LICENCE IS GRANTED OTHERWISE BY THE SUBMISSION OF THIS DOCUMENT. THEY ARE CONFIDENTIAL AND PRIVILEGED INFORMATION OF V.W.T. AND THEY MUST NOT BE DISCLOSED, REPRODUCED, LOANED, REMITTED OR USED IN ANY OTHER MANNER WITHOUT THE EXPRESS WRITTEN CONSENT OF V.W.T. V.W.T. ASSUMES NO RESPONSIBILITY OR LIABILITY FOR THE USE OF THIS DOCUMENT OR THE DESIGN CONCEPTS AND INFORMATION CONTAINED HEREIN FOR ANOTHER PROJECT, OR IN A MANNER THAT DOES NOT RELATE TO THE FITNESS OR PURPOSE OF THIS DOCUMENT. IN NO EVENT SHALL THIS DOCUMENT OR THE DESIGN CONCEPTS AND INFORMATION CONTAINED HEREIN BE USED IN A MANNER DETRIMENTAL TO THE INTEREST OF V.W.T. ALL COPYRIGHT, PATENT AND OTHER INTELLECTUAL PROPERTY RIGHTS ARE RESERVED. ACCEPTANCE OF THE DELIVERY OF THIS DOCUMENT CONSTITUTES AGREEMENT TO THESE TERMS AND CONDITIONS.

| | |
|---|---|
| DESIGNER | DATE |
| CHECKER | DATE |
| ENGINEER | DATE |
| SCALE: | |

TITLE: HYDRACARB #2
65PLC68004
TITLE PAGE

CLIENT: MELIADINE

VEOLIA
VEOLIA WATER TECHNOLOGIES CANADA INC. 4105 Sartelon, Saint-Laurent, Qc, Canada. Tel: (514) 334-7230

| PROJECT DRAWING | INTERNAL | SHEET | REV |
|---|---|---|---|
| 5000220043 – EPL-0002-AU-VWT | | 01 OF 06 | 4 |

Jul 12, 2021 10:57:12 – C:\Users\ehorwood\AppData\Local\Temp\AcPublish_19764\A7281A-5000220043-0002-EPL.dwg – ehorwood

| DESCRIPTION | DRAWING NUMBER |
|---|---|
| TITLE PAGE | 5000220043-EPL-0002-AU-VWT-01 |
| LEGEND & DRAWING LIST | 5000220043-EPL-0002-AU-VWT-02 |
| EXTERNAL LAYOUT & LOCAL STATION | 5000220043-EPL-0002-AU-VWT-03 |
| INTERNAL LAYOUT | 5000220043-EPL-0002-AU-VWT-04 |
| BILL OF MATERIAL | 5000220043-EPL-0002-AU-VWT-05 |
| TERMINAL LAYOUT | 5000220043-EPL-0002-AU-VWT-06 |
| | |
| ELECTRICAL SCHEMATIC (DISTRIBUTION 600VAC) | 5000220043-ELD-0002-AU-VWT-01 |
| ELECTRICAL SCHEMATIC (DISTRIBUTION 600VAC) | 5000220043-ELD-0002-AU-VWT-02 |
| ELECTRICAL SCHEMATIC (DISTRIBUTION 120VAC) | 5000220043-ELD-0002-AU-VWT-03 |
| ELECTRICAL SCHEMATIC (DISTRIBUTION 24VDC) | 5000220043-ELD-0002-AU-VWT-04 |
| ELECTRICAL SCHEMATIC (ETHERNET CONNECTION) | 5000220043-ELD-0002-AU-VWT-05 |
| ELECTRICAL SCHEMATIC (PLC DI) | 5000220043-ELD-0002-AU-VWT-06 |
| ELECTRICAL SCHEMATIC (PLC DI) | 5000220043-ELD-0002-AU-VWT-07 |
| ELECTRICAL SCHEMATIC (PLC DO) | 5000220043-ELD-0002-AU-VWT-08 |
| ELECTRICAL SCHEMATIC (PLC DO) | 5000220043-ELD-0002-AU-VWT-09 |
| ELECTRICAL SCHEMATIC (PLC AO) | 5000220043-ELD-0002-AU-VWT-09 |

## LEGEND

- LOW PRESSURE
- HIGH PRESSURE
- LOW LEVEL
- HIGH LEVEL
- LIMIT SWITCH
- LIMIT SWITCH
- LOW FLOW
- HIGH FLOW
- RELAY CONTACT
- RELAY CONTACT
- RELAY CONTACT
- ON DELAY TIMER
- OFF DELAY TIMER
- GROUND
- ISOLATED GROUND
- FUSE (POWER)
- FUSE (CONTROL)
- DISTRIBUTION BLOCK
- MAINTAINED TWO SELECTOR SWITCH
- MAINTAINED 3 POSITIONS SELECTOR SWITCH
- SPRING RETURN FROM LEFT 3 POSITIONS SELECTOR SWITCH
- SPRING RETURN FROM RIGHT 3 POSITIONS SELECTOR SWITCH
- SPRING RETURN FROM BOTH 3 POSITIONS SELECTOR SWITCH
- PUSH BUTTON
- PUSH BUTTON
- PULL BUTTON
- PULL BUTTON
- EMERGENCY STOP BUTTON
- POTENTIOMETER
- CURRENT TRANSFORMER
- THERMOSTAT
- THERMOSTAT
- 1 POLE CIRCUIT BREAKER
- COOLING FAN
- RECEPTACLE 120VAC WITH RJ45
- RECEPTACLE 120VAC DUPLEX
- PILOT LIGHT
- PUSH TO TEST PILOT LIGHT
- RELAY COIL
- RELAY COIL WITH SURGE SUPPRESSOR
- CONTACTOR COIL
- CONTACTOR COIL WITH SURGE SUPPRESSOR
- ALARM
- RESISTOR
- SOLENOID
- PULL CORD
- ZERO SPEED DETECTOR
- POWER BLOCK FOSGIELD WIRING
- TERMINAL
- WIRING JUNCTION
- KNIFE TERMINAL
- 3 POLES THERMAL MAGNETIC CIRCUIT BREAKER
- 3 POLES MAGNETIC CIRCUIT BREAKER
- 3 POLES FUSIBLE DISCONNECT SWITCH
- 3 POLES DISCONNECT SWITCH
- 3 POLES CONTACTOR
- 3 POLES OVERLOAD RELAY

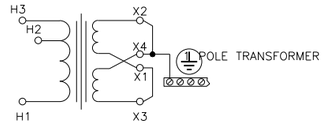


### WIRE NUMBER

XX XX XX
- LINE NUMBER
- PAGE NUMBER
- PANEL NUMBER

### WIRE COLOR CODE

| MINIMAL 16AWG GAUGE | |
|---|---|
| 3 PHASE (600VAC) | BLACK |
| POWER 120VAC | BLACK |
| CONTROL 120VAC | RED |
| NEUTRAL | WHITE |
| 24VDC | BLUE |
| 0VDC | BLUE/WHITE |
| DRY CONTRACT | YELLOW |
| NON-ISOLATED GROUND | GREEN |
| ISOLATED GROUND | GREEN/YELLOW |
| TWISTED PAIR | (+) RED & (-) BLACK |

| REV | DESCRIPTION | DATE | REVD | CHKD | APVD | ECN |
|---|---|---|---|---|---|---|
| | | | | | | |
| | | | | | | |
| 4 | AS BUILT | 2021-06-21 | EH | RA | - | - |
| 3 | FOR FABRICATION | 2021-05-18 | EH | RA | - | - |
| 2 | FOR APPROVAL | 2021-04-12 | EH | RA | - | - |
| 1 | FOR APPROVAL | 2021-03-17 | EH | RA | - | - |

**CONFIDENTIALITY AND INTELLECTUAL PROPERTY NOTICE**
ALL INFORMATION CONTAINED IN THIS DOCUMENT IS THE SOLE PROPERTY OF VEOLIA WATER TECHNOLOGIES CANADA INC. AND IS PROTECTED BY ALL APPLICABLE LAWS, INCLUDING BUT NOT LIMITED TO COPYRIGHT AND OTHER INTELLECTUAL PROPERTY LAWS. THE DESIGN CONCEPTS AND INFORMATION CONTAINED HEREIN ARE PROPRIETARY TO V.W.T AND ARE SUBMITTED IN CONFIDENCE. THEY ARE NOT TRANSFERABLE. THEY MUST BE USED ONLY FOR THE PURPOSE FOR WHICH THE DOCUMENT IS EXPRESSLY SUBMITTED AND NO IMPLICIT LICENCE IS GRANTED OTHERWISE BY THE SUBMISSION OF THIS DOCUMENT. THEY ARE CONFIDENTIAL AND PRIVILEGED INFORMATION OF V.W.T. AND THEY MUST NOT BE DISCLOSED, REPRODUCED, LOANED, REMITTED OR USED IN ANY OTHER MANNER WITHOUT THE EXPRESS WRITTEN CONSENT OF V.W.T. V.W.T. ASSUMES NO RESPONSIBILITY OR LIABILITY FOR THE USE OF THIS DOCUMENT OR THE DESIGN CONCEPTS AND INFORMATION CONTAINED HEREIN FOR ANOTHER PROJECT, OR IN A MANNER THAT DOES NOT RELATE TO THE FITNESS OR PURPOSE OF THIS DOCUMENT. IN NO EVENT SHALL THIS DOCUMENT OR THE DESIGN CONCEPTS AND INFORMATION CONTAINED HEREIN BE USED IN A MANNER DETRIMENTAL TO THE INTEREST OF V.W.T. ALL COPYRIGHT, PATENT AND OTHER INTELLECTUAL PROPERTY RIGHTS ARE RESERVED. ACCEPTANCE OF THE DELIVERY OF THIS DOCUMENT CONSTITUTES AGREEMENT TO THESE TERMS AND CONDITIONS.

| | |
|---|---|
| DESIGNER | DATE |
| CHECKER | DATE |
| ENGINEER | DATE |
| SCALE: | |

TITLE: HYDRACARB #2
65PLC68004
LEGEND & DRAWING LIST

CLIENT: MELIADINE

VEOLIA WATER TECHNOLOGIES CANADA INC. 4105 Sartelon, Saint-Laurent, Qc, Canada. Tel: (514) 334-7230

| PROJECT | DRAWING | INTERNAL | SHEET | REV |
|---|---|---|---|---|
| 5000220043 | EPL-0002-AU-VWT | | 02 OF 06 | 4 |

BAR = 1" AT PLOT SCALE
REF: A7281A
STD: "B" 11x17

Jul 12, 2021 10:57:12 – C:\Users\ehorwood\AppData\Local\Temp\AcPublish_19764\A7281A-5000220043-0002-EPL.dwg – ehorwood

ENLCOSURE : 48(H)X36(W)X12(D)''
PROTECTION : NEMA 12
APPROVAL : CSA

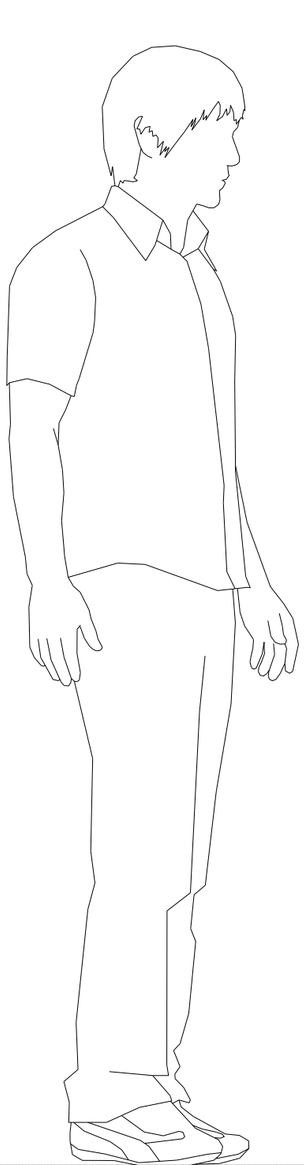

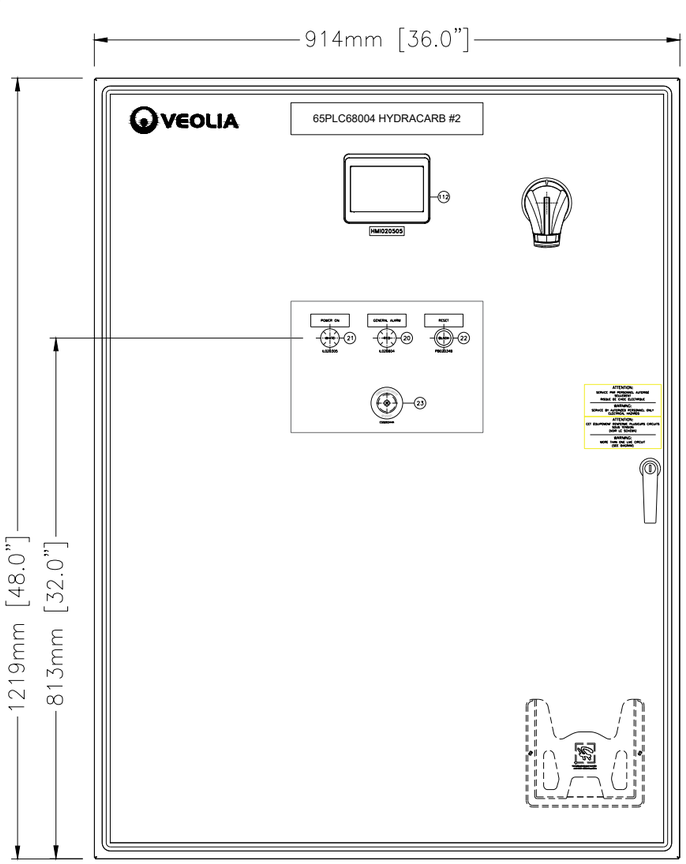


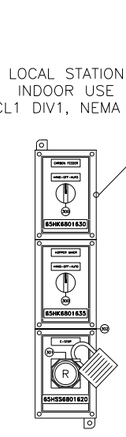


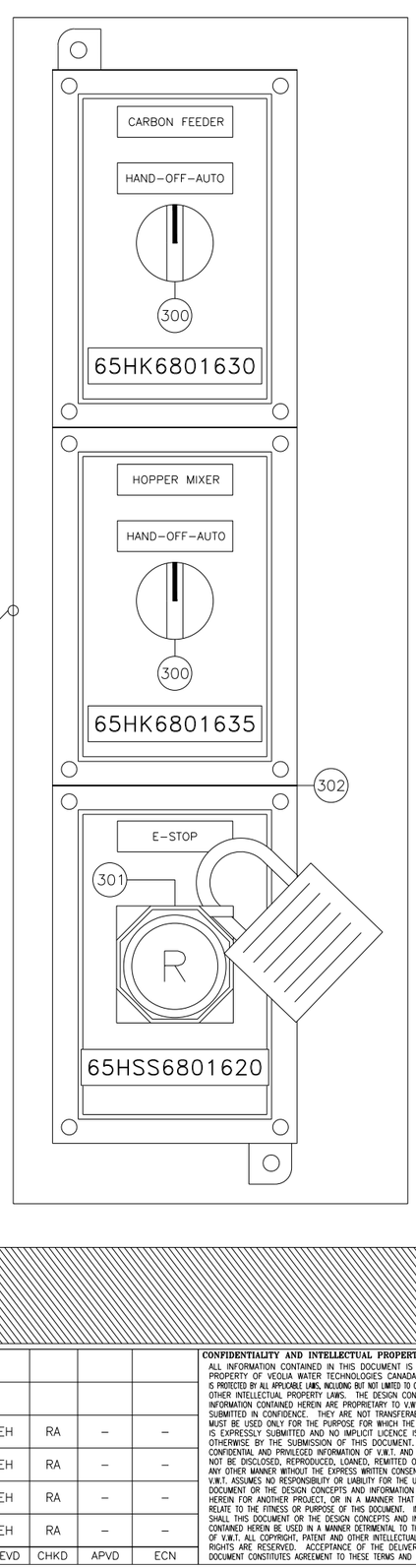


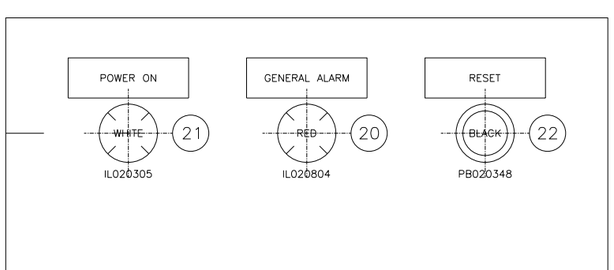


ATTENTION:
SERVICE PAR PERSONNEL AUTORISÉ SEULEMENT
RISQUE DE CHOC ÉLECTIRQUE

WARNING:
SERVICE BY AUTORIZED PERSONNEL ONLY
ELECTRICAL HAZARDS

ATTENTION:
CET ÉQUIPEMENT RENFERME PLUSIEURS CIRCUITS SOUS TENSION
(VOIR LE SCHÉMA)

WARNING:
MORE THAN ONE LIVE CIRCUIT
(SEE DIAGRAM)

| REV | DESCRIPTION | DATE | REVD | CHKD | APVD | ECN |
|---|---|---|---|---|---|---|
| | | | | | | |
| | | | | | | |
| 4 | AS BUILT | 2021-06-21 | EH | RA | – | – |
| 3 | FOR FABRICATION | 2021-05-18 | EH | RA | – | – |
| 2 | FOR APPROVAL | 2021-04-12 | EH | RA | – | – |
| 1 | FOR APPROVAL | 2021-03-17 | EH | RA | – | – |

**CONFIDENTIALITY AND INTELLECTUAL PROPERTY NOTICE**
ALL INFORMATION CONTAINED IN THIS DOCUMENT IS THE SOLE PROPERTY OF VEOLIA WATER TECHNOLOGIES CANADA INC. AND IS PROTECTED BY ALL APPLICABLE LAWS, INCLUDING BUT NOT LIMITED TO COPYRIGHT AND OTHER INTELLECTUAL PROPERTY LAWS. THE DESIGN CONCEPTS AND INFORMATION CONTAINED HEREIN ARE PROPRIETARY TO V.W.T AND ARE SUBMITTED IN CONFIDENCE. THEY ARE NOT TRANSFERABLE. THEY MUST BE USED ONLY FOR THE PURPOSE FOR WHICH THE DOCUMENT IS EXPRESSLY SUBMITTED AND NO IMPLICIT LICENCE IS GRANTED OTHERWISE BY THE SUBMISSION OF THIS DOCUMENT. THEY ARE CONFIDENTIAL AND PRIVILEGED INFORMATION OF V.W.T. AND THEY MUST NOT BE DISCLOSED, REPRODUCED, LOANED, REMITTED OR USED IN ANY OTHER MANNER WITHOUT THE EXPRESS WRITTEN CONSENT OF V.W.T. V.W.T. ASSUMES NO RESPONSIBILITY OR LIABILITY FOR THE USE OF THIS DOCUMENT OR THE DESIGN CONCEPTS AND INFORMATION CONTAINED HEREIN FOR ANOTHER PROJECT, OR IN A MANNER THAT DOES NOT RELATE TO THE FITNESS OR PURPOSE OF THIS DOCUMENT. IN NO EVENT SHALL THIS DOCUMENT OR THE DESIGN CONCEPTS AND INFORMATION CONTAINED HEREIN BE USED IN A MANNER DETRIMENTAL TO THE INTEREST OF V.W.T. ALL COPYRIGHT, PATENT AND OTHER INTELLECTUAL PROPERTY RIGHTS ARE RESERVED. ACCEPTANCE OF THE DELIVERY OF THIS DOCUMENT CONSTITUTES AGREEMENT TO THESE TERMS AND CONDITIONS.

| | |
|---|---|
| DESIGNER | DATE |
| CHECKER | DATE |
| ENGINEER | DATE |
| SCALE: | |

TITLE: HYDRACARB #2
65PLC68004
EXTERNAL LAYOUT & LOCAL STATION

CLIENT: MELIADINE

VEOLIA
VEOLIA WATER TECHNOLOGIES CANADA INC. 4105 Sartelon, Saint-Laurent, Qc, Canada. Tel: (514) 334-7230

| PROJECT | DRAWING | INTERNAL | SHEET | REV |
|---|---|---|---|---|
| 5000220043 – EPL–0002–AU–VWT | | | 03 OF 06 | 4 |

BAR = 1" AT PLOT SCALE
REF: A7281A
STD: "B" 11x17

Jul 12, 2021 10:57:14 – C:\Users\ehorwood\AppData\Local\Temp\AcPublish_19764\A7281A-5000220043-0002-EPL.dwg – ehorwood

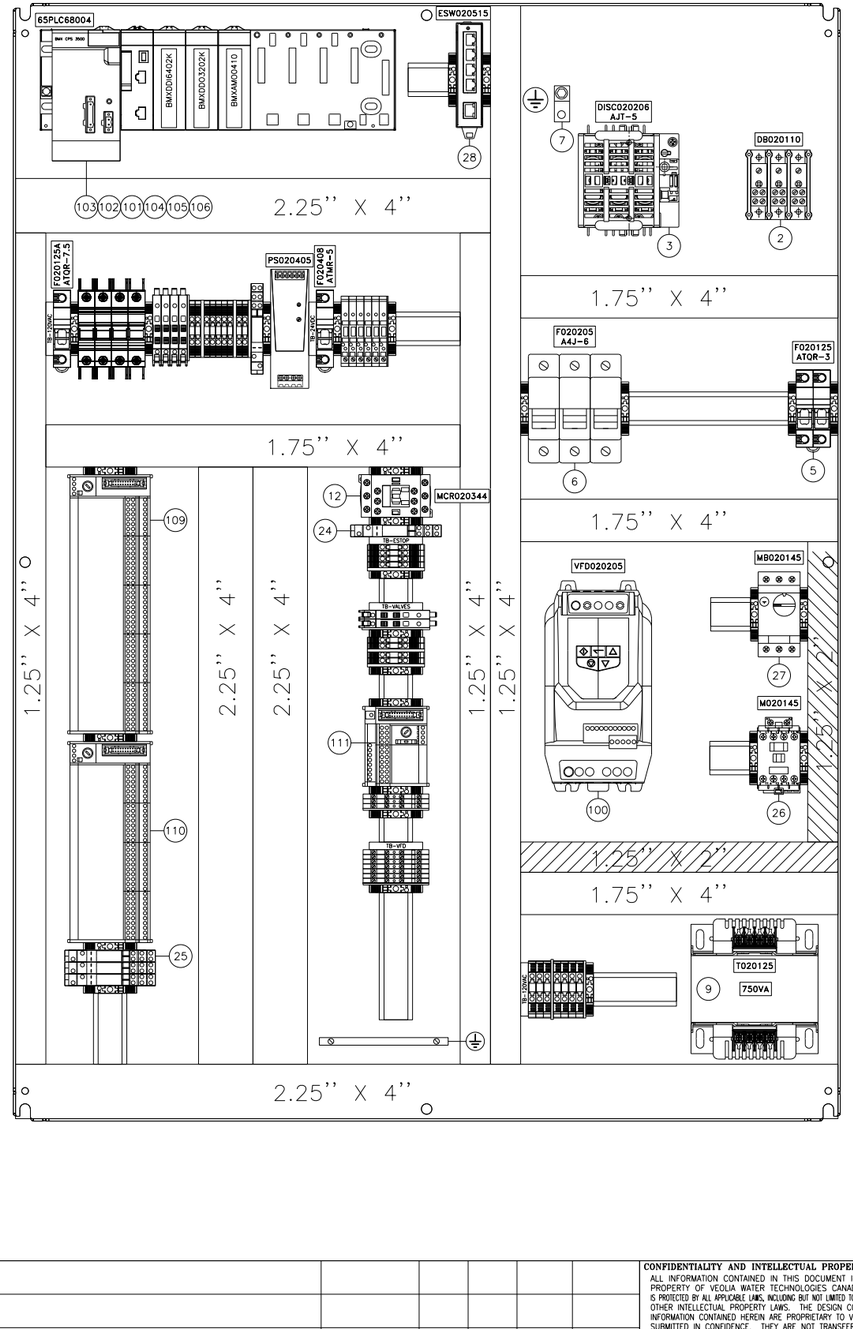


| REV | DESCRIPTION | DATE | REVD | CHKD | APVD | ECN |
|---|---|---|---|---|---|---|
| | | | | | | |
| | | | | | | |
| 4 | AS BUILT | 2021-06-21 | EH | RA | – | – |
| 3 | FOR FABRICATION | 2021-05-18 | EH | RA | – | – |
| 2 | FOR APPROVAL | 2021-04-12 | EH | RA | – | – |
| 1 | FOR APPROVAL | 2021-03-17 | EH | RA | – | – |

**CONFIDENTIALITY AND INTELLECTUAL PROPERTY NOTICE**
ALL INFORMATION CONTAINED IN THIS DOCUMENT IS THE SOLE PROPERTY OF VEOLIA WATER TECHNOLOGIES CANADA INC. AND IS PROTECTED BY ALL APPLICABLE LAWS, INCLUDING BUT NOT LIMITED TO COPYRIGHT AND OTHER INTELLECTUAL PROPERTY LAWS. THE DESIGN CONCEPTS AND INFORMATION CONTAINED HEREIN ARE PROPRIETARY TO V.W.T AND ARE SUBMITTED IN CONFIDENCE. THEY ARE NOT TRANSFERABLE. THEY MUST BE USED ONLY FOR THE PURPOSE FOR WHICH THE DOCUMENT IS EXPRESSLY SUBMITTED AND NO IMPLICIT LICENCE IS GRANTED OTHERWISE BY THE SUBMISSION OF THIS DOCUMENT. THEY ARE CONFIDENTIAL AND PRIVILEGED INFORMATION OF V.W.T. AND THEY MUST NOT BE DISCLOSED, REPRODUCED, LOANED, REMITTED OR USED IN ANY OTHER MANNER WITHOUT THE EXPRESS WRITTEN CONSENT OF V.W.T. V.W.T. ASSUMES NO RESPONSIBILITY OR LIABILITY FOR THE USE OF THIS DOCUMENT OR THE DESIGN CONCEPTS AND INFORMATION CONTAINED HEREIN FOR ANOTHER PROJECT, OR IN A MANNER THAT DOES NOT RELATE TO THE FITNESS OR PURPOSE OF THIS DOCUMENT. IN NO EVENT SHALL THIS DOCUMENT OR THE DESIGN CONCEPTS AND INFORMATION CONTAINED HEREIN BE USED IN A MANNER DETRIMENTAL TO THE INTEREST OF V.W.T. ALL COPYRIGHT, PATENT AND OTHER INTELLECTUAL PROPERTY RIGHTS ARE RESERVED. ACCEPTANCE OF THE DELIVERY OF THIS DOCUMENT CONSTITUTES AGREEMENT TO THESE TERMS AND CONDITIONS.

| | |
|---|---|
| DESIGNER | DATE |
| CHECKER | DATE |
| ENGINEER | DATE |
| SCALE: | |

TITLE: HYDRACARB #2
65PLC68004
INTERNAL LAYOUT

CLIENT: MELIADINE

VEOLIA

VEOLIA WATER TECHNOLOGIES CANADA INC. 4105 Sartelon, Saint-Laurent, Qc, Canada. Tel: (514) 334-7230

| PROJECT | DRAWING | INTERNAL | SHEET | REV |
|---|---|---|---|---|
| 5000220043 – | EPL-0002-AU-VWT | | 04 OF 06 | 4 |

BAR = 1" AT PLOT SCALE
REF: A7281A
STD: "B" 11x17

Jul 12, 2021 10:57:14 – C:\Users\ehorwood\AppData\Local\Temp\AcPublish_19764\A7281A-5000220043-0002-EPL.dwg – ehorwood

| ITEM | DESCRIPTION | PART | MANUF. | QTE | BY |
|---|---|---|---|---|---|
| 1 | ENCLOSURE NEMA 12/4, 48 x 36 x 12" (HWD)<br>C/W EP4836, EZPMFHD, PKT99 | EN4SD483612GY | HAMMOND | 1 | ENV |
| 2 | DISTRIBUTION BLOCK, 3 POLES, 1 IN – 4 OUT, 115A<br>C/W PROTECTIVE COVER 1492–PBC9 | 1492–PDM3141 | ALLEN–BRADLEY | 1 | ENV |
| 3 | DISCONNECT SWITCH 600VCA, 3 PÔLES, 30 AMPS<br>C/W HANDLE GS2AH110 AND EXTENSION ROD GS2AE81 | GS1DU3 | SCHNEIDER | 1 | ENV |
| 4 | FUSE HOLDER, 600VAC, 1P, 30 AMP, CC TYPE<br>C/A FUSES | E91/30CCS | ABB | 2 | ENV |
| 5 | FUSE HOLDER, 600VAC, 2P, 30 AMP, CC TYPE<br>C/A FUSES | E92/30CCS | ABB | 1 | ENV |
| 6 | FUSE HOLDER, 600VAC, 3P, 30 AMP, J TYPE<br>C/A FUSES | E93/30J | ABB | 1 | ENV |
| 7 | GROUND LUG | SLU70 | – | 1 | ENV |
| 8 | COPPER GROUND BAR, 5FEET, #4–14AWG | 4C–190 | NSI INDUSTRIES | A/R | ENV |
| 9 | TRANSFORMER, 600VAC TO 120VAC, 750VA<br>C/W 2X SPFG | SP750ACP | HAMMOND | 1 | ENV |
| 10 | POWER SUPPLY 24VDC, 120W, 5AMP | 1469480000 | WEIDMULLER | 1 | ENV |
| 11 | BREAKER, MULTI9, C CURVE<br>EX. M9F421XX (XX AMP) | M9F421XX | SCHNEIDER | A/R | ENV |
| 12 | SAFETY CONTACTOR 5 NO, 10A COIL, 120VAC<br>C/W AUX. CONTACT LADN22 | CAD50G7 | SCHNEIDER | 1 | ENV |
| 13 | TERMINAL 600VAC/DC, 30A WDU 4<br>C/W END PLATE 1050000000 | 1020100000 | WEIDMULLER | A/R | ENV |
| 14 | TERMINAL 600VAC/DC, 50A WDU 6<br>C/W END PLATE 1050000000 OR SEPERATOR 1050100000 | 1020200000 | WEIDMULLER | A/R | ENV |
| 15 | –<br>– | – | – | – | – |
| 16 | FUSE TERMINAL 2 LEVEL 5x20mm, 300VAC/DC, 10A, KDKS 1/EN4<br>C/W END PLATE 9503330000 | 9503350000 | WEIDMULLER | A/R | ENV |
| 17 | TERMINAL 2 LEVEL 300VAC/DC, 10A, WDK 2.5<br>C/W END PLATE 1059100000 | 1021500000 | WEIDMULLER | A/R | ENV |
| 18 | FUSE TERMINAL ¼ X 1¼, 300VAC/DC, 15A, WSI 4/2<br>C/W END PLATE 1880450000 | 1880430000 | WEIDMULLER | A/R | ENV |
| 19 | END STOPPER WEW 35/2 | 1061200000 | WEIDMULLER | A/R | ENV |
| 20 | PILOT LENS RED FOR LED MODULE 22MM<br>C/W RED LED 24VDC AND BASE ZB4BVB4 | ZB4BV043 | SCHNEIDER | 1 | ENV |
| 21 | PILOT LENS WHITE FOR LED MODULE 22MM<br>C/W WHITE LED AND BASE ZB4BVG1 | ZB4BV013 | SCHNEIDER | 1 | ENV |
| 22 | BLACK PB, FLUSH HEAD, 22MM<br>C/W BASE ZB4BZ009 + NO ZBE101 | ZB4BA2 | SCHNEIDER | 1 | ENV |
| 23 | ESTOP BUTTON RED, TURN TO RELEASE, 40mm<br>C/W ZBY9320 | ZB4BS844 | SCHNEIDER | 1 | ENV |
| 24 | 2 POLES RELAY, 120VAC COIL<br>C/W BASE 700–HN222 | 700–HK32A1 | ALLEN–BRADLEY | A/R | ENV |
| 25 | 2 POLES RELAY, 24VDC COIL<br>C/W BASE 700–HN222 | 700–HK32Z24 | ALLEN BRADLEY | A/R | ENV |
| 26 | CONTACTOR 3P 600VAC 9A COIL 24VDC<br>C/W LADN11 | LC1D09BD | SCHNEIDER | 1 | ENV |
| 27 | MOTOR CIRCUIT BREAKER, 3P, 0.63–1A, THERMAL MAGNETIC<br>C/W GVAE11 | GV2PE05 | SCHNEIDER | 1 | ENV |
| 28 | ETHERNET SWITCH 5 PORTS | 2891001 | PHOENIX | 1 | VEO |
| 29 | 2 POLE RELAY, 24VDC COIL<br>C/W BASE 700–HN222 | 700–HK32Z24 | ALLEN–BRADLEY | A/R | ENV |

| ITEM | DESCRIPTION | PART | MANUF. | QTE | BY |
|---|---|---|---|---|---|
| 100 | DRIVE AC, 600V, 1HP, 2.1AMPS | ACS255–03U–02A1–6 | ABB | 1 | VEO |
| 101 | MODICON M340 PROCESSOR | BMXP342020 | SCHNEIDER | 1 | VEO |
| 102 | POWER SUPPLY MODULE | BMXCPS3500 | SCHNEIDER | 1 | VEO |
| 103 | RACK 8 SLOTS FOR PLC MODULES | BMEXBP0800 | SCHNEIDER | 1 | VEO |
| 104 | DIGITAL INPUT MODULE, 64 DI | BMXDDI6402K | SCHNEIDER | 1 | VEO |
| 105 | DIGITAL OUTPUT MODULE, 32 DO | BMXDDO3202K | SCHNEIDER | 1 | VEO |
| 106 | ANALOG OUTPUT MODULE, 4 AO | BMXAMO0410 | SCHNEIDER | 1 | VEO |
| 107 | CONNECTOR CABLE FOR I/O MODULES, 1m | BMXFCC103 | SCHNEIDER | 2 | VEO |
| 108 | CONNECTOR CABLE FOR I/O MODULES, 1.5m | BMXFCA152 | SCHNEIDER | 1 | VEO |
| 109 | TELEFAST 16 CHANNELS FOR DI<br>C/W ABS7EC3B2, ABE7BV10 (2X) | ABE7P16F310 | SCHNEIDER | 1 | VEO |
| 110 | TELEFAST 16 CHANNELS FOR DO<br>C/W ABR7S21, ABE7BV10 (1X) | ABE7P16T210 | SCHNEIDER | 1 | VEO |
| 111 | TELEFAST 4 CHANNELS FOR AO<br>C/W ABE7BV10 (1X) | ABE7CPA21 | SCHNEIDER | 1 | VEO |
| 112 | 4"W touch panel display, 1COM,<br>1Ethernet, USB host&device, 24VDC | HMIGTO1310 | SCHNEIDER | 1 | VEO |

LOCAL STATION PARTS LIST

| ITEM | DESCRIPTION | PART NUMBER | MANUF. | QTY | BY |
|---|---|---|---|---|---|
| 300 | 3 POSITION SELECTOR<br>30mm, C/W CONTACT 800T–XA(1X) | 800H–JP2KB7AXXX | ALLEN–BRADLEY | 2 | ENV |
| 301 | RED EMERGENCY PUSH BUTTON<br>C/W 800H–NP4 | 800H–FPX6D4 | ALLEN–BRADLEY | 1 | ENV |
| 302 | NEMA 7/9 LOCAL STATION 3 HOLES<br>C/W COVER 800H–NP30 (3X) | 800H–3HYX7 | ALLEN–BRADLEY | 1 | ENV |

| REV | DESCRIPTION | DATE | REVD | CHKD | APVD | ECN |
|---|---|---|---|---|---|---|
| | | | | | | |
| | | | | | | |
| 4 | AS BUILT | 2021–06–21 | EH | RA | – | – |
| 3 | FOR FABRICATION | 2021–05–18 | EH | RA | – | – |
| 2 | FOR APPROVAL | 2021–04–12 | EH | RA | – | – |
| 1 | FOR APPROVAL | 2021–03–17 | EH | RA | – | – |

**CONFIDENTIALITY AND INTELLECTUAL PROPERTY NOTICE**
ALL INFORMATION CONTAINED IN THIS DOCUMENT IS THE SOLE PROPERTY OF VEOLIA WATER TECHNOLOGIES CANADA INC. AND IS PROTECTED BY ALL APPLICABLE LAWS, INCLUDING BUT NOT LIMITED TO COPYRIGHT AND OTHER INTELLECTUAL PROPERTY LAWS. THE DESIGN CONCEPTS AND INFORMATION CONTAINED HEREIN ARE PROPRIETARY TO V.W.T AND ARE SUBMITTED IN CONFIDENCE. THEY ARE NOT TRANSFERABLE. THEY MUST BE USED ONLY FOR THE PURPOSE FOR WHICH THE DOCUMENT IS EXPRESSLY SUBMITTED AND NO IMPLICIT LICENCE IS GRANTED OTHERWISE BY THE SUBMISSION OF THIS DOCUMENT. THEY ARE CONFIDENTIAL AND PRIVILEGED INFORMATION OF V.W.T. AND THEY MUST NOT BE DISCLOSED, REPRODUCED, LOANED, REMITTED OR USED IN ANY OTHER MANNER WITHOUT THE EXPRESS WRITTEN CONSENT OF V.W.T. V.W.T. ASSUMES NO RESPONSIBILITY OR LIABILITY FOR THE USE OF THIS DOCUMENT OR THE DESIGN CONCEPTS AND INFORMATION CONTAINED HEREIN FOR ANOTHER PROJECT, OR IN A MANNER THAT DOES NOT RELATE TO THE FITNESS OR PURPOSE OF THIS DOCUMENT. IN NO EVENT SHALL THIS DOCUMENT OR THE DESIGN CONCEPTS AND INFORMATION CONTAINED HEREIN BE USED IN A MANNER DETRIMENTAL TO THE INTEREST OF V.W.T. ALL COPYRIGHT, PATENT AND OTHER INTELLECTUAL PROPERTY RIGHTS ARE RESERVED. ACCEPTANCE OF THE DELIVERY OF THIS DOCUMENT CONSTITUTES AGREEMENT TO THESE TERMS AND CONDITIONS.

DESIGNER | DATE
CHECKER | DATE
ENGINEER | DATE
SCALE:

TITLE: HYDRACARB #2
65PLC68004
BILL OF MATERIALS

CLIENT: MELIADINE

VEOLIA
VEOLIA WATER TECHNOLOGIES CANADA INC. 4105 Sartelon, Saint-Laurent, Qc, Canada. Tel: (514) 334-7230

| PROJECT | DRAWING | INTERNAL | SHEET | REV |
|---|---|---|---|---|
| 5000220043 | EPL–0002–AU–VWT | | 05 OF 06 | 4 |

BAR = 1" AT PLOT SCALE
REF: A7281A
STD: "B" 11x17

Jul 12, 2021 10:57:14 – C:\Users\ehorwood\AppData\Local\Temp\AcPublish_19764\A7281A-5000220043-0002-EPL.dwg – ehorwood

BAR = 1" AT PLOT SCALE
REF: A7281A
STD: "B" 11x17

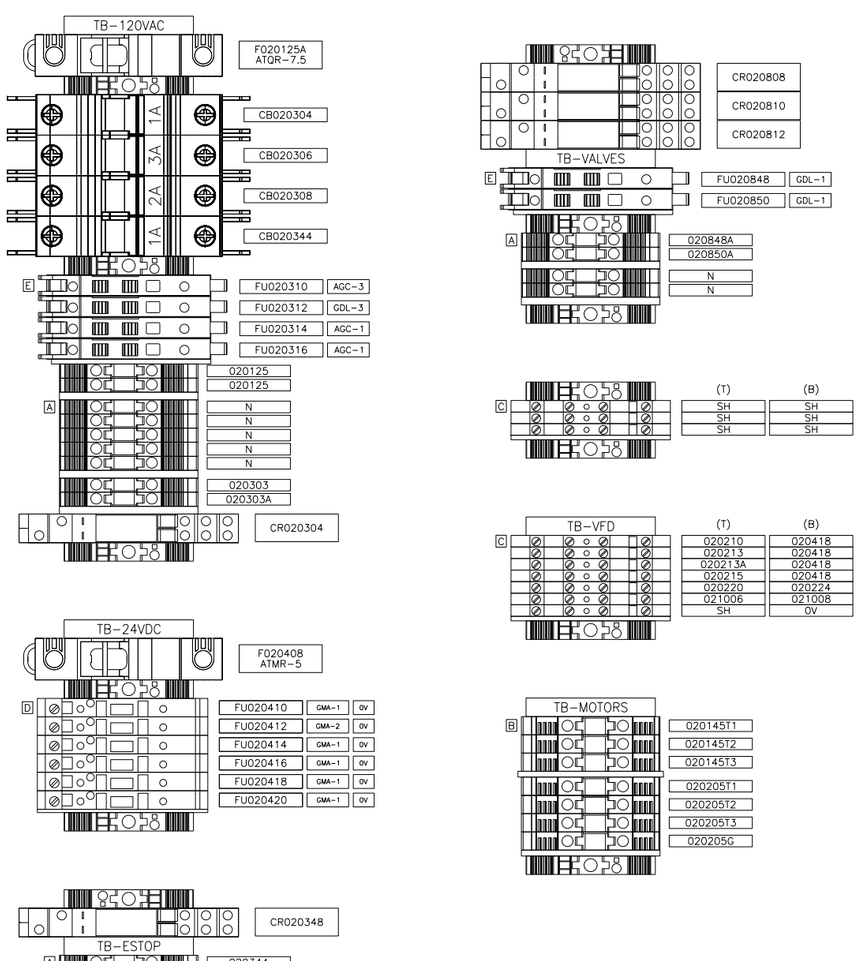














LEGEND :

| | |
|---|---|
| 1 LEVEL, WDU4 | A |
| 1 LEVEL, WDU6 | B |
| 2 LEVEL, WDK2.5 | C |
| 2 LEVEL FUSE TERMINAL 5X20 | D |
| PORTE FUSIBLE 1"X1.25" | E |

| REV | DESCRIPTION | DATE | REVD | CHKD | APVD | ECN |
|---|---|---|---|---|---|---|
| | | | | | | |
| | | | | | | |
| 4 | AS BUILT | 2021-06-21 | EH | RA | – | – |
| 3 | FOR FABRICATION | 2021-05-18 | EH | RA | – | – |
| 2 | FOR APPROVAL | 2021-04-12 | EH | RA | – | – |
| 1 | FOR APPROVAL | 2021-03-17 | EH | RA | – | – |

**CONFIDENTIALITY AND INTELLECTUAL PROPERTY NOTICE**
ALL INFORMATION CONTAINED IN THIS DOCUMENT IS THE SOLE PROPERTY OF VEOLIA WATER TECHNOLOGIES CANADA INC. AND IS PROTECTED BY ALL APPLICABLE LAWS, INCLUDING BUT NOT LIMITED TO COPYRIGHT AND OTHER INTELLECTUAL PROPERTY LAWS. THE DESIGN CONCEPTS AND INFORMATION CONTAINED HEREIN ARE PROPRIETARY TO V.W.T AND ARE SUBMITTED IN CONFIDENCE. THEY ARE NOT TRANSFERABLE. THEY MUST BE USED ONLY FOR THE PURPOSE FOR WHICH THE DOCUMENT IS EXPRESSLY SUBMITTED AND NO IMPLICIT LICENCE IS GRANTED OTHERWISE BY THE SUBMISSION OF THIS DOCUMENT. THEY ARE CONFIDENTIAL AND PRIVILEGED INFORMATION OF V.W.T. AND THEY MUST NOT BE DISCLOSED, REPRODUCED, LOANED, REMITTED OR USED IN ANY OTHER MANNER WITHOUT THE EXPRESS WRITTEN CONSENT OF V.W.T. V.W.T. ASSUMES NO RESPONSIBILITY OR LIABILITY FOR THE USE OF THIS DOCUMENT OR THE DESIGN CONCEPTS AND INFORMATION CONTAINED HEREIN FOR ANOTHER PROJECT, OR IN A MANNER THAT DOES NOT RELATE TO THE FITNESS OR PURPOSE OF THIS DOCUMENT. IN NO EVENT SHALL THIS DOCUMENT OR THE DESIGN CONCEPTS AND INFORMATION CONTAINED HEREIN BE USED IN A MANNER DETRIMENTAL TO THE INTEREST OF V.W.T. ALL COPYRIGHT, PATENT AND OTHER INTELLECTUAL PROPERTY RIGHTS ARE RESERVED. ACCEPTANCE OF THE DELIVERY OF THIS DOCUMENT CONSTITUTES AGREEMENT TO THESE TERMS AND CONDITIONS.

| | |
|---|---|
| DESIGNER | DATE |
| CHECKER | DATE |
| ENGINEER | DATE |
| SCALE: | |

TITLE: HYDRACARB #2
65PLC68004
TERMINAL LAYOUT

CLIENT: MELIADINE

VEOLIA WATER TECHNOLOGIES CANADA INC. 4105 Sartelon, Saint-Laurent, Qc, Canada. Tel: (514) 334-7230

| PROJECT | DRAWING | INTERNAL | SHEET | REV |
|---|---|---|---|---|
| 5000220043 | EPL-0002-AU-VWT | | 06 OF 06 | 4 |

Jul 12, 2021 10:57:16 - C:\Users\ehorwood\AppData\Local\Temp\AcPublish_19764\A7281A-5000220043-0002-EPL.dwg - ehorwood

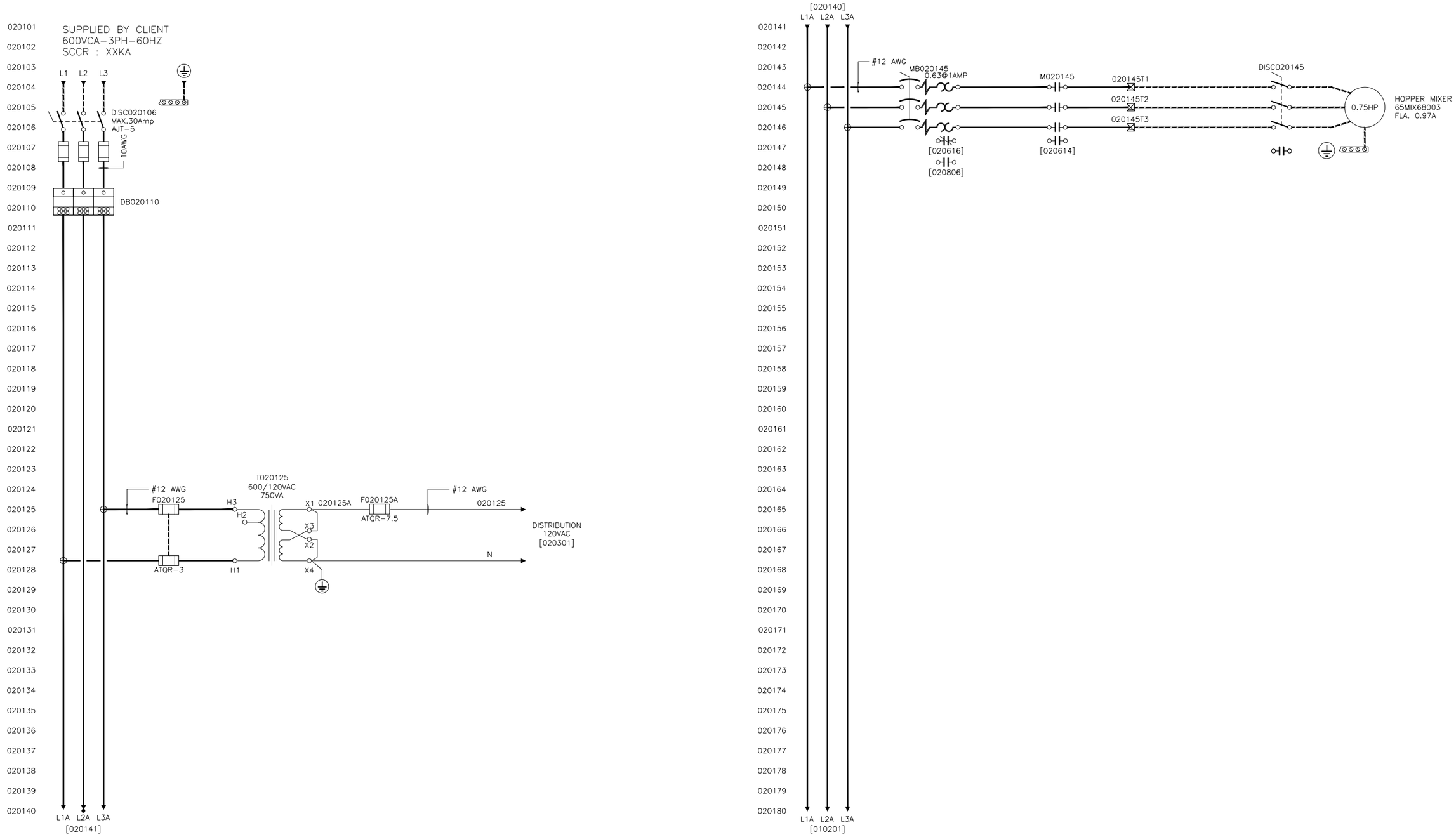


| REV | DESCRIPTION | DATE | REVD | CHKD | APVD | ECN |
|---|---|---|---|---|---|---|
| 4 | AS BUILT | 2021-06-21 | EH | RA | – | – |
| 3 | FOR FABRICATION | 2021-05-18 | EH | RA | – | – |
| 2 | FOR APPROVAL | 2021-04-12 | EH | RA | – | – |
| 1 | FOR APPROVAL | 2021-03-17 | EH | RA | – | – |


**CONFIDENTIALITY AND INTELLECTUAL PROPERTY NOTICE**
ALL INFORMATION CONTAINED IN THIS DOCUMENT IS THE SOLE PROPERTY OF VEOLIA WATER TECHNOLOGIES CANADA INC. AND IS PROTECTED BY ALL APPLICABLE LAWS, INCLUDING BUT NOT LIMITED TO COPYRIGHT AND OTHER INTELLECTUAL PROPERTY LAWS. THE DESIGN CONCEPTS AND INFORMATION CONTAINED HEREIN ARE PROPRIETARY TO V.W.T AND ARE SUBMITTED IN CONFIDENCE. THEY ARE NOT TRANSFERABLE. THEY MUST BE USED ONLY FOR THE PURPOSE FOR WHICH THE DOCUMENT IS EXPRESSLY SUBMITTED AND NO IMPLICIT LICENCE IS GRANTED OTHERWISE BY THE SUBMISSION OF THIS DOCUMENT. THEY ARE CONFIDENTIAL AND PRIVILEGED INFORMATION OF V.W.T. AND THEY MUST NOT BE DISCLOSED, REPRODUCED, LOANED, REMITTED OR USED IN ANY OTHER MANNER WITHOUT THE EXPRESS WRITTEN CONSENT OF V.W.T. V.W.T. ASSUMES NO RESPONSIBILITY OR LIABILITY FOR THE USE OF THIS DOCUMENT OR THE DESIGN CONCEPTS AND INFORMATION CONTAINED HEREIN FOR ANOTHER PROJECT, OR IN A MANNER THAT DOES NOT RELATE TO THE FITNESS OR PURPOSE OF THIS DOCUMENT. IN NO EVENT SHALL THIS DOCUMENT OR THE DESIGN CONCEPTS AND INFORMATION CONTAINED HEREIN BE USED IN A MANNER DETRIMENTAL TO THE INTEREST OF V.W.T. ALL COPYRIGHT, PATENT AND OTHER INTELLECTUAL PROPERTY RIGHTS ARE RESERVED. ACCEPTANCE OF THE DELIVERY OF THIS DOCUMENT CONSTITUTES AGREEMENT TO THESE TERMS AND CONDITIONS.


DESIGNER | DATE
CHECKER | DATE
ENGINEER | DATE
SCALE:

TITLE: HYDRACARB #2
65PLC68004
ELECTRICAL SCHEMATIC (DISTRIBUTION 600VAC)

CLIENT: MELIADINE

VEOLIA
VEOLIA WATER TECHNOLOGIES CANADA INC. 4105 Sartelon, Saint-Laurent, Qc, Canada. Tel: (514) 334-7230

| PROJECT | DRAWING | INTERNAL | SHEET | REV |
|---|---|---|---|---|
| 5000220043 | ELD-0002-AU-VWT | | 01 OF 10 | 4 |

BAR = 1" AT PLOT SCALE
REF: A7281A
STD: "B" 11x17

Jul 12, 2021 10:57:19 – G:\Projets A72XX\A7281A – VEOLIA – Projet 5000220043 A-E Meliadine (HydraCarb 1)\DOC\DESSIN\000-DESSINS\0002\REV4 – AS BUILT\A7281A-5000220043-0002-ELD.dwg – ehorwood

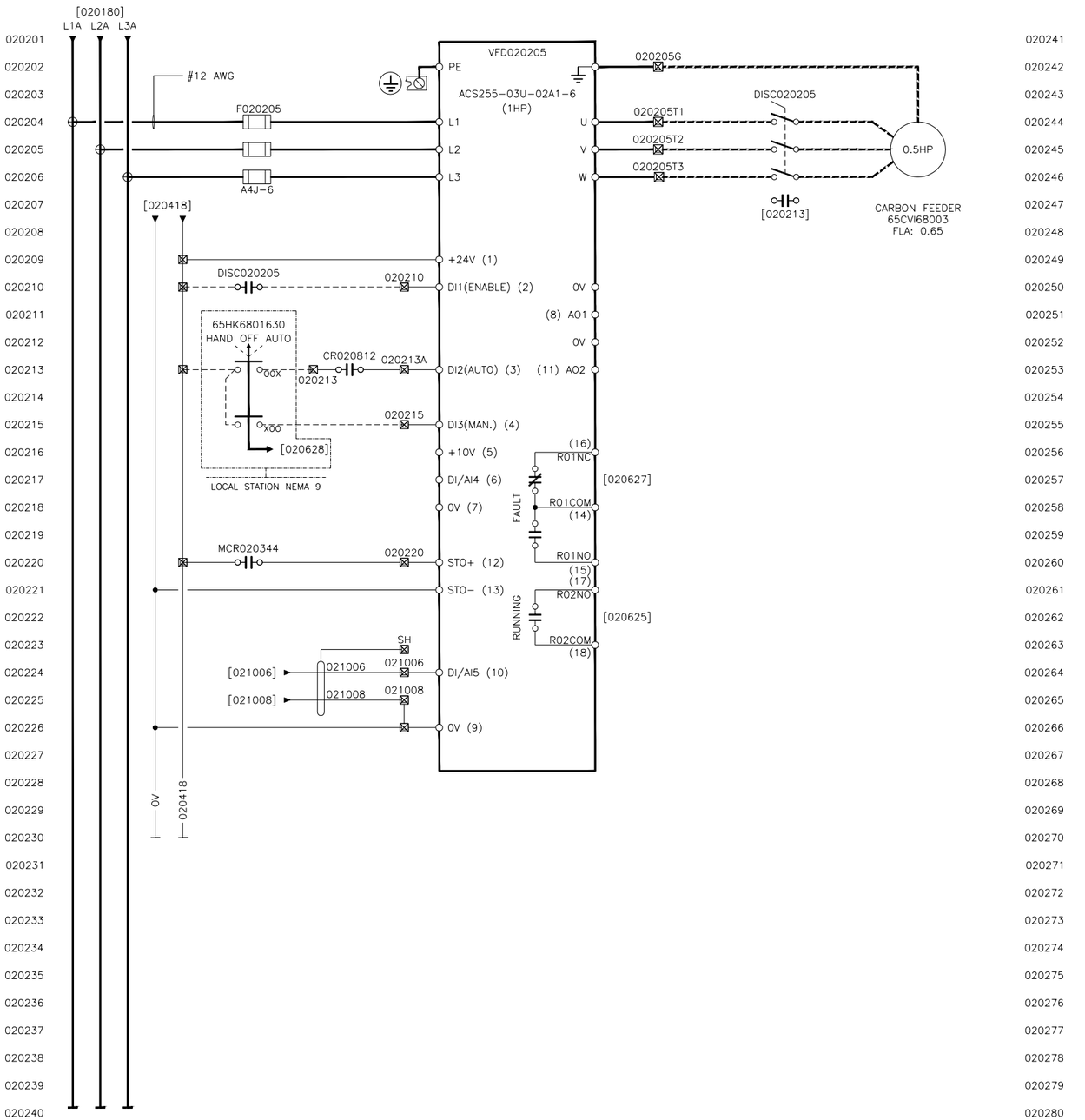


| REV | DESCRIPTION | DATE | REVD | CHKD | APVD | ECN |
|---|---|---|---|---|---|---|
| | | | | | | |
| | | | | | | |
| 4 | AS BUILT | 2021-06-21 | EH | RA | – | – |
| 3 | FOR FABRICATION | 2021-05-18 | EH | RA | – | – |
| 2 | FOR APPROVAL | 2021-04-12 | EH | RA | – | – |
| 1 | FOR APPROVAL | 2021-03-17 | EH | RA | – | – |

**CONFIDENTIALITY AND INTELLECTUAL PROPERTY NOTICE**
ALL INFORMATION CONTAINED IN THIS DOCUMENT IS THE SOLE PROPERTY OF VEOLIA WATER TECHNOLOGIES CANADA INC. AND IS PROTECTED BY ALL APPLICABLE LAWS, INCLUDING BUT NOT LIMITED TO COPYRIGHT AND OTHER INTELLECTUAL PROPERTY LAWS. THE DESIGN CONCEPTS AND INFORMATION CONTAINED HEREIN ARE PROPRIETARY TO V.W.T AND ARE SUBMITTED IN CONFIDENCE. THEY ARE NOT TRANSFERABLE. THEY MUST BE USED ONLY FOR THE PURPOSE FOR WHICH THE DOCUMENT IS EXPRESSLY SUBMITTED AND NO IMPLICIT LICENCE IS GRANTED OTHERWISE BY THE SUBMISSION OF THIS DOCUMENT. THEY ARE CONFIDENTIAL AND PRIVILEGED INFORMATION OF V.W.T. AND THEY MUST NOT BE DISCLOSED, REPRODUCED, LOANED, REMITTED OR USED IN ANY OTHER MANNER WITHOUT THE EXPRESS WRITTEN CONSENT OF V.W.T. V.W.T. ASSUMES NO RESPONSIBILITY OR LIABILITY FOR THE USE OF THIS DOCUMENT OR THE DESIGN CONCEPTS AND INFORMATION CONTAINED HEREIN FOR ANOTHER PROJECT, OR IN A MANNER THAT DOES NOT RELATE TO THE FITNESS OR PURPOSE OF THIS DOCUMENT. IN NO EVENT SHALL THIS DOCUMENT OR THE DESIGN CONCEPTS AND INFORMATION CONTAINED HEREIN BE USED IN A MANNER DETRIMENTAL TO THE INTEREST OF V.W.T. ALL COPYRIGHT, PATENT AND OTHER INTELLECTUAL PROPERTY RIGHTS ARE RESERVED. ACCEPTANCE OF THE DELIVERY OF THIS DOCUMENT CONSTITUTES AGREEMENT TO THESE TERMS AND CONDITIONS.

| | | |
|---|---|---|
| DESIGNER | DATE | |
| CHECKER | DATE | |
| ENGINEER | DATE | |
| SCALE: | | |

TITLE: HYDRACARB #2
65PLC68004
ELECTRICAL SCHEMATIC (DISTRIBUTION 600VAC)

CLIENT: MELIADINE

VEOLIA
VEOLIA WATER TECHNOLOGIES CANADA INC. 4105 Sartelon, Saint-Laurent, Qc, Canada. Tel: (514) 334-7230

| PROJECT / DRAWING | INTERNAL | SHEET | REV |
|---|---|---|---|
| 5000220043 – ELD-0002-AU-VWT | | 02 OF 10 | 4 |

BAR = 1" AT PLOT SCALE
REF: A7281A
STD: "B" 11x17
AS BUILT\A7281A-5000220043-0002-ELD.dwg – ehorwood
Jul 12, 2021 10:57:19 – G:\Projets A72XX\A7281A – VEOLIA – Projet 5000220043 A-E Meliadine (HydroCarb 1)\DOC\DESSIN\000-DESSINS\0002\REV4 –

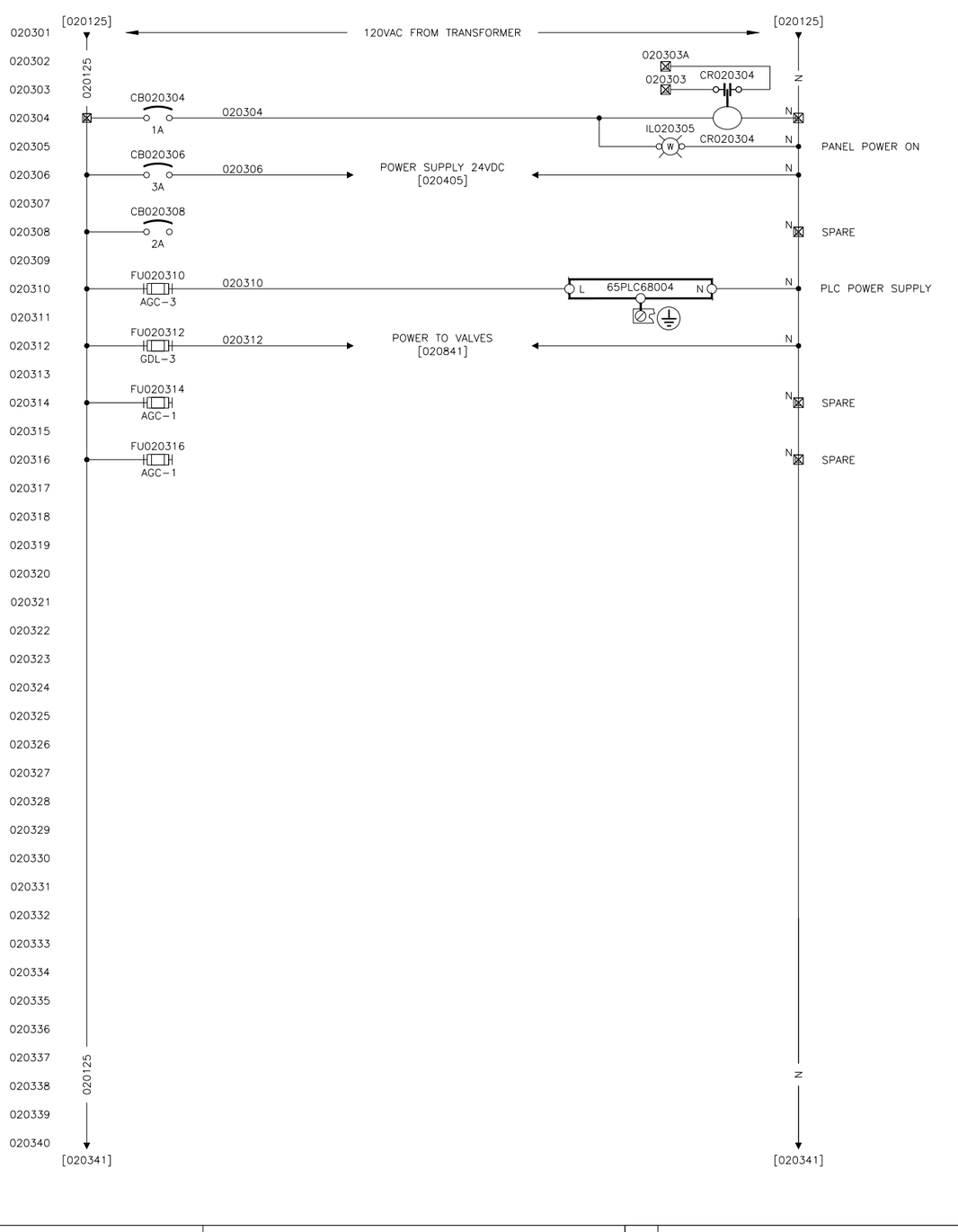


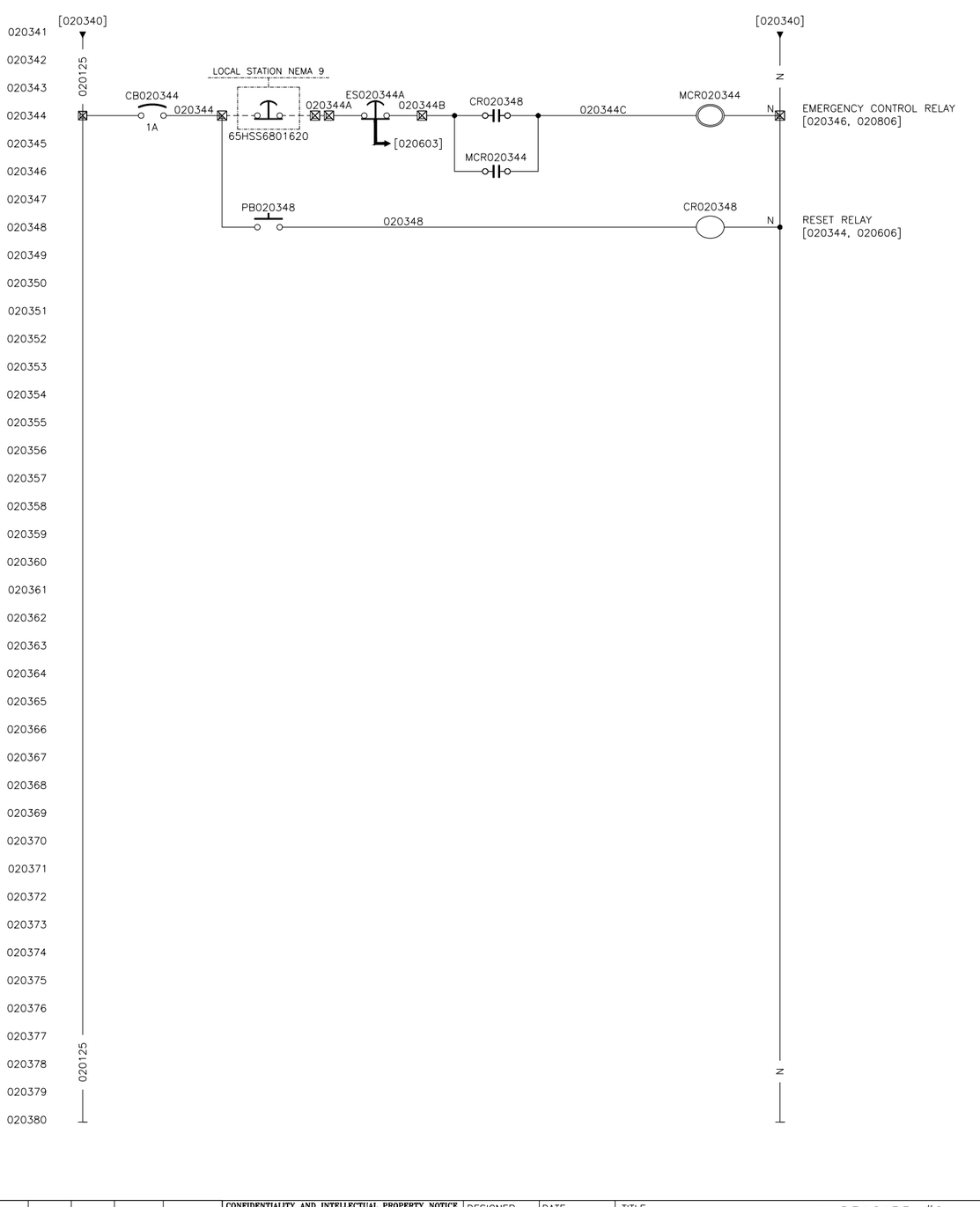


BAR = 1" AT PLOT SCALE

REF: A7281A

STD: "B" 11x17

Jul 12, 2021 10:57:21 – G:\Projets A72XX\A7281A – VEOLIA – Projet 5000220043 A-E Meliadine (HydraCarb 1)\DOC\DESSIN\000-DESSINS\0002\REV4 – AS BUILT\A7281A-5000220043-0002-ELD.dwg – ehorwood

| REV | DESCRIPTION | DATE | REVD | CHKD | APVD | ECN |
|---|---|---|---|---|---|---|
| | | | | | | |
| | | | | | | |
| 4 | AS BUILT | 2021-06-21 | EH | RA | – | – |
| 3 | FOR FABRICATION | 2021-05-18 | EH | RA | – | – |
| 2 | FOR APPROVAL | 2021-04-12 | EH | RA | – | – |
| 1 | FOR APPROVAL | 2021-03-17 | EH | RA | – | – |

**CONFIDENTIALITY AND INTELLECTUAL PROPERTY NOTICE**
ALL INFORMATION CONTAINED IN THIS DOCUMENT IS THE SOLE PROPERTY OF VEOLIA WATER TECHNOLOGIES CANADA INC. AND IS PROTECTED BY ALL APPLICABLE LAWS, INCLUDING BUT NOT LIMITED TO COPYRIGHT AND OTHER INTELLECTUAL PROPERTY LAWS. THE DESIGN CONCEPTS AND INFORMATION CONTAINED HEREIN ARE PROPRIETARY TO V.W.T AND ARE SUBMITTED IN CONFIDENCE. THEY ARE NOT TRANSFERABLE. THEY MUST BE USED ONLY FOR THE PURPOSE FOR WHICH THE DOCUMENT IS EXPRESSLY SUBMITTED AND NO IMPLICIT LICENCE IS GRANTED OTHERWISE BY THE SUBMISSION OF THIS DOCUMENT. THEY ARE CONFIDENTIAL AND PRIVILEGED INFORMATION OF V.W.T. AND THEY MUST NOT BE DISCLOSED, REPRODUCED, LOANED, REMITTED OR USED IN ANY OTHER MANNER WITHOUT THE EXPRESS WRITTEN CONSENT OF V.W.T. V.W.T. ASSUMES NO RESPONSIBILITY OR LIABILITY FOR THE USE OF THIS DOCUMENT OR THE DESIGN CONCEPTS AND INFORMATION CONTAINED HEREIN FOR ANOTHER PROJECT, OR IN A MANNER THAT DOES NOT RELATE TO THE FITNESS OR PURPOSE OF THIS DOCUMENT. IN NO EVENT SHALL THIS DOCUMENT OR THE DESIGN CONCEPTS AND INFORMATION CONTAINED HEREIN BE USED IN A MANNER DETRIMENTAL TO THE INTEREST OF V.W.T. ALL COPYRIGHT, PATENT AND OTHER INTELLECTUAL PROPERTY RIGHTS ARE RESERVED. ACCEPTANCE OF THE DELIVERY OF THIS DOCUMENT CONSTITUTES AGREEMENT TO THESE TERMS AND CONDITIONS.

| | |
|---|---|
| DESIGNER | DATE |
| CHECKER | DATE |
| ENGINEER | DATE |
| SCALE: | |

TITLE
# HYDRACARB #2
# 65PLC68004
# ELECTRICAL SCHEMATIC (DISTRIBUTION 120VAC)

CLIENT
MELIADINE

VEOLIA WATER TECHNOLOGIES CANADA INC. 4105 Sartelon, Saint-Laurent, Qc, Canada. Tel: (514) 334-7230

| PROJECT | DRAWING | INTERNAL | SHEET | REV |
|---|---|---|---|---|
| 5000220043 | – ELD-0002-AU-VWT | | 03 OF 10 | 4 |

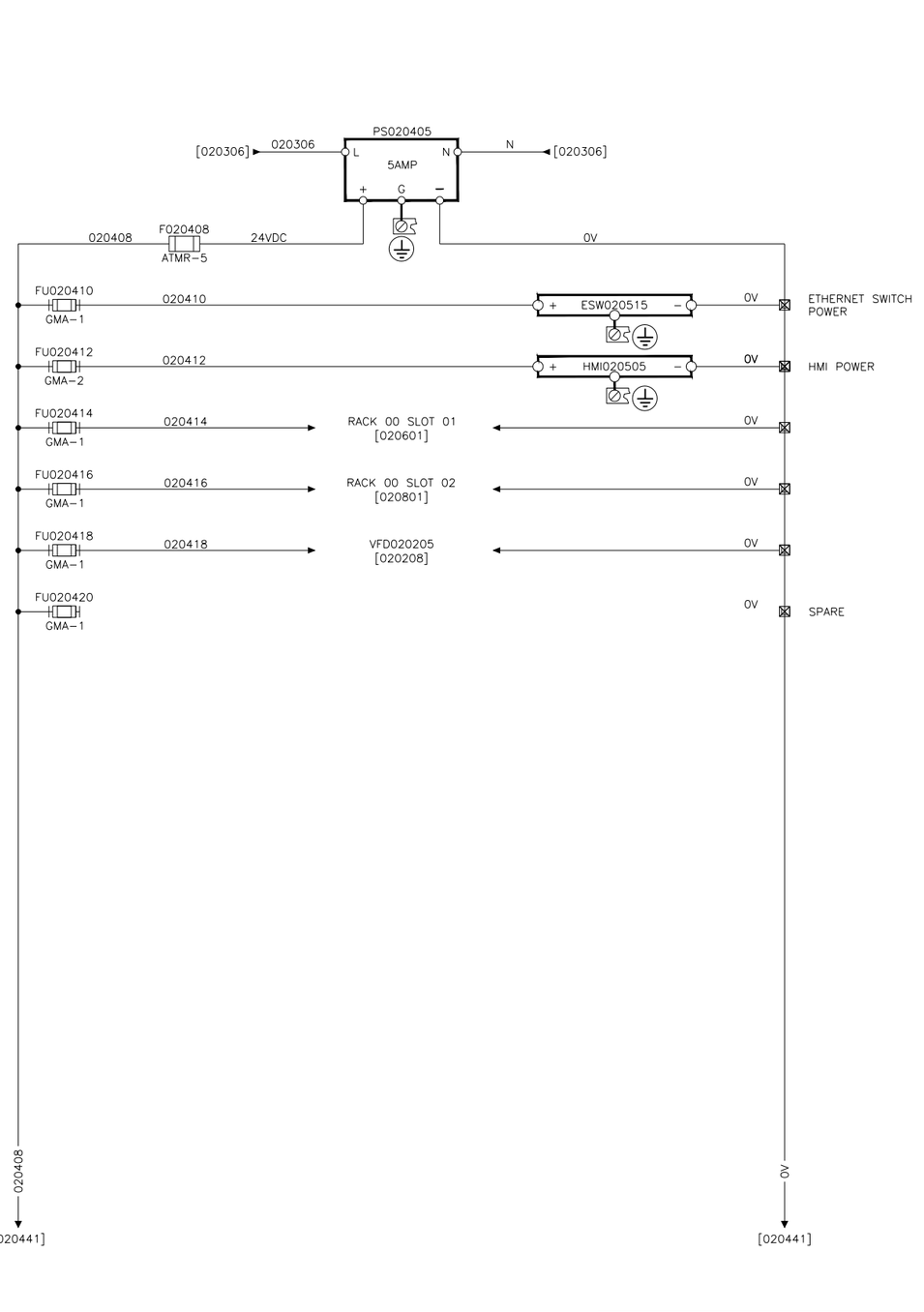


| REV | DESCRIPTION | DATE | REVD | CHKD | APVD | ECN |
|---|---|---|---|---|---|---|
| | | | | | | |
| | | | | | | |
| 4 | AS BUILT | 2021–06–21 | EH | RA | – | – |
| 3 | FOR FABRICATION | 2021–05–18 | EH | RA | – | – |
| 2 | FOR APPROVAL | 2021–04–12 | EH | RA | – | – |
| 1 | FOR APPROVAL | 2021–03–17 | EH | RA | – | – |

**CONFIDENTIALITY AND INTELLECTUAL PROPERTY NOTICE**
ALL INFORMATION CONTAINED IN THIS DOCUMENT IS THE SOLE PROPERTY OF VEOLIA WATER TECHNOLOGIES CANADA INC. AND IS PROTECTED BY ALL APPLICABLE LAWS, INCLUDING BUT NOT LIMITED TO COPYRIGHT AND OTHER INTELLECTUAL PROPERTY LAWS. THE DESIGN CONCEPTS AND INFORMATION CONTAINED HEREIN ARE PROPRIETARY TO V.W.T AND ARE SUBMITTED IN CONFIDENCE. THEY ARE NOT TRANSFERABLE. THEY MUST BE USED ONLY FOR THE PURPOSE FOR WHICH THE DOCUMENT IS EXPRESSLY SUBMITTED AND NO IMPLICIT LICENCE IS GRANTED OTHERWISE BY THE SUBMISSION OF THIS DOCUMENT. THEY ARE CONFIDENTIAL AND PRIVILEGED INFORMATION OF V.W.T. AND THEY MUST NOT BE DISCLOSED, REPRODUCED, LOANED, REMITTED OR USED IN ANY OTHER MANNER WITHOUT THE EXPRESS WRITTEN CONSENT OF V.W.T. V.W.T. ASSUMES NO RESPONSIBILITY OR LIABILITY FOR THE USE OF THIS DOCUMENT OR THE DESIGN CONCEPTS AND INFORMATION CONTAINED HEREIN FOR ANOTHER PROJECT, OR IN A MANNER THAT DOES NOT RELATE TO THE FITNESS OR PURPOSE OF THIS DOCUMENT. IN NO EVENT SHALL THIS DOCUMENT OR THE DESIGN CONCEPTS AND INFORMATION CONTAINED HEREIN BE USED IN A MANNER DETRIMENTAL TO THE INTEREST OF V.W.T. ALL COPYRIGHT, PATENT AND OTHER INTELLECTUAL PROPERTY RIGHTS ARE RESERVED. ACCEPTANCE OF THE DELIVERY OF THIS DOCUMENT CONSTITUTES AGREEMENT TO THESE TERMS AND CONDITIONS.

| | |
|---|---|
| DESIGNER | DATE |
| CHECKER | DATE |
| ENGINEER | DATE |
| SCALE: | |

TITLE
HYDRACARB #2
65PLC68004
ELECTRICAL SCHEMATIC (DISTRIBUTION 24VDC)

CLIENT
MELIADINE

VEOLIA WATER TECHNOLOGIES CANADA INC. 4105 Sartelon, Saint-Laurent, Qc, Canada. Tel: (514) 334-7230

| PROJECT | DRAWING | INTERNAL | SHEET | REV |
|---|---|---|---|---|
| 5000220043 | ELD–0002–AU–VWT | | 04 OF 10 | 4 |

BAR = 1" AT PLOT SCALE
REF: A7281A
STD: "B" 11x17
Jul 12, 2021 10:57:21 – G:\Projets A72XX\A7281A – VEOLIA – Projet 5000220043 A–E Meliadine (HydraCarb 1)\DOC\DESSIN\000–DESSINS\0002\REV4

BAR = 1" AT PLOT SCALE
REF: A7281A
STD: "B" 11x17

020501
020502
020503
020504
020505
020506
020507
020508
020509
020510
020511
020512
020513
020514
020515
020516
020517
020518
020519
020520
020521
020522
020523
020524
020525
020526
020527
020528
020529
020530
020531
020532
020533
020534
020535
020536
020537
020538
020539
020540

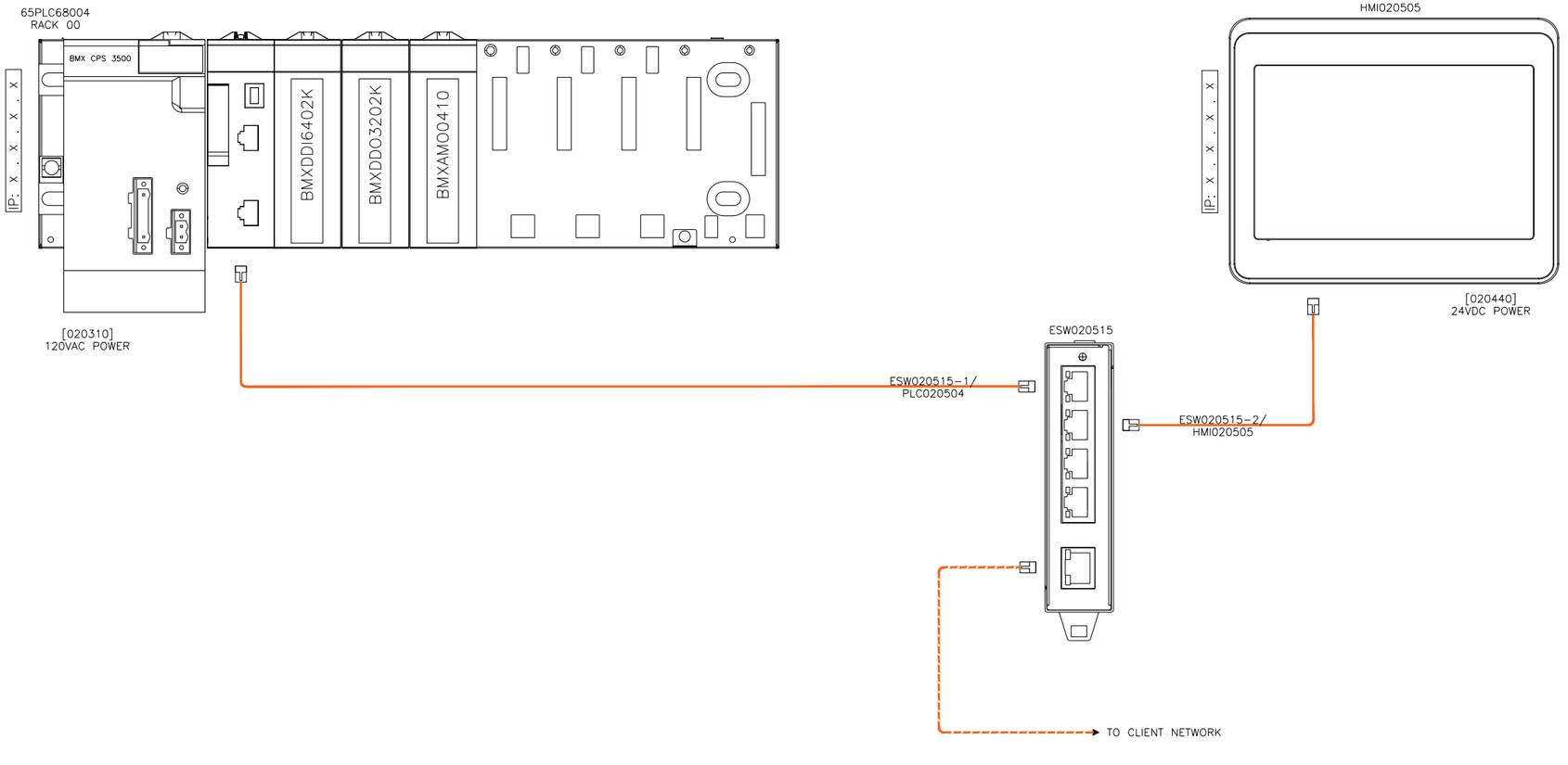


| REV | DESCRIPTION | DATE | REVD | CHKD | APVD | ECN |
|---|---|---|---|---|---|---|
| | | | | | | |
| | | | | | | |
| 4 | AS BUILT | 2021-06-21 | EH | RA | – | – |
| 3 | FOR FABRICATION | 2021-05-18 | EH | RA | – | – |
| 2 | FOR APPROVAL | 2021-04-12 | EH | RA | – | – |
| 1 | FOR APPROVAL | 2021-03-17 | EH | RA | – | – |

**CONFIDENTIALITY AND INTELLECTUAL PROPERTY NOTICE**
ALL INFORMATION CONTAINED IN THIS DOCUMENT IS THE SOLE PROPERTY OF VEOLIA WATER TECHNOLOGIES CANADA INC. AND IS PROTECTED BY ALL APPLICABLE LAWS, INCLUDING BUT NOT LIMITED TO COPYRIGHT AND OTHER INTELLECTUAL PROPERTY LAWS. THE DESIGN CONCEPTS AND INFORMATION CONTAINED HEREIN ARE PROPRIETARY TO V.W.T AND ARE SUBMITTED IN CONFIDENCE. THEY ARE NOT TRANSFERABLE. THEY MUST BE USED ONLY FOR THE PURPOSE FOR WHICH THE DOCUMENT IS EXPRESSLY SUBMITTED AND NO IMPLICIT LICENCE IS GRANTED OTHERWISE BY THE SUBMISSION OF THIS DOCUMENT. THEY ARE CONFIDENTIAL AND PRIVILEGED INFORMATION OF V.W.T. AND THEY MUST NOT BE DISCLOSED, REPRODUCED, LOANED, REMITTED OR USED IN ANY OTHER MANNER WITHOUT THE EXPRESS WRITTEN CONSENT OF V.W.T. V.W.T. ASSUMES NO RESPONSIBILITY OR LIABILITY FOR THE USE OF THIS DOCUMENT OR THE DESIGN CONCEPTS AND INFORMATION CONTAINED HEREIN FOR ANOTHER PROJECT, OR IN A MANNER THAT DOES NOT RELATE TO THE FITNESS OR PURPOSE OF THIS DOCUMENT. IN NO EVENT SHALL THIS DOCUMENT OR THE DESIGN CONCEPTS AND INFORMATION CONTAINED HEREIN BE USED IN A MANNER DETRIMENTAL TO THE INTEREST OF V.W.T. ALL COPYRIGHT, PATENT AND OTHER INTELLECTUAL PROPERTY RIGHTS ARE RESERVED. ACCEPTANCE OF THE DELIVERY OF THIS DOCUMENT CONSTITUTES AGREEMENT TO THESE TERMS AND CONDITIONS.

| | |
|---|---|
| DESIGNER | DATE |
| CHECKER | DATE |
| ENGINEER | DATE |
| SCALE: | |

TITLE
HYDRACARB #2
65PLC68004
ELECTRICAL SCHEMATIC (ETHERNET CONNECTION)

CLIENT
MELIADINE

VEOLIA
VEOLIA WATER TECHNOLOGIES CANADA INC. 4105 Sartelon, Saint-Laurent, Qc, Canada. Tel: (514) 334-7230

| PROJECT DRAWING | INTERNAL | SHEET | REV |
|---|---|---|---|
| 5000220043 – ELD-0002-AU-VWT | | 05 OF 10 | 4 |

AS BUILT\A7281A-5000220043-0002-ELD.dwg – ehorwood
Jul 12, 2021 10:57:22 – G:\Projets A72XX\A7281A – VEOLIA – Projet 5000220043 A-E Meliadine (HydroCarb 1)\DOC\DESSIN\000-DESSINS\0002\REV4 –

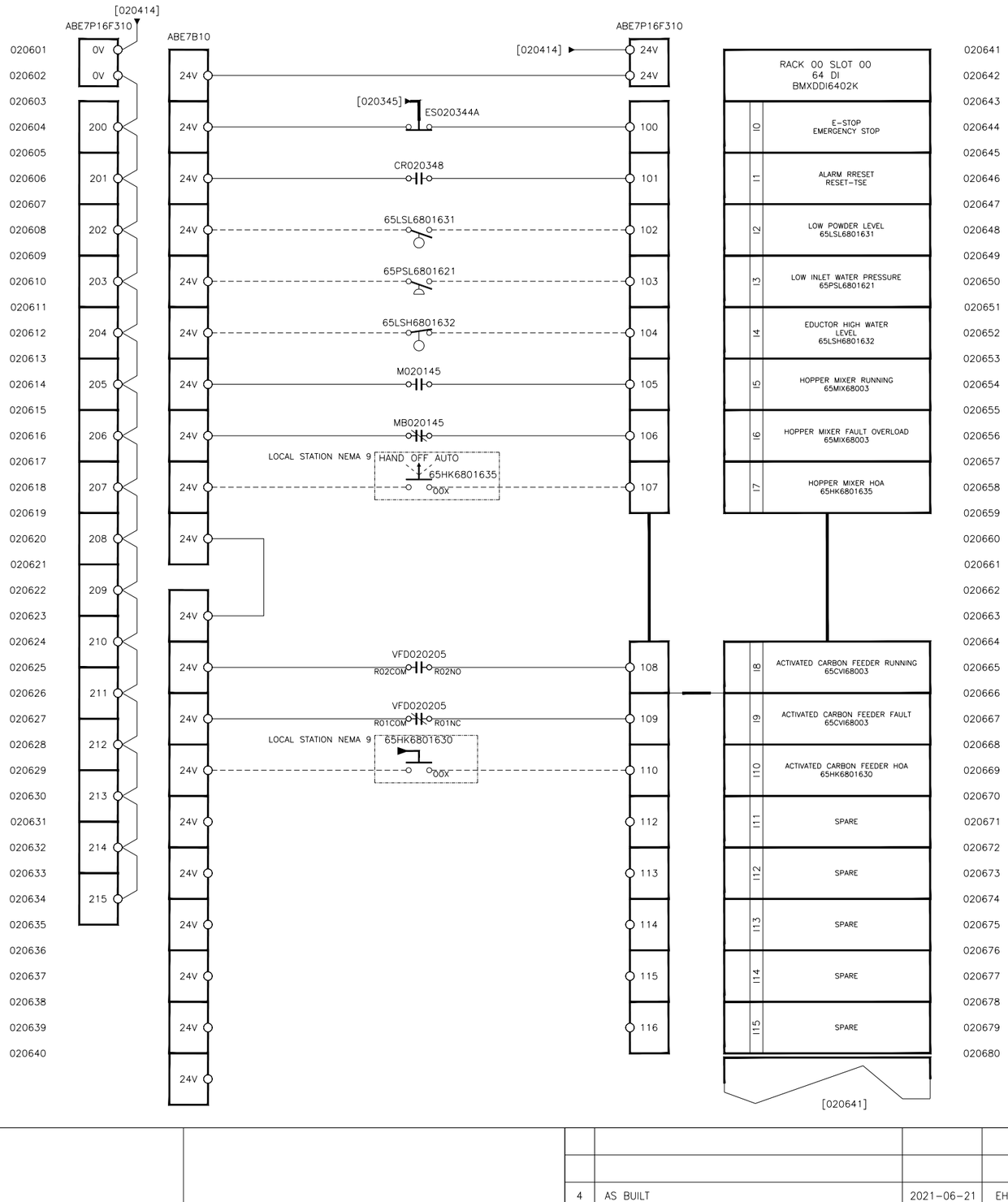


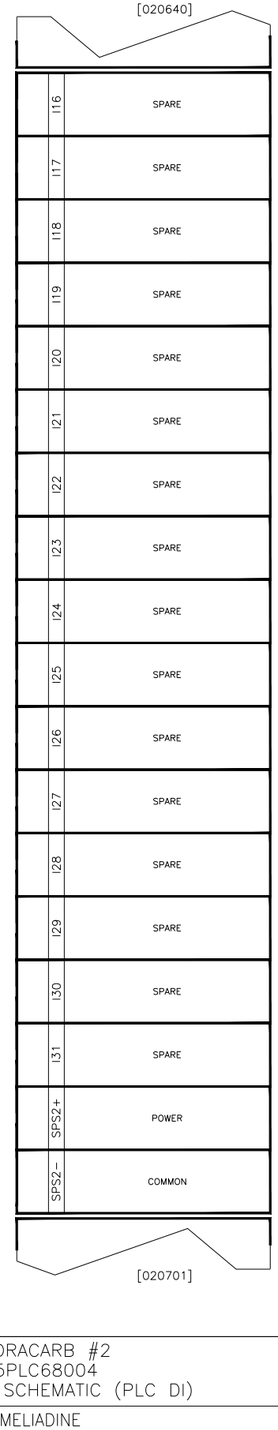


BAR = 1" AT PLOT SCALE

REF: A7281A

STD: "B" 11x17

| REV | DESCRIPTION | DATE | REVD | CHKD | APVD | ECN |
|---|---|---|---|---|---|---|
| | | | | | | |
| | | | | | | |
| 4 | AS BUILT | 2021-06-21 | EH | RA | – | – |
| 3 | FOR FABRICATION | 2021-05-18 | EH | RA | – | – |
| 2 | FOR APPROVAL | 2021-04-12 | EH | RA | – | – |
| 1 | FOR APPROVAL | 2021-03-17 | EH | RA | – | – |

**CONFIDENTIALITY AND INTELLECTUAL PROPERTY NOTICE**
ALL INFORMATION CONTAINED IN THIS DOCUMENT IS THE SOLE PROPERTY OF VEOLIA WATER TECHNOLOGIES CANADA INC. AND IS PROTECTED BY ALL APPLICABLE LAWS, INCLUDING BUT NOT LIMITED TO COPYRIGHT AND OTHER INTELLECTUAL PROPERTY LAWS. THE DESIGN CONCEPTS AND INFORMATION CONTAINED HEREIN ARE PROPRIETARY TO V.W.T AND ARE SUBMITTED IN CONFIDENCE. THEY ARE NOT TRANSFERABLE. THEY MUST BE USED ONLY FOR THE PURPOSE FOR WHICH THE DOCUMENT IS EXPRESSLY SUBMITTED AND NO IMPLICIT LICENCE IS GRANTED OTHERWISE BY THE SUBMISSION OF THIS DOCUMENT. THEY ARE CONFIDENTIAL AND PRIVILEGED INFORMATION OF V.W.T. AND THEY MUST NOT BE DISCLOSED, REPRODUCED, LOANED, REMITTED OR USED IN ANY OTHER MANNER WITHOUT THE EXPRESS WRITTEN CONSENT OF V.W.T. V.W.T. ASSUMES NO RESPONSIBILITY OR LIABILITY FOR THE USE OF THIS DOCUMENT OR THE DESIGN CONCEPTS AND INFORMATION CONTAINED HEREIN FOR ANOTHER PROJECT, OR IN A MANNER THAT DOES NOT RELATE TO THE FITNESS OR PURPOSE OF THIS DOCUMENT. IN NO EVENT SHALL THIS DOCUMENT OR THE DESIGN CONCEPTS AND INFORMATION CONTAINED HEREIN BE USED IN A MANNER DETRIMENTAL TO THE INTEREST OF V.W.T. ALL COPYRIGHT, PATENT AND OTHER INTELLECTUAL PROPERTY RIGHTS ARE RESERVED. ACCEPTANCE OF THE DELIVERY OF THIS DOCUMENT CONSTITUTES AGREEMENT TO THESE TERMS AND CONDITIONS.

DESIGNER | DATE
CHECKER | DATE
ENGINEER | DATE
SCALE:

TITLE
HYDRACARB #2
65PLC68004
ELECTRICAL SCHEMATIC (PLC DI)

CLIENT
MELIADINE

VEOLIA
VEOLIA WATER TECHNOLOGIES CANADA INC. 4105 Sartelon, Saint-Laurent, Qc, Canada. Tel: (514) 334-7230

| PROJECT DRAWING | INTERNAL | SHEET | REV |
|---|---|---|---|
| 5000220043 – ELD–0002–AU–VWT | | 06 OF 10 | 4 |

AS BUILT\A7281A-5000220043-0002-ELD.dwg – ehorwood Jul 12, 2021 10:57:22 – G:\Projets A72XX\A7281A – VEOLIA – Projet 5000220043 A-E Meliadine (HydroCarb 1)\DOC\DESSIN\000-DESSINS\0002\REV4 –

Jul 12, 2021 10:57:23 – G:\Projets A72XX\A7281A – VEOLIA – Projet 5000220043 A-E Meliadine (HydraCarb 1)\DOC\DESSIN\000-DESSINS\0002\REV4 – AS BUILT\A7281A-5000220043-0002-ELD.dwg – ehorwood

BAR = 1" AT PLOT SCALE
REF: A7281A
STD: "B" 11x17

020701
020702
020703
020704
020705
020706
020707
020708
020709
020710
020711
020712
020713
020714
020715
020716
020717
020718
020719
020720
020721
020722
020723
020724
020725
020726
020727
020728
020729
020730
020731
020732
020733
020734
020735
020736
020737
020738
020739
020740

[020680]

| | |
|---|---|
| I32 | SPARE |
| I33 | SPARE |
| I34 | SPARE |
| I35 | SPARE |
| I36 | SPARE |
| I37 | SPARE |
| I38 | SPARE |
| I39 | SPARE |
| I40 | SPARE |
| I41 | SPARE |
| I42 | SPARE |
| I43 | SPARE |
| I44 | SPARE |
| I45 | SPARE |
| I46 | SPARE |
| I47 | SPARE |
| SPS3+ | POWER |
| SPS3– | COMMON |

[020741]

020741
020742
020743
020744
020745
020746
020747
020748
020749
020750
020751
020752
020753
020754
020755
020756
020757
020758
020759
020760
020761
020762
020763
020764
020765
020766
020767
020768
020769
020770
020771
020772
020773
020774
020775
020776
020777
020778
020779
020780

[020740]

| | |
|---|---|
| I48 | SPARE |
| I49 | SPARE |
| I50 | SPARE |
| I51 | SPARE |
| I52 | SPARE |
| I53 | SPARE |
| I54 | SPARE |
| I55 | SPARE |
| I56 | SPARE |
| I57 | SPARE |
| I58 | SPARE |
| I59 | SPARE |
| I60 | SPARE |
| I61 | SPARE |
| I62 | SPARE |
| I63 | SPARE |
| SPS4+ | POWER |
| SPS4– | COMMON |

| REV | DESCRIPTION | DATE | REVD | CHKD | APVD | ECN |
|---|---|---|---|---|---|---|
| | | | | | | |
| | | | | | | |
| 4 | AS BUILT | 2021-06-21 | EH | RA | – | – |
| 3 | FOR FABRICATION | 2021-05-18 | EH | RA | – | – |
| 2 | FOR APPROVAL | 2021-04-12 | EH | RA | – | – |
| 1 | FOR APPROVAL | 2021-03-17 | EH | RA | – | – |

**CONFIDENTIALITY AND INTELLECTUAL PROPERTY NOTICE**
ALL INFORMATION CONTAINED IN THIS DOCUMENT IS THE SOLE PROPERTY OF VEOLIA WATER TECHNOLOGIES CANADA INC. AND IS PROTECTED BY ALL APPLICABLE LAWS, INCLUDING BUT NOT LIMITED TO COPYRIGHT AND OTHER INTELLECTUAL PROPERTY LAWS. THE DESIGN CONCEPTS AND INFORMATION CONTAINED HEREIN ARE PROPRIETARY TO V.W.T AND ARE SUBMITTED IN CONFIDENCE. THEY ARE NOT TRANSFERABLE. THEY MUST BE USED ONLY FOR THE PURPOSE FOR WHICH THE DOCUMENT IS EXPRESSLY SUBMITTED AND NO IMPLICIT LICENCE IS GRANTED OTHERWISE BY THE SUBMISSION OF THIS DOCUMENT. THEY ARE CONFIDENTIAL AND PRIVILEGED INFORMATION OF V.W.T. AND THEY MUST NOT BE DISCLOSED, REPRODUCED, LOANED, REMITTED OR USED IN ANY OTHER MANNER WITHOUT THE EXPRESS WRITTEN CONSENT OF V.W.T. V.W.T. ASSUMES NO RESPONSIBILITY OR LIABILITY FOR THE USE OF THIS DOCUMENT OR THE DESIGN CONCEPTS AND INFORMATION CONTAINED HEREIN FOR ANOTHER PROJECT, OR IN A MANNER THAT DOES NOT RELATE TO THE FITNESS OR PURPOSE OF THIS DOCUMENT. IN NO EVENT SHALL THIS DOCUMENT OR THE DESIGN CONCEPTS AND INFORMATION CONTAINED HEREIN BE USED IN A MANNER DETRIMENTAL TO THE INTEREST OF V.W.T. ALL COPYRIGHT, PATENT AND OTHER INTELLECTUAL PROPERTY RIGHTS ARE RESERVED. ACCEPTANCE OF THE DELIVERY OF THIS DOCUMENT CONSTITUTES AGREEMENT TO THESE TERMS AND CONDITIONS.

| | |
|---|---|
| DESIGNER | DATE |
| CHECKER | DATE |
| ENGINEER | DATE |
| SCALE: | |

TITLE
HYDRACARB #2
65PLC68004
ELECTRICAL SCHEMATIC (PLC DI)

CLIENT
MELIADINE

VEOLIA
VEOLIA WATER TECHNOLOGIES CANADA INC. 4105 Sartelon, Saint-Laurent, Qc, Canada. Tel: (514) 334-7230

| PROJECT | DRAWING | INTERNAL | SHEET | REV |
|---|---|---|---|---|
| 5000220043 | – ELD-0002-AU-VWT | | 07 OF 10 | 4 |

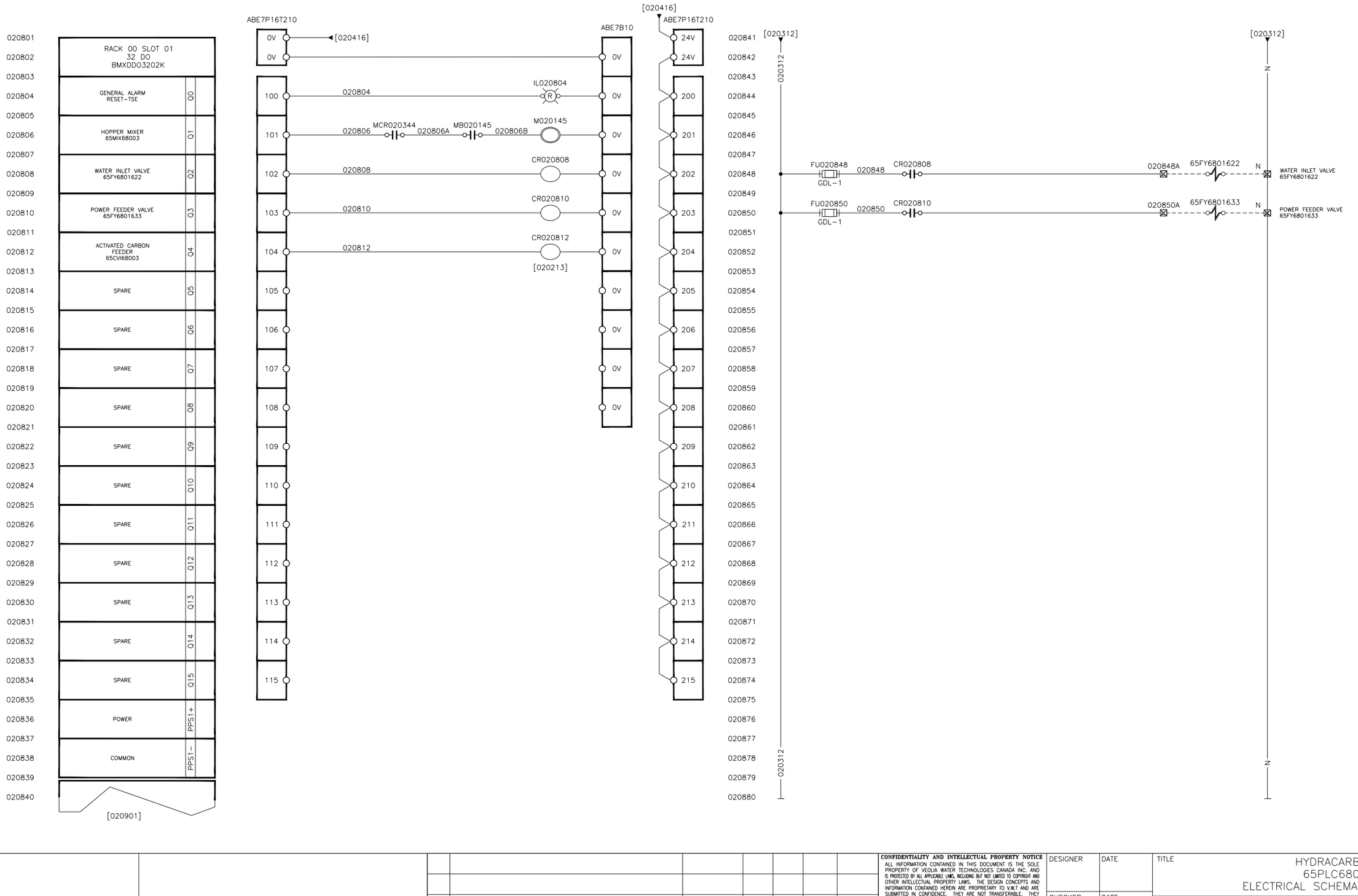


BAR = 1" AT PLOT SCALE

REF.: A7281A

STD: "B" 11x17

| REV | DESCRIPTION | DATE | REVD | CHKD | APVD | ECN |
|---|---|---|---|---|---|---|
| | | | | | | |
| | | | | | | |
| 4 | AS BUILT | 2021-06-21 | EH | RA | – | – |
| 3 | FOR FABRICATION | 2021-05-18 | EH | RA | – | – |
| 2 | FOR APPROVAL | 2021-04-12 | EH | RA | – | – |
| 1 | FOR APPROVAL | 2021-03-17 | EH | RA | – | – |

**CONFIDENTIALITY AND INTELLECTUAL PROPERTY NOTICE**
ALL INFORMATION CONTAINED IN THIS DOCUMENT IS THE SOLE PROPERTY OF VEOLIA WATER TECHNOLOGIES CANADA INC. AND IS PROTECTED BY ALL APPLICABLE LAWS, INCLUDING BUT NOT LIMITED TO COPYRIGHT AND OTHER INTELLECTUAL PROPERTY LAWS. THE DESIGN CONCEPTS AND INFORMATION CONTAINED HEREIN ARE PROPRIETARY TO V.W.T AND ARE SUBMITTED IN CONFIDENCE. THEY ARE NOT TRANSFERABLE. THEY MUST BE USED ONLY FOR THE PURPOSE FOR WHICH THE DOCUMENT IS EXPRESSLY SUBMITTED AND NO IMPLICIT LICENCE IS GRANTED OTHERWISE BY THE SUBMISSION OF THIS DOCUMENT. THEY ARE CONFIDENTIAL AND PRIVILEGED INFORMATION OF V.W.T. AND THEY MUST NOT BE DISCLOSED, REPRODUCED, LOANED, REMITTED OR USED IN ANY OTHER MANNER WITHOUT THE EXPRESS WRITTEN CONSENT OF V.W.T. V.W.T. ASSUMES NO RESPONSIBILITY OR LIABILITY FOR THE USE OF THIS DOCUMENT OR THE DESIGN CONCEPTS AND INFORMATION CONTAINED HEREIN FOR ANOTHER PROJECT, OR IN A MANNER THAT DOES NOT RELATE TO THE FITNESS OR PURPOSE OF THIS DOCUMENT. IN NO EVENT SHALL THIS DOCUMENT OR THE DESIGN CONCEPTS AND INFORMATION CONTAINED HEREIN BE USED IN A MANNER DETRIMENTAL TO THE INTEREST OF V.W.T. ALL COPYRIGHT, PATENT AND OTHER INTELLECTUAL PROPERTY RIGHTS ARE RESERVED. ACCEPTANCE OF THE DELIVERY OF THIS DOCUMENT CONSTITUTES AGREEMENT TO THESE TERMS AND CONDITIONS.

| | |
|---|---|
| DESIGNER | DATE |
| CHECKER | DATE |
| ENGINEER | DATE |
| SCALE: | |

TITLE: HYDRACARB #2
65PLC68004
ELECTRICAL SCHEMATIC (PLC DO)

CLIENT: MELIADINE

VEOLIA
VEOLIA WATER TECHNOLOGIES CANADA INC. 4105 Sartelon, Saint-Laurent, Qc, Canada. Tel: (514) 334-7230

| PROJECT | DRAWING | INTERNAL | SHEET | REV |
|---|---|---|---|---|
| 5000220043 | ELD-0002-AU-VWT | | 08 OF 10 | 4 |

AS BUILT\A7281A-5000220043-0002-ELD.dwg - ehorwood Jul 12, 2021 10:57:23 - G:\Projets A72XX\A7281A - VEOLIA - Projet 5000220043 A-E Meliadine (HydroCarb 1)\DOC\DESSIN\000-DESSINS\0002\REV4 -

| | | | |
|---|---|---|---|
| 020901 | [020640] | | 020941 |
| 020902 | | | 020942 |
| 020903 | | | 020943 |
| 020904 | SPARE | Q16 | 020944 |
| 020905 | | | 020945 |
| 020906 | SPARE | Q17 | 020946 |
| 020907 | | | 020947 |
| 020908 | SPARE | Q18 | 020948 |
| 020909 | | | 020949 |
| 020910 | SPARE | Q19 | 020950 |
| 020911 | | | 020951 |
| 020912 | SPARE | Q20 | 020952 |
| 020913 | | | 020953 |
| 020914 | SPARE | Q21 | 020954 |
| 020915 | | | 020955 |
| 020916 | SPARE | Q22 | 020956 |
| 020917 | | | 020957 |
| 020918 | SPARE | Q23 | 020958 |
| 020919 | | | 020959 |
| 020920 | SPARE | Q24 | 020960 |
| 020921 | | | 020961 |
| 020922 | SPARE | Q25 | 020962 |
| 020923 | | | 020963 |
| 020924 | SPARE | Q26 | 020964 |
| 020925 | | | 020965 |
| 020926 | SPARE | Q27 | 020966 |
| 020927 | | | 020967 |
| 020928 | SPARE | Q28 | 020968 |
| 020929 | | | 020969 |
| 020930 | SPARE | Q29 | 020970 |
| 020931 | | | 020971 |
| 020932 | SPARE | Q30 | 020972 |
| 020933 | | | 020973 |
| 020934 | SPARE | Q31 | 020974 |
| 020935 | | | 020975 |
| 020936 | POWER | PPS2+ | 020976 |
| 020937 | | | 020977 |
| 020938 | COMMON | PPS2- | 020978 |
| 020939 | | | 020979 |
| 020940 | | | 020980 |

| REV | DESCRIPTION | DATE | REVD | CHKD | APVD | ECN |
|---|---|---|---|---|---|---|
| | | | | | | |
| | | | | | | |
| 4 | AS BUILT | 2021-06-21 | EH | RA | – | – |
| 3 | FOR FABRICATION | 2021-05-18 | EH | RA | – | – |
| 2 | FOR APPROVAL | 2021-04-12 | EH | RA | – | – |
| 1 | FOR APPROVAL | 2021-03-17 | EH | RA | – | – |

**CONFIDENTIALITY AND INTELLECTUAL PROPERTY NOTICE**
ALL INFORMATION CONTAINED IN THIS DOCUMENT IS THE SOLE PROPERTY OF VEOLIA WATER TECHNOLOGIES CANADA INC. AND IS PROTECTED BY ALL APPLICABLE LAWS, INCLUDING BUT NOT LIMITED TO COPYRIGHT AND OTHER INTELLECTUAL PROPERTY LAWS. THE DESIGN CONCEPTS AND INFORMATION CONTAINED HEREIN ARE PROPRIETARY TO V.W.T AND ARE SUBMITTED IN CONFIDENCE. THEY ARE NOT TRANSFERABLE. THEY MUST BE USED ONLY FOR THE PURPOSE FOR WHICH THE DOCUMENT IS EXPRESSLY SUBMITTED AND NO IMPLICIT LICENCE IS GRANTED OTHERWISE BY THE SUBMISSION OF THIS DOCUMENT. THEY ARE CONFIDENTIAL AND PRIVILEGED INFORMATION OF V.W.T. AND THEY MUST NOT BE DISCLOSED, REPRODUCED, LOANED, REMITTED OR USED IN ANY OTHER MANNER WITHOUT THE EXPRESS WRITTEN CONSENT OF V.W.T. V.W.T. ASSUMES NO RESPONSIBILITY OR LIABILITY FOR THE USE OF THIS DOCUMENT OR THE DESIGN CONCEPTS AND INFORMATION CONTAINED HEREIN FOR ANOTHER PROJECT, OR IN A MANNER THAT DOES NOT RELATE TO THE FITNESS OR PURPOSE OF THIS DOCUMENT. IN NO EVENT SHALL THIS DOCUMENT OR THE DESIGN CONCEPTS AND INFORMATION CONTAINED HEREIN BE USED IN A MANNER DETRIMENTAL TO THE INTEREST OF V.W.T. ALL COPYRIGHT, PATENT AND OTHER INTELLECTUAL PROPERTY RIGHTS ARE RESERVED. ACCEPTANCE OF THE DELIVERY OF THIS DOCUMENT CONSTITUTES AGREEMENT TO THESE TERMS AND CONDITIONS.

DESIGNER | DATE
CHECKER | DATE
ENGINEER | DATE
SCALE:

TITLE: HYDRACARB #2
65PLC68004
ELECTRICAL SCHEMATIC (PLC DO)

CLIENT: MELIADINE

VEOLIA WATER TECHNOLOGIES CANADA INC. 4105 Sartelon, Saint-Laurent, Qc, Canada. Tel: (514) 334-7230

| PROJECT | DRAWING | INTERNAL | SHEET | REV |
|---|---|---|---|---|
| 5000220043 | ELD-0002-AU-VWT | | 09 OF 10 | 4 |

BAR = 1" AT PLOT SCALE
REF: A7281A
STD: "B" 11x17
Jul 12, 2021 10:57:24 – G:\Projets A72XX\A7281A – VEOLIA – Projet 5000220043 A-E Meliadine (HydroCarb 1)\DOC\DESSIN\000-DESSINS\0002\REV4 – AS BUILT\A7281A-5000220043-0002-ELD.dwg – ehorwood

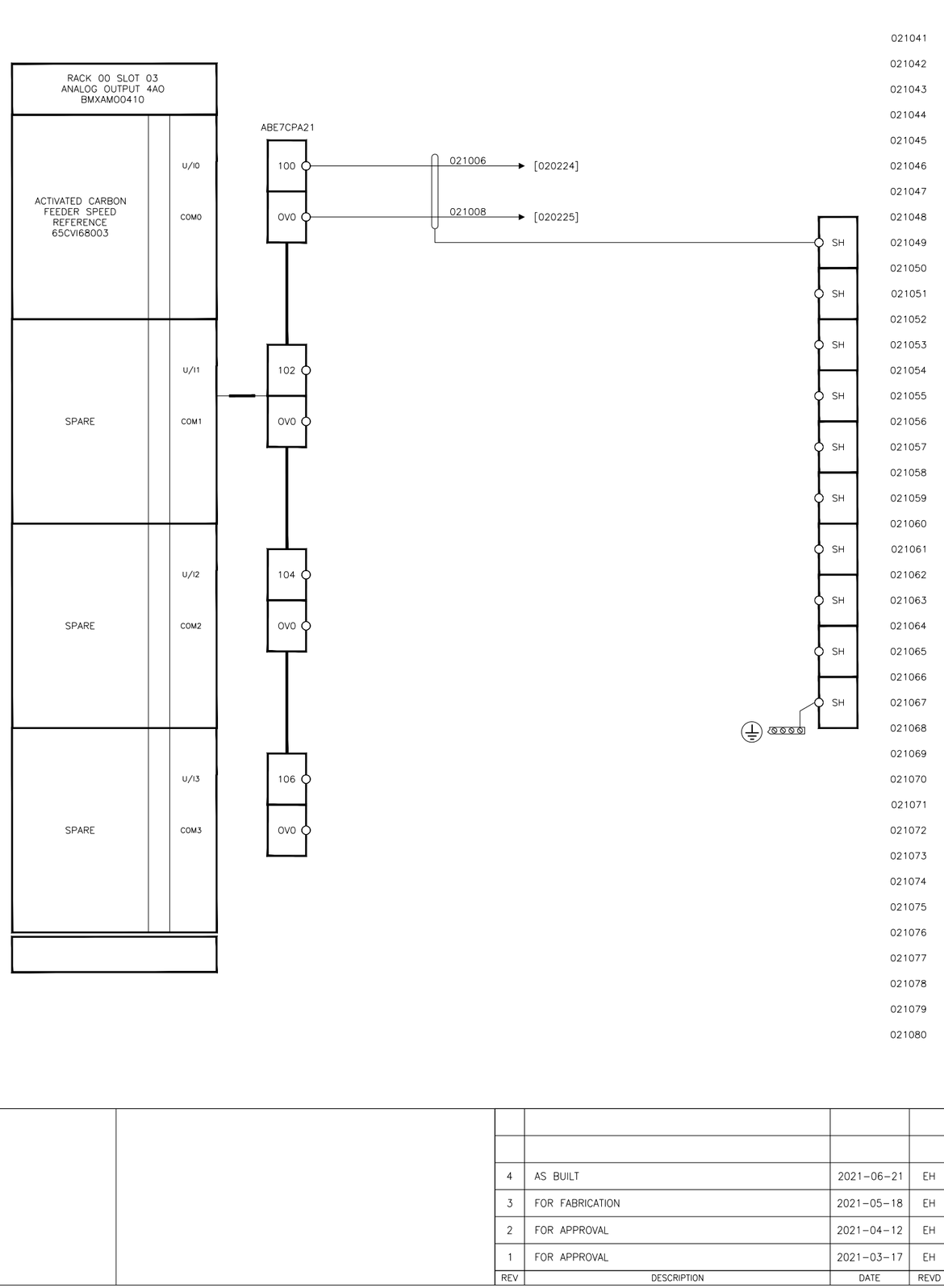


| REV | DESCRIPTION | DATE | REVD | CHKD | APVD | ECN |
|---|---|---|---|---|---|---|
| | | | | | | |
| | | | | | | |
| 4 | AS BUILT | 2021-06-21 | EH | RA | – | – |
| 3 | FOR FABRICATION | 2021-05-18 | EH | RA | – | – |
| 2 | FOR APPROVAL | 2021-04-12 | EH | RA | – | – |
| 1 | FOR APPROVAL | 2021-03-17 | EH | RA | – | – |

**CONFIDENTIALITY AND INTELLECTUAL PROPERTY NOTICE**
ALL INFORMATION CONTAINED IN THIS DOCUMENT IS THE SOLE PROPERTY OF VEOLIA WATER TECHNOLOGIES CANADA INC. AND IS PROTECTED BY ALL APPLICABLE LAWS, INCLUDING BUT NOT LIMITED TO COPYRIGHT AND OTHER INTELLECTUAL PROPERTY LAWS. THE DESIGN CONCEPTS AND INFORMATION CONTAINED HEREIN ARE PROPRIETARY TO V.W.T AND ARE SUBMITTED IN CONFIDENCE. THEY ARE NOT TRANSFERABLE. THEY MUST BE USED ONLY FOR THE PURPOSE FOR WHICH THE DOCUMENT IS EXPRESSLY SUBMITTED AND NO IMPLICIT LICENCE IS GRANTED OTHERWISE BY THE SUBMISSION OF THIS DOCUMENT. THEY ARE CONFIDENTIAL AND PRIVILEGED INFORMATION OF V.W.T. AND THEY MUST NOT BE DISCLOSED, REPRODUCED, LOANED, REMITTED OR USED IN ANY OTHER MANNER WITHOUT THE EXPRESS WRITTEN CONSENT OF V.W.T. V.W.T. ASSUMES NO RESPONSIBILITY OR LIABILITY FOR THE USE OF THIS DOCUMENT OR THE DESIGN CONCEPTS AND INFORMATION CONTAINED HEREIN FOR ANOTHER PROJECT, OR IN A MANNER THAT DOES NOT RELATE TO THE FITNESS OR PURPOSE OF THIS DOCUMENT. IN NO EVENT SHALL THIS DOCUMENT OR THE DESIGN CONCEPTS AND INFORMATION CONTAINED HEREIN BE USED IN A MANNER DETRIMENTAL TO THE INTEREST OF V.W.T. ALL COPYRIGHT, PATENT AND OTHER INTELLECTUAL PROPERTY RIGHTS ARE RESERVED. ACCEPTANCE OF THE DELIVERY OF THIS DOCUMENT CONSTITUTES AGREEMENT TO THESE TERMS AND CONDITIONS.

| | |
|---|---|
| DESIGNER | DATE |
| CHECKER | DATE |
| ENGINEER | DATE |
| SCALE: | |

TITLE: HYDRACARB #2
65PLC68004
ELECTRICAL SCHEMATIC (PLC AO)

CLIENT: MELIADINE

VEOLIA

VEOLIA WATER TECHNOLOGIES CANADA INC. 4105 Sartelon, Saint-Laurent, Qc, Canada. Tel: (514) 334-7230

| PROJECT DRAWING | INTERNAL | SHEET | REV |
|---|---|---|---|
| 5000220043 – ELD-0002-AU-VWT | | 10 OF 10 | 4 |

BAR = 1" AT PLOT SCALE
REF: A7281A
STD: "B" 11x17

AS BUILT\A7281A-5000220043-0002-ELD.dwg – ehorwood
Jul 12, 2021 10:57:24 – G:\Projets A72XX\A7281A – VEOLIA – Projet 5000220043 A-E Meliadine (HydraCarb 1)\DOC\DESSIN\000-DESSINS\0002\REV4 –

BAR = 1" AT PLOT SCALE
REF: A7281A
STD: "B" 11x17

# DISCFILTER COVER
# CONTROL PANEL
# 65CSP68001

| REV | DESCRIPTION | DATE | REVD | CHKD | APVD | ECN |
|---|---|---|---|---|---|---|
| | | | | | | |
| | | | | | | |
| | | | | | | |
| 3 | AS BUILT | 2021-07-07 | SB | RA | – | – |
| 2 | FOR FABRICATION | 2021-06-16 | EH | RA | – | – |
| 1 | FOR APPROVAL | 2021-04-20 | SB | RA | – | – |

**CONFIDENTIALITY AND INTELLECTUAL PROPERTY NOTICE**
ALL INFORMATION CONTAINED IN THIS DOCUMENT IS THE SOLE PROPERTY OF VEOLIA WATER TECHNOLOGIES CANADA INC. AND IS PROTECTED BY ALL APPLICABLE LAWS, INCLUDING BUT NOT LIMITED TO COPYRIGHT AND OTHER INTELLECTUAL PROPERTY LAWS. THE DESIGN CONCEPTS AND INFORMATION CONTAINED HEREIN ARE PROPRIETARY TO V.W.T AND ARE SUBMITTED IN CONFIDENCE. THEY ARE NOT TRANSFERABLE. THEY MUST BE USED ONLY FOR THE PURPOSE FOR WHICH THE DOCUMENT IS EXPRESSLY SUBMITTED AND NO IMPLICIT LICENCE IS GRANTED OTHERWISE BY THE SUBMISSION OF THIS DOCUMENT. THEY ARE CONFIDENTIAL AND PRIVILEGED INFORMATION OF V.W.T. AND THEY MUST NOT BE DISCLOSED, REPRODUCED, LOANED, REMITTED OR USED IN ANY OTHER MANNER WITHOUT THE EXPRESS WRITTEN CONSENT OF V.W.T. V.W.T. ASSUMES NO RESPONSIBILITY OR LIABILITY FOR THE USE OF THIS DOCUMENT OR THE DESIGN CONCEPTS AND INFORMATION CONTAINED HEREIN FOR ANOTHER PROJECT, OR IN A MANNER THAT DOES NOT RELATE TO THE FITNESS OR PURPOSE OF THIS DOCUMENT. IN NO EVENT SHALL THIS DOCUMENT OR THE DESIGN CONCEPTS AND INFORMATION CONTAINED HEREIN BE USED IN A MANNER DETRIMENTAL TO THE INTEREST OF V.W.T. ALL COPYRIGHT, PATENT AND OTHER INTELLECTUAL PROPERTY RIGHTS ARE RESERVED. ACCEPTANCE OF THE DELIVERY OF THIS DOCUMENT CONSTITUTES AGREEMENT TO THESE TERMS AND CONDITIONS.

| | |
|---|---|
| DESIGNER | DATE |
| CHECKER | DATE |
| ENGINEER | DATE |
| SCALE: | |

TITLE
DISCFILTER COVER
TITLE PAGE

CLIENT
MELIADINE

VEOLIA
VEOLIA WATER TECHNOLOGIES CANADA INC. 4105 Sartelon, Saint-Laurent, Qc, Canada. Tel: (514) 334-7230

| PROJECT DRAWING | INTERNAL | SHEET | REV |
|---|---|---|---|
| 5000220043 – EPL–0003–AU–VWT | | 01 OF 04 | 3 |

Jul 07, 2021 12:50:35 – G:\Projets A72XX\A7281A – VEOLIA – Projet 5000220043 A–E Meliadine (HydraCarb 1)\DOC\DESSIN\000–DESSINS\0003\REV3\A7281A–5000220043–0003–EPL.dwg – sbouya

| DESCRIPTION | DRAWING NUMBER |
|---|---|
| TITLE PAGE | 5000220043-EPL-0003-AU-VWT-01 |
| LEGEND | 5000220043-EPL-0003-AU-VWT-02 |
| EXTERNAL / INTERNAL LAYOUT & TERMINAL | 5000220043-EPL-0003-AU-VWT-03 |
| BILL OF MATERIAL | 5000220043-EPL-0003-AU-VWT-04 |
| | |
| ELECTRICAL SCHEMATIC | 5000220043-ELD-0003-AU-VWT-01 |

## LEGEND

- LOW PRESSURE
- HIGH PRESSURE
- LOW LEVEL
- HIGH LEVEL
- LIMIT SWITCH
- LIMIT SWITCH
- LOW FLOW
- HIGH FLOW
- RELAY CONTACT
- RELAY CONTACT
- RELAY CONTACT
- ON DELAY TIMER
- OFF DELAY TIMER
- GROUND
- ISOLATED GROUND
- FUSE (POWER)
- FUSE (CONTROL)
- DISTRIBUTION BLOCK
- MAINTAINED TWO SELECTOR SWITCH
- MAINTAINED 3 POSITIONS SELECTOR SWITCH
- SPRING RETURN FROM LEFT 3 POSITIONS SELECTOR SWITCH
- SPRING RETURN FROM RIGHT 3 POSITIONS SELECTOR SWITCH
- SPRING RETURN FROM BOTH 3 POSITIONS SELECTOR SWITCH
- PUSH BUTTON
- PUSH BUTTON
- PULL BUTTON
- PULL BUTTON
- EMERGENCY STOP BUTTON
- POTENTIOMETER
- CURRENT TRANSFORMER
- THERMOSTAT
- THERMOSTAT
- 1 POLE CIRCUIT BREAKER
- COOLING FAN
- RECEPTACLE 120VAC WITH RJ45
- RECEPTACLE 120VAC DUPLEX
- PILOT LIGHT
- PUSH TO TEST PILOT LIGHT
- RELAY COIL
- RELAY COIL WITH SURGE SUPPRESSOR
- CONTACTOR COIL
- CONTACTOR COIL WITH SURGE SUPPRESSOR
- ALARM
- RESISTOR
- SOLENOID
- PULL CORD
- ZERO SPEED DETECTOR
- POWER BLOCK FOSGIELD WIRING
- TERMINAL
- WIRING JUNCTION
- KNIFE TERMINAL
- 3 POLES THERMAL MAGNETIC CIRCUIT BREAKER
- 3 POLES MAGNETIC CIRCUIT BREAKER
- 3 POLES FUSIBLE DISCONNECT SWITCH
- 3 POLES DISCONNECT SWITCH
- 3 POLES CONTACTOR
- 3 POLES OVERLOAD RELAY

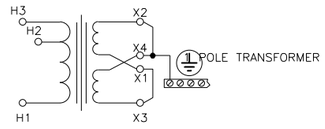


### WIRE NUMBER

XX XX XX
- LINE NUMBER
- PAGE NUMBER
- PANEL NUMBER

### WIRE COLOR CODE

| MINIMAL 16AWG GAUGE | |
|---|---|
| 3 PHASE (600VAC) | BLACK |
| POWER 120VAC | BLACK |
| CONTROL 120VAC | RED |
| NEUTRAL | WHITE |
| 24VDC | BLUE |
| 0VDC | BLUE/WHITE |
| DRY CONTRACT | YELLOW |
| NON-ISOLATED GROUND | GREEN |
| ISOLATED GROUND | GREEN/YELLOW |
| TWISTED PAIR | (+) RED & (-) BLACK |

| REV | DESCRIPTION | DATE | REVD | CHKD | APVD | ECN |
|---|---|---|---|---|---|---|
| 3 | AS BUILT | 2021-07-07 | SB | RA | - | - |
| 2 | FOR FABRICATION | 2021-06-16 | EH | RA | - | - |
| 1 | FOR APPROVAL | 2021-04-20 | SB | RA | - | - |

**CONFIDENTIALITY AND INTELLECTUAL PROPERTY NOTICE**
ALL INFORMATION CONTAINED IN THIS DOCUMENT IS THE SOLE PROPERTY OF VEOLIA WATER TECHNOLOGIES CANADA INC. AND IS PROTECTED BY ALL APPLICABLE LAWS, INCLUDING BUT NOT LIMITED TO COPYRIGHT AND OTHER INTELLECTUAL PROPERTY LAWS. THE DESIGN CONCEPTS AND INFORMATION CONTAINED HEREIN ARE PROPRIETARY TO V.W.T AND ARE SUBMITTED IN CONFIDENCE. THEY ARE NOT TRANSFERABLE. THEY MUST BE USED ONLY FOR THE PURPOSE FOR WHICH THE DOCUMENT IS EXPRESSLY SUBMITTED AND NO IMPLICIT LICENCE IS GRANTED OTHERWISE BY THE SUBMISSION OF THIS DOCUMENT. THEY ARE CONFIDENTIAL AND PRIVILEGED INFORMATION OF V.W.T. AND THEY MUST NOT BE DISCLOSED, REPRODUCED, LOANED, REMITTED OR USED IN ANY OTHER MANNER WITHOUT THE EXPRESS WRITTEN CONSENT OF V.W.T. V.W.T. ASSUMES NO RESPONSIBILITY OR LIABILITY FOR THE USE OF THIS DOCUMENT OR THE DESIGN CONCEPTS AND INFORMATION CONTAINED HEREIN FOR ANOTHER PROJECT, OR IN A MANNER THAT DOES NOT RELATE TO THE FITNESS OR PURPOSE OF THIS DOCUMENT. IN NO EVENT SHALL THIS DOCUMENT OR THE DESIGN CONCEPTS AND INFORMATION CONTAINED HEREIN BE USED IN A MANNER DETRIMENTAL TO THE INTEREST OF V.W.T. ALL COPYRIGHT, PATENT AND OTHER INTELLECTUAL PROPERTY RIGHTS ARE RESERVED. ACCEPTANCE OF THE DELIVERY OF THIS DOCUMENT CONSTITUTES AGREEMENT TO THESE TERMS AND CONDITIONS.

| | | |
|---|---|---|
| DESIGNER | DATE | |
| CHECKER | DATE | |
| ENGINEER | DATE | |
| SCALE: | | |

TITLE
DISCFILTER COVER
LEGEND & DRAWING LIST

CLIENT
MELIADINE

VEOLIA
VEOLIA WATER TECHNOLOGIES CANADA INC. 4105 Sartelon, Saint-Laurent, Qc, Canada. Tel: (514) 334-7230

| PROJECT DRAWING | INTERNAL | SHEET | REV |
|---|---|---|---|
| 5000220043 — EPL-0003-AU-VWT | | 02 OF 04 | 3 |

BAR = 1" AT PLOT SCALE
REF: A7281A
STD: "B" 11x17

Jul 07, 2021 12:50:35 – G:\Projets A72XX\A7281A – VEOLIA – Projet 5000220043 A-E Meliadine (HydroCarb 1)\DOC\DESSIN\000-DESSINS\0003\REV3\A7281A-5000220043-0003-EPL.dwg – sbouya

ENLCOSURE : 24" X 20" X 8" (HWD)
PROTECTION : NEMA 12
APPROVAL : CSA

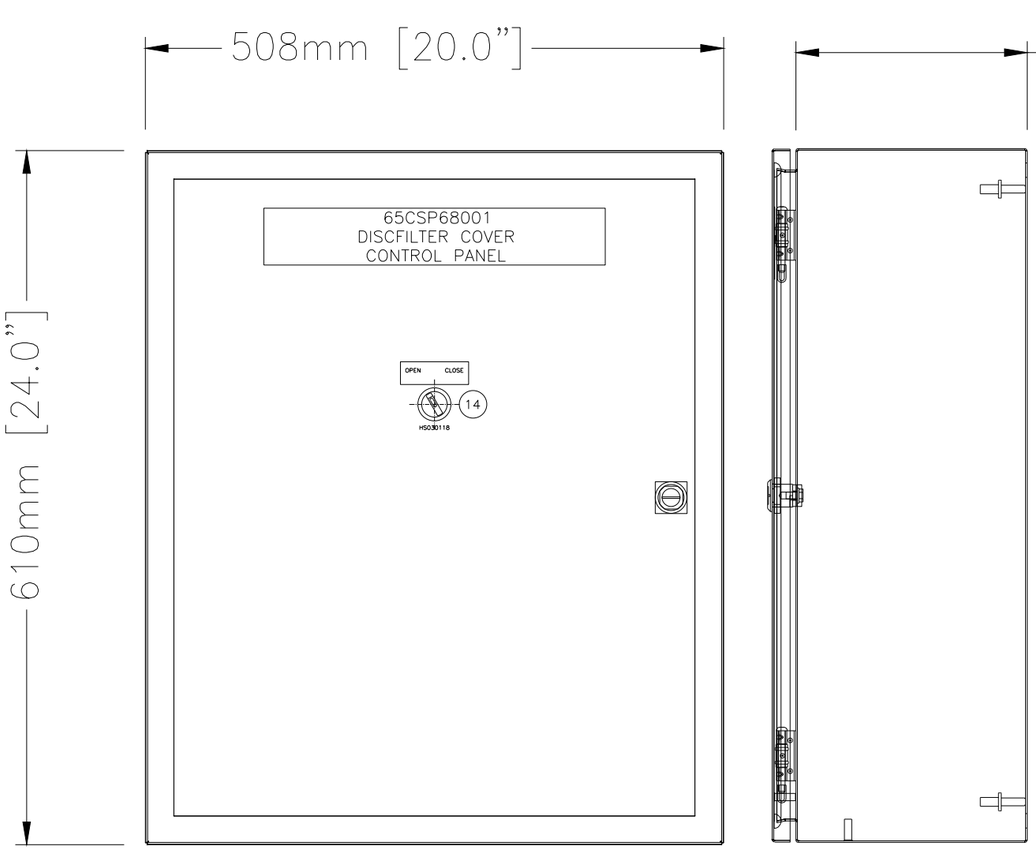


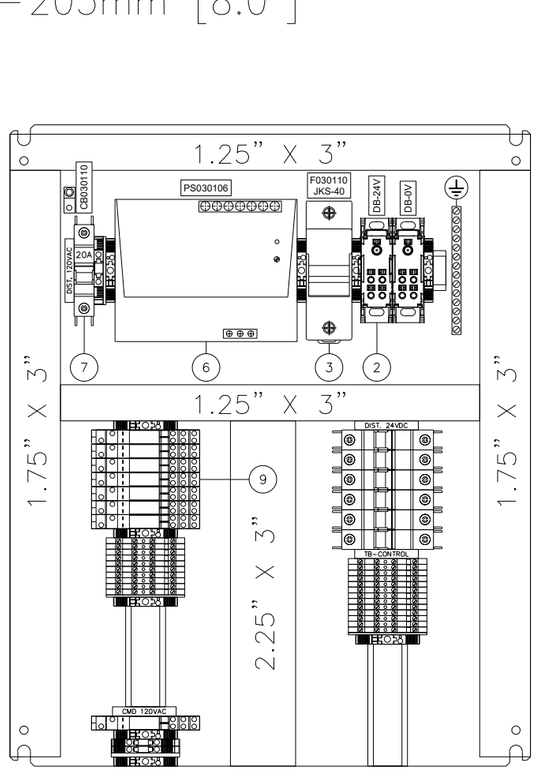


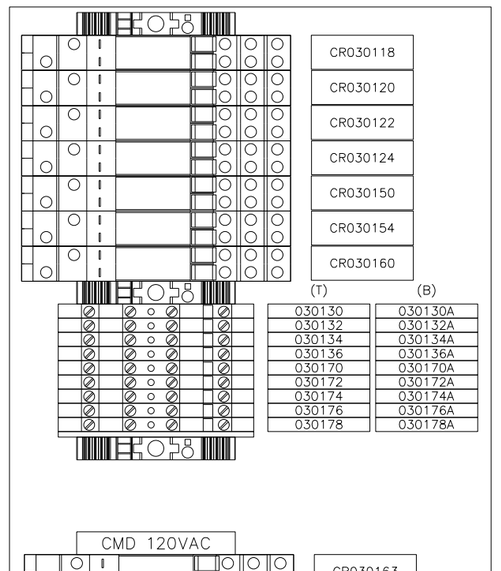


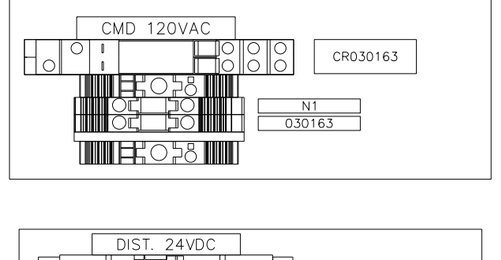


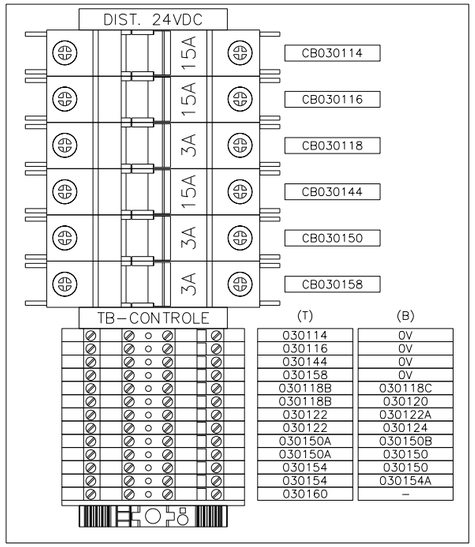


| REV | DESCRIPTION | DATE | REVD | CHKD | APVD | ECN |
|---|---|---|---|---|---|---|
| | | | | | | |
| | | | | | | |
| | | | | | | |
| 3 | AS BUILT | 2021-07-07 | SB | RA | – | – |
| 2 | FOR FABRICATION | 2021-06-16 | EH | RA | – | – |
| 1 | FOR APPROVAL | 2021-04-20 | SB | RA | – | – |

**CONFIDENTIALITY AND INTELLECTUAL PROPERTY NOTICE**
ALL INFORMATION CONTAINED IN THIS DOCUMENT IS THE SOLE PROPERTY OF VEOLIA WATER TECHNOLOGIES CANADA INC. AND IS PROTECTED BY ALL APPLICABLE LAWS, INCLUDING BUT NOT LIMITED TO COPYRIGHT AND OTHER INTELLECTUAL PROPERTY LAWS. THE DESIGN CONCEPTS AND INFORMATION CONTAINED HEREIN ARE PROPRIETARY TO V.W.T AND ARE SUBMITTED IN CONFIDENCE. THEY ARE NOT TRANSFERABLE. THEY MUST BE USED ONLY FOR THE PURPOSE FOR WHICH THE DOCUMENT IS EXPRESSLY SUBMITTED AND NO IMPLICIT LICENCE IS GRANTED OTHERWISE BY THE SUBMISSION OF THIS DOCUMENT. THEY ARE CONFIDENTIAL AND PRIVILEGED INFORMATION OF V.W.T. AND THEY MUST NOT BE DISCLOSED, REPRODUCED, LOANED, REMITTED OR USED IN ANY OTHER MANNER WITHOUT THE EXPRESS WRITTEN CONSENT OF V.W.T. V.W.T. ASSUMES NO RESPONSIBILITY OR LIABILITY FOR THE USE OF THIS DOCUMENT OR THE DESIGN CONCEPTS AND INFORMATION CONTAINED HEREIN FOR ANOTHER PROJECT, OR IN A MANNER THAT DOES NOT RELATE TO THE FITNESS OR PURPOSE OF THIS DOCUMENT. IN NO EVENT SHALL THIS DOCUMENT OR THE DESIGN CONCEPTS AND INFORMATION CONTAINED HEREIN BE USED IN A MANNER DETRIMENTAL TO THE INTEREST OF V.W.T. ALL COPYRIGHT, PATENT AND OTHER INTELLECTUAL PROPERTY RIGHTS ARE RESERVED. ACCEPTANCE OF THE DELIVERY OF THIS DOCUMENT CONSTITUTES AGREEMENT TO THESE TERMS AND CONDITIONS.

| | |
|---|---|
| DESIGNER | DATE |
| CHECKER | DATE |
| ENGINEER | DATE |
| SCALE: | |

TITLE
DISCFILTER COVER
EXTERNAL – INTERNAL & TERMINALS LAYOUT

CLIENT
MELIADINE

VEOLIA
VEOLIA WATER TECHNOLOGIES CANADA INC. 4105 Sartelon, Saint-Laurent, Qc, Canada. Tel: (514) 334-7230

| PROJECT DRAWING | INTERNAL | SHEET | REV |
|---|---|---|---|
| 5000220043 – EPL-0003-AU-VWT | | 03 OF 04 | 3 |

BAR = 1" AT PLOT SCALE
REF: A7281A
STD: "B" 11x17

Jul 07, 2021 12:50:36 – G:\Projets A72XX\A7281A – VEOLIA – Projet 5000220043 A-E Meliadine (HydroCarb 1)\DOC\DESSIN\000-DESSINS\0003\REV3\A7281A-5000220043-0003-EPL.dwg – sbouya

| ITEM | DESCRIPTION | PART | MANUF. | QTE | BY |
|---|---|---|---|---|---|
| 1 | ENCLOSURE NEMA 4, 24 x 20 x 8" (HWD)<br>C/W EP2420, EZPMFHD, PKT99 | EN4SD24208GY | HAMMOND | 1 | ENV |
| 2 | SPLITTER BLOCK 1P 115A, 1 LINE, 4 LOADS. | 1492PD3141 | ALLEN-BRADLEY | 2 | ENV |
| 3 | FUSE HOLDER 600VAC, 1 POLE, 60 AMP, TYPE J | CH60J1 | ALLEN-BRADLEY | 1 | ENV |
| 4 | GROUND LUG, 600VAC, COPPER, 6-14, STR | CB3536CY | PANDUIT | 1 | ENV |
| 5 | COPPER GROUND BAR, 5FEET, #4-14AWG | 4C-190 | NSI INDUSTRIES | A/R | ENV |
| 6 | POWER SUPPLY 24VDC, 960W, 40AMP | 1469520000 | WEIDMULLER | 1 | ENV |
| 7 | BREAKER, MULTI9, C CURVE<br>EX. M9F421XX (XX AMP) | M9F421XX | SCHNEIDER | A/R | ENV |
| 8 | END STOPPER WEW 35/2 | 1061200000 | WEIDMULLER | A/R | ENV |
| 9 | RELAY 2PDT COIL 24VDC<br>C/W BASE 700-HN222 | 700-HK32Z24 | ALLEN-BRADLEY | A/R | ENV |
| 10 | TERMINAL 2 LEVEL WDK 2.5<br>C/W END PLATE 1059100000 | 1021500000 | WEIDMULLER | A/R | ENV |
| 11 | TERMINAL 1 LEVEL WDU 6<br>C/W SEPARATOR 1050100000 | 1020200000 | WEIDMULLER | A/R | ENV |
| 12 | FUSE, TYPE J. FAST ACTING, 40 AMP | JKS-40 | BUSSMAN | 1 | ENV |
| 13 | TERMINAL 600VAC/DC, 30A WDU 4<br>C/W END PLATE 1050000000 | 1020100000 | WEIDMULLER | A/R | ENV |
| 14 | 2 POSITION SELECTOR MAINTAINED, 22.5MM<br>C/W CONTACT ZBE101 NO, ZBE102 NC, ZB4BZ009 BASE | ZB4BD2 | SCHNEIDER | 1 | ENV |

BAR = 1" AT PLOT SCALE

REF: A7281A

STD: "B" 11x17

| REV | DESCRIPTION | DATE | REVD | CHKD | APVD | ECN |
|---|---|---|---|---|---|---|
| | | | | | | |
| | | | | | | |
| | | | | | | |
| 3 | AS BUILT | 2021-07-07 | SB | RA | – | – |
| 2 | FOR FABRICATION | 2021-06-16 | EH | RA | – | – |
| 1 | FOR APPROVAL | 2021-04-20 | SB | RA | – | – |

**CONFIDENTIALITY AND INTELLECTUAL PROPERTY NOTICE**
ALL INFORMATION CONTAINED IN THIS DOCUMENT IS THE SOLE PROPERTY OF VEOLIA WATER TECHNOLOGIES CANADA INC. AND IS PROTECTED BY ALL APPLICABLE LAWS, INCLUDING BUT NOT LIMITED TO COPYRIGHT AND OTHER INTELLECTUAL PROPERTY LAWS. THE DESIGN CONCEPTS AND INFORMATION CONTAINED HEREIN ARE PROPRIETARY TO V.W.T AND ARE SUBMITTED IN CONFIDENCE. THEY ARE NOT TRANSFERABLE. THEY MUST BE USED ONLY FOR THE PURPOSE FOR WHICH THE DOCUMENT IS EXPRESSLY SUBMITTED AND NO IMPLICIT LICENCE IS GRANTED OTHERWISE BY THE SUBMISSION OF THIS DOCUMENT. THEY ARE CONFIDENTIAL AND PRIVILEGED INFORMATION OF V.W.T. AND THEY MUST NOT BE DISCLOSED, REPRODUCED, LOANED, REMITTED OR USED IN ANY OTHER MANNER WITHOUT THE EXPRESS WRITTEN CONSENT OF V.W.T. V.W.T. ASSUMES NO RESPONSIBILITY OR LIABILITY FOR THE USE OF THIS DOCUMENT OR THE DESIGN CONCEPTS AND INFORMATION CONTAINED HEREIN FOR ANOTHER PROJECT, OR IN A MANNER THAT DOES NOT RELATE TO THE FITNESS OR PURPOSE OF THIS DOCUMENT. IN NO EVENT SHALL THIS DOCUMENT OR THE DESIGN CONCEPTS AND INFORMATION CONTAINED HEREIN BE USED IN A MANNER DETRIMENTAL TO THE INTEREST OF V.W.T. ALL COPYRIGHT, PATENT AND OTHER INTELLECTUAL PROPERTY RIGHTS ARE RESERVED. ACCEPTANCE OF THE DELIVERY OF THIS DOCUMENT CONSTITUTES AGREEMENT TO THESE TERMS AND CONDITIONS.

| | |
|---|---|
| DESIGNER | DATE |
| CHECKER | DATE |
| ENGINEER | DATE |
| SCALE: | |

TITLE
DISCFILTER COVER
BILL OF MATERIALS

CLIENT
MELIADINE

VEOLIA

VEOLIA WATER TECHNOLOGIES CANADA INC. 4105 Sartelon, Saint-Laurent, Qc, Canada. Tel: (514) 334-7230

| PROJECT / DRAWING | INTERNAL | SHEET | REV |
|---|---|---|---|
| 5000220043 – EPL-0003-AU-VWT | | 04 OF 04 | 3 |

Jul 07, 2021 12:50:36 – G:\Projets A72XX\A7281A – VEOLIA – Projet 5000220043 A-E Meliadine (HydroCarb
1)\DOC\DESSIN\000-DESSINS\0003\REV3\A7281A-5000220043-0003-EPL.dwg – sbouya

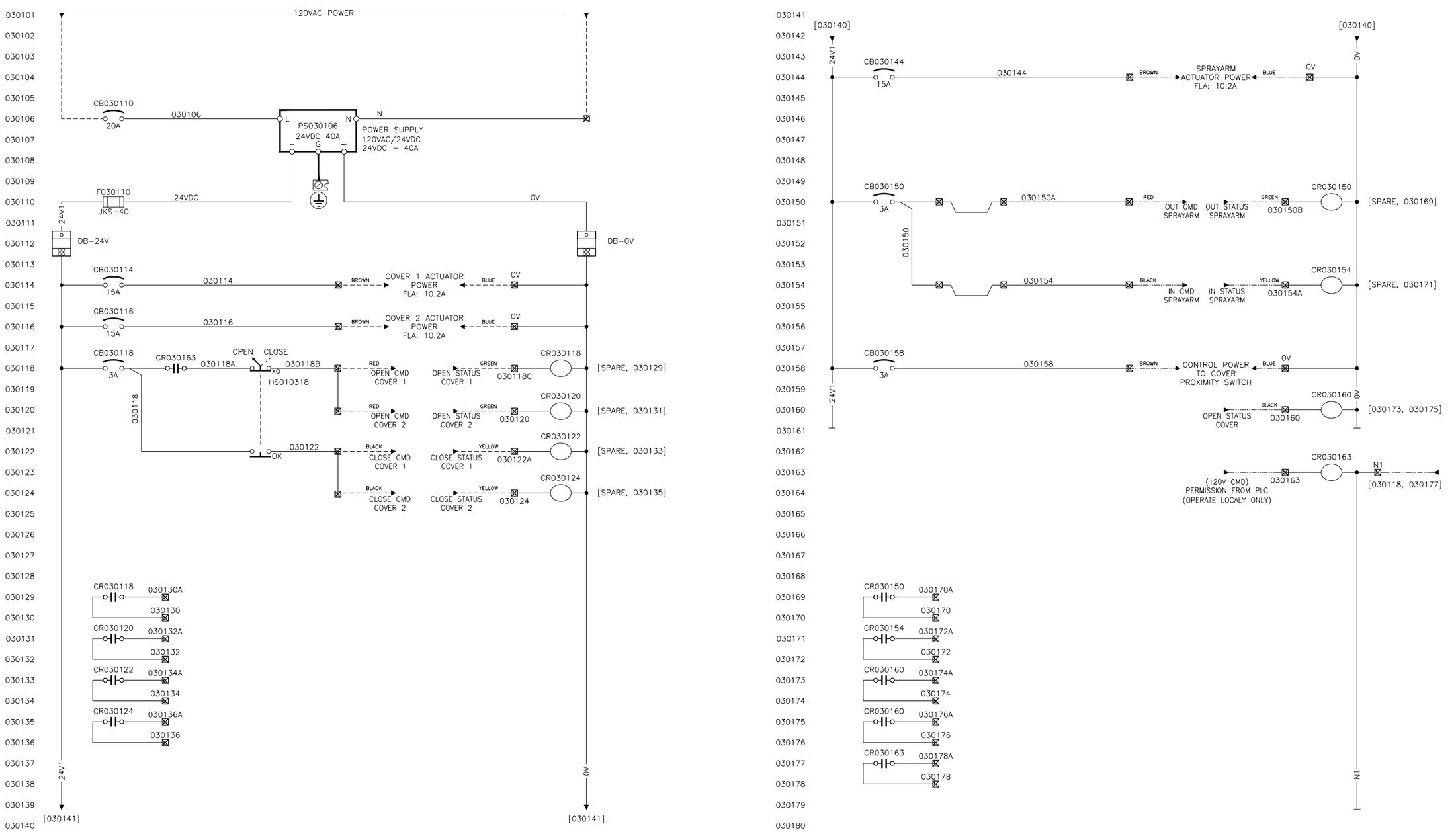


| REV | DESCRIPTION | DATE | REVD | CHKD | APVD | ECN |
|---|---|---|---|---|---|---|
| | | | | | | |
| | | | | | | |
| | | | | | | |
| 3 | AS BUILT | 2021-07-07 | SB | RA | – | – |
| 2 | FOR FABRICATION | 2021-06-16 | EH | RA | – | – |
| 1 | FOR APPROVAL | 2021-04-20 | SB | RA | – | – |

**CONFIDENTIALITY AND INTELLECTUAL PROPERTY NOTICE**
ALL INFORMATION CONTAINED IN THIS DOCUMENT IS THE SOLE PROPERTY OF VEOLIA WATER TECHNOLOGIES CANADA INC. AND IS PROTECTED BY ALL APPLICABLE LAWS, INCLUDING BUT NOT LIMITED TO COPYRIGHT AND OTHER INTELLECTUAL PROPERTY LAWS. THE DESIGN CONCEPTS AND INFORMATION CONTAINED HEREIN ARE PROPRIETARY TO V.W.T AND ARE SUBMITTED IN CONFIDENCE. THEY ARE NOT TRANSFERABLE. THEY MUST BE USED ONLY FOR THE PURPOSE FOR WHICH THE DOCUMENT IS EXPRESSLY SUBMITTED AND NO IMPLICIT LICENCE IS GRANTED OTHERWISE BY THE SUBMISSION OF THIS DOCUMENT. THEY ARE CONFIDENTIAL AND PRIVILEGED INFORMATION OF V.W.T. AND THEY MUST NOT BE DISCLOSED, REPRODUCED, LOANED, REMITTED OR USED IN ANY OTHER MANNER WITHOUT THE EXPRESS WRITTEN CONSENT OF V.W.T. V.W.T. ASSUMES NO RESPONSIBILITY OR LIABILITY FOR THE USE OF THIS DOCUMENT OR THE DESIGN CONCEPTS AND INFORMATION CONTAINED HEREIN FOR ANOTHER PROJECT, OR IN A MANNER THAT DOES NOT RELATE TO THE FITNESS OR PURPOSE OF THIS DOCUMENT. IN NO EVENT SHALL THIS DOCUMENT OR THE DESIGN CONCEPTS AND INFORMATION CONTAINED HEREIN BE USED IN A MANNER DETRIMENTAL TO THE INTEREST OF V.W.T. ALL COPYRIGHT, PATENT AND OTHER INTELLECTUAL PROPERTY RIGHTS ARE RESERVED. ACCEPTANCE OF THE DELIVERY OF THIS DOCUMENT CONSTITUTES AGREEMENT TO THESE TERMS AND CONDITIONS.

| | |
|---|---|
| DESIGNER | DATE |
| CHECKER | DATE |
| ENGINEER | DATE |
| SCALE: | |

TITLE
DISCFILTER COVER
ELECTRICAL SCHEMATIC (POWER DISTRIBUTION 24VDC)

CLIENT
MELIADINE

VEOLIA WATER TECHNOLOGIES CANADA INC. 4105 Sartelon, Saint-Laurent, Qc, Canada. Tel: (514) 334-7230

| PROJECT | DRAWING | INTERNAL | SHEET | REV |
|---|---|---|---|---|
| 5000220043 – | ELD-0003-AU-VWT | | 01 OF 01 | 3 |

BAR = 1" AT PLOT SCALE
REF: A7281A
STD: "B" 11x17

Jul 07, 2021 12:50:38 – G:\Projets A72xx\A7281A – VEOLIA – Projet 5000220043 A-E Meliadine (HydroCarb
1)\DOC\DESSIN\000-DESSINS\0003\REV3\A7281A-5000220043-0003-ELD.dwg – sbouya

LEFT BLANK

# *5 – ELECTRICITY AND CONTROL*

## *5.2 – ELECTRICAL DATA SHEETS*

LEFT BLANK

| | |
|---|---|
| VWT CANADA # | PSDS_0001_AU_VWT |
| Project # | Meliadine BPC Upgrade 2021 |
| Date | 2021-03-09 |

**Automation System**

| CLIENT | REV | DESCRIPTION | DATE | By | Chkd | App. |
|---|---|---|---|---|---|---|
| | 1 | For approval | 2021-03-09 | CRB | XM | TS |
| 5000220043 | 2 | | | | | |
| PROJECT | 3 | | | | | |
| | 4 | | | | | |
| HydraCarb | 5 | | | | | |
| | 6 | | | | | |

| | | | | | | REV |
|---|---|---|---|---|---|---|
| General | Voltage | | Volts | 575 | | |
| | Panel Enclosure | Material | | Nema 12 | 48"H x 36"L x 12"P | |
| | Panel type | Cable Entry | | Wall Mounted | | |
| | Control Panel Approval | | | CSA | | |
| | Wires color | | | Veolia standard | | |
| | Junction boxes | Pre-wiring | | N/A | N/A | |
| | Pre-Wire cable type | | | N/A | | |
| | UPS | | | Yes | | |
| | Motor control | | | Control panel | | |
| | Remote Access | | | N/A | No | |
| Environnement | Panel Location | | | Indoor use, in process area | | |
| | Min. Temperature | | °C | 5 | | |
| | Max . Temperature | | °C | 25 | | |
| | Max. Humidity | | % | 95 | | |
| | Corrosive Atmosphere | | | Non Corrosive | | |
| | Freeze | | | No | | |
| | Comments | | | | | |
| Safety | Electrical Classification | | | Non Hazardous Area | | |
| | Province/State | | | Nunavut | | |
| Process Controller | Brand | | | Schneider | | |
| | Model | | | M340 | | |
| | Spare I/O | | | 20% | | |
| | Digital inputs cards | | | BMXDDI6402K | | |
| | Digital outputs cards | | | BMXDDO3202K | | |
| | Analog inputs cards | | | N/A | | |
| | Analog outputs cards | | | BMXAMO0410 | | |
| | Communication cards | | | N/A | | |
| | Power supply | | | BMXCPS3500 | | |
| | Remote I/O | Model | | N/A | | |
| HMI | Brand | | | Schneider | | |
| | Model | | | Magelis | | |
| | Size | | in | 4 | | |
| | Resolution | | Pixels | 480x272 | | |
| SCADA Hardware | Brand | | | N/A | | |
| | Model | | | N/A | | |
| | Screen size | Screen Quantity | in | N/A | | |
| | Resolution | | Pixels | #N/A | | |
| | Printer | | | N/A | | |
| | MS Office | | | N/A | | |
| | Reporting | | | N/A | | |
| Software | PLC Software | Version | | Unity Software | | |
| | HMI Software | Version | | Vijeo Designer | | |
| | SCADA Software | Version | | | | |

**This page is intentionally left blank**

# Product data sheet
## Characteristics

# HMIST6200
4"W touch panel display, 1COM, 1Ethernet, USB host&device, 24VDC



## Main

| | |
|---|---|
| Range of product | Harmony ST6 |
| Product or component type | Touch panel screen |
| Software designation | EcoStruxure Operator Terminal Expert |
| Processor name | ARM Cortex-A8 |

## Complementary

| | |
|---|---|
| Display size | 4 inch |
| Display type | Colour TFT LCD |
| Display colour | 16 million colours |
| Display resolution | 480 x 272 pixels |
| Touch panel | Single touch analogue resistive |
| Backlight lifespan | 50000 hours white |
| Brightness | 16 levels |
| Character font | ASCII<br>ASCII (European characters)<br>Chinese (simplified Chinese)<br>Japanese (ANK, Kanji)<br>Katakana<br>Korean<br>Taiwanese (traditional Chinese) |
| [Us] rated supply voltage | 24 V DC +/- 20 % |
| Inrush current | 30 A |
| Local signalling | Status LED green, steady offline<br>Status LED green, steady operating<br>Status LED green, flashing operating<br>Status LED green, faded stand-by<br>Status LED orange, flashing software starting up<br>Status LED red, steady power supply (ON)<br>Status LED red, flashing operating<br>Status LED red, off power supply (OFF) |

Disclaimer: This documentation is not intended as a substitute for and is not to be used for determining suitability or reliability of these products for specific user applications

| | |
|---|---|
| Power consumption in W | 6.9 W |
| Number of pages | 200 application pages |
| Processor frequency | 800 MHz |
| Port Ethernet | 10/100BASE |
| Memory description | Device memory 512 MB<br>User data memory 128 MB<br>Backup memory 512 kB |
| Integrated connection type | 1 COM1 serial link - 1 SUB-D 9-pin female - RS232C/RS485 2400...115200 bps)bottom<br>COM1 serial link 2400...187500 bps)back<br>1 USB 2.0 type Aback<br>1 USB 2.0 type micro Bbottom<br>1 Ethernet - female RJ45 - RS485 |
| Supply | External supply |
| Realtime clock | Built-in 0...50 °C<br>Built-in 10...90 % RH |
| Downloadable protocols | Modbus<br>Uni-TE<br>Third party protocols |
| Product brand | Schneider Electric Modicon<br>Mitsubishi Melsec<br>Omron Sysmac<br>Rockwell Automation Allen-Bradley<br>Siemens Simatic |
| Fixing mode | By 2 screws 1.6...5 mm thick panel UL 61010-2-201<br>By 2 screws EN 61131-2<br>By 2 screws IEC 61000-6-2 |
| Enclosure material | PC |
| Front material | Aluminium |
| Marking | CE |
| Cut-out dimensions | 118.5 x 92.5 mm panel cut dimension |
| Height | 4.27 in (108.5 mm) |
| Width | 5.30 in (134.5 mm) |
| Depth | 1.69 in (43 mm) |
| Net weight | 0.88 lb(US) (0.4 kg) |

## Environment

| | |
|---|---|
| Immunity to microbreaks | 2 ms |
| Standards | EN 61000-6-4<br>EN 61000-6-2<br>EN 61131-2<br>UL 61010-2-201<br>CSA C22.2 No 61010-2-201 |
| Product certifications | CSA<br>CE |
| Directives | 2014/35/EU - low voltage directive<br>2014/30/EU - electromagnetic compatibility |
| Ambient air temperature for operation | 32…122 °F (0…50 °C) |
| Ambient air temperature for storage | -4…140 °F (-20…60 °C) |
| Relative humidity | 10…90 % non-condensing |
| Operating altitude | 2000 m |
| IP degree of protection | IP20 IEC 61131-2 rear panel)<br>IP65 IEC 61131-2 front panel) |
| NEMA degree of protection | NEMA 4 front panel (indoor use)<br>NEMA 13 front panel (in enclosure) |
| Shock resistance | 147 m/s² 11 ms X, Y, Z directions for 10 cycles (approx. 100 min))EN/IEC 61131-2 |
| Vibration resistance | +/- 3.5 mm 5…9 Hz)X, Y, Z directions for 10 cycles (approx. 100 min) EN/IEC 61131-2<br>9.8 m/s² 9…150 Hz) |
| Electromagnetic compatibility | Electrical fast transient/burst immunity test 2 kV power ports) IEC 61000-4-4<br>Electrical fast transient/burst immunity test 1 kV signal ports)<br>Electrostatic discharge immunity test - test level: 6 kV (contact discharge) conforming to EN/IEC 61000-4-2 level 3 |

| | |
|---|---|
| | Electrostatic discharge immunity test 8 kV air discharge) |

## Packing Units

| | |
|---|---|
| Unit Type of Package 1 | PCE |
| Package 1 Weight | 15.87 oz (450 g) |
| Package 1 Height | 2.76 in (7 cm) |
| Package 1 width | 5.31 in (13.5 cm) |
| Package 1 Length | 7.28 in (18.5 cm) |

## Offer Sustainability

| | |
|---|---|
| Sustainable offer status | Green Premium product |
| REACh Regulation | REACh Declaration |
| EU RoHS Directive | Pro-active compliance (Product out of EU RoHS legal scope)<br>EU RoHS Declaration |
| Mercury free | Yes |
| RoHS exemption information | Yes |
| China RoHS Regulation | China RoHS declaration |
| Environmental Disclosure | Product Environmental Profile |
| Circularity Profile | End of Life Information |
| WEEE | The product must be disposed on European Union markets following specific waste collection and never end up in rubbish bins |

## Dimensions

### External Dimensions

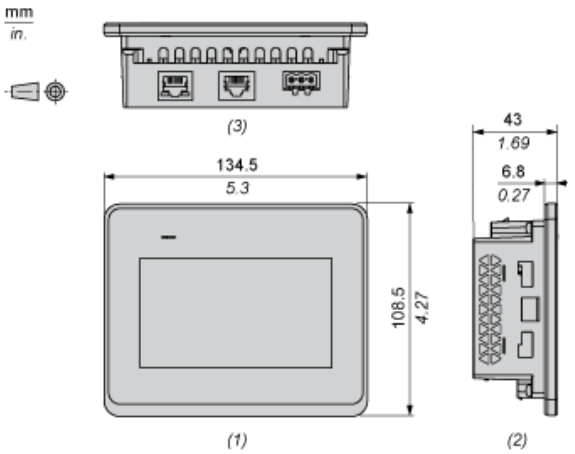


(1) : Front
(2) : Left
(3) : Bottom

### Dimensions with Installation Fasteners

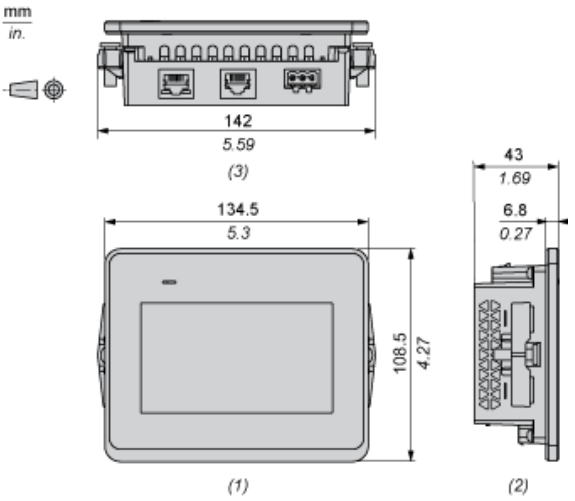


(1) : Front
(2) : Left
(3) : Bottom

## Dimensions with Spring Clips

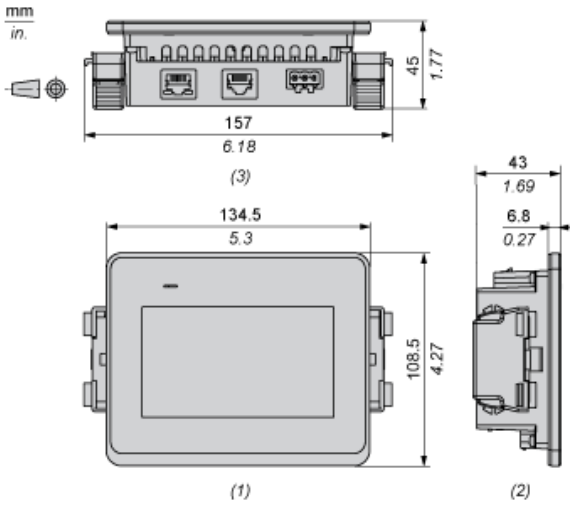


(1) : Front
(2) : Left
(3) : Bottom

## Dimensions with Cables

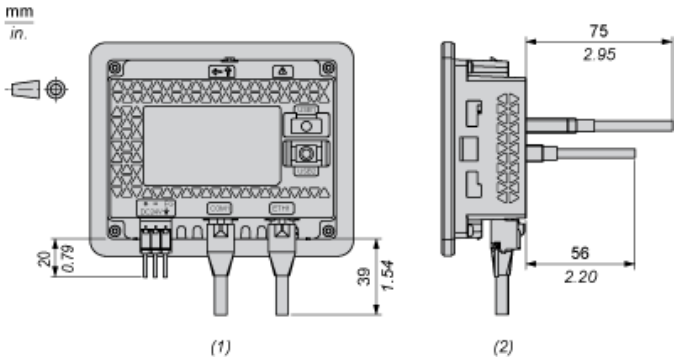


(1) : Rear
(2) : Right

## Mounting

### Panel Cut Dimensions

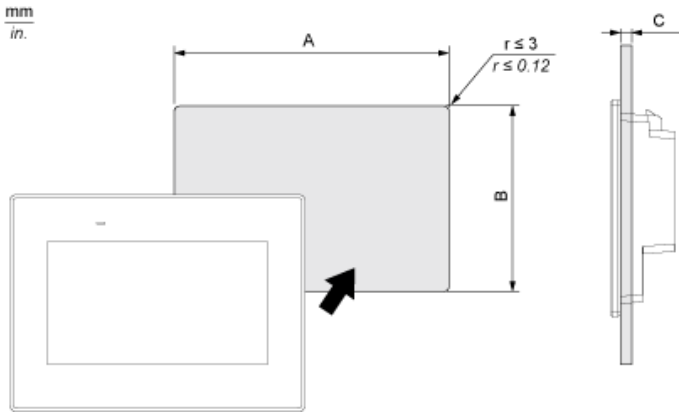


| A | | B | | C Installing with spring | | | |
|---|---|---|---|---|---|---|---|
| | | | | Position 1 | | Position 2 | |
| mm | in. | mm | in. | mm | in. | mm | in. |
| 118.5 (+1, -0) | 4.67 (+0.04, -0) | 92.5 (+1, -0) | 3.64 (+0.04, -0) | 1.5...4 | 0.06...0.16 | 4...6 | 0.16...0.24 |

## Installation Requirements

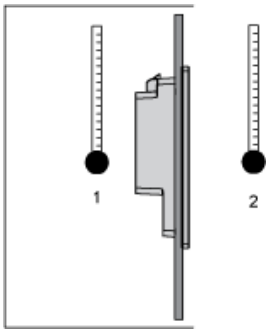


1 : Internal temperature
2 : External temperature

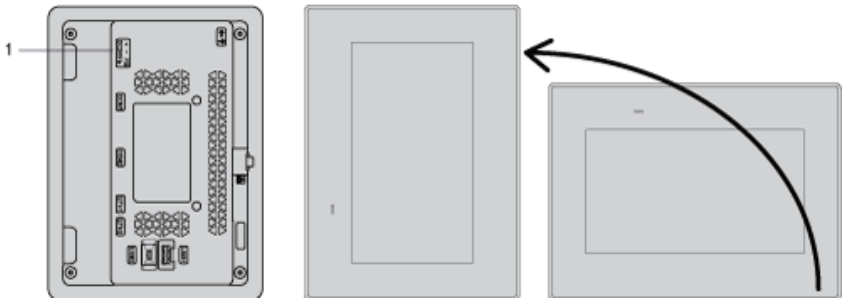


1 : Power connector

## Mounting Angle

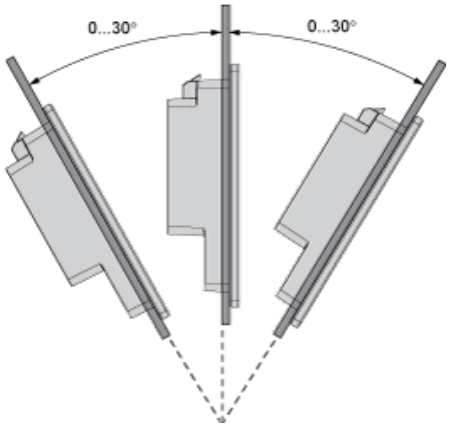

## Clearance

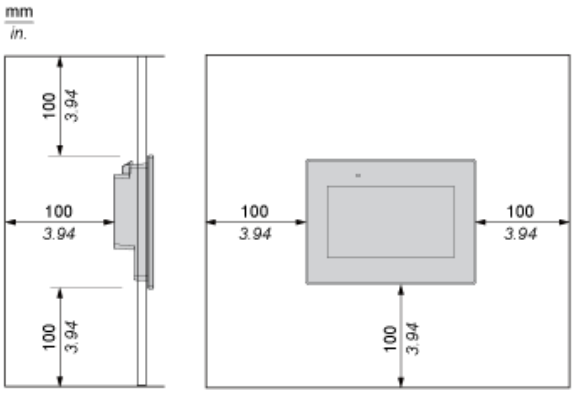

# Product data sheet
## Characteristics

# BMXP341000
processor module M340 - max 512 discrete + 128 analog I/O - Modbus




## Main

| | |
|---|---|
| Range of product | Modicon M340 automation platform |
| Product or component type | Processor module |
| Number of racks | 2 |
| Number of slots | 11 |
| Discrete I/O processor capacity | 512 I/O single-rack configuration |
| Analogue I/O processor capacity | 66 I/O single-rack configuration<br>128 I/O multi-rack configuration |
| Number of application specific channel | 20 |
| Monitoring | Diagnostic counters Modbus<br>Event counters Modbus |

## Complementary

| | |
|---|---|
| Control channels | Programmable loops |
| Integrated connection type | Non isolated serial link RJ45 character mode asynchronous in baseband, RS232C 2 twisted shielded pairs 0.3...19.2 kbit/s full duplex<br>Non isolated serial link RJ45 character mode asynchronous in baseband, RS485 1 twisted shielded pair 0.3...19.2 kbit/s half duplex<br>Non isolated serial link RJ45, master/slave Modbus, RTU/ASCII asynchronous in baseband, RS232C 1 twisted shielded pair 0.3...19.2 kbit/s half duplex<br>Non isolated serial link RJ45, master/slave Modbus, RTU/ASCII asynchronous in baseband, RS485 1 twisted shielded pair 0.3...19.2 kbit/s half duplex<br>USB port 12 Mbit/s |
| Communication module processor capacity | 2 Ethernet communication module<br>2 AS-Interface module |
| Number of devices per segment | 0…32character mode)<br>0…32Modbus) |
| Number of devices | 2 point-to-point character mode<br>2 point-to-point Modbus |
| Bus length | 0.00…32.81 ft (0…10 m) serial link non isolated character mode segment<br>0.00…32.81 ft (0…10 m) serial link non isolated Modbus segment<br>0.00…3280.84 ft (0…1000 m) serial link isolated character mode segment |

Disclaimer: This documentation is not intended as a substitute for and is not to be used for determining suitability or reliability of these products for specific user applications

| | |
|---|---|
| | 0.00…3280.84 ft (0…1000 m) serial link isolated Modbus segment<br>0.00…49.21 ft (0…15 m) character mode point-to-point<br>0.00…49.21 ft (0…15 m) Modbus point-to-point |
| Maximum tap links length | <49.21 ft (15 m) serial link non isolated character mode segment<br><49.21 ft (15 m) serial link non isolated Modbus segment<br><131.23 ft (40 m) serial link isolated character mode segment<br><131.23 ft (40 m) serial link isolated Modbus segment |
| Number of addresses | 0…248 character mode<br>0…248 Modbus |
| Requests | 1 K data bytes per request character mode<br>252 data bytes per RTU request Modbus<br>504 data bytes per ASCII request Modbus |
| Control parameter | One CRC on each frame (RTU) Modbus<br>One LRC on each frame (ASCII) character mode<br>One LRC on each frame (ASCII) Modbus |
| Memory description | Internal RAM 2048 kB<br>Internal RAM 128 kB data<br>Internal RAM 1792 kB program constants and symbols<br>Supplied memory card (BMXRMS008MP) backup of programs, constants, symbols and data |
| Maximum size of object areas | 128 kB unlocated internal data<br>16250 %Mi located internal bits<br>32464 %MWi internal words located internal data<br>32760 %KWi constant words located internal data |
| Default size of object areas | 128 %KWi constant words located internal data<br>256 %Mi located internal bits<br>512 %MWi internal words located internal data |
| Application structure | 1 periodic fast task<br>32 event tasks<br>1 cyclic/periodic master task<br>No auxiliary task |
| Execution time per instruction | 0.18 µs Boolean<br>0.26 µs double-length words<br>0.38 µs single-length words<br>1.74 µs floating points |
| Number of instructions per ms | 4.2 Kinst/ms 65 % Boolean + 35 % fixed arithmetic<br>5.4 Kinst/ms 100 % Boolean |
| System overhead | 0.2 ms fast task<br>1.05 ms master task |
| Current consumption | 72 mA 24 V DC |
| Supply | Internal power supply via rack |
| Marking | CE |
| Status LED | Processor running (RUN) 1 LED green)<br>I/O module fault (I/O) 1 LED red)<br>Memory card fault (CARD ERR) 1 LED red)<br>Processor or system fault (ERR) 1 LED red)<br>Activity on Modbus (SER COM) 1 LED yellow) |
| Net weight | 0.44 lb(US) (0.2 kg) |

## Environment

| | |
|---|---|
| Ambient air temperature for operation | 32…140 °F (0…60 °C) |
| Relative humidity | 10…95 % without condensation |
| IP degree of protection | IP20 |
| Protective treatment | TC |
| Directives | 2014/35/EU - low voltage directive<br>2014/30/EU - electromagnetic compatibility<br>2012/19/EU - WEEE directive |
| Product certifications | CE<br>UL<br>CSA<br>RCM<br>EAC<br>Merchant Navy |
| Standards | EN 61131-2<br>EN/IEC 61010-2-201<br>UL 61010-2-201 |

| | |
|---|---|
| | CSA C22.2 No 61010-2-201<br>IACS E10<br>EN/IEC 61000-6-5, interface type 1 and type 2<br>EN/IEC 61850-3, location G |
| Environmental characteristic | Hazardous location class I division 2 |

## Packing Units

| | |
|---|---|
| Unit Type of Package 1 | PCE |
| Number of Units in Package 1 | 1 |
| Package 1 Weight | 8.36 oz (237 g) |
| Package 1 Height | 2.17 in (5.5 cm) |
| Package 1 width | 4.33 in (11 cm) |
| Package 1 Length | 4.53 in (11.5 cm) |
| Unit Type of Package 2 | S02 |
| Number of Units in Package 2 | 15 |
| Package 2 Weight | 8.78 lb(US) (3.981 kg) |
| Package 2 Height | 5.91 in (15 cm) |
| Package 2 width | 11.81 in (30 cm) |
| Package 2 Length | 15.75 in (40 cm) |

## Offer Sustainability

| | |
|---|---|
| Sustainable offer status | Green Premium product |
| REACh Regulation | REACh Declaration |
| REACh free of SVHC | Yes |
| EU RoHS Directive | Pro-active compliance (Product out of EU RoHS legal scope)<br>EU RoHS Declaration |
| Mercury free | Yes |
| RoHS exemption information | Yes |
| China RoHS Regulation | China RoHS declaration |
| Environmental Disclosure | Product Environmental Profile |
| Circularity Profile | End of Life Information |
| WEEE | The product must be disposed on European Union markets following specific waste collection and never end up in rubbish bins |

## Contractual warranty

| | |
|---|---|
| Warranty | 18 months |

## Modules Mounted on Racks

### Dimensions

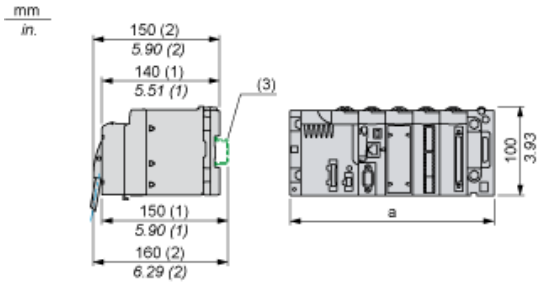


(1) With removable terminal block (cage, screw or spring).
(2) With FCN connector.
(3) On AM1 ED rail: 35 mm wide, 15 mm deep. Only possible with BMXXBP0400/0400H/0600/0600H/0800/0800H rack.

| Rack references | a in mm | a in in. |
|---|---|---|
| BMXXBP0400 and BMXXBP0400H | 242.4 | 09.54 |
| BMXXBP0600 and BMXXBP0600H | 307.6 | 12.11 |
| BMXXBP0800 and BMXXBP0800H | 372.8 | 14.68 |
| BMXXBP1200 and BMXXBP1200H | 503.2 | 19.81 |

# Product data sheet
## Characteristics

# BMXCPS3500
## power supply module X80 - 100..240 V AC - 36 W




## Main

| | |
|---|---|
| Range of product | Modicon X80 |
| Product or component type | Power supply module |
| Backplane compatibility | Not compatible with BMEXBP..02 |
| Primary voltage | 100...240 V |
| Supply circuit type | AC |
| Secondary power | 15 W 3.3 V DC I/O module logic power supply<br>31.2 W 24 V DC I/O module power supply and processor<br>21.6 W 24 V DC sensor power supply |

## Complementary

| | |
|---|---|
| Primary voltage limit | 85...264 V |
| Network frequency | 50/60 Hz |
| Network frequency limits | 47…63 Hz |
| Apparent power | 0.07 kVA |
| Input current | 0.52 A 240 V<br>1.04 A 115 V |
| Inrush current | 30 A 120 V<br>60 A 240 V |
| I²t on activation | 1 A².s 120 V<br>3 A².s 240 V |
| It on activation | 0.05 A.s 120 V<br>0.07 A.s 240 V |
| Protection type | Internal fuse not accessible for primary circuit<br>Overload protection for secondary circuit<br>Overvoltage protection for secondary circuit<br>Short-circuit protection for secondary circuit |
| Current at secondary voltage | 0.9 A 24 V DC sensor power supply<br>1.3 A 24 V DC I/O module power supply and processor<br>4.5 A 3.3 V DC I/O module logic power supply |
| Maximum power dissipation in W | 8.5 W |
| Status LED | Rack voltage OK 1 LED green) |

Disclaimer: This documentation is not intended as a substitute for and is not to be used for determining suitability or reliability of these products for specific user applications

| | |
|---|---|
| | Sensor voltage 1 LED green) |
| Control type | RESET push-button cold restart |
| Electrical connection | 1 connector 2 pin(s)alarm relay<br>1 connector 5 line supply, protective earth, 24 V DC input sensor |
| Insulation resistance | >= 100 MOhm primary/ground<br>>= 100 MOhm primary/secondary |
| Net weight | 0.79 lb(US) (0.36 kg) |

## Environment

| | |
|---|---|
| Immunity to microbreaks | 1 ms |
| Dielectric strength | 1500 V primary/secondary I/O module logic power supply<br>1500 V primary/secondary I/O module power supply and processor<br>2300 V primary/secondary sensor power supply<br>1500 V primary/ground<br>500 V 24 V sensor output/ground |
| Vibration resistance | 3 gn |
| Shock resistance | 30 gn |
| IP degree of protection | IP20 |
| Directives | 2014/35/EU - low voltage directive<br>2014/30/EU - electromagnetic compatibility<br>2012/19/EU - WEEE directive |
| Ambient air temperature for storage | -40…185 °F (-40…85 °C) |
| Ambient air temperature for operation | 32…140 °F (0…60 °C) |
| Relative humidity | 5…95 % at 55 °C without condensation |
| Protective treatment | TC |
| Operating altitude | 0...2000 m<br>2000...5000 m with derating factor |

## Packing Units

| | |
|---|---|
| Package 1 Weight | 1.07 lb(US) (0.485 kg) |
| Package 1 Height | 5.51 in (14.000 cm) |
| Package 1 width | 6.10 in (15.500 cm) |
| Package 1 Length | 6.10 in (15.500 cm) |

## Offer Sustainability

| | |
|---|---|
| Sustainable offer status | Green Premium product |
| REACh Regulation | REACh Declaration |
| EU RoHS Directive | Pro-active compliance (Product out of EU RoHS legal scope)<br>EU RoHS Declaration |
| Mercury free | Yes |
| RoHS exemption information | Yes |
| China RoHS Regulation | China RoHS declaration |
| Environmental Disclosure | Product Environmental Profile |
| Circularity Profile | End of Life Information |
| WEEE | The product must be disposed on European Union markets following specific waste collection and never end up in rubbish bins |

## Contractual warranty

| | |
|---|---|
| Warranty | 18 months |

## Modules Mounted on Racks

### Dimensions

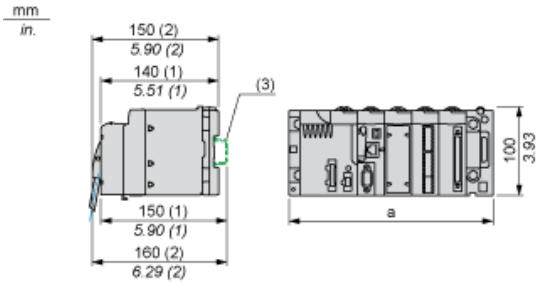


(1) With removable terminal block (cage, screw or spring).
(2) With FCN connector.
(3) On AM1 ED rail: 35 mm wide, 15 mm deep. Only possible with BMXXBP0400/0400H/0600/0600H/0800/0800H rack.

| Rack references | a in mm | a in in. |
|---|---|---|
| BMXXBP0400 and BMXXBP0400H | 242.4 | 09.54 |
| BMXXBP0600 and BMXXBP0600H | 307.6 | 12.11 |
| BMXXBP0800 and BMXXBP0800H | 372.8 | 14.68 |
| BMXXBP1200 and BMXXBP1200H | 503.2 | 19.81 |

## Connection of Alternating Current Power Supply Modules

### Connection of a PLC Station Constituted of a Single Rack

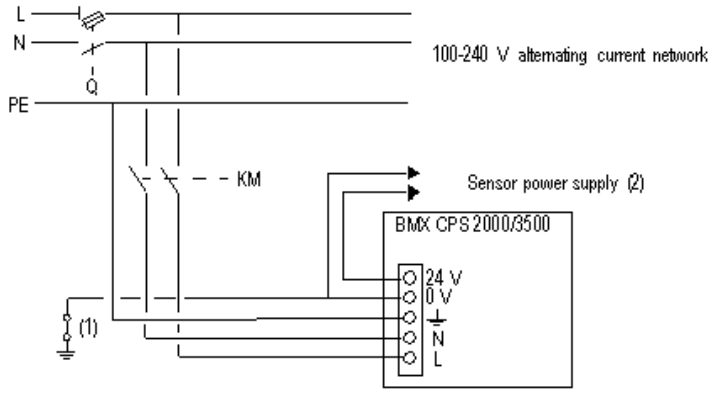


Q General isolator
KM Line contactor or circuit breaker
(1) Insulation connector bar for locating grounding errors
(2) Available current of 0.45 A for the BMXCPS2000 module or 0.9 A for the BMXCPS3500 module

### Connection of a PLC Station Constituted of Several Racks

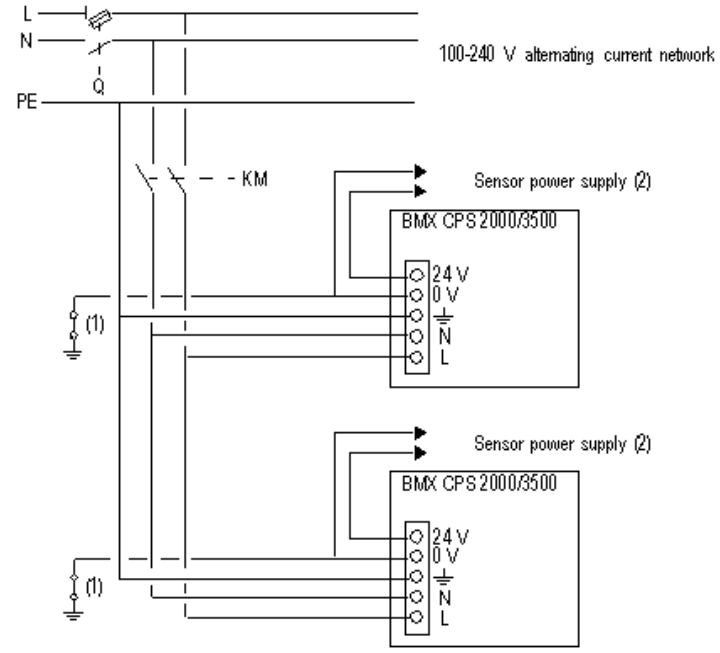


Q General isolator
KM Line contactor or circuit breaker
(1) Insulation connector bar for locating grounding errors
(2) Available current of 0.45 A for the BMXCPS2000 module or 0.9 A for the BMXCPS3500 module

# Product data sheet
## Characteristics

# BMEXBP0800
## rack X80 - 8 slots - Ethernet backplane

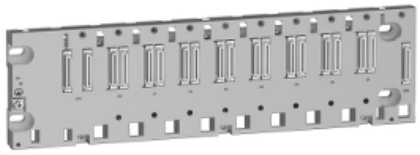

## Main

| | |
|---|---|
| Range of product | Modicon X80 |
| Accessory / separate part type | Rack |

## Complementary

| | |
|---|---|
| Number of slots | 8 bus X + Ethernet |
| Product compatibility | I/O module<br>BMX processor<br>Specific application module<br>BMXCPS power supply<br>BME processor |
| Power consumption in W | 211 mW 3.3 V DC<br>3.9 W 24 V DC |
| Electrical connection | 1 connector (XBE) expansion module |
| Fixing mode | By 4 screws 0.17…0.25 in (4.32…6.35 mm) panel<br>By 4 M6 screws plate<br>By clips 35 mm symmetrical DIN rail |
| Current consumption | 64 mA 3.3 V DC<br>164 mA 24 V DC |
| MTBF reliability | 1700000 H |
| Net weight | 2.34 lb(US) (1.06 kg) |

## Environment

| | |
|---|---|
| IP degree of protection | IP20 |
| Ambient air temperature for operation | 32…140 °F (0…60 °C) |
| Relative humidity | 5…95 % without condensation |
| Directives | 2014/35/EU - low voltage directive<br>2014/30/EU - electromagnetic compatibility<br>2012/19/EU - WEEE directive |

Disclaimer: This documentation is not intended as a substitute for and is not to be used for determining suitability or reliability of these products for specific user applications

## Packing Units

| | |
|---|---|
| Unit Type of Package 1 | PCE |
| Number of Units in Package 1 | 1 |
| Package 1 Weight | 2.35 lb(US) (1.065 kg) |
| Package 1 Height | 2.56 in (6.5 cm) |
| Package 1 width | 6.10 in (15.5 cm) |
| Package 1 Length | 17.91 in (45.5 cm) |
| Unit Type of Package 2 | S04 |
| Number of Units in Package 2 | 9 |
| Package 2 Weight | 22.66 lb(US) (10.28 kg) |
| Package 2 Height | 11.81 in (30 cm) |
| Package 2 width | 15.75 in (40 cm) |
| Package 2 Length | 23.62 in (60 cm) |

## Offer Sustainability

| | |
|---|---|
| Sustainable offer status | Green Premium product |
| REACh Regulation | REACh Declaration |
| REACh free of SVHC | Yes |
| EU RoHS Directive | Pro-active compliance (Product out of EU RoHS legal scope)<br>EU RoHS Declaration |
| Mercury free | Yes |
| RoHS exemption information | Yes |
| China RoHS Regulation | China RoHS declaration |
| Environmental Disclosure | Product Environmental Profile |
| Circularity Profile | End of Life Information |
| WEEE | The product must be disposed on European Union markets following specific waste collection and never end up in rubbish bins |

# BMEXBP0800

## Dimensions

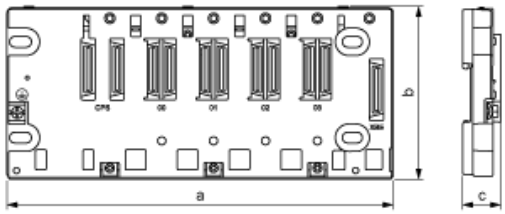


Dimensions in mm

| a | | b | c |
|---|---|---|---|
| Empty Rack | Rack With Extender Module Mounted | | |
| 372.8 | 373.98 | 105.11<br>NOTE: Overall height is 134.6 with a CPU mounted. | 19 |

Dimensions in in.

| a | | b | c |
|---|---|---|---|
| Empty Rack | Rack With Extender Module Mounted | | |
| 14.68 | 14.72 | 4.14<br>NOTE: Overall height is 5.30 with a CPU mounted. | 0.75 |

## Minimum Clearance

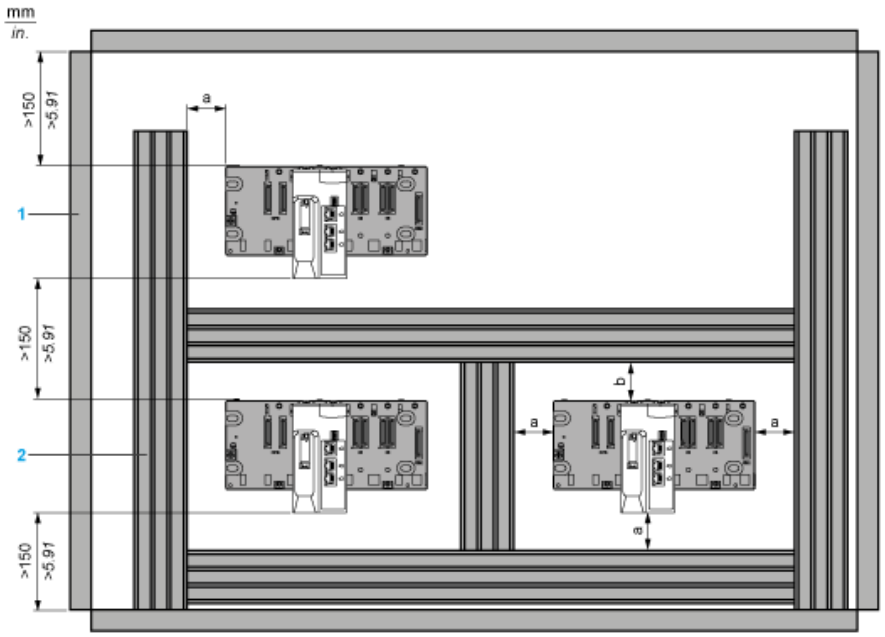


1 Installation or casing
2 Wiring duct or tray
a Side and bottom clearance: > 60 mm (2.36 in.)
b Top clearance: > 80 mm (3.15 in.)

## Mounting a Rack on a DIN rail

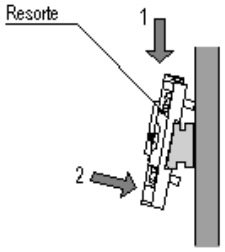

# BMEXBP0800

## Mounting and Fastening the Rack on Panels

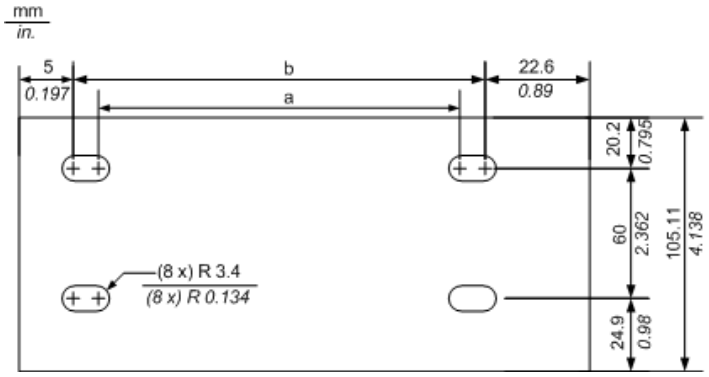


NOTE: You can use M4, M5, M6, or UNC #6 screws in the fastening holes.

Dimensions in mm

| a | b |
|---|---|
| 332.5 | 345.2 |

Dimensions in in.

| a | b |
|---|---|
| 13.09 | 13.59 |

## Mounting on Telequick Grid AM1-PA and AM3-PA Mounting Grids

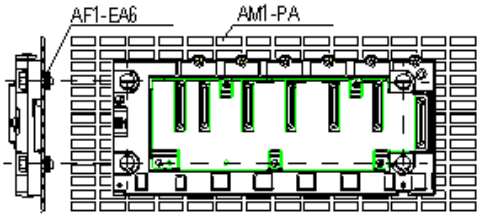


Fasten the rack with four M4, M5, M6 or UNC #6 screws

**This page is intentionally left blank**

# Product data sheet
## Characteristics

# BMXAMO0410
## isolated analog output module X80 - 4 outputs



### Main

| | |
|---|---|
| Range of product | Modicon X80 |
| Product or component type | Analog output module |
| Electrical connection | 20 ways 1 connector |
| Isolation between channels | Isolated |

### Complementary

| | |
|---|---|
| Measurement error | <= 0.2 % of full scale 0...60 °C<br>0.1 % of full scale 25 °C |
| Temperature drift | 45 ppm/°C +/- 10 V<br>45 ppm/°C 0...20 mA<br>45 ppm/°C 4...20 mA |
| Minimum crosstalk attenuation | 80 dB |
| Common mode rejection | 100 dB |
| Isolation voltage | 1400 V DC between channels and ground<br>1400 V DC between channels and bus<br>750 V DC between channels |
| Detection type | Open circuit 0...20 mA<br>Open circuit 4...20 mA<br>Short circuit +/- 10 V |
| Load impedance ohmic | >= 1000 Ohm +/- 10 V<br><= 500 Ohm 0...20 mA<br><= 500 Ohm 4...20 mA |
| Output level | High level |
| Analogue output number | 4 |
| Analogue output type | Current 0...20 mA<br>Current 4...20 mA<br>Voltage +/- 10 V |
| Analogue output resolution | 15 bits + sign |
| Supply | Internal power supply via rack |
| Conversion time | <= 1 ms |
| Maximum conversion value | 0...21 mA 0...20 mA |

Disclaimer: This documentation is not intended as a substitute for and is not to be used for determining suitability or reliability of these products for specific user applications

| | |
|---|---|
| | 0...21 mA 4...20 mA<br>+/- 10.5 V +/- 10 V |
| Fallback mode | Configurable<br>Predefined |
| Operating altitude | 0...2000 m<br>2000...5000 m with derating factor |
| Status LED | 1 LED (green)RUN<br>1 LED per channel (green)channel diagnostic<br>ERR 1 LED red)<br>I/O 1 LED red) |
| Net weight | 0.33 lb(US) (0.15 kg) |
| Power consumption in W | 3 W 24 V DC typical<br>3.6 W 24 V DC maximum<br>0.45 W 3.3 V DC typical<br>0.51 W 3.3 V DC maximum |

## Environment

| | |
|---|---|
| Vibration resistance | 3 gn |
| Shock resistance | 30 gn |
| Ambient air temperature for storage | -40…185 °F (-40…85 °C) |
| Ambient air temperature for operation | 32…140 °F (0…60 °C) |
| Relative humidity | 5…95 % at 55 °C without condensation |
| IP degree of protection | IP20 |
| Directives | 2014/35/EU - low voltage directive<br>2014/30/EU - electromagnetic compatibility<br>2012/19/EU - WEEE directive |
| Product certifications | CE<br>RCM<br>CSA<br>EAC<br>Merchant Navy<br>UL |
| Standards | EN/IEC 61010-2-201<br>EN/IEC 61131-2<br>UL 61010-2-201<br>CSA C22.2 No 61010-2-201 |

## Packing Units

| | |
|---|---|
| Unit Type of Package 1 | PCE |
| Number of Units in Package 1 | 1 |
| Package 1 Weight | 7.97 oz (226 g) |
| Package 1 Height | 2.17 in (5.5 cm) |
| Package 1 width | 4.33 in (11 cm) |
| Package 1 Length | 4.72 in (12 cm) |
| Unit Type of Package 2 | S02 |
| Number of Units in Package 2 | 15 |
| Package 2 Weight | 7.96 lb(US) (3.61 kg) |
| Package 2 Height | 5.91 in (15 cm) |
| Package 2 width | 11.81 in (30 cm) |
| Package 2 Length | 15.75 in (40 cm) |

## Offer Sustainability

| | |
|---|---|
| Sustainable offer status | Green Premium product |
| REACh Regulation | REACh Declaration |
| REACh free of SVHC | Yes |
| EU RoHS Directive | Pro-active compliance (Product out of EU RoHS legal scope)<br>EU RoHS Declaration |
| Mercury free | Yes |

| | |
|---|---|
| RoHS exemption information | Yes |
| China RoHS Regulation | China RoHS declaration |
| Environmental Disclosure | Product Environmental Profile |
| Circularity Profile | End of Life Information |
| WEEE | The product must be disposed on European Union markets following specific waste collection and never end up in rubbish bins |

## Contractual warranty

| | |
|---|---|
| Warranty | 18 months |

## Modules Mounted on Racks

### Dimensions

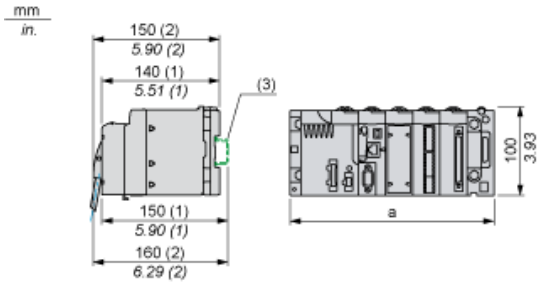


(1) With removable terminal block (cage, screw or spring).
(2) With FCN connector.
(3) On AM1 ED rail: 35 mm wide, 15 mm deep. Only possible with BMXXBP0400/0400H/0600/0600H/0800/0800H rack.

| Rack references | a in mm | a in in. |
|---|---|---|
| BMXXBP0400 and BMXXBP0400H | 242.4 | 09.54 |
| BMXXBP0600 and BMXXBP0600H | 307.6 | 12.11 |
| BMXXBP0800 and BMXXBP0800H | 372.8 | 14.68 |
| BMXXBP1200 and BMXXBP1200H | 503.2 | 19.81 |

## Wiring Diagram

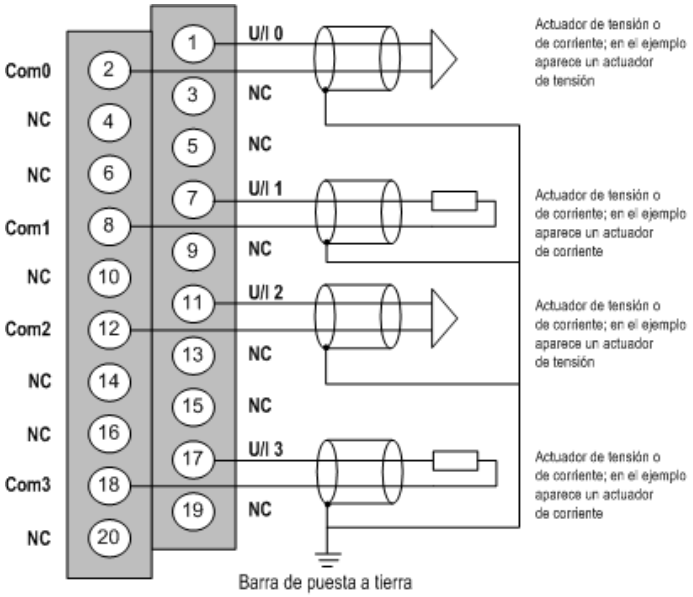


U/Ix + pole input for channel x
COMx - pole input for channel x
Channel 0Voltage actuator
Channel 1Current actuator

The current loop is self-powered by the output and does not request any external supply.

**This page is intentionally left blank**

# Product data sheet
## Characteristics

# BMXFCA152
cord set - 40-way terminal - SUB-D25 connector - for X80 I/O - 1.5 m



## Main

| | |
|---|---|
| Range of product | Modicon X80 |
| Accessory / separate part type | Preformed cordset |
| Product compatibility | BMXART0414<br>BMXART0814<br>ABE7CPA412 |
| Electrical connection | 1 connector SUB-D 25 sub-base side<br>1 connector, 40 ways module side |
| Cable length | 4.92 ft (1.5 m) |

## Complementary

| | |
|---|---|
| Net weight | 0.73 lb(US) (0.33 kg) |

## Packing Units

| | |
|---|---|
| Unit Type of Package 1 | PCE |
| Number of Units in Package 1 | 1 |
| Package 1 Weight | 10.12 oz (287 g) |
| Package 1 Height | 1.38 in (3.5 cm) |
| Package 1 width | 10.24 in (26 cm) |
| Package 1 Length | 11.02 in (28 cm) |

## Offer Sustainability

| | |
|---|---|
| EU RoHS Directive | Pro-active compliance (Product out of EU RoHS legal scope)<br>EU RoHS Declaration |
| Toxic heavy metal free | Yes |
| Mercury free | Yes |
| RoHS exemption information | Yes |
| China RoHS Regulation | China RoHS declaration |
| Environmental Disclosure | Product Environmental Profile |

Disclaimer: This documentation is not intended as a substitute for and is not to be used for determining suitability or reliability of these products for specific user applications

## Contractual warranty

| | |
|---|---|
| Warranty | 18 months |

# Product data sheet
## Characteristics

# ABE7CPA21
## connection sub-base ABE7 - for distribution of 4 analog output channels



## Main

| | |
|---|---|
| Range of product | Modicon ABE7 |
| Product or component type | Connection sub-base for counter and analogue channels |
| Number of channels | 4 |
| Connections - terminals | Screw type terminals, 1 x 0.09...1 x 1.5 mm² AWG 28...AWG 16) flexible with cable end<br>Screw type terminals, 1 x 0.14...1 x 2.5 mm² AWG 26...AWG 12) solid<br>Screw type terminals, 1 x 0.14...1 x 2.5 mm² AWG 26...AWG 14) flexible without cable end<br>Screw type terminals, 2 x 0.09...2 x 0.75 mm² AWG 28...AWG 20) flexible with cable end<br>Screw type terminals, 2 x 0.2...2 x 2.5 mm² AWG 24...AWG 14) solid |

## Complementary

| | |
|---|---|
| Function of module | Analogue output current Premium<br>Analogue output voltage Premium |
| Product compatibility | Premium TSXAEY420<br>Premium TSXASY410 |
| Connection to PLC | SUB-D 25 |
| Fixing mode | By clips 35 mm symmetrical DIN rail)<br>By screws solid plate with fixing kit) |
| [Ui] rated insulation voltage | 2000 V terminals/mounting rails |
| Installation category | II IEC 60664-1 |
| Tightening torque | 5.31 lbf.in (0.6 N.m) flat Ø 3.5 mm |
| Net weight | 0.40 lb(US) (0.18 kg) |

## Environment

| | |
|---|---|
| Product certifications | DNV<br>GL<br>LROS (Lloyds register of shipping)<br>CSA<br>BV<br>UL<br>EAC |

Disclaimer: This documentation is not intended as a substitute for and is not to be used for determining suitability or reliability of these products for specific user applications

| | |
|---|---|
| IP degree of protection | IP20 conforming to IEC 60529 |
| Protective treatment | TC |
| Resistance to incandescent wire | 1382 °F (750 °C) 30 s IEC 60695-2-11 |
| Shock resistance | 15 gn 11 ms IEC 60068-2-27 |
| Vibration resistance | 2 gn 10…150 Hz)IEC 60068-2-6 |
| Resistance to electrostatic discharge | 4 kV contact) level 3 IEC 61000-4-2<br>8 kV air) level 3 IEC 61000-4-2 |
| Resistance to radiated fields | 9.14 V/yd (10 V/m) 26000000…1000000000 Hz)IEC 61000-4-3 level 3 |
| Resistance to fast transients | 2 kV level 3 IEC 61000-4-4 |
| Ambient air temperature for operation | 32…140 °F (0…60 °C) IEC 61131-2 |
| Ambient air temperature for storage | -40…176 °F (-40…80 °C) IEC 61131-2 |
| Pollution degree | 2 IEC 60664-1 |

## Packing Units

| | |
|---|---|
| Unit Type of Package 1 | PCE |
| Number of Units in Package 1 | 1 |
| Package 1 Weight | 7.48 oz (212 g) |
| Package 1 Height | 2.76 in (7 cm) |
| Package 1 width | 3.27 in (8.3 cm) |
| Package 1 Length | 3.78 in (9.6 cm) |
| Unit Type of Package 2 | S03 |
| Number of Units in Package 2 | 36 |
| Package 2 Weight | 18.49 lb(US) (8.387 kg) |
| Package 2 Height | 11.81 in (30 cm) |
| Package 2 width | 11.81 in (30 cm) |
| Package 2 Length | 15.75 in (40 cm) |

## Offer Sustainability

| | |
|---|---|
| Sustainable offer status | Green Premium product |
| REACh Regulation | REACh Declaration |
| REACh free of SVHC | Yes |
| EU RoHS Directive | Pro-active compliance (Product out of EU RoHS legal scope)<br>EU RoHS Declaration |
| Mercury free | Yes |
| RoHS exemption information | Yes |
| China RoHS Regulation | China RoHS declaration |
| Environmental Disclosure | Product Environmental Profile |
| Circularity Profile | End of Life Information |
| WEEE | The product must be disposed on European Union markets following specific waste collection and never end up in rubbish bins |

## Contractual warranty

| | |
|---|---|
| Warranty | 18 months |

# ABE7CPA21

## Dimensions

mm
in.

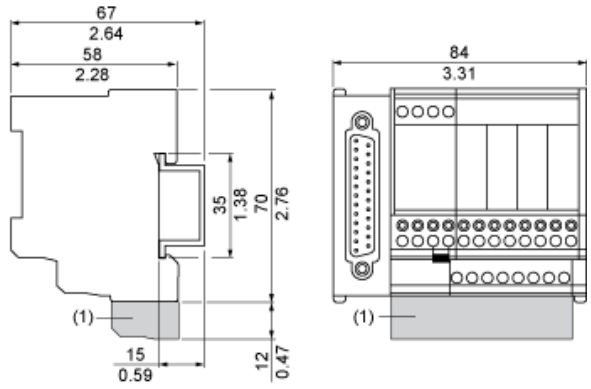


(1) ABE7BV20

# ABE7CPA21

## Mounting

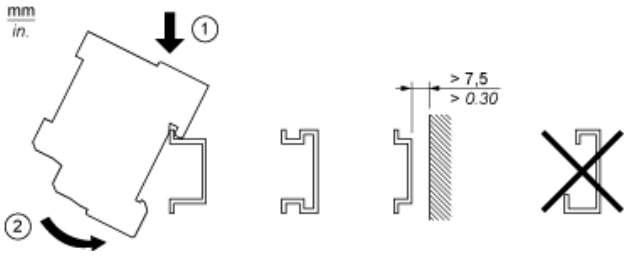

## Wiring Recommendations

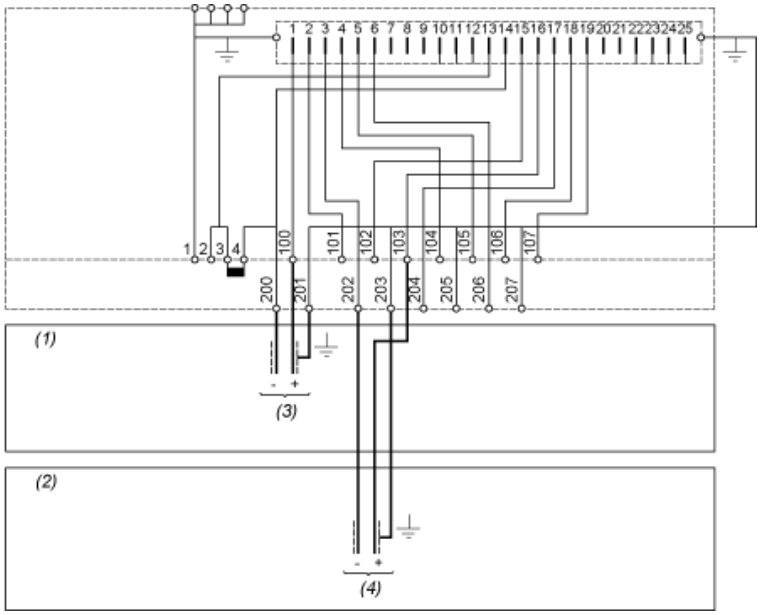


(1) 4 input voltage - 4 output voltage
(2) 4 input current - 4 output current
(3) Channel via 1
(4) Channel via 2

**This page is intentionally left blank**

# Product data sheet
## Characteristics

# BMXDDI6402K
## discrete input module X80 - 64 inputs - 24 V DC positive



## Main

| | |
|---|---|
| Range of product | Modicon X80 |
| Product or component type | Discrete input module |
| Discrete input number | 64 |
| Discrete input type | Isolated |
| Input type | Current sink (logic positive) |
| Discrete input voltage | 24 V DC, discrete input logic: positive |
| Discrete input current | 0.6 mA |

## Complementary

| | |
|---|---|
| Sensor power supply | 19...30 V |
| Input impedance | 40000 Ohm |
| Insulation resistance | > 10 MOhm 500 V DC |
| Power dissipation in W | 4.3 W |
| DC typical response time | 4 ms |
| DC maximum response time | 7 ms |
| Paralleling of inputs | No |
| Typical current consumption | 160 mA at 3.3 V DC |
| MTBF reliability | 342216 H |
| Protection type | 1 external fuse per group of channel0.5 A fast blow<br>without reverse polarity protection |
| Voltage detection threshold | < 14 V DC sensor fault<br>> 18 V DC sensor OK |
| Status LED | 1 LED (green)+32 channels indicator<br>1 LED (green)module operating (RUN)<br>1 LED per channel (green)channel diagnostic<br>1 LED (red)module error (ERR)<br>1 LED (red)module I/O |
| Net weight | 0.32 lb(US) (0.145 kg) |

Disclaimer: This documentation is not intended as a substitute for and is not to be used for determining suitability or reliability of these products for specific user applications

## Environment

| | |
|---|---|
| IP degree of protection | IP20 |
| Directives | 2014/35/EU - low voltage directive<br>2014/30/EU - electromagnetic compatibility<br>2012/19/EU - WEEE directive |
| Dielectric strength | 1500 V AC at 50/60 Hz 1 minute, primary/secondary<br>500 V DC 1 minute, between group of channels |
| Vibration resistance | 3 gn |
| Shock resistance | 30 gn |
| Ambient air temperature for storage | -40…185 °F (-40…85 °C) |
| Ambient air temperature for operation | 32…140 °F (0…60 °C) |
| Relative humidity | 5…95 % at 55 °C without condensation |
| Operating altitude | 0...2000 m<br>2000...5000 m with derating factor |

## Packing Units

| | |
|---|---|
| Package 1 Weight | 0.42 lb(US) (0.191 kg) |
| Package 1 Height | 2.17 in (55.000 mm) |
| Package 1 width | 4.53 in (115.000 mm) |
| Package 1 Length | 4.33 in (110.000 mm) |

## Offer Sustainability

| | |
|---|---|
| Sustainable offer status | Green Premium product |
| REACh Regulation | REACh Declaration |
| REACh free of SVHC | Yes |
| EU RoHS Directive | Pro-active compliance (Product out of EU RoHS legal scope)<br>EU RoHS Declaration |
| Mercury free | Yes |
| RoHS exemption information | Yes |
| China RoHS Regulation | China RoHS declaration |
| Environmental Disclosure | Product Environmental Profile |
| Circularity Profile | End of Life Information |
| WEEE | The product must be disposed on European Union markets following specific waste collection and never end up in rubbish bins |

## Contractual warranty

| | |
|---|---|
| Warranty | 18 months |

# BMXDDI6402K

## Modules Mounted on Racks

### Dimensions

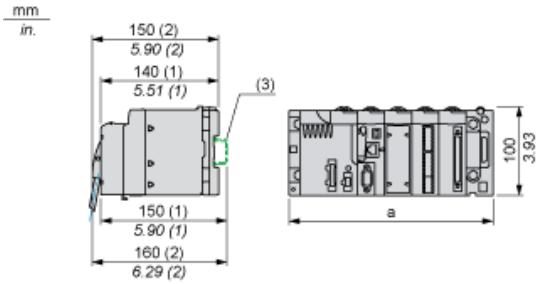


(1) With removable terminal block (cage, screw or spring).
(2) With FCN connector.
(3) On AM1 ED rail: 35 mm wide, 15 mm deep. Only possible with BMXXBP0400/0400H/0600/0600H/0800/0800H rack.

| Rack references | a in mm | a in in. |
|---|---|---|
| BMXXBP0400 and BMXXBP0400H | 242.4 | 09.54 |
| BMXXBP0600 and BMXXBP0600H | 307.6 | 12.11 |
| BMXXBP0800 and BMXXBP0800H | 372.8 | 14.68 |
| BMXXBP1200 and BMXXBP1200H | 503.2 | 19.81 |

## Connecting the Module

### Input Circuit Diagram

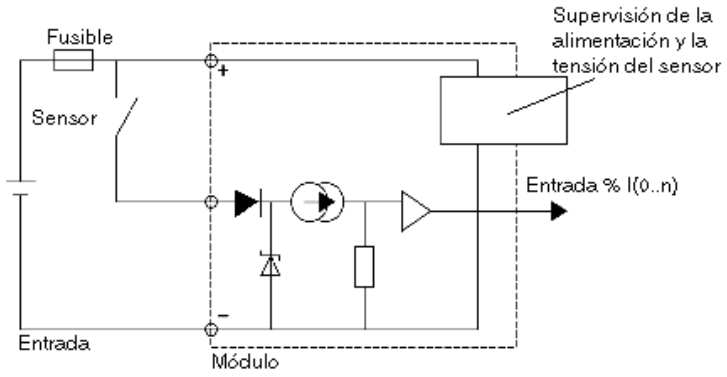


### Module Connection

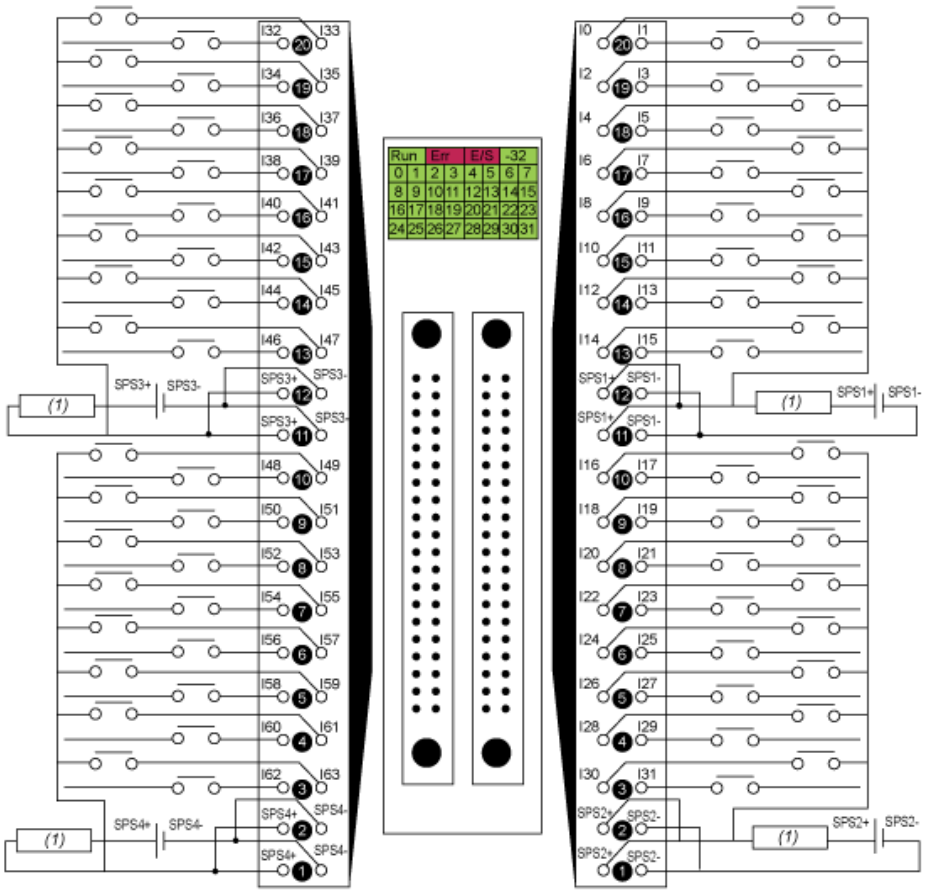


(1) fuse: fast blow fuse of 0.5 A for each 16-channel group
power supply 24 VDC
SPS sensor power supply

# Product data sheet
## Characteristics

# ABE7P16F310
## sub-base for plug-in relay ABE7 - 16 channels - relay 12.5 mm



## Main

| | |
|---|---|
| Range of product | Modicon ABE7 |
| Product or component type | Sub-base for plug-in relay |
| Sub-base type | Input sub-base |
| [Us] rated supply voltage | 19...30 V IEC 61131-2 |
| Number of channels | 16 |
| Number of terminal per channel | 2 |
| Connections - terminals | Screw type terminals, 1 x 0.09...1 x 1.5 mm², 0.00…0.00 in² (0.09…1.5 mm²) AWG 28...AWG 16) flexible with cable end<br>Screw type terminals, 1 x 0.14...1 x 2.5 mm², 0.00…0.00 in² (0.14…2.5 mm²) AWG 26...AWG 12) solid<br>Screw type terminals, 1 x 0.14...1 x 2.5 mm², 0.00…0.00 in² (0.14…2.5 mm²) AWG 26...AWG 14) flexible without cable end<br>Screw type terminals, 2 x 0.09...2 x 0.75 mm², 0.00…0.00 in² (0.09…0.75 mm²) AWG 28...AWG 20) flexible with cable end<br>Screw type terminals, 2 x 0.2...2 x 2.5 mm², 0.00…0.00 in² (0.2…2.5 mm²) AWG 24...AWG 14) solid |

## Complementary

| | |
|---|---|
| Supply voltage type | DC |
| Product compatibility | ABS7S33E<br>ABR7<br>ABS7E |
| Status LED | Channel status 1 LED per channel green)<br>Power ON 1 LED green) |
| Isolation PLC/operative part | Yes |
| Polarity distribution | Volt-free |
| Short-circuit protection | 1 A internal fuse, 5 x 20 mm, fast blow PLC end) |
| Fixing mode | By clips 35 mm symmetrical DIN rail)<br>By screws solid plate with fixing kit) |
| Maximum supply current | 1 A |
| Voltage drop on power supply fuse | 0.3 V |

Disclaimer: This documentation is not intended as a substitute for and is not to be used for determining suitability or reliability of these products for specific user applications

| | |
|---|---|
| [Uimp] rated impulse withstand voltage | 2.5 kV |
| [Ui] rated insulation voltage | 300 V coil circuit/contact circuits IEC 60947-1<br>2000 V terminals/mounting rails |
| Installation category | II IEC 60664-1 |
| Tightening torque | 5.31 lbf.in (0.6 N.m) flat Ø 3.5 mm |
| Net weight | 1.87 lb(US) (0.85 kg) |

## Environment

| | |
|---|---|
| Product certifications | GL<br>DNV<br>LROS (Lloyds register of shipping)<br>CSA<br>UL<br>BV<br>EAC |
| IP degree of protection | IP2x conforming to IEC 60529 |
| Resistance to incandescent wire | 1382 °F (750 °C) IEC 60695-2-11 |
| Shock resistance | 15 gn 11 ms IEC 60068-2-27 |
| Vibration resistance | 2 gn 10…150 Hz)IEC 60068-2-6 |
| Resistance to electrostatic discharge | 4 kV contact) level 3 IEC 61000-4-2<br>8 kV air) level 3 IEC 61000-4-2 |
| Resistance to radiated fields | 9.14 V/yd (10 V/m) 26000000…1000000000 Hz)IEC 61000-4-3 level 3 |
| Resistance to fast transients | 2 kV level 3 IEC 61000-4-4 |
| Ambient air temperature for operation | 23…140 °F (-5…60 °C) IEC 61131-2 |
| Ambient air temperature for storage | -40…176 °F (-40…80 °C) IEC 61131-2 |
| Pollution degree | 2 IEC 60664-1 |

## Packing Units

| | |
|---|---|
| Unit Type of Package 1 | PCE |
| Number of Units in Package 1 | 1 |
| Package 1 Weight | 27.30 oz (774 g) |
| Package 1 Height | 3.35 in (8.5 cm) |
| Package 1 width | 3.94 in (10 cm) |
| Package 1 Length | 11.50 in (29.2 cm) |
| Unit Type of Package 2 | S03 |
| Number of Units in Package 2 | 6 |
| Package 2 Weight | 11.66 lb(US) (5.29 kg) |
| Package 2 Height | 11.81 in (30 cm) |
| Package 2 width | 11.81 in (30 cm) |
| Package 2 Length | 15.75 in (40 cm) |

## Offer Sustainability

| | |
|---|---|
| Sustainable offer status | Green Premium product |
| REACh Regulation | REACh Declaration |
| REACh free of SVHC | Yes |
| EU RoHS Directive | Pro-active compliance (Product out of EU RoHS legal scope)<br>EU RoHS Declaration |
| Mercury free | Yes |
| RoHS exemption information | Yes |
| China RoHS Regulation | China RoHS declaration |
| Environmental Disclosure | Product Environmental Profile |
| Circularity Profile | End of Life Information |
| WEEE | The product must be disposed on European Union markets following specific waste collection and never end up in rubbish bins |

## Contractual warranty

| | |
|---|---|
| Warranty | 18 months |

# ABE7P16F310

## Dimensions

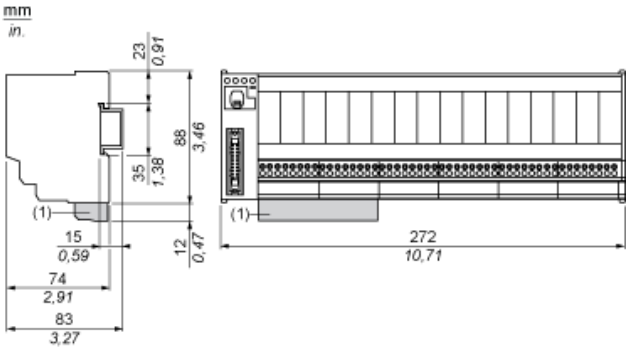


(1) ABE7BV10 / BV20, ABE7BV10E / BV20E

ABE7P16F310

## Mounting

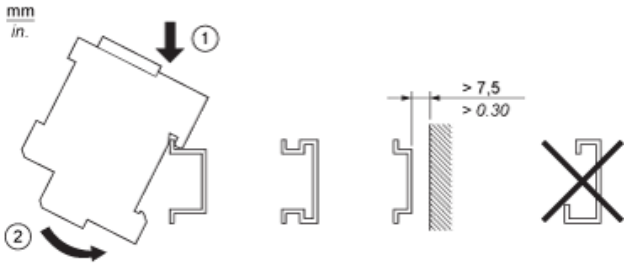

## HE10 16 Channels

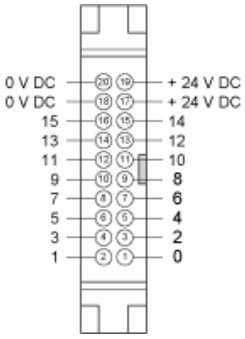

## Wiring Diagram

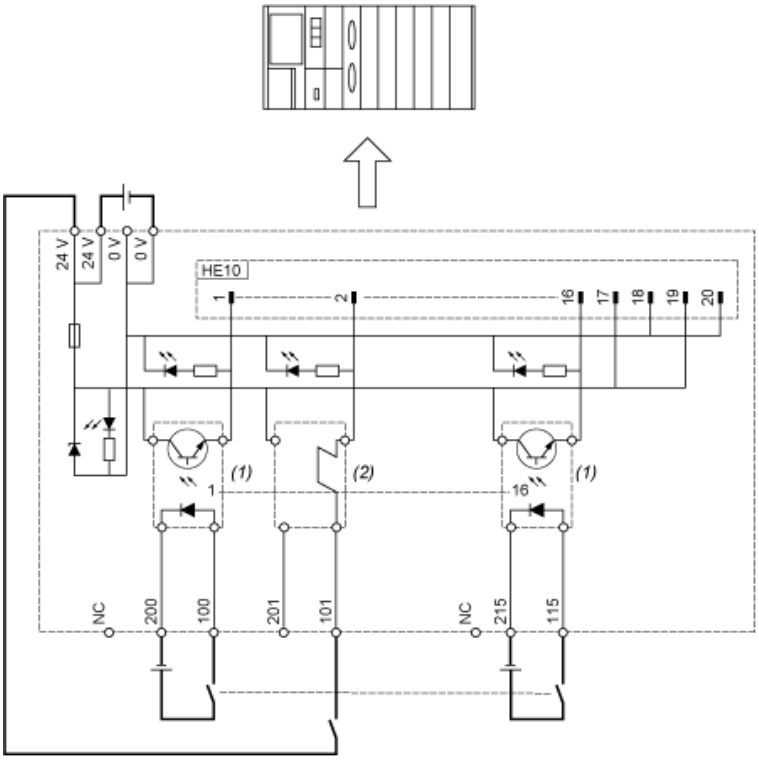


(1) ABS7EC3AL (5 VDC TTL) / ABS7EC3B2 (24 VDC) / ABS7EC3E2 (48 VDC) / ABS7EA3E5 (48 VAC) / ABS7EA3F5 (110/130 VAC) / ABS7EA3M5 (2

(2) ABE7ACC21 (24 VDC) (not supplied / not isolated)

## Curves for Determining Cable Type and Length According to the Current

### 16-channel Sub-base

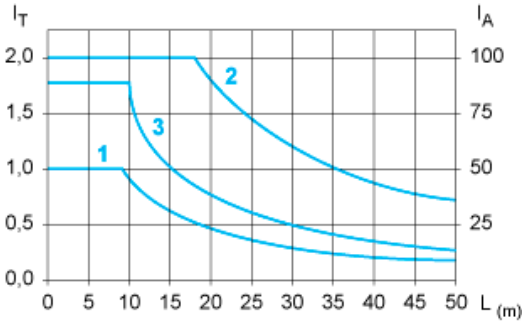


L Cable length
$I_T$ Total current per sub base (A)
$I_A$ Average current per channel (mA)
(1) TSXCDP••2 and ABFH20H••0 cables with c.s.a. 0.08 $mm^2$ (AWG 28).
(2) TSXCDP••3 cables with c.s.a. 0.34 $mm^2$ (AWG 22).
(3) Cables with c.s.a. 0.13 $mm^2$ (AWG 26).

The curves are given for a voltage drop of 1 V in the cable. For n volts tolerance, multiply the length determined from the graph by n.

# Product data sheet
## Characteristics

# ABS7EC3B2
plug-in solid state relay- 12.5 mm - input - 24 V DC type 2




## Main

| | |
|---|---|
| Range of product | Advantys Telefast ABE7 |
| Product or component type | Plug-in solid state relay |
| Relay type | Input relay |
| Quantity per set | Set of 4 |

## Complementary

| | |
|---|---|
| Response time | <= 0.05 ms from state 0 to 1<br><= 0.4 ms from state 1 to 0 |
| Width pitch dimension | 0.47 in (12 mm) |
| Product compatibility | ABE7P16F310<br>ABE7P16F310E<br>ABE7P16F312 |
| Discrete input voltage | 24 V DC, type 2 |
| Discrete output voltage | 5...24 V DC |
| Net weight | 0.03 lb(US) (0.014 kg) |

## Packing Units

| | |
|---|---|
| Package 1 Weight | 0.02 lb(US) (0.011 kg) |
| Package 1 Height | 0.480 dm |
| Package 1 width | 0.650 dm |
| Package 1 Length | 0.500 dm |

## Offer Sustainability

| | |
|---|---|
| Sustainable offer status | Green Premium product |
| REACh Regulation | REACh Declaration |
| REACh free of SVHC | Yes |
| EU RoHS Directive | Pro-active compliance (Product out of EU RoHS legal scope) |

Disclaimer: This documentation is not intended as a substitute for and is not to be used for determining suitability or reliability of these products for specific user applications

| | |
|---|---|
| | EU RoHS Declaration |
| Mercury free | Yes |
| RoHS exemption information | Yes |
| China RoHS Regulation | China RoHS declaration |
| Environmental Disclosure | Product Environmental Profile |
| PVC free | Yes |

## Contractual warranty

| | |
|---|---|
| Warranty | 18 months |

# ABS7EC3B2

## Internal Wiring Diagram

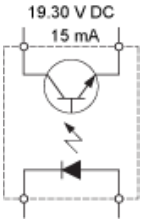

**This page is intentionally left blank**

# Product data sheet
## Characteristics

# BMXFCC103
cord set - 40-way terminal - 2 x HE10 connector - for M340 I/O - 1 m



## Main

| | |
|---|---|
| Range of product | Modicon X80 |
| Accessory / separate part type | Preformed cordset |
| Accessory / separate part designation | Preformed cordset for Telefast Advantys ABE7 sub-bases |
| Accessory / separate part destination | For I/O module with 40-way connectors |
| Number of cables | 2 |
| Electrical connection | 1 connector 40 ways<br>2 connectors HE10 |
| Cable length | 3.28 ft (1 m) |

## Complementary

| | |
|---|---|
| Total number of wires | 40 |
| Wire section | 0.00 in² (0.324 mm²) |
| Net weight | 0.77 lb(US) (0.35 kg) |

## Packing Units

| | |
|---|---|
| Unit Type of Package 1 | PCE |
| Number of Units in Package 1 | 1 |
| Package 1 Weight | 13.09 oz (371 g) |
| Package 1 Height | 1.18 in (3 cm) |
| Package 1 width | 6.69 in (17 cm) |
| Package 1 Length | 6.69 in (17 cm) |

## Offer Sustainability

| | |
|---|---|
| EU RoHS Directive | Pro-active compliance (Product out of EU RoHS legal scope)<br>EU RoHS Declaration |
| Toxic heavy metal free | Yes |
| Mercury free | Yes |
| RoHS exemption information | Yes |
| China RoHS Regulation | China RoHS declaration |
| Environmental Disclosure | Product Environmental Profile |

Disclaimer: This documentation is not intended as a substitute for and is not to be used for determining suitability or reliability of these products for specific user applications

## Contractual warranty

| | |
|---|---|
| Warranty | 18 months |

# Product data sheet
## Characteristics

# BMXDDO3202K
discrete output module X80 - 32 outputs - solid state - 24 V DC positive



## Main

| | |
|---|---|
| Range of product | Modicon X80 |
| Product or component type | Discrete output module |
| Discrete output number | 32 EN/IEC 61131-2 |
| Discrete output type | Solid state |
| Discrete output logic | Positive |
| Discrete output voltage | 24 V 19...30 V DC |
| Discrete output current | 0.1 A |

## Complementary

| | |
|---|---|
| Current per channel | 0.125 A |
| Maximum current per module | 3.2 A |
| Maximum leakage current | 0.1 mA at state 0 |
| Maximum voltage drop | <1.5 V at state 1 |
| Insulation resistance | > 10 MOhm 500 V DC |
| Power dissipation in W | 3.6 W |
| Response time on output | 1.2 ms |
| Paralleling of outputs | Yes : 3 maximum |
| Typical current consumption | 125 mA 3.3 V DC |
| MTBF reliability | 312254 H |
| Protection type | reverse polarity protection<br>External short-circuit protection<br>overload protection<br>overvoltage protection |
| Output overload protection | With current limiter<br>With electronic circuit breaker 0.125 A < Id < 0.185 A |
| Output overvoltage protection | With transil diode |
| Output short-circuit protection | With 2 A external fuse |

Disclaimer: This documentation is not intended as a substitute for and is not to be used for determining suitability or reliability of these products for specific user applications

| | |
|---|---|
| Reverse polarity protection | Reverse mounted diode |
| Voltage detection threshold | < 14 V DC preactuator fault<br>> 18 V DC preactuator at state 0 |
| Maximum tungsten load | 1.2 W |
| Switching frequency | 0.5/LI² Hz |
| Maximum overload time | 15 ms |
| Load impedance ohmic | >= 220 Ohm |
| Status LED | 1 LED (green)module operating (RUN)<br>1 LED per channel (green)channel diagnostic<br>1 LED (red)module error (ERR)<br>1 LED (red)module I/O |
| Net weight | 0.24 lb(US) (0.11 kg) |

## Environment

| | |
|---|---|
| IP degree of protection | IP20 |
| Directives | 2014/35/EU - low voltage directive<br>2014/30/EU - electromagnetic compatibility<br>2012/19/EU - WEEE directive |
| Dielectric strength | 1500 V AC at 50/60 Hz 1 minute, output/ground<br>1500 V AC at 50/60 Hz 1 minute, output/internal logic<br>500 V DC 1 minute, between group of channels |
| Vibration resistance | 3 gn |
| Shock resistance | 30 gn |
| Ambient air temperature for storage | -40…185 °F (-40…85 °C) |
| Ambient air temperature for operation | 32…140 °F (0…60 °C) |
| Relative humidity | 5…95 % at 55 °C without condensation |
| Operating altitude | 0...2000 m<br>2000...5000 m with derating factor |

## Packing Units

| | |
|---|---|
| Package 1 Weight | 0.34 lb(US) (0.152 kg) |
| Package 1 Height | 2.17 in (55.000 mm) |
| Package 1 width | 4.72 in (120.000 mm) |
| Package 1 Length | 4.53 in (115.000 mm) |

## Offer Sustainability

| | |
|---|---|
| Sustainable offer status | Green Premium product |
| REACh Regulation | REACh Declaration |
| REACh free of SVHC | Yes |
| EU RoHS Directive | Pro-active compliance (Product out of EU RoHS legal scope)<br>EU RoHS Declaration |
| Mercury free | Yes |
| RoHS exemption information | Yes |
| China RoHS Regulation | China RoHS declaration |
| Environmental Disclosure | Product Environmental Profile |
| Circularity Profile | End of Life Information |
| WEEE | The product must be disposed on European Union markets following specific waste collection and never end up in rubbish bins |

## Contractual warranty

| | |
|---|---|
| Warranty | 18 months |

# BMXDDO3202K

## Modules Mounted on Racks

### Dimensions

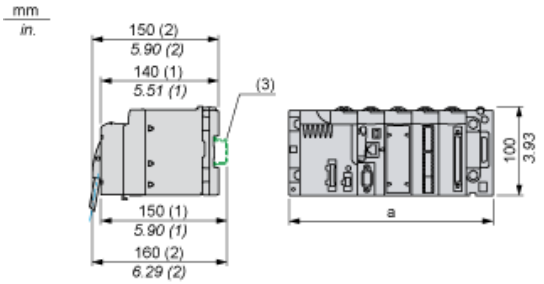


(1) With removable terminal block (cage, screw or spring).
(2) With FCN connector.
(3) On AM1 ED rail: 35 mm wide, 15 mm deep. Only possible with BMXXBP0400/0400H/0600/0600H/0800/0800H rack.

| Rack references | a in mm | a in in. |
|---|---|---|
| BMXXBP0400 and BMXXBP0400H | 242.4 | 09.54 |
| BMXXBP0600 and BMXXBP0600H | 307.6 | 12.11 |
| BMXXBP0800 and BMXXBP0800H | 372.8 | 14.68 |
| BMXXBP1200 and BMXXBP1200H | 503.2 | 19.81 |

## Connecting the Module

### Output Circuit Diagram

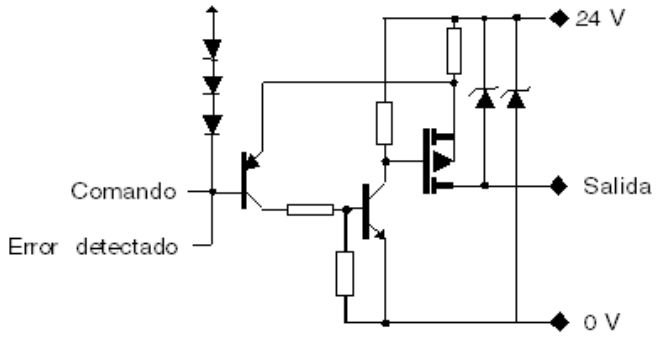


### Module Connection

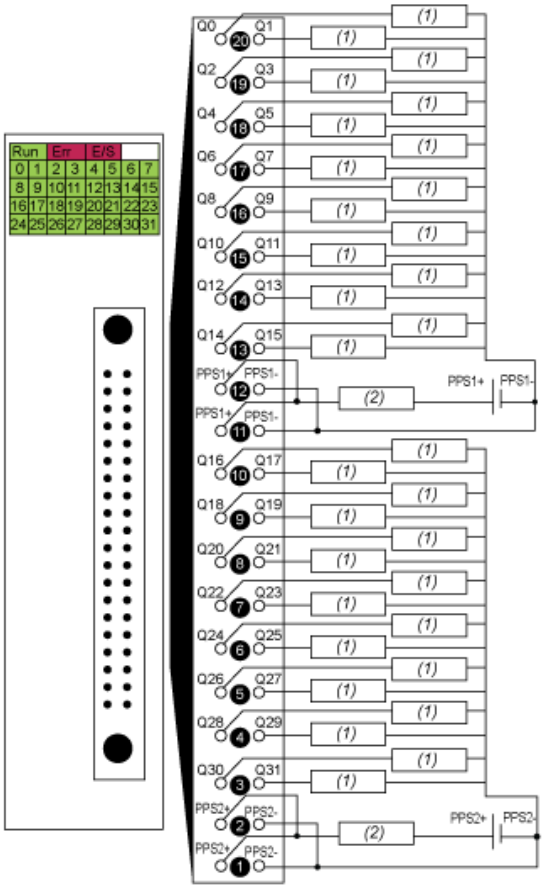


(1) pre-actuator
(2) fuse: fast blow fuse of 2 A for each 16-channel group
power supply 24 VDC
PPS pre-actuator power supply

# Product data sheet
## Characteristics

# ABE7P16T210
## sub-base for plug-in relay ABE7 - 16 channels - relay 10 mm



## Main

| | |
|---|---|
| Range of product | Modicon ABE7 |
| Product or component type | Sub-base for plug-in relay |
| Sub-base type | Output sub-base |
| [Us] rated supply voltage | 19...30 V IEC 61131-2 |
| Number of channels | 16 |
| Connections - terminals | Screw type terminals, 1 x 0.09...1 x 1.5 mm² AWG 28...AWG 16) flexible with cable end<br>Screw type terminals, 1 x 0.14...1 x 2.5 mm² AWG 26...AWG 12) solid<br>Screw type terminals, 1 x 0.14...1 x 2.5 mm² AWG 26...AWG 14) flexible without cable end<br>Screw type terminals, 2 x 0.09...2 x 0.75 mm² AWG 28...AWG 20) flexible with cable end<br>Screw type terminals, 2 x 0.2...2 x 2.5 mm² AWG 24...AWG 14) solid |

## Complementary

| | |
|---|---|
| Supply voltage type | DC |
| Product compatibility | ABS7SC2.<br>ABR7S2.<br>ABS7SA2.<br>ABE7ACC20 |
| Status LED | Channel status 1 LED per channel green)<br>Power ON 1 LED green) |
| Polarity distribution | Volt-free |
| Short-circuit protection | 1 A internal fuse, 5 x 20 mm, fast blow PLC end) |
| Fixing mode | By clips 35 mm symmetrical DIN rail)<br>By screws solid plate with fixing kit) |
| Maximum supply current | 1 A |
| Voltage drop on power supply fuse | 0.3 V |
| Maximum current per output common | 16 A |
| [Ui] rated insulation voltage | 300 V coil circuit/contact circuits IEC 60947-1<br>2000 V terminals/mounting rails |
| [Uimp] rated impulse withstand voltage | 2.5 kV |

Disclaimer: This documentation is not intended as a substitute for and is not to be used for determining suitability or reliability of these products for specific user applications

| | |
|---|---|
| Installation category | II IEC 60664-1 |
| Tightening torque | 5.31 lbf.in (0.6 N.m) flat Ø 3.5 mm |
| Net weight | 1.36 lb(US) (0.615 kg) |

## Environment

| | |
|---|---|
| Product certifications | BV<br>GL<br>LROS (Lloyds register of shipping)<br>CSA<br>UL<br>DNV<br>EAC |
| IP degree of protection | IP2x conforming to IEC 60529 |
| Resistance to incandescent wire | 1382 °F (750 °C) IEC 60695-2-11 |
| Shock resistance | 15 gn 11 ms IEC 60068-2-27 |
| Vibration resistance | 2 gn 10…150 Hz)IEC 60068-2-6 |
| Resistance to electrostatic discharge | 4 kV contact) level 3 IEC 61000-4-2<br>8 kV air) level 3 IEC 61000-4-2 |
| Resistance to radiated fields | 9.14 V/yd (10 V/m) 26000000…1000000000 Hz)IEC 61000-4-3 level 3 |
| Resistance to fast transients | 2 kV level 3 IEC 61000-4-4 |
| Ambient air temperature for operation | 23…140 °F (-5…60 °C) IEC 61131-2 |
| Ambient air temperature for storage | -40…176 °F (-40…80 °C) IEC 61131-2 |
| Pollution degree | 2 IEC 60664-1 |

## Packing Units

| | |
|---|---|
| Unit Type of Package 1 | PCE |
| Number of Units in Package 1 | 1 |
| Package 1 Weight | 20.88 oz (592 g) |
| Package 1 Height | 3.15 in (8 cm) |
| Package 1 width | 3.74 in (9.5 cm) |
| Package 1 Length | 8.66 in (22 cm) |
| Unit Type of Package 2 | S03 |
| Number of Units in Package 2 | 12 |
| Package 2 Weight | 16.50 lb(US) (7.486 kg) |
| Package 2 Height | 11.81 in (30 cm) |
| Package 2 width | 11.81 in (30 cm) |
| Package 2 Length | 15.75 in (40 cm) |

## Offer Sustainability

| | |
|---|---|
| Sustainable offer status | Green Premium product |
| REACh Regulation | REACh Declaration |
| REACh free of SVHC | Yes |
| EU RoHS Directive | Pro-active compliance (Product out of EU RoHS legal scope)<br>EU RoHS Declaration |
| Mercury free | Yes |
| RoHS exemption information | Yes |
| China RoHS Regulation | China RoHS declaration |
| Environmental Disclosure | Product Environmental Profile |
| Circularity Profile | End of Life Information |
| WEEE | The product must be disposed on European Union markets following specific waste collection and never end up in rubbish bins |

## Contractual warranty

| | |
|---|---|
| Warranty | 18 months |

## Dimensions

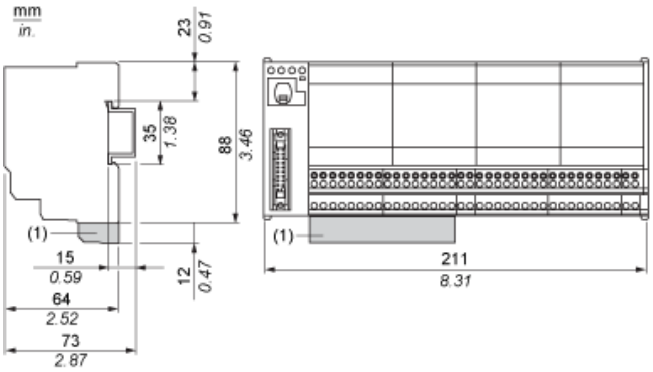


(1) ABE7BV10 / BV20, ABE7BV10E / BV20E

# ABE7P16T210

## Mounting

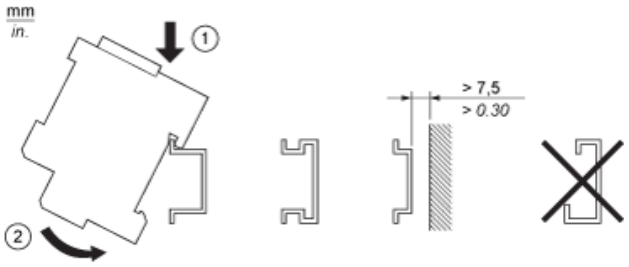

## HE10 16 Channels

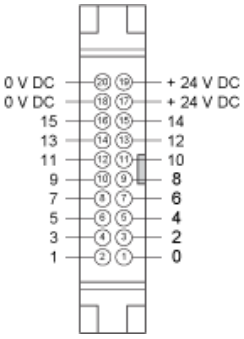

## Wiring Diagram

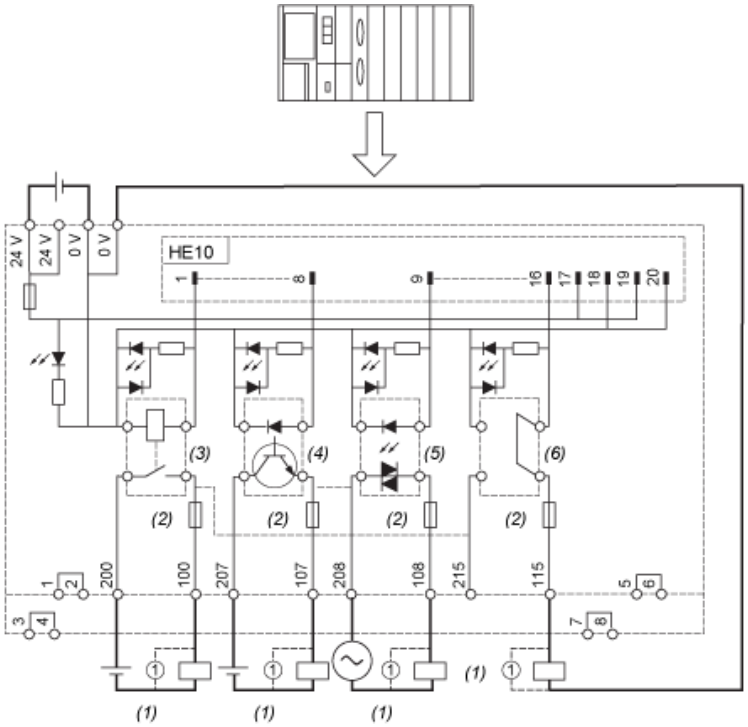


(1) Inductive load
(2) Fuse only for ABE7P16T214
(3) ABR7S21 (1 “F”/SPDT) (not supplied)
(4) ABS7SC2E (5...48 VDC) I max. = 0.5 A (not supplied)
(5) ABS7SA2M (24...240 VAC) I max. = 0.5 A (not supplied)
(6) ABE7ACC20 (24 VDC) (not supplied/not isolated)

## Curves for Determining Cable Type and Length According to the Current

### 16-channel Sub-base

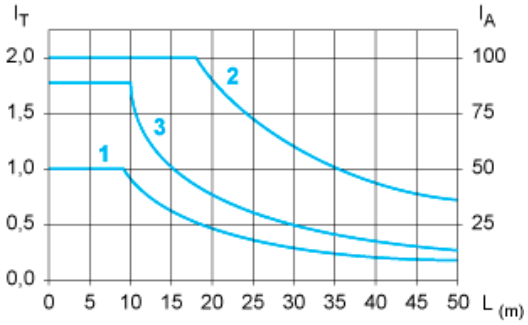


L Cable length
$I_T$ Total current per sub base (A)
$I_A$ Average current per channel (mA)
(1) TSXCDP••2 and ABFH20H••0 cables with c.s.a. 0.08 $mm^2$ (AWG 28).
(2) TSXCDP••3 cables with c.s.a. 0.34 $mm^2$ (AWG 22).
(3) Cables with c.s.a. 0.13 $mm^2$ (AWG 26).

The curves are given for a voltage drop of 1 V in the cable. For n volts tolerance, multiply the length determined from the graph by n.

## Temperature Derating Curves

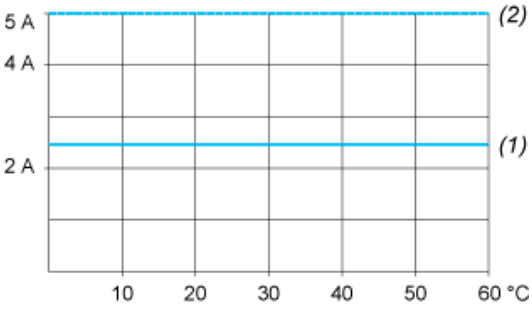


(1) 100 % of channels used
(2) 50 % of channels used

# Product data sheet
## Characteristics

# ABR7S21
## plug-in electromechanical relay - 10 mm - 24 V DC - 1 NO



## Main

| | |
|---|---|
| Range of product | Advantys Telefast ABE7 |
| Product or component type | Plug-in electromechanical relay |
| Control circuit type | DC |
| Quantity per set | Set of 4 |

## Complementary

| | |
|---|---|
| Width pitch dimension | 0.39 in (10 mm) |
| Product compatibility | ABE7P16T212<br>ABE7P16T214<br>ABE7P16T210<br>ABE7P16T230E<br>ABE7R16T210<br>ABE7R16T212<br>ABE7P16T215<br>ABE7P16T230 |
| [Uc] control circuit voltage | 24 V |
| [Ith] conventional free air thermal current | 5 A |
| Contacts type and composition | 1 NO |
| Threshold tripping voltage | 19.7 V 104 °F (40 °C) |
| Drop-out voltage | 2.4 V 68 °F (20 °C) |
| Drop-out current | 1 mA 68 °F (20 °C) |
| Maximum power dissipation per pole | 0.36 W |
| Associated fuse rating | 1 A, fast blow |
| Maximum switching voltage | 130 V DC IEC 60947-5-1<br>250 V AC 50/60 Hz IEC 60947-5-1 |
| Electrical durability | 500000 cycles 1500 mA 230 V AC-12<br>500000 cycles 1500 mA 24 V DC-12<br>500000 cycles 600 mA 24 V DC-13 10 ms<br>500000 cycles 900 mA 230 V AC-15 |
| Minimum switching current | 10 mA >= 5 V |
| Electrical reliability | 1e-008 |
| Operating rate in Hz | 10 Hz no load<br>0.5 Hz at Ie |

Disclaimer: This documentation is not intended as a substitute for and is not to be used for determining suitability or reliability of these products for specific user applications

| | |
|---|---|
| Mechanical durability | 20000000 cycles |
| [Uimp] rated impulse withstand voltage | IEC 60947-1 2.5 kV |
| Net weight | 0.02 lb(US) (0.008 kg) |

## Environment

| | |
|---|---|
| Max immunity to microbreaks | 5 ms |
| Dielectric strength | 2000 V IEC 60947-1 |

## Packing Units

| | |
|---|---|
| Package 1 Weight | 0.02 lb(US) (0.008 kg) |
| Package 1 Height | 0.350 dm |
| Package 1 width | 0.600 dm |
| Package 1 Length | 0.450 dm |

## Offer Sustainability

| | |
|---|---|
| REACh Regulation | REACh Declaration |
| REACh free of SVHC | Yes |
| EU RoHS Directive | Pro-active compliance (Product out of EU RoHS legal scope)<br>EU RoHS Declaration |
| Toxic heavy metal free | Yes |
| Mercury free | Yes |
| RoHS exemption information | Yes |
| China RoHS Regulation | China RoHS declaration |
| PVC free | Yes |

## Contractual warranty

| | |
|---|---|
| Warranty | 18 months |

## Electrical Durability (in Millions of Operating Cycles) Conforming to IEC 60947-5-1

### DC Loads

DC12 curves

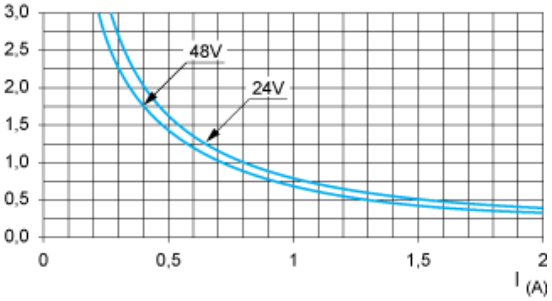


DC12 control of resistive loads and of solid state loads isolated by optocoupler, I/R ≤ 1 ms.

DC13 curves

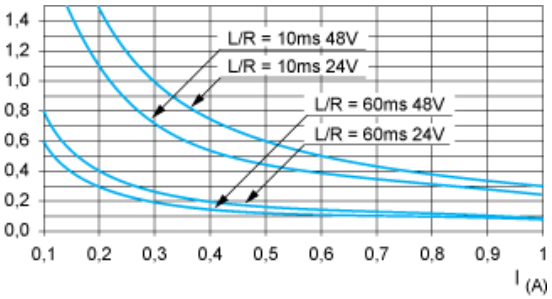


DC13 switching electromagnets, L/R ≤ 2 x (Ue x Ie) in ms, Ue: rated operational voltage, Ie: rated operational current (with a protective diode on the load, D

### AC Loads

AC12 curves

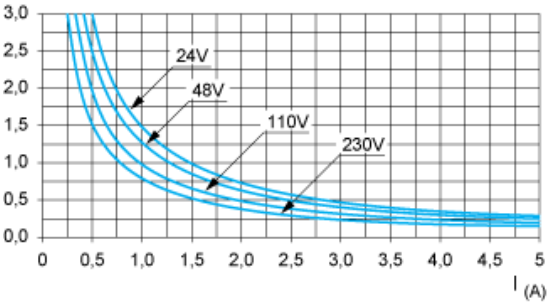


AC12 control of resistive loads and of solid state loads isolated by optocoupler, cos ϕ ≥ 0.9.

AC14 curves

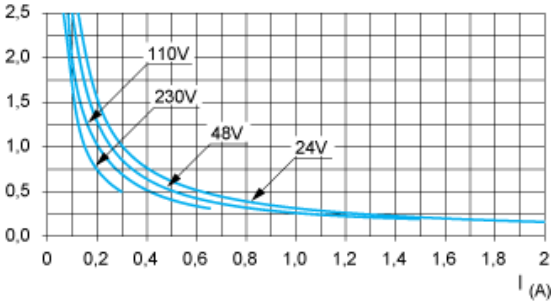


AC14 control of small electromagnetic loads ≤ 72 VA, make: cos ϕ = 0.3, break: cos ϕ = 0.3.

AC15 curves

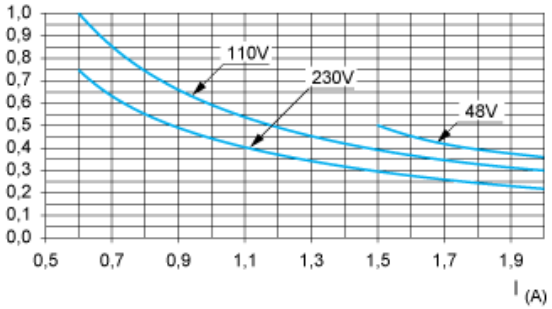


AC15 control of electromagnetic loads > 72 VA, make: cos ϕ = 0.7, break: cos ϕ = 0.4.

# Micro drives

## ACS255 600 V AC, 1 to 20 hp



Compact and available with flexible mounting options without the need for accessory mounting kits. These drives are ideal for panel builders and OEM's needing a micro drive with low cost, flexible mounting options, and rapid parameter setup.

ABB micro drive ACS255 with 600 V AC supply offers easy to use and compact solutions for general purpose low power applications, such as; screws, mixers, pumps, fans and conveyors. The key features include a built-in safe torque-off (STO), Modbus RTU and CANopen communication interfaces.

**Part of ABB micro drives portfolio**

The ACS255 drive is part of ABB's complete micro drive range, which offers a solution for every need:

- Drives for simple to more complex machines
- Full voltage range from 110 to 600 V
- Enclosures IP20 and IP66
- Power range up to 20 hp

**Supporting options**

- Remote keypad (RCRP-02) provides easy cabinet installations
- Parameter upload/download tool (RCCS-01) for straightforward commissioning
- Relay output card (RCRO-01)
- UL Type 4X/IP66 frames for harsh environments up to 15 hp
- Disconnect switch for UL Type 4X/IP66 frames

**Product highlights**

- Easy to use, compact design
- High performance vector control
- Input voltage 500 to 600 V +/- 10%
- Built-in safe torque-off (STO) complies with EN62061 SIL level 2
- Built-in braking chopper in all types
- Built-in communication with Modbus RTU and CANopen® interfaces
- Rated for 150% overload for 60 sec as standard
- DIN rail mounting
- Pluggable control terminals
- Remote keypad available as an option
- PID control with sleep mode
- IP20 panel mount and IP66/NEMA 4X enclosures
- Feed-thru wiring on IP 20 drives
- Front mounted operator control option for IP66/NEMA 4X drives

| Output ratings | | | Type designation | Frame size | Height | Width | Depth | Weight |
|---|---|---|---|---|---|---|---|---|
| $P_{N\_HD}$ hp | $P_{N\_HD}$ kW | $I_{2N}$ A | | | in | in | in | kg |
| **3-phase AC supply, 500 to 600 V** | | | | | | | | |
| 1 | 0.75 | 2.1 | ACS255-03U-02A1-6 | P2 | 8.70 | 4.41 | 7.28 | 4 |
| 2 | 1.5 | 3.1 | ACS255-03U-03A1-6 | P2 | 8.70 | 4.41 | 7.28 | 4 |
| 3 | 2.2 | 4.1 | ACS255-03U-04A1-6 | P2 | 8.70 | 4.41 | 7.28 | 4 |
| 5 | 4 | 6.5 | ACS255-03U-06A5-6 | P2 | 8.70 | 4.41 | 7.28 | 4 |
| 7.5 | 5.5 | 9 | ACS255-03U-09A0-6 | P2 | 8.70 | 4.41 | 7.28 | 4 |
| 10 | 7.5 | 12 | ACS255-03U-12A0-6 | P3 | 10.28 | 5.16 | 8.07 | 7.7 |
| 15 | 11 | 17 | ACS255-03U-17A0-6 | P3 | 10.28 | 5.16 | 8.07 | 7.7 |
| 20 | 15 | 22 | ACS255-03U-22A0-6 | P3 | 10.28 | 5.16 | 8.07 | 7.7 |
| 1 | 0.75 | 2.1 | ACS255-03U-02A1-6+B063(+F278) | P2 | 10.12 | 7.40 | 9.41 | 10.6 |
| 2 | 1.5 | 3.1 | ACS255-03U-03A1-6+B063(+F278) | P2 | 10.12 | 7.40 | 9.41 | 10.6 |
| 3 | 2.2 | 4.1 | ACS255-03U-04A1-6+B063(+F278) | P2 | 10.12 | 7.40 | 9.41 | 10.6 |
| 5 | 4 | 6.5 | ACS255-03U-06A5-6+B063(+F278) | P2 | 10.12 | 7.40 | 9.41 | 10.6 |
| 7.5 | 5.5 | 9 | ACS255-03U-09A0-6+B063(+F278) | P2 | 10.12 | 7.40 | 9.41 | 10.6 |
| 10 | 7.5 | 12 | ACS255-03U-12A0-6+B063(+F278) | P3 | 12.20 | 8.29 | 9.88 | 16.1 |
| 15 | 11 | 17 | ACS255-03U-17A0-6+B063(+F278) | P3 | 12.20 | 8.29 | 9.88 | 16.1 |

$P_N$ for kW = Typical motor power at 400V in normal use
$P_N$ for Hp = Typical motor power at 480V in normal use
$I_{2N}$ for A = Continuous rms currrent. 50% overload is allowed for one minute in ten minutes
U within the type code = no EMC filter
+B063 = IP66/UL TYPE 4X enclosure without input disconnect.
+B063+F278 = IP66/UL TYPE 4X enclosure with input disconnect and operator controls.

## Standard I/O configurations

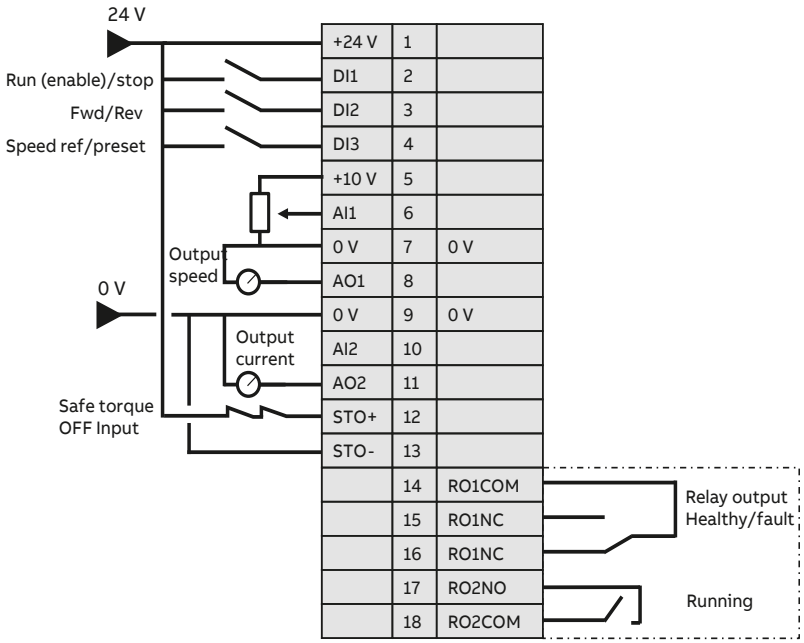


| Mains connection | |
|---|---|
| **Supply voltage** | 3-ph, 500 to 600 V ±10%: 1 to 20 hp |
| **Frequency** | 48 to 62 Hz |
| **Phase imbalance** | 3% maximum allowed |
| **Motor connection** | |
| **Motor types** | Asynchronous induction motors<br>Permanent magnet synchronous motors |
| **Frequency** | 0 to 500 Hz, 0.1 Hz resolution |
| **Overload capacity** | 150% of rated amps for 1 minute |
| **Switching frequency** | 4-32kHz Effective |
| **Control types** | Scalar U/f<br>Sensorless vector speed control<br>PM motor vector speed control<br>BLDC motor speed control (contact factory) |
| **Environmental limits** | |
| **Temperature** | Storage: –40 to 60°C<br>Operating: –10 to 50°C |
| **Relative humidity** | 95% (without condensation) |
| **Vibration** | Conforms to IEC 60068-2-6<br>Sinusoidal Vibration<br>10 - 57Hz @ 0.075mm Pk<br>57 - 150Hz @ 1g Pk |
| **Product compliance** | |
| UL, cUL, C-Tick, CE listing/conformance; RoHS Compliant | |
| **Programmable control connections** | |
| **Power supply** | 24 Volt DC, 100mA, Short Circuit Protected<br>10 Volt DC, 5mA for Potentiometer |
| **Programmable Inputs** | 5 Total<br>3 Digital<br>2 Analog / Digital selectable |
| **Digital inputs** | 8 – 30 Volt DC, internal or external supply<br>Response time < 4ms |
| **Analog inputs** | 0 - 10 VDC, 0 or 4 - 20mA, bi-polar<br>Resolution: 12 bits<br>Response time: < 4ms<br>Accuracy: < 1% full scale<br>Parameter adjustable scaling and offset |
| **Programmable outputs** | 4 Total<br>2 Analog / Digital<br>2 Relay |
| **Relay output** | Maximum Voltage: 250 VAC, 30 VDC<br>Switching Current Capacity: 6A AC, 5A DC |
| **Analog outputs** | 0 to 10 Volt<br>0 to 20mA<br>4 to 20mA |
| **PI control** | Internal PID Controller<br>Multi Setpoint Select<br>Standby / Sleep Mode<br>Boost Function |
| **Serial communication** | Modbus RTU<br>9.6 - 115.2 kbps selectable<br>8N1, 8N2, 8E1, 8O1<br>CANopen<br>125 - 1000kbps |


ABB Inc.
Robotics and Motion
Drives and Controls
16250 W. Glendale Drive
New Berlin, WI 53151


**abb.com/drives**

ACS255-PHPB02U-EN REV B Effective 06/15/2017

# *6 – OPERATION AND MAINTENANCE*

## *6.1 – ACTIFLO® CLARIFIER & REACTOR*

### *6.1.1 – INSTALLATION, OPERATION AND MAINTENANCE MANUAL*

LEFT BLANK

VEOLIA

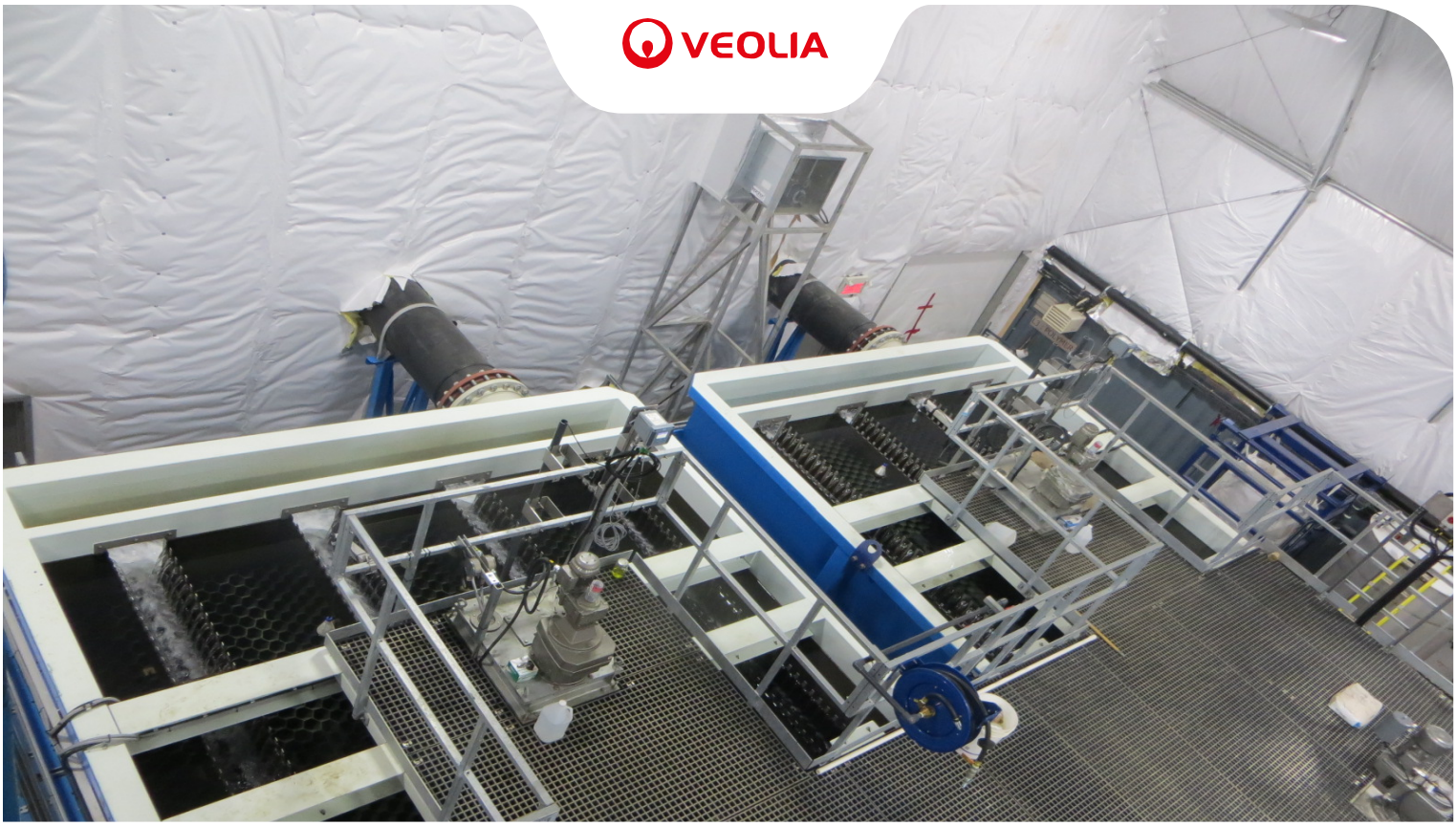

# Installation, Operation and Maintenance Manual

# Actiflo® Package Plant (MKIII)

*Document No: IOM_1001_ACP*

*Révision: 1 -- Date: October 2020*

WATER TECHNOLOGIES

# TABLE OF CONTENTS

**TABLE OF CONTENTS** ..... **2**
**LIST OF TABLES** ..... **8**
**LIST OF FIGURES** ..... **9**
**1 INTRODUCTION** ..... **10**
1.1 OBJECTIVES OF THIS MANUAL ..... 11
1.2 SAFETY ..... 11
1.3 STANDARDS ..... 12
1.4 MODIFICATIONS DONE BY THE CLIENT ..... 13
1.5 FIELD INSTALLATION – PAINT PROTECTION ..... 14
1.6 WARRANTY ..... 14
**2 RECEIVING** ..... **16**
2.1 STORAGE ..... 16
**3 GENERAL INSTALLATION** ..... **20**
**4 UNIT HANDLING** ..... **21**
4.1 LEVELING ..... 24
4.2 ANCHORING TO CONCRETE FLOOR ..... 24
4.3 UNWRAPPING ..... 24
**5 MECHANICAL INSTALLATION** ..... **25**
5.1 GRATING ..... 25
5.2 HANDRAIL ..... 25
5.3 SETTLING SECTION ..... 25
5.4 TROUGHS ..... 25
5.5 SCRAPER DRIVE INSTALLATION ..... 25
5.6 HYDROCYCLONE SUPPORT(S) ..... 26
5.7 COAGULATION / INJECTION / MATURATION TANK MIXER ..... 27
5.8 MIXER IMPELLER BLADE INSTALLATION ..... 28
5.9 STAIRS (Optional) ..... 31
5.10 LADDERS AND SAFETY GATES (Optional) ..... 31

**6 PERIPHERAL EQUIPMENT INSTALLATION ..... 32**
6.1 MICROSAND RECIRCULATION PUMP SYSTEM ..... 32
6.2 COAGULATION pH METER ..... 32
6.3 CLARIFIED WATER TURBIDIMETER ..... 32
6.4 INLET TURBIDIMETER (Optional) ..... 32
6.5 INLET FLOWMETER (Optional) ..... 32
6.6 INLET CONTROL VALVE (Optional) ..... 33
6.7 RECIRCULATION PRESSURE TRANSMITTER (Optional) ..... 33
6.8 PRESSURE GAUGE (Optional) ..... 33
**7 PIPING CONNECTION ..... 34**
7.1 WATER COLLECTOR ..... 34
7.2 TANK DRAIN ..... 34
7.3 SETTLED WATER TANK PARTIAL DRAIN ..... 34
7.4 HYDROCYCLONES SLUDGE OUTLET ..... 34
7.5 POLYMER FEEDING ..... 34
7.6 RECIRCULATION FLEXIBLE PIPE ..... 35
7.7 CLARIFIED WATER TURBIDIMETER ..... 36
7.8 INLET TURBIDIMETER (Optional) ..... 36
7.9 LAMELLA CLEANING SYSTEM (Optional) ..... 36
**8 TORQUE VALUES ..... 37**
**9 ELECTRICAL INSTALLATION ..... 39**
9.1 GROUNDING ..... 39
9.2 CONTROL PANEL ..... 39
9.3 TANK MIXER ..... 39
9.4 SCRAPER ..... 39
9.5 RECIRCULATION PUMP ..... 39
9.6 CLARIFIED WATER TURBIDIMETER ..... 39
9.7 CLARIFIED WATER pH METER ..... 40
9.8 WATER LEVEL SWITCH ..... 40
9.9 INLET FLOWMETER (Optional) ..... 40
9.10 INLET TURBIDIMETER (Optional) ..... 40
9.11 RECIRCULATION PRESSURE TRANSMITTER (Optional) ..... 40

**10 ACTIFLO® BALLASTED CLARIFICATION PROCESS ..... 41**
10.1 GENERAL INFORMATION ..... 41
10.2 CHARACTERISTICS AND PERFORMANCES ..... 41
10.3 REVIEW OF THE WATER CHEMISTRY AND THE ACTIFLO® PROCESS ..... 42
**Coagulation** ..... 42
**Flocculation** ..... 42
**Microsand** ..... 43
10.4 OPERATION PRINCIPLES ..... 43
10.4.1 EXTENDED COAGULATION (ACP2 VARIATION ONLY) ..... 43
10.4.2 COAGULATION ..... 43
10.4.3 INJECTION (ACP R VARIATION ONLY) ..... 43
10.4.4 MATURATION (ACP R VARIATION ONLY) ..... 43
10.4.5 FLOCCULATION (ACP2 VARIATION ONLY) ..... 44
10.4.6 COUNTER-CURRENT LAMELLAR SETTLING ..... 44
**11 DESCRIPTION OF COMPONENTS ..... 45**
11.1 ACTIFLO® CLARIFIER (ACP R VARIATION ONLY) ..... 45
11.1.1 GENERAL DESCRIPTION ..... 45
11.1.2 COAGULATION TANK ..... 45
11.1.3 INJECTION TANK ..... 46
11.1.4 MATURATION TANK ..... 46
11.2 ACTIFLO® CLARIFIER (ACP2 VARIATION ONLY) ..... 47
11.2.1 GENERAL DESCRIPTION ..... 47
11.2.2 EXTENDED COAGULATION TANK ..... 47
11.2.3 COAGULATION TANK ..... 48
11.2.4 FLOCCULATION TANK ..... 48
11.3 SETTLING TANK ..... 49
11.3.1 LAMELLA PACK ..... 49
11.3.2 SLUDGE COLLECTION HOPPER ..... 49
11.3.3 CIRCULAR SCRAPER ..... 49
11.3.4 CLARIFIED WATER TROUGHS ..... 49
11.3.5 PARTIAL DRAINAGE ..... 50
11.3.6 COMPLETE DRAINAGE ..... 50

11.4 MICROSAND RECIRCULATION PIPING ..... 50
11.4.1 COLLECTION OF SLUDGE AND MICROSAND ..... 50
11.4.2 MICROSAND RECIRCULATION PUMPS ..... 50
11.4.3 HYDROCYCLONES ..... 51
11.5 MICROSAND ..... 51
11.6 COAGULANT ..... 52
11.7 FLOCCULANT (POLYELECTROLYTE) ..... 52
11.8 CONTROL PANEL ..... 53
**12 START-UP & OPERATION ..... 54**
12.1 START-UP ..... 54
12.1.1 PRELIMINARY VERIFICATION ..... 54
12.1.2 INITIAL MICROSAND LOADING ..... 54
12.1.3 AUTOMATIC START-UP ..... 55
12.2 NORMAL OPERATION ..... 55
12.2.1 ACTIFLO® CLARIFIERS ..... 55
12.2.1.1 Mixers ..... 55
12.2.1.2 Circular scraper ..... 57
*12.2.1.2.1 Speed monitor configuration (IFM DD2503) ..... 58*
12.2.1.3 Lamellas ..... 59
12.2.1.4 Microsand recirculation pumps ..... 60
12.2.1.5 Hydrocyclones ..... 61
12.2.1.6 Microsand monitoring ..... 63
*12.2.1.6.1 Regular additions of microsand in normal operations ..... 65*
*12.2.1.6.2 Verification of the hydrocyclones' underflow-overflow ratio ..... 66*
12.2.2 DOSAGE OF CHEMICALS ..... 67
12.2.2.1 Coagulant ..... 67
12.2.2.2 Flocculant (polymer) ..... 68
12.2.2.3 Alkali, pH Adjustment ..... 69
**13 SURVEY OF OPERATIONS ..... 71**
13.1 AUTOMATION ..... 72
13.2 MANUAL SHUT DOWN OF THE MICROSAND RECIRCULATION PUMP ..... 72

13.3 PROCESS OPTIMIZATION ..... 72
13.3.1 POLYMER DOSAGE AND INJECTION POINTS ..... 72
13.3.2 COAGULANT DOSAGE AND INJECTION POINTS ..... 74
13.3.3 MICROSAND DOSAGE AND INJECTION POINTS ..... 75
13.3.4 pH INFLUENCE ..... 76
13.3.5 OTHER PARAMETERS ..... 77
13.4 TROUBLESHOOTING ..... 77
13.4.1 REVIEW OF THE TROUBLESHOOTING GUIDES ..... 78
13.4.2 INCREASE IN CLARIFIED WATER TURBIDITY ..... 78
13.4.3 INCREASE IN CLARIFIED WATER COLOUR ..... 80
13.4.4 CHEMICAL DOSING TROUBLESHOOTING ..... 82
13.4.5 MICROSAND TROUBLESHOOTING ..... 83
13.4.6 pH TROUBLESHOOTING ..... 85
13.4.7 TROUBLESHOOTING THROUGH VISUAL INSPECTIONS OF THE ACTIFLO® UNITS ..... 86
13.4.8 POWER FAILURE ..... 87
13.5 ACTIFLO® SHUT DOWN OPERATIONS ..... 88
13.5.1 ACTIFLO®: SHORT-TERM STORAGE PROCEDURE (LESS THAN A WEEK) ..... 89
13.5.2 ACTIFLO®: MID-TERM STORAGE PROCEDURE (MORE THAN A WEEK) ..... 90
13.5.3 ACTIFLO® WASTEWATER AND CSO APPLICATION ONLY: MID-TERM STORAGE PROCEDURE (UP TO ONE MONTH) ..... 91
13.5.4 ACTIFLO®: LONG-TERM STORAGE PROCEDURE (MORE THAN ONE MONTH) ..... 93
13.5.5 ACTIFLO®: RESTART AFTER LONG-TERM STORAGE PROCEDURE ..... 95
**14 JAR TEST PROCEDURE ..... 96**
14.1 INTRODUCTION ..... 96
14.2 MATERIAL REQUIRED ..... 96
14.3 CHEMICALS PREPARATION ..... 96
14.4 CHEMICAL DOSAGES ..... 98
14.5 LABORATORY METHODS AND PROCEDURE ..... 99
14.6 TIMELINE FOR SELECTED RISE RATE ..... 100
14.7 CHEMICAL DOSING GUIDE ..... 101

**15 MAINTENANCE ..... 103**
15.1 ACTIFLO® CLARIFIER ..... 103
15.1.1 LAMELLA PACK ..... 103
15.1.1.1 Lamellas fouling ..... 103
15.1.1.2 Cleaning frequency ..... 103
15.1.1.3 Required equipment ..... 104
15.1.1.4 Lamella cleaning procedure ..... 104
15.1.1.5 Manual cleaning with water ..... 104
15.1.1.6 Manual cleaning with air ..... 105
15.1.1.7 Automatic cleaning with integrated system under the lamella modules (optional) ..... 105
15.1.1.8 Severe obstruction ..... 106
15.1.2 MIXERS ..... 106
15.1.3 MICROSAND RECIRCULATION PUMPS ..... 106
15.1.4 HYDROCYCLONES ..... 107
15.1.5 SCRAPER ..... 107
15.2 CONTROL PANEL ..... 107
15.3 INSTRUMENTATION ..... 107
15.4 VALVES ..... 107
15.4.1 MANUAL VALVES ..... 107
15.4.2 AUTOMATIC VALVES ..... 107
15.5 PERIPHERAL EQUIPMENT ..... 108
15.6 PAINT INSPECTION ..... 108
15.7 PAINT REPAIR PROCEDURE ..... 108
15.8 LUBRICATION ..... 109
15.8.1 LUBRICATION SCHEDULE ..... 110
**APPENDIX: "TYPE D" DRY GLAND REPAIR PROCEDURE ..... 112**

# LIST OF TABLES

Table 1: List of applicable standards ..... 12
Table 2: Torque values for bolting by equipment type and size ..... 37
Table 3: Speed monitor IFM DD2503 set point (SP1) per Actiflo® model ..... 59
Table 4: Short-Term storage procedure ..... 89
Table 5: Mid-Term storage procedure ..... 90
Table 6: Mid-Term storage procedure – Wastewater and CSO application ..... 91
Table 7: Actiflo® Mid-Term storage specific procedure ..... 92
Table 8: Long-Term storage application ..... 93
Table 9: Actiflo® Long-Term storage specific procedures ..... 94
Table 10: Long-Term storage restart procedure ..... 95
Table 11: Polymer dilution to obtain 0.1 g/L solution ..... 97
Table 12: Polymer volume to inject for 1 L water during jar test ..... 98
Table 13: Coagulant volume to inject for 1 L water during jar test ..... 99
Table 14: Example of a series of laboratory tests with results ..... 102
Table 15: Lubrication schedule ..... 110

# LIST OF FIGURES

Figure 1: Actiflo® lifting lugs location ..... 21
Figure 2: Actiflo® lifting (1) ..... 22
Figure 3: Actiflo® lifting (2) ..... 22
Figure 4: Actiflo® lifting (3) ..... 23
Figure 5: Actiflo® lifting (4) ..... 23
Figure 6: Actiflo® lifting (5) ..... 24
Figure 7: Primary gear box recommended oil level (opened up gear box and filled with 8 L of oil) ..... 26
Figure 8: Mixer hub installation ..... 28
Figure 9: Mixer blades installation for CW rotation and DOWNWARD thrust ..... 29
Figure 10: Mixer blades installation for CCW rotation and UPWARD thrust ..... 30
Figure 11: Mixer blades installation for CW rotation and UPWARD thrust ..... 30
Figure 12: Mixer blades installation for CCW rotation and DOWNWARD thrust ..... 31
Figure 13: Microsand recirculation pump hose installation ..... 35
Figure 14: Actiflo® clarifier schematic – ACP R variation – General description ..... 45
Figure 15: Actiflo® clarifier schematic – ACP2 variation – General description ..... 47
Figure 16: Hydrocyclone – General description ..... 51
Figure 17: Direction of rotation and thrust of an Actiflo® unit's mixers ..... 56
Figure 18: Speed monitor configuration parameters (IFM DD2503) ..... 58
Figure 19: Typical hydrocyclone capacity curve ..... 62
Figure 20: Microsand conical bottom sampling tank (actual cone may differ from picture) ..... 64
Figure 21: Impact of polymer dosage on clarified water quality ..... 73
Figure 22: Impact of coagulant dosage on clarified water quality ..... 74
Figure 23: Impact of microsand concentration on clarified water quality ..... 76
Figure 24: Impact of pH on clarified water quality ..... 77
Figure 25: Clarified water turbidity – Troubleshooting guide ..... 79
Figure 26: Clarified water colour – Troubleshooting guide ..... 81
Figure 27: Chemicals dosing – Troubleshooting guide ..... 82
Figure 28: Microsand concentration – Troubleshooting guide ..... 84
Figure 29: pH change – Troubleshooting guide ..... 85
Figure 30: Hydrocyclone typical apex discharge jet shape ..... 87
Figure 31: Suggested material for lamella cleaning ..... 104

**SPECIAL NOTE:**

- **Reactor Tank RX75-3**

The handling, storage and maintenance of the Reactor Tanks RX is similar to the ones of the Actiflo units. Refer to the appropriate sections as in the following manual for mixers start-up, handling, and maintenance as for the tank handling, installation and maintenance:

- Section 4: Unit Handling
- Section 5.1/ 5.2 / 5.7/ 5.8: Mechanical Installation
- Section 7.1/ 7.2: Piping Connection
- Section 8: Torque Values
- Section 9.1/ 9.3: Electrical Installation
- Section 12.1.1: Preliminary Verification for Start-up
- Section 15.1.2: Mixers Maintenance
- Section 15.6: Paint Inspection
- Section 15.7: Paint Repair Procedure
- Section 15.8.1: Lubrication Schedule for Mixers Only

- **ActiCarb ACP700R:**

The MA hydrocyclone placed on the the clarifier #1 acticarb ACP700R is different from the krebs placed on the clarifier #2 ACP2-60. It requires a service water connection, refer to P&ID for the valves and instruments to be placed on this line. For more information, regarding the handling, operation and maintenance of the MA Hydrocyclone Refer to the annexed manual at the end of this manual.

Service Water requirements:

| | |
|---|---|
| Quality | 20 um filtered water |
| Pressure | sludge/sand inlet pressure + 0.5 to 3 bar |
| Flow | 8% to 10% of the hydrocyclone inlet flow |
| Type of connection | Hose Barb |

# 1 INTRODUCTION

This document describes the functions of the various components of the Actiflo® Package Plant clarifier MKIII, describes the procedures for the installation, start-up and standard operation of the system. It also plans preventive maintenance measures and describe procedures for the regular maintenance of the equipment.

The components of the Actiflo® Package Plant clarifier MKIII, the latest generation, are supplied by Veolia Water Technologies Canada (VWTC). This equipment of superior quality and proven design will insure years of operation without problems. However, in order to maintain peak efficiency and performance of the system, it is imperative to take into consideration the preventive measures and procedures described in this manual. These measures include the operation and maintenance of its components.

To obtain any additional information regarding characteristics, operation or maintenance of this equipment, or if a problem persists, please do not hesitate to contact us.

The Actiflo® Package Plant clarifier is manufactured in Canada by:

**Veolia Water Technologies Canada**
4105, Sartelon
Saint-Laurent, Qc.
Canada H4S 2B3
Phone: 514-334-7230
Fax: 514-334-5070

For technical support or service needs, for spare parts or to get assistance during your warranty period, you may contact us at the following number during regular business hours or write us at:

**Veolia Water Technologies Canada – After Sales Support**
1-844-SER-VWT9 | 1-844-737-8989 | vwtservicecanada@veolia.com

Our business hours are from
Monday to Friday
8:30am to 5:00pm EST

## 1.1 OBJECTIVES OF THIS MANUAL

- To describe the installation of the unit and its ancillary components.
- To describe and explain the functions of the various components of the Actiflo® clarifier and reaction tanks, if installed.
- To describe the procedure for the start-up and standard operation of the system.
- To plan preventive maintenance measures and describe procedures for the regular maintenance of the equipment.

**IMPORTANT NOTE:**

**The Actiflo® Package Plant (MKIII) is delivered with 2 major variations. The ACP R (classic variation) and the ACP2 (turbo variation).**

**For the sake of simplicity, whenever appropriate descriptions in the following manual will follow ACP R (classic variation) terminology.**

**If you are operating the ACP2 (turbo variation), and when no explicit alternative explanation is given, in place term replacement has to be done throughout this manual for the following terms:**

- **Replace injection tank by flocculation tank.**
- **Replace injection mixer by flocculation (Turbomix®) mixer.**
- **Replace maturation tank by flocculation tank.**
- **Replace maturation mixer by flocculation (Turbomix®) mixer.**

## 1.2 SAFETY

Operation of the Actiflo® Package Plant clarifier should be done by qualified personnel only.

It is imperative to ensure the security of all operators during the operation and maintenance of all mechanical equipment. In order to avoid accidents, it is important to determine the correct way to proceed and conveniently select appropriate clothing for the job. All workers having access to the equipment must scrupulously respect all the standard rules of safety as well as the precautions described in this manual.

Workers, which are directly responsible for the operation and maintenance of the equipment, must be aware of standard rules of safety.

The following safety rules should be followed:

- Safety devices such as handrail and belt guards should be installed and inspected regularly.
- Access to the building should be limited to authorize personnel only.
- Non-authorized personnel must never approach rotating shafts, connections, etc., in order to avoid injuries.
- The owner should implement a safety program and provide training for operation staff.
- Material Safety Data Sheets (MSDS) should be available for each chemical product.

- Appropriate protective gear including safety glasses, hard hat, boots, gloves, and ear protection should be worn at all times.

Protection systems or any other type of safety device supplied by the manufacturer must be carefully installed. If these are not supplied by the manufacturer, the user must supply and install the safety devices necessary for the protection of employees responsible for the operation of the equipment.

**WARNING**: The lamella pack is pre-installed in the settling tank section of the Actiflo® clarifier. The HIPS (High impact polystyrene) version of the lamella pack is made of a very flammable material. Do not expose it to open flames or sparks. Do not allow any welding works nearby unless special precautions have been taken.

**WARNING**: The operation staff should be aware that coagulant is highly corrosive and polymer solution can be very slippery. Handle dosing equipment and chemical products with extreme care. Always wear appropriate protective gear. Spills should be cleaned immediately according to the MSDS instructions.

**WARNING**: The microsand may contains fine particles of silica. Therefore, it must be handle safely and with caution by qualified staff. Consult the MSDS for further instructions.

## 1.3 STANDARDS

Unless specified otherwise, the equipment described in this manual is consistent with the most recent construction standards that are applicable, including:

| | |
|---|---|
| American Society of Mechanical Engineers | ASME |
| Canadian Standards Association | CSA |
| Canadian Electrical Manufacturers Association | CEMA |
| National Electrical Manufacturers Association | NEMA |
| American Society for Testing and Materials | ASTM |
| American National Standard Institute | ANSI |

Table 1: List of applicable standards

## 1.4 MODIFICATIONS DONE BY THE CLIENT

Please note that it is mandatory to contact Veolia Water Technologies Canada Inc. before undertaking any modification work to the equipment supplied in this project. In fact, any alteration made to any equipment (mechanical, control, computers, etc.) without prior notification and consent by VWTC voids the warranty of the mentioned equipment. Furthermore, the client is responsible for any additional cost necessary to restore the equipment to its original state.

## 1.5 FIELD INSTALLATION – PAINT PROTECTION

**IMPORTANT NOTE TO CONTRACTORS**

You are about to install Actiflo® Package Plant unit and its related equipment. Veolia Water Technologies Canada Inc. wants to warn the reader about potential problems related to installation of large steel units protected against corrosion by paint.

VWTC maintains a comprehensive quality program to prevent equipment from being affected by corrosion. Our fabrication methods are specially adapted to manufacturing of painted equipment. Every step of our fabrication and assembly process is checked to reduce corrosion issues. Each unit is also delivered under strict measures, meant to reduce potential corrosion problems and long product life.

However, we have identified that handling unit at job site is a key element of corrosion protection process. This operation completely escapes our control and is your responsibility. Consequently, we invite you to perform a thorough review of your installation procedures before handling VWTC products. Protecting units during and after installation is paramount to maintain corrosion risks to a bare minimum.

Likewise, after installation of units, you must insure complete equipment protection from working environment before unit is put into service. This will prevent damages caused by work not related to VWTC products taking place on site. Contractor is responsible for installation of any additional protection necessary at job site.

In order to maintain quality products free of defects, VWTC requests from contractor, that he takes all necessary measures to reduce risks of paint or equipment damage leading to steel corrosion. Among most important protection measures of paint protection, here are the principal ones:

- Making all men, working close to units, conscious of paint fragility and potential corrosion problems. Please encourage them to act with extreme care while working around installation.
- Protecting units from weld projection or falling debris, by covering unit with adequate plastic or cardboard hoods and padding.
- Protecting unit's tank bottom when installing mixers or other equipment inside unit.
- Keeping area and unit clean at all times.

All measures taken by contractor to insure paint protection will assure transfer to client of a quality product and will benefit to all.

## 1.6 WARRANTY

All equipment manufactured by **Veolia Water Technologies Canada Inc. (VWTC)** is guaranteed to be free from defects in material and workmanship for a period of twelve (12) months from the date at which unit is placed in service, eighteen (18) months from the date of shipment, whichever occurs first. All equipment found with defects during this period will be replaced at no extra charge when shipped

prepaid FOB to the manufacturer's shop. All parts sold by VWTC are warranted the same way for a period of three (3) months from date of shipment.

If the customer promptly notifies VWTC in writing of a claimed defect in the equipment and said equipment is found not to be in conformity with this warranty, VWTC will, at its option and expenses, repair or replace such defective part, prepaid FOB to the manufacturer's shop.

Must be given notice of such defect, and, where requested, such material must be returned to the manufacturer's shop, transportation charges prepaid, with written approval for the shipment by VWTC.

This warranty shall be void if start-up of equipment is not authorized by VWTC, or if repairs and/or alterations are made without a written authorization by VWTC. If the equipment or parts supplied by VWTC are altered in any way without VWTC consent, the present warranty will not be valid and have no effect.

The customer will use only VWTC parts for all labour covered by this warranty.

The foregoing warranty excludes responsibility or liability for:

(a) Failures not reported promptly within the warranty period, above specified.
(b) Damage due to accident, abuse, shipment, improper installation or operation, or abnormal operation condition.
(c) Damage caused by client's replacement, repair or inspection of parts.
(d) Lesion or personal accidents, material damage or any direct or indirect expenses or loss of profit related to this warranty.
(e) Damage, loss, expenses, lesion or personal accidents directly or indirectly related to the installation, the operation or the failure of the equipment supplied by VWTC.

The foregoing warranty is exclusive and replaces all other warranties, expressed or implied, including but not limited to any warranty of bargaining or modification for a particular purpose.

This warranty does not cover the following:

(a) Costs of repair, modification or other work done or requested by the customer or the management and all indirect costs.
(b) All expenses related to regular maintenance of parts as prescribed in the operation and maintenance manuals supplied by VWTC.
(c) Costs of dismantling, installation, transportation and insurance.
(d) Travelling and living expenses for the personnel carrying out the repair under such warranty.
(e) This warranty is not a performance or production warranty.

**VWTC** has the right to examine or to ask for details about defects before empowering the present warranty.

# 2 RECEIVING

Preliminary field-testing, inspection, and checkout of the unit, following installation, shall be performed by a qualified representative of both the supplier and the general contractor. Tests shall be conducted to demonstrate to the client that all system components furnished by the equipment supplier are fully operational, that all connecting piping is leak proof and properly anchored, and that the entire system furnished by the supplier is ready for continuous safe operation. The purpose of the checkout shall be to ensure that each individual system component has been correctly installed, shall operate fully in the manner intended, and is ready to perform its function as part of an integrated system when placed in continuous operation.

**MISSING EQUIPMENT/SHIPPING DAMAGE NOTIFICATION**

The condition of all delivered equipment must be verified by the responsible party upon arrival at site. Verification that all equipment has been delivered as per contract must also be done upon arrival at site. Notification of missing or damaged items must be sent to Veolia Water Technologies Canada (VWTC) within 10 days of receipt of equipment. If there is no documented notification of missing or damaged parts within 10 days, VWTC is not responsible for replacement of any items found to be missing or damaged at the time of installation and start-up of the supplied equipment. It is the responsibility of the party receiving the equipment to ensure all packaging is opened at the time of receipt to uncover and document any and all damages to the Freight Company and VWTC.

Photographs and written documentation should be provided on all damaged equipment.

## 2.1 STORAGE

The following instructions outline the duties and responsibilities of the responsible party for equipment storage. The responsible party shall assume responsibility for the equipment upon arrival at the project site. These instructions shall define the minimum expectations for storage of all equipment.

While this storage specification taken into account common environmental issues that may affect the system during storage, common sense should be the overriding factor in determining the best method to ensure the integrity and proper storage of the VWTC equipment.

Should it be necessary to delay installation and subsequent operation of a unit for more than one month from date of shipment, special precautions must be taken. If possible, all equipment should be stored indoors in a dry and sheltered environment having a relatively constant temperature (especially for gear reducers, motors, bearings, etc.).

Air may contain excessive moisture, pollutants, microorganisms, and other particulates that accelerate the deterioration of some materials. Humidity and pollutants can produce an aggressive atmosphere.

The storage environment into which a system is placed can have a dramatic effect on the long-term usefulness of some spare parts. Key environmental factors are:

1) Temperature
2) Relative Humidity
3) Pollutants

The environmental indoor conditions should not exceed the following ranges:

| | |
|---|---|
| Min/Max Temperature Range between: | 8°- 28°C (46°- 82°F) |
| Relative Humidity Range between: | 40% +/- 5% (RH) |

**A. OUTDOOR STORAGE:**

Pre mounted Actiflo® Package Plant clarifier can be stored outside with the following storage specifications:

1) Drain water completely with special attention for sections without drain on lower point.
2) Remove all motored, electronic equipment and instruments and store them indoor (heated and ventilated area).
3) Tanks must be stored with adequate support underneath to prevent distortion and to raise equipment above any undesirable ground or floor conditions. It will also prevent flooding damages.
4) Completely cover the equipment with a tarp or similar protections shield to prevent direct exposure to the elements (dust, rain, snow, etc.). The tarp should fit tightly around the equipment to prevent accumulation beneath tarp.
5) Make sure that the plastic tarp is in perfect condition. Repair plastic tarp if needed.
6) Remove all snow, dust or water accumulation from the top of the units.

**B. INDOOR STORAGE:**

All other equipment have to be stored indoors in a climate controlled environment under a clean dust free non-aggressive and dry environment, including but not limited to electrical enclosures, spare parts, etc.

1) The equipment should be stored in a manner to be kept free from allowing insects, rodents, etc. from entering the equipment.
2) Cover the equipment with a tarp or similar protective shield to prevent direct exposure to dust or any other contamination. However, never enclose the unit or components totally in plastic covers; always leave adequate ventilation of air to prevent condensation.
3) Storage volume depends on the size of the project.
4) Equipment must be checked on a weekly basis for tarp/wrap integrity and accumulation.
5) To avoid damage, do NOT stack crates.
6) To avoid damage, do NOT stack enclosures.
7) Do not store spares in barns, equipment sheds or any other building without the capacity for heating and cooling as needed.

## C. SPECIAL MAINTENANCE REQUIREMENTS DURING STORAGE:

***Mixers, Scraper and Recirculation Pumps***

**After three (3) months of storage**, long term storage methods must be applied to the unit including complete fill with lubricant. Protect machined surfaces and rotate shafts periodically (every month). Five (5) complete rotations of the output shafts are recommended each time.

Periodic checks should be made to ensure that no rusting or other damage has occurred. Should such be noted, corrective action should be quickly initiated. Prior to putting unit into service, drain lubricant and refill to proper level as determined by the mounting position. Refer to manufacturer documentation.

All motors must be removed and store indoor (in a heated and ventilated area). All motors must be run every 3 month as a preventive measure against the formation of corrosion.

***Instrumentation***

All instruments must be store inside. Refer to manufacturer documentation.

***Electrical Equipment and Spare Parts***

It is required that all electrical equipment is stored indoors in a climate controlled environment under a clean dust free non-aggressive and dry environment, including but not limited to electrical enclosures, spare parts, etc.

1) The electrical equipment should be stored in a manner to be kept free from allowing insects/rodents from entering the equipment.
2) Completely cover the equipment with a tarp or similar protective shield to prevent direct exposure to dust or any other contamination.
3) Storage volume depends on the size of the project.
4) Equipment should be checked on a weekly basis for tarp/wrap integrity and accumulation.
5) To avoid damage, do not stack crates.
6) To avoid damage, do not stack enclosures.
7) Do not store spares in barn, equipment sheds or any other building without the capacity for heating and cooling as needed.

***Other Equipment***

It is recommended that tanks and pumps be stored indoors and on a raised surface to avoid flooding however if this cannot be done, they must be places on secure, high ground and meet all other specifications provided in this document. The responsible party must be sure to elevate the equipment off of the ground.

If the equipment are stored outdoor they must be kept on a high ground not susceptible to flooding and elevate the equipment at least 10 inches (250 mm) of the ground. If there is reason known to the responsible party that more than 10 inches of elevation is required, appropriate measures should be taken. Completely cover the equipment with a tarp or similar protections shield to prevent direct

exposure to the elements (dust, rain, snow, etc.). The tarp should fit tightly around the equipment to prevent accumulation beneath tarp. Equipment to be checked on a weekly basis for tarp integrity and accumulation.

To avoid possible module damage, do not stack module crates.

***Equipment Cleaning***

VWTC is not responsible for cleaning of any equipment prior to installation and start-up due to the storage of the equipment. This is the complete responsibility of others.

The cleaning of the equipment, if necessary, must be completed prior to the VWTC start-up technician arriving at site.

***Handling***

Equipment will arrive at the project site in several different shipments, from various freight companies and in several different packaging containers. Typically a flatbed truck is used which requires a fork lift or a crane to remove the various items.

Control panels are shipped in a separate crate or wrapped for protection and should be removed from the flat bed with a fork lift along with all other items. Weight dependent upon system configuration.

# 3 GENERAL INSTALLATION

The Actiflo® package plant may be pre-mounted. However, for freight purpose and practical reasons, the installation of some items must be completed on site by the contractor. Please find below the list of tasks that need to be performed by the contractor at job site:

- Installation should be performed by qualified contractors.
- The contractor must ensure that the necessary lifting equipment is available on site to carry out the installation.
- All nuts & bolts need to be verified, accounted for and tightened.

**WARNING:** The HIPS variation of the settling tubes is very flammable, do not use any open flames near it and do not allow any welding works in the nearby area unless safety precautions have been taken. Once the settling tubes are submerged in water (normal use), this warning is no longer applicable.

- Refer to all field installation drawings for the installation of each Actiflo® unit.
- If any paint touch-ups are required, refer to documentation for recommended paint preparation and application instructions.
- After installation completion, clean the tank sections of all debris and objects that could damage the rotating mechanisms, damage pumps or clog the recirculation line.
- Microsand is supplied in 50 lbs. bags in quantities required for the first fill. Sand will be added to the maturation tank during process start up. Sand should be poured slowly once tank is filled with water. Initial sand loading should be performed with supervision of start-up personnel.

# 4 UNIT HANDLING

- Install each unit at the designated location at site. Lifting lugs are on top of each unit to facilitate handling and shall be removed after proper installation of Actiflo® unit in order to install the handrails.
- For equipment handling please refer to the following sketch and pictures for proper handling of the tank.
- The general contractor is responsible for the equipment unloading and handling.

**WARNING:** Do not use the welded lugs on Actiflo® package unit sides to lift the tank. These are for transportation purpose only.

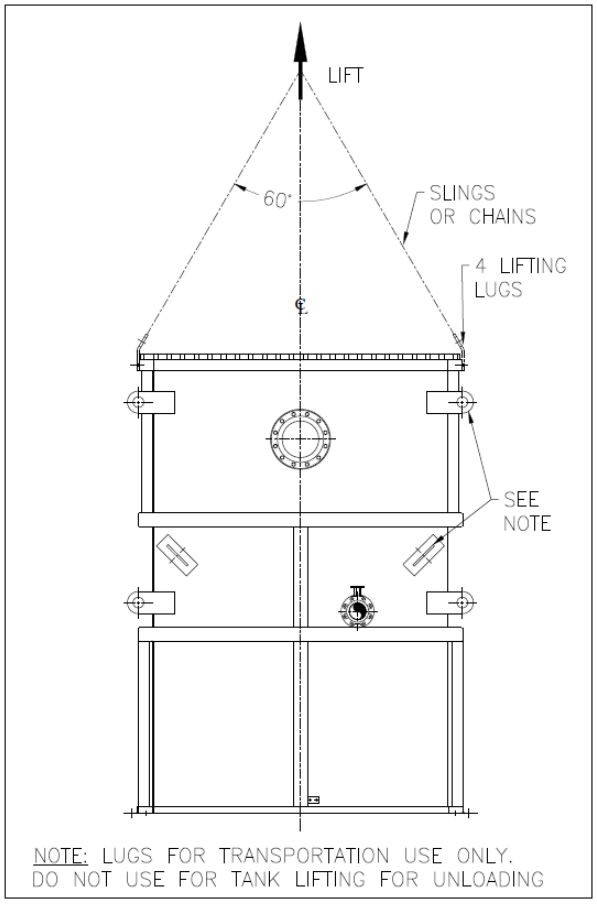


Figure 1: Actiflo® lifting lugs location

***ATTENTION: DO NOT LIFT THIS WAY***

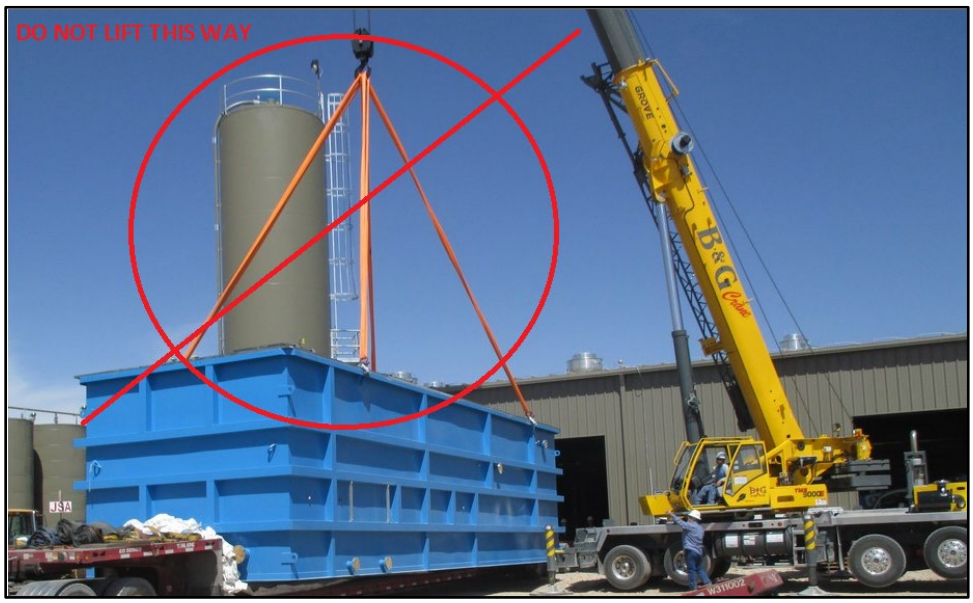


Figure 2: Actiflo® lifting (1)

***PROPER LIFTING: ALWAYS HAVE AT LEAST TWO LIFTING POINTS***

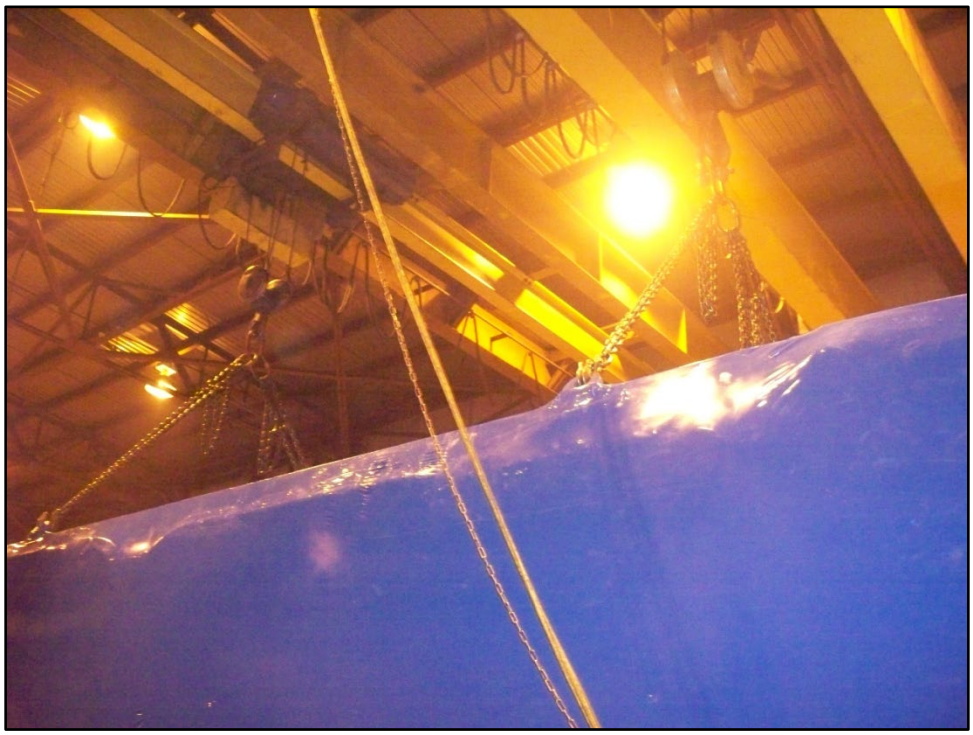

Figure 3: Actiflo® lifting (2)



Figure 4: Actiflo® lifting (3)



Figure 5: Actiflo® lifting (4)

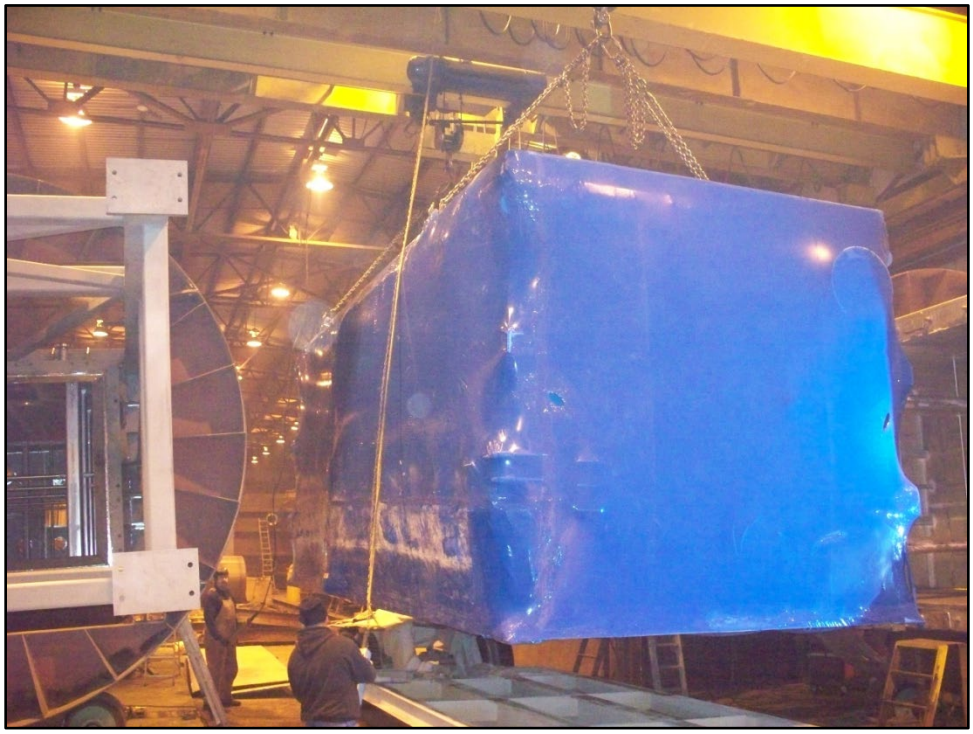

Figure 6: Actiflo® lifting (5)

## 4.1 LEVELING

- Unit base frame must be flat and leveled within proper tolerance (max. 1/8” every 15 ft).

## 4.2 ANCHORING TO CONCRETE FLOOR

- Refer to field installation drawing for tank anchors location.
- Drill appropriate holes in concrete support piers, in line with the anchoring holes of the Actiflo® base and fasten the tank structure with anchors (may be provided by others).
- Add leveling/finishing grout under the base frame where required.

## 4.3 UNWRAPPING

- Unwrap the equipment and remove any temporary supports and plywood protections from the unit. Be cautious when removing instrumentation protection.

# 5 MECHANICAL INSTALLATION

## 5.1 GRATING

- Install grating on each unit. The grating may already be mounted as part of shop assembly.

## 5.2 HANDRAIL

- Install hand railing on each unit at the site. Please refer to the field installation drawings.

## 5.3 SETTLING SECTION

- Lamella packs are already installed in settling section.
- If using HIPS variation of lamella packs and if required, be very cautious when manipulating the lamella packs in cold temperatures. They become very brittle and may break easily.

**WARNING:** HIPS variation of lamella pack is highly flammable. Submerge with water as soon as possible.

## 5.4 TROUGHS

- The troughs already installed in the settling section should be leveled using the adjustment nuts. All troughs must be at the same elevation. Tolerance should be 1/8”, so that water is distributed evenly within settling section.

## 5.5 SCRAPER DRIVE INSTALLATION

- Remove the transportation plate from the rake assembly.
- Lower the rake shaft using the inside round bar fixture.
- Connect the rake drive to the shaft.
- Add the lubricant in the primary gear box. Use FDA approved **Total Nevastane 460 EP** lubricating oil or equivalent. Please be careful about the oil quantity that is pour in the scraper drive assembly as too much oil may overflow into the tank. The primary gear box oil capacity is 8 liters and the oil level should correspond to about half the height of the gear (i.e. 25 to 30 mm from the bottom). The oil level plug, on the side of the gear box, can be unscrewed to drain excess oil and retain optimal oil level. Refer to the next figure.

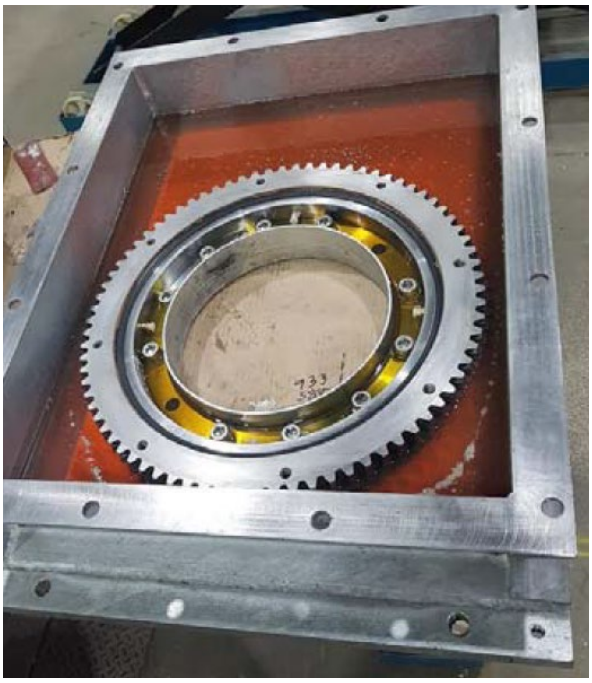

Figure 7: Primary gear box recommended oil level (opened up gear box and filled with 8 L of oil)

- Rectify alignment if necessary.
- All electrical connections must be completed.
- Rotation of the rake must be clockwise (CW).
- Ensure that there is no contact between the rake arm and the bottom of the hopper.
- Clean the tank sections of all debris and objects that could damage the rotating mechanisms.
- Inspect the recirculation inlet pipe. It should be free of any debris.

**NOTE**: Pay particular attention to remove temporary material (wood, cardboard) at the bottom of the scraper that was used to prevent movement during transport.

## 5.6 HYDROCYCLONE SUPPORT(S)

- Refer to the field installation drawings for proper hydrocyclone installation.
- Install the hydrocyclone assembly support on the maturation tank with supplied screws, nuts and washers at the site.
- Install the piping connections. It is important to drop one (1) meter (approximately 3 feet) at the sludge outlet of each hydrocyclone, to avoid backflow through hydrocyclone. Discharge of sludge pipe must not be submerged.

**NOTE**: Disruption in hydrocyclone pressure distribution will potentially affect separations performances, hence adequate return of microsand to the process.

## 5.7 COAGULATION / INJECTION / MATURATION TANK MIXER

- Refer to field installation drawings for proper mixers installation.
- The mixers are delivered separately. The shafts are already assembled to the gear box. The contractor must assemble the impellers on the shafts at job site.
- Install the motor on the appropriate tank mixer following instructions given in the supplier's equipment manual.
- Verify the mixer blade installation and orientation.
- Verify that set screws are well tightened to secure the hub onto the shaft.
- Follow manufacturer recommendations for oil check and fill up procedure (manufacturer manual).
- Larger mixers may require installation of an oil expansion chamber (to be installed on site).
- All electrical connections must be completed.
- Refer to the following sketches for proper hubs installation in section 5.8.

## 5.8 MIXER IMPELLER BLADE INSTALLATION

**WARNING:**

- Ensure the use of a right hub ( \ ) in the tanks. Always refer to field installation drawings.
- The leading edge of the blade shall be at 15° from horizontal and not at 75°.
- The screws and nuts must be installed on the wing with nuts on the opposite side from the blade or with screw head contacting blade or on blade side.

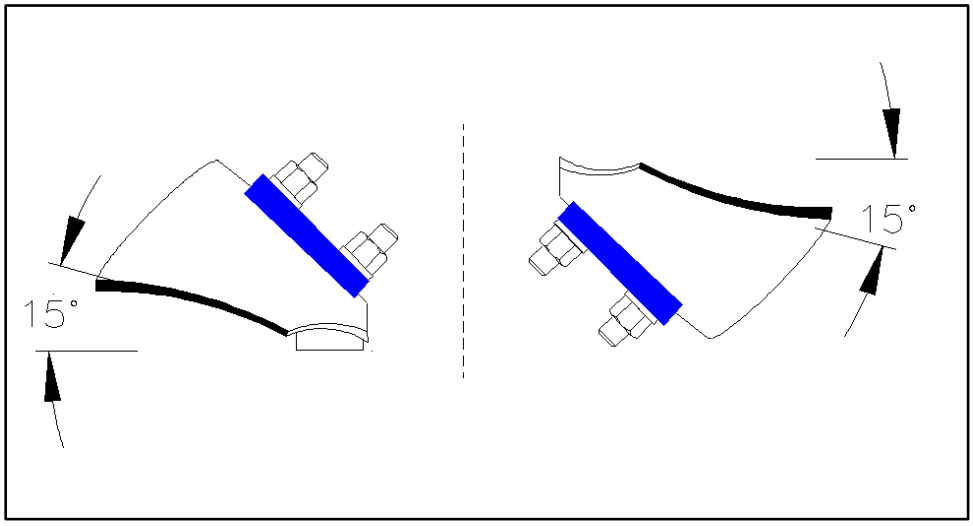


**INSTALLATION: TWO POSSIBLE CHOICES**

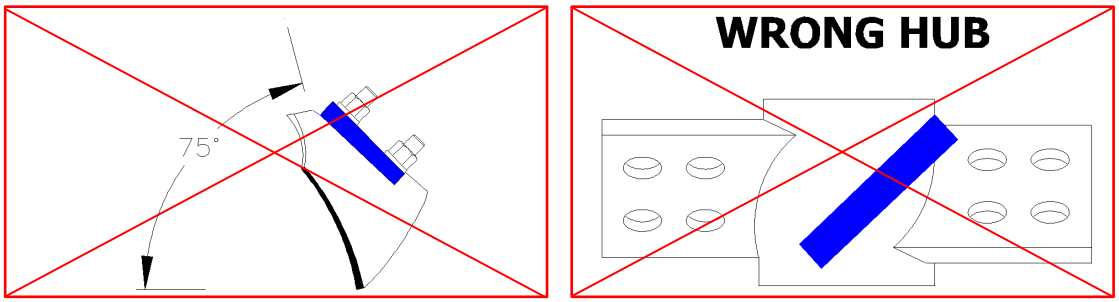


**WRONG HUB INSTALLATION**

Figure 8: Mixer hub installation

| LEGEND | |
|---|---|
| **CW-UP** | Clockwise – Up |
| **CW-DOWN** | Clockwise – Down |
| **CCW-UP** | Counterclockwise – Up |
| **CCW-DOWN** | Counterclockwise – Down |

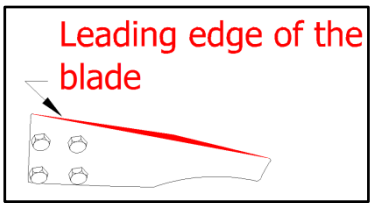


**POSSIBLE MIXER IMPELLER BLADE MOUNTING POSITION:**

**Note:** Refer to the field installation drawings for your particular application.

The following figures shows the different impeller blade mounting positions.

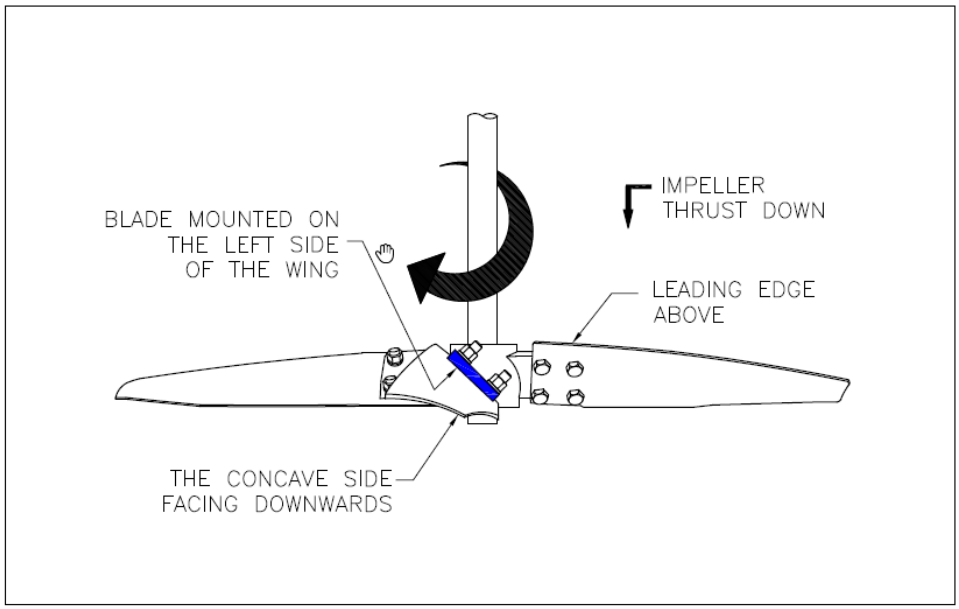


Figure 9: Mixer blades installation for CW rotation and DOWNWARD thrust

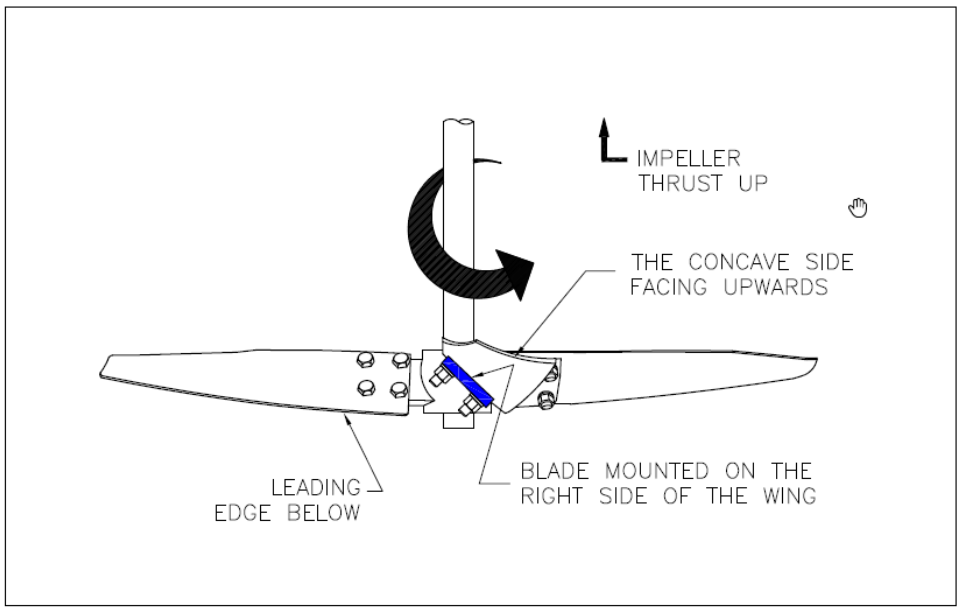


Figure 10: Mixer blades installation for CCW rotation and UPWARD thrust

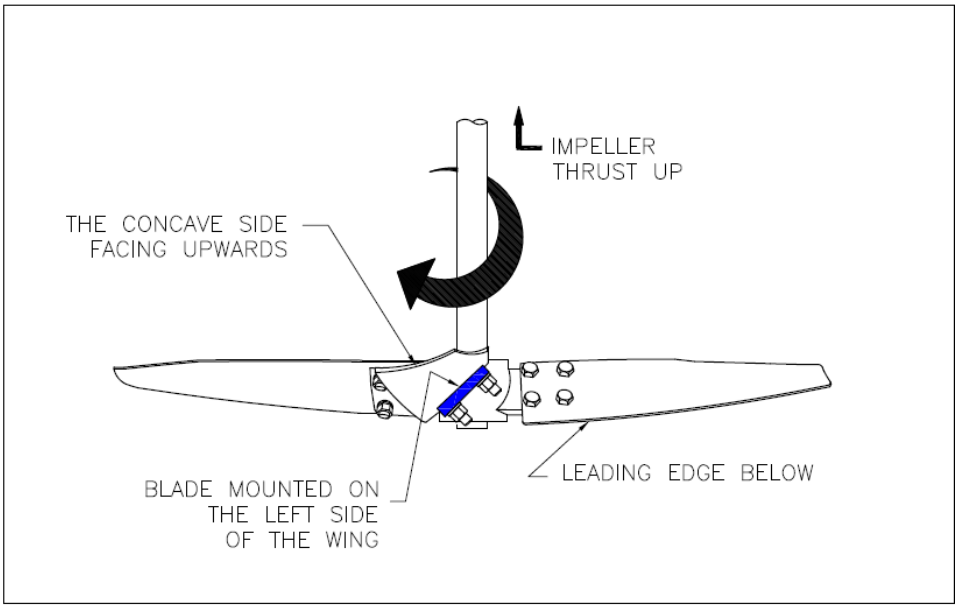


Figure 11: Mixer blades installation for CW rotation and UPWARD thrust

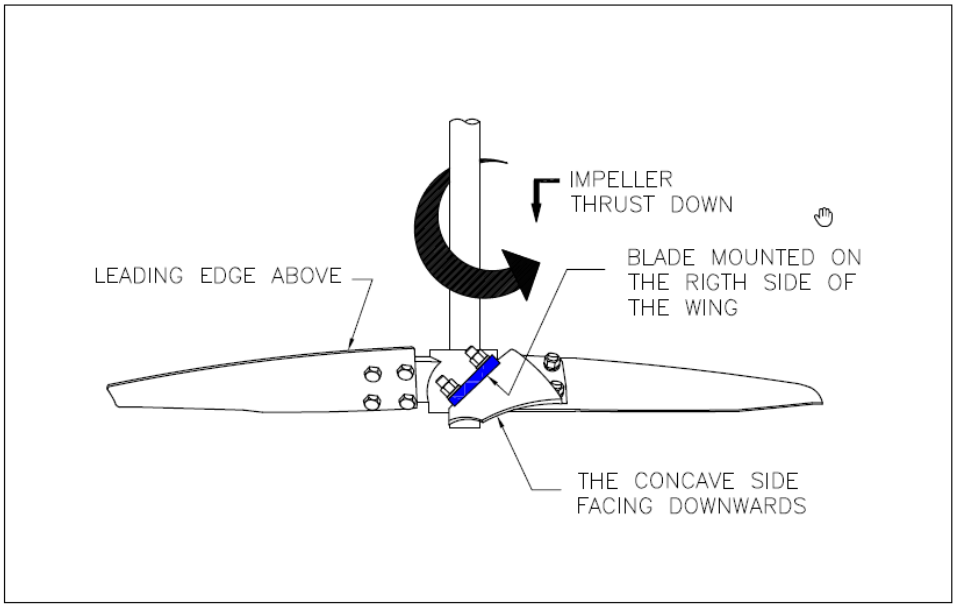


Figure 12: Mixer blades installation for CCW rotation and DOWNWARD thrust

## 5.9 STAIRS (Optional)

- Refer to field installation drawings for proper stairs installation.
- The stairs are delivered separately. The contractor must assemble and install the stairs at job site. Grout may be used underneath stairs legs to make sure that top of grating on tank matches stairs elevation.

## 5.10 LADDERS AND SAFETY GATES (Optional)

- Refer to the field installation drawings for details on ladder and safety gate installation.
- Ladder and safety gate are delivered separately. Install the ladder in place and fasten to unit at job site. Install the safety gate in the access opening of the ladder with the supplied screws and nuts.

# 6 PERIPHERAL EQUIPMENT INSTALLATION

## 6.1 MICROSAND RECIRCULATION PUMP SYSTEM

- Refer to field installation drawings for proper microsand recirculation pump system location and installation.
- Pump base frame must be leveled within proper tolerance.
- Drill appropriate holes in concrete floor and fasten the pump and flexible pipe supports with anchors.
- Connect the drip pan to a drain to avoid any leakage on the floor.

## 6.2 COAGULATION pH METER

- Refer to field installation drawings and manufacturer installation recommendations, for proper coagulation pH meter installation.
- Install the coagulation pH meter with probe mounted to scraper support beam on the settling tank side using supplied screws, nuts and washers. Refer as well to manufacturer's manual for installing and electrically connecting the instrument.

## 6.3 CLARIFIED WATER TURBIDIMETER

**FOR ENDRESS+HAUSER TURBIMAX CUS51D or HACH SOLITAX PROBE**

- Refer to field installation drawings and manufacturer installation recommendations, for proper location, installation and connection of the instrument. Install the turbidimeter probe mounted to scraper support beam on the settling tank side using supplied screws, nuts and washers.

## 6.4 INLET TURBIDIMETER (Optional)

**FOR ENDRESS+HAUSER TURBIMAX CUS51D or HACH SOLITAX PROBE**

- Install in line pipe. Refer to field installation drawings and manufacturer installation recommendations, for proper location and installation.
- The connection and installation are by others.

## 6.5 INLET FLOWMETER (Optional)

- Follow manufacturer installation recommendations (refer to manufacturer manual), to ensure adequate operation.

## 6.6 INLET CONTROL VALVE (Optional)

- Refer to field installation drawings and manufacturer installation recommendations, for proper location and installation.

## 6.7 RECIRCULATION PRESSURE TRANSMITTER (Optional)

- Install pressure transmitter on the piping at the inlet of each hydrocyclone. Refer to field installation drawings for proper location and installation.

## 6.8 PRESSURE GAUGE (Optional)

- Install on the piping at the outlet of each recirculation pump. Refer to field installation drawings for proper location and installation.

# 7 PIPING CONNECTION

**NOTE**: Remove the flange protecting grease prior to the installation of the valves and pipes.

## 7.1 WATER COLLECTOR

- Install a pipe from the Actiflo® unit effluent flange to the clarified water collector.
- A vent must be installed on the discharge if any equipment or instrument installed downstream could malfunction with air presence (UV, flowmeter, …)

## 7.2 TANK DRAIN

- Install a pipe from the tank drain valves to the drain.

## 7.3 SETTLED WATER TANK PARTIAL DRAIN

- Install a pipe from the pre-installed partial drain valve, located on Actiflo® effluent side, to the drain.

## 7.4 HYDROCYCLONES SLUDGE OUTLET

- Install a pipe from the hydrocyclones sludge outlet grooved coupling to the drain.

**IMPORTANT**: Provide sufficient pipe slope and size to prevent any backflow to the hydrocyclones. It is important to drop one (1) meter (approximately 3 feet) at the sludge outlet of each hydrocyclone to avoid backflow through hydrocyclone. After the drop, if the sludge collector is a gravity pipe, it must be calculated as free flow with maximum 70-80% of filling and with a maximum velocity of 0.8 m/s. If several hydrocyclones are in operation at the same time, a vent must be added on the collector.

## 7.5 POLYMER FEEDING

- Connect the supplied polymer injection tubing from the Actiflo® maturation and injection reservoirs to the appropriate hydrocyclone assembly support polymer distributor outlet.
- Connect polymer feeding pipe from the polymer metering pump skid outlet to the hydrocyclone assembly support polymer distributor inlet for the Actiflo® unit.

## 7.6 RECIRCULATION FLEXIBLE PIPE

- Refer to field installation drawings for proper recirculation pipe installation.
- Inspect the recirculation inlet pipe. It should be free of any debris.
- Connect the flexible pipe section using the connections provided.
- Pipe straps are supplied on the unit to secure the pipe along the tank wall. Install the recirculation flexible pipe in order to avoid any pipe drop that could cause sand accumulation and vibrations.
- Refer to the following pictures for proper installation.

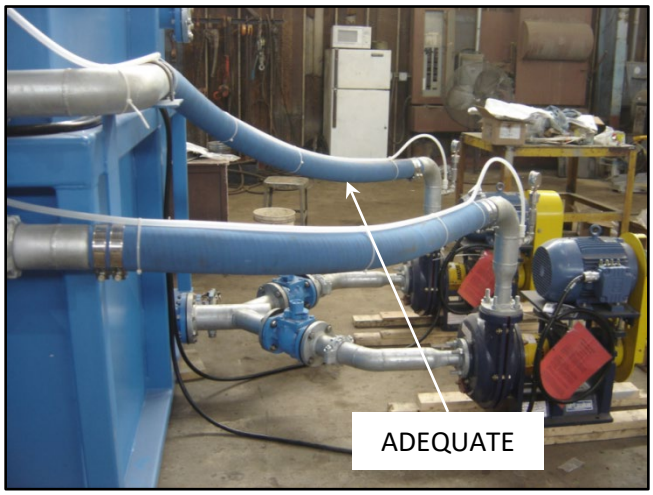


MICROSAND RECIRCULATION PUMP ADEQUATE HOSE INSTALLATION

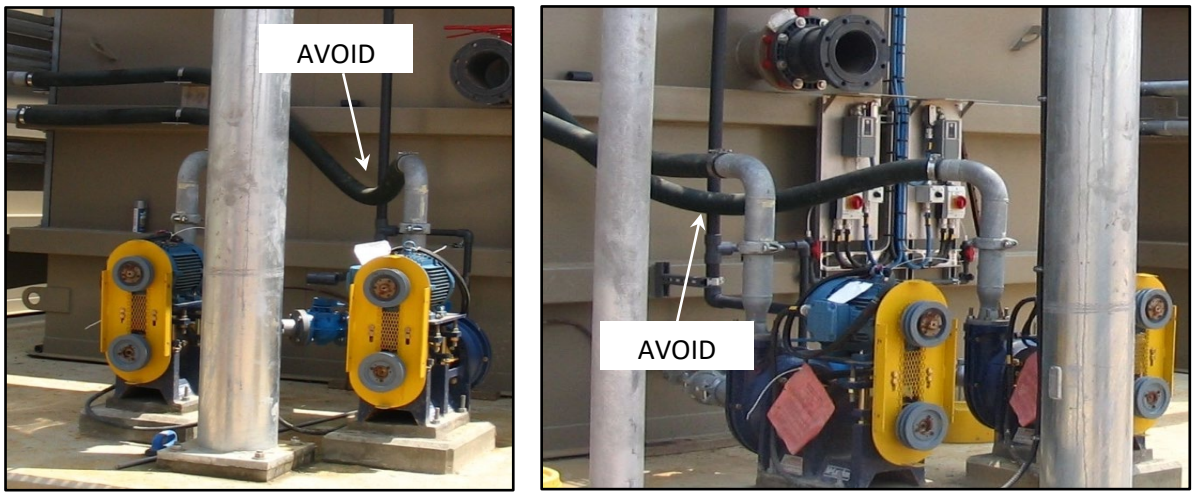


MICROSAND RECIRCULATION PUMP INCORRECT HOSE INSTALLATION

Figure 13: Microsand recirculation pump hose installation

## 7.7 CLARIFIED WATER TURBIDIMETER

**FOR ENDRESS+HAUSER TURBIMAX CUS51D PROBE**

- Install solenoid valve (ship loose item) and connect the probe cleaning head with compressed air tubing (¼" diameter, by others).

**FOR HACH SOLITAX PROBE**

- No action needed.

## 7.8 INLET TURBIDIMETER (Optional)

**FOR ENDRESS+HAUSER TURBIMAX CUS51D and HACH SOLITAX PROBRE**

- Refer to manufacturer's manual for installing inline retractable assembly kit to be mounted on inlet piping.

## 7.9 LAMELLA CLEANING SYSTEM (Optional)

- Refer to field installation drawings for proper system location and installation.
- Close all valves situated on the cleaning system conduct.
- Inspect the pipe inlet; it should be free of any debris.
- Connect the compressed air supply to pipe.
- Before feeding the system with air, reopen valves and refer to AERSHAFT® operation and maintenance manual.

# 8 TORQUE VALUES

| EQUIPMENT TYPE AND SIZE | LUBRICATED | |
|---|---|---|
| | in-lbs | ft-lbs |
| **Plug valves (drain connection and recirculation pump isolation) with ASTM A193 B8 304 bolts** | | |
| 1/2" - 13 UNC | 420 | 35 |
| 5/8" - 11 UNC | 420 | 35 |
| 3/4" - 10 UNC | 540 | 45 |
| **Butterfly valves (drain connections) with ASTM A193 B8 304 bolts** | | |
| 5/8" - 11 UNC | 420 | 35 |
| 3/4" - 10 UNC | 540 | 45 |
| **Recirculation pumps (piping connections) with zinc plated ASTM A193 B7 studs [1]** | | |
| 1/2" - 13 UNC | 576 | 48 |
| 5/8" - 11 UNC | 1140 | 95 |
| **Lifting system hardware with SAE Gr. 8 zinc plated bolts [2]** | | |
| 5/8" - 11 UNC | 1908 | 159 |
| 1" - 8 UNC | 8172 | 681 |
| **Steel flange bolting with red rubber gasket and ASTM A193 B8 AISI 304 bolts [3]** | | |
| Flange 1½" (1/2" - 13 UNC bolt) | 300 | 25 |
| Flange 2" (5/8" - 11 UNC bolt) | 588 | 49 |
| Flange 2½" (5/8" - 11 UNC bolt) | 600 | 50 |
| Flange 3" (5/8" - 11 UNC bolt) | 600 | 50 |
| Flange 4" (5/8" - 11 UNC bolt) | 588 | 49 |
| Flange 6" (3/4" - 10 UNC bolt) | 828 | 69 |
| Flange 8" (3/4" - 10 UNC bolt) | 996 | 83 |
| Flange 10" (7/8" - 9 UNC bolt) | 1152 | 96 |
| Flange 12" (7/8" - 9 UNC bolt) | 1596 | 133 |
| Flange 14" (1" - 8 UNC bolt) | 2412 | 201 |
| Flange 16" (1" - 8 UNC bolt) | 2172 | 181 |
| Flange 18" (1⅛" - UN8 bolt) | 2373 | 198 |
| Flange 20" (1⅛" - UN8 bolt) | 2244 | 187 |
| Flange 24" (1¼" - UN8 bolt) | 3120 | 260 |
| **Other steel hardware bolting with ASTM F593 AISI 316 bolts [4]** | | |
| 1/4" - 20 UNC | 62 | - |
| 3/8" - 16 UNC | 228 | 19 |
| 1/2" - 13 UNC | 552 | 46 |
| 5/8" - 11 UNC | 1104 | 92 |
| 3/4" - 10 UNC | 1356 | 113 |
| 7/8" - 9 UNC | 2184 | 182 |

Table 2: Torque values for bolting by equipment type and size

**Notes:**

1) Values used with this note is calculated from 60% of the full bolt torque (with anti-seize K = 0.17, formula T = KDF) to account for pump rubber seals.
2) Lubricated based on K = 0.15 for torque values calculated with formula T = KDF.
3) Durometer 60 red rubber gasket B16.5 #150 flat face flanges and A193 B8 Class 1 bolts preferred torque values.
4) Lubricated based on K = 0.16 for torque values calculated with formula T = KDF.
5) The use of this information is at sole risk of the user.

# 9 ELECTRICAL INSTALLATION

**NOTE**: Electrical work should be performed by a qualified contractor. Refer to control panel and electrical diagram for proper wiring installation.

## 9.1 GROUNDING

- Connect tanks earthing lugs in order to ground the tank.

## 9.2 CONTROL PANEL

- Supply wiring between unit (junction box optional) and the control panel.
- Supply power (575V or 460V / 3 ph / 60 Hz) and (120V / 1 ph / 60 hz) to the control panel. Refer to technical datasheet.
- Before permanently wiring the control panel, verify the rotation of each motor (clockwise or counter clockwise).

## 9.3 TANK MIXER

- Connect each mixer motor to control panel or junction box.

**WARNING**: Never run a mixer without the tank being completely filled with water.

## 9.4 SCRAPER

- Connect scraper motor to control panel or junction box.

## 9.5 RECIRCULATION PUMP

- Connect each recirculation pump motor to control panel or junction box.

## 9.6 CLARIFIED WATER TURBIDIMETER

- Recommended supplier wiring instructions are given in the manufacturer' manual.

**WARNING**: Never cut the original cable between turbidimeter unit and its power supply unit. This cable must remain at full length.

## 9.7 CLARIFIED WATER pH METER

- Connect coagulation pH meter to transmitter or junction box.

## 9.8 WATER LEVEL SWITCH

- Complete connection if any.
- Recommended supplier wiring instructions are given in the supplier manual.

## 9.9 INLET FLOWMETER (Optional)

- Supply wiring between unit and control panel.
- Complete connection if any.
- Recommended supplier wiring instructions are given in the supplier manual.

## 9.10 INLET TURBIDIMETER (Optional)

- Supply wiring between unit and control panel.
- Complete connection if any.
- Recommended supplier wiring instructions are given in the supplier manual.

## 9.11 RECIRCULATION PRESSURE TRANSMITTER (Optional)

- Supply wiring between unit and transmitter or junction box.
- Complete connection if any.
- Recommended supplier wiring instructions are given in the supplier manual.

# 10 ACTIFLO® BALLASTED CLARIFICATION PROCESS

## 10.1 GENERAL INFORMATION

The Actiflo® process is a high-speed clarification process that combines the benefits of ballasted flocculation and lamellar clarification. It is a high-performance compact process that results from many years of research and development in the fields of potable water, wastewater and storm water. It represents the most efficient clarification method currently available on the market to effectively eliminate turbidity, colour, algae, suspended solids (SS), metals, total organic carbon (TOC), tastes and odours.

Suspended particles, previously destabilized with the injection of a coagulant in the raw water, are fixed to the microsand with the help of a polyelectrolyte added to the water. The flocculate (or floc) thus formed is subsequently separated from the water by countercurrent lamellar settling with an ascending hydraulic flux.

## 10.2 CHARACTERISTICS AND PERFORMANCES

The high efficiency of the Actiflo® process is the result of the combination of two tried and tested technologies:

- Injection of microsand, which supports the ballasted flocs and works as weight in order to create very dense flocs, thus ensuring a very high rate of settling.
- Lamellar settling, which increases the settling surface in a reduced tank volume by using a set of inclined parallel tubes.

Combining ballasted flocculation and lamellar settling, the Actiflo® process enables the water to reach very high ascending hydraulic speeds. Furthermore, these technologies render the system very stable against variations in raw water flow, temperature, pH and/or turbidity without, however, compromising effluent quality. The stability of the Actiflo® process simplifies its operation.

When the water flow is at its peak, all treatment stages (coagulation/flocculation/maturation) take approximately 10 minutes to complete. This short hydraulic retention time makes the process extremely reactive to chemical dosage adjustments. An optimal use of reagents also results in minimal operating costs, i.e., up to 40% less compared to conventional processes.

Ballasted flocculation produces clarified water of very high quality, including in difficult operating conditions, such as very cold, very cloudy and/or very coloured water.

The Actiflo® clarifier reacts very quickly to starting requirements and changing operating conditions. Turbidity at the clarifier's outlet may be reduced to the point of surpassing required standards in less than 20 minutes (as the case may be) following system start-up.

The excellent settleability of the outgoing sludge makes it easy to thicken and dewater the sludge produced.

## 10.3 REVIEW OF THE WATER CHEMISTRY AND THE ACTIFLO® PROCESS

Extremely small colloidal particles (measuring 0.001–1 µm) are mainly what give water its turbidity and colour. These particles are stable and repel each other. To eliminate them, coagulation and flocculation processes are used.

The primary objective of coagulation is to destabilize the colloidal particles, i.e., to facilitate their coalescence. In practice, this process is characterized by the injection of a coagulant that coalesces the small particles into larger particles.

Flocculation is the physicochemical process during which suspended solids in a liquid coalesce and form larger particles, usually very porous, known as flocs. The flocs usually settle much more quickly than the primary particles of which they are formed. Flocculation may occur naturally or be accelerated by the use of a flocculant. The resulting flocculate is combined with microsand to increase its density and accelerate its settling, as is the case here using a combination of polymer and sand.

### Coagulation

Coagulation is the destabilization of colloidal particles (measuring 0.001–1 µm) to facilitate their coalescence.

Coagulation is affected by:

- The pH, which must be within the optimal range.
- The concentrations of dissolved salts, which impact the pH range, the coagulant dosage and the duration of the mixture.
- The temperature of the water, which impacts the kinetics of the chemical reactions and increases the water's viscosity.
- The mixture (a quick mixture increases the dispersion of the coagulant but can also break up the flocs).
- The turbidity (an increase in turbidity will lead to an increase in the required coagulant dosage).
- The colour (resulting from the presence of organic matter, the required coagulant dosage depends on the colour of the raw water).
- Overdosing, this impacts the stability of the solution (destabilization of the double layer) and the pH range.

### Flocculation

Flocculation consists of combining the coagulated flocs and microsand to create larger and heavier flocs in the injection and maturation tanks under the effect of the flocculant (polymer) which binds the particles together.

**Microsand**

Microsand is used as a ballast to accelerate the settling of the flocs in the settling tank. It also buffers the impact of wastewater flow, quality or temperature variations.

## 10.4 OPERATION PRINCIPLES

Raw water goes through four (4) successive steps that are part of the Actiflo® treatment process:

### 10.4.1 EXTENDED COAGULATION (ACP2 VARIATION ONLY)

A coagulant is added to the raw water upstream of the unit. The water then enters a first tank, i.e., the extended coagulation tank. A mechanical mixer is optionally fitted on this tank and allows to intensively mix the coagulant. The coagulant is homogeneously dispersed in the water and destabilizes the suspended particles. The rapid mixing triggers the dispersion of the coagulant in the raw water to form small flocs (also known as “pin flocs”).

### 10.4.2 COAGULATION

**For ACP R variation:** A coagulant is added to the raw water upstream of the unit. The water then enters a first tank, i.e., the coagulation tank.

**For ACP2 variation:** The water enters the second tank, i.e. the coagulation tank from the extended coagulation tank.

Within the coagulation tank, a mechanical mixer is used to ensure intensive mixing. Consequently, the coagulant is homogeneously dispersed in the water and destabilizes the suspended particles. The rapid mixing triggers the dispersion of the coagulant in the raw water to form small flocs (also known as “pin flocs”).

### 10.4.3 INJECTION (ACP R VARIATION ONLY)

The coagulated water then enters the injection tank. Microsand and the polymer are added simultaneously to foster contact between the coagulated solids, the polymer and the microsand. The rapid mixing accelerates the dispersion of the polymer and the microsand as well as the formation of ballasted flocs.

### 10.4.4 MATURATION (ACP R VARIATION ONLY)

Next, the water enters the maturation tank, which is the largest of the three (3) tanks. An additional quantity of polymer is injected in this tank and the slower mixing combined with a longer retention time foster the maturation of the flocculate. The resulting flocs are larger in size.

### 10.4.5 FLOCCULATION (ACP2 VARIATION ONLY)

The ACP2 variation of the Actiflo® has a flocculation tank which is the largest of the three (3) tanks that plays both the role of injection of microsand, polymer and maturation of the flocculate. This can be achieved through the use of Turbomix® technology that enhances flocculation.

### 10.4.6 COUNTER-CURRENT LAMELLAR SETTLING

Ballasted flocs precipitate to the bottom of a hopper and the clarified water is collected at the surface using troughs. The sludge is drawn out of the hopper by a pump and is directed toward a series of hydrocyclones. The hydrocyclones located above the injection tank separate the microsand from the sludge. The microsand is recirculated into the system via the underflow of the hydrocyclones while the sludge is evacuated through the overflow.

# 11 DESCRIPTION OF COMPONENTS

## 11.1 ACTIFLO® CLARIFIER (ACP R VARIATION ONLY)

### 11.1.1 GENERAL DESCRIPTION

An Actiflo® clarifier (ACP R variation) is composed of coagulation, injection and maturation tanks, a lamellar settling tank with a hopper, a series of lamellar tubes and troughs for the collection of clarified water, a microsand recirculation circuit, piping and a control panel.

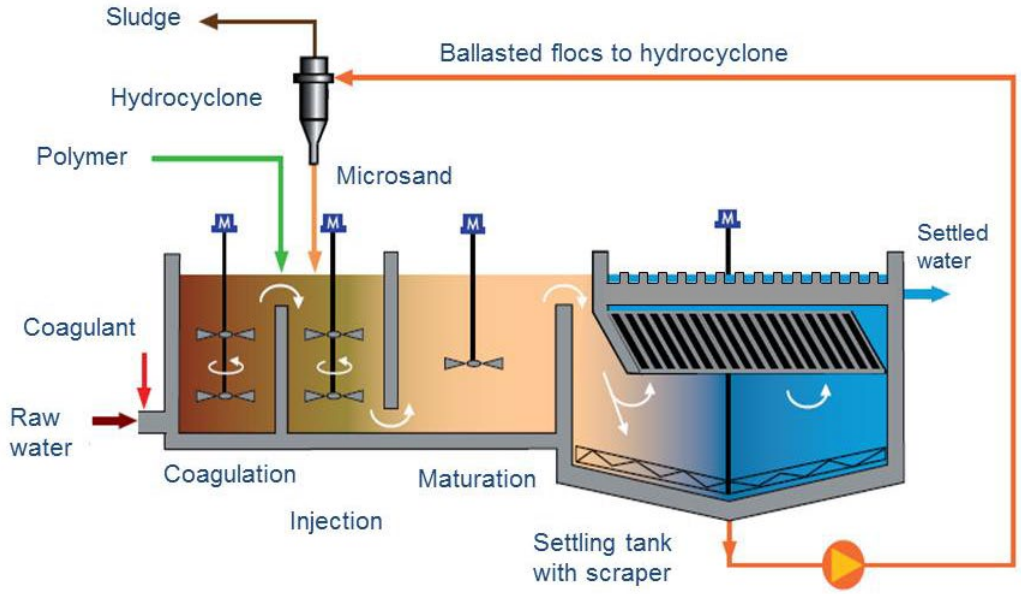


Figure 14: Actiflo® clarifier schematic – ACP R variation – General description

### 11.1.2 COAGULATION TANK

Raw water enters the Actiflo® at the bottom of the coagulation tank. Coagulant is added upstream of this tank to improve contact time.

The coagulation tank is equipped with a mechanical mixer composed of a shaft and a four-bladed propeller made of stainless steel. The mixer is vertically mounted and the induced water flow direction is downward.

The mixer is driven by a motor and a helical gear speed reducer. It is a totally enclosed fan cooled motor (TEFC) and operates at a constant speed. In case of thermo-mechanical overload, the motor stops automatically and an alarm warns the operator.

A manual drainage valve, located in the coagulation tank, allows draining this tank through the existing draining network.

### 11.1.3 INJECTION TANK

Coagulated water enters the top portion of the injection tank by going over a flooded overflow, which communicates directly with the coagulation tank. An accurate amount of microsand and polymer is added at the tank water surface. The polymer may also be directly added in the bottom injection or maturation tanks.

The injection tank is equipped with a mechanical mixer composed of a shaft and a four-bladed propeller made of stainless steel. The mixer is vertically mounted and the induced water flow direction is upward.

The mixer is driven by a motor and a helical gear speed reducer. It is a totally enclosed fan cooled motor (TEFC) and operates at a constant speed. In case of thermo-mechanical overload, the motor stops automatically and an alarm warns the operator.

A manual drainage valve, located in the injection tank, allows draining this tank and the maturation tank through the existing draining network.

### 11.1.4 MATURATION TANK

Water and flocculated solids originating from the injection tank enter at the bottom of the maturation tank through a common opening.

The maturation tank is equipped with a mechanical mixer composed of a shaft and a four-bladed propeller made of stainless steel. The mixer is vertically mounted and the induced water flow direction is downward. The maturation tank is equipped with baffles to insure better mixing.

The mixer is driven by a motor and a helical gear speed reducer. It is a totally enclosed fan cooled motor (TEFC) and may operate at a constant or variable speed. An adjustment to the rotating speed can be proven necessary when the incoming water flow rate is greatly reduced. In this case, it might be advantageous to compensate for losses in hydraulic energy by increasing the speed of rotation of the maturation mixer. In case of thermo-mechanical overload, the motor stops automatically and an alarm warns the operator. The unit automatic shutdown sequence is also initiated.

A manual drainage located, in the injection tank, allows draining the maturation tank through the existing draining network.

## 11.2 ACTIFLO® CLARIFIER (ACP2 VARIATION ONLY)

### 11.2.1 GENERAL DESCRIPTION

An Actiflo® clarifier (ACP2 variation) is composed of an extended coagulation (not shown but is located between raw water inlet and coagulation tank), coagulation and flocculation tanks, a lamellar settling tank with a hopper, a series of lamellar tubes and troughs for the collection of clarified water, a microsand recirculation circuit, piping and a control panel.

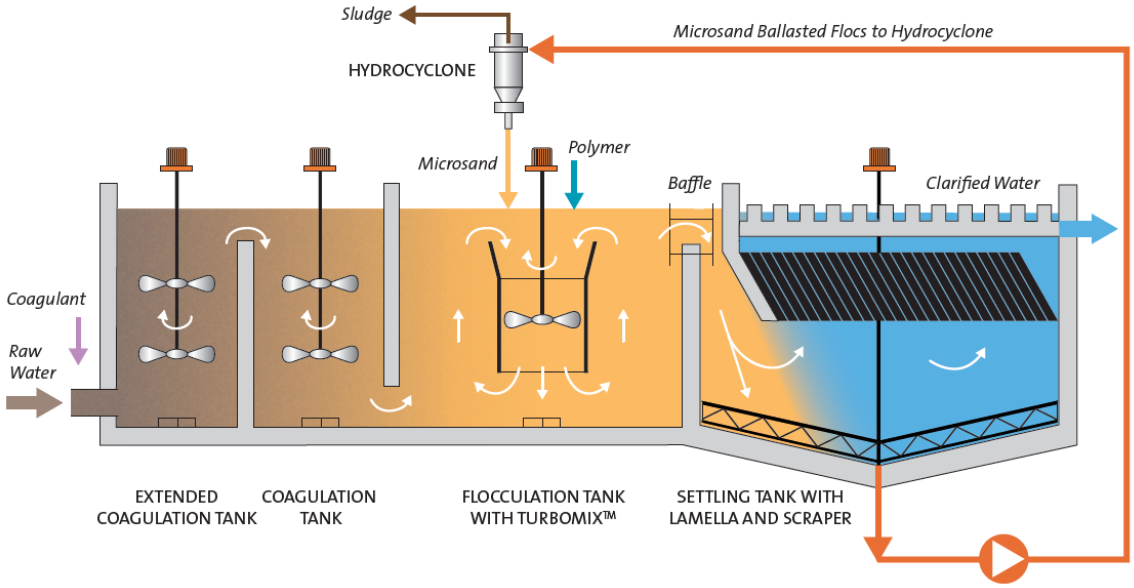


Figure 15: Actiflo® clarifier schematic – ACP2 variation – General description

### 11.2.2 EXTENDED COAGULATION TANK

Raw water enters the Actiflo® at the bottom of the extended coagulation tank. Coagulant is added upstream of this tank to improve contact time.

The extended coagulation tank is optionally equipped with a mechanical mixer composed of a shaft and a four-bladed propeller made of stainless steel. The mixer is vertically mounted and the induced water flow direction is downward.

The mixer is driven by a motor and a helical gear speed reducer. It is a totally enclosed fan cooled motor (TEFC) and operates at a constant speed. In case of thermo-mechanical overload, the motor stops automatically and an alarm warns the operator.

A manual drainage valve, located in the extended coagulation tank, allows draining this tank through the existing draining network.

### 11.2.3 COAGULATION TANK

Coagulated water enters the top portion of the coagulation tank by going over a flooded overflow, which communicates directly with the extended coagulation tank.

The coagulation tank is equipped with a mechanical mixer composed of a shaft and a four-bladed propeller made of stainless steel. The mixer is vertically mounted and the induced water flow direction is upward.

The mixer is driven by a motor and a helical gear speed reducer. It is a totally enclosed fan cooled motor (TEFC) and operates at a constant speed. In case of thermo-mechanical overload, the motor stops automatically and an alarm warns the operator.

A manual drainage valve, located in the coagulation tank, allows draining this tank and the flocculation tank through the existing draining network.

### 11.2.4 FLOCCULATION TANK

Coagulated water enters the bottom of the flocculation tank through a common opening.

The flocculation tank is equipped of a draft tube, a pyramid, anti-bypass baffles and a mechanical mixer composed of a shaft and a four-bladed propeller made of stainless steel that constitutes the Turbomix® technology. The mixer is vertically mounted and rotates within the draft tube and the induced water flow direction is downward towards the pyramid. The flocculation tank is equipped with baffles to insure better mixing. An accurate amount of microsand and polymer is added at the tank water surface above the draft tube. The polymer may also be directly added in the bottom of the flocculation tank.

The mixer is driven by a motor and a helical gear speed reducer. It is a totally enclosed fan cooled motor (TEFC) and may operate at a constant or variable speed. An adjustment to the rotating speed can be proven necessary when the incoming water flow rate is greatly reduced. In this case, it might be advantageous to compensate for losses in hydraulic energy by increasing the speed of rotation of the flocculation mixer. In case of thermo-mechanical overload, the motor stops automatically and an alarm warns the operator. The unit automatic shutdown sequence is also initiated.

A manual drainage located, in the coagulation tank, allows draining the flocculation tank through the existing draining network.

## 11.3 SETTLING TANK

The settling tank is composed of a set of lamella tubes, a sludge collection system and a clarified water collector.

The water coming from the maturation tank contains a suspension of microsand-ballasted flocs and enters the settling tank after going through a vertical baffle. The solids settle in the hopper while clarified water flows through the lamella pack to the clarified water troughs.

### 11.3.1 LAMELLA PACK

The settling tank contains a set of lamellar tube modules made from high impact polystyrene or polypropylene (depending on the standard option selected). The lamellar tubes are positioned at an angle of 60° from the horizontal plane. They are laid out in such a way as to form hexagonal (honeycomb) cells.

Clarified water flows upwards to the collection troughs and out of the clarifier.

**WARNING**: The lamella pack is installed in the settling tank section of the Actiflo® clarifier. The HIPS version of the lamella pack is made of a very flammable material. Do not expose it to open flames or sparks. Do not allow any welding works nearby unless special precautions have been taken.

### 11.3.2 SLUDGE COLLECTION HOPPER

The collection of sludge takes place within a hopper located at the base of settling tank where the settling solids are pumped to the hydrocyclones.

### 11.3.3 CIRCULAR SCRAPER

The settling tank has a circular scraper equipped with a drive shaft and metal and rubber flights. The vertically mounted scraper moves the settled microsand to the center of the hopper, where a basin captures the accumulated sludge. These components are powered by a combination of gear boxes and TEFC motor. In case of a mechanical overload, the scraper stops automatically and an alarm is displayed on the control panel. The automatic shutdown sequence is also triggered.

### 11.3.4 CLARIFIED WATER TROUGHS

Clarified water is collected above the lamella modules by stainless steel troughs. The dimension and position of the square-edged notches are designed in order to obtain an optimal hydraulic distribution of the flow rate inside the settling tank.

### 11.3.5 PARTIAL DRAINAGE

A manual valve, installed below the settling lamellas, allows for partial draining of the settling tank to facilitate the preventive maintenance of the lamellar tubes.

### 11.3.6 COMPLETE DRAINAGE

There is two (2) ways to achieve a complete drainage of the clarifier:

1) By opening the coagulation, injection and hopper drain manual valves.
2) By opening the coagulation and injection manual drainage valves and turning the recirculation pump on.

**WARNING**: It is important that the recirculation pump does not operate without water.

## 11.4 MICROSAND RECIRCULATION PIPING

### 11.4.1 COLLECTION OF SLUDGE AND MICROSAND

Sludge containing microsand is collected in the hopper and pumped to the hydrocyclones through galvanized steel pipes and flexible non-abrasive pipes that can withstand highly abrasive conditions.

In case of clogging, a clean-out assembly is provided to backwash and flush the suction line by connecting a pressurized service water hose.

### 11.4.2 MICROSAND RECIRCULATION PUMPS

The clarifier is provided with a centrifugal pump (second pump optional) equipped with a pulley and drive belt arrangement. A backup pump is also optionally supplied. The backup pump may be used to assist the first pump if higher influent solids are experienced. The impeller and the inside of the volute are coated with a material (usually natural rubber) resistant to microsand abrasion. The motor is totally enclosed fan cooled (TEFC). In case of a thermo-mechanical overload, the motor will automatically shut down and an alarm will warn the operator.

The recirculation pump operates at a constant pressure. An increase in pressure may be caused by an obstruction of the discharge pipe and a decrease in pressure may be caused by unpriming of the pump or an obstruction of the inlet pipe. An optional pressure gauge could be located at the pump discharge. An optional pressure transmitter is located at the hydrocyclone inlet. If the measured pressure becomes too low, the pump stops and an alarm will warn the operator.

### 11.4.3 HYDROCYCLONES

The sludge and microsand are pumped by the recirculation pump to a dedicated hydrocyclone where the microsand is separated from the sludge particles. This process allows the recycling of clean microsand back into the system. Sludge-microsand separation is accomplished by a vortex effect exerting a centrifugal force on the mixture of particles.

The microsand grains, more dense than sludge particles, descend along the internal surface of the hydrocyclone, while the sludge particles ascend. The microsand is returned to the injection tank while the sludge is evacuated out of the system through the hydrocyclone overflow piping.

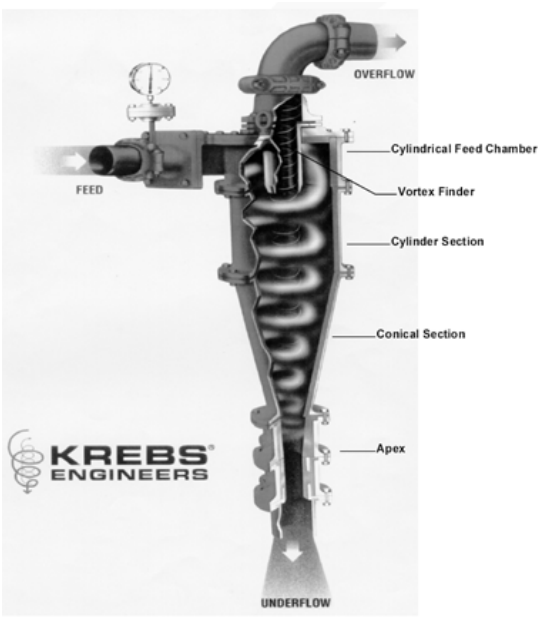


Figure 16: Hydrocyclone – General description

## 11.5 MICROSAND

The recycling of microsand into the injection tank along with the polyelectrolyte solution (polymer), serves as support for the flocs formation. The floc, ballasted with the microsand grain, becomes considerably heavier and therefore can settle more rapidly.

Two types of microsand with different grain sizes may be used:

- Effective size: 85 µm and 135 µm (refer to data sheet)
- Available in bags of 22.7 kg (50 lbs)

The first sand size (85 µm) is generally used in drinking water applications with water lightly to moderately loaded while the 2nd sand size (135 µm) is used in more heavily loaded water (waste water, industrial water, storm water) and higher rise rates.

A small portion of the microsand is lost in the process and microsand must therefore be periodically added to the system. Microsand refills that meet Actiflo® specifications are available from Veolia Water Technologies Canada Inc.

**WARNING**: The microsand may contains fine particles of silica. Therefore, it must be handle safely and with caution by qualified staff. Consult the MSDS for further instructions.

## 11.6 COAGULANT

The choice of a coagulant depends on the process. The following can be used as a coagulant: an aluminum salt such as alum, an iron salt such as ferric chloride, PASS (poly aluminum silicate sulfate) or PAC (poly aluminum chloride), if the feed pumps are sufficiently resistant to chemicals.

The coagulant is injected upstream of the raw water feed pipe and reacts with the water's alkaline components to form a precipitate that clings to the suspended colloidal particles and organic components in the raw water, thereby producing floc. In certain cases, an alkali such as caustic soda must be added to the water upstream of the settling tank before the coagulant is injected.

The coagulant is rapidly dispersed in the water when it is introduced in the coagulation tank.

**WARNING**: The operation staff should be aware that coagulant is highly corrosive. Spills should be cleaned immediately according to the MSDS instructions.

## 11.7 FLOCCULANT (POLYELECTROLYTE)

The polyelectrolyte is a white powder [1] generally sold in 50 lbs bags or supple big bags of 2000 lbs. The powder is naturally hygroscopic so it must be stored in a dry environment. The polymer powder must be vigorously mixed with service water using preparation and maturation equipment.

Polyelectrolyte is pumped into the injection and maturation tank along with the microsand. It forms a coating on the microsand particles in order to activate them and facilitate fixing of the floc onto the sand particle surface. Other injection points of flocculant can also be used, that is, at the inlet of the maturation tank and at various locations inside the maturation tank.

**WARNING**: The operation staff should be aware that flocculant solution could be very slippery. Spills should be cleaned immediately according to the MSDS instructions.

[1] Polymer could also be in emulsion form in certain waste water applications.

## 11.8 CONTROL PANEL

The Actiflo® clarifier operation is fully automated but manual control is possible from the control panel interface. The control panel normally includes but is not limited to components such as fuses, starters, Variable Frequency Drive (VFD), warning lights, PLC (Programmable Logic Controller) and operator interface.

The electrical circuit of the control panel performs the necessary functions for a fully automatic operation and equipment protection of the Actiflo® unit. The control panel gives the operator access to every mechanical component of the system. In addition, all the alarms are channelled through the control panel, which in turn warns the operator in the event of equipment malfunction. Refer to the process functional description of control system in the «Electricity and Control» section of the complete operation and maintenance manual for a detailed description of the control panel.

# 12 START-UP & OPERATION

## 12.1 START-UP

### 12.1.1 PRELIMINARY VERIFICATION

Before starting the Actiflo®, the following points must be checked:

- Remove any debris from the settling tank to prevent hydrocyclone clogging.
- Every section of the Actiflo® must be filled with water.
- Valves configuration on the microsand recirculation lines is adequate.
- Chemical metering systems must be ready to operate.
- Chemical storage tanks must be full.
- Chemical metering pumps must be calibrated and set for the desired dosage. These can however be adjusted once that the system is operational.
- All the field instruments must be calibrated (flowmeter, pressure transmitter, pH, turbidimeter).
- Verify the oil level in the mixers gear reducers and the grease in the recirculation pumps.
- Verify the rotation of each mixer.
- Verify the rotation of each recirculation pump; remove the belt to prevent impeller unscrewing if the rotation is the wrong way.
- Verify the proper installation of the mixer impellers, especially the height above tank floor (refer to technical sheet and field installation drawing).
- Adjust motor overload protection to the proper value as indicated on each motor nameplate.
- Record the pressure at the hydrocyclone inlet gauge. Refer to technical datasheet.

Once all these conditions have been checked, the system can be put into operation.

### 12.1.2 INITIAL MICROSAND LOADING

The standard microsand load in an Actiflo® clarifier is approximately 1000 lbs per MGD of design or 2.5 kg per $m^3/h$, flow rating of unit.

The addition of microsand is done by pouring it directly in the injection tank until the required concentration is reached. It is preferable to begin by adding a small quantity of microsand and measure the resulting microsand concentration in the recirculation line after a whole recirculation cycle has been completed (15 to 20 minutes). The quantity of microsand should be increased until the optimal concentration in the recirculation line is reached (typically 30 to 100 ml/litre).

**WARNING**: The microsand may contains fine particles of silica. Therefore, it must be handle safely and with caution by qualified staff. Consult the MSDS for further instructions.

### 12.1.3 AUTOMATIC START-UP

Refer to the process functional description of control system of the «Electricity and Control» section of the complete operation and maintenance manual to start the Actiflo® system in automatic mode.

## 12.2 NORMAL OPERATION

| |
|---|
| **NOTE**: In the case of a discrepancy between this section of the manual and the functional description of control system, the latest shall prevail. |

### 12.2.1 ACTIFLO® CLARIFIERS

#### *12.2.1.1 Mixers*

**Role in the process**

By fostering contact between the chemicals and the raw water, the coagulation mixer improves the coagulation of the colloidal particles present in the raw water. The injection tank mixer triggers the forming of the flocs and transfers them to the maturation tank. The maturation tank mixer is required to keep the flocs in suspension and foster their growth.

**Impact of a mixer problem on the process**

If the coagulation tank mixer breaks down during the normal process operation, the effectiveness of the treatment will be affected because optimal coagulation will not be achieved. The flocs may decrease in size and the turbidity of the clarified water may increase as a result of suboptimal coagulation. However, when the Actiflo® unit is operated in automatic mode, a breakdown of the coagulation mixer will not force the shutdown of the process. Although not optimal, the operation remains possible.

If the injection tank mixer breaks down during the normal process operation, the microsand that is recirculated by the hydrocyclone will settle and accumulate at the bottom of the injection tank. The effectiveness of the treatment will be significantly affected as the microsand is no longer available to ballast the flocs. For that reason, when the Actiflo® unit is operated in automatic mode, a breakdown of the injection tank mixer immediately results in a shutdown of the process, pursuant to the automatic shutdown sequence.

If the maturation tank mixer breaks down during the normal process operation, the microsand will settle and accumulate at the bottom of the maturation tank. The effectiveness of the treatment will be significantly affected as the microsand is no longer available to ballast the flocs. For that reason, when the Actiflo® unit is operated in automatic mode, a breakdown of the maturation tank mixer immediately results in a shutdown of the process, pursuant to the automatic shutdown sequence.

### Direction of rotation and position of the blades

It is very important to pay attention to the direction of rotation of the mixers in an Actiflo® unit, for example, when a motor is replaced and electrical connections are unplugged and replugged. When blades are replaced, it is also important to reinstall the blades in the correct position.

A mixer should always circulate the water in the opposite direction of the hydraulic path in the process, the goal being to increase turbulence and promote contact between the water and the chemicals added to it.

The following figure illustrates the direction of rotation of each of the mixers used in the Actiflo® process for a typical tank configuration. If a mixer does not rotate in the correct direction, the microsand may settle at the bottom of the injection or maturation tank and preferential currents may be generated. The performance of the process may be greatly affected.

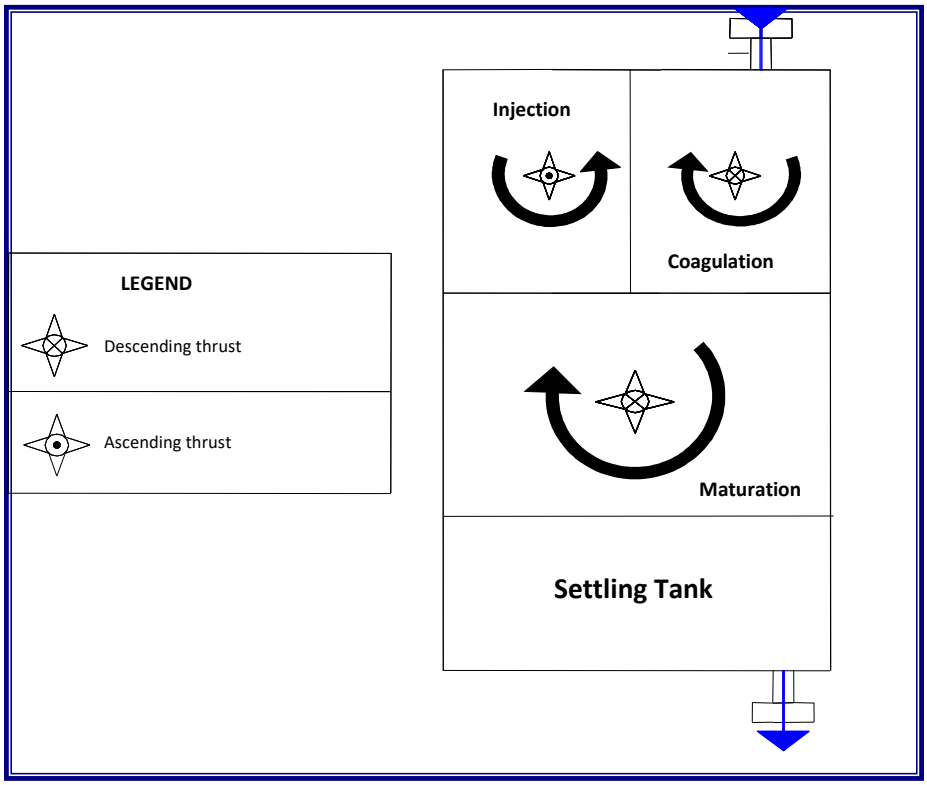


Figure 17: Direction of rotation and thrust of an Actiflo® unit's mixers

### Rotation speed

The coagulation and injection tank mixers operate at a predetermined nominal rotation speed.

In the case of the maturation tank mixer, a speed variator is added inside the control panel to provide the operator with the possibility of modifying the rotation speed. The rotation speed can be modified

using the variator's potentiometer. Furthermore, the operator can access a series of operating parameters through the speed variator's pin pad. The full list of these operating parameters is provided in the supplier's manual. When selected by the operator, these parameters are displayed on the screen of the speed variator along with their respective values and can then be modified. It may be necessary in certain situations to adjust the speed, for example, to compensate for a lack of kinetic energy resulting from a low processing speed or to reduce the speed in cases where the flocs are abnormally fragile to shearing.

#### *12.2.1.2 Circular scraper*

**Role in the process**

The Actiflo® clarifier is equipped with a circular scraper that collects the sludge resulting from the physico-chemical treatment of the raw water and directs it to the suction piping of the microsand recirculation pump.

**Impact of a scraper problem on the process**

Normally, the scraper operates on an ongoing basis and an accidental shutdown (electrical overload, very high torque) may lead to a sharp drop in treatment efficiency seeing as the microsand is then no longer recirculated in the process. That is why the whole system stops after the scraper has stopped working when the Actiflo® is operated in automatic mode.

**Rotation detection**

When the scraper's high torque alarm sounds, verify:

1) If the concentration of microsand in the hydrocyclone's underflow is too high, calculate the concentration of sand in the Actiflo® to determine if there is too much sand in the unit. If that is the case, it is then possible to redirect the excess sand by blocking the hydrocyclone's underflow for several minutes. However, this is a last-resort method to prevent damaging the sludge treatment equipment located downstream. A concentration of sand that is too high in the Actiflo® may sometimes be detected by unusual hydrocyclone behaviour and pressure (underflow that "bulges", unusual "umbrella", pressure that is unstable or different from that of normal operation, etc.). Refer to section 13.4.7.
2) Verify for the presence of debris at the bottom of the tank. Stop the Actiflo® unit and drain the settling tank to verify for the presence of debris at the bottom of the tank.

#### *12.2.1.2.1 Speed monitor configuration (IFM DD2503)*

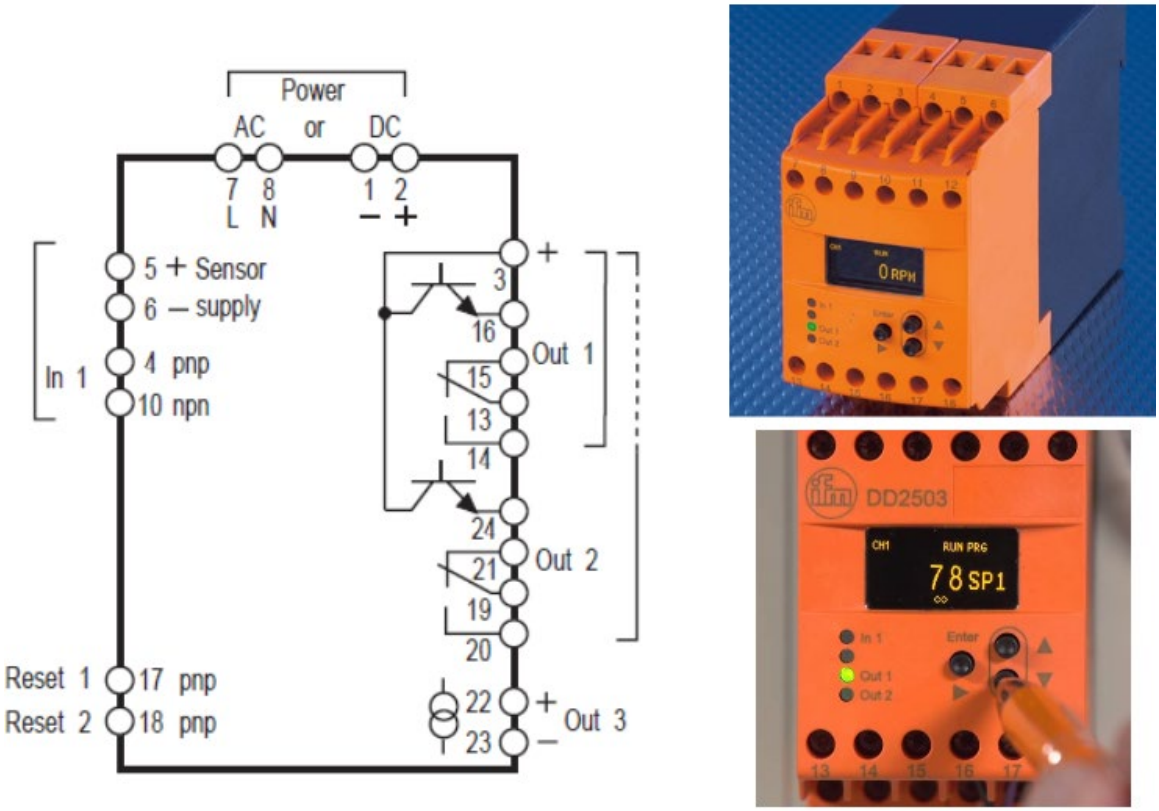


Figure 18: Speed monitor configuration parameters (IFM DD2503)

***Typical Adjustment***

- FO1: 2
- SO1: 0
- FWx: 0
- NC1: 1
- DIM: 0 = RPM
- SP1: Refer to Table 3 (next page)
- HY1: 5
- ST1: 15
- DT1: 0
- FT1: 5

| ACTIFLO® MODEL | DD2503 SP1 (RPM) |
|---|---|
| ACP-150R/ACP2-15 | 95 |
| ACP-300R/ACP2-30 | 79 |
| ACP-400R/ACP2-40 | 77 |
| ACP-450R/ACP2-45 | 71 |
| ACP-550R/ACP2-55 | 1745 |
| ACP-600R/ACP2-60 | 1745 |
| ACP-700R/ACP2-70 | 1745 |
| ACP-750R/ACP2-75 | 1745 |

Table 3: Speed monitor IFM DD2503 set point (SP1) per Actiflo® model

#### *12.2.1.3 Lamellas*

**Role in the process**

The settling of the ballasted flocs is the final step in the raw water clarification process. The flocs descend to the bottom of the settling tank while the clarified water is collected in the troughs. By increasing the contact surface, the lamellas increase the settling of small residual particles.

**Impact of the fouling of the lamellas on the process**

Over time, flocs accumulate on the surfaces of the lamellas (i.e., within the lamellar tubes) and the latter must be cleaned periodically. An excessive fouling of the lamellas may result in a carryover of flocs in the clarified water and an increase in turbidity, particularly when the flow increases within the Actiflo® unit (cleaning). Also, if the unit is not properly cleaned, the accumulation of sand in the modules may ultimately lead to the collapse or breakdown of the lamellar modules when they are exposed to the open air (emptying of the clarifier, for example).

The lamellas must be cleaned on a weekly basis at minimum. However, if the Actiflo® unit is used in wastewater or if fouling is visible after a few hours, it is then recommended to clean the lamellas after two days of ongoing operation.

The cleaning water pressure must not be too high (20–25 lb/in$^2$ or less, depending on the distance) to avoid damaging the lamellas. It is, however, recommended to use a large hose to ensure an optimal cleaning of the lamellas. This operation may take up to one hour per Actiflo® unit.

Refer to the lamellas cleaning procedure in section 15.1.1 for detailed information.

#### *12.2.1.4 Microsand recirculation pumps*

The Actiflo® clarifier requires the operation of at least one microsand recirculation pump.

**Role in the process**

The recirculation pump collects the mix of sludge produced by the process and microsand and directs it to the hydrocyclones. The hydrocyclones use centrifugal force to separate the microsand and the sludge.

**Impact of a recirculation pump or hydrocyclone problem on the process**

Normally, the recirculation pump operates continuously and an accidental stop (electrical overload, low or high pressure alarm) may result in a sharp decrease in treatment efficiency because the microsand is no longer recirculated in the process. That is why, when the Actiflo® unit is operated in automatic mode, a breakdown of the recirculation pump results in an immediate stop of the process according to the automatic sequence. Also, in the case of an accidental stop, microsand may accumulate and compact in the recirculation piping, thereby affecting the pump at the time of a subsequent start-up. That is why, in the event of an accidental stop of the recirculation pump, the problem must be diagnosed and quickly solved to avoid clogging the recirculation piping.

**Recirculation pump alarms**

A pump alarm sounds in each of the following three situations:

- Thermo-mechanical overload of the pump: This is normally a sign that the pump motor is overheating and can be caused by a mechanical breakdown or a pressure surge. The operator must correct this problem by verifying the pump and motor as well as the outlet piping and then reactivate the overload relay located inside the control panel. The overload relay must be adjusted to the maximum amperage value indicated on the pump motor's nameplate.
- Low pressure at the hydrocyclone inlet (optional): This can be caused by an incomplete priming of the pump, a closed isolation valve or the clogging of the pump suction line. The operator must make sure that there is no obstruction at the inlet of the pump and, if so, the sludge suction piping must be cleaned as follows:
    1. Close the suction valve.
    2. Connect a service water hose to the clean-out quick-connect outlet.
    3. Open the service water valve to enable the clean-out.
    4. Clean out the pipe for five minutes.
    5. Put the equipment back into normal operation.
    6. Restart the pump.

This alarm's set point is adjustable and is normally set at 35 kPa below operating pressure.

When one of these alarms is activated, the pump automatically stops. The operator must fix the problem and then reset the system by pressing the interface's alarm reset button. The pump will restart automatically.

In the presence of an alternate (optional) recirculation circuit, the alternate circuit pump will automatically start and become the priority once the alarm has sounded and the operating pump has stopped. This makes it possible to avoid having to completely shut down the Actiflo® clarifier.

In manual mode, when the microsand recirculation pump must be stopped, the following steps must be carried out first to avoid clogging problems:

- Stop the maturation tank's mixer to allow the microsand to settle in this tank rather than the hopper.
- Allow the pump to operate for approximately 15 minutes and then verify the absence of sand in the hydrocyclone's underflow. It is then possible to stop pumping sand without the risk of clogging the microsand recirculation circuit.

#### *12.2.1.5 Hydrocyclones*

**Role in the process**

The hydrocyclones operate at a stable pressure. Manometers are generally positioned at the inlets of the hydrocyclones and track the operating pressure. Through the hydrocyclone's overflow, the sludge is directed to the sewer and microsand losses are kept to a minimum.

The hydrocyclone's underflow and overflow must normally represent between 10–40% and 60–90% respectively of the total feed flow. Below is a typical hydrocyclone curve (in this case, Krebs' model U6-10) to illustrate the relationship between flow and pressure depending on the size of the Vortex Finder.

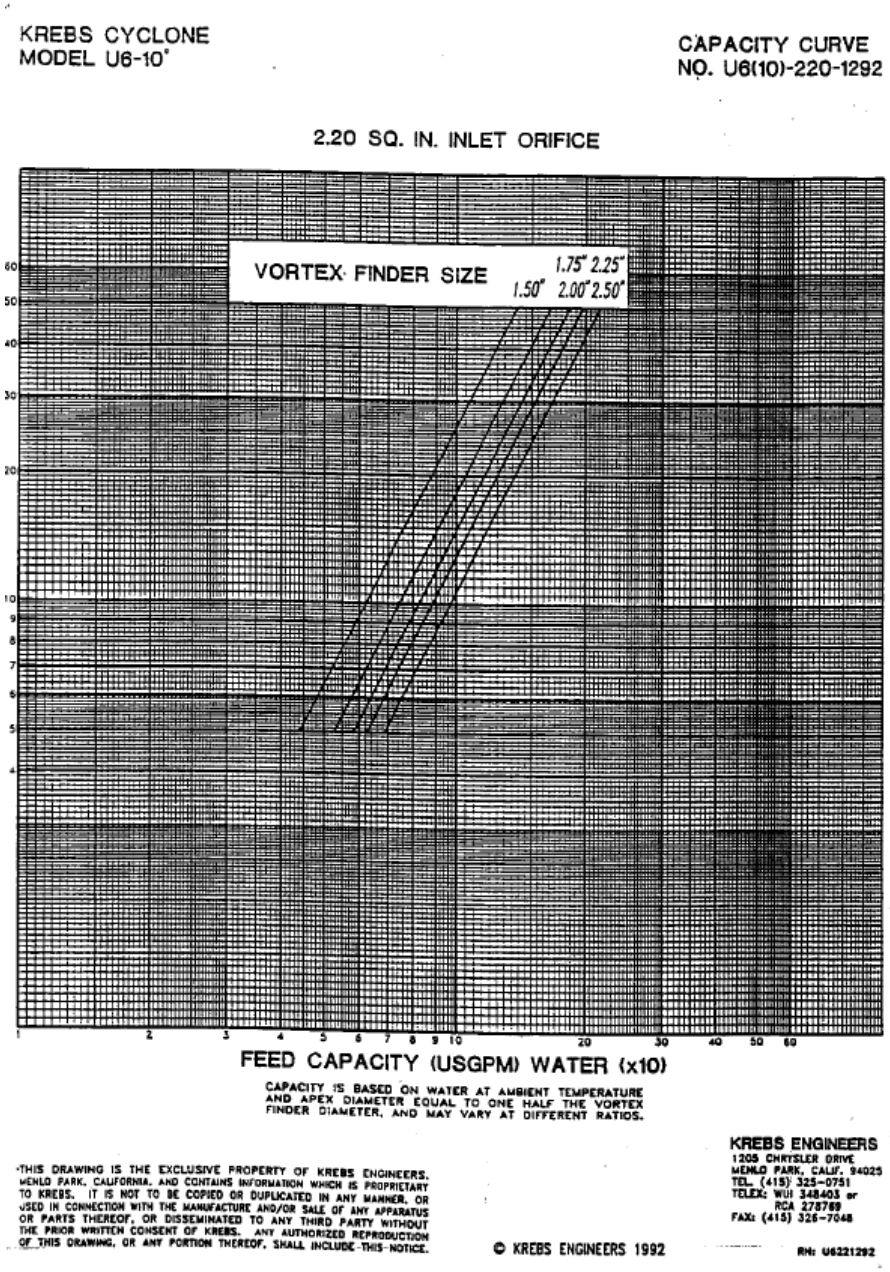


Figure 19: Typical hydrocyclone capacity curve

**Impact of a clogged hydrocyclone**

The operator must make sure at all times that neither of the hydrocyclone's two extremities are blocked.

In the case of the total or partial clogging of a hydrocyclone, microsand may be released with the sludge without separation and the concentration of microsand in the Actiflo® unit will decrease more rapidly than normal. Also, treatment efficiency will be affected. It is also possible that a separation problem results in sludge being reinjected in the process, thereby affecting the quality of the clarified water. Given its mechanical nature, hydrocyclone clogging will often be diagnosed only once the process lost.

**WARNING**: It is important to keep the Linaplus skirt in place at the underflow of the hydrocyclone at all times during operation of the Actiflo®. In absence of this Linaplus skirt, a premature wear of the tank wall may occur due to the sandblasting of the hydrocyclone.

#### *12.2.1.6 Microsand monitoring*

Microsand concentration is an important parameter to consider when it comes to process monitoring and optimization as well as troubleshooting treatment problems. The microsand treatment rate in the Actiflo® is usually between 3 and 10 kg/m³. Use the Excel file provided at the time of commissioning to automatically calculate the concentration of microsand in the Actiflo®.

Two methods can be used to measure the microsand concentration. Method 1 is used if the line separating the sand and the sludge in the sample is visible. It is the most used method, namely in potable and industrial water applications. Method 2 is used in more particular cases when the line separating the sand and the sludge is less visible (domestic wastewater, concentrated sludge, use of activated charcoal, for example).

***Method 1: Sampling in the recirculation line (upstream of the hydrocyclone)***

The concentration of the microsand in the feed line to the hydrocyclones is determined as follows:

- Open the isolation valve on the sampling line located on the hydrocyclone supply line. First, drain the line and then fill the 5 gallon US (19 L) conical bottom sampling tank attached to the hydrocyclone support structure. When the tank is full, close the valve. Refer to the following figure.



Figure 20: Microsand conical bottom sampling tank (actual cone may differ from picture)

- Wait for the microsand to settle in the semi-translucent or translucent tank (at least 2 minutes) and record the microsand volume ($V_s$) obtained as well as the total volume of the sample (V).
- Empty the contents of the tank by opening the drain valve of the can and rinse with clear water.
- Readings will vary depending on raw water quality and flow in Actiflo®. The microsand concentration ($C_s$) calculated should normally be between 3 to 10 g/L (refer to the following formula).
- Determine the flow rate of the recirculation pump using the curves provided in the Operation and Maintenance Manual (in volume 2, McLanahan tab or recirculation pump).
- Record the flow rate of Actiflo® at the time of sampling.

The concentration will be obtained as follows:

$$Cs\ (g/L) = \frac{\frac{Microsand\ volume\ V_m\ (L)}{Total\ volume\ V_t\ (L)} \times Q_{recirculation\ pump}\ (m^3/h) \times 1650\ \ g/L}{Actiflo\ flow\ (m^3/h)}$$

Where:

$V_m$ = volume of microsand in litres
$V_t$ = volume of the collected sample in litres
1650 g/L = density of the wet settled sand

**NOTE**: For the most accurate determination of microsand in any given system the sampling procedure above should be performed three (3) times throughout a 24 hour period. Three (3) separate values of $C_s$ should be averaged to determine one final microsand concentration for the day. It is also important to record and trend the final daily value of $C_s$ to give indication of microsand loss over an extended period of time.

***Method 2: Sampling in the recirculation line (upstream of the hydrocyclone) and sample weighing***

The concentration of the microsand in the hydrocyclone feed line is determined as follows:

- Open the isolation valve on the sampling line located on the hydrocyclone supply line. First, drain the line and fill the 3 L ($V_{tot}$) sampling tank up to the make-up line and then close the valve.
- Place the filled sampling tank on a scale pre-calibrated using the empty tank and record the total mass ($M_{tot}$).
- Empty the contents of the tank in the injection or maturation tank and rinse with clear water.
- Readings will vary depending on raw water quality and flow in the Actiflo®. The microsand concentration ($C_s$) should normally be calculated between 3 and 10 g/L (refer to the following formula).
- Determine the flow rate of the recirculation pump using the curves provided in the Operation and Maintenance Manual (in volume 2, McLanahan tab or recirculation pump).
- Record the flow rate of the Actiflo® at the time of sampling.

The concentration will be obtained as follows:

$$Cs\ (g/L) = \frac{(M_{tot}\ - (V_{tot} \times \rho_{water})) \times Q_{recirculation\ pump}\ (m^3/h) \times \rho_{sand} \times 1000}{(\rho_{sand} - \rho_{water}) \times V_{tot} \times Actiflo\ flow\ (m^3/h)}$$

Where:

$M_{tot}$ = Mass of the sampled liquid in kg
$V_{tot}$ = Volume of the collected sample in litres
$\rho_{sand}$ =Sand density in kg/L = 1.65 kg/L
$\rho_{water}$ = Water density in kg/L = 1 kg/L

#### *12.2.1.6.1 Regular additions of microsand in normal operations*

The microsand concentration in an Actiflo® unit decreases over time and new microsand must therefore be added to the unit on a regular basis. Microsand losses are normally of the order of between 0 and 3 g/m$^3$ of water treated by the process at the nominal flow rate (determination based on the application at the time of commissioning). These values are based on normal operating conditions and depend on the raw water flow rate, chemical dosages and type of microsand used.

To determine if microsand needs to be added to the unit, the microsand concentration in the Actiflo® unit should ideally be measured **at an equal raw water flow rate**. Even though the microsand

concentration in the recirculation line increases following an increase in the raw water flow rate, seeing as more microsand crosses the partition separating the maturation tank from the settling tank, the increase is not necessarily linear.

It is recommended to add microsand on a regular basis such as to maintain a stable concentration and keep the process operating efficiently. If, for example, a unit is sized to treat a maximum flow rate of 8000 $m^3$/d with a microsand loss of 3 g/$m^3$, the daily consumption of one Actiflo® unit can be estimated at 24 kg of microsand, i.e., 1 bag.

It is therefore strongly recommended to add **on a daily basis** small quantities of sand instead of making one large addition over a longer period. Combined with low retention times, the massive addition of sand does not foster sufficient contact with the polymer and the floc. Also, such a practice may lead to massive losses of microsand in the clarified water. To compensate losses, the sand must be added directly to the injection tank.

Seeing as microsand always contains a small quantity of fine particles, it is normal that the turbidity of the clarified water slightly increases temporarily following the addition of microsand.

**WARNING:** The microsand contains fine silica particles and must therefore be handled safely to protect the health of the personnel. Refer to the MSDS to this effect. The use of a P100 respirator filter is mandatory.

The concentration of microsand in the system is determined using the methods detailed in section 12.2.1.6.

In normal operating mode, if the raw water's turbidity increases and/or its colour darkens, it may be necessary to increase the concentration of microsand in the system. Refer to section 13.4 - Troubleshooting.

#### *12.2.1.6.2 Verification of the hydrocyclones' underflow-overflow ratio*

Ideally, this verification should be made every 6 to 12 months to confirm the integrity of the hydrocyclone and determine if the apex needs to be replaced. The measurement must be taken on each cyclone individually. If a flowmeter is present on the hydrocyclone's overflow line, the flow reading simply needs to be compared with the flow established at the time the unit was put into service. A variation in flow could be indicative of a damaged hydrocyclone part.

In the absence of a flowmeter, it is often possible to conduct an up-test in the sludge tank or to redirect the sludge line to a 200 L container if the outlet hose is of sufficiently small diameter and flexible.

A visual observation of the shape of the underflow jet may also provide information on how worn the apex is. Refer to section 13.4.7.

## 12.2.2 DOSAGE OF CHEMICALS

### *12.2.2.1 Coagulant*

The coagulant is injected into the raw water feed line.

The coagulant is an essential product used in the Actiflo® process because it destabilizes the colloidal particles—first step leading to the formation of ballasted flocs. The coagulant dosage must be tracked on a regular basis to optimize process performance and diagnose process problems that may arise.

**Manual method**

To validate the flow generated by the coagulant dosing pump as well as the value transmitted by the coagulant line's flowmeter (if applicable), the coagulant dosage may be measured manually through the coagulant dosage system's calibration cylinder. It is recommended to manually measure the coagulant dosage once per shift.

Material required: chronometer

**Procedure:**

Fill up the coagulant calibration cylinder by using the valves of the coagulant dosage system. Close the valve that connects the coagulant pump's suction line to the coagulant tank and open the valve that connects the coagulant pump's suction line to the calibration cylinder. The pump is now fed only by the calibration cylinder. Measure the volume pumped during a specific period (ideally longer than 1 minute). Put the valves back in their original position to once again feed the dosing pump from the coagulant tank. (**ATTENTION:** Do not forget this step or the calibration cylinder will empty itself and the coagulant will no longer be injected in the process.) Record the pumped volume and the required pumping time.

The required dosage will vary according to the type of coagulant used as well as the quality and temperature of the raw water to be treated. The product's dosage must often be increased when the turbidity of the raw water increases. During certain dark overflow periods, the coagulant dosage must be increased considerably, as determined by the *laboratory test procedure* presented in section 14.

The coagulant dosage at the inlet of the system is calculated from the raw water and dosing pump flow rates:

To obtain the volumetric flow:

$$Dosage\ (\mu L/L) = \frac{Dosing\ pump\ volumetric\ flow\ (\mu L/h)}{Raw\ water\ flow\ (L/h)}$$

At a more detailed level, we obtain:

$$Dosage\ (\mu L/L) = \frac{\frac{Measured\ volume\ (ml)}{Measured\ time\ (sec)} \times \frac{60\ sec}{1\ min} \times \frac{60\ min}{1\ h} \times \frac{1000\ \mu L}{ml}}{Raw\ water\ flow\ (m^3/h) \times \frac{1000\ L}{1\ m^3}}$$

The volumetric dosage also enables the operator to plan future chemical requirements by estimating the volume consumed on a daily or monthly basis.

To obtain the mass flow:

$$Dosage\ (mg/L) = \frac{Dosing\ pump\ mass\ flow\ (mg/h)}{Raw\ water\ flow\ (L/h)}$$

At a more detailed level, we obtain:

$$Dosage\ (mg/L) = \frac{\frac{Measured\ volume\ (L)}{Measured\ time\ (sec)} \times \frac{60\ sec}{1\ min} \times \frac{60\ min}{1\ h} \times [Density]\ g/L \times \frac{1000\ mg}{g}}{Raw\ water\ flow\ (m^3/h) \times \frac{1000\ L}{1\ m^3}}$$

[Density] = Specific gravity of the solution in g/L
Information obtained from the supplier's analysis sheets when the product is delivered

#### *12.2.2.2 Flocculant (polymer)*

The polymer that is used must enable the attainment of the performance levels required from the coagulant aid in the Actiflo® process.

The polymer is used in the form of a viscous solution. To ensure polymer quality, it is recommended to use **non-chlorinated** filtered water to prepare it and transport it to the injection point.

The polymer is an essential ingredient for the Actiflo® process because it facilitates the agglomeration of the coagulated particles to form the ballasted flocs. The dosage of the polymer must be tracked regularly such as to optimize process performance levels and diagnose process problems that may arise.

**Manual method**

To validate the flow generated by the polymer dosing pump as well as the value transmitted by the polymer line's flowmeter, the polymer dosage may be measured manually through the polymer dosage system's calibration cylinder. It is recommended to manually measure the polymer dosage once per shift.

Material required: chronometer

**Procedure:**

Fill up the polymer calibration cylinder by using the valves of the polymer dosage system. Close the valve that connects the polymer pump's suction line to the polymer tank and open the valve that connects the polymer pump's suction line to the calibration cylinder. The pump is now fed only by the calibration cylinder. Measure the volume pumped during a specific period (ideally longer than 1 minute). Put the valves back in their original position to once again feed the dosing pump from the polymer tank. (**ATTENTION:** Do not forget this step or the calibration cylinder will empty itself and the polymer will no longer be injected in the process.) Note down the pumped volume and the required pumping time.

The polymer dosage in the clarifier will depend on the quality of the raw water and is calculated from the raw water and dosing pump flow rates:

$$Dosage\ (mg/L) = \frac{Dosing\ pump\ mass\ flow\ (mg/h)}{Raw\ water\ flow\ (L/h)}$$

At a more detailed level, we obtain:

$$Dosage\ (mg/L) = \frac{\frac{Measured\ volume\ (L)}{Measured\ time\ (sec)} \times \frac{60\ sec}{1\ min} \times \frac{60\ min}{1\ h} \times [C]\ g/L \times \frac{1000\ mg}{g}}{Raw\ water\ flow\ (m^3/h) \times \frac{1000\ L}{1\ m^3}}$$

[C] = Concentration of the solution → In the case of 0.2% polymer = 2 g/L

The ideal polymer dosage can be determined by the *Laboratory test procedure* presented in section 14.

A polymer dosage that is too low is characterized by the presence of free flocs that are not ballasted by the sand and that will not be efficiently eliminated by the clarifier. The clarified water will have a higher turbidity and/or a darker colour as well as a high aluminum or iron concentration.

Moreover, if the polymer dosage is too high, the resulting sludge may be very sticky and difficult to recycle. It will also tend to quickly clog the filters located downstream of the system (if applicable).

#### *12.2.2.3 Alkali, pH Adjustment*

The pH and alkalinity are the most important variables that need to be taken into consideration in the coagulation process. To optimize this treatment step, it is important that the water be within the pH and alkalinity ranges that are conductive to an effective coagulation. If the raw water has a low pH or a low alkalinity, it is important that these values be increased by adding an alkali to the water upstream of the coagulation step or as otherwise determined by the designers. However, if the water is highly alkaline, it may be important to bring down the pH by adding an acid, usually sulfuric acid, to it.

The alkali dosage in the system is calculated from the raw water and dosing pump flow rates:

$$Dosage\ (mg/L) = \frac{Dosing\ pump\ mass\ flow\ (mg/h)}{Raw\ water\ flow\ (L/h)}$$

At a more detailed level, we obtain:

$$Dosage\ (mg/L) = \frac{\frac{Measured\ volume\ (L)}{Measured\ time\ (sec)} \times \frac{60\ sec}{1\ min} \times \frac{60\ min}{1\ h} \times [C]\ g/L \times \frac{1000\ mg}{g}}{Raw\ water\ flow\ (m^3/h) \times \frac{1000\ L}{1\ m^3}}$$

[C] = Concentration of the solution

Upstream of the coagulation process, the alkali's contact time with the water must be long enough to allow for the complete dispersion of the alkali in the water, thereby increasing the accuracy of the adjustment of the water's pH.

# 13 SURVEY OF OPERATIONS

In order to insure a reliable survey of the Actiflo® system operation and to provide the operators with a useful data bank, we suggest to the operators to record the following parameters:

***ON A HOURLY BASIS:***

- Turbidity, raw water
- Color, raw water
- pH, raw water
- Turbidity, clarified water
- Color, clarified water
- PH, clarified water

***EVERY EIGHT HOURS/SHIFT:***

- Flow rate, raw water
- Flow rate, coagulant metering pump and calculated concentration
- Flow rate, polyelectrolyte metering pump and calculated concentration
- Flow rate, alkali metering pump and calculated concentration
- Pressure at the recirculation pump outlet
- Pressure at the hydrocyclones inlet
- Shape of the hydrocyclones underflow
- Microsand concentration in the recirculation line

***ON A DAILY BASIS:***

- Total quantity of clarified water
- Mixers speed
- Electric current drawn by the mixers
- Lamella clogging state
- Other parameters of interest: dissolved iron and manganese, total organic carbon, etc.
- Alkalinity, raw water and clarified water
- Average raw water flow

## 13.1 AUTOMATION

Refer to the functional description of control system in the «Electricity and Control» section of the complete operation and maintenance manual.

## 13.2 MANUAL SHUT DOWN OF THE MICROSAND RECIRCULATION PUMP

In manual mode, when the microsand recirculation pump needs to be stopped, the following procedure must be followed in order to prevent possible clogging problems:

- Stop the mixer in the maturation tank. This allows the microsand to settle in the maturation tank instead of in the hopper.
- After approximately 30 minutes, verify that the underflow of the hydrocyclone does not contain any microsand.
- The microsand recirculation pump can then be stopped without any risk of clogging the recirculation line.

## 13.3 PROCESS OPTIMIZATION

The main optimization parameters are the following:

- Polymer
- Coagulant
- Microsand
- pH

### 13.3.1 POLYMER DOSAGE AND INJECTION POINTS

**Polymer Dosage**

The optimal dosage of polymer is generally determined when the Actiflo® process is commissioned. This optimal dosage can be adjusted and varies according to raw water quality. Different polymer dosages may be tested in an optic of improving the effectiveness of the process (quality of the clarified water, microsand losses), but it is recommended to avoid excessive polymer doses.

As illustrated in the following figure, an excessive dose of polymer will not make a notable contribution to improving turbidity.

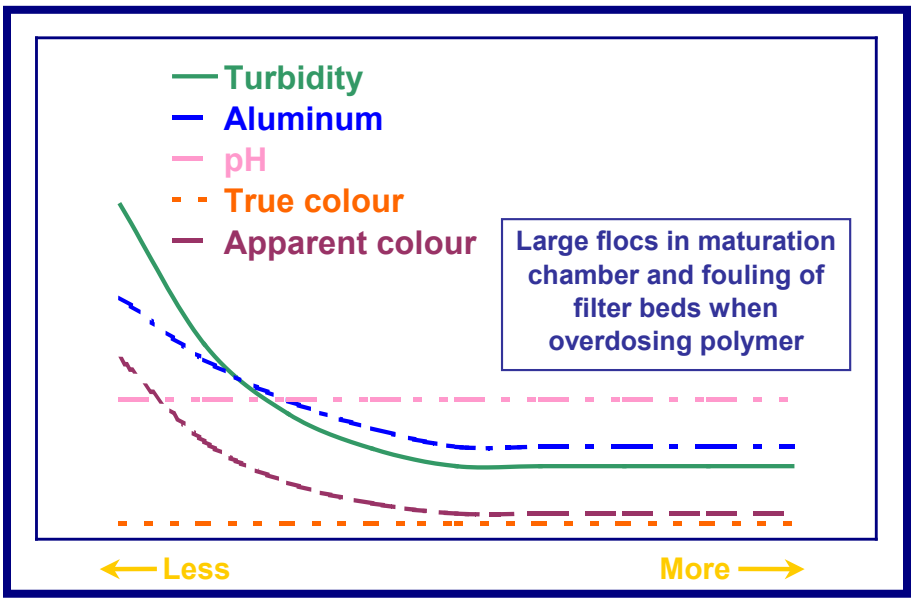


Figure 21: Impact of polymer dosage on clarified water quality

**Transport Water**

Service water is used to transport the polymer in the line and foster a better dispersion of the product in the process. The flow rate of the water used to convey the polymer should be anywhere from 3 to 5 times the dosing pump's flow rate. If the flow rate of the service water is too high (more than 10 times the dosing pump's flow rate), the polymer could lose some of its effectiveness and a higher dosage could be required.

**Injection Points**

There are three polymer injection points available on an Actiflo® unit:

- One in the injection tank, at the level of the hydrocyclones.
- One in the flow opening that connects the injection and maturation tanks (ACP R only).
- One at the middle of the maturation tank, generally under the mixer blade.

As a general rule and according to the type of polymer used, the following injection points are privileged:

Cationic polymer: Injection tank (hydrocyclones) and opening between the injection and maturation tanks because a longer reaction time is associated with this type of polymer and the polymer must therefore be dosed more upstream in the process.

Anionic polymer: Injection tank (hydrocyclones) and the middle of the maturation tank because a shorter reaction time is associated with this type of polymer and the polymer tends to lose in effectiveness if it is dosed more upstream.

The injection points used as well as the distribution of the total dosage of polymer between the injection points are generally determined when the process is commissioned, but they should be verified on a regular basis. The piping system used to control the polymer injection points is located at the level of the hydrocyclone support.

### 13.3.2 COAGULANT DOSAGE AND INJECTION POINTS

The optimal coagulant dosage is generally determined when the process is commissioned. Afterward, the dosage is adjusted according to changes in raw water quality, mainly with respect to turbidity and colour.

Different coagulant dosages may be tested in an attempt to improve the effectiveness of the Actiflo® process (turbidity and colour of the clarified water, microsand consumption), but the coagulant must be neither underdosed nor overdosed. Refer to the figure below.

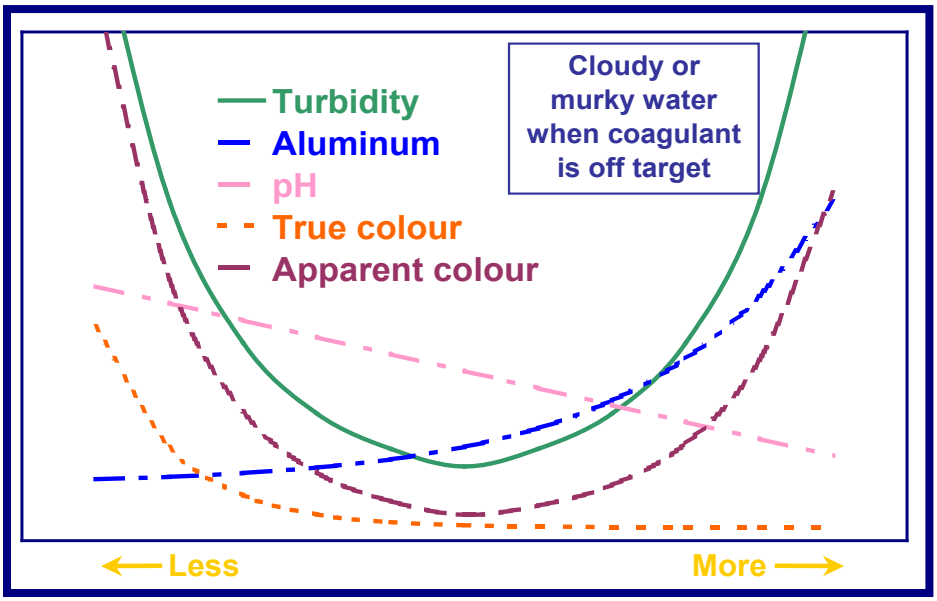


Figure 22: Impact of coagulant dosage on clarified water quality

As illustrated in the above figure, a coagulant dosage that is too low will increase the water's turbidity because the colloids will not have coagulated. On the other hand, a dosage that is too high will have for effect to destabilize the solution and increase the water's turbidity.

**Injection points**

Two coagulant injection points can be available on the Actiflo® process:

- One in raw water line, before entering Actiflo® process.
- One in the coagulation tank (optional).

If a longer coagulation time is required (water temperature below 5°C or during turbidity or color events) the coagulant has to be injected in the contact tank/near the raw water pumping station in order to enhance coagulation and improve the treatment efficiency.

If no extra contact time is necessary, coagulant may be injected in the coagulation tank.

This injection point may also be used in case of maintenance for the injection point in the contact tank (injection quills cleaning) without stopping the Actiflo® unit.

### 13.3.3 MICROSAND DOSAGE AND INJECTION POINTS

The optimal concentration of microsand is determined when the process is commissioned. The dosage may vary according to raw water quality, especially when turbidity increases.

Microsand concentration should be anywhere between 3–10 g/L to foster the effectiveness of the flocculation and settling. The concentration may be increased if the turbidity increases or colour darkens, thereby creating more flocs that requires more microsand to ballast them. However, it is recommended not to exceed a concentration of 15–20 g/L to avoid damaging equipment such as the scraper.

The figure below illustrates the impact of microsand concentration on different clarified water parameters.

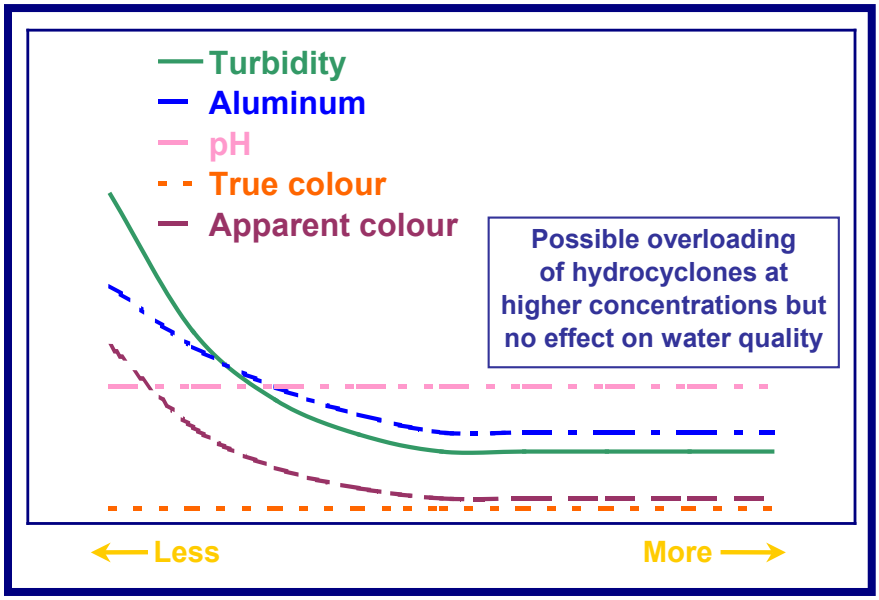


Figure 23: Impact of microsand concentration on clarified water quality

The above figure illustrates that a lack of microsand will result in water of poor quality because the flocs will not be ballasted and will remain suspended in the clarified water. On the other hand, an excessive concentration of microsand will in no way lead to considerably improved performance levels.

### 13.3.4 pH INFLUENCE

The pH is a very important factor when it comes to optimizing the process because the effectiveness of both the coagulant and the polymer could be diminished if the pH is not adequately controlled. The following figure illustrates the impact of the pH on different clarified water parameters.

It is recommended not to adjust the pH on the basis of the coagulant dosage because this could result in underdosing or overdosing. It is preferable to modify the pH adjustment dosage (lime, caustic soda or acid) to attain the optimal pH.

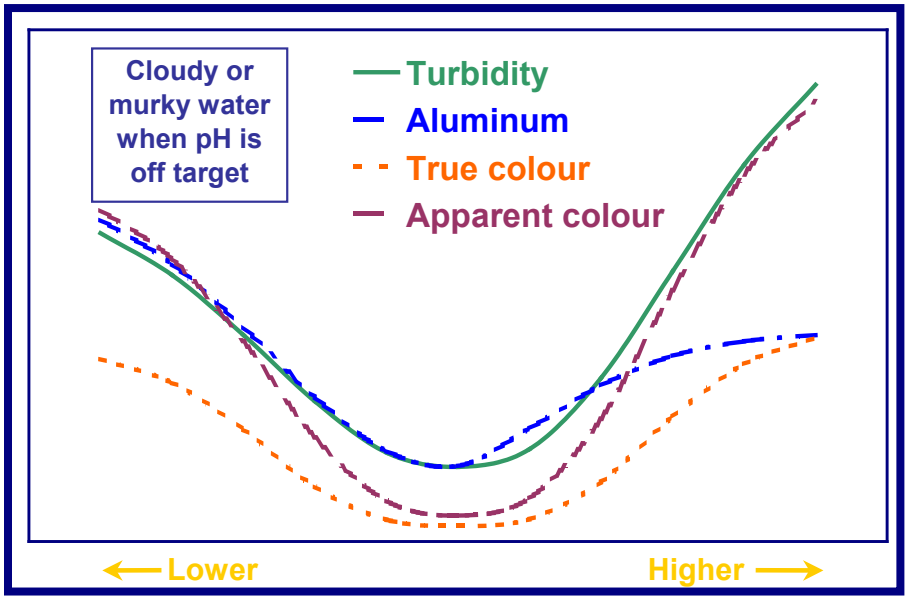


Figure 24: Impact of pH on clarified water quality

### 13.3.5 OTHER PARAMETERS

The water temperature has a major impact on the treatment process. As this parameter is predetermined by the raw water quality, the operator should adjust the other process parameters in order to decrease the potential damages, on the clarified water quality, that can be generated by the temperature variation. These kind of adjustments are required if the operator wish to keep a stable system.

The main problems, in term of treatment efficiency, are observed at low water temperature and could be resumed by the following:

1) The water viscosity that increases at low temperatures (below 5°C) so the flocs will have some difficulties to settle in the settling tank.
2) The water chemistry that changes at low temperatures and can affect the following parameters:
    - Coagulant that reacts more slowly.
    - Optimum pH range shrinks.

## 13.4 TROUBLESHOOTING

In the event of a sudden change in the quality of the raw water (turbidity, colour, etc.) or of accidental or unexpected spillage (spring peak, storm, etc.), the applied dosages may no longer be appropriate to maintain water quality and may need to be adjusted if the quality of the clarified water has deteriorated.

The troubleshooting guides are designed to help operators diagnose changes in the quality of the clarified water and take appropriate action to maintain the treatment chain's performance.

### 13.4.1 REVIEW OF THE TROUBLESHOOTING GUIDES

The troubleshooting guides are provided to the operators and maintenance personnel to facilitate diagnoses and support operations. The following guides are provided in this manual:

- Troubleshooting with respect to an **increase in the turbidity of the clarified water**
- Troubleshooting with respect to a **darkening of the colour of the clarified water**
- Troubleshooting with respect to **chemical dosages**
- Troubleshooting with respect to **microsand concentration**
- Troubleshooting with respect to **water pH**

### 13.4.2 INCREASE IN CLARIFIED WATER TURBIDITY

Turbidity of clarified water is one of the most monitored parameter is an excellent indicator of Actiflo® process performance, as well as accuracy of chemicals dosing (coagulant, polymer and microsand). If the turbidity of the clarified water should increase suddenly, this will result in excessive microsand losses. If filters are present downstream of the Actiflo®, filtration cycles will reduce in time and consequently increase backwash frequencies.

In potable water applications, the turbidity of the clarified water should normally be lower than 1.0 NTU at nominal flow. If it increases suddenly above this value, we recommend to verify the following parameters:

- The flow rate of raw water: if it is greatly increased or diminished, dosage flow rate of coagulant and polyelectrolyte should be adjusted in consequence.
- The flow rate of coagulant and polyelectrolyte: the metering pumps must inject an accurate dosage of these chemicals, such that the desired concentrations in the system can be obtained.
- The quality of raw water: if the turbidity, colour and/or the alkalinity of the raw water are increased or decreased, it is normally necessary to adjust the concentration of coagulant in the system. This dosage can be predetermined with the help of a jar test described in section 14. However, a change in the quality of the raw water does not usually require an adjustment in polyelectrolyte concentration.
- The concentration of microsand in the recirculation line: this must approach a value between 30–100 ml/L (5–10 g/L). Deterioration in the raw water quality can necessitate an increase in the quantity of microsand in the system.
- Sludge-sand recirculation rates: these flow rate generated by the recirculation pump must be kept constant.
- Maturation mixer rotation speed: mixer speed can be read directly on the display of the corresponding variable frequency drive.

Troubleshooting Guide
**Clarified water turbidity**

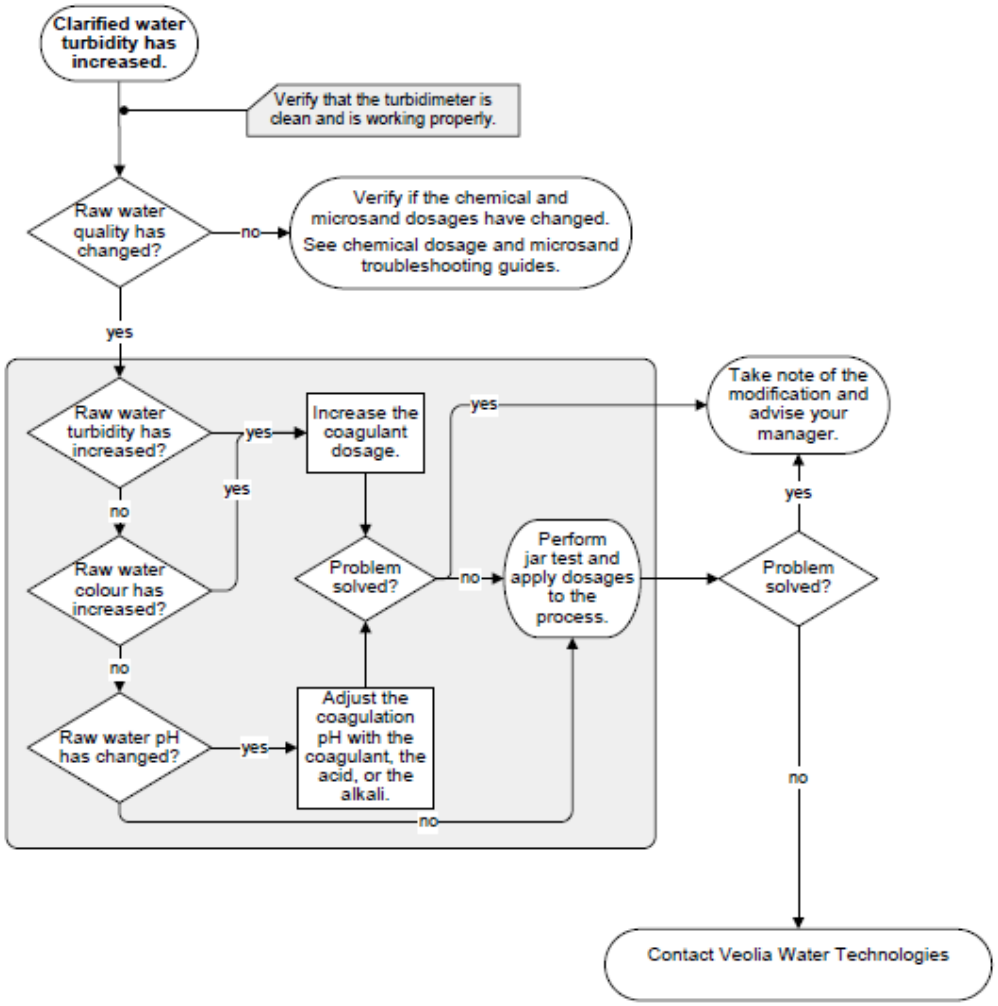


Figure 25: Clarified water turbidity – Troubleshooting guide

### 13.4.3 INCREASE IN CLARIFIED WATER COLOUR

The (apparent or true) colour of the clarified water is a parameter that needs to be monitored. It is indicative not only of the performance of the Actiflo® process, but also of the adequacy of the coagulant dosage or pH applied during the settling process.

If the colour of the clarified water is darker than normal:

- Verify if the colour of the raw water has increased.
- Verify the coagulant dosage (too high or too low).
- Conduct laboratory tests (jar tests) by carrying out a coagulant dosage curve.
- Consult the troubleshooting guide with respect to clarified water colour.

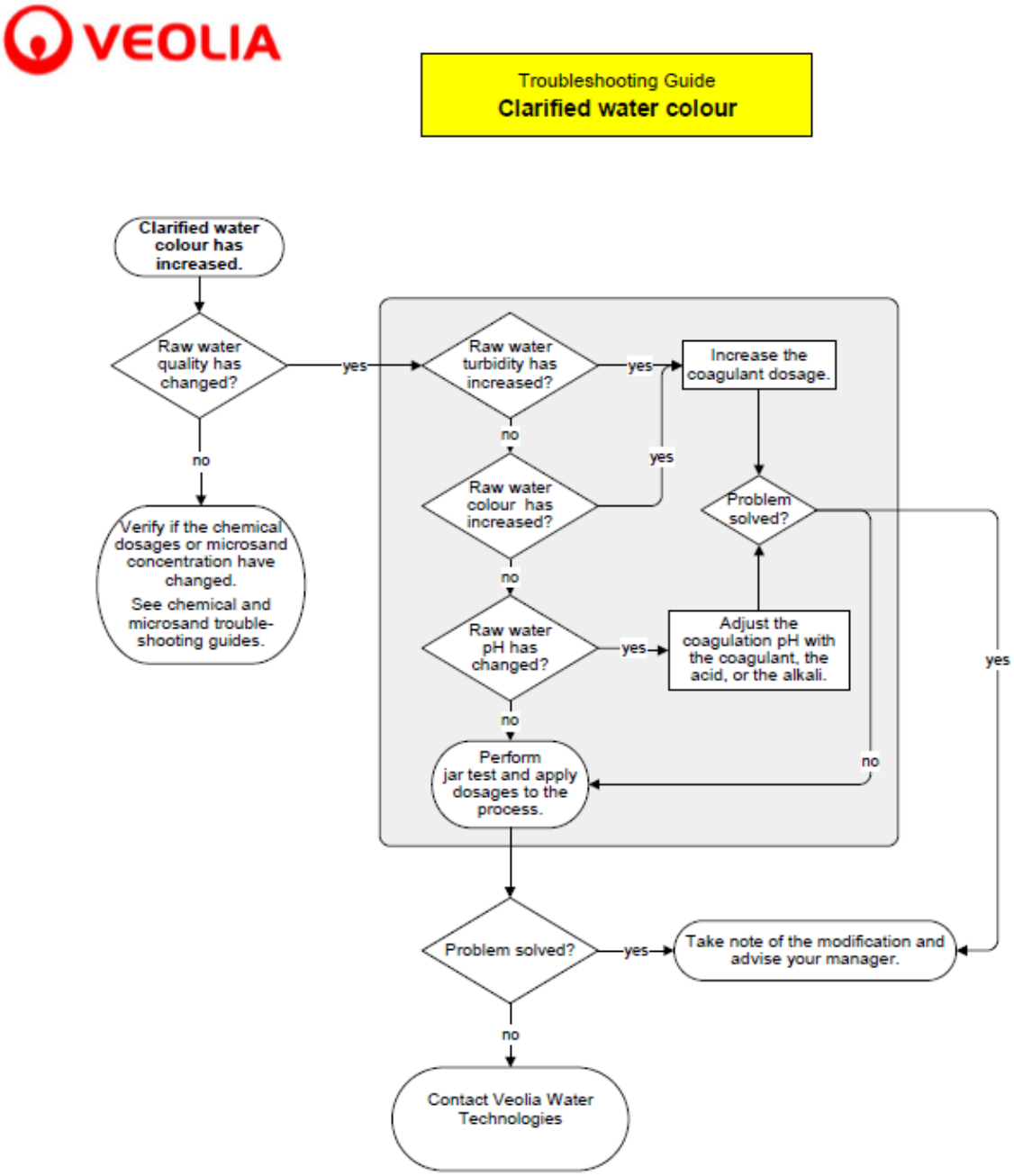


Figure 26: Clarified water colour – Troubleshooting guide

### 13.4.4 CHEMICAL DOSING TROUBLESHOOTING

Chemicals dosages have to be carefully monitored since the chemicals directly influence the process treatment by decreasing coagulation and flocculation. The clarified water quality may decrease (turbidity and color increase, more sand losses).

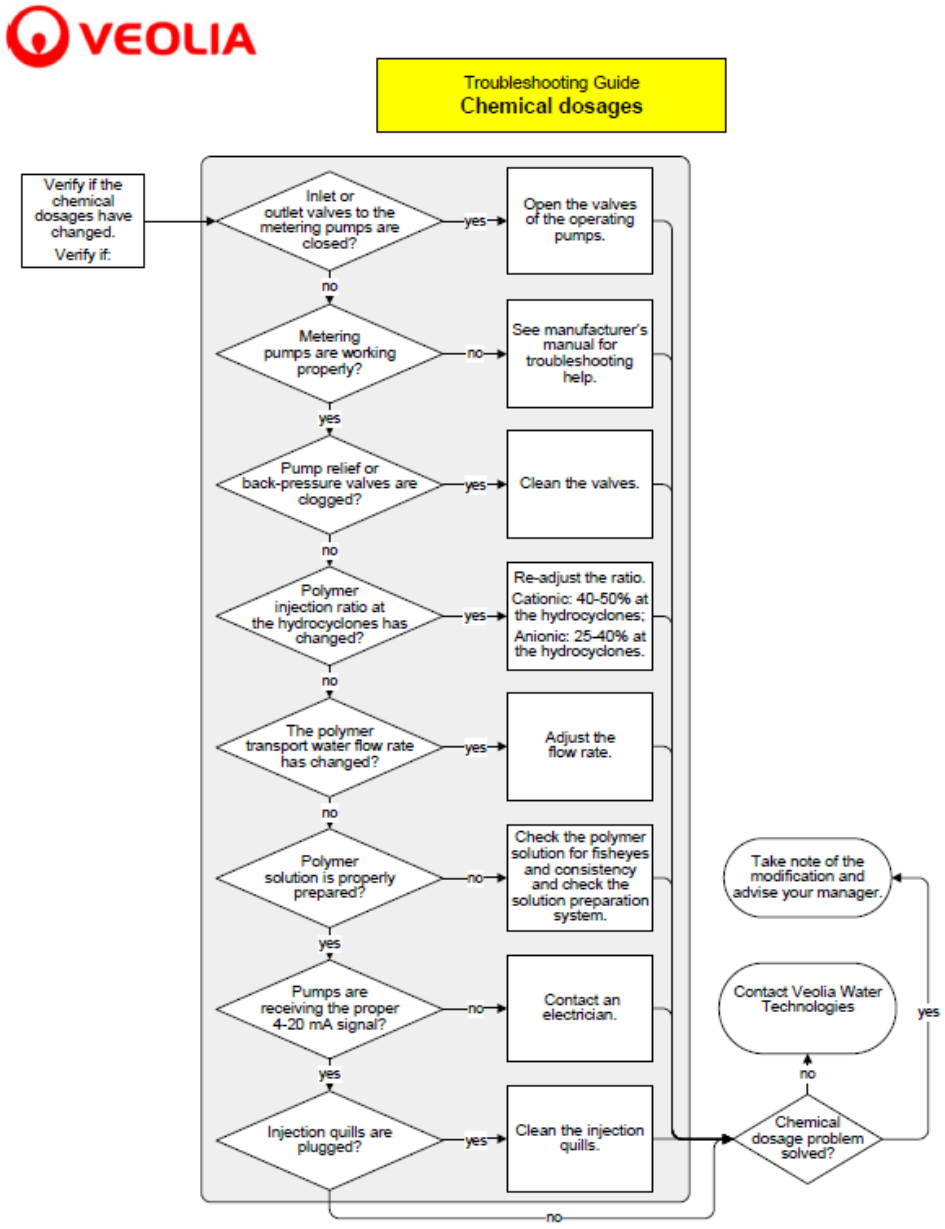


Figure 27: Chemicals dosing – Troubleshooting guide

### 13.4.5 MICROSAND TROUBLESHOOTING

The microsand is a key factor in the Actiflo® process because the concentration of sand has a direct influence on the quality of the clarified water by affecting flocculation and floc settling. The quality of the clarified water is therefore directly affected (increased turbidity and darkness, significant losses of sand).

**The sand concentration is low:**

If the sand concentration remains low despite repeated additions of microsand:

- Verify that the recirculation pump is functioning adequately.
- Verify for the presence of debris in the hydrocyclones' apex (even a partially clogged cyclone will lead to sand being evacuated along with the sludge).
- Verify the speed of the maturation tank mixer (a rotation speed that is too low will not keep the microsand in suspension and the sand will accumulate at the bottom of the maturation tank).
- Verify that the scraper is functioning adequately.
- Validate the direction of rotation of the injection and maturation tank mixers.
- Consult the troubleshooting guide with respect to microsand concentration.

**There are significant losses of sand:**

If a significant loss of sand is observed, the operator must verify the following with respect to the hydrocyclone:

- Compare the hydrocyclone's underflow rate with the base values.
- Compare the hydrocyclone's overflow rate (verify the presence of sand) with the base values.

**The overflow and underflow rates differ from the base values:**

If the overflow and underflow rates differ from the base values, inspect the hydrocyclone for signs of debris clogging it.

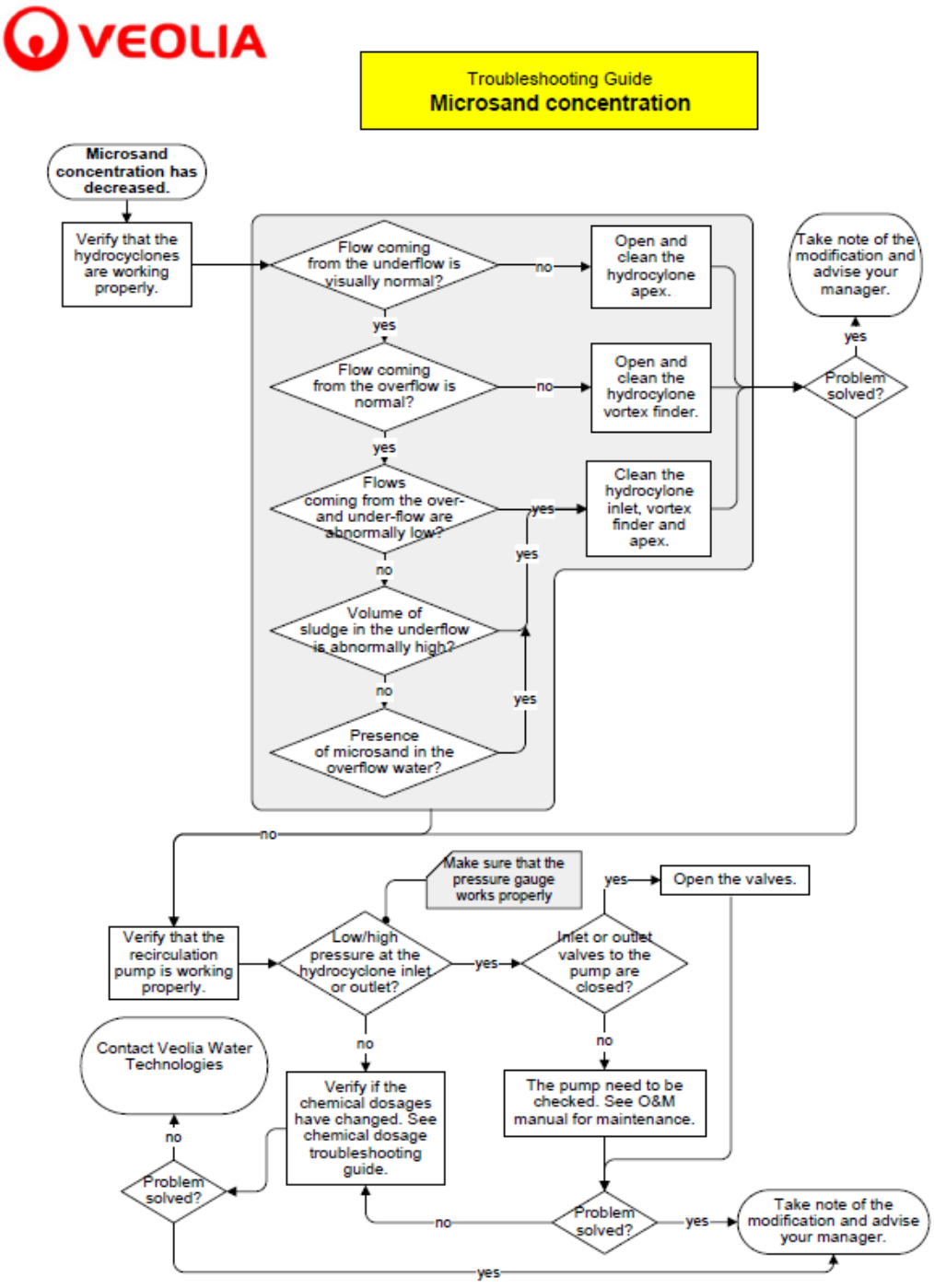


Figure 28: Microsand concentration – Troubleshooting guide

### 13.4.6 pH TROUBLESHOOTING

The pH is an important factor when it comes to process troubleshooting because the effectiveness of the coagulation and flocculation processes may be reduced if the pH is not adequately monitored and adjusted. That, in turn, could affect the quality of the clarified water (darker colour, increased turbidity, loss of sand).

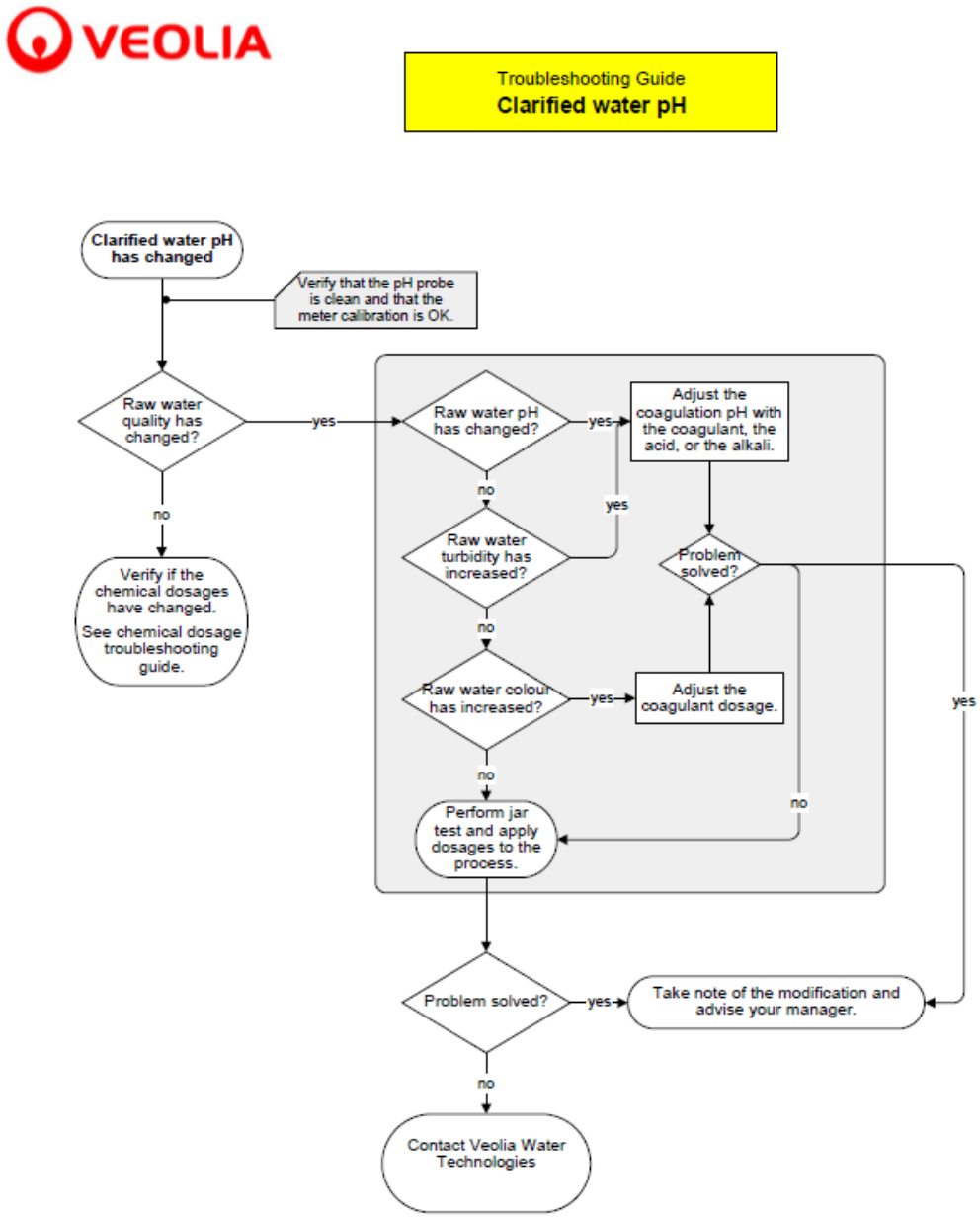


Figure 29: pH change – Troubleshooting guide

### 13.4.7 TROUBLESHOOTING THROUGH VISUAL INSPECTIONS OF THE ACTIFLO® UNITS

During routine verifications and if the clarified water presents a high turbidity and/or dark colour, operators may diagnose inappropriate dosages by conducting a simple visual inspection of the flocs and the water in the maturation and settling tanks.

**Different scenarios:**

*The flocs in the maturation tank are smaller than usual and the water is coloured and cloudy between the flocs:*

- Not enough coagulant (the polymer does not normally remove the colour from the water).

*The flocs in the maturation tank are smaller than usual but the water is clear between the flocs:*

- Not enough polymer (the coagulant is correctly dosed seeing as the water between the flocs is of good quality, but the lack of polymer results in flocs of smaller size).

*Colour that varies from the usual beige and few flocs:*

- Not enough sand: the microsand gives the maturation tank a beige appearance. Also, if the concentration of microsand is too low, there will also be fewer flocs. The turbidity of the clarified water is also deteriorated (presence of pin flocs).

*Small brown or grey flocs drawn into the settling tank and milky or dark coloured water:*

- Too much coagulant: the presence of too much coagulant colours the water, which becomes milky white (alum or PAC) or brown (ferric chloride). The result is a clarified water of darker colour and increased turbidity.

*Unusually shaped hydrocyclone underflow jets*

- The shape of the underflow jet provides information on the functioning of the hydrocyclone and the state of the apex. The following table illustrates how to interpret the shape of the jet.

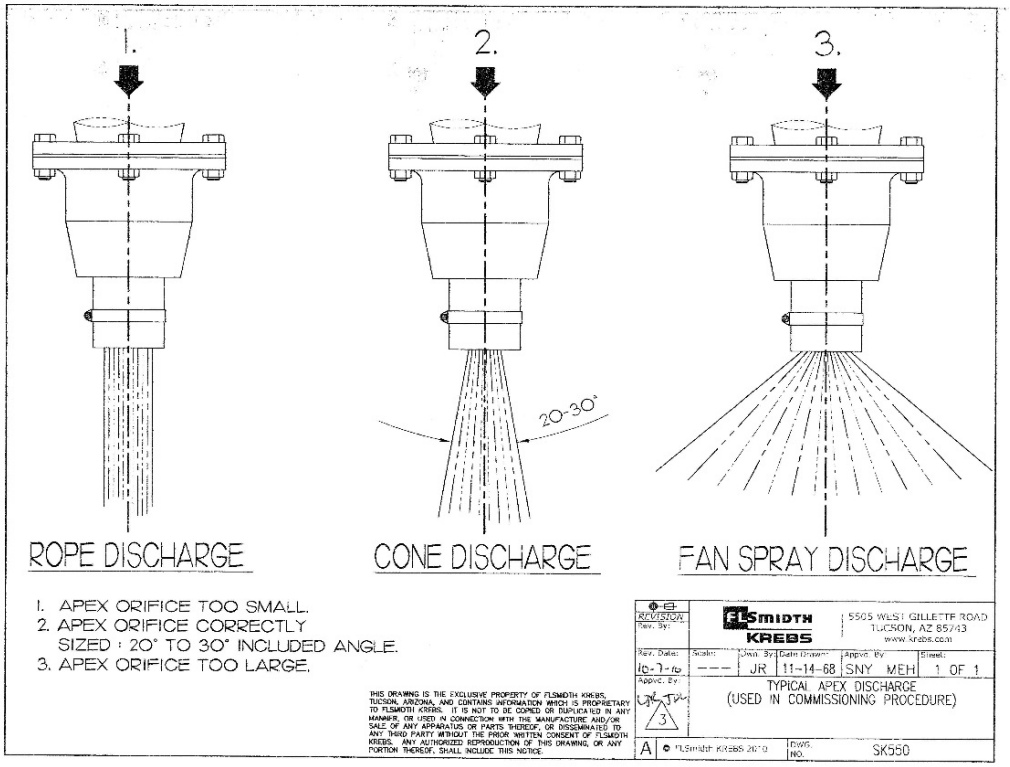


Figure 30: Hydrocyclone typical apex discharge jet shape

1. ROPE DISCHARGE: The opening of the apex is too small.
2. CONE DISCHARGE: The opening of the apex is properly dimensioned: 20–30° (included angle).
3. FAN SPRAY DISCHARGE: The opening of the apex is too large.

A rope discharge may also be symptomatic of a clogged hydrocyclone or of a concentration of sand in the system that is too high.

A fan spray discharge may be symptomatic of a worn apex that needs to be replaced or caused by a concentration of sand beyond recommended values.

### 13.4.8 POWER FAILURE

Refer to the functional description of control system in the «Electricity and Control» section of the complete Operation and Maintenance Manual.

## 13.5 ACTIFLO® SHUT DOWN OPERATIONS

The Actiflo® is designed to be operated in fully automatic mode, using PLC program and SCADA interface. The operational set points such as start-up/shut down flowrate or other conditions are entered by operation team but the system manages start and shut-down sequences in automatic. The system for lamellas cleaning (optional) is also in automatic sequence, and the operator's task will be to trigger an automatic cleaning when required. However, in the unlikely event of PLC/SCADA shut-down or failure, manual procedures are presented in the following sections to manually start and shut-down the Actiflo® unit, as well as manual cleaning of lamellas in section 15.1.1.

The purpose of the following sections is to provide information on the proper procedures required when the Actiflo® process is operated intermittently. The Actiflo® process has the unique ability to operate under repeated start and stop operations without effecting process performance or the equipment supplied with it. This type of operation is typical for the Actiflo® process and provides the ability to successfully treat events within 10–15 minutes of system start-up. The Actiflo® system intermittent use procedures is described in the following pages as pertaining to a single Actiflo® train.

### 13.5.1 ACTIFLO®: SHORT-TERM STORAGE PROCEDURE (LESS THAN A WEEK)

Short-term is defined as a shutdown where microsand and water are retained in the Actiflo® system for purposes of keeping the system active and ready for an event. Nearly all Actiflo® installations use the wet storage stand-by mode during offline conditions.

Operating conditions: When the unit is stopped for a period less than seven (7) days.

Operators' activities: Clean instrumentation, clean the lamellas, run equipment.

| STEPS | DURATION |
|---|---|
| 1. Stop the Actiflo® using the normal stopping procedure. | 15 minutes |
| 2. Clean the lamellas using the automatic air cleaning procedure or manual procedure. | 60 minutes |
| 3. Clean the instruments (turbidimeter, pH-meter, etc.). | 10 minutes |
| 4. Once a day, run the motors (mixers, recirculation pumps and scraper) for 30 minutes to prevent sand compaction, avoid anaerobic development in stagnant water (waste water application) and facilitate the restart of the unit. | 30 minutes |

Table 4: Short-Term storage procedure

**Estimated duration day 1: 2 hours**
**Estimated duration daily: 0.5 hours**

### 13.5.2 ACTIFLO®: MID-TERM STORAGE PROCEDURE (MORE THAN A WEEK)

This method is recommended by VWT Canada as wet system storage without removing the water from the system.

Operating conditions: When the unit is stopped for a period including one to four (1 to 4) weeks.

Operators' activities: Operate valves, clean the lamellas, add chlorine in the tanks, measure chlorine residual.

| STEPS | DURATION |
|---|---|
| **Day 1** | |
| 1. Stop the Actiflo® using the normal stopping procedure. | 10 minutes |
| 2. Clean the lamellas using the automatic air cleaning procedure (optional) or manual procedure. | 60 minutes |
| 3. Clean the turbidimeter and store the pH probe in the storage solution. | 15 minutes |
| 4. Add sodium hypochlorite in each tank (30–50 mg/L) to get a minimum chlorine residual of 15 mg/L after 12 hours of soaking*. Run the mixers, scraper and recirculation pumps to mix the chlorine for 5 minutes. Let react for a minimum of 12 hours. Measure the chlorine residual after 12 hours. | 12 hours minimum |
| 5. Once a day, run the motors (mixers, recirculation pumps and scraper for 30 minutes to avoid anaerobic development in stagnant water. | 30 minutes |
| 6. Equipment specific procedures: refer to the following table. | |

*Recommendation from AWWA for filter disinfection

Table 5: Mid-Term storage procedure

**Estimated duration day 1: >13 hours**
**Estimated duration weekly: 0.25 hour**

### 13.5.3 ACTIFLO® WASTEWATER AND CSO APPLICATION ONLY: MID-TERM STORAGE PROCEDURE (UP TO ONE MONTH)

This method is recommended by VWT Canada as wet system storage without removing the water from the system but replace the wastewater by clean/potable water.

Operating conditions: When the unit is stopped for a period up to one (1) month.

Operators' activities: Operate valves, clean the lamellas, drain tanks, fill tanks with clean water.

| STEPS | DURATION |
|---|---|
| **Day 1** | |
| 1. Stop the Actiflo® using the normal stopping procedure. | 10 minutes |
| 2. Clean the lamellas using the automatic air cleaning procedure (optional) or manual procedure. | 60 minutes |
| 3. Clean the turbidimeter and store the pH probe in the storage solution. | 15 minutes |
| 4. Drain completely the maturation/injection tank using drain valve. | 2–3 hours |
| 5. Drain completely the coagulation tank using drain valve and close the valve. | 1 hour |
| 6. Drain the settling tank using the two recirculation pumps until level in the settling tank reaches the bottom **(IMPORTANT: do not let the pumps running dry).** | 1 hour |
| 7. Fill with potable/service water up to the top of the lamellas. | Up to 10 hours* |
| 8. Once a day, run the motors (mixers, recirculation pumps and scraper for 30 minutes to avoid anaerobic development in stagnant water. | 30 minutes |
| 9. Equipment specific procedures: refer to the following table. | |

*Depending the flow and pressure available

Table 6: Mid-Term storage procedure – Wastewater and CSO application

**Estimated duration day 1: >13 hours**
**Estimated duration weekly: 0.25 hour**

| | |
|---|---|
| **Valves** | • Butterfly: Leave 100% close.<br>• Eccentric plug: Leave 100% close.<br>• PVC ball: Leave 100% close. |
| **Instrumentation** | • Flowmeter: Power on.<br>• Turbidimeter: Clean, power on and submerged.<br>• pH meter: Power on and store the probe in storage solution or submerged. |
| **Mixers** | • No particular measures.<br>• Power off. |
| **Scraper** | • Power off.<br>• When ready to run again, check the oil operating level. |
| **Recirculation pump** | • No particular measures.<br>• Check operating leak on the gland, adjust if required. |
| **Control Panel** | • Keep the power on (to keep the program in the PLC). |

Table 7: Actiflo® Mid-Term storage specific procedure

### 13.5.4 ACTIFLO®: LONG-TERM STORAGE PROCEDURE (MORE THAN ONE MONTH)

This method is recommended by VWT Canada as dry system storage without removing the sand from the system.

Operating conditions: When the unit is stopped for a period more than one month.

Operators' activities: Operate valves, clean the lamellas, adding chlorine in the tanks, measure chlorine residual, drain the tanks.

| STEPS | DURATION |
|---|---|
| **Day 1** | |
| 1. Stop the Actiflo using the normal stopping procedure. | 10 minutes |
| 2. Clean the lamellas using the automatic air cleaning procedure. | 60 minutes |
| 3. Clean the turbidimeter and store the pH probe in the storage solution. | 15 minutes |
| 4. Add sodium hypochlorite in each tank to get chlorine residual of 15-30 mg/L[2]. Run the mixers, scraper and recirculation pumps to mix the chlorine for 5 minutes. Let react for a minimum of 12 hours. | 12 hours minimum |
| **Day 2** | |
| 5. Drain completely the maturation/injection tank using drain valve. | 2–3 hours |
| 6. Drain completely the coagulation tank using drain valve. | 1 hour |
| 7. Drain the settling tank using the two recirculation pumps until level in the settling tank reaches the bottom **(IMPORTANT: do not let the pumps running dry).** | 1 hour |
| 8. Equipment specific procedures: refer to the following table. | |

Table 8: Long-Term storage application

**Estimated duration day 1: >13 hours**
**Estimated duration day 2: 4-5 hours**
**Estimated duration weekly: 0.25 hour**

[2] Recommendation from AWWA for filter disinfection

| | |
|---|---|
| **Valves** | • Butterfly: Leave 100% open. Close-open every 2 weeks.<br>• Eccentric plug: Leave 75% open. Close-open every 2 weeks.<br>• PVC ball: Leave 100% open. Close-open every 2 weeks. |
| **Piping (inlet/outlet)** | • Drain (watch for low points) and leave the drain valves open. |
| **Instrumentation** | • Flowmeter: Power off<br>• Turbidimeter: Clean. Power off.<br>• pH meter : Power off and store the probe in storage solution. |
| **Mixers** | • No particular measures.<br>• Power off. |
| **Scraper** | • Fill the gear box with new oil to avoid humidity.<br>• Power off.<br>• When ready to run again, drain the oil until the normal operating level. |
| **Recirculation pump** | • Drain the discharge line, the suction line and the casing.<br>• Loosen the gland adjusting screws.<br>• Power off.<br>• Rotate the pump manually with the belts in the proper direction of rotation every month. |
| **Control Panel** | • Keep the power on (to keep the program in the PLC).<br>• Power off the equipment and remove the fuses and breakers. |

Table 9: Actiflo® Long-Term storage specific procedures

### 13.5.5 ACTIFLO®: RESTART AFTER LONG-TERM STORAGE PROCEDURE

Operating conditions: After a long term storage period.

Operators' activities: Operate valves, readjust the recirculation pumps gland, run equipment.

| STEPS | DURATION |
|---|---|
| 1. Close all the isolation valves on the unit. | 15 minutes |
| 2. Fill up the Actiflo® tanks: Open the water inlet valve and fill up the unit until the water level reaches the level of the spillway between the maturation and settling tanks. Close the Actiflo®'s water inlet valve. | 30 minutes |
| 3. Open the recirculation pump isolation valves and readjust the gland screws. | 30 minutes |
| 4. Power on all the equipment. | 15 minutes |
| 5. Put back the pH probe in the process. | 10 minutes |
| 6. Make sure the equipment is in AUTO mode for AUTO start and open the isolation valves on chemical lines. | 20 minutes |
| 7. Start the unit in AUTO or MANUAL mode. Be sure all tank are full of water **(at least impeller have to be submerged).** | 15 minutes |
| 8. Perform the final adjustment on the recirculation dry gland. | 30 minutes |

Table 10: Long-Term storage restart procedure

**Estimated duration day: 3 hours**

# 14 JAR TEST PROCEDURE

## 14.1 INTRODUCTION

This jar test procedure was developed for the purpose of simulating the Actiflo® process. It may be used to determine the coagulant and polymer dosages required to procedure clarified water of low turbidity. In addition, the modified jar test procedure makes it possible to evaluate or predict the operational performances of an existing Actiflo® unit and accurately diagnose operating problems.

This simulation method generates results that are very similar to those generated for a large-scale unit. Such a level of reproducibility is obtained by simulating the same contact times in each tank and adding the chemicals and microsand in the same sequence as in the case of the life-size unit.

At the designated flow, the surface loading rate in a typical Actiflo® unit is 40 m/h. This loading rate corresponds to hydraulic retention times of 2, 2, 6 and 3 minutes in the coagulation, injection, maturation and settling tanks respectively.

## 14.2 MATERIAL REQUIRED

- Jar test apparatus (Phipps-Bird or equivalent)
- Raw water
- Circulating open bath for temperature control (optional)
- Square or round glass beakers
- Washed microsand
- Polymer
- Coagulant
- Acid or alkali, to adjust the pH (optional)
- Measurement apparatus (turbidimeter, spectrophotometer, etc.)
- Stopwatch
- Micro pipettes 20 µl - 1000 µl
- Disposable syringes 1 ml - 5 ml - 100 ml

## 14.3 CHEMICALS PREPARATION

**Prepare the microsand dedicated to Jar Test**

This microsand has to be already washed with distilled or tap water to remove sand dust causing turbidity. To prepare the microsand, follow the procedure below:

- Rinse the new or used microsand thoroughly 10 times or until the supernatant is clear, in order to eliminate turbidity caused by micro-grains or any suspended particles that could be introduced into the water tested in the jar test. Dry in a 104°C oven overnight. Place in an identified microsand plastic or glass jar.

**Prepare a polymer solution in the laboratory or use the polymer solution prepared for the full-scale unit in the WTP.**

From dry polymer powder:

- Prepare a 0.1% solution. Weight 0.1 g of dry polymer and slowly add in a 250 mL beaker filled with 100 mL distilled water. The beaker has to be mixed to avoid eye fish in the solution. Mix the solution for approximately 1 hour until complete dissolution of the polymer. 0.1 mL of this solution corresponds to 1 mg/L. For better accuracy, it is recommended to dilute this solution prior injecting in the jar test beakers: measure 10 mL of prepared polymer solution and complete at 100 mL with distilled water. 1 mL of this diluted solution corresponds to 0.1 mg/L of polymer dosage.

**CAUTION**: ***The 0.1% solution is efficient for 1 day. The diluted polymer solution (0.01%) is efficient for approximately 1 hour. Prepare new diluted solution after 1 hour use.***

From polymer preparation tank:

- **Polymer at 0.1 g/L (0.01%)**

Sample polymer from polymer metering pump or polymer preparation tank at the WTP.

Dilution to obtain a 0.1 g/L solution:

| Concentration in the tank | Dilution | Volume to add in the 100 ml cylinder |
|---|---|---|
| 1.5 | 15 | 6.7 |
| 2 | 20 | 5 |
| 2.5 | 25 | 4 |
| 3 | 30 | 3.3 |

Table 11: Polymer dilution to obtain 0.1 g/L solution

Fill the cylinder to 100 mL mark with distilled water and stir.

**CAUTION**: The polymer solution as prepared is efficient for approximately 1 hour. Prepare new dilution after 1 hour use.

**CAUTION**: The polymer solution is viscous and very slippery if spilled.

- **Coagulant**

Use coagulant from manufacturer bottle or sample coagulant metering pump skid in the WTP.

**CAUTION:** Dilution is not necessary if a micropipette is available (0-200 µL).

**CAUTION:** Change your tip or pipette between each jar tests series (risk of coagulant precipitation in the tip).

**CAUTION:** Never dilute PAC or PASS coagulants (risk of precipitation).

If no micropipette is available, prepare the following dilutions:

- In the case of an organic coagulant, a dilution factor of 10 is recommended. Dilute 10 mL of net coagulant in distilled water in a 100 mL graduated cylinder.
- In the case of an inorganic coagulant, a dilution factor of 10 or 50 can be used.

The coagulant dosage can be expressed in different ways:

- Volumetric dosage (µL/L).
- mg/L of commercial product as sold = volume (µL/L) x specific density.
- mg/L of active ingredient = volume (µL/L) x specific density x concentration (%).
- Mg Fe or Al/L (recommended but not very common)
  Mg Fe or Al/L = volume (µL/L) x specific density x % Fe or Al
- mg/L of solid product (not recommended but very common in water treatment plants)
  mg/L of solid product = volume (µL/L) x specific density x dry solid content (%)

To validate the calculation, refer to the chemical's technical specifications sheet.

## 14.4 CHEMICAL DOSAGES

- **Polymer at 0.1 g/L (0.01%)**

**Polymer volume to inject for 1 L water during the Jar Test is as follow:**

| Plant polymer diluted at 0.1 g/L (0.01%) | | | |
|---|---|---|---|
| Dosage required mg/L | Total Volume ml | Volume to add | |
| | | 1st injection | 2nd injection |
| 0.1 | 1 | 0.5 | 0.5 |
| 0.2 | 2 | 1 | 1 |
| 0.3 | 3 | 1.5 | 1.5 |
| 0.5 | 5 | 2.5 | 2.5 |
| 0.8 | 8 | 4 | 4 |
| 1 | 10 | 5 | 5 |
| 1.2 | 12 | 6 | 6 |

Table 12: Polymer volume to inject for 1 L water during jar test

- **Coagulant Volume**

The coagulant dosage is expressed in volumetric dosage (µL/L).

**Coagulant volume to inject for 1 L water during the Jar Test is as follow:**

| Dosage required µL/L | Volume of beaker | Volume to inject (µL) |
|---|---|---|
| 10 | 1 | 10 |
| 30 | 1 | 30 |
| 50 | 1 | 50 |
| 80 | 1 | 80 |
| 100 | 1 | 100 |
| 130 | 1 | 130 |
| 150 | 1 | 150 |

Table 13: Coagulant volume to inject for 1 L water during jar test

## 14.5 LABORATORY METHODS AND PROCEDURE

Proceed as follows to produce optimal results:

Step 1: Conduct a series of jar tests using fixed coagulant and polymer dosages and different pH values (pH curve).

Step 2: Conduct a series of jar tests using a fixed pH, different coagulant dosages and a fixed polymer dosage (coagulant curve). You may revise the pH curve in accordance with the most effective coagulant dosage found (optional).

Step 3: Conduct a series of jar tests using different polymer dosages and the optimal pH and coagulant values determined during the previous steps (polymer curve).

**Procedure:**

*The times provided in the following method are specific to a speed of 40 m/h.*

- Adjust the circulating bath to the desired temperature (optional).
- Measure the raw water's parameters (pH, alkalinity, actual and apparent colour, turbidity, UV absorbance, temperature). Measure the parameters according to the protocol and test objectives.
- Fill the 1 L beakers with raw water.
- Place the beakers on a test bench.
- Make sure that the raw water is at the desired temperature (optional).
- Place the blades at 0.5–1.0 cm from the bottom of the beakers.
- Begin mixing and adjust the speed at 150 RPM.

- Add the acid or alkali to adjust the pH (optional).
- Add the coagulant (refer to the timeline below).
- Start the chronometer.
- Two minutes after having added the coagulant, add the microsand (8–10 g/L of water) and 50% of the polymer dose.
- Two minutes (if cationic polymer is used) or five minutes (if anionic polymer is used) after having added the microsand and first dose of polymer, add the remaining dose of polymer.
- After an additional maturation contact time of six minutes (if cationic polymer is used) or three minutes (if anionic polymer is used), stop mixing and let the water rest for the following three minutes.
- Use a 50–100 mL syringe, a pipette or a vacuum hose to collect the supernatant (DO NOT collect it at the surface because of the microsand and micro-flocs that may be floating on the surface). Collect a sample of the clarified water.
- Measure the main parameters for the clarified water test objectives.
- Record all of the results and parameters on the Actiflo® jar test data sheet
- Collect the sand and have it disposed of in accordance with site regulations.

## 14.6 TIMELINE FOR SELECTED RISE RATE

***40 m/h***

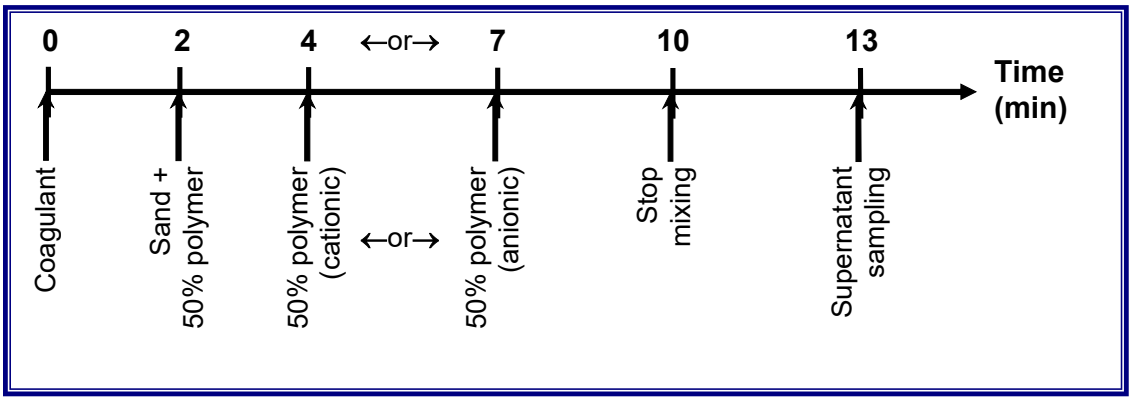

***50 m/h***

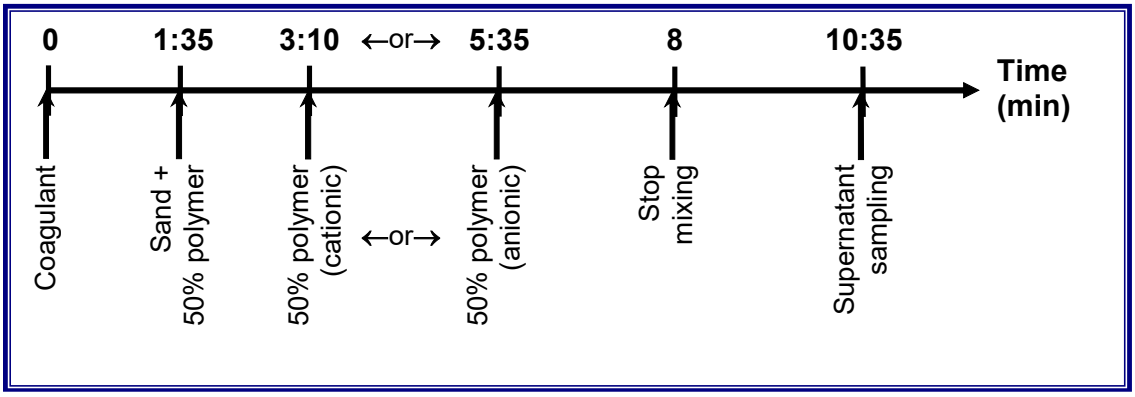


***60 m/h***

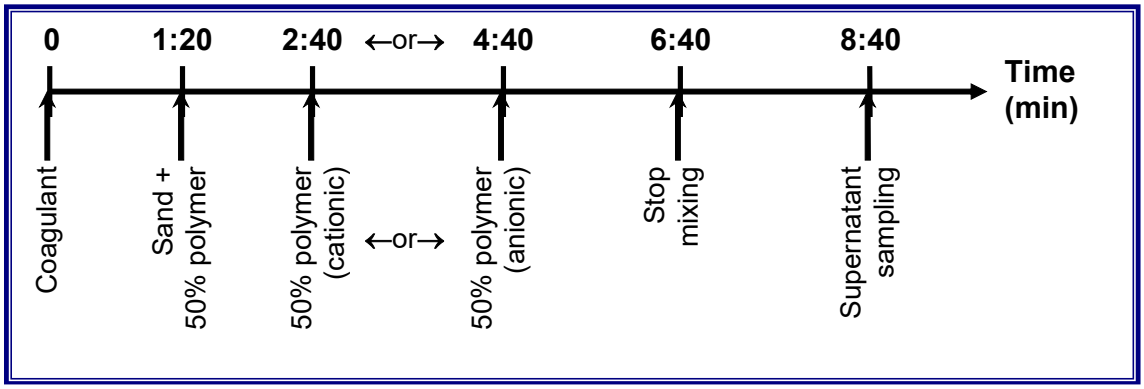


## 14.7 CHEMICAL DOSING GUIDE

To simulate the Actiflo® process in a laboratory setting, it is strongly recommended to plan the tests carefully to avoid losing time and having to repeat steps uselessly. In general, it is recommended to vary only one parameter from one test to another in order to accurately determine the impact of each parameter on the process. The following figure illustrates an example of a laboratory test.

Step 1: Measure the parameters of the raw water (pH, turbidity, colour, etc.).

Step 2: Select the most effective polymer (anionic, non-ionic or cationic).

Step 3: Change the coagulant dosage.

Step 4: Change the pH by adding the acid (sulfuric acid) or the base (lime, caustic soda, etc.).

Step 5: Change the polymer dosage.

**Project:**

**Project no.**

| Test | Water type | Simulated. superficial speed | pH adjustment | | | Coagulant | | Polymer | | Microsand | Parameters | | | | |
|---|---|---|---|---|---|---|---|---|---|---|---|---|---|---|---|
| | | | Type | Dosage | Contact time | Type | Dosage | Type | Dosage | | Turbidity | Colour | | pH | Alkalinity ($CaC_3$) |
| | | | | | | | | | | | | App. | Actual | | |
| | | m/h | | (mg/L) | minutes | | mg/L | | mg/L | g/L | NTU | CU | RCU | - | mg/L |
| **Raw water characteristics (non-ozonized)** | | | | | | | | | | | 1.12 | 60 | 39 | 5.3 | < 20 |
| **Raw water characteristics (ozonized)** | | | | | | | | | | | 1.11 | 25 | 5 | 8.04 | < 20 |
| 1A | Non-ozonized | 40 | Lime | 5 | 5 | Alum | 40 | 640 | 0.2 | 1 | 0.723 | 5 | < 2 | .28 | - |
| 1B | Non-ozonized | 40 | Lime | 10 | 5 | Alum | 40 | LT22S | 0.2 | 0.1 | 1.61 | 27 | 2 | 6.3 | |
| 1C | Non-ozonized | 40 | Lime | 13 | 5 | Alum | 40 | LT27AG | 0.2 | 0.1 | 1.46 | 24 | 3 | 6.75 | |
| 1D | Non-ozonized | 40 | Lime | 12 | 12 | Alum | 40 | A110 | 0.3 | 0.1 | 0.50 | 4 | 3 | 6.7 | |
| 2A | Non-ozonized | 40 | Lime | 5 | 5 | Alum | 20 | LT27AG | 0.2 | 1 | 2.61 | 50 | 7 | 6.62 | |
| 2B | Non-ozonized | 40 | Lime | 17 | 5 | Alum | 50 | LT27AG | 0.2 | 0.1 | 1.22 | 18 | - | 7.2 | |
| 2C | Non-ozonized | 40 | Lime | 21 | 5 | Alum | 60 | LT27AG | 0.2 | 0.1 | 1.40 | 23 | - | 7.1 | |
| 3A | Ozonized | 40 | Lime | 2,5 | 5 | Alum | 40 | 640 | 0.3 | 1 | 0.66 | 5 | < 2 | 6.0 | - |
| 3B | Ozonized | 40 | Lime | 2,5 | 5 | Alum | 40 | 640 | 0.2 | 0.1 | 0.85 | 10 | < 2 | 6.0 | - |

Table 14: Example of a series of laboratory tests with results

### Microsand concentration

For the purpose of a laboratory test, 5 g of microsand are usually added to 1 L of raw water, but this quantity can be increased to 10 g/L to verify its impact on the treatment.

### Polymer dosage

Pursuant to standard procedure, in Actiflo® process simulation tests conducted in a laboratory setting, 50% of the dosage is applied during the first injection of polymer and the remaining 50%, during the second injection. This procedure can be modified to optimize the process and visually assess a change in the formation and size of the flocs before the mixing is stopped.

**Note**: It is important to keep in mind that anionic and cationic polymers are not effective in the same pH ranges. Thus, a cationic polymer will be much more effective within a pH range of 3 to 7, whereas an anionic polymer will perform more effectively within a pH range of 6.2 to 12.

### Impact of the simulated surface speed

It is possible to simulate the impact of an increase of the raw water flow rate and, thereby, of the surface speed on the performance of the Actiflo® process by modifying each treatment stage's contact time. The timelines presenting the time required to simulate various surface speeds are presented in the laboratory test procedure.

# 15 MAINTENANCE

## 15.1 ACTIFLO® CLARIFIER

### 15.1.1 LAMELLA PACK

**WARNING**

- Comply with all safety rules and policies if you need to access the settling tank.
- If you must go under the lamellas, make sure of the support beams integrity and the cleanliness of the lamellas.
- Before lowering the water under the lamellas, make sure you have removed some of the accumulated sludge in the lamellas (visible from the top of the clarifier) to reduce the supported weight.
- In the case of excessive plugging, the sludge weight can damage the lamellas and in extreme cases, collapse and cause serious injury to anyone under the modules.
- For the HIPS version and if lamellas are exposed to very cold temperatures, do not proceed with dewatering the lamellas because the cold makes them too fragile. It is then cleaned by keeping a layer of water above and uses the water jet to create pulsations in the lamella cells to loosen sludge.

#### *15.1.1.1 Lamellas fouling*

To maintain the Actiflo® performance, the lamellas should be cleaned regularly. The nature of the raw water, the quality of the clarified water produced and the flow rates handled are factors influencing the fouling. The lamellas fouling can be of two types:

- Visible (observable fouling from above lamellas)
- Invisible (fouling in the lower area of the lamellas)

The visible fouling may be an indicator of an invisible fouling in the lower area. In the case of significant invisible fouling, the lamellas can be damaged.

#### *15.1.1.2 Cleaning frequency*

There is a need for a regular cleaning of the lamella modules, by water jet or air jet, to maintain the Actiflo® clarifier performance. The recommended cleaning frequency is **once every week**. This may be more or less spaced according to the fouling rate observed. The cleaning frequency interval is the operator responsibility, although a minimum frequency is recommended.

#### *15.1.1.3 Required equipment*

Depending on whether the cleaning is carried out by air or water, it is suggested to use a PVC pipe fitted at its upstream end of a hose connector and elbow, nozzle or sprayer at its downstream end to direct water or air along the inclined axis of the lamellas. The length of PVC pipe should be sufficient for it to be handled from the top of the Actiflo® unit while allowing access to the bottom of the modules.

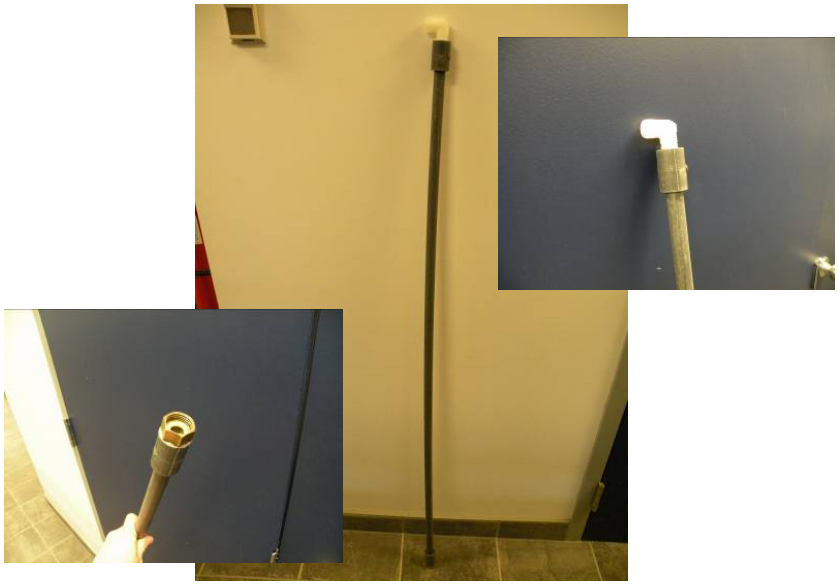

Figure 31: Suggested material for lamella cleaning

#### *15.1.1.4 Lamella cleaning procedure*

Lamellas cleaning can be achieved in 3 ways:

- Manual cleaning with water.
- Manual cleaning with air.
- Automatic cleaning with integrated system under the lamella modules (optional).

#### *15.1.1.5 Manual cleaning with water*

The cleaning procedure with water is:

1. Stop the Actiflo® unit according to the normal procedure.
2. Start the microsand recirculation system, in manual mode, including the scraper, if necessary, to assist in the disposal of cleaning sludge.
3. Slowly drain the basin using the partial drain located under the lamellas so as to have a lowering rate of 2 to 5 cm/min and start cleaning during emptying.
4. Open water jet on a wall of the decanter to prevent damage to the lamellas.

5. Clean the lamellas with a low pressure water jet (approximately 20 to 25 psi) using a cleaning tool (refer to previous figure). Repeat to clean every lamella. The water jet should be directed parallel to the lamella axis to clean the entire length.
6. With the aid of a high intensity light beam, validate the quality of the cleaning. When the lamellas are properly cleaned, it is possible to see through them.
7. Once completed, close the water jet on a wall of the decanter to prevent damage to the lamellas.
8. Finally, return the Actiflo® unit to service, to the sewer or to production depending on the quality of clarified water to be produced.

#### *15.1.1.6 Manual cleaning with air*

The cleaning procedure with air is:

1. Stop the Actiflo® unit according to the normal procedure.
2. Start the microsand recirculation system, in manual mode, including the scraper, if necessary, to assist in the disposal of cleaning sludge.
3. Insert the cleaning tool through the lamellas so that it goes below the lamella module and then inject air. Repeat to clean every lamella section.
4. Slowly drain the basin using the partial drain located under the lamellas so as to have a lowering rate of 2 to 5 cm/min.
5. Clean the lamellas with a low pressure air jet (approximately 20 to 25 psi) using a cleaning tool (refer to previous figure). Repeat to clean every lamella. The air jet should be directed parallel to the lamella axis to clean the entire length.
6. With the aid of a high intensity light beam, validate the quality of the cleaning. When the lamellas are properly cleaned, it is possible to see through them.
7. Finally, return the Actiflo® unit to service, to the sewer or to production depending on the quality of clarified water to be produced.

#### *15.1.1.7 Automatic cleaning with integrated system under the lamella modules (optional)*

The automatic cleaning system will clean the lamella modules according to a programmed sequence. The variation of the water level and air injection will be used for cleaning.

- The partial drain valve: used to drain the settling tank of the Actiflo® unit down to a few inches under the lamella.
- Backwash air valve: inject air under the lamellas with proper flow rate and pressure. Refer to technical datasheet.

Manual backwash sequence:

- Stop the Actiflo® unit according to the normal procedure.
- Open the partial drain valve to lower the level under the through.
- Open the backwash air valve and continue lowering the water level.
- Close the backwash air valve.
- Continue draining for a short time (with partial drain).
- Close the partial drain valve.
- Restart the Actiflo® unit.

**NOTE**: Open confirmation from partial drain valve is needed to allow the opening of the air valve. Close confirmation from partial drain valve is needed to allow Actiflo® to restart.

#### *15.1.1.8 Severe obstruction*

If the lamellas are severely obstructed or if the cleaning system is temporally down. It is recommended, every week, to stop the unit and partially drain the clarifier such that the lamellas are exposed (with the partial drain valve on the hopper). The lamellas can then be cleaned using a garden hose at 20 to 25 psi (maximum pressure). Remove any substance that is stuck to the settling module and which could interfere with the process efficiency.

### 15.1.2 MIXERS

For each mixer:

- Make sure that the gear box remains clean.
- Check on a regular basis the oil level in the gear box.
- Change the oil in the gear box.
- Refer to the mixer manufacturer manual for complete inspection and maintenance requirements.

### 15.1.3 MICROSAND RECIRCULATION PUMPS

- Every day, proceed to a visual inspection of the packing adjustment.
- Every 1000 hours of service (every 6 weeks at 24 hr/day), lubricate the bearings and check belt tension.
- Twice a year, proceed to an inspection of the pump: dry seal, impeller, rubber coating, bearings, etc.
- Refer to the pump manufacturer manual for complete inspection and maintenance requirements.

### 15.1.4 HYDROCYCLONES

- After the first year, inspect the inside surface. Replace worn sections if needed. The first inspection will determine the frequency of replacement.
- Refer to the hydrocyclone manufacturer manual for complete inspection and maintenance requirements.

### 15.1.5 SCRAPER

- Every 8700 hours of operation, change the oil in the gear motor.
- Refer to the gear motor manufacturer manual for complete inspection and maintenance requirements.

## 15.2 CONTROL PANEL

For each panel, including junction boxes:

- Replace fuses when needed.
- In case of an electrical problem other than a fuse, contact a certified electrician and verify the circuits.
- Refer to the electrical drawings.

## 15.3 INSTRUMENTATION

For each instrument equipped with a controller/transmitter:

- Calibrate instrument on a regular basis.
- Refer to the manufacturer manual for calibration instructions and maintenance requirements.

## 15.4 VALVES

### 15.4.1 MANUAL VALVES

- No preventive maintenance required.
- Refer to the manufacturer manual, if needed.

### 15.4.2 AUTOMATIC VALVES

- Refer to the manufacturer manual for complete inspection and maintenance requirements.

## 15.5 PERIPHERAL EQUIPMENT

- Any other peripheral equipment needing maintenance should be inspected on a regular basis.
- Refer to the manufacturer manual for complete inspection and maintenance requirements.

## 15.6 PAINT INSPECTION

To maintain the life expectancy or life-cycle of **Sherwin Williams Macropoxy 646 PW** or **Duraplate UHS** coating system applied as an internal lining system for potable or fresh water tank, a well-planned inspection schedule is required. When the coating system is applied adequately to properly prepare steel substrate, it can last up to 15 years or more.

The recommended inspection schedule is:

- Inspect after 12 months following the initial application of the coating system. If the substrate is exposed, if the surface is damage or require repairs, perform spot repairs according to the coating system manufacturer instructions specified in the following section.
- Repeat inspection every 3 years and repair.

## 15.7 PAINT REPAIR PROCEDURE

This procedure applies to **Sherwin Williams Macropoxy 646 PW** or **Duraplate UHS** coating system applied as an internal lining system for potable or fresh water tank.

If the painted surface is damage or require repairs perform the following:

1. Clean the surface with solvent according to surface preparation standard SSPC SP1 to remove any contamination.
2. Perform abrasive blasting of the surface according to surface preparation standard SSPC SP10 or perform power tool cleaning to bare metal as per SSPC SP11.
3. Surface preparation must create or expose existing profile to meet the minimum requirement set in the Sherwin Williams product data sheet.
4. Lessen the unevenness between the existing coating and steel by sanding the edges of the existing coating to a smoother transition.
5. Sand 5 to 10 cm on the existing coating surrounding the repair area in order to obtain a matte and rough surface.
6. Clean again the surface according to SSPC SP1 to remove any contamination or dust.
7. Apply Macropoxy 646 PW or Duraplate UHS, depending on the paint type used in the project, to restore specified dry film thickness (DFT) measurement.

## 15.8 LUBRICATION

- Refer to the following table for the lubrication schedule.
- Refer to the manufacturer equipment manual for complete lubrication, inspection and maintenance requirements.

### 15.8.1 LUBRICATION SCHEDULE

| Equipment to be serviced | Component serviced | Type of lubrication | Lubricant manufacturer | Lubricant brand name | Quantity of lubricant | Lubrication schedule | Comments |
|---|---|---|---|---|---|---|---|
| **Scraper (SEW Eurodrive)** | Reducer box<br><br>*Applicable for ACP-400R ACP2-40 and up* | Food grade oil | Total | Nevastane EP 460 or equivalent | 8 Liters | Change oil every 8700 hours of continuous operation | Fill by the glass window up to the oil level plug or to about half of the height of the slewing ring gear |
| | Gearmotor | Food grade oil | Klüberoil | 4UH1-460 N | 1.9 Liters for primary gear reducer and 14.0 Liters for secondary reducer | Check oil and oil level every 6 months<br><br>Change oil every 3 years | When changing oil, also replace oil seal (do not install it in the same track) |
| | Gearmotor bearings | Food grade grease | Aral | Aralube BAB EP2 | Low RPM bearings: Fill the cavities between the rolling elements one-third full with grease<br><br>High RPM bearings: Fill the cavities between the rolling elements two-third full with grease | Replace anti-friction bearing grease every 3 years | Regreasing recommended at the same time as changing the oil or replacing bearings |
| | Motor bearings | Food grade grease | Aral | Aralube BAB EP2 | N/A | Every 10000 hours of operation, check ball bearings and change if necessary | The anti-friction motor bearings are sealed and does not require lubrication |

Table 15: Lubrication schedule

| Equipment to be serviced | Component serviced | Type of lubrication | Lubricant manufacturer | Lubricant brand name | Quantity of lubricant | Lubrication schedule | Comments |
|---|---|---|---|---|---|---|---|
| **Mixers (Envirequip)** | Motor bearings | N/A | N/A | N/A | N/A | N/A | The bearings are sealed for life. No additional lubrication required. |
| | Reducer box | Food grade oil | Chevron | FM ISO FM 220 | Refer to manufacturer's manual (quantity varies with reducer box model) | Check oil and oil level every 6 months Change oil every 2 years or 10000 hours | N/A |
| | Reducer box bearings | Food grade grease | Mobil | Grease FM 222 (NLGI 2) | The bearing cavity should be packed to approximately 1/3 full with grease | Regrease bearings every 6 months | N/A |
| **Recirculation pump (McLanahan)** | Pump | Grease | Shell | Alvania Grease 3 (NLGI 2) | Inject grease by six strokes of a regular size grease gun (2" diameter body) | Regrease bearings every 1000 hours of operation | N/A |
| | Motor bearings | Grease | Esso | Polyrex® EM (NLGI 2) | N/A | N/A | Does not require lubrication as bearing life is 20000 hours |

Table 15: Lubrication schedule (cont'd)

# APPENDIX: "TYPE D" DRY GLAND REPAIR PROCEDURE

# MICROSAND RECIRCULATION PUMP

# MICROSAND RECIRCULATION PUMP
# DRY GLAND REPAIR PROCEDURE

## 1 INTRODUCTION

The face seal of the microsand recirculation pump (Linatex pump) is a wearing part that must be changed after a period of 5 years or 40 000 hours of operation following the application.

The face seal is a rubber piece in rotation which ensures sealing of the shaft. If the fit is too tight, the face seal will be damaged due to friction and the pump will leak. A proper adjusted face seal will not leak. However, a too tight face seal will not leak either, but lead to the results shown below.

It is therefore important to adjust the seal face so as to maximize its lifetime. The photo below shows a seal face damaged/used and another brand new.



## 2 PUMP DISMANTLING

Disassembly of the pump can be according to the following steps:

1. It is important to lockout/tagout the power supply to the pump before handling the pump;
2. Disassembly of the suction and discharge pipes;

The first step will be to debunk the suction and discharge in order to open the volute.

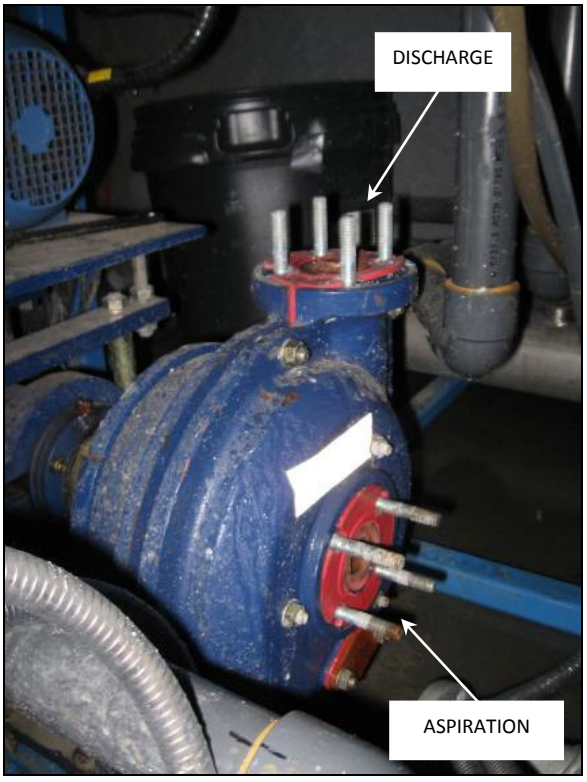

3. Volute opening;

   The opening of the volute provides access to the impeller that will also have to be removed.



4. Impeller removal;

   The impeller of the pump is removed by unscrewing in the counter clockwise rotation. This is usually done by hand and requires blocking the pump shaft to prevent it from turning. Depending on the size of the pump, using a lever may be appropriate.





5. Removal of the rear portion of the volute;

   The second half of the volute must be removed to access the gland. This requires unscrewing the 4 bolts clamping the volute and the clamping bolts of the gland (step 3) as shown below.

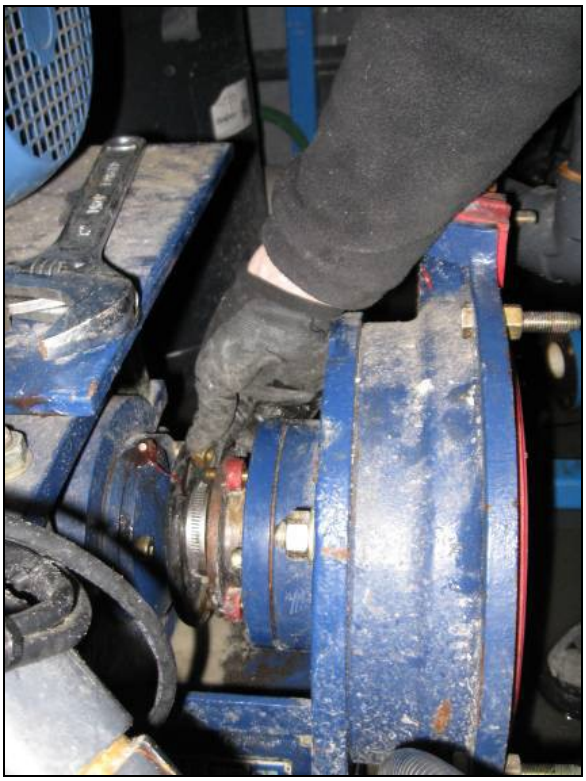

   It is important to remove the remaining half of the scroll carefully not to break the piece of graphite part of the gland. You must separate the volute structure by moving horizontally without up or down movement until the shaft is completely cleared.

6. Gland removal.

   The gland is now accessible and can be removed from the shaft.



## 3 NEW DRY GLAND SEAL ASSEMBLY

The following parts are required to assemble the new dry gland seal.

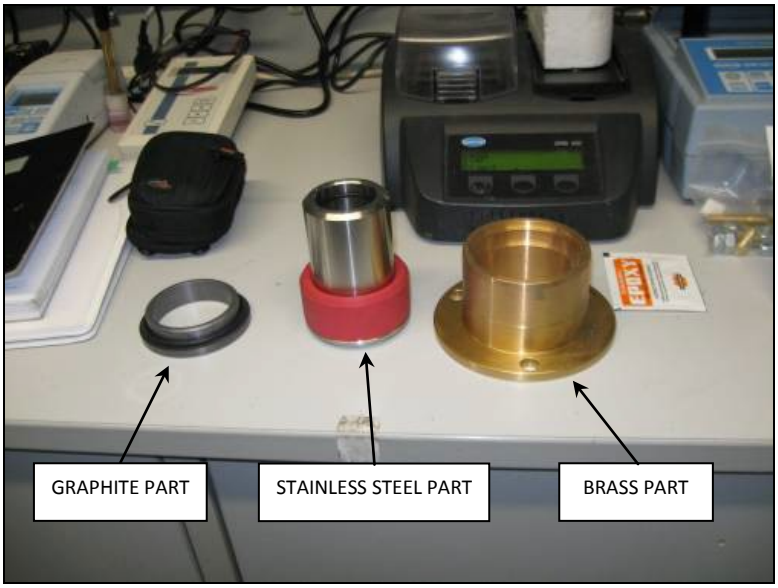

To assemble the dry gland seal, follow the assembly sequence (also refer to the McLanahan manual):

1. Bonding of the graphite part to brass part:

   Epoxy preparation.



   Coat the piece of graphite with epoxy glue, put the EPDM seal.




   Insert the piece of graphite in the piece brass and apply pressure to lower the graphite piece until it stops. A period of 4 hours the glue begins. Check glue drying on the unused epoxy sheet before moving workpiece. It is necessary to leave a weight on the graphite part during drying to ensure that the graphite piece seat uniformly on the brass part (5 kg approx.).

2. Final assembly.

   The final assembly is shown below.



# 4 PUMP ASSEMBLY

1. Assembly of the brass part on the volute:

   Assemble the brass gland adjustment piece on the volute with 3 adjustment bolts. It is important that the bolts are screwed only 3 to 4 threads.

2. Assembly of the rear part of the volute:

   Assemble the rear portion of the volute on its structure with 4 bolts. Assemble the volute to the structure horizontally without moving up and down once engaged on the volute shaft.

3. Install the face seal:

   Slide the stainless steel sleeve with the seal surface on the shaft to the shoulder on the shaft.

4. Install the impeller:

   The pump impeller is screwed clockwise on the pump shaft. This is done manually and requires blocking the pump shaft to prevent it from turning.

5. Installation of the outer portion of the volute:

   Install the outer portion of the volute and tight bolts evenly.

6. Installation of suction and discharge pipe:

   Bolt the suction and discharge pipes.

# 5 DRY GLAND SEAL ADJUSTMENT

With the adjustment part of the gland down, turn the shaft by hand to familiarize with the resistance of the bearings without friction of the dry gland.

Adjust the brass part to be parallel to the frame of the pump. Then tighten the 3 adjustment brass nuts to keep the parallelism of the piece with the frame until an additional resistance is felt during the rotation of the shaft and then loosen ¼ turn on the 3 nuts.

Open the valve upstream of the pump. If there is substantial water leak, close the valve and tighten the nut 1/8 turn and recheck the resistance of the shaft. Once the valve opened and no major water leak, start the pump for a short period of time (2 minutes) to check if there are leaks during operation. If so, stop the pump, lock out again and tighten 1, 2 or 3 nuts to try to improve the fit. It is important, after each adjustment, to rotate the shaft by hand to ensure that the seal is not too tight.

A well-adjusted seal will not leak (or 1 to 2 drops/min) and will have a very low additional resistance during rotation of the shaft.



# HYDROCYCLONES MA

VEOLIA

## INSTALLATION, OPERATION AND MAINTENANCE MANUAL

Rev.: C

**Veolia Water Technologies**
L'Aquarène - 1, Place Montgolfier - 94417 Saint-Maurice cedex France
Tel : +33(0)1 45 11 55 55 - Fax : +33(0)1 45 11 55 00
www.veoliawatertechnologies.com

WATER TECHNOLOGIES

# REVISION STATUS

| Issue | Date | Created | Reviewed | Approved | Description of Changes |
|---|---|---|---|---|---|
| A | 01/10/2013 | Oscar Jimenez | | Pierre Girodet | First version |
| B | 08/07/2020 | David Walsh | Margarita Gallego | Pierre Girodet | Complete review of the document content and Layout |
| C | 22/09/2020 | David Walsh | | Pierre Girodet | Addition of several safety notes according to risk analysis + update of SP list |
| | | | | | |
| | | | | | |

# TABLE OF CONTENTS

**1. Introduction ..... 7**
1.1. Intent of this Manual ..... 7
1.2. Disclaimer Statement ..... 7
1.3. Proprietary Rights Statement ..... 7
**2. Health & Safety ..... 9**
2.1. Safety Instructions ..... 9
2.2. Operator Care ..... 10
2.3. Personal Protective Equipment ..... 11
2.4. Safety Notes - Following Installation ..... 12
2.4.1. Water ..... 12
2.4.2. Chemicals ..... 12
2.4.3. Fire ..... 12
2.4.4. Natural disasters ..... 12
2.5. Safety Notes - Daily Operation ..... 13
2.5.1. Electrical ..... 13
2.5.2. Water ..... 13
2.5.3. Performance ..... 13
**3. Hydrocyclone Description ..... 14**
3.1. The different models of Hydrocyclones ..... 14
3.2. Material of construction ..... 14
3.3. Connections, weight and layout of the hydrocyclones ..... 15
**4. Shipping and Handling Requirements ..... 19**
4.1. Transport ..... 19
4.1.1. Packing description ..... 19
4.1.2. Lifting ..... 19
4.2. Storage ..... 20
**5. Mechanical Installation & Piping Connection ..... 21**
5.1. Mechanical installation ..... 21

5.2. Hydraulic connections ..... 24
5.2.1. Inlet for sand + sludge ..... 24
5.2.2. Sludge outlet (overflow) ..... 25
5.2.3. Sand outlet (underflow) ..... 26
5.2.4. Service water inlet ..... 26
5.3. Pre-commissioning checks ..... 26
5.4. Commissioning checks ..... 27
**6. Operation and Monitoring ..... 30**
6.1. Flows and pressure ..... 30
6.1.1. MA1: range from 400 to 1000 L/h ..... 31
6.1.2. MA5: range from 4 to 6 m3/h ..... 32
6.1.3. MA10: range from 8 to 14 m3/h ..... 33
6.1.4. MA20: range from 16 to 30 m3/h ..... 34
6.1.5. MA40: range from 35 to 54 m3/h ..... 35
6.1.6. MA80: range from 60 to 80 m3/h ..... 36
6.2. Normal operations and parameters to monitor ..... 37
**7. Maintenance and Troubleshooting ..... 38**
7.1. Daily inspection ..... 38
7.2. Components maintenance ..... 38
7.3. Troubleshooting ..... 40
7.4. Spare-parts ..... 41

# LIST OF FIGURES

Figure 1:Hydrocyclone MA20 external view ..... 16
Figure 2: Hydrocyclone MA20 internal view 1 ..... 17
Figure 3: Hydrocyclone MA20 internal view 2 ..... 17
Figure 4: External views of Hydrocyclones MA1 and MA5 ..... 18
Figure 5: Nuts & bolts screwing sequence ..... 22
Figure 6: Examples of hydrocyclone installation ..... 23
Figure 7: Example of hydrocyclone support skid ..... 24
Figure 8: underflow cone shape in normal operation conditions ..... 27
Figure 9: Interchangeable parts ..... 29

# LIST OF TABLES

Table 1: Connections and weights of the MA hydrocyclones ..... 16
Table 2: External dimensions and weight of the hydrocyclones ..... 19
Table 3: Maximal tightening torques for the different hydrocyclones parts ..... 21
Table 4: Micro-sand specifications ..... 27
Table 5: MA20, 40 and 80 interchangeable parts (Vortex finder and Apex Tip) ..... 28
Table 6: Daily inspection tasks ..... 38
Table 7: Components maintenance guidelines ..... 39
Table 8: troubleshooting guidelines ..... 40
Table 9: Spare-parts list ..... 41

# 1. INTRODUCTION

## 1.1. INTENT OF THIS MANUAL

This document describes the functions and components of the Hydrocyclones MA, and the procedures for the installation, start-up and standard operation of the system. It also plans preventive maintenance measures and describes procedures for the regular maintenance of the equipment as well as troubleshooting.

The Hydrocyclones MA are manufactured and supplied by Veolia Water Technologies. This equipment of proven design will ensure decades of trouble-free operation. However, in order to reach and maintain peak efficiency and performance of the system, it is imperative to take into consideration all guidelines described in this manual.

To obtain any additional information regarding characteristics, operation or maintenance of this equipment, or if a problem persists, please do not hesitate to contact us:

Veolia Water Technologies
L'Aquarène - 1, Place Montgolfier - 94417 Saint-Maurice cedex France
Tel : +33(0)1 45 11 55 55 - Fax : +33(0)1 45 11 55 00
www.veoliawatertechnologies.com

## 1.2. DISCLAIMER STATEMENT

The information in these manuals may not cover all operating details or variations or provide for all conditions in connection with installation, operation, and maintenance. Should questions arise which are not answered specifically in this manual, contact the Veolia Water Technologies' Service Department.

Veolia Water Technologies reserves the right to make engineering refinements that may not be reflected in these manuals. The material in these manuals is for informational purposes and is subject to change without notice.

## 1.3. PROPRIETARY RIGHTS STATEMENT

This manual discloses information in which Veolia Water Technologies has proprietary rights. Neither receipt nor possession of this manual confers or transfers any right to the client, and by its retention hereof, the client acknowledges that it will not reproduce or cause to be reproduced, in whole or in part, any such information except by written permission from Veolia Water Technologies. The client shall have the right to use and disclose to its employees the

information contained herein for the purpose of operating and maintaining the Veolia Water Technologies equipment, and for no other purpose.

In the event the content of this manual is altered or section/items are omitted during a reproduction, in whole or in part, and instructions or definitions within the reproduction result in personal injury to those who follow the altered instructions, the burden of responsibility for personal injury falls solely on the party who affects the reproduction.

# 2. HEALTH & SAFETY

## 2.1. SAFETY INSTRUCTIONS

The safety instructions listed in this document must be read carefully and strictly adhered to in order to reduce possible health hazards and to avoid dangerous situations.

In this chapter you will find general safety instructions that draw attention to hazards in the handling of the system as well as unavoidable residual risks.

Action-related safety instructions are shown ahead of the corresponding instructions.

The “Safety” chapter is fundamentally important and must be read carefully and adhered to. It is the only way to ensure that all operations and work on the system can be carried out safely and correctly.

Not adhering to the safety instructions can result in danger to persons and material damages to the system.

Please keep this Operator Manual & these safety instructions close to the unit so that they are available for reference by the operators at all times.

To the Operator:
It is your responsibility to read & become familiar with the instructions in this manual.
If in doubt, seek guidance before carrying out an operation / procedure with this equipment.

The following indications:



**Danger**



**Warning**



**Attention**

are shown at various points in this manual for your protection - please take note of them.

## 2.2. OPERATOR CARE

The equipment has been designed and manufactured to applicable harmonized standards and technical specifications and with the greatest possible safety in all operating modes.

The safety of the plant / unit operation can only be achieved if all of the following points are adhered too.

The operator must pay particular attention to the following:

- The equipment is used as only as specified
- The equipment is operated only when in good functional condition. All safety devices should be checked regularly to ensure proper functioning.
- Personnel Protection Equipment (PPE) is available in good condition and used when required.
- The operating instructions are complete, readable and available on site for use on the plant / unit.
- Only trained, qualified and authorised personnel are permitted to operate, maintain and repair the plant / unit.
- Those personnel are instructed with regard to safe working practices and environmental protection, and know the contents of the operating instructions and any safety notes.
- All safety and warning labels on the plant / unit are visible, readable and are not removed.
- Modifications are only to be carried out by authorised specialised personnel.

## 2.3. PERSONAL PROTECTIVE EQUIPMENT

To minimise safety hazards, personal protective equipment has to be worn correctly during operation of the plant.

Please respect any additional signs regarding personal protective equipment which are installed in the plant area.



**Protective clothing**

Protective clothing is tightly fitted and resistant to tearing, with tight sleeves and no external parts.



**Pair of goggles with side protection**

Used to protect the eyes from splashes and from contact with hazardous substances and microsand.



**Safety gloves**

Used to protect the hands from hot or cold surfaces, abrasive materials such as microsand and from contact with hazardous substances.



**Safety boots**

Used to protect the feet from falling parts and slipping on slick surfaces.



**Safety Helmet**

Used to protect the head from falling of parts and heavy loads.

## 2.4. SAFETY NOTES - FOLLOWING INSTALLATION

### 2.4.1. Water



**Attention**

Where water ingress is possible / expected, ensure that measures are taken to allow water to exit the electrical enclosure and / or provide a water leakage sensor and alarm system.

Ensure that there is sufficient drain capacity.

### 2.4.2. Chemicals



**Attention**

Refer to Chemical Safety Data Sheets before handling any chemicals.
Where chemicals are added to the system there is a risk of splashing.
Wear suitable personal protective equipment (PPE) - safety glasses, rubber gloves etc, when handling chemicals. Detailed information for the HYDREX products described in this leaflet can be found in our relevant health and safety information (Safety Data Sheet) available on following link: http://frclg11msdgenp1.vws.vh20.net/MSDSViewer/Default.aspx .
This tool is only accessible to VWT employees. Please contact your Hydrex water treatment additives expert for further information.

### 2.4.3. Fire



**Danger**

Fire Risk!
The unit should not be installed near flammable liquids or gases.
Hydrocyclones are made in Polyurethane that is flammable. It must not be put in contact with direct flame.

### 2.4.4. Natural disasters



**Attention**

Possible impacts of natural disasters (earthquake, cyclones, floods or others) have not been considered in the system standard conception. Risks criticality must be evaluated on a case by case basis by the company in charge of installation, in order to put in place suitable protective measures for the designated installation site (extra-reinforcements, clearance area,...)

## 2.5. SAFETY NOTES - DAILY OPERATION

### 2.5.1. Electrical



**Danger**

Make sure your hands and the place where you are standing is dry before touching any live electrical components.
When working on electrical equipment make sure that the mains power has been isolated / switched off.
Keep flammable liquids and gases away from electrical components.



**Attention**

Avoid touching electrical components / terminals with wet hands.
Switch off / electrically isolate the equipment during electric (thunder) storms.

### 2.5.2. Water



**Attention**

Ensure that all electrical enclosures around the hydrocyclones are sealed & / or locked during operation of the equipment.
A large content of microsand is present at the inlet of the hydrocyclone and at the underflow. Always wear eyes protection.

### 2.5.3. Performance



**Attention**

Do not supply out-of-specification feed water to the equipment under any circumstances.
A regular weekly, monthly and annual schedule of maintenance should be instigated to ensure continued good & cost-effective performance.

# 3. HYDROCYCLONE DESCRIPTION

MA hydrocyclones have been developed and patented by Veolia Water Technologies under the management of Veolia Performance and Technical Department. They are distributed by SOLYS.

MA hydrocyclones are devices used to separate microsand from sludge using centrifugal separation. They are used for all Actiflo® applications but are not designed for other applications. In these devices, the microsand particles, due to their specific mass and density, are pushed to the bottom while sludge is extracted from the top.

Their main differentiation to most other hydrocyclones available on the market is the injection of service water at the bottom part of the hydrocyclone to increase the cyclone efficiency on several specific Actiflo applications. The MA hydrocyclone range has been designed to offer a cutting point that is suitable for the Actiflo different types of microsand that are suitable.

## 3.1. THE DIFFERENT MODELS OF HYDROCYCLONES

Different sizes of MA hydrocyclone are available. The recommended working ranges are:

- MA1 for an inlet flow of 0.4 to 1 $m^3/h$ (inlet pressure of 0.5 to 2 bar)
- MA5 for an inlet flow of 4 to 6 $m^3/h$ (inlet pressure of 0.6 to 1.5 bar)
- MA10 for an inlet flow of 8 to 14 $m^3/h$ (inlet pressure of 0.6 to 1.8 bar)
- MA20 for an inlet flow of 16 to 30 $m^3/h$ (inlet pressure of 0.6 to 2 bar)
- MA40 for an inlet flow of 35 to 54 $m^3/h$ (inlet pressure of 1.2 to 2 bar)
- MA80 for an inlet flow of 60 to 80 $m^3/h$ (inlet pressure of 1 to 2 bar)

In some specific cases, it is possible to work at flow rates slightly below or above the recommended range but performances may be affected. It is in most cases not recommended.

Head loss vs flow indicative curves are available in chapter 6.1.

## 3.2. MATERIAL OF CONSTRUCTION

MA hydrocyclone body is made of Polyurethane that has a good resistance to abrasion (reference TM 390). This material is suitable for drinking water applications (DWI agreement in the UK, ACS certification in France, FDA approval). Seals are made of EPDM and nuts and bolts of SS.

Note: If the hydrocyclone is exposed to UV, it can turn yellow, but this has no impact on the properties of the material.

The suitable temperature range for the hydrocyclones is from -20°C to +60°C. If this range is not respected, there will be modifications of the mechanical properties of the material.

There are some chemical incompatibilities with MA hydrocyclones. The following chemical resistance is given for a water temperature of 20°C. The higher the temperature is, the lower is the chemical resistance.

Products to be avoided whatever the concentration:

- Chlorinated solvents (methylene chloride, chloroform, trichloroethane,..)
- Aromatic chlorinated solvents (chlorobenzene,…)
- Other solvents (THF, DMF, NMP, DMSO and pyridine)
- Ketones (MEK or MIBK)

Products to be avoided above a certain concentration:

- Weak acids (acetic, citric, boric, stearic): 3% maximum
- Strong acids (hydrochloric, sulphuric): 3% maximum
- Mineral acids (sodium bisulphate and phosphoric acid): 3% maximum
- Oxidant solutions:
  - Bleach (continuous): 0.5% maximum
  - Bleach (shock): 3% maximum
  - Sodium nitrate: 3% maximum
- Alkaline solutions:
  - Caustic soda: 3% maximum
  - Lime slurry: saturated
- Alcohol:
  - Ethanol and iso-propanol: 5% maximum
  - Methanol

There are no chemical incompatibilities with:

- Ferric chloride and aluminium chloride
- Oil and grease

## 3.3. CONNECTIONS, WEIGHT AND LAYOUT OF THE HYDROCYCLONES

The MA hydrocyclone has various connections:

- A feed inlet with Victaulic connection
- A service water inlet with barbed hose fitting
- An overflow with Victaulic connection
- An underflow nozzle

Note: MA1 hydrocyclone has four barbed hose fittings (feed, overflow and underflow and service water inlet).

Table 1: Connections and weights of the MA hydrocyclones

| | MA1 | MA5 | MA10 | MA20 | MA40 | MA80 |
|---|---|---|---|---|---|---|
| Feed inlet | 15.8mm | 1'' | 2" | 2" ½ | 4'' | 4'' |
| Overflow outlet | 15.8mm | 1''½ | 2" | 2" ½ | 4'' | 6'' |
| Service water inlet | 15.8mm | ½'' | ¾'' | ¾'' | ¾'' | 1'' |
| Weight | 650g | 6.2kg | 10.5kg | 18.2kg | 76.2kg | 116kg |

The MA10, 20, 40 and 80 have all a very similar design that is described in the Figure 1, Figure 2 and Figure 3. A per the latest design, some Victaulic connections of the MA40 and MA80 are reinforced with SS inserts.
The MA1 and MA5 have several specificities as shown in Figure 4. One of the key difference of these models is that they don't have a replaceable Apex Tip so must be full replaced when worn internally.

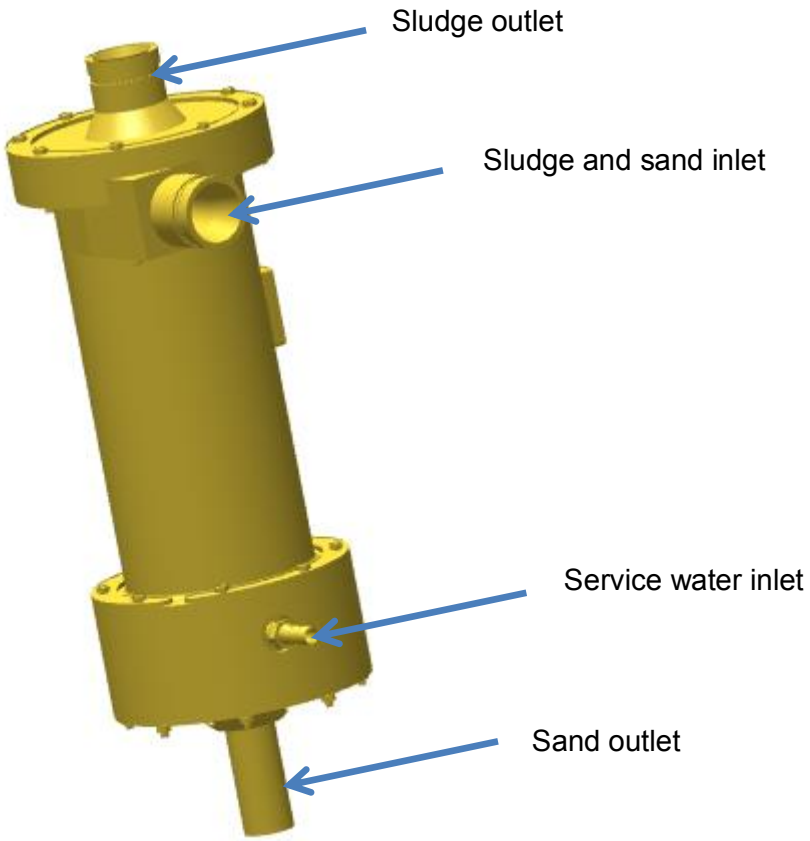


Figure 1:Hydrocyclone MA20 external view

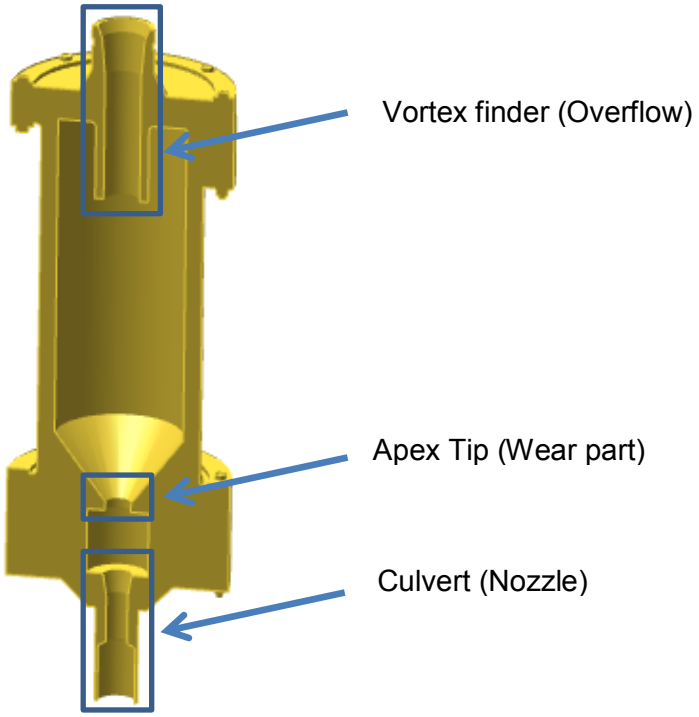


Figure 2: Hydrocyclone MA20 internal view 1

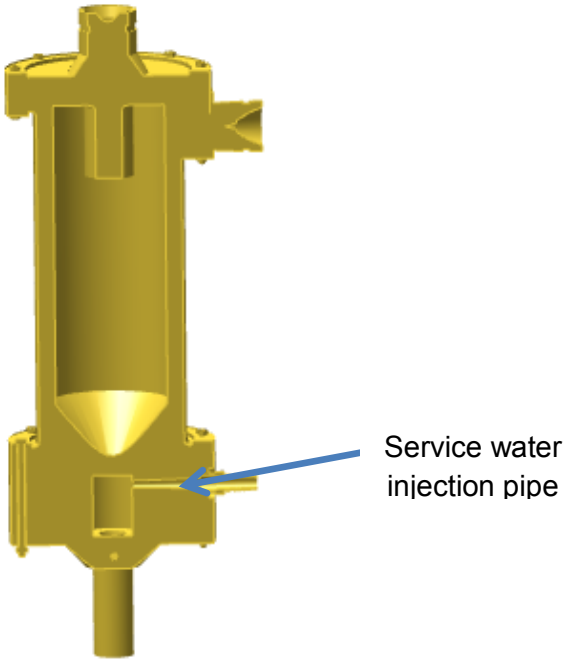


Figure 3: Hydrocyclone MA20 internal view 2

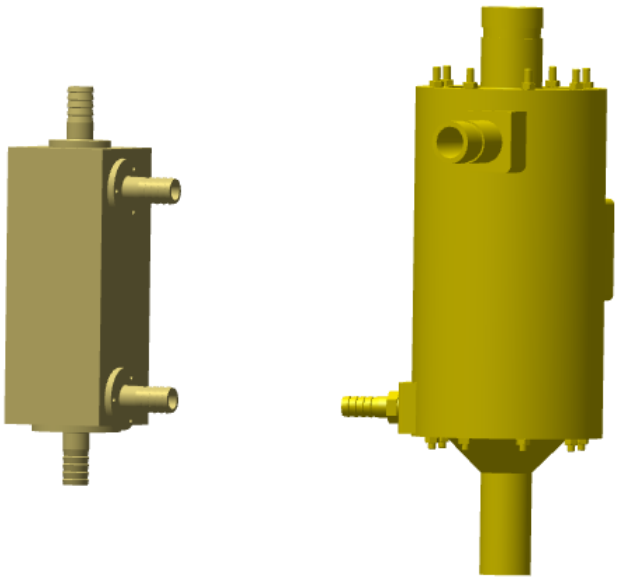

MA1 MA5

Figure 4: External views of Hydrocyclones MA1 and MA5

For the models MA20, MA40 and MA80, several alternatives Apex Tip and Vortex finder internal diameters are available in case the standard one doesn't provide expected performances and resistance to abrasion.

# 4. SHIPPING AND HANDLING REQUIREMENTS

## 4.1. TRANSPORT

Transport must be done by qualified staff, following local applicable legislations.
The freight company and its driver are responsible for ensuring that all components transported are secured according to all applicable transport regulations at pick-up, during transport and upon arrival.
Lifting must be done as described in the following chapter.
Suitable access control and limitation as well as signalisation must be ensured at the delivery place before the arrival of the trucks, according to local regulations.

### 4.1.1. Packing description

Unless specifically requested, MA hydrocyclones are delivered in carton boxes or filmed on pallets (depending on size and quantity ordered). Weight of the hydrocyclone without the packing are listed below. Dimensions of the hydrocyclone are available on the Outline and Connection Drawings.

Table 2: External dimensions and weight of the hydrocyclones

| Model | MA1 | MA5 | MA10 | MA20 | MA40 | MA80 |
|---|---|---|---|---|---|---|
| Total height | 224 mm | 445 mm | 606 mm | 796 mm | 1116 mm | 1293 mm |
| Body external width/diameter | 60 mm | 150 mm | 210 mm | 260 mm | 400 mm | 470 mm |
| Empty Weight | 650 g | 6.2 kg | 10.5 kg | 18.2 kg | 76.2 kg | 116 kg |
| Max Operating weight | 750 g | 7.5 kg | 15 kg | 31 kg | 102 kg | 170 kg |

### 4.1.2. Lifting

During any lifting operation, ensure you wear appropriate Personal Protective Equipment such as safety gloves, safety Shoes and suitable Helmet.
For MA1 to MA20, each hydrocyclone can be carried by hand.
For MA40 and MA80, lifting must be done using suitable equipment (two straps for example), by trained and authorized staff, following local regulations. Before lifting, delimit the no access safety perimeter to be maintained throughout the lifting operation. It shall also be ensured that no item is loose or damaged before.

If it is not possible to directly unload the hydrocyclone to its final location, suitable equipment shall be used for transportation between the unloading area and the final installation position. Ensure that the means used to lift and transport the hydrocyclone will not jeopardize its mechanical integrity. Use CE approved (or equivalent) lifting and transportation devices.

## 4.2. STORAGE

The following instructions outline the duties and responsibilities of the responsible party for equipment storage. The responsible party shall assume responsibility for the equipment upon arrival at the project site. These instructions shall define the minimum expectations for storage of all equipment.

While this storage specification takes into account common environmental issues that may affect the system during storage, common sense should be the overriding factor in determining the best method to ensure the integrity and proper storage of the VWT equipment.

If the equipment has to be stored on site, take into account following recommendations:

- Temperature between 5 and 50°C
- Relative humidity between 5 and 95% without condensation.
- Sheltered from sunlight and UV
- **Keep away from ignition sources at all time**
- Maximum storage of 10 years

# 5. MECHANICAL INSTALLATION & PIPING CONNECTION

## 5.1. MECHANICAL INSTALLATION

***WARNING :*** ***Some of the re-assembly steps may require working at heights There are also heavy loads that require suitable lifting devices. All work must be done with the suitable personal protective equipment at every step. This could include, amongst others wearing/using: a helmet, safety shoes, gloves, safety glasses, a harness, ladder, stop-fall device and mobile platform with handrails.***
***The unit should not be installed near flammable liquids or gases. Hydrocyclones are made in Polyurethane that is flammable. It must not be put in contact with direct flame. The hydrocyclone should be protected against any projections that could occur during welding activities.***

Before starting installation, check that the material is not damaged and the delivery is correct:

- There are no cracks
- There are no air bubbles in the polyurethane
- The model and number of parts is correct
- Material certificates are available

MA hydrocyclones are delivered already mounted. The only part of the cyclone that could be required to assemble on site is the service water connection. Teflon tap or a sealing gel should be applied to the threads before screwing the connection to the hydrocyclone. It is important to respect the maximum tightening torque as per values in the Table 3. If you don't need service water for your application, you can remove the service water nipple and use instead a simple plug in SS with Teflon tap or a sealing gel (refer to general assembly drawings for thread dimensions).

**Table 3: Maximal tightening torques for the different hydrocyclones parts**

| | MA5 | MA10 | MA20 | MA40 | MA80 |
|---|---|---|---|---|---|
| Nuts & bolts between overflow and cyclone body | 4Nm Max | 6Nm Max | 8Nm Max | 16Nm Max | 24Nm Max |
| Nuts & bolts between the underflow and the cyclone body | 4Nm Max | 2Nm Max | 8Nm Max | 16Nm Max | 24Nm Max |
| Service water connection | 1Nm Max | 1Nm Max | 1Nm Max | 1Nm Max | 1Nm Max |
| Nozzle | 1Nm Max | 1Nm Max | 1Nm Max | 1Nm Max | 1Nm Max |

Before installing the hydrocyclone to its final location, tightening must be checked and adjusted as per the table above. When tightening the connection between the overflow and the body as well as the overflow and the body, do not screw nut & bolts one after the other clockwise, but

screw opposite nuts & bolts one after the other (in a star shape as per Figure 5 below) and tight progressively the nuts, repeating the tightening sequence several times. This will avoid deformation problems and issues of leaking at the gaskets or O–rings.

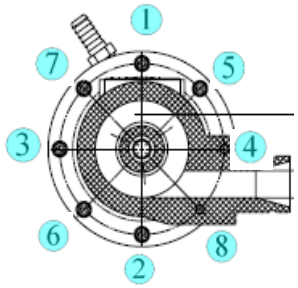


Figure 5: Nuts & bolts screwing sequence

There are many possible mechanical installations in terms of supporting skid. Below are some pictures of existing design within Veolia. An important point is that a belt or strap must maintain the body of the cyclone to minimize vibrations and expansion in operation (except for MA1) that hasn't a cylindrical body. It is mandatory for mechanical installation of MA40 and MA80 to consider a suitable strap in order to avoid excessive vibrations.





Figure 6: Examples of hydrocyclone installation

When installing the hydrocyclone:

- Make sure that the hydrocyclone is perfectly vertical
- Avoid knocking the hydrocyclone
- Install the hydrocyclone with its support
- Once the support assembly is set up, connect the different pipes

The Victaulic connections can compensate a slight misalignment. Avoid excessive misalignment which will generate stress and could break the cyclone.
During operation, hydrocyclones can inflate and vibrate. It is mandatory to consider a belt and a saddle around the body that would constraint the body over 360°.
For largest models (especially MA80 but also MA40 or MA20 when operating at high flows), it is recommended to have 2 belts and saddles.
Please refer to pictures available in Figure 6 as possible installation. Below in Figure 7, an example of skid in Stainless steel with Saddle in Item 6 and belt in Item 3. Other materials such as rigid plastics can be also considered for these 2 parts.

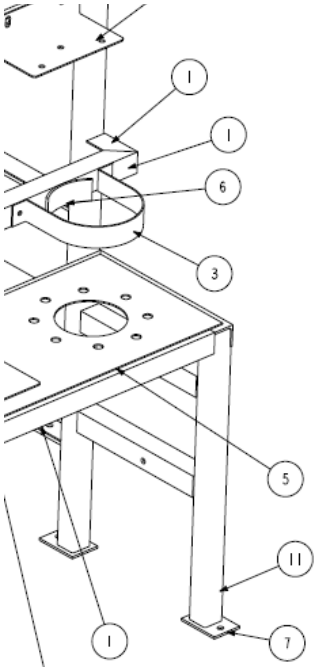


Figure 7: Example of hydrocyclone support skid

Refer to Table 2 for the weight of each hydrocyclone empty and full of water.

The unit should not be installed near flammable liquids or gases.
Hydrocyclones are made in Polyurethane that is flammable. It must not be put in contact with direct flame.

## 5.2. HYDRAULIC CONNECTIONS

### 5.2.1. Inlet for sand + sludge

The recirculation pipework of sludge + sand must be connected to the hydrocyclone inlet. This pipe must be self-supported and should not apply significant stress on the Hydrocyclone. A suitable victaulic coupling (not in hydrocyclone scope of supply) must be used to avoid any leaks. Ensure that you have proper tightening of the victaulic coupling with suitable torque as per supplier's datasheet. At least one device to control pressure at the inlet of sand+sludge is mandatory. As pressure cannot always be fully reliable to estimate flowrate, and is not always possible to install in the right position just before the hydrocyclone inlet, it can also be useful to have a suitable flow meter installed in the recirculation line, between the recirculation pump and the hydrocyclone.
If the inlet pipework does not match the hydrocyclone victaulic size, a slightly tapering convergent cone must be use or standard reducer if installed more than 10 times the pipe diameter before the hydrocyclone inlet.

Pipework should be straight without elbows more than 10 times the pipe diameter before the hydrocyclone inlet.

In case of single pump feeding several hydrocyclones, a proper repartition must absolutely be ensured through a proper pipework design.

### 5.2.2. Sludge outlet (overflow)

The pipework for sludge outlet must be connected to the hydrocyclone top outlet. This pipe must be self-supported and should not apply significant stress on the Hydrocyclone. A suitable victaulic coupling (not in hydrocyclone scope of supply) must be used to avoid any leaks. Ensure that you have proper tightening of the victaulic coupling with suitable torque as per supplier's datasheet.
It can be useful to have a suitable flow meter installed to monitor sludge flow rate.
The diameter of the sludge outlet pipework must be the same than the sludge outlet victaulic connection.
Hydrocyclone operation introduces air into the sludge extraction line. Therefore, it is necessary to install a vent in the sludge outlet pipework, for each Hydrocyclone. Vent must be at the highest point of the sludge outlet pipework, have a diameter equal to the sludge outlet pipework and a height of at least 10 times the pipe diameters, preferably 15 times.
To ensure proper functioning of the hydrocyclone, the overflow must be at atmospheric pressure. Sludge outlet pipework must go to a collector with an air break. Counter-pressure (static and dynamic) induced to the cyclone by the outlet pipework should be less than 0,15 bar.

### 5.2.3. Sand outlet (underflow)

For all Actiflo Turbo applications, return of sand must be going inside the draft tube of the flocculation mixer. In case it is impossible, it is possible but much less effective to design return of sand to go to the inlet of the flocculation tank.
The underflow outlet generates a lot of splashes so a suitable device shall be considered to protect against these. Materials of construction of this device must be suitable to resist against abrasion (rubber lining, suitable polyurethane or plastic). See Figure 6 for examples.

### 5.2.4. Service water inlet

Service water requirements are the following:

- Quality: 20 µm filtered water
- Pressure: Sand and sludge recirculation flow inlet pressure + 0.5bar
- Flow: 10% of the inlet flow

The service water pipe shall be connected to the hydrocyclone with a flexible pipe (Tricoclair for example) to avoid damage due to vibrations.

It is highly recommended to have a flow indicator in the service water feed line in order to check the inlet flow and a solenoid valve interlocked to the recirculation pump. If pressure is not controlled by another device, suitable pressure adjustment device and pressure indicator are mandatory to ensure proper pressure.

## 5.3. PRE-COMMISSIONING CHECKS

The minimum numbers of points, to verify before commissioning, are listed below. Use your good judgement to determine if there are any other points to verify. Any additional verification required according to project, site or local regulations must be also made. Read chapter 6 of this manual before proceeding with pre-commissioning.

1. Check that the micro-sand that will be used in commissioning and after in operation is in line with the specifications as per Table 4.
2. Check also that all components, especially the ones related to safety, are properly bolted/installed and that there is no unusual movement. If there is any risk of injury, the problem must be solved before proceeding with further tests.
3. Check that the Actiflo tanks are clean and completely empty of foreign objects
4. Run the recirculation pump with clear water and check no leaks are present and that the underflow water going out has the shape of a cone/umbrella. See Figure 8. If you don't obtain such shape, there might a problem with the recirculation pump duty point or maybe a foreign objects are inside the Hydrocyclone and must be removed.

5. Check the hydrocyclone inlet pressure and the back-pressure on the overflow
6. If applicable adjust service water flow and pressure.

Table 4: Micro-sand specifications

| | Drinking water / Process water (Type I) | Waste water (Type II) |
|---|---|---|
| Type (Rolled or Crushed) | Crushed | Crushed |
| Silica concentration (SiO2) | >95% | >95% |
| Effective size (d10) | 85-100 µm | 130-150 µm |
| Uniformity coefficient (d60/d10) | <1.7 | <1.7 |
| Minimum size (2/3*d10) | 60 µm | 80 µm |
| Maximum size | 200 µm | 300 µm |
| Real density | 2650 kg/m3 | 2650 kg/m3 |
| Loss on combustion | Less than 0.1% | Less than 0.1% |



Figure 8: underflow cone shape in normal operation conditions

## 5.4. COMMISSIONING CHECKS

During commissioning, micro-sand is present inside the Actiflo and so will be also present inside the hydrocyclone when the recirculation pumps are running. During all commissioning steps, suitable eyes protection must be worn next to the hydrocyclone to protect against sands projections. Also, suitable gloves must be worn anytime hands are exposed to the underflow fluid as microsand can be very abrasive.

The minimum numbers of points, to verify during commissioning, are listed below. Use your good judgement to determine if there are any other points to verify. Any additional verification

required according to project, site or local regulations must be also made. Read chapter 6 of this manual before proceeding with commissioning.

1. Check that the underflow water going out has the shape of a cone/umbrella. See Figure 8. If you don't obtain such shape, there is a problem with the recirculation pump duty point or foreign objects are inside the Hydrocyclone and must be removed.
2. Check sand concentration at the inlet of the hydrocyclone (it should be less than 150g/l)
3. Check that sand concentration and flow at the underflow are in line with the process calculations
4. Check repartition between overflow and underflow (should be around 80/20)
5. Check the absence of significant amount from micro-sand at the overflow. In theory, less than 0,1% of the micro-sand entering the hydrocyclone is going to the overflow.

To better adapt their performance, hydrocyclones MA20, 40 and 80 are equipped with interchangeable parts of different diameters for the overflow and underflow. Next table shows the available sizes. The ones already installed inside the hydrocyclone in standard are indicated with in bold and underlined. In most cases, the standard ones are suitable but depending on site parameters (Actiflo application, type of sludge, concentration of sludge, specification of microsand, etc), it might be required to change them for one of the available alternatives.

Note: The use of interchangeable parts with different inner diameters does not affect the connection diameters of the hydrocyclone.

**Table 5: MA20, 40 and 80 interchangeable parts (Vortex finder and Apex Tip)**

| | MA20 | MA40 | MA80 |
|---|---|---|---|
| Vortex finder internal diameter D1 (mm) | 37 | 51 | 65 |
| | **42** | **56** | **70** |
| | 47 | 61 | |
| Apex Tip iternal diameter D2 (mm) | 25 | 35 | 45 |
| | **30** | **40** | **50** |
| | 35 | 45 | 55 |

Please refer to the spare parts list in the chapter 7.4 for more information.

Some parts of the largest hydrocyclones are heavy. Suitable Personnel Protection Equipment such as safety shoes and a suitable helmet must be worn during the interchangeable parts replacements. For the largest hydrocyclones, suitable lifting devices are required.

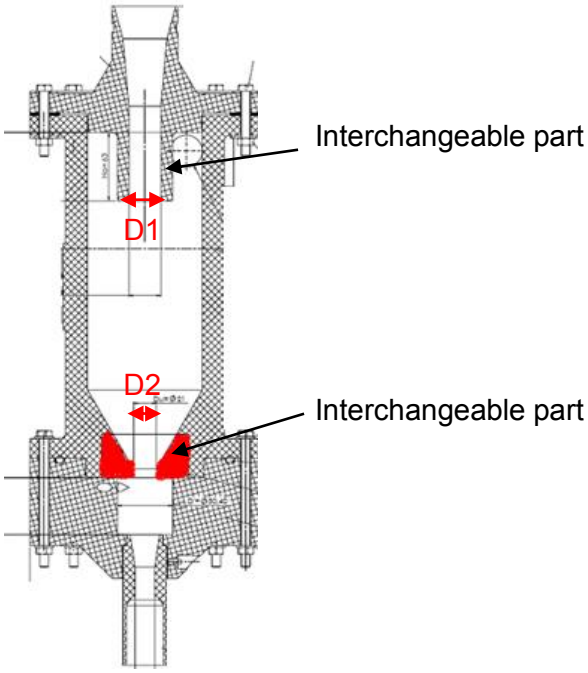


Figure 9: Interchangeable parts

The diameter of the overflow opening (VORTEX finder) affects the cut-off efficiency and the hydrocyclone head loss whereas the underflow (APEX Tip) diameter has influence on the cut-off efficiency and flow.

The lower the APEX Tip internal diameter is, the lower the water underflow is: the SS flow remains constant, but the underflow SS concentration rises.

The lower the overflow internal diameter is, the higher the pressure loss is and the lower the sand loss is.

# 6. OPERATION AND MONITORING

To minimise the risk of injury, adequate lighting is required for proper operation and monitoring. Only authorized personnel, using suitable Personnel Protection Equipment, shall be able to access the Actiflo Area while the unit is operating.
To reduce the risk of biological hazards, use personal protection equipment and ensure that all personnel working around the Actiflo have received the proper vaccines.
If you need to spend prolonged period of time near the Actiflo, consider also ear protections against motor noise.

## 6.1. FLOWS AND PRESSURE

The following graphs shows:
- Relation between inlet flow, overflow and underflow
- Relation between hydrocyclone's inlet flow and pressure losses inside the hydrocyclone for each model.

In case of pressure measurement at the inlet of the hydrocyclone, counter pressure applied on the overflow (less than 0.15 bar) must be removed from the value read on the pressure measurement device, in order to interpret properly these graphs.
In addition, if pressure is measured at the outlet of the recirculation pump, pressure losses in the recirculation pipework and hydrostatic pressure shall also be removed from the value read on the pressure measurement device, in order to interpret properly these graphs.

All the values of these graphs must be considered as approximate (+/-15%) as they depend on many site parameters such as type of sludge, concentration of sludge, concentration of sand, specification of microsand, temperature, type of supports, shape of pipework before the hydrocyclone, etc

### 6.1.1. MA1: range from 400 to 1000 L/h

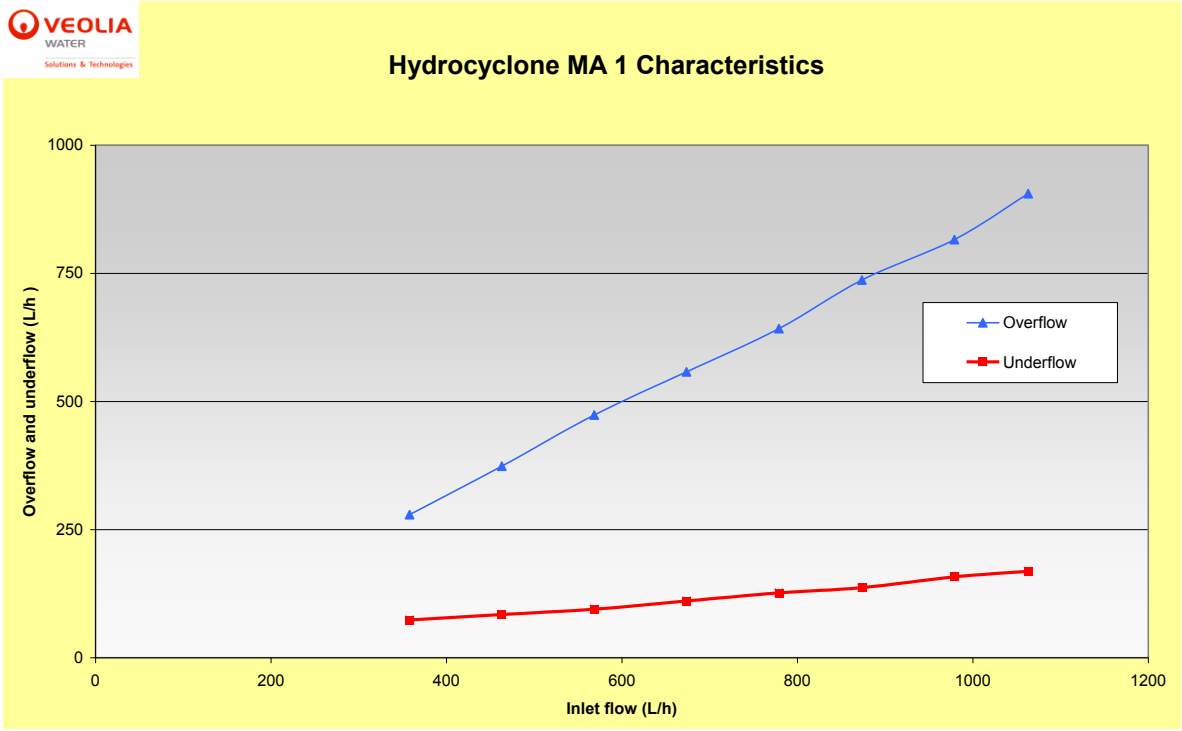


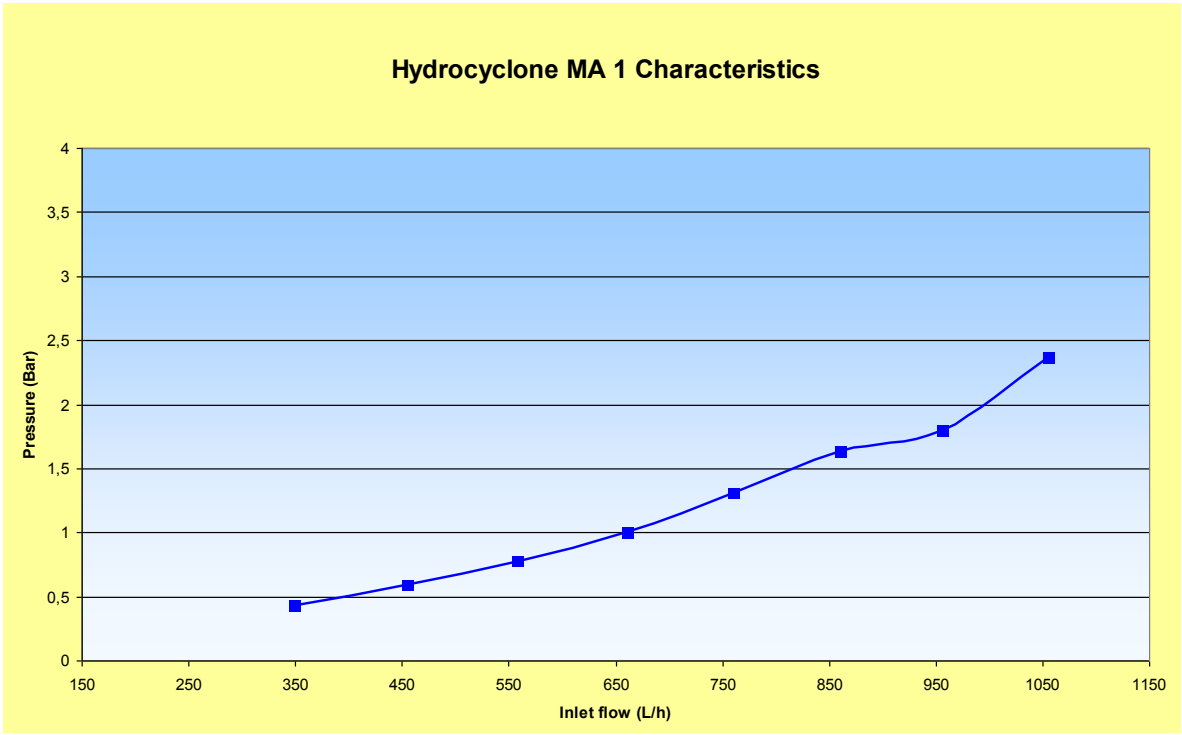

### 6.1.2. MA5: range from 4 to 6 m3/h

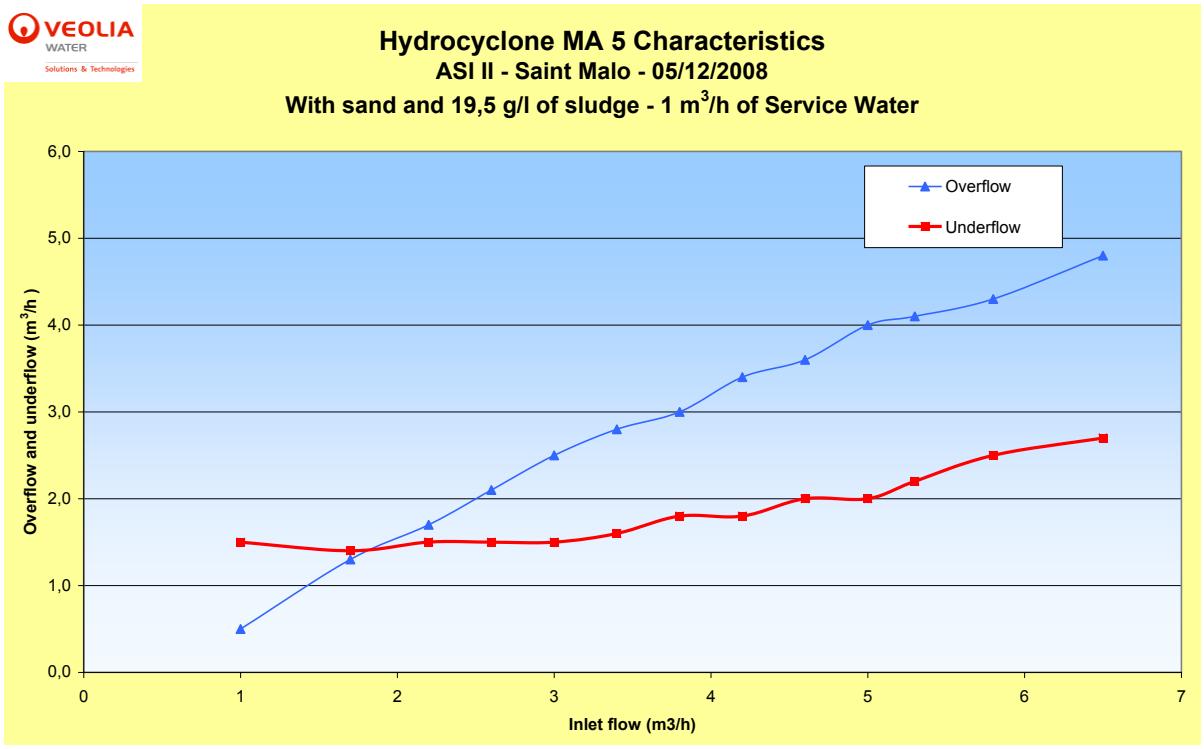


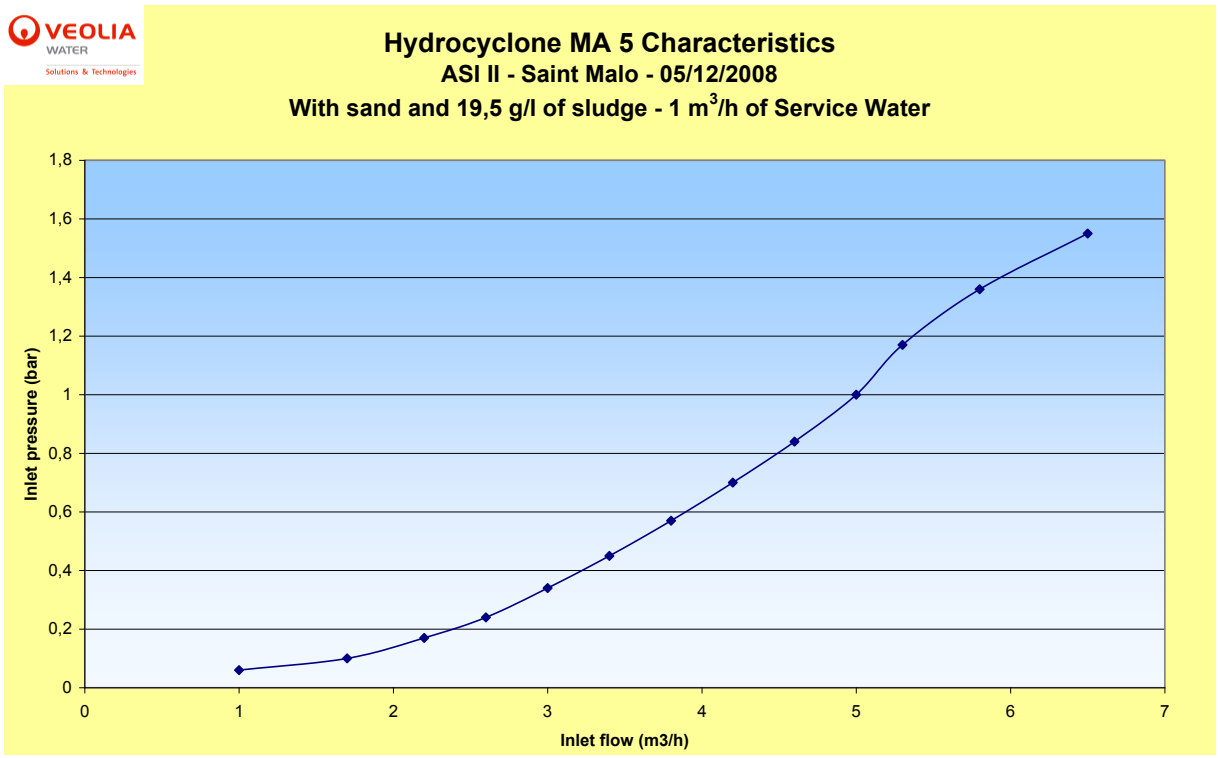

### 6.1.3. MA10: range from 8 to 14 m3/h

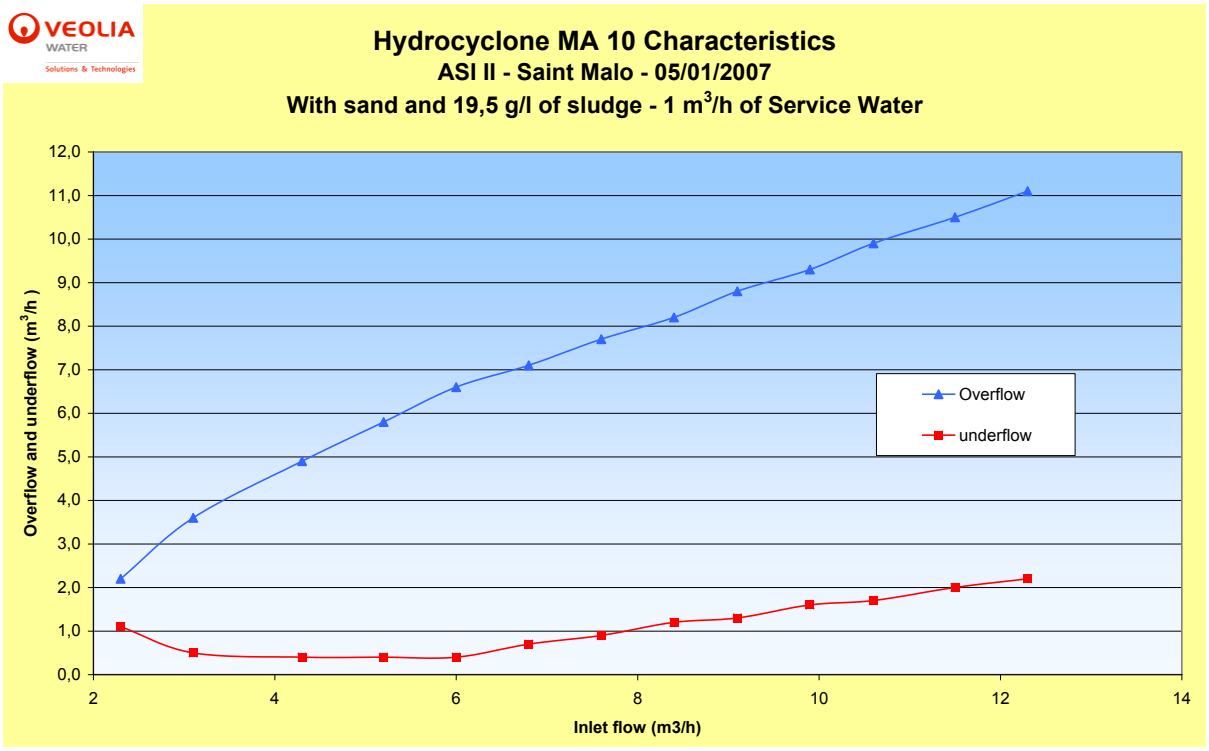


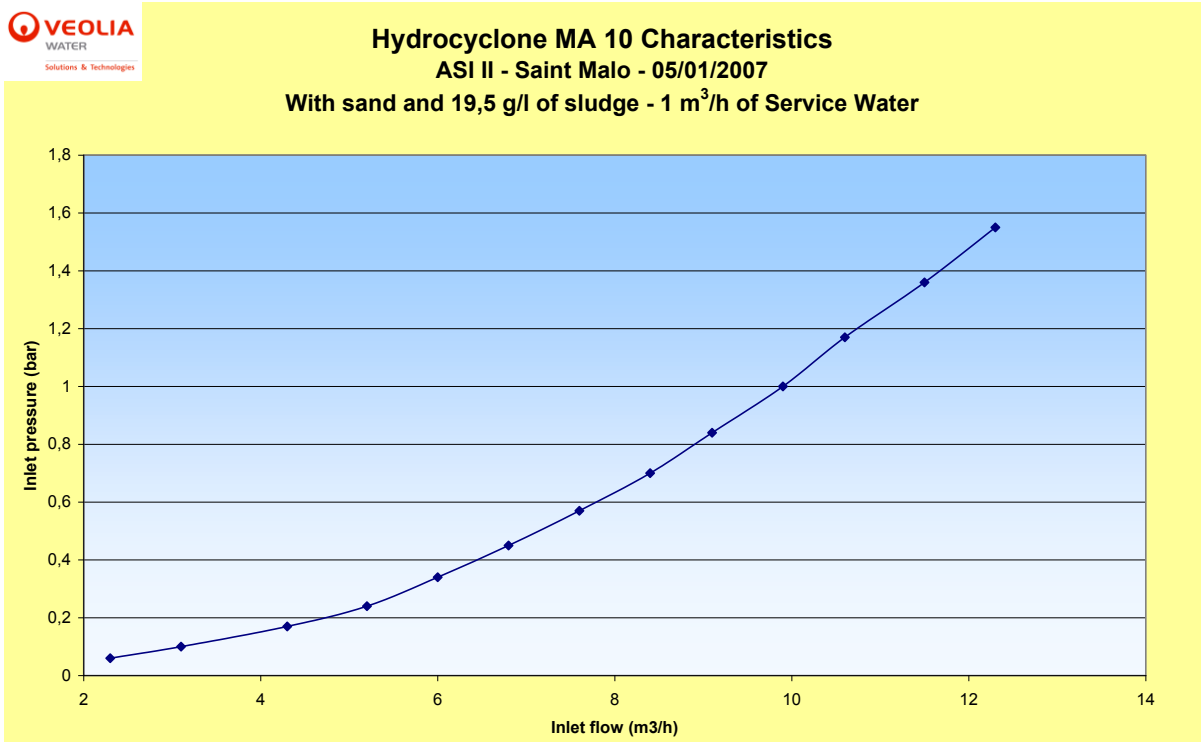

### 6.1.4. MA20: range from 16 to 30 m3/h

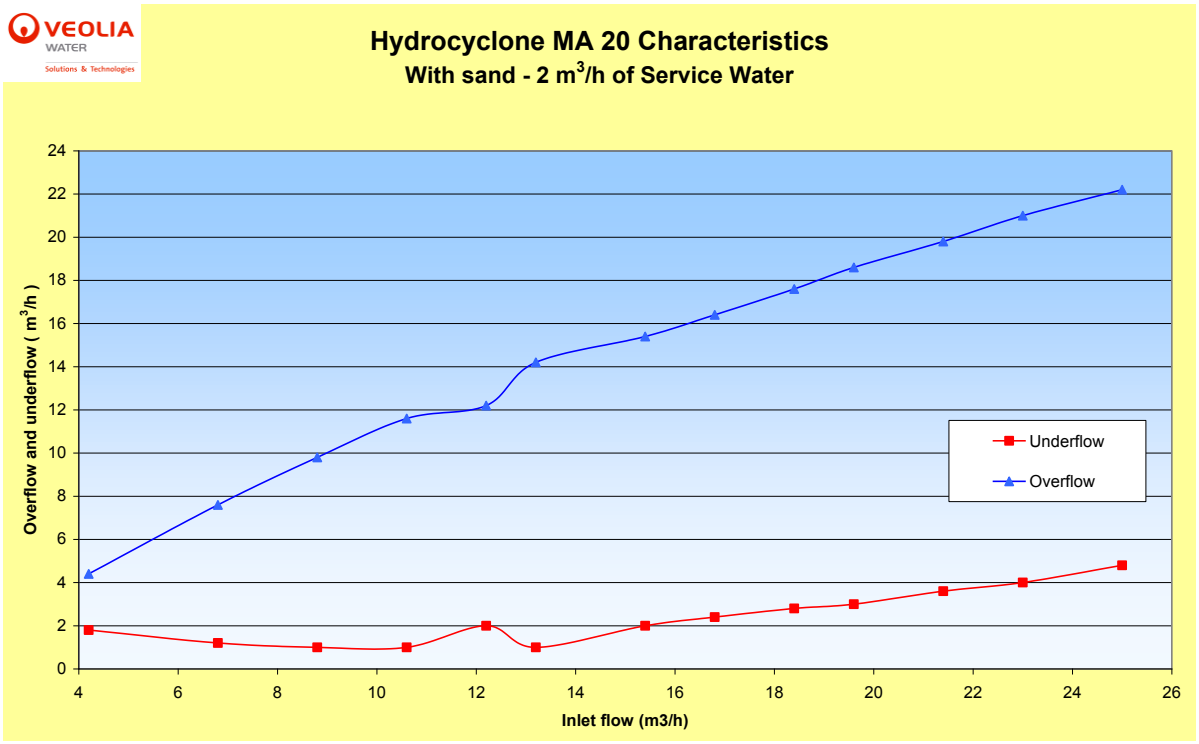


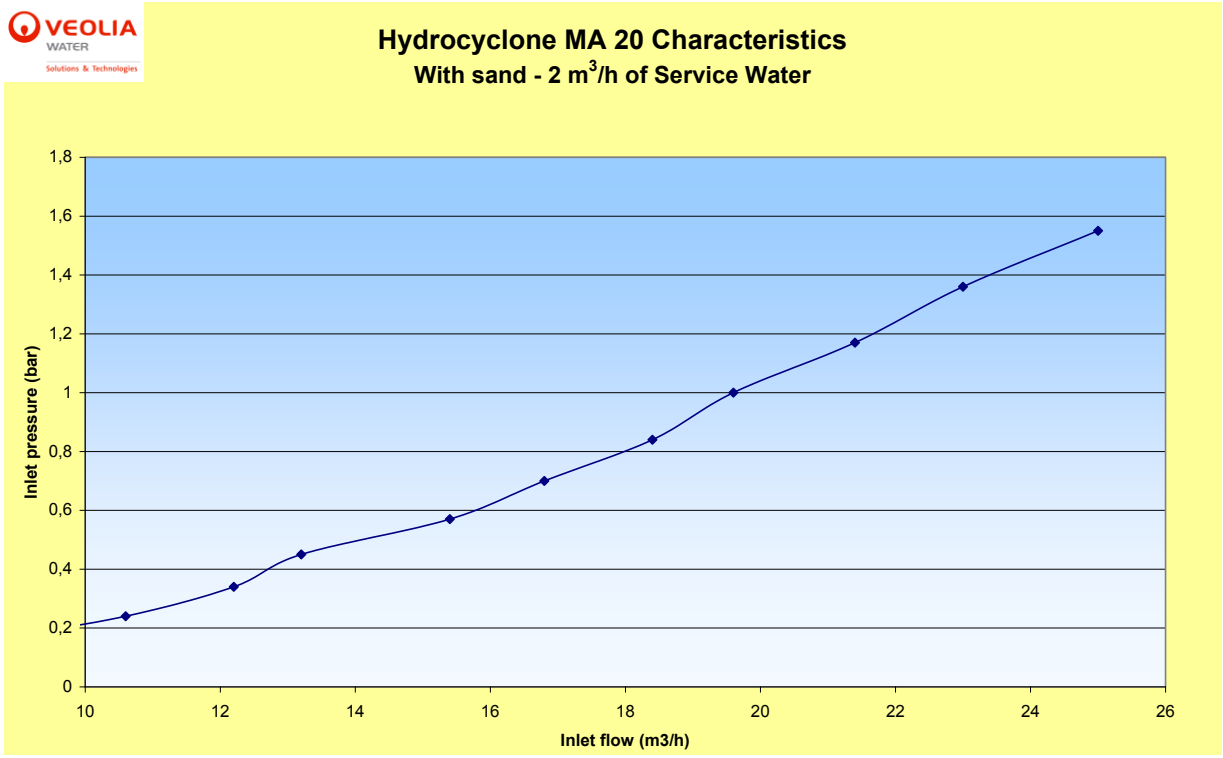

### 6.1.5. MA40: range from 35 to 54 m3/h

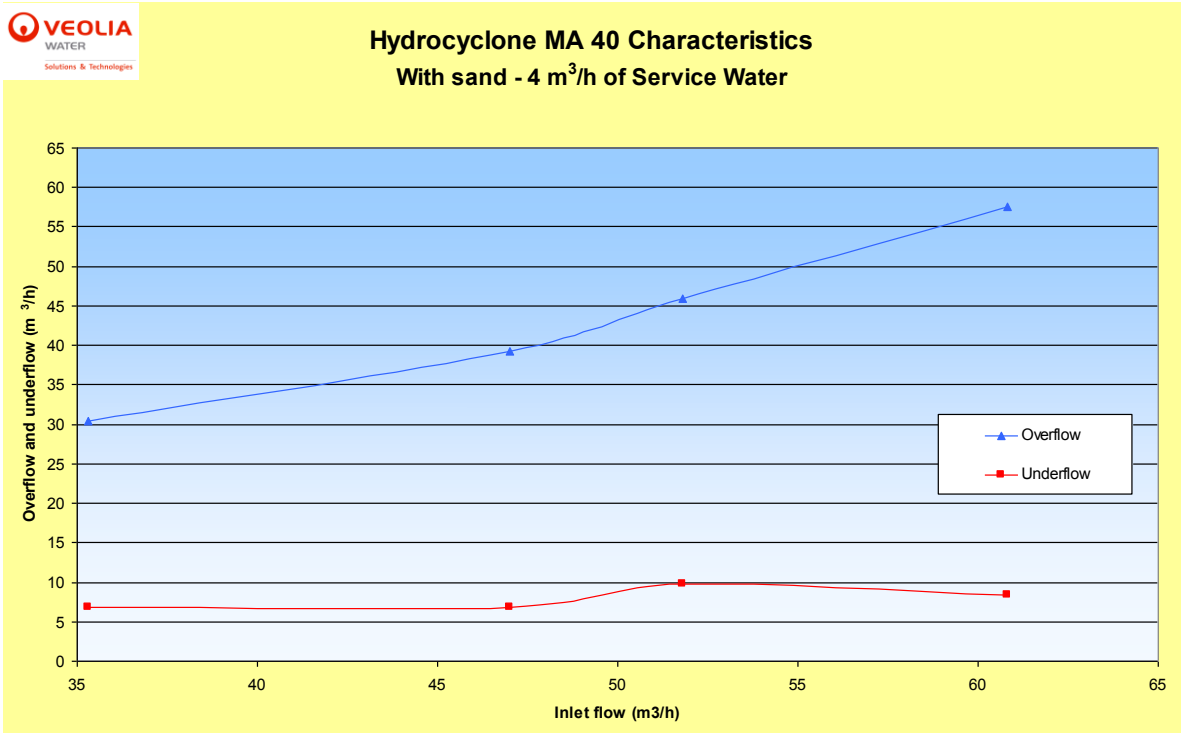


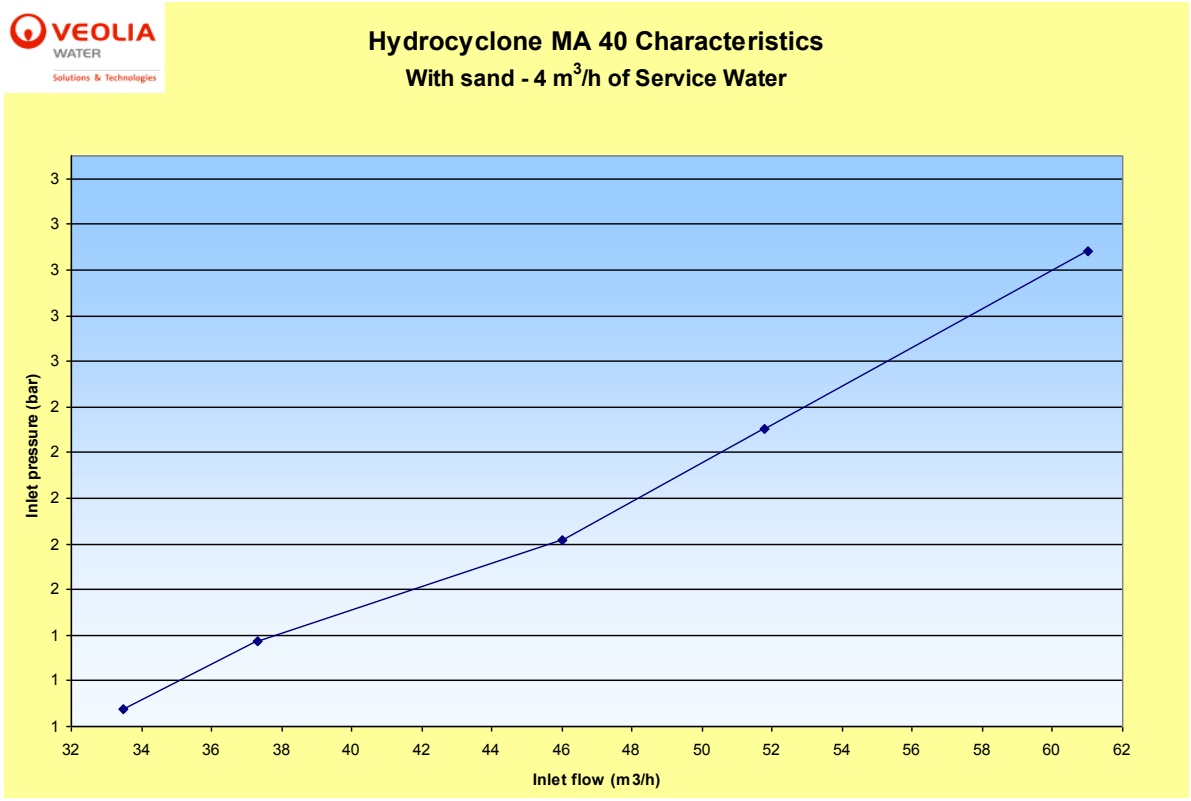

### 6.1.6. MA80: range from 60 to 80 m3/h

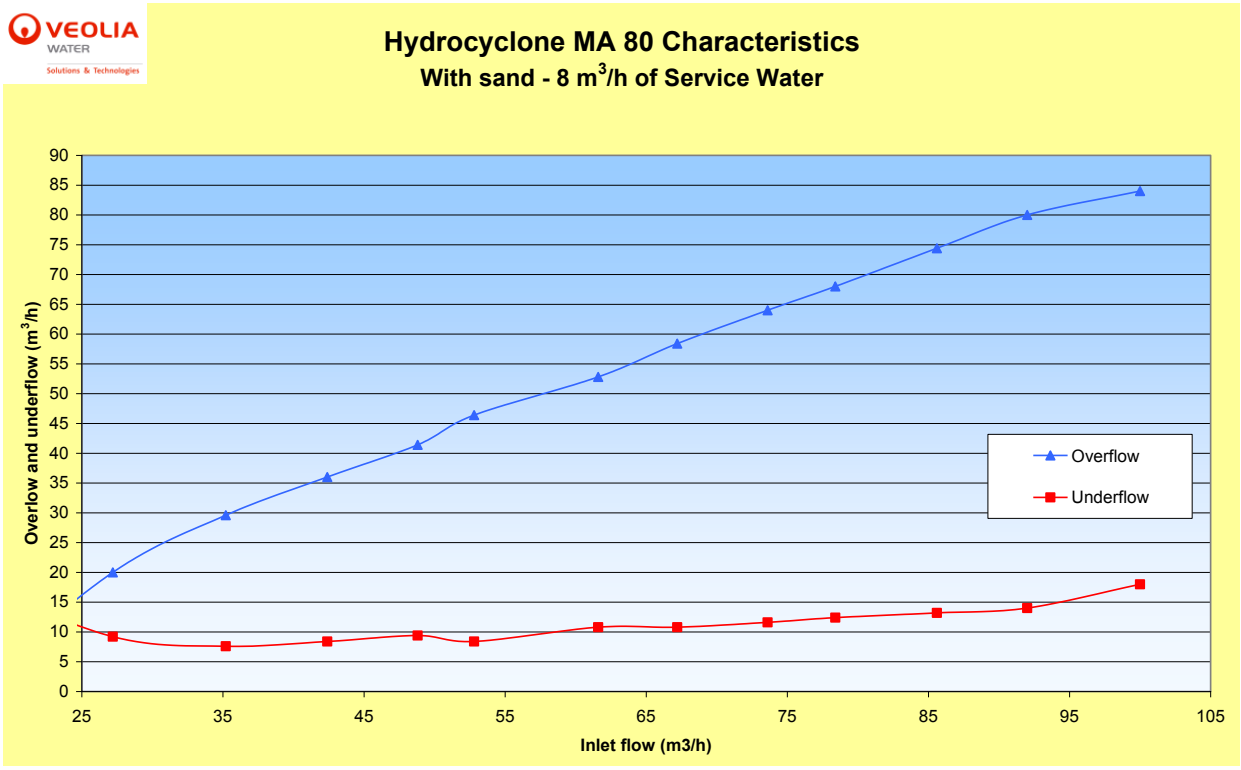


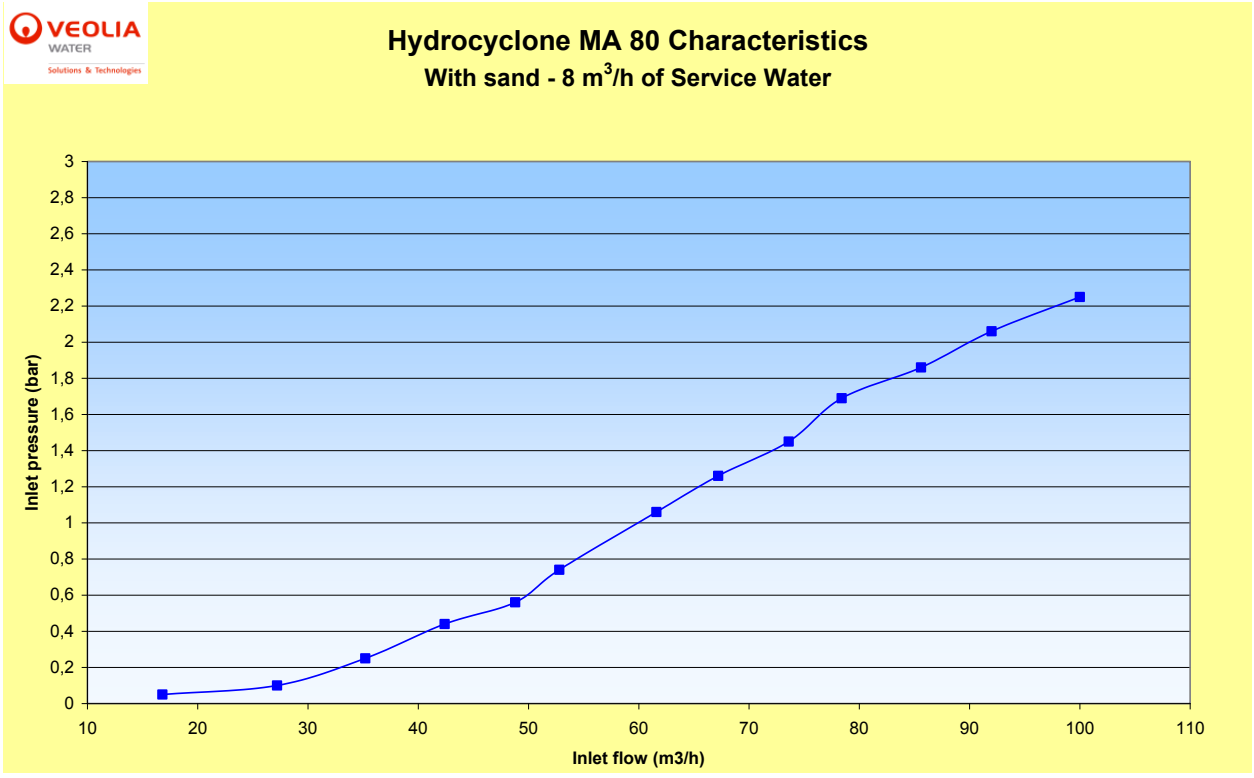

## 6.2. NORMAL OPERATIONS AND PARAMETERS TO MONITOR

In order to ensure optimum performance of the hydrocyclone, it is necessary to follow-up on several parameters on a regular basis and to record them.
Several parameters can be monitored by using the instruments, with values recorded managed by the automation software. Some other values (like sand concentration) are more usually measured manually, using suitable Personnel Protection Equipment.

It is recommended that the operators record the following parameters, if suitable devices are available:

- Every eight hours
  - pressure at the hydrocyclones inlet
  - flow rate in recirculation lines
  - microsand concentration in the recirculation lines

- On a daily basis
  - microsand concentration in the sludge outlet
  - microsand concentration in the flocculation tank
  - Overflow sludge flow rate

- On a weekly basis
  - flow rate at the hydrocyclone underflow
  - sand concentration, hydrocyclone underflow

During the operation required to check these values, always wear suitable eyes protection as well as gloves suitable to protect against microsand abrasion.

| ***WARNING :*** | ***Check on a daily basis that anchoring of the hydrocyclone supporting skid is stable and tightened. Also, check that there are no abnormal vibrations that could loosen supports or devices related to safety*** |
| --- | --- |

# 7. MAINTENANCE AND TROUBLESHOOTING

For all daily inspections, maintenance and troubleshooting activities, always wear the required personnel protection equipment (Safety shoes and helmet against heavy loads, gloves and safety glasses projections of sand or chemicals, dust, etc). If you need to spend a prolonged period of time near the Actiflo, wear hearing protection to reduce motor noise. In addition, always ensure you are following the site procedures in terms of safety, especially electrical, mechanical and hydraulic isolation/lock out-tag out.
If you need to use lifting devices, ensure they are suitable (max loads, etc) and that they are operated only by qualified staff.

## 7.1. DAILY INSPECTION

Inspections should be carried out on a daily basis. The purpose is to confirm that the unit is safe to operate and is fully functional.
In this section, there is a list of some major tasks to be carried out. Additional tasks may be required depending upon site requirements. In addition to the tasks in the following table, process parameters must also be monitored as listed in section 6.2.

Table 6: Daily inspection tasks

| Task | Location | Action | Specification |
|---|---|---|---|
| 1 | Unit and piping | Confirm no leakage | No water leakage |
| 2 | Unit and piping | Confirm no abnormal vibration | Vibrations hardly visible |
| 3 | Support and anchorings | Confirm no abnormal movements | No risk of falling, No abnormal movement of mechanical parts |
| 4 | Underflow | Check the shape of the sandy water out of the underflow | Cone similar to Figure 8 |

In case of leakage or abnormal vibrations, stop water/chemicals and check the integrity of the pipework, seals and check that all bolts are properly tightened.
If defect on seals are detected, replace damaged components. If all parts are in good state and retightening is not solving the leakage issue, replace the complete hydrocyclone.

## 7.2. COMPONENTS MAINTENANCE

Maintenance work should be carried out on a regular basis or in response to faults found during daily inspection and during exceptional maintenance during shutdown of the plant. This section indicates the minimum number of maintenance tasks that are required.

Depending on site conditions (sand concentration, type of sand, temperature and humidity, flow rate, etc.), the advised frequency might need to be increased. To optimize maintenance costs, many of these tasks can be done at the same time during yearly maintenance visits.

**Table 7: Components maintenance guidelines**

| No. | Location | Action | Frequency advised and references |
| --- | --- | --- | --- |
| 1 | APEX Tip | Check wear/attrition and replace when required | Check internal diameter increase every 6 months during the first 2 years. Replacement recommended every 6 to 18 months (depending wear speed, to replace when internal diameter is 10% larger than originally) |
| 2 | Vortex Finder | Check wear/attrition and replace when required | Check internal diameter increase every year during the first 2 years. Replacement recommended every 18 to 36 months (depending wear speed, to replace when internal diameter is 5% larger than originally or when external diameter is 5% smaller than originally) |
| 3 | Bolts and Nuts | Check tightening torque | Tighten every year, targeting 5% below the values in Table 3 |

## 7.3. TROUBLESHOOTING

The symptoms, related causes and actions might not be applicable to issues faced during commissioning. There causes and recommended actions are defined considering an hydrocyclone operating originally properly and then starting to malfunction.

Table 8: troubleshooting guidelines

| No. | Symptom | Probable causes | Recommended Actions |
|---|---|---|---|
| 1 | Excessive Sand Loss in Overflow | Blockage at the underflow outlet<br><br>Too high inlet pressure/flow<br><br>High Wear of Vortex finder<br><br>Too high flow of service water | Check overflow sludge pipework internal aspect and clean if it is clogged or contains debris<br><br>Check recirculation pump speed and compare with recommended frequency on site<br><br>Replace the Vortex finder<br><br>Adjust flow to be around or below 10% of recirculation flow |
| 2 | Excessive vibration | Untightened bolts and nuts<br><br>Too high inlet pressure/flow<br><br>High Wear of Vortex finder | Tighten targeting 5% below the values in Table 3<br><br>Check recirculation pump speed and compare with recommended frequency on site<br><br>Replace the Vortex finder |
| 3 | High return of sludge in underflow | Blockage in the overflow pipework<br><br>Too low inlet pressure/flow<br><br>High wear of APEX tip | Check overflow sludge pipework internal aspect and clean if it is clogged or contains debris<br><br>Check recirculation pump speed and compare with recommended frequency on site<br><br>Replace Wear part/Vortex finder |
| 4 | Excessive pressure loss inside the cyclone | Blockage at the underflow outlet<br><br>Blockage in the overflow pipework | Check overflow sludge pipework internal aspect and clean if it is clogged or contains debris<br><br>Open the hydrocyclone, remove foreign objects and clean internal parts |
| 5 | Leakage from the hydrocyclone | Untightened bolts and nuts<br><br>Damaged gasket or O-ring | Tighten targeting 5% below the values in Table 3<br><br>Replace Gasket and/or O-ring |

## 7.4. SPARE-PARTS

Spare-parts for MA1 and MA5 are not available. They must be fully replaced every 3 to 6 years.
If required spares are not in this list, replacement complete hydrocyclone must be ordered.

**Table 9: Spare-parts list**

| LATIS PART NUMBER | MODEL | | |
|---|---|---|---|
| | Type | Description | Drawing ref |
| PRIPHC320975 | MA1 | | |
| PRIPHC201726 | MA5 | | |
| PRIPHC201727 | MA10 | | |
| CMSPHC201571 | Wear part | Apex Tip - Wear part MA10 | A2102 01 304 |
| SPSVGU303728 | Wear part | Vortex finder - Overflow MA10 | A2102 01 203 |
| CMSPHC201572 | Spare-part | Culvert-Nozzle MA10 | A2102 01 305 |
| CMSPHC320564 | Spare-part | Flat Gasket dia 210 mm | A2102 01 306 |
| SEORGU334169 | Spare-part | O RING Ø int 148.59 Ø tore 6.99 | A2102 01 001 (item 13) |
| PRIPHC201728 | MA20 (supllied in standard with Apex Tip Ø30 and Vortex finder Ø42) | | |
| SPSVSV303664 | Wear part | Apex Tip - Wear part Ø30 | A2103 01 304 |
| CMSPHC201573 | Wear part | Apex Tip - Wear part Ø25 | A2103 01 314 |
| CMSPHC201574 | Wear part | Apex Tip - Wear part Ø35 | A2103 01 315 |
| SPSVGU304544 | Wear part | Vortex finder - Overflow Ø42 | A2103 01 203 |
| SPSVGU303864 | Wear part | Vortex finder - Overflow Ø37 | A2103 01 212 |
| SPSVGU303865 | Wear part | Vortex finder - Overflow Ø47 | A2103 01 213 |
| SPSVSV303645 | Spare-part | Culvert-Nozzle MA20 | A2103 01 305 |
| CMSPHC332987 | Spare-part | Flat Gasket dia 260 mm | A2103 01 306 |
| SEORGU334168 | Spare-part | O-ring Ø int 196.22 Ø tore 6.99 | A2103 01 001 (item 13) |
| PRIPHC201729 | MA40 (supllied in standard with Apex Tip Ø40 and Vortex finder Ø56) | | |
| SPSVGU308087 | Wear part | Apex Tip - Wear part Ø40 | A2109 01 306 |
| SPSVGU311090 | Wear part | Apex Tip - Wear part Ø35 | A2109 01 315 |
| SPSVGU311091 | Wear part | Apex Tip - Wear part Ø45 | A2109 01 316 |
| SPSVGU308084 | Wear part | Vortex finder - Overflow Ø56 | A2109 01 203 |
| SPSVGU308085 | Wear part | Vortex finder - Overflow Ø51 | A2109 01 217 |
| SPSVGU308086 | Wear part | Vortex finder - Overflow Ø61 | A2109 01 218 |
| SPSPGU308844 | Spare-part | Culvert-Nozzle MA40 | A2109 01 305 |
| CMSPHC332988 | Spare-part | Flat Gasket dia 400 mm | A2109 01 310 |
| SEORGU330708 | Spare-part | O-ring Ø int 291.47 X Ø tore 6.99 | A 2109 01 001 (item 13) |
| PRIPHC201730 | MA80 (supllied in standard with Apex Tip Ø50 and Vortex finder Ø70) | | |
| CMSPHC304258 | Wear part | Apex Tip - Wear part Ø50 | A2108 01 306 |
| CMSPHC302648 | Wear part | Apex Tip - Wear part Ø45 | A2108 01 315 |
| CMSPHC302649 | Wear part | Apex Tip - Wear part Ø55 | A2108 01 316 |
| CMSPHC201575 | Wear part | Vortex finder - Overflow Ø70 | A2108 01 203 |
| CMSPHC302650 | Wear part | Vortex finder - Overflow Ø65 | A2108 01 217 |
| CMSPHC302651 | Wear part | Vortex finder - Overflow Ø75 | A2108 01 218 |
| SPSVGU307427 | Spare-part | Culvert-Nozzle MA80 | A2108 01 305 |
| CMSPHC201581 | Spare-part | Flat Gasket dia 470 mm | A2108 01 310 |
| SEORGU330708 | Spare-part | O-ring Ø int 291.47 X Ø tore 6.99 | A 2108 01 001 (item 13) |
| SEORGU333468 | Spare-part | O-ring Ø int 367.67 X Ø tore 6.99 | A 2108 01 001 (item 21) |

LEFT BLANK

# *6 – OPERATION AND MAINTENANCE*

## *6.2 – DISCFILTER*

## *6.2.1 – INSTALLATION, OPERATION AND MAINTENANCE MANUAL*

**VEOLIA / HYDROTECH DISCFILTER**
**DETAILED MAINTENANCE MANUAL**
**REFER TO SECTION 8.2.027**
**IN VOLUME 2**

LEFT BLANK

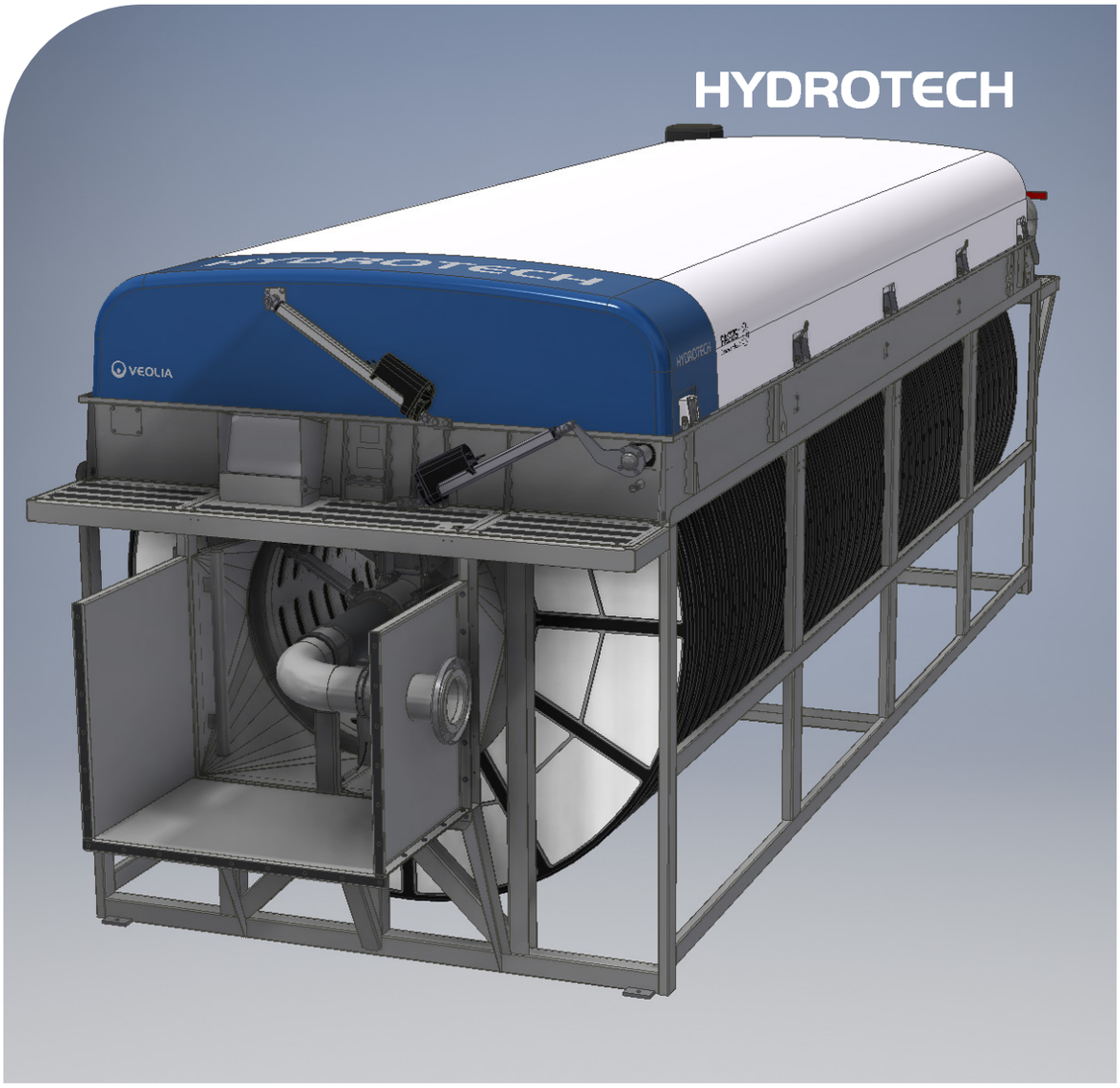


# Discfilter HPF2200 - series , PFLC

*Operation and maintenance manual*

Revision: 2020-08-26

VEOLIA

# Table of contents


1. INTRODUCTION 5

2. SAFETY INSTRUCTIONS 6

2.1 Warning symbols 6

2.2 CE marking 6

2.3 Conversion 7

2.4 Personnel requirements 7

2.5 Emergency stop 7

2.6 Electrical safety 7

2.7 Safety instructions 8

3. HYDROTECH DISCFILTER HPF2200 SERIES 9

3.1 Reception 9

3.2 Storage 9

3.3 Overview 10

3.3.1 HPF2200 type 1, filter with tank 10

3.3.2 HPF2200 type 2, filter without tank 12

3.4 Identifying the filter 14

3.4.1 Definition of filter type 14

4. GENERAL INSTALLATION INSTRUCTIONS 15

4.1 Lifting the equipment 15

4.2 Installation site 17

4.2.1 Outdoor installation 17

4.2.2 Foundations 17

4.3 Electrical connection 17

4.4 Equipotential bonding 18

4.5 Checking drum rotation 18

4.6 Pipe connections 18

5. START UP AND OPERATION 19

5.1 Check procedures during start-up 19

5.2 Automatic settings 20

5.2.1 Level differences 21

5.2.2 Operating mode AUTO – Automatic level control 21

5.2.3 Operating mode REMOTE – Remote control 21

5.2.4 Service mode HAND 22

5.3 Backwash system 22

6. FUNCTION 23

6.1 Intended use 23

6.2 Non-intended use 23

6.3 Filtration and backwash process 23

7. MAINTENANCE/SERVICE 24

7.1 Backwash system 24

7.1.1 Servicing conventional nozzles 24

7.2 Cleaning the Hydrotech strainer 26

7.3 Bearings 27

7.3.1 Lubrication of swivel 27

7.3.2 Lubricating drum bearings 27

7.3.3 Checking drum bearing wear 28

7.4 Filter panels 29

7.4.1 Additional cleaning 29

7.4.2 Chemical cleaning of filter panels 30

7.4.4 Changing filter panels 32

7.5 Drive chain 35

7.5.1 Checking and tensioning the drive chain 35

7.5.2 Using the chain tensioner to achieve correct tension 36

7.5.3 Replacing the drive chain 38

7.6 Drive unit 38

7.7 Inlet gasket 38

7.7.1 Checking the inlet gasket 38

7.7.2 Replacing the inlet gasket 39

7.8 Lifting the drum 39

7.8.1 Use of the front drum lifter 39

7.8.1 Use of the rear drum lifter 40

7.8.2 Lifting the drum on filters with tank 41

8. MAINTENANCE SCHEDULE 42

Symbols used on Hydrotech filters 43

Manuals & technical information 44

# 1. INTRODUCTION

This manual contains instructions for the operation and maintenance of Hydrotech Discfilters in the HPF2200 series with PFLC automation.

Pay attention to all warning symbols that appear in this manual. If this information is ignored it may result in serious personal injury and/or damage to equipment.

The manual must always be available to the personnel working with the equipment.

It is important that:

► The manual and other relevant documents are kept throughout the life of the equipment.

The manual and other relevant documents are a part of the equipment.

The following documents (manuals) are a part of the equipment:

- Operation & Maintenance Manual
- Automatic System Manual

► All applicable personnel must read the manuals carefully.

# 2. SAFETY INSTRUCTIONS

Hydrotech Discfilters in the HPF2200 series are designed for safe operation provided they are installed correctly and used in accordance with the enclosed instructions. The equipment must be installed correctly and adapted in accordance with local regulations. This equipment is designed for use by one or more operators. You must read the relevant sections of this manual before using the equipment or carrying out maintenance work.

► Pay attention to all warning symbols that appear in this manual. If this information is ignored it may result in serious personal injury and/or damage to equipment.

► Assume all electrical equipment to be live.

► Assume all hoses and pipes to be pressurised.

► Before carrying out maintenance work, the main power switch (see Figure 2.3) must be turned to the OFF (0) position and locked with a padlock.

► Maintenance and service may only be performed by authorised personnel.

► Adequate lighting should be used while operating the filter and when working in close proximity to the filter.

## 2.1 Warning symbols



*Figur 2.1*

Warning symbols are used in this manual to draw attention to potentially dangerous situations:



*Figur 1*

*Information that warns you of a potential risk of personal injury and/or damage to equipment.*

Warning stickers (see Figure 2.1) are attached to the filter to warn personnel and act as a reminder to keep hands and fingers away from the filter's moving parts.

## 2.2 CE marking

CE

*Figur 2.2*

This equipment is CE marked (see Figure 2.2), which guarantees that the equipment is designed, manufactured and described in accordance with the requirements set out in the EU Machinery Directive.

## 2.3 Conversion

The CE marking does not include any components that are not approved by Hydrotech AB and which are used in conversion/reconstruction of the equipment.

The warning symbols and CE marking must be attached where they are fully visible. If any part of the equipment with a warning symbol is replaced, a new symbol must be attached in the same position. Damaged symbols and CE markings must be replaced immediately.

## 2.4 Personnel requirements

Only personnel trained for the equipment and conversant with local regulations may perform service and maintenance, in order to avoid personal injury and damage to the equipment. Service and maintenance personnel may only handle those parts of the equipment they have been trained for.

The operator may need to work inside the safety barrier and in the safety zone during maintenance and set-up before operation.

## 2.5 Emergency stop

The filter is equipped with an emergency stop and a main power switch (see Figure 2.3).

In the event of a power outage, turn the main power switch to the OFF (0) position to prevent the filter drum from unintentionally starting when the power returns.

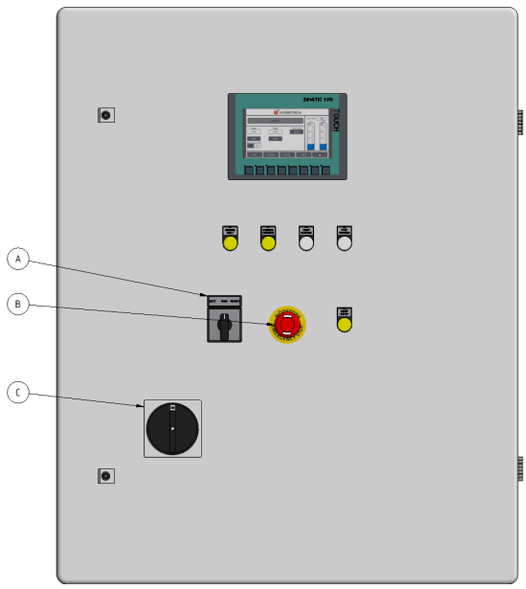


*Figure 2.3 Hydrotech control cabinet PFLC.*
*A. Mode selector*
*B. Emergency stop*
*C. Main power switch*

## 2.6 Electrical safety

Electrical installation must be carried out by a qualified electrician and in accordance with local regulations.

The filter tank or the frame must be connected to ground. Also see section 4.4.

The main power switch/emergency stop must be fitted in accordance with applicable regulations.

## 2.7 Safety instructions

The filter is activated by turning the main power switch to the ON (1) position and then selecting AUTO, REMOTE or HAND with the mode selector on the front of the control cabinet.

NB See instructions in section 5.1.



*Turn the main power switch to the OFF (0) position and lock it with a padlock before performing any work on the filter.*



*Access to the filter by unauthorised persons is strictly prohibited. Outdoor installations must be fenced in.*



*The drum can start rotating without warning if automatic control is activated. Moving parts must not be touched.*

Safety guards are fitted around the power transmission. Make sure these are secured and correctly fitted.



*Spray from the backwash water may contain harmful substances.*

Measured noise levels from the filter are less than 74 dB (A). Personnel should use appropriate protection, when necessary, in accordance with local regulations.

# 3. HYDROTECH DISCFILTER HPF2200 SERIES

## 3.1 Reception

Once the equipment has been delivered and received it must be checked for transport damage. Document any transport damage before further handling of the equipment. The consignment note, manual and spare part kit are attached to the equipment. Check all parts against the consignment note. Some parts may be delivered unassembled. Handle fragile parts with care. Refer to section 4.1 before lifting the equipment.

## 3.2 Storage

Some precautions must be taken to prevent damage to equipment if a long storage time is necessary (several weeks or more):

► The equipment should preferably be stored indoors, in a frost-free area.

► The filter must be protected against direct sunlight if stored outdoors. Heat and UV radiation can damage the filter panels and the control panel touch screen.

► If the filters are delivered inside plastic covered wooden crates, a special type of corrosion can occur if stored outdoors, especially in coastal areas. The moisture inside the plastic acts as an anode and the exposed dry components as a cathode. In these areas, filters must therefore be unpacked immediately upon delivery.

# 3.3 Overview

## 3.3.1 HPF2200 type 1, filter with tank

NB Also see section 3.3.2 (HPF2200 type 2, filter without tank) where several filter parts are shown.

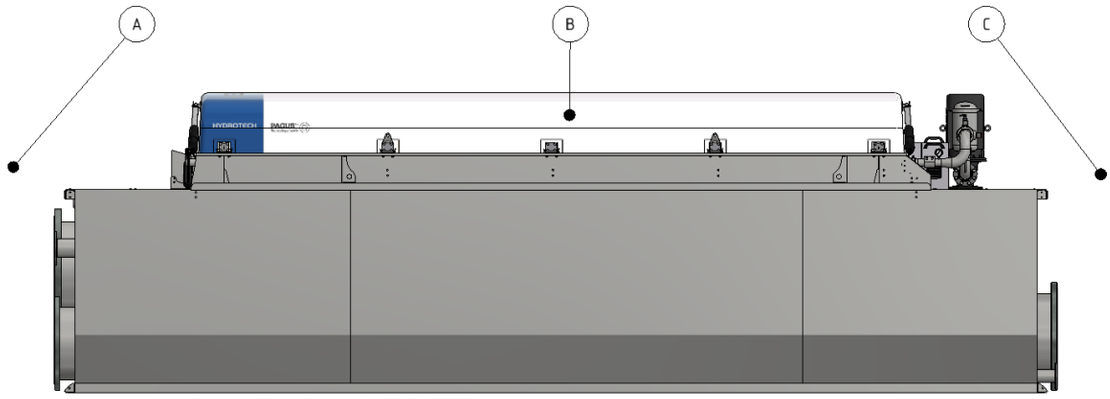


*Figure 3.1 Hydrotech Discfilter in HPF2200 series type 1 (side view).*
*A. Inlet side*
*B. Filter cover*
*C. Drive side*

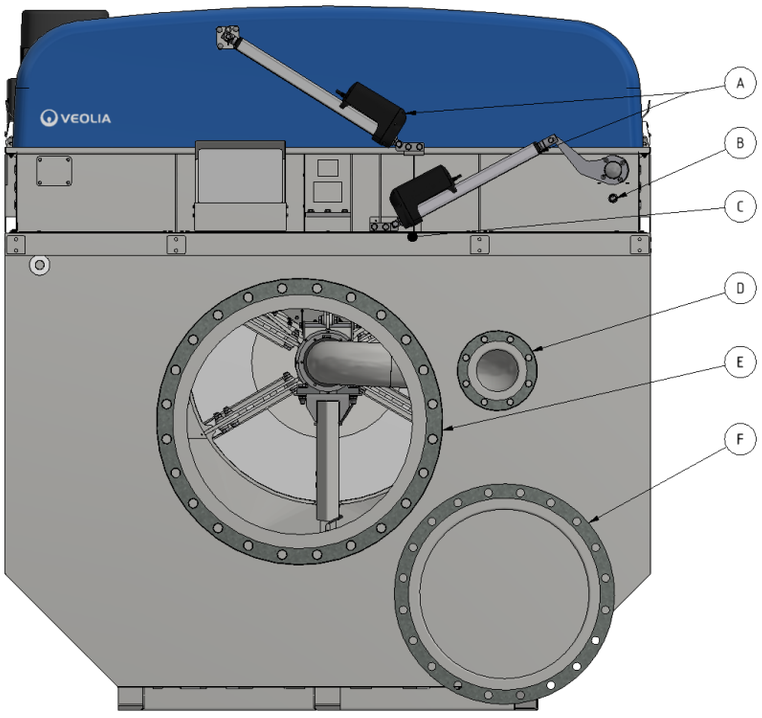


*Figure 3.2 Hydrotech Discfilter in HPF2200 series type 1 (inlet side).*
*A. Linnear actuators, for opening the cover and unfolding the spray bar ramp*
*B. Connection, chemical cleaning*
*C. Lubrication point*
*D. Sludge outlet*
*E. Inlet*
*F. Outlet, separate emergency overflow (bypass) (optional)*

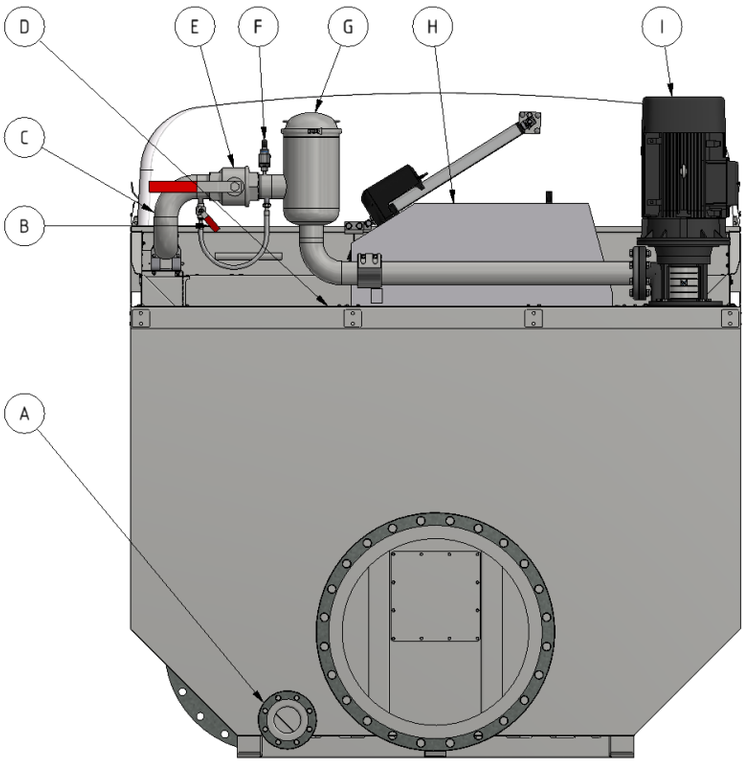


*Figure 3.3 Hydrotech Discfilter in HPF2200 series type 1 (outlet side).*
*A. Drain valve*
*B. Bypass valve for nozzle check*
*C. Manometer*
*D. Lubrication point*
*E. Shut off valve for backwash pipe*
*F. Pressure transmittor - dry running protection for pump*
*G. Strainer*
*H. Drive unit*
*I. Backwash pump*

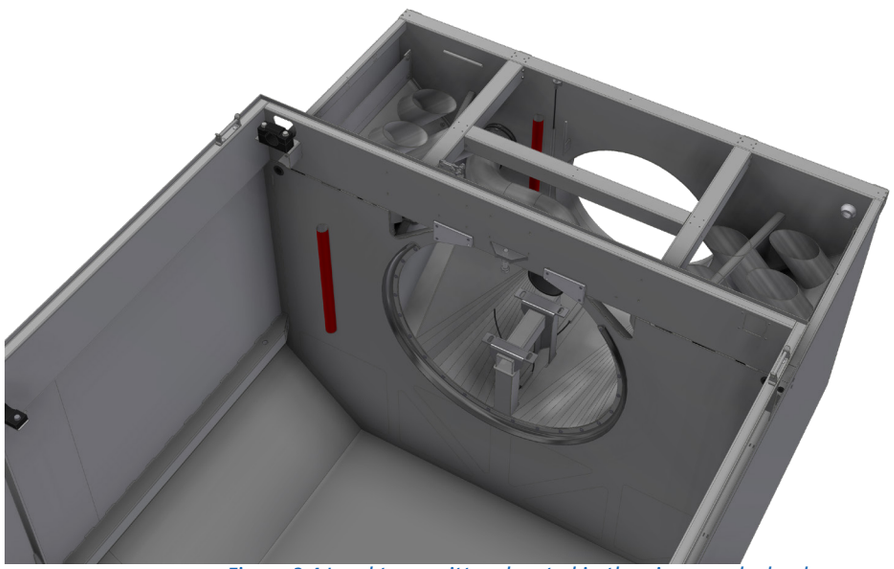

*Figure 3.4 Level transmittors located in the pipes marked red.*

## 3.3.2 HPF2200 type 2, filter without tank

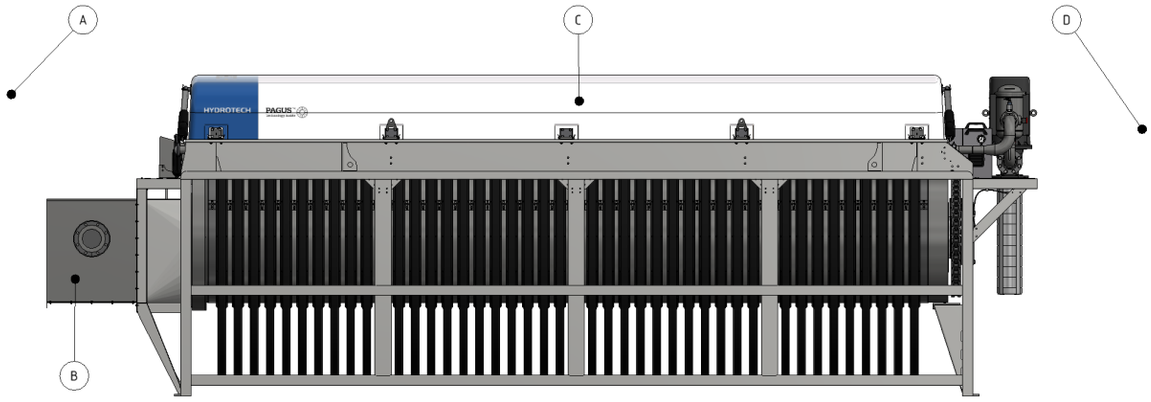


*Figure 3.5 Hydrotech Discfilter in HPF2200 series type 2 (side view).*
*A.Inlet side*
*B. Inlet passage*
*C. Filter cover*
*D. Outlet side*

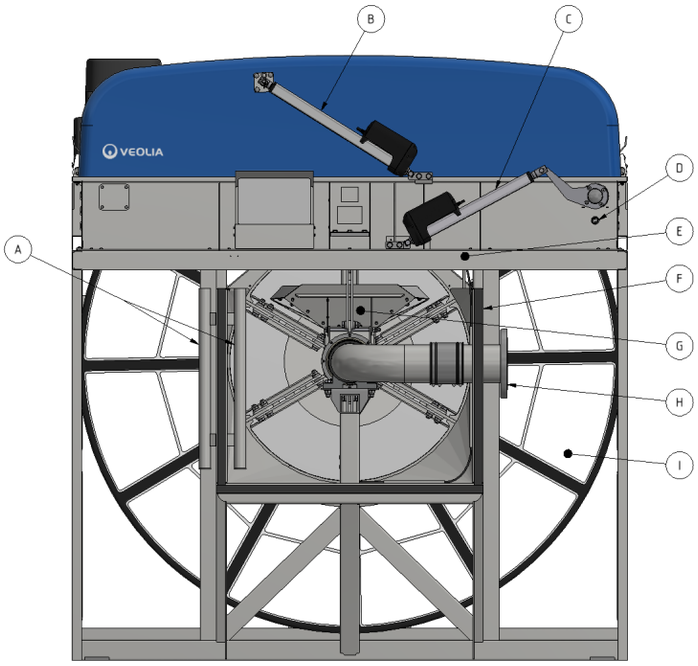


*Figure 3.6 Hydrotech Discfilter in HPF2200 series type 2 (inlet side).*
*A. Mounts for level transmittors*
*B. Linear actuator for opening cover*
*C. Linear actuator for unfolding the spray bar ramp*
*D. Connection for chemical cleaning*
*E. Lubrication point*
*F. Inlet channel*
*G. Sludge through*
*H. Sludge outlet*
*I. Filter panel*

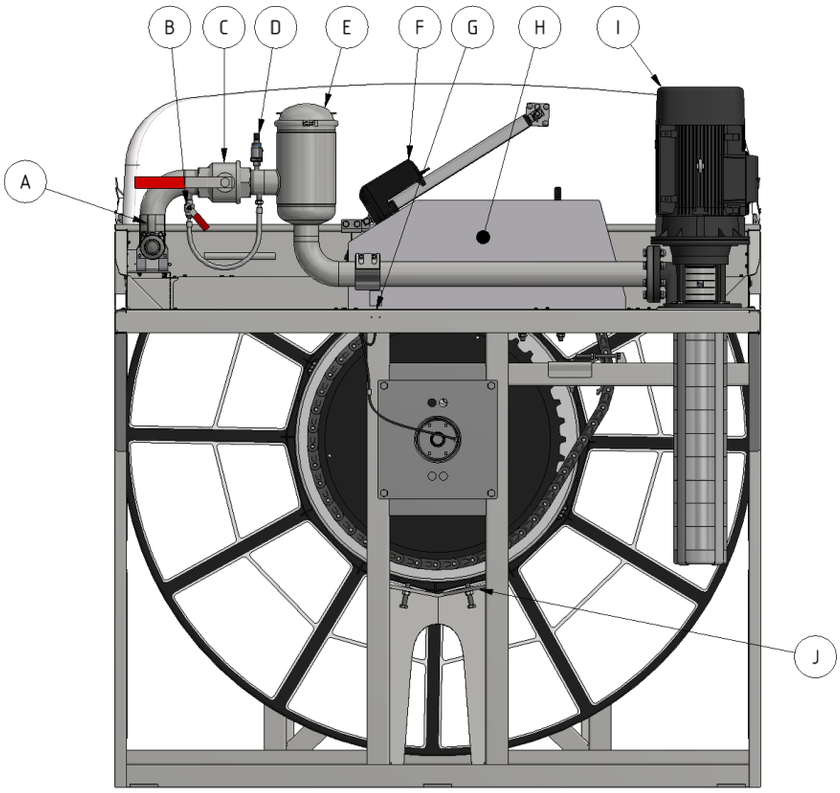


*Figure 3.7 Hydrotech Discfilter in HPF2200 series type 2 (outlet side).*
*A. Manometer*
*B. Bypass valve for nozzle check*
*C. Shut off valve for nozzle check*
*D. Pressure transmittor - dry running protection for pump*
*E. Strainer*
*F. Linear actuator for opening filter cover*
*G. Lubrication point*
*H. Drive motor*
*I. Backwash pump*
*J. Drum lifter*

## 3.4 Identifying the filter

Filter type, serial number and year of manufacture are stated on the marking plate. The filter type and serial number are also stated on the front of this manual.

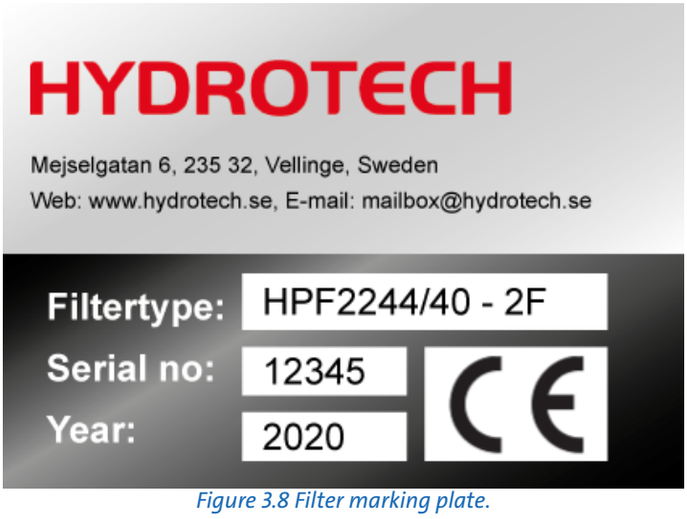


*Figure 3.8 Filter marking plate.*

### 3.4.1 Definition of filter type

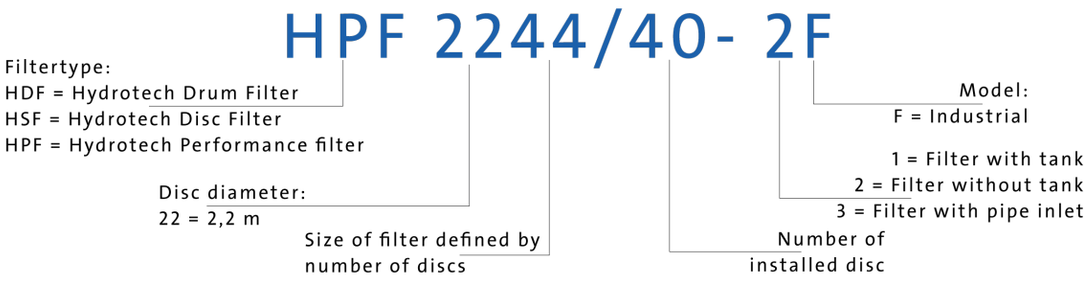


*Figure 3.9 Definition of filter type.*

# 4. GENERAL INSTALLATION INSTRUCTIONS

## 4.1 Lifting the equipment

► A forklift truck with long forks must be used when lifting filters in wooden crates.

► Filters with a tank can be lifted using a crane or overhead crane by using the filter's lifting lugs, or with a forklift truck.

*WARNING! The work area must be fenced off before unloading, in accordance with local regulations, to prevent unauthorised access.*

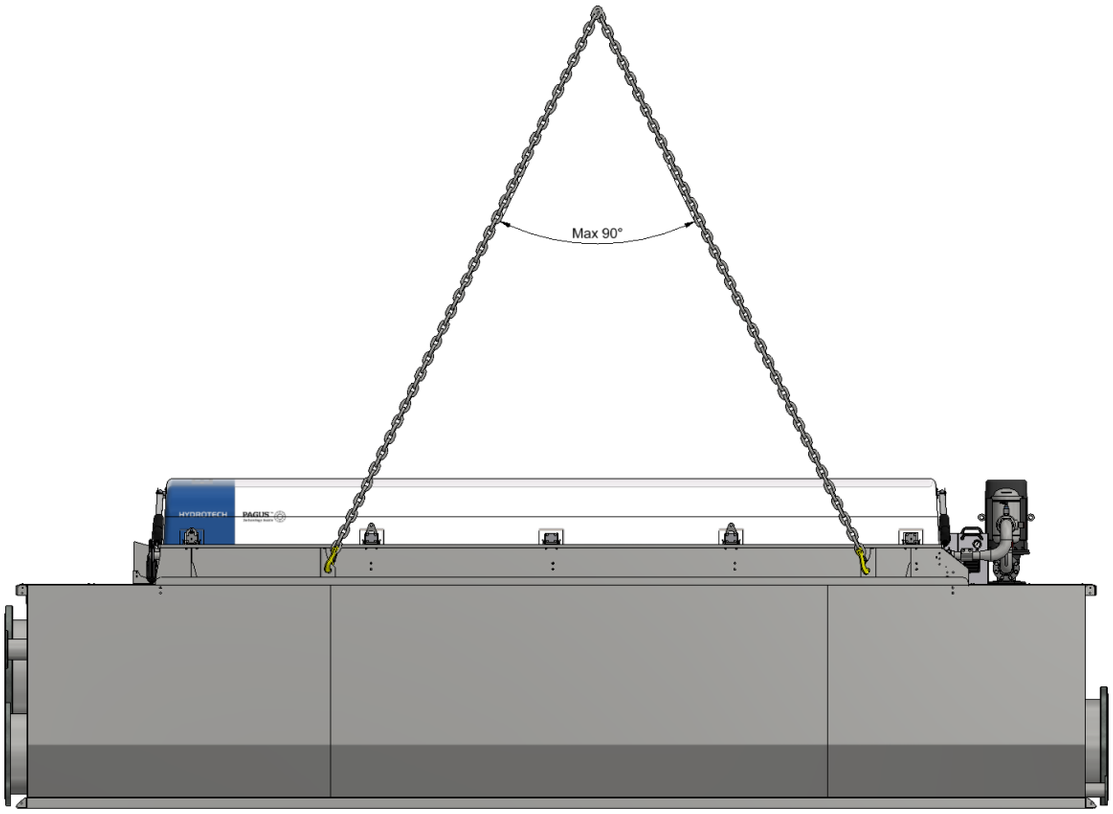


*Figure 4.1 Lifting Hydrotech Discfilter in HPF2200 series type 1 (with tank).*

► Filters without a tank can be lifted using a crane or overhead crane by using the filter's lifting lugs or by the use of a forklift.

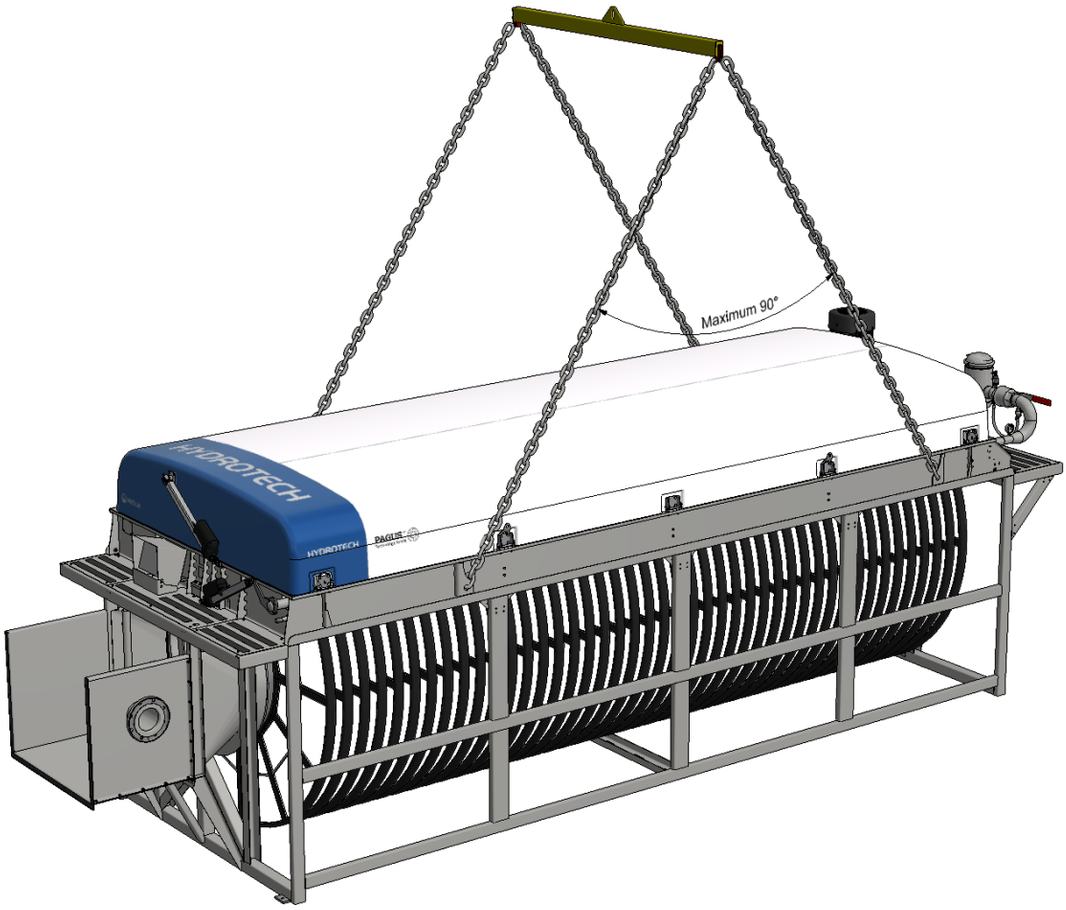


*Figure 4.2 Shows how lifting devices are attached (filter without tank).*

## 4.2 Installation site

### 4.2.1 Outdoor installation

In the event of outdoor installation it is important to protect the filter panels against direct sunlight, as heat and UV radiation otherwise can cause damage to the filter panels. The same applies to the control panel touch screen.

The equipment must be protected against temperatures below freezing point. At water temperatures above +5°C and air temperatures above -10°C the filter cover provides sufficient protection. At lower water and air temperatures, filter installation should be indoors.

### 4.2.2 Foundations

► The filter must be installed on a flat surface that offers sufficient load bearing capacity.

► The filter is to be bolted to the foundation.

► The filter must be level in both directions (see Figure 4.4).

► 600 mm wide aisles should be laid out around the filter to permit easy access to the filter during service work.

► The gap between the filter and the concrete structure must be sealed for safety reasons and to keep out foreign objects that can cause blockages in the backwash system.

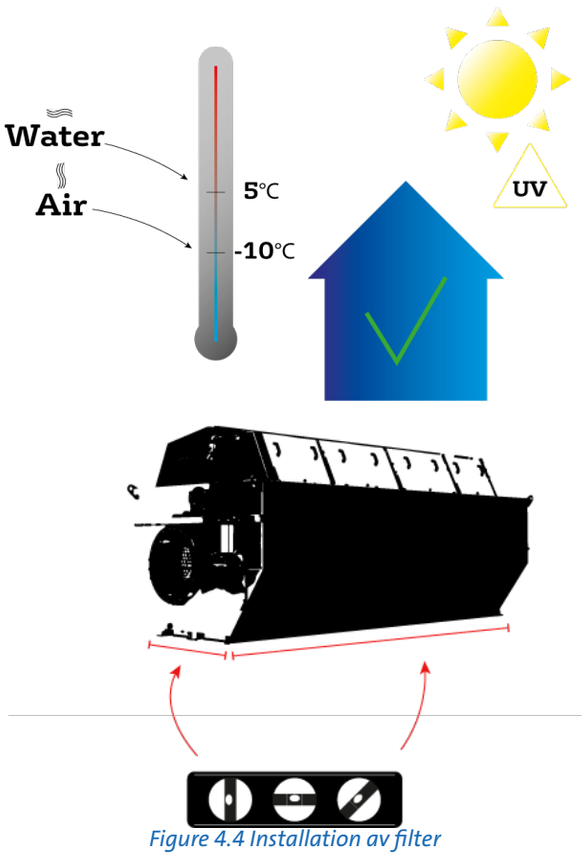


*Figure 4.4 Installation av filter*

## 4.3 Electrical connection

*Qualified electricians must perform all electrical work.*

Electrical connection must be done in accordance with local regulations. Check that the settings on the motor protection correspond with the motor data.

*Section 4.5 must be read before starting the filter's drum rotation.*

## 4.4 Equipotential bonding

The Hydrotech Discfilter and associated equipment should be protected with a suitable system for equipotential bonding. This is very important to prevent galvanic corrosion. Ideally use a cable with a cross section of 10–16 mm2. The cable should be connected to the same electrical potential as the drive system.

## 4.5 Checking drum rotation

Start drum rotation and check that the drum rotates in the same direction as the rotation arrow on the drive unit cover.

## 4.6 Pipe connections

Piping for reject should have a minimum inclination of 1%.

# 5. START UP AND OPERATION

## 5.1 Check procedures during start-up

1. Check that the drive unit cover is installed correctly.

2. Set the mode selector to the HAND position (see F in Figure 5.2).

3. Set the main power switch to the ON (1) position (see I in Figure 5.2).

4. Start the drum rotation on the operator panel main menu (see Figure 5.1 and Figure 5.2).

5. Open the water supply a little so that the water can slowly run into the filter drum. Make sure that the difference in water level between the inside and outside of the filter drum does not exceed 450 mm (see section 5.2.1). If the filter cloth becomes clogged, it may be necessary to fill the filter tank/chamber with water from an external source or to remove a filter panel and fill the filter tank/chamber with unfiltered water.

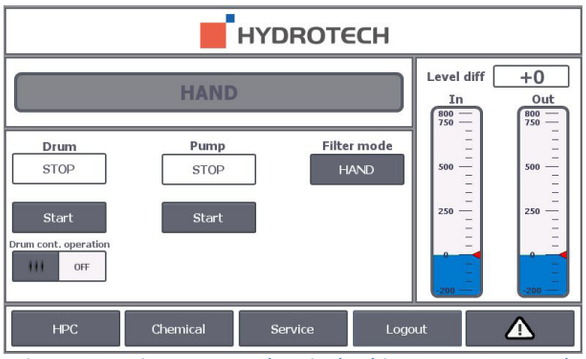


*Figure 5.1 Main menu on electrical cabinet operator panel. (Indication of current backwash pressure is an option.)*

*WARNING! A greater difference in water level between the inside and outside of the filter drum than 450 mm will damage the filter.*

6. When the water level inside the filter tank/chamber exceeds the suction pipe of the pump (or, the suction pipe if a CR- pump has been installed), the pump must be started by pressing “Start” on the operator panel main menu (see Figure 5.1). NB Also read section 2.7.

*WARNING! The backwash pump must not be started until the water level has reached the suction pipe of the pump (or, the suction pipe connected to the pump if using a CR- pump), otherwise the pump will run dry and fail.*

7. If the water level inside the filter tank/chamber reaches the overflow wall, turn the mode selector from HAND position to either REMOTE or AUTO (see section 5.2).

8. Open the water supply fully.

If the filter is operated using automatic level control, it may be necessary to calibrate the level sensor in order for the filter to be run optimally (see “Automatic System Manual HPF2200”).

## 5.2 Automatic settings

The control system for the HPF2200 series must be equipped with a frequency converter on the drive unit. This is factory calibrated if delivered from Hydrotech. To perform a soft start of the drive motor, the frequency converter settings must be min. 5 sec “ramp up” and min. 3 sec ”ramp down”. The filter works with 50 Hz or 60 Hz as standard, depending on region of delivery.

If the filter is equipped with a Hydrotech standard control, the filter has three operating modes:

1. Automatic level control (AUTO mode).

2. Remote control (REMOTE mode).

3. Service mode (HAND mode).

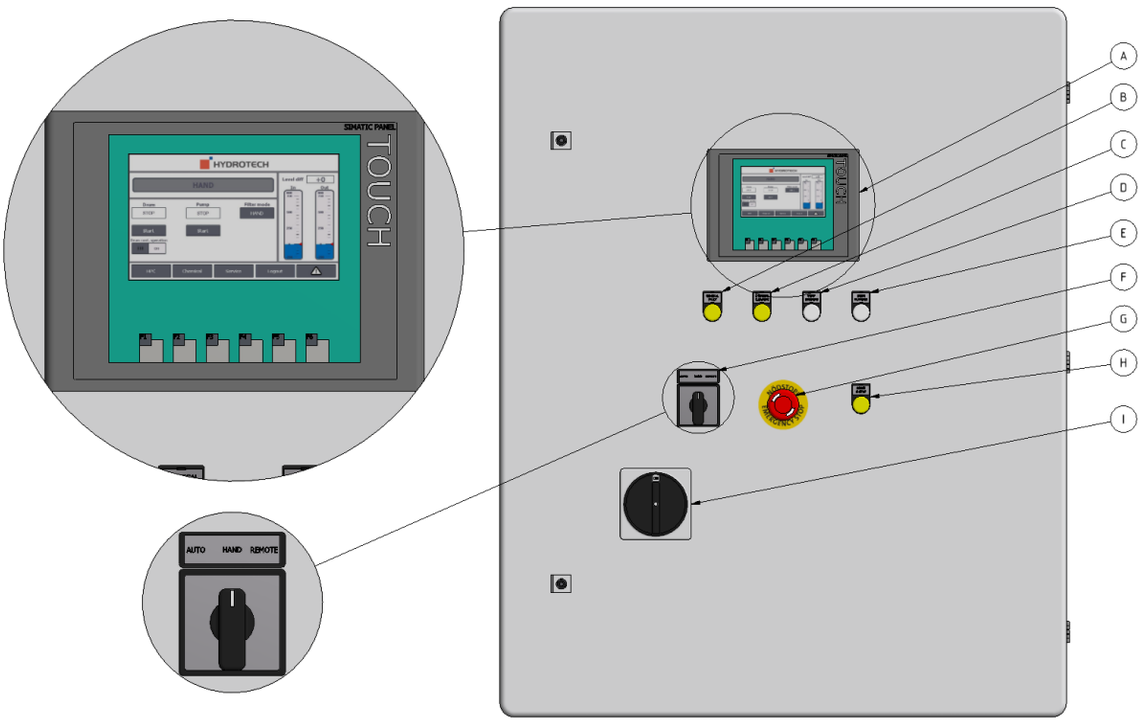


*Figure 5.2 Front of the control cabinet.*
*A. Operator panel*
*B. Warning lamp: Fault indicator*
*C. Warning lamp: Chemical cleaning*
*D. Indicator lamp: Drum operation*
*E. Indicator lamp: Pump operation*
*F. Mode selector (Auto/Hand/Remote)*
*G. Emergency stop*
*H. Reset button for emergency stop*
*I. Main power switch*

Turn the mode selector to select the appropriate operating mode (see Figure 5.2, detail F).

## 5.2.1 Level differences

The maximum permitted difference between the water levels inside and outside the drum is 250 mm during normal operation (see Figure 5.4). The recommended level difference is 100–200 mm.

If an even flow after the filter is required, the filter must be run with a small level difference.

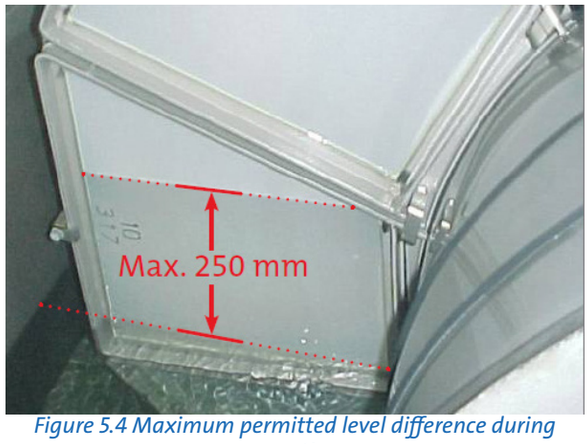

*Figure 5.4 Maximum permitted level difference during operation.*

*The filter must be installed so that the level difference in the event of operating disturbances under no circumstances exceeds 450 mm.*

*The filter must be run so that the level difference during normal operation does not exceed 250 mm.*

*Prolonged operation with a greater level difference will significantly shorten the life of the filter panels and other vital parts.*

## 5.2.2 Operating mode AUTO – Automatic level control

With automatic level control, drum rotation and the backwash pump are activated once the level difference between filtered and unfiltered water exceeds an adjustable value. The filter is force-started if the filter has stood still for an extended period of time. If an external backwash water supply is used, the level sensor can control a solenoid valve instead of a pump.

The water level inside the drum will vary when AUTO mode has been selected. The water level is at its lowest immediately after a backwash cycle and then rises until drum rotation and backwashing start.

## 5.2.3 Operating mode REMOTE – Remote control

In REMOTE operating mode, the filter can be controlled remotely. In remote control mode, the filter can either be controlled as if in AUTO operating mode or using an external controller, see the “Automatic System Manual”.

## 5.2.4 Service mode HAND

HAND is only a service mode.

In order to operate the filter in HAND mode, the following steps must be implemented:

1. Turn the mode selector shown in Figure 5.2 to the HAND position.

2. Once the mode selector has been turned to HAND, “HAND” will be shown in the operator panel main menu, see Figure 5.5. Press the drum “Start” button, see Figure 5.5.

3. Press the pump “Start” button, see Figure 5.5.

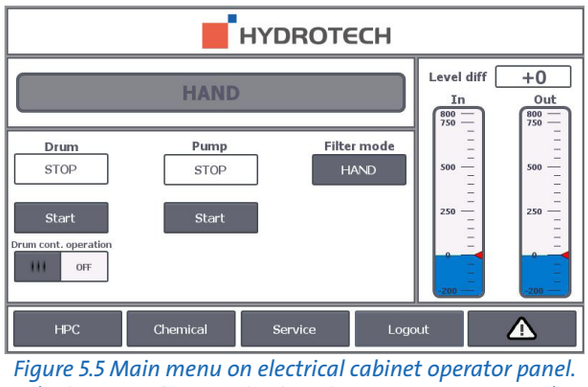


*Figure 5.5 Main menu on electrical cabinet operator panel. (Indication of current backwash pressure is an option.)*

The operator panel main menu also shows the water levels of unfiltered (In) and filtered water (Out), as well as the level difference between them (Level Diff).

# 5.3 Backwash system

NB Prior to servicing, read section 2.7.

The system pressure for backwashing must be set to 6–9 (preferably above 6,5) bar. Newly connected pipe systems for external backwash water should be rinsed through before they are connected to the filter. Check that the nozzles are not blocked, see section 7.1.

# 6. FUNCTION

## 6.1 Intended use

The filter is designed and manufactured to remove solid particles in unpressurised water flow systems. The filter is not a pressure vessel.

## 6.2 Non-intended use

Unless approved in writing by Hydrotech, the filter must not be used to filter liquids other than water. The filter must not be installed in an environment with an explosive atmosphere or another risk of explosion, such as high concentrations of dust.

## 6.3 Filtration and backwash process

A brief description of the process is given below.

1. The water to be filtered flows with gravity from the inside of the filter drum out to the filter segments.

2. Solid particles are separated from the water using a filter medium attached to both sides of the filter segments, whilst clean water passes through the filter medium to the outside of the filter segment.

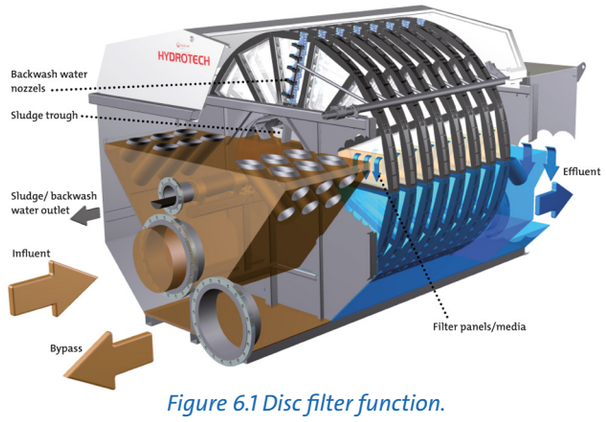


*Figure 6.1 Disc filter function.*

3. Operating mode AUTO – The solid particles trapped on the inside of the filter medium gradually reduce the water flow through the filter panel. The water level on the inside of the drum begins to rise. When the level difference between filtered and unfiltered water exceeds the set value, drum rotation and backwashing start. Operating mode REMOTE – The filter is controlled as in AUTO operating mode or using external control (e.g. time-controlled drum rotation and backwashing). Operating mode HAND – Drum rotation and backwashing are started manually.

4. The backwash nozzles spray wash water on the outside of the filter panels. The solid particles that accumulate are washed from the filter panels to the sludge channel, at the same time as the drum rotates.

5. The removed particles and backwash water flow with gravity out of the filter.

# 7. MAINTENANCE/SERVICE

## 7.1 Backwash system

The most common cause of operating disruptions in the backwash system is clogged nozzles. Clogging is caused by particles in the wash water and/or by e.g. biofouling in the pipe system.

### 7.1.1 Servicing conventional nozzles

1. Set the mode selector to the HAND position.

2. Open the cover on the side where the backwash pipe is located.

3. Extend the backwash ramp (see Figure 7.2).

3. Open the bypass valve (see Figure 7.1).

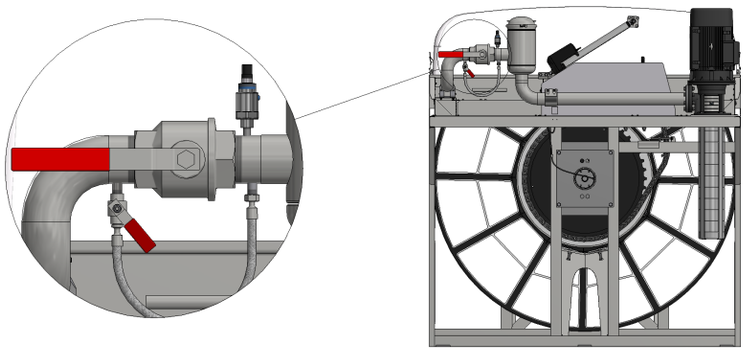

*Figure 7.1 Main valve and bypass valve for checking the nozzles.*

4. Close the main valve. The water flow can later be adjusted with the bypass valve so that it flows a little, yet with a constant flow through the nozzles. This makes it easy to determine which nozzles that needs to be cleaned.

5. Start drum rotation and the backwash pump.

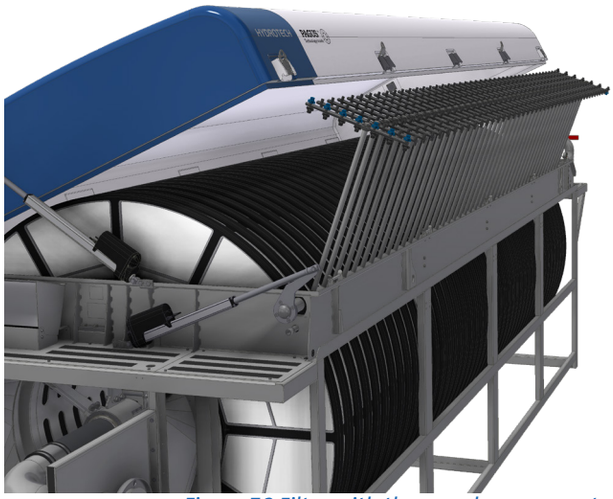

*Figure 7.2 Filter with the spraybar ramp extended*

8. Check whether any of the nozzles are clogged by checking whether water runs through them. Clogged nozzles are cleaned as follows:

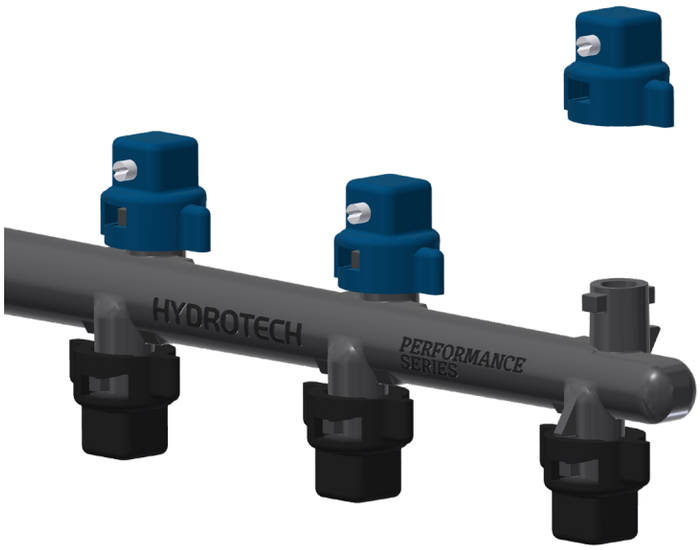


*Figure 7.3 Nozzle components.*

9. Remove the nozzle nut by turning it a ¼ turn anticlockwise. Exercise care not to lose the rubber seal.

10. Clean the tip of the nozzle with compressed air or a plastic brush. Never use a wire brush, metal pins or similar as these can damage the nozzle.

11. Assemble the parts in the reverse order. Make sure the nozzle nut reaches the stop position when turned a ¼ turn, clockwise.

12. Place the backwash ramp in its original position.

13. Open the main valve to the backwash water.

14. Close the cover.

15. Before restarting operations. Check the placement of the spraying arms and verify that no arms has been bent out of position during the check of the nozzles.

16. Start operations again as set out in section 5.1.

*WARNING! It is important that the nozzle nuts (see Figure 7.3) are refitted correctly after the nozzles have been cleaned.*

## 7.2 Cleaning the Hydrotech strainer

NB Prior to servicing, read section 2.7.

If the pressure gauge indicates a pressure that is more than 0.5 bar below normal pressure, it's time to clean the Hydrotech strainer.

1. Turn the main power switch to the OFF (0) position and lock with a padlock.

2. Loosen the wing nut and remove the clamping ring (B in figure 7.5).

3. Lift off the wash water filter cover (A in figure 7.5).

4. Remove and clean the filter insert.

5. Secure the filter insert in the cover.

6. Refit the cover/filter insert and the clamping ring.

7. Start operation in accordance with section 5.1.

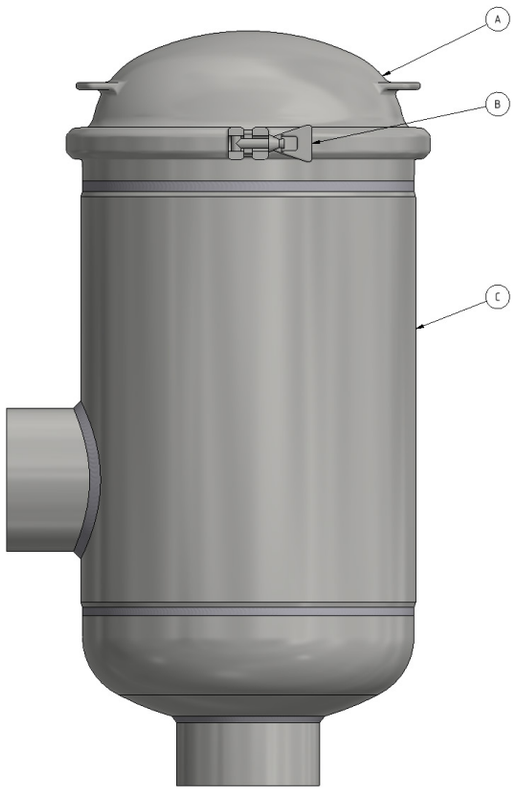


*Figure 7.5 Hydrotech wash water filter.*
*A. Cover*
*B. Wing nut*
*C.Strainer*

## 7.3 Bearings

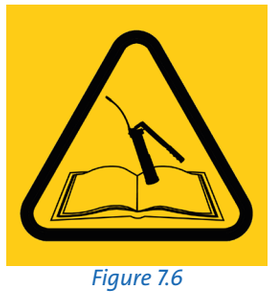

*Figure 7.6*

NB Prior to servicing, read section 2.7.

Stickers indicating the lubrication points are attached to the filter, see Figure 7.6.

### 7.3.1 Lubrication of swivel

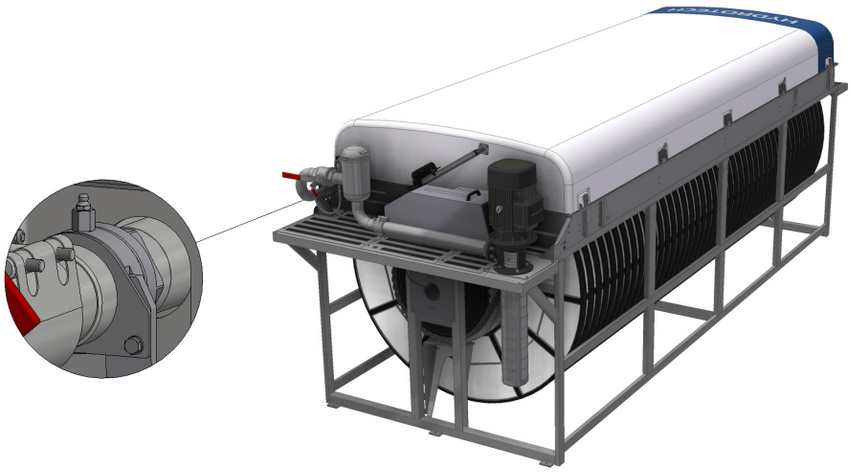

*Figure 7.7 Location of the swivel.*

The swivel makes up the bearing between the backwash pipe and the connecting pipe for the backwash water (see Figure 7.7 & 7.8).



*Figure 7.7 Swivel*

The swivel's lubrication points are shown in Figure 3.3 and Figure 3.6.

### 7.3.2 Lubricating drum bearings

The bearings' lubrication nipples are fitted on the outside of the filter. The drum must rotate when the bearings are lubricated.

Lubricate the drum bearings according to the recommendations in chapter 8. The lubrication points are shown in Figure 3.2, 3.3, 3.6 and 3.7.

## 7.3.3 Checking drum bearing wear

1. Turn the main power switch to the OFF (0) position and lock with a padlock.

2. Drain the chamber/filter tank.

3. Check the drum bearings with respect to wear. If the distance between the bearing housing (A) and the shaft (B) is less than 22 mm (see Figure 7.8), the drum bearing must be replaced.

4. Contact your supplier if the drum bearings need to be replaced.

5. Start operations again as set out in section 5.1.

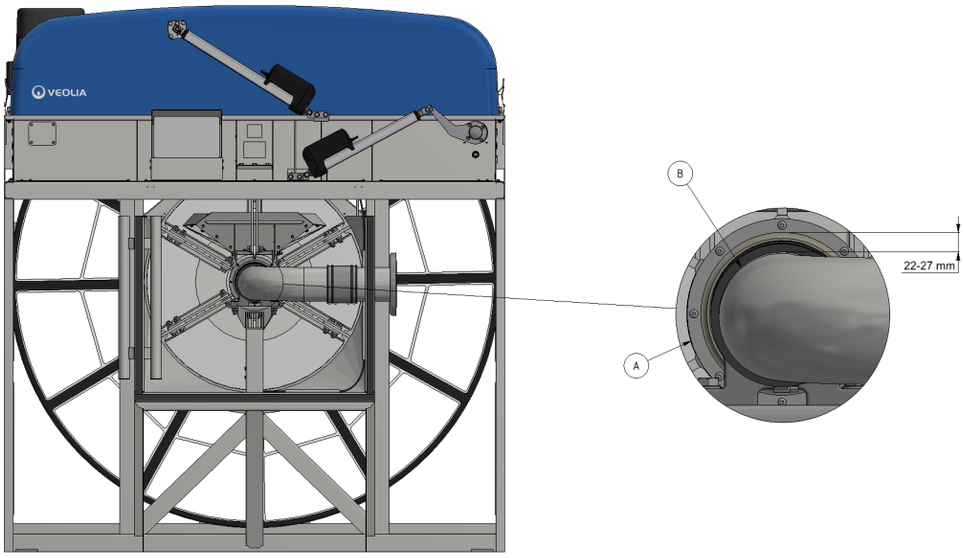


*Figure 7.8 Drum bearing housing on inlet side.*

## 7.4 Filter panels

NB Prior to servicing, read section 2.7.

### 7.4.1 Additional cleaning

Additional cleaning of the filter panels may be necessary. The need for additional cleaning becomes clear if the frequency of automatic backwash starts increases. Additional cleaning can be chemical cleaning or cleaning with a high pressure washer.



*When using a high pressure washer a wash pressure of max. 80 bar may be used. Maximum allowed water temperature is 60 °C. Never hold the cleaning nozzle directly against the filter media.*

A chemical cleaning programme can be started in accordance with section 7.4.2.

## 7.4.2 Chemical cleaning of filter panels

Long-term clogging of the filter media can be caused by, among other things, iron, calcium or organic fouling. This clogging can normally be removed through chemical cleaning. Three proven products that do not affect the life of the filter media are dilute hydrochloric acid (HCl), dilute sodium hypochlorite (NaClO) and dilute sodium hydroxide (NaOH).

*The use of other types of cleaning agents can cause damage to equipment.*

*The cleaning products must not be mixed. If, for example, HCl and NaClO are mixed this produces toxic chlorine gas. HCl and NaOH are highly corrosive. For safety advice, see applicable local regulations.*

For more detailed instructions, please contact your supplier.

Hydrotech Discfilters in the HPF2200 series as standard are prepared with a chemical ramp to make removal of long-term clogging of the filter media possible.

The Hydrotech chemical trolley HCT (option) is connected to the chemical ramp connection (see Figure 3.2 and Figure 3.6). The control system is prepared and programmed for connection of a dosage system. After completing electrical and mechanical connection, chemical cleaning is started as follows:

1. Turn the mode selector to “HAND”.

2. Select “Login” (if the user is not already logged in) and log in using your user name and password.

3. Select “Chemical” on the operator panel, see Figure 7.11.

4. Set the number of full cleaning cycles to be completed, see Figure 7.12.

5. Select “Start” to start the chemical cleaning programme, see Figure 7.12. (Settings are found under “Settings”, see Automatic System Manual.)

6. Once chemical cleaning has been completed, re-start operation as described in section 5.1.

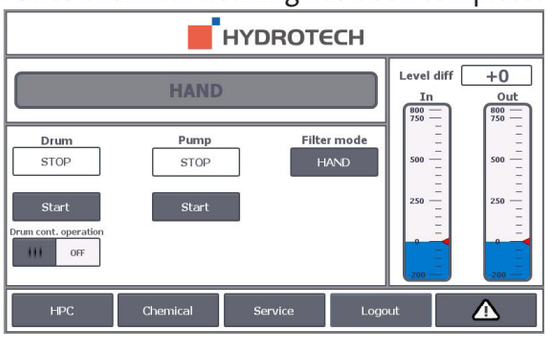


*Figure 7.11 Main menu in HAND operating mode.*

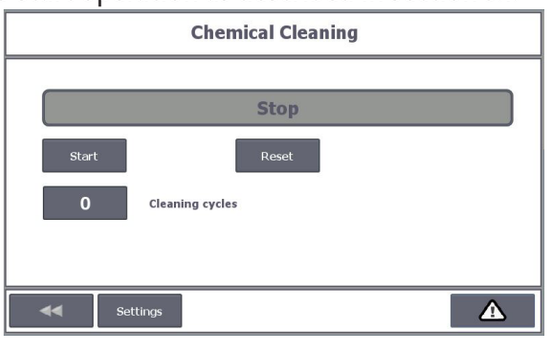


*Figure 7.12 “Chemical cleaning” window.*

If necessary clean the chemical ramp nozzles as described below:

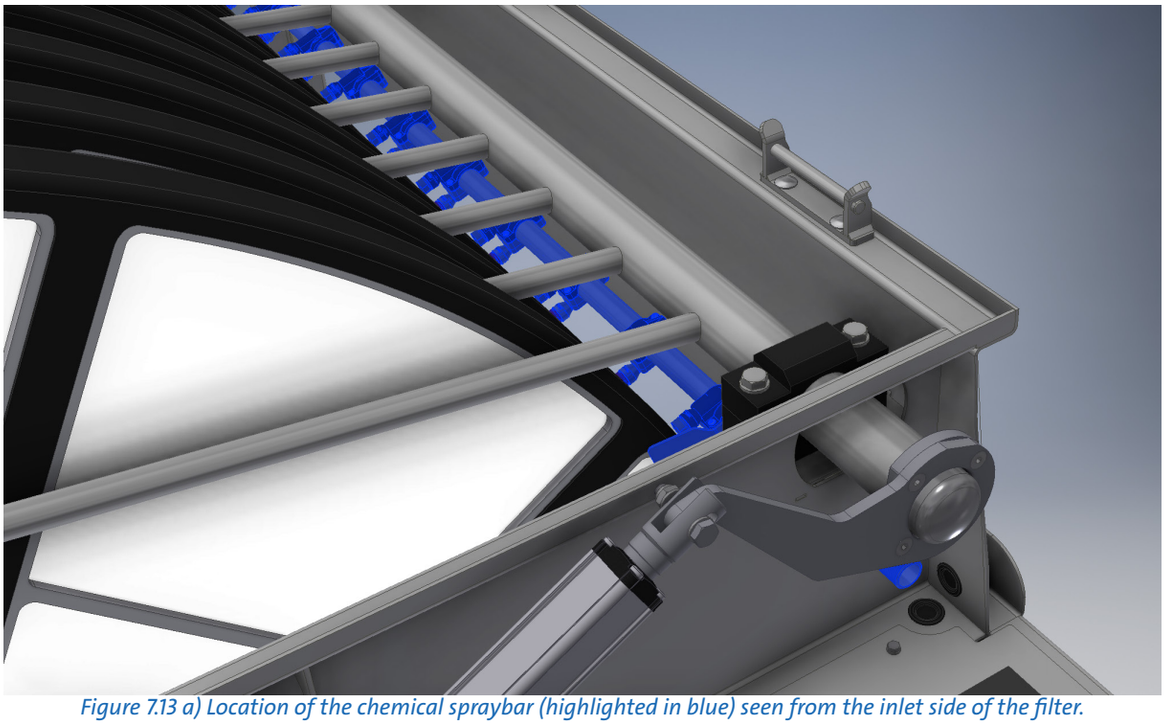

*Figure 7.13 a) Location of the chemical spraybar (highlighted in blue) seen from the inlet side of the filter.*

1. Turn the main power switch to the OFF (0) position and lock with a padlock.

2. Remove the nozzle by turning it ¼ turn anticlockwise (see Figure 7.13 b).

3. Clean the nozzle with compressed air or a plastic brush.

*Never use a wire brush, metal pins or similar as these can damage the nozzle.*

4. Refit the nozzle on the chemical ramp.

5. Start operations again as set out in section 5.1.



*Figure 7.13 b) Nozzles on chemical ramp.*

## 7.4.4 Changing filter panels

When replacing the filter panels it is important to maintain the balance of the drum. Remove/ refit every other filter panel. This prevents unintentional rotation of the drum and reduces the load on the drive chain and gearbox.

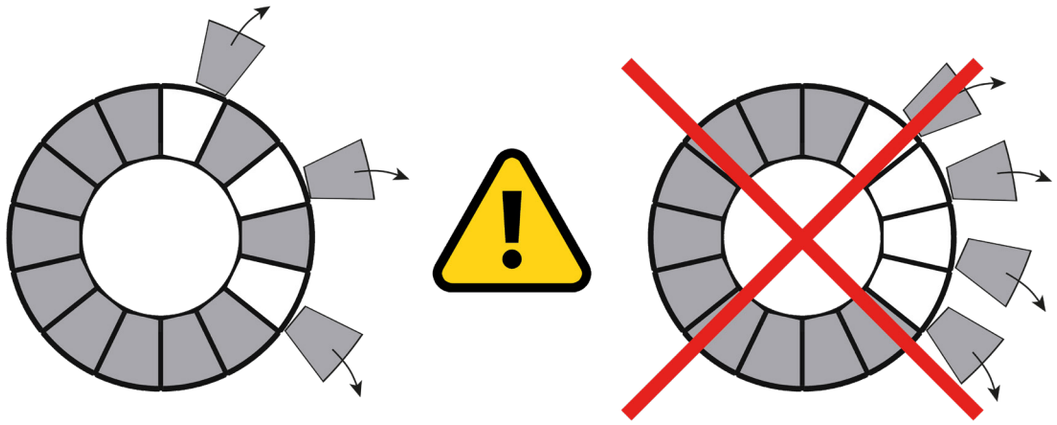

*Figure 7.14 Correct way of changing filter panels.*

*NEVER remove or refit all filter panels on just ONE side of the disc (see Figure 7.14).*

1. Turn the mode selector to “HAND”.

2. Select “Service” on the operator panel, see Figure 7.15.

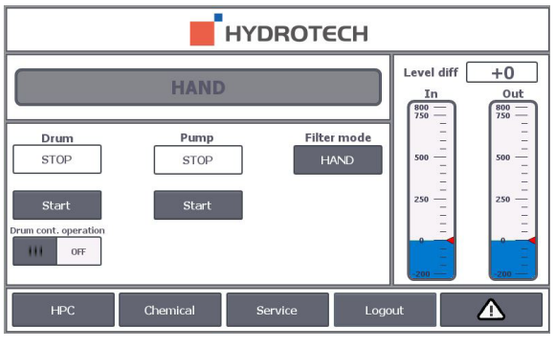


*Figure 7.15 Main menu in HAND operating mode.*

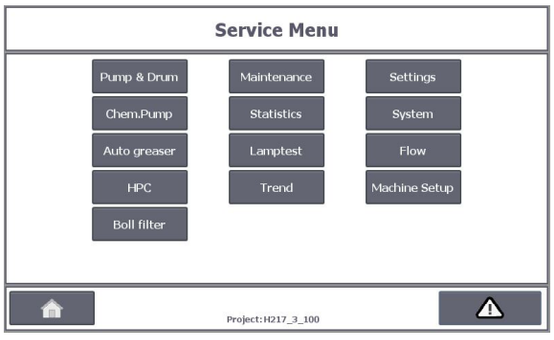


*Figure 7.16 Service menu.*

3. Select “Pump & Drum”, see Figure 7.16. Use the “Jog Fwd” and “Jog Bwd” buttons to set the drum to the desired mode, see Figure 7.17.

4. Turn the safety switch to the OFF (0) position and lock in the OFF (0) position with a padlock.

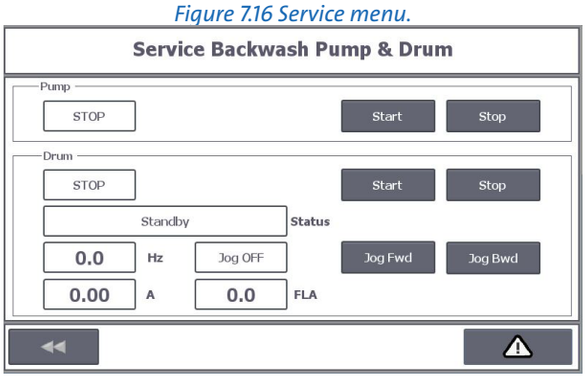


*Figure 7.17 “Service Backwash Pump & Drum”.*

5. Undo the filter segment cover screw and remove the cover, see Figure 7.18).



*Figure 7.18 The filter segment cover is removed.*

6. Pull out the filter panel (see Figure 7.19).



*Figure 7.19 The filter panel is pulled out.*

7. Insert a new filter panel and press in until it touches the bottom.

NB Filter panels with steel frames must be positioned with the filter cloth facing inwards (see Figure 7.20).

*Incorrect installation of the filter panels can cause damage to the filter segments.*

8. Replace the filter segment cover and tighten the screws.

*Maximum tightening torque: 3 Nm.*

9. Fit the remaining filter panels and covers in the same manner.

10. Start operations again as set out in section 5.1.

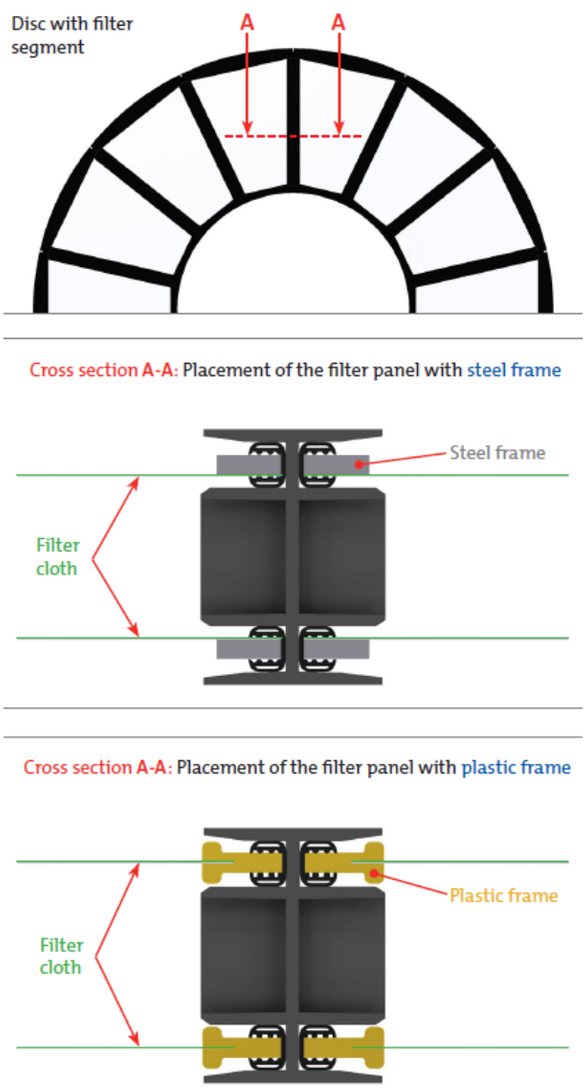


*Figure 7.20 Location of filter panel with steel or plastic frame.*

## 7.5 Drive chain

NB Prior to servicing, read section 2.7.

The filter is equipped with a chain drive. For technical data, see Appendices A and D.

### 7.5.1 Checking and tensioning the drive chain

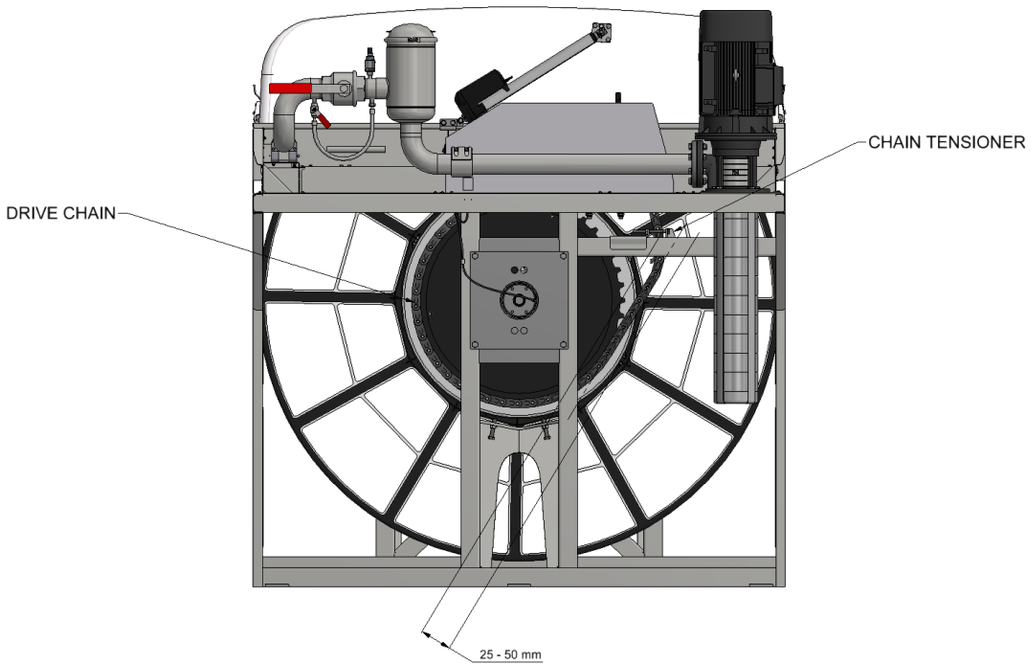


*Figure 7.21 Displaying the correct slack of the drive chain and position of the tensioner.*

1. Turn the main power switch to the OFF (0) position and lock with a padlock.

2. Remove the motor cover to access the chain.

3. Stretch the chain by turning the drum by hand in the non operational direction.

4. Check the tension of the chain's return section; it must be possible to move it between 25 and 50 mm, see Figure 7.21.

5. Adjust the chain setting, if necessary, with use of the chain tensioner, see figure 7.22.

6. Start operations again as described in section 5.1.

## 7.5.2 Using the chain tensioner to achieve correct tension

1. Turn the main power switch to the OFF (0) position and lock with a padlock.

2. Remove the motor cover to access the chain.

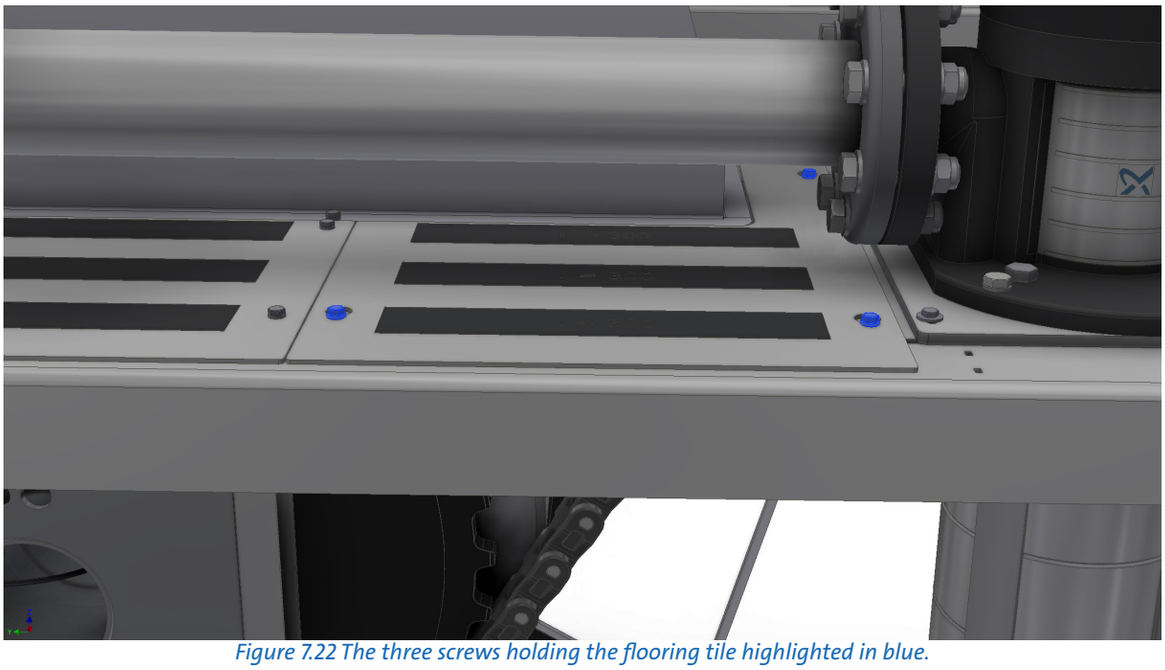

*Figure 7.22 The three screws holding the flooring tile highlighted in blue.*

3. Remove the flooring tile with the three screws marked blue in figure 7.22. This is done by releasing the tension of the screw and the sliding the tile towards the end of the filter. Then lift the tile to get access down below.

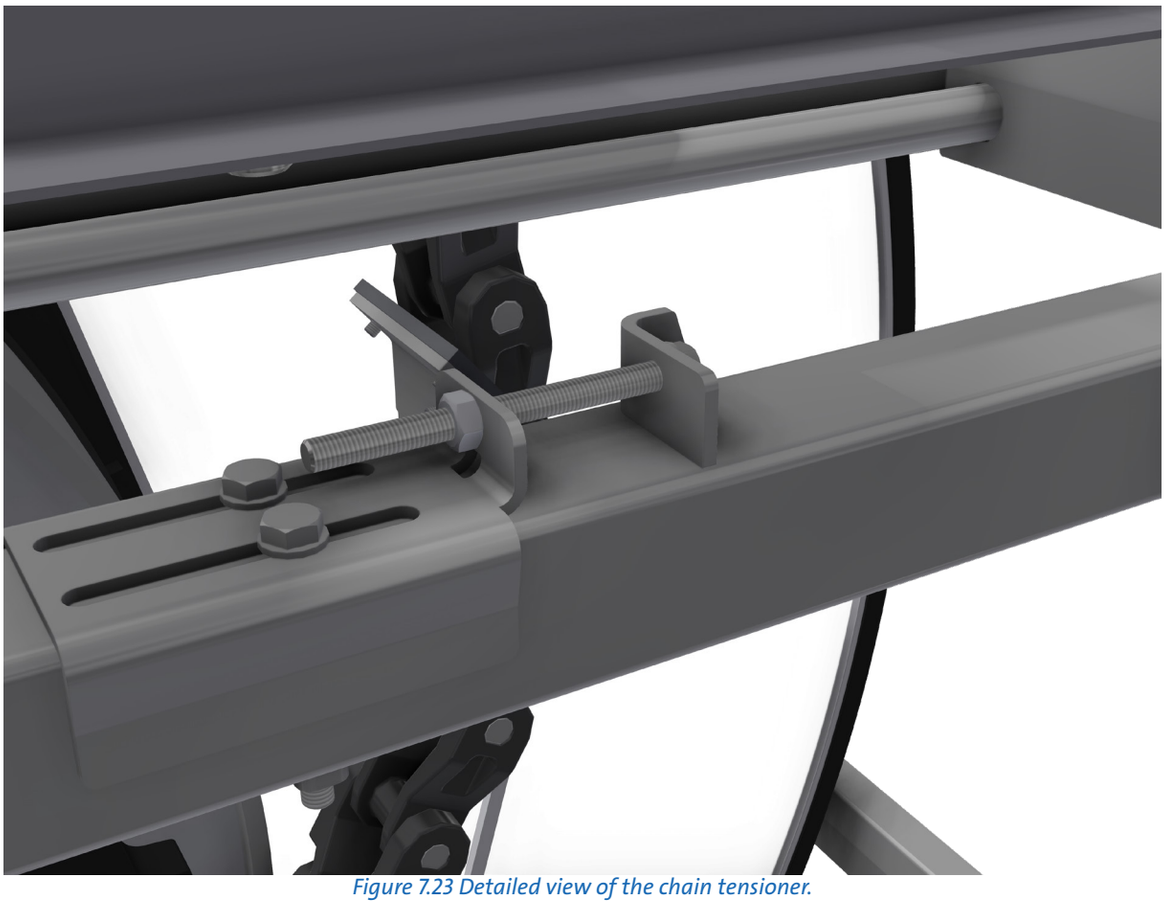

*Figure 7.23 Detailed view of the chain tensioner.*

4. Loosen the two screws to the left in figure 7.22. The screws are loosend enough when the chain tensioner is able to move freely. Be careful when loosening the screws so that the bracket underneath the beam dont fall off. Loosen the nut on the adjustment screw.

5. Adjust the long screw until the chain gets the correct amount of tension.

6. Secure the chain tensioner by tightening the nut onn the adjustmen screw, then tighten the screws to the beam again.

7. Start operations again as described in section 5.1.

### 7.5.3 Replacing the drive chain

1. Turn the main power switch to the OFF position and lock with a padlock.

2. Get maximum amount of slack on the drive chain by using the chain tensioner. For further information of how to use the chain tensioner, read section 7.5.2.

3. Split and remove the drive chain.

4. Fit the new drive chain.

5. Adjust drive chain tension in accordance with section 7.5.2.

6. Start operations again as set out in section 5.1.

## 7.6 Drive unit

NB Prior to servicing, read section 2.7.

For information about the drive unit, see Appendix D.

## 7.7 Inlet gasket

NB Prior to servicing, read section 2.7.

### 7.7.1 Checking the inlet gasket

1. Turn the main power switch to the OFF (0) position and lock with a padlock.

2. Lower the water level in the filter until the whole inlet gasket is accessible.

3. Make sure the inlet gasket rests against the inside of the drum.

4. Inspect the inlet gasket for damage and wear (see Figure 7.24).

5. If necessary, replace the inlet gasket in accordance with section 7.7.2.



*Figure 7.24 Inlet gasket.*

6. Start operations again as set out in section 5.1.

### 7.7.2 Replacing the inlet gasket

1. Turn the main power switch to the OFF (0) position and lock with a padlock.

2. Lower the water level in the filter until the whole inlet gasket is accessible.

3. Note how the inlet gasket is fitted before it is dismantled.

4. Loosen the screws and nuts holding the inlet gasket in position.

5. Remove the inlet gasket.

6. Fit a new inlet gasket.

7. Start operations again as set out in section 5.1.

## 7.8 Lifting the drum

The filter is equipped with two drumlifting devices, each located at the gables of the filter, that is to be used when lifting the drum.

### 7.8.1 Use of the front drum lifter

The front drum lifter is placed along the centreline of the filter, on a bracket behind the horizontal beam above the inlet channel. The screw marked in blue in figure 7.8.1 displays where the front drum lifter is located.

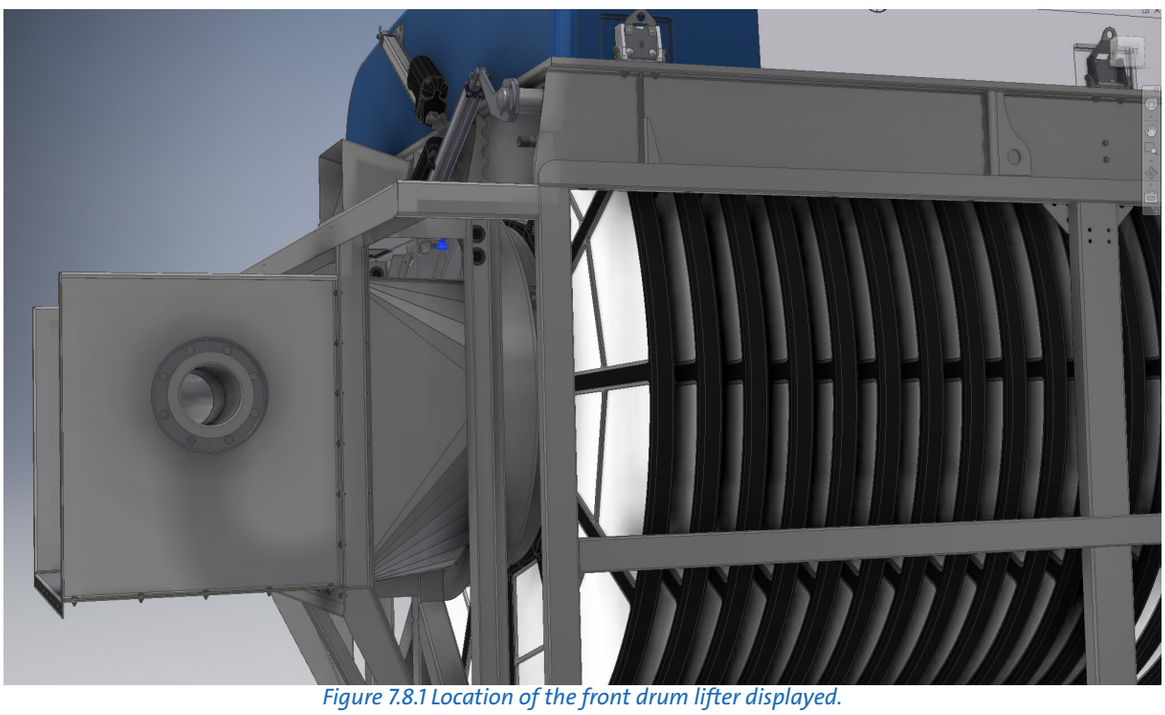

*Figure 7.8.1 Location of the front drum lifter displayed.*

The drum lifter is operated by tightening the screw (the screw marked blue, in figure 7.8.2). This will push on the center of the inside ring of the drum, lifting it vertically.

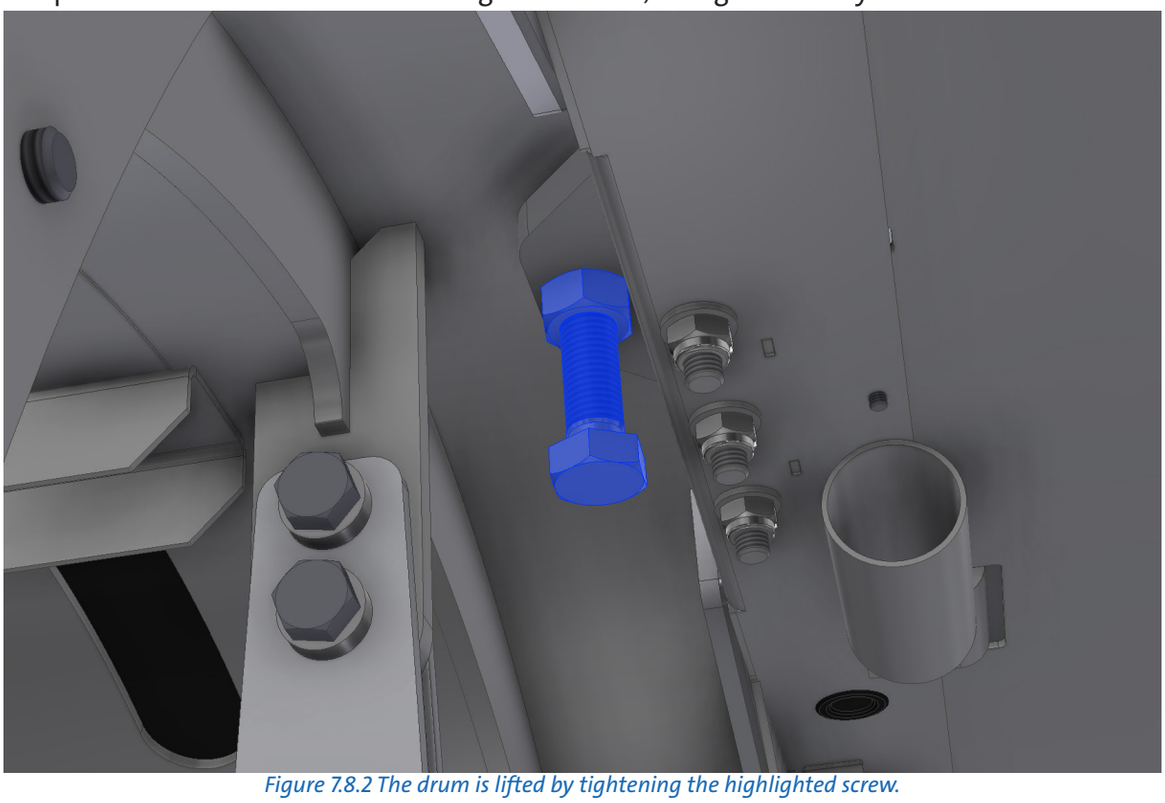

*Figure 7.8.2 The drum is lifted by tightening the highlighted screw.*

## 7.8.1 Use of the rear drum lifter

The location of the rear drumlifter is displayed in figure 7.8.3 below.

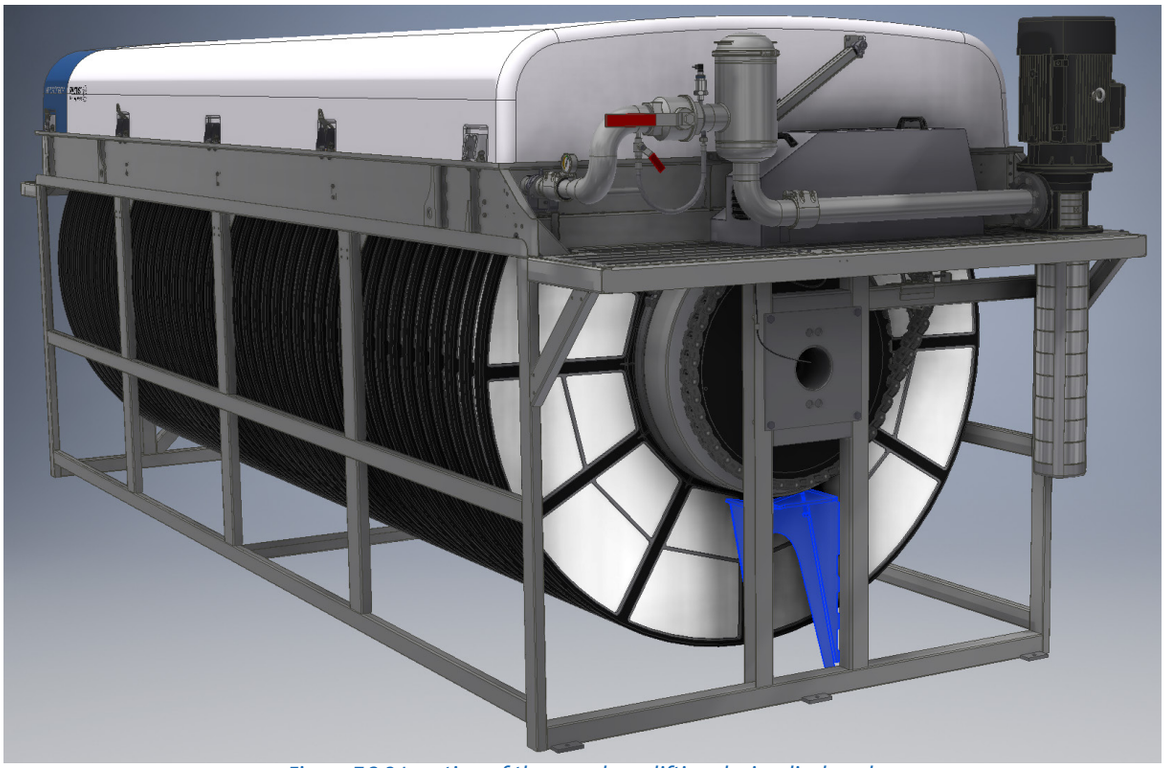

*Figure 7.8.3 Location of the rear drum lifting device displayed.*

The rear drum lifter is opeated in the same way as the front drum lifter, but instead of one screw placed in the center of the drum, there is now two screws lifting the drum.

Tighten one screw at the time, and lift the drum slowly by taking turns on the two screws so that the drum is being held close to the centreline of the filter during the entire process.

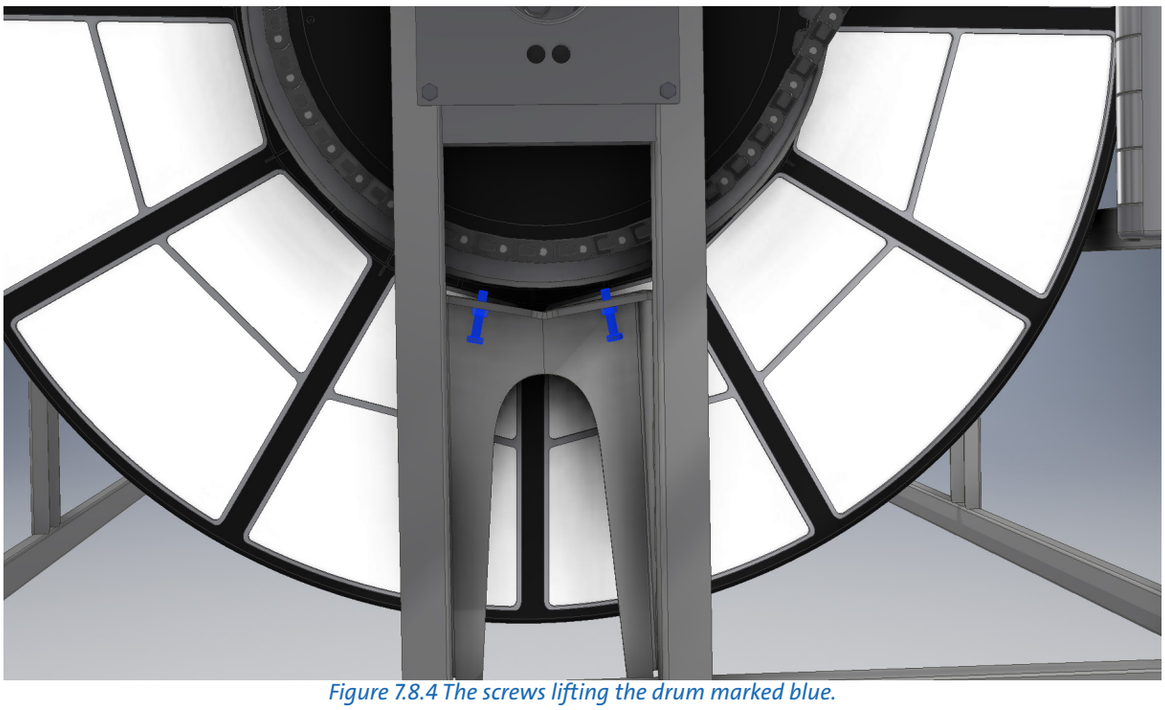

*Figure 7.8.4 The screws lifting the drum marked blue.*

## 7.8.2 Lifting the drum on filters with tank

The procedure for lifting the drum on a filter with tank is the same as for the frame version of the filter.

On the inlet side of the filter the drum lifter can be accessed by lifting the center flooring tile marked blue in figure 7.8.5.

On the effluent side of the filter the plate marked blue in figure 7.8.6 must be removed to access the drum lifter.



*Figure 7.8.5 Accessing the front drum lifter.*

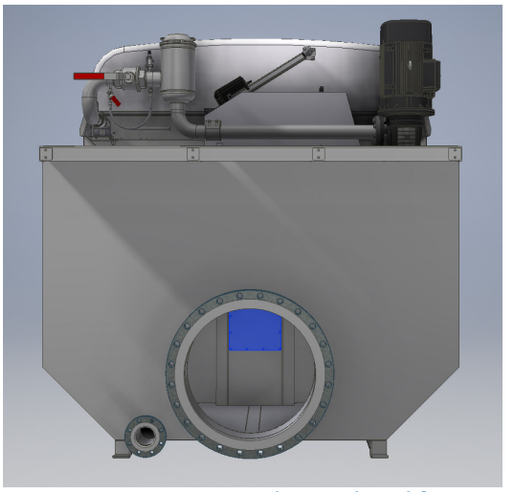

*Figure 7.8.6 Accessing the rear drum lifter.*

# 8. MAINTENANCE SCHEDULE

| Check/Action | Maintenance interval |
|---|---|
| Check whether the wash water filter is clogged. See section 7.2. | The interval is based on experience from the application in question. (When the backwash water pressure drops 0.5 bar below the normal value.) |
| Check the filter panels for clogging and damage. See section 7.4. | Once a week or another interval based on experience from the application in question. |
| Inspect the inside of the filter: Make sure no large objects that can get caught in the drum, filter segments or sludge trough have entered the filter. Also check that the reject does not accumulate (sediment) in the sludge trough.<br><br>NB Prior to servicing, read section 2.7. Remove large objects and rinse the sludge trough.<br><br>*WARNING! Turn the main power switch to the OFF position and lock in the OFF position with a padlock.* | Once a week or another interval based on experience from the application in question. |
| Rinse the metal surfaces of the filter structure with clean water. Clean (uncontaminated) metal surfaces minimise corrosion, particularly in salt water applications. | Twice a month or another interval based on experience from the application in question. |
| Check the nozzles with respect to clogging. See section 7.1. | Twice a month or another interval based on experience from the application in question. |
| Lubricate the swivel to the backwash pipe using grease of the type NLGI:2 (e.g. Molykote Multilub, Rembrandt EP or equivalent grease). See section 7.3.1. | Twice a month with continuous drum rotation. Once a month with intermittent drum operation. |
| Lubricate the drum bearings (on the inlet and drive side) using grease of the type NLGI:2 (e.g. Molykote Multilub, Rembrandt EP or equivalent grease). See section 7.3.2. | Twice a month with continuous drum rotation. Once a month with intermittent drum operation. |
| Check drive chain tension and condition. See section 7.5.1 | Four times a year with continuous drum rotation. Twice a year with intermittent drum rotation. |
| Check the drive unit's oil level. See section 7.6. | Twice a year. |
| Check the wear on the drum bearing. See section 7.3.3. | Once a year. |
| Check the inlet gasket. See section 7.7. | Once a year. |
| Change the gearbox oil. Oil type: ISO viscosity VG 680 (e.g. Omala oil 680 (Shell) or equivalent gearbox oil). Also see Appendix D. | See Appendix D. |

# Symbols used on Hydrotech filters



Symbol is displaying equipotential earth bonding points on the filter.



Symbol shown at lubrication points on the filter. Read the manual for further information about lubrication.



Symbol displaying moving parts. Negligence to comply with safety regulations may lead to injury.



This symbol is placed where certain attention is needed when handling the filter. Read the manual for further information.

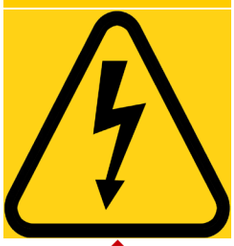

Warning for high voltage. Always assume all electrical equipment to be live and



Used as a warning where corrosive fluids is used. Always use appropriate safety equipment when handling corrosive products.

# Manuals & technical information

For further information regarding Hydrotech filters or any other product used together with Hydrotech filters, please visit www.hydrotech.se. Click on ”Manuals & technical information”.

Locate the desired product manual and select manual by clicking on one of the language options. The manual will open in a new browser tab where the option to save the manual also can be found.

# HYDROTECH

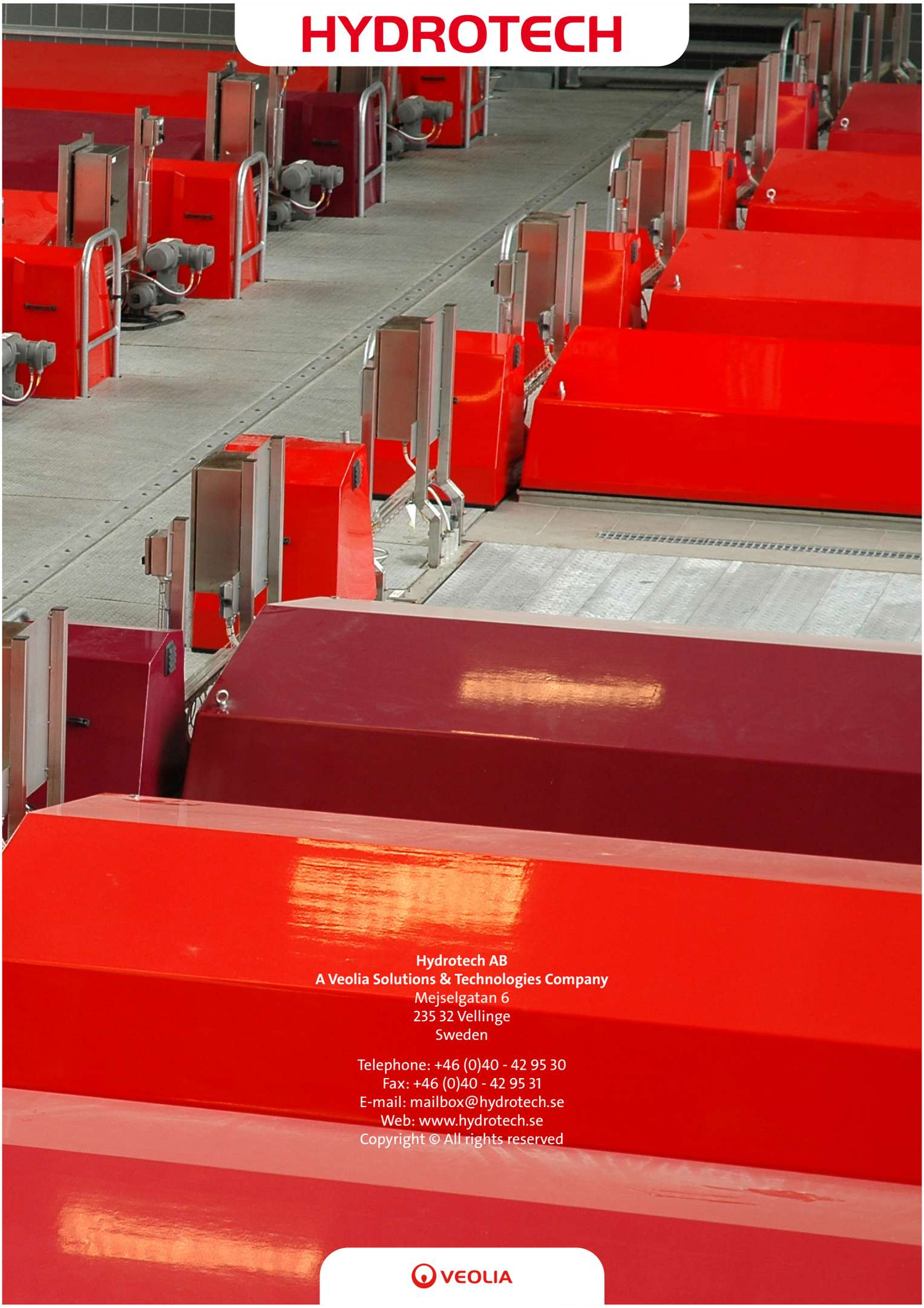

**Hydrotech AB**
**A Veolia Solutions & Technologies Company**
Mejselgatan 6
235 32 Vellinge
Sweden

Telephone: +46 (0)40 - 42 95 30
Fax: +46 (0)40 - 42 95 31
E-mail: mailbox@hydrotech.se
Web: www.hydrotech.se
Copyright © All rights reserved

VEOLIA

**This page is intentionally left blank**

HYDROTECH

# CHEMICAL CLEANING OF HYDROTECH FILTERS

*Version 1.2*

Vellinge
June 2, 2020

by VEOLIA Water Technologies

# Introduction

The purpose of this instruction is to provide a detailed overview of when and how to perform chemical cleaning of Hydrotech filters. The document can be used as an encyclopedia, where the user, by the help of the table of content, will find which sections to read when looking for answers to chemical cleaning related questions.

The document includes a short background describing how the filters work and how to determine when chemical cleaning is needed. The instruction also covers general health and safety aspects, the recommended chemicals to use and the estimated chemical consumptions for the drum and disc filters. The instruction also comprises different ways of performing chemical cleaning, manually or automatically, how to evaluate the performance of the chemical cleaning and a list of relevant documents for further reading.

# Contents

**1. Background ..... 3**
**2. Frequency ..... 5**
**3. Material ..... 6**
3.1. Health and safety ..... 6
3.2. Chemicals ..... 6
3.3. Chemical consumption ..... 7
**4. Execution ..... 8**
4.1. High-pressure cleaning system (option) ..... 8
4.2. Manual chemical cleaning ..... 9
4.3. Chemical spray bar ..... 10
4.4. Hydrotech Cleaning Trolley (option) ..... 11
4.5. Automatic chemical cleaning with HCT, and PFC control cabinet ..... 11
*4.5.1. Chemical cleaning settings ..... 12*
*4.5.2. Chemical cleaning sequence ..... 12*
4.6. Manual chemical cleaning with HCT, without PCF control cabinet ..... 13
**5. Performance evaluation ..... 14**
**6. Appendices ..... 15**

# 1. Background

The drum filter and the disc filter are based on the same principle. Water flows by gravity into a central drum, supporting vertically mounted discs (disc filter, Figure 1) or covered by filter panels (drum filter, Figure 2). During filtration, solids larger than the pore openings of the filter cloth are caught on the filter panels. As the solids layer on the panels increases, the water flux through the filtration media decreases, which (at a constant inlet flow) causes the water level inside the central drum to rise. When the water level reaches a level sensor, mounted at a certain critical head loss level, the backwash is initiated. The backwash pump is activated and the drum starts to rotate, to transport the solids retained from the water up to the backwash nozzles. The nozzles spray the filter cloth from the outside with clean water, at up to 8 bar, and the solids fall into a solids collection trough, from which they can be discharged.

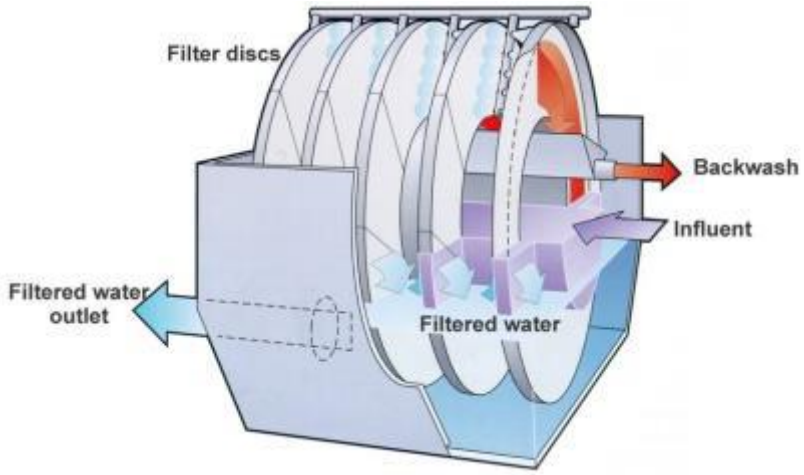


*Figure 1. The disc filter filtration principle.*

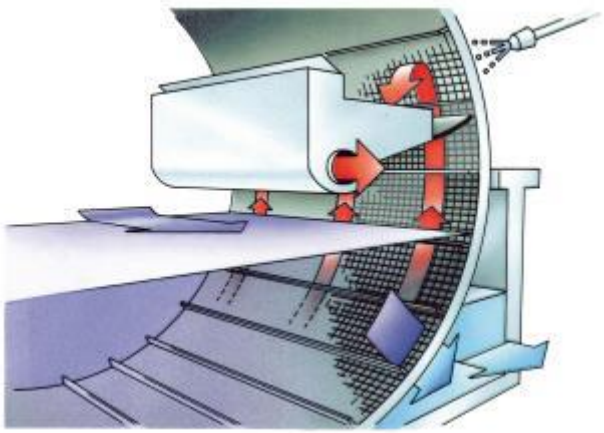

*Figure 2. The drum filter filtration principle.*

Once the water level inside the drum decreases, the backwash pump and the rotation of the drum stops. The filtration continues, without interruption, throughout the whole backwash cycle. In the best-case scenario, the filter installations will operate for several months without any noticeable reduction of the hydraulic capacity thanks to the regular backwash. There is however, a risk of the hydraulic capacity decreasing due to either clogging or fouling or by a combination of both.

Clogging occurs when particles are blocking the pore openings of the filter media, whilst fouling can be either reversible i.e. physically removed by the standard backwash or by high-pressure cleaning, or irreversible, which will require chemical cleaning. The fouling of the filter cloth is usually caused by both inorganic and organic foulants, where inorganic fouling is most often associated with chemical precipitating agents used in the treatment process, e.g. coagulants for phosphorus removal. Meanwhile, accumulation of biological material on the filter panels is typically seen in connection with applications with very active biomass (e.g. biofilm processes) and/or during long periods of very low

loading e.g. at night. For long periods of low loading, it is recommended to introduce a forced backwash once an hour and to implement a longer overrun on the backwash timer.

Fouling can in many cases be prevented by performing regular high-pressure cleaning (at max 80 bar), e.g. once a week or every second week, either by using the optional built-in high-pressure cleaning equipment or by cleaning the filters manually. If manual high-pressure cleaning is done, the high-pressure nozzles should not be closer than 10 cm to the filter media, in order to avoid tearing it. When the standard backwash and the high-pressure cleaning cannot remove the foulants, chemical cleaning of the filter media is required to recover the filtration capacity, see Figure 3.



*Figure 3. A disc filter panel from an installation with iron based coagulant dosing, before (left) and after (right) chemical cleaning and recovery of the filtration capacity.*

# 2. Frequency

How often chemical cleaning is needed depends on the pore sizes of the filter cloth, the dose of chemicals upstream the filter and the water characteristics of each installation. In some cases, it is rarely needed, while in others it might be needed every week. It is recommended to check if chemical cleaning is needed every 3-4 weeks by using the test-tube set-up described below, and adjust the chemical cleaning interval accordingly.

In general, for smaller pore openings such as 10 µm, chemical cleaning is needed more often than for larger openings such as 40 µm. When chemical precipitation is used in the water treatment process, e.g. for phosphorus removal, the chemical cleaning frequency might increase. For more information regarding the chemical cleaning frequency, see examples from full-scale installations in Appendix I.

Determining if chemical cleaning is needed can be done by comparing the operation hours, the sludge flow, the power consumption or the frequency of the backwash cycles for similar conditions over time. If the backwash frequency[1], hours of operation or power consumption for a similar load and the same backwash pressure increases over time, it means that the backwash is not succeeding in keeping the panels clean anymore, and that the capacity of the filter is decreasing. A decrease in the sludge flow over time can also serve as an indication that the filter media is suffering from clogging and/or fouling.

Another way of determining if chemical cleaning is necessary is to use a test-tube with an insert (see Figure 4) to relate the hydraulic capacity of the filter media to that of a new filter cloth, see the user manual in Appendix IV.



*Figure 4. Test tube and insert for measuring long-term fouling of the filter media.*

[1] Calculated as the backwash time divided by the time of the whole backwash cycle, i.e. the backwash time plus the static time when the filter is not backwashing.

# 3. Material

## 3.1. Health and safety

Read the labels, and safety data sheets (SDS) of the cleaning chemicals prior to use. Always wear gloves and all required personal protective equipment (PPE) as indicated on the SDS.

Local regulations for work with hazardous chemicals must be observed. For information regarding handling, storage, transport and disposal of the cleaning chemicals, see the SDS of each chemical used.

A workplace risk assessment should be done before starting the chemical cleaning. For an example of a risk assessment, see Appendix II.

## 3.2. Chemicals

The chemicals required for chemical cleaning will depend on the type and the extent of fouling. Before chemical cleaning is performed, the most effective chemical or combination of chemicals must be determined. In addition, the required concentration and necessary contact time of the chemicals should be evaluated. In some cases, it may be necessary to repeat the cleaning procedure a number of times or to use two different chemicals in succession. Higher concentrations than necessary should be avoided and the contact times stipulated below should not be exceeded.

To determine what chemicals should be used for chemical cleaning, a test-tube with an insert can be used to compare the hydraulic capacity before and after cleaning a clogged panel with the chemical that is being evaluated. For instructions that are more detailed see *User manual - Determination of clogging degree of filter media.*

The recommended products for chemical cleaning that do not affect the filter media lifetime are:

- Dilute hydrochloric acid (HCl, 3-5%)
- Dilute sodium hypochlorite (NaClO, 0,5-1,5%)

Generally, if the chemical cleanings are performed regularly according to site-specific maintenance schedules, a 3-5% HCl solution (v/v) and 0,5-1,5% NaClO (v/v) is sufficient. However, if the filter panels have been completely blinded, concentrations of up to 15% HCl and 4% NaClO respectively can be used.

If needed, the product Hydrex 4921 (10% w/w), dilute phosphoric acid ($H_3PO_4$, <10%) or dilute nitric acid ($HNO_3$, <10%) can be used as a replacement of HCl. Hydrogen peroxide ($H_2O_2$, <15% v/v), dilute sodium hydroxide (NaOH, 5%) or sodium percarbonate ($2Na_2CO_3 \cdot 3H_2O_2$, 5%) can be proposed as a substitute for NaClO. There are also commercial (acid) products, which include surfactants and inhibitors, available that can be used for chemical cleaning, for example Benco Extra/Duge supplied by FR Kemi ApS, Denmark. Dilute solutions of phosphoric acid or nitric acid can also be an alternative.

Do not use basic solutions at high pH, such as potassium hydroxide (KOH) and sodium hydroxide (NaOH), at high concentrations as this might damage the structural integrity of the filter cloth. Other solutions to avoid are listed in Table 1 below. Please contact Hydrotech for assistance in evaluating if any of the chemicals listed could be used for cleaning without damaging the filter media.

**IMPORTANT NOTE!**
**Do not mix hydrochloric acid and sodium hypochlorite, as poisonous chlorine gas will form.**

*Table 1. The chemical compatibility of the polyester cloth with different chemicals. The resistance of the filter media is limited for the chemicals on the left, and the filter media is strongly attacked by the chemicals on the right.*[2]

| **Limited resistance** | | **Strongly attacking** |
|---|---|---|
| Hydrofluoric acid | Sulphuric acid | Sulphuric acid |
| Nitric acid | Potassium hydroxide | Potassium hydroxide |
| Aqua regia | Sodium hydroxide | Sodium hydroxide |
| Salicylic acid | Sodium chlorite | Sodium chlorite |
| Sodium carbonate | Propylene glycol | Propylene glycol |
| Peracetic acid | Phenol | Phenol |
| Bromine | Cresol | |
| Potassium chlorite | Nitrobenzene | |
| Chlorine | | |

## 3.3. Chemical consumption

Tables with the chemical consumption for the drum, disc and performance filters can be found in Appendix III. The chemical consumption per cleaning cycle presented for the different filter models in the tables should be seen as a general estimation, which is likely to differ depending on the site-specific conditions, the cleaning frequency, the settings and the cleaning chemicals used. Hydrotech strongly recommends that the chemical cleaning settings, frequency, etc. are adapted to the conditions of each site.

[2] All information is derived from published data of the fiber manufacturers. Generally, it reflects the resistance at 20 °C (68 °F) of concentrated or saturated solutions. Rating, sample preparation, exposure time, load and other relevant factors vary between materials. Consequently, this information should be used as a guide only. Prior to any application, users are strongly advised to determine the accuracy, safety and suitability of this information by laboratory and field tests. Please contact Hydrotech for more information.

# 4. Execution

The cleaning procedure includes the following steps:

1. A backwash (and high-pressure cleaning, if available) is done to physically remove contaminants
2. The backwash water is allowed to drain from the filter panels
3. The chemical working solution is sprayed onto the panels
4. A certain contact time is allowed for the chemical reaction to take place
5. A backwash is done to wash the chemicals off the filter panels

While it is possible to clean the filter media manually with chemicals, Hydrotech strongly recommends using the Hydrotech Cleaning Trolley (HCT). The HCT is fully automated after it has been filled with the chemical and connected to the filter and the control cabinet. The control system ensures optimized cleaning and automatically rinses the filter after the chemical cleaning is finished.

If the panels are extremely fouled, due to e.g. issues with the chemical precipitation (over-/underdosing of coagulant and/or polymer), an option is to remove all of the panels, wash them with high-pressure equipment and let them soak in the chemicals.

## 4.1. High-pressure cleaning system (option)

If the filters have been equipped with the optional high-pressure cleaning system[3] (HPC, see Figure 5 and Figure 6), it can be operated using the buttons on the control cabinet (see Figure 7 for an example). For detailed instructions, see the filter manuals.



*Figure 5. The optional high-pressure cleaning system for disc filters.*

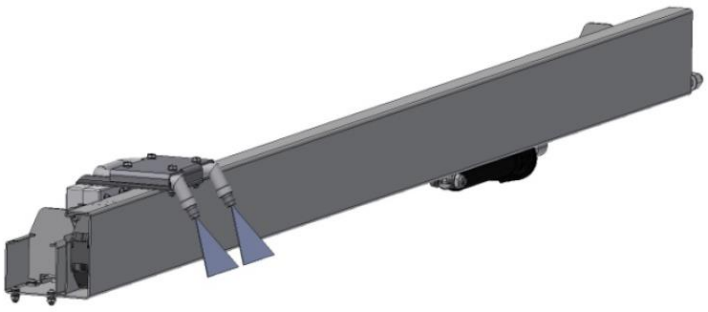

*Figure 6. The optional high-pressure cleaning system for drum filters.*

[3] Not available as an option for the HPF series.

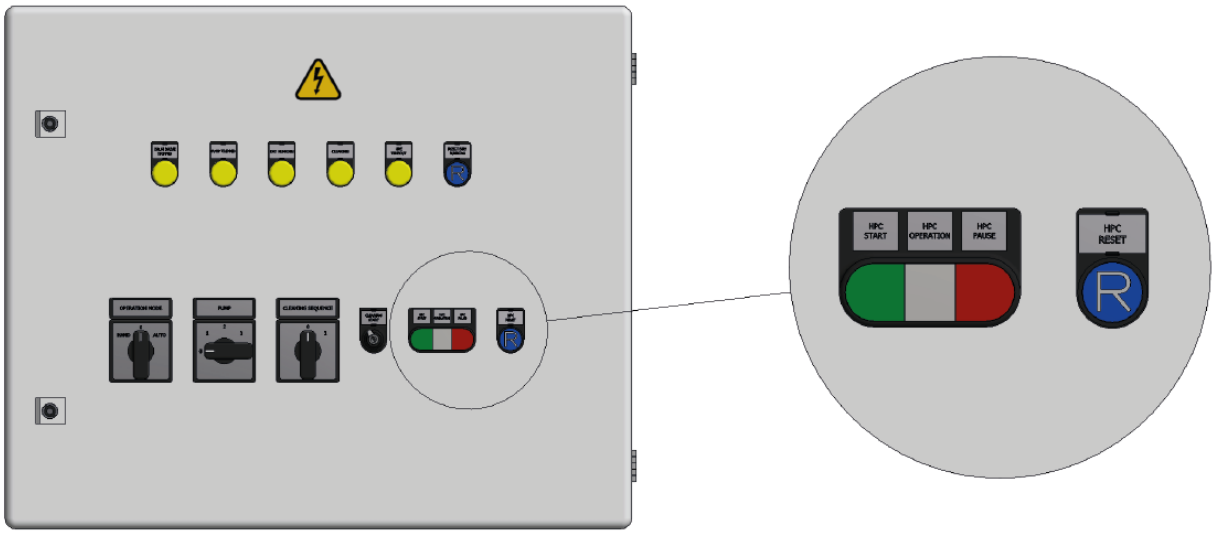


*Figure 7. Control cabinet on filter with the high-pressure cleaning system integrated.*

The high-pressure cleaning should be set to operate at a pressure of 80 bar. The time it takes to complete a cleaning cycle depends on the filter model. During the cleaning cycle, the filter will rotate continuously, while the high-pressure equipment cleans one filter segment at a time.

Manual high-pressure cleaning can also be performed, but it requires a pressure washer lance with an angled nozzle to fit in the space between the filter panels of the disc filters. The pressure washer lance must not be used closer than 10 cm from the filter panels.

If the fat, oil and grease concentration in the water is high and causes the filter media to clog, hot water (<60°C) can be used for the high-pressure cleaning.

## 4.2. Manual chemical cleaning

Note that the procedure for chemical cleaning outlined below is an example only. The actual procedure, i.e. the chemicals, concentrations and number of repetitions needed, must be determined for each installation depending on the type and extent of clogging before starting. The chemicals are preferably applied to the filter panels using a portable pressure spray bottle or similar (see Figure 8).

A. Backwash the filter continuously for 5 minutes at maximum pressure (7.5 bar or higher[4]). Alternatively, high-pressure wash the filter panels at a maximum of 80 bar, as described above.
B. Allow the filter panels to drain 1 minute.
C. Spray hydrochloric acid[5] on the filter panels that are visible and leave it for a contact time of 5-10 minutes.
D. Backwash the filter at maximum pressure (7.5 bar or higher[3]) for 5 minutes, to wash the hydrochloric acid off the filter panels.
E. Rotate the filter to expose untreated panels and allow the panels to drain for 1 minute.

Repeat steps C to E until all of the filter panels have been cleaned.

[4] The maximum backwash pressure depends on the filter model. It can be found in the technical specifications for each filter model.
[5] Alternatively, an equivalent cleaning product.



*Figure 8. Portable pressure spray bottle used for application of cleaning chemicals on the filter media.*

**Safety note:** Before starting with the following steps, make sure that the hydrochloric acid is not mixed with the sodium hypochlorite, to prevent toxic chlorine gas from forming.

A. Spray sodium hypochlorite[6] on the visible filter panels and leave it for a contact time of 5-10 minutes.
B. Backwash the filter at the maximum pressure (7.5 bar or higher[4]) for 5 minutes, to wash the sodium hypochlorite off the filter panels.
C. Rotate the filter to expose untreated panels and allow the panels to drain for 1 minute.

Repeat steps F to H until all of the filter panels have been cleaned.

## 4.3. Chemical spray bar

The filters can be equipped with chemical ramps[7] (see Figure 9 and Figure 10) with spray nozzles, to enable automatic chemical cleaning of the filter panels by connecting the optional Hydrotech Cleaning Trolley. Hydrotech recommends having one spray bar per cleaning chemical.

The chemical spray bar can also be used for manual cleaning. The chemicals are then injected using e.g. technical water as motive water and a dosing pump or ejector. The type and size of ejector needed depends on the filter model and the flows required to obtain the correct concentrations of the cleaning chemicals.

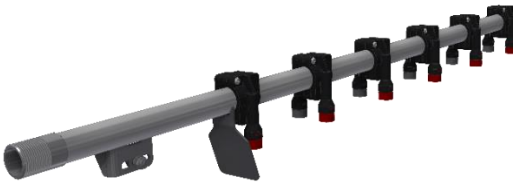

*Figure 9. Chemical spray bar with nozzles for disc filters.*



*Figure 10. Chemical spray bar with nozzles for drum filters.*

Before starting the chemical cleaning the spray bar, nozzles, spray pattern, and spray angle should be checked with pressurized tap water to ensure there are no leaks or clogged nozzles, which can significantly reduce the cleaning efficiency. If clogged nozzles, due to biological growth in the filter, is a recurring issue, exchanging the nozzles for blinded nozzles can be considered when the chemical spray bar is not in use.

[6] Alternatively, use an equivalent cleaning product.
[7] The HSF1700 series and the drum filters are not, as a standard, equipped with chemical ramps.

The spray pattern can be modified, if necessary, by replacing the standard spray nozzles with a larger model. Using larger nozzles, however, will have an effect on the chemical consumption.

## 4.4. Hydrotech Cleaning Trolley (option)

The Hydrotech Cleaning Trolley (HCT, Figure 11) can either be used with the automatic settings in the control cabinet or manually, as described in section 4.6. Before starting the chemical cleaning, the HCT manual should have been read and understood, see Appendix V.
The HCT has three connections:

- A 10 m power cable (3 x 400V), to be connected to the filter unit
- A 10 m signal cable, to be connected to the control cabinet
- A hose for the chemicals, to be connected to the spray bar of the filter unit



*Figure 11. The Hydrotech Cleaning Trolley (HCT).*

The HCT can be stored separately from the filter units, indoors, to protect it from frost and direct sunlight. When a chemical cleaning is needed, the HCT can be moved into position close to the filter unit and connected, as described above.

## 4.5. Automatic chemical cleaning with HCT, and PFC control cabinet

The automatic chemical cleaning procedure is fully automated once the HCT has been filled with the cleaning chemical to be used, connected to the filter and control cabinet and the operation of the filter is changed to cleaning mode. For the automatic chemical cleaning to start, the operator has to press the buttons manually. Consequently, the chemical cleaning requires someone to be on site to make sure that it is safe to start the chemical cleaning. The procedure is as follows.

A. Fill the container with the chemical to be used.
B. Connect the HCT to the filter and the control cabinet
C. Change to the cleaning mode in the control cabinet.

The system will start the cleaning, by spraying the chemical onto the filter panels following a sequence, which will allow the filter panels to be soaked in chemicals. When all the panels have been sprayed and left soaking, the backwash cycle will start to rinse the panels. The cleaning procedure is fully automated, and takes approximately 20 minutes.

If several chemicals are needed for the chemical cleaning, replace the chemical container and restart the procedure. If both hydrochloric acid (HCl) and sodium hypochlorite (NaClO) have to be used, great care should be taken to avoid mixing the two, as it can produce toxic chlorine gas. The

safer, faster and easier option is to use two separate cleaning trolleys, instead of using the same trolley.

If the same cleaning trolley has to be used, the chemical cleaning procedure with hydrochloric acid (HCl) is performed (see the HCT operation manual). The residual HCl is then pumped out of the tank and the whole system is thoroughly washed with an excess of water. After this is done, the sodium hypochlorite solution is pumped into the tank and the chemical cleaning procedure is repeated.

D. When the panels are clean, disconnect the HCT from the filter unit and the control cabinet.
E. Change to the standard operation mode in the control cabinet.

### 4.5.1. Chemical cleaning settings

Several different parameters can be adjusted to optimize the chemical cleaning, depending on the conditions of the specific site. When the HCT is used the factory settings are recommended, but for permanent chemical cleaning installations, the chemical cleaning system is more likely to require adjustments. Factors that can influence the choice of settings are, for example, the time required to build pressure in the chemical pipe and time delays in the control system, as well as the type and development of the fouling.
The parameters that need to be checked, and if necessary adjusted, are:

- Number of cleaning cycles
- Drum start delay
- Drum dispensing time
- Drum dispensing speed
- Chemical pump stop delay
- Soaking time
- Index steps
- Rinsing time

For more information, see the operation manuals and functional descriptions for the filters.

### 4.5.2. Chemical cleaning sequence

1. The chemical pump starts.
2. After a set time, the *drum start delay*, when the pressure in the chemical spray bar has built up and the spray pattern is right, the filter drum starts to rotate at the set *drum dispersing speed* (normally 10-20 Hz).
3. The drum rotates for a set time, the *drum dispersing time*, during which 2-3 segments are sprayed with the cleaning chemicals.
4. When the drum dispersing time has elapsed, a stop signal is sent to the drum motor, which ramps down the rotation of the drum. Due to the time it will take to slow down and stop the filter drum, a *chemical pump stop delay* is used, in order to make sure the chemicals are evenly applied to all of the filter segments.
5. After the chemical pump and the drum has stopped, the segments sprayed with cleaning chemicals will soak during a *soaking time* of, usually, 300-600 s.
6. After the soaking time, the whole cleaning sequence (steps 1-5 above) is repeated on the other segments, until all of the filter segments have been cleaned. The number of repetitions will depend on the filter model. As an example, a disc filter from the HSF2600-series has 14 segments and requires a minimum of 5 *index steps* to clean the whole filter discs. It is recommended, however, to clean the filter in 6-8 index steps to ensure that the filter segments are completely covered by cleaning chemicals. For other filter models and placements of the chemical spray bar, other settings might be needed.
7. When all of the filter segments have been sprayed and left soaking with cleaning chemicals, the chemical cleaning sequence is finished by backwashing of the filter for a *rinsing time* of approximately 5 minutes, to remove the cleaning chemicals from the filter media.

It is strongly recommended during commissioning of the filters that all of the above settings are evaluated, and if necessary adjusted, by using tap water. This should be done by having

manometers installed on the chemical spray bar and the filter lid kept open, to be able to inspect the performance.

The key is to verify the spray pattern from the chemical nozzles (spray pressure >3 bar) before the filter starts to rotate, that the filter stops before the treated segments enter the water, that the treated segments are left soaking long enough and that the cleaning of the filter segments overlap to avoid untreated sections.

## 4.6. Manual chemical cleaning with HCT, without PCF control cabinet

A. Backwash the filter continuously for 5 minutes at maximum pressure (7.5 bar or higher[8]) and allow the filter panels to drain for 1 minute.
B. Rotate the drum at 10-20Hz by changing the settings in the control panel.
C. Spray hydrochloric acid at 3 bar for 12 seconds (with the drum rotating at 10-20 Hz) using the chemical spray bar.
D. Stop the drum rotation and let the chemical soak for 3 minutes.
E. Repeat steps B-D 5 times until the whole surface has been covered with acid.
F. Backwash for 5 minutes and allow the filter panels to drain for 1 minute.
G. Repeat the above steps with sodium hypochlorite, if necessary.

**NB** Make sure to never mix hydrochloric acid and sodium hypochlorite to prevent poisonous chlorine gas from forming.

[8] The maximum backwash pressure depends on the filter model. It can be found in the technical specifications for each filter model.

# 5. Performance evaluation

To evaluate the efficiency of the chemical cleaning, remove a filter panel and use a test-tube with insert, as described in user manual in Appendix IV. The time it takes for 1 L of tap water to pass the filter is compared to the corresponding time of a new filter panel. If there is a substantial difference in time, repeating part of or the whole chemical cleaning sequence should be considered.

# 6. Appendices

Appendix I – Examples of Chemical Cleaning in Full-scale Installations

Appendix II – Example of a Risk Assessment

Appendix III – Chemical Consumption

Appendix IV – User manual - Determination of fouling degree of filter

Appendix V – Operation Manual Hydrotech Chemical Cleaning Trolley - HCT

# Appendix I - Examples of Chemical Cleaning in Full-scale Installations

| **Example** | **1** | **2** | **3** |
|---|---|---|---|
| Application | Tertiary treatment | Phosphorus removal | Phosphorus removal |
| Location | Sweden | Sweden | France |
| Pore size | 15 µm | 10 µm | 40 µm |
| Filter area installed | 3584 m² | 821 m² | 62 m² |
| Process upstream | Secondary clarifiers (activated sludge) and post-DN MBBR | Secondary clarifiers (activated sludge) and primary effluent by-pass | MBBR (C+N) |
| Chemical dosing upstream | Simultaneous precipitation (iron) | Coagulation (aluminium) and flocculation (anionic polymer) | Coagulation (aluminium) and flocculation (cationic polymer) |
| Chemical cleaning frequency | - HCl[1] (10%): Once a month<br>- NaClO[2] (6%): Once every third month[3] | - HCl: Once every sixth week<br>- NaClO: Once every sixth week | - HCl (10%): Three times per year<br>- NaClO (<10%): Three times per year |
| Chemical consumption | - HCl (34% solution): 6 m³/year<br>- NaClO: 7 m³/year | - HCl: 5200 L/year<br>- NaClO: 312 L/year | - HCl: 210 L/year<br>- NaClO: 250 L/year |
| Hours required | - HCl: 192 hours/year<br>- NaClO: 128 hours/year | - HCl + NaClO: 208 hours/year | N/A |

[1] Hydrochloric acid
[2] Sodium hypochlorite
[3] Continuous dosing of NaClO in the backwash water system to reduce the maintenance need of the nozzles (self-cleaning nozzles not installed).

**This page is intentionally left blank**

# Appendix II - Example of a Risk Assessment

| **Division:** Process | | | | | | **Date:** 2020-XX-XX | |
|---|---|---|---|---|---|---|---|
| **Installation:** Pilot | | | | | | **Conducted by:** NN | |
| **Overall activity** | **Identified risk** | **Preventive measures** | **C*** | **P**** | **Risk** | **Recommendations** | **Comments** |
| $H_2S$ formation due to anaerobic environment in confined spaces | Suffocation | Ensure proper ventilation on site. | 5 | 1 | 3 | Be particularly observant during start-up after power failure (more than 4 days) when $H_2S$ can be present where it normally does not appear. | Under normal operation no $H_2S$ is expected due to water flowing. |
| $Cl_2$-formation during cleaning of filter panels with HCl and NaClO. | Toxic | Make sure that the chemicals are not in contact with each other. Rinse the filter panels properly after use of each chemical | 5 | 1 | 3 | Perform chemical cleaning in a well-ventilated area | |
| Splashes of corrosive liquids, especially when chemicals are replaced or when cleaning the filter panels | Chemical burn | Always use eye protection in the container and protective clothing when handling chemicals. Emergency eye-wash is available in the control room. | 2 | 2 | 2 | | The main risk is when chemical containers are replaced or when filter panels are cleaned with acid and bleach. |
| Physical injuries by moving parts | Physical injuries | Use the safety switch to stop machinery before reparation or sampling. | 3 | 2 | 3 | Make sure that no one can operate the equipment while performing work around these parts | Moving parts: pumps, engines, mixers, rotating drum, screw conveyors, valves |
| Injuries due to the physical environment | - Physical injuries<br>- Burns due to hot surfaces<br>- Electrocution | - Keep the pilot cleaned<br>- Use the right tool for the task. | 5 | 3 | 4 | - Make sure there are no pipe leakages, make people aware about them | Beware slippery floors due to polymer leakage. Beware of cables, pipes and tubes |

* Consequence
** Probability

| | | | | | | | |
|---|---|---|---|---|---|---|---|
| | - Heavy lifts<br>- Spills<br>- Fires | - Be careful when moving around among the piping.<br>- Never open an electrical cabinet without switching the power off<br>- Use mechanical help for heavy lifts<br>- In case of fire use the fire extinguisher, if possible, otherwise leave the container immediately | | | | and clean them immediately.<br>- Make sure there are no obstructions in the pipes causing overpressures<br>- Any electrical work should be performed by an electrician<br>- Make sure the sink is connected to a proper drain<br>- Do not cover the radiators | when moving around in the containers |
| Analyses | Chemical risks | Read the MSDS before use | 3 | 2 | 3 | Make a risk assessment for any chemical analyses you perform. | The phosphax unit requires use of reagents that could pose health hazards |
| Noise | Hearing damage | Use hearing protection when required | 3 | 1 | 2 | Use hearing protection during longer work close to the backwash-pump. | |
| Biological risks | Upset stomach, polio (very rare), diphtheria | Take required vaccinations, use protective gloves and wash hands after contamination. Use mouth protection to avoid inhalation of aerosols. | 4 | 2 | 3 | Follow up for biological risks not present in Swedish treatment plants. Use protective clothes. Don't handle waste water with open wounds. No eating or drinking in the containers | All Hydrotech employees have vaccinations required by Swedish legislation |

The risk assessment considers the consequence and the probability of an accident and combines them to a final risk for the activity. The consequence of an accident is considered on a scale from 1 (some discomfort) to 5 (lethal accident). The probability of an accident is assessed in a similar way from 1 (unlikely, happens once in 100 years) to 5 (very common, occurs once a week). The risk is judged based on the matrix below, risks rated as 1 or 2 could be considered safe while a risk of 3 might require preventive actions. If the order of a risk is 4 or 5 preventive actions are required before the work can continue.

| Probability | Consequence | | | | |
|---|---|---|---|---|---|
| | Some discomfort | Injury without sick leave | Shorter sick leave | Longer sick leave | Lethal accident |
| Very common (1/week) | R3 | R4 | R5 | R5 | R5 |
| Common (1/month) | R2 | R3 | R4 | R5 | R5 |
| Quite common (1/year) | R2 | R3 | R3 | R4 | R5 |
| Rare (1/10 years) | R1 | R2 | R3 | R3 | R4 |
| Unlikely (1/100 years) | R1 | R1 | R2 | R2 | R3 |

| Risk order | | Need of preventive measures |
|---|---|---|
| R1 | **Low**<br>Insignificant risk | No preventive measures |
| R2 | Low risk | Take preventive measures if necessary |
| R3 | **Medium**<br>Some risk | Take all reasonable preventive action |
| R4 | Serious risk | Require preventive measures |
| R5 | **High**<br>Very serious risk | Work stopped until preventive measures are taken |

# Appendix III - Chemical consumption

The chemical consumption per cleaning cycle presented for the different filter models in the table below should be seen as a general estimation, which is likely to differ depending on the site-specific conditions, the cleaning frequency, the settings and the cleaning chemicals used. Hydrotech strongly recommends that the chemical cleaning settings, frequency, etc. are adapted to the conditions of each site.

The chemical flow is calculated based on the flow rate capacity of the spray nozzles multiplied by the number of nozzles installed in the filter. The chemical flow is then multiplied by the dispersion time, which will depend on the rotation speed of the filter drum. The maximum standard rotation speed during chemical cleaning is 20 Hz. Depending on the water characteristics, the process line upstream the filters, etc. a slower rotation speed might be required to let more of the chemicals penetrate the filter cloth and dissolve the fouling on the inside of the filter panels. If precipitation chemicals are dosed upstream of the filters, a rotation speed of 10-15 Hz has shown good results. Consequently, the calculations below are based on the factory settings for chemical cleaning but with a rotation speed of 10 Hz. For installations where chemical cleaning is done regularly and/or when the fouling is easier to remove, 20 Hz can be used and the consumption of chemicals per cleaning cycle will be lower than in the table below.

The values in the table are based on a pressure of > 3 bar for the chemical pump, which is necessary to ensure the correct spray pattern. Previously the spray nozzle types **QMVV-KY-9501** and **QMVV-KY-11001** (the white nozzle in Figure 1) have been used, but nowadays **QMVV-110015** (the red nozzle in Figure 1) is the new standard. The nozzles are placed in such a way to cover the whole filter area in the different models. Since the spray nozzles are a standard component and the same type is used in all filter models, more chemicals per m² of filter area will be needed for the smaller filter models and the drum filters than for the large disc filters.

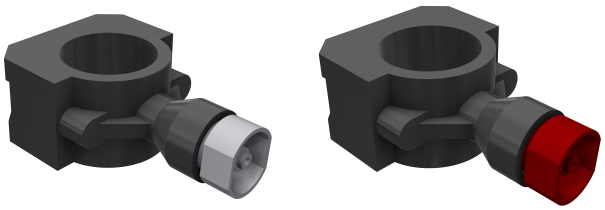

*Figure 1. Chemical cleaning nozzles **QMVV-KY 110-01 (left) and** **QMVV 110-015** (right).*

The Hydrotech Performance Filters (HPF) are equipped with two chemical cleaning nozzles per side of the filter disc, the **QMVV-110015** with a 110° spray angle and a QMVV-2502 nozzle[1] with a 25° spray angle to cover the increased filter area in a more efficient way.

[1] Light grey nozzle, not shown in Figure 1.

*Table 1. Chemical consumption of Hydrotech Drum Filters, including the Value series.*

| Filter model | Nozzles (pcs) | Chemical flow (L/min) | | Volume per cleaning cycle (L) | |
|---|---|---|---|---|---|
| HDF1201 | 2 | 0.8 | 1.2 | 1.7 | 2.6 |
| HDF1202 | 4 | 1.6 | 2.4 | 3.4 | 5.2 |
| HDF1203 | 6 | 2.3 | 3.5 | 5.2 | 7.8 |
| HDF1204 | 8 | 3.1 | 4.7 | 6.9 | 10.4 |
| HDF1601 | 2 | 0.8 | 1.2 | 1.7 | 2.6 |
| HDF1602 | 4 | 1.6 | 2.4 | 3.4 | 5.2 |
| HDF1603 | 6 | 2.3 | 3.5 | 5.2 | 7.8 |
| HDF1604 | 8 | 3.1 | 4.7 | 6.9 | 10.4 |
| HDF1605 | 10 | 3.9 | 5.9 | 8.6 | 13.0 |
| HDF1606 | 12 | 4.7 | 7.1 | 10.3 | 15.6 |
| HDF1607 | 14 | 5.5 | 8.3 | 12.0 | 18.2 |
| HDF2005 | 10 | 3.9 | 5.9 | 9.7 | 14.7 |
| HDF2006 | 12 | 4.7 | 7.1 | 11.7 | 17.6 |
| HDF2007 | 14 | 5.5 | 8.3 | 13.6 | 20.6 |
| HDF2008 | 16 | 6.2 | 9.4 | 13.0 | 19.6 |
| HDF2009 | 18 | 7.0 | 10.6 | 14.6 | 22.0 |
| HDF2010 | 20 | 7.8 | 11.8 | 16.2 | 24.5 |

*Table 2. Chemical consumption of Hydrotech Disc Filters.*

| Filter model | Nozzles (pcs) | Chemical flow (L/min) | | Volume per cleaning cycle (L) | |
|---|---|---|---|---|---|
| HSF1702 | 4 | 1.6 | 2.4 | 4.0 | 6.1 |
| HSF1704 | 8 | 3.1 | 4.7 | 8.0 | 12.1 |
| HSF1706 | 12 | 4.7 | 7.1 | 12.0 | 18.2 |
| HSF1708 | 16 | 6.2 | 9.4 | 16.0 | 24.2 |
| HSF2202 | 4 | 1.6 | 2.4 | 3.2 | 4.9 |
| HSF2204 | 8 | 3.1 | 4.7 | 6.5 | 9.8 |
| HSF2206 | 12 | 4.7 | 7.1 | 9.7 | 14.7 |
| HSF2208 | 16 | 6.2 | 9.4 | 13.0 | 19.6 |
| HSF2210 | 20 | 7.8 | 11.8 | 16.2 | 24.5 |
| HSF2212 | 24 | 9.4 | 14.2 | 19.4 | 29.4 |
| HSF2214 | 28 | 10.9 | 16.5 | 22.7 | 34.3 |
| HSF2216 | 32 | 12.5 | 18.9 | 25.9 | 39.2 |
| HSF2218 | 36 | 14.0 | 21.2 | 29.1 | 44.1 |
| HSF2220 | 40 | 15.6 | 23.6 | 32.4 | 49.0 |
| HSF2222 | 44 | 17.2 | 26.0 | 35.6 | 53.9 |
| HSF2224 | 48 | 18.7 | 28.3 | 38.9 | 58.8 |
| HSF2612 | 24 | 9.4 | 14.2 | 21.9 | 33.1 |
| HSF2614 | 28 | 10.9 | 16.5 | 25.5 | 38.6 |
| HSF2616 | 32 | 12.5 | 18.9 | 29.1 | 44.1 |
| HSF2618 | 36 | 14.0 | 21.2 | 32.8 | 49.6 |
| HSF2620 | 40 | 15.6 | 23.6 | 36.4 | 55.1 |
| HSF2622 | 44 | 17.2 | 26.0 | 40.1 | 60.6 |
| HSF2624 | 48 | 18.7 | 28.3 | 43.7 | 66.1 |
| HSF2626 | 52 | 20.3 | 30.7 | 47.3 | 71.6 |
| HSF2628 | 56 | 21.8 | 33.0 | 51.0 | 77.1 |
| HSF2630 | 60 | 23.4 | 35.4 | 54.6 | 82.6 |

*Table 3. Chemical consumption of Hydrotech Performance Filters.*

| Filter model | Nozzles (pcs) | Chemical flow (L/min) | | Volume per cleaning cycle (L) | |
|---|---|---|---|---|---|
| HPF2204 | 10 | N/A | **6.9** | N/A | **12.7** |
| HPF2206 | 14 | N/A | **9.7** | N/A | **17.8** |
| HPF2208 | 18 | N/A | **12.4** | N/A | **22.9** |
| HPF2210 | 22 | N/A | **15.2** | N/A | **28.0** |
| HPF2212 | 26 | N/A | **17.9** | N/A | **33.1** |
| HPF2214 | 30 | N/A | **20.7** | N/A | **38.2** |
| HPF2216 | 34 | N/A | **23.5** | N/A | **43.3** |
| HPF2218 | 38 | N/A | **26.2** | N/A | **48.4** |
| HPF2220 | 42 | N/A | **29.0** | N/A | **53.5** |
| HPF2222 | 46 | N/A | **31.7** | N/A | **58.6** |
| HPF2224 | 50 | N/A | **34.5** | N/A | **63.7** |
| HPF2226 | 54 | N/A | **37.3** | N/A | **68.8** |
| HPF2228 | 58 | N/A | **40.0** | N/A | **73.9** |
| HPF2230 | 62 | N/A | **42.8** | N/A | **79.0** |
| HPF2232 | 66 | N/A | **45.5** | N/A | **84.1** |
| HPF2234 | 70 | N/A | **48.3** | N/A | **89.2** |
| HPF2236 | 74 | N/A | **51.1** | N/A | **94.3** |
| HPF2238 | 78 | N/A | **53.8** | N/A | **99.4** |
| HPF2240 | 82 | N/A | **56.6** | N/A | **104.5** |
| HPF2242 | 86 | N/A | **59.3** | N/A | **109.6** |
| HPF2244 | 90 | N/A | **62.1** | N/A | **114.6** |

HYDROTECH

# USER MANUAL

# Determination of fouling degree of filter media

Reviewed: May 2020

Hydrotech
Veolia Water Technologies AB
Mejselgatan 6 • 235 32 Vellinge • Sweden
tel. +46 (0)40 429530 • mailbox@hydrotech.se
www.hydrotech.se

by VEOLIA Water Technologies

# Introduction

The following instructions summarise the recommended method for tests with the Hydrotech bench-scale Test-Tube unit and insert to evaluate the degree of fouling and identify the type of fouling of the filter media. The fouling can be either “hard” in character such as inorganic Ca , Fe, Al precipitates or “soft” of organic origin such as extracellular polymeric substances (EPS) or flocculant polymer residuals or a mixture of both. In this context, the long-term fouling is defined as the fouling caused by precipitates or biofoulants that are not removed by ordinary backwash (BW) at maximum 8 bar or high-pressure cleaning at maximum 80 bar.

This simple laboratory-scale apparatus promotes rapid and efficient tests to detect a decrease in filtration capacity. The equipment required is (Figure 1):

- A beaker with 1 L of tap water
- A 10 µm filter cartridge for pre-filtering of tap water (required only for the fouling evaluation of filter media with pore openings smaller than 18 µm)
- The bench-scale Test-Tube unit supplied by Hydrotech, consisting of:
    - A Test-Tube, fabricated from a PVC plastic pipe approximately 300 mm long and 75 mm wide (i.d. 67.8 mm);
    - An insert with a neoprene rubber gasket and a 20 mm hole
    - A clamp with a rubber joint to secure the insert at the bottom of the Test-tube and a hex key to tighten it



*Figure 1. Hydrotech bench-scale Test-Tube and insert.*

Hydrotech
Veolia Water Technologies AB
Mejselgatan 6 • 235 32 Vellinge • Sweden
tel. +46 (0)40 429530 • mailbox@hydrotech.se
www.hydrotech.se

by VEOLIA Water Technologies

# Procedure

1. Prepare an area of the filter media:
    a. If the test is performed on site, backwash the filter continuously for 5 minutes at the standard backwash pressure (6.5 - 8 bar). For Drum Filters, the capacity test can be performed with the filter panel in place (Figure 2a), while for Disc Filters, the filter panel must be removed and placed on top of a bucket or similarly (Figure 2b).
    b. If the test is performed off-line and the panel has left to dry, soak the panel in tap water for 1 hour.
2. Rinse the media with a water hose (2 - 4 bar) to remove any loose debris. Initially only rince from the BW side only to avoid altering the condition of the panel. Generally “soft” fouling such as EPS or polymer residual can be rinsed off with a regular water hose if rinsed from the filtration side of the panel, thus to have a correct measurement and evaluation of the type of fouling present this type of fouling should remain on the panel for the initial measurements.
3. Fill a beaker with 1 L of tap water.
4. Attach the insert at the bottom of the Test-Tube with the supplied clamp and tighten it.
5. Press the Test-Tube firmly against the media by hand.
6. Pour the water as quickly as possible into the Test-Tube.
7. Record the time it takes for the water to reach the upper part of the clamp (Figure 2c).
8. Repeat the measurements (3-5 times) on different parts of the filter panel, as shown in Figure 3, and calculate the average time.
9. Now the panel can be BW with a max pressure of 80 bar from the BW side at a distance of approx 6-8 cm to evaluate the degree of “soft” fouling by repeating the steps 3-8.

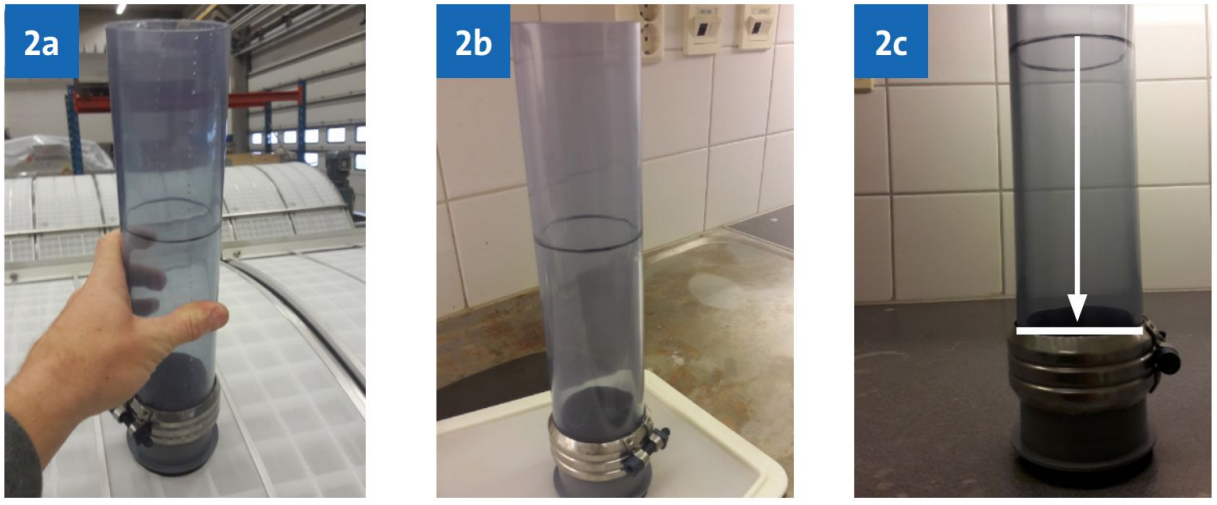


*Figure 2. a) The test set-up on a mounted Drum Filter panel and b) with a Disc Filter panel that has been removed from the filter. c) The assembled equipment with the line representing the end of the time measurement highlighted in white.*

Hydrotech
Veolia Water Technologies AB
Mejselgatan 6 • 235 32 Vellinge • Sweden
tel. +46 (0)40 429530 • mailbox@hydrotech.se
www.hydrotech.se

by VEOLIA Water Technologies

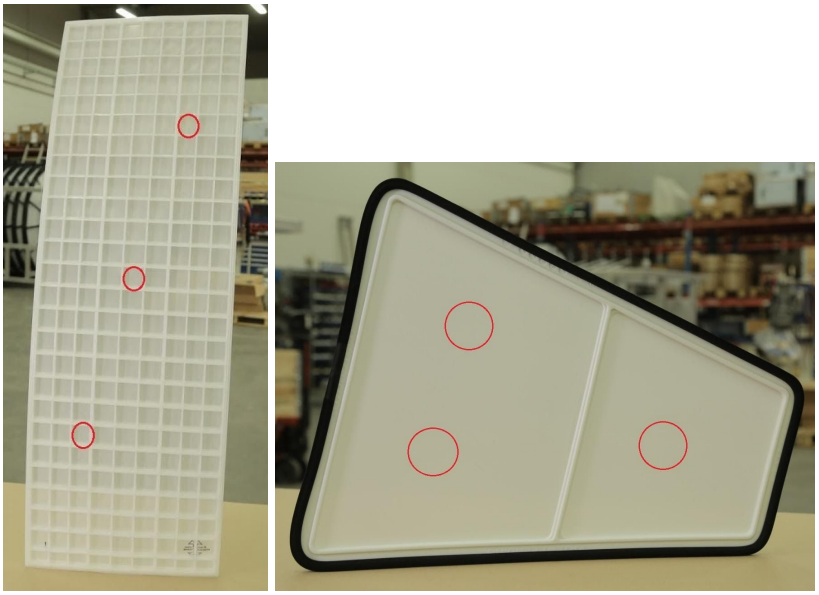

*Figure 3. Examples of three different positions for the tests, for a Drum Filter (left) and a Disc Filter (right) panel respectively.*

# Fouling evaluation

The following procedure is used to estimate the “soft” and “hard” fouling degree, by comparing the filtration time needed for a fouled panel to that of a new/cleaned panel:

1. Perform the tests (at least 3 times, in different positions, as shown in Figure 3) on a new panel (previously soaked in water and washing-up liquid for 1 hour to remove the hydrophobicity of the fabric) to determine the reference filtration time ($T_0$). Expected ranges are given in Table 2. Results may vary due to the water temperature (20°C for the ranges reported in Table 2) and slight differences between the filter media batches. It is always recommended to determine a site-specific $T_0$.
2. Perform filtration tests, 3-5 times in different areas on the clogged panel, as described in the previous section to determine the initial filtration time ($T_1$) when fouled.
3. Optional: perform high pressure cleaning or chemical cleaning applying the BW or chemicals from the BW side following the Hydrotech guidelines (see Appendix I) and consequently drop-tests (3 replicates) on the cleaned panel to determine the final filtration time ($T_2$). For severely fouled panels hte chemical cleaning needs to be repeated in order for the media to recover.

*Table 2. Estimated filtration times for the different filter cloth pore openings (water temperature 20°C).*

| Cloth label[1] | Opening (µm) | Reference filtration time $T_0$ (s) |
|---|---|---|
| **B** | 10 | 45 - 60 |
| **C** | 15 | 30 - 40 |
| **D** | 18 | 20 - 25 |
| **F** | 25 | 18 - 25 |
| **H** | 40 | 15 - 20 |
| **J** | 60 | 10 - 12 |
| **M** | 90 | 10 -12 |
| **N** | 100 | 8 - 10 |
| **n.a.** | 200 | 4 - 5 |
| **n.a.** | 300 | 4 - 5 |

Thereafter, the fouling degree (FD) can be calculated as follows:

$$FD\ [\%] = \frac{T_1 - T_0}{T_0}$$

In some cases it might not be possible to recover the full capacity of the new cloth. As a consequence, it may be preferable to refer to the filtration time after chemical cleaning ($T_2$) instead of the reference filtration time ($T_0$). Vise versa, filter fabric can increase in flux due to the removal of the hydrophobicity from the manufacturing and that there can be a minor stretch to the fabric after extended use, thus the reference has to be determined individually for each installation.

The capacity recovery (R) can be estimated through the following ratio:

$$R\ [\%] = \frac{T_1 - T_2}{T_1 - T_0}$$

The recovery rate can also be evaluated for the individual cleaning steps, 80 bar high pressure and chemical cleaning. If most of the capacity can be recovered with 80 Bar high pressure then fouling can be regarded as “soft” and thus a solution is to install an automated high pressure system provided by HT. If most of the fouling is related to “hard” fouling then a chem for chemical cleaning needs to be determined. To bear in mind, chemical cleaning will remove both the “soft” and “hard” fouling ,thus 80 BW must be evaluated before a chemical cleaning is conducted.

# Appendices

Appendix I - Chemical cleaning of Hydrotech filters

[1] The letters are used to denote the pore openings of the filter cloth and can be found on the filter panels.

**This page is intentionally left blank**



HYDROTECH

## Operation manual

# Hydrotech
# Chemical cleaning Trolley - HCT



**Series no.: .....**

Revised: 12/03/2013 EN

VEOLIA WATER
Solutions & Technologies

**This page is intentionally left blank**

# List of Contents

1. INTRODUCTION 4
2. SAFETY INSTRUCTIONS 5
2.1 Warning symbols 5
2.2 CE marking 6
2.3 Conversion 6
2.4 Demands on personnel 6
2.5 Emergency stop 6
2.6 Risk zone 7
3. HYDROTECH CHEMICAL CLEANING TROLLEY - HCT 8
3.1 Reception 8
3.2 Storage 8
3.3 Overview of components included 9
3.4 Identification of equipment 9
4. START UP AND OPERATION 10
4.1 Chemical cleaning products 10
4.2 Filling of containers 10
4.3 Start up and operation 11
4.4 Adjusting the pressure relief valve 12
5. FUNCTION 13
5.1 Intended use 13
5.2 Non-intended use 13
5.3 Functional description 13

**APPENDICES**

A. Technical specifications
B. Spare parts list
C. Dimension drawing
D. Pump manual

## 1. INTRODUCTION

This manual contains instructions for the operation of the Hydrotech Chemical cleaning Trolley - HCT.

Pay attention to all warning symbols that appear in this manual. If this information is ignored it may result in serious personal injury and/or damage to equipment.

The manual must always be available to the personnel working with the equipment.

It is important that:

- The manual and other relevant documents are kept throughout the whole life of the equipment.
- The manual and other relevant documents are a part of the equipment.
- All personnel affected must read the manuals carefully.

## 2. SAFETY INSTRUCTIONS

The Hydrotech Chemical cleaning Trolley - HCT is designed for safe operation provided it is installed correctly and used in accordance with the enclosed instructions. The equipment must be installed correctly and adapted in accordance with local regulations. This equipment is designed for use by one or more operators. You must read the relevant sections of this manual before using the equipment.

The equipment is intended to be used in conjunction with Hydrotech filter units/control systems.

- Pay attention to all warning symbols that appear in this manual. If this information is ignored it may result in serious personal injury and/or damage to equipment.
- Assume all electrical equipment to be live.
- Assume all hoses and pipes to be pressurised.
- The equipment may be used only by authorised personnel with the appropriate protective equipment. This also applies to service/maintenance work on the equipment.
- A risk zone of 3m in all directions around the chemical cleaning trolley must be marked out and fenced off from unauthorised personnel when the system is in operation. Only authorised personnel may be inside this area, wearing the appropriate protective equipment for the purpose. The power cable, signal cable and the hose between the chemical cleaning trolley and the filter must be clearly marked to minimise the risk of tripping over them.
- The protective cap on the hose must always be in place when moving the chemical cleaning trolley.
- Before maintenance work is carried out, the signal cable from the filter control system and the power cable must be disconnected. The tank and the pipe system must be drained and flushed with clean water to ensure that no chemicals remain in the system.
- When handling the chemical cleaning trolley, whole body protection and respiratory equipment is required and work involves: filling of containers, connection, start-up, flushing and post-flushing the system.
- Only pre-diluted chemicals may be used.
- Local safety regulations must be followed.

### 2.1 Warning symbols

Warning symbols are used in this manual to draw attention to potentially dangerous situations:



***Information that warns you of a potential risk of personal injury and/or damage to equipment.***



*Figure 2.1*

Warning stickers (see Figure 2.1) are affixed to the chemical cleaning trolley container to warn personnel and remind them that corrosive/harmful chemicals may be used in the system.

### 2.2 CE marking

This equipment is CE marked (see Figure 2.2), which ensures that the equipment is designed, manufactured and described in accordance with the requirements set out in the EU Machinery directive.

CE

*Figure 2.2*

NOT APPLICABLE

### 2.3 Conversion

The CE marking does not include any components that are not approved by Hydrotech AB and which are used in conversion/reconstruction of the equipment.

The warning symbols and CE marking must be attached where they are fully visible. If any part of the equipment with a warning symbol is replaced, a new symbol must be attached in the same position. Damaged symbols and CE markings must be replaced immediately.

### 2.4 Demands on personnel

Only personnel trained for the equipment and conversant with local regulations may perform service and maintenance, in order to avoid personal injury and damage to the equipment. Service and maintenance personnel may only handle those parts of the equipment they have been trained for.

### 2.5 Emergency stop

The emergency stop/main switch is in the Hydrotech control cabinet (see example of a Hydrotech control cabinet in Figure 2.3).

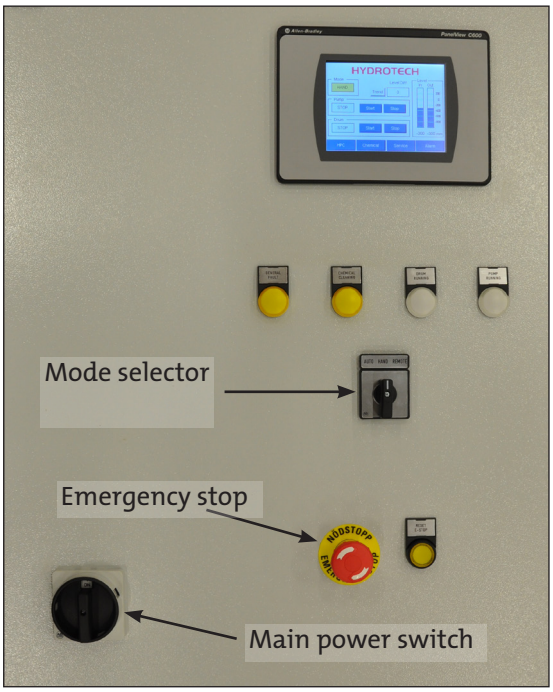


***Figure 2.3*** *Example of a Hydrotech control cabinet.*

## 2.6 Risk zone

A risk zone of 3 m in all directions around the chemical trolley must be marked out and fenced off from unauthorised personnel when the system is in operation. Only authorised personnel may be inside this area, wearing the appropriate protective equipment for the purpose. The power cable and the hose between the chemical cleaning trolley and the filter must be clearly marked to minimise the risk of tripping over them.

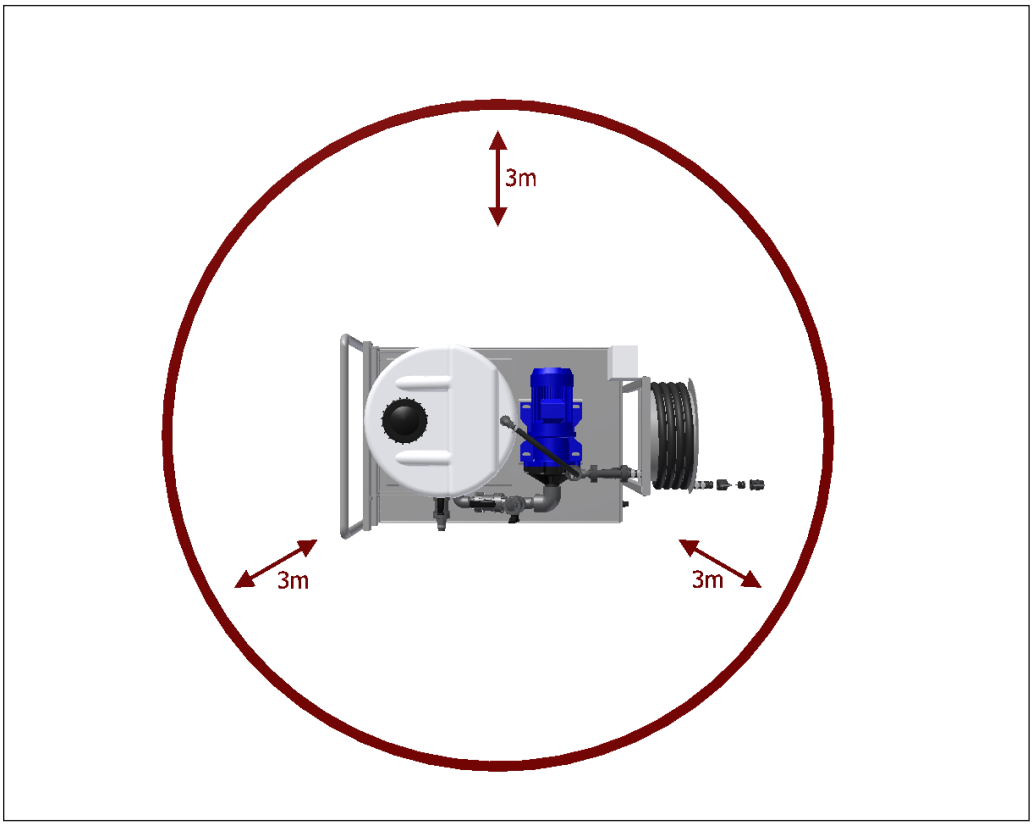


***Figure 2.4*** *Risk zone*

# 3. HYDROTECH CHEMICAL CLEANING TROLLEY - HCT

## 3.1 Reception

Once the equipment has been delivered and received it must be checked for transport damage. Document any transport damage before further handling of the equipment. The consignment note and manual are attached to the equipment. Check all parts against the consignment note. Some parts may be delivered unassembled. Handle fragile parts with care.

## 3.2 Storage

Some precautions must be taken to prevent damage to equipment if a long storage time is necessary (several weeks or more).

- ► The equipment should preferably be stored indoors, in a frost-free area.
- ► The equipment must be protected against direct sunlight if stored outdoors. Heat and UV radiation can damage the equipment.

### 3.3 Overview of components included

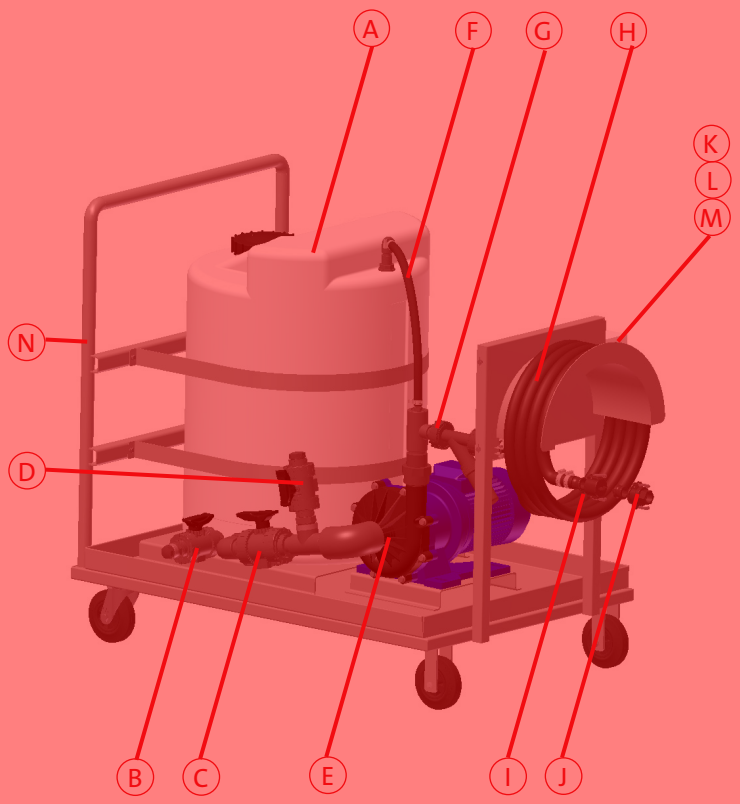


A. Container for chemicals
B. Drain valve
C. Shut-off valve
D. Flush valve (for connecting external flushing water)
E. Pump
F. Evacuation hose for venting
G. Pressure relief valve
H. Hose
I. Camlock coupling (male) with protective cap
J. Camlock coupling (female) with stopper
K. Connection box
L. Signal cable
M. Power cable
N. Trolley

***Figure 3.1*** *Components included*

### 3.4 Identification of equipment

Filter type, serial number and year of manufacture are stated on the marking plate. The filter type and serial number are also stated on the front of this manual.

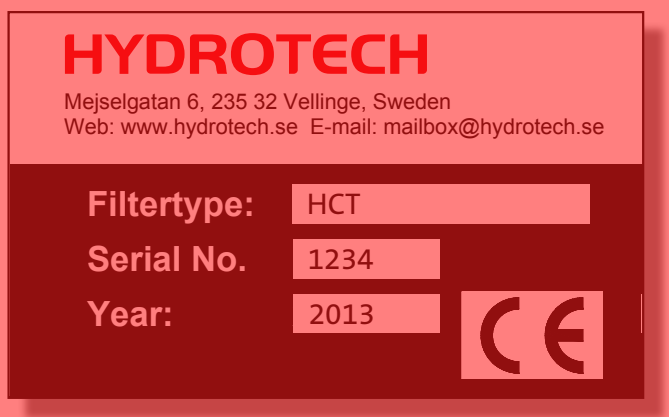


NOT APPLICABLE
REFER TO GA DRAWING

***Figure 3.2*** *The rating plate for the equipment.*

# 4. START UP AND OPERATION

***The equipment may be used only by authorised personnel with the appropriate protective equipment.***

## 4.1 Chemical cleaning products

Long-term clogging of the filter media can be caused by iron, calcium or organic fouling, among other things. This clogging can normally be removed through chemical cleaning. Three proven products that do not affect the life of the filter media are dilute hydrochloric acid (HCl), dilute sodium hypochlorite (NaClO) and dilute sodium hydroxide (NaOH).

***The use of other types of cleaning agents can cause damage to equipment.***

## 4.2 Filling of containers

The chemical cleaning trolley HCT is equipped with a 150 l container (see Figure 3.1). Care must be exercised when filling the chemicals in the container since some of the chemicals that must be handled are corrosive. When filling the chemicals, use the barrel pump or fill via the bottom valve in the chemical storage tank (see Figure 4.1). Check and ensure that the drain valve, shut-off valve and flush valve are closed before starting to fill the chemicals.

***Only pre-diluted chemicals may be used in the chemical cleaning trolley container.***



***Figure 4.1*** *Storage tank for chemicals with barrel pump and bottom valve.*

***The cleaning products must not be mixed. If, for example, HCl and NaClO are mixed this produces toxic chlorine gas. HCl and NaOH are highly corrosive. For safety advice, see applicable local regulations.***

### 4.3 Start up and operation

1. Place the chemical cleaning trolley on a flat/stable surface by the filter to be cleaned and lock the brakes on the two rear wheels of the trolley.
2. Mark out the risk zone in accordance with section 2.6
3. Check that the shut-off valve, drain valve and flushing valve are all in the closed position.
4. Make a visual check of the hoses and pipe system for any damage/leaks.
5. Connect the hose to the chemical connection on the filter and check that there are no kinks/blocks in the hose.
6. Check that the chemical container is filled with sufficient volumes of cleaning chemicals for the intended number of cleaning cycles. (Contact Hydrotech if you do not have the relevant information for the filter model in question.)



***The liquid level in the chemical containers must always be above the pump inlet to avoid the pump running dry. If the pump runs dry, this may lead to serious damage to the pump.***

7. Connect the signal cable to the filter control cabinet.
8. Plug in the power cable.
9. Mark the cables and hoses as in section 2.6
10. Open the shut-off valve and make a visual check of the system for any damage/leaks. In the event of any damage/leaks they must be rectified and the cleaning cycle interrupted.
11. Select the number of cleaning cycles to be carried out and start the cleaning cycle on the filter control cabinet (see instructions in the relevant filter manual/control manual).
12. Check the rotation direction of the pump. The pump rotation must be clockwise when seen from the pump motor fan. The correct rotation direction is indicated by an arrow on the pump type plate. If the rotation direction is incorrect, it must be rectified and the cleaning cycle interrupted.
13. After the cleaning cycle is completed, close the shut-off valve.
14. Plug in the pressurised external flush water to the flush water valve.
15. Open the flush valve and check the system for leaks. In the event of any leaks, they must be rectified and the cleaning cycle interrupted.
16. Flush the system until all cleaning chemicals have been removed from the pump, down-stream pipe system, hoses and the filter chemical unit.
17. Close the flush valve and disconnect the external flushing water.
18. Disconnect the hose from the filter chemical connection and replace the protective cover on the hose.
19. Disconnect the power cable and signal cable.



***The protective cap on the hose must always be in place when moving the chemical cleaning trolley.***

### 4.4 Adjusting the pressure relief valve

The Hydrotech chemical cleaning trolley is equipped with a pressure relief valve. This is installed in the pipe system on the pressurised side of the pump. The pressure relief valve is adjustable between 0.3-4 bar back pressure and is used to avoid the cleaning chemicals from flowing through the system by gravity, if the filter chemical unit is at a lower level than the liquid level in the trolley's chemical container. If the pre-set back-pressure needs to be adjusted this can be done by removing the protective cap (A) on the pressure relief valve and then loosening the locknut (B) to enable the back-pressure to be set using the regulating stem (C). When the regulating stem has been adjusted to the desired position, the regulating stem (C) is locked with the locknut (B) and the protective cap (A) is refitted.

***Before any maintenance work is carried out, the signal cable from the filter control system and the power cable must be disconnected. The tank and the pipe system must be drained and flushed with clean water toensure that no chemicals are left in the system.***



NOT APPLICABLE
REFER TO CHEMLINE MANUAL

***Figure 4.2*** *Pressure relief valve*

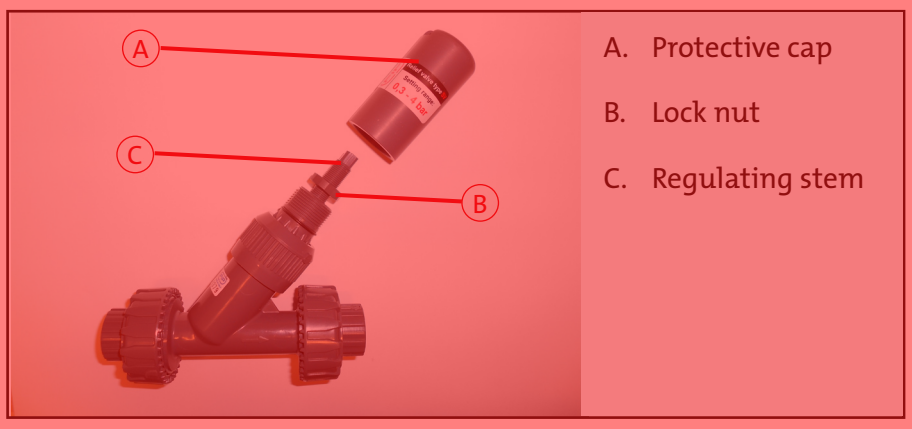


A. Protective cap

B. Lock nut

C. Regulating stem

***Figure 4.3*** *Adjusting the pressure relief valve.*

# 5. FUNCTION

## 5.1 Intended use

The equipment is designed and manufactured for the chemical cleaning of filter media in Hydrotech filters. The equipment may only be used with Hydrotech filters and control systems.

## 5.2 Non-intended use

Unless approved in writing by Hydrotech, no other cleaning chemicals may be used than those described in this manual.

## 5.3 Functional description

A concise description of the function is given below.

1. Cleaning chemicals are gravity fed from the container to the pump, which then pressurises the system.
2. The cleaning chemicals are pumped into the filter chemical unit through the chemical cleaning trolley's pipe system and hose.
3. The cleaning chemicals are applied to the filter media via the nozzles on the chemical unit.
4. The filter media is flushed clean using the filter flush water pump.
5. After the cleaning cycle is completed, the pump and downstream pipe system (on the chemical cleaning trolley), including the hose and chemical unit, must be flushed clean with external flushing water via the flushing valve.



User guide in original

HYDROTECH

Hydrotech AB, A Veolia Solutions & Technologies Company
Mejselgatan 6
SE-235 32 Vellinge
Sweden

Telephone: +46 (0)40 - 42 95 30
Fax: +46 (0)40 - 42 95 31
E-mail: mailbox@hydrotech.se
Website: www.hydrotech.se

VEOLIA WATER
Solutions & Technologies

Copyright © All rights reserved



**Hydrotech**
**Veolia Water Technologies AB**
Mejselgatan 6 | 235 32 Vellinge | Sweden
Tel. +46 (0)40 42 95 30 | mailbox@hydrotech.se
**www.hydrotech.se**

LEFT BLANK

# *6 – OPERATION AND MAINTENANCE*

## *6.3 – HYDRA-CARB*

## *6.3.1 – INSTALLATION, OPERATION AND MAINTENANCE MANUAL*

LEFT BLANK

# INSTALLATION, OPERATION AND MAINTENANCE MANUAL

# HYDRA-CARB

Document No: HSI_0001_SKG

Product version: 01

Revision: 02

Date: June 2021

# TABLE OF CONTENTS

**1 INTRODUCTION ..... 4**
**2 SAFETY ..... 5**
2.1 INTRODUCTION ..... 5
2.1.1 Utility Hazards ..... 5
2.1.1.1 Electrical ..... 5
2.1.1.2 Pressurized Water ..... 6
2.1.2 Equipment Hazards ..... 6
2.1.2.1 Rotating Parts ..... 6
2.1.2.2 Operation and Maintenance ..... 7
2.1.3 Product Hazards ..... 7
**3 SHIPPING ..... 8**
**4 RECEIVING ..... 8**
**5 HANDLING ..... 9**
5.1 GENERAL ..... 9
5.2 STAINLESS STEEL MATERIAL HANDLING ..... 9
**6 STORAGE ..... 10**
6.1 GENERAL ..... 10
6.2 STAINLESS STEEL MATERIAL STORAGE ..... 11
6.3 SPECIAL MAINTENANCE REQUIREMENTS DURING STORAGE ..... 11
6.4 EQUIPMENT CLEANING ..... 11
**7 HYDRA-CARB DESCRIPTION ..... 12**
7.1 ACTIVATED CARBON DOSING – GENERAL ..... 12
7.2 DESIGN SUMMARY ..... 13
7.2.1 Datasheet ..... 13
7.2.2 P&ID ..... 14
7.2.3 General Arrangement Drawings ..... 15
7.3 COMPONENTS DESCRIPTION ..... 16
7.3.1 Activated Carbon Storage and Dosing ..... 16
7.3.1.1 Hopper with Big Bag Unloader ..... 16
7.3.1.2 Volumetric Feeder ..... 16
7.3.2 Activated Carbon Dilution and Transfer to the Actiflo® Injection Tank ..... 17
7.3.2.1 Isolation Valve ..... 17
7.3.2.2 Solenoid Valves ..... 17
7.3.2.3 Service Water Low Pressure Switch ..... 17
7.3.2.4 Pressure Gauge ..... 17
7.3.2.5 Conical Hopper and Eductor ..... 18

7.3.2.6 Check Valve (and On-Off valve positioned upstream) ..... 18
7.3.2.7 Level Switch ..... 18
7.3.2.8 Control Panel ..... 18

**8 INSTALLATION ..... 19**

8.1 SERVICE WATER ..... 19
8.1.1 Flowrate and Inlet Pressure ..... 19
8.2 RECOMMENDED ARRANGEMENT ..... 19
8.3 PIPES CONNECTIONS ..... 20
8.4 ELECTRICAL REQUIREMENT ..... 20

**9 INSTALLATION AND PRE START-UP INSPECTION ..... 21**

9.1 PRE-OPERATIONAL CHECKOUT ..... 21
9.2 START-UP CHECKOUT ..... 21
9.2.1 Mechanical, Electrical and Control Start-Up ..... 21
9.2.1.1 Initial Checking and Adjustment ..... 22
9.2.2 Hydraulic Test ..... 24
9.2.3 Control Start-Up ..... 24
9.2.4 Process Start-Up ..... 25
9.2.4.1 Screw Calibration Procedure ..... 25
9.2.4.1.1 Dosage Calculation ..... 25
9.2.4.1.2 Feeder Capacity ..... 26
9.2.5 Process Start-Up Records ..... 26

**10 TROUBLESHOOTING GUIDE ..... 27**

**11 MAINTENANCE ..... 28**

**12 SPARE PARTS ..... 29**

**APPENDIX A PRE-OPERATIONAL CHECKOUT CHECKLIST ..... 30**

**APPENDIX B COMPONENTS DATA SHEETS AND MAINTENANCE MANUALS ..... 31**

# 1 INTRODUCTION

This document provides handling, storage, installation, operation and maintenance instructions for the Hydra-Carb make-up system. The components of the Hydra-Carb are supplied by Veolia Water Technologies Canada (**VWTC**).

To obtain any additional information regarding characteristics or instructions on this equipment, please do not hesitate to contact us.

The system was designed in Canada by:

Veolia Water Technologies Canada
4105, Sartelon
Saint-Laurent, Qc.
Canada H4S 2B3
Phone: 514-334-7230
Fax: 514-334-5070

For technical support or service needs, for spare parts or to get assistance during your warranty period, you may contact us at the following number during regular business hours or write us at:

**Veolia Water Technologies Canada After Sales Support**
1-844-SER-VWT9 | 1-844-737-8989 | vwtservicecanada@veolia.com

Our business hours are from
Monday to Friday
8:30am to 5pm EST

# 2 SAFETY

## 2.1 INTRODUCTION



It is important that the operator has understood the instructions of use, security and maintenance before using the Hydra-Carb system. The manufacturer cannot be held responsible for use or improper maintenance resulting from a breach or non-compliance with instructions. The Operation and Maintenance manual contents must be kept permanently close to the system in a safe place.

It is important for Operations and Maintenance individuals to understand the nature of the products they are working with.

The safety rules and guidelines issued to the operators are the primary precautions that are necessary for the prevention of accidents. The operators should be very familiar with these rules. The safety pictograms used in the plant are to be respected at all times.



Operators should always wear the safety equipment that is provided or required by their management. Such items as hard hats, safety shoes, safety glasses, gloves, breathing protection, protective clothing, protection harness and hearing protection are very basic and go a long way in preventing accidents.

Operators should be aware of the location of eye wash stations, safety showers, self-contained breathing apparatus, first aid stations, and other safety equipment furnished for the plant.



Good housekeeping will also eliminate safety hazards such as tripping or slipping. When spills happen, the floor should be cleaned as soon as possible.

### 2.1.1 Utility Hazards

Utility hazards exist on a system including high-voltage electricity, pressurized water, and high pressure air. Care should be taken when utilizing this system.

#### 2.1.1.1 Electrical



Electrical connections must be made by certified electricians in compliance with all applicable codes and regulations. Electrical equipment should never be worked on unless it is turned off and locked and tagged out. The lockout system key should belong to the person doing the repair or the on-site electrician. This will remove the potential danger for electrical shock or accidental start-up.

Even though most electrical motors and switch boxes are designed to be water tight, the presence of water around electrical equipment always presents a hazard and therefore should be used with care.

#### 2.1.1.2 Pressurized Water



Only the proper pressure fittings should be used in the piping system. Leaks should be repaired as soon as possible. Isolation valves on piping that are being repaired should be shut tight and locked out. Lock out the water inlet and remove pressure before starting any maintenance.

### 2.1.2 Equipment Hazards

#### 2.1.2.1 Rotating Parts



<u>General instructions</u>

Since the system includes equipment with rotating parts (Volumetric dosing screw and homogenizer agitator), operators should avoid wearing loose clothing and jewellery. Loose clothing can present one of the biggest safety hazards that exist when working near equipment in process.

<u>Volumetric dosing screw</u>

- Never introduce hands into a running dosing screw.
- Never open the inspection hatch when the dosing screw is running.
- It is however necessary fitting upstream the machine a fix safety grid or a hopper high enough to prevent damages to limbs according to the Machine Directive inforce. The same approach is necessary for the outlet: it is required using a vertical outlet or similar systems meant to prevent foreign bodies from entering the machine and cause damage to it, to persons or to their limbs. Always ensure the Machine Directive in force is being followed.
- Lock out the system before starting any maintenance.

<u>Homogenizer agitator</u>

- Never introduce hands into a running homogenizer agitator.
- Never open the inspection hatch when the blending tool is running.
- Lock-out the motor starter before starting any maintenance.

#### 2.1.2.2 Operation and Maintenance

The system in its normal use can present a hazard if not operated or repaired in a safe manner.

All equipment should only be operated and repaired according to the recommended procedures of the manufacturer, and by qualified individuals.

Only recommended spare parts should be used.



Maintenance on pumps, piping, etc. should be performed only after valves are locked and tagged or slip blanks are installed to completely isolate the equipment being worked on. Instrumentation and controls should always be kept in good working order to help assure the safe operation of equipment. Never remove instruments or controls out of service until having communicated with the operator and have established a plan to define the operation maintenance steps. If air operated valves are used for isolation, the air line should be removed to prevent inadvertent operation of the valves. When possible the valve can also be locked in position.




When maintenance is finished on equipment, the protective caps provided must be reinstalled. If a protection must be left off, unwary personnel should be notified by using safety pictograms or installing temporary protection. Equipment should never be inspected or maintenance attempted while the equipment is operating. All pumps and various automatic valves may cause harm to an operator if care is not taken.

### 2.1.3 Product Hazards

Activated Carbon Material Safety Data Sheets (MSDS) should be available close to the system.

All plant personnel should be required to wear proper protective clothing when handling or working near these products. A minimum wardrobe should include, but not be limited to, a plastic hard hat, coat, boots and gloves of a resistant material as well as a pair of safety glasses.

Hazardous Environments

*Hazardous environments are areas where flammable liquids, gases or vapors or combustible dust exist in sufficient quantities to produce an explosion or fire. In hazardous environments, specially designed equipment and special installation techniques must be used to protect against the explosive and flammable potential of these substances. (OSHA Publication 3073).*



Presence of activated carbon powder implies a classified area around the Hydra-Carb system. The area classification is **Class 2 Division 1 Group F**. Every equipment used within that perimeter must be approved for for safe operation in Class 2 Division 1 Group F locations.

# 3 SHIPPING

Most of the equipment and material for this project will be drop shipped from **VWTC** facilities and delivered directly to the site.

- All items delivered will be clearly identified with **VWTC**'s name, **VWTC**'s project name, **VWTC**'s project number.
- All shipments will have a clear Packing List identifying all parts in the shipment.
- All equipment will be tagged with the corresponding tag numbers shown on the design drawings (if applicable).

If there are more stringent requirements in the contract documents, they will take precedence over the above. If any of these requirements are not being followed, please notify the **VWTC** Project Manager immediately.

# 4 RECEIVING

The condition of all delivered equipment must be verified by the responsible party upon arrival at site. Verification that all equipment has been delivered as per contract must also be done upon arrival at site. Notification of missing or damaged items must be sent to Veolia Water Technologies Canada within five (5) working days of receipt of equipment. If there is no documented notification of missing or damaged parts within five (5) working days, Veolia Water Technologies Canada is not responsible for replacement of any items found to be missing or damaged at the time of installation and start-up of the supplied equipment. It is the responsibility of the party receiving the equipment to ensure all packaging is opened at the time of receipt to uncover and document any and all damages to the Freight Company and Veolia Water Technologies Canada.

Photographs and written documentation should be provided for all damaged equipment.

# 5 HANDLING

## 5.1 GENERAL

Equipment will arrive at the project site in several different shipments, from various freight companies and in several different packaging containers. Typically a flatbed truck is used which requires a fork lift or a crane to remove the items.

The Contractor is responsible for unloading and handling the equipment.

## 5.2 STAINLESS STEEL MATERIAL HANDLING

In order to minimize potential corrosion damage or unsightly surface marking, measures shall be taken to prevent contamination by iron, aluminium, copper, chlorides, and sulphides from lifting equipment. Stainless steel slippers or wooden packers should be used on forklift trucks to prevent contamination. Any resultant incidental contamination shall be removed at the earliest opportunity.

# 6 STORAGE

## 6.1 GENERAL

The following instructions outline the duties and responsibilities of the responsible party for equipment storage. The responsible party shall assume responsibility for the equipment upon arrival at the project site. These instructions shall define the minimum expectations for storage of all equipment. While this storage specification takes into account common environmental issues that may affect the system during storage, common sense should be the overriding factor in determining the best method to ensure the integrity and proper storage of the **VWTC** equipment.

For contractual purposes, **VWTC** demands the Client to send pictures of major equipment once it is placed in storage, any time it gets moved during storage and again prior to removing from storage. For outside storage, pictures must be sent every month. Alternatively, a written document (check list, etc.) confirming that proper storage conditions are maintained will suffice. Failing to do so would cancel the proposed warranty.

Should it be necessary to delay installation and subsequent operation of a unit for more than one month from date of receipt at Site, special precautions must be taken.

Although some equipment can be stored outdoors, indoor storage is preferred for most equipment.

The storage environment into which a system is placed can have a severe effect on the long-term usefulness of some parts. Key environmental factors are:

- Temperature
- Relative humidity
- Pollutants

Air may contain excessive moisture, pollutants, microorganisms, and other particulates that accelerate the deterioration of some materials. Humidity and pollutants can produce an aggressive atmosphere.

Indoor storage refers to storage in a climate controlled environment in a clean, non-aggressive, dry (non-condensing) and sheltered environment having a relatively constant temperature (especially for gear reducers, motors, bearings, etc.). Storage volume depends on the size of the project.

The environmental indoor conditions should not exceed the following ranges:

| | |
|---|---|
| Min/Max Temperature Range between: | 5°- 40°C |
| Relative Humidity (RH) Range between: | 35% - 70% |

1. Equipment should be stored in such a manner that it is free from allowing insects/rodents etc. from entering the equipment.
2. Cover the equipment with a tarp or similar protective shield to prevent direct exposure to dust or any other contamination. However, never enclose the unit or components totally in plastic covers; always leave adequate ventilation of air to prevent condensation.

Equipment must be checked on a weekly basis for tarp/wrap integrity and accumulation of dust or contaminants.

**To avoid damage, do NOT stack crates.**

**To avoid damage, do NOT stack enclosures.**

**Do not store equipment or spares parts in barns, equipment sheds, or any other building without the capacity for heating and cooling as needed.**

## 6.2 STAINLESS STEEL MATERIAL STORAGE

Stainless steel materials and products shall be stored separately from carbon steels and nonferrous materials. Materials should be stored under conditions that minimise the accumulation of dust and deposits. Any resultant incidental contamination shall be removed at the earliest opportunity.

## 6.3 SPECIAL MAINTENANCE REQUIREMENTS DURING STORAGE

After three (3) months of storage, long term storage methods must be applied to the unit including complete fill with lubricant. Protect machined surfaces and rotate shafts periodically (every month). Five (5) complete rotations of the output shafts are recommended each time.

Periodic checks should be made to ensure that no rusting or other damage has occurred. Should such be noted, corrective action should be taken immediately. Prior to putting the unit into service, drain lubricant and refill to the proper level as determined by the mounting position. Refer to manufacturer documentation.

All motors must be run every 3 month as a preventive measure against the formation of corrosion.

## 6.4 EQUIPMENT CLEANING

**VWTC** is not responsible for cleaning of any equipment prior to installation and start-up due to the storage of the equipment. This is the complete responsibility of others.

# 7 HYDRA-CARB DESCRIPTION

## 7.1 ACTIVATED CARBON DOSING – GENERAL

The activated carbon goes through the following steps prior to being dosed to each injection points (usually in Actiflo® injection tanks):

- Storage in bulk bag above feeder/hopper and eductor assembly.
- Metering on a dosing screw.
- Dilution to the proper concentration for effective transportation in conveying pipes via hydro-eductor.

Activated carbon is a critical component of the Acticarb® system and activated carbon addition is required to maintain the concentration in the basins between the recommended values.

In normal operation, the activated carbon is dosed on an automatic basis, in respect of treated volume by each Actiflo® unit.

## 7.2 DESIGN SUMMARY

### 7.2.1 Datasheet

Refer to the Detailed Technical Documentation section of the Operation and Maintenance Manual for the activated carbon dosing system datasheet.

### 7.2.2 P&ID

Refer to the Process and/or Detailed Technical Documentation section of the Operation and Maintenance Manual for the activated carbon dosing system drawings.

### 7.2.3 General Arrangement Drawings

Refer to the Process and/or Detailed Technical Documentation section of the Operation and Maintenance Manual for the activated carbon dosing system drawings.

## 7.3 COMPONENTS DESCRIPTION

The components of the Hydra-Carb system provide two main functions:

- Dry activated carbon storage and dosing
- Activated carbon dilution and transfer to the injection tank

### 7.3.1 Activated Carbon Storage and Dosing

#### 7.3.1.1 Hopper with Big Bag Unloader

The Hydra-Carb system comes standard with a 2000 lbs big bag frame/support. It may be configured with a hoist and trolley or with a special frame for forklift loading. Each big bag unloader includes four (4) strap hooks that raise the big bag to the activated carbon dosing system. A manual gate (plate) allows the discharge of the activated carbon to a storage hopper.

Hoist and Big Bag Manipulating Instructions (if applicable):

*Refer to the figure on the right*

- The lifting yoke is attached to the hook of the hoist.
- The lifting yoke is brought above the big bag. The center of the lifting yoke needs to be positioned right above the center of the big bag to prevent any swinging of the load when the big bag is being lifted.
- The 4 lifting loops of the big bag are placed around the 4 strap hooks of the lifting yoke.
- The operator raises the lifting yoke slowly, stops when the lifting loops are stretched and checks that the 4 straps are correctly positioned.
- The lifting of the big bag can be performed safely.

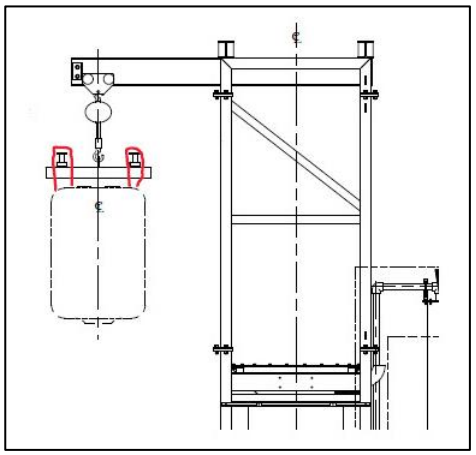

#### 7.3.1.2 Volumetric Feeder

A volumetric feeder doses a dry material at a constant rate. It includes a homogenizer agitator installed in a hopper for a better material flow. The feed screw is made of stainless steel 304. The feeder includes, at the outlet, a T nozzle which directs the flow of the material, allows for isolation of the dosing screw, and has an inspection window where the product dosing can be observed. The feeder contains a level switch, preventing the volumetric feeder from running when empty. A transition hopper is optional. It can be integrated with the volumetric feeder. It is made of stainless steel 304 and has a capacity of 100 L.

The feeder is also composed of a plunger which closes the T nozzle (at the exit of the metering) of the hopper. The operation of this device is controlled by a 4 way service solenoid valve that allows a flow of water to the cylinder.

### 7.3.2 Activated Carbon Dilution and Transfer to the Actiflo® Injection Tank

#### 7.3.2.1 Isolation Valve

An isolation ball valve is placed at the entry of the system to close the water inlet to the Hydra-Carb.

#### 7.3.2.2 Solenoid Valves

Two solenoid valves are placed in the system.

The first valve (*activated carbon service water valve*) monitors the pressure of the inlet to the service water line. It has three (3) main functions:

- Supply motive water to the eductor.
- Supply water tangentially to the conical hopper to impart a rotating flushing action around the cone (“toilet bowl” principle).
- Supply a perpendicular water jet to stop the rolling action of the first line after it has done one full round (optimal concept).

When the switch detects a fault, a switch commands the solenoid valve to close.

The second valve (*activated carbon output valve*) is a 4 way service water valve which function is to open or close the hydraulic (water operated) piston at the discharge of the screw.

The piston is open in operation to allow activated carbon to discharge/drop into the conical hopper.

The piston is closed (using water pressure) when system is not in function to seal the screw discharge portion and prevent moisture from entering the zone. Note: Water pressure required to seal is less than minimal pressure required for the system.

When piston is in open position or when piston is in closed position, water exhausts via the solenoid body through the conical hopper.

#### 7.3.2.3 Service Water Low Pressure Switch

If pressure is lower than required, there will not be enough vacuum created at the eductor and will cause the conical hopper to overflow. The pressure switch activation will trigger an error message and close the service water inlet valve if the inlet pressure is below its set point.

#### 7.3.2.4 Pressure Gauge

The gauge is used to read the service water inlet pressure.

#### 7.3.2.5 Conical Hopper and Eductor

The hopper is a device that mixes the metered activated carbon with water and prevents material accumulation in the cone at the feeder output. It includes a tangential inlet to the cone and a perpendicular water jet that are controlled by two (2) manual metering ball valves. It is very important to have the right amount of flow from this inlet into the cone to avoid having too little flow and a resulting accumulation of product. However too much flow is also an issue, as it can cause water to splash up out of the cone and into the T Nozzle.

An eductor, installed at the bottom of the conical hopper, draws the activated carbon into the water flow through the system.

#### 7.3.2.6 Check Valve (and On-Off valve positioned upstream)

The check valve is required to prevent water in the downstream line to flow back through the conical hopper and flood it, when the dosing operation stops. The device is carefully selected to be resistant to abrasion. The check valve is installed as an extra security measure for the actuated on-off valve positioned upstream in case of power outage or malfunction. For some configuration (i.e. pipe runs downward towards the injection point), the check valve is not needed.

#### 7.3.2.7 Level Switch

A level switch is installed in the hopper to signal the operator and stop the system when the level of activated carbon becomes too low.

#### 7.3.2.8 Control Panel

A control panel allows the fully automated system operation. It also allows the transmission of alarm signals to an external system.

# 8 INSTALLATION

## 8.1 SERVICE WATER

The Hydra-Carb system needs a clean water supply. The installer must connect the water supply as indicated on the general arrangement drawing.

### 8.1.1 Flowrate and Inlet Pressure

The required flow and pressure indicated on the technical data sheet are important to ensure proper system operation. These conditions must be met as a requirement for starting a dosing sequence. When setting these inlet water standards, the dynamic head losses have to be taken into account. Non-compliance can lead to overflows at the conical hopper or plugging of the conical hopper due to improper blending. Inlet pressure is not to exceed 120 psig working pressure and must exceed 80 psig.

## 8.2 RECOMMENDED ARRANGEMENT

The installation should be performed by qualified personnel.

Select a location providing:

- An easy access to the system and an easy activated carbon bulk bag handling.
- At least a clearance of one meter in front of the electrical panel.
- At least 72 inches of clearance behind the feeder for the maintenance.

It is recommended:

- To do not install equipment in areas of extreme heat, cold, dust or humidity. Avoid areas where objects or fluids can drop from overhead. Units are to be installed as close to the point of application as possible.

After selecting the optimal location, the installer will:

- Unpack the components.
- Install the dosing frame/structure on a sturdy level surface. Fasten to prevent movement.

## 8.3 PIPES CONNECTIONS

The installer has to connect the following pipes:

- Service water inlet.
- Interconnecting pipes between the dosing system and the injection tank. (The dosing system should be located as close as possible from the injection tank to reduce at the maximum the interconnecting pipe as shown on the General Arrangement drawing. Any extension of the pipe could bring an additional backpressure on the eductor and change its performance).

## 8.4 ELECTRICAL REQUIREMENT

Electrical connections and maintenance must only be performed by qualified personnel. Electrical elements have to be connected according to local regulations. The Hydra-Carb system is usually provided with its own control panel.

If not, the electrician has to connect:

- Screw feeder motor and homogenizer agitator motor to the control panel
- Cables of instruments to the control panel

In any cases, electrician has to connect main power supply to the control panel.

It is recommended to ground the dosing system frame.

# 9 INSTALLATION AND PRE START-UP INSPECTION

## 9.1 PRE-OPERATIONAL CHECKOUT

Included in appendices of this manual are standard **VWTC** checklist forms to be completed by the installer and returned to **VWTC** project manager prior **VWTC** onsite installation inspection. **VWTC** will schedule our field service visits prior to return of completed checklists but it is our policy to not dispatch field personnel to the jobsite until the completed and signed checklist is received by our project manager or field service manager.

## 9.2 START-UP CHECKOUT

### 9.2.1 Mechanical, Electrical and Control Start-Up

The mechanical and electrical start-up of the activated carbon dosing system includes the connection, verification and inspection of the following elements:

- Mounting
- Motors
- I/O Check
- Tubing and process connections
- Power connections and supply
- Valves
- Instrument calibration

9.2.1.1 Initial Checking and Adjustment

Prior to calibration the following elements will be verified:

**Automatic Activated Carbon Dosing System Installation Checklist**

| | | Date | |
|---|---|---|---|
| | | Expected | Realized |
| ☐ | Verify unit is properly installed (fastened and leveled) and all process connections are complete. | | |
| ☐ | Verify feeder & blending tool gearboxes have been lubricated as required in the supplier's O&M manual. | | |
| ☐ | Verify feeder & blending tool gear reducers have been filled with oil as required in the supplier's O&M manual. | | |
| ☐ | Verify the unit is accessible from all sides. Unit should not be installed up against walls or in enclosed spaces. | | |
| ☐ | Verify service water flowrate and service pressure are as required (18.0 $m^3$/h @ 80 psig min). | | |
| ☐ | Verify service water temperature. | | |
| ☐ | Verify service water quality. | | |
| ☐ | Verify instruments location. Avoid potential flooding. | | |
| ☐ | Verify tightening of pipes flange. | | |
| ☐ | Verify frame grounding. | | |
| ☐ | Verify that the Electrical Panel has been wired with 575 VAC. | | |
| ☐ | Verify that the communication cable is installed and VWT will be able to communicate between Main Control Panel and Activated Carbon Dosing System Panel. | | |

## Automatic Activated Carbon Dosing System Functional Checklist

| | | Date | |
|---|---|---|---|
| | | Expected | Realized |
| Hoist and Trolley | Check that the hoist and the trolley operate correctly. | | |
| Feeder | Check whether foreign substances or water have entered the feeder. In such a case, clean thoroughly. | | |
| | Avoid any friction between the metering screw and the body. This requires opening the hopper and removing the T nozzle. Inspecting the screw/auger to be sure that it is flush with the walls of the hopper is very important because removing the material can be difficult and risky. | | |
| | Check that the metering screw rotates counter clockwise when looking from the rear of the drive unit. | | |
| Wetting cone | Check that the wetting cone is completely clean and free from dirt or foreign objects. | | |
| | Check that the water flows tangentially into the wetting cone. | | |
| | Ensure that the water speed is sufficient to create a vortex. | | |
| | Ensure that water speed is not too great to create splashing up into the T nozzle. | | |
| | Check that the metered powder falls vertically in the middle of the wetting cone. | | |
| Eductor | Check that the eductor is completely clean and free from dirt or foreign objects. | | |
| | Check that the service water pressure is 80 psig ± 5 psig in operation. | | |
| Piping | Check that the pipework are completely clean and free from dirt or foreign objects. | | |
| Manual valves | Check that all manual valves are working properly. | | |
| | The globe valve controls the whirl and blending of the powder. Ensure that the flow is appropriate; it should be showing at least 900 LPH on the rotameter. | | |
| Automatic valves | Check that all automatic/electric valves are connected to the control panel. | | |
| | Check that all automatic/electric valves are working at proper times and the limit switches are set. | | |
| Instruments | Check that all instruments are properly calibrated. | | |
| | Check that all instruments are properly installed. | | |
| Pressure switch | Check that the pressure switch works properly by closing the water inlet valve. | | |
| | Check the pressure gauges are working correctly. | | |
| Blending tool agitator | Adjust the motor overload protection to the value shown on each motor nameplate. | | |
| | During start-up, listen for unusual noises and check for excessive vibration. | | |
| | Check the temperature of the motor and the gear reducer. The temperature should not exceed 180°F (82°C). | | |

### 9.2.2 Hydraulic Test

Due to the nature of the materials used in the Hydra-Carb systems, it is important that the hydraulic integrity of the system is verified even before the Control Start-Up is performed. The hydraulic inspection and testing is comprised of the following elements:

- Connect all fittings and walk the piping to be sure that the hydraulic pathway meets operational specifications.
- Verify that the service water system is ready to provide water and that the client is ready to accept water into their downstream system.
    - NOTE: this step is of extreme importance as during the construction phase, often communication with other workers is complicated and difficult. Be sure that you yourself check the discharge point and that no one is working in the area and that all risks are mitigated.
- Briefly allow water through the system by manually operating the valves. Check for leaks. Provided no leaking or loose connections are found, continue to the next step.
- Walk the Hydra-Carb to verify that all tubing fittings are tight, that the T nozzle plunger is pulled back, and that the whirl in the wetting code is adequate.
    - NOTE: this step is of importance. If the whirl of the conical hopper is not adequate, then the conical hopper may clog with activated carbon and the clean-up will take time.
- Stop the system and do a final walk-through of all hydraulic and mechanical integrity.

### 9.2.3 Control Start-Up

The control start-up for the activated carbon dosing system include; connection, verification and inspection of the following elements:

- The alarms, start-up and shut down of the motors.
- The transmission of the electric signals of the different components as well as their configuration parameters if needed.
- The pumps alarm transmission to the plant system.
- I/O verification of instrumentation.
- Sequencing.
- The proper functioning of the electrical and process alarms.
- The variable frequency drives connection.
- The control panel.
- Other elements of control, if required.

Start-up and shut down sequencing will be checked:

- Normal start and stop sequencing.
- Alarms stop sequencing.
- Clearing alarms and restarting the process.

### 9.2.4 Process Start-Up

Once the mechanical, electrical, hydraulic and control start-up of the preparation system have been completed, the equipment commissioning can begin. The following steps will be performed.

#### 9.2.4.1 Screw Calibration Procedure

Tests will be performed using water for the initial testing and the specific product for the final test.

- Calibration of the dosing screw at minimum, full range and intermediate speeds to set the functional output curve.
- Dosage settings.

##### 9.2.4.1.1 Dosage Calculation

Dosing is continuous with the dosing screw and the required dosing flowrate is adjusted using the VFD of the dosing screw motor. The calculation of the dosage percentage is done by integrating calibration values retrieved from the dosing screw.

$$\mathbf{(QP_{PAC}) = (CF_{PAC}) * (Q_{RW}) \ / (SG_{PAC}) * 1000}$$

Where:
**$QP_{PAC}$** = Required PAC Dosing Flowrate (L/h)
**$CF_{PAC}$** = Required Chemicals Concentration in the process (mg/L)
**$Q_{RW}$** = Raw Water Flowrate (m3/h). Process Value given by the inlet raw water flowmeter.
**$SG_{PAC}$** = Chemical Specific Gravity (kg/L)

Formula below gives reference speed for activated carbon volumetric dosing screw, in percentage. Screw calibration must be done in order to get a linear speed curve, depending on screw capacity.

$$V_d = 20 + \left[\left(\frac{60}{C_{80} - C_{20}}\right) \times (C_m - C_{20})\right]$$

$V_d$: Activated carbon volumetric dosing screw per Actiflo® (%)
$C_m$: Dosing flow (mass) ($C_m = \mathbf{QP_{PAC}} \times \mathbf{SG_{PAC}}$) (kg/h)
$C_{20}$: Dosing flow (mass) measured at 20% of screw speed (kg/h)
$C_{80}$: Dosing flow (mass) measured at 80% of screw speed (kg/h)

Variables $C_{20}$ & $C_{80}$ are entered on the operator interface and are common for both Actiflo® units.

9.2.4.1.2 Feeder Capacity

The feeder capacity must be checked by weighing the discharged amount of activated carbon/time.

The operator must repeat four (4) times the following procedure:

- Hold a sample shovel just under the outlet of the dry feeder.
- Then turn the switch for FEEDER to position H for a specific time.
- Weigh the contents in the sample shovel.

EXAMPLE:

Obtained value 2000 g/20 sec = 6 kg/min = feeder capacity

This dosing time is set on the interface. Record the test procedures and test results/settings within the manual.

9.2.5 Process Start-Up Records

The personal in charge of the commissioning will furnish inspection sheets for equipment including:

- Project name
- Tag number and description
- Manufacturer
- Model and serial number
- Date, time and person who will perform calibration
- Calibration data to include:
  - Input, output and error at minimum, intermittent and maximum output range
- Space for comments
- Certification by installer and acknowledgment by contractor and date
- Adjustment of the service water flow rate and pressures (if required)

# 10 TROUBLESHOOTING GUIDE

| COMPONENT | ISSUES | POSSIBLE CAUSES | ACTION |
|---|---|---|---|
| SERVICE WATER INLET | Service water low pressure. | Service water feed system low pressure. | Inspect service water system and booster pumps (if applicable). |
| | | Obstruction. | Clean pipes. |
| CONICAL HOPPER | Clogging of the conical hopper. | The feeder shutter at the outlet of the feeder is not shut. | Check the function of the solenoid valve to the feeder shutter, or clean the shutter from possible activated carbon clogging. |
| | | The water whirl in the conical hopper is too small. | Check water pressure. |
| FEEDER | Feeder does not run. | No power to the feeder. | Check the button or the on / off switch of the machine is turned on. |
| | | | Check that the isolating switch is in the on position. |
| | | | Check that the inverter is not set to 0 Hz. |
| | | | Check if there are short circuits, blown fuses or tripped breakers. |
| | | | Check that the power supply corresponds to control and motor requirements. |
| | | | Check if there are error messages in the drive controller screen. |
| | Feeder screw or agitator is damaged. | Foreign body inside feeder. | Remove foreign body and replace damaged components |
| | Feeder screw or agitator stops. | Hygroscopic material inside feeder has absorbed humidity. | Unload feeder completely when shutting down for long periods. |
| | Feeder – Rotating components unscrewed, no material handled. | Motor incorrectly wired. | Rewire (metering screw must turn counter clockwise when viewed from behind drive unit). |
| | Feeder – Sticking of hygroscopic products; Agglomeration of viscous materials; Contamination of the product. | Long shutdown period. | Unload feeder completely when shutting down for longer periods. |
| | Feeder makes scraping or grinding noise. | Foreign body inside feeder. Poor alignment of gearbox, hopper wall welding. | Visually inspect the hopper and the level of the auger by removing the T nozzle. |

# 11 MAINTENANCE

Any manipulation of metering equipment and activated carbon should be done by qualified and trained personnel. Refer to product MSDS for safe material handling.

| ITEM | DESCRIPTION | WEEKLY | MONTHLY | BI-MONTHLY | YEARLY | COMMENTS |
|---|---|---|---|---|---|---|
| PIPING | Check for leaks. | X | | | | |
| | Rinse pipes with lukewarm water. | | | | Every 6 months | |
| LEVEL TRANSMITTER | Calibrate on a regular basis and / or when readings become inaccurate (specific to each type of use). | | | | Every 6 months | |
| FEEDER | If the feeder uses MBTX, MBTN or MBTT type shaft seals, check these on a monthly basis to make sure they are in good working condition. | | X | | | Grease monthly |
| CONICAL HOPPER | Inspect the cone for the presence of activated carbon agglomeration. In case of loss of suction, remove and clean eductor with hot water. Inspect weekly to ensure that there is no accumulation of activated carbon or fouling and, if necessary, clean by draining the cone and the eductor with water. | X | | | | |
| VALVES | Inspected and clean if required. Refer to supplier's maintenance manual. | | | | Every 6 month | |
| DOSING SKID FRAME OR BIG BAG UNLOADER | Check the appearance of the structure, paying particular attention to the state of welds. | | X | | | |
| | Check that all bolts are correctly tightened, in particular the vibrator fixing bolts. | | X | | | |

# 12 SPARE PARTS

It is highly recommended to keep in stock spare parts in sufficient quantity for all critical components to the proper functioning of the system.

Only the use of original Veolia spare parts will ensure proper and reliable operation of the system.

When ordering a spare part, please give the following information:

- Veolia's project number
- Veolia's project name
- Part number

# APPENDIX A

# PRE-OPERATIONAL CHECKOUT CHECKLIST
# (TO BE COMPLETED BY CONTRACTOR)

| VEOLIA | HYDRA-CARB<br>PRE-OPERATIONNAL CHECKOUT CHECKLIST | | |
|---|---|---|---|
| Project | | Date | |
| Structure | | Revision | |
| Number | | Doc. N° | |
| Reactor | | Written by | |

| N° | ITEMS | X | COMMENTS |
|---|---|---|---|
| **1** | **GENERAL** | | |
| 1.1 | Inspection of received equipment | | |
| 1.2 | Check concrete base flatness | | |
| **2** | **SERVICE WATER** | | |
| 2.1 | Check service water flowrate and inlet pressure | | |
| 2.2 | Check service water temperature | | |
| 2.3 | Check service water quality | | |
| **3** | **GENERAL ARRANGEMENT** | | |
| 3.1 | Check access and clearance all around the quipment | | |
| 3.2 | Check instruments location. Avoid potential flooding. | | |
| 3.3 | Check that the equipment is fastened | | |
| **4** | **PIPING** | | |
| 4.1 | Tightening of water pipes support | | |
| 4.2 | Tightening of chemicals pipes support | | |
| 4.3 | Tightening of water pipes flange | | |
| 4.4 | Tightening of chemicals pipes flange | | |
| **5** | **ELECTRICAL REQUIREMENT** | | |
| 5.1 | Check that all electrical connections are done | | |
| 5.2 | Check frame and tanks grounding | | |

**Sign:** ……

# APPENDIX B

# COMPONENTS DATA SHEETS AND MAINTENANCE MANUALS

Refer to the Manufacturer Operation and Maintenance Manual section of the Operation and Maintenance Manual for the activated carbon dosing system component manufacturer manuals.

# *6 – OPERATION AND MAINTENANCE*

## *6.4 – SPECIAL OPERATION PROCEDURES*

### *6.4.1 – ROUTINE OPERATION CHECK LIST*

LEFT BLANK

DOCUMENT PROVIDED LATER

LEFT BLANK

# *6 – OPERATION AND MAINTENANCE*

## *6.4 – SPECIAL OPERATION PROCEDURES*

## *6.4.2 – BREAK POINT CHLORINATION*

LEFT BLANK

DOCUMENT PROVIDED LATER

LEFT BLANK

# *6 – OPERATION AND MAINTENANCE*

## *6.4 – SPECIAL OPERATION PROCEDURES*

### *6.4.3 – ACTI-CARB*

LEFT BLANK

DOCUMENT PROVIDED LATER

LEFT BLANK

# *6 – OPERATION AND MAINTENANCE*

## *6.4 – SPECIAL OPERATION PROCEDURES*

## *6.4.4 – CORROSION PROTECTION MAINTENANCE*

LEFT BLANK

DOCUMENT PROVIDED LATER

LEFT BLANK

# *6 – OPERATION AND MAINTENANCE*

## *6.5 – TRAINING DOCUMENTS*

LEFT BLANK

DOCUMENT PROVIDED LATER

LEFT BLANK

# *7 – SPARE PARTS*

LEFT BLANK

| VWTCA 5000220043 AEM Meliadine, NU - BPC upgrade 2021 (CA_06_20_320229) | | | Doc #: | SPLS_0001_GEN |
|---|---|---|---|---|
| | | | Client's Doc number : | 1.07 |
| | | | SPARE PARTS LIST | Actiflo |
| PROJECT: | REV | BY | DATE | |
| 5000220043 | 1 | Silvere nicoulin | 2021-03-25 | |
| | 2 | Silvere nicoulin | 2021-06-09 | |
| | 3 | Chris El Khazaka | 2021-07-28 | |
| | | | | |
| | | | | |
| | Ref: 5000220043_PI_0001_GEN_VWT | | | |

VEOLIA Water Technologies

| EQT / QTY | ID Number | EQT TYPE | Equipment Name | SPARE PART DESCRIPTION | SUPPLIER | Supplier REFERENCE NUMBER | QTY | PART CRITICALITY | WEAR PART | SPARE PART | CONSUMABLE | MAINTENANCE FREQUENCY | LEAD TIME |
|---|---|---|---|---|---|---|---|---|---|---|---|---|---|
| ***Recirculation Pump - SIZE : 3" X 3" MATERIAL : Natural rubber*** | | | ***REF: 5000220043_PI_0001_GEN_VWT SHEET 07*** | | | | | | | | | | |
| 2 | PSR68005A/PSR68005B | Pump | RecirculationPump | Dry Gland repair kit | *Mclanahan* | 9110003321 | 1 | | | X | | < 2 years | 6 WEEKS |
| 2 | PSR68005A/PSR68005B | Pump | RecirculationPump | Suction Side Liner c/w Drain Plug | *Mclanahan* | 9110003106 | 1 | | | X | | < 2 years | 6 WEEKS |
| 2 | PSR68005A/PSR68005B | Pump | RecirculationPump | Gland Side Liner | *Mclanahan* | 9110003109 | 1 | | | X | | < 2 years | 6 WEEKS |
| 2 | PSR68005A/PSR68005B | Pump | RecirculationPump | Impeller | *Mclanahan* | 9110003110 | 1 | | | X | | < 2 years | 6 WEEKS |
| 2 | PSR68005A/PSR68005B | Pump | RecirculationPump | BEARING REPAIR KIT, 3 X 3 PUMP | *Mclanahan* | 9110003225 | 1 | | | X | | < 2 years | 6 WEEKS |
| 2 | PSR68005A/PSR68005B | Pump | RecirculationPump | V-BELT, 5VX530 | *Mclanahan* | 293915053 | 1 | | | | | < 2 years | 2 WEEKS |
| 2 | PSR68005A/PSR68005B | Pump | RecirculationPump | KEY, SHAFT | *Mclanahan* | 9110003215 | 1 | | | X | | < 2 years | 2 WEEKS |
| ***Hydrocyclone - Size : 4" Material :MA40*** | | | ***REF: 5000220043_PI_0001_GEN_VWT SHEET 07*** | | | | | | | | | | |
| 2 | CYC68002A/CYC68002B | Hydrocyclone | Hydrocyclone | Vortex Finder MA40 | VEOLIA | ## | 1 | X | X | | | < 2 years | 12 WEEKS |
| 2 | CYC68002A/CYC68002B | Hydrocyclone | Hydrocyclone | Apex Tip MA40 | VEOLIA | SPSVGU308087 | 1 | X | X | | | < 2 years | 4-6 WEEKS |
| ***Coagulation Mixer Size : 3 HP Model: EVGX4-3.0*** | | | ***REF: 5000220043_PI_0001_GEN_VWT SHEET 07*** | | | | | | | | | | |
| 1 | AGI68018 | Mixer | coagulation mixer | BEARING 22216 E C216,0 OIL GROOVE | ENVIREQUIP | 24222169 | 1 | | | X | | 1 year | 2 WEEKS |
| 1 | AGI68018 | Mixer | coagulation mixer | BEARING NUP 214 E C120,0 | ENVIREQUIP | 24021419 | 1 | | | X | | 1 year | 2 WEEKS |
| 1 | AGI68018 | Mixer | coagulation mixer | BEARING 32305 A | ENVIREQUIP | 24323050 | 1 | | | X | | 1 year | 2 WEEKS |
| 1 | AGI68018 | Mixer | coagulation mixer | SEAL 80X140X13 AS MAT.:NBR | ENVIREQUIP | 25080120 | 1 | | | X | | 1 year | 2 WEEKS |
| 1 | AGI68018 | Mixer | coagulation mixer | SEAL 95X125X12 A MAT.:NBR | ENVIREQUIP | 25095030 | 1 | | | X | | 1 year | 2 WEEKS |
| 1 | AGI68018 | Mixer | coagulation mixer | SEAL 70X125X12 AS MAT.:NBR | ENVIREQUIP | 25070090 | 1 | | | X | | 1 year | 2 WEEKS |
| 1 | AGI68018 | Mixer | coagulation mixer | BORE PLUG 62X 8 SK42/4282 | ENVIREQUIP | 25806200 | 1 | | | X | | 1 year | 2 WEEKS |
| 1 | AGI68018 | Mixer | coagulation mixer | NILOS-RING 6214 AV | ENVIREQUIP | 25462141 | 1 | | | X | | 1 year | 2 WEEKS |
| 1 | AGI68018 | Mixer | coagulation mixer | O-RING 86X2,5 | ENVIREQUIP | 25508625 | 1 | | | X | | 1 year | 2 WEEKS |
| 1 | AGI68018 | Mixer | coagulation mixer | GASKET-ASSY CVR SK 4282 S=0.5 | ENVIREQUIP | 84297000 | 1 | | | X | | 1 year | 2 WEEKS |
| ***Injection mixer Size : 3 HP Model: EVGX4-3.0*** | | | ***REF: 5000220043_PI_0001_GEN_VWT SHEET 07*** | | | | | | | | | | |
| QTY | AGI68019 | Mixer | injection mixer | BEARING 22216 E C216,0 OIL GROOVE | ENVIREQUIP | 24222169 | 1 | | | X | | 1 year | 2 WEEKS |
| 1 | AGI68019 | Mixer | injection mixer | BEARING NUP 214 E C120,0 | ENVIREQUIP | 24021419 | 1 | | | X | | 1 year | 2 WEEKS |
| 1 | AGI68019 | Mixer | injection mixer | BEARING 32305 A | ENVIREQUIP | 24323050 | 1 | | | X | | 1 year | 2 WEEKS |
| 1 | AGI68019 | Mixer | injection mixer | SEAL 80X140X13 AS MAT.:NBR | ENVIREQUIP | 25080120 | 1 | | | X | | 1 year | 2 WEEKS |
| 1 | AGI68019 | Mixer | injection mixer | SEAL 95X125X12 A MAT.:NBR | ENVIREQUIP | 25095030 | 1 | | | X | | 1 year | 2 WEEKS |
| 1 | AGI68019 | Mixer | injection mixer | SEAL 70X125X12 AS MAT.:NBR | ENVIREQUIP | 25070090 | 1 | | | X | | 1 year | 2 WEEKS |
| 1 | AGI68019 | Mixer | injection mixer | BORE PLUG 62X 8 SK42/4282 | ENVIREQUIP | 25806200 | 1 | | | X | | 1 year | 2 WEEKS |
| 1 | AGI68019 | Mixer | injection mixer | NILOS-RING 6214 AV | ENVIREQUIP | 25462141 | 1 | | | X | | 1 year | 2 WEEKS |
| 1 | AGI68019 | Mixer | injection mixer | O-RING 86X2,5 | ENVIREQUIP | 25508625 | 1 | | | X | | 1 year | 2 WEEKS |
| 1 | AGI68019 | Mixer | injection mixer | GASKET-ASSY CVR SK 4282 S=0.5 | ENVIREQUIP | 84297000 | 1 | | | X | | 1 year | 2 WEEKS |
| ***Maturation Mixer Size : 5 HP Model: EVGX6-5.0*** | | | ***REF: 5000220043_PI_0001_GEN_VWT SHEET 07*** | | | | | | | | | | |
| 1 | AGI68020 | Mixer | maturation mixer | BEARING 23222 E C600,0 OIL GROOVE | ENVIREQUIP | 24232229 | 1 | | | X | | 1 year | 2 WEEKS |
| 1 | AGI68020 | Mixer | maturation mixer | BEARING NUP 220 E C250,0 | ENVIREQUIP | 24022019 | 1 | | | X | | 1 year | 2 WEEKS |
| 1 | AGI68020 | Mixer | maturation mixer | BEARING 22308 E C129,0 | ENVIREQUIP | 24223089 | 1 | | | X | | 1 year | 2 WEEKS |
| 1 | AGI68020 | Mixer | maturation mixer | BEARING NJ 407 C 75,0 | ENVIREQUIP | 24040720 | 1 | | | X | | 1 year | 2 WEEKS |
| 1 | AGI68020 | Mixer | maturation mixer | SEAL 110X200X13 AS MAT.:NBR | ENVIREQUIP | 25110030 | 1 | | | X | | 1 year | 2 WEEKS |
| 1 | AGI68020 | Mixer | maturation mixer | SEAL 140X180X12 A MAT.:NBR | ENVIREQUIP | 25140080 | 1 | | | X | | 1 year | 2 WEEKS |
| 1 | AGI68020 | Mixer | maturation mixer | SEAL 100X180X12 AS MAT.:NBR | ENVIREQUIP | 25100060 | 1 | | | X | | 1 year | 2 WEEKS |
| 1 | AGI68020 | Mixer | maturation mixer | BORE PLUG 90X 8 SK2282/6282/62 | ENVIREQUIP | 25809001 | 1 | | | X | | 1 year | 2 WEEKS |
| 1 | AGI68020 | Mixer | maturation mixer | NILOS-RING 6220 AV | ENVIREQUIP | 25462201 | 1 | | | X | | 1 year | 2 WEEKS |
| 1 | AGI68020 | Mixer | maturation mixer | NILOS-RING 6407 AV | ENVIREQUIP | 25464071 | 1 | | | X | | 1 year | 2 WEEKS |
| 1 | AGI68020 | Mixer | maturation mixer | O-RING 112X4 | ENVIREQUIP | 25511240 | 1 | | | X | | 1 year | 2 WEEKS |
| 1 | AGI68020 | Mixer | maturation mixer | GASKET-ASSY CVR SK 6282 S=0.5 | ENVIREQUIP | 86297000 | 1 | | | X | | 1 year | 2 WEEKS |
| 1 | AGI68020 | Mixer | maturation mixer | GASKET-HSG SK62 NOVA2300 | ENVIREQUIP | 52697060 | 1 | | | X | | 1 year | 2 WEEKS |
| ***Clarifier Scraper Model :*** | | | ***REF: 5000220043_PI_0001_GEN_VWT SHEET 07*** | | | | | | | | | | |
| 1 | TRM68002 | Scraper | Scraper motor | Oil seal W A40x80x8-NBR | SEW Eurodrive | 120820 | 2 | | | X | | < 2 year | 2 WEEKS |
| 1 | TRM68002 | Scraper | Scraper motor | Vent valve W4086 S-M10x1-CuZn-HEI | SEW Eurodrive | 130303 | 1 | | | X | | < 2 year | 2 WEEKS |
| 1 | TRM68002 | Scraper | Scraper motor | Oil seal W A17x30x7-NBR | SEW Eurodrive | 106062 | 1 | | | | | < 2 year | 2 WEEKS |
| 1 | TRM68002 | Scraper | Scraper motor | Slip clutch AR71 to be adjust to 1.5NM | SEW Eurodrive | 1655264 | 1 | | | | | < 2 year | 8 WEEKS |
| 1 | TRM68002 | Scraper | Scraper motor | Proximity switch W4852 M12x71-NO-2-2m | SEW Eurodrive | 1067117 | 1 | | | | | < 2 year | 8 WEEKS |
| 1 | TRM68002 | Scraper | Scraper motor | Oil seal W BAOFSF16x28x6/7-NBR | SEW Eurodrive | 19193696 | 1 | | | | | < 2 year | 2 WEEKS |
| 1 | TRM68002 | Scraper | Scraper motor | Oil seal DIN AS20x35x7-NBR-OF | SEW Eurodrive | 13241362 | 1 | | | | | < 2 year | 2 WEEKS |
| 1 | TRM68002 | Scraper | Scraper motor | Oil seal DIN AS20x35x7-NBR | SEW Eurodrive | 106526 | 1 | | | | | < 2 year | 2 WEEKS |
| 1 | TRM68002 | Scraper | Scraper motor | Oil seal W BASF72x95x12-NBR | SEW Eurodrive | 177911 | 1 | | | | | < 2 year | 2 WEEKS |
| 1 | TRM68002 | Scraper | Scraper motor | Vent valve W4086 M22x1.5-CuZn-HEI | SEW Eurodrive | 0013032X | 1 | | | | | < 2 year | 2 WEEKS |
| ***INSTRUMENTS*** | | | | | | | | | | | | | |
| 1 | AE-6801222 | Instrument | Clarified water Turbiditimeter (Solitax TS-Line sc) | TS-Line sc Sensor, 316SS w/wiper | HACH | LXV423.99.10100 | 1 | | | X | | > 5 years | 4 WEEKS |
| 1 | AIT-6801222 | Instrument | SC200 UNIVERSAL CONTROLLER: | SC200 UNIVERSAL CONTROLLER: | HACH | LXV404.99.00502 | 1 | | | X | | > 5 years | 4 WEEKS |
| 1 | AE-6801222 | Instrument | Clarified water Turbiditimeter (Solitax TS-Line sc) | Wiper blades, pk/5 | HACH | LZX050 | 1 | | X | | | < 1 year | STOCK |
| 1 | AE-6801222 | Instrument | Clarified water Turbiditimeter (Solitax TS-Line sc) | 800 NTU StablCal Formazin Calibration Standard. 500 ml | HACH | 2660549 | 1 | | | | X | < 1 year | 2 WEEKS |
| 1 | IESWLE201156 | Instrument | HIGH LEVEL SWITCH FLOAT | HIGH LEVEL SWITCH FLOAT | XYLEM | ENM-10 (13m) | 1 | | | | | < 2 year | 2 WEEKS |
| 1 | ST-413-393 | Instrument | RECIRCULATION LINE #1 PRESSURE GAUGE | RECIRCULATION LINE #1 PRESSURE GAUGE | ASHCROFT | 25-1009-SW-L-02L-60# + 04-3105S-02T-XCG | 1 | | | | | < 2 year | 2 WEEKS |
| 1 | ST-413-393 | Instrument | RECIRCULATION LINE #2 PRESSURE GAUGE | RECIRCULATION LINE #2 PRESSURE GAUGE | ASHCROFT | 25-1009-SW-L-02L-60# + 04-3105S-02T-XCG | 1 | | | | | < 2 year | 2 WEEKS |
| ***VALVES*** | | | | | | | | | | | | | |
| *1* | VABFDI364242 | VALVE | MANUAL DRAIN VALVE | MANUAL DRAIN VALVE | BRAY | Serie 31 - Lug// Série 31- à oreilles | 1 | | | | | 1 years | 1 WEEKS |
| 1 | VABFDI364242 | VALVE | MANUAL DRAIN VALVE | MANUAL DRAIN VALVE | BRAY | Serie 31 - Lug// Série 31- à oreilles | 1 | | | | | 2 years | 2 WEEKS |
| 1 | ST-312-664 | VALVE | RECIRCULATION LINE #1 ISOLATION VALVE | RECIRCULATION LINE #1 ISOLATION VALVE | DURCO | 4"T4E11C11D033NW | 1 | | | | | 2 years | 2 WEEKS |
| 1 | ST-312-664 | VALVE | RECIRCULATION LINE #2 ISOLATION VALVE | RECIRCULATION LINE #2 ISOLATION VALVE | DURCO | 4"T4E11C11D033NW | 1 | | | | | 2 years | 2 WEEKS |
| 1 | VABLPV200243 | VALVE | PRESSURE GAUGE #1 ISOLATION VALVE | PRESSURE GAUGE #1 ISOLATION VALVE | CHEMLINE | 21A005VC,TYPE21 | 1 | | | | | 2 years | 2 WEEKS |
| 1 | VABLPV200243 | VALVE | PRESSURE GAUGE #2 ISOLATION VALVE | PRESSURE GAUGE #2 ISOLATION VALVE | CHEMLINE | 21A005VC,TYPE21 | 1 | | | | | 2 years | 2 WEEKS |
| 1 | VABLPV200249 | VALVE | POLYMER ISOLATION VALVE | POLYMER ISOLATION VALVE | CHEMLINE | 21A005EC,TYPE21 | 1 | | | | | 2 years | 2 WEEKS |
| 1 | VABLPV200249 | VALVE | POLYMER ISOLATION VALVE | POLYMER ISOLATION VALVE | CHEMLINE | 21A005EC,TYPE21 | 1 | | | | | 2 years | 2 WEEKS |
| 1 | VABLPV200249 | VALVE | POLYMER ISOLATION VALVE | POLYMER ISOLATION VALVE | CHEMLINE | 21A005EC,TYPE21 | 1 | | | | | 2 years | 2 WEEKS |
| 1 | VABLPV200249 | VALVE | POLYMER ISOLATION VALVE | POLYMER ISOLATION VALVE | CHEMLINE | 21A005EC,TYPE21 | 1 | | | | | 2 years | 2 WEEKS |
| 1 | VABFDI364244 | VALVE | MANUAL PARTIAL DRAIN VALVE | MANUAL PARTIAL DRAIN VALVE | BRAY | Serie 31 - Lug// Série 31- à oreilles | 1 | | | | | 2 years | 2 WEEKS |
| 1 | VABLPV200244 | VALVE | SAMPLE BALL VALVE INLET HYDROCYCLONE #1 | SAMPLE BALL VALVE INLET HYDROCYCLONE #1 | CHEMLINE | 21A007VC,TYPE21 | 1 | | | | | 2 years | 2 WEEKS |
| *1* | VABLPV200244 | VALVE | SAMPLE BALL VALVE INLET HYDROCYCLONE #2 | SAMPLE BALL VALVE INLET HYDROCYCLONE #2 | CHEMLINE | 21A007VC,TYPE21 | 1 | | | | | 2 years | 2 WEEKS |

| | | | | | | | | | | | | | |
|---|---|---|---|---|---|---|---|---|---|---|---|---|---|
| 1 | VABLPV200244 | VALVE | SAMPLE BALL VALVE OUTLET HYDROCYCLONE #1 | SAMPLE BALL VALVE OUTLET HYDROCYCLONE #1 | CHEMLINE | 21A007VC,TYPE21 | 1 | | | | | 2 years | 2 WEEKS |
| 1 | VABLPV200244 | VALVE | SAMPLE BALL VALVE OUTLET HYDROCYCLONE #2 | SAMPLE BALL VALVE OUTLET HYDROCYCLONE #2 | CHEMLINE | 21A007VC,TYPE21 | 1 | | | | | 2 years | 2 WEEKS |

| VWTCA 5000220043 AEM Meliadine, NU - BPC upgrade 2021 (CA_06_20_320229) | | | Doc #: | SPLS_0001_GEN |
|---|---|---|---|---|
| | | | Client's Doc number : | 1.07 |
| | | | SPARE PARTS LIST | Actiflo |
| PROJECT: | REV | BY | DATE | |
| 5000220043 | 1 | Silvere nicoulin | 2021-03-25 | |
| | 2 | Silvere nicoulin | 2021-06-09 | |
| | 3 | Chris El Khazaka | 2021-07-28 | |
| | | | | |
| | | | | |
| | Ref: 5000220043_PI_0001_GEN_VWT | | | |

VEOLIA Water Technologies

| EQT / QTY | ID Number | EQT TYPE | Equipment Name | SPARE PART DESCRIPTION | SUPPLIER | Supplier REFERENCE NUMBER | QTY | PART CRITICALITY | WEAR PART | SPARE PART | CONSUMABLE | MAINTENANCE FREQUENCY | LEAD TIME |
|---|---|---|---|---|---|---|---|---|---|---|---|---|---|
| ***Recirculation Pump - SIZE : 2" X 2" MATERIAL : Natural rubber*** | | | ***REF: 5000220043_PI_0001_GEN_VWT SHEET 08*** | | | | | | | | | | |
| 2 | PSR68006A/PSR68006B | Pump | RecirculationPump | Dry Gland repair kit | *Mclanahan* | 9110002321 | 1 | | | X | | < 2 years | 6 WEEKS |
| 2 | PSR68006A/PSR68006B | Pump | RecirculationPump | Suction Side Liner c/w Drain Plug | *Mclanahan* | 9110002106 | 1 | | | X | | < 2 years | 6 WEEKS |
| 2 | PSR68006A/PSR68006B | Pump | RecirculationPump | Gland Side Liner | *Mclanahan* | 9110002109 | 1 | | | X | | < 2 years | 6 WEEKS |
| 2 | PSR68006A/PSR68006B | Pump | RecirculationPump | Impeller | *Mclanahan* | 9110002110 | 1 | | | X | | < 2 years | 6 WEEKS |
| 2 | PSR68006A/PSR68006B | Pump | RecirculationPump | BEARING REPAIR KIT, 3 X 3 PUMP | *Mclanahan* | 9110002225 | 1 | | | X | | < 2 years | 6 WEEKS |
| 2 | PSR68006A/PSR68006B | Pump | RecirculationPump | V-BELT, 3VX425 | *Mclanahan* | 2939050 42 | 1 | | | X | | < 2 years | 2 WEEKS |
| 2 | PSR68006A/PSR68006B | Pump | RecirculationPump | KEY, SHAFT | *Mclanahan* | 9110002215 | 1 | | | X | | < 2 years | 2 WEEKS |
| ***Hydrocyclone - Size :1,6"\. Material :U4B-10- 1734*** | | | ***REF: 5000220043_PI_0001_GEN_VWT SHEET 08*** | | | | | | | | | | |
| 2 | YC88003A/CYC88003B | Hydrocyclone | Hydrocyclone | EX FINDER/OVERFLOW INSERT WITH 2" VICTAULIC CONNECTION, URETHANE, SIZ | FLSmidth Krebs | CMSPHC315459 | 1 | | X | X | | < 2 years | 12 WEEKS |
| 2 | YC88003A/CYC88003B | Hydrocyclone | Hydrocyclone | APEX NOZZLE, URETHANE, SIZE 1.125'' DIA | FLSmidth Krebs | CMSPHC321667 | 1 | | X | X | | < 2 years | 4-6 WEEKS |
| ***Ext Coagulation Mixer Size : 2 HP Model: EVGX4-2.0*** | | | ***REF: 5000220043_PI_0001_GEN_VWT SHEET 08*** | | | | | | | | | | |
| QTY | AGI68021 | Mixer | ext coagulation mixer | BEARING 22216 E C216,0 OIL GROOVE | ENVIREQUIP | 24222169 | 1 | | | X | | 1 year | 2 WEEKS |
| 1 | AGI68021 | Mixer | ext coagulation mixer | BEARING NUP 214 E C120,0 | ENVIREQUIP | 24021419 | 1 | | | X | | 1 year | 2 WEEKS |
| 1 | AGI68021 | Mixer | ext coagulation mixer | BEARING 32305 A | ENVIREQUIP | 24323050 | 1 | | | X | | 1 year | 2 WEEKS |
| 1 | AGI68021 | Mixer | ext coagulation mixer | SEAL 80X140X13 AS MAT.:NBR | ENVIREQUIP | 25080120 | 1 | | | X | | 1 year | 2 WEEKS |
| 1 | AGI68021 | Mixer | ext coagulation mixer | SEAL 95X125X12 A MAT.:NBR | ENVIREQUIP | 25095030 | 1 | | | X | | 1 year | 2 WEEKS |
| 1 | AGI68021 | Mixer | ext coagulation mixer | SEAL 70X125X12 AS MAT.:NBR | ENVIREQUIP | 25070090 | 1 | | | X | | 1 year | 2 WEEKS |
| 1 | AGI68021 | Mixer | ext coagulation mixer | BORE PLUG 62X 8 SK42/4282 | ENVIREQUIP | 25806200 | 1 | | | X | | 1 year | 2 WEEKS |
| 1 | AGI68021 | Mixer | ext coagulation mixer | NILOS-RING 6214 AV | ENVIREQUIP | 25462141 | 1 | | | X | | 1 year | 2 WEEKS |
| 1 | AGI68021 | Mixer | ext coagulation mixer | O-RING 86X2,5 | ENVIREQUIP | 25508625 | 1 | | | X | | 1 year | 2 WEEKS |
| 1 | AGI68021 | Mixer | ext coagulation mixer | GASKET-ASSY CVR SK 4282 S=0.5 | ENVIREQUIP | 84297000 | 1 | | | X | | 1 year | 2 WEEKS |
| ***Coagulation mixer Size : 2 HP Model: EVGX4-2.0*** | | | ***REF: 5000220043_PI_0001_GEN_VWT SHEET 08*** | | | | | | | | | | |
| QTY | AGI68022 | Mixer | coagulation mixer | BEARING 22216 E C216,0 OIL GROOVE | ENVIREQUIP | 24222169 | 1 | | | X | | 1 year | 2 WEEKS |
| 1 | AGI68022 | Mixer | coagulation mixer | BEARING NUP 214 E C120,0 | ENVIREQUIP | 24021419 | 1 | | | X | | 1 year | 2 WEEKS |
| 1 | AGI68022 | Mixer | coagulation mixer | BEARING 32305 A | ENVIREQUIP | 24323050 | 1 | | | X | | 1 year | 2 WEEKS |
| 1 | AGI68022 | Mixer | coagulation mixer | SEAL 80X140X13 AS MAT.:NBR | ENVIREQUIP | 25080120 | 1 | | | X | | 1 year | 2 WEEKS |
| 1 | AGI68022 | Mixer | coagulation mixer | SEAL 95X125X12 A MAT.:NBR | ENVIREQUIP | 25095030 | 1 | | | X | | 1 year | 2 WEEKS |
| 1 | AGI68022 | Mixer | coagulation mixer | SEAL 70X125X12 AS MAT.:NBR | ENVIREQUIP | 25070090 | 1 | | | X | | 1 year | 2 WEEKS |
| 1 | AGI68022 | Mixer | coagulation mixer | BORE PLUG 62X 8 SK42/4282 | ENVIREQUIP | 25806200 | 1 | | | X | | 1 year | 2 WEEKS |
| 1 | AGI68022 | Mixer | coagulation mixer | NILOS-RING 6214 AV | ENVIREQUIP | 25462141 | 1 | | | X | | 1 year | 2 WEEKS |
| 1 | AGI68022 | Mixer | coagulation mixer | O-RING 86X2,5 | ENVIREQUIP | 25508625 | 1 | | | X | | 1 year | 2 WEEKS |
| 1 | AGI68022 | Mixer | coagulation mixer | GASKET-ASSY CVR SK 4282 S=0.5 | ENVIREQUIP | 84297000 | 1 | | | X | | 1 year | 2 WEEKS |
| ***Turbomix Mixer Size : 5 HP Model: EVGX4-5.0*** | | | ***REF: 5000220043_PI_0001_GEN_VWT SHEET 08*** | | | | | | | | | | |
| 1 | AGI68023 | Mixer | TURBOMIX | BEARING 22216 E C216,0 OIL GROOVE | ENVIREQUIP | 24222169 | 1 | | | X | | 1 year | 2 WEEKS |
| 1 | AGI68023 | Mixer | TURBOMIX | BEARING NUP 214 E C120,0 | ENVIREQUIP | 24021419 | 1 | | | X | | 1 year | 2 WEEKS |
| 1 | AGI68023 | Mixer | TURBOMIX | BEARING 32305 A | ENVIREQUIP | 24323050 | 1 | | | X | | 1 year | 2 WEEKS |
| 1 | AGI68023 | Mixer | TURBOMIX | SEAL 80X140X13 AS MAT.:NBR | ENVIREQUIP | 25080120 | 1 | | | X | | 1 year | 2 WEEKS |
| 1 | AGI68023 | Mixer | TURBOMIX | SEAL 95X125X12 A MAT.:NBR | ENVIREQUIP | 25095030 | 1 | | | X | | 1 year | 2 WEEKS |
| 1 | AGI68023 | Mixer | TURBOMIX | BORE PLUG 125X12 SK4282 SOLIDSHAFT | ENVIREQUIP | 25812500 | 1 | | | X | | 1 year | 2 WEEKS |
| 1 | AGI68023 | Mixer | TURBOMIX | BORE PLUG 62X 8 SK42/4282 | ENVIREQUIP | 25806200 | 1 | | | X | | 1 year | 2 WEEKS |
| 1 | AGI68023 | Mixer | TURBOMIX | NILOS-RING 6214 AV | ENVIREQUIP | 25462141 | 1 | | | X | | 1 year | 2 WEEKS |
| 1 | AGI68023 | Mixer | TURBOMIX | O-RING 86X2.5 | ENVIREQUIP | 25508625 | 1 | | | X | | 1 year | 2 WEEKS |
| 1 | AGI68023 | Mixer | TURBOMIX | GASKET-ASSY CVR SK 4282 S=0.5 | ENVIREQUIP | 84297000 | 1 | | | X | | 1 year | 2 WEEKS |
| ***Clarifier Scraper Model :*** | | | ***REF: 5000220043_PI_0001_GEN_VWT SHEET 08*** | | | | | | | | | | |
| 1 | TRM68003 | Scraper | Scraper motor | Oil seal W A40x80x8-NBR | SEW Eurodrive | 120820 | 2 | | | X | | < 2 year | 2 WEEKS |
| 1 | TRM68003 | Scraper | Scraper motor | Vent valve W4086 S-M10x1-CuZn-HEI | SEW Eurodrive | 130303 | 1 | | | X | | < 2 year | 2 WEEKS |
| 1 | TRM68003 | Scraper | Scraper motor | Oil seal W A17x30x7-NBR | SEW Eurodrive | 106062 | 1 | | | X | | < 2 year | 2 WEEKS |
| 1 | TRM68003 | Scraper | Scraper motor | Slip clutch AR71 to be adjust to 1.5NM | SEW Eurodrive | 1655264 | 1 | | | X | | < 2 year | 8 WEEKS |
| 1 | TRM68003 | Scraper | Scraper motor | Proximity switch W4852 M12x71-NO-2-2m | SEW Eurodrive | 1067117 | 1 | | | X | | < 2 year | 8 WEEKS |
| 1 | TRM68003 | Scraper | Scraper motor | Oil seal W BAOFSF16x28x6/7-NBR | SEW Eurodrive | 19193696 | 1 | | | X | | < 2 year | 2 WEEKS |
| 1 | TRM68003 | Scraper | Scraper motor | Oil seal DIN AS20x35x7-NBR-OF | SEW Eurodrive | 13241362 | 1 | | | X | | < 2 year | 2 WEEKS |
| 1 | TRM68003 | Scraper | Scraper motor | Oil seal DIN AS20x35x7-NBR | SEW Eurodrive | 106526 | 1 | | | X | | < 2 year | 2 WEEKS |
| 1 | TRM68003 | Scraper | Scraper motor | Oil seal W BASF62x90x12-NBR | SEW Eurodrive | 0017789X | 1 | | | X | | < 2 year | 2 WEEKS |
| 1 | TRM68003 | Scraper | Scraper motor | Vent valve W4086 M12x1,5-CuZn-HEI | SEW Eurodrive | 130311 | 1 | | | X | | < 2 year | 2 WEEKS |
| ***INSTRUMENTS*** | | | | | | | | | | | | | |
| 1 | IEPOTB200853 | Instrument | Clarified water Turbiditimeter (Solitax TS-Line sc) | TS-Line sc Sensor, 316SS w/wiper | HACH | LXV423.99.10100 | 1 | | | X | | > 5 years | 2 WEEKS |
| 1 | IECNGU301374 | Instrument | SC200 UNIVERSAL CONTROLLER: | SC200 UNIVERSAL CONTROLLER: | HACH | LXV404.99.00502 | 1 | | X | | | > 5 years | 2 WEEKS |
| 1 | AE-6801222 | Instrument | Clarified water Turbiditimeter (Solitax TS-Line sc) | Wiper blades, pk/5 | HACH | LZX050 | 1 | | X | | | < 1 year | STOCK |
| 1 | AE-6801222 | Instrument | Clarified water Turbiditimeter (Solitax TS-Line sc) | 800 NTU StablCal Formazin Calibration Standard. 500 ml | HACH | 2660549 | 1 | | | | X | < 1 year | 2 WEEKS |
| 1 | IESWLE201156 | Instrument | HIGH LEVEL SWITCH FLOAT | HIGH LEVEL SWITCH FLOAT | XYLEM | ENM-10 (13m) | 1 | | | | | < 2 year | 2 WEEKS |
| 1 | ST-413-393 | Instrument | RECIRCULATION LINE #1 PRESSURE GAUGE | RECIRCULATION LINE #1 PRESSURE GAUGE | ASHCROFT | 25-1009-SW-L-02L-60# + 04-310SS-02T-XCG | 1 | | | | | < 2 year | 2 WEEKS |
| 1 | ST-413-393 | Instrument | RECIRCULATION LINE #2 PRESSURE GAUGE | RECIRCULATION LINE #2 PRESSURE GAUGE | ASHCROFT | 25-1009-SW-L-02L-60# + 04-310SS-02T-XCG | 1 | | | | | < 2 year | 2 WEEKS |
| ***VALVES*** | | | | | | | | | | | | | |
| 1 | VABFDI364240 | VALVE | MANUAL DRAIN VALVE | VABFDI364240 | BRAY | Serie 31 - Lug// Série 31- à oreilles | 1 | | | | | 1 years | 1 WEEKS |
| 1 | VABFDI364240 | VALVE | MANUAL DRAIN VALVE | VABFDI364240 | BRAY | Serie 31 - Lug// Série 31- à oreilles | 1 | | | | | 2 years | 2 WEEKS |
| 1 | ST-312-663 | VALVE | RECIRCULATION LINE #1 ISOLATION VALVE | ST-312-663 | DURCO | 3''T4E11C11D033NW | 1 | | | | | 2 years | 2 WEEKS |
| 1 | ST-312-663 | VALVE | RECIRCULATION LINE #2 ISOLATION VALVE | ST-312-663 | DURCO | 3''T4E11C11D033NW | 1 | | | | | 2 years | 2 WEEKS |
| 1 | VABLPV200243 | VALVE | PRESSURE GAUGE #1 ISOLATION VALVE | VABLPV200243 | CHEMLINE | 21A005VC,TYPE21 | 1 | | | | | 2 years | 2 WEEKS |
| 1 | VABLPV200243 | VALVE | PRESSURE GAUGE #2 ISOLATION VALVE | VABLPV200243 | CHEMLINE | 21A005VC,TYPE21 | 1 | | | | | 2 years | 2 WEEKS |
| 1 | VABLPV200249 | VALVE | POLYMER ISOLATION VALVE | VABLPV200249 | CHEMLINE | 21A005EC,TYPE21 | 1 | | | | | 2 years | 2 WEEKS |
| 1 | VABLPV200249 | VALVE | POLYMER ISOLATION VALVE | VABLPV200249 | CHEMLINE | 21A005EC,TYPE21 | 1 | | | | | 2 years | 2 WEEKS |
| 1 | VABLPV200249 | VALVE | POLYMER ISOLATION VALVE | VABLPV200249 | CHEMLINE | 21A005EC,TYPE21 | 1 | | | | | 2 years | 2 WEEKS |
| 1 | VABFDI376221 | VALVE | MANUAL PARTIAL DRAIN VALVE | VABFDI376221 | BRAY | Serie 31 - Lug// Série 31- à oreilles | 1 | | | | | 2 years | 2 WEEKS |
| 1 | VABLPV200244 | VALVE | SAMPLE BALL VALVE INLET HYDROCYCLONE #1 | VABLPV200244 | CHEMLINE | 21A007VC,TYPE21 | 1 | | | | | 2 years | 2 WEEKS |
| 1 | VABLPV200244 | VALVE | SAMPLE BALL VALVE INLET HYDROCYCLONE #2 | VABLPV200244 | CHEMLINE | 21A007VC,TYPE21 | 1 | | | | | 2 years | 2 WEEKS |

| | | | | | | | | | | | | | |
|---|---|---|---|---|---|---|---|---|---|---|---|---|---|
| 1 | VABLPV200244 | VALVE | SAMPLE BALL VALVE OUTLET HYDROCYCLONE #1 | VABLPV200244 | CHEMLINE | 21A007VC,TYPE21 | 1 | | | | | 2 years | 2 WEEKS |
| 1 | VABLPV200244 | VALVE | SAMPLE BALL VALVE OUTLET HYDROCYCLONE #2 | VABLPV200244 | CHEMLINE | 21A007VC,TYPE21 | 1 | | | | | 2 years | 2 WEEKS |

| VWTCA 5000220043 AEM Meliadine, NU - BPC upgrade 2021 (CA_06_20_320229) | | | Doc #: | SPLS_0002_GEN |
|---|---|---|---|---|
| | | | Client's Doc number : | 1.07 |
| | | | SPARE PARTS LIST | Chlorination Reactor |
| PROJECT: | REV | BY | DATE | |
| 5000220043 | 1 | Silvere nicoulin | 2021-04-21 | |
| | 2 | Silvere nicoulin | 2021-06-18 | |
| | 3 | Chris El Khazaka | 2021-07-28 | |
| | | | | |
| | | | | |
| | Ref: 5000220043_PI_0001_GEN_VWT | | | |

VEOLIA Water Technologies

| EQT / QTY | ID Number | EQT TYPE | Equipment Name | SPARE PART DESCRIPTION | SUPPLIER | Supplier REFERENCE NUMBER | QTY | PART CRITICALITY | WEAR PART | SPARE PART | CONSUMABLE | MAINTENANCE FREQUENCY | LEAD TIME |
|---|---|---|---|---|---|---|---|---|---|---|---|---|---|
| ***Mixer Reactor*** | ***Size : 5 HP Model: EVGX6-5.0*** | | ***REF: 5000220043_PI_0001_GEN_VWT SHEET 05*** | | | | | | | | | | |
| 2 | 6SAGI6B012/13/14 | Mixer | Mixer Reactor | complete mixer | ENVIREQUIP | EVGX6 | 1 | | | | | | 6 WEEKS |
| 3 | 6SAGI6B012/13/14 | Mixer | Mixer Reactor | BEARING 23222 E C600.0 OIL GROOVE | ENVIREQUIP | 24232229 | 1 | | | X | | 1 year | 2 WEEKS |
| 3 | 6SAGI6B012/13/14 | Mixer | Mixer Reactor | BEARING NUP 220 E C250.0 | ENVIREQUIP | 24022019 | 1 | | | X | | 1 year | 2 WEEKS |
| 3 | 6SAGI6B012/13/14 | Mixer | Mixer Reactor | BEARING 22308 E C129.0 | ENVIREQUIP | 24223089 | 1 | | | X | | 1 year | 2 WEEKS |
| 3 | 6SAGI6B012/13/14 | Mixer | Mixer Reactor | BEARING NJ 407 C 75.0 | ENVIREQUIP | 24040720 | 1 | | | X | | 1 year | 2 WEEKS |
| 3 | 6SAGI6B012/13/14 | Mixer | Mixer Reactor | SEAL 110X200X13 AS MAT.:NBR | ENVIREQUIP | 25110030 | 1 | | | X | | 1 year | 2 WEEKS |
| 3 | 6SAGI6B012/13/14 | Mixer | Mixer Reactor | SEAL 140X180X12 A MAT.:NBR | ENVIREQUIP | 25140080 | 1 | | | X | | 1 year | 2 WEEKS |
| 3 | 6SAGI6B012/13/14 | Mixer | Mixer Reactor | SEAL 100X180X12 AS MAT.:NBR | ENVIREQUIP | 25100060 | 1 | | | X | | 1 year | 2 WEEKS |
| 3 | 6SAGI6B012/13/14 | Mixer | Mixer Reactor | BORE PLUG 90X 8 SK2282/6282/62 | ENVIREQUIP | 25809001 | 1 | | | X | | 1 year | 2 WEEKS |
| 3 | 6SAGI6B012/13/14 | Mixer | Mixer Reactor | NILOS-RING 6220 AV | ENVIREQUIP | 25462201 | 1 | | | X | | 1 year | 2 WEEKS |
| 3 | 6SAGI6B012/13/14 | Mixer | Mixer Reactor | NILOS-RING 6407 AV | ENVIREQUIP | 25464071 | 1 | | | X | | 1 year | 2 WEEKS |
| 3 | 6SAGI6B012/13/14 | Mixer | Mixer Reactor | O-RING 112X4 | ENVIREQUIP | 25511240 | 1 | | | X | | 1 year | 2 WEEKS |
| 3 | 6SAGI6B012/13/14 | Mixer | Mixer Reactor | GASKET-ASSY CVR SK 6282 S=0.5 | ENVIREQUIP | 86297000 | 1 | | | X | | 1 year | 2 WEEKS |
| 3 | 6SAGI6B012/13/14 | Mixer | Mixer Reactor | GASKET-HSG SK62 NOVA2300 | ENVIREQUIP | 52697060 | 1 | | | X | | 1 year | 2 WEEKS |
| ***INSTRUMENTS*** | | | | | | | | | | | | | |
| 1 | 6SAE6B01102 | Instrument | Clarified water Turbiditimeter (Solitax TS-Line sc) | TS-Line sc Sensor, 31655 w/wiper | HACH | LXV423.99.10100 | 1 | | | X | | > 5 years | 4 WEEKS |
| 1 | 6SAIT6B01102 | Instrument | SC200 UNIVERSAL CONTROLLER: | SC200 UNIVERSAL CONTROLLER: | HACH | LXV404.99.00502 | 1 | | | X | | > 5 years | 4 WEEKS |
| 1 | 6SAIT6B01102 | Instrument | Clarified water Turbiditimeter (Solitax TS-Line sc) | Wiper blades, pk/5 | HACH | LZX050 | 1 | | X | | | < 1 year | STOCK |
| ***VALVES*** | | | | | | | | | | | | | |
| 1 | 100-BF99-1109 | VALVE | MANUAL DRAIN VALVE | MANUAL DRAIN VALVE | BRAY | Serie 31 - Lug// Série 31- à oreilles | 1 | | | X | | 2 years | 2WEEKS |
| 1 | 100-BF99-1110 | VALVE | MANUAL DRAIN VALVE | MANUAL DRAIN VALVE | BRAY | Serie 31 - Lug// Série 31- à oreilles | 1 | | | X | | 2 years | 2 WEEKS |
| ***MISC*** | | | | | | | | | | | | | |
| 1 | 6SFAN6B005 | FAN | INLINE FAN | INLINE FAN | PLASTEC | JET10S54P | 1 | | | X | | 2 years | 2 WEEKS |
| ***TETHYS*** | | | | | | | | | | | | | |
| 1 | 6SAE6B01101 | Instrument | V-500, Unité de base, module 12 entrées/sorties, port US | UV-500, Unité de base, module 12 entrées/sorties, port USB | TETHYS | A13448 UV500 | 1 | | | | | > 5 years | 8 WEEKS |
| 1 | 6SAE6B01101 | Instrument | Pompe d'échantillonnage | Pompe d'échantillonnage | TETHYS | A17304 P-SPL-MO-2 | 1 | | | | | > 5 years | 4 WEEKS |
| 1 | 6SAE6B01101 | Instrument | UV-Visible spectrograph 180-750 nm | UV-Visible spectrograph 180-750 nm | TETHYS | A13442 SPECTRO500 | 1 | | | | | > 5 years | 4 WEEKS |
| 1 | 6SAE6B01101 | Instrument | "stripping system" pour UV abs phase gazeuse | "stripping system" pour UV abs phase gazeuse | TETHYS | A13444 STRIPS00 | 1 | | | | | > 5 years | 4 WEEKS |
| 1 | 6SAE6B01101 | Instrument | Module spectrograph ammonique | Module spectrograph ammonique | TETHYS | A13445 NH4-500 | 1 | | | | | > 5 years | 4 WEEKS |
| 1 | 6SAE6B01101 | Instrument | Module de sortie 4/20 mA | Module de sortie 4/20 mA | TETHYS | A11180 OUT4-20-500 | 1 | | | | | > 5 years | 4 WEEKS |
| 1 | 6SAE6B01101 | Instrument | module relais | module relais | TETHYS | A18295 Relay500 | 1 | | | | | > 5 years | 4 WEEKS |
| 1 | 6SAE6B01101 | Instrument | Pharmed tube 6.4x9.6mm- 0.75 m | Pharmed tube 6.4x9.6mm- 0.75 m | TETHYS | T-PHAR-1 | 1 | | | | | 2 years | 4 WEEKS |
| 1 | 6SAE6B01101 | Instrument | Tête de nettoyage pour pompe péristaltique UV-500 | Tête de nettoyage pour pompe péristaltique UV-500 | TETHYS | P-AC-HD-1 | 1 | | | | | 2 years | 4 WEEKS |
| 1 | 6SAE6B01101 | Instrument | "fitting" rouge avec O'ring pour " stripping pot" | "fitting" rouge avec O'ring pour " stripping pot" | TETHYS | F-STRI-1 | 1 | | | | | 2 years | 4 WEEKS |
| 1 | 6SAE6B01101 | Instrument | "fitting" rouge et blanc pour " stripping pot" | "fitting" rouge et blanc pour " stripping pot" | TETHYS | F-STRI-2 | 1 | | | | | 2 years | 4 WEEKS |
| 1 | 6SAE6B01101 | Instrument | Pompe à air | Pompe à air | TETHYS | P-AIR-2 | 1 | | | | | 2 years | 4 WEEKS |
| 1 | 6SAE6B01101 | Instrument | Tête pour pompe de réactifs (NhS, H2S) | Tête pour pompe de réactifs (NhS, H2S) | TETHYS | P-RGT-HD-1 | 1 | | | | | 2 years | 4 WEEKS |
| 1 | 6SAE6B01101 | Instrument | Quartz disque avec O' ring | Quartz disque avec O' ring | TETHYS | O-DISK-W | 1 | | | | | 2 years | 4 WEEKS |
| 1 | 6SAE6B01101 | Instrument | Check Valve | Check Valve | TETHYS | F-CHK-1 | 1 | | | | | 2 years | 4 WEEKS |

| VWTCA 5000220043 AEM Meliadine, NU - BPC upgrade 2021 (CA_06_20_320229) | | | Doc #: | SPLS_0002_GEN |
|---|---|---|---|---|
| | | | Client's Doc number : | 1.07 |
| | | | SPARE PARTS LIST | Dechlorination Reactor |
| PROJECT: | REV | BY | DATE | |
| 5000220043 | 1 | Silvere nicoulin | 2021-04-21 | |
| | 2 | Silvere nicoulin | 2021-06-18 | |
| | 3 | Chris El Khazaka | 2021-07-28 | |
| | | | | |
| | | | | |
| | Ref: 5000220043_PI_0001_GEN_VWT | | | |

| EQT / QTY | ID Number | EQT TYPE | Equipment Name | SPARE PART DESCRIPTION | SUPPLIER | Supplier REFERENCE NUMBER | QTY | PART CRITICALITY | WEAR PART | SPARE PART | CONSUMABLE | MAINTENANCE FREQUENCY | LEAD TIME |
|---|---|---|---|---|---|---|---|---|---|---|---|---|---|
| ***Mixer Reactor*** | ***Size : 5 HP Model: EVGX6-5.0*** | | ***REF: PID 5000220043-PI001_3 SHEET 06*** | | | | | | | | | | |
| 2 | 65AGI6B012/13/14 | Mixer | Mixer Reactor | complete mixer | ENVIREQUIP | EVGX6 | 1 | | | | | | 6 WEEKS |
| 3 | 65AGI6B015/16/17 | Mixer | Mixer Reactor | BEARING 23222 E C600,0 OIL GROOVE | ENVIREQUIP | 24232229 | 1 | | | X | | 1 year | 2 WEEKS |
| 3 | 65AGI6B015/16/17 | Mixer | Mixer Reactor | BEARING NUP 220 E C250,0 | ENVIREQUIP | 24022019 | 1 | | | X | | 1 year | 2 WEEKS |
| 3 | 65AGI6B015/16/17 | Mixer | Mixer Reactor | BEARING 22308 E C129,0 | ENVIREQUIP | 24223089 | 1 | | | X | | 1 year | 2 WEEKS |
| 3 | 65AGI6B015/16/17 | Mixer | Mixer Reactor | BEARING NJ 407 C 75,0 | ENVIREQUIP | 24040720 | 1 | | | X | | 1 year | 2 WEEKS |
| 3 | 65AGI6B015/16/17 | Mixer | Mixer Reactor | SEAL 110X200X13 AS MAT.:NBR | ENVIREQUIP | 25110030 | 1 | | | X | | 1 year | 2 WEEKS |
| 3 | 65AGI6B015/16/17 | Mixer | Mixer Reactor | SEAL 140X180X12 A MAT.:NBR | ENVIREQUIP | 25140080 | 1 | | | X | | 1 year | 2 WEEKS |
| 3 | 65AGI6B015/16/17 | Mixer | Mixer Reactor | SEAL 100X180X12 AS MAT.:NBR | ENVIREQUIP | 25100060 | 1 | | | X | | 1 year | 2 WEEKS |
| 3 | 65AGI6B015/16/17 | Mixer | Mixer Reactor | BORE PLUG 90X 8 SK2282/6282/62 | ENVIREQUIP | 25809001 | 1 | | | X | | 1 year | 2 WEEKS |
| 3 | 65AGI6B015/16/17 | Mixer | Mixer Reactor | NILOS-RING 6220 AV | ENVIREQUIP | 25462201 | 1 | | | X | | 1 year | 2 WEEKS |
| 3 | 65AGI6B015/16/17 | Mixer | Mixer Reactor | NILOS-RING 6407 AV | ENVIREQUIP | 25464071 | 1 | | | X | | 1 year | 2 WEEKS |
| 3 | 65AGI6B015/16/17 | Mixer | Mixer Reactor | O-RING 112X4 | ENVIREQUIP | 25511240 | 1 | | | X | | 1 year | 2 WEEKS |
| 3 | 65AGI6B015/16/17 | Mixer | Mixer Reactor | GASKET-ASSY CVR SK 6282 S=0.5 | ENVIREQUIP | 86297000 | 1 | | | X | | 1 year | 2 WEEKS |
| 3 | 65AGI6B015/16/17 | Mixer | Mixer Reactor | GASKET-HSG SK62 NOVA2300 | ENVIREQUIP | 52697060 | 1 | | | X | | 1 year | 2 WEEKS |
| | | | | | | | | | | | | | |
| ***INSTRUMENTS*** | | | ***REF: 5000220043_PI_0001_GEN_VWT SHEET 06*** | | | | | | | | | | |
| 1 | 65LSHH6B01131 | Instrument | HIGH LEVEL SWITCH FLOAT | HIGH LEVEL SWITCH FLOAT | XYLEM | ENM -10 (13m) | 1 | X | | X | | < 2 year | 2 WEEKS |
| ***VALVES*** | | | | | | | | | | | | | |
| 1 | 100-BF99-1113 | VALVE | MANUAL DRAIN VALVE | MANUAL DRAIN VALVE | BRAY | Serie 31 - Lug// Série 31- à oreilles | 1 | | | | | 2 years | 2 WEEKS |
| 1 | 100-BF99-1114 | VALVE | MANUAL DRAIN VALVE | MANUAL DRAIN VALVE | BRAY | Serie 31 - Lug// Série 31- à oreilles | 1 | | | | | 2 years | 2 WEEKS |

| VWTCA 5000220043 AEM Meliadine, NU - BPC upgrade 2021 (CA_06_20_320229) | | | Doc #: | SPLS_0002_GEN |
|---|---|---|---|---|
| | | | Client's Doc number : | 1.07 |
| | | | SPARE PARTS LIST | Sludge Spiltter Box |
| PROJECT: | REV | BY | DATE | |
| 5000220043 | 1 | Silvere nicoulin | 2021-04-21 | |
| | 2 | Silvere nicoulin | 2021-06-18 | |
| | 3 | Chris El Khazaka | 2021-07-28 | |
| | | | | |
| | | | | |
| | Ref: 5000220043_PI_0001_GEN_VWT | | | |

| EQT / QTY | ID Number | EQT TYPE | Equipment Name | SPARE PART DESCRIPTION | SUPPLIER | Supplier REFERENCE NUMBER | QTY | PART CRITICALITY | WEAR PART | SPARE PART | CONSUMABLE | MAINTENANCE FREQUENCY | LEAD TIME |
|---|---|---|---|---|---|---|---|---|---|---|---|---|---|
| ***Sludge extraction Pump - SIZE : 3" X 3" MATERIAL : Natural rubber*** | | | ***REF: 5000220043_PI_0001_GEN_VWT SHEET 09*** | | | | | | | | | | |
| 3 | PSR68007A/PSR68007B/PSR68007C | Pump | sludge extraction pump | *complete pump* | | | | | | | | | |
| 3 | PSR68007A/PSR68007B/PSR68007C | Pump | sludge extraction pump | Dry Gland repair kit | *McLanahan* | 9110003321 | 1 | | | X | | < 2 years | 6 WEEKS |
| 3 | PSR68007A/PSR68007B/PSR68007C | Pump | sludge extraction pump | Suction Side Liner c/w Drain Plug | *McLanahan* | 9110003106 | 1 | | | X | | < 2 years | 6 WEEKS |
| 3 | PSR68007A/PSR68007B/PSR68007C | Pump | sludge extraction pump | Gland Side Liner | *McLanahan* | 9110003109 | 1 | | | X | | < 2 years | 6 WEEKS |
| 3 | PSR68007A/PSR68007B/PSR68007C | Pump | sludge extraction pump | Impeller | *McLanahan* | 9110003110 | 1 | | | X | | < 2 years | 6 WEEKS |
| 3 | PSR68007A/PSR68007B/PSR68007C | Pump | sludge extraction pump | BEARING REPAIR KIT, 3 X 3 PUMP | *McLanahan* | 9110003225 | 1 | | | X | | < 2 years | 6 WEEKS |
| 3 | PSR68007A/PSR68007B/PSR68007C | Pump | sludge extraction pump | V-BELT, 5VX530 | *McLanahan* | 2939150S3 | 1 | | | | | < 2 years | 2 WEEKS |
| 3 | PSR68007A/PSR68007B/PSR68007C | Pump | sludge extraction pump | KEY, SHAFT | *McLanahan* | 9110003215 | 1 | | | X | | < 2 years | 2 WEEKS |
| ***INSTRUMENTS*** | | | | | | | | | | | | | |
| 2 | AE-6801417/AE-6801427 | Instrument | Clarified water Turbiditimeter (Solitax TS-Line sc) | TS-Line sc Sensor, 31655 w/wiper | HACH | LXV423.99.10100 | 1 | | | X | | > 5 years | 4 WEEKS |
| 2 | AIT-6801417/AIT-6801417 | Instrument | SC200 UNIVERSAL CONTROLLER: | SC200 UNIVERSAL CONTROLLER: | HACH | LXV404.99.00502 | 1 | | | X | | > 5 years | 4 WEEKS |
| 1 | AE-6801222 | Instrument | Clarified water Turbiditimeter (Solitax TS-Line sc) | Wiper blades, pk/5 | HACH | LZX050 | 1 | | X | | | < 1 year | STOCK |
| 1 | AE-6801222 | Instrument | Clarified water Turbiditimeter (Solitax TS-Line sc) | 800 NTU StabiCal Formazin Calibration Standard. 500 ml | HACH | 2660549 | 1 | | | | X | < 1 year | 2 WEEKS |
| 1 | 6SPI6801416 | Instrument | sludge splitter tank #1 PRESSURE GAUGE | sludge splitter tank #1 PRESSURE GAUGE | ASHCROFT | 2S-1009-SW-L-02L-60# + 04-310SS-02T-XCG | 1 | | | | | < 2 year | 2 WEEKS |
| 1 | 6SPI6801426 | Instrument | sludge splitter tank #2 PRESSURE GAUGE | sludge splitter tank #2 PRESSURE GAUGE | ASHCROFT | 2S-1009-SW-L-02L-60# + 04-310SS-02T-XCG | 1 | | | | | < 2 year | 2 WEEKS |
| ***VALVES*** | | | | | | | | | | | | | |
| 1 | 100-PG99-1405 | VALVE | PUMP #1 INLET ISOLATION VALVE | PUMP #1 INLET ISOLATION VALVE | DURCO | 4"T4E11C11D033NW | 1 | | | | | 2 years | 2 WEEKS |
| 1 | 100-PG99-1407 | VALVE | PUMP #1 OUTLET ISOLATION VALVE | PUMP #1 OUTLET ISOLATION VALVE | DURCO | 4"T4E11C11D033NW | 1 | | | | | 2 years | 2 WEEKS |
| 1 | 100-PG99-1418 | VALVE | PUMP #2 INLET ISOLATION VALVE | PUMP #2 INLET ISOLATION VALVE | DURCO | 4"T4E11C11D033NW | 1 | | | | | 2 years | 2 WEEKS |
| 1 | 100-PG99-1420 | VALVE | PUMP #2 OUTLET ISOLATION VALVE | PUMP #2 OUTLET ISOLATION VALVE | DURCO | 4"T4E11C11D033NW | 1 | | | | | 2 years | 2 WEEKS |
| 1 | 100-PV99-1404 | VALVE | RECIRCULATION ISOLATION VALVE | RECIRCULATION ISOLATION VALVE | DURCO | 4"T4E11C11D033NW | 1 | | | | | 2 years | 2 WEEKS |
| 1 | 100-PV99-1417 | VALVE | RECIRCULATION ISOLATION VALVE | RECIRCULATION ISOLATION VALVE | DURCO | 4"T4E11C11D033NW | 1 | | | | | 2 years | 2 WEEKS |
| 1 | 100-CK99-1406 | VALVE | PUMP #1 OUTLET CHECK VALVE | PUMP #1 OUTLET CHECK VALVE | CHEMLINE | BCA040ES | 1 | | | | | 2 years | 2 WEEKS |
| 1 | 100-CK99-1419 | VALVE | PUMP #2 OUTLET CHECK VALVE | PUMP #2 OUTLET CHECK VALVE | CHEMLINE | BCA040ES | 1 | | | | | 2 years | 2 WEEKS |

| VWTCA 5000220043 AEM Meliadine, NU - BPC upgrade 2021 (CA_06_20_320229) | | | Doc #: | | SPLS_0002_GEN |
|---|---|---|---|---|---|
| | | | Client's Doc number : | | 1.07 |
| | | | SPARE PARTS LIST | Actiflo | Sludge Tank |
| PROJECT: | REV | BY | DATE | | |
| 5000220043 | 1 | Silvere nicoulin | 2021-04-21 | | |
| | 2 | Silvere nicoulin | 2021-06-18 | | |
| | 3 | Chris El Khazaka | 2021-07-28 | | |
| | | | | | |
| | | | | | |
| | Ref: 5000220043_PI_0001_GEN_VWT | | | | |

| EQT / QTY | ID Number | EQT TYPE | Equipment Name | SPARE PART DESCRIPTION | VW item # | SUPPLIER | Supplier REFERENCE NUMBER | QTY | PART CRITICALITY | WEAR PART | SPARE PART | CONSUMABLE | MAINTENANCE FREQUENCY | LEAD TIME |
|---|---|---|---|---|---|---|---|---|---|---|---|---|---|---|
| *Sludge tank Mixer* | *Size : 3 HP Model: EVGX4-3.0* | | *REF: 5000220043_PI_0001_GEN_VWT SHEET 10* | | | | | | | | | | | |
| 1 | AGI68023 | Mixer | Mixer Reactor | complete mixer | TO COME | ENVIREQUIP | EVGX4 | 1 | | | | | | 6 WEEKS |
| 1 | AGI68024 | Mixer | sludge tank mixer | BEARING 22216 E C216.0 OIL GROOVE | TO COME | ENVIREQUIP | 24222169 | 1 | | | X | | 1 year | 2 WEEKS |
| 1 | AGI68024 | Mixer | sludge tank mixer | BEARING NUP 214 E C120.0 | TO COME | ENVIREQUIP | 24021419 | 1 | | | X | | 1 year | 2 WEEKS |
| 1 | AGI68024 | Mixer | sludge tank mixer | BEARING 32305 A | TO COME | ENVIREQUIP | 24323050 | 1 | | | X | | 1 year | 2 WEEKS |
| 1 | AGI68024 | Mixer | sludge tank mixer | SEAL 80X140X13 AS MAT.:NBR | TO COME | ENVIREQUIP | 25080120 | 1 | | | X | | 1 year | 2 WEEKS |
| 1 | AGI68024 | Mixer | sludge tank mixer | SEAL 95X125X12 A MAT.:NBR | TO COME | ENVIREQUIP | 25095030 | 1 | | | X | | 1 year | 2 WEEKS |
| 1 | AGI68024 | Mixer | sludge tank mixer | SEAL 70X125X12 AS MAT.:NBR | TO COME | ENVIREQUIP | 25070090 | 1 | | | X | | 1 year | 2 WEEKS |
| 1 | AGI68024 | Mixer | sludge tank mixer | BORE PLUG 6ZX 8 SK42/4282 | TO COME | ENVIREQUIP | 25806200 | 1 | | | X | | 1 year | 2 WEEKS |
| 1 | AGI68024 | Mixer | sludge tank mixer | NILOS-RING 6214 AV | TO COME | ENVIREQUIP | 25462141 | 1 | | | X | | 1 year | 2 WEEKS |
| 1 | AGI68024 | Mixer | sludge tank mixer | O-RING 86X2.5 | TO COME | ENVIREQUIP | 25086625 | 1 | | | X | | 1 year | 2 WEEKS |
| 1 | AGI68024 | Mixer | sludge tank mixer | GASKET-ASSY CUR SK 4282 S=0.5 | TO COME | ENVIREQUIP | 84297000 | 1 | | | X | | 1 year | 2 WEEKS |

| | | | | |
|---|---|---|---|---|
| VWTCA 5000220043 AEM Meliadine, NU - BPC upgrade 2021 (CA_06_20_320229) | | | Doc #: | SPLS_0002_GEN |
| | | | Client's Doc number : | 1.07 |
| | | | SPARE PARTS LIST | Discfilter |
| PROJECT: | REV | BY | DATE | |
| 5000220043 | 1 | Silvere nicoulin | 2021-04-21 | |
| | 2 | Silvere nicoulin | 2021-06-18 | |
| | 3 | Chris El Khazaka | 2021-07-28 | |
| | | | | |
| | | | | |
| | Ref: 5000220043_PI_0001_GEN_VWT | | | |

VEOLIA Water Technologies

| EQT / QTY | ID Number | EQT TYPE | Equipment Name | SPARE PART DESCRIPTION | SUPPLIER | Supplier REFERENCE NUMBER | QTY | PART CRITICALITY | WEAR PART | SPARE PART | CONSUMABLE | MAINTENANCE FREQUENCY | LEAD TIME |
|---|---|---|---|---|---|---|---|---|---|---|---|---|---|
| ***discfilter spare parts*** | | | ***REF: 5000220043_PI_0001_GEN_VWT SHEET 11*** | | | | | | | | | | |
| 1 | FIL68001 | FILTER | discfilter | Slide bearing for drum | *Hydrotech* | 1008030 | 1 | | | X | | < 2 years | 6 WEEKS |
| 1 | FIL68001 | FILTER | discfilter | Rubber sealing for inlet shaft | *Hydrotech* | 10012535 | 1 | | | X | | < 2 years | 6 WEEKS |
| 1 | FIL68001 | FILTER | discfilter | V-sealing, V-180A | *Hydrotech* | 1010585 | 1 | | | X | | < 2 years | 6 WEEKS |
| 1 | FIL68001 | FILTER | discfilter | Axial bearing | *Hydrotech* | 1008139 | 1 | | | X | | < 2 years | 6 WEEKS |
| 1 | FIL68001 | FILTER | discfilter | Rubber sealing for outlet shaft | *Hydrotech* | 1008493 | 1 | | | X | | < 2 years | 6 WEEKS |
| 1 | FIL68001 | FILTER | discfilter | Sprocket wheel on motor Z=14 | *Hydrotech* | 1019684 | 1 | | | X | | < 2 years | 6 WEEKS |
| 1 | FIL68001 | FILTER | discfilter | Excenter wheel for backwash bar | *Hydrotech* | 22046.POM | 1 | | | X | | < 2 years | 6 WEEKS |
| 1 | FIL68001 | FILTER | discfilter | Manometer | *Hydrotech* | 1010967 | 1 | | | X | | < 2 years | 6 WEEKS |
| 1 | FIL68001 | FILTER | discfilter | Bearing for backwash bar | *Hydrotech* | 1000808 | 2 | | | X | | < 2 years | 6 WEEKS |
| 1 | FIL68001 | FILTER | discfilter | Swivel connection, 2" | *Hydrotech* | 1012730 | 1 | | | X | | < 2 years | 6 WEEKS |
| 1 | FIL68001 | FILTER | discfilter | Strainer cartridge, 200 µm | *Hydrotech* | 1006903 | 1 | | | X | | < 2 years | 6 WEEKS |
| 1 | FIL68001 | FILTER | discfilter | Rubber lip seal on drum inlet | *Hydrotech* | 1025398 | 1 | | | X | | < 2 years | 6 WEEKS |
| 1 | FIL68001 | FILTER | discfilter | Guidingblocks Drum, T=8 mm | *Hydrotech* | 1008141 | 2 | | | X | | < 2 years | 6 WEEKS |
| 1 | FIL68001 | FILTER | discfilter | Nozzle Hydrotec Blue w. sealing. Flat fan nozzle | *Hydrotech* | 1024919 | 1 | | | X | | < 2 years | 6 WEEKS |
| 1 | FIL68001 | FILTER | discfilter | 10 µm PE HPF22 PPG, Hydrotech Filter panel w. plastic frame and gasket | *Hydrotech* | 1025463 | 1 | | | X | | < 2 years | 6 WEEKS |
| 1 | FIL68001 | FILTER | discfilter | Chain HT78 53 links | *Hydrotech* | 1026690 | 1 | | | X | | < 2 years | 6 WEEKS |
| 1 | FIL68001 | FILTER | discfilter | Sprocket wheel drum 24/26 | *Hydrotech* | 1013116 | 1 | | | X | | < 2 years | 6 WEEKS |
| 1 | FIL68001 | FILTER | discfilter | Drive unit S77DRN90S4 M1A 330/575V 60Hz IE3 | *Hydrotech* | S-1026683 | 1 | | | X | | < 2 years | 6 WEEKS |
| 1 | FIL68001 | FILTER | discfilter | Pump CRT 16-5 APAE-DQQE, 3x575V 60H | *Hydrotech* | S-1026684 | 1 | | | X | | < 2 years | 6 WEEKS |
| 1 | 50-BA99-1502 | VALVE | discfilter | MANUAL DRAIN VALVE | to come | to come | 1 | | | X | | | |
| 1 | 65LSH6801502 | INSTRUMENTS | discfilter | HIGH LEVEL SWITCH | to come | to come | 1 | | | X | | | |
| 1 | 65LSHH6801502 | INSTRUMENTS | discfilter | HIGH HIGH LEVEL SWITCH | to come | to come | 1 | | | X | | | |
| 1 | 65PI6801511 | INSTRUMENTS | discfilter | PUMP #1 OUTLET PRESSURE INDICATOR | to come | to come | 1 | | | X | | | |
| 1 | 65PSHI6801512 | INSTRUMENTS | discfilter | PUMP #1 OUTLET LOW PRESSURE SWITCH | to come | to come | 1 | | | X | | | |
| 1 | 65PSR6800BA | PUMP | discfilter | DISCFILTER BACKWASH WATER PUMP #1 | to come | to come | 1 | | | X | | | |
| 1 | 65PSR6800BB | PUMP | discfilter | DISCFILTER BACKWASH WATER PUMP #2 | to come | to come | 1 | | | X | | | |
| 1 | dd-BA99-1503 | VALVE | discfilter | PUMP #1 RECIRUCLATION LINE ISOLATION VALVE | to come | to come | 1 | | | X | | | |
| 1 | dd-BA99-1504 | VALVE | discfilter | PUMP #2 RECIRUCLATION LINE ISOLATION VALVE | to come | to come | 1 | | | X | | | |
| 1 | dd-BA99-1505 | VALVE | discfilter | PUMP #1 PRESSURE INDICATOR ISOLATION VALVE | to come | to come | 1 | | | X | | | |
| 1 | dd-BA99-1506 | VALVE | discfilter | PUMP #2 PRESSURE INDICATOR ISOLATION VALVE | to come | to come | 1 | | | X | | | |
| 1 | dd-ST99-1501 | | discfilter | PUMPS STRAINER | to come | to come | 1 | | | X | | | |
| ***cleaning unit*** | | | ***REF: 5000220043_PI_0001_GEN_VWT SHEET 11*** | | | | | | | | | | |
| 1 | dd-BA99-1513 | Instrument | Cleaningunit | PRESSURE GAUGE ON CHEMICAL CLEANING UNIT | CHEMLINE | SGA005-002PG | 1 | | | X | | > 5 years | 4 WEEKS |
| 1 | dd-BA99-1507 | VALVE | Cleaningunit | ISOLATION CHEMICAL CLEANING OUTLET | CHEMLINE | 21A007EC | 1 | | | | | 2 years | 2 WEEKS |
| 1 | dd-BA99-1508 | VALVE | Cleaningunit | CHEMICAL CONNECTION FOR CLEANING UNIT | CHEMLINE | 21A007EC | 1 | | | | | 2 years | 2 WEEKS |
| 1 | dd-BA99-1509 | VALVE | Cleaningunit | ISOLATION TO PUMP ON CHEMICAL CLEANING UNIT | CHEMLINE | 21A007EC | 1 | | | | | 2 years | 2 WEEKS |
| 1 | dd-BA99-1510 | VALVE | Cleaningunit | WATER SUPPLY ISOLATION ON CHEMICAL CLEANING UNIT | CHEMLINE | 21A010EC | 1 | | | | | 2 years | 2 WEEKS |
| 1 | dd-BA99-1511 | VALVE | Cleaningunit | RECIRCULATION ISOLATION ON CHEMICAL CLEANING UNIT | CHEMLINE | 21A010EC | 1 | | | | | 2 years | 2 WEEKS |
| 1 | dd-BA99-1512 | VALVE | Cleaningunit | BACKPRESSURE VALVE ON CHEMICAL CLEANING UNIT | CHEMLINE | 3/4" sb-12 | 1 | | | | | 2 years | 2 WEEKS |
| 1 | P 110 | PUMP | Cleaningunit | PUMP | IWAKI | MK 403H | 1 | | | X | | < 2 years | 6 WEEKS |

| VWTCA 5000220043 AEM Meliadine, NU - BPC upgrade 2021 (CA_06_20_320229) | | | Doc #: | SPLS_0002_GEN |
|---|---|---|---|---|
| | | | Client's Doc number : | 1.07 |
| | | | SPARE PARTS LIST | Instrument |
| PROJECT: | REV | BY | DATE | |
| 5000220043 | 1 | Silvere nicoulin | 2021-04-21 | |
| | 2 | Silvere nicoulin | 2021-06-18 | |
| | 3 | Chris El Khazaka | 2021-07-28 | |
| | | | | |
| | | | | |
| | Ref: 5000220043_PI_0001_GEN_VWT | | | |

| EQT / QTY | ID Number | EQT TYPE | Equipment Name | SPARE PART DESCRIPTION | SUPPLIER | Supplier REFERENCE NUMBER | QTY | PART CRITICALITY | WEAR PART | SPARE PART | CONSUMABLE | MAINTENANCE FREQUENCY | LEAD TIME |
|---|---|---|---|---|---|---|---|---|---|---|---|---|---|
| ***INSTRUMENTS*** | | | **REF: 5000220043_PI_0001_GEN_VWT SHEET 12** | | | | | | | | | | |
| 1 | 6SAE68D1603 | Instrument | TREATED WATER TSS/TURBISITY SENSOR | TS-Line sc Sensor, 316SS w/wiper | HACH | LXV423.99.10100 | 1 | | | X | | > 5 years | 4 WEEKS |
| 1 | 6SAIT68D1603 | Instrument | TREATED WATER TSS/TURBISITY TRANSMITTER | Wiper blades, pk/5 | HACH | LZX050 | 1 | | X | | | > 5 years | 2 WEEKS |
| 1 | AE-68D1222 | Instrument | Clarified water Turbiditimeter (Solitax TS-Line sc) | 800 NTU StabiCal Formazin Calibration Standard. 500 ml | HACH | 2660549 | 1 | | | | X | < 1 year | 2 WEEKS |
| 1 | 6SAIT68D1604 | Instrument | TREATED WATER TOTAL CHLORINE ANALYZER (Ami Codes II TC) | Reagent set Oxycon On-line DPD, 8 sets | SWAN | A-85.410.120 | 2 | | | | X | 4-6 weeks based on meas. Interval | 2 WEEKS |
| 1 | 6SAIT68D1604 | Instrument | TREATED WATER TOTAL CHLORINE ANALYZER (Ami Codes II TC) | Reagent set Oxycon On-line KI, 8 sets | SWAN | A-85.419.200 | 2 | | | | X | 4-6 weeks based on meas. Interval | 2 WEEKS |
| 1 | 6SAIT68D1604 | Instrument | TREATED WATER TOTAL CHLORINE ANALYZER (Ami Codes II TC) | Verification kit, AMI photometer | SWAN | A-85.151.100 | 1 | | | X | | 1 month | 4 WEEKS |
| 1 | 6SAIT68D1604 | Instrument | TREATED WATER TOTAL CHLORINE ANALYZER (Ami Codes II TC) | Cleaning set for Trides flow cell | SWAN | A-83.590.030 | 1 | | | X | | as needed | 4 WEEKS |
| 1 | 6SAIT68D1604 | Instrument | TREATED WATER TOTAL CHLORINE ANALYZER (Ami Codes II TC) | Spare part set for Codes-II flow cell and photometer | SWAN | A-83.590.036 | 1 | | | X | | 1 year | 4 WEEKS |
| 1 | 6SAIT68D1604 | Instrument | TREATED WATER TOTAL CHLORINE ANALYZER (Ami Codes II TC) | Spare water filter for flow cell | SWAN | A-82.819.010 | 1 | | | X | | 1 year | 4 WEEKS |
| 1 | 6SAIT68D1604 | Instrument | TREATED WATER TOTAL CHLORINE ANALYZER (Ami Codes II TC) | Tubing kit for AMI photometers | SWAN | A-86.170.040 | 1 | | X | | | 1 year | 4 WEEKS |
| 1 | 6SAIT68D1604 | Instrument | TREATED WATER TOTAL CHLORINE ANALYZER (Ami Codes II TC) | Tubing kit reagent AMI Codes-II | SWAN | A-86.191.890 | 1 | | X | | | 1 year | 4 WEEKS |
| 1 | 6SAIT68D1604 | Instrument | TREATED WATER TOTAL CHLORINE ANALYZER (Ami Codes II TC) | Tube 2.29mm in frame for PeriClip pump | SWAN | A-86.191.151 | 1 | | X | | | 1 year | 4 WEEKS |
| 1 | 6SAIT68D1604 | Instrument | TREATED WATER TOTAL CHLORINE ANALYZER (Ami Codes II TC) | Photometer AMI Codes | SWAN | A-87.531.100 | 1 | | | X | | > 3-5 years | 4 WEEKS |
| 1 | 6SAIT68D1604 | Instrument | TREATED WATER TOTAL CHLORINE ANALYZER (Ami Codes II TC) | Swansensor Bubble AMI | SWAN | A-87.932.020 | 1 | | | X | | > 3-5 years | 4 WEEKS |

| VWTCA 5000220043 AEM Meliadine, NU - BPC upgrade 2021 (CA_06_20_320229) | | | Doc #: | SPLS_0002_GEN |
|---|---|---|---|---|
| | | | Client's Doc number : | 1.07 |
| | | | SPARE PARTS LIST | Backwash Tank |
| PROJECT: | REV | BY | DATE | |
| 5000220043 | 1 | Silvere nicoulin | 2021-04-21 | |
| | 2 | Silvere nicoulin | 2021-06-18 | |
| | 3 | Chris El Khazaka | 2021-07-28 | |
| | | | | |
| | | | | |
| | Ref: 5000220043_PI_0001_GEN_VWT | | | |

| EQT / QTY | ID Number | EQT TYPE | Equipment Name | SPARE PART DESCRIPTION | SUPPLIER | Supplier REFERENCE NUMBER | QTY | PART CRITICALITY | WEAR PART | SPARE PART | CONSUMABLE | MAINTENANCE FREQUENCY | LEAD TIME |
|---|---|---|---|---|---|---|---|---|---|---|---|---|---|
| ***REF: 5000220043_PI_0001_GEN_VWT SHEET 13*** | | | | | | | | | | | | | |
| 1 | 65PSR68009A | Pump | Pump | BACKWASH WASTEWATER TANK | MUNSCH | NP65-50-160 | 1 | | | X | | 5 years | 6 WEEKS |
| 1 | 65PSR68009B | Pump | Pump | BACKWASH WASTEWATER TANK | MUNSCH | NP65-50-160 | 1 | | | X | | 5 years | 6 WEEKS |
| 1 | 65PSR68009A/B | Pump | Pump | O-Ring at Pump Casing | MUNSCH | NP-B-65-50-160 - 412.1 | 4 | | | X | | 2 years | 6 WEEKS |
| 1 | 65PSR68009B | Pump | Pump | Repair Kit Mechanical Seal | MUNSCH | NP-B-65-50-160 - 523 | 2 | | | X | | 2years | 6 WEEKS |
| 1 | 65PSR68009B | Pump | Pump | Impeller | MUNSCH | NP-B-65-50-160 - 940.1 | 2 | | | X | | 2 years | 6 WEEKS |

| VWTCA 5000220043 AEM Meliadine, NU - BPC upgrade 2021 (CA_06_20_320229) | | | Doc #: | SPLS_0003_GEN |
|---|---|---|---|---|
| | | | Client's Doc number : | 1.07 |
| | | | SPARE PARTS LIST | Hydracarb |
| PROJECT: | REV | BY | DATE | |
| 5000220043 | 1 | Silvere nicoulin | 2021-04-21 | |
| | 2 | Silvere nicoulin | 2021-06-09 | |
| | 3 | Chris El Khazaka | 2021-07-28 | |
| | | | | |
| | | | | |
| | | Ref: 5000220043_PI_0001_GEN_VWT | | |

| EQT / QTY | ID Number | EQT TYPE | Equipment Name | SPARE PART DESCRIPTION | SUPPLIER | Supplier REFERENCE NUMBER | QTY | PART CRITICALITY | WEAR PART | SPARE PART | CONSUMABLE | MAINTENANCE FREQUENCY | LEAD TIME |
|---|---|---|---|---|---|---|---|---|---|---|---|---|---|
| | | | *REF: 5000220043_PI_0001_GEN_VWT SHEET 14 & 15* | | | | | | | | | | |
| ***VALVES*** | | | | | | | | | | | | | |
| ***1*** | 15-BA99-1604 | VALVE | PRESSURE GAUGE ISOLATION VALVE | PRESSURE GAUGE ISOLATION VALVE | PMP | A201 (1/2") | 1 | | | | | 1 years | 1 WEEKS |
| 1 | 15-BA99-1608 | VALVE | PRESSURE GAUGE ISOLATION VALVE | PRESSURE GAUGE ISOLATION VALVE | PMP | A201 (1/2") | 1 | | | | | 2 years | 2 WEEKS |
| 1 | 15-BA99-1611 | VALVE | AIR ISOLATION VALVE | AIR ISOLATION VALVE | PMP | A201 (1/2") | 1 | | | | | 2 years | 2 WEEKS |
| 1 | 15-BA99-1613 | VALVE | AIR ISOLATION VALVE | AIR ISOLATION VALVE | PMP | A201 (1/2") | 1 | | | | | 2 years | 2 WEEKS |
| 1 | 15-GL99-1606 | VALVE | WASHDOWN LINE GLOBE VALVE | WASHDOWN LINE GLOBE VALVE | CHEMLINE | GVA015ET | 1 | | | | | 2 years | 2 WEEKS |
| 1 | 15-RV99-1612 | VALVE | AIR PRESSURE REGULATING VALVE | AIR PRESSURE REGULATING VALVE | WATTS | R-119-04C | 1 | | | | | 2 years | 2 WEEKS |
| 1 | 40-BA99-1605 | VALVE | WASHDOWN LINE ISOLATION VALVE | WASHDOWN LINE ISOLATION VALVE | CHEMLINE | 21A015EC | 1 | | | | | 2 years | 2 WEEKS |
| 1 | 50-BA99-1601 | VALVE | SERVICE WATER INLET ISOLATION VALVE | SERVICE WATER INLET ISOLATION VALVE | CHEMLINE | 21A020EC,TYPE21 | 1 | | | | | 2 years | 2 WEEKS |
| 1 | 50-BA99-1603 | VALVE | SERVICE WATER ISOLATION VALVE | SERVICE WATER ISOLATION VALVE | CHEMLINE | 21A020EC,TYPE21 | 1 | | | | | 2 years | 2 WEEKS |
| 1 | 65-CK99-1608 | VALVE | ACTIVATED CARBON SLURRY CHECK VALVE | ACTIVATED CARBON SLURRY CHECK VALVE | TIDEFLEX | SERIE 33 -2.5" / GUM RUBBER | 1 | | | | | 2 years | 2 WEEKS |
| 1 | 65FY6801602 | VALVE | SERVICE WATER INLET SOLENOID VALVE | SERVICE WATER INLET SOLENOID VALVE | ASCO | 8210G100 -120 VAC | 1 | | | | | 2 years | 2 WEEKS |
| 1 | 65FY6801613 | VALVE | AIR SOLENOIDE VALVE | AIR SOLENOIDE VALVE | BRAY | S63 | 1 | | | | | 2 years | 2 WEEKS |
| ***1*** | dd-GA99-1609 | VALVE | HOPPER ISOLATION VALVE | HOPPER ISOLATION VALVE | WAM | VLC0250P3/CMG0250 | 1 | | | | | 2 years | 2 WEEKS |
| ***INSTRUMENTS*** | | | | | | | | | | | | | |
| 1 | 65PI6801613/31 | Instrument | ACTIVATED CARBON SLURRY PRESSURE GAUGE | ACTIVATED CARBON SLURRY PRESSURE GAUGE | ASHCROFT | 25-1009-SW-L-02L-160# + 04-310SS-02T-XCG | 1 | | | | | < 2 year | 2 WEEKS |
| 1 | 65PI6801606/26 | Instrument | SERVICE WATER PRESSURE GAUGE | SERVICE WATER PRESSURE GAUGE | ASHCROFT | 25-1009-SW-L-04L-160# | 1 | | | | | < 2 year | 2 WEEKS |
| 1 | 65FI6801607/27 | Instrument | WASHDOWN LINE FLOWMETER | WASHDOWN LINE FLOWMETER | CHEMLINE | FSA03000 | 1 | | | | | < 2 year | 2 WEEKS |
| 1 | 65LSL6801611/31 | Instrument | HOPPER LOW LEVEL SWITCH | HOPPER LOW LEVEL SWITCH | ENDRESS+HAUSER | FTE31-C2D111-A | 1 | X | | X | | < 2 year | 2 WEEKS |
| 1 | 65LSH6801612/32 | Instrument | WETTING CONE HIGH LEVEL SWITCH | WETTING CONE HIGH LEVEL SWITCH | ENDRESS+HAUSER | FTL50-SGM2AA5E4A+Z1 | 1 | X | | X | | < 2 year | 2 WEEKS |
| 1 | 65PSL6801601/21 | Instrument | SERVICE WATER PRESSURE SWITCH | SERVICE WATER PRESSURE SWITCH | ALLEN BRADLEY | 836T-T253J | 1 | X | | X | | < 2 year | 2 WEEKS |
| 1 | 65EQM68002/3 | Instrument | ACTIVATED CARBON EDUCTOR | ACTIVATED CARBON EDUCTOR | ELMRIDGE | NCTLST5 | 1 | X | | | | < 2 year | 2 WEEKS |

| VWTCA 5000220043 AEM Meliadine, NU - BPC upgrade 2021 (CA_06_20_320229) | | | Doc #: | SPLS_0003_GEN |
|---|---|---|---|---|
| | | | Client's Doc number : | 1.07 |
| | | | SPARE PARTS LIST | Dilution Skid |
| PROJECT: | REV | BY | DATE | |
| 5000220043 | 1 | Silvere nicoulin | 2021-04-21 | |
| | 2 | Silvere nicoulin | 2021-06-09 | |
| | 3 | Chris El Khazaka | 2021-07-28 | |
| | | | | |
| | | | | |
| | Ref: 5000220043_PI_0001_GEN_VWT | | | |

| EQT / QTY | ID Number | EQT TYPE | Equipment Name | SPARE PART DESCRIPTION | SUPPLIER | Supplier REFERENCE NUMBER | QTY | PART CRITICALITY | WEAR PART | SPARE PART | CONSUMABLE | MAINTENANCE FREQUENCY | LEAD TIME |
|---|---|---|---|---|---|---|---|---|---|---|---|---|---|
| *INSTRUMENTS* | | | REF: 5000220043_PI_0001_GEN_VWT SHEET 16 & 17 | | | | | | | | | | |
| 2 | 65AIT6801141/65AIT6801116 | Instrument | FREE CHLORINE ANALYZER | FREE CHLORINE ANALYZER | SWAN | A-25.441.100.0/ A-81.420.060/ A-96.250.571 | 2 | | | | | > 5 years | 4 WEEKS |
| 2 | 65AIT6801142/65AIT6801117 | Instrument | TOTAL CHLORINE ANALYZER | TOTAL CHLORINE ANALYZER | SWAN | A-25.441.600.0/ A-96.250.631 | 2 | | | | | > 5 years | 4 WEEKS |
| 1 | 65AIT6801117 | Instrument | CHLORINATION TOTAL CHLORINE ANALYZER (Ami Codes II TC) | Reagent set Oxycon On-line DPD, 8 sets | SWAN | A-85.410.120 | 2 | | | | X | 2 weeks for 3 min meas. Interval** | 2 WEEKS |
| 1 | 65AIT6801117 | Instrument | CHLORINATION TOTAL CHLORINE ANALYZER (Ami Codes II TC) | Reagent set Oxycon On-line KI, 8 sets | SWAN | A-85.419.200 | 2 | | | | X | 2 weeks for 3 min meas. Interval** | 2 WEEKS |
| 1 | 65AIT6801117 | Instrument | CHLORINATION TOTAL CHLORINE ANALYZER (Ami Codes II TC) | Verification kit, AMI photometer | SWAN | A-85.151.100 | 1 | | | X | | 1 month | 4 WEEKS |
| 1 | 65AIT6801117 | Instrument | CHLORINATION TOTAL CHLORINE ANALYZER (Ami Codes II TC) | Cleaning set for Trides flow cell | SWAN | A-83.590.030 | 1 | | | X | | as needed | 4 WEEKS |
| 1 | 65AIT6801117 | Instrument | CHLORINATION TOTAL CHLORINE ANALYZER (Ami Codes II TC) | Spare part set for Codes-II flow cell and photometer | SWAN | A-83.590.036 | 1 | | | X | | 1 year | 4 WEEKS |
| 1 | 65AIT6801117 | Instrument | CHLORINATION TOTAL CHLORINE ANALYZER (Ami Codes II TC) | Spare water filter for flow cell | SWAN | A-82.819.010 | 1 | | | X | | 1 year | 4 WEEKS |
| 1 | 65AIT6801117 | Instrument | CHLORINATION TOTAL CHLORINE ANALYZER (Ami Codes II TC) | Tubing kit for AMI photometers | SWAN | A-86.170.040 | 1 | | X | | | 1 year | 4 WEEKS |
| 1 | 65AIT6801117 | Instrument | CHLORINATION TOTAL CHLORINE ANALYZER (Ami Codes II TC) | Tubing kit reagent AMI Codes-II | SWAN | A-86.191.890 | 1 | | X | | | 1 year | 4 WEEKS |
| 1 | 65AIT6801117 | Instrument | CHLORINATION TOTAL CHLORINE ANALYZER (Ami Codes II TC) | Tube 2.29mm in frame for PeriClip pump | SWAN | A-86.191.151 | 1 | | X | | | 1 year | 4 WEEKS |
| 1 | 65AIT6801117 | Instrument | CHLORINATION TOTAL CHLORINE ANALYZER (Ami Codes II TC) | Photometer AMI Codes | SWAN | A-87.531.100 | 1 | | | X | | > 3-5 years | 4 WEEKS |
| 1 | 65AIT6801117 | Instrument | CHLORINATION TOTAL CHLORINE ANALYZER (Ami Codes II TC) | Swansensor Bubble AMI | SWAN | A-87.932.020 | 1 | | | X | | > 3-5 years | 4 WEEKS |
| 1 | 65AIT6801116 | Instrument | CHLORINATION FREE CHLORINE ANALYZER (Ami Codes II AC) | Reagent set Oxycon On-line DPD, 8 sets | SWAN | A-85.410.120 | 3 | | | | X | 2 weeks for 3 min meas. Interval** | 2 WEEKS |
| 1 | 65AIT6801116 | Instrument | CHLORINATION FREE CHLORINE ANALYZER (Ami Codes II AC) | Verification kit, AMI photometer | SWAN | A-85.151.100 | 1 | | | X | | 1 month | 4 WEEKS |
| 1 | 65AIT6801116 | Instrument | CHLORINATION FREE CHLORINE ANALYZER (Ami Codes II AC) | Cleaning set for Trides flow cell | SWAN | A-83.590.030 | 1 | | | X | | as needed | 4 WEEKS |
| 1 | 65AIT6801116 | Instrument | CHLORINATION FREE CHLORINE ANALYZER (Ami Codes II AC) | Spare part set for Codes-II flow cell and photometer | SWAN | A-83.590.036 | 1 | | | X | | 1 year | 4 WEEKS |
| 1 | 65AIT6801116 | Instrument | CHLORINATION FREE CHLORINE ANALYZER (Ami Codes II AC) | Spare water filter for flow cell | SWAN | A-82.819.010 | 1 | | | X | | 1 year | 4 WEEKS |
| 1 | 65AIT6801116 | Instrument | CHLORINATION FREE CHLORINE ANALYZER (Ami Codes II AC) | Tubing kit for AMI photometers | SWAN | A-86.170.040 | 1 | | X | | | 1 year | 4 WEEKS |
| 1 | 65AIT6801116 | Instrument | CHLORINATION FREE CHLORINE ANALYZER (Ami Codes II AC) | Tubing kit reagent AMI Codes-II | SWAN | A-86.191.890 | 1 | | X | | | 1 year | 4 WEEKS |
| 1 | 65AIT6801116 | Instrument | CHLORINATION FREE CHLORINE ANALYZER (Ami Codes II AC) | Tube 2.29mm in frame for PeriClip pump | SWAN | A-86.191.151 | 1 | | X | | | 1 year | 4 WEEKS |
| 1 | 65AIT6801116 | Instrument | CHLORINATION FREE CHLORINE ANALYZER (Ami Codes II AC) | Photometer AMI Codes | SWAN | A-87.531.100 | 1 | | | X | | > 3-5 years | 4 WEEKS |
| 1 | 65AIT6801116 | Instrument | CHLORINATION FREE CHLORINE ANALYZER (Ami Codes II AC) | Swansensor Bubble AMI | SWAN | A-87.932.020 | 1 | | | X | | > 3-5 years | 4 WEEKS |

** 2 liters reagent canister last for 15 days of operation

**PACKAGE NUMBER: 6526-S-265-605**
**PURCHASE ORDER NUMBER: OC-989680**

# AGNICO EAGLE MINES
# MELIADINE WTP, NUNAVUT
# BREAK POINT CHLORINATION SYSTEM

*VEOLIA Project 5000 220 043*

Operation and Maintenance Manual
Volume 2

**Prepared by:**
Veolia Water Technologies Canada Inc.
4105, Sartelon
Montreal, Quebec, Canada
H4S 2B3
Tel.: 514-334-7230

**Revision: 2**
**Date: January 2022**

**VEOLIA DOCUMENT NO: 5000220043_OMM_0002_GEN_VWT**

LEFT BLANK

The system was manufactured in Canada by:

**Veolia Water Technologies Canada**
4105, Sartelon
Saint-Laurent, Qc.
Canada H4S 2B3
Phone: 514-334-7230
Fax: 514-334-5070

For technical support or service needs, for spare parts or to get assistance during your warranty period, you may contact us at the following number during regular business hours or write us at:

**Veolia Water Technologies Canada – After Sales Support**
1-844-SER-VWT9 | 1-844-737-8989 | vwtservicecanada@veolia.com

Our business hours are from:
Monday to Friday
8:30am to 5pm (EST)

Have the following information on hand for each request or call:

Project Name: **Meliadine WTP - Break Point Chlorination System**
VWTC Reference Number: **5000 220 043**

LEFT BLANK

# TABLE OF CONTENTS
# Operation & Maintenance Manual
# Meliadine WTP – Break Point Chlorination System


**1 INTRODUCTION ..... VOLUME 1**

1.1 GENERAL DESCRIPTION

**2 SAFETY ..... VOLUME 1**

2.1 GENERAL RECOMMENDATIONS

**3 DRAWINGS ..... VOLUME 1**

3.1 PROCESS FLOW DIAGRAM
3.2 PROCESS AND INSTRUMENTATION DIAGRAM
3.3 HYDRAULIC PROFILE
3.4 GENERAL ARRANGEMENT DRAWINGS
3.5 FIELD INSTALLATION DRAWINGS

**4 DETAILED TECHNICAL DOCUMENTATION ..... VOLUME 1**

4.1 EQUIPMENT LIST
4.2 SHOP DRAWINGS
- 4.2.1 Chlorination Reactor RX75-3 #1
- 4.2.2 Dechlorination Reactor RX75-3 #2
- 4.2.3 Clarifier #1 ACP-700R
- 4.2.4 Clarifier #2 ACP2-60
- 4.2.5 Hydra-Carb Activated Carbon Preparation System
- 4.2.6 Sludge Tank
- 4.2.7 Backwash Tank
- 4.2.8 Splitter Box Clarifier #1
- 4.2.9 Splitter Box Clarifier #2
- 4.2.10 Discfilter
- 4.2.11 Instrumentation
- 4.2.12 Cathodic Protection System

# TABLE OF CONTENTS
# Operation & Maintenance Manual
# Meliadine WTP – Break Point Chlorination System


4.3 LIST OF SUPPLIERS
4.4 CONTROL NARRATIVE
4.5 COMMISSIONING AND PERFORMANCE TEST PROTOCOLS
4.6 COMMISSIONING AND PERFORMANCE TEST REPORTS

**5 ELECTRICITY AND CONTROL ..... VOLUME 1**

5.1 ELECTRICAL DRAWINGS
5.2 ELECTRICAL DATA SHEETS

**6 OPERATION AND MAINTENANCE ..... VOLUME 1**

6.1 ACTIFLO® CLARIFIER & REACTOR (ACP2-60, ACP700R, RX75-3)
6.1.1 Installation, Operation and Maintenance Manual
6.2 DISCFILTER
6.2.1 Installation, Operation and Maintenance Manual
6.3 HYDRA-CARB
6.3.1 Installation, Operation and Maintenance Manual
6.4 SPECIAL OPERATION PROCEDURES
6.4.1 Routine Operation Check List
6.4.2 Break Point Chlorination
6.4.3 Acti-Carb
6.4.4 Corrosion Protection Maintenance
6.5 TRAINING DOCUMENTS

**7 SPARE PARTS ..... VOLUME 1**

**8 MANUFACTURER MAINTENANCE MANUALS ..... VOLUME 2**

8.1 MANUFACTURER LIST
8.2 MANUFACTURER INSTALLATION, OPERATION AND MAINTENANCE MANUALS

# *OPERATION AND MAINTENANCE MANUAL*

# *VOLUME 2*

LEFT BLANK

# *8 – MANUFACTURER MAINTENANCE MANUALS*

## *8.1 – MANUFACTURER LIST*

LEFT BLANK

| MELIADINE WTP - BREAK POINT CHLORINATION SYSTEM | | | |
|---|---|---|---|
| MANUFACTURER INSTALLATION, OPERATION AND MAINTENANCE MANUAL | | | |
| SECTION | | MANUFACTURER LIST | |
| | | | |
| 8.2 | | | |
| | 001 | **ACO CONTAINER** | |
| | | Model DMT-40, Chemical trolley tank | |
| | | Model CT-3305, Sludge tank | |
| | | Model CT-1655, Backwash tank | |
| | | | |
| | 002 | **ALLEN BRADLEY** | |
| | | Model 836T, Pressure switch | |
| | | | |
| | 003 | **ASCO** | |
| | | Model 8210G100, Solenoid valve | |
| | | | |
| | 004 | **ASHCROFT** | |
| | | Model 1009, Pressure gauge | |
| | | Model 310, Diaphragm seal | |
| | | | |
| | 005 | **BALDOR** | |
| | | AC Induction motor (0.5 and 0.75 HP) | |
| | | | |
| | 006 | **BRAY** | |
| | | Series 31, Butterfly valve | |
| | | Series 63, Solenoid valve | |
| | | Series 01, Manual operator (lever) | |
| | | Series 04, Manual operator (handwheel) | |
| | | | |
| | 007 | **CHEMLINE** | |
| | | Type 21, Ball valve | |
| | | Series FC/FS, Variable area flowmeter | |
| | | Series GV, Globe valve | |
| | | Series NG, Needle valve | |
| | | Series SB12, Back pressure/relief valve | |
| | | Series SR50, Pressure regulating valve | |
| | | Series YSA, Y Strainer | |
| | | | |
| | 008 | **CLA-VAL** | |
| | | Series RF-DBJ, Check valve | |
| | | | |
| | 009 | **ELMRIDGE** | |
| | | Model NCTLST5, Eductor | |
| | | | |
| | 010 | **ENDRESS + HAUSER** | |
| | | Liquiphant M FTL50, Level switch (point level) | |
| | | Soliswitch FTE31, Level switch (paddle) | |
| | | | |
| | 011 | **ENVIREQUIP** | |
| | | Series EVGX, Mixers | |
| | | c/w Nord gear reducer | |
| | | c/w Weg motor | |
| | | | |
| | 012 | **FLOWSERVE** | |
| | | Model Durco T4E, Lined plug valve | |
| | | | |
| | 013 | **FLSMIDTH KREBS** | |
| | | Model U4B-10-1734, Hydrocyclone | |
| | | | |
| | 014 | **FLYGT** | |
| | | Model ENM-10, Level switch | |
| | | | |

| MELIADINE WTP - BREAK POINT CHLORINATION SYSTEM | | | |
|---|---|---|---|
| MANUFACTURER INSTALLATION, OPERATION AND MAINTENANCE MANUAL | | | |
| SECTION | | MANUFACTURER LIST | |
| | | | |
| | 015 | **HACH** | |
| | | Model Solitax sc, Turbity sensor | |
| | | Model sc200, Universal controller | |
| | | | |
| | 016 | **IFM EFECTOR** | |
| | | Model FR-1, Speed monitor | |
| | | | |
| | 017 | **IWAKI** | |
| | | Series MD, Magnetic drive pump | |
| | | | |
| | 018 | **McLANAHAN** | |
| | | Model M3H-CND 3x3, Microsand recirculation pump | |
| | | Model M3H-CRD 2x2, Microsand recirculation pump | |
| | | | |
| | 019 | **MUNSCH** | |
| | | Model NP-65-50-160, Centrifugal chemical pump | |
| | | | |
| | 020 | **NORD** | |
| | | Clincher Series, Gear reducer | |
| | | | |
| | 021 | **PLASTEC VENTILATION** | |
| | | Model JET20SS4P, Inline centrifugal fan | |
| | | | |
| | 022 | **PMP** | |
| | | Model A201, Ball valve | |
| | | | |
| | 023 | **PRIMARY FLUID SYSTEM** | |
| | | Model IQ-56-PVC, Injection quill | |
| | | | |
| | 024 | **SEW EURODRIVE** | |
| | | RF97 R57 AR71 /W DRN71 M4/C/DH/RI, Gearmotor combination | |
| | | RF87 R57 AR71 /W DRN71 M4/C/DH/RI, Gearmotor combination | |
| | | Model DRN71 M4/C/DH/RI, Motor | |
| | | Model AR71, Friction coupling | |
| | | c/w IFM Efector, Model FR-1, Speed monitor | |
| | | | |
| | 025 | **SWAN** | |
| | | AMI Codes-II, Free chlorine analyzer | |
| | | AMI Codes-II TC, Total chlorine analyzer | |
| | | | |
| | 026 | **THETYS** | |
| | | Model UV500, Water analyser including: | |
| | | Model ABS500, Absorbance flow cell and xenon lamp | |
| | | Model Spectro500 UV, Spectograph | |
| | | with NH4-500, Ammonia measurement | |
| | | Model P, Internal sampling pump | |
| | | Model STRIP500, Stripping system | |
| | | Model OUT4-20-500, Output module (4-20 mA) | |
| | | | |
| | 027 | **VEOLIA** | |
| | | Model MA40, Hydrocyclone | |
| | | Hydrotech, Model HPF2218-1F, Discfilter | |
| | | | |

| MELIADINE WTP - BREAK POINT CHLORINATION SYSTEM | | | |
|---|---|---|---|
| MANUFACTURER INSTALLATION, OPERATION AND MAINTENANCE MANUAL | | | |
| SECTION | | MANUFACTURER LIST | |
| | | | |
| | 028 | **WAM** | |
| | | MBF Series, Micro batch feeder | |
| | | SBB Series, Cone for big bag unloading station | |
| | | VL Series, Slide gate valve | |
| | | | |
| | 029 | **WATTS** | |
| | | Series R119, Air pressure regulator valve | |
| | | | |
| | 030 | **WEG** | |
| | | Series W22 Premium efficiency, AC Motor | |
| | | | |
| | | | |

LEFT BLANK

# *8 – MANUFACTURER MAINTENANCE MANUALS*

## *8.2 – MANUFACTURER INSTALLATION, OPERATION AND MAINTENANCE MANUALS*

LEFT BLANK

# *ACO CONTAINER*

## *MODEL DMT-40, CHEMICAL TROLLEY TANK*
## *MODEL CT-3305, SLUDGE TANK*
## *MODEL CT-1655, BACKWASH TANK*

LEFT BLANK

# ACO CONTAINER SYSTEMS LTD.

## INSTALLATION AND MAINTENANCE

## INSTRUCTIONS

# TABLE OF CONTENTS

SECTION PAGE


Safety Checklist ..... 3
Receiving Your Tank ..... 4
Damaged merchandise or other problems ..... 4
Return Merchandise ..... 4
Uninstalled Parts ..... 5
Unloading Instructions ..... 5
Installation Instructions ..... 6
Field Installation of Fittings ..... 7
- Bulkhead Fittings Installation Instructions ..... 7
- Bolted-Flange Fittings Installation Instructions ..... 8
- Stainless Steel Fittings ..... 9
- "Universal Dome" Bulkhead Fittings ..... 10
- "Universal Dome" Flange Fittings ..... 11
- Vents ..... 12

Field Installation of Liquid Level Gauges ..... 12
- Sight Glass Style ..... 12
- Reverse Float Style ..... 13

Ladder Installation ..... 14
Horizontal Tank Stands ..... 15
Maintenance Guidelines ..... 16
Shipping Polyethylene Tanks ..... 16
Installation & Maintenance Record ..... 17

# Safety Checklist

- **Confirm chemical compatibility** of product being stored with that of the polyethylene tank and fittings.

- **Vent tanks** as required to prevent pressure or vacuum from developing as the tank is filling or emptying. Unrestricted (no screen) vent size must exceed size of tank's largest inlet or outlet nozzles by one inch. With exceptionally high rates of intake or discharge, larger vents could be required. If tank has two inlets or outlets, add the size of the two nozzles together to determine the minimum vent size. Screened vent size must exceed size of tank's largest inlet or outlet nozzles by two inches.

- **Prevent excessive heat near or inside the tank.** Polyethylene tanks are designed for a maximum continuous temperature of 120°F for Linear Polyethylene and 150° for Cross-Linked Polyethylene.

- **Have and use Material Safety Data Sheets** (MSDS) for the product being stored.

- **Regard tanks as confined spaces.** Follow proper entry procedures.

- **Make sure ladders are properly secured,** top and bottom. Allow only one person on a ladder at a time.

- **Avoid standing and working on tank domes.** The surface is flexible and slippery. There is no weight or load rating for the dome.

- **Do not move tanks while holding liquid and never allow personnel under a tank when it is being lifted!**

- **ACO Container Systems Ltd. offers a seismic hold down assembly** for all Zone 4 applications.

## Receiving Your Tank

Upon receipt of your tank, INSPECT IMMEDIATELY for obvious defects. Please look for any loose packages containing parts and accessories. Open the packages, inspect and account for all parts against the packing slip. Any damage or discrepancies should be noted on both the driver's delivery copy and your packing list. We urge you to IMMEDIATELY NOTIFY your sales representative of any problems within one business day.

## Damaged merchandise or other problems

Failure to report damaged / lost merchandise within the time limitations may mean you relinquish your rights to claim. Always inspect your merchandise on the day you receive it, because damage or loss can occur in transit. Obvious damage should be noted on the freight bill or shipping invoice and the driver should initial the notation. Hidden damage must be reported to the carrier with THREE (3) WORKING DAYS. Any damaged / lost items can be reported to your ACO Container Systems Ltd. Sales or Customer service representative, and we will work to repair or replace the damaged or missing product as quickly as possible.

## Return Merchandise

ACO Container Systems Ltd. cannot accept used containers at its facilities for safety and liability reasons.

However, to return unused merchandise and ensure you're receiving proper credit, please do the following:

- Contact your ACO Container Systems Ltd. Customer service representative and obtain an ACO Return Merchandise Authorization (RMA) number. Have your packing slip available for any needed information.
- Use the RMA number on all return shipping paperwork and all correspondence.
- Return the merchandise *prepaid*. Freight collect shipments will be refused.

Upon receipt, ACO will inspect the merchandise and issue appropriate credit. A restocking fee may be assessed, particularly on products "made and fitted to order."

# Uninstalled Parts

Parts must sometimes be shipped uninstalled to prevent damage in transit. These parts can usually be found bagged or boxed in separate packages. Please check before reporting missing parts.

# Unloading Instructions

**By Crane using Lifting Lugs:**

**Use Lifting Lugs (if provided) to lift Tank after standing upright.**

**By Forklift:**

Make sure the forklift tines are **smooth and free from burrs.**
Use **extended tines** if handling a large tank.
**Tie the tank** to the forklift mast if there is a possibility of rolling or sliding.

**By Crane using Manway:**

Use the usual method of rigging and lifting a tank with slings or **use a pipe and chain** in the manway of the tank as shown below: The pipe should be 42″ to 46″ long(no shorter than 42″), and a minimum of 3″ in diameter.

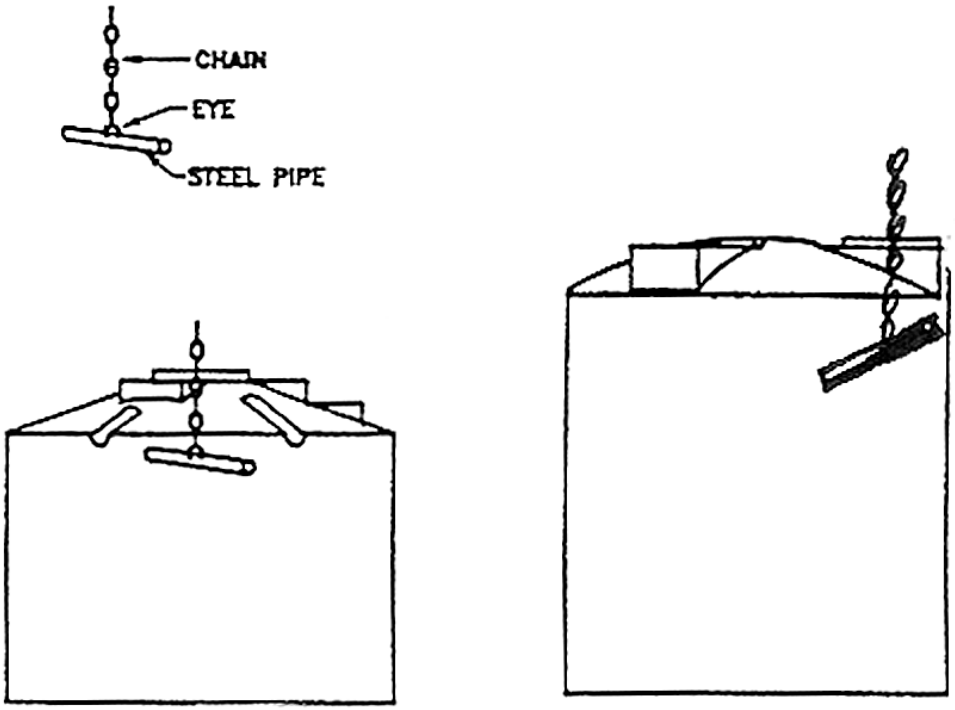

# Installation Instructions

- Retrieve and check the uninstalled parts usually shipped inside the tank.
- Locate the tank on a hard, flat surface. Make certain ongoing servicing will be easy and inexpensive. Protect personnel from chemical danger in the event of a leak and protect the tank from traffic damage and excessive heat. Tanks are designed for above ground use only.
- Utilize adequate secondary containment according to specific chemical danger and governmental and industry requirements.
- Support hoses, piping, and valves using structural support independent of tank sidewall and dome, within 4" of flange.
- Use Teflon tape, paste, or both at all threaded connections. Do not over tighten; threaded connections should be no more than one to two turns past hand tight.
- Flexible connections are recommended to preserve the life of your tank. They allow for tank expansion / contraction and to reduce pump / piping vibration stress on the tank.
- Flange gaskets must be used when mating flanges. It is imperative to use a flange gasket that is a minimum of 3/16" thick and made from an appropriate, compressible gasket material (i.e. EPDM, Viton, Buna or Teflon). Failure to use a proper flange gasket when joining flanges together will void your warranty.
- When mating installed flanges on tank to other flanges, the two flange faces must meet face to face with no gaps or spaces between the two. **A SPACE OR GAP BETWEEN THE FLANGE FACES CAN NOT BE ACCOMODATED BY OVER TIGHTENEING THE BOLTS**! A maximum torque of 15-20 ft. lbs. is to be used when tightening all bolts. Failure to properly join flanges together will void your warranty.
- Fully support the *entire* bottom of the tank on a clean, smooth concrete foundation or in ACO approved metalwork. Make certain no trash of any kind is trapped between the tank and its foundation. **FAILURE TO PROVIDE PROPER FOUNDATION AND SUPPORT CONSTITUTES A MISUSE OF THE TANK AND WILL VOID YOUR WARRANTY.**
- Fill the usable capacity of the tank with water and hydro test for 24 hours after installation, and *before* product is introduced, to ensure tank and fitting integrity.
- Make sure there is an ACO Container Systems Ltd. warning label on the tank.
- All ACO Container Systems Ltd. rotationally molded tanks are manufactured from UV8 stabilized raw material, pigmentation can also be added for further protection against ultra violet rays. For outdoor applications, we recommend using PVC mechanical connections.

**EXTREME CAUTION:**
Consult Customer Service on any applications where continuous use is above 100°F.

# Field Installation of Fittings

Bulkhead Fittings Installation Instructions

1. Remove the large fitting nut from the fitting body. Note that the gasket is located immediately below this nut. The gasket and remainder of the fitting should be set aside for later use.
2. Using the nut as a template, locate the desired position of the fitting. Trace the nut inside and out. Draw a line through the centre of the traced outline from each of the points of the nut (see illustration 7.1). This will locate the centre of the fitting. **Fittings must be installed at an elevation that will prevent interference with tank's inside bottom knuckle radius.**
3. Before drilling, the hole saw should match the Outside Diameter (O.D.) portion of the fitting that must go through the hole in the tank. Drill the tank with a hole saw. Remove any flashing with a de-burring tool and brush away any shavings around the hole.
4. Working from the inside of the tank, slide the fitting body through the hole in the tank. The gasket should be between the back of the shoulder of the fitting and the inside wall of the tank.
5. Install the largest fitting nut on the outside of the tank. Tighten the nut securely; hand tight plus one half turn to three quarter turn. Care should be taken to prevent the fitting body from turning during this process to prevent the gasket from creeping from between the fitting and the tank wall.
6. Inspect the gasket to make sure it has not crept from the shoulder of the fitting. If so, loosen the nut on the outside of the tank and the gasket will return to its original position. Retighten nut carefully.
7. Piping such as a flange adapter should now be threaded into the fitting. Teflon sealant tape or other thread sealant should be applied to all pipe threads. Do not over tighten.
8. **HYDRO TEST THE TANK WITH STANDING WATER FOR AT LEAST 24 HOURS BEFORE PUTTING INTO SERVICE.**
9. **NOTE:** Some bulkhead fittings have left hand threads for the large fitting Nut.

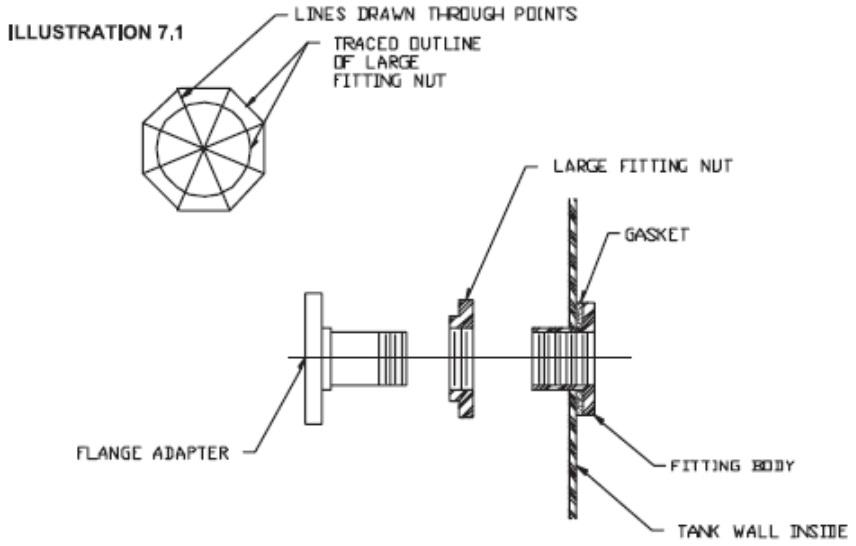

# Bolted-Flange Fittings Installation Instructions

1. Disassemble the fittings as shipped. If the holes are not drilled, place the flange against the tank in the desired location and use as a template for drilling the holes. Use either a hole saw the same size as the fittings size or up to a ½" size larger.
2. With the gaskets installed, place the stud bolts through the holes with the plastic head on the inside of the tank, threads on the outside.
3. Place the full face flange gasket over the bolts on the outside surface of the tank.
4. Place the flange over the gasket and stud threads with the hub of the flange facing out.
5. Put a washer and nut on each stud bolt. Be sure to lubricate the threads of the bolts with anti-seize lubricant.
6. Tighten the nuts by pulling down the nuts diametrically opposite each other using a torque wrench. Tighten bolts according to sequence shown in illustration 7.2. Complete tightening should be accomplished in stages. Tighten until the gasket is fully compressed (Approximately 15/20 ft.lbs. for all size flanges)
7. Inspect fitting. Gasket must be compressed and the outer flange drawn down evenly.
8. Piping such as a flange adapter should now be threaded into the fitting. Teflon sealant tape or other thread sealant should be applied to all pipe threads. **Do not over tighten**.
9. Flanges for pipe sizes 4" and larger should be curved to match the outside diameter of the tank.
10. **HYDRO TEST THE TANK WITH STANDING WATER FOR AT LEAST 24 HOURS BEFORE PUTTING INTO SERVICE.**

ILLUSTRATION 7.2

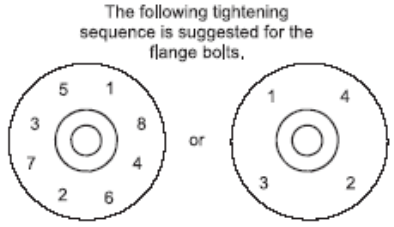


**CAUTION: OVERTORQUING WILL DAMAGE THE FLANGE AND GASKETS.**

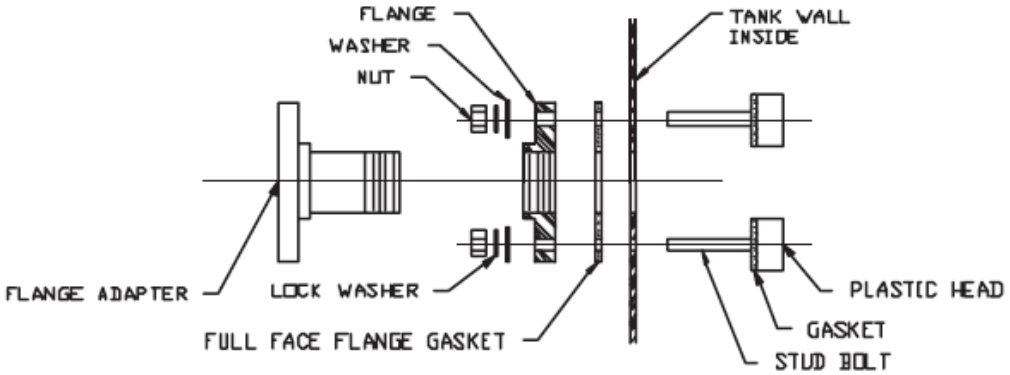


ILLUSTRATION
(F:\DWG\FITTING\ASM2FLG)

## Stainless Steel Fittings

1. Disassemble the stainless steel fitting by removing the nuts from the stud bolts. Remove the 1/8" thick stainless steel outer plate. Set the remainder of the fitting aside along with the nuts and washers.
2. Using the outer plate as a template, mark the hole patters on the outside of the tank.
3. Find the center of the large "tank fitting" hole be drawing an "X" through the center of the bolt holes (see illustration).
4. With the drill motor and hole saw, drill out the pipe fitting hole. Please not that the hole to be drilled in the tank may be much smaller than the hole in the outer plate that was used as a template. The hole saw should match the Outside Diameter (O.D.) of the portion of the fitting that must go through the hole in the tank.
5. Next drill out the stud bolt holes using the 9/16" drill bit for fittings with ½" diameter studs or a 3/8" drill bit for fittings with 5/16" diameter studs.
6. Trim any flashing from the holes with a de-burring tool and brush away any shavings around the hole.
7. You are now ready to install the tank fitting. With the gasket on the studs against the back plate of the fitting, install the fitting from the inside of the tank. Slide the outer plate onto the stud bolts that are protruding from the tank wall.
8. Replace the washers and nuts on the stud bolts. Tighten the nuts by pulling down the nuts diametrically opposite each other using a torque wrench. Tighten bolts according to sequence shown in illustration 7.2 on pg. 7. Complete tightening should be accomplished in stages. Tighten until the gasket is fully compressed (Approximately 15/20 ft.lbs. on a torque wrench). **½" nuts should be torqued to 30 ft. lbs., 5/16" nuts to 12 ft. lbs. Be sure to lubricate the threads of the bolts with copper anti-seize lubricant prior to tightening.**
9. Inspect the fitting. The gasket should be compressed and the other stainless steel plate should conform to the wall of the tank.
10. **HYDRO TEST THE TANK WITH STANDING WATER FOR AT LEAST 24 HOURS BEFORE PUTTING INTO SERVICE.**

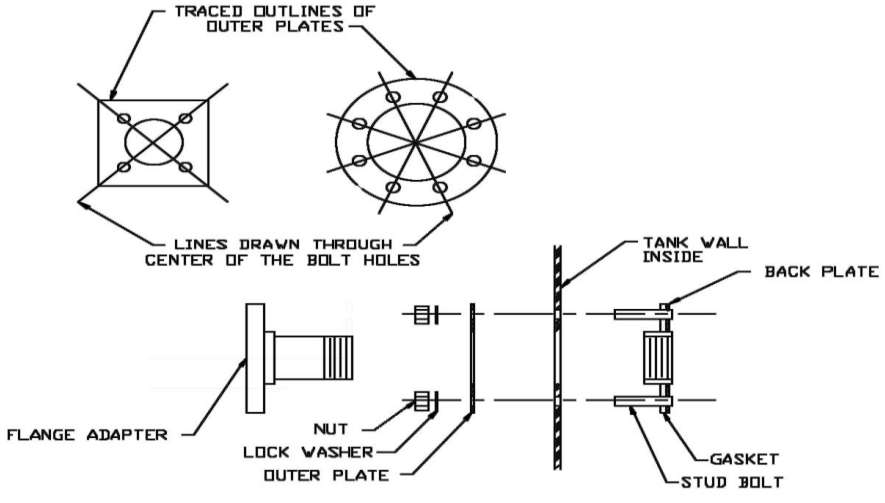


ILLUSTRATION
(F:\DWG\FITTING\ASMSSFTG)

## “Universal Dome” Bulkhead Fittings

1. Remove the large fitting nut from the fitting body. Note that the gasket is located immediately below this nut. The gasket and remainder of the fitting should be set aside for later use.
2. Using the nut as a template, locate the desired position of the fitting. Trace the nut inside and out. Draw a line through the center of the traced outline from each of the points of the nut (see illustration) This will locate the center of the fitting.
3. Before drilling, the hole saw should match the Outside Diameter (O.D.) portion of the fitting that must go through the hole in the tank. Drill the tank with a hole saw. Remove any flashing with a de-burring tool and brush away any shavings around the hole.
4. Working from the inside of the tank, slide the fitting body through the hole in the tank. The gasket should be between the back of the shoulder of the fitting and the inside wall of the tank.
5. Install the large fitting nut on the outside of the tank. Tighten the nut securely; hand tight plus one half turn to three quarter turn.
6. Inspect the gasket to make sure it has not crept from the shoulder of the fitting. If so, loosen the nut carefully.
7. Piping such as flange adapter should be threaded into the “ball” of the fitting now. Teflon sealant tape or other thread sealant should be applied to all pipe threads. Piping may not be adjusted to any angle desired within the limits of the fitting.
8. Note, universal ball fittings are adjusted at the factory to provide vertical entry into the tank dome, but are sometimes knocked out of adjustment during transit. If necessary, gently loosen the ball retainer ring located on top of the fitting ball using a spanner wrench, adjust to desired angle, and tighten ring taking care not to over-tighten and crack.
9. For a flanged connection Flange Adaptors may be used.

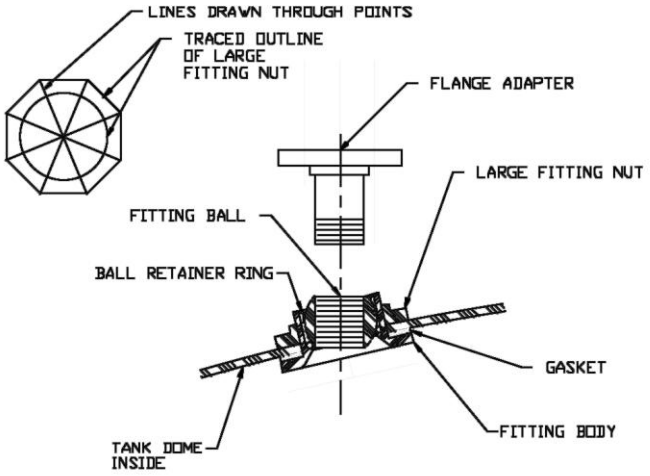


ILLUSTRATION
(F:\DWG\FITTING\ASMUDBS)

## "Universal Dome" Flange Fittings

1. Disassemble the fitting as shipped.
2. If the holes are not drilled, place the full face flange gasket against the tank in the desired location and use as a template.
3. Drill the center hole using the proper size hole saw. Hole must be at least ½" larger than the hole in back of the flange in order for ball to turn.
4. Drill the bolt holes using a 9/16" bit.
5. Remove any flashing with a de-burring tool.
6. From the outside of the tank, reach through the center hole and place the threaded end of the stud bolts with their gaskets on them through the bolts on the inside.
7. Please the full face flange gasket over the stud bolts on the outside surface of the tank.
8. Place the flange style universal dome fitting over the stud bolts and the full face flange gasket.
9. Put the washers and nuts on the stud bolts. (Note: Be sure to lubricate the threads of the bolt.)
10. Tighten the nuts by pulling down the nuts diametrically opposite each other using a torque wrench. Tighten bolts according to sequence shown in illustration 7.2 on page 7. Complete tightening should be accomplished in stages. Tighten until the gasket is fully compressed (Approximately 15/20 ft. lbs. on a torque wrench).
11. Inspect the fitting and the gaskets. The gaskets should be compressed and the fitting should be drawn down evenly.
12. Piping such as a flange adapter should be threaded into the ball of the fitting now. Teflon sealant tape or other thread sealant should be applied to pipe threads. Piping may be adjusted to any angle desired within the limits of the fitting.
13. Note, universal dome fittings are adjusted at the factory to provide vertical entry into the tank dome, but are sometimes knocked out of adjustment during transit. If necessary, gently loosen the ball retainer ring located on top of the ball using a spanner type wrench, adjust to desired angle and tighten the retainer ring, taking care not to over tighten and crack.

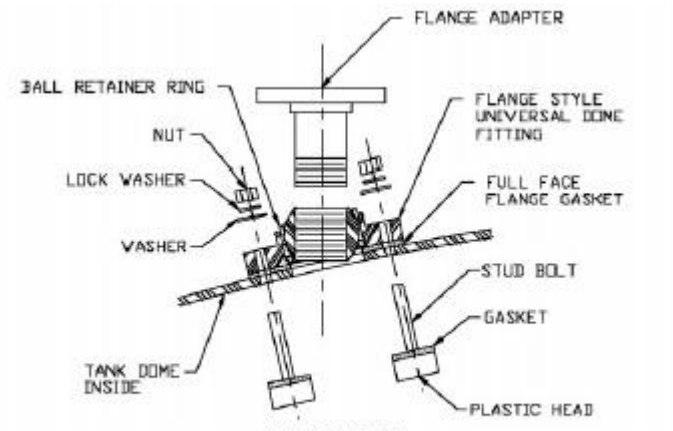


ILLUSTRATION
(F:\DWG\FITTING\ASMUDFS)

### Vents

2” vents and larger may not be installed for shipping in order to protect against breakage. Installation will require threading the gooseneck vent into the proper fitting.

## Field Installation of Liquid Level Gauges

### Sight Glass Style

Sight glass assemblies are made up complete at the factory when ordered with your tank. They are usually shipped “loose” since they can easily be damaged in transit. To install a sight glass assembly, “break” the two unions apart on either end of the sight glass. Screw the short nipple and one half of the union into the sight glass fittings which have been mounted onto the tank wall at the factory. For your convenience and ease of assembly, drawings of standard sight glass assemblies are shown below. (Also, see instructions of “Uninstalled Parts” on page 3.) If sight gauge is added later to tank, tank fittings must be drilled according to previous installation instructions. Clear sight glass will be provided loose from sight gauge assembly, to be cut down and custom fitted to tank. **IF FIELD INSTALLED, HYDRO TEST WITH STANDING WATER FOR 24 HOURS BEFORE PUTTING INTO SERVICE.**

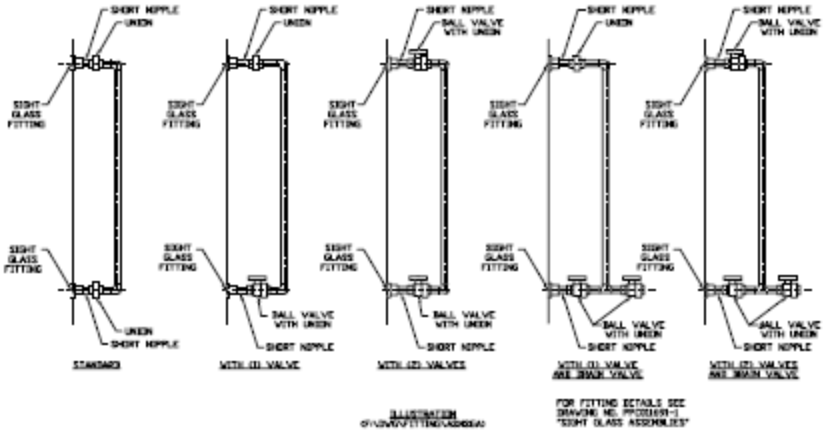

## Reverse Float Style

Liquid level gauges of a float type are shipped complete but with this exterior portion uninstalled. This exterior portion of the assembly will be shipped inside the tank and upon retrieving, the installation can begin. The installation is a simple matter of connecting the threaded end of the gauge into the pose. The pipe portion of the gauge will be attached to the combination support pipe bracket on the side wall of the tank. This is usually done with a hose clamp that fits around the exterior pipe and attaches to the pipe support bracket. Review the drawing to understand how these parts fit and this will be a simple installation. Do not glue 2″ elbows.

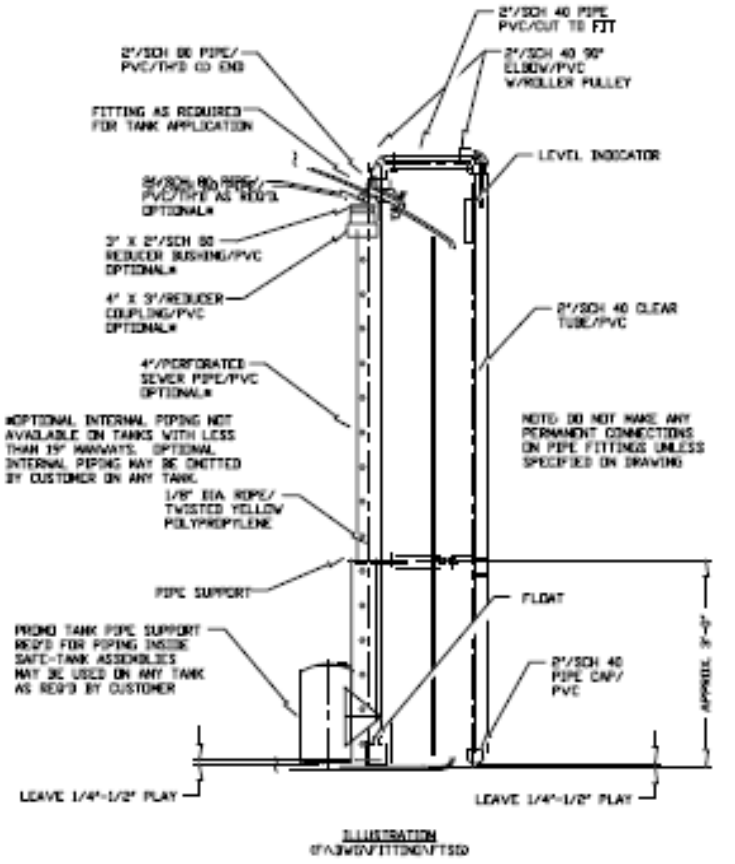


ILLUSTRATION

\

# Ladder Installation

1. Inspect the vessel, check the ladder attachment bracket if installed prior to shipping. Check all fasteners, making sure they are secured.
2. Locate the (2) 9/16″ diameter mounting holes near the top portion of the ladder. From the bolts provided, insert (2) ¼″ x 1½″ long bolts such that the threaded ends protrude outward from the ladder.
3. Locate the (2) 2″ x 2″ x ½″ x 9″ angle iron attachment tabs that have (2) 9/16″ diameter holes punched approximately 6¼″ apart. Place tabs, one on each side, on the outside of ladder facing toward the direction in which the ladder is to be attached. Orient the tabs so that the slotted out section is against the ladder and the horizontal leg is on the top facing to the outside and attach with (2) ½″ x 1½″ bolts.
4. Stand the ladder base with approved type anchor bolts. Removal of ladder may be required for anchor installation
5. Replace ladder in its desired position. Using a stepladder or approved personnel lifting device, bolt the attachment tabs to the ladder attachment bracket using (2) ½″ x 1½″ long bolts.
6. Secure all connections.
7. If a return or cage is required, they will be welded to the ladder and no other assembly will be required. These are not field additions.

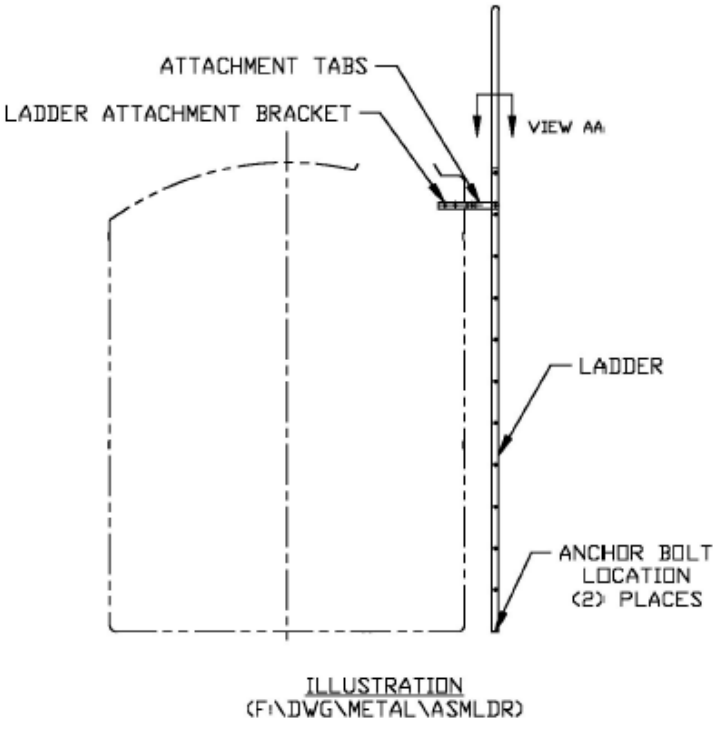


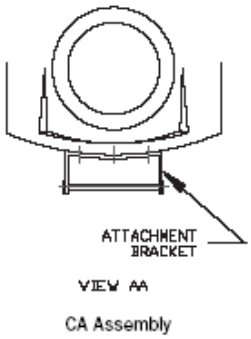


CA Assembly

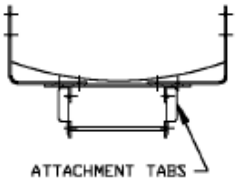


LA Assembly

# Horizontal Tank Stands

**NOTE: HORIZONTAL TANK STANDS ARE DESIGNED TO BE ERECTED ON LEVEL CONCRETE (OR OTHER APPROVED SURFACES) SUPPORT PADS. WE STRONGLY RECOMMEND THAT TANK STANDS BE BOLTED TO THE SUPPORT PADS. (Please see the section marked "Installation Checklist" of Page 5.)**

Stands for horizontal tanks are normally designed as one piece steel units. The stands are shrink wrapped for protection during shipping.

1. **CHECK TO ENSURE THAT ALL COMPONENTS HAVE BEEN RECEIVED.**
2. **INSTALL THE STAND.** Carefully set the stand up in the location required ensuring that the foundation upon which the stand rests is level.
3. **PLACE THE TANK ON THE STAND**. With a forklift, crane, or other lifting device, raise the tank onto the stand being careful not to damage the tank or the paint. Center the tank on the stand.
4. **HYDRO TEST.** ACO Container Systems Ltd. recommends that all tanks be hydro tested for at least 24 hours at end users location before being placed into service.

## PRODUCT LIMITATIONS

**TEMPERATURE LIMITATIONS –** Tanks are designed for a maximum continuous temperature use of 120° F. Continuous temperature above 120° F reduces the design hoop stress, which will require a thicker wall for a given application. Consult Customer Service for any continuous use above 120° F.

**CHEMICAL COMPATIBILITY –** In all cases the chemical resistance of the assembly (tank, fittings, accessories and gaskets) must be confirmed by chemical resistance data. This should have been done before the tank was ordered, however the service of the tank can change and it is important to be sure the tank and assembly are compatible with the chemical. It should be noted that the effect of the storage of sulfuric acid, hydrochloric acid, and aqua ammonia darkens the tank over time and this is not an indication of weakness or failure of the tank. This change of color is simply a reaction of the reagent with the additives in the plastic (e.g., UV stabilizers, anti-oxidants, etc). Chemical compatibility is the sole responsibility of the end user.

**FITTINGS AND VENTS –** Tank fittings are installed and sealed at the factory per your specifications. Temperature variations, road vibrations and other factors may influence these fittings, requiring minor adjustments before use. All bolted fittings should have the outer nuts checked before the tank is hydro tested or put into service. Non-bolted fittings have at least one outer nut which should be checked as well. **REMEMBER – PLASTIC FITTINGS ARE EASILY OVER-TIGHTENED.** Review that portion of the manual related to the particular fitting involved for complete instructions for installation.

The most frequent cause of leaks and tank failure is improperly supported plumbing, over-tightening of bolts, and misalignment of fittings. All piping and valves must be independently supported separately from the tank. Any external valves / piping that are connected to tank fittings must be supported. Tank fittings are not designed to bear weight. Be sure that all vents, pressure relief devices, vacuum relief devices, fill assemblies, and other connecting accessories are clear of any obstruction before attempting to use.

## Maintenance Guidelines

Tanks should be inspected on a routine basis every three months, and the findings of the inspections recorded. As a very minimum, follow these guidelines:

- Clean the exterior and interior of the tank. You cannot properly inspect a dirty tank. Tank can be cleaned with varsol and a rag and / or a paint scraper.
- Inspect the exterior and the interior of the tank for cracking, glazing, and brittle appearance.
    - Pay particular attention to areas around fittings and where different planes of the tank radius into one another.
    - A bright light source should be used to inspect the interior from the manway opening to avoid a confined space entry.
- Inspect fittings, bolts and exterior gaskets for leaks and signs of general corrosion and deterioration.

Confirm that secondary containment is appropriate for chemical stored, adequate in size, and in good repair.

## Shipping Polyethylene Tanks

- Tanks with a diameter smaller than 90" can be shipped in a closed van.
- Anything with a diameter exceeding 90" should be shipped on a flat bed or special truck as required if oversized.
- For applications where the tank height surpasses that of the trailer, tanks may be placed on their side for shipping.
- When shipping tanks on their side, one should allow for one side of tank to be free of fittings. This provides a flat surface on which to lay the tank. Laying the tank down on top of fittings will most likely result in damage.

# Installation & Maintenance Record

| Inspector's Name | Date | Serial Number | Checked Bolts for Corrosion | Checked Gussets for Cracks | Checked Gaskets for Deterioration | Checked Tank Walls for signs of Cracking |
|---|---|---|---|---|---|---|
| | | | | | | |
| | | | | | | |
| | | | | | | |
| | | | | | | |
| | | | | | | |
| | | | | | | |
| | | | | | | |
| | | | | | | |
| | | | | | | |
| | | | | | | |
| | | | | | | |
| | | | | | | |
| | | | | | | |
| | | | | | | |
| | | | | | | |
| | | | | | | |
| | | | | | | |
| | | | | | | |

LEFT BLANK

# *ALLEN BRADLEY*

## *MODEL 836T, PRESSURE SWITCH*

LEFT BLANK

# Bulletin 836T Pressure Controls

**ATTENTION:** To prevent electrical shock, disconnect from power source before installing or servicing.

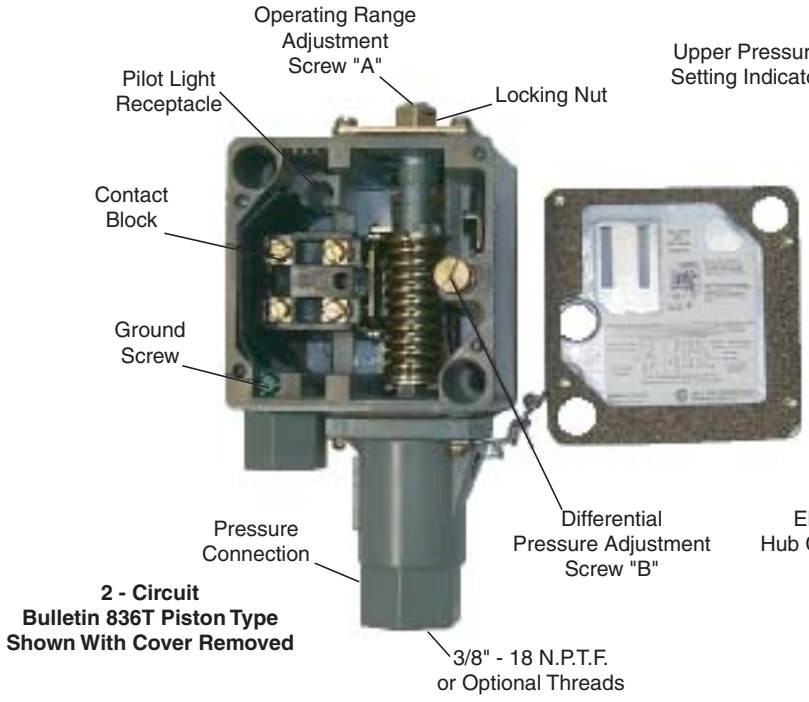


**2 - Circuit Bulletin 836T Piston Type Shown With Cover Removed**

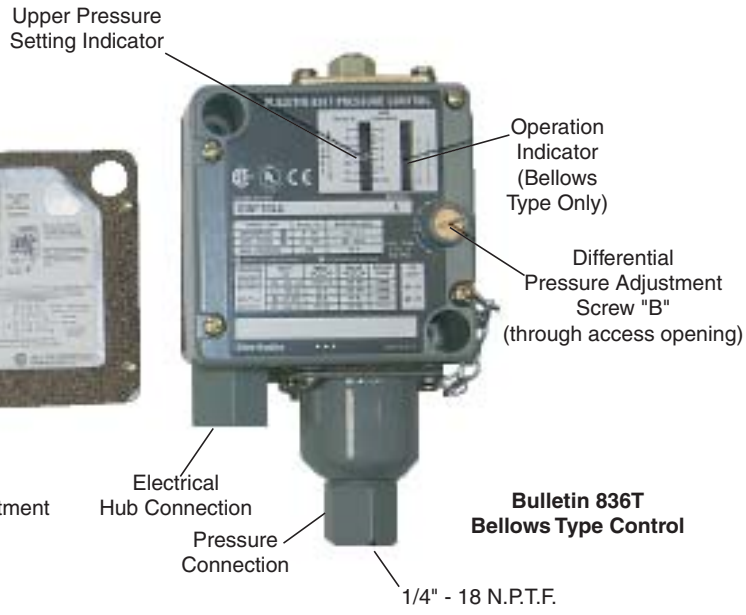


**Bulletin 836T Bellows Type Control**

**DESCRIPTION -** Bulletin 836T, Type 1, 4, & 13 oiltight pressure controls are designed for use on machine tool applications where a stream of oil or water may flow over the enclosure. Other applications would include areas where it is desirable to resist the entrance of lint, dust, and dirt into the enclosure.

The operating range pressure and differential are adjustable externally.

Bellows type devices are available from vacuum to pressures up to 650 psi.

**ATTENTION:** Copper alloy bellows may be used on water or air and other liquids or gases not corrosive to this alloy. Type 316 stainless steel bellows are available and are used for the more corrosive liquids and gases.

Piston type devices are available for pressures up to 5000 psi.

**ATTENTION:** Stainless steel piston type controls are designed for use on oil, water and waterbased fluids but must not be used on air or gases.

The 2 - Circuit contact block has one set of normally open and one set of normally closed contacts. These contacts may be arranged for single pole double-throw operation or separate circuit operation having the same polarity.

A 4 - Circuit contact block assembly with two normally open and two normally closed contacts is also available. An isolated terminal is furnished to provide a termination point when an optional power source is used. These contacts may be arranged for double pole double-throw operation or two isolated single pole double-throw, electrically isolated circuits. Circuits must be of the same polarity.

**MOUNTING -** The pressure control should be mounted securely to a firm base using two mounting screws. The recommended fastener for mounting is a 1/4"-20 or M6X1 metric screw. The applied torque should not exceed 70 lb-in (8 Nm).The mounting holes (see sketch) are easily accessible without removing the front cover assembly.

**ATTENTION:** The control should not be supported by only the electricaland pressure connections. A support wrench should be used when tightening the electrical hub and pressure connections.

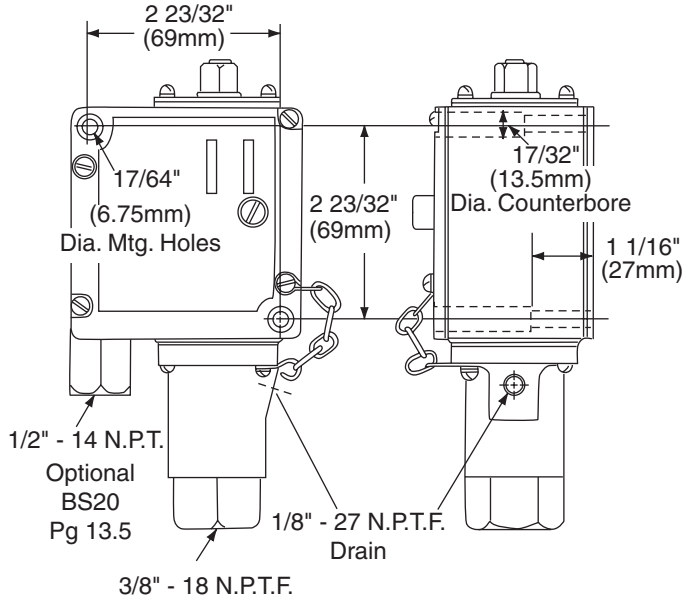


**Piston Type Shown**

**OPERATION -** A toggle mechanism operates the snap action switch at a predetermined pressure setting. For the 2 - Circuit snap switch the pressure causes the normally closed circuit 1-2 to open and normally open circuit 3-4 to close. This is known as the trip pressure. When the pressure returns to a lower predetermined setting, the circuit 1-2 will close and circuit 3-4 will open. This is known as the reset pressure. The difference between "trip" and "reset" pressure is the differential.
Similarly, for the 4 - Circuit snap switch, both normally closed circuits, 1-2 & 5-6 would open and both normally open circuits, 3-4 & 7-8 would close on increasing pressure. On decreasing pressure, the contacts would return to their original state at a predetermined setting.

Catalog number 836T-T251J can also be operated in a vacuum. At a higher vacuum setting (lower pressure toward 30" Hg) the 2 - Circuit switch contacts 1-2 will be closed and 3-4 open. At a lower vacuum (higher pressure toward 0 psi) circuit 1-2 will open and circuit 3-4 will close.

**EXAMPLE:** Control set to close contacts at 15" Hg vacuum, open at 5" Hg vacuum. For the 2 - Circuit switch, circuit 1-2 would be used. For the 4 - Circuit switch, circuits 1-2 or 5-6 would be used.

**CONTACT BLOCK WIRING SYMBOL**
**(Increasing Pressure Operation)**

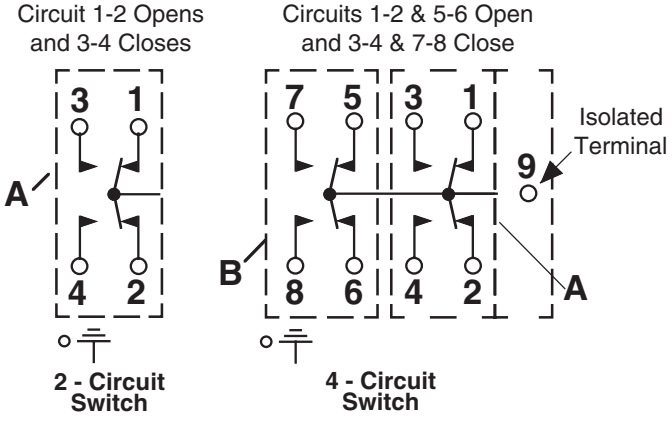


A or B circuits must be the same polarity.

**ADJUSTMENT** - Generally, unless otherwise specified, controls shipped from the factory are set at the maximum operating range pressure and minimum differential.

The following procedure should be used to set the control to a particular requirement.

**OPERATING RANGE ADJUSTMENT:** Turn lock nut on adjustment screw "A" counterclockwise to loosen. Turn range adjustment screw "A" clockwise to raise upper and lower pressure settings. To decrease the upper and lower settings, turn screw "A" counterclockwise. The approximate upper pressure setting is shown by an indicator in the left window between the calibration scales on the nameplate. When the proper setting is reached, tighten the lock nut on screw "A" clockwise.

**DIFFERENTIAL ADJUSTMENT:** When the differential screw "B" is up against the underside of the differential access opening in the cover the control will function at minimum differential. To increase the differential, turn adjustment screw "B" clockwise. This will decrease the lower setting only. The higher setting will not change. Similarly, to decrease the differential turn the differential adjustment screw "B" counterclockwise. This will raise the lower setting only.
Condensed instructions can be found on the inside of the front cover.

**NOTE: The use of a pressure gauge is desirable when setting the control.**

**ATTENTION:** The adjustment screw "A" should not be forced beyond the range of the control indicated on the calibrated scale. The adjustment screw "B" should not be adjusted beyond the maximum specified differential of the control.

Operating variables in a system may cause changing pressure requirements. It is recommended that a periodic inspection of the gauge pressure be made and the pressure control adjusted to compensate when necessary for these changes.

**PISTON TYPE APPLICATIONS -**

**ATTENTION:** All pistons are provided with a 1/8 inch threaded drainopening which should be connected to an oil return line leading to anoil reservoir which is vented to atmosphere. This reservoir may be at ahigher level of elevation than the control. The controls with seal ringsusually do not require return lines. However, the 1/8 inch threaded drainopening should never be plugged on either type of piston control. Thisalso includes the shipping plug which must be removed upon installa-tion. Filters should be used to reduce contamination of hydraulic fluid.

**PILOT LIGHT OPTION -** A high intensity neon glow pilot light is available for 120 volt, 60 hertz applications and can be installed at the factory or in the field. To order pilot light kit specify catalog number of existing control and add N9 to this number. Optional pilot lights are available on special orders.

The pilot light is wired to the contact block as follows:

A. **2 - Circuit**
Always connect lamp wires to same set of terminals used for the load. To light on increasing pressure connect across 1-2. To light on decreasing pressure connect across 3-4.

B. **4 - Circuit**
Consists of 2 electrically isolated single pole-double throw circuits. Connect lamp wires to same set of terminals used for load. To light on increasing pressure connect across 1-2 or 5-6. To light on decreasing pressure connect across 3-4 or 7-8.
(or)
An isolated terminal, 9, is provided as a termination point when an optional power source is used. This provides a convenient means for various circuit connections when separation of the load and pilot light is required. Circuits must be the same polarity for pilot light connections and switching of auxiliary equipment.

**PAINTING -** Standard controls are supplied with a removable paint mask on the nameplate. Remove the mask on final installation.

**CONTACT BLOCK REPLACEMENT -** To order Bulletin 836T Contact Block 2 - Circuit (SPDT-DB) Replacement Kit specify Catalog Number 836T-N1. For the 4 - Circuit (DPDT-DB) Contact Block Replacement Kit specify Catalog Number 836T-N2.

**REPAIRS** - Due to the integral construction of the Bulletin 836T Pressure Control, it is recommended it be returned to the factory for repairs (excluding contact block replacement). The control will be adjusted for optimum performance and tested to specifications.

# *ASCO*

## *MODEL 8210G100, SOLENOID VALVE*

LEFT BLANK

# Installation & Maintenance Instructions

**2 - WAY INTERNAL PILOT - OPERATED SOLENOID VALVES**
**NORMALLY CLOSED OPERATION**
**2" OR 2 1/2" NPT**

**BULLETIN**
**8210**
**8211**

**IMPORTANT: See separate solenoid installation and maintenance instructions for information on: Wiring, Solenoid Temperature, Cause of Improper Operation, Coil or Solenoid Replacement.**

## DESCRIPTION

Series 8210 valves are 2-way normally closed, internal pilot operated solenoid valves designed for general service. These valves are made of rugged forged brass or die cast stainless steel and have an integral adjustable bleed device for controlling the opening and closing speed of the piston. Series 8210 valves are supplied with general purpose, or explosionproof/ watertight solenoids.

Series 8211 valves are the same as Series 8210 except that they are provided with a metal explosionproof/watertight solenoid enclosure.

## OPERATION

Normally Closed: Valve is closed when solenoid is de-energized; open when energized.

**IMPORTANT: Minimum operating pressure differential required is 5 psi.**

**Adjustable Bleed Device**

Series 8210 valves have an integral adjustable bleed device for controlling the opening and closing speed of the piston. When valve leaves the factory, the bleed adjusting screw (metering pin) has been preset to provide quick shockless closing for most applications. If faster or slower closing is required, adjust the screw (metering pin) as follow:

1. Turn metering pin in (clockwise) as far as possible without over tightening. Back out tightening. Back out metering pin (counterclockwise) two complete turns. From this point, adjustments may be made to suit system.
2. Turn metering pin clockwise for slower closing.
3. Turn metering pin counterclockwise for faster closing.

**Manual Operation** (Optional Feature)

Valve with suffix ***MO*** in the catalog number are provided with a manual operator which allows manual operation when desired or during an electrical power outage.

To engage manual operator, rotate stem fully clockwise (approximately 180°). Valve will now be in the same position as when the solenoid is energized.

To disengage manual operatork, rotate stem fully counterclockwise (approximately 180°) before operating electrically.

**⚠ CAUTION: For valve to operate electrically, manual operator stem/lever must be fully rotated counterclockwise.**

**⚠ ATTENTION : Afin que la vanne fonctionne électriquement, la commande manuelle doit être complètement tournée dans le sens inverse des aiguilles d'une montre.**

## INSTALLATION

Check nameplate for correct catalog number, pressure, voltage, frequency, and service. Never apply incompatible fluids or exceed pressure rating of the valve. Installation and valve maintenance to be performed by qualified personnel.

**Future Service Considerations**

Provision should be made for performing seat leakage, external leakage, and operational tests on the valve with a nonhazardous, noncombustible fluid after disassembly and reassembly.

**Temperature Limitations**

For maximum valve ambient and fluid temperatures, refer to chart below. Check catalog number prefix on nameplate to determine the maximum temperatures.

| Construction | Catalog Number Prefix | Coil Class | Maximum Ambient Temp.°F | Maximum Fluid Temp.°F |
|---|---|---|---|---|
| AC | None or FT | F | 122 | 180 |
| | HT | H | 140 | 180 |
| DC | None,FT or HT | F or H | 77 | 150 |

**Positioning**

This valve is designed to perform properly when mounted in any position. However, for optimum life and performance, the solenoid should be mounted vertically and upright to reduce the possibility of foreign matters accumulating in the solenoid base sub-assembly area.

**Piping**

Connect piping or tubing to valve according to markings on valve body. Apply pipe compound sparingly to male pipe threads only. If applied to valve threads, the compound may enter the valve and cause operational difficulty. Avoid pipe strain by properly supporting and aligning piping. When tightening the pipe, do not use valve or solenoid as a lever. Locate wrenches applied to valve body or piping as close as possible to connection point.

**IMPORTANT: To protect the solenoid valve, install a strainer or filter, suitable for the service involved, in the inlet side as close to the valve as possible. Clean periodically depending on service conditions. See ASCO Series 8600 and 8601 for strainers.**

**Wiring**

Wiring must comply with Local and National Electrical Codes. Housing is provided with 7/8 diameter hole to accommodate 1/2 inch conduit. The general purpose solenoid enclosure may be rotated to facilitate wiring by removing the retaining clip.

## MAINTENANCE

**⚠ WARNING: To prevent the possibility of death, serious injury or property damage, turn off electrical power, depressurize valve, and vent fluid to a safe area before servicing the valve.**

**⚠ AVERTISSEMENT: Pour éviter tous danger de mort, de blessure grave ou de dommage matériel, avant d'intervenir sur la vanne, couper le courant, purger la vanne dans une zone sécurisée.**

NOTE: It is not necessary to remove the valve from the pipeline for repairs.

**Cleaning**

All solenoid valves should be cleaned periodically. The time between cleanings will vary depending on the medium and service conditions. In general, if the voltage to the coil is correct, sluggish valve operation, excessive noise, or leakage will indicate that cleaning is required. In the extreme case, faulty valve operation will occur and the valve may fail to open or close. Clean valve strainer or filter when cleaning the valve.

**Preventive Maintenance**

- Keep medium flowing through the valve as free from dirt and foreign material as possible.
- Periodic exercise of the valve should be considered if ambient or fluid conditions are such that corrosion, elastomer degradation, fluid contamination build up, or other conditions that could impede solenoid valve shifting are possible. The actual frequency of exercise necessary will depend on specific operating conditions. A successful operating history is the best indication of a proper interval between exercise cycles.
- Depending on the medium and service conditions, periodic inspection of internal valve parts for damage or excessive wear is recommended. Thoroughly clean all parts. If parts are worn or damaged, install a complete rebuild kit.

**Causes of Improper Operation**

- **Incorrect Pressure:** Check valve pressure. Pressure to valve must be within range specified on nameplate.
- **Excessive Leakage:** Disassemble valve and clean all parts. If parts are worn or damaged, install a complete ASCO Rebuild Kit.

**Valve Disassembly** (Refer to Figure 3 on page 4)

1. Disassemble valve in an orderly fashion. Use exploded view for identification and placement of parts.
2. Remove solenoid, see separate instructions.
3. If the valve being serviced has a manual operator, ***suffix MO*** in the catalog number, refer to section on ***Manual Operator Disasembly***.
4. Unscrew solenoid base sub-assembly and remove solenoid base gasket, core assembly with core spring.
5. For normal maintenance, it is not necessary to remove the valve seat. However, if valve seat removal is required, use a 7/16" socket wrench.
6. Dislodge retainer from metering pin passageway and remove metering pin with gasket. Then remove metering pin gasket from metering pin.
7. Remove bonnet screws, valve bonnet, piston spring, piston assembly, support, lip seal, body gasket, and body passage gasket.
8. Remove aspirator tube and disc with disc gasket from piston.
9. All parts are now accessible to clean or replace. If parts are worn or

 All Rights Reserved. 
©ASCO, L.P. 160 Park Avenue, Florham Park, New Jersey 07932 www.asco.com 

damaged, install a complete ASCO Rebuild kit.

**Valve Reassembly**

1. Reassemble valve using exploded views for identification and placement of parts.
2. Lubricate the solenoid base gasket, body gasket, body passage gasket, metering pin gasket, and the surface of the piston which contacts the lip seal with MOLYKOTE® 200 Fluid lubricant.
3. Lubricate disc and disc gasket with MOLYKOTE® 111 Compound lubricant or an equivalent high-grade silicone grease.
4. Position body gasket, body passage gasket, and support in valve body.
5. Install aspirator tube and disc with disc gasket in piston.
6. Position lip seal, flanged end out, onto piston assembly. Install piston assembly with lip seal into support in valve body cavity.
7. Replace piston spring, valve bonnet, and bonnet screws. Torque bonnet screws in a crisscross manner to 144 ± 15 in-lbs [16,3 ± 1,7 Nm].
8. Replace valve seat with a small amount of thread compound on the seat threads. Torque valve seat to 65 ± 15 in-lbs [7,3 ± 1,7 Nm].
9. Install metering pin with metering pin gasket into valve body. Replace retainer and refer to ***Adjustable Bleed Device*** section for metering pin adjustment.
10. If the valve being service has a manual operator, refer to ***Manual Operator Reassembly*** section.
11. Replace solenoid base gasket, core assembly, core spring, and solenoid base sub-assembly. Torque solenoid base sub-assembly to 175 ± 25 in-lbs [19,8 ± 2,8].
12. Install solenoid, see separate instructions and make electrical hookup.

⚠ **WARNING: To prevent the possibility of death, serious injury or property damage, check valve for proper operation before returning to service. Also perform internal seat and external leakage tests with a nonhazardous, noncombustible fluid.**

⚠ **AVERTISSEMENT: Afin d'éviter le risque de mort, de blessure ou de dommage matériel, vérifier le bon fonctionnement de l'électrovanne avant de la remettre en service. Contrôler aussi les fuites externe et interne avec un fluide non dangereux.**

13. Restore line pressure and electrical power supply to valve.
14. After maintenance is completed, operate the valve a few times to be sure of proper operation. A metallic *click* signifies the solenoid is operating.

**Manual Operator Disassembly**

1. Refer to ***Valve Disassembly*** section and follow step 1 and 2.
2. For AC construction refer to Figure 1 on page 3; DC construction Figre 2 on page 3.
3. Unscrew solenoid base sub-assembly from manual operator body.
4. Unscrew manual operator body and remove this assembly intact. Remove body gasket from main valve body.
5. Before removing the stem retainer from the manual operator body, note the location of captive spacing washer on the stem/lever sub-assembly. The captive spacing washer will be on the ***inside*** of the fork on the stem retainer for AC construction and on the ***outside*** for DC construction. Location of this captive spacing washer is important for reassembly.
6. Remove stem/lever sub-assembly with stem gasket from manual operator body. remove solenoid base gasket, core assembly with core spring.
7. Refer to ***Valve Disassembly*** sections, step 5 for further disassembly.

**Manual Operator Reassembly**

Refer to steps 1 through 9 of ***Valve Reassembly*** then proceed as follows:

1. Position stem gasket on stem/lever sub-assembly.
2. Preassemble manual operator parts as follows: Position core assembly with core spring into manual operator body from the bottom. Install stem/lever sub-assembly into manual operator body. Install stem retainer and be sure the captive spacing washer on the stem/level sub-assembly is located on the ***inside*** of the fork on the stem retainer for AC construction and on the ***outside*** of the fork on the stem retainer for DC construciton.
3. Replace body gasket in valve body.
4. Screw manual operator body intact into valve body. Torque manual operator body to 175 ± 25 in-lbs [19,8 ± 2,8 Nm].

**ORDERING INFORMATION**
**FOR ASCO REBUILD KITS**

Parts marked with an asterisk (*) in the exploded view are supplied in Rebuild Kits.

* When Ordering Rebuild Kits for ASCO valves, order the Rebuild Kit number stamped on the valve nameplate.

+ If the number of the kit is not visible, order by indicating the number of kits required, and the Catalog Number and Serial Number of the valve(s) for which they are intended.



©ASCO, L.P. 160 Park Avenue, Florham Park, New Jersey 07932 www.asco.com

## Torque Chart

| Part Name | Torque Value in Inch–Pounds | Torque Value in Newton–Meters |
|---|---|---|
| Solenoid Base Sub–Assembly / Manual Operator Body | 175 ± 25 | 19,8 ± 2,8 |
| Valve Seat | 65 ± 15 | 7,3 ± 1,7 |

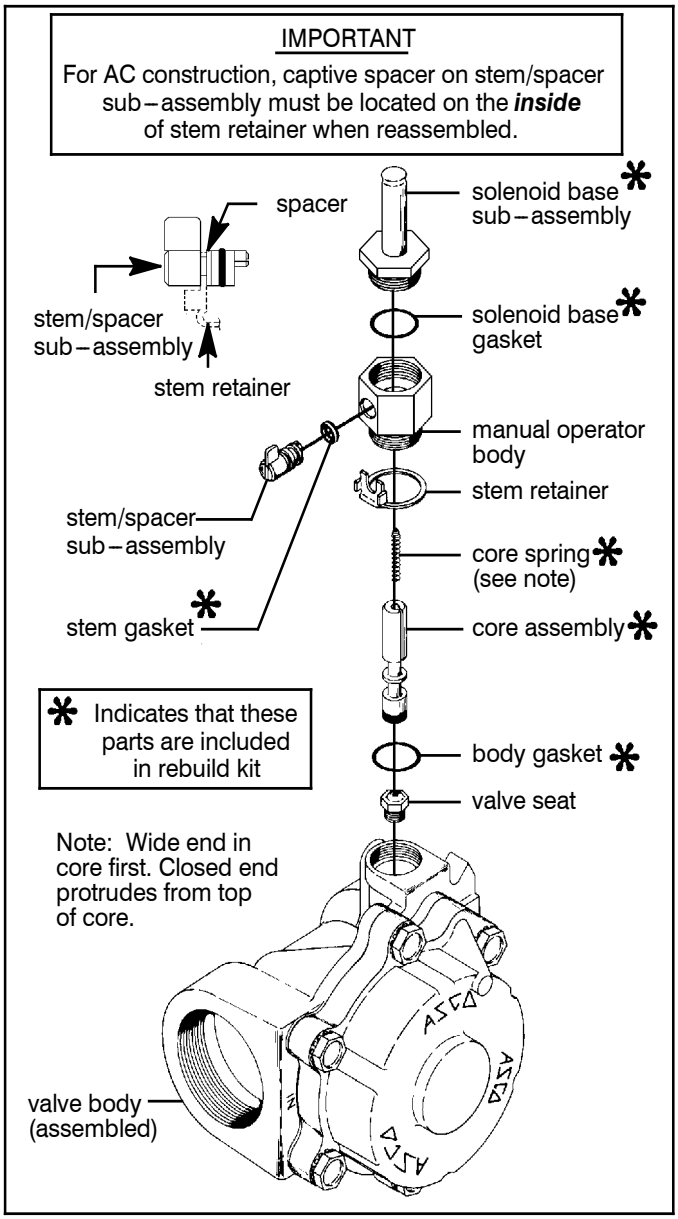


Figure 1. Manual Operator Assembly, AC Construction.

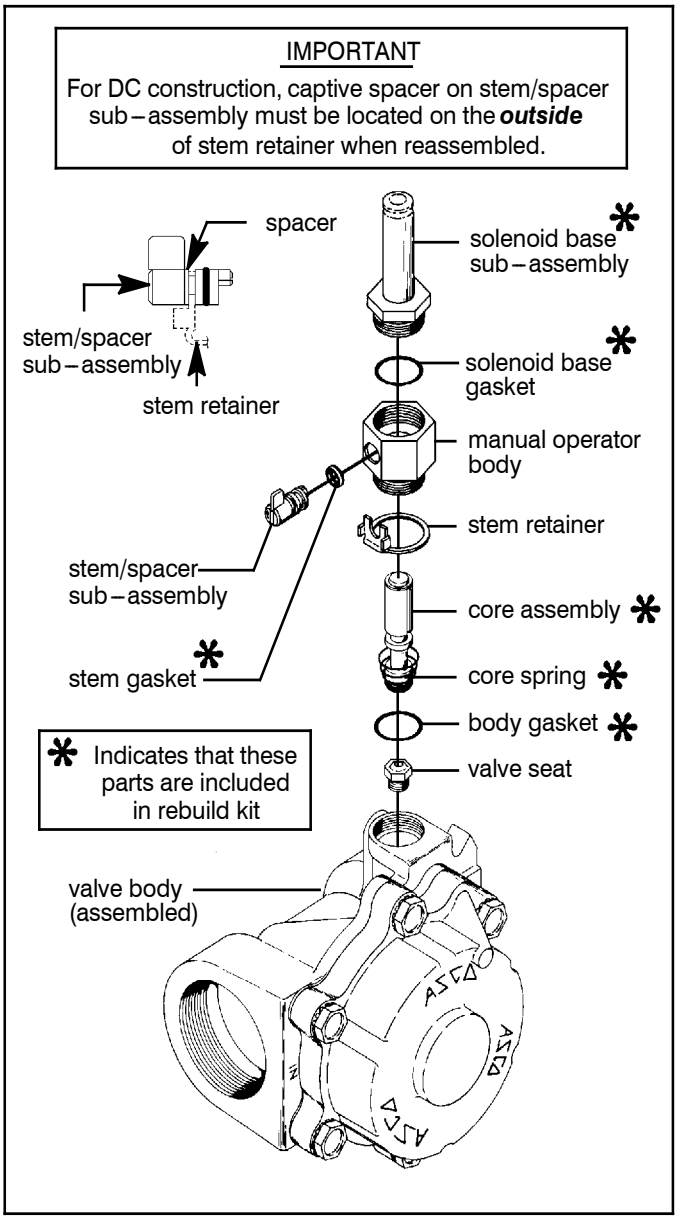


Figure 2. Manual Operator Assembly, DC construction.



©ASCO, L.P. 160 Park Avenue, Florham Park, New Jersey 07932 www.asco.com

## Torque Chart

| Part Name | Torque Value in Inch–Pounds | Torque Value in Newton–Meters |
|---|---|---|
| Solenoid Base Sub–Assembly | 175 ± 25 | 19,8 ± 2,8 |
| Bonnet Screws | 144 ± 15 | 16,3 ± 1,7 |
| Valve Seat | 65 ± 15 | 7,3 ± 1,7 |

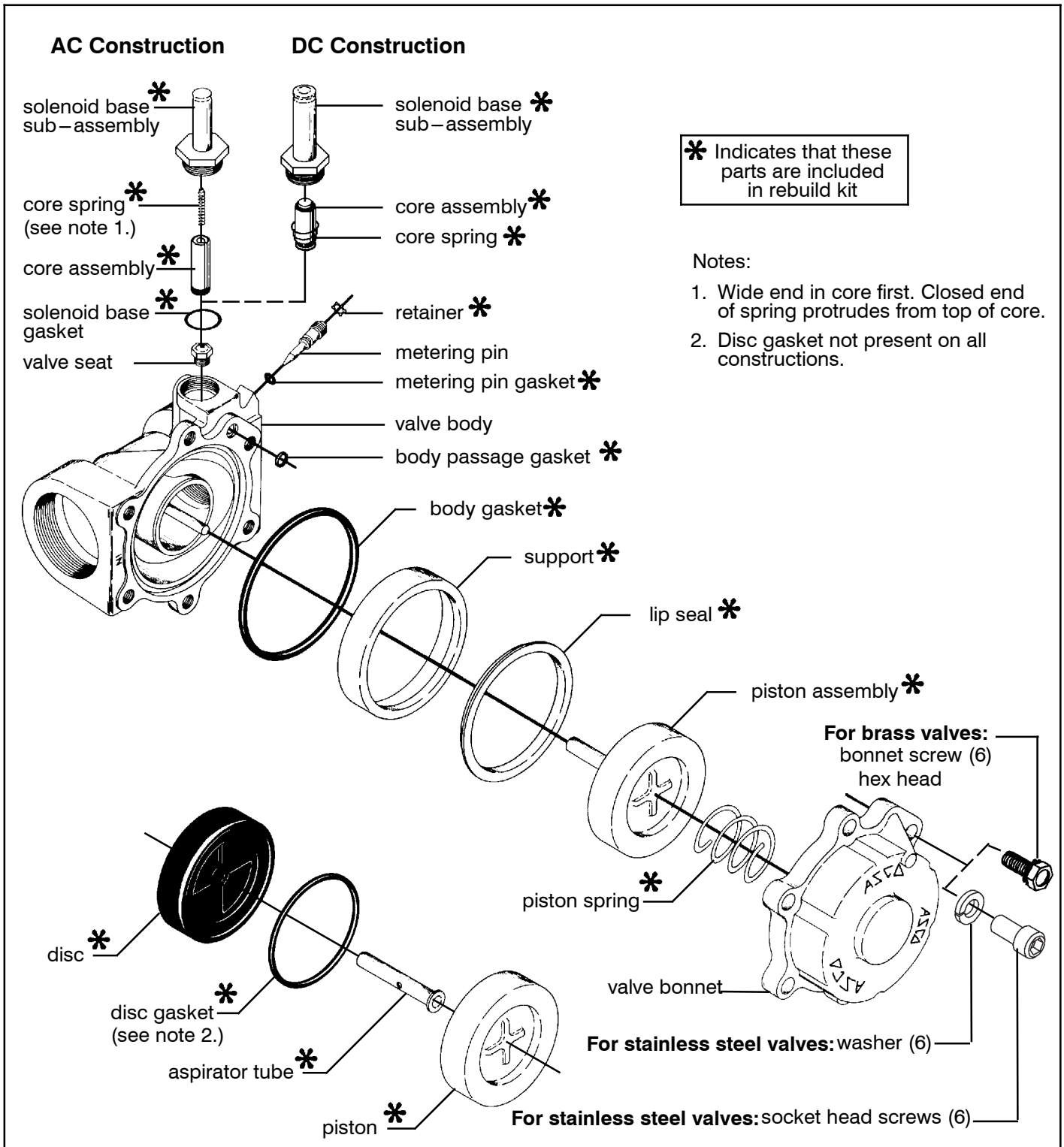


Figure 3. Series 8210 valve without solenoid.



©ASCO, L.P. 160 Park Avenue, Florham Park, New Jersey 07932 www.asco.com

# Installation&Maintenance Instructions

ASCO Red-Hat II™

**OPEN-FRAME, GENERAL PURPOSE, WATERTIGHT/EXPLOSIONPROOF SOLENOIDS**
**OPTIONAL FEATURE FOR OPEN FRAME (GENERAL PURPOSE) CONSTRUCTION ONLY**

**SERIES**
**8016G/H**

## — SERVICE NOTICE —

ASCO™ solenoid valves with design change letter "G" or "H" in the catalog number (ex. 8210G1) have an epoxy encapsulated ASCO Red Hat II® solenoid. This solenoid replaces some of the solenoids with metal enclosures and open-frame constructions. Follow these installation and maintenance instructions if your valve or operator uses this solenoid.

## DESCRIPTION

Catalog numbers 8016G/H1 and 8016G/H2 are epoxy encapsulated pull-type solenoids. The green solenoid with lead wires and 1/2 conduit connection is designed to meet Enclosure Type 1-General Purpose, Type 2-Dripproof, Types 3 and 3S-Raintight, and Types 4 and 4X-Watertight. The black solenoid on catalog numbers prefixed "EF" is designed to meet Enclosure Types 3 and 3S-Raintight, Types 4 and 4X-Watertight, Types 6 and 6P-Submersible, Type 7, Explosionproof Class I, Division1 Groups A, B, C, & D and Type 9, -Dust-Ignitionproof Class II, Division1 Groups E, F & G. The Class II, Groups F & G Dust Locations designation is not applicable for solenoids or solenoid valves used for steam service or when a class "H" solenoid is used. See *Temperature Limitations* section for solenoid identification and nameplate/retainer for service. When installed just as a solenoid and not attached to an ASCO valve, the core has a 0.250-28 UNF-2B tapped hole, 0.38 minimum full thread.

**Series 8016G/H are also available in:**

- **Open-Frame Construction:** The green solenoid may be supplied with 1/4″ spade, screw or DIN terminals. (Refer to Figure 4)
  - □ **DIN Plug Connector Kit No. K236034:** Use this kit only for solenoids with DIN terminals. The DIN plug connector kit provides a two pole with grounding contact DIN Type 43650 construction (See Figure 6).
- **Panel Mounted Construction:** These solenoids are specifically designed to be panel mounted by the customer through a panel having a .062 to .093 maximum wall thickness. (Refer to Figure 3 and section on *Installation of Panel Mounted Solenoid*).
- **Junction Box:** This junction box construction meets Enclosure Types 2, 3, 3S, 4, and 4X. Only solenoids with 1/4″ spade or screw terminals may have a junction box. The junction box provides a 1/2″ conduit connection, grounding and spade or screw terminal connections within the junction box (See Figure 5).
- **Multipin Connectors:** All Multipin connectors (VT, ZT) do not have any enclosure ratings.

NOTE: For China RoHS Hazardous Substances table, please go to the link below or scan QR code:

**www.asco.com/ChinaRoHSDisclosure**

## OPERATION

When the solenoid is energized, the core is drawn into the solenoid base sub-assembly.

**IMPORTANT: When the solenoid is de-energized, the initial return force for the core, whether developed by spring, pressure, or weight, must exert a minimum force to overcome residual magnetism created by the solenoid. Minimum return force for AC construction is 0.69 lbs (3.1 N) and 0.31 lbs (1.38 N) for DC.**

## INSTALLATION

Check nameplate for correct catalog number, service, and wattage. Check front of solenoid for voltage and frequency.

**⚠ WARNING: Electrical hazard from the accessibility of live parts. To prevent the possibility of death, serious injury or property damage, install the open - frame solenoid in an enclosure.**

**⚠ AVERTISSEMENT: Risque d'accès aux parties électriques actives. Afin d'éviter tout risque de mort, blessure ou dommage, installer la bobine dans un boitier.**

## FOR BLACK ENCLOSURE TYPES 7 AND 9 ONLY

**⚠ CAUTION: To prevent fire or explosion, do not install solenoid and/or valve where ignition temperature of hazardous atmosphere is less than 165 °C. On valves used for steam service or when a class "H" solenoid is used, do not install in hazardous atmosphere where ignition temperature is less than 180 °C. See nameplate/retainer for service.**

**⚠ ATTENTION: Afin d'éviter le risque de feu ou d'explosion, ne pas installer la bobine ou l'électrovanne ou la température d'inflammation en atmosphère explosible est inferieure à 165 °C. Pour les vannes vapeur ou lorsqu'une bobine de classe H est utilisée, ne pas installer en atmosphère explosible lorsque la température d'inflammation est inférieure à 180 °C. Consulter les conditions d'utilisations sures indiquées sur le produit ou dans la notice.**

**NOTE:** These solenoids have an internal non-resetable thermal fuse to limit solenoid temperature in the event that extraordinary conditions occur which could cause excessive temperatures. These conditions include high input voltage, a jammed core, excessive ambient temperature or a shorted solenoid, etc. This unique feature is a standard feature only in solenoids with black explosionproof/dust-ignitionproof enclosures (Types 7 & 9).

**⚠ CAUTION: To protect the solenoid valve or operator, install a strainer or filter, suitable for the service involved in the inlet side as close to the valve or operator as possible. Clean periodically depending on service conditions. See ASCO Series 8600 and 8601 for strainers.**

**⚠ ATTENTION : Afin de protéger l'électrovanne ou l'actionneur, installer une crépine ou un filtre adapté le plus proche possible en amont de l'électrovanne ou de l'actionneur. Nettoyer périodiquement le filtre en fonction des conditions d'utilisation. Se référer aux séries 8600 et 8601 pour les crépines.**

### Temperature Limitations

For maximum solenoid ambient temperatures, refer to chart. The temperature limitations listed, only indicate maximum application temperatures for field wiring rated at 90 °C. Check catalog number prefix and watt rating on nameplate to determine maximum ambient temperature. See valve installation and maintenance instructions for valve temperature limitations.

NOTE: For steam service, refer to *Wiring* section, *Junction Box* for temperature rating of supply wires.

| Temperature Limitations For Series 8016G Solenoids | | | |
|---|---|---|---|
| Watt Rating | Catalog Number Coil Prefix | Class of Insulation | Maximum § Ambient Temp. |
| 6.1, 8.1, 9.1 & 11.1 | None, FB, KF, KP, SC, SD, SF, SP, VT & ZT | F | 125 °F (52 °C) |
| 6.1, 8.1, 9.1, 11.1 & 20.6 | HB, HT, KB, KH, SS, ST, HC & SU | H | 140 °F (60 °C) |
| 10.6** | None, KF, SF, SC, HT, KH, ST, SU, VT & ZT | F & H | 104 °F (40 °C) |
| 7.1 @ 60Hz (8.1 @ 50Hz) | | F & H | 175 °F (79 °C)* |
| 10.6** | | F & H | 140 °F (60 °C) |

§ Minimum ambient temperature -40 °F (-40 °C).
* When used with watertight aluminum junction boxes (screw or spade) max. ambient and fluid temperature will be reduced to 157 °F (69.4 °C)
** 10.6 Watt solenoids rated for 104 °F are 8030, 8260, 8316, 8321, 8320, 8360 & 8344 valves while those rated for 140 °F are 8040 valves

 All Rights Reserved. 
©ASCO, L.P. 160 Park Avenue, Florham Park, New Jersey 07932 

| Temperature Limitations for Series 8016H solenoids | | | | | | |
|---|---|---|---|---|---|---|
| | | Watt Ratings | | | Maximum Ambient Temperature | |
| Prefix ① | Coil Class | AC | | DC | | |
| | | 60 Hz | 50 Hz | | °C | °F |
| EF | FT | 6.1 | 8.1 | - | 52 | 125 |
| EF | FB | 9.1 | 11.1 | - | | |
| | FT | 6.1 | 8.1 | - | 55 | 131 |
| | FB | 9.1 | 11.1 | - | | |
| | HT | - | - | 10.6 | 40 ② | 104② |
| | HB | - | - | 18.6 | | |
| EF | HT | - | - | 10.6 | | |
| EF | HB | - | - | 18.6 | | |
| | HT | 6.1 | 8.1 | - | 60 ③ | 140 ③ |
| | HB | 9.1 | 11.1 | - | | |
| EF | HT | 6.1 | 8.1 | - | | |
| EF | HB | 9.1 | 11.1 | - | | |
| EF | HC | - | - | 20.6 | | |

①= EF data applies to Explosionproof coils only.
②= Some DC solenoid valves can be operated at maximum ambient temperature of 55 °C / 131 °F with reduced pressure ratings. See valve I&M for maximum operating pressure differential ratings.
③= Steam Service Valves have a maximum ambient temperature of 55 ° C/ 131 °F.

## Positioning

This solenoid is designed to perform properly when mounted in any position. However, for optimum life and performance, the solenoid should be mounted vertically and upright to reduce the possibility of foreign matter accumulating in the solenoid base sub-assembly area.

## Wiring

Wiring must comply with local codes and the National Electrical Code. All solenoids supplied with lead wires are provided with a grounding wire which is green or green with yellow stripes and a 1/2″ conduit connection. To facilitate wiring, the solenoid may be rotated 360°. For explosionproof solenoid version, the conduit lead wires are factory sealed for use in hazardous locations.

## Additional Wiring Instructions For Optional Features:

- **Open-Frame solenoid with 1/4″ spade terminals.**

For solenoids supplied with screw terminal connections use #12-18 AWG stranded copper wire rated at 90°C or greater. Torque terminal block screws to 10±2 in-lbs [1,1±0,2 Nm]. A tapped hole is provided in the solenoid for grounding, use a #10-32 machine screw. Torque grounding screw to 15-20 in-lbs [1,7-2,3 Nm]. On solenoids with screw terminals, the socket head screw holding the terminal block to the solenoid is the grounding screw. Torque the screw to 15-20 in-lbs [1,7-2,3 Nm] with a 5/32″ hex key wrench.

- **Junction Box**

The junction box is used with spade or screw terminal solenoids only and is provided with a grounding screw and a 1/2″ conduit connection. Connect #12-18 AWG standard copper wire only to the screw terminals. Within the junction box use field wire that is rated 90°C or greater for connections. For steam service use 105°C rated wire up to 50 psi or use 125°C rated wire above 50 psi. After electrical hookup, replace cover gasket, cover, and screws. Tighten screws evenly in a crisscross manner.

| Multipin Connector | | |
|---|---|---|
| Connector type | Mating Connector | Application |
| VT | 4-Pin, M12, Female, Single Keyway | DC |
| | 4-Pin, M12, Female, Dual Reverse Keyway | AC |
| ZT | 3-Pin, Mini, Female, Singe Keyway | AC/DC |

- **DIN Plug Connector Kit No. K236034**

1. The open-frame solenoid is provided with DIN terminals to accommodate the plug connector kit.
2. Remove center screw from plug connector. Using a small screwdriver, pry terminal block from connector cover.
3. Use #12-18 AWG stranded copper wire rated at 90°C or greater for connections. Strip wire leads back approximately 1/4″ for installation in socket terminals. The use of wire-end sleeves is also recommended for these socket terminals. Maximum length of wire-end sleeves to be approximately 1/4″. Tinning of the ends of the lead wires is not recommended.
4. Thread wire through gland nut, gland gasket, washer and connector cover.

NOTE: Connector housing may be rotated in 90° increments from position shown for alternate positioning of cable entry.

5. Check DIN connector terminal block for electrical markings. Then make electrical hookup to terminal block according to markings on it. Snap terminal block into connector cover and install center screw.
6. Position connector gasket on solenoid and install plug connector. Torque center screw to 5±1 in-lbs [0,6±1,1 Nm].

NOTE: Alternating current (AC) and direct current (DC) solenoids are built differently and cannot be converted from one to the other by changing the coil.

**Installation of Solenoid**

Solenoids may be assembled as a complete unit. Tightening is accomplished by means of a hex flange at the base of the solenoid.

**Installation of Panel Mounted Solenoid** (See Figure 3)

Disassemble solenoid following instruction under *Solenoid Replacement* then proceed.

**3/4" Valve Bonnet Construction**

1. Install retainer (convex side to solenoid) in 1.312 diameter mounting hole in customer panel.
2. Position spring washer over plugnut/core tube sub-assembly.
3. Install plugnut/core tube sub-assembly through retainer in customer panel then replace solenoid, nameplate and red cap.

**15/16" Valve Bonnet Construction**

1. Install solenoid base sub-assembly through 0.69 diameter mounting hole in customer panel.
2. Position spring washer on opposite side of panel over solenoid base sub-assembly then replace.

## Solenoid Temperature

Standard solenoids are designed for continuous duty service. When the solenoid is energized for a long period, the solenoid becomes hot and can be touched by hand only for an instant. This is a safe operating temperature.

# MAINTENANCE

**⚠ WARNING: To prevent the possibility of death, serious injury or property damage, turnoff electrical power, depressurize solenoid operator and/or valve, and vent fluid to a safe area before servicing.**

**⚠ AVERTISSEMENT : Afin d'éviter tout risque de mort, blessure ou dommage, couper l'alimentation électrique, dépressuriser la vanne ou l'électrovanne et vidanger le fluide en zone non dangereuse avant toute maintenance.**

## Cleaning

All solenoid operators and valves should be cleaned periodically. The time between cleaning will vary depending on medium and service conditions. In general, if the voltage to the solenoid is correct, sluggish valve operation, excessive noise or leakage will indicate that cleaning is required. Clean strainer or filter when cleaning the valve.

## Preventive Maintenance

- Keep the medium flowing through the solenoid operator or valve as free from dirt and foreign material as possible.
- Periodic exercise of the valve should be considered if ambient or fluid conditions are such that corrosion, elastomer degradation, fluid contamination build up, or other conditions that could impede solenoid valve shifting are possible. The actual frequency of exercise necessary will depend on specific operating conditions. A successful operating history is the best indication of a proper interval between exercise cycles.
- Depending on the medium and service conditions, periodic inspection of internal valve parts for damage or excessive wear is recommended. Thoroughly clean all parts. Replace any worn or damaged parts.

## Causes of Improper Operation

- **Faulty Control Circuit:** Check the electrical system by energizing the solenoid. A metallic *click* signifies that the solenoid is operating. Absence of the *click* indicates loss of power supply. Check for loose or blown fuses, open-circuited or grounded solenoid, broken leadwires or splice connections.
- **Burned-Out Solenoid:** Check for open-circuited solenoid. Replace if necessary. Check supply voltage; it must be the same as specified on nameplate/retainer and marked on the solenoid. Check ambient temperature and check that the core is not jammed.
- **Low Voltage:** Check voltage across the solenoid leads. Voltage must be at least 85% of rated voltage.

## Solenoid Replacement

1. On solenoids with lead wires disconnect conduit, coil leads, and grounding wire.

NOTE: Any optional parts attached to the old solenoid must be reinstalled on the new solenoid.

2. Disassemble solenoids with optional features as follows:
   - **Spade or Screw Terminals**

   Remove terminal connections, grounding screw, grounding wire, and terminal block (screw terminal type only).

NOTE: For screw terminals, the socket head screw holding the terminal block serves as a grounding screw.


©ASCO, L.P. 160 Park Avenue, Florham Park, New Jersey 07932
www.asco.com

- **Junction Box**
  Remove conduit and socket head screw (use 5/32″ hex key wrench) from center of junction box. Disconnect junction box from solenoid.
- **DIN Plug Connector**
  Remove center screw from DIN plug connector. Disconnect DIN plug connector from adapter. Remove socket head screw (use 5/32″ hex key wrench), DIN terminal adapter, and gasket from solenoid.

3. Snap off red cap from top of solenoid base sub-assembly.
4. Push down on solenoid. Then using a suitable screwdriver, insert blade in slot provided between solenoid and nameplate/retainer. Pry up slightly and push to remove. Then remove solenoid from solenoid base sub-assembly.
5. Reassemble using exploded views for parts identification and placement.

**Disassembly and Reassembly of Solenoids**

1. Remove solenoid, see *Solenoid Replacement*.
2. Remove spring washer from solenoid base sub-assembly.
3. Unscrew solenoid base sub-assembly.

NOTE: Some solenoid constructions have a plugnut/core tube sub-assembly, bonnet gasket and bonnet in place of the solenoid base sub-assembly. To remove bonnet use special wrench adapter supplied in ASCO Rebuild Kit. For wrench adapter only, order ASCO Wrench Kit No. K218948.

4. The core is now accessible for cleaning or replacement.
5. If the solenoid is part of a valve, refer to basic valve installation and maintenance instructions for further disassembly.
6. Reassemble using exploded views for identification and placement of parts.

## ORDERING INFORMATION FOR ASCO SOLENOIDS

When Ordering Solenoids for ASCO Solenoid Operators or Valves, order the number stamped on the solenoid. Also specify voltage and frequency.

## Torque Chart

| Part Name | Torque Value in Inch-Pounds | Torque Value in Newton-Meters |
|---|---|---|
| solenoid base sub-assembly | 175 ± 25 | 19,8± 2,8 |
| valve bonnet (3/4" bonnet construction) | 90 ± 10 | 10,2 ± 1,1 |
| bonnet screw (3/8" or 1/2" NPT pipe size) | 25 | 2,8 |
| bonnet screw (3/4" NPT pipe size) | 40 | 4,5 |

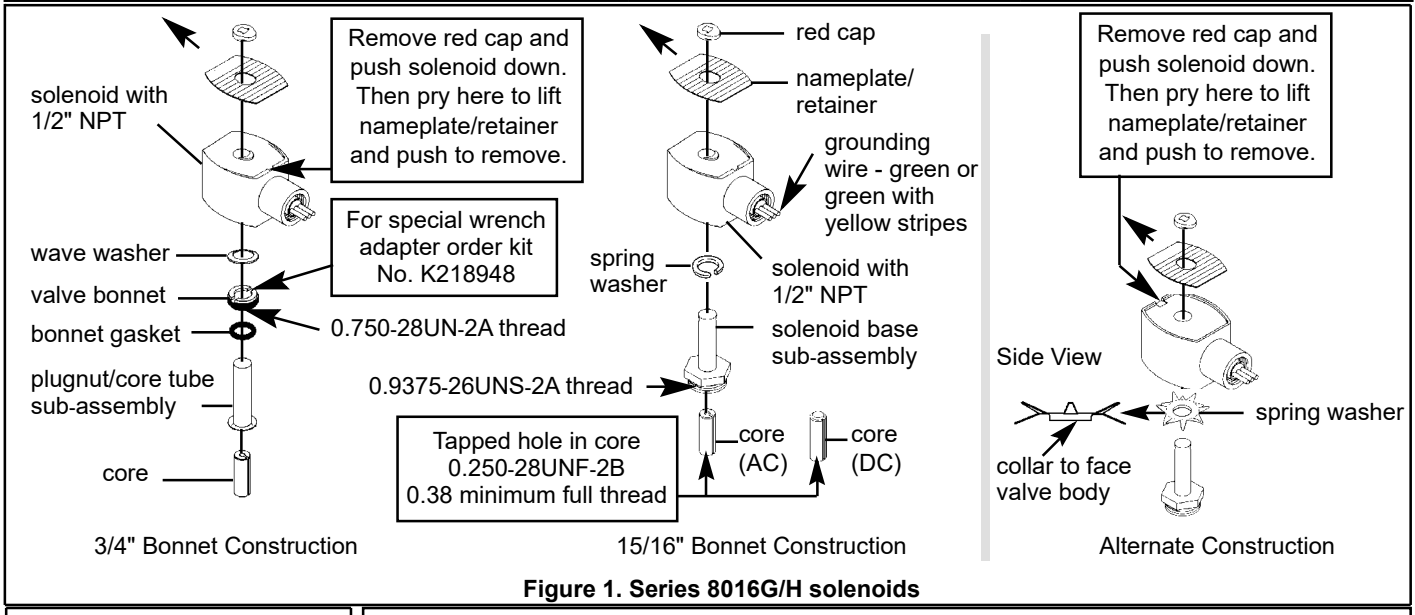


**Figure 1. Series 8016G/H solenoids**

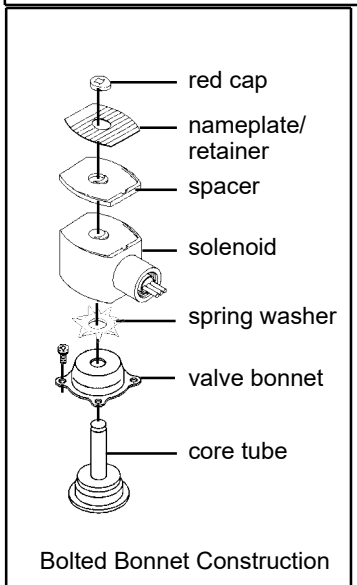


**Figure 2. Series 8016G/H solenoids**

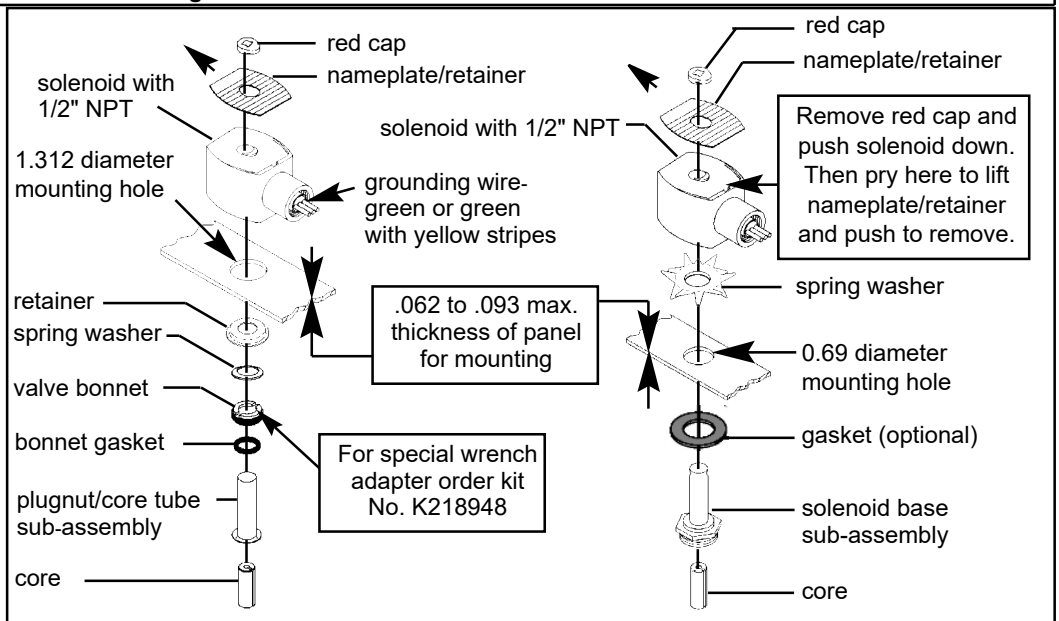


**Figure 3. Series 8016G/H panel mounted solenoids**


©ASCO, L.P. 160 Park Avenue, Florham Park, New Jersey 07932

## Torque Chart

| Part Name | Torque Value in Inch-Pounds | Torque Value in Newton-Meters |
|---|---|---|
| terminal block screws | 10 ± 2 | 1,1 ± 0,2 |
| socket head screw | 15 - 20 | 1,7 - 2,3 |
| center screw | 5±1 | 0,6 ± 0,1 |

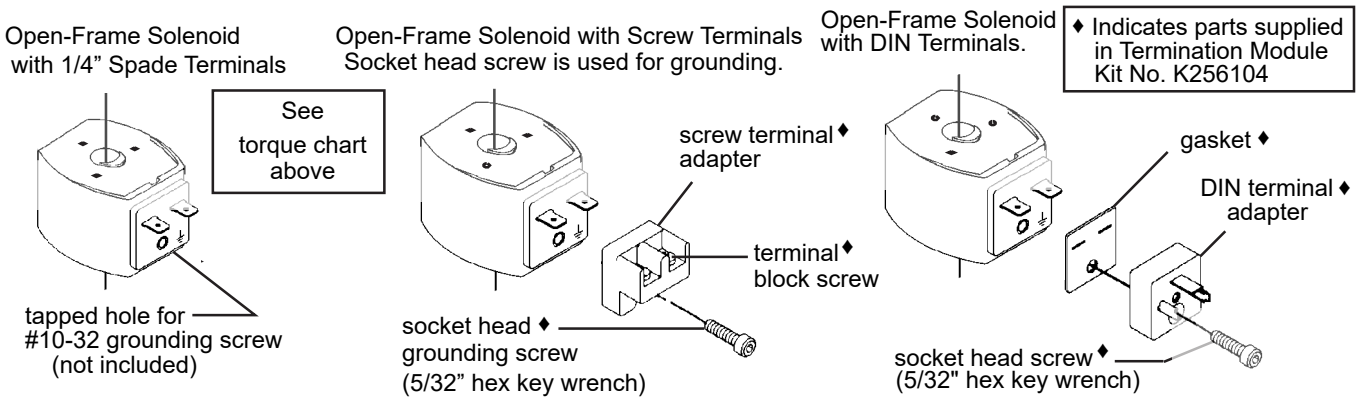


**Figure 4. Open-frame solenoids**

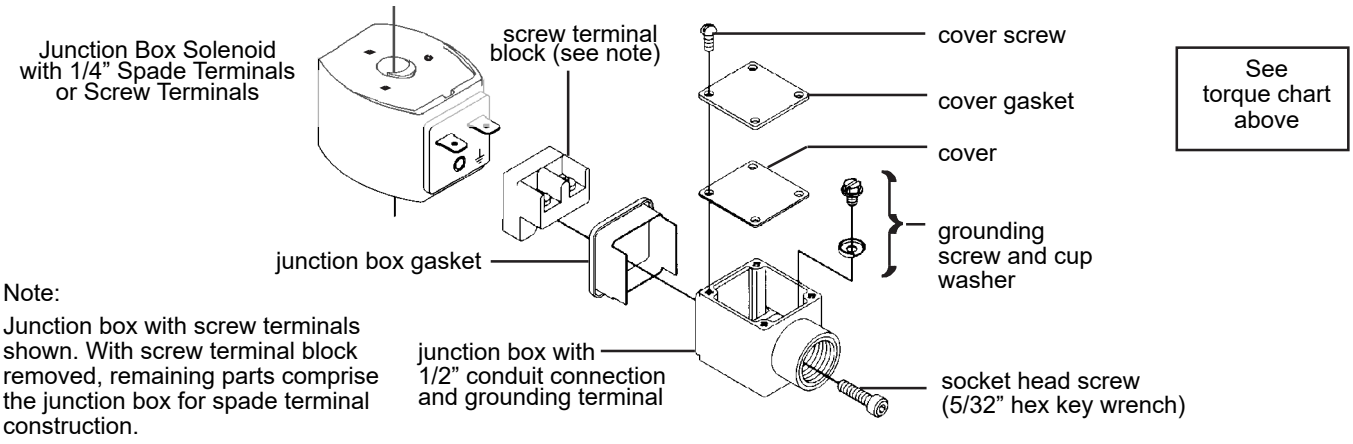


**Figure 5. Junction box (optional feature)**

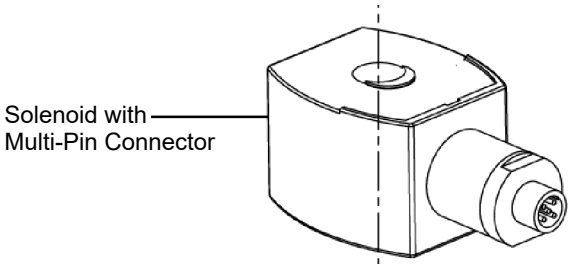


DC: For mating connector, use 4-pin M12 x 1 threaded female connector.

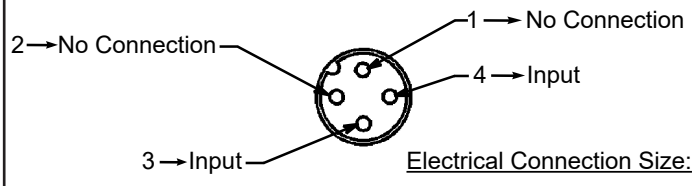


**Figure 6.**
**4-Pin Anodized Aluminum Electrical Termination (VT)**

Electrical Connection Size:

DC: Single keyway M12 x 1 (*Not polarity sensitive)*

AC: Dual keyway 1/2-20UNF Thread

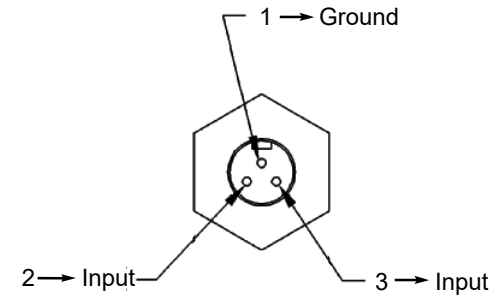


**Figure 7.**
**Mini 3-pin Epoxy Coated Zinc Electrical Termination (ZT)**

Electrical Connection Size:

DC/AC: 7/8-16 UNS-2A


©ASCO, L.P. 160 Park Avenue, Florham Park, New Jersey 07932
www.asco.com

# GB CE*

## GENERAL INSTALLATION AND MAINTENANCE INSTRUCTIONS

Note: These general Installation and Maintenance Instructions must be read in conjunction with the Instruction Sheet for the specific product.

### INSTALLATION

ASCO Numatics components are intended to be used only within the technical characteristics as specified on the nameplate. Changes to the equipment are only allowed after consulting the manufacturer or its representative. Before installation, depressurize the piping system and clean internally.
The equipment may be mounted in any position if not otherwise indicated on the product by means of an arrow.
The flow direction and pipe connection of valves are indicated on the body.
The pipe connections have to be in accordance with the size indicated on the nameplate and fitted accordingly.

**Caution:**
- Reducing the connections may cause improper operation or malfunctioning.
- For the protection of the equipment install a strainer or filter suitable for the service involved in the inlet side as close to the product as possible.
- If tape, paste, spray or a similar lubricant is used when tightening, avoid particles entering the system.
- Use proper tools and locate wrenches as close as possible to the connection point.
- To avoid damage to the equipment. DO NOT OVERTIGHTEN pipe connections
- Do not use valve or solenoid as lever.
- The pipe connections should not apply any force, torque or strain to the product.

### ELECTRICAL CONNECTION

In case of electrical connections, they are only to be made by trained personnel and have to be in accordance with the local regulations and standards.

**Caution:**
- Turn off electrical power supply and de-energize the electrical circuit and voltage carrying parts before starting work.
- All electrical screw terminals must be properly tightened according to the standards before putting into service.
- Dependent upon the voltage electrical components must be provided with an earth connection and satisfy local regulations and standards.

The equipment can have one of the following electrical terminals:
- Spade plug connections according to ISO-4400 or 3 x DIN-46244 (when correctly installed, this connection provides IP-65 protection).
- Embedded screw terminals in metal enclosure with “Pg” cable gland
- Spade terminals (AMP type).
- Flying leads or cables.

### PUTTING INTO SERVICE

Before pressurizing the system, first carry-out an electrical test. In case of solenoid valves, energize the coil a few times and notice a metal click signifying the solenoid operation.

### SERVICE

Most of the solenoid valves are equipped with coils for continuous duty service. To prevent the possibility of personal or property damage, do not touch the solenoid which can become hot under normal operating conditions.

### SOUND EMISSION

The emission of sound depends on the application, medium and nature of the equipment used. The exact determination of the sound level can only be carried out by the user having the valve installed in his system

### MAINTENANCE

Maintenance of ASCO Numatics products is dependent on service conditions. Periodic cleaning is recommended, the timing of which will depend on the media and service conditions. During servicing, components should be examined for excessive wear. A complete set of internal parts is available as spare parts or rebuild kit. If a problem occurs during installation/maintenance or in case of doubt please contact ASCO Numatics or authorized representatives.

*A separate Declaration of Incorporation relating to EU-Directive 2006/42/EC Annex IIB is available on request for applicable products. Please provide product identification number and serial numbers of products concerned.
The product, , when marked CE, complies with the essential requirements of the EMC 2004/108/EC (until April 20th 2016) and EMC 2014/30/EU (from April 20th 2016) and LVD 2006/95/EC (until April 20th 2016) and LVD 2014/35/EU (from April 20th 2016). A separate Declaration of Conformity is available on request. Please provide product identification number and serial numbers of the products concerned.

# FR CE*

## INSTRUCTIONS GÉNÉRALES D’INSTALLATION ET D’ENTRETIEN

Note: Ces instructions générales d’installation et d’entretien complètent la notice spécifique du produit.

### MONTAGE

Les composants ASCO Numatics sont conçus pour les domaines de fonctionnement indiqués sur la plaque signalétique ou la documentation. Aucune modification ne peut être réalisée sur le matériel sans l’accord préalable du fabricant ou de son représentant. Avant de procéder au montage, dépressuriser les canalisations er effectuer un nettoyage inteme.
A moins qu’une fléche ou la notice n’indique un sens de montage spécifique de la tête magnétique, le produit peut être monté dans n’importe quelle position
Le sens de circulation du fluide est indiqué par repères sur le corps er dans la documentation.
La dimension des tuyauteries doit correspondre au raccordement indiqué sur le corps, l’étiquette ou la notice.

**Attention:**
- Une restriction des tuyauteries peut entraîner des dysfonctionnements.
- Afin de protéger le matériel, installer une crépine ou un filtre adéquat en amont, aussi près que possible du produit.
- En cas d’ utilisation de ruban; pàte, aérosol ou autre lubrifiant lors du serrage, veiller à ce qu” aucun corps étranger ne pénètre dans le circuit.
- Utiliser un outillage approprié et placer les clés aussi près que possible du point de raccordement.
- Afin d’éviter toute détérioration, NE PAS TROP SERRER les raccords des tuyauteries.
- Ne pas se servir de la vanne ou de tête magnétique comme d’un levier.
- The pipe connections should not apply any force, torque or strain to the product.

### RACCORDEMENT ÉLECTRIQUE

Le raccordement électrique doit être réalisé par un personnel qualifié et selon les normes et règlements locaux.

**Attention:**
- Avant toute intervention, couper l’alimentation électrique pour mettre hors tension les composants.
- Toutes les bornes à vis doivent être serrées correctement avant la mise en service.
- Selon la tension, les composants électrique doivent être mis à la terre conformément aux normes et règlements locaux.

Selon les cas, le raccordement électrique s’effectué par:
- Connecteur débrochable ISO-4400 ou 3 x DIN-46244 avec degré de protection IP-65 lorsque le raccordement est correctement effectué.
- Bornes à vis solidaires du bobinage, sous boîter métallique avec presse-étoupe “Pg--”.
- Cosses (type AMP).
- Fils ou câbles solidaires de la bobine.

### MISE EN SERVICE

Avant de mettre le circuit sous pression, effectuer un essai électrique. Dans le cas d’une électrovanne, mettre la bobine sous tension plusieurs fois er écouter le “clic” métallique qui signale le fonctionnement de la tête magnétique.

### FONCTIONNEMENT

La plupart des électrovannes comportant des bobinages prévus pour mise sous tension permanente. Pour éviter toute brûlure, ne pas toucher la tête magnétique qui, en fonctionnement normal et en permanence sous tension, peut atteindre une température élevée.

### BRUIT DE FONCTIONNEMENT

Le bruit de fonctionnement varie selon l’utilisation, le fluide et le type de matériel employé. L’utilisateur ne pourra déterminer avec précision le niveau sonore émis qu’après avoir monté le composant sur l’installation.

### ENTRETIEN

L’entretien nécessaire aux produits ASCO Numatics varie avec leurs conditions d’utilisation. Il est souhaitable de procéder à un nettoyage périodique dont l’intervalle varie suivant la nature du fluide, les conditions de fonctionnement et le milieu ambiant. Lors de l’intervention. Les composants doivent être examinés our détecter toute usure excessive. Un ensemble de pièces internes est proposé en pièces de rechange pour procéder à la réfection. En cas de problème lors du montage/entretien ou en cas de doute, veuillez contacter ASCO Numatics ou ses représentants officiels.

*Une déclaration d’incorporation relative à la directive UE 2006/42/CE Annexe II B est disponible sur demande pour les produits applicables. Veuillez fournir le numéro d'identification du produit et les numéros de série des produits concernés.
Lorsqu’il est marqué du label CE, le produit est conforme aux exigences essentielles des directives CEM 2004/108/CE (jusqu’au 20 avril 2016) et CEM 2014/30/UE (à partir du 20 avril 2016) et des directives Basse tension 2006/95/CE (jusqu’au 20 avril 2016) et 2014/35/UE (à partir du 20 avril 2016). Une déclaration de conformité peut être fournie sur simple demande. Veuillez fournir le numéro d'identification du produit et les numéros de série des produits concernés.

# DE CE*

## ALLGEMEINE BETRIEBSANLEITUNG

Achtung: Diese Allgemeine Betriebsanleitung gilt in Zusammenhang mit der jeweiligen Betriebsanleitung für die speziellen Produkte.

### EINBAU

Die ASCO Numatics-Komponenten dürfen nur innerhalb der auf den Typenschildern angenebenen Daten eingesetzt warden, Veränderungen an den Produkten sind nur nach Rücksprache mit ASCO Numatics zulässig.
Vor dem Einbau der Ventile muß das Rohrleitungssystem drucklos geschaltet und innen gereinigt werden.
Die Einbaulage der Produkte ist genereil beliebig. Ausnahme: Die mit einem Pfeil gekennzeichneten Produkte mûssen entsprechend der Pfeilrichtung montiert werden.
Die Durchflußrichtung und der Eingang von Ventilen sind gekennzeichnet.
Die Rohranschlüsse sollten entsprechend den Größenangaben auf den Typenschildern mit handelsüblichen Verschraubungen durchgeführt werden.

**Dabei ist folgendes zu beachten:**
- Eine Reduzierung der Anschlüsse kann zu Leistungs-und Funktionsminderungen führen.
- Zum Schutz der Ventile sollten Schmutzfänger oder Filter so dicht wie möglich in den Ventileingang integriert werden.
- Bei Abdichtung am Gewinde ist darauf zu achten, daß kein Dichtungsmaterial in die Rohrleitung oder das Ventil gelangt.
- Zur Montage darf nur geeignetes Werkzeug verwendetwerden.
- Konische Verschraubungen sind sorgfältig anzuziehen. Es ist darauf zu achten, daß beim Anziehen das Gehäuse nicht beschádigt wird.
- Spule und Führungsrohr von Ventilen dürfen nicht als Gegenhalter benutzt werde.
- Die Rohrleitungsanschlüsse sollen fluchten und dürfen keine Spannungen auf das Ventil übertragen.

### ELECTRISCHER ANSCHLUß

Der elektrische Anschluß ist von Fachpersonal entsprechend den geltenden VDE-und CEE Richtlinien auszuführen.

**Es ist besonders auf foigendes zu achten:**
- Vor Beginn der Arbeiten ist sicherzustellen, daß alle elektrischen Leitungen und Netzteile spannungslos geschaltet sind.
- Alle Anschlußklemmen sind nach Beendigung der Arbeiten vorschriftsmäßig entsprechend den geltenden Regeln anzuziehen.
- Je nach Spannungsbereich muß das Ventil nach den geltenden Regeln einen Schutzleiteranschluß erhalten.

Der Magnetantrieb kann je nach Bauart folgende Anschlüsse haben:
- Anschluß für Gerätesteckdose nach DIN 43650 Form A/ISO 4400 oder 3 x DIN 46244 (durch ordnungsgemäße Montage der Gerätesteckdose wird Schutzklasse IP 65 erreicht).
- Anschlüsse innerhalb eines Blechgehäuses mittels Schraubklemmen. Kabeleinführung ins Gehäuse mit PG-Verschraubung.
- Offene Spulen mit Flachsteckern (AMP-Fahnen) oder mit eingegossenen Kabelenden.

### INBETRIEBNAHME

Vor Druckbeaufschlagung des Produktes sollte eine elektrische Funktionsprüfung erfolgen:
Bei Ventilen Spannung an der Magnetspule mehrmals ein-und ausschalten. Es muß ein Klicken zu hören sein.

### BETRIEB

Die meisten Ventile sind mit Spulen für Dauerbetrieb ausgerüstet. Zur Vermeidung von Personen-und Sachschäden sollte jede Berührung mit dem Ventil vermieden werden, da die Magnetspule bei längerem Betrieb sehr heiß werden kann.

### GERÄUSCHEMISSION

Diese hängt sehr stark vom Anwendungsfall, den Betriebsdaten und dem Medium, mit denen das Produkt beaufschlagt wird, ab. Eine Aussage über die Geräuschemission des Produktes muß deshalb von demjenigen getroffen werden, der das Produkt innerhalb einer Maschine in Betrieb nimmit.

### WARTUNG

Die Wartung hängt von den Einsatzbedigungen ab. In entsprechenden Zeitabständen muß das Produkt geöffnet und gereinigt werden. Für die Überholung der ASCO Numatics-Produkte können Ersatzteilsätze geliefert werden. Treten Schwierigkeiten bei Einbau, Betrieb oder Wartung auf, sowie bei Unklarheiten, ist mit ASCO Numatics Rücksprache zu halten. ASCO Numatics Produkte sind entsprechend der EG-Richtlinie 89/392/EWG gefertigt.

*Eine separate Herstellererklärung im Sinne der Richtlinie 2006/42/EWG Anhang II B ist auf Anfrage für die entsprechenden Produkte erhältlich. Geben Sie bitte die Kennnummer sowie die Seriennummer der betreffenden Produkte an.
Das Produkt, wenn mit CE gekennzeichnet, erfüllt die Anforderungen von EMV 2004/108/EWG (bis 20. April 2016) und EMV 2014/30/EU (vom 20. April 2016) und LVD 2006/95/EWG (bis 20. April 2016) und LVD 2014/35/EU (vom 20. April 2016). Eine separate Konformitätserklärung ist auf Anfrage erhältlich. Geben Sie bitte die Kennnummer sowie die Seriennummer der betreffenden Produkte an.

**ASCO, L.P.**
160 Park Ave
Florham Park, New Jersey 07932
Tel. (973) 966-2000
Fax (973) 966-2628

**ASCO, L.P.**
1561 Columbia Highway
Aiken, South Carolina 29801
Tel. (803) 641-9200
Fax (803) 641-9290

 All Rights Reserved. 

©ASCO, L.P. 160 Park Avenue, Florham Park, New Jersey 07932 

LEFT BLANK

# *ASHCROFT*

## *MODEL 1009, PRESSURE GAUGE*

LEFT BLANK

ASHCROFT®

# PRESSURE GAUGE INSTALLATION, OPERATION AND MAINTENANCE



I&M008-10098-5/02 (250-1353-L) Rev. 12/15

Left Blank

# CONTENTS


| | | Page |
|---|---|---|
| **1.0** | **Selection and Application** | |
| 1.1 | Range | 4 |
| 1.2 | Temperature | 4 |
| 1.3 | Media | 4 |
| 1.4 | Oxidizing media | 4 |
| 1.5 | Pulsation/Vibration | 4 |
| 1.6 | Gauge fills | 4 |
| 1.7 | Mounting | 4 |
| **2.0** | **Temperature** | |
| 2.1 | Ambient Temperature | 4 |
| 2.2 | Accuracy | 4 |
| 2.3 | Steam service | 4 |
| 2.4 | Hot or very cold media | 4 |
| 2.5 | Diaphragm seals | 5 |
| 2.6 | Autoclaving | 5 |
| **3.0** | **Installation** | |
| 3.1 | Installation Location | 5 |
| 3.2 | Gauge reuse | 5 |
| 3.3 | Tightening of gauge | 5 |
| 3.4 | Process isolation | 5 |
| 3.5 | Surface mounting | 5 |
| 3.6 | Flush mounting | 5 |
| **4.0** | **Operation** | |
| 4.1 | Frequency of inspection | 5 |
| 4.2 | In-service inspection | 5 |
| 4.3 | When to check accuracy | 5 |
| 4.4 | When to recalibrate | 5 |
| 4.5 | Other considerations | 5 |
| 4.6 | Spare parts | 5 |
| **5.0** | **Gauge Replacement** | 5 |
| **6.0** | **Accuracy: Procedures/Definitions** | 6 |
| 6.1 | Calibration - Rotary movement gauges | 7 |
| **7.0** | **Diaphragm Seals** | |
| 7.1 | General | 8 |
| 7.2 | Installation | 8 |
| 7.3 | Operation | 8 |
| 7.4 | Maintenance | 8 |
| 7.5 | Failures | 8 |
| **8.0** | **Dampening Devices** | |
| 8.1 | General | 8 |
| 8.2 | Throttle Screws & Plugs | 8 |
| 8.3 | Ashcroft Pulsation Dampener | 8 |
| 8.4 | Ashcroft Pressure Snubber | 8 |
| 8.5 | Ashcroft Needle Valves | 8 |
| 8.6 | Chemiquip® Pressure Limiting Valves | 8 |
| **9.0** | **Test Equipment & Tool Kits** | |
| 9.1 | Pressure Instrument Testing Equipment | 9 |
| 9.2 | Tools & Tool Kits | 9 |
| 9.3 | Kits to Convert a Dry Gauge to a Liquid Filled or Weather Proof Case Gauge | 9 |
| 9.4 | 2½ & 3½ 1009 Duralife® Gauge Tools | 10 |
| **Appendix** | | |
| | Type 1188 Bellows Gauge Calibration Procedure | 11 |
| | Type 1009 Calibration Procedure (Vacuum-Previous Style) | 12 |
| | Type 1009 Calibration Procedure (Pressure-Previous Style) | 13 |
| | Type 1009 Calibration Procedure (Pressure & Vacuum-Current Style) | 14 |
| | Type 1279 & 1379 I&M Liquid Fill Conversion Instruction | 15-16 |
| | Type 1082 Calibration Procedure | 17-18 |


Cover photo courtesy of Johnson/Yokogawa Co.

Chemiquip® is a registered trademark of Chemiquip Products Co. Inc.

# 1.0 SELECTION & APPLICATION

Users should become familiar with ASME B40.100 (Gauges – Pressure Indicating Dial Type – Elastic Element) before specifying pressure measuring gauges. That document – containing valuable information regarding gauge construction, accuracy, safety, selection and testing – may be ordered from:

*ASME International*
Three Park Avenue
New York, N.Y. 10016-5990
800-843-2763 (US/Canada)
001-800-843-2763 (Mexico)
973-882-1170 outside North America
email: infocentral@asme.org
www.asme.org

***WARNING:*** To prevent misapplication, pressure gauges should be selected considering media and ambient operating conditions. Improper application can be detrimental to the gauge, causing failure and possible personal injury, property damage or death. The information contained in this manual is offered as a guide in making the proper selection of a pressure gauge. Additional information is available from Ashcroft Inc.

The following is a highlight of some of the more important considerations:

**1.1 Range** – The range of the instrument should be approximately twice the maximum operating pressure. Too low a range may result in (a) low fatigue life of the elastic element due to high operating stress and (b) susceptibility to overpressure set due to pressure transients that exceed the normal operating pressure. Too high a range may yield insufficient resolution for the application.

**1.2 Temperature** – Refer to Section 2 of this manual for important information concerning temperature related limitations of pressure gauges, both dry and liquid filled.

**1.3 Media** – The material of the process sensing element must be compatible with the process media. Use of a diaphragm seal with the gauge is recommended for process media that (a) is corrosive to the process sensing element; (b) contain heavy particulates (slurries) or (c) are very viscous including those that harden at room temperature.

**1.4 Oxidizing media** – Gauges for direct use on oxidizing media should be specially cleaned. Gauges for oxygen service should be ordered to variation X6B and will carry the ASME required dial marking "USE NO OIL" in red letters. Gauges for direct use on other oxidizing media may be ordered to variation X6W. They will be cleaned but carry no dial marking. *PLUS!*™ Performance gauges or Halocarbon filled gauge or diaphragm fill is required for use with oxidizing media; order variation XCF.

**1.5 Pulsation/Vibration** – Pressure pulsation can be dampened by several mechanisms; the patented *PLUS! Performance* gauge will handle the vast majority of applications. One exception to this is high frequency pulsation which is difficult to detect. The only indication may be an upscale zero shift due to movement wear. These applications should be addressed with a liquid filled gauge, or in extreme cases, a remotely mounted liquid filled gauge connected with a length of capillary line. The small diameter of the capillary provides excellent dampening, but can be plugged. The Ashcroft 1106 pulsation dampener and 1112 snubber are auxiliary devices which dampen pulsation with less tendency to plug.

**1.6 Gauge fills**. – Once it has been determined that a liquid filled gauge is in order, the next step is selecting the type of fill. **Glycerin** satisfies most applications. While being the least expensive fill, its usable temperature range is 20/180°F. **Silicone** filled gauges have a broader service range: –40/250°F. Oxidizing media require the use of **Halocarbon,** with a service range of –40/250°F. Pointer motion will be slowed at the low end of the low end of these temperature ranges.

**1.7 Mounting** – Users should predetermine how the gauge will be mounted in service: stem (pipe), wall (surface) or panel (flush). Ashcroft wall or panel mounting kits should be ordered with the gauge. See Section 3.

# 2.0 TEMPERATURE

**2.1 Ambient Temperature** – To ensure long life and accuracy, pressure gauges should preferably be used at an ambient temperature between –20 and +150°F (–30 to +65°C). At very low temperatures, standard gauges may exhibit slow pointer response. Above 150°F, the accuracy will be affected by approximately 1.5% per 100°F. Other than discoloration of the dial and hardening of the gasketing and degradation of accuracy, non-liquid filled Type 1279 (phenolic case) and 1379 (aluminum case) Duragauge® gauge, with standard glass windows, can withstand continuous operating temperatures up to 250°F. Unigauge models 2½˝ and 3½˝ 1009 and 1008S liquid filled gauges can withstand 200°F but glycerin fill and the acrylic window of Duragauge® gauges will tend to yellow. Silicone fill will have much less tendency to yellow. Low pressure, liquid filled Types 1008 and 1009 gauges may have some downscale errors caused by liquid fill expansion. This can be alleviated by venting the gauge at the top plug (pullout the blue plug insert). To do this the gauge must be installed in the vertical position.

Although the gauge may be destroyed and calibration lost, gauges can withstand short times at the following temperatures: gauges with all welded pressure boundary joints, 750°F (400°C); gauges with silver brazed joints, 450°F (232°C) and gauges with soft soldered joints, 250°F (121°C). For expected long term service below –20°F (–30°C) Duragauge® and 4½˝ 1009 gauges should be hermetically sealed and specially lubricated; add "H" to the product code for hermetic sealing. Add variation XVY for special lubricant. Standard Duralife® gauges may be used to –50°F (–45°C) without modification.

**2.2 Accuracy** – Heat and cold affect accuracy of indication. A general rule of thumb for **dry gauges** is 0.5% of full scale change for every 40°F change from 75°F. Double that allowance for gauges with hermetically sealed or liquid filled cases, except for Duragauge® gauges where no extra allowance is required due to the elastomeric, compensating back. Above 250°F there may exist very significant errors in indication.

**2.3 Steam service** – In order to prevent live steam from entering the Bourdon tube, a siphon filled with water should be installed between the gauge and the process line. Siphons can be supplied with ratings up to 4,000 psi. If freezing of the condensate in the loop of the siphon is a possibility, a diaphragm seal should be used to isolate the gauge from the process steam. Siphons should also be used whenever condensing, hot vapors (not just steam) are present. Super heated steam should have enough piping or capillary line ahead of the siphon to maintain liquid water in the siphon loop.

**2.4 Hot or very cold media** – A five foot capillary line assembly will bring most hot or cold process media within the recommended gauge ambient temperature range. For media above

750°F (400°C) the customers should use their own small diameter piping to avoid possible corrosion of the stainless steel. The five foot capillary will protect the gauges used on the common cryogenic (less than –300°F (200°C) gases, liquid argon, nitrogen, and oxygen.) The capillary and gauge must be cleaned for oxygen service. The media must not be corrosive to stainless steel, and must not plug the small bore of the capillary.

**2.5 Diaphragm seals** – A diaphragm seal should be used to protect gauges from corrosive media, or media that will plug the instrument. Diaphragm seals are offered in a wide variety of designs and corrosion resistant materials to accommodate almost any application and most connections. Visit www.ashcroft.com for details.

**2.6 Autoclaving** – Sanitary gauges with clamp type connections are frequently steam sterilized in an autoclave. Gauges equipped with polysulfone windows will withstand more autoclave cycles than those equipped with polycarbonate windows. Gauges equipped with plain glass or laminated safety glass **should not be autoclaved.** Gauge cases should be vented to atmosphere (removing the rubber fill/safety plug if necessary) **before** autoclaving to prevent the plastic window from cracking or excessively distorting. If the gauge is liquid filled, the fill should be drained from the case and the front ring loosened before autoclaving.

# 3.0 INSTALLATION

**3.1 Location** – Whenever possible, gauges should be located to minimize the effects of vibration, extreme ambient temperatures and moisture. Dry locations away from very high thermal sources (ovens, boilers etc.) are preferred. If the mechanical vibration level is extreme, the gauge should be remotely located (usually on a wall) and connected to the pressure source via flexible tubing.

**3.2 Gauge reuse** – ASME B40.100 recommends that gauges not be moved indiscriminately from one application to another. The cumulative number of pressure cycles on an in-service or previously used gauge is generally unknown, so it is generally safer to install a new gauge whenever and wherever possible. This will also minimize the possibility of a reaction with previous media.

**3.3 Tightening of gauge** – Torque should never be applied to the gauge case. Instead, an open end or adjustable wrench should always be used on the wrench flats of the gauge socket to tighten the gauge into the fitting or pipe. NPT threads require the use of a suitable thread sealant, such as pipe dope or teflon tape, and must be tightened very securely to ensure a leak tight seal.

***CAUTION:*** Torque applied to a diaphragm seal or its attached gauge, that tends to loosen one relative to the other, can cause loss of fill and subsequent inaccurate readings. Always apply torque **only** to the wrench flats on the lower seal housing when installing filled, diaphragm seal assemblies or removing same from process lines.

**3.4 Process isolation** – A shut-off valve should be installed between the gauge and the process in order to be able to isolate the gauge for inspection or replacement without shutting down the process.

**3.5 Surface mounting** – Also known as wall mounting. Gauges should be kept free of piping strains. The gauge case mounting feet, if applicable, will ensure clearance between the pressure relieving back and the mounting surface.

**3.6 Flush mounting** – Also known as panel mounting. The applicable panel mounting cutout dimensions can be found at www.ashcroft.com

# 4.0 OPERATION

**4.1 Frequency of inspection** – This is quite subjective and depends upon the severity of the service and how critical the accuracy of the indicated pressure is. For example, a monthly inspection frequency may be in order for critical, severe service applications. Annual inspections, or even less frequent schedules, are often employed in non-critical applications.

**4.2 In-service inspection** – If the accuracy of the gauge cannot be checked in place, the user can at least look for (a) erratic or random pointer motion; (b) readings that are suspect – especially indications of pressure when the user believes the true pressure is 0 psig. Any gauge which is obviously not working or indicating erroneously, should be immediately valved-off or removed from service to avoid a possible pressure boundary failure.

**4.3 When to check accuracy** – Any suspicious behavior of the gauge pointer warrants that a full accuracy check be performed. Even if the gauge is not showing any symptoms of abnormal performance, the user may want to establish a frequency of bench type inspection.

**4.4 When to recalibrate** – This depends on the criticality of the application. If the accuracy of a 3-2-3% commercial type gauge is only 0.5% beyond specification, the user must decide whether it's worth the time and expense to bring the gauge back into specification. Conversely if the accuracy of a 0.25% test gauge is found to be 0.1% out of specification then the gauge should be recalibrated.

**4.5 Other considerations** – These include (a) bent or unattached pointers due to extreme pressure pulsation; (b) broken windows which should be replaced to keep dirt out of the internals; (c) leakage of gauge fill; (d) case damage – dents and/or cracks; (e) any signs of service media leakage through the gauge including its connection; (f) discoloration of gauge fill that impedes readability.

**4.6 Spare parts** – As a general rule it is recommended that the user maintain in inventory one complete Ashcroft® instrument for every ten (or fraction thereof) of that instrument type in service.

# 5.0 GAUGE REPLACEMENT

It is recommended that the user stock one complete Ashcroft® instrument for every ten (or fraction thereof) of that instrument type in service. With regard to gauges having a service history, consideration should be given to discarding rather than repairing them. Gauges in this category include the following:

**a.** Gauges that exhibit a span shift greater than 10%. It is possible the Bourdon tube has suffered thinning of its walls by corrosion.

**b.** Gauges that exhibit a zero shift greater than 25%. It is likely the Bourdon tube has seen significant overpressure leaving residual stresses that may be detrimental to the application.

**c.** Gauges which have accumulated over 1,000,000 pressure cycles with significant pointer excursion.

**d.** Gauges showing any signs of corrosion and/or leakage of the pressure system.

**e.** Gauges which have been exposed to high temperature or exhibit signs of having been exposed to high temperature – specifically 250°F or greater for soft soldered systems; 450°F or greater for brazed systems; and 750°F or greater for welded systems.

**f.** Gauges showing significant friction error and/or wear of the movement and linkage.

**g.** Gauges having damaged sockets, especially damaged threads.

**h.** Liquid filled gauges showing loss of case fill.

***NOTE:*** ASME B40.100 does not recommend moving gauges from one application to another. This policy is prudent in that it encourages the user to procure a new gauge, properly tailored by specification, to each application that arises.

## 6.0 ACCURACY: PROCEDURES/DEFINITIONS

**Accuracy inspection** – Readings at approximately five points equally spaced over the dial should be taken, both upscale and downscale, before and after lightly rapping the gauge to remove friction. **A pressure standard with accuracy at least four times greater than the accuracy of the gauge being tested is recommended.**

**Equipment** – A finely regulated pressure supply will be required. It is critical that the piping system associated with the test setup be leaktight. The gauge under test should be positioned as it will be in service to eliminate positional errors due to gravity.

**Method** – ASME B40.100 recommends that **known** pressure (based on the reading from the pressure standard used) be applied to the gauge under test. Readings including any error from the nominal input pressure, are then taken from the gauge under test. The practice of aligning the pointer of the gauge under test with a dial graduation and then reading the error from the master gauge ("reverse reading") can result in inconsistent and misleading data and should NOT be used.

**Calibration chart** – After recording all of the readings it is necessary to calculate the errors associated with each test point using the following formula: ERROR in percent = 100 times (TRUE VALUE minus READING) ÷ RANGE. Plotting the individual errors (Figure 1) makes it possible to visualize the total gauge characteristic. The plot should contain all four curves: upscale – before rap; upscale – after rap; downscale – before rap; downscale – after rap. "*Rap*" means lightly tapping the gauge **before** reading to remove friction as described in ASME B40.100.

Referring to Figure 1, several classes of error may be seen:

**Zero** – An error which is approximately equal over the entire scale. This error can be manifested when either the gauge is

FIG. 1

### TYPICAL CALIBRATION CHART

**INDICATED VALUE (PSI)**

| True Value – PSI | Increasing – Without RAP | Increasing – With RAP | Decreasing – Without RAP | Decreasing – With RAP |
|---|---|---|---|---|
| 0 | –.4 | 0 | –.4 | 0 |
| 40 | +.8 | +1.0 | +1.4 | +1.1 |
| 80 | +.4 | +.5 | +1.2 | +1.0 |
| 120 | –.4 | –1.0 | +.8 | +.6 |
| 160 | –.8 | –.5 | +.6 | +.4 |
| 200 | +.4 | +.8 | +.4 | +.4 |

**ERROR (% OF FULL SCALE)**

| True Value – % of Range | Increasing – Without RAP | Increasing – With RAP | Decreasing – Without RAP | Decreasing – With RAP |
|---|---|---|---|---|
| 0 | –.20 | 0 | –.20 | 0 |
| 20 | +.40 | +.50 | +.70 | +.55 |
| 40 | +.20 | +.25 | +.60 | +.50 |
| 60 | –.20 | –.05 | +.40 | +.30 |
| 80 | –.40 | –.25 | +.30 | +.20 |
| 100 | +.20 | +.40 | +.20 | +.20 |

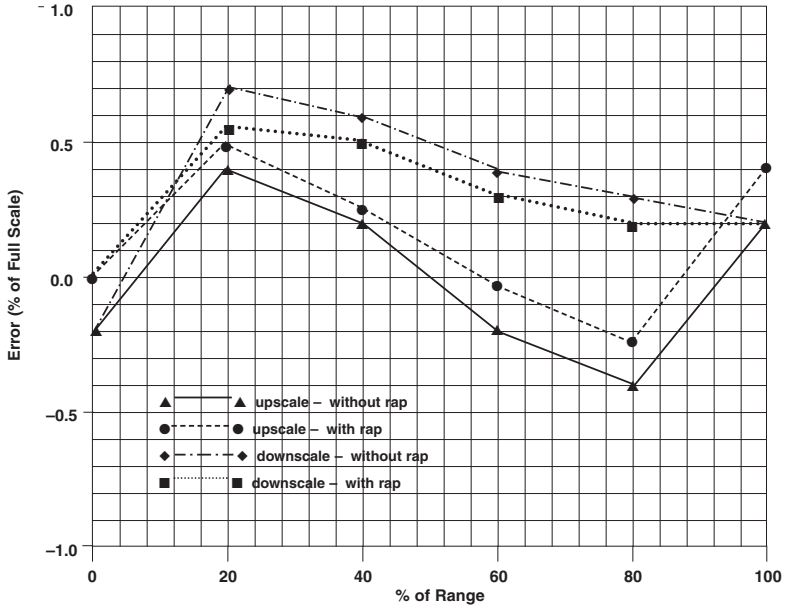

dropped or overpressured and the Bourdon tube takes a permanent set. This error may often be corrected by simply repositioning the pointer. Except for test gauges, it is recommended that the pointer be set at midscale pressure to "split" the errors.

**Span** – A span error exists when the error at full scale pressure is different from the error at zero pressure. This error is often proportional to the applied pressure. Most Ashcroft gauges are equipped with an internal, adjusting mechanism with which the user can correct any span errors which have developed in service.

**Linearity** – A gauge that has been properly spanned can still be out of specification at intermediate points if the response of the gauge as seen in Figure 1 (Typical Calibration Chart) is not linear. The Ashcroft Duragauge® pressure gauge is equipped with a rotary movement feature which permits the user to minimize this class of error. Other Ashcroft gauge designs (e.g., 1009 Duralife®) require that the dial be moved left or right prior to tightening the dial screws.

**Hysteresis** – Some Bourdon tubes have a material property known as hysteresis. This material characteristic results in differences between the upscale and downscale curves. This class of error can **not** be eliminated by adjusting the gauge movement or dial position.

**Friction** – This error is defined as the difference in readings before and after lightly tapping the gauge case at a check point. Possible causes of friction are burrs or foreign material in the movement gearing, "bound" linkages between the movement and the bourdon tube, or an improperly tensioned hairspring. If correcting these potential causes of friction does not eliminate excessive friction error, the movement should be replaced.

**6.1 Calibration – Rotary Movement Gauges and Type 1259 Gauges –** Inspect gauge for accuracy. Many times gauges are simply "off zero" and a simple pointer adjustment using the micrometer pointer is adequate. If inspection shows the gauge warrants recalibration to correct span and/or linearity errors, proceed as follows:

**a.** Remove ring, window and, if solid front case, the rear closure assembly.

**b.** Pressurize the gauge **once** to full scale and back to zero.

**c.** Refer to Figure 2 (Ashcroft System Assembly w/Rotary Gear Movement) for a view of a typical Ashcroft rotary system assembly with component parts identified. Refer to Figure 2A for link configuration of Type 1259 gauge.

**FIG. 2 ASHCROFT SYSTEM ASSEMBLY W/ROTARY GEAR MOVEMENT**

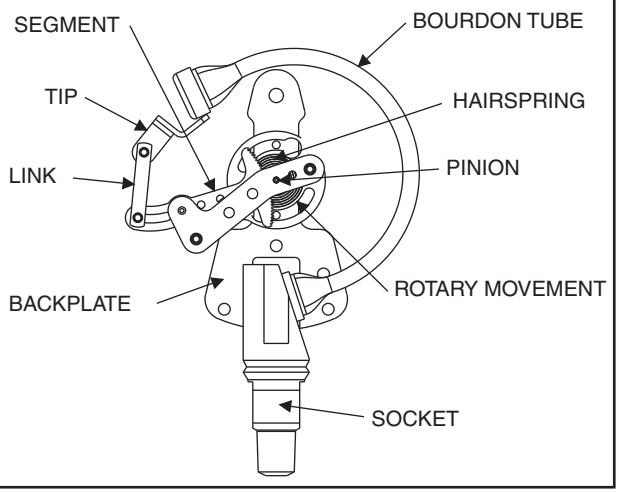


**FIG. 2A ASHCROFT TYPE 1259 SYSTEM ASSEMBLY**

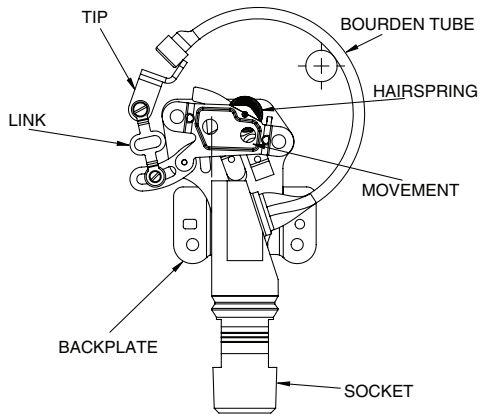


**d.** Adjust the micrometer pointer so that it rests at the true zero position. For open front gauges the pointer and dial must also be disassembled and the pointer should then be lightly pressed onto the pinion at the 9:00 o'clock position.

**e.** Apply full scale pressure and note the magnitude of the span error. With open front gauges, ideal span (270 degrees) will exist when at full scale pressure the pointer rests exactly at the 6:00 o'clock position.

**f.** If the span has shifted significantly (span error greater than 10%), the gauge should be replaced because there may be some partial corrosion inside the Bourdon tube which could lead to ultimate failure. If the span error exceeds 0.25%, loosen the lower link screw and move the lower end of the link toward the movement to increase span or away to decrease span. An adjustment of 0.004 inch will change the span by approximately 1%. This is a repetitive procedure which often requires more than one adjustment of the link position and the subsequent rechecking of the errors at zero and full scale pressure.

**g.** Apply midscale pressure and note error in reading. Even though the gauge is accurate at zero and full scale, it may be inaccurate at the midpoint. This is called linearity error. For corrections to linearity with the Type 1259 gauges refer to Figure 2B. For rotary movement gauges, note the following: if the error is positive, the movement should be rotated counter clockwise. Rotating the movement one degree will change this error by approximately 0.25%. Rotating the movement often affects span and it should be subsequently rechecked and readjusted if necessary according to step 6.1e and 6.1f.

**FIG. 2B LINEARITY ADJUSTMENT & LINK CONFIGURATION FOR ASHCROFT TYPE 1259**

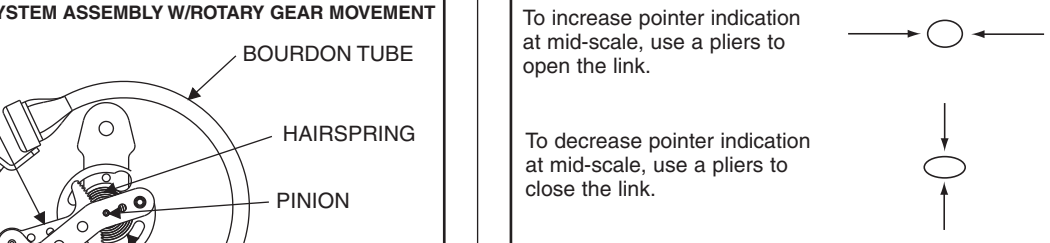


**h.** While recalibrating the gauge, the friction error – difference in readings taken with and without rap – should be

noted. This error should not exceed the basic accuracy of the gauge. If the friction error is excessive, the movement should be replaced. One possible cause of excessive friction is improper adjustment of the hairspring. The hairspring torque,or tension, must be adequate without being excessive. The hairspring should also be level, unwind evenly (no turns rubbing) and it should never tangle.

***NOTES:***

**1** For operation of test gauge external zero reset, refer to page 17.

**2** For test gauge calibration procedure, refer to Figure 2 on page 18.

## 7.0 DIAPHRAGM SEALS

**7.1 General** – A diaphragm seal (isolator) is a device which is attached to the inlet connection of a pressure instrument to isolate its measuring element from the process media. The space between the diaphragm and the instrument's pressure sensing element is solidly filled with a suitable liquid. Displacement of the liquid fill in the pressure element, through movement of the diaphragm, transmits process pressure changes directly to a gauge, switch or any other pressure instrument. When diaphragm seals are used with pressure gauges, an additional 0.5% tolerance must be added to the gauge accuracy because of the diaphragm spring rate.

Used in a variety of process applications where corrosives, slurries or viscous fluids may be encountered, the diaphragm seal affords protection to the instrument where:

- The process fluid being measured would normally clog the pressure element.
- Pressure element materials capable of withstanding corrosive effects of certain fluids are not available.
- The process fluid might freeze due to changes in ambient temperature and damage the element.

**7.2 Installation** – Refer to bulletin OH-1 for information regarding (a) seal configurations; (b) filling fluids; (c) temperature range of filling fluids; (d) diaphragm material pressure and temperature limits; (e) bottom housing material pressure and temperature limits; (f) pressure rating of seal assembly; (g) accuracy/temperature errors of seal assembly; (h) diaphragm seal displacement. The volumetric displacement of the diaphragm must at least equal the volumetric displacement of the measuring element in the pressure instrument to which the seal is to be attached.

It is imperative that the pressure instrument/diaphragm seal assembly be **properly** filled prior to being placed in service. Ashcroft diaphragm seal assemblies should only be filled by a seal assembler certified by Ashcroft Inc. Refer to section 3.3 for a cautionary note about not applying torque on either the instrument or seal relative to the other.

**7.3 Operation** – All Ashcroft® diaphragm seals, with the exception of Type 310 mini-seals, are continuous duty. Should the pressure instrument fail, or be removed accidentally or deliberately, the diaphragm will seat against a matching surface preventing damage to the diaphragm or leakage of the process fluid.

**7.4 Maintenance** – Clamp type diaphragm seals – Types 100, 200 and 300 – allow for replacement of the diaphragm or diaphragm capsule, if that ever becomes necessary. The Type 200 top housing must also be replaced with the diaphragm. With all three types the clamping arrangement allows field disassembly to permit cleaning of the seal interior.

**7.5 Failures** – Diaphragm failures are generally caused by either corrosion, high temperatures or fill leakage. Process media build-up on the process side of the diaphragm can also require seal cleaning or replacement. Consult Customer Service, Stratford CT for advice on seal failures and/or replacement.

***WARNING:*** All seal components should be selected considering process and ambient operating conditions to prevent misapplication. Improper application could result in failure, possible personal injury, property damage or death.

## 8.0 DAMPENING DEVICES

**8.1 General** – Some type of dampening device should be used whenever the pressure gauge may be exposed to repetitive pressure fluctuations that are fairly rapid, high in magnitude and especially when transitory pressure spikes exceeding the gauge range are present (as with starting and stopping action of valves and pumps). A restricted orifice of some kind is employed through which pressure fluctuations must pass before they reach the Bourdon tube. The dampener reduces the magnitude of the pressure pulse thus extending the life of the Bourdon tube and movement. This reduction of the pressure pulsation as "seen" by the pressure gauge is generally evidenced by a reduction in the pointer travel. If the orifice is very small the pointer may indicate the average service pressure, with little or no indication of the time varying component of the process pressure.

Commonly encountered media (e.g. – water and hydraulic oil) often carry impurities which can plug the orifice over time thus rendering the gauge inoperative until the dampener is cleaned or replaced.

Highly viscous media and media that tend to periodically harden (e.g., asphalt) require a diaphragm seal be fitted to the gauge. The seal contains an internal orifice which dampens the pressure fluctuation within the fill fluid.

**8.2 Throttle Screws & Plugs** – These accessories provide dampening for the least cost. They have the advantage of fitting completely within the gauge socket and come in three types: (a) a screwed-in type which permits easy removal for cleaning or replacement; (b) a pressed in, non-threaded design and (c) a pressed in, threaded design which provides a highly restrictive, helical flow path. Not all styles are available on all gauge types.

**8.3 Ashcroft Pulsation Dampener** – Type 1106 Ashcroft pulsation dampener is a moving pin type in which the restricted orifice is the clearance between the pin and any one of five preselected hole diameters. Unlike a simple throttle screw/plug, this device has a self-cleaning action in that the pin moves up and down under the influence of pressure fluctuations.

**8.4 Ashcroft Pressure Snubber** – The heart of the Type 1112 pressure snubber is a thick porous metal filter disc. The disc is available in four standard porosity grades.

**8.5 Ashcroft Needle Valves** – Type 7001 thru 7004 steel needle valves provide varying degrees of dampening. These devices, in the event of plugging, can easily be opened to allow the pressure fluid to clear away the obstruction.

**8.6 Chemiquip® Pressure Limiting Valves** – Model PLV-255, PLV-2550, PLV-5460, PLV-5500 and PLV-6430, available with and without built-in snubbers, automatically "shut off" at adjustable preset values of pressure to protect the gauge from damage to overpressure. They are especially useful on hydraulic systems wherein hydraulic transients

(spikes) are common.

# 9.0 TEST EQUIPMENT & TOOL KITS

**See our website www.ashcroft.com for more details**

**9.1 Pressure Instrument Testing Equipment**

Type 1305D Deadweight Tester

Type 1327D Pressure Gauge Comparator

Type 1327CM “Precision” Gauge Comparator

**9.2 Tools & Tool Kits For Recalibration of 4½˝ and Larger Gauges**

Type 2505 universal carrying case for 1082 test gauge

Type 266A132-01 span wrench for 1082 test gauge

Type 1281 socket O-Ring kit for 1279/1379 lower connect

Type 1285 4½˝ ring wrench for 1279/1379 lower & back connect

Type 1286 6˝ ring wrench for 1379 lower & back connect

Type 3220 pointer puller (all gauges except 1009 Duralife®)

Type 3530 pinion back-up tool for 1009 Duralife®

Type 3220 Handjack set

Type 1105 Tool Kit

**9.3 Kits to Convert a Dry Gauge to a Liquid Filled or Weather Proof Case Gauge**

Type 1280 conversion kit for 4½˝ lower connect 1279/1379

Type 1283 conversion kit for 4½˝ back connect 1279/1379

Type 1284 conversion kit for 6˝ lower & back connect



TYPE 1105
TOOL KIT



TYPE 3220
HAND JACK SET

### 9.4 2½ & 3½ 1009 Duralife® Gauge Tools

| Description | Part No. |
|---|---|
| Pointer Puller Screw/Pin[2][3][4] | 112A381-01 |
| Pointer Puller Body[2][3][4] | 292A133-01 |
| Pointer Staker[2][4] | 188A101-01 |
| Span Wrench[2][5] (to adjust span) | 266A137-01 |
| Ring Wrench 3½″[1][5] (for ring removal) (35 1009) | 266B134-01 |
| Ring Wrench 2½″[1][5] (for ring removal) (25 1009) | 266B135-01 |
| Nest 2½″ & 3½″[1][5] (to hold gauge for ring removal) (25/35 1009) | 266B136-01 |
| Ring Removal Tool[6] (25 1009) | 101B221-02 |
| Ring Removal Tool[6] (35 1009) | 101B221-01 |
| Nest 2½″[6] (to hold gauge for ring removal) (25 1009) | 101B220-02 |
| Nest 3½″[6] (to hold gauge for ring removal) (35 1009) | 101B220-01 |
| Type 1230 throttle plug insertion (¼ NPT) for 1009 Duralife®) | 1230 |
| Type 1231 throttle plug insertion (⅛ NPT) for 1009 Duralife® (body only) | 1231 |
| Tool to open orifice on push-in throttle plug | 101A206-01 |

**(1)** Formerly 1206T Tool Kit.
**(2)** Formerly some parts in 1205T Tool Kit.
**(3)** Both parts must be purchased together.
**(4)** Previous and current design.
**(5)** Previous design only.
**(6)** Current design only.

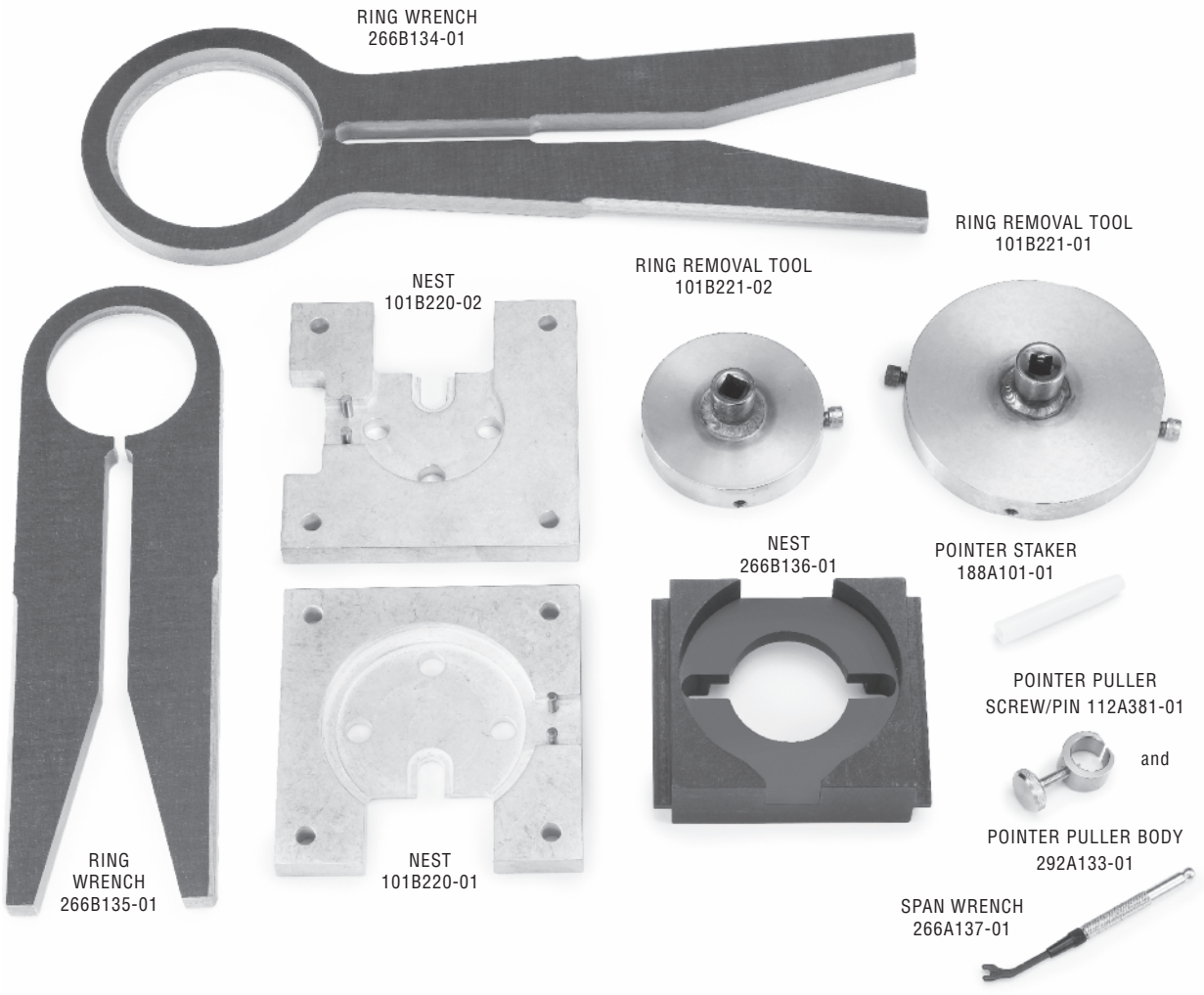

# ASHCROFT® Type 1188 Bellows Gauge Calibration Procedure

**CALIBRATION & TROUBLE CORRECTION DIAGRAM**

**RANGE SPAN ADJUSTMENT**

**RANGE TOO SHORT**
Adjust slide "S" inward

**RANGE TOO LONG**
Adjust slide "S" outward

**POINTER JUMPING**

**STICKY PARTS**
Clean all bearings and gear teeth

**LOOSE HAIRSPRING**
Remove backlash by disengaging pinion & rotate to tighten

**COUNTER BALANCE RUBBING**
Bend if necessary to clear socket in travel

**NOTE:** After adjusting range span, set both movement stops. Set the underload stop so that the pointer will stop at zero. Set the overload stop so that the pointer will pass the maximum range approximately 5˝.

After adjusting span re-zero pointer by removing from pinion and re-assembling at the proper dial mark.

**SLUGGISH MOVEMENT**

**TIGHT HAIRSPRING**
Loosen by disengaging pinion & rotate

**NON LINEAR**

**NON LINEAR FIRST 3RD.**

**ADJ. ANGLE OF PULL BY INCREASING ANGLE "A"**

**NON LINEAR LAST 3RD.**

**ADJ. ANGLE OF PULL BY DECREASING ANGLE "A"**

**NOTE:** To increase or decrease angle "A," bend tip inward or outward as required. Doing this may run the movement segment off the pinion. This can be corrected by cutting off one end off the link "E" decreasing its length, or makin a new length from .032 dia. phos. bronze wire.
**Caution:** When reproducing link end, follow figure 44 very closely. this will prevent too much play, or, binding in operation.

**REF: Replacing System Bellows**
After assembling bellows to the gauge socket securely, subject system to 30 psi for five minutes, allowing bellows to travel approximately 1/8˝ against the overload stop. After this, heat treat system for 15 hours at 250°F, this procedure is necssary to prevent gauge drift.

**SLIDE AND LINK (angle "A")**
**Enlarged view of slide and link**

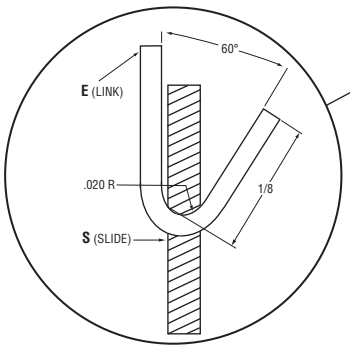


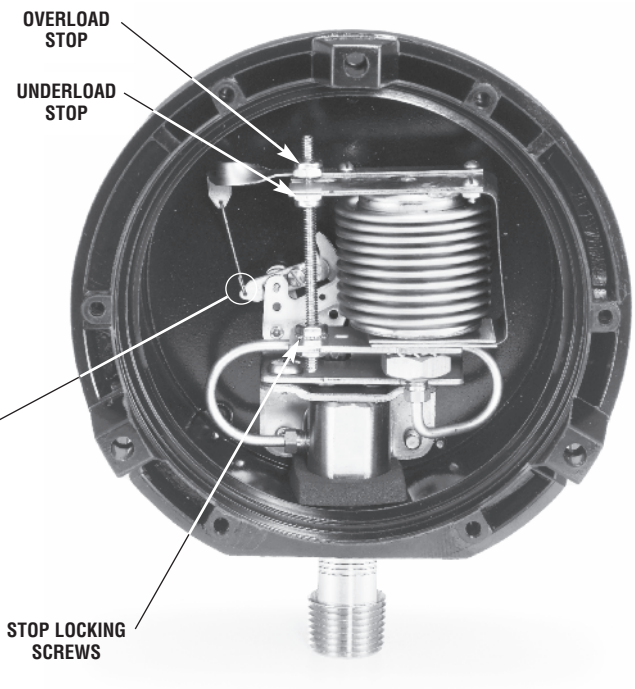


© Ashcroft Inc., 250 E. Main St., Stratford, CT 06614-5145, Tel: 203-378-8281, Fax: 203-385-0499, www.ashcroft.com
All sales subject to standard terms and conditions of sale. I&M008-10173-3/10 (1188)

1. Remove ring, window and gasket pointer.
2. Using a pencil, refer to dial and mark the 0 and 25˝ Hg positions on the case flange.
3. Remove dial.
4. Apply 25˝ Hg vac.
5. Lightly press pointer onto pinion carefully aligning it with the 25˝ Hg vac. mark on the flange.
6. Release vacuum fully.
7. Note agreement of pointer to zero mark on flange.
8. If span is high or low, turn span block as shown in Figure 1.

**Figure 1 –**

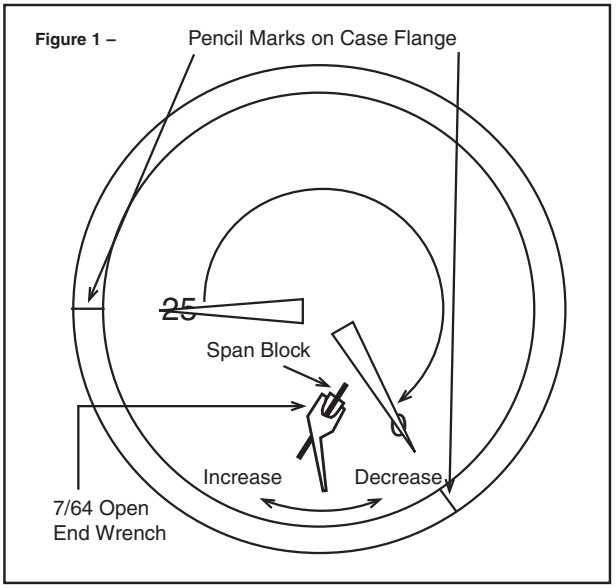


9. Repeat steps 4 through 8 until span is correct.
10. Remove pointer.
11. With 25˝ Hg vac applied, reassemble dial, dial screws (finger tight) and point.
12. Apply 15˝ Hg vac. and note accuracy of indication. If required, slide dial left or right to reduce error to 1% maximum.
13. Firmly tighten dial screws.
14. Firmly tap pointer onto pinion.
15. recheck accuracy at 15 and 25˝ Hg vac. (Figure 2).
16. Reassemble window, gasket and ring.

**Figure 2 –**

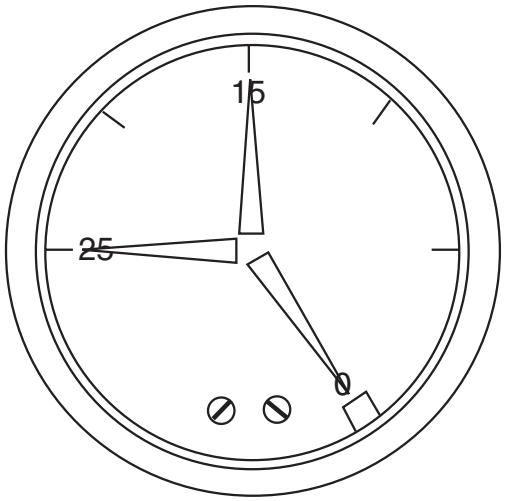


**Notes:** See page 10 for any tools required to calibrate.

**For models produced prior to September 2008 for 2½˝ version and December 2008 for 3½˝ version.**
Back of gauge will have a date code sticker.

© 2010 Ashcroft Inc., 250 East Main Street, Stratford, CT 06614-5145, USA, Tel: 203-378-8281, Fax: 203-385-0499, www.ashcroft.com
All sales subject to standard terms and conditions of sale. I&M008-10077 9/01 AMR 05/10

**Step 1.** With the dial off, install pointer at 9 o'clock "lightly," Figure 3.

**Figure 3 –**

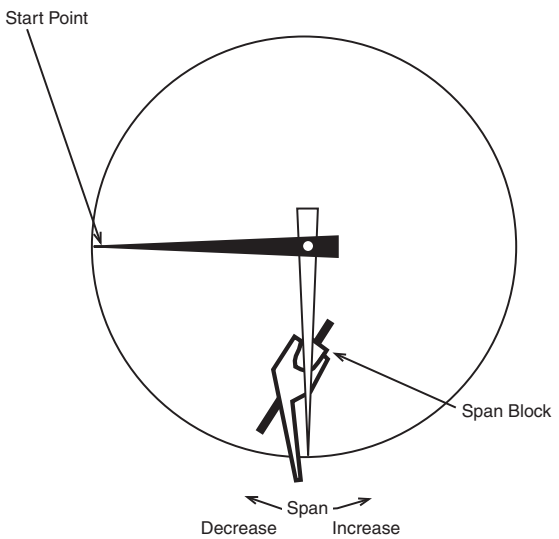


**Step 2.** Go to full scale pressure…rotate span block with tool until pointer rests at 6 o'clock.

**Step 3.** Go to zero pressure (9 o'clock)…if pointer has not moved away from start point, go to Step 4. If pointer has moved, repeat Step 1 until span is correct.

**Step 4.** Install dial with screws snug.

**Figure 4 –**

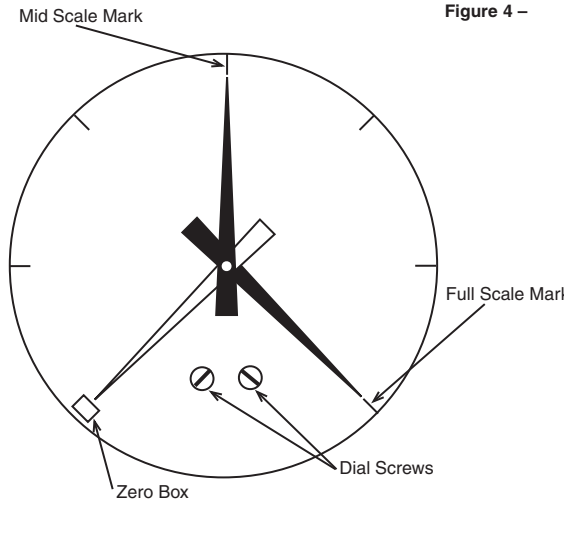


**Step 5.** Install pointer centered in zero box, Figure 4.

**Step 6.** Go to full scale pressure…check that pointer is within 1% of full scale mark. If not, remove pointer and dial and return to step 1, Figure 4.

**Step 7.** Go to mid-scale pressure…rotate dial until mid-scale mark is aligned with pointer, Figure 4.

**Step 8.** Tighten dials screws and stake on pointer.

**Step 9.** Check zero and full scale. Reassemble window, gasket and ring.

**Notes:** See page 10 for any tools required to calibrate.

**For models produced prior to September 2008 for 2½˝ version and December 2008 for 3½˝ version.**
Back of gauge will have a date code sticker.

© 2010 Ashcroft Inc., 250 East Main Street, Stratford, CT 06614-5145, USA, Tel: 203-378-8281, Fax: 203-385-0499, www.ashcroft.com
All sales subject to standard terms and conditions of sale. I&M008-10077 9/01 AMR 05/10

## ASHCROFT® Current Type 1009 Duralife® Calibration Procedure – Pressure and Vacuum Range

**Calibration – 1009 Duralife® Gauge –**
Inspect gauge for accuracy. At times gauges are simply "off zero" and opening the ventable plug at the top of the gauge will relieve internal gauge pressure and correct the offset. If this is not adequate and inspection shows that the gauge warrants recalibration to correct zero, span and/or linearity errors, proceed as follows:

Remove ring, window, and gasket using Ashcroft Ring Removal Tools P/N 101B220-02 and 101B221-02 for 2½" gauges and 101B220-01 and 101B221-01 for 3½" gauges.

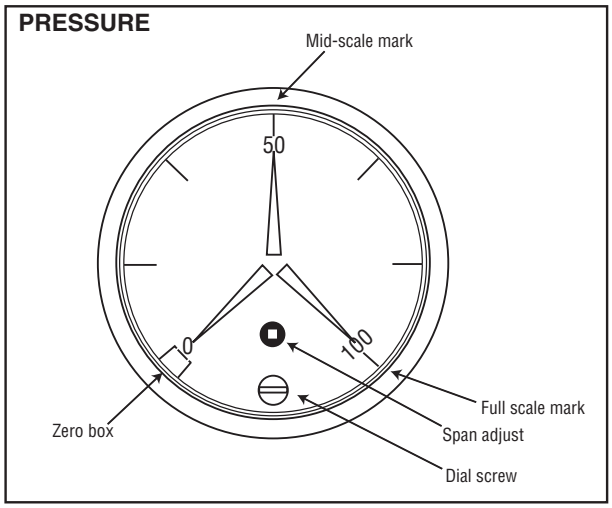


**Positive Pressure Ranges** –

**1.** Adjust pointer with a slotted screwdriver until it is in the center of the zero box. This is often all that is required it correct calibration issues.

**2.** Apply full scale pressure. If error exceeds 1% rotate the black span adjustment device with a #0 square drive bit. Clockwise increases span, counterclockwise decrease span.

**3.** Fully exhaust pressure and check that pointer still is still in the zero box. If not, repeat step 1 and 2

**4.** Once 0 and full scale are within tolerance, pressurize gauge to mid-scale.

**5**. If gauge is within 1%, calibration is complete. If not loosen the dial screw and rotate dial left or right to adjust midpoint. Retighten dial screw.

**6.** If an adjustment was made in step 5, recheck the gauge at zero and full scale, adjust accordingly until zero, mid and full scale points are in tolerance.

**Vacuum Range –**

**1**. Adjust pointer with a slotted screwdriver until it is in the center of the zero box. This is often all that is required it correct calibration issues.

**2**. Apply 25 inches Hg vacuum. If the error exceeds 1% adjust pointer with a slotted screwdriver until gauge is within tolerance.

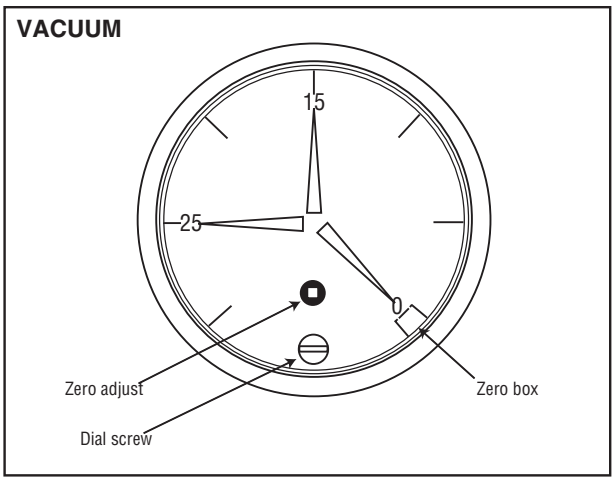


**3**. Vent to 0 pressure and check pointer position in the zero box. If error exceeds 1% rotate the black span adjustment device with a #0 square drive bit. Clockwise rotation moves pointer clockwise, counterclockwise rotation moves the pointer counterclockwise.

**4**. Repeat step 1 and 2 until 0 and 25 inches of Hg are within gauge tolerance.

**5**. Apply 15 inches Hg vacuum. If gauge is within 1%, calibration is complete. If not loosen the dial screw and rotate dial left or right to adjust midpoint. Retighten dial screw.

**6**. If an adjustment was made in step 4, recheck the gauge at zero and 25 inches of Hg vacuum, adjust accordingly until zero, 15 and 25 inches Hg are in tolerance.

**7**. Continue below.

Re-assemble window and ring to gauge:

**a**. If plastic window is used, push window back into front of gauge, ensure the o-ring does not roll out of window groove (lubricate if necessary). Align the tabs of the window with the tabs of the case front. Once window is in place, install ring and tighten with tools referenced above and shown on page 10.

**b** If safety glass is used, reinstall window, gasket, and ring. Ensure that the gasket is seated properly under all four tabs of the ring and does not wrinkle when ring is tightened.

Note: Tighten ring: Apply 120-200inlb of torque. Rotate ring clockwise to tighten. Warning: over tightening of safety glass may induce cracking.

**Notes:** See page 10 for any tools required to calibrate.

**For models produced after September 2008 for 2½˝ version and December 2008 for 3½˝ version.**
Back of gauge will have a date code sticker.

© 2010 Ashcroft Inc., 250 East Main Street, Stratford, CT 06614-5145, USA, Tel: 203-378-8281, Fax: 203-385-0499, www.ashcroft.com
All sales subject to standard terms and conditions of sale. I&M008-10081-05/10 AMR 05/10

# TYPE 1279 & 1379 SOLID FRONT DURAGAUGE® PRESSURE GAUGE CONVERSION INSTRUCTIONS TO:

- **Convert A Standard Dry Gauge To A Liquid Filled Gauge**
- **Convert A Standard Dry Gauge To A Dry, Weatherproof IP66 Gauge**

ASHCROFT®

**TYPICAL 45-1279_S-04L-100* GAUGE SHOWN WITH KIT 101A202-01**

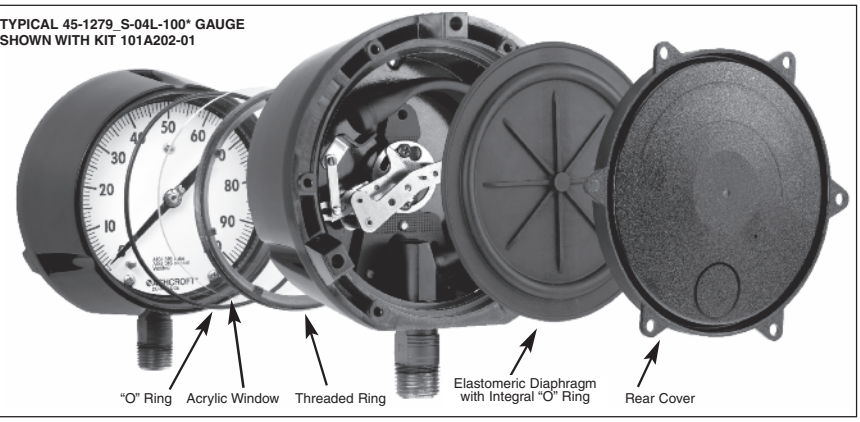


| | 1279 | | 1379 | | |
|---|---|---|---|---|---|
| | 4½˝ LOWER | 4½˝ BACK | 4½˝ LOWER | 4½˝ BACK | 6˝ LOWER & BACK |
| KIT PART NO. | 101A202-01 | 101A203-01 | 1280 | 1283 | 1284 |
| | QUANTITY INCLUDED | | | | |
| ACRYLIC WINDOW | 1 | 1 | 1 | 1 | 1 |
| FRONT O-RING | 1 | 1 | 1 | 1 | 1 |
| DIAPHRAGM(1) | 1 | 1 | 1 | 1 | 2(1-LC:1-BC) |
| REAR COVER | 1 | 1 | 1 | 1 | 2(1-LC:1-BC) |
| COVER SCREWS | 4 | 4 | - | - | - |
| THROTTLE SCREWS | 2 | 2 | 2 | 2 | 2 |
| GARTER SPRING | – | 1 | 1 | 1 | 1 |
| FILL IDENTIFICATION | 1 | 1 | 1 | 1 | 1 |
| THREADED RING | – | – | 1 | 1 | 1 |
| TOP FILL PLUG | – | – | 1 | 1 | – |

**1.** When Halocarbon fill is a requirement, rear case diaphragm bladder material is Viton instead of the standard Buna diaphragm bladder. Consult factory for part number.

| TEMPERATURE LIMITS[1] | | | | 60 psi and Under Down Scale Zero Shift Required |
|---|---|---|---|---|
| | Ambient | Process | Storage | |
| Dry (IP66) | –20/200°F (–29/93°C) | –20/250°F(1) (–29/121°C) | –40/250°F (–40/121°C) | NONE |
| LF (glycerin) | 20/150°F (7/66°C) | 20/200°F (7/93°C) | 0/150°F (–18/66°C) | NONE |
| (silicone) | –40/150°F (–40/66°C) | –40/200°F (–40/93°C) | –40/150°F (–40/66°C) | .12 psi |
| (halocarbon) | –40/150°F (–40/66°C) | –40/200°F (–40/93°C) | –40/150°F (–40/66°C) | .12 psi |

**Note:** Other than discoloration of the dial and hardening of the gasketing that may occur as ambient or process temperatures exceeds 150°F, non-liquid-filled gauges with standard glass windows, can withstand continuous operating temperatures up to 250°F (121°C). Liquid-filled gauges can withstand 200°F (93°C) but glycerin fill and acrylic window will tend to yellow. Accuracy at temperatures above or below the reference ambient temperature of 68°F will be affected by approximately .4% per 25°F. Gauges with welded joints will withstand 750°F (450°F (232°C) with silver brazed joints) for short times without rupture, although other parts of the gauge will be destroyed and calibration will be lost. For continuous use and for process or ambient temperatures above 250°F (121°C), a diaphragm seal or capillary or siphon is recommended.
**(1)** Available for temperature below –20°F, see Production Information page ASH-PI-21B for details

**1.** Unscrew front threaded ring (turn CCW). Remove and discard glass window. For range spans 60 psi and under, shift pointer down scale by the amount shown in the table. With either the glass or plastic window, replace the O-ring with one furnished in the kit.
**2.** Remove protective paper from acrylic plastic window taking care not to scratch window. Assemble window in gauge.
**3.** Moisten face of threaded ring with silicone oil or silicone grease where ring bears up against window. Replace front threaded ring and tighten firmly hand tight. See instructions on reverse side for applying proper torque to ring to establish desired squeeze on O-ring seal. **(Fig. 4).**
It is important to hold gauge **rigidly,** otherwise ring lugs may be damaged during removal or assembly process.
**4.** From rear of gauge, remove and discard these parts: rear cover and cover gaskets from case.
**Note:** Disregard Step Nos. 5a and 5b if converting to hermetically sealed version.
When converting a 45-1379 with the top fill hole configuration, p/n 256A176-01 fill plug is required and must be ordered separately.
**5. Filling Procedures:**
**a. Manual Filling Procedure:** Place gauge face down on bench and **tip gauge** by blocking up front with a ⅜ inch block at the 12 o'clock dial position. Tipping of the gauge is necessary so fluid will flow into front cavity of the case. Pour in fill liquid to within about 1⁄16 inch of rear seal lip. When bubbles stop rising, front cavity is filled. Remove ⅜ inch block and pour in liquid until level is about 1⁄16 inch below rear sealing lip.
**Note:** An alternative method of filling is to fill the front dial cavity, adding the front window, etc., as in Step No. 3. Then fill the rear of the gauge. This method eliminates the need to tip the gauge.
**b. Vacuum Pump Fill Procedure:** (This procedure is recommended when filling a large number of gauges.) Place gauge face down and insert a ⅛ inch diameter tube, connected to a vacuum pump, through the 12 o'clock position hole in the rear, solid front portion of the case **(see Fig. 5).** Evacuate the air from the front dial cavity while pouring in the fill fluid through the case back. The vacuum will displace the air with fluid. When the dial cavity is solidly filled, remove the tubing and continue to pour the fill fluid to within 1⁄16 inch BELOW the O-ring channel lip.
Pre-measuring fill amount is not necessary with above methods. For reference, amount of fill is approximately 400 ml. or 14 fluid oz. (4½˝ GA.) and 455 ml. or 16 fluid oz. (6˝ GA.).
**c. Note:** The liquid fill level should be ⅜˝ (±⅛) as measured from the inside of the ring at the 12:00 o'clock position.
**6.** On lower connection gauges, assemble rear seal diaphragm to case.
For back connection gauges see instructions on reverse side. **(Fig. 2/4).**
**7. For 1279:**
Assemble rear cover and six self tapping screws in a criss-cross pattern and torque to 12 in lbs. (±2 in lbs.)
**For 1379:**
- Thread rear ring and torque to 200 in lbs
- Install stainless steel back cover using two screws. Torque screws to 14 in lbs. (±2 in lbs.)

**8.** Assemble throttle screw to threaded hole in socket.
**Note:** If system is monel (socket wrench flat stamped "PHS" or "PH") use monel throttle screw.
**9.** Check appropriate box on fill identification label, and peel off label back, and attach fill label to gauge case.
**10.** If gauge is to be repackaged:
**a.** Include enclosed instruction sheet inside carton.
**b.** Change type number on carton label to:
(1) Hermetically Sealed – 1279(*)SH.
(2) Liquid Filled – 1279(*)SL.
*Bourdon Tube System Code

Glycerin or silicone should not be used in applications involving Oxygen, Chlorine, Nitric Acid, Hydrogen Peroxide or other strong oxidizing agents, because of danger of spontaneous chemical reaction, ignition or explosion. Halocarbon should be specified. Products with this fill can be ordered from factory.

The use of fluids other than those listed in the table above (for example, Hydrocarbon-based oils) may result in leakage caused by a reaction between the fluid and the elastomeric seals. Consult the factory before filling with any other fluid.

© 2015 Ashcroft Inc., 250 East Main Street, Stratford, CT 06614 USA, Tel: 203-378-8281, Fax 203-385-0402 www.ashcroft.com
All sales subject to standard terms and conditions of sale. All rights reserved. I&M008-10090 (84B276) Rev 10/15

**TYPE 1279 & 1379 SOLID FRONT DURAGAUGE®**
**PRESSURE GAUGE CONVERSION INSTRUCTIONS TO:**

- **Convert A Standard Dry Gauge To A Liquid Filled Gauge**
- **Convert A Standard Dry Gauge To A Dry, Weatherproof IP66 Gauge**

ASHCROFT®

## INSTRUCTIONS FOR USING CONE TOOL AND RING WRENCH

**Garter Spring & Diaphragm Assembly (Back Connection Gauge Only)**

**A.** Place cone tool over socket shank as shown.

**B**. Moisten lip of socket and outer O-ring surface with silicone oil or grease.

**C.** Place diaphragm with rib side facing upward over cone into case grove. Diaphragm O-ring must be completely in socket-shank grove.

**D.** Place garter spring over cone as shown and slide onto diaphragm in socket grove

**E.** Assemble rear cover with screws per step 7.

**Front Ring Assembly (All Gauges)**

**A.** Assemble ring to case by hand to start.

**B.** Place ring on wrench as shown

**C.** Use ½˝ drive extension and torque ring to 200 in. lb

**Alternate Method**

**A.** Tighten ring snugly by hand

**B.** Mark case and ring.

**C.** Turn ring another 100 to 120 degrees (slightly less than ½ turn) using the ring wrench and ½˝ drive socket wrench or place the blunt end of a wooden or plastic dowel against a ring lug and tap with a hammer.

**BACK CONNECTION ASSEMBLED GAUGE**

**Fig. 2**

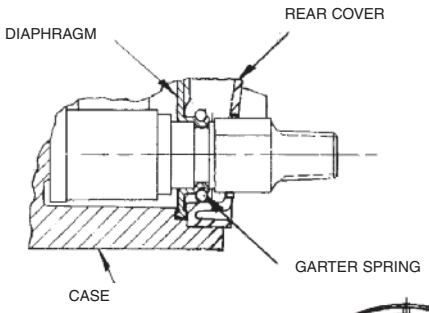


**Fig. 3**

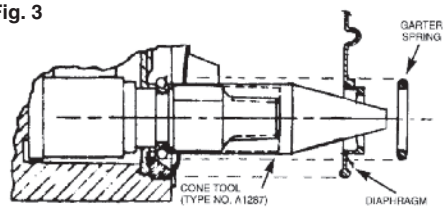


**Fig. 4**

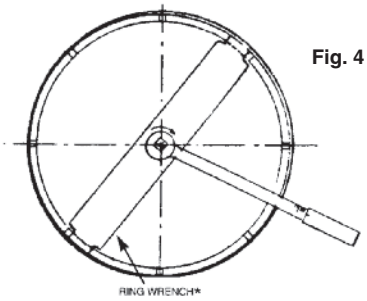


## INSTRUCTIONS FOR LIQUID FILLING ASHCROFT® TYPE 1279 AND 1379 SOLID FRONT DURAGAUGE® PRESSURE GAUGES USING A VACUUM PUMP

**A.** Insert a length of ⅛ ˝ diameter tubing through the 12 o'clock position hole in the rear, solid front portion of the case, as shown.

**B.** Evacuate the air from the front dial cavity while pouring in the fill fluid through the case back. The vacuum will displace the air with fluid.*

**C.** When the dial cavity is solidly filled, remove the tubing and continue to pour the fill fluid to within 1/16 ˝ below the o-ring channel lip, as shown.

**D.** When converting a 45-1379 with the top fill hole configuration, p/n 256A176-01 fill plug is required and must be ordered separately.

*To prevent breakage, reduce vacuum to 15 in. Hg for plain glass and safety glass.

**Fig. 5**

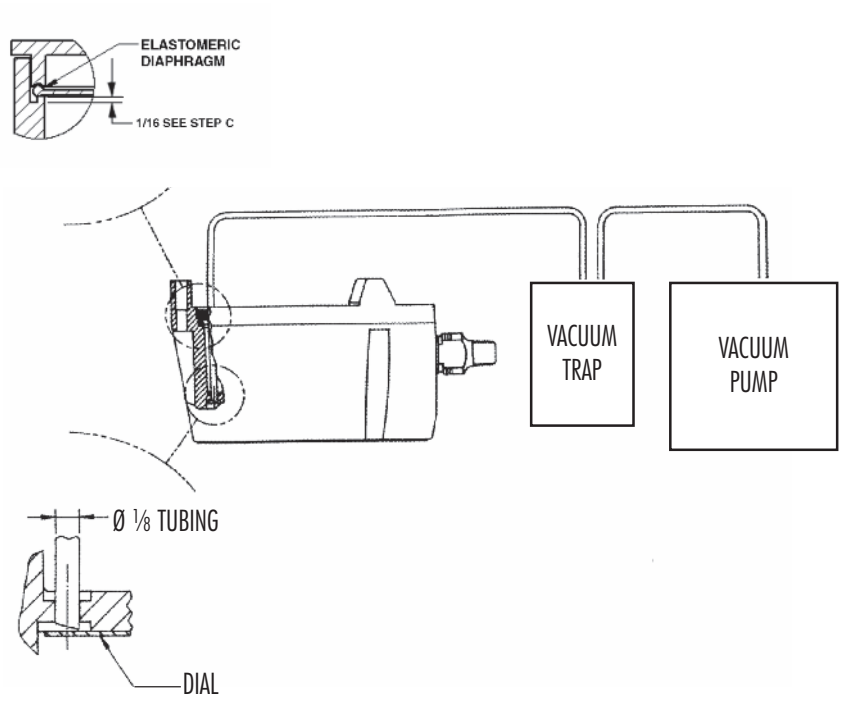


© 2015 Ashcroft Inc., 250 East Main Street, Stratford, CT 06614 USA, Tel: 203-378-8281, Fax 203-385-0402 www.ashcroft.com
All sales subject to standard terms and conditions of sale. All rights reserved. I&M008-10090 (84B276) Rev 10/15

## INSTRUCTIONS FOR USE OF EXTERNAL EASY ZERO™ ADJUST FEATURE*

**Fig. 1**

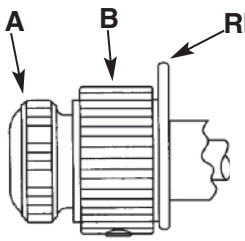


1. LOOSEN RING-LOCKING SCREW **A**.
2. OBTAIN REQUIRED ADJUSTMENT BY ROTATING KNOB **B** CLOCKWISE OR COUNTER-CLOCKWISE.
3. TIGHTEN SCREW **A** DOWN ON KNOB **B**.

*Applicable only for test gauge with hinged ring design.

## ADDITIONAL CALIBRATION INSTRUCTIONS

1) "Standards shall have nominal errors no greater than ¼ of these permitted for the gauge being tested." *(Ref: ASME B40=100-1998)*
2) The instrument used as the calibration standard should have a maximum range no greater than 2x that of the gauge being tested. (i.e. Do not use a 400psi standard to test a 15psi gauge.)
3) "Known pressure shall be applied at each test point on increasing pressure (or vacuum) from one end to the other end of the scale. At each test point the gauge shall be . . .
lightly tapped, and then read . . ."
(*Ref: ASME B40.1 ¶ 6.2.4.1*)
4) To read gauge indication, move eye over red pointer tip at OD of printed dial until red reflection in mirror band is no longer visible, and then read the pointer position in reference to the dial.

© Ashcroft Inc., 250 E. Main St., Stratford, CT 06614-5145, Tel: 203-378-8281, Fax: 203-385-0499, www.ashcroft.com
All sales subject to standard terms and conditions of sale. I&M008-10082 11/01 RevB (250-2917-4) AMR 10/07

**Fig. 2**

THIS TEST GAUGE IS PROVIDED WITH A MICROSPAN™ ADJUSTMENT TO SIMPLIFY CALIBRATION. THE FLOW CHART BELOW OUTLINES THE RECOMMENDED CALIBRATION PROCEDURE

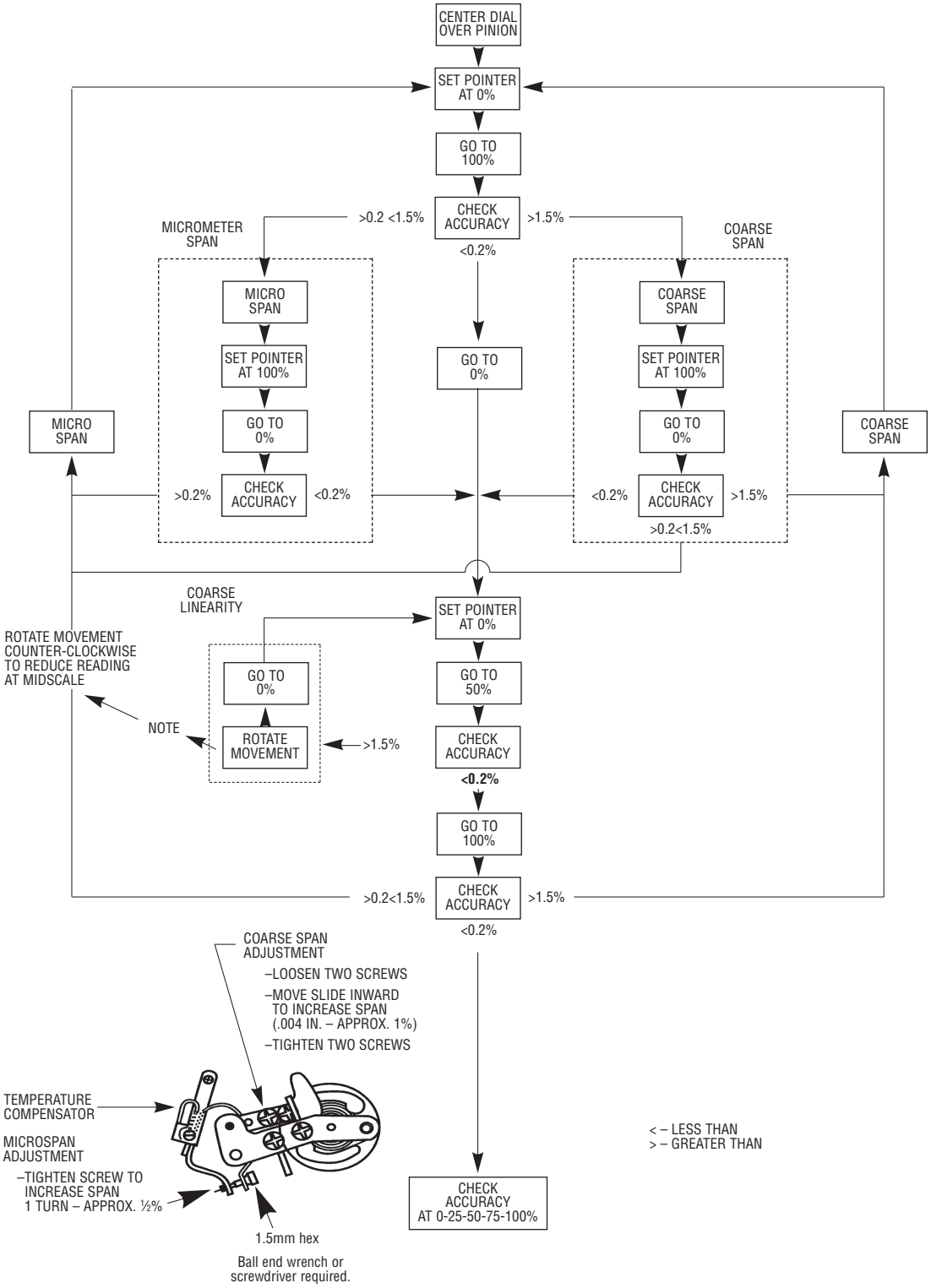


© Ashcroft Inc., 250 E. Main St., Stratford, CT 06614-5145, Tel: 203-378-8281, Fax: 203-385-0499, www.ashcroft.com
All sales subject to standard terms and conditions of sale. I&M008-10082 11/01 Rev C (250-2917-4) 12/15

Ashcroft Inc.,
250 East Main Street
Stratford, CT 06614-5145
U.S.A.
Tel: 203-378-8281
Fax: 203-385-0408 (Domestic)
Fax: 203-385-0357 (International)
email: info@ashcroft.com
www.ashcroft.com
I&M008-10098-5/02 (250-1353-L) Rev. 12/15

***Visit our web site www.ashcroft.com***

LEFT BLANK

# *ASHCROFT*

## *MODEL 310, DIAPHRAGM SEAL*

LEFT BLANK

# Diaphragm Seal Installation and Maintenence Manual

ASHCROFT®

## 1. Introduction




A diaphragm seal is a device that attaches to the process side of a pressure-measuring instrument to separate the instrument from the process fluid while transmitting pressure across a flexible membrane. The volume enclosed by the diaphragm, the top housing, and the measuring element is completely filled with a pressure transfer fluid. A change in pressure at the process connection causes a displacement of the filling fluid due to deflection of the diaphragm, transferring the change in pressure to the sensing element of the pressure instrument.

## 2. Safety Information

**WARNING:** Serious injury or equipment damage can result from failure to properly install, maintain, or operate these components. To assure safe operation and maintenance procedures, read carefully and follow the instructions in this manual.

- Follow all instructions in this document to avoid exposure to pressurized fluid
- Use proper tools and safety equipment in installing or maintaining components
- Assure that process pressure and temperatures are properly monitored and maintained, and the process fluid is appropriate and compatible with the wetted materials of the diaphragm seal
- Follow all of your company's safety procedures in the event of a leak or diaphragm seal failure

## 3. Diaphragm Seal Components

Though the exact components will vary between specific models, most diaphragm seals will share the same essential parts.

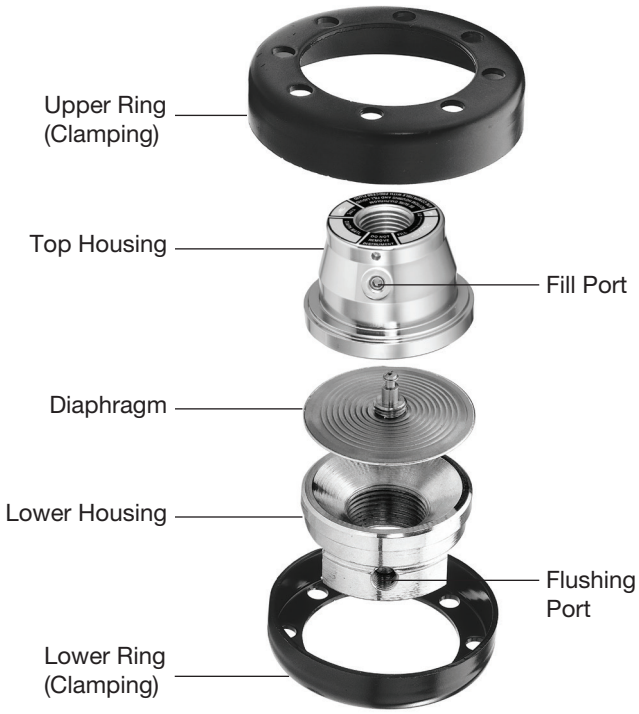


### 3.1 Top Housing

The top housing of the diaphragm seal is used to connect to the pressure measurement instrument. The fill port allows for assemblies to be vacuum filled, then sealed with a ball bearing in a conical seat and secured with a set screw.

### 3.2 Diaphragm

The diaphragm serves to separate the process fluid from the filling fluid, and as such is a component wetted to the process. Diaphragms can be welded or threaded into the top housing, which in turn can be welded or clamped to a lower housing. Changes in pressure cause the diaphragm to deflect, displacing fill fluid and transmitting pressure to the pressure-measuring instrument. It is important to ensure that a diaphragm has sufficient displacement to operate a pressure-measuring instrument across its entire span. For detailed diaphragm seal and instrument compatibility, see Ashcroft Product Information Page DS-PI-82, "Minimum and Maximum Pressures for Diaphragm Seals," found at Ashcroft.com

### 3.3 PTFE Gasket

All 100- and 200-series seals are supplied with a single-use PTFE skirted gasket. Refer to Section 4.2.3 for process considerations related to these gaskets.

© 2019 Ashcroft Inc. 250 East Main Street 06614, Tel: 203-378-8281 • Fax: 203-378-0499, All specifications are subject to change without notice.
All sales subject to standard terms and conditions. www.ashcroft.com All rights reserved. 100-200-300_seal_im_RevA_07-26-19

### 3.4 Lower Housing

The lower housing connects a diaphragm seal to the user's process, and is therefore a wetted part. Lower housings are designed to mate with the process They are avaiable in a wide variety of thread sizes. Lower housings can optionally be provided with threaded flushing connections which can be used to clean the inside of the seal or to flush out process media.

### 3.5 Fill Fluid

A filling fluid (sometimes referred to as "system fill," "pressure sensing fluid," or, "hydraulic fluid") is required to transmit pressure from the diaphragm membrane to the pressure sensing device. Diaphragm seal assemblies are filled via a vacuum filling process that ensures the system contains no air gaps. Fill fluids are selected based on operating conditions; primarily temperature. Though normally not in contact with the process media, a diaphragm failure may bring process media in contact with the fill fluid, so compatibility with the process media should be a consideration.

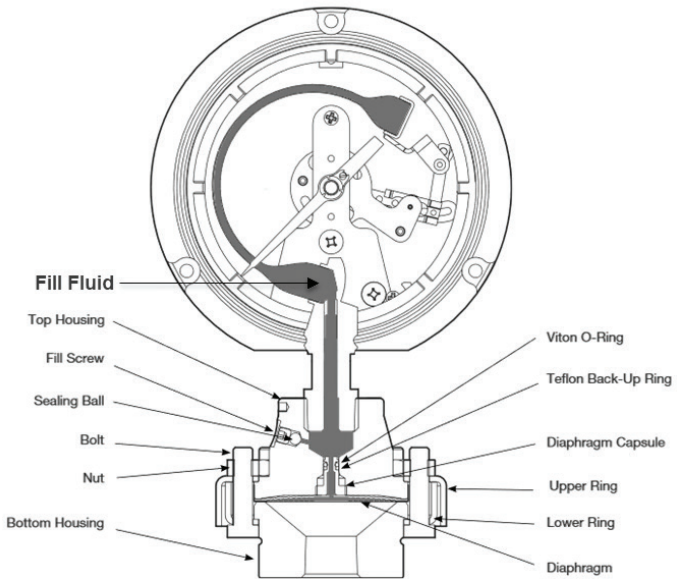


## 4. Specifications

### 4.1 100/200/300-Series Seals

#### 4.1.1 Threaded Seals: 100, 101, 200, 201, 300, 301

| | |
|---|---|
| **Connections** | 100, 200, 300: threaded process connection<br>101, 201, 301: threaded process connection with flushing port |
| **Process Connection Sizes** | ¼ to 1½ NPT female<br>¼ to 1 NPT male |
| **Instrument Connection Sizes** | ¼ or ½ NPT female |
| **Pressure Ratings** | 2,500 psi (5,000 psi optional) |
| **Added Instrument Tolerance** | ±0.5% typical |
| **Wetted Components** | Diaphragm, bottom housing, PTFE gasket |
| **Non-Wetted Components** | Top Housing, clamp rings, assembly hardware |

### 4.2 Temperature Information

#### 4.2.1 Thermal Dissipation

Seals will dissipate thermal energy, though ambient and process conditions will greatly affect the amount of heat that can be lost through the seal. Accessories designed for dissipating heat, such as siphons or capillaries, should be used whenever dealing with elevated process temperatures.

#### 4.2.2 Elastomers and Polymeric materials

Seals made with elastomeric or polymeric wetted components will have lower pressure ratings than those made from metallic components. Refer to the applicable data sheet for temperature and pressure ratings for seals with non-metallic diaphragms or bottom housings.

#### 4.2.3 PTFE Gasketing

The highest acceptable process temperature for PTFE gaskets is 500F. The lowest acceptable temperature is limited by the fill fluid, the lowest of which is Syltherm XLT, rated to -150ºF. For process temperatures below -150ºF or exceeding 500ºF, consider a temperature dissipating device, such as capillary or a a microTube™ or siphon. For processes that are not compatible with PTFE, consider an all-welded diaphragm seal.

© 2019 Ashcroft Inc. 250 East Main Street 06614, Tel: 203-378-8281 • Fax: 203-378-0499, All specifications are subject to change without notice.
All sales subject to standard terms and conditions. www.ashcroft.com All rights reserved. 100-200-300_seal_im_RevA_07-26-19

## 5. Fill Fluid Specifications

| Fill Fluid | Temperature | Viscosity (cSt at RT) | Variation Code | Notes |
|---|---|---|---|---|
| Glycerin (food grade) | 0°F to 400°F (-18°C to 204°C) | 1,300 | CG | Direct-mounting only. Not for use with vacuum service |
| 50 cSt Silicone | -40°F to 500°F (-40°C to 260°C) | 50 | CK | |
| 10 cSt Silicone | -40°F to 500°F (-40°C to 260°C) | 10 | DJ | |
| Halocarbon® 4.2 | -70°F to 300°F (-57°C to 199°C) | 4.2 | CF | For use with oxygen/ oxidizing process media |
| Slytherm® 800 | -40°F to 750°F (-40°C to 400°C) | 10 | HA | High temperature applications |
| Syltherm® XLT | -150°F to 500°F (-100°C to 260°C) | 1.4 | CC | Low temperature applications |
| Calflo® AF | -20°F to 600°F (-29°C to 316°C) | 60 | KF | High temperature, silicone-free |
| Mineral Oil | 10°F to 400°F (-12°C to 204°C) | 75 | MY | |
| Neobee® M-20 (food grade) | 5°F to 400°F (-15°C to 204°C) | 9.5 | NM | |
| Silicone (food grade) | -40°F to 500°F (-40°C to 260°C) | 350 | CZ | |
| Distilled Water | 40°F to 185°F (4°C to 85°C) | 0.9 | FJ | |
| 50/50 Glycerin/Water | 15°F to 200°F (-9°C to 93°C) | 30 | GH | |
| Propylene Glycol | -50°F to 325°F (-46°C to 163°C) | 54 | CV | |
| Ethylene Glycol | 20°F to 325°F (-7°C to 163°C) | 14 | FK | |
| 50/50 Ethylene Glycol/Water | -25°F to 190°F (-32°C to 88°C) | 2.9 | CT | |
| 80/20 Glycerin/Water | 15°F to 225°F (-9°C to 107°C) | 270 | GR | |
| 95/5 Water/ Propylene Glycol | 40°F to 185°F (4°C to 85°C) | 1.0 | PY | |

© 2019 Ashcroft Inc. 250 East Main Street 06614, Tel: 203-378-8281 • Fax: 203-378-0499, All specifications are subject to change without notice.
All sales subject to standard terms and conditions. www.ashcroft.com All rights reserved. 100-200-300_seal_im_RevA_07-26-19

# Diaphragm Seal Installation and Maintenence Manual

ASHCROFT®

## 6. Installation

### 6.1 General Information

Instruments attached and filled to diaphragm seals should never be tightened or loosened at the top housing. Doing so will alter the dynamics of the fill fluid and diaphragm movement, causing errors in the reading. Assemblies should ONLY be installed and/or tightened at the diaphragm seal lower housing. Most diaphragm seals can be purchased with either a locking device (XLD) or with the instrument welded to the top housing of the seal to prevent tampering (XDU).

Diaphragm seals should be installed in accordance with any safety precautions or installation specifications applicable to the end user. That said, the general principles in the following sections still apply.

### 6.2 Flushing Ports

Use of flushing ports is application-specific and are often used when process media has the potential to clog inside the lower housing, whether due to process media solidification, suspended solids, polymerization, or other factors. Diaphragm seals with flushing ports must have the flushing ports plugged prior to startup. Flushing ports on most seals are ¼ NPT, though some configurations may have ⅛ or ½ NPT flushing ports. Diaphragm seals can be ordered with the flushing ports pre-plugged with the "XPU" variation. Note that to prevent thread galling or stripping, factory-installed flush plugs may not be fully tightened and should be checked for tightness prior to pressurization.

### 6.3 Threaded Seals

Note: Torque should never be applied to the pressure instrument when installing the diaphragm seal. Most seals are supplied with either wrench flats or spanner holes to be used when installing the seal into process piping.

Threaded seals are most commonly supplied with NPT threads per ASME B1.20.1. NPT threads require the use of a suitable thread sealant, such as pipe dope or PTFE tape, and must be tightened securely to prevent galled threads and to ensure a leak-tight seal. Torque values will vary by connection size, though 2-3 full turns past finger-tight is often used as a guideline. Refer to ASME B1.20.1 for detailed information regarding NPT threads. For alternate thread types (metric, BSP, etc.), refer to the applicable specification.

## 7. Maintenence

### 7.1 Storage

Diaphragm seal assemblies should be stored in accordance with the storage requirements for all instruments attached, as well as any temperature limits listed above. Common instrumentation is shown in the table below. Refer to the respective data sheets or maintenance guides for detailed storage requirements for Ashcroft pressure instruments. Note that certain fill fluids (e.g., distilled water) may have storage and process temperature limitations narrower than the below data.

| Pressure Instrument | Minimum Storage Temperature °F (°C) | Maximum Storage Temperature °F (°C) |
|---|---|---|
| Pressure Gauge (Dry) | -40 (-40) | 250 (121) |
| Pressure Gauge (Glycerin-filled) | 0 (-18) | 150 (66) |
| B-series switches | -20 (-28) | 150 (65) |
| A- Series Switches | -40 (-40) | 257 (125) |

### 7.2 Frequency of Inspection

Inspection frequency is application-specific and depends on the severity of the service and how critical the accuracy of the pressure instrument is. For example, a monthly inspection may be necessary for severe service applications, such as corrosive process media or heavy pulsation and vibration. Annual inspections, or even less frequent schedules, are often employed in non-critical applications.

### 7.3 Removal from Service

Diaphragm seals should be properly isolated and vented from the process prior to disassembly. Most diaphragms can be inspected by removing the diaphragm seal from the process (either by unthreading or by removing it from the mating flange) and viewing the diaphragm through the lower housing. If additional inspection is needed, 100- and 200-series diaphragm seals can be disassembled by removing the clamping screws and separating the top housing and diaphragm from the lower housing. Note that the PTFE wetted gaskets on certain seals are single use, and must be replaced anytime the compression is lost. Replacement gaskets can be ordered from Ashcroft (part number 124A287-01). 300-series seal should not be disassembled, as the diaphragm is merely clamped between the top and bottom housing; disassembling will result in loss of fill fluid.

© 2019 Ashcroft Inc. 250 East Main Street 06614, Tel: 203-378-8281 • Fax: 203-378-0499, All specifications are subject to change without notice.
All sales subject to standard terms and conditions. www.ashcroft.com All rights reserved. 100-200-300_seal_im_RevA_07-26-19

## 7.4 Diaphragm Seal Failures and Troubleshooting

100, 200, and 300-series diaphragm seal are continuous duty as defined by ASME B40.2. Should the pressure instrument fail or be removed accidentally, the diaphragm will seat against a matching surface in the top housing preventing damage to the diaphragm or leakage of the process fluid.

In the event that a diaphragm failure is suspected, the assembly should be immediately isolated from the process and the cause for failure determined. Most diaphragm failures are caused by corrosion, high temperatures, or fill leakage. Process media build-up in the lower housing can also require cleaning or replacement. In the event of a diaphragm failure due to corrosion, it is critical that the wetted materials of the assembly be evaluated for compatibility before it is replaced.

### 7.4.1 Troubleshooting Guide

| Symptom | Possible Cause | Solution |
|---|---|---|
| Instrument not responding to pressure | Poor filling process, loss of fill fluid | Refill diaphragm seal and instrument assembly |
| | Process media clog or accumulation in lower housing | Clean out lower housing; alternately, use a seal with a flushing port |
| Process media leaking from process connection | Threaded seals: Inadequate thread sealing | Check that the seal has been properly torqued and that the threads have been sealed with pipe dope or PTFE tape |
| Rusted bolts/top housing/flange | Corrosive atmosphere | In most cases rust will not affect the performance of the seal. Consider more corrosion-resistant non-wetted materials. |
| Upscale shift on pressure reading | Temperature error – High Temp | Consider a heat dissipation accessory, such as a capillary or MicroTube™ Siphon |
| | Overfilling | Refill diaphragm seal and instrument assembly |
| | Diaphragm permeation | Certain process media can permeate the very thin diaphragm material and react with fill fluid. Review wetted material compatibility |

© 2019 Ashcroft Inc. 250 East Main Street 06614, Tel: 203-378-8281 • Fax: 203-378-0499, All specifications are subject to change without notice.
All sales subject to standard terms and conditions. www.ashcroft.com All rights reserved. 100-200-300_seal_im_RevA_07-26-19

LEFT BLANK

# *BALDOR*

## *AC INDUCTION MOTOR (0.5 AND 0.75 HP)*

LEFT BLANK

# Baldor-Reliance AC & DC Motor Installation & Maintenance

**Note! The manufacturer of these products, Baldor Electric Company, became ABB Motors and Mechanical Inc. on March 1, 2018. Nameplates, Declaration of Conformity and other collateral material may contain the company name of Baldor Electric Company and the brand names of Baldor-Dodge and Baldor-Reliance until such time as all materials have been updated to reflect our new corporate identity.**

Safety Notice: Be sure to read and understand all of the Safety Notice statements in MN408 or Product Specific manual for your motor. A copy is available at: http://www.baldor.com/support/product_manuals.asp

## ACCEPTANCE

Thoroughly inspect this equipment before accepting shipment from the transportation company. If any damage or shortage is discovered do not accept until noted on the freight bill. Report all damage to the freight carrier.

## SAFETY

Eye bolts, lifting lugs or lifting openings, if provided, are intended only for lifting the motor and motor mounted standard accessories not exceeding, in total 30% of the motor weight. These lifting provisions should never be used when lifting or handling the motor and driven equipment. Eye bolt lifting capacity rating is based on a lifting alignment coincident with eye bolt center line. Eye bolt capacity reduces as deviation from this alignment is increased. Be sure eye bolts are tight and prevented from turning before lifting.

## INSTALLATION OUTSIDE THE USA:

Refer to MN408 and MN1383 for Compliance with European Directives. Copies are available at:
http://www.baldor.com/support/product_manuals.asp

## MOTOR ENCLOSURE

ODP, Open drip proof motors are intended for use in clean, dry locations with adequate supply of cooling air. These motors should not be used in the presence of flammable or combustible materials. Open motors can emit flame and/or molten metal in the event of insulation failure.

TEFC, totally enclosed motors are intended for use where moisture, dirt and/or corrosive materials are present in indoor and outdoor locations.

Explosion protected motors, as indicated by a Nationally Recognized Testing Laboratory Certification mark and marking with Class, Division and Temperature Code are intended for installation in hazardous locations as described in Article 500 of the NEC. Refer to MN408 for more details.

## MOUNTING

Foot mounted machines should be mounted to a rigid foundation to prevent excessive vibration. Shims may be used if location is uneven.

**Flange mounted** machines should be properly seated and aligned. Note: If improper rotation direction is detrimental to the load, check rotation direction prior to coupling the load to the motor shaft.

For V-belt drive, mount the sheave pulley close to the motor housing. Allow clearance for end to end movement of the motor shaft. Do not overtighten belts as this may cause premature bearing failure or shaft breakage.

**Direct coupled** machines should be carefully aligned and the shaft should rotate freely without binding.

## GENERAL

The user must select a motor starter and overcurrent protection suitable for this motor and its application. Consult motor starter application data as well as the National Electric Code and/or applicable local codes.

Special motors for use by United States Government including special specifications, master plans, etc. refer to the applicable master plans and specifications involved.

On motors received from the factory with the shaft blocked, remove blocking before operating the motor.

If motor is to be reshipped alone or installed to another piece of equipment, the shaft block must be installed to prevent axial movement and prevent brinelling of the bearings during shipment.

## TESTING

If the motor has been in storage for an extensive period or has been subjected to adverse moisture conditions, check the motor insulation resistance with a meg ohm meter. Depending on storage conditions it may be necessary to regrease or change rusted bearings. Contact your local sales office if resistance is less than 5 meg ohms.

**WARNING: Do not touch electrical connections before you first ensure that power has been disconnected. Electrical shock can cause serious or fatal injury.**

**WARNING: Be sure the system is properly grounded before applying power. Electrical shock can cause serious or fatal injury.**

## INSTALLATION

This motor must be installed in accordance with National Electric Code, NEMA MG-2, IEC standards or local codes.

**WIRING**
Connect the motor as shown in the connection diagrams. If this motor is installed as part of a motor control drive system, connect and protect the motor according to the control manufacturers diagrams. Refer to MN408 for additional details on lead marking. The wiring, fusing and grounding must comply with the National Electrical Code or IEC and local codes. When the motor is connected to the load for proper direction of rotation and started, it should start quickly and run smoothly. If not, stop the motor immediately and determine the cause. Possible causes are: low voltage at the motor, motor connections are not correct or the load is too heavy. Check the motor current after a few minutes of operation and compare the measured current with the nameplate rating.

**GROUNDING**
Ground the motor according to NEC and local codes. In the USA consult the National Electrical Code, Article 430 for information on grounding of motors and generators, and Article 250 for general information on grounding. In making the ground connection, the installer should make certain that there is a solid and permanent metallic connection between the ground point, the motor or generator terminal housing, and the motor or generator frame. In non-USA locations consult the appropriate national or local code applicable.

**ADJUSTMENT**
The neutral is adjustable on some DC motors. AC motors have no adjustable parts.

**Noise**
For specific sound power or pressure level information, contact your local sales office.

**VIBRATION**
This motor is balanced to NEMA MG1, Part 7 standard.

**BRUSHES (DC Motors)**
Periodically, the brushes should be inspected and all brush dust blown out of the motor. If a brush is worn 1/2, (length specified in renewal parts data), replace the brushes.

**WARNING: Guards must be installed for rotating parts such as couplings, pulleys, external fans, and unused shaft extensions, should be permanently guarded to prevent accidental contact by personnel. Accidental contact with body parts or clothing can cause serious or fatal injury.**

Reassemble and seat the new brushes using a brush seating stone. Be sure the rocker arm is set on the neutral mark.

**INSPECTION**
Before connecting the motor to an electrical supply, inspect for any damage resulting from shipment. Turn the shaft by hand to ensure free rotation. Motor leads must be isolated before the shaft will turn freely on permanent magnet motors.

**DRAIN PLUGS**
One or more condensation drain plugs are provided on each endplate for various motor mounting configurations. For Washdown and totally enclosed, fan cooled or non-ventilated motors, the plugs in the lowest portion of the ends shields should be removed for operation (unless the motor has special stainless steel drains). All drains are located in the lowest portion of the ends shields.

**MOUNTING**
Mount the motor on a foundation sufficiently rigid to prevent excessive vibration. Grease lubricated ball bearing motors may be mounted with the feet at any angle. After careful alignment, bolt motor securely in place. Use shim to fill any unevenness in the foundation. Motor feet should sit solidly on the foundation before mounting bolts are tightened.

**IP (Ingress Protection)**
IP designations include two numerals, the first characteristic numeral is for ingress solid bodies and from dust. The second for ingress protection from liquid - water. Motors marked less than IP23 require additional protection from water.

**GUARDING**
After motor installation is complete, a guard of suitable dimensions must be constructed and installed around the motor/gearmotor. This guard must prevent personnel from coming in contact with any moving parts of the motor or drive assembly but must allow sufficient cooling air to pass over the motor. If a motor mounted brake is installed, provide proper safeguards for personnel in case of brake failure. Brush inspection plates and electrical connection cover plates or lids, must be installed before operating the motor.

**STARTING**
Before starting motor remove all unused shaft keys and loose rotating parts to prevent them from flying off. Check direction of rotation before coupling motor to load. The motor should start quickly and run smoothly and with little noise. If the motor should fail to start the load may be too great for the motor, the voltage is low or the motor has been miswired. In any case immediately shut motor off and investigate the cause.

**ROTATION**
To reverse the direction of rotation, disconnect and lockout power and interchange any two of the three AC power leads for three phase motors. For two-phase four wire, disconnect and lockout power and interchange the AC line leads on any one phase. For two phase three wire, disconnect and lockout power and interchange phase one and phase two AC line leads.

**Maintenance Procedures**

**WARNING: Do not touch electrical connections before you first ensure that power has been disconnected. Electrical shock can cause serious or fatal injury.**

**WARNING: Surface temperatures of motor enclosures may reach temperatures which can cause discomfort or injury to personnel accidentally coming into contact with hot surfaces. Protection should be provided by the user to protect against accidental contact with hot surfaces. Failure to observe this precaution could result in bodily injury.**

**Lubrication Information**
Refer to motor nameplate for recommended lubricant. If none is shown, the recommended lubricant for anti-friction bearings (-15°F to 120°) is POLYREX EM. For Min Start Temp -100°F use AEROSHELL #7. For roller bearings is ExxonMobil SHC-220.

**Relubrication Intervals**
**(For motors with regrease capability)**
New motors that have been stored for a year or more should be relubricated. Lubrication is also recommended at Table 1 intervals.

**LUBRICATION INSTRUCTIONS**
Cleanliness is important in lubrication. Any grease used to lubricate anti friction bearings should be fresh and free from contamination. Properly clean the grease inlet area of the motor to prevent grease contamination.

1. Select service conditions from Table 2.
2. Select lubrication interval (Table 1).
3. Adjust lubrication interval with multiplier from Table 3.
4. Select volume of grease from Table 4.

**LUBRICATION PROCEDURE**
Bearings should be lubricated while stationary and the motor is warm.

1. Locate the grease inlet, clean the area, and replace the pipe plug with a grease fitting.
2. Locate and remove the grease drain plug, if provided.
3. Add the recommended volume of the recommended grease.
4. Replace the grease inlet plug and run the motor for 15 minutes.
5. Replace the grease drain plug.

**SPECIAL APPLICATIONS**
For special temperature applications, contact your local sales office.

**Relubrication Intervals**
Recommended relubrication intervals are shown in Table 1. It is important to realize that the recommended intervals of Table 2 are based on average use. Refer to additional information contained in Tables 2, 3 and 4.

**Table 1 Relubrication Interval**

| NEMA (IEC) Frame Size | Rated Speed (RPM) | | | |
|---|---|---|---|---|
| | 3600 | 1800 | 1200 | 900 |
| Up to 210 incl. (132) | 5500Hrs. | 12000Hrs. | 18000Hrs. | 22000Hrs. |
| Over 210 to 280 incl. (180) | 3600Hrs. | 9500Hrs. | 15000Hrs. | 18000Hrs. |
| Over 280 to 360 incl. (225) | 2200Hrs. | 7400Hrs. | 12000Hrs. | 15000Hrs. |
| Over 360 to 5800 incl. (400) | 2200Hrs. | 3500Hrs. | 7400Hrs. | 10500Hrs. |

* Relubrication intervals are for ball bearings.
For vertically mounted motors and roller bearings, divide the relubrication interval by 2.

** For motors operating at speeds greater than 3600 RPM, contact your local sales office for relubrication recommendations.

**Table 2 Service Conditions**

| Severity of Service | Hours per day of Operation | Ambient Temperature Maximum | Atmospheric Contamination |
|---|---|---|---|
| Standard | 8 | 40° C | Clean, Little Corrosion |
| Severe | 16 Plus | 50° C | Moderate dirt, Corrosion |
| Extreme | 16 Plus | >50° C* or Class H Insulation | Severe dirt, Abrasive dust, Corrosion, Heavy Shock or Vibration |
| Low Temperature | | <-29 ° C ** | |

* Special high temperature grease is recommended (Dow Corning DC44).

** Special low temperature grease is recommended (Aeroshell 7).

Note: Different grease types are generally incompatible and should not be mixed. Mixing different types can cause lubricant and bearing failure. Thoroughly clean bearing and cavity before changing grease type.

**Table 3 Lubrication Interval Multiplier**

| Severity of Service | Multiplier |
|---|---|
| Standard | 1.0 |
| Severe | 0.5 |
| Extreme | 0.1 |
| Low Temperature | 1.0 |

Some motor designs use different bearings on each motor end. This is normally indicated on the motor nameplate. In this case, the larger bearing is installed on the motor Drive endplate. For best relubrication results, only use the appropriate amount of grease for each bearing size (not the same for both).

**Table 4 Amount of Grease to Add**

| Frame Size NEMA (IEC) | Bearing Description (These are the "Large" bearings (Shaft End) in each frame size) | | | |
|---|---|---|---|---|
| | Bearing | Weight of Grease to add * oz (Grams) | Volume of grease to be added | |
| | | | $in^3$ | teaspoon |
| 56 to 140 (90) | 6203 | 0.08 (2.4) | 0.15 | 0.5 |
| 140 (90) | 6205 | 0.15 (3.9) | 0.2 | 0.8 |
| 180 (100–112) | 6206 | 0.19 (5.0) | 0.3 | 1.0 |
| 210 (132) | 6307 | 0.30 (8.4) | 0.6 | 2.0 |
| 250 (160) | 6309 | 0.47 (12.5) | 0.7 | 2.5 |
| 280 (180) | 6311 | 0.61 (17) | 1.2 | 3.9 |
| 320 (200) | 6312 | 0.76 (20.1) | 1.2 | 4.0 |
| 360 (225) | 6313 | 0.81 (23) | 1.5 | 5.2 |
| 400 (250) | 6316 | 1.25 (33) | 2.0 | 6.6 |
| 440 (280) | 6318 | 1.52(40) | 2.5 | 8.2 |
| 440 (280) | 6319 | 2.12 (60) | 4.1 | 13.4 |
| 5000 to 5800 (315–400) | 6328 | 4.70 (130) | 9.2 | 30.0 |
| 5000 to 5800 (315–400) | NU328 | 4.70 (130) | 9.2 | 30.0 |
| 360 to 449 (225–280) | NU319 | 2.12 (60) | 4.1 | 13.4 |
| **AC Induction Servo** | | | | |
| 76 Frame 180 (112) | 6207 | 0.22 (6.1) | 0.44 | 1.4 |
| 77 Frame 210 (132) | 6210 | 0.32 (9.0) | 0.64 | 2.1 |
| 80 Frame 250(160) | 6213 | 0.49 (14.0) | 0.99 | 3.3 |

## Typical IEC vs NEMA Lead Marking

**Single Phase Non-Reversible**
Refer to the connection diagram provided on the motor.




**Single Phase Reversible**




**Dual Voltage Reversible**




**DC Motors**
Lead markings can be translated between IEC and NEMA designations as follows:

| | NEMA | IEC |
|---|---|---|
| Armature | A1, A2 | A1, A2 |
| Series Field | S1, S2 | D1, D2 |
| Shunt Field | F1, F2 | E1, E2 |

Refer to the connection diagram provided on the motor.

**Three Phase**
For single winding 3 phase motors, lead markings can be directly translated between IEC and NEMA designations. For these motors, the lead markings are:

U1=T1 U2=T4 U3=T7 U4=T10
V1=T2 V2=T5 V3=T8 V4=T11
W1=T3 W2=T6 W3=T9 W4=T12

Refer to the connection diagram provided on the motor. Some examples are as follows:

**Three Leads**

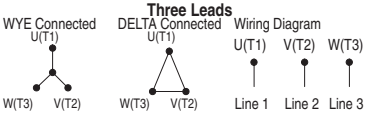


**Six Leads**

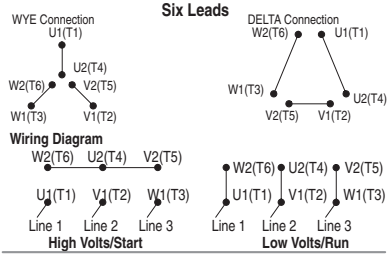



**ABB Motors and Mechanical Inc.**
5711 R. S. Boreham Jr. Street
Fort Smith, AR 72901
Ph: 1.479.646.4711

**baldor.com**



© ABB Motors and Mechanical Inc. All Rights Reserved. Printed in USA.


MN416A01 5/18

# *BRAY*

## *SERIES 31, BUTTERFLY VALVE*

LEFT BLANK

BRAY

# RESILIENT SEATED BUTTERFLY VALVES

Installation, Operation and Maintenance Manual

20/21 | 22/23 | 30/31 | 3A/3AH | 31H | 31U | 32/33 | 35/36 | 36H

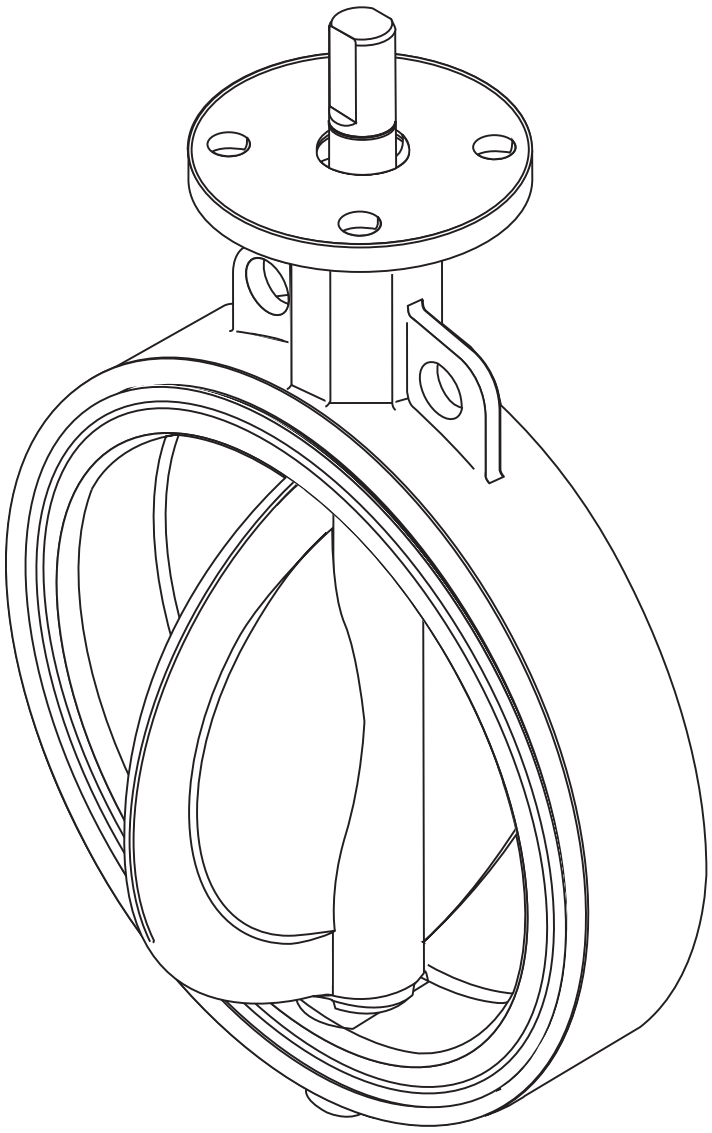

Bray®

# Table of Contents


| | | |
|---|---|---|
| 1.0 | Safety Instructions - Definition of Terms | 3 |
| 2.0 | Introduction | 3 |
| 3.0 | Installation Considerations - Piping and Valve Orientation and Placement | 5 |
| 4.0 | Installation Procedure | 10 |
| 5.0 | Maintenance and Repair | 14 |
| APPENDIX - Disassembly/Assembly Instructions | | 16 |
| 6.0 | Appendix A - Series 20/21 Resilient Seated Butterfly Valves | 16 |
| 7.0 | Appendix B - Series 22/23 Resilient Seated Butterfly Valves | 18 |
| 8.0 | Appendix C - Series 30/31 Resilient Seated Butterfly Valves | 20 |
| 9.0 | Appendix D - Series 3A/3AH Resilient Seated Butterfly Valves | 22 |
| 10.0 | Appendix E - Series 31H Resilient Seated Butterfly Valves | 24 |
| 11.0 | Appendix F - Series 31U Resilient Seated Butterfly Valves | 26 |
| 12.0 | Appendix G - Series 32/33 Resilient Seated Butterfly Valves | 28 |
| 13.0 | Appendix H - Series 35/36 Resilient Seated Butterfly Valves (Taper Pin Disc/Stem Connection) | 30 |
| 14.0 | Appendix I - Series 35/36 Resilient Seated Butterfly Valves (Internal Spiine or Keyed Disc/Stem Connection) | 32 |
| 15.0 | Appendix J - Series 36H Resilient Seated Butterfly Valves | 36 |


© 2020 BRAY INTERNATIONAL, INC. ALL RIGHTS RESERVED. BRAY.COM The Information contained herein shall not be copied, transferred, conveyed, or displayed in any manner that would violate its proprietary nature without the express written permission of Bray International, Inc.

**READ AND FOLLOW THESE INSTRUCTIONS CAREFULLY.**
**SAVE THIS MANUAL FOR LATER USE.**

## 1.0 SAFETY INSTRUCTIONS - DEFINITION OF TERMS

**⚠ WARNING**

Indicates a potentially hazardous situation which, if not avoided, could result in death or serious injury.

**⚠ CAUTION**

Indicates a potentially hazardous situation which, if not avoided, may result in minor or moderate injury.

**NOTICE**

Used without the safety alert symbol, indicates a potential situation which, if not avoided, may result in an undesirable result or state, including property damage.

## 2.0 INTRODUCTION

### 2.1 Historical Experience

2.1.1 Based on over thirty years experience in the butterfly industry, Bray can state without question the majority of all field problems for resilient seated butterfly valves are directly related to poor installation procedures. For this reason, it is very important all distributor salespeople educate their customers regarding proper installation of resilient seated butterfly valves.

### 2.2 Butterfly Valve Seat / Disc Function

2.2.1 Before reviewing the proper installation, maintenance, and repair procedures for resilient seated butterfly valves, let's discuss the seat-disc function of a butterfly valve. The seat in a resilient seated butterfly valve has molded o-rings on its flange face. As a result, no gaskets are required as these o-rings serve the function of a gasket. The flange face and molded o-rings of the seat extend beyond the body face-to-face to ensure sealing at the flange faces. The seat material, which extends past the face is compressed in installation and flows toward the center of the valve seat I.D.

© 2020 BRAY INTERNATIONAL, INC. ALL RIGHTS RESERVED. BRAY.COM The Information contained herein shall not be copied, transferred, conveyed, or displayed in any manner that would violate its proprietary nature without the express written permission of Bray International, Inc.

2.2.2 In essence, the elastomer seat acts as a liquid, and the displaced elastomer moves toward the point of least resistance. The seat I.D. of all resilient seated butterfly valves is smaller than the disc O.D. This difference, the disc-seat interference, plus the increased interference due to the elastomer movement toward the seat center after installation, has been engineered so as to be the basis for pressure rating capability and the related seating/unseating torques. Any change in this interference due to improper installation directly affects the pressure rating and seating/unseating torques.

2.2.3 Finally, unlike many valve types, the resilient seated butterfly valve's disc actually extends beyond the face of the valve body at given angles of opening (say, 30° or more) when installed between flanges.

**⚠ CAUTION**

It is very important before installation to ensure the critical chordial dimension of the disc at the full open position is less than the adjacent pipe flange I.D.

**2.3 Shipmment and Storage**

2.3.1 The seat, disc, stem and bushing of the resilient seated butterfly valve should be coated with silicone lubricant unless specified otherwise

2.3.2 The disc should be positioned at 10° open. **Note:** See page 2 for special considerations for valves with spring return actuators.

2.3.3 Valves should be stored indoors with a preferred temperature range from 40°F (4°C) to 85°F (29°C).

2.3.4 While valves are in storage, they should be opened and closed once every 3 months.

2.3.5 Ship and store valves so that no heavy loads are applied to the bodies.

2.3.6 Polymer and elastomer parts should not be stored in the presence of sunlight or artificial light with high ultraviolet content, or any source of radiation as these are primary causes of aging.

2.3.7 If a component is cooled below 59°F (14°C), the entire valve assembly should be allowed to rise above 68°F (20°C) before installing into service.

2.3.8 Valve end protectors should only be removed at the time of valve installation.

© 2020 BRAY INTERNATIONAL, INC. ALL RIGHTS RESERVED. BRAY.COM The Information contained herein shall not be copied, transferred, conveyed, or displayed in any manner that would violate its proprietary nature without the express written permission of Bray International, Inc.

# 3.0 INSTALLATION CONSIDERATIONS - PIPING AND VALVE ORIENTATION AND PLACEMENT

## 3.1 Piping and Flanged Compatibilities

### 3.1.1 Piping

3.1.1.1 These valves have been engineered so that the critical disc chord dimension at the full open position will clear the adjacent inside diameter of most types of piping, including Schedule 40, lined pipe, heavy wall, etc.

### 3.1.2 Metal Flanges

3.1.2.1 Resilient seated butterfly valves have been designed to be suitable for all types of flanges (ASME, DIN, JIS and other international flange standards), whether flat-faced, raised face, slip-on, weld-neck, etc. Proper alignment of any butterfly valve between flanges is critical to good performance of the valve. The flange bolts must also be evenly tightened around the circumference of the valve, providing consistent flange compression of the molded o-ring in the seat face.

3.1.2.2 Since Bray does not recommend the use of gaskets between flanges on resilient seated butterfly valves, a uniform flange face is critical to proper valve sealing. Most weld-neck and slip-on flanges conforming to ASME specifications have an appropriate flange face. Types A and B butt-weld stub-end flanges also provide a suitable mating surface for the molded o-ring.

3.1.2.3 It should be noted that Type C butt-weld stub-end flanges have an “as formed” flange face. The varying surface of this flange face can create sealing problems between any resilient-seated butterfly valve and the flange face. For this reason, Type C flanges are not recommended for use with resilient-seated butterfly valves.

### 3.1.3 Non-Metallic Flanges

3.1.3.1 When non-metallic flanges, such as plastic or PVC, are used with resilient seated butterfly valves, care must be taken not to over-tighten the flange bolts. The inherent flexibility of these non-metallic flange materials allow them to be over-tightened relatively easily. Flexing caused by this over-tightening can actually reduce the compression of the valve between the flanges, causing leaks between the valve and the flange face. Proper alignment and firm, even, but not excessive tightening of flange bolts are especially important with non-metallic flanges. In some cases, non-metallic flanges of low quality will not mate tightly with butterfly valves regardless of the care taken during installation.

© 2020 BRAY INTERNATIONAL, INC. ALL RIGHTS RESERVED. BRAY.COM The Information contained herein shall not be copied, transferred, conveyed, or displayed in any manner that would violate its proprietary nature without the express written permission of Bray International, Inc.

### 3.2 Valves with Spring Return Actuators

#### 3.2.1 Fail Closed Assemblies

3.2.1.1 If the valve is supplied with an actuator, the butterfly valve is shipped in the full closed position (as no air pressure is present to compress the springs and open the disc).

**⚠ CAUTION**

Installing the valve with the disc in the full closed position may create a compression set on the seat causing higher than expected torques or premature seat failure. It is recommended to:

> Remove the actuator. Be sure to scribe the valve and actuator to ensure the re-installed actuator is in the exact same quadrant as originally configured

> Install the valve per the attached installation tag instructions

> Re-install the actuator ensuring it is in the proper quadrant

#### 3.2.2 Fail Open Assemblies

3.2.2.1 If the valve is supplied with an actuator, the butterfly valve disc is shipped in the full open position (as no air pressure is present to compress the springs and close the valve disc.) The sealing surface, or disc edge, is therefore exposed. Damage to that surface will cause premature seat failure.

**⚠ CAUTION**

Use caution installing the valve being careful not to damage the disc edge. It is recommended to:

> Remove the actuator. Be sure to scribe the valve and actuator to ensure the re-installed actuator is in the exact same quadrant as originally configured

> Install the valve per the attached installation tag instructions

> Re-install the actuator ensuring it is in the proper quadrant.

#### 3.2.3 Valve Location

3.2.3.1 Resilient seated butterfly valves should be installed if possible a minimum of 6 pipe diameters from other line elements, i.e., elbows, pumps, valves, etc. of course, 6 pipe diameters are not always practical, but it is important to achieve as much distance as possible.

3.2.3.2 Where the resilient seated butterfly valve is connected to a check valve or pump, use an expansion joint between them to ensure the disc does not interfere with the adjacent equipment.

© 2020 BRAY INTERNATIONAL, INC. ALL RIGHTS RESERVED. BRAY.COM The Information contained herein shall not be copied, transferred, conveyed, or displayed in any manner that would violate its proprietary nature without the express written permission of Bray International, Inc.

### 3.2.4 Valve Orientation

3.2.4.1 In general, Bray recommends the resilient seated valve be installed with the stem in the vertical position and the actuator mounted vertically directly above the valve; however, there are those applications as discussed below where the stem should be horizontal. NOTE: Bray does not recommend valves be installed in an upside-down position.

3.2.4.2 For slurries, sludge, mine tailing, pulp stock, dry cement, and any media with sediment or particles, Bray recommends the resilient seated valve be installed with the stem in the horizontal position with the lower disc edge opening in the downstream direction as illustrated below.

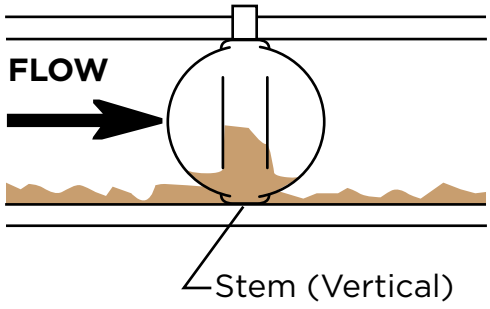


**Incorrect Installation**
Sludge builds up on the disc

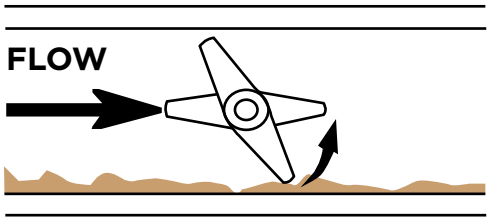


Stem (Horizontal)

**Correct Installation**
Sludge passes under the disc

© 2020 BRAY INTERNATIONAL, INC. ALL RIGHTS RESERVED. BRAY.COM The Information contained herein shall not be copied, transferred, conveyed, or displayed in any manner that would violate its proprietary nature without the express written permission of Bray International, Inc.

3.2.4.3 Resilient seated butterfly valve located at the discharge of a pump should be oriented as follows:

| | INCORRECT INSTALLATION | CORRECT INSTALLATION |
|---|---|---|
| **1. Centrifugal Pump** Pump shaft horizontal and stem vertical | 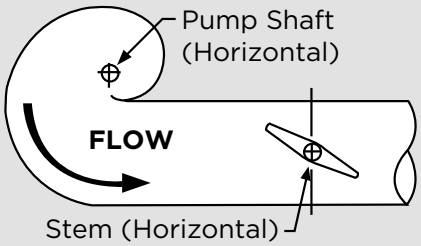 | 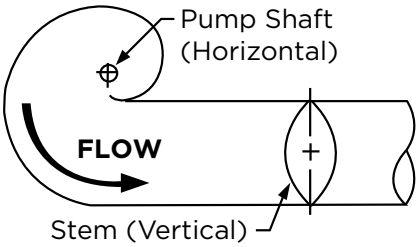 |
| **2. Centrifugal Pump** Pump shaft vertical and stem horizontal | 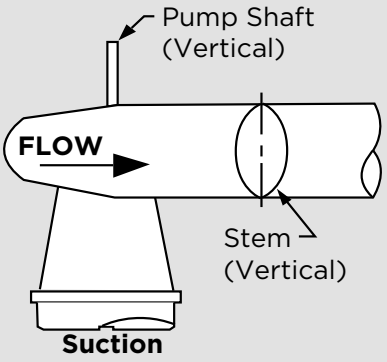 | 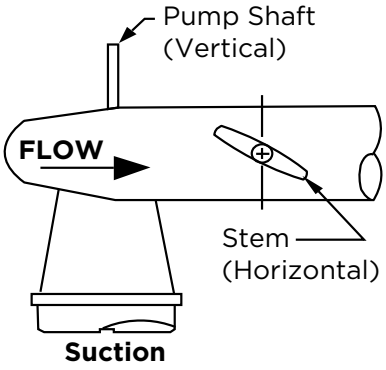 |
| **3. Axial Pump** Pump shaft vertical and stem vertical | 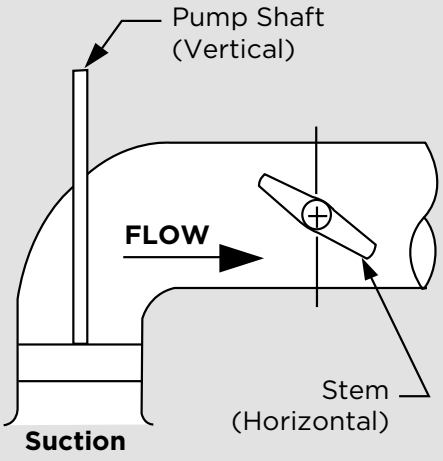 | 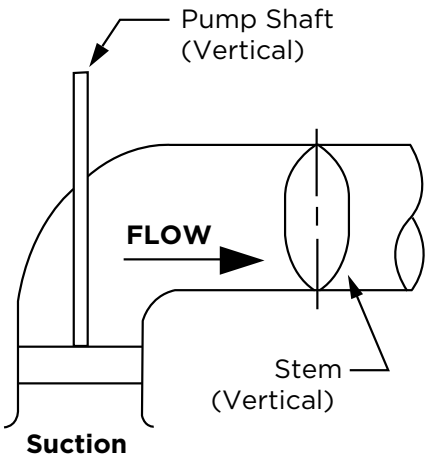 |

© 2020 BRAY INTERNATIONAL, INC. ALL RIGHTS RESERVED. BRAY.COM The Information contained herein shall not be copied, transferred, conveyed, or displayed in any manner that would violate its proprietary nature without the express written permission of Bray International, Inc.

3.2.4.4 Butterfly valves located downstream of a bend or pipe reducer should be oriented as follows:

| | INCORRECT INSTALLATION | CORRECT INSTALLATION |
|---|---|---|
| **1. Bend** | 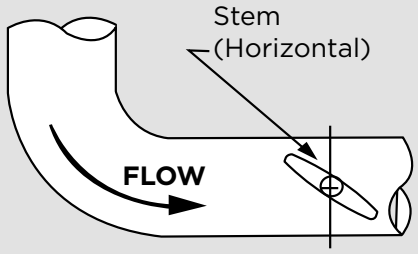 | 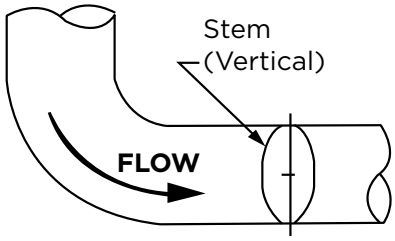 |
| **2. Tee** | 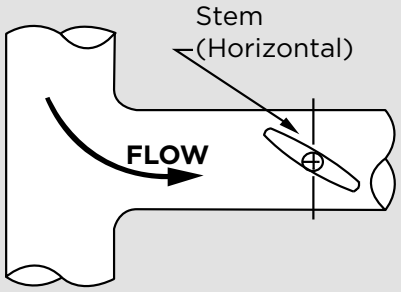 | 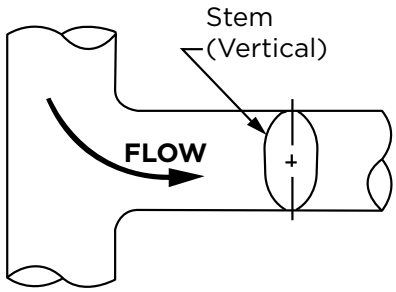 |
| **3. Pipe Reducer** | 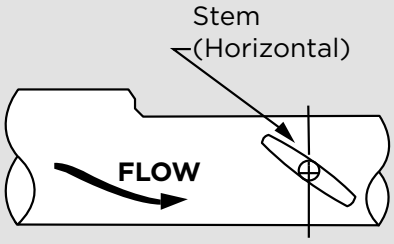 | 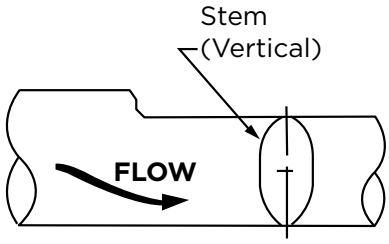 |

© 2020 BRAY INTERNATIONAL, INC. ALL RIGHTS RESERVED. BRAY.COM The Information contained herein shall not be copied, transferred, conveyed, or displayed in any manner that would violate its proprietary nature without the express written permission of Bray International, Inc.

3.2.4.5 Butterfly valves in combination for control/isolation applications should be installed as follows:

| INCORRECT INSTALLATION | CORRECT INSTALLATION |
|---|---|
| 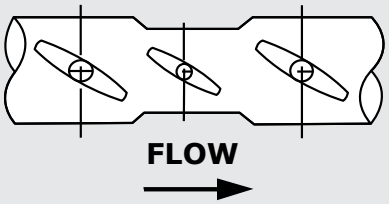 | 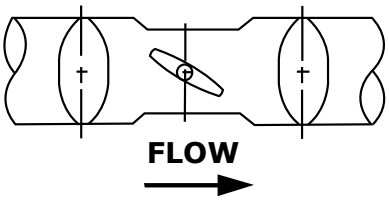 |
| Combination with all valve stems in the same direction accelerates possible noise, vibration, and erosion problems. | Combination with the stem of the control valve at right angle to those of other valves tends to cancel the drift of the fluid, and reduces noises, vibration, and erosion. |

## 4.0 INSTALLATION PROCEDURE

### 4.1 General Installation

4.1.1 Make sure the pipeline and pipe flange faces are clean. Any foreign material such as pipe scale, metal chips, welding slag, welding rods, etc., can obstruct disc movement or damage the disc or seat.

4.1.2 The Bray elastomer seat has molded o-rings on the face of the seat. **As a result, no gaskets are required as these o-rings serve the function of a gasket.**

4.1.3 Align the piping and then spread the pipe flanges a distance apart so as to permit the valve body to be easily dropped between the flanges without contacting the pipe flanges (see Figure 1 page 11).

4.1.4 Check to see that the valve disc has been positioned to a partially open position, with the disc edge about 1/2 inch to 3/8 inch inside the face of the seat, (approximately 10° open) **(see Figure 1 page 11) Note: See page 6 for special consideration for valves with spring return actuators.**

4.1.5 Insert the valve between the flanges as shown in Figure 1 of page 11, taking care not to damage the seat faces. Always pick the valve up by the locating holes or by using a nylon sling on the neck of the body.

**⚠ WARNING**

Never pick up the valve by the actuator or operator mounted on top of the valve.

© 2020 BRAY INTERNATIONAL, INC. ALL RIGHTS RESERVED. BRAY.COM The Information contained herein shall not be copied, transferred, conveyed, or displayed in any manner that would violate its proprietary nature without the express written permission of Bray International, Inc.

**Figure 1 - Insert Resilient Seated Butterfly Valve Between Flanges**

| INCORRECT INSTALLATION | CORRECT INSTALLATION |
|---|---|
| 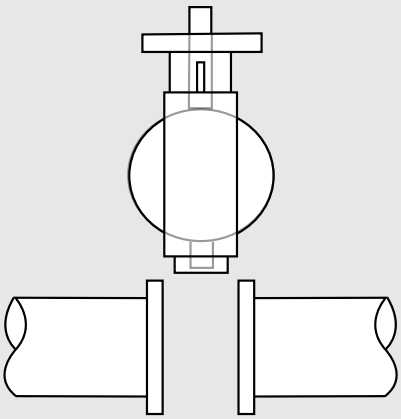 | 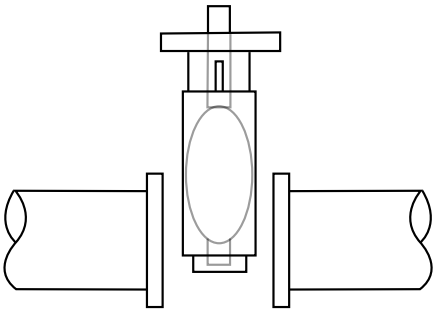 |
| **⚠ CAUTION** | |
| Pipe not spread, disc opened beyond valve body face; **Results:** Disc edge damaged when it hits pipe flange. | Pipe spread and aligned, disc rotated; **Results:** no undesirable beginning seating/ unseating torque, disc edge protected. |

4.1.6 Place the valve between the flanges, center it, and then span the valve body with all flange bolts, but do not tighten the bolts. Carefully open the disc to the full open position, making sure the disc does not hit the adjacent pipe I.D. Now systematically remove jack bolts or other flange spreaders, and hand-tighten the flange bolts as shown in Figure 2 below. Very slowly close the valve disc to ensure disc edge clearance from the adjacent pipe flange I.D. Now open the disc to full open and tighten **all** flange bolts per specification as shown in **Figure 2**. Finally, repeat a full close to full open rotation of the disc to ensure proper clearances (See Figures 3 & 4 page 7).

**Figure 2 - Flange Bolt Tightening Pattern**

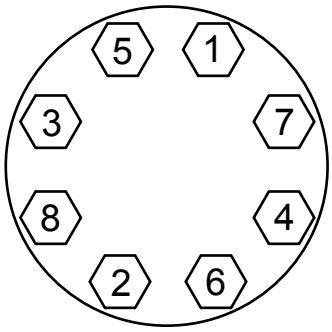


© 2020 BRAY INTERNATIONAL, INC. ALL RIGHTS RESERVED. BRAY.COM The Information contained herein shall not be copied, transferred, conveyed, or displayed in any manner that would violate its proprietary nature without the express written permission of Bray International, Inc.

4.1.7 For additional flange bolting information please reference the Resilient Seated Butterfly Valve Technical Manual and "Typical Flange Bolting Guide" found at www.bray.com

**Figure 3 - Initial Centering and Flanging of Valve**

| INCORRECT INSTALLATION | CORRECT INSTALLATION |
|---|---|
| 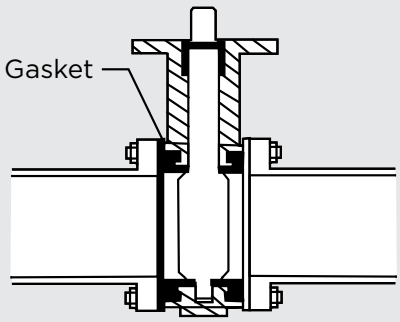 | 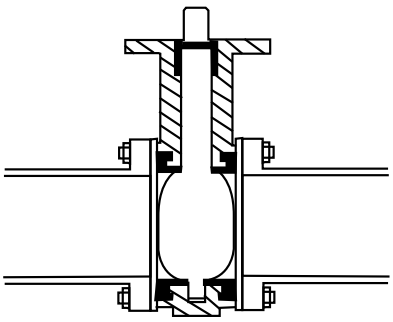 |
| Disc in closed position; gaskets used; **Results:** Seat distorted and over-compressed causing high initial unseating torque problems. | Bolts snugged, not torqued tight, disc edge within body face-to-face but not fully closed, no flange gaskets; **Results:** No disc edge damage, proper sealing allowed. |

**Figure 4 - Final Aligning and Tightening of Flange Bolts**

| INCORRECT INSTALLATION | CORRECT INSTALLATION |
|---|---|
| 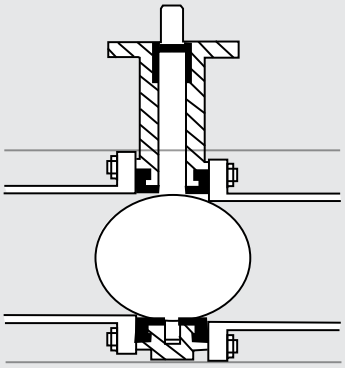 | 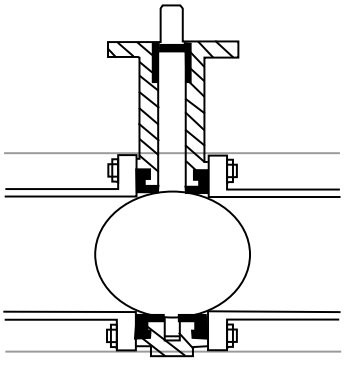 |
| Piping misaligned; **Results:** Disc O.D. strikes pipe I.D. causing disc edge damage, increased torque & leakage. Seat face o-rings will not seal properly with incorrectly aligned piping. | Piping aligned properly when bolts tightened, disc in full open position; **Results:** disc clears adjacent pipe I.D., seat face seals properly, no excessive initial torque. |

4.1.8 When resilient seated butterfly valves are to be installed between ASME welding type flanges, care should be taken to abide by the following procedure to ensure no damage will occur to the seat:

© 2020 BRAY INTERNATIONAL, INC. ALL RIGHTS RESERVED. BRAY.COM The Information contained herein shall not be copied, transferred, conveyed, or displayed in any manner that would violate its proprietary nature without the express written permission of Bray International, Inc.

4.1.8.1 Place the valve between the flanges with the flange bores and valve body aligned properly. The disc should be in the 10° open position.

4.1.8.2 Span the body with the bolts.

4.1.8.3 Take this assembly of flange-body-flange and align it properly to the pipe.

4.1.8.4 Tack weld the flanges to the pipe.

4.1.8.5 When tack welding is complete, remove the bolts and the valve from the pipe flanges and complete the welding of the flanges. Be sure to let the pipe and flanges cool before installing the valve.

**⚠ CAUTION**

Never complete the welding process (after tacking) with the valve between pipe flanges. This causes severe seat damage due to heat transfer.

**4.2 Installation of Bray PTFE Seated Butterfly Valves in Plastic Flanges.**

4.2.1 Bray recommends the following guidelines when PTFE Seated Valves are installed between plastic flanges:

4.2.1.1 The valve body should be coated with epoxy, not nylon. The extra thickness of the nylon coating slightly reduces the seat compression, and every advantage to maximize seat compression should be taken with plastic flanges.

4.2.1.2 The plastic flange can be either one piece construction, or two piece construction comprised of a stub end and a backup ring.

4.2.1.3 The plastic flange style can be butt-weld, socket or slip-on, but butt-weld and socket are preferred.

4.2.1.4 The plastic flange face must be flat. Concave and convex flange faces are not acceptable. This includes flange faces that were originally flat but later distorted into a concave shape by over tightening the flange bolts.

4.2.1.5 The plastic flange face surface may have grooves or serrations, provided the grooves do not exceed .100” (2.54 mm) in width or .020” (.508 mm) in depth. If the grooves are less than .100” (2.54 mm) in width, the groove depth must not exceed the width. However, fine conentric or “phonograph record” grooves are acceptable regardless of the groove depth.

© 2020 BRAY INTERNATIONAL, INC. ALL RIGHTS RESERVED. BRAY.COM The Information contained herein shall not be copied, transferred, conveyed, or displayed in any manner that would violate its proprietary nature without the express written permission of Bray International, Inc.

4.2.1.6 Flange gaskets must not be used with PTFE seats, since they create an uncontrolled over compression that can buckle the PTFE and damage the seat. If a damaged face, a flange gasket can appear to cure the leak to atmosphere, while simultaneously damaging the PTFE seat and creating a second leak across the disc or up the stem hole. Leaks across the plastic flange must be cured without the use of gaskets, by proper selection and installation of the flange.

4.2.1.7 The bolts holding plastic flanges should be installed in strict conformance to the recommended practices of the plastic flange manufacturer. This usually involves aligning the flanges accurately, using lubricated bolts, and tightening the bolts in the proper sequence and to the specified torque. Uniform stress across the flange prevents leakage.

## 5.0 MAINTENANCE AND REPAIR

**⚠ WARNING**

No valve maintenance, including removal of manual or power actuators, should be performed until the piping system is completely depressurized.

5.1 The many Bray features minimize wear and maintenance requirements. No routine lubrication is required. **All components – stem, disc, seat, bushing, stem seal, etc., are field replaceable, no adjustment is required.** If components require replacement, the valve may be removed from the line by placing the disc in the near closed position, then supporting the valve and removing the flange bolts.

© 2020 BRAY INTERNATIONAL, INC. ALL RIGHTS RESERVED. BRAY.COM The Information contained herein shall not be copied, transferred, conveyed, or displayed in any manner that would violate its proprietary nature without the express written permission of Bray International, Inc.

This page intentionally blank

© 2020 BRAY INTERNATIONAL, INC. ALL RIGHTS RESERVED. BRAY.COM The Information contained herein shall not be copied, transferred, conveyed, or displayed in any manner that would violate its proprietary nature without the express written permission of Bray International, Inc.

## APPENDIX - DISASSEMBLY/ASSEMBLY INSTRUCTIONS

### 6.0 Appendix A - Series 20/21 Resilient Seated Butterfly Valves

**6.1 Disassembly**

6.1.1 Remove handle, gear operator or power actuator from actuator mounting flange.

6.1.2 Remove the body bolts and pull the lower body half away from the seat.

6.1.3 Pull the seat and disc stem from the upper body half.

6.1.4 Remove bushing and seal from the upper body.

6.1.5 Push the seat into an oval shape and remove the disc stem by withdrawing the short stem end first.

**6.2 Assembly**

6.2.1 Push the long stem end of the disc into the seat.

6.2.2 Then push the seat over the disc's short stem.

6.2.3 Place the disc stem and seat into the upper body half.

6.2.4 Align the lower body with the upper body and position lower body in the seat.

**NOTICE**

The body halves have a matching casting node on one side only to ensure correct assembly of body halves.

6.2.5 Replace the body bolts and tighten.

6.2.6 Install the stem seal, then the stem bushing.
**Note: It is recommended that the stem bushing be coated with a light amount of silicone grease before installation in the valve body. This coating of silicone grease will assist in keeping the stem bushing in the valve body until an actuator is mounted on the valve.**

6.2.7 Replace handle, manual gear operator or power actuator on the actuator mounting flange.

© 2020 BRAY INTERNATIONAL, INC. ALL RIGHTS RESERVED. BRAY.COM The Information contained herein shall not be copied, transferred, conveyed, or displayed in any manner that would violate its proprietary nature without the express written permission of Bray International, Inc.

## Series 20/21 - Resilient Seated Butterfly Valves

| | |
|---|---|
| 1 | Body (S20 Wafer Style Shown) |
| 2 | Seat |
| 3 | Disc Stem |
| 4 | Stem Seal |
| 5 | Stem Bushing |
| 6 | Body Bolt |

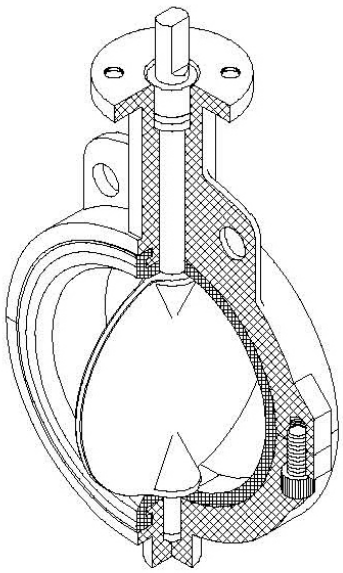

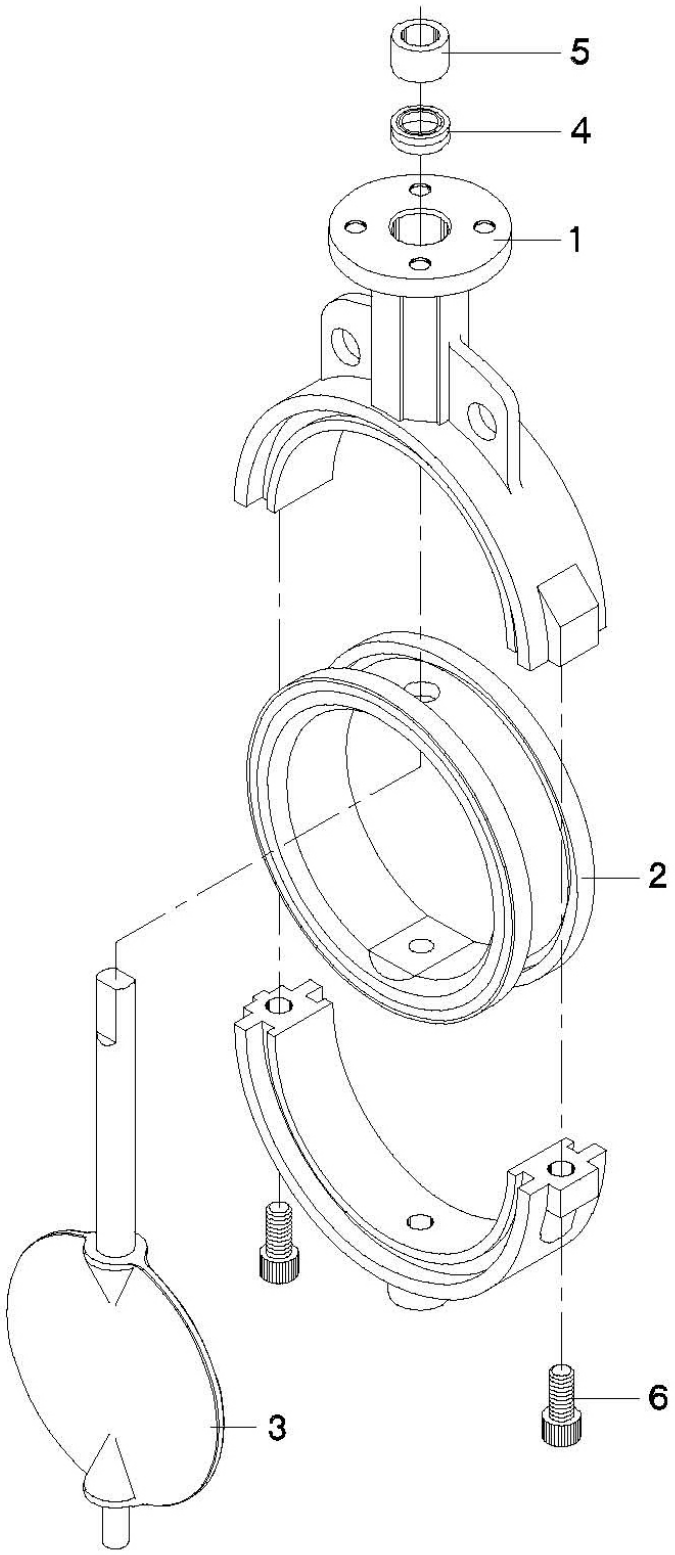


© 2020 BRAY INTERNATIONAL, INC. ALL RIGHTS RESERVED. BRAY.COM The Information contained herein shall not be copied, transferred, conveyed, or displayed in any manner that would violate its proprietary nature without the express written permission of Bray International, Inc.

## 7.0 Appendix B - Series 22/23 Resilient Seated Butterfly Valves

### 7.1 Disassembly

7.1.1 Remove the handle, gear operator, or power actuator from actuator mounting flange.

7.1.2 Remove the "Spirolox"® retaining ring and the two C-ring stem retainers from the stem hole.

7.1.3 Then remove the stem, bushing and seal.

7.1.4 Remove the disc from the seat, protecting the disc edge at all times.

7.1.5 Remove the seat energizer from the stems and seat.

7.1.6 Remove the lower and upper stems from the disc or remove the lower stem if the upper stem is connected to the disc.

7.1.7 Compress the seat just enough to allow the disc to be removed along with the seal capsules.

7.1.8 Remove the retainer bushing and upper stem seal.

### 7.2 Assembly

7.2.1 Install the stem bearings in upper and lower body halves.

7.2.2 Place the body seal strip on the lower body half, overlapping the body width by approximately 0.19" on both sides.

7.2.3 Press the seat to make the I.D. elliptical, then insert the shaft seals and place the disc into the seat. Rotate the disc hubs into alignment with the seat.

7.2.4 Insert the upper and lower stems.

7.2.5 Slip one seat energizer strip onto the lower portion of the upper shaft.

7.2.6 Insert the upper shaft with the pre-installed seat energizer strip into the disc/seat sub assembly.

7.2.7 Drive the upper shaft into the disc and slip one seat energizer strip onto the lower shaft.

7.2.8 Rotate the disc into the open position and insert the disc/seat/stems/energizer sub assembly into the upper body half.

7.2.9 Place the lower body half over the seat, and ensure that both body halves are properly aligned (identified by cast-on markings.

7.2.10 Attach and tighten the body fasteners.

© 2020 BRAY INTERNATIONAL, INC. ALL RIGHTS RESERVED. BRAY.COM The Information contained herein shall not be copied, transferred, conveyed, or displayed in any manner that would violate its proprietary nature without the express written permission of Bray International, Inc.

Series 22/23 - Resilient Seated Butterfly Valves

| | |
|---|---|
| 1 | Body |
| 2 | Disc |
| 3 | Seat |
| 4 | Upper Stem |
| 5 | Lower Stem |
| 6 | Bushing |
| 7 | Upper Stem Seal |
| 8 | Seal Capsule |
| 9 | Bearing |
| 10 | Seat Energizer |
| 11 | Cap Screw |
| 12 | Retainer |
| 13 | Body Seal |
| 14 | ID Tag |

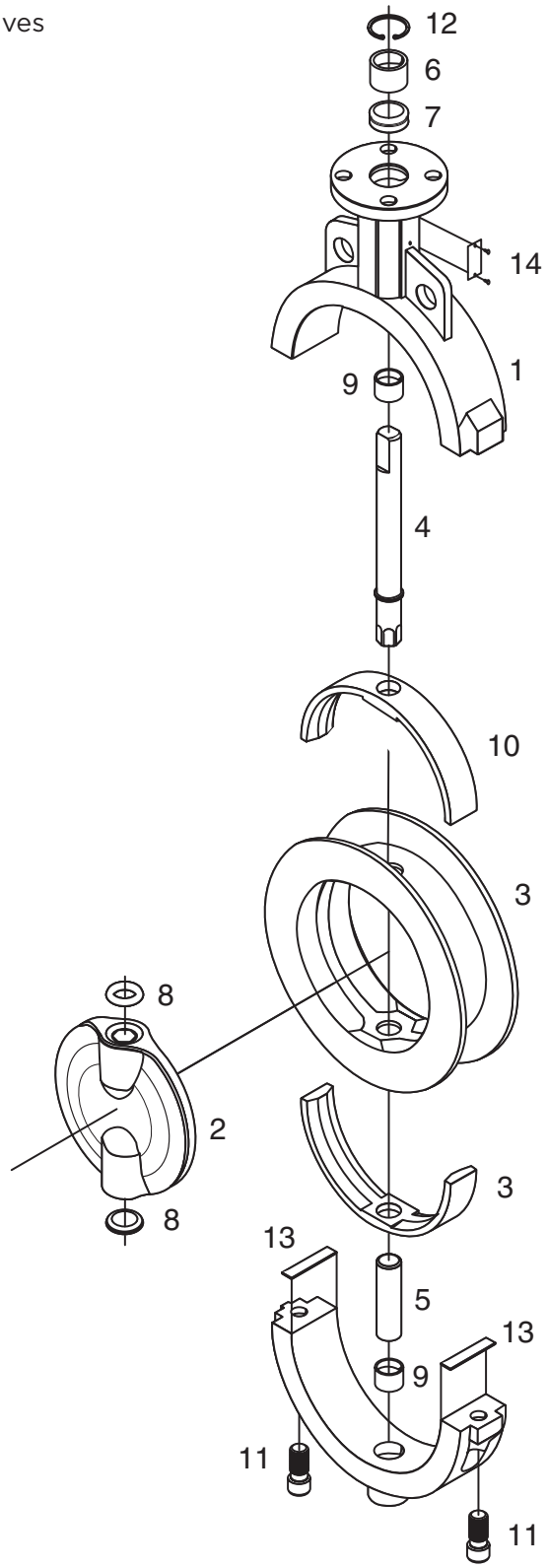


© 2020 BRAY INTERNATIONAL, INC. ALL RIGHTS RESERVED. BRAY.COM The Information contained herein shall not be copied, transferred, conveyed, or displayed in any manner that would violate its proprietary nature without the express written permission of Bray International, Inc.

## 8.0 Appendix C - Series 30/31 Resilient Seated Butterfly Valves

### 8.1 Disassembly

8.1.1 Remove the handle, gear operator, or power actuator from actuator mounting flange.

8.1.2 Remove the "Spirolox"® retaining ring and the two C-ring stem retainers from the stem hole.

8.1.3 Then remove the stem, bushing and seal.

8.1.4 Remove the disc from the seat, protecting the disc edge at all times.

8.1.5 Push the seat into an oval shape, and then remove the seat from the body.

### 8.2 Assembly

8.2.1 Push the valve seat into an oval and push it into the body with seat stem holes aligned to body stem holes.

**NOTICE**

When installing the seat the larger hole should be on top and the smaller hole should be on bottom.

8.2.2 Insert stem seal and bushing.

8.2.3 Push stem into the stem hole of the body until the bottom of the stem is flush with the inner top edge of the seat.

8.2.4 Install a light coating of silicone or grease on the I.D. of seat. Insert the disc into the seat by lining up the disc holes with the stem holes of the seat. **Note: The broached double "D" flats in the disc must be toward the bottom of the valve body.**

8.2.5 With a downward pressure and rotating the stem back and forth, push the stem until the stem touches the bottom of the body stem hole.

8.2.6 Make certain that when pushing the stem through the disc bottom, the broached flats of stem and disc are aligned.

8.2.7 Replace the stem bushing and two stem retainers, then replace the "Spirolox"® retaining ring back into position.

8.2.8 Replace handle, manual gear operator or power actuator on the actuator mounting flange.

© 2020 BRAY INTERNATIONAL, INC. ALL RIGHTS RESERVED. BRAY.COM The Information contained herein shall not be copied, transferred, conveyed, or displayed in any manner that would violate its proprietary nature without the express written permission of Bray International, Inc.

## Series 30/31 - Resilient Seated Butterfly Valves

| | |
|---|---|
| 1 | Body (S30 Wafer Style Shown) |
| 2 | Seat |
| 3 | Disc |
| 4 | Stem |
| 5 | Stem Seal |
| 6 | Stem Bushing |
| 7 | Stem Retainer |
| 8 | Thrust Washer |
| 9 | Retainer Ring |

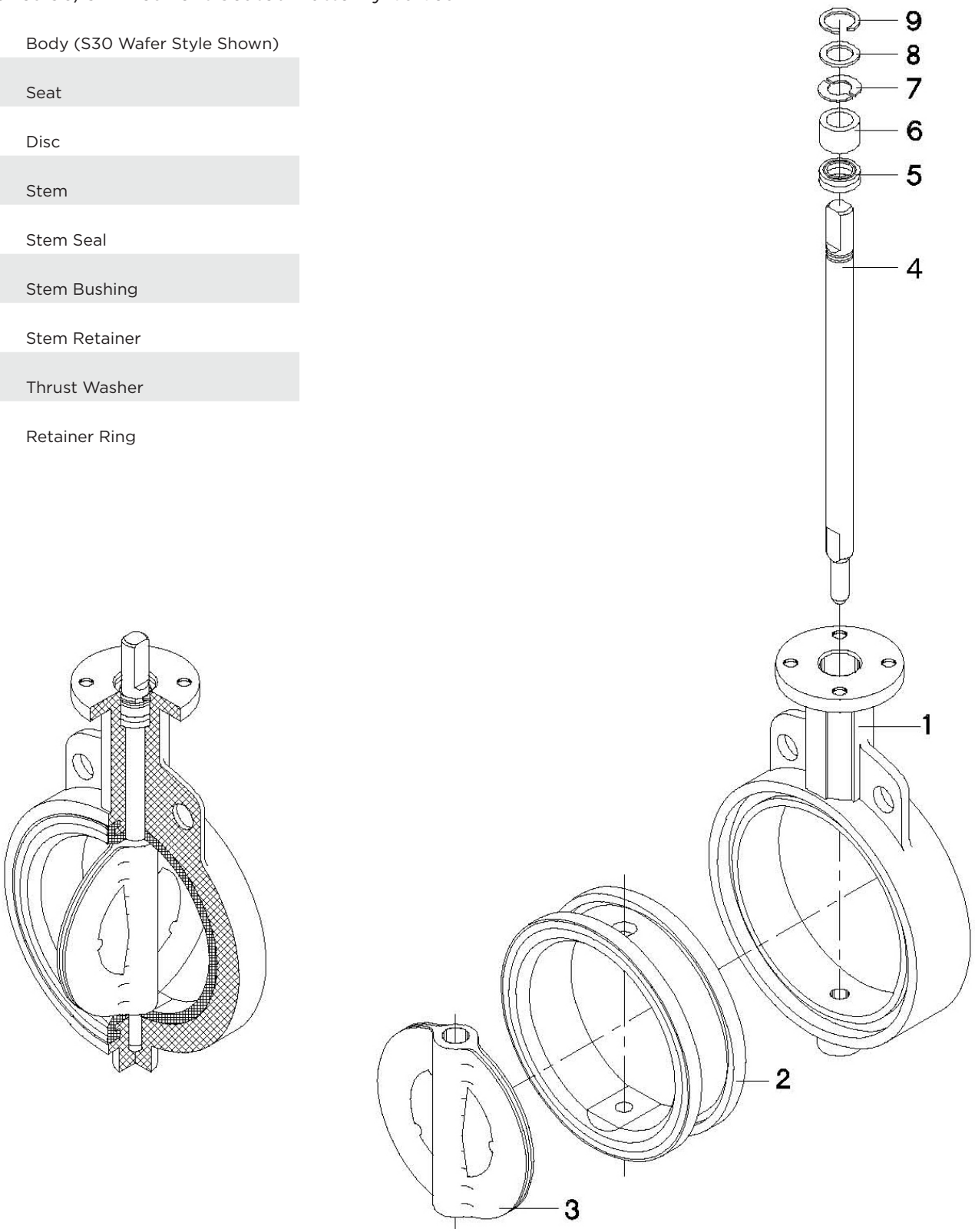


© 2020 BRAY INTERNATIONAL, INC. ALL RIGHTS RESERVED. BRAY.COM The Information contained herein shall not be copied, transferred, conveyed, or displayed in any manner that would violate its proprietary nature without the express written permission of Bray International, Inc.

## 9.0 Appendix D - Series 3A/3AH Resilient Seated Butterfly Valves

### 9.1 Disassembly

9.1.1 Remove the handle, gear operator, or power actuator from actuator mounting flange.

9.1.2 Remove the "Spirolox"® retaining ring and the two C-ring stem retainers from the stem hole.

9.1.3 Then remove the stem, bushing and seal.

9.1.4 Remove the disc from the seat, protecting the disc edge at all times.
**Note: The seat is bonded to the body and is not easily field replaceable. Please contact your local Bray representative for seat replacement.**

### 9.2 Assembly

9.2.1 Insert stem seal and bushing.

9.2.2 Push stem into the stem hole of the body until the bottom of the stem is flush with the inner top edge of the seat.

9.2.3 Install a light coating of silicone or grease on the I.D. of seat. Insert the disc into the seat by lining up the disc holes with the stem holes of the seat. Note: The broached double "D" flats in the disc must be toward the bottom of the valve body.

9.2.4 With a downward pressure and rotating the stem back and forth, push the stem until the stem touches the bottom of the body stem hole.

9.2.5 Make certain that when pushing the stem through the disc bottom, the broached flats of stem and disc are aligned.

9.2.6 Replace the stem bushing and two stem retainers, then replace the "Spirolox"® retaining ring back into position.

9.2.7 Replace handle, manual gear operator or power actuator on the actuator mounting flange.

© 2020 BRAY INTERNATIONAL, INC. ALL RIGHTS RESERVED. BRAY.COM The Information contained herein shall not be copied, transferred, conveyed, or displayed in any manner that would violate its proprietary nature without the express written permission of Bray International, Inc.

## Series 3A/3AH - Resilient Seated Butterfly Valves

| | |
|---|---|
| 1 | Body |
| 2 | Seat |
| 3 | Disc |
| 4 | Stem |
| 5 | Stem Seal |
| 6 | Stem Bushing |
| 7 | Stem Retainer |
| 8 | Thrust Washer |
| 9 | Retaining Ring |

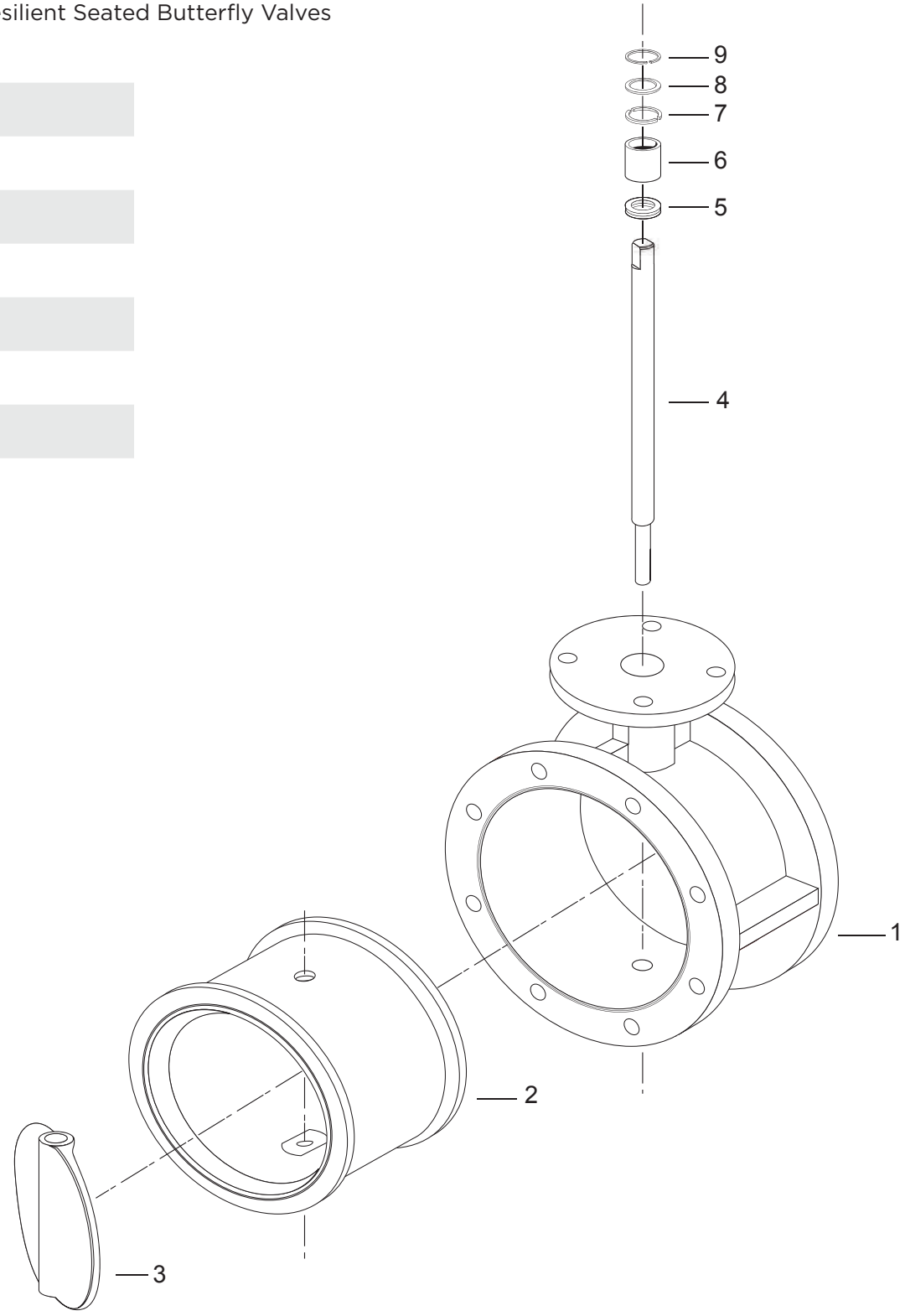


© 2020 BRAY INTERNATIONAL, INC. ALL RIGHTS RESERVED. BRAY.COM The Information contained herein shall not be copied, transferred, conveyed, or displayed in any manner that would violate its proprietary nature without the express written permission of Bray International, Inc.

## 10.0 Appendix E - Series 31H Resilient Seated Butterfly Valves

### 10.1 Disassembly

10.1.1 Remove the handle, gear operator, or power actuator from actuator mounting flange.

10.1.2 Remove the "Spirolox"® retaining ring and the two C-ring stem retainers from the stem hole.

10.1.3 Then remove the stem, bushing and seal.

10.1.4 Remove the disc from the seat, protecting the disc edge at all times.
**Note: Valve is provided with the seat bonded to the body and therefore is not easily field replaceable. Please contact your local Bray representative for seat replacement.**

### 10.2 Assembly

10.2.1 Insert stem seal and bushing.

10.2.2 Push stem into the stem hole of the body until the bottom of the stem is flush with the inner top edge of the seat.

10.2.3 Install a light coating of silicone or grease on the I.D. of seat. Insert the disc into the seat by lining up the disc holes with the stem holes of the seat.
**Note: The broached double "D" flats in the disc must be toward the bottom of the valve body.**

10.2.4 With a downward pressure and rotating the stem back and forth, push the stem until the stem touches the bottom of the body stem hole.

10.2.5 Make certain that when pushing the stem through the disc bottom, the broached flats of stem and disc are aligned.

109.2.6 Replace the stem bushing and two stem retainers, then replace the "Spirolox"® retaining ring back into position.

10.2.7 Replace handle, manual gear operator or power actuator on the actuator mounting flange.

© 2020 BRAY INTERNATIONAL, INC. ALL RIGHTS RESERVED. BRAY.COM The Information contained herein shall not be copied, transferred, conveyed, or displayed in any manner that would violate its proprietary nature without the express written permission of Bray International, Inc.

## Series 31H - Resilient Seated Butterfly Valves

| | |
|---|---|
| 1 | Body S30 Wafer Style Shown) |
| 2 | Seat |
| 3 | Disc |
| 4 | Stem |
| 5 | Stem Seal |
| 6 | Stem Bushing |
| 7 | Stem Retainer |
| 8 | Thrust Washer |
| 9 | Retaining Ring |

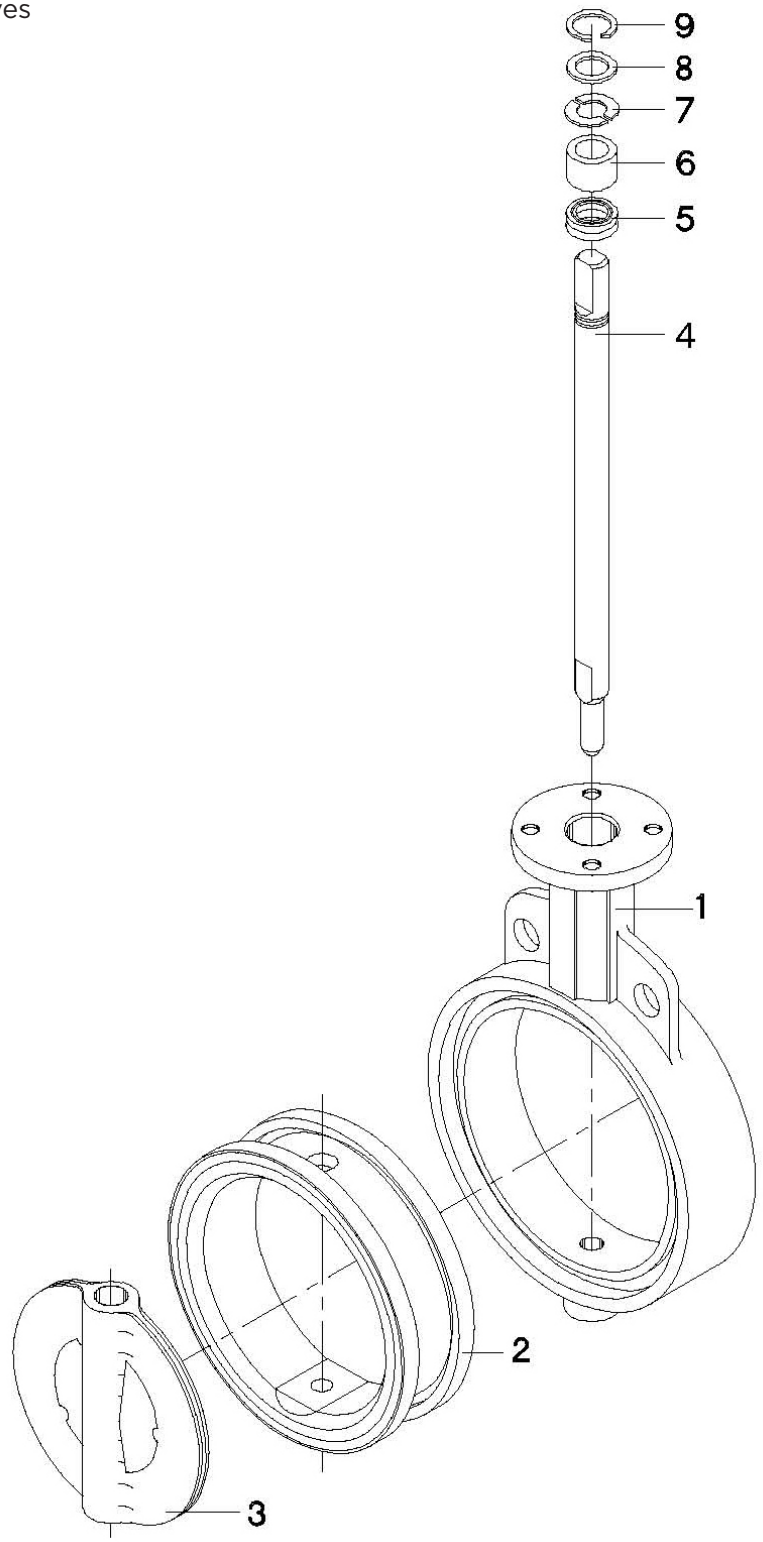


© 2020 BRAY INTERNATIONAL, INC. ALL RIGHTS RESERVED. BRAY.COM The Information contained herein shall not be copied, transferred, conveyed, or displayed in any manner that would violate its proprietary nature without the express written permission of Bray International, Inc.

## 11.0 Appendix F - Series 31U Resilient Seated Butterfly Valves

### 11.1 Disassembly

11.1.1 Remove the handle, gear operator, or power actuator from actuator mounting flange.

11.1.2 Remove the "Spirolox"® retaining ring and the two C-ring stem retainers from the stem hole.

11.1.3 Then remove the top stem bushing and seal, upper stem and retaining rod.

11.1.4 Remove the disc from the seat, protecting the disc edge at all times.

11.1.5 The upper and lower stem bearings will remain in the valve behind the seat.
**Note: The seat is bonded to the body and is not easily field replaceable. Please contact your local Bray representative for seat replacement.**

### 11.2 Assembly

11.2.1 Install a light coating of silicone or grease on the I.D. of seat.

11.2.2 Insert the lower stem inside the disc before inserting the disc into the seat.

11.2.3 Insert the disc into the seat by lining up the disc holes with the stem holes of the seat.

11.2.4 Line up the disc using a T-Bar (Allan key style)

11.2.5 With a downward pressure and rotating the T-Bar back and forth, push the lower stem until the lower stem touches the bottom of the body stem hole recess.
**Note: The broached double "D" flats in the disc must be toward the bottom of the valve body.**

11.2.6 Make certain that when pushing the stem through the disc bottom, the broached flats of stem and disc are aligned.

11.2.7 Insert the spacer bar and upper stem into the disc and valve.

11.2.8 Replace the top stem bushing and seal and two stem retainers.

11.2.9 Then replace the two "C" ring stem retainers and the "Spirolox"® retaining ring back into position in the top stem hole.
**Note: It is recommended that a torque and seat test be done to confirm all is in order with the maintenance of the valve.**

11.2.10 Replace the handle, manual gear operator or power actuator on the actuator mounting flange.

© 2020 BRAY INTERNATIONAL, INC. ALL RIGHTS RESERVED. BRAY.COM The Information contained herein shall not be copied, transferred, conveyed, or displayed in any manner that would violate its proprietary nature without the express written permission of Bray International, Inc.

## Series 31U - Resilient Seated Butterfly Valves

| | |
|---|---|
| 1 | Body |
| 2 | Disc |
| 3 | Upper Stem |
| 4 | Lower Stem |
| 5 | Seat |
| 6 | Bearing |
| 7 | Stem Seal |
| 8 | Stem Bushing |
| 9 | Stem Retainer Washers |
| 10 | Upper Thrust Washer |
| 11 | Retaining ring |
| 12 | Lower Thust Washer |
| 13 | Spacer |
| 14 | Seal Plug |

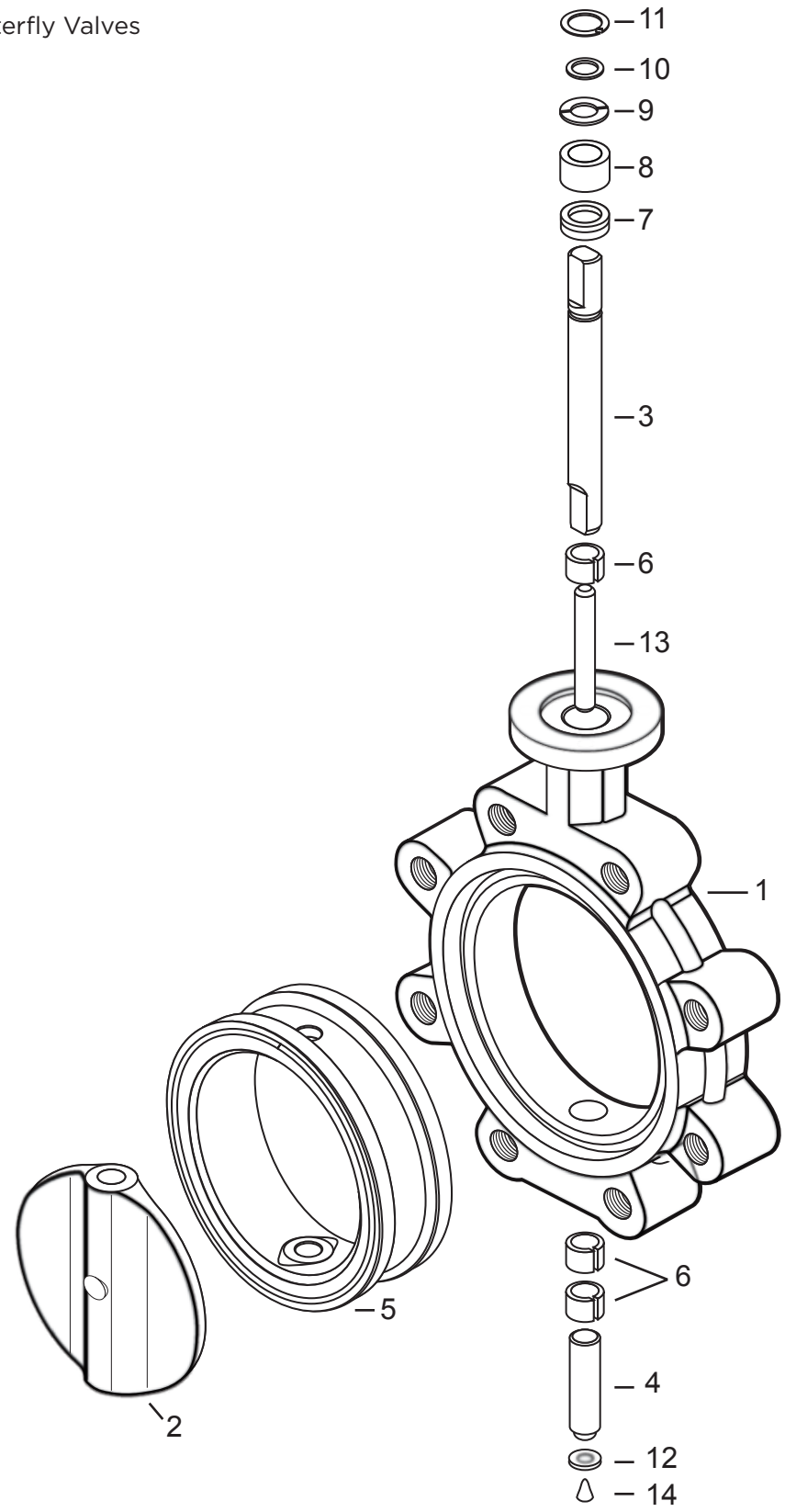


© 2020 BRAY INTERNATIONAL, INC. ALL RIGHTS RESERVED. BRAY.COM The Information contained herein shall not be copied, transferred, conveyed, or displayed in any manner that would violate its proprietary nature without the express written permission of Bray International, Inc.

## 12.0 Appendix G - Series 32/33 Resilient Seated Butterfly Valves

### 12.1 Disassembly

12.1.1 Remove the gear operator or power actuator from the actuator mounting flange.

12.1.2 Secure the valve in a horizontal position with the taper-pin nuts facing upward.

**⚠ CAUTION**

Prior to removal of the valve stem the valve disc must be secured and supported to insure it does not drop out of the valve body once the stem is removed. Lay the valve down with two wood blocks located under the disc at the 6 o'clock and 12 o'clock positions making sure the blocks are in close contact with the disc but not supporting the valve.

121.1.4 Remove the packing gland by removing the retaining screws and sliding the gland off the top of the stem.

12.1.5 Remove bottom plate and thrust bearing to expose bottom of stem.

12.1.6 Remove nuts and washers from ends of taper pins and drive taper pins out of the disc. Avoid damaging the disc coating or surface when removing taper-pins.

12.1.7 Once taper-pins are removed, drive the stem, bushing, and packing out of the valve body through the top.

12.1.8 Remove the disc from the seat, protecting disc edge at all times.

12.1.9 Push the seat into an oval shape, and then remove the seat from the body.

### 12.2 Assembly

12.2.1 Replace bottom thrust bearing and plate.

12.2.2 Push the seat into an oval and push it into the body with seat stem holes aligned to body stem holes.

12.2.3 De-bur taper-pin grooves in the stem.

12.2.4 Push stem into stem hole of body until the bottom of the stem is flush with the inner top edge of the seat.
**Note: The end of the stem containing the keyway must be toward the top of the valve body.**

12.2.5 Install a light coating of silicone or grease on the I.D. of the seat.

12.2.6 Insert the disc into the seat by lining up the disc hole with the upper stem hole of the seat.

12.2.7 With a downward pressure and rotating the stem back and forth, push the stem until the stem touches the bottom of the body stem hole.
**Note: Make certain that when pushing the stem to the bottom of the body, the taper-pin grooves in the stem line up with the holes in the disc face.**

12.2.8 Tap the taper-pins into their holes from the large side of the hole, making sure the pins fit tightly in the hole and allow no movement of the stem in the disc.
**Note: Ensure that the taper-pin o-rings are in place before completing valve assembly.**

12.2.9 Replace the washers and nuts on the ends of the taper-pins.

12.2.10 Replace bushing, packing, and packing gland, and then tighten the retaining screws snugly.

12.2.11 Replace manual gear operator or power actuator on the actuator mounting flange.

© 2020 BRAY INTERNATIONAL, INC. ALL RIGHTS RESERVED. BRAY.COM The Information contained herein shall not be copied, transferred, conveyed, or displayed in any manner that would violate its proprietary nature without the express written permission of Bray International, Inc.

## Series 32/33 - Resilient Seated Butterfly Valves

| | |
|---|---|
| 1 | Body |
| 2 | Disc |
| 3 | Stem |
| 4 | Seat |
| 5 | Stem Packing |
| 6 | Stem Bearing |
| 7 | Taper Pin |
| 8 | Washer |
| 9 | Nut |
| 10 | O-Ring |
| 11 | Thrust Bearing |
| 12 | Bottom Plate |
| 13 | Bottom Plate Gasket |
| 14 | Bolt-Hex Head |
| 15 | Key |
| 16 | Stem Retainer |
| 17 | Ca[ Screw |
| 18 | ID Tag |
| 19 | POP Rivet |

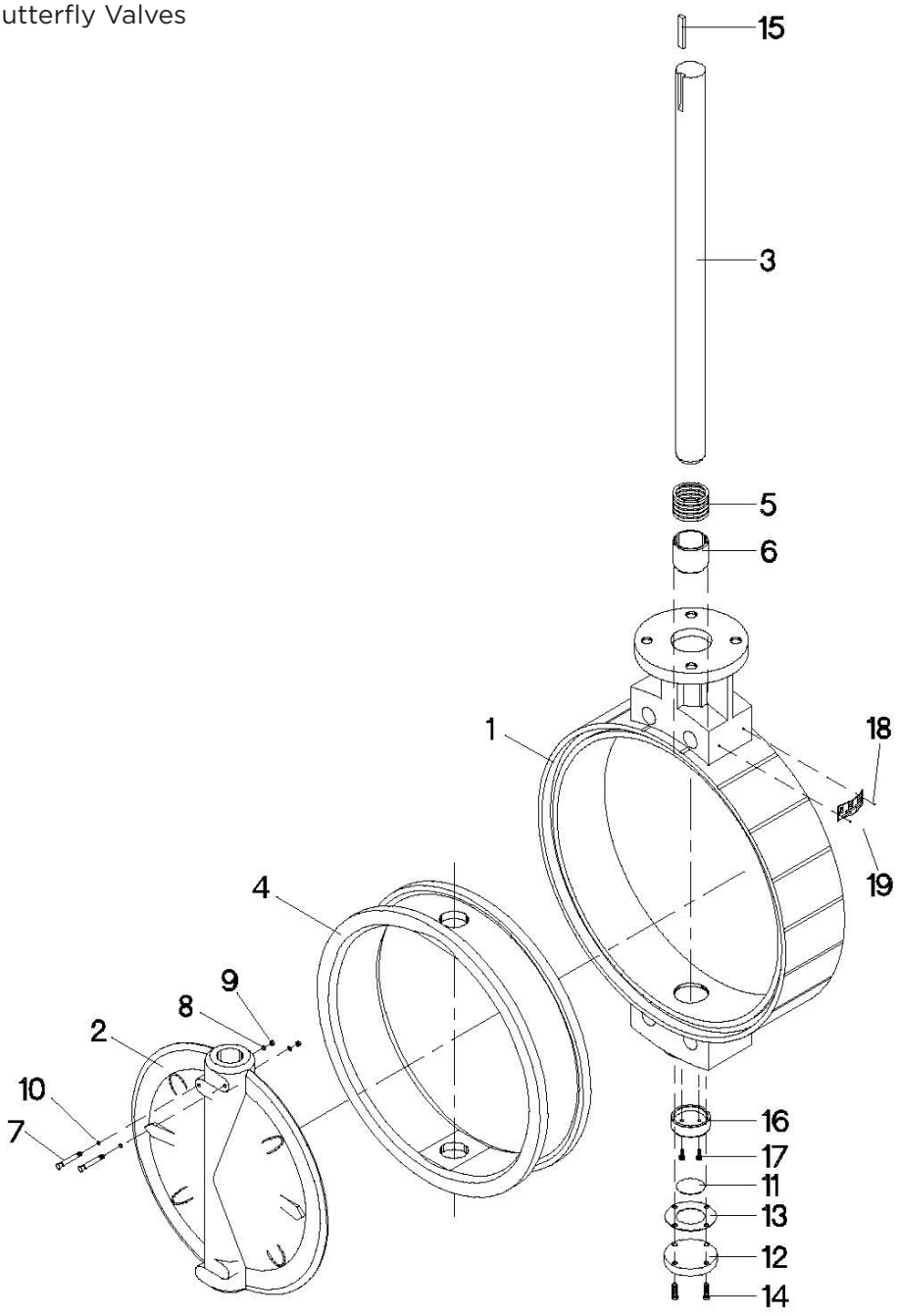


© 2020 BRAY INTERNATIONAL, INC. ALL RIGHTS RESERVED. BRAY.COM The Information contained herein shall not be copied, transferred, conveyed, or displayed in any manner that would violate its proprietary nature without the express written permission of Bray International, Inc.

## 13.0 Appendix H - Series 35/36 Resilient Seated Butterfly Valves (Taper Pin Disc/Stem Connection)

### 13.1 Disassembly

13.1.1 Remove the gear operator or power actuator from the actuator mounting flange.

13.1.2 Secure the valve in a horizontal position with the taper-pin nuts facing upward.

**⚠ CAUTION**

Prior to removal of the valve stem the valve disc must be secured and supported to insure it does not drop out of the valve body once the stem is removed. Lay the valve down with two wood blocks located under the disc at the 6 o'clock and 12 o'clock positions making sure the blocks are in close contact with the disc but not supporting the valve.

13.1.3 Remove the packing gland by removing the retaining screws and sliding the gland off the top of the stem.

13.1.4 Remove bottom plate and thrust bearing to expose bottom of stem.

13.1.5 Remove nuts and washers from ends of taper pins and drive taper pins out of the disc. Avoid damaging the disc coating or surface when removing taper-pins.

13.1.6 Once taper-pins are removed, drive the stem, bushing, and packing out of the valve body through the top.

13.1.7 Remove the disc from the seat, protecting disc edge at all times.

13.1.8 Push the seat into an oval shape, and then remove the seat from the body.
**Note: Valves 54" and larger are provided with the seat bonded to the body and therefore is not easily field replaceable. Please contact your local Bray representative for seat replacement.**

### 132.2 Assembly

13.2.1 Replace bottom thrust bearing and plate.

13.2.2 Push the seat into an oval and push it into the body with seat stem holes aligned to body stem holes.
**Note: Valves 54" and larger are provided with the seat bonded to the body and therefore is not easily field replaceable. Please contact your local Bray representative for seat replacement.**

13.2.3 De-bur taper-pin grooves in the stem.

13.2.4 Push stem into stem hole of body until the bottom of the stem is flush with the inner top edge of the seat.
**Note: The end of the stem containing the keyway must be toward the top of the valve body.**

13.2.5 Install a light coating of silicone or grease on the I.D. of the seat.

13.2.6 Insert the disc into the seat by lining up the disc hole with the upper stem hole of the seat.

13.2.7 With a downward pressure and rotating the stem back and forth, push the stem until the stem touches the bottom of the body stem hole.
**Note: Make certain that when pushing the stem to the bottom of the body, the taper-pin grooves in the stem line up with the holes in the disc face.**

13.2.8 Tap the taper-pins into their holes from the large side of the hole, making sure the pins fit tightly in the hole and allow no movement of the stem in the disc.
**Note: Ensure that the taper-pin o-rings are in place before completing valve assembly.**

13.2.9 Replace the washers and nuts on the ends of the taper-pins.

13.2.10 Replace bushing, packing, and packing gland, and then tighten the retaining screws snugly.

13.2.11 Replace manual gear operator or power actuator on the actuator mounting flange.

© 2020 BRAY INTERNATIONAL, INC. ALL RIGHTS RESERVED. BRAY.COM The Information contained herein shall not be copied, transferred, conveyed, or displayed in any manner that would violate its proprietary nature without the express written permission of Bray International, Inc.

## Series 35/36 - Resilient Seated Butterfly Valves (Taper Pin Disc/Stem Connection)

| | |
|---|---|
| 1 | Body |
| 2 | Disc |
| 3 | Stem |
| 4 | Seat |
| 5 | Stem Packing |
| 6 | Stem Bearing |
| 7 | Taper Pin |
| 8 | Washer |
| 9 | Nut |
| 10 | O-Ring |
| 11 | Thrust Bearing |
| 12 | Bottom Plate |
| 13 | Bottom Plate Gasket |
| 14 | Bolt-Hex Head |
| 15 | Key |
| 16 | Stem Retainer |
| 17 | Cap Screw |
| 18 | Packing Gland |
| 19 | Bolt-Hex Head |
| 20 | ID Tag |
| 21 | Pop Rivet |

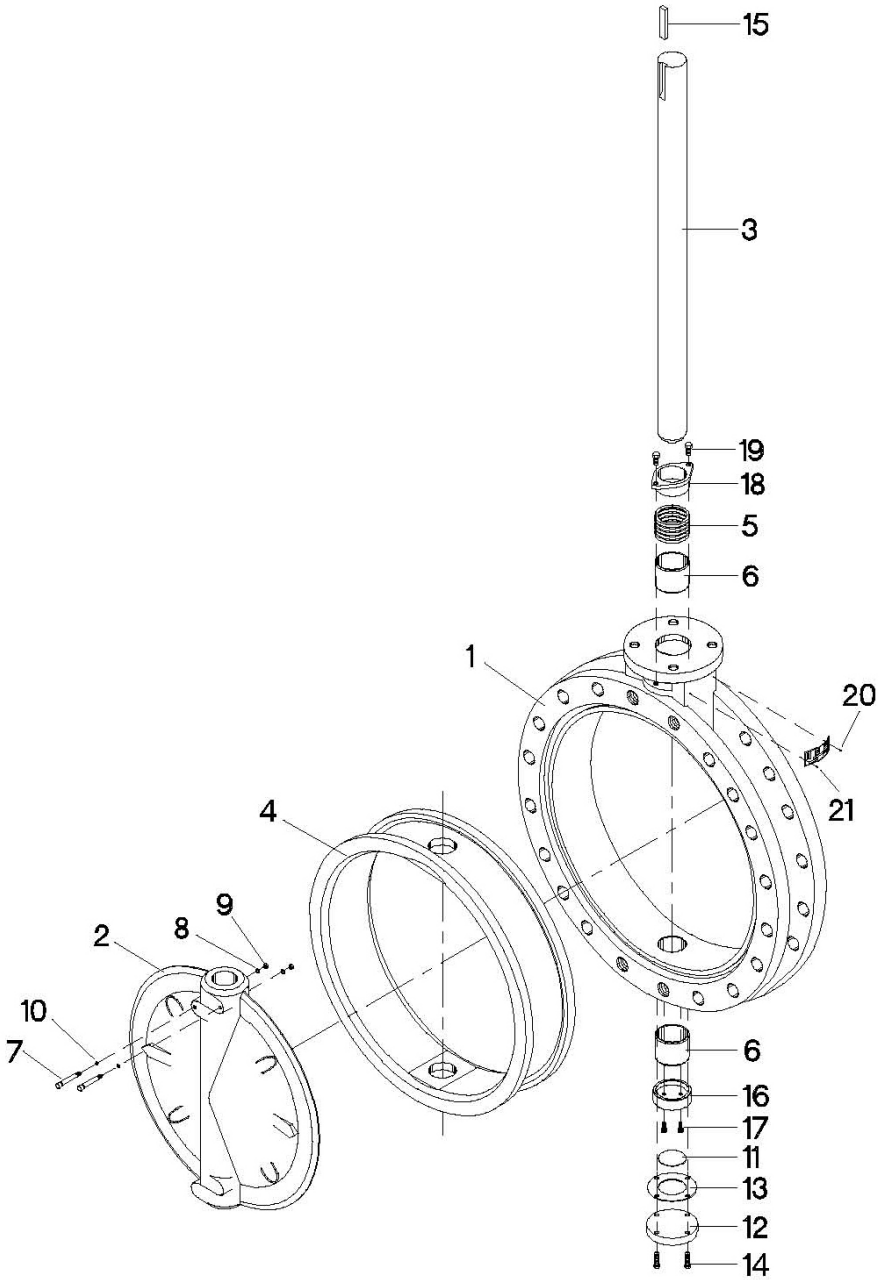


© 2020 BRAY INTERNATIONAL, INC. ALL RIGHTS RESERVED. BRAY.COM The Information contained herein shall not be copied, transferred, conveyed, or displayed in any manner that would violate its proprietary nature without the express written permission of Bray International, Inc.

## 14.0 Appendix I - Series 35/36 Resilient Seated Butterfly Valves (Internal Spiine or Keyed Disc/ Stem Connection)

### 14.1 Disassembly

14.1.1 Remove the gear operator or power actuator from the actuator mounting flange.

14.1.2 Secure the valve in a horizontal position.

**CAUTION**

Prior to removal of the valve stems the valve disc must be secured and supported to insure it does not drop out of the valve body once the stems are removed. Lay the valve down with two wood blocks located under the disc at the 6 o'clock and 12 o'clock positions making sure the blocks are in close contact with the disc but not supporting the valve.

14.1.3 Removal of the lower valve stem:
- > Remove the bottom plate screws, bottom plate, bottom plate gasket and thrust bearing.
- > Remove the locking nut from the tie bolt.
- > Remove the stem retainer.
- > Secure a hoist to the lower stem (end is imperial threaded).
- > Then use the hoist to remove the lower stem from the valve body.
- > Remove the stem bearing.

14.1.4 Removal of the upper valve stem:
- > Remove the packing gland by removing the retaining screws and sliding the gland off the top of the stem.
- > Secure a hoist to the upper stem (end is imperial threaded).
- > Then use the hoist to remove the upper stem including the tie bolt from the valve body.

14.1.5 Removal of the valve disc:
- > Remove the wood blocks noted above from below the disc.
- > Using a rubber hammer, pound one area of the disc (ex. 12 o'clock position) repeatedly until the disc clears the face of the valve body.

14.1.6 Removal of packing and bearings:
- > Remove the stem packing.
- > Use a slotted screwdriver to carefully remove the upper and lower stem bearings.

14.1.7 Removal of the valve seat:
**Note: Valves 54" and larger are provided with the seat bonded to the body and therefore is not easily field replaceable. Please contact your local Bray representative for seat replacement.**

**WARNING**

Set the valve body in an upright position and secure it in a floor vice capable of handling the weight of the valve body and seat.
**Note: Be sure to not clamp the seat in the vice.**

14.1.8 Insert a slotted screwdriver into the space between the body and the seat on the face of the valve at the 12 o'clock position.

14.1.9 Carefully leverage the seat away from the body.

14.1.10 Push the seat into an oval shape and remove the seat from the body.

© 2020 BRAY INTERNATIONAL, INC. ALL RIGHTS RESERVED. BRAY.COM The Information contained herein shall not be copied, transferred, conveyed, or displayed in any manner that would violate its proprietary nature without the express written permission of Bray International, Inc.

## 14.0 Appendix I - Series 35/36 Resilient Seated Butterfly Valves (Internal Spiine or Keyed Disc/ Stem Connection)

### 14.2 Assembly

14.2.1 Installation of the valve seat:

**Note: Valves 54" and larger are provided with the seat bonded to the body and therefore is not easily field replaceable. Please contact your local Bray representative for seat replacement.**

**⚠ WARNING**

Set the valve body in an upright position and secure it in a floor vice capable of handling the weight of the valve body and seat.

**Note: Be sure to not clamp the seat in the vice.**

- Check to assure the interior surface of the valve body is clean.
- Install a light coating of silicone lubricant on the interior surface of the valve body.
- Push the seat into an oval and push it into the body with seat stem holes aligned to the body stem holes.

14.2.2 Installation of the valve disc:

**Note: Before installing the disc, check to assure the upper and lower stems are matched to the upper and lower stem holes in the disc.**

- With the valve still in the vice in a vertical position, hoist the upper stem with the splined end or the double keyed end pointing upward.
- Push the upper stem into the stem hole of the upper body until the bottom of the stem exceeds the upper stem hole of the seat by 20-50 mm.
- Apply a light coating of silicone or grease on the I.D. of the seat.
- Insert the disc into the seat with the splined end or the double keyed end up.
- Push the disc into the seat while inserting the upper stem into the upper stem hole in the disc.
- Adjust the disc to assure the lower stem hole of the disc is properly aligned with the lower body stem hole.

14.2.3 Installation of the lower stem:

- Close the valve so that the disc is inside the edge of the seat.
- Carefully place the valve in a horizontal position assuring that there is no damage to the body and disc coatings and disc edge.
- Insert the stem bearing into the bottom stem hole of the body.
- Insert the lower stem into the body and disc.

**Note: The cone-shaped end of the lower stem should be toward the center of the disc.**

14.2.4 Installation of the upper stem:

**⚠ CAUTION**

Hoist the valve to an angle and secure it (be careful not to go to high so the lower stem does not drop out).

- Remove the upper stem from the valve.
- Screw the tie bolt with lock nut to the splined or the double keyed end of the upper stem, tighten the lock nut and insert the upper stem into the valve with the tie bolt end first.

**Note: The tie bolt will go through the disc and reach to the bottom of the valve.**

**Note: During this step, the keyway of the upper stem should be vertical to the front face of the valve.**

14.2.5 Installation of packing and bearings (upper valve stem):

- Insert the stem bearing into the top hole of the body followed by the stem packing and packing gland follower.
- Use two hexagon bolts to fasten the packing gland.

14.2.6 Installation of packing and bearings (lower valve stem):

- Insert the stem retainer into the bottom hole of the body using a nut to fasten it.
- Install the locking nut on the tie bolt.
- Install the thrust bearing, bottom plate gasket and bottom plate follower.
- Use four hexagon bolts to fasten the bottom plate tightly.

© 2020 BRAY INTERNATIONAL, INC. ALL RIGHTS RESERVED. BRAY.COM The Information contained herein shall not be copied, transferred, conveyed, or displayed in any manner that would violate its proprietary nature without the express written permission of Bray International, Inc.

## Series 35/36 - Resilient Seated Butterfly Valves (Internal Spline Valve)

| | |
|---|---|
| 1 | Body |
| 2 | Disc |
| 3 | Upper Stem |
| 4 | Seat |
| 5 | Key |
| 6 | Tie Bolt |
| 7 | Stem Bearing |
| 8 | Stem Packing |
| 9 | Packing Gland Follower |
| 10 | Packing Gland |
| 11 | Bolt-Hex Head |
| 12 | Lower Stem |
| 13 | Stem Retainer |
| 14 | Hex Nut |
| 15 | Thrust Bearing |
| 16 | Bottom Plate Gasket |
| 17 | Bottom Plate |
| 18 | Bolt-Hex Head |
| 19 | ID Tag |
| 20 | Pop Rivet |

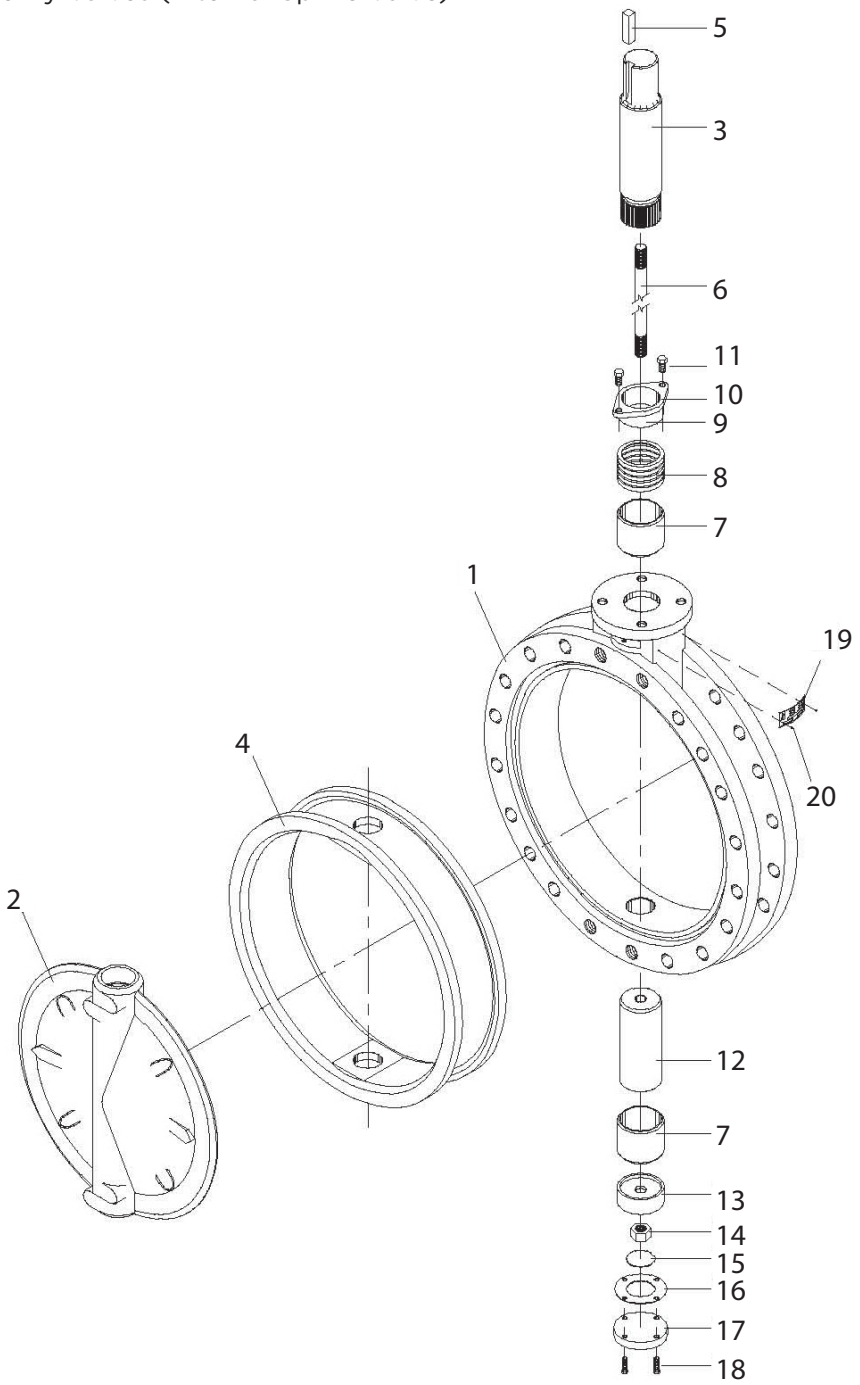


© 2020 BRAY INTERNATIONAL, INC. ALL RIGHTS RESERVED. BRAY.COM The Information contained herein shall not be copied, transferred, conveyed, or displayed in any manner that would violate its proprietary nature without the express written permission of Bray International, Inc.

## Series 35/36 - Resilient Seated Butterfly Valves (Internal Keyed Valve)

| | |
|---|---|
| 1 | Body |
| 2 | Disc |
| 3 | Upper Stem |
| 4 | Seat |
| 5 | Key |
| 6 | Tie Bolt |
| 7 | Stem Bearing |
| 8 | Stem Packing |
| 9 | Packing Gland Follower |
| 10 | Packing Gland |
| 11 | Bolt-Hex Head |
| 12 | Lower Stem |
| 13 | Stem Retainer |
| 14 | Hex Nut |
| 15 | Thrust Bearing |
| 16 | Bottom Plate Gasket |
| 17 | Bottom Plate |
| 18 | Bolt-Hex Head |
| 19 | ID Tag |
| 20 | Pop Rivet |

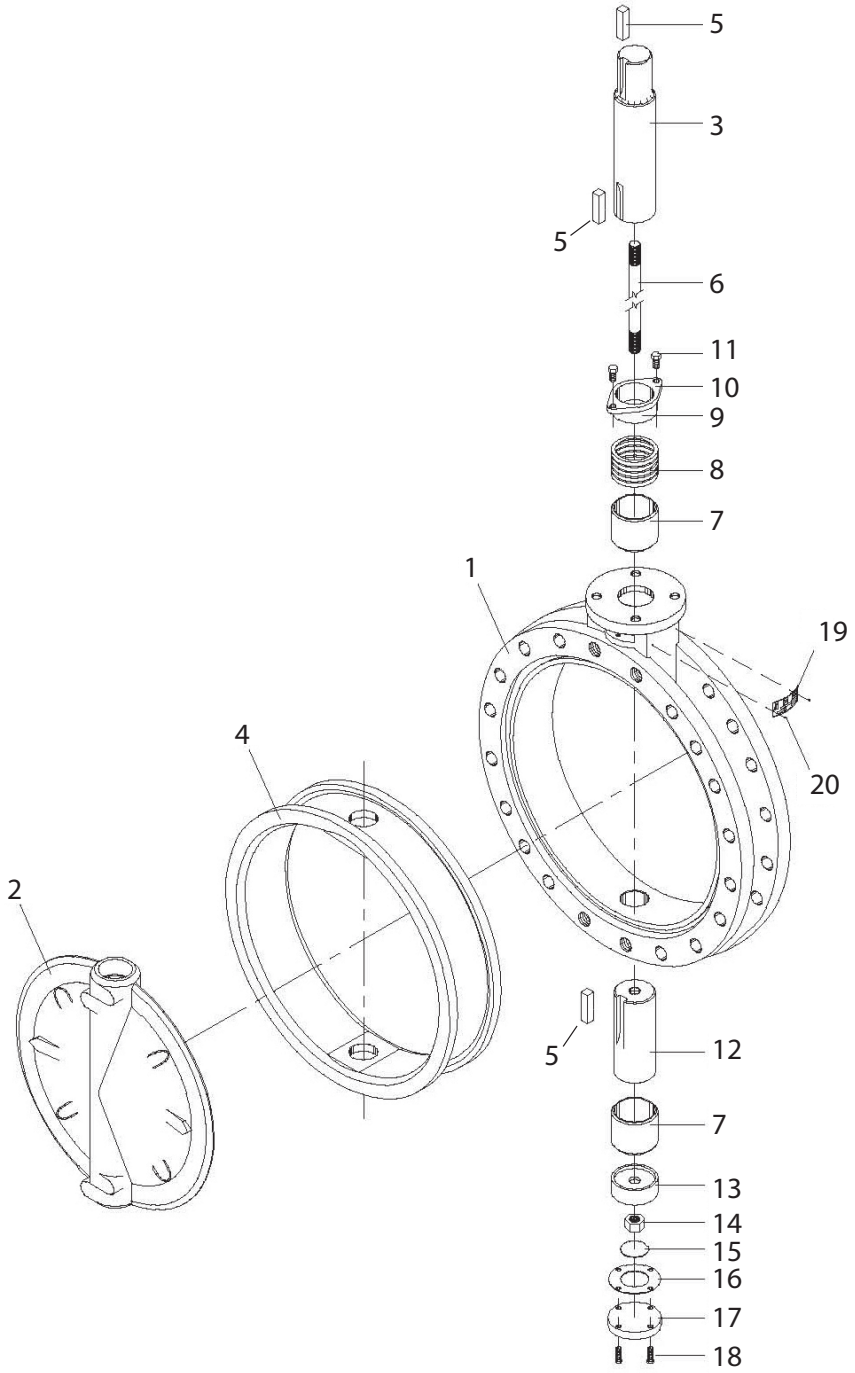


© 2020 BRAY INTERNATIONAL, INC. ALL RIGHTS RESERVED. BRAY.COM The Information contained herein shall not be copied, transferred, conveyed, or displayed in any manner that would violate its proprietary nature without the express written permission of Bray International, Inc.

## 15.0 Appendix J - Series 36H Resilient Seated Butterfly Valves

### 15.1 Disassembly

15.1.1 Remove the gear operator or power actuator from the actuator mounting flange.

15.1.2 Secure the valve in a horizontal position with the taper-pin nuts facing upward.

**⚠ CAUTION**

Prior to removal of the valve stem the valve disc must be secured and supported to insure it does not drop out of the valve body once the stem is removed. Lay the valve down with two wood blocks located under the disc at the 6 o'clock and 12 o'clock positions making sure the blocks are in close contact with the disc but not supporting the valve.

15.1.3 Remove the packing gland by removing the retaining screws and sliding the gland off the top of the stem.

15.1.4 Remove bottom plate and thrust bearing to expose bottom of stem.

15.1.5 Remove nuts and washers from ends of taper pins and drive taper pins out of the disc. Avoid damaging the disc coating or surface when removing taper-pins.

15.1.6 Once taper-pins are removed, drive the stem, bushing, and packing out of the valve body through the top.

15.1.7 Remove the disc from the seat, protecting disc edge at all times.
**Note: Valve is provided with the seat bonded to the body and therefore is not easily field replaceable. Please contact your local Bray representative for seat replacement.**

### 15.2 Assembly

15.2.1 Replace bottom thrust bearing and plate.

15.2.2 De-bur taper-pin grooves in the stem.

15.2.3 Push stem into stem hole of body until the bottom of the stem is flush with the inner top edge of the seat.
**Note: The end of the stem containing the keyway must be toward the top of the valve body.**

15.2.4 Install a light coating of silicone or grease on the I.D. of the seat.

15.2.5 Insert the disc into the seat by lining up the disc hole with the upper stem hole of the seat.

15.2.6 With a downward pressure and rotating the stem back and forth, push the stem until the stem touches the bottom of the body stem hole.
**Note: Make certain that when pushing the stem to the bottom of the body, the taper-pin grooves in the stem line up with the holes in the disc face.**

15.2.7 Tap the taper-pins into their holes from the large side of the hole, making sure the pins fit tightly in the hole and allow no movement of the stem in the disc.
**Note: Ensure that the taper-pin o-rings are in place before completing valve assembly.**

15.2.8 Replace the washers and nuts on the ends of the taper-pins.

15.2.9 Replace bushing, packing, and packing gland, and then tighten the retaining screws snugly.

15.2.10 Replace manual gear operator or power actuator on the actuator mounting flange.

© 2020 BRAY INTERNATIONAL, INC. ALL RIGHTS RESERVED. BRAY.COM The Information contained herein shall not be copied, transferred, conveyed, or displayed in any manner that would violate its proprietary nature without the express written permission of Bray International, Inc.

## Series 36H - Resilient Seated Butterfly Valves

| | |
|---|---|
| 1 | Body |
| 2 | Disc |
| 3 | Stem |
| 4 | Seat |
| 5 | Stem Packnig |
| 6 | Stem Bearing |
| 7 | Taper Pin |
| 8 | Washer |
| 9 | Nut |
| 10 | O-Ring |
| 11 | Thrust Bearing |
| 12 | Bottom Plaate |
| 13 | Bottom Plate Gasket |
| 14 | Bolt-Hex Head |
| 15 | Key |
| 16 | Stem Retainer |
| 17 | Cap Screw |
| 18 | Packing Gland |
| 19 | Bolt-Hex Head |
| 20 | ID Tag |
| 21 | Pop Rivet |

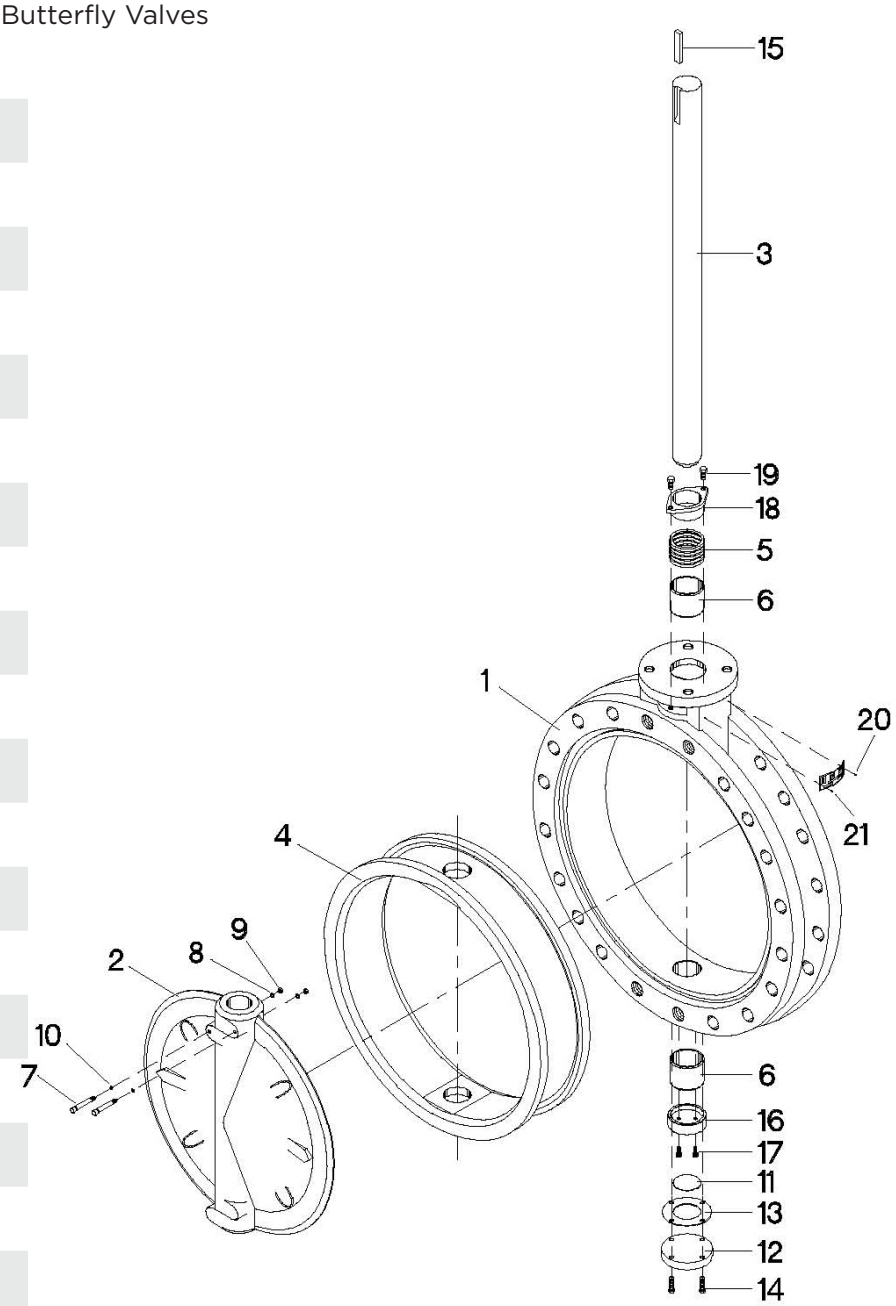


© 2020 BRAY INTERNATIONAL, INC. ALL RIGHTS RESERVED. BRAY.COM The Information contained herein shall not be copied, transferred, conveyed, or displayed in any manner that would violate its proprietary nature without the express written permission of Bray International, Inc.

BRAY FLOW CONTROL SOLUTIONS ARE AVAILABLE FOR A VARIETY OF INDUSTRIES.

**ENERGY**
Mining
Oil & Gas
Power / FGD
Nuclear Power

**WATER**
Water / Wastewater
Ultra Pure Water
Desalination
Irrigation

**INDUSTRIAL**
Chemical
Pulp & Paper
Textile
Marine

**INFRASTRUCTURE**
Beverage & Food
Transportation
Heating, Ventilation & Air Conditioning (HVAC)

---


**US HEADQUARTERS**
**Bray International, Inc.**
13333 Westland East Blvd.
Houston, Texas 77041
Tel: 281.894.5454

**CHINA HEADQUARTERS**
**Bray Controls (ZheJiang) Co. Limited**
98 GaoXin # 6 Road
XiaoShan Economic & Development Zone
HangZhou, ZheJiang 311231, P.R. China
Tel: 86 571 8285 2200

**EUROPE HEADQUARTERS**
**Bray Armaturen & Antriebe Europa**
Halskestraße 25
47877 Willich
Germany
Tel: +49 2154 8875-0

**INDIA HEADQUARTERS**
**Bray Controls India Pvt. Ltd.**
Plot No. H-18 & H-19
SIPCOT Industrial Park
Vallam Vadagal, Echoor Post
Sriperumbudur Taluk
Kancheepuram District
Tamil Nadu - 631 604
Tel: +91-44-67170100


---

THE SMART CHOICE FOR FLOW CONTROL SINCE 1986.
WITH MORE THAN 300 LOCATIONS WORLDWIDE,
FIND A REPRESENTATIVE NEAR YOU AT **BRAY.COM**


All statements, technical information, and recommendations in this bulletin are for general use only. Consult Bray representatives or factory for the specific requirements and material selection for your intended application. The right to change or modify product design or product without prior notice is reserved. Patents issued and applied for worldwide.

Bray® is a registered trademark of Bray International, Inc.

© 2020 Bray International, Inc.. All rights reserved.


IOM_RSBFV_2020-08

# *BRAY*

## *SERIES 63, SOLENOID VALVE*

LEFT BLANK

# Bray Series 63-N4/N7 Installation & Maintenance Instructions

General Purpose/Rain Tight/Water Tight and Rain Tight/Water Tight/Explosion Proof

**For S63-N4 see O&M Instructions for information on: Operation, Positioning, Mounting, Cleaning, Preventive Maintenance, Causes of Improper Operation, Disassembly, and Reassembly of basic valve.**

## DESCRIPTION

S63 N4/N7 Solenoid coils are thermoplastic encapsulated pull-type for use with Bray solenoids. These solenoids have three lead wires with one wire for grounding and a ½ NPT male conduit connection. S63 N4 Solenoids are designed to meet Enclosure Type 1-General Purpose, Types 3 and 3S-Raintight, and Types 4 and 4X-Watertight. S63 N4/N7 Solenoids meet Enclosure Types 3 and 3S-Raintight, Types 4 and 4X-Watertight, Type 7 Explosion proof Class I, Division 1, Groups A, B, C, & D and Type 9 - Dust - Ignition proof Class II, Division 1, Groups E, F, & G.

## STORAGE

Bray Series 63 N4/N7 are not weatherproof until the unit is properly installed, or all conduits and applicable port connections are sealed off and prepared for storage. The units may be shipped with temporary covers to prevent foreign matter from entering through the conduit openings; however, the user is responsible for replacing with the proper sealing plugs to support its NEMA/IP ratings.

To prevent condensation from forming inside the unit, maintain a near constant external temperature and store indoors in a well ventilated, clean, dry room. The temperature shall be between 40°F (4°C) and 85°F (29°C), with a relative humidity less than 70%. Store units away from vibration and direct sunlight exposure, and place units on a shelf or wooden pallet in order to protect against dampness. Keep units covered to protect against dust and dirt; if storing for long term, placing the unit inside a plastic sealed bag may be preferred.

Bray cannot accept responsibility for deterioration caused on-site once the cover is removed or due to improper storage.

## OPERATION

When the solenoid is energized, the core assembly is drawn into the plugnut/core tube sub-assembly. When the solenoid is de-energized, spring force returns the core assembly to the original position.

**Enclosure Types 7 and 9 Only**

**CAUTION**

To prevent fire or explosion, do not install solenoid and/or valve where ignition temperature of hazardous atmosphere is less than 160° C. Open circuit before disassembling.

### Positioning

Solenoid may be mounted in any position.

### Valve Mounting

The solenoid is assembled onto an actuator and is rigidly supported using the actuator body mounting provisions.

**CAUTION**

Solenoid coil wiring must be carried out by trained personnel.

### Wiring

Wiring must comply with local codes and the National Electrical Code. The solenoid is provided with lead wires and one grounding wire, which is green or green with a yellow stripe. To facilitate wiring, the solenoid may be rotated 360° in 90° increments. To rotate solenoid, remove the four mounting screws, reposition solenoid and replace screws. Torque screws evenly in a crisscross manner to 12 in-lbs [1.3 Nm].

All information herein is proprietary and confidential and may not be copied or reproduced without the expressed written consent of BRAY INTERNATIONAL, Inc. The technical data herein is for general information only. Product suitability should be based solely upon customer's detailed knowledge and experience with their application.

Solenoids have a ½-14 NPT male thread. For connection to rigid metal conduit, metal type NPT electrical fittings should be used.

**WARNING**

For the watertight and explosion proof solenoid, electrical fittings must be approved for use in hazardous locations.

**CAUTION**

Temperature of external casing of coil can burn skin.

### Solenoid Temperature

Standard solenoids are designed for continuous duty service. When the solenoid is energized for a long period, the solenoid becomes hot and can be touched by hand only for an instant. This is a safe operating temperature.

## MAINTENANCE

**WARNING**

To prevent the possibility of personal injury or property damage, turn off electrical power, depressurize valve, and vent medium to a safe area before servicing. .

### Cleaning

All solenoid valves should be cleaned periodically. The time between cleaning will vary depending on medium and service conditions. In general, if the voltage to the solenoid is correct, sluggish valve operation, excessive noise, or leakage will indicate that cleaning is required. In the extreme case, faulty valve operation will occur and the valve may fail to shift. Clean strainer or filter when cleaning the valve.

### Preventive Maintenance

- Keep the medium flowing through the solenoid valve as free from dirt and foreign material as possible.
- While in service, the solenoid valve should be operated at least once a month to ensure proper opening and closing.
- Depending on the medium and service conditions, periodic inspection of internal valve parts for damage or excessive wear is recommended. Thoroughly clean all parts. Replace any worn or damaged parts.

### Causes of Improper Operation

- **Faulty Control Circuit:** Check the electrical system by energizing the solenoid. A metallic click signifies that the solenoid is operating. Absence of the click indicates loss of power supply. Check for loose or blown fuses, open-circuited or grounded solenoid, broken lead wires or splice connections.
- **Burned-Out Solenoid:** Check for open-circuited solenoid. Check supply voltage; it must be the same as specified on nameplate and marked on the solenoid. Check ambient temperature and check that the core is not jammed. If necessary, replace pilot valve.
- **Low Voltage:** Check voltage across the solenoid leads. Voltage must be at least 85% of rated voltage.

### ORDERING INFORMATION FOR REPLACEMENT PILOT VALVE WITH SOLENOID:

1. Specify valve Catalog Number
2. Solenoid Catalog Number
3. Serial Number
4. Voltage
5. Frequency

All information herein is proprietary and confidential and may not be copied or reproduced without the expressed written consent of BRAY INTERNATIONAL, Inc. The technical data herein is for general information only. Product suitability should be based solely upon customer's detailed knowledge and experience with their application.

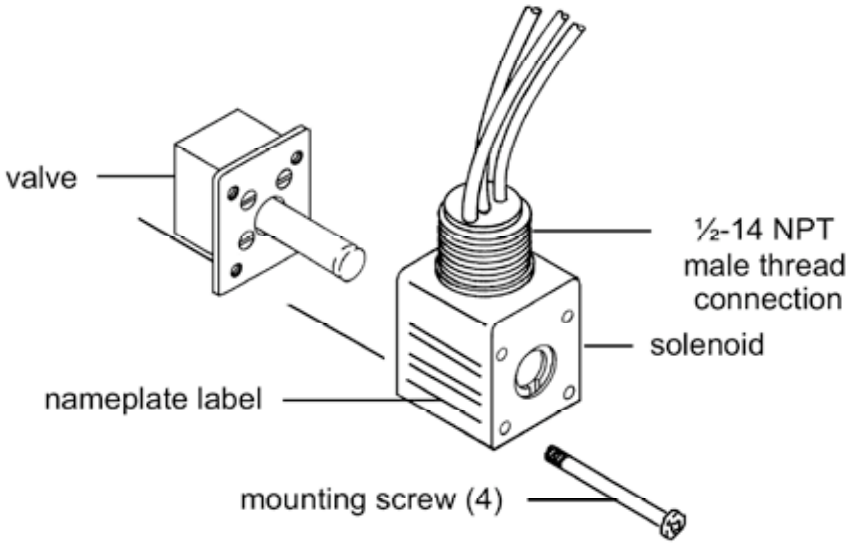


Figure 1. S63-N4 General Purpose/Raintight/Watertight Solenoid.

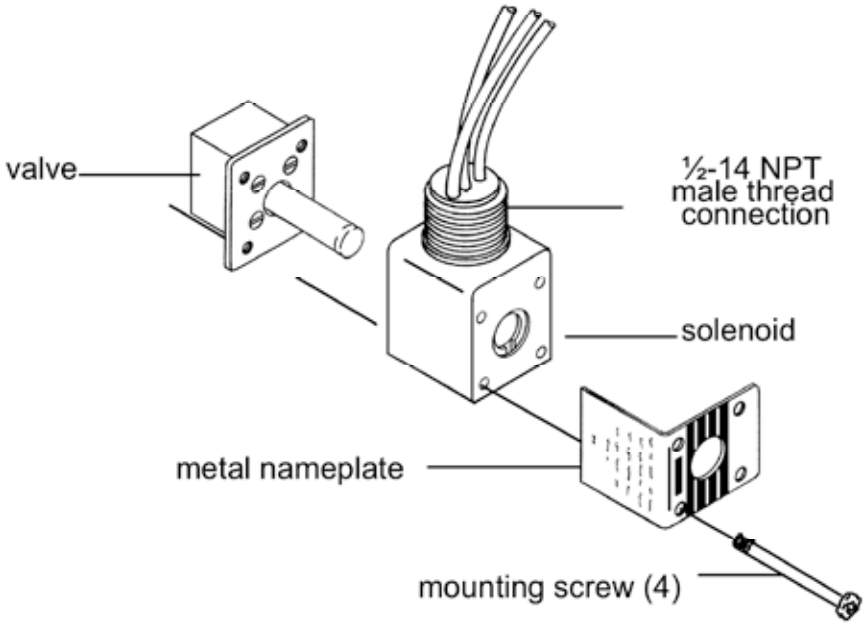


Figure 2. S63-N4/N7 Raintight/Watertight/Explosionproof Solenoid.

All information herein is proprietary and confidential and may not be copied or reproduced without the expressed written consent of BRAY INTERNATIONAL, Inc. The technical data herein is for general information only. Product suitability should be based solely upon customer's detailed knowledge and experience with their application.

LEFT BLANK

# *BRAY*

## *SERIES 01, MANUAL OPERATOR (LEVER)*

LEFT BLANK

# Series 01 Handle and Notch-Plate

Bray offers handle assemblies for standard Resilient Seated Valves from 1"-6" [25-152 mm] (Through 12" [305 mm] with undercut disc assemblies). These quarter turn handles have a locking spring and a directional pointer for valve disc position indication. Bolted notch plates with on-off stops to prevent over rotation of the valve disc complete the assembly.

**WARNING:** Do not use handle or notch plate to lift a valve assembly.

The following procedure is recommended when mounting a Series 01 handle and notch plate on a resilient seated valve:

**NOTE: For readjustment of the handle and notch plate assembly in the field, remove the handle and notch plate from the valve and remount according to the procedures below.**


Figure 1


Figure 2

**Step 1:** Mount the handle without the notch plate and use it to assure that the "Double D" flats on the valve stem are aligned parallel with the face of the valve ***(See Figure 1)***.

**NOTE:** When mounting the Series 01 handle with the valve out of the line it is more accurate to measure from the face of the valve to the disc face at the 90° and 270° positions using the handle to adjust the disc until the measurements are equal ***(See Figure 2)***.

**Step 2:** Once the Double D flats on the stem and the disc are centered, remove the handle and attached the notch plate to the mounting pad on the valve with two (2) fasteners ***(See Figure 3)***. Do not tighten the bolts.

**Step 3:** Carefully replace the handle and make sure the latch on the lever properly engages the first notch ***(See Figure 4)***.

**Step 4:** Tighten the notch plate fasteners.


Figure 3


Figure 4

All information herein is proprietary and confidential and may not be copied or reproduced without the expressed written consent of BRAY INTERNATIONAL, Inc.

The technical data herein is for general information only. Product suitability should be based solely upon customer's detailed knowledge and experience with their application.

LEFT BLANK

# *BRAY*

## *SERIES 04, MANUAL OPERATOR (HANDWHEEL)*

LEFT BLANK

# Series 04 Gear Operator Mounting and Lubrication Instructions

For heavy-duty on-off and throttling service of 2" – 48" (51-1219 mm) Quarter Turn Valves. The Series 04 gear operator is self lubricated for smooth trouble-free operation. The rugged cast iron body with o-ring body seals is weatherproof to IP65. A self locking worm and worm gear drive holds the valve in the desired position. Features include a readily accessible hand-wheel, a valve position indicator and mechanical travel stops which permit field adjustment of valve position to specific degrees of rotation.

**WARNING**

Gear operator handwheel is attached to manual override shaft with a split spring pin. The pin is designed to shear if excessive force is applied to handwheel before internal gears or housing is damaged. Gear operator with or without valve should never be lifted by handwheel.

The gear operator is mounted to the valve as follows:

- Manually operate the gear operator until the output shaft is in line with the valve stem. On valve sizes through 12" (305 mm) the valve stem will be aligned with the "double-D" stem. On valves larger than 12" (305 mm) the gear operator and valve stem alignment will be with the keyway on the full diameter stem.
- Place the correct stem adaptor, if required, onto the valve stem. It is recommended that a small amount of grease is applied to the adaptor for easier assembly to the valve stem and gear operator drive shaft.
- Install the mounting studs into the gear unit base mounting holes. The shorter threaded end fits into the gear unit base.

**CAUTION**

Care must be taken not to jam fingers or hand between gear operator and valve.

- Mount the gear unit onto the valve stem. Make certain that the mounting studs are correctly aligned with the holes on the top plate of the valve or the valve mounting bracket. It may be necessary to rotate the gear operator hand-wheel to align the studs with the mounting holes.
- Lower the gear operator onto the valve and secure in place by fitting the lock washers and hex nuts.

All information herein is proprietary and confidential and may not be copied or reproduced without the expressed written consent of BRAY INTERNATIONAL, Inc.
The technical data herein is for general information only. Product suitability should be based solely upon customer's detailed knowledge and experience with their application.

## Adjustment of travel stops in the field is achieved as follows:

(The instructions are for a standard clockwise to close application).

### Adjustment of the "Closed" position travel stop:



Figure 1



Figure 2

- Looking on the end of the gear operator the right hand bolt is the close adjustment. ***(See Figure 1)***
- Remove the valve position indicator and view the position of the valve stem. ***(See Figure 2)***
- Rotate the close travel stop screw clockwise until the screw touches the quadrant.
- We have to consider that in the full closed position the stem "double D" flats align with the position of the valve disc ***(See Figure 3)***. Similarly on the full diameter stem the keyway position will align with the valve disc position.
- Loosen the lock nut and back off the close travel stop screw one turn in the counter-clockwise direction.
- Rotate the hand-wheel until the sides of the "double D" or the sides of the keyway are parallel with the face of the valve. ***(See Figure 4)***
- Verify that the "double D" or keyway is still parallel to the valve face.
- Carefully re-tighten the travel stop lock nut
- Replace the valve position indicator.
- At this point apply a sealant to the lock nut of the close travel stop to ensure that it will not be readjusted.
- When factory setting the close stop, as the valve is not in line, instead of aligning the shaft with the face of the valve, it is more accurate to measure from the face of the valve to the disc face at the 3 o'clock and 9 o'clock positions and adjust the gear unit until the measurements are equal.




Figure 3

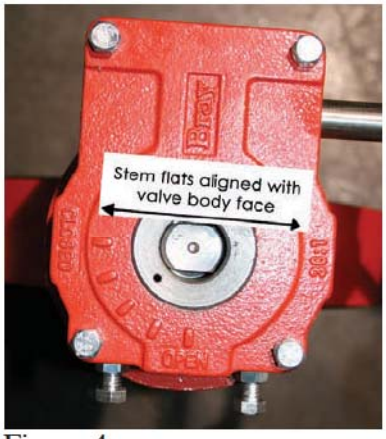


Figure 4

All information herein is proprietary and confidential and may not be copied or reproduced without the expressed written consent of BRAY INTERNATIONAL, Inc.
The technical data herein is for general information only. Product suitability should be based solely upon customer's detailed knowledge and experience with their application.

### Adjustment of the "Open" position travel stop:

- Looking on the end of the gear operator the left hand bolt is the open adjustment.
- Remove the valve position indicator and view the position of the valve stem.
- We have to consider that in the full open position the stem "double D" flats align with the position of the valve disc. Similarly on the full diameter stem the keyway position will align with the valve disc position.
- Loosen the lock nut and back off the open travel stop screw one turn in the counter-clockwise direction.
- Rotate the hand-wheel until the sides of the "double D" or the sides of the keyway are perpendicular with the face of the valve.
- Rotate the open travel stop screw clockwise until the screw touches the quadrant.
- Verify that the "double D" or keyway is still perpendicular to the valve face.
- Carefully re-tighten the travel stop lock nut.
- Replace the valve position indicator.
- At this point apply a sealant to the lock nut of the open travel stop to ensure that it will not be readjusted.

## Lubrication Procedures

These instructions are to be used during original assembly or during re-assembly after service for lubricating Series 04 worm gear operators. Proper lubrication is necessary to insure smooth operation and long life of the unit. Failure to adhere to these instructions may lead to loss of performance or premature failure of the operator.

### I. Lubricant

The lubricant must be a high pressure or extreme pressure petroleum grease with a lithium based thickener, which meets the NLGI grade 2. The grease must exhibit a high degree of tackiness or stringiness, which enhances its ability to cling tenaciously to the lubricated surfaces.

The grease should meet the following specifications as a minimum. Any deviation below these specifications must be approved by the Bray USA Engineering Department.

| Typical Properties | ASTM Test Method | Result |
|---|---|---|
| NLGI Grade Number | | 2 |
| Soap Type | | Lithium |
| Color | | Brown |
| Mineral Oil Viscosity, SUS @ 210°F [100°C] | D2161 | 80 |
| Penetration (Worked 60 Strokes) | D217 | 285 |
| Dropping Point (Maximum Temperature) | D566 | 363°F [184°C] |
| Oil Separation | D1742 | 5.0% |
| Rust Preventative Test | D1743 | Pass |
| Timken EP Test | D2509 | 45lbs [20.4kg] |
| Wheel Bearing Test (60mph [660rpm] @ 250°F [121°C] leakage) | D1263 | 2.8gms |
| Oxidation Stability 100hrs, psi drop | D942 | 6 |
| Water Washout Test (% loss @ 175°F [80°C], typ.) | D1264 | 7 |

[1]National Lubricating Grease Institute

All information herein is proprietary and confidential and may not be copied or reproduced without the expressed written consent of BRAY INTERNATIONAL, Inc.
The technical data herein is for general information only. Product suitability should be based solely upon customer's detailed knowledge and experience with their application.

## II. Application

Lubricate all gears, pinions, bearings, shafts, gaskets, seals (o-rings) and contact surfaces as they are being assembled.

- **Contact surfaces**
  Apply grease liberally to all mating surfaces.
- **O-Rings**
  Fill grooves with grease before installing o-rings.
- **Gaskets**
  Gasket and gasket surfaces should be greased on both sides prior to installation.
- **Bearings**
  Sleeve type bearings should be coated with grease before they are pressed into the housing. Thrust washers should be coated with grease on both sides prior to installation.
- **Shafts**
  Lubricate shafts before installing them into the housing.
- **Pinions and other spur gears**
  Grease should be applied to the gear teeth in such a way that it is carried through the meshing of the gears. After applying the grease, rotate the gears enough times so that the slowest gear in the set makes at least two (2) revolutions.
- **Worm and worm gear set**
  Lubricate both hubs and shoulders of the worm gear prior to installing it in the housing. Apply grease to the worm and worm gear teeth in such a way that it is carried through the meshing of the gears. After applying the grease, rotate the worm enough times so that the worm gear makes at least two (2) complete cycles (one cycle being from closed to open to closed or open-closed-open). After cycling, inspect and re-apply grease if necessary.

**Note: Gear operators intended for marine service or buried service, and so specified on the Purchase Order or Sales Order, must have the housing(s) filled with grease.**

All information herein is proprietary and confidential and may not be copied or reproduced without the expressed written consent of BRAY INTERNATIONAL, Inc.
The technical data herein is for general information only. Product suitability should be based solely upon customer's detailed knowledge and experience with their application.

# *CHEMLINE*

## *TYPE 21, BALL VALVE*

LEFT BLANK

CHEMLINE Plastics Limited

*Your Pipeline To Quality* Valves, Strainers, Flowmeters and Controls

55 Guardsman Road
Thornhill, Ontario
L3T 6L2
Canada
Tel: 905-889-7890
Fax: 905-889-8553

# MAINTENANCE & INSTALLATION INSTRUCTIONS
# For Chemline Type 21 True Union Ball Valve Size 1/2"- 4"

## *Installation:*

1. Make sure all surfaces are clear and free of debris prior to installing valve in pipeline. Pipeline should be empty at connection site.

2. Valve should be set to the closed position.

3. When installing valves with socket connections, ensure that only PVC solvent cement is used. Excessive use of cement can cause sticking in the valve interior, therefore use caution when applying cement, especially on vertical piping.

4. For threaded connections we recommend the use of sealing tape and, with the use of a strap wrench, to tighten no more than 2 full turns past finger-tight. Use of a pipe wrench can deform the pipe or union nut and cause damage to the valve and/or connection(s).

5. Flanged connections should be torqued evenly and in a symmetrical pattern with a torque wrench and as per the figure and chart below:

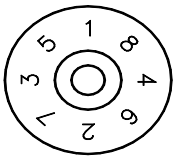


**RECOMMENDED FLANGE BOLT TORQUES**

| VALVE SIZE | FLANGE | BOLT TORQUE | IN FT-LB | AXIAL MISALIGNMENT | PARALLELISM (INCH) |
|---|---|---|---|---|---|
| | PSI - 50 | PSI - 100 | PSI – 150 | | |
| 1½ | 11 | 13 | 14 | 0.04 | 0.03 |
| 2 | 13 | 14 | 16 | 0.04 | 0.03 |
| 2½ | 13 | 14 | 16 | 0.04 | 0.03 |
| 3 | 18 | 20 | 22 | 0.04 | 0.03 |
| 4 | 20 | 20 | 22 | 0.04 | 0.04 |
| 5 | 22 | 15 | 29 | 0.04 | 0.04 |
| 6 | 25 | 15 | 32 | 0.04 | 0.04 |
| 8 | 25 | 32 | 40 | 0.06 | 0.04 |
| 10 | 25 | 32 | 40 | 0.06 | 0.04 |
| 12 | 29 | 36 | 43 | 0.06 | 0.04 |
| 14 | 32 | 36 | 43 | 0.06 | 0.04 |
| 16 | 36 | [58-85 PSI] | 58 | 0.06 | 0.04 |
| 18 | 36 | [58-85 PSI] | - | | |
| 20 | 72 | - | - | | |
| 24 | 72 | - | - | | |

# Maintenance Instructions Type 21 Ball Valve cont.

***Maintenance:***

Refer to **ASSEMBLY DRAWING T21V Rev. 0.** And proceed as follows:

1. Turn valve to the closed position.
2. Unscrew union nut (5) from both ends of valve.
3. Remove end connectors (4).
4. On solid mold end, remove face o-ring (9). This completely disassembles this end of valve.
5. Pull upward on handle (7) to remove.
6. On opposite end of valve, remove face o-ring (9) and use handle (7) as a spanner wrench to remove carrier (3).
7. Remove carrier o-ring (10).
8. Remove seat (6) and seat cushion (12) to expose ball (2).
9. Remove ball (2) by pushing from solid molded end of body.
10. Remove stem (6) by pushing it down into body (1).
11. Remove stem o-rings 11(A) and 11(B) from groves in stem.
12. Remove other seat (6) and seat cushion (12).
13. Inspect all parts for wear and replace as necessary.
14. Before re-assembling valve, lubricate all o-rings with Dow Corning III silicone compound or equivalent.
15. To re-assemble valve follow steps 1 through 10 in reverse order.

**NOTE:** If mounting actuator on mounting flange (13), make sure handle (7) is removed and stem (6) and actuator are aligned.

After replacing carrier (3), the face of the carrier should remain slightly projected from the end of the body. Make sure the ball rotates smoothly with only a touch of resistance.

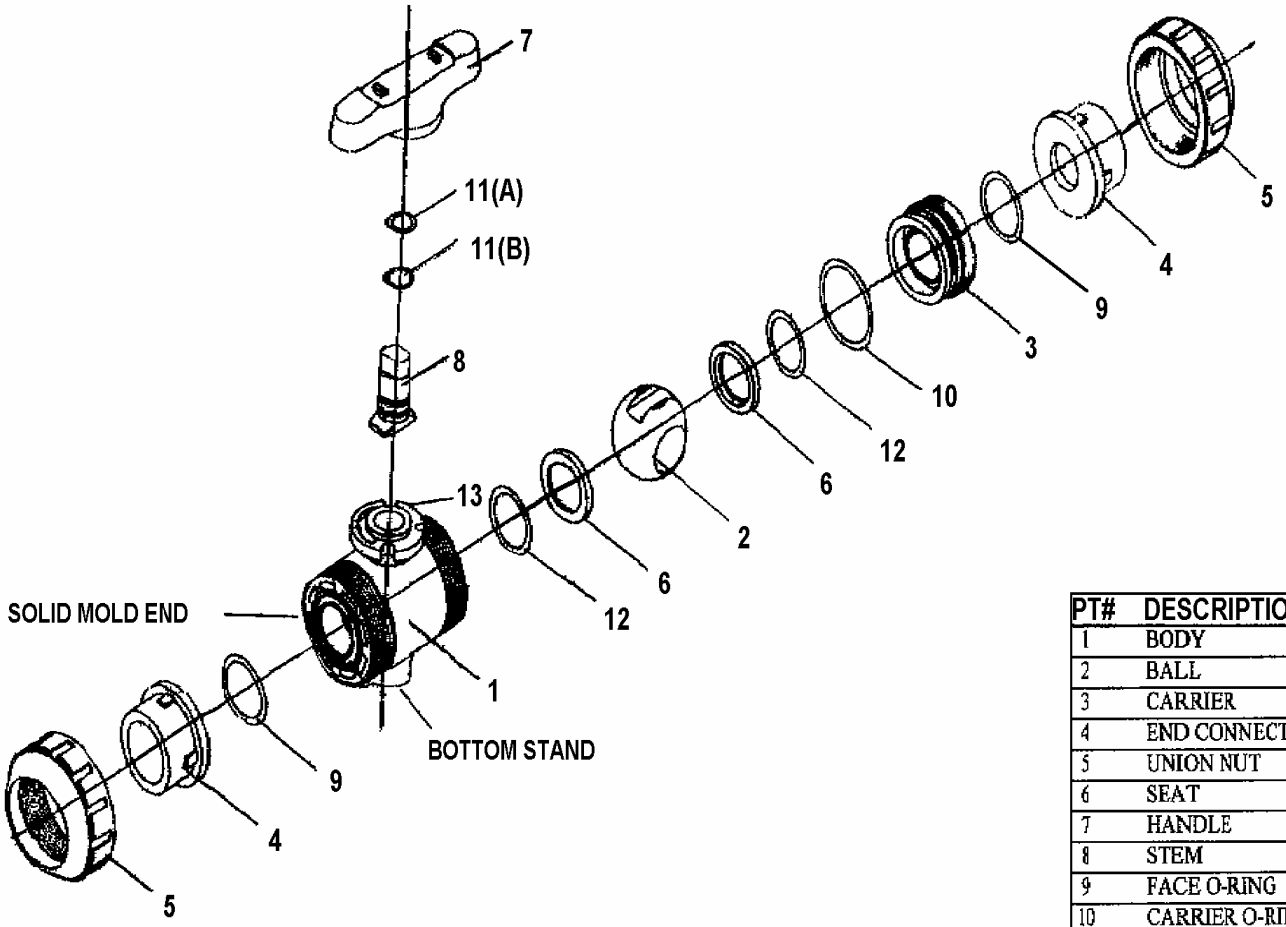


| PT# | DESCRIPTION | QTY | MATERIALS |
|---|---|---|---|
| 1 | BODY | 1 | PVC/PP/PVDF/CPVC |
| 2 | BALL | 1 | PVC/PP/PVDF/CPVC |
| 3 | CARRIER | 1 | CPE/EPDM/VITON/HYP. |
| 4 | END CONNECTOR | 2 | PVC/PP/PVDF/CPVC |
| 5 | UNION NUT | 2 | PVC/PP/PVDF/CPVC |
| 6 | SEAT | 1 | CPE/EPDM/CITON/HYP. |
| 7 | HANDLE | 1 | PVC/PP/PVDF/CPVC |
| 8 | STEM | 1 | PVC/PP/PVDF/CPVC |
| 9 | FACE O-RING | 2 | CPE/EPDM/VITON/HYP. |
| 10 | CARRIER O-RING | 1 | CPE/EPDM/VITON/HYP. |
| 11(A) | STEM O-RING (Upper) | 1 | CPE/EPDM/VITON/HYP. |
| 11(B) | STEM O-RING (Lower) | 1 | CPE/EPDM/VITON/HYP. |
| 12 | SEAT CUSHION | 2 | CPE/EPDM/VITON/HYP |
| 13 | MOUNTING FLANGE | 1 | PVC/PP/PVDF/CPVC |

| | | | | | |
|---|---|---|---|---|---|
| TITLE<br>CHEMLINE TYPE 21 TRUE UNION BALL VALVE | SCALE | | DATE | CHEMLINE PLASTICS | |
| | DR. BY | | | | |
| REFERENCE<br>SIZES 1/2" - 4" | CHKD BY | | | DWG. NO.<br>T21V | REV.<br>0 |
| | APP. BY | | | | |

LEFT BLANK

# *CHEMLINE*

## *SERIES FC/FS, VARIABLE AREA FLOWMETER*

LEFT BLANK

CHEMLINE Plastics Limited

*Your Pipeline To Quality* Valves, Strainers, Flowmeters and Controls

55 Guardsman Road
Thornhill, Ontario
L3T 6L2
Canada
Tel: 905-889-7890
Fax: 905-889-8553

# INSTALLATION & MAINTENANCE INSTRUCTIONS
# For Chemline FC/FS Series Variable Area Flowmeter Sizes 5" and 7"

## *Installation & Maintenance:*

Refer to **ASSEMBLY DRAWING SFM1 REV 0**. And proceed as follows:

1. Install in line (where flow readings are required).
2. Unscrew union nuts (5).
3. Remove end connectors (6).
4. Tube (1) will slide out when end connectors (6) are removed.
5. Upper and lower float stops will come out with the end connectors (6).
6. Remove and clean or replace o-rings (7).
7. Remove float (2) from tube (1) and clean.
8. Remove range indicator (8) from tube and clean or replace.
9. It is recommended that spare o-rings (7) and range indicators (8) be kept.

## Maximum Working Pressures and Temperature Ranges

| *Construction* | | | | |
|---|---|---|---|---|
| **Tube** | **Union Nuts** | **Ends** | **Pressure** | **Temperature** |
| PVC | PVC | PVC | 150 psi | 0 to 60° C |
| Polyamide (PA) | PVC | PVC | 150 psi | 0 to 60° C |
| Polyamide (PA | PPG | PP or CPVC | 150 psi | 0 to 80° C |
| Polysulfone (PSU) | PPG | PP or CPVC | 150 psi | 0 to 90° C |
| Polysulfone (PSU) | PVDF | PVDF | 150 psi | 0 to 120° C |
| PVDF | PVDF | PVDF | 150 psi | -40 to 120° C |

Ranges, Conversion Charts, Sizing, Scale Correction Factors etc. are available on the Chemline Data Page and also available from the Chemline Technical Department.

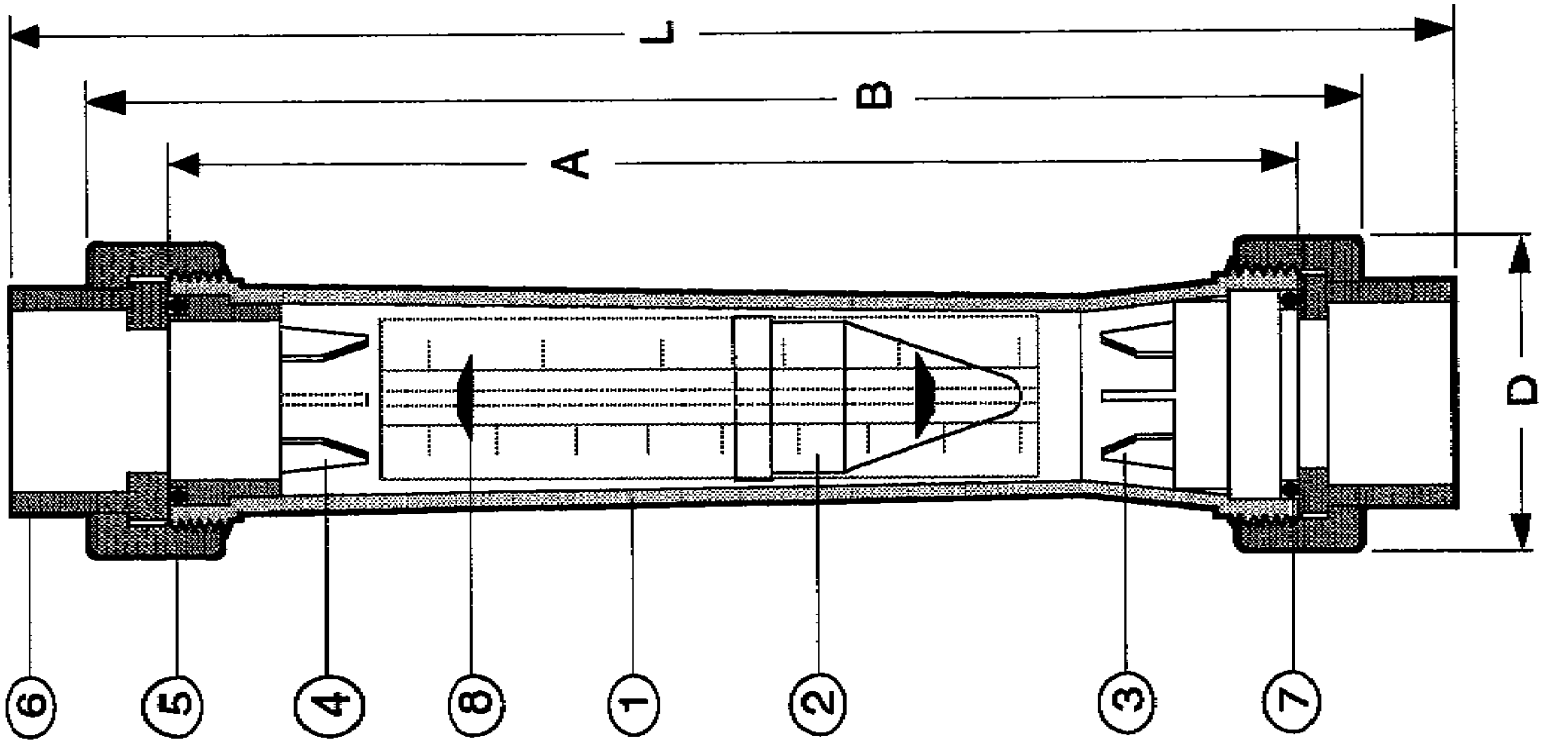


| | | | | |
|---|---|---|---|---|
| TITLE<br>FS / FC VARIABLE-AREA FLOWMETERS | SCALE | NTS | DATE | REFERENCE |
| | DR. BY | DB | 02/22/91 | |
| CHEMLINE PLASTICS LIMITED<br>55 GUARDSMAN ROAD, THORNHILL, ONTARIO L3T 6L2<br>TEL: (905) 889-7890 - FAX (905) 889-8553 | CHK BY | | | DWG. NO. SFM1 / REV. 0 |
| | APP BY | | | |

LEFT BLANK

# *CHEMLINE*

## *SERIES GV, GLOBE VALVE*

LEFT BLANK

CHEMLINE Plastics Limited

*Your Pipeline To Quality* Valves, Strainers, Flowmeters and Controls

55 Guardsman Road
Thornhill, Ontario
L3T 6L2
Canada
Tel: 905-889-7890
Fax: 905-889-8553

# MAINTENANCE INSTRUCTIONS
# For Chemline Globe Valves Sizes 1/2" - 2"

## *Maintenance (Sizes 1/2" to 2")*

Refer to **ASSEMBLY DRAWING GV-01(A).** And proceed as follows:

1. Remove bonnet and stem assembly (2 through 5) by unscrewing gland nut (6). The complete stem assembly should lift out of the valve body.
   (Note: make sure there is no pressure in line prior to removing valve.)

2. The stem (4) is removed from the bonnet assembly by first removing the handwheel (3) by unscrewing nut (9). Loosen the stem packing (8) and inspect for excessive wear and cracking.

3. Lubricate the seal (7) before replacing the shaft (4). Dow Corning III silicone compound recommended.

4. Inspect the body seat (1) and disc seat (5) for excessive wear and pitting. Pitting is caused by foreign objects being jammed between the sealing surfaces when closing the valve. If the disc seat (5) is damaged, replace the part.
   **Important**: If the body seat is damaged replace the complete valve.

5. To reassemble valve, reverse steps 1 to 4 above.

   **(NOTE)** When replacing the stem assembly back into the valve body, be sure that the stem NOT in the closed position. If it is, the stem may be over extended and could damage the body seat when the bonnet is re-tightened.

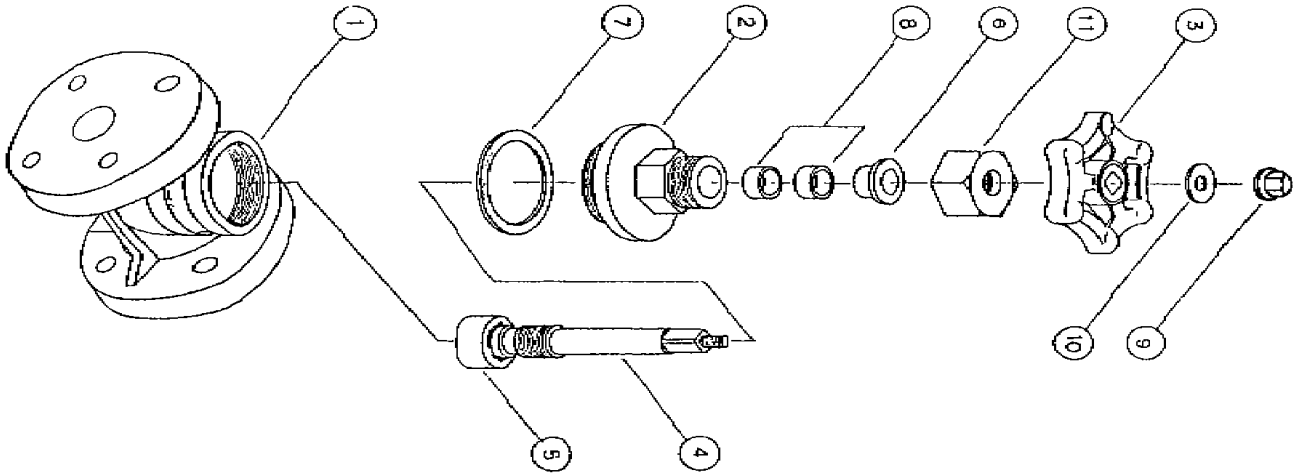


| PART | DESCRIPTION | QTY | MATERIAL |
|---|---|---|---|
| 1 | BODY | 1 | PVC/PP |
| 2 | BONNET | 1 | PVC/PP |
| 3 | HANDWHEEL | 1 | PP |
| 4 | STEM | 1 | PVC/PP |
| 5 | DISC | 1 | PP |
| 6 | GLAND | 1 | PVC/PP |
| 7 | BONNET SEAL | 1 | EPDM |
| 8 | STEM PACKING | 2 | EPDM |
| 10 | NUT | 1 | PVC |
| 11 | WASHER | 1 | PVC |
| 12 | GLAND NUT | 1 | PVC/PP |
| 13 | DISC RETAINER | 1 | PP |
| 14 | STEM TOP | 1 | BRASS |
| 15 | YOLK | 1 | PP |
| 16 | YOLK SLEEVE | 1 | BRONZE |
| 17 | BOLT & NUT | 8 | SS. 304 |
| 18 | STUD & NUT | 2 | SS. 304 |

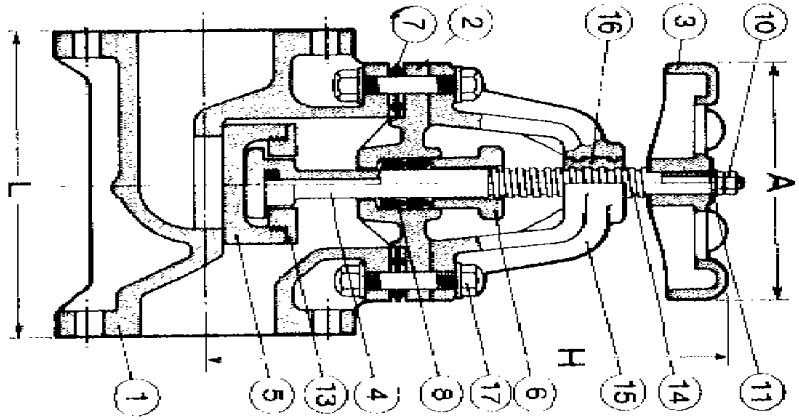


| | | | | | |
|---|---|---|---|---|---|
| TITLE: CHEMLINE GLOBE VALVE SIZES | SCALE | | DATE | CHEMLINE PLASTICS | |
| | DR. BY | | | | |
| REFERENCE: 1/2" - 2" | CHKD. BY | | | DWG. NO. | REV. |
| | APP. BY | | | GV01(A) | 0 |

# *CHEMLINE*

## *SERIES NG, NEEDLE VALVE*

LEFT BLANK

CHEMLINE Plastics Limited

*Your Pipeline To Quality* Valves, Strainers, Flowmeters and Controls

55 Guardsman Road
Thornhill, Ontario
L3T 6L2
Canada
Tel: 905-889-7890
Fax: 905-889-8553

# MAINTENANCE INSTRUCTIONS
# For Chemline Needle Valves Sizes 1/4" - 3/8" - 1/2"

***Maintenance (all sizes):***

Refer to **ASSEMBLY DRAWING CNV1 rev 0.** And proceed as follows:

1. Valve can be serviced in line as unit' s complete topworks can be removed in one piece.
2. Remove panel nut (6) and lift off bonnet (4).
3. Handle (2) stem (3) and thread insert (5) will lift out in one piece.
4. Remove and inspect seal (7) for wear and abrasion.
5. Replace seal if necessary.
6. To reassemble valve follow steps 2 through 5 in reverse order.

**Note:** Seal wear can be compensated for by hand tightening the cap.

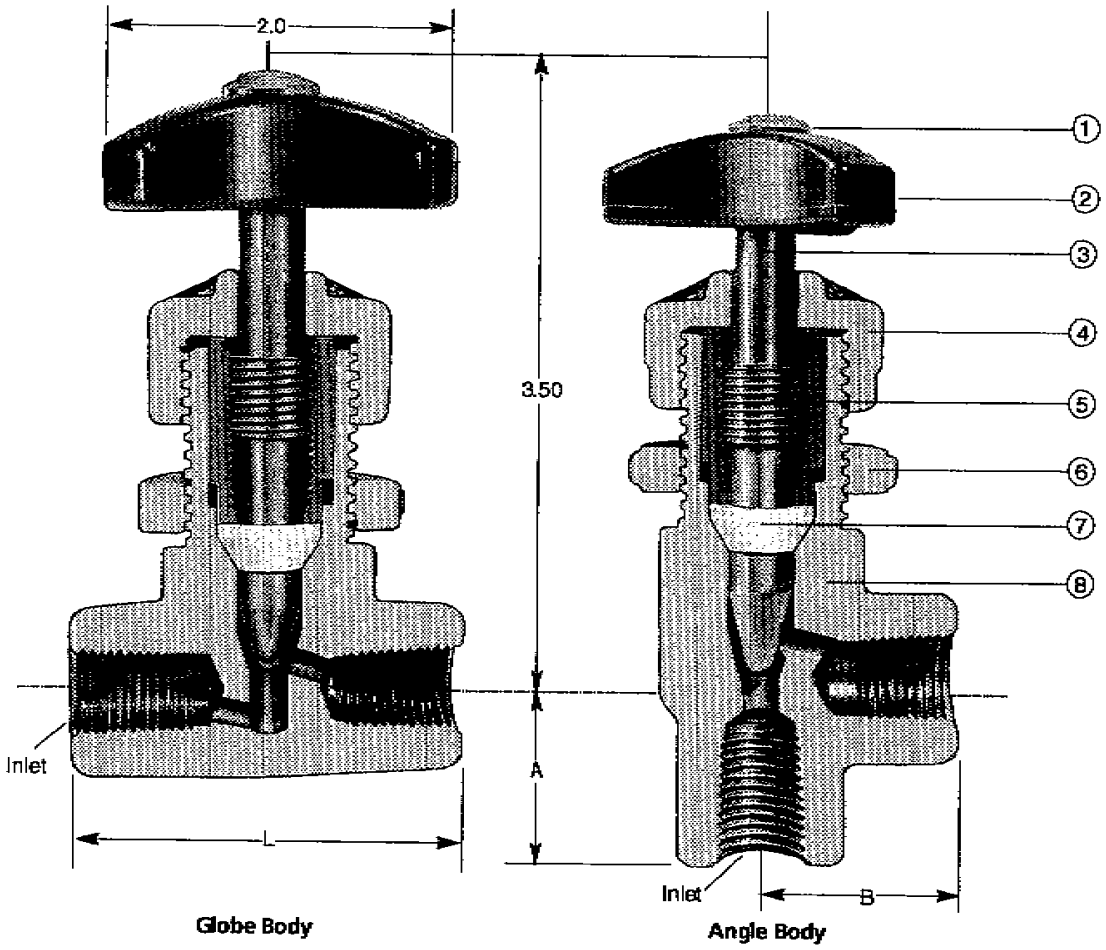


Globe Body

Angle Body

**PARTS**

| No. | Part* | Pcs. | Materials |
|---|---|---|---|
| 1 | Coloured Button | 1 | PVC |
| 2 | Handle | 1 | PVC, CPVC, PPG |
| 3 | Stem/Needle | 1 | PVC, CPVC, PPG, PVDF |
| 4 | Bonnet | 1 | PVC, CPVC, PPG |
| 5 | Thread Insert | 1 | Nylon, PPG |
| 6 | Panel Nut | 1 | PVC, CPVC, PPG |
| 7 | Seal | 1 | PTFE |
| 8 | Body | 1 | PVC, CPVC, PPG, PVDF |

*Threaded insert in reinforced Nylon for PVC and CPVC valves, PPG for PPG valves.

**DIMENSIONS** INCHES

| Size | L | A | B | Globe | Angle | Outlet Orifice |
|---|---|---|---|---|---|---|
| 1/4" | 2.33 | 1.10 | 1.20 | .187 | .250 | .187 |
| 3/8" | 2.33 | 1.10 | 1.20 | .187 | .250 | .187 |
| 1/2" | 2.50 | 1.18 | 1.25 | .218 | .250 | .218 |

**CHEMLINE NEEDLE VALVES**
**Sizes 1/4" - 3/8" - 1/2"**

CHEMLINE Plastics Limited

**Dwg. No.: CNV1**

# *CHEMLINE*

## *SERIES SB12, BACK PRESSURE/RELIEF VALVE*

LEFT BLANK

CHEMLINE Plastics Limited

*Your Pipeline To Quality* Valves, Strainers, Flowmeters and Controls

55 Guardsman Road
Thornhill, Ontario
L3T 6L2
Canada
Tel: 905-889-7890
Fax: 905-889-8553

# MAINTENANCE INSTRUCTIONS
# For Chemline 3/8" - 1-1/2" SB Series Pressure Relief Valves

## *Installation:*

1. Always mount a filter or strainer in the line immediately before the valve to avoid damage to the valve from dirt or particles. Valve is spring operated, therefore can be installed in any orientation.

2. **To adjust pressure use the adjustment screw (8) and a pressure gauge**.
   - the valve will be closed at the set pressure and will start to open when the operating pressure rises above the set pressure.
   - connect the compressed air supply to the inlet of the valve. Adjust the flow of the air to the desired set pressure by turning clockwise to increase the set pressure, counterclockwise to decrease it.
   - with the valve being closed, adjust the screw (8) until the valve starts to open. Fix the adjusting screw in place with the locking nut (9).

3. For installation in an application where the temperature is $0^{o}$ C or less. Check with Chemline Engineering
   Technical staff prior to installation.

## *Maintenance*

Refer to **ASSEMBLY DRAWING SB10/11 rev 0.** And proceed as follows.

1. Loosen and remove cap (10).

2. Loosen counter nut (9) and remove adjustment screw (8).

3. Remove body cap (12a), body bolt (12b), body nut (12c) and washer (12d).

4. Lift up and remove bonnet (2).

5. Remove pressure plate (7a) and ball bearing (7b) to reach relief spring (3).

6. Loosen piston screw (11), remove spring plate (6) and draw piston assembly (5) downward and out of body (1).
   **Note:** Piston assembly (5) is all parts (5a) outer piston assembly
   (5b) inner piston assembly
   (5c) seat
   (5d) piston o-ring

Piston assembly is removed from body as a unit. It can then be further disassembled into the component parts listed above.

7 Remove diaphragm (4).

8. Remove seal (14) at intermediate flange (13).

9. Inspect all parts for wear and abrasion, replace seals, diaphragm etc. if necessary.

10. To re-assemble valve follow steps 1 through 9 in reverse order.

## TROUBLESHOOTING

| FAILURE | | REASON | REPAIR |
|---|---|---|---|
| VALVE LEAKS AT DIAPHGRAM (4) | | CLAMPING PRESSURE FOR DIAPHRAGM (4) TOO LOW. | TIGHTEN SCREWS (12) |
| PRESSURE RISES ABOVE SET PRESSURE | {A) | VALVE SEAT (5c ) & SEALS (14) & (5d) ARE | CHECK SEALS OF PISTON (5) BODY (14) - REPLACE |
| | (B) | DEFECTIVE DIAPHRAGM (4) LEAKING | REPLACE. |
| | (C) | PISTON (5) BORE AT BODY (1) DIRTY | DISMANTLE PISTON (5) AND CLEAN BORE |
| VALVE CLOSED (DOES NOT OPEN) | | VALVE MOUNTED IN WRONG DIRECTION. | TURN VALVE IN DIRECTION OF ARROWS |
| FLUIDS PENETRATE ADJUSTING SCREW (8) | | DIAPHRAGM (4) DEFECTIVE. | REPLACE DIAPHRAGM (4) |
| LEAKING AT PLUG AT VALVE BODY | | O-RING SEAL LEAKING | DISMANTLE PLUG AND REPLACE SEAL |

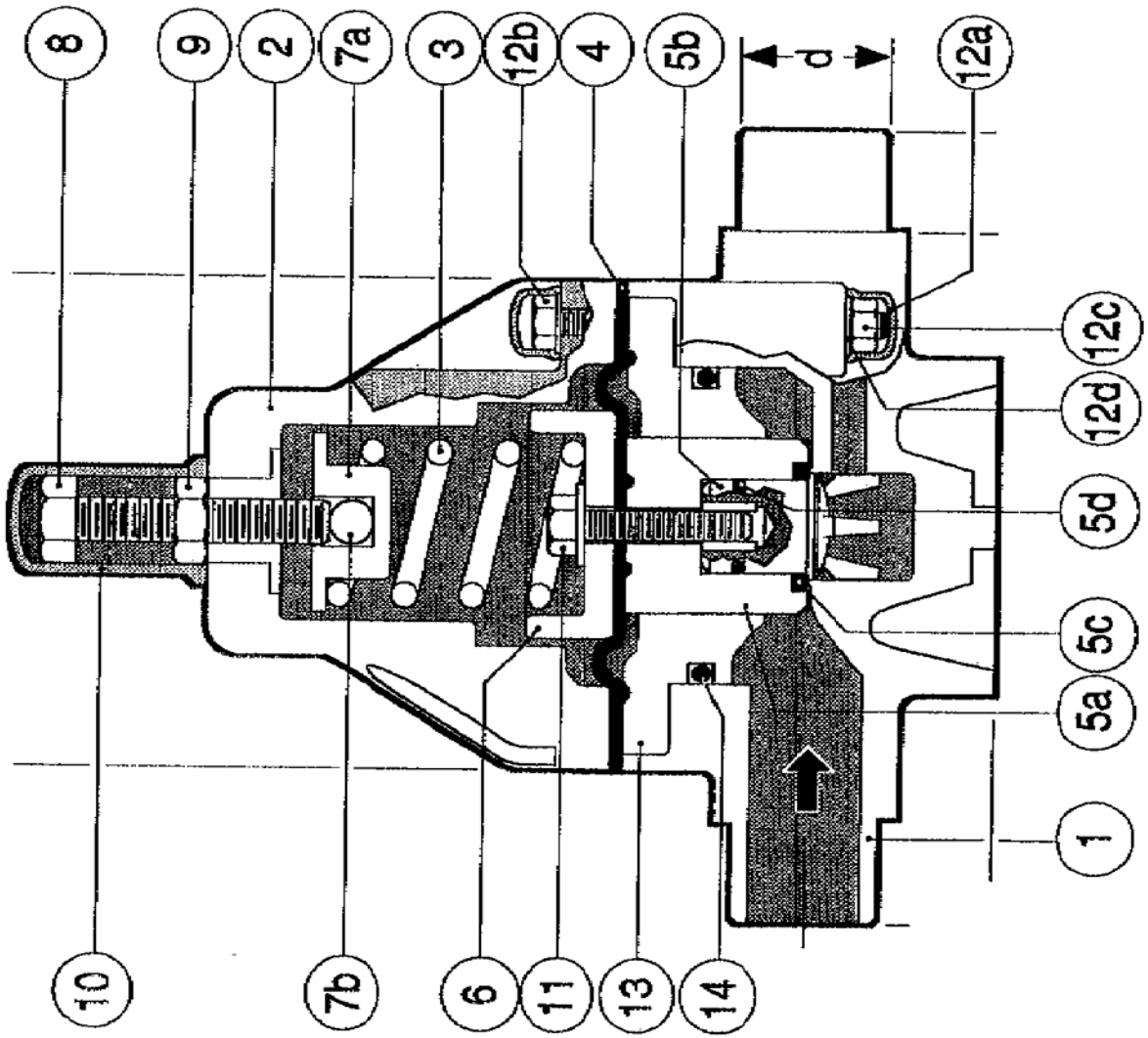


| Part | Description | Pcs |
|---|---|---|
| 1 | BODY | 1 |
| 2 | BONNET | 1 |
| 3 | RELIEF SPRING | 1 |
| 4 | DIAPHRAGM | 1 |
| 5(a) | OUTER PISTON | 1 |
| | *(PART OF ASSY)* | |
| 5(b) | INNER PISTON | 1 |
| | *(PART OF ASSY)* | |
| 5(c) | SEAT | 2 |
| | *(PART OF ASSY)* | |
| 5(d) | PISTON O-RING | 2 |
| | *(PART OF ASSY)* | |
| 6 | SPRING PLATE | 1 |
| 7(a) | PRESS. PLATE | 1 |
| 7(b) | BALL BEARING | 1 |
| 8 | ADJ. SCREW | 1 |
| 9 | COUNTER NUT | 1 |
| 10 | CAP | 1 |
| 11 | PISTON SCREW | 1 |
| 12 (a) | BODY CAP | 4/6 |
| 12 (b) | BODY BOLT | 4/6 |
| 12 (c) | BODY NUT | 4/6 |
| 12 (d) | BODY WASHER | 4/6 |
| 13 | INT. FLANGE | 2 |
| 14 | SEAL | 2 |

| | | | | |
|---|---|---|---|---|
| TITLE: CHEMLINE SB PRESSURE RELIEF VALVES | SCALE | | DATE | CHEMLINE PLASTICS |
| | DR. BY | | | |
| REFERENCE: 3/8" - 1-1/2" | CHKD. BY | | | DWG. NO. SB1011 |
| | APP. BY | | | REV. 0 |

LEFT BLANK

# *CHEMLINE*

## *SERIES SR50, PRESSURE REGULATING VALVE*

LEFT BLANK

CHEMLINE Plastics Limited

*Your Pipeline To Quality* Valves, Strainers, Flowmeters and Controls

55 Guardsman Road
Thornhill, Ontario
L3T 6L2
Canada
Tel: 905-889-7890
Fax: 905-889-8553

# INSTALLATION & MAINTENANCE INSTRUCTIONS
# For Chemline Series SR50 Pressure Reducing Valve Sizes 3/8" to 1-1/2"

## *Installation:*

1. Always mount a filter or strainer in the line immediately before the valve to avoid damage to the valve from dirt or particles. Valve is spring operated, therefore can be installed in any orientation.

2. **To adjust pressure use the adjustment screw (8) and a pressure gauge**.
   - the valve will be closed at the set pressure and will start to open when the operating pressure rises above the set pressure.
   - connect the compressed air supply to the inlet of the valve. Adjust the flow of the air to the desired set pressure by turning clockwise to increase the set pressure, counterclockwise to decrease it.
   - with the valve being closed, adjust the screw (8) until the valve starts to open. Fix the adjusting screw in place with the locking nut (9).

3. For installation in an application where the temperature is $0^{o}$ C or less. Check with Chemline Engineering
   Technical staff prior to installation.

4. **Size vs Working Pressure**
   3/8" - 1-1/2" set pressure 15 psi to 135 psi. Minimal backlash, should be no more than approx. 3 psi.

5. **Operating Temperature Range**
   PVC up to $50^{o}$ C
   PP up to $70^{o}$ C
   PVDF up to $100^{o}$ C

## *Maintenance:*

Refer to **ASSEMBLY DRAWING SR501 rev 0**. And proceed as follows:

1. Loosen and remove cap (10).

2. Loosen counternut (9) and remove adjusting screw (8).

## Install. & Maint. SR Pressure Reducing Valve Sizes 3/8” – 1-1/2” Cont.

3. Remove cap (12d), nut (12c), washer O-ring (12b) and bolt (12a).

4. Lift up and remove bonnet (2).

5 Remove pressure plate (7a) and ball bearing (7b) to reach spring (3).

6. Loosen piston screw (11), remove spring plate (6) and draw piston (5a) downward and out of body (1).

7 When piston has been removed, it can be further disassembled into the component parts (5a) inner piston, (5b) hex nut and (5c) seat.

8. Remove diaphragm (4).

9. Remove O-ring seals (14a) and (14b) at intermediate flange (13).

10. Inspect all parts for wear and abrasion, replace O-rings, diaphragm etc. if necessary.

11. To re-assemble, follow steps 1 through 9 in reverse.

### WEIGHT & DIMENSION CHART

| SIZE | OVERALL WIDTH | WEIGHT (LBS) | | |
|---|---|---|---|---|
| | | PVC | PP | PVDF |
| 3/8” | 5.7” | 1.5 | 1.3 | 1.8 |
| 1/2” | 5.7” | 1.5 | 1.3 | 1.8 |
| 3/4” | 6.9” | 3.5 | 2.6 | 4.2 |
| 1” | 6.9” | 3.5 | 2.6 | 4.2 |
| 1-1/4” | 8.8” | 8.6 | 6.6 | 10.1 |
| 1-1/2” | 8.8” | 8.6 | 6.6 | 10.1 |

# Install. & Maint. SR Pressure Reducing Valve Sizes 3/8” – 1-1/2” Cont.

## TROUBLESHOOTING

| FAILURE | REASON | REPAIR |
|---|---|---|
| VALVE LEAKS AT DIAPHRAGM (4) | CLAMPING PRESSURE FOR DIAPHRAGM (4) TOO LOW | TIGHTEN SCREWS (12) |
| PRESSURE RISES ABOVE SET PRESSURE | [A] PISTON SEAT (5c) & SEALS ARE DEFECTIVE | CHECK SEALS (14a) (14b) OF PISTON (5) – REPLACE |
| | [B] DIAPHRAGM (4) LEAKING | REPLACE |
| | [C] PISTON (5) BORE AT BODY (1) DIRTY | DISMANTLE PISTON (5) AND CLEAN |
| VALVE CLOSED (DOES NOT OPEN) | VALVE MOUNTED IN WRONG DIRECTION | TURN VALVE IN DIRECTION OF FLOW |
| FLUIDS PENETRATE ADJUSTING SCREW (8) | DIAPHRAGM (4) DEFECTIVE | REPLACE DIAHRAGM (4) |
| LEAKING AT PLUG AT VALVE BODY | O-RING SEAL LEAKING | DISMANTLE PLUG AND REPLACE SEAL |

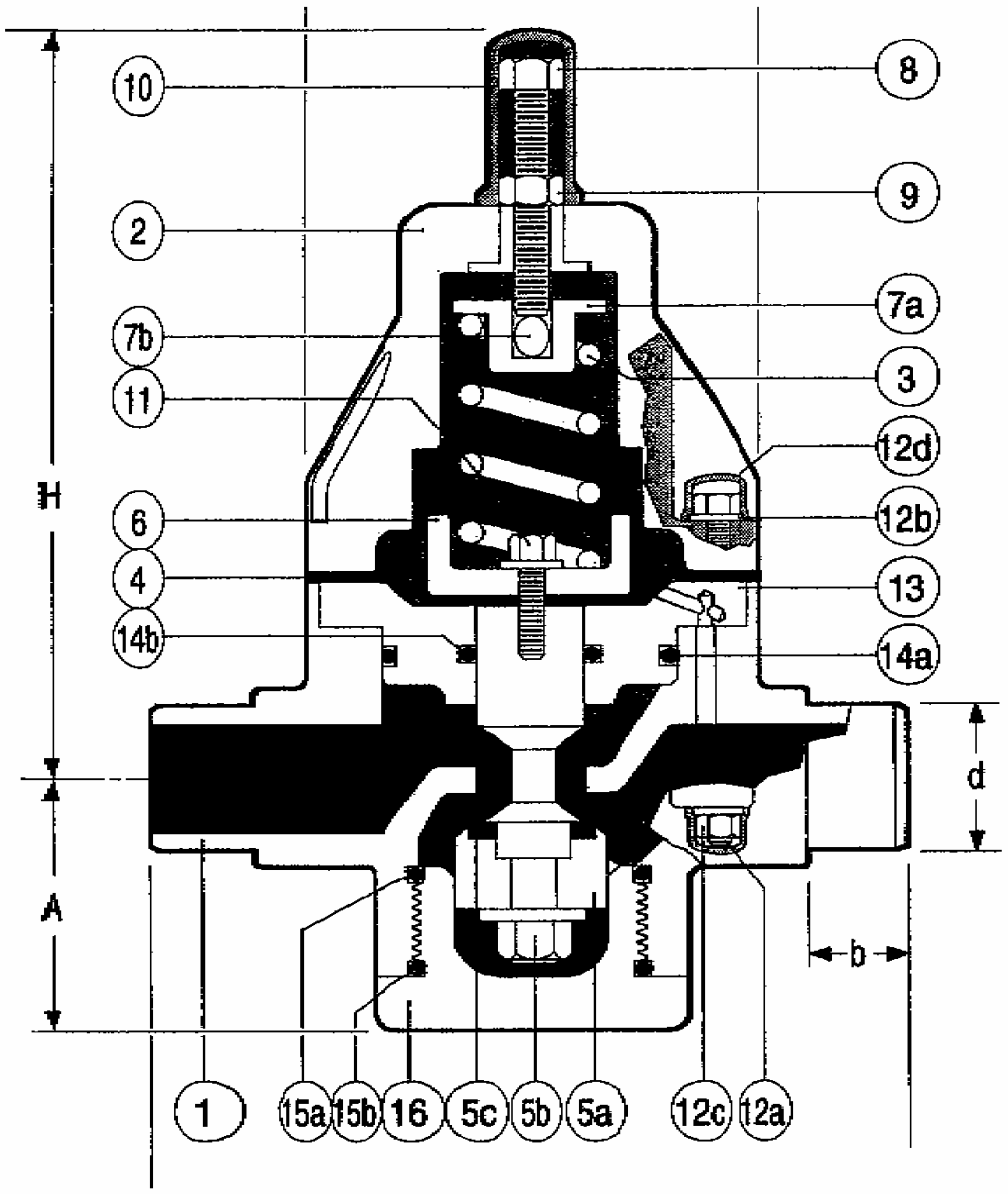


| PART | DESCRIPTION | PCS. |
|---|---|---|
| 1 | BODY | 1 |
| 2 | BONNET | 1 |
| 3 | SPRING | 1 |
| 4 | DIAPHRAGM | 1 |
| 5(a) | INNER PISTON | 1 |
| 5(b) | HEX NUT | 1 |
| 5(c) | SEAT | 1 |
| 6 | SPRING PLATE | 1 |
| 7(a) | PRESSURE PLATE | 1 |
| 7(b) | BALL BEARING | 1 |
| 8 | ADJUSTING SCREW | 1 |
| 9 | COUNTERNUT | 1 |
| 10 | CAP | 1 |
| 11 | SCREW | 1 |
| 12(a) | BOLT | 2 |
| 12(b) | WASHER O-RING | 2 |
| 12(c) | NUT | 2 |
| 12(d) | CAP | 2 |
| 13 | INTERMEDIATE FLANGE | 1 |
| 14(a) | O-RING SEAL | 2 |
| 14(b) | O-RING SEAL | 2 |
| 15(a) | O-RING SEAL | 2 |
| 15(b) | O-RING SEAL | 2 |
| 16 | PLUG | 1 |

| | | | | |
|---|---|---|---|---|
| TITLE: SR SERIES PRESSURE REDUCING | SCALE | | DATE | CHEMLINE PLASTICS |
| | DR. BY | | | |
| REFERENCE: VALVE SIZES 3/8"- 1"1/2" | CHKD. BY | | | DWG. NO. SR501 / REV. 0 |
| | APP. BY | | | |

# *CHEMLINE*

## *SERIES YSA, Y STRAINER*

LEFT BLANK

CHEMLINE Plastics Limited

*Your Pipeline To Quality* Valves, Strainers, Flowmeters and Controls

55 Guardsman Road
Thornhill, Ontario
L3T 6L2
Canada
Tel: 905-889-7890
Fax: 905-889-8553

# INSTALLATION AND MAINTENANCE INSTRUCTIONS
# For Chemline 1/2" To 4" True Union Y Strainers

## *Installation (for all sizes)*

1. Note direction of flow in piping, (there is a flow direction arrow clearly marked on the body (1) of the strainer). Install Y strainer with screen (2) directed downward (as shown in Assembly drawing CYS1 - 0).

2. Tighten bolts evenly (if using flanges) and in sequence, as shown below.

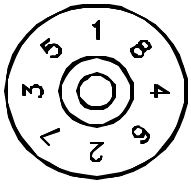


3. Do not over-tighten the cap nut (8) in the screen unit, it has no direct bearing on sealing.

4. Specifications

| Size | Material | Temperature ($C^o$) | Maximum Pressure ($20^oC$) Mpa ($kgf/cm^3$) | End Connection | Mesh |
|---|---|---|---|---|---|
| | | | | | |
| 1/2"- 2" | U-PVC | 0-50 | 1.0 Mpa (10.2) | Flange | 20 |
| | | | | Socket | |
| 3" - 4" | U-PVC | 0-50 | 0.6Mpa (6.1) | Threaded | 20 |

## Installation and Maintenance Y Strainers cont.

### *Maintenance*

Refer to **ASSEMBLY DRAWING CYS1 rev 0.** And proceed as follows.

1. Loosen the union nut (8) remove the split ring (6), cap O-ring (5), cap filter cage (3) and screen (2).
2. Clean the screen retainer (4) and screen (2) and replace if necessary.
3. Inspect O-rings and replace if worn.
4. To re-assemble strainer reverse steps 3 through 1.

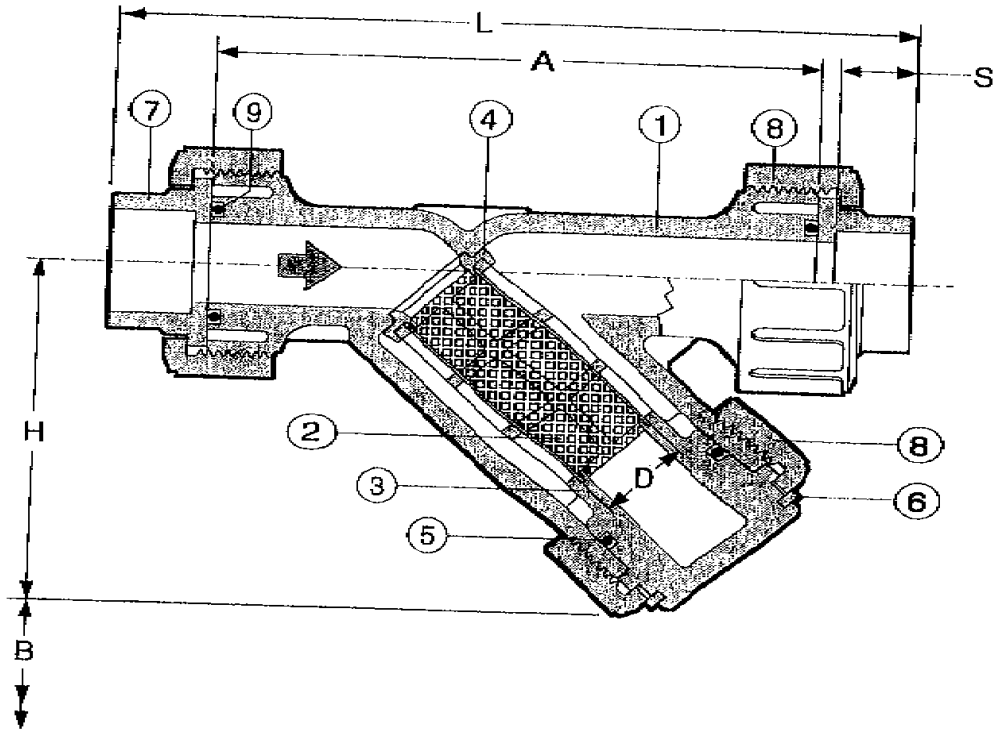


| PART | DESCRIPTION | QTY | MATERIAL |
|---|---|---|---|
| 1 | BODY | 1 | PVC |
| 2 | FILTER SCREEN | 1 | PVC, 316 SS |
| 3 | CAP/FILTER CAGE | 1 | PVC |
| 4 | SCREEN RETAINER | 1 | PVC |
| 5 | CAP O-RING | 1 | EPDM/VITON |
| 6 | SPLIT RING | 1 | PVC |
| 7 | END CONNECTOR | 2 | PVC |
| 8 | UNION NUT | 3 | PVC |
| 9 | UNION O-RING | 2 | EPDM/VITON |

| | | | | | |
|---|---|---|---|---|---|
| TITLE: CHEMLINE Y STRAINERS | SCALE | | DATE | CHEMLINE PLASTICS | |
| | DR. BY | | | | |
| REFERENCE | CHKD. BY | | | DWG. NO. CYS1 | REV. 0 |
| | APP. BY | | | | |

LEFT BLANK

# *CLA-VAL*

## *SERIES RF-DBJ, CHECK VALVE*

LEFT BLANK

INSTALLATION / OPERATION / MAINTENANCE

# Rubber-Flex Duckbill Check Valves



Model RF-DBF



Model RF-DBI



Model RF-DBO



Model RF-DBI-IN



Model RF-DBI-LH

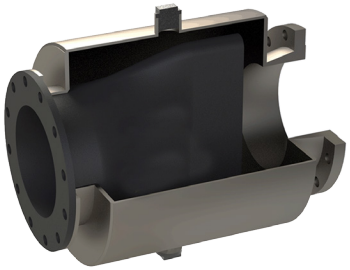

Model RF-DBJ

# Table of Contents


1.0 Introduction ..... 3
1.1 Model RF-DBF: Rubber-Flex Flanged Duckbill Check Valve ..... 3
1.2 Model RF-DBI: Rubber-Flex Flanged In-Line Duckbill Check Valve ..... 3
1.3 Model RF-DBO: Rubber-Flex Slip-On Duckbill Check Valve ..... 3
1.4 Model RF-DBI-IN: Rubber-Flex Slip-In In-Line Duckbill Check Valve ..... 3
1.5 Model RF-DBJ: Rubber-Flex Jacket Style Duckbill Check Valve ..... 4
1.6 Model RF-DBI-LH: Rubber-Flex Low Head Loss In-Line Duckbill Check Valve ..... 4
2.0 Storage and Handling ..... 5
2.1 Storage ..... 5
2.2 Handling ..... 5
3.0 Prior to Installation ..... 5
3.1 Inspect the Received Check Valve ..... 5
3.2 Verify the System Parameters ..... 5
3.3 Check Valve Mating Surface ..... 5
3.4 Safety Area ..... 5
4.0 Installation ..... 6
4.1 Rubber-Flex Check Valve Installation ..... 6
4.1.1 Model RF-DBF: Rubber-Flex Flanged Duckbill Check Valve Installation ..... 6
4.1.2 Model RF-DBI: Rubber-Flex Flanged In-Line Duckbill Check Valve Installation ..... 7
4.1.3 Model RF-DBO: Rubber-Flex Slip-On Duckbill Check Valve Installation ..... 7
4.1.4 Model RF-DBI-IN: Rubber-Flex Slip-In In-Line Duckbill Check Valve Installation ..... 8
4.1.5 Model RF-DBJ: Rubber-Flex Jacket Style Duckbill Check Valve Installation ..... 9
4.1.6 Model RF-DBI-LH: Rubber-Flex Low Head Loss In-Line Duckbill Check Valve Installation ..... 10
4.1.7 Flange Bolt Torqueing (Model RF-DBF/RF-DBI/RF-DBJ & Flanged RF-DBI-LH) ..... 11
4.1.8 Anchor Bolts/Pins (Model RF-DBO/RF-DBI-IN/RF-DBI-LH) ..... 11
5.0 Operation ..... 12
6.0 Maintenance ..... 12
7.0 Appendix A ..... 13
7.1 Torque Data ..... 13
7.2 Sample Torqueing Patterns ..... 13

## 1.0 Introduction

Cla-Val Rubber-Flex Duckbill Check Valves are designed to provide outstanding back-flow prevention; eliminating costly and unwanted back-flow from rivers, oceans, storm water, and is an excellent choice for sewage diffuser systems. Cla-Val Rubber-Flex Duckbill Check Valves are fully passive flow devices requiring neither maintenance nor any outside sources of power or manual assistance to operate. They are offered as direct replacements for ineffective and maintenance ridden flap-type check valves as well as for new/existing construction and custom applications. Each check valve is manufactured to exacting specifications ensuring a perfect fit and usability and is available in a wide variety of elastomers to meet the design requirements of the application. This installation, operation and maintenance manual will cover the general practices for the proper installation, operation and maintenance of the Cla-Val Rubber-Flex Duckbill Check Valves.

### 1.1 Model RF-DBF: Rubber-Flex Duckbill Check Valve

This type of rubber check valve is designed to bolt directly to existing flanges or new installations. Flanges are drilled to ANSI 125/150# standard but other drill patterns are available upon request. This style of rubber check valve can be installed in either vertical or horizontal applications.

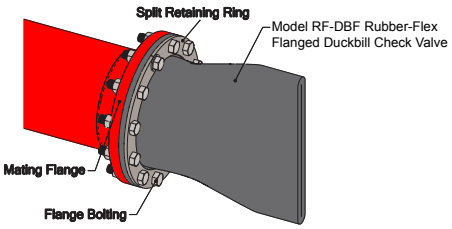


**Figure 1: Model RF-DBF**

### 1.2 Model RF-DBI: Rubber-Flex Flanged In-Line Duckbill Check Valve

This type of rubber check valve is designed to fit directly inside of existing piping systems. The design is supplied with a flat face rubber flange which allows installation between existing pipe flanges eliminating the requirement for a valve body. Flanges are drilled to ANSI 125/150# standard but other drill patterns are available upon request. This style of rubber check valve can be installed in either vertical or horizontal applications.

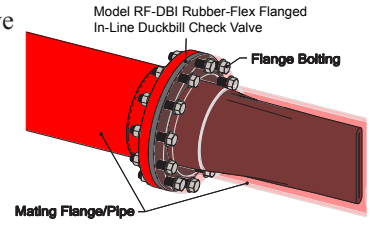


**Figure 2: Model RF-DBI**

### 1.3 Model RF-DBO: Rubber-Flex Slip-On Duckbill Check Valve

This type of rubber check valve is designed to easily slip over an existing pipe and is affixed to the pipe with heavy duty stainless steel clamps. This style of rubber check valve can be installed in either a vertical or horizontal orientation for most applications. *Note: External Clamp shown is of a general style and will change depending on the size of the supplied check valve.*

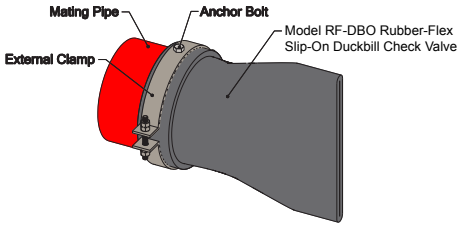


**Figure 3: Model RF-DBO**

### 1.4 Model RF-DBI-IN: Rubber-Flex Slip-In In-Line Duckbill Check Valve

This type of rubber check valve is designed to slip directly inside of an existing pipe and is supplied with a stainless steel expandable clamp to secure in place. This style of rubber check valve can be installed in either a vertical or horizontal orientation for most applications.

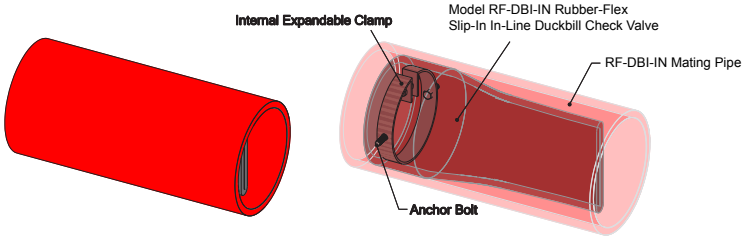


**Figure 4: Model RF-DBI-IN**

## 1.5 Model RF-DBJ: Rubber-Flex Jacket Style Duckbill Check Valve

This type of rubber check valve is designed with a full metal enclosure (Model RF-DBJ Shroud) which allows easy installation in existing piping systems. Flanges are drilled to ANSI 125/150# standard but other drill patterns are available upon request.

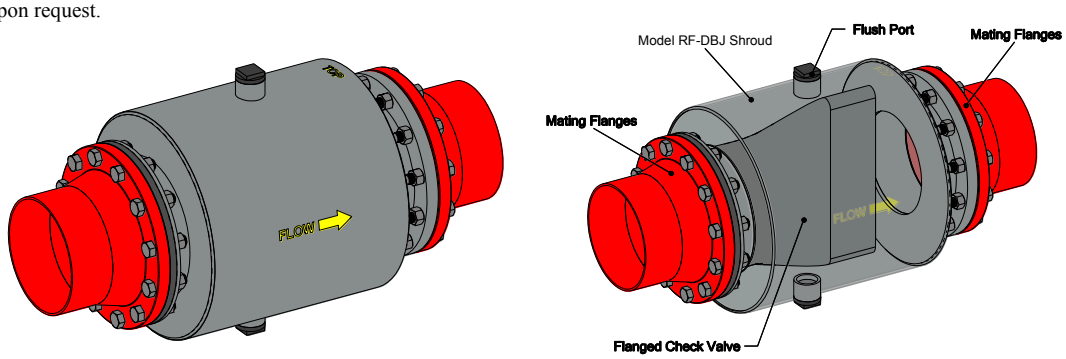


**Figure 5: Model RF-DBJ**

## 1.6 Model RF-DBI-LH: Rubber-Flex Low Head Loss In-Line Duckbill Check Valve

This type of rubber check valve is designed to slip directly inside of an existing pipe with the supplied stainless steel expandable clamp or retaining ring to secure in place; it can be fastened from either the inlet or discharge end of the valve. The standard Model RF-DBI-LH valve must be installed in a truly round pipe. Out of round pipe may cause distortion of the valve causing valve failure.

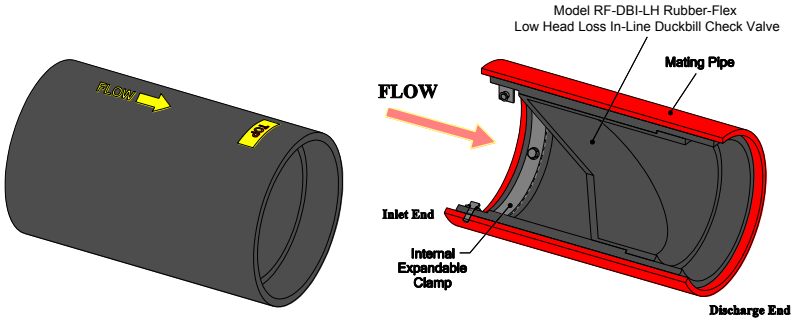


**Figure 6: Model RF-DBI-LH Rubber-Flex Low Head Loss In-Line Duckbill Check Valve**

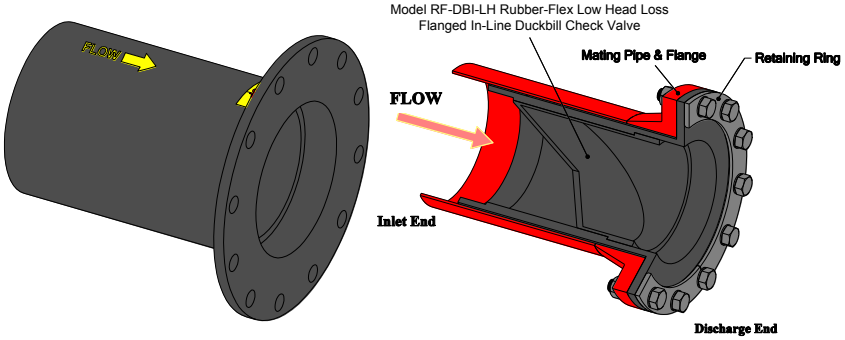


**Figure 7: Model RF-DBI-LH Rubber-Flex Low Head Loss Flanged In-Line Duckbill Check Valve**

*Note: For flanged versions of Model RF-DBI-LH Low Head Loss In-Line Rubber Check Valves the integrated rubber flange can be located on either the inlet or discharge end depending on required installation orientation.*

## 2.0 Storage and Handling

### 2.1 Storage

#### 2.1.1 Inside

The ideal storage location for a Cla-Val Rubber-Flex Duckbill Check Valve is in a warehouse setting with a relatively dry and cool location. Store the check valve in a vertical position on a pallet or wooden platform similar to as shown in Figure 8 below.

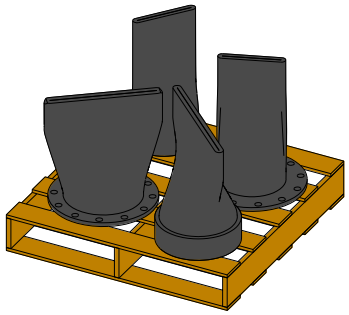

**Figure 8: Typical Check Valve Storage Position**

#### 2.1.2 Outside

If the rubber check valve is to be stored outside, keep the check valve protected in a waterproof crate until ready for installation. Keep the check valve protected from any external elements such as direct UV exposure. Do not lay other boxes on top of the check valve or check valve box.

### 2.2 Handling

Care should be taken when handling the Cla-Val Rubber-Flex Duckbill Check Valves whether big or small to reduce the possibility of damaging the check valve during installation. For large size check valves, special care should be taken in loading, hoisting, and lowering; being careful not to hit adjacent equipment, forklift tines, crane cables, etc. Model RF-DBF & RF-DBO valves 36" and larger are manufactured with a lifting support hole to assist in the safe and proper lifting/installation of these check valves. The lifting support holes are not intended to support the entire weight of the check valve and care must be taken to adequately support the cuffed or flanged end as well. *Note: Cla-Val will not be responsible or liable for damage to the rubber check valve, adjacent equipment, or injury to personnel if these steps are not taken.*

## 3.0 Prior to Installation

### 3.1 Inspect the Received Check Valve

Rubber-Flex check valves are fully inspected at the factory and are carefully packaged to arrive at the job site ready for installation. Upon receipt of the check valve(s), inspect for damage that may have occurred during transportation and immediately contact your transportation company to report any damage. Check the item(s) received against the packing slip to ensure that all items have been received. For any questions or concerns about the received product contact your Agent or Cla-Val at info@cla-val.com or for immediate assistance call (800) 942-6326.

### 3.2 Verify the System Parameters

Check the system design parameters for the application to ensure the specified/supplied Cla-Val Rubber-Flex Duckbill Check Valve(s) will meet the system requirements.

### 3.3 Check Valve Mating Surface

Inspect the mating flange/surface to ensure that it is undamaged and clean and free of all foreign matter before installation of the check valve. For slip-on style of rubber check valves, the mating pipe must be free of sharp edges which may damage the inside sealing diameter of the check valve.

### 3.4 Safety Area

Always check your work area before installation for safety hazards which may cause injury or damage to personnel or product. Develop and discuss a safety and exit plan for you and your fellow employees in the event of an emergency.

## 4.0 Installation

*Note: Each Cla-Val Rubber-Flex Check Valve installation can be considered a major pipe installation and the same safety requirements as used in pipe contracting installations should be implemented. Each Cla-Val Rubber-Flex Check Valve regardless of size should be installed in the same manner. Cla-Val will accept no responsibility for an improperly installed Rubber-Flex Check Valve(s) or the improper use of this product. Incorrect installation may result in injury to personnel, reduced check valve service life and/or damage to other adjacent equipment.*

### 4.1 Rubber-Flex Check Valve Installation

#### 4.1.1 Model RF-DBF: Rubber-Flex Flanged Duckbill Check Valve Installation

##### 4.1.1.1 Step 1: Align

Position/Align the Flanged Rubber check valve into the system. For horizontal applications the bill of the check valve should be in vertical orientation relative to the ground unless there are clearance issues. In the case of clearance issues the check valve may be rotated to a maximum of 35 degrees to allow clearance to the ground.

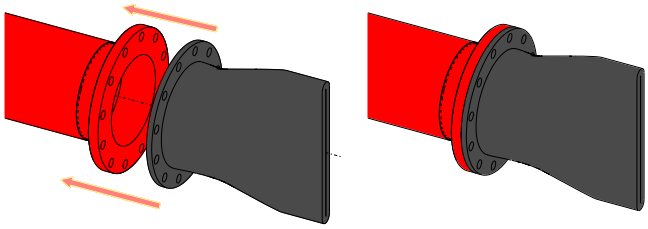

**Figure 9: Model RF-DBF Installation Step 1**

##### 4.1.1.2 Step 2: Retaining Rings

Position the split retaining rings onto the flange of the check valve. Use a flat washer to properly cover the split in the retaining ring.

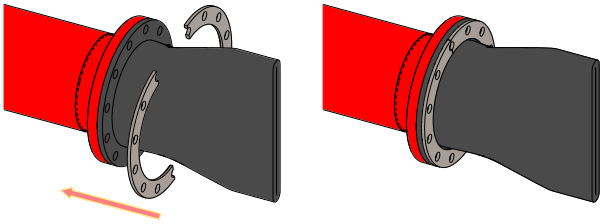

**Figure 10: Model RF-DBF Installation Step 2**

##### 4.1.1.3 Step 3: Flange Bolting

Insert the flange bolting and tighten the flange bolting hardware to a “snug” tight fit before torqueing. Proceed to section 4.1.7 for proper bolt torqueing and a sample torqueing pattern.

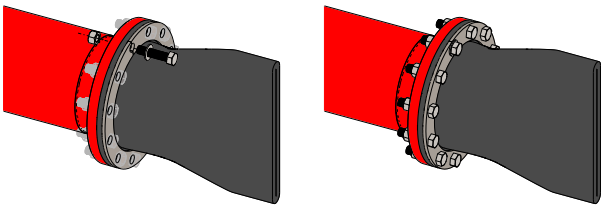

**Figure 11: Model RF-DBF Installation Step 3**

### 4.1.2 Model RF-DBI: Rubber-Flex Flanged In-Line Duckbill Check Valve

#### 4.1.2.1 Step 1: Insert

Insert the Slip-In flanged rubber check valve into the existing pipe. For horizontal applications the bill of the check valve should be installed in a vertical orientation in the mating pipe as shown in below in Figure 9.

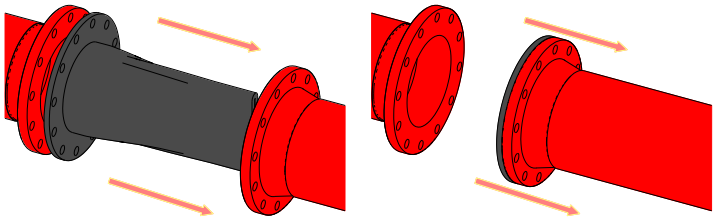

**Figure 12: Model RF-DBI Installation Step 1**

#### 4.1.2.2 Step 2: Attach

Re-attach the 2 mating pipe flanges.

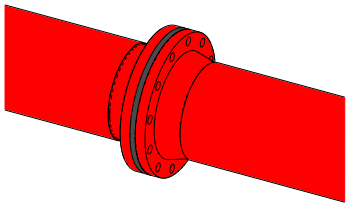

**Figure 13: Model RF-DBI Installation Step 2**

#### 4.1.2.3 Step 3: Flange Bolting

Add the flange bolting to the installation and tighten to a "snug" tight fit before torqueing. Proceed to step 4.1.7 for proper bolt torqueing and a sample torqueing pattern.

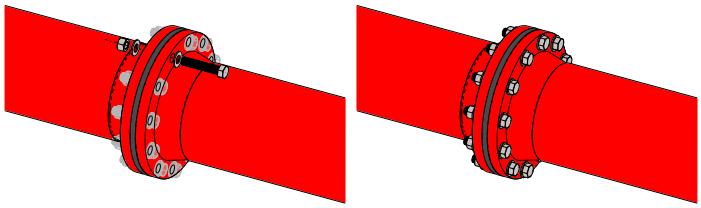

**Figure 14: Model RF-DBI Installation Step 3**

### 4.1.3 Model RF-DBO: Rubber-Flex Slip-On Duckbill Check Valve Installation

#### 4.1.3.1 Step 1: Slip-On

For Slip-On rubber check valves, slip the rubber check valve over the existing pipe. For horizontal applications the bill of the check valve must be installed in a vertical orientation relative to the ground unless there are clearance issues. In the case of clearance issues the check valve may be rotated to a maximum of 35 degrees to allow clearance to the ground. To ease installation it is acceptable but not necessary to add soapy water to the exterior of the pipe to facilitate the installation of the check valve.

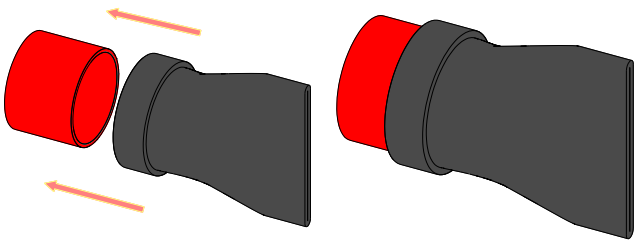

**Figure 15: Model RF-DBO Installation Step 1**

#### 4.1.3.2 Step 2: External Clamps

Add the external clamps to the slip-on rubber check valve. For nominal diameters less than or equal to 10″ the check valve will be supplied with either T-Bolt or Worm Gear Clamps. For nominal diameters greater than 10″, the check valve(s) will be supplied with fabricated stainless steel clamp(s). If the valve are supplied with more than one fabricated stainless steel clamp, then rotate the additional clamps which will place the clamping section at opposite angles from the first clamp. This will ensure that even pressure is applied to the valve. *Note: The supplied number of clamps will vary depending on size and application.*

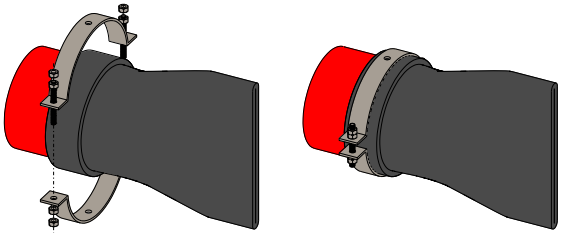

**Figure 16: Model RF-DBO Installation Step 2**

#### 4.1.3.3 Step 3: Tighten Clamps

Tighten the external clamp until the rubber is compressed by the external clamp and a tight fit is achieved then proceed to section 4.1.8 for anchor bolting/pinning to anchor the slip-on check valve to the mating piping.

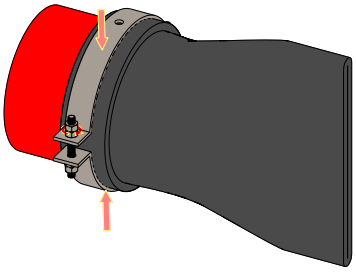

**Figure 17: Model RF-DBO Installation Step 3**

### 4.1.4 Model DBI-IN: Rubber-Flex Slip-In In-Line Duckbill Check Valve Installation

#### 4.1.4.1 Step 1: Slip-In

Insert the slip-in check valve inside the existing pipe. For horizontal applications the bill of the check valve must be installed in vertical orientation as shown below in Figure 15.

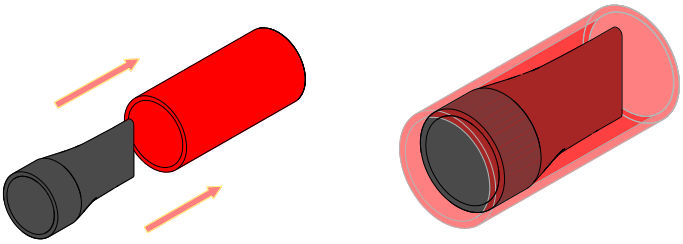

**Figure 18: Model RF-DBI-IN Installation Step 1**

#### 4.1.4.2 Step 2: Insert Clamp

Insert and the expandable internal clamp into the rubber check valve.

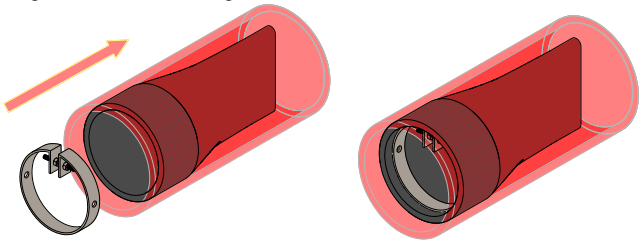

**Figure 19: Model RF-DBI-IN Installation Step 2**

#### 4.1.4.3 Step 3: Expand Clamp

Tighten the expandable internal clamp until the stainless steel portion of the clamp has imbedded itself into the rubber of the valve. Tighten the lock nut once the internal expandable clamp is in the proper position and proceed to section 4.1.8 for anchor bolting/pinning to anchor the slip-in check valve to the mating pipe. When installing multiple internal expandable clamps ensure the clamps are evenly spaced/ rotated to provide even clamping pressure as well as the internal expandable fasteners located in a position that minimizes flow interference. *Note: This style of check valve installation relies on external pressure of the internal expandable clamp to ensure that the valve does not move, care should be taken to ensure proper sealing.*

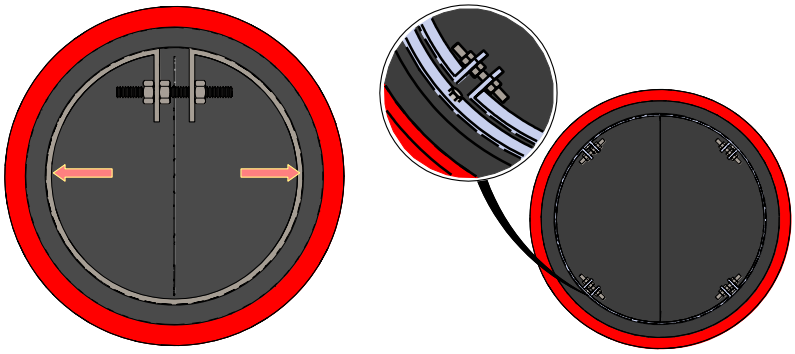

**Figure 20: Model RF-DBI-IN Installation Step 3**

### 4.1.5 Model RF-DBJ: Rubber-Flex Jacket Style Duckbill Check Valve Installation

#### 4.1.5.1 Step 1: Align/Insert

Align/Insert the Model RF-DBJ Assembly into the required breach opening noting the position of flow and orientation of the valve. The assembly should be installed to where the top notation on the Model RF-DBJ shroud is in the vertical position as shown in Figure 21. Use a gasket where required, supplied by others. *Note: Ensure the bill of the check valve is in the vertical position when installed.*

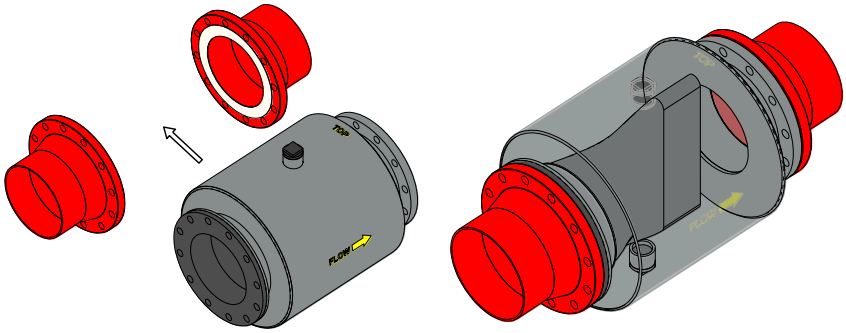


**Figure 21: Model RF-DBJ Installation Step 1**

#### 4.1.5.2 Step 2: Flange Bolting

Secure the Model RF-DBJ assembly to the mating flanges with the appropriate flange bolting hardware. Follow the procedures in section 4.1.7 for proper flange bolt torqueing.

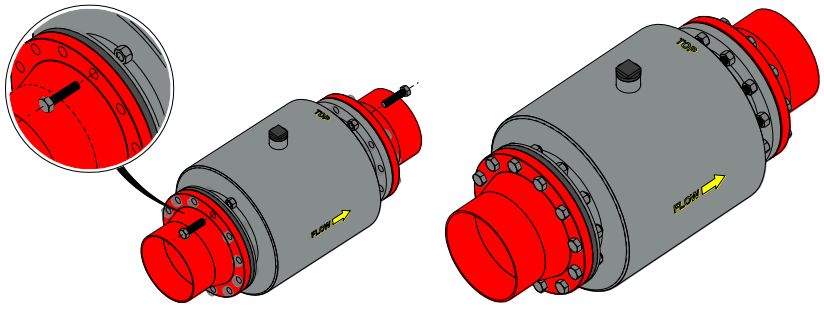


**Figure 22: Model RF-DBJ Installation Step 2**

### 4.1.6 Model RF-DBI-LH: Rubber-Flex Low Head Loss In-Line Duckbill Check Valve Installation

#### 4.1.6.1 Slip In Model RF-DBI-LH

##### 4.1.6.1.1 Step 1: Insert Valve

The RF-DBI-LH valve must be installed in a horizontal pipe and will be supplied with **a "FLOW" direction label and a "TOP"** label to ensure proper installation orientation within the pipe. Insert the slip-in check valve inside the existing pipe and push until inlet/discharge end is flush with end of pipe.

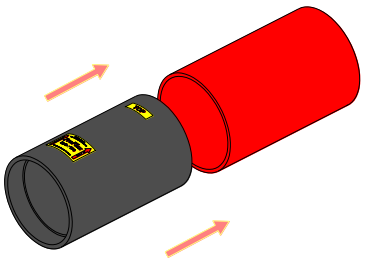

**Figure 23: Model RF-DBI-LH Installation Step 1**

##### 4.1.6.1.2 Step 2: Insert Clamp

Insert the expandable internal clamp(s) into the rubber check valve in either the inlet or discharge end depending on installation orientation and ensuring that the adjustable bolts are located at the top of the valve. When installing multiple internal expandable clamps ensure the clamps are evenly spaced/ rotated to provide even clamping pressure as well as the internal expandable fasteners located in a position that minimizes flow interference.



**Figure 24: Model RF-DBI-LH Installation Step 2**

##### 4.1.6.1.3 Step 3: Expand Clamp

Tighten the expandable internal clamp until the stainless-steel portion of the clamp has imbedded itself into the rubber of the valve. Tighten the lock nut once the internal expandable clamp is in the proper position and proceed to section 4.1.8 for anchor bolting/pinning to anchor the slip-in check valve to the mating pipe.
*Note: This style of check valve installation relies on external pressure of the internal expandable clamp to ensure that the valve does not move, care should be taken to ensure proper sealing.*

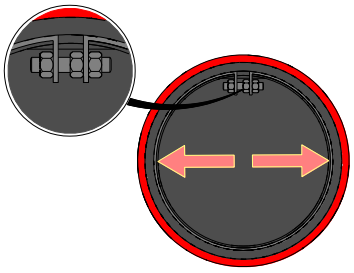

**Figure 25: Model RF-DBI-LH Installation Step 3**

#### 4.1.6.2 Flanged Model RF-DBI-LH

##### 4.1.6.2.1 Step 1: Insert

The RF-DBI-LH valve must be installed in a horizontal pipe and will be supplied **with a "FLOW" direction label and a "TOP" label to** ensure proper installation orientation within the pipe. Insert the slip-in flanged check valve inside the existing pipe and push until flanged inlet/discharge end is flush with end of pipe.
*Note: Model RF-DBI-LH Flanged Check Valve can be supplied with the integrated rubber flange in the inlet or discharge position depending on the required installation parameters.*

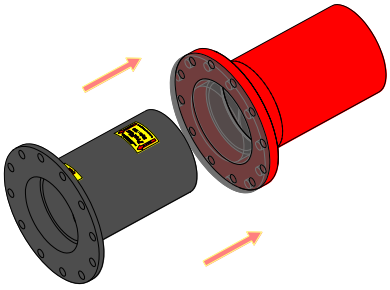

**Figure 26: Model RF-DBI-LH Flanged Installation Step 1**

#### 4.1.6.2.2 Step 2: Retaining Ring & Bolting Installation

Attach and secure the retaining ring in place with the flange bolting hardware and

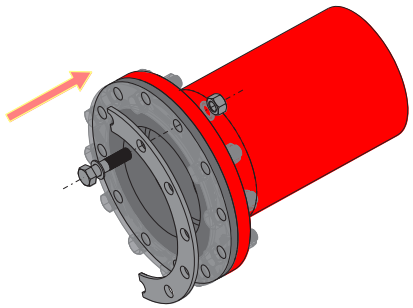

**Figure 27: Model RF-DBI-LH Flanged Installation Step 2**

### 4.1.7 Flange Bolt Torqueing (Model RF-DBF/RF-DBI/RF-DBJ & Flanged RF-DBI-LH)

Torqueing should then be accomplished in steps gradually and as evenly as possible around the circumference of the flange. The bolts should be tightened in an alternating sequence similar to a star pattern shown below in Figure 18 to within the proper torque range specified for the size of check valve to be installed. The flange bolting is not **considered tight and "locked-on" until the edges of the check** valve flange bulges out or extrudes slightly. Refer to appendix A for the proper ranges of torque values as well as further examples of the proper patterns used for torqueing the flange bolting. *Note: Never tighten bolts on a flanged rubber check valve to the point where there is contact between the retaining ring and mating flange. This type of tightening will crush the integrated* **rubber** *flange of the check valve* **and** *cause* **a** *premature failure.*

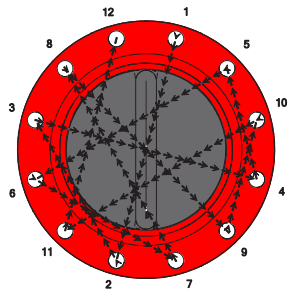


**Figure 28: Sample Flange Torqueing Sequence**

### 4.1.8 Anchor Bolts/Pins (Model RF-DBO/RF-DBI-IN/RF-DBI-LH)

After the Check Valve is installed, drill a hole or holes, depending on the valve size number of clamps, through the cuff of the check valve and into the mating pipe using the center hole on the clamp as a guide. Insert a bolt, which will be sufficient in length to completely travel through the clamp, valve and mating pipe. Completely weld or use some other means of ensuring that this bolt/pin will not fall out or be removed.

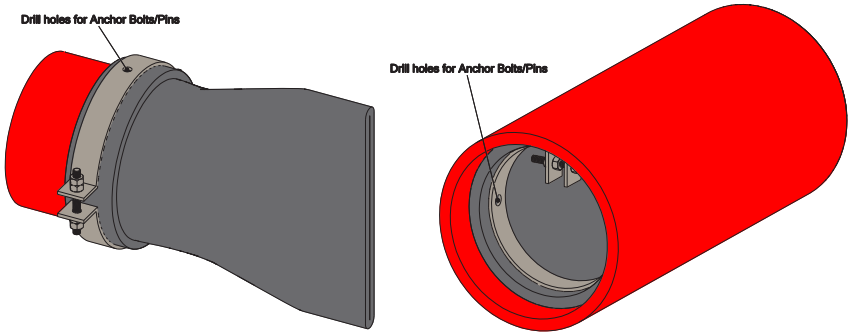


**Figure 29: Model RF-DBO, RF-DBI-IN & RF-DBI-LH Typical Drilled Through Hole Positions**

4.1.8.1 Model RF-DBO: Insert the Bolt/Pin through the drilled hole(s) and completely weld or use some other means of ensuring that this bolt/pin will not fall out or be removed from the expandable clamp.

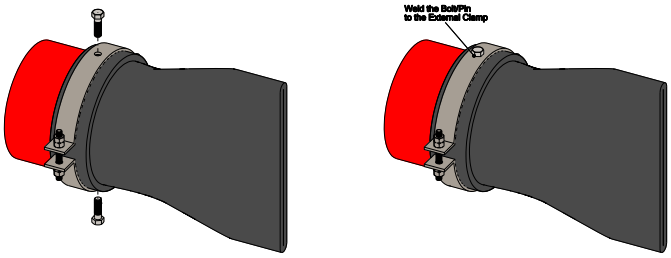


**Figure 30: Model RF-DBO Anchor Bolt/Pin Install**

4.1.8.2 Model RF-DBI-IN: Insert the Bolt/Pin through the drilled hole(s) and completely weld or use some other means of ensuring that this bolt/pin will not fall out or be removed from to the internal expandable clamp.

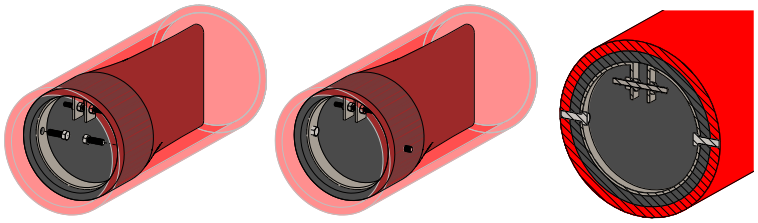

**Figure 31: Model RF-DBI-IN Anchor Bolt/Pin Installation**

4.1.8.3 Model RF-DBI-LH: Insert the Bolt/Pin through the drilled hole(s) and completely weld or use some other means of ensuring that this bolt/pin will not fall out or be removed from to the internal expandable clamp.

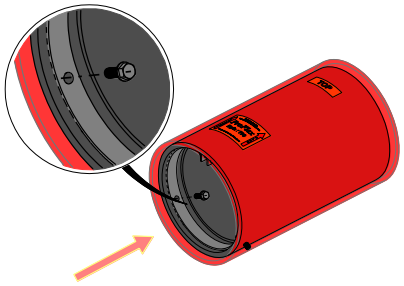

**Figure 32: Model RF-DBI-LH Anchor Bolt/Pin Installation**

## 5.0 Operation

The Rubber-Flex Duckbill Check Valves require little operational requirements. Each unit is an elastomeric back flow device which relies solely on inlet flow pressure and back flow pressure to provide operation.

## 6.0 Maintenance

Rubber-Flex Duckbill Check Valves require little maintenance. Periodic inspections can ensure that the check valve will provide years of maintenance-free service. Check for cuts or gouges which can easily be repaired with a self-curing rubber compound (Contact Cla-Val). Ensure that the bill section is free from any debris that may have been lodged in the bill. This will be the only areas of concern that require periodic inspection.

## 7.0 Appendix A

### 7.1 Torque Data

| Table 1: Model RF-DBF/RF-DBO/RF-DBJ/RF-DBI-LH | |
|---|---|
| Size | Approx. Torque Values |
| 1" thru 2" | 20 - 40 ft./lbs. |
| 2.5" thru 5" | 25 - 60 ft./lbs. |
| 6" thru 12" | 35 - 140 ft./lbs. |
| 14" thru 18" | 50 - 180 ft./lbs. |
| 20" thru 24" | 60 - 200 ft./lbs. |
| 26" thru 40" | 70 - 300 ft./lbs. |
| 42" thru 50" | 80 - 300 ft./lbs. |
| 52" thru 60" | 100 - 400 ft./lbs. |
| 66" thru 72" | 200 - 500 ft./lbs. |
| 78" thru 90" | 300 - 600 ft./lbs. |
| 96" thru 108" | 400 - 700 ft./lbs. |
| 120" | 500 - 800 ft./lbs. |

### 7.2 Sample Torqueing Patterns

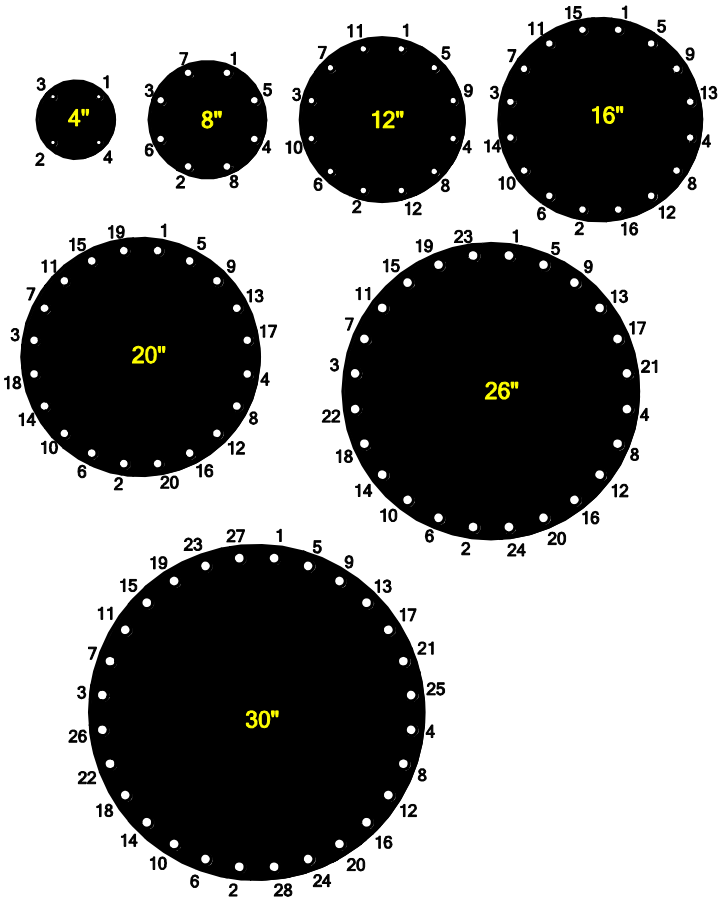


**Figure 33: Sample Torque Patterns**


©Copyright Cla-Val 2019 • Printed in USA • Specifications subject to change without notice.

LEFT BLANK

# *ELMRIDGE*

## *MODEL NCTLST5, EDUCTOR*

LEFT BLANK

NOTE: NBTLST & NCTLST EDUCTORS HAVE THE SAME OPERATING CHARACTERISTICS

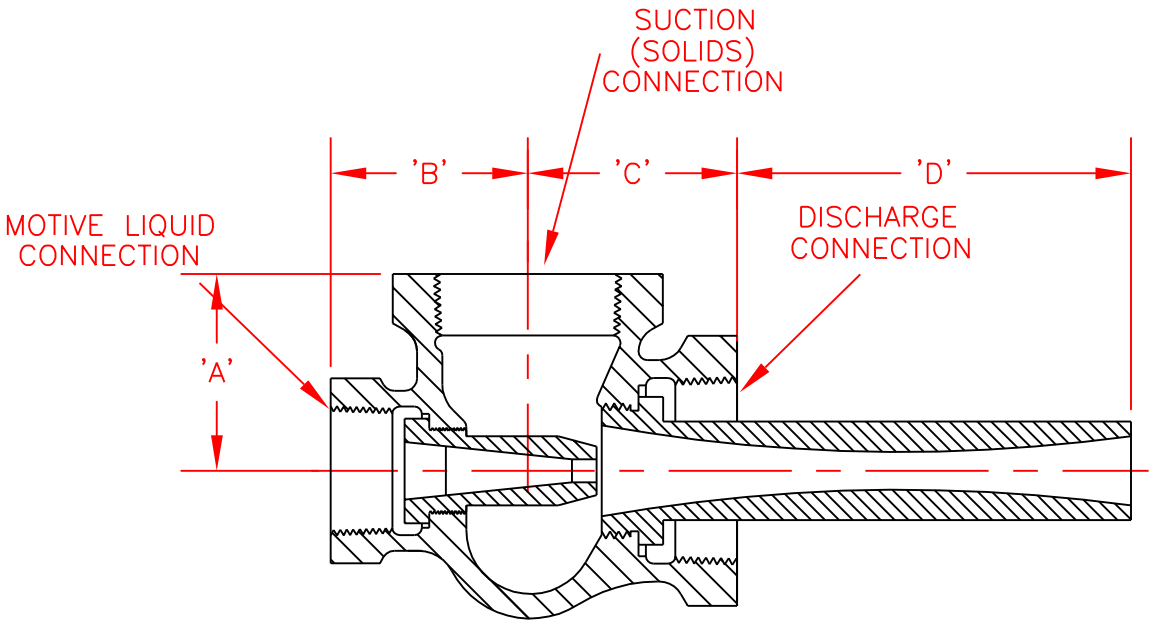


| CAPACITY FACTOR | MODEL | DIM. A | DIM. B | DIM. C | DIM. D | PRESSURE CONNECTION | SUCTION & DISCHARGE CONNECTION |
|---|---|---|---|---|---|---|---|
| 0.091 | NCTLST1 | 1-1/4" | 1-1/4" | 1-1/2" | 1-1/16" | 3/8" NPT | 1/2" NPT |
| 0.165 | NCTLST2 | 1-3/8" | 1-7/16" | 1-1/2" | 1-7/8" | 1/2" NPT | 3/4" NPT |
| 0.30 | NCTLST3 | 1-1/2" | 1-9/16" | 1-11/16" | 2-3/4" | 3/4" NPT | 1" NPT |
| 0.55 | NCTLST4 | 2" | 2" | 2-1/8" | 4-1/16" | 1" NPT | 1-1/2" NPT |
| 1.00 | NCTLST5 | 2" | 2" | 2-1/8" | 5-3/4" | 1" NPT | 1-1/2" NPT |
| 1.80 | NCTLST6 | 2-1/2" | 2-3/8" | 2-3/4" | 7-7/8" | 1-1/2" NPT | 2" NPT |
| 3.24 | NCTLST7 | 3-1/2" | 3-1/8" | 3-3/4" | 11-1/16" | 2" NPT | 3" NPT |
| 4.30 | NCTLST8 | 3-1/2" | 3-1/8" | 3-3/4" | 12" | 2" NPT | 3" NPT |
| 5.71 | NCTLST9 | 4-1/2" | 4" | 4-13/16" | 13-5/8" | 3" NPT | 4" NPT |
| 7.57 | NCTLST10 | 4-1/2" | 4" | 4-13/16" | 16-1/8" | 3" NPT | 4" NPT |

PRELIMINARY

DO NOT SCALE

DIMENSIONS AND SPECIFICATIONS ARE SUBJECT TO CHANGE WITHOUT NOTICE

| NO. | DATE | REVISION | BY |
|---|---|---|---|
| | | | |

ELMRIDGE JET APPARATUS
TORONTO, ONTARIO CANADA
LIVONIA, MICHIGAN USA

PROJECT : Liqui-Jet Solids Eductors

PART : NCTLST Dimensions

MATERIAL : QTY.:

UNLESS OTHERWISE SPECIFIED, GENERAL TOLERANCES:
X/X = ± 1/32"
.XX = ± .010
.XXX = ± .002
DEG. = ± 1/2 °

SCALE : None
DRAWN BY : B.W.
APPROVED BY :
RELEASE DATE :
DATE : 8/4/95
DATE :

NOTE : TLS-NCTLST-B-D

DRAWING NUMBER 2066 — A
REV.NO. 1.1

LEFT BLANK

# *ENDRESS+HAUSER*

## *LIQUIPHANT M FTL51, LEVEL SWITCH (POINT LEVEL)*

LEFT BLANK

# Operating Instructions
# **Liquiphant M FTL50, FTL51**

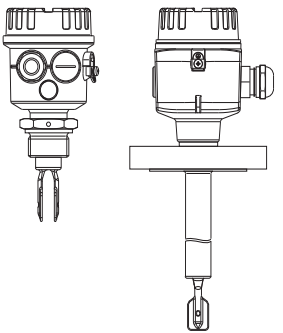

**DE-** Grenzschalter
**EN-** Point Level Switch
**FR -** Détecteur de niveau
**ES -** Detector de nivel
**IT -** Interruttore di livello
**NL-** Niveauschakelaar

Endress+Hauser
People for Process Automation

**DE- Inhalt**


| | |
|---|---|
| Sicherheitshinweise | 4 |
| Behandlung | 6 |
| Geräte-Identifikation | 8 |
| Verwendung | 14 |
| Messeinrichtung | 15 |
| Einbau | 19 |
| Einstellungen | 28 |
| Lichtsignale | 32 |
| Anschluss | 33 |
| Wartung, Reinigung | 54 |
| Technische Daten | 55 |
| Zubehör | 57 |
| Fehlersuche | 60 |
| Ersatzteile | 68 |
| Reparatur | 69 |
| Ergänzende Dokumentation | 73 |


**EN -Contents**


| | |
|---|---|
| Notes on Safety | 4 |
| Handling | 6 |
| Device Identification | 8 |
| Application | 14 |
| Measuring system | 15 |
| Installation | 19 |
| Setting-up | 28 |
| Light signals | 32 |
| Connections | 33 |
| Maintenance, Cleaning | 54 |
| Technical Data | 55 |
| Accessories | 57 |
| Trouble-shooting | 61 |
| Spare parts | 68 |
| Repair | 69 |
| Supplementary Documentation | 73 |


**FR- Sommaire**


| | |
|---|---|
| Conseils de sécurité | 4 |
| Manipulation | 6 |
| Dénomination | 8 |
| Utilisation | 14 |
| Ensemble de détection de niveau | 15 |
| Montage | 19 |
| Réglage | 28 |
| Signaux lumineux | 32 |
| Raccordement | 33 |
| Entretien, Nettoyage | 54 |
| Caractéristiques techniques | 55 |
| Accessoires | 57 |
| Recherche de défauts | 62 |
| Pièces de rechange | 68 |
| Réparations | 69 |
| Documentation complémentaire | 73 |




**Achtung!**
= verboten;
führt zu fehlerhaftem Betrieb oder Zerstörung.



**Caution!**
= forbidden;
leads to incorrect operation or destruction.



**Attention!**
= interdit; peut provoquer des dysfonctionnements ou la destruction.

**ES - Indice**


| | |
|---|---|
| Notas sobre seguridad | 5 |
| Modo de empleo | 6 |
| Identificación del equipo | 8 |
| Aplicación | 14 |
| Sistema de medida | 15 |
| Montaje | 19 |
| Ajuste | 28 |
| Señales luminosas | 32 |
| Conexiones | 33 |
| Mantenimiento, Limpieza | 54 |
| Datos técnicos | 55 |
| Accesorios | 57 |
| Identificación de fallos | 63 |
| Repuestos | 68 |
| Reparaciones | 69 |
| Documentación suplementaria | 70 |


**IT - Indice**


| | |
|---|---|
| Note sulla sicurezza | 5 |
| Accorgimenti | 6 |
| Identificazione dello strumento | 8 |
| Applicazione | 14 |
| Sistema di misura | 15 |
| Montaggio | 19 |
| Messa in servizio | 28 |
| Segnali luminosi | 32 |
| Collegamenti elettrici | 33 |
| Manutenzione, Pulizia | 54 |
| Dati tecnici | 55 |
| Accessori | 57 |
| Individuazione e eliminazione delle anomalie | 64 |
| Ricambi | 68 |
| Riparare | 69 |
| Documentazione supplementare | 70 |


**NL- Inhoud**


| | |
|---|---|
| Veiligheidsinstructies | 5 |
| Behandeling | 6 |
| Instrument- identificatie | 8 |
| Toepassing | 14 |
| Meetopstelling | 15 |
| Inbouw | 19 |
| Instellingen | 28 |
| Lichtsignalen | 32 |
| Aansluiting | 33 |
| Onderhoud, Reiniging | 54 |
| Technische gegevens | 55 |
| Toebehoren | 57 |
| Fout zoeken | 65 |
| Reserve-onderdelen | 68 |
| Reparatie | 69 |
| Aanvullende documentatie | 70 |




**Atención!**
= Prohibido; peligro de mal funcionamiento o de destrucción.



**Attenzione!**
= Vietato; pericolo di malfunzionamento o di distruzione.



**Opgelet!**
= verboden; leidt tot foutieve werking of storing.

**DE- Sicherheitshinweise**

Der Liquiphant M FTL50, FTL51 darf nur als Grenzschalter für Flüssigkeiten verwendet werden.
Bei unsachgemäßem Einsatz können Gefahren von ihm ausgehen.
Das Gerät darf **nur von qualifiziertem und autorisiertem Fachpersonal** unter strenger Beachtung dieser Betriebsanleitung, der einschlägigen Normen, der gesetzlichen Vorschriften und der Zertifikate (je nach Anwendung) eingebaut, angeschlossen, in Betrieb genommen und gewartet werden.
In der Gebäudeinstallation ist ein Netzschalter für das Gerät leicht erreichbar in dessen Nähe zu installieren.
Er ist als Trennvorrichtung für das Gerät zu kennzeichnen.

**EN- Notes on Safety**

The Liquiphant M FTL50, FTL51 is designed for point level detection in liquids.
If used incorrectly it is possible that application-related dangers may arise.
The level limit switch Liquiphant M FTL50, FTL51 may be installed, connected, commissioned, operated and maintained **by qualified and authorised personnel only**, under strict observance of these operating instructions, any relevant standards, legal requirements, and, where appropriate, the certificate.
Install an easily accessible power switch in the proximity of the device.
Mark the power switch as a disconnector for the device.

**FR- Conseils de sécurité**

Le Liquiphant M FTL50, FTL51 doit être exclusivement utilisé comme détecteur de niveau pour liquides.
Il peut être source de danger en cas d'utilisation non conforme aux prescriptions.
L'appareil ne doit être installé, raccordé, mise en service et entretenu **que par un personnel qualifié et autorisé**, qui tiendra compte des indications contenues dans la présente mise en service, des normes en vigueur et des certificats disponibles (selon l'application).
Installer un commutateur réseau à proximité immédiate de l'appareil, en veillant à ce qu'il soit facilement accessible.
Marquer ce commutateur comme prise de coupure de l'appareil.

**ES - Notas sobre seguridad**

El detector de nivel Liquiphant M FTL50, FTL51 ha sido diseñado para la detección de límite en fluidos.
Su empleo inapropiado puede resultar peligroso.
El equipo deberá ser montado, conectado, instalado y mantenido **única y exclusivamente por personal cualificado y autorizado**, bajo rigurosa observación de las presentes instrucciones de servicio, de las normativas y legislaciones vigentes, así como de los certificados (dependiendo de la aplicación).
Instalar un interruptor de fácil acceso en las proximidades del equipo.
Identificar el interruptor como desconectador del equipo.

**IT - Note sulla sicurezza**

Il Liquiphant M FTL50, FTL51 è particolarmente studiato per l'impiego come soglia di livello in liquidi.
Un'installazione non corretta può determinare pericolo.
Lo strumento può essere montato **solamente da personale qualificato ed autorizzato**.
La messa in esercizio e la manutenzione devono rispettare le indicazioni di collegamento, le norme e i certificati di seguito riportati.
Installare un interuttore per l'alimentazione in prossimità del dispositivo.
Marcare l'interuttore come disconnessione del dispositivo.

**NL- Veiligheidsinstructies**

Gebruik de Liquiphant M FTL50, FTL51 alleen als niveauschakelaar voor vloeistoffen.
Indien niet correct gebruikt kunnen gevaarlijke situaties ontstaan.
Het instrument **alleen door gekwalificeerd en geautoriseerd personeel** laten inbouwen, aansluiten, in bedrijf nemen en onderhouden.
Neem de instructies in deze Inbedrijfstellingsvoorschriften, de desbetreffende normen, de wettelijke voorschriften en eventuele certificaten in acht.
Installeer een makkelijk bereikbare voedingschakelaar in de nabijheid van het instrument.
Kenmerk de voedingschakelaar specifiek voor het instrument.

**DE- Behandlung**
Am Gehäuse, Flansch oder Verlängerungsrohr anfassen.

**EN- Handling**
Hold by housing, flange or extension tube.

**FR- Manipulation**
Tenir par le boîtier, la bride ou le tube prolongateur.

**ES - Modo de empleo**
Coger por el cabezal, brida o tubo de extensión.

**IT - Accorgimenti**
Afferrare la custodia, per la flangia o per il tubo di estensione.

**NL- Behandeling**
Vastpakken via behuizing, flens of verlengbuis.

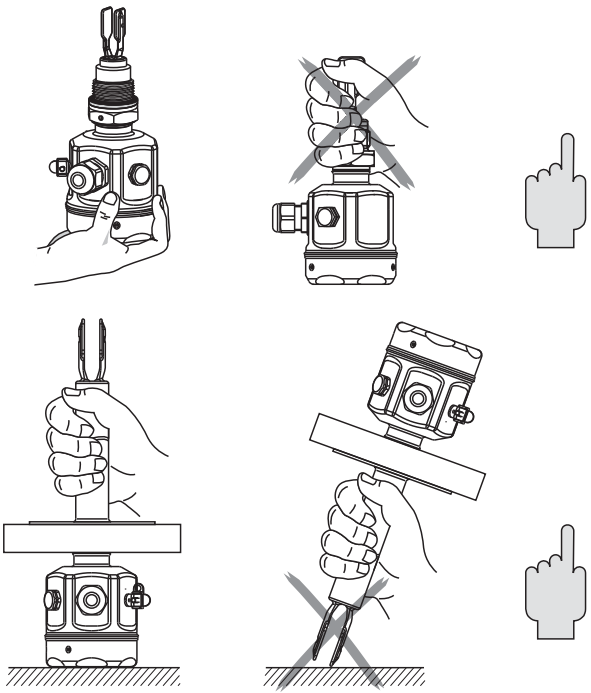

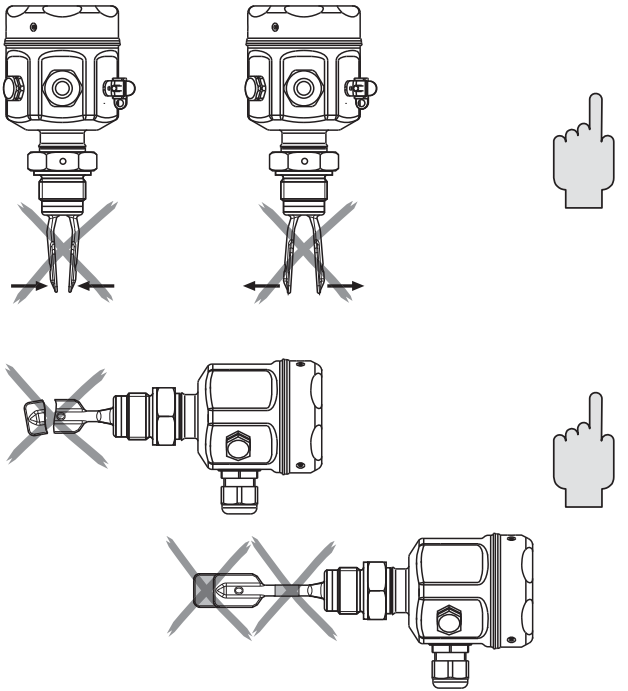

**DE-** **Nicht** verbiegen
**Nicht** kürzen
**Nicht** verlängern

**EN-** Do **not** bend
Do **not** shorten
Do **not** lengthen

**FR-** **Ne pas** déformer
**Ne pas** raccourcir
**Ne pas** rallonger

**ES -** **No** torcer
**No** acortar
**No** alargar

**IT -** **Non** stringere o allargare
**Non** accorciare o allungare
**Non** piegare

**NL-** **Niet** verbuigen
**Niet** inkorten
**Niet** verlengen

**DE- Geräte-Identifikation**

**EN- Device Identification**

**FR - Dénomination**

**ES - Identificación del equipo**

**IT - Identificazione dello strumento**

**NL- Instrument-identificatie**

| | | | |
|---|---|---|---|
| A## | Flansche / Flanges / Brides / Brida / Flangia / Flens | → 12 13 | |
| B## | | | |
| C## | | | |
| D## | | | |
| F## | | | |
| K## | | | |
| N## | | | |
| GE2 | R ¾, | DIN 2999, 316L | max. 100 bar, 150 °C |
| GE5 | R ¾, | DIN 2999, AlloyC4 | |
| GE6 | R ¾, | DIN 2999, AlloyC22 | |
| GF2 | R 1, | DIN 2999, 316L | |
| GF5 | R 1, | DIN 2999, AlloyC4 | |
| GF6 | R 1, | DIN 2999, AlloyC22 | |
| GM2 | NPT ¾, | ANSI, 316L | |
| GM5 | NPT ¾, | ANSI, AlloyC4 | |
| GM6 | NPT ¾, | ANSI, AlloyC22 | |
| GN2 | NPT 1, | ANSI, 316L | |
| GN5 | NPT 1, | ANSI, AlloyC4 | |
| GN6 | NPT 1, | ANSI, AlloyC22 | |
| GQ2 | G ¾, | ISO 228, 316L | max. 100 bar, 150 °C |
| GQ5 | G ¾, | ISO 228, AlloyC4 | |
| GQ6 | G ¾, | ISO 228, AlloyC22 | |
| GR2 | G 1, | ISO 228, 316L | |
| GR5 | G 1, | ISO 228, AlloyC4 | |
| GR6 | G 1, | ISO 228, AlloyC22 | |
| GW2 | G 1, | ISO 228, 316L | max. 25 bar, 150 °C<br>max. 40 bar, 100 °C |
| TC2 | DN25-38 (1...1½"), Tri-Clamp | ISO 2852, 316L | max. 16 bar, 120 °C<br>max. 2 bar, 150 °C |
| TE2 | DN40-51 (2"), Tri-Clamp | ISO 2852, 316L | |
| YY9 | *2 | | |

→ 10 11

*1 ohne / without / sans / sin / senza / zonder

*2 andere / others / autres / otros / altri / andere

*3 nicht gültig für PBT / not valid for PBT / non valable pour PBT / no es válido para PBT / non valido per PBT / niet geldig voor PBT

ENDRESS+HAUSER
LIQUIPHANT M

Order Code

FTL51

FTL5#-########## #### mm
in

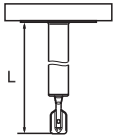


| | | | |
|---|---|---|---|
| AA | *[2], | | Ra < 3.2 µm/80 grit (FTL50) |
| BB | ……. mm, | 316L, | Ra < 3.2 µm/80 grit |
| BE | ……. mm, | AlloyC4, | Ra < 3.2 µm/80 grit |
| CB | ……. in, | 316L, | Ra < 3.2 µm/80 grit |
| CE | ……. in, | AlloyC4, | Ra < 3.2 µm/80 grit |
| DB | "L II", | 316L, | Ra < 3.2 µm/80 grit |
| DE | "L II", | AlloyC4, | Ra < 3.2 µm/80 grit |
| IA | *[2], | | + **"T"** (FTL50) |
| JB | ……. mm, | 316L | + **"T"** |
| JE | ……. mm, | AlloyC4 | + **"T"** |
| KB | ……. in, | 316L | + **"T"** |
| KE | ……. in, | AlloyC4 | + **"T"** |
| LB | "L II", | 316L | + **"T"** |
| LE | "L II", | AlloyC4 | + **"T"** |
| QA | *[2], | | + **"p"** (FTL50) |
| RB | ……. mm, | 316L | + **"p"** |
| RE | ……. mm, | AlloyC4 | + **"p"** |
| SB | ……. in, | 316L | + **"p"** |
| SE | ……. in, | AlloyC4 | + **"p"** |
| TB | "L II", | 316L | + **"p"** |
| TE | "L II", | AlloyC4 | + **"p"** |
| YY | *[2] | | |

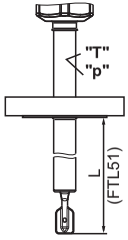


| | |
|---|---|
| A | FEL50A, PROFIBUS PA |
| 1 | FEL51, 19…253 V AC |
| 2 | FEL52, 10… 55 V DC, PNP |
| 4 | FEL54, 19…253 V AC, 19…55 V DC, DPDT |
| 5 | FEL55, 11… 36 V DC, 8/16 mA |
| 6 | FEL56, NAMUR, L-H |
| 7 | FEL57, PFM |
| 8 | FEL58, NAMUR, H-L |
| 9 | *[2] |

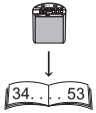

| | | | | |
|---|---|---|---|---|
| E1 | F27 | NEMA6P, | NPT ¾ | |
| E4 | F16, | NEMA4X, | NPT ½ | F16 (PBT) |
| E5 | F13/17, | NEMA4X, | NPT ¾ | |
| E6 | F15, | NEMA4X, | NPT ½ | |
| F1 | F27, | IP68, | G ½ | |
| F4 | F16, | IP66, | G ½ | F13/17 (Alu) |
| F5 | F13/17, | IP66, | G ½ | F27 (316L ) |
| F6 | F15, | IP66, | G ½ | |
| G1 | F27, | IP68, | M20 | |
| G4 | F16, | IP66, | M20 | |
| G5 | F13/17, | IP66, | M20 | |
| G6 | F15, | IP66, | M20 | F15 (316L) |
| N4 | F16, | IP66, | M12 | |
| N5 | F13/17, | IP66, | M12 | |
| N6 | F15, | IP66, | M12 | |
| Y9 | *2 | | | |







#3 Kompakt-Gehäuse / compact housing / boîtier compact / cabezal compacto / testa compatta / compacte behuizing → KA220

#7 Alu/sep. → KA163

| | |
|---|---|
| A | *1 |
| B | PVIS free |
| C | EN 10204 - 3.1, 316L |
| K | Spec. adjustment density H20 |
| L | Spec. adjustment density H20, EN10204-3.1 |
| N | EN 10204 - 3.1, NACE MR0175, 316L |
| P | 100 bar (FTL51) |
| R | 100 bar, EN 10204 - 3.1, NACE MR0175, 316L (FTL51) |
| S | GL/ABS marine certificate (FTL51: max. 1600 mm) |
| Y | *2 |

*1 ohne / without / sans / sin / senza / zonder

*2 andere / others / autres / otros / altri / andere

"L II" Schaltpunkt / Switchpoint / Point de commutation / Punto de conmutación / Punto di commutazione / Schakelpunt

Liquiphant II FTL 360/365, FDL 30/35

"T" Temperaturdistanzstück / Temperature spacer / Elément de refroidissement / Tramo disipador detemperatura / Distanziale per temperatura / Temperatuurreductiestuk

"p" Druckdichte Durchführung / Pressure sealed bushing / Entrée résistant à la pression / Extensión resistente a la presión / Passacavo a tenutadi pressione / Gasdichte doorvoering

**DE-** Flansche

**EN-** Flanges

**FR -** Brides

**ES -** Brida

**IT -** Flangia

**NL-** Flens



**ANSI B 16.5**

AA2 1¼", 150 lbs, RF, 316/316L
AB2 1¼", 300 lbs, RF, 316/316L (FTL51)
AC2 1½", 150 lbs, RF, 316/316L
AD2 1½", 300 lbs, RF, 316/316L (FTL51)
AE2 2", 150 lbs, RF, 316/316L
AE5 2", 150 lbs, RF, AlloyC4 >316/316L
AE6 2", 300 lbs, RF, Alloy C22 >316/316L
AF2 2", 300 lbs, RF, 316/316L
AG2 2", 600 lbs, RF, 316/316L (FTL51)
AJ2 2½", 300 lbs, RF, 316/316L (FTL51)
AL2 3", 150 lbs, RF, 316/316L
AM2 3", 300 lbs, RF, 316/316L (FTL51)
AN2 3", 600 lbs, RF, 316/316L (FTL51)
AP2 4", 150 lbs, RF, 316/316L
AQ2 4", 300 lbs, RF, 316/316L (FTL51)
AR2 4", 600 lbs, RF, 316/316L (FTL51)
A82 1", 150 lbs, RF, 316/316L

**EN 1092-1**

BA2 DN32, PN6 A, 316L
BB2 DN32, PN25/40 A, 316L
BC2 DN40, PN6 A, 316L
BD2 DN40, PN25/40 A, 316L
BE2 DN50, PN6 A, 316L
BG2 DN50, PN25/40 A, 316L
BH2 DN65, PN6 A, 316L
BJ2 DN50, PN100 A, 316L (FTL51)
BK2 DN65, PN25/40 A, 316L
BM2 DN80, PN10/16 A, 316L
BN2 DN80, PN25/40 A, 316L
BQ2 DN100, PN10/16 A, 316L
BR2 DN100, PN25/40 A, 316L

| | | | |
|---|---|---|---|
| B12 | DN80, | PN100 A, | 316L (FTL51) |
| B82 | DN25, | PN25/40 A, | 316L |
| CA2 | DN32, | PN6 B1, | 316L |
| CA5 | DN32, | PN6, | AlloyC4 >316L |
| CA6 | DN32, | PN6, | AlloyC22 >316L |
| CE2 | DN50, | PN6 B1, | 316L |
| CE5 | DN50, | PN6, | AlloyC4 >316L |
| CE6 | DN50, | PN6, | AlloyC22 >316L |
| CG2 | DN50, | PN25/40 B1, | 316L |
| CG5 | DN50, | PN25/40, | AlloyC4 >316L |
| CG6 | DN50, | PN25/40, | AlloyC22 >316L |
| CJ2 | DN50, | PN100 B2, | 316L (FTL51) |
| CN2 | DN80, | PN25/40 B1, | 316L |
| CN5 | DN80, | PN25/40, | AlloyC4 >316L |
| CN6 | DN80, | PN25/40, | AlloyC22 >316L |
| CQ2 | DN100, | PN10/16 B1, | 316L |
| CQ5 | DN100, | PN10/16, | AlloyC4 >316L |
| CQ6 | DN100, | PN10/16, | AlloyC22 >316L |
| C12 | DN80, | PN100 B2, | 316L (FTL51) |
| C82 | DN25, | PN25/40 B1, | 316L |
| C85 | DN25, | PN25/40, | AlloyC4 >316L |
| C86 | DN25, | PN25/40, | AlloyC22 >316L |
| DG2 | DN50, | PN40 B1, | 316L |
| DN2 | DN80, | PN40 B1, | 316L |
| D82 | DN25, | PN40 B1, | 316L |
| FG2 | DN50, | PN40 C, | 316L |
| NG2 | DN50, | PN40 D, | 316L |

**JIS B2220**

| | | | |
|---|---|---|---|
| KA2 | 10K 25, | RF, | 316L |
| KC2 | 10K 40, | RF, | 316L |
| KE2 | 10K 50, | RF, | 316L |
| KE5 | 10K 50, | RF, | AlloyC4 >316L |
| KE6 | 10K 50, | RF, | AlloyC22 >316L |
| KL2 | 10K 80, | RF, | 316L |
| KP2 | 10K 100, | RF, | 316L |

**DE- Verwendung**
Grenzstanddetektion in Flüssigkeiten

**EN- Application**
Point level detection in fluids

**FR- Utilisation**
Détection de niveau dans les liquids

**ES - Aplicación**
Detección de nivel en líquidos agua

**IT - Applicazione**
Controllo livello nei liquidi

**NL- Toepassing**
Niveaudetectie in vloeistoffen

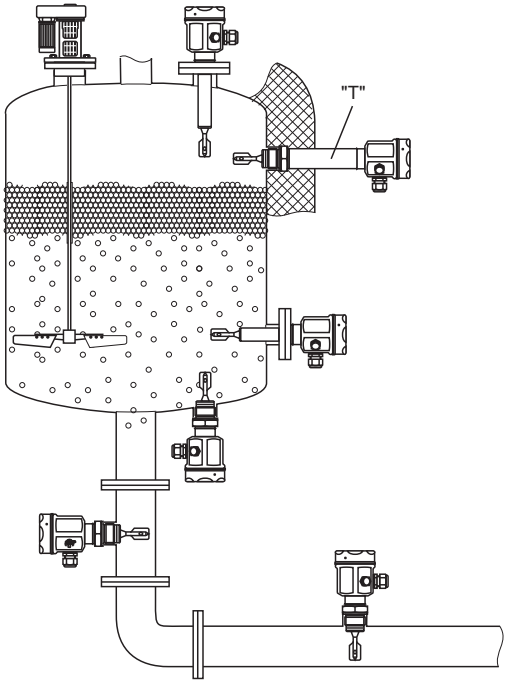

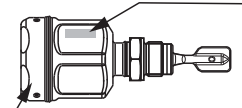

Order code:
FTL5# - # ### ## **#** ## #

Elektronikeinsätze
Electronic inserts
Electronique
Electrónica
Inserti elettronici
Elektronica-insert

FEL5**1**
FEL5**2**
FEL5**4**

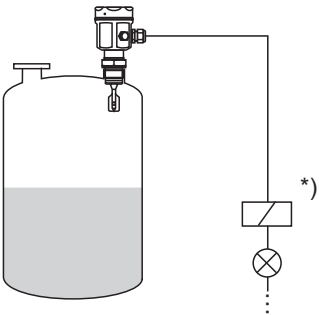

*)

*) Externe Last
External load
Charge externe
Carga externa
Carico esterno
Externe belasting

**DE- Messeinrichtung**
für direkten Anschluss

**EN- Measuring system**
for direct connection

**FR - Ensemble de détection de niveau**
pour raccordement direct

**ES - Sistema de medida**
para conexión directa

**IT - Sistema di misura**
per connessione diretta

**NL- Meetopstelling**
voor directe aansluiting

**DE- Messeinrichtung**
für Anschluss über Schaltgerät

**EN- Measuring system**
for connection via switching unit

**FR- Ensemble de détection de niveau**
pour raccordement via détecteur

**ES - Sistema de medida**
para conexión vía interruptores

**IT - Sistema di misura**
per connessione mediante unità di commutazione

**NL- Meetopstelling**
voor aansluiting aan een schakelversterker

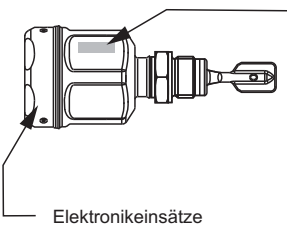

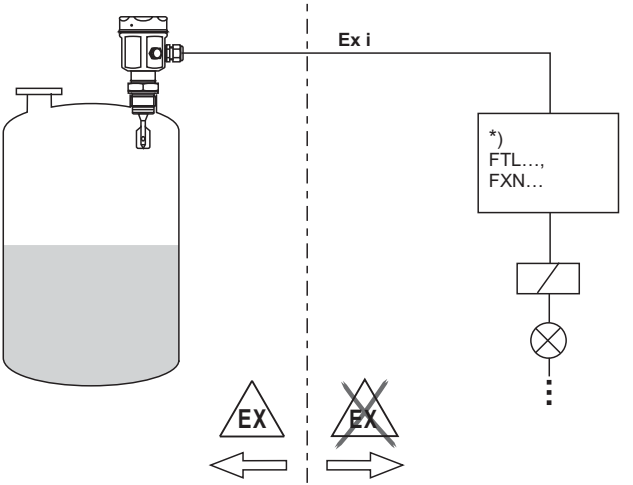


*) Schaltgerät, SPS, Trennverstärker
Switching unit, PLC, isolating amplifier
Détecteur, API, convertisseur/ séparateur
Interruptor, PLC, amplificador aislado
Unità di commutazione, PLC, barriera di separazione
Schakelversterker, PLC, scheidingsversterker

**DE- Messeinrichtung**
für Anschluss an PROFIBUS PA

**EN- Measuring system**
for connection to PROFIBUS PA

**FR- Ensemble de détection de niveau**
pour le raccordement à PROFIBUS PA

**ES - Sistema de medida**
para conexión a PROFIBUS PA

**IT - Sistema di misura**
per connessione a PROFIBUS PA

**NL- Meetopstelling**
voor aansluiting aan PROFIBUS PA

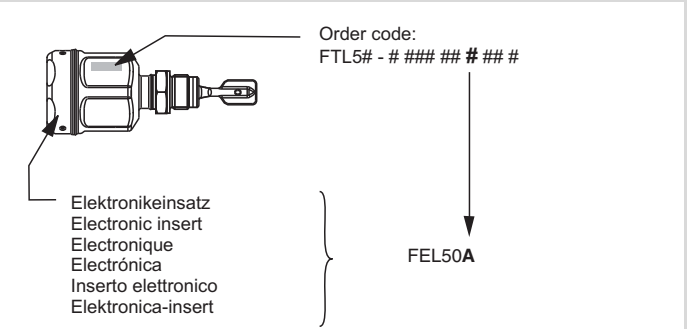


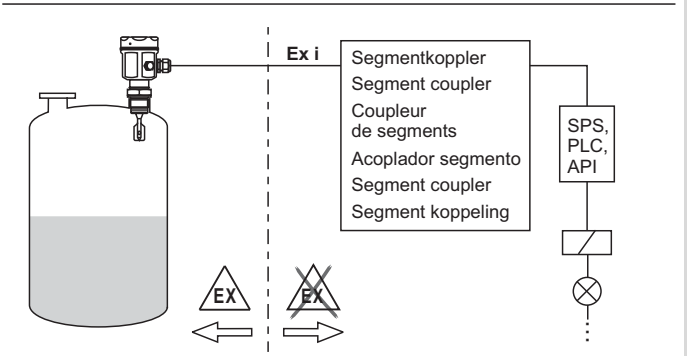

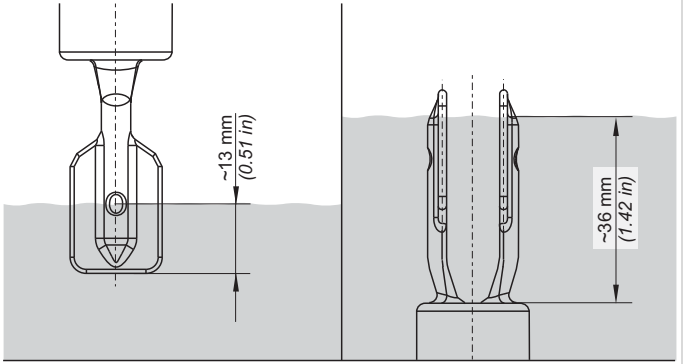


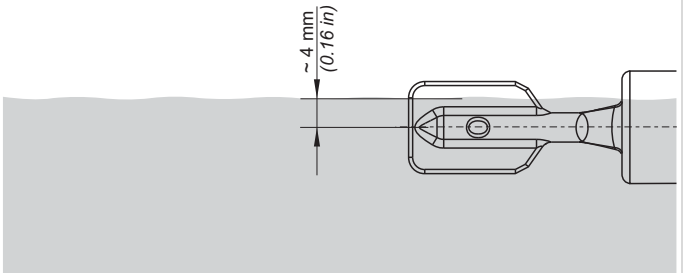


**DE- Einbau**
Schaltpunkt in Abhängigkeit vom Einbau

**EN- Installation**
Switchpoint depends on mounting position

**FR - Montage**
Point de commutation en fonction de l'implantation

**ES - Montaje**
Punto de conmutación dependiendo de la posición de montaje

**IT - Montaggio**
Punto di commutazione in funzione della posizione di montaggio

**NL- Inbouw**
Schakelpunt afhankelijk van inbouw

**DE-** Einbaubeispiele
in Abhängigkeit von der
Viskosität ν der Flüssigkeit

**EN-** Mounting examples
as a function of liquid viscosity ν

**FR-** Exemples d'implantation
dépendant de la viscosité ν
du liquide

**ES -** Ejemplos de montaje
dependiendo de la viscosidad ν
del líquido

**IT -** Esempi di montaggio
come funzione di viscosità ν
del liquido

**NL-** Inbouwvoorbeelden
afhankelijk van de viscositeit ν
van de vloeistof

ν = 0…2000 mm²/s
*(ν = 0…2000 cSt)*

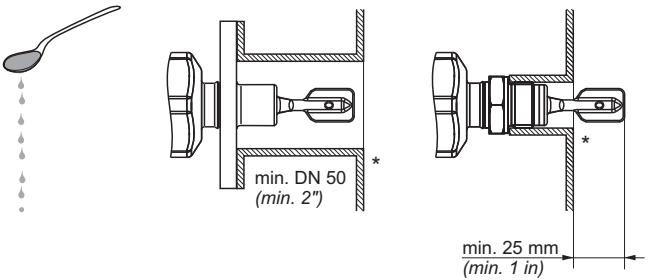


* entgraten / deburr / ébarber / libre / sbavare / ontbramen

ν = 0…10000 mm²/s
*(ν = 0…10000 cSt)*

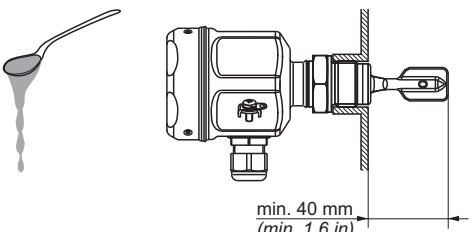

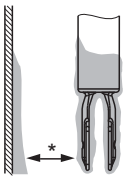


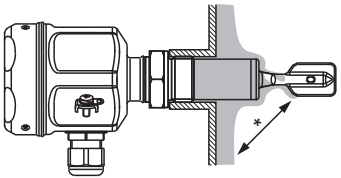


* Abstand! / Distance! / Distance! / ¡Distancia! / Distanza! / Afstand!

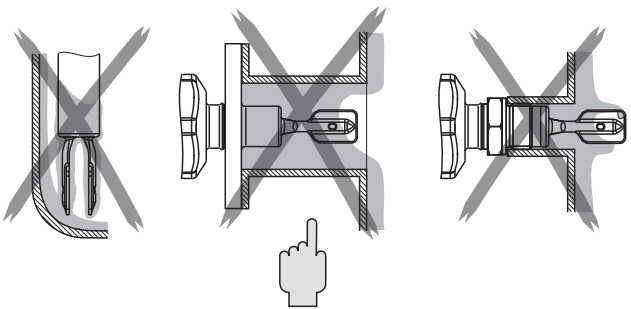

**DE-** Ansatzbildung berücksichtigen. Schwinggabel darf Ansatz nicht berühren.

**EN-** Consider build-up. Fork may not contact the build-up.

**FR -** Tenir compte du colmatage. Fourche ne doit pas entrer en contact avec le dépôt.

**ES -** Tener en cuenta las adherencias. Las horquillas no deben estar en contacto con las adherencias.

**IT -** Tenere conto dei depositi. La forcella non deve entrare in contatto con i depositi.

**NL-** Rekening houden met aangroei. Trilvork mag de aangroei niet aanraken.

**DE-** Bei dynamischer Belastung abstützen

**EN-** In cases of dynamic forces support

**FR -** En cas de contraintes dynamiques, étayer le tube

**ES -** En caso de cargas dinámicas altas debe ser apoyado

**IT -** In caso di carichi dinamici, rinforzare con un supporto meccanico

**NL-** Bij mechanische belasting verstevigen

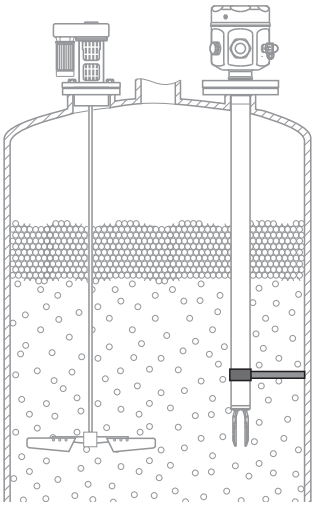

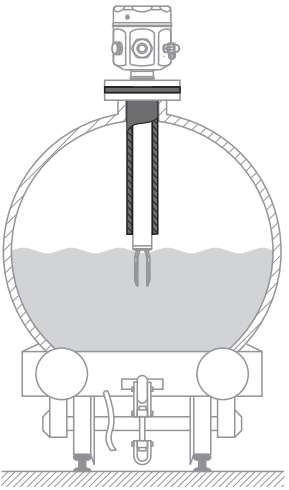

"T" = mit Temperaturdistanzstück für isolierten Tank
"T" = with temperature spacer for insulated tanks
"T" = avec élément de refroidissement pour réservoir isolé
"T" = con tramo disipador de temperatura para tanques aislados
"T" = con distanziale di temperatura per serbatoi isolati
"T" = met temperatuurreductiestuk voor geïsoleerde tanks

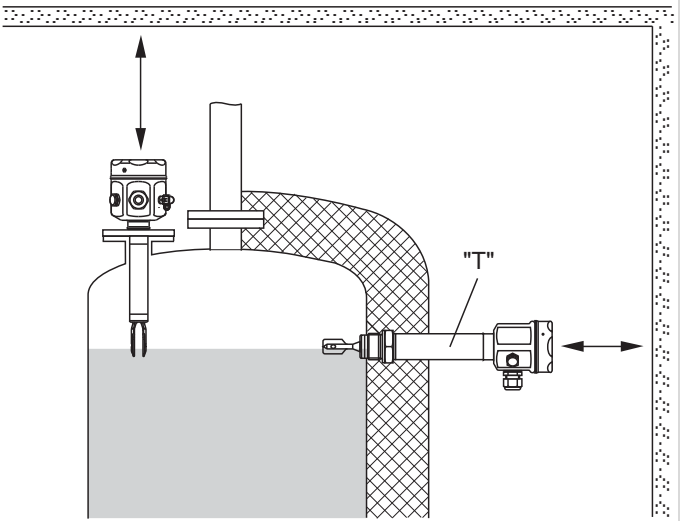


**DE-** Freiraum vorsehen
**EN-** Allow clearance
**FR -** Prévoir un espace libre
**ES -** Prever espacio
**IT -** Lasciare spazio per estrazione
**NL-** Ruimte vrijhouden

**DE-** Schwinggabel ausrichten:
Markierung oben oder unten

**EN-** Orientation of fork tines:
Marking above or below

**FR-** Orientation des lames vibrantes:
Repères en haut ou en bas

**ES -** Orientación de la horquilla:
Marca arriba o abajo

**IT -** Allineamento della forcella:
Marcatura in alto o in basso

**NL-** Vork uitrichten:
Markering boven of onder

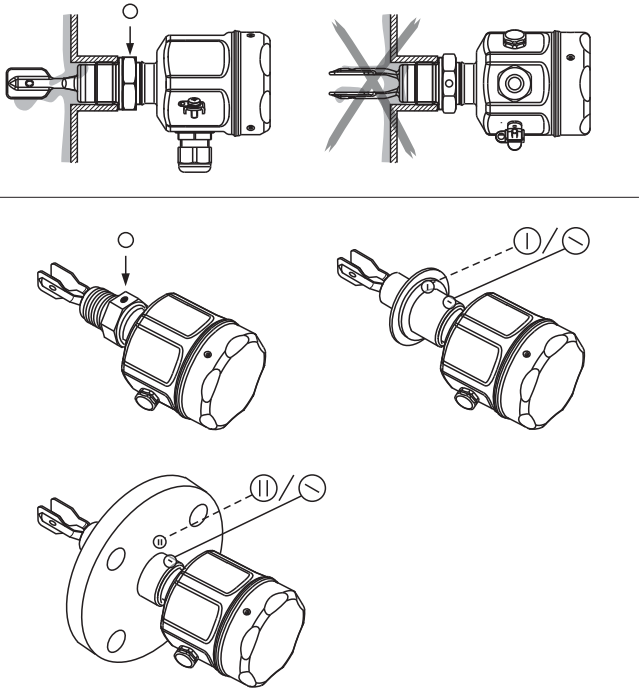

G ¾, 32 mm (1¼")*
G 1, 41 mm (1⅝")*

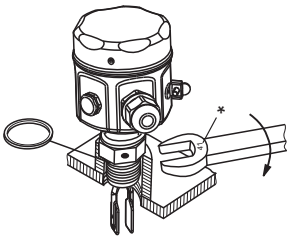


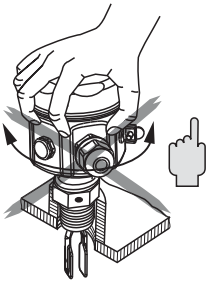

NPT ¾, R ¾, G ¾, 32 mm (1¼")*
NPT 1, R 1, G 1, 41 mm (1⅝")*

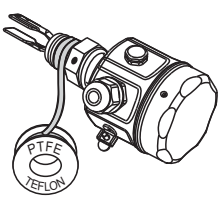


A

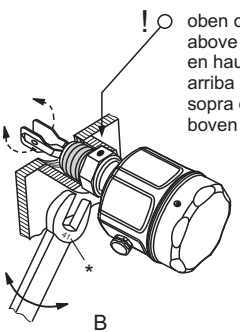


B

**DE-** Liquiphant einschrauben.
**Nicht** am Gehäuse drehen.

**EN-** Screw Liquiphant into process connection.
**Don't** use housing to turn.

**FR-** Visser le Liquiphant.
**Ne pas** se servir du boîtier.

**ES -** Roscar el Liquiphant a la conexión a proceso.
**No** girar el cabezal.

**IT -** Avvitare il Liquiphant all'attacco di processo.
Allo scopo **non** utilizzare la custodia.

**NL-** Schroef de Liquiphant in de procesaansluiting.
Draai hierbij **niet** aan de behuizing.

**DE-** Ausrichten in Rohrleitungen:
Markierung in Fließrichtung

**EN-** Orientation in pipes:
Marking in direction of flow

**FR -** Orientation dans une conduite:
Repère dans le sens de
l'écoulement

**ES -** Montaje y orientación dentro
de tuberías:
Marca en dirección del caudal

**IT -** Allineamento per montaggio
in tubazioni:
Marcatura nella direzione
del flusso

**NL-** Opstelling in leidingen:
Markering in de stroomrichting

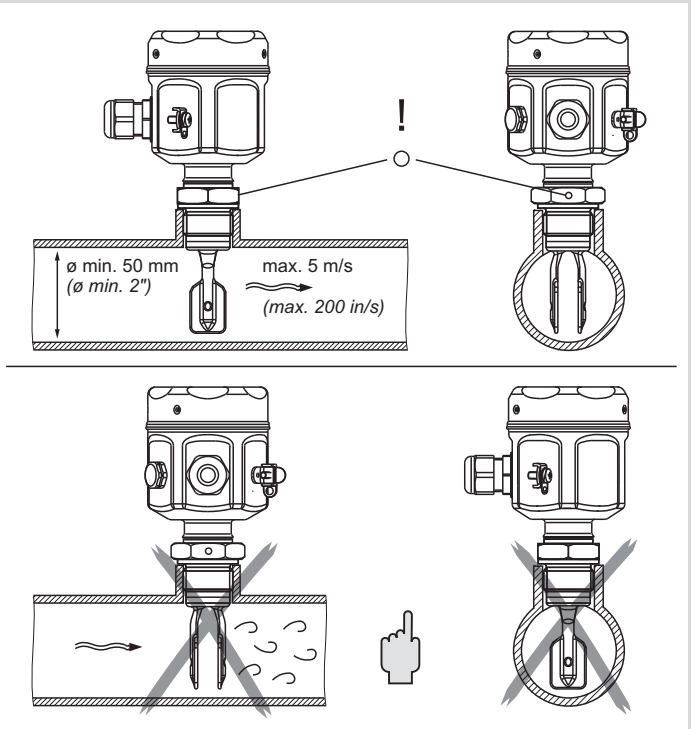

F15, F27

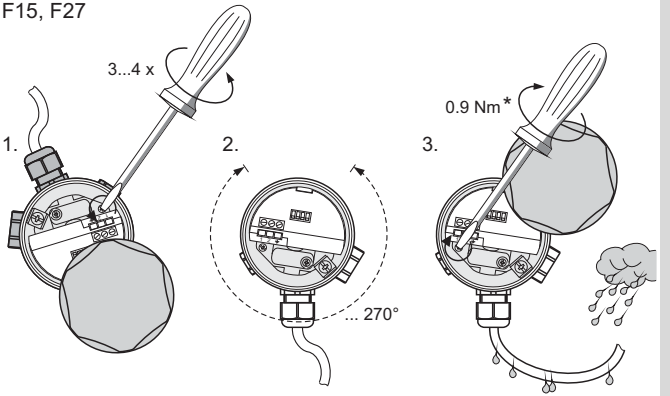


F16, F13, F17

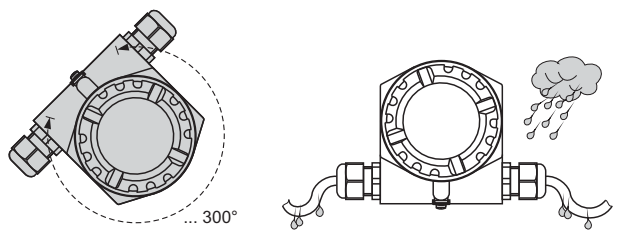


**DE-** Kabeleinführung ausrichten

**EN-** Cable gland orientation

**FR-** Positionnement de l'entrée de câble

**ES-** Ajuste del prensaestopa

**IT-** Posizionamento del passacavo

**NL-** Kabelinvoer uitrichten

* Anzugsdrehmoment /
Torque /
Couple de serrage /
Esfuerzo de torsión /
Coppia di torsione /
Aandraaimoment

**DE- Einstellungen**
Minimum-/Maximum-
Sicherheitsschaltung

**EN- Setting-up**
Minimum/maximum
fail-safe mode

**FR- Réglage**
Sécurité minimum/maximum

**ES - Ajuste**
Conmutador de seguridad
mín./máx.

**IT - Messa in servizio**
Selezione della modalità
di sicurezza min./max.

**NL- Instellingen**
Minimum/maximum
veiligheidsschakeling

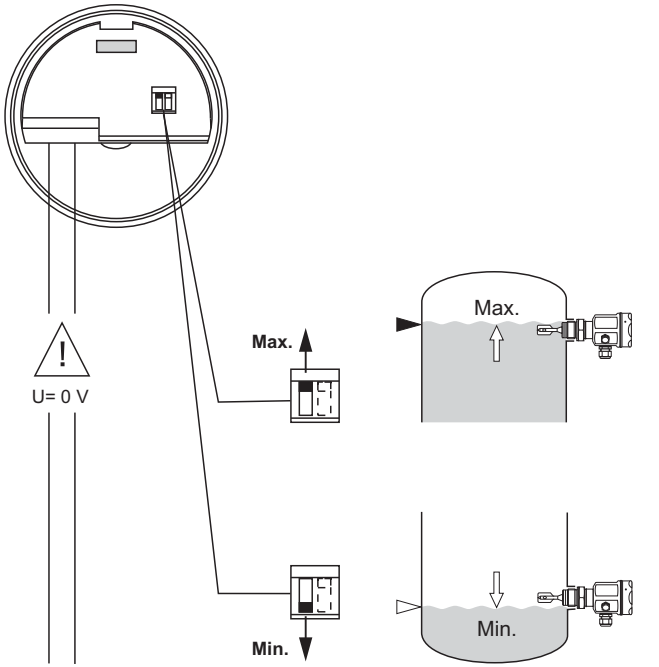

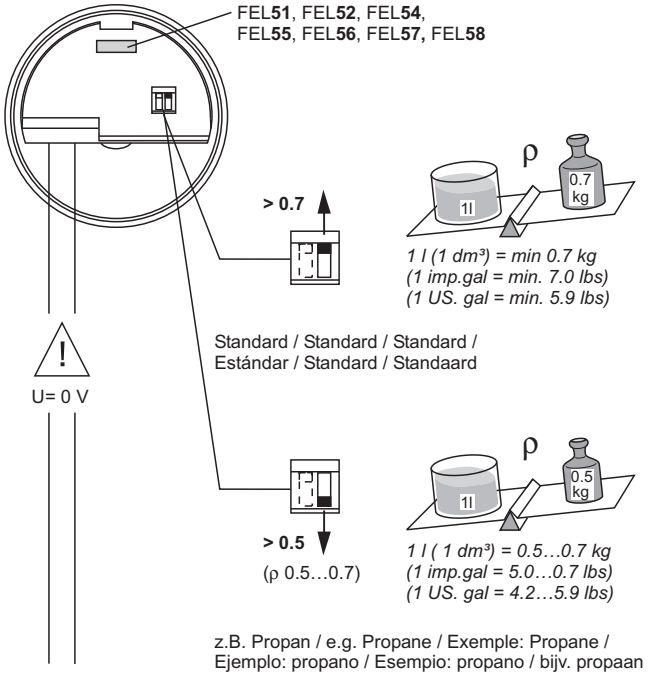


**DE-** Dichte der Flüssigkeit.
Dichte ρ gemessen in g/cm³ oder in kg/l.

**EN-** Liquid density.
Density ρ measured in g/cm³ or in kg/l.

**FR-** Densité du liquide.
Unité de mesure de la densité ρ : g/cm³ ou kg/l.

**ES -** Densidad de líquidos.
Densidad ρ medida en g/cm³ o en kg/l.

**IT -** Densità del liquido.
Densità ρ misurata in g/cm³ o in kg/l.

**NL-** Dichtheid van de vloeistof.
Dichtheid ρ gemeten in g/cm³ of in kg/l.

**DE-** Selbsttest FEL57
(Funktion siehe Seite 46, 47 und Schaltgerät)

**EN-** Selftest FEL57
(see page 46, 47 and switching unit for sequence)

**FR-** Auto-test FEL57
(voir pages 46, 47 et détecteur)

**ES -** Prueba automática FEL57
(ver pág. 46, 47 e interruptor para secuencia)

**IT -** Prova automatica FEL57
(vds. pag. 46, 47 e unità di commutazione)

**NL-** Functietest FEL57
(zie voor functie pag 46, 47 en schakelversterker)

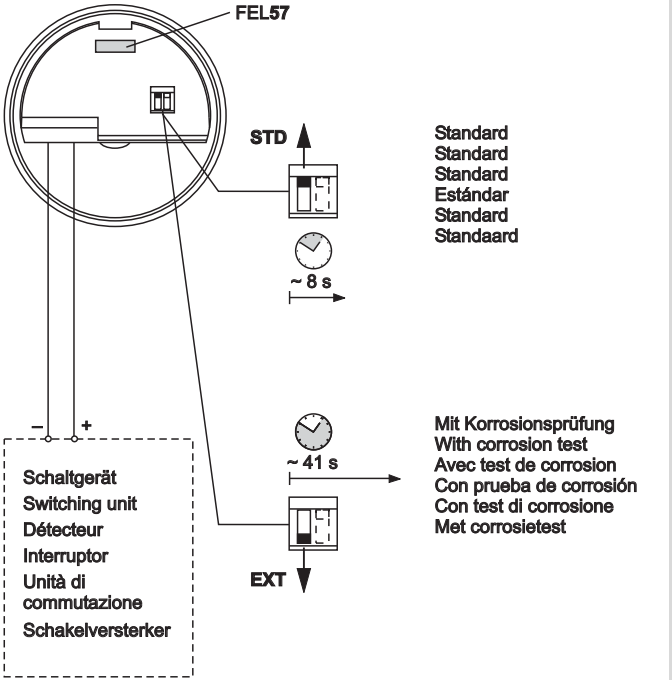

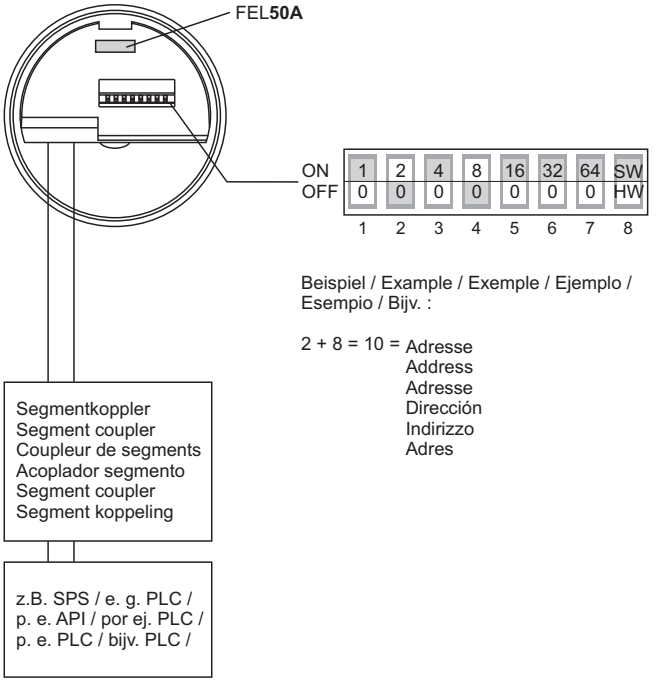


**DE-** Geräteadresse einstellen
(Einstellung der Parameter siehe BA141F)

**EN-** Setting Device Address
(Setting the parameters, see BA141F)

**FR-** Réglage de l'adresse d'appareil
(Réglage des paramètres voir BA141F)

**ES -** Configuración de la dirección del equipo
(Ver configuración parámetros en BA141F)

**IT -** Impostare indirizzo del dispositivo
(Per impostazione parametri vds. BA141F)

**NL-** Instrumentadres instellen
(Parameter instelling zie BA141F)

**DE- Lichtsignale**
**EN- Light signals**
**FR- Signaux lumineux**
**ES - Señales luminosas**
**IT - Segnali luminosi**
**NL- Lichtsignalen**

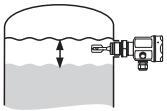

Füllstand variieren
Vary level
Varier le niveau
Nivel variable
Variare livello
Niveau variëren

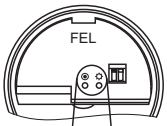





Leuchtdioden / LEDs / DEL / LEDs / LED / LED's

Betrieb / Stand-by / Fonctionnement /
Reposo / Attesa / stand-by

Schaltzustand / Switching status / Etat de commutation /
Estado conexión / Stato di commutazione / schakelstand

FEL57, FEL50A: Bedeckung / Covering / Recouvrement /
Cubierto / Copertura / bedekking

leuchtet / on / allumée / iluminado / on / aan

blinkt / flashes / clignote / parpadea / lampeggia / knippert

aus / off / éteinte / apagado / off / uit

Ausgangssignal / Output signal / Signal de sortie /
Señal de salida / Segnale uscita / uitgangssignaal

Störung / Fault / Défaut / Fallo / Guasto / storing

Nationale Normen und Vorschriften beachten!
Note national regulations!
Respecter les lois et règles locales en vigueur!
Considere reglamentaciones nacionales
Osservare le norme nazionali!
Nationale voorschriften in acht nemen!

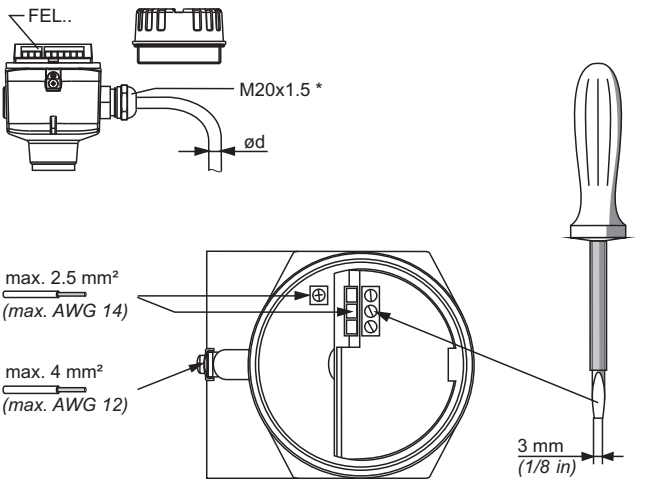


**DE- Anschluss**
**EN- Connections**
**FR - Raccordement**
**ES - Conexiones**
**IT - Collegamenti elettrici**
**NL- Aansluiting**

***Cable entry**
Nickel-plated brass:
Ød = 7...10,5 mm (0,28...0,41 in)
Plastic:
Ød = 5...10 mm (0,2...0,38 in)
Stainless steel:
Ød = 7...12 mm (0,28...0,47 in)

**DE-** Anschluss FEL51
Zweileiter-
Wechselstromanschluss

**EN-** Connections FEL51
Two-wire AC connection

**FR -** Raccordement FEL51
Raccordement 2 fils
courant alternatif

**ES -** Conexiones FEL51
Conexión a corriente alterna
a dos hilos

**IT -** Collegamenti elettrici FEL51
Collegamento bifilare
con corrente alternata

**NL-** Aansluiting FEL51
2- draads
wisselspanningsaansluiting

Zerstörung
Destruction
Destruction
Destrucción
Distruzione
Storing

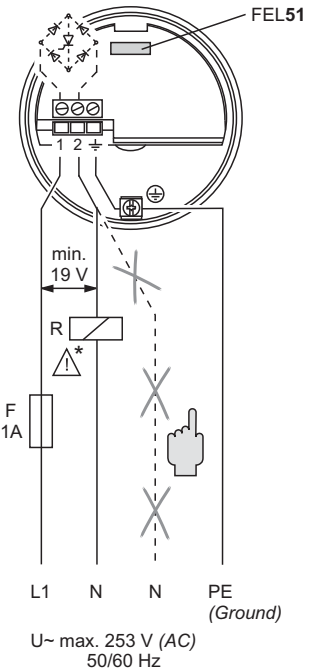


* Externe Last R **muss** angeschlossen werden

External load R **must** be connected

Charge externe R **doit** être raccordée

La carga externa R **debe** estar conectada

Il carico esterno R **deve** essere connesso

Externe belasting R **moet** aangesloten worden

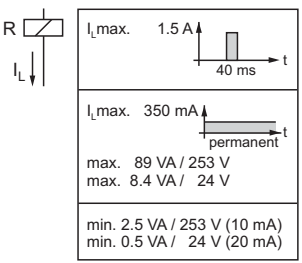

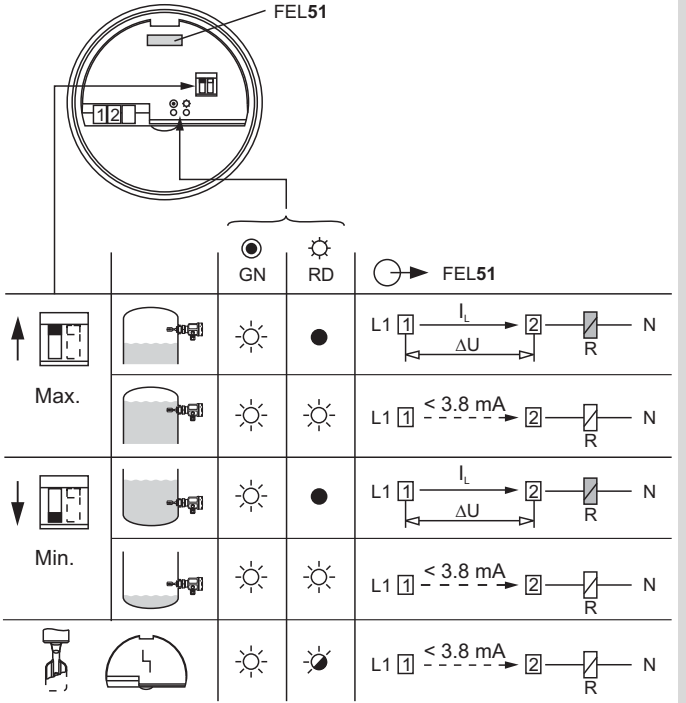


**DE-** Funktion FEL51

**EN-** Function FEL51

**FR -** Fonction FEL51

**ES -** Funcionamiento FEL51

**IT -** Funzione FEL51

**NL-** Functie FEL51

$\Delta U_{FEL51}$ max. 12 V

**DE-** Anschluss FEL52
Gleichstromanschluss (PNP)

**EN-** Connections FEL52
DC connection (PNP)

**FR-** Raccordement FEL52
Courant continu (PNP)

**ES-** Conexiones FEL52
Alimentación CC (PNP)

**IT -** Collegamenti elettrici FEL52
Collegamento CC (PNP)

**NL-** Aansluiting FEL52
Gelijkspanningsaansluiting (PNP)

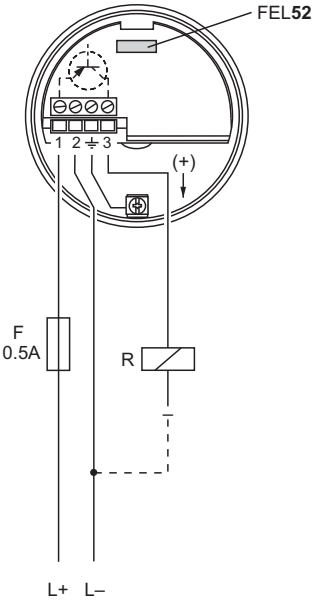


auch für DI-Module
also for DI modules
également pour des modules DI
también para módulos DI
anche per DI modules
aan de DI-module

EN 61131-2

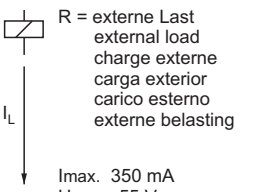

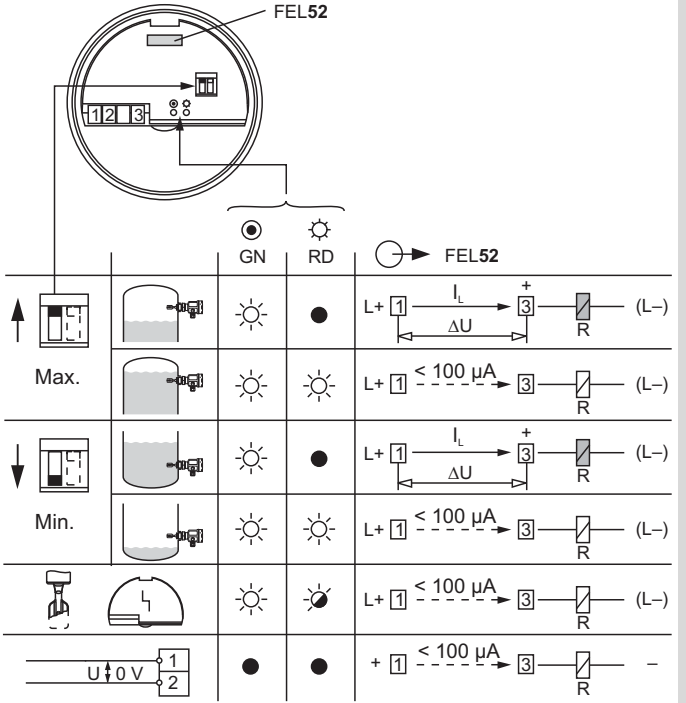


**DE-** Funktion FEL52
**EN-** Function FEL52
**FR -** Fonction FEL52
**ES -** Funcionamiento FEL52
**IT -** Funzione FEL52
**NL-** Functie FEL52

$\Delta U_{FEL52}$ max. 3 V

**DE-** Anschluss FEL54
Allstromanschluss
Relaisausgang

**EN-** Connections FEL54
Universal connection
Relay output

**FR-** Raccordement FEL54
Tous courants
Sorties relais

**ES -** Conexiones FEL54
Conexión universal
Salida por relé

**IT -** Collegamenti elettrici FEL54
Collegamento corrente universale
Uscita relè

**NL-** Aansluiting FEL54
Universele spanningsaansluiting
Relaisuitgang

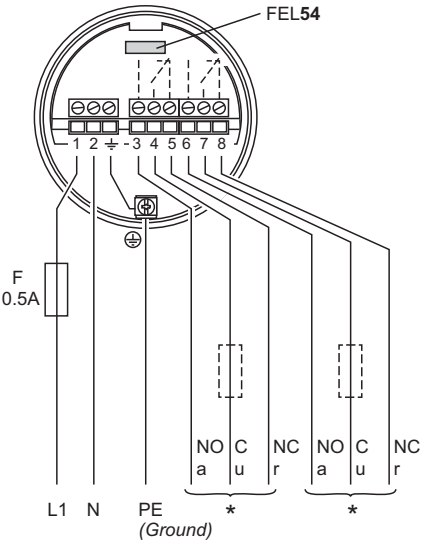


U~ 19…253 V *(AC)*

L+ L–
U⎓ 19… 55 V *(DC)*

* { U~ max. 253 V, I~ max. 6 A
P~ max. 1500 VA, cos φ = 1
P~ max. 750 VA, cos φ > 0.7
I⎓ max. 6 A, U⎓ < 30 V
I⎓ max. 0.2 A, U⎓ < 125 V

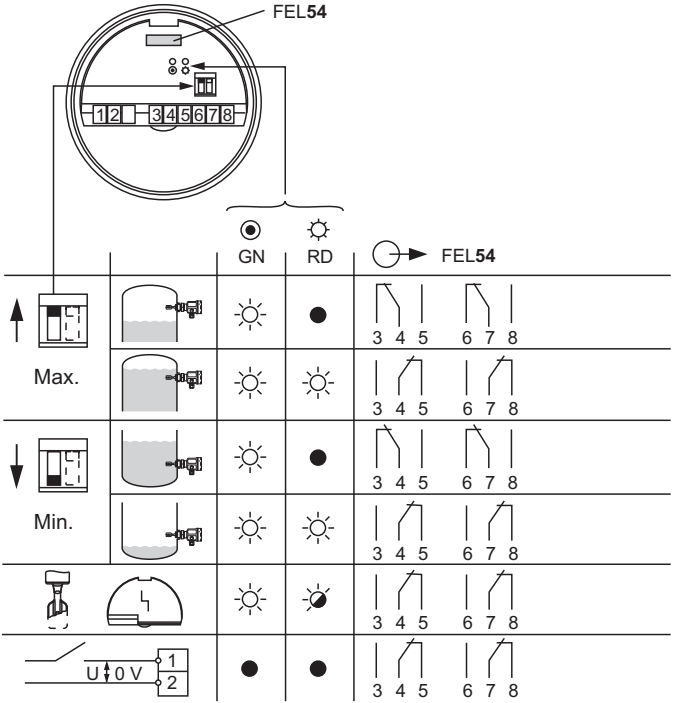


**DE-** Funktion FEL54
**EN-** Function FEL54
**FR -** Fonction FEL54
**ES -** Funcionamiento FEL54
**IT -** Funzione FEL54
**NL-** Functie FEL54

**DE-** Anschluss FEL55
Ausgang 8/16 mA
* In nasser Umgebung.

**EN-** Connections FEL55
Output 8/16 mA
* Wet location.

**FR-** Raccordement FEL55
Sortie 8/16 mA
* Dans les environnements humides.

**ES -** Conexiones FEL55
Salida 8/16 mA
* En ambientes húmedos.

**IT -** Collegamenti elettrici FEL55
Uscita 8/16 mA
* In ambienti umidi.

**NL-** Aansluiting FEL55
Uitgang 8/16 mA
* In vochtige omgevingen.

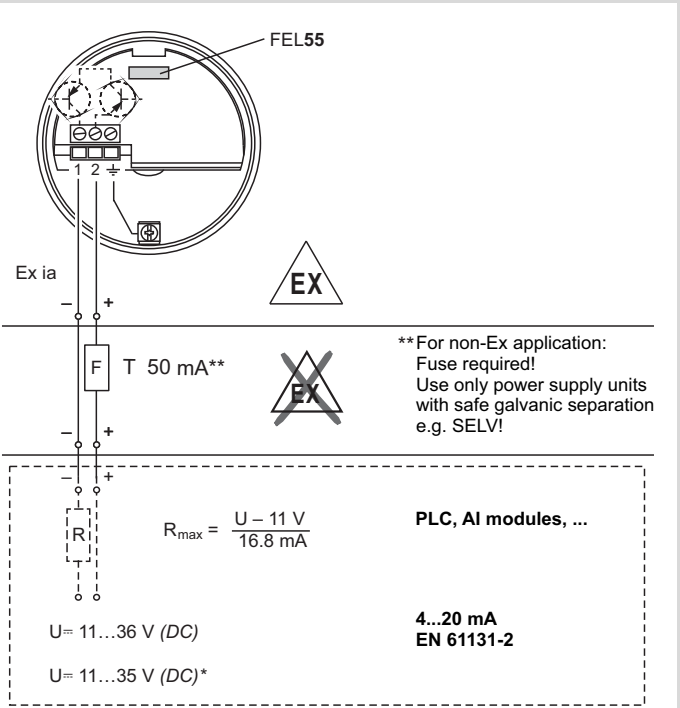

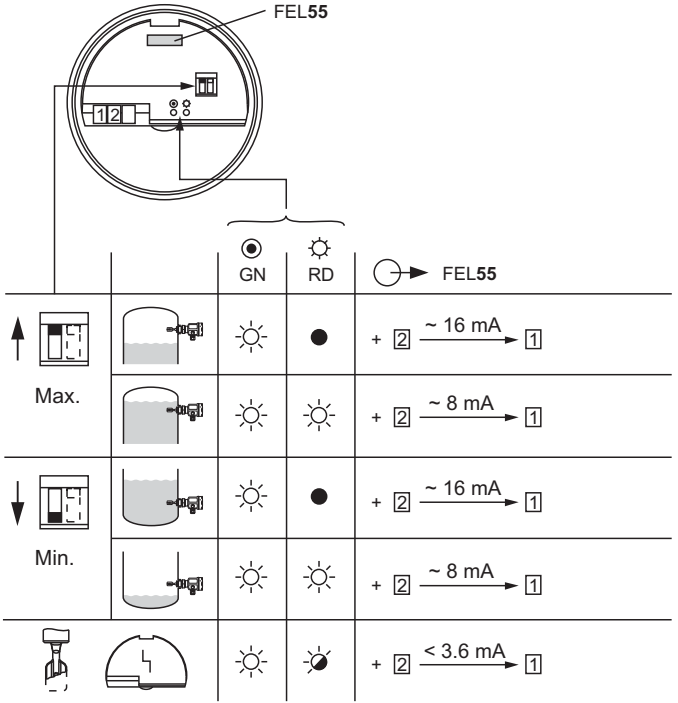


**DE-** Funktion FEL55
**EN-** Function FEL55
**FR-** Fonction FEL55
**ES-** Funcionamiento FEL55
**IT -** Funzione FEL55
**NL-** Functie FEL55

**DE-** Anschluss FEL56
NAMUR- Ausgang L-H
< 1,0 mA / > 2,2 mA

**EN-** Connections FEL56
NAMUR output L-H
< 1,0 mA / > 2,2 mA

**FR -** Raccordement FEL56
Sortie NAMUR L-H
< 1,0 mA / > 2,2 mA

**ES -** Conexiones FEL56
Salida NAMUR L-H
< 1,0 mA / > 2,2 mA

**IT -** Collegamenti elettrici FEL56
NAMUR uscita L-H
< 1,0 mA / > 2,2 mA

**NL-** Aansluiting FEL56
NAMUR uitgang L-H
< 1,0 mA / > 2,2 mA

**Power supply**
DC: 8.2 V +/- 20%

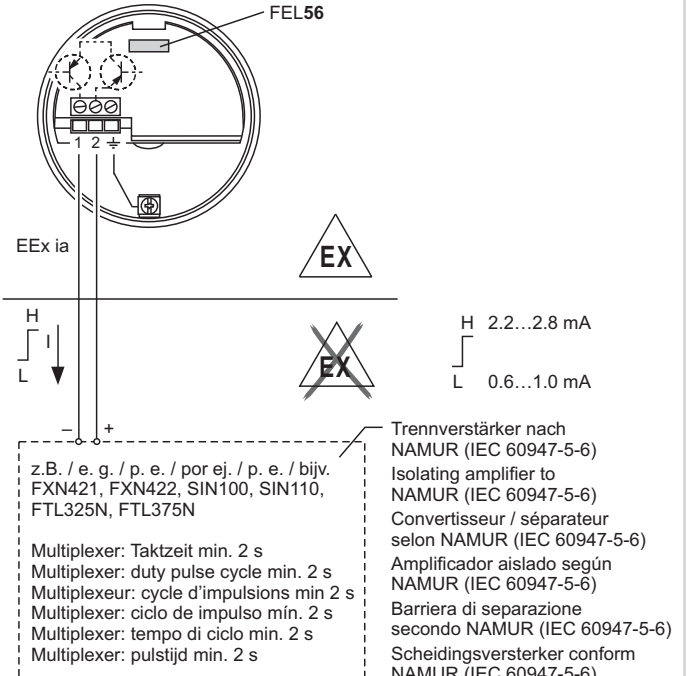

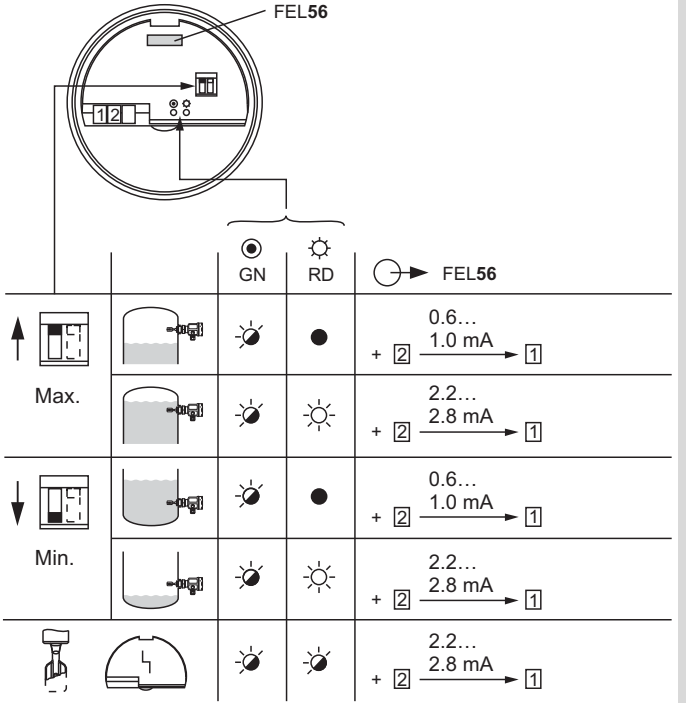


**DE-** Funktion FEL56
**EN-** Function FEL56
**FR -** Fonction FEL56
**ES -** Funcionamiento FEL56
**IT -** Funzione FEL56
**NL-** Functie FEL56

**DE-** Anschluss FEL57
Ausgang PFM
150 Hz / 50 Hz

**EN-** ConnectionsFEL 57
PFM output
150 Hz / 50 Hz

**FR-** Raccordement FEL57
Sortie PFM
150 Hz / 50 Hz

**ES -** Conexiones FEL57
Salida PFM
150 Hz / 50 Hz

**IT -** Collegamenti elettrici FEL57
PFM uscita
150 Hz / 50 Hz

**NL-** Aansluiting FEL57
PFM uitgang
150 Hz / 50 Hz

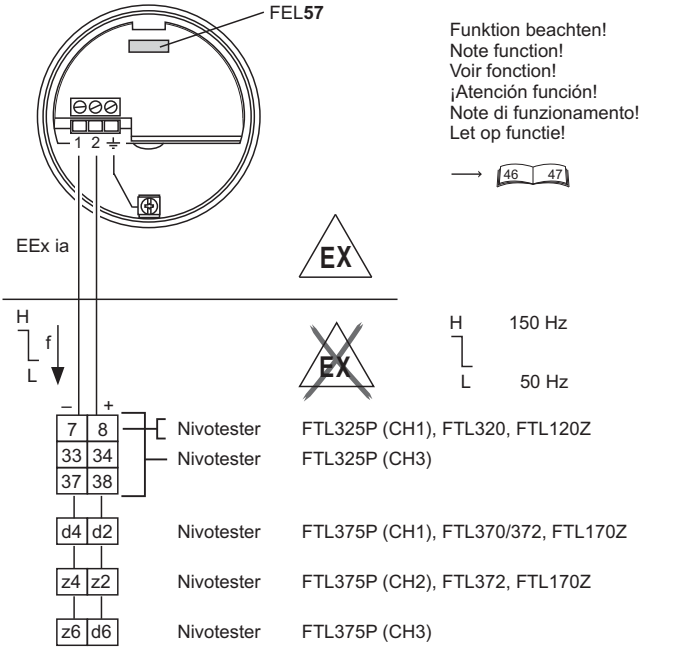

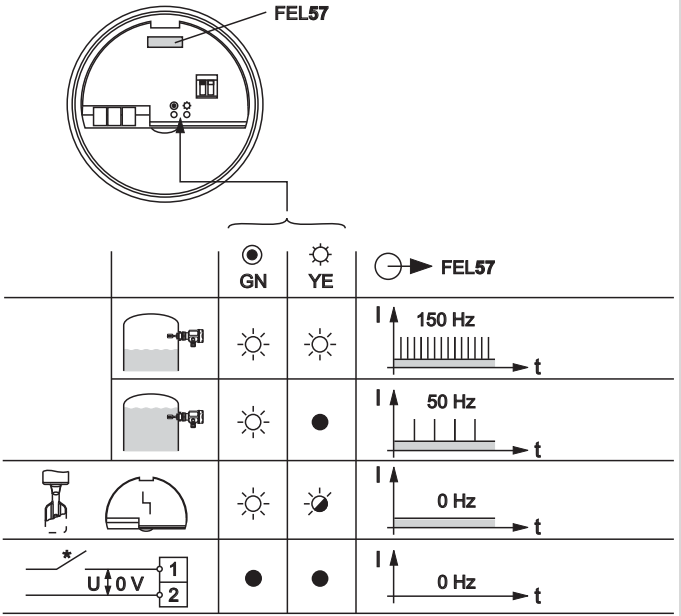


**DE-** Funktion FEL57
**EN-** Function FEL57
**FR -** Fonction FEL57
**ES -** Funcionamiento FEL57
**IT -** Funzione FEL57
**NL-** Functie FEL57

**DE-** Einschaltverhalten
Selbsttest (STD)

**EN-** Switch-on behaviour
Selftest (STD)

**FR -** Comportement à la mise sous tension
Auto-test (STD)

**ES -** Comportamiento del cambio de e stado
Prueba automática (STD)

**IT -** Comportamento in fase di accensione
Prova automatica (STD)

**NL-** Inschakelgedrag
Functietest (STD)

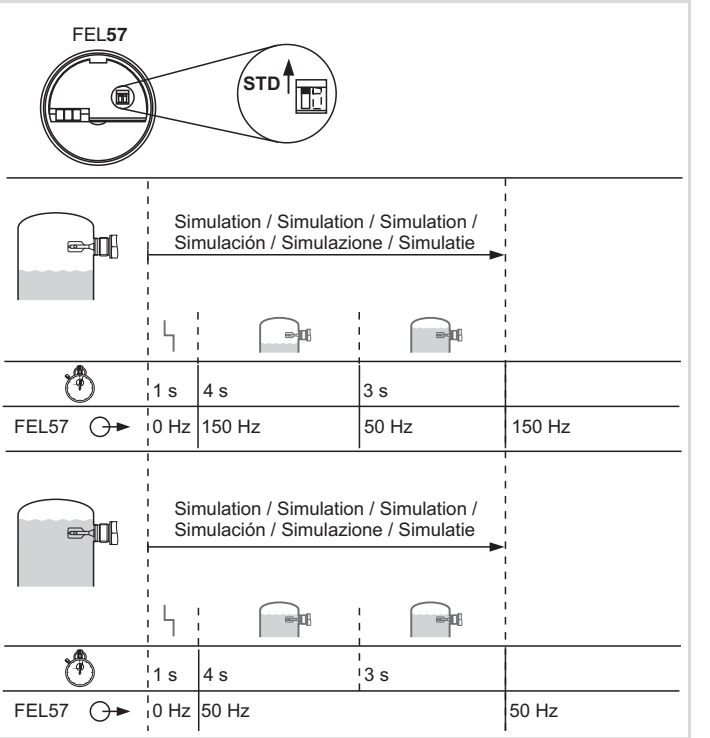

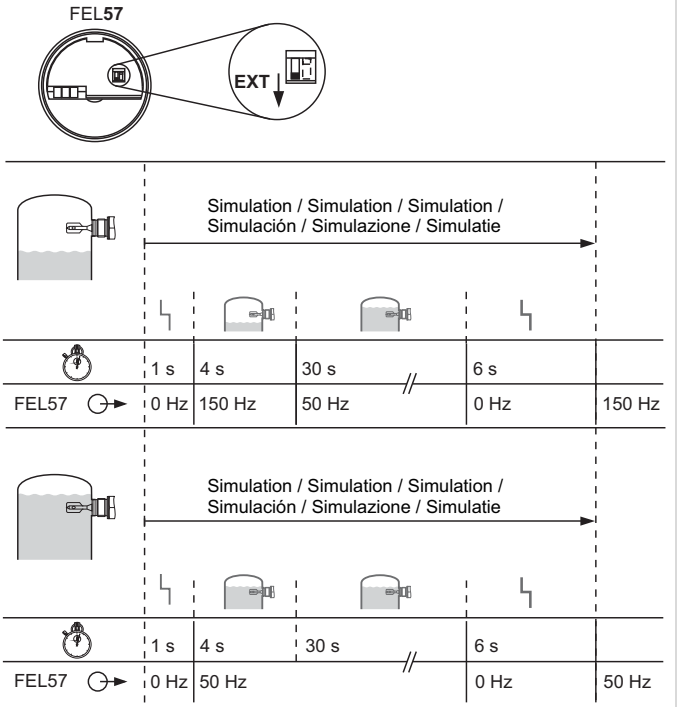


**DE-** Einschaltverhalten
Selbsttest (EXT)

**EN-** Switch-on behaviour
Selftest (EXT)

**FR -** Comportement à la mise sous tension
Auto-test (EXT)

**ES -** Comportamiento del cambio de e stado
Prueba automática (EXT)

**IT -** Comportamento in fase di accensione
Prova automatica (EXT)

**NL-** Inschakelgedrag
Functietest (EXT)

**DE-** Anschluss FEL50A
**EN-** Connections FEL50A
**FR -** Raccordement FEL50A
**ES -** Conexiones FEL50A
**IT -** Collegamenti elettrici FEL50A
**NL-** Aansluiting FEL50A

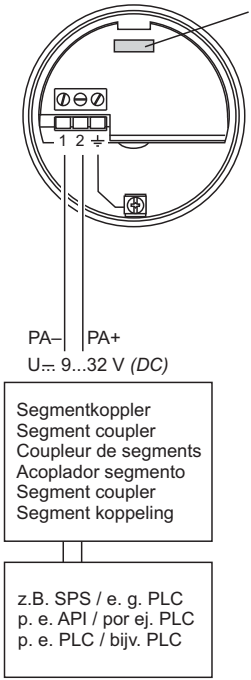


M12-Stecker / M12 Plug /
Connecteur M12 / M12 Conector /
Connettore M12 / M12 Connector

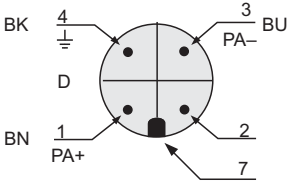


Gerätestecker am Gehäuse (male)
Device plug on housing (male)
Connecteur d'appareil sur le boîtier (mâle)
Conector del equipo en cabezal (macho)
Connettore del dispositivo (maschio)
Instrumentsteker op behuizing (male)

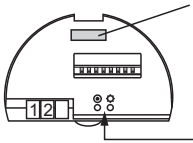


| | | GN | YE | FEL50A<br>PA-Bussignal / PA Bus Signal / Signal bus PA / Señal Bus PA / Segnale bus PA / PA bussignaal |
|---|---|---|---|---|
| nicht invertiert<br>not inverted<br>non inversé<br>no invertido<br>non invertito<br>niet geïnverteerd | | ☼ | ● | OUT_D = 0 |
| | | ☼ | ☼ | OUT_D = 1 |
| invertiert<br>inverted<br>inversé<br>invertido<br>invertito<br>geïnverteerd | | ☼ | ☼ | OUT_D = 0 |
| | | ☼ | ● | OUT_D = 1 |
| SPS<br>Commuwin II | | ☼ | – | Kommunikation/ Communication/ Communication / Comunicación / Comunicazione / Communicatie |
| | | – | ☼ | Status siehe BA141F<br>Status, see BA141F<br>Etat, voir BA141F<br>Estado, ver BA141F<br>Stato, vedere BA141F<br>Status, zie BA141F |
| U ↕ 0 V 1 2 | | ● | ● | ../.. |

**DE-** Funktion FEL50A
**EN-** Function FEL50A
**FR -** Fonction FEL50A
**ES -** Funcionamiento FEL50A
**IT -** Funzione FEL50A
**NL-** Functie FEL50A

**DE-** Anschluss FEL58
NAMUR- Ausgang H-L
> 2,2 mA / < 1,0 mA

**EN-** Connections FEL58
NAMUR output H-L
> 2,2 mA / < 1,0 mA

**FR -** Raccordement FEL58
Sortie NAMUR H-L
> 2,2 mA / < 1,0 mA

**ES -** Conexiones FEL58
Salida NAMUR H-L
> 2,2 mA / < 1,0 mA

**IT -** Collegamenti elettrici FEL58
NAMUR uscita H-L
> 2,2 mA / < 1,0 mA

**NL-** Aansluiting FEL58
NAMUR uitgang H-L
> 2,2 mA / < 1,0 mA

**Power supply**

DC: 8.2 V +/- 20%

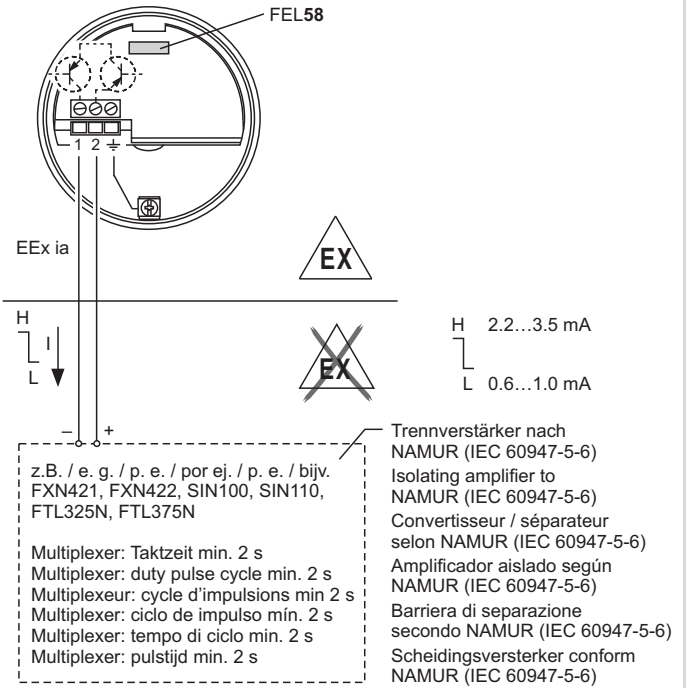

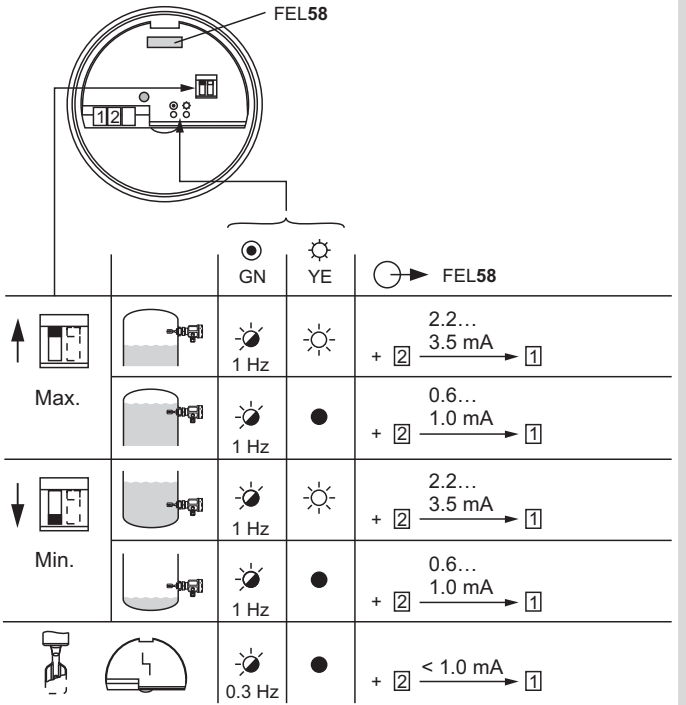


**DE-** Funktion FEL58
**EN-** Function FEL58
**FR -** Fonction FEL58
**ES -** Funcionamiento FEL58
**IT -** Funzione FEL58
**NL-** Functie FEL58

**DE-** Funktion Prüftaste FEL58
Sicherheitsschaltung MAX

**EN-** Function test button FEL58
Fail-safe mode MAX

**FR -** Fonction touche test FEL58
Sécurité MAX

**ES -** Funcionamiento
botón de prueba FEL58
Conmutador de seguridad MAX

**IT -** Funzione pulsante test FEL58
Selezione della modalità di
sicurezza MAX

**NL-** Functie testknop FEL58
Veiligheidsschakeling MAX

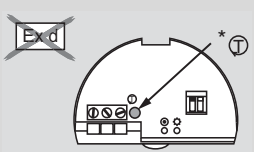


MAX + T

| | | |
|---|---|---|
| 1. Normaler Betrieb / Normal operation / Fonctionnement normal / Funcionamiento normal / Funzionamento normale / Normaal bedrijf | GN YE<br>1 Hz<br>+ 2 — 2.2… 3.5 mA → 1 | GN YE<br>1 Hz<br>+ 2 — 0.6… 1.0 mA → 1 |
| 2. Prüftaste drücken / Press test button / Appuyer sur la touche test / Pulse el botón de prueba / Premere il pulsante test / Testknop indrukken (>3 s) | GN YE<br>+ 2 — 0 mA → 1 | GN YE<br>+ 2 — 0 mA → 1 |
| 3. Prüftaste loslassen, nach ~2 s normaler Betrieb / Release the test button, after ~2 s normal operation / Relâcher la touche test, après ~2 s fonctionnement normal / Deje de presionar el botón de prueba, después de ~2 s funcionamiento normal / Rilasciare il pulsante test, dopo ~2 s funzionamento normale / De testknop loslaten, na ~2 s normaal bedrijf | GN YE<br>1 Hz<br>+ 2 — 2.2… 3.5 mA → 1 | GN YE<br>1 Hz<br>+ 2 — 0.6… 1.0 mA → 1 |

MIN + Ⓣ

| | | |
|---|---|---|
| 1. Normaler Betrieb / Normal operation / Fonctionnement normal / Funcionamiento normal / Funzionamento normale / Normaal bedrijf | GN ☼ 1 Hz YE ☼<br>+ 2 — 2.2… 3.5 mA → 1 | GN ☼ 1 Hz YE ●<br>+ 2 — 0.6… 1.0 mA → 1 |
| 2. Prüftaste drücken / Press test button / Appuyer sur la touche test / Pulse el botón de prueba / Premere il pulsante test / Testknop indrukken   | GN ● YE ●<br>+ 2 - - - 0 mA → 1 | GN ● YE ●<br>+ 2 - - - 0 mA → 1 |
| 3. Prüftaste loslassen, nach ~2 s normaler Betrieb / Release the test button, after ~2 s normal operation / Relâcher la touche test, après ~2 s fonctionnement normal / Deje de presionar el botón de prueba, después de ~2 s funcionamiento normal / Rilasciare il pulsante test, dopo ~2 s funzionamento normale / De testknop loslaten, na ~2 s normaal bedrijf  | GN ☼ 1 Hz YE ☼<br>+ 2 — 2.2… 3.5 mA → 1 | GN ☼ 1 Hz YE ●<br>+ 2 — 0.6… 1.0 mA → 1 |

**DE-** Funktion Prüftaste FEL58
Sicherheitsschaltung MIN

**EN-** Function test button FEL58
Fail-safe mode MIN

**FR -** Fonction touche test FEL58
Sécurité MIN

**ES -** Funcionamiento
botón de prueba FEL58
Conmutador de seguridad MIN

**IT -** Funzione pulsante test FEL58
Selezione della modalità di
sicurezza MIN

**NL-** Functie testknop FEL58
Veiligheidsschakeling MIN

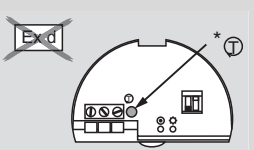

**DE- Wartung, Reinigung**
Anbackungen entfernen

**EN- Maintenance, Cleaning**
Removal of encrustation

**FR- Entretien, Nettoyage**
Enlever les incrustations

**ES - Mantenimiento, Limpieza**
Eliminación de adherencias

**IT - Manutenzione, Pulizia**
Rimozione dei depositi

**NL- Onderhoud, Reiniging**
Aangroei verwijderen

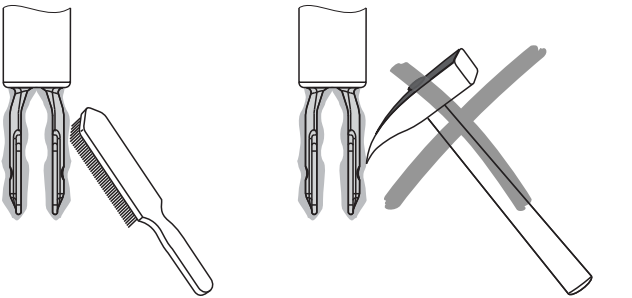

**Nicht** besteigen!
**Don't** use as a step!
**Ne pas** marcher
sur les lames vibrantes!
**No** usar como peldaño!
**Non** usare come scalino!
**Niet** op staan!

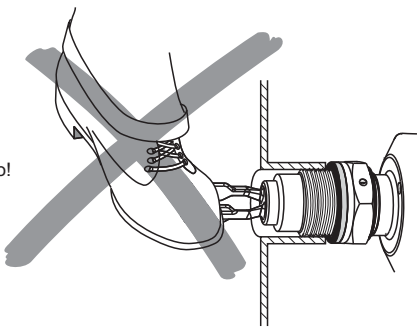

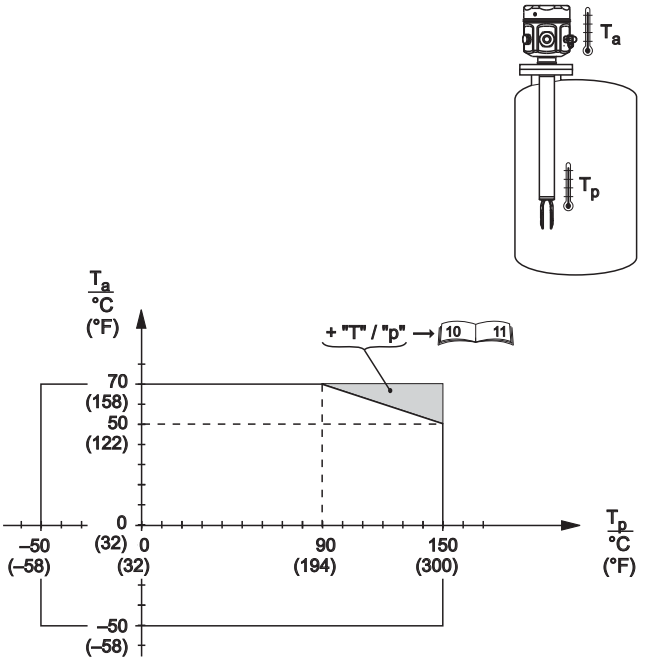


**DE- Technische Daten**
Umgebungstemperatur $T_a$
Prozesstemperatur $T_p$

**EN- Technical Data**
Ambient temperature $T_a$
Process temperature $T_p$

**FR - Caractéristiques techniques**
Température ambiante $T_a$
Température de process $T_p$

**ES - Datos técnicos**
Temperatura ambiente $T_a$
Temperatura del proceso $T_p$

**IT - Dati tecnici**
Temperatura ambiente $T_a$
Temperatura di processo $T_p$

**NL- Technische gegevens**
Omgevingstemperatuur $T_a$
Procestemperatuur $T_p$

**DE-** Prozessdruck $p_e$
Prozesstemperatur $T_p$

**EN-** Process pressure $p_e$
Process temperature $T_p$

**FR-** Pression de process $p_e$
Température de process $T_p$

**ES -** Presión del proceso $p_e$
Temperatura del proceso $T_p$

**IT -** Pressione di processo $p_e$
Temperatura di processo $T_p$

**NL-** Procesdruk $p_e$
Procestemperatuur $T_p$

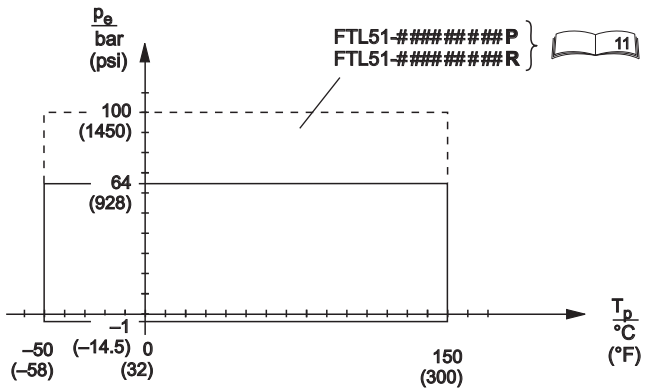

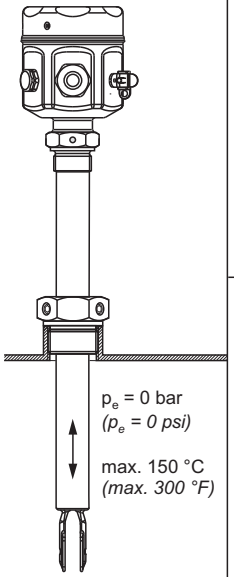


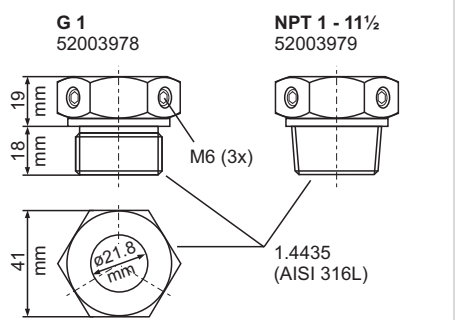


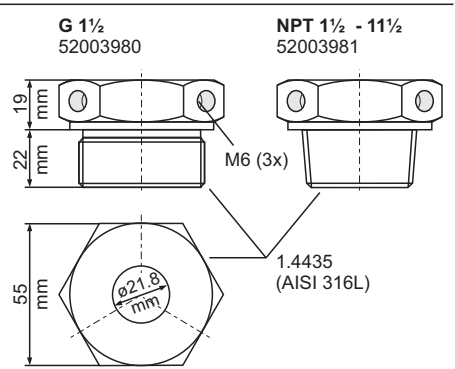


**DE- Zubehör**
Schiebemuffen für drucklosen Betrieb

**EN- Accessories**
Sliding sleeves for unpressurised operation

**FR - Accessoires**
Manchons coulissants pour applications sans pression

**ES - Accesorios**
Manguitos deslizantes para operación sin presión

**IT - Accessori**
Manicotto scorrevole per impieghi privi di pressione

**NL- Toebehoren**
Schuifmof voor drukloze toepassing

siehe / see / voir / ver / vedi / zie :
KA00151F (G 1, NPT 1)
KA00152F (G 1½, NPT 1½)

100 mm = 3. 94 in

**DE-** Hochdruck-Schiebemuffen

**EN-** High pressure sliding sleeves

**FR -** Manchons coulissants haute pression

**ES -** Manguitos deslizantes para alta presión

**IT -** Manicotto scorrevole per impieghi ad alta pressione

**NL-** Schuifmof voor toepassing onder druk

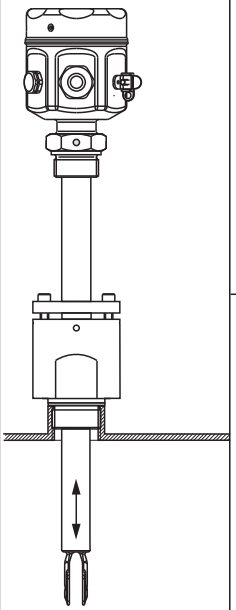

**G 1**
1.4435 (AISI 316L)
52003663

AlloyC4: 52003664
AlloyC22: 71118691

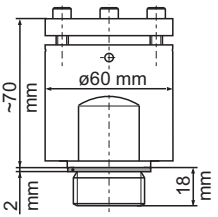


**NPT 1 - 11½**
1.4435 (AISI 316L)
52003667

AlloyC4: 52003668
AlloyC22: 71118694

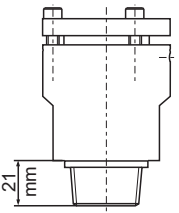


**G 1½**
1.4435 (AISI 316L)
52003665

AlloyC4: 52003666
AlloyC22: 71118693

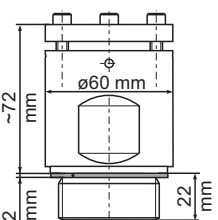


**NPT 1½ - 11½**
1.4435 (AISI 316L)
52003669

AlloyC4: 52003670
AlloyC22: 71118695

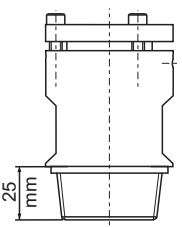


siehe / see / voir / ver / vedi / zie :
KA00153F (G 1, NPT 1)
KA00154F (G 1½, NPT 1½)

100 mm = 3. 94 in

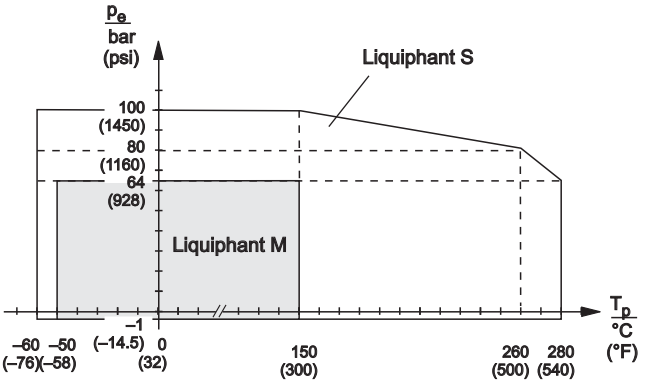


**DE-** Hochdruck-Schiebemuffen:
Prozessdruck $p_e$
Prozesstemperatur $T_p$

**EN-** High pressure sliding sleeves:
Process pressure $p_e$
Process temperature $T_p$

**FR-** Manchons coulissants haute pression:
Pression de process $p_e$
Température de process $T_p$

**ES -** Manguitos deslizantes para alta presión:
Presión del proceso $p_e$
Temperatura del proceso $T_p$

**IT -** Manicotto scorrevole per impieghi ad alta pressione:
Pressione di processo $p_e$
Temperatura di processo $T_p$

**NL-** Schuifmof voor toepassing onder druk:
Procesdruk $p_e$
Procestemperatuur $T_p$

| Fehlfunktion | Ursache | Maßnahme |
|---|---|---|
| Schaltet nicht | Versorgungsspannung fehlt | Versorgung prüfen |
| | Signalleitung defekt | Signalleitung prüfen |
| | Elektronikeinsatz defekt<br>- FEL51 direkt an L1 und N angeschlossen | Austauschen<br>- FEL51 immer über externe Last anschließen |
| | Dichte der Flüssigkeit zu gering | Am Elektronikeinsatz Dichte auf > 0,5 einstellen |
| | Schwinggabel verkrustet | Schwinggabel säubern |
| | Schwinggabel korrodiert<br>(Anzeige am FEL: rot/gelb blinkt,<br>FEL58: grün blinkt 0,3 Hz) | Schwinggabel komplett mit Prozessanschluss austauschen |
| | FEL51: Relais mit zu großem Innenwiderstand angeschlossen | Geeignetes Relais anschließen |
| | FEL51: Relais mit zu geringem Haltestrom angeschlossen | Widerstand parallel zum Relais anschließen |
| | FEL54: Kontakte verschweißt<br>(nach einem Kurzschluss) | FEL54 austauschen; Sicherung in den Kontaktstromkreis |
| Schaltet falsch | Minimum-/Maximum- Sicherheitsschaltung vertauscht | Am Elektronikeinsatz Sicherheitsschaltung richtig einstellen |
| Fehlschaltung, sporadisch | Dichter schwerer Schaum,<br>wilde Turbulenzen,<br>aufgeschäumte Flüssigkeit | Liquiphant im Bypass montieren |
| | Extreme Funkstörung | Verbindungskabel abschirmen |
| | Extreme Vibrationen | Entkoppeln, dämpfen,<br>Schwinggabel 90° drehen |
| | Wasser im Gehäuse | Deckel und Kabeldurchführungen fest zuschrauben |
| | FEL52: Ausgang überlastet | Last, (Leitungs-) Kapazität verringern |
| Fehlschaltung nach Netzausfall | FEL57, Verhalten beim Einschalttest (wiederkehrende Prüfung) | Schaltverhalten FEL57 beachten;<br>Anlagensteuerung nach Netzausfall bis ca. 45 s blockieren |

| Fault | Reason | Remedy |
|---|---|---|
| Does not switch | No power | Check power |
| | Faulty signal line | Check signal line |
| | Faulty electronic insert<br>- FEL51 connected directly to L1 and N | Exchange<br>- always connect FEL51 via external load |
| | Density of liquid too low | Set density to > 0.5 at electronic insert |
| | Fork encrusted | Clean fork |
| | Fork corroded<br>(Indication on FEL: red/yellow flashes, FEL58: green flashes 0.3 Hz) | Exchange fork and process connection |
| | FEL51: Internal resistance of connected relay too large | Connect suitable relay |
| | FEL51: Holding current of connected relay too low | Connected resistor in parallel with relay |
| | FEL54: Contacts welded together (after short-circuit) | Exchange FEL54; put fuse in contact circuit |
| Switches incorrectly | Min-/Max- fail-safe mode set wrongly | Set correct mode at electronic insert |
| Sporadic faulty switching | Thick heavy foam,<br>very turbulent conditions,<br>foaming liquid | Mount Liquiphant in bypass |
| | Extreme RFI | Use screened cable |
| | Extreme vibration | Decouple, damp, turn fork 90° |
| | Water in housing | Screw cover and cable gland tight |
| | FEL52: Output overloaded | Reduce load,(cable) capacitance |
| Switches incorrectly after power failure | FEL57, behaviour during switch-on test (functional test) | Observe switching behaviour of FEL57;<br>After power failure blockplant control for up to 45 s |

## FR- Recherche de défauts

| Défaut | Cause | Mesure |
|---|---|---|
| Ne commute pas | Tension d'alimentation manquante | Vérifier la tension d'alimentation |
| | Câble de signal défectueux | Vérifier le câble de signal |
| | Electronique défectueuse<br>- FEL51 relié directement á L1 et N | Remplacer<br>- Relier FEL51 toujours via la charge externe |
| | Densité du liquide trop faible | Régler la densité sur > 0,5 sur l'électronique |
| | Lames vibrantes encroûtées | Nettoyer les lames vibrantes |
| | Lames vibrantes corrodées<br>(Sur FEL: rouge/jaune clignote,<br>FEL58: vert clignote 0,3 Hz) | Remplacer les lames vibrantes ainsi que le raccord process |
| | FEL51: relais avec résistance interne trop élevée | Raccorder un relais approprié |
| | FEL51: relais avec courant de maintien trop faible | Raccorder une résistance en parallèle au relais |
| | FEL54: contacts soudés<br>(après un court-circuit) | Remplacer FEL54; fusible dans le circuit courant |
| Mauvaise commutation | Sécurité min/max inversée | Régler correctement le circuit de sécurité sur l'électronique |
| Mauvaise commutation, sporadique | Mousse dense et lourde,<br>fortes turbulences,<br>liquide émulsionné | Monter le Liquiphant en bypass |
| | Parasites puissants | Blinder le câble de liaison |
| | Vibrations importantes | Découpler, amortir,<br>tourner la fourche de 90° |
| | Eau dans le boîtier | Visser fermement le couvercle et les entrées de câble |
| | FEL52: surcharge de la sortie | Réduire la charge et la capacité (de ligne) |
| Mauvaise commutation après coupure | FEL57, comportement lors du test de mise sous tension (test cyclique) | Observer le comportement du FEL57 à la mise sous tension;<br>bloquer la commande de l'installation après coupure de courant pendant max. 45 s |

| Fallo | Causa | Solución |
|---|---|---|
| No conmuta | No hay alimentación | Comprobar alimentación |
| | Señal defectuosa | Comprobar cable de señal |
| | Electrónica defectuosa<br>- FEL51 conectada directamente a L1 y N | Cambio<br>- Siempre conectar FEL51 vía una carga externa |
| | Densidad del líquido demasiado baja | Fijar densidad a > 0.5 en la electrónica |
| | Horquillas con adherencias | Limpiar horquillas |
| | Horquillas corroidas<br>(En FEL: rojo/amarillo parpadea,<br>FEL58: verde parpadea 0.3 Hz) | Cambiar la horquilla y la conexión a proceso |
| | FEL51: Relé con resistencia interna demasiado grande | Conectar un relé adecuado |
| | FEL51: El relé conectado retiene muy poca corriente | Resistencia conectada en paralelo con el relé |
| | FEL54: Contactos soldados juntos<br>(después del corto circuito) | Cambiar FEL54;<br>poner fusible en el circuito de contacto |
| Conmuta incorrectamente | El modo de fallo mín./máx. está mal ajustado | Ajustar el modo correcto en la electrónica |
| Fallos de conmutación esporádicos | Espuma muy densa,<br>turbulencias,<br>líquidos espumosos | Montar el Liquiphant en bypass |
| | RFI extremo | Utilizar cable apantallado |
| | Vibraciones extremas | Desacoplar, amortiguar y girar las horquillas 90° |
| | Agua en el cabezal | Roscar la cubierta y el prensaestopas firmemente |
| | FEL52: Salida con sobretensión | Reducir carga, capacidad (cable) |
| Conmuta incorrectamente después de un fallo de alimentación | FEL57, comportamiento durante la comprobación de conmutación<br>(test de funcionamiento) | Observar el comportamiento de conmutación del FEL57;<br>del fallo de alimentación, bloqueo del control de la planta durante 45 s aprox. |

## IT - Individuazione e eliminazione delle anomalie

| Guasto | Motivo | Rimedio |
|---|---|---|
| Non commuta | Mancanza alimentazione | Controllare l'alimentazione |
| | Linea segnale guasta | Controllare segnale linea |
| | Inserto elettronico guasto<br>- FEL51 connesso direttamente a L1 e N | Sostituire<br>- connettere sempre FEL51 mediante carico esterno |
| | Densità del liquido troppo bassa | Impostare la densità a > 0,5 sull'inserto elettronico |
| | Forcella incrostata | Pulire la forcella |
| | Forcella corrosa<br>(Sul FEL: rosso/giallo lampeggiano,<br>FEL58: verde lampeggiano 0,3 Hz) | Sostituire la forcella e la connessione al processo |
| | FEL51: resistenza interna del relè connesso troppo grande | Collegare il relè adeguato |
| | FEL51: corrente di mantenimento del relè connesso troppo grande | Connettere resistenza in parallelo al relè |
| | FEL54: contatti saldati insieme<br>(dopo il corto circuito) | Sostituire FEL54;<br>mettere il fusibile nel circuito di contatto |
| Commuta non correttamente | Modalità di sicurezza min-/max-impostata in modo errato | Impostare la modalità corretta nell'inserto elettronico |
| Commutazione sporadicamente difettosa | Schiuma pesante e torbida condizioni molto turbolente, liquido che produce schiuma | Montare il Liquiphant nel bypass |
| | RFI forte | Usare cavo schermato |
| | Forte vibrazione | Disaccoppiare, smorzare,<br>ruotare la forcella di 90° |
| | Acqua nella custodia | Avvitare correttamente il coperchio e il passacavi |
| | FEL52: Uscita sovraccaricata | Ridurre il carico, capacità (cavo) |
| Commutazione non corretta dopo la mancanza alimentazione | FEL57, comportamento durante la fase di test all'accensione<br>(test di funzionamento) | Osservare il comportamento di commutazione del FEL57; dopo il ripristino di una mancanza di alimentazione inibire il controllo dell'impianto per 45 s |

| Fout | Oorzaak | Maatregel |
|---|---|---|
| Schakelt niet | Voeding ontbreekt | Voeding kontroleren |
| | Signaalleiding defect | Signalleiding kontroleren |
| | Insert defect<br>- FEL51 direct op L1 en N aangesloten | Ver vangen<br>- FEL51 altijd via een belasting aansluiten |
| | Dichtheid van de vloeistof te gering | Op elektronica- insert dichtheid<br>op > 0, 5 instellen |
| | Trilvork te veel vervuild | Trilvork reinigen |
| | Trilvork gecorrodeerd<br>(LED op FEL knippert rood/geel,<br>FEL58: groen knippert 0,3 Hz) | Trilvork compleet met procesaansluiting vervangen |
| | FEL51: Relais met te groteinwendige weerstand aangesloten | Passender relais aansluiten |
| | FEL51: Relais met te geringe houdstroom aangesloten | Weerstand parallel aan relais aansluiten |
| | FEL54: Contacten verkleeft<br>(na een kortsluiting) | FEL54 vervangen;<br>zekering in circuit aanbrengen |
| Schakelt foutief | Minimum- /Maximum-<br>fail-safe instelling verwisseld | FEL fail-safe keuze correct instellen |
| Sporadische foutschakeling | Dik zwaar schuim,<br>wilde turbulentie,<br>opgeschuimde vloeistof | Liquiphant in by-pass monteren |
| | Extreme RFI invloed | Verbindingskabel afschermen |
| | Extreme vibraties | Ontkoppelen, dempen,<br>vork 90° draaien |
| | Water in de behuizing | Deksel en wartels vast aandraaien |
| | FEL52: uitgang overbelast | Schakelbelasting verminderen |
| Foutmelding | FEL57, gedrag bij inschakelen na netuitval<br>(periodieke testfunctie) | Schakelgedrag FEL57 controleren;<br>procesherstart na netuitval ca. 45 s<br>blokkeren |

**DE-** Ergänzung Fehlersuche

Ist das Schaltverhalten der Gabel ungewöhnlich, kann an PIN 4 der Diagnosebuchse die Gabelfrequenz gemessen werden.
Bei den Elektronikeinsätzen FEL51/52/54/55/56/57/58 ist dies eine sinusförmige Schwingung deren Amplitude einen Rückschluss auf den Gabelzustand zulässt.
Bei FEL50A ist aufgrund eines Rechtecksignals nur noch die Gabelfrequenzmessung möglich.

**EN-** Trouble- shooting Supplement

If the switching behaviour of the fork is abnormal, the fork frequency can be measured at PIN 4 of the diagnosis socket.
With electronic inserts FEL51/52/54/55/56/57/58 this is a sinusoidal vibration whose amplitude makes it possible to determine the condition of the fork.
With FEL50A, only the fork frequency measurement is possible due to a rectangular pulse signal.

**FR-** Additif recherche de défauts

Si la commutation de la fourche est inhabituelle, il est possible de mesurer la fréquence de cette dernière au PIN 4 de la prise diagnostic.
Pour l es électroniques FEL51/52/54/55/56/57/58 il s'agit d'une oscillation sinusoïdale dont l'amplitude permet d'évaluer l'état de la fourche.
Pour FEL50A, le signal rectangulaire ne permet qu'une mesure de la fréquence de fourche.

**ES** – Suplemento para la identificación de fallos

Si el comportamiento de conmutación de la horquilla es anormal, puede medir la frecuencia de la misma en el PIN 4 del interruptor de diagnosis. Con las electrónicas FEL51/52/54/55/56/57/58 se consigue una vibración sinusoidal cuya amplitud hace posible determinar la condición de la horquilla.
Con FEL50A, sólo es posible medir la frecuencia de la horquilla debido a una señal de impulsos rectangular.

**IT** – Supplemento alla ricerca dei malfunzionamenti

Se le condizioni di commutazione dei rebbi non è normale la frequenza di vibrazione può essere misurata al PIN 4 del connettore per la diagnosi. Con gli inserti elettronici FEL51/52/54/55/56/57/58 è possibile determinare la condizione dei rebbi anche tramite l'ampiezza dell'onda sinusoidale. Con FEL50A il segnale è un onda quadra, per cui è possibile valutare solo il valore di frequenza.

**NL**– Bijlage problemen oplossen

Indien het schakelgedrag van de trilvork niet normaal verloopt kan de frequentie van de vork gemeten worden op pen 4 van de diagnoseconnector.
Bij de elektronica inserts van de FEL51/52/54/55/56/57/58 is dit een sinusvormige trilling waarvan de amplitude een beeld geeft van de conditie van de vork.
Bij de FEL50A is alleen de vorkfrequentie te meten als gevolg van een rechthoekig pulssignaal.

**DE- Ersatzteile**
Elektronikeinsätze

**EN- Spare parts**
Electronic inserts

**FR- Pièces de rechange**
Electroniques

**ES - Repuestos**
Electrónicas

**IT - Ricambi**
Inserti elettronici

**NL- Reserve-onderdelen**
Elektronica inserts



| | |
|---|---|
| FEL51 | 52002304 |
| FEL52 | 52002305 |
| FEL54 | 52002306 |
| FEL55 | 52002307 |
| FEL56 | 52002308 |
| FEL57 | 52002309 |
| FEL58 | 52006454 |
| FEL50A | 52010527 |

**Installationsregel:** Bei der Installation ist zu beachten, dass elektrische Betriebsmittel (Elektronikeinsätze) die mit nichteigensicheren Stromkreisen gespeist wurden, grundsätzlich **nicht** mehr mit eigensicheren Stromkreisen zusammengeschaltet werden dürfen.

**Installation specification:** During installation, please keep in mind that electrical resources (electronic inserts) which are powered by non-intrinsically-safe circuits may **no** longer be interconnected with intrinsically-safe circuits.

**Directive d'installation :** Lors de l'installation, tenir compte du fait que les matériels électriques (électroniques) alimentés par des circuits sans sécurité intrinsèque **ne** doivent plus être connectés à des circuits à sécurité intrinsèque.

**Normas de instalación:** Durante la instalación, tenga en cuenta que los elementos eléctricos (electrónicas) alimentadas por circuitos no instrínsecamente seguros, **no** podrán estar interconectadas con circuitos intrínsecamente seguros.

**Specifiche di installazione:** Durante l'installazione è necessario tenere presente che gli impianti elettrici (inserti elettronici) alimentati da circuiti elettrici non a sicurezza intrinseca **non** possono più essere collegati con circuiti elettrici a sicurezza intrinseca.

**Installatievoorschrift:** Bij de installatie moet erop worden gelet, dat elektrisch materieel (elektronica-units) die via niet-intrinsiekveilige circuits worden gevoed, in principe **niet** meer met intrinsiekveilige circuits mogen worden samengeschakeld.

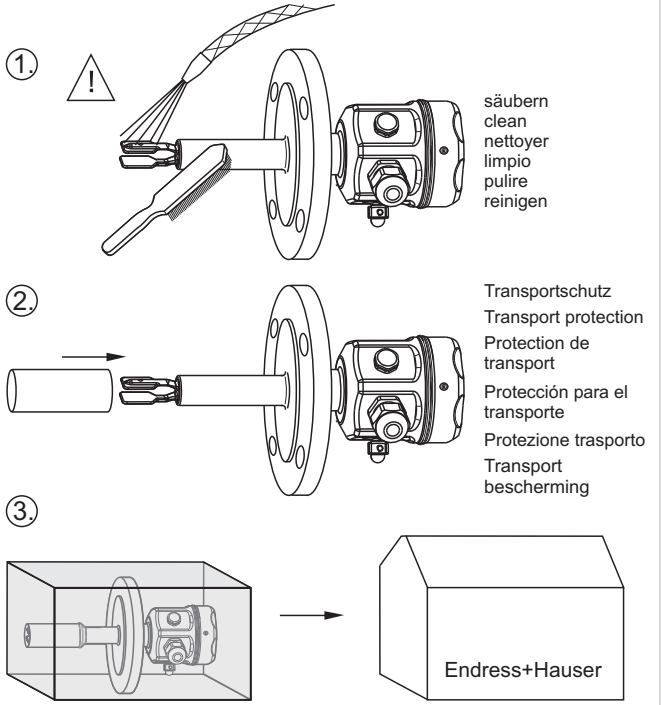


**DE- Reparatur**
bei Endress+Hauser

**EN- Repair**
at Endress+Hauser

**FR - Réparations**
chez Endress+Hauser

**ES - Reparaciones**
en Endress+Hauser

**IT - Riparare**
presso la Endress+Hauser

**NL- Reparatie**
bij Endress+Hauser

**DE- Ergänzende Dokumentation**

**EN- Supplementary Documentation**

**FR- Documentation complémentaire**

**ES - Documentación adicional**

**IT - Documentazione supplementare**

**NL- Aanvullende documentatie**

Technische Information / Technical Information / Information technique / Información técnica / Informazioni tecniche / Technische Informatie

| | |
|---|---|
| TI328F | Liquiphant FTL50, FTL50H, FTL51, FTL51H |
| TI426F | Weld-in adapter, leven and pressure |

Betriebsanleitung / Operating Instruction / Mise en service / Instrucciones de funcionamiento / Istruzioni operative / Inbedrijfstellingsvoorschrift

BA00141F FEL50A, PROFIBUS PA

Sicherheitshinweise / Notes on Safety / Conseils de sécurité / Notas sobre seguridad / Note sulla sicurezza / Veiligheidsinstructies

| | | | | |
|---|---|---|---|---|
| XA00031F | CE ⟨Ex⟩ | II 1/2 G, | Ex d | IIC/IIB |
| XA00063F | CE ⟨Ex⟩ | II 1/2 G, II 1/2 D, | Ex ia/ib | IIC/IIB |
| XA00064F | CE ⟨Ex⟩ | II 1 G, | Ex ia | IIC/IIB |
| XA00108F | CE ⟨Ex⟩ | II 1/2 G, | Ex de | IIC/IIB |
| XA00113F | CE ⟨Ex⟩ | II 1/2 G, | Ex ia/ib | IIC |
| XA00114F | CE ⟨Ex⟩ | II 1/2 G, | Ex d | IIC |
| XA00115F | CE ⟨Ex⟩ | II 1/2 G, | Ex de | IIC |
| XA00154F | CE ⟨Ex⟩ | II 1/2 G, II 1/2 D, | Ex ia/ib | IIC/IIB |
| XA00158F | CE ⟨Ex⟩ | II 1/2 G, | Ex ia/ib | IIC |
| XA00159F | CE ⟨Ex⟩ | II 1 G, | Ex ia | IIC/IIB |
| XA00182F | CE ⟨Ex⟩ | II 3 G, II 3 D, | Ex nA/nC | IIC/IIIC |




www.endress.com/worldwide

Endress+Hauser

People for Process Automation

# *ENDRESS+HAUSER*

## *SOLISWTITCH FTE31, LEVEL SWITCH (PADDLE)*

LEFT BLANK

KA 094R/09/a3/01.09
No.: 510 00917

# FTE 31

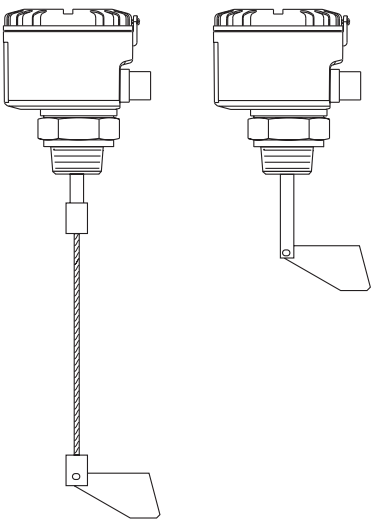

**d** **Füllstandgrenzschalter**
**e** **Level Limit Switch**
**f** **Détecteur de niveau**

Endress+Hauser
The Power of Know How

**d Inhalt** **Seite**

Sicherheitshinweise 3
Einbaubeispiele 4
Funktion 7
Anschluss 8
Wartung 10
Technische Daten 11
Abmessungen und Werkstoffe 13
Geräteidentifikation 14
Ergänzende Dokumentation 16

**e Contents** **Page**

Notes on safety 3
Mounting examples 4
Function 7
Connection 8
Maintenance 10
Technical data 11
Dimensions and materials 13
Device identification 14
Supplementary documentation 16

**f Sommaire** **Page**

Conseils de sécurité 3
Exemples d'implantation 4
Fonction 7
Raccordement 8
Entretien 10
Caractéristiques techniques 11
Dimensions et matériaux 13
Dénomination 14
Documentation complémentaire 16

## d Sicherheitshinweise

Der FTE 31 darf nur als Füllstandsgrenzschalter für spezifizierte Schüttgüter eingesetzt werden. Bei unsachgemäßem Gebrauch können Gefahren von ihm ausgehen.

Das Gerät darf nur von **qualifiziertem und autorisiertem Fachpersonal unter besonderer Beachtung dieser Betriebsanleitung**, der gesetzlichen Vorschriften und der Zertifikate (je nach Anwendung) eingebaut, angeschlossen, in Betrieb genommen und gewartet werden.



**Achtung!**
= verboten - führt zu fehlerhaftem Betrieb oder Zerstörung.

## e Notes on safety

The FTE 31 paddle switch is a level limit switch, designed for use in fine-grained bulk solids in non-hazardous areas.
If used incorrectly it is possible that application-related dangers may arise.
The FTE 31 paddle switch may be installed, connected, commissioned, operated and maintained **by qualified and authorised personnel only,** under strict observance of these operating instructions, any relevant standards, legal requirements, and, where appropriate, the certificate.



**Caution!**
= forbidden - leads to incorrect operation or destruction.

## f Conseils de sécurité

Le FTE 31 est un détecteur de niveau à palette rotative pour produits solides en vrac de faible granulométrie, utilisable en zones non explosibles. Il peut être source de danger en cas d´utilisation non conforme aux prescriptions. L´appareil ne doit être installé, raccordé, mis en service et maintenu **que par un personnel qualifié et autorisé,** qui tiendra compte des indications contenues dans la présente mise en service, des normes en vigueur et des certificats disponibles (selon l´application).



**Attention!**
= interdit - peut provoquer des dysfonctionnements ou la destruction.

**d** **Einbaubeispiele**

* Schutzdach

**e** **Mounting examples**

* Protective roof

**f** **Exemples d´implantation**

* Déflecteur

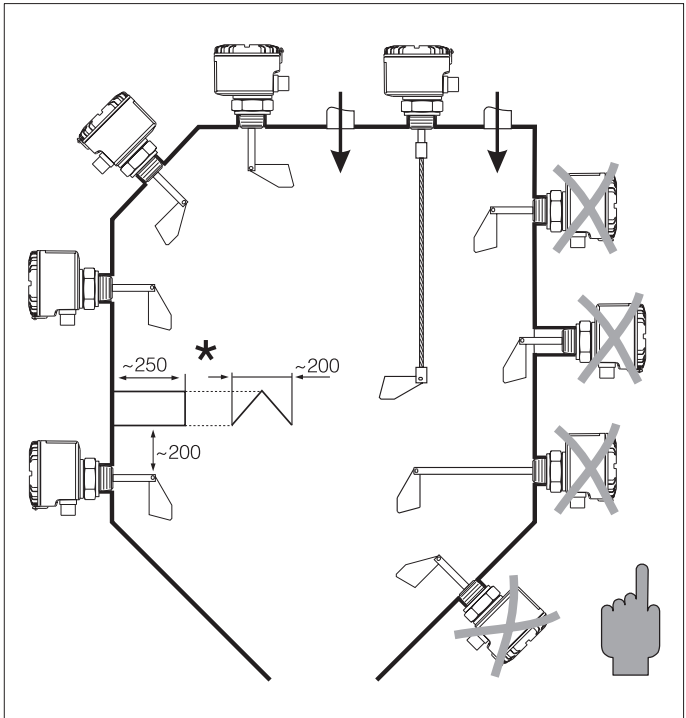

**d** Füllstandgrenzschalter FTE 31 einschrauben
**Nicht** am Gehäuse drehen!

**e** Screw the FTE 31 paddle switch into the process connection
**Don´t** use housing to turn!

**f** Visser le détecteur à palette rotative FTE 31
**Ne pas** se servir du boîtier!

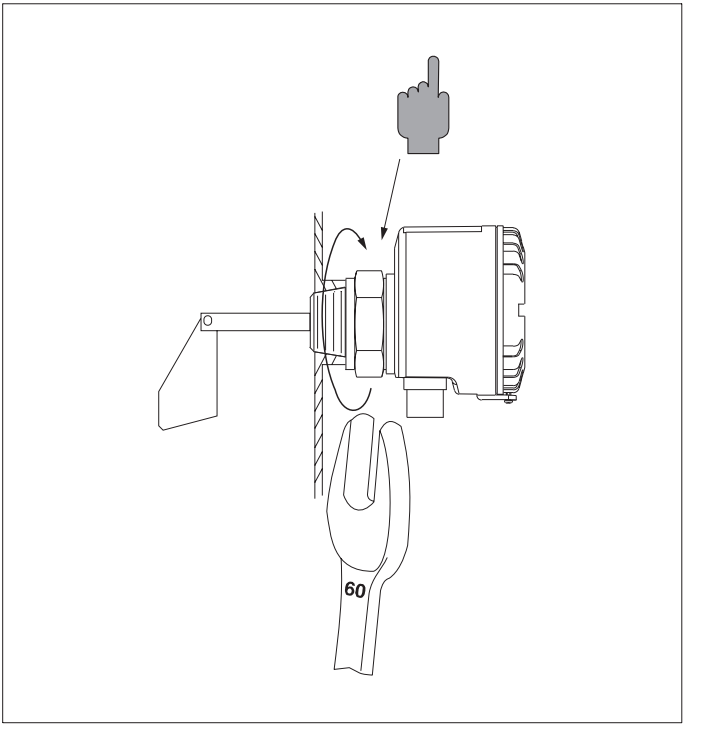

**d** Gehäuse in richtige Position drehen.

**e** Screw the housing to the correct position.

**f** Positionner le boîtier.

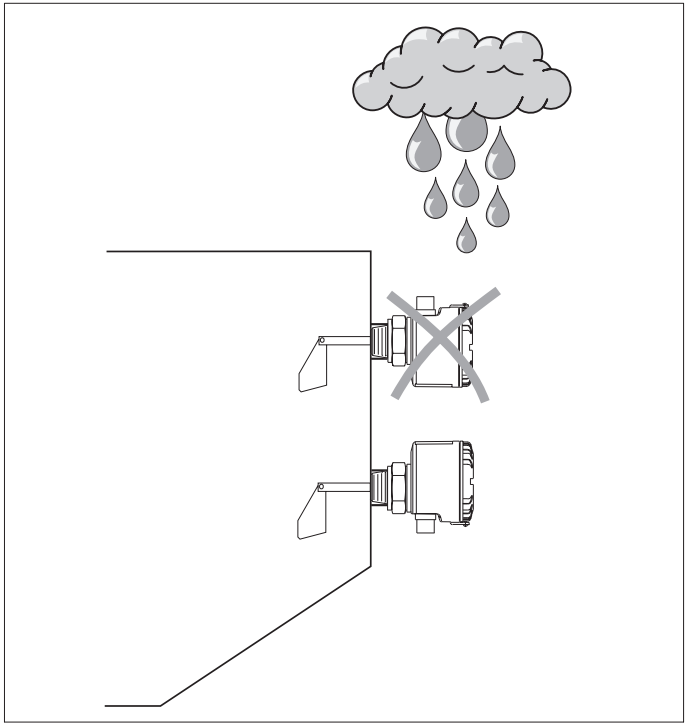

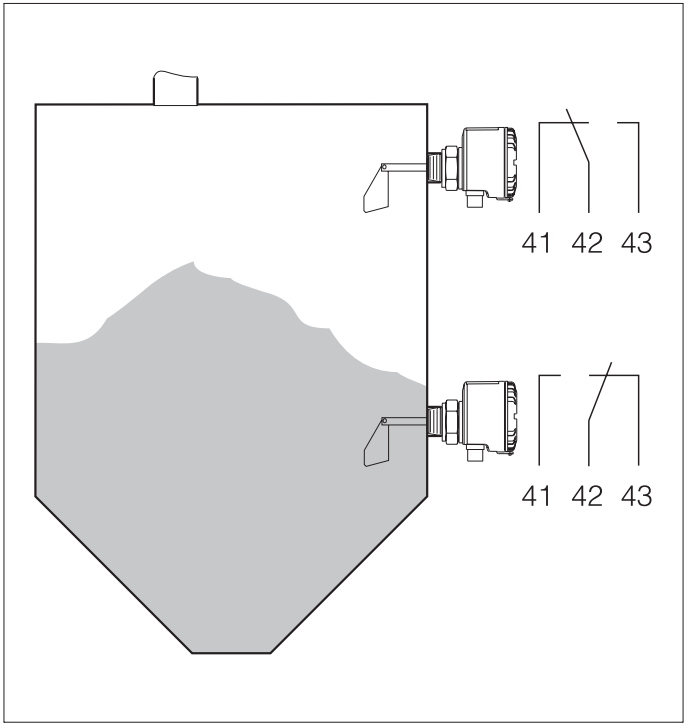


**d** **Funktion**

**e** **Function**

**f** **Fonction**

**d** **Anschluss FTE 31**

**e** **Connection FTE 31**

**f** **Raccordement FTE 31**

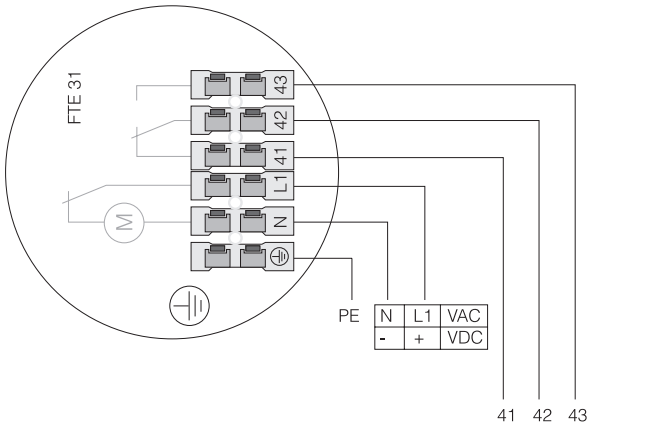


U ~ 220...240 VAC, 50/60 Hz, 4.5 VA
U ~ 110...125 VAC, 50/60 Hz, 4.5 VA
U = 20... 28 VDC, I = 66 mA

P ~ max. 10 A, cos δ = 1
P ~ max. 3 A, cos δ < 0,7






**d** Beachten Sie die Anschlussspannung auf dem Typenschild

**e** Take note of the power supply indicated on the legend plate

**f** Tenir complete de la tension indiquée sur la plaque signalétique

**d** **Wartung**
Anbackungen entfernen

**e** **Maintenance**
Build up removal

**f** **Entretien**
Enlever les incrustations

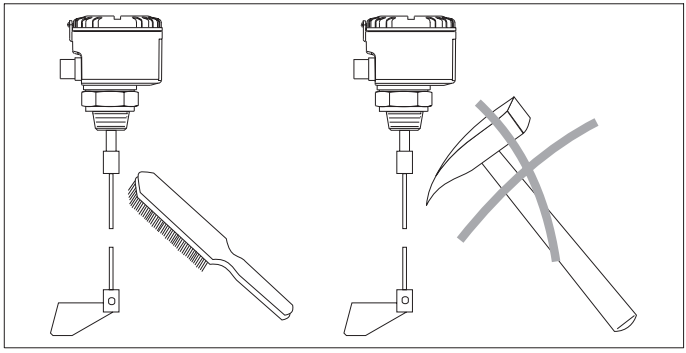

**d** **Nicht** besteigen!

**e** **Don´t** use as a step!

**f** **Ne pas** marcher sur les lames vibrantes!

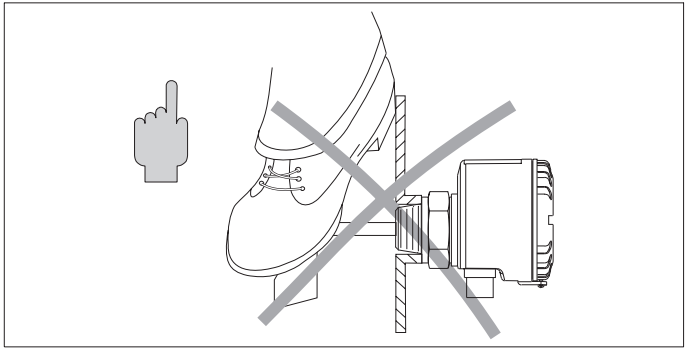

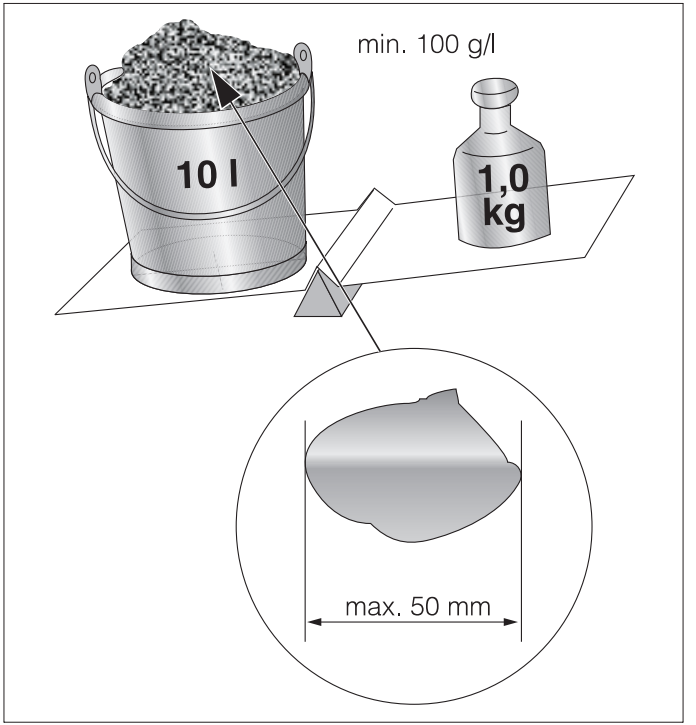


**d** **Technische Daten**

Schüttgröße und
Korngewicht

**e** **Technical data**

Solids density
and grain size in mm.

**f** **Caractéristiques techniques**

Densité apparente
et granulométrie en mm.

**d** Umgebungstemperatur $T_a$
Betriebstemperatur $T_M$
Betriebsdruck $p_e$

**e** Ambient temperature $T_a$
Operating temperature $T_M$
Operating pressure $p_e$

**f** Température ambiante $T_a$
Température de service $T_M$
Pression de service $p_e$

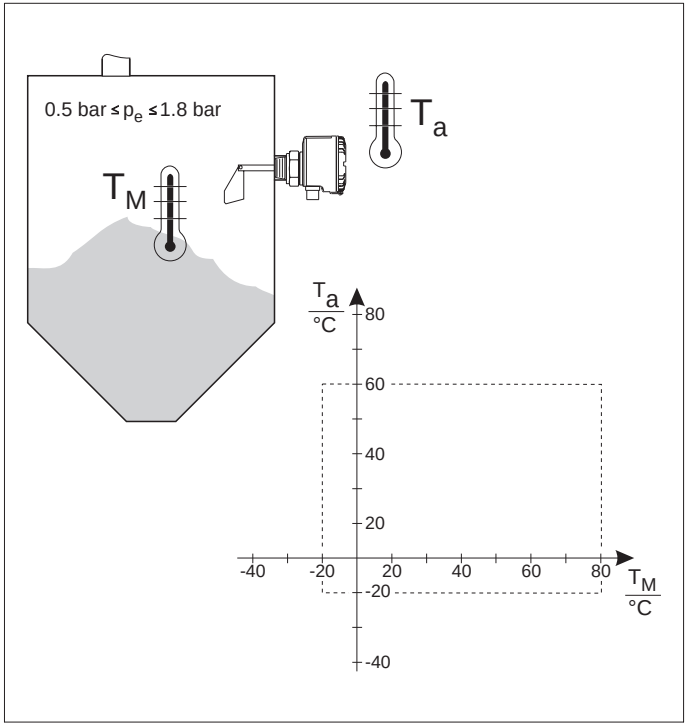

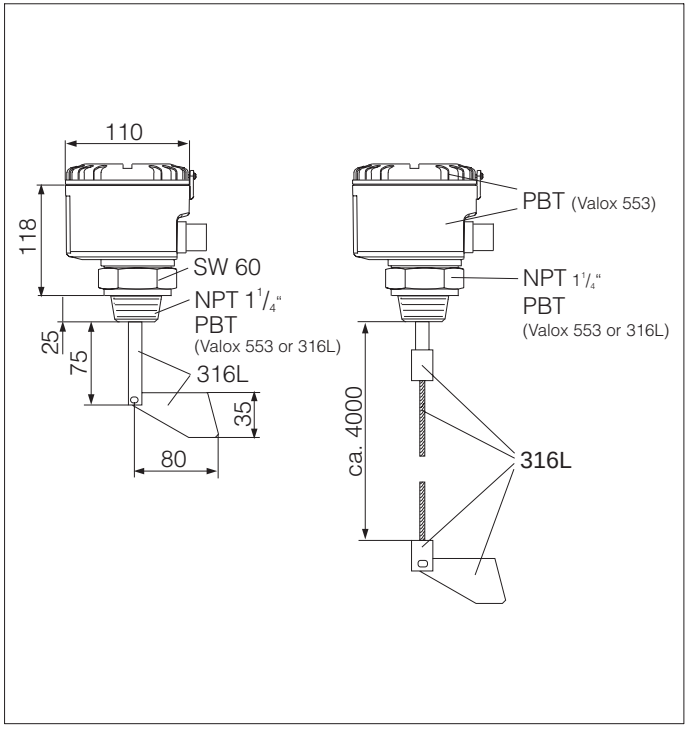


**d** **Abmessungen in mm und Werkstoffe**

**e** **Dimensions in mm and materials**

**f** **Dimensions en mm et matériaux**

**d** **Geräte Identifikation**

**e** **Device identification**

**f** **Dénomination**

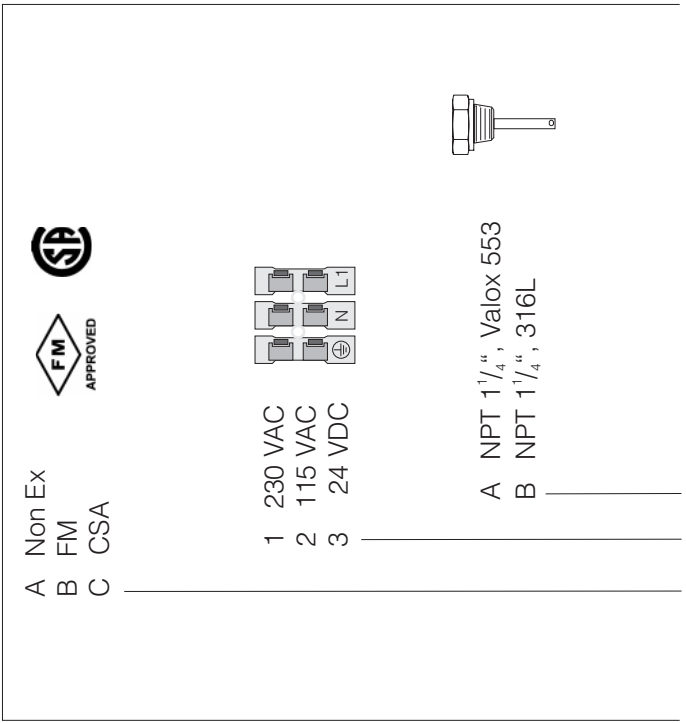

1 75 mm
2 4 m, 1.4571
A-F 100 mm - 600 mm

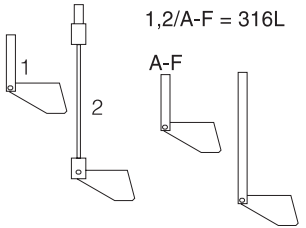


1 Standard (316L)
2 fold-down paddle (316L)

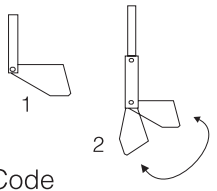


FTE31- ⇐ Order-Code

| | | | |
|---|---|---|---|
| **d** | **Ergänzende Dokumentation** | TI 068R/09/de | Technische Information<br>Füllstandgrenzschalter FTE 31 |
| **e** | **Supplementary documentation** | TI 068R/09/en | Technical information<br>Paddle limit switch FTE 31 |
| **f** | **Documentation complémentaire** | | |

**d** **Notizen:**

**e** **Notes:**

**f** **Notes:**

| | | |
|---|---|---|
| d | ✎ **Hinweis!** | Mechanische Lebensdauer: min. 500 000 Schaltzyklen |
| e | ✎ **Note!** | Mechanical life time: min. 500 000 switch cycles |
| f | ✎ **Remarque !** | Durée de vie mécanique : min. 500 000 cycles de commutation |
| es | ✎ **¡Nota!** | Vida estimada: mínimo 500 000 usos |
| i | ✎ **Nota !** | Tempo di vita delle parti meccaniche: min. 500 000 cicli di commutazione |
| nl | ✎ **Opmerking!** | Mechanische levensduur: min. 500 000 schakelcycli |

| | | |
|---|---|---|
| d | **Reparatur** | Bei Austausch von Teilen nur original E+H Ersatzteile verwenden! |
| e | **Repairs** | When exchanging only use original E+H spare parts. |
| f | **Réparation** | Lors du remplacement de pièces, n'utiliser que des pièces de rechange d'origine E+H. |
| es | **Repuestos** | Cuando realice sustituciones utilice sólo recambios originales E+H. |
| i | **Riparazioni** | In caso di riparazione utilizzare solo ricambi originali E+H. |
| nl | **Reparatie** | Bij wisseling van onderdelen uitsluitend originele E+H service onderdelen toepassen |

**Austria**
Endress+Hauser Ges.m.b.H.
Wien
Tel. (0222) 88056-0, Fax (0222) 88056-35

**Belgium, Luxembourg**
Endress+Hauser S.A./N.V.
Brussels
Tel. (02) 2480600, Fax (02) 2480553

**Canada**
Endress+Hauser Ltd.
Burlington, Ontario
Tel. (905) 6819292, Fax (905) 6819444

**Denmark**
Endress+Hauser A/S
Søborg
Tel. 70 13 11 32, Fax 70 13 21 33

**Finland**
Endress+Hauser Oy
Espoo
Tel. (90) 8596155, Fax (90) 8596055

**France**
Endress+Hauser
Huningue
Tel. 89696768, Fax 89694802

**Germany**
Endress+Hauser Messtechnik GmbH+Co.
Weil am Rhein
Tel. (07621) 97501, Fax (07621) 975555

**Great Britain**
Endress+Hauser Ltd.
Manchester
Tel. (0161) 2865000, Fax (0161) 9981841

**Hong Kong**
Endress+Hauser (H.K.) Ltd.
Hong Kong
Tel. 25283120, Fax 28654171

**Italy**
Endress+Hauser Italia S.p.A.
Cernusco s/N Milano
Tel. (02) 92106421, Fax (02) 92107153

**Japan**
Sakura Endress Co., Ltd.
Tokyo
Tel. (0422) 540611, Fax (0422) 550275

**Malaysia**
Endress+Hauser (M) Sdn. Bhd.
Petaling Jaya, Selangor Darul Ehsan
Tel. (03) 7334848, Fax (03) 7338800

**Netherlands**
Endress+Hauser B.V.
Naarden
Tel. (035) 6958611, Fax (035) 6958825

**Norway**
Endress+Hauser A/S
Lierskogen
Tel. (032) 8598 50, Fax (032) 8598 51

**Singapore**
Endress+Hauser (S.E.A.) Pte., Ltd.
Singapore
Tel. 5 66 82 22, Fax 5 66 68 48

**South Africa**
Endress+Hauser Pty. Ltd.
Sandton
Tel. (011) 4441386, Fax (011) 4441977

**Spain**
Endress+Hauser S.A.
Barcelona
Tel. (93) 4 80 33 66, Fax (93) 4 73 38 39

**Sweden**
Endress+Hauser AB
Sollentuna
Tel. (08) 626 1600, Fax (08) 626 9477

**Switzerland**
Endress+Hauser AG
Reinach/BL 1
Tel. (061) 7157575, Fax (061) 7111650

**Thailand**
Endress+Hauser Ltd.
Bangkok
Tel. (2) 9 96 78 11 -20, Fax (2) 9 96 78 10

**USA**
Endress+Hauser Inc.
Greenwood, Indiana
Tel. (317) 535-7138, Fax (317) 535-1489

**International**
Endress+Hauser GmbH+Co.
Instruments International
Weil am Rhein
Tel. (07621) 97502, Fax (07621) 975345

**http://www.endress.com**

Endress+Hauser
The Power of Know How

KA 094R/09/a3/01.09 Mat-Nr.: 510 00917 SS/CV5

LEFT BLANK

# *ENVIREQUIP*

## *SERIES EVGX, MIXERS*

LEFT BLANK

Envirequip (Division of 6445772 Canada Inc.)
MIX-TECH DYNAMIC MIXERS
710 Cotton Mill Street, Suite 512, Cornwall, ON  K6H 7L3
Mobile:  514-386-1043  Email:  envirequip@cogeco.ca
Internet:  http://www.envirequip.com

# Instruction & Operating Manual
# Envirequip Mixers

(See section for agitator/gear reducer design at end of Manual)

**EVG** Parallel Shafts with hollow output shafts & tapered roller bearings

**EVGX** Parallel shafts with hollow output shafts & high capacity upper cylindrical & lower (2)-row Spherical roller bearings

**EHG** Worm drives for small top entry & portable mixers with hollow output shafts

**EHGB** Helical/bevel gearing with hollow output shafts & tapered roller bearings

**EVGFS** Helical in-line gears with solid output shaft tapered roller or spherical roller bearings
Refer to Nord Installation & Operation Manual

NOTE: For units with solid output shafts, refer to the Nord Manual

# ENVIREQUIP MIXERS – INDEX I.O.M.

MIX-TECH MIXERS – INSTALLATION & OPERATION MANUAL (Rev 0)

For mixers installed in OPEN TANKS
See section for mechanical seals & packing (stuffing boxes) at end of IOM Pg (S)


| SECTION | SUBJECT | PAGE NO. |
|---|---|---|
| 1 | Inspection | 1 |
| 2 | Installation | 1-2-3 |
| 3 | Mixer Assembly | 4 |
| 4 | Motors: 5 HP WEG Motor Supplied | 5 |
| 5 | Pedestals: Shaft & Gear Reducer Removal – EVG Series | 6-7-8 |
| 6 | Shafts, Impellers & Couplings | 9 |
| 7 | Gear Drive Maintenance | 10-11 |
| 8 | Bolts | 11-12 |
| 9 | Operation | 12 |
| 10 | Motor Removal & Installation | 13 |
| 11 | Trouble Shooting / Mixer Performance | 13-14 |
| 12 | Warranty | 15 |
| 13 | Maintenance Log | 16 |

Envirequip (Division of 6445772 Canada Inc.)
MIX-TECH DYNAMIC MIXERS
710 Cotton Mill Street, Suite 512, Cornwall, ON K6H 7L3
Mobile: 514-386-1043 Email: envirequip@cogeco.ca
Internet: http://www.envirequip.com


# INSTALLATION & OPERATION MANUAL

## ENVIREQUIP MIXERS

## SECTION 1 – INSPECTION

- Make sure that all mixer parts have been removed from the crate(s) before discarding.
- Each mixer should be carefully checked for any possible shipping damage. Any shipping damage should be reported immediately to the TRANSPORT COMPANY.
- Check the paint and make any necessary touch-ups.

## SECTION 2 – INSTALLATION

- Most mixer problems can be avoided by following proper installation and operation instructions. The following is a list of hints to help insure proper installation and therefore satisfactory mixer service.
- Please read all appropriate instruction manuals prior to proceeding with the mixer installation.
- For shipment, the gear-case is **drained of oil** (except for Nord drives) so **be sure to fill** the gear case with the proper lubricant to the proper level. DO NOT OVERFILL – note: if the reducer is already filled, (as is the case with NORD drives.
- Install breather(s) – if you forget to install the breather(s) the seals may fail.

CAUTIONS:

- Lock out the motor starter if any person is in the tank.
- Remove wick form the breather vent plug.
- Do NOT paint breather or the vent plug.

MOST COMMON PROBLEMS:

- Mixer shaft(s) not vertical.
- Impeller going through liquid level.
- Make sure the impeller blades have been installed onto the hubs in the proper position with regards to Rotation and Direction of flow.
- Please also note the impeller blades are installed with the hub ears always backing the blade into the flow.

- Also be sure that the leading edge and NOT the trailing edge is presented into the flow and that the angle at the impeller tip (angle of attack) from the horizontal is closer to 15” rather than to 75”

CAUTIONS:

- If the angle of attack at the impeller tip is closer to 75”, either an incorrect hub in combination with the correct impeller blade (or vice versa) has been incorrectly assembled to make an incorrect matching of possible hub and blade combinations. For help in determining what the correct combination should, please refer to the mixer nameplate that will have the Rotation and the Direction of thrust written on it. Once you know the combination, refer to the pictorial guide of impeller/hub installation positions of A, B, C or D.
- Depending on whether the concave or the convex surface is facing the fluid, if the angle of attack at the impeller is closer to 75”, the HP drawn will be 2 to 3 times greater than what it should be. This can result in OVERLOADING the motor and damaging the mixer.
- Make sure that the impeller blades are installed in the correct position for the required rotation e.g. if the impeller blades are installed up-side-down, the pumping capacity will be reduced by about 65%. Check the mixer nameplate for the flow direction and install the impeller blades to suit.

POTENTIALLY DAMAGING SITUATIONS FOR MIXERS – CAUTIONS:

- Prolonged operation of the mixer (impeller) at the liquid interface causes increased stress on the shaft and impeller for which the system was NOT DESIGNED to accommodate.
- Installations where there is a large hydraulic flow (or Velocity) in the mixer reservoir: Make sure that if such a flow is present, that the flow is BAFFLED or dispersed over a larger area (as opposed to directed flow via a pipe), or that the flow be re-directed away from the impeller/shaft assembly, or is introduced evenly e.g. via a weir.
- If this cannot be done, this external hydraulic flow will exert additional un-designed-for stress loads and deflection on the mixer shaft and impeller which can result in component failure.
- Sparging-in air or other gasses: If a mixer has not been selected to handle gassing, there is every probability that damage will occur due to the un-designed-for enormous unbalanced loads generated by the gasses rising.
- Do not attempt to install a mixer all assembled as a unit as this will cause extra undersigned-for stresses – Failure to abide by the above constraints may CAUSE DAMAGE NOT UNDER WARRANTY.
- Before permanently wiring the motor, check for the correct rotation of the low speed shaft. Normal is Clock-wise looking down from the top of the tank, although the reverse may also be required. Please check mixer NAMEPLATE for other instructions (eg Letters A,B,C or D)

- Read and follow the instructions of all tags and nameplates before operating.
- Check the mixer full load motor amperage and voltage before operating any mixer.
- It is recommended that the mixer impeller be rotated by hand in order to check for smooth operation. NB: For crown & worm drives, remove the fan cover and rotate the fan manually.
- Always operate the mixer in a fluid which has a specific gravity and viscosity less than or equal to the design specific gravity and viscosity.
- Do not dump the contents of large bags of chemicals directly onto the rotating mixer impeller(s); but add the contents into the reservoir gradually. This will also promote better mixing.
- Before starting the mixer, make sure the impeller is not buried in solids or a "set-up" fluid. NB: If solids have settled-out, then dilute or jog the mixer clockwise then counter-clockwise.
- Please check that there is no directed flow from an external source at the impeller or shaft unless the mixer was specifically designed to accommodate these additional stress loads, as mixers could be damaged.
- During START-UP, please listen for unusual noises and check for excessive vibration.
- Check the temperature of the motor and gear reducer. The temperature should not exceed 180$^{o}$F (82$^{o}$C). If they are too hot, please STOP THE OPERATION of the mixer and contact ENVIREQUIP immediately.
- Measure the motor amperage. The measured amperage must be less than the nameplate rating value. If the amps are over, please check the rotational speed of the great reducer/mixer output shaft. Place a piece of tape onto the shaft (or use an RPM counter if available, and count the number of revolutions for a period of e.g. 10 seconds using your watch second hand. Multiply the result by (6) for 60 Hz operation and this will provide you with the rotational speed of the mixer. Check rotation and impeller blade installation to be sure they are correct. If the power draw remains high, please check with ENVIREQUIP.

  NOTE: Record the full load motor amperage (FLA) and measure them every (3) months. Some motor amperage readings are poor indicators at low loads.

CAUTION:

- **DO NOT STAY IN THE TANK DURING MIXER ROTATION**
- Never use the mixer impeller as a foot stand or support for body weight – as such actions could damage the mixer as well as result in serious bodily injury.
- As with any rotating equipment, in order to avoid injury, extreme care should be taken to avoid contacting the rotating parts including not connecting the motors to the electrical power source until the mixer is completely assembled. Then, vacate the tank prior to operating the mixer.
- Before making field changes of motor horsepower, mixer speed, shaft length, impeller diameter or width, etc. Be sure to consult with ENVIREQUIP.
- After any plant electrical work has been done, check that the mixer(s) rotation(s) are correct as power lines may be been reversed.

## SECTION 3 – MIXER ASSEMBLY – Closed tanks are Flange Mounted

- Open tank models usually are mounted on a steel structure. Level the drive as closely as possible. This assures that the shaft will turn in a true vertical position. Incorrect mounting is often a cause of mechanical difficulty with a mixer. Unless specified on the mixer assembly drawing, the mixer extension shaft is designed to run in a true vertical position. NEVER angle or side mount the mixers.
- While operating, there is a random fluid motion in the vessel that exerts great forces on the extension shaft of the mixer. The mixer accommodates these forces since they are transmitted directly to the support mounting(s). Therefore, the mounting system must be RIGID. It must support that static mixer weight as well as live mixer reactions that result from Torque and Bending Moment. It is not enough to design the support system for acceptable levels of stress. It must be rigid enough to take care of Start-up Torque Load (**2.5** times the Torque) and preclude large deflections that may result in mixer vibration.
- When designing the support structure to accommodate bending moments, be sure that the structure is sufficiently rigid so that the mixer extension shaft will not move more than 1/32" per 10 feet (0.8m per 3.05 meters) of shaft length due to deflection of the support structure.
- After the great drive (with the motor already flange-mounted onto the drive) has been properly installed, the mixer extension shaft should be installed into the gear drive's hollow output shaft (quill shaft) and fastened in the quill shaft with the thrust plate and secured in position with the threaded bolt provided – use Locktite Blue (or equivalent) or in the case of an output shaft coupling, bolt the mating flanges together.
- Mixer blades over 20" in diameter are generally bolted to a welded hub. **Check the welds** on the hub on your **yearly** overall inspection.

## SECTION 4 – MOTORS – 5 HP WEG MOTORS SUPPLIED

- These mixers are supplied with the finest electric motors available. They are manufactured by a nationally known manufacturer (e.g. Nord, WEG, Brook etc). Under normal operation conditions, within specified temperatures, proper installation and maintenance, these motors are guaranteed to deliver rated output.
- In order to get top performance from any electric motor, be sure that there is plenty of air circulation and a minimum of obstructions. On fan cooled motors, be sure not to choke off the suction inlets, also be sure to check the allowable temperature that's indicated on the motor nameplate. Don't decrease the service life of a motor by operating it at excessively high ambient temperatures.
- In order to avoid damage to the motor during temporary overloads, jams, etc., be sure that correctly sized overload protection is provided. Starter overload heater elements can be sized from the full load current of the motor as shown on the motor nameplate. It is advisable to consult a supplier of motor control equipment when selecting thermal overload heaters.
- Before the motor is permanently wired, check to be sure that the output shaft rotation is correct. (Normally clockwise looking down from the mixer drive, but sometimes counter-clockwise depending on the process requirements).

CAUTION

- Make sure to check rotation of the mixer before it is operated. **To reverse the rotation** of standard 3 phrase electric motors, simply switch any 2 power leads.

# SECTION 5 – PEDESTALS: SHAFT & GEARBOX REMOVAL – EVG SERIES

Series EVG standard design of the dry-well pedestal and shaft catcher is one where the flinger (for the dry well) and the shaft catcher are one-in-the-same part serving both purposes.

**Shaft Removal and/or to Remove the Gear Reducer – see assembly drawing**

1. Lock-out electrical power to the electric motor
2. If the electrical wiring is not long enough to allow removal of the gear reducer, disconnect the motor wiring.
3. Remove the safety cover located on top of the gear reducer exposing the bolt (#3) and top plate (#4) which holds the shaft (#12).
4. Slowly remove the top bolt (#3).
5. As the bolt is loosened, the shaft and impeller assembly will be lowered a distance of about 0.125" (3.175mm).
6. After the bolt has been loosened sufficiently, the flinger (#8) will come into contact with the Pedestal to the inner support pipe (#11) and stop there.
7. Remove the bolts holding together the Adaptor Plate Reducer to Pedestal top plate (#7).
8. Inside of the pedestal ($10), you can now see the flinger (#8) which rests on the collar / clamp (2) bolts / shaft catcher (#9).
9. Prior to undoing the set screws on the collar / clamp, make preparation to handle the shaft which will now fall through the dry well (#11) and into the tank.
10. Once the shaft is secured, loosen the set screws on the flinger assembly or clamp bolts (#9).
11. **To reinstall the shaft** (et al) follow the above procedure in Reverse.

NOTE: In order designs, the flinger was welded onto the shaft. In that case, the shaft can only be removed vertically through the top of the Pedestal.

**CAUTION:**

- Prior to loosening the (3) set screws on the flinger / shaft catcher, please ensure that there is some means of holding the shaft in place (if no clamp is supplied, use 2 pieces of wood 4" x 4" or 6" x 6" with tightening bolts to hold the shaft in place via friction.) **IF NOT, THE SHAFT WILL DROP INTO THE TANK**, possibly causing damage to the equipment or vessel and bodily injury. Shafts are often of sufficient weight to cause serious bodily injury **or even death** were it not properly secured.
- You may want to install a plastic hose in the pedestal so that you can monitor if the gear reducer is losing oil and collecting in the dry-well pedestal.

- **A split collar is used to prevent the shaft from accidentally falling from the gear reducer.**

**NOTE:** On older EVG series, there may not be a split ring but rather a flinger that rests on the dry well seal to hold the shaft in place.

1. Insert eye-bolt in top center of the impeller shaft.
2. Slowly lift up the complete impeller shaft assembly a distance of 6mm (0.25”).
3. Remove the split collar that rests against the top of the quill shaft of the gearbox.
4. Slowly lower the complete shaft / impeller assembly a distance of 10 to 12mm (0.375” to 0.50”).
5. At this point, the flinger / clamp assembly will come into contact with the pedestal top inner support pipe / dry well.
6. Remove bolts.
7. Lift off the complete gear reducer until the gearbox clears the shaft and eye-bolt.
8. Then reinstall the gear drive, follow the above procedure in reverse.

**Shaft Straightness:**

- When shipped, the mixer extension shaft was straight to within 0.003” per foot (0.25mm per meter) of shaft length for mixers equipped with centre-less ground shafts (special order – uncommonly used). If the shaft does not appear to be damaged, but the run-out is **greater than** the above standard, the shafting supplied may have been “smooth-turn” (more commonly used), which might not be dimensionally the same over the entire length of the shaft. This is probably still acceptable. In such cases, or where it might be difficult to obtain an accurate shaft run-out value, we may apply another rule: 0.25 to 0.50% of the impeller diameter = the maximum shaft run-out at the bottom of the shaft. E.g.:
- 50” diameter impeller 0.14 to 0.28”
- 100” diameter impeller 0.26 to 0.53”
- 150” diameter impeller 0.40 to 0.67”
- Flanges are used as shaft couplings when shaft extensions exceed approximately 12”-0” (3.65mm). Ensure that the bolts are **tightened** and that a product like Never Seize (or equivalent) is used. Refer to the table in this manual for torque tightening values.
- Recheck bolt tightness after 1500 hours (or 3 months) OR <u>tack weld the nuts to prevent this</u>. These couplings are welded onto the shafts with (4 to 6) gussets and are not removable.

**CAUTION:**

- Handle the shaft carefully to be sure that it is not bent
- After the shaft has been installed, check it for straightness. Storage and handling may have resulted in a bend. To check it, an indicator is placed at the end of the shaft, and the high speed shaft is then rotated by hand. Run-out of the total shaft should not be greater than the above referenced values. If the run-out is greater than the above values, the shaft can be re-straightened in the field.

- **To re-straighten the shaft**, follow this procedure:
- Where the maximum positive readout is found, place the indicator on that side of the shaft.
- Heat the shaft at a point of $180^0$ from the indicator, (and just below the $1^{st}$ in-tank coupling if applicable), apply heat just below the mounting nozzle.
- The shaft will grow toward the indicator as heat is applied to it. However, **DO NOT permit the surface temperature to go over $500^0$F ($260^o$C).** Use Tempilstics or equivalent.
- The shaft will straighten since it will draw more than it grows.
- After each heating process, rotate the shaft and recheck until the straightness is within tolerance to meet the allowable tolerance.
- **To install any impeller**, simply slide the impeller hub onto the extension shaft above the shaft keyway. Install Hook type (Gib) key into the keyway making sure that the pin is inserted into the correct hole for proper impeller location. Lower the hub (with or without blades bolted on) down onto the key. Tighten set screw. Bolt on blades if not already done.

**NOTE:**

All MIX-TECH Portable mixers operate at least 35% below the $1^{st}$ Critical Speed or harmonic frequency – there is no danger of "hitting-on" or approaching the $1^{st}$ Critical Speed – (unless specifically mentioned otherwise)

Please refer to the specific manufacturer's installation and operating manual.

Correct lubrication practices are essential to long life and satisfactory performance of a gear drive. Be sure to use the right lubricants as recommended. With proper lubrication maintenance, the gear drive will carry its rated design load and provide years of satisfactory operation.

# SECTION 6 – SHAFTS, IMPELLERS & COUPLINGS

**IMPELLERS:**

- Make sure that the impeller blades have been installed onto the hubs in the proper position with regard to Rotation and Direction of Flow. Please also note that the impeller blades are installed with the hub's ears ALWAYS BACKING the blade INTO the flow. Also be sure that the leading edge and NOT the trailing edge is presented into the flow, and that the angle at the impeller tip (angle of attack) from the horizontal is closer to $15^0$ rather than to $75^0$.

CAUTION:

- If the angle of attack at the impeller tip is closer to $75^0$, either an incorrect hub in combination with the correct impeller blade (OR VICE VERSA) has been incorrectly assembled to make an incorrect matching of possible hub and blade combinations. For help in determining what the correct combination should be, please refer to the mixer nameplate that will have the Rotation and Direction of Thrust written on it. Once you know the combination, refer to the pictorial guide of impeller / hug installation positions A,B,C, or D.
- Depending on whether the concave or the convex surface is facing the fluid, if the angle of attack at the impeller is closer to $75^0$, the HP drawn will be 2-3 times greater than what it should be. This could result in OVERLOADING THE MOTOR and damaging the mixer.
- Make sure that the impeller blades are installed in the correct position for the required rotation: e.g. if the impeller blades are installed up-side-down, the pumping capacity will be reduced by about 65%. Check the mixer nameplate for the flow direction and install the blades to suit.

# SECTION 7 – GEAR DRIVE MAINTENANCE

CAUTION:

- By following instructions, many premature gear and bearing failures can be avoided.
- Keeping a maintenance log is highly recommended.
- Lubricant used in the gear case must be free of dirt, metal particles and other contaminants. Use only NEW OIL. Strain the oil if there is any possibility that it contains contaminants.
- To equalize pressure inside and outside the gear case, a breather is installed on top of the unit. This breather normally requires no maintenance, and must NOT be blocked. Check hole for free breathing.

PORTABLE MIXERS:

- Lubricant for PORTABLE MIXERS (Series EHG), the Crown and worm gear reducers are filled FOR LIFE (20,000 hours or 4 years) with synthetic oil.

CAUTION:

- For shipment the gear case is drained of oil (except for NORD drives). Be sure to fill the gear case with the proper lubricant to the proper leve. Install breather. **DO NOT OVERFILL.** N.B. if the reducer is already filled (as is the case with NORD drives), do not forget to install the breather(s) **or the seals may fail.**

RECOMMENDED LUBRICANTS FOR NORD HELICAL GEARING:

- These Nord Gear reducers are factory-filled with Shell Omala 220 mineral oil or with Chevron ISO FM 220 food grade oil (if required) or equivalent, or with Shell Omala 220 regular mineral oil fill <u>when the mixer is provided with a dry well seal unless otherwise specified.</u>

**Note:**
- A reducer previously filled with Shell Omala 220 mineral oil can be drained (as much as practical to achieve) and Chevron ISO FM 220 substituted without any harmful chemical reactions or reduction to the lubricating quality of the new (or old) oil.
- Please note that the gear reducers for MIX-TECH'S "EVG" SERIES ARE Nord Parallel shaft drives. The top output bearing is grease-packed although there is no grease nipple. Please remove the seal and **re-pack** the bearing with grease (refer to Nord Instructions on the WEB by putting in the Nord Unit Serial Number. The output shaft seals are "Quadrilip" having 2 discrete grease-filled pockets.

**GEAR DRIVE MAINTENANCE FOR SERIES EVG & EVGX PARALLEL SHAFT DESIGN GEAR REDUCERS:**

- Recommended oil change intervals in Nord IOM:
- Synthetic lubricants should be changed every 20,000 service hours or every 4 years

- Mineral oils should be changed every 10,000 service hours or after 2 years. See gear reducer service manual (IOM)

CAUTION:

Units should be checked out periodically for increased noise, surface temperature, vibration, shaft movement and amperage draw. Units with inspection covers should not be operated with the inspection covers removed.

**PROCEDURE FOR RE-GREASING THE UPPER OUTPUT BEARING** equipped with Tapered roller bearing option:

1. Remove upper output shaft seal(s).
2. Inspect bearing cavity for presence of grease. The bearing cavity should be packed to approximately 1/3 full with grease.
3. If required, inject grease into the taper roller bearing until the cavity is filled to 1/3. A Needle Nozzle is generally required on the grease gun, because the shim(s) partially cover the access to the bearing cavity.
4. Install new upper output seals.

NOTE:

The other bearings in these gear boxes are open and are submerged in oil.

The recommended interval for changing the gearbox oil is every 10,000 hours of operation.

- The standard ambient temperature selected is 15 to 125$^{o}$F (9 to 52$^{0}$C) for the gear reducer.
- Some gear reducers are equipped with bulls-eye oil level indicators, **others have a plug**.

# SECTION 8 – BOLTS

- Impeller blades and other in-tank fasteners are supplied as standard with lock-washers.

NOTE:

For bolting locations that are not easily accessible, you might want to consider tack welding the nuts to prevent nuts from loosening.

CAUTION:

- Extreme care should be taken to see that locking devices are properly installed and to be sure that the bolts / studs are properly tightened and lubricated.

It is recommended that all in-tank fasteners (and all other bolts) be rechecked for tightness **after the first 1500 hours of operation** and subsequently at each scheduled shut-down and that a suitable lubricant be used e.g. Never seize or equivalent.

NOTE:

Once the nuts are tightened, it is a good idea to tack weld them to prevent the need for re-tightening them every 3 months.

**RECOMMENDED BOLT TORQUE VALUES:**

| **BOLT SIZE** | | | **TIGHTENING TORQUE** | | | | | |
|---|---|---|---|---|---|---|---|---|
| | | | **Ft.lbs.** | **Nm** | | | **Ft.lbs.** | **Nm.** |
| a. | 0.25” | -20 | 5 | 7 | 0.875” | -9 | 320 | 434 |
| b. | 0.3125” | -18 | 10 | 14 | 1.0” | -8 | 490 | 664 |
| c. | 0.375” | -16 | 20 | 27 | 1.125” | -8 | 560 | 760 |
| d. | 0.50” | -13 | 60 | 81 | 1.25” | -7 | 710 | 963 |
| e. | 0.625” | -11 | 120 | 163 | | | | |
| f. | 0.75” | -10 | 200 | 271 | | | | |

NOTE:

Tighten all bolts as specified. Lubricate all fasteners with an anti-seize product. If no lubrication is used when tightening the bolts as specified, multiply the table values by 1.3

**GEAR REDUCER & MOUNTING PLATE BOLTS**:

These bolts are also subject to high loads and should be properly torque to prevent bolt stretch and/or reducer wobble. For situations with large reducers or long shafts with large reducers, use additional care to make sure that these bolts are installed and torque properly.

This "Turn of the nut Method" can be summed up n one sentence:
"Turn the Nut ½ to 2/3 turns beyond the snug tight position, this applies to any bolt of any size. However, fasteners should be clean, rust-free and lightly oiled.

In cases where the nut is not accessible, the bolt may be turned ½ to ¾ turn beyond snug tight.

**LEVER ARM SYSTEM:**

| **Bolt Size** | **Lever Arm** |
|---|---|
| ¼" - 3/8" | 6" handle |
| 7/16" – 5/8" | 12" handle |
| ¾" – 1.125" | 24" handle |
| 1.25" And over | 36" handle |

NOTE:

This lever arm system should be used with or without lock washers. If lock washers show signs of splitting or fatigue, they must be replaced.

## SECTION 9 – OPERATION

- The mixers that you have purchased have been designed to accommodate all the loads that will be encountered in the normal course of operation.

CAUTION:

- Care must be taken to avoid prolonged operation of the mixer impeller(s) at liquid interface. These mixers were not designed to operate under those severe conditions and could become damaged.

## SECTION 10 – MOTOR REMOVAL & INSTALLATION OF MOTORS

- **For Nema "C" Flanged Motors** (NOT integral motors): The motors supplied have been installed onto the reducers. In the event of motor maintenance, remove the bolts which hold the gear reducer's Nema "C" flange adaptor to the motor's "C" face. Remove the coupling half and service the standard NEMA motor as required.
- **Installation:** reverse the procedure.
- Please refer to "COUPLING ENCLOSED" cross sectional drawing which shows the mounting distance 1 13/16" (46.03mm). Note that the coupling is keyed onto the motor shaft (key provided).
- In the case of NORD integral motors: The motor can then be removed exposing the high speed pinion gear mounted on the motor shaft. The motor can then be serviced as required.

## SECTION 11 – TROUBLE-SHOOTING / MIXER PERFORMANCE

**PERFORMANCE:**

- If you find that the mixer is not performing according to your expectations, one of the things that directly affects mixer performance are the BAFFLES (or lack thereof).
- Also check that the impeller blades are in the correct configuration A,B,C or D, that the correct blades are matched to the correct hubs and that the rotation is correct. (Please refer to Section 6 Pages 7, 8 & 9 for more information.

NOTE:

**Baffles always help any mixer application** by providing the means to convert rotational motion into top-to-bottom pumping / mixing.

- If the viscosity of the fluid is over 25,000 cp. Then baffles are not necessary.
- If the vessel is rectangular in shape, baffles may not be necessary.
- In circular or square vessels, the use of baffles is MANDATORY.

OTHER METHODS: Of achieving top-to-bottom motion without using baffles:

- Off-centering the mixer by 20% (uses the vessel as a baffle)
- Angle mounting (into a quadrant) – often seen on Portable Mixers. If you want to angle-mount a larger mixer, please check to be sure that the shaft was designed to accept these additional stress loads.

NOTE:
**OIL LEAK(S)** FOR Series EVG supplied with a flinger / shaft catcher & dry well seal.

**FOR SERIES EVGX**:
There is an oil overflow plastic pipe indicating oil leaks.

- If one of the 2 output oil seals were to fail (very rare), then the oil would migrate down the output shaft and be pumped by the flinger into the moat surrounding the dry well pipe. Any such leak would be contained by our sealed pedestal – access to it is by a plug.
- Any other oil leak will be visible on the outside of the gear reducer.

| **SYMPTOM** | **REASON(S)** | **SOLUTION** |
|---|---|---|
| Oil leak on the reducer | Vent plug not installed or Vent plug painted over or Vent plug failure. | Clean up oil and remove the vent plug. If this stops the leak, change vent plug. |
| Oil leak on top of reducer | Motor and/or top bolts not tightened. | Use Teflon tape and tighten bolts |
| Oil leak on end plate | Bolts loose | Tighten bolts |
| Oil leak on top of reducer | Gasket between motor & the reducer failed | Replace gasket & silicone sealant |
| Sign of oil on baseplate | Drain pipe & valve damaged | Use Teflon tape/sealant to reseal |
| Oil leak on reducers with C Flanged motor(s) | If the vent was not installed plugged or faulty, the oil pressure in the reducer might have exceeded 2 psi causing the input oil seal to "blow-out" / reverse | Change the input oil seal |

NOISE: Under normal circumstances, Envirequip mixers operate quietly and without vibration. If there is a metal-on-metal noise, check to see if the top bolt #3 is properly tightened to the shaft. If the bolt is not, the shaft will be lower than it should be and the flinger / shaft catcher may be touching the dry well pipe.

HEAT: Check the temperature of the reducer and motor. If hot, (>140$^0$F) that is **too hot** - check the oil level.

NOTE: On Series EVG & EVGX, an oil expansion chamber is supplied to minimize problems with over-filling of oil into the gear case. Care should be taken NOT to overfill the gear reducer with oil.

## SECTION 12 – WARRANTY

- These mixers should provide long and satisfactory service. Only the finest materials were employed in their manufacture. However, if any defects in materials or workmanship occur, the defective part(s) must be returned to ENVIREQUIP (Division of 6445772 Canada Inc.) freight prepaid. ENVIREQUIP reserves the right to repair or replace, at its discretion, any part that proves to have been defective in materials or workmanship.
- ENVIREQUIP is not responsible for the warranties on components purchased, e.g. motors, but will endeavour to help to obtain resolution of any problem(s) with any of our sub-supplier(s) as regards their warranties.
- In any warranty claim involving any of our sub-suppliers, their warranty rules and Terms & Conditions will also rule.
- For a warranty, even if for a valid claim, to be acted upon, the original invoice must be paid. If the equipment is not paid, there is no warranty expressed or implied.
- ENVIREQUIP specifically excludes any liability as to loss of production, improper use of the equipment, abuse, any other liability expressed or implied that exceed the limited warranty given as applies to the equipment being free of defects in materials and/or workmanship.
- ENVIREQUIP's warranty is for (1) year against defects in materials or workmanship and also includes a Process warranty.
- The Process warranty only applies to the conditions that were specified at the time of bidding.
- Please refer to the terms and conditions as well as to the warranty for complete details.
- **The maximum liability on any given order cannot exceed the value of the amount of the original order.**

Call: 1-514-386-1043

## SECTION 13 – MAINTENANCE LOG

We highly recommend you make a log for these items complete with the date checked and your signature, which is information required for warranty claims.

SUGGESTED ITEMS TO LOG:

CHECK OIL

CHANGE OIL

CHECK PEDESTAL FOR OIL LEAKAGE

CHECK FOR HEAT

CHECK FOR NOISE

CHECK FOR VIBRATION

CHECK BOLT TIGHTNESS:

- Top bolt & pedestal bolts
- Base bolts
- Clamp
- Coupling
- Hub & blades
- Reducer end cover bolts

CHECK MOTOR AMPERAGE

CHECK ROTATION AFTER ELECTRICAL WORK

OTHER

**This page is intentionally left blank**

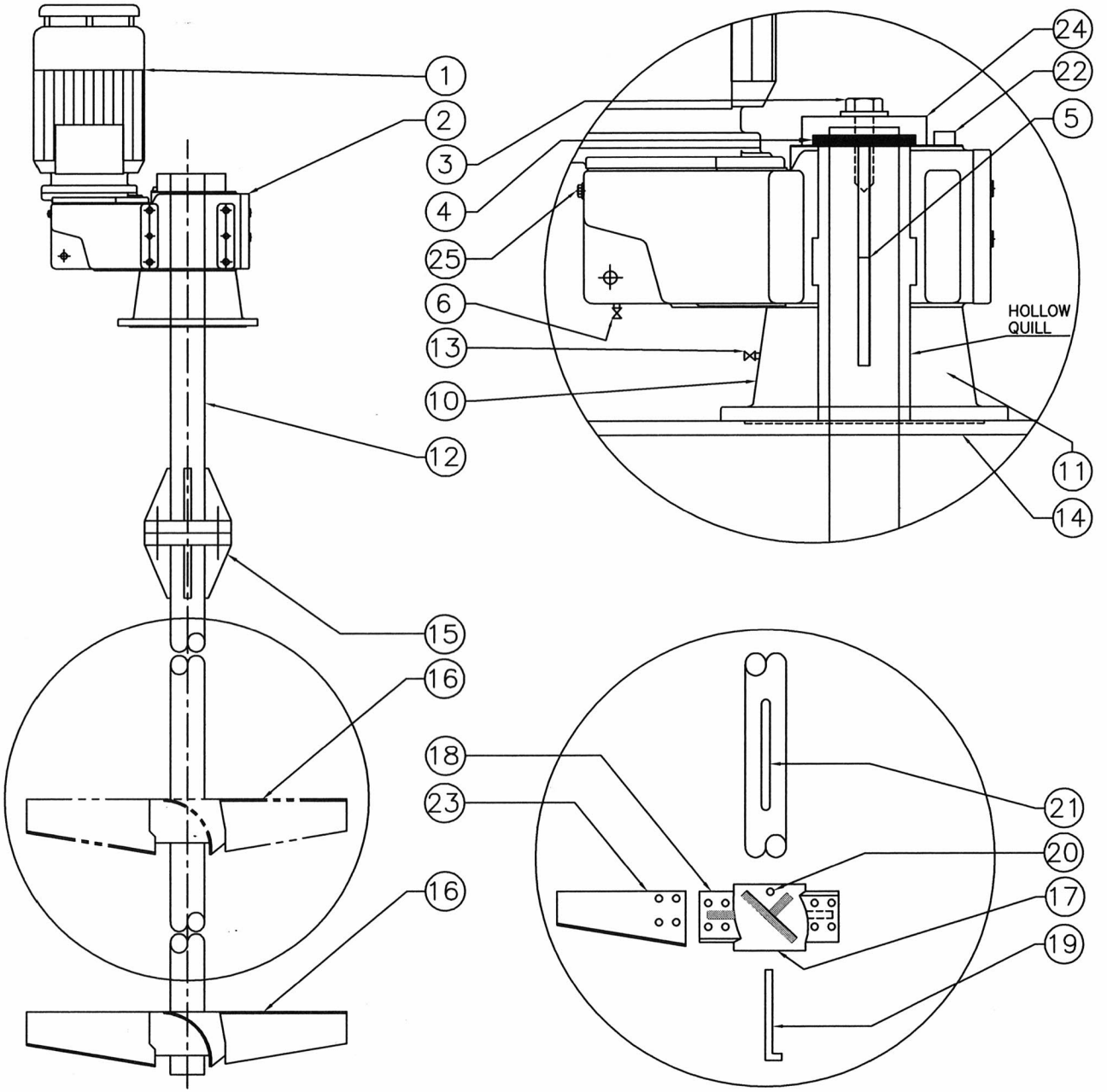


| ITEM No: | DESCRIPTION |
|---|---|
| 1 | MOTOR |
| 2 | NORD GEAR REDUCER |
| 3 | BOLT AND WASHER/LOCKTITE |
| 4 | SPLIT RING |
| 5 | QUILL KEYS (2) |
| 6 | OIL DRAIN |
| 10 | PEDESTAL |
| 11 | DRY-WELL |
| 12 | SHAFT |
| 13 | OIL DRAIN FOR THE DRY WELL |
| 14 | BASE PLATE/MOUNTING FLANGE |
| 15 | IN-TANK COUPLING WITH GUSSETS (IF SUPPLIED) |
| 16 | ENVIROFOIL IMPELLER (SEE GA DWG. FOR IMPELLER SPACING IF TWO IMPELLERS SUPPLIED) |
| 17 | IMPELLER HUB |
| 18 | HUB WINGS (EARS) |
| 19 | GIB (HOOK) KEY |
| 20 | SET SCREWS (2) |
| 21 | KEY WAY'S IN SHAFT FOR IMPELLER HUB(S) |
| 22 | GEAR REDUCER BREATHER |
| 23 | ENVIROFOIL IMPELLER BLADE |
| 24 | SPLIT RING/SHAFT COVER |
| 25 | OIL LEVEL PLUG |

NOTE:
IMPELLER/HUB CONFIG. "A" SHOWN. (STANDARD)
STANDARD = CLOCKWISE ROTATION, DOWN THRUST.
CHECK NAME PLATE FOR OTHER POSSIBLE IMPELLER CONFIGURATION REQUIREMENTS.

| TITLE | REVISION # |
|---|---|
| MIX-TECH MIXER "EVGX SERIES" | 0 |

ENVIREQUIP
WTEM INC.
490 Bord du Lac - Suite 2
Dorval, QC H9S 2A8
Montreal Tel: (514) 388-1043
RR1 (21494 Little Russia Rd.)
Glen Robertson, Ont K0B 1H0
Ontario Tel: (613) 874-2615
Fax: (613) 874-2629
E-mail: envireqp@glen-net.ca

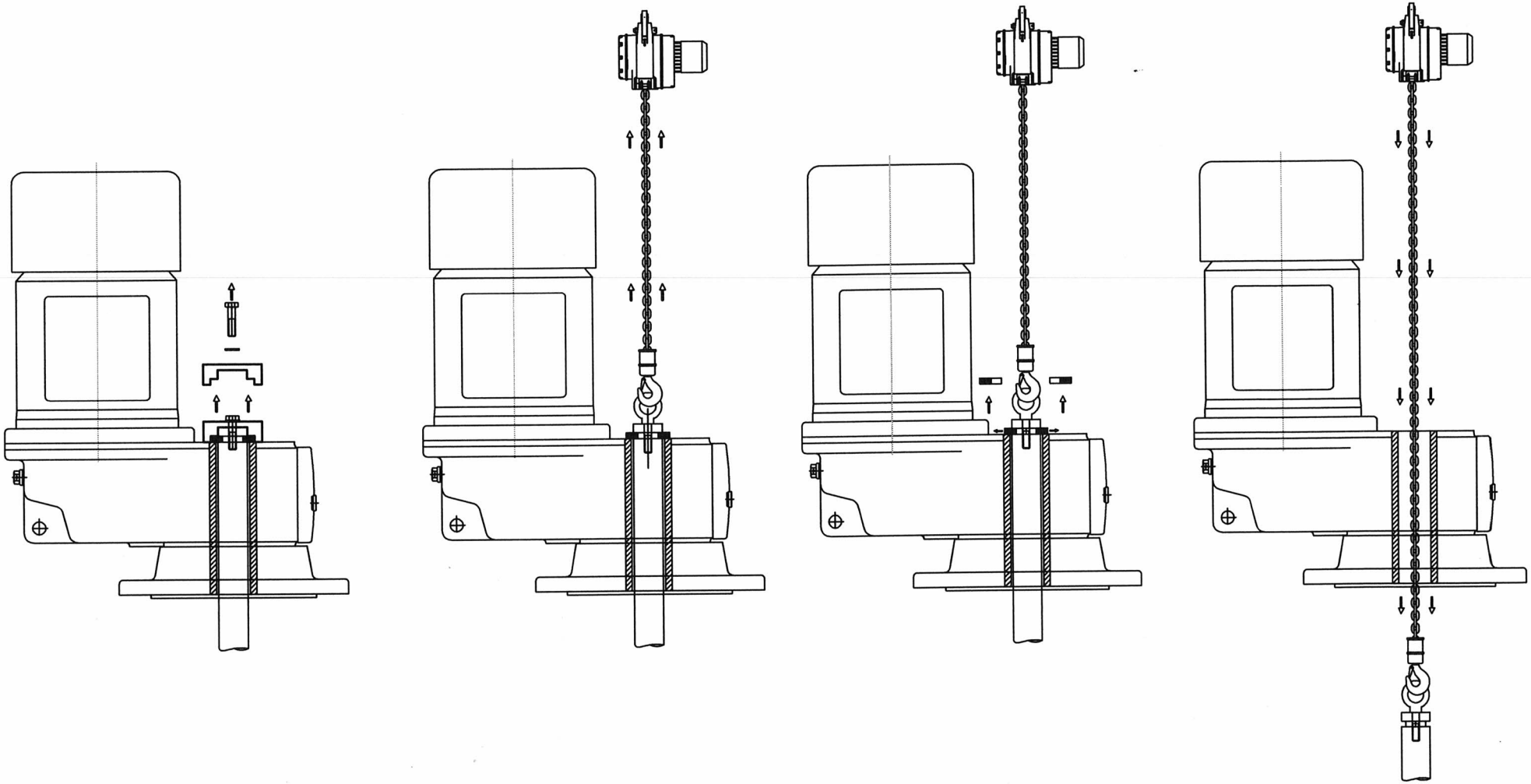

# *FLOWSERVE*

## *MODEL DURCO T4E, LINED PLUG VALVE*

LEFT BLANK

FLOWSERVE
**Ahaus GmbH**
von-Braun-Straße 19a
D-48683 Ahaus
Postfach 1162 D-48661 Ahaus
Telefon: +49(0) 2561-686-100
Fax: +49(0) 2561-686-200



# Register 18
# Contents - T4E

***Contents*** ***Page***

*Technical Data T4E-1, DN½“ to DN6“ ..... 2*
*Technical Data T4E-1, DN8“ to DN12“ ..... 3*
*Technical Data T4E-2, DN15 to DN150 ..... 4*
*Technical Data T4E-2, DN200 to DN300 ..... 5*
*Technical Data T4E-3, DN½“ to DN6“ ..... 6*
*Technical Data T4E-3, DN8“, DN10“ ..... 7*
*Material specification T4E-1, DN½“ to DN6“ ..... 8*
*Material specificationT4E-1, DN8“ to DN12“ ..... 8*
*Material specification T4E-2, DN15 to DN150 ..... 9*
*Material specification T4E-2, DN200 to DN300 ..... 9*
*Material specification T4E-3, DN½“ to DN6“ ..... 10*
*Material specification T4E-3, DN8“, DIN10“ ..... 10*
*Assembly instructions T4E ..... 11*
*Disassembly instructions T4E ..... 12*
*T4E - Recommended tightening torques ..... 13*
*T4E - Dimension sheet for actuator mounting ..... 14*
*T4E - $K_v$ Data and $C_v$ Data ..... 15*

FLOWSERVE
**Ahaus GmbH**
von-Braun-Straße 19a
D-48683 Ahaus
Postfach 1162 D-48661 Ahaus
Telefon: +49(0) 2561-686-100
Fax: +49(0) 2561-686-200



# Technical Data T4E-1
# DN½“ to DN6“

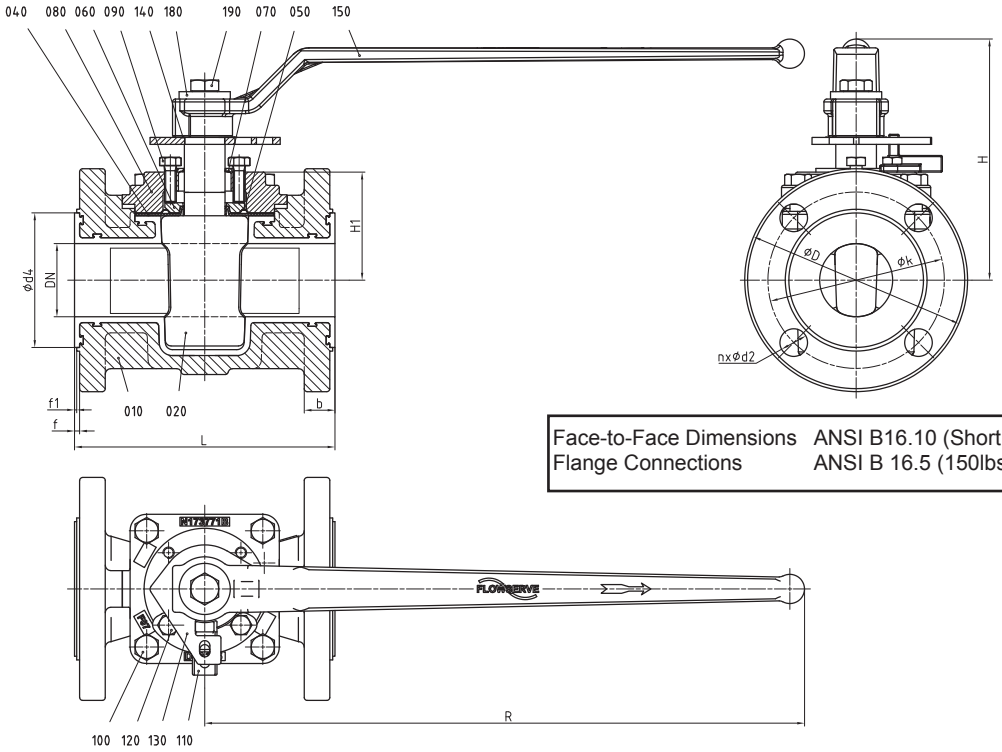


| | |
|---|---|
| Face-to-Face Dimensions | ANSI B16.10 (Short Pattern) |
| Flange Connections | ANSI B 16.5 (150lbs) |

| DN / ANSI | | L | f1 | f | b | H1 | H | Ød4 |
|---|---|---|---|---|---|---|---|---|
| ½“ | mm | 108 | 1,5 | 3 | 14 | 53,8 | 139 | 36 |
| | inch | 4,25 | 0,06 | 0,12 | 0,55 | 2,12 | 5,47 | 1,42 |
| ¾“ | mm | 117,5 | 1,5 | 3 | 15,5 | 53,8 | 139 | 43 |
| | inch | 4,6 | 0,06 | 0,12 | 0,61 | 2,12 | 5,47 | 1,69 |
| 1“ | mm | 127 | 1,5 | 3 | 15,6 | 53,8 | 139 | 51 |
| | inch | 5 | 0,06 | 0,12 | 0,61 | 2,12 | 5,47 | 2,01 |
| 1½“ | mm | 165 | 2 | 4 | 20 | 62,9 | 145 | 73 |
| | inch | 6,5 | 0,08 | 0,16 | 0,79 | 2,48 | 5,71 | 2,87 |
| 2“ | mm | 178 | 1,5 | 3,5 | 21 | 73,8 | 165 | 92 |
| | inch | 7 | 0,06 | 0,14 | 0,83 | 2,91 | 6,5 | 3,62 |
| 3“ | mm | 203 | 1,5 | 3 | 25,5 | 86,4 | 179 | 127 |
| | inch | 8 | 0,06 | 0,12 | 1 | 3,4 | 7,05 | 5 |
| 4“ | mm | 229 | 2 | 4 | 26,5 | 106,9 | 222 | 157 |
| | inch | 9 | 0,08 | 0,16 | 1,04 | 4,21 | 8,74 | 6,18 |
| 6“ | mm | 267 | 2 | 4 | 28 | 141,4 | - | 208 |
| | inch | 10,5 | 0,08 | 0,16 | 1,1 | 5,57 | - | 8,19 |

| DN / ANSI | | ØD | R | Øk | nxd2 | weight | |
|---|---|---|---|---|---|---|---|
| ½“ | mm | 88,9 | 260 | 60,5 | 4x16 | kg | 3,7 |
| | inch | 3,5 | 10,24 | 2,38 | 4x0,63 | lbs | 8,2 |
| ¾“ | mm | 98,6 | 260 | 69,9 | 4x16 | kg | 4,1 |
| | inch | 3,88 | 10,24 | 2,75 | 4x0,63 | lbs | 9,0 |
| 1“ | mm | 107,9 | 260 | 79,2 | 4x16 | kg | 4,9 |
| | inch | 4,25 | 10,24 | 3,12 | 4x0,63 | lbs | 10,8 |
| 1½“ | mm | 127 | 260 | 98,6 | 4x16 | kg | 7,4 |
| | inch | 5 | 10,24 | 3,88 | 4x0,63 | lbs | 16,3 |
| 2“ | mm | 152,4 | 410 | 120,7 | 4x19 | kg | 11,3 |
| | inch | 6 | 16,14 | 4,75 | 4x0,75 | lbs | 24,9 |
| 3“ | mm | 190,5 | 410 | 152,4 | 4x19 | kg | 17,5 |
| | inch | 7,5 | 16,14 | 6 | 4x0,75 | lbs | 38,6 |
| 4“ | mm | 228,6 | 674 | 190,5 | 8x19 | kg | 31,1 |
| | inch | 9 | 26,54 | 7,5 | 8x0,75 | lbs | 68,5 |
| 6“ | mm | 282 | - | 240,5 | 8x23 | kg | 43,2 |
| | inch | 11,1 | - | 9,5 | 8x0,91 | lbs | 95,2 |

FLOWSERVE
**Ahaus GmbH**
von-Braun-Straße 19a
D-48683 Ahaus
Postfach 1162 D-48661 Ahaus
Telefon: +49(0) 2561-686-100
Fax: +49(0) 2561-686-200



# Technical Data T4E-1
# DN8“ to DN12“

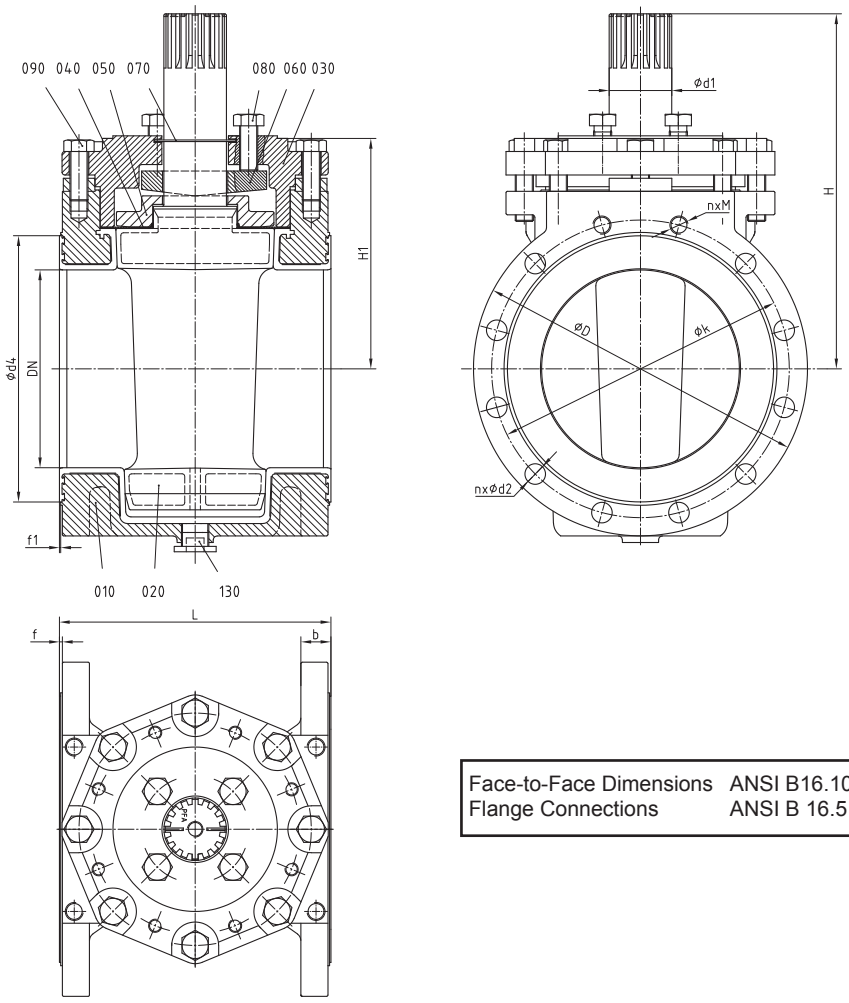


| | |
|---|---|
| Face-to-Face Dimensions | ANSI B16.10 (Short Pattern) |
| Flange Connections | ANSI B 16.5 (150lbs) |

| DN / ANSI | | L | f1 | f | b | H1 | H | Ød4 |
|---|---|---|---|---|---|---|---|---|
| 8" | mm | 292,1 | 2 | 4 | 27,5 | 235,4 | 362 | 262 |
| | inch | 11,5 | 0,08 | 0,16 | 1,08 | 9,27 | 14,25 | 10,32 |
| 10" | mm | 330,2 | 2 | 4 | 37 | 280,2 | 431,8 | 316 |
| | inch | 13 | 0,08 | 0,16 | 1,46 | 11 | 17 | 12,44 |
| 12" | mm | 355,6 | 2 | 4 | 40 | 301,6 | 454 | 381 |
| | inch | 14 | 0,08 | 0,16 | 1,57 | 11,87 | 17,87 | 15 |

| DN / ANSI | | ØD | Øk | nxd2 | Ød1 | nxM | weight | |
|---|---|---|---|---|---|---|---|---|
| 8" | mm | 342,9 | 298,5 | 6x22 | 63,4 | 2xUNC 3/4" | kg | 157,0 |
| | inch | 13,5 | 11,75 | 6x0,87 | 2,5 | | lbs | 346,1 |
| 10" | mm | 406,4 | 362 | 10x25 | 76,2 | 2xUNC 7/8" | kg | 190,0 |
| | inch | 16 | 14,25 | 10x0,98 | 3 | | lbs | 418,9 |
| 12" | mm | 482,6 | 431,8 | 10x25 | 76,2 | 2xUNC 7/8" | kg | 220,0 |
| | inch | 19 | 17 | 10x0,98 | 3 | | lbs | 485,0 |

**Ahaus GmbH**
von-Braun-Straße 19a
D-48683 Ahaus
Postfach 1162 D-48661 Ahaus
Telefon: +49(0) 2561-686-100
Fax: +49(0) 2561-686-200



# Technical Data T4E-2
# DN15 to DN150

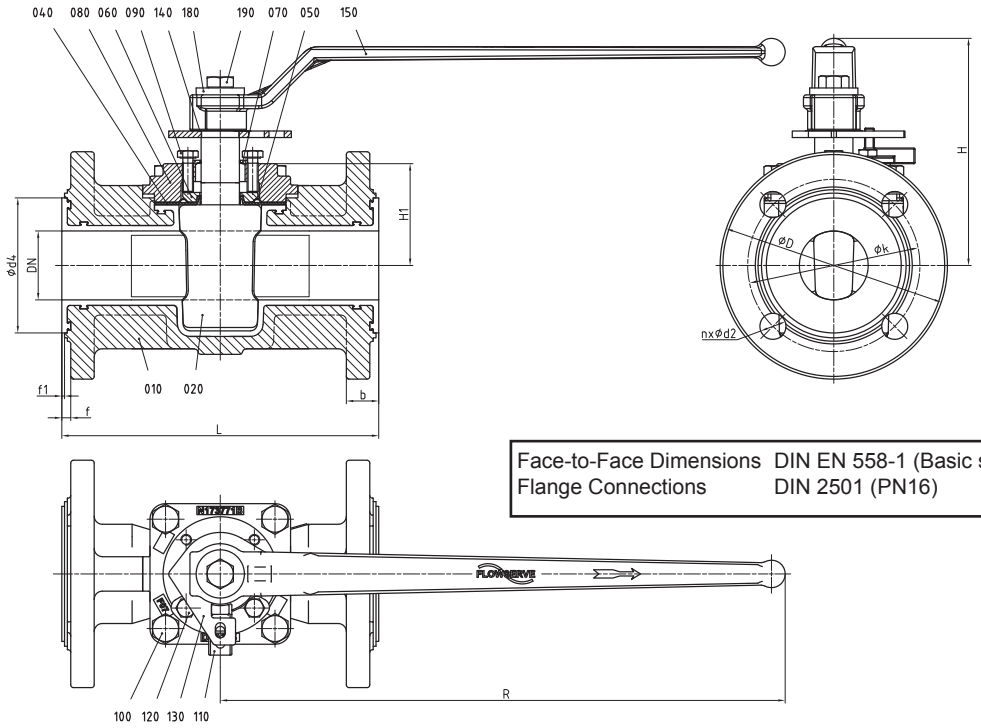





| | |
|---|---|
| Face-to-Face Dimensions | DIN EN 558-1 (Basic series 1) |
| Flange Connections | DIN 2501 (PN16) |

| DN / DIN | | L | f1 | f | b | H1 | H | Ød4 |
|---|---|---|---|---|---|---|---|---|
| 015 | mm | 130 | 2 | 6 | 18 | 53,8 | 139 | 42 |
| | inch | 5,12 | 0,08 | 0,24 | 0,71 | 2,12 | 5,47 | 1,65 |
| 020 | mm | 150 | 2 | 6 | 22 | 53,8 | 139 | 56 |
| | inch | 5,91 | 0,08 | 0,24 | 0,87 | 2,12 | 5,47 | 2,2 |
| 025 | mm | 160 | 2 | 6,5 | 20,5 | 53,8 | 139 | 65 |
| | inch | 6,3 | 0,08 | 0,26 | 0,81 | 2,12 | 5,47 | 2,56 |
| 040 | mm | 200 | 2 | 6,5 | 21,5 | 62,9 | 145 | 85 |
| | inch | 7,87 | 0,08 | 0,26 | 0,85 | 2,48 | 5,71 | 3,35 |
| 050 | mm | 230 | 2 | 6,5 | 23,5 | 73,8 | 165 | 98 |
| | inch | 9,06 | 0,08 | 0,26 | 0,93 | 2,91 | 6,5 | 3,86 |
| 080 | mm | 310 | 2,0 | 7 | 26 | 86,4 | 179 | 133 |
| | inch | 12,2 | 0,08 | 0,28 | 1,02 | 3,4 | 7,05 | 5,24 |
| 100 | mm | 350 | 2 | 7 | 28 | 106,9 | 222 | 152 |
| | inch | 13,78 | 0,08 | 0,28 | 1,1 | 4,21 | 8,74 | 5,98 |
| 150 * | mm | 267 | 2 | 4 | 28 | 141,4 | - | 208 |
| | inch | 10,51 | 0,08 | 0,16 | 1,1 | 5,57 | - | 8,19 |

| DN / DIN | | ØD | R | Øk | nxd2 | weight | |
|---|---|---|---|---|---|---|---|
| 015 | mm | 95 | 260 | 65 | 4x14 | kg | 4,2 |
| | inch | 3,74 | 10,24 | 2,56 | 4x0,55 | lbs | 9,3 |
| 020 | mm | 105 | 260 | 75 | 4x14 | kg | 4,9 |
| | inch | 4,13 | 10,24 | 2,95 | 4x0,55 | lbs | 10,8 |
| 025 | mm | 115 | 260 | 85 | 4x14 | kg | 5,8 |
| | inch | 4,53 | 10,24 | 3,35 | 4x0,55 | lbs | 12,8 |
| 040 | mm | 150 | 260 | 110 | 4x19 | kg | 9,1 |
| | inch | 5,91 | 10,24 | 4,33 | 4x0,75 | lbs | 20,1 |
| 050 | mm | 165 | 410 | 125 | 4x19 | kg | 13,2 |
| | inch | 6,5 | 16,14 | 4,92 | 4x0,75 | lbs | 29,1 |
| 080 | mm | 200 | 410 | 160 | 8x19 | kg | 20,8 |
| | inch | 7,87 | 16,14 | 6,3 | 8x0,75 | lbs | 45,8 |
| 100 | mm | 220 | 674 | 180 | 8x19 | kg | 34,7 |
| | inch | 8,66 | 26,54 | 7,09 | 8x0,75 | lbs | 76,5 |
| 150 * | mm | 282 | - | 240,5 | 8x23 | kg | 43,2 |
| | inch | 11,1 | - | 9,47 | 8x0,91 | lbs | 95,2 |

* Face-to-Face Dimensions acc. ANSI B 16.10 (Short Pattern)

FLOWSERVE
**Ahaus GmbH**
von-Braun-Straße 19a
D-48683 Ahaus
Postfach 1162 D-48661 Ahaus
Telefon: +49(0) 2561-686-100
Fax: +49(0) 2561-686-200



# Technical Data T4E-2
# DN200 to DN300

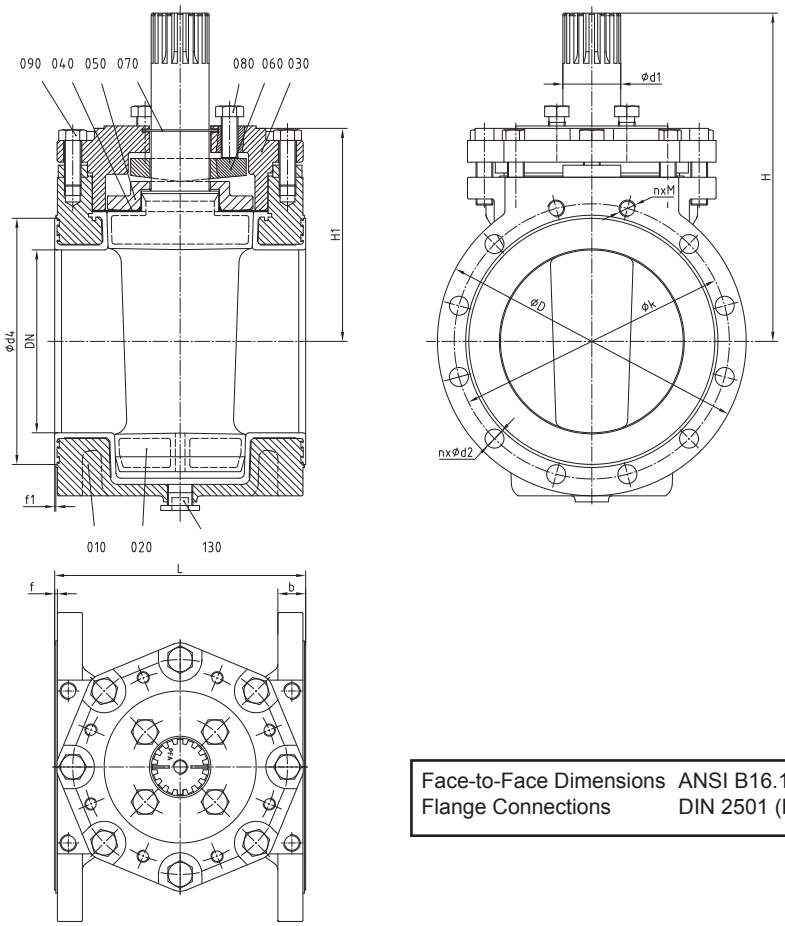


| | |
|---|---|
| Face-to-Face Dimensions | ANSI B16.10 (Short Pattern) |
| Flange Connections | DIN 2501 (PN10) |

| DN / DIN | | L | f1 | f | b | H1 | H | Ød4 |
|---|---|---|---|---|---|---|---|---|
| **200** | mm | 292,1 | 2 | 4 | 27,5 | 235,4 | 362 | 262 |
| | inch | 11,5 | 0,08 | 0,16 | 1,08 | 9,27 | 14,25 | 10,32 |
| **250** | mm | 330,2 | 2 | 4 | 37 | 280,2 | 431,8 | 316 |
| | inch | 13 | 0,08 | 0,16 | 1,46 | 11 | 17 | 12,44 |
| **300** | mm | 355,6 | 2 | 4 | 40 | 301,6 | 454 | 381 |
| | inch | 14 | 0,08 | 0,16 | 1,57 | 11,87 | 17,87 | 15 |

| DN / DIN | | ØD | Øk | nxd2 | Ød1 | nxM | weight | |
|---|---|---|---|---|---|---|---|---|
| **200** | mm | 342,9 | 295 | 6x22 | 63,4 | 2xM20 | kg | 157,0 |
| | inch | 13,5 | 11,61 | 6x0,87 | 2,5 | | lbs | 346,1 |
| **250** | mm | 406,4 | 350 | 10x22 | 76,2 | 2xM20 | kg | 190,0 |
| | inch | 16 | 13,78 | 10x0,87 | 3 | | lbs | 418,9 |
| **300** | mm | 482,6 | 400 | 10x22 | 76,2 | 2xM20 | kg | 220,0 |
| | inch | 19 | 15,75 | 10x0,87 | 3 | | lbs | 485,0 |

**Ahaus GmbH**
von-Braun-Straße 19a
D-48683 Ahaus
Postfach 1162 D-48661 Ahaus
Telefon: +49(0) 2561-686-100
Fax: +49(0) 2561-686-200



# Technical Data T4E-3
# DN½“ to DN6“

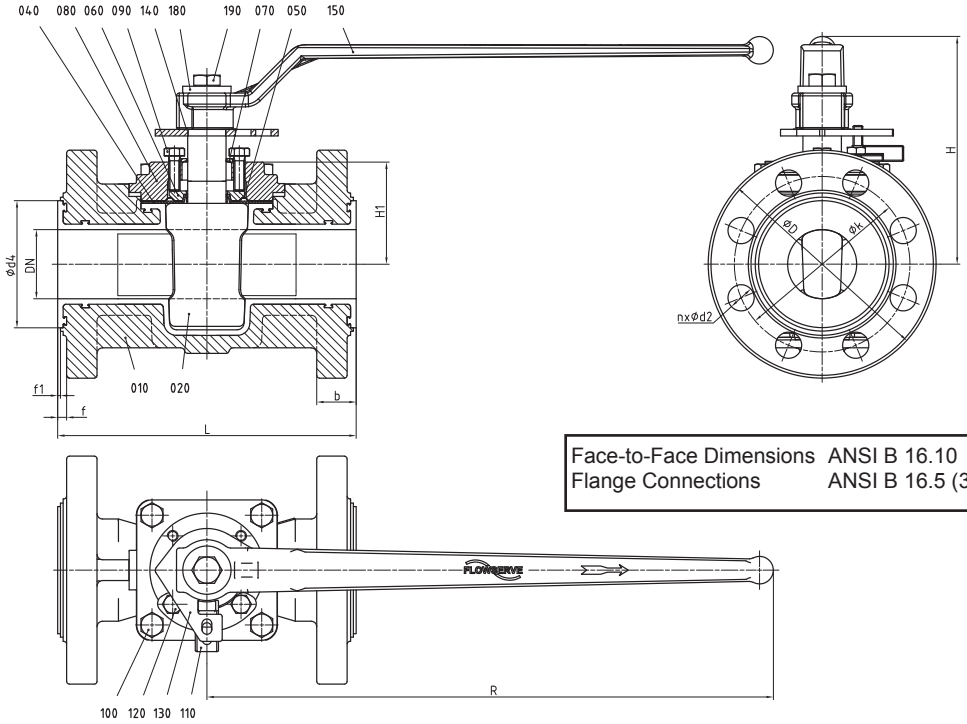


| | |
|---|---|
| Face-to-Face Dimensions | ANSI B 16.10 |
| Flange Connections | ANSI B 16.5 (300lbs) |

| DN / ANSI | | L | f1 | f | b | H1 | H | Ød4 |
|---|---|---|---|---|---|---|---|---|
| ½“ | mm | 139,5 | 2 | 4 | 17 | 53,8 | 139 | 36 |
| | inch | 5,5 | 0,08 | 0,16 | 0,67 | 2,12 | 5,47 | 1,42 |
| ¾“ | mm | 152,5 | 2 | 6 | 21,5 | 53,8 | 139 | 43 |
| | inch | 6 | 0,08 | 0,24 | 0,85 | 2,12 | 5,47 | 1,69 |
| 1“ | mm | 165 | 2 | 6,5 | 22,5 | 53,8 | 139 | 65 |
| | inch | 6,5 | 0,08 | 0,26 | 0,89 | 2,12 | 5,47 | 2,56 |
| 1½“ | mm | 190,5 | 2 | 6,5 | 25,5 | 62,9 | 145 | 85 |
| | inch | 7,5 | 0,08 | 0,26 | 1 | 2,48 | 5,71 | 3,35 |
| 2“ | mm | 216 | 2 | 6,5 | 28,5 | 73,8 | 165 | 98 |
| | inch | 8,5 | 0,08 | 0,26 | 1,12 | 2,91 | 6,5 | 3,86 |
| 3“ | mm | 282,5 | 2 | 7 | 34 | 86,4 | 179 | 133 |
| | inch | 11,12 | 0,08 | 0,28 | 1,34 | 3,4 | 7,05 | 5,24 |
| 4“ | mm | 305 | 2 | 7 | 37 | 106,9 | 222 | 152 |
| | inch | 12 | 0,08 | 0,28 | 1,46 | 4,21 | 8,74 | 5,98 |
| 6“ | mm | 403,5 | 2 | 7 | 42 | 141,4 | - | 208 |
| | inch | 15,88 | 0,08 | 0,28 | 1,65 | 5,57 | - | 8,19 |

| DN / ANSI | | ØD | R | Øk | nxd2 | weight | |
|---|---|---|---|---|---|---|---|
| ½“ | mm | 95 | 260 | 66,5 | 4x16 | kg | 4,5 |
| | inch | 3,74 | 10,24 | 2,6 | 4x0,63 | lbs | 9,9 |
| ¾“ | mm | 117,3 | 260 | 82,5 | 4x19 | kg | 5,6 |
| | inch | 4,62 | 10,24 | 3,25 | 4x0,75 | lbs | 12,3 |
| 1“ | mm | 123,9 | 260 | 88,9 | 4x19 | kg | 6,5 |
| | inch | 4,88 | 10,24 | 3,5 | 4x0,75 | lbs | 14,3 |
| 1½“ | mm | 155,4 | 260 | 114,3 | 4x22,5 | kg | 10,1 |
| | inch | 6,12 | 10,24 | 4,5 | 4x0,89 | lbs | 22,3 |
| 2“ | mm | 165 | 410 | 127 | 8x19 | kg | 14,0 |
| | inch | 6 | 16,14 | 5 | 8x0,75 | lbs | 30,9 |
| 3“ | mm | 209,5 | 410 | 168 | 8x22,5 | kg | 23,7 |
| | inch | 8,25 | 16,14 | 6,61 | 8x0,89 | lbs | 52,2 |
| 4“ | mm | 254 | 674 | 200 | 8x22,5 | kg | 42,4 |
| | inch | 10 | 26,54 | 7,87 | 8x0,89 | lbs | 93,5 |
| 6“ | mm | 317,5 | - | 269,7 | 12x22,5 | kg | 69,2 |
| | inch | 12,5 | - | 10,62 | 12x0,89 | lbs | 152,5 |

FLOWSERVE
**Ahaus GmbH**
von-Braun-Straße 19a
D-48683 Ahaus
Postfach 1162 D-48661 Ahaus
Telefon: +49(0) 2561-686-100
Fax: +49(0) 2561-686-200



# Technical Data T4E-3
# DN8“, 10“

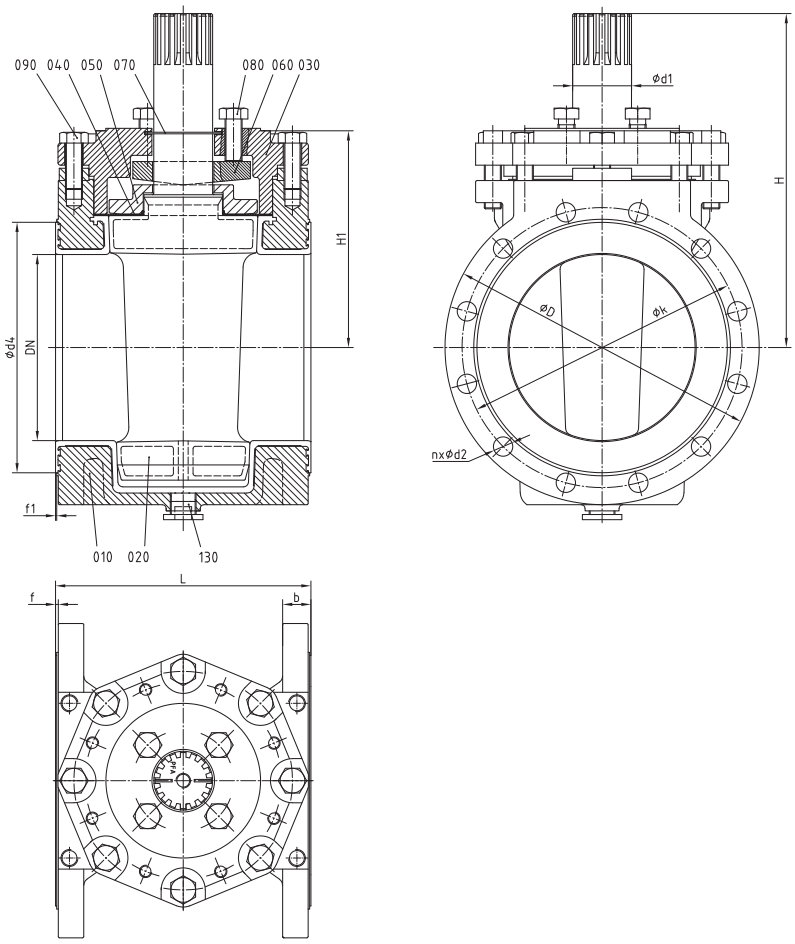


Face-to-Face Dimensions ANSI B 16.10
Flange Connections ANSI B 16.5 (300lbs)

| DN / ANSI | | L | f1 | f | b | H | H1 | Ød4 |
|---|---|---|---|---|---|---|---|---|
| 8“ | mm | 419 | 2 | 4 | 43 | 362 | 235,4 | 262 |
| | inch | 16,5 | 0,08 | 0,16 | 1,69 | 14,25 | 9,27 | 10,32 |
| 10“ | mm | 457 | 2 | 4 | 50 | 432 | 280,3 | 316 |
| | inch | 18 | 0,08 | 0,16 | 1,97 | 17,01 | 11,04 | 12,44 |

| DN / ANSI | | ØD | Øk | nxd2 | Ød1 | weight | |
|---|---|---|---|---|---|---|---|
| 8“ | mm | 381 | 330,2 | 12x25,4 | 63,4 | kg | 156,0 |
| | inch | 15 | 13 | 12x1 | 2,5 | lbs | 343,9 |
| 10“ | mm | 445 | 387,5 | 8x28,5 | 76,2 | kg | 216,0 |
| | inch | 17,5 | 15,26 | 8x1,1 | 3 | lbs | 476,2 |

FLOWSERVE
Ahaus GmbH
von-Braun-Straße 19a
D-48683 Ahaus
Postfach 1162 D-48661 Ahaus
Telefon: +49(0) 2561-686-100
Fax: +49(0) 2561-686-200



# Material specification T4E-1 DN½“ to DN6“

| No. | Designation | Pieces | Material | Material-No. / DIN |
|---|---|---|---|---|
| 010 | body | 1 | DCI ASTM A395 / PFA lined | 0.7043 / DIN EN 1563 |
| 020 | plug | 1 | DCI ASTM A395 / PFA lined | 0.7043 / DIN EN 1563 |
| 040 | diaphragm | 1 | PFA | |
| 050* | metal diaphragm | 1 | 302 SS | ~1.8815 |
| 060 | thrust gland | 1 | 304 SS | ~1.5523 |
| 070 | grounding spring | 1 | 302 SS | ~1.8815 |
| 080 | top cap | 1 | DCI ASTM A395 | 0.7043 / DIN EN 1563 |
| 090 | adjuster bolt | 1 set | ASTM A193 GRADE B7 | ~1.7225 / DIN EN 10083-1 |
| 100 | top cap bolt | 1 set | ASTM A193 GRADE B7 | ~1.7225 / DIN EN 10083-1 |
| 110 | stop | 1 | D4 ASTM A351/A744 Grade CF-8M (316 SS) | 1.4408 / DIN EN 10213-4 |
| 120 | stop fastener | 1 set | Stainless Steel | 1.4301 / DIN EN 10088-3 |
| 130 | stop collar | 1 | carbon steel, protective plated | |
| 140 | stop collar retainer | 1 | 302 SS | ~1.8815 |
| 150 | wrench | 1 | EN-JS1082 (GGG-50) | 0.7050 / DIN EN 1563 |
| 180 | washer | 1 | Stainless Steel | 1.4301 / DIN EN 10088-3 |
| 190 | hexagon bolt | 1 | Stainless Steel | 1.4301 / DIN EN 10088-3 |

* optional

# Material specification T4E-1 DN8“ to DN12“

## ➤ Ductile Cast Iron

| No. | Designation | Pieces | Material | Material-No. / DIN |
|---|---|---|---|---|
| 010 | body | 1 | DCI ASTM A395 / PFA lined | 0.7043 / DIN EN 1563 |
| 020 | plug | 1 | CD4M ASTM A351 Gr CD4MCu / PFA lined | |
| 030 | top cap | 1 | DCI ASTM A395 | 0.7043 / DIN EN 1563 |
| 040 | diaphragm | 1 | PFA | |
| 050 | thrust gland | 1 | CD4M ASTM A351 Gr CD4MCu | |
| 060 | adjuster | 1 | CD4M ASTM A351 Gr CD4MCu | |
| 070 | grounding spring | 1 | 302 SS | ~1.8815 |
| 080 | adjuster bolt | 1 set | Stainless Steel | 1.4301 / DIN EN 10088-3 |
| 090 | hexagon bolt | 1 set | Stainless Steel | 1.4301 / DIN EN 10088-3 |
| 130 | locking screw | 1 | X 5 CrNiMo 17-12-2 | 1.4401 / DIN EN 10088 |

## ➤ Stainless Steel

| No. | Designation | Pieces | Material | Material-No. / DIN |
|---|---|---|---|---|
| 010 | body | 1 | D4 ASTM A744 Gr. CF-8M / PFA lined | 1.4408 / DIN EN 10213-4 |
| 020 | plug | 1 | CD4M ASTM A351 Gr CD4MCu / PFA lined | |
| 030 | top cap | 1 | CD4M ASTM A351 Gr CD4MCu | 0.7043 / DIN EN 1563 |
| 040 | diaphragm | 1 | PFA | |
| 050 | thrust gland | 1 | CD4M ASTM A351 Gr CD4MCu | |
| 060 | adjuster | 1 | CD4M ASTM A351 Gr CD4MCu | |
| 070 | grounding spring | 1 | 302 SS | ~1.8815 |
| 080 | adjuster bolt | 1 set | Stainless Steel | 1.4301 / DIN EN 10088-3 |
| 090 | hexagon bolt | 1 set | Stainless Steel | 1.4301 / DIN EN 10088-3 |
| 130 | locking screw | 1 | X 5 CrNiMo 17-12-2 | 1.4401 / DIN EN 10088 |

# Material specificationT4E-2 DN15 to DN150

| No. | Designation | Pieces | Material | Material-No. / DIN |
|---|---|---|---|---|
| **010** | body | 1 | DCI ASTM A395 / PFA lined | 0.7043 / DIN EN 1563 |
| **020** | plug | 1 | DCI ASTM A395 / PFA lined | 0.7043 / DIN EN 1563 |
| **040** | diaphragm | 1 | PFA | |
| **050*** | metal diaphragm | 1 | 302 SS | ~1.8815 |
| **060** | thrust gland | 1 | 304 SS | ~1.5523 |
| **070** | grounding spring | 1 | 302 SS | ~1.8815 |
| **080** | top cap | 1 | DCI ASTM A395 | 0.7043 / DIN EN 1563 |
| **090** | adjuster bolt | 1 set | Stainless Steel | 1.4301 / DIN EN 10088-3 |
| **100** | top cap bolt | 1 set | Stainless Steel | 1.4301 / DIN EN 10088-3 |
| **110** | stop | 1 | D4 ASTM A351/A744 Grade CF-8M (316 SS) | 1.4408 / DIN EN 10213-4 |
| **120** | stop fastener | 1 set | Stainless Steel | 1.4301 / DIN EN 10088-3 |
| **130** | stop collar | 1 | carbon steel, protective plated | |
| **140** | stop collar retainer | 1 | 302 SS | ~1.8815 |
| **150** | wrench | 1 | EN-JS1082 (GGG-50) | 0.7050 / DIN EN 1563 |
| **180** | washer | 1 | Stainless Steel | 1.4301 / DIN EN 10088-3 |
| **190** | hexagon bolt | 1 | Stainless Steel | 1.4301 / DIN EN 10088-3 |

* optional

# Material specificationT4E-2 DN200 to DN300

## ➤ Ductile Cast Iron

| No. | Designation | Pieces | Material | Material-No. / DIN |
|---|---|---|---|---|
| **010** | body | 1 | DCI ASTM A395 / PFA lined | 0.7043 / DIN EN 1563 |
| **020** | plug | 1 | CD4M ASTM A351 Gr CD4MCu / PFA lined | |
| **030** | top cap | 1 | DCI ASTM A395 | 0.7043 / DIN EN 1563 |
| **040** | diaphragm | 1 | PFA | |
| **050** | thrust gland | 1 | CD4M ASTM A351 Gr CD4MCu | |
| **060** | Adjuster | 1 | CD4M ASTM A351 Gr CD4MCu | |
| **070** | grounding spring | 1 | 302 SS | ~1.8815 |
| **080** | adjuster bolt | 1 set | Stainless Steel | 1.4301 / DIN EN 10088-3 |
| **090** | hexagon bolt | 1 set | Stainless Steel | 1.4301 / DIN EN 10088-3 |
| **130** | locking screw | 1 | X 5 CrNiMo 17-12-2 | 1.4401 / DIN EN 10088 |

## ➤ Stainless Steel

| No. | Designation | Pieces | Material | Material-No. / DIN |
|---|---|---|---|---|
| **010** | body | 1 | D4 ASTM A744 Gr. CF-8M / PFA lined | 1.4408 / DIN EN 10213-4 |
| **020** | plug | 1 | CD4M ASTM A351 Gr CD4MCu / PFA lined | |
| **030** | top cap | 1 | CD4M ASTM A351 Gr CD4MCu | 0.7043 / DIN EN 1563 |
| **040** | diaphragm | 1 | PFA | |
| **050** | thrust gland | 1 | CD4M ASTM A351 Gr CD4MCu | |
| **060** | adjuster | 1 | CD4M ASTM A351 Gr CD4MCu | |
| **070** | grounding spring | 1 | 302 SS | ~1.8815 |
| **080** | adjuster bolt | 1 set | Stainless Steel | 1.4301 / DIN EN 10088-3 |
| **090** | hexagon bolt | 1 set | Stainless Steel | 1.4301 / DIN EN 10088-3 |
| **130** | locking screw | 1 | X 5 CrNiMo 17-12-2 | 1.4401 / DIN EN 10088 |

FLOWSERVE
**Ahaus GmbH**
von-Braun-Straße 19a
D-48683 Ahaus
Postfach 1162 D-48661 Ahaus
Telefon: +49(0) 2561-686-100
Fax: +49(0) 2561-686-200



# Material specificationT4E-3 DN½“ to DN6“

| No. | Designation | Pieces | Material | Material-No. / DIN |
|---|---|---|---|---|
| **010** | body | 1 | DS ASTM A216 Grade WCB / PFA lined | ~1.0619 / DIN EN 10213-2 |
| **020** | plug | 1 | DCI ASTM A395 / PFA lined | 0.7043 / DIN EN 1563 |
| **040** | diaphragm | 1 | PFA | |
| | metal diaphragm | 1 | 302 SS | ~1.8815 |
| **060** | thrust gland | 1 | 304 SS | ~1.5523 |
| **070** | grounding spring | 1 | 302 SS | ~1.8815 |
| **080** | top cap | 1 | CD4M ASTM A351 Gr CD4MCuN | |
| **090** | adjuster bolt | 1 set | ASTM A193 GRADE B7 | ~1.7225 / DIN EN 10083-1 |
| **100** | top cap bolt | 1 set | ASTM A193 GRADE B7 | ~1.7225 / DIN EN 10083-1 |
| **110** | stop | 1 | D4 ASTM A351/A744 Grade CF-8M (316 SS) | 1.4408 / DIN EN 10213-4 |
| **120** | stop fastener | 1 set | stainless steel | 1.4301 / DIN EN 10088-3 |
| **130** | stop collar | 1 | carbon steel, protective plated | |
| **140** | stop collar retainer | 1 | 302 SS | ~1.8815 |
| **150** | wrench | 1 | EN-JS1082 (GGG-50) | 0.7050 / DIN EN 1563 |
| **180** | washer | 1 | stainless steel | 1.4301 / DIN EN 10088-3 |
| **190** | hexagon bolt | 1 | stainless steel | 1.4301 / DIN EN 10088-3 |

* optional

# Material specification T4E-3 DN8“, 10“

| No. | Designation | Pieces | Material | Material-No. / DIN |
|---|---|---|---|---|
| **010** | body | 1 | DS ASTM A216 Grade WCB / PFA lined | ~1.0619 / DIN EN 10213-2 |
| **020** | plug | 1 | CD4M ASTM A351 Gr CD4MCu / PFA lined | |
| **030** | top cap | 1 | CD4M ASTM A351 Gr CD4MCu | |
| **040** | diaphragm | 1 | PFA | |
| **050** | thrust gland | 1 | CD4M ASTM A351 Gr CD4MCu | |
| **060** | adjuster | 1 | CD4M ASTM A351 Gr CD4MCu | |
| **070** | grounding spring | 1 | 302 SS | ~1.8815 |
| **080** | adjuster bolt | 1 set | Class 8.8 (Metric) yellow chromated | |
| **090** | hexagon bolt | 1 set | Class 8.8 (Metric) yellow chromated | |
| **130** | locking screw | 1 | X 5 CrNiMo 17-12-2 | 1.4401 / DIN EN 10088 |

# Assembly instructions T4E

*The general installation and maintenance instructions must be observed.*

1. Plug Subassembly:
   - 1.1 Assemble PFA diaphragm **(040)** over the plug stem **(020)** with the aid of diaphragm guide.
   - 1.2 Place metal diaphragm **(050)** (optional) and thrust gland **(060)** over the plug stem and slide it down to the PFA diaphragm.
   - 1.3 Remove the guide.
   - 1.4 Place the grounding spring **(070)** over the plug stem and slide it down to the thrust gland.
2. Top Cap Subassembly:
   - 2.1 Adjusting the hexagon bolts **(090)** so the bottom of the thrust gland is flush with the bottom face of the top cap **(080).**
   - 2.2 Assembly the stop **(110)** using the hexagon bolts **(120).**
3. Apply a thin, even film of silicone to the entire outside surface of the plug.
4. Place the pre-assembled plug into the body. The plug ports shall be lined up in the open position.
5. Slide the pre-assembled top cap over the plug stem down until it rests on the thrust gland.
6. Apply Loctite to the top cap fasteners. Place the four bolts **(100)** and tighten them using the criss-cross method according the recommended torques.
7. Loosen the adjuster bolts (¼-½ turn) and rotate the plug three times to make it move upward.
8. Retighten the adjuster bolts according to the recommended torques.
9. Open and close the valve a couple of times to make sure the stops lines the plug ports properly with the runs in the body.
10. Slide the stop collar **(130)** over the stem afterwards place the stop collar retainer **(140)**.
11. Place the wrench **(150)** and fasten it by using the washer **(180)** and the bolt **(190)**.
12. All valves shall be seat tested in both flow directions.

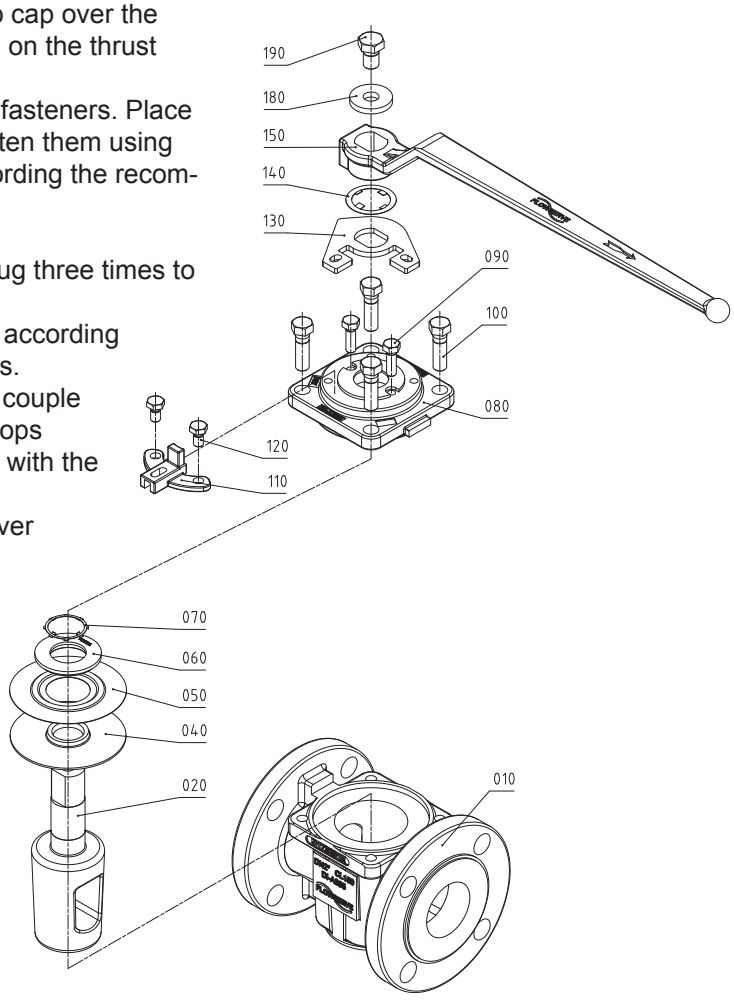

FLOWSERVE
**Ahaus GmbH**
von-Braun-Straße 19a
D-48683 Ahaus
Postfach 1162 D-48661 Ahaus
Telefon: +49(0) 2561-686-100
Fax: +49(0) 2561-686-200



# Disassembly instructions T4E

*For all jobs which are to be carried out on an installed valve, the works safety requirements and the general accident prevention instructions must be observed. Moreover, the general installation and maintenance instructions for atomac fluorcarbon resin lined valves must be considered.*

1. Prior to disassembly, the valve must be cleared of all fluid according to the above-mentioned instructions. Particular care must be taken that during rinsing and draining of the piping, the valve is opened and closed repeatedly. These cycles (opening and closing) are to be repeated during draining of the piping. Only when following this procedure, is it ensured that all remaining pressure inside the body is eliminated.
2. For disassemble the valve put the body on a work bench with a soft cover (rubber mat).
3. Disassemble the wrench by removing the bolt **(190)** and washer **(180)**.
4. By pushing up the stop collar **(130)** the stop collar retainer **(140)** can easily be removed.
5. Unscrew the top cap bolts **(100)** and remove the top cap **(080)** from the body **(010)**.
6. Turn the plug **(020)** several timer to make it move upwards.
7. Remove the grounding spring **(070)**, thrust gland **(060)**, metal diaphragm **(050)** (optional) and the
   PFA diaphragm **(040)**.
8. If necessary the stop **(110)** can be removed by unscrew the stop fasteners **(120)**.

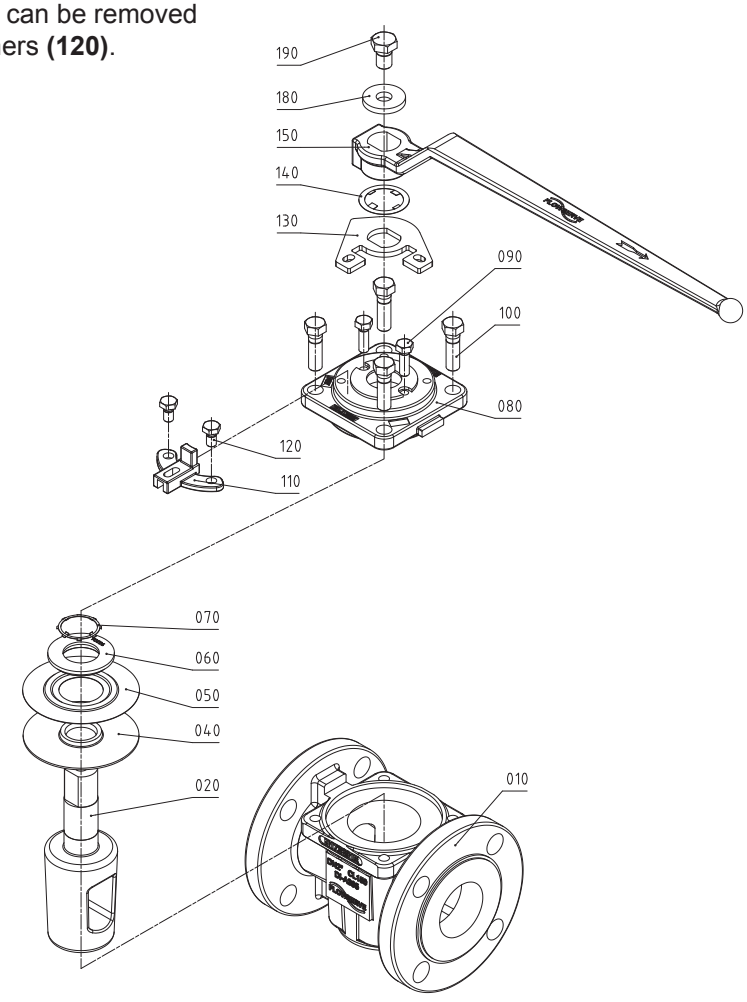

# T4E1 and T4E2 - Recommended tightening torques* (150lbs a. PN16)

| DN | | top cap bolts (100) | | adjuster bolts (090) | |
|---|---|---|---|---|---|
| | | Nm | in.lbs | Nm | in.lbs |
| 015 | ½“ | - | - | - | - |
| 020 | ¾“ | - | - | - | - |
| 025 | 1“ | 10 | 89 | 4 | 35 |
| 040 | 1½“ | 10 | 89 | 4 | 35 |
| 050 | 2“ | 18 | 159 | 4 | 35 |
| 080 | 3“ | 33 | 292 | 6 | 53 |
| 100 | 4“ | 44 | 389 | 8 | 71 |
| 150 | 6“ | 70 | 620 | 17 | 150 |
| 200 | 8“ | 108 | 956 | 14 | 124 |
| 250 | 10“ | 165 | 1460 | 50 | 443 |
| 300 | 12“ | 150 | 1328 | 50 | 443 |

** maximum valve*

# T4E3 - Recommended tightening torques* (300lbs)

| DN | top cap bolts (100) | | adjuster bolts (090) | |
|---|---|---|---|---|
| | Nm | in.lbs | Nm | in.lbs |
| ½“ | - | - | - | - |
| ¾“ | - | - | - | - |
| 1“ | 14 | 124 | 4 | 35 |
| 1½“ | 14 | 124 | 4 | 35 |
| 2“ | 27 | 239 | 4 | 35 |
| 3“ | 48 | 425 | 6 | 53 |
| 4“ | 84 | 743 | 8 | 71 |
| 6“ | 150 | 1328 | 17 | 150 |
| 8“ | 150 | 1328 | 14 | 124 |

** maximum valve*

**Ahaus GmbH**
von-Braun-Straße 19a
D-48683 Ahaus
Postfach 1162 D-48661 Ahaus
Telefon: +49(0) 2561-686-100
Fax: +49(0) 2561-686-200



# T4E - Dimention sheet for actuator mounting

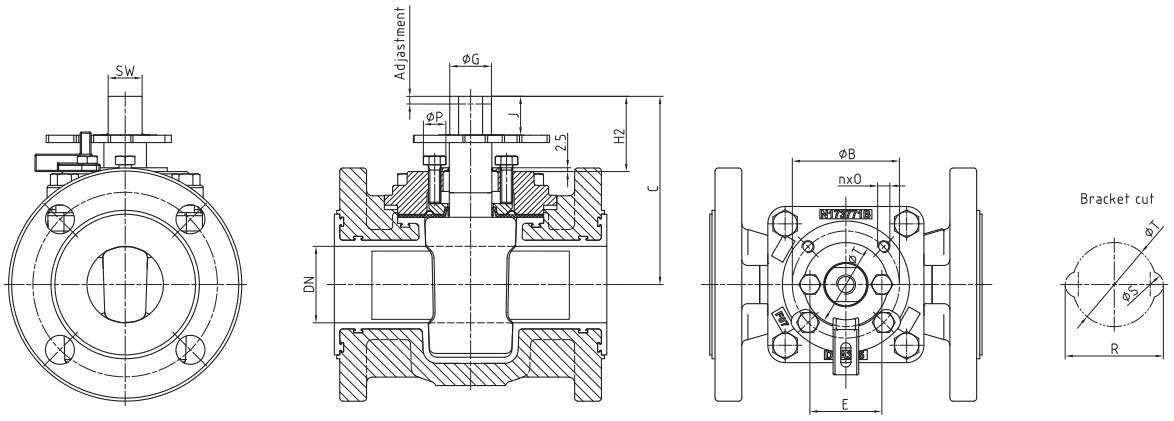


| DN | | SW | ØG | ØP | J | E | H2 | C | ØB | nxO | R | ØS | ØT | Adjast-ment | F-Size DIN/ISO 521 |
|---|---|---|---|---|---|---|---|---|---|---|---|---|---|---|---|
| **015** | mm | 16,6 | 20 | 13 | 15,5 | 38 | 38,5 | 92,5 | 50 | 4xM6 | 54 | 16 | 35 | 2 | F05 |
| | inch | 0,65 | 0,79 | 0,51 | 0,61 | 1,5 | 1,52 | 3,64 | 1,97 | | 2,13 | 0,63 | 1,38 | 0,08 | |
| **020** | mm | 16,6 | 20 | 13 | 15,5 | 38 | 38,5 | 92,5 | 50 | 4xM6 | 54 | 16 | 35 | 2 | F05 |
| | inch | 0,65 | 0,79 | 0,51 | 0,61 | 1,5 | 1,52 | 3,64 | 1,97 | | 2,13 | 0,63 | 1,38 | 0,08 | |
| **025** | mm | 16,6 | 20 | 15 | 15,5 | 38 | 38,7 | 92,5 | 50 | 4xM6 | 58 | 20 | 35 | 2 | F05 |
| | inch | 0,65 | 0,79 | 0,59 | 0,61 | 1,5 | 1,52 | 3,64 | 1,97 | | 2,28 | 0,79 | 1,38 | 0,08 | |
| **040** | mm | 16,6 | 20 | 15 | 19 | 38 | 37,7 | 102 | 50 | 4xM6 | 58 | 20 | 35 | 2 | F05 |
| | inch | 0,65 | 0,79 | 0,59 | 0,75 | 1,5 | 1,48 | 4,02 | 1,97 | | 2,28 | 0,79 | 1,38 | 0,08 | |
| **050** | mm | 22,2 | 27,2 | 15 | 25,2 | 47 | 49 | 103 | 70 | 4xM8 | 67 | 20 | 55 | 2 | F07 |
| | inch | 0,87 | 1,07 | 0,59 | 0,99 | 1,85 | 1,93 | 4,06 | 2,76 | | 2,64 | 0,79 | 2,17 | 0,08 | |
| **080** | mm | 22,1 | 27,2 | 22 | 25,2 | 54 | 50,6 | 137 | 70 | 4xM8 | 80 | 26 | 55 | 4 | F07 |
| | inch | 0,87 | 1,07 | 0,87 | 0,99 | 2,13 | 1,99 | 5,39 | 2,76 | | 3,15 | 1,02 | 2,17 | 0,16 | |
| **100** | mm | 36 | 42,8 | 22 | 40,4 | 73 | 70,2 | 177 | 102 | 4xM10 | 99 | 26 | 70 | 4 | F10 |
| | inch | 1,42 | 1,69 | 0,87 | 1,59 | 2,87 | 2,76 | 6,97 | 4,02 | | 3,90 | 1,02 | 2,76 | 0,16 | |
| **150*** | mm | 36 | 42,8 | 35 | 40,4 | 86 | 67,7 | 209 | 125 | 4xM12 | 126 | 40 | 85 | 5 | F12 |
| | inch | 1,42 | 1,69 | 1,38 | 1,59 | 3,39 | 2,67 | 8,23 | 4,92 | | 4,96 | 1,57 | 3,35 | 0,2 | |

* Face to Face Dimentions acc. ANSI B 16.10

FLOWSERVE
**Ahaus GmbH**
von-Braun-Straße 19a
D-48683 Ahaus
Postfach 1162 D-48661 Ahaus
Telefon: +49(0) 2561-686-100
Fax: +49(0) 2561-686-200



# T4E - $K_v$ Data and $C_v$ Data (DIN EN 60534-2-3)

| DIN | ANSI | $K_v$ m³/h | $C_v$ gal/min |
|---|---|---|---|
| **015** | **½“** | - | - |
| **020** | **¾“** | - | - |
| **025** | **1“** | 32 | 37 |
| **040** | **1 ½“** | 70* | 81* |
| **050** | **2“** | 133 | 155 |
| **080** | **3“** | 230* | 267* |
| **100** | **4“** | 472* | 549* |
| **150** | **6“** | 863* | 1003* |
| **200** | **8“** | - | - |
| **250** | **10“** | - | - |
| **300** | **12“** | - | - |

** estimated value*

LEFT BLANK

# *FLSMIDTH KREBS*

## *MODEL U4B-10-1734, HYDROCYCLONE*

LEFT BLANK

INSTALLATION, OPERATION, AND MAINTENANCE MANUAL

# KREBS® Cyclone

## Urethane

Customer: Veolia Water Technologies Inc
Tag Number(s): 65CYC68003A, 65CYC68003B
Serial Number(s): 182356U-182357U
Customer Order Number: 21000128 HD 05000
January 2021



FLSmidth

Copyright © 2021 by FLSmidth Inc., All Rights Reserved.

Documents, drawings, technical manuals, and all other information contained in this manual, provided in conjunction with the purchase of FLSmidth products and services, are the proprietary property of FLSmidth. No part of this manual may be disclosed, copied, duplicated, photocopied, reproduced, translated, or reduced to any electronic medium or machine-readable form without prior written consent from FLSmidth.

The data included in this manual is not to be duplicated, used, or disclosed, in whole or in part, for any purpose other than in the operation, maintenance, and service of the machine described. Nothing contained herein should be construed to guarantee, modify, or enhance the operational capabilities as described in the machinery specification. This manual does not imply liability to the manufacturer for any or all operational capabilities that may be affected by the misuse or neglect in operating or servicing this machine.

“Original instructions” are provided in the English language. As required, “translation of the original instructions” is provided in the official community language for the area where the equipment is used.

# Table of Contents

## Chapter 1: Safety


**1.1 Important Safety Information . . . . . 3**
1.1.1 Hazard Signal Indicators . . . . . 3
1.1.2 Safety Signs and Symbols . . . . . 3
1.1.2.1 Mandatory Action Symbols . . . . . 4
1.1.2.2 Prohibition Symbols . . . . . 4
1.1.2.3 Warning Symbols . . . . . 5
**1.2 Safe Working Practices . . . . . 6**
1.2.1 Operator Responsibilities . . . . . 7
1.2.2 General Safety Recommendations . . . . . 7
1.2.3 Unauthorized Modifications . . . . . 8
1.2.4 Lockout/Tagout (Energy Isolation) . . . . . 8
1.2.5 Fire Extinguishers . . . . . 8
1.2.6 Emergency Procedures . . . . . 8
1.2.7 Equipment Safety Signs and Labels . . . . . 9
1.2.8 Protective Devices . . . . . 9
1.2.8.1 Emergency Stop Switches . . . . . 9
1.2.8.2 Safety Trip Wire . . . . . 9
1.2.8.3 Interlocks . . . . . 10
1.2.8.4 Guards . . . . . 10
**1.3 Equipment-Specific Risks and Hazards . . . . . 11**
**1.4 General Risks and Hazards . . . . . 11**
1.4.1 Identifying and Controlling Hazards . . . . . 12
1.4.2 Ladders . . . . . 12
1.4.3 Scaffolds . . . . . 12
1.4.4 Railings . . . . . 12
1.4.5 Elevated Work Conditions . . . . . 12
1.4.6 Harness and Line (Fall-Arrest System) . . . . . 13
1.4.7 Cranes and Lifting Operations . . . . . 13
1.4.8 Moving Parts on Stationary Equipment . . . . . 13
1.4.9 Remote Starts . . . . . 13
1.4.10 Confined Spaces . . . . . 13
1.4.11 Welding, Cutting, and Brazing . . . . . 14
1.4.12 High Temperatures . . . . . 14
1.4.13 Power Lines . . . . . 14
1.4.14 Inclement Weather . . . . . 14
1.4.15 Noise and Vibrations . . . . . 14


Copyright © 2021 FLSmidth. ALL RIGHTS RESERVED.

FLSmidth is constantly striving to improve its products and must therefore reserve the right to change designs, materials, specifications, and price without notice.

1.4.16 Pinch and Crush Points . . . 15
1.4.17 Electrical Energy . . . 15
1.4.18 Surface Heat . . . 15
1.4.19 Lines, Tubes, and Hoses . . . 16
1.4.20 Mechanical Stability . . . 16
**1.5 Hazardous Chemicals and Materials . . . 17**
1.5.1 Mineral Powders (Silica) . . . 17
1.5.2 Acids and Bases . . . 17
1.5.3 Cyanide . . . 17
1.5.4 Solvents . . . 17
**1.6 Emergency Preparedness Plan . . . 17**

# Chapter 2: Introduction

**2.1 Using this Manual . . . 20**
**2.2 Installation and Start-Up Services . . . 20**
**2.3 Shipment and Receiving . . . 21**
**2.4 Parts and Repair Orders . . . 21**
**2.5 Warranty Conditions . . . 21**
2.5.1 Limited Warranty . . . 22
**2.6 Accessory Equipment Manufacturer Information . . . 22**
**2.7 FLSmidth Offices . . . 23**

# Chapter 3: Storage

**3.1 Long-Term Storage Introduction . . . 26**
3.1.1 Maintaining Warranty . . . 26
3.1.2 Storing OEM Components . . . 26
**3.2 Covered or Indoor Storage . . . 26**
**3.3 Outdoor Storage . . . 26**
**3.4 Equipment Support . . . 27**
**3.5 Preventing Corrosion . . . 27**
3.5.1 Protective Finishes or Seal Coats . . . 28
**3.6 Storing Elastomer Components . . . 28**
**3.7 Storing BPC Rubber Components . . . 28**
**3.8 Storing Instrumentation and Valves . . . 28**
**3.9 Storing Fiberglass Reinforced Plastic Components . . . 29**
**3.10 Environmental Precautions . . . 29**

# Chapter 4: Equipment Overview

**4.1 Cyclone Function . . . 32**
4.1.1 Selection . . . 32
**4.2 Cyclone Overview . . . 32**

Copyright © 2021 FLSmidth. ALL RIGHTS RESERVED. 1/6/21
FLSmidth is constantly striving to improve its products and must therefore reserve the right to change designs, materials, specifications, and price without notice.

4.2.1 Inlet Head . . . . . 32
4.2.2 Vortex Finder . . . . . 33
4.2.3 Apex Insert . . . . . 33
4.2.4 Inlet, Cylinder, and Cone Housings . . . . . 33
**4.3 Add-On Features . . . . . 33**
4.3.1 CycloStack™ . . . . . 33
4.3.2 CycloWash™ . . . . . 34
4.3.3 Corrosive Duty Cyclone Design . . . . . 34

## Chapter 5: Installation

**5.1 Installation Overview . . . . . 38**
**5.2 Receiving . . . . . 38**
**5.3 Cyclone Installation . . . . . 38**
**5.4 Pressure Gauge Installation (if applicable) . . . . . 39**
**5.5 Planning for Pump Installation . . . . . 39**
**5.6 Piping Design . . . . . 39**
**5.7 CycloStack™ Installation (if applicable) . . . . . 40**
**5.8 CycloWash™ Installation (if applicable) . . . . . 40**

## Chapter 6: Operation

**6.1 Operation Overview . . . . . 44**
**6.2 Cyclone Start-Up . . . . . 44**
**6.3 Cyclone Adjustments . . . . . 45**
6.3.1 Feed Dilution . . . . . 45
6.3.2 Pressure Measurement . . . . . 45
6.3.3 Cyclone Orifices . . . . . 46
**6.4 Cyclone Monitoring . . . . . 46**
6.4.1 Apex Orifice . . . . . 46
6.4.2 Cyclone Discharge . . . . . 46
6.4.3 Feed Conditions . . . . . 48
**6.5 Cyclone Sampling (Optional) . . . . . 48**
6.5.1 Sample Cups . . . . . 48
6.5.2 Taking Samples . . . . . 49
**6.6 CycloStack™ Operation (if applicable) . . . . . 50**
6.6.1 Vacuum Gauge Readings . . . . . 50
6.6.2 CycloStack™ Adjustments . . . . . 50
**6.7 Flows, Densities, and Tonnages Calculations . . . . . 50**

## Chapter 7: Maintenance

**7.1 Maintenance Overview . . . . . 54**
**7.2 Cyclone Handling . . . . . 54**

Copyright © 2021 FLSmidth. ALL RIGHTS RESERVED. 1/6/21
FLSmidth is constantly striving to improve its products and must therefore reserve the right to change designs, materials, specifications, and price without notice.

7.3 Interior Surface Maintenance . . . . . .54
7.4 CycloStack™ Maintenance (if applicable) . . . . . .54
7.5 CycloWash™ Maintenance (if applicable) . . . . . .55

## Chapter 8: Troubleshooting

8.1 Troubleshooting Overview . . . . . .58
8.1.1 Cyclone Troubleshooting . . . . . .58
8.1.2 CycloStack™ Troubleshooting (if applicable) . . . . . .59

## Appendix A: Recommended Spare Parts

A.1 Recommended Spare Parts . . . . . A.1

## Appendix B: Declaration of Incorporation

B.1 Declaration of Incorporation . . . . . B.1

## Appendix C: Drawing Package

C.1 Cyclone General Arrangement . . . . . C.1
C.2 Capacity Curve and Cyclone Simulation . . . . . C.2
C.3 Add-On Drawings . . . . . C.3

## Appendix D: Vendor Documents

D.1 Using this Appendix . . . . . D.1
D.2 Add-On Information . . . . . D.2

## Appendix E: Commissioning

E.1 Dry Commissioning . . . . . .E.1
E.2 Commissioning with Water . . . . . E.2
E.3 Commissioning with Slurry . . . . . E.3

Copyright © 2021 FLSmidth. ALL RIGHTS RESERVED. 1/6/21
FLSmidth is constantly striving to improve its products and must therefore reserve the right to change designs, materials, specifications, and price without notice.

# Chapter 1: Safety


**1.1 Important Safety Information . . . . . 3**
1.1.1 Hazard Signal Indicators . . . . . 3
1.1.2 Safety Signs and Symbols . . . . . 3
1.1.2.1 Mandatory Action Symbols . . . . . 4
1.1.2.2 Prohibition Symbols . . . . . 4
1.1.2.3 Warning Symbols . . . . . 5
**1.2 Safe Working Practices . . . . . 6**
1.2.1 Operator Responsibilities . . . . . 7
1.2.2 General Safety Recommendations . . . . . 7
1.2.3 Unauthorized Modifications . . . . . 8
1.2.4 Lockout/Tagout (Energy Isolation) . . . . . 8
1.2.5 Fire Extinguishers . . . . . 8
1.2.6 Emergency Procedures . . . . . 8
1.2.7 Equipment Safety Signs and Labels . . . . . 9
1.2.8 Protective Devices . . . . . 9
1.2.8.1 Emergency Stop Switches . . . . . 9
1.2.8.2 Safety Trip Wire . . . . . 9
1.2.8.3 Interlocks . . . . . 10
1.2.8.4 Guards . . . . . 10
**1.3 Equipment-Specific Risks and Hazards . . . . . 11**
**1.4 General Risks and Hazards . . . . . 11**
1.4.1 Identifying and Controlling Hazards . . . . . 12
1.4.2 Ladders . . . . . 12
1.4.3 Scaffolds . . . . . 12
1.4.4 Railings . . . . . 12
1.4.5 Elevated Work Conditions . . . . . 12
1.4.6 Harness and Line (Fall-Arrest System) . . . . . 13
1.4.7 Cranes and Lifting Operations . . . . . 13
1.4.8 Moving Parts on Stationary Equipment . . . . . 13
1.4.9 Remote Starts . . . . . 13
1.4.10 Confined Spaces . . . . . 13
1.4.11 Welding, Cutting, and Brazing . . . . . 14
1.4.12 High Temperatures . . . . . 14
1.4.13 Power Lines . . . . . 14


Copyright © 2021 FLSmidth. ALL RIGHTS RESERVED. 1/6/21
FLSmidth is constantly striving to improve its products and must therefore reserve the right to change designs, materials, specifications, and price without notice.

1.4.14 Inclement Weather . . . . . 14
1.4.15 Noise and Vibrations . . . . . 14
1.4.16 Pinch and Crush Points . . . . . 15
1.4.17 Electrical Energy . . . . . 15
1.4.18 Surface Heat . . . . . 15
1.4.19 Lines, Tubes, and Hoses . . . . . 16
1.4.20 Mechanical Stability . . . . . 16
**1.5 Hazardous Chemicals and Materials . . . . . 17**
1.5.1 Mineral Powders (Silica) . . . . . 17
1.5.2 Acids and Bases . . . . . 17
1.5.3 Cyanide . . . . . 17
1.5.4 Solvents . . . . . 17
**1.6 Emergency Preparedness Plan . . . . . 17**

Copyright © 2021 FLSmidth. ALL RIGHTS RESERVED. 1/6/21
FLSmidth is constantly striving to improve its products and must therefore reserve the right to change designs, materials, specifications, and price without notice.

# 1.1 Important Safety Information

FLSmidth recommends that equipment be installed, operated, and maintained in accordance with all applicable governmental safety and health laws, regulations, and generally recognized industrial standards.

The information provided in this chapter is intended to provide a general overview of safety guidelines recommended by FLSmidth, and is not an exhaustive list of all standard safety procedures. The specific guidelines outlined below may or may not apply to your particular equipment. FLSmidth is neither responsible nor liable for incorrect or unsafe practices or policies.

**Follow all governing safety standards and local jobsite procedures.**

## 1.1.1 Hazard Signal Indicators

Danger, Warning, and Caution indicators are located throughout the manual at specific points of interest and alert the reader to the relative degree of a hazard.

These notices are given to prevent personal injury, death, equipment damage, and improper service, and must be followed to reduce or eliminate these risks. Always heed these notices, and practice common sense when performing any maintenance or repair procedure.

| Hazard Symbol | Symbol Description |
|---|---|
|  | This is the safety alert symbol. It is used to alert you to potential personal injury hazards. Obey all safety messages that follow this symbol to avoid possible injury and death. |
|   | “Danger” indicates an imminently hazardous situation which, if not avoided, could result in death. |
|   | “Warning” indicates a potentially hazardous situation which, if not avoided, could result in death, serious injury, or property damage. |
|   | “Caution” indicates a potentially hazardous situation which, if not avoided, MAY result in minor or moderate injury and property damage. It may also be used to alert against unsafe practices. |
|   | “Notice” is used to draw attention to detailed instructions. These notes are intended to give further important information regarding the equipment or a step in a procedure. |

**Table 1-1: Hazard Signal Indicators**

## 1.1.2 Safety Signs and Symbols

Additional safety signs and symbols may appear along with the Danger and Caution indicators, and are used to specify certain hazards. These warnings describe particular areas where special care and procedures are required in order to prevent serious injury and possible death.

Copyright © 2021 FLSmidth. ALL RIGHTS RESERVED. 1/6/21
FLSmidth is constantly striving to improve its products and must therefore reserve the right to change designs, materials, specifications, and price without notice.

### 1.1.2.1 Mandatory Action Symbols

Mandatory Action Symbols are referred to as Personal Protective Equipment (PPE) and are identified by a blue circle with a white symbol in the middle signifying the type of protective equipment required. These symbols indicate a mandatory action required to safeguard personal health and avoid risk of personal injury.

FLSmidth recommends that personnel wear the correct PPE at all times, and that all PPE meet local country standards, and where appropriate, international standards such as ISO, ANSI and EN. Follow all governing safety standards and local jobsite procedures.

The following table contains the comprehensive list of mandatory action symbols and their descriptions. The symbols below may or may not apply to your equipment.

| Mandatory Action Symbols | Description | Mandatory Action Symbols | Description |
|---|---|---|---|
|  | General Mandatory Action |  | Wear Protective Clothing |
|  | Refer to Instruction Manual |  | Use Handrail |
|  | Wear Ear Protection |  | Wear a Face Shield |
|  | Wear Eye Protection |  | Wear Head Protection |
|  | Connect an Earth Terminal to the Ground |  | Wear High Visibility Clothing |
|  | Disconnect Plug from Outlet |  | Wear a Mask |
|  | Wear Opaque Eye Protection |  | Wear a Safety Harness |
|  | Wear Safety Footwear |  | Disconnect Before Carrying Out Maintenance or Repair |
|  | Wear Protective Gloves |  | Use This Walkway |

**Table 1-2: Mandatory Action Symbols**

### 1.1.2.2 Prohibition Symbols

FLSmidth recommends the use of prohibition symbols that are used to indicate a prohibited action. They are identified by a red circle with a diagonal line running through and the black symbol in the middle (sometimes accompanied by words). These symbols signify what you should not do or what is prohibited.

Copyright © 2021 FLSmidth. ALL RIGHTS RESERVED. 1/6/21
FLSmidth is constantly striving to improve its products and must therefore reserve the right to change designs, materials, specifications, and price without notice.

The following table contains the comprehensive list of prohibition symbols and their descriptions. The symbols below may or may not apply to your equipment.

| Prohibition Symbols | Description | Prohibition Symbols | Description |
|---|---|---|---|
|  | General Prohibition |  | No Pushing |
|  | No Smoking |  | No Sitting |
|  | No Open Flame, Fire, Open Ignition Source, or Smoking |  | No Stepping on the Surface |
|  | No Thoroughfare |  | Do Not Use Lift in Event of Fire |
|  | No Access for People with Active Implanted Cardiac Devices |  | No Eating or Drinking |
|  | No Metallic Articles or Watches |  | Do Not Use Lift for People |
|  | Do Not Touch |  | No Running |
|  | No Heavy Load |  | No Climbing |
|  | No Reaching In |  | Do Not Enter |

**Table 1-3: Prohibition Symbols**

### 1.1.2.3 Warning Symbols

FLSmidth recommends the use of warning symbols that are used to signify potential danger. These symbols are identified by a triangle with a yellow background and a black symbol in the middle signifying the danger.

The following table contains the comprehensive list of warning symbols and their descriptions. The symbols below may or may not apply to your equipment.

Copyright © 2021 FLSmidth. ALL RIGHTS RESERVED. 1/6/21
FLSmidth is constantly striving to improve its products and must therefore reserve the right to change designs, materials, specifications, and price without notice.

| Warning Symbols | Description | Warning Symbols | Description |
|---|---|---|---|
|  | General Warning |  | Automatic Start-up |
|  | Explosive Material |  | Crushing |
|  | Floor Level Obstacle |  | Flammable Material |
|  | Drop Fall |  | Sharp Element |
|  | Slippery Surface |  | Corrosive Substance |
|  | Electricity |  | Crushing of Hands |
|  | Forklift and Other Industrial Vehicles |  | Counter Rotating Rollers |
|  | Overhead Load |  | Battery Charging |
|  | Toxic Material |  | Oxidizing Substance |
|  | Hot Surface |   | Explosive Atmosphere |

**Table 1-4: Warning Symbols**

There may be additional types of signage to those shown above depending on the country or site. Make sure that you familiarize yourself with, and **understand the signage that is used at your site.**

# 1.2 Safe Working Practices

Safe working practices are essential when working in construction areas with heavy equipment. The high noise levels, dust conditions, and ever-present danger of high-powered machinery demands that safety be observed by all personnel on the jobsite, and most specifically by those working on or in the immediate area of the equipment.

Copyright © 2021 FLSmidth. ALL RIGHTS RESERVED. 1/6/21
FLSmidth is constantly striving to improve its products and must therefore reserve the right to change designs, materials, specifications, and price without notice.



**Do not install, operate, maintain, or repair this equipment until you have read and fully understand the instructions and warnings in this manual. Failure to follow these safety precautions could result in personal injury, death, or property damage.**

- Proper care is your responsibility.
- All maintenance and repair of this equipment shall be performed in accordance with safety warnings. Failure to do so may result in personal injury or property damage.

## 1.2.1 Operator Responsibilities

Machinery is to be operated by those with prior experience operating sophisticated equipment and systems, and who have been appropriately trained and certified in the proper use of this particular machinery.

FLSmidth recommends that equipment be installed, operated, and maintained in accordance with all applicable governmental safety and health laws, regulations, and generally recognized industrial standards.

## 1.2.2 General Safety Recommendations

FLSmidth recommends that assembly, operation, and maintenance personnel observe the following general safety guidelines.

- Perform both a pre-start inspection as well as a walk-around inspection. This can be done by the installer, operator, or a designated maintenance technician.
- Do not put equipment into operation unless all regularly scheduled maintenance and any unscheduled, but necessary, repairs have been performed.
- Adhere to the recommended maintenance schedule for machinery and component parts.
- Use all of the systems designed to keep people safe when in the area of the equipment, including proper safety signs and any standards appropriate to the specific country where the site is located.
- Do not override any safety system.
- Engage the equipment controls slowly.
- Ease components into motion gradually to prevent shock load damage and unnecessary wear on gear cases and other moving parts.
- Keep hands and anything you are holding out of any area with moving parts.
- Prevent tripping and falling hazards around the equipment according to your site requirements.
- Make sure that all working components come to a complete stop before reversing the controls.
- Do not leave the operator's station unattended while the equipment is in operation.
- Be familiar with the emergency shutdown procedures and locations where they can activate an emergency stop system shutdown.

**Note:** FLSmidth cannot anticipate every possible circumstance that may involve a potential hazard, therefore, the safety and informational prompts in this manual are not all-inclusive. If a tool, procedure, work method, or maintenance technique not specifically recommended by FLSmidth is used, make sure that it's safe prior to use. Make sure that lubrication, maintenance, or repair procedures do not damage the machinery or make it unsafe for operation. For more information on maintenance and repair procedures for items furnished but not manufactured by FLSmidth, refer to the original equipment manufacturer instructions.

Copyright © 2021 FLSmidth. ALL RIGHTS RESERVED. 1/6/21
FLSmidth is constantly striving to improve its products and must therefore reserve the right to change designs, materials, specifications, and price without notice.

## 1.2.3 Unauthorized Modifications

Unauthorized modifications to the equipment may impair its function and capacity to operate safely, and may lead to shortened equipment life and unsafe operating conditions. Do not take shortcuts on equipment repair. Read all instructions thoroughly.

## 1.2.4 Lockout/Tagout (Energy Isolation)

The purpose of Lockout/Tagout (LOTO) and related procedures is to avoid electrocution or accidental start-up of the machine(s) or parts during maintenance or service. An unwanted start or movement can lead to serious injury or death.

Follow all governing safety standards and local jobsite procedures.

Examples of potential risk include:

1. A machine that was switched off is suddenly restarted from a remote control panel or locally by mistake.
2. A machine unexpectedly energizes due to a failure in the machine control system.
3. Residual energy such as compressed gas or liquid, as well as spring or gravity loads, is suddenly released and applies considerable force to one or more parts.

Further, FLSmidth recommends that chains, blocking, locking pins or other hardware be used for isolating, securing or blocking machines or equipment from mechanical energy sources, including springs and gravity loads.

The equipment used for securing the machinery must be strong enough to effectively prevent movement of the machine, for example, using a weak chain will provide a false sense of security as it may break.

Follow all governing safety standards and local jobsite procedures.

## 1.2.5 Fire Extinguishers

Fire is a major cause of loss of life and property throughout the world. While fire normally does not pose a grave danger on open construction sites with steel and concrete as major materials, it may occur at any time and anywhere.

Have fire extinguishers available and know how to use them. Inspect and have them serviced as recommended on their instruction plates.

Follow all governing safety standards and local jobsite procedures.

## 1.2.6 Emergency Procedures

The best way to deal with emergencies is to prevent them in the first place.

Follow all governing safety standards and local jobsite procedures.

Each site will have its own procedures, which you will learn at your site induction. If the emergency procedures are not provided to you, it is your duty to seek out the emergency procedures, telephone numbers, and radio channels that are used on site.

**NOTICE**

**Always follow site procedures when dealing with an emergency situation. Use your site emergency call procedure and be ready to provide relevant information.**

Copyright © 2021 FLSmidth. ALL RIGHTS RESERVED. 1/6/21
FLSmidth is constantly striving to improve its products and must therefore reserve the right to change designs, materials, specifications, and price without notice.

## 1.2.7 Equipment Safety Signs and Labels

Equipment supplied by FLSmidth is fitted with safety signs and labels in accordance with global safety standards. Read and understand all safety signs and labels on your equipment before installing, operating, lubricating, or maintaining this equipment. Make sure safety signs and labels are legible.

Replace any safety signs and labels that are damaged or missing. If a safety sign or label is attached to a part that is replaced, install a new safety sign or label on the replacement part.

## 1.2.8 Protective Devices

Your equipment may be fitted with devices that are designed to provide protection for personnel who are working on or around the equipment. To maintain safety it is critical that these devices are kept in place and correctly maintained.

Protective devices may include the following:

- Emergency stop switches
- Safety trip wires
- Interlocks
- Guards

### 1.2.8.1 Emergency Stop Switches

Moving machines are typically fitted with emergency stop (E-stop) switches located at strategic places on the machine. These E-stop switches will immediately cut off the power source to the machine, and, once triggered, require manual (physical) reset before the machine may be started again either locally or from a remote control room.

Locate the nearest E-stop switch as close to moving parts as possible. In some cases, such as with a long belt conveyor, this can be difficult to achieve. In this case, the conveyor could be fitted with cables running along the length of the machine and tied to the E-stop switches. The belt can be stopped at any time by pulling a cable from any location. The figure below is a typical E-stop switch fitted to a local control station in the field.



**Figure 1-1: Emergency Stop Switch**

### 1.2.8.2 Safety Trip Wire

Trip wire assembly and switches (one cord on each side) allow equipment to be stopped without using the control panel push buttons.

Follow all governing safety standards and local jobsite procedures.

Copyright © 2021 FLSmidth. ALL RIGHTS RESERVED. 1/6/21
FLSmidth is constantly striving to improve its products and must therefore reserve the right to change designs, materials, specifications, and price without notice.

Trip wire cords are connected to E-stop switches. Once one of the trip wire cords is pulled, the wiring circuit is broken and the motor will stop.

> **Note:** If your equipment includes a vacuum pump motor, be advised that this is not stopped by the trip wire system.

The following figure shows a typical trip wire switch that is often installed along each side of the equipment.



**Figure 1-2: Trip Wire Emergency Stop Switch**

> **DANGER**
>
> **Never use a trip wire or emergency stop switch as a means of isolating equipment. Trip wire and emergency stop switches are normally controlled through software systems and as such they do not provide positive isolation.**

### 1.2.8.3 Interlocks

Machines equipped with interlocks prevent a malfunction from having disastrous consequences. The power source may be cut off if problems are detected, such as:

- Motor overload (current too large)
- Speed too slow (speed monitors)
- Part of machine out of normal range (proximity switch)
- Excessive vibrations (vibration detector)
- Excessive heating of machine (thermo couple)

Belt alignment switches are used on conveyor belts to monitor whether the belt is properly aligned, and notify the operator if the belt is moving outside the roller path.

If you are operating a chain of transport equipment, a stop on any machine will automatically stop all upstream machines to avoid overfilling the stopped machine. The downstream machines will, in most cases, be allowed to continue so that they will empty themselves.

### 1.2.8.4 Guards

Guards prevent the possibility of personnel becoming entangled in moving parts. Keep guards intact and securely in place at all times while the machine is operating.

If you need to remove guards to conduct maintenance work or clear a blockage, make sure that the equipment is shut down, isolated, and rendered safe before doing so.

Follow all governing safety standards and local jobsite procedures.

Copyright © 2021 FLSmidth. ALL RIGHTS RESERVED. 1/6/21
FLSmidth is constantly striving to improve its products and must therefore reserve the right to change designs, materials, specifications, and price without notice.




**Do not operate any part of the equipment if all guards are not securely in place.**




**There are some moving parts of the equipment for which guards are not practical. Such unguarded areas have been evaluated as safe to work around with proper training and safe work practices.**

# 1.3 Equipment-Specific Risks and Hazards

It is strictly prohibited to operate the cyclone under conditions other than those described within this manual.




**Do not weld on this piece of equipment. No welding or hot work is allowed near the cyclone system without first covering the equipment to protect it.**
**There is risk of igniting rubber-lined components.**




**Operating with a pressure or temperature that is above the specified limits may result in leaking, and damage the equipment. This may lead to injuries.**




**Shut down and lock out the cyclone system before performing any maintenance. The system operates under pressure that may lead to injuries if it is started during maintenance.**




**Corrosion and wear create a safety risk. Repair or replace components that corrode or wear.**




**Do not step on the cyclone system. Only use appropriate equipment such as ladders and platforms.**

# 1.4 General Risks and Hazards

Working at industrial sites unavoidably poses hazards from various activities and conditions. In the following sections, several well-known industry hazards are outlined and precautions are described accordingly.

Follow all governing safety standards and local jobsite procedures.

Copyright © 2021 FLSmidth. ALL RIGHTS RESERVED. 1/6/21
FLSmidth is constantly striving to improve its products and must therefore reserve the right to change designs, materials, specifications, and price without notice.

## 1.4.1 Identifying and Controlling Hazards

It is important to identify and control hazards before beginning any work or task. This is called risk management. There are four basic steps in risk management:

1. Identify the hazards: Before you begin any task on or around the equipment, inspect the area and consider the task to make sure that you are able to identify hazards or potential hazards.
2. Assess the risks: When you have identified the hazards or potential hazards, assess each one to determine the overall level of risk. Risk is determined as the potential severity of the hazard and the likelihood of an incident being caused by it.
3. Eliminate or control the hazards: If the risk is too great, put controls in place to eliminate or control the hazard. Controls will vary according to the situation so it is up to the established site procedures and the personnel conducting the task to find methods that are suitable for the conditions.
4. Reassess the risks if conditions change: Whenever the conditions that existed when the initial assessment was conducted change, carry out the assessment of the hazards and risks again. This is to make sure that the changed conditions do not increase the likelihood of an incident or increase the severity of an incident.

Follow all governing safety standards and local jobsite procedures.

## 1.4.2 Ladders

When the working height is greater than 1.8 m (6 ft) special considerations and equipment is required. Put site emergency procedures in place when conducting work at heights to make sure that any incident will be handled with a proper emergency response.

Follow all governing safety standards and local jobsite procedures.

## 1.4.3 Scaffolds

Scaffolds are an important means of ensuring safety when working at heights. Make sure that anyone constructing or climbing on scaffolds is aware of the basic safety precautions. Correct any scaffold deemed unsafe immediately.

Follow all governing safety standards and local jobsite procedures.

## 1.4.4 Railings

FLSmidth recommends that all stairways, open-sided floors, and loading docks contain perimeter or fall protection devices such as a removable guardrail, a guardrail fence, or two chains strong enough to withstand the weight of someone sitting on it.

Follow all governing safety standards and local jobsite procedures.

## 1.4.5 Elevated Work Conditions

Train personnel riding in or working from the following devices to the local jobsite requirements and maintain 100% tie-off procedures.

- Personnel lifts
- Hoisting devices
- Elevated work platforms

Copyright © 2021 FLSmidth. ALL RIGHTS RESERVED. 1/6/21
FLSmidth is constantly striving to improve its products and must therefore reserve the right to change designs, materials, specifications, and price without notice.

Follow all governing safety standards and local jobsite procedures.

## 1.4.6 Harness and Line (Fall-Arrest System)

FLSmidth recommends that fall arrest system components be properly rated and mutually compatible.

Follow all governing safety standards and local jobsite procedures.

## 1.4.7 Cranes and Lifting Operations

Operating cranes, whether mobile or fixed, present unique risks for both the operator and the equipment. Train crane operators by approved site management.

Follow all governing safety standards and local jobsite procedures.

## 1.4.8 Moving Parts on Stationary Equipment

The primary risk associated with stationary machinery is that anyone close enough to the machine may get hands, arms, feet, or loose clothing caught in the moving parts: shafts, rollers, cranks, v-belt drives, and so forth. This type of accident often occurs when the victim is climbing on or gets too close to a machine that starts suddenly via a remote control, or is already running. The consequences will be injuries (squeezing or crushing of extremities), but can also result in death.

Make sure that personnel near components of moving equipment are safe. Make sure that all procedures are followed, and equipment guards are in place and undamaged before starting work. Never place your body near any moving parts, and always wear the correct PPE.

Follow all governing safety standards and local jobsite procedures.

## 1.4.9 Remote Starts

Remote starting of machines will normally be accompanied by a start warning: either audible (siren), visual (flashing lights), or both. The start warning is intended to allow employees enough time to move to a safe distance away from the machinery.

If maintenance or repair work is to be carried out, machines are furnished with a power source or controls that permit Lockout/Tagout (LOTO).

Follow all governing safety standards and local jobsite procedures.

## 1.4.10 Confined Spaces

Confined Space Entry (CSE) is the entry of personnel into any space or structure not normally intended for human occupancy, in which entry, movement within or exit is restricted, such as underground vaults, tanks, storage bins, pits and diked areas, vessels, silos, and so forth. These enclosed or partially enclosed spaces:

- Are large enough for an employee to enter fully and perform assigned work
- Are not designed for continuous occupancy by the employee
- Have a limited or restricted means of entry or exit

Follow all governing safety standards and local jobsite procedures.

Copyright © 2021 FLSmidth. ALL RIGHTS RESERVED. 1/6/21
FLSmidth is constantly striving to improve its products and must therefore reserve the right to change designs, materials, specifications, and price without notice.

## 1.4.11 Welding, Cutting, and Brazing

FLSmidth recommends that all welding and brazing operations have proper ventilation. Fumes such as those produced when working with zinc, cadmium, and painted surfaces can be toxic.

Follow all governing safety standards and local jobsite procedures.

## 1.4.12 High Temperatures

Operations involving high air temperatures, radiant heat sources, high humidity, direct physical contact with hot objects, or strenuous physical activities can have a high potential for causing heat-related illness/injury. Workplaces with these conditions may include iron and steel foundries, nonferrous foundries, cement plants, rubber products factories, electrical utilities (particularly boiler rooms), chemical plants, mining sites and smelters. Potential hazards are thermal burns due to contact with hot equipment or exposure to high temperatures.

Follow all governing safety standards and local jobsite procedures.

## 1.4.13 Power Lines

Be aware of power lines in the area and consider all power lines energized unless proper measures have been taken for de-energizing.

Follow all governing safety standards and local jobsite procedures.

## 1.4.14 Inclement Weather

The local Health and Safety Executive (HSE) or business management can provide a means to determine the weather forecast for the project location. FLSmidth recommends that you take precautionary measures during severe conditions.

Follow all governing safety standards and local jobsite procedures.

## 1.4.15 Noise and Vibrations

Prolonged exposure to loud noise can impair hearing or cause permanent hearing loss. To protect from hearing loss, FLSmidth recommends the following:

- Always wear PPE to protect against noise.
- Measure the noise levels for areas that may be considered a noise hazard.
- All personnel working in areas that exceed permissible exposure levels are required to wear jobsite-approved ear protection.




**Excessive noise can permanently damage your hearing. If you need to raise your voice to be heard, wear hearing protection.**

Some tools and equipment can expose employees to vibrations that can be harmful if not properly mitigated. Some vibration when operating this equipment is to be expected. However, excessive vibration is often an indication of a problem with the machine. Trace the sources of excessive vibration and rectify any problems as soon as possible. Do not allow yourself to be exposed to vibration for long periods of time.

Copyright © 2021 FLSmidth. ALL RIGHTS RESERVED. 1/6/21
FLSmidth is constantly striving to improve its products and must therefore reserve the right to change designs, materials, specifications, and price without notice.

Follow all governing safety standards and local jobsite procedures.

## 1.4.16 Pinch and Crush Points

Pinch points or crush points are a major hazard for personnel working around equipment. Loose clothing or hand tools that are placed anywhere near a pinch point can result in the person being dragged into rotating or moving equipment.

- Always be aware of pinch point hazards.
- Never attempt to remove material from a moving conveyor or other equipment.
- Never place your hands, any part of your body, or anything you are holding in a location where rotating or moving parts could pinch the item and drag you in.
- Never work on any part of a conveyor or equipment that is running.
- Never work on a stopped conveyor unless it has been correctly shut down, isolated, locked out, and tagged out.

Crushing and shearing points can occur in the following locations on equipment:

- Between the belt and drive pulley
- Between the belt and take-up rolls
- Between the belt and idler rolls

This equipment may be provided with casings and covers, specifically at the discharge and feeding points, to reduce injuries from pinching or crushing. Have maintenance and repair work done only by specifically instructed personnel.

Follow all governing safety standards and local jobsite procedures.

## 1.4.17 Electrical Energy

Electrical hazards have the potential to cause serious injury to personnel or damage to equipment. FLSmidth recommends that only trained, competent, and authorized personnel work on electrical components and equipment. Follow correct isolation procedures when working on electrical equipment. FLSmidth further recommends that the following precautions be taken:

- Do not override or bypass any electrical safety functions.
- Keep control panel doors closed at all times.
- Do not use oversized fuses, buss bars, or heaters.
- Connect the motor drives and accessories to an electrical ground, such as an underground water piping system, the frame of a building, or other electrical ground.




**Do not undertake electrical work if you are not trained, competent, and authorized to do so.**

FLSmidth recommends that electrical systems comply with the relevant electrical provisions, and that all work done on the electrical system be done by certified electricians. All electrical components must be interconnected and grounded according to correct and safe electrical procedures.

Follow all governing safety standards and local jobsite procedures.

## 1.4.18 Surface Heat

Certain components on equipment can become hot during operation. Be aware of potential hot components in your working area and treat them with caution.

Copyright © 2021 FLSmidth. ALL RIGHTS RESERVED. 1/6/21
FLSmidth is constantly striving to improve its products and must therefore reserve the right to change designs, materials, specifications, and price without notice.

FLSmidth recommends that if any components seem disproportionately hot, shut down the equipment and investigate and report immediately. Excessively hot components can indicate a mechanical problem and may result in equipment damage and unsafe situations for personnel.

During commissioning, operation, maintenance, repair, and shutdown, contact of hot machine components or electrical equipment may occur. Instruct all personnel accordingly.

**CAUTION**

**Never place your hands on any item of equipment until you are certain it is at a safe temperature.**

## 1.4.19 Lines, Tubes, and Hoses

FLSmidth recommends that operators and maintenance personnel take precautions to isolate and de-pressurize, if necessary, any pressurized lines or vessels before they are opened. Observe the following safety points:

- Inspect all lines, tubes, and hoses carefully.
- Do not use your bare hands to inspect for leaks.
- Tighten all connections to the recommended torque.
- Do not bend or strike high pressure lines.
- Do not install bent or damaged lines, tubes, or hoses.
- Repair any loose or damaged hydraulic oil lines, tubes, and hoses.

**CAUTION**

**Leaks can cause fires.**

**Note:** Even though the equipment is switched off and electrically isolated, the contents of pipes and vessels may still be under high pressure.

If high-pressure water or air hoses are used, FLSmidth recommends that all quick-connectors are fitted with a safety clip similar to one shown in the figure below.

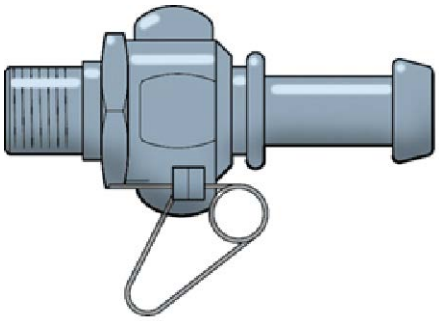

**Figure 1-3: Safety Clip**

## 1.4.20 Mechanical Stability

The machine and its components are designed to minimize hazards due to insufficient mechanical stability; however, during transport and assembly, maintenance, repair, shutdown, disposal, and storage, machine parts may tip or fall and endanger the staff.

During commissioning FLSmidth recommends that extensive static and dynamic tests be carried out. Do not overload the machine during operation, and use it only for its intended purpose.

Copyright © 2021 FLSmidth. ALL RIGHTS RESERVED. 1/6/21
FLSmidth is constantly striving to improve its products and must therefore reserve the right to change designs, materials, specifications, and price without notice.

# 1.5 Hazardous Chemicals and Materials

Many materials used in the industry contain hazardous ingredients that potentially pose health risks to employees. FLSmidth recommends that the appropriate Safety Data Sheet (SDS) be obtained for all hazardous materials used on site, and that the SDS be available for personnel and supervisors working with these chemicals. Careful study of the SDS and adherence to the required safety precautions can improve on-site safety.

FLSmidth also recommends that chemicals be properly labeled.

Follow all governing safety standards and local jobsite procedures.

## 1.5.1 Mineral Powders (Silica)

Mineral powders may be natural, such as sand or gravel, but very often they are an intermediate product in the cement or mining industry (ore concentration). Mineral powders will also be generated as dust from grinding or cutting operations in stone or concrete, or by handling dry soil.

Follow all governing safety standards and local jobsite procedures.

## 1.5.2 Acids and Bases

Strong acids include nitric ($HNO_3$), sulphuric ($H_2SO_4$), hydrochloric (HCl), phosphoric ($H_3PO_4$) acid, and hydrofluoric acid (HF). Strong acids give off heat when diluted with water, which may lead to vapor explosions.

Some systems use an acid wash containing hydrochloric (muriatic) or other acids. These acids can cause severe burns, irritation of mucous membranes, and skin irritation even in dilute solutions. Fumes may cause respiratory problems. Eye protection, skin protection, and respiratory masks are required when working with this material.

Follow all governing safety standards and local jobsite procedures.

## 1.5.3 Cyanide

In some processes, including gold mining, the use of cyanide (calcium cyanide CaCN; potassium cyanide KCN; sodium cyanide NaCN) is common. Any work with a direct risk of interacting with cyanide requires additional training.

Follow all governing safety standards and local jobsite procedures.

## 1.5.4 Solvents

The most abundant toxic materials are solvents; other toxic materials include pigments (lead), paint, binders (epoxies, polyesters) and additives (organotin).

Follow all governing safety standards and local jobsite procedures.

# 1.6 Emergency Preparedness Plan

Refer to your site emergency preparedness plan.

**Note:** Emergency preparedness plans are a critical component of safety.

Copyright © 2021 FLSmidth. ALL RIGHTS RESERVED. 1/6/21
FLSmidth is constantly striving to improve its products and must therefore reserve the right to change designs, materials, specifications, and price without notice.

THIS PAGE INTENTIONALLY LEFT BLANK

Copyright © 2021 FLSmidth. ALL RIGHTS RESERVED. 1/6/21
FLSmidth is constantly striving to improve its products and must therefore reserve the right to change designs, materials, specifications, and price without notice.

# Chapter 2: Introduction

**2.1 Using this Manual . . . . . 20**
**2.2 Installation and Start-Up Services . . . . . 20**
**2.3 Shipment and Receiving . . . . . 21**
**2.4 Parts and Repair Orders . . . . . 21**
**2.5 Warranty Conditions . . . . . 21**
2.5.1 Limited Warranty . . . . . 22
**2.6 Accessory Equipment Manufacturer Information . . . . . 22**
**2.7 FLSmidth Offices . . . . . 23**

Copyright © 2021 FLSmidth. ALL RIGHTS RESERVED. 1/6/21
FLSmidth is constantly striving to improve its products and must therefore reserve the right to change designs, materials, specifications, and price without notice.

# 2.1 Using this Manual

This manual describes the FLSmidth Urethane Cyclone and outlines its installation, maintenance, and operational procedures. It also includes a number of FLSmidth-recommended best practices.

FLSmidth has designed this equipment to provide dependable, efficient, and economical operation throughout its entire period of service. In order to achieve the desired level of performance and make sure that the equipment has full warranty coverage, it is required that users thoroughly read, understand, and follow the contents of this manual before carrying out the installation of the equipment, making any adjustments, or operating the equipment. Regular care and maintenance must also be performed as outlined in this manual.

The accessory pieces of equipment (items furnished but not manufactured by FLSmidth) shall be stored, installed, operated, and maintained according to the original equipment manufacturer instructions for complete warranty protection.

Note the following:

- The procedures described in this manual do not relieve users of the responsibility to exercise caution and common sense.
  - Users are responsible for their own personal safety when operating this equipment.
  - Users must comply with all safe working procedures and instructions relevant to their work site at all times.
- Pictures, descriptions, and technical data may not match your equipment in every aspect.
- The information, specifications, and illustrations in this manual are written according to information available at the time it was produced; therefore, this information may change at any time. These changes could include one or more of the following: lubrication, storage, installation instructions, maintenance, and so forth. FLSmidth reserves the right to make changes without notice and without obligation to replace existing manuals.
- FLSmidth will not furnish editable electronic copies of any data, manuals, or drawings at any time and accepts no liability whatsoever for unauthorized changes or alterations to the data provided.
- All information contained in this manual is the property of FLSmidth. None of the content may be copied or made public without prior written consent from FLSmidth.
- English is the governing language. When manuals are translated into any other language, FLSmidth is not liable for damages caused by errors in translation. The English translation will govern in case of discrepancies. In the event there is confusion, notify your FLSmidth representative immediately. Refer to http://www.flsmidth.com/en-US/Contact for the applicable address and telephone numbers for the FLSmidth office nearest you.
- FLSmidth accepts no liability to update the information contained in this manual. These materials are provided as is WITHOUT WARRANTY OF ANY KIND, EITHER EXPRESSED OR IMPLIED, INCLUDING, BUT NOT LIMITED TO, THE IMPLIED WARRANTIES OF MERCHANTABILITY, FITNESS FOR A PARTICULAR PURPOSE, OR NON-INFRINGEMENT. YOU ASSUME COMPLETE RESPONSIBILITY AND RISK FOR USE OF THESE MATERIALS. Some jurisdictions do not allow the exclusion of implied warranties, so the above exclusion may not apply to you.
- BY USING THIS MANUAL YOU AGREE THAT YOU HAVE READ, UNDERSTAND, AND AGREE TO THE TERMS OF USE.

# 2.2 Installation and Start-Up Services

Experienced FLSmidth engineers and service personnel are available to assist in the installation, safety training, and start-up of your FLSmidth equipment. These personnel have technical expertise and firsthand knowledge of this equipment, as well as the backing of the engineering and research facilities of FLSmidth.

Service personnel instruct on proper safety, operating and maintenance procedures, advise on best practices and troubleshooting assembly, and can supervise the entire installation and start-up.

To request this assistance, make arrangements at the earliest possible date, outlining the services required and the approximate duration of needed service.

Refer to your FLSmidth representative or http://www.flsmidth.com/en-US/Contact to submit your request concerning the availability and charges for these services.

Copyright © 2021 FLSmidth. ALL RIGHTS RESERVED. 1/6/21
FLSmidth is constantly striving to improve its products and must therefore reserve the right to change designs, materials, specifications, and price without notice.

# 2.3 Shipment and Receiving

Carefully inspect your shipment immediately upon receipt. Although every precaution is taken when shipping to make sure that your items arrive undamaged and as ordered, damage or other issues may occur during shipment. If equipment packaging is damaged, immediately contact your FLSmidth representative for further instructions.

> **Note:** All equipment must be stored in their original shipping containers, especially when such containers are wooden crates or cardboard cartons as this will maintain necessary storage protection.

- Refer to the installation lifting instructions before handling the equipment.
- Carefully handle boxes when opening for inspection to prevent damage or loss of contents. Repack all parts, or store them in a safe place with all protective covers reinstalled until assembly.

In case of damage or missing parts, immediately notify the carrier and your FLSmidth representative at http://www.flsmidth.com/en-US/Contact.

> **NOTICE**
> **You must notify FLSmidth within the time frame specified in your contract in the event of shortages or discrepancies on the shipment. FLSmidth is not responsible for replacing items if notification occurs outside the contractual time. If no time frame has been specified in your contract, you must notify FLSmidth within 30 days of shipment receipt.**

# 2.4 Parts and Repair Orders

Please contact FLSmidth for parts, repair orders, and equipment service, referring to http://www.flsmidth.com/en-US/Contact for the FLSmidth office nearest you.

To make sure that the right replacement parts are received and to avoid undue delay, please provide the following information with each order:

- **Style of Unit:** Urethane Cyclone
- **Serial Number:** This is found on the unit nameplate.
- Size: This is found on the unit nameplate.
- **Specific Component Part Numbers and Descriptions:** See individual component part nameplates included on the drawings for these part numbers.
- **Special Field Modifications:** This is important if the original material or design has been changed. Include drawings and other descriptive information.

# 2.5 Warranty Conditions

Your FLSmidth-provided equipment (the “Equipment”) is designed with dependability in mind. However, this unit can be damaged through misuse and by failing to follow the storage, installation, and maintenance procedures outlined in this manual.

FLSmidth will not be responsible for damage to the Equipment, component parts, or other related structures, nor will the warranty coverage on the Equipment be valid if any of the following apply:

- The Equipment is operated in an incorrect or negligent manner.
- The Equipment is not maintained in accordance with provided instructions.
- Operating conditions fall outside those specified for the Equipment, as originally designed and supplied.

Copyright © 2021 FLSmidth. ALL RIGHTS RESERVED. 1/6/21
FLSmidth is constantly striving to improve its products and must therefore reserve the right to change designs, materials, specifications, and price without notice.

The Equipment must be installed only by trained personnel who have been thoroughly trained in the safety procedures pertaining to it.

All drawings and erection or installation instructions must be followed. Drawings provided will always govern. In the event of any discrepancies, notify your FLSmidth representative immediately, referring to http://www.flsmidth.com/en-US/Contact for contact information.

### 2.5.1 Limited Warranty

a. FLSmidth warrants the Equipment to be free from defects in material and workmanship. Refer to your contract for specific warranty terms and conditions.

b. FLSmidth warranties are subject to the Equipment being properly stored, erected, installed, maintained, and operated in accordance with FLSmidth instructions and good industry practice and exclude ordinary wear and tear, improper loading of software or firmware, corrosion, erosion, chemical or abrasive action, power failures, power surges, other fluctuations in power, excessive heat, improper lubrication, extended storage before start-up, unauthorized repair, replacement, modification or alteration of the Equipment; or application outside the contractual design limitations of the Equipment.

c. Buyer shall provide FLSmidth with written notice of a defect in materials or workmanship, including a full description thereof, within 14 days after the defect is or should have been detected and in any event before expiration of the warranty period.

d. FLSmidth agrees to repair or, at its option, replace at its expense, FCA shipping point (Incoterms 2010) any Equipment or parts and components thereof, excluding the costs of dismantling and re-installation of the Equipment or parts and components, that prove during the warranty period to contain defects in materials or workmanship.

e. The remedies stated in this Article are Buyer's exclusive remedies for breach of this FLSmidth warranty. In no event shall the exclusive remedies in this Article be considered or alleged to have failed their essential purpose. **Buyer agrees that if there are any discrepancies or inconsistencies between this Limited Warranty and the warranty terms and conditions accompanying the Contract, the warranty terms and conditions accompanying the Contract shall always govern.**

f. EXCEPT FOR THE EXPRESS WARRANTY STATED IN THIS ARTICLE, FLSMIDTH EXPRESSLY DISCLAIMS ALL OTHER WARRANTIES, WHETHER EXPRESS, IMPLIED, STATUTORY, AT LAW OR IN EQUITY. THERE ARE NO IMPLIED WARRANTIES OF MERCHANTABILITY, FITNESS OF PURPOSE, OR OTHERWISE.

## 2.6 Accessory Equipment Manufacturer Information

Whenever the installation, lubrication, maintenance, or operation of an accessory piece of equipment (item which is furnished by FLSmidth but is fabricated by a third party) is discussed in the FLSmidth instruction manual, this information is provided only as a courtesy, as provided by the manufacturer at that time, and with no warranty expressed or implied. This information must be verified by consulting the original equipment manufacturer (OEM) manuals, which are the ruling documents for any accessory equipment.

As manufacturer instructions or recommendations may change over time, it is the user's responsibility to periodically consult the manufacturer to obtain the most up-to-date information, including maintenance instructions and recall information.

**NOTICE**

**In the event of any discrepancies between the information found in the FLSmidth instruction manual and the information in the OEM manuals, notify your FLSmidth representative immediately, referring to http://www.flsmidth.com/en-US/Contact.**

Copyright © 2021 FLSmidth. ALL RIGHTS RESERVED. 1/6/21
FLSmidth is constantly striving to improve its products and must therefore reserve the right to change designs, materials, specifications, and price without notice.

As with any mechanical equipment, there are safety concerns associated with the installation of the primary and accessory equipment. It is absolutely essential that installers, operators, maintenance personnel, and supervisors be instructed in safe working practices.

# 2.7 FLSmidth Offices

After completion of the contract, all service and spare parts will be supported by the closest FLSmidth regional headquarters. To find the FLSmidth office nearest you, refer to http://www.flsmidth.com/en-US/Contact.

Copyright © 2021 FLSmidth. ALL RIGHTS RESERVED. 1/6/21
FLSmidth is constantly striving to improve its products and must therefore reserve the right to change designs, materials, specifications, and price without notice.

THIS PAGE INTENTIONALLY LEFT BLANK

Copyright © 2021 FLSmidth. ALL RIGHTS RESERVED. 1/6/21
FLSmidth is constantly striving to improve its products and must therefore reserve the right to change designs, materials, specifications, and price without notice.

# Chapter 3: Storage

**3.1 Long-Term Storage Introduction ..... 26**
3.1.1 Maintaining Warranty ..... 26
3.1.2 Storing OEM Components ..... 26
**3.2 Covered or Indoor Storage ..... 26**
**3.3 Outdoor Storage ..... 26**
**3.4 Equipment Support ..... 27**
**3.5 Preventing Corrosion ..... 27**
3.5.1 Protective Finishes or Seal Coats ..... 28
**3.6 Storing Elastomer Components ..... 28**
**3.7 Storing BPC Rubber Components ..... 28**
**3.8 Storing Instrumentation and Valves ..... 28**
**3.9 Storing Fiberglass Reinforced Plastic Components ..... 29**
**3.10 Environmental Precautions ..... 29**

Copyright © 2021 FLSmidth. ALL RIGHTS RESERVED. 1/6/21
FLSmidth is constantly striving to improve its products and must therefore reserve the right to change designs, materials, specifications, and price without notice.

# 3.1 Long-Term Storage Introduction

The storage procedures in this manual are general guidelines and standard practices that aid in maintaining the condition of the equipment during long-term and pre-commissioning storage. If storage time is between 3 and 24 months, the following procedures shall be followed. If storage time is to exceed 24 months, contact FLSmidth for further instructions.

## 3.1.1 Maintaining Warranty

FLSmidth warranties are subject to the equipment being properly stored as outlined below.

When storing items for extended periods—six months or longer—detailed records must be kept and regularly updated for the duration of the storage period. In the event of a warranty claim, these records must be submitted to FLSmidth to show that all equipment and components have been properly maintained during the storage period. A paid periodic inspection by an FLSmidth service personnel may be required to maintain the warranty. For the specific terms and conditions of your equipment warranty please contact your FLSmidth representative.

Failure to comply with these storage instructions will void the FLSmidth warranty.

## 3.1.2 Storing OEM Components

FLSmidth provides vendor documentation that includes installation, operation and maintenance manuals for all parts supplied by FLSmidth, but manufactured by a sub-contractor. This can include, but is not limited to, the following: actuators, bearings, blowers, compressors, gear boxes, heaters, HPU, and other instruments.

# 3.2 Covered or Indoor Storage

Store cyclones, liners, rubber-lined manifold components, valves, and other auxiliary equipment in covered or indoor storage if possible; indoor storage is preferable.

**Covered** storage consists of any structure with a roof to protect the equipment and components from the sun and rain.

**Indoor** storage consists of an enclosed structure that will protect from sun, rain, wind, and dust. It is preferable that the structure be well ventilated.

Covered or indoor storage require the following conditions:

- A constant temperature between 5 and 40°C (41 and 104°F), with no sudden temperature fluctuation
- A relative air humidity ≤ 50%
- Protection from extreme weather conditions
- Relatively free of dirt or dust deposits

# 3.3 Outdoor Storage

Only use outdoor storage for cyclones, rubber-lined manifold components, valves, and other auxiliary equipment if indoor or covered storage is not possible.

Site selection for outdoor storage of FLSmidth supplied equipment and accessories shall be:

Copyright © 2021 FLSmidth. ALL RIGHTS RESERVED. 1/6/21
FLSmidth is constantly striving to improve its products and must therefore reserve the right to change designs, materials, specifications, and price without notice.

- Level, well-drained, clean, and dry, with a firm surface
- Isolated or barricaded from possibility of physical damage from transport vehicles
- Accessible for periodic inspection and maintenance
- Away from direct sunlight, moisture, and excessive vibration
- Away from high concentrations of dust or corrosive gas

### Protective Covering

Equipment must be completely covered with a heavy, opaque, plastic weather covering. It is essential that the plastic be opaque to prevent direct sunlight from reaching the equipment. It is preferable that the opaque covering be a light color to minimize heat under the covering. Flange protectors are usually supplied with rubber-lined flanges.

Elevate the equipment a minimum of 51 mm (2 in) above ground level to make sure that adequate ventilation and prevention of moisture condensation under the covering.

### Inspections

A painted and protective corrosion-resistant coating must be inspected on monthly intervals, and repaired, re-applied, or replaced as necessary.

In the event of substantial corrosion (other than loose surface rusting) consult FLSmidth for recommendations for corrective action.

## 3.4 Equipment Support

Support all large fabricated equipment components in a manner that will allow free air flow under and around the component being stored. Place steel beam or wood timber supports (not supplied by FLSmidth) of significant size and strength at appropriate load-bearing locations. Store and support all components shipped on skids and pallets or in crates and shipping containers in a manner that will allow free air flow under and around the skid, pallet, crate, or shipping container.

## 3.5 Preventing Corrosion

Equipment that is in storage or that is out of service for more than 30 days **must** be protected against corrosion damage.

Regularly scheduled equipment inspections are critical for proper storage of FLSmidth supplied equipment and components. These inspections include the following:

- Inspect primer paints, protective finishes, seal coats, and corrosion protection treatments thoroughly on a monthly schedule.
- Repair, re-apply, or replace protective coatings as necessary.

If there is substantial corrosion (other than loose surface rusting), contact FLSmidth for recommendations for corrective action.

FLSmidth will not be responsible for the condition of protective coatings after the equipment leaves the contracted fabrication facility. FLSmidth assumes no responsibility for field surface preparation or touch-up of shipping damage to protective coatings.

Identification tags that are removed for field painting prior to assembly must be reattached to the original components for correct identification.

Copyright © 2021 FLSmidth. ALL RIGHTS RESERVED. 1/6/21
FLSmidth is constantly striving to improve its products and must therefore reserve the right to change designs, materials, specifications, and price without notice.

### 3.5.1 Protective Finishes or Seal Coats

In most cases, equipment is supplied with a complete protective finish or seal coat. Regularly inspect these finishes for deterioration. If rust or oxidation is found, clean the surfaces and re-apply the appropriate protective finishes.

All paint must be applied using the paint manufacturer's recommended processes and environmental conditions. Protective finishes or seal coats for repair purposes are not supplied by FLSmidth.

## 3.6 Storing Elastomer Components

Elastomer and elastomer-covered (such as neoprene, nitrile, and chlorobutyl) products in storage can be adversely affected by temperature, humidity, ozone, sunlight, oils, solvents, corrosive liquids and fumes, insects, rodents, and radiation. Proper care shall be taken to meet the following requirements.

- Elastomer parts shall be protected from physical damage by objects that can cut or tear.
- If stored below 0°C (32°F), some products may become stiff and will need to be warmed before being placed in service. Do not store elastomer products near sources of heat, such as radiators and base heaters.
- To protect against the adverse effects of ozone, do not store elastomer products near electrical equipment that may generate ozone or in geographical areas of known high ozone concentrations. Avoid exposure to direct and reflected sunlight.
- Whenever feasible, store elastomer products in their original shipping containers, especially when such containers are wooden crates or cardboard cartons, since this will provide protection against the deteriorating effects of oils, solvents, and corrosive liquids. This will also afford some protection against ozone and sunlight.
- Since certain rodents and insects thrive on rubber products, provide adequate protection against them.
- Rotate all elastomer products on a first-in, first-out basis. Even if all above conditions are met, a prolonged length of time in storage will result in the deterioration of elastomeric products.

## 3.7 Storing BPC Rubber Components

The blue pale crepe (BPC) gum rubber used in the manufacture of the cyclone liners is adversely affected by heat. However, if the components are correctly stored according to the directions provided in 3.2 "Covered or Indoor Storage" on page 26 and 3.3 "Outdoor Storage" on page 26, ambient temperatures of less than 49°C (120°F) (preferably less than 38°C [100°F]) can be maintained.

The equipment will not be damaged by freezing conditions as long as it is kept dry, but the rubber becomes brittle at low temperatures. If below freezing conditions are involved, use care when handling it to avoid damaging the projecting rubber splash skirts and similar rubber components.

BPC rubber is damaged by ozone. Do not store this equipment near possible ozone sources such as high voltage rectifier equipment.

## 3.8 Storing Instrumentation and Valves

Where auxiliary equipment includes instrumentation and automatic valves, use particular care to prevent moisture and moisture condensation during storage.

Copyright © 2021 FLSmidth. ALL RIGHTS RESERVED. 1/6/21
FLSmidth is constantly striving to improve its products and must therefore reserve the right to change designs, materials, specifications, and price without notice.

# 3.9 Storing Fiberglass Reinforced Plastic Components

Fiberglass reinforced plastic products in storage can be adversely affected by temperature, ozone, sunlight, and corrosive liquids and fumes. Proper care shall be taken to meet the following requirements.

- The ideal storage temperature for fiberglass reinforced plastics is 0°C to 32°C (32°F to 90°F) with a maximum limit of 38°C (100°F). If stored below 0°C (32°F), some products may become brittle and caution must be taken when placing these components into service. Do not store fiberglass reinforced plastic products near sources of heat, such as radiators and base heaters.
- Whenever feasible, fiberglass reinforced plastic products shall be stored in their original shipping containers, especially when such containers are wooden crates or cardboard cartons, since this will provide protection against the deteriorating effects of corrosive liquids and fumes and will also afford some protection against ozone and sunlight.
- All fiberglass reinforced plastics products shall be on a first-in, first-out basis. Even if all above conditions are met, a prolonged length of time in storage will result in the deterioration of fiberglass reinforced plastics products.

# 3.10 Environmental Precautions

The following table highlights the major environmental precautions that must be addressed in order to maintain proper condition throughout and after long-term storage. Table 3-1 outlines the specific precautions for equipment that is stored for up to six months.

| Items | Environmental Precautions | | | | |
|---|---|---|---|---|---|
| | **Temperature** | **Humidity** | **Ventilation** | **Cleanliness** | **UV Exposure** |
| Metal and machined parts | No | Yes | Yes | Yes | No |
| Elastomer parts (urethane, polyurethane, rubber) | Yes | No | Yes | Yes | Yes |
| Fiberglass parts | Yes | No | No | Yes | Yes |
| Polypropylene/polyethylene filter components | Yes | Yes | No | No | Yes |

**Table 3-1: Environmental Precautions—Storage Up to Six Months**

Copyright © 2021 FLSmidth. ALL RIGHTS RESERVED. 1/6/21
FLSmidth is constantly striving to improve its products and must therefore reserve the right to change designs, materials, specifications, and price without notice.

THIS PAGE INTENTIONALLY LEFT BLANK

Copyright © 2021 FLSmidth. ALL RIGHTS RESERVED. 1/6/21
FLSmidth is constantly striving to improve its products and must therefore reserve the right to change designs, materials, specifications, and price without notice.

# Chapter 4: Equipment Overview

**4.1 Cyclone Function . . . . . 32**
4.1.1 Selection . . . . . 32
**4.2 Cyclone Overview . . . . . 32**
4.2.1 Inlet Head . . . . . 32
4.2.2 Vortex Finder . . . . . 33
4.2.3 Apex Insert . . . . . 33
4.2.4 Inlet, Cylinder, and Cone Housings . . . . . 33
**4.3 Add-On Features . . . . . 33**
4.3.1 CycloStack™ . . . . . 33
4.3.2 CycloWash™ . . . . . 34
4.3.3 Corrosive Duty Cyclone Design . . . . . 34

Copyright © 2021 FLSmidth. ALL RIGHTS RESERVED. 1/6/21
FLSmidth is constantly striving to improve its products and must therefore reserve the right to change designs, materials, specifications, and price without notice.

# 4.1 Cyclone Function

Cyclones separate solids from liquids and, under certain circumstances, liquids from liquids. For proper function, the materials to be separated must have a difference in specific gravity and must be capable of being mechanically separated. Cyclones do not provide chemical emulsion separation.

Particles with the same mass and shape have the same settling velocity. This means that large, heavy particles (high mass) settle more quickly than small, light particles (low mass). The centrifugal force in a cyclone increases the settling velocity. Heavy particles move quickly to the cyclone housing wall and then move to the cyclone underflow. Light particles are sucked to the cyclone center and then move to the cyclone overflow. The smaller the cyclone, the higher the centrifugal forces and the smaller the particles that move to the cyclone underflow.

The involute inlet creates the centrifugal forces that allow the cyclone to function. Typically, cyclones are fed by centrifugal pumps. The higher the feed pressure, the higher the centrifugal forces and the smaller the particles that move to the cyclone underflow.

## 4.1.1 Selection

The primary consideration in selecting the proper size and design of the cyclone is the classification objective rather than the capacity, unlike many other process devices.

For each specific classification objective, FLSmidth calculates the proper relationship between the inlet orifice, vortex finder, and apex orifice size. All cyclones are engineered for the specific application prior to shipment.

There is seldom any necessity for changing the orifice sizes unless the classification objectives or plant operating conditions are altered.

The Urethane Cyclone is available with diameters from 13 to 380 mm (0.5 to 15 in).

# 4.2 Cyclone Overview

Cyclones have no moving parts and require only minimal maintenance.

Urethane Cyclones are available in various materials, including:

- Urethane (RU)
- Food grade urethane (RT90)
- High temperature urethane (RI)
- Ultrane (RW)—only available for cyclones with a diameter of 250 mm (10 in) or larger
- Royal cast (RC)—only available for cyclone with a diameter of 250 mm (10 in) or larger
- Natural gum rubber (apex liner and adjustable apex only)
- Other urethane materials are available upon request

## 4.2.1 Inlet Head

When slurry enters the cyclone, the first wear liner that it encounters is the inlet head (with a cover plate liner for some cyclone models). The inlet head sets the size and shape of the inlet orifice for the cyclone.

The inlet orifice size governs the pulp entrance velocity, but its major function is to provide a smooth flow pattern at the point of entry. All KREBS® cyclones are designed with an involute entry that orientates the particles before they reach the tangential point of contact with the cylinder wall. This design minimizes turbulence at the inlet head and reduces the possibility of turbulence or ricocheting particles to short-circuit oversize particles into the vortex finder.

Copyright © 2021 FLSmidth. ALL RIGHTS RESERVED. 1/6/21
FLSmidth is constantly striving to improve its products and must therefore reserve the right to change designs, materials, specifications, and price without notice.

The involute entry also allows for the use of vortex finders that are larger than a direct tangential entry for equivalent separations. This obtains lower pressure drops, greater unit capacities, and sharper separations.

### 4.2.2 Vortex Finder

From the standpoint of its impact on operating results, the vortex finder is the most critical of all orifices. The vortex finder size has the greatest effect on pressure drop for a given volume; in general, the larger the vortex finder, the coarser the cut and the greater the proportion of solids that report to overflow. Conversely, a smaller vortex finder normally means a finer cut and lower solids, but too small of a vortex finder may reduce volume and velocity enough that it could cause inferior performance.

For any slurry, seek an optimum balance between permissible dilution, largest vortex finder, and lowest pressure drop possible for the desired objective. Since most classification problems involve a fixed volume, the size of the vortex finder and pressure drop are interdependent.

### 4.2.3 Apex Insert

The apex insert is a wear component at the bottom of the cyclone that governs the apex orifice size. The apex orifice discharges the coarse material in a form that maximizes density and smoothness of discharge. It must be large enough to allow the tonnage reporting there to exit with a slight conical cross-sectional shape, but it must not be used to control separation.

The apex orifice must never be so small that a roping condition exists. Roping is an indication that a larger tonnage is reporting to the underflow than the apex orifice is allowing to discharge. Therefore, the remainder is reporting to overflow, reducing the effectiveness of classification.

### 4.2.4 Inlet, Cylinder, and Cone Housings

Inlet, cylinder, and cone housings are constructed of steel or fiberglass. They retain the wear components (inlet head, cylinder, cone, and apex insert) of the cyclone. The housings are long-lasting components that can be reused when cyclones are repaired or refurbished.

## 4.3 Add-On Features

The following are add-on features that are available for the cyclone. If you have purchased one or more add-ons, refer to the descriptions below.

### 4.3.1 CycloStack™

The CycloStack™ is a molded elastomer control device that is installed below the apex of a modified cyclone. The CycloStack™ reduces the moisture in the underflow product by constricting the flow of liquid out of the cyclone underflow. It maximizes the density in the underflow without losing valuable product to the overflow.

The overflow piping is designed to alleviate any fluctuations in the main body of the cyclone that result from feed fluctuations. Therefore, the configuration of the overflow piping is critical to the smooth, consistent operation of the CycloStack™.

Copyright © 2021 FLSmidth. ALL RIGHTS RESERVED. 1/6/21
FLSmidth is constantly striving to improve its products and must therefore reserve the right to change designs, materials, specifications, and price without notice.

## 4.3.2 CycloWash™

The CycloWash™ attachment provides a method for obtaining an extremely sharp separation and a clean underflow product. The tangential inlet ports in the CycloWash™ cylinder give a smooth flow pattern for the injected water at the point of entry, thus eliminating turbulence and the possibility of coarse particles being short-circuited into the vortex stream.

The CycloWash™ is a low cost, trouble-free system for obtaining an extremely sharp separation by cyclonic classification. CycloWash™ attachments are available for all sizes of cyclones Ø76 through 762 mm (Ø3 through 30 in), and require only a single fresh water connection for operation.

The operation of this device is based upon the theory that clear water injected through the CycloWash™ attachment displaces the slime fraction that ordinarily reports to the underflow. The displacement water is injected in a smooth flow pattern which eliminates turbulence and the short-circuiting of coarse particles into the vortex stream. Field installations in various de-sliming applications have proven conclusively that the CycloWash™ is extremely beneficial in sharpening cyclone classification.

A typical application is the preparation of mine backfill from tailings in which the removal of minus 20 micron slime is necessary for acceptable drainage rates underground.

> **Note:** For this application, the performance of the CycloWash™ has proven outstanding. With the addition of a relatively small volume of water, the drainage rate has been doubled with no loss of sand in the overflow product.

## 4.3.3 Corrosive Duty Cyclone Design

In corrosive duty cyclones, the basic cyclone design has been adapted to the unusual temperature, pressure, and corrosion that are often encountered in chemical process industries.

- The feed inlet and overflow adapters are elastomer lined spool piece adapters that have either no Victaulic groove connections or Victaulic connections with the elastomer wrapped around the end of the pipe. The adapters are spark tested to make sure they provide lining integrity.
- All whetted surfaces of the top cover plate are lined with elastomer, including the area mating with the overflow adapter.
- The vortex finder is completely elastomer lined, and it has been spark tested to make sure it provides lining integrity.
- The molded liners for the inlet head, cylinder section(s), and conical section(s) have integral molded gaskets to seal at the flanged joints.

  > **Note:** Molded elastomer liners and vulcanized linings are offered in premium blue pale crepe (BPC) gum rubber, nitrile, neoprene, chlorobutyl, and other materials. Many of these elastomer liners are interchangeable with silicon carbide ceramic or alumina ceramic liners where additional abrasion resistance is required.

- Standard sectionalized metal housings are constructed of cast or fabricated steel, and are generally designed for operating pressures of up to 345 kPa (50 psig). All welds are continuous and water tight.

  > **Note:** Special designs for higher system pressures are available.

- Cyclone housings are painted inside and outside with an epoxy coating system for corrosive service.
- Assembly hardware is of 18-8 stainless steel material unless otherwise noted.

Cyclone applications involving unusual temperature, pressure, or corrosive conditions may not permit the use of elastomer liners. FLSmidth also offers unlined cast and fabricated cyclones in materials such as:

- Carbon steel
- Types 304 and 316 stainless steel
- Duplex 2205
- Alloy 20
- Monel

Copyright © 2021 FLSmidth. ALL RIGHTS RESERVED. 1/6/21
FLSmidth is constantly striving to improve its products and must therefore reserve the right to change designs, materials, specifications, and price without notice.

- Inconel
- Nickel 200
- CD4MCU
- 254SMO
- Other materials as required for the application

For very fine separations, alumina ceramic cyclones are available in the following diameters for installation in compact vessels that are sized for high capacity.

- 12.7 mm (0.5 in)
- 25.4 mm (1 in)
- 50.8 mm (2 in)
- 76.2 mm (3 in)

Copyright © 2021 FLSmidth. ALL RIGHTS RESERVED. 1/6/21
FLSmidth is constantly striving to improve its products and must therefore reserve the right to change designs, materials, specifications, and price without notice.

THIS PAGE INTENTIONALLY LEFT BLANK

Copyright © 2021 FLSmidth. ALL RIGHTS RESERVED. 1/6/21
FLSmidth is constantly striving to improve its products and must therefore reserve the right to change designs, materials, specifications, and price without notice.

# Chapter 5: Installation

5.1 Installation Overview ..... 38
5.2 Receiving ..... 38
5.3 Cyclone Installation ..... 38
5.4 Pressure Gauge Installation (if applicable) ..... 39
5.5 Planning for Pump Installation ..... 39
5.6 Piping Design ..... 39
5.7 CycloStack™ Installation (if applicable) ..... 40
5.8 CycloWash™ Installation (if applicable) ..... 40

Copyright © 2021 FLSmidth. ALL RIGHTS RESERVED. 1/6/21
FLSmidth is constantly striving to improve its products and must therefore reserve the right to change designs, materials, specifications, and price without notice.

# 5.1 Installation Overview

This section provides tips and guidelines for installing your Urethane Cyclone. The recommendations in this assembly guide are based on FLSmidth's previous field erection and supervisory experience with similar projects. If you have problems or questions regarding installation, contact your FLSmidth representative. Refer to http://www.flsmidth.com/en-US/Contact for the FLSmidth office nearest you.

This equipment has been designed for a specific duty cycle. The project requirements and specifications, operating conditions, and safety factors comprise the design parameters for this system. As its intended design use is specific, the valve must not be used for other purposes. If it is so used, the owner assumes full liability.

The instructions and recommendations in this installation guide are general in nature. They are designed to accommodate common variations in equipment designs. Therefore, the actual assembly requirements for your equipment may vary somewhat from these guidelines. In all cases, the actual project drawings in Appendix C: "Drawing Package" on page 69 take priority over these instructions.

FLSmidth field service professionals are also available to guide site contractors through common variations to these instructions. For assistance, refer to http://www.flsmidth.com/en-US/Contact for the FLSmidth office nearest you.

Prior to beginning installation of the equipment, make sure all of the assembly drawings are readily available and all installation personnel are familiar with them. These drawings can be found in Appendix C: "Drawing Package" on page 69 of this manual.

If there are any problems in the installation of the cyclones, please contact FLSmidth for assistance. Our staff will be happy to assist you. Refer to http://www.flsmidth.com/en-US/Contact.

# 5.2 Receiving

When removing the cyclone from the packing, account for all parts by comparing individual items with the packing slip.

Where possible with the given transportation and handling limitations, cyclones are shipped in the complete assembled form. Component parts such as pipe fittings and spare parts are frequently placed inside the cone section of the cyclone.

# 5.3 Cyclone Installation

Cyclones are typically assembled before they are delivered to site.

**⚠ CAUTION**

**Make sure that the urethane flanges are not stressed during installation. Do not over-torque the fasteners, which can deform the urethane**

1. Securely mount each cyclone on a soundly-constructed frame so that stresses on the overflow and underflow piping are minimized. Do not force the urethane cyclone into an unnatural position.
2. Assemble the inlet flange to its mating piping.
3. Assemble the overflow connection.
4. Install the cyclone mounting plate. Do not force the urethane cyclone into an unnatural position.
5. Install the cyclone mounting plate.

Copyright © 2021 FLSmidth. ALL RIGHTS RESERVED. 1/6/21
FLSmidth is constantly striving to improve its products and must therefore reserve the right to change designs, materials, specifications, and price without notice.

# 5.4 Pressure Gauge Installation (if applicable)

Refer to “Add-On Drawings” in section C.3.

A pressure gauge and diaphragm assembly are optional with most cyclones.

The assembly is available with a 0.25 inch connection for use with fine solids or a 1.25 inch connection for use with coarse solids. Refer to the pressure gauge information in “Add-On Drawings” in section C.3.

1. Position the diaphragm assembly on the pipe nipple. Align the bolt holes in the diaphragm assembly with the holes in the pipe nipple.
2. Apply pipe sealant to the diaphragm assembly bolt threads.
3. Insert the diaphragm assembly bolts through the diaphragm assembly and pipe nipple. Tighten the nuts on the end of the two diaphragm assembly bolts. Only hand tighten the nuts.
4. Fill the upper chamber of the diaphragm with a suitable, light machine oil. Any light weight machine oil is suitable.
5. Apply pipe sealant to the pressure gauge threads on the diaphragm assembly.
6. Install the pressure gauge onto the end of the diaphragm assembly. Only hand tighten the pressure gauge.

# 5.5 Planning for Pump Installation

If adequate pressure is available in the cyclone feed line, a pump may not be required.

Carefully engineer the size and type of pump, and the size and length of the pipe line used for pumping to the cyclone, or battery of cyclones, for the specific job.

Wear on a pump varies approximately proportionately to the cube of the velocity. In order to minimize the pump speed and pump maintenance, the cyclone must be as near to the pump as possible. A certain inlet pressure at the cyclone will be required, so there is also a power saving by having the static and friction head as low as possible.

Wear results in a much higher pump maintenance cost than cyclone maintenance cost.

# 5.6 Piping Design

When designing cyclone piping, the most important consideration is to establish a velocity that prevents particle segregation in the pipe line, and at the same time holds the velocity to a minimum to reduce wear, which increases rapidly with an increase in velocity.

With a large majority of installations for pumping slurries, the velocity range falls between 1.5 and 4.6 m/s (5 and 15 f/s).

The major factors in determining the optimum velocity in a pipeline are:

- Particle size
- Angularity of the coarser fractions
- Specific gravity of solids
- Slimes content
- Pulp density
- Viscosity

Copyright © 2021 FLSmidth. ALL RIGHTS RESERVED. 1/6/21
FLSmidth is constantly striving to improve its products and must therefore reserve the right to change designs, materials, specifications, and price without notice.

# 5.7 CycloStack™ Installation (if applicable)

Refer to the CycloStack™ and overflow pipe information in "Add-On Drawings" in section C.3 during installation.

1. If the CycloStack™ is not pre-assembled to the cyclone:
   a. Install an adapter ring (or serrated retainer plate for a clamp CycloStack™) to the cyclone in order to attach the CycloStack™ below the apex.
   b. Bolt the CycloStack™ and retaining ring (or backing flange for a flanged CycloStack™) below the existing apex housing.

      **Note:** No modifications are required to install the CycloStack™.

      - Make sure that the cyclone is mounted so that the product can be stacked on the ground, discharged onto a conveyor, or discharged into a screw classifier. As needed, discuss the mounting location with FLSmidth to determine the ideal placement.
      - If you are mounting the cyclone above a screw classifier, mount the cyclone approximately half-way up the flights of the screw to maximize the mixing and de-watering of the fines.

   c. Install the overflow piping so that the end of the overflow reducer is the required minimum measurement below the base of the lower flange of the apex. Refer to Table 5-1.

| Overflow Reducer Model | Minimum Distance Below Apex Discharge |
|---|---|
| C7197 | 1219 mm (48 in) |
| C7297 | 1524 mm (60 in) |
| C7397 | 1524 mm (60 in) |

**Table 5-1: Overflow Reducer Positioning**

2. Fill the top half of both gauge guards with light-weight oil.
3. Install the vacuum line with the gauge and valve in a place where they are readily accessible to the operator. Refer to the CycloStack™ and overflow pipe information in "Add-On Drawings" in section C.3.
   a. Clamp the valve securely so that no air is leaking.
   b. Make sure there is no damage to the CycloStack™.
4. Install the overflow piping.
   a. Make sure that the CycloStack™ overflow piping is sized so that it will be full with a minimum of 2 to 3 m/sec (6 to 9 ft/sec) flow velocity.

      **Note:** The overflow piping must establish a siphon for the CycloStack™ work effectively.

   b. Make sure that no air is leaking. Air leaks inhibit the operation of the unit.

# 5.8 CycloWash™ Installation (if applicable)

1. Install the CycloWash™.
2. Set up the inlet water line to the CycloWash™.

Copyright © 2021 FLSmidth. ALL RIGHTS RESERVED. 1/6/21
FLSmidth is constantly striving to improve its products and must therefore reserve the right to change designs, materials, specifications, and price without notice.

- The volume of water required for the CycloWash™ is dependent upon the characteristics of the particular installation. In most instances, the best results are obtained when the water volume is equal to or greater than the volume of water reporting in the cyclone underflow product when the wash attachment is not used.
  - For example, an underflow with particles of 2.6 specific gravity at 70% solids and 35 gpm flow rate has 10.8 tph of solids and 4.6 tph of water. The 4.6 tph of water is 18.4 gpm. In this case, the provide at least 18 gpm of injection water through the CycloWash™ attachment for optimum performance.

3. Install a flow rate monitoring device on the inlet water line for the CycloWash™ to measure and control the volume of injection water.

Copyright © 2021 FLSmidth. ALL RIGHTS RESERVED. 1/6/21
FLSmidth is constantly striving to improve its products and must therefore reserve the right to change designs, materials, specifications, and price without notice.

THIS PAGE INTENTIONALLY LEFT BLANK

Copyright © 2021 FLSmidth. ALL RIGHTS RESERVED. 1/6/21
FLSmidth is constantly striving to improve its products and must therefore reserve the right to change designs, materials, specifications, and price without notice.

# Chapter 6: Operation

**6.1 Operation Overview . . . . . 44**
**6.2 Cyclone Start-Up . . . . . 44**
**6.3 Cyclone Adjustments . . . . . 45**
6.3.1 Feed Dilution . . . . . 45
6.3.2 Pressure Measurement . . . . . 45
6.3.3 Cyclone Orifices . . . . . 46
**6.4 Cyclone Monitoring . . . . . 46**
6.4.1 Apex Orifice . . . . . 46
6.4.2 Cyclone Discharge . . . . . 46
6.4.3 Feed Conditions . . . . . 48
**6.5 Cyclone Sampling (Optional) . . . . . 48**
6.5.1 Sample Cups . . . . . 48
6.5.2 Taking Samples . . . . . 49
**6.6 CycloStack™ Operation (if applicable) . . . . . 50**
6.6.1 Vacuum Gauge Readings . . . . . 50
6.6.2 CycloStack™ Adjustments . . . . . 50
**6.7 Flows, Densities, and Tonnages Calculations . . . . . 50**

Copyright © 2021 FLSmidth. ALL RIGHTS RESERVED.

FLSmidth is constantly striving to improve its products and must therefore reserve the right to change designs, materials, specifications, and price without notice.

# 6.1 Operation Overview

The cyclone is chemical resistant in some cases.

The maximum recommended operating temperature is 60°C (140°F).

If there are any problems in the operation of the cyclones, please contact FLSmidth for assistance. Our staff will be happy to assist you. Refer to http://www.flsmidth.com/en-US/Contact.

# 6.2 Cyclone Start-Up

When starting the cyclone, first run water through the system to inspect for leaks and make sure that the operation is correct. Only feed slurry to the system after making sure that it is running correctly with water.

For cyclones with a CycloStack™, a small amount of water is released by the CycloStack™ during start-up and shutdown.

1. Inspect the feed pump and other equipment to make sure that they are clean and ready for operation.
2. Open the correct number of cyclone isolation valves for the desired operation and feed pressure.
3. Prepare the system to run water to the cyclone in the place of feed.
4. For cyclones with a CycloWash™ and CycloStack™:
   a. Start the CycloWash™ injection water.

      **Note:** Starting the CycloWash™ injection water before introducing feed slurry to the cyclone will keep the CycloWash™ injection ports from plugging.

   b. For initial start-up, close the siphon control valve.
5. Start the feed pump to send water to the cyclone.
6. For initial start-up with a cyclone that has a CycloWash™ and CycloStack™:
   a. Start the pump to reduce the make-up water requirements.
   b. After water is discharging from the overflow pipe, open the siphon control valve only enough to allow a very slight bleed of water out through the CycloStack™.
7. Set the pressure at the feed distributor to 0.2 to 0.3 bar (2.9 to 4.4 psi) higher than the necessary operating pressure. Refer to “Capacity Curve and Cyclone Simulation” in section C.2.

      **Note:** The pressure loss in the feed distributor is up to 0.3 bar (4.4 psi), so the feed pressure will be higher than the pressure measured at the feed distributor.

   a. Adjust the feed pressure as needed by increasing or decreasing the pump speed, and opening or closing the cyclone isolation valves to control the number of cyclones that are operating in the system.

      **Note:** A pressure that is too low coarsens the separation, and may result in excessive solids in the overflow.

      **Note:** For some applications, a simulation cannot be created. When this occurs, run the cyclones with the originally-specified flow rate to achieve the feed pressure that was specified at the time of ordering. Refer to “Capacity Curve and Cyclone Simulation” in section C.2.
8. Measure the pressure in the feed distributer as it builds to make sure that it does not rise above the maximum operating pressure.

   
   

   **A pressure that is too high can lead to leaking and damage.**
9. Inspect the cyclone system for leaks.

Copyright © 2021 FLSmidth. ALL RIGHTS RESERVED. 1/6/21
FLSmidth is constantly striving to improve its products and must therefore reserve the right to change designs, materials, specifications, and price without notice.

a. If the system has a leak, tighten the necessary nuts, bolts, and flanges.

b. If the leak does not stop:

i. Disassemble the leaking line or equipment.

ii. Clean the disassembled equipment.

iii. Inspect the equipment for damage. Repair or replace the components as needed.

10. Inspect the cyclone system for operation function.

**Note:** When the cyclone is operated with water, the water will spray out of the discharge. Do not attempt to troubleshoot the spraying discharge because it is normal at this step of start-up.

a. Make sure that the pressure measurement devices indicate the pressure correctly.

11. Send feed to the cyclone.

12. For cyclones with a CycloStack™ or CycloWash™:

a. As needed, adjust the siphon control valve to increase the vacuum and increase the solids coming from the CycloStack.

b. As needed, adjust the CycloStack™ vacuum to get the desired underflow density. Refer to 6.6.2 “CycloStack™ Adjustments” on page 50.

13. Take samples from the underflow, overflow, and feed. Refer to “Cyclone Sampling (Optional)” in section 6.5.

# 6.3 Cyclone Adjustments

Numerous factors influence the operation of a cyclone, such as distribution of particle sizes, percent feed solids, specific gravity of solids, and liquid and pulp viscosity.

Following is a brief discussion of some factors influencing cyclone operation, which the operator is normally able to vary:

## 6.3.1 Feed Dilution

Feed dilution is the most effective control available.

- Increase the dilution water addition for a finer and sharper separation.
- Adjust the dilution water to maintain a constant level in the sump.

**Note:** If using dilution water to maintain the sump level, be aware of the potential change in the separation. For very dilute feeds, the change in the separation will be minimal.

## 6.3.2 Pressure Measurement

Pressure drop across a cyclone is the pressure differential between the cyclone inlet and overflow. When the cyclone discharges to the atmosphere, a condition that is always recommended, the inlet pressure indicated on the gauge is, for practical purposes, the pressure drop.

The pressure measurement is the energy required to force a given volume through a cyclone fitted with a certain combination of orifices. It is not an indication of a developed force-pattern or throughput, except as related to one particular set of operating conditions.

Excessive pressures result in higher costs for pump operation and maintenance; avoid them wherever possible. It is generally not recommended to have a pressure drop above 276 kPa (40 psi).

Copyright © 2021 FLSmidth. ALL RIGHTS RESERVED. 1/6/21
FLSmidth is constantly striving to improve its products and must therefore reserve the right to change designs, materials, specifications, and price without notice.

In general, a higher pressure drop results in a greater throughput capacity for the cyclone. A higher pressure drop will also produce a finer separation.

### 6.3.3 Cyclone Orifices

Various orifices have on the cyclone performance. Changing the orifice requires shutting down the system.

#### Inlet Orifice

An increase in the inlet area will increase the capacity of the cyclone and coarsen the separation slightly.

- Cyclones with a diameter of 100 mm (4 in) or smaller have a fixed inlet orifice.
- Cyclones with a diameter larger than 100 mm (4 in) have multiple inlet head size options. The inlet head can be replaced as needed to change the inlet orifice size.

#### Vortex Finder

The vortex finder has the greatest impact on the operating results of all the orifices. The vortex finder size has a major effect on the cyclone capacity at a fixed pressure drop and also significantly affects the cyclone separation.

- The larger the vortex finder diameter, the greater the cyclone capacity will be at a given pressure drop.
- A larger diameter vortex finder will also coarsen the cyclone separation and send a larger proportion of solids to the overflow.

Various vortex finder sizes are available and the entire part can be replaced.

#### Apex Orifice

Fixed and manually adjustable apexes are available but fixed apexes are more common. Fixed apexes are available in various sizes, and the entire part can be easily replaced to optimize the underflow solids.

## 6.4 Cyclone Monitoring

### 6.4.1 Apex Orifice

Monitor the shape of the apex orifice. If the shape changes within a very short period of time, it may be an indication that a change in the process has occurred.

### 6.4.2 Cyclone Discharge

#### Optimum Discharge

The optimum discharge is a cone of approximately 20–30 degrees.

Copyright © 2021 FLSmidth. ALL RIGHTS RESERVED. 1/6/21
FLSmidth is constantly striving to improve its products and must therefore reserve the right to change designs, materials, specifications, and price without notice.



*Image may not reflect exact equipment*

**Figure 6-1: Optimum Discharge**

## Spray Discharge

A spray discharge occurs when the discharge cone exceeds approximately 30 degrees. It occurs when too much water and too many fines are in the underflow.



*Image may not reflect exact equipment*

**Figure 6-2: Spray Discharge**

## Roping Discharge

A roping discharge occurs when the discharge cone is more narrow than approximately 20 degrees. When it occurs, solids cannot discharge properly and there is risk of misplaced coarse material in the overflow. Overflow piping may become plugged.

Copyright © 2021 FLSmidth. ALL RIGHTS RESERVED. 1/6/21
FLSmidth is constantly striving to improve its products and must therefore reserve the right to change designs, materials, specifications, and price without notice.



*Image may not reflect exact equipment*

**Figure 6-3: Roping Discharge**

### 6.4.3 Feed Conditions

Any change in the feed conditions can result in a change to cyclone performance. Keep the feed conditions as near as possible to the conditions that the cyclone was designed for.

## 6.5 Cyclone Sampling (Optional)

**NOTICE**

**Not all cyclone applications require sampling. Contact FLSmidth if you have questions regarding whether sampling is recommended for your application. Refer to http://www.flsmidth.com/en-US/Contact.**

Incorrect sampling procedures may result in improper adjustments to the cyclone.

### 6.5.1 Sample Cups

For ease of sampling, use sampling cups that meet the following standards:

- Large enough to contain the sample volume without splashing or overflowing—a typical sample cup is typically 0.25 to 0.5 L (0.26 to 0.53 qt).
- Slit in the cap that approximately 5 to 10 mm (0.20 to 0.39 in) so that it fills slowly, allowing the sampling cup to be moved through the stream before it fills
- Prevent splashing
- Clean

Copyright © 2021 FLSmidth. ALL RIGHTS RESERVED. 1/6/21
FLSmidth is constantly striving to improve its products and must therefore reserve the right to change designs, materials, specifications, and price without notice.

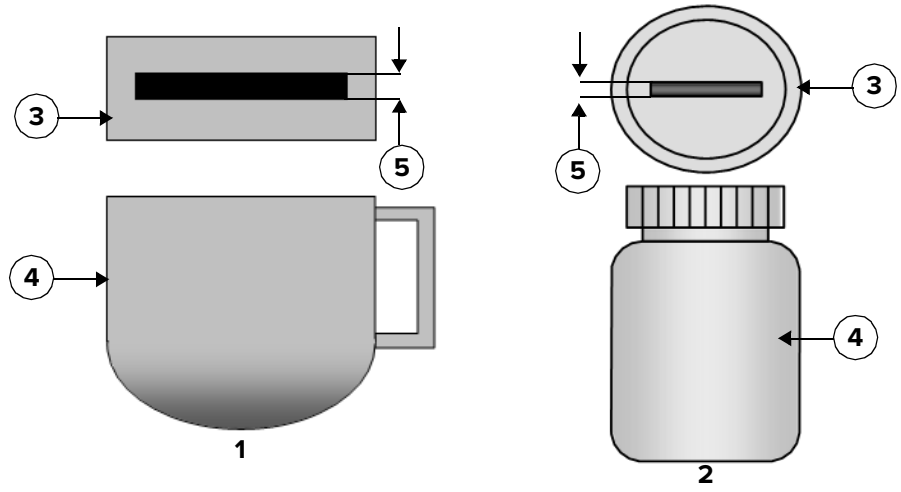


*Image may not reflect exact equipment*

| | | |
|---|---|---|
| **1** Sampling cup for sample at cyclone | **2** Sampling cup for sample at port | **3** Top view |
| **4** Side view | **5** Slit in the cap | |

**Figure 6-4: Sample Cups**

## 6.5.2 Taking Samples

The cyclone is designed for a specific operating duty. Any deviations to the feed affect the cyclone performance. The feed, underflow, and overflow must be sampled to make sure that the cyclone system is running at its optimal level. The samples taken must be representative.

Samples must be taken with the cyclone is running and after the process has stabilized following start-up.

- Take an overflow sample directly from the sampling port in the overflow launder.
- Take an underflow sample directly from the underflow. The proper sampling location must be determined by the customer.
- Take a feed sample at a point where the slurry is well mixed.

  **Note:** FLSmidth manifolds come with an optional sampling port at the feed distributor that allow the sample to be taken immediately before it enters the cyclone.

1. At the designated sample location, fill the sample cup.
   - When taking samples from a stream, move the sample cup through the stream instead of taking it from one point in the stream.
   - When taking samples from a sample port:
     i. Open the port completely.
     ii. Allow the slurry to run out for a few seconds.
     iii. Make sure that the stream from the port is constant and a high enough volume to provide a representative sample.
     iv. Fill the sample cup until it is full but not overflowing.
     v. Close the port.
2. Compare the sample results with the calculated values of the simulations. Refer to “Capacity Curve and Cyclone Simulation” in section C.2.

Copyright © 2021 FLSmidth. ALL RIGHTS RESERVED.

FLSmidth is constantly striving to improve its products and must therefore reserve the right to change designs, materials, specifications, and price without notice.

# 6.6 CycloStack™ Operation (if applicable)

## 6.6.1 Vacuum Gauge Readings

The higher the vacuum gauge reading, the dryer the solids discharge is.

The cyclones are typically operated in the range of 55 to 138 kPa (8 to 20 psig) inlet pressure.

The vacuum gauge is located with the siphon valve. It will read an average of 76 to 127 mm (3 to 5 in) of mercury vacuum for the correct siphon. An insufficient vacuum will cause excess water to exit through the CycloStack™.

## 6.6.2 CycloStack™ Adjustments

Adjust the CycloStack™ attachment at the vacuum bleed line and valve until you optimize its performance.

- For large CycloStack™ adjustments, adjust the siphon control valve on the cyclone overflow line.
- For small, fine-tuning CycloStack™ adjustments, adjust the needle valve at the siphon control valve.

# 6.7 Flows, Densities, and Tonnages Calculations

### Tonnage Solids Formula

$$\text{GPM of slurry} \times \text{Specific gravity of slurry} \times \text{\% solids} = \text{Dry tons per hour}$$

### Tonnage Slurry Formula

$$\frac{\text{Dry tons per hour}}{\text{\% solids}} = \text{Slurry per hour}$$

### Pulp Specific Gravity Formula

$$\frac{100 \times \text{SG of solids} \times \text{SG of liquid}}{100 \times \text{SG of solids} - \text{\% solids}(\text{SG of solids} - \text{SG of liquid})} = \text{Specific gravity of pulp}$$

### Percent Solids in Pulp Formula

$$\frac{\text{TPH solids}}{\text{TPH slurry}} \times 100 = \text{\% solids in pulp}$$

Copyright © 2021 FLSmidth. ALL RIGHTS RESERVED. 1/6/21
FLSmidth is constantly striving to improve its products and must therefore reserve the right to change designs, materials, specifications, and price without notice.

## Gallons Per Minute Formula

$$\frac{\text{TPH solids} \times 4}{\text{SG slurry} \times \text{\% solids}} = \text{GPM of slurry}$$

## Percent Solids by Volume Formula

$$\frac{\text{\% solids by weight} \times \text{SG pulp}}{\text{SG solids}} = \text{\% solids by volume}$$

## Gallons Per Minute Per Dry TPH

$$\frac{4}{\text{SG pulp} \times \text{\% solids}} = \text{GPM per TPH}$$

Copyright © 2021 FLSmidth. ALL RIGHTS RESERVED. 1/6/21
FLSmidth is constantly striving to improve its products and must therefore reserve the right to change designs, materials, specifications, and price without notice.

THIS PAGE INTENTIONALLY LEFT BLANK

Copyright © 2021 FLSmidth. ALL RIGHTS RESERVED.

FLSmidth is constantly striving to improve its products and must therefore reserve the right to change designs, materials, specifications, and price without notice.

# Chapter 7: Maintenance

7.1 Maintenance Overview ..... 54
7.2 Cyclone Handling ..... 54
7.3 Interior Surface Maintenance ..... 54
7.4 CycloStack™ Maintenance (if applicable) ..... 54
7.5 CycloWash™ Maintenance (if applicable) ..... 55

Copyright © 2021 FLSmidth. ALL RIGHTS RESERVED.

FLSmidth is constantly striving to improve its products and must therefore reserve the right to change designs, materials, specifications, and price without notice.

# 7.1 Maintenance Overview

This chapter provides detailed information on maintaining the equipment and its systems safely and efficiently. Regular care and maintenance must be performed as outlined in this chapter.

For maintenance instructions specific to an accessory piece of equipment (item which is furnished by FLSmidth but is fabricated by a third party) refer to the original equipment manufacturer documentation.



**Do not install, operate, maintain, or repair this equipment unless you have read and understand the instructions and warnings in Chapter 1: "Safety". Failure to follow these safety precautions could result in personal injury, death, or property damage.**

If there are any problems in the installation or operation of the cyclones, please contact FLSmidth for assistance. Our staff will be happy to assist you. Refer to http://www.flsmidth.com/en-US/Contact.

# 7.2 Cyclone Handling

Urethane Cyclones are very lightweight, which makes maintenance easier. For cyclones with a diameter of 152 mm (6 in) or smaller, the cone sections are generally connected by stainless steel clamps for ease of connection by operators.

# 7.3 Interior Surface Maintenance

The replacement schedule for your cyclone segments depends on the precise operating conditions at your plant. With experience, determine a regular maintenance schedule for your equipment.

Inspect the interior of the cyclone regularly to make sure that it is smooth. When the interior surfaces become worn or uneven, replace the segment of the cyclone (such as cone section, vortex finder, or apex). Unlike cyclones with steel housings and replaceable elastomer or ceramic liners, this urethane cyclone is designed for complete segment replacement as the interior of the segments wear.

Replace the apex once it opens more than 10% of its original size.

# 7.4 CycloStack™ Maintenance (if applicable)

The CycloStack™ has no moving mechanical parts, so it requires very little maintenance.

1. Regularly inspect the condition of the CycloStack™. Replace the CycloStack™ when it becomes worn or damaged. Refer to the siphon control bill of materials in "Add-On Drawings" in section C.3 for the part numbers.
    a. Keep a spare CycloStack™ in stock at all times. They have a relatively long life, but a minor investment in a spare CycloStack™ may prevent production delays when replacement is necessary.

Copyright © 2021 FLSmidth. ALL RIGHTS RESERVED. 1/6/21
FLSmidth is constantly striving to improve its products and must therefore reserve the right to change designs, materials, specifications, and price without notice.

2. Regularly inspect the feed inlet pressure gauge and overflow vacuum gauge. Replace the gauges when they become worn or damaged. Refer to the siphon control bill of materials in “Add-On Drawings” in section C.3 for the part numbers.

# 7.5 CycloWash™ Maintenance (if applicable)

The truncated cone supplied with the CycloWash™ is manufactured of nitrite bonded silicon carbide: a material with exceptionally good wear resistance. However, due to the high rotational velocity and solids concentration in the CycloWash™, it is prone to wear.

Inspect the CycloWash™ periodically to determine the extent of wear and need for replacement.

> **Note:** The diameter of the truncated cone orifice with the vortex finder diameter and other cyclone orifices are engineered for each specific application. Optimum performance can only be obtained when these orifices are in proper relationship.

Copyright © 2021 FLSmidth. ALL RIGHTS RESERVED. 1/6/21
FLSmidth is constantly striving to improve its products and must therefore reserve the right to change designs, materials, specifications, and price without notice.

THIS PAGE INTENTIONALLY LEFT BLANK

Copyright © 2021 FLSmidth. ALL RIGHTS RESERVED. 1/6/21
FLSmidth is constantly striving to improve its products and must therefore reserve the right to change designs, materials, specifications, and price without notice.

# Chapter 8: Troubleshooting

**8.1 Troubleshooting Overview . . . . . 58**
8.1.1 Cyclone Troubleshooting . . . . . 58
8.1.2 CycloStack™ Troubleshooting (if applicable) . . . . . 59

Copyright © 2021 FLSmidth. ALL RIGHTS RESERVED. 1/6/21
FLSmidth is constantly striving to improve its products and must therefore reserve the right to change designs, materials, specifications, and price without notice.

# 8.1 Troubleshooting Overview

The following chart describes a potential problem or operating condition and then defines the most common cause or source of the problem with suggestions for corrective action.

## 8.1.1 Cyclone Troubleshooting

| Problem | Possible Cause | Corrective Action |
|---|---|---|
| 1. Coarse material is in the overflow. | a. The pressure drop is too high. | 1. Reduce the pressure drop through one of the two methods:<br>a. Reduce the flow to the cyclone.<br>b. Operate additional cyclones in the manifold. |
| | b. The apex diameter is too small. | 1. Increase the apex diameter until you obtain a constant 30 degree cone angle on the discharge.<br>Note: Certain styles of the urethane fixed apexes can be cut to increase the diameter. An adjustable apex that is already fully open must be replaced with a larger apex. |
| 2. The cyclone pressure drop fluctuates wildly. | a. The sump is not being maintained at a constant level. | 1. Slow the pump down or increase the dilution water to the sump to maintain a constant sump level. |
| | b. Air is entrained in the slurry. | 1. Change the feed so that it angles against a side wall of the sump or install a baffle plate. |
| 3. The separation is not fine enough. | a. The cyclone feed density is too high. | 1. Increase the dilution water to the feed. |
| | b. The cyclone pressure drop is too low. | 1. Speed up the pump.<br>2. Install a smaller diameter vortex finder. |
| | c. The cyclone diameter is too large. | 1. Replace the cyclones with smaller diameter cyclones. |
| 4. The underflow is too dilute. | a. The apex is too large. | 1. Decrease the apex diameter until you obtain a 30 degree cone discharge. Do not allow the discharge to rope.<br>a. For adjustable apexes, tighten the worm driven clamp.<br>b. For fixed apexes, replace the apex for a smaller size. |
| | b. The pressure drop is too low. | 1. Increase the flow to the cyclone by operating fewer cyclones in the manifold. |

**Table 8-1: Cyclone Troubleshooting**

Copyright © 2021 FLSmidth. ALL RIGHTS RESERVED. 1/6/21
FLSmidth is constantly striving to improve its products and must therefore reserve the right to change designs, materials, specifications, and price without notice.

## 8.1.2 CycloStack™ Troubleshooting (if applicable)

| Problem | Possible Cause | Corrective Action |
|---|---|---|
| 1. The underflow density is too low. | a. The siphon control valve setting is too low. | 1. Close the siphon control valve until you get the desired underflow density. |
| | b. The cyclone apex opening is too large. | 1. Replace the cyclone apex with a size that is 13 to 25 mm (0.5 to 1 in) smaller. |
| 2. There is too much coarse material in the cyclone overflow. | a. The siphon control valve setting is too high. | 1. Open the siphon control valve until the coarse material in the overflow disappears. |
| | b. The cyclone apex opening is too small. | 1. Replace the cyclone apex with a size that is 13 to 25 mm (0.5 to 1 in) larger. |
| 3. The cyclone is operating erratically, with uneven flow or flushing. | a. The overflow pipe is underwater. | 1. Change the piping to make sure the overflow pipe is above the water. |
| 4. The CycloStack™ is plugged or the cyclone is vibrating or shaking excessively. | a. The cyclone apex opening is too small. | 1. Replace the cyclone apex with a size that is 13 to 25 mm (0.5 to 1 in) larger. |
| 5. The CycloStack™ is overly sensitive, and you cannot control it with the siphon control valve. | a. The adjustments are incorrectly being done at the siphon control valve. | 1. Adjust the needle valve for fine-tuning adjustments to the CycloStack™. |
| 6. The CycloStack™ fails to close when the cyclone is operating on water alone, or the CycloStack™ consistently or intermittently discharges a very wet product when the cyclone is operating with solids. | a. The vacuum is too low. | 1. If the vacuum gauge reading is lower than 50.8 mm (2.0 in), close the bleed valve further or completely. |
| | b. Air is leaking from the system. | 1. Look for an air leak in the hose connection between the bleed valve and the overflow pipe at the cyclone. Tighten the connections or replace the hose as needed to address any leaks.<br>2. Look for an air leak in the overflow pipe assembly. Tighten the connections as needed to address any leaks.<br>3. Look for an air leak in the CycloStack™. Tighten the connections or replace the CycloStack™ as needed to address any leaks.<br>4. Look for an air leak in the cyclone feed line. Tighten the connections or replace the hose as needed to address any leaks. |
| | c. The overflow pipe is not full. | 1. Increase the flow to meet the design flow, or replace the piping or vortex finder. The overflow pipe must be full and establish a siphon. |
| | d. The slurry inlet pressure is too low. | 1. If possible, increase the slurry inlet pressure to a minimum of 55 kPa (8 psi). Cyclones can operate with an inlet pressure as low as 34 kPa (5 psi), but operation will be erratic |

**Table 8-2: CycloStack™ Troubleshooting**

Copyright © 2021 FLSmidth. ALL RIGHTS RESERVED. 1/6/21
FLSmidth is constantly striving to improve its products and must therefore reserve the right to change designs, materials, specifications, and price without notice.

| Problem | Possible Cause | Corrective Action |
|---|---|---|
| | e. The pump speed is too slow as read at the inlet pressure gauge. Insufficient feed volume stops the cyclone from overflowing and will not let a siphon form to close the CycloStack™. The feed water flushes out the bottom apex opening. | 1. Increase the pump speed. Use a tachometer or another speed measuring device to determine the pump speed. Do not rely on the motor speed stated on the nameplate; differences between assumed and actual voltage to the motor can change the motor and pump speed.<br>2. If the pump turns over at the right speed but does not pump at the right speed, it is worn. Repair or replace the pump.<br>3. If the pump liner or impeller is worn, repair or replace the pump. |
| | f. The cyclone bottom cone liner has worn excessively. The larger opening causes a higher flow of water to report through the CycloStack™. | 1. Replace the bottom cone liner. |
| | g. The cyclone overflow pipe is too short. | 1. Replace the overflow pipe as needed to make sure that it extends the proper amount below the base of the apex. |
| | h. The cyclone feed is surging, causing a fluctuating inlet pressure. | 1. If the incoming feed lines or return feed lines are sending air bubbles into the inlet of the feed pump, address the air entrapment by installing baffles in the feed sump or installing a larger, deeper sump.<br>2. If changes to the sump level cause the pump to surge, return some of the cyclone overflow to the sump as make-up water to maintain a steady level in the sump. Ideally, operated the sump in a slightly overflow condition, using make-up water to keep the sump level steady.<br>3. If the sump has low slope angles in the bottom, re-design the sump so that the angles are sufficiently steep. |
| | i. The V-belts driving the feed pump are slipping. | 1. Set the V-belts to the correct tension. |
| | j. The cyclone overflow piping is restricted, causing back-pressure to develop inside the cyclone and preventing a siphon from forming. | 1. Clear the restriction from the overflow pipes.<br>2. Replace the piping if it is too small. |
| | k. The apex liner opening is too large. In cases where a large amount of feed water must be processed for a low percentage of solids by weight, the apex must be smaller than typical. | 1. Replace the apex with a smaller size. |
| 7. The cyclone becomes blocked with sand. | a. The apex insert is too small. If the solids flow is too restricted, the CycloStack™ may cause plugging. | 1. Remove the lower cone or apex section where the CycloStack™ is fitted.<br>2. Clean out any blockages.<br>3. Look for any loose or worn liners, and replace the liners as needed.<br>4. As needed, replace the apex insert with a larger size. Contact FLSmidth for assistance. |
| 8. An excessive amount of sand or coarse particles are in the cyclone overflow. | a. The apex insert is too small, forcing solids into the overflow. | 1. Contact FLSmidth for apex sizing assistance. Do not design the overflow piping to break to the atmosphere, or unnecessary siphoning will occur. |
| 9. Water is flushing out the siphon control piping. | a. The top pipe in the overflow elbow is too low. | 1. Increase the height of the top pipe in the overflow elbow. |

**Table 8-2: CycloStack™ Troubleshooting**

Copyright © 2021 FLSmidth. ALL RIGHTS RESERVED. 1/6/21
FLSmidth is constantly striving to improve its products and must therefore reserve the right to change designs, materials, specifications, and price without notice.

| Problem | Possible Cause | Corrective Action |
|---|---|---|
| 10. An excessive amount of water continually discharges through the apex. High underflow densities cannot be maintained. | a. The apex insert is too large. | 1. Replace the apex insert with a smaller size. Contact FLSmidth for assistance. |
| | b. The overflow pipe is too large for the flow rate. | 1. Replace the overflow pipe with a smaller pipe. |
| | c. The pump speed is too slow as read at the inlet pressure gauge. Insufficient feed volume stops the cyclone from overflowing and will not let a siphon form to close the CycloStack™. The feed water flushes out the bottom apex opening. | 1. Increase the pump speed. Use a tachometer or another speed measuring device to determine the pump speed. Do not rely on the motor speed stated on the nameplate; differences between assumed and actual voltage to the motor can change the motor and pump speed.<br>2. If the pump turns over at the right speed but does not pump at the right speed, it is worn. Repair or replace the pump.<br>3. If the pump liner or impeller is worn, repair or replace the pump. |

**Table 8-2: CycloStack™ Troubleshooting**

Copyright © 2021 FLSmidth. ALL RIGHTS RESERVED. 1/6/21
FLSmidth is constantly striving to improve its products and must therefore reserve the right to change designs, materials, specifications, and price without notice.

THIS PAGE INTENTIONALLY LEFT BLANK

Copyright © 2021 FLSmidth. ALL RIGHTS RESERVED. 1/6/21
FLSmidth is constantly striving to improve its products and must therefore reserve the right to change designs, materials, specifications, and price without notice.

# Appendix A: Recommended Spare Parts

A.1 Recommended Spare Parts . . . . . A.1

Copyright © 2021 FLSmidth. ALL RIGHTS RESERVED.

FLSmidth is constantly striving to improve its products and must therefore reserve the right to change designs, materials, specifications, and price without notice.

# A.1 Recommended Spare Parts

Copyright © 2021 FLSmidth. ALL RIGHTS RESERVED.

FLSmidth is constantly striving to improve its products and must therefore reserve the right to change designs, materials, specifications, and price without notice.

Storing spare parts on site is an important part of maintenance planning to prevent downtime. The parts we recommend are based on your specific application and conditions. Please contact your FLSmidth representative for a list of the recommended spare parts for your equipment. Refer to http://www.flsmidth.com/en-US/Contact.

Copyright © 2021 FLSmidth. ALL RIGHTS RESERVED.

FLSmidth is constantly striving to improve its products and must therefore reserve the right to change designs, materials, specifications, and price without notice.

# Appendix B: Declaration of Incorporation

B.1 Declaration of Incorporation ..... B.1

Copyright © 2021 FLSmidth. ALL RIGHTS RESERVED.

FLSmidth is constantly striving to improve its products and must therefore reserve the right to change designs, materials, specifications, and price without notice.

# B.1 Declaration of Incorporation

Copyright © 2021 FLSmidth. ALL RIGHTS RESERVED.

FLSmidth is constantly striving to improve its products and must therefore reserve the right to change designs, materials, specifications, and price without notice.

No compliance information is supplied. If you have any questions, please contact FLSmidth.
Refer to http://www.flsmidth.com/en-US/Contact.

Copyright © 2021 FLSmidth. ALL RIGHTS RESERVED.

FLSmidth is constantly striving to improve its products and must therefore reserve the right to change designs, materials, specifications, and price without notice.

# Appendix C: Drawing Package

C.1 Cyclone General Arrangement ..... C.1
C.2 Capacity Curve and Cyclone Simulation ..... C.2
C.3 Add-On Drawings ..... C.3

Copyright © 2021 FLSmidth. ALL RIGHTS RESERVED.

FLSmidth is constantly striving to improve its products and must therefore reserve the right to change designs, materials, specifications, and price without notice.

# C.1 Cyclone General Arrangement

Copyright © 2021 FLSmidth. ALL RIGHTS RESERVED.

FLSmidth is constantly striving to improve its products and must therefore reserve the right to change designs, materials, specifications, and price without notice.

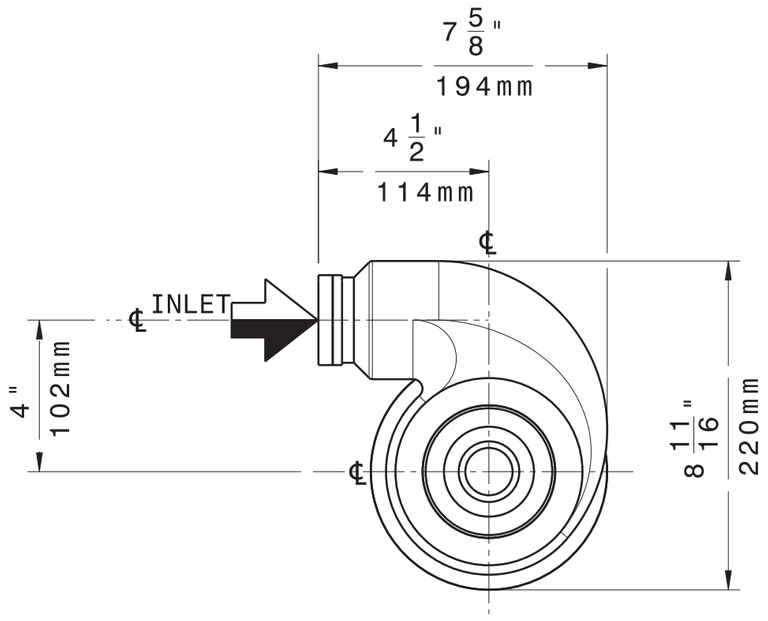


## PLAN VIEW

Scale: 1:4
(VICTAULIC NOT SHOWN)

## 1 1/2" [40mm] INLET

2" [50mm] VICTUALIC GROOVED CONN.
2" [50mm] X 1 1/2" [40mm] REQUIRED
COUPLING STYLE 750 REQUIRED
PART NO: VIC-750-2X1.5

## 1 1/2" [40mm] OVERFLOW

2" [50mm] VICTAULIC GROOVED CONN.

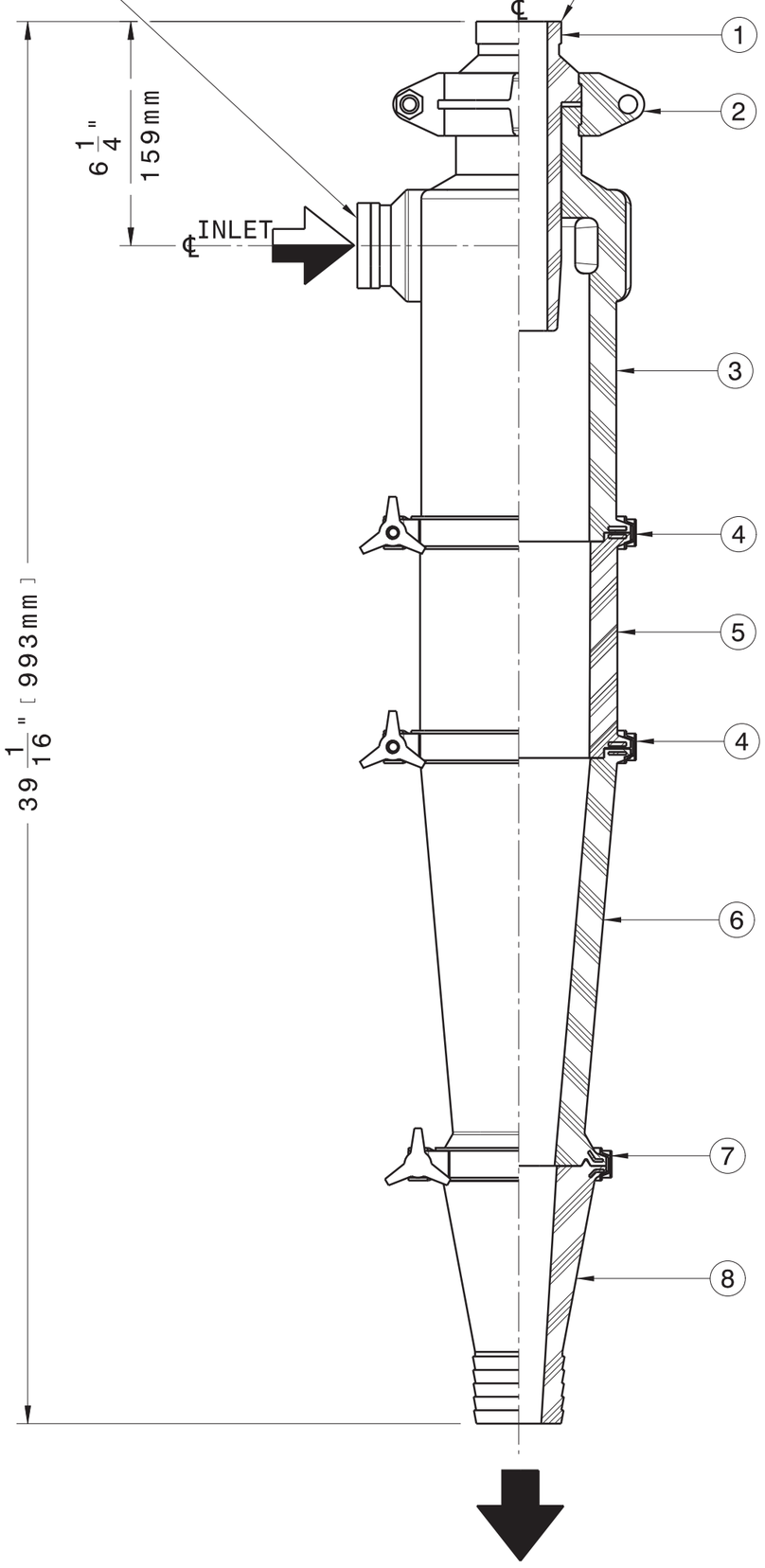


## VEOLIA WATER TECHNOLOGIES INC

TAG NO: 65CYC68003A, 65CYC68003B
SERIAL NO: 182356U - 182357U

PART NO: U4-182356

| NUMBER | PART NUMBER | PRODUCT DESCRIPTION | QTY. |
|---|---|---|---|
| 1 | C1717-RU-1.60 | VORTEX FINDER / O'FLOW INSERT WITH 2" VICTAULIC CONN., 1.60" SIZE, URETHANE. | 1 |
| 2 | VIC-75-3 | VICTAULIC COUPLING, 3" SIZE STEEL. | 1 |
| 3 | C1723-RU-1.25 | INLET HEAD, 1.25" SQUARE INCH INLET ORIFICE SIZE 1.5" VICTAULIC CONNECTION, URETHANE. | 1 |
| 4 | C7712-SS | ADJUSTABLE CLAMP WITH HAND WHEEL,STAINLESS STEEL. | 2 |
| 5 | C1671-RU | CYLINDER SECTION, URETHANE. | 1 |
| 6 | C1703-RU | CONICAL SECTION, URETHANE. | 1 |
| 7 | C7710-SS | CLAMP WITH HAND WHEEL, STAINLESS STEEL. | 1 |
| 8 | C1681-RU-1.25 | APEX VALVE LINER, 1.25" SIZE, URETHANE. | 1 |

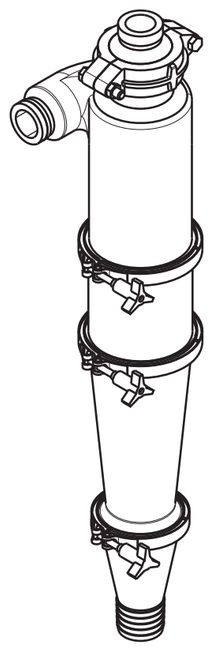

## ISO VIEW

Scale: 1:8

## NOTES:

1. PAINT SPEC: EN-SPEC-4-3041 (FOR CARBON STEEL PARTS ONLY)
2. BARE WEIGHT: 28# [12kg].

| GENERAL ARRANGEMENT TOLERANCE SCHEDULE UNLESS OTHERWISE SPECIFIED | | |
|---|---|---|
| -24" | 24"-100" | +100 |
| ±6mm | ±12mm | ±25mm |

THIS DRAWING IS THE EXCLUSIVE PROPERTY OF FLSMIDTH, TUCSON, ARIZONA, AND CONTAINS INFORMATION WHICH IS PROPRIETARY TO FLSMIDTH, IT IS NOT TO BE COPIED OR DUPLICATED IN ANY MANNER, OR USED IN CONNECTION WITH THE MANUFACTURE AND/OR SALE OF ANY APPARATUS OR PARTS THEREOF, OR DISSEMINATED TO ANY THIRD PARTY WITHOUT THE PRIOR WRITTEN CONSENT OF FLSMIDTH. ANY AUTHORIZED REPRODUCTION OF THIS DRAWING, OR ANY PORTION THEREOF, SHALL INCLUDE THIS NOTICE.

## FINAL CERTIFICATION

CERTIFIED FOR Veolia Water Technologies Inc
P.O. No. 21000128 HD 05000
S.O. No. 257205
BY Joel J Larsen DATE 18-May-2021

5505 WEST GILLETTE ROAD
TUCSON, ARIZONA 85743
PHONE: (520) 744-8200 FAX: (520) 744-8300

FLSmidth

| REVISION | | | | | |
|---|---|---|---|---|---|
| Rev. By: | | | | | |
| Approval Date: | Scale: | Dwn. By: | Date Drawn: | Orig. Appvd. By: | Sheet: |
| 02/17/2021 | NOTED | EXK | 2-17-21 | JWM ABS | 1 OF 1 |

FLSmidth — 5505 WEST GILLETTE ROAD TUCSON, AZ 85743

Approved By: 0

**GENERAL PARTS ARRANGEMENT**
**KREBS CYCLONES MODEL U4B-10-1734**
**WITH ADJUSTABLE APEX ASSEMBLY C1681**
**(SO: 0257205)**

© FLSmidth 2021

DWG NO. S1734-182356U

# C.2 Capacity Curve and Cyclone Simulation

Copyright © 2021 FLSmidth. ALL RIGHTS RESERVED.

FLSmidth is constantly striving to improve its products and must therefore reserve the right to change designs, materials, specifications, and price without notice.

**Krebs Cyclone**
**Model No.: U4B**

**CAPACITY CURVE**
**No.: U4B-125-583**

## 1.25 SQ. IN. INLET ORIFICE

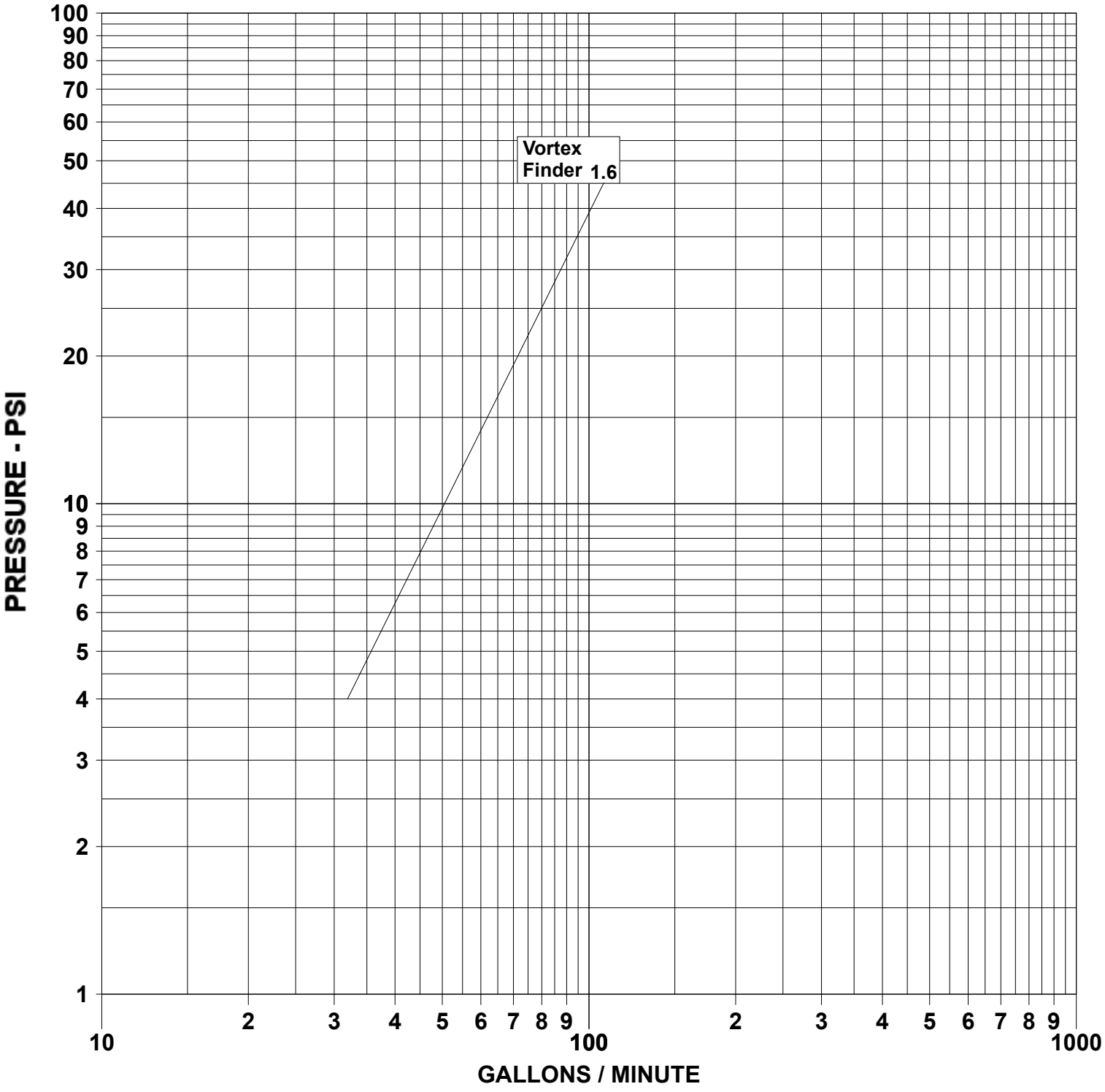


**CAPACITY IS BASED ON WATER AT AMBIENT TEMPERATURE AND APEX DIAMETER EQUAL TO ONE HALF THE VORTEX FINDER DIAMETER, AND MAY VARY AT DIFFERENT RATIOS**

**This sheet is the property of Krebs Engineers, Tucson Arizona, and is loaned under the express condition that it is not to be used in any manner directly or indirectly detrimental to Krebs Engineers**

**KREBS ENGINEERS**
**5505 West Gillette Road**
**Tucson, AZ 85743**
**TEL: (520) 744-8200**
**FAX: (520) 744-8300**
**e-mail: www.krebs.com**

# C.3 Add-On Drawings

Copyright © 2021 FLSmidth. ALL RIGHTS RESERVED.

FLSmidth is constantly striving to improve its products and must therefore reserve the right to change designs, materials, specifications, and price without notice.

No add-ons were purchased that require additional drawings. If you have any questions, please contact FLSmidth.
Refer to http://www.flsmidth.com/en-US/Contact.

Copyright © 2021 FLSmidth. ALL RIGHTS RESERVED.

FLSmidth is constantly striving to improve its products and must therefore reserve the right to change designs, materials, specifications, and price without notice.

# Appendix D: Vendor Documents

D.1 Using this Appendix . . . . . D.1
D.2 Add-On Information . . . . . D.2

Copyright © 2021 FLSmidth. ALL RIGHTS RESERVED.

FLSmidth is constantly striving to improve its products and must therefore reserve the right to change designs, materials, specifications, and price without notice.

# D.1 Using this Appendix

Whenever the installation, lubrication, maintenance, or operation of an accessory piece of equipment, which has been furnished by FLSmidth but was fabricated by a third party, is discussed in the FLSmidth instruction manual, this information is provided only as a courtesy, and is included as-is, with no warranty expressed or implied. This information must be verified by consulting the original equipment manufacturer (OEM) instruction manuals, which are the ruling documents for the accessory equipment.

As manufacturer instructions or recommendations may change over time, it is the user's responsibility to periodically consult the manufacturer to obtain the most up-to-date information, including maintenance instructions and recall information.




**In the event of any discrepancies, notify your FLSmidth representative immediately. Refer to FLSmidth Offices below.**

As with any mechanical equipment, there are safety concerns associated with the installation of the primary and accessory equipment. It is absolutely essential that installers, operators, maintenance personnel, and supervisors be instructed in safe working practices.

Copyright © 2021 FLSmidth. ALL RIGHTS RESERVED.

FLSmidth is constantly striving to improve its products and must therefore reserve the right to change designs, materials, specifications, and price without notice.

# D.2 Add-On Information

Copyright © 2021 FLSmidth. ALL RIGHTS RESERVED.

FLSmidth is constantly striving to improve its products and must therefore reserve the right to change designs, materials, specifications, and price without notice.

No add-ons were purchased that require additional information from our vendors. If you have any questions, please contact FLSmidth.
Refer to http://www.flsmidth.com/en-US/Contact.

Copyright © 2021 FLSmidth. ALL RIGHTS RESERVED.

FLSmidth is constantly striving to improve its products and must therefore reserve the right to change designs, materials, specifications, and price without notice.

# Appendix E: Commissioning

E.1 Dry Commissioning ..... E.1
E.2 Commissioning with Water ..... E.2
E.3 Commissioning with Slurry ..... E.3

Copyright © 2021 FLSmidth. ALL RIGHTS RESERVED.

FLSmidth is constantly striving to improve its products and must therefore reserve the right to change designs, materials, specifications, and price without notice.

# E.1 Dry Commissioning

Sign off by initialing and dating each commissioning step made.

| Commissioning Point | Commissioner Sign-Off |
|---|---|
| Inspect all upstream and downstream equipment according to the respective manufacturer and supplier recommendations, including all tanks, pumps, pipes, and valves. Make sure all equipment is free of debris. | |
| Visually inspect the cyclone manifold. Correct any observed problems. | |
| Make sure that the underflow launder and discharge nozzle are free of debris that could lodge and plug in the discharge nozzle.<br>**Note:** The launder splash cover may need to be removed during this process. | |
| Make sure that the overflow launder and discharge nozzle are free of debris that could lodge and plug in the discharge nozzle. | |
| Make sure that all fasteners are in place and properly torqued to the manufacturer's recommendation. | |
| If pressure gauges and pressure transmitters are supplied, make sure that they are installed on the feed header or near the feed connection to the system.<br>If the underflow and overflow do not discharge at atmospheric pressure, install pressure gauges on these additional lines near the cyclone. | |
| Notes and Comments: | |

**Table E-1: Dry Commissioning**

_____ _____

(Site Commissioner) (Date)

Copyright © 2021 FLSmidth. ALL RIGHTS RESERVED.

FLSmidth is constantly striving to improve its products and must therefore reserve the right to change designs, materials, specifications, and price without notice.

# E.2 Commissioning with Water

Commissioning the hydrocyclone, valves, and instrumentation with water is optional but highly recommended. Performing the recommended commissioning identifies any leaks or other problems present in the system before adding hot and corrosive gypsum slurry.

If commissioning with water is desired, sign off by initialing and dating each commissioning step made. Complete all steps in E.1 “Dry Commissioning” on page 79 before commissioning the cyclone with water.

| Commissioning Point | Commissioner Sign-Off |
|---|---|
| Fill the permanent or temporary cyclone feed tank with plant process water. | |
| Set up the cyclones for initial operation. Open all but two of the cyclone isolation valves. | |
| Make sure that any valves on the cyclone manifold overflow and underflow discharge lines are in the open position. | |
| Start the feed pump. The water does not need to run at the specified operating pressure or flow. | |
| After water begins discharging into the overflow launder, watch for any water leaks in the piping connections in the manifold and on the process lines.<br><br>**Note:** During commissioning, it is normal to notice low or no flow in the cyclone underflow. No corrective action is necessary for a lack of underflow. | |
| If the piping connections leak more than a slow trickle, stop the feed pump and tighten or repair the fasteners at the leaking connections as required. Re-start the feed pump to confirm that all significant leaks have been repaired. | |
| Shut down the cyclone feed pumps. Close the pump suction and discharge isolation valves as needed. | |
| Drain the process water from the system. Dispose of the water as directed by the plant procedures. | |
| Notes and Comments: | |

**Table E-2: Commissioning with Water**

_____ _____

(Site Commissioner) (Date)

Copyright © 2021 FLSmidth. ALL RIGHTS RESERVED.

FLSmidth is constantly striving to improve its products and must therefore reserve the right to change designs, materials, specifications, and price without notice.

# E.3 Commissioning with Slurry

Complete all steps in E.1 “Dry Commissioning” on page 79 and, if desired, E.2 “Commissioning with Water” on page 80 before starting the cyclone with slurry. After performing the commissioning with slurry steps, normal plant operation may begin.

| Commissioning Point | Commissioner Sign-Off |
|---|---|
| Make sure that all safety protocols are in place. | |
| Set up the cyclones for initial operation. Open all but two of the cyclone isolation valves. | |
| Open all of the valves on the cyclone manifold overflow and underflow discharge lines. | |
| If the cyclone has a CycloStack™ or CycloWash™, close the siphon control valve. | |
| Make sure that the absorber solids concentration is within the recommended and specified range before operating the gypsum de-watering cyclones. | |
| Start the cyclone feed pump. | |
| If the cyclone has a CycloStack™, open the siphon control valve after water is discharging from the overflow pipe. Open the valve only enough to allow a very slight bleed of water out through the CycloStack™. | |
| Obtain the desired cyclone feed pressure. Refer to 6.3.2 “Pressure Measurement” on page 45. | |
| Allow the system to run until it is operating at steady rate (usually 5 to 10 minutes). | |
| Look for leaks at all of the joints. Tighten the fasteners at any leaking joints. | |
| Perform samples. As desired, continue operating the system or shut it down until you get the results from the samples.<br>• Sample the overflow and underflow streams of the cyclones, and measure the solids concentration. Record these values.<br>• If possible, sample the feed, and measure the solids concentration and particle size distribution. Record these values.<br>• Record any relevant process data, such as the cyclone feed pressure, pump speed, volumetric flow rate, and number of operating cyclones.<br>If one or more of the samples are not within the desired or expected results, contact FLSmidth for specific recommendations. The recommendations may include, but are not limited to, modifying the apex diameter to increase or decrease the cyclone underflow solids concentration or changing the number of operating cyclones. | |
| Notes and Comments: | |

**Table E-3: Commissioning with Slurry**

_____ _____

(Site Commissioner) (Date)

Copyright © 2021 FLSmidth. ALL RIGHTS RESERVED.

FLSmidth is constantly striving to improve its products and must therefore reserve the right to change designs, materials, specifications, and price without notice.

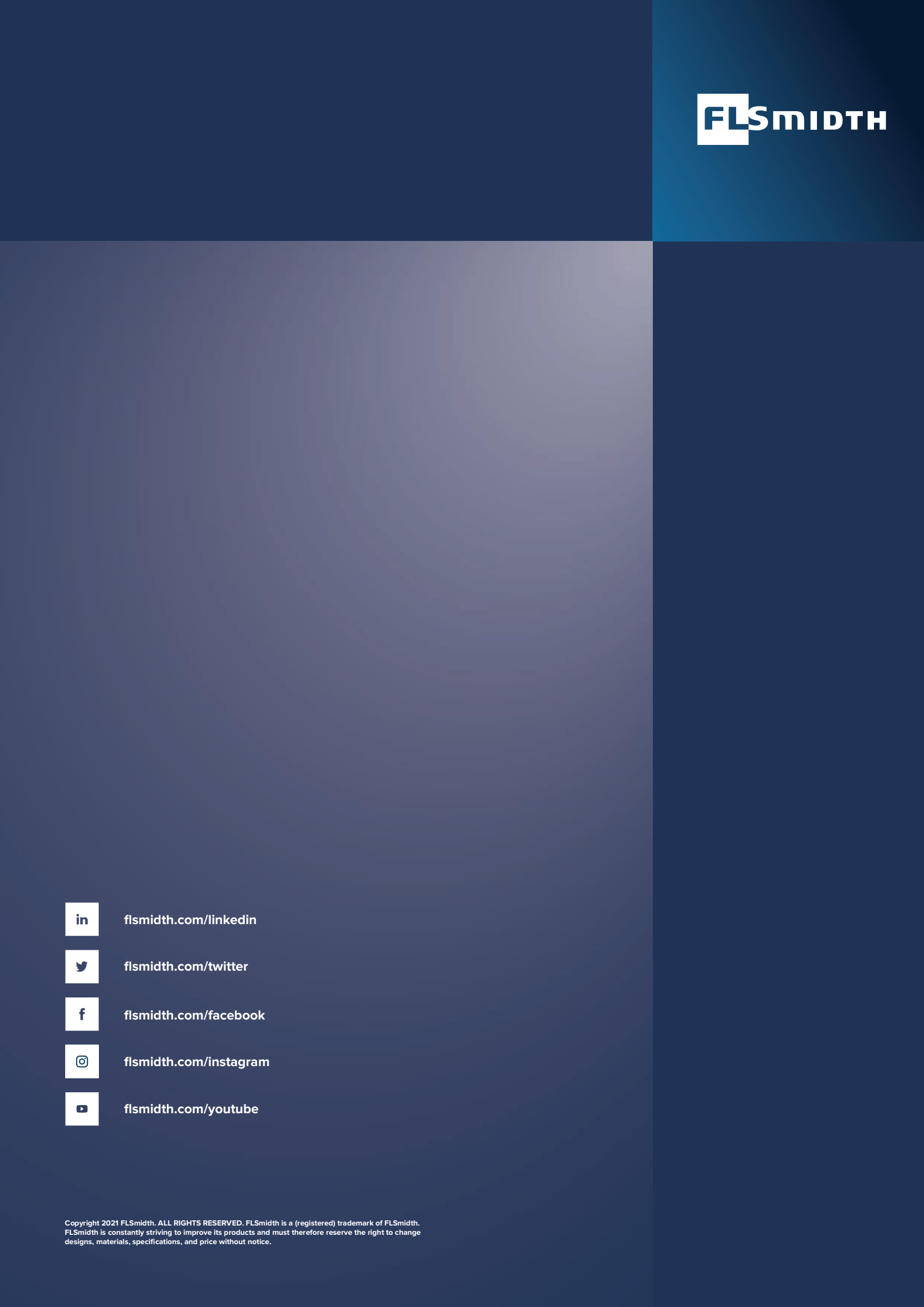

flsmidth.com/linkedin

flsmidth.com/twitter

flsmidth.com/facebook

flsmidth.com/instagram

flsmidth.com/youtube

Copyright 2021 FLSmidth. ALL RIGHTS RESERVED. FLSmidth is a (registered) trademark of FLSmidth. FLSmidth is constantly striving to improve its products and must therefore reserve the right to change designs, materials, specifications, and price without notice.

# *FLYGT*

## *MODEL ENM-10, LEVEL SWITCH*

LEFT BLANK

Installation, Operation
and Maintenace Manual



# ENM 10

FLYGT
a xylem brand

# Table of Contents

**Introduction and Safety....2**
Introduction....2
Safety....2
Safety terminology and symbols....2
User safety and health....3
Product warranty....3

**Product Description....5**
Introduction....5
Process description....5
Material....6
Cable lengths....6
Electrical data....6
Electrical data for Ex-approved installation....7
Approvals....7
Ex-approvals....7

**Mechanical Installation....8**
Precautions....8
General....8

**Electrical Installation....9**
Precautions....9
Wiring diagrams....9
Connection for audible or visible alarm....10
Ex-installation....11

**Maintenance....12**
General....12

# Introduction and Safety

## Introduction



CAUTION:

- Read this manual carefully before installing and using the product. Improper use of the product can cause personal injury and damage to property, and may void the warranty.
- Observe accident prevention regulations in force.
- Save this manual for future reference, and keep it readily available at the location of the unit.

### Purpose of this manual

The purpose of this manual is to provide the necessary information for:

- Installation
- Operation
- Maintenance

## Safety

### Precautions



WARNING:

- The operator must be aware of safety precautions to prevent physical injury.
- You must observe the instructions contained in this manual. Failure to do so could result in physical injury, damage, or delays.
- Before starting work on the unit, make sure that the unit and the control panel are isolated from the power supply and cannot be energized. This applies to the control circuit as well.[R]
- A certified electrician must supervise all electrical work. Comply with all local codes and regulations. [R]

### Safety terminology and symbols

#### About safety messages

It is extremely important that you read, understand, and follow the safety messages and regulations carefully before handling the product. They are published to help prevent these hazards:

- Personal accidents and health problems
- Damage to the product
- Product malfunction

#### Hazard levels

| Hazard level | Indication |
|---|---|
|  DANGER: | A hazardous situation which, if not avoided, will result in death or serious injury |

| Hazard level | Indication |
|---|---|
| WARNING: | A hazardous situation which, if not avoided, could result in death or serious injury |
| CAUTION: | A hazardous situation which, if not avoided, could result in minor or moderate injury |
| NOTICE: | • A potential situation which, if not avoided, could result in undesirable conditions<br>• A practice not related to personal injury |

### Electrical hazards

Electrical hazards are indicated by the following specific symbol. This symbol warns for presence of a dangerous voltage.



Electrical Hazard:

## User safety and health

### Introduction

All government regulations, local health and safety directives must be observed.

### Prevent danger due to electricity

All danger due to electricity must be avoided. Electrical connections must always be carried out in compliance with the following:

- The standard connections shown in the product documentation that is delivered together with the product
- All international, national, state, and local regulations. (For details, consult the regulations of your local electricity supplier.)

For more information about requirements, see sections dealing specifically with electrical connections.

# Product warranty

### Coverage

Xylem undertakes to remedy faults in products from Xylem under these conditions:

- The fault is due to defects in design, materials, or workmanship.
- The fault is reported to a Xylem representative within the warranty period.
- The product is used only under the conditions described in this manual.
- All service and repair work is done by qualified and authorized personnel. All modifications must be done by qualified technicians.
- Genuine Xylem parts are used.

### Limitations

The warranty does not cover faults caused by these situations:

- Deficient maintenance
- Improper installation
- Modifications or changes to the product and installation made without consulting Xylem

- Incorrectly executed repair work
- Normal wear and tear

Xylem assumes no liability for these situations:

- Bodily injury
- Material damage
- Economic loss

### Warranty claim

Xylem products are high quality products with expected reliable operation and long life. However, should the need arise for a warranty claim, then contact your Xylem representative.

### Qualification of personnel

All work on the product should be carried out by certified electricians or Xylem authorized mechanics.

Xylem disclaims all responsibility for work done by untrained, unauthorized personnel.

### Support

Xylem only supports products that have been tested and approved. Xylem does not support unapproved equipment.

# Product Description

## Introduction

### Product description

The ENM-10 is the simplest possible method for level control. A mechanical switch in a plastic casing, freely suspended at the desired height from its own cable. When the liquid level reaches the regulator, the casing will tilt and the mechanical switch will close or break the circuit, thereby starting or stopping a pump or actuating an alarm device. No wear, no maintenance. In sewage pumping stations, for ground water and drainage pumping – in fact, for most level control applications – the ENM-10 is the ideal solution.

### Liquid density

The product is available in different versions for different liquid densities.

### Temperature limit

The regulator can withstand up to 60°C (140°F).

### Manual coverage

This manual is applicable to the following versions:

- Standard version Blue casing of ENM-10
- EX-version Black casing of ENM-10.

### Available languages

For manuals in other languages, visit *tpi.xyleminc.com*

## Process description

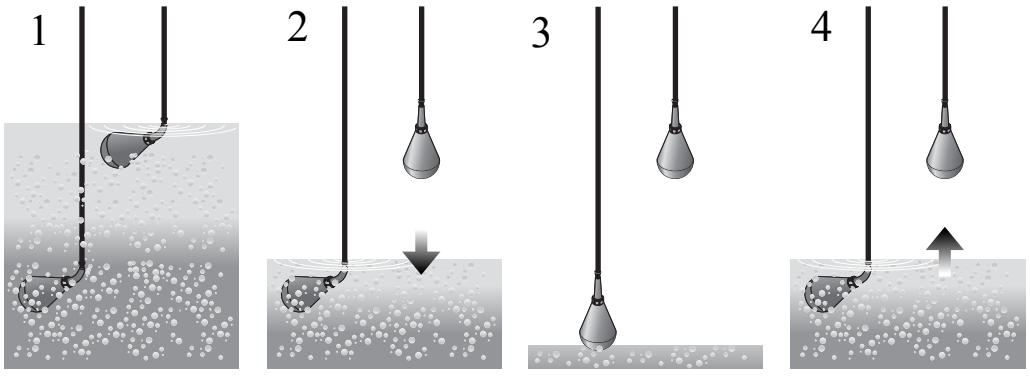


WS004996A

1. When the pumped media reaches a predetermined level, the upper level regulator tips over to horizontal position and the pump starts to drain the basin.
2. The basin is drained of fluid.
3. The pump stops when the lower level regulator returns to the vertical position.
4. The basin fills up again. The process restarts.

# Material

### Standard version

| Part | Material |
|---|---|
| Regulator casing | Polypropylene |
| Cable sheath | PVC or Nitrile/PVC rubber compound |

The plastic components are welded and screwed together. Adhesive is never used. Impurities and deposits will not adhere to the smooth casing.

### EX-version

The version for Ex-applications has a black casing, made conductive by adding carbon to the polypropylene.

# Cable lengths

For liquids with specific density between 0.95 and 1.10 g/cm$^3$, the following cables are available:

| Version | Lengths m (ft) |
|---|---|
| Standard | • 6 m (20 ft)<br>• 13 (42)<br>• 20 (65)<br>• 30 (100)<br>• 50 (167) |
| Ex-version | • 6 m (20 ft)<br>• 13 (42)<br>• 20 (65)<br>Nitrile/PVC rubber cable |

# Electrical data

| Country | Electrical data |
|---|---|
| Canada | 5 A, 250 V, DC<br>10 A, 250 V, AC |
| Denmark | 10 A, 250 V, AC |
| Switzerland | 6 A, 250 V, AC |
| Sweden | 10 A, 230 V, AC Resistive load<br>3 A, 250 V, AC Inductive load<br>5 A, 30 V, DC Resistive load<br>*1 mA, 5 V, DC, Gold Contact |

* Part no: 594 79 19 and 594 79 20

### Micro switch

The level regulator contains a micro switch, max rated 250 VAC/10 A.

### Low-voltage supply

In many cases, local codes require that the regulator is connected to a low-voltage supply, even though it is approved for a higher voltage.

It is recommended that the regulator is connected to a low-voltage supply, 48 V or 24 V, and a protective transformer.

# Electrical data for Ex-approved installation

| Description | Data |
|---|---|
| Maximum input voltage, $U_i$ | 30 V |
| Maximum input current, $I_i$ | 100 mA |
| Maximum input power, $P_i$ | 1.2 W |
| Depth of immersion | Max 20 m |

For cable

| Description | Data |
|---|---|
| Maximum internal capacitance, $C_i$: | 1.8 nF |
| Maximum internal inductance, $L_i$: | 10 µH |

Installation

There are special rules that apply to installation in an explosive atmosphere. Intrinsically safe circuits are normally required: Ex i. Use a EX-safety barrier, for example, Prod. No. 84 01 07.

# Approvals

CE, CSA, SEMKO, NEMKO, DEMKO, EX

LVD approval according to EN61058

CSA approval: Cert No. 1330172

Cl.I Zone 0, Gr. IIC;

CL.I Div.1 Gr A, B, C and D

Cl.II Gr. E, F and G

Cl.III when installed to the certified Intrinsically Safe relay, Ex ia, rated for the locations per submitter control drawing and installation manual.

## Ex-approvals

IECEx ia IIC T4 Ga: -20°C<Ta<60°C

IECEx NEMKO 09.008

ATEX II 1G ia IIC T4

NEMKO 10ATEX 1082

Applied standards

- EN 60079-0:2009/IEC 60079-0:2007
- EN 60079-11:2007/IEC 60079-0:2006
- EN 60079-26:2007/IEC 60079-26:2006

Intrinsically safe circuits are required for the automatic control system.

Use a Ex-safety barrier: For example, Prod. No. 84 01 07

0080

# Mechanical Installation

## Precautions



CAUTION:

- Read this manual carefully before installing and using the product. Improper use of the product can cause personal injury and damage to property, and may void the warranty.
- The operator must be aware of safety precautions to prevent physical injury.

## General

To conform to local regulations, the regulators are normally connected through a transformer to a low-tension control circuit.

Make sure that two regulators are used, one for starting and one for stopping.

If an alarm is required at a given level, then connect a third regulator.

Identical regulators can be used for all functions.

Make sure that the cables do not become tangled during the installation.

The regulator cables must hang freely from each other.

# Electrical Installation

## Precautions

WARNING:

- Before starting work on the unit, make sure that the unit and the control panel are isolated from the power supply and cannot be energized. This applies to the control circuit as well.[R]
- There is a risk of electrical shock or explosion if the electrical connections are not correctly carried out or if there is fault or damage on the product. [R]
- A certified electrician must supervise all electrical work. Comply with all local codes and regulations. [R]
- All electrical equipment must be grounded (earthed). Make sure that the ground (earth) lead is correctly connected by testing it. [R]
- Make sure that all unused conductors are insulated. [R]

## Wiring diagrams

**Empty the sump**

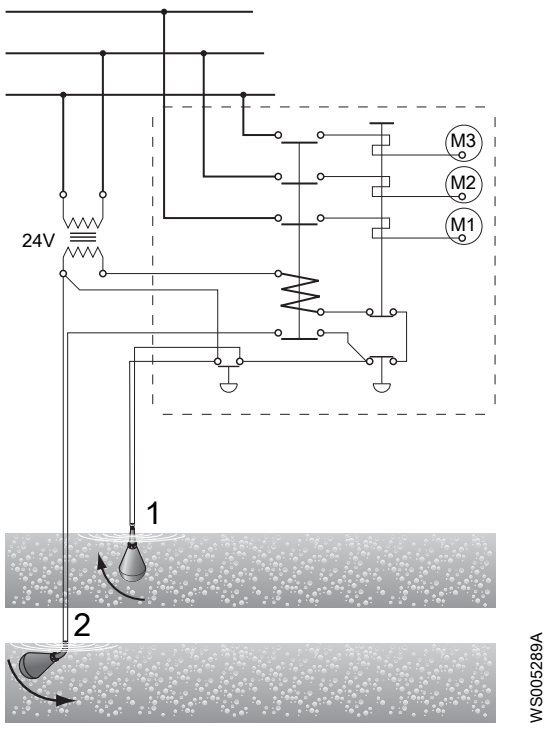


1. Start
2. Stop

**Fill the tank**

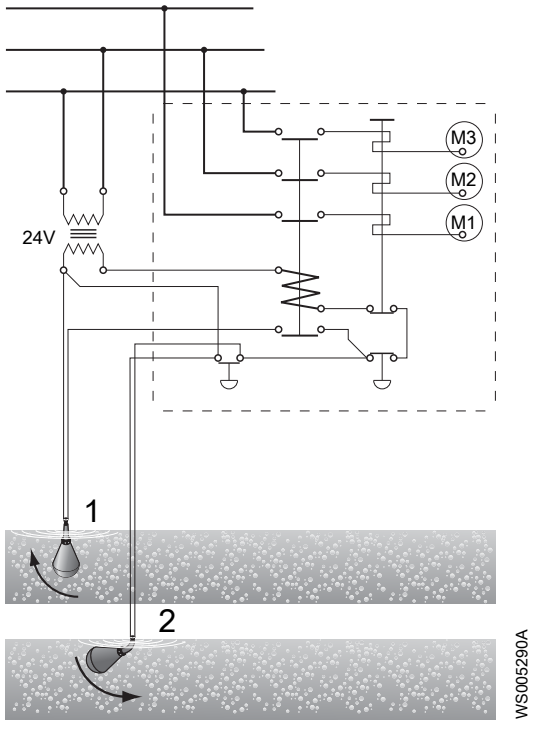


1. Stop
2. Start

### Connection table

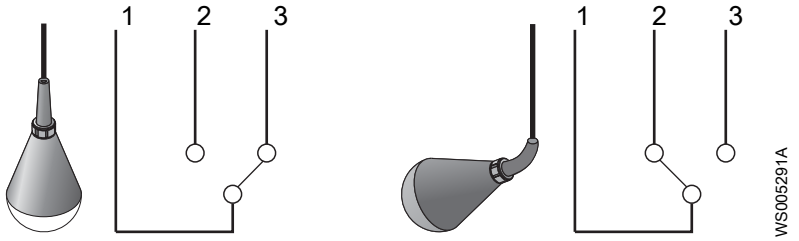


| Cable | Connections to empty a sump | Connections to fill a tank |
|---|---|---|
| 1 | X | X |
| 2 | X | Insulate |
| 3 | Insulate | X |

### Color code

| Cable | 1 | 2 | 3 |
|---|---|---|---|
| Color | EU: Grey<br>US: Red | Black | EU: Brown<br>US: White |

## Connection for audible or visible alarm

### Wiring diagrams

| Alarm low level | Alarm high level |
|---|---|
| 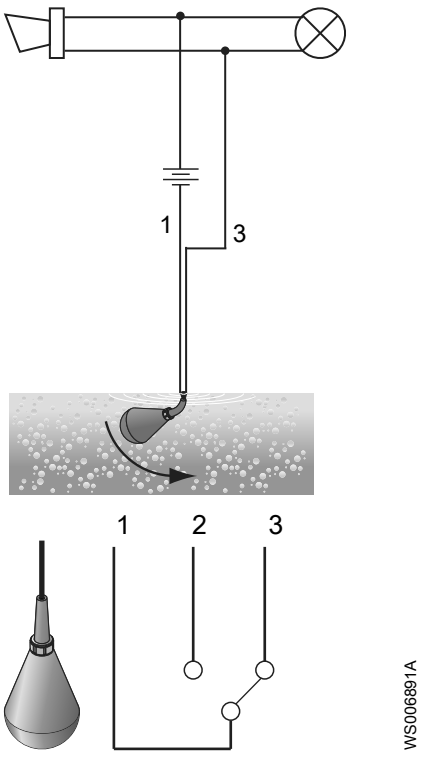 | 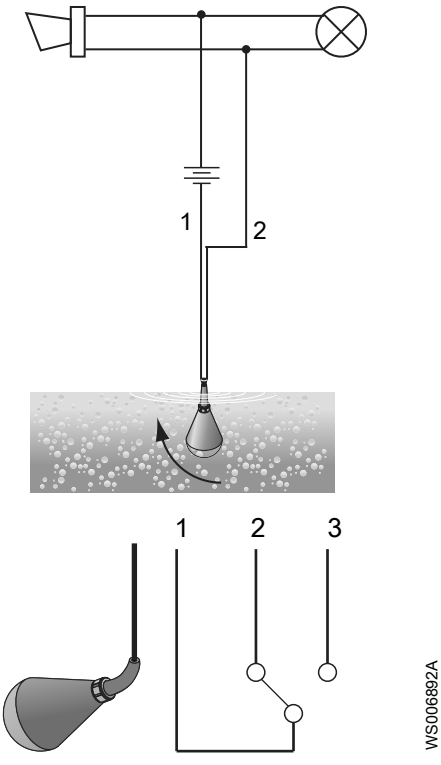 |





### Description of position

| Cable | 1 | 2 | 3 |
|---|---|---|---|
| Alarm high level | X | X | Insulate |
| Alarm low level | X | Insulate | X |

### Color code

| Cable | 1 | 2 | 3 |
|---|---|---|---|
| Color | EU: Grey<br>US: Red | Black | EU: Brown<br>US: White |

# Ex-installation

### EX-safety barrier

Intrinsically safe circuits are required for the automatic control system. EX-safety barrier (Prod. No. 84 01 07) must be installed.

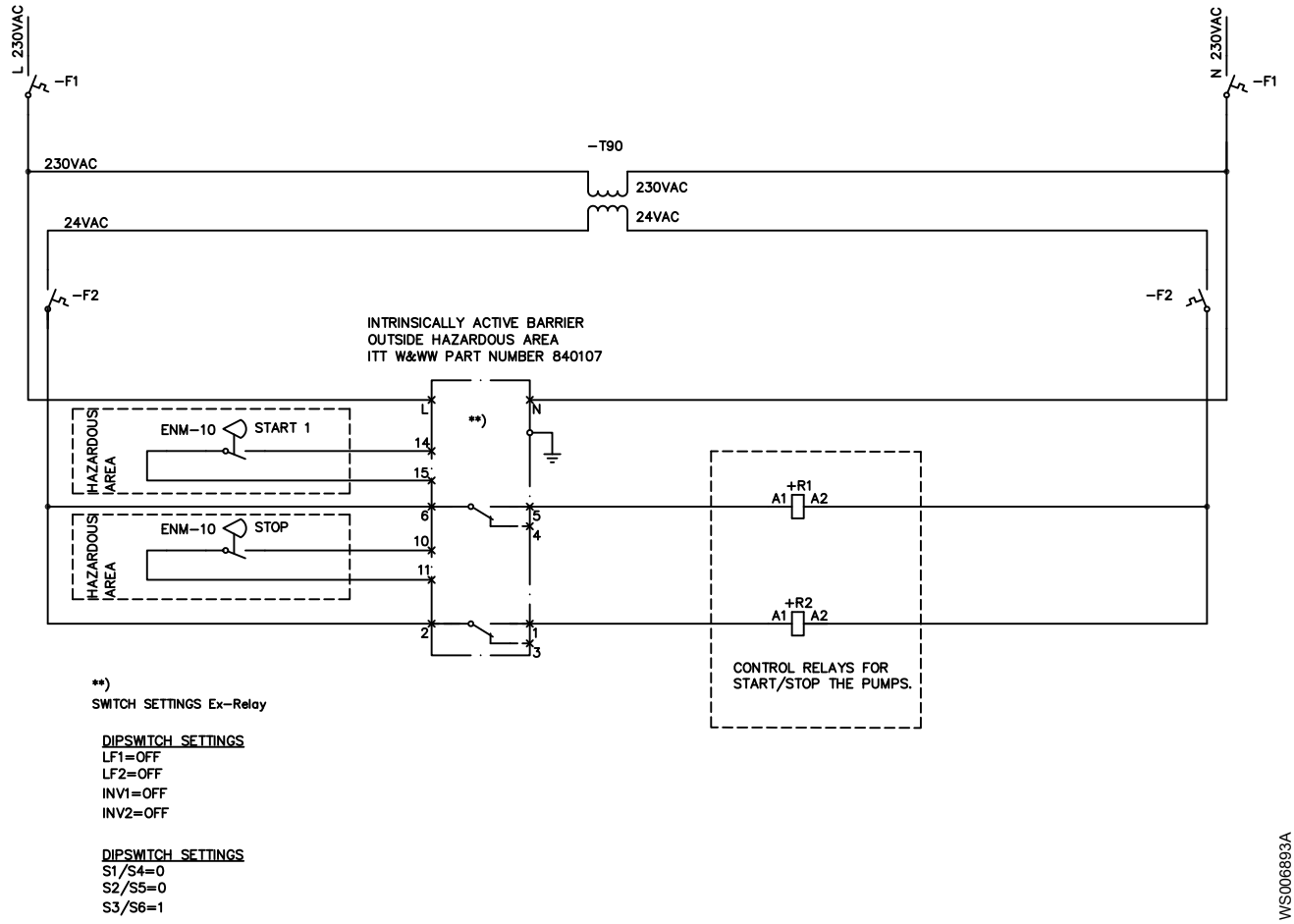

# Maintenance

## General

To ensure its continual operation:

- Clean the product, especially when fat/grease covers the plastic surface
- Make an occular inspection of the regulator. Make sure neither cable, protective sleeve or plastic casing show any signs of damage.
- A damaged regulator cannot be repaired in any way, due to the hermetic encapsulation. If the product is found to be damaged, replace it with a new one

### EX-istallations

Make absolutely sure that the Ex-barrier is operating correctly.

- The LED changes when the switch is toggled.

# Xylem |'zīləm|

1) The tissue in plants that brings water upward from the roots
2) A leading global water technology company

We're 12,500 people unified in a common purpose: creating innovative solutions to meet our world's water needs. Developing new technologies that will improve the way water is used, conserved, and re-used in the future is central to our work. We move, treat, analyze, and return water to the environment, and we help people use water efficiently, in their homes, buildings, factories and farms. In more than 150 countries, we have strong, long-standing relationships with customers who know us for our powerful combination of leading product brands and applications expertise, backed by a legacy of innovation.

For more information on how Xylem can help you, go to xyleminc.com

Refer to www.xylemwatersolutions.com/contacts/ for contact details of your local sales and service representative.

xylem
Let's Solve Water

Xylem Water Solutions
Manufacturing AB
361 80 Emmaboda
Sweden
Tel: +46 471 24 70 00
Fax: +46 471 24 74 01
http://tpi.xyleminc.com

Visit our Web site for the latest version of this document and more information

The original instruction is in English. All non-English instructions are translations of the original instruction.

© 2013 Xylem Inc

899751_4.0_en.US_2014-05_IOM.ENM10

# *HACH*

## *MODEL SOLITAX sc, TURBIDITY SENSOR*

LEFT BLANK

DOC023.54.03232

# SOLITAX sc

## User Manual

12/2009, Edition 4A

© HACH Company, 2006–2009. All rights reserved. Printed in Germany.

**This page is intentionally left blank**

# Table of Contents

**Section 1 Specifications** ..... 5

**Section 2 General Information** ..... 7
2.1 Safety Information ..... 7
2.1.1 Use of Hazard Information ..... 7
2.1.2 Precautionary Labels ..... 7
2.2 Sensor Overview ..... 8
2.3 Measuring Principle ..... 8
2.4 Handling ..... 8

**Section 3 Installation** ..... 9
3.1 Unpacking the Instrument ..... 9
3.1.1 Function Check ..... 9
3.2 Sensor Installation ..... 10
3.3 Pipe Installation ..... 11
3.4 Connecting sensor cable ..... 13

**Section 4 Operations** ..... 15
4.1 Use of an sc controller ..... 15
4.2 Sensor Setup ..... 15
4.3 Sensor Data Logging ..... 15
4.4 Sensor Diagnostics Menu for pH and ORP ..... 15
4.5 Sensor Setup Menu ..... 15
4.6 Calibration ..... 16
4.6.1 Setting the Outmode ..... 17
4.6.2 Calibration for Turbidity ..... 17
4.6.2.1 Calculating the Factor ..... 17
4.6.3 Calibration for Suspended Solids ..... 18
4.6.3.1 For Single Point (Factor) Calibration ..... 18
4.6.3.2 Multi-point Calibration ..... 18

**Section 5 Maintenance** ..... 19
5.1 Maintenance Schedule ..... 19
5.2 Cleaning the Sensor Measuring Windows ..... 19
5.3 Replacing the Wiper ..... 20

**Section 6 Troubleshooting** ..... 21
6.1 Error Codes ..... 21
6.2 Warnings ..... 21

**Section 7 Replacement Parts and Accessories** ..... 23
7.1 Immersion Sensors ..... 23
7.2 Insertion Sensors ..... 23
7.3 Replacement Parts ..... 23

**Section 8 Contact Information** ..... 25

**Section 9 Limited warranty** ..... 27

**Appendix A Modbus Register Information** ..... 29

**This page is intentionally left blank**

# Section 1 Specifications

Specifications are subject to change without notice.

| | |
|---|---|
| **Measuring Technique** | Infrared Duo scattered light technique for color-independent turbidity measurement<br>Turbidity in accordance with DIN EN 27027 / TS equivalent DIN 38414 |
| **Measuring Range** | t-line turbidity: 0.001–4000 FNU/NTU<br>ts-line, inline turbidity: 0.001–4000 FNU/NTU; TSS content: 0.001 mg/L–50 g/L<br>hs-line, highline turbidity: 0.001–4000 FNU/NTU; TSS content: 0.001 mg/L–500 g/L TSS |
| **Reproducibility** | Turbidity < 1 %, Total Suspended Solids (TSS) < 3 % |
| **Measuring Accuracy** | Turbidity up to 1000 FNU/NTU:<br>without calibration < 5 % of the measured value ± 0.01 FNU/NTU<br>with calibration < 1 % of the measured value ± 0.01 FNU/NTU |
| **Technique variation coefficient** | 1 % in accordance with DIN 38402 |
| **Response Time** | 1 s ≤ T90 ≤ 300 s (adjustable) |
| **Calibration** | Zero point permanently set from the factory, gradient once for the TS content |
| **Cable Length** | 10 m (33 ft), max. 100 m (328 ft) with extension cable |
| **Ambient Temperature** | 0 to +40 °C (32 to 104 °F) |
| **Pressure Range** | Stainless steel: ≤ 6 bar or ≤ 60 m (87 psi)<br>PVC: ≤ 1 bar or ≤ 10 m (14,5 psi) |
| **Flow Velocity** | Max. 3 m/s (the presence of air bubbles affects the measurement) |
| **Materials** | Optics carrier and sleeve: stainless steel 1.4571 or PVC black |
| | Wiper shaft: stainless steel 1.4104 |
| | Wiper arm: stainless steel 1.4581 |
| | Wiper rubber: silicone rubber (standard) Optional: Viton[1] (LZX578) |
| | Windows and light guide: quartz glass |
| | O-rings (optics carrier, wiper, windows): NBR (acrylonitrile butadiene rubber) |
| | Housing seals: NBR 70 |
| | Sensor connecting cable (hard-wired): 1 cable pair AWG 22 / 12 V DC twisted, 1 cable pair AWG 24 / data twisted, common cable screen, Semoflex (PUR) |
| | Sensor connection plug (hard-wired): type M12 enclosure rating IP 67 |
| | Threaded cable fitting: stainless steel 1.4305 |
| **Inspection interval** | On request 1/year service contract with guarantee extension to 5 years |
| **Dimensions** | Tank probe: D x L 60 mm x 200 mm (2 x 8 in.)<br>Probe for pipe installation: D x L 60 mm x 315 mm (2 x 12.4 in.)<br>(Pipe installation fitting: DN 65 / PN 16 DIN 2633; < 5 bar (73 psi); for pipes from DN 80)<br>Distance sensor - wall (floor): TS > 10 cm (4 in.), turbidity > 50 cm (20 in.) |
| **Weight** | Tank probe: approx. 1.8 kg (63 oz) (t-line: approx. 0.6 kg (21 oz))<br>Probe for pipe installation: approx. 2.4 kg (85 oz)<br>Pipe installation fitting: approx. 2.7 kg (95 oz) (without probe)<br>Pipe installation safety fitting:approx. 18 kg (40 lb) (without probe) |
| **User Maintenance** | 1 h / month, typical |
| **Certifications** | CE |

[1] Viton® is a registered trademark of E.I. DuPont de Nemours + Co.

**Figure 1 Sensor Dimensions**

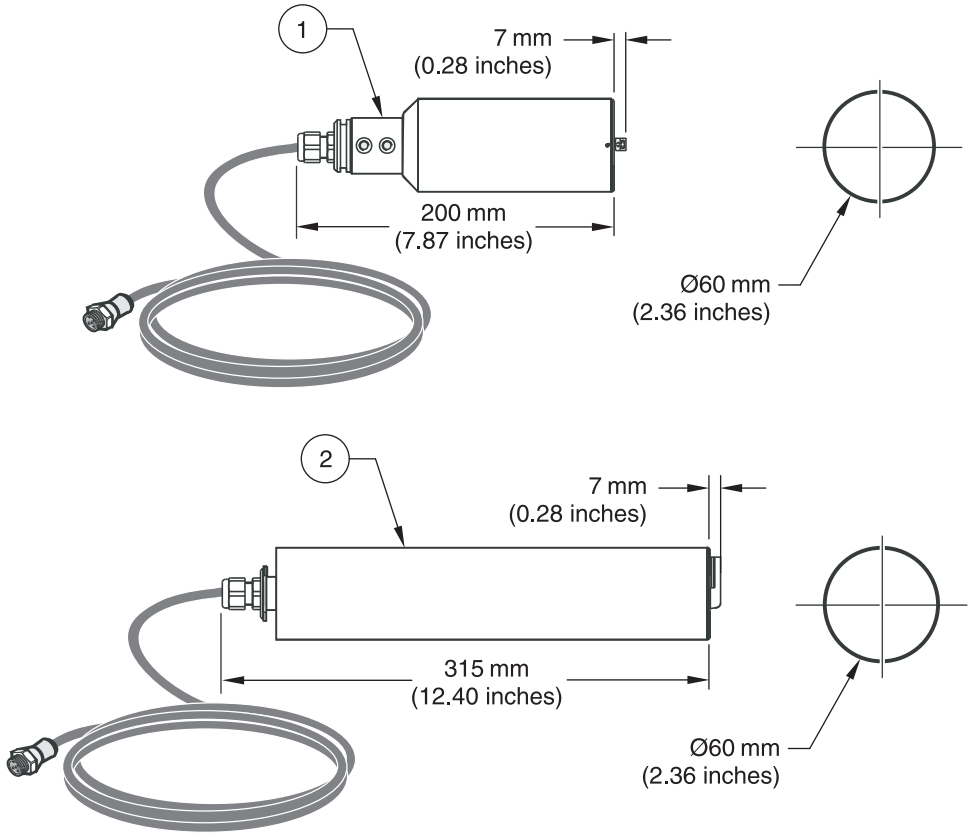


| | |
|---|---|
| **1.** | SOLITAX sc models t-line, ts-line, and hs-line for immersion in open tanks |
| **2.** | SOLITAX sc models inline and highline sensors for insertion in pipes |

# Section 2 General Information

## 2.1 Safety Information

Please read this entire manual before unpacking, setting up, or operating this equipment. Pay attention to all danger and caution statements. Failure to do so could result in serious injury to the operator or damage to the equipment.

Make sure that the protection provided by this equipment is not impaired, do not use or install this equipment in any manner other than that specified in this manual.

### 2.1.1 Use of Hazard Information



***DANGER***
***Indicates a potentially or imminently hazardous situation which, if not avoided, will result in death or serious injury.***



***CAUTION***
***Indicates a potentially hazardous situation that may result in minor or moderate injury.***

***Important Note:*** *Information that requires special emphasis.*

***Note:*** *Information that supplements points in the main text.*

### 2.1.2 Precautionary Labels

Read all labels and tags attached to the instrument. Personal injury or damage to the instrument could occur if not observed

| | |
|---|---|
|  | This symbol, if noted on the instrument, references the instruction manual for operation and/or safety information. |
|  | This symbol indicates that a risk of electrical shock and/or electrocution exists. |
|  | Electrical equipment marked with this symbol may not be disposed of in European public disposal systems after 12 August of 2005. In conformity with European local and national regulations (EU Directive 2002/96/EC), European electrical equipment users must now return old or end-of life equipment to the Producer for disposal at no charge to the user.<br>***Note:*** *For return for recycling, please contact the equipment producer or supplier for instructions on how to return end-of-life equipment, producer-supplied electrical accessories, and all auxiliary items for proper disposal.* |

## 2.2 Sensor Overview

***Note:*** *All sensors are also available without wipers for special applications.*

**t-line: 0.001–4000 FNU/NTU**

High-resolution turbidity probe made of plastic for the outlets of sewage treatment plants and bodies of water.

**ts-line: 0.001–4000 FNU/NTU; 0.001 mg/L–50.0 g/L**

High-precision turbidity and solids probe made of stainless steel or plastic for color-independent measurement of fine turbidities and sludges.

**hs-line: 0.001–4000 FNU/NTU; 0.001 mg/L–500.0 g/L**

High-precision turbidity and solids probe made of stainless steel or plastic for color-independent measurement of highly concentrated sludges.

**inline: 0.001–4000 FNU/NTU; 0.001 mg/L–50.0 g/L**

High-precision pipe installation probe for turbidity and solids made of stainless steel for color-independent measurement of fine turbidities and sludges.

**highline: 0.001–4000 FNU/NTU; 0.001 mg/L–500.0 g/L**

High-precision pipe installation probe for turbidity and suspended solids made of stainless steel for color-independent measurement of highly concentrated sludges.

**Figure 2 Solitax sc Sensors**

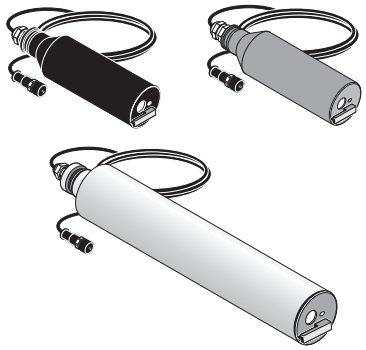

## 2.3 Measuring Principle

The measuring principle is based on a combined infrared absorption scattered light technique that measures the lowest turbidity values in accordance with DIN EN 27027 just as precisely and continuously as high sludge content. Using this method, the light scattered sideways by the turbidity particles is measured over an angle of 90°.

## 2.4 Handling

The sensor contains high-quality optical and electronic assemblies. Make sure the sensor is not subjected to any hard mechanical knocks. There are no customer-serviceable items inside the sensor.

# Section 3 Installation

***DANGER***
***Only qualified personnel should conduct the tasks described in this section of the manual.***

## 3.1 Unpacking the Instrument

**Figure 3 Items Supplied with Sensorl**

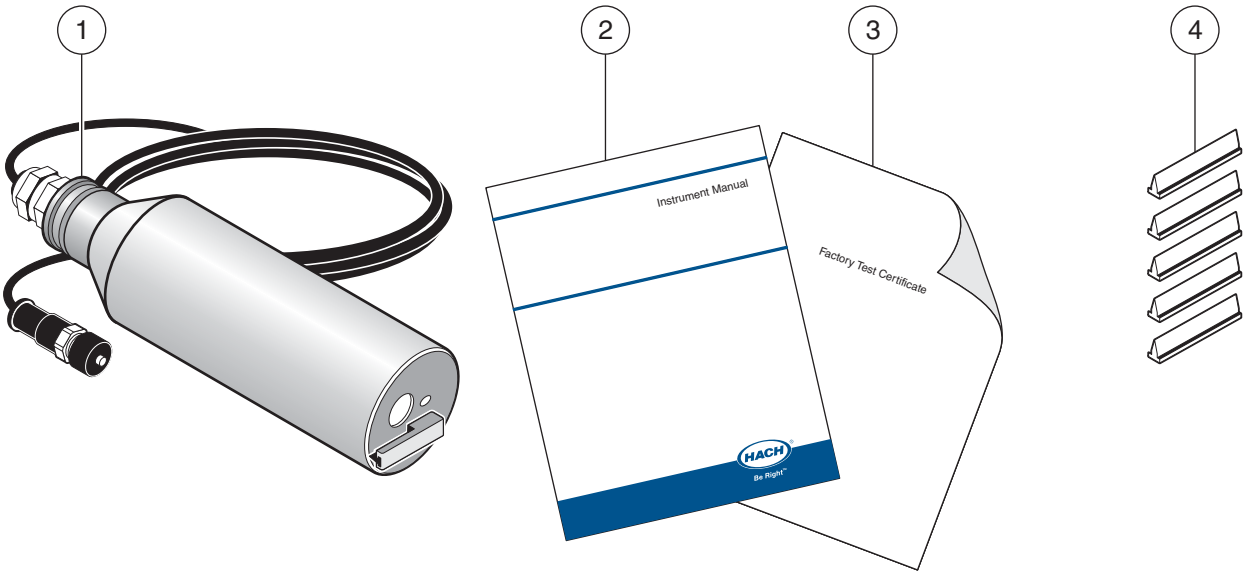


| | | | |
|---|---|---|---|
| **1.** | SOLITAX sc Sensor | **3.** | Factory Test Certificate |
| **2.** | User Manual | **4.** | Wiper Set (for 5 changes) LZX050 |

### 3.1.1 Function Check

After unpacking, both components should be checked for any transport damage and a short function check performed prior to installation.

To perform a function check, connect the sensor to the display unit and power the unit. Shortly after the unit is plugged in, the display is activated and the instrument switches to the measurement display. Measured values taken in air is meaningless.

If no messages appear in the lower part of the display, the function check is then complete.

## 3.2 Sensor Installation

Figure 4 on page 10 illustrates the installation overview for Solitax sc Models t-line, ts-line, and hs-line for immersion in open tanks.

The maximum distance from the mounting surface to the sensor without the use of an extension tube is 1.5 m (4.9 ft). When that distance exceeds 1.5 m (4.9 ft), one of the following extension tubes is required and can be ordered separately:

- 1.0 m (3.28 ft) extension pipe LZY413
- 1.8 m (5.90 ft) extension pipe LZY414

To ensure a suitable measuring position, install the probe to the following conditions:

- The probe optical window must have a ground clearance of at least 30 cm (11.8 in.).
- Install the probe with the optical window facing (downstream) in the direction of the flow to minimize the risk of fouling.
- Avoid installation sites where air bubbles are inconsistent. If this not possible, try moving the probe slightly or adjusting its alignment to minimize the bubble effect.
- Protect the probe against the oncoming flow of large objects, such as branches or ice and against flow surges.
- Avoid installing the probe with the optical window facing into direct light or facing a highly-reflective surface.

**Figure 4 Sensor Installation Overview**

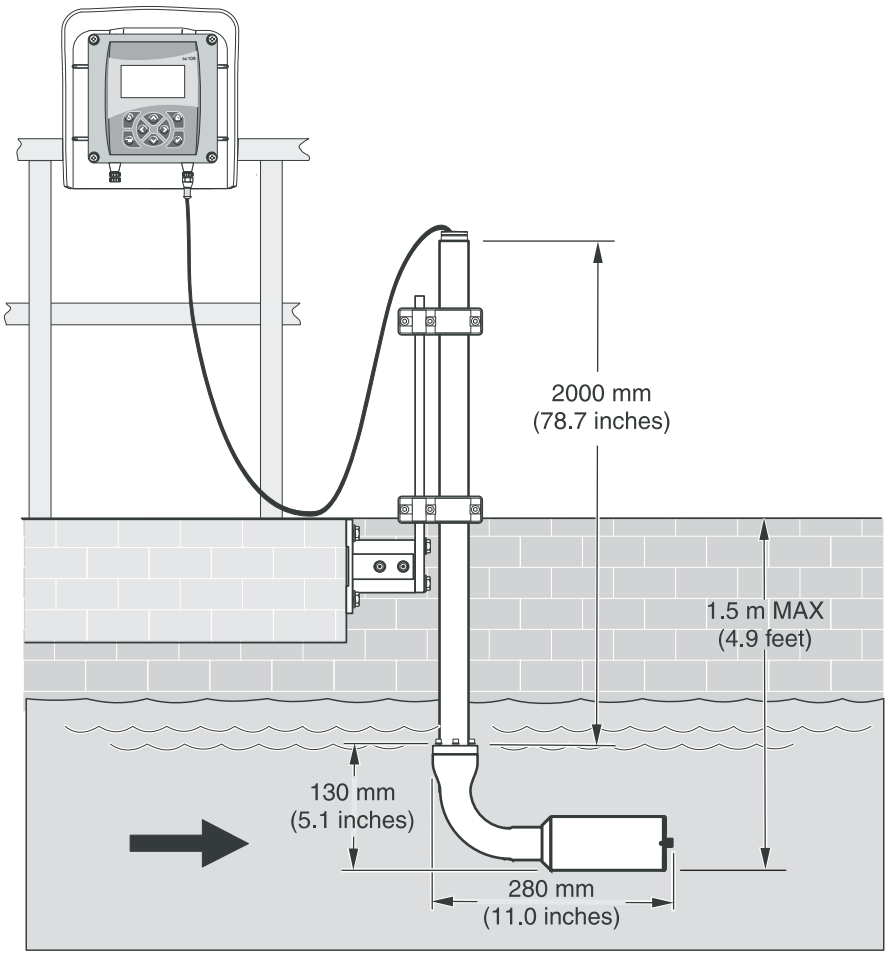

## 3.3 Pipe Installation

- Install the sensor in an up-flow pipe section for best results. Do not mount the sensor in a down-flow pipe section.
- Mounting in a horizontal pipe section is acceptable if the sensor is fully immersed at all times. Usually, mounting 90 degrees from the top of the pipe guarantees full immersion. Do not mount on the top or bottom of a horizontal pipe section.
- Install the sensor in a pipe that is equal to or greater than 4 inches in diameter.
- Install the sensor at least 1.5 m (5 ft.) or three times the pipe diameter (whichever is greater) downstream of pumps, valves, or pipe elbows.
- Install the sensor on the discharge side of a pump, if possible, with a dilution or flush valve installed on the suction side of the pump.
- If the sensor is to be used to measure sludge with significant amounts of debris, install it after a sludge grinding pump or after a pump with a grinding/comminuting unit in front of it.
- Install the sensor within 7.8 m (25 ft.) of the controller with the standard probe cable. Optional cable extensions can be added for a maximum combined distance of 100 meters (330 ft.).
- If the flange cannot be welded to the pipe due to incompatibility of materials between the stud and the pipe, it is recommended that a stainless steel pipe section be fabricated. Weld the flange onto the stainless steel pipe section and attach the stainless steel section as a segment of the process pipe.

**Figure 5 Proper Positioning for Insertion into Pipe**

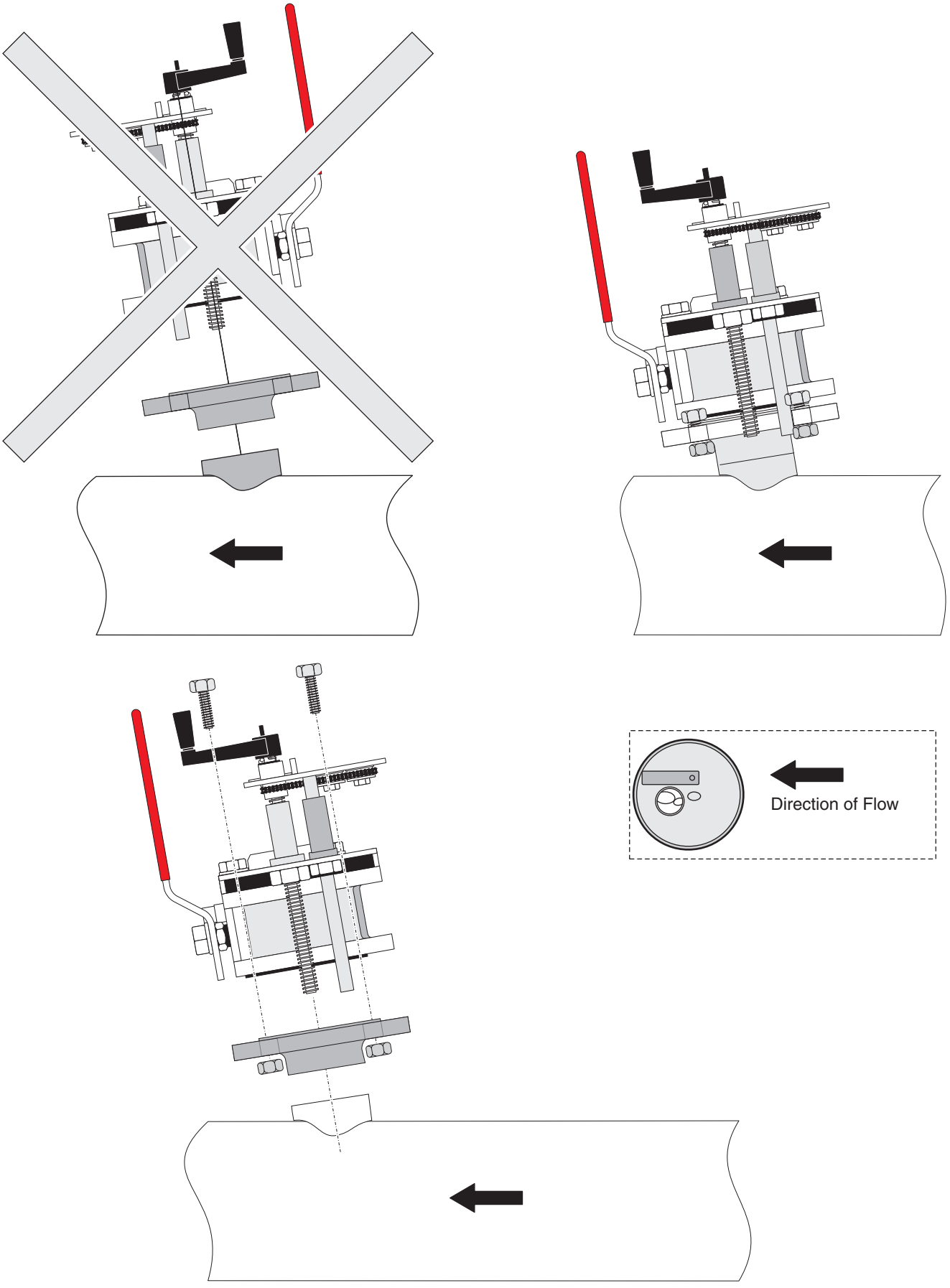

## 3.4 Connecting sensor cable

***CAUTION***
***Always lay cables and hoses so they do not pose a trip hazard and are not bent.***

1. Unscrew the protective cap on the controller socket and retain it.
2. Pay attention to the guide in the plug and push the plug into the socket.
3. Tighten the nuts.

Connector cables are available in various lengths (refer to Section 7 Replacement Parts and Accessories on page 23). Maximum overall cable length: 50 m (165 ft).

**Figure 6 Connection of the sensor plug to the controller**

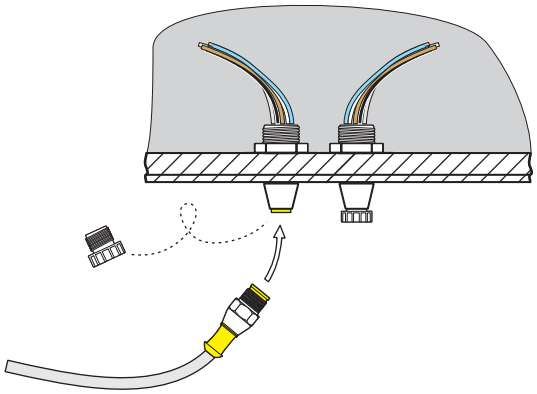

**Figure 7 Sensor connector pin assignment**

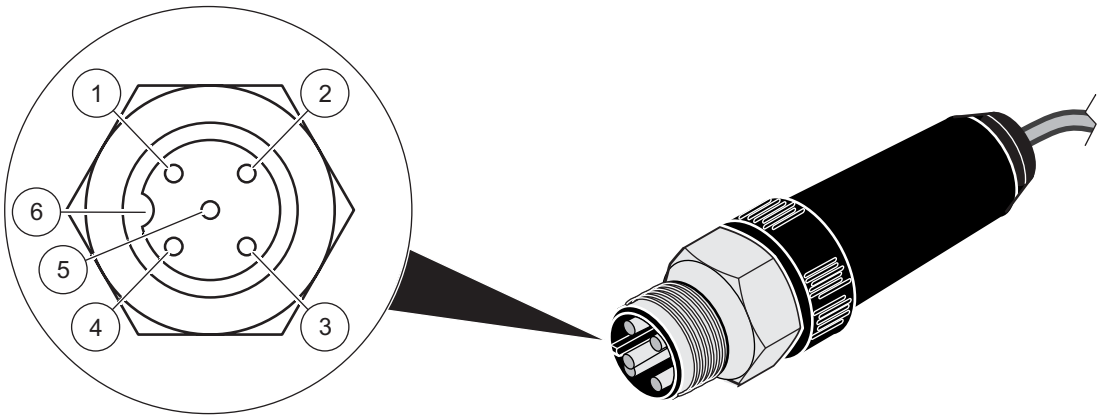


| Number | Description | Cable colour (Standard-Cable) |
|---|---|---|
| 1 | +12 VDC | brown |
| 2 | Ground | black |
| 3 | Data (+) | blue |
| 4 | Data (–) | white |
| 5 | Screen | Screen (grey) |
| 6 | Notch | – |

**This page is intentionally left blank**

# Section 4 Operations

## 4.1 Use of an sc controller

Before using the sensor in combination with an sc controller, refer to the controller user manual for navigation information.

## 4.2 Sensor Setup

When a sensor is initially installed, the serial number of the sensor will be displayed as the sensor name. To change the sensor name refer to the following instructions:

1. Select Main Menu.
2. From the Main Menu, select SENSOR SETUP and confirm.
3. Highlight the appropriate sensor if more than one sensor is attached and confirm.
4. Select CONFIGURE and confirm.
5. Select EDIT NAME and edit the name. Confirm or cancel to return to the Sensor Setup menu.

## 4.3 Sensor Data Logging

A data memory and event memory per sensor are available via the sc controller. While measured data are saved in the data memory at stipulated intervals, the event memory collects numerous events such as configuration changes, alarms and warning conditions. Both the data memory and the event memory can be read out in CSV format. For information on how you can download the data, please see the controller manual.

## 4.4 Sensor Diagnostics Menu for pH and ORP

**SELECT SENSOR (if more than one sensor is attached)**

| **STATUS** | |
|---|---|
| ERROR LIST | See section 6.1 on page 21. |
| WARNING LIST | See section 6.2 on page 21.. |

## 4.5 Sensor Setup Menu

**SELECT SENSOR (if more than one sensor is attached)**

| **WIPE** | |
|---|---|
| Initiates a wiping action on the sensor window. | |
| **CALIBRATE** | |
| SET OUTMODE | Select the behavior of the outputs during calibration for zero point setting (Hold, Active, Transfer, Selection). Hold maintains the last reading prior to going into the menu. Active transmits the current level readings, corrected with previous calibration data until new data is entered. Set Transfer transmits the value designated during the system setup |
| SENSOR MEASURE | Displays the current, uncorrected measured value. |
| CONFIGURE | Select the calibration type and follow the calibration steps for 2 point, 3 point, 4 point, and 5 point calibration. |
| FACTOR/2 POINTS/ 3 POINTS/4 POINTS/ 5 POINTS | Display depends on the selection in configuration. |
| SET CAL DEFAULT | Return the instrument to the default calibration settings. |

## 4.5 Sensor Setup Menu (continued)

| | |
|---|---|
| **CONFIGURE** | |
| EDIT NAME | Enter up to a 10-digit name in any combination of symbols and alpha or numeric characters. |
| SET PARAMETER | This setting configures the Solitax to measure turbidity or suspended solids. The Solitax cannot simultaneously measure both. Choose “TRB” for turbidity measurements, or “TS” for suspended solids measurement. This selection determines which units may be selected in the “Meas Units” menu. |
| MEAS UNITS | Choose from the displayed units. TRB (FNU, EBC, TE/F, NTU); TS (mg/L, g/L, ppm, %)<br>Default: FNU<br>If TRB was selected in set parameter, select “NTU” (commonly used in the U.S.), FNU, EBC, or TE/F. If TS was selected, choose mg/L, g/L, ppm, or %. Press enter to choose the selection. If the units selected result in a reading that exceeds 4 digits, the display will only show dashes. For example, if mg/L were selected, and the measurement was 10,500 mg/L, the display will show dashes until the reading drops to 9999 or lower. |
| CLEAN INTERVAL | Select the cleaning interval (1, 5, 15 or 30 minutes; 1, 4, or 12 hours; 1, 3, 7 days)<br>Default: 12 hours<br>This is the interval between wiper cleaning of the sensor window. It is recommended to start with a setting of 30 minutes. This time may be adjusted according to the application. If readings continue to be accurate, try a longer interval. If not, shorten the interval. |
| RESPONSE TIME | This is a damping function. While the Solitax takes readings continually, it will average them together over the period of the response time. Once the response time has elapsed, the displayed reading, 4-20 outputs, and alarm status are updated. (0 to 300 seconds)<br>Default: 3 seconds |
| LOGGER INTERVAL | This is the datalog interval, with options from 1–15 minutes. Values logged are the average of the all readings during the previous logging interval. The controller will hold approximately 360 days of readings for one sensor at 15 minute intervals, or 24 days at 1 minute intervals (and proportional in between). Default:10 minutes |
| SET DEFAULTS | Resets all user-editable options to the factory-defaults. |
| TEST/MAIN | |
| PROBE INFO | Displays the sensor type, entered name of the sensor (Default: sensor serial number), the sensor serial number, the software version number, and the sensor driver version number. |
| PROFILE | Select Profile Counter to display the number of wipes made (from 20000 backwards). Select Reset Config to manually reset the profile counter. |
| COUNTER | Shows the number of hours or cycles left for operating hours, test/maint, gasket, and the motor. |
| TEST/MAIN | WIPE—Initiates the wiping action of the wiper. |
| | SIGNALS—displays the signal outputs for the device. |
| | OUTPUT MODE—Select the behavior of the instrument outputs (Hold, Active, Transfer, Selection) |
| | DEFAULT SETUP—Resets all user-editable options to the factory defaults. |

## 4.6 Calibration

There are two calibration techniques; depending on whether turbidity or suspended solid is required (refer to section 4.6.2 or section 4.6.3 on page 18). Before calibration, determine the behavior of the 4–20 outputs and alarm relays while the user is in the CALIBRATE menu (refer to section 4.6.1).

### 4.6.1 Setting the Outmode

1. From the Main Menu, select SENSOR SETUP and press confirm.
2. Select the appropriate sensor if more than one is attached and confirm.
3. Select CALIBRATE and press confirm.
4. Select SET OUTMODE. Select the available Out Mode (Active, Hold, Transfer) and confirm.

### 4.6.2 Calibration for Turbidity

Turbidity calibration requires the use of a Turbidity Standard Solution. The manufacturer recommends the 800 NTU Turbidity Standard Solution (part of the calibration kit No. 57330-00). A zero-point calibration using deionized water is also recommended.

1. From the Main Menu, select SENSOR SETUP and press confirm.
2. Select the appropriate sensor if more than one is attached and confirm.
3. Select CALIBRATE and press confirm.
4. Select SENSOR MEASURE and confirm.
5. Place the sensor in the calibration cylinder with deionized water, mounting it with the supplied clamp. The tip of the probe should be approximately 1-inch below the surface of the water. Record the reading from the sensor measure display.
6. Select OFFSET. Multiply the reading obtained in step 5 and enter the value.
7. Select SENSOR MEASURE.
8. Rinse the outside of the StablCal® 800 NTU standard with water to remove any dust or debris adhering to the surface of the bottle. Gently invert both StablCal standard bottles a minimum of 50 times. Remove the lid and seal from each bottle. Slowly (to avoid creating bubbles) pour the contents of the bottles into the calibration cylinder. Immediately place the tip of the probe into the positioning bracket in the calibration cylinder. The tip of the probe should be approximately 1-inch below the surface standard. Allow the reading to become stable on the SENSOR MEASURE screen. Record the value (measured value). Calculate the factor. Refer to section 4.6.2.1.
9. Select FACTOR to display the corrected measurement.

#### 4.6.2.1 Calculating the Factor

$$\text{New Factor} = \frac{\text{800 NTU Standard}}{\text{measured value}}$$

For example, if a sample measures 750 NTU using the sensor and the standard is 800 NTU, the new factor would be calculated as follows:

$$\text{New Factor} = \frac{\text{800 NTU}}{\text{750 NTU}} = 1.07$$

### 4.6.3 Calibration for Suspended Solids

Suspended solids calibration requires calibration to the actual sample. This optimizes the compensation for the particle size and shape typical at a measuring site. It is best performed by mounting the sensor as usual for normal measurement, and then grab samples collected and evaluated by laboratory methods. While a single point calibration is usually sufficient to provide accuracy, the SOLITAX does offer the ability to calibrate with up to 5 calibration points.

1. From the Main Menu, select SENSOR SETUP and press confirm.
2. Select the appropriate sensor if more than one is attached and confirm.
3. Select CALIBRATE and press confirm.
4. Select CONFIGURE and confirm.
5. Select the number of points desired for calibration (the unit with linearly interpolate values between calibration points). Select Factor for a single point calibration.
6. Mount the sensor as is during normal operation. Alternatively, place the sensor in the calibration cylinder (or a container with dark, non-reflective walls) 2 inches of clearance from the probe face with the probe face submerged by 1 inch or more.
7. Select SENSOR MEASURE and record the reading.
8. Immediately take a grab sample. Determine the total suspended solids using a gravimetric method such as Method 2540 D in *Standards Methods for the Examination of Water and WasteWater.*
9. Calculate the new factor. Refer to section 4.6.3.1 for single point (Factor) calibration. Refer section 4.6.3.2 on page 18 for multiple point calibrations.
10. Select FACTOR and press confirm. The corrected measurement should be displayed.

#### 4.6.3.1 For Single Point (Factor) Calibration

Calculate the new factor:

$$\text{New Factor} = \frac{\text{Determined gravimetric value}}{\text{measured value}}$$

For example, if a sample measures 2.3 g/L using the SS sensor and the gravimetric value was 2.0 g/L, the new factor would be calculated as follows:

$$\text{New Factor} = \frac{2.0\ \text{g/L}}{2.3\ \text{g/L}} = 0.87$$

#### 4.6.3.2 Multi-point Calibration

1. Repeat steps 6–8 in section 4.6.3 on page 18 at different times to obtain different measurements.
2. From the CONFIGURE menu, select the appropriate calibration point menu.
3. Enter the pairs of values for each reading, the target value being the laboratory determined value, and the actual value being the reading that the SOLITAX produced in step 5. The pairs should be entered in order from lowest values to highest.

# Section 5 Maintenance



***DANGER***
***Only qualified personnel should conduct the tasks described in this section of the manual.***

Proper maintenance of the measuring windows in the sensor is critical for accurate measurements. The measuring windows should be checked monthly for soiling and the wiper checked for wear.

***Important Note:*** *The seals must be replaced every 2 years by the Service Department. If the seals are not changed regularly, water may enter the probe head and seriously damage the instrument.*

## 5.1 Maintenance Schedule

| Maintenance Task | Duration |
|---|---|
| Visual inspection | monthly |
| Check calibration | monthly<br>*(depending on the ambient conditions)* |
| Inspection | six months (counter) |
| Seal change | every 2 years (counter) |
| Change wiper and reset counter | as per counter (20000 cycles) |

## 5.2 Cleaning the Sensor Measuring Windows



***CAUTION***
***Always were***
- ***Safety glasses,***
- ***Gloves and***
- ***Overal***

***handling hydrochloric acid and observe safety regulations.***

The measuring windows are made of quartz glass. If necessary, they can be cleaned with a cleaning agent and a cloth.

## 5.3 Replacing the Wiper

The life of the wiper is dependent on the number of cleaning actions performed and the type of deposits to be removed. The life of the wiper varies. The wipers supplied with the instrument should last for approximately one year.

1. From the Main Menu, select SENSOR SETUP and press confirm.
2. Select the appropriate sensor if more than one is attached and confirm.
3. Select TEST/MAINT and press confirm.
4. Select PROFILE and confirm. Change the wiper, see section 5.3 on page 20.
5. Select RESET CONFIG and confirm.
6. Select MAN. RESET ARE YOU SURE? and confirm.

**Figure 8 Wiper Replacement**

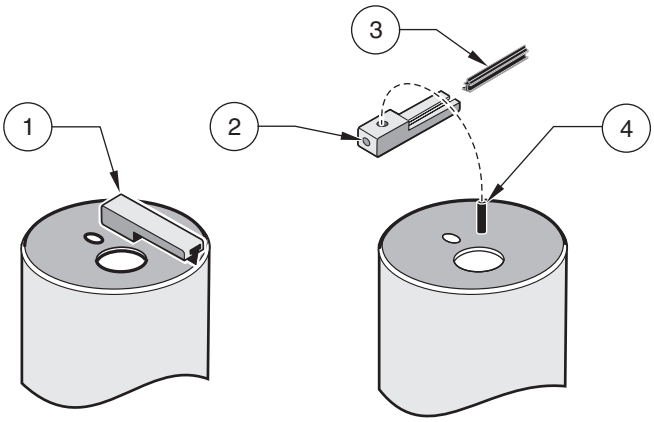


| | | | |
|---|---|---|---|
| **1.** | Wiper arm | **3.** | Wiper |
| **2.** | M4 hex socket head bolt | **4.** | Wiper axle |

# Section 6 Troubleshooting

## 6.1 Error Codes

In the case of an error, the indication of the measured value flashes on the display and all the contacts and current outputs allocated to this sensor are placed on hold. The following conditions will result in flashing measured values:

- Data transmission between controller and sensor interrupted

On the Main menu open the SENSOR DIAG menu using **ENTER** and determine the cause of the fault.

**Table 1 Error Messages**

| Error Displayed | Cause | Solution |
|---|---|---|
| POS. UNKNOWN | Wiper position unknown | Open the TEST/MAINT menu and trigger the ”WIPE” function, if the problem persists contact the manufacturer's customer service |
| LED FAULTY | Faulty LED | Contact customer service |
| MOIST | Moisture value > 10 | Remove the sensor immediately and store in a dry place, contact customer service |
| CAL. DATA | Factory calibration data lost | Contact customer service |

## 6.2 Warnings

A warning results in a flashing warning icon on the right of the display, all menus, contacts and outputs remain unaffected and continue to work normally. On the Main menu open the SENSOR DIAG menu using **ENTER** and determine the cause of the warning.

A warning may be used to trigger a relay and users can set warning levels to define the severity of the warning.

**Table 2 Warnings**

| Warning Displayed | Cause | Solution |
|---|---|---|
| WARNING | Cause | Action |
| REPLACE WIPER | Counter elapsed | Replace wiper, reset counter |
| TEST/MAINT | Counter elapsed | Contact customer service |
| GASKET | Counter elapsed | Contact customer service |

**This page is intentionally left blank**

# Section 7 Replacement Parts and Accessories

## 7.1 Immersion Sensors[1]

| Description | Catalog Number |
|---|---|
| Turbidity, t-line sc, PVC with wiper (0.001 to 4000 NTU) | LXV423.99.10000 |
| Turbidity, t-line sc, PVC without wiper (0.001 to 4000 NTU) | LXV423.99.12000 |
| Turbidity and Suspended Solids, ts-line sc, PVC with wiper (0.001 to 4000 NTU, 0.001 mg/L to 50 g/L) | LXV423.99.10100 |
| Turbidity and Suspended Solids, ts-line sc, PVC without wiper (0.001 to 4000 NTU, 0.001 mg/L to 50 g/L) | LXV423.99.12100 |
| Turbidity and Suspended Solids, ts-line sc, stainless steel with wiper (0.001 to 4000 NTU, 0.001 mg/L to 50 g/L) | LXV423.99.00100 |
| Turbidity and Suspended Solids, ts-line sc, stainless steel without wiper (0.001 to 4000 NTU, 0.001 mg/L to 50 g/L) | LXV423.99.02100 |
| Turbidity and Suspended Solids, hs-line sc, PVC with wiper (0.001 to 4000 NTU, 0.001 mg/L to 500 g/L) | LXV423.99.10200 |
| Turbidity and Suspended Solids, hs-line sc, PVC without wiper (0.001 to 4000 NTU, 0.001 mg/L to 500 g/L) | LXV423.99.12200 |
| Turbidity and Suspended Solids, hs-line sc, stainless steel with wiper (0.001 to 4000 NTU, 0.001 mg/L to 500 g/L) | LXV423.99.00200 |
| Turbidity and Suspended Solids, hs-line sc, stainless steel without wiper (0.001 to 4000 NTU, 0.001 mg/L to 500 g/L) | LXV423.99.02200 |

[1] All sensors come with the sensor, replacement wipers, and manual.

## 7.2 Insertion Sensors[1]

| Description | Catalog Number |
|---|---|
| Turbidity and Suspended Solids, inline sc, stainless steel with wiper (0.001 to 4000 NTU, 0.001 mg/L to 50 g/L) | LXV424.99.00100 |
| Turbidity and Suspended Solids, inline sc, stainless steel without wiper (0.001 to 4000 NTU, 0.001 mg/L to 50 g/L) | LXV424.99.02100 |
| Turbidity and Suspended Solids, highline sc, stainless steel with wiper (0.001 to 4000 NTU, 0.001 mg/L to 500 g/L) | LXV424.99.00200 |
| Turbidity and Suspended Solids, highline sc, stainless steel without wiper (0.001 to 4000 NTU, 0.001 mg/L to 500 g/L) | LXV424.99.02200 |

[1] All sensors come with the sensor, replacement wipers, and manual.

## 7.3 Replacement Parts

| Description | Catalog Number |
|---|---|
| Set of wipers (for 5 changes) made of silicone for normal applications | LZX050 |
| Set of wipers (for 5 changes) made of Viton for e. g. media containing oil | LZX578 |
| SOLITAX sc User Manual, english | DOC023.54.03232 |
| Extension cable, 5 m (16.4 ft) | LZX848 |
| Extension cable, 10 m (33 ft) | LZX849 |
| Extension cable, 15 m (50 ft) | LZX850 |
| Extension cable, 20 m (65 ft) | LZX851 |
| Extension cable, 30 m (100 ft) | LZX852 |
| Extension cable, 50 m (165 ft) | LZX853 |

## 7.3 Replacement Parts (continued)

| Description | Catalog Number |
|---|---|
| Extension pipe, 1,0 m (3.28 ft) | LZY413 |
| Extension pipe, 1,8 m (5.90 ft) | LZY414 |
| Installation kit, fixed-point (for t-line, ts-line, and hs-line immersion sensors) | LZX414.00.10000 |
| Consisting of: | |
| Base | ATS010 |
| Mounting plate | HPL061 |
| Holding clamp (2×) | LZX200 |
| Assembly pipe 2 m | BRO075 |
| HS small parts set | LZX416 |
| Installation kit with straight adapter | LZX414.00.20000 |
| Kit, screws and seals for sensor adapters | LZX417 |
| Miscellaneous hardware for probe installation kit | LZX416 |
| Second fastening point, includes: bracket, sensor pipe stand, sensor pipe stand bracket, screws, and grommet) | LZX456 |
| Sensor fixed-point mounting kit: Sensor pipe bracket | ATS010 |
| Sensor pipe stand bracket | LZX200 |
| L-bracket | ATS011 |
| Adapter, Sensor 90° elbow | AHA034 |
| Ball valve for insertion probes without adapting flange | LZX337 |
| Welded flange made of C-steel for the pipe installation fitting | LZX703 |
| Welded flange made of stainless steel for pipe installation safety fitting | LZX660 |

# Section 8 Contact Information

**HACH Company**
**World Headquarters**
P.O. Box 389
Loveland, Colorado
80539-0389 U.S.A.
Tel (800) 227-HACH
(800) -227-4224
(U.S.A. only)
Fax (970) 669-2932
orders@hach.com
www.hach.com

**Repair Service in the United States:**
HACH Company
Ames Service
100 Dayton Avenue
Ames, Iowa 50010
Tel (800) 227-4224
(U.S.A. only)
Fax (515) 232-3835

**Repair Service in Canada:**
Hach Sales & Service
Canada Ltd.
1313 Border Street, Unit 34
Winnipeg, Manitoba
R3H 0X4
Tel (800) 665-7635
(Canada only)
Tel (204) 632-5598
Fax (204) 694-5134
canada@hach.com

**Repair Service in Latin America, the Caribbean, the Far East, Indian Subcontinent, Africa, Europe, or the Middle East:**
Hach Company World Headquarters,
P.O. Box 389
Loveland, Colorado,
80539-0389 U.S.A.
Tel +001 (970) 669-3050
Fax +001 (970) 669-2932
intl@hach.com

**HACH LANGE GMBH**
Willstätterstraße 11
D-40549 Düsseldorf
Tel. +49 (0)2 11 52 88-320
Fax +49 (0)2 11 52 88-210
info@hach-lange.de
www.hach-lange.de

**HACH LANGE LTD**
Pacific Way
Salford
GB-Manchester, M50 1DL
Tel. +44 (0)161 872 14 87
Fax +44 (0)161 848 73 24
info@hach-lange.co.uk
www.hach-lange.co.uk

**HACH LANGE LTD**
Unit 1, Chestnut Road
Western Industrial Estate
IRL-Dublin 12
Tel. +353(0)1 46 02 5 22
Fax +353(0)1 4 50 93 37
info@hach-lange.ie
www.hach-lange.ie

**HACH LANGE GMBH**
Hütteldorferstr. 299/Top 6
A-1140 Wien
Tel. +43 (0)1 9 12 16 92
Fax +43 (0)1 9 12 16 92-99
info@hach-lange.at
www.hach-lange.at

**HACH LANGE**
Rorschacherstrasse 30 a
CH-9424 Rheineck
Tel. +41 (0)71 886 91 11
Fax +41 (0)71 886 91 66
info@hach-lange.ch
www.hach-lange.ch

**HACH LANGE FRANCE S.A.S.**
8, mail Barthélémy Thimonnier
Lognes
F-77437 Marne-La-Vallée cedex 2
Tél. +33 (0)8 20 20 14 14
Fax +33 (0)1 69 67 34 99
info@hach-lange.fr
www.hach-lange.fr

**HACH LANGE SA**
Motstraat 54
B-2800 Mechelen
Tél. +32 (0)15 42 35 00
Fax +32 (0)15 41 61 20
info@hach-lange.be
www.hach-lange.be

**DR. LANGE NEDERLAND B.V.**
Laan van Westroijen 2a
NL-4003 AZ Tiel
Tel. +31(0)344 63 11 30
Fax +31(0)344 63 11 50
info@hach-lange.nl
www.hach-lange.nl

**HACH LANGE APS**
Åkandevej 21
DK-2700 Brønshøj
Tel. +45 36 77 29 11
Fax +45 36 77 49 11
info@hach-lange.dk
www.hach-lange.dk

**HACH LANGE AB**
Vinthundsvägen 159A
SE-128 62 Sköndal
Tel. +46 (0)8 7 98 05 00
Fax +46 (0)8 7 98 05 30
info@hach-lange.se
www.hach-lange.se

**HACH LANGE S.R.L.**
Via Riccione, 14
I-20156 Milano
Tel. +39 02 39 23 14-1
Fax +39 02 39 23 14-39
info@hach-lange.it
www.hach-lange.it

**HACH LANGE S.L.U.**
Edif. Arteaga Centrum
C/Larrauri, 1C- 2ª Pl.
E-48160 Derio/Vizcaya
Tel. +34 94 657 33 88
Fax +34 94 657 33 97
info@hach-lange.es
www.hach-lange.es

**HACH LANGE LDA**
Av. do Forte nº8
Fracção M
P-2790-072 Carnaxide
Tel. +351 214 253 420
Fax +351 214 253 429
info@hach-lange.pt
www.hach-lange.pt

**HACH LANGE SP.ZO.O.**
ul. Opolska 143 a
PL-52-013 Wrocław
Tel. +48 (0)71 342 10-83
Fax +48 (0)71 342 10-79
info@hach-lange.pl
www.hach-lange.pl

**HACH LANGE S.R.O.**
Lešanská 2a/1176
CZ-141 00 Praha 4
Tel. +420 272 12 45 45
Fax +420 272 12 45 46
info@hach-lange.cz
www.hach-lange.cz

**HACH LANGE S.R.O.**
Roľnícka 21
SK-831 07 Bratislava – Vajnory
Tel. +421 (0)2 4820 9091
Fax +421 (0)2 4820 9093
info@hach-lange.sk
www.hach-lange.sk

**HACH LANGE KFT.**
Vöröskereszt utca. 8-10.
H-1222 Budapest XXII. ker.
Tel. +36 (06)1 225 7783
Fax +36 (06)1 225 7784
info@hach-lange.hu
www.hach-lange.hu

**HACH LANGE S.R.L.**
Str. Căminului nr. 3
Sector 2
RO-021741 Bucureşti
Tel. +40 (0) 21 205 30 03
Fax +40 (0) 21 205 30 17
info@hach-lange.ro
www.hach-lange.ro

**HACH LANGE**
8, Kr. Sarafov str.
BG-1164 Sofia
Tel. +359 (0)2 963 44 54
Fax +359 (0)2 866 15 26
info@hach-lange.bg
www.hach-lange.bg

**HACH LANGE SU ANALİZ SİSTEMLERİ LTD.ŞTİ.**
Hilal Mah. 75. Sokak
Arman Plaza No: 9/A
TR-06550 Çankaya/ANKARA
Tel. +90 (0)312 440 98 98
Fax +90 (0)312 442 11 01
bilgi@hach-lange.com.tr
www.hach-lange.com.tr

**HACH LANGE D.O.O.**
Fajfarjeva 15
SI-1230 Domžale
Tel. +386 (0)59 051 000
Fax +386 (0)59 051 010
info@hach-lange.si
www.hach-lange.si

**HACH LANGE E.Π.E.**
Αυλίδος 27
GR-115 27 Αθήνα
Τηλ. +30 210 7777038
Fax +30 210 7777976
info@hach-lange.gr
www.hach-lange.gr

**HACH LANGE E.P.E.**
27, Avlidos str
GR-115 27 Athens
Tel. +30 210 7777038
Fax +30 210 7777976
info@hach-lange.gr
www.hach-lange.gr

**HACH LANGE D.O.O.**
Ivana Severa bb
42 000 Varaždin
Tel. +385 (0) 42 305 086
Fax +385 (0) 42 305 087
info@hach-lange.hr
www.hach-lange.hr

**HACH LANGE MAROC SARLAU**
Villa 14 – Rue 2 Casa Plaisance
Quartier Racine Extension
MA-Casablanca 20000
Tél. +212 (0)522 97 95 75
Fax +212 (0)522 36 89 34
info-maroc@hach-lange.com
www.hach-lange.ma

# Section 9 Limited warranty

Hach Company warrants its products to the original purchaser against any defects that are due to faulty material or workmanship for a period of one year from date of shipment unless otherwise noted in the product manual.

In the event that a defect is discovered during the warranty period, Hach Company agrees that, at its option, it will repair or replace the defective product or refund the purchase price excluding original shipping and handling charges. Any product repaired or replaced under this warranty will be warranted only for the remainder of the original product warranty period.

This warranty does not apply to consumable products such as chemical reagents; or consumable components of a product, such as, but not limited to, lamps and tubing.

Contact Hach Company or your distributor to initiate warranty support. Products may not be returned without authorization from Hach Company.

**Limitations**

This warranty does not cover:

- Damage caused by acts of God, natural disaster, labor unrest, acts of war (declared or undeclared), terrorism, civil strife or acts of any governmental jurisdiction
- Damage caused by misuse, neglect, accident or improper application or installation
- Damage caused by any repair or attempted repair not authorized by Hach Company
- Any product not used in accordance with the instructions furnished by Hach Company
- Freight charges to return merchandise to Hach Company
- Freight charges on expedited or express shipment of warranted parts or product
- Travel fees associated with on-site warranty repair

This warranty contains the sole express warranty made by Hach Company in connection with its products. All implied warranties, including without limitation, the warranties of merchantability and fitness for a particular purpose, are expressly disclaimed.

Some states within the United States do not allow the disclaimer of implied warranties and if this is true in your state the above limitation may not apply to you. This warranty gives you specific rights, and you may also have other rights that vary from state to state.

This warranty constitutes the final, complete, and exclusive statement of warranty terms and no person is authorized to make any other warranties or representations on behalf of Hach Company.

**Limitation of Remedies**

The remedies of repair, replacement or refund of purchase price as stated above are the exclusive remedies for the breach of this warranty. On the basis of strict liability or under any other legal theory, in no event shall Hach Company be liable for any incidental or consequential damages of any kind for breach of warranty or negligence.

**This page is intentionally left blank**

# Appendix A Modbus Register Information

**Table 3 Sensor Modbus Registers**

| Group Name | Tag Name | Register | Data Type# | Length | R/W | Description |
|---|---|---|---|---|---|---|
| Measurements | TurbidityFNU | 40001 | Float | 2 | R | Turbidity FNU |
| Measurements | TurbidityEBC | 40003 | Float | 2 | R | Turbidity EBC |
| Measurements | SolidsMGL | 40005 | Float | 2 | R | Solids mg/L |
| Measurements | SolidsGL | 40007 | Float | 2 | R | Solids g/L |
| Measurements | SolidsPR | 40009 | Float | 2 | R | Solids % |
| — | Reserved | 40011 | Unsigned Integer | 1 | R | Reserved |
| Base | Parameter | 40012 | Unsigned Integer | 1 | R/W | Parameter |
| Base | UnitTRB | 40013 | Unsigned Integer | 1 | R/W | Unit Turbidity |
| Base | UnitTS | 40014 | Unsigned Integer | 1 | R/W | Units Solids |
| Calibration | OffsetTRB | 40015 | Float | 2 | R/W | Turbdity Offset |
| Calibration | FactorTRB | 40017 | Float | 2 | R/W | Turbidity Factor |
| Calibration | FactorTS | 40019 | Float | 2 | R/W | Solids Factor |
| Data | Wiperstate | 40021 | Unsigned Integer | 1 | R/W | Wiper register |
| Setup | ResponseInterval | 40022 | Unsigned Integer | 1 | R/W | Response time |
| Setup | CleaningInterval | 40023 | Unsigned Integer | 1 | R/W | Wiper interval |
| Setup | LogInterval | 40024 | Unsigned Integer | 1 | R/W | Logger interval |
| Setup | Outputmodekal | 40025 | Unsigned Integer | 1 | R/W | Output when calibrate |
| Setup | Outputmodesrv | 40026 | Unsigned Integer | 1 | R/W | Output when service |
| Setup | Location | 40027 | String | 8 | R/W | Edited name |
| Setup | ProfilCounter | 40035 | Unsigned Integer | 1 | R/W | Profi counter |
| Data | SerienNummer | 40036 | String | 6 | R | Serial number |
| Calibration | DateUserCal | 40042 | Date | 2 | R | Date of manufacturing calibration |
| Calibration | DateUserCalTURB | 40044 | Date | 2 | R | Date of calibration turbidity |
| Calibration | DateUserCalSOLID | 40046 | Date | 2 | R | Date of calibration solid |
| Data | VersionAppl | 40048 | Float | 2 | R | Version application |
| Data | VersionBoot | 40050 | Float | 2 | R | Version Bootlader |
| Data | VersionStruct | 40052 | Unsigned Integer | 1 | R | Version structure probedriver |
| Data | VersionContent | 40053 | Unsigned Integer | 1 | R | Version register probedriver |
| Data | VersionFirmware | 40054 | Unsigned Integer | 1 | R | Version firmware probedriver |
| Data | FormatMinFNU | 40055 | Float | 2 | R | Minimum turbidity FNU |
| Data | FormatMaxFNU | 40057 | Float | 2 | R | Maximum turbidity FNU |
| Data | FormatMinEBC | 40059 | Float | 2 | R | Minimum turbidity EBC |
| Data | FormatMaxEBC | 40061 | Float | 2 | R | Maximum turbidity EBC |
| Data | FormatMinGL | 40063 | Float | 2 | R | Minimum solids g/L |
| Data | FormatMaxGL | 40065 | Float | 2 | R | Maximum solids g/L |
| Data | FormatMinMGL | 40067 | Float | 2 | R | Minimum solids mg/L |
| Data | FormatMaxMGL | 40069 | Float | 2 | R | Maximum mg/L |
| Data | FormatMinPR | 40071 | Float | 2 | R | Minimum solids % |
| Data | FormatMaxPR | 40073 | Float | 2 | R | Maximum solids % |
| Data | SignalsLED | 40075 | Unsigned Integer | 1 | R | Signal LED |
| Data | SignalsMoist | 40076 | Unsigned Integer | 1 | R | Signal moist |

**This page is intentionally left blank**

# *HACH*

## *MODEL sc200, UNIVERSAL CONTROLLER*

LEFT BLANK

DOC023.53.80040

# SC200 Controller

12/2019, Edition 10

**User Manual**

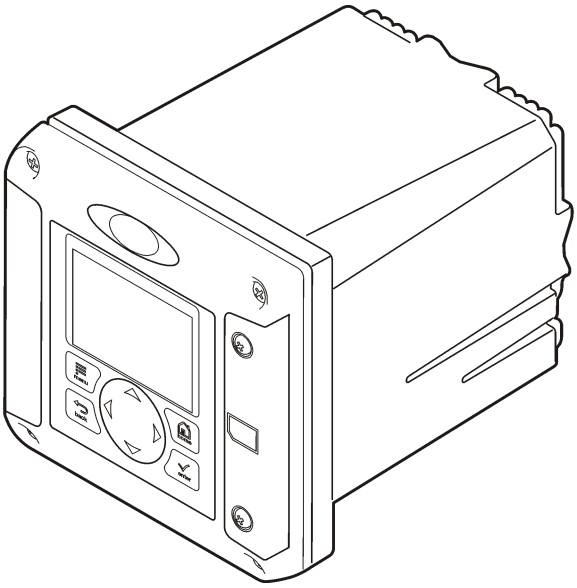

**Section 1 Specifications** ..... 3
**Section 2 General information** ..... 3
2.1 Safety information ..... 4
2.1.1 Use of hazard information ..... 4
2.1.2 Precautionary labels ..... 4
2.1.3 Certification ..... 5
2.2 Product overview ..... 5
2.2.1 Sensors and sensor modules ..... 6
2.2.2 Relays outputs and signals ..... 6
2.2.3 Device scans ..... 6
2.2.4 Controller enclosure ..... 6
2.2.5 Controller mounting options ..... 6
**Section 3 Installation** ..... 7
3.1 Mounting components and dimensions ..... 7
3.2 Controller mounting ..... 8
3.3 High-voltage barrier ..... 11
3.4 Electrostatic discharge (ESD) considerations ..... 11
3.5 Wiring overview ..... 12
3.6 Wiring for power ..... 12
3.7 Alarms and relays ..... 15
3.8 Wiring for relays ..... 15
3.9 Analog output connections ..... 17
3.10 Discrete input wiring connections ..... 18
3.11 Connect a digital sc sensor ..... 20
3.12 Connect the optional digital communication output ..... 20
3.13 Install a Secure Digital (SD) memory card ..... 20
**Section 4 User interface and navigation** ..... 21
4.1 User interface ..... 21
4.2 Display ..... 22
4.2.1 Additional display formats ..... 23
4.2.2 Graphical display ..... 23
**Section 5 System startup** ..... 24
5.1 Set the language, date and time for the first time ..... 24
5.2 Controller configuration information ..... 24
**Section 6 Advanced operation** ..... 25
6.1 Security setup ..... 25
6.1.1 Enable or disable the passcode ..... 25
6.1.2 Edit the passcode ..... 25
6.1.3 Protect features ..... 26
6.2 Configure a 4-20 mA input module ..... 26
6.3 Configure a 4-20 mA output module ..... 27
6.4 Configure the controller analog outputs ..... 27
6.4.1 Logarithmic output mode ..... 29
6.4.2 Bilinear output mode ..... 29
6.5 Configure relays ..... 30

6.6 Display setup ..... 39
6.7 Update the date and time ..... 40
6.8 Set the datalog mode and interval ..... 40
6.9 Set up a calculation ..... 40
6.10 Set up the discrete inputs ..... 41
6.11 Update the display language ..... 42
6.12 Using the secure digital memory (SD) card ..... 42
6.12.1 Updating software ..... 42
6.12.2 Saving data and event logs with SD cards ..... 43
6.12.3 Access data and event log files on the SD card ..... 43
6.12.4 Firmware updates with SD cards ..... 44
6.12.5 Backup settings to an SD card ..... 44
6.12.6 Restore settings to the controller ..... 44
6.12.7 Transfer settings to another device ..... 45
6.13 Using the service port ..... 45
6.14 Using DataCom ..... 45
**Section 7 Maintenance** ..... 46
7.1 Cleaning the controller ..... 46
7.2 Fuse replacement ..... 46
7.3 Battery replacement ..... 46
**Section 8 Troubleshooting** ..... 46
8.1 Test and Maintenance menu ..... 48
8.2 Warning and error conditions ..... 49
**Section 9 Device scan information** ..... 50
**Section 10 Replacement parts and accessories** ..... 50

# Section 1 Specifications

Specifications are subject to change without notice.

| Specification | Details |
|---|---|
| Component description | Microprocessor-controlled and menu-driven controller that operates the sensor and displays measured values. |
| Operating temperature | -20 to 60 ºC (-4 to 140 ºF); 95% relative humidity, non-condensing with sensor load <7 W; -20 to 50 ºC (-4 to 104 ºF) with sensor load <28 W |
| Storage temperature | -20 to 70 ºC (-4 to 158 ºF); 95% relative humidity, non-condensing |
| Enclosure[1] | NEMA 4X/IP66 metal enclosure with a corrosion-resistant finish |
| Power requirements | **AC powered controller:** 100-240 VAC ±10%, 50/60 Hz; Power 50 VA with 7 W sensor/network module load, 100 VA with 28 W sensor/network module load (optional Modbus, RS232/RS485, Profibus DPV1 or HART network connection). |
| | **24 VDC powered controller:** 24 VDC—15%, + 20%; Power 15 W with 7 W sensor/network module load, 40 W with 28 W sensor/network module load (optional Modbus, RS232/RS485, Profibus DPV1 or HART network connection). |
| Altitude requirements | Standard 2000 m (6562 ft) ASL (Above Sea Level) |
| Pollution degree/Installation category | Polution Degree 2; Installation Category II |
| Outputs | Two analog (0-20 mA or 4-20 mA) outputs. Each analog output can be assigned to represent a measured parameter such as pH, temperature, flow or calculated values. Optional module supplies three additional analog outputs (5 total). |
| Relays | Four SPDT, user-configured contacts, rated 250 VAC, 5 Amp resistive maximum for the AC powered controller and 24 VDC, 5A resistive maximum for the DC powered controller. Relays are designed for connection to AC Mains circuits (i.e., whenever the controller is operated with 115 - 240 VAC power) or DC circuits (i.e., whenever the controller is operated with 24 VDC power). |
| Dimensions | ½ DIN—144 x 144 x 180.9 mm (5.7 x 5.7 x 7.12 in.) |
| Weight | 1.7 kg (3.75 lb) |
| Compliance information[2] | CE approved (with all sensor types). Listed for use in general locations to UL and CSA safety standards by ETL (with all sensor types).<br>Certain AC mains powered models are listed for use in general safety locations to UL and CSA safety standards by Underwriters Laboratories (with all sensor types). |
| Digital communication | Optional Modbus, RS232/RS485, Profibus DPV1 or HART network connection for data transmission |
| Data logging | Secure Digital Card (32 GB maximum) or special RS232 cable connector for data logging and performing software updates. The controller will keep approximately 20,000 data points per sensor. |
| Warranty | 2 years |

# Section 2 General information

In no event will the manufacturer be liable for direct, indirect, special, incidental or consequential damages resulting from any defect or omission in this manual. The manufacturer reserves the right to

[1] Units that have the Underwriters Laboratories (UL) certification are intended for indoor use only and do not have a NEMA 4X/IP66 rating.

[2] DC powered units are not listed by UL.

make changes in this manual and the products it describes at any time, without notice or obligation. Revised editions are found on the manufacturer's website.

## 2.1 Safety information

**NOTICE**

The manufacturer is not responsible for any damages due to misapplication or misuse of this product including, without limitation, direct, incidental and consequential damages, and disclaims such damages to the full extent permitted under applicable law. The user is solely responsible to identify critical application risks and install appropriate mechanisms to protect processes during a possible equipment malfunction.

Please read this entire manual before unpacking, setting up or operating this equipment. Pay attention to all danger and caution statements. Failure to do so could result in serious injury to the operator or damage to the equipment.

Make sure that the protection provided by this equipment is not impaired. Do not use or install this equipment in any manner other than that specified in this manual.

### 2.1.1 Use of hazard information

**⚠ DANGER**

Indicates a potentially or imminently hazardous situation which, if not avoided, will result in death or serious injury.

**⚠ WARNING**

Indicates a potentially or imminently hazardous situation which, if not avoided, could result in death or serious injury.

**⚠ CAUTION**

Indicates a potentially hazardous situation that may result in minor or moderate injury.

**NOTICE**

Indicates a situation which, if not avoided, may cause damage to the instrument. Information that requires special emphasis.

### 2.1.2 Precautionary labels

Read all labels and tags attached to the instrument. Personal injury or damage to the instrument could occur if not observed. A symbol on the instrument is referenced in the manual with a precautionary statement.

| | |
|---|---|
|  | This symbol, if noted on the instrument, references the instruction manual for operation and/or safety information. |
|  | This symbol indicates that a risk of electrical shock and/or electrocution exists. |
|  | This symbol indicates the presence of devices sensitive to Electro-static Discharge (ESD) and indicates that care must be taken to prevent damage with the equipment. |
|  | Electrical equipment marked with this symbol may not be disposed of in European domestic or public disposal systems. Return old or end-of-life equipment to the manufacturer for disposal at no charge to the user. |

### 2.1.3 Certification

**⚠ CAUTION**

This equipment is not intended for use in residential environments and may not provide adequate protection to radio reception in such environments.

**Canadian Radio Interference-Causing Equipment Regulation, ICES-003, Class A**:

Supporting test records reside with the manufacturer.

This Class A digital apparatus meets all requirements of the Canadian Interference-Causing Equipment Regulations.

Cet appareil numérique de classe A répond à toutes les exigences de la réglementation canadienne sur les équipements provoquant des interférences.

**FCC Part 15, Class "A" Limits**

Supporting test records reside with the manufacturer. The device complies with Part 15 of the FCC Rules. Operation is subject to the following conditions:

1. The equipment may not cause harmful interference.
2. The equipment must accept any interference received, including interference that may cause undesired operation.

Changes or modifications to this equipment not expressly approved by the party responsible for compliance could void the user's authority to operate the equipment. This equipment has been tested and found to comply with the limits for a Class A digital device, pursuant to Part 15 of the FCC rules. These limits are designed to provide reasonable protection against harmful interference when the equipment is operated in a commercial environment. This equipment generates, uses and can radiate radio frequency energy and, if not installed and used in accordance with the instruction manual, may cause harmful interference to radio communications. Operation of this equipment in a residential area is likely to cause harmful interference, in which case the user will be required to correct the interference at their expense. The following techniques can be used to reduce interference problems:

1. Disconnect the equipment from its power source to verify that it is or is not the source of the interference.
2. If the equipment is connected to the same outlet as the device experiencing interference, connect the equipment to a different outlet.
3. Move the equipment away from the device receiving the interference.
4. Reposition the receiving antenna for the device receiving the interference.
5. Try combinations of the above.

## 2.2 Product overview

The controller displays sensor measurements and other data, can transmit analog and digital signals, and can interact with and control other devices through outputs and relays. Outputs, relays, sensors and sensor modules are configured and calibrated through the user interface on the front of the controller.

Figure 1 shows the product components. Components may vary according to controller configuration. Contact the manufacturer if parts are damaged or missing.

**Figure 1 System components**

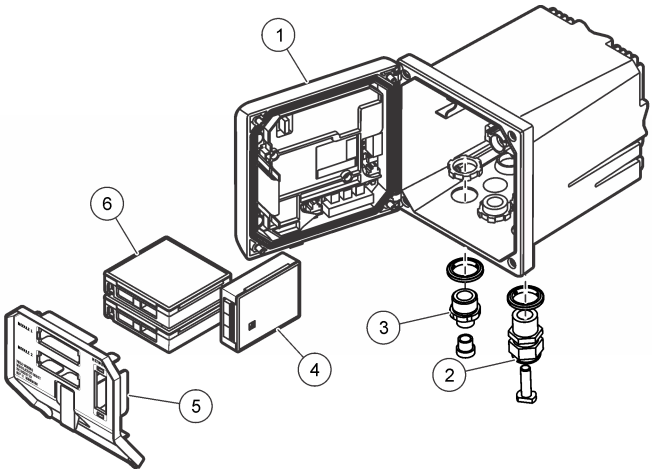


| | |
|---|---|
| **1** Controller | **4** Network module (optional) |
| **2** Strain relief assembly (optional depending on controller version) | **5** High-voltage barrier |
| **3** Digital connection fitting (optional depending on controller version) | **6** Sensor modules (optional) |

### 2.2.1 Sensors and sensor modules

The controller accepts up to a maximum of two sensor modules or two digital sensors (depending on the controller configuration), along with one communication module. A single digital sensor and a single sensor module can be installed in combination. A variety of sensors can be wired to the sensor modules. Sensor wiring information is given in the specific sensor manuals and in the user instructions for specific modules.

### 2.2.2 Relays outputs and signals

The controller has four configurable relay switches and two analog outputs. An optional analog output module can increase the number of analog outputs to five.

### 2.2.3 Device scans

With two exceptions, the controller automatically scans for connected devices without user input when it is powered on. The first exception is when the controller is powered on for the first time before initial use. The second exception is after the controller configuration settings have been set to their default values and the controller is powered on. In both cases, the controller first displays the language, date and time edit screens. After the language, date and time entries are accepted, the controller performs a device scan. Refer to Connect a digital sc sensor on page 20 for instructions about how to scan for devices when the controller is already powered on.

### 2.2.4 Controller enclosure

The controller enclosure is NEMA 4X/IP66-rated and has a corrosion-resistant finish designed to withstand corrosive environmental constituents such as salt spray and hydrogen sulfide. Protection against environmental damage is strongly recommended for outdoor use.
***Note:*** *Units that have the Underwriters Laboratories (UL) certification are intended for indoor use only and do not have a NEMA 4X/IP66 rating.*

### 2.2.5 Controller mounting options

The controller can be mounted to a panel, to a wall or to a vertical or horizontal pipe. A neoprene sealing gasket is included and can be used to reduce vibration. The gasket can be used as a template for panel mounting before the inner gasket component is separated.

# Section 3 Installation

## 3.1 Mounting components and dimensions

**⚠ CAUTION**

Personal injury hazard. Only qualified personnel should conduct the tasks described in this section of the manual.

The controller can be installed on a surface, panel or pipe (horizontal or vertical). For mounting options and instructions, refer to Figure 2, Figure 3 on page 8, Figure 4 on page 9, Figure 5 on page 10 and Figure 6 on page 11.

For horizontal pipe mounts, the mounting feet (Figure 2) must be attached to the mounting bracket in a vertical position.

For both horizontal and vertical pipe mounts, attach the mounting bracket to the controller as shown in Figure 5 on page 10.

**Figure 2 Mounting components**

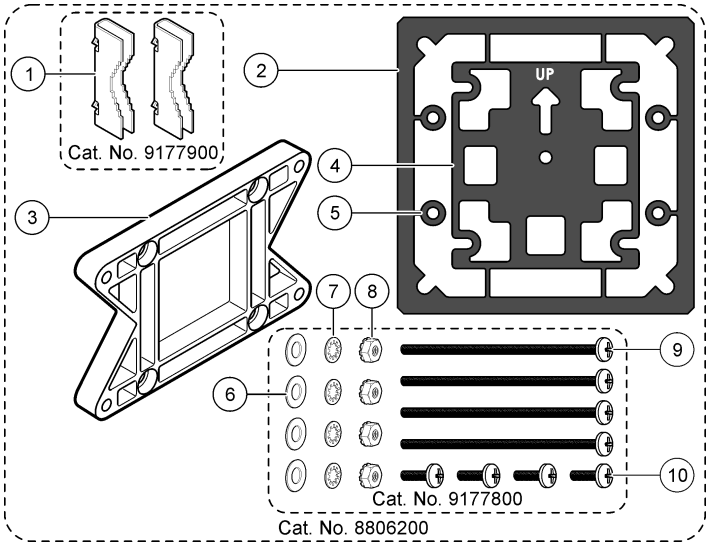


| | |
|---|---|
| **1** Mounting foot (2x) | **6** Flat washer, ¼-inch ID (4x) |
| **2** Sealing gasket for panel mount, Neoprene | **7** Lock washer, ¼-inch ID (4x) |
| **3** Bracket for wall and pipe mounting | **8** M5 x 0.8 Keps hexnut (4x) |
| **4** Vibration isolation gasket for pipe mount | **9** Pan head screws, M5 x 0.8 x 100mm (4x) (Used for variable diameter pipe mount installations) |
| **5** Vibration isolation washer for pipe mount (4x) | **10** Pan head screws, M5 x 0.8 x 15 mm (4x) |

***Note:*** *A bracket for panel mounting is available as an optional accessory.*

## 3.2 Controller mounting

**Figure 3 Surface mounting dimensions**

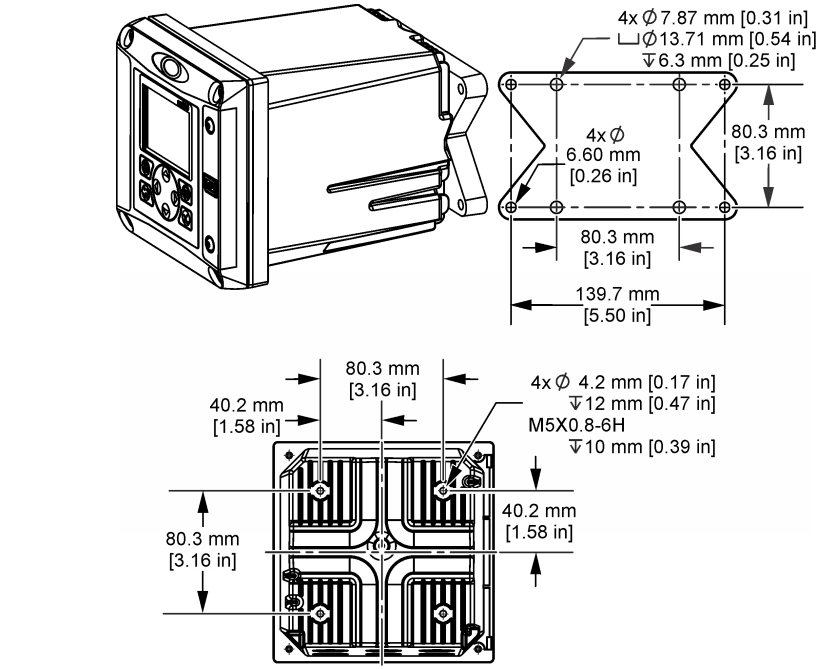

**Figure 4 Panel mounting dimensions**

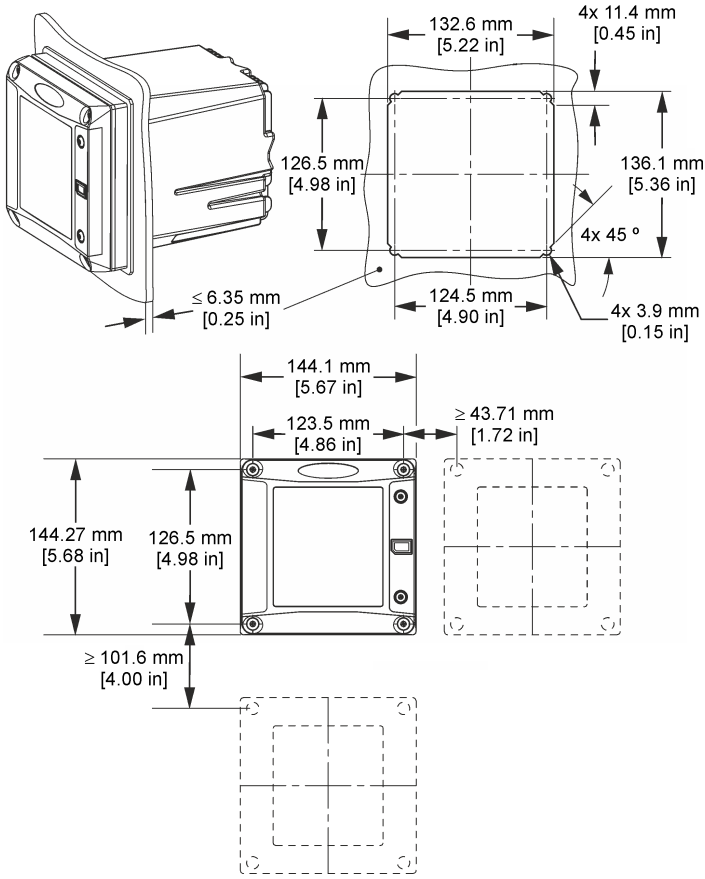


***Note:*** *If using the bracket (optional) for panel mounting, push the controller through the hole in the panel and then slide the bracket over the controller on the back side of the panel. Use the four 15 mm pan head screws (supplied) to attach the bracket to the controller and secure the controller to the panel.*

**Figure 5 Pipe mounting (vertical pipe)**

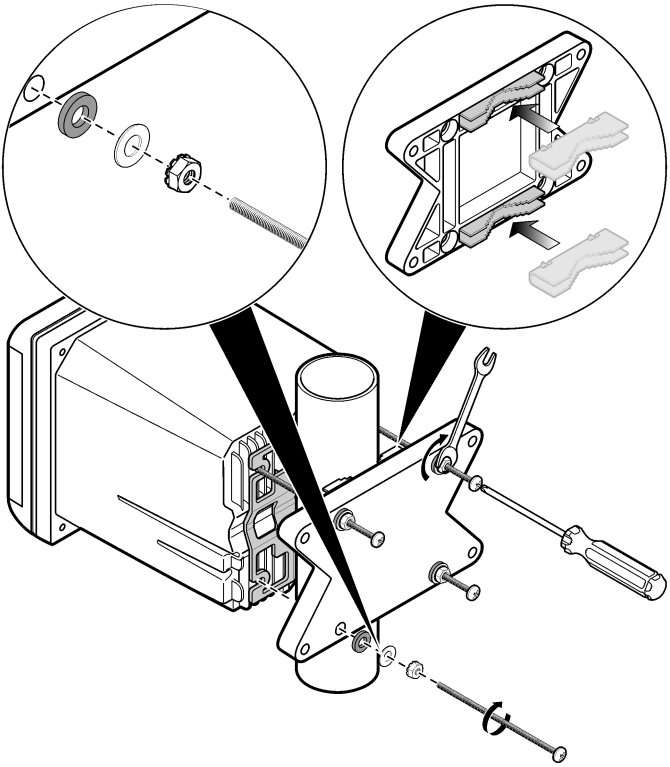

**Figure 6 Top and bottom views**

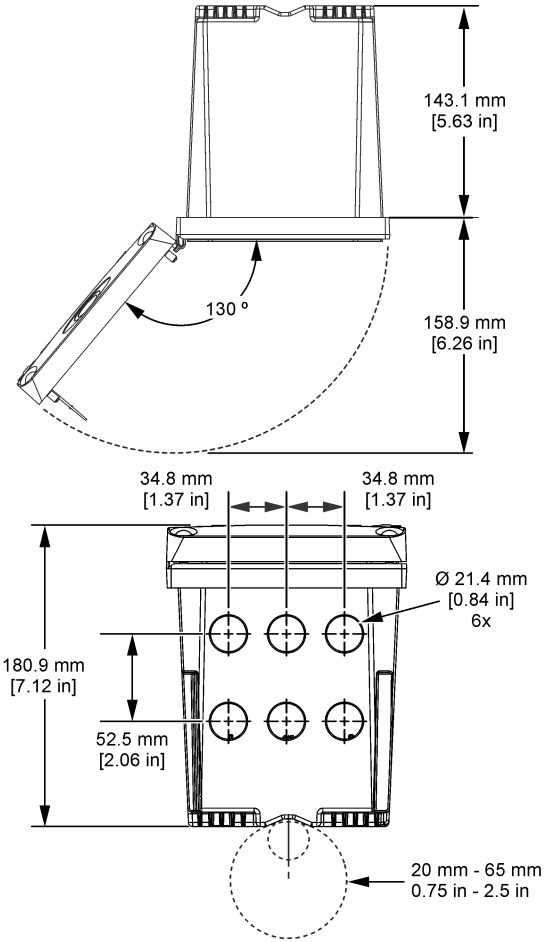


## 3.3 High-voltage barrier

High-voltage wiring for the controller is located behind the high-voltage barrier in the controller enclosure. The barrier must remain in place except when installing modules or when a qualified installation technician is wiring for power, alarms, outputs or relays. Do not remove the barrier while power is applied to the controller.

## 3.4 Electrostatic discharge (ESD) considerations

**NOTICE**

Potential Instrument Damage. Delicate internal electronic components can be damaged by static electricity, resulting in degraded performance or eventual failure.

Refer to the steps in this procedure to prevent ESD damage to the instrument:

- Touch an earth-grounded metal surface such as the chassis of an instrument, a metal conduit or pipe to discharge static electricity from the body.

- Avoid excessive movement. Transport static-sensitive components in anti-static containers or packages.
- Wear a wrist strap connected by a wire to earth ground.
- Work in a static-safe area with anti-static floor pads and work bench pads.

## 3.5 Wiring overview

Figure 7 shows an overview of the wiring connections inside the controller with the high voltage barrier removed. The left side of the figure shows the back side of the controller cover.
***Note:*** *Remove connector caps from the connectors before module installation.*

**Figure 7 Wiring connections overview**

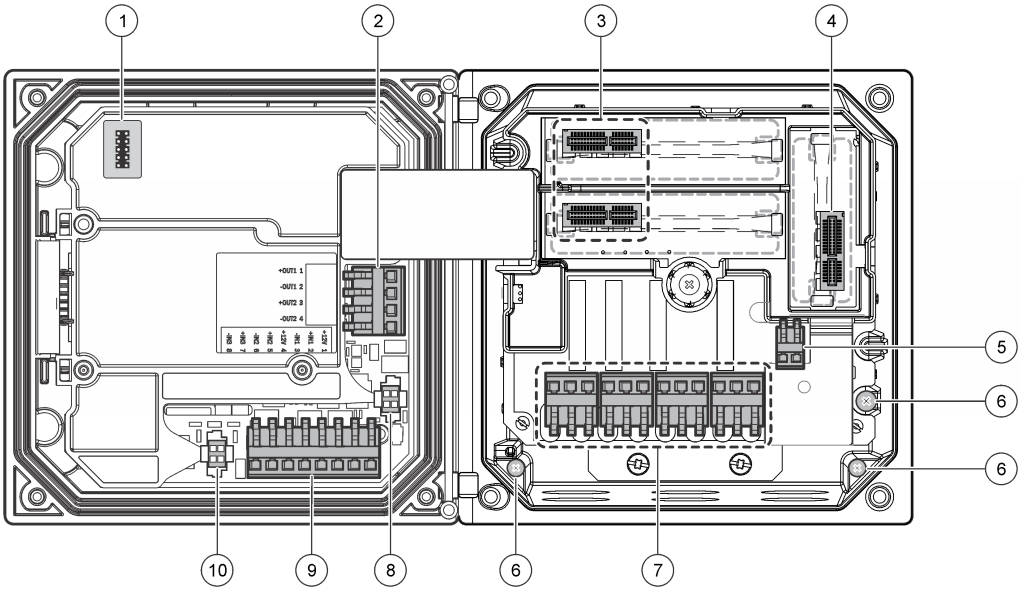


| | | |
|---|---|---|
| **1** Service cable connection | **5** AC and DC power connector[3] | **9** Discrete input wiring connector[3] |
| **2** 4-20 mA output[3] | **6** Ground terminals | **10** Digital sensor connector[3] |
| **3** Sensor module connector | **7** Relay connections[3] | |
| **4** Communication module connector (e.g., Modbus, Profibus, HART, optional 4-20 mA module, etc.) | **8** Digital sensor connector[3] | |

## 3.6 Wiring for power

**⚠ WARNING**

Potential Electrocution Hazard. Always disconnect power to the instrument when making electrical connections.

[3] Terminals can be removed for improved access.

**⚠ WARNING**



Potential Electrocution Hazard. If this equipment is used outdoors or in potentially wet locations, a **Ground Fault Interrupt** device must be used for connecting the equipment to its mains power source.

**⚠ DANGER**



Electrocution Hazard. Do not connect AC power to a 24 VDC powered model.

**⚠ WARNING**



Potential Electrocution Hazard. A protective earth (PE) ground connection is required for both 100-240 VAC and 24 VDC wiring applications. Failure to connect a good PE ground connection can result in shock hazards and poor performance due to electromagnetic interferences. ALWAYS connect a good PE ground to the controller terminal.

***NOTICE***

Install the device in a location and position that gives easy access to the disconnect device and its operation.

The controller can be purchased as either a 100-240 VAC powered model or a 24 VDC powered model. Follow the appropriate wiring instructions for the purchased model.

The controller can be wired for line power by hard-wiring in conduit or wiring to a power cord. Regardless of the wire used, the connections are made at the same terminals. A local disconnect designed to meet local electrical code is required and must be identified for all types of installation. In hard-wired applications, the power and safety ground service drops for the instrument must be 0.82 to 1.31 $mm^2$ (18 to 16 AWG). Make sure that the field wiring insulation is rated 80 °C (176 °F) minimum.

**Notes:**

- The voltage barrier must be removed before making any electrical connections. After making all connections, replace the voltage barrier before closing the controller cover.
- A sealing type strain relief and a power cord less than 3 meters (10 feet) in length with three 18-gauge conductors (including a safety ground wire) can be used to maintain the NEMA 4X/IP66 environmental rating.
- Controllers can be ordered with AC power cords pre-installed. Additional power cords may also be ordered.
- The DC power source that supplies power to the 24 VDC powered controller must maintain voltage regulation within the specified 24 VDC-15% +20% voltage limits. The DC power source must also provide adequate protection against surges and line transients.

### Wiring procedure

Refer to the illustrated steps that follow and Table 1 or Table 2 to wire the controller for power. Insert each wire into the appropriate terminal until the insulation is seated against the connector with no bare wire exposed. Tug gently after insertion to make sure that there is a secure connection. Seal any unused openings in the controller box with conduit opening sealing plugs.

**Table 1 AC power wiring information (AC powered models only)**

| Terminal | Description | Color—North America | Color—EU |
|---|---|---|---|
| 1 | Hot (L1) | Black | Brown |
| 2 | Neutral (N) | White | Blue |
| — | Protective Earth (PE) Ground lug | Green | Green with yellow stripe |

**Table 2 DC power wiring information (DC powered models only)**

| Terminal | Description | Color—North America | Color—EU |
|---|---|---|---|
| 1 | +24 VDC | Red | Red |
| 2 | 24 VDC return | Black | Black |
| — | Protective Earth (PE) Ground lug | Green | Green with yellow stripe |

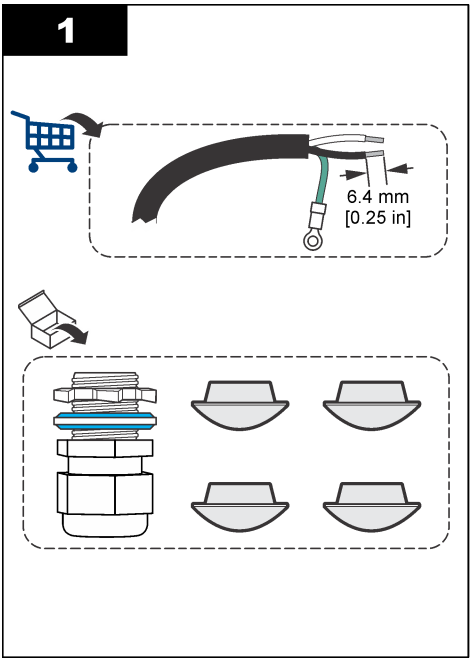


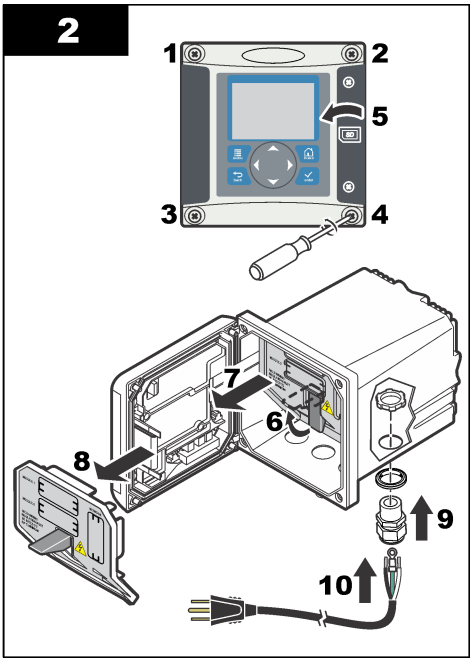

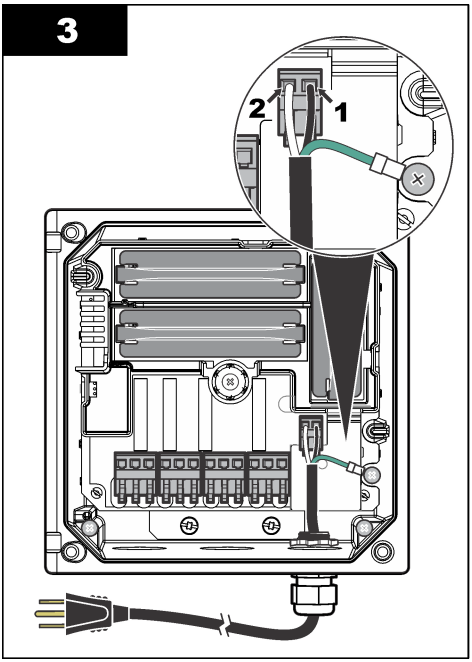


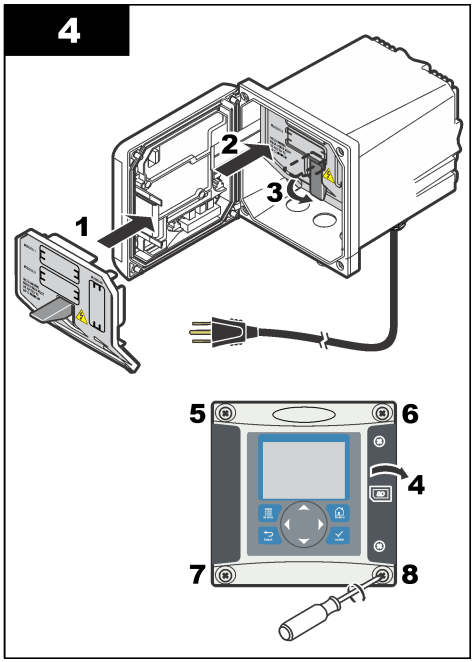


## 3.7 Alarms and relays

The controller is equipped with four unpowered, single pole relays rated 100-250 VAC, 50/60 Hz, 5 amp resistive maximum. Contacts are rated 250 VAC, 5 amp resistive maximum for the AC powered controller and 24 VDC, 5A resistive maximum for the DC powered controller. The relays are not rated for inductive loads.

## 3.8 Wiring for relays

| ⚠ WARNING |
| --- |
| Potential Electrocution Hazard. Always disconnect power to the instrument when making electrical connections. |

| ⚠ WARNING |
| --- |
| Potential fire hazard. The relay contacts are rated 5A and are not fused. External loads connected to the relays must have current limiting devices provided to limit current to < 5 A. |

| ⚠ WARNING |
| --- |
| Potential fire hazard. Do not daisy-chain the common relay connections or jumper wire from the mains power connection inside the instrument. |

| ⚠ WARNING |
| --- |
| Potential electrocution hazard. In order to maintain the NEMA/IP environmental ratings of the enclosure, use only conduit fittings and cable glands rated for at least NEMA 4X/IP66 to route cables in to the instrument. |

**AC line (100—250 V) powered controllers**

**⚠WARNING**

Potential electrocution hazard. AC mains powered controllers (115 V–230 V) are designed for relay connections to AC mains circuits (i.e., voltages greater than 16 V-RMS, 22.6 V-PEAK or 35 VDC).

The wiring compartment is not designed for voltage connections in excess of 250 VAC.

**24 VDC powered controllers**

**⚠WARNING**

Potential electrocution hazard. 24 V powered controllers are designed for relay connections to low voltage circuits (i.e., voltages less than 16 V-RMS, 22.6 V-PEAK or 35 VDC).

The 24 VDC controller relays are designed for the connection to low voltage circuits (i.e., voltages less than 30 V-RMS, 42.2 V-PEAK or 60 VDC). The wiring compartment is not designed for voltage connections above these levels.

The relay connector accepts 0.82 to 1.31 $mm^2$ (18 to 16 AWG) wire (as determined by load application). Wire gauge less than 18 AWG is not recommended. Make sure that the field wiring insulation is rated 80 °C (176 °F) minimum.

The Normally Open (NO) and Common (COM) relay contacts will be connected when an alarm or other condition is active. The Normally Closed (NC) and Common relay contacts will be connected when an alarm or other condition is inactive (unless the Fail Safe is set to Yes) or when power is removed from the controller.

Most relay connections use either the NO and COM terminals or the NC and COM terminals. The numbered installation steps show connection to the NO and COM terminals.

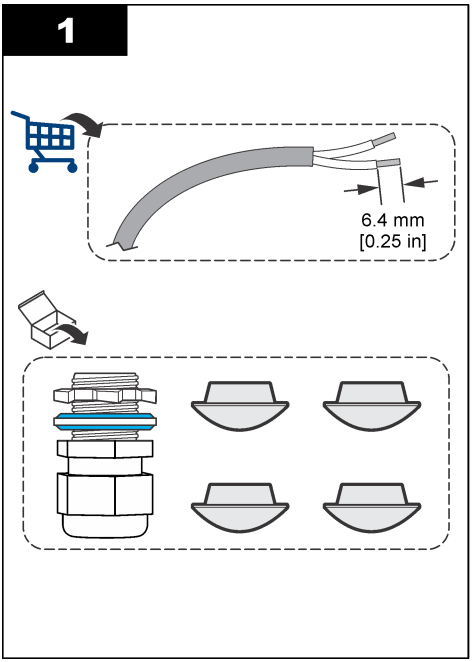


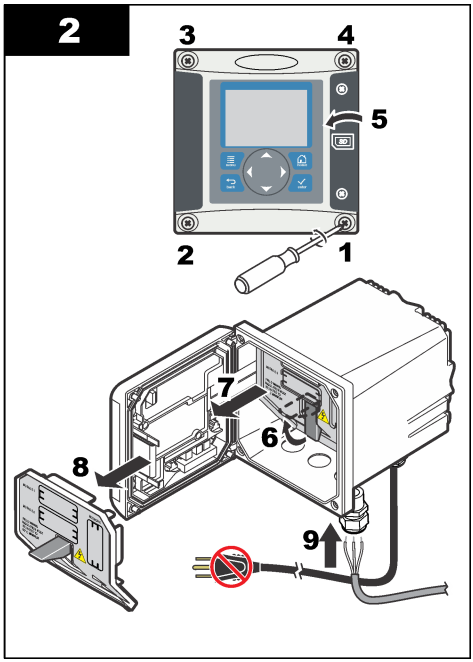

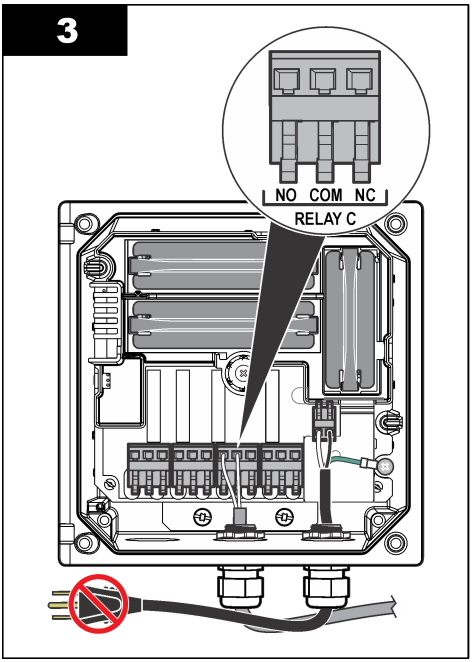


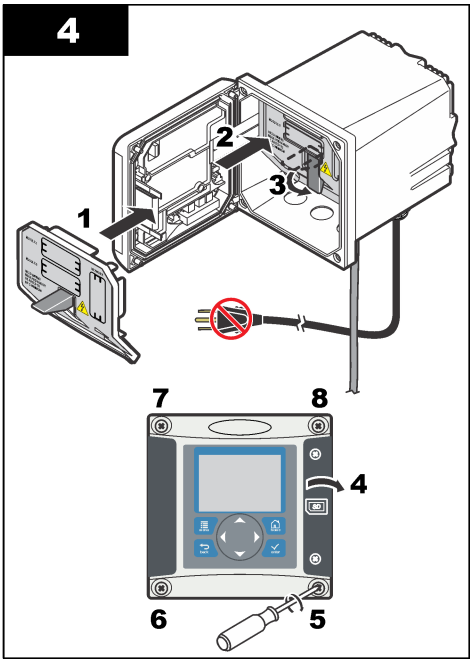


## 3.9 Analog output connections

**⚠ WARNING**

Potential Electrocution Hazard. Always disconnect power to the instrument when making electrical connections.

**⚠ WARNING**

Potential electrocution hazard. In order to maintain the NEMA/IP environmental ratings of the enclosure, use only conduit fittings and cable glands rated for at least NEMA 4X/IP66 to route cables in to the instrument.

Two isolated analog outputs (1 and 2) are provided (Figure 8). Such outputs are commonly used for analog signaling or to control other external devices.

Make wiring connections to the controller as shown in Figure 8 and Table 3.
***Note:*** *Figure 8 shows the back of the controller cover and not the inside of the main controller compartment.*

**Table 3 Output connections**

| Recorder wires | Circuit board position |
|---|---|
| Output 2– | 4 |
| Output 2+ | 3 |
| Output 1– | 2 |
| Output 1+ | 1 |

1. Open the controller cover.
2. Feed the wires through the strain relief.
3. Adjust the wire as necessary and tighten the strain relief.

4. Make connections with twisted-pair shielded wire and connect the shield at the controlled component end or at the control loop end.
   - Do not connect the shield at both ends of the cable.
   - Use of non-shielded cable may result in radio frequency emission or susceptibility levels higher than allowed.
   - Maximum loop resistance is 500 ohm.
5. Close the controller cover and tighten the cover screws.
6. Configure outputs in the controller.

**Figure 8 Analog output connections**

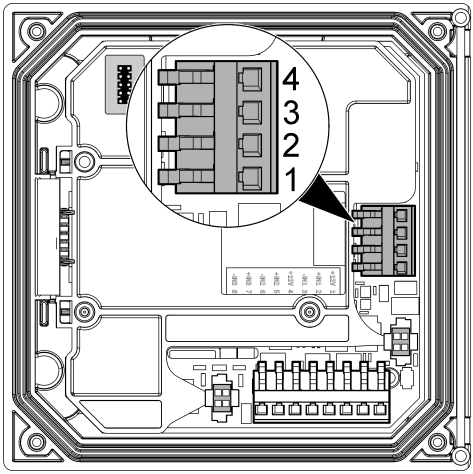


## 3.10 Discrete input wiring connections

**⚠ WARNING**

Potential Electrocution Hazard. Always disconnect power to the instrument when making electrical connections.

**⚠ WARNING**

Potential electrocution hazard. In order to maintain the NEMA/IP environmental ratings of the enclosure, use only conduit fittings and cable glands rated for at least NEMA 4X/IP66 to route cables in to the instrument.

Three discrete inputs are provided for switch closure inputs or logic level voltage inputs. Make wiring connections and configure jumper settings to the controller as shown in Figure 9, Table 4 and Figure 10.

***Note:*** *Figure 9 shows the back of the controller cover and not the inside of the main controller compartment.*

**Figure 9 Discrete input wiring connections**

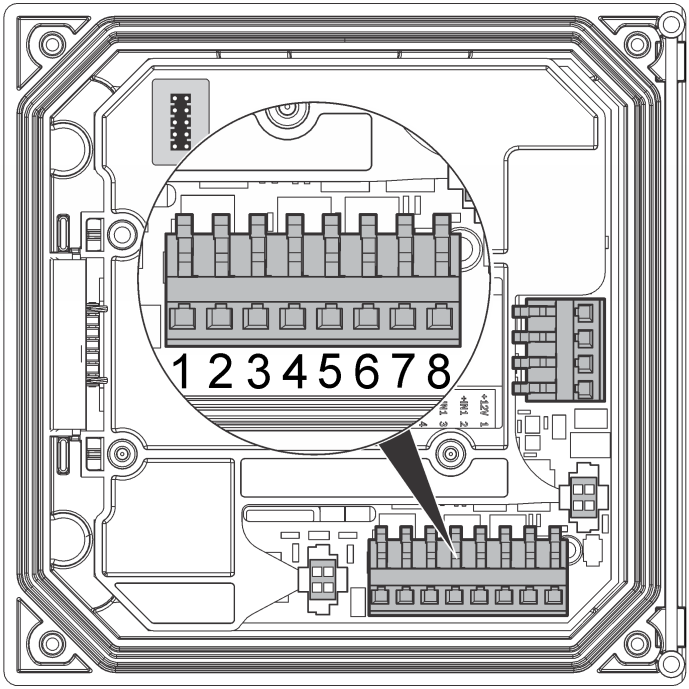


**Table 4 Input connections**

| Discrete inputs | Connector position - Switch input | Connector position - Voltage input |
|---|---|---|
| Input 1+ | 3 | 2 |
| Input 1- | 2 | 3 |
| Input 2+ | 6 | 5 |
| Input 2- | 5 | 6 |
| Input 3+ | 8 | 7 |
| Input 3- | 7 | 8 |

**Figure 10 Jumper settings**

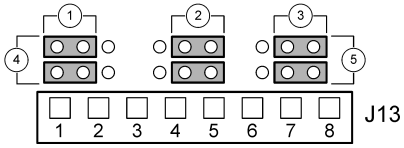


| | |
|---|---|
| **1** Input 1 configuration jumpers | **4** Jumpers positioned to the left for switch inputs |
| **2** Input 2 configuration jumpers | **5** Jumpers positioned to the right for voltage inputs |
| **3** Input 3 configuration jumpers | |

1. Open the controller cover.
2. Feed the wires through the cable gland.
3. Adjust the wire as necessary and tighten the cable gland.
4. The jumpers are positioned immediately behind the connector. Remove the connector for improved access to the jumpers and configure the jumper settings according to the type of input as shown in Figure 10.
5. Close the controller cover and tighten the cover screws.
6. Configure inputs in the controller.

***Note:*** *In* ***switch input*** *mode the controller supplies 12 volts to the switch and is not isolated from the controller. In* ***voltage input*** *mode the inputs are isolated from the controller (user input voltage from 0 to 30 volts).*

## 3.11 Connect a digital sc sensor

***Note:*** *To connect an analog sensor, refer to the instructions supplied in the module or sensor manual.*

A digital sc sensor can be connected to the controller using the keyed quick-connect fitting ( Figure 11). A digital sensor can be connected with the controller powered on or off.

When a sensor is connected with the controller powered on, the controller does not automatically perform a device scan. To make the controller perform a device scan, navigate to the Test/Maintenance menu and select Scan Devices. If a new device is found, the controller performs the installation process without further user action.

When a sensor is connected with the controller powered off, the controller will perform a device scan when it is powered on again. If a new device is found, the controller performs the installation process without further user action.

Retain the connector cap to seal the connector opening in case the sensor must be removed.

**Figure 11 Digital sensor quick connect**

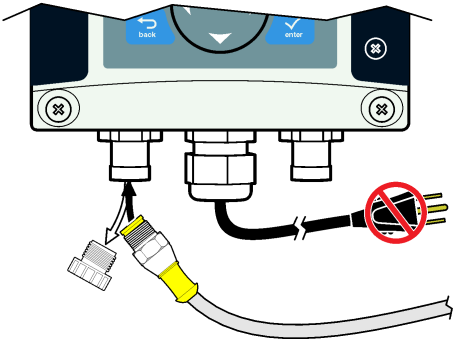


## 3.12 Connect the optional digital communication output

The manufacturer supports Modbus RS485, Modbus RS232, Profibus DPV1 and HART communication protocols. The optional digital output module is installed in the location indicated by item 4 in Figure 7 on page 12. Refer to the instructions supplied with the network module for more details.

For information about Modbus registers, go to http://www.de.hach.com or http://www.hach.com and search *Modbus registers* or go to any sc200 product page.

## 3.13 Install a Secure Digital (SD) memory card

For instructions on how to install an SD card in the controller, refer to Figure 12. Information on how to use the SD memory card can be found in Using the secure digital memory (SD) card on page 42.

To remove an SD card, push down on the edge of the card and release, then pull the card up and out of the slot. After the card is removed, close the slot cover and tighten the cover screws.

**Figure 12 SD card installation**

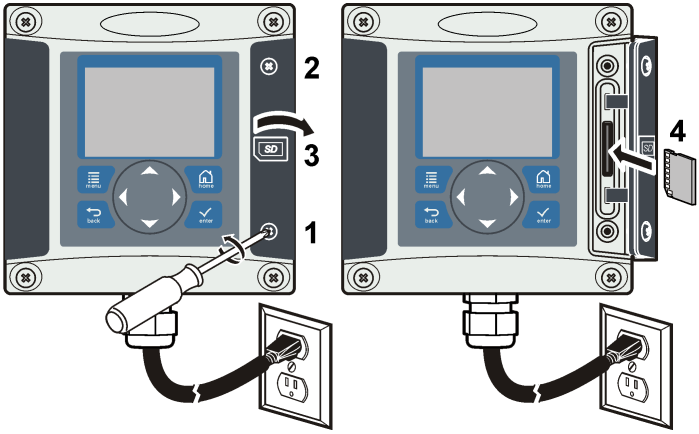


# Section 4 User interface and navigation

## 4.1 User interface

The keypad has four menu keys and four directional keys as shown in Figure 13.

**Figure 13 Keypad and front panel overview**

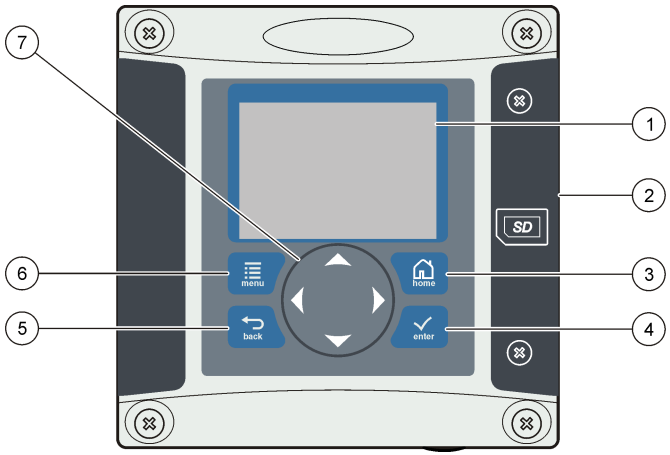


| | |
|---|---|
| **1** Instrument display | **5** **BACK** key. Moves back one level in the menu structure. |
| **2** Cover for secure digital memory card slot | **6** **MENU** key. Moves to the Settings Menu from other screens and submenus. |
| **3** **HOME** key. Moves to the Main Measurement screen from other screens and submenus. | **7** Directional keys. Used to navigate through the menus, change settings, and increment or decrement digits. |
| **4** **ENTER** key. Accepts input values, updates, or displayed menu options. | |

Inputs and outputs are set up and configured through the front panel using the keypad and display screen. This user interface is used to set up and configure inputs and outputs, create log information and calculated values, and calibrate sensors. The SD interface can be used to save logs and update software.

## 4.2 Display

Figure 14 shows an example of the main measurement screen with a DO sensor connected to the controller.

The front panel display screen shows sensor measurement data, calibration and configuration settings, errors, warnings and other information.

**Figure 14 Example of Main Measurement screen**

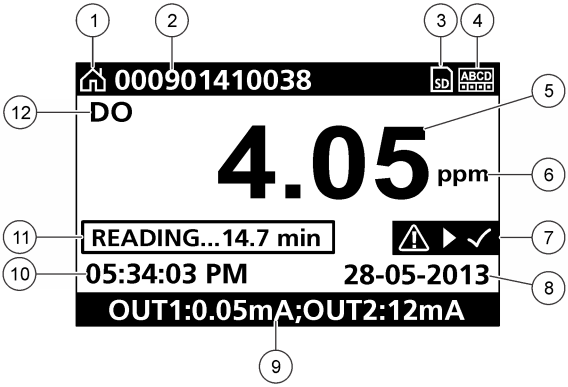


| | |
|---|---|
| **1** Home screen icon | **7** Warning status bar |
| **2** Sensor name | **8** Date |
| **3** SD Memory card icon | **9** Analog output values |
| **4** Relay status indicator | **10** Time |
| **5** Measurement value | **11** Progress bar |
| **6** Measurement unit | **12** Measurement parameter |

**Table 5 Icon descriptions**

| Icon | Description |
|---|---|
| Home screen | The icon may vary depending on the screen or menu being displayed. For example, if an SD card is installed, an SD card icon appears here when the user is in the SD Card Setup menu. |
| SD memory card | This icon appears only if an SD card is in the reader slot. When a user is in the SD Card Setup menu, this icon appears in the upper left corner. |
| Warning | A warning icon consists of an exclamation point within a triangle. Warning icons appear on the right of the main display below the measurement value. Push the **ENTER** key then select the device to view any problems associated with that device. The warning icon will no longer be displayed once all problems have been corrected or acknowledged. |
| Error | An error icon consists of an exclamation point within a circle. When an error occurs, the error icon and the measurement screen flash alternately in the main display. To view errors, push the **MENU** key and select **Diagnostics**. Then select the device to view any problems associated with that device. |

### 4.2.1 Additional display formats

- From the Main Measurement screen push the **UP** and **DOWN** arrow keys to switch between measurement parameters
- From the Main Measurement screen push the **RIGHT** arrow key to switch to a split display of up to 4 measurement parameters. Push the **RIGHT** arrow key to include additional measurements. Push the **LEFT** arrow key as needed to return to the Main Measurement screen
- From the Main Measurement screen push the **LEFT** arrow key to switch to the graphical display (see Graphical display on page 23 to define the parameters). Push the **UP** and **DOWN** arrow keys to switch measurement graphs

### 4.2.2 Graphical display

The graph shows concentration and temperature measurements for each channel in use. The graph supplies easy monitoring of trends and shows changes in the process.

1. From the graphical display screen use the up and down arrow keys to select a graph and push the **HOME** key.
2. Select an option:

| Option | Description |
|---|---|
| **MEASUREMENT VALUE** | Set the measurement value for the selected channel. Select between Auto Scale and Manually Scale. For manual scaling enter the minimum and maximum measurement values |
| **DATE & TIME RANGE** | Select the date and time range from the available options |

# Section 5 System startup

When initially powered up, the Language, Date Format and Date/Time screens appear in order. After these options are set, the controller performs a device scan and displays the message **Scanning for devices. Please wait...** If a new device is found, the controller performs an installation process before displaying a main measurement screen.

If the scan finds previously installed devices without configuration changes, the main measurement screen of the device in the number one position appears immediately after the scan is complete.

If a device has been removed from the controller or is not found during the next power-cycled or menu-driven scan, the controller displays a **Device missing** message and prompts to delete the missing device.

If no sensor is connected to an installed analog module, the controller will indicate an error. If devices are connected but not found by the controller, refer to Troubleshooting on page 46.

## 5.1 Set the language, date and time for the first time

The controller displays the language, date and time edit screens when the controller is powered on for the first time, and when it is powered on after the configuration settings have been set to their default values.
After the language, date and time options are set for the first time, update the options as necessary through the sc200 setup menu.

1. In the Language screen, highlight a language in the options list and push the **ENTER** key. English is the default language for the controller.
   The selected language is saved. The Date Format screen appears.
2. In the Date Format screen, highlight a format and push the **ENTER** key.
   The date and time format is saved. Next, the Date /Time screen appears.
3. In the Date/Time screen, push the **RIGHT** or **LEFT** arrow keys to highlight a field, then push the **UP** and **DOWN** arrow keys to update the value in the field. Update the other fields as necessary.
4. Push the **ENTER** key.
   The changes are saved and the controller performs a start-up scan for devices. If connected devices are found, the controller displays the main measurement screen for the device in the number one position. If the controller fails to find connected devices, refer to Troubleshooting on page 46.

## 5.2 Controller configuration information

General information about configuration options is listed in the table.

1. To navigate to the menu options, from the Settings Menu, select sc200 Setup.

| Option | Description |
|---|---|
| **Security setup** | Sets the passcode preferences (refer to Security setup on page 25) |
| **Output setup** | Configures the controller analog outputs (refer to Configure the controller analog outputs on page 27) |

| Option | Description |
|---|---|
| **Relay setup** | Configures the controller relays (refer to Configure relays on page 30) |
| **Display setup** | Configures the controller display (refer to Display setup on page 39) |
| **Set Date/Time** | Sets the controller time and date (refer to Update the date and time on page 40) |
| **Datalog setup** | Configures data logging options. Available only if Calculation has been setup. At least one sensor must be attached to enter a calculation (refer to Set the datalog mode and interval on page 40) |
| **Manage Data** | Select the device from the list of installed components to view the data or event log |
| **Error Hold Mode** | **Hold Outputs**—Holds outputs at last known value when controller loses communication with the sensor.<br>**Transfer Outputs**—Switches to transfer mode when controller loses communication with the sensor. Outputs transfer to a pre-defined value. |
| **Calculation** | Configures the controller math function (refer to Set up a calculation on page 40) |
| **sc200 Information** | **S/W VER:**—Displays the current version of controller software<br>**Bootloader VER:**—Displays the current Bootloader version. The Bootloader is a file that loads the main operating system for the controller<br>**S/N:**—Displays the controller serial number<br>**Version:**—Displays the current version of controller hardware |
| **Discrete Input Setup** | Configures three discrete input channels (refer to Set up the discrete inputs on page 41) |
| **Language** | Assigns the language used in the controller (refer to Update the display language on page 42) |

2. Select an option and push **ENTER** to activate the menu item.

# Section 6 Advanced operation

## 6.1 Security setup

### 6.1.1 Enable or disable the passcode

By default the passcode option is disabled and all configuration settings and calibrations can be changed. When the passcode function is enabled, access to Sensor calibration and Test/Maint menus requires a passcode.
To enable the passcode:

1. From the Settings Menu, select sc200 Setup and push the **ENTER** key.
2. Select Security Setup and push the **ENTER** key.
3. Select Set Passcode and push the **ENTER** key.
4. Select Disabled or Enabled and push the **ENTER** key.
   The passcode is enabled.
5. Push the **BACK** key to return to the sc200 Setup Menu, or push the **MENU** key to return to the Settings Menu.

### 6.1.2 Edit the passcode

The passcode is factory set to SC200. The Edit Passcode menu option appears in the Security Setup menu only after the passcode feature is enabled and a valid passcode has been entered.
A passcode consists of up to six upper or lower-case alpha, numeric and special characters. Passcodes are case-sensitive.

To edit the passcode:

1. Make sure the passcode is enabled. Refer to Enable or disable the passcode on page 25 for information on how to enable the passcode.
2. From the Settings menu, select Security Setup and push **ENTER**.
3. Use the arrow keys to enter the current valid passcode and push **ENTER**.
   The Edit Passcode option appears in the Security Setup menu.
4. Select Edit Pass Code and push **ENTER**.
   The Edit Pass Code screen appears.
5. Use the arrow keys to edit the passcode and push **ENTER**.
   The new passcode is saved and the Security Setup menu appears.
   ***Note:*** *All menus stay accessible until the* ***HOME*** *key is pushed or the controller is restarted.*
6. Push the **HOME** key or perform a controller restart.
   The new passcode settings are saved, and the new passcode is required to enter the Security Setup, Datalog Setup and Test/Maint menus.

### 6.1.3 Protect features

This option is only displayed if an analyzer or sensor that supports this feature is connected to the controller. Security categories are displayed that are defined by the connected analyzer or sensor. The user can then enable or disable password protection against individual menu options within these categories.

## 6.2 Configure a 4-20 mA input module

An analog module must be installed in the controller.

1. Determine what output the connected device is using (0-20 mA or 4-20 mA). This information will be used to set the scale.
2. Determine what the 20 mA value is equal to (e.g, 100 psi).
3. Determine what the low end (0 or 4 mA) value is equal to (e.g., 10 psi). This information will be used to set the display range.
4. From the Settings Menu, select Sensor Setup.
5. Select Configure.
6. Update the options.
   a. Highlight an option and push **ENTER**.
   b. Make a selection or update the entries.
   c. Push **ENTER** to save the changes.

| Option | Description |
|---|---|
| **Edit name** | Edits the module name |
| **Edit units** | Edits the measurement units |
| **Edit parameter** | Edits the parameter name |
| **Display range**<br>**For the 0-20 mA scale:**<br>• **Set the 20 mA value**<br>• **Set the 0 mA value**<br>**For the 4-20 mA scale:**<br>• **Set the 20 mA value**<br>• **Set the 4 mA value** | Sets the values used for the selected scale (0-20 mA or 4-20 mA) |

| Option | Description |
|---|---|
| **Signal average** | Sets how often signals are averaged. Higher values produce a smoother signal but increase the time it takes for a signal to respond to a change in the process value. |
| **Set resolution—**<br>**X.XXX, XX.XX, XXX.X, XXXX** | Sets the number of decimal places used in the display. |
| **Select scale—**<br>**4-20 mA or 0-20 mA** | Sets scale used for the 4-20 mA input |
| **Data log interval—5 sec, 30 sec, 1 min, 2 min, 5 min, 10 min, 15 min, 30 min, 60 min** | Sets how often data is logged to the internal controller memory. |
| **Reset defaults—Push ENTER to reset configuration settings or push the BACK key to cancel.** | Resets configuration settings to the default values. |

For additional information, refer to the *sc200 4–20 Analog Input Module User Manual*.

## 6.3 Configure a 4-20 mA output module

The Network Setup option appears in the Settings Menu only if an analog output module or other network module such as Modbus or Profibus is installed in the controller.

Outputs for analog output modules are set at 4-20 mA. Outputs can be assigned to represent a measured parameter such as pH, temperature, flow or calculated values.

1. From the Settings menu, select Network Setup.
2. Select Edit Name and enter a name for the module. Push **ENTER** to save the name.
3. Select an output (A, B, C, D) and push **ENTER**.
   a. Highlight an option and push **ENTER**.
   b. Make a selection from the list or update the entries.
   c. Push **ENTER** to save the changes.

| Option | Description |
|---|---|
| **Select Source** | Selects the output to configure—None, sensor 1 name, sensor 2 name, calculation (if set up). For sensor output, Select Parameter sets the measurement options. When the measurement is autorange, Set Range sets the range. |
| **Set Low Value** | Sets the 4 mA value (default: 0.000). (Range and units depend on sensor) |
| **Set High Value** | Sets the 20 mA value (default: 1.000). (Range and units depend on sensor) |
| **Set Transfer** | Sets the transfer value. Range 3.0 to 25.0 mA (default 4.000). |
| **Set Filter** | Sets a time-average filter value of 0 (default) to 120 seconds. |

For additional information, refer to the *sc200 4-20 Output Module User Manual*.

## 6.4 Configure the controller analog outputs

The controller analog outputs can be assigned to represent the measured parameter or secondary measurements such as temperature and calculations. To configure the options, highlight a menu option, push **ENTER** and select an option or update the entries. Push **ENTER** after an option is selected or the entries are updated.

1. From the Settings menu, select sc200 Setup.
2. Select Output Setup.
3. Select Output 1 or Output 2.

4. Choose Select Source and select a source from the list. Typically the source is one of the sensors attached to the system. If an analog input card is installed, the analog input may be used as a source.
5. From the Output Setup menu, choose Select Parameter and choose an option from the list. Parameters will vary depending on the type of sensors installed.
6. From the Output Setup menu, select Set Function and choose a function. Further setup options will vary depending on which function is chosen.

| Option | Description |
|---|---|
| **Linear** | Signal is linearly dependent on the process value |
| **PID** | Signal works as a PID (Proportional, Integral, Derivative) controller |
| **Logarithmic** | Signal is represented logarithmically within the process variable range |
| **Bilinear** | Signal is represented as two linear segments within the process variable range |

7. From the Output Setup menu, select Activation. Use the information in the table below the chosen function to configure the options.
8. If Transfer is or will be selected as the Error Hold Mode, or if the Transfer will be used during calibration or other functions within the sensor menu, select Set Transfer from the Output Setup menu and enter the transfer value.
9. From the Output Setup menu, select Set Filter and enter the filter value.
10. From the Output Setup menu, select Scale and choose the scale (0-20 mA or 4-20 mA).

- **Linear**

| Option | Description |
|---|---|
| **Set low value** | Sets the low endpoint of the process variable range |
| **Set high value** | Sets the high endpoint of the process variable range |

- **PID**

| Option | Description |
|---|---|
| **Set mode (Auto or Manual)** | Auto—the signal is automatically controlled by the algorithm within the analyzer using proportional, integral, and derivative inputs.<br>Manual—the signal is controlled by the user through manual adjustment of the % change value. This option is shown as Manual Output after the manual set mode is selected. |
| **Phase (Direct or Reverse)** | The direction in which the signal responds to process change.<br>Direct—signal increases as the process increases.<br>Reverse—signal increases as process decreases. |
| **Set setpoint** | Creates a desired control point of process |
| **Prop band** | A function of the difference between the measured signal and the desired setpoint. |
| **Integral** | The period of time from the injection point of a reagent to contact with the measuring device. |
| **Derivative** | Used to compensate for the 2$^{nd}$ order effects of the process. The majority of applications can be controlled without the use of the derivative setting. |
| **Transit time** | Stops all PID control for a selected period of time as the sample travels from the control pump to the measurement sensor. |

- **Logarithmic**

| Option | Description |
|---|---|
| **Set 50% value** | Sets the value corresponding to 50% of the process variable range. |
| **Set high value** | Sets the upper value of the process variable range. |

- **Bilinear**

| Option | Description |
|---|---|
| **Set low value** | Sets the low endpoint value of the process variable range. |
| **Set high value** | Sets the high endpoint value of the process variable range. |
| **Set knee point value** | Sets the value at which the process variable range divides into another linear segment. |
| **Set knee point current** | Sets the value of the current at the knee point value. |

### 6.4.1 Logarithmic output mode

Figure 15 shows in graph form the operation of the logarithmic output mode.

**Figure 15 Logarithmic output**

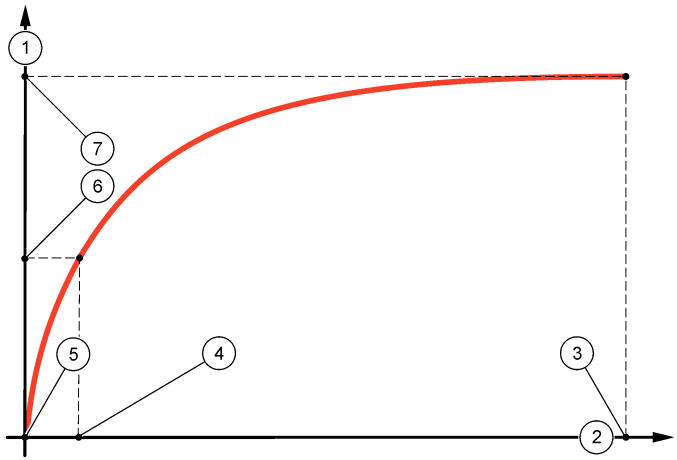


| | |
|---|---|
| **1** Output current axis | **5** Minimum output current (0-4 mA) |
| **2** Source value axis | **6** 50% output current |
| **3** High value | **7** Maximum output current (20 mA) |
| **4** 50% value | |

### 6.4.2 Bilinear output mode

Figure 16 shows in graph form the operation of the bilinear output mode.

**Figure 16 Bilinear output**

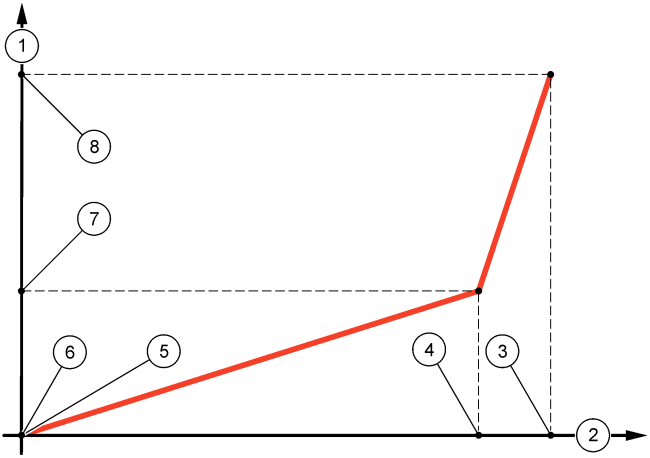


| | |
|---|---|
| **1** Output current axis | **5** Low value |
| **2** Source value axis | **6** Minimum output current (0-4 mA) |
| **3** High value | **7** Knee point current |
| **4** Knee point value | **8** Maximum output current (20 mA) |

## 6.5 Configure relays

The Normally Open (NO) and Common (COM) relay contacts will be connected when an alarm or other condition is active. The Normally Closed (NC) and Common relay contacts will be connected when an alarm or other condition is inactive (unless the Fail Safe is set to Yes), or when power is removed from the controller. To select a menu option, highlight the option and push **ENTER**.

1. From the sc200 Setup menu, select Relay Setup.
2. Select a relay from the list.
3. From the Relay Setup menu, choose Select Source and push **ENTER**. Normally, a source is one of the sensors attached to the system, but the controller can also function as a source. If an analog input module is installed, the source may be the analog input.
4. From the Relay Setup menu, select Set Parameter and choose from the list of parameters. The list of parameter options will vary with the type of attached sensor.
5. From the Relay Setup menu, select Set Function and choose from the list. Further setup will depend on the function chosen.

| Option | Description |
|---|---|
| **Scheduler Function (available if the controller is selected as the relay source)** | Relay switches at certain times independently of any process value |
| **Alarm Function** | Relay activates when upper or lower alarm value is exceeded |
| **Feeder Control Function** | Relay indicates if a process value exceeds or falls below a setpoint |
| **Event Control Function** | Relay toggles if a process value reaches an upper or lower limit |
| **Pulse Width Modulation (PWM) Control Function** | Relay uses a Pulse Width Modulation control depending on a process value |

| Option | Description |
|---|---|
| **Frequency control** | Relay switches with a frequency depending on a process value |
| **Warning** | Relay indicates warning and error conditions in probes |

6. From the Relay Setup menu, select Set Transfer and choose Active or Inactive.
7. From the Relay Setup menu, select Fail Safe and choose Yes or No.
8. From the Relay Setup menu, select Activation.
   The activation options for the selected function appear. Use the information in the table below each function to update the options.
9. Test the relay function to make sure it is properly energizing the connected device. To do relay testing, go to the Setting menu, then select **Test/Maint>Test Relay**.

- **Scheduler Function (refer to Figure 17)**

| Option | Description |
|---|---|
| **Hold outputs** | Holds outputs in the present ON or OFF state |
| **Run days** | Sets the weekday(s) that the relay operates. Options: Sunday, Monday, Tuesday., Wednesday, Thursday, Friday, Saturday |
| **Start time** | Sets the start time. |
| **Interval** | Sets the time between activation cycles (Default value: 5 min). |
| **Duration** | Sets the period of time the relay is energized (Default value: 30 sec). |
| **Off delay** | Sets the time for additional hold/output time after the relay has been turned off. |

**Figure 17 Scheduler function**

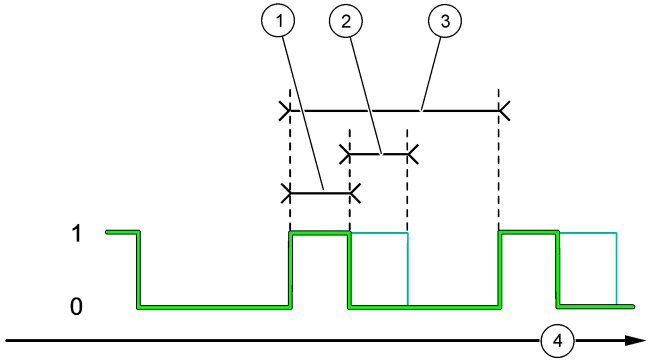


| | |
|---|---|
| **1** Duration | **3** Interval |
| **2** OFF delay | **4** Time (x-axis) |

- **Alarm Function (refer to Figure 18)**

| Option | Description |
|---|---|
| **Low alarm** | Sets the value where the relay will turn on in response to decreasing measured value. For example, if the low alarm is set for 1.0 and the measured value drops to 0.9, the relay activates. |
| **High alarm** | Sets the value where the relay will turn on in response to increasing measured value. For example, if the high alarm is set for 1.0 and the measured value increases to 1.1, the relay activates. |

| Option | Description |
|---|---|
| **Low deadband** | Sets the range where the relay remains on after the measured value increases above the low alarm value. For example, if the low alarm is set for 1.0 and the low deadband is set for 0.5, the relay remains on between 1.0 and 1.5. Default is 5% of the range. |
| **High deadband** | Sets the range where the relay remains on after the measured value decreases below the high alarm value. For example, if the high alarm is set for 4.0 and the high deadband is set for 0.5, the relay remains on between 3.5 and 4.0. Default is 5% of the range. |
| **Off delay** | Sets a time (0-300 seconds) to delay the relay from normally turning off (Default: 0 seconds). |
| **On delay** | Sets a delay time for the relay to turn on (Default: 0 seconds). |

**Figure 18 Alarm function**

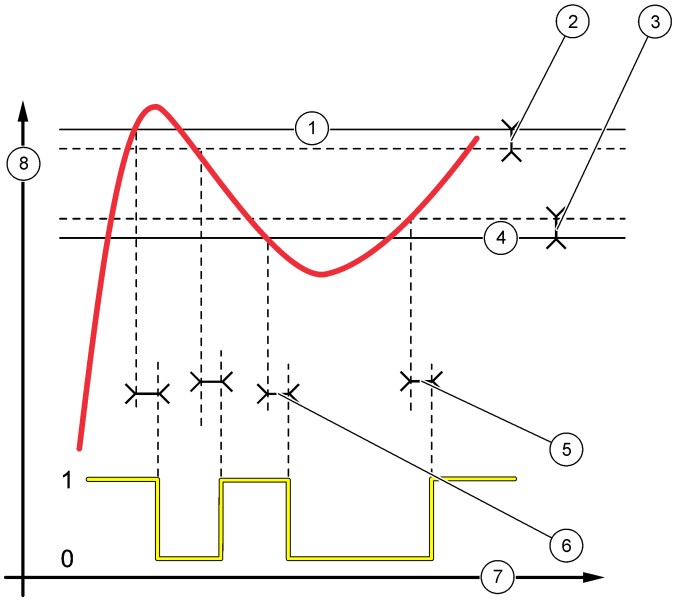


| | |
|---|---|
| **1** High alarm | **5** ON delay |
| **2** High deadband | **6** OFF delay |
| **3** Low deadband | **7** Time (x-axis) |
| **4** Low alarm | **8** Source (y-axis) |

- **Feeder Control Function (refer to Figure 19 and Figure 20)**

| Option | Description |
|---|---|
| **Phase** | Defines the relay status if the process value exceeds the setpoint.<br>High (default)—turns the relay on when the process value exceeds the setpoint.<br>Low—turns the relay on when the process value falls below the setpoint. |
| **Set setpoint** | Sets the process value at which the relay toggles. The default value is different for each sensor. |
| **Deadband** | Sets the area for an amount of change necessary after the relay setpoint is reached in order to satisfy a condition. |

| Option | Description |
|---|---|
| **Overfeed timer** | Sets a time period for de-activating an active relay if the process setpoint cannot be reached. Once an overfeed alarm is present, it must be manually reset. |
| **Off delay** | Sets a delay time for the relay to turn off (default: 0 seconds). |
| **On delay** | Sets a delay time for the relay to turn on (default: 0 seconds). |

**Figure 19 Feeder control function**

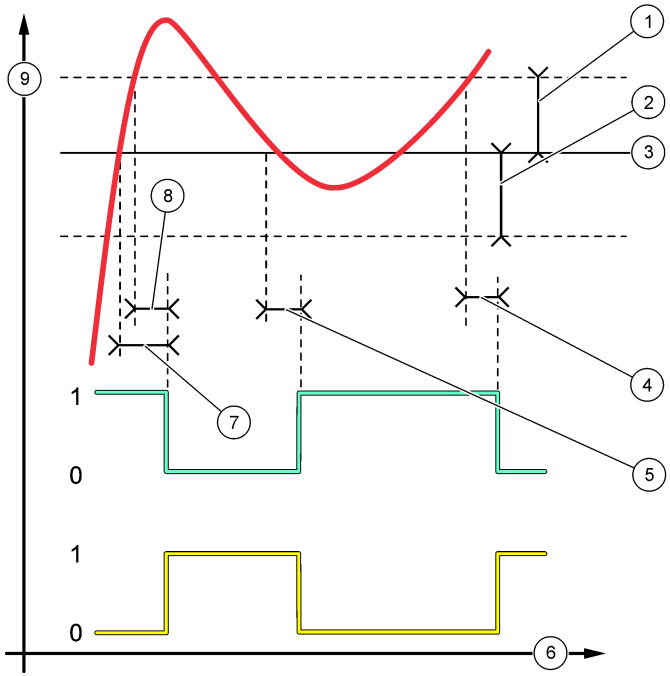


| | |
|---|---|
| **1** Deadband (Phase = Low) | **6** Time (x-axis) |
| **2** Deadband (Phase = High) | **7** ON delay (phase set high) |
| **3** Setpoint | **8** OFF delay (phase set low) |
| **4** OFF delay (phase set high) | **9** Source (y-axis) |
| **5** ON delay (phase set low) | |

**Figure 20 Feeder control function (Phase low, Overfeed timer)**

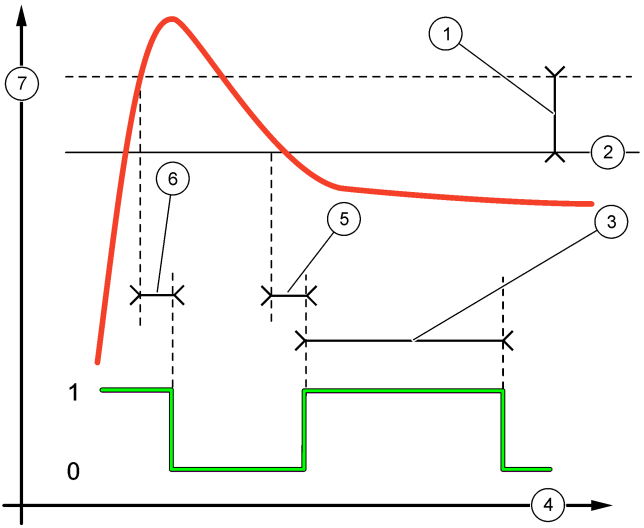


| | |
|---|---|
| **1** Deadband | **5** ON delay |
| **2** Setpoint | **6** OFF delay |
| **3** Overfeed timer | **7** Source (y-axis) |
| **4** Time (x-axis) | |

- **Event Control Function (refer to Figure 21, Figure 22 and Figure 23)**

| Option | Description |
|---|---|
| **Set setpoint** | Sets the value where the relay will turn on. |
| **Deadband** | Sets a hysteresis so the relay will not swing unregulated when the process value converges to the setpoint. |
| **OnMax timer** | Sets the maximum time the relay can stay on independent from the measured value (default: + 0 min). |
| **OffMax timer** | Sets the maximum time the relay can stay off independent from the measured value (default: + 0 min). |
| **OnMin timer** | Sets the minimum time the relay can stay on independent from the measured value (default: + 0 min). |
| **OffMin timer** | Sets the minimum time the relay can stay off independent from the measured value (default: + 0 min). |

**Figure 21 Event control function (no delay)**

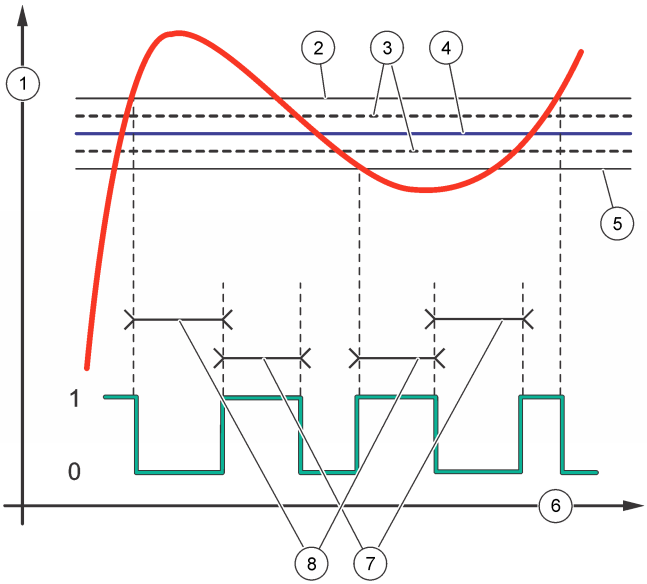


| | |
|---|---|
| **1** Source (y-axis) | **5** Low alarm |
| **2** High alarm | **6** Time (x-axis) |
| **3** Deadband | **7** OnMax-time |
| **4** Setpoint | **8** OffMax-time |

**Figure 22 Event control function (OnMin timer, OffMin timer)**

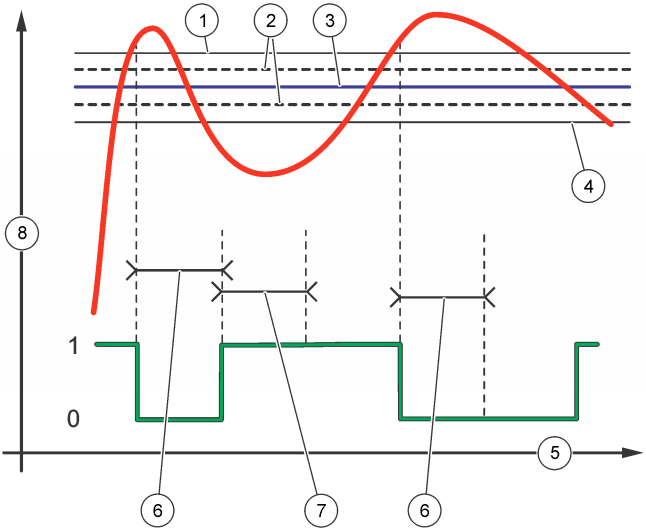


| | |
|---|---|
| **1** High alarm | **5** Time (x-axis) |
| **2** Deadband | **6** OffMin timer |
| **3** Setpoint | **7** OnMin timer |
| **4** Low alarm | **8** Source (y-axis) |

**Figure 23 Event control function (ON/OFF delay)**

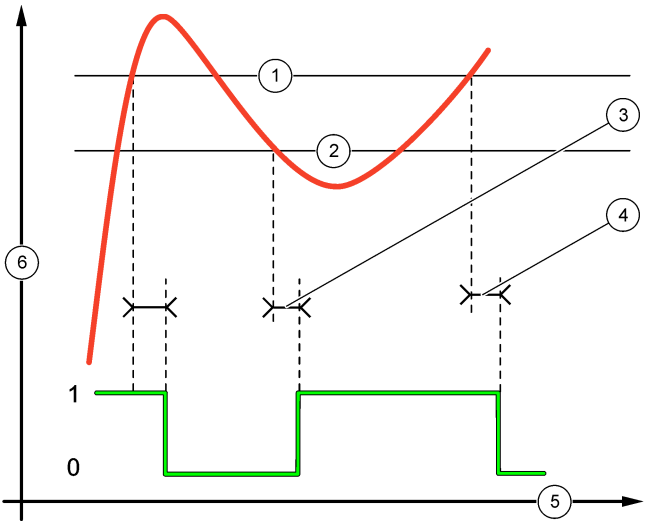


| | |
|---|---|
| **1** High alarm | **4** OFF delay |
| **2** Low alarm | **5** Time (x-axis) |
| **3** ON delay | **6** Source (y-axis) |

- **Pulse Width Modulation Control Function (refer to Figure 24)**

| Option | Description |
|---|---|
| **Set mode** | Auto—the relay output works as a PID controller.<br>Manual—the signal is controlled by the user through manual adjustment of the % change value. This option is shown as Manual Output after the manual set mode is selected. |
| **Phase** | Reverses the leading sign of the control deviation for the PID controller (default: Reverse). The phase selects whether the relay will operate at the first part of a cycle (direct phase) or the second part (reverse phase). |
| **Set setpoint** | Creates a setpoint value. |
| **Dead zone** | The range above and below the setpoint. In this set range, the PID controller does not take action to change the Pulse Width Modulation On/Off Ratio output signal until the limits of the dead zone are reached. |
| **Period** | Sets the cycle duration of the PWM output signal (default: 5 seconds). |
| **Min width** | Sets the minimum PWM ratio (default: 1.0 second). |
| **Max width** | Sets the maximum PWM ratio (default: 4.0 seconds). |
| **Prop band** | Sets the proportional part of the PID controller. The proportional part of the controller supplies an output signal which is linearly dependent to the control deviation. The proportional part reacts on any changes at the input but starts to oscillate easily if the value is set high. The proportional part cannot completely compensate for disturbances. |
| **Integral** | Sets the integral part of the PID controller (default: 000 minutes). The integration part of the controller supplies an output signal. The output signal increases linearly if the control deviation is constant. The integration part responds slower than the proportional part and can completely compensate disturbances. The higher the integration part, the slower it responds. If the integration part is set too low, it starts to oscillate. |

**Figure 24 Pulse Width Modulation function (linear mode)**

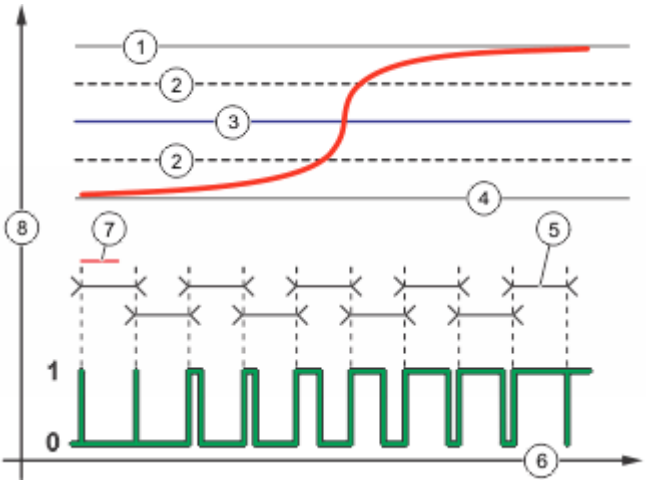


| | |
|---|---|
| **1** High alarm | **5** Period |
| **2** Deadband | **6** Time (x-axis) |
| **3** Setpoint | **7** Phase |
| **4** Low alarm | **8** Selected source (y-axis) |

- **Frequency Control Function (refer to Figure 25)**

| Option | Description |
|---|---|
| **Set mode** | Auto—The relay works as a PID controller.<br>Manual—the signal is controlled by the user through manual adjustment of the % change value. This option is shown as Manual Output after the manual set mode is selected. |
| **Phase** | Reverses the leading sign of the control deviation for the PID controller (default: Reverse). The phase selects whether the relay will operate at the first part of a cycle (direct phase) or the second part (reverse phase). |
| **Set setpoint** | Sets the process value which is controlled by the PID controller. |
| **Dead zone** | In this set range, the PID controller does not take action to change the output frequency until within the limits of the dead zone. |
| **Pulse width** | Sets the cycle duration (0-600 seconds) of the PWM output signal. (default: 0.5 seconds) The cycle duration is equal to the duty cycle of the output signal. |
| **Minimum pulses** | Sets the minimum number of pulses per minute at which the relay can operate. Range: 0.001–4.000 (default: 1.000) |
| **Maximum pulses** | Sets the maximum number of pulses per minute at which the relay can operate. Range: 0.001–60.000 (default: 04.000). This value cannot be set lower than Minimum Pulses value. |
| **Prop band** | Sets the proportional part of the PID controller. The proportional part of the controller supplies an output signal which is linearly dependent to the control deviation. The proportional part reacts on any changes at the input but starts to oscillate easily if the value is set high. The proportional part cannot fully compensate for disturbances. |
| **Integral** | Sets the derivative part of the PID controller (default: 000 minutes). The integration part of the controller generates an output signal. The output signal increases linearly if the control deviation is constant. The integration part responds slower than the proportional part and can fully compensate disturbances. The higher the integration part, the slower it responds. If the integration part is set too low, it starts to oscillate. |

**Figure 25 Frequency control function**

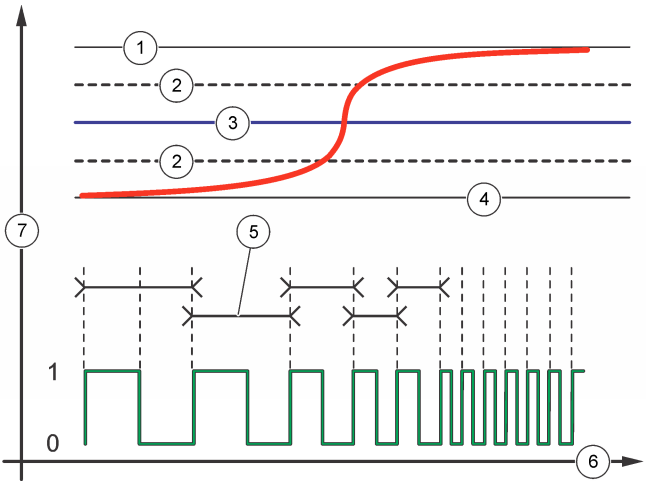


| | |
|---|---|
| **1** High limit | **5** Cycle duration |
| **2** Deadband | **6** Time (x-axis) |
| **3** Setpoint | **7** Selected source (y-axis) |
| **4** Low limit | |

- **Warning Function**

| Option | Description |
|---|---|
| **Warning** | Sets the level for warning activation. Refer to the sensor manual for the numbers for individual warning messages. |

## 6.6 Display setup

Configures the controller display.

1. From the Settings menu, select sc200 Setup and push **ENTER**.
2. Select Display Setup and push **ENTER**.

| Option | Description |
|---|---|
| **Adjust Order** | View and modify the measurement display order.<br>• **See Current Order**—View the current display order<br>• **Add Measurements**—Add selected measurements to the display<br>• **Remove Measurements**—Remove selected measurements from the display<br>• **Reorder List**—Select one or more measurements and change their order in the display<br>• **See Default Order**—View the default display order<br>• **Set to Default**—Set the display order to the default configuration<br>***Note:*** *Some of the above will not be available if no adjustment is possible for that option (e.g.* ***Reorder List*** *and* ***Remove Measurements*** *will not be available if only one measurement is selected for display).* |
| **Display Contrast** | Adjust the contrast to a value between the minimum of +1 and the maximum of +9 |
| **Edit Name** | Assigns a name to the controller |

## 6.7 Update the date and time

1. From the Settings menu, select sc200 Setup and push **ENTER**.
2. Select Set Date/Time and push **ENTER**.
3. Select Date Format from the Set Date/Time screen and push **ENTER**.
4. Select a format and push **ENTER**.
5. Select Date/Time from the Set Date/Time screen and push **ENTER**.
6. Update the entries.
   a. Use the right and left arrow keys to highlight a field.
   b. Use the up and down arrow keys to change the values in the field and push **ENTER**.
   c. At the end of the date field, push the right arrow to wrap down to the time fields.
   d. Use the up and down and arrow keys to update the time fields.
7. Push **ENTER** to save the changes.
   The controller returns to the Set Date/Time menu.

## 6.8 Set the datalog mode and interval

Datalog Setup is available if a calculation has been set up.

1. From the Settings menu, select sc200 Setup and push **ENTER**.
2. Select Datalog Setup and push **ENTER**.
3. Select Set Mode and push **ENTER**.
4. Select an option (Snap Shot, Average, Maximum, Minimum) and push **ENTER**.
5. From the Datalog Setup menu, select Set Interval and push **ENTER**.
6. Select an interval from the list and push **ENTER**.

## 6.9 Set up a calculation

1. From the Settings menu, select sc200 Setup and push **ENTER**.
2. Select Calculation and push **ENTER**. Select a menu option and choose from the displayed list or update the entry. Refer to the table below for more information about each option.

| Option | Description |
|---|---|
| **Set variable X** | Selects the sensor for the x variable |
| **Set parameter X** | Selects the sensor measurement for the x variable |
| **Set variable Y** | Selects the sensor for the y variable |
| **Set parameter Y** | Selects the sensor measurement for the y variable |
| **Set formula** | Select the math function to implement:<br>• **None**—Disables the math function<br>• **X-Y**—Subtraction function<br>• **X+Y**—Addition function<br>• **X/Y**—Division function<br>• **[X/Y]%**—Percentage function<br>• **[X+Y]/2**—Average function<br>• **[X*Y]**—Multiplication function<br>• **[X-Y]%/X**—Difference function |
| **Display format** | Selects the number of digits and decimal points |

| Option | Description |
|---|---|
| **Set units** | Selects the units for the calculated reading |
| **Set parameter** | Selects the parameter for the calculated reading |

3. Push **ENTER** to save the selection or setting and return to the Calculation menu.

## 6.10 Set up the discrete inputs

Use these inputs to switch closure inputs or logic level voltage inputs.

1. Press the **MENU** key.
2. Select sc200 Setup and push **ENTER**.
3. Select Discrete Input Setup and push **ENTER**.
4. Select the desired channel (Input 1, Input 2 or Input 3) and push **ENTER**.
5. Select a control logic option and push **ENTER**.

| Option | Description |
|---|---|
| **Disable** | This channel is disabled and not used. |
| **On/High** | This channel is active when either the switch input is On (or closed), or the logic level voltage input is at a High level. |
| **Off/Low** | This channel is active when either the switch input is Off (or opened), or the logic level voltage input is at a Low level. |

6. Select a warning option and push **ENTER**.

| Option | Description |
|---|---|
| **Off** | An active discrete input does not trigger a device warning. |
| **On** | An active discrete input triggers a device warning. |

7. Select an output mode option and push **ENTER**.

| Option | Description |
|---|---|
| **Active** | Output level continues to represent operating conditions. |
| **Hold** | Output level is held static. |
| **Transfer** | Output level moves to a pre-configured value. |

8. Select the sensors that will have their outputs (analog and relay) affected when one of the discrete inputs becomes active. Push **ENTER**.
9. Use the arrows to select the On Delay value (the duration time delay between the discrete input activation and the configured response of the controller). Push **ENTER**.
10. Use the arrows to select the Off Delay value (the duration time delay between the discrete input de-activation and the configured response of the controller). Push **ENTER**.
11. Repeat steps 4–10 for each desired channel.
12. If a discrete input needs to be changed after initially set up:
    a. Repeat steps 1–4 and an Input Settings menu appears with the following options:
       - Control Logic
       - Set Warning
       - Output Mode
       - On Delay
       - Off Delay
    b. Select the desired option and push **ENTER**.

c. Make the desired changes and push **ENTER** to save the changes and return to the Inputs Setting menu.

## 6.11 Update the display language

The display language can be changed through the Setup menu.

1. From the Settings Menu, select sc200 Setup and push **ENTER**.
2. Select Language and push **ENTER**.
   The list of language options appears. English is the default language for the controller.
3. Highlight the language to be used for the controller and push **ENTER**.
   The selected language is saved and is used for the controller display. The display returns to the sc200 Setup menu.

## 6.12 Using the secure digital memory (SD) card

An SD card must be installed in the controller.

- The SD card can be used to update software and firmware and to download event and data logs. If the SD card is installed while the controller is in the Settings Menu, push the **HOME** key and then the **MENU** key to verify the option is visible. The SD icon will also be visible in the upper status bar of the main measurement screen when a card is installed.
- Data log files on the SD card are available in XML and binary formats.
- DataCom is used to convert files from binary to CSV format. Refer to the DataCom manual for more information on how to use the application. For a copy of the DataCom manual, software updates or other downloadable resources, go to http://www.de.hach.com or http://www.hach.com. Search *DataCom* or go to any sc200 product page.

### 6.12.1 Updating software

**Notes:**

- The controller does not automatically transfer information to or from an SD card.
- When the SD card is put in multiple controllers, each controller has a separate set of folders in the SD card memory. To make sure software updates are in the correct folder for the controller in use, it is best to use a separate dedicated SD card for each controller.

1. From the Settings Menu, select SD Card Setup and push the **ENTER** key.
2. Select Upgrade Software and push the **ENTER** key.

   ***Note:*** *If the Upgrade Software option does not appear, do the steps in* Firmware updates with SD cards on page 44.
3. Select a device from the list and push the **ENTER** key. The list of options includes the controller and all connected devices that have software placed in the appropriate folder on the SD card.
4. If more than one version of the upgrade software is available, select the version with the highest number and push the **ENTER** key.
5. Push the **ENTER** key to begin the software transfer.
   The display will show "Transferring files. Please wait..." The percentage of completion appears in the bottom left corner of the display. The upgrade cannot be halted once it has begun.

   - When the transfer is successful, the display will show "Transfer complete" along with a prompt to push **ENTER** to restart the controller or to push the **BACK** key and exit to the SD Card Setup menu. Controller updates take effect when the controller is restarted. A restart is not necessary for sensor updates.
   - If the transfer is unsuccessful, the display will show "Transfer failed" and an error message. Press the **ENTER** key to acknowledge the warning and exit out of the menu. Error messages are different for each sensor. Refer to the applicable sensor manual.

### 6.12.2 Saving data and event logs with SD cards

**Notes:**

- Data and event logs can be downloaded to an SD card and viewed with any device capable of reading an SD card.
- Data logs store the measurement data at selected intervals in a packed binary format (.flg file).
- Event logs store a variety of events that occur on the devices such as configuration changes, alarms and warning conditions. Event logs are set up during the sensor or module configuration process. Event logs are stored in a CSV format.

1. From the Settings Menu, select SD Card Setup and push the **ENTER** key.
2. Select Save Logs and push the **ENTER** key.
3. If more than one device appears on the screen, all devices are selected by default. To deselect an item, highlight the selection and push the left arrow key. Select the devices from which logs will be saved and push the **ENTER** key.
4. Select the time period from which logs are to be saved.

| Option | Description |
|---|---|
| **Last Day** | All logs from the last full 24 hours, starting from 12:00 a.m., and any additional time remaining on the current day |
| **Last Week** | All logs from the last full week (7 days) starting from 12:00 a.m., and any additional time remaining on the current day |
| **Last Month** | All logs from the last full month (30 days) starting from 12:00 a.m., and any additional time remaining on the current day |
| **All** | Save all logs in memory |
| **New** | All logs that are new since the last time logs were saved to the SD card |

5. Push the **ENTER** key to confirm the choice, and push the **ENTER** key again to begin the file transfers.
6. Allow time for the files to transfer. The display will show Transferring files. Please wait... and the percentage of files transferred.
   If the transfer is successful, the display will show "Transfer complete." If the transfer is not successful, the display will show "Transfer failed."
7. Do one of the following:
   a. Push the **ENTER** key to exit back to the SD Card Setup menu.
   b. Push the **HOME** key to return to the measurement screen.
   c. Push the **BACK** keys to return to the Settings Menu.

### 6.12.3 Access data and event log files on the SD card

A PC with an SD Card reader device or USB adapter is necessary to view the event and data logs kept on the SD Card. Excel 2003 or higher (for XML files) or the Data Com application (for binary flg files) is necessary to open the event and data logs.
Data logs have the following structure: Device Name, Device Serial Number, Device Identification, Data Log, Time Stamp.

Event logs have the following structure: Device Name, Device Serial Number, Device Identification, Event Log, Time Stamp.

To view data or event log files stored on the SD card:

1. Attach the card reader device to the PC (if necessary) and install the SD card that contains the files in the reader device.
2. In the SD card directory, open the HACH folder.
3. Select the Logs folder.
4. Select a device folder.

The event and data log files in the folder are shown.

5. To view XML data log files:
   a. Make sure the HachDatalog.xsl style sheet exists in the device folder.
   b. Open the Excel application.
   c. Go to File, Open.
   d. Select the data log file.
   e. In the Import XML dialog box, select **Open the file with the following style sheet applied** and select **HachDatalog.xml**.
   f. Click OK to view the data.
6. To view binary data log (.flg) files:
   a. Make sure the device driver (.flg.drv) file exists in the device folder.
   b. Open Data Com.
   c. In the File Viewer section, click Open.
   d. Select the data log file.
      The data log file is shown in the box and a comma separated values (csv) file with the same file name is created. This csv file can be opened in Excel.

### 6.12.4 Firmware updates with SD cards

The latest firmware updates can be placed on an SD card. The SD card can then be used to update the controller or device firmware.

A PC and a USB card reader or other device capable of reading an SD card are necessary.

1. Find the zip file at http://www.hach.com and copy it to the PC.
2. Extract file(s) from the zip folder and save them to the SD card.
3. Remove the SD card and update the controller and device firmware. Refer to Updating software on page 42.

### 6.12.5 Backup settings to an SD card

Saves the configuration of a device to the SD card.

1. Push the **MENU** key.
2. Select SD Card Setup and push **ENTER**.
3. Select Manage Configuration and push **ENTER**.
4. Select Backup Settings and push **ENTER**.
5. Select the devices to be backed up. All devices are selected by default. To deselect an item, highlight the selection and push the left arrow key. Push **ENTER** to begin the file transfers. If backup files already exist on the SD card, a confirmation window appears. Select the devices again and push **ENTER**. Wait for the "Transfer complete" message.
6. Push **ENTER** again to return to the Manage Configuration menu.

### 6.12.6 Restore settings to the controller

This menu selection only appears if a (serial number-specific) backup file for the controller or one of the sensors connected to it exists on the SD Card. This menu selection loads the configuration of a specific device from the SD card to the same device (serial number-controlled function).

1. Push the **MENU** key.
2. Select SD Card Setup and push **ENTER**.
3. Select Manage Configuration and push **ENTER**.
4. Select Restore Settings and push **ENTER**.
5. Select the device that will be restored. All devices are selected by default. To deselect an item, highlight the selection and push the left arrow key. Push **ENTER** to begin the file transfers.

6. When the transfer is complete, push **ENTER**.
7. To have the settings take effect immediately, restart the controller. Push the **BACK** key to exit the Manage Configuration menu.

### 6.12.7 Transfer settings to another device

All device settings including calibration, sensor name, selected temperature and measurement units and data logging settings are transferred.

1. Push the **MENU** key.
2. Select SD Card Setup and push **ENTER**.
3. Select Manage Configuration and push **ENTER**.
4. Select Transfer Settings and push **ENTER**. Two options appear:
   - Retrieve Settings
   - Copy Settings
5. To retrieve settings from the controller (or a device connected to it) and put the settings on the SD card:
   a. Select Retrieve Settings and push **ENTER**.
   b. Select the devices that contain the information to be transferred. All devices are selected by default. To deselect an item, highlight the selection and push the left arrow key. Push **ENTER** to begin the file transfers. Wait for the "Transfer complete" message.
   c. If files already exist on the SD card, a confirmation window appears. Select the devices again and push **ENTER**. Wait for the "Transfer complete" message.
   d. Push **ENTER** to return to the Manage Configuration menu.
6. To copy settings from the SD card to a controller (or a device connected to it):
   a. Select Transfer Settings and push **ENTER**.
   b. Select Copy Settings and push **ENTER**.
   c. Select the devices on the SD card. All devices are selected by default. To deselect an item, highlight the selection and push the left arrow key. Push **ENTER** to begin the file transfers.
7. When the transfer is complete, push **ENTER** to restart the connected devices.
8. Push **ENTER** to restart the controller or push **BACK** to return to the Manage Configuration menu.

## 6.13 Using the service port

The service port is used to download data files from the controller and install new versions of controller and sensor firmware. To download data and update software, use the service port in combination with DataCom and a service cable (LZX887).

## 6.14 Using DataCom

When using the service port, it is necessary to use DataCom. DataCom is a PC Application Utility that downloads data log and event log files from the controller and installed sensors. Files are downloaded from the controller through the controller service port or they can be placed on a Secure Digital Memory (SD) card installed in the controller. In addition, DataCom is used to upload software for the controller and sensors. The DataCom application must be installed on a PC to read the files.

Refer to the DataCom manual for more information on how to use the application. The DataCom manual, software updates and other downloadable resources are available at http://www.de.hach.com or http://www.hach.com on any sc200 product page.

# Section 7 Maintenance

**⚠ DANGER**



Multiple hazards. Only qualified personnel must conduct the tasks described in this section of the document.

## 7.1 Cleaning the controller

**⚠ DANGER**



Electrocution hazard. Remove power from the instrument before doing maintenance or service activities.

***Note:*** *Never use flammable or corrosive solvents to clean any part of the controller. Use of these solvents may degrade the environmental protection of the unit and may void the warranty.*

1. Make sure the controller cover is securely closed.
2. Wipe the controller exterior with a cloth dampened with water, or with a mixture of water and mild detergent.

## 7.2 Fuse replacement

Fuses are not user-serviceable items. The need for fuse replacement in controllers indicates severe technical failure and is therefore considered to be a service activity. If a blown fuse is suspected, contact Technical Support.

## 7.3 Battery replacement

The lithium ion backup battery is not user replaceable. Contact technical support for replacement.

# Section 8 Troubleshooting

| Problem | Resolution |
|---|---|
| No current output | Verify current output configuration. |
| | Test current output signal using the Test/Maintenance submenu. Input a current value and verify the output signal at the controller connections. |
| | Contact Technical Support. |
| Incorrect current output | Verify current output configuration. |
| | Test current output signal using the Test/Maintenance submenu. Input a current value and verify the output signal at the controller connections. If the output is incorrect, perform an output calibration. |

| Problem | Resolution |
|---|---|
| No relay activation | Make sure relay connections are secure. |
| | If using an external power source, make sure the relay wiring is correct. |
| | Make sure the relay configuration is correct. |
| | Test the relay activation through the Test/Maintenance menu. The relay should energize and de-energize as selected. |
| | Make sure the controller is not in calibration mode and that the relay is not being held. |
| | Reset the Overfeed Timer to make sure the timer has not expired. |
| Secure Digital Memory (SD) card not recognized by the controller | Make sure the SD card is properly oriented. The copper traces should face toward the controller display. |
| | Make sure the SD card is fully seated in the slot and the spring lock is engaged. |
| | Make sure the SD card is properly formatted with a Fat 32 format. The MMC format is not supported. Follow the instructions of the card manufacturer to format the SD card on a PC. |
| | Make sure the card is not larger than 32 GB. |
| | Make sure an SD card is being used. Other types of cards (such as xSD, micro SD, mini SD) will not work properly. |
| Information not saving, or not saving properly to the SD card. | Make sure the SD card is properly formatted with the FAT 32 format. The MMC format is not supported. Follow the instructions of the card manufacturer to format the SD card on a PC. |
| | If the SD card has previously been in use, format the card with the Fat 32 format, install the card in the controller, and try downloading files. |
| | Try a different SD card. |
| SD card full | Read the SD card with a PC or other card reader device. Save important files and then delete some or all of the files on the SD card. |
| Controller cannot find software updates on the SD card. | Make sure an appropriate folder is created by installing the SD card in the controller. An update folder will automatically be created. |
| | Install the SD card on a PC and make sure the software files are located in the appropriate update folder. |
| | If the same SD card is used with multiple controllers, each controller will have a separate folder on the system. Make sure the software updates are in the folder dedicated to the controller in use. |
| Display is lit but shows no characters or characters are faint or blurry. | Adjust the display contrast |
| | Make sure protective film has been removed from display. |
| | Clean the outside of the controller, including the display screen. |

| Problem | Resolution |
|---|---|
| Controller will not power up, or powers up intermittently | Make sure the AC power connections are properly terminated in the controller. |
| | Make sure the power strip, line power, wall plug are all properly plugged in. |
| | Contact Technical Support |
| Network or sensor module not recognized | Make sure the module is properly installed. |
| | Make sure the module selector switch is set to the proper number. |
| | Remove sensor module and install the module into the second analog slot. Apply power to the controller and allow the controller to perform a device scan. |
| | Contact Technical Support. |
| Sensor not recognized<br>***Note:*** *Example of possible display message: ***** | If the sensor is an analog sensor and a corresponding module is installed in the controller, refer to the instructions supplied with the Network or Sensor Module. |
| | Make sure the digital connector wiring harness is seated on the inside of the door assembly and that the wiring harness is not damaged. |
| | If the digital sensor is connected to the controller with a digital termination box, user supplied junction box, digital extension cables, or a user-supplied extension cable, connect the sensor directly to the controller and perform a device scan. If the controller recognizes the sensor, check that all the wiring in the junction boxes or extension cables is correct. |
| | Make sure that only two sensors are installed in the controller. Although two analog module ports are available, if a digital sensor and two analog modules are installed, only two of the three devices will be seen by the controller. |
| | Contact Technical Support |
| Device Missing error message appears | Perform a Device Scan from the Test/Maintenance menu. |
| | Power cycle the controller |

## 8.1 Test and Maintenance menu

**1.** From the Settings Menu, select Test/Maint and push **ENTER**.

| Option | Description |
|---|---|
| **Scan devices** | Performs a scan for active and missing devices. |
| **Output cal**<br>• **Output 1**<br>• **Output 2** | Lets the user calibrate the 4–20 mA outputs with a 250 ohm resistor in series to the mA output terminals. The settings for each output are adjusted until the correct value (4 mA or 20 mA) is supplied.<br>Calibrate 4 mA output (Min: 0 Max: 25000)<br>Calibrate 20 mA output (Min: 35000 Max: 65533) |
| **Hold outputs** | Sets the value the controller sends to an external system for a defined period of time. After the time period, the instrument goes back to reporting real time values.<br>Set activation—Launch or release<br>Set Outmode—Hold Outputs (default) or Transfer Outputs<br>Set Channels—All (default) or select from hardware list |

| Option | Description |
|---|---|
| **Test output**<br>• **Output 1**<br>• **Output 2** | Lets the user select a mA value that is sent by the controller for verification.<br>Min: 0 mA (default +04.00)<br>Max: 25.00 mA |
| **Status** | View status of all modules, sensors and relays. |
| **Test relay—A, B, C, D** | Energize or De-energize the selected relay |
| **Overfeed reset** | Resets the Overfeed Timer. |
| **Reset default config** | Resets the controller configuration settings to the default values (language, date and time, relay function and data output function). |
| **Restart sc200** | Performs a controller restart |
| **Simulation (only displays if sensors or modules are connected)** | After the sim value is entered, the controller outputs this value as if it was the value sent from the sensor. The simulation stops after the user exits the screen.<br>Source-<br>• <Module 1><br>• <Module 2><br>(Footer displays current source selection)<br>Parameter—Source measurement type (footer displays current source selection)<br>Sim value—Use arrow keys to change value (footer displays current source selection) |
| **Modbus stats** | Displays Error and Good count stats for selected port.<br>• Sensor port 1, 2, 3 or 4<br>• Network port<br>• Service port<br>• Clear stats |
| **System data** | Displays the current system current, temperature and voltage data. |

## 8.2 Warning and error conditions

Follow the steps below to acknowledge controller warnings.

1. From the Settings menu, select Diagnostics and push **ENTER**.
2. Select the device (controller, sensor, network card) with the warning or error and push **ENTER**.
3. Select the warning, error or event list and push **ENTER**.
4. Select Yes and push **ENTER** to acknowledge the warning.
   ***Note:*** *Errors cannot be acknowledged.*
5. For more information on a specific warning, error or event, refer to the device manual.

## Section 9 Device scan information

| Display message | Action |
|---|---|
| Installing device...please wait | The controller has found a new device. No action is necessary. The controller automatically performs an installation process for the new device and displays the main measurement screen of the device installed in the number one position. |
| Device missing <device id> | A previously installed device has been removed from the controller or is not detected.<br>• Push the **Enter** key to continue.<br>• Push the left arrow key to select or de-select a missing device.<br>• Push the **Enter** key to delete the missing device.<br>The controller will display the main measurement screen for the device in the number one position.<br>***Note:*** *This message also displays when a device is missing and a new device has been installed. After the missing device is deleted, the controller automatically installs the new device and displays Installing device...please wait. The controller then displays the main measurement screen for the device installed in the number one position.* |

## Section 10 Replacement parts and accessories

***Note:*** *Product and Article numbers may vary for some selling regions. Contact the appropriate distributor or refer to the company website for contact information.*

| Description | Item number |
|---|---|
| 4 GB Secure Digital Memory (SD) card | 9218100 |
| Connector kit for digital sensor | 9201000 |
| Controller installation kit | 8806200 |
| DataCom cable | LZX887 |
| Mounting bracket inserts | 9177900 |
| Plug, conduit opening (set of 3) | 5868700 |
| Power cord kit, with strain relief, 125 VAC, U.S.-style plug | 9202900 |
| Power cord kit, with strain relief, 230 VAC, European-style plug | 9203000 |
| Screw driver | 6134300 |
| SD card reader | 9218200 |
| SD card cover kit for sc200 controller | 9200900 |
| Screws for controller installation kit | 9177800 |
| Cord grip kit (1) | 9178000 |
| Sealing washer for cord grip assembly | 1033814 |
| UV protection screen | 8809200 |
| Weather and sun shield w/ UV protection screen | 9220600 |
| **Sensor and communication modules** | |
| Conductivity module | 9013000 |

| Description | Item number |
|---|---|
| Flow module | 9012700 |
| 4-20 mA input module | 9012800 |
| pH and DO module | 9012900 |
| 4-20 mA output module | 9334600 |
| HART network module kit | 9328100 |
| Modbus network module | 9013200 |
| Profibus network module | 9173900 |
| Profibus M12 connector kit | 9178500 |
| Profibus M12 socket (hard wire to quick connector adapter) | 9178200 |
| Profibus M12 T-splitter | 9178400 |




**HACH COMPANY World Headquarters**
P.O. Box 389, Loveland, CO 80539-0389 U.S.A.
Tel. (970) 669-3050
(800) 227-4224 (U.S.A. only)
Fax (970) 669-2932
orders@hach.com
www.hach.com

**HACH LANGE GMBH**
Willstätterstraße 11
D-40549 Düsseldorf, Germany
Tel. +49 (0) 2 11 52 88-320
Fax +49 (0) 2 11 52 88-210
info-de@hach.com
www.de.hach.com

**HACH LANGE Sàrl**
6, route de Compois
1222 Vésenaz
SWITZERLAND
Tel. +41 22 594 6400
Fax +41 22 594 6499

© Hach Company/Hach Lange GmbH, 2011-2014, 2016, 2018, 2019.
All rights reserved.

LEFT BLANK

# *IFM EFECTOR*

## *MODEL FR-1, SPEED MONITOR*

LEFT BLANK

ifm electronic

CE

# Operating instructions

## ecomat200®

UK

## Monitor
## FR-1 / FR-1N

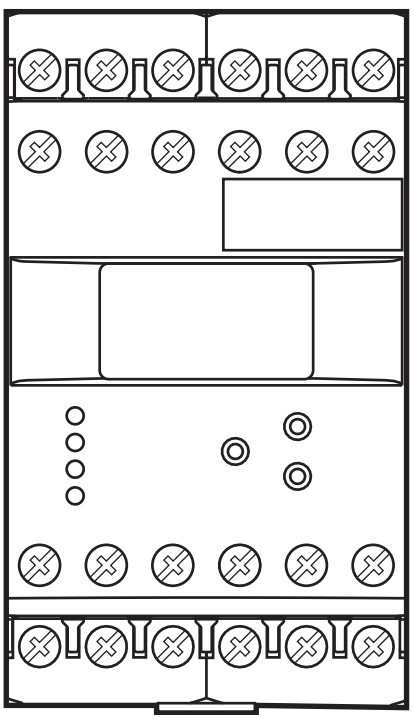

7390953 / 00 01 / 2013

# Contents


1 Preliminary note ..... 4
1.1 Symbols used ..... 4
1.2 Warning signs used ..... 4

2 Safety instructions ..... 5
2.1 General ..... 5
2.2 Target group ..... 5
2.3 Electrical connection ..... 5
2.4 Operation ..... 5
2.5 Installation location ..... 6
2.6 Housing temperature ..... 6
2.7 Tampering with the device ..... 6

3 Functions and features ..... 6

4 Operating and display elements ..... 8
4.1 Display stand-by mode ..... 9

5 Installation ..... 9
5.1 Installation of the device ..... 9
5.2 Installation of the sensors ..... 10

6 Electrical connection ..... 10
6.1 Terminal connection ..... 10
6.2 Voltage supply (power) ..... 10
6.2.1 AC supplies ..... 10
6.2.2 DC supplies ..... 11
6.3 Inputs ..... 11
6.3.1 Connection of the sensors (In1) ..... 11
6.3.2 Reset inputs (reset 1 and 2) ..... 11
6.3.3 Typical input circuit F...-x ..... 12
6.4 Outputs ..... 12
6.4.1 Relay outputs (Out1, 2) ..... 12
6.4.2 Transistor outputs (Out1, 2) ..... 13
6.4.3 Analogue output (Out 3) ..... 13
6.5 Additional outputs for NAMUR devices (F...-xN) ..... 13
6.5.1 Fault output ..... 13
6.5.2 Stepping output ..... 13

7 Navigation and parameter overview ..... 14
7.1 System parameters ..... 15
7.1.1 FOx ..... 15
7.1.2 SOx ..... 15
7.1.3 FWx ..... 16
7.1.4 NC1 ..... 16
7.1.5 DIM ..... 16
7.1.6 VER ..... 17
7.1.7 AO3 ..... 17
7.2 Application parameters ..... 17
7.2.1 SPx ..... 17
7.2.2 HYx ..... 17
7.2.3 STx ..... 17
7.2.4 DTx ..... 18
7.2.5 FTx ..... 18
7.2.6 FA3 ..... 18

8 Programming ..... 19
8.1 Programming example DT1 (Delay Time, output 1) ..... 19
8.2 Notes on programming ..... 20
8.2.1 RUN mode ..... 20
8.2.2 Time Out Function ..... 20
8.2.3 Numerical entries ..... 20
8.2.4 Factory Reset ..... 21
8.2.5 KEY function (locking) ..... 21

9 Test mode ..... 22
9.1 Activate the test mode ..... 22
9.2 Terminate the test mode ..... 22
9.3 Test parameters ..... 23

10 Scale drawing ..... 24

11 Technical data ..... 24
11.1 Overview ..... 24
11.2 Approvals/standards ..... 25

12 Maintenance, repair, disposal ..... 25

UK

This document is the original instructions.

# 1 Preliminary note

This document is part of the device and contains information about the correct handling of the product.

This document is intended for specialists. These specialists are people who are qualified by their training and their experience to see risks and to avoid possible hazards that may be caused during operation or maintenance of the device.

Read this document before use to familiarise yourself with operating conditions, installation and operation. Keep this document during the entire duration of use of the device.

Adhere to the warning notes and safety instructions.

## 1.1 Symbols used

▶ Instruction

> Reaction, result

[…] Designation of pushbuttons, buttons or indications

→ Cross-reference

Important note
Non-compliance can result in malfunction or interference.

Information
Supplementary note.

## 1.2 Warning signs used

**⚠ WARNING**

Warning of serious personal injury.
Death or serious irreversible injuries may result.

**⚠ CAUTION**

Warning of personal injury.
Slight reversible injuries may result.

**NOTE**

Warning of damage to property.

# 2 Safety instructions

## 2.1 General

Follow the operating instructions. Non-observance of the instructions, operation which is not in accordance with use as prescribed below, wrong installation or incorrect handling can affect the safety of operators and machinery.

The installation and connection must comply with the applicable national and international standards. Responsibility lies with the person installing the device.

## 2.2 Target group



The device must only be installed, connected and put into operation by a qualified electrician.

## 2.3 Electrical connection

Disconnect the unit externally before handling it. Also disconnect any independently supplied relay load circuits.

Make sure that the external voltage is generated and supplied according to the requirements for safe extra-low voltage (SELV) since this voltage is supplied without further measures near the operating elements and at the terminals for the supply of connected sensors.

The wiring of all signals in connection with the SELV circuit of the device must also comply with the SELV criteria (safety extra-low voltage, safe electrical isolation from other electric circuits).

If the externally supplied or internally generated SELV voltage is externally grounded, the responsibility lies with the user in accordance with the applicable national installation regulations. All statements in this manual refer to the unit the SELV voltage of which is not grounded.

It is not allowed to supply external voltage to the terminals for the pulse pick-up supply. The consumption of current which exceeds the value given in the technical data is not allowed.

An external main switch must be installed for the unit which can switch off the unit and all related circuits. This main switch must be clearly assigned to the unit.

## 2.4 Operation

Be careful when handling the unit once power is applied. This is only allowed by qualified personnel due to the protection rating IP 20.

The design of the unit corresponds to the protection class II except for the terminal blocks. Protection against accidental contact (finger protection to IP 20) for qualified personnel is only guaranteed if the terminal screw has been completely screwed in.

### 2.5 Installation location

For the correct operation the unit must be mounted in a housing (protection rating IP 40 or higher) which can only be opened using a tool or in a locked control cabinet.

The device has been tested for an impact energy of 1 joule according to EN61010.

### 2.6 Housing temperature

As described in the technical specifications below the device can be operated in a wide ambient temperature range. Because of the additional internal heating the operating elements and the housing walls can have high perceptible temperatures when touched in hot environments.

### 2.7 Tampering with the device

In case of malfunction of the unit or queries please contact the manufacturer. Any tampering with the device can seriously affect the safety of operators and machinery. This is not permitted and leads to the exclusion of any liability and warranty claims.

## 3 Functions and features

The monitor FR-1/FR-1N is a pulse evaluation system. It monitors rotating, linear, vibrating or oscillating movements.

It receives the pulses from external sensors, measures the pulse interval and calculates the input frequency. This value is compared with the set switch points; the outputs are switched in accordance with the set parameters. The integrated frequency-to-current converter converts the input frequency into an analogue output signal.

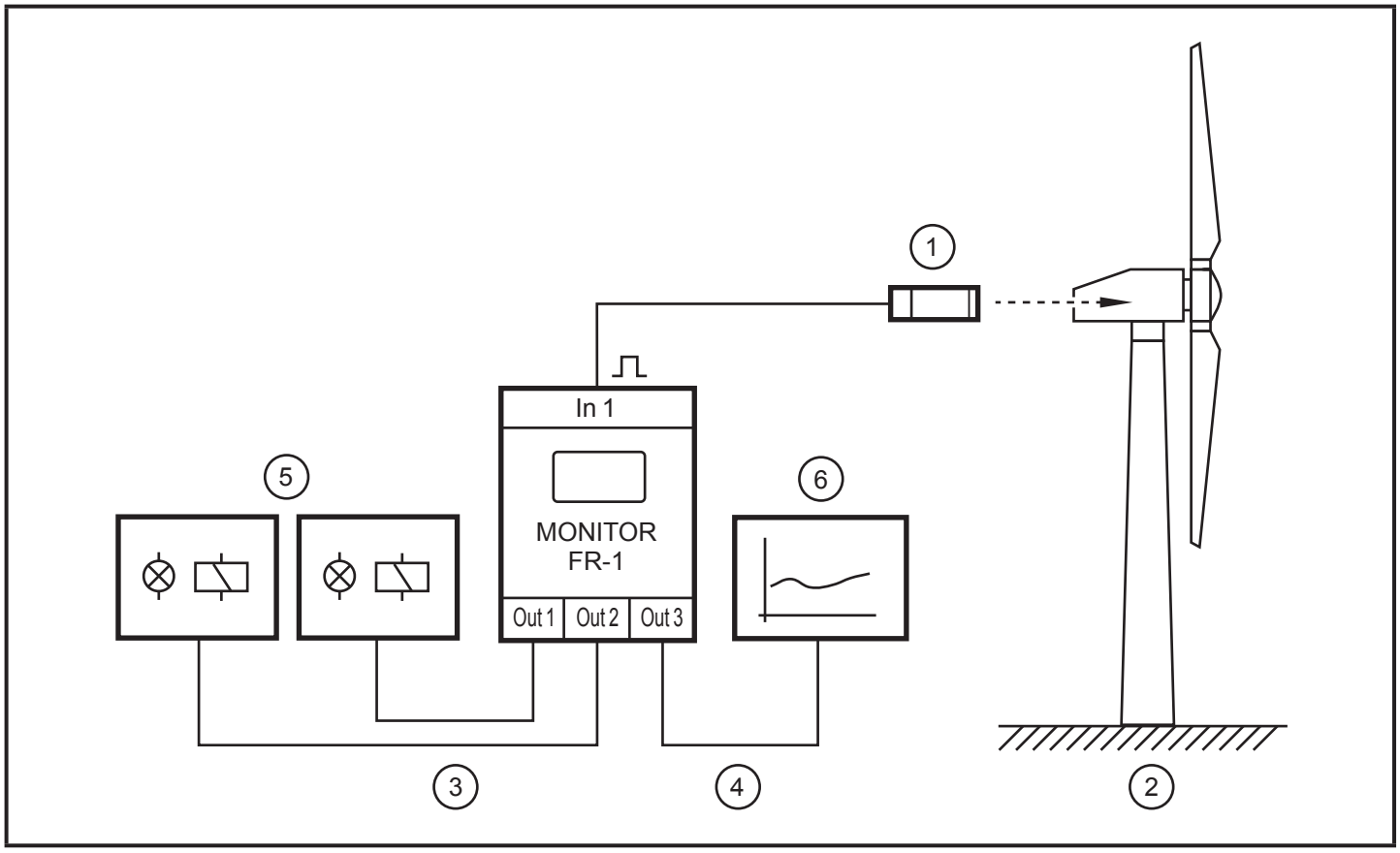


Example: speed monitoring in a wind power station

1: sensor at the rotor or generator shaft
2: wind power station
3: switching outputs
4: analogue output
5: signals depending on the selected switching functions
6: recording or display

**⚠ WARNING**

The device is not approved for safety-related tasks in the field of operator protection.
Using an electrical connection of the outputs from two or more units to achieve a redundant circuit, they can also be used for safety-related tasks. All applicable technical standards must be followed.

# 4 Operating and display elements

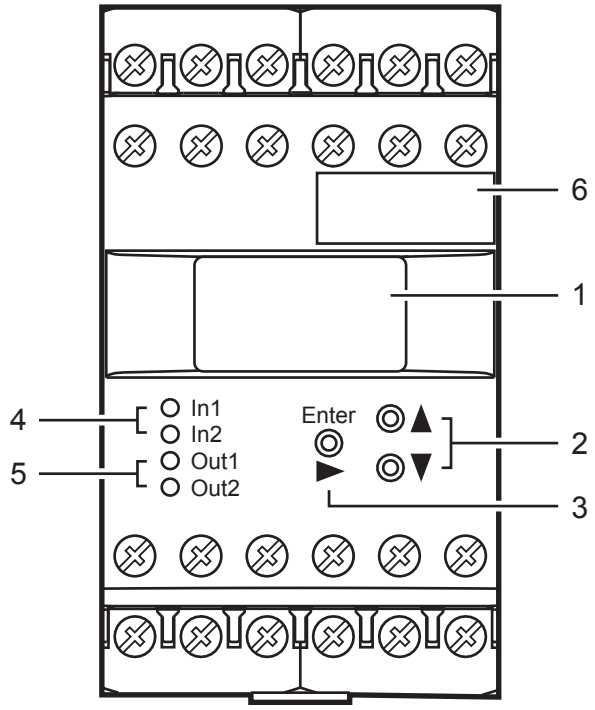


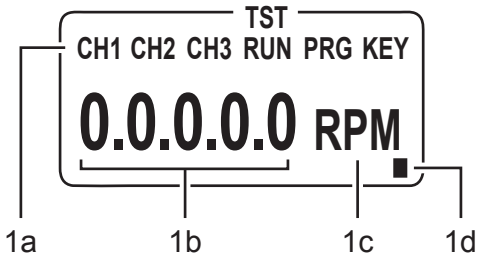


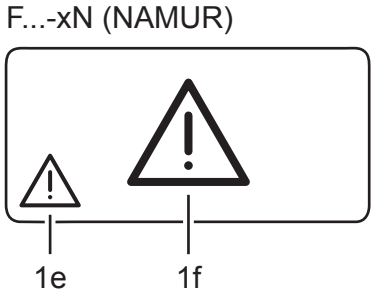


| | | |
|---|---|---|
| 1 | OLED display | |
| 1a | Indicators for input channels and operating modes | |
| | **CH...** | Input channels |
| | **RUN** | Run mode (normal operating mode) |
| | **TST** | Test mode (check of the switching characteristics without pulse pick-up connected) |
| | **PRG** | Programming mode (setting of the parameter values) |
| | **KEY** | Locking |
| 1b | Actual values and parameter values (5-digit, numerical) | |
| | Rotational speed | 0...60,000 RPM |
| | Pulses | 0.1...1,000.0 Hz |
| | Analogue value | 0/4...20.5 mA |
| | Outside the value ranges the display shows "----". | |
| 1c | Parameter abbreviation and units (3-digit, alphanumeric) | |
| 1d | Display is in stand-by mode, no values visible (→ 4.1) | |
| 1e | Display in display mode<br>Symbol for wire break/ short circuit on the cable of the pulse pick-up (only F...-xN) | |
| 1f | Display in standby mode<br>Symbol for wire break/ short circuit on the cable of the pulse pick-up (only F...-xN) | |

| | | |
|---|---|---|
| 2 | [▲] and [▼] buttons | |
| | Selection of the actual value display, parameter selection, setting of the parameter values | |
| 3 | [Enter/▶] button | |
| | Selection of the operating mode, acknowledgement of the parameter value, front reset | |
| 4 | LEDs In1/2 (yellow) | Input pulse |
| 5 | LEDs Out1/2 (green) | Switching status of the outputs 1 and 2 |
| | Off | Output is not switched.<br>(Relay deenergised, transistor blocked) |
| | On | Output is switched.<br>(Relay energised, transistor switched) |
| | Flashing quickly | Output is kept latched.<br>(Parameter SOx, Store Output) |
| | Flashing slowly | The delay time has an effect on the output.<br>The output switches when the delay time has elapsed and the trigger event is still present (parameter DTx, Delay Time) |
| 6 | Panel for labelling | |

F...-xN = device with NAMUR input



### 4.1 Display stand-by mode

If no button is pressed for more than 10 minutes, the display changes to the stand-by mode. Values and units are no longer visible.
The stand-by mode can be identified by a flashing rectangle.

Even if no values and units are visible, the device continues its monitoring function on the basis of the set parameters and switches the relay and transistor outputs accordingly.

Press any button to switch the display on again.

## 5 Installation

### 5.1 Installation of the device

- ▶ Install the device on a 35 mm DIN rail.
- ▶ Leave enough space between the unit and the top and bottom of the control cabinet to enable air circulation and to avoid excessive heating.
- ▶ Take into account the internal heating of all units when mounting several units side by side. The environmental conditions must be observed for every unit.

## 5.2 Installation of the sensors

▶ Follow the manufacturer's installation instructions.

# 6 Electrical connection

## 6.1 Terminal connection

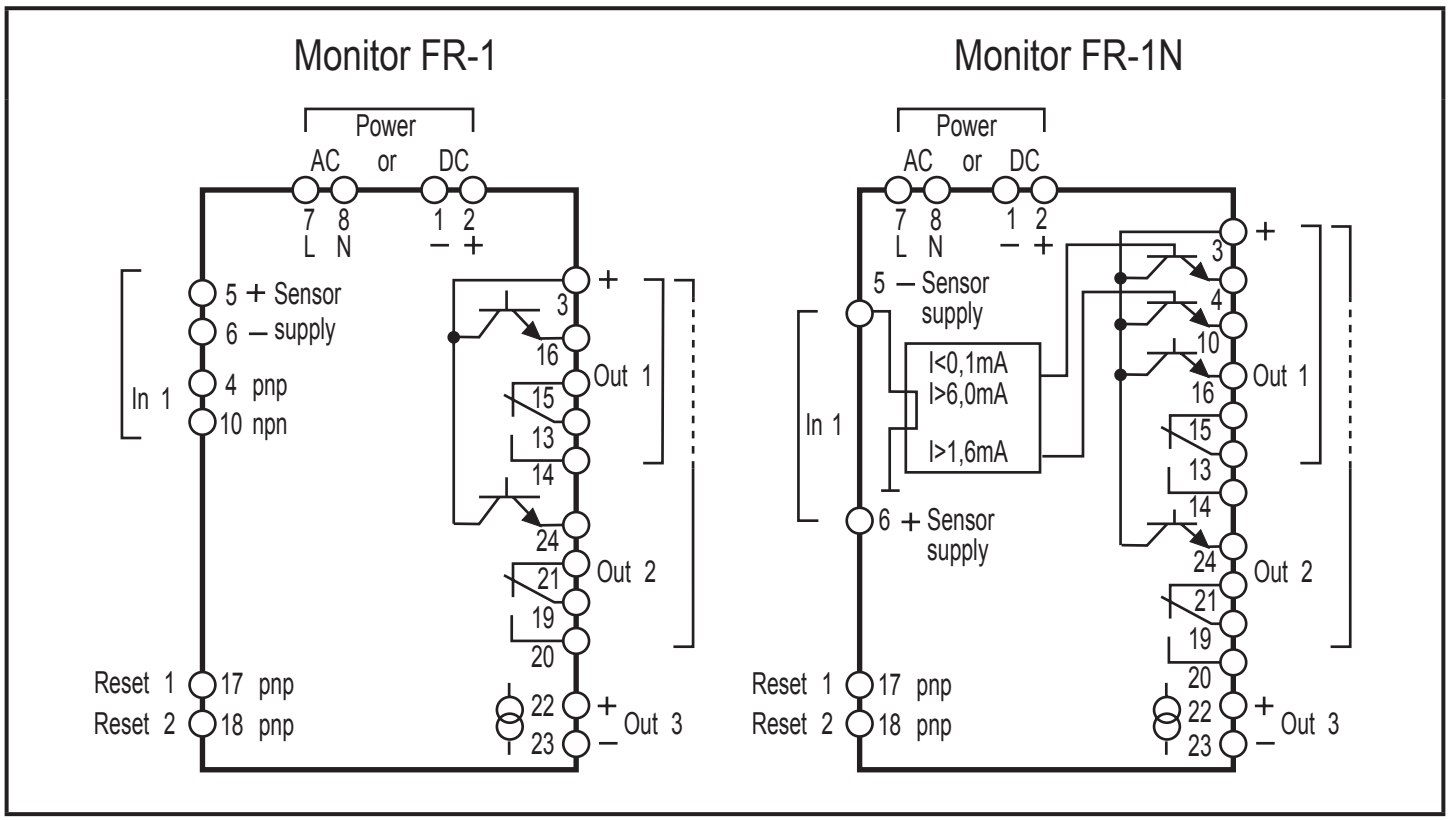


Terminal connection

**⚠ WARNING**

Do not use unconnected terminals such as terminal 9 as support point terminal.

## 6.2 Voltage supply (power)

▶ Voltage supply see type label.

▶ The device may only be operated using one of the possible voltage connections, i.e. either terminals 7/8 (AC) or terminals 1/2 (24 V DC).

▶ All supply and signal cables must be laid separately. Use a screened cable if required in the application.

### 6.2.1 AC supplies

▶ The AC supply cable must be protected according to the cross-section used (max. 16 A).

If the unit is supplied on AC, the low voltage provided for the sensor supply meets the SELV criteria according to EN 61010, overvoltage category II, soiling degree 2.

### 6.2.2 DC supplies

- ▶ The SELV criteria (safety extra-low voltage) must be met for the DC supply.
- ▶ The DC supply cable L+ (terminal 2) must be protected externally with a 315 mA time-lag fuse (5 x 20 mm or similar).

The DC supply terminals are directly connected to the sensor supply terminals.

## 6.3 Inputs

### 6.3.1 Connection of the sensors (In1)



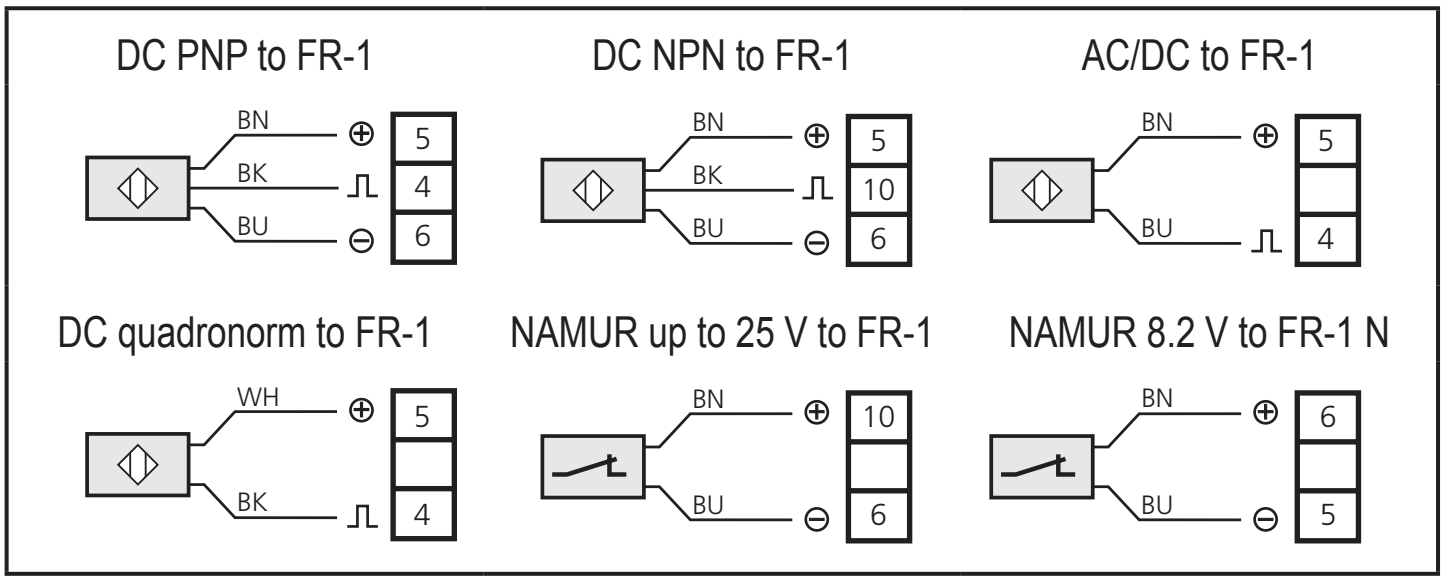


Connection of the sensors

The connection of mechanical switch contacts is not recommended since they tend to bounce and produce faulty pulses.

The terminals 5/6 can be used for the sensor supply or for the reset inputs (only F...-x).

### 6.3.2 Reset inputs (reset 1 and 2)

The start-up delay can be started or a saved error can be reset via the reset inputs (terminals 17/18).

- ▶ The internal +24 V DC voltage (terminal 5) or an external +24 V DC voltage is connected with terminal 17 or 18 via a closing contact.
- ▶ If an external voltage is used, the negative reference point of this voltage must be connected to terminal 1 of the monitor.

When the contact is opened (+ 24 V DC no longer applied), the start-up delay or the memory reset starts.

A +24 V DC continuous signal leads to a permanent bridging of the monitoring, i.e. the same state as during the start-up delay is indicated. When the voltage is no longer applied and the set start-up delay has elapsed, monitoring starts.

Note on F...-xN:
The +24 V DC signal voltage required for the reset inputs is not available to the F...-xN. This must be taken from an external voltage source. The reference point (GND) of the external power supply must be connected to terminal 1 of the monitor; otherwise no switching operation is possible.

### 6.3.3 Typical input circuit F...-x

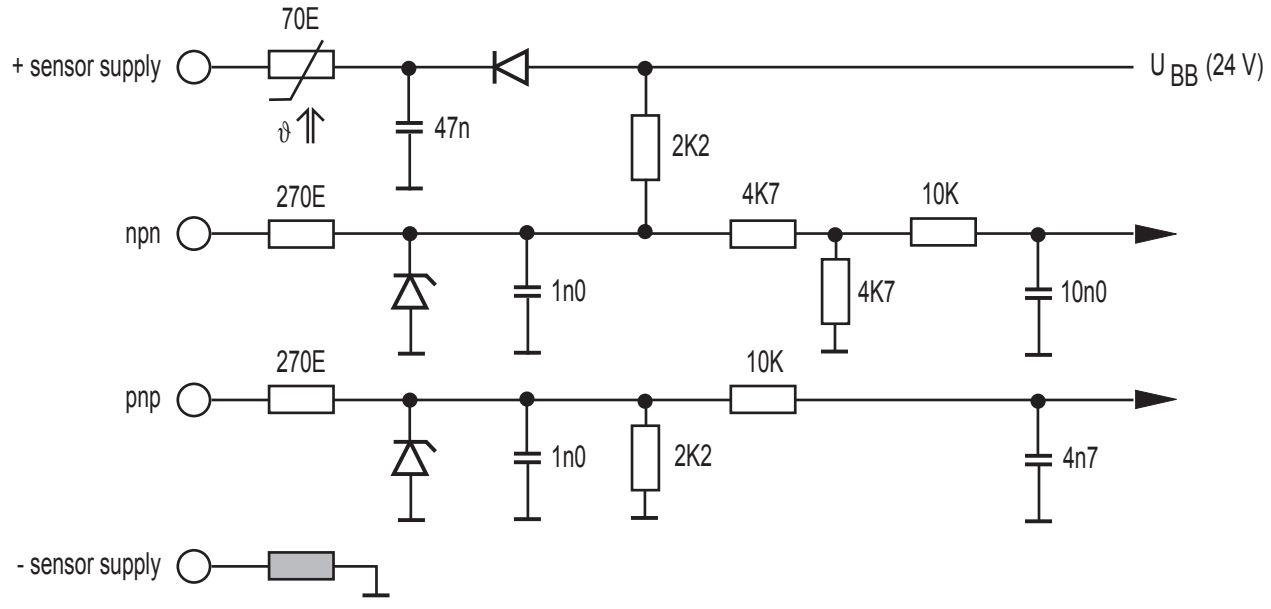


## 6.4 Outputs

### 6.4.1 Relay outputs (Out1, 2)

► To prevent excessive wear and to comply with the EMC standards, interference suppression of the contacts is required for switching inductive loads.

**⚠ WARNING**

If the device is operated on an AC supply (terminals 7/8) this must use the same supply cable as the voltage supply to switch an AC voltage via the relay outputs.

If the relay outputs are used for switching very small currents (e.g. PLC inputs), considerable contact resistance can arise. In this case use the transistor outputs.

### 6.4.2 Transistor outputs (Out1, 2)

- ▶ The transistor outputs need an external voltage of +24 V DC on terminal 3.
- ▶ Connect the reference point (GND) of the external power supply to terminal 1 of the monitor. Otherwise no switching operation is possible.
- ▶ The SELV criteria (safety extra-low voltage) must be met for the DC supply of the transistor outputs.
- ▶ The DC supply cable L+ (terminal 3) must be protected externally with a 315 mA time-lag fuse (5 x 20 mm or similar).



### 6.4.3 Analogue output (Out 3)

The analogue output is not electrically separated from the pulse pick-up supply and the 24 V DC supply voltage.
No dangerous contact circuits must be connected to the analogue output.

## 6.5 Additional outputs for NAMUR devices (F...-xN)

### 6.5.1 Fault output

The fault output (terminal 4) indicates a wire fault between monitor and sensor (wire break/short circuit). In case of a fault the respective output is blocked.

### 6.5.2 Stepping output

Signals from NAMUR sensors cannot be transferred to the inputs of other systems by simple cable links. To use the signals for other inputs, the F...-xN monitor provides a copy of the input pulses at the stepping output (terminal 10, ratio 1:1).

# 7 Navigation and parameter overview

The pushbuttons [▲] / [▼] and [Enter/►] are used for the navigation, entry of values and acknowledgement within the parameters arranged in columns.

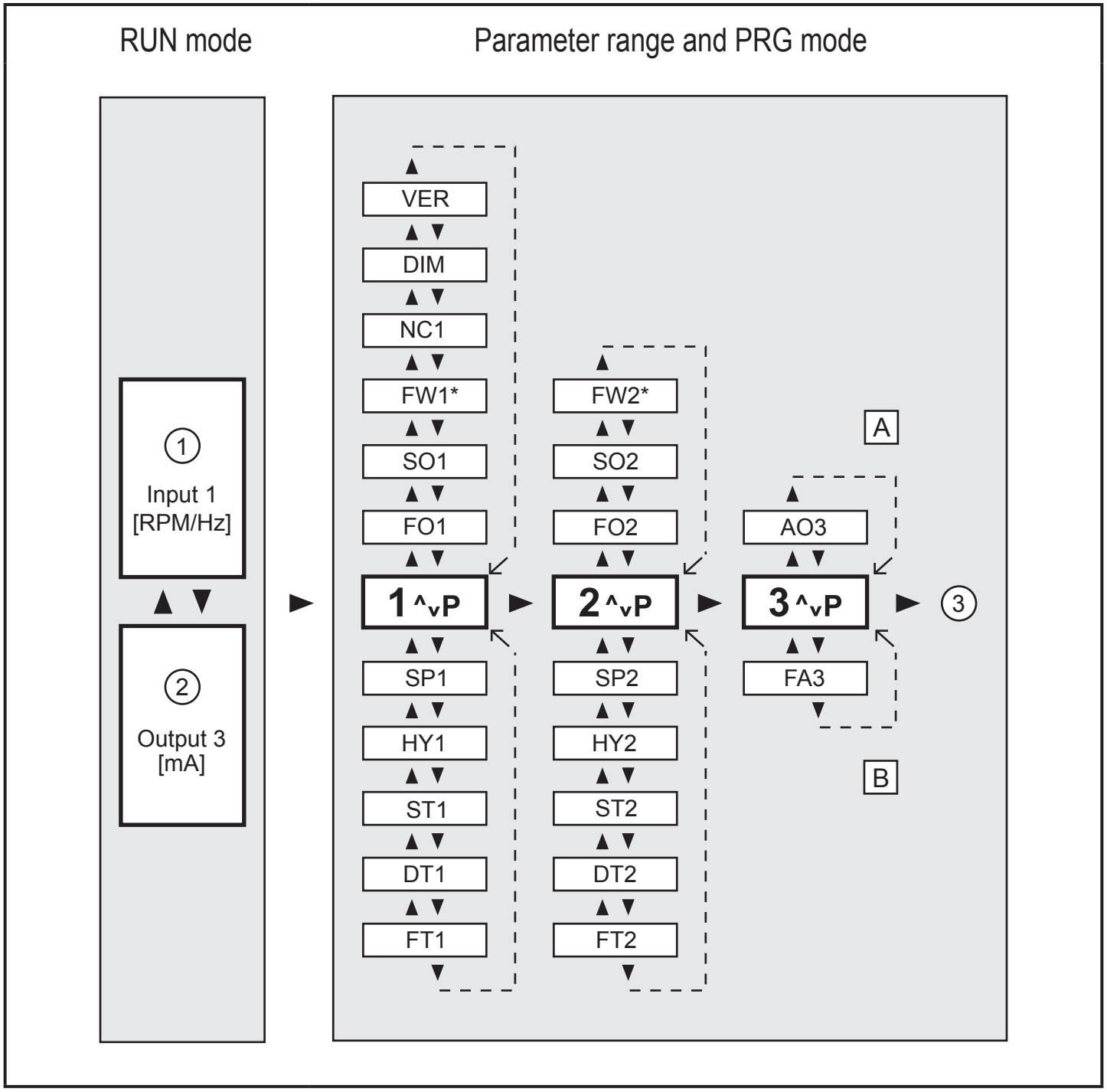


1: Indication: actual value input 1
2: Indication: actual value output 3
3: Back to the RUN mode

A: System parameters
B: Application parameters

*) only F...-xN

## 7.1 System parameters

### 7.1.1 FOx

Function Output (switching function of the outputs 1/2)

| | | |
|---|---|---|
| 1 | Relay energised (transistor output switched) when the current value is below the switch point SPx (signalled state: "minimum speed"/"blocked"). | |
| 2 | Relay de-energised (transistor output blocked) when the current value is below the switch point SPx (signalled fault: "underspeed "/"blocked"). | |
| 3 | Relay energised (transistor output switched) when the current value is above the switch point SPx (signalled state: "rotational speed reached"). | |
| 4 | Relay de-energised (transistor output blocked) when the current value is above the switch point SPx (signalled fault: "overspeed"). | |
| 5 | Relay is energised (transistor output switched) within a frequency range (acceptable range). | |
| 6 | Relay is de-energised (transistor output blocked) within the frequency range. With the functions 5 and 6 a frequency range above and below the switch point SPx is defined in connection with the parameter **HYx** (hysteresis). | |
| | SPx = $(f_{max} + f_{min}) \div 2$ | |
| | HY = $((SP - SP_{min}) \div SP) \times 100$ [%] | |
| | Values | 1...6 |
| | Default settings | FO1 = 2 |
| | | FO2 = 3 |

### 7.1.2 SOx

Store Output (latching function outputs 1/2)

| | |
|---|---|
| When this parameter is active, the respective output does not switch back automatically but must be reset. | |
| Values | 0 = inactive |
| | 1 = front reset ([Enter/▶] > 3 s) |
| | 2 = front reset and external reset |
| Default value | 0 (inactive) |

### 7.1.3 FWx

Function Wire Break Monitoring (only F...-xN)

| Relay characteristics for wire fault or short circuit, i.e. input frequency = 0 | | |
|---|---|---|
| **Frequency > SPx** | FWx = inactive (0) | FWx = active (1) |
| FOx = 1 or 4 | relay energised | relay de-energised |
| FOx = 2 or 3 | relay de-energised | relay remains de-energised |
| **Frequency < SPx** | FWx = inactive (0) | FWx = active (1) |
| FOx = 1 or 4 | relay energised | relay de-energised |
| FOx = 2 or 3 | relay de-energised | relay remains de-energised |
| **Frequency in the range** | FWx = inactive (0) | FWx = active (1) |
| FOx = 5 | relay deenergised | relay remains de-energised |
| FOx = 6 | relay energised | relay deenergised |

| In case of fault the preset analogue initial value AO3 is available at the analogue output. | |
|---|---|
| Values | 0 = inactive |
| | 1 = active |
| Default value | 0 |

### 7.1.4 NC1

Number of Cams (input 1)

| Number of cams detected per revolution. On the basis of this value the monitor calculates the rotational speed (measured frequency ÷ NC1 = displayed speed in RPM).<br>For frequency measurements NC1 = 1 should remain set. | |
|---|---|
| Values | 1...999 |
| Default value | 1 |

### 7.1.5 DIM

Dimension (display format)

| Indication in Hz or RPM (revolutions per minute).<br>When a new unit is selected, the monitor converts all existing values into the new unit! | |
|---|---|
| Values | 0 = RPM |
| | 1 = Hz |
| Default value | 0 = RPM |

### 7.1.6 VER

Software version

| |
|---|
| The installed software version is displayed (5-digit number with abbreviation VCO). |

### 7.1.7 AO3

Analogue Offset (for analogue output 3)

| | |
|---|---|
| Current value displayed and provided for an input value of 0 Hz/RPM. | |
| Value range | 0.0...20 mA (typical setting: 0.0 or 4.0 mA) |
| Default value | 4.0 mA |



## 7.2 Application parameters

### 7.2.1 SPx

Switch Point (outputs 1/2)

| | |
|---|---|
| Value at which the output 1/2 changes its switching state according to switching function FOx. | |
| Values | 0.1 ... 1000.0 Hz or 1 ... 60000 RPM (unit depends on DIM) |
| Default value | SP1 = 100 RPM, SP2 = 1000 RPM |

### 7.2.2 HYx

Hysteresis (for switch points SP1/SP2)

| | |
|---|---|
| The hysteresis value determines the distance between the switch-off point and the switch point SPx. Prevents a possible chattering of the switching output. In connection with the switching functions 5 and 6 (FOx) an acceptable range or an error range can be defined. | |
| Values | 0.0...1000.0 % of the value for SPx |
| Default value | 5.0 |

### 7.2.3 STx

Start-Up Delay Time (for outputs 1/2)

| | |
|---|---|
| Enables the suppression of error messages when a plant is started. When the device is switched on or when the 24 V signal is removed from the reset input, the respective output for the time set here is in the "good" state (= no fault). | |
| Values | 0.0...1000.0 s |

| | |
|---|---|
| Default value | 0.0 (no start-up delay) |

### 7.2.4 DTx

Delay Time (for outputs 1/2)

| | |
|---|---|
| Enables a delayed switching of the outputs 1/2. The respective output switches only if the current value is above or below the switch point for more than the time set here. | |
| Values | 0.0...1000.0 s |
| Default value | 0.0 (no delay time) |

### 7.2.5 FTx

Fleeting Time (for outputs 1/2)

| | |
|---|---|
| If an event occurs, the output changes its state during the set time and then switches back to the initial state. | |
| Values | 0.0...1000.0 s |
| Default value | 0.0 (fleeting time not active) |

### 7.2.6 FA3

Final Value Analogue (for analogue output 3)

| | |
|---|---|
| Input value in Hz or RPM at which the final value 20 mA is displayed or provided.<br>The output signal is limited to 20.5 mA. | |
| Value range | 0.1 ... 1000.0 Hz or 1 ... 60000 RPM (unit depends on DIM) |
| Default value | 1000 RPM |

# 8 Programming

**⚠ WARNING**

If programming takes place during operation, dangerous contact voltage may occur. Therefore ensure that programming is done by a qualified electrician.

Parameter changes during operation, especially changes to the switching function and the switch points can lead to malfunction in the plant. Therefore disconnect it during the change and then check the function.



| Programming consists of 6 steps: | |
|---|---|
| 1. Change from the RUN mode to the parameter range 1 or 2 or 3 | [Enter/►] |
| 2. Selection of the requested parameter (FOx, SOx, NCx, etc.) | [▲] / [▼] |
| 3. Change to the PRG mode | [Enter/►] |
| 4. Setting or changing the parameter value | [▲] / [▼] |
| 5. Acknowledgement of the set parameter value | [Enter/►] > 3 s |
| 6. Return to the RUN mode | [Enter/►] > 3 s |

## 8.1 Programming example DT1 (Delay Time, output 1)

| Operation | Display |
|---|---|
| **Change from the RUN mode to the parameter range (here 1)** | |
| ► Briefly press [Enter/►] once.<br>> The 1st parameter range is displayed. |  |
| **Selection of the requested parameter (here DT1)** | |
| ► Press the [▼] button until the parameter DT1 is displayed with the currently set value (here default value 0.0). |  |
| **Change to the PRG mode** | |
| ► Briefly press [Enter/►] once.<br>> The unit is in the programming mode.<br>> PRG indicator visible, parameter abbreviation flashes. |  |

| Setting or changing the parameter value | |
|---|---|
| ▶ Press [▲] / [▼] until the requested parameter value is displayed (→ 8.2.3 Numerical entries). |  |
| **Acknowledgement of the set parameter value** | |
| ▶ Press [Enter/▶] until the parameter abbreviation no longer flashes and the indicator PRG has disappeared.<br>> The new parameter value is indicated and effective. |  |
| **Return to the RUN mode** | |
| ▶ Press [Enter/▶] for about 3 s or wait for the time-out function (approx. 15 s).<br>> The unit is again in the RUN mode, the current value is indicated. |  |

## 8.2 Notes on programming

### 8.2.1 RUN mode

During programming the unit internally remains in the RUN mode (RUN indicator visible).
This means that until a new value is acknowledged with [Enter/▶], the unit carries out its monitoring function on the basis of the previously set parameters and switches the relay and transistor outputs accordingly.

The monitoring function of the monitor is deactivated by continuously pressing [Enter/▶] in the RUN mode. The deactivation is effective as long as the button is pressed.

### 8.2.2 Time Out Function

If during programming no pushbutton is pressed for approx. 15 s, this is seen as a cancellation.
Parameter changes which are not acknowledged with [Enter/▶] are rejected.
The previously set parameter value is restored and remains effective for the monitoring functions.

### 8.2.3 Numerical entries

▶ Press [▲] or [▼] and hold it.

The smallest decade becomes active and is counted up or down depending on the selected pushbutton (e.g. 1, 2, 3,...0). Then comes the next decade, etc.

As soon as the pushbutton is released, the active decade flashes. It is set by pressing [▲] or [▼] several times. The preceding decade then flashes and can be set.

### 8.2.4 Factory Reset

The factory default values can be restored by pressing [▲] and [▼] simultaneously during power on. All previously entered parameter values are lost.

### 8.2.5 KEY function (locking)

The unit can be locked to prevent incorrect entries.
After locking, only the actual value indication can be switched with the [▲] and [▼] buttons. Parameter range and PRG mode can no longer be selected.



| Locking | Unlocking |
|---|---|
| ▶ Press [▲] and [▼] simultaneously and hold them pressed.<br>> The KEY indicator flashes.<br>▶ Release the pushbuttons when the KEY indicator is continuously indicated. | ▶ Press [▲] and [▼] simultaneously and hold them pressed.<br>> The KEY indicator flashes.<br>▶ Release the pushbuttons when the KEY indicator is no longer indicated. |

# 9 Test mode

In the test mode the switching behaviour of the monitor can be checked, set and stored without any connected pulse pick-up. The monitor runs through a freely definable frequency range and switches the outputs according to the selected switching function and switch points.

## 9.1 Activate the test mode

► Apply the operating voltage and press [Enter/►] simultaneously.
> The display indicates the parameter range 11 and "TST".
> In addition to the system and application parameters, the parameters for the test frequency are available.

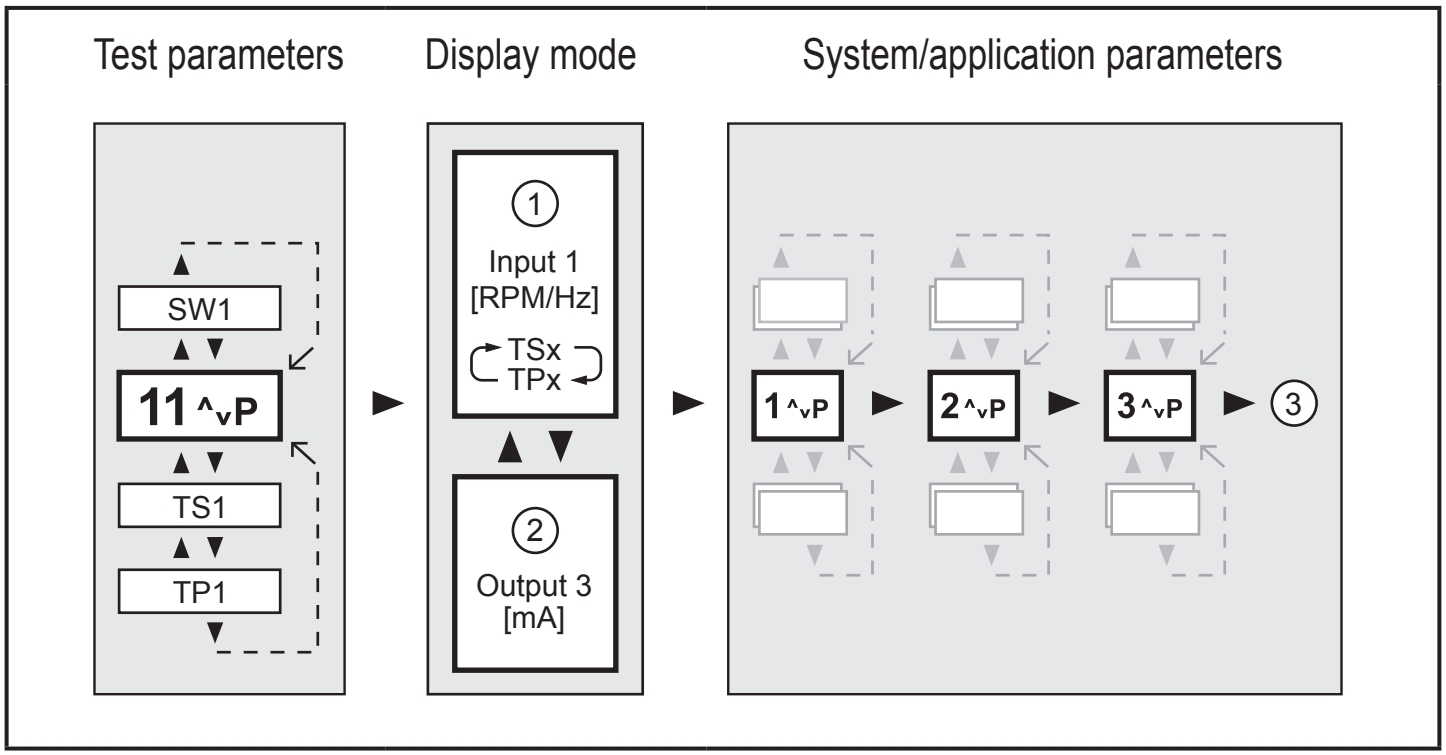


1: Test frequency
2: Analogue output
3: Back to the test parameters

## 9.2 Terminate the test mode

► Switch off the unit.

## 9.3 Test parameters

| | | |
|---|---|---|
| **SW1** | Sweep on input 1 | |
| | Change of speed of the test frequency | |
| | Values | 1...5 (1 = fast, 5 = slow) |
| | Default value | 1 |
| **TS1** | Test Start on input 1 | |
| | Initial value of the test frequency | |
| | Values | 1...60,000 RPM or 0.1...1000.0 Hz |
| | Default value | 50 RPM |
| **TP1** | Test Stop on input 1 | |
| | Final value of the test frequency | |
| | Values | 1...60,000 RPM or 0.1...1000.0 Hz |
| | Default value | 1500 RPM |

# 10 Scale drawing

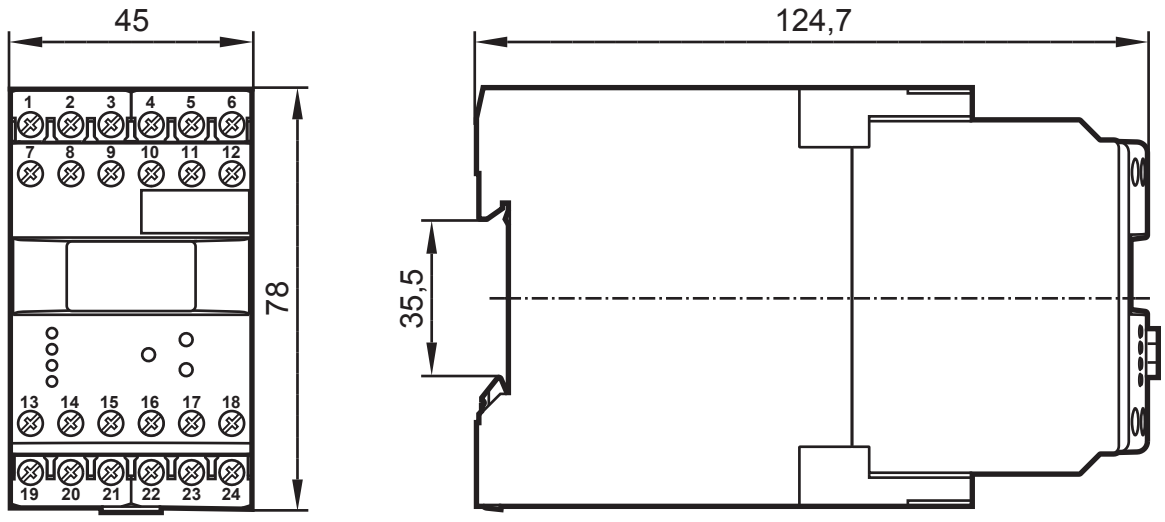


# 11 Technical data

## 11.1 Overview

| Art. no. | DD2503 | DD2510 | DD2603 |
|---|---|---|---|
| Monitor type | FR-1 | FR-1 | FR-1N |
| Supply voltage<br>Frequency range<br>Power consumption | see type label | | |
| Sensor types | PNP/NPN; NAMUR | | NAMUR (to EN 50227) |
| Sensor supply | 24 V DC | | 8.2 V DC |
| Input frequency | ≤ 5 kHz | ≤ 3 kHz | ≤ 5 kHz |
| Relay outputs | 2 changeover contacts potential free | | |
| Switching current | ≤ 6 A | ≤ 4 A | ≤ 6 A |
| Switching voltage | ≤ 250 V AC; B300, R300 | | |
| Transistor outputs | PNP switched; externally supplied | | |
| Switching current | ≤ 15 mA; short-circuit proof | | |
| Switching voltage | 24 V DC (± 20%) | | |
| Analogue output | 0/4...20 mA, short-circuit proof, no feedback | | |
| Load | ≤ 500 ohms | | |
| Protection housing / terminals | IP 50 / IP 20 | | |
| Ambient temperature | -40...60 °C | –10...60 °C | -40...60 °C |

| Art. no. | DD2503 | DD2510 | DD2603 |
|---|---|---|---|
| Storage temperature | -40...85° C | -25…80°C | -40...85° C |
| Max. relative air humidity | 80 % (31 °C)<br>linearly decreasing to 50 % (40 °C) | | |
| Maximum operating altitude | 2000 m above sea level | | |
| Connection | 21 dual-chamber terminals;<br>2 x 2.5 mm² (AWG 14) | | |
| cULus test conditions | housing dimensions for temperature rise test:<br>200 x 200 x 150 mm | | |



Data sheets can be found at:
www.ifm.com → Data sheet search → article number.

### 11.2 Approvals/standards

EC declarations of conformity, approvals etc. can be downloaded at:
www.ifm.com → Data sheet search → Article number → More information

## 12 Maintenance, repair, disposal

The device is maintenance-free.

- ▶ Do not open the housing as the device does not contain any components which can be repaired by the user. The device must only be repaired by the manufacturer.
- ▶ Dispose of the device in accordance with the national environmental regulations.

LEFT BLANK

# *IWAKI*

## *SERIES MD, MAGNETIC DRIVE PUMP*

LEFT BLANK



# *IWAKI AMERICA*
# *MAGNETIC DRIVE PUMP*
# *MD/WMD SERIES*

IWAKI AMERICA

Thank you for having selected an Iwaki America MD/WMD Series magnetic drive pump. This instruction manual deals with the correct handling, maintenance, inspection and troubleshooting procedures for the MD/WMD magnetic drive pump. Please read through it carefully to ensure the optimum performance, safety and long service of your pump.

Contents


1 SAFETY INSTRUCTION ..... 1

2 UNPACKING AND INSPECTION ..... 3

3 OPERATING PRINCIPLE ..... 3

4 MODEL IDENTIFICATION GUIDE ..... 4

5 SPECIFICATIONS ..... 5
Construction/Materials ..... 6

6 HANDLING INSTRUCTIONS ..... 7

7 INSTALLATION, PIPING, AND WIRING ..... 8
7.1 Installation ..... 8
7.2 Piping instructions ..... 9
7.3 Wiring ..... 9

8 ASSEMBLY ..... 11

9 OPERATION ..... 12

10 MAINTENANCE/INSPECTION AND CONSUMABLE PARTS ..... 14

11 PARTS DESCRIPTION AND EXPLODED VIEW ..... 14

12 DIMENSIONS ..... 15

13 TROUBLESHOOTING ..... 16


P/N 180243 Rev. G Jan 2014

# 1 SAFETY INSTRUCTIONS

***Turn off the power supply***
Working without disconnecting the power supply may cause an electrical shock. Before performing any assembly or maintenance procedures involving the pump, make sure to turn the power supply switch off and to stop the pump and other related devices.

***Terminate operation***
When you detect any signs of abnormal operation, terminate pump operation immediately.

***For specified application only***
The use of a pump in any applications other than those clearly specified may result in injury or damage to the pump. Use the pump strictly in accordance with the pump specifications and application capabilities.

***Modification***
Never modify the pump. Iwaki America will not be responsible for any accident or damage of any kind caused by the user remodeling the pump without first obtaining permission or instructions from Iwaki America.

***Protective clothing***
If application involves the handling of hazardous liquids, protective gear (gloves, glasses, clothing, etc) must be worn before performing any maintenance on the pump. Please follow safety guidelines established for such applications.

***Operation***
Operation of the pump and related system must be by experienced or knowledgeable personal. The pump operator or pump operation supervisor must not allow any personal who have little or no knowledge of the pump to operate the unit.

***Power***
Do not operate the pump at a different voltage than specified on the nameplate. This may result in damage to the unit or fire. Only the specified voltage must be used.

***Do not submerge***
If the motor or power cable becomes wet or damp fire or electric shock may occur. The unit should be installed in such a manner to prevent contact with fluids or in a wet environment. Follow all local, state and government regulations for the installation and wiring of the pump.

***Spill accident***
Protective measures should be taken against any accidental spill or leakage of any hazardous liquids as a result of unexpected damage to the pump or the related piping. Please follow safety guidelines established for such occurrences.

***Operating site must be free of water and humidity***
The pump is not designed to be water-proof or dust-proof. The use of the pump in places with splashing water or humidity above 90% may result in an electrical shock or short circuit.

***Do not damage power cord***
Do not cut, abrade or forcibly pull the power cord. Excessive heat or heavy load applied to the cable may damage the cable and finally result in a fire or an electrical shock.

***Do not cover the motor***
Covering the motor during operation may result in an accumulation heat inside the motor and cause a fire or a mechanical failure. Proper ventilation is necessary for the motor.

***Grounding***
Do not operate the pump without proper grounding; otherwise an electrical shock may result. Follow all local, state and government regulations for the installation and wiring of the pump.

***Power cord cannot be replaced***
Never use a damaged power cable; otherwise, a fire or an electrical shock may result. Handle the power cord carefully, as it cannot to be replaced by a new cable. (The complete motor must be replaced if damaged).

***Location and storage***
Do not install or store the pump in the following places:

* Places where a flammable gas or material is used or stored.
* Places where the ambient temperature is extremely high (104°F or higher) or extremely low (32°F or lower).

***Static Electricity Hazard***
When low electric conductivity liquid such as ultra-pure water is handled, static electricity may be generated in the pump, which may cause static discharge and damage the pump. Take appropriate countermeasures to avoid and remove any potential static electricity.

## 2 UNPACKING AND INSPECTION




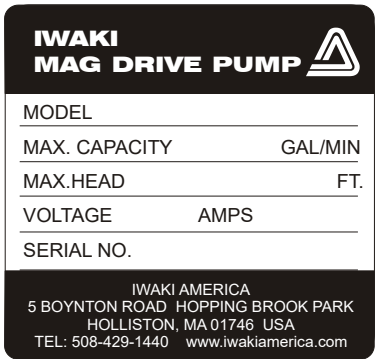


Open the package and check that the product conforms to your order. Also, check each of the following points. For any problem or inconsistency, contact your distributor at once.

1. Check that the model number indicated on the nameplate conforms to the specifications of your order.

2. Check that all the accessories you ordered are included.

3. Check that the pump body and parts have not been accidentally damaged or that any bolts have not been loosened in transit.

## 3 OPERATING PRINCIPLE

A sealless magnet drive pump uses magnet torque to transmit energy from the motor to the impeller. A magnet coupling is formed using an inner, or driven magnet, attached to the impeller and an outer, or drive magnet, attached to the motor shaft. This design eliminates mechanical shaft seals or packing, since there is no direct connection between the motor shaft and the impeller. The front and rear casings, sealed with a static o-ring, form the pump or liquid end. The magnetic field is transmitted from the drive magnet through the rear casing to the driven magnet that is attached to the impeller. The combined coupling torque of the drive magnet and impeller magnet provides the driving power to the fluid being pumped.

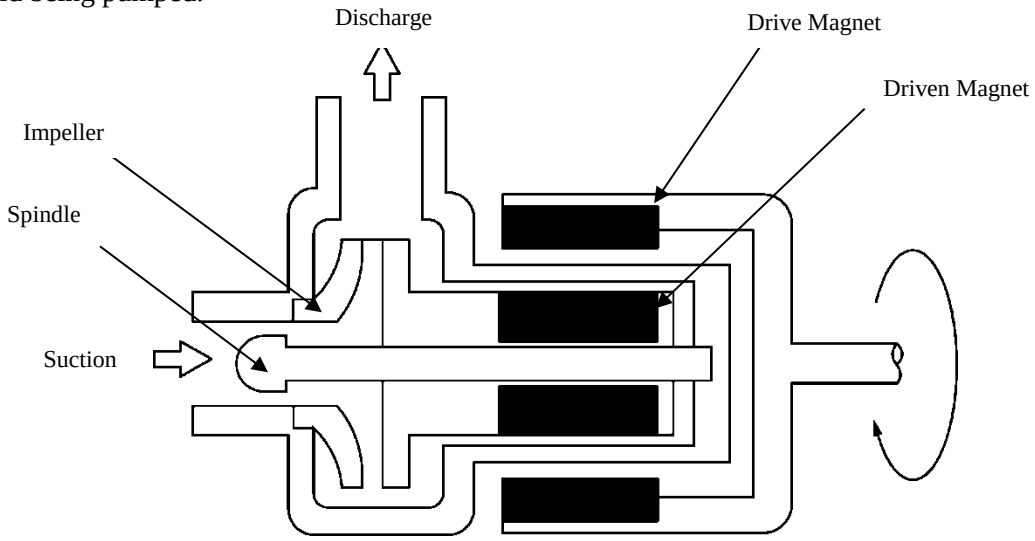

# 4 MODEL IDENTIFICATION GUIDE

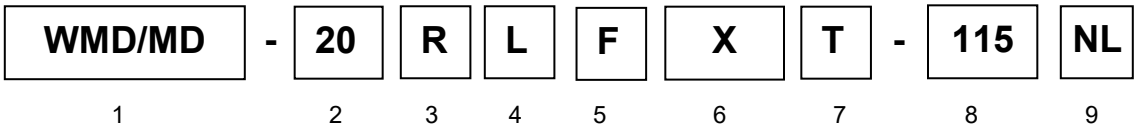


1. **Series name (WMD specifies US motor design)**

2. **Pump Size (6, 10, 15, 20, 30, 55, 70, 100)**

3. **R = Rotating Spindle (leave blank for MD-6, MD-10 and Fluoroplastic models)**

4. **L = UL Listed Motor, included in 6, 10, 55, 70, 100 Polypropylene models, 30, 55, 100 Fluoroplastic models**

5. **Material**
   Blank: Polypropylene models
   F: Fluoroplastic models

6. **Pump type**
   Blank: Standard Impeller
   Z: High Head Impeller
   X: High Flow Impeller
   X,Y,Z: Fluoroplastic models

7. **Suction/Discharge Port Connections**
   Blank*: Hose Connection
   T: Threaded Connection

   * All Fluoroplastic models have threaded connections

8. **Power source voltage:**
   115: 115V (50/60Hz)
   220: 220/240V(50/60Hz)
   230: 230V (50/60Hz)

9. **NL = UL Listed 115V Motor (applies to 15, 20, 30, 40 sizes) Polypropylene models**

# 5 SPECIFICATIONS

| Model | Connections | | Motor Output (HP) | Motor Speed (RPM) | Current (Amps) | Max Flow (GPM) | Max Head (Ft) | Max Sys. Pressure (PSI) | Specific Gravity | Weight (Lbs) |
|---|---|---|---|---|---|---|---|---|---|---|
| | Hose | NPT | | | | | | | | |
| ***Polypropylene*** | | | | | | | | | | |
| MD-6 | 1/2 | --- | 1/250 | 3100 | 0.25 | 2.3 | 4.5 | 2.80 | 1.2 | 1.8 |
| MD-10 | 1/2 | --- | 1/125 | 2900 | 0.40 | 3.1 | 6.8 | 4.30 | 1.1 | 1.6 |
| MD-15R(T) | 1/2 | 1/2 | 1/75 | 3100 | 0.29 | 5.0 | 11.1 | 7.20 | 1.3 | 3.5 |
| WMD-15R(T) | 1/2 | 1/2 | 1/38 | 3100 | 0.82 | 5.0 | 11.1 | 7.20 | 1.3 | 6.0 |
| MD-20RT(T) | 5/8 | 3/4 | 1/38 | 3100 | 0.48 | 8.2 | 14.1 | 9.95 | 1.1 | 4.4 |
| WMD-20R(T) | 5/8 | 3/4 | 1/38 | 3100 | 0.48 | 8.2 | 14.1 | 9.95 | 1.1 | 7.0 |
| MD-20RX(T) | 1 | 1 | 1/38 | 3100 | 0.50 | 13.7 | 8.2 | 5.69 | 1.3 | 4.4 |
| WMD-20RX | 1 | 1 | 1/38 | 3100 | 0.50 | 13.7 | 8.2 | 5.69 | 1.3 | 7.0 |
| MD-20RZ | 5/8 | 3/4 | 1/38 | 3100 | 0.53 | 2.9 | 22.6 | 14.22 | 1.1 | 4.4 |
| WMD-20RZ | 5/8 | 3/4 | 1/38 | 3100 | 0.53 | 2.9 | 22.6 | 14.22 | 1.1 | 7.0 |
| MD-30R | 3/4 | 3/4 | 1/16 | 3150 | 0.80 | 10.0 | 17.7 | 11.60 | 1.3 | 7.7 |
| WMD-30R | 3/4 | 3/4 | 1/16 | 3150 | 1.00 | 10.0 | 17.7 | 11.60 | 1.3 | 9.0 |
| MD-30RX | 1 | 1 | 1/16 | 3150 | 1.10 | 19.0 | 13.5 | 8.54 | 1.1 | 7.7 |
| WMD-30RX | 1 | 1 | 1/16 | 3150 | 1.00 | 19.0 | 13.5 | 8.54 | 1.1 | 9.0 |
| MD-30RZ | 5/8 | 3/4 | 1/16 | 3150 | 1.10 | 4.5 | 36.1 | 24.18 | 1.0 | 7.7 |
| WMD-30RZ | 5/8 | 3/4 | 1/16 | 3150 | 1.00 | 4.5 | 36.1 | 24.20 | 1.0 | 9.0 |
| MD-40R | 3/4 | 3/4 | 1/12 | 3200 | 1.30 | 13.7 | 21.3 | 14.22 | 1.1 | 8.6 |
| WMD-40R | 3/4 | 3/4 | 1/12 | 3200 | 1.90 | 13.7 | 21.3 | 14.22 | 1.1 | 10.0 |
| MD-40RX | 1 | 1 | 1/12 | 3200 | 1.20 | 22.4 | 15.4 | 9.95 | 1.1 | 8.6 |
| WMD-40RX | 1 | 1 | 1/12 | 3200 | 1.90 | 22.4 | 15.4 | 9.95 | 1.1 | 10.0 |
| MD-55R | 1 | 1 | 1/8 | 3400 | 1.60 | 18.4 | 26.9 | 17.06 | 1.2 | 10.1 |
| MD-70R | 1 | 1 | 1/4 | 3400 | 2.80 | 25.6 | 31.8 | 21.33 | 1.0 | 13.2 |
| MD-70RZ | 3/4 | 3/4 | 2/7 | 3400 | 3.80 | 11.4 | 66.6 | 42.70 | 1.0 | 13.2 |
| MD-100R | 1 | 1 | 1/3 | 3300 | 3.40 | 35.6 | 39.0 | 25.60 | 1.2 | 18.7 |
| WMD-100R | 1 | 1 | 1/3 | 3400 | * | 35.6 | 39.0 | 25.60 | 1.2 | * |
| ***Fluoroplastic*** | | | | | | | | | | |
| WMD-30FX | --- | 1/2 | 1/16 | 3200 | 0.9 | 3.2 | 35.2 | 17.0 | 1.3 (1.5) | 9 |
| WMD-30FY | --- | 1/2 | 1/16 | 3200 | 0.9 | 3.2 | 26.0 | 17.0 | 1.5 (1.8) | 9 |
| WMD-30FZ | --- | 1/2 | 1/16 | 3200 | 0.9 | 2.6 | 24.0 | 21.3 | 1.9 (2.1) | 9 |
| MD-55Y | --- | 1 | 1/8 | 3300 | 1.9 | 17.1 | 25.6 | 21.3 | 1.3 (1.5) | 11.9 |
| MD-55Z | --- | 1 | 1/8 | 3300 | 1.6 | 13.0 | 19.0 | 21.3 | 2.0 (2.2) | 11.9 |
| WMD-100FY | --- | 1 | 1/3 | 3450 | * | 36.0 | 38.0 | 31.2 | 1.3 (1.6) | * |
| MD-100FY | --- | 1 | 1/3 | 3300 | 3.4 | 35.7 | 37.7 | 31.2 | 1.3 (1.6) | 18.7 |
| WMD-100FZ | --- | 1 | 1/3 | 3450 | * | 28.0 | 27.2 | 31.2 | 1.9 (2.2) | * |
| MD-100FZ | --- | 1 | 1/3 | 3300 | 3.4 | 28.0 | 27.2 | 31.2 | 1.9 (2.2) | 18.7 |

**Notes:**

1. Pump performance data is based on pumping clean water at ambient temperature.
2. The maximum flow rate is at 0 discharge head.
3. Maximum viscosity of liquid: 1.0 cP (for a specific gravity of 1.0)
4. Permissible liquid temperature: 32-176°F (0 – 80°C). Note, permissible temperature range may differ depending upon the type of liquid and operating conditions.)
5. The maximum specific gravity of the liquid is the value at max. flow rate. The value varies depending on the flow rate, ambient temperature, viscosity of liquid, etc.
6. Motor: Single-phase capacitor-run induction motor or 3-phase induction motor.

* Built-in thermal protector
A thermal protector is built in the motor. The protector automatically stops motor operation when the motor is overheated. (The motor starts again when the temperature falls to normal.)

## Typical Construction/Materials

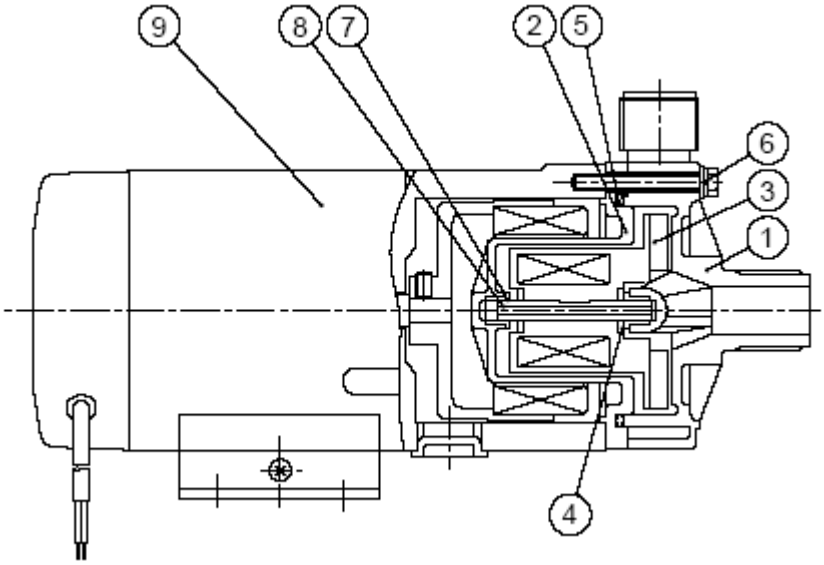


| No. | Part Name | Qty | Material |
|---|---|---|---|
| 1 | Front Casing | 1 | GFRPP (Note 1) |
| 2 | Rear Casing | 1 | |
| 3 | Impeller | 1 | |
| 4 | Thrust | 2 | Alumina Ceramic |
| 5 | O-ring | 1 | FKM or EPDM (Note 2) |
| 6 | Screw | 4~6 | Stainless steel |
| 7 | Bearing | 2 | Fluororesin containing filler material (Note 3) |
| 8 | Spindle | 1 | Alumina ceramic |
| 9 | Motor | 1 | |

Note 1: The material of the impeller used in MD-70RZ, 100R, 100R-5 is CFRPP.
Note 2: More elastomer options available
Note 3: The material of the bearing used in (W)MD-20RZ, 30RZ, and MD-70RZ is PPS.

# 6 HANDLING INSTRUCTIONS

1. **Handle the pump carefully**
   Strong impact to the pump assembly may result in damage or reduced performance.

2. **Starting**
   Before priming the pump be sure the power is turned off then proceed with filling the pump end with water. Note, the pump must be fully primed before starting.

   Next close the valve on the outlet or discharge side of pump. Turn on power to the pump, when full speed is reached gradually open the discharge vale until specified flow rate is achieved.

   

   **Caution**
   **Operating the pump dry (without liquid) may cause severe damage.**

3. **Stopping**
   When stopping the pump, first close the discharge valve gradually. When it is completely closed, turn off the power switch so that the pump stops. Never stop the pump suddenly by quickly closing a valve (i.e., solenoid or hydraulic valves).

   

   **Caution**
   **Quick valve closure may cause water hammer that can cause severe damage to the pump.**

4. **Temperature**
   The pump itself may not suffer a change in performance due to temperature fluctuation. However, the liquid may change in terms of viscosity, vapor pressure, and corrosive properties. Pay special attention to changes in liquid characteristics as a result of temperature fluctuation.

   | | |
   |---|---|
   | Liquid temperature range: | 32 – 176°F (0 – 80°C) |
   | Ambient temperature range: | 32 – 104°F (0 – 40°C) |

5. As there is a powerful magnet inside the pump unit, do not use any liquid that contains metallic substances such as iron, nickel, etc.

6. Do not operate the pump in the following places:
   - Places exposed to rain and/or wind.
   - Places where the temperature falls below 32°F (0°C).
   - Places where corrosive gas (such as chlorine) is present.
   - Places exposed to splashing of water or fluid being pumped.
   - Places where the ambient temperature is 104°F (40°C) or above.
   - Places where explosive or combustible materials/gases are present.

7. Do not operate the pump with the following liquids:

- For the compatibility to chemical liquid or any special liquid, contact an Iwaki America sales representative.
- Liquids that significantly swell polypropylene.
- Paraffinic hydrocarbons such as gasoline and kerosene.
- Halogenated hydrocarbons such as trichloroethylene and carbon tetrachloride.
- Ether and low-grade ester
- Slurry
  (For a chemical compatibility to guide contact Iwaki America customer service.)

8. To prevent fire and explosions, do not place dangerous or flammable substances near the pump.

9. Be sure unit is properly ground.

10. If a pumped is damaged, it can be dangerous to operate. Contact factory for assistance.

11. Avoid direct physical contact with the motor or pump during operation, as surface temperatures may be extremely high due to operating conditions.

# 7 INSTALLATION, WIRING AND CONNECTIONS

## 7.1 Installation

1. **Installation site**
   Installation site must have an ambient temperature of 32-104°F (0-40°C) and a relative humidity lower than 90%. Install the pump where maintenance and inspection work can be done easily.

2. **Pump installation method**
   This pump is not self-priming. It is recommended that the pump shall be installed in a position lower than the liquid level of the suction tank by at least 12 inches (30 cm). If this distance is too short, air may enter the pump, causing damage.

3. **Direction of pump discharge port**
   The discharge port can be directed as desired. However, for efficient elimination of air in the pump end, it is recommended that the discharge port be positioned in the horizontal direction.

4. **Anchoring of base**
   The base of the pump must be anchored firmly. The pump must not be mounted in a vertical position.

## 7.2 Piping instructions

1. To minimize frictional resistance, the shortest piping possible with a minimum number of bends should be utilized on the inlet or suction side of the pump.

2. Use a corrosion-resistant vinyl hose that is rated at or above the pressure rating of the pump (see specification table).

3. Hose size (for hose-barb style pumps)
   Select hose size in accordance with the diameter of the pump connections. As the hose tends to be crushed under the force, the use of a braided reinforced hose is recommended. Note, if the connection on the suction side is loose air may be mixed in with pumped fluid.

   **(In the case of high temperature liquids, special attention must be paid to the selection of a hose.)**

4. Hose connection
   Be sure to cut the ends of the hose straight. Press the hose end firmly against the discharge or suction port until it reaches the bottom of the port. Use a fastener (such as a hose clamp) to make the connection tight and leak free.

   

   **Caution**
   **Do not over tighten the connection ports (suction and discharge) excessively as they are made of plastic resin and are could be damaged.**

5. Valve installation
   Install valves close to the suction and discharge ports.
   - Suction side valve:
     For easy liquid removal and pump maintenance
   - Discharge side valve:
     For adjustment of the discharge rate or head and for easy removal and pump maintenance.

## 7.3 Wiring

1. Prior to wiring the pump, confirm the voltage indicated on the nameplate is correct for your installation. (Observe all local and national regulations regarding electrical work.) The connection diagram is presented on the next page.

2. The pump does not have an external switch. It starts when power is supplied to the pump wires.

**Wiring diagrams**

• (W)MD-15R, 20R, 20RX, 20RZ, 30R, 30RX and 30RZ (Single-phase capacitor run motor with thermal protector)

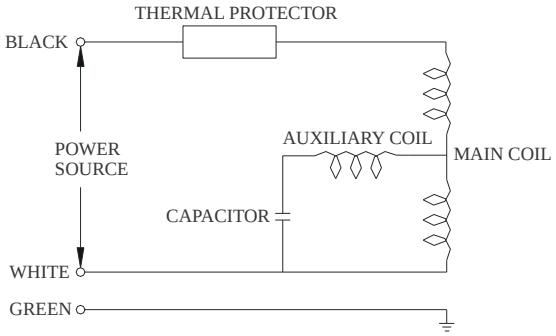


• (W)MD-40R, 40RX, 40RZ, 55R, 70R, 70RZ, and 100R (Single-phase capacitor run motor with thermal protector)

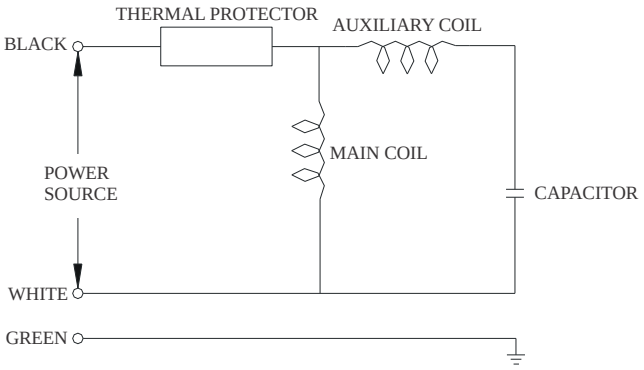


100R ONLY

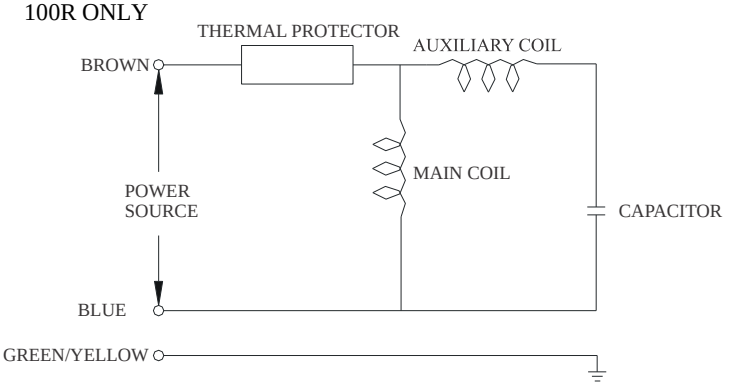


• MD-70R, 70RZ, and 100R models (3-phase motor, 220/380V)

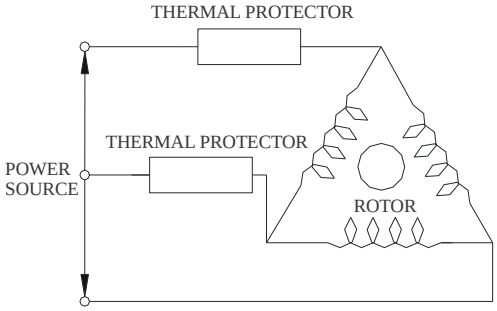


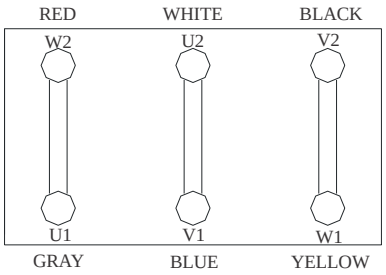


220V

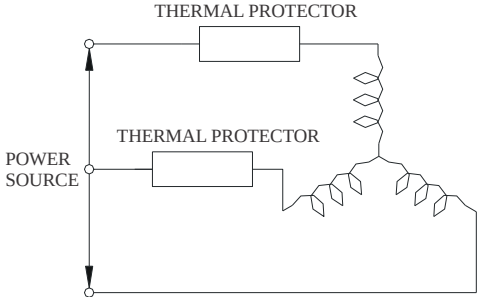


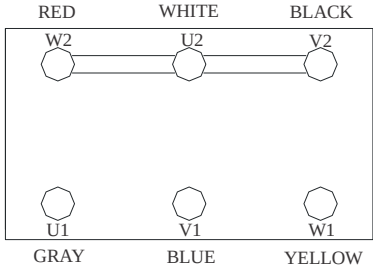


380V

• (W)MD-70R, 70RZ, and 100R models (3-phase motor,400/440V)

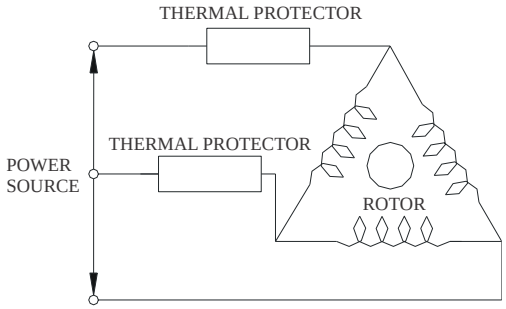


# 8 ASSEMBLY

1. Place the motor on end vertically so that the shaft is pointed upward.

2. Install the drive magnet on the motor shaft and position the shaft flush with the inside of the magnet. Note: On WMD models, screw the bracket to the motor first.

3. Insert the rear casing into the magnet/motor bracket.

4. Install the impeller and O-ring into the rear casing.

5. Place the front casing over the pump, making sure that the volute casing is aligned.

6. Using a hex head driver, fasten the liquid end to the bracket using six screws. Tighten in a star pattern.

# 9 OPERATION

**Caution**

- Before operating the pump, confirm that connections to the discharge and suction ports are secure.
- Dry run operation (operation without liquid in the pump) damages the pump. Be sure to fill the pump with liquid prior to startup.
- Do not operate the pump with closed, or almost entirely closed, suction and/or discharge side valve(s). A closed suction valve will cause dry-run operation.
- Do not open or close the suction or discharge side valve suddenly, this may result in decoupling and damage to the pump end. (Under such circumstances, turn off the power supply immediately. When the motor stops rotating, the magnetic coupling will be reconnect automatically.)

| No. | Operation Step | Note |
|---|---|---|
| 1 | Check piping, wiring and voltage. | Check connections to confirm they are secure and leak-free. Check the power supply voltage by referring to the information on the nameplate. |
| 2 | Open and close valves. | Fully open suction side valve.<br>Fully close discharge side valve. |
| 3 | Check that pump chamber is filled with liquid. | Fill pump chamber with priming liquid.<br>Be sure suction line is completely filled, this is especially important if pump is above liquid level. |
| 4 | Supply power to pump | After steps 1 to 3 above, connect power supply to start pump. |
| 5 | Adjust discharge capacity & head to desired values. | Adjust discharge side valve gradually till desired discharge capacity and head are obtained. Do not open or close valves suddenly.<br>**Note: Do not keep discharge side valve closed for more than 1 minute.**<br>**Note: Check that pump is operating normally. If not, turn off power immediately and eliminate cause referring to 'Causes of Trouble and Troubleshooting' section (p.27).** |
| 6 | Checkpoints during operation | Be careful to prevent solids from entering the pump. Solids in the pump may cause impeller to be locked stopping liquid circulation. The motor continues to rotate even if impeller is locked. In such a case, turn off power supply at once. |

## Pump Stopping Procedure

| No. | Stopping Step | Description |
|---|---|---|
| 1 | Close discharge side valve. | Close discharge side valve gradually.<br>Do not use electromagnetic valve for quick closing. |
| 2 | Switch power off. | Check that motor stops smoothly after power supply is disconnected. If not, pump should be inspected. (For details, contact Iwaki or your dealer.) |

## How to store pump when it is out of use for a long time

Remove the liquid from the pump if it is to be stored for a long period of time. In addition, run it with water for about 5 minutes every 3 months to prevent rust on the motor bearing.

**Warning**

- Before draining the pump, turn off the power supply.
- Be sure to wear proper safety gear (gloves, protective shoes, etc.) when handling pump end for draining purposes, especially when a hazardous chemical is being pumped.



**Caution**

Note that residual liquid may run from the discharge and suction ports when the housing is removed. Do not allow any electric parts to come in contact with the liquid.

Never discharge hazardous or chemical liquid over the ground or floor in the plant. Instead, use a draining pan (or container). Observe each applicable local law or regulation for the handling or disposal of hazardous liquids.

## Draining procedure

1. Turn off the power supply. (Make sure no other operator will turn the power supply on accidentally.)
2. Close the discharge and suction sides valves fully.
3. Remove the hoses piping attached to the pump.
4. Remove the screws on the pump base to detach the pump from its mounting location.
5. Rotate the pump.
6. Discharge hazardous liquids appropriately.

# 10 MAINTENANCE/INSPECTION

**Maintenance and inspection**

- When the pump has been used for a long time, the front casing screws attaching the pump head to the motor bracket may loosen. Tighten screws periodically taking care not to deform the plastic parts. Also, after pump has been stored for a long time, tighten screws before pump is used again.

- Daily inspection
  Check operating conditions (vibration, noise) as well as electric current value and pump discharge capacity. As soon as you find any abnormality, turn off power and refer to "Troubleshooting" on page 27.

# 11 PARTS DESCRIPTION AND EXPLODED VIEW

**TYPICAL MD-6 through 40**

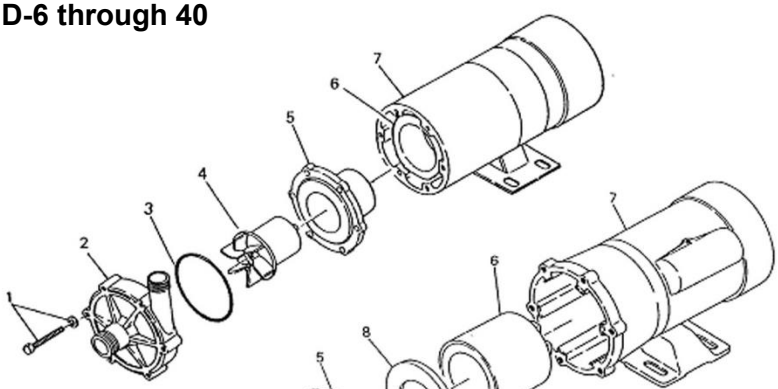


**TYPICAL MD-55/70/100**




**TYPICAL WMD**

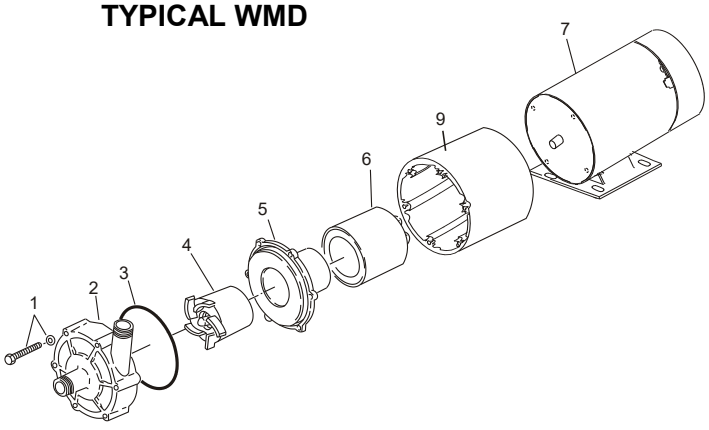


| Item No. | Description | Item No. | Description |
|---|---|---|---|
| 1 | Screw | 5 | Rear Casing |
| 2 | Front Casing | 6 | Drive Magnet |
| 3 | O-Ring | 7 | Motor Assembly |
| 4 | Impeller | 8 | Retainer (MD-100R,100F, 70RZ, 55F only) |
| | | 9 | Bracket |

# 12 DIMENSIONS

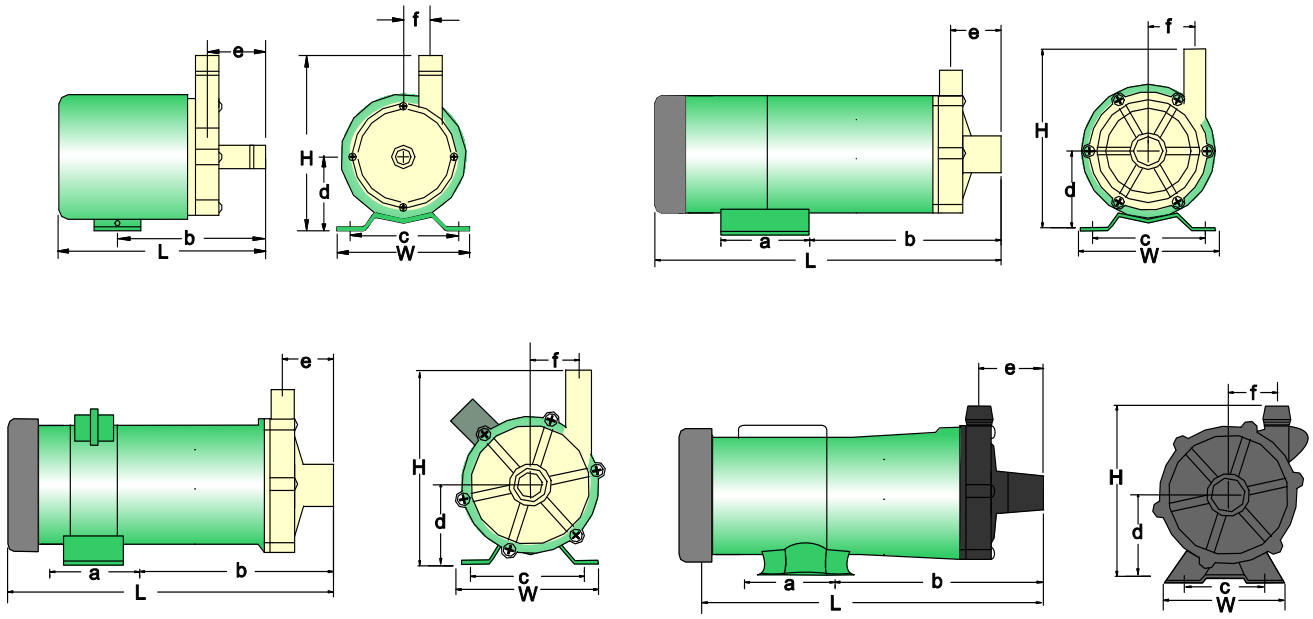


Dimensions in inches

*Varies with motor

| Model | Connections | | W | H | L | a | b | c | d | e | f |
|---|---|---|---|---|---|---|---|---|---|---|---|
| | Hose | NPT(M) | | | | | | | | | |
| ***Polypropylene Models (MD-115V models only)*** | | | | | | | | | | | |
| MD-6/10 | 1/2 | --- | 2.91 | 3.62 | 4.09 | 1.18 | 2.87 | 2.36 | 1.77 | 1.22 | 0.67 |
| WMD-15R(T) | 1/2 | 1/2 | 3.50 | 4.26 | 9.46 | 2.37 | 4.15 | 2.50 | 1.94 | 1.52 | 0.85 |
| MD-15R(T) | 1/2 | 1/2 | 3.74 | 4.39 | 7.05 | 1.97 | 4.59 | 3.35 | 2.17 | 1.52 | 0.85 |
| WMD-20R(T) | 5/8 | 3/4 | 3.50 | 4.35 | 9.70 | 2.37 | 4.39 | 2.50 | 1.94 | 1.30 | 1.12 |
| MD-20R(T) | 5/8 | 3/4 | 4.17 | 4.19 | 7.99 | 1.73 | 4.06 | 3.54 | 1.77 | 1.30 | 1.12 |
| WMD-20RX(T) | 1 | 1 | 3.50 | 4.95 | 10.37 | 2.37 | 5.06 | 2.50 | 1.94 | 1.83 | 40+ |
| MD-20RX | 1 | 1 | 4.17 | 4.75 | 8.66 | 1.73 | 4.45 | 3.54 | 1.74 | 1.83 | 40+ |
| WMD-20RZ | 5/8 | 3/4 | 3.50 | 4.70 | 9.98 | 2.37 | 4.67 | 2.50 | 1.94 | 1.56 | 1.52 |
| MD-20RZ | 5/8 | 3/4 | 4.17 | 4.92 | 8.31 | 1.73 | 4.17 | 3.54 | 2.17 | 1.56 | 1.52 |
| WMD-30R | 3/4 | 3/4 | 3.50 | 4.70 | 11.65 | 2.37 | 5.72 | 2.50 | 1.94 | 1.89 | 1.22 |
| MD-30R | 3/4 | 3/4 | 4.72 | 5.12 | 9.76 | 1.57 | 5.87 | 3.94 | 2.36 | 1.89 | 1.22 |
| WMD-30RX | 1 | 1 | 3.50 | 5.09 | 11.89 | 2.37 | 5.96 | 2.50 | 1.94 | 1.97 | 40+ |
| MD-30RX | 1 | 1 | 4.72 | 5.51 | 10.00 | 1.57 | 6.10 | 3.94 | 2.36 | 1.97 | 40+ |
| WMD-30RZ | 5/8 | 3/4 | 3.50 | 4.70 | 10.97 | 2.37 | 5.04 | 2.50 | 1.94 | 1.56 | 1.53 |
| MD-30RZ | 5/8 | 3/4 | 4.72 | 5.12 | 9.05 | 1.57 | 5.16 | 3.94 | 2.36 | 1.56 | 1.53 |
| WMD-40R | 3/4 | 3/4 | 4.38 | 4.84 | 11.34 | 3.09 | 6.66 | 3.37 | 2.08 | 1.89 | 1.22 |
| MD-40R | 3/4 | 3/4 | 4.72 | 5.12 | 9.85 | 1.57 | 5.87 | 3.94 | 2.36 | 1.89 | 1.22 |
| WMD-40RX | 1 | 1 | 4.38 | 5.23 | 11.30 | 3.09 | 7.02 | 3.37 | 2.08 | 1.97 | 43+ |
| MD-40RX | 1 | 1 | 4.72 | 5.51 | 10.08 | 1.57 | 6.10 | 3.94 | 2.36 | 1.97 | 43+ |
| MD-55R | 1 | 1 | 4.72 | 6.10 | 10.77 | 1.57 | 7.05 | 3.94 | 2.56 | 2.42 | 1.57 |
| MD-70R | 1 | 1 | 5.63 | 6.11 | 10.18 | 2.76 | 5.71 | 4.25 | 2.56 | 2.07 | 1.70 |
| MD-70RZ | 3/4 | 3/4 | 5.63 | 6.50 | 9.72 | 2.76 | 5.24 | 4.25 | 2.56 | 1.65 | 1.87 |
| MD-100R | 1 | 1 | 6.14 | 6.89 | 12.67 | 2.76 | 6.38 | 4.33 | 2.95 | 2.55 | 1.71 |
| WMD-100R | 1 | 1 | * | 7.44 | * | 3.00 | 10.43 | 4.87 | 3.50 | 2.55 | 1.71 |
| ***Fluoroplastic Models (MD-115V models only)*** | | | | | | | | | | | |
| WMD-30F (X,Y,Z) | --- | 1/2 | 3.50 | 5.02 | 11.82 | 2.37 | 6.67 | 2.62 | 2.29 | 1.84 | 1.22 |
| MD-30F (X,Y,Z) | --- | 1/2 | 4.72 | 5.12 | 9.09 | 1.57 | 6.77 | 3.94 | 2.36 | 1.53 | 1.52 |
| MD-55F (Y,Z) | --- | 1 | 4.72 | 6.11 | 10.53 | 1.57 | 6.61 | 3.94 | 2.56 | 2.30 | 1.56 |
| WMD-100F (Y,Z) | --- | 1 | * | 6.80 | * | 3.00 | 12.05 | 4.88 | 3.56 | 2.55 | 1.71 |
| MD-100 (Y,Z) | --- | 1 | 6.14 | 6.89 | 12.67 | 2.76 | 6.38 | 4.33 | 2.95 | 2.55 | 1.71 |

# 13 TROUBLESHOOTING

| | Pump does not start. | Pump is not pumping or flow is insufficient. | Electric current is high. | Excessive noise or vibration. | Liquid leaks. | |
|---|---|---|---|---|---|---|
| Power is not supplied or wiring is faulty. | ○ | | ○ | | | Check power connections or contact your dealer. |
| Motor is out of order (short coil or capacitor failure). | ○ | | ○ | | | Contact your dealer. |
| There is residual air in the pump. | | ○ | | ○ | | Eliminate air from pump end completely. |
| Air is sucked in via suction port. | | ○ | | ○ | | Check suction connection. |
| Pump is running dry. | | ○ | | ○ | | Supply priming water to pump. |
| Specific gravity/viscosity of liquid is too high. | ○ | ○ | ○ | | | Confirm application with pump specifications. |
| Periphery of impeller magnet is in contact with rear casing. | ○ | ○ | ○ | ○ | | Contact your dealer. |
| Impeller is damaged. | ○ | ○ | ○ | ○ | | Contact your dealer. |
| Foreign matter is stuck to impeller. | | ○ | ○ | ○ | | Contact your dealer. |
| O-ring is damaged. | | | | | ○ | Contact your dealer. |
| Loose front casing bolts. | | ○ | | | ○ | Tighten bolts. |

5 BOYNTON ROAD HOPPING BROOK PARK HOLLISTON, MA 01746 USA
TEL: 508-429-1440 FAX: 508-429-1386 www.iwakiwalchem.com

LEFT BLANK

# *McLANAHAN*

## *MODEL M3H-CND 3x3, MICROSAND RECIRCULATION PUMP*
## *MODEL M3H-CRD 2x2, MICROSAND RECIRCULATION PUMP*

LEFT BLANK

# INSTALLATION, OPERATION & MAINTENANCE MANUAL

## PUMP ASSEMBLY, 2X2 DRY GLAND

## W/7.5 HP DRIVE PACKAGE

PROJECT ID #20212074


| | | | |
|---|---|---|---|
| **WORLD HEADQUARTERS** | 200 Wall Street, Hollidaysburg, PA 16648 USA | Ph: +1 (814) 695 9807 | Fax: +1 (814) 695 6684 |
| **TENNESSEE** | 585 Airport Road, Gallatin, TN 37066 USA | Ph: +1 (615) 451 4440 | Fax: +1 (615) 451 4461 |
| **FLORIDA** | 6550 New Tampa Highway, Lakeland, FL 33815 USA | Ph: +1 (863) 667 2090 | Fax: +1 (863) 667 0449 |
| **IOWA** | 800 First Avenue N.W., Cedar Rapids, IA 52405 USA | Ph: +1 (319) 365 0441 | Fax: +1 (319) 369 5440 |
| **AUSTRALIA** | 16 Callistemon Close, Warabrook, NSW 2304 Australia | Ph: +02 49 248 248 | Fax: +02 4926 2514 |
| **UNITED KINGDOM** | Unit 15, Newman Lane, Alton, Hampshire, GU34 2QR, UK | Ph: +44 (0) 1420 542489 | |

mclanahan.com

# Table of Contents


Table of Contents ..... 3
Safety Precautions ..... 5
Introduction ..... 7
"Pumptec" Computer Software ..... 8
Maska ..... 9
Pump Curve ..... 10
Specific Information About Your Pump ..... 12
Design Condition (To be filled in by distributor or owner) ..... 12
Gland Options ..... 13
"H" and "P" Glands ..... 13
"D" Gland ..... 14
General Pump Suction Requirements ..... 19
Installation ..... 19
Noise ..... 19
Foundations ..... 20
Pipe Work ..... 20
Power ..... 20
Gland Services ..... 20
Access ..... 20
Impeller Adjustment Axially ..... 20
Coupling Alignment ..... 20
Motor Rotation ..... 21
Tension V-belts ..... 21
Belt Guard ..... 21
Gland Service ..... 21
Greased Bearings ..... 21
Final Checks ..... 21
Electrical Installation ..... 21
Gland Services ..... 22
Gland Service Systems ..... 23
Lubrication and Cooling ..... 23
Start-Up Procedure ..... 24
Shutdown Procedure ..... 24
Disassembly Procedure ..... 24
Assembly Procedure ..... 25

Spare Parts List ..... 29
Troubleshooting ..... 36
Wear and Replacement of Parts ..... 36
No Discharge When Pump Runs ..... 36
Brief Discharge Only ..... 37
Pumps water but not solids ..... 37
Overloads for Motor Trip Out ..... 38
Pump Handles Only a Limited Percentage Solids ..... 41
Pump Speed Incorrect ..... 41
Air Entrainment ..... 41
Poor Suction Line ..... 41
Cavitation ..... 41
Gland Will Not Seal Adequately ..... 41
Excessive Heat in Drive ..... 42
Sudden Reduction in Discharge ..... 43
Sudden Increases in Power Demand ..... 44
Rapid Component Wear ..... 45
Mechanical Failure ..... 46
Motor Manual ..... 47
Drawings ..... 78

# Safety Precautions

### Overview

**READ THIS MANUAL IN ITS ENTIRETY BEFORE BEGINNING OPERATION.**

- **DO NOT** install, operate or service this equipment (or any portion thereof) without fully understanding the information contained herein.
- **DO NOT** operate this equipment in any manner other than that for which it has been designed or approved.

**NOTE:** A copy of this manual **must** be provided to the operator of this equipment and **must** be kept with the equipment at all times.

The safety instructions presented throughout this manual do not supersede any other directives or practices associated with this equipment or its operation. Rather, they are to be used in addition to any other applicable guidelines set forth by governing bodies (ANSI, ISO, OSHA, MSHA, etc.), plant administrators, signs, tags or placards, etc. (Refer to the **TAGS** section of this manual for information regarding safety and instructional tags provided with the equipment.) In the event of conflicting information, **always use the guidelines providing the highest degree of protection/safety.**

The safety instructions used throughout this manual and on the equipment contain a "signal word" (CAUTION, WARNING or DANGER) that indicates the seriousness of the hazard as described below.




**DANGER** *indicates an imminently hazardous situation, which, if not avoided, will result in death or serious injury.*




**WARNING** *indicates a potentially hazardous situation, which, if not avoided, could result in death or serious injury.*




**CAUTION** *indicates a potentially hazardous situation, which, if not avoided, may result in minor or moderate injury.*




**CAUTION** *(used without the safety alert symbol) indicates a potentially hazardous situation, which, if not avoided, may result in property damage.*

The safety instructions listed below are general guidelines. Additional safety instructions are listed throughout this manual as required. **All** safety instructions **must** be followed at all times to ensure personal safety and to prevent equipment damage.




**Verify that all personnel are clear of any/all moving or rotating parts** (or parts that are subject to movement or rotation) before installing, operating or servicing this equipment or any portion thereof.




**Verify that all guards and safety devices are in place, secured and functional** before operating this equipment or any portion of it. **DO NOT** circumvent or disable any safety devices.




**Lockout/Tagout all controls and secure all applicable components to prevent unexpected movement** before performing any maintenance, repairs or adjustments on this equipment or any portion thereof.




**Lockout/Tagout power at the source** before accessing any electrical panels or devices on this equipment or before performing any maintenance or repairs to the power line(s) feeding this equipment.




Wear appropriate personal protective equipment at all times.




**Obey all safety tags and signs** and replace any that are illegible or missing.

If any questions arise concerning the safe operation of this equipment, or if clarification of any information is required, cease operation and contact **McLanahan Corporation** immediately.

# The McLanahan Pump

## Introduction

The Aggregate Processing Division of McLanahan is a major manufacturer of process plants for the minerals industry. The McLanahan Model lllr is the latest generation of successful abrasion/corrosion-resistant slurry handling pumps.

**This manual should be carefully read before attempting to install or operate this McLanahan Model lllr Pump.**

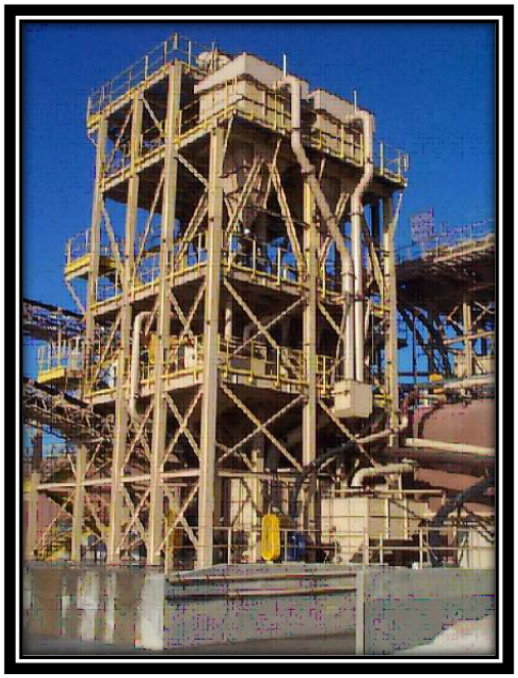

## Service, Selection and Support

### Total Service

From design to installation and beyond, McLanahan engineers are available to give advice on your slurry pumping needs and solutions for your problems.

The McLanahan Model lllr range has been designed to offer a wide choice of pump sizes to suit most slurry pumping applications. A standard questionnaire is available to ensure that the most complex installation, as well as the more straightforward pumping application, receives individual consideration.

McLanahan can also advise on the ancillary components within the pumping system. The provision of low head loss valves, gland feed pumps, priming devices and flexible bends, all incorporating application specific linings for trouble-free life, are an important aspect of ensuring a totally successful pump installation.

## Design Specifications and Options

The McLanahan Model lllr standard casing is designed for a maximum working pressure of 88psi (6 bar). A high pressure casing is available, rated at 272psi (18.5 bar). Please contact McLanahan for pressures higher than this.

The pump units in the McLanahan Model lllr range are designated by the size of suction and discharge ports. Units up to 4” (100mm) have equal size suction and discharge; above this, the Model lllr has a larger suction than discharge. Size is given in inches i.e. 8”/6” (200/150mm) Model lllr has an 8” (200mm) suction port and a 6” (150mm) discharge port.

Suction and discharge flanges are universal and, as a standard, are available in ASA150 drilling patterns. Other drilling patterns (metric & BS4504) are available to special order. Orientation of discharge to 4 positions according to installation requirements.

The McLanahan Model lllr pump components are designed and manufactured in accordance with appropriate International Quality Standards, such as ISO9000.

## "Pumptec" Computer Software

Many complex calculations are needed in order to

- Size a pump
- Establish the optimum pipeline carrying velocity
- De-rate the pump for a slurry duty
- Calculate pipeline friction head losses
- Calculate power absorbed
- Analyze the system head

McLanahan Corporation uses unique software, **Pumptec,** to perform these calculations.

The pump is able to adapt to a change of V-belt sheave ratios and different speeds. However, it is **crucial** to recalculate duty parameters and check motor and drives to guarantee that they are not overloaded under any normal operating condition.

**Please consult McLanahan Corporation before making any changes to your pump system to ensure the correct combination of speed and power is selected.**

**Input criteria required:**

- Volume to be pumped
- Percent solids
- Gradation of solids (top size & 50% passing size)
- Specific Gravity of Solids
- Specific Gravity of Liquid
- Temperature of Liquid
- Elevation above sea level
- Height of liquid level in tank (**if negative suction**, height from liquid surface to center line of pump inlet)
- Vertical height from pump inlet to discharge point
- Pressure required at delivery point
- Pipe diameter (inside diameter important)
- Pipe material
- Pipe fittings – type and quantity

### *Pumptec: Computer Aided Support*

To complement and facilitate optimum selection of your slurry system, McLanahan uses **Pumptec.**

This unique computer program:

- Analyzes the effects of changing slurry density
- Calculates the $P_{50}$ particle size from a sieve analysis
- Calculates settling velocities and select pump sizes
- Calculates pipeline frictional losses in various pipe materials and pipe fittings
- Calculates the pump duty and selects a pump and drive based on input parameters
- Prints full application and selection data including NPSH, BEP, RPM, HP, etc.

Troubleshooting is made easier using **Pumptec** Software to evaluate different scenarios.

# Belted Drives Selection Tool

## Duty 21 CVI Revised SF

### Selection Number

1830047766 (Created on 10/31/2019)

| Drive Requirements | Input | Actual |
|---|---|---|
| Motor Speed | 1,750 rpm | 1,750 rpm |
| Motor Power | 7.50 hp | 7.50 hp |
| Service Factor | 1.2 | 2.25 |
| Output Speed | 1,869 - 1,985 rpm | 1,944 rpm |
| Center Distance | 11.75 - 13.75 in | 12.54 in |

### Technical Data

| | | | |
|---|---|---|---|
| Speed Ratio | 0.90 | Facewidth | 1.50 in |
| Belt Speed | 2,268 ft/min | Driver Pitch Diameter | 4.95 in |
| Belt Pull | 190 lbs | Driven Pitch Diameter | 4.45 in |
| Static Shaft Load | 185 lbs | Install/Take-up Center Distance Range | 12.04 - 13.54 in |

### Tensioning

#### Sonic Tension Meter Data

| | |
|---|---|
| Tension Frequency | 69 - 84 Hz |
| Belt Mass Constant | 72.0 g/m |
| Span Length | 318.5 mm |
| # of Belts | 3 |

#### Force Deflection Method

| | |
|---|---|
| Span Length | 12.54 in |
| Belt Deflection Distance | 0.20 in |
| Belt Deflection Force | 3.0 - 3.1 lbs |

**NOTE:** Values shown are for new belts.

### Selection

| Product | Part Number | Description | Weight (lbs) | Qty. | List Price (USD) |
|---|---|---|---|---|---|
| Driver Sheave | 112206 | 3-3V5.0-1610 SHEAVE | 4.3 | 1 | |
| Driver Bushing | 119225 | 1610 X 1 3/8-IK BUSHING | 0.6 | 1 | |
| Driven Sheave | 112204 | 3-3V4.5-1610 SHEAVE | 3.4 | 1 | |
| Driven Bushing | 119606 | 1610 X 40MM-KW BUSHING | 0.4 | 1 | |
| Belt(s) | 102788 | 3V400 BELT | 1.0 | 3 | |

| | |
|---|---|
| **Quantity:** | 1 |
| **List Price:** | |
| **Net Total Weight:** | 11.7 lbs |

**NOTE:** Product selections are dependent upon user inputs. Performance of the combined products is dependent upon the exclusive use of the ABB part numbers defined on this selection. Modifications, substitutions, or interchanges to other parts, vendors, or inputs may affect reliability and/or performance, therefore user assumes full liability for any changes. User is responsible for system considerations such as, but not limited to, space limitations, shaft engagement, and proper installation and maintenance.

JMI - 5000220043 /

20210115-012, February 1, 2021

M3H-CR 2/2 , 1938 rpm, 7.5 hp

©2018-2019 McLanahan. This curve is the property of McLanahan. And must not be reproduced or disclosed without permission in writing. All rights are reserved.

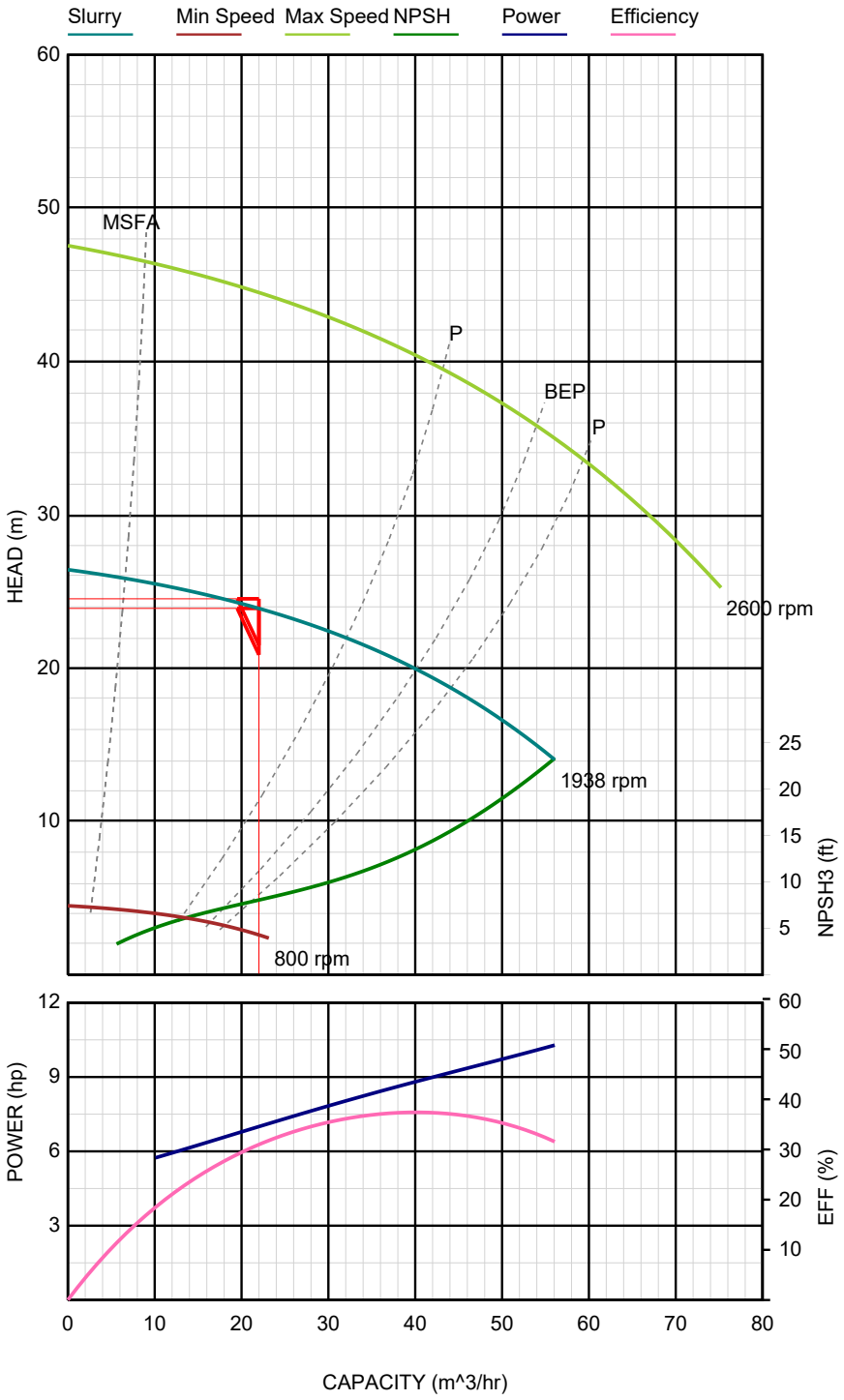


# Pump model: M3H-CR 2/2

| Pump | |
|---|---|
| Pump range | -CR |
| Speed | 1938 rpm |
| Max Speed | 2600 rpm |
| Efficiency @ BEP | 36.87 % |
| No. of pumps | 1 |
| Power absorbed - Total | 7 hp |

| Duty Point | |
|---|---|
| Flow | 22 m^3/hr |
| Static Head | 0 m |
| Total Head | 23.9 m |
| Efficiency | 31.38 % |
| NPSH required | 13.64 ft |
| % of BEP | 54.85 % |
| Power absorbed - @ Duty | 7 hp |
| Motor size | 7.5 hp |
| Tip Speed | 66.54 ft/s |
| Impeller Diameter | 7.874 in |
| Speed Head | 24.51 m |

| Slurry Data | |
|---|---|
| Solid flow rate | 5.636 Tons/hr |
| Solid SG | 2.7 |
| Slurry SG | 1.144 |
| % Comp. by Weight | 20 % |
| % comp. by Volume | 8.475 % |
| Ave. Particle size (D50) | 100 microns |
| Max Particle Size | 300 microns |
| Head Ratio | 0.975 |

**Engineer's Notes**

McLanahan

Pump Selection Program

Powered by TAS

### Pump Details

| | | |
|---|---|---|
| Pump Model | M3H-CR 2/2 | |
| Rated Flow | 22.00 | $m^3/hr$ |
| Rated Head | 23.90 | m |
| Efficiency | 31.38 | % |
| QBEP | 54.85 | % |
| Impeller Diameter | 7.874 | in |
| Pump Speed | 1938 | rpm |
| Minimum Speed | 800 | rpm |
| Maximum Speed | 2600 | rpm |
| Tip speed | 66.54 | ft/s |
| NPSH required | 8.11 | ft |

### Selection Details

| | | |
|---|---|---|
| Required Flow | 22.00 | $m^3/hr$ |
| Required Head | 23.90 | m |
| Static Head | 0.00 | m |
| Friction Head | 23.90 | m |
| Suction Height | 0.00 | m |
| Discharge Height | 0.00 | m |
| Discharge Pressure | 0.00 | kPa |
| Head Ratio | 0.97 | |
| NPSH Available | 0.00 | m |
| No. of pumps | 1 | |
| Power absorbed - Total | 7.00 | hp |

### Slurry Details

| | | |
|---|---|---|
| Solid flow rate | 5.64 | Tons/hr |
| Slurry flow rate | 22.00 | $m^3/hr$ |
| SG solid | 2.70 | |
| SG liquid | 1.00 | |
| SG slurry | 1.14 | |
| % comp. by weight | 20.00 | % |
| % comp by volume | 8.47 | % |
| Ave. particle size | 100.00 | microns |
| Max particle size | 300.00 | microns |
| Widely graded particles | False | |
| Froth factor | 0.00 | |
| Set ER & HR manually | False | |
| Efficiency ratio | 0.975 | |
| Head ratio | 0.975 | |

### Electrical Driver Details

| | | |
|---|---|---|
| Motor | 7.50 | hp |
| Power absorbed - @ Duty | 7.00 | hp |
| Power required | 7.49 | hp |
| Frame size | 213.00 | |
| Temperature rise | 105.00 | °C |
| Insulation class | F | |
| Bearing size D/E | 6308.00 | |
| Bearing size N/D/E | 6207.00 | |
| Weight | 139.00 | |
| Shaft size | 1.38 | |

## Specific Information About Your Pump

| | | |
|---|---|---|
| Company Name: | | |
| Address: | | Tel: |
| | | Fax: |
| Supplier: | Type of Industry: | |
| | Pump Model: | Size: |
| | Serial No: | Flange Type: |
| Contact Person: | Gland Size: | Drive Style: |
| Start-up date/remarks: | | |

## Design Condition (To be filled in by distributor or owner)

The following data should be completed as a record of the duty for which the pump was originally sold. During its lifetime the pumping requirements may change; if so, the new speed and operating conditions must be carefully engineered. McLanahan engineers are able to assist you in doing this. U.S. units are used, unless otherwise noted.

**Details of Solids**

Description of Solids: _____

Specific Gravity Solids: S=_____ Quantity of Solids M: _____ dry tons/hr

Particle Size: Topsize= _____mesh (mm). 50% passing size= _____mesh (mm).

**Details of Liquor**

Description of Liquor: _____

Specific Gravity of Liquor: Sl = _____

**Details of Slurry**

Specific Gravity of Slurry: Sm = _____

Percent (%) of solids by volume in slurry: Cv=_____

Percent (%) of solids by weight in slurry: Cm = _____

Flow rate of slurry: Q=_____gpm (l/s, $m^3$/Hr).

**Calculated Design Data**

Total Head: _____ft (m). Maximum working Head: _____ft (m).
NPSHa: _____ft (m). NPSHr: _____ft (m).
Pump Speed on Slurry: _____rpm. Derate factor for Slurry: _____

**Motor Data**

Motor Power rating: _____HP (kW).
Motor Frame size: _____
Motor Speed: _____rpm.
Motor Shaft Size: _____in (mm).

**Vee-Belt Drive Data**

Motor pulley O.D. _____in (mm). Pump pulley O.D.: _____in (mm).
Taper lock Bush No: _____ Taper lock Bush No: _____
Vee-belt: _____No off_____ No of grooves/pulley: _____

**Gland Water Requirements (H and P glands only)**

Quantity: _____gpm (l/s)
Pressure: _____psi (m)

**Technical Data**

Pump Mass: _____lbs (kg).
Motor Mass: _____lbs (kg).
Pump Shaft Size: _____mm
Noise Level: _____db (A)

## Gland Options

### Gland Seals

The **gland** is usually the weakest point on any **pump**; therefore, it requires the most attention and maintenance. All glands need cooling and lubrication between the sliding surfaces, so **a leisurely drip from the glands is normal**. **NOTE: DO NOT PREVENT DRIP.** All glands must be finally adjusted while the pump is running.

The McLanahan Glands have been developed to minimize the attention and service needed; Pressure of the fluid being pumped, the size and shape of the solid particles and the concentration of the solid particles in the liquid all affect wear and tear on pumps. Three unique seal arrangements have been developed and McLanahan engineers can give advice regarding the optimum selection for a specific duty.

### "H" and "P" Glands

The slurry pressure at the gland is reduced by back pump out vanes on the impeller. The rubber axial expeller, which is a stretch fit on the shaft of the "H" and "P" glands, is used to avert waste.

The solids are restrained by the outward centrifugal swirl behind the impeller, the axial expeller and the restricted path to the seal interface.

With the "H" Gland, the adjusting gland must be eased **outward** to increase the sealing pressure. The geometric shape of the **gland seal** is carefully designed to provide a flawless seal while limiting the amount of "digging" onto the gland sleeve.

The gland sealing water must be as clean as possible and at a pressure of about 3-5psi (2-4m water gauge) above the discharge pressure. A high-flushing water pressure results in greater water use and greater dilution of the pumped slurry without any benefit to the seal.

**“D” Gland**

This is a unique type of mechanical seal. The **face seal** runs against the **hard wearing face**.

The **face seal** acts as a spring and if any grit particles get between the rotating rubber and stationary **wear face** it is pressed into the rubber. The **face seal** is a stretch fit on the **shaft sleeve**. As the gland pressure increases, the rubber extends axially and increases the pressure at the rubbing interface. Be sure not to over-tighten the adjusting sleeve.

**When the pump is first started, ensure that the adjusting nuts are finger tight**. While the pump runs, adjust the gland nuts so there are approximately five (5) drops per minute from the gland. This should reduce to one (1) occasional drop and run satisfactorily for up to a year without further attention in a good application.

# Dry Gland

**Also known as "D" type gland**
This gland has a unique proprietary design and is unlike conventional mechanical seals. A rotating rubber **face seal** is adjusted against a static **hard wearing face**; it is **self-lubricating** - pressure from inside the pump head forces small amounts of liquid between the surfaces for lubrication.

**Note:** The gland needs no external water source to lubricate the gland; both small amounts of water and the fines do exit the pump, accumulating at its base, hence the term **dry gland**.

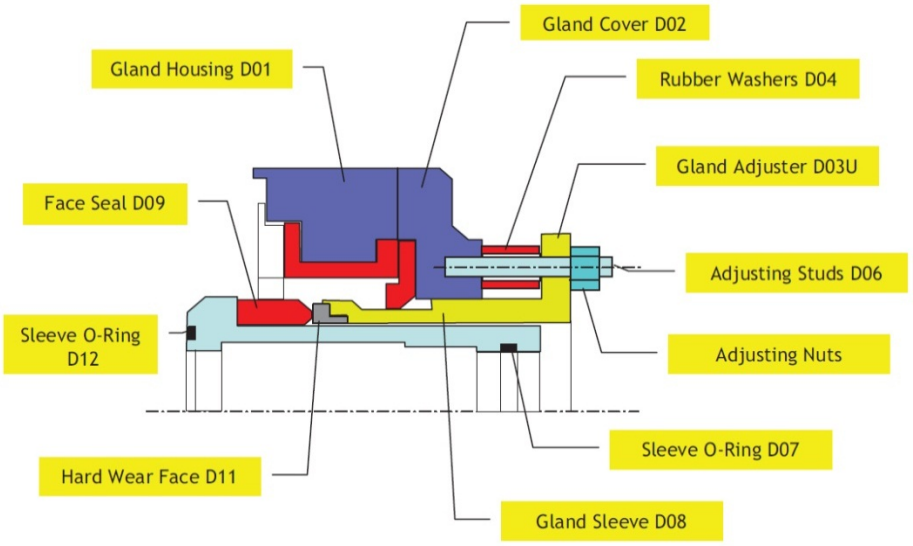


The **face seal** acts as a spring; if any grit particles get between the rotating rubber and **stationary wear face**, it is pressed into the rubber. The **face seal** is a stretch fit on the shaft sleeve. As the gland pressure increases, the rubber extends axially and increases the pressure at the rubbing interface.

While the pump is running, adjust the gland nuts so there are approximately five (5) drops per minute from the gland. This should reduce to one (1) occasional drop and run satisfactorily for up to one year without further attention in a typical application.

# Hydrostatic Gland

**Also known as "H" type gland**
This gland has a unique proprietary design with the lowest maintenance and longest life. The unique rubber gland seal is designed to deflect inwards to provide an effective seal. The **slurry pressure** at the gland is reduced by back pump out vanes on the impeller; when fitted, it is reduced by the **rubber axial expeller**, which is a stretch fit on the shaft of the "H" gland sleeve.

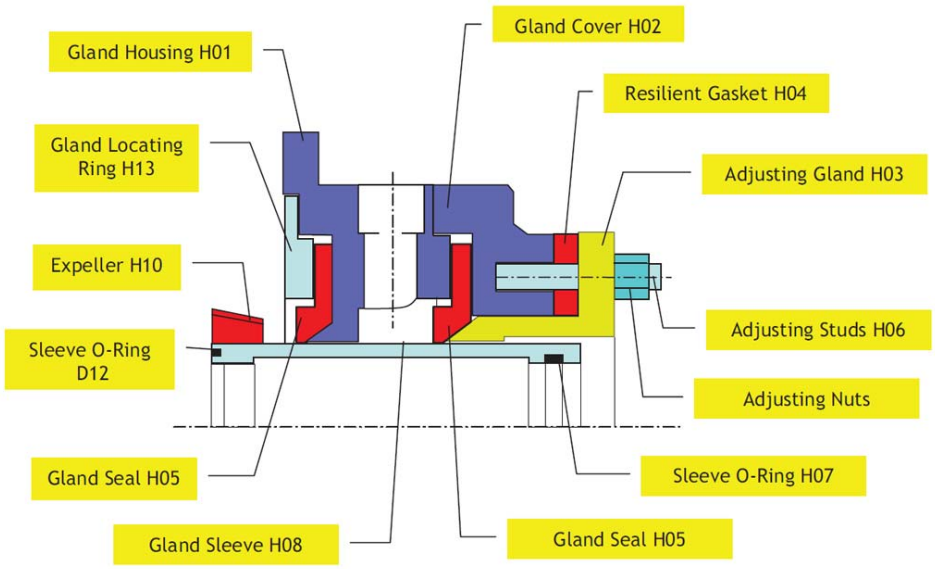


The solids are restrained by the outward centrifugal swirl behind the impeller, the axial expeller and the restricted path to the seal interface.

With the H Gland, the adjusting gland must be eased outwards to increase the sealing pressure. The geometric shape of the **gland seal** is carefully designed to give a good seal while limiting the amount of "digging" onto the gland sleeve.

The gland sealing water must be as clean as possible at a pressure of about 5psi (4m water gauge) above the discharge pressure and at a volume of between 1 to 5 gpm depending on pump size. A high-flushing water pressure results in greater water use and greater dilution of the pumped slurry without any benefit to the seal.

# Packed Gland

**“P” Type Gland**
In a classic “stuffing box” design, sealing is obtained by compressing the gland packing rings onto the shaft sleeve. The gland offers the capacity to seal the pump even at high pressures, for instance, in series pumping.

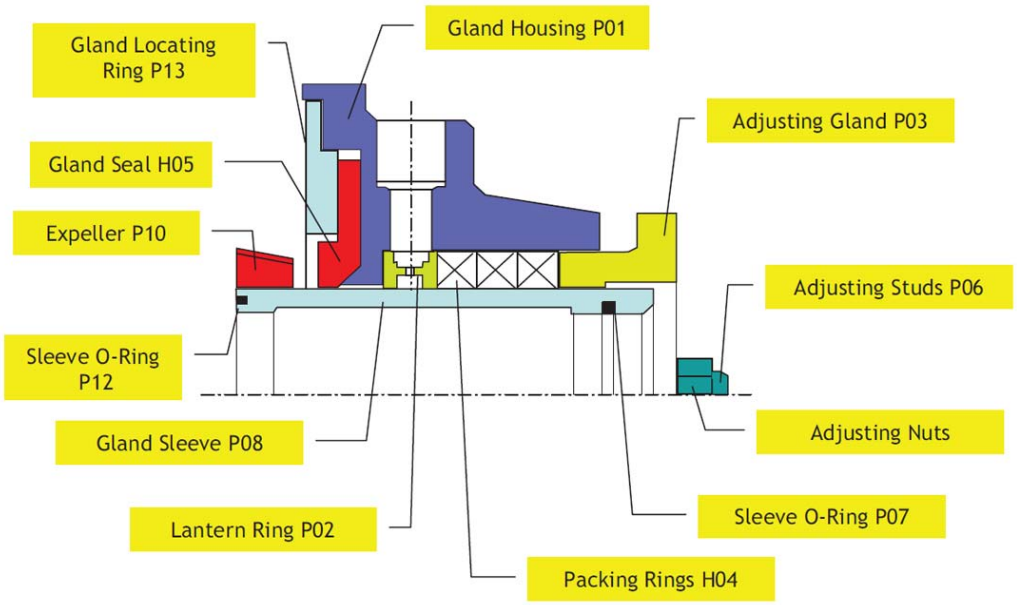


The solids are restrained by the outward centrifugal swirl behind the impeller, the axial expeller and the restricted path to the seal interface.

With the “P” gland, the adjusting gland must face inwards to increase the sealing pressure. The geometric shape of the **gland seal** is carefully designed to give a good seal while limiting the amount of “digging” onto the gland sleeve.

The gland sealing water must be as clean as possible at a pressure of about 5psi (4m water gauge) above the discharge pressure and at a volume of between 1 to 5 gpm depending on pump size. A high flushing water pressure results in greater water use and greater dilution of the pumped slurry without any benefit to the seal.

A pressure-fed grease supply can be used with the “P” gland; be sure to use synthetic rubber parts (special order).

## Assembly of Dry Gland – Hard Wear Face & Gland Adjuster (2” x 2” shown)




1. Check all components



2. Extrude epoxy from package & mix thoroughly

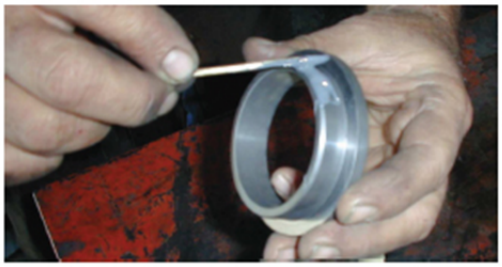

3. Apply epoxy to outer rim of Hard Wear Face (D11)



4. Place ‘O’ Ring (D10) on outer rim of Hard Wear Face (D11). Position ‘O’ Ring at leading edge.



5. Position Hard Wear Face & ‘O’ Ring into Gland Adjuster (D03U)



6. Using a slight twisting motion Carefully push Hard Wear Face into Adjuster



7. Wipe off excess epoxy

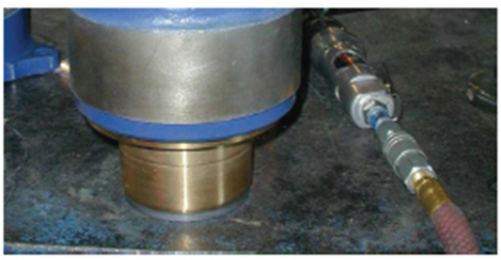

8. Place a heavy object on top of the assembly until dry (min 30 minutes)

## General Pump Suction Requirements

A pump does not "suck," as fluid has no tensile strength. The centrifugal expulsion of fluids creates a low pressure area at the eye of the impeller; atmospheric pressure, plus any static head, pushes fluid into the pump. It is essential that suction systems do not restrict flow from the sump into the pump. With slurries, this is even more important as the solids themselves can settle and cause obstructions to flow.

In order to maintain the short pipelines and prevent obstruction**, cleaning is essential**. A trap to remove tramp material is beneficial as well.

Air entrained in the slurry reduces the pump's capacity and head; an air vent pipe on the suction pipe close to the pump inlet is often essential.

The pump will operate best if the flow velocity approaching the impeller is evenly distributed across the suction eye, and is sensibly axial, without swirl.

Pump performance is potentially impaired by a number of factors. Intake conditions in the sump, such as the formation of vortices, can cause an uneven flow over the eye of the impeller. Intake conditions in the suction pipeline, such as a sharp bend just before the pump, can affect performance as well.

## Installation

## Important Notes

- The maintenance of rotating machinery should be done by experienced mechanics.
- Protective clothing as well as proper tools and lifting equipment, all in good condition, must be used.
- Do not lift heavy weights without mechanical aids.
- Do not take any risks with your health and safety.
- If a pump has run without discharge, the fluid temperature and pressure may be dangerously high.
- The casing suspension arm is fitted as a maintenance aid only.
- The installer must ensure that guards are fitted in accordance with national & local regulations.

The following notes cover most situations; however, certain installations will require additional assessments.

**Noise**

Because of its heavy construction, rigid bearing housing and the sound attenuation due to the rubber lining, the noise generated by a bare shaft McLanahan Pump is low: less than 70dB (A).

The noise emission from a complete pump and drive unit will be dependent upon various factors including that from the motor, its fan and the V-belt drive. To obtain an indication of the noise level generated by a specific complete unit, take the highest component noise level, which is generally the motor, and multiply by 1.15.
*For example:*

dB (A) pump + dB (A) motor + dB (A) drive = 1.15 x dB (A) motor.

Other factors, including the piping system and hydraulically-generated noise as well as any reflected noise, will affect the final installed figure.

**Foundations**

Location and dimensions must be checked and matched to the pump-certified drawing when holding down bolts, bolt holes in steel work or pockets in concrete. The foundations must be rigid.

The pump base must be level in its final position; it must also be rigidly supported at each bolt, which is designed to hold it down, before the bolts are tightened.

**Pipe Work**

The suction and delivery pipe work must be independently supported and the pump must not be used as an anchor to pull the pipes into position.

The procedure for discarding solids in an emergency situation should be planned before it is needed. If the removal of suction and delivery pipe work is planned ahead of time, it will facilitate unblocking and servicing of the pump.

Precautionary checks that need to be completed include:

- Areas that could cause restriction on the suction side
- The possibility of thermal expansion in the pipework causing undue loads on the pump
- The pipework should match up to the pump without strain

The lining on the McLanahan model lllr is continued out to form gaskets on the suction and discharge flanges, therefore the use of joint rings or additional gaskets is not necessary. Connections to the pump should be made using flat-faced flanges only.

When fitting McLanahan pumps to rubber-lined equipment such as valves, hose or lined pipe, a steel gasket must be used.

**Power**

Check that the motor voltage, power and starter rating and supply match.

**Gland Services**

If gland sealing water is required, the quantity, quality and availability should be checked.

**Access**

Crane capacity and access routes from the delivery point should be checked. Access for maintenance, protection from flooding, as well as ventilation for motor cooling, must all be checked.

**Impeller Adjustment Axially**

The position of the rotating element must be set so there is a minimum running clearance, approximately 1/16” – 1/8” between the suction bush and the impeller. The bearing housing must then be locked into position. This clearance should be checked by bolting a dummy flange or stub pipe to the suction flange. This ensures any movement of the rubber lining on connection is allowed. Once connected to suction and delivery lines, the unit should be checked for free rotation.

**Coupling Alignment**

The pump and motor couplings must be aligned in accordance with good engineering practice. Axial or radial run-out must be less than 0.05 mm total indicated reading on a clock gauge. With V-belt pulleys, the faces of the couplings must be exactly in line and the shafts must be parallel to each other. A check with a straight edge or string line across the pulley faces should have no visible gap.

**Motor Rotation**

Before the belts are fitted or the couplings are connected, the direction of rotation of the motor must be checked. Incorrect motor rotation can cause the impeller to unscrew and destroy the pump.

**Tension V-belts**

When the motor's direction of rotation is correct, fit and tension the V-belts in accordance with the maker's recommendation. In general, a quarter to a half twist of the belt will be possible at the center of the belt by simply using fingers. Check the tension after a few running hours.

**Belt Guard**

The belt guard provided with this pump unit is manufactured with the shaft aperture fully closed with mesh. On installation of the V-belt drive and determination of pulley centers, the shaft guard is offered up and the mesh relieved locally to allow the shafts to pass through. Allowance may be required for movement of shafts when belt tensioning.

The mesh should be relieved and a guard should be fitted in a manner which prevents accidental contact with the rotating parts of the drive assembly.

The installer must ensure that the guard is installed in accordance with national and local regulations.

**Gland Service**

When these are fitted, be sure that gland water supply and protection systems are working.

**Greased Bearings**

The pump bearings have been greased at the factory. **Over-greasing them can cause them to overheat**; they should be looked over but may not need grease. **Suitable grease types** are: Shell Alvania 3, Mobil EP2, Caltex LS3 or their equivalents.

**Final Checks**

- All nuts and bolts are tight
- Gland adjusting nuts are finger tight
- No loose material is lying around the pump set
- The guards are securely fitted and the pump is safe to start

The running speed of the pump must not exceed the following:

| Pump | 1½ x 1½ | 2x2 | 3x3n | 4x4 | 6x5 | 8x6 | 10x8 | 12x10 |
|---|---|---|---|---|---|---|---|---|
| MAX RPM | 2750 | 2400 | 2100 | 1600 | 1400 | 1200 | 1200 | 900 |

**Electrical Installation**

This equipment must be installed and controlled in accordance with applicable national and local regulations.

## Gland Services

On the hydrostatic gland and also on the packed gland, it is usually necessary to have a clean water flushing supply to the gland.

The pressure should be 3-5 psi (2-4m) water gauge above the pump discharge pressure (remember to include the S.G. of the slurry) and the flow rate should be in accordance with the table below.

| Pump | units | 1½x1½ | 2x2 | 3x3n | 4x4 | 6x5 | 8x6 | 10x8 | 12x10 |
|---|---|---|---|---|---|---|---|---|---|
| Water flow. | USgpm | 1 | 1 | 1 | 2 | 2 | 2 | 3 | 4 |
| Water flow. | liter/sec | 0.04 | 0.04 | 0.05 | 0.07 | 0.07 | 0.09 | 0.1 | 0.2 |

The gland flushing water should be clean. The life of the gland and gland sleeve is significantly affected by the cleanliness of the flushing water. Although a few particles will not do instant damage, the seal life will be reduced. Slurry must not be used.

There are many combinations of flow control devices that may be used. A few of these are shown on the diagram below. The objective is to maintain a secure supply of clean flushing water to extend the gland life.

With pumps in series, there are three main ways of supplying gland service water.

- Individual dedicated pumps at the correct pressure and flow rate.
- One large pump at the highest pressure throttling down the supply to each pump in the series.
- One multi-stage pump tapping off a supply at a different stage to each pump in the series.

**Gland Service Systems**

These are a few typical systems. Any selection of items may be combined.

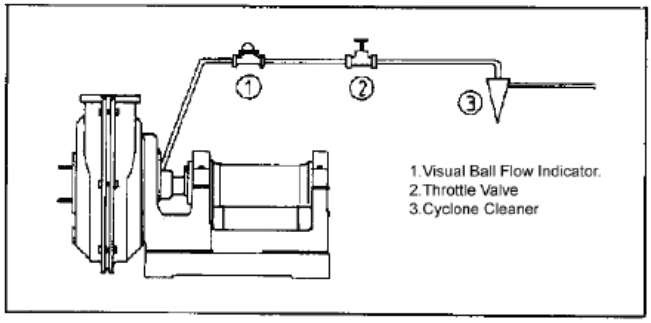


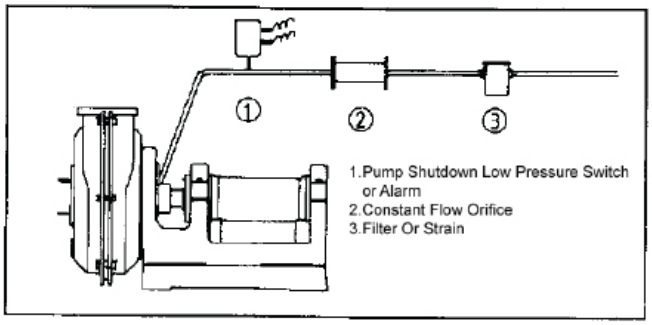


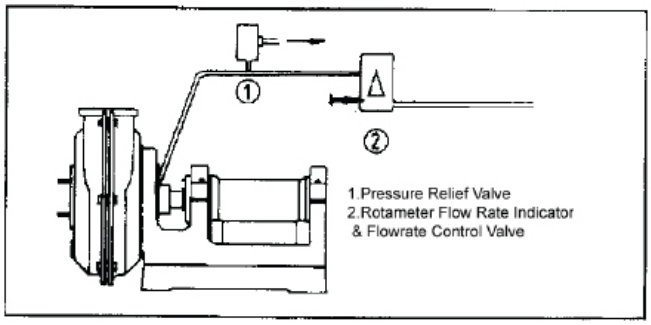


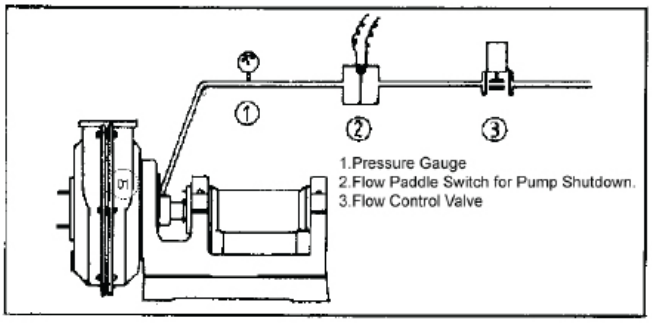


## Lubrication and Cooling

Additional grease must only be added about twice per year, as the bearings are already lubricated. **DO NOT over grease the bearings**.

The bearing assemblies are all checked in the factory to prove that they are correctly assembled.

The bearings are designed to run at high temperatures (maximum 120° C) and the grease has to be compatible with this operating condition. Clean grease must be used.

If water gets into the bearings, the assembly must be stripped, thoroughly dried and greased over; then, any seal failure must be corrected.

Recommended greases are Shell Alvania 3, Mobile EP2, Caltex LS3 or their equivalents.

## Start-Up Procedure

The recommended procedure to follow is listed below:

- Check the free rotation of the pump
- If required, verify that water for gland services is running
- At first start, or after any work on the electric motor terminal box, check direction of rotation **with drive belts removed**.
- Prime the pump
- Check that all guards are in place and that the pump is safe to run
- Start the pump
- If the pipeline is empty and there is no discharge valve (possibly due to abrasive nature of the product), the pump motor may be bogged down for a period of time and the pump may begin to go through the process of cavitation. This condition should be examined to evaluate the possible long term effect on the equipment.
- Check the pump for noise, vibration or any hot spots.
- **Adjust the gland to maintain a drip**, which is necessary for lubrication and for cooling.

## Shutdown Procedure

This depends ultimately on the system and process flow requirements but the following procedure is recommended.

- Stop the flow of solids into the sump.
- Turn the sluicing water or run system on water only to wash out the pump and delivery pipeline.
- Shut down the pump.
- Shut down the gland service water system.

**In cold weather, the pump and auxiliary equipment should be drained to prevent freezing damage.**

## Disassembly Procedure

Check that all power is switched off and isolated and that it is safe, electrically and mechanically, to work the pump. The following sequence is a general guide to stripping the pump for inspection. Refer to Cross Section drawings in Appendix.

On sizes up to the 4x4 (100x100) there is no separate suction bush or liner.

1. Remove the suction pipe and inspect for wear.
2. Check the suction bush liner for wear, noting any uneven wear pattern and position. Check the axial clearance.
3. Between the suction bush liner and the eye of the impeller (or on smaller pumps between the casing liner and eye of the impeller).
4. Remove nuts and suction bush. The suction bush liner is pushed out of the suction bush from the suction side. Some water spread under the lip of the suction bush liner will lubricate its passage out of the suction bush.

5. Remove casing bolts after supporting the suction side casing. Lift off the suction side casing. A crane will be necessary on the larger pumps.
6. The impeller is exposed for inspection. Hold the shaft using a spanner, which is a good fit, on the flats between the gland and the flinger. The impeller is screwed onto the shaft with an Acme right hand thread. The impeller may be very tightly locked onto the shaft and may need an impact force or a long lever to loosen it. If the impeller is to be used again, protect the rubber against damage. Inspect the impeller and note unusual wear patterns in the flow passages and back or front pump out vanes. Check that the "O" ring behind the impeller has sealed against the gland sleeve and slurry has not corroded the impeller or shaft thread. This "O" ring should be replaced at every strip-down.
7. Remove the axial expeller, which is a stretch fit on the gland sleeve. If "D" gland is fitted, the gland sleeve should be removed at this point.
8. Support the gland side casing, undo the casing to pedestal nuts and remove casing half along with the gland assembly. Undo the gland holding screws and remove the gland assembly. Undo liner nuts. The casing liner can now be removed for inspection; be sure to note any unusual wear patterns.
9. Remove bearing pedestal caps and fixings; unfasten the axial positioning jack to enable bearing assembly to be removed.
10. To disassemble the bearing assembly, remove the gland sleeve, flinger and bearing covers. The bearings can be inspected at this stage. If there is no sign of damage, the bearings should not be disturbed and they should merely be washed out with mild solvent oil and re-greased.
11. Press the shaft (with the bearing still fitted) out of the bearing housing. Push the shaft from the impeller side out of the bearing housing. The inner ring of the front bearing will still be attached to the shaft and can be removed later.
12. The remainder of the front bearing can then be withdrawn from housing.
13. Loosen the tab washer, undo the locknut and pull the end bearing off of the shaft.

Notes:

1. The 2x2, 3x3 and 4x4 pumps do not have a loose suction bush liner or suction bush.
2. The 10x8 (250/200) and larger sizes have the inside gland cover, which is held in position by (H14 / P14 / D14). Undo and withdraw the inside gland cover from the impeller side.
3. The Casing Suspension Arm is fitted as a maintenance aid ONLY and as much may be used to support **singularly**, either of the casing halves and its associated liner or the impeller. It must not be used for any other purpose. Suspension arm not fitted to 1.5 x 1.5 and 2x2 (50/50) pump.

## Assembly Procedure

Before assembly, ensure all parts are clean and free of old grease and dirt. The new bearings or replacement bearings should be generously filled with grease between the rollers. Check that the Neoprene grease seals are not soft or distorted. Replace if necessary.

1. Clamp the shaft horizontally in a vice. Heat the spherical roller end bearing in an oil bath or induction heater to 240°F (115°C) and fit it to the drive end of the shaft using clean insulated gloves. Ensure the inner ring of the bearing is hard against its seat by tapping it with a brass pin. Fit the tab washer and the lock nut.
2. Fit the inner ring of the front bearing to the impeller end of the shaft. Ensure, by tapping with a brass pin, that it is hard against its seat.
3. Clamp bearing housing securely, grease bearing. Fit shaft and end bearing assembly into housing. Ensure that outer race of bearing is hard against seat.
4. Fit neoprene seal and bearing cover seal to end cover and fix to bearing housing using set screws.

5. Mount bearing housing vertically with front end upwards and wedge shaft so it is central in the housing. Fill front bearing with grease and carefully tap outer ring into bearing housing.
6. Fit neoprene seal and bearing seal cover to front cover and fix to bearing housing using set screws. Fit V-Ring Seal to shaft and place with slight tension against front cover. Fit flinger ring to shaft and locate in position using screw clamp supplied with flinger ring.
7. Set bearing housing assembly into pedestal and loosely assemble bearing pedestal caps with pedestal cap screws; fit axial positioning jack. Rarely, shims are required for shaft alignment; if factory fitted, the thickness of shim required will be stamped on the vertical face of the pedestal adjacent to the pedestal cap stud.
8. If "D" gland is to be fitted – loosely assemble gland components without damaging the wearing face when fitting. Leave the gland sleeve out, as well as "O" rings and face seal. Fit the gland side liner into the gland side casing by securing with liner nuts. Bolt the gland assembly loosely to the casing. Fit the casing and gland assembly to the pedestal using fixings; take care not to damage the wearing face against the shaft on assembly. Fit the "O" rings and face seal to gland sleeve. Slide home onto shaft, through casing and into the gland assembly. Carefully align gland components (specifically check concentricity of gland parts relative to the shaft) and tighten all fixings.
9. If "H" or "P" gland is to be fitted, fit "O" rings to gland sleeve. Slide home onto the shaft. Loosely assemble gland components, slide over shaft and onto the gland sleeve. Fit the gland side liner into the gland side casing securing with liner nuts. Fit the casing to the pedestal using fixings. Carefully align the components of the gland assembly (specifically check concentricity of gland parts relative to the shaft) and fit to the casing. The axial expeller will then have a stretch fit over the gland sleeve.
10. Smear the impeller thread on the shaft with protective long life graphite grease before screwing on the impeller, ensuring that the impeller "O" ring is fitted into the gland sleeve.
11. Fit the suction side liner in the suction side casing using liner nuts.
12. Fit the suction bush liner inside the suction bush before bolting it to the suction side casing using the bolts. NOTE: using soapy water will facilitate the process.
13. Check the concentricity of the fit between suction bush liner and the impeller.
14. Using the axial positioning jack, adjust the impeller toward the suction bush liner, keeping the holding down studs loose. Check the axial clearance between the impeller and the suction bush liner. A steel ring or dummy flange should be bolted to the suction flange to simulate any distortion in the suction bush liner when connected to the suction pipe before the axial clearance is checked. This clearance should be set at approximately 1/8". Rotate the shaft to ensure effective clearance.
15. Tighten the bearing holding down nuts and the axial positioning jack.

# ATTENTION PLANT OPERATORS:
# HANG THIS NEAR YOUR PUMP

## McLanahan Model IIIr Centrifugal Pump With Type "D" Gland

### MOTOR DIRECTION TEST

| | |
|---|---|
|  | *ALWAYS PERFORM THE MOTOR DIRECTION TEST WITH THE V BELTS REMOVED* |

Note: The pump ships with the V-belts removed

| | |
|---|---|
|  | *WARNING: RUNNING THE PUMP IN THE WRONG DIRECTION MAY CAUSE THE IMPELLER TO UNSCREW, AND DESTROY THE PUMP.* |

A motor direction test should be carried out without the belts installed before running the pump for the first time, or after any work on the motors, switchgear or softstart that may affect the direction of rotation of the motor.

### STARTING UP AND RUNNING THE PUMP

| | |
|---|---|
|  | *BEFORE STARTING, ENSURE THAT THIS PUMP IS BEING SUPPLIED WITH GLAND SERVICE WATER. RUNNING THE PUMP WITHOUT GLAND SERVICE WATER WILL DESTROY THE GLAND* |

With the pump full of water, and all isolation valves open (if present) start the pump. The pump should immediately start pumping.

### BEFORE STARTING THE PUMP FOR THE FIRST TIME

The gland should be pre-set before starting the pump for the first time. To do so:

- Fill the feed sump with water and open the suction isolation valve (if present).
- Evenly adjust the gland Adjusting Nuts (see section 5) so a steady trickle leaks from the gland. Note: On a "P" Gland, tightening the nuts decreases the leak rate.

| | |
|---|---|
|  | *WARNING: THE PUMP MUST NOT BE ALLOWED TO RUN IF IT DOES NOT DISCHARGE* |
|  | *DANGER: RUNNING THE PUMP WITH NO DISCHARGE WILL CAUSE THE LIQUID INSIDE THE PUMP TO HEAT UP. IN EXTREME CASES THIS CAN LEAD TO THE LIQUID BOILING, & THE PUMP CASE MAY EXPLODE* |

The outside of the pump may not feel hot, as the rubber lining of the pump acts as thermal insulation. If by accident the pump has run without pumped discharge, it must be stopped immediately and the cause of the problem investigated.

| | |
|---|---|
|  | *DANGER: IF IT IS SUSPECTED THAT THE PUMP HAS OPERATED WITHOUT DISCHARGE, EXTREME CAUTION SHOULD BE USED IN DRAINING THE PUMP – THE LIQUID INSIDE MAY BE DANGEROUSLY HOT AND UNDER PRESSURE* |

## PRIMING

The McLanahan centrifugal pump is NOT self-priming. For this reason the pump must be installed with a flooded suction, or with the appropriate system for suction lift.

## ADJUSTING THE "P" TYPE PACKED GLAND:

Before starting, the gland should have been adjusted so a steady trickle leaks from the gland (see section 2). Check that Gland Service Water is being supplied. See the Manual for details of the flow & pressure requirements.

Final adjustment of the gland should be done with the pump in operation. Tighten the adjusting nuts until the leak reduces to drips. (60 drops /minute maximum, 5 TO 45 drops per minute minimum). Care must be exercised not to tighten too much, which may lead to damage to the seal.

| | |
|---|---|
|  | *WARNING: THE ADJUSTING NUTS SHOULD BE ADJUSTED INCREMENTALY, EVENLY, AND IN TURN, TO ENSURE THAT THE GLAND COMPONENTS STAY PARALLEL. TIGHTENING ONE NUT MORE THAN THE OTHERS MAY CAUSE MISALIGNMENT AND DAMAGE TO THE GLAND* |

## STOPPING THE PUMP

Before stopping the pump, it is advisable (if possible) to run the pump on clear water before turning it off, to prevent solids from settling out in the pump casing.

## LUBRICATION

The Pump comes from the factory fully greased. The Shaft Bearings should be greased with the correct grade of grease every 1000 hours of operation. Inject grease into the grease nipples by six strokes of a regular size (2" diameter body) grease gun.

The recommended grease is "Conoco Tacna HD No. 2" or equivalent grade grease.

## MAINTENANCE

Except for attention to the gland while the pump is in operation, there is no daily maintenance required on the pump. It is essential, however, that routine inspections be carried out, with the first such inspection taking place approximately three months from startup. This inspection should provide some idea of the wear rate, which will be a guide for scheduling future inspections and maintenance. For instructions on dismantling and reassembling the pump, see the instruction manual supplied with the pump.

## SPARES

Recommended spare parts are listed in the instruction manual. It is recommended that a supply of the wear parts listed be kept in stock so as to minimize down time in the event of failure of the part. (SEE NEXT PAGE)

## PUMP BEARING TEMPERATURE

On high speed duties it is to be expected that the bearings will run hotter than on low speed duties. At 150 F (65 C) the assembly will be uncomfortable to the hands for more than a second or two, but this is not unduly hot for the bearing assemblies. The bearings are designed to run at high temperatures, maximum 120° C.

# Appendix - Long Term Storage

## General:

The following are recommendations in reference to long term storage of McLanahan Pumps and Drives; McLanahan does not accept liability for components under these conditions. Documentation and photographic evidence is necessary for warranties to apply.

## Preventive Maintenance for Stored Rotating Spares

In the absence of data on premature bearing failures and armature/shaft sag and imbalance, we recommend a general procedure as follows:

The motor shaft targets should generally be used on any motor of 50HP or higher. They also should be used on fans and any other large rotating equipment that sits in storage for lengthy periods of time. By rotating these shafts monthly (or more, depending on the floor vibrations), you are preventing armature and shaft sag as well as false brinelling of the bearings into the races.

You may also find some smaller motors that have premature bearing failures after prolonged storage in your facility. If this is the case, the shaft targets should be attached (with double-stick foam tape) and smaller motors must be rotated.

## What is False Brinelling?

Whenever a **non-rotating bearing** is subjected to external vibration, **false brinelling** can occur. A protective oil film cannot form between the races and rotating elements when the bearing isn't turning, causing metal-to-metal contact. False brinelling can occur during transportation, typically truck or rail, and during motor storage if the storage area is subject to vibration.

Another type of brinelling, **true brinelling** occurs in **rotating bearings**.

## Pump

If stored, the pump should be kept in a clean, dry, vibration-free environment. The shaft should be rotated manually every three (3) months, or at the same interval as recommended by the electric motor manufacturer. In order to care for the natural rubber linings and components, follow the recommendations below.

## Electric Motor

The following information is reprinted from the WEG "Installation and Maintenance Manual for NEMA low Voltage Electric Motors"

## Storage

Motors should be raised by their eyebolts and never by their shafts. It is important that high rating three phase motors be raised by their eyebolts. Raising and lowering must be steady; otherwise bearings may be harmed. When motors are not immediately installed, they should be stored in their normal upright position in a dry even temperature place, free of dust, gases and corrosive atmosphere. Other objects should not be placed on or against them. Motors stored over long periods are subject to loss of insulation resistance and oxidation of bearings.

Bearings and lubricant deserve special attention during prolonged periods of storage. Depending on the length and conditions of storage it may be necessary to re-grease or change rusted bearings. The weight of the rotor in an inactive motor tends to expel grease from between the bearing surfaces thereby removing

the protective film that impedes metal-to-metal contact. As a preventive measure against the formation of corrosion by contact, motors should not be stored near machines which cause vibrations, and every 3 month their shafts should be rotated manually.

Insulation resistance fluctuates widely with temperature and humidity variations and the cleanliness of components. When a motor is not immediately put into service it should be protected against moist, high temperatures and impurities, thus avoiding damage to insulation resistance. If the motor has been in storage more than six month or has been subjected to adverse moisture conditions, it is best to check the insulation resistance of the stator winding with a megohmeter. If the resistance is lower than ten megohms the windings should be dried in one of the two following ways:
1) Bake in oven at temperatures not exceeding 194 degrees F until insulation resistance becomes constant.
2) With rotor locked, apply low voltage and gradually increase current through windings until temperature measured with thermometer reaches 194 degrees F. Do not exceed this temperature. If the motor is stored for an extensive period, the rotor must be periodically rotated. Should the ambient conditions be very humid, a periodical inspection is recommended during storage. It is difficult to prescribe rules for the true insulation resistance value of a machine as resistance varies according to the type, size and rated voltage and the state of the insulation material used, method of construction and the machine's insulation antecedents. A lot of experience is necessary in order to decide when a machine is ready or not to be put into service. Periodical records are useful in making this decision.

The following guidelines show the approximate values that can be expected of a clean and dry motor, at 40°C test voltage in applied during one minute.

Insulation resistance Rm is obtained by the formula: $Rm = Vn + 1$

Where: Rm – minimum recommended insulation resistance in MΩ with winding at 40°C
Vn – rated machine voltage in kV

In case the test is carried out at a temperature other than 40°C, the value must be corrected to 40°C using an approximated curve of insulation resistance vs temperature of the winding (see graph below).

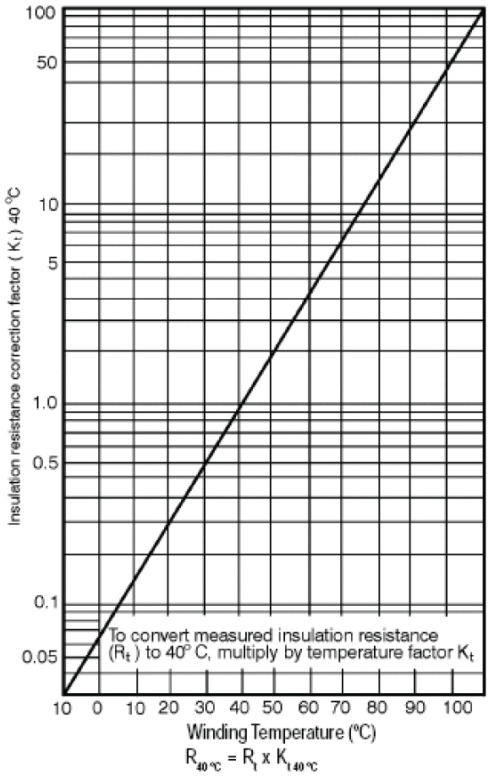


*Example:*
Ambient temperature = 50°C
Motor winding resistance at 50°C = 1.02 MΩ
Correction to 40°C

R 40°C = R 50°C x K 50°C
R 40º C = 1.02 x 1.3
R 40º C = 1.326 M&
The minimum resistance Rm will be:
Rm = Vn + 1
Rm = 0.440 + 1
Rm = 1.440 MΩ

On new motors, lower values are often attained due to solvents present in the insulating varnishes that later evaporate during normal operation.

This does not necessarily mean that the motor is not operational, since insulating resistance will increase after a period of service. On motors which have been in service for a while, a comparison of the values recorded in previous tests on the same motor under similar load, temperature and humidity conditions, serves as a better indication of insulation condition than that of the value derived from a single test. The cause for any substantial or sudden reduction should be determined, followed by corrective action.

Insulation resistance is usually measured with a **megger**.

In the event that insulation resistance is inferior to the values derived from the above formula, motors should be subjected to a drying process.

## Drying the windings

Only qualified personnel should carry out this operation. The temperature should not rise more than 5°C per hour and the overall temperature should not exceed 105°C; if either of these two things occur, vapor which is harmful to the insulation, may be generated.

Temperature should be accurately controlled and insulation resistance should be properly measured at regular intervals during the drying process. During early stages of drying, insulation resistance will decrease as a result of the temperature increasing. However, the resistance will increase again when the insulation dries a little more.

The drying process should be extended until successive measurements of insulation resistance indicate that a constant value above the minimum acceptable value has been attained. It is extremely important that the interior of the motor be well-ventilated during the drying operation to ensure that the dampness is really removed.

Heat for drying can be obtained from outside sources such as an oven or space heater, or by introducing a current through the actual winding of the motor being dried.

Electric machines should be installed in order to allow an easy access for inspection and maintenance. Should the surrounding atmosphere be humid, corrosive or contain flammable substances or particles, it is essential to ensure an adequate degree of protection. The installation of motors in environments where there are vapors, gases or dusts, flammable or combustible materials, subject to fire or explosion, should be undertaken according to appropriate and governing codes, such as NEC Art. 500 (National Electrical Code) and UL-674 (Underwriters Laboratories, Inc.) standards.

Under no circumstances are motors to be enclosed in boxes or covered with materials which may impede or reduce the free circulation of ventilating air. Machines fitted with external ventilation should be at least 50cm from the wall to permit the passage of air. The opening for the entry and exit of air flow should never be obstructed or reduced by conductors, pipes or other objects. The place of installation should allow for renewal at a rate of 700 cubic feet per minute for each 75 HP motor capacity.

## Rubber Products

Rubber products in storage can be adversely affected by several factors, including:

- Temperature
- Humidity
- Ozone
- Sunlight
- Oils
- Solvents
- Corrosive liquids and fumes
- Insects and rodents
- Radiation

The warehousing area should be relatively cool, dark and free from dampness and mildew. All rubber products should be used on a first-in, first-out basis since even under these conditions an unusual length of time in storage can result in the deterioration of certain products.

The ideal storage temperature for rubber products is 50 to 70°F (10 to 21°C) with a maximum limit of 100°F (38°C). If stored below 32°F (0°C), some products may become stiff and should be warmed before being placed in service. Rubber products should not be stored near sources of heat, such as radiators and base heaters.

Rubber products **should not** be stored under conditions of high or low humidity.

To protect against the adverse effects of ozone, rubber products should not be stored near electrical equipment that may generate ozone and should not be stored for any lengthy period in geographical areas of known high ozone concentrations. Exposure to direct and reflected sunlight should also be avoided.

Whenever viable, rubber products should be stored in their original shipping containers, especially when such containers are wooden crates or cardboard cartons; this will provide protection against the deteriorating effects of oils, solvents and corrosive liquids, and will also provide some protection against ozone and sunlight.

**Certain rodents and insects thrive on rubber products, so the equipment must be protected.**

## *McLanahan* ***Pump Applications***

**Sand plants**
Feeding sand and water to all types of classification and dewatering plants; effluent water transfer duties.

**Coal preparation plants**
For dense medium circuits, feeding hydrocyclones, filtrate pumping, handling the underflow from thickeners, disposal of effluent, etc.

**Chemical manufacturing & Environmental applications**
McLanahan pumps, by virtue of their various rubber linings, are suitable for pumping many chemical solutions, acid or alkaline, at moderate temperatures and for the disposal of effluent.

**Cement manufacture**
Slurry feed to: tube mill circuits, thickener feed and underflow, flotation plant circuits.

**Metalliferous mining**
Mill circuits, feeding hydrocyclones, cyanide plant filter residues, concentrates, tailings disposal and other pulp and slurry handling duties.

**Irrigation systems and dredging**
Silt removal in dams and canal sand traps

**Paper mills**
China clay slurries, paper stock, effluent disposal

**Steel works and manufacturing applications**
Pickling acid distribution circuits in plate and wire de-scaling plants, abrasive wet scrubber blow-down

**Power stations**
Boiler house ash disposal, de-scaling plants

**China clay production**
Feeding slurry to hydrocyclones and for general use in the preparation of china clay

**Glass manufacturing**
Feeding polishing media, sand plants, handling effluent

## Troubleshooting

If a pump fails to pump through a blockage, switch off **immediately**. Take extreme care as the pump may be filled with scorching steam and solids at a high pressure.

### Wear and Replacement of Parts

To obtain the best service and performance from the pump, periodic routine inspections should be executed. The rate of wear on pumps is not precisely predictable since it varies from one application to the next, so intervals at which these inspections should be made vary. Initially, the pump should be allowed to run for a period of time (for example, three months); afterward, an examination of the pump will give some idea of the length of life, which may be expected from the rubber-covered parts.

### No Discharge When Pump Runs

**The pump must not be allowed to run if it does not discharge.** If it is noted that the pump has been running without discharge, cease it immediately.

Take extreme care in dismantling after such an occurrence due to high temperature and pressure, which may be present in the pump casing. Do not remove the drain plug until the fluid temperature in the pump has dropped.

### Air Lock

Air lock in the casing is the most common cause of failure on a newly installed pump. Even when a pump is well below water level, it may retain a large bubble inside the casing, which prevents the start of pumping. This phenomenon is far more likely with horizontal undershot discharge branch arrangements than any other practical configuration. It is least likely with horizontal overshot arrangements.

If you suspect air lock as the cause of failure to pump, start and stop pump several times to drive the air out, one fraction at a time. When using this procedure, ensure that you do not damage the motor starter or burn out the motor by trying too many starts in a short period of time. The number of permissible attempts will vary with the equipment installed but usually it is safe to try one start every three to four minutes.

### Inadequate Prime

Failure to pump may be caused by inadequate priming. This is usually rectified by allowing more time for priming to occur.

It is possible when “jet priming” to have such a small amount of priming water that the pump will never prime; in this case, more water for the priming option will be needed.

Usually, the diameter of the priming branch should be at least one-third of the diameter of the suction pipe. NOTE: 2” (50mm) will prime 6” (150mm), 3” (80mm) will prime 8” (200mm) etc. The minimum water required is about 30% of the pump capacity.

If priming is by vacuum pump, there must be a valve or at least an air-lock on the delivery side. The vacuum pump must be able to “beat” the air leakage throughout the gland. To assist in this, always attempt to prime with the gland water running, no matter what style of priming is being attempted.

**Installation Faults**

Failure to discharge on start-up can be caused by installation faults. The most common is inadequate sump capacity. The result of installing a sump with inadequate capacity is to risk repeated air-locks of the pump. This can happen when the pump reduces the water level, either allowing a vortex to form, which air-locks the pump, or (when water is introduced to the sump) it entrains so much air that it produces the same effect.

A small sump can easily prevent any discharge reaching the end of the pump discharge line. The only remedy is to extend the sump capacity. We recommend sumps of at least one minute's pumping time as a minimum. NOTE: This recommendation does not apply to feed regulating sumps in sand plants where greater capacity is required.

Other installation faults are more obvious, such as tramp material lodged over a pump suction or a kinked suction hose.

**Brief Discharge Only**

**1. Air Lock**

A pump with a suction lift and partial air lock will often start to pump at a greatly reduced rate after each start, and then it will give up completely. At the discharge end of the pipe this may appear as a brief surge followed by failure.

This problem can only be overcome by closer attention to the priming system.

**2. Obstructed Suction**

If the suction line is obstructed either by tramp material or a delaminated suction hose lining, the pump may start well. However, when the discharge rate rises, the suction obstruction throttles the pump in a way that it quickly fails by gross cavitation.

Detection of this sort of condition is difficult. The only way to guarantee finding out what is actually happening is by using a vacuum gauge immediately before the pump suction. An obstructed suction line will be indicated by a sudden increase in vacuum reading immediately before the failure.

**3. Lack of Delivery Resistance**

A pump, which is required to pump with a suction or with a fair length of suction pipe, although with practically no resistance on the delivery side, may pump briefly before failing. The reason for this is that centrifugal pumps on open discharge need positive pressure on the suction eye to prevent gross cavitation. If the installation does not provide sufficient positive pressure on the suction side, the pump will fail.

Usually, the easiest way to overcome this difficulty is to artificially create resistance on the delivery side by extending the pipe work or introducing a valve or other resistance, such as an orifice.

**Pumps water but not solids**

**1. Air Leaks on Suction Side**

Joints in the suction line or air entrainment with feed into a sump may be insufficient if they are made poorly. Poorly made joints sometimes prevent a pump from pumping water satisfactorily. However, when solids are introduced (particularly coarse solids) the pump has a more arduous duty; it has to entrain the solids into the fast moving stream in the suction pipe. In effect, it has to "dredge" the solids

into the stream. Even if the solids were already moving in the right general direction, they must be accelerated up to the water velocity and thus they act as a suction resistance for the pump.

Introducing solids into an aerated system will cause failure. The pump can only handle a small margin of solids when pumping water alone. Air leaks can usually be detected as water leaks when the pump is not running; **where water can get out, air can get in**. Air entrainment with the feed can sometimes be overcome by the use of baffles in the sump. The air bubbles have time to rise to the surface before being drawn down to the suction.

**2. Poor Suction Line**

Several different factors in the suction line may allow a pump to appear adequate when it is not. A long suction line, a line with a considerably small diameter or a line with a restriction (sudden step-downs in diameter are the worst) will all affect whether or not the pump can handle solids. The reasons for this are explained in the two previous paragraphs.

Reworking the suction line is the only solution to this problem. If the line increased in diameter it should be brought to the pump inlet diameter by a specially rolled flanged taper pipe. It must not be stepped down by a mismatch.

3. Electric Motor Wrongly Wired

Most Squirrel Cage Induction Motors can be wired in two ways: **Star** or **Delta**. In order to reduce the current surge when a motor is brought **on line**, some users start their motors in **Star.** They do this because this mode gives good starting torque and a reduced starting current surge. Then, change to running their motors in **Delta** once smooth starting has been achieved. The **Delta** mode of powering the motor increases the speed close to synchronous speed, which is maximum, and maintains a constant speed under variations in load.

If a motor is left to run continuously in **Star**, it will vary its speed dramatically with load. If a mistake has been made in the wiring of the motor, it may appear that the pump is unable to pick up solids but is still pumping water. The reason would be that on **Star**, the motor speed drops when the solids load comes on.

To detect this fault, the easiest method is to check the speed of the motor shaft and compare it with the Nameplate rating. There should not be more than a few RPM difference between Nameplate RPM rating and actual speed, no matter what load the pump is pulling.

**NOTE: Correction of this fault is intended for an electrician.**

**Overloads for Motor Trip Out**

**1. Wrong Pump Speed**

The power drawn by a centrifugal pump discharging through a given delivery system is approximately proportional to the cube of its speed. As an example, if the speed is changed by 20% to 1.2 times the original speed, you can expect its power demand to rise by the cube of 1.2, i.e. 1.728, or nearly 73% above the original. Even a rise in speed of 10% to 1.1 times the original speed will give a rise of 33% in power demanded by the pump.

The relationship is not exact but it is close enough for field calculation purposes.

If a pump is run at the wrong speed, it can make a considerable difference to the load drawn from the motor.

Calculation of the correct pump speed is based on:

- Flow rate to be pumped
- Difference in height between pump and discharge points
- Length, diameter and inner surface of pipeline through which pump must deliver
- Number of elbows, bends, valves, other fittings in pipeline
- Equipment at end of pipeline such as hydrocyclones, pressurized distributors, jets, etc.
- Grading, tonnage and specific gravity of solids to be pumped
- Pump performance curves

As far as fault finding is concerned, the actual RPM of a pump should be compared with the RPM specified. Corrections to pump speed can be made by pulley changes.

**2. Changed Pipeline System**

It is not uncommon for a pump speed to be calculated on the basis of a pipeline system intended to be used at the time of the negotiations for the purchase of the pump, but to be commissioned into service with a different pipeline system. A client may say, "but it's not such a high lift so the pump does not have to work quite so hard." **This is not true.** At a given pump speed, a pump will pump a larger amount through a shorter pipeline (or lesser vertical height) and **will take more power**, not less.

When confronted with this situation, the only thing to do is to calculate the correct **head** and RPM before making a pulley change. The affinity rule can be used or the drive can be recalculated.

**3. Low Voltage**

The power consumed by an electric motor is the product of the voltage, amperage and power factor for the motor. If a pump demands a certain power from the motor, the motor in turn will demand corresponding amperage from the electric supply system. However, if the voltage of the electric supply system happens to be lower than normal, the motor will draw extra amps to meet the pump's power demand. This way the power consumed by the motor, the product of voltage, amperage and power factor remains unchanged.

Circumstances where lower than standard voltages might be encountered include:

- When power supply is from a generator set
- At the end of a long trailing cable
- At the end of an electric supply system remote from the nearest transformer substation
- In an area where very heavy start-up loads can occur, such as near large crusher stations or long conveyor installations

Low voltage can readily cause a motor overload by drawing higher than expected amps; this is, in no way, related to the pump itself.

If low voltage is suspected as the cause of motor overload, a qualified electrician should be called.

**4. Wrongly Set Overload Protection**

All motor starting equipment has some form of overload protection equipment built into the system so a burnt out motor or locked-rotor motor does not cause more extensive damage. If a motor repeatedly drops out on overload and there is no other readily apparent reason, the electrical overload protection equipment should be checked.

**5. Mechanical Fault in Pump**

The pump shaft should be free to turn by hand. Remove the V-belts and check the pump shaft for freedom to turn. If there is no resistance, the fault must be in the motor. If a jarring or resistance can be felt when attempting to turn the pump shaft, drop off the suction pipe and check the clearance between the impeller and suction plate. Also check for blockages.

If this proves clear, remove the suction bush and look for marks on the surface of the impeller, which might indicate if the impeller has been rubbing. In this case, rotate the shaft again to determine if the resistance is still present; if it is, remove the impeller and inspect the gland side liner. If there is still no evidence of rubbing, rotate the shaft by hand again to check that the resistance is still present; then, remove the gland sleeve. If the resistance can still be felt by hand it can only be the bearings of the pump.

The remedies for the faults, which may be revealed by this step-by-step approach are:

- Impeller rubs on suction bush: release bearing housing, set impeller to suction bush clearance by adjusting position of bearing housing until impeller runs free. Tighten bearing housing. Replace suction pipe. Re-align belt drive.
- Impeller rubs on gland half lining; reset the suction bush clearance. Check for movement of casing liner.
- Seizure in the gland area. Strip and inspect.
- Shaft tight in bearings; there is no simple field remedy if the pump shaft is found to be tight in the bearings, the rotating assembly must be removed and stripped for inspection of the bearings and grease seals.

**6. Air Entrainment**

In sump-fed pump systems, air entrainment with the pump feed can produce periodic overloads on the motor by the following sequence of events:

- Air entrainment with feed gives the pump a “spongy” pulp, which reduces the pump throughput and power.
- Flow through the sump is reduced allowing air in the feed now entering the sump to escape to the surface. Solids, of course, reach the pump suction.
- The pump now has a largely de-aired pulp of far greater percentage solids than intended, and the power demand rises. At this stage the pump may choke. This is a dangerous condition.
- Pump entrains the accumulated solids into suction pipeline and begins to pump normally again, increasing throughput through sump.
- Air entrainment begins to reach pump suction again and sequence repeats.
- Air entrainment can permanently reduce slurry throughput and make it appear as if the pump is not working.

In small installations this surge may be repeated at three minute intervals; in large installations, it may take as long as five minutes for the full cycle to complete. If the cycle terminates at stage three, the pump may explode, if it is left to run while blocked.

**Pump Handles Only a Limited Percentage Solids**

**Pump Speed Incorrect**

With increasing solids feed into a pumping system three major factors will limit the percentage solids handled:

- Friction resistance increases, leaving less pressure on the delivery side to maintain the velocity in the pipeline
- Critical (settling) velocity for the pulp in the pipeline increases
- Pump performance "drops" so that the total head generated by the pump diminishes

Clearly, if the pump speed has been calculated for water only, increasing tonnages of solids are fed into the system; the combination of factors above may soon produce a situation where the pipeline velocity is too low to maintain movement of the solids.

**Air Entrainment**

Under 15.3, section 1 above, there is an explanation of how a pump can handle water, but due to the air entrainment, fails when solids are introduced to the system. The same fault can sometimes explain why a pump appears to perform well on pulp up to a certain percentage solids, then "gives up" when this is passed.

**Poor Suction Line**

A suction line layout as described in 15.3, section 2 is far worse as the percentage solids is increased and can become completely blocked.

**Cavitation**

If a pump is expected to draw relatively coarse solids from a sump below the pump centerline, depending on the speed of the pump and its capacity in relation to the flow rate being handled, it may suffer from cavitation. When this happens, and the onset is often quite sudden and sharp, the total head generated by the pump diminishes dramatically. As described previously, the conditions for blocking a line are suddenly created; namely reduced delivery pressure for maintaining flow combined with increased requirement for velocity in the pipeline.

Generally, if cavitation is the source of the trouble, there is ample evidence; audible cavitation "rattle" in the pump or from the bearings, sudden reduction in power demand, the gland leaks or draws air and there is a dramatic drop in delivery pressure.

The solution to the problem is to make the suction arrangements as smooth as possible without restrictions as well as to arrange for the feed to come gradually up to load without sudden surges of solids. If these measures do not overcome the problem it may be necessary to change the suction line to a size larger and fit a flat topped taper-piece to the pump suction. If trouble persists, a larger pump will have to be installed. Something effective must be done as the situation is potentially dangerous.

**Gland Will Not Seal Adequately**

**1. Poor Adjustment**

The outer seal of a Hydrostatic gland assembly must be allowed to rub lightly on the gland sleeve for an effective seal to be maintained. If the gland adjuster is pushed in too far this will lift the seal off the sleeve and the gland will leak profusely. When seeing a leaking gland, most people immediately think

to tighten it. With the Hydrostatic gland, the **gland adjuster must be moved outward to reduce leakage.**

Type D and P glands should be tightened for reduction of leakage in the same way as standard packed glands in water pumps. **Over tightening should be avoided**, especially on "D" glands as a drip is always necessary to lubricate the rubber face seal.

**2. Dry Running**

The glands will not be damaged by a few seconds of running without lubrication and cooling by water, but if either gland runs for a length of time without water in the pump, there is danger of melting the rubber seals. If a Type D gland has been correctly adjusted, this is a fairly remote danger because without hydraulic pressure to force the rubber seal against the gland seat, the seal should run without touching the seat. However, do not run a pump in dry conditions because of the danger of damaging the gland seals.

Once seals have been damaged in this way, they must be replaced.

**3. Too Much Sealing Pressure**

Too much water pressure in either type of gland can make the glands almost impossible to seal reliably. With Hydrostatic glands the solution to the problem is to insert a pressure control in the gland water line. With Type D glands the problem usually only arises with pumps being run in a series or as booster pumps. In either case, the only solution is to convert the pump over to H gland or P gland and provide suitably pressured gland water.

**4. Inadequate Prime**

The "snore" condition for operating a pump is very difficult to seal without unacceptable leakage. Under this condition a pump continuously receives a good proportion of air drawn in with the pulp from the sump, in which the level is too low, or the sump has inadequate capacity, or both. The sump should contain a minimum of one minute's pumping time.

**Excessive Heat in Drive**

**1. Slack V-belts**

The most common cause for generation of heat in the drive to a newly installed pump is undoubtedly lack of tension in the V-belts. All V-belts should be tensioned periodically and newly commissioned drives should be re-tensioned an hour or so after start up.

This fault is easily detected (pulleys are the hottest part of the drive) as the belts will have been slipping.

**2. Hot pump Bearings**

On high speed duties it is to be expected that the bearings will run hotter than on low speed duties. Providing the shaft is free spinning by hand, the heat generated while running under power is probably immaterial. At 150°F (65°C) the assembly will be uncomfortable to the hands for more than a second or two; this is not unduly hot for the bearing assembles. If the bearing is failing, the shaft will not run free.

**3. Inadequate Lubrication of Pump Bearings**

The bearings will be charged with grease before dispatch from the factory. Details of lubricants are given in this Manual.

Addition of grease should be tried if bearings become very hot or noisy. Excess greasing should be avoided.

**4. Motor Runs Hot**

Motors are intended to run hot. With Continuous Maximum Rated Motors, the temperature rises are surprising and are allowed for in the design of the motor and the selection of the insulation.

Generally, heat from a motor can be safely ignored, provided the amperage drawn is lower or equal to the nameplate rating. Many motors are fitted with Thermistors in the windings, which sense the temperature rise and are wired to operate a cut-out relay if the temperature exceeds a safe limit.

If a pump is choked when the motor starts, the protection must trip out the supply to the motor.

Bearing troubles in motors are generally indicated b noise as well as heat and can sometimes be detected by use of a long-stemmed screwdriver. The blade of the screwdriver is pushed against the bearing cover and the ear of the investigator pushed up to the handle. With a limited amount of experience bearing "rumble" can quite easily be detected.

**Sudden Reduction in Discharge**

**1. Change in Feed Conditions**

Operators do not always recognize a pump as simply one element in a complete system and any change in that system will bear on all the parts of it. For instance, if a screen rejecting plus ¼" (6 mm) material is worn and passes 1" (25 mm) stones, this affects the pump performance. The suction resistance of the larger stones will cause the suction pressure to reduce and have less head available for pushing the pulp through the delivery side piping.

At the pump, the larger stones will make a significant difference to the pump performance, decreasing flow and potentially causing damage to Impeller and Linings.

In the pipeline, the large stones will probably progress by "saltation," that is, leaping along the bottom of the pipe. The rest of the pulp is fully in suspension and has to flow past these slow moving obstacles. Overall this means the resistance of the pipeline to flow has increased, thus, again reducing flow.

A simple fault such as a screen cloth with a hole in it can cause a sudden reduction in discharge. If it causes the pipeline to block, the condition is potentially dangerous.

Other changes in feed conditions, which must be investigated are: increased tonnage of solids, change of grading of solids and change in manner of introduction of solids to pump system. On this last count, a plant, which was started in summer, and is bin-fed via a vibrating feeder, will perform differently in winter when the wetter feed "hangs up" in the feed bin and collapses down onto the feeder intermittently in larger dollops.

2. Air leaks on the Suction Pipe

A pipe, which has been steadily wearing away from the inside may break through to the open air near a flange (in a welded area) at the bottom of the pipe, which is where the coarsest solids run. In a suction pipe this will almost certainly allow air into the pipe with all the resultant ills described elsewhere.

Frequently, a pinhole leak will not allow enough air into a pump for any of the five faults listed to become critical. Operators, being human, postpone the repair or replacement of the worn pipe. The last chapter of the saga occurs surprisingly quickly and usually on nightshift – when fault produces a blocked pipeline.

**3. Suction Blockage**

In dredging applications there is always the danger that the pump suction will be suddenly submerged in collapsed solids from the surrounding pit contours. When pumping from a sump, the same thing can happen when solids, which have been clinging precariously to the steel sides of the sump, subside and momentarily block the pump suction.

If the pump is feeding a fair length of delivery piping, it will not be possible for the long column of pulp in that piping to come instantly to rest when the suction gets blocked. The pulp in an 8" (200mm) pipe, 1000 ft (300 m) long, moving at 10ft/sec (3 m/sec) has considerable momentum. It cannot be stopped dead in the same short length of time it takes to block the suction.

The result is a massive reduction in pressure throughout the system. It can cause a massive "water hammer" and surges that can split the pump casing, valves and piping. This can cause hoses to collapse – delivery as well as suction – and almost invariably leads to a great gulp of air being sucked through the pump gland. Usually this is sufficient to air-lock the pump.

When an operator hears the air hiss into the gland and then has to contend with the resultant air-lock, the assumption is that the gland is at fault for pump failure. However, the trouble generally begins at the end of the suction pipe and the gland collapses afterward.

In dredging applications, better control should be taken over the pit development. In sump-fed systems, the feed pulp can sometimes be directed to flush away any build-up of solids on the sides or valleys of the sump.

If this is not possible, a larger capacity take-off box at the base of the sump must improve the situation. The blocked pipeline situation is potentially dangerous.

**4. Tramp Material**

The simplest explanations of a fault should never be overlooked. If the complaint is sudden reduction in discharge, drain the sump and before removing any pipe work or dismantling the pump in any way, examine the take-off box at the base of the sump.

## Sudden Increases in Power Demand

**5. Damage Inside Pump**

Pumps wear with each use. Results of abrasion, which will give an increase in power demand, are shown below in order of occurrence frequency.

- Excessive gap between impeller and suction bush
- Cut or ripped rubber in suction bush or casing gland rubbing against impeller
- Worn out cutwater
- Worn out or broken casing liners
- Impeller worn through back shroud
- Impeller passages worn significantly wider than intended

**6. Change in Pipeline System**

**DO NOT** alter pipeline system by shortening or changing layout. If altered, it will pump larger amounts and take more power.

**7. Low Voltage**

A new installation near the pump site can make a significant difference in the amount of voltage available, depending on the electric distribution system in the area. Lower volts means higher current for the same power output of the motor.

**8. Changed Pump Speed**

When dismounting both pump and motor pulleys, electricians have, in the past, interchanged the pulleys when reassembling the pump set. Ensure this does not happen.

**9. Air Entrainment**

In sump-fed pump systems, air entrainment can produce cyclic pump overload, caused by a change to the amount or direction in which a sump is fed. It could also be caused by a casual change to the feed type baffle arrangement in the sump.

## Rapid Component Wear

**1. Air Entrainment**

As an experiment, place some sand in an empty bottle, fill the bottle to the very top with water, place the palm of one hand over the top and shake the bottle. You will find it difficult to move the sand vigorously against your hand. Now tip out a third of the water, and repeat the test. You will undoubtedly feel the sand in the air-water froth hitting your palm.

The point of the experiment is to show how much more readily sand can move around in froth than it can in water without air bubbles. Therefore any air leaks in the suction side accelerate abrasion.

If air entrainment is severe enough to produce an air lock in the presence of solids and water, the result is an escalation of the abrasion rate.

Air entrainment can also cause severe abrasion indirectly. With cyclic changes in pulp density due to air, the pump may have to handle far denser pulp than intended. This is also an abrasive accelerator.

**2. Properties of the Solids**

When confronted with a rapid abrasion problem such as coarse or sharp-edged particles, always reduce pump speed if possible. A larger pump with a larger diameter impeller will be rotating slower at the suction eye of the impeller for a given head than a smaller pump would. So, if wear on the leading edge of the vanes occurs, a larger pump would help.

**3. Change in Feed Conditions**

A change in feed conditions, such as extra tonnage, coarser grading or higher proportion of crushed material will all affect the rate of wear on a pump. As an example, deposits from a river are notoriously variable; the proportion of crushed sand in relation to natural sand can vary widely. However, to the operator, sand is sand, and the fact that the pump is now handling, say 80% crushed material, while three months ago it was 60% natural sand may not appear significant.

If there is a permanent change in feed conditions, which makes component life unsatisfactory, consider modifying the pump. A two-stage pump set will allow each pump to run at about 70% of the speed that a single unit would run, which would make a significant change to the abrasion rate.

4. Shaft Misalignment

After several years of wear and tear, the saddles on the pedestal occasionally wear out, thus allowing the shaft to point downward. If the eccentricity of the shaft through the gland is severe enough, the gland will not seal properly. There will also be a misalignment between the eye of the impeller and the suction bush, which will detract from pump performance. In this case, the most effective solution, reducing cost and saving time, would be to purchase a new pedestal. Temporarily, the saddles may be packed with shims; however, these inevitably get lost during impeller adjustment.

## Mechanical Failure

### 1. Broken Shaft

Typically, the only broken shafts on McLanahan pumps are those where there has been tramp material in the feed, a bearing has seized, or slurry has worn through the gland sleeve. In this case, wear will of course weaken the shaft.

### 2. Broken Pedestal or Casing

Although the front bracket of the pump pedestal appears massive, it can be broken down from the box section of the pedestal by simply starting the pump backwards. As a result, the impeller will begin to unscrew from the shaft, and while in motion, strikes the suction bush, which is fixed in place by the flange of the suction pipe work. Because something has to give, occasionally, with older shafts, the thread in the shaft is stripped instead of the pedestal being broken.

Realigning broken pedestals can be quite difficult; therefore, the quickest, most cost-effective way to fix a broken pedestal is merely to replace it.

A pump running backwards is an electrical problem, which is overcome quite easily, and should not happen to begin with. Electricians are required to check the direction of rotation of a motor prior to fitting the V-belts onto the pulleys.

### 3. Pump Explodes

The centrifugal pump (McLanahan or any other) can potentially explode by running with pulp or water in the casing when there is no discharge. This can happen in a pump that is drawing pulp from a sump and pumping it to a cyclone through a rising pipeline. If the pump receives a sudden surge of solids, which blocks off the suction, flow will cease. In the delivery line, the solids will settle in the rising pipe but will be unable to enter the casing because the impeller will still be spinning.

As the impeller rotates, the pump will continue absorbing power. The power raises the fluid temperature. The water will eventually boil and the pressure may be enough to destroy the rubber or cause the pump head to explode. **If a pump head feels unusually warm and is not discharging**, switch the power off immediately. **Do not approach the pump** until it has been relieved of pressure, preferably through the suction or discharge pipework by flushing away the solids plugs. A sign that a pump may explode will be a considerable amount of steam leaking from the gland.

**NOTE:** at this point, even if a pump does not feel hot, be extremely cautious when dismantling, as the pump may be full of scalding water. Do not remove the drain plug until certain the fluid temperature in the pump has reduced. If in doubt, carefully clear blockages in the manner described above.

# 2X2 DRY GLAND PUMP SPARE PARTS LIST

## OVERVIEW

**McLANAHAN CORPORATION** recommends that you keep certain replacement parts at your facility. These parts will be available in the event of a breakdown and will also be available to perform any repairs that must be made as a result of regularly scheduled maintenance checks. **McLANAHAN CORPORATION** stocks a wide variety of commonly used components; however storing these parts at your facility will eliminate the expense of air-freighting critical parts that may be required during a breakdown situation. Refer to the "PARTS LIST AND ASSEMBLY" drawing(s) to assist with parts identification, part numbers and quantities. Contact the Parts Department at **McLANAHAN CORPORATION** for price and availability of all parts for your McLanahan equipment.

| Qty | Part Number | Description | Lead Time | |
|---|---|---|---|---|
| | | | | |
| 1 | 09110002321 | Dry Gland Repair Kit | 6-8 Weeks | $1208.00 |
| 1 | 09110002109 | Gland Side Liner | 6-8 Weeks | $691.00 |
| 1 | 09110002106 | Suction Side Liner | Stock | $745.00 |
| 1 | 09110002110 | Impeller | Stock | $1146.00 |
| 1 | 09110002225 | Bearing Repair Kit | Stock | $564.00 |
| 3 | 293905042 | V-Belts, 3VX425 | 2 Weeks | $26.00 |
| | | | | |

Note: Prices shown are current for 30 days from today's date.

| Bill Of Materials | | | | |
|---|---|---|---|---|
| Item | Qty. | Part Number | Description | Fin Wt |
| 1 | 1 | 09100002001 | PUMP ASSEMBLY, DRY GLAND, 2 X 2 PUMP | 343 lbmass |
| 2 | 1 | 294307042 | MOTOR, ELECTRIC, 7.5 HP, 1800 RPM, 575V, 3-PH, 60 HZ, 213T FRAME, TEFC, PREMIUM EFFICIENCY, IEEE841 | 165 lbmass |
| 3 | 1 | 293700502 | PULLEY, V-BELT, 5 IN OD, 3-3V, SDS BUSHING. | 4 lbmass |
| 4 | 1 | 293700408 | V-BELT PULLEY, 4.5" OD, 3-3V GROOVES, MACHINED FOR "SDS" BUSHING | 1 lbmass |
| 5 | 1 | 293800222 | BUSHING, TYPE 'SDS', 1-3/8" BORE | 1 lbmass |
| 6 | 1 | 293890021 | BUSHING, TYPE 'SDS', 40MM BORE | 0 lbmass |
| 7 | 3 | 293905042 | V-BELT, 3VX425 | 0 lbmass |
| 8 | 1 | 09110002128 | Belt Guard Assy: 35x35 and 50x50 Inline Table | 14 kg |
| 9 | 4 | 294740632 | CAPSCREW, HEX HEAD, 3/8" X 2", NC, GRADE 5, ZINC PLATED | 0 lbmass |
| 10 | 8 | 296600600 | WASHER, FLAT, 3/8", ZINC PLATED | 0 lbmass |
| 11 | 4 | 296700600 | WASHER, LOCK, 3/8", ZINC PLATED | 0 lbmass |
| 12 | 4 | 296507060 | NUT, HEX, 3/8", NC, GRADE 5, ZINC PLATED | 0 lbmass |
| 13 | 1 | 09110000000 | DRIP TRAY, 5" X 9" X 1" DEEP, MAGNETIC MOUNTING, 1/2" HOSE CONNECTION | 4 lbmass |
| 14 | 1 | 297610020 | IDENTIFICATION PLATE, 4" X 2-1/2", | |

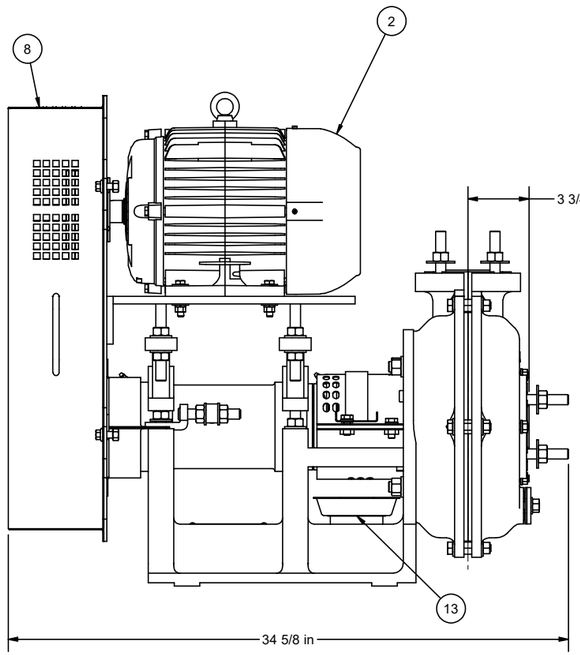


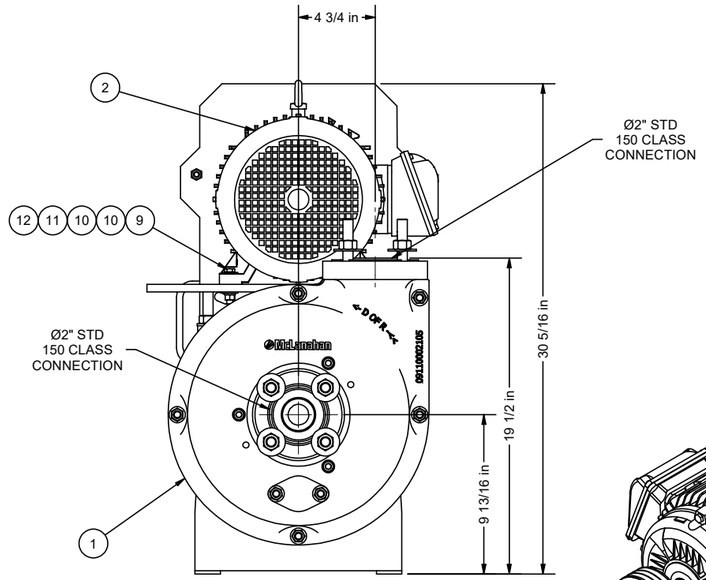


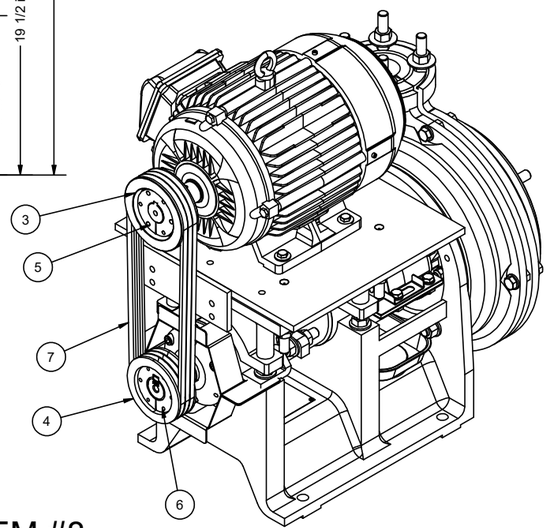


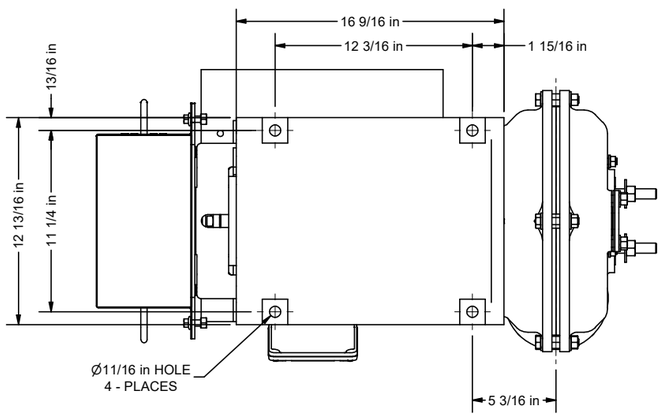


DRIVE GUARD ITEM #8
REMOVED FOR CLARITY

UNLESS OTHERWISE NOTED, TOLERANCES ON DIMENSIONS ARE:
xx ±0.01 in
.xxx ±0.005 in
PROFILE/SAW FABRICATION ±1/16 in ±1/8 in
ANGLE ±1°
SURFACE √125

REFERENCES

McLanahan

WEIGHT 550#
SHEET NUMBER 1 OF 1

THIS DRAWING IS THE PROPERTY OF MCLANAHAN CORPORATION AND SHALL NOT BE USED OR COPIED EXCEPT AS EXPRESSLY AUTHORIZED. INFORMATION CONTAINED IN THIS DOCUMENT IS A TRADE SECRET AND ANY USE OF THE INFORMATION, EXCEPT BY ITS INTENDED RECEIVER, IS STRICTLY PROHIBITED AND MISAPPROPRIATION OF THE INFORMATION SHALL MAKE THE NONINTENDED RECEIVER LIABLE FOR ANY AND ALL DAMAGES SUFFERED AS A RESULT BY THE McLANAHAN CORPORATION.

THIRD ANGLE PROJECTION
ASSEMBLY DRAWING

SCALE 1:6
DRAWN BY KAZ
CHECKED BY DLE
APPROVED BY

PART NUMBER: US20900114
DESCRIPTION
PUMP ASSEMBLY, 2 x 2, DG, 1,961 RPM W/ 7.5 HP, 575V, 60HZ, 213T, IEEE841 MOTOR ,INCLUDES DRIP TRAY

1ST ISSUE DATE 3/2/2021
SHEET SIZE C
DRAWING NUMBER US20900114
REVISION

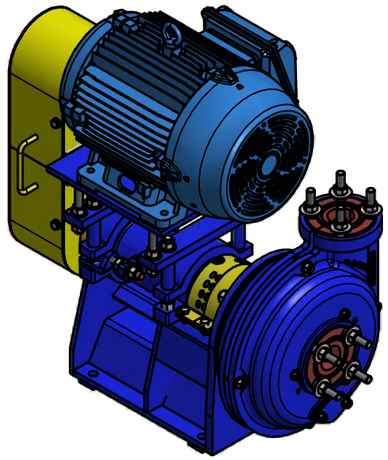

**ISOMETRIC**
(15 HP MOTOR SHOWN)

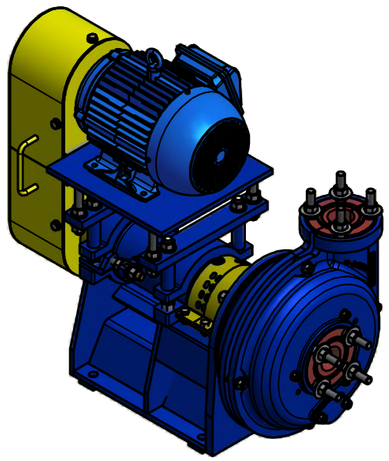

**ISOMETRIC**
(5 HP MOTOR SHOWN)

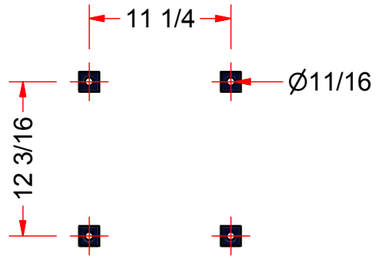


**SECTION B-B**
SCALE 1:12

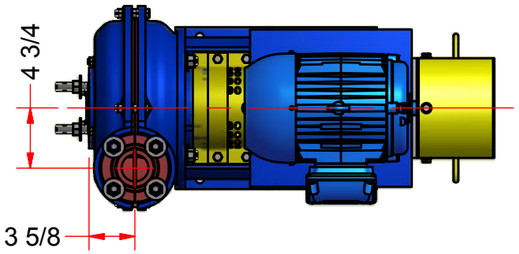


**TOP**

McLanahan

INFORMATION CONTAINED WITHIN THIS DOCUMENT IS A TRADE SECRET & ANY USE OF THE INFORMATION, EXCEPT BY ITS INTENDED RECEIVER, IS STRICTLY PROHIBITED. ANY MISAPPROPRIATION OF THE INFORMATION SHALL MAKE THE UNINTENDED RECEIVER LIABLE FOR ANY AND ALL DAMAGES SUFFERED AS A RESULT BY THE MCLANAHAN CORPORATION.

| DESCRIPTION: | | | | WEIGHT: | DWG SIZE: | SCALE: |
|---|---|---|---|---|---|---|
| GENERAL ARRANGEMENT<br>PUMP, 2X2, ALL GLANDS<br>ALL LINING TYPES &<br>5 HP THRU 15 HP DRIVE PACKS | | | | 455-611 LBS | B | 1:12 |
| | | | | PART NUMBER: 2X2 (5-15 HP) | ORIGIN: TN | SHEET#: 1 /1 |
| DESIGNER: TSCHROEDER | DATE: 3/19/2013 | CHECKER: TSCHROEDER | DATE: 3/20/2013 | DRAWING NUMBER: **2X2 (5-15 HP)** | | REV: 00 |

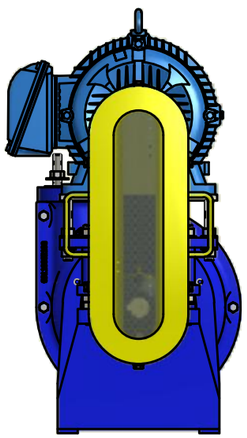

**REAR**
(15 HP MOTOR SHOWN)

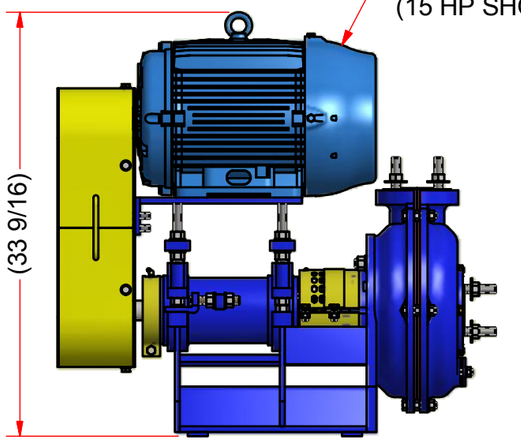


**LEFT**
(15 HP MOTOR SHOWN)

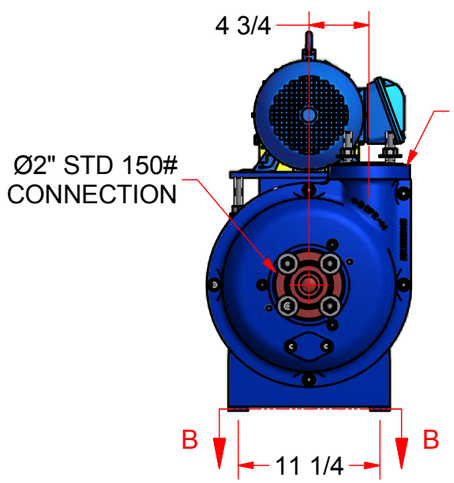


**FRONT**
(5 HP MOTOR SHOWN)

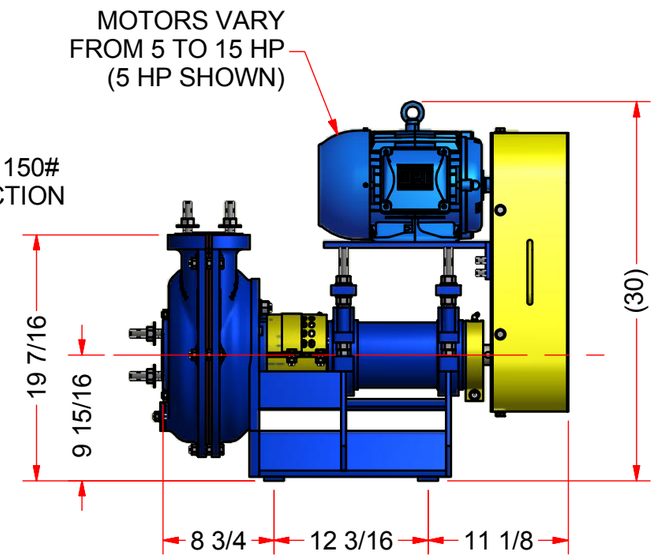


**RIGHT**
(5 HP MOTOR SHOWN)

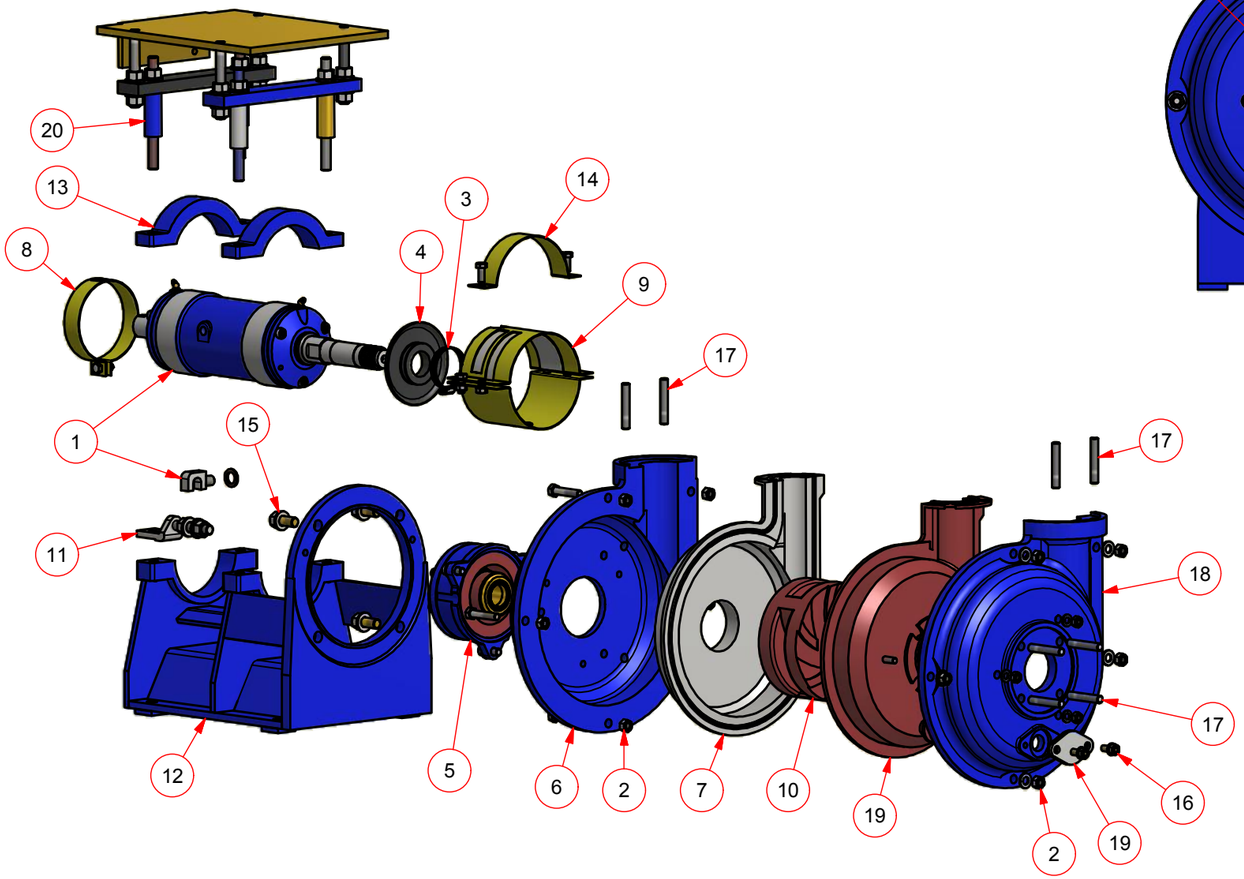


## EXPLODED ASSEMBLY

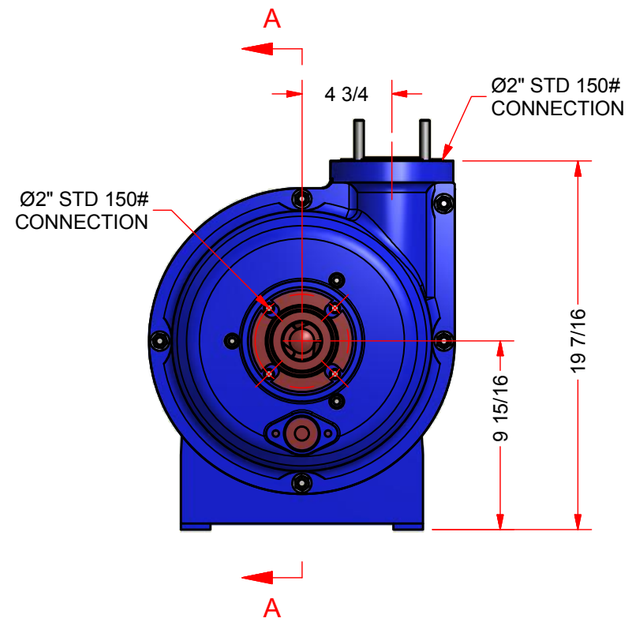


## FRONT

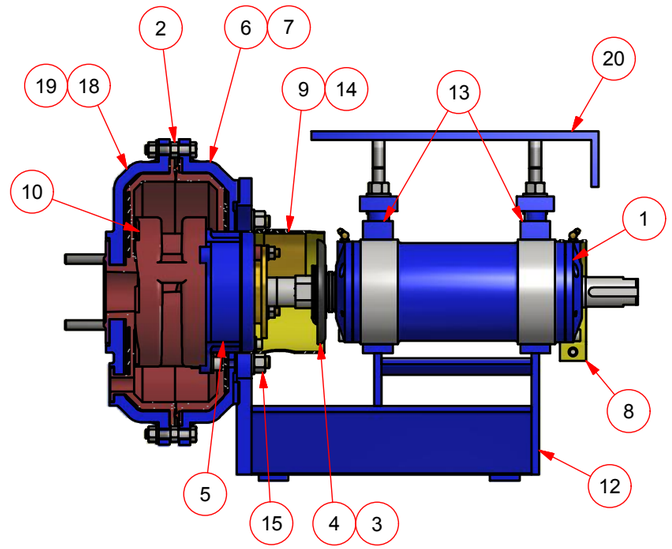


## SECTION A-A
SCALE: 1:8

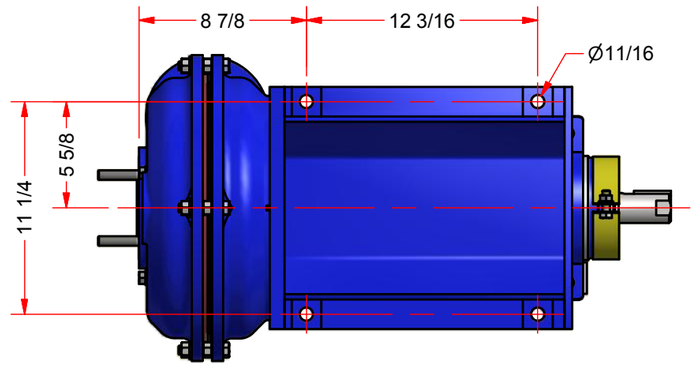


## FOOT PRINT

| ITEM | QTY | PART NUMBER | DESCRIPTION | ITEM | QTY | PART NUMBER | DESCRIPTION |
|---|---|---|---|---|---|---|---|
| 1 | 1 | 09110002116 | BEARING ASSEMBLY | 11 | 1 | 09110002120 | JACK, AXIAL POSITIONING |
| 2 | 5 | 09110002111 | BOLT SET, M12, SC CASING | 12 | 1 | 09110002119 | PEDESTAL |
| 3 | 1 | 09110002001 | CLAMP, S.S. | 13 | 2 | 09110002118 | PEDESTAL CAP |
| 4 | 1 | 09110002115 | FLINGER | 14 | 1 | 09110002137 | PROTECTIVE STRIP |
| 5 | 1 | 09110002325 | GLAND ASSEMBLY, DRY GLAND | 15 | 4 | 09110002113 | STUD SET, CASING TO PEDESTAL |
| 6 | 1 | 09110002108 | GLAND SIDE CASING | 16 | 2 | 09110001126 | STUD SET, DRAIN PLUG |
| 7 | 1 | 09110002109 | GLAND SIDE LINER | 17 | 8 | 09110001125 | STUD SET, UNC, SUCTION AND DISCHARGE FLANGE |
| 8 | 1 | 09110002139 | GUARD, PULLEY SHAFT | 18 | 1 | 09110002105 | SUCTION SIDE CASING |
| 9 | 1 | 09110002130 | GUARD, SHAFT | 19 | 1 | 09110002106 | SUCTION SIDE LINER C/W DRAIN PLUG |
| 10 | 1 | 09110002110 | IMPELLER | 20 | 1 | 09110002117 | SUPPORT ASSEMBLY, MOTOR |

McLanahan

INFORMATION CONTAINED WITHIN THIS DOCUMENT IS A TRADE SECRET & ANY USE OF THE INFORMATION, EXCEPT BY ITS INTENDED RECEIVER, IS STRICTLY PROHIBITED. ANY MISAPPROPRIATION OF THE INFORMATION SHALL MAKE THE UNINTENDED RECEIVER LIABLE FOR ANY AND ALL DAMAGES SUFFERED AS A RESULT BY THE MCLANAHAN CORPORATION.

| DESCRIPTION: | DESIGNED BY: | ORIGIN: | DWG SIZE: |
|---|---|---|---|
| ASSEMBLY DRAWING<br>PUMP, 2X2, DRY GLAND<br>C/W CLOSED VANE IMPELLER<br>& RUBBER LINERS | WTD | TN | B |
| REFERENCE DWG: | DRAWN BY: WTD | DATE: 7/15/2010 | SCALE: AS NOTED |
| | CHECKED BY: T SCHROEDER | DATE: 4/16/2014 | SHEET#: 1 /1 |
| PART NUMBER: 09100002001 | WEIGHT: 325.80 LBS | DRAWING NUMBER: **09100002001** | REV: - |

| ITEM | QTY | PART NUMBER | DESCRIPTION | LBS | TOTAL LBS |
|---|---|---|---|---|---|
| 1 | 1 | 09110002201 | HOUSING, BEARING | 29.5 | 13.4 |
| 2 | 1 | 09110002202 | SHAFT | 16.8 | 7.6 |
| 3 | 1 | 09110002203 | COVER, END | 2.9 | 1.3 |
| 4 | 1 | 09110002204 | COVER, FRONT | 2.7 | 1.2 |
| 5* | 1 | 09110002205 | BEARING, END | 0.4 | 0.2 |
| 6* | 1 | 09110002206 | BEARING, FRONT | 0.4 | 0.2 |
| 7* | 1 | 09110002207 | WASHER, TAB | 0.0 | 0.0 |
| 8* | 1 | 09110002208 | NUT, LOCK | 0.2 | 0.1 |
| 9* | 1 | 09110002209 | SEAL, END, GREASE | 0.0 | 0.0 |
| 10* | 1 | 09110002210 | SEAL,  FRONT, GREASE | 0.0 | 0.0 |
| 11 | 1 | 09110002211 | SCREW SET, BEARING COVER | 0.5 | 0.2 |
| 12 | 2 | 09110002212 | NIPPLE, GREASE | 0.0 | 0.0 |
| 13* | 2 | 09110002213 | O-RING, 99 ID □2, SEAL, BEARING HOUSING COVER | 0.0 | 0.0 |
| 14 | 1 | 09110002215 | KEY, SHAFT, 50 X 12 X 8 | 0.1 | 0.0 |
| 15* | 1 | 09110002217 | SEAL, VEE | 0.0 | 0.0 |

NOTE: REPAIR KIT 09110002225 ITEMS MARKED WITH "*"

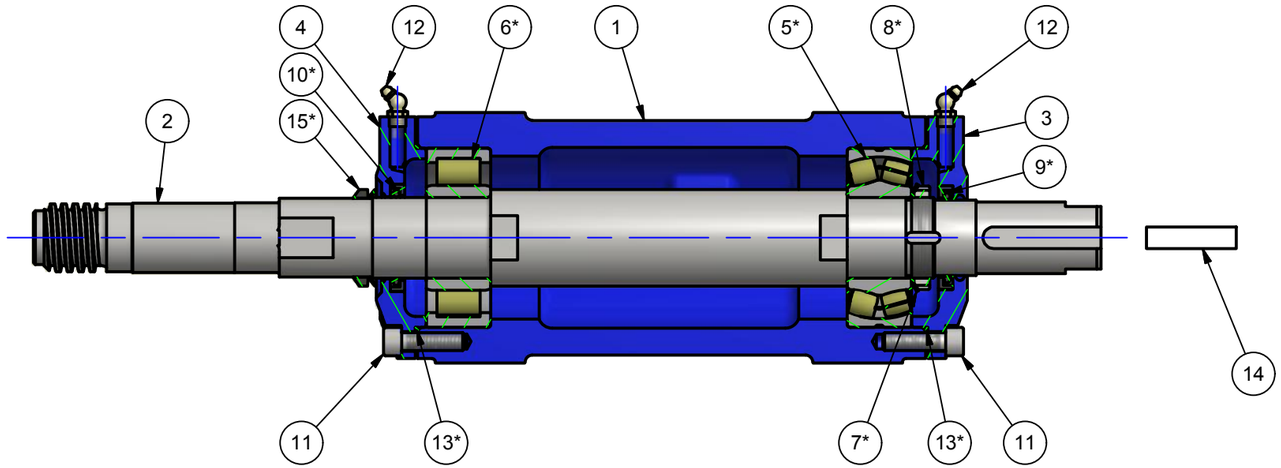


SECTION VIEW

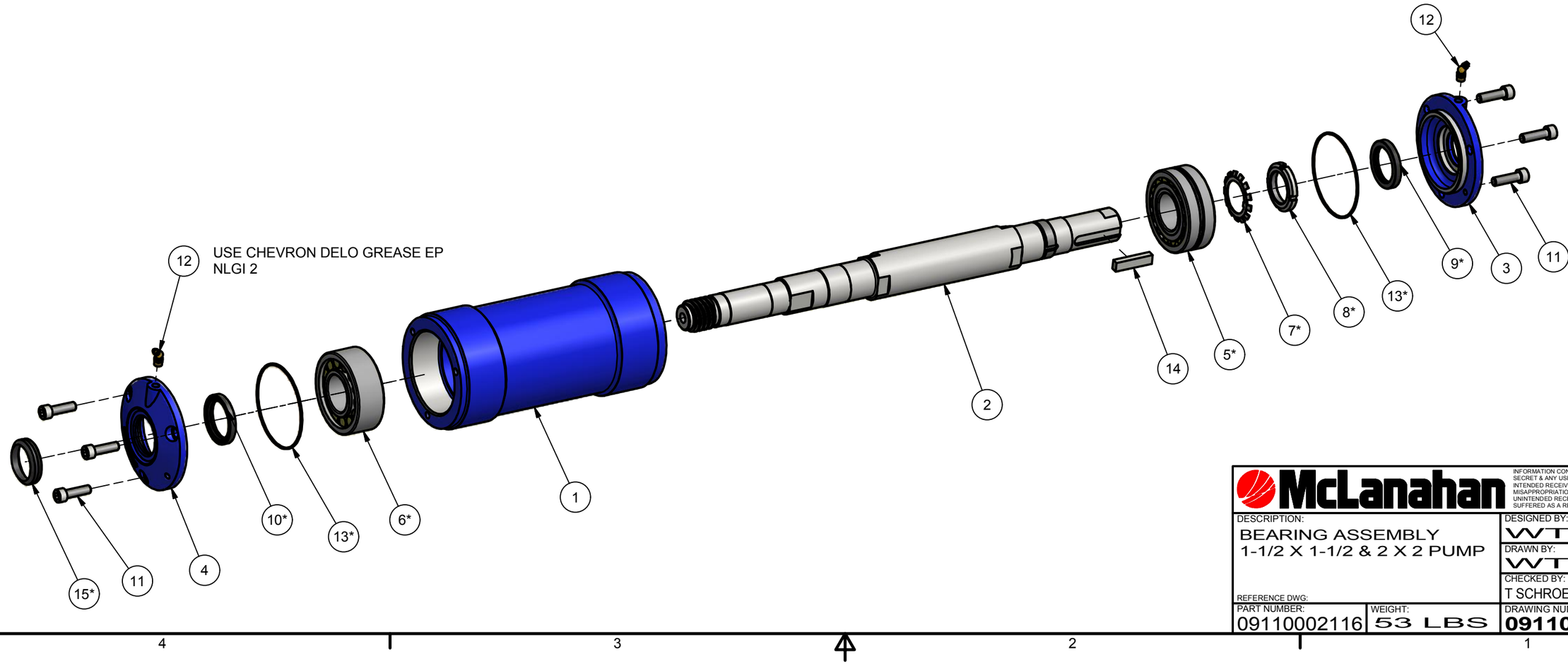


INFORMATION CONTAINED WITHIN THIS DOCUMENT IS A TRADE SECRET & ANY USE OF THE INFORMATION, EXCEPT BY ITS INTENDED RECEIVER, IS STRICTLY PROHIBITED. ANY MISAPPROPRIATION OF THE INFORMATION SHALL MAKE THE UNINTENDED RECEIVER LIABLE FOR  ANY AND ALL DAMAGES SUFFERED AS A RESULT BY THE MCLANAHAN CORPORATION.

McLanahan

| DESCRIPTION: | DESIGNED BY: | ORIGIN: | DWG SIZE: |
|---|---|---|---|
| BEARING ASSEMBLY<br>1-1/2 X 1-1/2 & 2 X 2 PUMP | WTD | TN | B |
| | DRAWN BY: WTD | DATE: 7/16/2010 | SCALE: AS NOTED |
| REFERENCE DWG: | CHECKED BY: T SCHROEDER | DATE: 8/29/2013 | SHEET#: 1 /1 |
| PART NUMBER: 09110002116 | WEIGHT: 53 LBS | DRAWING NUMBER: 09110002116 | REV: 0 |

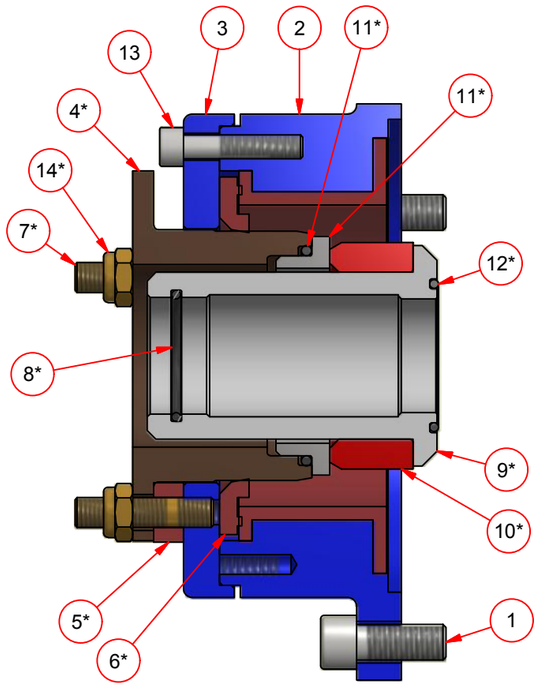


SECTION VIEW

| MATERIAL LIST | | | | | |
|---|---|---|---|---|---|
| ITEM | QTY | PART NUMBER | DESCRIPTION | LBS | TOTAL LBS |
| 1 | 1 | 09110002121 | SCREW SET, GLAND HOLDING | 0.3 | 0.1 |
| 2 | 1 | 09110002301 | GLAND HOUSING, DRY GLAND | 9.7 | 4.4 |
| 3 | 1 | 09110002302 | GLAND COVER, DRY GLAND | 2.9 | 1.3 |
| 4* | 1 | 09110002303 | SLEEVE, ADJUSTING, DRY GLAND | 3.7 | 1.7 |
| 5* | 3 | 09110002304 | WASHER, DRY GLAND | 0.0 | 0 |
| 6* | 1 | 09110002305 | SEAL, DRY GLAND | 0.1 | 0 |
| 7* | 1 | 09110002306 | STUD SET, ADJUSTING, DRY GLAND | 0.2 | 0.1 |
| 8* | 1 | 09110002307 | O-RING, SLEEVE, 39mm ID □3mm | 0.0 | 0 |
| 9* | 1 | 09110002308 | SLEEVE, GLAND, DRY GLAND | 2.2 | 1 |
| 10* | 1 | 09110002309 | SEAL, FACE, DRY GLAND | 0.1 | 0.1 |
| 11* | 1 | 09110002311 | CERAMIC WEAR FACE KIT<br>C/W CERAMIC FACE, O-RING & EPOXY | 0.2 | 0.1 |
| 12* | 1 | 09110002312 | O-RING, IMPELLER, 45mm ID X 3mm | 0.0 | 0 |
| 13 | 1 | 09110002314 | SCREW SET, GLAND, COVER | 0.2 | 0.1 |
| 14* | 3 | 296220100 | NUT, M10, HEX, BRASS, NYLON | 0.0 | 0 |

NOTE: REPAIR KIT 09110002321 MARKED WITH "*"

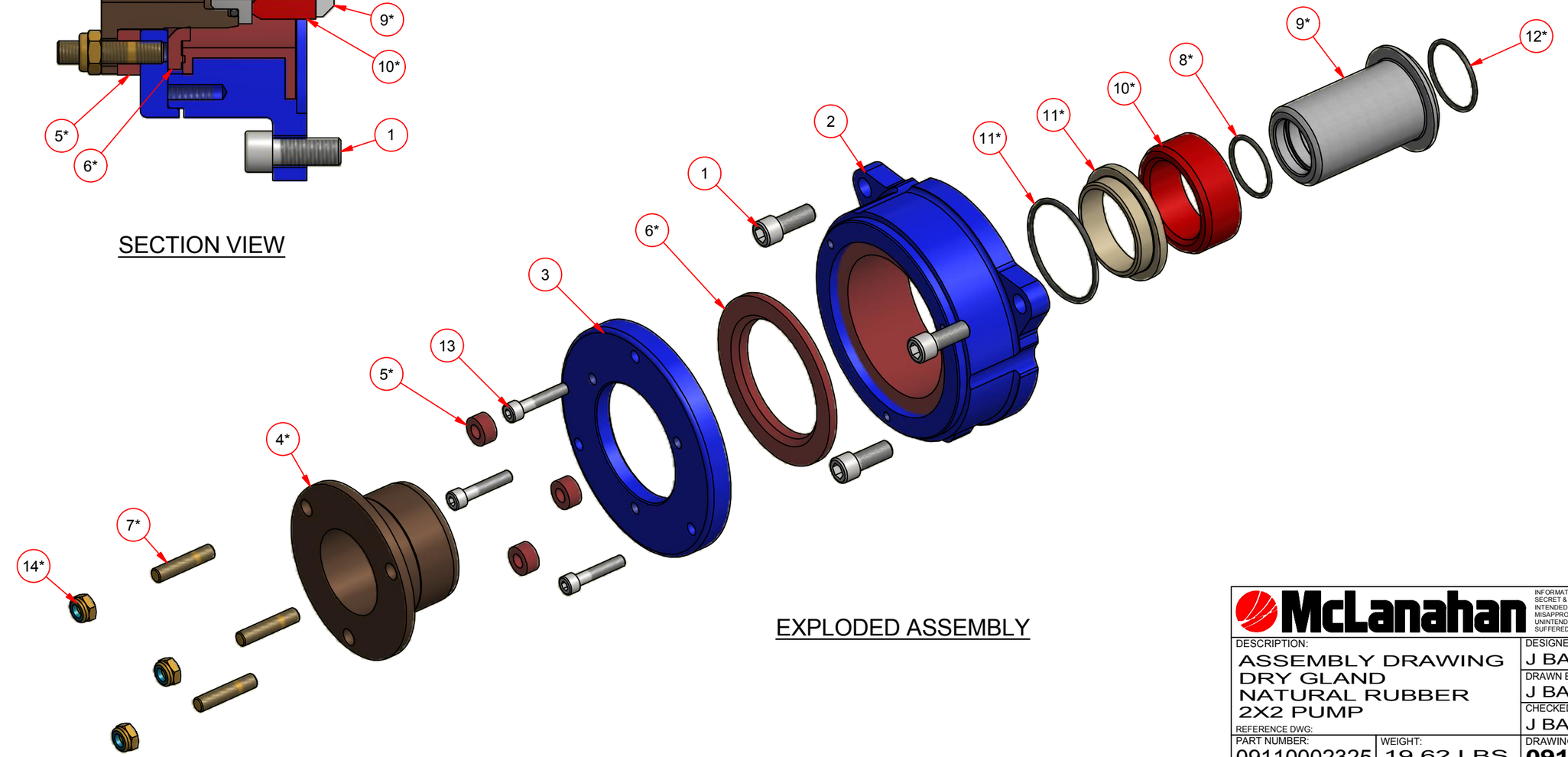


EXPLODED ASSEMBLY

INFORMATION CONTAINED WITHIN THIS DOCUMENT IS A TRADE SECRET & ANY USE OF THE INFORMATION, EXCEPT BY ITS INTENDED RECEIVER, IS STRICTLY PROHIBITED. ANY MISAPPROPRIATION OF THE INFORMATION SHALL MAKE THE UNINTENDED RECEIVER LIABLE FOR ANY AND ALL DAMAGES SUFFERED AS A RESULT BY THE MCLANAHAN CORPORATION.

McLanahan

| DESCRIPTION: | DESIGNED BY: | ORIGIN: | DWG SIZE: |
|---|---|---|---|
| ASSEMBLY DRAWING<br>DRY GLAND<br>NATURAL RUBBER<br>2X2 PUMP | J BAXTER | TN | B |
| | DRAWN BY: J BAXTER | DATE: 1/13/2012 | SCALE: AS NOTED |
| REFERENCE DWG: | CHECKED BY: J BAXTER | DATE: 9/3/2013 | SHEET#: 1 /1 |
| PART NUMBER: 09110002325 | WEIGHT: 19.62 LBS | DRAWING NUMBER: **09110002325** | REV: 0 |

**This page is intentionally left blank**

# INSTALLATION, OPERATION & MAINTENANCE MANUAL

## PUMP ASSEMBLY, 3X3 DRY GLAND

## W/DRIVE PACKAGE LESS MOTOR

PROJECT ID #20212074


| | | | |
|---|---|---|---|
| **WORLD HEADQUARTERS** | 200 Wall Street, Hollidaysburg, PA 16648 USA | Ph: +1 (814) 695 9807 | Fax: +1 (814) 695 6684 |
| **TENNESSEE** | 585 Airport Road, Gallatin, TN 37066 USA | Ph: +1 (615) 451 4440 | Fax: +1 (615) 451 4461 |
| **FLORIDA** | 6550 New Tampa Highway, Lakeland, FL 33815 USA | Ph: +1 (863) 667 2090 | Fax: +1 (863) 667 0449 |
| **IOWA** | 800 First Avenue N.W., Cedar Rapids, IA 52405 USA | Ph: +1 (319) 365 0441 | Fax: +1 (319) 369 5440 |
| **AUSTRALIA** | 16 Callistemon Close, Warabrook, NSW 2304 Australia | Ph: +02 49 248 248 | Fax: +02 4926 2514 |
| **UNITED KINGDOM** | Unit 15, Newman Lane, Alton, Hampshire, GU34 2QR, UK | Ph: +44 (0) 1420 542489 | |

mclanahan.com

# Belted Drives Selection Tool

| | |
|---|---|
| **Date Entered:** | 2/17/2021 |



## 20212074-80-01

| Drive Requirements | Input | Actual |
|---|---|---|
| Motor Speed | 1,760 rpm | 1,760 rpm |
| Motor Power | 15 hp | 15 hp |
| Service Factor | 1.2 | 1.86 |
| Output Speed | 1,593 - 1,691 rpm | 1,645 rpm |
| Center Distance | 16.50 - 18 in | 16.92 in |

### Technical Data

| | | | |
|---|---|---|---|
| Speed Ratio | 1.07 | Facewidth | 1.69 in |
| Belt Speed | 2,672 ft/min | Driver Pitch Diameter | 5.80 in |
| Belt Pull | 316 lbs | Driven Pitch Diameter | 157.48 mm |
| Static Shaft Load | 311 lbs | Install/Take-up Center Distance Range | 15.92 - 18.12 in |

### Tensioning

#### Sonic Tension Meter Data

| | |
|---|---|
| Tension Frequency | 58 - 71 Hz |
| Belt Mass Constant | 140.0 g/m |
| Span Length | 429.8 mm |
| # of Belts | 2 |

#### Force Deflection Method

| | |
|---|---|
| Span Length | 16.92 in |
| Belt Deflection Distance | 0.26 in |
| Belt Deflection Force | 7.6 - 8.1 lbs |

**NOTE:** Values shown are for new belts.

### Selection

| Product | Part Number | Description | Weight (lbs) | Qty. |
|---|---|---|---|---|
| Driver Sheave | 455245 | 2-5V5.90-SDS SHEAVE | 6.2 | 1 |
| Driver Bushing | 120406 | SDS X 1-5/8-KW BUSHING | 1.1 | 1 |
| Driven Sheave | 455246 | 2-5V6.30-SK SHEAVE | 7.6 | 1 |
| Driven Bushing | 120070 | SK X 45MM-KW BUSHING | 2.7 | 1 |
| Belt(s) | 107233 | 5VX530 BELT | 0.5 | 2 |

| | |
|---|---|
| **Quantity:** | 1 |
| **Net Total Weight:** | 18.5 lbs |

JMI - 5000220043 /

20210115-011, January 15, 2021

M3H-CR 3/3 , 1642 rpm, 15 hp

©2018-2019 McLanahan. This curve is the property of McLanahan. And must not be reproduced or disclosed without permission in writing. All rights are reserved.

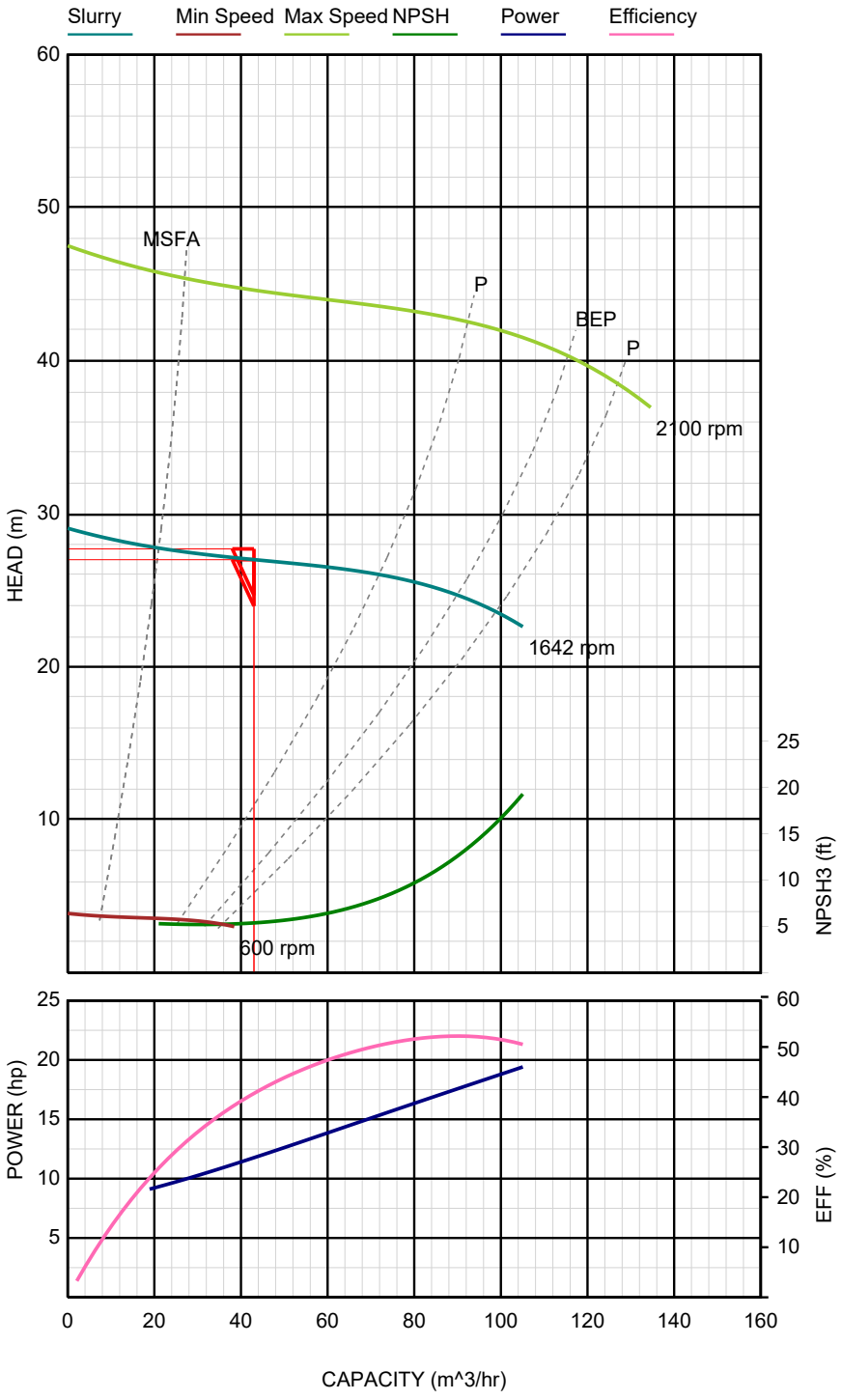


## Pump model: M3H-CR 3/3

| Pump | |
|---|---|
| Pump range | -CR |
| Speed | 1642 rpm |
| Max Speed | 2100 rpm |
| Efficiency @ BEP | 51.41 % |
| No. of pumps | 1 |
| Power absorbed - Total | 12 hp |

| Duty Point | |
|---|---|
| Flow | 43 m^3/hr |
| Static Head | 0 m |
| Total Head | 27 m |
| Efficiency | 41.27 % |
| NPSH required | 12.71 ft |
| % of BEP | 47.83 % |
| Power absorbed - @ Duty | 11.75 hp |
| Motor size | 15 hp |
| Tip Speed | 71.6 ft/s |
| Impeller Diameter | 10 in |
| Speed Head | 27.69 m |

| Slurry Data | |
|---|---|
| Solid flow rate | 11.02 Tons/hr |
| Solid SG | 2.7 |
| Slurry SG | 1.144 |
| % Comp. by Weight | 20 % |
| % comp. by Volume | 8.475 % |
| Ave. Particle size (D50) | 100 microns |
| Max Particle Size | 300 microns |
| Head Ratio | 0.975 |

**Engineer's Notes**

McLanahan

Pump Selection Program

Powered by TAS

### Pump Details

| | | |
|---|---|---|
| Pump Model | M3H-CR 3/3 | |
| Rated Flow | 43.00 | $m^3/hr$ |
| Rated Head | 27.00 | m |
| Efficiency | 41.27 | % |
| QBEP | 47.83 | % |
| Impeller Diameter | 10 | in |
| Pump Speed | 1642 | rpm |
| Minimum Speed | 600 | rpm |
| Maximum Speed | 2100 | rpm |
| Tip speed | 71.60 | ft/s |
| NPSH required | 5.42 | ft |

### Selection Details

| | | |
|---|---|---|
| Required Flow | 43.00 | $m^3/hr$ |
| Required Head | 27.00 | m |
| Static Head | 0.00 | m |
| Friction Head | 27.00 | m |
| Suction Height | 0.00 | m |
| Discharge Height | 0.00 | m |
| Discharge Pressure | 0.00 | kPa |
| Head Ratio | 0.97 | |
| NPSH Available | 0.00 | m |
| No. of pumps | 1 | |
| Power absorbed - Total | 12.00 | hp |

### Slurry Details

| | | |
|---|---|---|
| Solid flow rate | 11.02 | Tons/hr |
| Slurry flow rate | 43.00 | $m^3/hr$ |
| SG solid | 2.70 | |
| SG liquid | 1.00 | |
| SG slurry | 1.14 | |
| % comp. by weight | 20.00 | % |
| % comp by volume | 8.47 | % |
| Ave. particle size | 100.00 | microns |
| Max particle size | 300.00 | microns |
| Widely graded particles | False | |
| Froth factor | 0.00 | |
| Set ER & HR manually | False | |
| Efficiency ratio | 0.975 | |
| Head ratio | 0.975 | |

### Electrical Driver Details

| | | |
|---|---|---|
| Motor | 15.00 | hp |
| Power absorbed - @ Duty | 11.75 | hp |
| Power required | 13.51 | hp |
| Frame size | 254.00 | |
| Temperature rise | 105.00 | °C |
| Insulation class | F | |
| Bearing size D/E | 6309.00 | |
| Bearing size N/D/E | 6209.00 | |
| Weight | 227.00 | |
| Shaft size | 1.63 | |

# 3 X 3 DRY GLAND PUMP SPARE PARTS LIST

## OVERVIEW

**McLANAHAN CORPORATION** recommends that you keep certain replacement parts at your facility. These parts will be available in the event of a breakdown and will also be available to perform any repairs that must be made as a result of regularly scheduled maintenance checks. **McLANAHAN CORPORATION** stocks a wide variety of commonly used components; however storing these parts at your facility will eliminate the expense of air-freighting critical parts that may be required during a breakdown situation. Refer to the "PARTS LIST AND ASSEMBLY" drawing(s) to assist with parts identification, part numbers and quantities. Contact the Parts Department at **McLANAHAN CORPORATION** for price and availability of all parts for your McLanahan equipment.

| Qty | Part Number | Description | Lead Time | Price Each |
|---|---|---|---|---|
| | | | | |
| 1 | 09110003321 | Dry Gland Repair Kit | Stock | $1223.00 |
| 1 | 09110003225 | Bearing Repair Kit | Stock | $675.00 |
| 1 | 09110003109 | Gland Side Liner | 6-8 Weeks | $1181.00 |
| 1 | 09110003106 | Suction Side Liner | Stock | $1298.00 |
| 1 | 09110003110 | Impeller | Stock | $1948.00 |
| 2 | 293915053 | V-Belts, 5VX530 | 2 Weeks | $32.00 |
| | | | | |
| | | | | |

Note: Prices shown are current for 30 days from today's date.

**This page is intentionally left blank**

| Bill Of Materials | | | | |
|---|---|---|---|---|
| Item | Qty. | Part Number | Description | Fin Wt |
| 1 | 1 | 09100003001 | PUMP, 3X3, DRY GLAND | 647 lbmass |
| 2 | 1 | BY OTHERS | MOTOR, ELECTRIC, 15 HP, 1765 RPM, 575V, 3-PH, 60 HZ, 1.25 SF, 254T, TEFC-IEEE841 ENCL PREMIUM EFF SEVERE DUTY, FOOT MOUNT, 01518ST3HIE254T-W22 | 291 lbmass |
| 3 | 1 | 293800226 | BUSHING, TYPE 'SDS', 1-5/8" BORE | 1 lbmass |
| 4 | 1 | 293890026 | BUSHING, TYPE 'SK', 45MM BORE | 3 lbmass |
| 5 | 1 | 293710500 | V-BELT PULLEY, 5.9" OD, 2-5V GROOVES, "SDS" BUSHING. | 0 lbmass |
| 6 | 1 | 293710603 | PULLEY, V-BELT, 6.3 IN OD, 2-5V, SK BUSHING | 8 lbmass |
| 7 | 2 | 293915053 | V-BELT, 5VX530 | 1 lbmass |
| 8 | 1 | 09110003128 | BELT GUARD, 3X3 PUMP | 41 lbmass |
| 9 | 1 | 09110000000 | DRIP TRAY, 5" X 9" X 1" DEEP, MAGNETIC MOUNTING, 1/2" HOSE CONNECTION | 4 lbmass |
| 10 | 4 | 294740840 | CAPSCREW, HEX HEAD, 1/2" X 2-1/2", NC, GRADE 5, ZINC PLATED | 1 lbmass |
| 11 | 8 | 296600800 | WASHER, FLAT, 1/2", ZINC PLATED | 0 lbmass |
| 12 | 4 | 296700800 | WASHER, LOCK, 1/2", ZINC PLATED | 0 lbmass |
| 13 | 4 | 296507080 | NUT, HEX, 1/2", NC, GRADE 5, ZINC PLATED | 0 lbmass |
| 14 | 1 | 297610020 | IDENTIFICATION PLATE, 4" X 2-1/2", | |

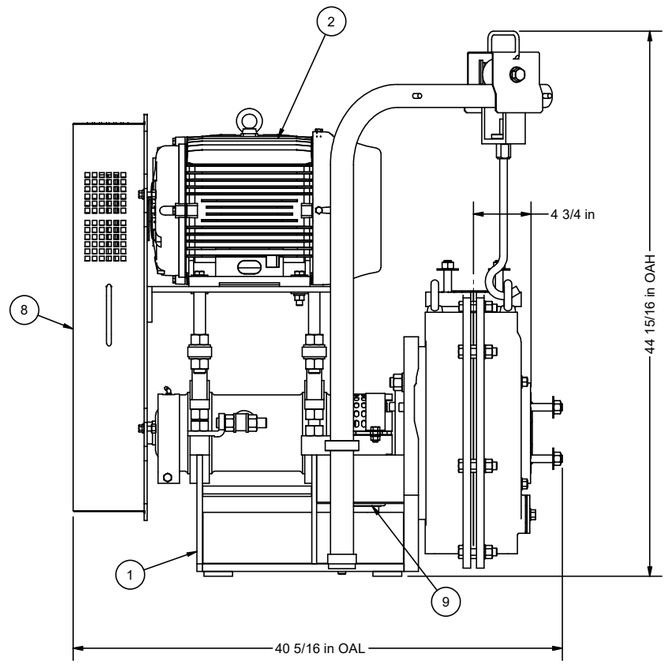


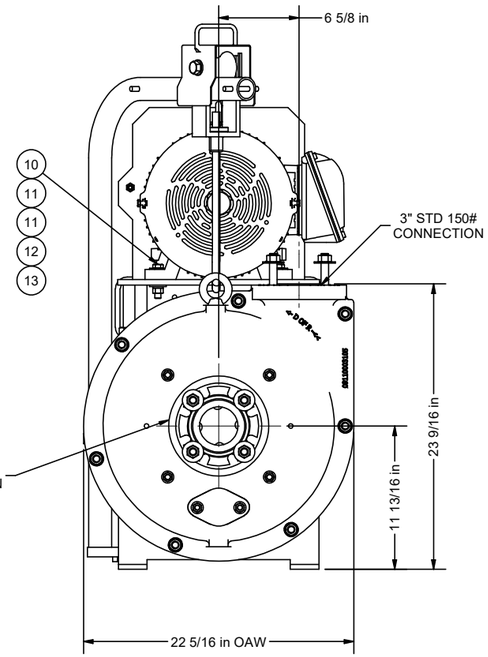


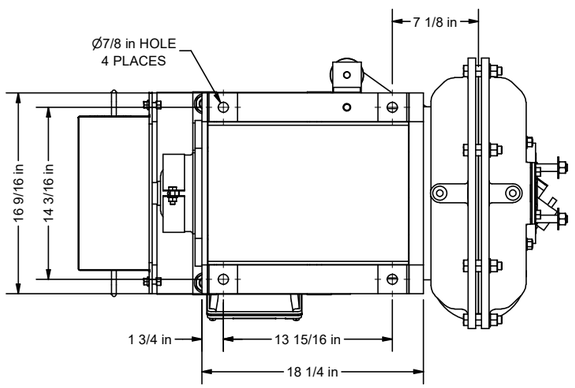


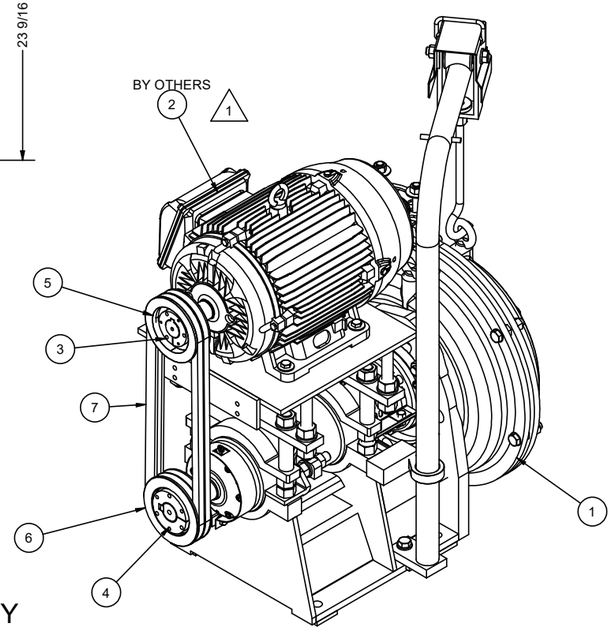


BELT GUARD, ITEM 8,
REMOVED FOR CLARITY

| REV | DESCRIPTION | DATE | BY | CKD BY |
|---|---|---|---|---|
| 1 | ITEM #2 P/N WAS US51700066; UPDATED DESCRIPTION | 5/5/21 | KAZ | DEM |

UNLESS OTHERWISE NOTED, TOLERANCES ON DIMENSIONS ARE:
.xx ±0.01 in
.xxx ±0.005 in
PROFILE/SAW FABRICATION ±1/16 in ±1/8 in
ANGLE ±1°
SURFACE √125

REFERENCES

McLanahan

THIS DRAWING IS THE PROPERTY OF MCLANAHAN CORPORATION AND SHALL NOT BE USED OR COPIED EXCEPT AS EXPRESSLY AUTHORIZED. INFORMATION CONTAINED IN THIS DOCUMENT IS A TRADE SECRET AND ANY USE OF THE INFORMATION, EXCEPT BY ITS INTENDED RECEIVER, IS STRICTLY PROHIBITED AND MISAPPROPRIATION OF THE INFORMATION SHALL MAKE THE NONINTENDED RECEIVER LIABLE FOR ANY AND ALL DAMAGES SUFFERED AS A RESULT BY THE McLANAHAN CORPORATION.

THIRD ANGLE PROJECTION

ASSEMBLY DRAWING

| WEIGHT | SHEET NUMBER | SCALE | PART NUMBER: US20900112 |
|---|---|---|---|
| 1,042 LBS | 1 OF 1 | 1:10 | DESCRIPTION: PUMP ASSEMBLY, 3 X 3, DG, 1,648 W/ 15 HP, 575V, 60HZ, IEEE841 254T FRAME MOTOR , INCLUDES DRIP TRAY, MOTOR BY OTHERS |

| DRAWN BY | CHECKED BY | APPROVED BY | 1ST ISSUE DATE | SHEET SIZE | DRAWING NUMBER | REVISION |
|---|---|---|---|---|---|---|
| KAZ | DLE | | 3/2/2021 | C | US20900112 | 1 |

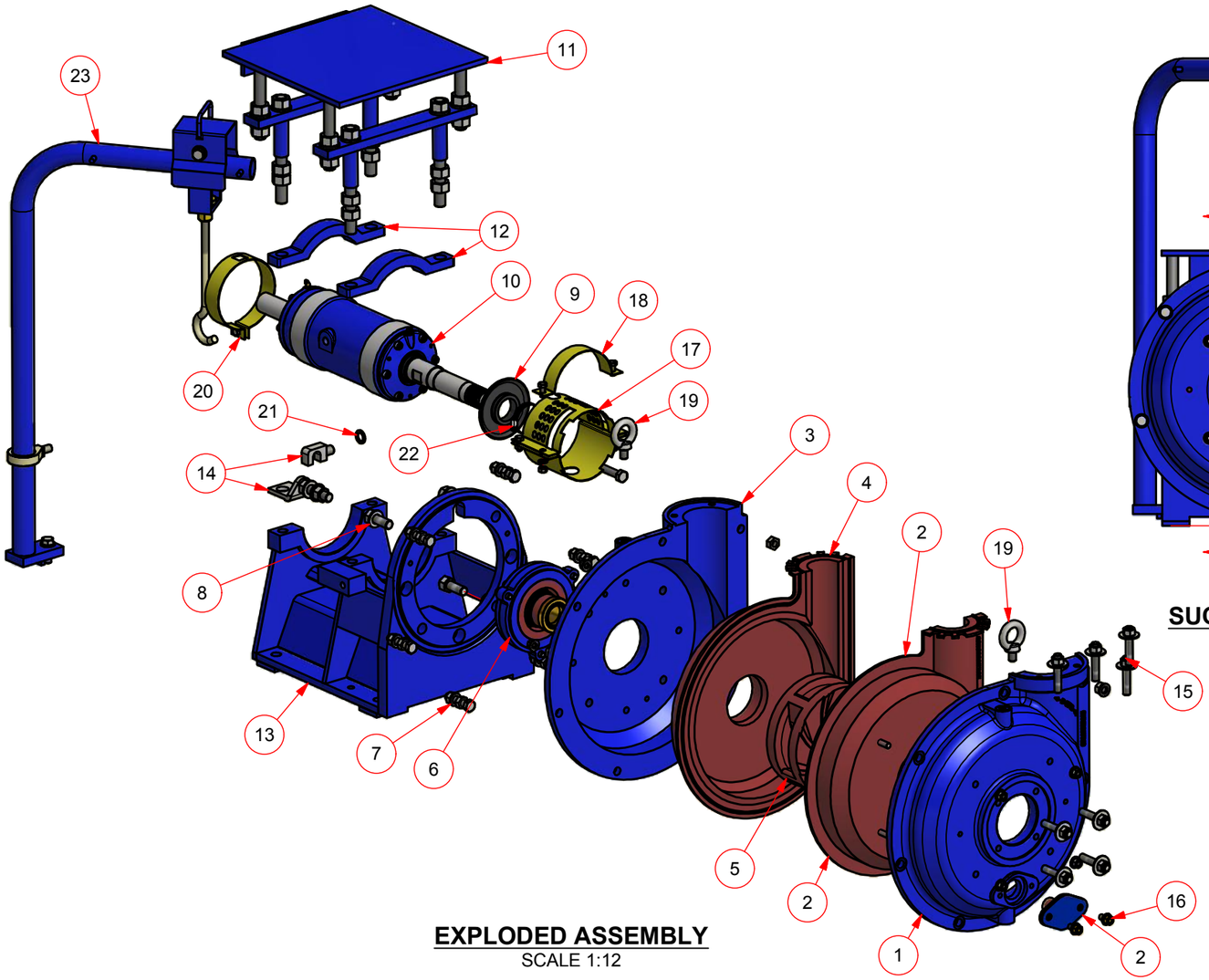


**EXPLODED ASSEMBLY**
SCALE 1:12

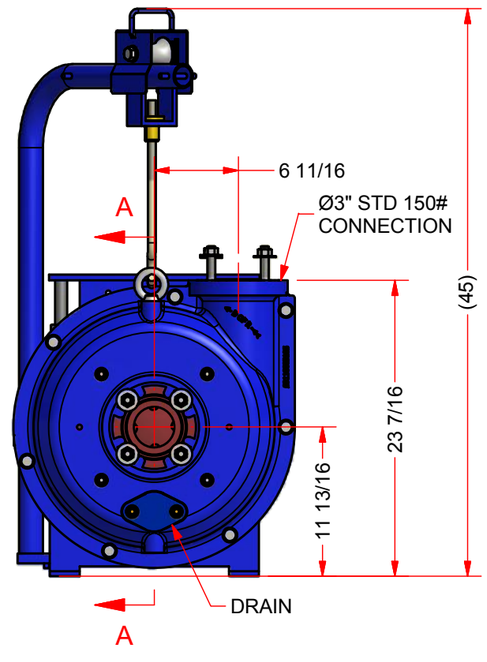


**SUCTION SIDE**

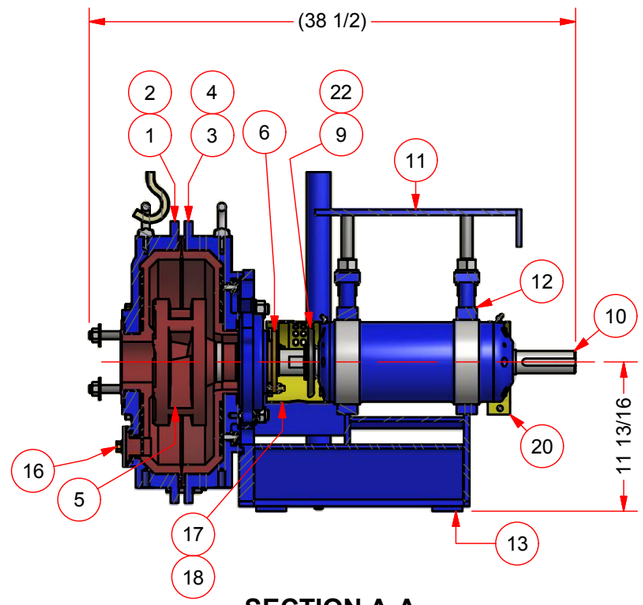


**SECTION A-A**

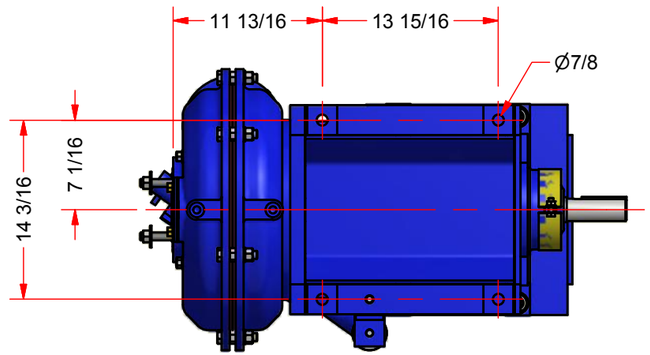


**BOTTOM**
FOOT PRINT

**GENERAL NOTES:**
1. ALL DIMENSIONS ARE IN INCHES UNLESS OTHERWISE NOTED.
2. SHAFT SPANNER NOT SHOWN HEREIN.

MATERIAL LIST

| ITEM | QTY | PART NUMBER | DESCRIPTION | LBS | TOTAL LBS |
|---|---|---|---|---|---|
| 1 | 1 | 09110003105 | CASING, SUCTION SIDE | 98.5 | 98.5 |
| 2 | 1 | 09110003106 | LINER, SUCTION SIDE C/W DRAIN PLUG & HARDWARE | 15.4 | 15.4 |
| 3 | 1 | 09110003108 | CASING, GLAND SIDE | 105.0 | 105 |
| 4 | 1 | 09110003109 | LINER, GLAND SIDE C/W HARDWARE | 14.5 | 14.5 |
| 5 | 1 | 09110003110 | IMPELLER | 19.1 | 19.1 |
| 6 | 1 | 09110003325 | DRY GLAND ASSEMBLY | 25.6 | 25.6 |
| 7 | 1 | 09110003111 | BOLT SET, CASING | 3.6 | 3.6 |
| 8 | 1 | 09110003113 | STUD SET, CASING TO PEDESTAL | 2.5 | 2.5 |
| 9 | 1 | 09110003115 | FLINGER | 0.2 | 0.2 |
| 10 | 1 | 09110003116 | BEARING ASSEMBLY | 88.9 | 88.9 |
| 11 | 1 | 09110003117 | MOTOR TABLE | 74.3 | 74.3 |
| 12 | 2 | 09110003118 | PEDESTAL CAP | 4.4 | 8.7 |

MATERIAL LIST

| ITEM | QTY | PART NUMBER | DESCRIPTION | LBS | TOTAL LBS |
|---|---|---|---|---|---|
| 13 | 1 | 09110003119 | PEDESTAL | 148.0 | 148 |
| 14 | 1 | 09110003120 | JACK, AXIAL POSITIONING | 2.6 | 2.6 |
| 15 | 1 | 09110002125 | STUD SET, FLANGE | 3.6 | 3.6 |
| 16 | 1 | 09110003126 | STUD SET, DRAIN PLUG | 0.2 | 0.2 |
| 17 | 1 | 09110003130 | GUARD, SHAFT | 2.1 | 2.1 |
| 18 | 1 | 09110002137 | PROTECTIVE STRIP | 0.3 | 0.3 |
| 19 | 2 | 09110003122 | EYEBOLT, CASING | 0.8 | 1.5 |
| 20 | 1 | 09110003139 | GUARD, PULLEY SHAFT | 0.7 | 0.7 |
| 21 | 1 | 09110003035 | WASHER, AXIAL POSITIONING JACK | 0.0 | 0 |
| 22 | 1 | 09110002001 | CLAMP, SS | 0.1 | 0.1 |
| 23 | 1 | 09110003127 | CRANE & CRAWL ASSEMBLY | 28.1 | 28.1 |
| 24 | 1 | 09110003129 | SPANNER, SHAFT | 2.9 | 2.9 |

| REVISION HISTORY | | | |
|---|---|---|---|
| REV | DESCRIPTION | DATE | BY |
| 1 | TOTAL WEIGHT HAS CHANGED. | 5/6/2015 | JTM |

INFORMATION CONTAINED WITHIN THIS DOCUMENT IS A TRADE SECRET & ANY USE OF THE INFORMATION, EXCEPT BY ITS INTENDED RECEIVER, IS STRICTLY PROHIBITED. ANY MISAPPROPRIATION OF THE INFORMATION SHALL MAKE THE UNINTENDED RECEIVER LIABLE FOR ANY AND ALL DAMAGES SUFFERED AS A RESULT BY THE MCLANAHAN CORPORATION.

| DESCRIPTION: | DESIGNED BY: | ORIGIN: | DWG SIZE: |
|---|---|---|---|
| ASSEMBLY DRAWING PUMP, 3X3 C/W DRY GLAND, CLOSED VANE IMPELLER & RUBBER LINERS | BFERRELL | TN | B |
| REFERENCE DWG: N/A | DRAWN BY: BFERRELL | DATE: 12/11/2013 | SCALE: AS NOTED |
| | CHECKED BY: JMCEWEN | DATE: 5/6/2015 | SHEET#: 1 /1 |
| PART NUMBER: 09100003001 | WEIGHT: 646.4 LBS | DRAWING NUMBER: 09100003001 | REV: 1 |

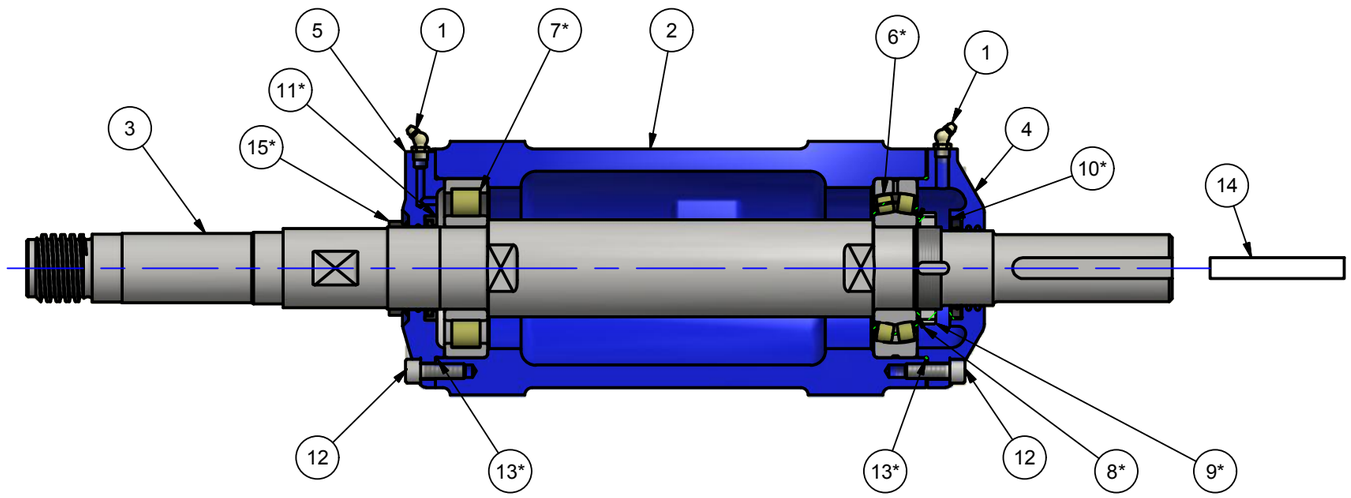


SECTION THROUGH BEARING ASSEMBLY

| MATERIAL LIST | | | | | |
|---|---|---|---|---|---|
| ITE | QTY | PART NUMBER | DESCRIPTION | LBS. | TOTAL LBS. |
| 1 | 2 | 09110002212 | NIPPLE, GREASE | 0.0 | 0.0 |
| 2 | 1 | 09110003201 | BEARING HOUSING | 45.8 | 45.8 |
| 3 | 1 | 09110003202 | SHAFT | 31.0 | 31.0 |
| 4 | 1 | 09110003203 | COVER, END | 5.2 | 5.2 |
| 5 | 1 | 09110003204 | COVER, FRONT | 4.4 | 4.4 |
| 6* | 1 | 09110003205 | BEARING, END | 0.5 | 0.5 |
| 7* | 1 | 09110003206 | BEARING, FRONT | 0.4 | 0.4 |
| 8* | 1 | 09110003207 | WASHER, TAB | 0.1 | 0.1 |
| 9* | 1 | 09110003208 | NUT, LOCK | 0.4 | 0.4 |
| 10* | 1 | 09110003209 | SEAL, END, GREASE | 0.0 | 0.0 |
| 11* | 1 | 09110003210 | SEAL, FRONT, GREASE | 0.0 | 0.0 |
| 12 | 12 | 09110003211 | SOCKET HEAD CAP SCREW - M10□1.5□30 | 0.1 | 0.8 |
| 13* | 2 | 09110003213 | O-RING, 2MM DIA X 119MM ID, SEAL, BEARING HOUSING | 0.0 | 0.0 |
| 14 | 1 | 09110003215 | KEY, SHAFT, 89.83 MM X 9.10 MMX 13.95 MM | 0.2 | 0.2 |
| 15* | 1 | 09110003217 | SEAL, VEE | 0.0 | 0.0 |

NOTE: REPAIR KIT 09110003225 INCLUDES ITEMS MARKED WITH "*"

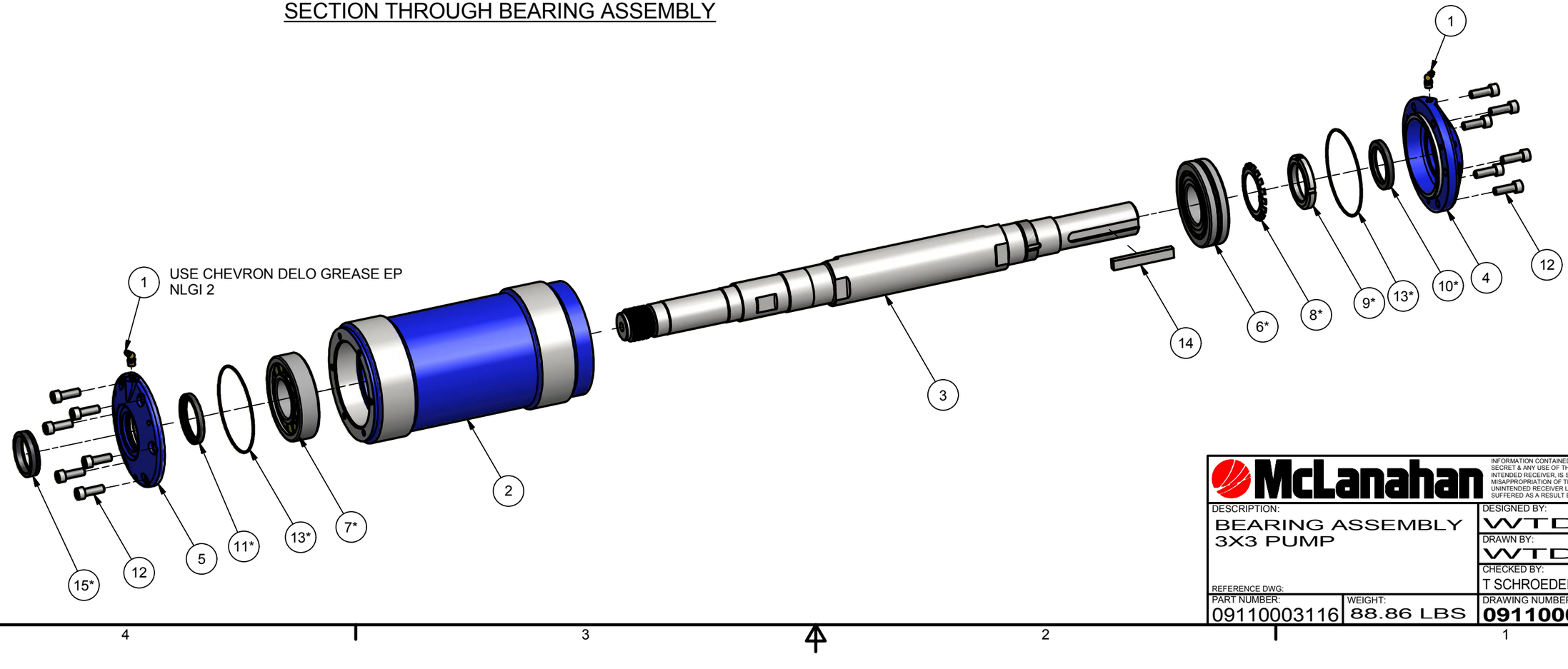


INFORMATION CONTAINED WITHIN THIS DOCUMENT IS A TRADE SECRET & ANY USE OF THE INFORMATION, EXCEPT BY ITS INTENDED RECEIVER, IS STRICTLY PROHIBITED. ANY MISAPPROPRIATION OF THE INFORMATION SHALL MAKE THE UNINTENDED RECEIVER LIABLE FOR ANY AND ALL DAMAGES SUFFERED AS A RESULT BY THE MCLANAHAN CORPORATION.

McLanahan

| | | | |
|---|---|---|---|
| DESCRIPTION: BEARING ASSEMBLY 3X3 PUMP | DESIGNED BY: WTD | ORIGIN: TN | DWG SIZE: B |
| | DRAWN BY: WTD | DATE: 7/23/2010 | SCALE: AS NOTED |
| | CHECKED BY: T SCHROEDER | DATE: 3/18/2013 | SHEET#: 1 /1 |
| REFERENCE DWG: | | | |
| PART NUMBER: 09110003116 | WEIGHT: 88.86 LBS | DRAWING NUMBER: 09110003116 | REV: 00 |

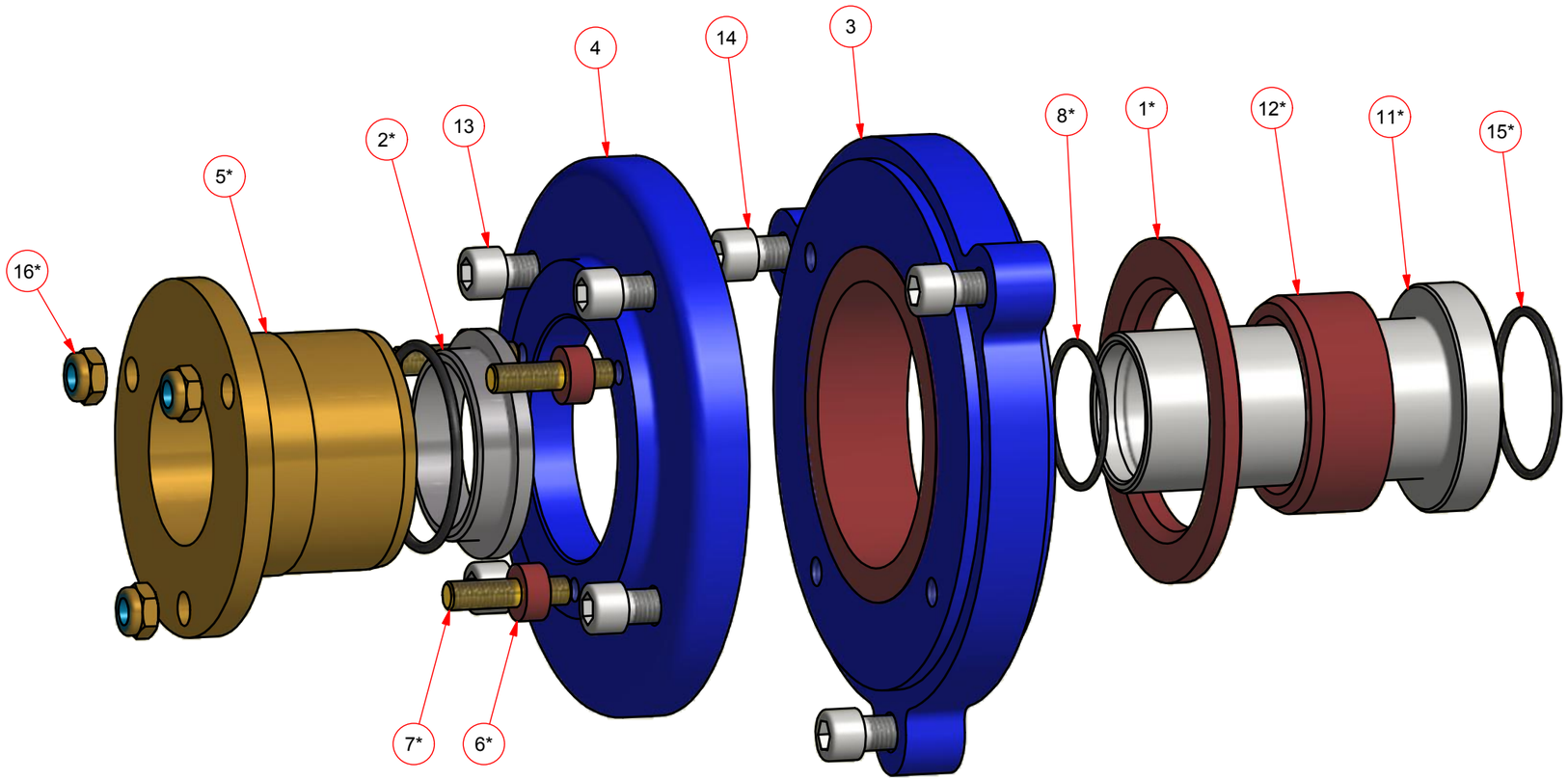


**EXPLODED ASSEMBLY**
SCALE 1:2

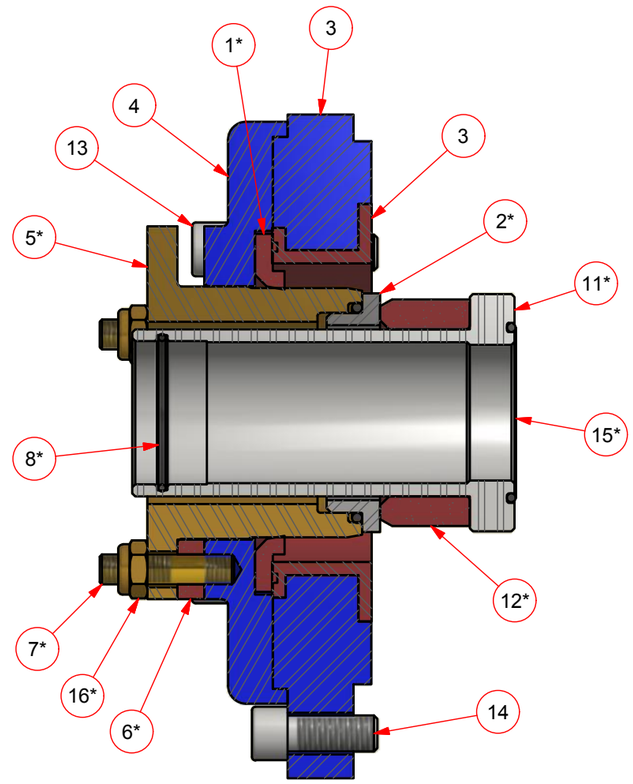


**SECTION A-A**
SCALE 1:2

NOTE: REPAIR KIT 09110003321 ITEMS MARKED WITH AN ASTERISK *.

| MATERIAL LIST | | | | | |
|---|---|---|---|---|---|
| ITEM | QTY | PART NUMBER | DESCRIPTION | LBS | TOTAL LBS |
| 1* | 1 | 09110002305 | SEAL, DRY GLAND | 0.1 | 0.1 |
| 2* | 1 | 09110002311 | CERAMIC WEAR FACE KIT<br>C/W CERAMIC FACE, O-RING & EPOXY | 0.2 | 0.2 |
| 3 | 1 | 09110003301 | GLAND HOUSING | 11.9 | 11.9 |
| 4 | 1 | 09110003302 | GLAND COVER, DRY GLAND | 6.0 | 6 |
| 5* | 1 | 09110003303 | SLEEVE, ADJUSTING, DRY GLAND | 4.1 | 4.1 |
| 6* | 3 | 09110003304 | WASHER, DRY GLAND | 0.0 | 0 |
| 7* | 1 | 09110003306 | STUD SET, ADJUSTING | 0.2 | 0.2 |

| MATERIAL LIST | | | | | |
|---|---|---|---|---|---|
| ITEM | QTY | PART NUMBER | DESCRIPTION | LBS | TOTAL LBS |
| 8* | 1 | 09110003307 | COARSE THREAD | 0.0 | 0 |
| 11* | 1 | 09110003308 | SLEEVE, GLAND, DRY GLAND | 2.2 | 2.2 |
| 12* | 1 | 09110003309 | SEAL, FACE, DRY GLAND | 0.1 | 0.1 |
| 13 | 1 | 09110003314 | SCREW SET, COVER | 0.4 | 0.4 |
| 14 | 1 | 09110003121 | SCREW SET, HOUSING | 0.3 | 0.3 |
| 15* | 1 | 09110004307 | O- RING, 54 mm I.D. X 3 mm | 0.0 | 0 |
| 16* | 3 | 296220100 | NUT, M10, HEX, BRASS, NYLON | 0.0 | 0.1 |

| REVISION HISTORY | | | |
|---|---|---|---|
| REV | DESCRIPTION | DATE | BY |
| 1 | CORRECTED ITEM 14 P/N FROM -3421 TO -3121 | 10/29/2014 | TBS |

McLanahan

INFORMATION CONTAINED WITHIN THIS DOCUMENT IS A TRADE SECRET & ANY USE OF THE INFORMATION, EXCEPT BY ITS INTENDED RECEIVER, IS STRICTLY PROHIBITED. ANY MISAPPROPRIATION OF THE INFORMATION SHALL MAKE THE UNINTENDED RECEIVER LIABLE FOR ANY AND ALL DAMAGES SUFFERED AS A RESULT BY THE MCLANAHAN CORPORATION.

| | | | | |
|---|---|---|---|---|
| DESCRIPTION: ASSEMBLY DRAWING DRY GLAND NATURAL RUBBER 3X3 PUMP<br>REFERENCE DWG: N/A | | DESIGNED BY: T SCHROEDER | ORIGIN: TN | DWG SIZE: B |
| | | DRAWN BY: T SCHROEDER | DATE: 9/6/2013 | SCALE: AS NOTED |
| | | CHECKED BY: T SCHROEDER | DATE: 9/11/2013 | SHEET#: 1 /1 |
| PART NUMBER: 09110003325 | WEIGHT: 25.55 LBS | DRAWING NUMBER: **09110003325** | | REV: 1 |

# INSTALLATION, OPERATION & MAINTENANCE MANUAL

## PUMP ASSEMBLY, 3X3 DRY GLAND

## W/5 HP DRIVE PACKAGES

PROJECT ID #20212074


| | | | |
|---|---|---|---|
| **WORLD HEADQUARTERS** | 200 Wall Street, Hollidaysburg, PA 16648 USA | Ph: +1 (814) 695 9807 | Fax: +1 (814) 695 6684 |
| **TENNESSEE** | 585 Airport Road, Gallatin, TN 37066 USA | Ph: +1 (615) 451 4440 | Fax: +1 (615) 451 4461 |
| **FLORIDA** | 6550 New Tampa Highway, Lakeland, FL 33815 USA | Ph: +1 (863) 667 2090 | Fax: +1 (863) 667 0449 |
| **IOWA** | 800 First Avenue N.W., Cedar Rapids, IA 52405 USA | Ph: +1 (319) 365 0441 | Fax: +1 (319) 369 5440 |
| **AUSTRALIA** | 16 Callistemon Close, Warabrook, NSW 2304 Australia | Ph: +02 49 248 248 | Fax: +02 4926 2514 |
| **UNITED KINGDOM** | Unit 15, Newman Lane, Alton, Hampshire, GU34 2QR, UK | Ph: +44 (0) 1420 542489 | |

mclanahan.com

# Belted Drives Selection Tool

| | |
|---|---|
| **Date Entered:** | 2/17/2021 |



## 20212074-80-03

| Drive Requirements | Input | Actual |
|---|---|---|
| Motor Speed | 1,745 rpm | 1,745 rpm |
| Motor Power | 5 hp | 5 hp |
| Service Factor | 1.2 | 3.02 |
| Output Speed | 736 - 736 rpm | 736 rpm |
| Center Distance | 14.50 - 16.50 in | 14.66 in |

### Technical Data

| | | | |
|---|---|---|---|
| Speed Ratio | 2.37 | Facewidth | 1.69 in |
| Belt Speed | 1,964 ft/min | Driver Pitch Diameter | 4.30 in |
| Belt Pull | 157 lbs | Driven Pitch Diameter | 259.08 mm |
| Static Shaft Load | 154 lbs | Install/Take-up Center Distance Range | 13.66 - 15.86 in |

### Tensioning

**Sonic Tension Meter Data**

| | |
|---|---|
| Tension Frequency | 48 - 59 Hz |
| Belt Mass Constant | 140.0 g/m |
| Span Length | 364.7 mm |
| # of Belts | 2 |

**Force Deflection Method**

| | |
|---|---|
| Span Length | 14.36 in |
| Belt Deflection Distance | 0.22 in |
| Belt Deflection Force | 4.2 - 4.5 lbs |

**NOTE:** Values shown are for new belts.

### Selection

| Product | Part Number | Description | Weight (lbs) | Qty. |
|---|---|---|---|---|
| Driver Sheave | 455240 | 2-5V4.40-SH SHEAVE | 3.3 | 1 |
| Driver Bushing | 120355 | SH X 1-1/8-KW BUSHING | 0.9 | 1 |
| Driven Sheave | 455255 | 2-5V10.30-SK SHEAVE | 17.6 | 1 |
| Driven Bushing | 120070 | SK X 45MM-KW BUSHING | 2.7 | 1 |
| Belt(s) | 107233 | 5VX530 BELT | 0.5 | 2 |

| | |
|---|---|
| **Quantity:** | 1 |
| **Net Total Weight:** | 25.5 lbs |

JMI - 5000220043 /

20210115-013, January 21, 2021

M3H-CR 3/3 , 736 rpm, 5 hp

©2018-2019 McLanahan. This curve is the property of McLanahan. And must not be reproduced or disclosed without permission in writing. All rights are reserved.

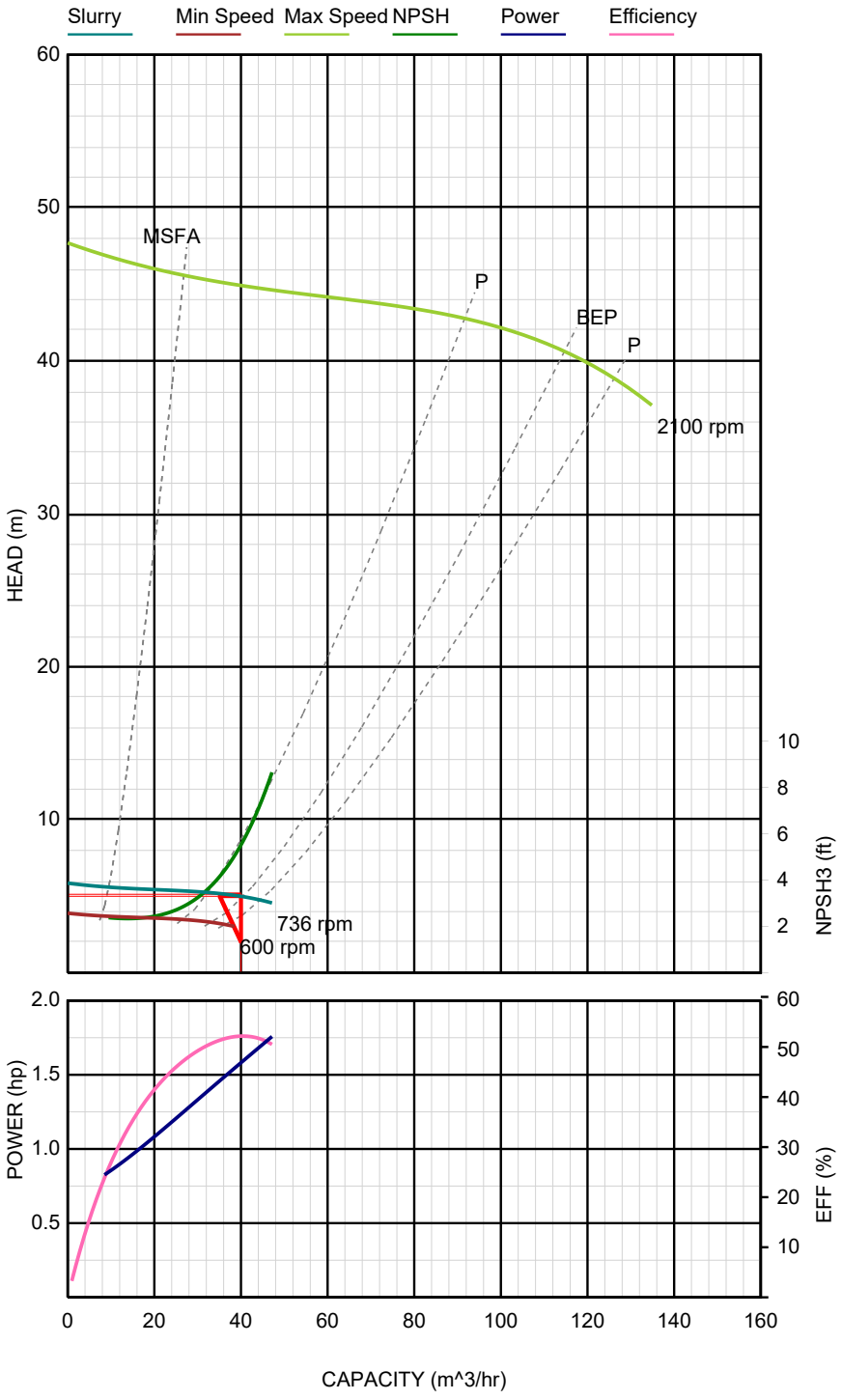


## Pump model: M3H-CR 3/3

| Pump | |
|---|---|
| Pump range | -CR |
| Speed | 736 rpm |
| Max Speed | 2100 rpm |
| Efficiency @ BEP | 51.41 % |
| No. of pumps | 1 |
| Power absorbed - Total | 2 hp |

| Duty Point | |
|---|---|
| Flow | 40 m^3/hr |
| Static Head | 0 m |
| Total Head | 5 m |
| Efficiency | 52.82 % |
| NPSH required | 5.705 ft |
| % of BEP | 99.1 % |
| Power absorbed - @ Duty | 1.582 hp |
| Motor size | 5 hp |
| Tip Speed | 32.09 ft/s |
| Impeller Diameter | 10 in |
| Speed Head | 5.128 m |

| Slurry Data | |
|---|---|
| Solid flow rate | 10.25 Tons/hr |
| Solid SG | 2.7 |
| Slurry SG | 1.144 |
| % Comp. by Weight | 20 % |
| % comp. by Volume | 8.475 % |
| Ave. Particle size (D50) | 100 microns |
| Max Particle Size | 300 microns |
| Head Ratio | 0.975 |

**Engineer's Notes**

McLanahan

Pump Selection Program

Powered by TAS

### Pump Details

| | | |
|---|---|---|
| Pump Model | M3H-CR 3/3 | |
| Rated Flow | 40.00 | m^3/hr |
| Rated Head | 5.00 | m |
| Efficiency | 52.82 | % |
| QBEP | 99.10 | % |
| Impeller Diameter | 10 | in |
| Pump Speed | 736 | rpm |
| Minimum Speed | 600 | rpm |
| Maximum Speed | 2100 | rpm |
| Tip speed | 32.09 | ft/s |
| NPSH required | 5.58 | ft |

### Selection Details

| | | |
|---|---|---|
| Required Flow | 40.00 | m^3/hr |
| Required Head | 5.00 | m |
| Static Head | 0.00 | m |
| Friction Head | 5.00 | m |
| Suction Height | 0.00 | m |
| Discharge Height | 0.00 | m |
| Discharge Pressure | 0.00 | kPa |
| Head Ratio | 0.97 | |
| NPSH Available | 0.00 | m |
| No. of pumps | 1 | |
| Power absorbed - Total | 2.00 | hp |

### Slurry Details

| | | |
|---|---|---|
| Solid flow rate | 10.25 | Tons/hr |
| Slurry flow rate | 40.00 | m^3/hr |
| SG solid | 2.70 | |
| SG liquid | 1.00 | |
| SG slurry | 1.14 | |
| % comp. by weight | 20.00 | % |
| % comp by volume | 8.47 | % |
| Ave. particle size | 100.00 | microns |
| Max particle size | 300.00 | microns |
| Widely graded particles | False | |
| Froth factor | 0.00 | |
| Set ER & HR manually | False | |
| Efficiency ratio | 0.975 | |
| Head ratio | 0.975 | |

### Electrical Driver Details

| | | |
|---|---|---|
| Motor | 5.00 | hp |
| Power absorbed - @ Duty | 1.58 | hp |
| Power required | 1.82 | hp |
| Frame size | 184.00 | |
| Temperature rise | 105.00 | °C |
| Insulation class | F | |
| Bearing size D/E | 6207.00 | |
| Bearing size N/D/E | 6206.00 | |
| Weight | 92.60 | |
| Shaft size | 1.13 | |

# 3 X 3 DRY GLAND PUMP SPARE PARTS LIST

## OVERVIEW

**McLANAHAN CORPORATION** recommends that you keep certain replacement parts at your facility. These parts will be available in the event of a breakdown and will also be available to perform any repairs that must be made as a result of regularly scheduled maintenance checks. **McLANAHAN CORPORATION** stocks a wide variety of commonly used components; however storing these parts at your facility will eliminate the expense of air-freighting critical parts that may be required during a breakdown situation. Refer to the "PARTS LIST AND ASSEMBLY" drawing(s) to assist with parts identification, part numbers and quantities. Contact the Parts Department at **McLANAHAN CORPORATION** for price and availability of all parts for your McLanahan equipment.

| Qty | Part Number | Description | Lead Time | Price Each |
|---|---|---|---|---|
| | | | | |
| 1 | 09110003321 | Dry Gland Repair Kit | Stock | $1223.00 |
| 1 | 09110003225 | Bearing Repair Kit | Stock | $675.00 |
| 1 | 09110003109 | Gland Side Liner | 6-8 Weeks | $1181.00 |
| 1 | 09110003106 | Suction Side Liner | Stock | $1298.00 |
| 1 | 09110003110 | Impeller | Stock | $1948.00 |
| 2 | 293915053 | V-Belts, 5VX530 | 2 Weeks | $32.00 |
| | | | | |
| | | | | |

Note: Prices shown are current for 30 days from today's date.

**This page is intentionally left blank**

| Bill Of Materials | | | | |
|---|---|---|---|---|
| Item | Qty. | Part Number | Description | Fin Wt |
| 1 | 1 | 09100003001 | PUMP, 3X3, DRY GLAND | 647 lbmass |
| 2 | 1 | 294305070 | MOTOR, ELECTRIC, 5 HP, 1800 RPM, 575V, WEG SEVERE DUTY, IEEE841, 3 PH, 184T, TEFC | 95 lbmass |
| 3 | 1 | 293800118 | BUSHING, TYPE 'SH', 1-1/8" BORE | 0 lbmass |
| 4 | 1 | 293890026 | BUSHING, TYPE 'SK', 45MM BORE | 3 lbmass |
| 5 | 1 | 293710417 | V-BELT PULLEY, 4.4" OD, 2-5V GROOVES, MACHINED FOR "SH" BUSHING | 0 lbmass |
| 6 | 1 | 293711016 | V-BELT PULLEY, 10.3" OD, 2-5V GROOVES, MACHINED FOR "SK" BUSHING | 2 lbmass |
| 7 | 2 | 293915053 | V-BELT, 5VX530 | 1 lbmass |
| 8 | 1 | 09110003128 | BELT GUARD, 3X3 PUMP | 41 lbmass |
| 9 | 1 | 09110000000 | DRIP TRAY, 5" X 9" X 1" DEEP, MAGNETIC MOUNTING, 1/2" HOSE CONNECTION | 4 lbmass |
| 10 | 4 | 294740632 | CAPSCREW, HEX HEAD, 3/8" X 2", NC, GRADE 5, ZINC PLATED | 0 lbmass |
| 11 | 8 | 296600600 | WASHER, FLAT, 3/8", ZINC PLATED | 0 lbmass |
| 12 | 4 | 296700600 | WASHER, LOCK, 3/8", ZINC PLATED | 0 lbmass |
| 13 | 4 | 296507060 | NUT, HEX, 3/8", NC, GRADE 5, ZINC PLATED | 0 lbmass |
| 14 | 1 | 297610020 | IDENTIFICATION PLATE, 4" X 2-1/2", | |

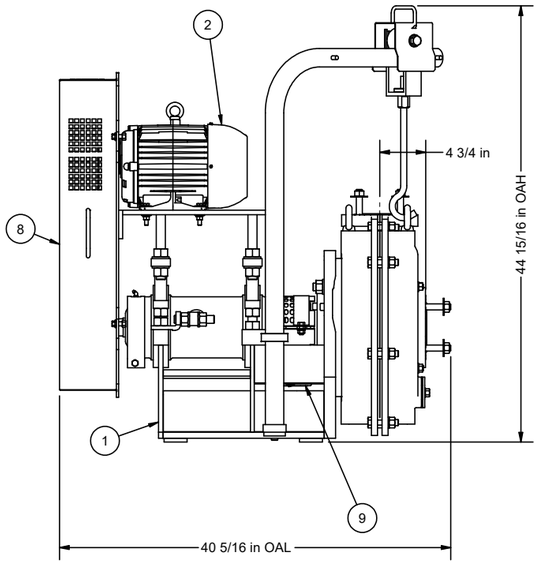


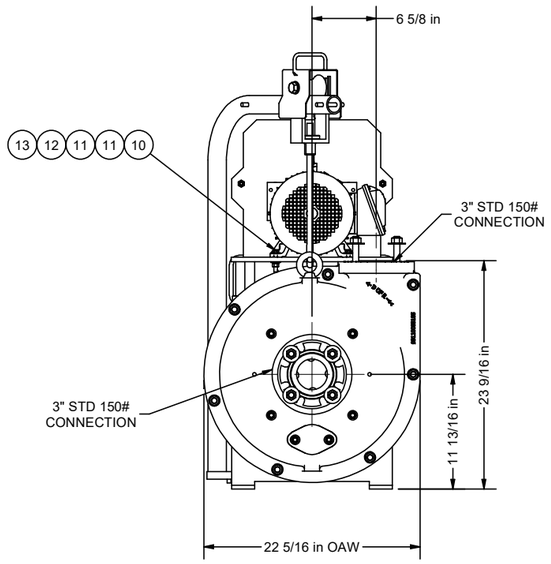


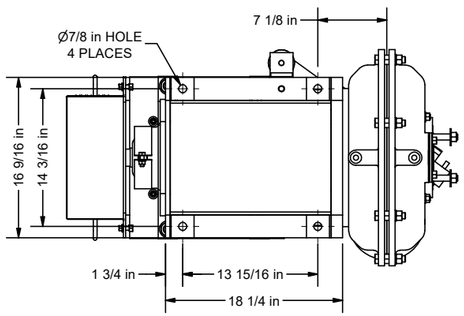


BELT GUARD, ITEM 8,
REMOVED FOR CLARITY

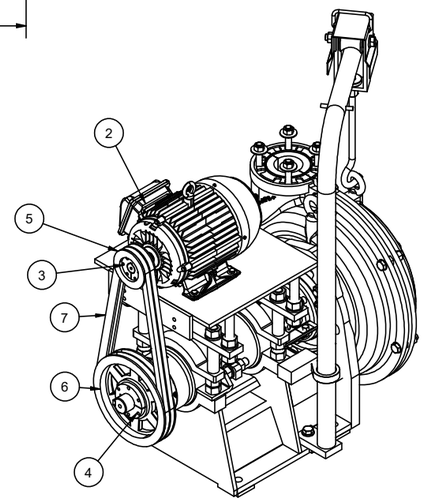


UNLESS OTHERWISE NOTED, TOLERANCES ON DIMENSIONS ARE:
.xx ±0.01 in
.xxx ±0.005 in
PROFILE/SAW ±1/16 in
FABRICATION ±1/8 in
ANGLE ±1°
SURFACE √125

REFERENCES

McLanahan

THIS DRAWING IS THE PROPERTY OF MCLANAHAN CORPORATION AND SHALL NOT BE USED OR COPIED EXCEPT AS EXPRESSLY AUTHORIZED. INFORMATION CONTAINED IN THIS DOCUMENT IS A TRADE SECRET AND ANY USE OF THE INFORMATION, EXCEPT BY ITS INTENDED RECEIVER, IS STRICTLY PROHIBITED AND MISAPPROPRIATION OF THE INFORMATION SHALL MAKE THE NONINTENDED RECEIVER LIABLE FOR ANY AND ALL DAMAGES SUFFERED AS A RESULT BY THE McLANAHAN CORPORATION.

THIRD ANGLE PROJECTION

ASSEMBLY DRAWING

| WEIGHT | SHEET NUMBER | SCALE | PART NUMBER: US20900111 |
|---|---|---|---|
| 826 LBS | 1 OF 1 | 1:10 | DESCRIPTION: PUMP ASSEMBLY, 3X3, DG, 745 RPM W/ 5 HP, 575V, 60HZ, IEEE841, 184T FRAME MOTOR, INCLUDES DRIP TRAY |
| DRAWN BY: KAZ | | | |
| CHECKED BY: DLE | | | |
| APPROVED BY | 1ST ISSUE DATE: 3/2/2021 | SHEET SIZE: C | DRAWING NUMBER: US20900111 — REVISION |

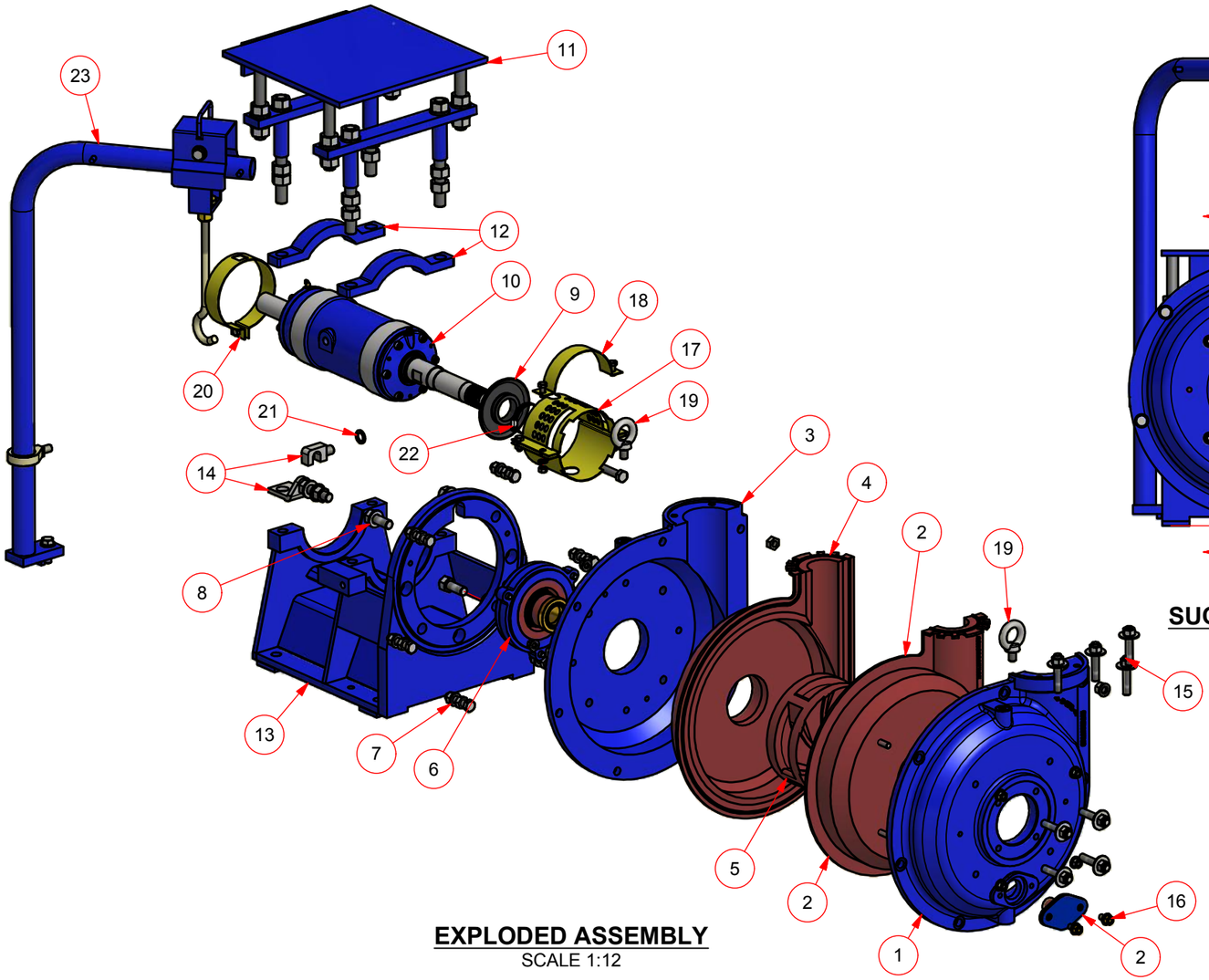


**EXPLODED ASSEMBLY**
SCALE 1:12

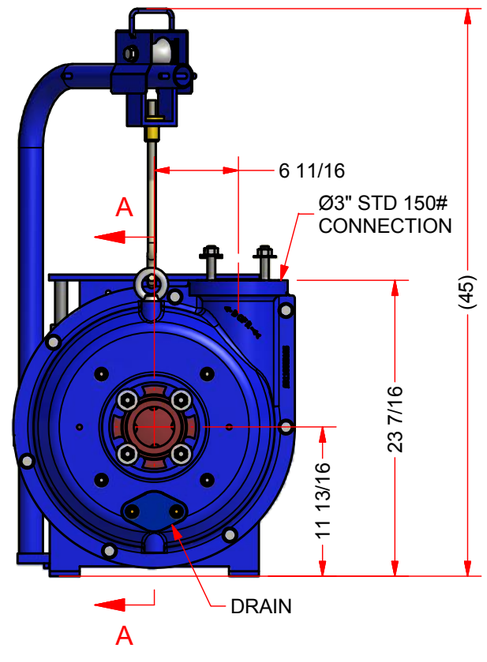


**SUCTION SIDE**

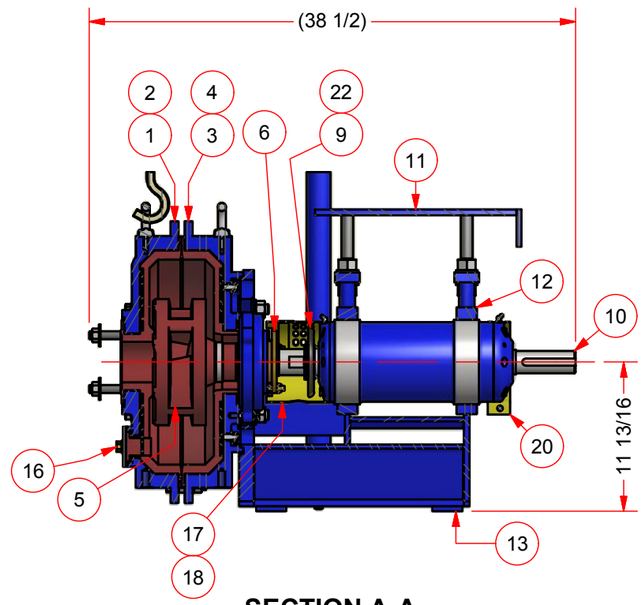


**SECTION A-A**

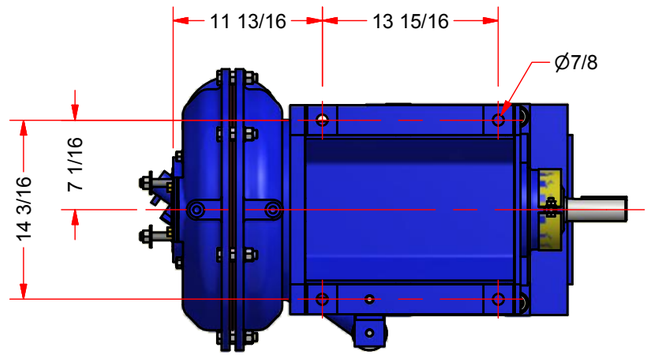


**BOTTOM**
FOOT PRINT

**GENERAL NOTES:**
1. ALL DIMENSIONS ARE IN INCHES UNLESS OTHERWISE NOTED.
2. SHAFT SPANNER NOT SHOWN HEREIN.

MATERIAL LIST

| ITEM | QTY | PART NUMBER | DESCRIPTION | LBS | TOTAL LBS |
|---|---|---|---|---|---|
| 1 | 1 | 09110003105 | CASING, SUCTION SIDE | 98.5 | 98.5 |
| 2 | 1 | 09110003106 | LINER, SUCTION SIDE C/W DRAIN PLUG & HARDWARE | 15.4 | 15.4 |
| 3 | 1 | 09110003108 | CASING, GLAND SIDE | 105.0 | 105 |
| 4 | 1 | 09110003109 | LINER, GLAND SIDE C/W HARDWARE | 14.5 | 14.5 |
| 5 | 1 | 09110003110 | IMPELLER | 19.1 | 19.1 |
| 6 | 1 | 09110003325 | DRY GLAND ASSEMBLY | 25.6 | 25.6 |
| 7 | 1 | 09110003111 | BOLT SET, CASING | 3.6 | 3.6 |
| 8 | 1 | 09110003113 | STUD SET, CASING TO PEDESTAL | 2.5 | 2.5 |
| 9 | 1 | 09110003115 | FLINGER | 0.2 | 0.2 |
| 10 | 1 | 09110003116 | BEARING ASSEMBLY | 88.9 | 88.9 |
| 11 | 1 | 09110003117 | MOTOR TABLE | 74.3 | 74.3 |
| 12 | 2 | 09110003118 | PEDESTAL CAP | 4.4 | 8.7 |

MATERIAL LIST

| ITEM | QTY | PART NUMBER | DESCRIPTION | LBS | TOTAL LBS |
|---|---|---|---|---|---|
| 13 | 1 | 09110003119 | PEDESTAL | 148.0 | 148 |
| 14 | 1 | 09110003120 | JACK, AXIAL POSITIONING | 2.6 | 2.6 |
| 15 | 1 | 09110002125 | STUD SET, FLANGE | 3.6 | 3.6 |
| 16 | 1 | 09110003126 | STUD SET, DRAIN PLUG | 0.2 | 0.2 |
| 17 | 1 | 09110003130 | GUARD, SHAFT | 2.1 | 2.1 |
| 18 | 1 | 09110002137 | PROTECTIVE STRIP | 0.3 | 0.3 |
| 19 | 2 | 09110003122 | EYEBOLT, CASING | 0.8 | 1.5 |
| 20 | 1 | 09110003139 | GUARD, PULLEY SHAFT | 0.7 | 0.7 |
| 21 | 1 | 09110003035 | WASHER, AXIAL POSITIONING JACK | 0.0 | 0 |
| 22 | 1 | 09110002001 | CLAMP, SS | 0.1 | 0.1 |
| 23 | 1 | 09110003127 | CRANE & CRAWL ASSEMBLY | 28.1 | 28.1 |
| 24 | 1 | 09110003129 | SPANNER, SHAFT | 2.9 | 2.9 |

| REVISION HISTORY | | | |
|---|---|---|---|
| REV | DESCRIPTION | DATE | BY |
| 1 | TOTAL WEIGHT HAS CHANGED. | 5/6/2015 | JTM |

INFORMATION CONTAINED WITHIN THIS DOCUMENT IS A TRADE SECRET & ANY USE OF THE INFORMATION, EXCEPT BY ITS INTENDED RECEIVER, IS STRICTLY PROHIBITED. ANY MISAPPROPRIATION OF THE INFORMATION SHALL MAKE THE UNINTENDED RECEIVER LIABLE FOR ANY AND ALL DAMAGES SUFFERED AS A RESULT BY THE MCLANAHAN CORPORATION.

| DESCRIPTION: | DESIGNED BY: | ORIGIN: | DWG SIZE: |
|---|---|---|---|
| ASSEMBLY DRAWING PUMP, 3X3 C/W DRY GLAND, CLOSED VANE IMPELLER & RUBBER LINERS | BFERRELL | TN | B |
| REFERENCE DWG: N/A | DRAWN BY: BFERRELL | DATE: 12/11/2013 | SCALE: AS NOTED |
| | CHECKED BY: JMCEWEN | DATE: 5/6/2015 | SHEET#: 1 /1 |
| PART NUMBER: 09100003001 | WEIGHT: 646.4 LBS | DRAWING NUMBER: 09100003001 | REV: 1 |

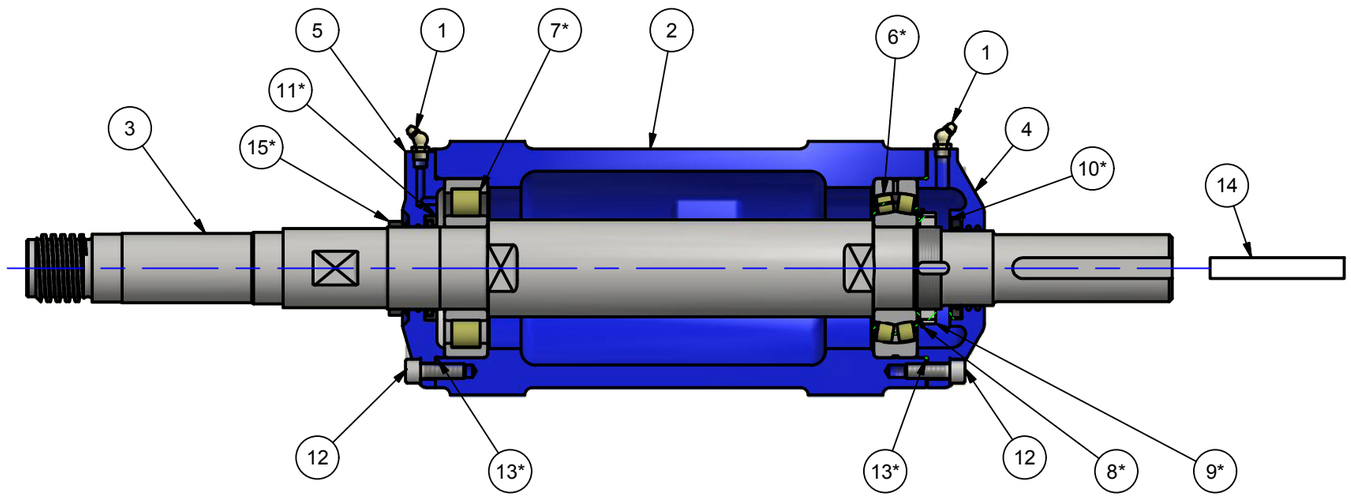


SECTION THROUGH BEARING ASSEMBLY

| MATERIAL LIST | | | | | |
|---|---|---|---|---|---|
| ITE | QTY | PART NUMBER | DESCRIPTION | LBS. | TOTAL LBS. |
| 1 | 2 | 09110002212 | NIPPLE, GREASE | 0.0 | 0.0 |
| 2 | 1 | 09110003201 | BEARING HOUSING | 45.8 | 45.8 |
| 3 | 1 | 09110003202 | SHAFT | 31.0 | 31.0 |
| 4 | 1 | 09110003203 | COVER, END | 5.2 | 5.2 |
| 5 | 1 | 09110003204 | COVER, FRONT | 4.4 | 4.4 |
| 6* | 1 | 09110003205 | BEARING, END | 0.5 | 0.5 |
| 7* | 1 | 09110003206 | BEARING, FRONT | 0.4 | 0.4 |
| 8* | 1 | 09110003207 | WASHER, TAB | 0.1 | 0.1 |
| 9* | 1 | 09110003208 | NUT, LOCK | 0.4 | 0.4 |
| 10* | 1 | 09110003209 | SEAL, END, GREASE | 0.0 | 0.0 |
| 11* | 1 | 09110003210 | SEAL, FRONT, GREASE | 0.0 | 0.0 |
| 12 | 12 | 09110003211 | SOCKET HEAD CAP SCREW - M10□1.5□30 | 0.1 | 0.8 |
| 13* | 2 | 09110003213 | O-RING, 2MM DIA X 119MM ID, SEAL, BEARING HOUSING | 0.0 | 0.0 |
| 14 | 1 | 09110003215 | KEY, SHAFT, 89.83 MM X 9.10 MMX 13.95 MM | 0.2 | 0.2 |
| 15* | 1 | 09110003217 | SEAL, VEE | 0.0 | 0.0 |

NOTE: REPAIR KIT 09110003225 INCLUDES ITEMS MARKED WITH "*"

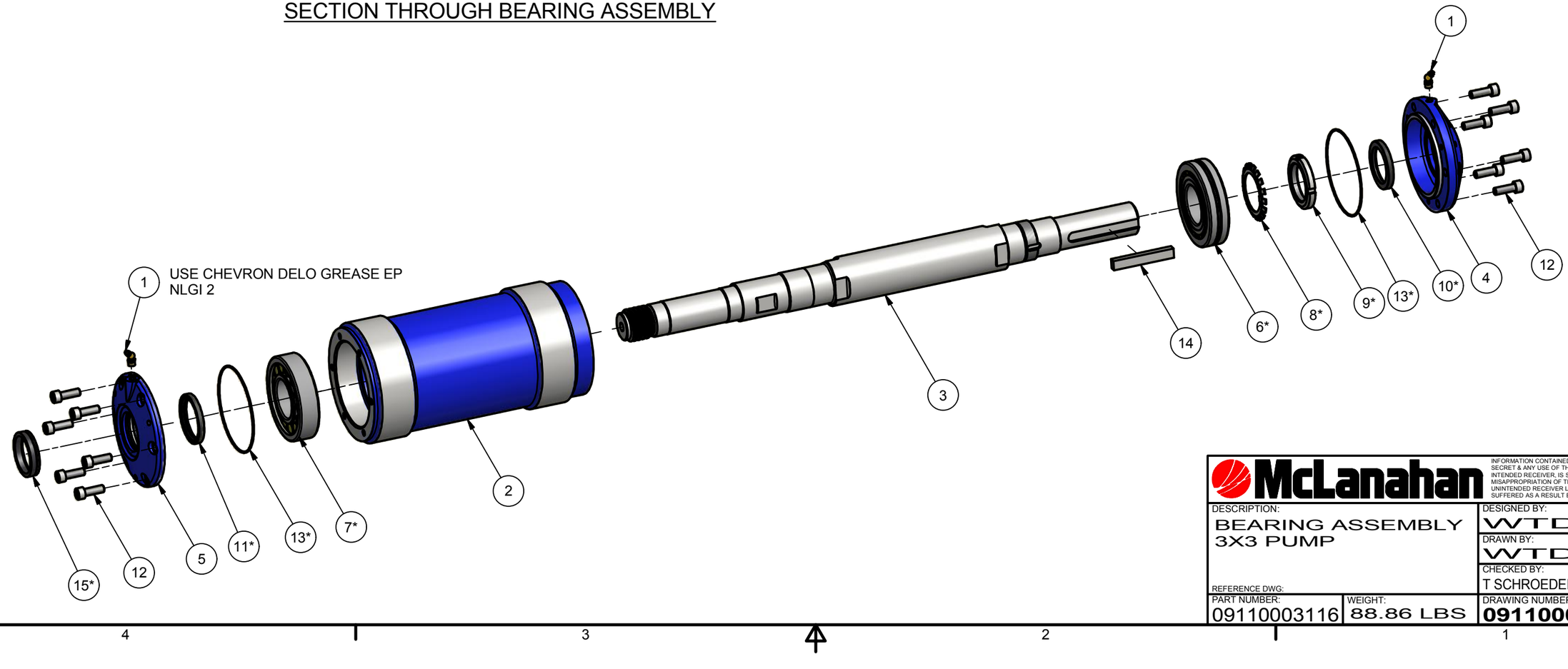


INFORMATION CONTAINED WITHIN THIS DOCUMENT IS A TRADE SECRET & ANY USE OF THE INFORMATION, EXCEPT BY ITS INTENDED RECEIVER, IS STRICTLY PROHIBITED. ANY MISAPPROPRIATION OF THE INFORMATION SHALL MAKE THE UNINTENDED RECEIVER LIABLE FOR ANY AND ALL DAMAGES SUFFERED AS A RESULT BY THE MCLANAHAN CORPORATION.

McLanahan

| | | | |
|---|---|---|---|
| DESCRIPTION: BEARING ASSEMBLY 3X3 PUMP | DESIGNED BY: WTD | ORIGIN: TN | DWG SIZE: B |
| | DRAWN BY: WTD | DATE: 7/23/2010 | SCALE: AS NOTED |
| | CHECKED BY: T SCHROEDER | DATE: 3/18/2013 | SHEET#: 1 /1 |
| REFERENCE DWG: | | | |
| PART NUMBER: 09110003116 | WEIGHT: 88.86 LBS | DRAWING NUMBER: 09110003116 | REV: 00 |

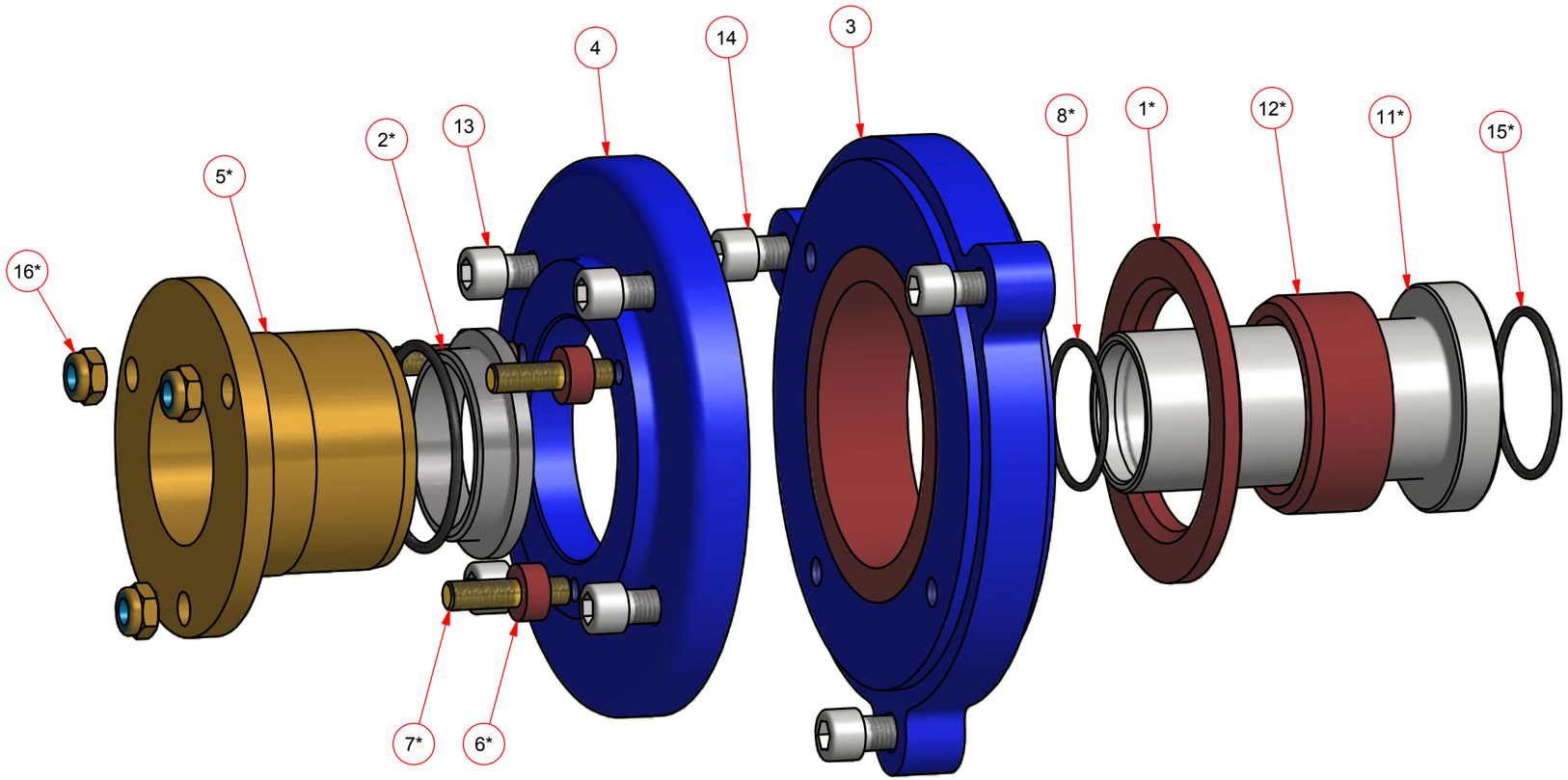


**EXPLODED ASSEMBLY**
SCALE 1:2

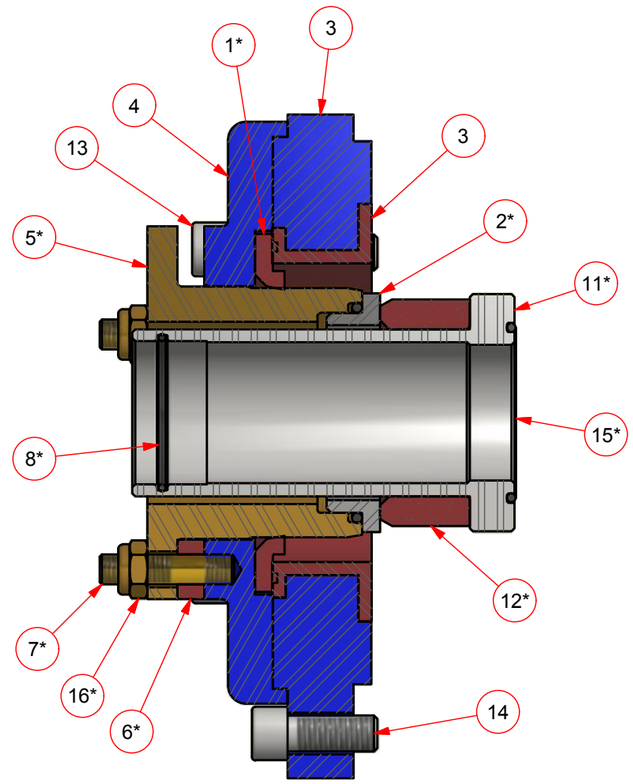


**SECTION A-A**
SCALE 1:2

NOTE: REPAIR KIT 09110003321 ITEMS MARKED WITH AN ASTERISK *.

| MATERIAL LIST | | | | | |
|---|---|---|---|---|---|
| ITEM | QTY | PART NUMBER | DESCRIPTION | LBS | TOTAL LBS |
| 1* | 1 | 09110002305 | SEAL, DRY GLAND | 0.1 | 0.1 |
| 2* | 1 | 09110002311 | CERAMIC WEAR FACE KIT<br>C/W CERAMIC FACE, O-RING & EPOXY | 0.2 | 0.2 |
| 3 | 1 | 09110003301 | GLAND HOUSING | 11.9 | 11.9 |
| 4 | 1 | 09110003302 | GLAND COVER, DRY GLAND | 6.0 | 6 |
| 5* | 1 | 09110003303 | SLEEVE, ADJUSTING, DRY GLAND | 4.1 | 4.1 |
| 6* | 3 | 09110003304 | WASHER, DRY GLAND | 0.0 | 0 |
| 7* | 1 | 09110003306 | STUD SET, ADJUSTING | 0.2 | 0.2 |

| MATERIAL LIST | | | | | |
|---|---|---|---|---|---|
| ITEM | QTY | PART NUMBER | DESCRIPTION | LBS | TOTAL LBS |
| 8* | 1 | 09110003307 | COARSE THREAD | 0.0 | 0 |
| 11* | 1 | 09110003308 | SLEEVE, GLAND, DRY GLAND | 2.2 | 2.2 |
| 12* | 1 | 09110003309 | SEAL, FACE, DRY GLAND | 0.1 | 0.1 |
| 13 | 1 | 09110003314 | SCREW SET, COVER | 0.4 | 0.4 |
| 14 | 1 | 09110003121 | SCREW SET, HOUSING | 0.3 | 0.3 |
| 15* | 1 | 09110004307 | O- RING, 54 mm I.D. X 3 mm | 0.0 | 0 |
| 16* | 3 | 296220100 | NUT, M10, HEX, BRASS, NYLON | 0.0 | 0.1 |

| REVISION HISTORY | | | |
|---|---|---|---|
| REV | DESCRIPTION | DATE | BY |
| 1 | CORRECTED ITEM 14 P/N FROM -3421 TO -3121 | 10/29/2014 | TBS |

McLanahan

INFORMATION CONTAINED WITHIN THIS DOCUMENT IS A TRADE SECRET & ANY USE OF THE INFORMATION, EXCEPT BY ITS INTENDED RECEIVER, IS STRICTLY PROHIBITED. ANY MISAPPROPRIATION OF THE INFORMATION SHALL MAKE THE UNINTENDED RECEIVER LIABLE FOR ANY AND ALL DAMAGES SUFFERED AS A RESULT BY THE MCLANAHAN CORPORATION.

| | | | | |
|---|---|---|---|---|
| DESCRIPTION: ASSEMBLY DRAWING DRY GLAND NATURAL RUBBER 3X3 PUMP<br>REFERENCE DWG: N/A | | DESIGNED BY: T SCHROEDER | ORIGIN: TN | DWG SIZE: B |
| | | DRAWN BY: T SCHROEDER | DATE: 9/6/2013 | SCALE: AS NOTED |
| | | CHECKED BY: T SCHROEDER | DATE: 9/11/2013 | SHEET#: 1 /1 |
| PART NUMBER: 09110003325 | WEIGHT: 25.55 LBS | DRAWING NUMBER: **09110003325** | | REV: 1 |

# INSTALLATION AND MAINTENANCE MANUAL FOR NEMA LOW VOLTAGE ELECTRIC MOTORS

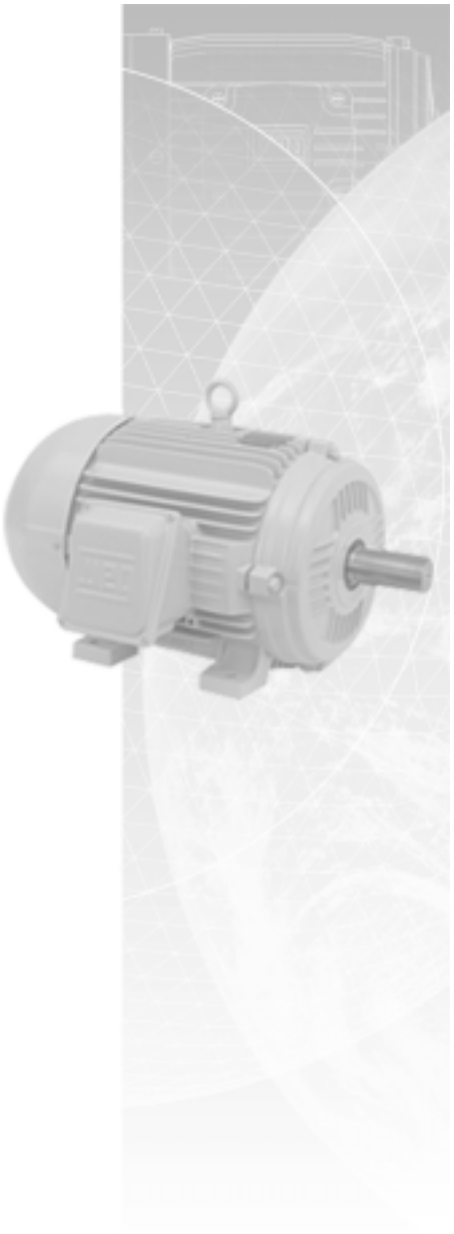

*The electric motor is the item of equipment most widely used by man in his pursuit of progress, as virtually all machines and many renowned inventions depend upon it.*
*By virtue of the prominent role the electric motor plays in the comfort and welfare of mankind, it must be regarded and treated as a prime power unit embodying features that merit special attention, including its installation and maintenance.*
*This means that the electric motor should receive proper attention.*
*Its installation and routine maintenance require specific care to ensure perfect operation and longer life of the unit.*
*THE WEG ELECTRIC MOTOR INSTALLATION AND MAINTENANCE MANUAL provides the necessary information to properly install, maintain and preserve the most important component of all equipment:*

*THE ELECTRIC MOTOR!*

*WEG*

# Contents

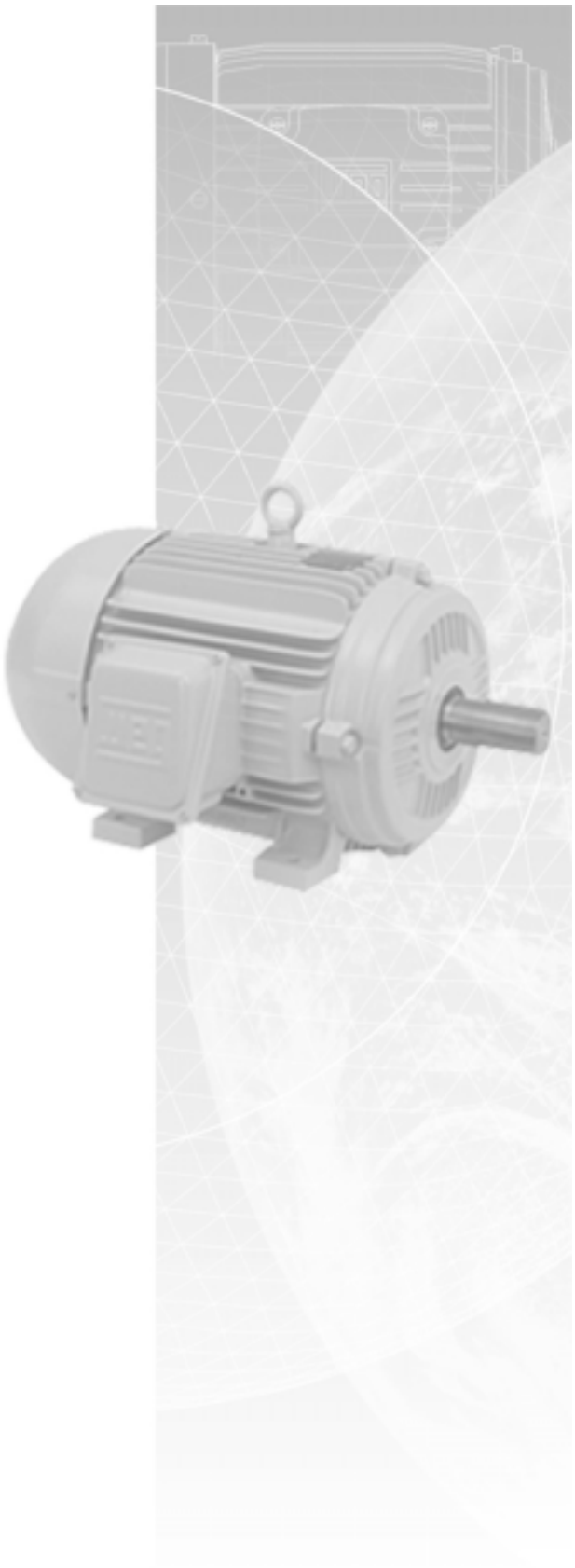

**1 - Introduction** ..... 04

**2 - Basic Instructions** ..... 05
2.1 Safety Instructions ..... 05
2.2 Delivery ..... 05
2.3 Storage ..... 05
2.3.1 Drying the Windings ..... 06

**3 - Installation** ..... 07
3.1 Mechanical Aspects ..... 07
3.1.1 Foundation ..... 07
3.1.2 Types of bases ..... 07
3.1.3 Alignment ..... 08
3.1.4 Coupling ..... 08
3.2 Electrical Aspects ..... 16
3.2.1 Feed System ..... 16
3.2.2 Starting of Electric Motors ..... 16
3.2.3 Motor Protection ..... 18
3.3 Start-up ..... 18
3.3.1 Preliminary Inspection ..... 18
3.3.2 The First Start-up ..... 18
3.3.3 Operation ..... 18
3.3.4 Stopping ..... 18

**4 - Maintenance** ..... 23
4.1 Cleanliness ..... 23
4.2 Lubrication ..... 23
4.2.1 Periodical Lubrication ..... 23
4.2.2 Quality and Quantity of Grease ..... 23
4.2.3 Lubricating Instructions ..... 23
4.2.4 Replacement of Bearings ..... 24
4.3 Air Gap Checking ..... 24
4.4 Explosion Proof Motor Repair Steps ..... 24
4.4.1 Objective ..... 24
4.4.2 Repair Procedure and Precautions ..... 24
4.4.3 Miscellaneous Recommendations ..... 25

**5 - Malfunctioning** ..... 26
5.1 Standard Three-phase Motor Failures ..... 26
5.1.1 Short Circuits Between Turns ..... 26
5.1.2 Winding Failures ..... 26
5.1.3 Rotor Failures ..... 27
5.1.4 Bearing Failures ..... 27
5.1.5 Shaft Fractures ..... 27
5.1.6 Unbalanced V-Belt Drives ..... 27
5.1.7 Damage Arising from Poorly Fitted Transmission Parts or Improper Motor Alignment ..... 27
5.2 Troubleshooting Chart ..... 28

**6 - Spare Parts and Component Terminology** ..... 29

# 1. Introduction

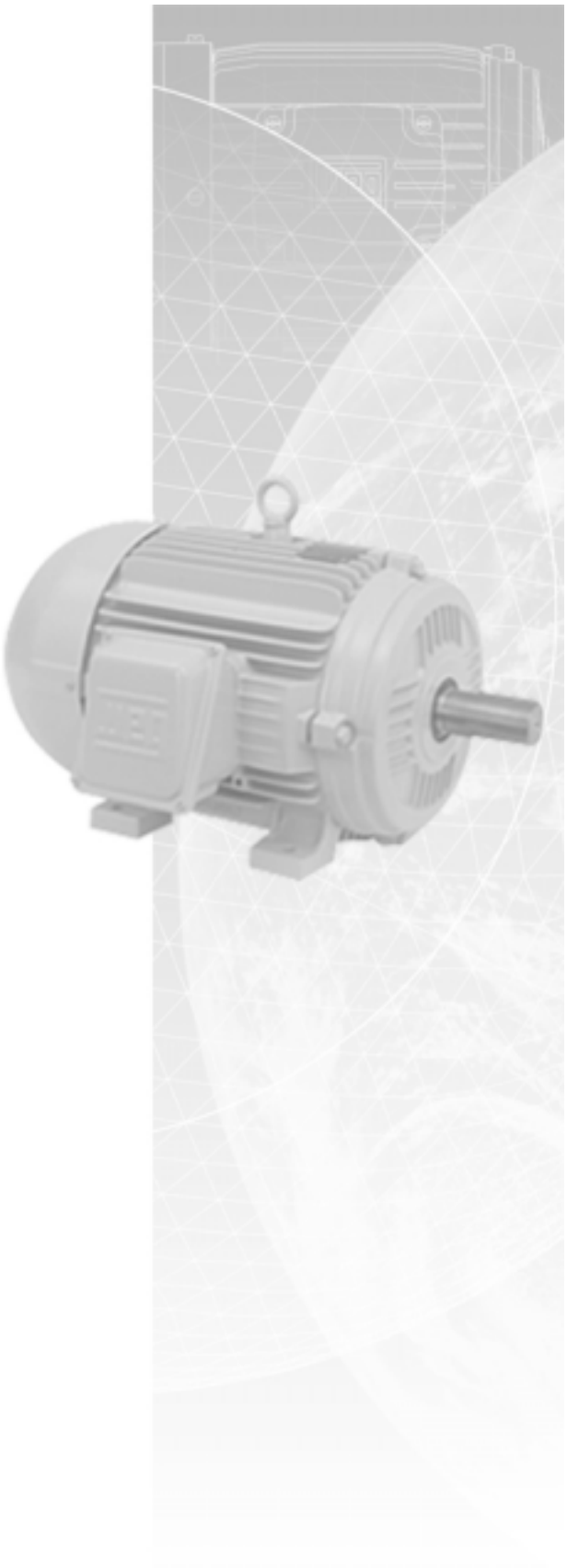

This manual covers all the three-phase and single-phase asynchronous squirrel-cage induction motors, from 140T to 580T frame sizes.

The motors described in this manual are subject to continuous improvement and all information is subject to change without notice.
For further details, please consult WEG.

# 2. Basic Instructions

## 2.1 Safety Instructions

All personnel involved with electrical installations, either handling, lifting, operation and maintenance, should be well-informed and up-to-date concerning the safety standards and principles that govern the work and carefully follow them.
Before work commences, it is the responsibility of the person in charge to ascertain that these have been duly complied with and to alert his personnel of the inherent hazards of the job in hand.
It is recommended that these tasks be undertaken only by qualified personnel and they should be instructed to:

- avoid contact with energized circuits or rotating parts,
- avoid by-passing or rendering inoperative any safeguards or protective devices,
- avoid extended exposure in close proximity to machinery with high noise levels,
- use proper care and procedures in handling, lifting, installing, operating and maintaining the equipment, and
- follow consistently any instructions and product documentation supplied when they do such work.

Before initiating maintenance procedures, be sure that all power sources are disconnected from the motor and accessories to avoid electric shock.
Fire fighting equipment and notices concerning first aid should not be lacking at the job site; these should be visible and accessible at all times.

## 2.2 Delivery

Prior to shipment, motors are factory-tested and balanced. They are packed in boxes or bolted to a wooden base.
Upon receipt, we recommend careful handling and a physical examination for damage which may have occurred during transportation.
In the event of damage and in order to guaranty insurance coverage, both the nearest WEG sales office and the carrier should be notified without delay.

## 2.3 Storage

Motors should be raised by their eyebolts and never by their shafts. It is important that high rating three-phase motors be raised by their eyebolts. Raising and lowering must be steady and joltless, otherwise bearings may be harmed.
When motors are not immediately installed, they should be stored in their normal upright position in a dry even temperature place, free of dust, gases and corrosive atmosphere.
Other objects should not be placed on or against them.
Motors stored over long periods are subject to loss of insulation resistance and oxidation of bearings.

**Bearings and lubricant deserve special attention during prolonged periods of storage. Depending on the length and conditions of storage it may be necessary to regrease or change rusted bearings. The weight of the rotor in an inactive motor tends to expel grease from between the bearing surfaces thereby removing the protective film that impedes metal-to-metal contact.**
**As a preventive measure against the formation of corrosion by contact, motors should not be stored near machines which cause vibrations, and every 3 month their shafts should be rotated manually.**

Insulation resistance fluctuates widely with temperature and humidity variations and the cleanliness of components. When a motor is not immediately put into service it should be protected against moist, high temperatures and impurities, thus avoiding damage to insulation resistance.
If the motor has been in storage more than six month or has been subjected to adverse moisture conditions, it is best to check the insulation resistance of the stator winding with a megohmeter.
If the resistance is lower than ten megohms the windings should be dried in one of the two following ways:

1) Bake in oven at temperatures not exceeding 194 degrees F until insulation resistance becomes constant.
2) With rotor locked, apply low voltage and gradually increase current through windings until temperature measured with thermometer reaches 194 degrees F. Do not exceed this temperature.

If the motor is stored for an extensive period, the rotor must be periodically rotated.
Should the ambient conditions be very humid, a periodical inspection is recommended during storage. It is difficult to prescribe rules for the true insulation resistance value of a machine as resistance varies according to the type, size and rated voltage and the state of the insulation material used, method of construction and the machine's insulation antecedents. A lot of experience is necessary in order to decide when a machine is ready or not to be put into service. Periodical records are useful in making this decision.

The following guidelines show the approximate values that can be expected of a clean and dry motor, at 40°C test voltage in applied during one minute.

Insulation resistance Rm is obtained by the formula:

$$Rm = Vn + 1$$

Where: Rm - minimum recommended insulation resistance in MΩ with winding at 40°C
Vn - rated machine voltage in kV

In case the test is carried out at a temperature other than 40°C, the value must be corrected to 40°C using an approximated curve of insulation resistance v.s temperature of the winding with the aid of Figure 2.1; it's possible verify that resistance practically doubles every 10°C that insulating temperature is lowered.

*Example:*

Ambient temperature = 50°C
Motor winding resistence at 50°C = 1.02 MΩ
Correction to 40°C

$$R_{40°C} = R_{50°C} \times K_{50°C}$$

$$R_{40°C} = 1.02 \times 1.3$$

$$R_{40°C} = 1.326\ M\Omega$$

The minimum resistence Rm will be:

$$Rm = Vn + 1$$
$$Rm = 0.440 + 1$$
$$Rm = 1.440\ M\Omega$$

On new motors, lower values are often attained due to solvents present in the insulating varnishes that later evaporate during normal operation. This does not necessarily mean that the motor is not operational, since insulating resistance will increase after a period of service.
On motors which have been in service for a period of time much larger values are often attained. A comparison of the values recorded in previous tests on the same motor under similar load, temperature and humidity conditions, serves as a better indication of insulation condition than that of the value derived from a single test. Any substantial or sudden reduction is suspect and the cause determined and corrective action taken.
Insulation resistance is usually measured with a MEGGER.
In the event that insulation resistance is inferior to the values derived from the above formula, motors should be subjected to a drying process.

## 2.3.1 Drying the windings

This operation should be carried out with maximum care, and only by qualified personnel. The rate of temperature rise should not exceed 5°C per hour and the temperature of the winding should not exceed 105°C. An overly high final temperature as well as a fast temperature increase rate can each generate vapour harmful to the insulation.
Temperature should be accurately controlled during the drying process and the insulation resistance measured at regular intervals.
During the early stages of the drying process, insulation resistance will decrease as a result of the temperature increase, but the resistance will increase again when the insulation becomes dryer.
The drying process should be extended until sucessive measurements of insulation resistance indicate that a constant value above the minimum acceptable value has been attained. It is extremely important that the interior of the motor be well ventilated during the drying operation to ensure that the dampness is really removed.
Heat for drying can be obtained from outside sources (an oven), energization of the space heater (optional), or introducing a current through the actual winding of the motor being dried.

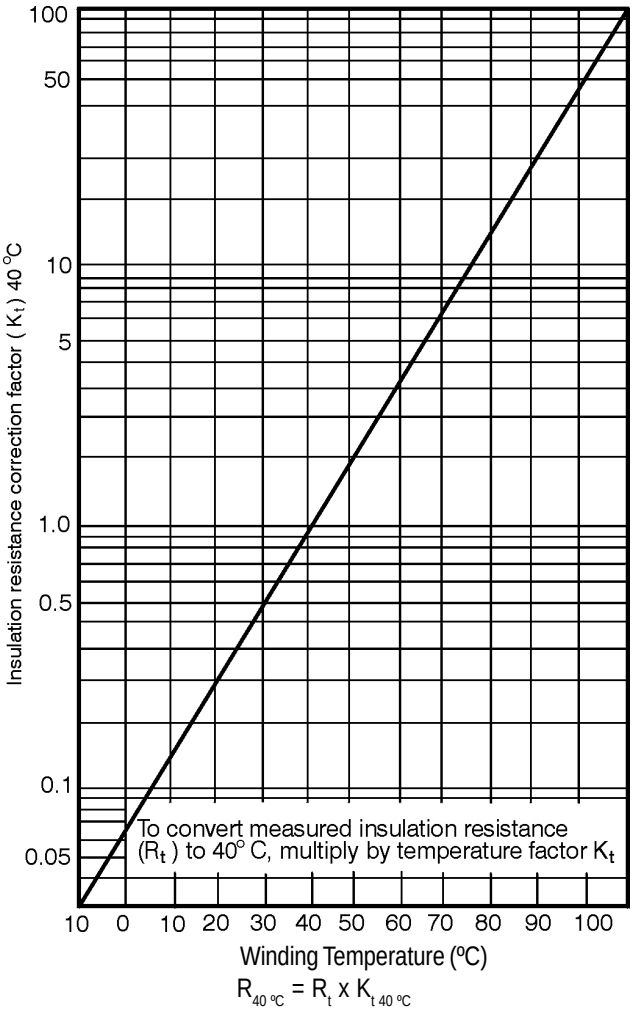


*Figure 2.1*

# 3. Installation

Electric machines should be installed in order to allow an easy access for inspection and maintenance. Should the surrounding atmosphere be humid, corrosive or contain flammable substances or particles, it is essential to ensure an adequate degree of protection.
The installation of motors in environments where there are vapours, gases or dusts, flammable or combustible materials, subject to fire or explosion, should be undertaken according to appropriate and governing codes, such as NEC Art. 500 (National Electrical Code) and UL-674 (Underwriters Laboratories, Inc.) Standards.
Under no circumstances can motors be enclosed in boxes or covered with materials which may impede or reduce the free circulation of ventilating air. Machines fitted with external ventilation should be at least 50cm from the wall to permit the passage of air.
The opening for the entry and exit of air flow should never be obstructed or reduced by conductors, pipes or other objects.
The place of installation should allow for air renewal at a rate of 700 cubic feet per minute for each 75 HP motor capacity.

## 3.1 Mechanical Aspects

### 3.1.1 Foundation

The motor base must be levelled and as far as possible free of vibrations. A concrete foundation is recommended for motors over 100 HP. The choice of base will depend upon the nature of the soil at the place of erection or of the floor capacity in the case of buildings.
When dimensioning the motor base, keep in mind that the motor may occasionally be run at a torque above that of the rated full load torque.
Based upon Figure 3.1, foundation stresses can be calculated by using the following formula:

$$F1 = 0.2247\ (0.009\ x\ g\ x\ G - 213\ Tmáx/A)$$

$$F2 = 0.2247\ (0.009\ x\ g\ x\ G + 213\ Tmax/A\ )$$

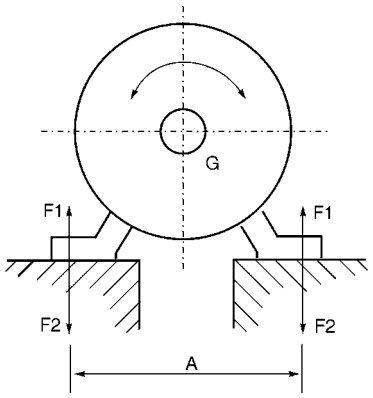


*Figure 3.1 - Base stresses*

Where:

F1 and F2 - Lateral stress (Lb)
g - Force of gravity (32.18 ft/s$^2$)
G - Weight of motor (Lb)
Tmax - Maximum torque (Lb . Ft)
A - Obtained from the dimensional drawing of the motor (in)

Sunken bolts or metallic base plates should be used to secure the motor to the base.

### 3.1.2 Types of Bases

*a) Slide Rails*

When motor drive is by pulleys the motor should be mounted on slide rails and the lower part of the belt should be pulling.
The rail nearest the drive pulley is positioned in such a manner that the adjusting bolt be between the motor and the driven machine.
The other rail should be positioned with the bolt in the opposite position, as shown in Figure 3.2.
The motor is bolted to the rails and set on the base. The drive pulley is aligned such that its center is on a plane with the center of the driven pulley and the motor shaft and that of the machine be parallel.

The belt should not be overly stretched, see Figure 3.11.
After the alignment, the rails are fixed.

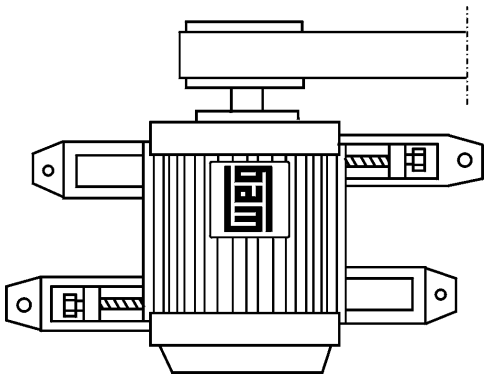

*Figure 3.2 - Positioning of slide rails for motor alignment*

*b) Foundation Studs*

Very often, particularly when drive is by flexible coupling the motor is anchored directly to the base with foundation studs.
It is recommended that shim plates of approximately 0.8 inches be used between the foundation studs and the feet of the motor for replacement purposes. These shim plates are useful when exchanging one motor for another of larger shaft height due to variations allowed by standard tolerances.
Foundation studs should neither be painted nor rusted as both interfere with to the adherence of the concrete, and bring about loosening.
After accurate alignment and levelling of the motor, the foundation studs are cemented and their screws tightened to secure the motor.

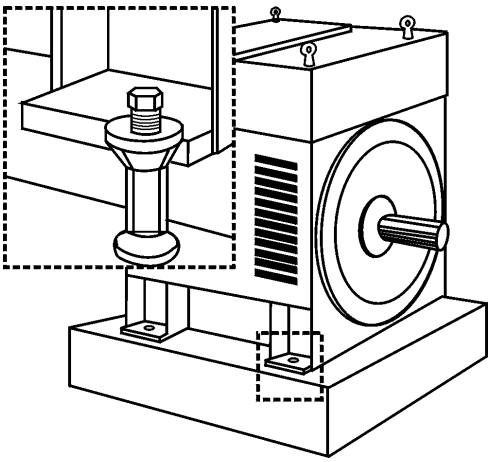

*Figure 3.3 - Motor mounted on a concrete base with foundation studs*

### 3.1.3 Alignment

The electric motor should be accurately aligned with the driven machine, particularly in cases of direct coupling. An incorrect alignment can cause bearing failure vibrations and even shaft rupture.
The best way to ensure correct alignment is to use dial gauges placed on each coupling half, one reading radially and the other exially - Figure 3.5.

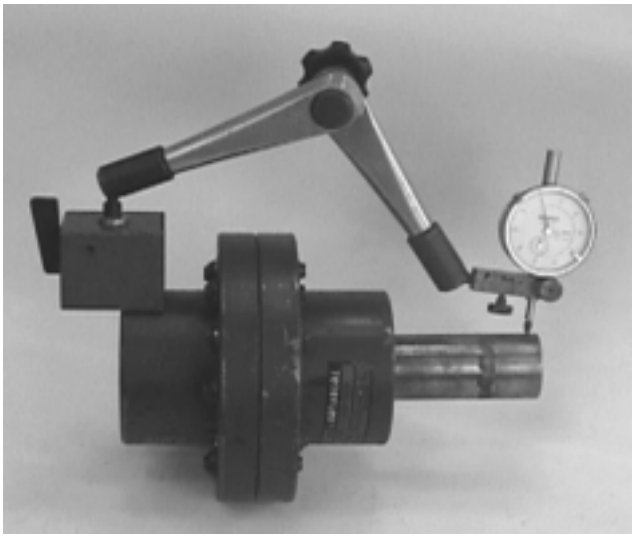

*Figure 3.5 - Alignment with dial gauges*

Thus, simultaneous readings are possible and allow for checking for any parallel (Figure 3.6a) and concentricity deviations (Figure 3.6b) by rotating the shafts one turn.
Gauge readings should not exceed 0.02 inches. If the installer is sufficiently skilled, he can obtain alignment with feeler gauges and a steel ruler, providing that the couplings are perfect and centered - Figure 3.6c.

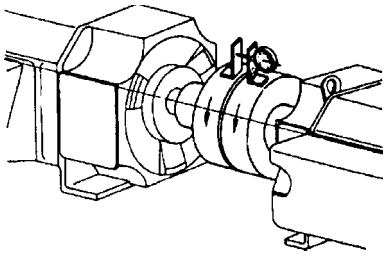

*Figure 3.6a - Deviation from parallel*

*Figure 3.6b - Deviation from concentricity*

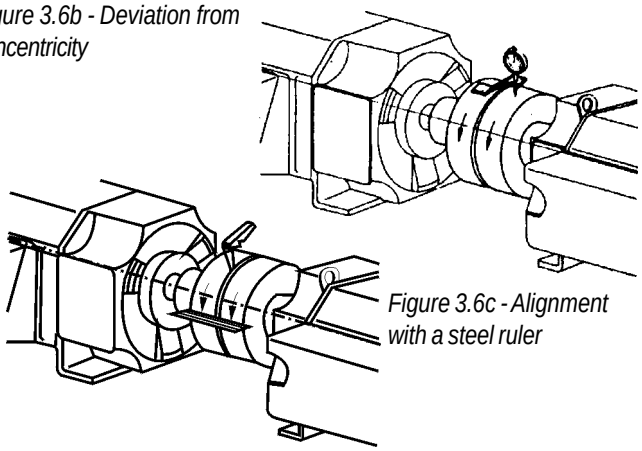

*Figure 3.6c - Alignment with a steel ruler*

### 3.1.4 Coupling

*a) Direct Coupling*

Direct coupling is always preferable due to its lower cost, space economy, no belt slippage and lower accident risk.
In the case of speed ratio drives, it is also common to use a direct coupling with a reducer (gear box).

CAUTION: Carefully align the shaft ends using, whenever feasible, a flexible coupling.

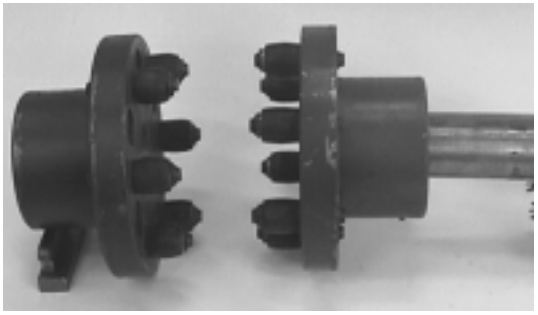

*Figure 3.7 - A type of direct coupling*

*b) Gear Coupling*

Poorly aligned gear couplings are the cause of jerking motions which bring about the vibration of the actual drive and vibrations within the motor.

Therefore, due care must be given to perfect shaft alignment: exactly parallel in the case of straight gears, and at the correct angle for bevel or helical gears.
Perfect gear engagement can be checked by the insertion of a strip of paper on which the teeth marks will be traced after a single rotation.

### *c) Belt and Pulley Coupling*

*Belt coupling is most commonly used when a speed ratio is required.*
Assembly of Pulleys: To assemble pulleys on shaft ends with a keyway and threaded end holes the pulley should be inserted halfway up the keyway merely by manual pressure.
On shafts without threaded end holes the heating of the pulley to about 80°C is recommended, or alternatively, the devices illustrated in Figure 3.8 may be employed.

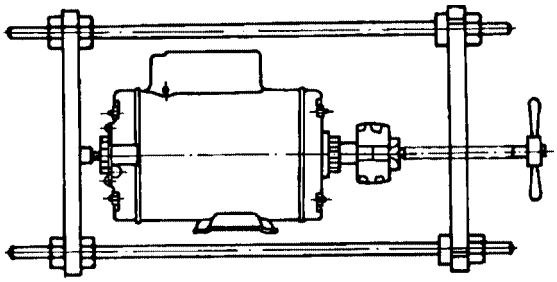

*Figure 3.8 - Pulley mounting device*

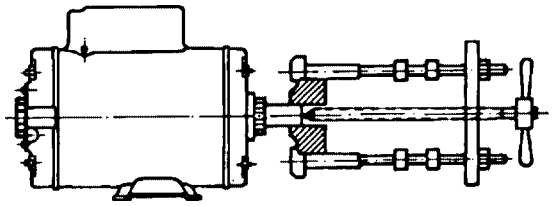

*Figure 3.8a - Pulley extractor*

Hammers should be avoided during the fitting of pulleys and bearings. The fitting of bearings with the aid of hammers leaves blemishes on the bearing races. These initially small flaws increase with usage and can develop to a stage that completely impairs the bearing.
The correct positioning of a pulley is shown in Figure 3.9.

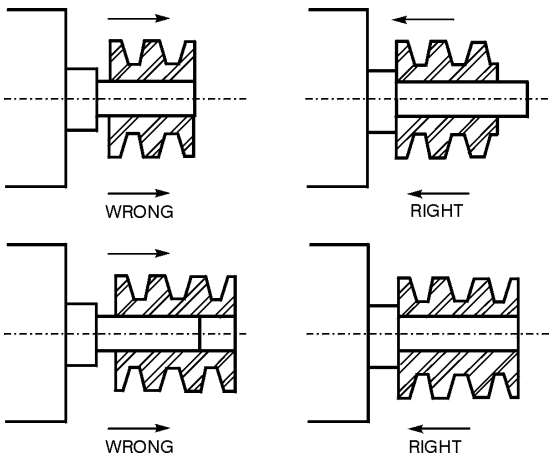


*Figure 3.9 - Correct positioning of pulley on the shaft*

RUNNING: To avoid needless radial stresses on the bearings it is imperative that shafts are parallel and the pulleys perfectly aligned. (Figure 3.10).

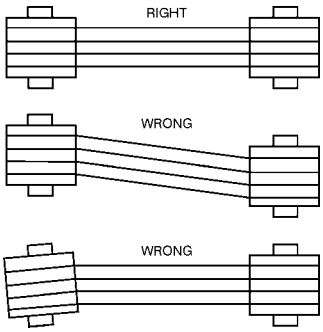


*Figure 3.10 - Correct pulley alignment*

Laterally misaligned pulleys, when running, transmit alternating knocks to the rotor and can damage the bearing housing. Belt slippage can be avoided by applying a resin (rosin for example).
Belt tension should be sufficient to avoid slippage during operation (Figure 3.11).
Pulleys that are too small should be avoided; these cause shaft flexion because belt traction increases in proportion to a decrease in the pulley size. Table 1 determines minimum pulley diameters, and Tables 2 and 3 refer to the maximum stresses acceptable on motor bearings up to frame 580. Beyond frame size 600, an analysis should be requested from the WEG engineering.

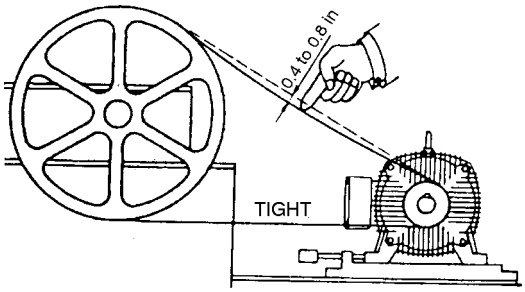


*Figure 3.11 - Belt tensions*

***Table 1** - Minimum pitch diameter of pulleys*

| Frame | Ball bearings | | | | | | |
|---|---|---|---|---|---|---|---|
| | Bearing | Size X Inches | | | | | |
| | | 0.79 | 1.57 | 2.36 | 3.15 | 3.94 | 4.72 |
| 140 | 6205-Z | 1.7 | 1.85 | 2 | | | |
| W 180 | 6206-Z | 3.03 | 3.23 | 3.46 | | | |
| 180 | 6307-Z | 1.69 | 1.81 | 1.93 | | | |
| W 210 | 6308-Z | | 2.86 | 3.00 | 3.16 | | |
| 210 | 6308-Z | | 2.90 | 3.06 | 3.22 | | |
| W 250 | 6309 C3 | | 4.37 | 4.54 | 4.72 | 4.92 | |
| 250 | 6309 C3 | | 4.41 | 4.59 | 4.77 | 4.97 | |
| 280 | 6311 C3 | | | 5.08 | 5.19 | 5.47 | 5.65 |
| 320 | 6312 C3 | | | 7.44 | 7.76 | 7.94 | 8.18 |
| 360 | 6314 C3 | | | 8.73 | 9.00 | 9.28 | 9.57 |

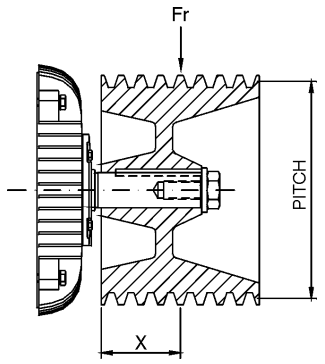


| Frame | Poles | | Ball Bearing | | | | | Roller Bearing | | | | | |
|---|---|---|---|---|---|---|---|---|---|---|---|---|---|
| | | Bearing | Size X Inches | | | | Bearing | Size X Inches | | | | | |
| | | | 1.97 | 3.15 | 4.33 | 5.51 | | 1.97 | 3.15 | 4.33 | 5.51 | 6.69 | 8.27 |
| 400 | II | 6314 C3 | 7.3 | 7.62 | 7.94 | 8.24 | | - | - | - | - | - | - |
| | IV-VI-VII | 6314 C3 | | | | | NU 316 | 4.13 | 4.31 | 4.49 | 4.67 | 4.85 | - |
| 440 | II | 6314 C3 | 11.75 | 12.16 | 12.61 | 13.08 | | - | - | - | - | - | - |
| | IV-VI-VIII | 6319 C3 | | | | | NU 319 | 4.02 | 4.17 | 4.32 | 4.47 | 4.62 | 4.82 |
| 500 | II | 6314 C3 | 23.54 | 24.34 | 25.12 | 25.87 | | - | - | - | - | - | - |
| | IV-VI-VIII | 6319 C3 | | | | | NU 319 | 6.52 | 6.73 | 6.95 | 7.17 | 7.39 | 7.67 |
| 5008 | II | 6314 C3 | 44.66 | 45.79 | 46.98 | 48.23 | | - | - | - | - | - | - |
| | IV-VI-VIII | 6322 C3 | | | | | NU 322 | 8.73 | 8.95 | 9.96 | 11.34 | 12.87 | 14.82 |
| 580 | II | 6314 C3 | 57 | 58 | 59 | 60 | | - | - | - | - | - | - |
| | IV-VI-VIII | 6322 C3 | | | | | NU 322 | 10.72 | 10.91 | 11.11 | 11.31 | 11.50 | 11.76 |

Important: 1) Peripheral speeds for solid grey cast iron pulleys FC 200 is V = 115 ft/s.
2) Use steel pulleys when peripheral speed is higher than 115 ft/s.
3) V-belt speed should not exceed 115 ft/s.

***Table 2** - Maximum acceptable radial load (Lbf)*

| Nema 56 Motors | | | | |
|---|---|---|---|---|
| Frame | Radial Force (Lbf) | | | |
| | Poles | Distance X | | |
| | | 1 | 1,18 | 2 |
| 56A | II | 88 | - | 59 |
| | IV | 88 | - | 59 |
| 56B | II | 88 | - | 59 |
| | IV | 86 | - | 59 |
| 56D | II | 127 | - | 70 |
| | IV | 141 | - | 70 |

| Saw Arbor Motors | | | | |
|---|---|---|---|---|
| 80 LMS | II | - | 355 | - |
| 80 MMS | II | - | 359 | - |
| 80 SMS | II | - | 357 | - |
| 90 LMS | II | | 427 | - |
| | IV | - | 555 | - |

***Table 3*** *- Maximum acceptable axial load (Lbf)*

IP55 Totally Enclosed Motors - 60Hz
Position / Construction Form

| FRAME | 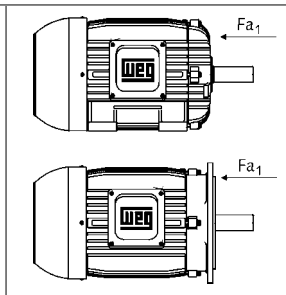 | | | | 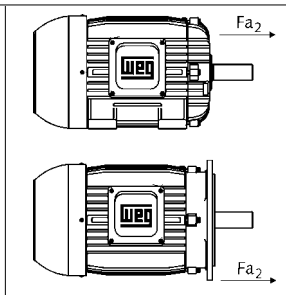 | | | | 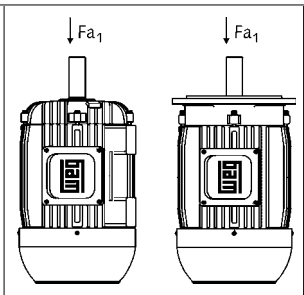 | | | | 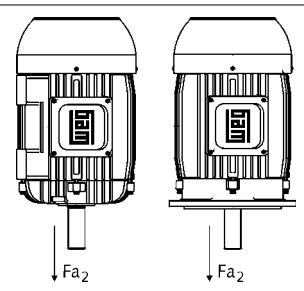 | | | |
|---|---|---|---|---|---|---|---|---|---|---|---|---|---|---|---|---|
| | II | IV | VI | VIII | II | IV | VI | VIII | II | IV | VI | VIII | II | IV | VI | VIII |
| 140 | 103 | 141 | 167 | 187 | 112 | 152 | 185 | 207 | 99 | 132 | 158 | 178 | 105 | 143 | 174 | 198 |
| W 180 | 108 | 145 | 180 | 202 | 154 | 209 | 255 | 286 | 94 | 130 | 165 | 183 | 141 | 194 | 240 | 269 |
| 180 | 149 | 207 | 249 | 286 | 269 | 370 | 443 | 500 | 136 | 189 | 229 | 266 | 253 | 352 | 421 | 480 |
| W 210 | 196 | 264 | 326 | 368 | 329 | 447 | 544 | 610 | 176 | 238 | 297 | 339 | 310 | 421 | 518 | 582 |
| 210 | 189 | 257 | 315 | 357 | 324 | 443 | 533 | 599 | 160 | 220 | 275 | 310 | 295 | 405 | 493 | 553 |
| W 250 | 282 | 372 | 443 | 485 | 471 | 620 | 734 | 811 | 240 | 317 | 394 | 414 | 430 | 564 | 685 | 743 |
| 250 | 273 | 368 | 436 | 485 | 463 | 615 | 727 | 813 | 220 | 310 | 379 | 421 | 410 | 557 | 672 | 749 |
| 280 | 355 | 480 | 551 | 624 | 621 | 826 | 959 | 1,082 | 275 | 388 | 427 | 502 | 540 | 736 | 838 | 961 |
| 320 | 374 | 498 | 588 | 668 | 703 | 930 | 1,091 | 1,232 | 266 | 366 | 432 | 511 | 597 | 793 | 937 | 1,078 |
| 360 | 890 | 1,181 | 1,144 | 1,323 | 890 | 1,181 | 1,375 | 1,552 | 745 | 985 | 1,144 | 1,323 | 745 | 985 | 1,144 | 1,323 |
| 400 | 877 | 1,148 | 1,347 | 1,521 | 877 | 1,148 | 1,347 | 1,521 | 705 | 890 | 1,060 | 1,241 | 705 | 890 | 1,060 | 1,241 |
| 440 | 842 | 1,303 | 1,563 | 1,821 | 842 | 1,303 | 1,563 | 1,821 | 568 | 884 | 1,109 | 1,488 | 568 | 884 | 1,109 | 1,488 |
| 500 | 769 | 1,250 | 1,481 | 1,728 | 769 | 1,250 | 1,481 | 1,728 | 355 | 721 | 844 | 1,190 | 355 | 721 | 844 | 1,109 |
| 5008 | 791 | 1624 | 1909 | 2137 | 791 | 1624 | 1909 | 2137 | 728 | 1548 | 1808 | 2029 | 728 | 1548 | 1808 | 2029 |
| 580 | 679 | 1,406 | 1,649 | 1,865 | 679 | 1,406 | 1,649 | 1,865 | 033 | 474 | 549 | 597 | 033 | 474 | 549 | 597 |

Open Motors - NEMA 56 Frames - 60Hz
Position / Construction Form

| FRAME | 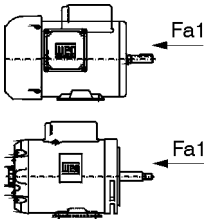 | | 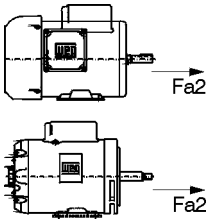 | | 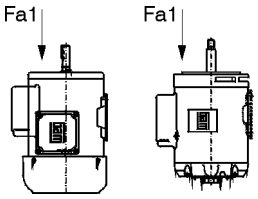 | | 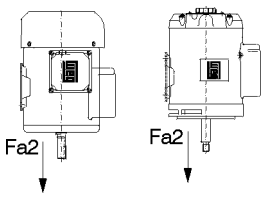 | |
|---|---|---|---|---|---|---|---|---|
| | II | IV | II | IV | II | IV | II | IV |
| 56 A | 68 | 90 | 83 | 112 | 63 | 85 | 79 | 108 |
| 56 B | 66 | 90 | 81 | 110 | 63 | 83 | 77 | 105 |
| 56 D | 63 | 88 | 105 | 145 | 59 | 81 | 101 | 138 |

The maximum radial load for each frame are determined, by graphs.

**INSTRUCTIONS ON HOW TO USE THE GRAPHS**

1 - Maximum radial load on shaft.
2 - Maximum radial load on bearings.

Where: X - Half of pulley width (inches)
Fr- Maximum radial load in relation to the diameter and pulley width.

*Example:*
Verify whether a 2HP motor, II Pole, 60Hz withstands a radial load of 110Lb, considering a pulley width of 4 inches.

Frame: 145T
Fr: 110Lb
X: 2 inches

1 - Mark the distance X
2 - Find out line N = 3600 for bearing
Based on the above, this bearing withstands a radial load of 130Lb.

***Frame 180T***

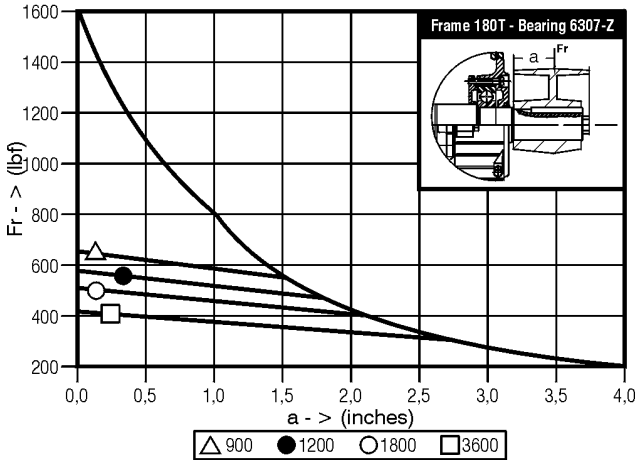


***Frame 140T***

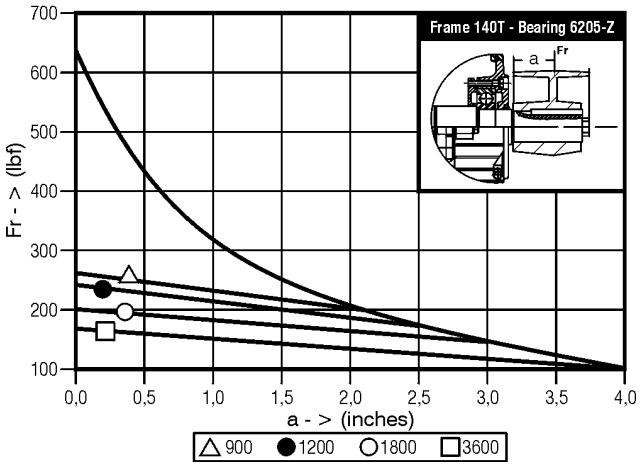


***Frame W210T***

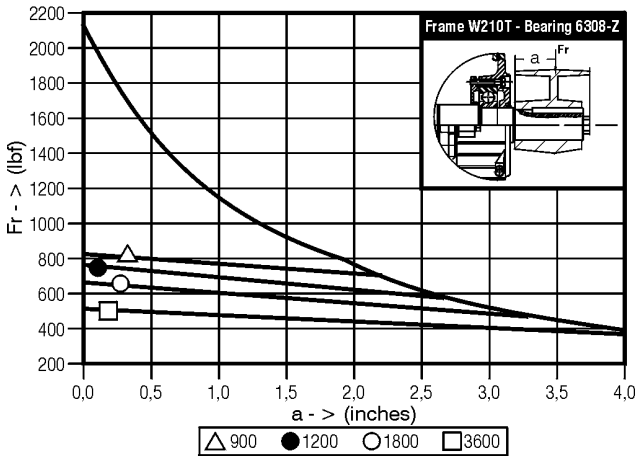


***Frame W180T***

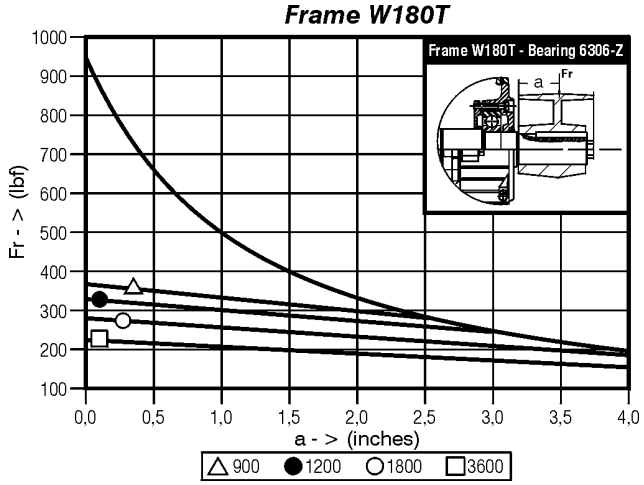


***Frame 210T***

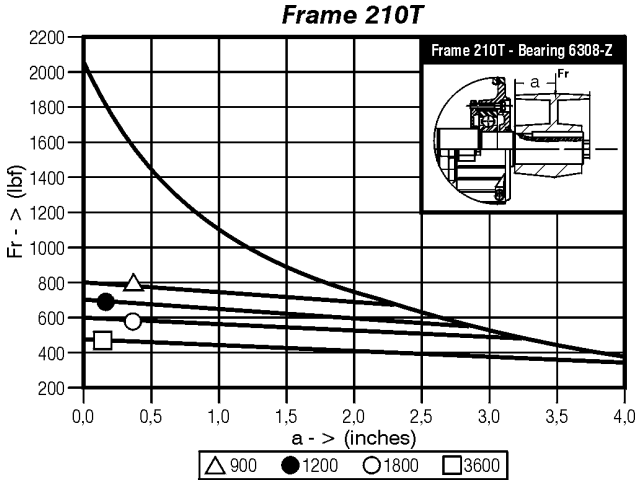

### Frame W250T

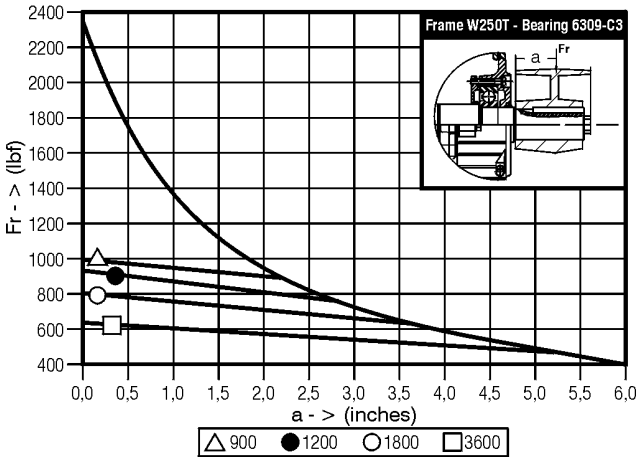


### Frame 280T

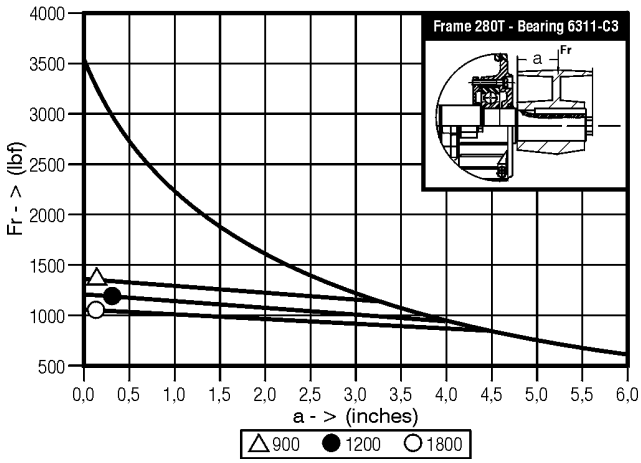


### Frame 250T

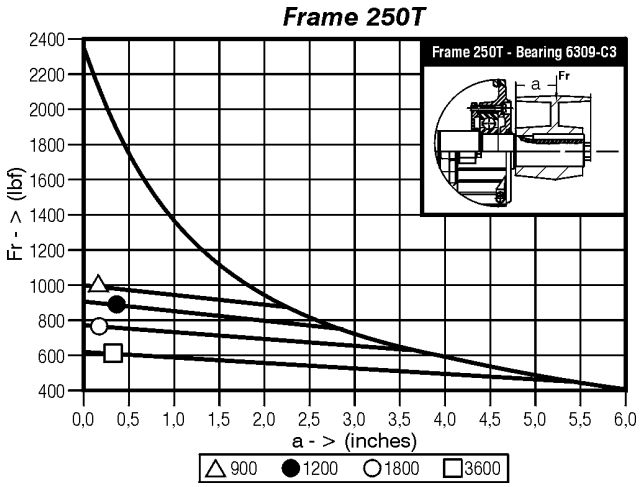


### Frame 320TS

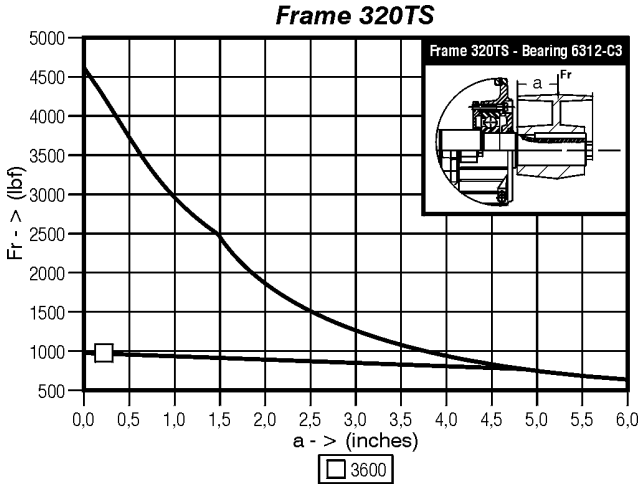


### Frame 280TS

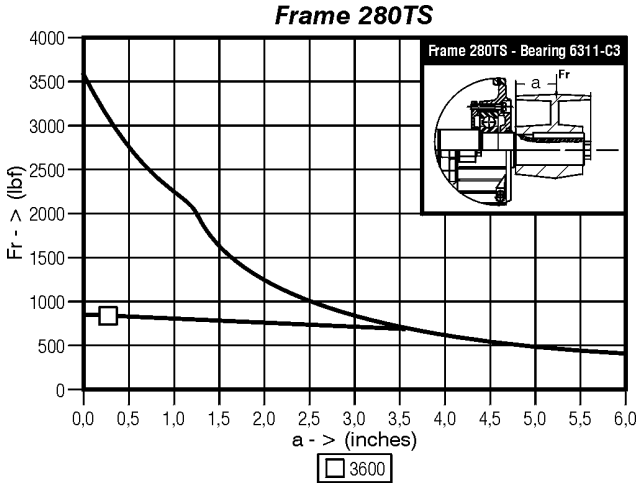


### Frame 320T

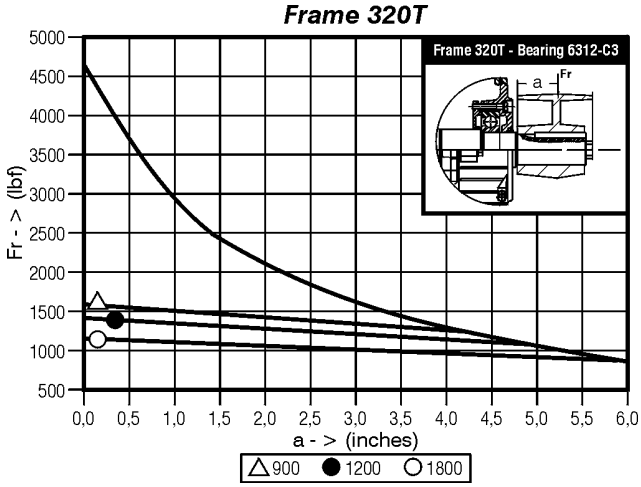

### Frame 360TS

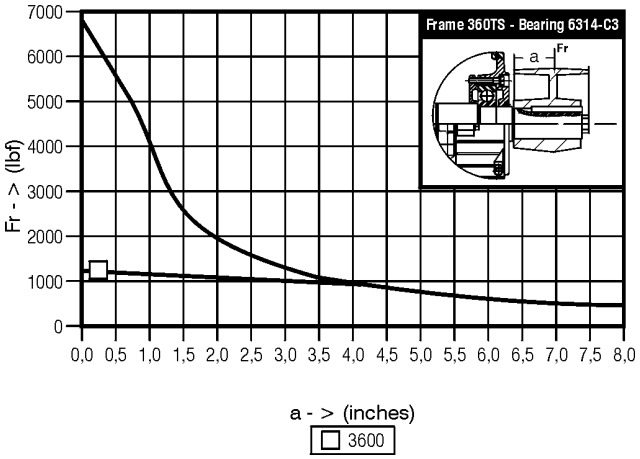


### Frame 400T

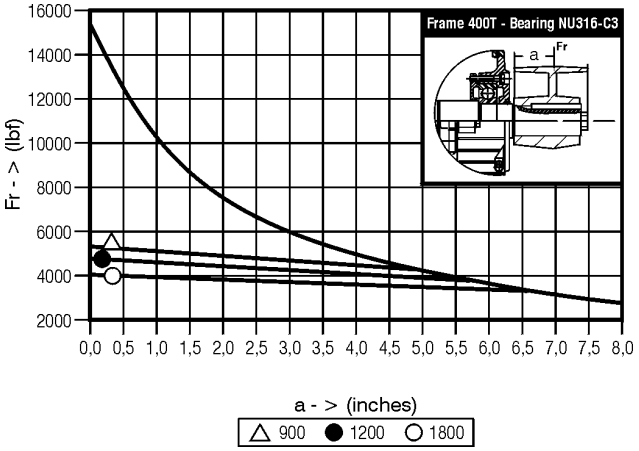


### Frame 360T

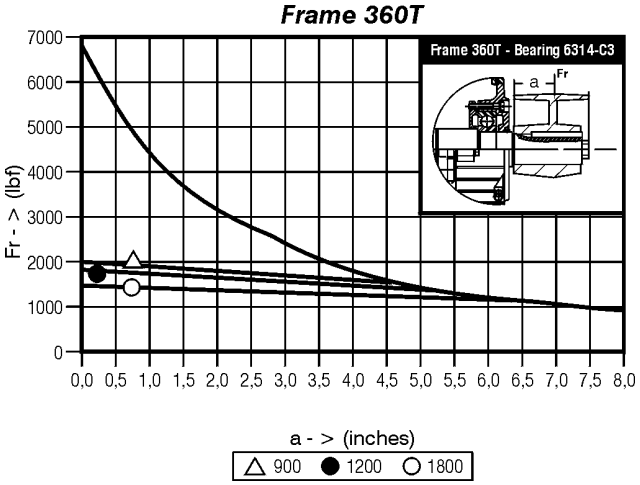


### Frame 440TS

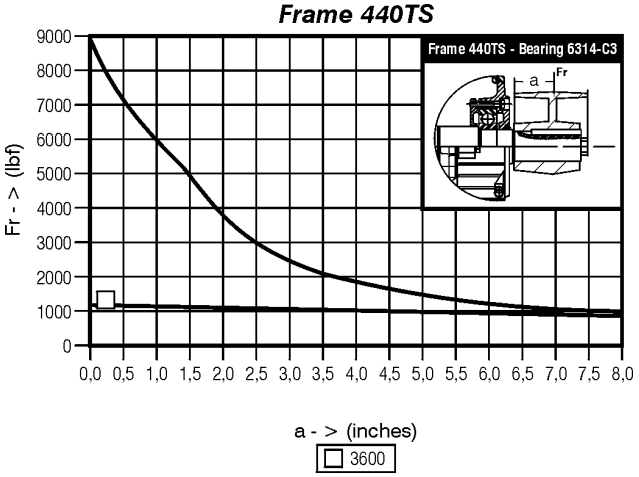


### Frame 400TS

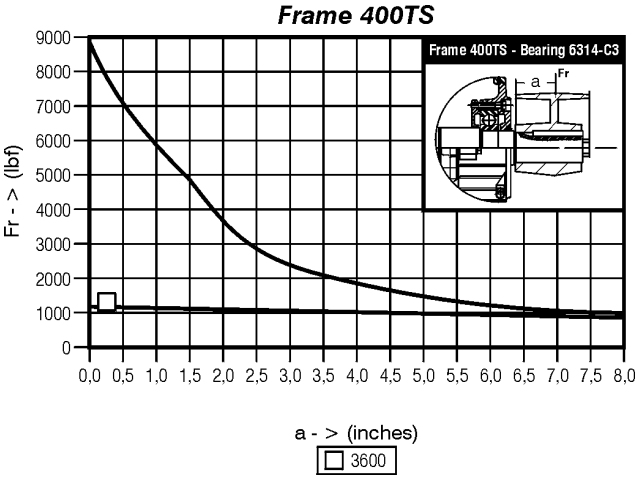


### Frame 440T

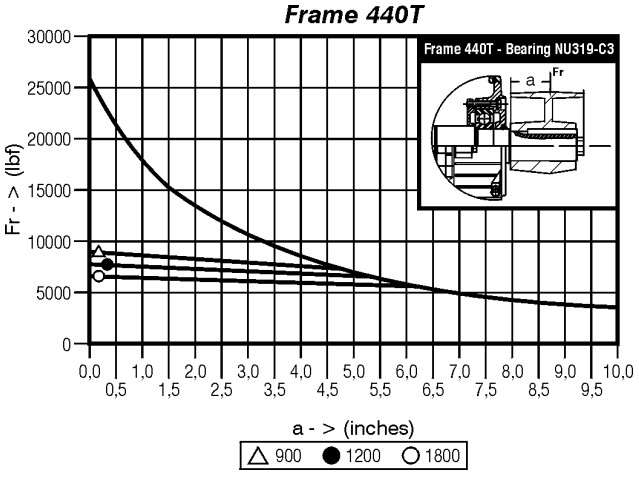

### Frame 500TS

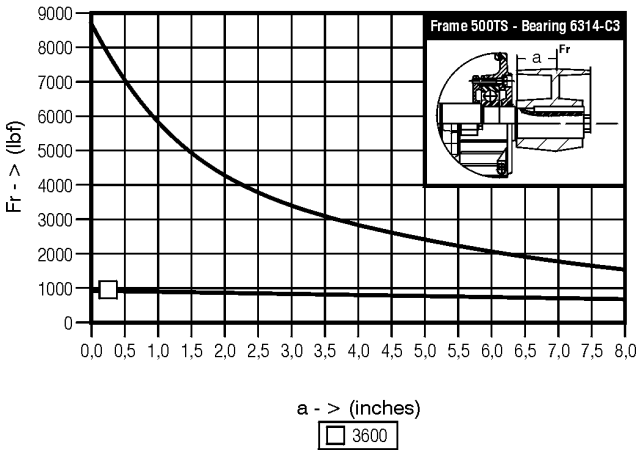


### Frame 5008T

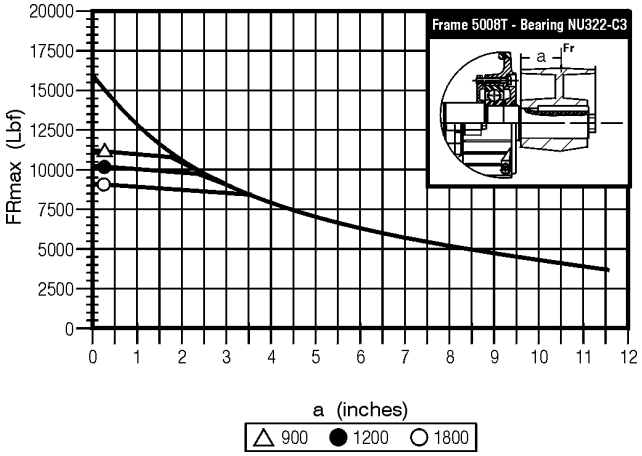


### Frame 500T

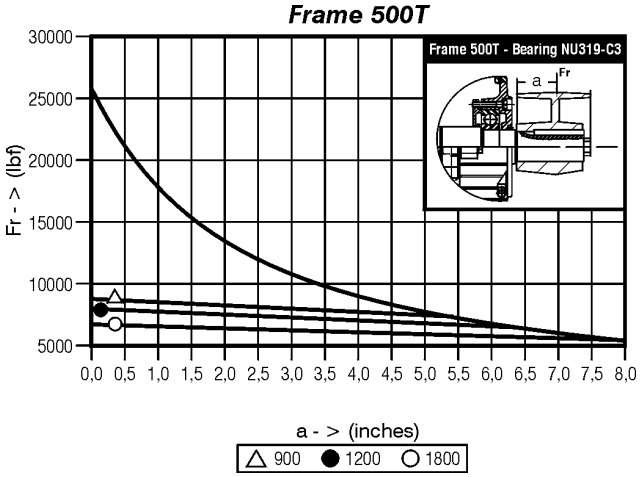


### Frame 580TS

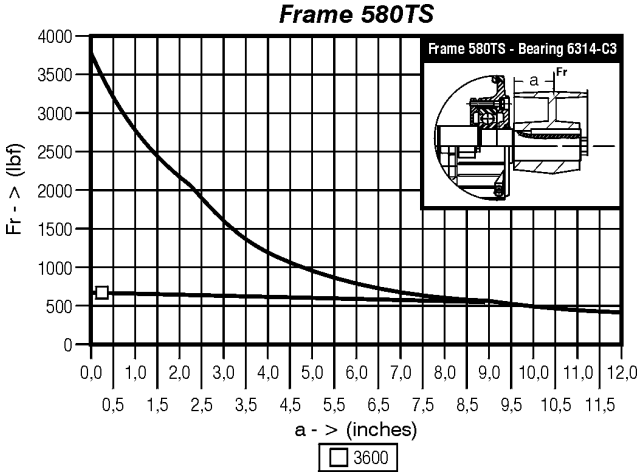


### Frame 5008TS

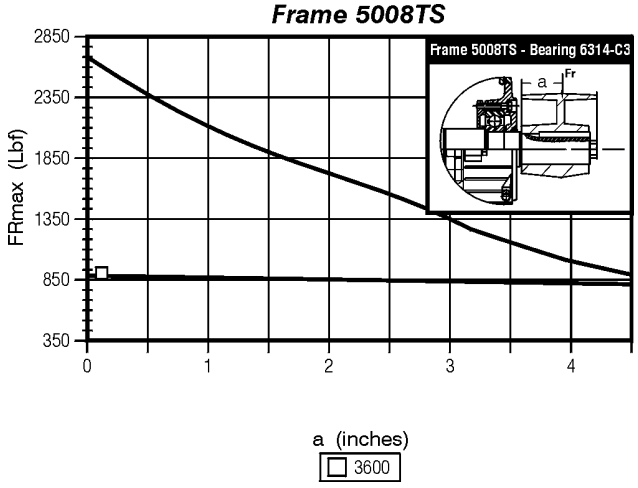


### Frame 580T

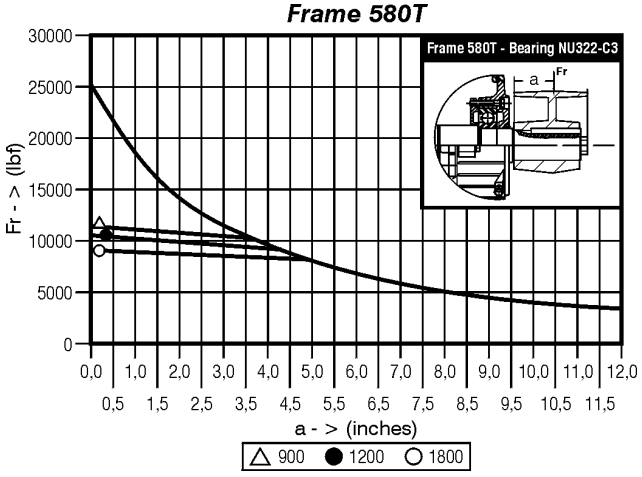


**Note:** For frames 600 and above, consult your engineering representative.

## 3.2 Electrical Aspects

### 3.2.1 Feed System

Proper electric power supply is very important. The choice of motor feed conductors, whether branch or distribution circuits, should be based on the rated current of the motors as per NFPA-70 Standard article 430.
Tables 4, 5 and 6 show minimum conductor gauges sized according to maximum current capacity and maximum voltage drop in relation to the distance from the distribution center to the motor, and to the type of installation (Overhead or in ducts).

**To determine the conductor gauge proceed as follows:**

a) Determine the current by multiplying the current indicated on the motor nameplate by 1.25 and then locate the resulting value on the corresponding table.
If the conductor feeds more than one motor, the value to be sought on the table should be equal 1.25 times the rated current of the largest motor plus the rated current of the other motors.
In the case of variable speed motors, the highest value among the rated currents should be considered.
When motor operation is intermittent, the conductors should have a current carrying capacity equal or greater, to the product of the motor rated current times the running cycle factor shown on Table 7.

***Table 7** - Running cycle factor*

**Motor Short**

| Motor short time rating / Duty Classification | 5min | 15min | 30 at 60min | Continuos |
|---|---|---|---|---|
| Short (operating valves, activating contacts etc) | 1.10 | 1.20 | 1.50 | - |
| Intermittent (passenger or freight elevators, tools, pumps, rolling bridges etc) | 0.85 | 0.85 | 0.90 | 1.40 |
| Cyclic (rolling mills,mining machines etc) | 0.85 | 0.90 | 0.95 | 1.40 |
| Variable | 1.10 | 1.20 | 1.50 | 2.00 |

b) Locate the rated voltage of the motor and the feed network distance in the upper part of the corresponding table. The point of intersection of the distance column and the line referring to current will indicate the minimum required gauge of the conductor.

*Example:*
Size the conductors for a 15 HP, three-phase, 230V, 42A, motor located 200 feet from the main supply with cables laid in conduits.

a) Current to be located: 1.25 x 42A = 52.5A
b) Closest value on table 6:55A
c) Minimum gauge: 6 AWG

### 3.2.2 Starting of Electric Motor

Induction motors can be started by the following methods:

#### Direct Starting

Whenever possible a three-phase motor with a squirrel cage rotor should be started directly at full supply voltage by means of a contactor (Connection diagram a). This method is called Direct-on-Line (DOL) starting.
There are DOL starter assemblies available combining a three-pole contactor, a bimetal relay (overload protection device), and a fuse (short circuit protection on branch circuit).
DOL starting is the simplest method, only feasible however, when the locked rotor current (LRC) does not influence the main electric supply lines.
Initial locked rotor current (LRC) in induction motors reach values six to eight times the value of the full load current. During starting by the DOL method, starting current can reach these high levels. The main electrical supply should be rated sufficiently, such that during the starting cycle no supply disturbance to others on the power network is caused by the voltage drop in the main supply.
This can be achieved under one of the following situations:

a) The rated main supply current is high enough for the locked rotor current not to be proportionally high.
b) Motor locked rotor current is low with no effect on the networks.
c) The motor is started under no-load conditions with a short starting cycle and, consequently, a low locked rotor current with a transient voltage drop tolerable to other consumers.

#### Starting with a compensating switch (auto-transformer starting)

Should direct on line starting not be possible, either due to restrictions imposed by the power supply authority or due to the installation itself, reduced voltage indirect starting methods can be employed to lower the locked rotor current. The single line connection diagram (C) shows the basic components of a compensating switch featuring a transformer (usually an auto-transformer) with a series of taps corresponding to the different values of the reduced voltage. Only three terminals of the motor are connected to the switch, the other being interconnected as per diagram, for the indicated voltage.

#### Star-Delta starting

It is fundamental to star-delta starting that the three-phase motor has the necessary numbers of leads for both connections:

6 leads for Y/Δ
or 12 leads for YY/ΔΔ

All the connections for the various voltages are made through terminals in the terminal box in accordance with the wiring diagram that accompanies the motor. This diagram may be shown on the nameplate or in the terminal box.
The star-delta connection is usually used only in low-voltage motors due to normally available control and protection devices. In this method of starting the locked rotor current is approximately 30% of the original LRC. The locked rotor torque is reduced proportionally as well. For this reason, it is very important before deciding to use

***Table 4** - Wire and cable gauges for single-phase motor installation (voltage drop < 5%) (in conduits)*

| Supply Voltage | Distance of motor from distribution centre (feet) | | | | | | | | | | | | | |
|---|---|---|---|---|---|---|---|---|---|---|---|---|---|---|
| 115 | 34 | 51 | 69 | 85 | 102 | 137 | 171 | 205 | 240 | 273 | 308 | 342 | 428 | 514 |
| 230 | 69 | 102 | 138 | 170 | 204 | 274 | 342 | 410 | 480 | 546 | 616 | 684 | 856 | 1028 |
| 460 | 138 | 204 | 276 | 340 | 408 | 548 | 684 | 820 | 960 | 1092 | 1232 | 1368 | 1712 | 2056 |
| 575 | 170 | 250 | 338 | 420 | 501 | 670 | 840 | 1010 | 1181 | 1342 | 1515 | 1680 | 2105 | 2530 |
| Current (A) | Cable gauge (conductor) | | | | | | | | | | | | | |
| 5 | 14 | 14 | 14 | 14 | 14 | 14 | 14 | 12 | 12 | 12 | 12 | 10 | 10 | 8 |
| 10 | 14 | 14 | 14 | 14 | 12 | 12 | 10 | 10 | 10 | 8 | 8 | 8 | 6 | 6 |
| 15 | 12 | 12 | 12 | 12 | 12 | 10 | 8 | 8 | 6 | 6 | 6 | 6 | 4 | 2 |
| 20 | 12 | 12 | 12 | 10 | 10 | 8 | 8 | 6 | 6 | 6 | 4 | 4 | 4 | 2 |
| 30 | 10 | 10 | 10 | 8 | 8 | 6 | 6 | 6 | 4 | 4 | 2 | 2 | 2 | 1/0 |
| 40 | 8 | 8 | 8 | 8 | 6 | 6 | 4 | 4 | 2 | 2 | 2 | 2 | 1/0 | 2/0 |
| 55 | 6 | 6 | 6 | 6 | 6 | 4 | 4 | 2 | 2 | 1/0 | 1/0 | 1/0 | 1/0 | 2/0 |
| 70 | 4 | 4 | 4 | 4 | 4 | 2 | 2 | 2 | 1/0 | 1/0 | 2/0 | 2/0 | 2/0 | 2/0 |
| 95 | 2 | 2 | 2 | 2 | 2 | 2 | 1/0 | 1/0 | 1/0 | 2/0 | 3/0 | 3/0 | 4/0 | 250M |

***Table 5** - Wire and cable gauges for three-phase motor installation - aerial conductors with 25cm spacing (voltage drop < 5%)*

| Supply Voltage | Distance of motor from distribution centre (feet) | | | | | | | | | | | | | |
|---|---|---|---|---|---|---|---|---|---|---|---|---|---|---|
| 115 | 51 | 69 | 85 | 102 | 137 | 171 | 205 | 240 | 273 | 308 | 342 | 428 | 514 | 685 |
| 230 | 102 | 138 | 170 | 204 | 274 | 342 | 410 | 480 | 546 | 616 | 684 | 856 | 1028 | 1370 |
| 460 | 204 | 276 | 340 | 408 | 547 | 684 | 820 | 960 | 1092 | 1232 | 1368 | 1712 | 2056 | 2740 |
| 575 | 250 | 338 | 420 | 501 | 670 | 840 | 1010 | 1181 | 1342 | 1515 | 1680 | 2105 | 2530 | 3350 |
| Current (A) | Cable gauge (conductor) | | | | | | | | | | | | | |
| 15 | 14 | 14 | 14 | 12 | 12 | 10 | 10 | 10 | 8 | 8 | 8 | 6 | 6 | 4 |
| 20 | 14 | 14 | 12 | 12 | 10 | 10 | 8 | 8 | 8 | 6 | 6 | 4 | 4 | 2 |
| 30 | 14 | 12 | 10 | 8 | 8 | 8 | 6 | 6 | 4 | 4 | 4 | 2 | 2 | 1/0 |
| 40 | 12 | 10 | 10 | 8 | 8 | 6 | 4 | 4 | 4 | 2 | 2 | 2 | 1/0 | 2/0 |
| 55 | 10 | 10 | 8 | 8 | 6 | 4 | 4 | 2 | 2 | 2 | 1/0 | 2/0 | 3/0 | -- |
| 70 | 8 | 8 | 6 | 6 | 4 | 2 | 2 | 2 | 1/0 | 1/0 | 2/0 | 3/0 | -- | -- |
| 100 | 6 | 6 | 4 | 4 | 2 | 2 | 1/0 | 2/0 | 3/0 | 4/0 | 4/0 | -- | -- | -- |
| 130 | 4 | 4 | 4 | 2 | 1/0 | 1/0 | 2/0 | 4/0 | -- | -- | -- | -- | -- | -- |
| 175 | 2 | 2 | 2 | 1/0 | 2/0 | 3/0 | -- | -- | -- | -- | -- | -- | -- | -- |
| 225 | 1/0 | 1/0 | 1/0 | 2/0 | 3/0 | -- | -- | -- | -- | -- | -- | -- | -- | -- |
| 275 | 2/0 | 2/0 | 2/0 | 4/0 | -- | -- | -- | -- | -- | -- | -- | -- | -- | -- |
| 320 | 3/0 | 3/0 | 3/0 | 4/0 | -- | -- | -- | -- | -- | -- | -- | -- | -- | -- |

***Table 6** - Wire and cable gauges for three-phase motor installation (voltage drop < 5%) (in conduits)*

| Supply Voltage | Distance of motor from distribution centre (feet) | | | | | | | | | | | |
|---|---|---|---|---|---|---|---|---|---|---|---|---|
| 115 | 85 | 102 | 120 | 137 | 171 | 205 | 240 | 273 | 308 | 342 | 428 | 514 |
| 230 | 170 | 204 | 240 | 274 | 342 | 410 | 480 | 546 | 616 | 684 | 856 | 1028 |
| 460 | 340 | 408 | 480 | 548 | 684 | 820 | 960 | 1092 | 1232 | 1368 | 1712 | 2056 |
| 575 | 420 | 501 | 590 | 670 | 840 | 1010 | 1181 | 1342 | 1515 | 1680 | 2105 | 2530 |
| Current (A) | Cable gauge (conductor) | | | | | | | | | | | |
| 15 | 12 | 12 | 12 | 10 | 10 | 8 | 8 | 8 | 6 | 6 | 6 | 4 |
| 20 | 12 | 10 | 10 | 10 | 8 | 8 | 6 | 6 | 6 | 6 | 4 | 4 |
| 30 | 10 | 8 | 8 | 8 | 6 | 6 | 6 | 4 | 4 | 4 | 2 | 2 |
| 40 | 8 | 8 | 6 | 6 | 6 | 4 | 4 | 4 | 2 | 2 | 2 | 1/0 |
| 55 | 6 | 6 | 6 | 4 | 4 | 4 | 2 | 2 | 2 | 1/0 | 1/0 | 1/0 |
| 70 | 4 | 4 | 4 | 4 | 2 | 2 | 2 | 1/0 | 1/0 | 1/0 | 2/0 | 2/0 |
| 95 | 2 | 2 | 2 | 2 | 2 | 1/0 | 1/0 | 1/0 | 1/0 | 2/0 | 3/0 | 4/0 |
| 125 | 1/0 | 1/0 | 1/0 | 1/0 | 1/0 | 1/0 | 2/0 | 2/0 | 3/0 | 3/0 | 4/0 | 250M |
| 145 | 2/0 | 2/0 | 2/0 | 2/0 | 2/0 | 2/0 | 2/0 | 3/0 | 3/0 | 4/0 | 250M | 300M |
| 165 | 3/0 | 3/0 | 3/0 | 3/0 | 3/0 | 3/0 | 3/0 | 3/0 | 4/0 | 4/0 | 250M | 350M |
| 195 | 4/0 | 4/0 | 4/0 | 4/0 | 4/0 | 4/0 | 4/0 | 4/0 | 250M | 250M | 300M | 350M |
| 215 | 250M | 250M | 250M | 250M | 250M | 250M | 250M | 250M | 250M | 300M | 350M | 400M |
| 240 | 300M | 300M | 300M | 300M | 300M | 300M | 300M | 300M | 300M | 300M | 400M | 500M |
| 265 | 350M | 350M | 350M | 350M | 350M | 350M | 350M | 350M | 350M | 350M | 500M | 500M |
| 280 | 400M | 400M | 400M | 400M | 400M | 400M | 400M | 400M | 400M | 400M | 400M | -- |
| 320 | 500M | 500M | 500M | 500M | 500M | 500M | 500M | 500M | 500M | 500M | 500M | -- |

**Note:** The above indicated values are orientative. For guaranteed values, contact the Local Power Company.

star-delta starting to verify if the reduced locked rotor torque in "STAR" connection is enough to accelerate the load.

### 3.2.3 Motor Protection

Motor circuits have, in principle, two types of protection: motor overload, locked rotor and protection of branch circuit from short circuits. Motors in continuous use should be protected from overloading by means of a device incorporated into the motor, or by an independent device, usually a fixed or adjustable thermal relay equal or less than to the value derived from multiplying the rated feed current at full load by:

- 1.25 for motors with a service factor equal or superior to 1.15 or;

- 1.15 for motors with service factor equal to 1.0.

Some motors are optionally fitted with overheating protective detectors (in the event of overload, locked rotor, low voltage, inadequate motor ventilation) such as a thermostat (thermal probe), thermistor (PTC), RTD type resistance which dispense with independent devices.

THERMOSTAT (THERMAL PROBE)**:** Bimetallic thermal detectors with normally closed silver contacts. These open at pre-determined temperatures. Thermostats are series connected directly to the contactor coil circuit by two conductors.

THERMISTORS: Semi-conductor heat detectors positive temperature coeficient (PTC) that sharply change their resistance upon reaching a set temperature. Thermistors, depending upon the type, are series or parallel-connected to a control unit that cuts out the motor feed, or actuates an alarm system, in response to the thermistors reaction.

RESISTANCE TEMPERATURE DETECTORS (RTD) - PT 100:The resistance type heat detector (RTD) is a resistance element usually manufactured of copper or platinum.
The RTD operates on the principle that the electrical resistance of a metallic conductor varies linearly with the temperature. The detector terminals are connected to a control panel, usually fitted with a temperature gauge, a test resistance and a terminal changeover switch.

Subject to the desired degree of safety and the client's specification, three (one per phase) or six (two per phase) protective devices can be fitted to a motor for the alarm stems, circuit breaker or combined alarm and circuit breaker, with two leads from the terminal box to the alarm or circuit breaker system and four for the combined system (alarm and circuit breaker).
Table 9 compares the two methods of protection.

## 3.3 Start-up

### 3.3.1 Preliminary Inspection

Before starting a motor for the first time, it will be necessary to:

a) Remove all locking devices and blocks used in transit and check that the motor rotates freely;

b) Check that the motor is firmly secured and that coupling elements are correctly mounted and aligned.;

c) Ascertain that voltage and frequency correspond to those indicated on the nameplate. Motor performance will be satisfactory with main supply voltage fluctuation within ten per cent of the value indicated on the nameplate or a frequency fluctuation within five per cent or, yet, with a combined voltage and frequency variance within ten per cent;

d) Check that connections are in accordance with the connection diagram shown on the nameplate and be sure that all terminal screws and nuts are tight;

e) Check the motor for proper grounding. Providing that there are no specifications calling for ground-insulated installation, the motor must be grounded in accordance with prevalent standard for grounding electrical machines. The screw identified by the symbol ⏚ should be used for this purpose.
This screw is generally to be found in the terminal box or on one foot of the frame;

f) Check that motor leads connecting with the mains, as well as the control wires and the overload protection device, are in accordance with Nema Standards;

g) If the motor has been stored in a damp place, or has been stopped for some time, measure the insulating resistance as recommended under the item covering storage instructions;

h) Start the motor uncoupled to ascertain that it is turning in the desired direction. To reverse the rotation of a three-phase motor, invert two terminal leads of the mains supply.
High voltage motors bearing an arrow on the frame indicating rotation direction can only turn in the direction shown.

### 3.3.2 The First Start-up

*Three-Phase Motor with Cage Rotor:*
After careful examination of the motor, follow the normal sequence of starting operations listed in the control instructions for the initial start-up.

### 3.3.3 Operation

Drive the motor coupled to the load for a period of at least one hour while watching for abnormal noises or signs of overheating.
Compare the line current with the value shown on the nameplate.
Under continuous running conditions without load fluctuations this should not exceed the rated current times the service factor, also shown on the nameplate.
All measuring and control instruments and apparatus should be continuously checked for anomalies, and any irregularities corrected.

### 3.3.4 Stopping

*Warning:*

To touch any moving part of a running motor, even though

disconnected, is a danger to life and limb.

*Three-phase motor with cage rotor:*
Open the stator circuit switch. With the motor at a complete stop, reset the auto-transformer, if any, to the "start" position.

Caption: ◯ unprotected
◑ partially protected
● totally protected

***Table 9** - Comparison between motor protection system*

| **Causes of overheating** | Current-based protection | | Protection with probe thermistor in motor |
|---|---|---|---|
| | Fuse only | Fuse and thermal protector | |
| | 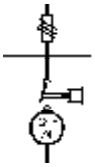 | 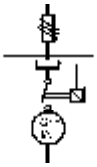 | 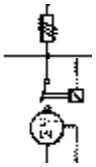 |
| 1. Overload with 1.2 times rated current | ◯ | ● | ● |
| 2. Duty cycles S1 to S8 IEC 34, EB 120 | ◯ | ◑ | ● |
| 3. Brakings, reversals and frequent starts | ◯ | ◑ | ● |
| 4. Operating with more than 15 starts p/hour | ◯ | ◑ | ● |
| 5. Locked rotor | ◑ | ◑ | ● |
| 6. Fault on one phase | ◯ | ◑ | ● |
| 7. Execessive voltage fluctuation | ◯ | ● | ● |
| 8. Frequency fluctuation on main supply | ◯ | ● | ● |
| 9. Excessive ambient temperature | ◯ | ● | ● |
| 10. External heating caused by bearings, belts, pulleys etc. | ◯ | ◯ | ● |
| 11. Obstructed ventilation | ◯ | ◯ | ● |

## CONNECTION DIAGRAMS

a) Direct starting

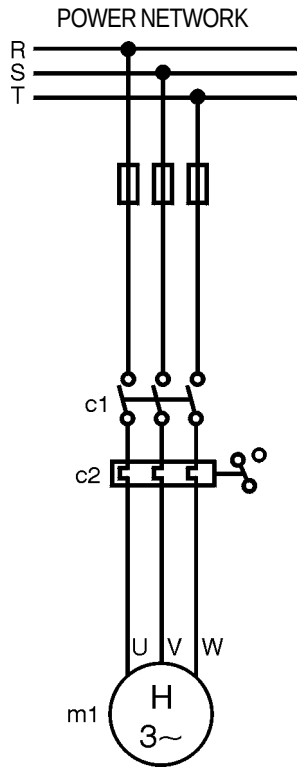


b) Star-Delta starting

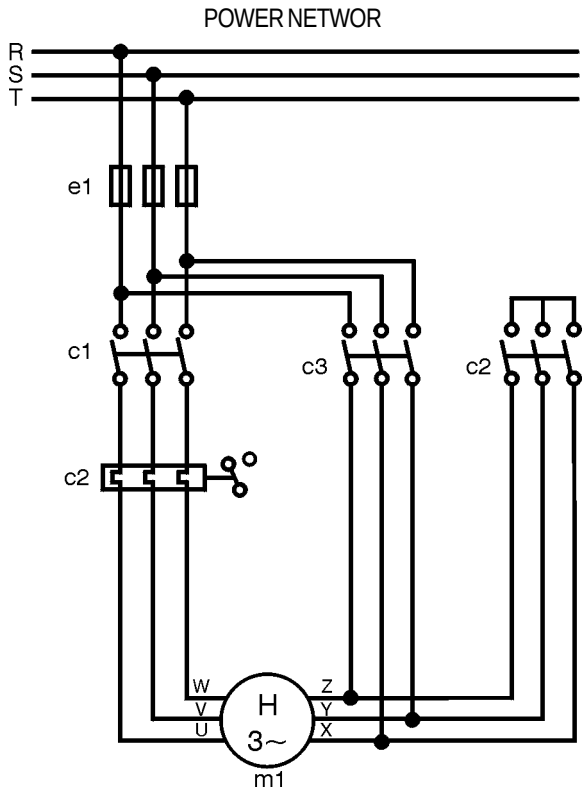


c) Auto-transformer starting

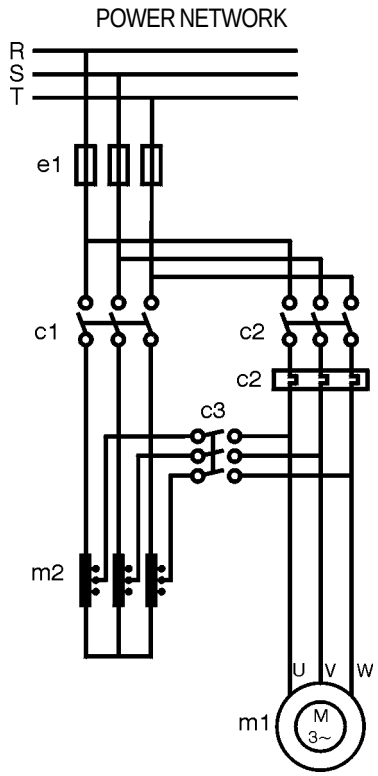

***Table 11** - Bearing specifications by type of motor*

| NEMA Frames | Mounting | Bearings | |
|---|---|---|---|
| | | Front (D.E.) | Rear (O.D.E.) |
| Open drip proof motors | | | |
| B48 and C48 | ALL FORMS | 6203 Z | 6202 Z |
| 56 and A56 | | 6203 Z | 6202 Z |
| B56 and C56 | | 6203 Z | 6202 Z |
| D56 and F56H/G56H | | 6204 Z | 6202 Z / 6203 Z |
| Totally enclosed fan cooled motors | | | |
| 143 T | ALL FORMS | 6205 ZZ | 6204 ZZ |
| 145 T | | 6205 ZZ | 6204 ZZ |
| 182 T | | 6307 ZZ | 6206 ZZ |
| 184 T | | 6307 ZZ | 6206 ZZ |
| W 182 T | | 6206 ZZ | 6205 ZZ |
| W 184 T | | 6206 ZZ | 6205 ZZ |
| 213 T | | 6308 ZZ | 6207 ZZ |
| 215 T | | 6308 ZZ | 6207 ZZ |
| W 213 T | | 6308 ZZ | 6207 ZZ |
| W 215 T | | 6308 ZZ | 6207 ZZ |
| 254 T | | 6309-C3 | 6209 Z-C3 |
| 256 T | | 6309-C3 | 6209 Z-C3 |
| W 254 T | | 6309-C3 | 6209 Z-C3 |
| W 256 T | | 6309-C3 | 6209 Z-C3 |
| 284 T and TS | | 6311-C3 | 6211 Z-C3 |
| 286 T and TS | | 6311-C3 | 6211 Z-C3 |
| 324 T and TS | | 6312-C3 | 6212 Z-C3 |
| 326 T and TS | | 6312-C3 | 6212 Z-C3 |
| 364 T and TS | | 6314-C3 | 6314-C3 |
| 365 T and TS | | 6314-C3 | 6314-C3 |
| 404 T | | NU 316-C3 | 6314-C3 |
| 404 TS | | 6314-C3 | 6314-C3 |
| 405 T | | NU 316-C3 | 6314-C3 |
| 405 TS | | 6314-C3 | 6414-C3 |
| 444 T | | NU 319-C3 | 6316-C3 |
| 444 TS | | 6314-C3 | 6314-C3 |
| 445 T | | NU 319-C3 | 6316-C3 |
| 445 TS | | 6314-C3 | 6314-C3 |
| 447 T | | NU 319-C3 | 6316-C3 |
| 447 TS | | 6314-C3 | 6314-C3 |
| 449 T | | NU 322-C3 | 6319-C3 |
| 449 TS | | 6314-C3 | 6314-C3 |
| 504 T | | NU 319-C3 | 6316-C3 |
| 504 TS | | 6314-C3 | 6314-C3 |
| 505 T | | NU 319-C3 | 6316-C3 |
| 505 TS | | 6314-C3 | 6314-C3 |
| 5008 T | | NU 322-C3 | 6319-C3 |
| 5008TS | | 6314-C3 | 6314-C3 |
| 586 T | | NU 322-C3 | 6319-C3 |
| 586 TS | | 6314-C3 | 6314-C3 |
| 587 T | | NU 322-C3 | 6319-C3 |
| 587 TS | | 6314-C3 | 6314-C3 |

| Saw Arbor motor frame | Mounting | Bearings | |
|---|---|---|---|
| | | Front (D.E.) | Rear (O.D.E.) |
| 80 S MS | B3 | 6307 ZZ | 6207 ZZ |
| 80 M MS | | 6307 ZZ | 6207 ZZ |
| 80 L MS | | 6307 ZZ | 6207 ZZ |
| 90 L MS | | 6308 ZZ | 6208 ZZ |

| ODP Motors Nema-T frames | Mounting | Bearings | |
|---|---|---|---|
| | | Front (D.E.) | Rear (O.D.E.) |
| E143/5T | HORIZONTAL MOUNTING ONLY | 6205 ZZ | 6204 ZZ |
| F143/5T | | 6205 ZZ | 6204 ZZ |
| 182 T | | 6206 ZZ | 6205 ZZ |
| 184 T | | 6202 ZZ | 6205 ZZ |
| 213/5T | | 6208 ZZ | 6206 ZZ |
| 254 T | | 6309 Z-C3 | 6209 Z-C3 |
| 256 T | | 6309 Z-C3 | 6209 Z-C3 |
| 284 T | | 6311 Z-C3 | 6211 Z-C3 |
| 284 TS | | 6311 Z-C3 | 6211 Z-C3 |
| 286 T | | 6311 Z-C3 | 6211 Z-C3 |
| 286 TS | | 6311 Z-C3 | 6211 Z-C3 |
| 324 T | | 6312 Z-C3 | 6212 Z-C3 |
| 324 TS | | 6312 Z-C3 | 6212 Z-C3 |
| 326 T | | 6312 Z-C3 | 6212 Z-C3 |
| 326 TS | | 6312 Z-C3 | 6212 Z-C3 |
| 364 T | | 6314 C3 | 6314 C3 |
| 364 TS | | 6314 C3 | 6314 C3 |
| 365 T | | 6314 C3 | 6314 C3 |
| 365 TS | | 6314 C3 | 6314 C3 |
| 404 T | | NU 316 C3 | 6314 C3 |
| 404 TS | | 6314 C3 | 6314 C3 |
| 405 T | | NU 316 C3 | 6314 C3 |
| 405 TS | | 6314 C3 | 6314 C3 |
| 444 T | | NU 319 C3 | 6316 C3 |
| 444 TS | | 6314 C3 | 6314 C3 |
| 445 T | | NU 319 C3 | 6316 C3 |
| 445 TS | | 6314 C3 | 6314 C3 |

| IEC frame | Mounting | Bearings | |
|---|---|---|---|
| | | Front (D.E.) | Rear (O.D.E.) |
| Totally enclosed fan cooled motors | | | |
| 63 | B3 | 6201 ZZ | 6201 ZZ |
| 71 | | 6203 ZZ | 6202 ZZ |
| 80 | | 6204 ZZ | 6203 ZZ |
| 90 S - L | | 6205 ZZ | 6204 ZZ |
| 100 L | | 6206 ZZ | 6205 ZZ |
| 112 M | | 6307 ZZ | 6206 ZZ |
| 132 S - M | | 6308 ZZ | 6207 ZZ |
| 160 M - L | | 6309-C3 | 6209 Z-C3 |
| 180 M - L | | 6311-C3 | 6211 Z-C3 |
| 200 M - L | | 6312-C3 | 6212 Z-C3 |
| 225 S/M | | 6314-C3 | 6314-C3 |
| 250 S/M | | 6314-C3 | 6314-C3 |
| 280 S/M | | 6314-C3 | 6314-C3 |
| | | 6316-C3 | 6316-C3 |
| 315 S/M | | 6314-C3 | 6314-C3 |
| | | 6319-C3 | 6316-C3 |
| 355 M/L | | 6314-C3 | 6314-C3 |
| | | NU 322-C3 | 6319-C3 |

***Table 12** – Bearing lubrication intervals and amount of grease*

| **BALL BEARINGS - Series 62/63** | | | | | | | | | | | | | |
|---|---|---|---|---|---|---|---|---|---|---|---|---|---|
| Relubrication intervals (running hours – horizontal position) | | | | | | | | | | | | | |
| | II pole | | IV pole | | VI pole | | VIII pole | | X pole | | XII pole | | Amount of grease |
| Serie 62 | | | | | | | | | | | | | |
| Bearing | 60Hz | 50Hz | 60Hz | 50Hz | 60Hz | 50Hz | 60Hz | 50Hz | 60Hz | 50Hz | 60Hz | 50Hz | (g) |
| 6209 | 18400 | 20000 | 20000 | 20000 | 20000 | 20000 | 20000 | 20000 | 20000 | 20000 | 20000 | 20000 | 9 |
| 6211 | 14200 | 16500 | 20000 | 20000 | 20000 | 20000 | 20000 | 20000 | 20000 | 20000 | 20000 | 20000 | 11 |
| 6212 | 12100 | 14400 | 20000 | 20000 | 20000 | 20000 | 20000 | 20000 | 20000 | 20000 | 20000 | 20000 | 13 |
| Serie 63 | | | | | | | | | | | | | |
| Bearing | 60Hz | 50Hz | 60Hz | 50Hz | 60Hz | 50Hz | 60Hz | 50Hz | 60Hz | 50Hz | 60Hz | 50Hz | (g) |
| 6309 | 15700 | 18100 | 20000 | 20000 | 20000 | 20000 | 20000 | 20000 | 20000 | 20000 | 20000 | 20000 | 13 |
| 6311 | 11500 | 13700 | 20000 | 20000 | 20000 | 20000 | 20000 | 20000 | 20000 | 20000 | 20000 | 20000 | 18 |
| 6312 | 9800 | 11900 | 20000 | 20000 | 20000 | 20000 | 20000 | 20000 | 20000 | 20000 | 20000 | 20000 | 21 |
| 6314 | 3600 | 4500 | 9700 | 11600 | 14200 | 16400 | 17300 | 19700 | 19700 | 20000 | 20000 | 20000 | 27 |
| 6316 | - | - | 8500 | 10400 | 12800 | 14900 | 15900 | 18700 | 18700 | 20000 | 20000 | 20000 | 34 |
| 6319 | - | - | 7000 | 9000 | 11000 | 13000 | 14000 | 17400 | 17400 | 18600 | 18600 | 20000 | 45 |
| 6322 | - | - | 5100 | 7200 | 9200 | 10800 | 11800 | 15100 | 15100 | 15500 | 15500 | 19300 | 60 |

***Table 13** – Bearing lubrication intervals and amount of grease*

| **BALL BEARINGS - Series NU3** | | | | | | | | | | | | | |
|---|---|---|---|---|---|---|---|---|---|---|---|---|---|
| Relubrication intervals (running hours – horizontal position) | | | | | | | | | | | | | |
| | II pole | | IV pole | | VI pole | | VIII pole | | X pole | | XII pole | | Amount of grease |
| Bearing | 60Hz | 50Hz | 60Hz | 50Hz | 60Hz | 50Hz | 60Hz | 50Hz | 60Hz | 50Hz | 60Hz | 50Hz | (g) |
| NU 309 | 9800 | 13300 | 20000 | 20000 | 20000 | 20000 | 20000 | 20000 | 20000 | 20000 | 20000 | 20000 | 13 |
| NU 311 | 6400 | 9200 | 19100 | 20000 | 20000 | 20000 | 20000 | 20000 | 20000 | 20000 | 20000 | 20000 | 18 |
| NU 312 | 5100 | 7600 | 17200 | 20000 | 20000 | 20000 | 20000 | 20000 | 20000 | 20000 | 20000 | 20000 | 21 |
| NU 314 | 1600 | 2500 | 7100 | 8900 | 11000 | 13100 | 15100 | 16900 | 16900 | 19300 | 19300 | 20000 | 27 |
| NU 316 | - | - | 6000 | 7600 | 9500 | 11600 | 13800 | 15500 | 15500 | 17800 | 17800 | 20000 | 34 |
| NU 319 | - | - | 4700 | 6000 | 7600 | 9800 | 12200 | 13700 | 13700 | 15700 | 15700 | 20000 | 45 |
| NU 322 | - | - | 3300 | 4400 | 5900 | 7800 | 10700 | 11500 | 11500 | 13400 | 13400 | 17300 | 60 |
| NU 324 | - | - | 2400 | 3500 | 5000 | 6600 | 10000 | 10200 | 10200 | 12100 | 12100 | 15000 | 72 |

Notes:
- The ZZ bearings from 6201 to 6307 do not require relubrication as its life time is about 20,000 hours.
- Tables 1 and 2 are intended for the lubrication period under bearing temperature of 70ºC (for bearings up to 6312 and NU 312) and temperature of 85ºC (for bearings 6314 and NU 314 and larger).
- For each 15ºC of temperature rise, the relubrication period is reduced by half.
- The relubrication periods given above are for those cases applying Polyrex® EM grease.
- When motors are used on the vertical position, their relubrication interval is reduced by half if compared to horizontal position motors.

**Compatibility of Polyrex® EM grease with other types of grease:**

Containing polyurea thickener and mineral oil, the Polyrex® EM grease is compatible with other types of grease that contain:
- Lithium base or complex of lithium or polyurea and highly refined mineral oil.
- Inhibitor additive against corrosion, rust and anti-oxidant additive.

Notes:
- Although Polyrex® EM is compatible with types of grease given above, we do no recommended to mix it with any other greases.
- If you intend to use a type of grease different than those recommended above , first contact WEG.
- On applications (with high or low temperatures, speed variation, etc), the type of grease and relubrification interval are given on an additional nameplate attached to the motor.

# 4. Maintenance

A well-designed maintenance program for electric motors can be summed up as: periodical inspection of insulation levels, temperature rise, wear, bearing lubrication and the occasional checking of fan air flow.
Inspection cycles depend upon the type of motor and the conditions under which it operates.

## 4.1 Cleanliness

Motors should be kept clean, free of dust, debris and oil. Soft brushes or clean cotton rags should be used for cleaning. A jet of compressed air should be used to remove non-abrasive dust from the fan cover and any accumulated grime from the fan and cooling fins.
Oil or damp impregnated impurities can be removed with rags soaked in a suitable solvent.
Terminal boxes fitted to motors with IP55 protection should be cleaned; their terminals should be free of oxidation, in perfect mechanical condition, and all unused space dust-free.
Motors with IPW 55 protection are recommended for use under unfavourable ambient conditions.

## 4.2 Lubrication

Proper lubrication extends bearing life.

### Lubrication Maintenance Includes:

a) Attention to the overall state of the bearings;
b) Cleaning and lubrication;
c) Critical inspection of the bearings.

Motor noise should be measured at regular intervals of one to four months. A well-tuned ear is perfectly capable of distinguishing unusual noises, even with rudimentary tools such as a screw driver, etc., without recourse to sophisticated listening aids or stethescopes that are available on the market.
A uniform hum is a sign that a bearing is running perfectly. Bearing temperature control is also part of routine maintenance.
Constant temperature control is possible with the aid of external thermometers or by embedded thermal elements. WEG motors are normally equipped with grease lubricated ball or roller bearings.
Bearings should be lubricated to avoid metallic contact of the moving parts, and also for protection against corrosion and wear. Lubricant properties deteriorate in the course of time and mechanical operation: furthermore, all lubricants are subject to contamination under working conditions.
For this reason lubricants must be renewed and any lubricant consumed needs replacing from time to time.

### 4.2.1 Periodical Lubrication

WEG motors are supplied with sufficient grease for a long running period. Lubrication intervals, the amount of grease and the type of bearing used in frames 140T to 580T are to be found in Tables 11, 12 and 13.
Lubrication intervals depend upon the size of the motor, speed, working conditions and the type of grease used.

### 4.2.2 Quality and Quantity of Grease

***Correct lubrication is important!***
Grease must be applied correctly and in sufficient quantity as both insufficient or excessive greasing are harmful.
Excessive greasing causes overheating brought about by the greater resistance encountered by the rotating parts and, in particular, by the compacting of the lubricant and its eventual loss of lubricating qualities.
This can cause seepage with the grease penetrating the motor and dripping on the coils.

**GREASES FOR MOTOR BEARINGS**

| **For operating temperatures from -30 to 170ºC** | |
|---|---|
| **Type** | **Supplier** |
| Polyrex® EM | Esso |

### 4.2.3 Lubricating Instructions

a) Frame 140T to 210T motors
Frame 140T to 210T size motors are not fitted with grease nipples. Lubrication is carried out during periodical overhauls when the motor is taken apart.

### Cleaning and Lubrication of Bearings

With the motor dismantled and without extracting the bearings from the shaft, all existing grease should be removed and the bearings cleaned with Diesel oil, kerosene or other solvent, until thoroughly clean.
Refill the spaces between the balls or rollers and the bearing cages with grease immediately after washing. Never rotate bearings in their dry state after washing.
For inspection purposes apply a few drops of machine oil. During these operations maximum care and cleanliness is recommended to avoid the penetration of any impurities or dust that could harm the bearings. Clean all external parts prior to reassembly.

b) Frame 360T to 580T Motors
Motors above 360T frame size are fitted with regreasable bearing system.
The lubrication system from this frame size upwards was designed to allow the removal of all grease from the bearing races through a bleeder outlet which at the same time impedes the entry of dust or other contaminants harmful to the bearing.
This outlet also prevents injury to the bearings from the well-known problem of over-greasing.

It is advisable to lubricate while the motor is running, to allow the renewal of grease in the bearing case.
Should this procedure not be possible because of rotating parts in the proximity of the nipple (pulleys, coupling sleeves, etc.) that are hazardous to the operator the following procedure should be followed:
- Inject about half the estimated amount of grease and run the motor at full speed for approximately a minute; switch off the motor and inject the remaining grease.
The injection of all the grease with the motor at rest could cause penetration of a portion of the lubricant through the internal seal of the bearing case and hence into the motor.

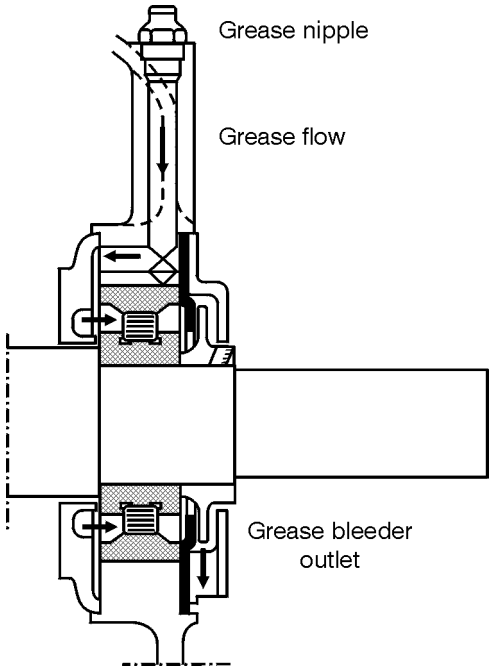


*Figure 4.1 - Bearings and lubrication system*

Nipples must be clean prior to introduction of grease to avoid entry of any alien bodies into the bearing.
For lubricating use only a manual grease gun.

### Bearing Lubrication Steps

1. Cleanse the area around the grease nipples with clean cotton fabric.
2. With the motor running, add grease with a manual grease gun until the lubricant commences to be expelled from the bleeder outlet, or until the quantity of grease recommended in Tables 12 or 13 has been applied.
3. Allow the motor to run long enough to eject all excess grease.

### 4.2.4 Replacement of Bearings

The opening of a motor to replace a bearing should only be carried out by qualified personnel.
Damage to the core after the removal of the bearing cover can be avoided by filling the gap between the rotor and the stator with stiff paper of a proper thickness.

Providing suitable tooling is employed, disassembly of a bearing is not difficult.
The extractor grips should be applied to the sidewall of the inner ring to be stripped, or to an adjacent part.
To ensure perfect functioning and to prevent injury to the bearing parts, it is essential that the assembly be undertaken under conditions of complete cleanliness and by competent personnel.
New bearings should not be removed from their packages until the moment of assembly.
Prior to fitting a new bearing, ascertain that the shaft has no rough edges or signs of hammering.

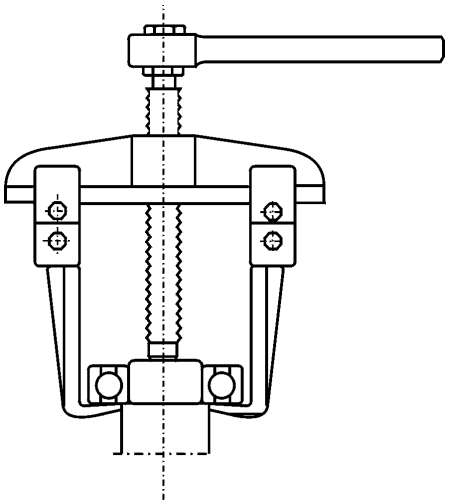

*Figure 4.2 - A bearing extractor*

During assembly bearings cannot be subjected to direct blows.
The aid used to press or strike the bearing should be applied to the inner ring.

## 4.3 Air Gap Checking (Large Rating Open Motors)

Upon the completion of any work on the bearings check the gap measurement between the stator and the rotor using the appropriate gazes.
The gap variation at any two vertically opposite points must be less than 10% of the average gap measurement.

## 4.4 Explosion Proof Motor Repair Steps

### 4.4.1 Objective

In view of the heavy liability associated with burning of motors of this type, this product has been designed and manufactured to high technical standards, under rigid controls. In addition, in many areas it is required that explosion proof motors ONLY be repaired by licensed personnel or in licensed facilities authorized to do this type of work.
The following general procedures, safeguards, and guidelines must be followed in order to ensure repaired explosion proof motors operate as intended.

### 4.4.2 Repair Procedure and Precautions

Dismantle the damaged motor with appropriate tools without hammering and/or pitting machined surfaces such as enclosure joints, fastening

holes, and all joints in general.
The position of the fan cover should be suitably marked prior to removal so as to facilitate reassembly later on.
Examine the motor's general condition and, if necessary, disassemble all parts and clean them with kerosene. Under no circumstances should scrapers, emery papers or tools be used that could affect the dimensions of any part during cleaning.
Protect all machined parts against oxidation by applying a coating of vaseline or oil immediately after cleaning.

***STRIPPING OF WINDINGS***
This step requires great care to avoid knocking and/or denting of enclosure joints and, when removing the sealing compound from the terminal box, damage or cracking of the frame.

***IMPREGNATION***
Protect all frame threads by inserting corresponding bolts, and the joint between terminal box and frame, by coating it with a non-adhesive varnish (ISO 287 - ISOLASIL).
Protective varnish on machined parts should be removed soon after treating with impregnating varnish. This operation should be carried out manually without using tools.

***ASSEMBLY***
Inspect all parts for defects, such as cracks, joint incrustations, damaged threads and other potential problems.
Assemble using a rubber headed mallet and a bronze bushing after ascertaining that all parts are perfectly fitted.
Bolts should be positioned with corresponding spring washers and evenly tightened.

***TESTING***
Rotate the shaft by hand while examining for any drag problems on covers or fastening rings.
Carry out running tests as for standard motors.

***MOUNTING THE TERMINAL BOX***
Prior to fitting the terminal box all cable outlets on the frame should be sealed with a sealing compound (I$^{st}$ layer) and an Epoxy resin (ISO 340) mixed with ground quartz (2$^{nd}$ layer) in the following proportions:

| | |
|---|---|
| 340A resin | 50 parts |
| 340B resin | 50 parts |
| Ground quartz | 100 parts |

Drying time for this mixture is two hours during which the frame should not be handled and cable outlets should be upwards.
When dry, see that the outlets and areas around the cables are perfectly sealed.
Mount the terminal box and paint the motor.

### 4.4.3 Miscellaneous Recommendations

- Any damaged parts (cracks, pittings in machined surfaces, defective threads) must be replaced and under no circumstances should attempts be made to recover them.
- Upon reassembling explosion proof motors IPW55 the substitution of all seals is mandatory.
- Should any doubts arise, consult WEG.

# 5. Malfunctioning

Most malfunctions affecting the normal running of electric motors can be prevented by maintenance and the appropriate precautions.
While ventilation, cleanliness and careful maintenance are the main factors ensuring long motor life, a further essential factor is the prompt attention to any malfunctioning as signalled by vibrations, shaft knock, declining insulation resistance, smoke or fire, sparking or unusual slip ring or brush wear, sudden changes of bearing temperatures.
When failures of an electric or mechanical nature arise, the first step to be taken is to stop the motor and subsequent examination of all mechanical and electrical parts of the installation.
In the event of fire, the installation should be isolated from the mains supply, which is normally done by turning off the respective switches.
In the event of fire within the motor itself, steps should be taken to restrain and suffocate it by covering the ventilation vents.
To extinguish a fire, dry chemical or $C0_2$ extinguishers should be used - never water.

## 5.1 Standard Three-Phase Motor Failures

Owing to the widespread usage of asynchronous three-phase motors in industry which are more often repaired in the plant workshops, there follows a summary of possible failures and their probable causes, detection and repairs.
Motors are generally designed to Class B or F insulation and for ambient temperatures up to 40°C.
Most winding defects arise when temperature limits, due to current overload, are surpassed throughout the winding or even in only portions thereof. These defects are identified by the darkening or carbonizing of wire insulation.

### 5.1.1 Short Circuits Between Turns

A short circuit between turns can be a consequent of two coinciding insulation defects, or the result of defects arising simultaneously on two adjacent wires. As wires are randomly tested, even the best quality wires can have weak spots. Weak spots can, on occasion, tolerate a voltage surge of 30% at the time of testing for shorting between turns, and later fail due to humidity, dust or vibration.
Depending on the intensity of the short, a magnetic hum becomes audible.
In some cases, the three-phase current imbalance can be so insignificant that the motor protective device fails to react. A short circuit between turns, and phases to ground due to insulation failure is rare, and even so, it nearly always occurs during the early stages of operation.

### 5.1.2 Winding Failures

#### a) One burnt winding phase

This failure arises when a motor runs wired in delta and current fails in one main conductor.
Current rises from 2 to 2.5 times in the remaining winding with a simultaneous marked fall in speed. If the motor stops, the current will increase from 3.5 to 4 times its rated value.
In most instances, this defect is due to the absence of a protective switch, or else the switch has been set too high.

#### b) Two burnt winding phases

This failure arises when current fails in one main conductor and the motor winding is star-connected. One of the winding phases remains currentless while the others absorb the full voltage and carry an excessive current.
The slip almost doubles.

#### c) Three burnt winding phases

***Probable cause 1***

Motor only protected by fuses; an overload on the motor will be the cause of the trouble.
Consequently, progressive carbonizing of the wires and insulation culminate in a short circuit between turns, or a short against the frame occurs.
A protective switch placed before the motor would easily solve this problem.

***Probable cause 2***

Motor incorrectly connected. For example: A motor with windings designed for 230/400V is connected through a star-delta switch to 400V connection.
The absorted current will be so high that the winding will burn out in a few seconds if the fuses or a wrongly set protective switch fail to react promptly.

***Probable cause 3***

The star-delta switch is not commutated and the motor continues to run for a time connected to the star under overload conditions.
As it only develops 1/3 of its torque, the motor cannot reach rated speed. The increased slip results in higher ohmic losses arising from the Joule effect. As the stator current, consistent with the load, may not exceed the rated value for the delta connection, the protective switch will not react.
Consequent to increased winding and rotor losses the motor will overheat and the winding burn out.

***Probable cause 4***

Failures from this cause arise from thermal overload, due to too many starts under intermittent operation or to an overly long starting cycle.
The perfect functioning of motor operating under these conditions is only assured when the following values are heeded:
a) number of starts per hour;
b) starting with or without load;
c) mechanical brake or current inversion;
d) acceleration of rotating masses connected to motor shaft;
e) load torque vs. speed during acceleration and braking.

The continuous effort exerted by the rotor during intermittent starting brings about heavier losses which provoke overheating.
Under certain circumstances with the motor idle there is a possibility that the stator winding is subjected to damage as a result of the

heating of the motor. In such a case, a slip ring motor is recommended as a large portion of the heat (due to rotor losses) is dissipated in the rheostat.

### 5.1.3 Rotor Failures

If a motor running under load conditions produces a noise of varying intensity and decreasing frequency while the load is increased, the reason, in most cases, will be an unsymmetrical rotor winding.
In squirrel-cage motors the cause will nearly always be a break in one or more of the rotor bars; simultaneously, periodical stator current fluctuations may be recorded. As a rule, this defect appears only in molded or die cast aluminum cages.
Failures due to spot heating in one or another of the bars in the rotor stack are identified by the blue coloration at the affected points.
Should there be failures in various contiguous bars, vibrations and shuddering can occur as if due to an unbalance, and are often interpreted as such. When the rotor stack acquires a blue or violet coloration, it is a sign of overloading.
This can be caused by overly high slip, by too many starts or overlong starting cycles. This failure can also arise from insufficient main voltage.

### 5.1.4 Bearing Failures

Bearing damage is a result of overloading brought about by an overly taut belt or axial impacts and stresses.
Underestimating the distance between the drive pulley and the driven pulley is a common occurrence.
The arc of contact of the belt on the drive pulley thus becomes inadmissibly small and thereby belt tension is insufficient for torque transmission.
In spite of this it is quite usual to increase belt tension in order to attain sufficient drive.
Admittably, this is feasible with the latest belt types reinforced by synthetic materials.
However, this practice fails to consider the load on the bearing and the result is bearing failure within a short time.
Additionally there is the possibility of the shaft being subjected to unacceptably high loads when the motor is fitted with a pulley that is too wide.

### 5.1.5 Shaft Fractures

Although bearings traditionally constitute the weaker part, and the shafts are designed with wide safety margins, it is not beyond the realm of possibility that a shaft may fracture by fatigue from bending stress brought about by excessive belt tension.
In most cases, fractures occur right behind the drive end bearing.
As a consequence of alternating bending stress induced by a rotating shaft, fractures travel inwards from the outside of the shaft until the point of rupture is reached when resistance of the remaining shaft cross-section no longer suffices.
Avoid additional drilling the shaft (fastening screw holes) as such operations tend to cause stress concentration.

### 5.1.6 Unbalanced V-Belt Drives

The substitution of only one of a number of other parallel belts on a drive is frequently the cause of shaft fractures, as well as being malpractice.
Any used, and consequently stretched belts retained on the drive, especially those closest to the motor, while new and unstretched belts are placed on the same drive turning farther from the bearing, can augment shaft stress.

### 5.1.7 Damage Arising from Poorly Fitted Transmission Parts or Improper Motor Alignment

Damage to bearing and fracture in shafts often ensue from inadequate fitting of pulleys, couplings or pinions. There parts “knock” when rotating. The defect is recognized by the scratches that appear on the shaft or the eventual scalelike flaking of the shaft end.
Keyways with edges pitted by loosely fitted keys can also bring about shaft failures.
Poorly aligned couplings cause knocks and radial and axial shaking to shaft and bearings.
Within a short while these malpractices cause the deterioration of the bearings and the enlargement of the bearing cover bracket located on the drive end side.
Shaft fracture can occur in more serious cases.

## 5.2 Troubleshooting chart

| FAILURE | PROBABLE CAUSE | CORRECTIVE MEASURES |
|---|---|---|
| **Motor fails to start** | • No voltage supply<br>• Low voltage supply<br>• Wrong control connections<br>• Loose connection at some terminal lug<br>• Overload | • Check feed connections to control system and from this to motor.<br>• Check voltage supply and ascertain that voltage remains within 10% of the rated voltage shown on the motor nameplate.<br>• Compare connections with the wiring diagram on the motor nameplate.<br>• Tighten all connections.<br>• Try to start motor under no-load conditions. If it starts, there may be an overload condition or a blocking of the starting mechanism. Reduce load to rated load level and increase torque. |
| **High noise level** | • Unbalance<br>• Distorted shaft<br>• Incorrect alignment<br>• Uneven air gap<br>• Dirt in the air gap<br>• Extraneous matter stuck between fan and motor casing<br>• Loose motor foundation<br>• Worn bearings | • Vibrations can be eliminated by balancing rotor. If load is coupled directly to motor shaft, the load can be unbalanced.<br>• Shaft key bent; check rotor balance and eccentricity.<br>• Check motor aligment with machine running.<br>• Check shaft for warping or bearing wear.<br>• Dismantle motor and remove dirt or dust with jet of dry air.<br>• Dismantle motor and clean. Remove trash or debris from motor vicinity.<br>• Tighten all foundation studs. If necessary, realign motor.<br>• Check lubrication. Replace bearing if noise is excessive and continuous. |
| **Overheating of bearings** | • Excessive grease<br>• Excessive axial or radial strain on belt<br>• Deformed shaft<br>• Rough bearing surface<br>• Loose or poorly fitted motor end shields<br>• Lack of grease<br>• Hardened grease cause locking of balls<br>• Foreign material in grease | • Remove grease bleeder plug and run motor until excess grease is expelled.<br>• Reduce belt tension.<br>• Have shaft straightened and check rotor balance.<br>• Replace bearings before they damage shaft.<br>• Check end shields for close fit and tightness around circumference.<br>• Add grease to bearing.<br>• Replace bearings.<br>• Flush out housings and relubricate. |
| **Intense bearing vibration** | • Unbalanced rotor<br>• Dirty or worn bearing<br>• Bearing rings too tight on shaft and/or bearing housing<br>• Extraneous solid particles in bearing | • Balance rotor statically and dynamically.<br>• If bearing rings are in perfect condition, clean and relubricate the bearing, otherwise, replace bearing.<br>• Before altering shaft or housing dimensions, it is advisable to ascertain that bearing dimensions correspond to manufacturer's specifications.<br>• Take bearing apart and clean. Reassemble only if rotating and support surfaces are unharmed. |
| **Overheating of motor** | • Obstructed cooling system<br>• Overload<br>• Incorrect voltages and frequecies<br>• Frequent inversions<br>• Rotor dragging on stator<br>• Unbalanced electrical load (burnt fuse, incorrect control) | • Clean and dry motor; inspect air vents and windings periodically.<br>• Check application, measuring voltage and current under normal running conditions.<br>• Compare values on motor nameplate with those of mains supply. Also check voltage at motor terminals under full load.<br>• Exchange motor for another that meets needs.<br>• Check bearing wear and shaft curvature.<br>• Check for unbalanced voltages or operation under single-phase condition. |

# 6. Spare Parts and Component Terminology

## THREE-PHASE MOTORS IP55 NEMA
## Frames 140T - W180T - 180T - 210T and W210T

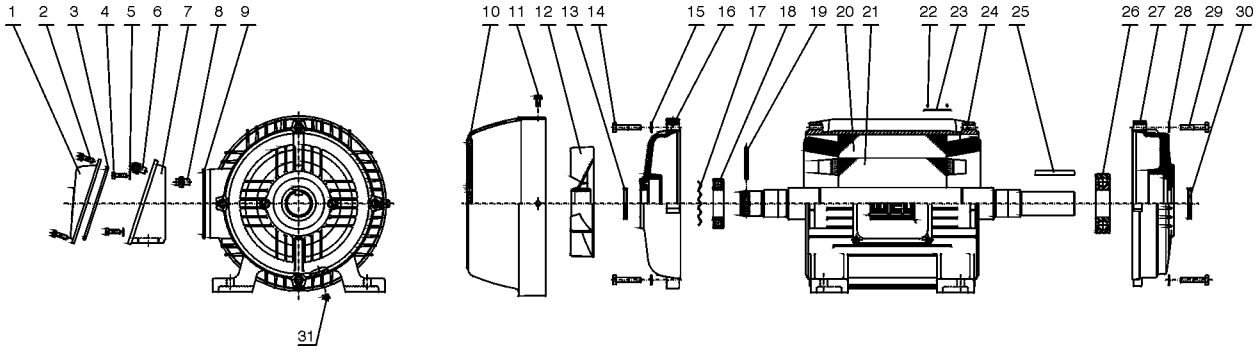


| Part Nr. | Description |
|---|---|
| 1 | Terminal box cover |
| 2 | Terminal box cover fixing bolt |
| 3 | Terminal box cover gasket |
| 4 | Terminal box fixing bolt |
| 5 | Terminal box fixing washer |
| 6 | Terminal box grounding lug |
| 7 | Terminal box |
| 8 | Frame grounding lug |
| 9 | Terminal box o'ring gasket |
| 10 | Fan cover |
| 11 | Fan cover fixing bolt |
| 12 | Fan |

| Part Nr. | Description |
|---|---|
| 13 | V'Ring |
| 14 | Non-drive end endshield fixing bolt |
| 15 | Non-drive end endshield washer |
| 16 | Non-drive endshield |
| 17 | Spring washer |
| 18 | Non-drive bearing |
| 19 | Fan fixing pin |
| 20 | Wound stator |
| 21 | Rotor / shaft assembly |
| 22 | Nameplate fixing rivet |
| 23 | Nameplate |
| 24 | Frame |

| Part Nr. | Description |
|---|---|
| 25 | Shaft key |
| 26 | Drive end bearing |
| 27 | Drive endshield |
| 28 | Drive endshield washer |
| 29 | Drive end endshield fixing bolt |
| 33 | V'Ring |
| 31 | Drain plug |

## THREE-PHASE MOTORS IP55 NEMA
## Frames 250T - W250T - 280T and 320T

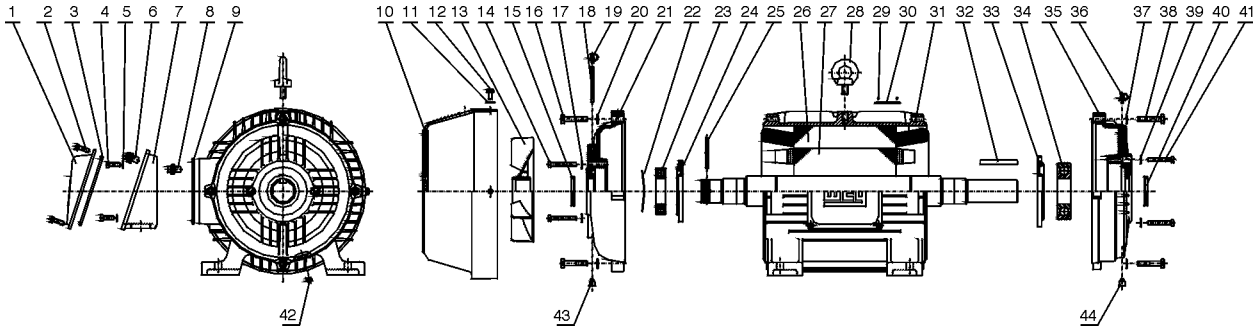


| Part Nr. | Description |
|---|---|
| 1 | Terminal box cover |
| 2 | Terminal box cover fixing bolt |
| 3 | Terminal box cover gasket |
| 4 | Terminal box fixing bolt |
| 5 | Terminal box fixing washer |
| 6 | Terminal box grounding lug |
| 7 | Terminal box |
| 8 | Frame grounding lug |
| 9 | Terminal box o'ring gasket |
| 10 | Fan cover |
| 11 | Fan cover washer |
| 12 | Fan cover fixing bolt |
| 13 | Fan |
| 14 | Non-drive end bearing cap bolt |
| 15 | V'Ring |

| Part Nr. | Description |
|---|---|
| 16 | Non-drive end endshield fixing bolt |
| 17 | Non-drive end bearing cap washer |
| 18 | Non-drive end grease nipple |
| 19 | Non-drive end grease nipple cover |
| 20 | Non-drive end endshield washer |
| 21 | Non-drive endshield |
| 22 | Spring washer |
| 23 | Non-drive end bearing |
| 24 | Non-drive end bearing cap |
| 25 | Fan fixing pin |
| 26 | Wound stator |
| 27 | Rotor and shaft |
| 28 | Eyebolt |
| 29 | Nameplate fixing rivet |

| Part Nr. | Description |
|---|---|
| 30 | Nameplate |
| 31 | Frame |
| 32 | Shaft key |
| 33 | Drive end bearing cap |
| 34 | Drive end bearing |
| 35 | Drive andshield |
| 36 | Drive end grease nipple cover |
| 37 | Drive endshield washer |
| 38 | Drive end endshield fixing bolt |
| 39 | Drive end bearing cap washer |
| 40 | V'Ring |
| 41 | Drive end bearing cap fixing bolt |
| 42 | Drain plug |
| 43 | Non-drive and grease relief |
| 44 | Drive end grease relief |

## THREE-PHASE MOTORS IP55 NEMA T
## Frames 360T - 400T - 440T - 500T and 580T

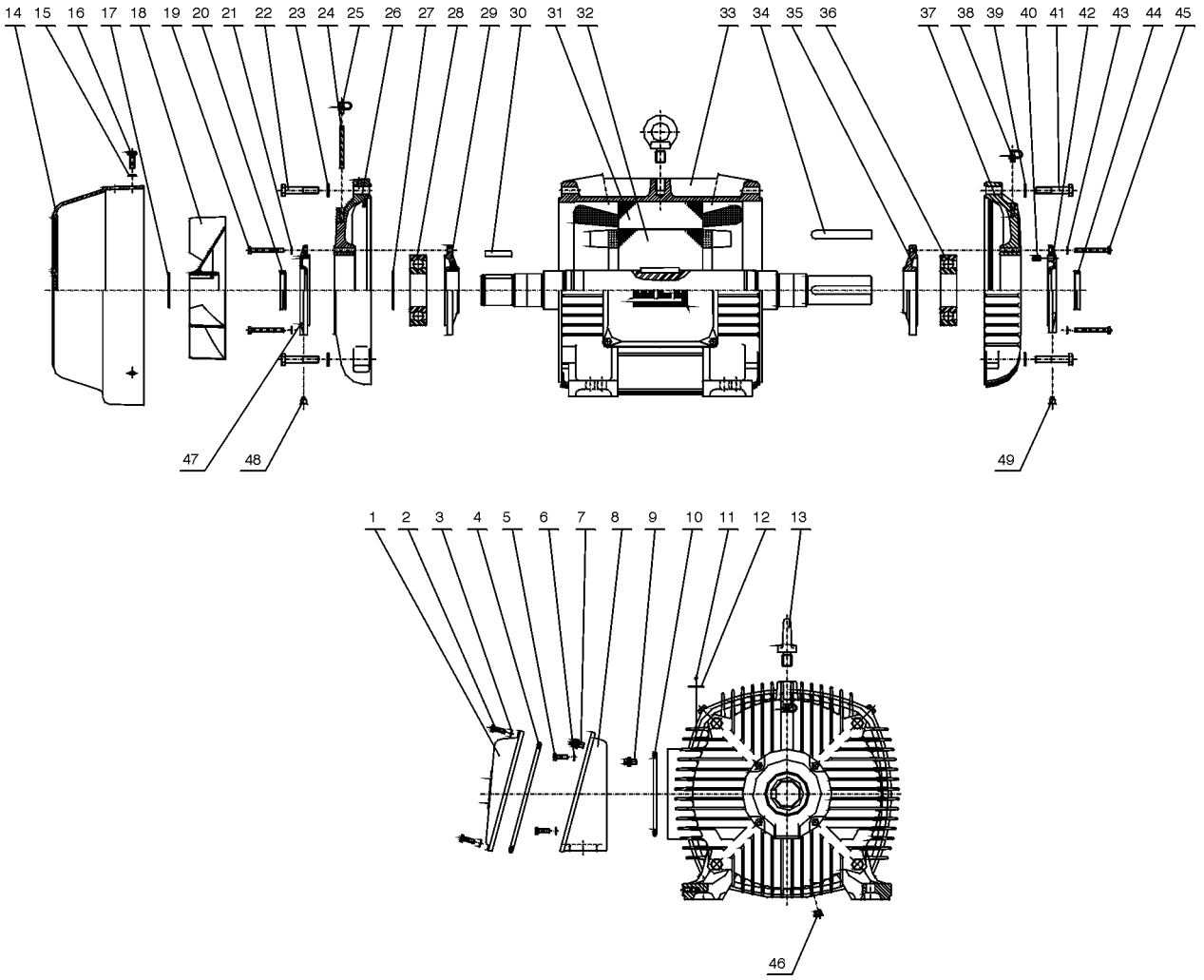


| Part Nr. | Description |
|---|---|
| 1 | Terminal box cover |
| 2 | Terminal box cover fixing bolt |
| 3 | Terminal box cover washer |
| 4 | Terminal box cover gasket |
| 5 | Terminal box fixing bolt |
| 6 | Terminal box fixing washer |
| 7 | Terminal box grounding lug |
| 8 | Terminal box |
| 9 | Frame grounding lug |
| 10 | Terminal box o'ring gasket |
| 11 | Nameplate fixing rivet |
| 12 | Nameplate |
| 13 | Eyebolt |
| 14 | Fan cover |
| 15 | Fan cover washer |
| 16 | Fan cover fixing bolt |
| 17 | Fan fixing ring |

| Part Nr. | Description |
|---|---|
| 18 | Fan |
| 19 | Non-drive end bearing cap bolt |
| 20 | V'Ring |
| 21 | Non-drive end bearing cap washer |
| 22 | Non-drive end endshield fixing bolt |
| 23 | Non-drive end endshield washer |
| 24 | Non-drive end grease nipple |
| 25 | Non-drive end grease nipple cover |
| 26 | Non-drive enshield |
| 27 | Bearing cap |
| 28 | Non-drive bearing |
| 29 | Internal non-drive end bearing cap |
| 30 | Fan fixing key |
| 31 | Wound stator |
| 32 | Rotor / shaft assembly |
| 33 | Frame |

| Part Nr. | Description |
|---|---|
| 34 | Shaft key |
| 35 | Internal drive end bearing cap |
| 36 | Drive end bearing |
| 37 | Drive endshield |
| 38 | Drive end grease nipple cover |
| 39 | Drive endshield washer |
| 40 | Pre-load spring |
| 41 | Drive end endshield fixing bolt |
| 42 | External drive end bearing cap |
| 43 | Drive end bearing cap washer |
| 44 | V'Ring |
| 45 | Drive end bearing cap fixing bolt |
| 46 | Drain plug |
| 47 | External non-drive end bearing cap |
| 48 | Non drive end grease relief |
| 49 | Non-drive end grease relief |

## THREE-PHASE MOTORS NEMA 56
## Frames A56 - B56 - D56 - F56H and G56H

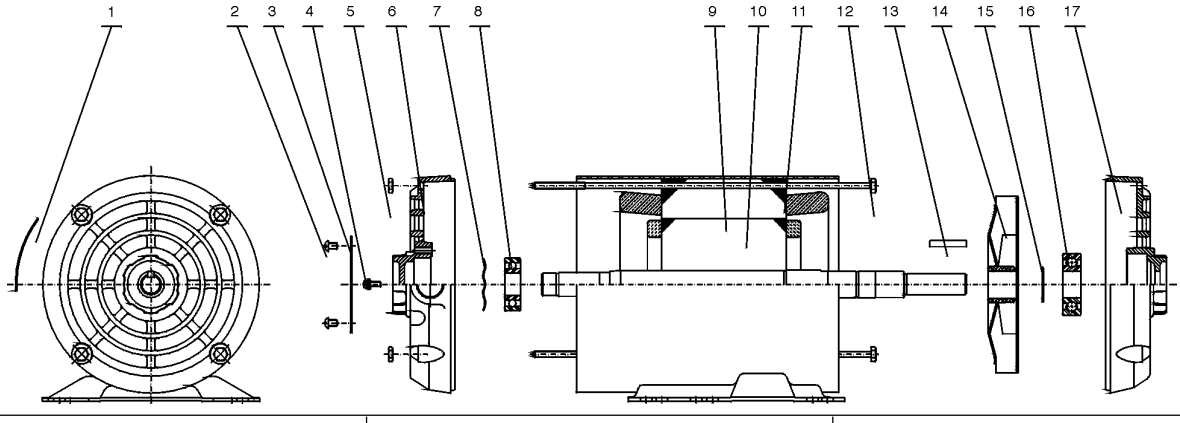


| Part Nr. | Description |
|---|---|
| 1 | Sticker |
| 2 | Terminal box cover fixing bolt |
| 3 | Terminal box cover |
| 4 | Grounding lug |
| 5 | Through bolt fastening nut |
| 6 | Non-drive endshield |
| 7 | Spring washer |
| 8 | Non-drive end bearing |
| 9 | Wound stator |
| 10 | Rotor / shaft assembly |
| 11 | Frame |
| 12 | Through bolt |
| 13 | Shaft key |
| 14 | Fan |
| 15 | Drive end bearing fastening washer |
| 16 | Drive end bearing |
| 17 | Drive endshield |

## SINGLE-PHASE MOTORS NEMA 56
## Frames B48 - C48 - C56 - A56 - B56 - D56 - F56H - G56H

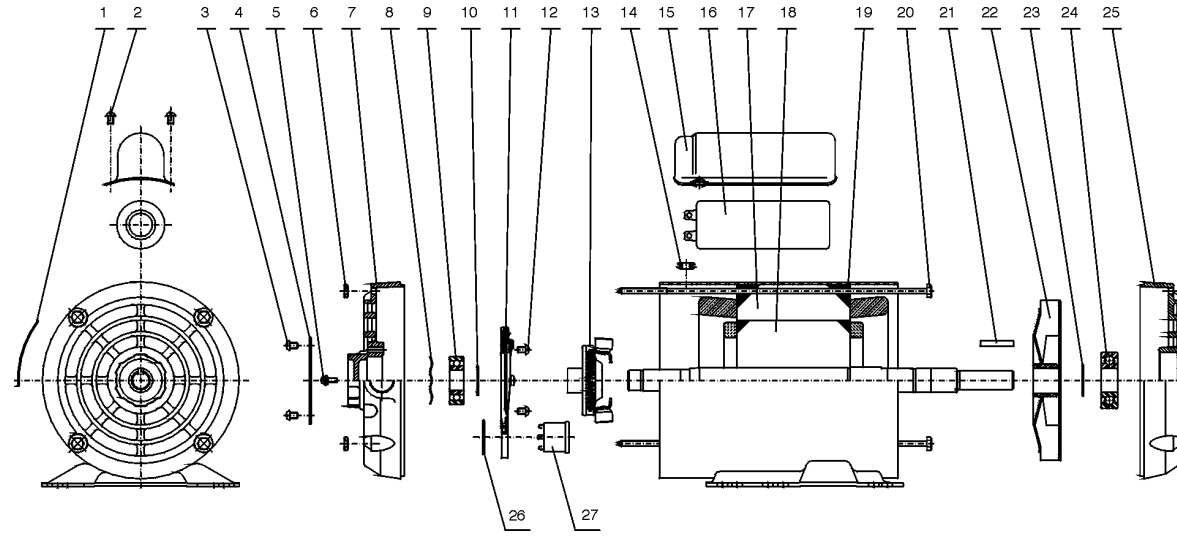


| Part Nr. | Description |
|---|---|
| 1 | Sticker |
| 2 | Capacitor cover fixing bolt |
| 3 | Terminal box cover fixing bolt |
| 4 | Terminal box cover |
| 5 | Grounding lug |
| 6 | Through bolt fastening nut |
| 7 | Non-drive endshield |
| 8 | Spring washer |
| 9 | Non-drive and bearing |
| 10 | Non-drive and bearing fastening washer |
| 11 | Stationary switch |
| 12 | Stationary switch fastening bolt |
| 13 | Centrifugal switch |
| 14 | Rubber ring for lead passing hole to capacitor |
| 15 | Capacitor cover |
| 16 | Capacitor |
| 17 | Wound stator |
| 18 | Rotor / shaft assembly |
| 19 | Frame |
| 20 | Through bolt |
| 21 | Shaft key |
| 22 | Fan |
| 23 | Drive end bearing fastening washer |
| 24 | Drive end bearing |
| 25 | Drive endshield |
| 26 | Overload thermal protector fixing ring |
| 27 | Overload thermal protector |

***Note:*** *For F56H and G56H frame motors: 1) Part nr. 2 = 3 pieces; 2) Part nr. 15 and 16 = 2 pieces*

N O T E S :

LEFT BLANK

# *MUNSCH*

## *MODEL NP-65-50-160, CENTRIFUGAL CHEMICAL PUMP*

LEFT BLANK

# Chemical Block Pump

## Original Operating Manual

## Plant No.:_____

## NP-B Series with MUNSCH-REA-F / MUNSCH-REA-F/D Mechanical Seal

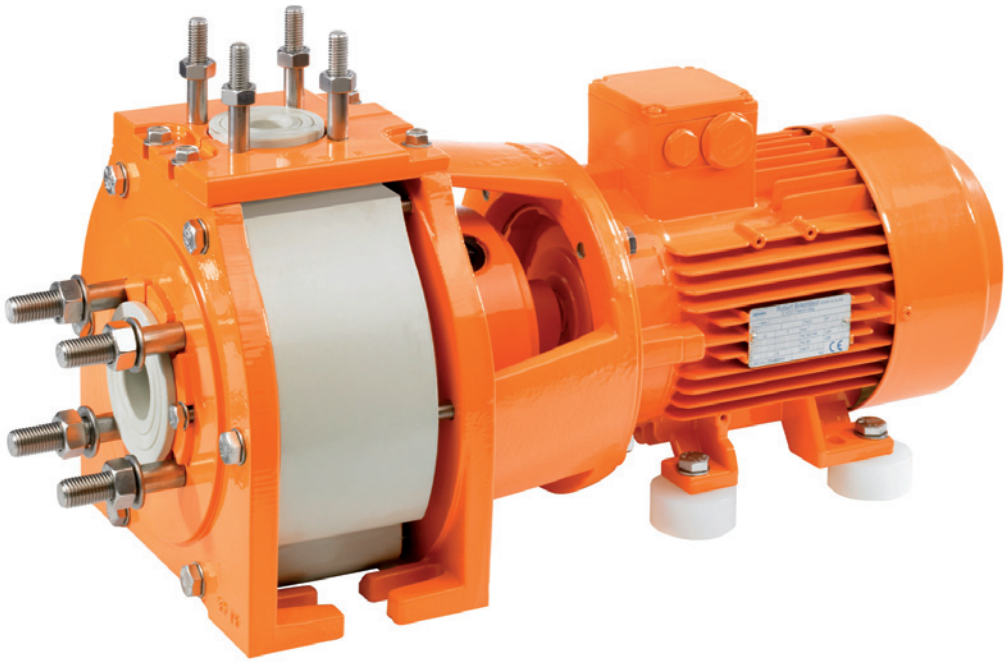

Version BA-2020.04
Print-No. EN – 10

Munsch Chemie-Pumpen GmbH
Im Staudchen
D-56235 Ransbach-Baumbach
Germany
Phone: +49 (0) 26 23-8 98-90
Fax: +49 (0) 26 23-8 98-95
E-mail: munsch@munsch.de
Internet: http://www.munsch.de

We reserve the right to make technical changes.

**Read this operating manual before installation and commissioning!**

Save for future use.

CE

# Table of contents


**1 About this document** ..... 6
1.1 Target groups ..... 6
1.2 Other applicable documents ..... 6
1.3 Warnings and symbols ..... 7
1.4 Technical terms ..... 7

**2 Safety** ..... 8
2.1 Intended use ..... 8
2.2 General safety instructions ..... 8
2.2.1 Product safety ..... 8
2.2.2 Operator's obligations ..... 9
2.2.3 Duties of staff ..... 9
2.3 Special hazards ..... 9
2.3.1 Potentially explosive areas ..... 9
2.3.2 Hazardous pumped media ..... 9

**3 Layout and function** ..... 10
3.1 Description ..... 10
3.2 Labels ..... 10
3.2.1 Type plate ..... 10
3.2.2 Type plate with ATEX ..... 10
3.2.3 Pump type code ..... 10
3.3 Layout ..... 11
3.4 Shaft seals ..... 12
3.4.1 Mechanical seals ..... 12
3.5 Auxiliary operating systems ..... 12
3.5.1 Sealing systems ..... 12
3.5.2 Flushing options ..... 13

**4 Transport, storage and disposal** ..... 14
4.1 Transport ..... 14
4.1.1 Unpacking and inspection on delivery ..... 14
4.1.2 Lifting ..... 14
4.2 Preservation ..... 15
4.3 Storage ..... 15
4.4 Disposal ..... 15

**5 Setup and connection** ..... 16
5.1 Preparing the setup ..... 16
5.1.1 Checking the ambient conditions ..... 16
5.1.2 Preparing the setup site ..... 16
5.1.3 Preparing the foundation and setup surface ..... 16
5.1.4 Preparing the pump ..... 16
5.1.5 Installing the heat insulation ..... 16
5.2 Setting up the pump unit ..... 17
5.3 Setup with foundation ..... 17
5.3.1 Setting the pump unit with base plate on the foundation ..... 17
5.3.2 Fastening the base plate ..... 18
5.4 Setup without foundation ..... 18
5.5 Planning pipes ..... 18
5.5.1 Laying out supports and flange connections ..... 18
5.5.2 Specifying nominal diameters ..... 18
5.5.3 Specify pipe lengths ..... 19
5.5.4 Optimising changes in cross-section and direction ..... 19
5.5.5 Providing safety and monitoring devices (recommended) ..... 19
5.6 Connecting pipes ..... 20
5.6.1 Avoid impurities in the pipes ..... 20
5.6.2 Installing auxiliary piping ..... 20
5.6.3 Installing the suction pipe ..... 20
5.6.4 Installing the pressure pipe ..... 20
5.6.5 Checking that the pipe connection is stress-free ..... 20
5.7 Connecting the electrical system ..... 20
5.7.1 Connecting the motor ..... 20
5.7.2 Checking the direction of rotation ..... 20

**6 Operation** ..... 21
6.1 Putting the pump into service for the first time ..... 21
6.1.1 Identifying the pump version ..... 21
6.1.2 Checking the downtime ..... 21
6.1.3 Preparing auxiliary operating systems (if available) ..... 21
6.1.4 Filling and bleeding ..... 21
6.1.5 Checking the direction of rotation ..... 21
6.1.6 Switching on the pump ..... 22
6.1.7 Switching off the pump ..... 22
6.2 Operating ..... 23
6.2.1 Making preparations for operation ..... 23
6.2.2 Switching on the pump ..... 23
6.2.3 Switching off the pump ..... 23
6.3 Shut-down ..... 24
6.4 Restoring the pump to service ..... 24
6.5 Operating the stand-by pump ..... 24

**7 Maintenance** ..... 25
7.1 Monitoring ..... 25
7.2 Maintenance ..... 25
7.2.1 Mechanical seals ..... 26
7.3 Dismounting the pump ..... 26
7.3.1 Returning the pump to the manufacturer ..... 27
7.3.2 Preparations for dismounting the pump ..... 27
7.3.3 Loosen connectors (if applicable) ..... 27
7.3.4 Dismounting the pump casing ..... 28
7.3.5 Dismounting the impeller and front shaft sleeve ..... 28
7.3.6 Dismounting the product-side MUNSCH-REA-F mechanical seal ..... 28
7.3.7 Disassembling the atmosphere-side mechanical seal ..... 29
7.3.8 Dismounting the rear shaft sleeve ..... 29
7.3.9 Dismounting the pump shaft ..... 29

7.4 Installing the pump ..... 30
7.4.1 Preparing the installation ..... 30
7.4.2 Fitting the casing cover ..... 30
7.4.3 Installing the pump in the installation ..... 30

7.5 Ordering spare parts ..... 30

**8 Troubleshooting** ..... 31

**9 Appendix** ..... 34

9.1 Sectional drawing ..... 34
9.1.1 Part numbers and designations ..... 34
9.1.2 Overview sectional drawing ..... 35
9.1.3 Variants ..... 36

9.2 Technical specifications ..... 39
9.2.1 Ambient conditions ..... 39
9.2.2 Parameters for auxiliary operating systems ..... 39
9.2.3 Noise pressure levels ..... 39
9.2.4 Tightening torques ..... 40
9.2.5 Cleaning agents ..... 40
9.2.6 Socket loads acc. to ISO 5199 ..... 41
9.2.7 Operating limits for pressure and temperature ..... 41
9.2.8 Flushing options ..... 42

9.3 Spare parts for two years of continuous operation according to DIN 24296 ..... 44
9.3.1 Commissioning ..... 44
9.3.2 Maintenance ..... 44

9.4 Declaration of conformity according to EC machine directives ..... 45

# List of figures


Fig. 1 Type plate (example) ..... 10
Fig. 2 Type plate with ATEX (example) ..... 10
Fig. 3 Pump type code (example) ..... 10
Fig. 4 NP-B layout (with single-action mechanical seal) ..... 11
Fig. 5 Double mechanical seal with quench – operating principle ..... 12
Fig. 6 Double mechanical seal with pressurised barrier medium – operating principle ..... 13
Fig. 7 Fastening the lifting gear to the pump unit with base plate ..... 14
Fig. 8 Fastening the lifting gear to the pump unit without base plate ..... 14
Fig. 9 Fastening the pump unit ..... 17
Fig. 10 Setup with foundation ..... 17
Fig. 11 Setup without foundation ..... 18
Fig. 12 Straight pipe lengths upstream and downstream of the pump (recommended) ..... 19
Fig. 13 Loosening the connectors ..... 27
Fig. 14 Dismounting the pump casing ..... 28
Fig. 15 Dismounting the impeller and front shaft sleeve ..... 28
Fig. 16 Dismounting the product-side MUNSCH-REA-F mechanical seal ..... 28
Fig. 17 Dismounting the MUNSCH-REA-F/D mechanical seal ..... 29
Fig. 18 Dismounting the pump shaft ..... 29
Fig. 19 Fitting the casing cover ..... 30
Fig. 20 NP-B with MUNSCH-REA-F mechanical seal – overview sectional drawing ..... 35
Fig. 21 MUNSCH-REA-F single mechanical seal ..... 36
Fig. 22 MUNSCH-REA-F/D double mechanical seal ..... 36
Fig. 23 Stationary flushing (supply connection) ..... 36
Fig. 24 Permanent flushing (supply connection) ..... 36
Fig. 25 Single mechanical seal unit with spring chamber flushing (supply connectors) ..... 37
Fig. 26 MUNSCH-REA-F/D supply connections (operation in through feed mode) ..... 37
Fig. 27 MUNSCH-REA-F/D supply connections (operation in thermal syphon system) ..... 38
Fig. 28 Using a pressurised barrier medium (in preparation) – pressure of barrier medium ..... 39
Fig. 29 Socket loads at the pump ..... 41
Fig. 30 Operating limits for pressure and temperature ..... 41
Fig. 31 Connection points ..... 42

# List of tables

Tab. 1 Target groups and their duties ..... 6
Tab. 2 Other applicable documents and their purpose ..... 6
Tab. 3 Warnings and consequences of non-observance ..... 7
Tab. 4 Symbols and their meaning ..... 7
Tab. 5 Technical terms and their meaning ..... 7
Tab. 6 Quenching (in preparation) – variants and characteristics ..... 13
Tab. 7 Using a pressurised barrier medium (in preparation) – variants and characteristics ..... 13
Tab. 8 Measures after long storage times/downtimes ..... 16
Tab. 9 Measures to be taken if operation is interrupted ..... 24
Tab. 10 Measures to be taken, depending on the pumped medium behaviour ..... 24
Tab. 11 Measures for return ..... 27
Tab. 12 Fault/number assignment ..... 31
Tab. 13 Troubleshooting table ..... 33
Tab. 14 Designation of components according to part numbers ..... 34
Tab. 15 Ambient conditions ..... 39
Tab. 16 Operating parameters for quenching/ barrier medium in open system (in preparation) ..... 39
Tab. 17 Noise pressure levels ..... 39
Tab. 18 Hexagon head bolt **901.2** – steel/cast iron pairings ..... 40
Tab. 19 Socket head cap screw **914.1** – steel/steel pairings ..... 40
Tab. 20 Flange connection ..... 40
Tab. 21 Cleaning agents ..... 40
Tab. 22 Socket load – forces ..... 41
Tab. 23 Socket load – torque ..... 41
Tab. 24 Flushing options and parameters for REA-F, F/D seals ..... 43
Tab. 25 Replacement parts for 2 years' continuous operation – commissioning ..... 44
Tab. 26 Replacement parts for 2 years' continuous operation – maintenance ..... 44

# 1 About this document

This manual

- Is part of the pump
- Applies to all of the afore-mentioned series
- Describes safe and appropriate operation during all operating phases

## 1.1 Target groups

| Target group | Duty |
|---|---|
| Operating company | ► Keep this manual available where the installation is used, including for later use.<br>► Make sure the staff read and follow this manual and the other applicable documents, especially the safety instructions and warnings.<br>► Observe any additional rules and regulations referring to the installation. |
| Qualified staff, fitter | ► Read, observe and follow this manual and the other applicable documents, especially the safety instructions and warnings. |

Tab. 1 Target groups and their duties

## 1.2 Other applicable documents

| Document | Purpose |
|---|---|
| ATEX additional instructions | Operation in potentially explosive areas |
| Order data sheet | Technical specifications, operating conditions |
| Setup drawing | Setup dimensions, connection dimensions etc. |
| Technical description | Technical specifications, operating limits |
| Sectional drawing | Sectional drawing, part numbers, component designations |
| Supplier documentation | Technical documentation for supplier parts |
| Spare parts list | Ordering spare parts |
| Document of compliance | Returning the pump to the manufacturer |
| Declaration of conformity | Legal confirmation that the pump meets all requirements of the applicable EC directive(s) (→ 9.4 Declaration of conformity according to EC machine directives, Page 45). |

Tab. 2 Other applicable documents and their purpose

## 1.3 Warnings and symbols

| Warning | Risk level | Consequences of non-observance |
|---|---|---|
| ⚠ DANGER | Immediate acute risk | Fatal or serious injury |
| ⚠ WARNING | Potential acute risk | Fatal or serious injury |
| ⚠ CAUTION | Potentially hazardous situation | Minor bodily harm |
| NOTE | Potentially hazardous situation | Material damage |

Tab. 3 Warnings and consequences of non-observance

| Symbol | Meaning |
|---|---|
| ⚠ | Safety warning sign<br>► Observe all information indicated by the safety warning sign to avoid injury or death. |
| ► | Instruction |
| 1. , 2. , ... | Multiple-step instructions |
| ✓ | Requirement |
| → | Cross reference |
| ⓘ | Information, note |

Tab. 4 Symbols and their meaning

## 1.4 Technical terms

| Term | Meaning |
|---|---|
| Pump unit | Pump with motor |
| Quenching medium | Medium for quenching shaft seals |
| Barrier medium | Pressurised barrier medium for shaft seals |
| Flushing medium | Medium for flushing the sealing faces in the seal space or plain bearing |
| Auxiliary operating systems | Devices for operating the pump |

Tab. 5 Technical terms and their meaning

# 2 Safety

The manufacturer does not accept any liability for damage resulting from non-observance of the entire documentation.

## 2.1 Intended use

The intended use of the pump is defined in the technical documents. If the pump is to be used for operating data other than those specified in the order data sheet, the operator should check carefully whether the pump version, the accessories and the materials are suitable for the new operating conditions.

- Adhere to the operating limits (→ order data sheet, technical description).
- Only use the pump to pump the agreed pumped media (→ order data sheet).
- Avoid dry running:
  Initial damage such as destruction of mechanical seal and plastic parts within only a few seconds.
  – Make sure the pump is never put into operation or operated without pumped medium.
- Avoid cavitation:
  – Fully open the suction-side fitting; do not use the fitting to adjust the flow rate.
  – Do not open the pressure-side fitting beyond the agreed operating point.
  – Ensure a sufficient $NPSH_{installation}$.
- Avoid overheating:
  – Do not operate the pump while the pressure-side fitting is closed.
  – Minimum permissible flow rate 0.1 x $Q_{opt}$ (minimum flow rate → order data sheet)
- Avoid damage to the motor:
  – Do not open the pressure-side fitting beyond the agreed operating point.
  – Observe the number of permitted motor start-ups per hour (→ manufacturer's specifications).
- Consult the manufacturer about any other use of the pump.
- Adhere to the operating limits for pressure and temperature (→ 9.2.7 Operating limits for pressure and temperature , Page 41).

**Avoiding common types of misuse (examples)**

- The power uptake of the pump increases with increasing density of the pumped medium. To avoid any overloading of the pump and motor, maintain the permissible density (→ order data sheet).
  Lower densities are allowed. Adapt the auxiliary systems accordingly.
- Adhere to the limits for solids content and grit size when pumping solids-carrying fluids (→ order data sheet, technical description).
- When using auxiliary operating systems:
  – Make sure the operating medium is compatible with the product medium.
  – Ensure a permanent supply of the respective operating medium.

## 2.2 General safety instructions

Take note of the following instructions before carrying out any work.

### 2.2.1 Product safety

The pump has been constructed according to the latest technology and established technical safety rules. Nevertheless, a potential risk to life and limb of the operator or other persons or damage to the pump and other property cannot be completely excluded.

- Only operate the pump if it is in perfect technical condition; only use it as intended, staying aware of safety and risks and adhering to the instructions in this manual.
- Keep this manual and all other applicable documents complete, legible and accessible to staff at all times.
- Refrain from any procedures that would endanger staff or third parties.
- If a safety-relevant fault occurs, shut down the pump immediately and have the fault eliminated by appropriate staff.
- In addition to the entire documentation, comply with statutory or other safety and accident-prevention regulations as well as with the applicable standards and guidelines in the country where the pump is operated.
- The assembly of incomplete pump units delivered by the customer must be made in accordance with EC machine directive 2006/42/EC.

### 2.2.2 Operator's obligations

**Safety-conscious operation**

- Only operate the pump if it is in perfect technical condition; only use it as intended, staying aware of safety and risks and adhering to the instructions in this manual.
- Ensure the following are observed and monitored:
  – Adherence to intended use
  – Statutory or other safety and accident-prevention regulations
  – Safety regulations governing the handling of hazardous substances
  – Applicable standards and guidelines in the country where the pump is operated
- Make protective equipment available.

**Staff qualifications**

- Make sure all staff assigned with work on the pump have read and understood this manual and all other applicable documents, especially the safety, maintenance and repair information, before beginning with work.
- Organise responsibilities, areas of competence and the supervision of staff.
- Make sure all work is carried out by specialist technicians only:
  – Fitting, repair and maintenance work
  – Work on the electrical system
- Make sure trainee staff only work on the pump under supervision of specialist technicians.

**Safety devices**

- Provide the following safety devices and verify their integrity:
  – For hot, cold and moving parts: contact protection of the pump provided by the customer
  – If electrostatic charging is possible: provide appropriate earthing

**Warranty**

- Obtain the manufacturer's approval before carrying out any modifications, repairs or alterations during the warranty period.
- Only use original parts or parts that have been approved by the manufacturer.

### 2.2.3 Duties of staff

- Observe and keep legible all directions given on the pump, e.g. the arrow indicating the direction of rotation and the markings for flushing connections.
- Pump and components:
  – Do not step on them or use as a climbing aid
  – Do not use them to support boards, ramps or beams
  – Do not use them as a fixing point for winches or supports
  – Do not use them for storing paper or similar materials
  – Do not de-ice using gas burners or similar tools
- Do not remove the protection against accidental contact with hot, cold and moving parts during operation.
- Use protective equipment if necessary.
- Carry out work on the pump only while the pump is not running.
- Before carrying out any fitting or maintenance work, isolate the motor from its supply voltage and secure it against being switched back on again.
- Reinstall the safety devices according to regulations after any work on the pump.

## 2.3 Special hazards

### 2.3.1 Potentially explosive areas

- (→ ATEX additional instructions)

### 2.3.2 Hazardous pumped media

- Observe the safety regulations for handling hazardous substances when handling hazardous pumped media (e.g. hot, flammable, explosive, poisonous or potentially harmful).
- Use protective equipment when carrying out any work on the pump.

# 3 Layout and function

## 3.1 Description

Horizontal centrifugal block pump with volute casing and single-entry, single-stage radial impeller; nominal pressure PN 10.

The casing dimensions and connection dimensions correspond to EN 22858/ISO 2858, with the addition of pump sizes 40-25-160 and 40-25-125.

## 3.2 Labels

### 3.2.1 Type plate

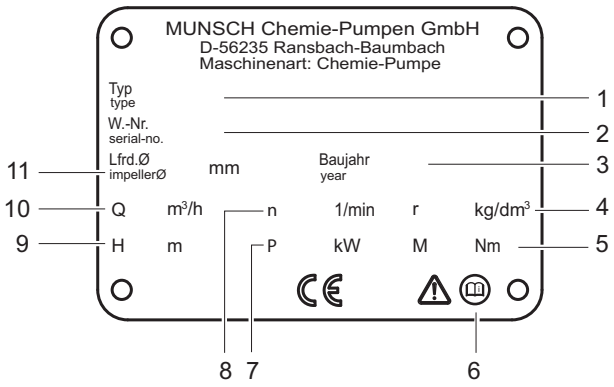


Fig. 1 Type plate (example)

1 Pump type
2 Serial number
3 Year of construction
4 Density
5 Torque
6 Note on operating manual
7 Power consumption
8 Speed
9 Pump head
10 Flow rate
11 Impeller diameter

### 3.2.2 Type plate with ATEX

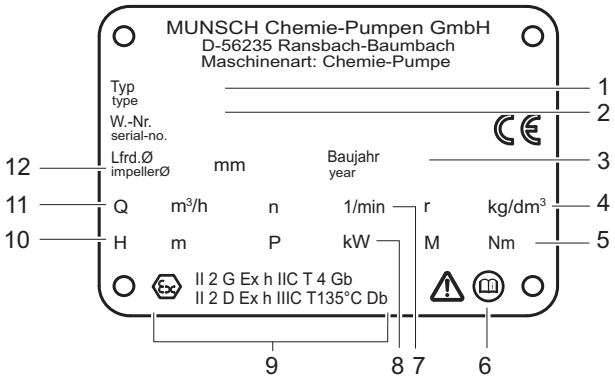


Fig. 2 Type plate with ATEX (example)

1 Pump type
2 Serial number
3 Year of construction
4 Density
5 Torque
6 Note on operating manual
7 Speed
8 Power consumption
9 Explosion protection code
10 Pump head
11 Flow rate
12 Impeller diameter

### 3.2.3 Pump type code

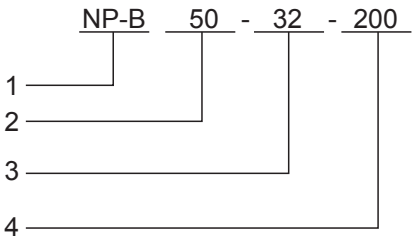


Fig. 3 Pump type code (example)

1 Series
2 Suction nozzle DN [mm]
3 Pressure joint DN [mm]
4 Nominal impeller diameter [mm]

## 3.3 Layout

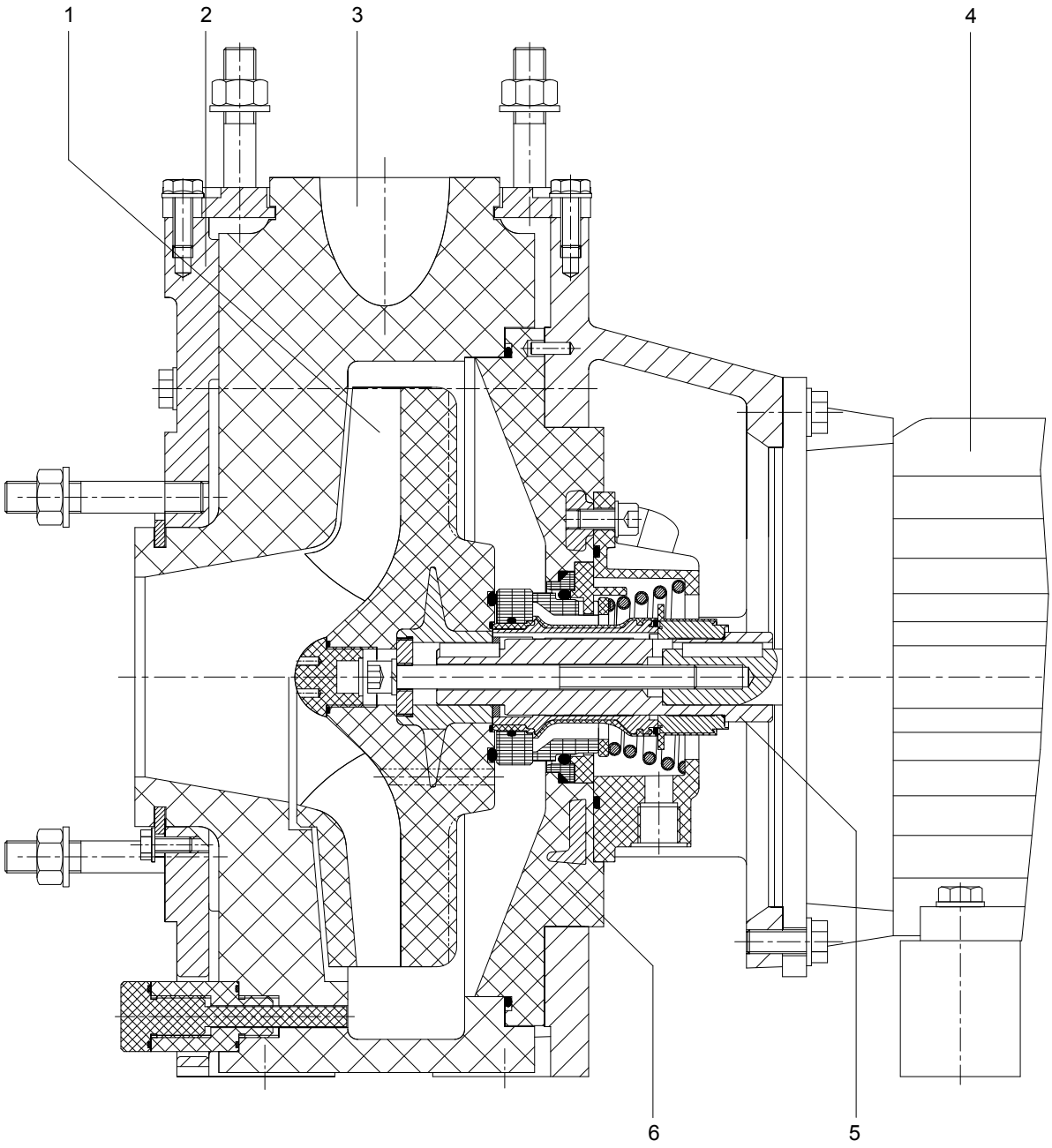


Fig. 4 NP-B layout (with single-action mechanical seal)

1 Impeller
2 Suction flange
3 Pump casing
4 Motor
5 Pump shaft
6 Casing cover

## 3.4 Shaft seals

Only one of the following shaft seals can be used.

### 3.4.1 Mechanical seals

Mechanical seals will always show some functional drip leakage.

Use of double mechanical seals only possible from motor size 100 L upwards

- Single mechanical seal
- Double mechanical seal with quench
- Double mechanical seal with using a pressurised barrier medium

## 3.5 Auxiliary operating systems

Specification and connection points of the sealing systems and flushing options

- (→ 9.2.2 Parameters for auxiliary operating systems, Page 39).
- (→ 9.2.8 Flushing options , Page 42).

### 3.5.1 Sealing systems

Only one of the following sealing systems can be used.

**Quenching**

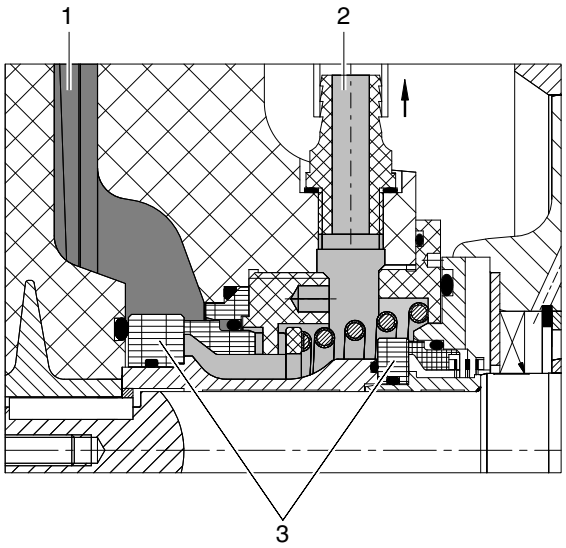


Fig. 5 Double mechanical seal with quench – operating principle

1 Pumped medium
2 Quenching medium (unpressurised)
3 Double mechanical seal

The pressure of the pumped medium on the product-side mechanical seal is higher than the pressure of the quenching medium during quenching. The sealing friction surfaces of the product-side seal are lubricated by the pumped medium. The sealing friction surfaces of the atmosphere-side seal are lubricated by the quenching medium.

Application examples:

- Pumped media that crystallize in air, causing long-term damage to the seal
- Prevention of odours
- Cooling of seals

| Variant | Characteristics of the quenching medium |
|---|---|
| Open system | • Supplied and drained continuously<br>• Unpressurised<br>• Clean fluid |
| Closed system | • Circulated in a closed circuit<br>• Unpressurised |

Tab. 6 Quenching (in preparation) – variants and characteristics

| Variant | Characteristics of the barrier medium |
|---|---|
| Open system | • Supplied and drained continuously<br>• Pressurised<br>• Clean fluid |
| Closed system | • Circulated in a closed circuit<br>• Pressurised |

Tab. 7 Using a pressurised barrier medium (in preparation) – variants and characteristics

**Using a pressurised barrier medium**

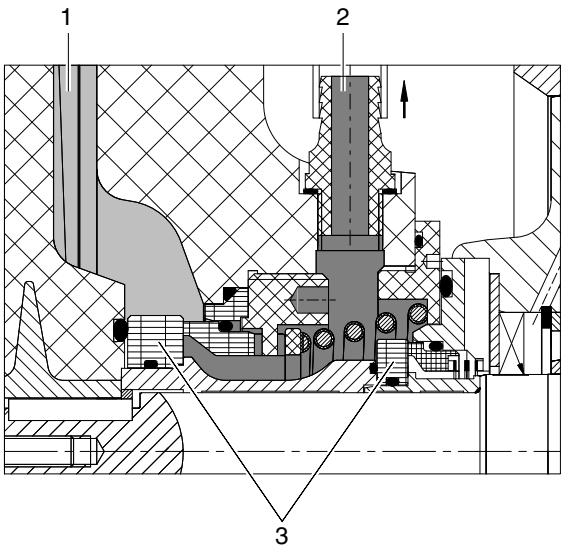


Fig. 6 Double mechanical seal with pressurised barrier medium – operating principle

1 Pumped medium
2 Barrier medium (pressurised)
3 Double mechanical seal

When using a pressurised barrier medium, the pressure of the barrier medium on the product-side mechanical seal is higher than the pressure of the pumped medium. The sealing friction surfaces are lubricated by the barrier medium.

Application examples:

- Pumped media that crystallize or carry solids, causing long-term damage to the seal
- Toxic pumped media
- Pumped media presenting an environmental hazard

### 3.5.2 Flushing options

Flushing options and parameters for REA-F, REA-F/D seals (→ 9.2.8 Flushing options , Page 42).

- Spring chamber flushing
- Stationary flushing
- Permanent flushing

# 4 Transport, storage and disposal

## 4.1 Transport

Weight specifications (→ individual order documents)

### 4.1.1 Unpacking and inspection on delivery

1. Unpack the pump/unit on delivery and check it for transport damage.
2. Report any transport damage to the manufacturer without delay.
3. Dispose of packaging material according to local regulations.

### 4.1.2 Lifting

**⚠ DANGER**

**Death or crushed limbs caused by falling loads!**

- ► Use lifting gear appropriate for the total weight to be transported.
- ► Fasten the lifting gear as shown in the illustrations below.
- ► Do not stand under suspended loads.

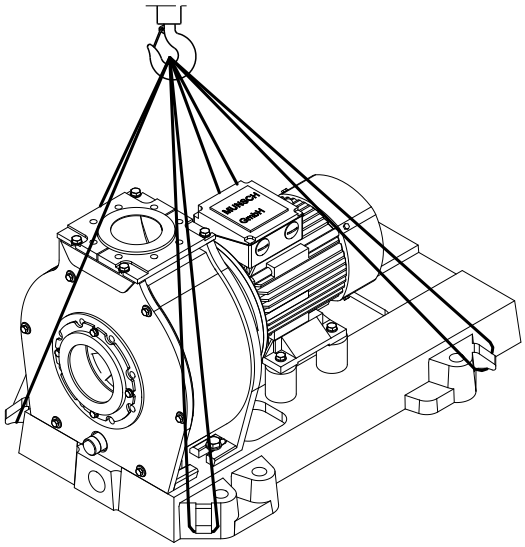

Fig. 7 Fastening the lifting gear to the pump unit with base plate

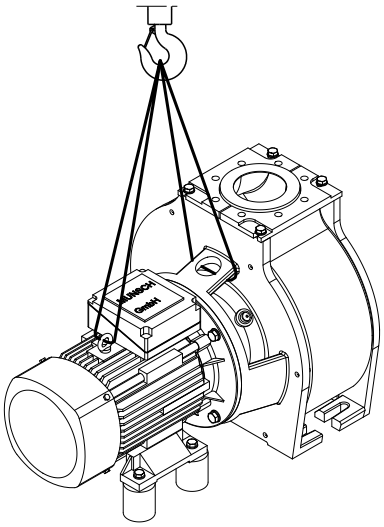

Fig. 8 Fastening the lifting gear to the pump unit without base plate

- ► Lift the pump unit properly.

## 4.2 Preservation

No preservation required

► Do not preserve the pump.

## 4.3 Storage

**NOTE**

**Material damage due to inappropriate storage!**

► Store the pump in an appropriate manner.

1. Seal all openings with blank flanges, blind plugs or plastic covers.
2. Make sure the storage room meets the following conditions:
   – Dry
   – Frost-free
   – Vibration-free
3. Turn the motor shaft once a month:
   – Remove any existing transport protection devices first. Keep the transport protection devices for later use.
   – Make sure the shaft and the bearing change their rotational position in the process.

## 4.4 Disposal

Plastic parts can be contaminated by poisonous or radioactive pumped media to such an extent that cleaning is insufficient.

**⚠ WARNING**

**Risk of poisoning and environmental damage due to the pumped medium or oil!**

► Use protective equipment when carrying out any work on the pump.

► Prior to the disposal of the pump:
   – Collect any pumped medium and oil or grease which run out and dispose of them separately according to local regulations.
   – Neutralise residues of pumped medium in the pump.

► Remove the plastic parts and dispose of them according to local regulations.

► Dispose of the pump according to local regulations.

# 5 Setup and connection

For pumps in potentially explosive areas (→ ATEX additional instructions)

**NOTE**

**Material damage caused by dirt!**

► Do not remove the covers and sealing covers until immediately before connecting the pipes to the pump.

## 5.1 Preparing the setup

### 5.1.1 Checking the ambient conditions

► Make sure the required ambient conditions are met (→ 9.2.1 Ambient conditions, Page 39).

### 5.1.2 Preparing the setup site

► Make sure the setup site meets the following conditions:
- Pump freely accessible from all sides
- Sufficient space for installation/removal of the pipes and for maintenance and repair work, especially for the removal and installation of the pump and motor
- Pump not exposed to external vibrations (damage to bearings)
- Frost protection
- Sufficient leak protection available according to local regulations

### 5.1.3 Preparing the foundation and setup surface

Setup options:
- with concrete foundation
- with steel foundation frame
- without foundation

► Make certain that the foundation and setup surface meet the following conditions:
- Level
- Clean (no oil, dust or other impurities)
- Capable of bearing the weight of the pump unit and all operating forces
- Stability of the pump unit ensured
- For concrete foundation: Standard concrete of strength class B 25

### 5.1.4 Preparing the pump

1. Take the following measures after long storage times / downtimes.

| Storage time/ downtime | Measure |
|---|---|
| > 2 years | ► Replace the motor bearing if necessary (→ operating manual of the motor manufacturer).<br>► Replace the elastomer seals (O-rings, shaft seal rings). |

Tab. 8 Measures after long storage times/downtimes

2. Remove any transport protection devices which are present.
Keep the transport protection devices for later use.

### 5.1.5 Installing the heat insulation

Only necessary to maintain the temperature of the pumped medium.

**NOTE**

**Material damage caused by overheating!**

► Only install the heat insulation on the volute casing.

► Install the heat insulation appropriately.

## 5.2 Setting up the pump unit

✓ Aids, tools and materials:
- Fasteners / screws (→ setup drawing)
- Washers

Only necessary if the pump unit is fixed to the setup surface or base plate at the setup site.

**NOTE**

**Material damage due to incorrect installation!**

► Do not screw the motor or motor sub-structure to the setup surface or base plate.

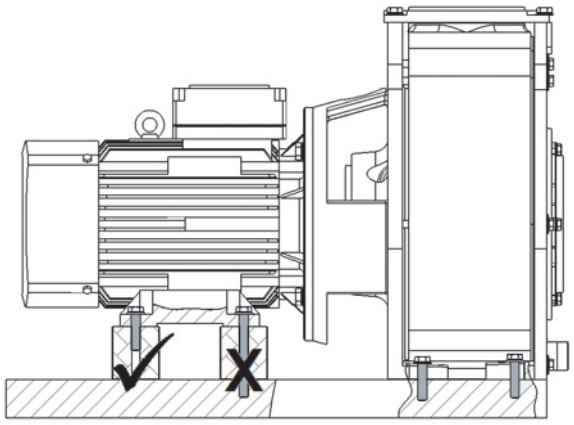

Fig. 9 Fastening the pump unit

1. Set down the pump unit onto a suitable setup surface or base plate, then align it.
2. Ensure that the pump and motor feet / sub-structures are aligned.
   Use suitable washers, when necessary.
3. Screw the pump onto the intermediate lantern and the suction flange to the setup surface or base plate.
4. Make sure the pump unit is not deformed.

## 5.3 Setup with foundation

**NOTE**

**Material damage due to base plate distortion!**

► Set and fasten the base plate on the foundation as described in the following.

### 5.3.1 Setting the pump unit with base plate on the foundation

✓ Implements, tools and materials:
- Foundation bolts (→ Setup drawing)
- Steel washers
- Mortar grout, non-shrinking
- Spirit level

1. Lift the pump unit with base plate (→ 4.1 Transport, Page 14).
2. Working from below, hang the foundation bolts in the fixation holes of the base plate.

Observe the manufacturer's instruction when using chemical anchors.

3. Set down the pump unit with base plate onto the foundation. When doing this, sink the foundation bolts into the prepared anchoring holes.

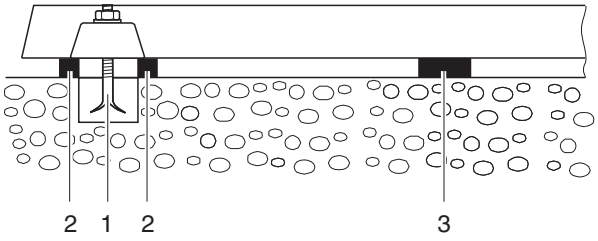


Fig. 10 Setup with foundation

4. Use steel washers to align the base plate to height and system measurements as described in the following:
   - Position 1 steel washer (2) each left and right of next to each foundation bolt (1).
   - If the distance between anchoring holes is > 750 mm, position additional steel washer (3) centrally at each of the base plate.
5. Make certain that the base plate and the steel washers are in full surface contact.
6. Use a machine spirit level to check the permissible height deviation (1 mm/m) lengthwise and crosswise.
7. Repeat procedure until the base plate is correctly aligned.

### 5.3.2 Fastening the base plate

Filling out the base plate with mortar grout will improve the damping behaviour.

1. Fill the anchoring holes with mortar grout.
2. Once the mortar grout has set:
   – Screw the base plate tight at three points with the specified tightening torque (→ 9.2.4 Tightening torques, Page 40).
3. Before tightening the remaining screws, compensate any unevenness of the fixation surface, using metal shims next to every screw.
4. Fill the base plate with moulding material if applicable. Knock on the base plate to ensure that no cavities are created in the process.
5. Make sure the base plate is not deformed.

## 5.4 Setup without foundation

✓ Implements, tools and materials:
   – Fasteners / screws (→ setup drawing)
   – Washers

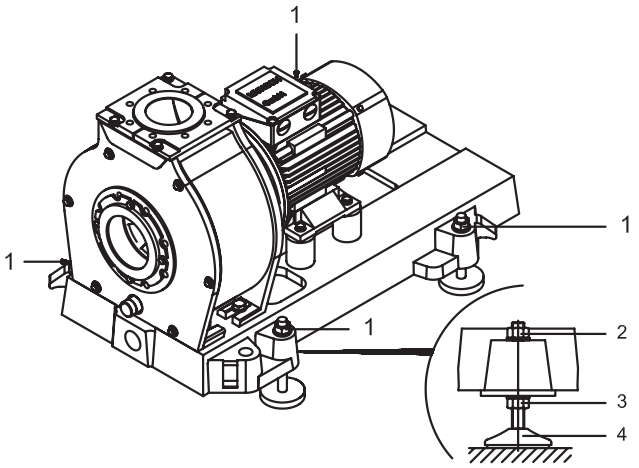


Fig. 11 Setup without foundation

1. Lift the pump unit with base plate (→ 4.1.2 Lifting, Page 14).
2. Mount the four levelling feet (1) as shown in the illustration.
3. Set down the pump unit with base plate onto the setup surface.
4. Adjust the height of the base plate using levelling feet (1) as shown above:
   – Use wrench to hold the hexagon at levelling foot (4).
   – Slacken hexagon nut (2).
   – Adjust height by turning hexagon nut (3).
   – Tighten hexagon nut (2) (→ 9.2.4 Tightening torques, Page 40).
   – Use a machine spirit level to check the permissible height deviation (1 mm/m) lengthwise and crosswise.
   – Repeat procedure until the base plate is correctly aligned.

## 5.5 Planning pipes

### 5.5.1 Laying out supports and flange connections

**NOTE**

**Material damage due to excessive forces and torques of the pipes on the pump!**

► Do not exceed approved limits (→ 9.2.6 Socket loads acc. to ISO 5199, Page 41).

1. Calculate pipe forces taking into account every possible operating condition:
   – Cold/warm
   – Empty/full
   – Unpressurised/pressurised
   – Position shifts of flanges
2. Ensure the pipe can slide freely in the supports and does not seize up due to corrosion.

### 5.5.2 Specifying nominal diameters

Keep the flow resistance in the pipes as low as possible.

1. Specify suction pipe nominal width ≥ suction nozzle nominal width.
2. Specify pressure pipe nominal width ≥ pressure joint nominal width.

### 5.5.3 Specify pipe lengths

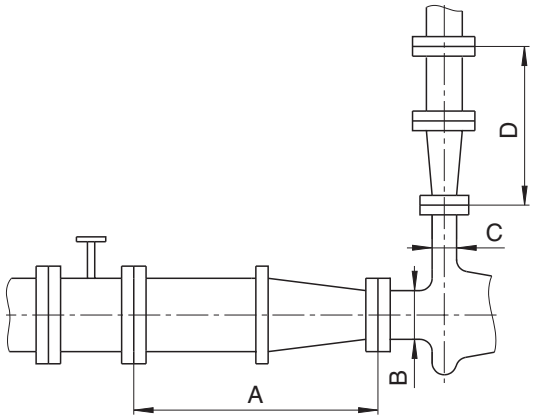


Fig. 12 Straight pipe lengths upstream and downstream of the pump (recommended)

A > 5x DNs
B DNs
C DNd
D > 5x DNd

► Observe recommend minimum values when installing the pump.

Suction side: Shorter pipes are feasible but can restrict hydraulic performance data.

Pressure side: Shorter pipes are feasible but can lead to increased operating noise.

### 5.5.4 Optimising changes in cross-section and direction

1. Avoid bends with radii smaller than 1.5 times the pipe diameter.
2. Avoid abrupt changes of cross-sections in the pipes.

### 5.5.5 Providing safety and monitoring devices (recommended)

**Avoid impurities**

1. Integrate filter into the suction pipe.
2. To monitor the level of dirt, install a differential manometer with contact manometer.

**Avoiding reverse operation**

1. Install a non return valve between the pressure joint and stop valve to ensure the medium does not flow back after the pump is switched off.
2. To enable bleeding, provide a bleeding connection between the pressure joint and non return valve.

**Make provisions for isolating and shutting off the pipes**

For maintenance and repair work.

► Provide shut-off devices in the suction and pressure pipes.

**Enable measurements of the operating conditions**

1. Provide manometers for pressure measurements in suction and pressure pipes.
2. Provide for motor-side output measurement.
3. Provide for pump temperature measurements.

## 5.6 Connecting pipes

**NOTE**

**Material damage due to excessive forces and torques of the pipes on the pump!**

► Do not exceed approved limits (→ 9.2.6 Socket loads acc. to ISO 5199, Page 41).

**NOTE**

**Material damage due to excessive tightening torques of the flange connections and housing connections!**

► The torques on the flange connection and housing connection are dependent on the seal type and size. Observe the correct guideline values based on the type of screw connection:
  – (→ Tab. 18 Hexagon head bolt **901.2** – steel/cast iron pairings, Page 40).
  – (→ Tab. 20 Flange connection, Page 40).

### 5.6.1 Avoid impurities in the pipes

**NOTE**

**Material damage due to impurities in the pump!**

► Ensure no impurities enter the pump.

1. Clean all pipe sections and fittings prior to assembly.
2. Ensure no flange gaskets protrude inwards.
3. Remove any blank flanges, plugs, protective films and/or protective paint from the flanges.

### 5.6.2 Installing auxiliary piping

Observe the manufacturer's specifications for any existing auxiliary operating systems.

1. Install the auxiliary pipes at the auxiliary connections without stress and leaks.
2. To avoid air enclosures: install the pipes so that they ascend to the pump.

### 5.6.3 Installing the suction pipe

1. Remove the transport and sealing covers from the pump.
2. Install the suction pipe without stress and leaks.
   To avoid air enclosures: install the pipes so that they ascend to the pump.
3. Ensure no seals protrude inwards.
4. For suction operation: Install a foot valve in the suction pipe to prevent the pump and suction pipe from running empty during downtimes.

### 5.6.4 Installing the pressure pipe

1. Remove the transport and sealing covers from the pump.
2. Install the pressure pipe without stress and leaks.
3. Ensure no seals protrude inwards.

### 5.6.5 Checking that the pipe connection is stress-free

✓ Pipe installed and cooled down

1. Disconnect the connection flange of the pipes from the pump.
2. Check whether the pipe is freely moveable in all directions within the range of expected expansion:
   – Nominal width < 150 mm: by hand
   – Nominal width > 150 mm: with a small lever
3. Make sure the flange surfaces are parallel.
4. Reconnect the connection flange of the pipes to the pump.

## 5.7 Connecting the electrical system

### 5.7.1 Connecting the motor

Observe the specifications of the motor manufacturer.

**DANGER**

**Risk of fatal injury due to electric shock!**

► Have all electrical work carried out by qualified electricians only.

► Isolate the installation from its supply voltage and secure it against being switched back on again prior to any work on the electrical system.

1. Connect the motor according to the circuit diagram.
2. Ensure the electrical power does not pose any risks.
3. Install an EMERGENCY STOP switch.

### 5.7.2 Checking the direction of rotation

Only possible when putting the pump into service (→ 6.1 Putting the pump into service for the first time, Page 21).

# 6 Operation

For pumps in potentially explosive areas (→ ATEX additional instructions)

## 6.1 Putting the pump into service for the first time

### 6.1.1 Identifying the pump version

► Identify the pump version (→ order data sheet).

Pump versions vary, for example in the shaft seal and auxiliary operating systems.

### 6.1.2 Checking the downtime

► Check the downtime (→ Tab. 8 Measures after long storage times/downtimes, Page 16).

### 6.1.3 Preparing auxiliary operating systems (if available)

The manufacturer assumes no liability for damage caused by installing or using a third-party or non-approved auxiliary operating system.

**Sealing systems**

1. Make sure the quenching/barrier medium is suitable for mixing with the pumped medium.
2. Identify the sealing system (→ order data sheet) (→ 3.5.1 Sealing systems, Page 12).
3. Install the sealing system (→ manufacturer's instructions).
4. Ensure the parameters required for the installed sealing system (→ 9.2.2 Parameters for auxiliary operating systems, Page 39).

### 6.1.4 Filling and bleeding

✓ If available: Auxiliary operating systems are ready for operation

**⚠ WARNING**

**Risk of injury and poisoning due to hazardous pumped media!**

► Use protective equipment when carrying out any work on the pump.

► Collect any leaking pumped medium safely and dispose of it according to local regulations.

1. Open the suction-side fitting.
2. Open the pressure-side fitting.
3. Fill the pump and the suction pipe with pumped medium.
4. Open the auxiliary operating systems, if available, and check the flow rate.
5. Make sure all connections are tight.

### 6.1.5 Checking the direction of rotation

✓ Transport protection devices removed

**⚠ DANGER**

**Risk of fatal injury due to rotating parts!**

► Use protective equipment when carrying out any work on the pump.

► Keep a sufficient distance to rotating parts.

**NOTE**

**Material damage caused by dry running!**

► Make sure the pump is filled properly.

1. Switch the motor on and immediately off again.
2. Check whether the motor's direction of rotation corresponds to the arrow indicating the direction of rotation of the pump.
3. If the direction of rotation is different:
   – Swap two phases (→ 5.7.1 Connecting the motor, Page 20).

### 6.1.6 Switching on the pump

✓ The pump is correctly set up and connected
✓ The motor is correctly set up and connected
✓ All connections stress-free and leak-free
✓ Any existing auxiliary system are ready for operation
✓ All safety devices installed and checked for integrity
✓ The pump has been correctly prepared, filled and bled

**⚠ DANGER**

**Risk of injury due to running pump!**

► Do not touch the running pump.
► Do not carry out any work on the running pump.
► Allow the pump to cool down completely before starting any work.

**⚠ WARNING**

**Risk of injury and poisoning due to hazardous pumped media!**

► Use protective equipment when carrying out any work on the pump.
► Collect any leaking pumped medium safely and dispose of it according to local regulations.

**NOTE**

**Material damage caused by dry running!**

► Make sure the pump is filled properly.

**NOTE**

**Risk of cavitation when throttling the suction flow rate!**

► Fully open the suction-side fitting; do not use the fitting to adjust the flow rate.
► Do not open the pressure-side fitting beyond the operating point.

**NOTE**

**Material damage caused by overheating!**

► Do not operate the pump while the pressure-side fitting is closed.
► Observe the minimum flow rate (→ order data sheet).

**NOTE**

**Material damage due to partial load operation!**

► Do not operate below the minimum flow rate (0.1 x $Q_{opt}$).

1. Open the suction-side fitting.
2. Close the pressure-side fitting.
3. Switch on the motor and check whether it is running smoothly.
4. As soon as the motor is running at nominal speed, open the pressure-side fitting slowly until the operating point is reached.
5. With hot pumped media, make sure any temperature changes do not exceed 50 °C/h.
6. After the initial stress caused by pressure and operating temperature, check whether the pump is not leaking.

### 6.1.7 Switching off the pump

✓ Pressure-side fitting closed (recommended)

**⚠ WARNING**

**Risk of injury due to hot pump components!**

► Use protective equipment when carrying out any work on the pump.

1. Switch off the motor. If available, maintain the following functions:
   – With double mechanical seals: Barrier pressure until pump is unpressurised
2. Check all connecting screws and tighten them if necessary.

## 6.2 Operating

### 6.2.1 Making preparations for operation

► If necessary, perform the following steps:
  – Prepare any auxiliary operating systems (→ 6.1.3 Preparing auxiliary operating systems (if available), Page 21).
  – Fill and bleed the pump (→ 6.1.4 Filling and bleeding, Page 21).

### 6.2.2 Switching on the pump

✓ Pump put into service properly
✓ Operation prepared properly

**⚠ DANGER**

**Risk of injury due to running pump!**

► Do not touch the running pump.
► Do not carry out any work on the running pump.
► Allow the pump to cool down completely before starting any work.

**⚠ WARNING**

**Risk of injury and poisoning due to hazardous pumped media!**

► Use protective equipment when carrying out any work on the pump.
► Collect any leaking pumped medium safely and dispose of it according to local regulations.

**NOTE**

**Material damage caused by dry running!**

► Make sure the pump is filled properly.

**NOTE**

**Risk of cavitation when throttling the suction flow rate!**

► Fully open the suction-side fitting; do not use the fitting to adjust the flow rate.
► Do not open the pressure-side fitting beyond the operating point.

**NOTE**

**Material damage caused by overheating!**

► Do not operate the pump while the pressure-side fitting is closed.
► Observe the minimum flow rate (→ order data sheet).

**NOTE**

**Material damage due to partial load operation!**

► Do not operate below the minimum flow rate (0.1 x $Q_{opt}$).

1. Open the suction-side fitting.
2. Close the pressure-side fitting.
3. Switch on the motor and check whether it is running smoothly.
4. As soon as the motor is running at nominal speed, open the pressure-side fitting slowly until the operating point is reached.
5. Make sure the temperature changes do not exceed 50 °C/h at pumps with hot pumped media.

### 6.2.3 Switching off the pump

✓ Pressure-side fitting closed (recommended)

**⚠ WARNING**

**Risk of injury due to hot pump components!**

► Use protective equipment when carrying out any work on the pump.

► Switch off the motor. If available, maintain the following functions:
  – With double mechanical seals: Barrier pressure until pump is unpressurised

## 6.3 Shut-down

**⚠ WARNING**

**Risk of injury and poisoning due to hazardous pumped media!**

- ▶ Use protective equipment when carrying out any work on the pump.
- ▶ Collect any leaking pumped medium safely and dispose of it according to local regulations.

**⚠ DANGER**

**Risk of fatal injury due to electric shock!**

- ▶ Have all electrical work carried out by qualified electricians only.
- ▶ Isolate the installation from its supply voltage and secure it against being switched back on again prior to any work on the electrical system.

**⚠ DANGER**

**Risk of injury due to running pump!**

- ▶ Do not touch the running pump.
- ▶ Do not carry out any work on the running pump.
- ▶ Before carrying out any fitting or maintenance work, isolate the motor from its supply voltage and secure it against being switched back on again.

▶ Take the following measures if operation is interrupted:

| Pump is | Measure |
|---|---|
| ...shut down for a prolonged period | ▶ Take measures according to the pumped medium (→ Tab. 10 Measures to be taken, depending on the pumped medium behaviour, Page 24).<br>▶ Isolate the motor from its supply voltage and secure it against being switched back on again. |
| ...emptied | ▶ Close the suction-side and pressure-side fittings. |
| ...dismounted | ▶ Disconnect the electrical connections and secure the motor against being switched back on again |
| ...put into storage | ▶ Follow the storage instructions (→ 4.3 Storage, Page 15). |

Tab. 9 Measures to be taken if operation is interrupted

| Behaviour of the pumped medium | Duration of the interruption to service (depending on process) | |
|---|---|---|
| | Short | Long |
| Solids sedimenting | ▶ Flush the pump. | ▶ Flush the pump. |
| Solidifying/ freezing, non-corrosive | ▶ Heat up or empty the pump and containers. | ▶ Empty the pump and containers. |
| Solidifying/ freezing, corrosive | ▶ Heat up or empty the pump and containers. | ▶ Empty the pump and containers.<br>▶ Clean and dry the pump.<br>▶ Preserve the containers if necessary. |
| Remains liquid, non-corrosive | – | – |
| Remains liquid, corrosive | – | ▶ Empty the pump and containers.<br>▶ Clean and dry the pump.<br>▶ Preserve the containers if necessary. |

Tab. 10 Measures to be taken, depending on the pumped medium behaviour

## 6.4 Restoring the pump to service

1. Check the downtime (→ Tab. 8 Measures after long storage times/downtimes, Page 16).
2. Carry out all steps as for the initial start-up (→ 6.1 Putting the pump into service for the first time, Page 21).

## 6.5 Operating the stand-by pump

✓ Stand-by pump filled and bled

ⓘ Operate the stand-by pump at least once a week.

1. Fully open the suction-side fitting.
2. Open the pressure-side fitting until the stand-by pump reaches operating temperature and is evenly heated(→ 6.1.6 Switching on the pump, Page 22).

# 7 Maintenance

For pumps in potentially explosive areas (→ ATEX additional instructions)

Trained service technicians are available for fitting and repair work. Present a pumped material certificate (DIN safety data sheet or document of compliance) upon request.

## 7.1 Monitoring

The inspection intervals depend on the load placed on the pump.

**⚠ DANGER**

**Risk of injury due to running pump!**

- ► Do not touch the running pump.
- ► Do not carry out any work on the running pump.

**⚠ WARNING**

**Risk of injury and poisoning due to hazardous pumped media!**

- ► Use protective equipment when carrying out any work on the pump.

1. Check at appropriate intervals:
   - – Compliance with minimum flow rate
   - – Roller bearing temperature < 70 °C
   - – Normal operating conditions unchanged
   - – Concentration of the quenching/barrier medium in the closed system
2. For trouble-free operation, ensure the following:
   - – No dry running
   - – No leaks
   - – No cavitation
   - – Suction-side gate valves open
   - – Unobstructed and clean filters
   - – Sufficient supply pressure
   - – No unusual running noises and vibrations
   - – No impermissible leaks at the shaft seal
   - – Proper functioning of auxiliary operating systems

## 7.2 Maintenance

Service life of the roller bearings for operation within the permissible operating range: > 2 years

Intermittent operation, high temperatures, low viscosities and aggressive ambient and process conditions reduce the service life of roller bearings (→ operating manual of the motor manufacturer).

Mechanical seals and plain bearings are subject to natural wear, which strongly depends on the actual operating conditions. Therefore, general statements regarding their service life cannot be made.

**⚠ DANGER**

**Risk of fatal injury due to electric shock!**

- ► Have all electrical work carried out by qualified electricians only.
- ► Isolate the installation from its supply voltage and secure it against being switched back on again prior to any work on the electrical system.

**⚠ DANGER**

**Risk of injury due to running pump!**

- ► Do not touch the running pump.
- ► Do not carry out any work on the running pump.
- ► Before carrying out any fitting or maintenance work, isolate the motor from its supply voltage and secure it against being switched back on again.

**⚠ WARNING**

**Risk of injury and poisoning due to hazardous or hot pumped media!**

- ► Use protective equipment when carrying out any work on the pump.
- ► Allow the pump to cool down completely before performing any work.
- ► Make sure the pump is unpressurised.
- ► Empty the pump, safely collect the pumped medium and dispose of it in accordance with environmental rules and requirements.

### 7.2.1 Mechanical seals

Mechanical seals will always show some functional drip-leakage (→ manufacturer's instructions).

Double mechanical seals with quench: Any dramatic rise of the quench system level indicates a major leak at the product-side mechanical seal.

Double mechanical seals with pressurised barrier medium: A dramatic pressure drop in the barrier system (loss of lubricating fluid) indicates a major leak at one of the mechanical seals.

► If there is a major leak: Replace the mechanical seal with its auxiliary seals and check the functionality of auxiliary operating systems.

## 7.3 Dismounting the pump

**⚠ DANGER**

**Risk of injury due to running pump!**

► Do not touch the running pump.
► Do not carry out any work on the running pump.
► Before carrying out any fitting or maintenance work, isolate the motor from its supply voltage and secure it against being switched back on again.

**⚠ DANGER**

**Risk of fatal injury due to electric shock!**

► Have all electrical work carried out by qualified electricians only.
► Isolate the installation from its supply voltage and secure it against being switched back on again prior to any work on the electrical system.

**⚠ WARNING**

**Risk of injury and poisoning due to hazardous or hot pumped media!**

► Use protective equipment when carrying out any work on the pump.
► Allow the pump to cool down completely before performing any work.
► Make sure the pump is unpressurised.
► Empty the pump, safely collect the pumped medium and dispose of it in accordance with environmental rules and requirements.

**⚠ WARNING**

**Risk of injury due to heavy components!**

► Pay attention to the component weight. Lift and transport heavy components with suitable lifting gear.
► Set down components safely and secure them against overturning or rolling away.

### 7.3.1 Returning the pump to the manufacturer

✓ The pump is unpressurised
✓ Pump completely empty
✓ Electrical connections disconnected and motor secured against being switched back on again
✓ Pump cooled down
✓ Auxiliary systems shut down, unpressurised and emptied
✓ Manometer lines, manometer and fixtures dismounted

1. Enclose a truthfully completed declaration of compliance when returning pumps or components to the manufacturer. Order a form for the document of compliance from the manufacturer if necessary.
2. Take the measures required to return the pump to the manufacturer as specified in the following table, depending on the repair work required.

| Repairs | Measure for return |
|---|---|
| At the customer's premises | ▶ Return the defective component to the manufacturer. |
| At the manufacturer's premises | ▶ Flush the pump and decontaminate it if it has been used with hazardous pumped media.<br>▶ Return the entire pump unit (not disassembled) to the manufacturer. |
| At the manufacturer's premises for warranty repairs | ▶ Only in the event of hazardous pumped media:<br>– Flush and decontaminate the pump.<br>▶ Return the entire pump unit (not disassembled) to the manufacturer. |

Tab. 11 Measures for return

### 7.3.2 Preparations for dismounting the pump

✓ The pump is unpressurised
✓ Pump completely empty, flushed and decontaminated
✓ Electrical connections disconnected and motor secured against being switched back on again
✓ Pump cooled down
✓ Auxiliary systems shut down, unpressurised and emptied
✓ Manometer lines, manometer and fixtures dismounted

The pumps are constructed in process architecture as standard. The slide-in unit can be dismounted without removing the volute casing and piping.

1. Observe the following when dismounting the pump:
   – Mark the precise installation orientation and position of all components prior to the disassembly.
   – Dismount the components concentrically without canting.
   – Dismount the pump (→ sectional drawing).
2. Unscrew the fixation bolts between the pump/plug-in unit and base plate.
3. If necessary, undo the pipes.
4. Lift the pump out of the installation (→ 4.1.2 Lifting, Page 14).

### 7.3.3 Loosen connectors (if applicable)

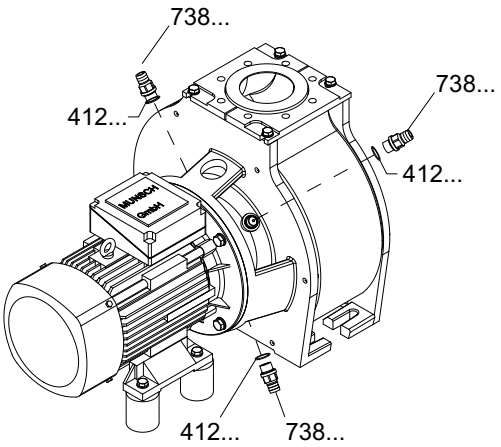


Fig. 13 Loosening the connectors

1. Loosen and unscrew existing fittings **738...**.
2. Remove and replace O-rings **412...**.

### 7.3.4 Dismounting the pump casing

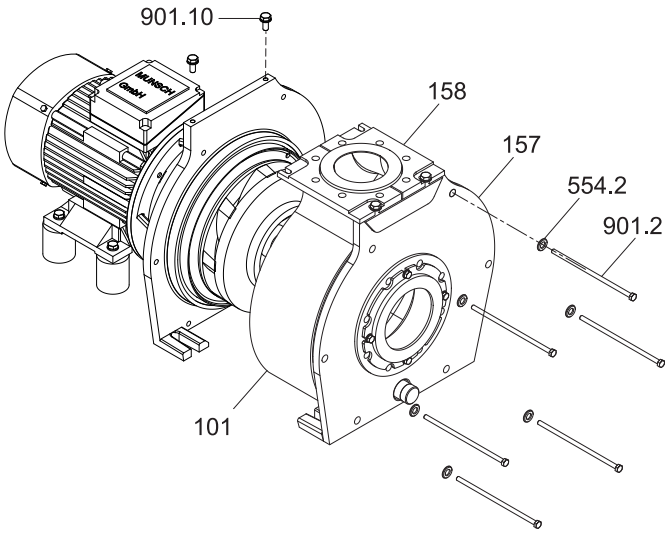


Fig. 14 Dismounting the pump casing

1. Loosen hexagon head bolts **901.10** at intermediate lantern **146**.
2. Undo the hexagon head screws **901.2**.
3. Slide off pump casing **101** with suction flange **157** and pressure flange **158**.

### 7.3.5 Dismounting the impeller and front shaft sleeve

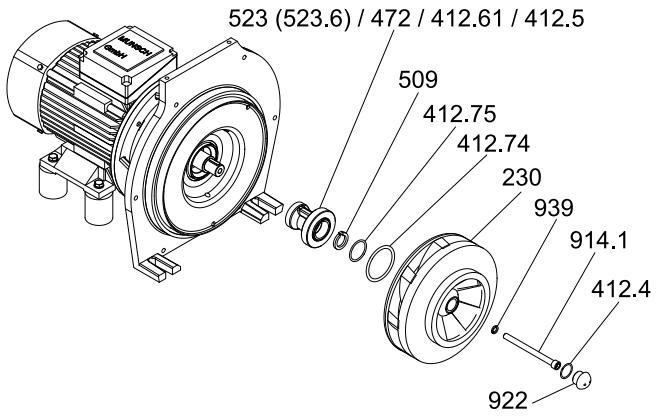


Fig. 15 Dismounting the impeller and front shaft sleeve

1. Loosen impeller screw **922** using circlip pliers and remove the screw.
2. Undo the socket head cap screw **914.1** and remove with the SCHNORR spring washer **939**.
3. Extract impeller **230**.
4. Extract intermediate ring **509**.
5. Remove and replace the O-rings **412.4**, **412.74** and **412.75**.
6. Remove the rotating seal ring **472** with shaft sleeve **523** (**523.6**) from the pump shaft **211**.

### 7.3.6 Dismounting the product-side MUNSCH-REA-F mechanical seal

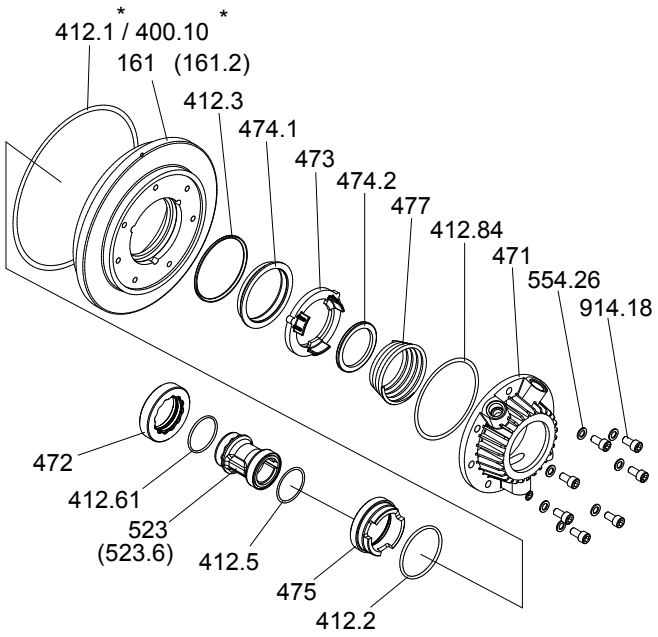


Fig. 16 Dismounting the product-side MUNSCH-REA-F mechanical seal

1. Undo the rotating seal ring **472** from the shaft sleeve **523** (**523.6**).
2. Take the casing cover **161** (**161.2**) out of the intermediate lantern **146** and set it down with the seal cover **471**.
3. Take the O-ring **412.1** or gasket **400.10** off the casing cover **161** (**161.2**) and replace it if necessary.
4. Extract stationary seal ring **475**.
5. Turn the casing cover upside down.
6. Undo the socket head cap screws **914.18** and remove the washers **554.26**.
7. Remove the seal cover (**471**).
8. Remove spring **477** and thrust ring **474.2**.
9. Remove stationary seal ring holder **473**.
10. Remove thrust ring **474.1**.
11. Take out the O-rings **412.61**, **412.5**, **412.2**, **412.84**, **412.3** and replace them.

### 7.3.7 Disassembling the atmosphere-side mechanical seal

Only with MUNSCH-REA-F/D double mechanical seal

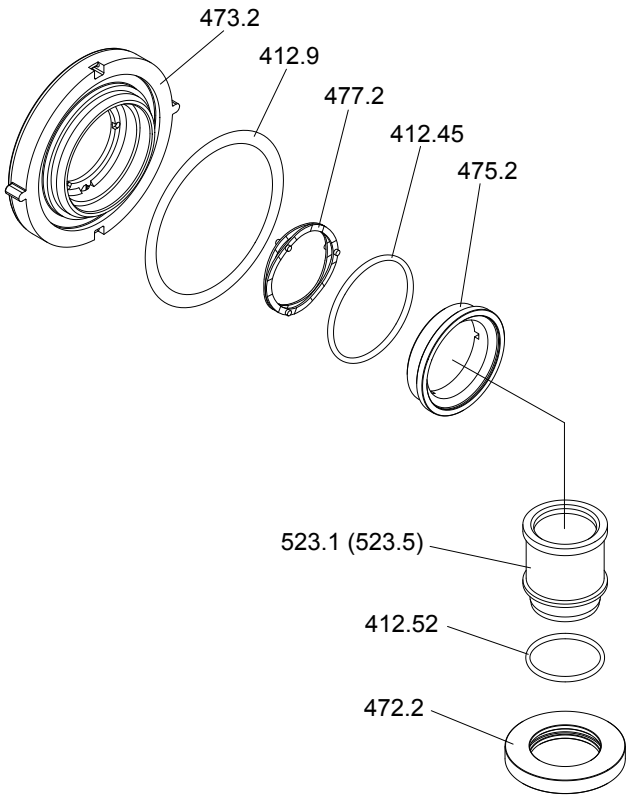


Fig. 17 Dismounting the MUNSCH-REA-F/D mechanical seal

1. Remove the rotating seal ring **472.2** and shaft sleeve **523.1** (**523.5**) from the shaft.
2. Remove the stationary seal ring holder **473.2** from the pump.
3. Pull the stationary seal ring **475.2** out of the stationary seal ring holder **473.2**.
4. Remove spring **477.2**.
5. Remove and replace O-rings **412.52**, **412.45**, **412.9**.

### 7.3.8 Dismounting the rear shaft sleeve

Only on pumps with MUNSCH-REA-F single mechanical seal

► Pull the rear shaft sleeve **523.1** (**523.5**) off the pump shaft **211**.

### 7.3.9 Dismounting the pump shaft

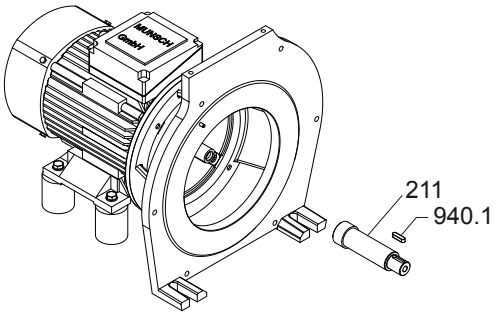


Fig. 18 Dismounting the pump shaft

► Pull the pump shaft **211** off the motor shaft.

## 7.4 Installing the pump

### 7.4.1 Preparing the installation

1. Observe the following for the installation:
   – Replace worn out parts with original spare parts.
   – Replace the seals.
   – Before installation, lubricate all O-rings (**412.4/.8/.10/.18/.47/.51**) that are stressed by shearing during installation with lubricant which is approved for the process and compatible with the O-ring material.
   – Tighten the screws/nuts crosswise with a torque key in an appropriate manner.
     Observe any tightening torques which deviate from standard (→ 9.2.4 Tightening torques, Page 40).
   – Reinstall the components concentrically without canting according to the applied marks.
2. Clean all components (→ 9.2.5 Cleaning agents, Page 40). but do not remove the applied marks.
3. Install the pump (→ sectional drawing).

The pump is installed in the reverse order of its disassembly. The following sections show particular aspects to be observed when installing the pump.

### 7.4.2 Fitting the casing cover

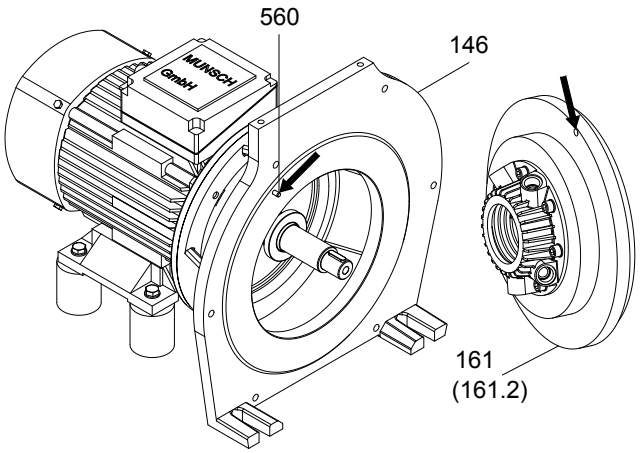


Fig. 19 Fitting the casing cover

► Fit the casing cover **161** (**161.2**) into the intermediate lantern **146**.
Make sure the pin **560** is in the bore hole of the casing cover **161** (**161.2**).

### 7.4.3 Installing the pump in the installation

► (→ 5 Setup and connection, Page 16).

## 7.5 Ordering spare parts

For trouble-free replacement in the event of damage, we recommend keeping entire plug-in units or spare pumps available on site.

The application guidelines according to DIN 24296 recommend keeping a supply for two years of continuous use (→ 9.3 Spare parts for two years of continuous operation according to DIN 24296, Page 44).

► Have the following information ready to hand when ordering spare parts (→ type plate):
   – Short designation of the pump
   – Serial number
   – Year of construction
   – Part number
   – Designation
   – Quantity

# 8 Troubleshooting

If faults occur which are not specified in the following table or cannot be traced back to the specified causes, please consult the manufacturer.

Possible faults are assigned a number in the table below. Use this number to find the cause and remedy in the troubleshooting table.

| Fault | Number |
|---|---|
| Pump not pumping | 1 |
| Pumping rate insufficient | 2 |
| Pumping rate too high | 3 |
| Pumping pressure too low | 4 |
| Pumping pressure too high | 5 |
| Pump running roughly | 6 |
| Roller bearing temperature too high | 7 |
| Pump leaking | 8 |
| Excessive motor power uptake | 9 |

Tab. 12 Fault/number assignment

| Fault number | | | | | | | | | Cause | Remedy |
|---|---|---|---|---|---|---|---|---|---|---|
| 1 | 2 | 3 | 4 | 5 | 6 | 7 | 8 | 9 | | |
| X | – | – | – | – | – | – | – | – | Supply/Suction pipe and/or pressure pipe closed by fitting | ▶ Open the fitting. |
| – | X | – | X | – | – | – | – | – | Supply/Suction pipe not fully opened | ▶ Open the fitting. |
| X | X | – | X | – | X | – | – | – | Supply/Suction pipe, pump or suction strainer blocked or encrusted | ▶ Clean the supply/suction pipe, pump or suction strainer. |
| – | X | – | X | – | X | – | – | – | Supply/Suction pipe cross-section too narrow | ▶ Increase the cross-section.<br>▶ Remove encrustations from the suction pipe.<br>▶ Open the fitting completely. |
| X | – | – | – | – | – | – | – | – | Transport sealing cover not removed | ▶ Remove the transport sealing cover.<br>▶ Dismount the pump and check for dry-running damage. |
| – | X | – | X | – | X | – | – | – | Suction head too large: $NPSH_{pump}$ larger than $NPSH_{installation}$ | ▶ Increase the supply pressure.<br>▶ Consult the manufacturer. |
| X | – | – | – | – | X | – | – | – | Supply/Suction pipe and pump not bled properly or not filled up completely | ▶ Fill the pump and/or pipes completely and bleed them. |
| X | – | – | – | – | X | – | – | – | Supply/Suction pipe contains air pockets | ▶ Install a fitting for bleeding.<br>▶ Correct the pipe installation. |
| X | X | – | X | – | X | – | – | – | Air is sucked in | ▶ Seal the source of malfunction. |
| X | X | – | X | – | X | – | – | – | Excessive amount of gas: pump cavitating | ▶ Consult the manufacturer. |
| – | X | – | X | – | X | – | – | – | Temperature of pumped medium too high: pump cavitating | ▶ Increase the supply pressure.<br>▶ Lower the temperature.<br>▶ Consult the manufacturer. |

| Fault number | | | | | | | | | Cause | Remedy |
|---|---|---|---|---|---|---|---|---|---|---|
| 1 | 2 | 3 | 4 | 5 | 6 | 7 | 8 | 9 | | |
| – | X | – | X | – | – | – | – | X | Viscosity or density of the pumped medium outside the specified range for the pump | ▶ Consult the manufacturer. |
| – | X | – | X | – | – | – | – | – | Geodetic pump head and/or pipe flow resistance too high | ▶ Remove sediments from the pump and/or pressure pipe.<br>▶ Install a larger impeller and consult the manufacturer. |
| – | X | – | – | X | X | – | – | – | Pressure-side fitting not opened wide enough | ▶ Open the pressure-side fitting. |
| X | X | – | – | X | X | – | – | – | Pressure pipe blocked | ▶ Clean the pressure pipe. |
| X | X | – | X | – | X | – | – | – | Pump running in wrong direction | ▶ Swap any two phases at the motor. |
| X | X | – | X | – | – | – | – | – | Motor speed too low | ▶ Compare the required motor speed with the specification on the pump type plate. Replace the motor if necessary.<br>▶ Increase the motor speed if speed control is available. |
| – | X | – | X | – | X | X | – | – | Pump components worn out | ▶ Replace any worn-out pump components. |
| – | – | X | X | – | X | – | – | X | Pressure-side fitting opened too wide | ▶ Throttle with pressure-side fitting.<br>▶ Mill down the impeller. Consult the manufacturer and adjust the impeller diameter. |
| – | – | X | – | – | X | – | – | X | Geodetic pump head, pipe flow resistances and/or other resistances lower than specified | ▶ Throttle the flow rate with the pressure-side fitting. Observe the minimum flow rate.<br>▶ Mill down the impeller. Consult the manufacturer and adjust the impeller diameter. |
| – | – | X | – | X | – | – | – | – | Viscosity lower than expected | ▶ Mill down the impeller. Consult the manufacturer and adjust the impeller diameter. |
| – | – | X | – | X | X | X | – | X | Motor speed too high | ▶ Compare the required motor speed with the specification on the pump type plate. Replace the motor if necessary.<br>▶ Reduce the motor speed if speed control is available. |
| – | – | X | – | X | X | – | – | X | Impeller diameter too large | ▶ Throttle the flow rate with the pressure-side fitting. Observe the minimum flow rate.<br>▶ Mill down the impeller. Consult the manufacturer and adjust the impeller diameter. |
| X | X | – | X | – | X | – | – | – | Impeller out of balance or clogged up | ▶ Dismount the pump and check for dry-running damage.<br>▶ Clean the impeller. |
| – | X | – | X | – | X | – | – | – | Hydraulic components of the pump dirty, clotted or encrusted | ▶ Dismount the pump.<br>▶ Clean the components. |
| – | – | – | – | – | – | X | – | X | Roller bearing in motor defective | ▶ Replace the roller bearing. |

| Fault number | | | | | | | | | Cause | Remedy |
|---|---|---|---|---|---|---|---|---|---|---|
| 1 | 2 | 3 | 4 | 5 | 6 | 7 | 8 | 9 | | |
| – | – | – | – | – | – | X | – | – | Lubricant: excessive, insufficient or unsuitable | ► Reduce, top up or replace the lubricant. |
| – | – | – | – | – | – | – | X | – | Connecting screws not tightened properly | ► Tighten the connecting screws. |
| – | – | – | – | – | – | – | X | – | Mechanical seal worn | ► Replace mechanical seal. |
| – | – | – | – | – | – | – | X | – | Housing seal defective | ► Replace the housing seal. |
| – | – | – | – | – | – | – | X | – | Shaft sleeve is infiltrated | ► Replace shaft sleeve and/or O-rings. |
| – | – | – | – | – | X | X | X | X | Pump distorted | ► Check the pipes and pump fastenings. |
| – | X | – | X | – | X | – | – | X | Motor running on 2 phases | ► Check the fuse and replace it if necessary.<br>► Check the cable connections and insulation. |

Tab. 13 Troubleshooting table

# 9 Appendix

## 9.1 Sectional drawing

### 9.1.1 Part numbers and designations

| Part no. | Designation |
|---|---|
| 101 | Pump casing |
| 132.xxx | Intermediate piece |
| 146 | Intermediate lantern |
| 157 | Suction flange |
| 158 | Pressure flange |
| 161 | Casing cover |
| 211 | Pump shaft |
| 230 | Impeller |
| 412.xxx | O-ring |
| 471.xxx | Seal cover |
| 472.xxx | Rotating seal ring |
| 473.xxx | Stationary seal ring holder |
| 474.xxx | Thrust ring |
| 475.xxx | Stationary seal ring |
| 477.xxx | Spring |
| 509 | Intermediate ring |
| 523.xxx | Shaft sleeve |
| 550 | Disc |
| 554.xxx | Washer |
| 560.xxx | Pin |
| 738.xxx | Fitting |
| 801 | Flange motor |
| 901.1–9 | Hexagon head screw |
| 901.10 | Hexagon head bolt with washer |
| 902.xxx | Stud |
| 903.xxx | Screwed plug |
| 912.1 | Drain plug |
| 914.xxx | Socket head cap screw |
| 920.xxx | Nut |
| 922 | Impeller screw |
| 932.8 | Circlip |
| 939 | Schnorr spring washer |
| 940.xxx | Fitting key |

Tab. 14 Designation of components according to part numbers

### 9.1.2 Overview sectional drawing

The position numbers in brackets in the following illustrations only apply to previous versions of the pump.

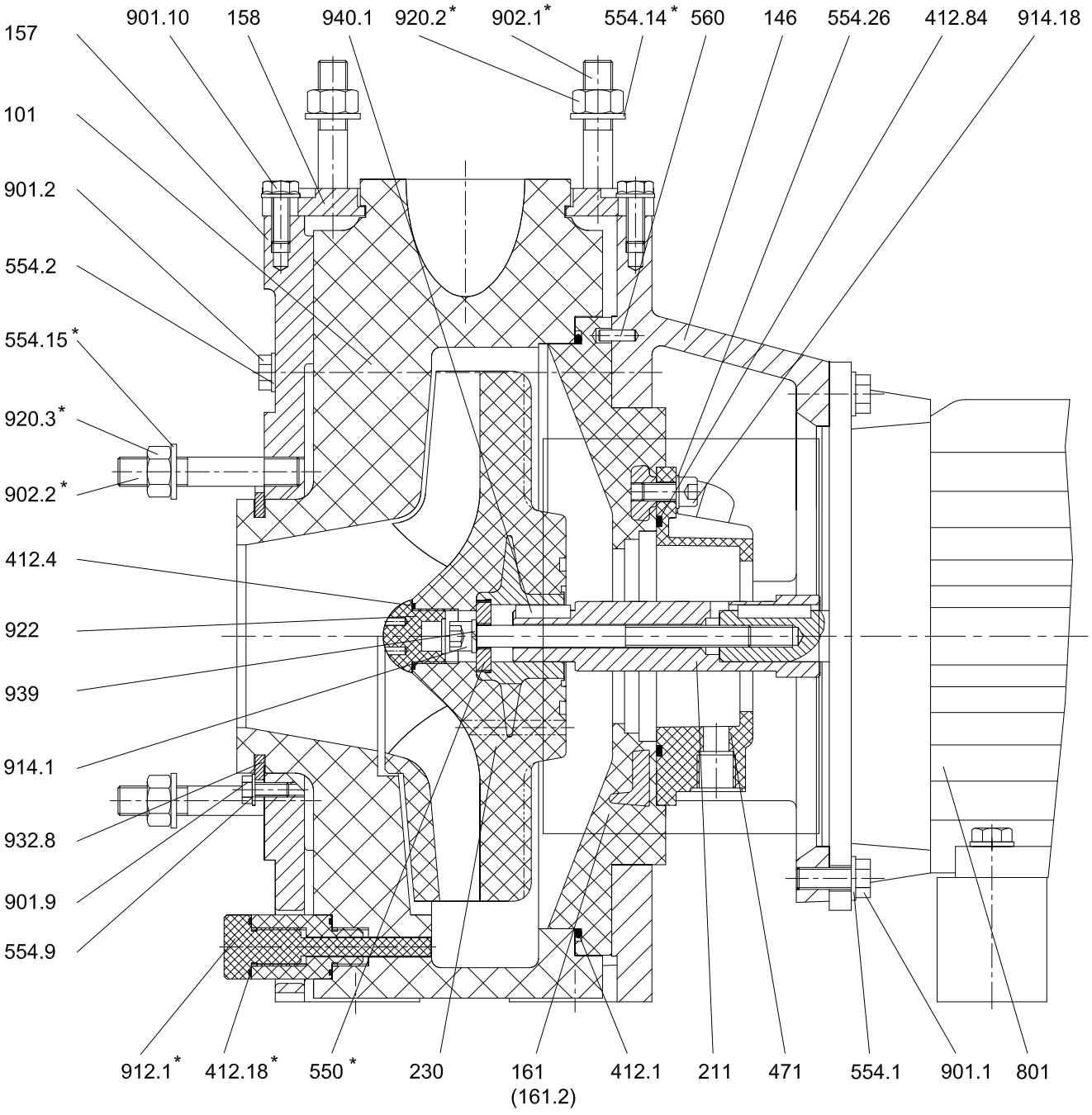


Fig. 20 NP-B with MUNSCH-REA-F mechanical seal – overview sectional drawing

* optional

### 9.1.3 Variants

The position numbers in brackets in the following illustrations only apply to previous versions of the pump.

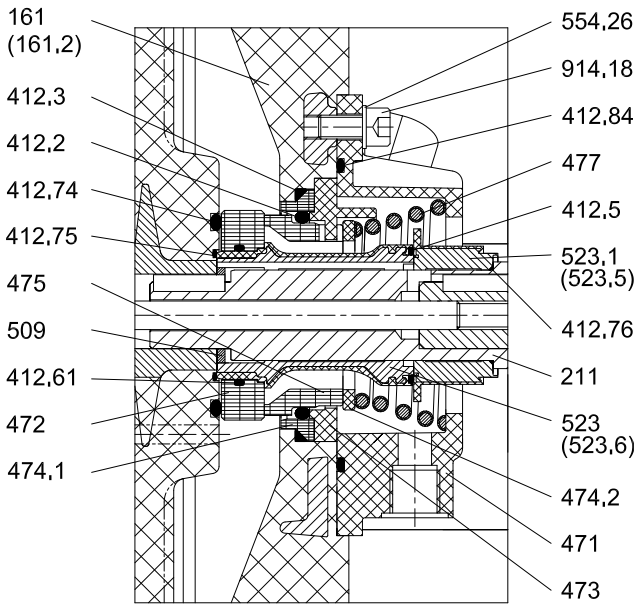


Fig. 21 MUNSCH-REA-F single mechanical seal

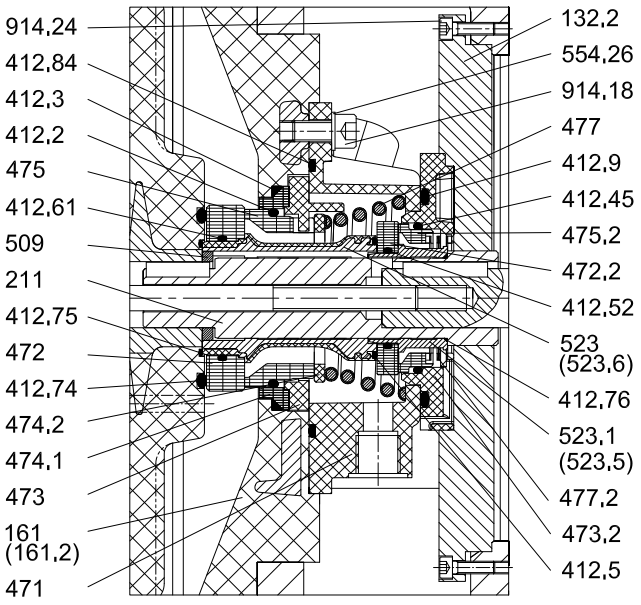


Fig. 22 MUNSCH-REA-F/D double mechanical seal

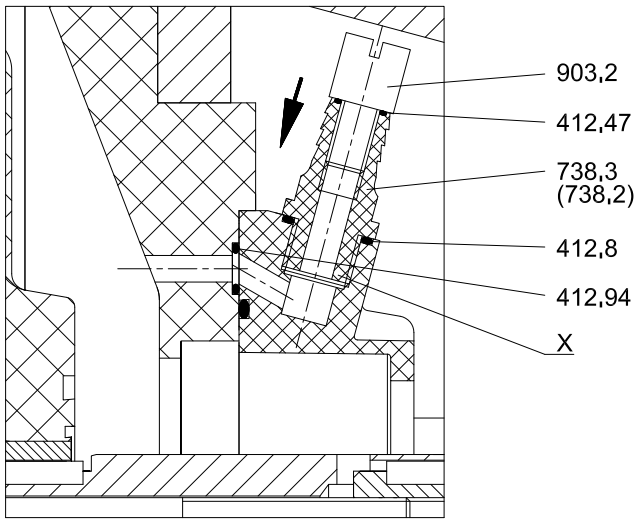


Fig. 23 Stationary flushing (supply connection)

x drawn staggered

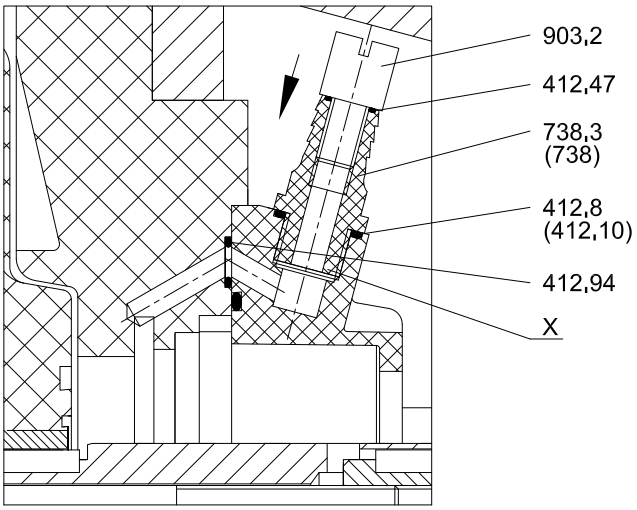


Fig. 24 Permanent flushing (supply connection)

x drawn staggered

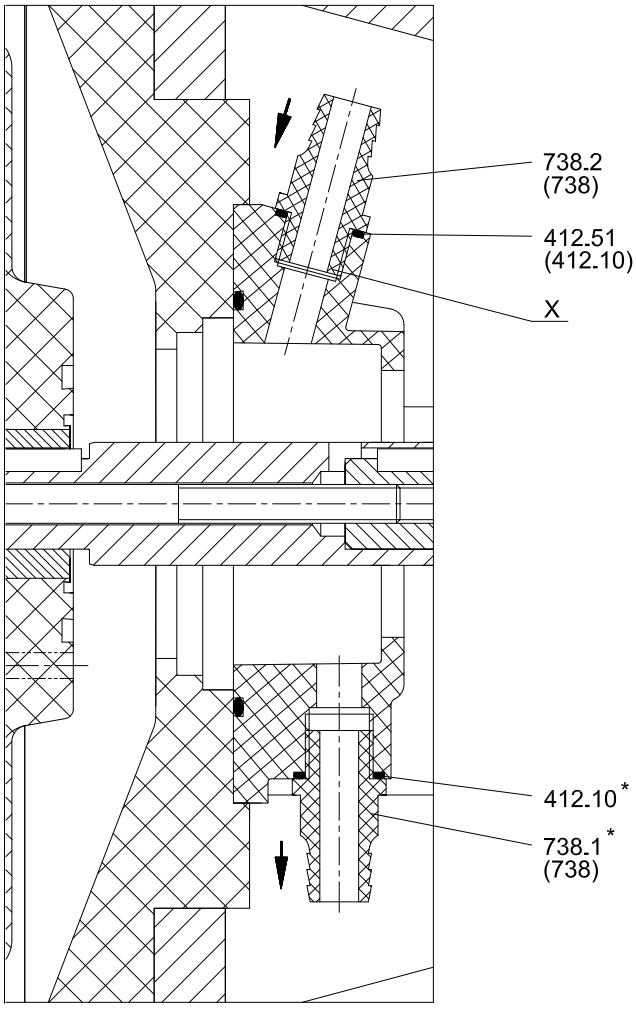


Fig. 25 Single mechanical seal unit with spring chamber flushing (supply connectors)

* Optional

x Drawn staggered

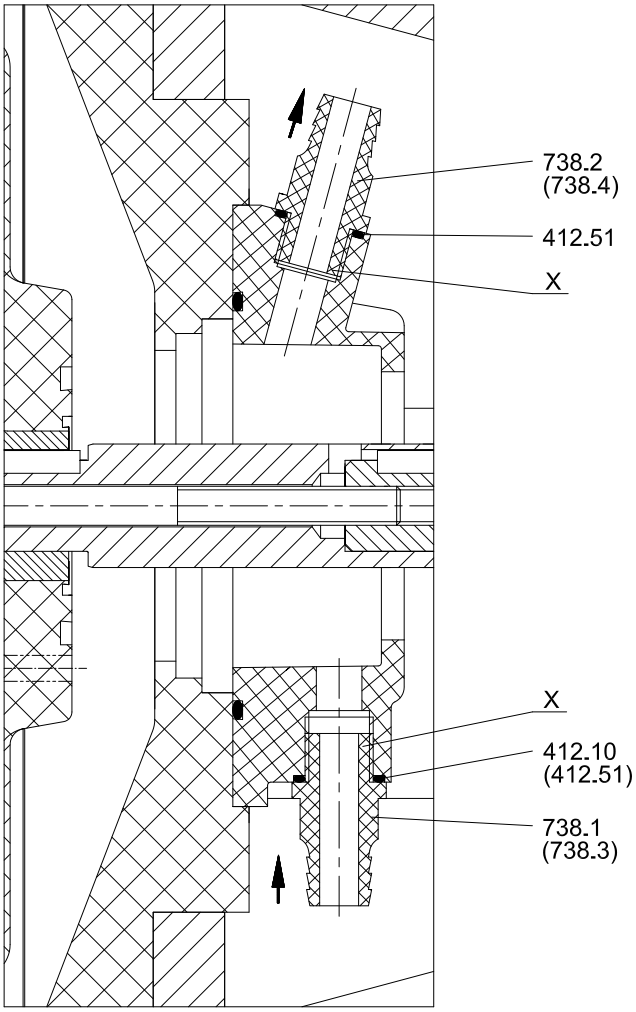


Fig. 26 MUNSCH-REA-F/D supply connections (operation in through feed mode)

x drawn staggered

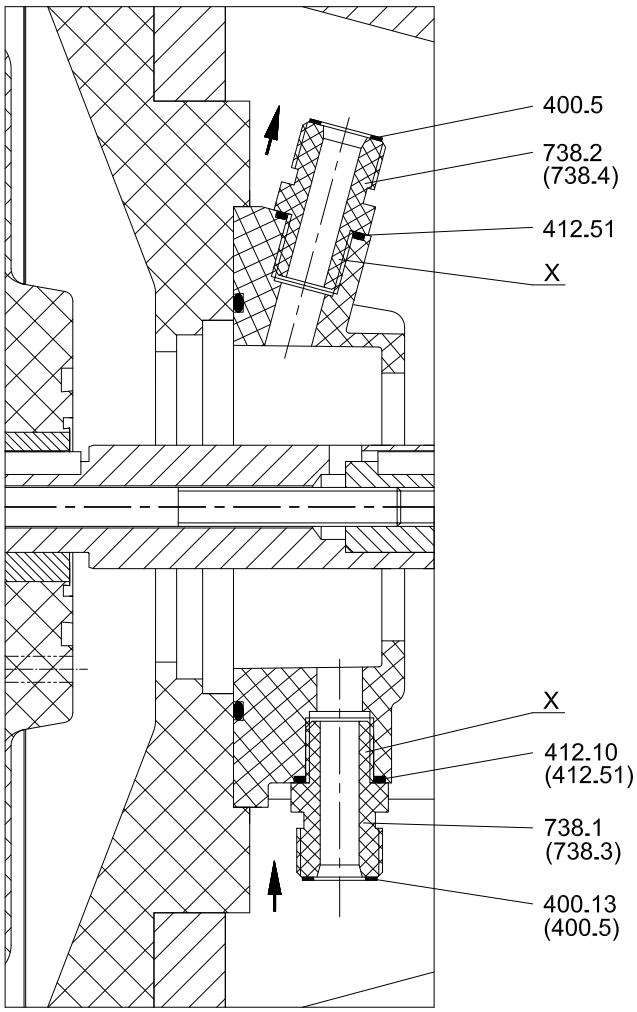


Fig. 27 MUNSCH-REA-F/D supply connections (operation in thermal syphon system)

x Drawn staggered

## 9.2 Technical specifications

Further technical specifications (→ order data sheet)

### 9.2.1 Ambient conditions

Consult the manufacturer about operation under other ambient conditions.

| Temperature [°C] | Relative humidity [%] | | Setup level above sea level [m] |
|---|---|---|---|
| | Long-term | Short-term | |
| –20 to +40 | ≤ 85 | ≤ 100 | ≤ 1000 |

Tab. 15 Ambient conditions

### 9.2.2 Parameters for auxiliary operating systems

**Quenching/barrier medium in open system**

| Medium | Volume flow [l/h] | Pressure |
|---|---|---|
| Quenching medium | 30 | Unpressurised |
| Barrier medium | 30 | ▶ (→ diagram below). |

Tab. 16 Operating parameters for quenching/barrier medium in open system (in preparation)

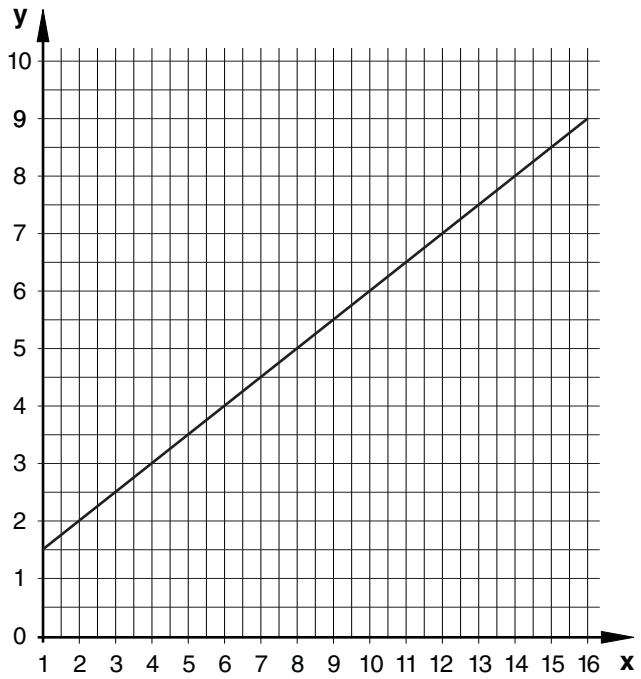


Fig. 28 Using a pressurised barrier medium (in preparation) – pressure of barrier medium

x Pressure at pressure socket [bar]

y Required pressure for using a pressurised barrier medium [bar]

### 9.2.3 Noise pressure levels

Measuring conditions:

- Distance to pump: 1 m
- Operation: cavitation-free
- Motor: IEC standard motor
- Tolerance ±3 dB

Lower-noise motor versions are available if the expected noise values exceed the permissible limits.

| Nominal motor power PM [kW] | Noise pressure level [dB] for pump with motor at speed [$min^{-1}$] | | | |
|---|---|---|---|---|
| | 1450 | 1750 | 2900 | 3500 |
| 1,5 | 58 | 58,5 | 63 | 64 |
| 2,2 | 60 | 60,5 | 66 | 67 |
| 3,0 | 62 | 62,5 | 68 | 69 |
| 4,0 | 63 | 63,5 | 69 | 70 |
| 5,5 | 65 | 65,5 | 71 | 72 |
| 7,5 | 66 | 66,5 | 72 | 73 |
| 11,0 | 68 | 68,5 | 74 | 75 |

Tab. 17 Noise pressure levels

### 9.2.4 Tightening torques

Tighten the screws/nuts with torques properly in accordance with the general technical rules. Deviating torques are dealt with in the following.

The following figures apply to new screws and nuts.

The following values only apply to the assembly procedure.

| Thread size | Tightening torque [Nm] |
|---|---|
| | Casing bolts |
| M 8 | – |
| M 10 | 15 |
| M 12 | 30 |
| M 16 | 45 |
| M 20 | 75 |

Tab. 18 Hexagon head bolt **901.2** – steel/cast iron pairings

| Thread size | Tightening torque [Nm] |
|---|---|
| M 8 | 25 |
| M 10 | 45 |
| M 12 | 55 |

Tab. 19 Socket head cap screw **914.1** – steel/steel pairings

Tighten hand-tight for plastic/plastic pairings, e.g. impeller screw **922**.

| Thread size | Tightening torque [Nm] | Nominal diameter DN [mm] | Number of screws |
|---|---|---|---|
| M 12 | 12 | 25 | 4 |
| M 16 | 15 | 32 | 4 |
| M 16 | 19 | 40 | 4 |
| M 16 | 23 | 50 | 4 |
| M 16 | 34 | 65 | 4 |
| M 16 | 19 | 65 | 8 |
| M 16 | 23 | 80 | 8 |
| M 16 | 26 | 100 | 8 |
| M 16 | 35 | 125 | 8 |
| M 20 | 45 | 150 | 8 |
| M 20 | 45 | 200 | 12 |
| M 20 | 55 | 200 | 8 |
| M 20 | 55 | 250 | 12 |
| M 20 | 65 | 300 | 12 |

Tab. 20 Flange connection

### 9.2.5 Cleaning agents

| Application area | Cleaning agents |
|---|---|
| Foodstuff and drinking water sector | E.g. spirit, Ritzol 155, strong alkaline soap suds, steam blast (for individual components only) |
| Other | Benzine, wax solvents, diesel, petrol, alkaline cleaners |

Tab. 21 Cleaning agents

### 9.2.6 Socket loads acc. to ISO 5199

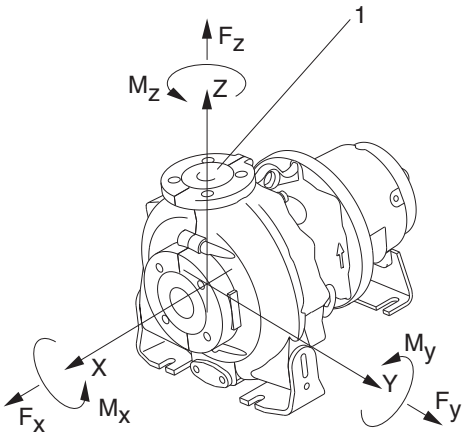


Fig. 29 Socket loads at the pump

1 Pressure socket

| Nominal diameter DN [mm] | Fx [N] | | Fy [N] | Fz [N] | | ∑ F [N] |
|---|---|---|---|---|---|---|
| | Pull | Push | | Pull | Push | |
| 25 | 600 | 300 | 500 | 700 | 350 | 1100 |
| 32 | 800 | 400 | 700 | 900 | 450 | 1500 |
| 40 | 1100 | 550 | 900 | 1200 | 600 | 2000 |
| 50 | 1500 | 750 | 1300 | 1600 | 800 | 2500 |
| 65 | 1900 | 950 | 1600 | 2000 | 1000 | 3500 |
| 80 | 2400 | 1200 | 2100 | 2600 | 1300 | 4500 |
| 100 | 3000 | 1500 | 2600 | 3300 | 1650 | 5500 |
| 125 | 3600 | 1800 | 3200 | 4000 | 2000 | 6500 |

Tab. 22 Socket load – forces

| Nominal diameter DN [mm] | Mx [Nm] | My [Nm] | Mz [Nm] | ∑ M [Nm] |
|---|---|---|---|---|
| 25 | 900 | 600 | 800 | 1550 |
| 32 | 1200 | 800 | 700 | 1700 |
| 40 | 1300 | 900 | 1000 | 1850 |
| 50 | 1400 | 1000 | 1100 | 2000 |
| 65 | 1500 | 1100 | 1200 | 2150 |
| 80 | 1600 | 1200 | 1300 | 2300 |
| 100 | 1800 | 1300 | 1500 | 2600 |
| 125 | 2100 | 1500 | 1700 | 3000 |

Tab. 23 Socket load – torque

### 9.2.7 Operating limits for pressure and temperature

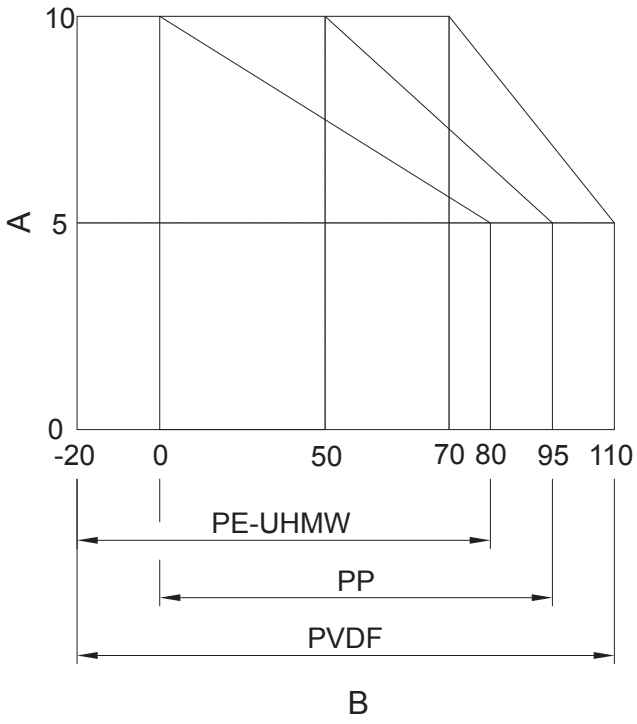


Fig. 30 Operating limits for pressure and temperature

A Permissible pump interior pressure [bar]

B Temperature of pumped medium [°C]

### 9.2.8 Flushing options

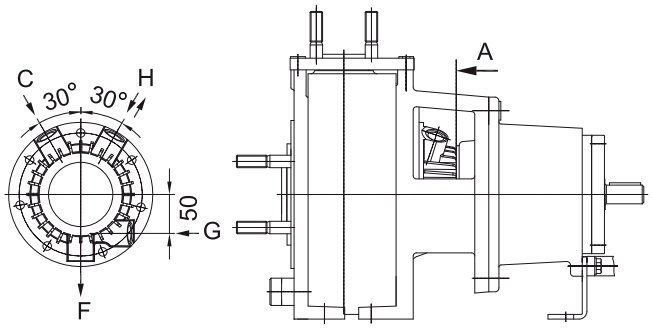


Fig. 31 Connection points

| Seal type | Flushing type | Connection points | Flushing medium data | Supply | Notes / comments |
|---|---|---|---|---|---|
| REA F | Spring chamber flushing | Input H<br>Output F | Clean, product-compatible, non-corrosive, usually tap water | Internal supply system | Depressurised flushing |
| | Permanent flushing | C | Clean, product-compatible, non-corrosive<br>Amount: 0.9 – 1.5 l/min<br>Pressure: max. 10 bar | | ► Seal connection C tightly when not in use. |
| | Stationary flushing | C | Clean, product-compatible, non-corrosive<br>Amount: 5 – 8 l/min<br>Pressure: max. 10 bar | Internal supply system | |
| REA F/D | Continuous barrier fluid (with barrier pressure) | Input G<br>Output H | Clean, product-compatible, non-corrosive<br>Kinematic viscosity = max. 15 mm²/s<br>Minimum throughput rate = 0.25 l/min<br>Return temperature = max. 60 °C<br>Temperature difference between feed and return flow = max. 25 K<br>Does not exceed boiling point | Internal supply system | Example for barrier medium: Water<br>Recommended throughput rate: 0.5 l/min |
| | Barrier fluid in thermal siphon circuit | Input G<br>Output H | Clean, non-crystallising, product-compatible, high boiling point, good lubrication, environmentally friendly, non-corrosive<br>Kinematic viscosity = max. 5 mm²/s<br>Return temperature = max. 60 °C<br>Temperature difference between feed and return flow = max. 25 K<br>Does not exceed boiling point | Thermal siphon container, pressurised | Example for barrier medium: Water, vegetable oil, glycol/water mixture<br>Barrier pressure > Pressure on medium side of mechanical seal.<br>► Attach the container 1.5 to 2 metres above the mechanical seal. Lines must be laid with an upward or downward slope. Avoid horizontal sections. |
| | Continuous barrier fluid (without barrier pressure) | Input G<br>Output H | Clean, product-compatible, non-corrosive<br>Kinematic viscosity = max. 15 mm²/s<br>Minimum throughput rate = 0.25 l/min<br>Return temperature = max. 60 °C<br>Temperature difference between feed and return flow = max. 25 K<br>Does not exceed boiling point | Internal supply system | Depressurised flushing |

| Seal type | Flushing type | Connection points | Flushing medium data | Supply | Notes / comments |
|---|---|---|---|---|---|
| REA F/D | Quench | Input G<br>Output H | Clean, non-crystallising, product-compatible, high boiling point, good lubrication, environmentally friendly, non-corrosive<br>Kinematic viscosity = max. 5 mm²/s<br>Return temperature = max. 60 °C<br>Temperature difference between feed and return flow = max. 25 K<br>Does not exceed boiling point | Depressurised operation with quench tank | Depressurised flushing with atmosphere-side mechanical seal operated as a quench seal<br>▶ Attach the container 1 to 2 metres above the mechanical seal. Lines must be laid with an upward or downward slope. Avoid horizontal sections. |
| | Permanent flushing | C | Clean, product-compatible, non-corrosive<br>Amount: 0.9 – 1.5 l/min<br>Pressure: max. 10 bar | | ▶ Seal connection C tightly when not in use. |
| | Stationary flushing | C | Clean, product-compatible, non-corrosive<br>Amount: 5 – 8 l/min<br>Pressure: max. 10 bar | | |

Tab. 24 Flushing options and parameters for REA-F, F/D seals

## 9.3 Spare parts for two years of continuous operation according to DIN 24296

### 9.3.1 Commissioning

| Part no. | Part designation | Number of identical pumps (including spare pumps) | | | | | | | |
|---|---|---|---|---|---|---|---|---|---|
| | | 1 | 2 | 3 | 4 | 5 | 6 or 7 | 8 or 9 | 10 or more |
| | | Set/Quantity of spare parts | | | | | | | |
| – | Repair set for mechanical seal | 1 | 1 | 1 | 2 | 2 | 2 | 3 | 25 % |
| 412.1 | O-ring (casing) | 1 | 2 | 3 | 4 | 5 | 100 % | 100 % | 100 % |
| 523 (523.6) | Shaft sleeve | 1 | 1 | 1 | 2 | 2 | 2 | 3 | 25 % |
| 523.1 (523.5) | Shaft sleeve | 1 | 1 | 1 | 2 | 2 | 2 | 3 | 25 % |

Tab. 25 Replacement parts for 2 years' continuous operation – commissioning

### 9.3.2 Maintenance

| Part no. | Part designation | Number of identical pumps (including spare pumps) | | | | | | | |
|---|---|---|---|---|---|---|---|---|---|
| | | 1 | 2 | 3 | 4 | 5 | 6 or 7 | 8 or 9 | 10 or more |
| | | Set/Quantity of spare parts | | | | | | | |
| – | Repair set for mechanical seal | 1 | 1 | 1 | 2 | 2 | 2 | 3 | 25 % |
| 161 | Casing cover | 1 | 1 | 1 | 1 | 2 | 2 | 2 | 20 % |
| 211 | Pump shaft | 1 | 1 | 1 | 1 | 2 | 2 | 2 | 20 % |
| 230 | Impeller | 1 | 1 | 1 | 1 | 2 | 2 | 2 | 20 % |
| 412.1 | O-ring (casing) | 1 | 2 | 3 | 4 | 5 | 100 % | 100 % | 100 % |
| 523 (523.6) | Shaft sleeve | 1 | 1 | 1 | 2 | 2 | 2 | 3 | 25 % |
| 523.1 (523.5) | Shaft sleeve | 1 | 1 | 1 | 2 | 2 | 2 | 3 | 25 % |

Tab. 26 Replacement parts for 2 years' continuous operation – maintenance

## 9.4 Declaration of conformity according to EC machine directives

MUNSCH

### EG-Konformitätserklärung des Herstellers

**nach der EG-Maschinenrichtlinie 2006/42/EG Anhang II, Nr. 1 A**

### EC Declaration of Conformity by the Manufacturer

**as defined by machinery directive 2006/42/EC, Annex II, No. 1 A**

CE

MUNSCH Chemie-Pumpen GmbH
Im Staudchen
56235 Ransbach-Baumbach
Germany

Mr Johann Dausenau,
MUNSCH Chemie-Pumpen GmbH,
is authorised to compile the technical documentation.

We hereby declare that the pump units

| Machine Type: | Standardized Chemical Pump | Chemical Pump in Close-Coupled Design | Chemical Pump in Close-Coupled Design | Chemical Pump in Close-Coupled Design |
|---|---|---|---|---|
| | | With Mechanical Seal | With Magnetic Drive | |
| Design Designation: | **NP** | **NP-B**<br>**SP-K** | **MNP-B** | **MSP-K** |

are in accordance with all relevant provisions of the EC Machinery Directive.

The following harmonised standards (or parts of these standards) were applied:

| | | | |
|---|---|---|---|
| ☒ | DIN EN ISO 12100 : 2011-03 | ☐ | |
| ☒ | DIN EN 809 : 2012-10 | ☐ | |
| ☐ | | ☐ | |
| ☐ | | ☐ | |
| ☐ | | ☐ | |

The product complies with the aforesaid standards insofar as it is used at the contractually agreed conditions. The operator is responsible for this.

In the event of any structural change or use not as intended, this declaration becomes invalid unless the manufacturer's prior written approval has expressly been given.

Ransbach-Baumbach, 31.05.2014

Dipl.-Ing. Stefan Munsch
Managing Director

MUNSCH Chemie-Pumpen GmbH — Januar 2013

LEFT BLANK

# *NORD*

## *CLINCHER SERIES, GEAR REDUCER*

LEFT BLANK

Intelligent Drivesystems



# B1000

## Operating & Instruction Manuals For Gear Units

B1000

NORD DRIVESYSTEMS

# TABLE OF CONTENTS


| TITLE | Document Number & Hyperlink |
|---|---|
| General Instructions | U10000 |
| Safety Notes | U10020 |
| Storage & Commissioning | U10040 |
| Unit Installation | U10060 |
| Solid Shaft Connections | U10250 |
| Keyed Hollow Shaft | U10270 |
| Fixing Kit | U10280 |
| Hollow Shaft With Shrink Disc | U10290 |
| GRIPMAXX™ Bushing System | U10310 |
| Reducer Mounting Footed & Flange Mount Gear Units | U10500 |
| Clincher Shaft Mount With Rubber Buffer | U10580 |
| Right Angle Shaft Mount with Bottom Mount Torque Arm (K) | U10600 |
| Helical Bevel Shaft Mount with Torque Arm (D) | U10620 |
| Helical & Bevel Reducer Lubrication | U10750 |
| Helical Worm Reducer Lubrication | U10770 |
| Minicase Worm Reducer Lubrication | U10790 |
| FLEXBLOC Worm Reducer Lubrication | U10810 |
| Expansion Chambers | U10830 |
| Helical & Bevel Reducer Lubrication Types | U11000 |
| Helical Worm Reducer Lubrication Types | U11020 |
| Minicase Worm Reducer Lubrication Types | U11040 |
| FLEXBLOC Worm Reducer Lubrication Types | U11060 |
| Standard In-Line Foot Oil Fill Quantities | U11500 |
| Standard In-Line Flange Oil Fill Quantities | U11600 |
| Helical In-Line Foot Mount Oil Fill Quantities | U11700 |
| Helical In-Line Flange Mount Oil Fill Quantities | U11800 |
| CLINCHER Oil Fill Quantities | U11900 |
| Helical Bevel Foot Mount Oil Fill Quantities | U12000 |
| Helical Bevel Flange Mount Oil Fill Quantities | U12100 |
| 92 Helical Bevel Foot Mount Oil Fill Quantities | U12200 |
| 92 Helical Bevel Flange Mount Oil Fill Quantities | U12300 |
| Helical Worm Foot Mount Oil Fill Quantities | U12400 |
| Helical Worm Solid Shaft/Flange Mount Oil Fill Quantities | U12500 |
| Helical Worm Hollow Shaft Oil Fill Quantities | U12600 |
| Nordbloc Foot Mount Oil Fill Quantities | U12700 |
| Nordbloc Flange Mount Oil Fill Quantities | U12800 |
| Nordbloc.1 Foot Mount Oil Fill Quantities | U12900 |
| Nordbloc.1 Flange Mount Oil Fill Quantities | U13000 |
| Minicase Foot Mount Oil Fill Quantities | U13100 |
| Minicase Flange Mount Oil Fill Quantities | U13200 |
| FLEXBLOC Oil Fill Quantities | U13300 |
| Standard In-Line Oil & Drain Plug Locations | U14000 |
| Helical In-Line Oil & Drain Plug Locations | U14100 |
| CLINCHER Oil & Drain Plug Locations | U14200 |
| 92 Helical Bevel Oil & Drain Plug Locations | U14300 |
| 90.1 Helical Bevel Oil & Drain Plug Locations | U14400 |
| Helical Worm Oil & Drain Plug Locations | U14500 |
| Nordbloc Oil & Drain Plug Locations | U14600 |
| Nordbloc.1 Oil & Drain Plug Locations | U14700 |
| FLEXBLOC Oil & Drain Plug Locations | U14800 |
| Standard In-Line Parts Lists | U15000 |
| Helical In-Line Parts Lists | U15100 |
| CLINCHER Parts Lists | U15200 |
| 90.1 Helical Bevel Parts Lists | U15300 |
| 92 Helical Bevel Parts Lists | U15400 |
| Helical Worm Parts LIsts | U15500 |
| Nordbloc Parts Lists | U15600 |
| Troubleshooting | U19000 |
| Terms & Conditions | Terms |


**NORD Gear Limited**
Toll Free in Canada: 800.668.4378

**NORD Gear Corporation**
Toll Free in the United States: 888.314.6673

## 1. Importance of the operating instructions

These operating instructions are intended to provide general information and safety guidelines. It is the responsibility of the buyer, machine builder, installer and user of the NORD product to make sure that all the proper safetynotes and operating instructions have been reviewed and understood. If the contents of this instruction or any applicable operating instructions are not understood, please consult NORD.

**⚠ *WARNING* ⚠**

Electric motors, gearmotors, electrical brakes, variable frequency drives, and gear reducers contain potentially dangerous high-voltage, rotating-components and surfaces that may become hot during operation. All work involved in the transport, connection, commissioning and maintenance of any NORD product must be carried out by qualified and responsible technicians.

## 2. Inspect incoming freight

Before accepting shipment from the freight company, thoroughly inspect the NORD equipment for any shipping and handling damage. If any goods called for in the bill of lading or express receipt are damaged, or if the quantity is short, do not accept until the freight express agent makes an appropriate notation on your freight bill or express receipt. If any concealed loss or damage is discovered later, notify your freight carrier or express agent at once, and request a formal review of your claim.

Claims for loss or damage in shipment must not be deducted from the NORD invoice, nor should payment of the NORD invoice be withheld awaiting adjustment of such claims, as the carrier guarantees safe delivery. NORD will try to assist in collecting claims for loss or damage during shipment; however, this willingness on our part does not remove the transportation company's responsibility in reimbursing you for collection of claims or replacement of material.

## 3. Obtaining detailed operating instructions

One can receive the detailed installation and maintenance instructions by entering a serial number (or NORD order number) at the appropriate location on the NORD web site.

i. Record the serial number from your gearmotor, gear reducer, or motor nameplate, or record the serial number found on your order confirmation.

ii. Go to **www.nord.com/docs** to download the appropriate operating instructions.

**EXAMPLE: www.nord.com/docs**

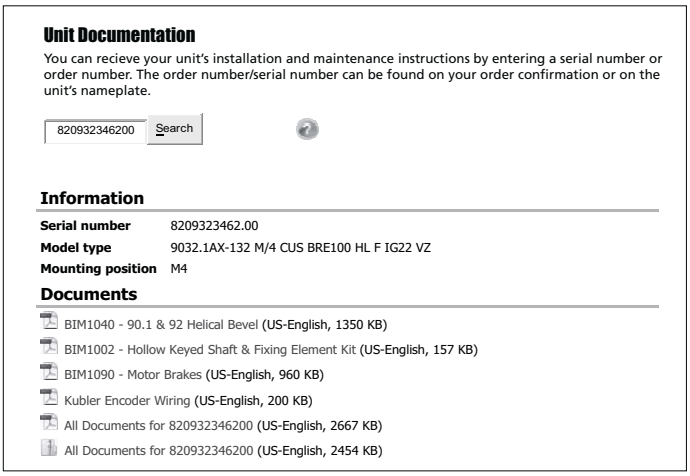


## 4. Intended use

NORD is a supplier of electric motors, gearmotors, reducers, electromechanical brakes, mechanical variators, and electrical variable frequency drives that are intended for commercial installations on larger systems and machines.

**⚠ *WARNING* ⚠**

NORD does not accept any liability for damage or injury caused by:

- Inappropriate use, operation or adaptation of the drive system.
- Unauthorized removal of housing covers, safety and inspection covers, guarding, etc.
- Unauthorized modifications to the drive system.
- Improper servicing or repair work on the drive system.
- Damage caused during shipment or transportation.
- Disregard of the important Safety Notes or Operating Instructions.

### 5. Notes concerning warranty and liability

All units are supplied according to the terms described in our standard "Conditions of Sale." The unit limited warranty is also defined in our "Conditions of Sale" and is located in the back of our product catalogs as well as the back of your order invoice.

All NORD Safety Notes and all related NORD Operating instructions shall be considered up-to-date at the time in which they were compiled by the buyer, machine builder, installer or user. NORD reserves the right to incorporate technical modifications and information updates to any safety/operating instructions that are within the scope of providing additional knowledge or clarification, communicating design changes, or product enhancements. Information updates may include any NORD product, or subsequent products purchased and supplied by NORD; No specific claims can be derived from the information or illustrations and descriptions contained in the safety notes or related operating instructions.

**⚠ *WARNING* ⚠**

NORD assumes no liability for personal injury, equipment damage or malfunctions resulting from failure to comply with any installation safety notes. The applicable national, regional, and local work regulations and safety requirements must also be complied with. Failure to comply with any safety notes or regulations may result in serious injury, damage to property, or even death.

### 6. Checklist for installation and operation

- ☑ Verify that the purchased NORD product has been supplied with the expected accessories & options. Check the received goods and packing slip to make sure items are properly received.
- ☑ Make sure that you have all of the required Operating Instructions for your NORD electric motor, gearmotor, reducer, electromechanical brake, mechanical variable speed drives, or electrical variable frequency drives.
- ☑ Consult NORD if you feel you are missing any documentation or if you have questions.

## 1. Safety & information symbols

**All work** including transportation, storage, installation, electrical connection, commissioning, servicing, maintenance and repair must be performed **only by qualified specialists or personnel**. It is recommended that repairs to NORD Products are carried out by the NORD Service Department. Instructions related to operational safety will be emphasized as shown.

| Symbol | Meaning |
|---|---|
| ⚠ | **General Warning or Hazard -** Severe risk or danger of personal injury or death by working around dangerously high electrical voltage or moving machinery. Proper safety precautions must be taken. |
| STOP | **Possible Harmful Situation -** Care must be taken to avoid the possibility of damaging the drive unit, driven machine, or the environment. |
| ℹ | **Important Note -** Useful note or tip to help assure trouble-free operation. |
| ♻ | **Material Disposal Note -** Important note concerning suggested material disposal. |

## 2. Safety warnings

### ⚠ GENERAL WARNINGS ⚠

- All work involved in the transport, connection, commissioning and maintenance of any NORD product must be carried out by qualified and responsible technicians. All applicable national, regional, and local work regulations and safety requirements must also be complied with. **NORD assumes no liability for personal injury, accidental death, or equipment damage and malfunctions resulting from failure to comply with installation or operating instructions, safety notes, or any work regulations and laws!**
- Gear unit installation and maintenance work may only be performed when no power is available to the prime mover or motor. Electric motors, electrical brakes, and variable frequency drives, contain potentially dangerous high-voltage. Prior to installation or maintenance, shut down the power at the circuit breaker or power switch. **While working on the drive, make sure the power from the prime mover is isolated or secured on "lock-out" to prevent accidental start-up and to safeguard against injury!**
- Surfaces of motors and gear units may become hot during operation or shortly after start-up. In some instances additional protection against accidental contact may be necessary. **Use caution to avoid burns or serious injury!**

## 3. Observe published performance range & nameplate data

### STOP HARMFUL SITUATION STOP

Observe the data on all reducer nameplates and verify published ratings for the NORD item/s in question. Do not operate any NORD equipment outside the published performance range. Failure to comply may result in damage to the drive unit, driven machine, or the environment.

**U.S. Nameplate**

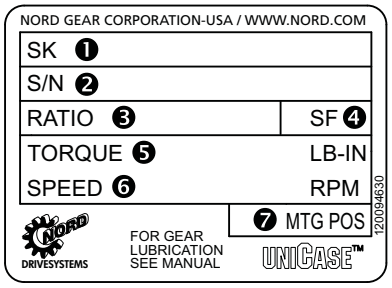


❶ Model/Type
❷ Serial Number
❸ Gear Ratio
❹ Service Factor
❺ Torque Rating
❻ Output Speed RPM
❼ Mounting Position

**European Nameplate**

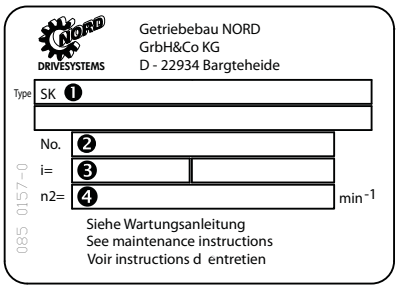


❶ Model/Type
❷ Serial Number
❸ Gear Ratio
❹ Speed

## 4. Transportation and handling

Make sure that all eyebolts and lifting lugs are tight and lift only at designed points. Protect the mounting surface from possible damage during transportation.

### ⚠ WARNING ⚠

Do not attach other machinery or loads to the NORD assembly, since the supplied lifting bolts are not designed for this purpose.

If the gearmotor or assembly is equipped with two suspension eye bolts, then both locations should be used for transportation and placement of the unit; in this case the tension force of the slings must not exceed a 45° angle.

In some instances it may be appropriate to use additional lifting straps or slings in order to assure safe transportation of the assembly. Always use sufficiently rated handling equipment and ensure that adequate safety measures are taken to protect personnel from injury during transportation. Once the NORD assembly is properly installed, remove the transportation fixtures.

## 7. DISPOSAL

### MATERIAL DISPOSAL

Properly dispose of all used gear units and internal parts in accordance with all local regulations. In particular, all lubricants must be properly collected and disposed.

For confirmation of specific materials used in a specific reducer or gearmotor assembly, please consult NORD with the appropriate unit identification or serial number.

| Components | Material |
|---|---|
| Gear wheels, shafts, rolling bearings, parallel keys, snap rings, spacers, shims, etc. | Steel |
| Gear housing and housing components | Cast iron or Aluminum (depending on type and size) |
| Worm gears | Bronze alloy |
| Radial seals, sealing caps, and rubber components | Elastomers with some steel |
| Coupling components | Plastic or Elastomer with Steel |
| Housing gaskets and flat oil seals | Asbestos-free sealing or gasket material (various types used) |
| Gear Oil | Mineral, SHC-Synthetic or PG-Synthetic (can vary) |

## 1. Storage

**IMPORTANT NOTE**

For storage periods longer than 9 months, or for storage in less than desirable conditions, please consult NORD for recommendations.

Storage for up to 9 months is possible, so long as the following conditions are observed:

- Store the gear unit in its actual mounting position in accordance with the specified oil fill-level, in a clean and dry temperature controlled area. Avoid temperature fluctuations within the range of 0°C and 40°C (32°F to 104°F) and avoid relative humidity conditions in excess of 60%.
- Protect all exposed or unpainted shaft and flange surfaces with an anti-corrosion agent (such as CRC® SP400™ Corrosion Inhibitor).
- Store in a location free from shock and vibration, to avoid false brinelling of bearing elements and raceways.
- Whenever possible, rotate the shafts periodically, by hand if necessary, to help prevent brinelling (bearing damage) and to help keep the shaft seals pliable.
- Avoid direct exposure to the sun or UV light and aggressive or corrosive materials in the environment (ozone, gases, solvents, acids, caustic solutions, salts, radioactivity, etc.

## 2. Commissioning

Prior to gear unit start-up, complete the following:

- Check the lubricant and be sure the gear unit is filled with the proper oil type, to the proper level, as determined by the mounting position.
- Check the condition of all shaft seals and all assembled flange gasket areas. If any change is detected in the shape, color, hardness or permeability, or if any leaks are detected, the corresponding shaft seals and/or gaskets must be replaced.
- Remove all anti-corrosive metal protectant from otherwise bare metal surfaces. Follow product manufacturers directions and warnings during surface protection removal.
- Check the resistance of all motor and brake windings to verify the integrity of the winding insulation and inspect all terminal box openings and wire connection areas to verify that all components are dry and free of corrosion.

• *CRC® and SP400™ are trademarks of CRC Industries.*

## 1. Installation site

Drives must be properly installed if they are to produce the rated torque. Improper installation may lead to oil leaks, reduced life, or even catastrophic failure. NORD gear drives and motors are intended to be installed at a suitable mounting site under the following conditions:

- Unimpeded airflow to and around the units.
- Accessibility to oil drain, level and breather plugs.
- On brakemotors, allow adequate space for removing the fan guard and replacing and adjusting the brake.
- Mounting surfaces must be flat, torsionally rigid, and dampened against vibration.
- Unless special measures are taken, the immediate vicinity around the gear drive or motor should not be exposed to any aggressive or corrosive substances, contaminated air, ozone, gases, solvents, acids, alkalis, salts, radioactivity, etc.

## 2. Mounting position

Reducer mounting position charts illustrate the standard mounting positions for horizontal and vertical mounting. All gear units are assembled with the oil fill-level, oil-drain and vent plugs installed in their proper locations, **according to the customer-specified mounting position**. For mounting orientations other than shown consult NORD Gear.

### HARMFUL SITUATION

The gear reducer may not receive proper lubrication if the unit is not mounted in the position for which it is designed. Observe the mounting position designated on the reducer nameplate, or specified in the order acknowledgement. Consult NORD prior to changing mounting position in the field. While it is often possible to simply relocate the oil fill-level and vent locations, and adjust the oil fill amount, in some cases, different mounting positions may lend themselves to different internal construction features.

## 3. Reducer mounting

- The support foundation must be straight, level and flat. Whether the gear unit is foot-mounted or flange-mounted, NORD recommends that the straightness and flatness of the customer-supplied support foundation follow **Table 1**.
- The gear unit must be properly aligned with the driven shaft of the machine in order to prevent additional stress or load forces from being imposed upon the gear unit.
- To facilitate oil drainage it may be desirable to elevate the gear box foundation above the surrounding support structure.
- All bolting surfaces must be clean and free from contamination and corrosion.

**Table 1: Recommended Straightness and Flatness of Customer-Supplied Support Foundation**

| Above (in) | To & Including (in) | General Tolerance on Straigtness & Flatness ISO 2768-2, Tolerance Class K |
|---|---|---|
| 0.00 | 0.39 | +/- 0.002 in |
| 0.39 | 1.18 | +/- 0.004 in |
| 1.18 | 3.9 | +/- 0.008 in |
| 3.9 | 11.8 | +/- 0.016 in |
| 11.8 | 39 | +/- 0.024 in |
| 39 | 118 | +/- 0.031 in |

| Above (mm) | To & Including (mm) | General Tolerance on Straigtness & Flatness ISO 2768-2, Tolerance Class K |
|---|---|---|
| 0 | 10 | +/- 0.05 mm |
| 10 | 30 | +/- 0.1 mm |
| 30 | 100 | +/- 0.2 mm |
| 100 | 300 | +/- 0.4 mm |
| 300 | 1000 | +/- 0.6 mm |
| 1000 | 3000 | +/- 0.8 mm |

**Straightness: Based upon the length of the corresponding line.**

**Flatness: Based upon the longer lateral surface or the diameter of the circular surface.**

### HARMFUL SITUATION

The responsibility for the design and construction of the support foundation is with the user. The foundation must be adequate to withstand normal operating loads and possible overloads while maintaining alignment to attached system components under such loads. ***Motors and drive components mounted on prefabricated base plates can become misaligned during shipment. Always check alignment after installation.***

## 4. Steel foundation

An engineered structural steel foundation should be designed to provide adequate rigidity and prevent loads from distorting the housing or causing misalignment of internal gears and shafts. When foot-mounting the gear reducer, a base plate or sole plate with suitable thickness (generally equal or greater than the thickness of the drive feet) should be securely bolted to steel supports and extend under the entire gear drive assembly. When flange-mounting the gear unit, the bulk head plate must be engineered to minimize buckling distortions and support the cantilevered weight of the gear unit or gear motor.

### HARMFUL SITUATION

Do not weld on the gear unit or use the gear unit as an earth or ground connection for any welding procedure as this may cause permanent damage to the bearings and gears.

## 5. Concrete foundation

If a concrete foundation is used, allow the concrete to set firmly before bolting down the gear drive. Grout structural steel mounting pads and bolts of sufficient size into the concrete, to adequately distribute the load stress onto the concrete foundation.

**Figure 1: Concrete Foundation**

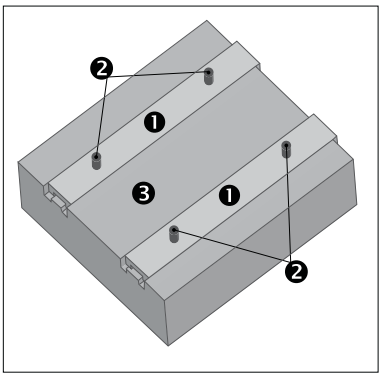


❶ Grouted Structural Steel Mounting Pads
❷ Mounting Bolts
❸ Concrete Foundation

## 6. Bolt connections for footed & flange mounted units

NORD footed reducers and flange-mount reducers (with B5 flange) have clearance designed into the mounting holes to allow for some minor adjustments in alignment. Bolt size, strength and quantity should be verified to insure proper torque reaction capacity whatever the mounting arrangement. Tightening torque for gear reducer mounting bolts, and recommended fastener grades, are provided in Table 2.

**Table 2A: Tightening Torque for Inch Reducer Mounting Bolts**

| Thread Size | Tightening Torque | | | | | |
|---|---|---|---|---|---|---|
| | Grade SAE 5 / ASTM A449 | | | Grade SAE 8 | | |
| (in) | (lb-in) | (lb-ft) | (Nm) | (lb-in) | (lb-ft) | (Nm) |
| 1/4-20 | 85 | 7.1 | 9.6 | 120 | 10.0 | 13.6 |
| 5/16-18 | 190 | 16 | 21 | 267 | 22 | 30 |
| 3/8-16 | 330 | 28 | 37 | 470 | 39 | 53 |
| 1/2-13 | 825 | 69 | 93 | 1,170 | 98 | 132 |
| 5/8-11 | 1,660 | 138 | 188 | 2,340 | 195 | 264 |
| 3/4-10 | 2,960 | 247 | 334 | 4,180 | 348 | 472 |
| 7/8-9 | 4,750 | 396 | 537 | 6,700 | 558 | 757 |
| 1-8 | 7,100 | 592 | 802 | 10,000 | 833 | 1,130 |
| 1 1/8-7 | - | - | - | 14,800 | 1,233 | 1,672 |
| 1 1/4-7 | - | - | - | 20,600 | 1,717 | 2,327 |
| 1 3/8-6 | - | - | - | 27,200 | 2,267 | 3,073 |
| 1 1/2-6 | - | - | - | 35,800 | 2,983 | 4,045 |
| 1 3/4-5 | - | - | - | 53,500 | 4,458 | 6,045 |

- Calculated tightening torques are based a conventional 60°, clean and dry (un-lubricated) thread, with thread-friction and head-friction equal to 0.15.
- When using inch-fasteners, NORD recommends a minimum Grade SAE 5 (ASTM A-449) for sizes up to 1-8 UNC, and Grade SAE 8 for all larger sizes.

**Table 2B: Tightening Torque for Metric Reducer Mounting Bolts**

| Above | Tightening Torque | | | | | |
|---|---|---|---|---|---|---|
| | ISO Grade 8.8 | | | ISO Grade 10.9 | | |
| (mm) | (lb-in) | (lb-ft) | (Nm) | (lb-in) | (lb-ft) | (Nm) |
| M4 | 28 | 2.4 | 3.2 | 42 | 3.5 | 4.7 |
| M5 | 57 | 4.7 | 6.4 | 82 | 6.9 | 9.3 |
| M6 | 97 | 8 | 11 | 142 | 12 | 16 |
| M8 | 239 | 20 | 27 | 345 | 29 | 39 |
| M10 | 469 | 39 | 53 | 690 | 58 | 78 |
| M12 | 814 | 68 | 92 | 1,195 | 100 | 135 |
| M14 | 1,283 | 107 | 145 | 1,903 | 159 | 215 |
| M16 | 2,036 | 170 | 230 | 2,965 | 247 | 335 |
| M18 | 2,036 | 170 | 230 | 2,965 | 247 | 335 |
| M20 | 4,071 | 339 | 460 | 5,841 | 487 | 660 |
| M22 | 5,576 | 465 | 630 | 7,966 | 664 | 900 |
| M24 | 6,992 | 583 | 790 | 10,178 | 848 | 1,150 |
| M27 | 10,178 | 848 | 1,150 | 14,604 | 1,217 | 1,650 |
| M30 | 14,161 | 1,180 | 1,600 | 19,914 | 1,660 | 2,250 |
| M36 | 24,605 | 2,050 | 2,780 | 34,606 | 2,884 | 3,910 |
| M42 | 39,563 | 3,297 | 4,470 | 55,671 | 4,639 | 6,290 |

- Calculated tightening torques are based on a conventional 60°, clean and dry (un-lubricated) thread, with thread-friction and head-friction equal to 0.15.
- When using metric-fasteners, NORD recommends a minimum ISO Grade 8.8 bolt.

## 7. Mounting the prime mover

When the motor is not flange mounted or integrally mounted to the gearbox, it is important to properly secure and align the gear drive with respect to the driven machine before attempting to align the prime mover or motor.

A. After the main gear drive is properly aligned and bolted in place, align the prime mover with respect to the reducer input shaft.

B. Use shims under the feet of the prime mover as needed, and secure in place with the proper mounting bolts. Dowel pins may be field-installed to help prevent misalignment and ensure proper realignment if removed for service.

### *IMPORTANT NOTE*

When using a high speed coupling connection between the prime mover and the reducer, check alignment per the coupling manufacturers recommendations. If the coupling is misaligned, the reducer alignment or shimming is incorrect. Re-align the gear reducer and re-check the high-speed coupling alignment before re-aligning the motor.

# SOLID SHAFT CONNECTIONS



## 1. Solid shaft diameter tolerance

Reducer input and output shaft extensions have a diameter tolerance as specified in **Table 1**.

**Table 1: Solid Shaft Diameter Tolerance**

| Above ø (in) | To & Including ø (in) | Tolerance (in) |
|---|---|---|
| 0.375 | 1.750 | +0.0000 / -0.0005 |
| 1.750 | 7.500 | +0.0000 / -0.0010 |

| Above ø (mm) | To & Including ø (mm) | Tolerance (mm) | ISO 286-2 Fit Class |
|---|---|---|---|
| 10 | 18 | +0.012 / +0.001 | k6 |
| 18 | 30 | +0.015 / +0.002 | k6 |
| 30 | 50 | +0.018 / +0.002 | k6 |
| 50 | 80 | +0.030 / +0.011 | m6 |
| 80 | 120 | +0.035 / +0.013 | m6 |
| 120 | 180 | +0.040 / +0.015 | m6 |
| 180 | 190 | +0.046 / +0.017 | m6 |

## 2. Fitting drive elements onto the reducer solid shaft

Solid input and output shaft extensions are provided with a drill and tap feature as indicated in Table 2. When installing drive elements such as coupling hubs, pulleys, sprockets, or gears, NORD recommends using the threaded hole in the end of the shaft, along with a suitable assembly device fitted into the threaded hole.

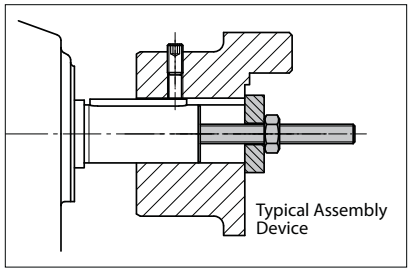


**Table 2: Solid Shaft End - Threaded Holes**

| Above ø (in) | To & Including ø (in) | Tap size & Depth (in) |
|---|---|---|
| 0.375 | 0.500 | 10-24 x 0.43 in |
| 0.500 | 0.875 | 1/4-20 x 0.59 in |
| 0.875 | 0.938 | 5/16-18 x 0.71 in |
| 0.938 | 1.100 | 3/8-16 x 0.87 in |
| 1.100 | 1.300 | 1/2-13 x 1.10 in |
| 1.300 | 1.875 | 5/8-11 x 1.42 in |
| 1.875 | 3.500 | 3/4-10 x 1.73 in |
| 3.500 | 7.500 | 1-8 x 2.20 in |

| Above ø (mm) | To & Including ø (mm) | Tap Size & Depth (mm) |
|---|---|---|
| 10 | 13 | M4 x 10 mm |
| 13 | 16 | M5 x 12.5 mm |
| 16 | 21 | M6 x 16 mm |
| 21 | 24 | M8 x 19 mm |
| 24 | 30 | M10 x 22 mm |
| 30 | 38 | M12 x 28 mm |
| 38 | 50 | M16 x 36 mm |
| 50 | 85 | M20 x 42 mm |
| 85 | 130 | M24 x 50 mm |
| 130 | 190 | M30 x 60 mm |

### HARMFUL SITUATION

**DO NOT DRIVE** or **HAMMER** the coupling hub, pulley, sprocket, or gear into place. An endwise blow to the reducer shaft can generate damaging axial forces and cause damage to the reducer housing, bearings or internal components.

### WARNING

To avoid serious injury the user must provide suitable safety guards for all rotating shafts and shaft components such as couplings, chain drives, belt drives, etc. All guarding must adhere to local regulations and safety standards.

## 3. Installing interference-fit hubs to the reducer shaft

Prior to installing any interference-fit hubs to the reducer shaft, consult with the manufacturer to determine proper assembly and fit. Interference-fits usually require heating the coupling, sprocket or gear hub, per the manufacturer's recommendations. Coupling hub installation typically follows ANSI/AGMA 9002-A86. Always make sure the reducer shaft seals are protected from the heat source. Apply uniform heat to the drive element hub to prevent distortion. NORD does not recommend heating the drive element hub beyond 212°F to 275°F (100°C to 135° C).

### WARNING

When using heat to mount a drive element hub, do not use open flame in a combustible atmosphere or near flammable materials. Use suitable protection to avoid burns or serious injury.

### HARMFUL SITUATION

When using external chain or belt drives, make sure the reducer is sized so that the shaft and bearings have adequate capacity. To avoid unnecessary bearing loads and additional shaft deflection, mount all power take-off devices (sprockets, pulleys, etc.) so that the applied load center is as close to the gear housing as possible and check component alignment and tension of any belts or chains per the manufacturer's recommendation. Do not over tighten the belts or chains.

### 4. Coupling installation

The performance and life of any coupling depends upon how well it is installed. Coupling hubs are typically mounted flush with the shaft ends, unless specifically ordered for overhung mounting. Shaft couplings should be installed according to the coupling manufacturer's recommendations for gap, angular and parallel alignment. To help obtain critical shaft alignment coupling hubs may be installed to the machine shafts prior to final shimming or tightening of the foundation bolts. Proper coupling alignment allows for thermal and mechanical shaft movement during operation and ensures that only torque (no radial load) is transmitted between the mating shafts.

#### Coupling gap and angular alignment

The shaft gap must be sufficient to accommodate any anticipated thermal or mechanical axial movement. When setting the coupling gap, insert a spacer or shim stock equal to the required spacing or gap between the coupling hub faces. Measure the clearance using feeler gauges at 90-degree intervals, to verify the angular alignment.

#### Parallel (or offset) alignment

Mount a dial indicator to one coupling hub, and rotate this hub, sweeping the outside diameter of the other hub. The parallel or offset misalignment is equal to one-half of the total indicator reading. Another method is to rest a straight edge squarely on the outside diameter of the hubs at 90° intervals and measure any gaps with feeler gauges. The maximum gap measurement is the parallel or offset misalignment.

#### Check alignment

After both angular and parallel alignments are within specified limits, tighten all foundation bolts securely and re-check critical alignment. If any of the specified limits for alignment are exceeded, realign the coupling.

### 5. Installing sheaves (pulleys), sprockets and gears

To avoid unnecessary bearing loads and additional shaft deflection, mount all power take-off devices (sprockets, pulleys, gears, etc.) so that the applied load center is as close to the gear housing as possible, as shown in **Figure 2**.

**Figure 2**: Sprocket or Gear Mounting

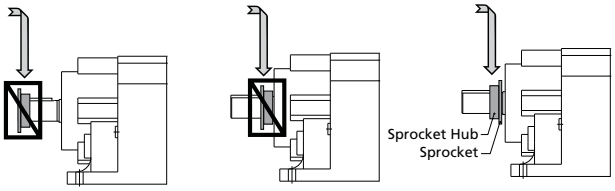


Preferred Mounting of Sprocket or Gear

Align the driver sheave or sprocket with the driven sheave or sprocket by placing a straight-edge length-wise across the face of the sheaves or sprockets. Alignment of bushed sheaves and sprockets should be checked only after bushings have been tightened. Check horizontal shaft alignment by placing one leg of a square or a level vertically against the face of the sheave or sprocket.

Always check component alignment and tension any belts or chains per the manufacturer's recommendation. The ideal belt or chain tension allows proper wrap of the driver and driven wheels, while maintaining the lowest possible tension of the belts or chain, so that no slipping occurs under load conditions. Check belt or chain tension frequently over the first 24 to 48 hours of operation.

**STOP** ***HARMFUL SITUATION*** **STOP**

When using external chain or belt drives, make sure the reducer is sized so that the shaft and bearings have adequate capacity. To avoid unnecessary bearing loads and additional shaft deflection, mount all power take-off devices (sprockets, pulleys, etc.) so that the applied load center is as close the gear housing as possible and check component alignment and tension of any belts or chains per the manufacturer's recommendation. Do not over tension the belts or chains.

### 6. Outboard pinion gear alignment

Align outboard pinion gears and adjust the gear tooth clearance according to the manufacturer's recommendations, checking for acceptable outboard pinion tooth contact. The foundation bolts may have to be loosened and the gear unit moved slightly to obtain proper gear tooth contact. After the unit is moved to correct tooth contact, the prime mover may need to be realigned.

# KEYED HOLLOW SHAFT

## 1. Keyed hollow shaft design

NORD uses high quality carbon steel to manufacture hollow-shafts. Upon request, NORD can provide alternate materials, such as stainless steel. NORD hollow shafts are designed with a bore relief (reduced contact area) between the mating shafts.

The bore relief provides a cavity to hold an anti-seize assembly paste. It also acts as a design feature intended to help prevent corrosion and to facilitate gearbox removal from the solid shaft.

NORD furnishes dual keys designed to be used in each of the bore land areas, as opposed to supplying a single long key. The dual keys are intended to simplify assembly onto the machine's solid shaft.

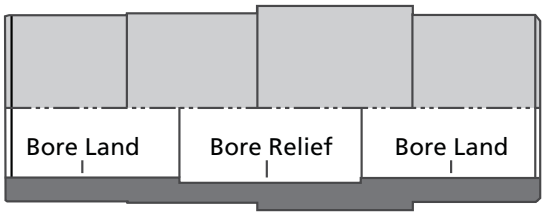


**IMPORTANT NOTE**

If a single shaft key or dual shaft keys are supplied by others, the key/s must engage the full bore-land length at each end of the hollow shaft.

## 2. Key and keyway dimensions

Unless otherwise indicated, inch keys and keyways follow the ANSI B17.1 standard and metric keys and keyways follow the DIN6885-1 standard. Inch bores will typically utilize square keys but in some instances the larger hollow shaft bore sizes utilize the alternate rectangular key shown in the ANSI B17.1 standard.

Key slots for the solid machine shaft should be made with a Class 2, transitional-fit class (slightly loose to slightly tight). Key slots in the female shaft are designed to be a low clearance fit. These suggested practices should allow for easier assembly with the mating solid shaft, without allowing excessive clearance which could cause keys to work loose during reducer operation.

**IMPORTANT NOTE**

If the key fit is too tight, light filing of the key sides and hand-fitting of the keys may be required.

## 3. Keyed hollow-shaft bore tolerances

Standard keyed hollow-shaft bore tolerances are shown in the following table.

**Table 1 - Keyed hollow bore tolerances**

| Above ø [in] | To and Including ø [in] | Bore Diameter Tolerance ø [in] |
|---|---|---|
| 0.4375 | 1.6250 | +0.0010 / -0.0000 |
| 1.6250 | 3.2500 | +0.0012 / -0.0000 |
| 3.2500 | 7.0000 | +0.0014 / -0.0000 |

| Above ø [mm] | To and Including ø [mm] | Bore Diameter Tolerance ø [mm] |
|---|---|---|
| 10 | 18 | +0.018 / -0.000 |
| 18 | 30 | +0.021 / -0.000 |
| 30 | 50 | +0.025 / -0.000 |
| 50 | 80 | +0.030 / -0.000 |
| 80 | 120 | +0.035 / -0.000 |
| 120 | 180 | +0.040 / -0.000 |
| 180 | 190 | +0.035 / -0.000 |

**Metric hollow bore tolerances per ISO286-2, Class H7**

## 4. Suggested solid shaft (machine shaft) tolerances

NORD recommends a close fit of the customer-supplied solid shaft or machine-shaft, for the following reasons:

- To help minimize the potential for fretting and corrosion.
- To help prevent excessive free play in the shaft connection that could lead to excessive load stress on the driven system, the gear drive, or both.

**Table 2 - Suggested solid shaft tolerances**

| Above ø [in] | To and Including ø [in] | Shaft Diameter Tolerance Uniform Load ø [in] | Shaft Diameter Tolerance Shock Load ø [in] |
|---|---|---|---|
| 0.4375 | 0.8750 | +0.0000 / -0.0005 | +0.0000 / +0.0005 |
| 0.8750 | 4.5000 | +0.0000 / -0.0010 | +0.0000 / +0.0010 |
| 4.5000 | 7.0000 | +0.0000 / -0.0012 | +0.0000 / +0.0015 |

| Above ø [mm] | To and Including ø [mm] | Shaft Diameter Tolerance Uniform Load ❶ ø [mm] | Shaft Diameter Tolerance Shock Load ❷ ø [mm] |
|---|---|---|---|
| 10 | 18 | +0.000 / -0.011 | +0.012 / +0.001 |
| 18 | 30 | +0.000 / -0.013 | +0.015 / +0.002 |
| 30 | 50 | +0.000 / -0.016 | +0.018 / +0.002 |
| 50 | 80 | +0.000 / -0.019 | +0.021 / +0.002 |
| 80 | 120 | +0.000 / -0.022 | +0.025 / +0.003 |
| 120 | 180 | +0.000 / -0.025 | +0.028 / +0.003 |
| 180 | 190 | +0.000 / -0.029 | +0.033 / +0.004 |

❶ **Uniform load: Mating shaft diameter tolerance per ISO286-2, class h6**

❷ **Shock load: Mating shaft diameter tolerance per ISO286-2, class k6**

As indicated in Table 2, different solid shaft tolerances are suggested depending upon the load type.

- If the machine load conditions are considered "Uniform" a clearance fit is allowed.
- If the machine load conditions are considered to have "Shock Load" a light clearance to interference fit condition is suggested.

Typically the machine builder will have good knowledge as to the load type. As an alternate method to classify load type, one could follow the "Mass Acceleration Factor Selection Method" that is discussed in NORD's product catalog/s.

Straightness, roundness, and diameter tolerance variations of both shafts should be controlled as accurately as possible. When mating, solid shaft design features are not controlled, reducer installation may be very difficult without ordering special hollow-bore design features to accomodate.

**STOP** ***HARMFUL SITUATION*** **STOP**

The supporting solid shaft or driven machine shaft must be of adequate size and strength to withstand normal operating loads and peak loads without damage to itself or any of the system components.

### 5. Suggested solid-shaft mating shaft surface finish

Controlling the mating shaft surface finish helps to assure proper fit and assembly while minimizing the possibility of corrosion and fretting. NORD recommends that the mating solid shaft surface should be at least 125 micro-inches (3.2 microns) or smoother.

### 6. Assembly to the machine shaft

A. Clean and remove any dirt, grease, or rust-preventative coatings from both the reducer hollow shaft and the machine shaft.

B. Make sure the edges of both the reducer hollow shaft and machine shaft are free from any nicks or burrs. If nicks or burrs are present remove them using an abrasive material such as an emery cloth.

C. Before installing the gear reducer onto the machine shaft, apply an anti-seize compound or anti-corrosive lubricant to the mating shafts as shown in Figure 1. Assembly and subsequent dismantling will be aided by the anti-seize agent.

**Figure 1 – Application of anti-seize to the mating shafts**

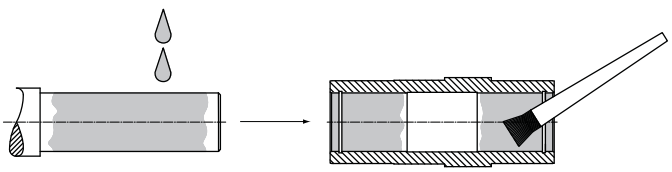

Apply to machine shaft  Apply to bore land area

D. Fit the shaft key/s into place on the machine shaft. Depending upon the key slot design on the machine shaft, it may be necessary to stake or Loctite® the key/s into place so they do not slide axially while fitting the reducer to the shaft.

E. Lift the gear unit assembly into place and align it carefully with respect to the machine shaft.

F. Fit the gear unit assembly onto the machine shaft using a suitable pulling device.

G. Secure the reducer onto the machine shaft in an axial direction, to prevent the reducer from shifting or walking out of place during operation.

**STOP** ***HARMFUL SITUATION*** **STOP**

Do not use excessive force or try to hammer the gear unit into place. The housing, shafting, bearings or gear wheels may become damaged.

### 7. Securing the reducer onto the machine shaft

There are slight shaft oscillations during operation in any rotating shaft equipment or any shaft-mounted reducer assembly. Therefore it is important to secure the reducer in an axial direction onto the machine shaft, to prevent the reducer from shifting or walking out of place during operation.

Possible methods to secure the reducer axially to the machine shaft include:

- Using commercial set collars, retaining rings, or snap rings.
- Using the optional "NORD Fixing Element Kit" (see U10280).

The NORD Fixing Element Kit includes all of the necessary parts to secure the shaft by using a tapped hole in the end of the mating male shaft.

*Loctite® is a registered trademark of Loctite Corporation U.S.A. and Henkel.*

# SHAFT FIXING KIT

## 1. Shaft fixing kit - basic design

The NORD Fixing Kit provides a method for securing the reducer in an axial direction, after the keyed-hollow shaft reducer is mounted onto the machine shaft. The fixing kit prevents the reducer from shifting or walking out of place during operation. NORD offers a variety of standard fixing kits, based upon bore size, as shown on Page 2 of this manual.

**Figure 1 – Fixing kit components**

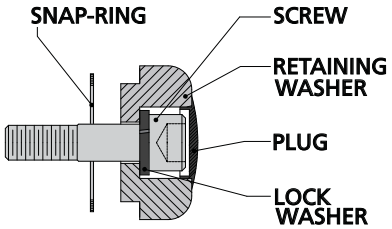


### IMPORTANT NOTE

For installation of the keyed-hollow bore reducer to the machine-shaft, see user manual U10270.

## 2. Assembly types

There are two types of assembly methods commonly used for securing the fixing kit.

**Figure 2 – Fixing kit assembly methods**

**Type 1**

The machine-shaft is located against a fixed snap-ring located inside the bore of the reducer.

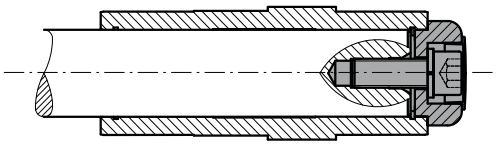

**Type 2**

The machine shaft is shouldered and is pulled tight against the hollow-shaft; the snap-ring is no longer required.

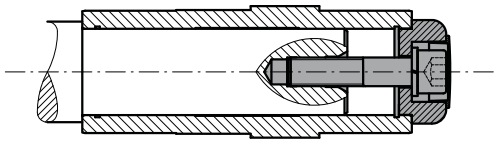

### HARMFUL SITUATION

The maximum edge break on the solid machine shaft must not exceed the values shown on Page 2 of this manual. Otherwise the load-bearing capacity of the snap-ring will be reduced and may result in failure.

## 3. Assembly

A. If using a Type 1 assembly, secure the appropriate snap-ring into the bore of the reducer. With Type 2 assembly, no snap-ring is required.

B. Draw the hollow bore gear reducer onto the machine shaft as instructed in U10270. Remember to apply a suitable assembly paste or anti-seize compound to the mating shafts.

C. Install the retaining washer over the end of the hollow bore.

D. Secure the appropriate cap-screw into the machine shaft and tighten the screw based upon the assembly type, as noted below. Then install the protective plug over the screw hole.

**Type 1 - Screw tightening**

Tighten until lightly snug and secure the screw with a thread-locking compound to prevent the screw from backing out.

### HARMFUL SITUATION

Over tightening the retaining screw may cause the snap ring to be pulled out of its seating groove, causing damage to the hollow-bore or snap ring.

**Type 2 - Screw tightening**

Follow the cap screw manufactures guidelines and tighten the screw to the proper torque, based upon the bolt grade and material. For reference tightening torque values, also see manual U10060, Table 2.

## 4. Disassembly

When using Type 2 assembly, it is possible to design a simple disassembly tool to allow easier removal of the hollow-bore reducer. The solid shaft is shouldered to rest against the hollow-bore of the reducer. The machine shaft is supported in both of the hollow bore land areas, but the overall length is reduced compared to Type 1 assembly.

**Figure 3 – Disassembly Tool**

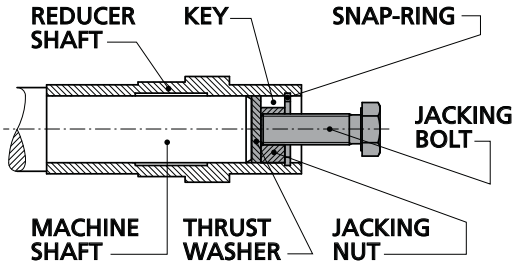


### IMPORTANT NOTE

For suggestions on how to construct a disassembly tool for a particular reducer and bore size, please consult NORD's application engineering department.

## 5. Standard fixing kit size offerings

NORD offers a variety of standard fixing kit sizes as shown by the following tables.

**Table 1 - Standard fixing kit size offerings**

| Shaft Bore [in] | Bolt Size | Allowable Thrust Groove ❷ lb [N] | Allowable Thrust Ring ❸ lb [N] | Max. Edge Break ❹ in [mm] |
|---|---|---|---|---|
| **0.500** | 10-32 | 730 [3255] | 520 [2300] | 0.02 [0.5] |
| **0.750** | 1/4-20 | 1800 [7905] | 560 [2500] | 0.04 [1] |
| **1.000** | 3/8-16 | 2900 [13020] | 1000 [4600] | 0.04 [1] |
| **1.188** | 7/16-14 | 5100 [22630] | 1000 [4700] | 0.04 [1] |
| **1.250** | 7/16-14 | 5100 [22630] | 1000 [4700] | 0.04 [1] |
| **1.375** | 5/8-11 | 6500 [29140] | 1400 [6400] | 0.06 [1.5] |
| **1.438** | 5/8-11 | 6900 [30690] | 1500 [6500] | 0.06 [1.5] |
| **1.500** | 5/8-11 | 7800 [34875] | 1500 [6700] | 0.06 [1.5] |
| **1.625** | 5/8-11 | 9900 [44020] | 1900 [8400] | 0.08 [2] |
| **1.688** | 5/8-11 | 10500 [46810] | 1800 [8200] | 0.08 [2] |
| **1.938** | 5/8-11 | 11100 [49600] | 1900 [8400] | 0.08 [2] |
| **2.000** | 5/8-11 | 14100 [62775] | 2700 [12100] | 0.08 [2] |
| **2.063** | 5/8-11 | 14100 [62775] | 2700 [12100] | 0.08 [2] |
| **2.188** | 3/4-10 | 16800 [74865] | 2900 [13000] | 0.08 [2] |
| **2.375** | 3/4-10 | 17400 [77190] | 2900 [13000] | 0.08 [2] |
| **2.438** | 3/4-10 | 17400 [77190] | 2900 [13000] | 0.08 [2] |
| **2.750** | 3/4-10 | 19600 [87110] | 4700 [21000] | 0.10 [2.5] |
| **2.938** | 3/4-10 | 20900 [93000] | 4700 [21000] | 0.10 [2.5] |
| **3.188** | 3/4-10 | 27700 [123225] | 7000 [31200] | 0.12 [3] |
| **3.438** | 3/4-10 | 29300 [130200] | 7000 [31400] | 0.12 [3] |
| **3.625** | 7/8-9 | 30900 [137330] | 7000 [31400] | 0.12 [3] |
| **3.938** | 7/8-9 | 32400 [144305] | 6900 [30800] | 0.12 [3] |
| **4.000** | 7/8-9 | 39000 [173600] | 16400 [73000] | 0.12 [3] |
| **4.063** | 7/8-9 | 39000 [173600] | 16400 [73000] | 0.12 [3] |
| **4.375** | 7/8-9 | 41500 [184450] | 16200 [72000] | 0.12 [3] |
| **4.438** | 7/8-9 | 41500 [184450] | 16200 [72000] | 0.12 [3] |
| **4.750** | 7/8-9 | 44200 [196850] | 15700 [70000] | 0.12 [3] |
| **4.938** | 7/8-9 | 48000 [213900] | 15500 [69000] | 0.12 [3] |

**Upon request, additional hollow-bore sizes & fixing kit sizes may be offered.**

| Shaft Bore [mm] | Bolt Size | Allowable Thrust Groove ❷ N [lb] | Allowable Thrust Ring ❸ N [lb] | Max. Edge Break ❹ mm [in] |
|---|---|---|---|---|
| **16** | M5 | Not applicable ❶ | | |
| **20** | M6 | 8370 [1900] | 5600 [1300] | 1.0 [0.04] |
| **25** | M10 | 12400 [2800] | 7300 [1600] | 1.0 [0.04] |
| **30** | M10 | 17515 [3900] | 7200 [1600] | 1.0 [0.04] |
| **35** | M12 | 29140 [6500] | 8700 [1900] | 1.5 [0.06] |
| **40** | M16 | 41850 [9400] | 10900 [2400] | 2.0 [0.08] |
| **45** | M16 | 46810 [10500] | 10700 [2400] | 2.0 [0.08] |
| **50** | M16 | 62775 [14100] | 19000 [4300] | 2.0 [0.08] |
| **60** | M20 | 74865 [16800] | 29200 [6600] | 2.0 [0.08] |
| **70** | M20 | 87110 [19600] | 30300 [6800] | 2.5 [0.10] |
| **80** | M20 | 115630 [26000] | 56000 [12600] | 2.5 [0.10] |
| **90** | M24 | 130200 [29300] | 56000 [12600] | 3.0 [0.12] |
| **100** | M24 | 144305 [32400] | 55000 [12400] | 3.0 [0.12] |
| **110** | M24 | 181350 [40800] | 71000 [16000] | 3.0 [0.12] |
| **120** | M24 | 196850 [44300] | 70000 [15700] | 3.0 [0.12] |

**Upon request, additional hollow-bore sizes and fixing kit sizes may be offered.**

❶ This fixing kit is not supplied with a snap-ring. A Type 2 machine shaft is required.

❷ Thrust load-bearing capacity of the groove is based upon using a hollow-shaft material with a yield-strength of at least 45,000 psi (310 N/mm²).

❸ Thrust load-bearing capacity of the snap-ring is based upon a typical snap-ring material with a yield-strength of at least 30,500 psi (210 N/mm²).

❹ On the solid machine shaft, observe the maximum edge break (radius or chamfer) shown. A larger edge break will result in reduced load-bearing capacity of the snap-ring.

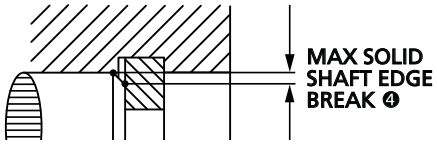

# HOLLOW SHAFT WITH SHRINK DISC

## 1. Shrink disc design concept

A shrink disc option is adaptable to many NORD hollow-bore reducers. The shrink disc applies a high-capacity, zero backlash, interference fit to the driven machine shaft. The double tapered inner ring converts most all of the screw clamping load into radial contact pressure, as the outer clamping discs are pulled together by proper tightening of the locking screws. As the inner ring is contracted, the clearance between the customer solid shaft and reducer shaft is absorbed.

- In their relaxed state, shrink discs provide a generous assembly clearance, thus eliminating the typical assembly and disassembly challenges of using interference fits.
- Shrink discs also reduce solid machine shaft stresses by eliminating the need for shaft keys and keyways.
- When properly applied, high shrink fits help eliminate shaft fretting corrosion and allow for easier shaft mounting and dismounting.

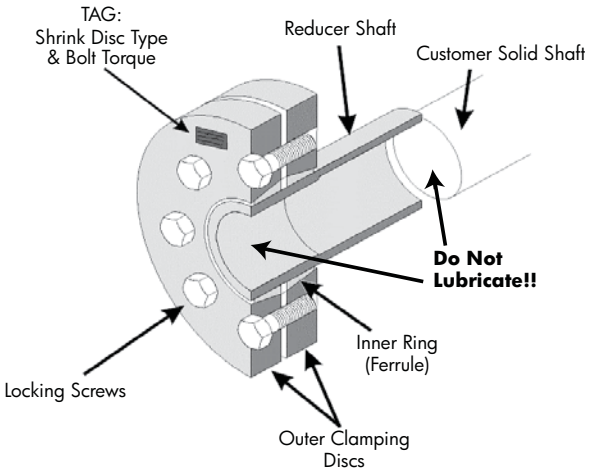


## 2. Solid (machine) shaft design guidelines

Always use a solid shaft material of adequate strength and apply proper shaft fits in order to establish adequate clamping force during assembly and assure proper shaft release during disassembly.

- Use solid shaft material with yield strength of at least 52,260 psi (360 N/mm²).
- The solid machine shaft should be machined according to ISO 286-2, Class h6 fit tolerances, with a shaft finish of 125 micro inches (3.2 µm) or smoother, per Table 1.
- The solid machine shaft must extend the full length of the reducer hollow shaft.

**HARMFUL SITUATION**

Contact NORD when using a shrink disc in an application where the shrink disc connection must simultaneously transmit torque and thrust.

## 3. Safety

**WARNING**

- The supporting solid shaft or driven machine shaft must be of adequate size and strength to withstand normal operating loads and peak loads without damage to itself or any of the system components.
- The transmissible torque and the gripping capacity of the shrink disc may be reduced if shaft tolerances or clearances are larger than specified.
- Excessive tightening torque can result in permanent deformation of the inner ring and the reducer hollow bore, making disassembly very difficult. Do not over tighten the shrink disc to compensate for excessive clearance between the machine shaft and reducer bore.
- Observe the published ratings and safety factors for both the reducer and shrink disc. Overload conditions or excessively high torque can cause the shrink disc connection to slip. In extreme cases localized galling or welding of components may occur.

## 4. Shrink disc shaft tolerances

Recommended solid shaft tolerances and reducer bore tolerances are shown in the table below.

**Table 1: Shrink disc shaft tolerances**

| Above & Including ø [in] | To & Including ø [in] | Solid Shaft Tolerance ø [in] | Reducer Bore Tolerance ø [in] |
|---|---|---|---|
| 0.4375 | 0.6875 | +0.0000 / -0.0004 | +0.0007 / -0.0000 |
| 0.7500 | 1.1250 | +0.0000 / -0.0005 | +0.0008 / -0.0000 |
| 1.1250 | 1.9375 | +0.0000 / -0.0006 | +0.0009 / -0.0000 |
| 2.0000 | 3.1250 | +0.0000 / -0.0007 | +0.0011 / -0.0000 |
| 3.1875 | 4.6875 | +0.0000 / -0.0008 | +0.0013 / -0.0000 |
| 4.7500 | 7.0625 | +0.0000 / -0.0009 | +0.0015 / -0.0000 |
| 7.1250 | 7.5000 | +0.0000 / -0.0011 | +0.0018 / -0.0000 |

| Above ø [mm] | To & Including ø [mm] | Solid Shaft Tolerance ø [mm] | Reducer Bore Tolerance ø [mm] |
|---|---|---|---|
| 10 | 18 | +0.000 / -0.011 | +0.018 / -0.000 |
| 18 | 30 | +0.000 / -0.013 | +0.021 / -0.000 |
| 30 | 50 | +0.000 / -0.016 | +0.025 / -0.000 |
| 50 | 80 | +0.000 / -0.019 | +0.030 / -0.000 |
| 80 | 120 | +0.000 / -0.022 | +0.035 / -0.000 |
| 120 | 180 | +0.000 / -0.025 | +0.040 / -0.000 |
| 180 | 190 | +0.000 / -0.029 | +0.046 / -0.000 |

**Shaft/bore tolerances per ISO 282-6, Class h6/H7.**

**Solid shaft finish should be 125 micro inches (3.2 mocro meters) or smoother.**

# HOLLOW SHAFT WITH SHRINK DISC

## 5. Installation

**⚠ WARNING ⚠**

Disconnect all power sources from the equipment before beginning this installation procedure. Handle the components with care and avoid all sharp machined edges to prevent personal injury.

**STOP HARMFUL SITUATION STOP**

Do not tighten any of the shrink disc locking screws prior to installing the reducer with shrink disc onto the machine shaft. The inner ring of the shrink disc can become permanently contracted or damaged at relatively low tightening torque.

A. Inspect the gear unit received. Make sure the shrink disc and extended hollow shaft projection is on the side of the reducer where it was specified or ordered.

B. Loosen the shrink disc locking screws but do not take the shrink disc completely apart. Remove and discard any packaging material or transportation spacers that come with the shrink disc.

C. Remove all burrs, rust, corrosion, lubricants, and foreign matter from the surfaces of the solid shaft and hollow-bore.

D. Make sure the shrink disk is positioned onto the hollow shaft until the outer clamping ring is flush with the edge of the hollow shaft.

E. To aid in assembly, it is acceptable to lightly grease the solid shaft, only in the area that will come in contact with the bronze-bushing side of the reducer hollow-shaft. ***The reducer hollow shaft must be completely de-greased and free of lubricant, especially in the area of the shrink disc.***

F. Position the gear reducer onto the solid machine shaft and make certain the area under the shrink disc is completely supported by the solid shaft.

G. After confirming the proper positioning of gear reducer and the shrink disc, hand tighten (3) or (4) equally spaced locking screws to make sure the outer collars of the shrink disc are drawn together in a parallel fashion. Then hand-tighten the remaining screws.

H. Refer to Table 2 for the specified tightening torques for the shrink disc locking screws. Using a properly set torque wrench using approximately ¼ (90°) turns; tighten the locking screws, by working in a circular clockwise or counterclockwise sequence around the shrink disc.

I. Continue the tightening sequence (Step H.) even if some locking screws initially require very low tightening torque to achieve ¼ turns; do this for several passes until ¼ turns can no longer be achieved.

J. Reset the torque wrench to approximately 3-5% over-torque and tighten the locking screws for 1 or 2 more passes. This procedure will compensate for relaxation of the locking screws, since tightening of a given screw will always tend to relax the adjacent screw. Without a slight overtorquing of the screws, an infinite number of passes would be required to reach the desired tightening torque.

**Table 2 - Shrink Disc Locking Screw Torque**

| Screw Size | Wrench Size [mm] | Tightening Torque [Nm] | [lb-in] | [ft-lb] |
|---|---|---|---|---|
| M5 | 8 | 7 | 62 | 5.2 |
| M6 | 10 | 12 | 106 | 8.9 |
| M8 | 13 | 30 | 266 | 22 |
| M10 | 17 | 59 | 522 | 44 |
| M12 | 19 | 100 | 885 | 74 |
| M16 | 24 | 250 | 2213 | 184 |
| M20 | 30 | 490 | 4337 | 361 |

**BOLT TIGHTENING PATTERN**

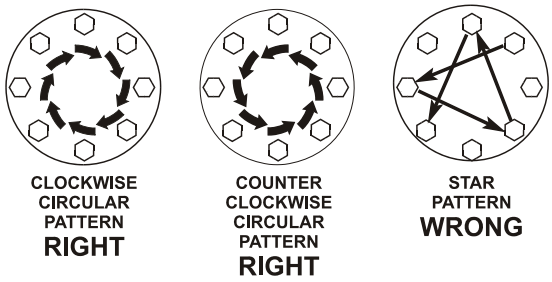


K. Reset the torque wrench to the correct tightening torque as indicated in Table 2. Make sure each locking screw has been properly tightened until the screws are no longer turning at the specified torque wrench setting. If necessary repeat Steps G. & H.

## 6. Removal

A. Loosen the shrink disc locking screws in a circular pattern by using ½ (180°) turns, until the shrink disc hub can be moved or until the shrink disc hub and reducer shaft will return to their original fits.

**⚠ WARNING ⚠**

Do not completely remove the locking screws before the outer clamping disks of the shrink disc are disengaged from the inner ring. A sudden release of the outer collars will create high separating forces and could result in injury or even death.

B. Loosen the outer collars of the shrink disc from the tapered inner ring. This may require tapping the bolts with a **soft faced** hammer or prying lightly between the outer collars.

C. Remove the gear reducer from the machine shaft.

## 7. Re-installation

A. It may be possible to re-use the shrink disc. However the shrink disk should not be re-used if it becomes damaged during removal, or excessively rusty or corroded. Shrink discs must always be disassembled and thoroughly cleaned before re-using.

B. After cleaning the shrink disc, lubricate between the taper of the outer clamping disks and the outside of the inner ring using MOLYKOTE® G-Rapid Plus Paste (product of Dow Corning) or equivalent. In addition, grease screw threads and head contact area with multi-purpose grease.

# NORD GRIPMAXX™

## 1. General information

The NORD GRIPMAXX™ keyless bushing system is adaptable to most all NORD shaft-mounted reducers. The bushing system offers interchangeable bushings to accommodate a large range of driven machine-shaft sizes.

The unique design of the NORD GRIPMAXX™ bushing system offers a number of distinct advantages as follows:

- The NORD GRIPMAXX™ allows the machine builder to utilize standard cold finished shaft stock, without the need for additional shaft machining or shaft keys.
- It uses a NORD shrink disc to apply a high-capacity, zero backlash, interference fit to the driven machine shaft, while eliminating the typical assembly and disassembly challenges of using interference fits.
- The built in clearance between the customer shaft and the bushing system helps to ensure easy installation and removal of the gearbox. To help ensure easy removal, the NORD GRIPMAXX™ bushings are prepared with a special low-wear, corrosion-resistant hardened surface treatment, that minimizes the formation of shaft corrosion and fretting.
- The NORD GRIPMAXX™ is ideal for start-stop operation and bi-directional loading because it does not depend on keys or keyways that transmit torque, which can also can become loose or deform when subjected to these loading conditions.
- Unlike the typical conical or tapered bushing kits, the NORD GRIPMAXX™ design allows a tight fit against a shouldered machine shaft.
- The torque bushing and support bushing are the same part and are fully interchangeable with one another.

## 2. GRIPMAXX™ assembly detail

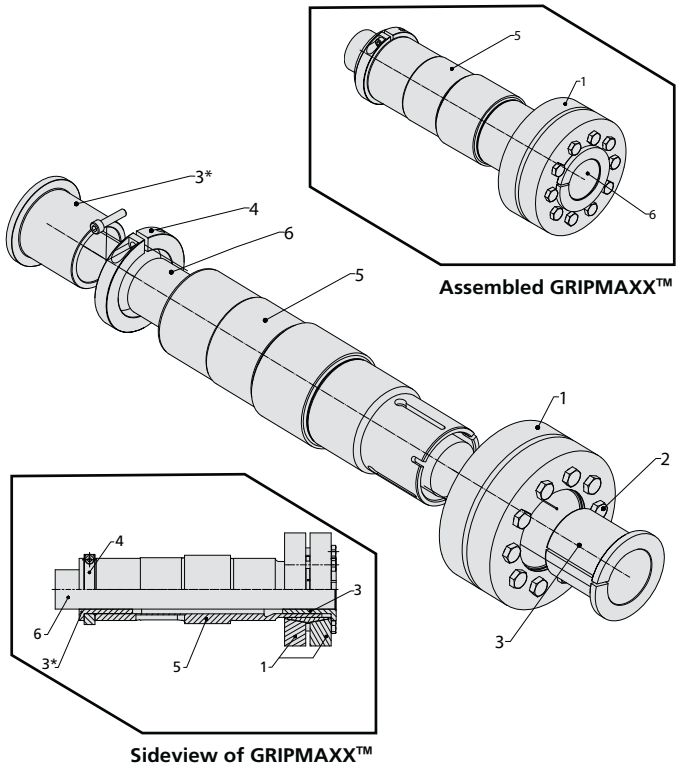


Assembled GRIPMAXX™

Sideview of GRIPMAXX™

**[1] NORD Shrink Disc**
**[2] Locking Screw**
**[3] Bushing (Torque Side)**
**[3*] Bushing (Support Side)**
**[4] Clamp Ring**
**[5] Gear Reducer Hollow Shaft**
**[6] Machine Shaft**

### IMPORTANT NOTE

NORD recommends that the machine shaft have a yield strength of at least 52,260psi (360N/mm$^2$)

### IMPORTANT NOTE

Observe the recommended machine shaft tolerances in table 1, page 2.

### WARNING

The supporting solid shaft or driven machine shaft must be of adequate size and strength to withstand normal operating loads and peak loads without damage to itself or any of the system components.

### 3. Installation

**⚠ WARNING ⚠**

Disconnect all power sources from the equipment before beginning this installation procedure. Handle the components with care and avoid all sharp or machined edges to prevent personal injury.

**STOP HARMFUL SITUATION STOP**

Do not tighten any of the shrink disc locking screws prior to installing the reducer with shrink disc onto the machine shaft. The inner ring of the shrink disc can become permanently contracted or damaged at a relatively low tightening torque.

**Table 1 - Required Machined Shaft Tolerance**

| Inch Machine Shaft | | | Metric Machine Shaft | | |
|---|---|---|---|---|---|
| Above ø [in] | To & Including ø [in] | Tolerance ISO 286-2 [in] | Above ø [mm] | To & Including ø [mm] | Tolerance h11 [mm] |
| 0.4375 | 0.6875 | - 0.0043 | 10 | 18 | - 0.110 |
| 0.7500 | 1.1250 | - 0.0051 | 18 | 30 | - 0.130 |
| 1.1250 | 1.9375 | - 0.0063 | 30 | 50 | - 0.160 |
| 2.0000 | 2.9375 | - 0.0074 | 50 | 75 | - 0.190 |

A. Carefully inspect the machine shaft [6] and remove all burrs, rust, corrosion, lubricants, and foreign matter from the shaft surface. Verify that the diameter is within the dimensional tolerances shown in Table 1.

B. Inspect the gear unit received to confirm the correct position of the shrink disc [1]. Make sure the hollow shaft [5] projection is on the side of the reducer where it was specified or ordered.

C. In addition to cleaning the machine shaft [6], remove all dirt, grease or oils from the reducer hollow shaft [5], bushings [3], clamp ring [4], and shrink disk [1]. ***Do not apply lubricants, corrosion preventatives, anti-sieze compounds or coatings to the mating surfaces of the shaft, bushings, clamp collars or shrink disc.***

D. Position the clamp ring [4] and support bushing [3*] over the machine shaft [6], making sure the support bushing is in its desired location. Then secure the support bushing [3*] with the clamp ring [4] and tighten the clamp ring screw.

E. Slide the gear reducer unto the machine shaft [6] until the gear reducer stops against the secured support bushing [3*].

F. Without taking the shrink disc [1] apart, loosen the shrink disc locking screws [2]. Slide the shrink disk over the reducer shaft [5] and slide the torque bushing [3] onto the machine shaft, making sure it is seated completely.

G. Confirm the positioning of the shrink disc [1] and torque bushing [3]. ***Do not tighten the shrink disc until the machine shaft and torque bushing are in proper position, or the reducer shaft will be damaged.*** Hand-tighten 3 or 4 or locking screws [2] and make sure the outer collars of the shrink disc are drawn together in a parallel fashion and then hand-tighten the remaining screws.

H. Refer to Table 2 for the specified tightening torques for the shrink disc locking screws. Using a properly set torque wrench using approximately ¼ (90°) turns; tighten the locking screws, by working in a circular clockwise or counterclockwise sequence around the shrink disc.

I. Continue the tightening sequence (Step H.) even if some locking screws initially require very low tightening torque to achieve ¼ turns; do this for several passes until ¼ turns can no longer be achieved.

J. Reset the torque wrench to approximately 3-5% over-torque and tighten the locking screws for 1 or 2 more passes. This procedure will compensate for relaxation of the locking screws, since tightening of a given screw will always tend to relax the adjacent screw. Without a slight overtorquing of the screws, an infinite number of passes would be required to reach the desired tightening torque.

**Table 2 - Shrink Disc Locking Screw Torque**

| Screw Size | Wrench Size [mm] | Tightening Torque [Nm] | [lb-in] | [ft-lb] |
|---|---|---|---|---|
| M5 | 8 | 7 | 62 | 5.2 |
| M6 | 10 | 12 | 106 | 8.9 |
| M8 | 13 | 30 | 266 | 22 |
| M10 | 17 | 59 | 522 | 44 |
| M12 | 19 | 100 | 885 | 74 |
| M16 | 24 | 250 | 2213 | 184 |
| M20 | 30 | 490 | 4337 | 361 |

**BOLT TIGHTENING PATTERN**

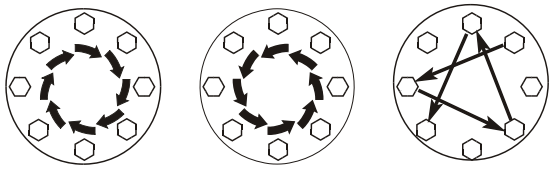

CLOCKWISE CIRCULAR PATTERN **RIGHT**

COUNTER CLOCKWISE CIRCULAR PATTERN **RIGHT**

STAR PATTERN **WRONG**

K. Reset the torque wrench to the correct tightening torque as indicated in Table 2. Make sure each locking screw has been properly tightened until the screws are no longer turning at the specified torque wrench setting. If necessary repeat Steps G. & H.

### 5. Bushing kit removal

A. Loosen the shrink disc locking screws [2] in circular pattern by using ½ (180°) turns, until the shrink disc hub can be moved or until the shrink disc hub and reducer shaft will return to their original fits.

> ⚠ ***WARNING*** ⚠
>
> Do not completely remove the locking screws before the outer clamping disks of the shrink disc are disengaged from the inner ring. A sudden release of the outer collars will create high separating forces and could result in injury or even death.

B. Loosen the outer collars of the shrink disc from the tapered inner ring. This may require tapping the bolts with a **soft faced** hammer or prying lightly between the outer collars.

C. Remove the gear reducer from the machine shaft.

### 6. Re-installation

A. It may be possible to re-use the bushings and shrink disc that are part of the NORD bushing system. However these components should not be re-used if they are damaged during removal, or excessively rusty or corroded.

B. Never re-use any of the bushing kit components without prior cleaning. Shrink discs must always be disassembled and thoroughly cleaned before re-using.

C. After cleaning the shrink disc, lubricate between the taper of the outer clamping disks and the outside of the inner ring using MOLYKOTE® G-Rapid Plus Paste (product of Dow Corning) or equivalent. In addition, grease screw threads and head contact area with multipurpose grease.

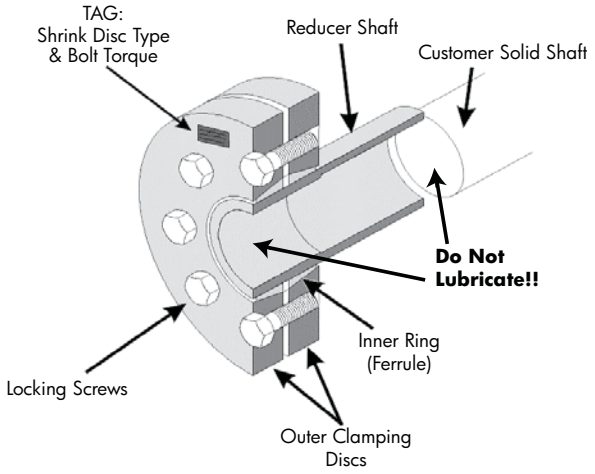

# REDUCER MOUNTING
# FOOTED & FLANGE MOUNT GEAR UNITS

## 1. Foot-mounted reducers

When installing the foot-mounted gear unit, observe the flatness specifications and bolt tightening torque guidelines provided in U10060 and make sure the mating mounting surface and reducer feet are clean and free of debris. Use of shims under the feet of the gear unit may be required in order to align the output shaft to the driven equipment. Make sure that all feet are supported so that the housing will not distort when it is bolted down. Improper shimming will cause mis-alignment and may reduce the life of the gear unit or cause component failure. Dowel pins may be field-installed to help prevent misalignment and ensure proper realignment if removed for service.

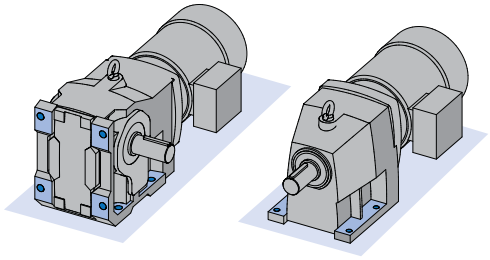

**IMPORTANT NOTE**

Gear units may be subjected to radial loads or side pull, caused by external chain drives or belt drives. In these instances it is recommended that the mounting base be designed with a slide-plate adjustment to accommodate extra slack in the chain or the belt after the feet are loosened. When using an external chain or belt drive, make sure the reducer is sized so that the shaft and bearings have adequate capacity.

## 2. Flange-mounted reducers (with B5 flange)

When using the B5 flange to mount the gear unit, the bulk head plate must be engineered to minimize buckling distortions and support the cantilevered weight of the gear reducer or gearmotor. On the B5 mounting flange NORD provides a pilot register or and the flange pilot tolerance as listed per Table 1. When the mating hole is designed with the proper fit, the flange pilot tenon provides a means of accurately positioning the reducer while the hold-down bolts are properly secured; once the reducer is secured, the tenon helps prevent movement of the reducer and it helps locate the center of the reducer output shaft.

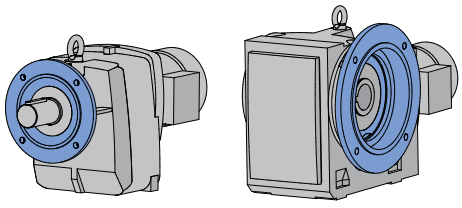

**Table : Flange Pilot Tolerance**

| Above ø (in) | To & Including ø (in) | Tolerance (in) | ISO 286-2 Fit Class |
|---|---|---|---|
| 1.969 | 3.150 | +0.0005 / -0.0003 | j6 |
| 3.150 | 4.724 | +0.0005 / -0.0004 | j6 |
| 4.724 | 7.087 | +0.0006 / -0.0004 | j6 |
| 7.087 | 9.055 | +0.0000 / -0.0005 | h6 |
| 9.055 | 9.843 | +0.0000 / -0.0011 | h6 |
| 9.843 | 12.402 | +0.0000 / -0.0013 | h6 |
| 12.402 | 15.748 | +0.0000 / -0.0014 | h6 |
| 15.748 | 19.685 | +0.0000 / -0.0016 | h6 |

| Above ø (mm) | To & Including ø (mm) | Tolerance (mm) | ISO 286-2 Fit Class |
|---|---|---|---|
| 50 | 80 | +0.012 / -0.007 | j6 |
| 80 | 120 | +0.013 / -0.009 | j6 |
| 120 | 180 | +0.014 / -0.011 | j6 |
| 180 | 230 | +0.000 / -0.013 | h6 |
| 230 | 250 | +0.000 / -0.029 | h6 |
| 250 | 315 | +0.000 / -0.032 | h6 |
| 315 | 400 | +0.000 / -0.036 | h6 |
| 400 | 500 | +0.000 / -0.040 | h6 |

When installing the flange mounted gear unit, observe the flatness specifications and bolt tightening torque guidelines provided in U10060. Make sure the mating mounting surface and reducer flange are clean and free of debris. Use a straight edge or parallel bar to check for high spots on the mating mounting surface and remove any raised material around the mounting holes.

Set the gear unit into place and tighten the bolts until they are snug. Before final bolt-tightening check for any material gaps between the mating surfaces and if shimming is required, use "U" shaped shims at least 2 times the width of the bolt. Avoid over shimming a very irregular surface as this will make it very difficult to achieve proper alignment.

**IMPORTANT NOTE**

For heavy shock applications, it is advisable to field-install dowel pins through the mounting flange connection (in addition to the mounting bolts). This will help control flange movement or flange rotation and relieve the mounting bolts from this additional stress.

### 3. Flange-mounted reducers (with B14 flange)

When using the B14 flange to mount the gear unit, the bulk head plate must be engineered to minimize buckling distortions and support the cantilevered weight of the gear reducer or gearmotor. When properly installed, the output flange of the reducer housing is designed to enable the permissible torques and radial forces to be reliably transmitted by the bolt connections.

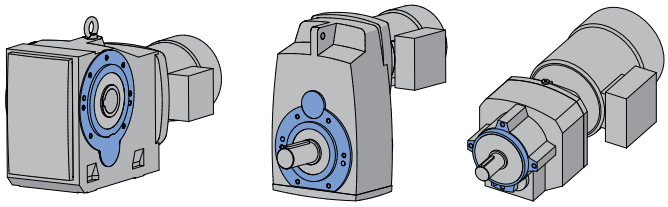

**IMPORTANT NOTE**

When using the B14 flange-face for mounting, if dowel pin holes are provided in addition to the threaded holes, then it is advisable to also use the proper dowel pins, to help control flange movement or flange rotation and relieve the mounting bolts from this additional stress This is especially important for heavy shock applications.

### 4. Foot & flange reducer housings

Some gear reducer housings are available with a foot and an output flange. Units with a foot and a B5 Flange are designated with the suffix XF after the primary model number and units with a B14 face-flange are designated with the suffix XZ after the primary model number. When a gear unit is provided with both a foot and a flange, the foot is consider the primary mounting surface. The flange is generally considered to be the secondary mounting option and it is intended that this surface be used for auxiliary add on elements that place minimal load stress on the reducer housing.

**HARMFUL SITUATION**

To prevent overstress on the main gear unit housing, never tighten the reducer mounting feet and the mounting flange against one-another. Auxiliary add-on elements that are mounted to the reducer flange, must not transmit excessive force, torque or vibration to the main gear housing.

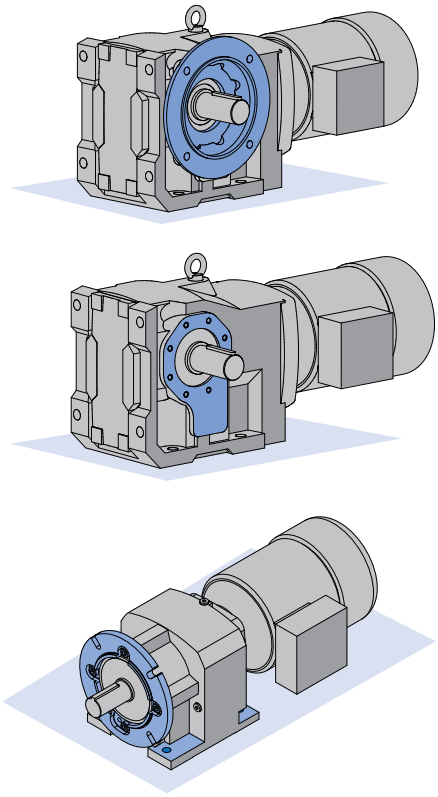

# CLINCHER™ SHAFT-MOUNT WITH RUBBER BUFFERS



### 1. Purpose of the built-in torque arm lug

The preferred method of installing a shaft-mounted Clincher™ reducer is to support the weight of the gear unit or gearmotor assembly from the driven solid machine shaft. In order to restrain the gearbox, react the torque, and keep the gear unit from spinning around the shaft, the Clincher™ gear units have a built-in torque arm lug or tab cast into the reducer housing. This torque tab is intended to be used in conjunction with the NORD Rubber Buffers.

**Figure 1: Built-in torque lug**

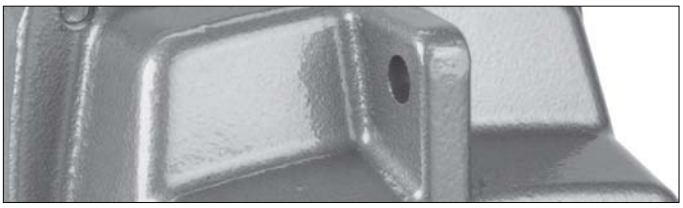

### 2. Rubber buffers

When specified, NORD provides two rubber buffers that are installed on either side of the gear unit's integral torque lug.

When properly used in tandem, on either side of the torque-arm lug, the rubber buffers help isolate and absorb the load forces present in the system and increase the reducer's service life by reducing cumulative torsional shock loads.

- The primary load force acts in the direction of driven shaft rotation, reacts the torque of the reducer, keeping the gearbox from spinning on the shaft.
- Additional forces present themselves in the direction opposite of the shaft rotation, due to the typical slight out-of-round condition present in the machine shaft. This condition is the reason most shaft mounted-reducers have a slight shaft-wobble, which is normal.

For further dampening it is possible to combine several rubber buffers in a row, on either side of the torque lug.

**IMPORTANT NOTE**

Please reference Table 1 on page 2 of this manual for dimensional information.

**HARMFUL SITUATION**

Always mount at least one rubber buffer on either side of the reducer's torque-arm lug. When using rubber buffers in tandem, make sure equal numbers are used on both sides of the torque tab. Failure to do so will not properly cushion the reducer and can result in excessive binding, bearing stress, and damage to the reducer.

### 3. Machine support

**WARNING**

It is the responsibility of the machine builder to design a support bracket of adequate strength and rigidity, and supply an appropriate tightening bolt assembly. Failure to do so may result in injury caused from a damaged or broken torque-reaction assembly.

A single customer-supplied machine support bracket, of adequate strength and rigidity, can provide adequate restraint for both directions. This is because when the rubber buffer system is used, the applied load forces are always parallel to the retaining bolt and there are no twisting forces induced onto the bolt in either the clockwise or counter-clockwise direction. In some cases the customer may desire to supply a rigid support on either side of the rubber buffers. In these instances, longer assembly hardware is required.

### 4. Installation of the rubber buffers

A. Install the Clincher™ hollow bore reducer onto the machine shaft. Line up the hole in the reducer's torque-arm lug with the hole in the machine's support bracket and temporarily hold the reducer in place.

B. Properly secure the gear unit assembly to the driven shaft in an axial direction. If using the NORD Shaft Fixing Kit, follow the instructions in User Manual U10280.

C. Install the rubber buffers on either side of the gear unit's torque-arm lug. Apply a thread locking compound to the end of the fixing bolt. Then place the fixing bolt through the rubber buffers, torque-arm lug and rigid machine support bracket and loosely secure the nut onto the end of the bolt.

D. Tighten the fixing bolt and nut until lightly snug until all of the free play is eliminated from the rubber buffer assembly. Then snug the fixing bolt assembly by tightening an additional 1/4 to 1/2 turn.

E. Tighten the fixing bolt and nut until lightly snugand all of the free-play is eliminated from the rubber buffer assembly. Then snug the fixing bolt assembly by tightening an additional ¼ to ½ turn.

**WARNING**

To help prevent damage to the rubber buffers, avoid over-tightening.

**IMPORTANT NOTE**

- A min. of (2) rubber buffers are required for each unit.
- For larger size CLINCHER'S™, NORD offers the heavy-duty rubber buffer (Option VG).
- A metric fixing bolt is preferred for rubber buffer assembly. NORD recommends a minimum ISO Grade 8.8 fixing bolt.

# CLINCHER™ SHAFT-MOUNT WITH RUBBER BUFFERS

**Table 1: Rubber buffer assembly/typical dimensions**

Standard Rubber Buffer Assembly Option **(V)**

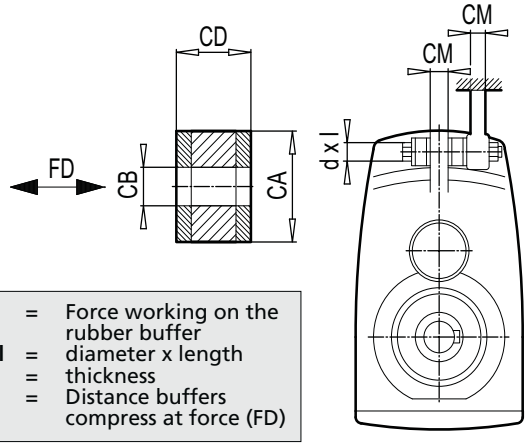


**FD** = Force working on the rubber buffer
**d x l** = diameter x length
**c** = thickness
$S_{FD}$ = Distance buffers compress at force (FD)

Heavy Duty Rubber Buffer Assembly Option **(VG)**

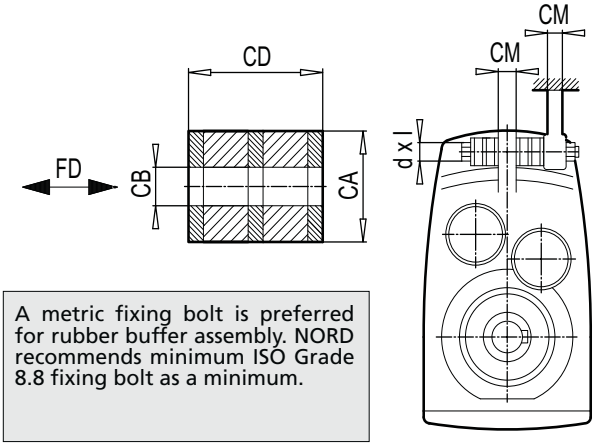


A metric fixing bolt is preferred for rubber buffer assembly. NORD recommends minimum ISO Grade 8.8 fixing bolt as a minimum.

| Type | Rubber Buffer P/N | CB inch [mm] | CA inch [mm] | CD inch [mm] | CM inch [mm] | Bolt d x l [metric] | FD lb [kN] | SFD inch [mm] |
|---|---|---|---|---|---|---|---|---|
| SK0182NB..G | 29603000 | 0.43 [11] | 1.18 [30] | 0.59 [15] | 0.39 [10] | M10 x 70 | 217 [0.967] | 0.06 [1.5] |
| SK0282NB..G | 29603000 | 0.43 [11] | 1.18 [30] | 0.59 [15] | 0.47 [12] | M10 x 70 | 234 [1.04] | 0.07 [1.7] |
| SK1282..G | 29603000 | 0.43 [11] | 1.18 [30] | 0.59 [15] | 0.55 [14] | M10 x 80 | 504 [2.24] | 0.14 [3.6] |
| SK1382NB..G | 29603000 | 0.43 [11] | 1.18 [30] | 0.59 [15] | 0.55 [14] | M10 x 80 | 402 [1.79] | 0.11 [2.8] |
| SK2282..G SK2382..G | 29604000 | 0.49 [12.5] | 1.57 [40] | 0.59 [15] | 0.63 [16] | M12 x 90 | 600 [2.67] | 0.07 [1.8] |
| SK3282..G SK3382..G | 29604000 | 0.49 [12.5] | 1.57 [40] | 0.59 [15] | 0.71 [18] | M12 x 90 | 935 [4.16] | 0.11 [2.9] |
| SK4282..G SK4382..G | 29606000 | 0.83 [21] | 2.36 [60] | 1.18 [30] | 0.87 [22] | M20 x 150 | 1661 [7.39] | 0.29 [7.3] |
| SK5282..G SK5382..G | 29606000 | 0.83 [21] | 2.36 [60] | 1.18 [30] | 1.1 [28] | M20 x 150 | 2133 [9.49] | 0.37 [9.4] |
| SK6282..G SK6382..G | 29608000 | 0.98 [25] | 3.15 [80] | 1.57 [40] | 1.38 [35] | M24 x 190 | 3779 [16.81] | 0.36 [9.2] |
| SK7282..G SK7382..G | 29608000 | 0.98 [25] | 3.15 [80] | 1.57 [40] | 1.57 [40] | M24 x 200 | 4676 [20.8] | 0.45 [11.4] |
| SK8282..G SK8382..G | 29610000 | 1.22 [31] | 3.94 [100] | 1.97 [50] | 1.97 [50] | M30 x 260 | 6382 [28.39] | 0.64 [16.3] |
| SK9282..G SK9382..G | 29610000 | 1.22 [31] | 3.94 [100] | 1.97 [50] | 2.17 [55] | M30 x 260 | 9777 [43.49] | 0.98 [24.9] |

| Type | Rubber Buffer P/N | CB inch [mm] | CA inch [mm] | CD inch [mm] | CM inch [mm] | Bolt d x l [metric] | FD lb [kN] | SFD inch [mm] |
|---|---|---|---|---|---|---|---|---|
| SK7282.VG SK7382.VG | 29620850 | 0.98 [25] | 3.35 [85] | 2.36 [60] | 1.57 [40] | M24 x 240 | 4676 [20.8] | 0.48 [12.2] |
| SK8282.VG SK8382.VG | 29621100 | 1.22 [31] | 4.33 [110] | 3.54 [90] | 1.97 [50] | M30 x 340 | 6382 [28.39] | 0.76 [19.3] |
| SK9282.VG SK9382.VG | 29621400 | 1.22 [31] | 5.51 [140] | 4.33 [110] | 2.17 [55] | M30 x 380 | 9777 [43.49] | 0.83 [21.2] |
| SK10282.VG SK10382.VG | 29621800 | 1.22 [31] | 5.51 [140] | 4.33 [110] | 3.15 [80] | M30 x 430 | 12670 [56.36] | 1.08 [27.4] |
| SK11282.VG SK11382.VG | 29621800 | 1.93 [49] | 7.09 [180] | 5.91 [150] | 3.54 [90] | M48 x 550 | 18185 [80.89] | 1.52 [38.5] |
| SK12382.VG | 29621800 | 1.93 [49] | 7.09 [180] | 5.91 [150] | 3.54 [90] | M48 x 550 | 23720 [105.51] | 1.98 [50.2] |

# RIGHT ANGLE SHAFT-MOUNT WITH TORQUE ARM (D)



### 1. Torque arm (D)

The preferred method of installing a shaft-mounted reducer is to support the weight of the gear unit or gearmotor assembly from the driven solid machine shaft. A torque arm is required in order to restrain the gearbox, react the load torque, and keep the gear unit from spinning around the shaft.

Table 1 (Page 2) provides a list of Torque-Arm (D) part numbers available based upon reducer series and type. The torque-arm is a tear-drop shaped bracket that is mounted to the B14 flange-face of the reducer. Each torque-arm bracket is supplied with a resilient rubber bushing located at the fastening hole-end of the bracket.

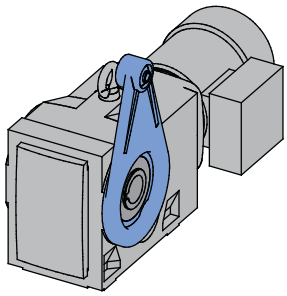

**IMPORTANT NOTE**

The side of the reducer that the torque arm is mounted on, and the angular position can be specified at time of order. Consult the appropriate NORD catalog for specific Torque Arm (D) mounting options and ordering guidelines.

### 2. Purpose of the built-in resilient rubber bushing

The resilient rubber bushing installed into the fastening hole end of the torque-arm helps isolate and absorb all the load forces present in the system and increase the reducer's service life by reducing cumulative torsional shock loads.

- The primary load force acts in the direction of driven shaft rotation, reacts the load torque of the reducer, and prevents the gearbox from spinning on the shaft.
- Additional forces present themselves in the direction opposite of the shaft rotation, due to the typical slight out-of-round condition present in the machine shaft. This condition is the reason most shaft mounted-reducers have a slight shaft-wobble, which is normal.

**HARMFUL SITUATION**

Always make sure that the Torque Arm (D) has the resilient rubber bushing installed into the fastening hole end of the torque arm. Failure to do so will not properly cushion the reducer and can result in excessive binding, bearing stress, and damage to the reducer.

### 3. Machine support

The user must supply a suitably strong and rigid mating machine support that provides load bearing capacity on both sides of the torque-arm bracket.

**WARNING**

It is the responsibility of the machine builder to design a support bracket of adequate strength and rigidity, and supply an appropriate tightening bolt assembly. Failure to do so may result in injury caused from a damaged or broken torque-reaction assembly.

### 4. Installation of the right-angle reducer with torque arm (D)

A. Make sure the Torque-Arm (D) is mounted in the correct position on the reducer.
   - The torque-arm can be repositioned on the as-received unit by removing the fixing screws, re-position the torque-arm in the correct location, and re-securing the fixing screws to the proper tightening torque, as indicated in Table 2 (Page 2).
   - If the torque-arm was shipped loose, position the torque-arm in the correct location on the gear unit, and secure the torque-arm with the proper fixing screws & tightening torque, as indicated in Table 2 (Page 2).

B. Install the right-angle hollow bore reducer onto the machine shaft. Line up the hole in the reducer's torque-arm with the hole in the machine's support bracket and temporarily hold the reducer in place

C. Properly secure the gear unit assembly to the driven shaft in an axial direction.

D. Place the fastening bolt through the rigid machine support bracket and reducer torque-arm. Then apply a thread locking compound to the end of the fixing bolt and loosely secure the nut onto the end of the bolt.

E. Tighten the fixing bolt to the proper tightening torque as indicated in Table 2 (Page 2).

# RIGHT ANGLE SHAFT-MOUNT WITH TORQUE ARM (D)

**Table 1 - Torque Arm (D) with rubber buffer**

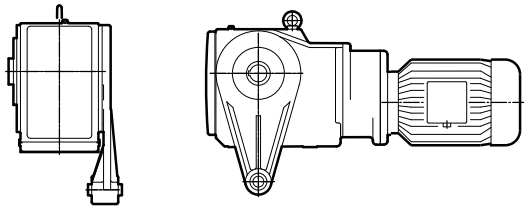

- For all 90.1 Series Helical-Bevel gear units, NORD also offers a bottom mount Torque Arm (K). See User Manual U10620.
- For the large 90.1 Series Helical-Bevel gear units sizes: SK9082.1, SK9086.1, SK9092.1, and SK9096.1, please use the Torque Arm (K).
- A metric fixing bolt is preferred for fastening the Torque-Arm(D) to the machine support bracket.

| Series | Type | Torque Arm P/N | Reducer Mounting Screws | Mounting Screw P/N | Fastening Hole in [mm] | Fastening Bolt Size |
|---|---|---|---|---|---|---|
| 92 Series Helical- Bevel | SK92172AZD | 69290600 | (Qty 8) M6 X 16 SHCS | 22106165 | 0.41 [10.5] | M10 |
| | SK92372AZD | 69390600 | (Qty 8) M8 X 25 SHCS | 22108250 | 0.41 [10.5] | M10 |
| | SK92672AZD | 69390600 | (Qty 8) M8 X 25 SHCS | 22108250 | 0.41 [10.5] | M10 |
| | SK92772AZD | 69590600 | (Qty 8) M8 X 25 SHCS | 22108250 | 0.65 [16.5] | M16 |
| 90.1 Series Helical-Bevel | SK9012.1AZD/SK9013.1AZD | 61090600 | (Qty 7) M8 X 20 SHCS | 22108205 | 0.41 [10.5] | M10 |
| | SK9016.1AZD/SK9017.1AZD | 61090600 | (Qty 7) M8 X 20 SHCS | 22108205 | 0.41 [10.5] | M10 |
| | SK9022.1AZD/SK9023.1AZD | 68290600 | (Qty 7) M8 X 25 SHCS | 22108250 | 0.65 [16.5] | M16 |
| | SK9032.1AZD/SK9033.1AZD | 68390600 | (Qty 7) M10 X 30 SHCS | 22110305 | 0.65 [16.5] | M16 |
| | SK9042.1AZD/SK9043.1AZD | 68490600 | (Qty 7) M12 X 35 SHCS | 22112350 | 0.98 [25] | M24 |
| | SK9052.1AZD/SK9053.1AZD | 68590600 | (Qty 7) M12 X 35 SHCS | 22112350 | 0.98 [25] | M24 |
| | SK9072.1AZD | 68690600 | (Qty 7) M16 X 45 SHCS | 22116450 | 0.98 [25] | M24 |
| Helical-Worm | SK02040AZD | 60190600 | (Qty 4) M6 X 20 SHCS | 22106205 | 0.41 [10.5] | M10 |
| | SK02050AZD/SK13050AZD | 60290600 | (Qty 4) M8 X 20 SHCS | 22108205 | 0.41 [10.5] | M10 |
| | SK12063AZD/SK13063AZD | 61090600 | (Qty 7) M8 X 22 SHCS | 22108220 | 0.41 [10.5] | M10 |
| | SK12080AZD/SK13080AZD | 61290600 | (Qty 7) M10 X 25 SHCS | 22110255 | 0.41 [10.5] | M10 |
| | SK32100AZD/SK33100AZD | 63290600 | (Qty 7) M12 X 30 SHCS | 22112300 | 0.65 [16.5] | M16 |
| | SK42125AZD/SK43125AZD | 64290600 | (Qty 7) M12 X 30 SHCS | 22112300 | 0.65 [16.5] | M16 |
| MINICASE® Worm | 1SM31AZD | 60390600 | (Qty 4) M6 X 20 SHCS | 22106205 | 0.41 [10.5] | M10 |
| | 1SM40AZD/2SM40AZD | 60490600 | (Qty 4) M8 X 20 SHCS | 22008206 | 0.41 [10.5] | M10 |
| | 1SM50AZD/2SM50AZD | 60490600 | (Qty 4) M8 X 20 SHCS | 22008206 | 0.41 [10.5] | M10 |
| | 1SM63AZD/2SM63AZD | 60690600 | (Qty 4) M8 X 20 SHCS | 22008206 | 0.41 [10.5] | M10 |
| FLEXBLOC™ Worm | SK1SI31AZD | 60393900 | (Qty 4) M6 X 16 SHCS | 22106160 | 0.41 [10.5] | M10 |
| | SK1SI40AZD | 60493900 | (Qty 4) M8 X 22 SHCS | 22108220 | 0.41 [10.5] | M10 |
| | SK1SI50AZD | 60593900 | (Qty 4) M8 X 22 SHCS | 22108220 | 0.41 [10.5] | M10 |
| | SK1SI63AZD | 60693900 | (Qty 4) M10 X 25 SHCS | 22110250 | 0.41 [10.5] | M10 |
| | SK1SI75AZD | 60793900 | (Qty 4) M12 X 30 SHCS | 22112300 | 0.41 [10.5] | M10 |

| Thread Size | Tightening Torque | | | | | |
|---|---|---|---|---|---|---|
| | ISO Grade 8.8 | | | ISO Grade 10.9 | | |
| (mm) | (lb-in) | (lb-ft) | (N-m) | (lb-in) | (lb-ft) | (Nm) |
| M6 | 97 | 8 | 11 | 142 | 12 | 16 |
| M8 | 239 | 20 | 27 | 345 | 29 | 39 |
| M10 | 469 | 39 | 53 | 690 | 58 | 78 |
| M12 | 814 | 68 | 92 | 1,195 | 100 | 135 |
| M16 | 2,036 | 170 | 230 | 2,965 | 247 | 335 |
| M20 | 4,071 | 339 | 460 | 5,841 | 487 | 660 |
| M24 | 6,992 | 583 | 790 | 10,178 | 848 | 1,150 |

# 90.1 HELICAL-BEVEL SHAFT-MOUNT WITH BOTTOM MOUNT TORQUE ARM (K)

### 1. Torque arm (K)

The preferred method of installing a shaft-mounted reducer is to support the weight of the gear unit or gearmotor assembly from the driven solid machine shaft. A torque arm is required in order to restrain the gearbox, react to the load torque, and keep the gear unit from spinning around the shaft.

Table 1 (Page 2) provides a list of Torque-Arm (K) part numbers available for the 90.1 Series Helical-Bevel gear units. The Torque Arm (K) is secured to the base of the reducer. On most sizes there is an integral resilient rubber bushing located at the fastening hole-end of the torque arm. On the larger sizes, rubber buffers are used in conjunction with the torque arm and when properly used they are applied in tandem, on either side of the torque arm lug.

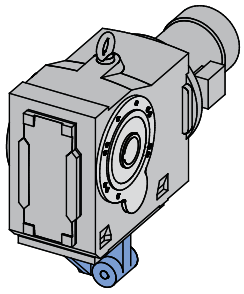

**IMPORTANT NOTE**

When ordering the Torque Arm (K) one can specify which side of the reducer to mount the fastening hole that bolts to the machine support bracket. Consult the appropriate NORD catalog for specific Torque Arm (K) mounting options and ordering guidelines.

### 2. Purpose of the rubber bushing or rubber buffers

Regardless if the Torque Arm (K) is supplied with the integral rubber bushing or whether separate rubber buffers are required, the bushing/buffers help isolate and absorb all the load forces present in the system and increase the reducer's service life by reducing cumulative torsional shock loads.

- The primary load force acts in the direction of driven shaft rotation, reacts the load torque of the reducer, and prevents the gearbox from spinning on the shaft.
- Additional forces present themselves in the direction opposite of the shaft rotation, due to the typical slight out-of-round condition present in the machine shaft. This condition is the reason most shaft mounted-reducers have a slight shaft-wobble, which is normal.

**HARMFUL SITUATION**

Always make sure that the Torque Arm (K) is used in conjunction with the required rubber bushing/s. Failure to do so will not properly cushion the reducer and can result in excessive binding, bearing stress, and damage to the reducer.

### 3. Machine support

The user must supply a suitably strong and rigid mating machine support that provides load bearing capacity on both sides of the machine support bracket.

**WARNING**

It is the responsibility of the machine builder to design a support bracket of adequate strength and rigidity, and supply an appropriate tightening bolt assembly. Failure to do so may result in injury caused from a damaged or broken torque-reaction assembly.

### 4. Installation of the right-angle reducer with torque arm (K)

A. Make sure the Torque-Arm (K) is mounted so that the machine fastening hole is on the correct side of the reducer.
   - The torque-arm can be repositioned on the as-received unit by removing the fixing screws, re-position the torque-arm in the correct location, and re-securing the fixing screws to the proper tightening torque, as indicated in Table 2 (Page 2).
   - If the torque-arm was shipped loose, position the torque-arm in the correct location on the gear unit, and secure the torque-arm with the proper fixing screws & tightening torque, as indicated in Table 2 (Page 2).

B. Install the right-angle hollow bore reducer onto the machine shaft. Line up the hole in the reducer's torque-arm with the hole in the machine's support bracket ,and temporarily hold the reducer in place

C. Properly secure the gear unit assembly to the driven shaft in an axial direction.

D. Apply thread locking compound to the end of the fixing bolt, then place the fastening bolt through the rigid machine support bracket and reducer torque-arm and loosely secure the nut onto the end of the bolt.

E. If the torque arm has an integral rubber bushing follow step F and skip steps G-H. If the torque arm uses rubber buffers skip forward to steps G-H.

F. Tighten the fixing bolt to the proper tightening torque as indicated in Table 2 (Page 2).

G. Install the rubber buffers on either side of the gear unit's torque-arm lug and place the fixing bolt through the rubber buffers and torque-arm lug and into the rigid machine support bracket.

H. Tighten the fixing bolt and nut lightly snug, until all the free-play is eliminated from the rubber buffer assembly. Then snug the fixing bolt assembly by tightening an additional ¼ to ½ turn.

**WARNING**

To prevent damage to the rubber buffers, avoid over-tightening.

# 90.1 HELICAL-BEVEL SHAFT-MOUNT WITH BOTTOM MOUNT TORQUE ARM (K)

**Torque Arm (K) with integrated bushing**

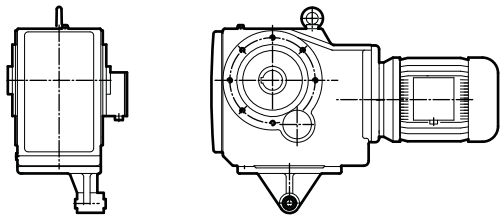

**Torque Arm (K) with rubber buffer**

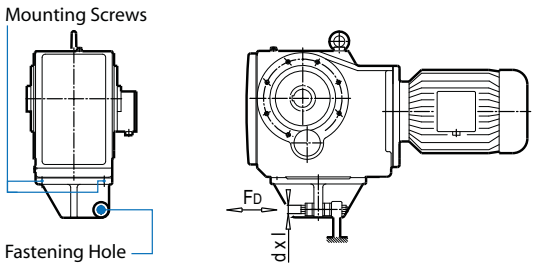


- For most all 90.1 series Helical-Bevel gear units, an optional tear-drop shaped side -mounted torque arm (D) is available. See user manual U10600.

- A metric fixing bolt is preferred for fastening the torque arm (K) to the machine support bracket.

| Type | Torque Arm P/N | Reducer Hardware Hex Head Cap Screws + Lock Washer | Mounting Screw P/N | Lock Washer P/N | Rubber Buffer P/N | Fastening Hole In [mm] | Fastening Bolt Size | Bolt d x l [metric] | FD lb [N] | SFD inch [mm] |
|---|---|---|---|---|---|---|---|---|---|---|
| SK9012.1...K<br>SK9013.1...K | 68190600 | M10 X 30 + A10<br>(Qty 3 Ea.) | 22010300 | 28560106 | N/A | 0.41 [10.5] | M10 | N/A | N/A | N/A |
| SK9016.1...K<br>SK9017.1...K | 68190600 | M10 X 30 + A10<br>(Qty 3 Ea.) | 22010300 | 28560106 | N/A | 0.41 [10.5] | M10 | N/A | N/A | N/A |
| SK9022.1...K<br>SK9023.1...K | 68290610 | M12 X 35 + A12<br>(Qty 3 Ea.) | 22012350 | 28560126 | N/A | 0.65 [16.5] | M16 | N/A | N/A | N/A |
| SK9032.1...K<br>SK9033.1...K | 68390610 | M12 X 35 + A12<br>(Qty 3 Ea.) | 22012350 | 28560126 | N/A | 0.65 [16.5] | M16 | N/A | N/A | N/A |
| SK9042.1...K<br>SK9043.1...K | 68490610 | M16 X 40 + A16<br>(Qty 3 Ea.) | 22016400 | 28560166 | N/A | 0.98 [25] | M24 | N/A | N/A | N/A |
| SK9052.1...K<br>SK9053.1...K | 68590620 | M16 X 40 + A16<br>(Qty 3 Ea.) | 22016450 | 28560166 | N/A | 0.98 [25] | M24 | N/A | N/A | N/A |
| SK9072.1...K | 68690620 | M24 X 60 + A24<br>(Qty 4 Ea.) | 22024060 | 28560246 | N/A | 0.98 [25] | M24 | N/A | N/A | N/A |
| SK9082.1...K<br>SK9082.1...SHK | 68819010 | M24 x 65 + A24<br>(Qty 4 Ea.) | 22024650 | 22024650 | 29610000 | 1.22 [31] | M30 | M30 x 260 | 5300<br>[23.64] | 0.53<br>[13.5] |
| SK9086.1...K<br>SK9086.1...SHK | 68819010 | M24 x 65 + A24<br>(Qty 4 Ea.) | 22024650 | 22024650 | 29610000 | 1.22 [31] | M30 | M30 x 260 | 6900<br>[30.77] | 0.69<br>[17.6] |
| SK9092.1...SHK | 68919010 | M36 x 90 + A36<br>(Qty 4 Ea.) | 22036900 | 28560366 | 29610000 | 1.22 [31] | M30 | M30 x 260 | 10300<br>[45.71] | 1.03<br>[26.2] |
| SK9096.1...SHK | 69019000 | M42 x 120 + A42<br>(Qty 4 Ea.) | 22042120 | 28560426 | 29621800 | 1.93 [49] | M48 | M48 x 550 | 12,500<br>[55.56] | 1.06<br>[27.0] |

| Thread Size | Tightening torque | | | | | |
|---|---|---|---|---|---|---|
| | ISO Grade 8.8 | | | ISO Grade 10.9 | | |
| [mm] | [lb-in] | [lb-ft] | [N-m] | [lb-in] | [lb-ft] | [N-m] |
| M10 | 469 | 39 | 53 | 690 | 58 | 78 |
| M12 | 814 | 68 | 92 | 1,195 | 100 | 135 |
| M16 | 2,036 | 170 | 230 | 2,965 | 247 | 335 |
| M20 | 4,071 | 339 | 460 | 5,841 | 487 | 660 |
| M24 | 6,992 | 583 | 790 | 10,178 | 848 | 1,150 |
| M30 | 14,161 | 1,180 | 1,600 | 19,914 | 1,660 | 2,250 |
| M36 | 24,605 | 2,050 | 2,780 | 34,606 | 2,884 | 3,910 |
| M42 | 39,563 | 3,297 | 4,470 | 55,671 | 4,639 | 6,290 |
| M48 | 59,300 | 4,942 | 6,700 | 84,436 | 7,036 | 9,540 |

# HELICAL & BEVEL REDUCER LUBRICATION

## 1. Importance of proper lubrication

Proper gearbox lubrication is essential in order to reduce friction, heat, and component wear. Lubricants reduce heat and wear by inserting a protective "fluid boundary" between mating parts and preventing direct metal to metal contact. Lubricants also help prevent corrosion and oxidation, minimize foam, improve heat transfer, optimize reducer efficiency, absorb shock loads and reduce noise.

Most NORD reducers are shipped from the factory with a pre-determined oil fill level in accordance to the specified reducer size and mounting position.

## 2. Standard oil type

The following tables indicate the standard oil fill type used. Please see user manual U11000 for more specific information and for optional helical and bevel gear lubricants:

| Serviceable Gear Units | |
|---|---|
| Helical In-line | Standard Oil Fill: ISO VG 220, Mineral Oil |
| Clincher Parallel-Shaft | |
| Right-Angle Bevel | |
| NORDBLOC® Series In-line | |
| NORDBLOC®.1 Series In-line | |
| Standard Series In-line | |

**IMPORTANT NOTE**

For shipping purposes, the following large gear units are supplied without oil:
- Clincher™ Sizes SK10282, SK10382, SK11282 and SK12382
- Right-Angle Bevel Size SK9096.1

| Maintenance-free / Lubricated For Life Gear Units | |
|---|---|
| Clincher™ sizes SK0182NB, SK0282NB & SK1382NB | Standard Oil Fill: ISO VG220 SHC/PAO Synthetic Oil |
| NORDBLOC® Sizes SK172, SK272, SK371F, SK372, SK373, SK320 | |

**IMPORTANT NOTE**

Maintenance-free units are supplied as sealed units with no vent-plug. Consult NORD prior to ordering if interested in ordering any of the above sizes as serviceable gear units.

**IMPORTANT NOTE**

Consult the sticker adjacent to the fill plug to determine the type of lubricant installed at the factory. Some units have special lubricants designed to operate in certain environments or intended to extend the service life or service temperature range of the lubricant. If in doubt about which lubricant is needed for a certain application, please contact NORD Gear.

## 3. Lubrication replacement

If the gear unit is filled with mineral oil, the lubricant should be replaced at least after every 10,000 operating hours or after every two years. If the gear unit is filled with synthetic oil, the lubricant should be replaced at least after every 20,000 operating hours or after every four years. Often gear reducers are exposed to extreme ambient conditions, hostile environments, wet conditions, or dirty and dusty operating areas. Especially in these situations, it is important to establish a condition-based oil service interval.

## 4. Oil viscosity

Viscosity, or the oil's resistance to shear under load, is often considered the single most important property of any gear oil.

- Often one will consider making a viscosity correction to the oil to improve the performance when operating the gear unit at low temperature or high temperature.
- In cases of extreme load conditions, gear pairs and antifriction bearings may be more susceptible to sliding or scuffing wear. In these operating conditions, it may also be beneficial to consider an increased lubrication viscosity and/or a lubrication with improved antiwear additive packages.

**IMPORTANT NOTE**

The user should consult with their primary lubrication supplier before considering changes in oil type or viscosity.

## 5. Maximum oil sump temperature limit

To prevent reducer overheating, the reducer's maximum oil sump temperature limit must not be exceeded for prolonged periods of operation (up to 3 hours continuous operation depending upon reducer size).

| Oil Type | Maximum Oil Temperature Limit | |
|---|---|---|
| | NORD | AGMA 9005-D94 |
| Mineral | 80-85°C (176-185°F) | 95°C (203°F) |
| Synthetic | 105°C (220°F) | 107°C (225°F) |

**IMPORTANT NOTE**

***Use caution when specifying gear reducers for high temperature service.*** If there is concern about exceeding the allowable safe operating temperatures, please consult NORD to discuss alternatives.

# HELICAL & BEVEL REDUCER LUBRICATION

### 6. The importance of routine oil analysis

Routine oil analysis, sound lubrication practices, and good tracking of oil performance trends will help establish proper lubrication maintenance and change-out intervals. To maximize equipment reliability, NORD Gear generally recommends a condition-based lubrication maintenance program. One may take exceptions to this general recommendation on sealed-for-life or maintenance-free gear units or smaller and less costly gear units. In these instances, the replacement cost of the gear unit is often small compared to the costs associated with this type of oil analysis program.

**STOP** ***HARMFUL SITUATION*** **STOP**

NORD suggests replacing the gear oil if oil analysis indicates any of the following:

- Viscosity has changed by approximately 10% or more.
- Debris particles (silicon, dust, dirt or sand) exceed 25 ppm.
- Iron content exceeds 150-200 ppm.
- Water content is greater than 0.05% (500 ppm).
- The total acid number (TAN) tests indicate a significant level of oxidative break-down of the oil, and a critical reduction in performance; If the TAN number measured changes by more than 5% over the new oil, then an oil change would be recommended.

### 7. Mounting position and oil fill quantity

All NORD Gear reducers are shipped from the factory with a pre-determined oil fill level in accordance to the specified reducer size and mounting position. ***For additional information, please see the seperate mounting position diagrams and the corresponding oil fill quantity tables for the specified gear unit.***

The gearbox nametag will indicate the mounting position that was provided. ***For mounting orientations other than shown in the mounting position charts, please consult NORD Gear.***

**STOP** ***HARMFUL SITUATION*** **STOP**

Actual oil volume can vary slightly depending upon the gear case size, mounting and ratio. Prior to commissioning the reducer, check the oil-fill level using the reducer's oil-level plug and drain or add additional oil as needed.

### 8. Oil plug locations

All gear units are assembled with the oil fill-level, oil-drain and vent plugs installed in their proper locations, according to the specified mounting position. All standard plugs are metric and utilize sealing gaskets between the head of the plug and the reducer housing.

### 9. Drain and fill-level plugs

All reducer drain plugs are metric socket head cap screws. For ease of draining the used oil from the gear reducer use the socket head screw located at the lowest part of the gearbox. For ease of identification, it is NORD's standard practice to provide a hex-head screw for the fill-level plug.

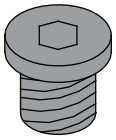

Drain Plug

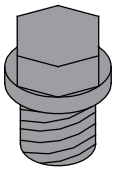

Fill Level Plug

### 10. Vent plug locations

Reducer venting allows for air pressure differences that occur during operation, between the inner space of the reducer and the atmosphere, while ensuring leak-free operation. The AUTOVENT™ is standard on all helical-inline gear units.



**AUTOVENT™** - The AUTOVENT™ helps prevent bearing and gear damage by blocking entry of foreign material (water, dust, corrosives, etc.). The breather acts like a check valve that opens at approximately 2 psi during operation, closes tightly as the gearbox cools, and produces a slightly negative pressure. This option is perfect for humid conditions and wash-down environments, helping to maintain proper oil cleanliness, and reducing foaming and oxidation.

**Open Vent** - An optional open vent can be supplied on NORD reducers. The open vent will be closed upon delivery to prevent oil leakage. Before the reducer is put into operation the open vent should be activated by removing the sealing plug.

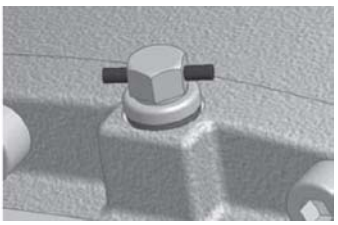

Sealed open vent

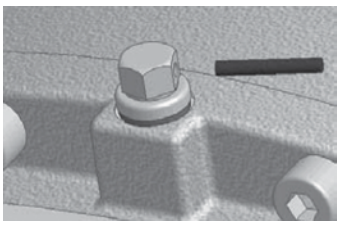

Activated open vent

**Filtered Vent** - NORD may offer an optional filtered vent, which allows gases to permeate, but does not allow dust and debris to pass through the vent.

# HELICAL WORM REDUCER LUBRICATION



### 1. Importance of proper lubrication

Proper gearbox lubrication is essential in order to reduce friction, heat, and component wear. Lubricants reduce heat and wear by inserting a protective "fluid boundary" between mating parts and preventing direct metal to metal contact. Lubricants also help prevent corrosion and oxidation, minimize foam, improve heat transfer, optimize reducer efficiency, absorb shock loads and reduce noise.

NORD helical-worm reducers are shipped from the factory with a pre-determined oil fill level in accordance to the specified reducer size and mounting position.

### 2. Standard oil type

NORD helical worm gear reducers are filled with ISO VG 680 synthetic-hydrocarbon/polyalphaolefin (SHC/PAO) worm gear oil.

- SHC/PAO worm gear oils have good high and low temperature stability, are compatible with most paint and seal types, and are miscible with mineral oils.
- SHC/PAO worm gear oils also contain a small amount of organic ester and other antiwear (AW) packages to offer improved lubrication conditions, especially in the worm mesh, where a sideways sliding motion prevails.

Please see user manual U11020 for more specific information and for optional helical worm lubricants.

**HARMFUL SITUATION**

In worm gears avoid using extreme pressure (EP) gear oils containing sulfur-phosphorous chemistries; these additives can react adversely with bronze worm gears, and accelerate wear.

**IMPORTANT NOTE**

Consult the sticker adjacent to the fill plug to determine the type of lubricant installed at the factory. Some units have special lubricants designed to operate in certain environments or intended to extend the service life or service temperature range of the lubricant. If in doubt about which lubricant is needed for a certain application, please contact NORD Gear.

### 3. Lubrication replacement

The helical-worm gear oil should be replaced at least after every 20,000 operating hours or after every four years. Often gear reducers are exposed to extreme ambient conditions, hostile environments, wet conditions, or dirty and dusty operating areas. Especially in these situations, it is important to establish a condition-based oil service interval.

### 4. Efficiency

Helical worm gears reach efficiencies up to 92% and are generally much more efficient than worm-only gear units. However, it is important to consider the following, when using worm gears.

- Worm gears reach their peak rated efficiency, after they undergo a natural run-in process (up to 25 hours operating time at maximum rated load). Catalog published power and torque figures are based upon the rated efficiency after the run-in is complete.
- Worm gears have naturally lower startup efficiencies compared to operating efficiencies. As input speed increases the enhanced hydrodynamic effects of the oil result in less tooth friction and increased worm gear efficiency.

**IMPORTANT NOTE**

***Worm gear reducers applied in cold temperature service***, may require increased motor power for the following reasons:

- Lower operating temperatures, cause lubrication viscosity to increase in both the gearbox and in the moving areas of the driven machine.
- Worm-gears have naturally lower start-up efficiencies compared to operating efficiencies.
- In extreme cases, one might need to consider increasing the motor power and lowering the oil viscosity

### 5. Oil Viscosity

Viscosity, or the oil's resistance to shear under load, is often considered the single most important property of any gear oil.

- Often one will consider making a viscosity correction to the oil to improve the performance when operating the gear unit at low temperature or high temperature.
- In cases of extreme load conditions, gear pairs and antifriction bearings may be more susceptible to sliding or scuffing wear. In these operating conditions, it may also be beneficial to consider an increased lubrication viscosity and/or a lubrication with improved antiwear additive packages.

**IMPORTANT NOTE**

The user should consult with their primary lubrication supplier before considering changes in oil type or viscosity.

### 6. Maximum oil sump temperature limit

To prevent reducer overheating, the reducer's maximum oil sump temperature limit must not be exceeded for prolonged periods of operation (up to 3 hours continuous operation depending upon reducer size).

| Oil Type | Maximum Oil Temperature Limit | |
|---|---|---|
| | NORD | AGMA 9005-D94 |
| Synthetic | 105°C (220°F) | 107°C (225°F) |

**IMPORTANT NOTE**

***Use caution when specifying gear reducers for high temperature service.*** If there is concern about exceeding the allowable safe operating temperatures, please consult NORD to discuss alternatives.

# HELICAL WORM REDUCER LUBRICATION

### 7. The importance of routine oil analysis

Routine oil analysis, sound lubrication practices, and good tracking of oil performance trends will help establish proper lubrication maintenance and change-out intervals. To maximize equipment reliability, NORD Gear generally recommends a condition-based lubrication maintenance program. One may take exceptions to this general recommendation on sealed-for-life or maintenance-free gear units or smaller and less costly gear units. In these instances, the replacement cost of the gear unit is often small compared to the costs associated with this type of oil analysis program.

**STOP** ***HARMFUL SITUATION*** **STOP**

NORD suggests replacing the gear oil if oil analysis indicates any of the following:

- Viscosity has changed by approximately 10% or more.
- Debris particles (silicon, dust, dirt or sand) exceed 25 ppm.
- Iron content exceeds 150-200 ppm.
- Water content is greater than 0.05% (500 ppm).
- The total acid number (TAN) tests indicate a significant level of oxidative break-down of the oil, and a critical reduction in performance; If the TAN number measured changes by more than 5% over the new oil, then an oil change would be recommended.

### 8. Mounting position and oil fill quantity

All NORD Gear reducers are shipped from the factory with a pre-determined oil fill level in accordance to the specified reducer size and mounting position. ***For additional information, please see the seperate mounting position diagrams and the corresponding oil fill quantity tables for the specified gear unit.***

The gearbox nametag will indicate the mounting position that was provided. ***For mounting orientations other than shown in the mounting position charts, please consult NORD Gear.***

**STOP** ***HARMFUL SITUATION*** **STOP**

Actual oil volume can vary slightly depending upon the gear case size, mounting and ratio. Prior to commissioning the reducer, check the oil-fill level using the reducer's oil-level plug and drain or add additional oil as needed.

### 9. Oil plug locations

All gear units are assembled with the oil fill-level, oil-drain and vent plugs installed in their proper locations, according to the specified mounting position. All standard plugs are metric and utilize sealing gaskets between the head of the plug and the reducer housing.

### 10. Drain and fill-level plugs

All reducer drain plugs are metric socket head cap screws. For ease of draining the used oil from the gear reducer use the socket head screw located at the lowest part of the gearbox. For ease of identification, it is NORD's standard practice to provide a hex-head screw for the fill-level plug.

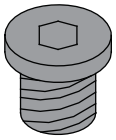

Drain Plug

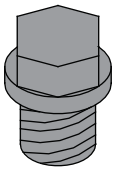

Fill Level Plug

### 11. Vent plug locations

Reducer venting allows for air pressure differences that occur during operation, between the inner space of the reducer and the atmosphere, while ensuring leak-free operation. The AUTOVENT™ is standard on all helical-inline gear units.



**AUTOVENT™** - The AUTOVENT™ helps prevent bearing and gear damage by blocking entry of foreign material (water, dust, corrosives, etc.). The breather acts like a check valve that opens at approximately 2 psi during operation, closes tightly as the gearbox cools, and produces a slightly negative pressure. This option is perfect for humid conditions and wash-down environments, helping to maintain proper oil cleanliness, and reducing foaming and oxidation.

**Open Vent** - An optional open vent can be supplied on NORD reducers. The open vent will be closed upon delivery to prevent oil leakage. Before the reducer is put into operation the open vent should be activated by removing the sealing plug.

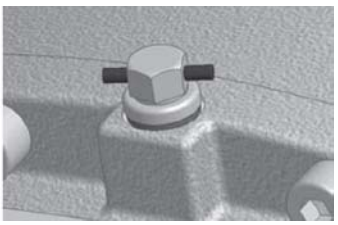

Sealed open vent

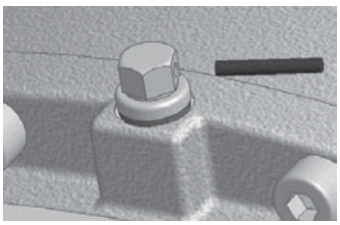

Activated open vent

**Filtered Vent** - NORD may offer an optional filtered vent, which allows gases to permeate, but does not allow dust and debris to pass through the vent.

# MINICASE™ WORM REDUCER LUBRICATION



### 1. Importance of proper gearbox lubrication

Proper gearbox lubrication is essential in order to reduce friction, heat, and component wear. Lubricants reduce heat and wear by inserting a protective "fluid boundary" between mating parts and preventing direct metal to metal contact. Lubricants also help prevent corrosion and oxidation, minimize foam, improve heat transfer, optimize reducer efficiency, absorb shock loads and reduce noise.

### 2. Maintenance free design

NORD MINICASE™ worm gear reducers are designed to be maintenance-free and are supplied completely sealed. They are factory oil-filled with a pre-determined oil fill amount in accordance to the specified reducer size and mounting position. The synthetic lubrication used is suitable for the life of the product so the MINICASE™ is inherently maintenance free.

### 3. Standard oil type

NORD MINICASE™ worm gear reducers are filled with ISO VG 680 synthetic-hydrocarbon/polyalphaolefin (SHC/PAO) worm gear oil.

- SHC/PAO worm gear oils have good high and low temperature stability, are compatible with most paint and seal types, and are miscible with mineral oils.
- SHC/PAO worm gear oils also contain a small amount of organic ester and other antiwear (AW) packages to offer improved lubrication conditions, especially in the worm mesh, where a sideways sliding motion prevails.

Please see user manual U11040 for more specific information and for optional MINICASE™ worm lubricants.

**HARMFUL SITUATION**

In worm gears avoid using extreme pressure (EP) gear oils containing sulfur-phosphorous chemistries; these additives can react adversely with bronze worm gears, and accelerate wear.

### 4. Efficiency

It is important to consider the following, when using worm gears.

- Worm gears reach their peak rated efficiency, after they undergo a natural run-in process (up to 25 hours operating time at maximum rated load). Catalog published power and torque figures are based upon the rated efficiency after the run-in is complete.
- Worm gears have naturally lower startup efficiencies compared to operating efficiencies. As input speed increases the enhanced hydrodynamic effects of the oil result in less tooth friction and increased worm gear efficiency.

**IMPORTANT NOTE**

***Worm gear reducers applied in cold temperature service***, may require increased motor power for the following reasons:

- Lower operating temperatures, cause lubrication viscosity to increase in both the gearbox and in the moving areas of the driven machine.
- Worm-gears have naturally lower start-up efficiencies compared to operating efficiencies.
- In extreme cases, one might need to consider increasing the motor power and/or lowering the oil viscosity.

### 5. Oil Viscosity

Viscosity, or the oil's resistance to shear under load, is often considered the single most important property of any gear oil.

- Often one will consider making a viscosity correction to the oil to improve the performance when operating the gear unit at low temperature or high temperature.
- In cases of extreme load conditions, gear pairs and antifriction bearings may be more susceptible to sliding or scuffing wear. In these operating conditions, it is also may be beneficial to consider an increased lubrication viscosity and/or a lubrication with improved antiwear additive packages.

**IMPORTANT NOTE**

The user should consult with their primary lubrication supplier before considering changes in oil type or viscosity.

### 6. Maximum oil sump temperature limit

To prevent reducer overheating, the reducer's maximum oil sump temperature limit must not be exceeded for prolonged periods of operation (up to 3 hours continuous operation depending upon reducer size).

| Oil Type | Maximum Oil Temperature Limit | |
|---|---|---|
| | NORD | AGMA 9005-D94 |
| Synthetic | 105°C (220°F) | 107°C (225°F) |

**IMPORTANT NOTE**

***Use caution when specifying gear reducers for high temperature service.*** If there is concern about exceeding the allowable safe operating temperatures, please consult NORD to discuss alternatives.

# FLEXBLOC™ WORM REDUCER LUBRICATION

## 1. Importance of proper gearbox lubrication

Proper gearbox lubrication is essential in order to reduce friction, heat, and component wear. Lubricants reduce heat and wear by inserting a protective "fluid boundary" between mating parts and preventing direct metal to metal contact. Lubricants also help prevent corrosion and oxidation, minimize foam, improve heat transfer, optimize reducer efficiency, absorb shock loads and reduce noise.

## 2. FLEXBLOC™ - Sealed or vented options available

FLEXBLOC™ worm gear modules are designed to operate sealed or vented. They are factory oil filled for any mounting configuration with a pre-determined oil level (See User Manual U13300). There are four factors that need to be considered when deciding to use a sealed unit versus a vented unit.

A. If the duty cycle is intermittent, the run times are short, and any build-up of internal pressure or temperature is low to modest, the sealed unit option can be used.

B. If running continuous under moderate to high load, worm gears generate moderate to high operating temperature and a build-up of internal pressure. In these instances a vented option is usually suggested.

C. By design radial shaft seals produce a hydrodynamic pumping action to help push lubricant back into the gear unit. This causes the unit to ingest some air. Tests have shown that this only causes a small pressure increase (1-2 psi) but when combined with "factor B" this minimal pressure can seem significant.

D. When the environment is contaminated with water, dirt, etc., which can be ingested into the breather, increased wear of bearings and gearing, and lubrication breakdown, can result. In these instances the sealed option or an AUTOVENT™ should be considered.

***Typical Execution – Sealed maintenance free design***

The FLEXBLOC™ is supplied completely sealed and the unit's lubrication is considered suitable for the life of the product, so it is inherently maintenance free.

***Optional Execution – A Field Installable Vent Kit Is Ordered***

When ordered, NORD can provide field installable vent kit option for most all FLEXBLOC™ Gear units, with exception to the smallest SK1SI31 unit.

| | |
|---|---|
| **Open Vent Kit** | P/N 60693500 |
| **Autovent™:** | P/N 22008005 (vent) +<br>P/N 25308120 (gasket) |

## 3. Standard oil type

FLEXBLOC™ worm gear reducers are oil-filled as follows:

- FLEXBLOC™ inch hollow-bore modules are factory-filled with an ISO VG220 food grade synthetic polyglycol lubricant (suitable for NSF-H1 incidental contact).
- FLEXBLOC™ metric hollow-bore modules are factory filled with an ISO VG220 polyglycol lubricant (unless special ordered).

Please see user manual U11060 for more specific information concerning FLEXBLOC™ lubricants.

## 4. Efficiency

It is important to consider the following, when ordering worm gears.

- Worm gears reach their peak rated efficiency, after they undergo a natural run-in process (up to 25 hours operating time at maximum rated load). Catalog published power and torque figures are based upon the rated efficiency after the run-in is complete.
- Worm gears have naturally lower startup efficiencies compared to operating efficiencies. As input speed increases the enhanced hydrodynamic effects of the oil result in less tooth friction and increased worm gear efficiency.

### IMPORTANT NOTE

***Worm gear reducers applied in cold temperature service***, may require increased motor power for the following reasons:

- Lower operating temperatures, cause lubrication viscosity to increase in both the gearbox and in the moving areas of the driven machine.
- Worm-gears have naturally lower start-up efficiencies compared to operating efficiencies.
- In extreme cases, one might need to consider increasing the motor power and lowering the oil viscosity

## 5. Oil Viscosity

Viscosity, or the oil's resistance to shear under load, is often considered the single most important property of any gear oil.

- Often one will consider making a viscosity correction to the oil to improve the performance when operating the gear unit at low temperature or high temperature.
- In cases of extreme load conditions, gear pairs and antifriction bearings may be more susceptible to sliding or scuffing wear. In these operating conditions, it also may be beneficial to consider an increased lubrication viscosity and/or a lubrication with improved antiwear additive packages.

### IMPORTANT NOTE

The user should consult with their primary lubrication supplier before considering changes in oil type or viscosity.

## 6. Maximum oil sump temperature limit

To prevent reducer overheating, the reducer's maximum oil sump temperature limit must not be exceeded for prolonged periods of operation (up to 3 hours continuous operation depending upon reducer size).

| Oil Type | Maximum Oil Temperature Limit | |
|---|---|---|
| | NORD | AGMA 9005-D94 |
| Synthetic | 105°C (220°F) | 107°C (225°F) |

### IMPORTANT NOTE

***Use caution when specifying gear reducers for high temperature service.*** If there is concern about exceeding the allowable safe operating temperatures, please consult NORD to discuss alternatives.

# EXPANSION CHAMBERS INSTALLATION & MAINTENANCE MANUAL



### Installation Instructions

Sometimes NORD requires the use of an oil expansion chamber when the motor or reducer input is mounted vertically. Consult your NORD catalog for additional information and application considerations.

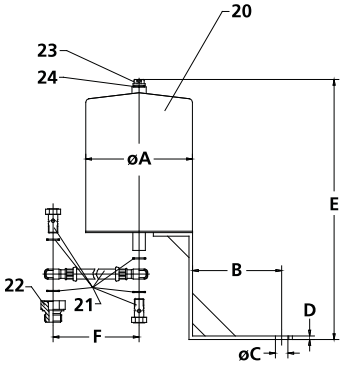


1. Secure the gear reducer in the proper mounting position for the application and remove the vent plug from the gear reducer. The hose assembly kit (21) will be fitted to the reducer using the housing port provided.
2. When using the larger 2.7 and 5.4 liter chambers, screw the adapter fitting (22) into the reducer housing port. Use all sealing gaskets provided.
3. Mount the overflow tank (20) at the highest location from the reducer, as permitted by the hose assembly kit (21). Typical mounting configurations are represented below. Use one of the input cover's mounting bolts, to mount the chamber support leg to the reducer.

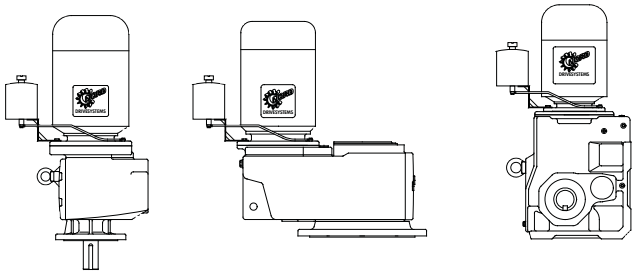

4. Be sure to use the proper fittings. Assemble one end of the vent-hose assembly (21) to bottom of the chamber and one-end to the reducer.
5. Secure the vent-plug (23) and gasket (24) that is supplied with the kit to the top of the expansion chamber.

**STOP** ***HARMFUL SITUATION*** **STOP**

Remove the protective "rubber element" from the supplied vent prior to use so that an open-vent is formed on top of the overflow tank. Avoid using a pressurized AUTOVENT™ breather on the overflow tank since this may create an undesired pressure-vacuum in the overflow tank.

### Expansion Chamber Kit Dimensions & Parts List

**Kit Part Number: 28390390 - 0.7 Liter Oil Expansion Chamber**

| Kit P/N | Ø A | B | Ø C | D | E | F | Units |
|---|---|---|---|---|---|---|---|
| 28390390 (0.7 Liter) | 3.94 | 1.97 | 0.53 | 0.20 | 8.50 | 19.69 | inch |
| | 100 | 50 | 13.5 | 5 | 216 | 500 | mm |

| Item | Part Number | Description |
|---|---|---|
| 20 | 28300390 | Overflow Tank - 0.7 Liter |
| 21 | 28310020 | Flexible Vent Hose Assembly - Includes: Hose, metal gaskets & 2 Hollow Bolts (1 Bolt. - M12 X 1.5 and 1 Pc. - G1/4) |
| 22 | None | Adapter Fitting |
| 23 | 22012004 | Normal Style Vent Plug (M12 X 1.5, DIN 910) |
| 24 | 25312150 | Vent Plug Gasket (12 X 15.5 X 1.5) |

**Kit Part Number: 28390400 - 2.7 Liter Oil Expansion Chamber**

| Kit P/N | Ø A | B | Ø C | D | E | F | Units |
|---|---|---|---|---|---|---|---|
| 28390400 (2.7 Liter) | 5.91 | 4.92 | 0.69 | 0.20 | 15.22 | 27.56 | inch |
| | 150 | 125 | 17.5 | 5 | 386.5 | 700 | mm |

| Item | Part Number | Description |
|---|---|---|
| 20 | 28300400 | Overflow Tank - 2.7 Liter |
| 21 | 28310030 | Flexible Vent Hose Assy - Includes: Hose, metal gaskets & 2 Hollow Bolts (2 Pcs. - G1/4) |
| 22 | 22024030 | Adapter Fitting (M24 X 1.5 to G1/4) |
| 23 | 22012004 | Normal Style Vent Plug (M12 X 1.5, DIN 910) |
| 24 | 25312150 | Vent Plug Gasket (12 X 15.5 X 1.5) |

**Kit Part Number: 28390400 - 2.7 Liter Oil Expansion Chamber**

| Kit P/N | Ø A | B | Ø C | D | E | F | Units |
|---|---|---|---|---|---|---|---|
| 28390410 (5.4 Liter) | 7.09 | 3.54 | 0.69 | 0.20 | 15.18 | 31.50 | inch |
| | 180 | 90 | 17.5 | 5 | 385.5 | 800 | mm |

| Item | Part Number | Description |
|---|---|---|
| 20 | 28300410 | Overflow Tank - 5.4 Liter |
| 21 | 28310040 | Flexible Vent Hose Assy - Includes: Hose, metal gaskets & 2 Hollow Bolts (2 Pcs. - G1/4) |
| 22 | 22030030 | Adapter Fitting (M30 X 1.5 to G1/4) |
| 23 | 22012004 | Normal Style Vent Plug (M12 X 1.5, DIN 910) |
| 24 | 25312150 | Vent Plug Gasket (12 X 15.5 X 1.5) |

**Please see page 2 for gearbox compatability**

**Expansion Chamber Compatability Chart**

| Helical In-line | NORDBLOC™ | NORDBLOC.1™ | Clincher™ | Helical-Bevel | Part Number | [lb] |
|---|---|---|---|---|---|---|
| SK 42/43<br>SK 52/53<br>SK 63 | SK472/473<br>SK572/573<br>SK672/673<br>SK772/773<br>SK872/873<br>SK972/973 | SK572.1/573.1*<br>SK672.1/673.1* | SK 4282/4382<br>SK 5282/5382<br>SK 6382 | SK 9042.1/9043.1<br>SK 9052.1/9053.1 | 28390390 | 11.0 |
| SK 62<br>SK 72/73 | | | SK 6282<br>SK 7282/7382 | SK 9072.1<br>SK 9082.1 | 28390400 | 13.2 |
| SK 82/83<br>SK 92/93<br>SK 102/103 | | | SK 8282/8382 | SK 9086.1<br>SK 9092.1 | 28390410 | 15.4 |

* Need to additionally order part #28390380 which is sub-assembly shown below.

**Sub-Assembly P/N 28390380 for NORDBLOC®.1 gear units with M10x1 air vent.**

| ❶ | ❷ | ❸ | ❹ |
|---|---|---|---|
|  |  |  |  |
| 1x DIN 7643<br>M10x1<br>283 00380 | 1x DIN 7603A Cu<br>10x16x1<br>253 10166 | 1x Ring<br>10x14x5<br>283 00370 | 1xDIN<br>9021 ø8,4<br>227 10840 |

**Assembly of the expansion unit at the gear unit. Types SK 572.1/573.1, SK 672.1/673.1**



Vent Hose Sub-Assembly




❹ For motor sizes 63, 71, 80, 90, 100 & 112

• Motor attachment bolt

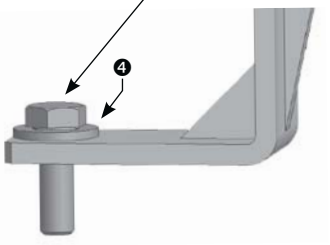


Motor Sizes 63, 71 & 80:
Assembly vent-hose to port as shown.

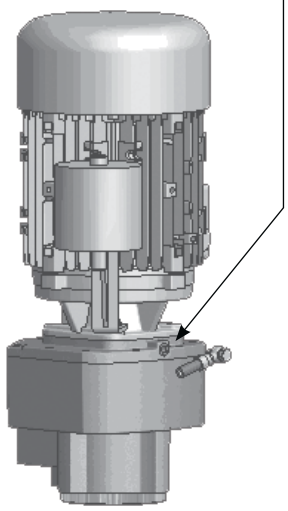

Motor Sizes 90,100 & 112:
Assembly vent-hose to port as shown.

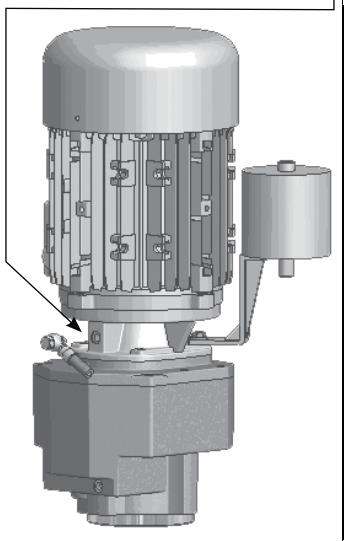

# HELICAL & BEVEL REDUCER LUBRICATION TYPES



## Lubrication Tables – Helical and Bevel Gear Units

**Standard Oil Lubricants**

| ISO Viscosity | Oil Type | Ambient Temperature Range | Manufacturer Brand / Type |
|---|---|---|---|
| VG220 | MIN-EP | -5 to 40 °C (23 to 104 °F) | Mobil / Spartan EP220 ♦ ❶ |
| | PAO | -35 to 50 °C (-31 to 122 °F) | Mobil / SHC630 ♦ ❷ |
| | FG | -5 to 40 °C (23 to 104 °F) | Shell / FM220 ♦ |

**Optional Oil Lubricants**

| ISO Viscosity | Oil Type | Ambient Temperature Range | Manufacturer Brand / Type |
|---|---|---|---|
| VG460 | PAO | -35 to 80 °C (-31 to 176 °F) | Mobil / SHC634 |
| | FG-PAO | -40 to 80 °C (-40 to 176 °F) | Shell / Cassida GL460 |
| VG220 | FG-PAO | -40 to 50 °C (-40 to 122 °F) | Shell / Cassida GL220 |
| VG150 | PAO | -40 to 25 °C (-40 to 77 °F) | Mobil / SHC629 |
| | FG-PAO | -45 to 25 °C (-49 to 77 °F) | Shell / Cassida GL220 |

**Grease Options (applied to greased bearings and seal cavities)**

| NLGI Grade | Grease Type / Thickener | Ambient Temperature Range | Manufacturer Brand / Type |
|---|---|---|---|
| NLGI 2 | Standard / Li-Complex | -30 to 60 °C (-22 to 140 °F) | Shell Albida EP 2 ♦ ❶ |
| | High-Temperature / Polyurea | -25 to 80 °C (-13 to 176 °F) | Mobil Polyrex EP 2 ♦ ❷ |
| | Food-Grade / Al-Complex | -25 to 40 °C (-13 to 104 °F) | Mobil Grease FM222 ♦ |

♦ Stocked Lubricants

❶ Standard product on serviceable gear units

❷ Standard product on maintenance free gear units

### *IMPORTANT NOTES*

- The "Ambient Temperature" is intended to be an operation guideline based upon the typical properties of all the lubricant. The viscosity and other properties of the lubricant change based upon load, speed, ambient conditions, and reducer operating temperatures. The user should consult with their lubrication supplier & NORD gear before considering changes in oil type or viscosity.
- To prevent reducer overheating, observe the maximum operating oil temperature limits:
  Mineral Oil: 80-85 °C (176 – 180 °F).
  Synthetic Oil: 105 °C (225 °F).
- In the following instances, please consult NORD for specific recommendations:
  - √ Gear units will operate in high ambient temperature conditions exceeding 40 °C (104 °F).
  - √ Gear units will operate in cold ambient temperature conditions approaching 0 °C (32 °F) or lower.
  - √ Lower than an ISO VG100 viscosity oil is being considered for a cold-temperature service.
  - √ Fluid grease is required for lubricating the gear unit.
- Observe the general lubrication guidelines outlined in user manual U10750.

**Oil Formulation Codes**

MIN-EP - Mineral Oil with EP Additive
PAO-EP - Synthetic Polyalphaolefin Oil with EP Additive
PAO - Synthetic Polyalphaolefin Oil
PG - Synthetic Polyglycol Oil
FG - Food-Grade Oil
FG-PAO - Food-Grade, Synthetic Poyalphaolefin Oil
FG-PG - Food-Grade, Synthetic Polyglycol Oil

**Lubrication Notes**

- Avoid using (EP) gear oils in worm gears that contain sulfur-phosphorous chemistries, as these additives can react adversely with bronze worm gears and accelerate wear.
- Food grade lubricants must be in compliance with FDA 212 CFR 178.3570 and qualify as a NSF-H1 lubricant. Please consult with lubrication manufacturer for more information.
- When making a lubrication change, check with the lubrication supplier to assure compatibility and to obtain recommended cleaning or flushing procedures.
- Do not to mix different oils with different additive packages or different base oil formulation types. Polyglycol (PG) oils are not miscible with other oil types and should never be mixed with mineral oil or polyalphaolefin (PAO) synthetic oil.

**NORD Gear Limited**
Toll Free in Canada: 800.668.4378

**NORD Gear Corporation**
Toll Free in the United States: 888.314.6673

# HELICAL & BEVEL REDUCER LUBRICATION TYPES

**Oil Cross-reference Chart**

| ISO Viscosity | Oil Type | Ambient Temperature Range | Mobil | Shell | Castrol | FUCHS | KLÜBER LUBRICATION |
|---|---|---|---|---|---|---|---|
| VG460 | MIN-EP | 0 to 40 °C (32 to 104 °F) | Spartan EP460 | Omala 460 | Alpha SP460 | Renolin EP460 | Klüberoil GEM 1-460N |
| | PAO-EP | -20 to 80 °C (-4 to 176 °F) | Mobilgear SHC460 | Omala HD460 | Alphasyn EP460 | Gearmaster SYN460/NA | Klübersynth EG 4-460 |
| | PAO | -20 to 80 °C (-4 to 176 °F) | Mobil SHC634 | Omala RL460 | Alphasyn T460 | Geralyn SF460 | Klübersynth GEM 4-460N |
| | PG | -20 to 80 °C (-4 to 176 °F) | Mobil Glygoyle 460 | Tivela S460 | Alphasyn PG460 | Renolin PG460 | Klübersynth GH 6-460 |
| | FG-PAO | -20 to 80 °C (-4 to 176 °F) | N/A | Cassida GL460 | N/A | Geralyn SF460 | Klüberoil 4 UH 1-460N |
| | FG-PG | -20 to 80 °C (-4 to 176 °F) | Mobil Glygoyle 460 | Cassida WG460 | N/A | N/A | Klübersynth UH 1-460 |
| VG220 | MIN-EP | 0 to 40 °C (32 to 104 °F) | Spartan EP220 | Omala 220 | Alpha SP220 | Renolin EP220 | Klüberoil GEM 1-220N |
| | PAO-EP | -30 to 60 °C (-22 to 140 °F) | Mobilgear SHC220 | Omala HD220 | Alphasyn EP220 | Gearmaster SYN220/NA | Klübersynth EG 4-220 |
| | PAO | -20 to 50 °C (-4 to 122 °F) | Mobil SHC630 | Omala RL220 | Alphasyn T220 | Geralyn SF220 | Klübersynth GEM 4-220N |
| | PG | -25 to 60 °C (-13 to 140 °F) | Mobil Glygoyle 220 | Tivela S220 | Alphasyn PG220 | Renolin PG220 | Klübersynth GH 6-220 |
| | FG | 0 to 40 °C (32 to 104 °F) | Mobil DTE FM 220 | Shell FM220 | N/A | Geralyn AW220 | N/A |
| | FG-PAO | -20 to 50 °C (-4 to 122 °F) | N/A | Cassida GL220 | N/A | Geralyn SF220 | Klüberoil 4 UH 1-220N |
| | FG-PG | -25 to 60 °C (-13 to 140 °F) | Mobil Glygoyle 220 | Cassida WG220 | N/A | N/A | Klübersynth UH 1-220 |
| VG150 | MIN-EP | 0 to 40 °C (32 to 104 °F) | Spartan EP150 | Omala 150 | Alpha SP150 | Renolin EP150 | Klüberoil GEM 1-150N |
| | PAO-EP | -30 to 25 °C (-22 to 77 °F) | Mobilgear SHC150 | Omala HD150 | Alphasyn EP150 | Gearmaster SYN150/NA | Klübersynth EG 4-150 |
| | PAO | -25 to 25 °C (-13 to 77 °F) | Mobil SHC629 | Omala RL150 | Alphasyn T150 | Geralyn SF150 | Klübersynth GEM 4-150N |
| | PG | -25 to 25 °C (-13 to 77 °F) | Mobil Glygoyle 150 | Tivela S150 | Alphasyn PG150 | Renolin PG150 | Klübersynth GH 6-150 |
| | FG-PAO | -25 to 25 °C (-13 to 77 °F) | N/A | Cassida GL150 | N/A | Geralyn SF150 | Klüberoil 4 UH 1-150N |
| | FG-PG | -25 to 25 °C (-13 to 77 °F) | Mobil Glygoyle 150 | N/A | N/A | N/A | Klübersynth UH 1-150 |

Low-end service temperature limit may vary for a specific lubricant; Please also see the important notes on Page 1.

# HELICAL WORM REDUCER LUBRICATION TYPES



## Lubrication Tables – Helical Worm Gear Units

**Standard Oil Lubricants**

| ISO Viscosity | Oil Type | Ambient Temperature Range | Manufacturer Brand / Type |
|---|---|---|---|
| VG680 | PAO | -30 to 60 °C (-22 to 140 °F) | Mobil / SHC636 ♦ ❶ |
| | FG-PAO | -30 to 60 °C (-22 to 140 °F) | Shell / Cassida GL680 ♦ ❷ |

**Optional Oil Lubricants**

| ISO Viscosity | Oil Type | Ambient Temperature Range | Manufacturer Brand / Type |
|---|---|---|---|
| VG460 | PAO | -35 to 50 °C (-31 to 122 °F) | Mobil / SHC634 |
| | FG-PAO | -40 to 50 °C (-40 to 122 °F) | Shell / Cassida GL460 |

**Grease Options (applied to greased bearings and seal cavities)**

| NLGI Grade | Grease Type / Thickener | Ambient Temperature Range | Manufacturer Brand / Type |
|---|---|---|---|
| NLGI 2 | Standard / Li-Complex | -30 to 60 °C (-22 to 140 °F) | Shell Albida EP 2 ♦ ❶ |
| | High-Temperature / Polyurea | -25 to 80 °C (-13 to 176 °F) | Mobil Polyrex EP 2 ♦ ❷ |
| | Food-Grade / Al-Complex | -25 to 40 °C (-13 to 104 °F) | Mobil Grease FM222 ♦ |

♦ **Stocked Lubricants**

❶ Standard product on serviceable gear units

❷ Standard product on maintenance free gear units

### *IMPORTANT NOTES*

- The "Ambient Temperature" is intended to be an operation guideline based upon the typical properties of all the lubricant. The viscosity and other properties of the lubricant change based upon load, speed, ambient conditions, and reducer operating temperatures. The user should consult with their lubrication supplier & NORD Gear before considering changes in oil type or viscosity.
- To prevent reducer overheating, observe the maximum operating oil temperature limits:

  Synthetic Oil: 105 °C (225 °F).
- In the following instances, please consult NORD for specific recommendations:

√ Gear units will operate in high ambient temperature conditions exceeding 40 °C (104 °F).

√ Gear units will operate in cold ambient temperature conditions approaching 0 °C (32 °F) or lower.

√ Lower than an ISO VG100 viscosity oil is being considered for a cold-temperature service.

√ Fluid grease is required for lubricating the gear unit.

- Observe the general lubrication guidelines outlined in user manual U10770.

**Oil Formulation Codes**

PAO - Synthetic Polyalphaolefin Oil
PG - Synthetic Polyglycol Oil
FG-PAO - Food-Grade, Synthetic Poyalphaolefin Oil
FG-PG - Food-Grade, Synthetic Polyglycol Oil

**Lubrication Notes**

- Avoid using (EP) gear oils in worm gears that contain sulfur-phosphorous chemistries, as these additives can react adversely with bronze worm gears and accelerate wear.
- Food grade lubricants must be in compliance with FDA 212 CFR 178.3570 and qualify as a NSF-H1 lubricant. Please consult with lubrication manufacturer for more information.
- When making a lubrication change, check with the lubrication supplier to assure compatibility and to obtain recommended cleaning or flushing procedures.
- Do not to mix different oils with different additive packages or different base oil formulation types. Polyglycol (PG) oils are not miscible with other oil types and should never be mixed with mineral oil or polyalphaolefin (PAO) synthetic oil.

# HELICAL WORM REDUCER LUBRICATION TYPES

**Oil Cross-reference Chart**

| ISO Viscosity | Oil Type | Ambient Temperature Range | Mobil | Shell | Castrol | FUCHS | KLÜBER LUBRICATION |
|---|---|---|---|---|---|---|---|
| VG680 | PAO | -20 to 60 °C (-4 to 140 °F) | Mobil SHC636 | Omala RL680 | N/A | Geralyn SF680 | Klübersynth GEM 4-680N |
| | PG | -20 to 60 °C (-4 to 140 °F) | Mobil Glygoyle 680 | Tivela S680 | N/A | Renolin PG680 | Klübersynth GH 6-680 |
| | FG-PAO | -20 to 60 °C (-4 to 140 °F) | N/A | Cassida GL680 | N/A | Geralyn SF680 | Klüberoil 4 UH 1-680N |
| | FG-PG | -20 to 60 °C (-4 to 140 °F) | Mobil Glygoyle 680 | Cassida WG680 | N/A | N/A | Klübersynth UH1 6-680 |
| VG460 | PAO | -20 to 50 °C (-4 to 122 °F) | Mobil SHC634 | Omala RL460 | Alphasyn T460 | Geralyn SF460 | Klübersynth GEM 4-640N |
| | PG | -20 to 50 °C (-4 to 122 °F) | Mobil Glygoyle 460 | Tivela S460 | Alphasyn PG460 | Renolin PG460 | Klübersynth GH 6-460 |
| | FG-PAO | -20 to 50 °C (-4 to 122 °F) | Mobil Cibus SHC 460 | Cassida GL460 | N/A | Geralyn SF460 | Klüberoil 4 UH 1-460N |
| | FG-PG | -20 to 50 °C (-4 to 122 °F) | Mobil Glygoyle 460 | Cassida WG460 | N/A | N/A | Klübersynth UH 1-460 |

Low-end service temperature limit may vary for a specific lubricant; Please also see the important notes on Page 1.

# MINICASE™ WORM REDUCER LUBRICATION TYPES



## Lubrication Tables – MINICASE™ Worm Gear Units

**Standard Oil Lubricants**

| ISO Viscosity | Oil Type | Ambient Temperature Range | Manufacturer Brand / Type |
|---|---|---|---|
| VG680 | PAO | -30 to 60 °C (-22 to 140 °F) | Mobil / SHC636 ♦ |
| | FG-PAO | -30 to 60 °C (-22 to 140 °F) | Shell / Cassida GL680 ♦ |

**Optional Oil Lubricants**

| ISO Viscosity | Oil Type | Ambient Temperature Range | Manufacturer Brand / Type |
|---|---|---|---|
| VG460 | PAO | -35 to 50 °C (-31 to 122 °F) | Mobil / SHC634 |
| | FG-PAO | -40 to 50 °C (-40 to 122 °F) | Shell / Cassida GL460 |

**Grease Options (applied to greased bearings and seal cavities)**

| NLGI Grade | Grease Type / Thickener | Ambient Temperature Range | Manufacturer Brand / Type |
|---|---|---|---|
| NLGI 2 | Standard / Li-Complex | -30 to 60 °C (-22 to 140 °F) | Shell Albida EP 2 ♦ (standard grease) |
| | High-Temperature / Polyurea | -25 to 80 °C (-13 to 176 °F) | Mobil Polyrex EP 2 ♦ |
| | Food-Grade / Al-Complex | -25 to 40 °C (-13 to 104 °F) | Mobil Grease FM222 ♦ |

♦ **Stocked Lubricants**

### *IMPORTANT NOTES*

- The "Ambient Temperature" is intended to be an operation guideline based upon the typical properties of all the lubricant. The viscosity and other properties of the lubricant change based upon load, speed, ambient conditions, and reducer operating temperatures. The user should consult with their lubrication supplier & NORD Gear before considering changes in oil type or viscosity.
- To prevent reducer overheating, observe the maximum operating oil temperature limits:

  Synthetic Oil: 105 °C (225 °F).
- In the following instances, please consult NORD for specific recommendations:

√ Gear units will operate in high ambient temperature conditions exceeding 40 °C (104 °F).
√ Gear units will operate in cold ambient temperature conditions approaching 0 °C (32 °F) or lower.
√ Lower than an ISO VG100 viscosity oil is being considered for a cold-temperature service.
√ Fluid grease is required for lubricating the gear unit.

- Observe the general lubrication guidelines outlined in user manual U10790.

**Oil Formulation Codes**

PAO - Synthetic Polyalphaolefin Oil
PG - Synthetic Polyglycol Oil
FG-PAO - Food-Grade, Synthetic Poyalphaolefin Oil
FG-PG - Food-Grade, Synthetic Polyglycol Oil

**Lubrication Notes**

- Avoid using (EP) gear oils in worm gears that contain sulfur-phosphorous chemistries, as these additives can react adversely with bronze worm gears and accelerate wear.
- Food grade lubricants must be in compliance with FDA 212 CFR 178.3570 and qualify as a NSF-H1 lubricant. Please consult with lubrication manufacturer for more information.
- When making a lubrication change, check with the lubrication supplier to assure compatibility and to obtain recommended cleaning or flushing procedures.
- Do not to mix different oils with different additive packages or different base oil formulation types. Polyglycol (PG) oils are not miscible with other oil types and should never be mixed with mineral oil.

# MINICASE™ WORM REDUCER LUBRICATION TYPES

**Oil Cross-reference Chart**

| ISO Viscosity | Oil Type | Ambient Temperature Range | Mobil | Shell | Castrol | FUCHS | KLÜBER LUBRICATION |
|---|---|---|---|---|---|---|---|
| VG680 | PAO | -20 to 60 °C (-4 to 140 °F) | Mobil SHC636 | Omala RL680 | N/A | Geralyn SF680 | Klübersynth GEM 4-680N |
| | PG | -20 to 60 °C (-4 to 140 °F) | Mobil Glygoyle 680 | Tivela S680 | N/A | Renolin PG680 | Klübersynth GH 6-680 |
| | FG-PAO | -20 to 60 °C (-4 to 140 °F) | N/A | Cassida GL680 | N/A | Geralyn SF680 | Klüberoil 4 UH 1-680N |
| | FG-PG | -20 to 60 °C (-4 to 140 °F) | Mobil Glygoyle 680 | Cassida WG680 | N/A | N/A | Klübersynth UH1 6-680 |
| VG460 | PAO | -20 to 50 °C (-4 to 122 °F) | Mobil SHC634 | Omala RL460 | Alphasyn T460 | Geralyn SF460 | Klübersynth GEM 4-640N |
| | PG | -20 to 50 °C (-4 to 122 °F) | Mobil Glygoyle 460 | Tivela S460 | Alphasyn PG460 | Renolin PG460 | Klübersynth GH 6-460 |
| | FG-PAO | -20 to 50 °C (-4 to 122 °F) | Mobil Cibus SHC 460 | Cassida GL460 | N/A | Geralyn SF460 | Klüberoil 4 UH 1-460N |
| | FG-PG | -20 to 50 °C (-4 to 122 °F) | Mobil Glygoyle 460 | Cassida WG460 | N/A | N/A | Klübersynth UH 1-460 |

Low-end service temperature limit may vary for a specific lubricant; Please also see the important notes on Page 1.

# FLEXBLOC™ WORM REDUCER LUBRICATION TYPES

## Lubrication Tables – FLEXBLOC™ Worm Gear Units

### Standard Oil Lubricants

NORD uses a semi automated assembly process to produce the FLEXBLOC™ gear unit assemblies. During this process the gear units are factory filled in accordance with the following table.

| ISO Viscosity | Unit Type | Oil Type | Ambient Temperature Range | Manufacturer Brand / Type |
|---|---|---|---|---|
| VG220 | Inch | FG-PG | -20 to 60 °C (-4 to 140 °F) | Klüber / Klübersynth UH 1-220 |
| | Metric | PG | -20 to 60 °C (-4 to 140 °F) | Klüber / Klübersynth GH 6-220 |

Please consult with NORD prior to considering any optional lubricants for the FLEXBLOC™ gear unit

### *IMPORTANT NOTES*

- The "Ambient Temperature" is intended to be an operation guideline based upon the typical properties of the lubricant. The viscosity and other properties of the lubricant change based upon load, speed, ambient conditions, and reducer operating temperatures. The user should consult with their lubrication supplier before considering changes in oil type or viscosity.
- To prevent reducer overheating, observe the maximum operating oil temperature limits:
  Synthetic Oil: 105 °C (225 °F).
- In the following instances, please consult NORD for specific recommendations:

√ Gear units will operate in high ambient temperature conditions exceeding 40 °C (104 °F).
√ Gear units will operate in cold ambient temperature conditions approaching 0 °C (32 °F) or lower.
√ Lower than an ISO VG100 viscosity oil is being considered for a cold-temperature service.
√ Fluid grease is required for lubricating the gear unit.

- Observe the general lubrication guidelines outlined in user manual U10810.

**Oil Formulation Codes**

PAO - Synthetic Polyalphaolefin Oil
PG - Synthetic Polyglycol Oil
FG-PAO - Food-Grade, Synthetic Poyalphaolefin Oil
FG-PG - Food-Grade, Synthetic Polyglycol Oil

**Lubrication Notes**

- Avoid using (EP) gear oils in worm gears that contain sulfur-phosphorous chemistries, as these additives can react adversely with bronze worm gears and accelerate wear.
- Food grade lubricants must be in compliance with FDA 212 CFR 178.3570 and qualify as a NSF-H1 lubricant. Please consult with lubrication manufacturer for more information.
- When making a lubrication change, check with the lubrication supplier to assure compatibility and to obtain recommended cleaning or flushing procedures.
- Do not to mix different oils with different additive packages or different base oil formulation types. Polyglycol (PG) oils are not miscible with other oil types and should never be mixed with mineral oil.

# FLEXBLOC™ WORM REDUCER LUBRICATION TYPES

**Oil Cross-reference Chart**

| ISO Viscosity | Oil Type | Ambient Temperature Range | Mobil | Shell | Castrol | FUCHS | KLÜBER LUBRICATION |
|---|---|---|---|---|---|---|---|
| VG680 | PAO | -20 to 60 °C (-4 to 140 °F) | Mobil SHC636 | Omala RL680 | N/A | Geralyn SF680 | Klübersynth GEM 4-680N |
| | PG | -20 to 60 °C (-4 to 140 °F) | Mobil Glygoyle 680 | Tivela S680 | N/A | Renolin PG680 | Klübersynth GH 6-680 |
| | FG-PAO | -20 to 60 °C (-4 to 140 °F) | N/A | Cassida GL680 | N/A | Geralyn SF680 | Klüberoil 4 UH 1-680N |
| | FG-PG | -20 to 60 °C (-4 to 140 °F) | Mobil Glygoyle 680 | Cassida WG680 | N/A | N/A | Klübersynth UH1 6-680 |
| VG460 | PAO | -20 to 50 °C (-4 to 122 °F) | Mobil SHC634 | Omala RL460 | Alphasyn T460 | Geralyn SF460 | Klübersynth GEM 4-640N |
| | PG | -20 to 50 °C (-4 to 122 °F) | Mobil Glygoyle 460 | Tivela S460 | Alphasyn PG460 | Renolin PG460 | Klübersynth GH 6-460 |
| | FG-PAO | -20 to 50 °C (-4 to 122 °F) | Mobil Cibus SHC 460 | Cassida GL460 | N/A | Geralyn SF460 | Klüberoil 4 UH 1-460N |
| | FG-PG | -20 to 50 °C (-4 to 122 °F) | Mobil Glygoyle 460 | Cassida WG460 | N/A | N/A | Klübersynth UH 1-460 |
| VG220 | PAO | -20 to 50 °C (-4 to 122 °F) | Mobil SHC630 | Omala RL220 | Alphasyn T220 | Geralyn SF220 | Klübersynth GEM 4-220N |
| | PG | -25 to 60 °C (-13 to 140 °F) | Mobil Glygoyle 220 | Tivela S220 | Alphasyn PG220 | Renolin PG220 | Klübersynth GH 6-220 |
| | FG-PAO | -20 to 50 °C (-4 to 122 °F) | Mobil Cibus SHC220 | Cassida GL220 | N/A | Geralyn SF220 | Klüberoil 4 UH 1-220N |
| | FG-PG | -25 to 60 °C (-13 to 140 °F) | Mobil Glygoyle 220 | Cassida WG220 | N/A | N/A | Klübersynth UH 1 6-220 |

Low-end service temperature limit may vary for a specific lubricant; Please also see the important notes on Page 1.

# STANDARD IN-LINE FOOT MOUNTED OIL FILL QUANTITIES

### Standard In-line foot mounted lubrication

All Standard In-line reducers are shipped from NORD with a pre-determined oil fill level in accordance to the specified reducer size and mounting position. When filling these gear units the oil must be measured and added until one establishes the proper fill quantity. For additional information please refer to the "Oil & vent plug locations" documentation for your specified gear unit

**STOP** ***HARMFUL SITUATION*** **STOP**

For mounting orientations other than shown please consult NORD Gear. Reducer modifications may be required.

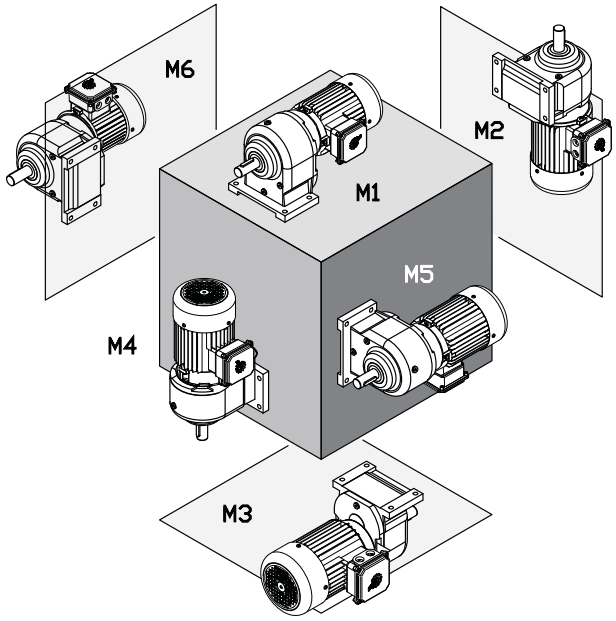


| Type | M1 | | M2 | | M3 | | M4 | | M5 | | M6 | |
|---|---|---|---|---|---|---|---|---|---|---|---|---|
| | Quarts | Liters | Quarts | Liters | Quarts | Liters | Quarts | Liters | Quarts | Liters | Quarts | Liters |
| **SK0/SK05** | 0.140 | 0.130 | 0.230 | 0.220 | 0.140 | 0.130 | 0.230 | 0.220 | 0.140 | 0.130 | 0.140 | 0.130 |
| **SK000** | 0.250 | 0.240 | 0.430 | 0.410 | 0.250 | 0.240 | 0.430 | 0.410 | 0.250 | 0.240 | 0.250 | 0.240 |
| **SK01/SK015** | 0.230 | 0.220 | 0.400 | 0.380 | 0.230 | 0.220 | 0.400 | 0.380 | 0.230 | 0.220 | 0.230 | 0.220 |
| **SK010/SK0105** | 0.400 | 0.380 | 0.630 | 0.600 | 0.400 | 0.380 | 0.630 | 0.600 | 0.400 | 0.380 | 0.400 | 0.380 |
| **SK20/SK205** | 0.580 | 0.550 | 1.06 | 1.000 | 0.580 | 0.550 | 1.06 | 1.000 | 0.580 | 0.550 | 0.580 | 0.550 |
| **SK200/SK2005** | 0.850 | 0.800 | 1.37 | 1.30 | 0.850 | 0.800 | 1.37 | 1.30 | 0.850 | 0.800 | 0.850 | 0.800 |
| **SK25/SK255** | 0.530 | 0.500 | 1.06 | 1.000 | 0.530 | 0.500 | 1.06 | 1.000 | 0.530 | 0.500 | 0.530 | 0.500 |
| **SK250/SK2505** | 1.48 | 1.40 | 1.59 | 1.50 | 1.48 | 1.40 | 1.59 | 1.50 | 1.48 | 1.40 | 1.48 | 1.40 |
| **SK30/SK305** | 0.740 | 0.700 | 1.48 | 1.40 | 0.740 | 0.700 | 1.48 | 1.40 | 0.740 | 0.700 | 0.740 | 0.700 |
| **SK300/SK3005** | 1.48 | 1.40 | 1.59 | 1.50 | 1.48 | 1.40 | 1.59 | 1.50 | 1.48 | 1.40 | 1.48 | 1.40 |
| **SK33/335** | 0.850 | 0.800 | 1.69 | 1.60 | 0.850 | 0.800 | 1.69 | 1.60 | 0.850 | 0.800 | 0.850 | 0.80 |
| **SK330/SK3305** | 1.59 | 1.50 | 1.67 | 1.58 | 1.59 | 1.50 | 1.67 | 1.58 | 1.59 | 1.50 | 1.59 | 1.50 |

# STANDARD IN-LINE FLANGE MOUNTED OIL FILL QUANTITIES

### Standard In-line foot mounted lubrication

All Standard In-line reducers are shipped from NORD with a pre-determined oil fill level in accordance to the specified reducer size and mounting position. When filling these gear units the oil must be measured and added until one establishes the proper fill quantity. For additional information please refer to the "Oil & vent plug locations" documentation for your specified gear unit

**STOP** ***HARMFUL SITUATION*** **STOP**

For mounting orientations other than shown please consult NORD Gear. Reducer modifications may be required.

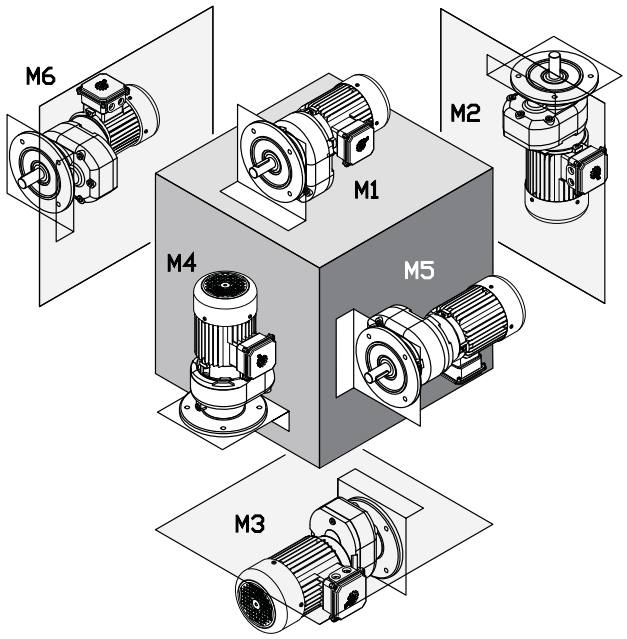


| Type | M1 | | M2 | | M3 | | M4 | | M5 | | M6 | |
|---|---|---|---|---|---|---|---|---|---|---|---|---|
| | Quarts | Liters | Quarts | Liters | Quarts | Liters | Quarts | Liters | Quarts | Liters | Quarts | Liters |
| **SK0/SK05 F** | 0.140 | 0.130 | 0.230 | 0.220 | 0.140 | 0.130 | 0.230 | 0.220 | 0.140 | 0.130 | 0.140 | 0.130 |
| **SK000 F** | 0.250 | 0.240 | 0.430 | 0.410 | 0.250 | 0.240 | 0.430 | 0.410 | 0.250 | 0.240 | 0.250 | 0.240 |
| **SK01/SK015 F** | 0.230 | 0.220 | 0.400 | 0.380 | 0.230 | 0.220 | 0.400 | 0.380 | 0.230 | 0.220 | 0.230 | 0.220 |
| **SK010/SK0105 F** | 0.400 | 0.380 | 0.630 | 0.600 | 0.400 | 0.380 | 0.630 | 0.600 | 0.400 | 0.380 | 0.400 | 0.380 |
| **SK20/SK205 F** | 0.370 | 0.350 | 0.630 | 0.600 | 0.370 | 0.350 | 0.630 | 0.600 | 0.370 | 0.350 | 0.370 | 0.350 |
| **SK200/SK2005 F** | 0.630 | 0.600 | 1.10 | 1.04 | 0.630 | 0.600 | 1.10 | 1.04 | 0.630 | 0.600 | 0.630 | 0.600 |
| **SK25/SK255 F** | 0.530 | 0.500 | 1.06 | 1.000 | 0.530 | 0.500 | 1.06 | 1.000 | 0.530 | 0.500 | 0.530 | 0.500 |
| **SK250/SK2505 F** | 1.48 | 1.40 | 1.59 | 1.50 | 1.48 | 1.40 | 1.59 | 1.50 | 1.48 | 1.40 | 1.48 | 1.40 |
| **SK30/SK305 F** | 0.740 | 0.700 | 1.48 | 1.40 | 0.740 | 0.700 | 1.48 | 1.40 | 0.740 | 0.700 | 0.740 | 0.700 |
| **SK300/SK3005 F** | 1.48 | 1.40 | 1.59 | 1.50 | 1.48 | 1.40 | 1.59 | 1.50 | 1.48 | 1.40 | 1.48 | 1.40 |
| **SK33/335 F** | 0.850 | 0.800 | 1.69 | 1.60 | 0.850 | 0.800 | 1.69 | 1.60 | 0.850 | 0.800 | 0.850 | 0.800 |
| **SK330/SK3305 F** | 1.59 | 1.50 | 1.67 | 1.58 | 1.59 | 1.50 | 1.67 | 1.58 | 1.59 | 1.50 | 1.59 | 1.50 |

# HELICAL IN-LINE FOOT MOUNTED OIL FILL QUANTITIES

### Helical In-line foot mounted lubrication

The following NORD Gear reducers are shipped from the factory with a pre-determined oil fill level in accordance to the specified reducer size and mounting position. For additional information, please refer to the "Oil Plug & Vent Locations" documentation for your gear unit.

**HARMFUL SITUATION**

Actual oil volume can vary slightly depending upon the gear case size, mounting and ratio. Prior to commissioning the reducer, check the oil-fill level using the reducer's oil level plug and drain or add addition oil as needed.

For mounting orientations other than shown please consult NORD Gear. Reducer modifications may be required.

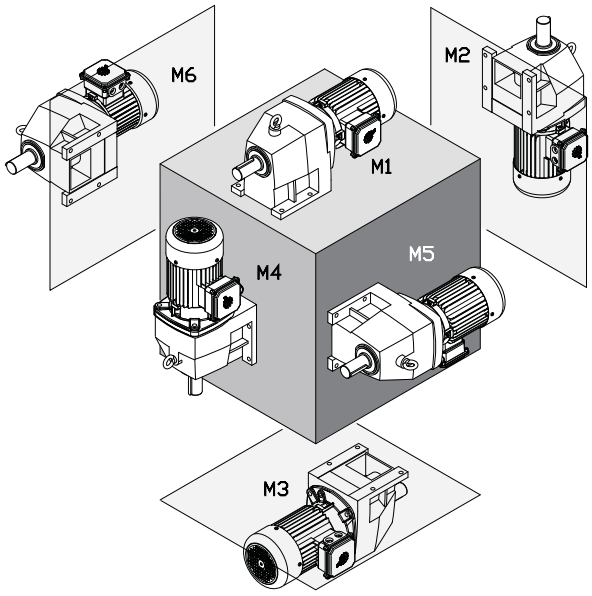


| Type | M1 | | M2 | | M3 | | M4 | | M5 | | M6 | |
|---|---|---|---|---|---|---|---|---|---|---|---|---|
| | Quarts | Liters | Quarts | Liters | Quarts | Liters | Quarts | Liters | Quarts | Liters | Quarts | Liters |
| **SK02** | 0.160 | 0.150 | 0.630 | 0.600 | 0.740 | 0.700 | 0.630 | 0.600 | 0.420 | 0.400 | 0.420 | 0.400 |
| **SK03** | 0.320 | 0.300 | 1.06 | 1.000 | 0.850 | 0.800 | 0.950 | 0.900 | 0.630 | 0.600 | 0.630 | 0.600 |
| **SK11E** | 0.260 | 0.250 | 0.530 | 0.500 | 0.580 | 0.550 | 0.420 | 0.400 | 0.370 | 0.350 | 0.370 | 0.350 |
| **SK12** | 0.260 | 0.250 | 0.790 | 0.750 | 0.900 | 0.850 | 0.790 | 0.750 | 0.530 | 0.500 | 0.530 | 0.500 |
| **SK13** | 0.630 | 0.600 | 1.32 | 1.25 | 1.16 | 1.10 | 1.27 | 1.20 | 0.740 | 0.700 | 0.740 | 0.700 |
| **SK21E** | 0.630 | 0.600 | 1.27 | 1.20 | 1.27 | 1.20 | 1.06 | 1.000 | 1.06 | 1.000 | 1.06 | 1.000 |
| **SK22** | 0.530 | 0.500 | 1.90 | 1.80 | 2.11 | 2.00 | 1.90 | 1.80 | 1.43 | 1.35 | 1.43 | 1.35 |
| **SK23** | 1.37 | 1.30 | 2.54 | 2.40 | 2.43 | 2.30 | 2.48 | 2.35 | 1.69 | 1.60 | 1.69 | 1.60 |
| **SK31E** | 1.16 | 1.10 | 2.85 | 2.70 | 2.33 | 2.20 | 2.43 | 2.30 | 1.80 | 1.70 | 1.80 | 1.70 |
| **SK32** | 0.950 | 0.900 | 2.64 | 2.50 | 3.17 | 3.00 | 3.07 | 2.90 | 2.11 | 2.00 | 2.11 | 2.00 |
| **SK33N** | 1.69 | 1.60 | 3.07 | 2.90 | 3.38 | 3.20 | 3.91 | 3.70 | 2.43 | 2.30 | 2.43 | 2.30 |
| **SK41E** | 1.80 | 1.70 | 2.75 | 2.60 | 3.49 | 3.30 | 2.64 | 2.50 | 2.75 | 2.60 | 2.75 | 2.60 |
| **SK42** | 1.37 | 1.30 | 4.76 | 4.50 | 4.76 | 4.50 | 4.55 | 4.30 | 3.38 | 3.20 | 3.38 | 3.20 |
| **SK43** | 3.17 | 3.00 | 5.92 | 5.60 | 5.50 | 5.20 | 6.98 | 6.60 | 3.81 | 3.60 | 3.81 | 3.60 |
| **SK51E** | 2.33 | 2.20 | 4.65 | 4.40 | 4.97 | 4.70 | 4.23 | 4.00 | 3.59 | 3.40 | 3.59 | 3.40 |
| **SK52** | 2.64 | 2.50 | 7.40 | 7.00 | 7.19 | 6.80 | 7.19 | 6.80 | 5.39 | 5.10 | 5.39 | 5.10 |
| **SK53** | 4.76 | 4.50 | 9.20 | 8.70 | 8.14 | 7.70 | 9.20 | 8.70 | 6.34 | 6.00 | 6.34 | 6.00 |
| **SK62** | 6.87 | 6.50 | 15.86 | 15.00 | 13.74 | 13.00 | 16.91 | 16.00 | 15.86 | 15.00 | 15.86 | 15.00 |
| **SK63** | 13.74 | 13.00 | 15.32 | 14.50 | 15.32 | 14.50 | 16.91 | 16.00 | 13.74 | 13.00 | 13.74 | 13.00 |
| **SK72** | 10.57 | 10.00 | 24.31 | 23.00 | 19.03 | 18.00 | 27.48 | 26.00 | 24.31 | 23.00 | 24.31 | 23.00 |
| **SK73** | 21.66 | 20.50 | 21.14 | 20.00 | 23.78 | 22.50 | 28.53 | 27.00 | 21.14 | 20.00 | 21.14 | 20.00 |
| **SK82** | 14.80 | 14.00 | 37.00 | 35.00 | 28.54 | 27.00 | 46.51 | 44.00 | 33.82 | 32.00 | 33.82 | 32.00 |
| **SK83** | 31.71 | 30.00 | 32.76 | 31.00 | 35.93 | 34.00 | 39.10 | 37.00 | 34.88 | 33.00 | 34.88 | 33.00 |
| **SK92** | 26.43 | 25.00 | 77.16 | 73.00 | 49.68 | 47.00 | 80.33 | 76.00 | 54.96 | 52.00 | 54.96 | 52.00 |
| **SK93** | 56.02 | 53.00 | 73.99 | 70.00 | 62.04 | 59.00 | 76.10 | 72.00 | 51.79 | 49.00 | 51.79 | 49.00 |
| **SK102** | 38.05 | 36.00 | 83.50 | 79.00 | 69.76 | 66.00 | 107.81 | 102.00 | 75.05 | 71.00 | 75.05 | 71.00 |
| **SK103** | 78.19 | 74.00 | 75.05 | 71.00 | 78.21 | 74.00 | 102.52 | 97.00 | 70.82 | 67.00 | 70.82 | 67.00 |

# HELICAL IN-LINE FLANGE MOUNTED OIL FILL QUANTITIES

### Helical In-line flange mounted lubrication

The following NORD Gear reducers are shipped from the factory with a pre-determined oil fill level in accordance to the specified reducer size and mounting position. For additional information, please refer to the "Oil Plug & Vent Locations" documentation for your gear unit.

**HARMFUL SITUATION**

Actual oil volume can vary slightly depending upon the gear case size, mounting and ratio. Prior to commissioning the reducer, check the oil-fill level using the reducer's oil level plug and drain or add addition oil as needed.

For mounting orientations other than shown please consult NORD Gear. Reducer modifications may be required.

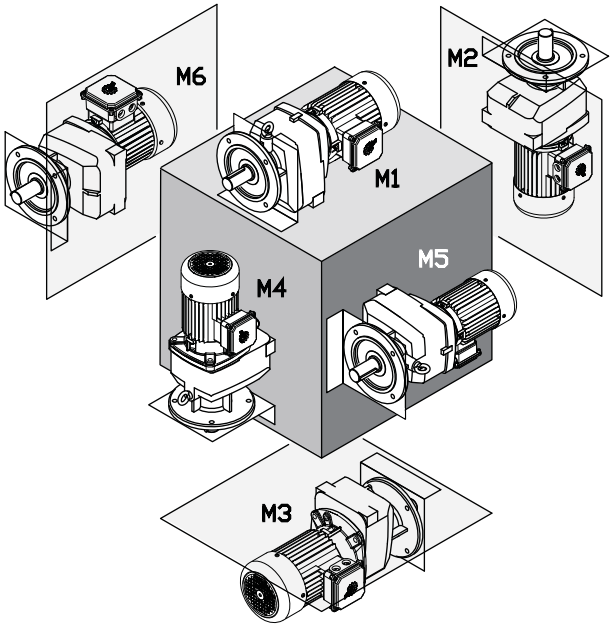


| Type | M1 | | M2 | | M3 | | M4 | | M5 | | M6 | |
|---|---|---|---|---|---|---|---|---|---|---|---|---|
| | Quarts | Liters | Quarts | Liters | Quarts | Liters | Quarts | Liters | Quarts | Liters | Quarts | Liters |
| SK02 F | 0.260 | 0.250 | 0.630 | 0.600 | 0.630 | 0.600 | 0.630 | 0.600 | 0.530 | 0.500 | 0.530 | 0.500 |
| SK03 F | 0.530 | 0.500 | 0.850 | 0.800 | 0.950 | 0.900 | 1.16 | 1.10 | 0.850 | 0.800 | 0.850 | 0.800 |
| SK11E F | 0.320 | 0.300 | 0.370 | 0.350 | 0.530 | 0.500 | 0.320 | 0.300 | 0.420 | 0.400 | 0.420 | 0.400 |
| SK12 F | 0.370 | 0.350 | 0.900 | 0.850 | 0.950 | 0.900 | 0.950 | 0.900 | 0.630 | 0.600 | 0.630 | 0.600 |
| SK13 F | 0.900 | 0.850 | 1.27 | 1.20 | 1.27 | 1.20 | 1.27 | 1.20 | 1.000 | 0.950 | 1.000 | 0.950 |
| SK21E F | 0.530 | 0.500 | 1.48 | 1.40 | 1.16 | 1.10 | 0.740 | 0.700 | 0.950 | 0.900 | 0.950 | 0.900 |
| SK22 F | 0.740 | 0.700 | 2.11 | 2.00 | 2.11 | 2.00 | 1.90 | 1.80 | 1.64 | 1.55 | 1.64 | 1.55 |
| SK23 F | 1.59 | 1.50 | 2.75 | 2.60 | 2.64 | 2.50 | 2.96 | 2.80 | 2.96 | 2.80 | 2.96 | 2.80 |
| SK31E F | 0.850 | 0.800 | 1.37 | 1.30 | 1.74 | 1.65 | 1.16 | 1.10 | 2.11 | 2.00 | 2.11 | 2.00 |
| SK32 F | 1.37 | 1.30 | 3.07 | 2.90 | 3.49 | 3.30 | 3.28 | 3.10 | 2.54 | 2.40 | 2.54 | 2.40 |
| SK33N F | 2.01 | 1.90 | 3.59 | 3.40 | 3.70 | 3.50 | 4.65 | 4.40 | 2.75 | 2.60 | 2.75 | 2.60 |
| SK41E F | 1.06 | 1.000 | 2.75 | 2.60 | 2.96 | 2.80 | 1.69 | 1.60 | 3.49 | 3.30 | 3.49 | 3.30 |
| SK42 F | 1.90 | 1.80 | 4.65 | 4.40 | 4.76 | 4.50 | 4.23 | 4.00 | 3.91 | 3.70 | 3.91 | 3.70 |
| SK43 F | 3.70 | 3.50 | 6.02 | 5.70 | 5.29 | 5.00 | 6.45 | 6.10 | 4.33 | 4.10 | 4.33 | 4.10 |
| SK51E F | 1.90 | 1.80 | 3.70 | 3.50 | 4.33 | 4.10 | 3.17 | 3.00 | 4.02 | 3.80 | 4.02 | 3.80 |
| SK52 F | 3.17 | 3.00 | 7.19 | 6.80 | 6.55 | 6.20 | 7.82 | 7.40 | 5.92 | 5.60 | 5.92 | 5.60 |
| SK53 F | 5.50 | 5.20 | 8.88 | 8.40 | 7.40 | 7.00 | 9.41 | 8.90 | 7.08 | 6.70 | 7.08 | 6.70 |
| SK62 F | 7.40 | 7.00 | 15.86 | 15.00 | 14.80 | 14.00 | 19.55 | 18.50 | 16.91 | 16.00 | 16.91 | 16.00 |
| SK63 F | 14.26 | 13.50 | 14.80 | 14.00 | 16.38 | 15.50 | 19.02 | 18.00 | 14.80 | 14.00 | 14.80 | 14.00 |
| SK72 F | 10.57 | 10.00 | 24.31 | 23.00 | 19.55 | 18.50 | 29.60 | 28.00 | 24.31 | 23.00 | 24.31 | 23.00 |
| SK73 F | 23.25 | 22.00 | 23.78 | 22.50 | 24.31 | 23.00 | 29.06 | 27.50 | 21.14 | 20.00 | 21.14 | 20.00 |
| SK82 F | 15.86 | 15.00 | 39.11 | 37.00 | 30.65 | 29.00 | 47.57 | 45.00 | 36.47 | 34.50 | 36.47 | 34.50 |
| SK83 F | 32.76 | 31.00 | 35.93 | 34.00 | 36.99 | 35.00 | 42.28 | 40.00 | 35.93 | 34.00 | 35.93 | 34.00 |
| SK92 F | 27.48 | 26.00 | 77.16 | 73.00 | 49.68 | 47.00 | 82.45 | 78.00 | 54.96 | 52.00 | 54.96 | 52.00 |
| SK93 F | 56.02 | 53.00 | 73.99 | 70.00 | 62.04 | 59.00 | 78.21 | 74.00 | 51.79 | 49.00 | 51.79 | 49.00 |
| SK102 F | 42.28 | 40.00 | 85.62 | 81.00 | 69.76 | 66.00 | 109.93 | 104.00 | 76.10 | 72.00 | 76.10 | 72.00 |
| SK103 F | 72.93 | 69.00 | 82.44 | 78.00 | 82.44 | 78.00 | 104.64 | 99.00 | 70.82 | 67.00 | 70.82 | 67.00 |

# CLINCHER™ OIL FILL QUANTITIES

### CLINCHER™ lubrication

Unless otherwise noted below, the following NORD Gear reducers are shipped from the factory with a pre-determined oil fill level in accordance to the specified reducer size and mounting position. For additional information, please refer to the "Oil Plug & Vent Locations" documentation for your gear unit.

**HARMFUL SITUATION**

Actual oil volume can vary slightly depending upon the gear case size, mounting and ratio. Prior to commissioning the reducer, check the oil-fill level using the reducer's oil level plug and drain or add addition oil as needed.

For mounting orientations other than shown please consult NORD Gear. Reducer modifications may be required.

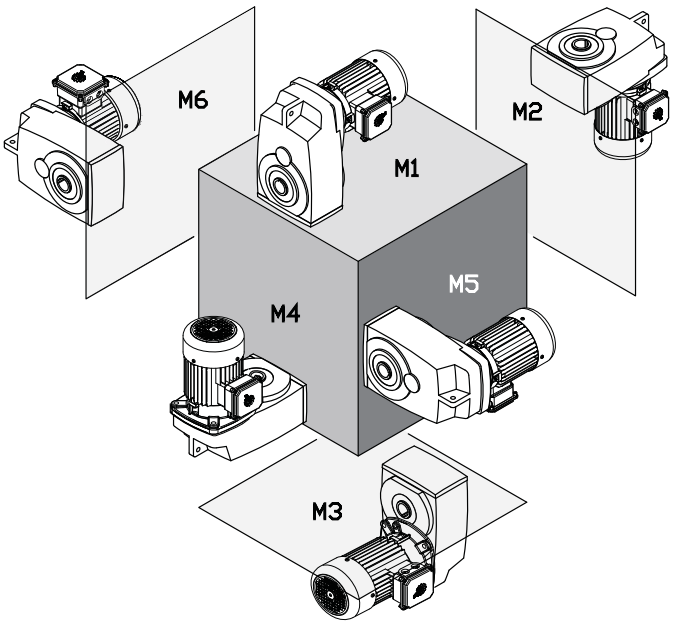


| Type | M1 | | M2 | | M3 | | M4 | | M5 | | M6 | |
|---|---|---|---|---|---|---|---|---|---|---|---|---|
| | Quarts | Liters | Quarts | Liters | Quarts | Liters | Quarts | Liters | Quarts | Liters | Quarts | Liters |
| **SK 0182NB** | 0.420 | 0.400 | 0.580 | 0.550 | 0.630 | 0.600 | 0.580 | 0.550 | 0.370 | 0.350 | 0.370 | 0.350 |
| **SK 0282NB** | 0.740 | 0.700 | 1.06 | 1.000 | 0.850 | 0.800 | 1.16 | 1.10 | 0.950 | 0.900 | 0.950 | 0.900 |
| **SK 1282** | 0.950 | 0.900 | 1.37 | 1.30 | 0.950 | 0.900 | 1.27 | 1.20 | 1.000 | 0.950 | 1.000 | 0.950 |
| **SK 1382NB** | 1.37 | 1.30 | 2.43 | 2.30 | 1.48 | 1.40 | 2.22 | 2.10 | 2.11 | 2.00 | 2.01 | 1.90 |
| **SK 2282** | 1.74 | 1.65 | 2.54 | 2.40 | 2.01 | 1.90 | 2.11 | 2.00 | 1.90 | 1.80 | 1.90 | 1.80 |
| **SK 2382** | 1.80 | 1.70 | 2.75 | 2.60 | 2.01 | 1.90 | 3.28 | 3.10 | 1.59 | 1.50 | 1.59 | 1.50 |
| **SK 3282** | 3.33 | 3.15 | 4.33 | 4.10 | 3.44 | 3.25 | 4.33 | 4.10 | 3.33 | 3.15 | 3.33 | 3.15 |
| **SK 3382** | 4.33 | 4.10 | 5.18 | 4.90 | 3.49 | 3.30 | 5.92 | 5.60 | 3.49 | 3.30 | 3.49 | 3.30 |
| **SK 4282** | 4.97 | 4.70 | 6.45 | 6.10 | 5.02 | 4.75 | 5.71 | 5.40 | 4.97 | 4.70 | 4.97 | 4.70 |
| **SK 4382** | 6.24 | 5.90 | 7.19 | 6.80 | 5.18 | 4.90 | 8.77 | 8.30 | 5.18 | 4.90 | 5.18 | 4.90 |
| **SK 5282** | 7.93 | 7.50 | 9.30 | 8.80 | 7.93 | 7.50 | 9.30 | 8.80 | 7.61 | 7.20 | 7.61 | 7.20 |
| **SK 5382** | 13.21 | 12.50 | 12.68 | 12.00 | 7.08 | 6.70 | 14.80 | 14.00 | 8.77 | 8.30 | 8.77 | 8.30 |
| **SK 6282** | 17.97 | 17.00 | 14.80 | 14.00 | 12.68 | 12.00 | 18.50 | 17.50 | 10.57 | 10.00 | 14.80 | 14.00 |
| **SK 6382** | 17.44 | 16.50 | 13.74 | 13.00 | 10.15 | 9.60 | 19.03 | 18.00 | 14.80 | 14.00 | 13.21 | 12.50 |
| **SK 7282** | 26.42 | 25.00 | 22.20 | 21.00 | 21.14 | 20.00 | 28.54 | 27.00 | 16.91 | 16.00 | 22.20 | 21.00 |
| **SK 7382** | 23.25 | 22.00 | 21.14 | 20.00 | 16.91 | 16.00 | 26.42 | 25.00 | 24.31 | 23.00 | 20.08 | 19.00 |
| **SK 8282** | 39.11 | 37.00 | 34.88 | 33.00 | 31.71 | 30.00 | 43.34 | 41.00 | 32.77 | 31.00 | 32.77 | 31.00 |
| **SK 8382** | 35.94 | 34.00 | 33.82 | 32.00 | 26.42 | 25.00 | 40.17 | 38.00 | 37.00 | 35.00 | 31.71 | 30.00 |
| **SK 9282** | 78.22 | 74.00 | 73.99 | 70.00 | 58.14 | 55.00 | 76.10 | 72.00 | 63.42 | 60.00 | 62.36 | 59.00 |
| **SK 9382** | 77.16 | 73.00 | 73.99 | 70.00 | 47.56 | 45.00 | 78.22 | 74.00 | 68.70 | 65.00 | 63.42 | 60.00 |
| **SK 10282*** | 95.13 | 90.00 | 95.13 | 90.00 | 42.28 | 40.00 | 95.13 | 90.00 | 63.42 | 60.00 | 86.67 | 82.00 |
| **SK 10382*** | 89.84 | 85.00 | 105.67 | 100.00 | 77.16 | 73.00 | 105.70 | 100.00 | 84.56 | 80.00 | 84.56 | 80.00 |
| **SK 11282*** | 174.40 | 165.00 | 169.12 | 160.00 | 153.26 | 145.00 | 206.12 | 195.00 | 105.70 | 100.00 | 147.98 | 140.00 |
| **SK 11382*** | 169.12 | 160.00 | 163.84 | 155.00 | 147.98 | 140.00 | 221.97 | 210.00 | 163.84 | 155.00 | 142.70 | 135.00 |
| **SK 12382*** | 169.12 | 160.00 | 163.84 | 155.00 | 147.98 | 140.00 | 221.97 | 210.00 | 163.84 | 155.00 | 142.70 | 135.00 |

*** For shipping purposes the larger Clincher™ gear units are supplied without oil.**

# 90.1 HELICAL-BEVEL FOOT MOUNT OIL FILL QUANTITIES



### 90.1 Helical-bevel foot mount lubrication

Unless otherwise noted below, the following NORD Gear reducers are shipped from the factory with a pre-determined oil fill level in accordance to the specified reducer size and mounting position. For additional information, please refer to the "Oil Plug & Vent Locations" documentation for your gear unit.

**HARMFUL SITUATION**

Actual oil volume can vary slightly depending upon the gear case size, mounting and ratio. Prior to commissioning the reducer, check the oil-fill level using the reducer's oil level plug and drain or add addition oil as needed.

For mounting orientations other than shown please consult NORD Gear. Reducer modifications may be required.

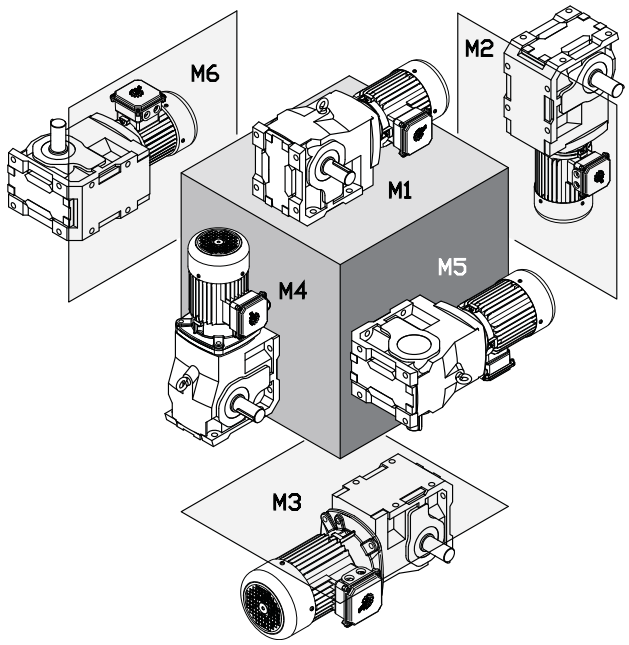


| Type | M1 | | M2 | | M3 | | M4 | | M5 | | M6 | |
|---|---|---|---|---|---|---|---|---|---|---|---|---|
| | Quarts | Liters | Quarts | Liters | Quarts | Liters | Quarts | Liters | Quarts | Liters | Quarts | Liters |
| **SK 9012.1** | 0.740 | 0.700 | 1.69 | 1.60 | 2.01 | 1.90 | 2.54 | 2.40 | 1.27 | 1.20 | 1.80 | 1.70 |
| **SK 9013.1** | 1.27 | 1.20 | 2.11 | 2.00 | 2.32 | 2.20 | 3.17 | 3.00 | 1.48 | 1.40 | 2.01 | 1.90 |
| **SK 9016.1** | 0.740 | 0.700 | 1.69 | 1.60 | 2.01 | 1.90 | 2.54 | 2.40 | 1.27 | 1.20 | 1.80 | 1.70 |
| **SK 9017.1** | 1.27 | 1.20 | 2.11 | 2.00 | 2.32 | 2.20 | 3.17 | 3.00 | 1.48 | 1.40 | 2.01 | 1.90 |
| **SK 9022.1** | 1.37 | 1.30 | 2.75 | 2.60 | 3.70 | 3.50 | 4.44 | 4.20 | 2.11 | 2.00 | 2.96 | 2.80 |
| **SK 9023.1** | 2.54 | 2.40 | 3.17 | 3.00 | 4.02 | 3.80 | 5.60 | 5.30 | 2.32 | 2.20 | 3.28 | 3.10 |
| **SK 9032.1** | 1.80 | 1.70 | 5.07 | 4.80 | 6.76 | 6.40 | 7.08 | 6.70 | 4.33 | 4.10 | 5.39 | 5.10 |
| **SK 9033.1** | 3.49 | 3.30 | 6.97 | 6.60 | 7.40 | 7.00 | 8.24 | 7.80 | 4.54 | 4.30 | 5.39 | 5.10 |
| **SK 9042.1** | 4.65 | 4.40 | 9.19 | 8.70 | 10.57 | 10.00 | 10.36 | 9.80 | 7.19 | 6.80 | 7.93 | 7.50 |
| **SK 9043.1** | 4.86 | 4.60 | 10.78 | 10.20 | 11.31 | 10.70 | 13.53 | 12.80 | 5.49 | 5.20 | 7.08 | 6.70 |
| **SK 9052.1** | 6.87 | 6.50 | 16.91 | 16.00 | 20.08 | 19.00 | 22.72 | 21.50 | 11.62 | 11.00 | 16.38 | 15.50 |
| **SK 9053.1** | 10.57 | 10.00 | 17.96 | 17.00 | 21.13 | 20.00 | 25.57 | 24.20 | 12.15 | 11.50 | 17.44 | 16.50 |
| **SK 9062.1** | 10.57 | 10.00 | 29.06 | 27.50 | 33.81 | 32.00 | 38.04 | 36.00 | 19.02 | 18.00 | 25.36 | 24.00 |
| **SK 9072.1** | 10.57 | 10.00 | 29.06 | 27.50 | 33.81 | 32.00 | 38.04 | 36.00 | 19.02 | 18.00 | 25.36 | 24.00 |
| **SK 9082.1** | 17.96 | 17.00 | 54.42 | 51.50 | 66.04 | 62.50 | 75.55 | 71.50 | 34.87 | 33.00 | 49.14 | 46.50 |
| **SK 9086.1** | 30.64 | 29.00 | 77.14 | 73.00 | 89.82 | 85.00 | 107.78 | 102.00 | 50.72 | 48.00 | 65.51 | 62.00 |
| **SK 9092.1** | 43.32 | 41.00 | 165.90 | 157.00 | 179.64 | 170.00 | 181.75 | 172.00 | 84.54 | 80.00 | 95.10 | 90.00 |
| **SK 9096.1*** | 73.97 | 70.00 | 197.60 | 187.00 | 205.00 | 194.00 | 268.40 | 254.00 | 115.18 | 109.00 | 160.62 | 152.00 |

**Oil Levels shown apply to base models and gear units ending in LX, AX, & VX.**

*** For shipping purposes, the larger Helical-bevel gear units are supplied without oil.**

# 90.1 HELICAL-BEVEL FLANGE/SHAFT MOUNT OIL FILL QUANTITIES



### 90.1 Helical-bevel flange/shaft mount lubrication

Unless otherwise noted below, the following NORD Gear reducers are shipped from the factory with a pre-determined oil fill level in accordance to the specified reducer size and mounting position. For additional information, please refer to the "Oil Plug & Vent Locations" documentation for your gear unit.

**HARMFUL SITUATION**

Actual oil volume can vary slightly depending upon the gear case size, mounting and ratio. Prior to commissioning the reducer, check the oil-fill level using the reducer's oil level plug and drain or add addition oil as needed.

For mounting orientations other than shown please consult NORD Gear. Reducer modifications may be required.

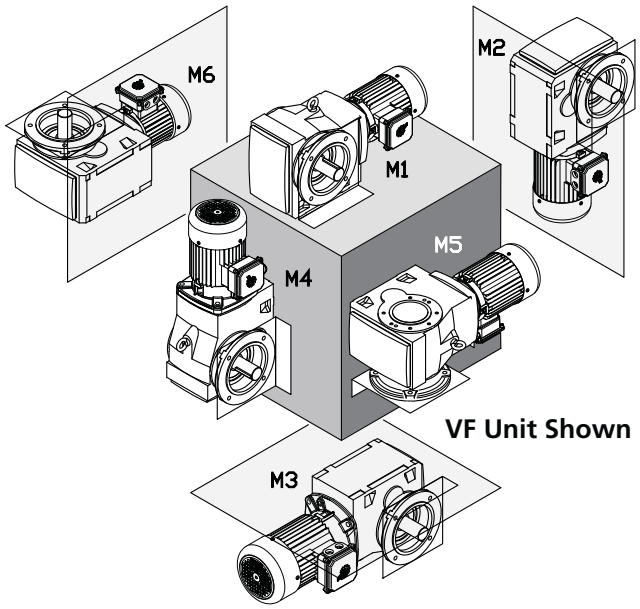

VF Unit Shown

| Type | M1 | | M2 | | M3 | | M4 | | M5 | | M6 | |
|---|---|---|---|---|---|---|---|---|---|---|---|---|
| | Quarts | Liters | Quarts | Liters | Quarts | Liters | Quarts | Liters | Quarts | Liters | Quarts | Liters |
| **SK 9012.1** | 0.740 | 0.700 | 2.01 | 1.90 | 2.01 | 1.90 | 2.54 | 2.40 | 1.27 | 1.20 | 1.80 | 1.70 |
| **SK 9013.1** | 1.27 | 1.20 | 2.43 | 2.30 | 2.32 | 2.20 | 3.17 | 3.00 | 1.48 | 1.40 | 2.01 | 1.90 |
| **SK 9016.1** | 0.740 | 0.700 | 2.01 | 1.90 | 2.01 | 1.90 | 2.54 | 2.40 | 1.27 | 1.20 | 1.80 | 1.70 |
| **SK 9017.1** | 1.27 | 1.20 | 2.43 | 2.30 | 2.32 | 2.20 | 3.17 | 3.00 | 1.48 | 1.40 | 2.01 | 1.90 |
| **SK 9022.1** | 1.37 | 1.30 | 2.75 | 2.60 | 3.70 | 3.50 | 4.44 | 4.20 | 2.11 | 2.00 | 2.96 | 2.80 |
| **SK 9023.1** | 2.54 | 2.40 | 3.17 | 3.00 | 4.02 | 3.80 | 5.60 | 5.30 | 2.32 | 2.20 | 3.28 | 3.10 |
| **SK 9032.1** | 2.01 | 1.90 | 5.49 | 5.20 | 6.76 | 6.40 | 7.71 | 7.30 | 3.49 | 3.30 | 5.39 | 5.10 |
| **SK 9033.1** | 4.02 | 3.80 | 6.02 | 5.70 | 7.29 | 6.90 | 8.98 | 8.50 | 3.80 | 3.60 | 5.92 | 5.60 |
| **SK 9042.1** | 3.80 | 3.60 | 10.25 | 9.70 | 12.05 | 11.40 | 12.15 | 11.50 | 6.87 | 6.50 | 8.66 | 8.20 |
| **SK 9043.1** | 6.02 | 5.70 | 10.78 | 10.20 | 15.53 | 14.70 | 15.53 | 14.70 | 6.97 | 6.60 | 10.14 | 9.60 |
| **SK 9052.1** | 7.93 | 7.50 | 17.44 | 16.50 | 21.13 | 20.00 | 23.78 | 22.50 | 12.15 | 11.50 | 19.02 | 18.00 |
| **SK 9053.1** | 13.21 | 12.50 | 19.02 | 18.00 | 22.72 | 21.50 | 28.00 | 26.50 | 13.74 | 13.00 | 17.96 | 17.00 |
| **SK 9062.1** | 12.68 | 12.00 | 29.06 | 27.50 | 34.87 | 33.00 | 40.68 | 38.50 | 20.08 | 19.00 | 27.47 | 26.00 |
| **SK 9072.1** | 12.68 | 12.00 | 29.06 | 27.50 | 34.87 | 33.00 | 40.68 | 38.50 | 20.08 | 19.00 | 27.47 | 26.00 |
| **SK 9082.1** | 22.19 | 21.00 | 57.06 | 54.00 | 69.74 | 66.00 | 84.54 | 80.00 | 40.15 | 38.00 | 54.95 | 52.00 |
| **SK 9086.1** | 38.04 | 36.00 | 82.42 | 78.00 | 96.16 | 91.00 | 106.73 | 101.00 | 56.00 | 53.00 | 80.31 | 76.00 |
| **SK 9092.1** | 42.27 | 40.00 | 137.37 | 130.00 | 162.73 | 154.00 | 184.92 | 175.00 | 86.65 | 82.00 | 96.16 | 91.00 |
| **SK 9096.1*** | 84.54 | 80.00 | 197.60 | 187.00 | 203.94 | 193.00 | 271.57 | 257.00 | 119.41 | 113.00 | 164.84 | 156.00 |

**Oil Levels shown apply to base models and gear units ending in AZ, AF, VZ, & VF.**

*** For shipping purposes, the larger Helical-bevel gear units are supplied without oil.**

# 92 HELICAL-BEVEL FOOT MOUNT OIL FILL QUANTITIES

### 92 Helical-bevel foot mount lubrication

The following NORD Gear reducers are shipped from the factory with a pre-determined oil fill level in accordance to the specified reducer size and mounting position. For additional information, please refer to the "Oil Plug & Vent Locations" documentation for your gear unit.

**HARMFUL SITUATION**

Actual oil volume can vary slightly depending upon the gear case size, mounting and ratio. Prior to commissioning the reducer, check the oil-fill level using the reducer's oil level plug and drain or add addition oil as needed.

For mounting orientations other than shown please consult NORD Gear. Reducer modifications may be required.

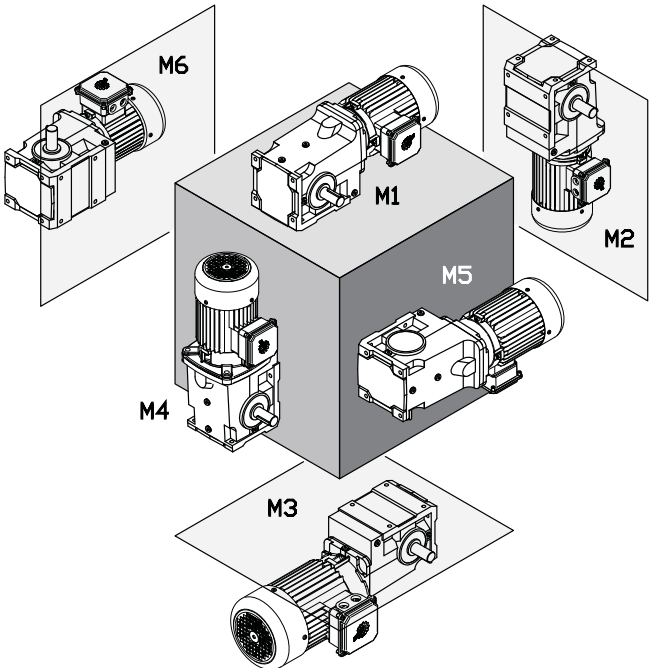


| Type | M1 | | M2 | | M3 | | M4 | | M5 | | M6 | |
|---|---|---|---|---|---|---|---|---|---|---|---|---|
| | Quarts | Liters | Quarts | Liters | Quarts | Liters | Quarts | Liters | Quarts | Liters | Quarts | Liters |
| **SK 92072** | 0.420 | 0.400 | 0.630 | 0.600 | 0.530 | 0.500 | 0.530 | 0.500 | 0.420 | 0.400 | 0.420 | 0.400 |
| **SK 92172** | 0.580 | 0.550 | 0.950 | 0.900 | 1.000 | 0.950 | 1.16 | 1.10 | 0.790 | 0.750 | 0.660 | 0.620 |
| **SK 92372** | 0.950 | 0.900 | 1.37 | 1.30 | 1.53 | 1.45 | 1.69 | 1.60 | 1.27 | 1.20 | 1.27 | 1.20 |
| **SK 92672** | 1.90 | 1.80 | 3.70 | 3.50 | 3.38 | 3.20 | 3.59 | 3.40 | 2.75 | 2.60 | 2.75 | 2.60 |
| **SK 92772** | 2.43 | 2.30 | 4.76 | 4.50 | 4.86 | 4.60 | 5.60 | 5.30 | 4.33 | 4.10 | 4.33 | 4.10 |

**Oil Levels shown apply to base models and gear units ending in LX, AX, & VX.**

# 92 HELICAL-BEVEL FLANGE/SHAFT MOUNT OIL FILL QUANTITIES

### 92 Helical-bevel flange/shaft mount lubrication

The following NORD Gear reducers are shipped from the factory with a pre-determined oil fill level in accordance to the specified reducer size and mounting position. For additional information, please refer to the "Oil Plug & Vent Locations" documentation for your gear unit.

**STOP** ***HARMFUL SITUATION*** **STOP**

Actual oil volume can vary slightly depending upon the gear case size, mounting and ratio. Prior to commissioning the reducer, check the oil-fill level using the reducer's oil level plug and drain or add addition oil as needed.

For mounting orientations other than shown please consult NORD Gear. Reducer modifications may be required.

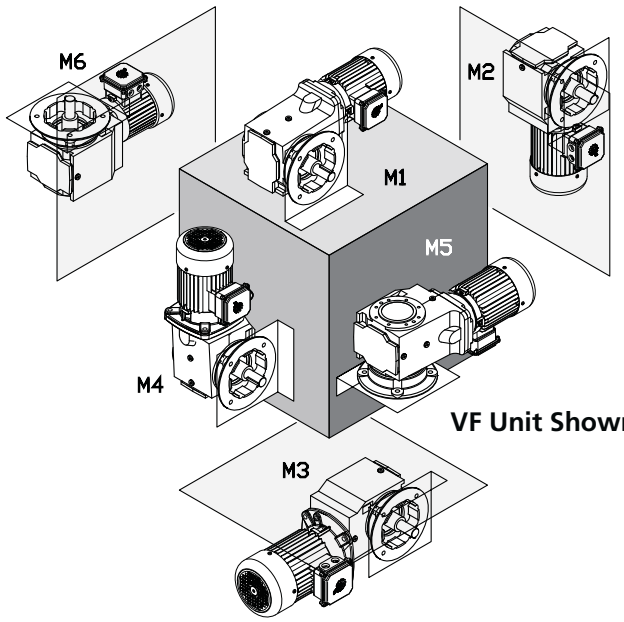

VF Unit Shown

| Type | M1 | | M2 | | M3 | | M4 | | M5 | | M6 | |
|---|---|---|---|---|---|---|---|---|---|---|---|---|
| | Quarts | Liters | Quarts | Liters | Quarts | Liters | Quarts | Liters | Quarts | Liters | Quarts | Liters |
| **SK 92072** | 0.420 | 0.400 | 0.630 | 0.600 | 0.530 | 0.500 | 0.530 | 0.500 | 0.420 | 0.400 | 0.420 | 0.400 |
| **SK 92172** | 0.530 | 0.500 | 0.970 | 0.920 | 0.920 | 0.870 | 1.11 | 1.05 | 0.790 | 0.750 | 0.690 | 0.650 |
| **SK 92372** | 1.22 | 1.15 | 1.59 | 1.50 | 1.27 | 1.20 | 1.80 | 1.70 | 1.22 | 1.15 | 1.22 | 1.15 |
| **SK 92672** | 1.64 | 1.55 | 2.96 | 2.80 | 2.64 | 2.50 | 3.49 | 3.30 | 2.54 | 2.40 | 2.54 | 2.40 |
| **SK 92772** | 2.91 | 2.75 | 4.65 | 4.40 | 4.76 | 4.50 | 5.81 | 5.50 | 3.70 | 3.50 | 3.70 | 3.50 |

**Oil Levels shown apply to gear units ending in AZ, AF, VZ, & VF.**

# HELICAL-WORM FOOT MOUNT OIL FILL QUANTITIES

### Helical-worm foot mount lubrication

The following NORD Gear reducers are shipped from the factory with a pre-determined oil fill level in accordance to the specified reducer size and mounting position. For additional information, please refer to the "Oil Plug & Vent Locations" documentation for your gear unit.

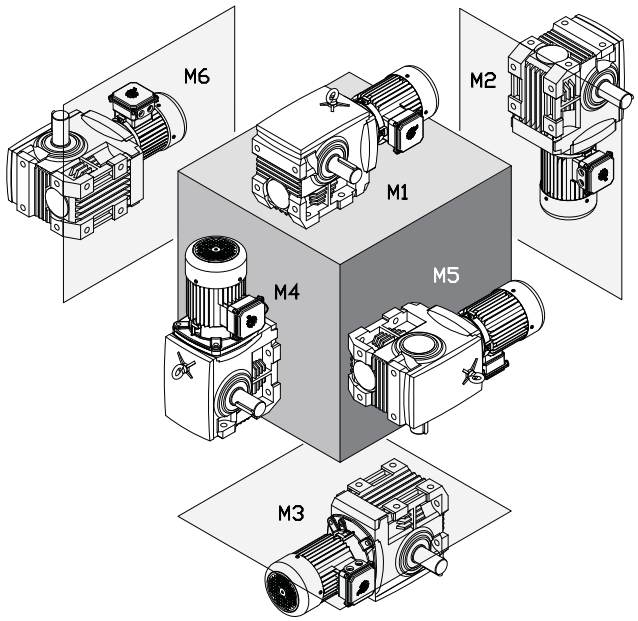


**STOP** ***HARMFUL SITUATION*** **STOP**

Actual oil volume can vary slightly depending upon the gear case size, mounting and ratio. Prior to commissioning the reducer, check the oil-fill level using the reducer's oil level plug and drain or add addition oil as needed.

For mounting orientations other than shown please consult NORD Gear. Reducer modifications may be required.

| Type | M1 | | M2 | | M3 | | M4 | | M5 | | M6 | |
|---|---|---|---|---|---|---|---|---|---|---|---|---|
| | Quarts | Liters | Quarts | Liters | Quarts | Liters | Quarts | Liters | Quarts | Liters | Quarts | Liters |
| **SK 02040** | 0.480 | 0.450 | 0.630 | 0.600 | 0.630 | 0.600 | 0.630 | 0.600 | 0.530 | 0.500 | 0.530 | 0.500 |
| **SK 02050** | 0.420 | 0.400 | 1.27 | 1.20 | 0.740 | 0.700 | 1.22 | 1.15 | 0.740 | 0.700 | 0.740 | 0.700 |
| **SK 13050** | 1.000 | 0.950 | 1.64 | 1.55 | 1.16 | 1.10 | 1.53 | 1.45 | 1.000 | 0.950 | 1.000 | 0.950 |
| **SK 12063** | 0.630 | 0.600 | 1.80 | 1.70 | 1.27 | 1.20 | 1.64 | 1.55 | 1.06 | 1.000 | 1.06 | 1.000 |
| **SK 13063** | 0.900 | 0.850 | 2.43 | 2.30 | 1.69 | 1.60 | 2.11 | 2.00 | 1.32 | 1.25 | 1.32 | 1.25 |
| **SK 12080** | 0.850 | 0.800 | 2.75 | 2.60 | 1.80 | 1.70 | 2.85 | 2.70 | 1.80 | 1.70 | 1.80 | 1.70 |
| **SK 13080** | 1.80 | 1.70 | 3.38 | 3.20 | 2.22 | 2.10 | 3.59 | 3.40 | 2.06 | 1.95 | 2.06 | 1.95 |
| **SK 32100** | 1.69 | 1.60 | 5.81 | 5.50 | 3.59 | 3.40 | 5.71 | 5.40 | 3.38 | 3.20 | 3.38 | 3.20 |
| **SK 33100** | 2.22 | 2.10 | 8.03 | 7.60 | 4.23 | 4.00 | 7.19 | 6.80 | 3.91 | 3.70 | 3.91 | 3.70 |
| **SK 42125** | 2.96 | 2.80 | 11.63 | 11.00 | 6.55 | 6.20 | 10.89 | 10.30 | 6.13 | 5.80 | 6.13 | 5.80 |
| **SK 43125** | 8.24 | 7.80 | 14.80 | 14.00 | 7.61 | 7.20 | 14.27 | 13.50 | 7.08 | 6.70 | 7.08 | 6.70 |

# HELICAL-WORM SOLID SHAFT/FLANGE MOUNT OIL FILL QUANTITIES



### Helical-worm solid shaft/flange mount lubrication

The following NORD Gear reducers are shipped from the factory with a pre-determined oil fill level in accordance to the specified reducer size and mounting position. For additional information, please refer to the "Oil Plug & Vent Locations" documentation for your gear unit.

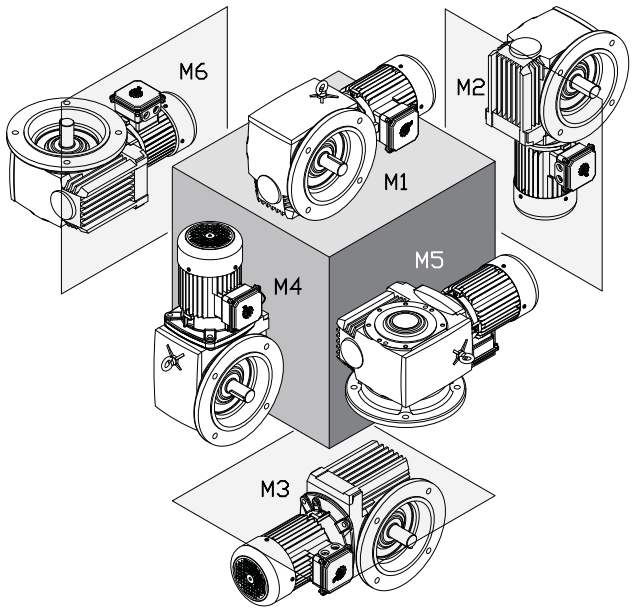


**STOP** ***HARMFUL SITUATION*** **STOP**

Actual oil volume can vary slightly depending upon the gear case size, mounting and ratio. Prior to commissioning the reducer, check the oil-fill level using the reducer's oil level plug and drain or add addition oil as needed.

For mounting orientations other than shown please consult NORD Gear. Reducer modifications may be required.

| Type | M1 | | M2 | | M3 | | M4 | | M5 | | M6 | |
|---|---|---|---|---|---|---|---|---|---|---|---|---|
| | Quarts | Liters | Quarts | Liters | Quarts | Liters | Quarts | Liters | Quarts | Liters | Quarts | Liters |
| **SK 02040 VF** | 0.530 | 0.500 | 0.850 | 0.800 | 0.790 | 0.750 | 0.630 | 0.600 | 0.530 | 0.500 | 0.530 | 0.500 |
| **SK 02050 VF** | 0.480 | 0.450 | 1.48 | 1.40 | 0.950 | 0.900 | 1.32 | 1.25 | 1.06 | 1.000 | 1.06 | 1.000 |
| **SK 13050 VF** | 0.950 | 0.900 | 1.90 | 1.80 | 1.22 | 1.15 | 1.85 | 1.75 | 1.32 | 1.25 | 1.32 | 1.25 |
| **SK 12063 VF** | 0.530 | 0.500 | 1.69 | 1.60 | 1.48 | 1.40 | 1.90 | 1.80 | 1.59 | 1.50 | 1.59 | 1.50 |
| **SK 13063 VF** | 1.000 | 0.950 | 2.22 | 2.10 | 1.74 | 1.65 | 2.27 | 2.15 | 1.85 | 1.75 | 1.85 | 1.75 |
| **SK 12080 VF** | 1.000 | 0.950 | 3.38 | 3.20 | 3.28 | 3.10 | 3.91 | 3.70 | 2.64 | 2.50 | 2.64 | 2.50 |
| **SK 13080 VF** | 1.48 | 1.40 | 4.44 | 4.20 | 3.54 | 3.35 | 4.44 | 4.20 | 2.91 | 2.75 | 2.91 | 2.75 |
| **SK 32100 VF** | 1.59 | 1.50 | 7.50 | 7.10 | 5.18 | 4.90 | 7.50 | 7.10 | 4.65 | 4.40 | 4.65 | 4.40 |
| **SK 33100 VF** | 2.43 | 2.30 | 8.03 | 7.60 | 5.81 | 5.50 | 8.24 | 7.80 | 5.12 | 4.85 | 5.12 | 4.85 |
| **SK 42125 VF** | 3.49 | 3.30 | 11.83 | 11.20 | 6.45 | 6.10 | 10.99 | 10.40 | 7.19 | 6.80 | 7.19 | 6.80 |
| **SK 43125 VF** | 4.54 | 4.30 | 13.63 | 12.90 | 7.50 | 7.10 | 12.79 | 12.10 | 8.14 | 7.70 | 8.14 | 7.70 |

# HELICAL-WORM HOLLOW SHAFT OIL FILL QUANTITIES



### Helical-worm hollow shaft lubrication

The following NORD Gear reducers are shipped from the factory with a pre-determined oil fill level in accordance to the specified reducer size and mounting position. For additional information, please refer to the "Oil Plug & Vent Locations" documentation for your gear unit.

**STOP** ***HARMFUL SITUATION*** **STOP**

Actual oil volume can vary slightly depending upon the gear case size, mounting and ratio. Prior to commissioning the reducer, check the oil-fill level using the reducer's oil level plug and drain or add addition oil as needed.

For mounting orientations other than shown please consult NORD Gear. Reducer modifications may be required.

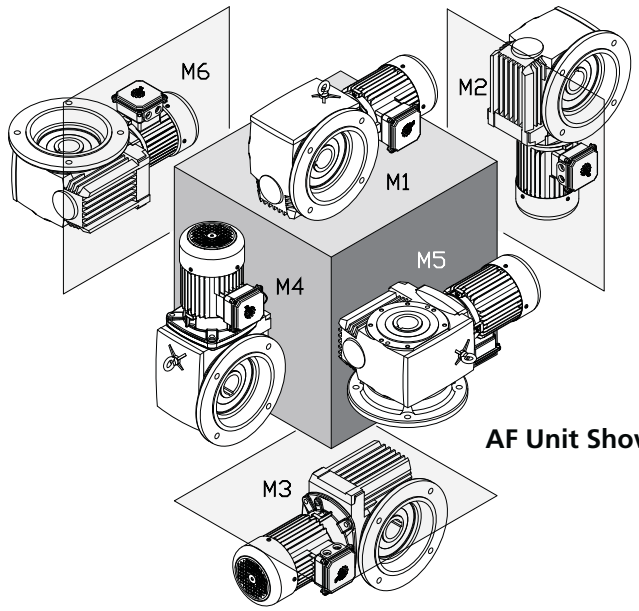


**AF Unit Shown**

| Type | M1 | | M2 | | M3 | | M4 | | M5 | | M6 | |
|---|---|---|---|---|---|---|---|---|---|---|---|---|
| | Quarts | Liters | Quarts | Liters | Quarts | Liters | Quarts | Liters | Quarts | Liters | Quarts | Liters |
| **SK 02040** | 0.420 | 0.400 | 0.850 | 0.800 | 0.690 | 0.650 | 0.630 | 0.600 | 0.530 | 0.500 | 0.530 | 0.500 |
| **SK 02050** | 0.480 | 0.450 | 1.16 | 1.10 | 0.950 | 0.900 | 1.16 | 1.10 | 0.850 | 0.800 | 0.850 | 0.800 |
| **SK 13050** | 0.900 | 0.850 | 1.85 | 1.75 | 1.32 | 1.25 | 1.43 | 1.35 | 1.22 | 1.15 | 1.22 | 1.15 |
| **SK 12063** | 0.530 | 0.500 | 1.53 | 1.45 | 1.27 | 1.20 | 1.48 | 1.40 | 1.16 | 1.10 | 1.16 | 1.10 |
| **SK 13063** | 0.950 | 0.900 | 2.22 | 2.10 | 1.64 | 1.55 | 2.22 | 2.10 | 1.53 | 1.45 | 1.53 | 1.45 |
| **SK 12080** | 0.950 | 0.900 | 3.28 | 3.10 | 3.17 | 3.00 | 3.17 | 3.00 | 2.33 | 2.20 | 2.33 | 2.20 |
| **SK 13080** | 1.80 | 1.70 | 3.96 | 3.75 | 3.80 | 3.60 | 3.80 | 3.60 | 2.69 | 2.55 | 2.69 | 2.55 |
| **SK 32100** | 1.59 | 1.50 | 5.49 | 5.20 | 4.02 | 3.80 | 5.60 | 5.30 | 4.02 | 3.80 | 4.02 | 3.80 |
| **SK 33100** | 2.22 | 2.10 | 6.45 | 6.10 | 5.07 | 4.80 | 6.97 | 6.60 | 4.44 | 4.20 | 4.44 | 4.20 |
| **SK 42125** | 3.38 | 3.20 | 13.63 | 12.90 | 6.45 | 6.10 | 11.10 | 10.50 | 6.66 | 6.30 | 6.66 | 6.30 |
| **SK 43125** | 5.07 | 4.80 | 14.27 | 13.50 | 7.82 | 7.40 | 15.32 | 14.50 | 8.45 | 8.00 | 8.45 | 8.00 |

**Oil Levels shown apply to gear units ending in AZ, AF.**

# NORDBLOC® FOOT MOUNTED OIL FILL QUANTITIES

### NORDBLOC® foot mounted lubrication

The following NORD Gear reducers are shipped from the factory with a pre-determined oil fill level in accordance to the specified reducer size and mounting position. For additional information, please refer to the "Oil Plug & Vent Locations" documentation for your gear unit.

**HARMFUL SITUATION**

Actual oil volume can vary slightly depending upon the gear case size, mounting and ratio. Prior to commissioning the reducer, check the oil-fill level using the reducer's oil level plug and drain or add addition oil as needed.

For mounting orientations other than shown please consult NORD Gear. Reducer modifications may be required.

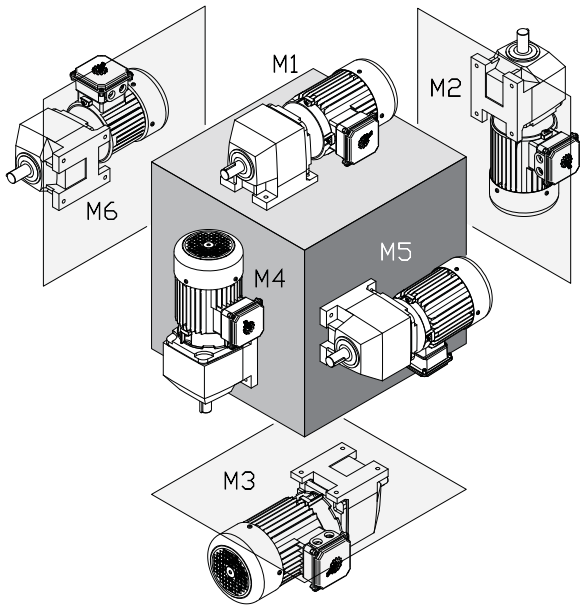


| Type | M1 | | M2 | | M3 | | M4 | | M5 | | M6 | |
|---|---|---|---|---|---|---|---|---|---|---|---|---|
| | Quarts | Liters | Quarts | Liters | Quarts | Liters | Quarts | Liters | Quarts | Liters | Quarts | Liters |
| **SK 172** | 0.370 | 0.350 | 0.530 | 0.500 | 0.530 | 0.500 | 0.530 | 0.500 | 0.530 | 0.500 | 0.530 | 0.500 |
| **SK 272** | 0.630 | 0.600 | 1.06 | 1.000 | 1.06 | 1.000 | 1.06 | 1.000 | 1.06 | 1.000 | 1.06 | 1.000 |
| **SK 273** | 0.660 | 0.620 | 1.16 | 1.10 | 1.16 | 1.10 | 1.16 | 1.10 | 1.16 | 1.10 | 1.16 | 1.10 |
| **SK 372** | 0.630 | 0.600 | 1.06 | 1.000 | 1.06 | 1.000 | 1.06 | 1.000 | 1.06 | 1.000 | 1.06 | 1.000 |
| **SK 373** | 0.580 | 0.550 | 1.16 | 1.10 | 1.16 | 1.10 | 1.16 | 1.10 | 1.16 | 1.10 | 1.16 | 1.10 |
| **SK 472** | 1.06 | 1.000 | 2.01 | 1.90 | 2.01 | 1.90 | 2.11 | 2.00 | 1.90 | 1.80 | 1.90 | 1.80 |
| **SK 473** | 1.37 | 1.30 | 2.64 | 2.50 | 2.22 | 2.10 | 2.54 | 2.40 | 2.22 | 2.10 | 2.22 | 2.10 |
| **SK 572** | 1.06 | 1.000 | 2.01 | 1.90 | 2.01 | 1.90 | 2.11 | 2.00 | 1.90 | 1.80 | 1.90 | 1.80 |
| **SK 573** | 1.37 | 1.30 | 2.64 | 2.50 | 2.22 | 2.10 | 2.54 | 2.40 | 2.22 | 2.10 | 2.22 | 2.10 |
| **SK 672** | 1.48 | 1.40 | 3.59 | 3.40 | 3.28 | 3.10 | 3.33 | 3.15 | 1.53 | 1.45 | 3.33 | 3.15 |
| **SK 673** | 1.90 | 1.80 | 4.02 | 3.80 | 3.38 | 3.20 | 3.59 | 3.40 | 3.06 | 2.90 | 3.17 | 3.00 |
| **SK 772** | 2.11 | 2.00 | 3.49 | 3.30 | 3.70 | 3.50 | 4.44 | 4.20 | 2.85 | 2.70 | 3.49 | 3.30 |
| **SK 773** | 2.64 | 2.50 | 4.76 | 4.50 | 3.91 | 3.70 | 4.86 | 4.60 | 3.49 | 3.30 | 3.49 | 3.30 |
| **SK 872** | 3.91 | 3.70 | 10.14 | 9.60 | 9.62 | 9.10 | 7.71 | 7.30 | 4.97 | 4.70 | 8.46 | 8.00 |
| **SK 873** | 6.60 | 6.20 | 8.88 | 8.40 | 7.93 | 7.50 | 9.62 | 9.10 | 7.93 | 7.50 | 7.93 | 7.50 |
| **SK 972** | 6.87 | 6.50 | 16.91 | 16.00 | 16.59 | 15.70 | 15.53 | 14.70 | 8.98 | 8.50 | 14.80 | 14.00 |
| **SK 973** | 11.63 | 11.00 | 16.70 | 15.80 | 13.74 | 13.00 | 16.91 | 16.00 | 14.06 | 13.30 | 13.74 | 13.00 |

# NORDBLOC® FLANGE MOUNTED OIL FILL QUANTITIES

### NORDBLOC® flange mounted lubrication

The following NORD Gear reducers are shipped from the factory with a pre-determined oil fill level in accordance to the specified reducer size and mounting position. For additional information, please refer to the "Oil Plug & Vent Locations" documentation for your gear unit.

**HARMFUL SITUATION**

Actual oil volume can vary slightly depending upon the gear case size, mounting and ratio. Prior to commissioning the reducer, check the oil-fill level using the reducer's oil level plug and drain or add addition oil as needed.

For mounting orientations other than shown please consult NORD Gear. Reducer modifications may be required.

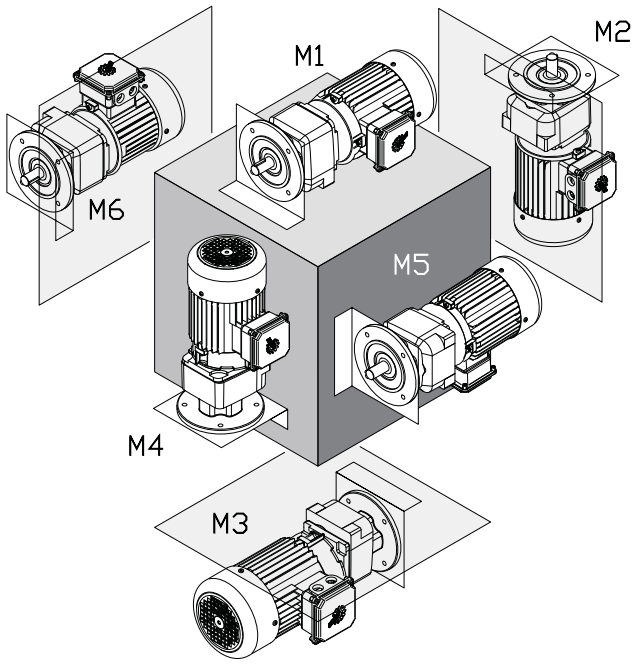


| Mounting Position | M1 | | M2 | | M3 | | M4 | | M5 | | M6 | |
|---|---|---|---|---|---|---|---|---|---|---|---|---|
| | Quarts | Liters | Quarts | Liters | Quarts | Liters | Quarts | Liters | Quarts | Liters | Quarts | Liters |
| **SK 172 F** | 0.370 | 0.350 | 0.530 | 0.500 | 0.530 | 0.500 | 0.530 | 0.500 | 0.530 | 0.500 | 0.530 | 0.500 |
| **SK 272 F** | 0.630 | 0.600 | 1.06 | 1.000 | 1.06 | 1.000 | 1.06 | 1.000 | 1.06 | 1.000 | 1.06 | 1.000 |
| **SK 273 F** | 0.660 | 0.620 | 1.16 | 1.10 | 1.16 | 1.10 | 1.16 | 1.10 | 1.16 | 1.10 | 1.16 | 1.10 |
| **SK 372 F** | 0.630 | 0.600 | 1.06 | 1.000 | 1.06 | 1.000 | 1.06 | 1.000 | 1.06 | 1.000 | 1.06 | 1.000 |
| **SK 373 F** | 0.580 | 0.550 | 1.16 | 1.10 | 1.16 | 1.10 | 1.16 | 1.10 | 1.16 | 1.10 | 1.16 | 1.10 |
| **SK 472 F** | 1.06 | 1.000 | 2.01 | 1.90 | 2.01 | 1.90 | 2.01 | 1.90 | 2.01 | 1.90 | 1.59 | 1.50 |
| **SK 473 F** | 1.32 | 1.25 | 2.54 | 2.40 | 2.22 | 2.10 | 2.64 | 2.50 | 2.22 | 2.10 | 2.22 | 2.10 |
| **SK 572 F** | 1.06 | 1.000 | 2.01 | 1.90 | 2.01 | 1.90 | 2.01 | 1.90 | 2.01 | 1.90 | 1.59 | 1.50 |
| **SK 573 F** | 1.32 | 1.25 | 2.54 | 2.40 | 2.22 | 2.10 | 2.64 | 2.50 | 2.22 | 2.10 | 2.22 | 2.10 |
| **SK 672 F** | 1.22 | 1.15 | 3.59 | 3.40 | 2.85 | 2.70 | 2.96 | 2.80 | 1.32 | 1.25 | 2.85 | 2.70 |
| **SK 673 F** | 1.80 | 1.70 | 4.02 | 3.80 | 3.17 | 3.00 | 3.38 | 3.20 | 3.17 | 3.00 | 3.17 | 3.00 |
| **SK 772 F** | 1.69 | 1.60 | 3.49 | 3.30 | 3.70 | 3.50 | 3.49 | 3.30 | 3.28 | 3.10 | 3.28 | 3.10 |
| **SK 773 F** | 2.43 | 2.30 | 5.29 | 5.00 | 3.81 | 3.60 | 4.76 | 4.50 | 4.12 | 3.90 | 4.12 | 3.90 |
| **SK 872 F** | 3.70 | 3.50 | 9.51 | 9.00 | 8.35 | 7.90 | 8.14 | 7.70 | 4.12 | 3.90 | 7.61 | 7.20 |
| **SK 873 F** | 5.29 | 5.00 | 9.30 | 8.80 | 8.03 | 7.60 | 8.46 | 8.00 | 8.46 | 8.00 | 8.46 | 8.00 |
| **SK 972 F** | 6.87 | 6.50 | 15.86 | 15.00 | 13.74 | 13.00 | 14.27 | 13.50 | 6.87 | 6.50 | 12.68 | 12.00 |
| **SK 973 F** | 10.89 | 10.30 | 17.44 | 16.50 | 13.74 | 13.00 | 16.91 | 16.00 | 14.80 | 14.00 | 14.80 | 14.00 |

# NORDBLOC®.1 FOOT MOUNTED OIL FILL QUANTITIES



### NORDBLOC®.1 foot mounted lubrication

The following NORD Gear reducers are shipped from the factory with a pre-determined oil fill level in accordance to the specified reducer size and mounting position. For additional information, please refer to the "Oil Plug & Vent Locations" documentation for your gear unit.

**HARMFUL SITUATION**

Actual oil volume can vary slightly depending upon the gear case size, mounting and ratio. Prior to commissioning the reducer, check the oil-fill level using the reducer's oil level plug and drain or add addition oil as needed.

For mounting orientations other than shown please consult NORD Gear. Reducer modifications may be required.

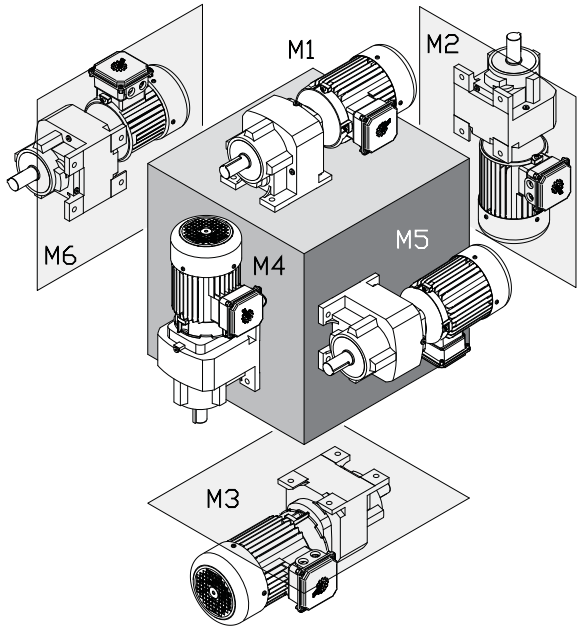


| Type | M1 | | M2 | | M3 | | M4 | | M5 | | M6 | |
|---|---|---|---|---|---|---|---|---|---|---|---|---|
| | Quarts | Liters | Quarts | Liters | Quarts | Liters | Quarts | Liters | Quarts | Liters | Quarts | Liters |
| **SK 072.1** | 0.169 | 0.160 | 0.338 | 0.320 | 0.222 | 0.210 | 0.243 | 0.230 | 0.190 | 0.180 | 0.210 | 0.200 |
| **SK 172.1** | 0.285 | 0.270 | 0.624 | 0.590 | 0.444 | 0.420 | 0.529 | 0.450 | 0.338 | 0.320 | 0.412 | 0.390 |
| **SK 372.1** | 0.480 | 0.450 | 1.11 | 1.05 | 0.790 | 0.750 | 1.06 | 1.000 | 0.630 | 0.600 | 0.690 | 0.650 |
| **SK 373.1** | 0.480 | 0.450 | 1.11 | 1.05 | 0.791 | 0.750 | 1.06 | 1.000 | 0.630 | 0.600 | 0.690 | 0.650 |
| **SK 572.1** | 0.790 | 0.750 | 2.01 | 1.90 | 1.59 | 1.50 | 2.11 | 2.00 | 1.16 | 1.10 | 1.22 | 1.15 |
| **SK 573.1** | 0.790 | 0.750 | 2.00 | 1.90 | 1.59 | 1.50 | 2.11 | 2.00 | 1.16 | 1.10 | 1.22 | 1.15 |
| **SK 672.1** | 1.16 | 1.10 | 2.75 | 2.60 | 2.27 | 2.15 | 2.85 | 2.70 | 1.64 | 1.55 | 1.74 | 1.65 |
| **SK 673.1** | 1.16 | 1.10 | 2.75 | 2.60 | 2.27 | 2.15 | 2.85 | 2.70 | 1.64 | 1.55 | 1.74 | 1.65 |
| **SK 772.1** | 1.22 | 1.15 | 3.86 | 3.65 | 2.38 | 2.25 | 3.33 | 3.15 | 1.43 | 1.35 | 2.27 | 2.15 |
| **SK 773.1** | 2.06 | 1.95 | 3.70 | 3.50 | 3.38 | 3.20 | 3.06 | 2.90 | 2.38 | 2.25 | 3.12 | 2.95 |
| **SK 872.1** | 2.75 | 2.60 | 8.45 | 8.00 | 5.60 | 5.30 | 7.40 | 7.00 | 2.96 | 2.80 | 4.86 | 4.60 |
| **SK 873.1** | 4.28 | 4.05 | 8.03 | 7.60 | 7.24 | 6.85 | 6.92 | 6.55 | 5.28 | 5.00 | 6.92 | 6.55 |
| **SK 972.1** | 4.76 | 4.50 | 13.63 | 12.90 | 8.56 | 8.10 | 13.42 | 12.70 | 4.86 | 4.60 | 8.24 | 7.80 |
| **SK 973.1** | 7.82 | 7.40 | 12.89 | 12.20 | 11.73 | 11.10 | 12.26 | 11.60 | 8.45 | 8.00 | 11.52 | 10.90 |

# NORDBLOC®.1 FLANGE MOUNTED OIL FILL QUANTITIES



### NORDBLOC®.1 flange mounted lubrication

The following NORD Gear reducers are shipped from the factory with a pre-determined oil fill level in accordance to the specified reducer size and mounting position. For additional information, please refer to the "Oil Plug & Vent Locations" documentation for your gear unit.

**HARMFUL SITUATION**

Actual oil volume can vary slightly depending upon the gear case size, mounting and ratio. Prior to commissioning the reducer, check the oil-fill level using the reducer's oil level plug and drain or add addition oil as needed.

For mounting orientations other than shown please consult NORD Gear. Reducer modifications may be required.

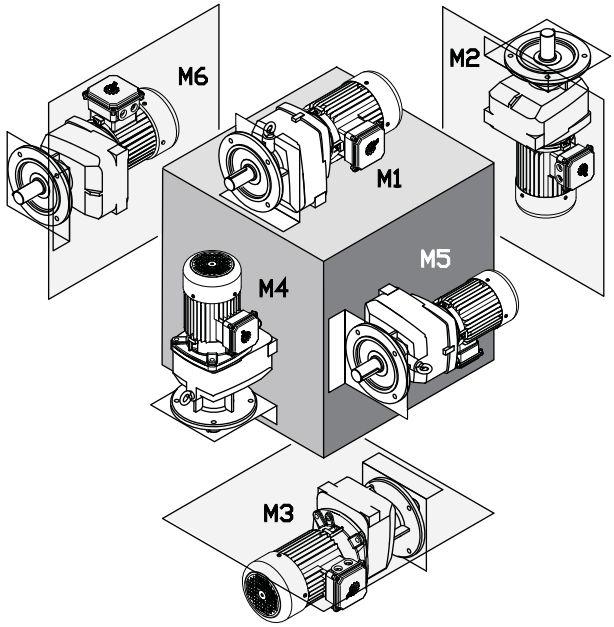


| Type | M1 | | M2 | | M3 | | M4 | | M5 | | M6 | |
|---|---|---|---|---|---|---|---|---|---|---|---|---|
| | Quarts | Liters | Quarts | Liters | Quarts | Liters | Quarts | Liters | Quarts | Liters | Quarts | Liters |
| **SK 072.1 F** | 0.169 | 0.160 | 0.338 | 0.320 | 0.222 | 0.210 | 0.243 | 0.230 | 0.190 | 0.180 | 0.210 | 0.200 |
| **SK 172.1 F** | 0.285 | 0.270 | 0.624 | 0.590 | 0.444 | 0.420 | 0.529 | 0.450 | 0.338 | 0.320 | 0.412 | 0.390 |
| **SK 372.1 F** | 0.480 | 0.450 | 1.11 | 1.05 | 0.790 | 0.750 | 1.06 | 1.000 | 0.630 | 0.600 | 0.690 | 0.650 |
| **SK 373.1 F** | 0.480 | 0.450 | 1.11 | 1.05 | 0.791 | 0.750 | 1.06 | 1.000 | 0.630 | 0.600 | 0.690 | 0.650 |
| **SK 572.1 F** | 0.790 | 0.750 | 2.01 | 1.90 | 1.59 | 1.50 | 2.11 | 2.00 | 1.16 | 1.10 | 1.22 | 1.15 |
| **SK 573.1 F** | 0.790 | 0.750 | 2.00 | 1.90 | 1.59 | 1.50 | 2.11 | 2.00 | 1.16 | 1.10 | 1.22 | 1.15 |
| **SK 672.1 F** | 1.16 | 1.10 | 2.75 | 2.60 | 2.27 | 2.15 | 2.85 | 2.70 | 1.64 | 1.55 | 1.74 | 1.65 |
| **SK 673.1 F** | 1.16 | 1.10 | 2.75 | 2.60 | 2.27 | 2.15 | 2.85 | 2.70 | 1.64 | 1.55 | 1.74 | 1.65 |
| **SK 772.1 F** | 1.22 | 1.15 | 3.86 | 3.65 | 2.38 | 2.25 | 3.33 | 3.15 | 1.43 | 1.35 | 2.27 | 2.15 |
| **SK 773.1 F** | 2.06 | 1.95 | 3.70 | 3.50 | 3.38 | 3.20 | 3.06 | 2.90 | 2.38 | 2.25 | 3.12 | 2.95 |
| **SK 872.1 F** | 2.75 | 2.60 | 8.45 | 8.00 | 5.60 | 5.30 | 7.40 | 7.00 | 2.96 | 2.80 | 4.86 | 4.60 |
| **SK 873.1 F** | 4.28 | 4.05 | 8.03 | 7.60 | 7.24 | 6.85 | 6.92 | 6.55 | 5.28 | 5.00 | 6.92 | 6.55 |
| **SK 972.1 F** | 4.76 | 4.50 | 13.63 | 12.90 | 8.56 | 8.10 | 13.42 | 12.70 | 4.86 | 4.60 | 8.24 | 7.80 |
| **SK 973.1 F** | 7.82 | 7.40 | 12.89 | 12.20 | 11.73 | 11.10 | 12.26 | 11.60 | 8.45 | 8.00 | 11.52 | 10.90 |

# MINICASE® FOOT MOUNT OIL FILL QUANTITIES

### MINICASE® foot mount lubrication

All MINICASE® worm-gear reducers are shipped from NORD with a pre-determined oil fill level in accordance to the specified reducer size and mounting position. The MINICASE® series of worm gear reducers are completely sealed. The unit's lubrication is suitable for the life of the product so it is inherently maintenance free.

All MINICASE® worm-gear reducers are filled with a synthetic hydrocarbon or polyalphaolefin (SHC/PAO) oil and utilize synthetic bearing and seal grease. This ensures proper operation throughout the full lifetime of the units.

**STOP** ***HARMFUL SITUATION*** **STOP**

For mounting orientations other than shown please consult NORD Gear. Reducer modifications may be required.

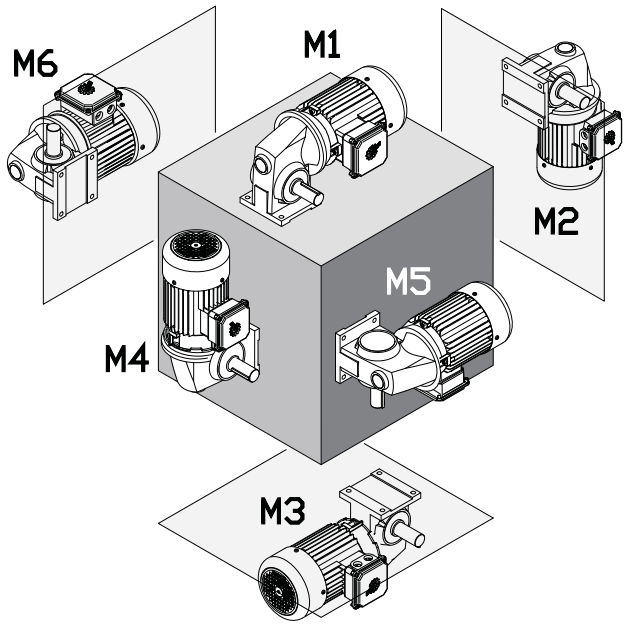


| Type | M1 | | M2 | | M3 | | M4 | | M5 | | M6 | |
|---|---|---|---|---|---|---|---|---|---|---|---|---|
| | Quarts | Liters | Quarts | Liters | Quarts | Liters | Quarts | Liters | Quarts | Liters | Quarts | Liters |
| **SK 1SM31** | 0.130 | 0.120 | 0.130 | 0.120 | 0.130 | 0.120 | 0.130 | 0.120 | 0.130 | 0.120 | 0.130 | 0.120 |
| **SK 1SM40** | 0.230 | 0.220 | 0.230 | 0.220 | 0.230 | 0.220 | 0.230 | 0.220 | 0.230 | 0.220 | 0.230 | 0.220 |
| **SK 2SM40** | 0.350 | 0.330 | 0.350 | 0.330 | 0.350 | 0.330 | 0.380 | 0.360 | 0.350 | 0.330 | 0.350 | 0.330 |
| **SK 1SM50** | 0.260 | 0.250 | 0.260 | 0.250 | 0.260 | 0.250 | 0.260 | 0.250 | 0.260 | 0.250 | 0.260 | 0.250 |
| **SK 2SM50** | 0.370 | 0.350 | 0.370 | 0.350 | 0.370 | 0.350 | 0.440 | 0.420 | 0.370 | 0.350 | 0.370 | 0.350 |
| **SK 1SM63** | 0.440 | 0.420 | 0.440 | 0.420 | 0.440 | 0.420 | 0.440 | 0.420 | 0.440 | 0.420 | 0.440 | 0.420 |
| **SK 2SM63** | 0.560 | 0.530 | 0.560 | 0.530 | 0.560 | 0.530 | 0.670 | 0.630 | 0.560 | 0.530 | 0.560 | 0.530 |

# MINICASE® FLANGE MOUNT OIL FILL QUANTITIES

### MINICASE® flange mount lubrication

All MINICASE® worm-gear reducers are shipped from NORD with a pre-determined oil fill level in accordance to the specified reducer size and mounting position. The MINICASE® series of worm gear reducers are completely sealed. The unit's lubrication is suitable for the life of the product so it is inherently maintenance free.

All MINICASE® worm-gear reducers are filled with a synthetic hydrocarbon or polyalphaolefin (SHC/PAO) oil and utilize synthetic bearing and seal grease. This ensures proper operation throughout the full lifetime of the units.

**STOP** ***HARMFUL SITUATION*** **STOP**

For mounting orientations other than shown please consult NORD Gear. Reducer modifications may be required.

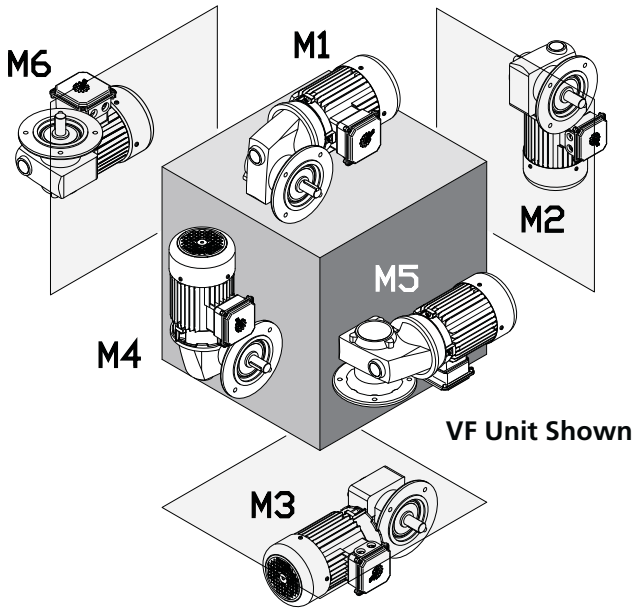

VF Unit Shown

| Type | M1 | | M2 | | M3 | | M4 | | M5 | | M6 | |
|---|---|---|---|---|---|---|---|---|---|---|---|---|
| | Quarts | Liters | Quarts | Liters | Quarts | Liters | Quarts | Liters | Quarts | Liters | Quarts | Liters |
| **SK 1SM31** | 0.140 | 0.130 | 0.140 | 0.130 | 0.140 | 0.130 | 0.140 | 0.130 | 0.140 | 0.130 | 0.140 | 0.130 |
| **SK 1SM40** | 0.250 | 0.240 | 0.250 | 0.240 | 0.250 | 0.240 | 0.250 | 0.240 | 0.250 | 0.240 | 0.250 | 0.240 |
| **SK 2SM40** | 0.360 | 0.340 | 0.360 | 0.340 | 0.360 | 0.340 | 0.400 | 0.380 | 0.360 | 0.340 | 0.360 | 0.340 |
| **SK 1SM50** | 0.290 | 0.270 | 0.290 | 0.270 | 0.290 | 0.270 | 0.290 | 0.270 | 0.290 | 0.270 | 0.290 | 0.270 |
| **SK 2SM50** | 0.390 | 0.370 | 0.390 | 0.370 | 0.390 | 0.370 | 0.480 | 0.450 | 0.390 | 0.370 | 0.390 | 0.370 |
| **SK 1SM63** | 0.480 | 0.450 | 0.480 | 0.450 | 0.480 | 0.450 | 0.480 | 0.450 | 0.480 | 0.450 | 0.480 | 0.450 |
| **SK 2SM63** | 0.630 | 0.600 | 0.630 | 0.600 | 0.630 | 0.600 | 0.770 | 0.730 | 0.630 | 0.600 | 0.630 | 0.600 |

**Oil Levels shown apply to gear units ending in VF, VZ, AF, & AZ.**

# FLEXBLOC™ OIL FILL QUANTITIES

## FLEXBLOC™ lubrication

The following FLEXBLOC™ worm gear modules are designed to be maintenance-free and are typically supplied completely sealed. They are factory oil filled for any mounting configuration with a pre-determined oil level. The unit's lubrication is suitable for the life of the product so it is inherently maintenance free.

- FLEXBLOC™ inch hollow-bore modules are factory-filled with a food grade synthetic polyglycol lubricant (suitable for NSF-H1 incidental contact).
- FLEXBLOC™ metric hollow-bore modules are factory-filled with a standard polyglycol lubricant (unless special ordered).

NORD can provide a field installable vent option for most all FLEXBLOC™ Gear units, with exception to the SK1SI31 unit. For additional information, please refer to the "FLEXBLOC™ Oil Plug & Vent Locations" documentation.



| Lubricant synthetic: CLP PG 220 | | | | | |
|---|---|---|---|---|---|
| **Type** | SK 1SI31 | SK 1SI40 | SK 1SI50 | SK 1SI63 | SK 1SI75 |
| **Quantity** | 30 ml<br>1.0 oz | 55 ml<br>1.9 oz | 95 ml<br>3.2 oz | 180 ml<br>6.0 oz | 500 ml<br>17 oz |

**Temperature Range -20°F to +60°F (-4°C to +140°C)**

# STANDARD IN-LINE OIL PLUG & VENT LOCATIONS

**Oil plug connections**

All reducers are shipped from the factory with a pre-determined oil fill level in accordance to the specified reducer size and mounting position. ***For mounting orientations other than shown please consult NORD Gear. New plug locations may be required.***

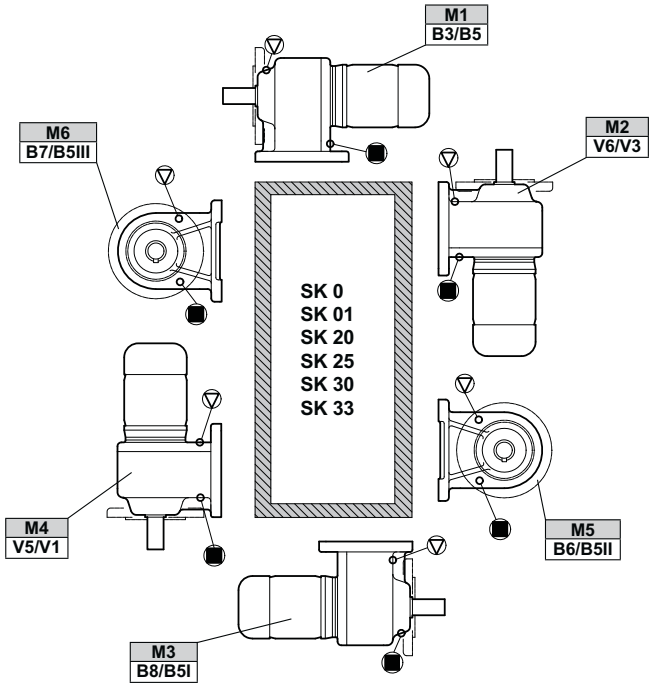


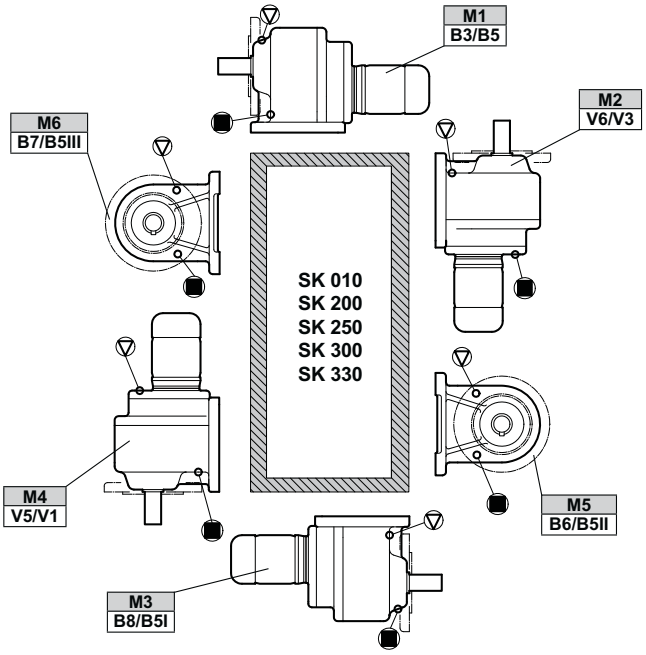


▽ = Vent

■ = Oil Drain

# HELICAL IN-LINE OIL PLUG & VENT LOCATIONS

### Oil plug connections

Prior to commissioning the reducer, check the oil-fill level using the reducer's oil-level plug and drain or add additional oil as needed. ***For mounting orientations other than shown please consult NORD Gear. New plug locations may be required.***

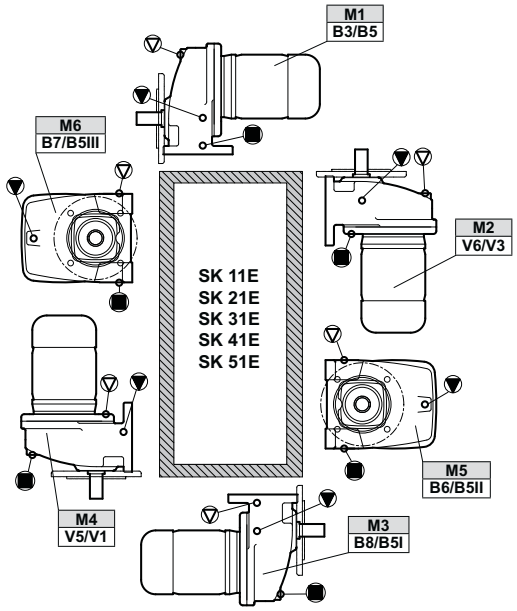


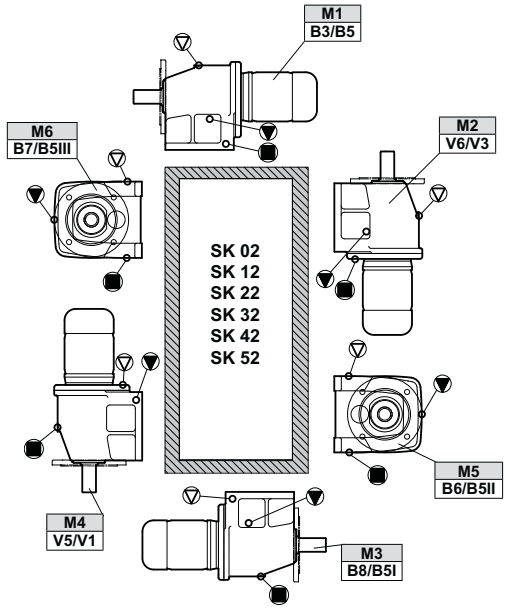


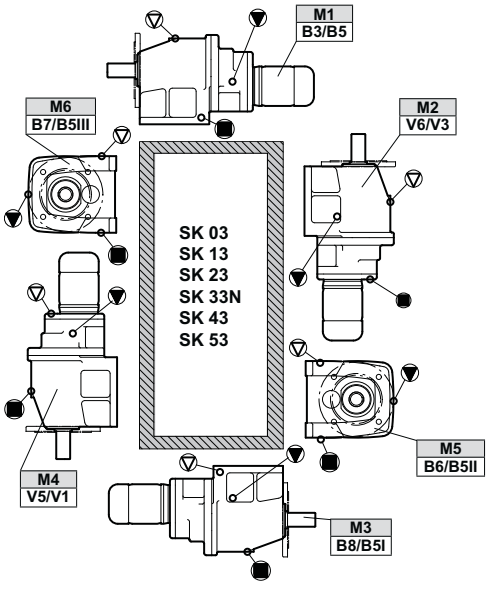


▽ = Vent

▼ = Oil Level

■ = Oil Drain

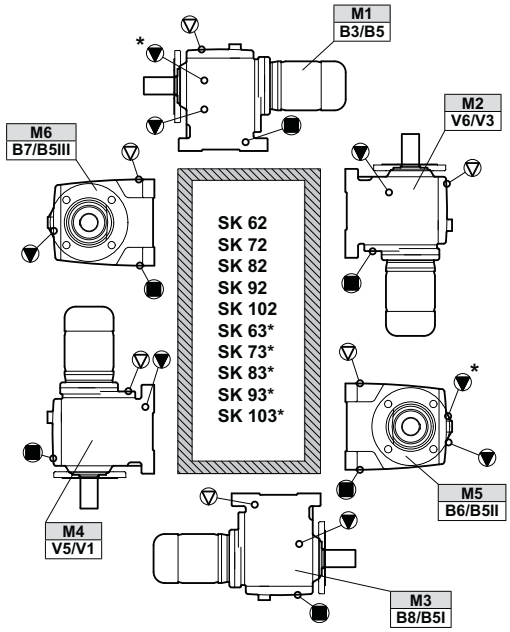


*** Oil level for 3 stage gear units.**

# CLINCHER™
# OIL PLUG & VENT LOCATIONS

**Oil plug connections**

Prior to commissioning the reducer, check the oil-fill level using the reducer's oil-level plug and drain or add additional oil as needed. ***For mounting orientations other than shown please consult NORD Gear. New plug locations may be required.***

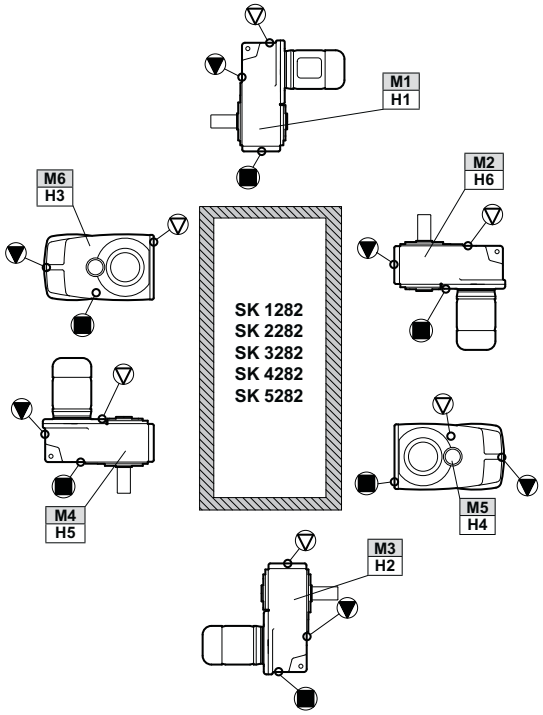


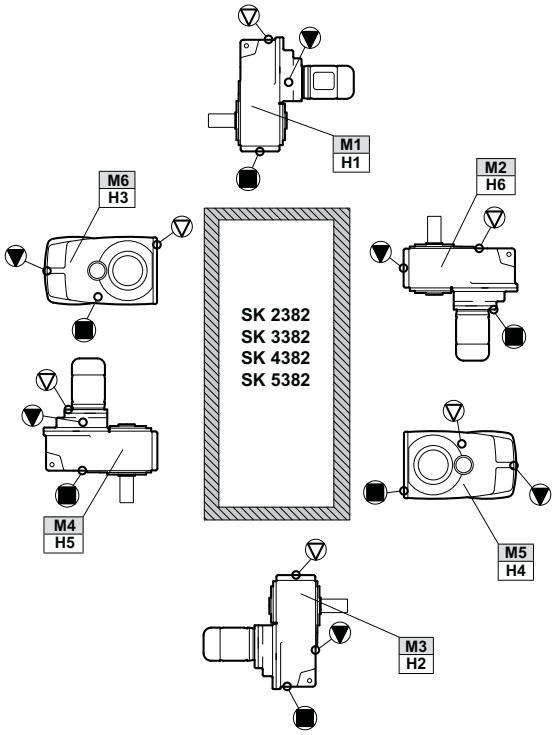


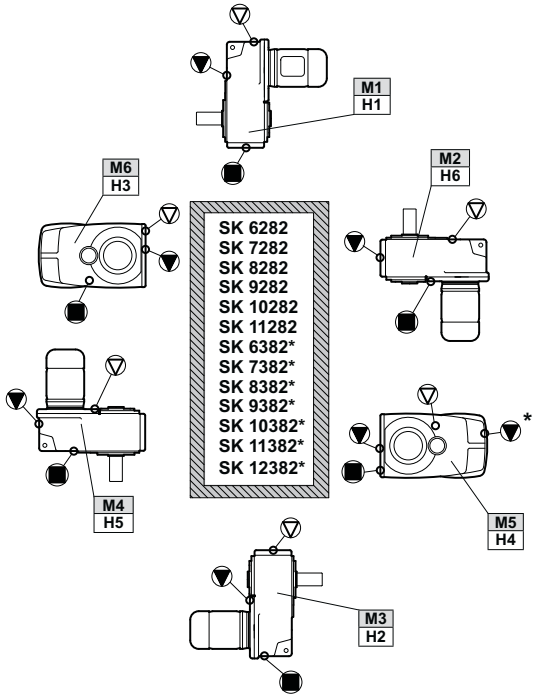


▽ = Vent

▼ = Oil Level

■ = Oil Drain

*** Oil level for 3 stage gear units.**

# 92 SERIES HELICAL-BEVEL OIL PLUG & VENT LOCATIONS

## Oil plug connections

Prior to commissioning the reducer, check the oil-fill level using the reducer's oil-level plug and drain or add additional oil as needed. ***For mounting orientations other than shown please consult NORD Gear. New plug locations may be required.***

### Foot Mount

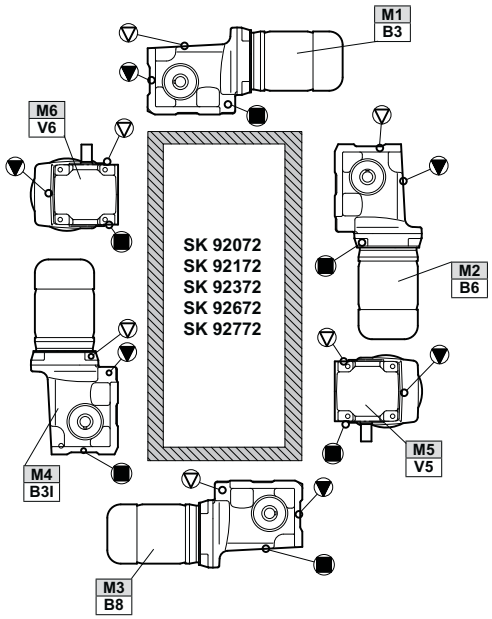


### Shaft/Flange Mount

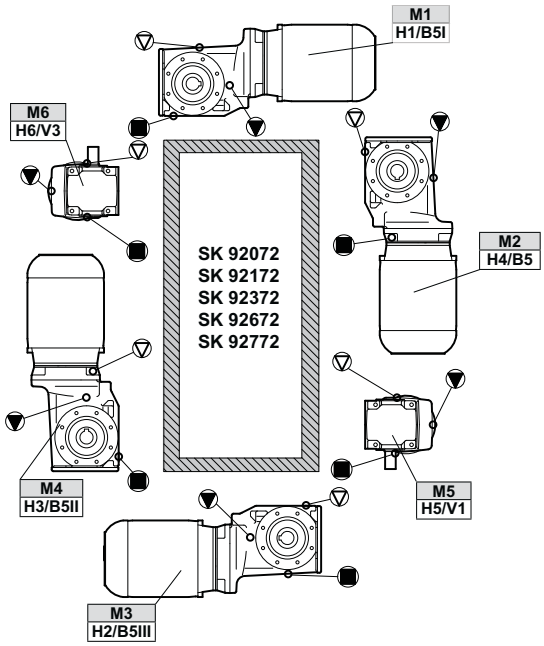


▽ = Vent

▼ = Oil Level

■ = Oil Drain

# 90.1 HELICAL-BEVEL OIL PLUG & VENT LOCATIONS



### Oil plug connections

Prior to commissioning the reducer, check the oil-fill level using the reducer's oil-level plug and drain or add additional oil as needed. ***For mounting orientations other than shown please consult NORD Gear. New plug locations may be required.***

**Foot Mount**

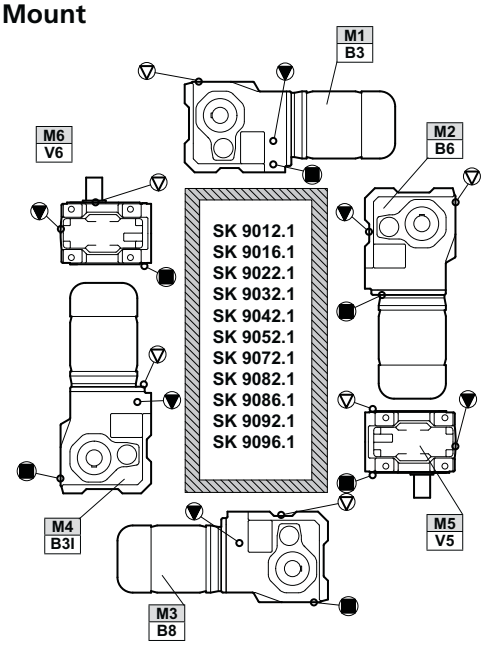


**Foot Mount**

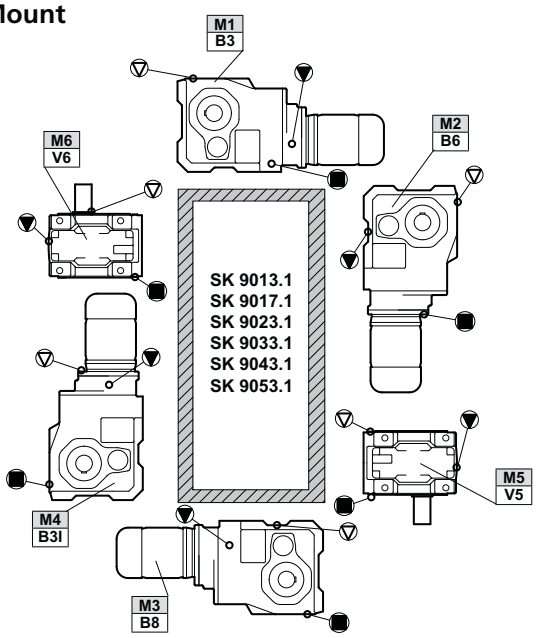


**Shaft/Flange Mount**

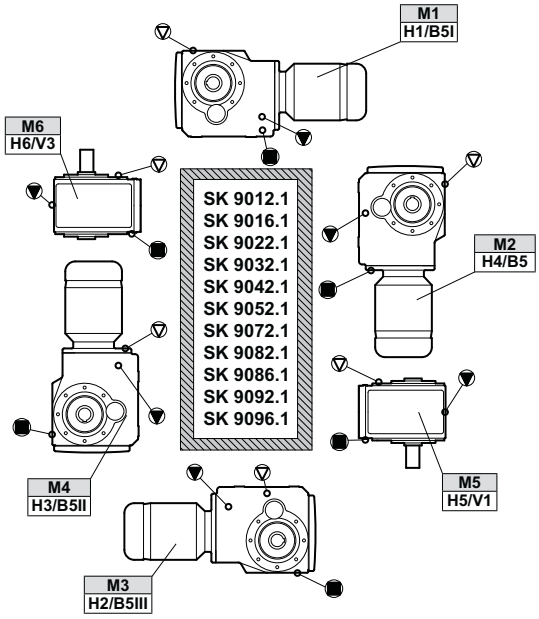


**Shaft/Flange Mount**

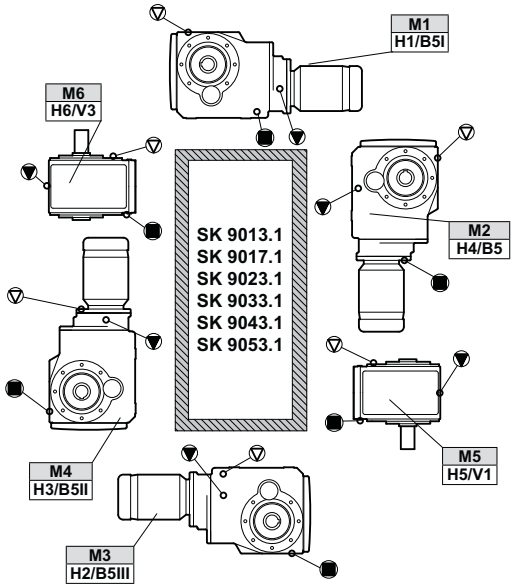


▽ = Vent

▼ = Oil Level

■ = Oil Drain

**NORD Gear Limited**
Toll Free in Canada: 800.668.4378

**NORD Gear Corporation**
Toll Free in the United States: 888.314.6673

# HELICAL-WORM
# OIL PLUG & VENT LOCATIONS

### Oil plug connections

Prior to commissioning the reducer, check the oil-fill level using the reducer's oil-level plug and drain or add additional oil as needed. ***For mounting orientations other than shown please consult NORD Gear. New plug locations may be required.***

**Foot Mount**

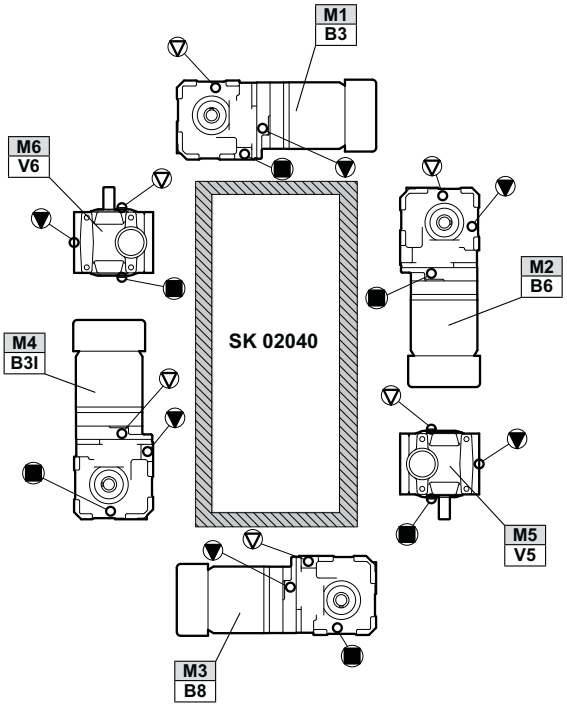


**Shaft/Flange Mount**

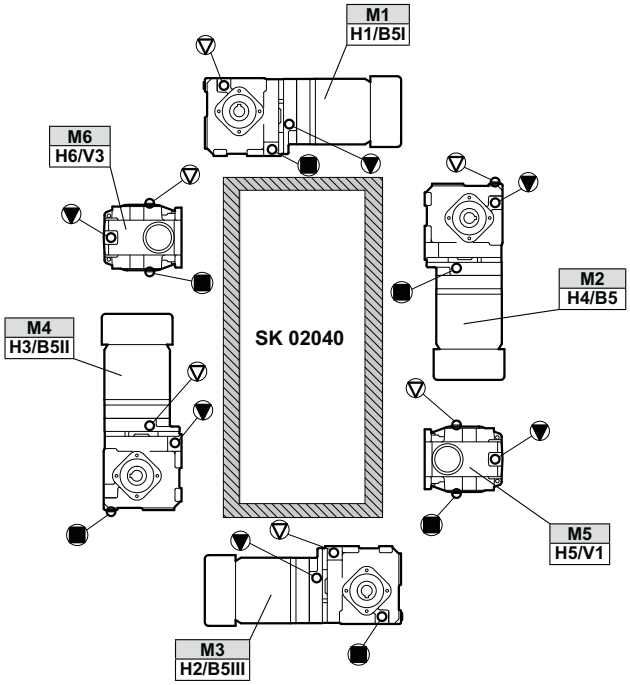


▽ = Vent

▼ = Oil Level

■ = Oil Drain

# HELICAL-WORM
# OIL PLUG & VENT LOCATIONS

**Foot Mount**

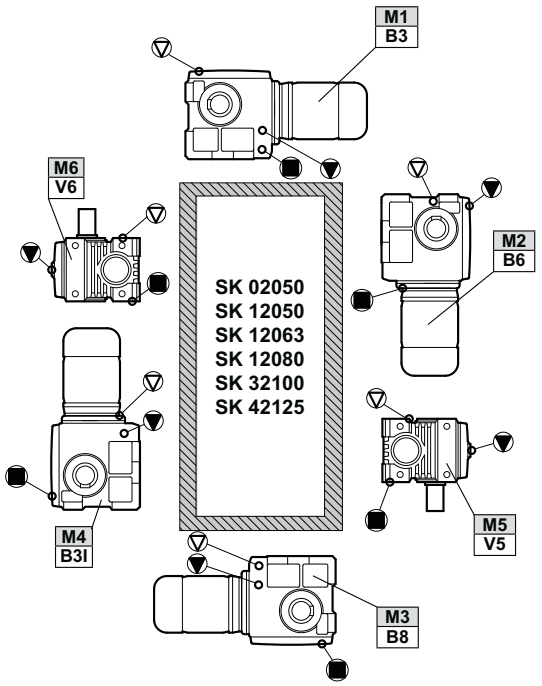


**Foot Mount**

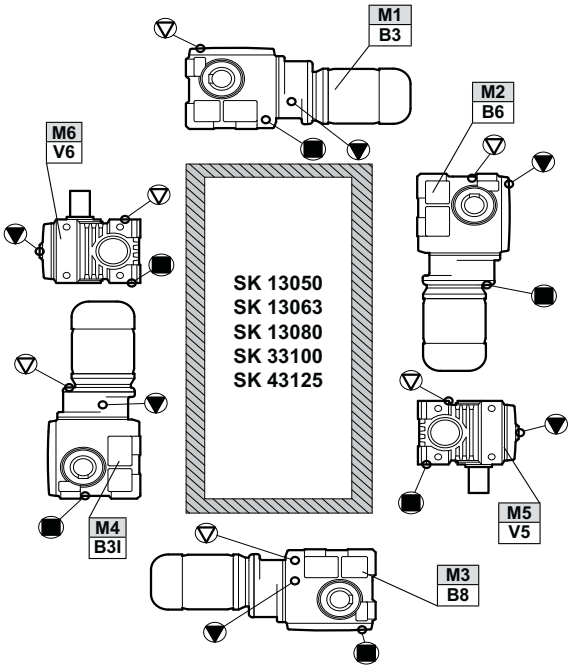


**Shaft/Flange Mount**

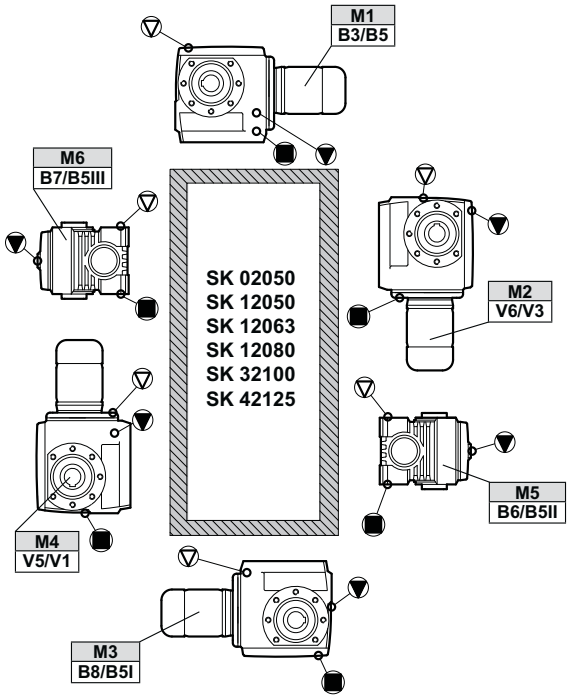


**Shaft/Flange Mount**

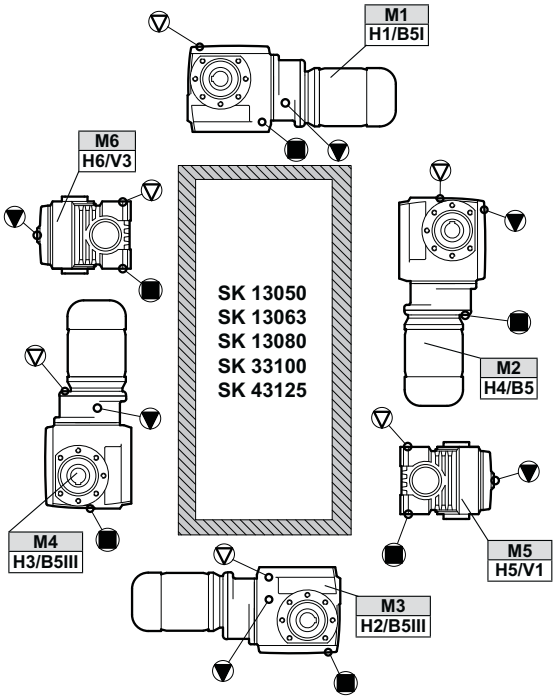


▽ = Vent

▼ = Oil Level

■ = Oil Drain

**NORD Gear Limited**
Toll Free in Canada: 800.668.4378

**NORD Gear Corporation**
Toll Free in the United States: 888.314.6673

# NORDBLOC®
# OIL PLUG & VENT LOCATIONS



**Oil plug connections**

Prior to commissioning the reducer, check the oil-fill level using the reducer's oil-level plug and drain or add additional oil as needed. ***For mounting orientations other than shown please consult NORD Gear. New plug locations may be required.***

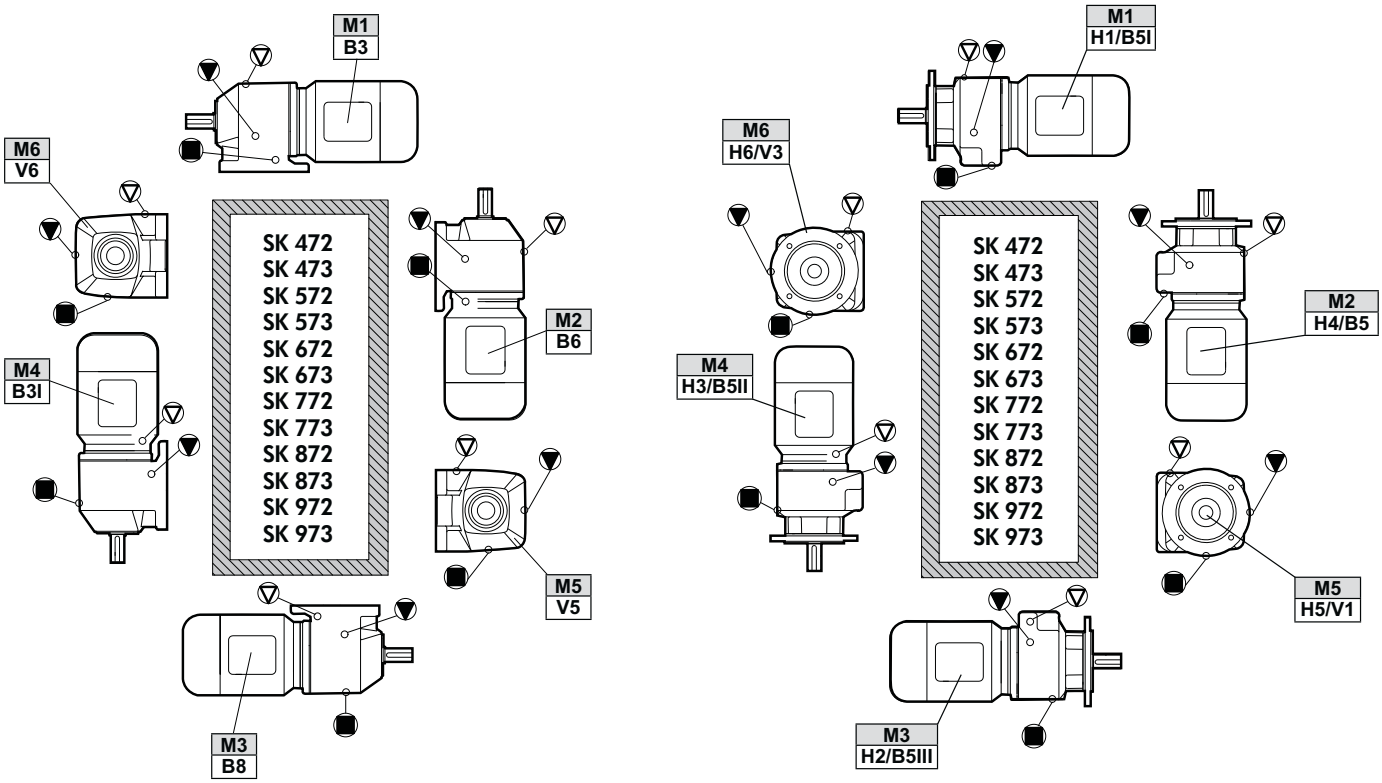


▽ = Vent

▼ = Oil Level

■ = Oil Drain

# NORDBLOC®.1
# OIL PLUG & VENT LOCATIONS

**Oil plug connections**

Prior to commissioning the reducer, check the oil-fill level using the reducer's oil-level plug and drain or add additional oil as needed. ***For mounting orientations other than shown please consult NORD Gear. New plug locations may be required.***

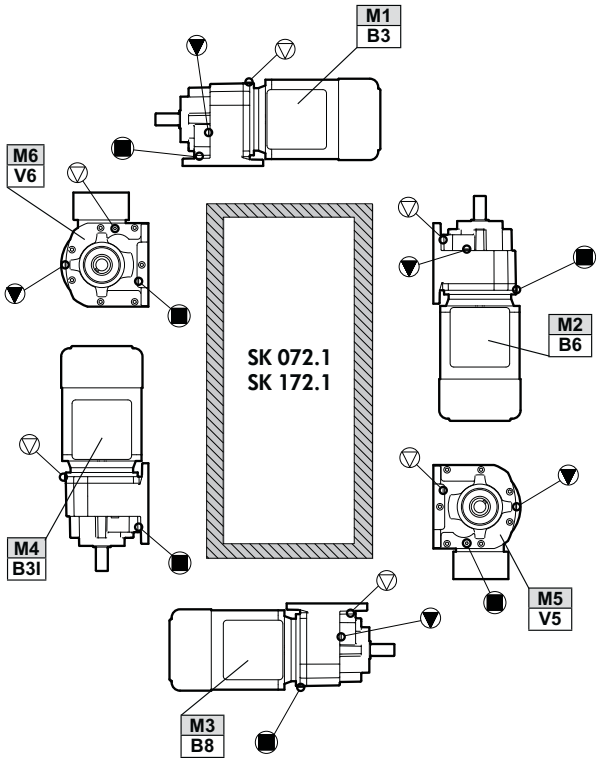


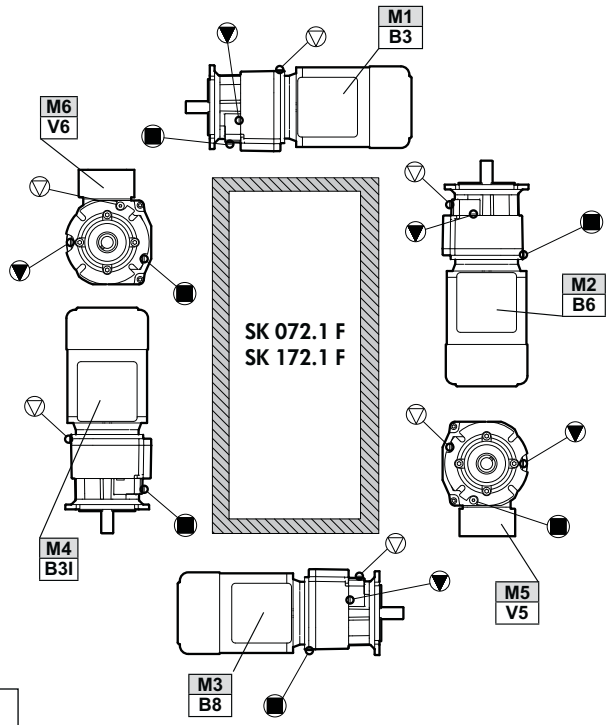


▽ = Vent

▼ = Oil Level

■ = Oil Drain

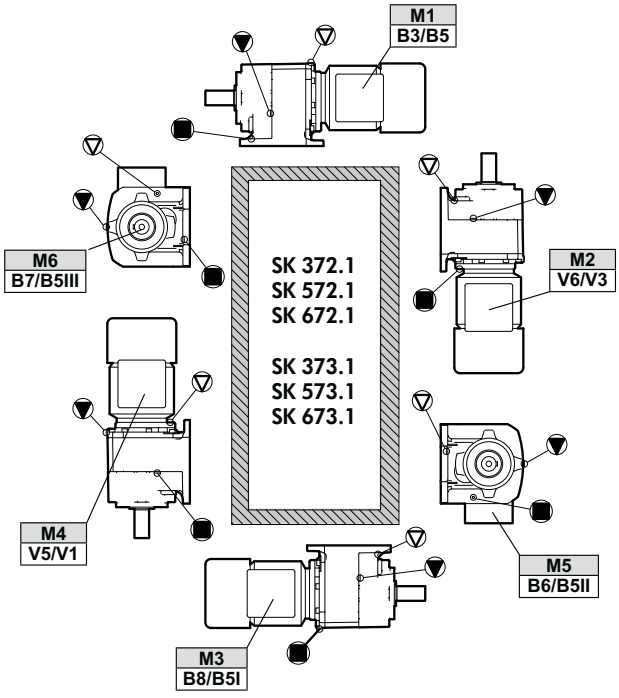


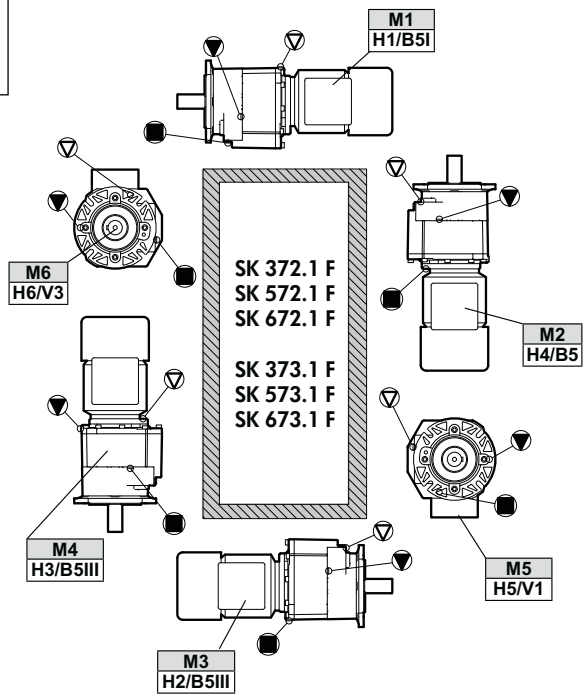


**NORD Gear Limited**
Toll Free in Canada: 800.668.4378

**NORD Gear Corporation**
Toll Free in the United States: 888.314.6673

# FLEXBLOC™ VENT LOCATIONS

## Vent locations

When ordered, NORD can provide a vent kit option for most FLEXBLOC™ gear units, with exception to the smallest SK1S31 unit.

| | |
|---|---|
| **Open Vent Kit** | P/N 60693500 (Includes gasket) |
| **AUTOVENT™** | P/N 22008005 (vent) + P/N 25308120 (gasket) |

The FLEXBLOC™ vent kits are field installable in accordance to the mounting positions as shown below.

### *HARMFUL SITUATION*

The FLEXBLOC™ worm gear unit is intended to be mounted in oune of six positions as shown. For mounting positions other than shown, please consult NORD Gear prior to comissioning the gear drive unit.

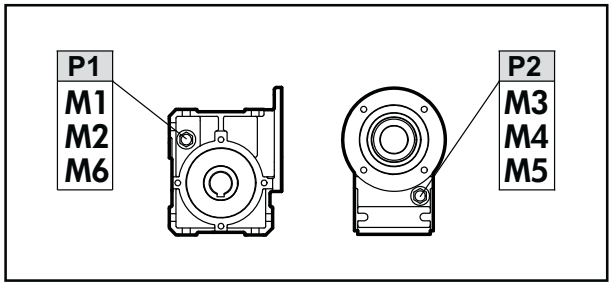


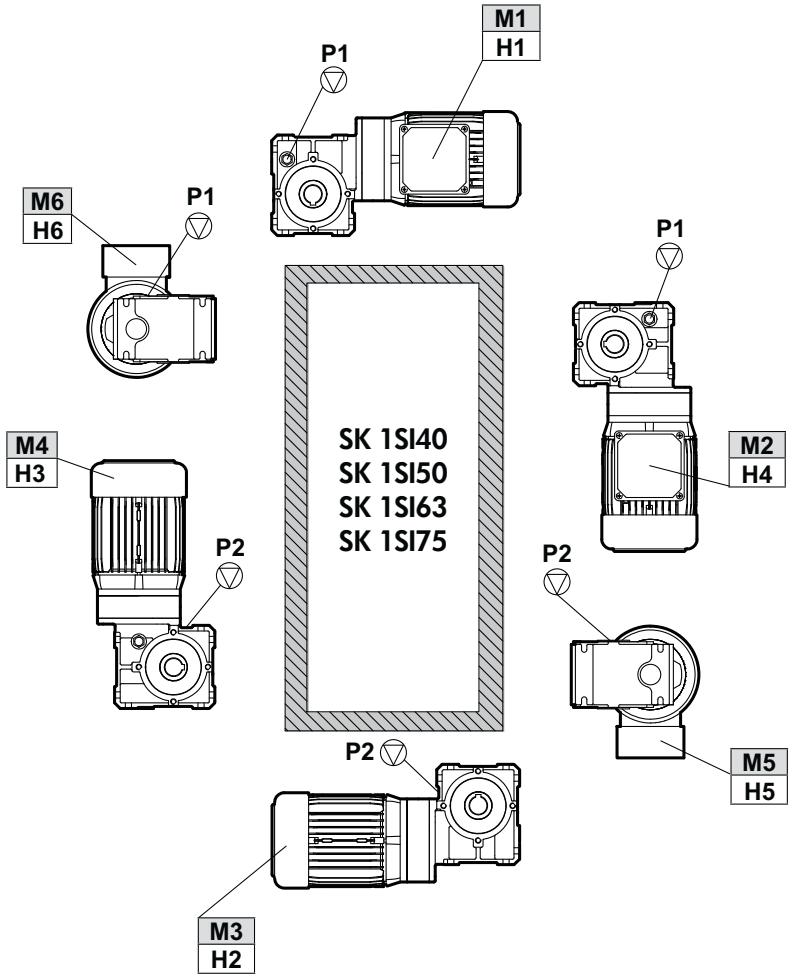


▽ = Vent

**NORD Gear Limited**
Toll Free in Canada: 800.668.4378

**NORD Gear Corporation**
Toll Free in the United States: 888.314.6673

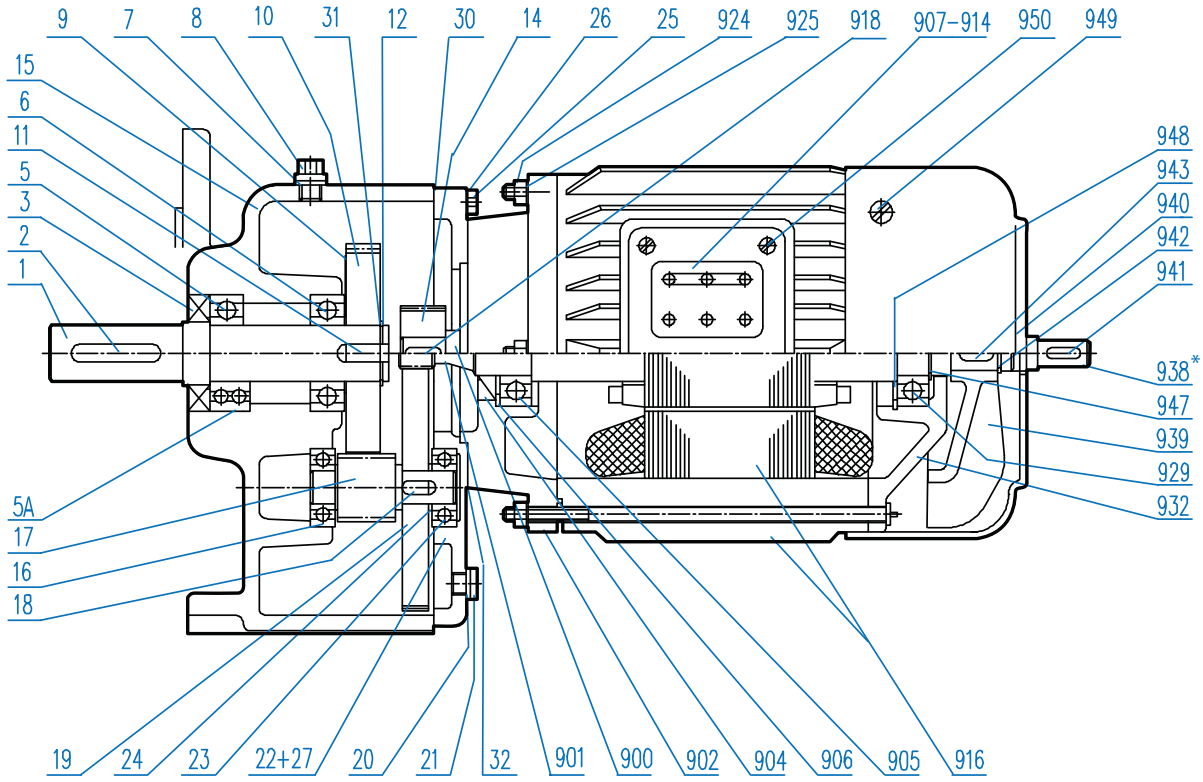


## SK 0 - SK 33 Helical Gear Unit

| | | | | | |
|---|---|---|---|---|---|
| 1 | Output shaft | 21 | Plug | 910 | Terminal box cover gasket |
| 2 | Key | 22 | Gear case cover | 911 | Terminal board |
| 3 | Shaft seal | 23 | Pinion shaft bearing | 914 | Cable entry gland |
| 5 | Output shaft bearing, normal | 24 | Shim | 916 | Stator case |
| 5A | Output shaft bearing, reinforced | 25 | Hexagon bolt | 918 | Key |
| 6 | Output shaft bearing | 26 | Washer | 924 | Collar bolt |
| 7 | Seal | 27 | Spiral pin | 925 | Hexagonal nut |
| 8 | Vent screw | 30 | Seal | 929 | Bearing B |
| 9 | Shim | 31 | Shim | 932 | Endshield B |
| 10 | Driven gear | 32 | Seal | 938 | Second motor shaft end* |
| 11 | Key | 900 | Rotor with shaft,plain | 939 | Fan |
| 12 | Circlip | 901 | Rotor with shaft,gearcut | 940 | Fan cover |
| 14 | Driving pinion | 902 | End shield A | 941 | Key |
| 15 | Gear case | 904 | Shaft seal | 942 | Circlip |
| 16 | Pinion shaft, bearing | 905 | Bearing A | 943 | Key |
| 17 | Driven pinion | 906 | Bearing shim | 947 | Circlip |
| 18 | Key | 907 | Terminal box frame | 948 | Circlip |
| 19 | Driving gear | 908 | Terminal box cover | 949 | Oval flat-head bolt |
| 20 | Seal | 909 | Terminal box frame gasket | 950 | Oval flat-head bolt |

* Optional Part

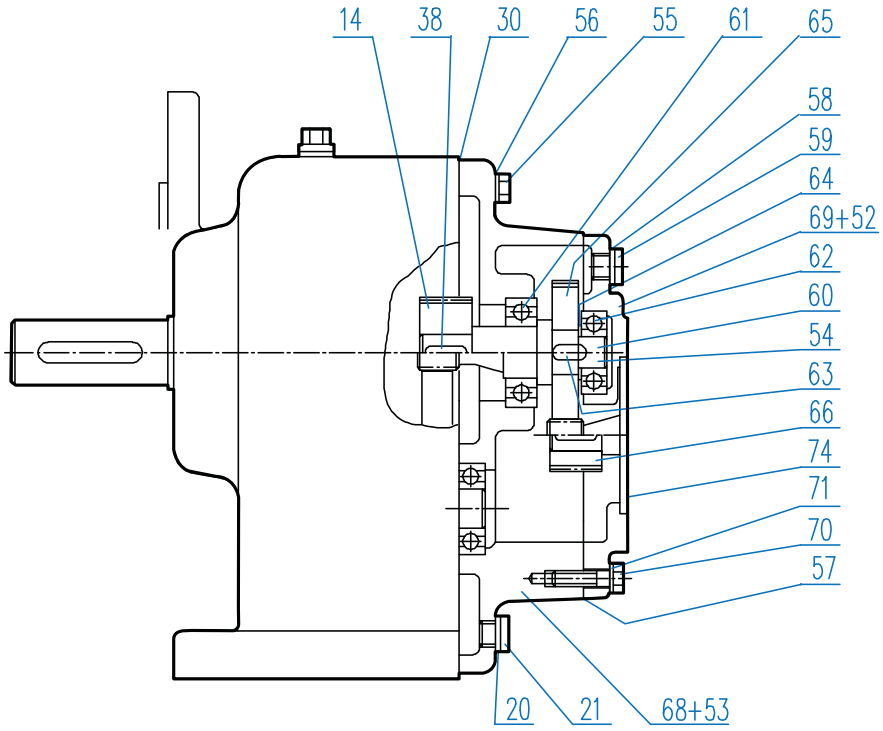


## SK 010 - SK 330 Third Stage Reduction Gear

| | | | | | |
|---|---|---|---|---|---|
| 14 | Driving pinion | 55 | Hexagon bolt | 64 | Shim |
| 20 | Seal | 56 | Washer | 65 | Driving gear |
| 21 | Plug | 57 | Seal | 66 | Driving pinion |
| 27 | Spiral pin | 58 | Seal | 68 | Gear case 3rd.-red. |
| 30 | Seal | 59 | Plug | 69 | Gear case cover |
| 38 | Key | 60 | Intermediate shaft, plain | 70 | Hexagon bolt |
| 52 | Spiral pin | 61 | Grooved ball bearing | 71 | Washer |
| 53 | Spiral pin | 62 | Grooved ball bearing | 74 | Seal |
| 54 | Intermediate shaft, gearcut | 63 | Key | | |

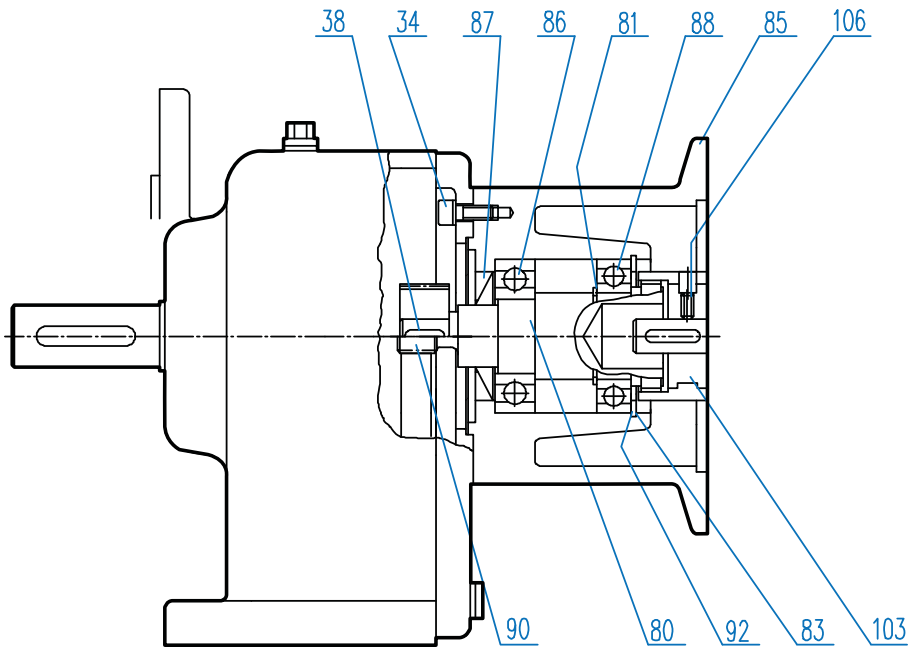


## SK 0 - SK 330 IEC Input

| | | | | | |
|---|---|---|---|---|---|
| 34 | Socket head bolt | 85 | IEC adaptor | 92 | Shim |
| 38 | Key | 86 | Input shaft bearing | 103 | Coupling |
| 80 | Input shaft | 87 | Shaft seal | 106 | Set screw |
| 81 | Circlip | 88 | Input shaft bearing | | |
| 83 | Circlip | 90 | Pinion shaft | | |

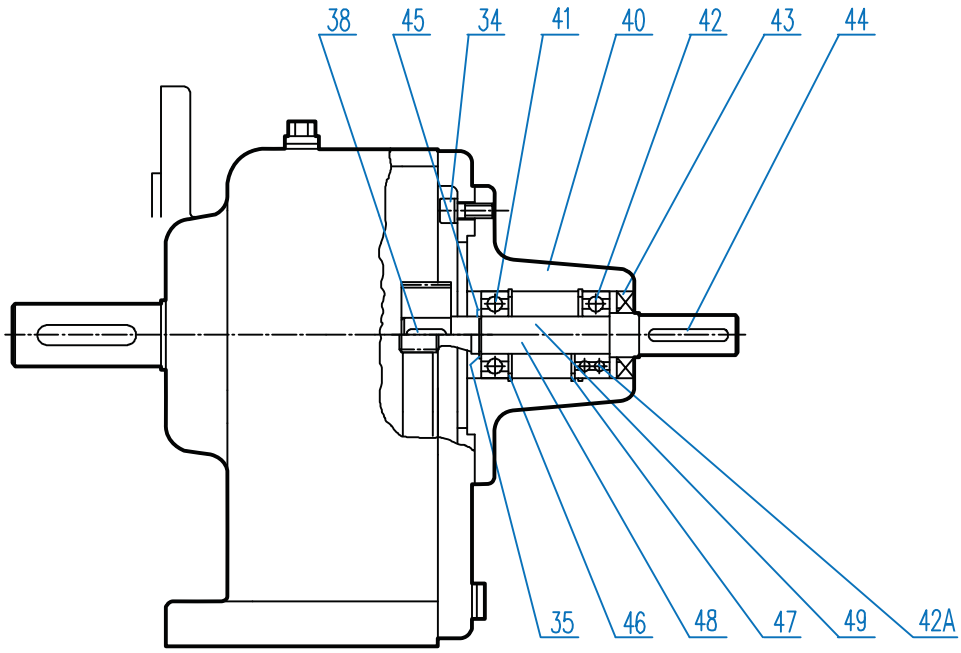


## SK 0 - SK 330 Solid Shaft Input (W)

| | | | | | |
|---|---|---|---|---|---|
| 34 | Socket head bolt | 42 | Grooved ball bearing, normal | 46 | Circlip |
| 35 | Shim | 42A | Grooved ball bearing, reinforced | 47 | Circlip |
| 38 | Key | 43 | Shaft seal | 48 | Input shaft, gearcut |
| 40 | Input bearing housing | 44 | Key | 49 | input shaft, plain |
| 41 | Grooved ball bearing | 45 | Circlip | | |

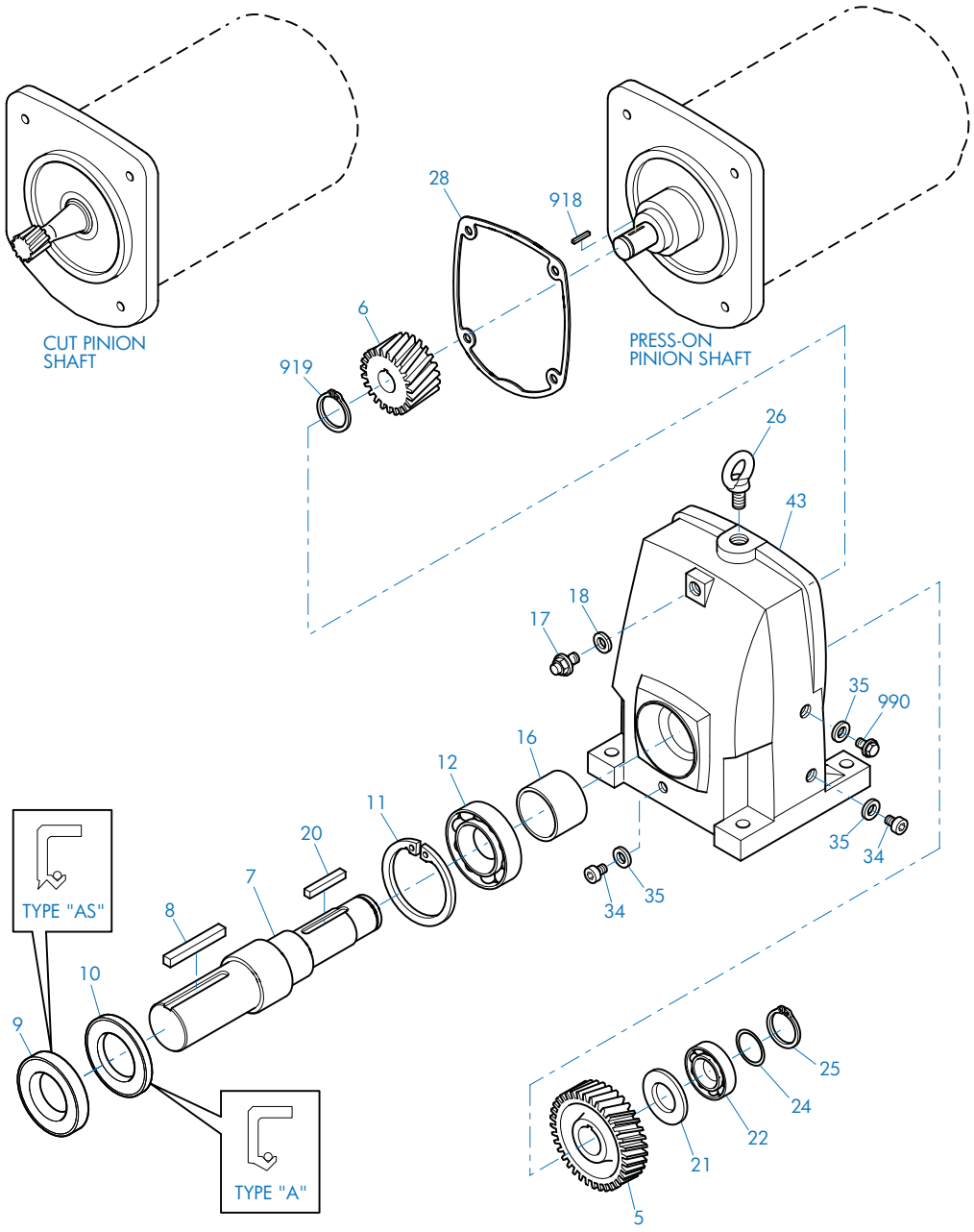


## SK 11E - SK 51E Foot Mount

| | | | | | |
|---|---|---|---|---|---|
| 5 | Gear | 16 | Spacer | 26 | Flanged Eye Bolt |
| 6 | Pinion | 17 | Vent Plug | 28 | Gasket |
| 7 | Output Shaft | 18 | Seal | 34 | Drain Plug |
| 8 | Key | 20 | Key | 35 | Gasket |
| 9 | Oil Seal | 21 | Spacer | 43 | Gearcase |
| 10 | Oil Seal | 22 | Anti-Friction Bearing | 918 | Key |
| 11 | Snap Ring | 24 | Shim | 919 | Snap Ring |
| 12 | Anti-Friction Bearing | 25 | Snap Ring | 990 | Oil Level Plug |

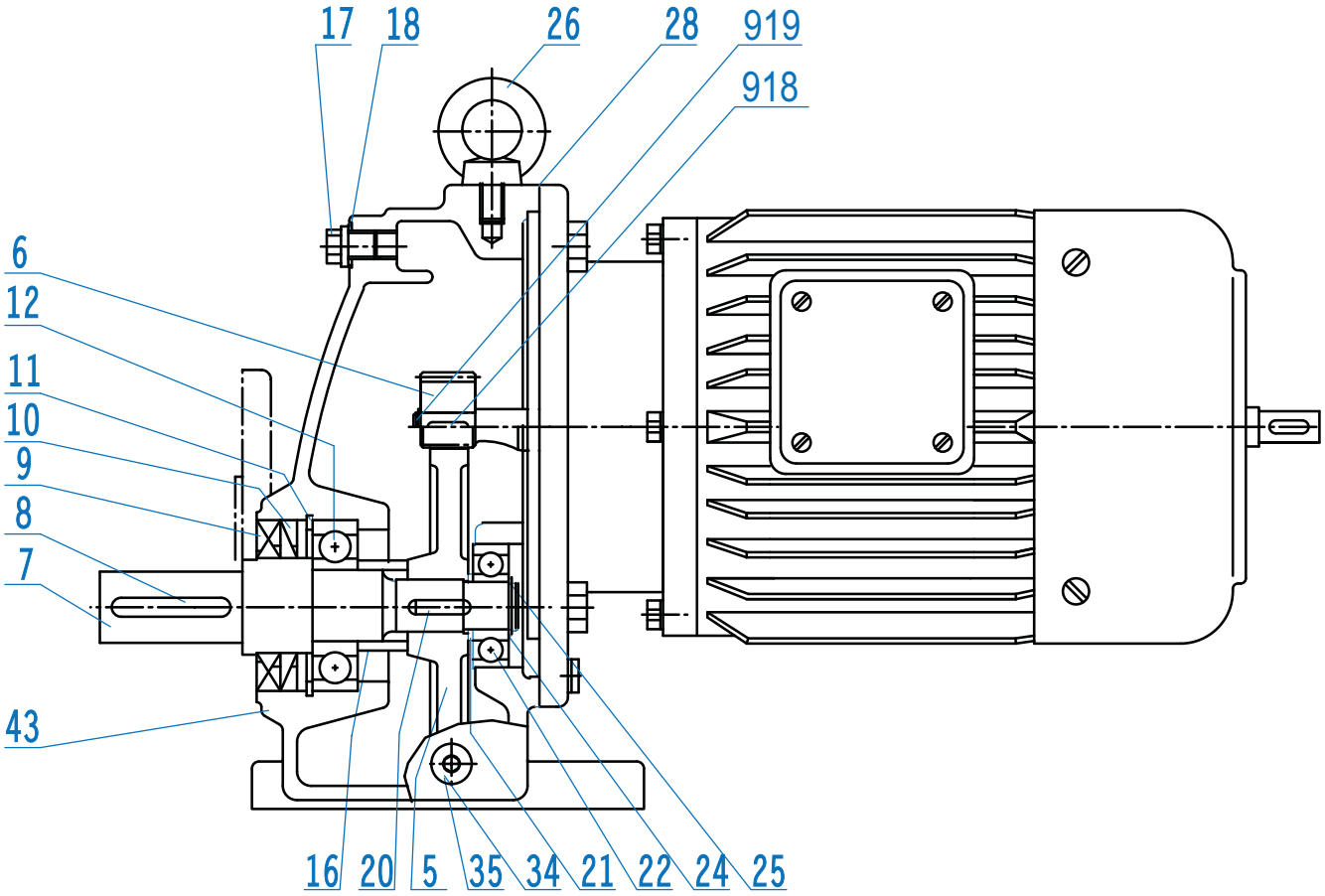


## SK 11E - SK 51E Foot Mount

| | | | | | |
|---|---|---|---|---|---|
| 5 | Gear | 16 | Spacer | 26 | Flanged Eye Bolt |
| 6 | Pinion | 17 | Vent Plug | 28 | Gasket |
| 7 | Output Shaft | 18 | Seal | 34 | Drain Plug |
| 8 | Key | 20 | Key | 35 | Gasket |
| 9 | Oil Seal | 21 | Spacer | 43 | Gearcase |
| 10 | Oil Seal | 22 | Anti-Friction Bearing | 918 | Key |
| 11 | Snap Ring | 24 | Shim | 919 | Snap Ring |
| 12 | Anti-Friction Bearing | 25 | Snap Ring | | |

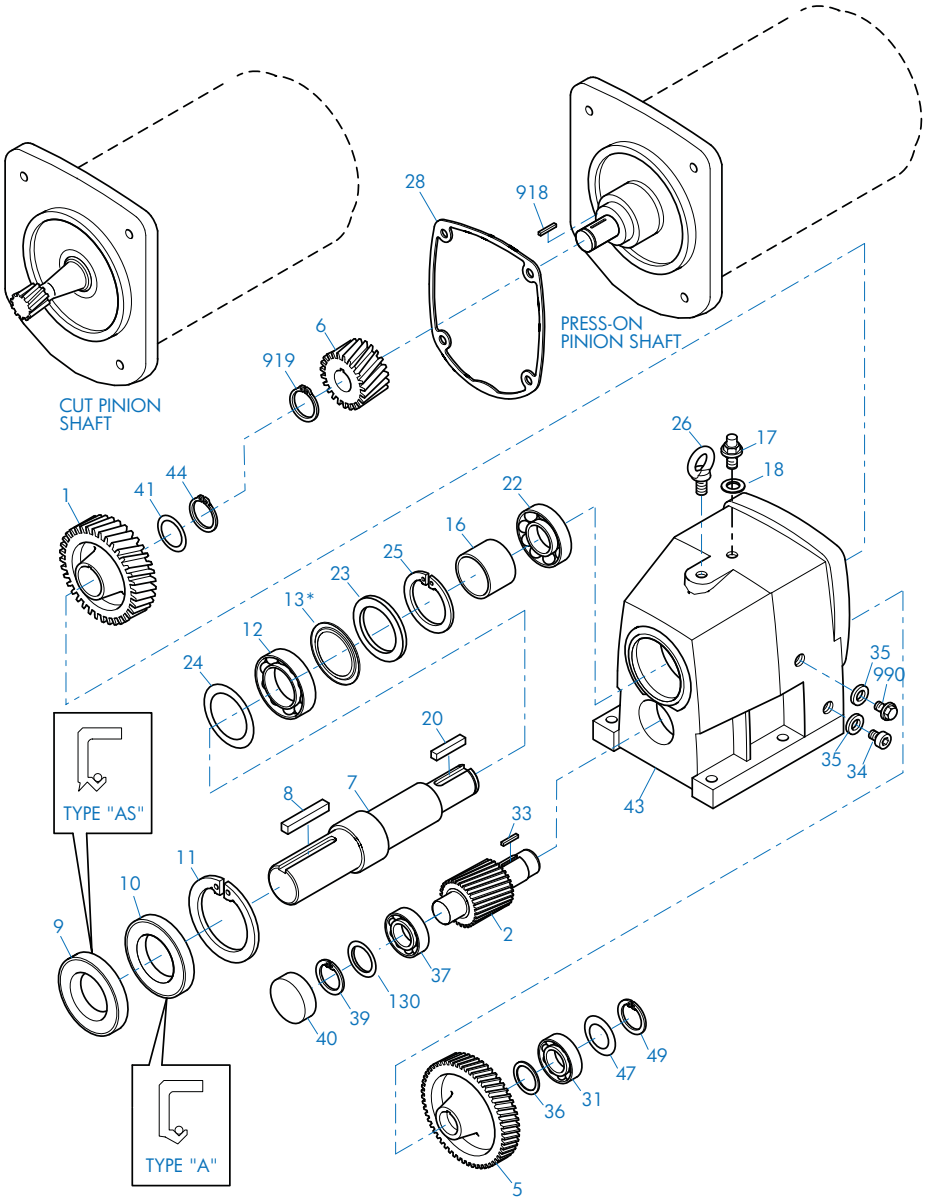


## SK02 - SK52 Foot Mount

| | | | | | |
|---|---|---|---|---|---|
| 1 | Gear | 18 | Seal | 37 | Anti-Friction Bearing |
| 2 | Pinion Shaft | 20 | Key | 39 | Snap Ring |
| 5 | Gear | 22 | Anti-Friction Bearing | 40 | Bore Plug |
| 6 | Pinion | 23 | Thrust Washer | 41 | Shim |
| 7 | Output Shaft | 24 | Shim | 43 | Gearcase |
| 8 | Key | 25 | Snap Ring | 44 | Snap Ring |
| 9 | Oil Seal | 26 | Flanged Eye Bolt | 47 | Shim |
| 10 | Oil Seal | 28 | Gasket | 49 | Snap Ring |
| 11 | Snap Ring | 31 | Anti-Friction Bearing | 130 | Shim |
| 12 | Anti-Friction Bearing | 33 | Key | 918 | Key |
| 13 | NILOS Ring* | 34 | Drain Plug | 919 | Snap Ring |
| 16 | Spacer | 35 | Gasket | 990 | Oil Level Plug |
| 17 | Vent Plug | 36 | Spacer | | |

* Conditionally used part

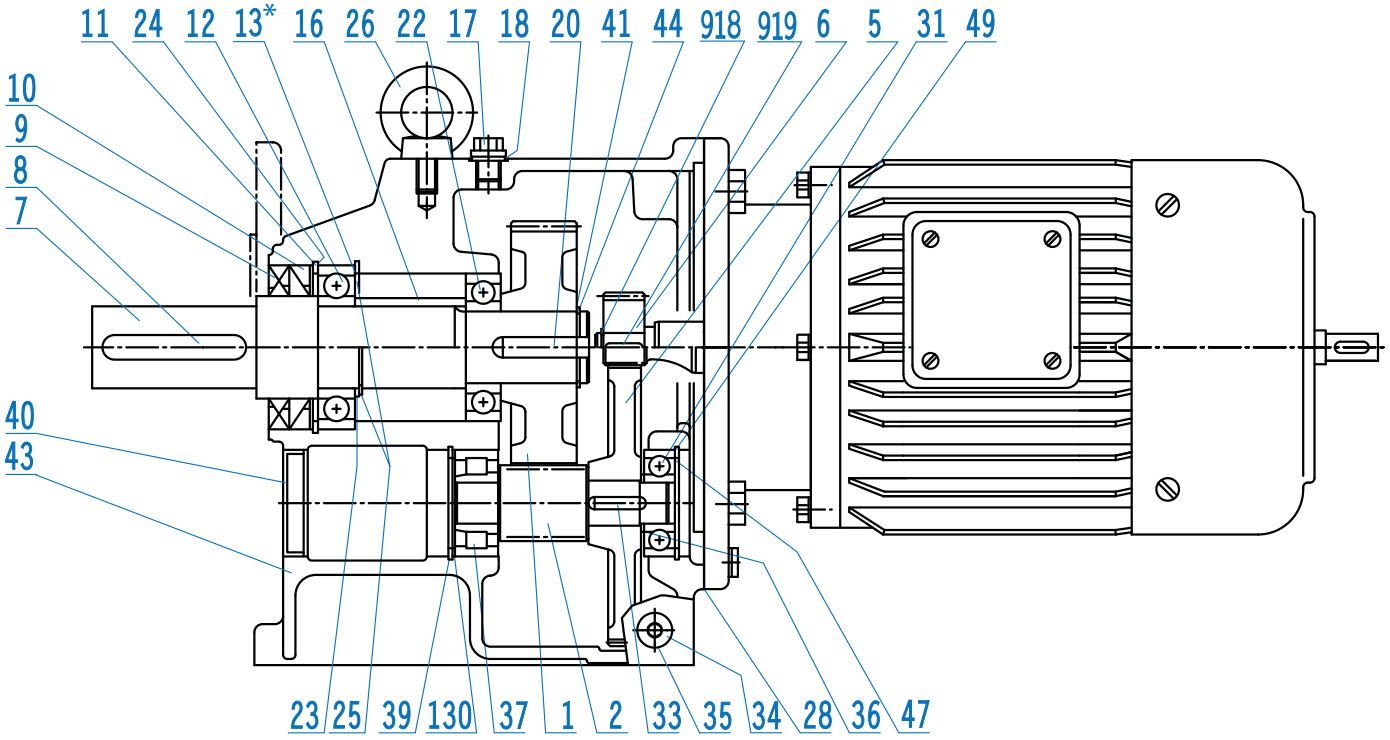


## SK02 - SK52 Foot Mount

| | | | | | |
|---|---|---|---|---|---|
| 1 | Gear | 18 | Seal | 37 | Anti-Friction Bearing |
| 2 | Pinion Shaft | 20 | Key | 39 | Snap Ring |
| 5 | Gear | 22 | Anti-Friction Bearing | 40 | Bore Plug |
| 6 | Pinion | 23 | Thrust Washer | 41 | Shim |
| 7 | Output Shaft | 24 | Shim | 43 | Gearcase |
| 8 | Key | 25 | Snap Ring | 44 | Snap Ring |
| 9 | Oil Seal | 26 | Flanged Eye Bolt | 47 | Shim |
| 10 | Oil Seal | 28 | Gasket | 49 | Snap Ring |
| 11 | Snap Ring | 31 | Anti-Friction Bearing | 130 | Shim |
| 12 | Anti-Friction Bearing | 33 | Key | 918 | Key |
| 13 | NILOS Ring* | 34 | Drain Plug | 919 | Snap Ring |
| 16 | Spacer | 35 | Gasket | | |
| 17 | Vent Plug | 36 | Spacer | | |

* Conditionally used part

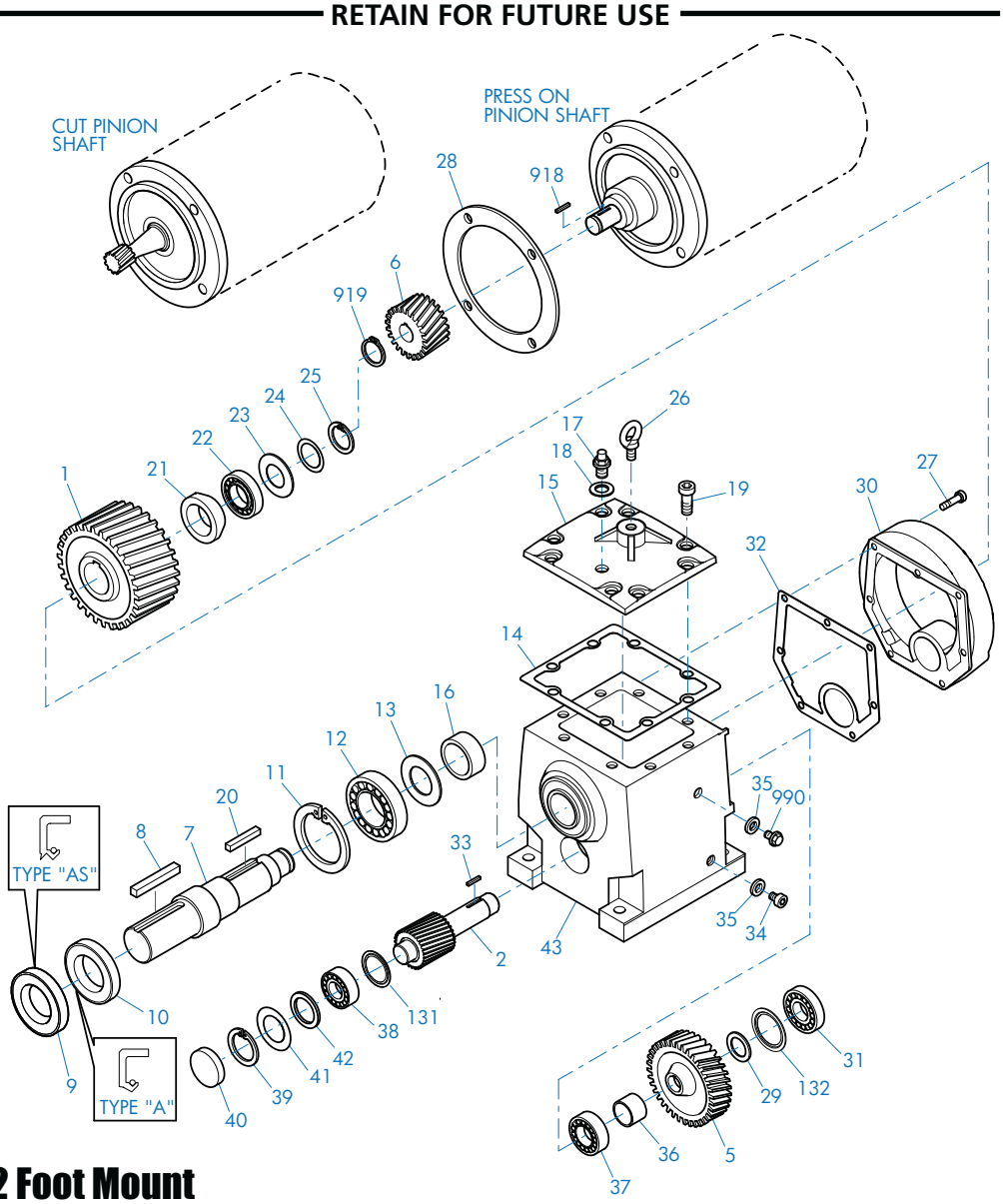


## SK62 - SK102 Foot Mount

| | | | | | |
|---|---|---|---|---|---|
| 1 | Gear | 19 | Bolt | 35 | Gasket |
| 2 | Pinion Shaft | 20 | Key | 36 | Spacer |
| 5 | Gear | 21 | Spacer | 37 | Anti-Friction Bearing |
| 6 | Pinion | 22 | Anti-Friction Bearing | 38 | Anti-Friction Bearing |
| 7 | Output Shaft | 23 | Thrust Washer | 39 | Snap Ring |
| 8 | Key | 24 | Shim | 40 | Bore Plug |
| 9 | Oil Seal | 25 | Snap Ring | 41 | Shim |
| 10 | Oil Seal | 26 | Flanged Eye Bolt | 42 | Thrust Washer |
| 11 | Snap Ring | 27 | Bolt | 43 | Gearcase |
| 12 | Anti-Friction Bearing | 28 | Gasket | 131 | NILOS Ring |
| 13 | NILOS ring | 29 | Spacer | 132 | NILOS Ring |
| 14 | Gasket | 30 | Input Cover | 918 | Key |
| 15 | Inspection Cover | 31 | Anti-Friction Bearing | 919 | Snap Ring |
| 16 | Spacer | 32 | Gasket | 990 | Oil Level Plug |
| 17 | Vent Plug | 33 | Key | | |
| 18 | Seal | 34 | Drain Plug | | |

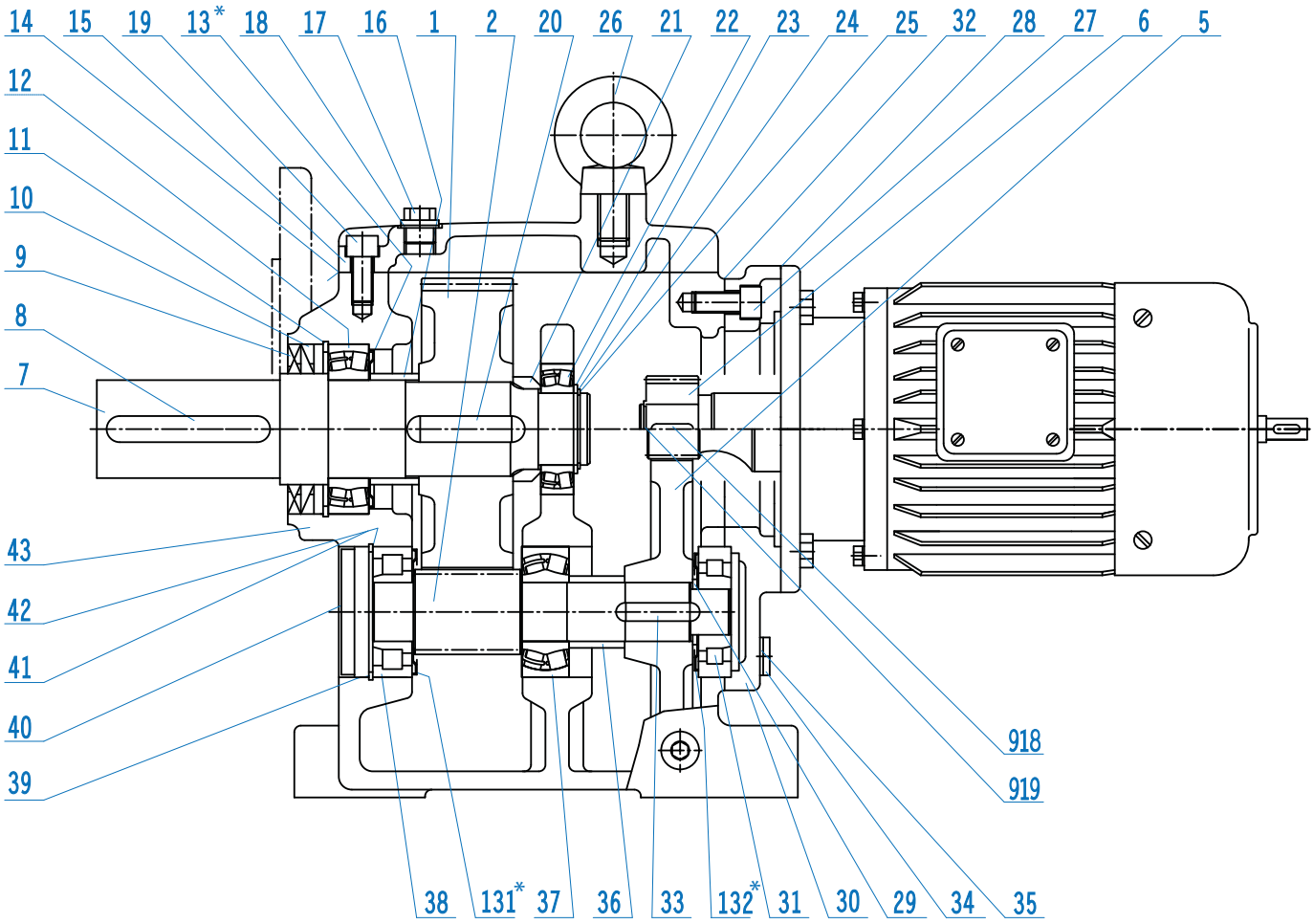


## SK62 - SK102 Foot Mount

| | | | | | |
|---|---|---|---|---|---|
| 1 | Gear | 18 | Seal | 33 | Key |
| 2 | Pinion Shaft | 19 | Bolt | 34 | Drain Plug |
| 5 | Gear | 20 | Key | 35 | Gasket |
| 6 | Pinion | 21 | Spacer | 36 | Spacer |
| 7 | Output Shaft | 22 | Anti-Friction Bearing | 37 | Anti-Friction Bearing |
| 8 | Key | 23 | Thrust Washer | 38 | Anti-Friction Bearing |
| 9 | Oil Seal | 24 | Shim | 39 | Snap Ring |
| 10 | Oil Seal | 25 | Snap Ring | 40 | Bore Plug |
| 11 | Snap Ring | 26 | Flanged Eye Bolt | 41 | Shim |
| 12 | Anti-Friction Bearing | 27 | Bolt | 42 | Thrust Washer |
| 13 | NILOS ring* | 28 | Gasket | 43 | Gearcase |
| 14 | Gasket | 29 | Spacer | 131 | NILOS Ring* |
| 15 | Inspection Cover | 30 | Input Cover | 132 | NILOS Ring* |
| 16 | Spacer | 31 | Anti-Friction Bearing | 918 | Key |
| 17 | Vent Plug | 32 | Gasket | 919 | Snap Ring |

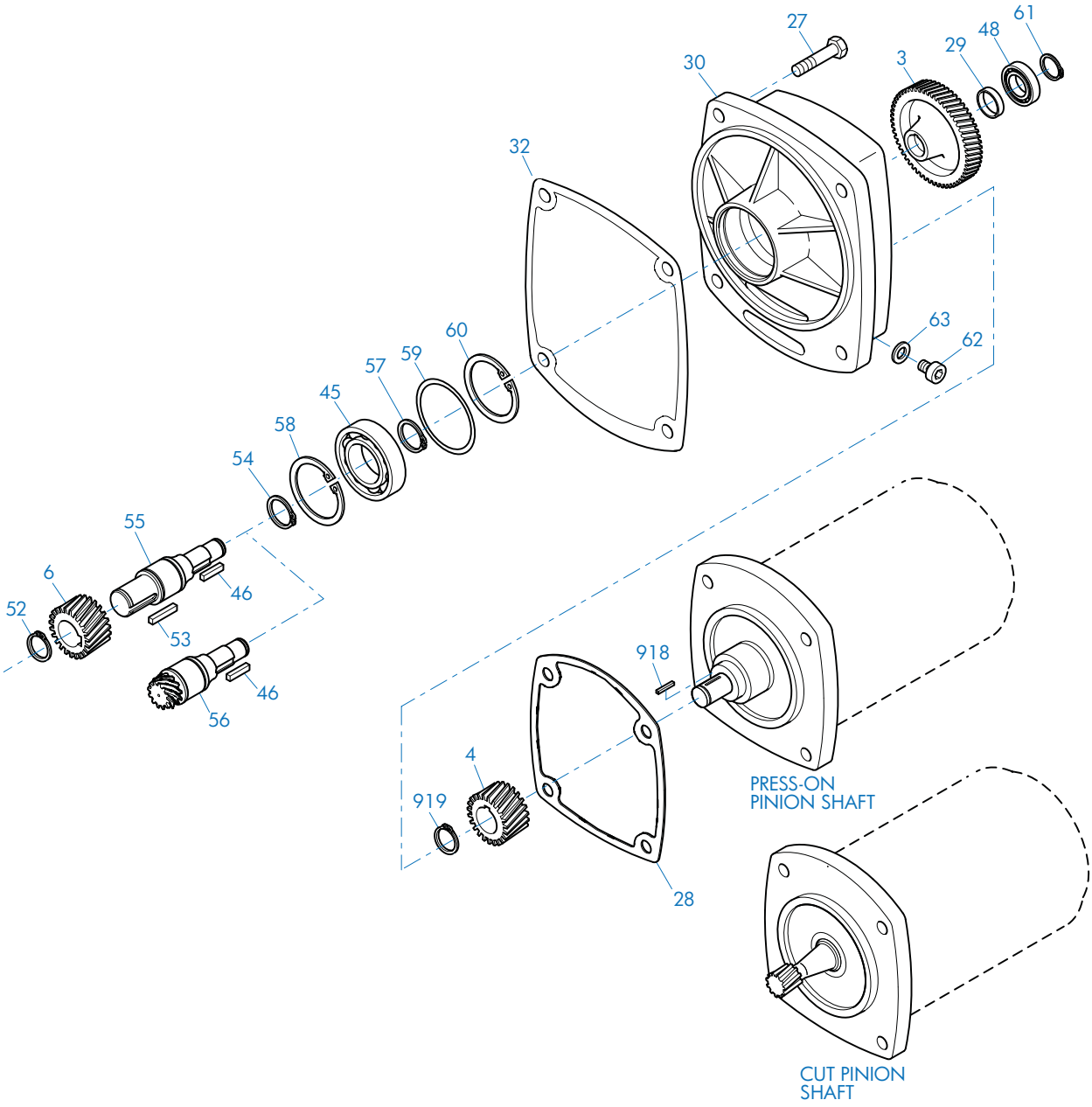


## SK03 - SK53 Third Stage Reduction Gear

| | | | | | |
|---|---|---|---|---|---|
| 3 | Gear | 46 | Key | 59 | Shim |
| 4 | Pinion | 48 | Anti-Friction Bearing | 60 | Snap Ring |
| 6 | Pinion | 52 | Snap Ring | 61 | Snap Ring |
| 27 | Bolt | 53 | Key | 62 | Oil Plug |
| 28 | Gasket | 54 | Snap Ring | 63 | Gasket |
| 29 | Spacer | 55 | Intermediate Shaft, Plain | 918 | Key |
| 30 | Third Reduction Gearcase | 56 | Intermediate Shaft, Gearcut | 919 | Snap Ring |
| 32 | Gasket | 57 | Snap Ring | | |
| 45 | Anti-Friction Bearing | 58 | Snap Ring | | |

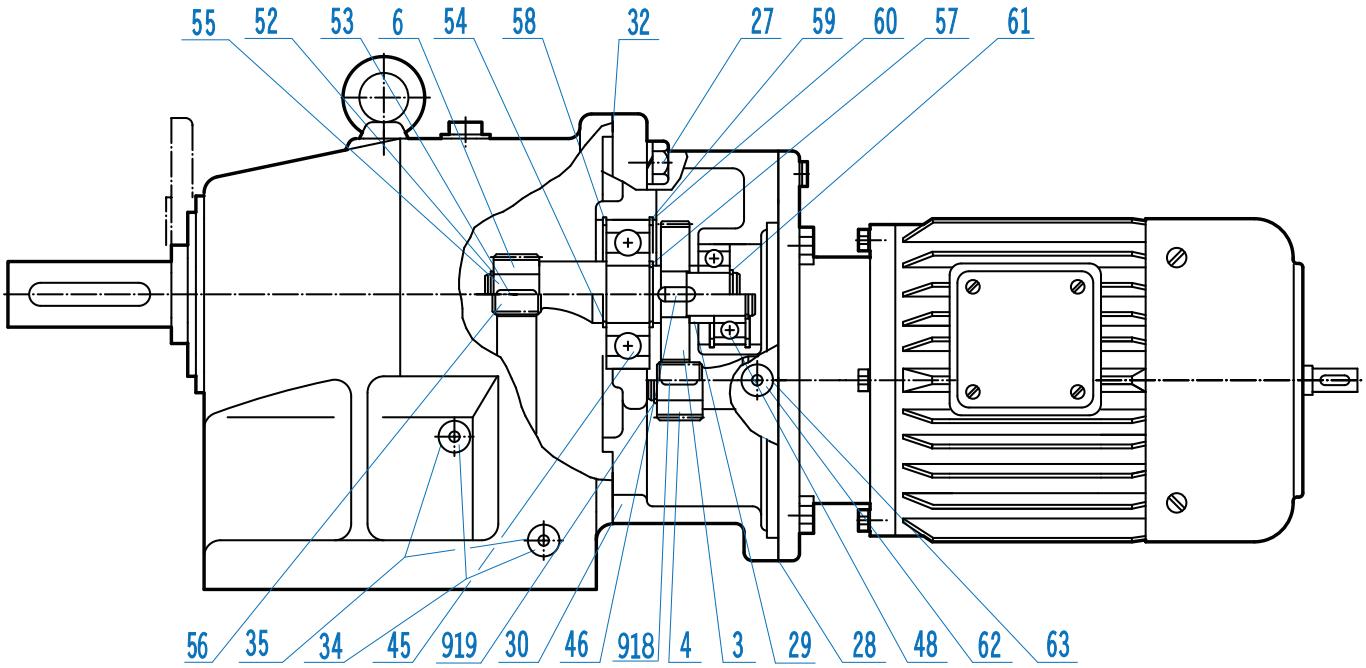


## SK03 - SK53 Using Third Stage Reduction Gear

| | | | | | |
|---|---|---|---|---|---|
| 3 | Gear | 46 | Key | 59 | Shim |
| 4 | Pinion | 48 | Anti-Friction Bearing | 60 | Snap Ring |
| 6 | Pinion | 52 | Snap Ring | 61 | Snap Ring |
| 27 | Bolt | 53 | Key | 62 | Oil Plug |
| 28 | Gasket | 54 | Snap Ring | 63 | Gasket |
| 29 | Spacer | 55 | Intermediate Shaft, Plain | 918 | Key |
| 30 | Third Reduction Gearcase | 56 | Intermediate Shaft, Gearcut | 919 | Snap Ring |
| 32 | Gasket | 57 | Snap Ring | | |
| 45 | Anti-Friction Bearing | 58 | Snap Ring | | |

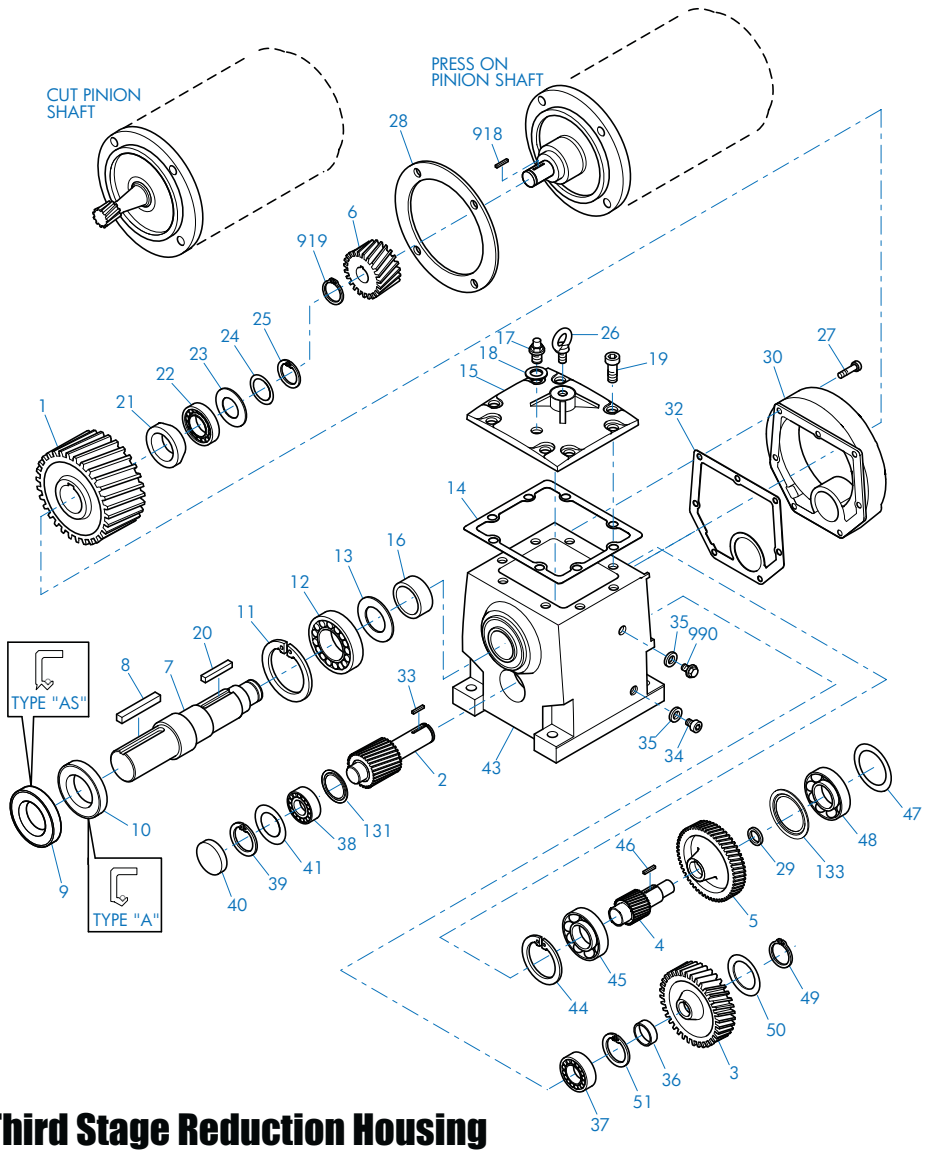


## SK63 - SK103 Third Stage Reduction Housing

| | | | | | |
|---|---|---|---|---|---|
| 1 | Gear | 19 | Bolt | 38 | Anti-Friction Bearing |
| 2 | Pinion Shaft | 20 | Key | 39 | Snap Ring |
| 3 | Gear | 21 | Spacer | 40 | Bore Plug |
| 4 | Pinion Shaft | 22 | Anti-Friction Bearing | 41 | Shim |
| 5 | Gear | 23 | Thrust Washer | 43 | Gearcase |
| 6 | Pinion | 24 | Shim | 44 | Snap Ring |
| 7 | Output Shaft | 25 | Snap Ring | 45 | Anti-Friction Bearing |
| 8 | Key | 26 | Flanged Eye Bolt | 46 | Key |
| 9 | Oil Seal | 27 | Bolt | 47 | Shim |
| 10 | Oil Seal | 28 | Gasket | 48 | Bearing |
| 11 | Snap Ring | 29 | Spacer | 49 | Snap Ring |
| 12 | Anti-Friction Bearing | 30 | Input Cover | 50 | Thrust Washer |
| 13 | NILOS Ring | 32 | Gasket | 51 | Snap Ring |
| 14 | Gasket | 33 | Key | 131 | NILOS Ring |
| 15 | Inspection Cover | 34 | Drain plug | 133 | NILOS Ring |
| 16 | Spacer | 35 | Gasket | 918 | Key |
| 17 | Vent Plug | 36 | Spacer | 919 | Snap Ring |
| 18 | Seal | 37 | Anti-Friction Bearing | 990 | Oil Level Plug |

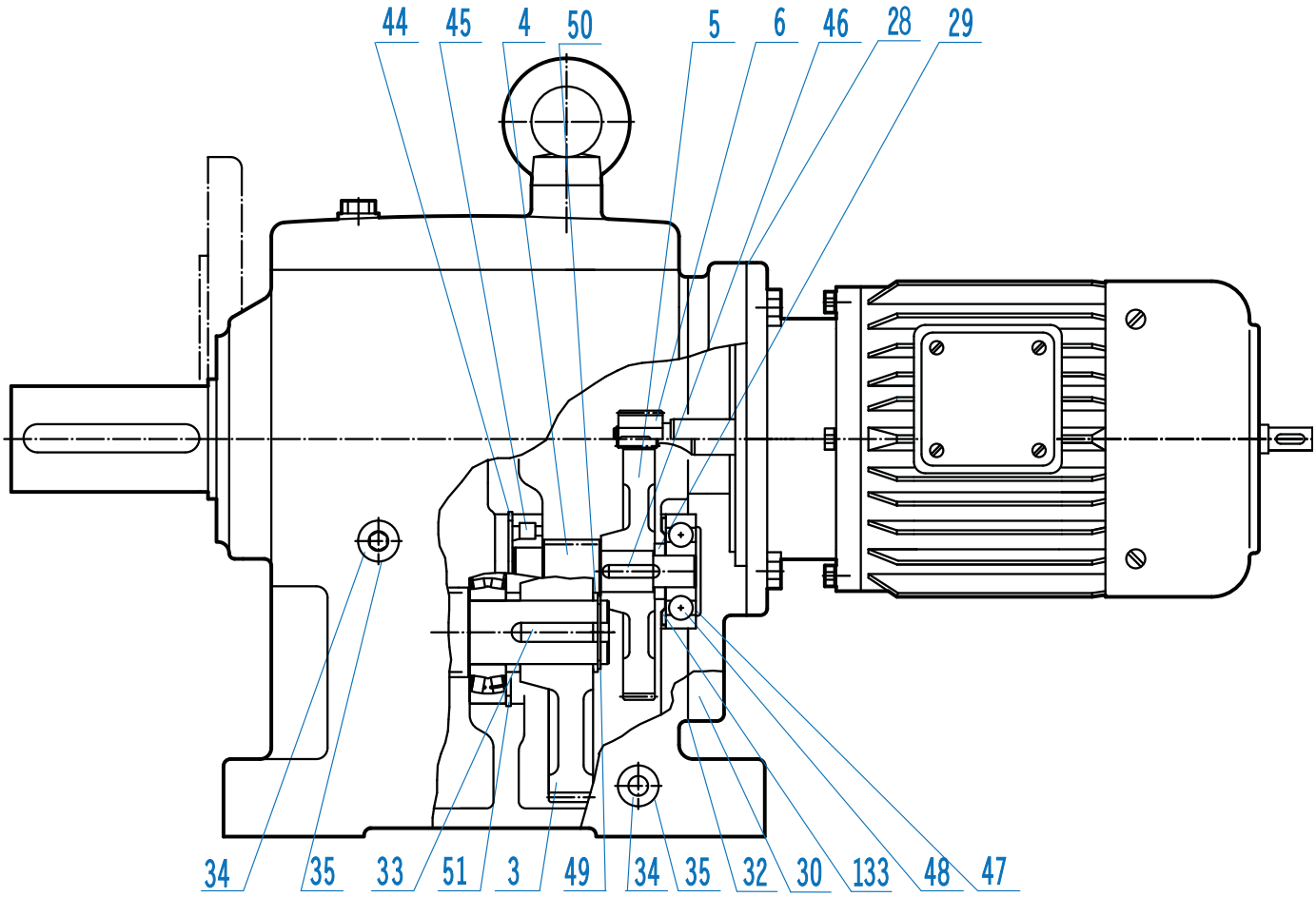


## SK63 - SK103 Foot Mount

| | | | | | |
|---|---|---|---|---|---|
| 3 | Gear | 32 | Gasket | 47 | Shim |
| 4 | Pinion Shaft | 33 | Key | 48 | Bearing |
| 5 | Gear | 34 | Drain plug | 49 | Snap Ring |
| 6 | Pinion | 35 | Gasket | 50 | Thrust Washer |
| 28 | Gasket | 44 | Snap Ring | 51 | Snap Ring |
| 29 | Spacer | 45 | Anti-Friction Bearing | 133 | NILOS Ring |
| 30 | Input Cover | 46 | Key | | |

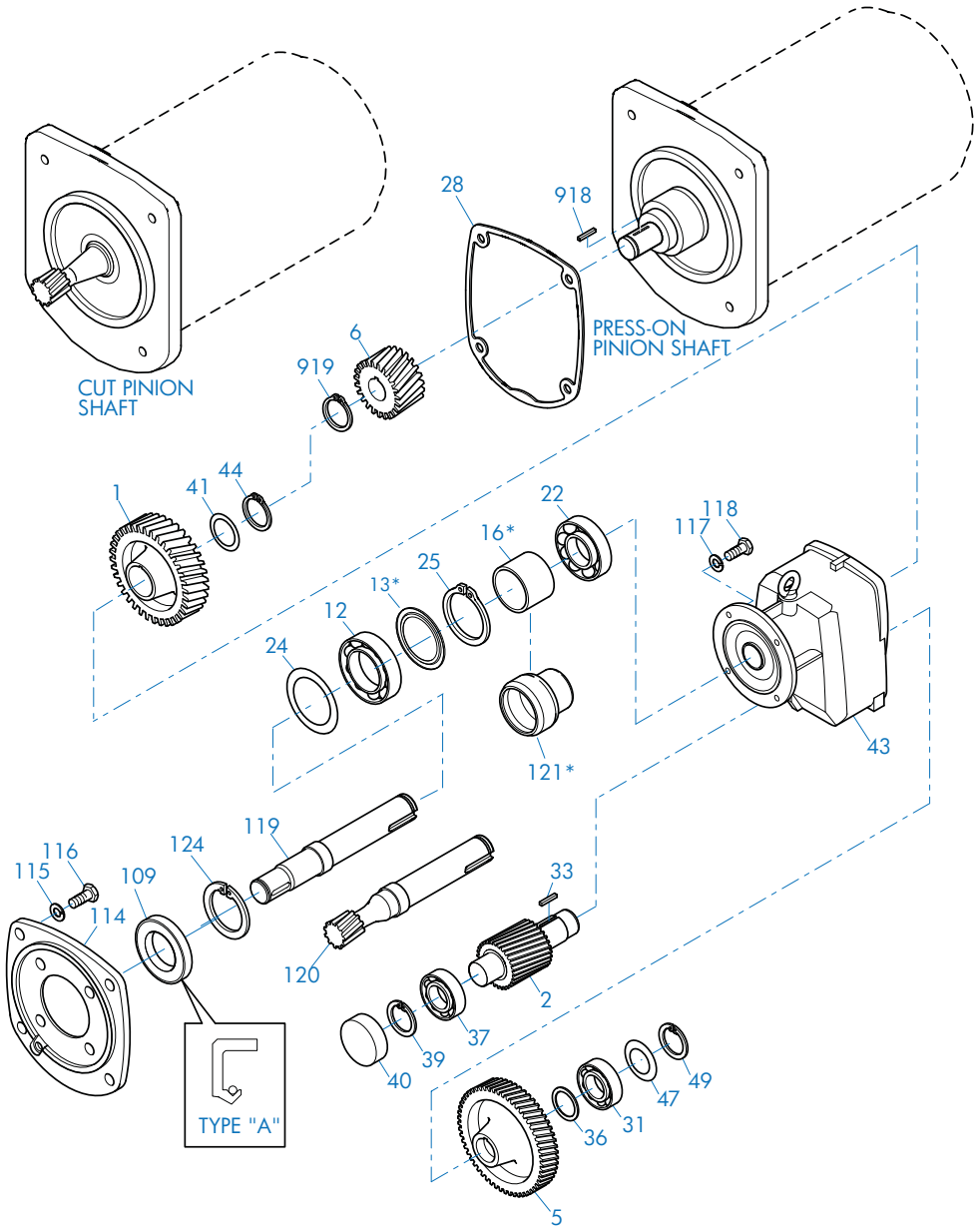


## SK12/02 - SK103/52 Input Compound Reduction

| | | | | | |
|---|---|---|---|---|---|
| 1 | Gear | 33 | Key | 115 | Lock Washer |
| 2 | Pinion Shaft | 36 | Spacer | 116 | Bolt |
| 5 | Gear | 37 | Anti-Friction Bearing | 117 | Lock Washer |
| 6 | Pinion | 39 | Snap Ring | 118 | Bolt |
| 12 | Anti-Friction Bearing | 40 | Bore Plug | 119 | Intermediate Shaft, Plain |
| 13 | Nilos Ring* | 41 | Shim | 120 | Intermediate Shaft, Gearcut |
| 16 | Spacer* | 43 | Gearcase | 121 | Bearing Sleeve* |
| 22 | Anti-Friction Bearing | 44 | Snap Ring | 124 | Snap Ring |
| 24 | Shim | 47 | Shim | 918 | Key |
| 25 | Snap Ring | 49 | Snap Ring | 919 | Snap Ring |
| 28 | Gasket | 109 | Oil Seal | | |
| 31 | Anti-Friction Bearing | 114 | Intermediate Flange | | |

* Conditionally used part

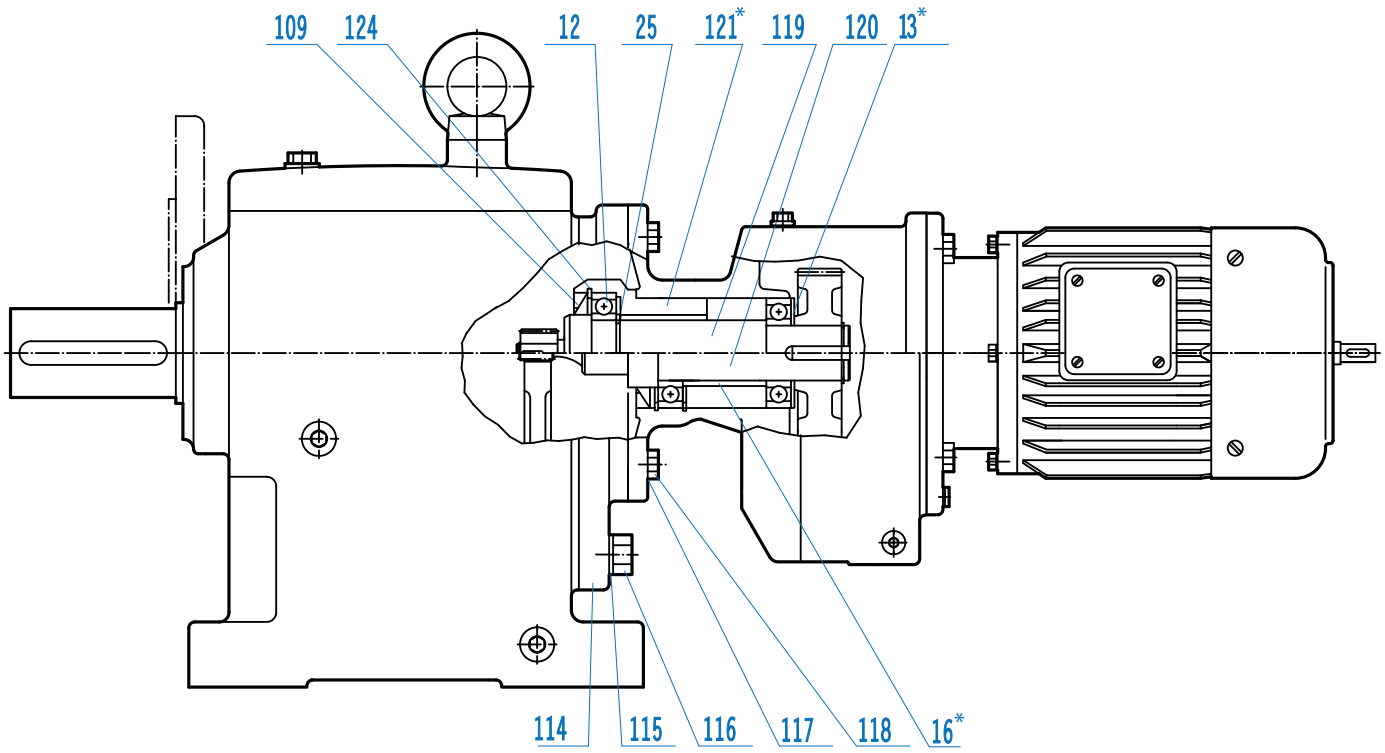


## SK12/02 - SK103/52 Input Compound Reduction

| | | | | | |
|---|---|---|---|---|---|
| 12 | Anti-Friction Bearing | 115 | Lock Washer | 120 | Intermediate Shaft, Gearcut |
| 13 | Nilos Ring* | 116 | Bolt | 121 | Bearing Sleeve* |
| 16 | Spacer* | 117 | Lock Washer | 124 | Snap Ring |
| 25 | Snap Ring | 118 | Bolt | | |
| 109 | Oil Seal | 119 | Intermediate Shaft, Plain | | |
| 114 | Intermediate Flange | | | | |

* Conditionally used part

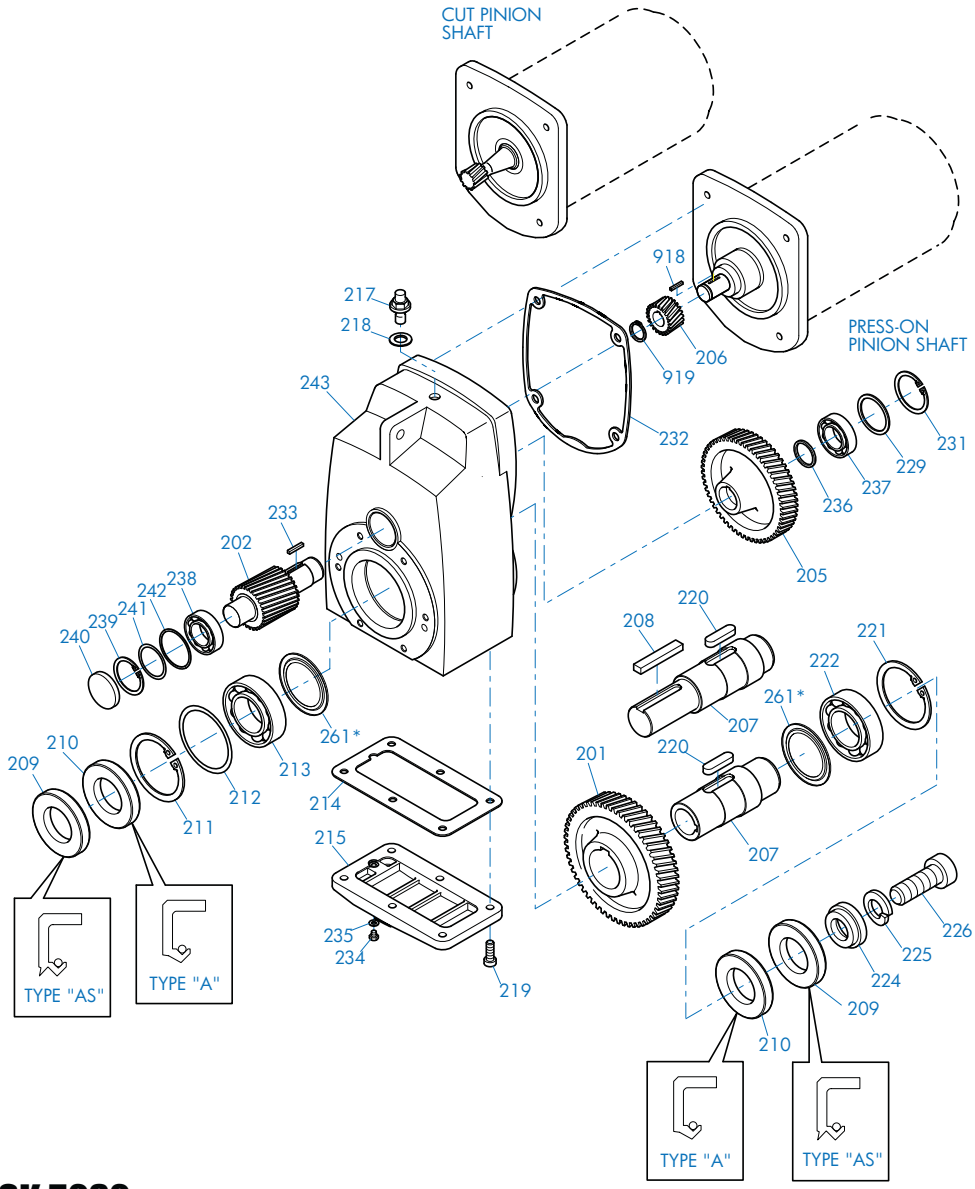


## SK 0182NB - SK 5282

| | | |
|---|---|---|
| 201 Gear | 217 Vent Plug | 234 Drain Plug |
| 202 Pinion Shaft | 218 Gasket | 235 Gasket |
| 205 Gear | 219 Bolt | 236 Thrust Washer |
| 206 Pinion | 220 Key | 237 Anti-Friction Bearing |
| 207 Output Shaft | 221 Snap Ring | 238 Anti-Friction Bearing |
| 208 Key | 222 Anti-Friction Bearing | 239 Snap Ring |
| 209 Oil Seal | 224 Retaining Washer | 240 Bore Plug |
| 210 Oil Seal | 225 Lock Washer | 241 Shim |
| 211 Snap Ring | 226 Bolt | 242 Thrust Washer |
| 212 Shim | 229 Thrust Washer | 243 Gearcase |
| 213 Anti-Friction Bearing | 231 Snap Ring | 261 Nilos Ring* |
| 214 Gasket | 232 Gasket | 918 Key |
| 215 Inspection Cover | 233 Key | 919 Snap Ring |

* Conditionally used part

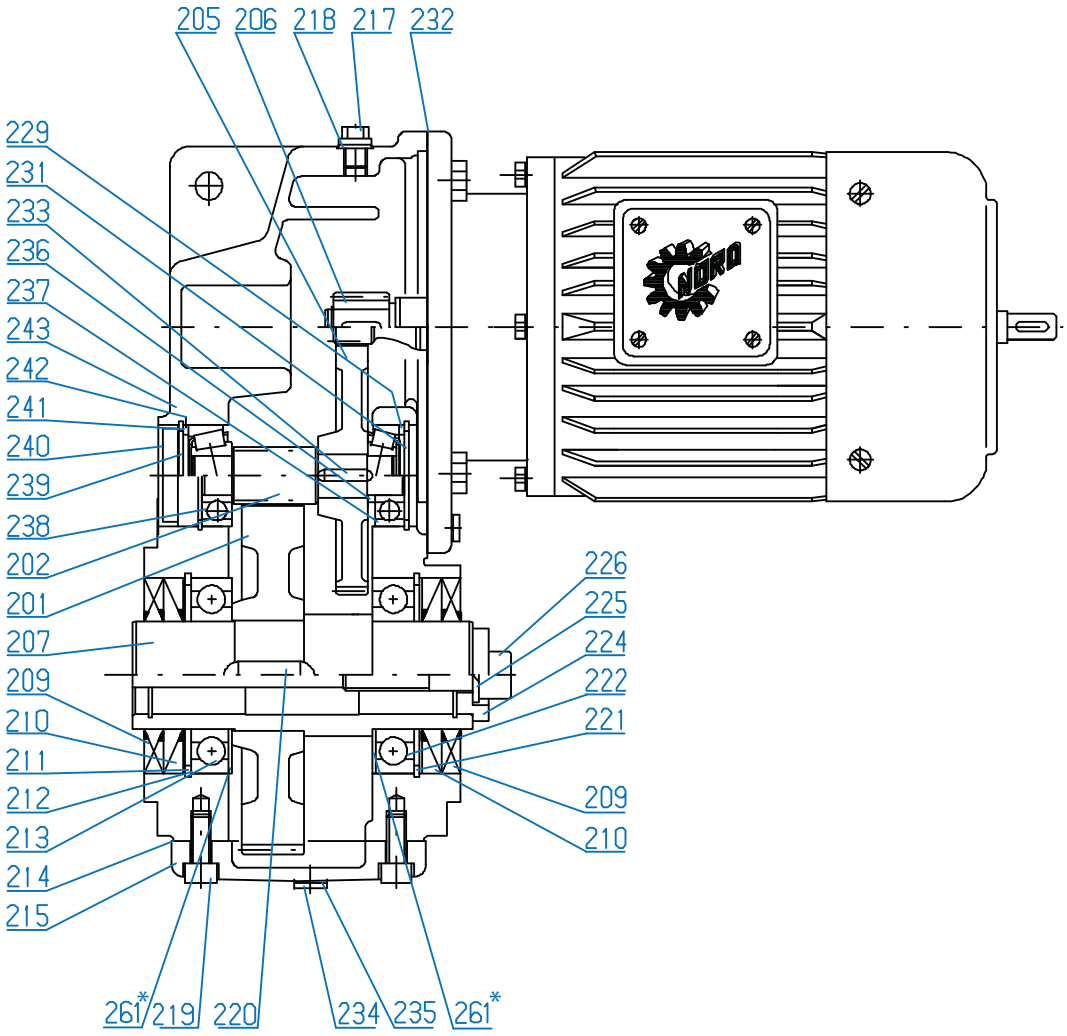


## SK 0182NB - SK 5282

| | | |
|---|---|---|
| 201 Gear | 217 Vent Plug | 233 Key |
| 202 Pinion Shaft | 218 Gasket | 234 Drain Plug |
| 205 Gear | 219 Bolt | 235 Gasket |
| 206 Pinion | 220 Key | 236 Thrust Washer |
| 207 Output Shaft | 221 Snap Ring | 237 Anti-Friction Bearing |
| 209 Oil Seal | 222 Anti-Friction Bearing | 238 Anti-Friction Bearing |
| 210 Oil Seal | 224 Retaining Washer | 239 Snap Ring |
| 211 Snap Ring | 225 Lock Washer | 240 Bore Plug |
| 212 Shim | 226 Bolt | 241 Shim |
| 213 Anti-Friction Bearing | 229 Thrust Washer | 242 Thrust Washer |
| 214 Gasket | 231 Snap Ring | 243 Gearcase |
| 215 Inspection Cover | 232 Gasket | 261 Nilos Ring* |

* Conditionally used part

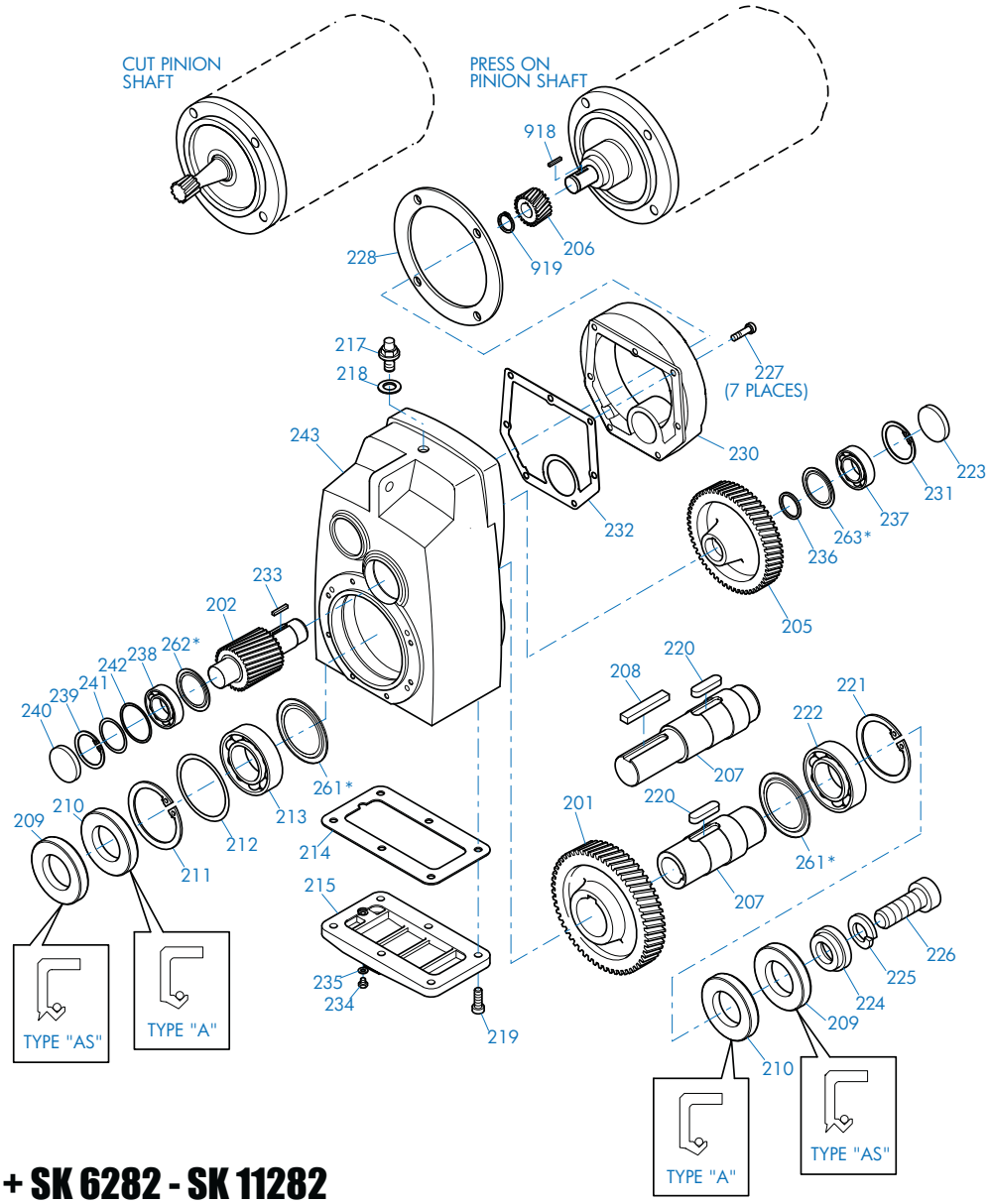


## SK 0282NB + SK 6282 - SK 11282

| | | |
|---|---|---|
| 201 Gear | 219 Bolt | 236 Thrust Washer |
| 202 Pinion Shaft | 220 Key | 237 Anti-Friction Bearing |
| 205 Gear | 221 Snap Ring | 238 Anti-Friction Bearing |
| 206 Pinion | 222 Anti-Friction Bearing | 239 Snap Ring |
| 207 Output Shaft | 224 Retaining Washer | 240 Bore Plug |
| 208 Key | 225 Lock Washer | 241 Shim |
| 209 Oil Seal | 226 Bolt | 242 Thrust Washer |
| 210 Oil Seal | 227 Bolt | 243 Gear case |
| 211 Snap Ring | 228 Gasket | 261 Nilos Ring* |
| 212 Shim | 230 Input Cover | 262 Nilos Ring* |
| 213 Anti-Friction Bearing | 231 Snap Ring | 263 Nilos Ring* |
| 214 Gasket | 232 Gasket | 918 Key |
| 215 Inspection Cover | 233 Key | 919 Snap Ring |
| 217 Vent Plug | 234 Drain Plug | |
| 218 Gasket | 235 Gasket | |

* Conditionally used part

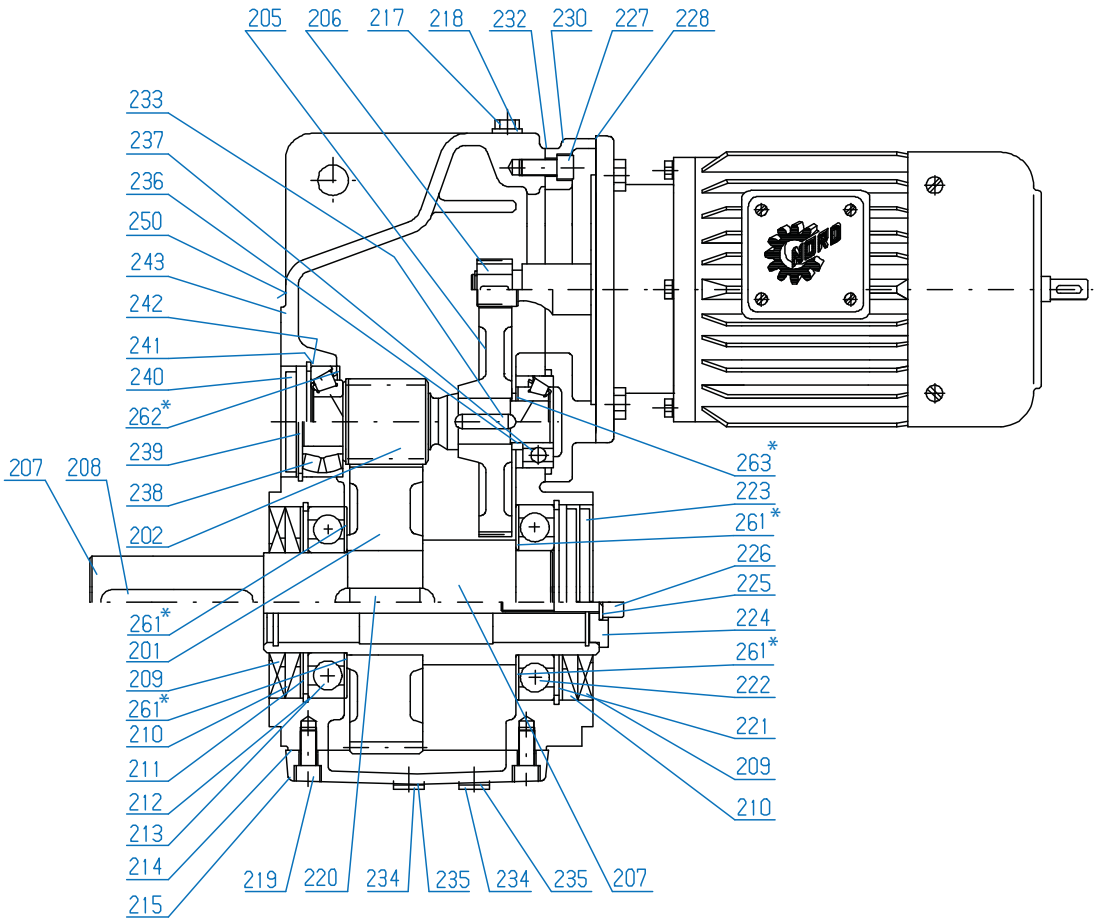


## SK 0282NB + SK 6282 - SK 11282

| | | |
|---|---|---|
| 201 Gear | 218 Gasket | 234 Drain Plug |
| 202 Pinion Shaft | 219 Bolt | 235 Gasket |
| 205 Gear | 220 Key | 236 Thrust Washer |
| 206 Pinion | 221 Snap Ring | 237 Anti-Friction Bearing |
| 207 Output Shaft | 222 Anti-Friction Bearing | 238 Anti-Friction Bearing |
| 208 Key | 223 Bore Plug | 239 Snap Ring |
| 209 Oil Seal | 224 Retaining Washer | 240 Bore Plug |
| 210 Oil Seal | 225 Lock Washer | 241 Shim |
| 211 Snap Ring | 226 Bolt | 242 Thrust Washer |
| 212 Shim | 227 Bolt | 243 Gear case |
| 213 Anti-Friction Bearing | 228 Gasket | 250 Bore Plug |
| 214 Gasket | 230 Input Cover | 261 Nilos Ring* |
| 215 Inspection Cover | 232 Gasket | 262 Nilos Ring* |
| 217 Vent Plug | 233 Key | 263 Nilos Ring* |

* Conditionally used part

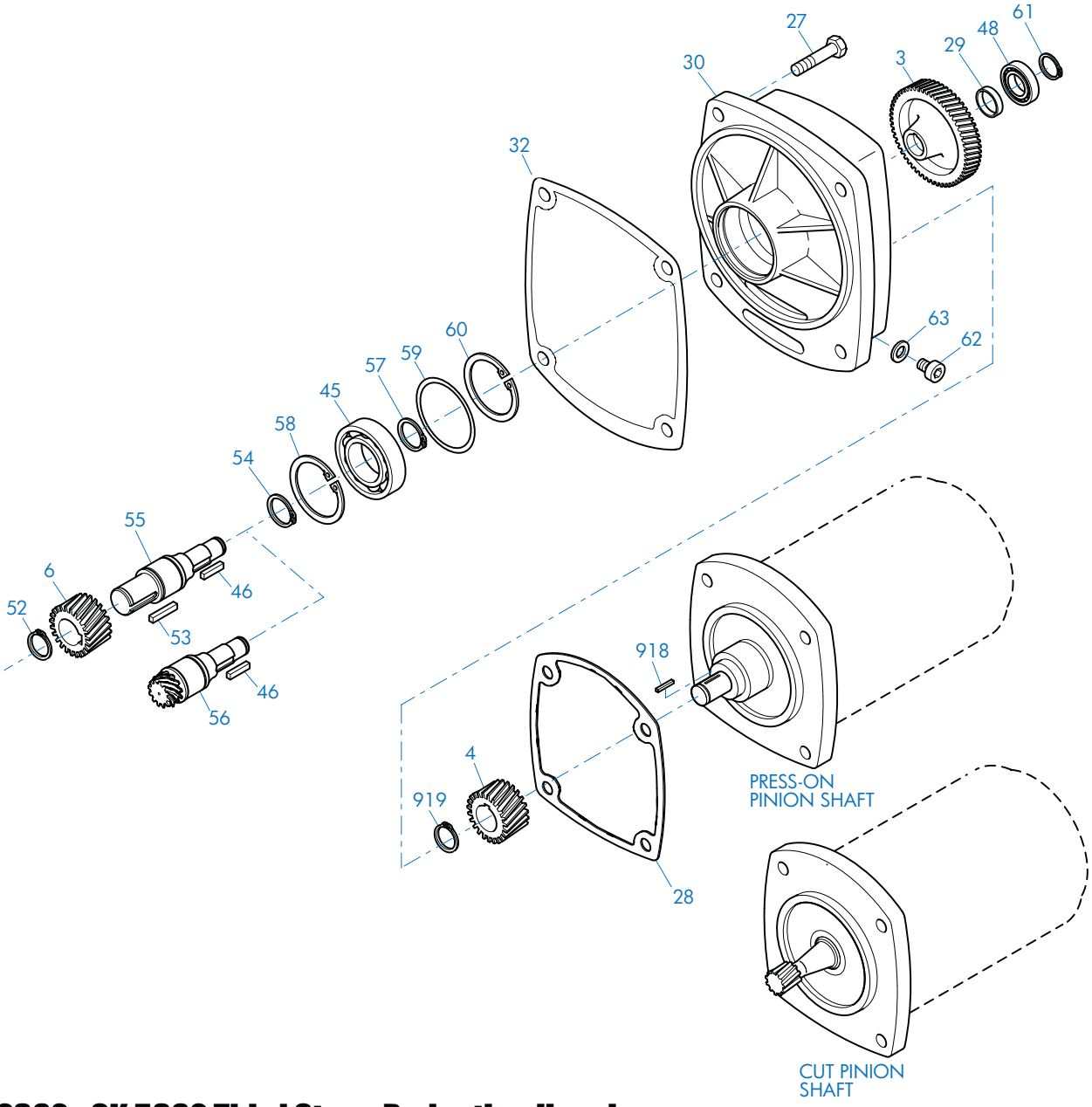


## SK 2382 - SK 5382 Third Stage Reduction Housing

| | | | | | |
|---|---|---|---|---|---|
| 3 | Gear | 46 | Key | 59 | Shim |
| 4 | Pinion | 48 | Anti-Friction Bearing | 60 | Snap Ring |
| 6 | Pinion | 52 | Snap Ring | 61 | Snap Ring |
| 27 | Bolt | 53 | Key | 62 | Oil Plug |
| 28 | Gasket | 54 | Snap Ring | 63 | Gasket |
| 29 | Spacer | 55 | Intermediate Shaft, Plain | 918 | Key |
| 30 | Third Reduction Gearcase | 56 | Intermediate Shaft, Gearcut | 919 | Snap Ring |
| 32 | Gasket | 57 | Snap Ring | | |
| 45 | Anti-Friction Bearing | 58 | Snap Ring | | |

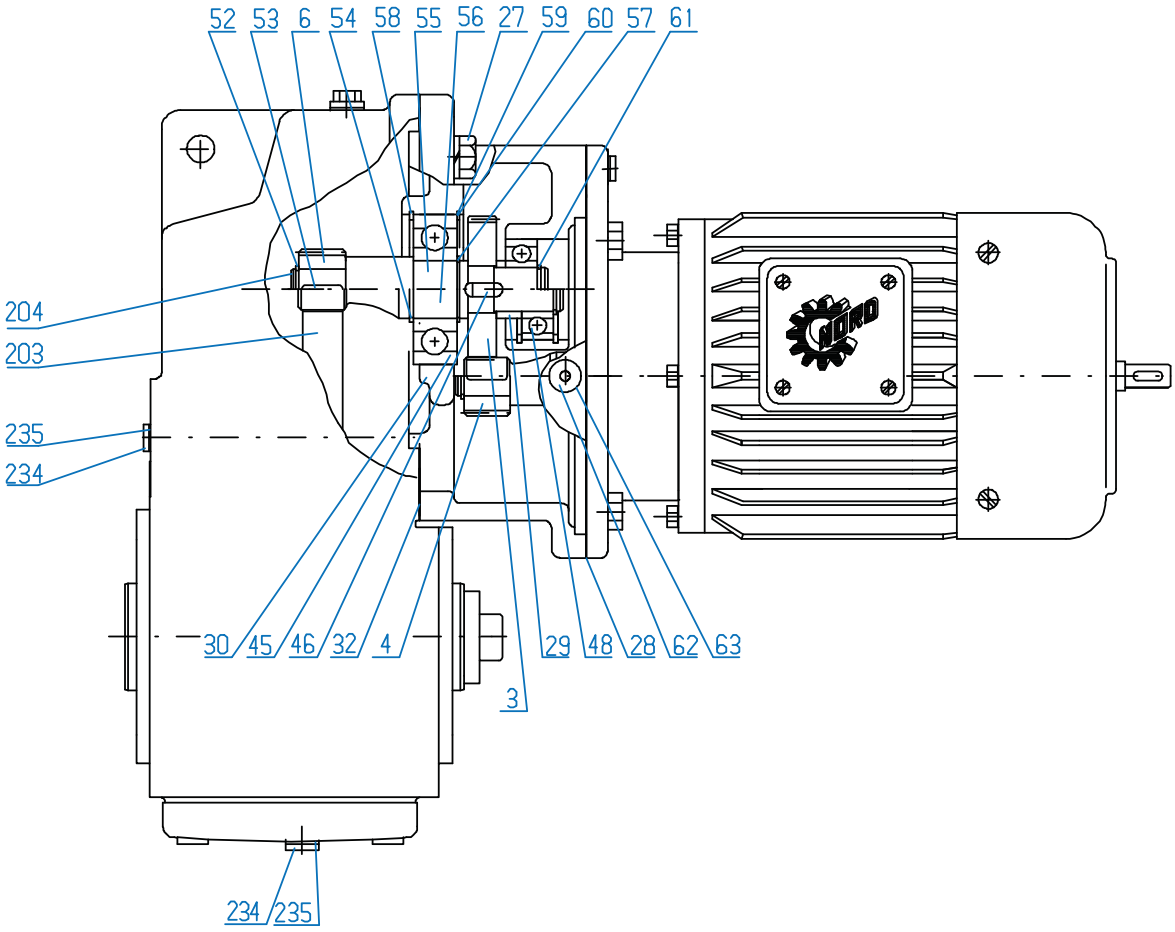


## SK 2382 - SK 5382 Third Stage Reduction Housing

| | | | | | |
|---|---|---|---|---|---|
| 3 | Gear | 46 | Key | 59 | Shim |
| 4 | Pinion | 48 | Anti-Friction Bearing | 60 | Snap Ring |
| 6 | Pinion | 52 | Snap Ring | 61 | Snap Ring |
| 27 | Bolt | 53 | Key | 62 | Oil Plug |
| 28 | Gasket | 54 | Snap Ring | 63 | Gasket |
| 29 | Spacer | 55 | Intermediate Shaft, Plain | 203 | Gear |
| 32 | Gasket | 56 | Intermediate Shaft, Gearcut | 204 | Pinion Shaft |
| 30 | Third Reduction Gearcase | 57 | Snap Ring | 234 | Oil Plug |
| 45 | Anti-Friction Bearing | 58 | Snap Ring | 235 | Gasket |

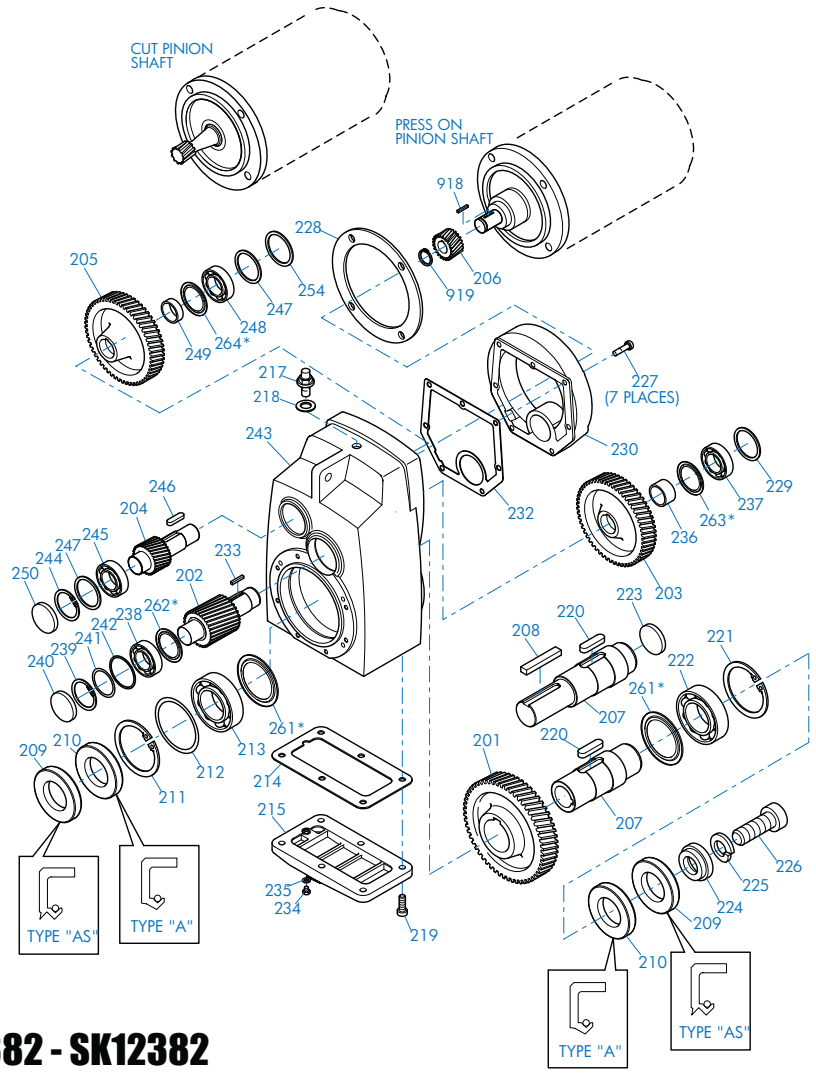


## SK 1382 NB + SK 6382 - SK12382

201 Gear
202 Pinion Shaft
203 Gear
204 Pinion Shaft
205 Gear
206 Pinion
207 Output Shaft
208 Key
209 Oil Seal
210 Oil Seal
211 Snap Ring
212 Shim
213 Anti-Friction Bearing
214 Gasket
215 Inspection Cover
217 Vent Plug
218 Gasket
219 Bolt
220 Key
221 Snap Ring
222 Anti-Friction Bearing
223 Bore Plug
224 Retaining Washer
225 Lock Washer
226 Bolt
227 Bolt
228 Gasket
229 Thrust Washer
230 Input Cover
232 Gasket
233 Key
234 Drain Plug
235 Gasket
236 Thrust Washer
237 Anti-Friction Bearing
238 Anti-Friction Bearing
239 Snap Ring
240 Bore Plug
241 Shim
242 Thrust Washer
243 Gearcase
244 Snap Ring
245 Anti-Friction Bearing
246 Key
247 Shim
248 Anti-Friction Bearing
249 Spacer
250 Bore Plug
254 Thrust Washer
261 Nilos Ring*
262 Nilos Ring*
263 Nilos Ring*
264 Nilos Ring*
918 Key
919 Snap Ring

* Conditionally used part

**NORD Gear Limited**
Toll Free in Canada: 800.668.4378

**NORD Gear Corporation**
Toll Free in the United States: 888.314.6673

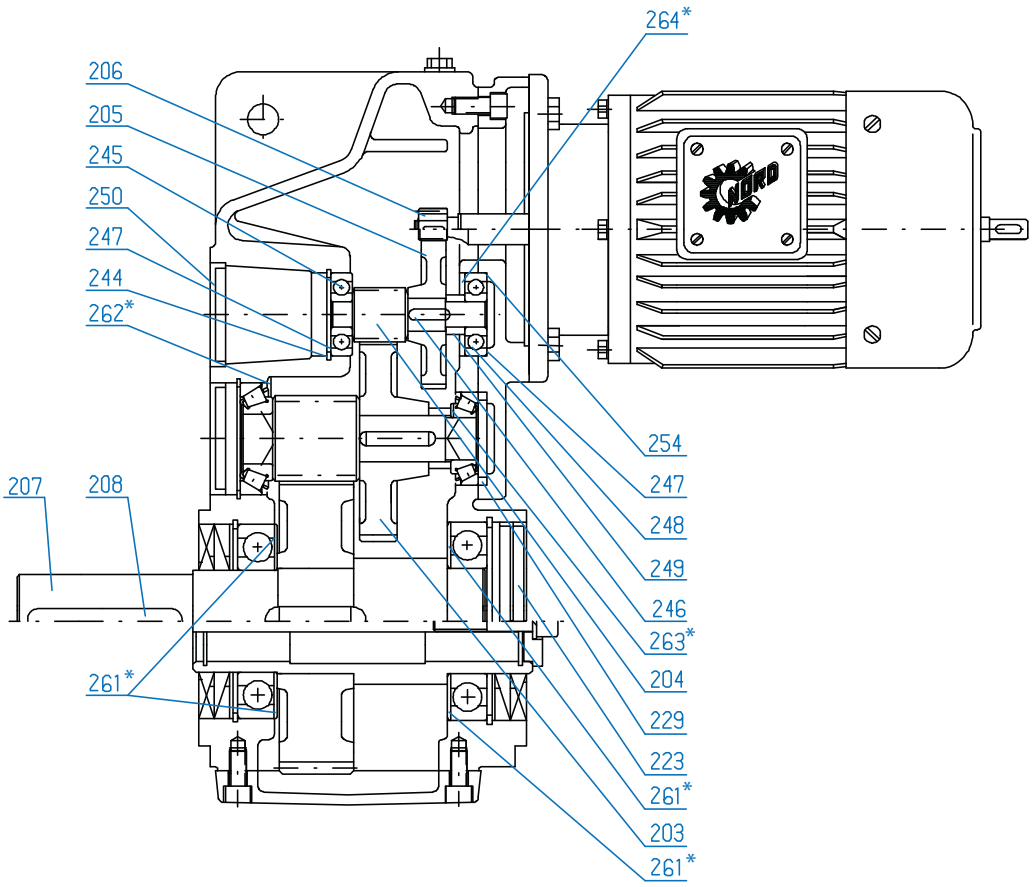


## SK 1382 NB + SK 6382 - SK12382

| | | |
|---|---|---|
| 203 Gear | 229 Thrust Washer | 250 Bore Plug |
| 204 Pinion Shaft | 244 Snap Ring | 254 Thrust Washer |
| 205 Gear | 245 Anti-Friction Bearing | 261 Nilos Ring* |
| 206 Pinion | 246 Key | 262 Nilos Ring* |
| 207 Output Shaft | 247 Shim | 263 Nilos Ring* |
| 208 Key | 248 Anti-Friction Bearing | 264 Nilos Ring* |
| 223 Bore Plug | 249 Spacer | |

* Conditionally used part

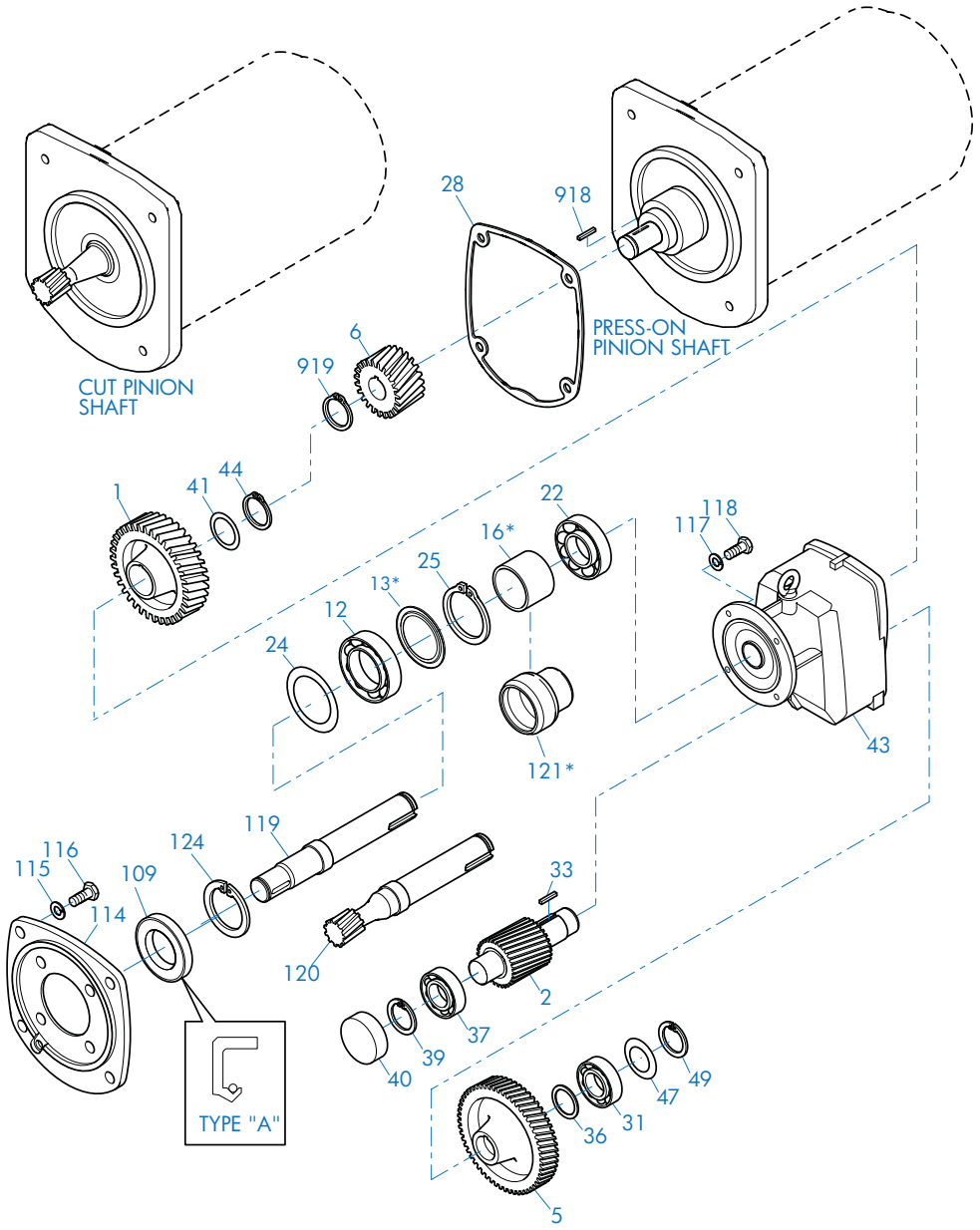


## SK1282/02 - SK11382/52 Multi-stage Reduction Unit

| | | | | | |
|---|---|---|---|---|---|
| 1 | Gear | 33 | Key | 115 | Lock Washer |
| 2 | Pinion Shaft | 36 | Spacer | 116 | Bolt |
| 5 | Gear | 37 | Anti-Friction Bearing | 117 | Lock Washer |
| 6 | Pinion | 39 | Snap Ring | 118 | Bolt |
| 12 | Anti-Friction Bearing | 40 | Bore Plug | 119 | Intermediate Shaft, Plain |
| 13 | Nilos Ring* | 41 | Shim | 120 | Intermediate Shaft, Gearcut |
| 16 | Spacer* | 43 | Gearcase | 121 | Bearing Sleeve* |
| 22 | Anti-Friction Bearing | 44 | Snap Ring | 124 | Snap Ring |
| 24 | Shim | 47 | Shim | 918 | Key |
| 25 | Snap Ring | 49 | Snap Ring | 919 | Snap Ring |
| 28 | Gasket | 109 | Oil Seal | | |
| 31 | Anti-Friction Bearing | 114 | Intermediate Flange | | |

* Conditionally used part

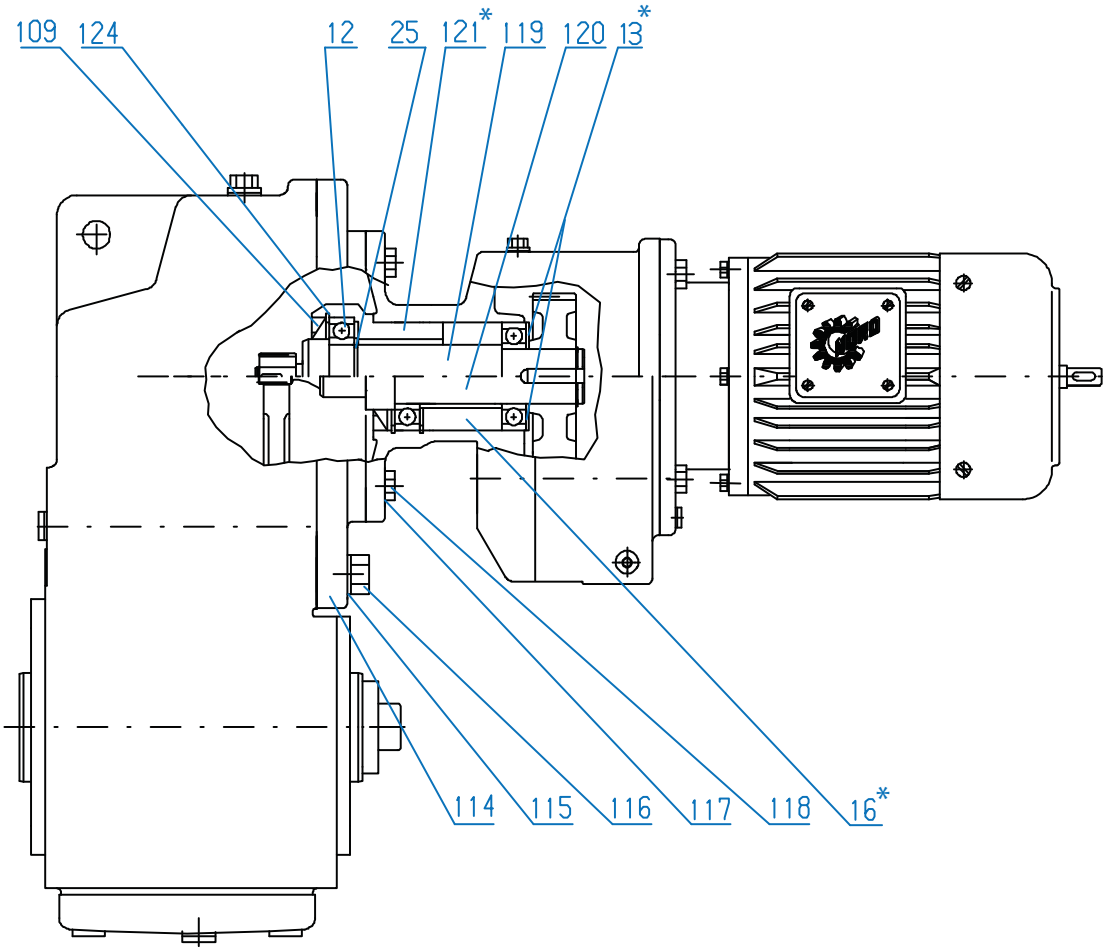


## SK 1282/02 - SK 11382/52

| | | |
|---|---|---|
| 12 Anti-friction Bearing | 114 Intermediate Flange | 119 Intermediate Shaft, Plain |
| 13 Nilos Ring* | 115 Lock Washer | 120 Intermediate Shaft, Gearcut |
| 16 Spacer | 116 Bolt | 121 Bearing Sleeve |
| 25 Snap Ring | 117 Lock Washer | 124 Snap Ring |
| 109 Oil Seal | 118 Bolt | |

* Conditionally used part

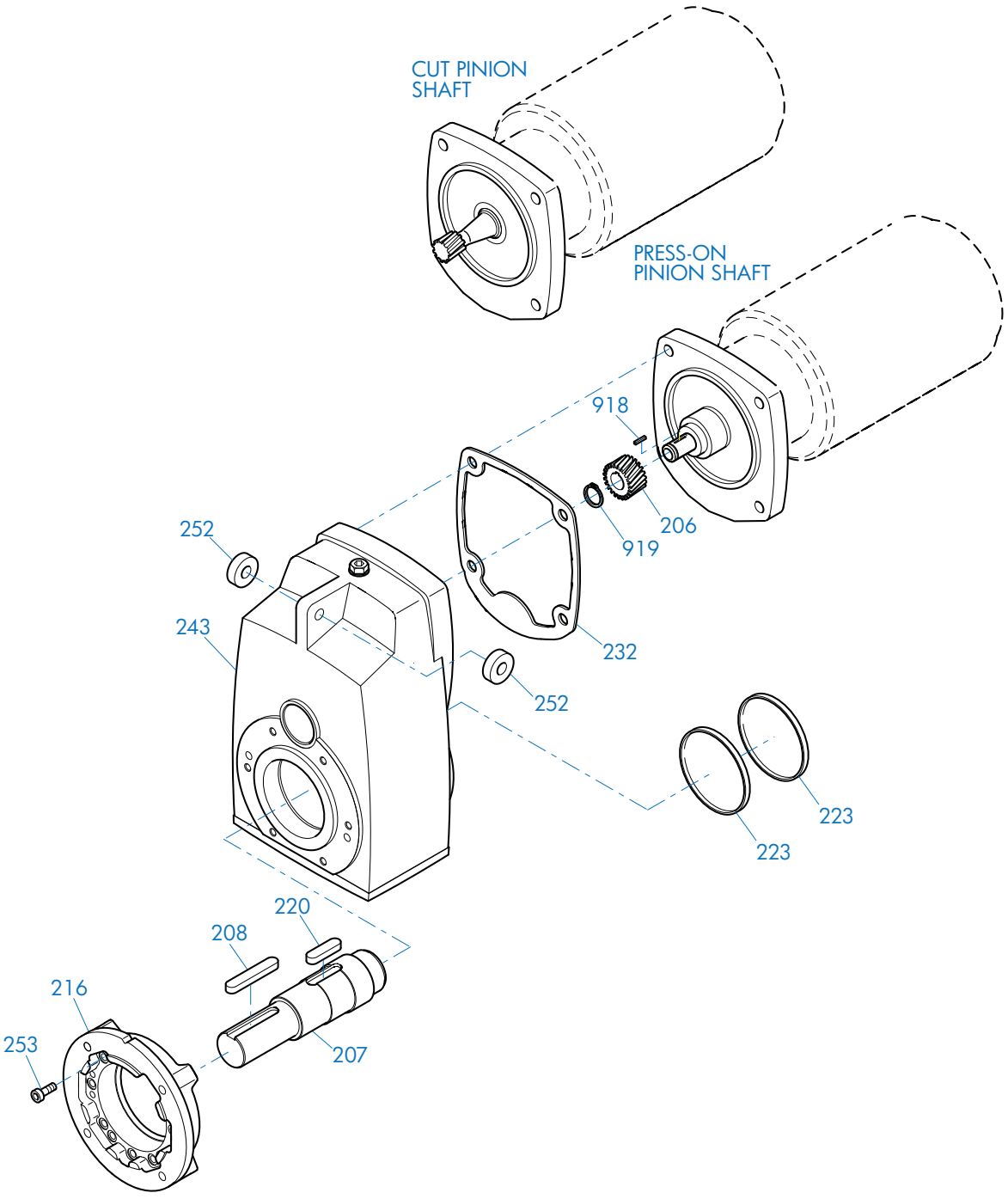


## SK 0182NB - SK 11282 & SK 1382 - SK 11382

| | | |
|---|---|---|
| 206 Pinion | 220 Key | 252 Rubber Buffer |
| 207 Output Shaft | 223 Bore Plug | 253 Bolt |
| 208 Key | 232 Gasket | 918 Key |
| 216 Flange | 243 Gearcase | 919 Snap Ring |

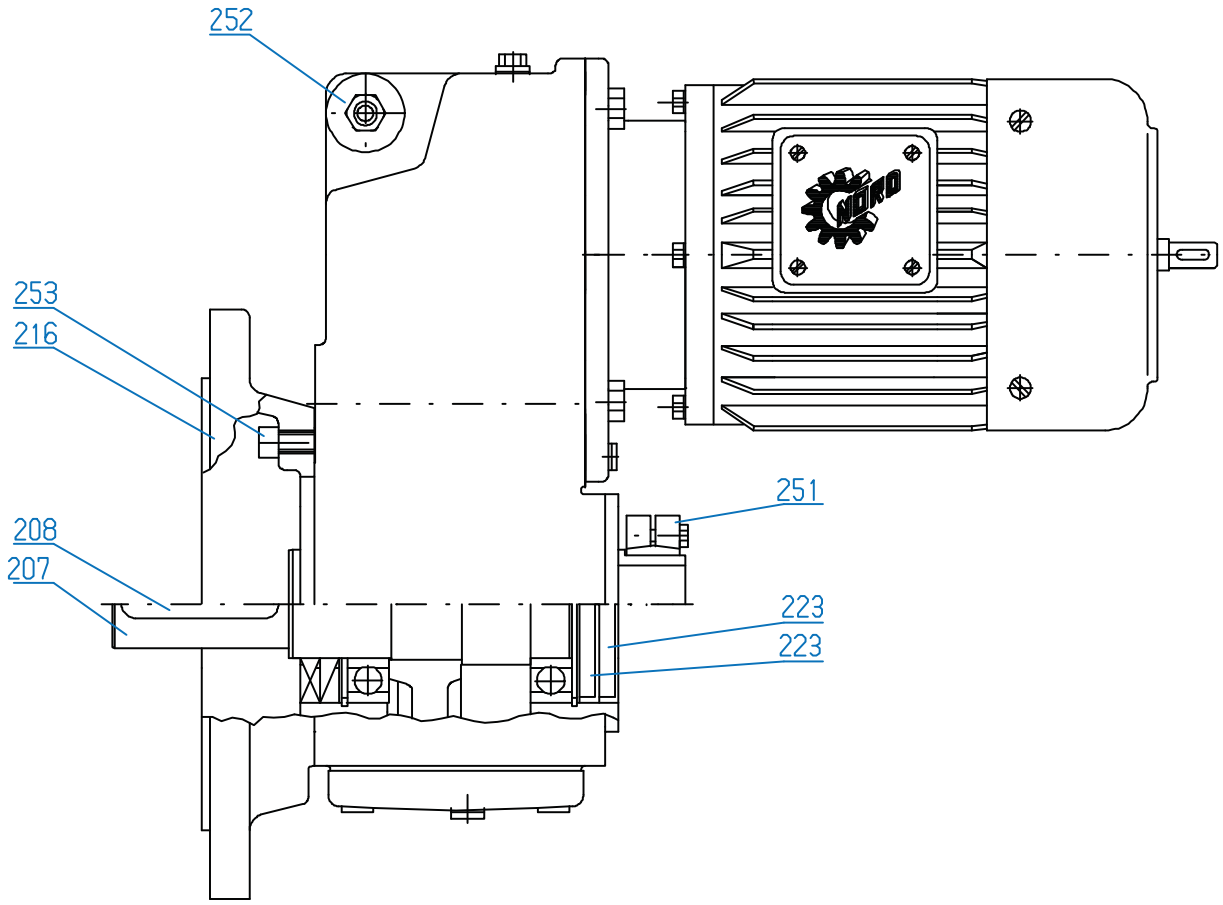


## SK 0182NB - SK 11282 & SK 1382 - SK 11382

| | | |
|---|---|---|
| 207 Output Shaft | 223 Bore Plug | 253 Bolt |
| 208 Key | 251 Shrink Disc | |
| 216 Flange | 252 Rubber Buffer | |

# 90.1 SERIES HELICAL-BEVEL PARTS LIST DRAWINGS

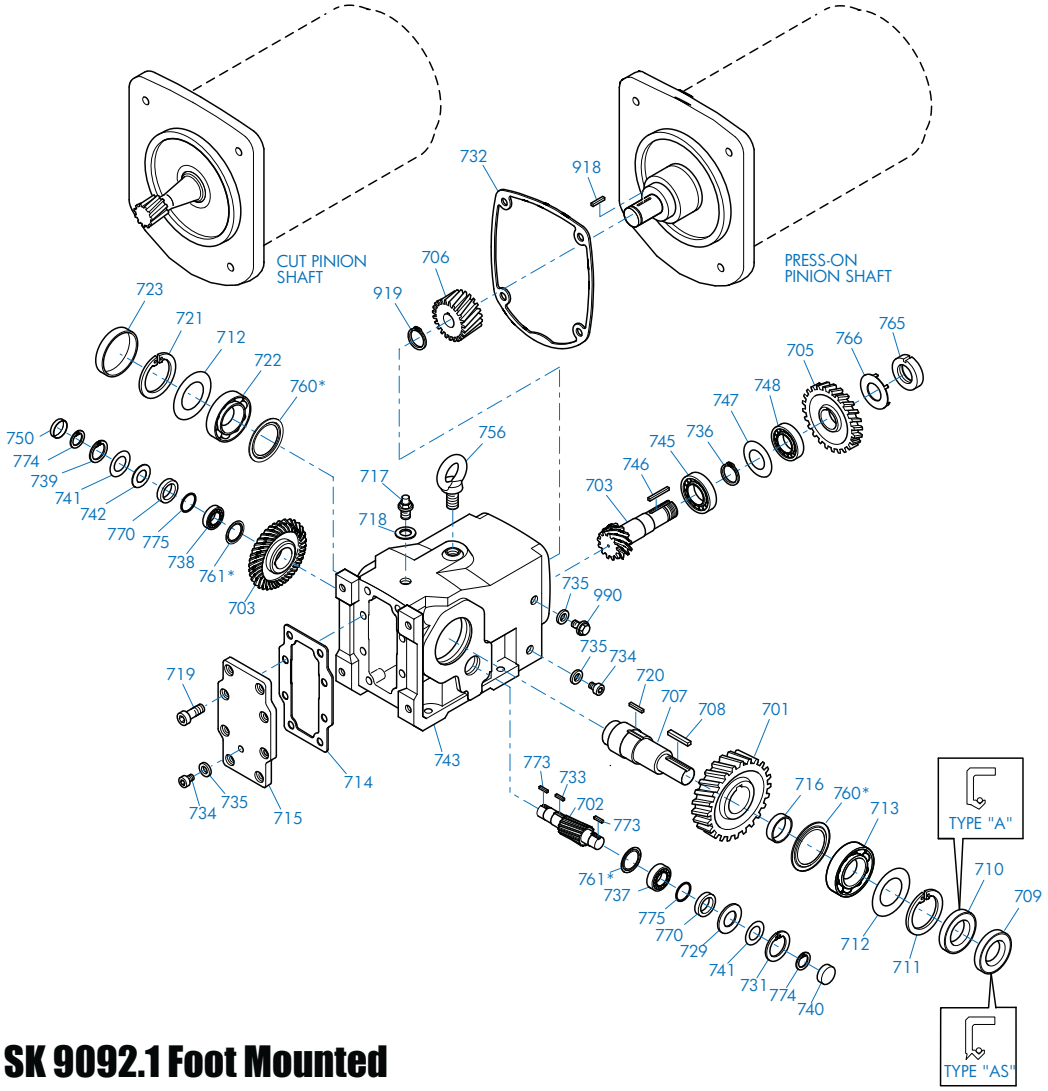


## SK 9012.1 - SK 9092.1 Foot Mounted

| | | |
|---|---|---|
| 701 Output Gear | 721 Snap Ring | 747 Shim |
| 702 Pinion Shaft | 722 Anti-Friction Bearing | 748 Anti-Friction Bearing |
| 703 Bevel Gearset | 723 Bore Plug | 750 Bore Plug |
| 705 Gear | 729 Thrust Washer | 756 Flanged Eye Bolt |
| 706 Pinion | 731 Snap Ring | 760 Nilos Ring* |
| 707 Output Shaft | 732 Gasket | 761 Nilos Ring* |
| 708 Key | 733 Key | 765 Slotted Round Nut |
| 709 Oil Seal | 734 Oil Plug | 766 Tab Lock Washer |
| 710 Oil Seal | 735 Gasket | 770 Backstop (If Equipped) |
| 711 Snap Ring | 736 Snap Ring | 773 Key (w/Backstop) |
| 712 Shim | 737 Anti-Friction Bearing | 774 Snap Ring (w/Backstop) |
| 713 Anti-Friction Bearing | 738 Anti-Friction Bearing | 775 Thrust Washer (w/Backstop) |
| 714 Gasket | 739 Snap Ring | 918 Key |
| 715 Inspection Cover | 740 Bore Plug | 919 Snap Ring |
| 716 Spacer | 741 Shim | 990 Oil Level Plug |
| 717 Vent screw | 742 Thrust Washer | |
| 718 Gasket | 743 Gearcase | |
| 719 Bolt | 745 Anti-Friction Bearing | |
| 720 Key | 746 Key | |

* Conditionally used part

**NORD Gear Limited**
Toll Free in Canada: 800.668.4378

**NORD Gear Corporation**
Toll Free in the United States: 888.314.6673

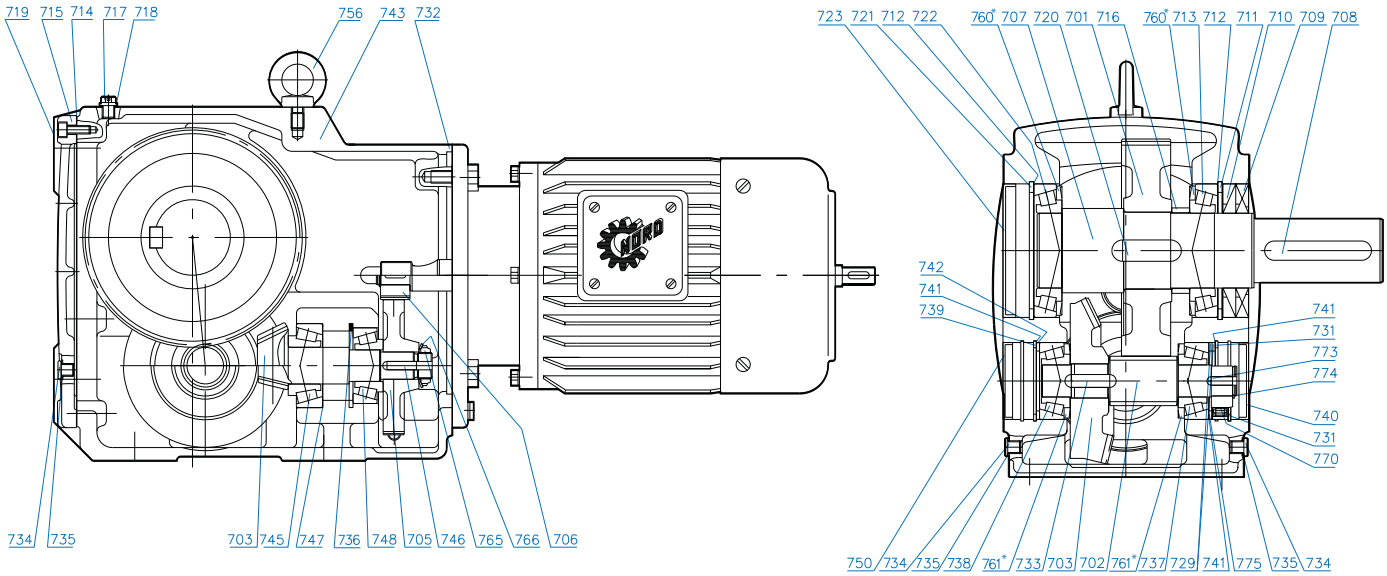


## SK 9012.1 - SK 9092.1 Foot Mounted

701 Output Gear
702 Pinion Shaft
703 Bevel Gearset
705 Gear
706 Pinion
707 Output Shaft
708 Key
709 Oil Seal
710 Oil Seal
711 Snap Ring
712 Shim
713 Anti-Friction Bearing
714 Gasket
715 Inspection Cover
716 Spacer
717 Vent
718 Gasket
719 Bolt
720 Key
721 Snap Ring
722 Anti-Friction Bearing
723 Bore Plug
729 Thrust Washer
731 Snap Ring
732 Gasket
733 Key
734 Oil Plug
735 Gasket
736 Snap Ring
737 Anti-Friction Bearing
738 Anti-Friction Bearing
739 Snap Ring
740 Bore Plug
741 Shim
742 Thrust Washer
743 Gearcase
745 Anti-Friction Bearing
746 Key
747 Shim
748 Anti-Friction Bearing
750 Bore Plug
756 Flanged Eye Bolt
760 Nilos Ring*
761 Nilos Ring*
765 Slotted Round Nut
766 Tab Lock Washer
770 Backstop (If Equipped)
773 Key (w/Backstop)
774 Snap Ring (w/Backstop)
775 Thrust Washer (w/Backstop)

* Conditionally used part

# 90.1 SERIES HELICAL-BEVEL PARTS LIST DRAWINGS

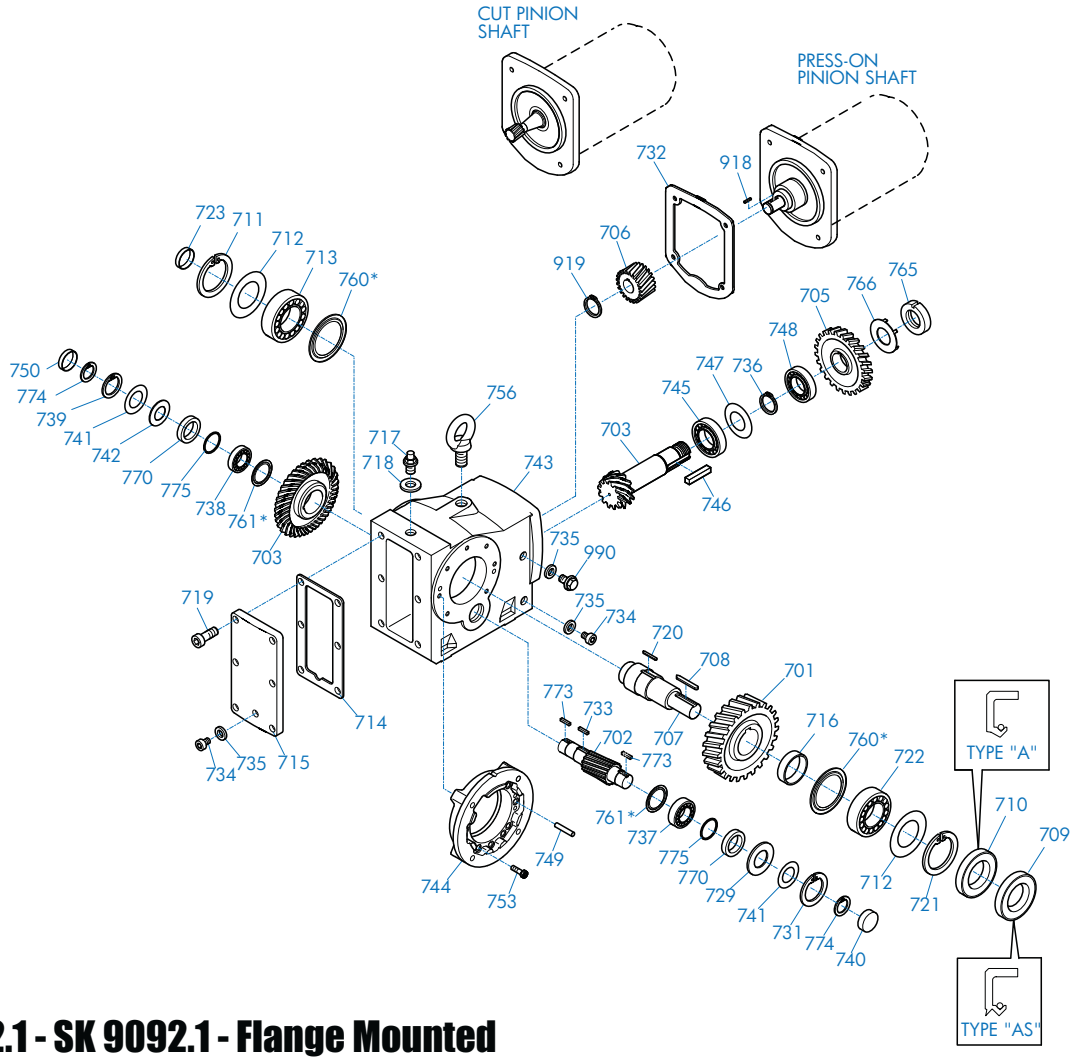


## SK 9012.1 - SK 9092.1 - Flange Mounted

701 Output Gear
702 Pinion Shaft
703 Bevel Gearset
705 Gear
706 Pinion
707 Output Shaft
708 Key
709 Oil Seal
710 Oil Seal
711 Snap Ring
712 Shim
713 Anti-Friction Bearing
714 Gasket
715 Inspection Cover
716 Spacer
717 Vent Plug
718 Gasket
719 Bolt
720 Key
721 Snap Ring
722 Anti-Friction Bearing
723 Bore Plug
729 Thrust Washer
731 Snap Ring
732 Gasket
733 Key
734 Oil plug
735 Gasket
736 Snap Ring
737 Anti-Friction Bearing
738 Anti-Friction Bearing
739 Snap Ring
740 Bore Plug
741 Shim
742 Thrust Washer
743 Gearcase
744 Flange
745 Anti-Friction Bearing
746 Key
747 Shim
748 Anti-Friction Bearing
749 Dowel Pin
750 Bore Plug
753 Bolt
756 Flanged Eye Bolt
760 Nilos Ring*
761 Nilos Ring*
765 Slotted Round Nut
766 Tab Lock Washer
770 Backstop (If Equipped)
773 Key (w/Backstop)
774 Snap Ring (w/Backstop)
775 Thrust Washer (w/Backstop)
918 Key
919 Snap Ring
990 Oil Level Plug

* Conditionally used part

**NORD Gear Limited**
Toll Free in Canada: 800.668.4378

**NORD Gear Corporation**
Toll Free in the United States: 888.314.6673

# 90.1 SERIES HELICAL-BEVEL PARTS LIST DRAWINGS

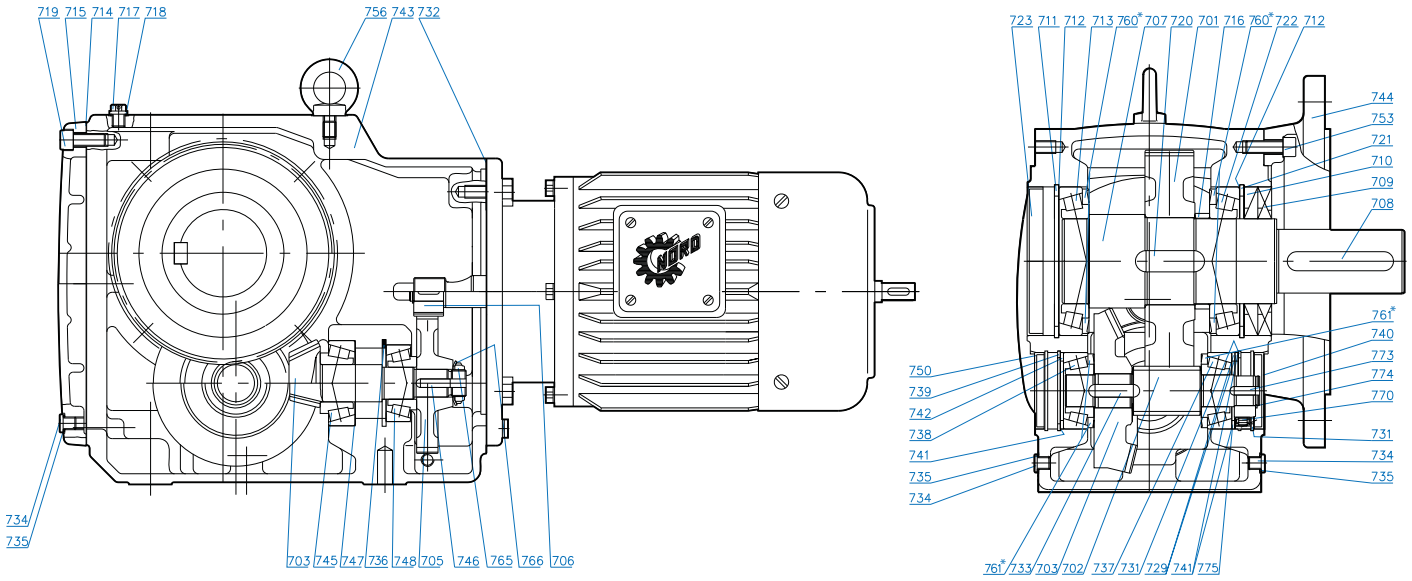


## SK 9012.1 - SK 9092.1 - Flange Mounted

701 Output Gear
702 Pinion Shaft
703 Bevel Gearset
705 Gear
706 Pinion
707 Output Shaft
708 Key
709 Oil Seal
710 Oil Seal
711 Snap Ring
712 Shim
713 Anti-Friction Bearing
714 Gasket
715 Inspection Cover
716 Spacer
717 Vent Plug
718 Gasket
719 Bolt
720 Key
721 Snap Ring
722 Anti-Friction Bearing
723 Bore Plug
729 Thrust Washer
731 Snap Ring
732 Gasket
733 Key
734 Oil plug
735 Gasket
736 Snap Ring
737 Anti-Friction Bearing
738 Anti-Friction Bearing
739 Snap Ring
740 Bore Plug
741 Shim
742 Thrust Washer
743 Gearcase
744 Flange
745 Anti-Friction Bearing
746 Key
747 Shim
748 Anti-Friction Bearing
750 Bore Plug
753 Bolt
756 Flanged Eye Bolt
760 Nilos Ring*
761 Nilos Ring*
765 Slotted Round Nut
766 Tab Lock Washer
770 Backstop*
773 Key (w/Backstop)
774 Snap Ring (w/Backstop)
775 Thrust Washer (w/Backstop)

* Conditionally used part

**NORD Gear Limited**
Toll Free in Canada: 800.668.4378

**NORD Gear Corporation**
Toll Free in the United States: 888.314.6673

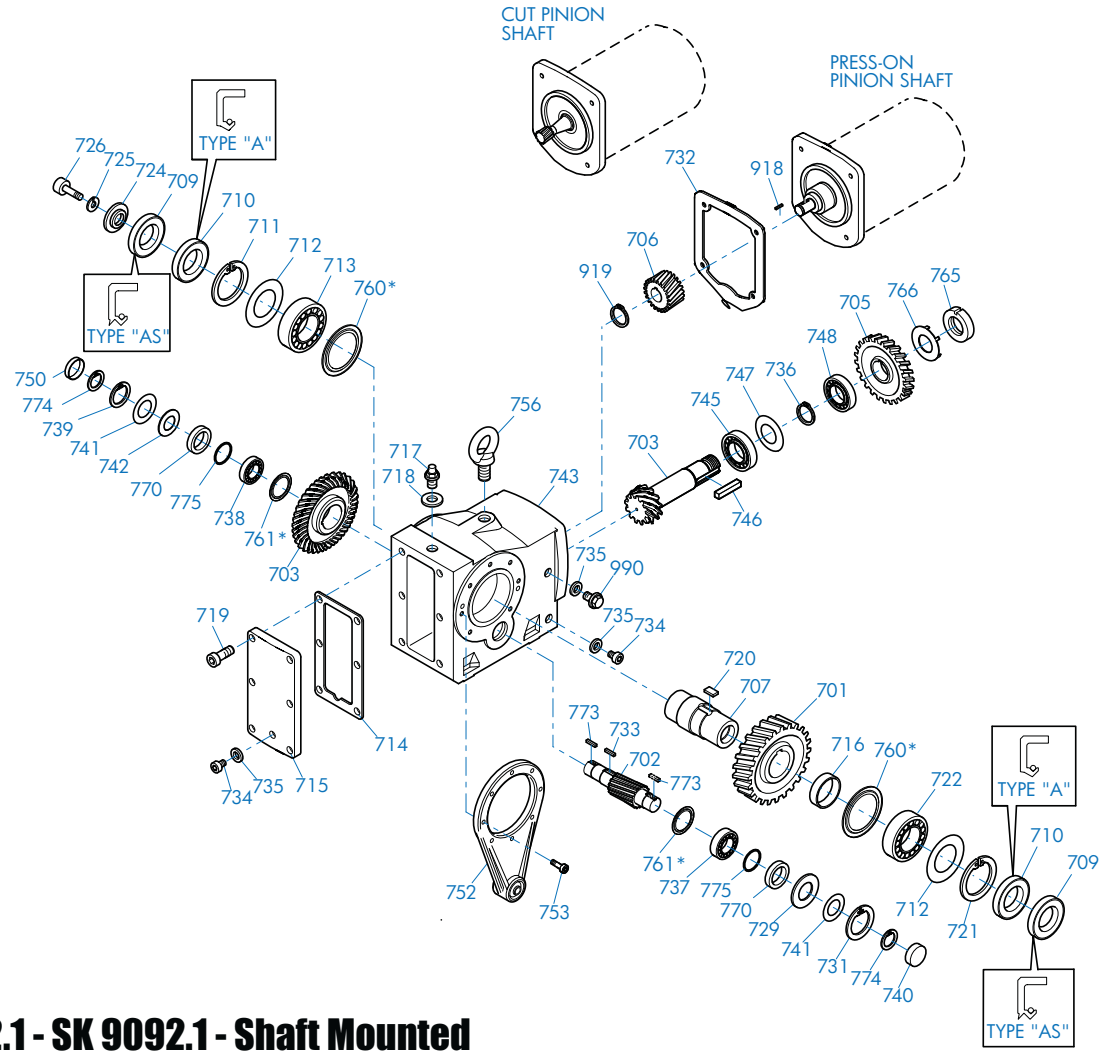


## SK 9012.1 - SK 9092.1 - Shaft Mounted

701 Gear
702 Pinion Shaft
703 Bevel Gearset
705 Gear
706 Pinion
707 Output Shaft
709 Oil Seal
710 Oil Seal
711 Snap Ring
712 Shim
713 Anti-Friction Bearing
714 Gasket
715 Inspection Cover
716 Spacer
717 Vent Plug
718 Gasket
719 Bolt
720 Key
721 Snap Ring
722 Anti-Friction Bearing
724 Retaining Washer
725 Lock Washer
726 Bolt
729 Thrust Washer
731 Snap Ring
732 Gasket
733 Key
734 Oil plug
735 Gasket
736 Snap Ring
737 Anti-Friction Bearing
738 Anti-Friction Bearing
739 Snap Ring
740 Bore Plug
741 Shim
742 Thrust Washer
743 Gearcase
745 Anti-Friction Bearing
746 Key
747 Shim
748 Anti-Friction Bearing
750 Bore Plug
752 Torque Arm
753 Bolt
756 Flanged Eye Bolt
760 Nilos Ring*
761 Nilos Ring*
765 Slotted Round Nut
766 Tab Lock Washer
770 Backstop (If Equipped)
773 Key (w/Backstop)
774 Snap Ring (w/Backstop)
775 Thrust Washer (w/Backstop)
918 Key
919 Snap Ring
990 Oil Level Plug

* Conditionally used part

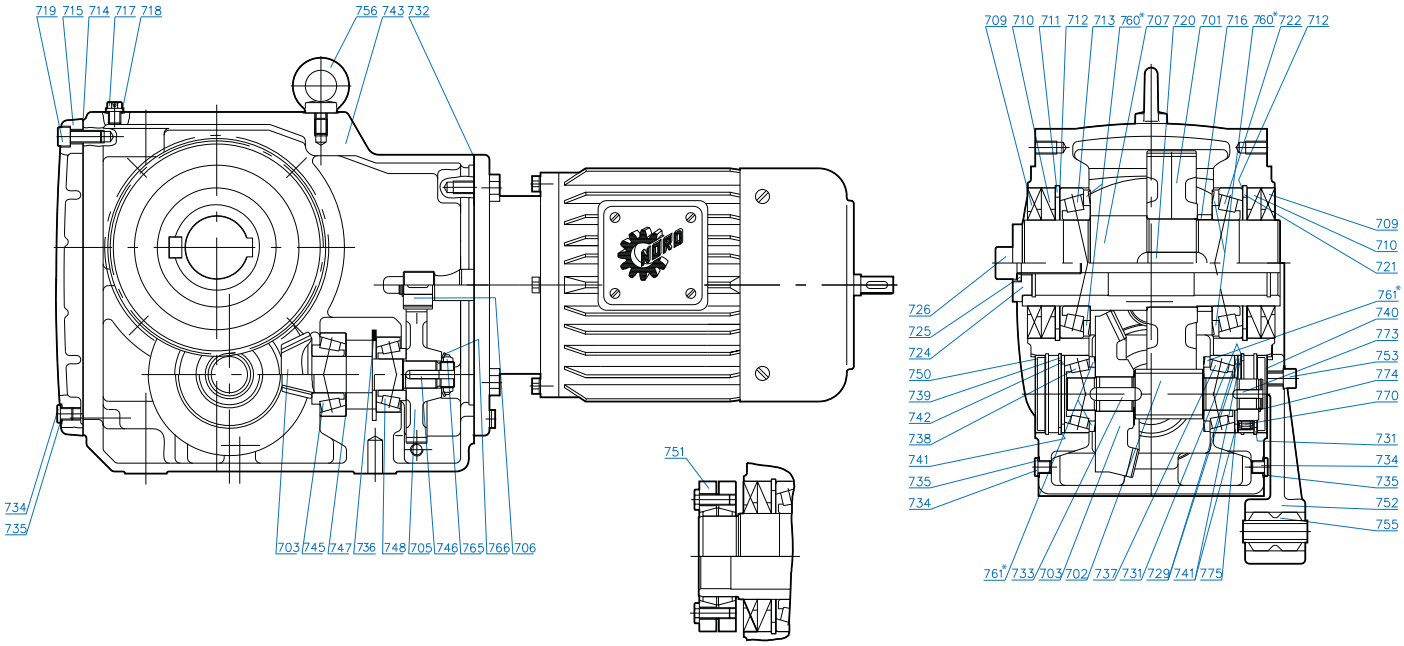


## SK 9012.1 - SK 9092.1 - Shaft Mounted

701 Gear
702 Pinion Shaft
703 Bevel Gearset
705 Gear
706 Pinion
707 Output Shaft
709 Oil Seal
710 Oil Seal
711 Snap Ring
712 Shim
713 Anti-Friction Bearing
714 Gasket
715 Inspection Cover
716 Spacer
717 Vent Plug
718 Seal
719 Bolt
720 Key
721 Snap Ring
722 Anti-Friction Bearing
724 Washer
725 Lock Washer
726 Bolt
729 Thrust Washer
731 Snap Ring
732 Gasket
733 Key
734 Oil plug
735 Gasket
736 Snap Ring
737 Anti-Friction Bearing
738 Anti-Friction Bearing
739 Snap Ring
740 Bore Plug
741 Shim
742 Thrust Washer
743 Gearcase
745 Anti-Friction Bearing
746 Key
747 Shim
748 Anti-Friction Bearing
750 Bore Plug
751 Shrink Disc
752 Torque Arm
753 Bolt
755 Rubber Buffer
756 Flanged Eye Bolt
760 Nilos Ring*
761 Nilos Ring*
765 Slotted Round Nut
766 Tab Lock Washer
770 Backstop*
773 Key (w/Backstop)
774 Snap Ring (w/Backstop)
775 Thrust Washer (w/Backstop)

* Conditionally used part

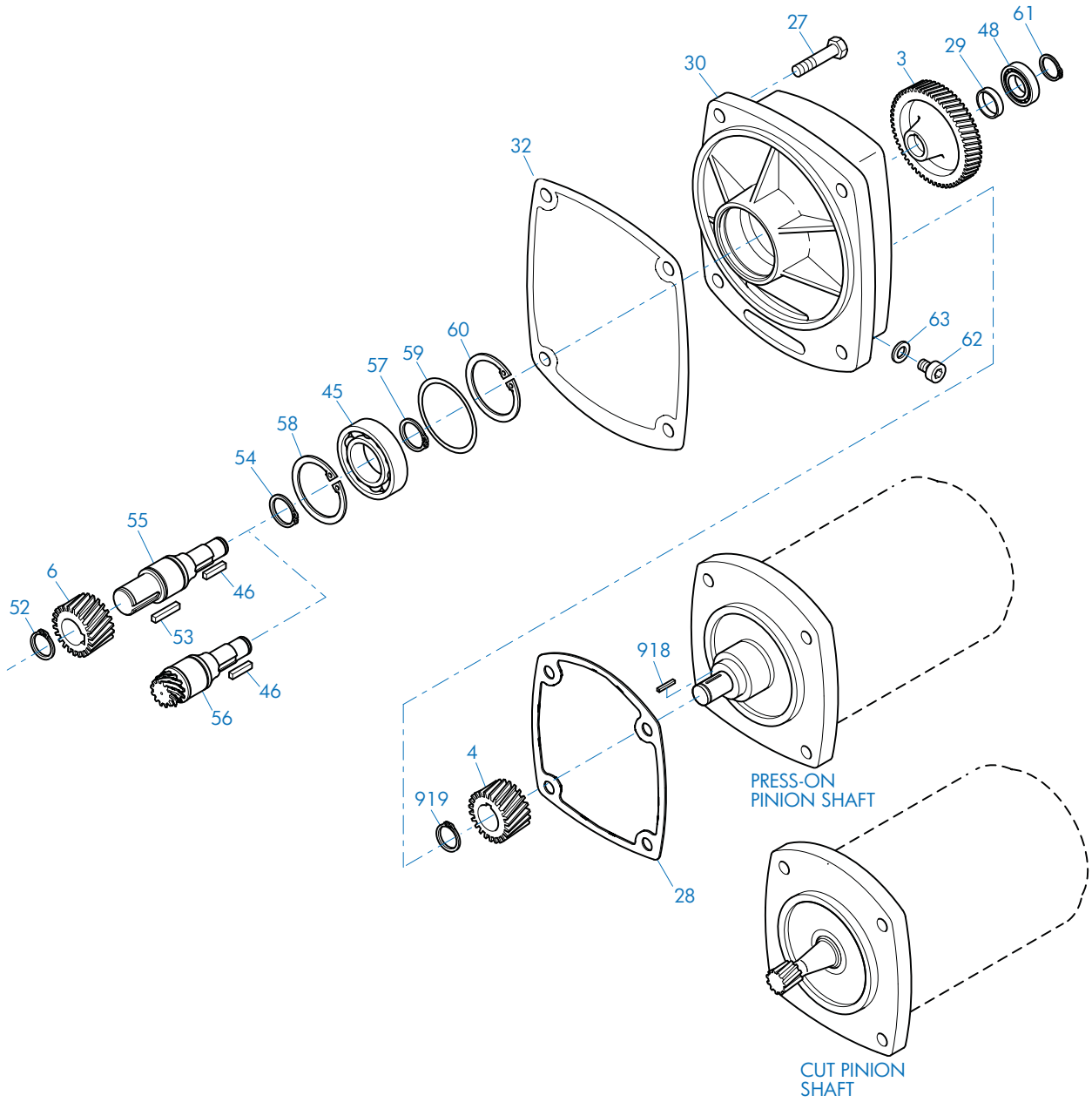


## SK9013.1 - SK9053.1 Third Stage Reduction Gear

| | | | | | |
|---|---|---|---|---|---|
| 3 | Gear | 46 | Key | 59 | Shim |
| 4 | Pinion | 48 | Anti-Friction Bearing | 60 | Snap Ring |
| 6 | Pinion | 52 | Snap Ring | 61 | Snap Ring |
| 27 | Bolt | 53 | Key | 62 | Oil Plug |
| 28 | Gasket | 54 | Snap Ring | 63 | Gasket |
| 29 | Spacer | 55 | Intermediate Shaft, Plain | 918 | Key |
| 30 | Third Reduction Gearcase | 56 | Intermediate Shaft, Gearcut | 919 | Snap Ring |
| 32 | Gasket | 57 | Snap Ring | | |
| 45 | Anti-Friction Bearing | 58 | Snap Ring | | |

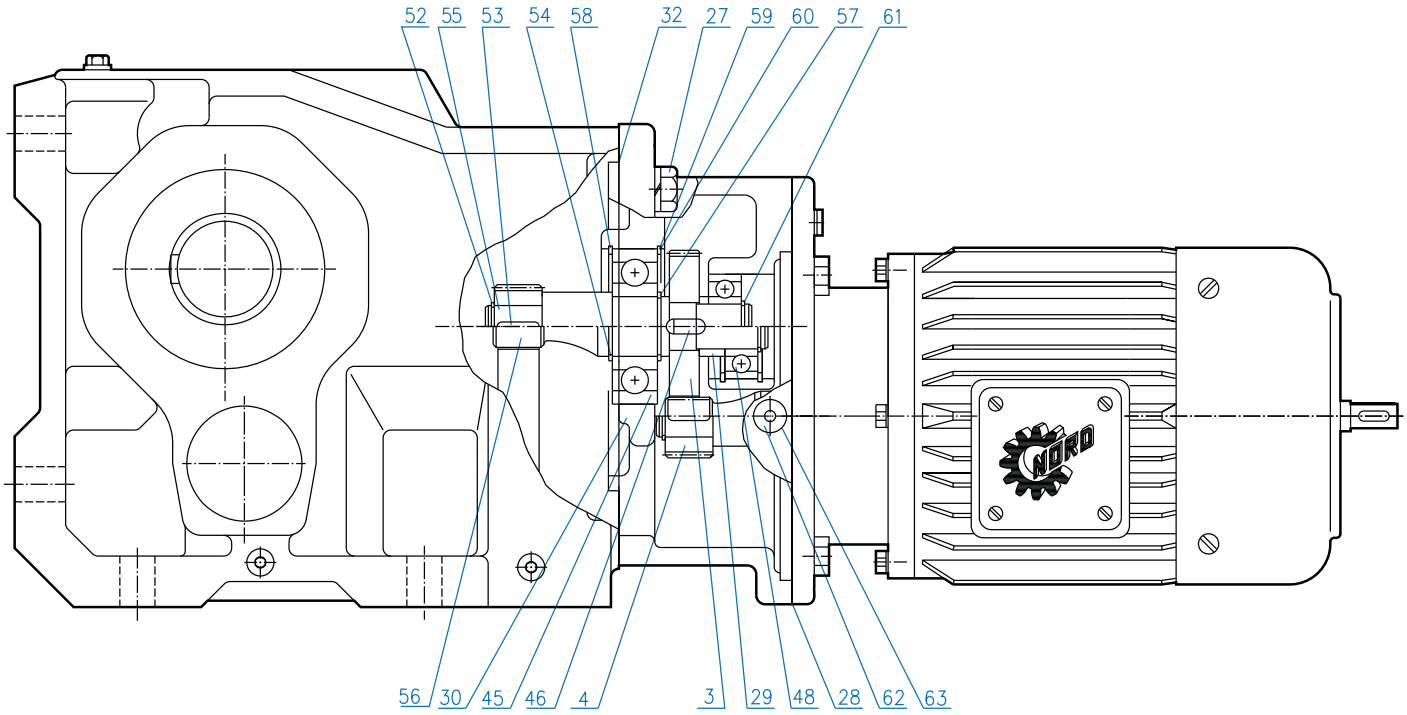


## SK9013.1 - SK9053.1 Third Stage Reduction Gear

| | | | | | |
|---|---|---|---|---|---|
| 3 | Gear | 46 | Key | 58 | Snap Ring |
| 4 | Pinion | 48 | Anti-Friction Bearing | 59 | Shim |
| 27 | Bolt | 52 | Snap Ring | 60 | Snap Ring |
| 28 | Gasket | 53 | Key | 61 | Snap Ring |
| 29 | Spacer | 54 | Snap Ring | 62 | Oil Plug |
| 30 | Third Reduction Gearcase | 55 | Intermediate Shaft, Plain | 63 | Gasket |
| 32 | Gasket | 56 | Intermediate Shaft, Gearcut | | |
| 45 | Anti-Friction Bearing | 57 | Snap Ring | | |

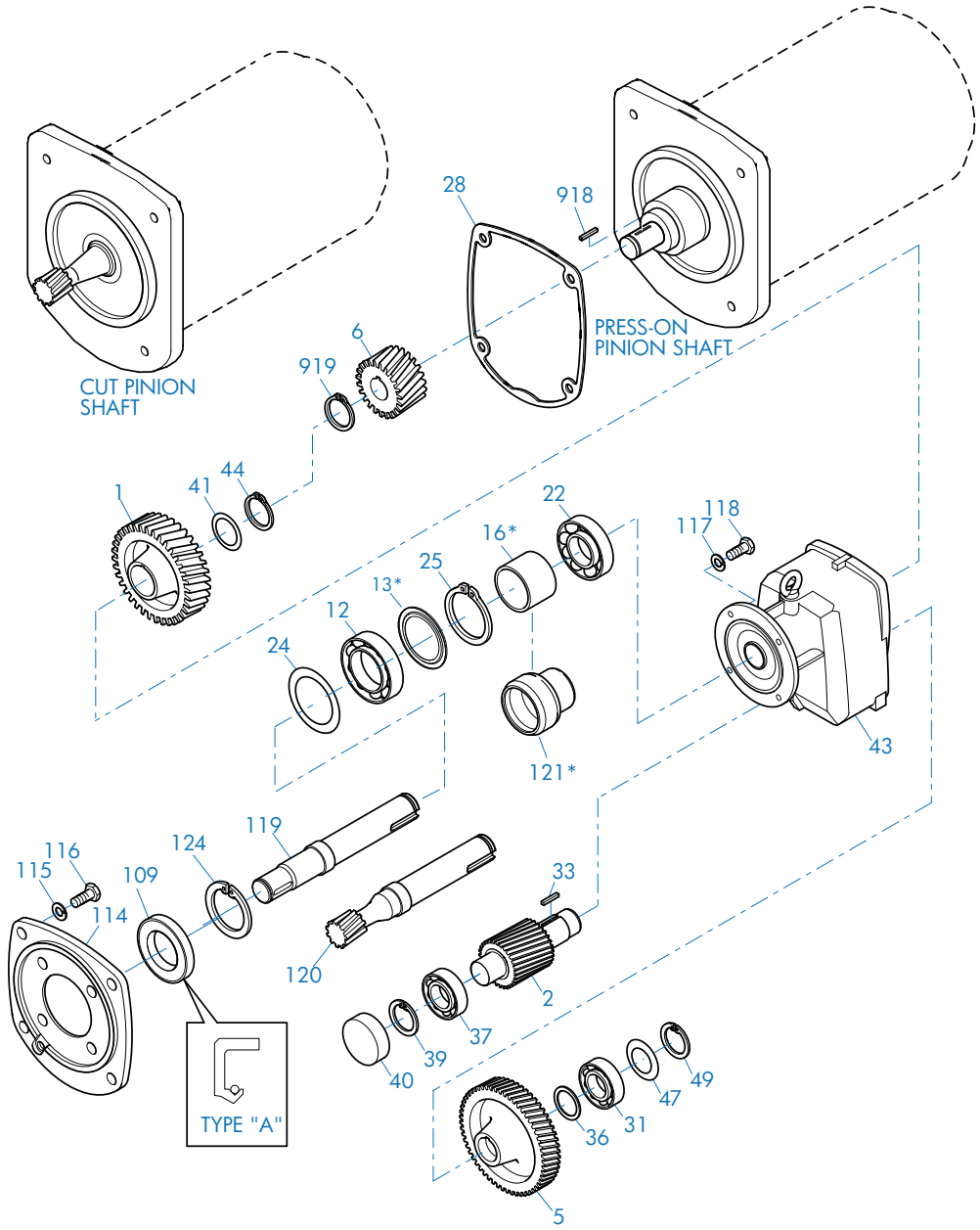


## SK9062.1/32 - SK9092.1/52 Input Compound Reduction

| | | | | | |
|---|---|---|---|---|---|
| 1 | Gear | 33 | Key | 115 | Lock Washer |
| 2 | Pinion Shaft | 36 | Spacer | 116 | Bolt |
| 5 | Gear | 37 | Anti-Friction Bearing | 117 | Lock Washer |
| 6 | Pinion | 39 | Snap Ring | 118 | Bolt |
| 12 | Anti-Friction Bearing | 40 | Bore Plug | 119 | Intermediate Shaft, Plain |
| 13 | Nilos Ring* | 41 | Shim | 120 | Intermediate Shaft, Gearcut |
| 16 | Spacer* | 43 | Gearcase | 121 | Bearing Sleeve* |
| 22 | Anti-Friction Bearing | 44 | Snap Ring | 124 | Snap Ring |
| 24 | Shim | 47 | Shim | 918 | Key |
| 25 | Snap Ring | 49 | Snap Ring | 919 | Snap Ring |
| 28 | Gasket | 109 | Oil Seal | | |
| 31 | Anti-Friction Bearing | 114 | Intermediate Flange | | |

* Conditionally used part

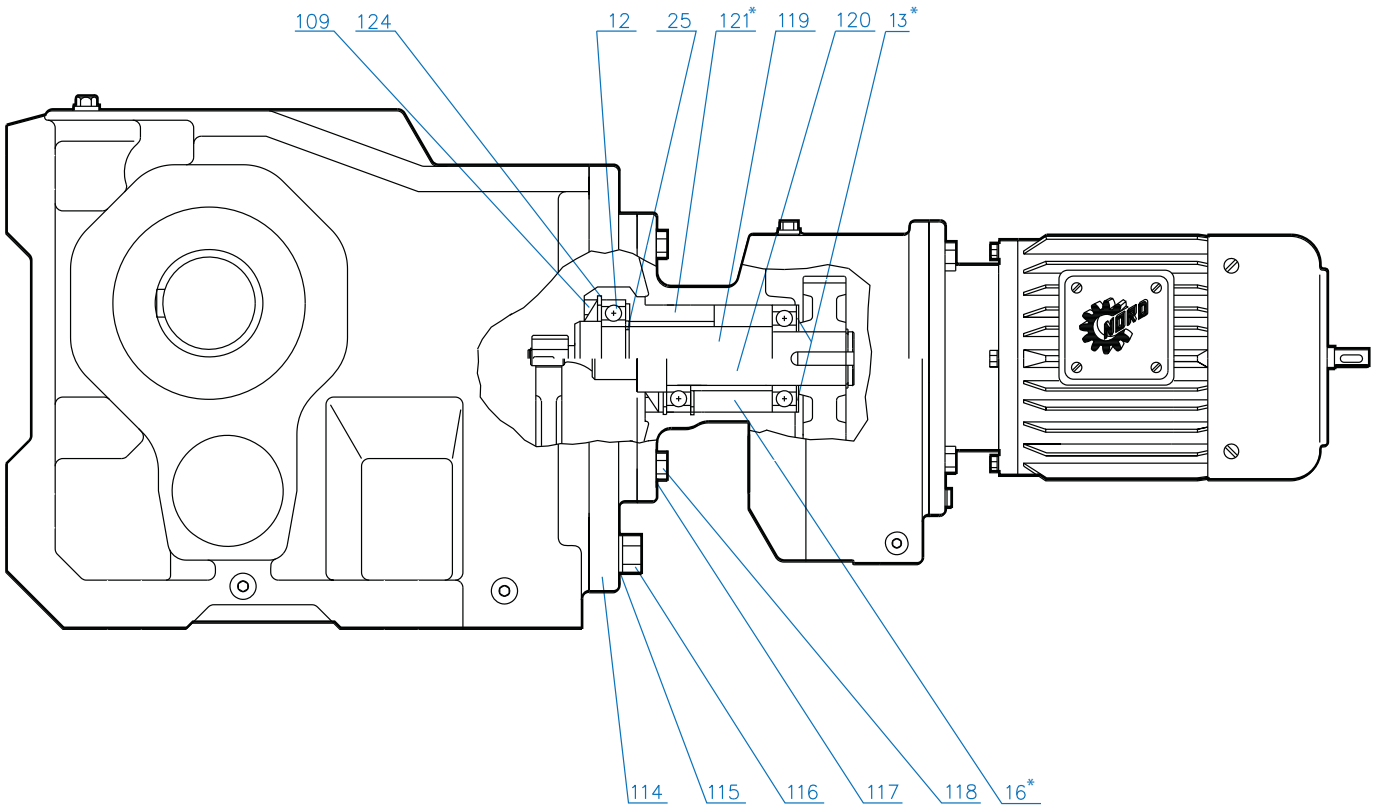


## SK9062.1/32 - SK9092.1/52 Input Compound Reduction

| | | |
|---|---|---|
| 11 Bearing | 114 Intermediate Flange | 119 Intermediate Shaft, Plain |
| 13 Nilos Ring* | 115 Lock Washer | 120 Intermediate Shaft, Gearcut |
| 16 Spacer* | 116 Bolt | 121 Bearing Sleeve * |
| 25 Snap Ring | 117 Lock Washer | 124 Snap Ring |
| 109 Oil Seal | 118 Bolt | |

* Conditionally used part

# 92 SERIES BEVEL PARTS LIST DRAWINGS

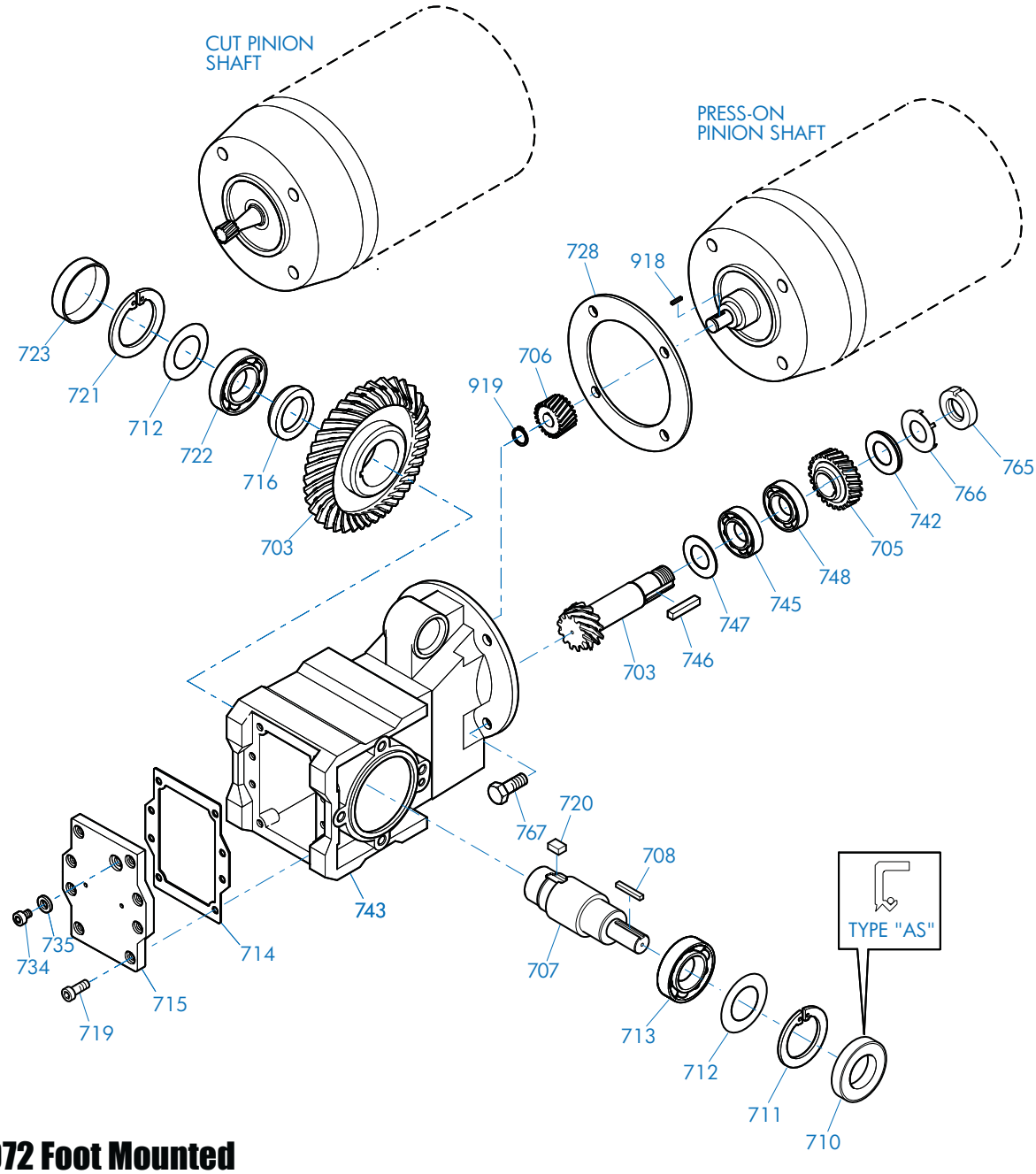


## SK 92072 Foot Mounted

| | | |
|---|---|---|
| 703 Bevel Gearset | 716 Spacer | 745 Anti-Friction Bearing |
| 705 Gear | 719 Bolt | 746 Key |
| 706 Pinion | 720 Key | 747 Shim |
| 707 Output Shaft | 721 Snap Ring | 748 Anti-Friction Bearing |
| 708 Key | 722 Anti-Friction Bearing | 765 Slotted Nut |
| 710 Oil Seal | 723 Bore Plug | 766 Tab Lock Washer |
| 711 Snap Ring | 728 Gasket | 767 Bolt |
| 712 Shim | 734 Oil Plug | 918 Key |
| 713 Anti-Friction Bearing | 735 Gasket | 919 Snap Ring |
| 714 Gasket | 742 Thrust Washer | |
| 715 Inspection Cover | 743 Gear case | |

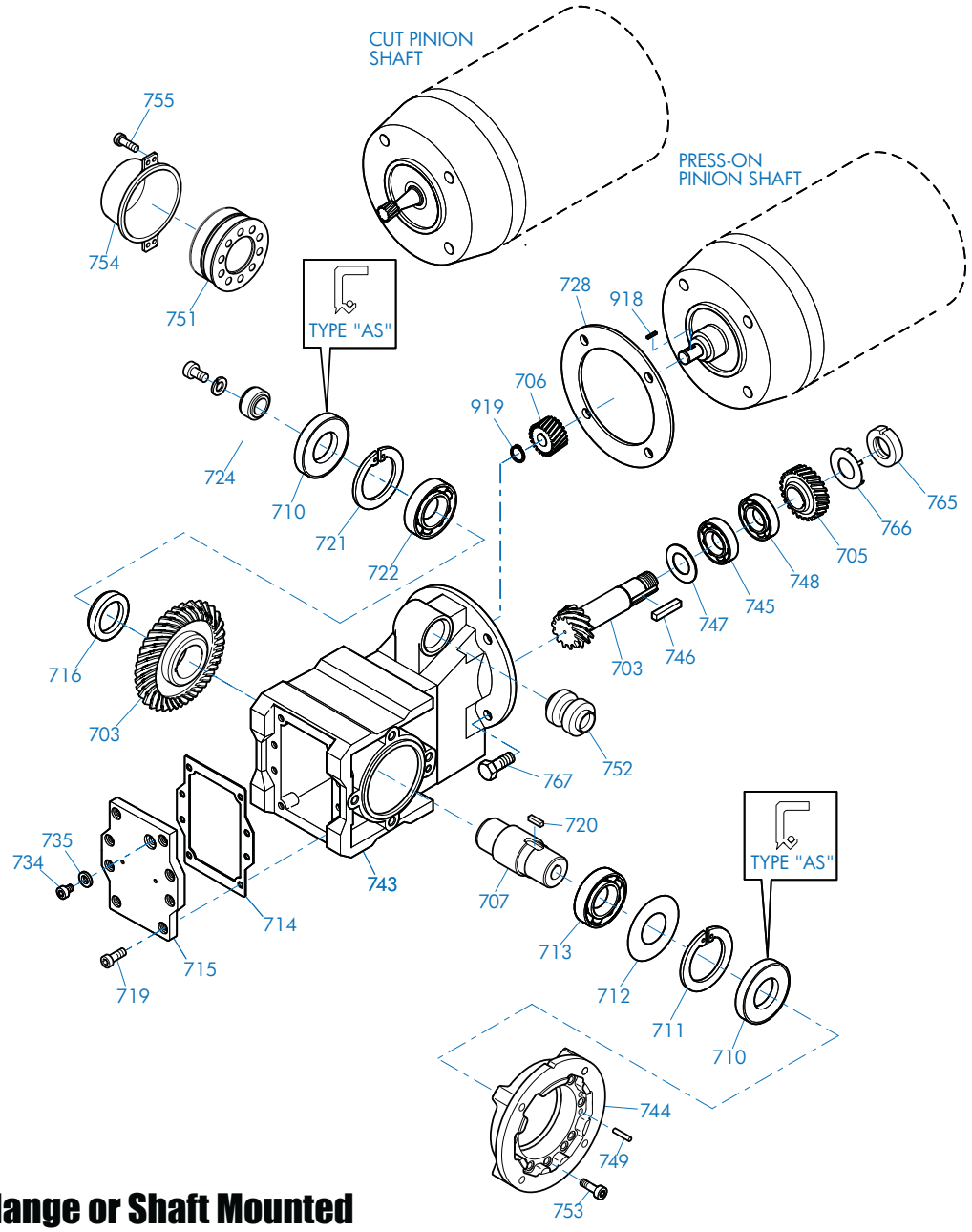


## SK 92072 Flange or Shaft Mounted

703 Bevel Gearset
705 Gear
706 Pinion
707 Output Shaft
710 Oil Seal
711 Snap Ring
712 Shim
713 Anti-Friction Bearing
714 Gasket
715 Inspection Cover
716 Spacer
719 Bolt
720 Key
721 Snap Ring
722 Anti-Friction Bearing
724 Fixing Element Kit
728 Gasket
734 Oil Plug
735 Gasket
743 Gearcase
744 Flange
745 Anti-Friction Bearing
746 Key
747 Shim
748 Anti-Friction Bearing
749 Grooved Pin
751 Shrink Disc
752 Rubber Buffer
753 Bolt
754 Cover
755 Bolt
765 Slotted Round Nut
766 Tab Lock Washer
767 Bolt
918 Key
919 Snap Ring

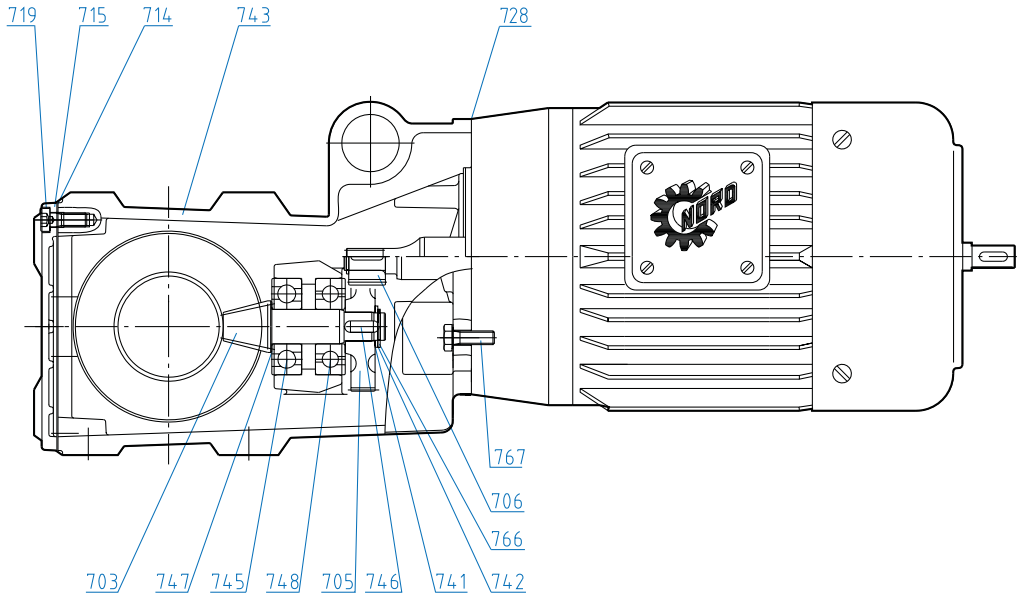


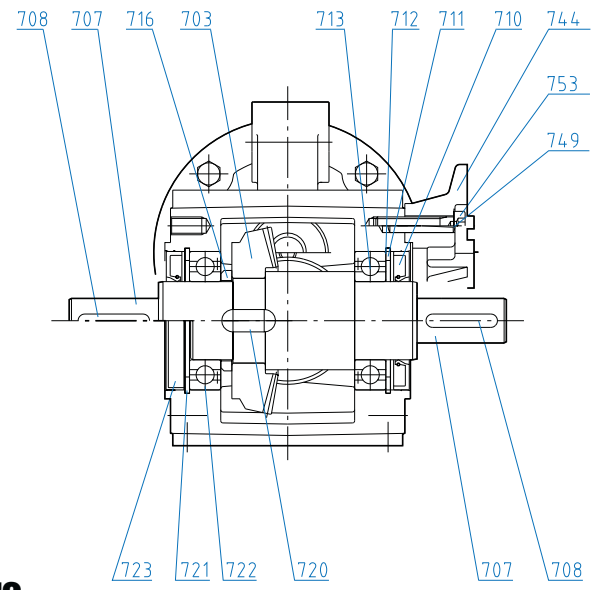


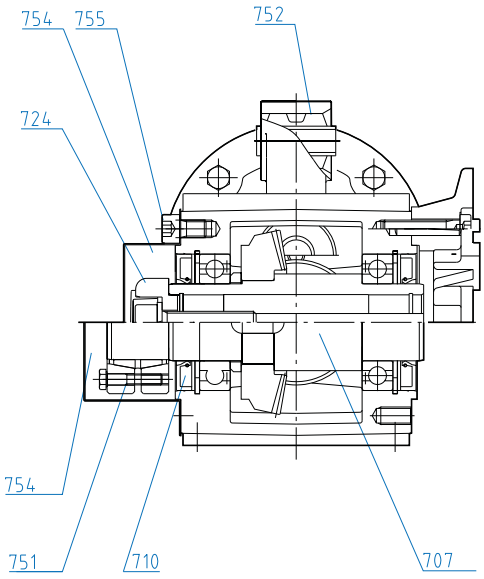


## SK 92072

703 Bevel Gearset
705 Gear
706 Pinion
707 Output Shaft
708 Key
710 Oil Seal
711 Snap Ring
712 Shim
713 Anti-Friction Bearing
714 Gasket
715 Inspection Cover
716 Spacer
719 Bolt
720 Key
721 Snap Ring
722 Anti-Friction Bearing
723 Bore Plug
724 Fixing Element Kit
728 Gasket
741 Shim
742 Thrust Washer
743 Gear case
744 Flange
745 Anti-Friction Bearing
746 Key
747 Shim
748 Anti-Friction Bearing
749 Grooved Pin
751 Shrink Disc Connector
752 Rubber Buffer
753 Socket Head Screw
754 Shrink Disc Cover
755 Socket Head Screw
766 Tab Lock Washer
767 Bolt

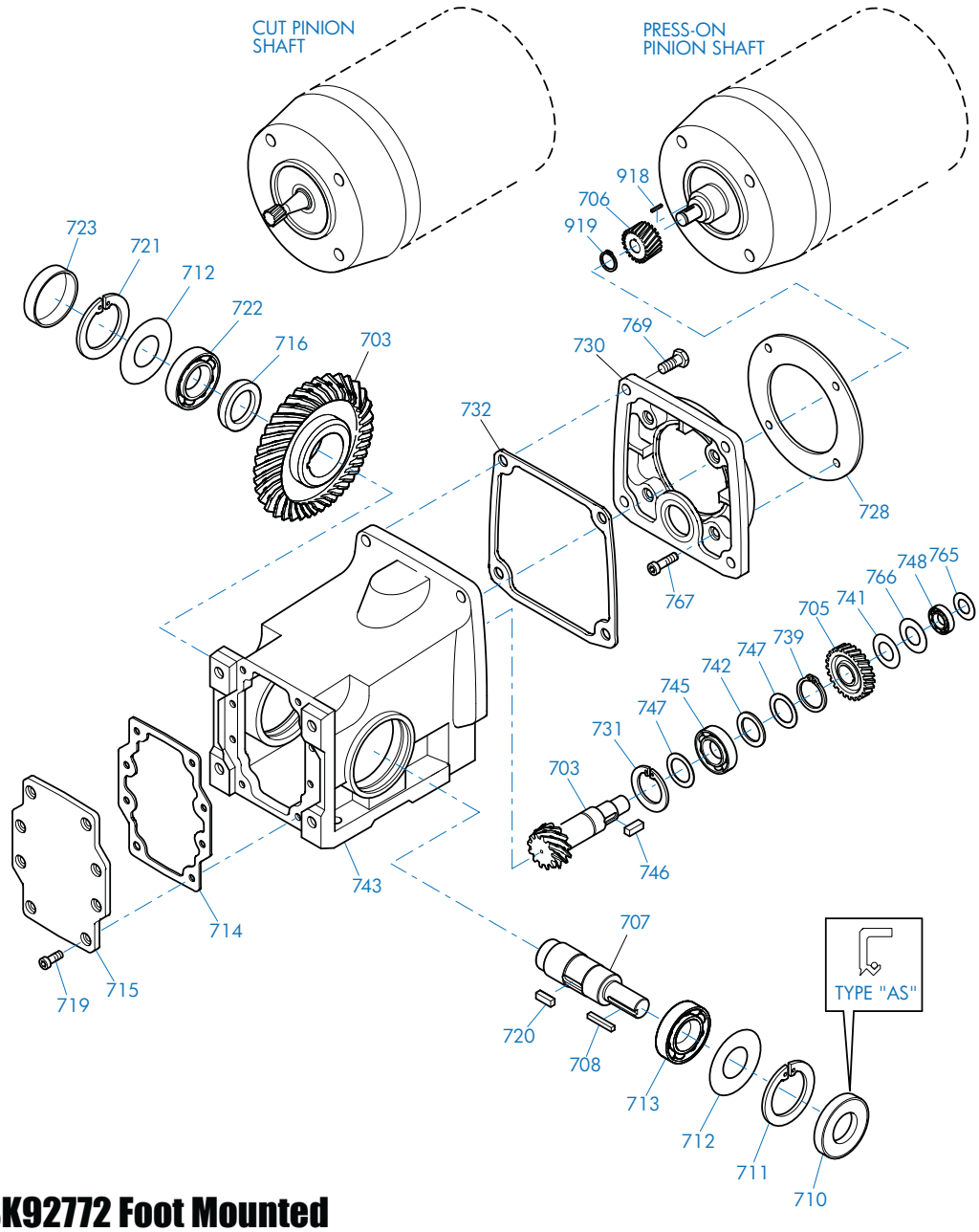


## SK 92172 - SK92772 Foot Mounted

703 Bevel Gearset
705 Gear
706 Pinion
707 Output Shaft
708 Key
710 Oil Seal
711 Snap Ring
712 Shim
713 Anti-Friction Bearing
714 Gasket
715 Inspection Cover
716 Spacer
719 Bolt
720 Key
721 Snap Ring
722 Anti-Friction Bearing
723 Bore Plug
728 Gasket
730 Input Cover
731 Snap Ring
732 Gasket
739 Snap Ring
741 Shim
742 Thrust Washer
743 Gearcase
745 Anti-Friction Bearing
746 Key
747 Shim
748 Anti-Friction Bearing
765 Shim
766 Snap Ring
767 Bolt
769 Bolt
918 Key
919 Snap Ring

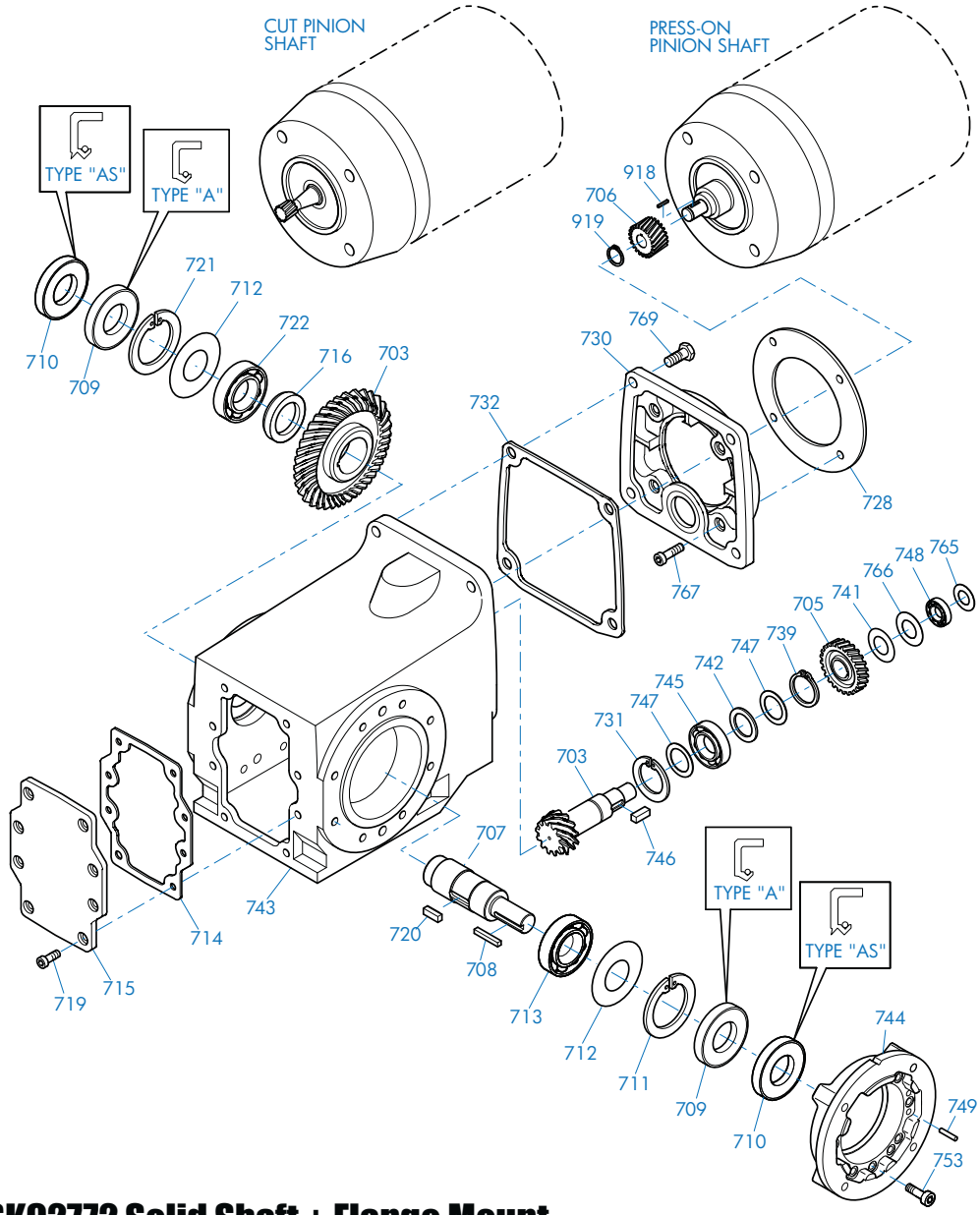


## SK 92172 - SK92772 Solid Shaft + Flange Mount

703 Bevel Gearset
705 Gear
706 Pinion
707 Output Shaft
708 Key
709 Oil Seal
710 Oil Seal
711 Snap Ring
712 Shim
713 Anti-Friction Bearing
714 Gasket
715 Inspection Cover
716 Spacer
719 Bolt
720 Key
721 Snap Ring
722 Anti-Friction Bearing
728 Gasket
730 Input Cover
731 Snap Ring
732 Gasket
739 Snap Ring
741 Shim
742 Thrust Washer
743 Gearcase
744 Flange
745 Anti-Friction Bearing
746 Key
747 Shim
748 Anti-Friction Bearing
749 Grooved Pin
753 Bolt
765 Shim
766 Snap Ring
767 Bolt
769 Bolt
918 Key
919 Snap Ring

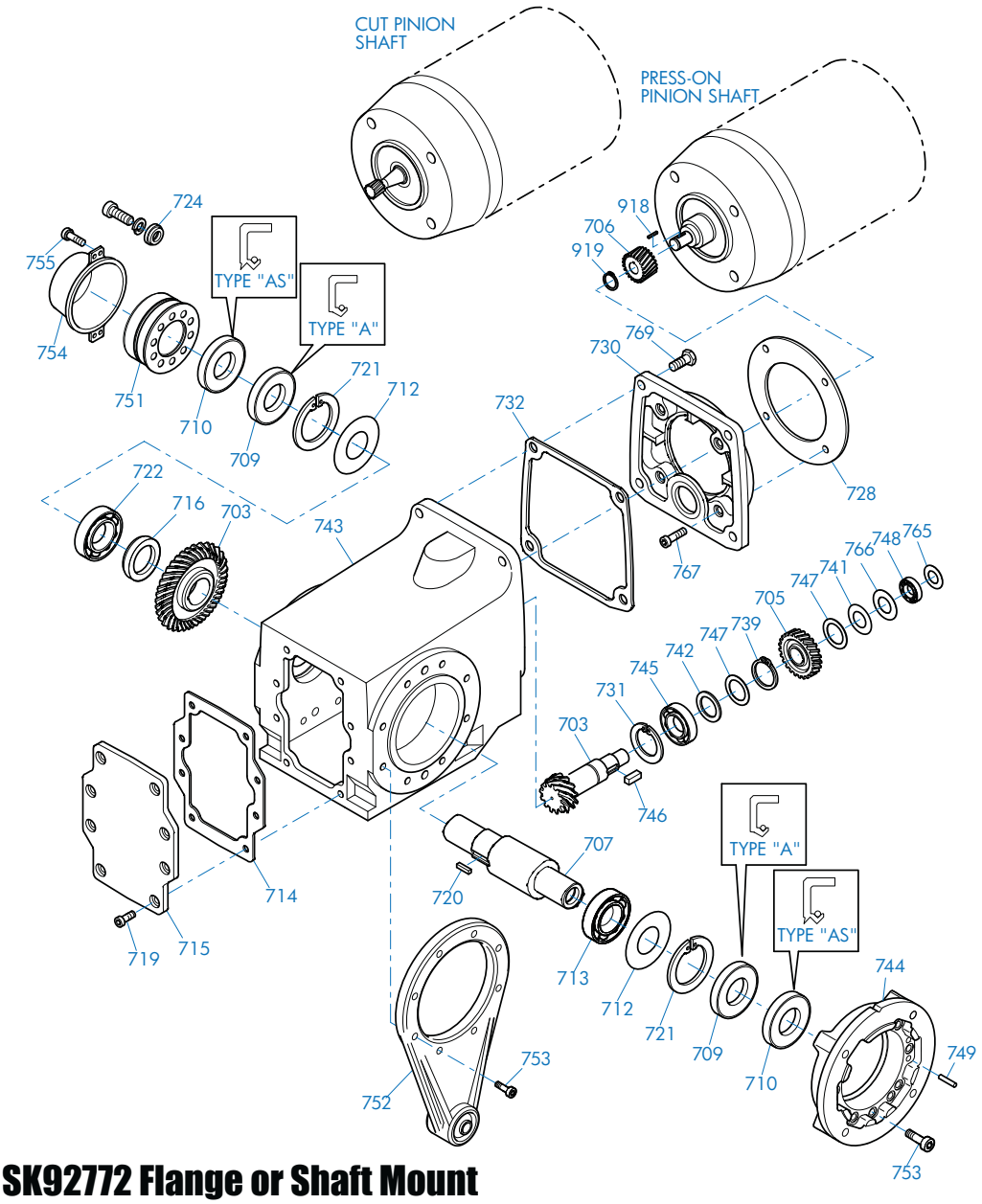


## SK 92172 - SK92772 Flange or Shaft Mount

| | | |
|---|---|---|
| 703 Bevel Gearset | 722 Anti-Friction Bearing | 748 Anti-Friction Bearing |
| 705 Gear | 724 Fixing Element Kit | 749 Grooved Pin |
| 706 Pinion | 728 Gasket | 751 Shrink Disc Connector |
| 707 Output Shaft | 730 Input Cover | 752 Torque Arm |
| 709 Oil Seal | 731 Snap Ring | 753 Bolt |
| 710 Oil Seal | 732 Gasket | 754 Cover |
| 712 Shim | 739 Snap Ring | 755 Bolt |
| 713 Anti-Friction Bearing | 741 Shim | 765 Shim |
| 714 Gasket | 742 Thrust Washer | 766 Snap Ring |
| 715 Inspection Cover | 743 Gearcase | 767 Bolt |
| 716 Spacer | 744 Flange | 769 Bolt |
| 719 Bolt | 745 Anti-Friction Bearing | 918 Key |
| 720 Key | 746 Key | 919 Snap Ring |
| 721 Snap Ring | 747 Shim | |

# 92 SERIES BEVEL PARTS LIST DRAWINGS

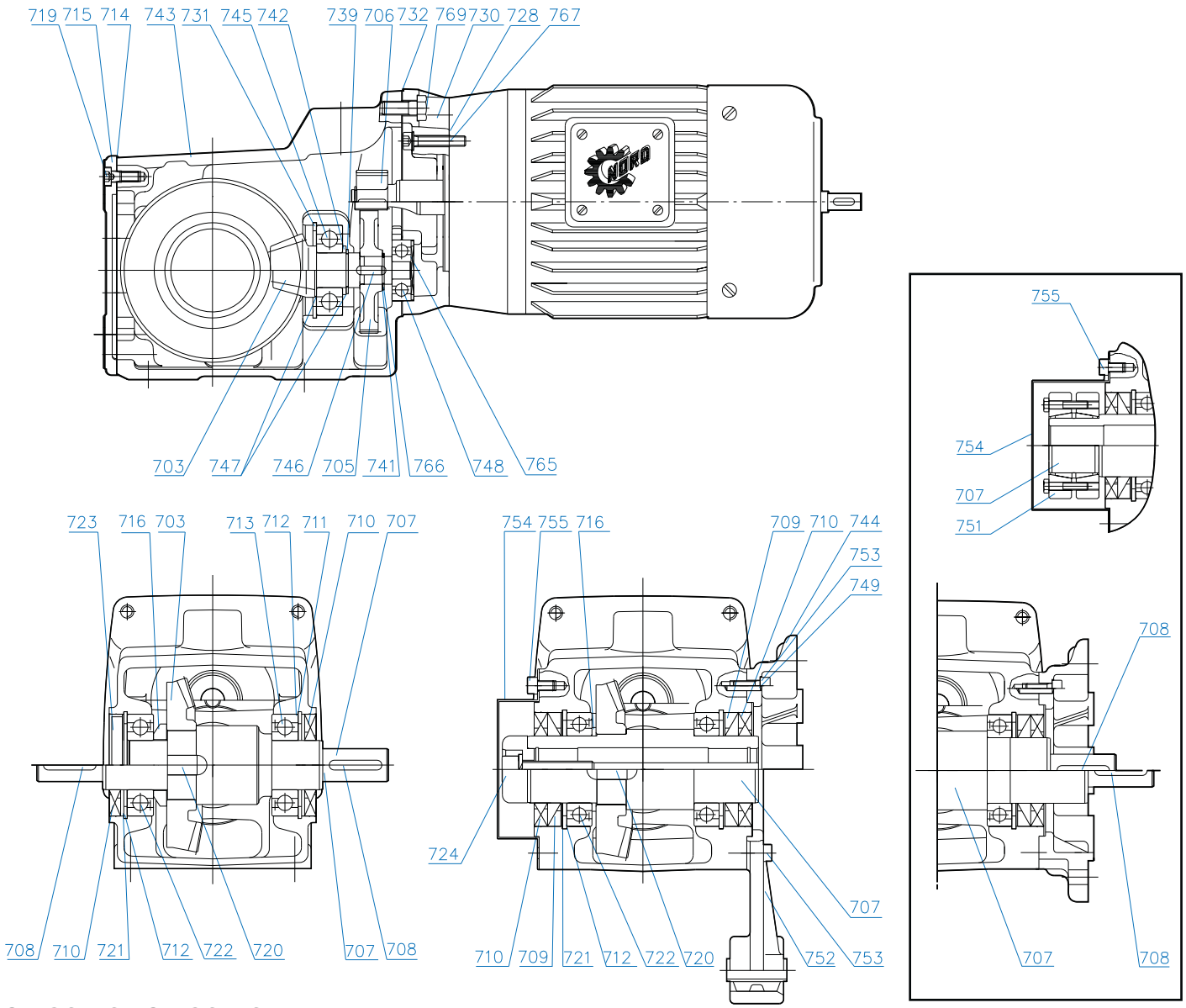


## SK 92172 - SK 92772

703 Bevel Gearset
705 Gear
706 Pinion
707 Output Shaft
708 Key
709 Oil Seal
710 Oil Seal
711 Snap Ring
712 Shim
713 Anti-Friction Bearing
714 Gasket
715 Inspection Cover
716 Spacer
719 Bolt
720 Key
721 Snap Ring
722 Anti-Friction Bearing
723 Sealing Plug
724 Fixing Element Kit
728 Gasket
730 Gearbox Cover
731 Snap Ring
732 Gasket
739 Snap Ring
741 Shim
742 Thrust Washer
743 Gearcase
744 Flange
745 Anti-Friction Bearing
746 Key
747 Shim
748 Anti-Friction Bearing
749 Grooved Pin
751 Shrink Disc Connector
752 Torque Arm
753 Bolt
754 Cover
755 Bolt
765 Slotted Round Nut
766 Tab Lock Washer
767 Bolt
769 Hexagonal Screw

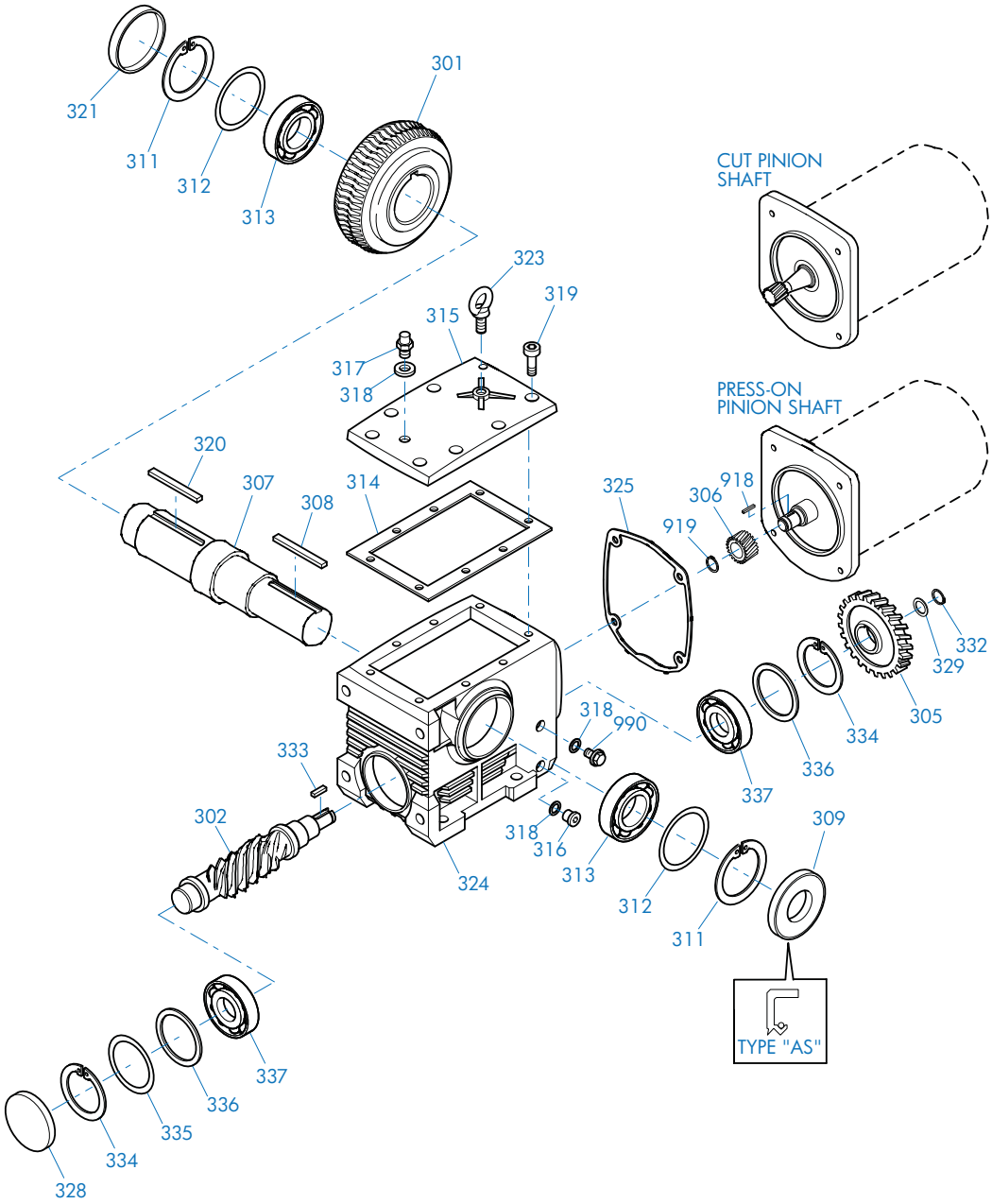


## SK 02040 - SK 42125 Foot Mounted

| | | |
|---|---|---|
| 301 Worm Wheel | 315 Inspection Cover | 329 Thrust Washer |
| 302 Worm | 316 Drain Plug | 332 Snap Ring |
| 305 Gear | 317 Vent Plug | 333 Key |
| 306 Pinion | 318 Gasket | 334 Snap Ring |
| 307 Output Shaft | 319 Socket Head Screw | 335 Shim |
| 308 Key | 320 Key | 336 Thrust Washer |
| 309 Oil Seal | 321 Bore Plug | 337 Anti-Friction Bearing |
| 311 Snap Ring | 323 Flanged Eye Bolt | 918 Key |
| 312 Shim | 324 Gearcase | 919 Snap Ring |
| 313 Anti-Friction Bearing | 325 Gasket | 990 Oil Level Plug |
| 314 Gasket | 328 Bore Plug | |

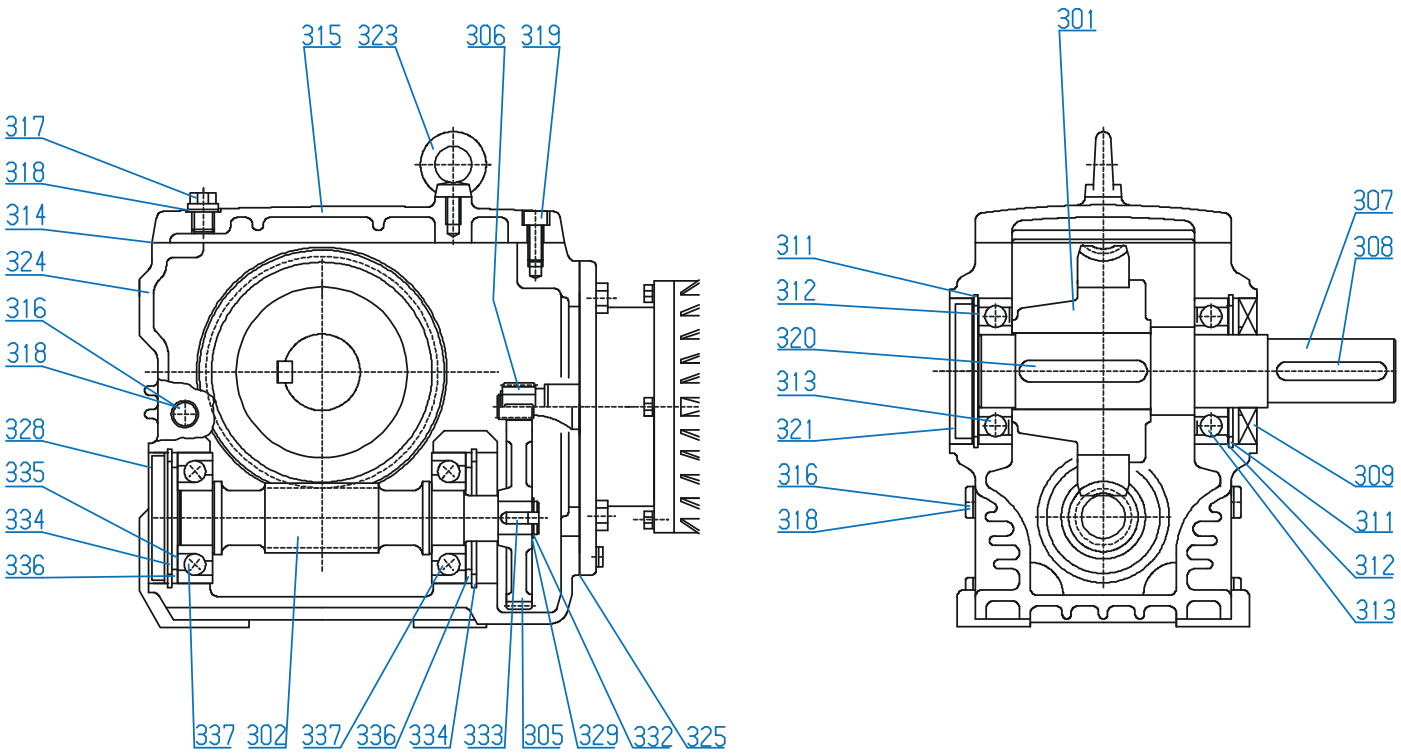


## SK 02040 - SK 42125 Foot Mounted

| | | |
|---|---|---|
| 301 Worm Wheel | 314 Gasket | 325 Gasket |
| 302 Worm | 315 Inspection Cover | 328 Bore Plug |
| 305 Gear | 316 Drain Plug | 329 Thrust Washer |
| 306 Pinion | 317 Vent Plug | 332 Snap Ring |
| 307 Output Shaft | 318 Gasket | 333 Key |
| 308 Key | 319 Socket Head Screw | 334 Snap Ring |
| 309 Oil Seal | 320 Key | 335 Shim |
| 311 Snap Ring | 321 Bore Plug | 336 Thrust Washer |
| 312 Shim | 323 Flanged Eye Bolt | 337 Anti-Friction Bearing |
| 313 Anti-Friction Bearing | 324 Gearcase | |

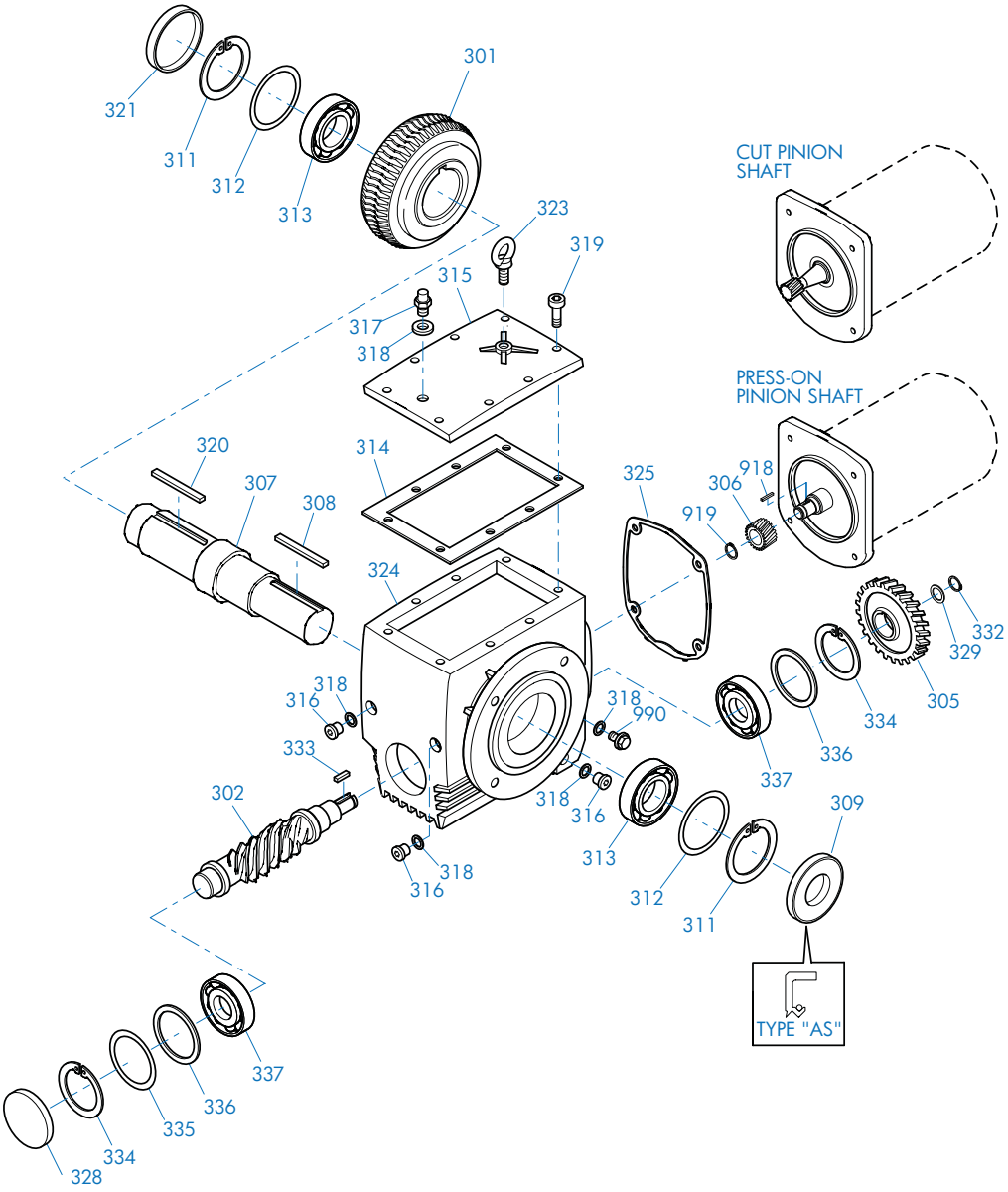


## SK 02040 - SK 42125 Flange Mounted

| | | |
|---|---|---|
| 301 Worm Wheel | 315 Inspection Cover | 329 Thrust Washer |
| 302 Worm | 316 Drain Plug | 332 Snap Ring |
| 305 Gear | 317 Vent Plug | 333 Key |
| 306 Pinion | 318 Gasket | 334 Snap Ring |
| 307 Output Shaft | 319 Socket Head Screw | 335 Shim |
| 308 Key | 320 Key | 336 Thrust Washer |
| 309 Oil Seal | 321 Bore Plug | 337 Anti-Friction Bearing |
| 311 Snap Ring | 323 Flanged Eye Bolt | 918 Key |
| 312 Shim | 324 Gearcase | 919 Snap Ring |
| 313 Anti-Friction Bearing | 325 Gasket | 990 Oil Level Plug |
| 314 Gasket | 328 Bore Plug | |

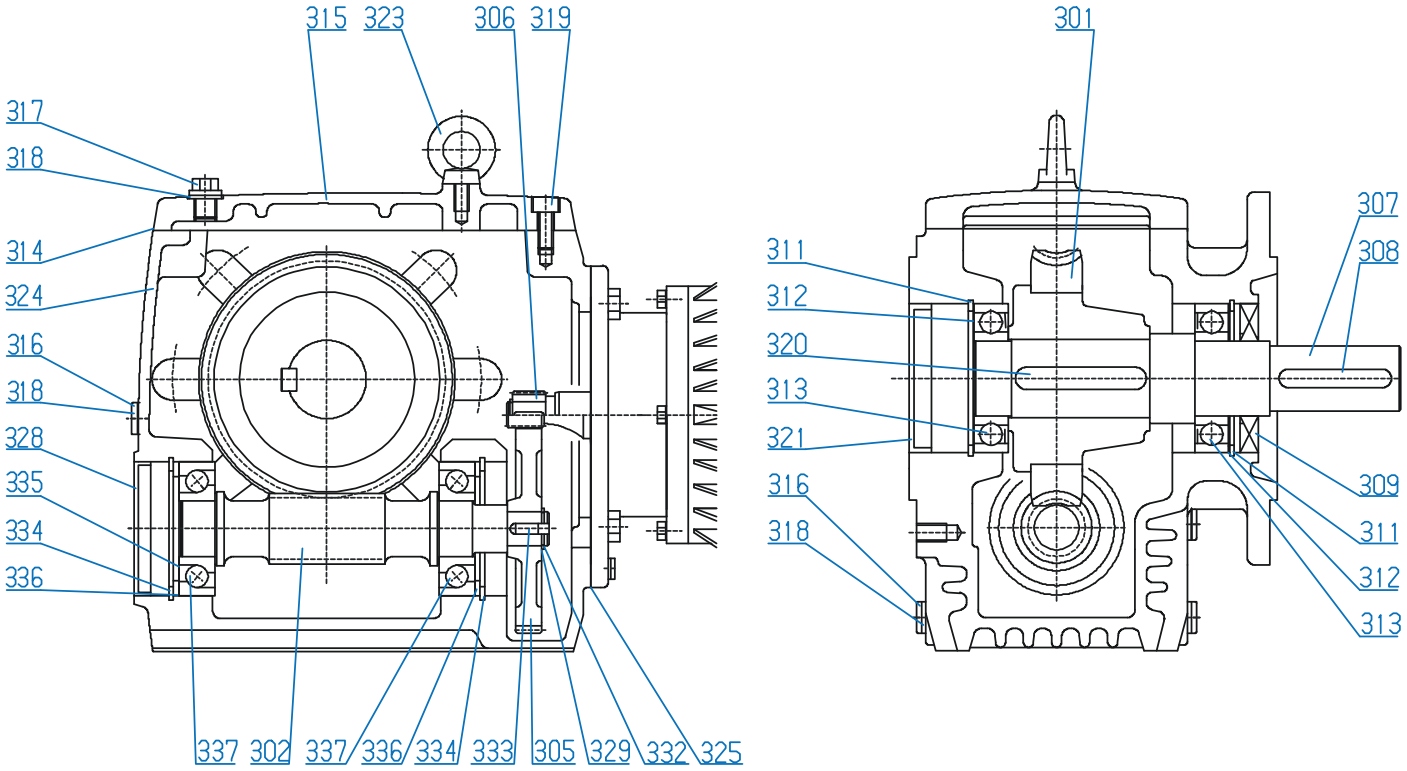


## SK 02040 - SK 42125 Flange Mounted

| | | |
|---|---|---|
| 301 Worm Wheel | 314 Gasket | 325 Gasket |
| 302 Worm | 315 Inspection Cover | 328 Bore Plug |
| 305 Gear | 316 Drain Plug | 329 Thrust Washer |
| 306 Pinion | 317 Vent Plug | 332 Snap Ring |
| 307 Output Shaft | 318 Gasket | 333 Key |
| 308 Key | 319 Socket Head Screw | 334 Snap Ring |
| 309 Oil Seal | 320 Key | 335 Shim |
| 311 Snap Ring | 321 Bore Plug | 336 Thrust Washer |
| 312 Shim | 323 Flanged Eye Bolt | 337 Anti-Friction Bearing |
| 313 Anti-Friction Bearing | 324 Gearcase | |

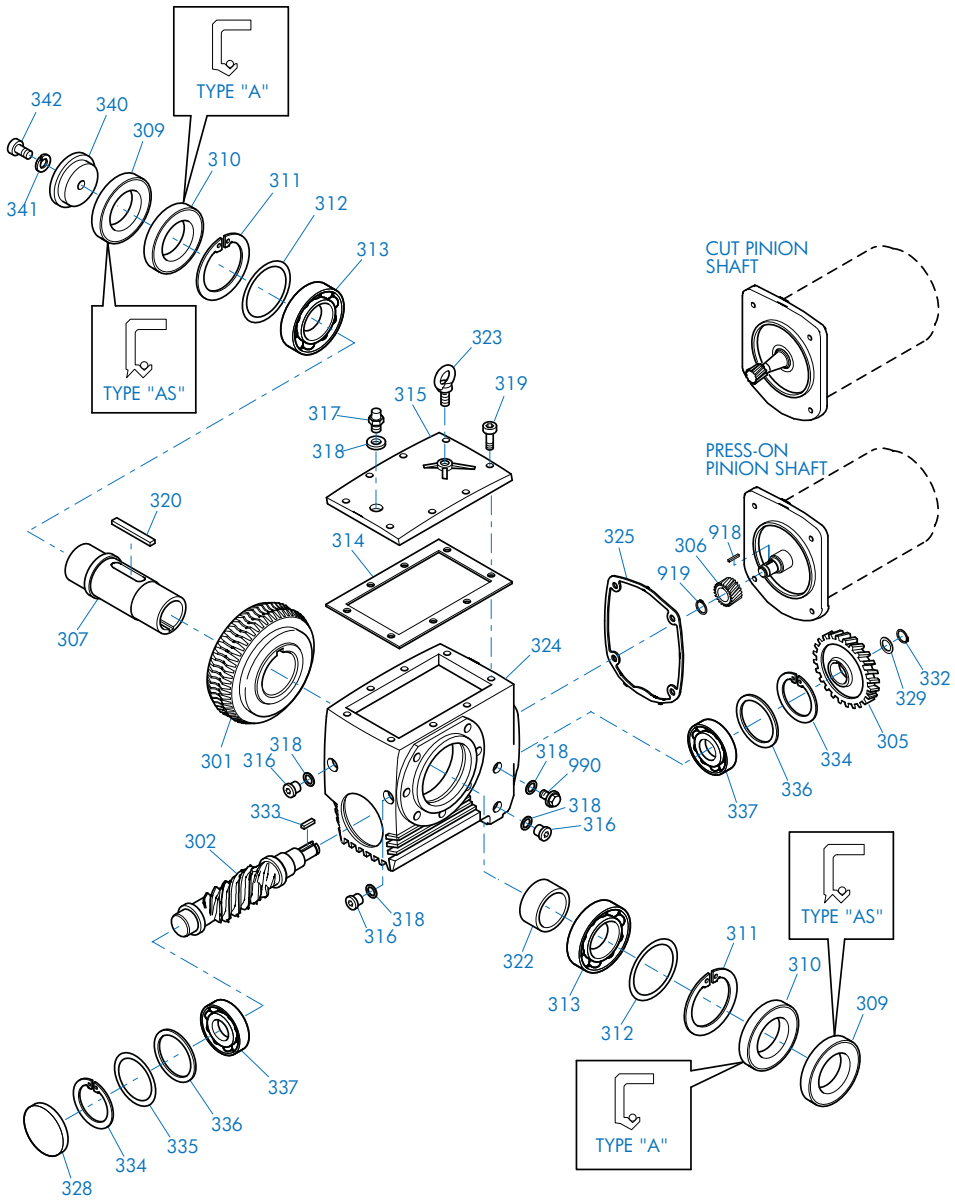


## SK 02040 - SK 42125 Shaft Mounted

301 Worm Wheel
302 Worm
305 Gear
306 Pinion
307 Output Shaft
309 Oil Seal
310 Oil Seal
311 Snap Ring
312 Shim
313 Anti-Friction Bearing
314 Gasket
315 Inspection Cover
316 Drain Plug
317 Vent Plug
318 Gasket
319 Socket Head Screw
320 Key
322 Spacer
323 Flanged Eye Bolt
324 Gearcase
325 Gasket
328 Bore Plug
329 Thrust Washer
332 Snap Ring
333 Key
334 Snap Ring
335 Shim
336 Thrust Washer
337 Anti-Friction Bearing
340 Retaining Washer
341 Lock Washer
342 Bolt
350 Flange
351 Bolt
918 Key
919 Snap Ring
990 Oil Level Plug

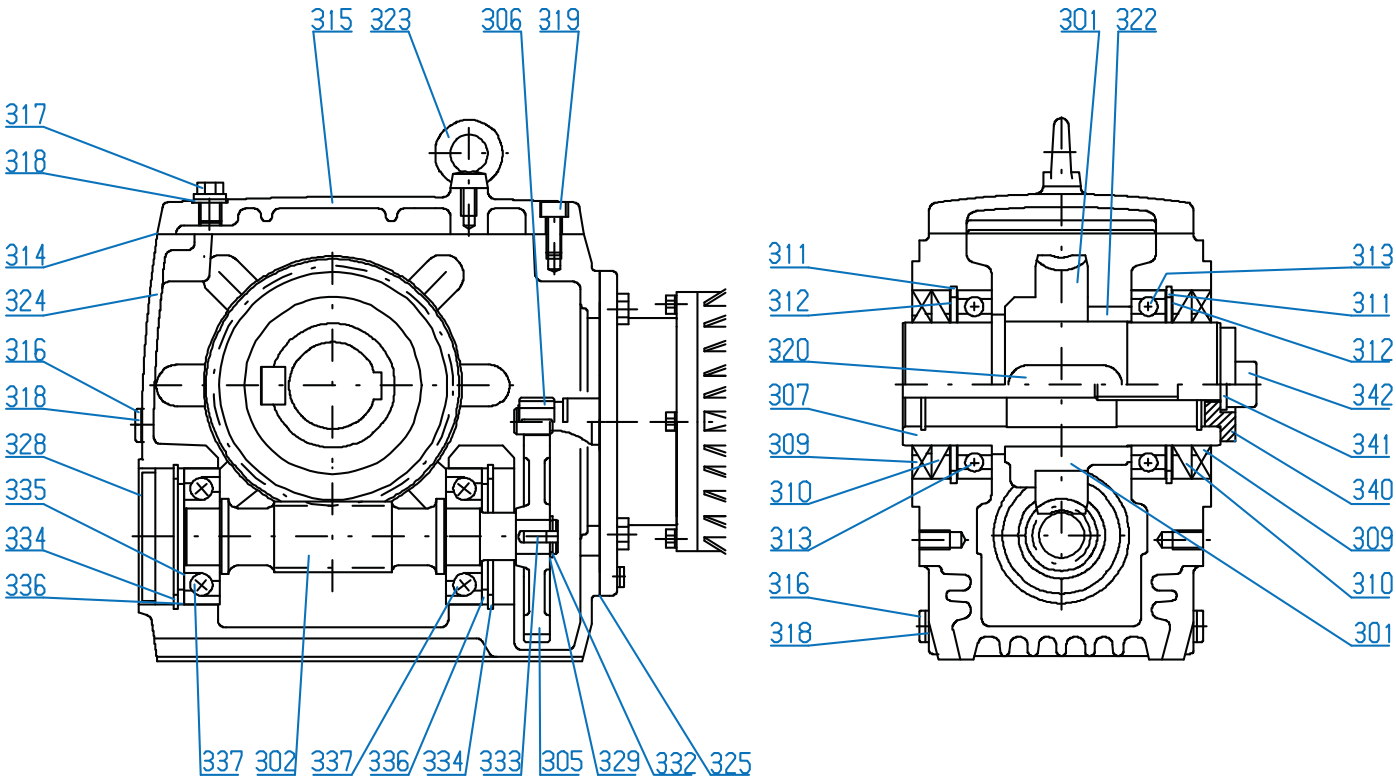


## SK 02040 - SK 42125 Shaft Mounted

301 Worm Wheel
302 Worm
305 Gear
306 Pinion
307 Output Shaft
309 Oil Seal
310 Oil Seal
311 Snap Ring
312 Shim
313 Anti-Friction Bearing
314 Gasket
315 Inspection Cover
316 Drain Plug
317 Vent Plug
318 Gasket
319 Socket Head Screw
320 Key
322 Spacer
323 Flanged Eye Bolt
324 Gearcase
325 Gasket
328 Bore Plug
329 Thrust Washer
332 Snap Ring
333 Key
334 Snap Ring
335 Shim
336 Thrust Washer
337 Anti-Friction Bearing
340 Retaining Washer
341 Lock Washer
342 Bolt
350 Flange
351 Bolt

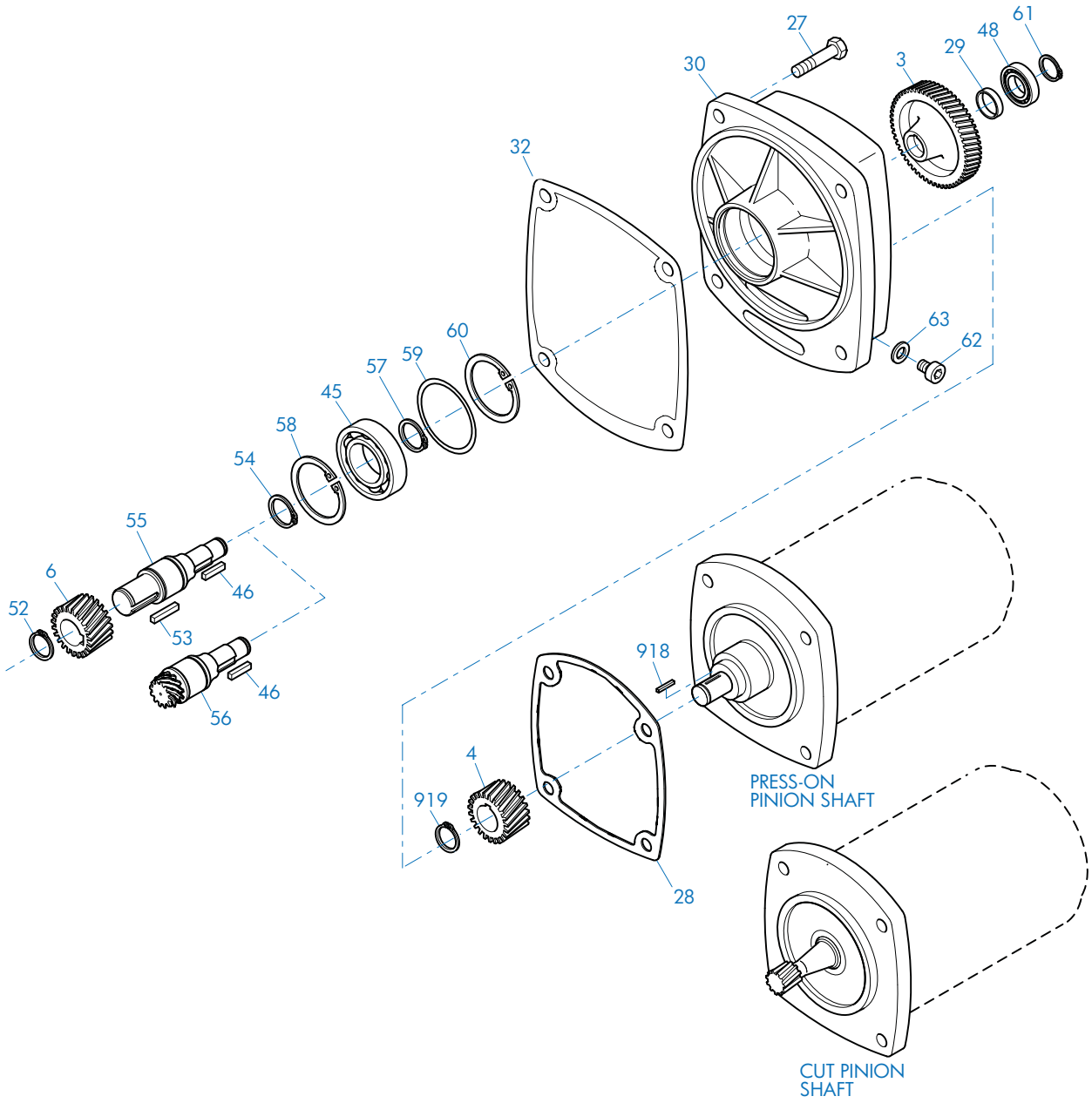


## SK13050 - SK43125 Third Stage Reduction Gear

| | | | | | |
|---|---|---|---|---|---|
| 3 | Gear | 46 | Key | 59 | Shim |
| 4 | Pinion | 48 | Anti-Friction Bearing | 60 | Snap Ring |
| 6 | Pinion | 52 | Snap Ring | 61 | Snap Ring |
| 27 | Bolt | 53 | Key | 62 | Oil Plug |
| 28 | Gasket | 54 | Snap Ring | 63 | Gasket |
| 29 | Spacer | 55 | Intermediate Shaft, Plain | 918 | Key |
| 30 | Third Reduction Gearcase | 56 | Intermediate Shaft, Gearcut | 919 | Snap Ring |
| 32 | Gasket | 57 | Snap Ring | | |
| 45 | Anti-Friction Bearing | 58 | Snap Ring | | |

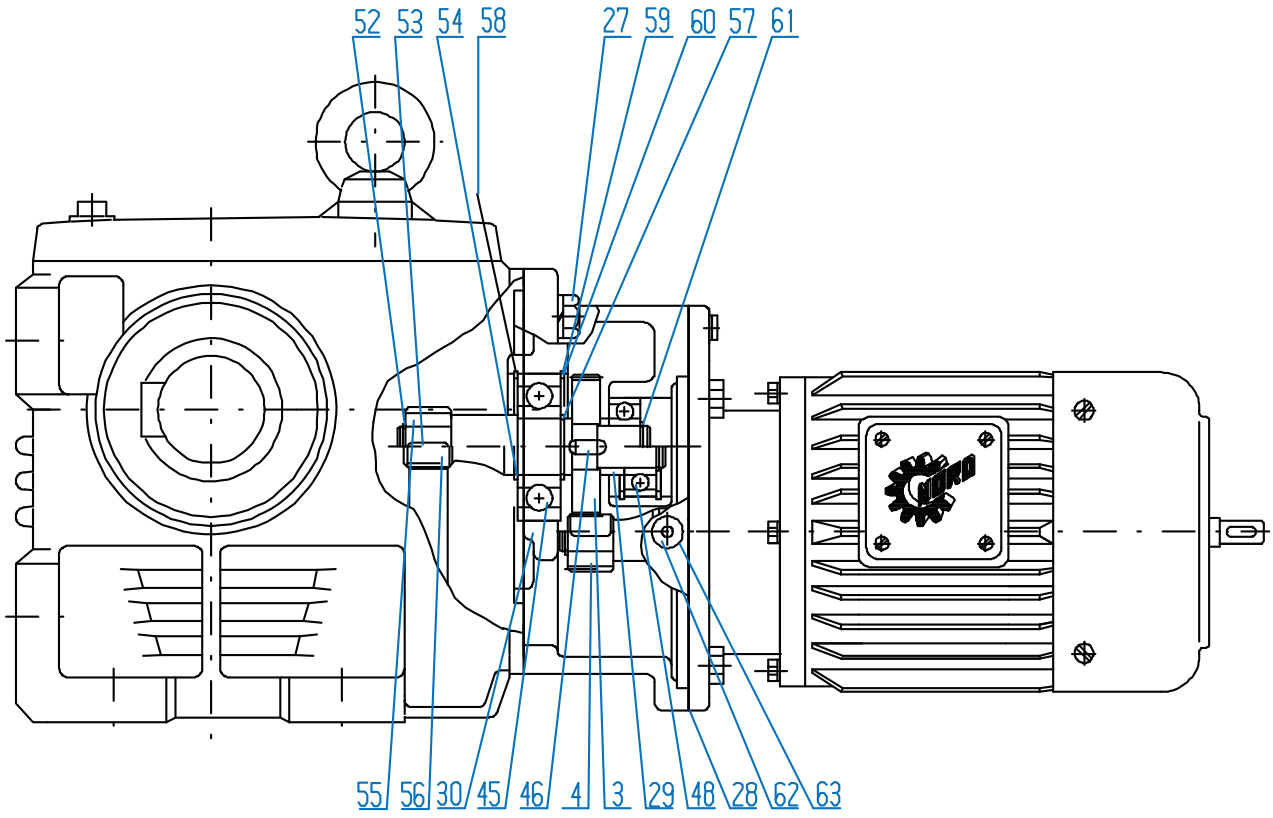


## SK13050 - SK43125 Third Stage Reduction Gear

| | | | | | |
|---|---|---|---|---|---|
| 3 | Gear | 46 | Key | 58 | Snap Ring |
| 4 | Pinion | 48 | Anti-Friction Bearing | 59 | Shim |
| 27 | Bolt | 52 | Snap Ring | 60 | Snap Ring |
| 28 | Gasket | 53 | Key | 61 | Snap Ring |
| 29 | Spacer | 54 | Snap Ring | 62 | Oil Plug |
| 30 | Third Reduction Gearcase | 55 | Intermediate Shaft, Plain | 63 | Gasket |
| 32 | Gasket | 56 | Intermediate Shaft, Gearcut | | |
| 45 | Anti-Friction Bearing | 57 | Snap Ring | | |

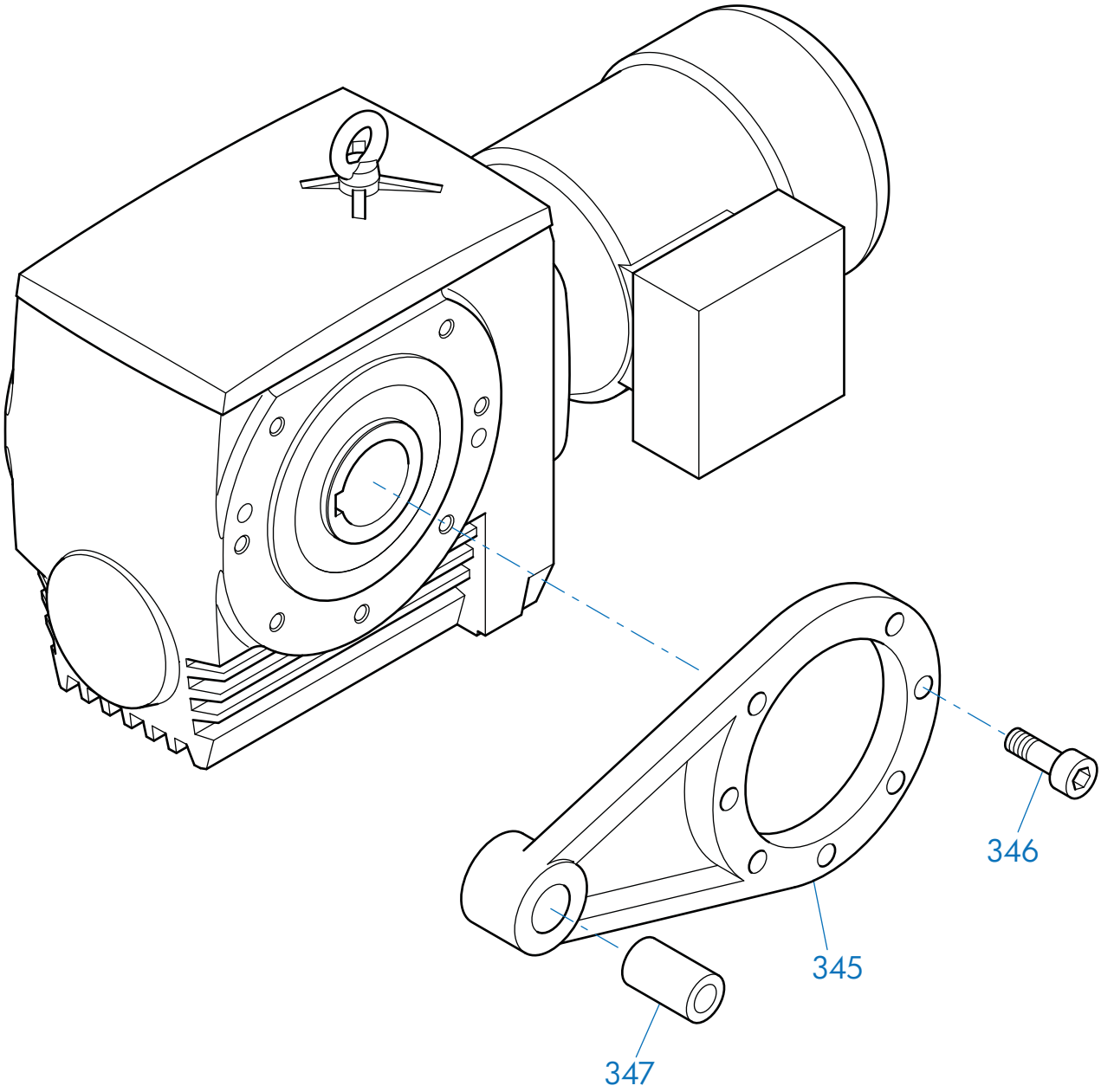


## SK13050 - SK43125 Torque Arm

| | | |
|---|---|---|
| 345 Torque Arm | 346 Bolt | 347 Bushing |

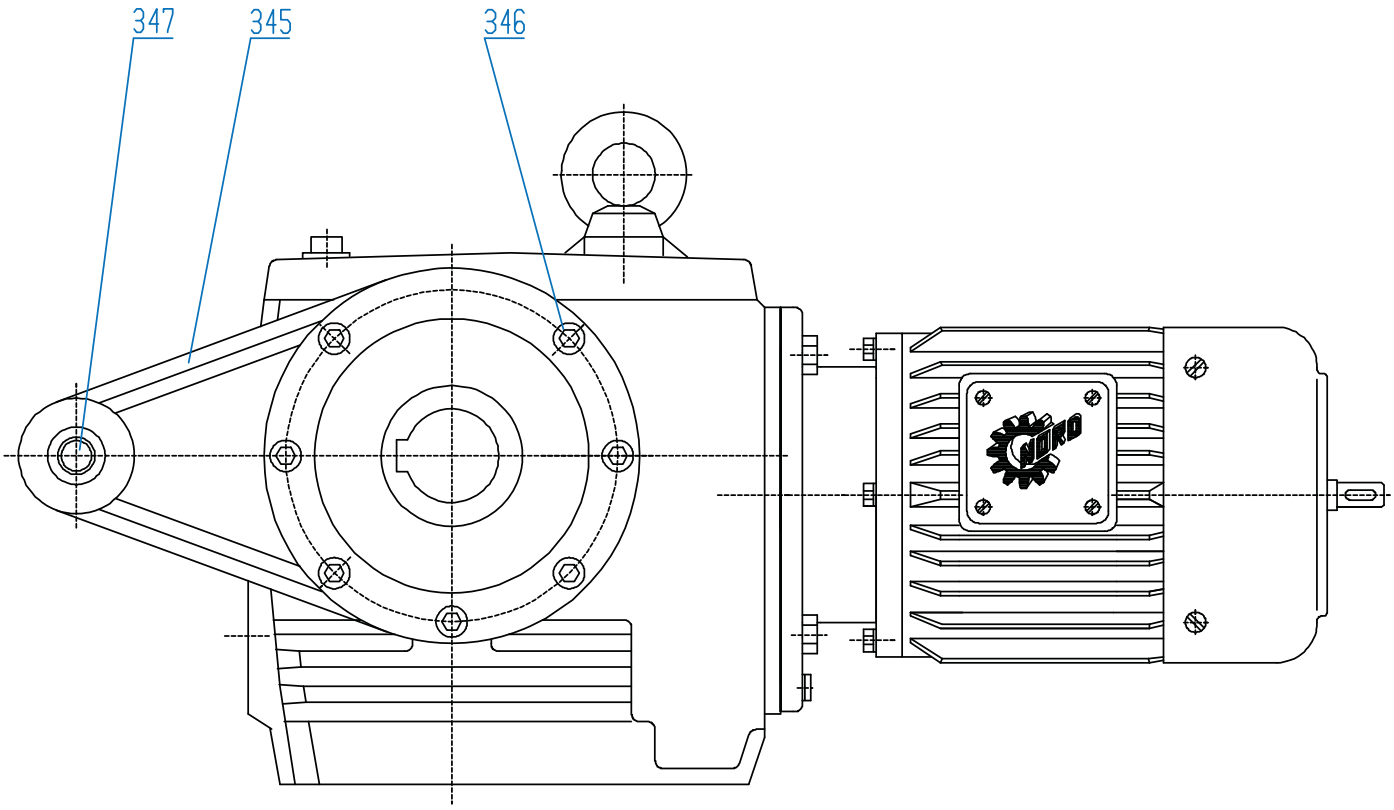


## SK13050 - SK43125 Torque Arm

| | | |
|---|---|---|
| 345 Torque Arm | 346 Bolt | 347 Bushing |

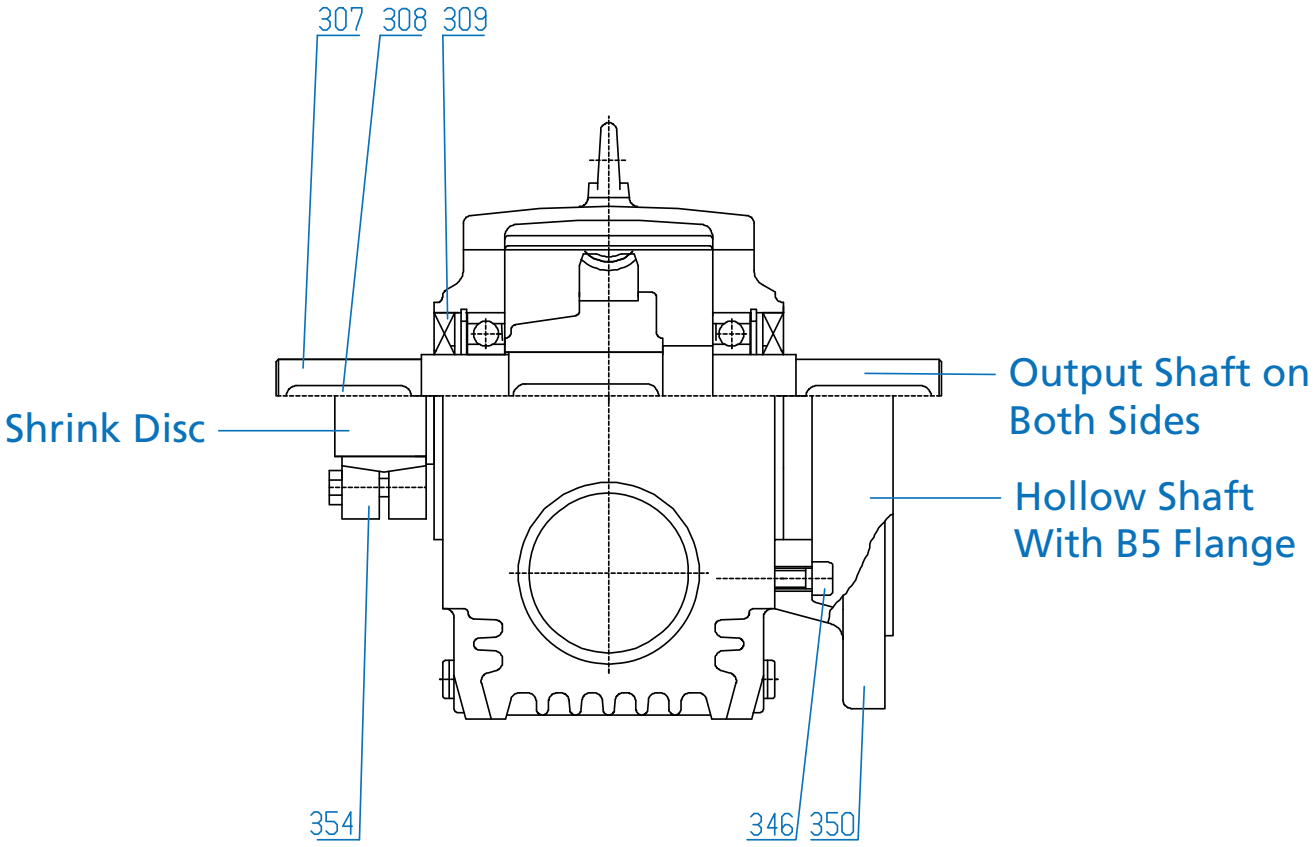


## SK13050 - SK43125

| | | |
|---|---|---|
| 307 Output Shaft | 309 Oil Seal | 350 Flange |
| 308 Key | 346 Screw | 354 Shrink Disc Connector |

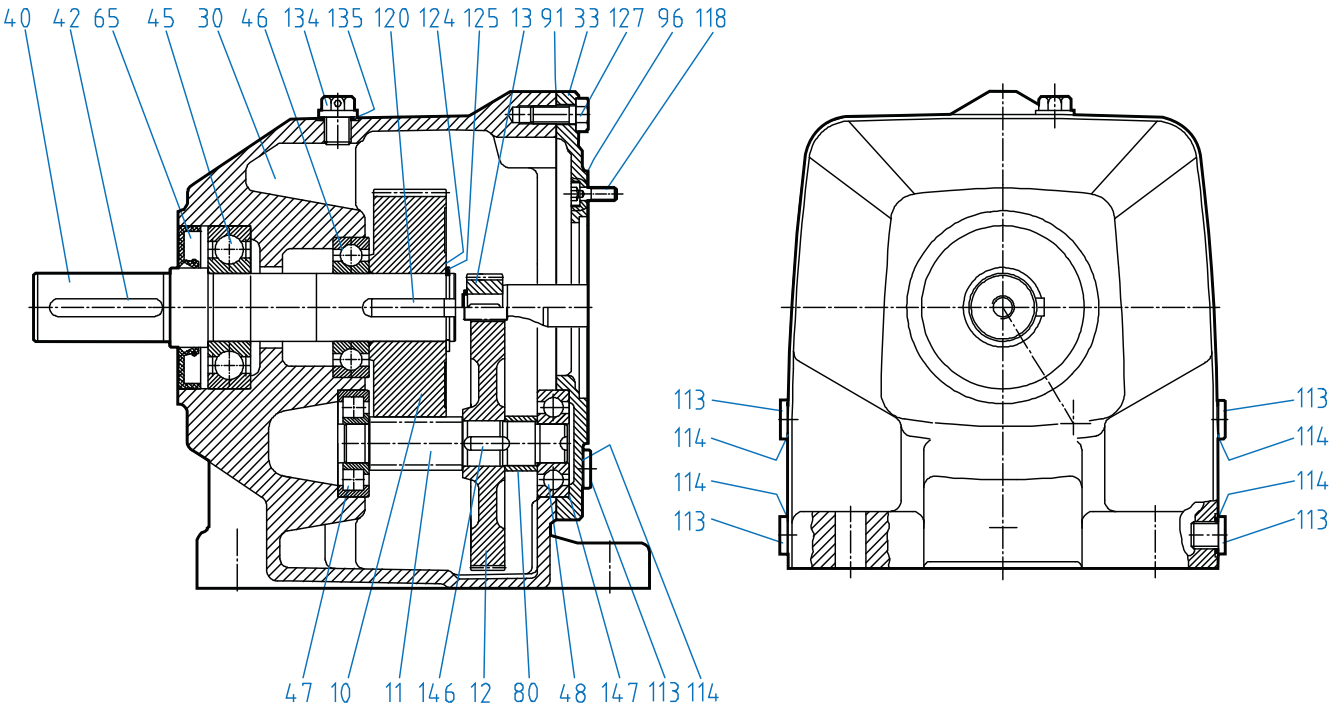


## SK 172 - SK 972 Foot Mounted

| | | | | | |
|---|---|---|---|---|---|
| 10 | Driven gear | 46 | Output shaft bearing | 118 | Bolt |
| 11 | Pinion shaft | 47 | Pinion shaft bearing | 120 | Key |
| 12 | Driving gear | 48 | Pinion shaft bearing | 124 | Shim |
| 13 | Driving pinion | 65 | Shaft seal | 125 | Snap ring |
| 30 | Gearcase | 80 | Spacer | 127 | Bolt |
| 33 | Input cover | 91 | Gasket | 134 | Vent plug |
| 40 | Output shaft | 96 | Gasket | 135 | Gasket |
| 42 | Key | 113 | Oil plug | 146 | Key |
| 45 | Output shaft bearing | 114 | Gasket | 147 | Shim |

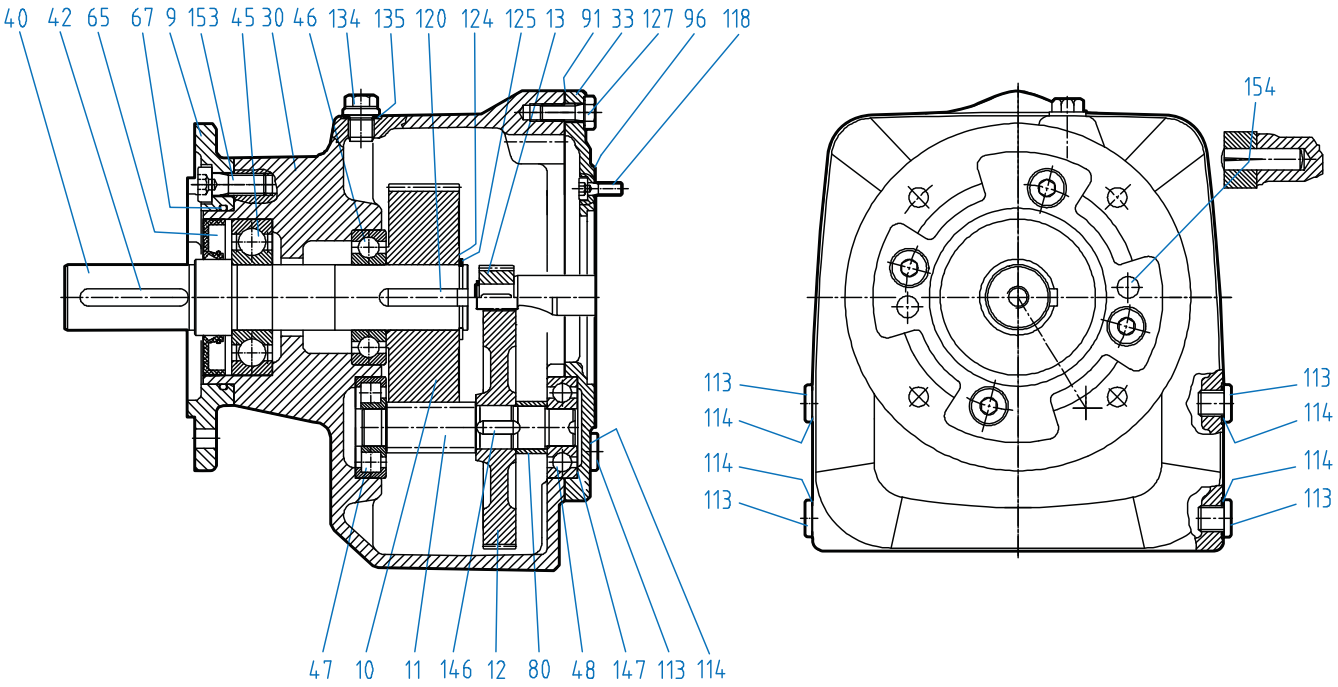


## SK 172 - SK 972 Flange Mounted

| | | | | | |
|---|---|---|---|---|---|
| 9 | Flange | 47 | Pinion shaft bearing | 124 | Shim |
| 10 | Driven gear | 48 | Pinion shaft bearing | 125 | Snap ring |
| 11 | Pinion shaft | 65 | Shaft seal | 127 | Bolt |
| 12 | Driving gear | 67 | O-Ring | 134 | Vent plug |
| 13 | Driving pinion | 80 | Spacer | 135 | Gasket |
| 30 | Gearcase | 91 | Gasket | 146 | Key |
| 33 | Input cover | 96 | Gasket | 147 | Shim |
| 40 | Output shaft | 113 | Oil plug | 153 | Bolt |
| 42 | Key | 114 | Gasket | 154 | Grooved dowel pin |
| 45 | Output shaft bearing | 118 | Bolt | | |
| 46 | Output shaft bearing | 120 | Key | | |

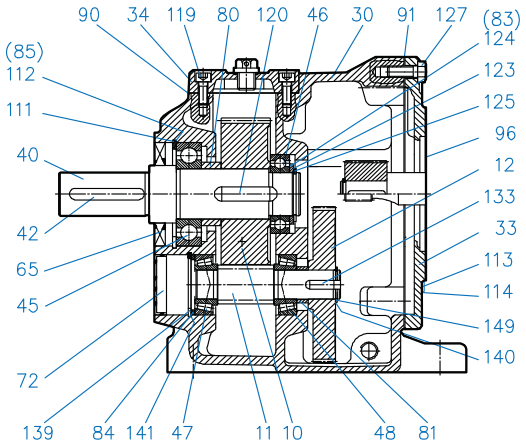


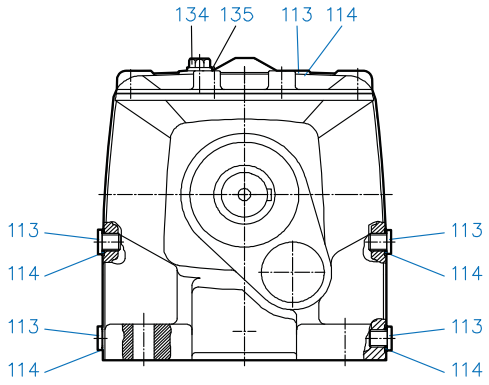


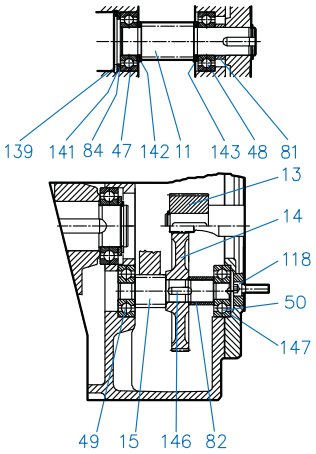


## SK 273 - SK 973 Foot Mounted

| | | | | | |
|---|---|---|---|---|---|
| 10 | Driven gear | 65 | Shaft seal | 120 | Key |
| 11 | Pinion shaft | 72 | Bore plug | 123 | Thrust washer |
| 12 | Driving gear | 80 | Spacer | 124 | Shim |
| 13 | Driving pinion | 81 | Spacer | 125 | Snap ring |
| 14 | Driving gear | 82 | Spacer | 127 | Bolt |
| 15 | Pinion shaft | 83 | Thrust washer | 133 | Key |
| 30 | Gearcase | 84 | Thrust washer | 134 | Vent plug |
| 33 | Input cover | 85 | Thrust washer | 135 | Gasket |
| 34 | Gear case cover | 90 | Gasket | 139 | Snap ring |
| 40 | Output shaft | 91 | Gasket | 140 | Shim |
| 42 | Key | 96 | Gasket | 141 | Shim |
| 45 | Output shaft bearing | 111 | Snap ring | 142 | Thrust washer |
| 46 | Output shaft bearing | 112 | Shim | 143 | Thrust washer |
| 47 | Pinion shaft bearing | 113 | Oil plug | 146 | Key |
| 48 | Pinion shaft bearing | 114 | Gasket | 147 | Shim |
| 49 | Pinion shaft bearing | 118 | Bolt | 149 | Snap ring |
| 50 | Pinion shaft bearing | 119 | Bolt | | |

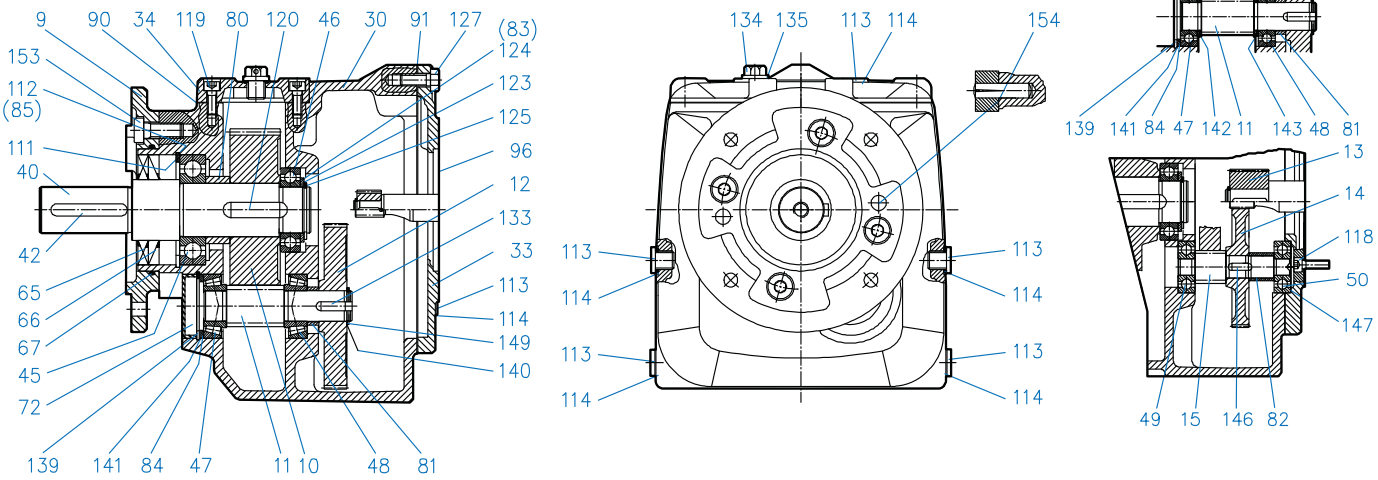


## SK 273 - SK 973 Flange Mounted

| | | | | | |
|---|---|---|---|---|---|
| 9 | Flange | 66 | Shaft seal | 123 | Thrust washer |
| 10 | Driven gear | 67 | O-Ring | 124 | Shim |
| 11 | Pinion shaft | 72 | Bore plug | 125 | Snap ring |
| 12 | Driving gear | 80 | Spacer | 127 | Bolt |
| 13 | Driving pinion | 81 | Spacer | 133 | Key |
| 14 | Driving gear | 82 | Spacer | 134 | Vent plug |
| 15 | Pinion shaft | 83 | Thrust washer | 135 | Gasket |
| 30 | Gearcase | 84 | Thrust washer | 139 | Snap ring |
| 33 | Input cover | 85 | Thrust washer | 140 | Shim |
| 34 | Gearcase cover | 90 | Gasket | 141 | Shim |
| 40 | Output shaft | 91 | Gasket | 142 | Thrust washer |
| 42 | Key | 96 | Gasket | 143 | Thrust washer |
| 45 | Output shaft bearing | 111 | Snap ring | 146 | Key |
| 46 | Output shaft bearing | 112 | Shim | 147 | Shim |
| 47 | Pinion shaft bearing | 113 | Oil plug | 149 | Snap ring |
| 48 | Pinion shaft bearing | 114 | Gasket | 153 | Bolt |
| 49 | Pinion shaft bearing | 118 | Bolt | 154 | Grooved dowel pin |
| 50 | Pinion shaft bearing | 119 | Bolt | | |
| 65 | Shaft seal | 120 | Key | | |

## Troubleshooting

This section identifies some of the most common issues involved with NORD Gear speed reducers , and provides recommendations to assist you in defining and answering your questions as you work with our products. You may also contact our Engineering/Application departments if your questions are not answered in the table below.

| Problem With the Reducer | | Possible Causes | Suggested Remedy |
|---|---|---|---|
| **Runs Hot** | Overloading | Load exceeds the capacity of the reducer | Check rated capacity of reducer, replace with unit of sufficient capacity or reduce the load. |
| | Improper lubrication | Insufficient lubrication | Check lubricant level and adjust up to recommended levels |
| | | Excessive lubrication | Check lubricant level and adjust down to recommended levels. |
| | | Wrong lubrication | Flush out and refill with correct lubricant as recommended |
| **Runs Noisy** | Loose foundation bolts | Weak mounting structure | Inspect mounting of reducer. Tighten loose bolts and/or reinforce mounting and structure. |
| | | Loose hold down bolts | Tighten bolts |
| | Failure of bearings | May be due to lack of lubricant | Replace bearing. Clean and flush reducer and fill with recommended lubricant. |
| | | Overload | Check rated capacity of reducer. |
| | Insufficient lubricant | Level of lubricant in reducer not properly maintained. | Check lubricant level and adjust to factory recommended level. |
| **Output shaft does not turn** | Internal parts are broken or missing | Overloading of reducer can cause damage | Replace broken parts. Check rated capacity of reducer. |
| | | Key missing or sheared off on input shaft. | Replace key. |
| | | Coupling loose or disconnected | Properly allign reducer and coupling. Tighten coupling. |
| **Oil Leakage** | Worn seals | Caused by dirt or grit entering seal. | Replace seals. Autovent may be clogged. Replace or clean. |
| | Unit runs hot or leaks | Overfilled reducer | Check lubricant level and adjust to recommended level. |
| | | Vent clogged. | Clean or replace, being sure to prevent any dirt from falling into the reducer. |
| | Incorrect fill level | Improper mounting position, such as wall or ceiling mount of horizontal reducer. | Check mounting position on the name tag & verify with mounting chart in manual. |

# NORD GEAR CORPORATION

DRIVESYSTEMS — CONDITIONS OF SALE — WWW.NORD.COM

1. CONTRACT

Any contract between Nord Gear Corporation, hereinafter designated as Seller, and the Buyer is subject to the terms and conditions of sale hereinafter set forth. Any deviation from such terms and conditions must be specifically set forth in writing and consented to by Seller. Accordingly, the Buyer and Seller acknowledge and agree that the terms and conditions set forth below and on the face hereof shall govern Buyer's purchase of the goods described on the face hereof and shall take precedence over and represents the final agreement between Buyer and Seller, notwithstanding any inconsistent, contradictory or other prior or further conditions contained in any oral or written request or purchase order issued by Buyer or any other document furnished by Buyer in connection with its purchase of the Goods, regardless of whether such document or documents are exchanged simultaneously with this Invoice or prior or subsequent thereto. Any additional or different terms or conditions which may appear in any communicaiton, oral or written, from Seller, its officers, employees, agents or representatives, are hereby expressly rejected and shall not be effective or binding upon the Seller, unless specifically hereafter agreed to in writing by Seller and no such additional or different terms or conditions in any document submitted to Seller by Buyer shall become part of the contract between Buyer and Seller, unless such written acceptance by Seller specifically recognizes and assents to their inclusion. Any objection by Buyer to the terms and conditions hereof shall be ineffective unless Seller is advised in writing thereof within two (2) days of the date of this Invoice.

2. CONFIRMATION

An order shall be deemed accepted only when duly confirmed by Seller, at Nord Gear Corporation's home office in Waunakee, Wisconsin, and upon such confirmation the order shall become a contract binding upon the parties hereto, their successors and assigns.

3. PRICES

Prices shown are list prices and may be subject to applicable discounts. Unless otherwise agreed upon in writing, prices are FOB factory Waunakee, Wisconsin. Prices and discounts are subject to change without notice until order is accepted. Seller's prices do not include cost of any inspection permits required.

4. LIMITED WARRANTY

Seller warrants the goods sold hereunder to be free from defects in material and workmanship under normal use and service not arising from misuse, negligence, or accident, including but not limited to the use, installation, and transportation of the goods by the Buyer, its agents, servants, employees, or by carriers. Such obligations under this warranty are limited to remedying any deficiencies in the goods at Waunakee, Wisconsin, or at such place or places in the United States of America as may be designated by Seller. THIS WARRANTY SHALL PERTAIN TO ANY PART OR PARTS OF ANY GOODS TO WHICH BUYER OR ITS ASSIGNS HAS GIVEN WRITTEN NOTICE OF CLAIMED DEFECTS TO SELLER. NORD GEAR CORP. WARRANTS ITS PRODUCTS AGAINST DEFECTS IN MATERIAL AND WORKMANSHIP FOR A PERIOD OF 12 MONTHS FROM DATE OF INSTALLATION OR 18 MONTHS FROM DATE OF SHIPMENT WHICHEVER COMES FIRST ON ALL COMPONENTS. 36 MONTHS FROM DATE OF INVOICE OR 24 MONTHS FROM DATE OF INSTALLATION WHICHEVER COMES FIRST ON GEARS AND HOUSINGS ONLY. PARTS WHICH ARE SUBJECT TO OPERATIONAL WEAR AND TEAR, SUCH AS BELTS & TRACTION DISCS, ARE NOT COVERED BY THE LIMITED WARRANTY. Buyer shall be required to furnish Seller with details of such defects and this warranty shall be effective as to such goods which Seller's examination shall disclose to its satisfaction to have been defective and which at Seller's option shall promptly thereafter be returned to Seller or its nominees. THE LIMITED WARRANTY SET FORTH HEREIN IS IN LIEU OF ALL OTHER WARRANTIES, EXPRESS OR IMPLIED. EXCEPT FOR THE EXPRESS WARRANTIES SET FORTH HEREIN, SELLER HAS MADE AND MAKES NO OTHER WARRANTIES, EXPRESS OR IMPLIED, AS TO THE GOODS SOLD HEREUNDER, INCLUDING, BUT NOT LIMITED TO, THEIR MERCHANTABILITY OR FITNESS FOR ANY PARTICULAR PURPOSE. ANY DESCRIPTION OR MODEL OF THE GOODS IS FOR IDENTIFICATION OR ILLUSTRATIVE PURPOSES ONLY AND SHALL NOT BE DEEMED TO CREATE ANY WARRANTY, EXPRESS OR IMPLIED. SELLER MAKES NO REPRESENTATIONS AS TO THE CAPACITY OR PERFORMANCE OF THE GOODS SOLD HEREUNDER, EXCEPT AS SET FORTH IN THE INVOICE'S SPECIFICATIONS OR OTHER VALID AGREEMENT OR CONDITION AGREED TO BETWEEN THE PARTIES, AND ANY SUCH REPRESENTATIONS ARE EXPRESSLY CONDITIONED UPON THE CORRECTNESS OF THE DATA AND INFORMATION FURNISHED BY THE BUYER AND UPON THE GOODS BEING PROPERLY INSTALLED AND MAINTAINED. THE REMEDIES OF THE BUYER PROVIDED HEREUNDER ARE EXCLUSIVE. In no event shall the Seller be liable to the Buyer or to any other person for any loss or damage, direct or indirect, arising out of or caused by the use or operation of the goods, or for the loss of profits, business, or good will, or for any incidental, special or consequential damages. Seller shall in no event be liable to any person or firm (including any assignee or Buyer) except Buyer and its successors. Unless specifically authorized by Seller in writing, Seller shall not become responsible for any repair work done by Buyer or any other party on any goods sold. Any and all costs of the return to the Seller of such goods and all related costs to remove and re-install such goods, shall be borne by Buyer. Goods sold but not manufactured by the Seller are being warranted as to defects in material and workmanship consistent with the limited warranty policy of the original manufacturer of the goods and if there is not such a limited warranty policy, the warranty shall be limited to the provision of the preceding paragraph of Article 4 herein. Standards for the operating characteristics of the gearboxes and the gearmotors are in conformity with Seller's tests.

5. SHORTAGE AND NONCONFORMITY

Any claim of shortage or that the goods do not conform with the specifications of the order or model must be made in writing within ten (10) days after delivery of the goods (as to which such claim is made) to Buyer or its nominees, but in no event shall the claim be later than within the time limit provided by the carrier or insurance company, otherwise such claim shall be deemed waived. Buyer may not return any goods claimed to be in non-conformity without Seller's prior written authorization. Goods returned without permission will not be accepted, including for credit, and will be returned to Buyer, F.O.B. Sellter's plant. Any claim based on the receipt of damaged Goods must be filed with the carrier which delivered the goods. The samples, measurements, dimensions and weights contained in the Seller's catalogs, sales manuals, photographs and drawings constitute only an approximate guide. The Seller reserves the right to make any change which the Seller, in its absolute discretion, considers necessary. While the goods will be delivered principally according to specifications or standards or quantities agreed upon, insignificant deviations or insignificant changes in construction are permissible. The same applies to partial deliveries, In the event that Buyer has a verified claim of shortage or nonconformity of the goods to the specifications of the order or the model, and if such claim has been submitted within the required time limit as set forth above, the Seller shall, at its own expense, make up for the shortage of the goods, or replace or repair the goods, as the case may be, but in no event shall Seller be or become liable to Buyer or to any other person or persons for any loss in damage, direct or indirect, arising out of or caused by such incidents or for the loss of profits, business or good will. The liability of the Seller to Buyer, if any hereunder, for breach of warranty, contract, negligence or otherwise, shall in no event exceed the amount of the purchase price of the goods sold with respect to which any damages are claimed. Shipping dates are estimates unless parties expressly agree on time of the essence.

6. FORCE MAJEURE

The obligation of the Seller shall be modified or excused, as the case may be, for reasons of Acts of God, war, governmental law regulations, strikes or lock-outs, fire, breakdown of machinery, whether in its own business enterprise, or if for any other cause beyond Seller's control, the goods cannot be delivered or their delivery becomes delayed in whole or in part. In the above instances time for delivery shall be extended for the period of the delay caused, with the proviso, however, that either party may cancel in writing the undelivered portion of the order or contract if the delay exceeds six (6) months from the delivery date originally confirmed by Seller. In no event shall Seller become liable in the aforesaid instances to Buyer or any third party for consequential damages or business loss.

7. SHIPMENT AS UNIT

Each shipment by Seller shall be treated as a separate and distinct unit with respect, but only with respect to forwarding, terms of payment, and the making of claims by the Buyer: provided, however, that if the Buyer defaults in the payment of any obligation to Seller or any installments thereof, under any agreement between Buyer and Seller, or if Buyer refuses to accept any goods when tendered for delivery, the Seller may, on fifteen (15) days written notice to the Buyer, without prejudice to Seller's other lawful remedies, either defer further performance until the defaulted payments are made in full, or make future deliveries for cash in advance only, or treat the entire contract or contracts with Buyer as breached by the Buyer and pursue its remedies for breach.

8. BUYER'S REFUSAL OF DELIVERY

If Buyer refuses to accept delivery of any goods tendered for delivery, then Seller, without prejudice to Seller's other lawful remedies, may either store or cause such goods to be stored in a warehouse, for buyer's account and at Buyer's cost, risk and expense, or sell such goods (without notice) to any purchases at public or private sale, and hold the Buyer liable for any difference between (a) the contract price of the goods, and (b) the price at which goods are resold less the costs and expense of such resale including brokerage commissions, or restocking charges.

9. GOODS IN TRANSIT

If prior to delivery or while the goods are in transit, Buyer or Seller becomes bankrupt or insolvent, or any petition in bankruptcy or for the reorganization or for a state court receivership is filed against Buyer or Seller, as the case may be, then the other party hereto may forthwith terminate this contract by giving written notice of such termination. Such termination shall not affect any claim for damages available to the Buyer, provided that if Buyer is then indebted to Seller, the amount of any such damage claim shall be abated to the extent that the indebtedness of Buyer to Seller, as actually paid in money, is abated by any order of judgement entered or any plan adopted in any bankruptcy, reorganization, receivership, or similar proceeding. Such termination shall not prejudice the Seller's rights to any amounts then due under the contract. If Buyer becomes bankrupt or insolvent or any petition in bankruptcy or for reorganizing or if a state court receivership is filed against Buyer, then, at its option Seller may take possession of any goods theretofore sold to Buyer, in connection with which the full purchase price has not been paid, analogous to the terns and provisions set forth in Paragraphs 11 and 12 hereinafter.

10. DELIVERY

(a) Any indicated dates of delivery are approximate only, but NORD Gear will attempt to meet them whenever possible. (b) NORD Gear will not be liable for any penalty clausess contained in any specifications or order submitted unless agreed to in writing by an authorized officer of NORD Gear Corporation. (c) Unless otherwise agreed, delivery of the goods to any carrier shall constitute delivery to the Buyer, and thereafter the risk of loss or damage to the goods shall be upon the Buyer. (d) If the Buyer does not give delivery instructions to the Seller at least (10) days prior to the delivery date ex factory confirmed by the Seller, the Seller may deliver the goods to a carrier of its own choosing, at Buyer's cost and risk, or, at Seller's option, may store the goods on the pier or any warehouse, at Buyer's cost and risk. Any purchase price in such event becomes due and payable within ten (10) days of such storage.

11. PAYMENT OF PURCHASE PRICE

Time of payment is of the essence under the contract. Unless otherwise provided, terms of payment are 30 days net from the date of invoice with a 1% discount if paid within 10 days of date of invoice. Upon default in any of the terms of the contract, or failure to comply with any of the conditions thereof, or upon seizure of the property under execution or other legal process, or if the Buyer becomes bankrupt or insolvent, or any petition for reorganization or for a state court receivership is filed against Buyer, or if the Buyer makes any assignment for the benefit of it's creditors or otherwise sells, encumbers or disposes of the goods, or if for any other reason the Seller should deem itself insecure, the full amount of the purchase price then remaining unpaid shall at once become due and payable at the option of the Seller.

12. BUYER'S DEFAULT

Upon the Buyer's default, the Seller may dispose of the merchandise in any manner that it deems fit and, if it desires to resell same, may do so at private or public sale, with or without notice, and with or without the property being at the place of sale, subject, however, to applicable laws. The Seller or its assigns shall have the right to bid at such sale and may become the purchaser of the property. The proceeds of the sale shall first be applied to the expenses incurred in retaking, repairing, storing and selling the goods, reasonable attorney's fees included, and then shall be applied to the payment of the balance due under the contract. Any surplus amount shall be paid to the Buyer. If a deficiency results after the resale, the Buyer agrees to pay such forthwith, together with reasonable attorney's fees, for the recovery of the goods incurred by the Seller. If upon the Buyer's default, the Seller elects not to resell any goods which it may repossess, then the cost of repossession, including reasonable attorney's fees, shall forthwith be due and payable from Buyer to Seller. Buyer agrees to pay all reasonable costs and reasonable attorneys' fees incurred by Seller in enforcing Seller's rights against Buyer, including Seller's right to payment of the purchase price of the goods and Buyer's payment of all other amounts owing to Seller required under this Invoice and Conditions of Sale.

13. SECURITY INTEREST AND TITLE

In states and localities which are governed by the Uniform Commercial Code, this contract shall serve as security agreement, reserving in Seller a security interest until full payment of purchase price. The provisions of the Uniform Commercial Code regarding security interest shall have preference and apply if inconsistent with other terms of the conditions of sale. In states and localities where the Uniform Commercial Code does not apply, title to the goods shall remain in the Seller or its assigns until full payment of the purchase price. Buyer agrees to execute forthwith any and all documents in such a way and form as Seller may need for filing or recording the security interest under the Uniform Commercial Code with the proper registers or offices, or for filing or recording the conditional sales contract.

14. SALES AND USE TAX

Buyer agrees to bear and pay any sales or use tax in connection with the purchase herein, and to hold the Seller harmless from payment. At the option the Seller, Buyer shall give evidence of payment or of exemption certificate.

15. INSURANCE

The Buyer shall keep the goods insured against damage by fire, water or other casualty as required by Seller, with a company acceptable to Seller, with loss payable to Seller for the total purchase price until the Seller is fully paid. Seller, if it so elects, may place said insurance at Buyer's expense; Seller may cancel such insurance at any time and without notice and may receive the return premium, if any.

16. MODIFICATION BY SELLER

Any contract may be assigned or transferred by the Seller, or the time for the making of any payment due by Buyer may be extended by Seller without derogation of any of the rights of the Seller or its assigns. Waiver by any party of any default shall not be deemed a waiver of any subsequent default.

17. RETURNED GOODS

No goods will be accepted for return unless authorized in writing by Seller. In all cases, transportation and restocking charges will be borne by Buyer.

18. PACKING

The Buyer will be charged for export packaging or other special packing desired. Cost for cartage to ship or transfer express will be added to the invoice. No credit will be allowed if no packing is required.

19. CHANGES/CANCELLATION

NORD Gear will not accept changes in specifications to a confirmed order unless such changes are requested in writing and confirmed back in writing. In addition, the purchaser must to agree to any additional charges that may arise from the change. Placing orders on hold or cancellation of orders require Seller's written approval, and are subject to cancellation and/or restocking charges.

20. BUYER'S RESPONSIBILITY AS TO MAINTENANCE

Buyer shall use and shall require its employees and agents to use all safety devices and guards and shall maintain the same in proper working order. Buyer shall use and require its employees and agents to use safe operation procedures in operating the equipment and shall further obey and have its employees and agents obey safety instructions given by Seller. If Buyer fails to meet the obligations herein, Buyer agrees to defend, indemnify and save Seller harmless from any liability or obligation with regard to any personal injuries or property damages directly or indirectly connected with the operation of the equipment. Buyer further agrees to notify Seller promptly and in any event not later than ten (10) days after notice or knowledge of any accident or malfunction involving Seller's equipment which has caused personal injury or property damages and to cooperate fully with Seller in investigating and determining the causes of such accident and malfunction. In the event that Buyer fails to give such notice to Seller or to cooperate with Seller, Buyer shall be obligated to defend, indemnify and save Seller harmless from any such claims arising from such accident.

21. MISCELLANEOUS PROVISIONS

(a) If for any reason a provision of a contract is legally invalid, then in such event the rest of the contract shall remain in full force and affect, except that the parties shall try to replace such invalid provision closest to their original mutual intentions. (b) This Invoice and these Conditions of Sale constitute the entire agreement between the parties regarding the subject matter hereof and supercedes all prior agreements, understandings and statements, whether oral or written, regarding such subject matter. No modification to, change in or departure from, the provisions of this Invoice and Conditions of Sale shall be valid or binding on Seller, unless approved in writing by Seller. No course of dealing or usage of trade shall be applicable unless expressly incorporated into this Invoice and Conditions of Sale. Any amendments to any contract or contracts between the parties shall be valid only upon the written consent of both parties.

22. NON ASSIGNMENT BY BUYER

Contract or contracts may not be assigned by the Buyer without prior written consent of the Seller.

23. APPLICABLE LAW AND VENUE

All contracts and their interpretation are governed by the applicable, substantive laws of the State of Wisconsin. Any litigation brought by the Buyer regarding this Invoice or goods purchased hereunder may only be brought in the Circuit Court for Dane County, Wisconsin.

# NORD GEAR LIMITED

DRIVESYSTEMS — TERMS & CONDITIONS OF SALE — WWW.NORD.COM

## 1. CONTRACT

Any contract between Nord Gear Limited, hereinafter designated as Seller, and the Buyer is subject to the terms and conditions of sale hereinafter set forth. Any deviation from such terms and conditions must be specifically set forth in writing and consented to by Seller.

## 2. CONFIRMATION

An order shall be deemed accepted only when duly confirmed by Seller, at Nord Gear Limited's home office in Brampton, Ontario, and upon such confirmation the order shall become a contract binding upon the parties hereto, their successors and assigns.

## 3. PRICES

Prices shown are list prices and may be subject to applicable discounts. Unless otherwise agreed upon in writing, prices are FOB factory Bramton, Ontario. Prices and discounts are subject to change without notice until order is accepted. Seller's prices do not include cost of any inspection permits required.

## 4. LIMITED WARRANTY

Seller warrants the goods sold hereunder to be free from defects in material and workmanship under normal use and service not arising from misuse, negligence, or accident, including but not limited to the use, installation, and transportation of the goods by the Buyer, its agents, servants, employees, or by carriers. Such obligations under this warranty are limited to remedying any deficiencies in the goods at Brampton, Ontario, or at such place or places in Canada as may be designated by Seller. This warranty shall pertain to any part or parts of any goods to which Buyer or its assigns has, within one year from date of original factory invoice, given written notice of claimed defects to Seller. Buyer shall be required to furnish Seller with details of such defects and this warranty shall be effective as to such goods which Seller's examination shall disclose to its satisfaction to have been defective and which at Seller's option shall promptly thereafter be returned to Seller or its nominees. EXCEPT FOR THE EXPRESS WARRANTIES SET FORTH ABOVE, SELLER HAS MADE NO WARRANTIES, EXPRESS, IMPLIED OR STATUTORY, AS TO THE GOODS SOLD HEREUNDER, INCLUDING, BUT NOT LIMITED TO THEIR MERCHANTABILITY OR FITNESS FOR ANY PARTICULAR PURPOSE. ANY DESCRIPTION OR MODEL OF THE GOODS IS FOR IDENTIFICATION OR ILLUSTRATIVE PURPOSES ONLY AND SHALL NOT BE DEEMED TO CREATE AN EXPRESS WARRANTY. THE REMEDIES OF THE BUYER SET FORTH IN THIS SECTION ARE EXCLUSIVE. In no event shall the Seller be liable to the Buyer or to any other person for any loss or damage, direct or indirect, arising out of or caused by the use or operation of the goods, or for the loss of profits, business, or good will, or for any incidental, special or consequential damages. Seller shall in no event be liable to any person or firm (including any assignee or Buyer) except Buyer and its successors. Unless specifically authorized by Seller in writing, Seller shall not become responsible for any repair work done by Buyer or any other party on any goods sold. Any costs of the return of such goods to Seller shall be borne by Buyer. Goods sold but not manufactured by the Seller are being warranted as to defects in material and workmanship consistent with the limited warranty policy of the original manufacturer of the goods and if there is not such a limited warranty policy, the warranty shall be limited to the provisions of the preceding paragraph of Article 4 herein. Standards for the operating characteristics of the gearboxes and the gearmotors are in conformity with Seller's test. THIS WARRANTY IS IN LIEU OF ALL OTHER EXPRESS OR IMPLIED WARRANTIES, INCLUDING ANY IMPLIED WARRANTY OF MERCHANTABILITY OR FITNESS FOR ANY PARTICULAR PURPOSE THE SELLER DOES NOT ASSUME, NOR DOES IT AUTHORIZE ANY PERSON TO ASSUME, ON ITS BEHALF, ANY OTHER OBLIGATION OR LIABILITY.

## 5. SHORTAGE AND NONCONFORMITY

Any claim of shortage or that the goods do not conform with the specifications of the order or model must be made in writing within ten (10) days after delivery of the goods (as to which such claim is made) to Buyer or its nominees, but in no event shall the claim be later than within the time limit provided by the carrier or insurance company, otherwise such claim shall be deemed waived. The samples, measurements, dimensions and weights contained in the Seller's catalogs, sales manuals, photographs and drawings constitute only an approximate guide. The Seller reserves the right to make any changes which the Seller, in its absolute discretion, considers necessary. While the goods will be delivered principally according to specifications or standards or quantities agreed upon, insignificant deviations or insignificant changes in construction are permissible. The same applies to partial deliveries. In the event that Buyer has a verified claim of shortage or noncomformity of the goods to the specifications of the order or the model, and if such claim has been submitted within the required time limit as set forth above, the Seller shall, at its own expense, make up for the shortage of the goods, or replace or repair the goods, as the case may be, but in no event shall Seller be or become liable to Buyer or to any other person or persons for any loss in damage, direct or indirect, arising out of or caused by such incidents or for the loss of profits, business or good will. Shipping dates are estimates unless parties expressly agree on time of the essence.

## 6. FORCE MAJEURE

The obligation of the Seller shall be modified or excused, as the case may be, for reasons of Acts of God, war, governmental law regulations, strikes or lock-outs, fire, breakdown of machinery, whether in its own business enterprise, or if for any other cause beyond Seller's control, the goods cannot be delivered or their delivery becomes delayed in whole or in part. In the above instances time for delivery shall be extended for the period of the delay caused, with the proviso, however, that either party may cancel in writing the undelivered portion of the order or contract if the delay exceeds six (6) months from the delivery date originally confirmed by Seller. In no event shall Seller become liable in the aforesaid instances to Buyer or any third party for consequential damages or business loss.

## 7. SHIPMENT AS UNIT

Each shipment by Seller shall be treated as a separate and distinct unit with respect, but only with respect to forwarding, terms of payment, and the making of claims by the Buyer; provided, however, that if the Buyer defaults in the payment of any obligation to Seller or any installments thereof, under any agreement between Buyer and Seller, or if Buyer refuses to accept any goods when tendered for delivery, the Seller may, on fifteen (15) days' written notice to the Buyer, without prejudice to Seller's other lawful remedies, either defer further performance until the defaulted payments are made in full, or make future deliveries for cash in advance only, or treat the entire contract or contracts with Buyer as breached by the Buyer and pursue its remedies for breach.

## 8. BUYER'S REFUSAL OF DELIVERY

If Buyer refuses to accept delivery of any goods tendered for delivery, then Seller, without prejudice to Seller's other lawful remedies, may either store or cause such goods to be stored in a warehouse, for Buyer's account and at Buyer's cost, risk and expense, or sell such goods (without notice) to any purchaser at public or private sale, and hold Buyer liable for any difference between (a) the contract price of the goods, and (b) the price at which goods are resold less the costs and expense of such resale including brokerage commissions, or restocking charges.

## 9. GOODS IN TRANSIT

If prior to delivery or while the goods are in transit, Buyer or Seller becomes bankrupt or insolvent, or any petition in bankruptcy or for the reorganization or for appointment of a receiver is filed against Buyer or Seller, as the case may be, then the other party hereto may forthwith terminate this contract by giving written notice of such termination. Such termination shall not affect any claim for damages available to the Buyer, provided that if Buyer is then indebted to Seller, the amount of any such damage claim shall be abated to the extent that the indebtedness of Buyer to Seller, as actually paid in money, is abated by any order or judgment entered or any plan adopted in any bankruptcy, reorganization, receivership, or similar proceeding. Such termination shall not prejudice the Seller's rights to any amounts then due under the contract. If Buyer becomes bankrupt or insolvent or any petition in bankruptcy or for reorganization or if a state court receivership is filed against Buyer, then, at its option, Seller may take possession of any goods theretofore sold to Buyer, in connection with which the full purchase price has not been paid, analogous to the terms and provisions set forth in Paragraphs 11 and 12 hereinafter.

## 10. DELIVERY

(a) Unless otherwise agreed, delivery of the goods to any carrier shall constitute delivery to the Buyer, and thereafter the risk of loss or damage to the goods shall be upon the Buyer. (b) If the Buyer does not give delivery instructions to the Seller at least (10) days prior to the delivery date *ex factory confirmed* by the Seller, the Seller may deliver the goods to a carrier of its own choosing, at Buyer's cost and risk, or, at Seller's option, may store the goods on the pier or on any warehouse, at Buyer's cost and risk. Any purchase price in such event becomes due and payable within ten (10) days of such storage.

## 11. PAYMENT OF PURCHASE PRICE

Time of payment is of the essence under the contract. Upon default in any of the terms of the contract, or failure to comply with any of the conditions thereof, or upon seizure of the property under execution or other legal process, or if the Buyer becomes bankrupt or insolvent, or any petition for reorganization or for appointment of a receiver is filed against Buyer, or if the Buyer makes any assignment for the benefit of its creditors or otherwise sells, encumbers or disposes of the goods, or if for any other reason the Seller should deem itself insecure, the full amount of the purchase price then remaining unpaid shall at once become due and payable at the option of the Seller.

## 12. BUYER'S DEFAULT

Upon the Buyer's default, the Seller may dispose of the merchandise in any manner that it deems fit and, if it desires to resell same, may do so at private or public sale, with or without notice, and with or without the property being at the place of sale, subject, however, to applicable laws. The Seller or its assigns shall have the right to bid at such sale and may become the purchaser of the property. The proceeds of the sale shall first be applied to the expenses incurred in retaking, repairing, storing and selling the goods, reasonable solicitor's fees included, and then shall be applied to the payment of the balance due under the contract. Any surplus amount shall be paid to the Buyer. If a deficiency results after the resale, the Buyer agrees to pay such forthwith, together with reasonable solicitor's fees, for the recovery of the goods incurred by the Seller. If upon the Buyer's default, the Seller elects not to resell any goods which it may repossess, then the cost of repossession, including reasonable solicitor's fees, shall forthwith be due and payable from Buyer to Seller.

## 13. SECURITY INTEREST AND TITLE

In provinces which are governed by a Personal Property Security Act, this contract shall serve as Security Agreement, reserving in Seller a security interest until full payment of purchase price. The provisions of the Personal Property Security Act regarding security interest shall have preference and apply if inconsistent with other terms of the conditions of sale herein. In provinces where a Personal Property Security Act does not apply, title to the goods shall remain in the Seller or its assigns until full payment of the purchase price. Buyer agrees to execute forthwith any and all documents in such a way and form as Seller may need for filing or recording the security interest under a Personal Property Security Act with the proper registers or offices, or for filing or recording the Conditional Sales Contract herein.

## 14. SALES AND USE TAX

The Seller's prices do not include sales, use, excise or other taxes payable to any governmental authority in respect of the sale of Seller's goods. The Buyer shall pay, in addition to the Seller's price the amount of any such taxes or shall reimburse the Seller for the amount thereof that the Seller may be required to pay. At the option of the Seller, Buyer shall give evidence of payment or of exemption certificate.

## 15. INSURANCE

The Buyer shall keep the goods insured against damage by fire, water or other casualty as required by Seller, with a company acceptable to Seller, with loss payable to Seller for the total purchase price until the Seller is fully paid. Seller, if it so elects, may place said insurance at Buyer's expense; Seller may cancel such insurance at any time and without notice and may receive the return premium, if any.

## 16. MODIFICATION BY SELLER

Any contract may be assigned or transferred by the Seller, or the time for the making of any payment due by Buyer may be extended by Seller without derogation of any of the rights of the Seller or its assigns. Waiver by any party of any default shall not be deemed a waiver of any subsequent default.

## 17. RETURNED GOODS

No goods will be accepted for return unless authorized in writing by Seller. In all cases, transportation and restocking charges will be borne by Buyer.

## 18. PACKING

The Seller does not charge for standard packaging for domestic shipment. The Buyer will be charged, however, for export packaging or other special packing desired. Cost for cartage to ship or transfer express will be added to the invoice. No credit will be allowed if no packing is required.

## 19. EXPORT ORDER

Export orders are to be accompanied by a confirmed irrevocable Letter of Credit in Seller's favor, in Canadian currency, with an accredited Canadian bank, subject to Seller's draft, with shipping documents attached.

## 20. CANCELLATION

Placing orders on hold or cancellation of orders require Seller's written approval, and are subject to cancellation and/or restocking charges.

## 21. BUYER'S RESPONSIBILITY AS TO MAINTENANCE

Buyer shall use and shall require its employees and agents to use all safety devices and guards and shall maintain the same in proper working order. Buyer shall use and require its employees and agents to use safe operating procedures in operating the equipment and shall further obey and have its employees and agents obey safety instructions given by Seller. If Buyer fails to meet the obligations herein, Buyer agrees to indemnify and save Seller harmless from any liability or obligation with regard to any personal injuries or property damages directly or indirectly connected with the operation of the equipment. Buyer further agrees to notify Seller promptly and in any event not later than ten (10) days after notice or knowledge of any accident or malfunction involving Seller's equipment which has caused personal injury or property damages and to cooperate fully with Seller in investigating and determining the causes of such accident and malfunction. In the event that Buyer fails to give such notice to Seller or to cooperate with Seller, Buyer shall be obligated to indemnify and save Seller harmless from any such claims arising from such accident.

## 22. MISCELLANEOUS PROVISIONS

(a) If for any reason a provision of a contract is legally invalid, then in such event the rest of the contract shall remain in full force and affect, except that the parties shall try to replace such invalid provision with a provision closest to their original mutual intentions. (b) Any amendments to any contract or contracts require the consent in writing by both parties.

## 23. NON ASSIGNMENT BY BUYER

Contract or contracts may not be assigned by the Buyer without prior written consent of the Seller.

## 24. APPLICABLE LAW

All contracts are governed by the applicable laws of Ontario.

**25.** This instrument sets forth the entire understanding and agreement of the parties hereto in respect of the subject matter hereof, and all prior undertakings between the parties hereto, together with all representations and obligations of such parties in respect of such subject matter, shall be superceded by and merged into this instrument.

**26.** The provisions of this agreement shall bind and enure to the benefit of the parties hereto and their respective heirs, executors, administrators, successors and (subject to any restrictions or assignment herein above set forth) assigns, as the case may be.

**27.** The parties acknowledge that they have requested this Contract and all notices or other documents relating thereto be drafted in the English language.

Les parties reconnaisent qu'ils ont requis que ce contrat et tous les avis ou autres documents qui s y rapportent soient rediges en langue anglaise.

*"Terms and Conditions in French available upon request."*

# Product Overview

We can match our NORDAC AC vector drives with our Inverter/Vector Duty Motors and UNICASE™ Speed Reducers to provide a total AC Motor Drive solution from one trusted source.

## UNICASE™ SPEED REDUCERS



**HELICAL IN-LINE**
- Foot or Flange Mount
- Torque up to 205,000 lb-in
- Gear ratios – 1.82:1 to over 300,000:1



**NORDBLOC® HELICAL IN-LINE**
- Foot or Flange Mount
- Torque up to 26,550 lb-in
- Gear ratios – 1.88:1 to over 370:1



**PARALLEL HELICAL CLINCHER™**
- Shaft, Flange or Foot Mount
- Torque up to 797,000 lb-in
- Gear ratios – 4.26:1 to over 300,000:1



**RIGHT ANGLE HELICAL-BEVEL 2-STAGE**
- Foot, Flange or Shaft Mount
- Torque up to 5,840 lb-in
- Gear ratios – 4.1:1 to 72:1



**RIGHT ANGLE HELICAL-BEVEL**
- Foot, Flange or Shaft Mount
- Torque up to 283,000 lb-in
- Gear ratios – 8.04:1 to over 300,000:1



**RIGHT ANGLE HELICAL-WORM**
- Foot, Flange or Shaft Mount
- Torque up to 27,585 lb-in
- Gear ratios – 4.40:1 to over 300,000:1



**MINICASE™ RIGHT ANGLE WORM**
- Foot, Flange or Shaft Mount
- Torque up to 3,540 lb-in
- Gear ratios – 5:1 to 500:1



**FLEXBLOC™ WORM**
- Modular bolt-on options
- Torque up to 4,683 lb-in
- Gear ratios – 5:1 to 3,000:1

## HIGH PERFORMANCE MOTORS & BRAKEMOTORS



**INVERTER/VECTOR DUTY**
- Standard or Energy Efficient
- Integral, NEMA or Metric IEC
- 1/6 to 250 hp

## NORDAC AC VECTOR DRIVES



**TRIO SK300E**
- Motor or remote mounted
- IP55 – washdown
- 380-460V, 3-phase, to 5hp
- 200-240V, 3-phase, to 3hp



**SK500/520/530E**
- Compact, high performance
- 380-480V, 3-phase, to 10hp
- 200-240V, 3-phase, to 5hp
- 200-240V, 1-phase, to 3hp
- 110-120V, 1-phase, to 1.5hp



**SK700E**
- Flexible high performance
- 380-460V, 3-phase, to 200hp


DRIVESYSTEMS

www.nord.com

**NORD Gear Corporation**
National Customer Service Toll-Free: 888.314.6673
info.us@nord.com

**NORD Gear Limited**
Toll-Free in Canada: 800.668.4378
info.ca@nord.com

**WEST**
Corona, CA (Los Angeles)
Phone: 608.849.0190

**MIDWEST**
Waunakee, WI (Madison)
Phone: 608.849.7300

**EAST**
Charlotte, NC
Phone: 608.849.0140

**CANADA**
Brampton, ON (Toronto)
Phone: 905.796.3606



10020010 4/0909

LEFT BLANK

# VL2 & VL3 AGITATOR
## MIXER & SHREDDER REDUCERS

NORD DRIVESYSTEMS

## VL2 - SPREAD BEARING DESIGN

Increased bearing spreads with an oversized double row spherical bearing on the lower side. It is commonly used in shredders, mixers or applications requiring increased bearing load carrying capacities.

## VL3 - SPREAD BEARING DESIGN

In addition to the VLII design an oil leakage control system is added. Our Dry Cavity System provides a very high degree of oil safety. The anti-leak QUADRILIP™ Oil Sealing System is enhanced with an oil collection cavity (just-in-case) and various ways to sense and remove the leakage from the cavity. Standard is a viewable oil sight indicator with an optional capacitive proximity switch and control available for electronic indication of a leak.



## OPTIONS TO BOTH DESIGNS

You may include a grease zerk to lubricate the lower bearing, and a removable plug to allow excess grease to purge from the bearing cavity.

| Unit Size | B5 Flange Diameter | | Solid Shaft Diameter | | Hollow Shaft Diameter | | Shrink Disc Diameter | | Output Bearings | | Bearing Spread | |
|---|---|---|---|---|---|---|---|---|---|---|---|---|
| | [in] | [mm] | [in] | [mm] | [in] | [mm] | [in] | [mm] | upper | lower | [in] | [mm] |
| Offset Parallel (Clincher) | | | | | | | | | | | | |
| SK 1282 | 7.87 | 200 | 1.250 | 30 | 1.188 | 30 | 1.250 | 30 | 6009Z | 22210E | 4.91 | 125 |
| SK 2282 or SK 2382 | 9.84 | 250 | 1.375 | 35 | 1.438 | 35 | 1.500 | 35 | NUP210E | 22212E | 5.55 | 141 |
| SK 3282 or SK 3382 | 11.81 | 300 | 1.875 | 45 | 1.625 | 40 | 1.625 | 40 | NUP211E | 22213E | 6.58 | 167 |
| SK 4282 or SK 4382 | 11.81 | 300 | 2.250 | 55 | 2.062 | 50 | 2.000 | 50 | NUP214E | 22216E | 8.45 | 215 |
| SK 5282 or SK 5382 | 13.78 | 350 | 2.500 | 65 | 2.438 | 60 | 2.500 | 60 | NUP217E | 22219E | 9.92 | 252 |
| SK 6282 or SK 6382 | 15.75 | 400 | 3.000 | 75 | 2.750 | 70 | 3.000 | 70 | NUP220E | 23222E | 12.67 | 322 |
| SK 7282 or SK 7382 | 17.72 | 450 | 3.500 | 90 | 3.188 | 80 | 3.188 | 80 | NUP222E | 23224E | 14.08 | 358 |
| SK 8282 or SK 8382 | 21.65 | 550 | 4.250 | 110 | 4.062 | 100 | 4.000 | 100 | NUP226E | 23228E | 16.76 | 426 |
| SK 9282 or SK 9382 | 25.98 | 660 | 5.250 | 140 | 4.750 | 120 | 4.750 | 125 | NUP232E | 23236E | 19.04 | 484 |
| SK 10282 or SK 10382 | 25.98 | 660 | 6.250 | 160 | ---- | ---- | 6.250 | 160 | 23044MB | 22244MB | 23.70 | 602 |
| SK 11282 or SK 11382 | 25.98 | 660 | 7.000 | 180 | ---- | ---- | 7.000 | 180 | 23048MB | 22244MB | 24.29 | 617 |
| SK 12382 | 25.98 | 660 | 7.000 | 180 | ---- | ---- | 7.000 | 180 | 23048MB | 22244MB | 24.29 | 617 |
| Helical-Bevel Speed Reducer | | | | | | | | | | | | |
| SK 9012.1 or SK 9013.1 | 7.87 | 200 | 1.250 | 30 | 1.375 | 35 | 1.375 | 35 | 6010Z | 22210E | 6.17 | 157 |
| SK 9016.1 or SK 9017.1 | 7.87 | 200 | 1.375 | 35 | 1.500 | 40 | 1.500 | 40 | 6010Z | 22210E | 6.17 | 157 |
| SK 9022.1 or SK 9023.1 | 9.84 | 250 | 1.375 | 35 | 1.500 | 40 | 1.500 | 40 | 6010Z | 22210E | 7.13 | 181 |
| SK 9032.1 or SK 9033.1 | 11.81 | 300 | 1.750 | 45 | 2.000 | 50 | 2.000 | 50 | 6014 2RS | 22214ES | 8.17 | 207 |
| SK 9042.1 or SK 9043.1 | 13.78 | 350 | 2.375 | 65 | 2.375 | 60 | 2.375 | 60 | NUP216E | 22219ES | 10.47 | 266 |
| SK 9052.1 or SK 9053.1 | 15.75 | 400 | 2.875 | 75 | 2.750 | 70 | 3.250 | 70 | NUP220E | 23222ES | 13.28 | 337 |
| SK 9072.1 | 17.72 | 450 | 3.625 | 90 | 3.250 | 80 | 3.250 | 80 | NUP222E | 23224ES | 15.74 | 400 |
| SK 9072.1/32 | 17.72 | 450 | 3.625 | 90 | 3.250 | 80 | 3.250 | 80 | NUP222E | 23224ES | 15.74 | 400 |
| SK 9072.1/42 | 17.72 | 450 | 3.625 | 90 | 3.250 | 80 | 3.250 | 80 | NUP222E | 23224ES | 15.74 | 400 |
| SK 9082.1 | 21.65 | 550 | 4.375 | 110 | 4.000 | 110 | 4.000 | 110 | NUP228E | 23228ES | 18.61 | 473 |
| SK 9082.1/42 | 21.65 | 550 | 4.375 | 110 | 4.000 | 110 | 4.000 | 110 | NUP228E | 23228ES | 18.61 | 473 |
| SK 9082.1/52 | 21.65 | 550 | 4.375 | 110 | 4.000 | 110 | 4.000 | 110 | NUP228E | 23228ES | 18.61 | 473 |
| SK 9086.1 | 25.98 | 660 | 4.750 | 120 | 4.750 | 120 | 4.750 | 125 | 22232E | 23236ES | 21.50 | 546 |
| SK 9086.1/52 | 25.98 | 660 | 4.750 | 120 | 4.750 | 120 | 4.750 | 125 | 22232E | 23236ES | 21.50 | 546 |
| SK 9092.1 | 25.98 | 660 | 5.500 | 140 | ---- | ---- | 5.500 | 150 | 23040E | 23236ES | 25.57 | 650 |
| SK 9092.1/52 | 25.98 | 660 | 5.500 | 140 | ---- | ---- | 5.500 | 150 | 23040E | 23236ES | 25.57 | 650 |
| SK 9096.1 | 25.98 | 660 | 7.500 | 190 | ---- | ---- | ---- | ---- | 23040E | 23236ES | 25.57 | 650 |
| SK 9096.1/62 | 25.98 | 660 | 7.500 | 190 | ---- | ---- | ---- | ---- | 23040E | 23236ES | 25.57 | 650 |
| SK 9096.1/63 | 25.98 | 660 | 7.500 | 190 | ---- | ---- | ---- | ---- | 23040E | 23236ES | 25.57 | 650 |

# VL2 & VL3 AGITATOR



## RATIO & SPEED

### OFFSET PARALLEL CLINCHER

- Ratio range : 4.03:1 to 6616.79:1
- Speed range from 1750 rpm motor : 0.26 to 434 rpm
- 95.5% minimum standard efficiency

### 90 SERIES RIGHT ANGLE BEVEL

- Ratio range : 8.04:1 to 4916.63:1
- Speed range from 1750 rpm motor : 0.36 to 218 rpm
  95.5% minimum standard efficiency

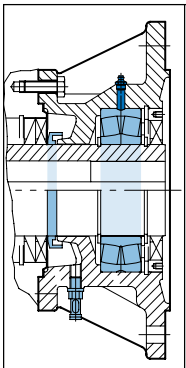

## STANDARD CONFIGURATION

- B5 flange housing style
- Output shaft types : Keyed solid shaft, Keyed hollow shaft, Keyless shrink disc connector
- VLII-spread bearing design has an Increased bearing spread, and a Large double row spherical bearing on lower side
- VLIII-dry cavity design : VLII with added oil leakage control, Oil flinger, Oil accumulation cavity, Sight glass to shows if oil is present in the control cavity

### STANDARD CONFIGURATION OPTIONS

Regreasable zerk lubricating nipple for lower bearing, Capacitive oil sensing switch, Capacitive oil switch



## SHAFT DATA

- AISI 4140 output shaft material
- Inch shaft key dimensions according to AISI B17
- Metric shaft key dimensions according to DIN 6885
- Standard output shaft drill and tap
- Shrink disc size range [in] :1.250 to 7.000
- Shrink disc size range [mm] : 30 to 180



## INTERNAL PARTS ASSEMBLY

- Heavy press fit assembly method
- Standard reversing duty
- Typical backlash range [arc minutes] : 6 to 13



## GEARING

- Up to AGMA Class 13 quality rating on gears
- 58 Rockwell C minimum hardness of steel gears
- Ground or skive hobbed hard finishing of gear teeth
- Standard drop forged gear blanks
- 275% momentary overload capacity
- Standard hunting tooth ratios



## HOUSING

- Class 35 gray iron typical housing material
- Single setup machining method
- UNICASE™ one piece main housing design
- Seals directly contact main housing
- Exceptional housing torsional stiffness
- Thick housing wall section
- Castings are dip sealed



## BEARINGS

- ABEC-1 quality bearings
- Bearing spread is larger than standard unit by at least 50%
- Double row spherical lower output bearing
- Optional housing with grease zerk available for lower bearing regreasing
- NIGI 2EP lithium based lower bearing lubricant
- 50,000 + hours of L10 output bearing life



## LUBRICANT & SEALING COMPONENTS

- Factory filled ISO 220 mineral oil
- Standard AUTOVENT™ breather style
- QUADRILIP™ output seal system
- 3 double lip & 2 single lip output shaft oil seals
- Double lipped lower flange seal
- Nitrile rubber oil seals

### LUBRICANT & SEALING OPTIONS

Custom synthetic lubricating oil, High or low temperature lubricating oil, Fluid grease lubricant, Food grade lubricating oil, Long term storage preparation, Magnetic drain plug, Bullseye sight glass, Custom drain plug, Fluorinated rubber oil seal material



## ENVIRONMENTAL PROTECTION

- Exterior primer coverage : all metal exterior surfaces
- Paint type : Water Based Resin
- Paint additive : 316 stainless steel flakes
- USDA incidental contact exposure : H1

### ENVIRONMENTAL OPTIONS

Severe duty and washdown duty paint options, Custom paint, Top side shaft covers


DRIVESYSTEMS

www.nord.com

**NORD Gear Corporation**
National Customer Service Toll-Free: 888.314.6673
info.us@nord.com

**NORD Gear Limited**
Toll-Free in Canada: 800.668.4378
info.ca@nord.com

**WEST**
Corona, CA (Los Angeles)
Phone: 608.849.0190

**MIDWEST**
Waunakee, WI (Madison)
Phone: 608.849.7300

**EAST**
Charlotte, NC
Phone: 608.849.0140

**CANADA**
Brampton, ON (Toronto)
Phone: 905.796.3606


100200023/0509

# PM064
# GREASE LUBRICATION OF VL2/VL3 ASSEMBLY

TYPICAL VL2/VL3 ASSEMBLY - CLINCHER™ REDUCER SHOWN
BEVEL REDUCER OPTIONS ALSO AVAILABLE

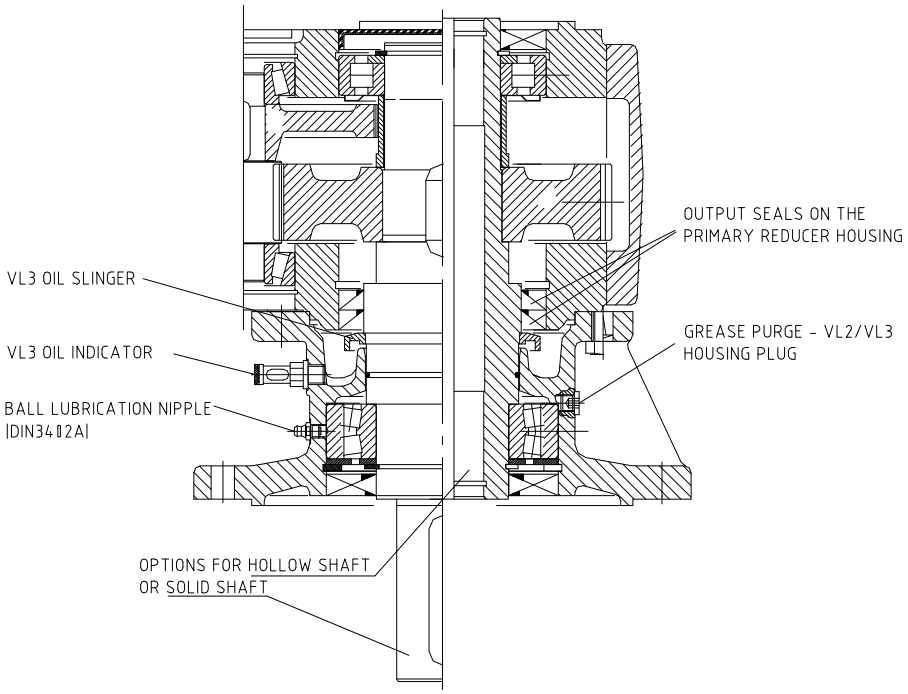


VL2 & VL3 greased bearing lubrication
Standard factory lube:

**STANDARD BEARING GREASE** – NLGI 2EP Lithium

| Ambient Temperature | Formulation |
|---|---|
| -20 to 140°F (-30 to 60°C) | Mineral |

Optional bearing greases, which must be specified at time of order (do not mix grease formulations)

**OPTIONAL BEARING GREASES**

| Ambient Temperature | Formulation | Manufacturer | Grease Brand Name |
|---|---|---|---|
| -40 to 230°F (-40 to 110°C) | Synthetic | Shell | Aeroshell 6 |
| -40 to 230°F (-40 to 110°C) | *Food Grade* - Synthetic | Lubriplate | SFL1 |

Normal grease bearing re-lubrication intervals is every 5000 hours or every10 months (minimum)

**GREASE QUANTITY**

| **Clincher** | **Helical/Bevel** | Grease Quantity |
|---|---|---|
| **SK2282 - 5282** | **SK9012.1 – 9052.1** | 1 oz per interval |
| **SK6282 - 8282** | **SK9062.1 – 9082.1** | 2 oz per interval |
| **SK9282 – 12382** | **SK9086.1 – 9092.1** | 3 oz per interval |

**Note**: Grease purge housing plug must be removed during the re-lubrication of the bearing.

Remove and dispose of any old grease escaping the purge port, and re-install grease purge plug when finished.

LEFT BLANK

# EXPANSION CHAMBERS INSTALLATION & MAINTENANCE MANUAL



### Installation Instructions

Sometimes NORD requires the use of an oil expansion chamber when the motor or reducer input is mounted vertically. Consult your NORD catalog for additional information and application considerations.

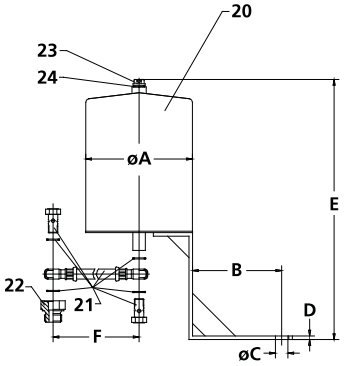


1. Secure the gear reducer in the proper mounting position for the application and remove the vent plug from the gear reducer. The hose assembly kit (21) will be fitted to the reducer using the housing port provided.
2. When using the larger 2.7 and 5.4 liter chambers, screw the adapter fitting (22) into the reducer housing port. Use all sealing gaskets provided.
3. Mount the overflow tank (20) at the highest location from the reducer, as permitted by the hose assembly kit (21). Typical mounting configurations are represented below. Use one of the input cover's mounting bolts, to mount the chamber support leg to the reducer.

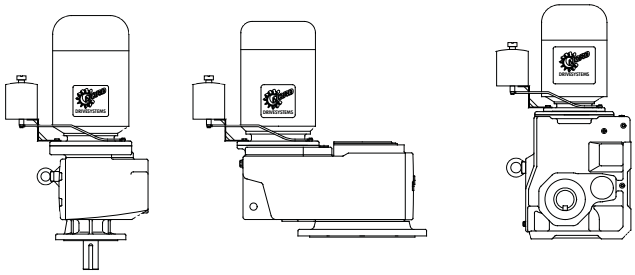

4. Be sure to use the proper fittings. Assemble one end of the vent-hose assembly (21) to bottom of the chamber and one-end to the reducer.
5. Secure the vent-plug (23) and gasket (24) that is supplied with the kit to the top of the expansion chamber.

**STOP** ***HARMFUL SITUATION*** **STOP**

Remove the protective "rubber element" from the supplied vent prior to use so that an open-vent is formed on top of the overflow tank. Avoid using a pressurized AUTOVENT™ breather on the overflow tank since this may create an undesired pressure-vacuum in the overflow tank.

### Expansion Chamber Kit Dimensions & Parts List

**Kit Part Number: 28390390 - 0.7 Liter Oil Expansion Chamber**

| Kit P/N | Ø A | B | Ø C | D | E | F | Units |
|---|---|---|---|---|---|---|---|
| 28390390 (0.7 Liter) | 3.94 | 1.97 | 0.53 | 0.20 | 8.50 | 19.69 | inch |
| | 100 | 50 | 13.5 | 5 | 216 | 500 | mm |

| Item | Part Number | Description |
|---|---|---|
| 20 | 28300390 | Overflow Tank - 0.7 Liter |
| 21 | 28310020 | Flexible Vent Hose Assembly - Includes: Hose, metal gaskets & 2 Hollow Bolts (1 Bolt. - M12 X 1.5 and 1 Pc. - G1/4) |
| 22 | None | Adapter Fitting |
| 23 | 22012004 | Normal Style Vent Plug (M12 X 1.5, DIN 910) |
| 24 | 25312150 | Vent Plug Gasket (12 X 15.5 X 1.5) |

**Kit Part Number: 28390400 - 2.7 Liter Oil Expansion Chamber**

| Kit P/N | Ø A | B | Ø C | D | E | F | Units |
|---|---|---|---|---|---|---|---|
| 28390400 (2.7 Liter) | 5.91 | 4.92 | 0.69 | 0.20 | 15.22 | 27.56 | inch |
| | 150 | 125 | 17.5 | 5 | 386.5 | 700 | mm |

| Item | Part Number | Description |
|---|---|---|
| 20 | 28300400 | Overflow Tank - 2.7 Liter |
| 21 | 28310030 | Flexible Vent Hose Assy - Includes: Hose, metal gaskets & 2 Hollow Bolts (2 Pcs. - G1/4) |
| 22 | 22024030 | Adapter Fitting (M24 X 1.5 to G1/4) |
| 23 | 22012004 | Normal Style Vent Plug (M12 X 1.5, DIN 910) |
| 24 | 25312150 | Vent Plug Gasket (12 X 15.5 X 1.5) |

**Kit Part Number: 28390400 - 2.7 Liter Oil Expansion Chamber**

| Kit P/N | Ø A | B | Ø C | D | E | F | Units |
|---|---|---|---|---|---|---|---|
| 28390410 (5.4 Liter) | 7.09 | 3.54 | 0.69 | 0.20 | 15.18 | 31.50 | inch |
| | 180 | 90 | 17.5 | 5 | 385.5 | 800 | mm |

| Item | Part Number | Description |
|---|---|---|
| 20 | 28300410 | Overflow Tank - 5.4 Liter |
| 21 | 28310040 | Flexible Vent Hose Assy - Includes: Hose, metal gaskets & 2 Hollow Bolts (2 Pcs. - G1/4) |
| 22 | 22030030 | Adapter Fitting (M30 X 1.5 to G1/4) |
| 23 | 22012004 | Normal Style Vent Plug (M12 X 1.5, DIN 910) |
| 24 | 25312150 | Vent Plug Gasket (12 X 15.5 X 1.5) |

**Please see page 2 for gearbox compatability**

**Expansion Chamber Compatability Chart**

| Helical In-line | NORDBLOC™ | NORDBLOC.1™ | Clincher™ | Helical-Bevel | Part Number | [lb] |
|---|---|---|---|---|---|---|
| SK 42/43<br>SK 52/53<br>SK 63 | SK472/473<br>SK572/573<br>SK672/673<br>SK772/773<br>SK872/873<br>SK972/973 | SK572.1/573.1*<br>SK672.1/673.1* | SK 4282/4382<br>SK 5282/5382<br>SK 6382 | SK 9042.1/9043.1<br>SK 9052.1/9053.1 | 28390390 | 11.0 |
| SK 62<br>SK 72/73 | | | SK 6282<br>SK 7282/7382 | SK 9072.1<br>SK 9082.1 | 28390400 | 13.2 |
| SK 82/83<br>SK 92/93<br>SK 102/103 | | | SK 8282/8382 | SK 9086.1<br>SK 9092.1 | 28390410 | 15.4 |

* Need to additionally order part #28390380 which is sub-assembly shown below.

**Sub-Assembly P/N 28390380 for NORDBLOC®.1 gear units with M10x1 air vent.**

| ❶ | ❷ | ❸ | ❹ |
|---|---|---|---|
|  |  |  |  |
| 1x DIN 7643<br>M10x1<br>283 00380 | 1x DIN 7603A Cu<br>10x16x1<br>253 10166 | 1x Ring<br>10x14x5<br>283 00370 | 1xDIN<br>9021 ø8,4<br>227 10840 |

**Assembly of the expansion unit at the gear unit. Types SK 572.1/573.1, SK 672.1/673.1**



Vent Hose Sub-Assembly




❹ For motor sizes 63, 71, 80, 90, 100 & 112

• Motor attachment bolt

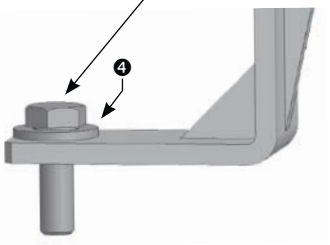


Motor Sizes 63, 71 & 80:
Assembly vent-hose to port as shown.

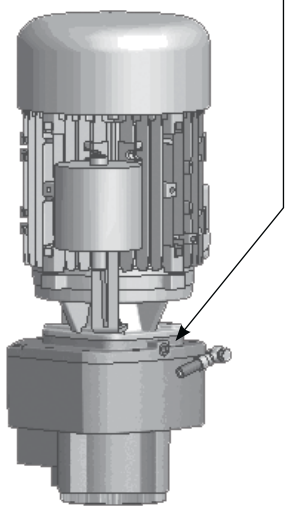

Motor Sizes 90,100 & 112:
Assembly vent-hose to port as shown.

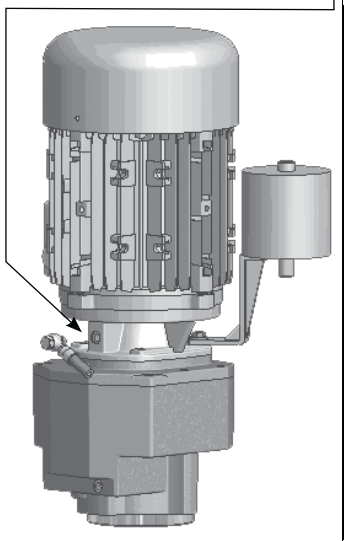

# *PLASTEC VENTILATION*

## *MODEL JET20SS4P, INLINE CENTRIFUGAL FAN*

LEFT BLANK

July 2012

# PLASTEC VENTILATION, INC.

## Installation, Operation & Maintenance Manual

## TABLE OF CONTENTS


| PAGE | ITEM |
|---|---|
| 1 | GENERAL INSTRUCTIONS: Introduction, Shipping and Receiving |
| 2 | GENERAL INSTRUCTIONS: Installation |
| 3 | GENERAL INSTRUCTIONS: Test & Start |
| 4 | GENERAL INSTRUCTIONS: Maintenance |
| 5 | GENERAL INSTRUCTIONS: Motors |
| 6 | GENERAL INSTRUCTIONS: Warranty |
| 7 | DISASSEMBLY INSTRUCTIONS: Plastec and Storm Blowers |
| 8 | REASSEMBLY INSTRUCTIONS: Plastec and Storm Blowers |
| 9 | DISASSEMBLY INSTRUCTIONS: Plastec PSS Series |
| 10 | REASSEMBLY INSTRUCTIONS: Plastec PSS Series |
| 11 | DISASSEMBLY INSTRUCTIONS: JET Series |
| 12 | REASSEMBLY INSTRUCTIONS: JET Series |
| 13 | ILLUSTRATIONS: Plastec/Storm Utility Blower |
| 14 | ILLUSTRATIONS: Plastec PSS Series Blower |
| 15 | ILLUSTRATIONS: JET Series |
| 16-17 | ILLUSTRATIONS: Roof Unit 15-30 Kit Assembly |
| 18 | ILLUSTRATIONS: Roof Unit 35 Kit Assembly |
| 19 | ILLUSTRATIONS: Attachment of Plastec Fan to Weather Hood |

# PLASTEC VENTILATION, INC.

## Installation, Operation & Maintenance Manual
## GENERAL INSTRUCTIONS

### INTRODUCTION

DO NOT INSTALL, USE OR OPERATE THIS EQUIPMENT UNTIL THIS MANUAL HAS BEEN READ AND UNDERSTOOD. RETAIN THESE INSTRUCTIONS FOR FUTURE USE.

THESE INSTRUCTIONS ARE INTENDED TO SUPPLEMENT GOOD GENERAL PRACTICES FOR THE VARIOUS STYLES OF PLASTEC FANS AND BLOWERS. DETAILED INSTRUCTIONS WILL BE PRESENTED SEPARATELY.

IT IS THE RESPONSIBILITY OF THE USER/PURCHASER TO ASSURE THE INSTALLATION, OPERATION, AND MAINTENANCE OF THIS EQUIPMENT IS CARRIED OUT BY EXPERIENCED AND QUALIFIED PERSONNEL IN THIS TYPE OF WORK.

CONTACT YOUR LOCAL REPRESENTATIVE FOR ANY FURTHER INFORMATION REQUIRED.

### SHIPPING & RECEIVING

All fans and blowers have been thoroughly inspected before shipment. Unless otherwise noted. All fans and blowers are test run and approved prior to shipment.
**THE RECEIVER MUST NOTE ANY DAMAGE ON THE CARRIER'S BILL OF LADING AND FILE A CLAIM IMMEDIATELY WITH THE FREIGHT COMPANY.**
Keep a record of all equipment received including inspection details and date of receipt.

Contact your sales representative for replacement service.

### HANDLING

Handle your equipment with caution using proper equipment and safety procedures.

### STORAGE

Store fans in a clean, dry location prior to installation to protect against the weather and corrosive atmospheres. If it is necessary to store equipment outdoors, protect from the elements as much as possible. Keep equipment dry and clean. Cover inlets/outlets to prevent collection of moisture, dust, etc.

For equipment stored for extended periods of time (1 month), rotate motor bearings. Records of stored equipment should be kept to assure proper procedures.

# PLASTEC VENTILATION, INC.

## Installation, Operation & Maintenance Manual
## GENERAL INSTRUCTIONS

### INSTALLATION

Area where fan is installed should provide support for rigid mounting of the fan(s).
Fans not supported properly will cause vibration that could cause damage or injury!
Use guy wires to secure roof mounted units, stacks and accessories where excessively windy conditions are prevalent.

**CAUTION!** Fans contain rotating parts and electrical service is used to operate.
Use appropriate safety precautions during Installation, Operation and Maintenance procedures.

**WARNING!** Do not install or operate fan in an environment or atmosphere where combustible or flammable materials, gases or fumes are present unless it is specifically designed for that type of environment. Explosion or fire can result.

Roof curbs for mounting of fans should be securely installed prior to fan installation. Fan should be firmly secured to roof curb to prevent vibration.

**CAUTION!** All electrical work must be done in accordance with local and/or national codes as applied. Work should be performed by qualified electricians.

**WARNING!** This product must be grounded.

**DANGER!** Make sure power is turned off and locked in the off position before installing, wiring or servicing fan.

**CAUTION!** Always check the supply voltage against the motor name plate voltage. Incorrect voltage can damage the motor and void the motor warranty.

**WARNING!** Keep all wiring clear of rotating or moving parts.

**WARNING!** Before starting the fan, turn the wheel to assure it rotates freely. **POWER MUST BE OFF DURING THIS OPERATION.**

**CAUTION!** Before operating any fan or blower, make sure any guards or protective devices required are in place for protection against injury.

# PLASTEC VENTILATION, INC.

## Installation, Operation & Maintenance Manual
## GENERAL INSTRUCTIONS

### TEST & START PROCEDURES

Disconnect power before servicing the unit. Make sure power is turned off and locked in the **OFF** position.

Check that fan/blower is securely attached to the mounting location and that the mounting location is also secure. This unit should not vibrate when operating! Check clearances and all mounting hardware and secure as required.

All fans have sealed for life ball bearings and do not require lubrication. Running the unit for 15 to 20 minutes will assure lubricant to thoroughly mix with the bearings and operate at optimum quietness.

When power is applied to the unit, check for proper rotation of fan wheel/impeller. Most motors allow for reverse rotation and if the fan wheel/impeller is moving in the wrong direction, air performance will be greatly affected. Reverse rotation for a prolonged period of time may cause motor damage that could void the warranty. Check the motor wiring diagram for proper wiring.

Electrical input check should be performed with fan properly loaded (pressure drop) to assure motor name plate amps are not exceeded. Never run a fan at free air.

Check fan RPM against motor name plate to verify correct performance.

The fans are factory tested and checked for vibration so this type of balancing is not required. Vibration could be caused by rough handling during shipment, installation, and weak foundations. Correct as required.

## MAINTENANCE

Before performing any maintenance on the fan, be sure power is turned off and locked in the off position at the service entrance.

Ventilators should be carefully checked at least once a year. For critical or rugged applications, a routine check every two or three months is suggested.

All motors carry a one-year warranty from the date of shipment. For repairs within the warranty period, the motor must be taken to the motor manufacturer's authorized service dealer. Contact your representative for additional warranty details.

A periodic motor check should consist of spinning the motor shaft with the power off to be sure the motor turns freely and the bearings run smoothly.

The motor cooling fan and guard should also be maintained by checking and cleaning accumulated dust and debris.

The rotating wheel or propeller requires particular attention since materials in the air being handled can build up on blades to cause destructive vibration or weaken the structure of the propeller by corroding and/or eroding the blades. Regular inspection and corrective action at intervals determined by the severity of each application are essential to good service life and safety.

# PLASTEC VENTILATION, INC.

## Installation, Operation & Maintenance Manual
## GENERAL INSTRUCTIONS

### MOTORS

Periodic checks of voltage, frequency and current of a motor while in operation are recommended. Such checks assure the correctness of frequency and voltage applied to the motor and yield an indication of the fan load. Comparison of this data with previous data will give an indication of the fan performance. Any serious deviations could indicate a potential motor failure.

All motors carry a one-year warranty from date of shipment. For repairs within warranty period, the motor must be taken to the motor manufacturer's authorized service dealer. Contact your representative for additional warranty details.

A periodic motor check should consist of spinning the motor shaft with the power off so to be sure the motor turns freely and the bearings run smoothly.

Repair or replacement of motors is normally performed by a repair station authorized by the manufacturer. Contact your representative or the factory for locations nearest you. DO NOT ship motor to factory without specific authorization forms.

# PLASTEC VENTILATION, INC.

## Installation, Operation & Maintenance Manual
## GENERAL INSTRUCTIONS

### WARRANTY

This Blower Housing Assembly is warranted to be free from defects in material and workmanship for two years from date of original shipment. Any units or parts which prove to be defective and are reported during the warranty period will be replaced at our option when returned to our factory, transportation prepaid by the sender. Deterioration of wear by heat, abrasive action, chemicals, improper installation or operation or lack of normal maintenance shall not constitute defects, and are not covered by warranty. **Transportation to and from the factory for warranty repairs is not covered under warranty and is the sole responsibility of the owner of the equipment**.

The motor is warranted by the motor manufacturer for one year. If the motor becomes defective in the warranty period, it should be taken to the nearest authorized motor service station. If this is not done, the motor manufacturer will not warrant the motor. Call the factory for instructions if authorized service station is not known.

The manufacturer will not be responsible for any installation, removal or re-installation cost or any consequential damage resulting in failure to meet conditions of any warranty.

**LIMITATION OF WARRANTY AND LIABILITY:** This warranty does not apply to any product or parts which have failed as a result of faulty installation or abuse, or incorrect electrical connections or alterations, made by other, or use under abnormal operating conditions or misapplications of the products and parts.

The manufacturer will not approve for payment any repairs made outside its factory without prior written consent.

The foregoing shall constitute our sole and exclusive warranty and our sole and exclusive liability and is in lieu of all other warranties whether written, oral, implied, or statutory. There are no warranties which extend beyond the description of the page hereof. Seller does not warranty that said goods and articles are merchantable quality or that they are fit for any particular purpose. The liability of seller on any claim of any kind, including negligence, for any loss or damage arising out of, or connected with, or resulting from the sale and purchase of the products and parts covered by this proposal, acknowledgment, order or from performance or breach of any contract pertaining to such sale or purchase, or from the design, manufacture, sale, delivery, resale, installation, technical direction of installation, inspection, repair, operation or use of any products or parts covered by this proposal, acknowledgment, order or furnished by seller shall, in no case exceed the price allocable to the product or parts thereof which give rise to the claim and shall terminate one (1) year after shipment of said products and parts.

In no event, whether as a result of breach of contract, or warranty or alleged negligence, defects, incorrect advise or other causes, shall seller be liable for special or consequential damages including, but not limited to, loss of profits or revenue, loss of use of the equipment or any associated equipment, cost of capital, cost of substitute equipment, facilities or services, down time costs or claims of customers of the purchaser for such damages. The manufacturer neither assumes nor authorizes any persons to assume for it any other liability in connection with the sale of its fan products and parts.

**SAFETY ACCESSORIES WARNING:** The responsibility for providing safety accessories for equipment supplied by the manufacturer is that of the installer and user of this equipment The manufacturer sells its equipment with and without safety accessories, and accordingly it can supply such safety accessories upon receipt of order.

The user, in making its determination as to the appropriate safety accessories to be installed and any warning notices, should consider (1) the location of the installation, (2) the accessibility of employees and other persons to this equipment, (3) any adjacent equipment, (4) applicable building codes, and (5) requirements of the Federal Occupational Safety and Health Act.

Users and installers of this equipment should read, “RECOMMENDED SAFETY PRACTICES FOR AIR MOVING DEVICES” which is published by Air Movement and Control Association, 30 West University Drive, Arlington Heights, Illinois, 60004.

# PLASTEC VENTILATION, INC.

## Installation, Operation & Maintenance Manual
## DISASSEMBLY INSTRUCTIONS

## PLASTEC UTILITY AND STORM BLOWERS

**Before beginning these instructions, place this fan on a bench or table top that can support its weight.**

**1)** Remove Torx head screws from the motor plate. **(These screws require a T-20 bit.)**

**2)** Lift the assembly clear of the fan housing. Set the fan housing aside.

**3)** Use a thin flat head screwdriver to pop the black hub cap off the bushing. It may be necessary to reach between the blades of the impeller to do this. **(Be careful not to damage the impeller during this step.)**

**4)** Remove the shaft bolt, lock washer and washer. The bolt will be 8mm, 10mm or 13mm.

**5)** Use a gear puller to remove the impeller from the shaft. Always use the bushing as the pulling point. Pulling on the blades or rim of the impeller will cause irreparable damage.

**6)** Use a 10mm or 13mm socket to remove the four bolts securing the motor plate to the C-face.

*(See Illustrations)*

# PLASTEC VENTILATION, INC.

## Installation, Operation & Maintenance Manual
## REASSEMBLY INSTRUCTIONS

## PLASTEC UTILITY AND STORM BLOWERS

**Before beginning these instructions, place this fan on a bench or table top that can support its weight.**

**1)** Stand the motor on end, so that the shaft is pointing vertically.

**2)** Set the motor plate onto the C-face and align bolt holes. If motor plate does not fit flush on the C-face, use a small hammer or dead blow mallet to seat the plate onto the rabbet. You should not need much force to seat the plate. Secure the motor plate with four bolts, lock washers and washers.

**3)** Check the fit of the impeller bushing on the motor shaft. If it slides on easily, then push it onto the shaft and tap to seat it on the shaft shoulder. If it is a tight fit, lubricate the inside of the bushing with 3-in-1 oil or a similar product. Set the impeller on top of the shaft so it sits level. Use a driving rod and mallet, on bushing only, to drive the impeller onto the shaft until it touches the shoulder. Do not hit with excessive force or the bearings may be damaged. Remove any debris that was cut from the inside of the bushing. If there is a gap between the tip of the shaft and the top of the bushing, fill it with stainless steel washer(s).

**4)** Secure the impeller on the shaft with supplied bolt, lock washer and washer.

**5)** Cover the bushing with the hub cap and use a mallet to seat it properly. It may be necessary to cut out the raised ring on the inside of the hub cap with a box knife.

**6)** Select the orientation of the fan housing. There are eight possible orientations. Remember, if the fan is being installed in a weather hood, the motor will be upside down. Use eight Torx head screws to secure the motor assembly to the fan housing. Inspect visually and test electrically before installing the fan.

*(See Illustrations)*

# PLASTEC VENTILATION, INC.

## Installation, Operation & Maintenance Manual
## DISASSEMBLY INSTRUCTIONS

## PLASTEC PSS SERIES STAINLESS STEEL UTILITY BLOWERS

**Before beginning these instructions, place this fan on a bench or table top that can support its weight. For tool size see illustration.**

**1)** Remove Hex cap screws from the motor plate. **(Be careful not to damage the impeller during this operation.)**

**2)** Lift the assembly clear of the fan housing. Set the fan housing aside.

**3)** Remove the hub cap and teflon gasket.

**4)** Loosen the shaft locking screws (hub).

**5)** Use a gear puller to remove the impeller from the shaft. Always use the bushing as the pulling point. Pulling on the blades or rim of the impeller will cause irreparable damage.

**6)** Remove the 4 motor plate bolts to remove the motor plate from the motor.

**7)** Remove the motor support stand if required by this operation.

*(See Illustrations)*

**NOTE: Any new assembly parts or mounting hardware sourced must be 316 Stainless Steel**

# PLASTEC VENTILATION, INC.

## Installation, Operation & Maintenance Manual
## REASSEMBLY INSTRUCTIONS

## PLASTEC PSS SERIES STAINLESS STEEL UTILITY BLOWERS

**Before beginning these instructions, place this fan on a bench or table top that can support its weight.**

**1)** Stand the motor on end, so that the shaft is pointing vertically.

**2)** Set the motor plate onto the C-face and align bolt holes. If motor plate does not fit flush on the C-face, use a small hammer or dead blow mallet to seat the plate onto the rabbet. You should not need much force to seat the plate. Secure the motor plate with four bolts, lock washers and washers. Apply the teflon gasket between the motor plate and housing.

**3)** Check the fit of the impeller bushing on the motor shaft. If it slides on easily, then push it onto the shaft and tap to seat it on the shaft. If it is a tight fit, lubricate the inside of the bushing with 3-in-1 oil or a similar product. Set the impeller on top of the shaft so it sits level. Use a driving rod and mallet, on bushing only, to drive the impeller onto the shaft until it is even with the end of the motor shaft. Do not hit with excessive force or the bearings may be damaged.

**4)** Secure the impeller on the shaft with supplied locking screws (2).

**5)** Cover the bushing with the hub cap gasket and hub cap. Lock in place with two screws supplied.

**6)** Select the orientation of the fan housing. There are eight possible orientations. Remember, if the fan is being installed in a weather hood, the motor will be upside down. Use eight Hex head screws to secure the motor assembly to the fan housing. Inspect visually and test electrically before installing the fan. Ensure the teflon gasket is in place.

*(See Illustrations)*

**NOTE: Any new assembly parts or mounting hardware sourced must be 316 Stainless Steel**

# PLASTEC VENTILATION, INC.

## Installation, Operation & Maintenance Manual
## DISASSEMBLY INSTRUCTIONS

## PLASTEC JET SERIES

**Before beginning these instructions, place this fan on a bench or table top that can support its weight.**

**1)** Disconnect the fan from its power source.

**2)** Open the switch box. Take note of the wire positions before removing them from the wiring terminal.

**3)** Unscrew the plastic locknut from the liquid tight fitting on top of the switch box and the one from the face of the weather cover.

**4)** Gently pull the conduit and cable out of the top of the switch box and pull the conduit off the cable.

**5)** Push a short length of cable back into the weather cover. This provides slack for lifting the weather cover off the manifold.

**6)** Remove the six or eight Phillips head screws from the base ring of the weather cover.

**7)** Lift the weather cover up and over the top of the manifold, being careful not to damage the cable.

**8)** If the motor is being replaced, be sure to retrieve the cable and strain relief connector from the wiring box. Take note of the orientation of the wiring positions before removing the cable.

**9)** Take note of the orientation of the motor as it sits in the fan body. This is important for the reassembly procedure.

**10)** Remove eight Torx head screws from the motor plate. Lift the motor assembly out of the fan body. Stand on the cooling fan end of the motor. Refer to step #3 of the utility blower disassembly sheet.

*(See Illustrations)*

# PLASTEC VENTILATION, INC.

## Installation, Operation & Maintenance Manual
## REASSEMBLY INSTRUCTIONS

## PLASTEC JET SERIES

**Before beginning these instructions, place this fan on a bench or table top that can support its weight.**

**1)** Complete steps one through five of the Utility Blower assembly procedure.

**2)** Set the motor plate into the fan body in the same orientation as it was before being removed.

**3)** Secure the motor assembly to the fan body with eight Torx head screws.

**4)** Remove the lid from the wiring box. Install the strain relief connector and wire according to the motors and wiring diagram. Close the wiring box.

**5)** Slide the manifold onto the outlet of the fan body. If it is a tight fit, use a rubber mallet to tap it into position. Use careful strikes to avoid damaging the fan body or manifold. Do not use any adhesive or hardware to secure the manifold. Make sure the drain hole in the manifold is clear from the fan housing outlet.

**6)** Hold the weather cover over the fan assembly and feed the cable through the liquid tight fitting, from inside to out, while lowering the weather cover over the fan assembly.

**7)** Push the weather cover down past the fan body so it is seated in the ring on the colored base. Pull any additional slack out of the power cable. Align the holes around the base of the weather cover and the colored ring. Secure it in place with 6 or 8 Phillips head screws.

**8)** Feed the power cable through the conduit and fit the conduit into the liquid tight fitting in the weather cover. Screw the plastic lock nut onto this liquid tight fitting. Slide the other locknut onto the conduit and make sure it is oriented correctly.

**9)** Feed the power cable through the liquid tight fitting on top of the switch box and fit positions as before. Screw the second locknut onto the liquid tight fitting. Reconnect the power supply and close the switch box.

*(See Illustrations)*

# PLASTEC VENTILATION, INC.

## Installation, Operation & Maintenance Manual
## ILLUSTRATIONS

## PLASTEC/STORM BLOWERS

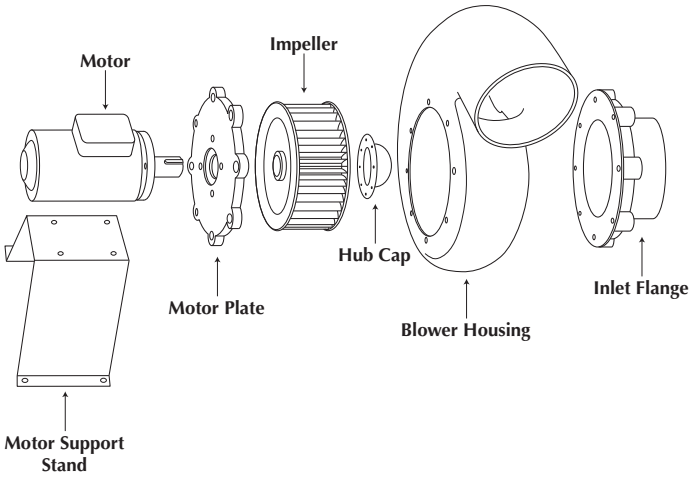


TYPICAL ROOF TOP INSTALLATION FOR PLASTEC/STORM UTILITY BLOWER

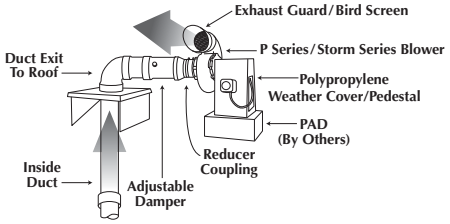


TYPICAL INSTALLATION FOR PLASTEC BLOWER WITH ROOF UNIT OPTION

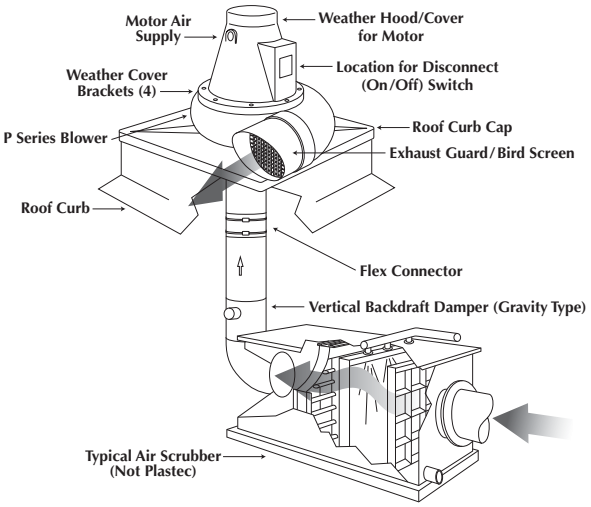


MOUNTING PLASTEC SERIES AND STORM SERIES TO SUPPORT STAND

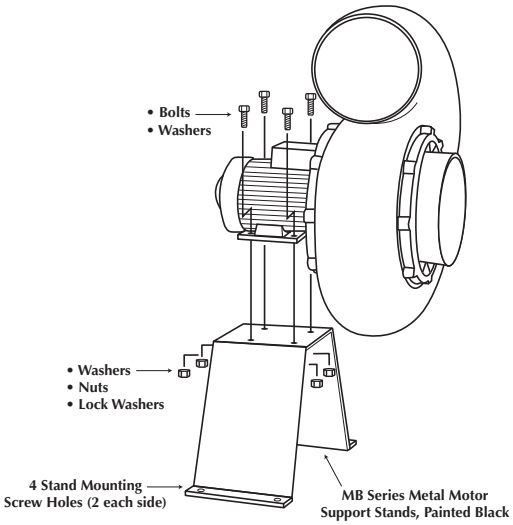

# PLASTEC VENTILATION, INC.

## Installation, Operation & Maintenance Manual
## ILLUSTRATIONS

## PSS SERIES – PSS20 AND PSS35

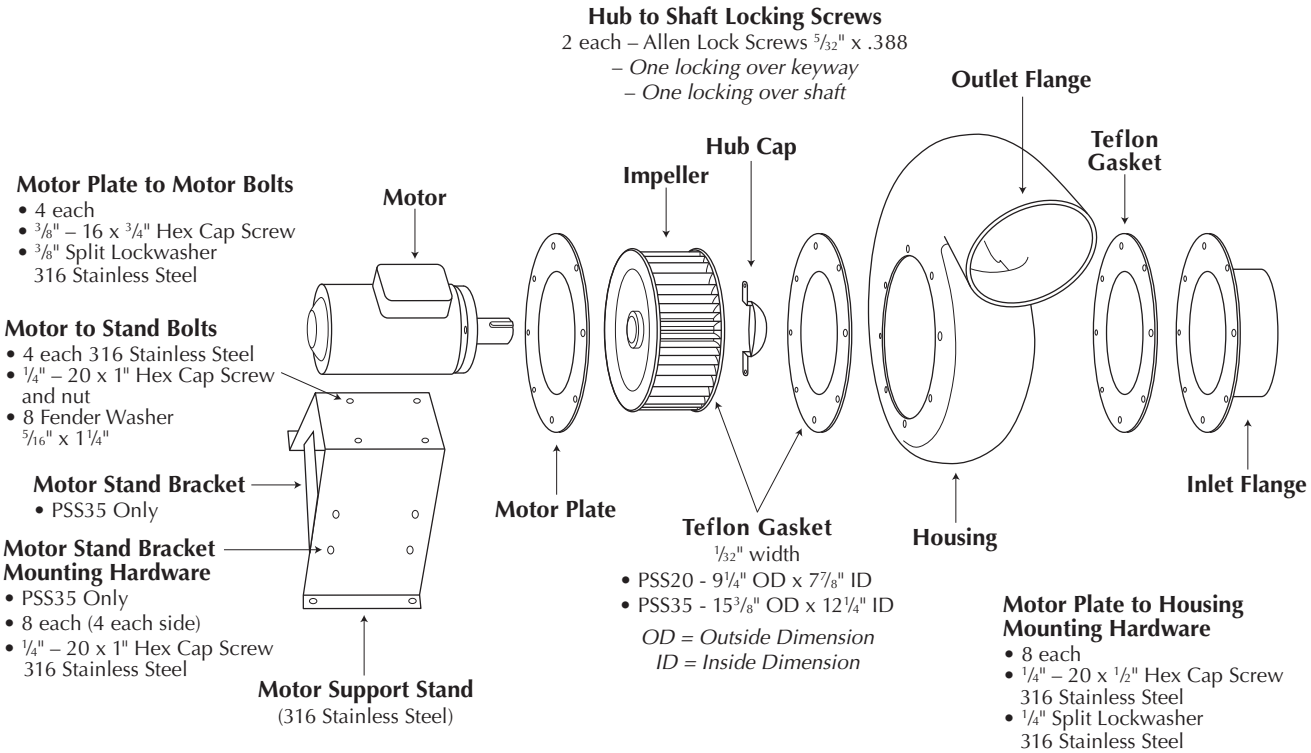


### TYPICAL ROOF TOP INSTALLATION

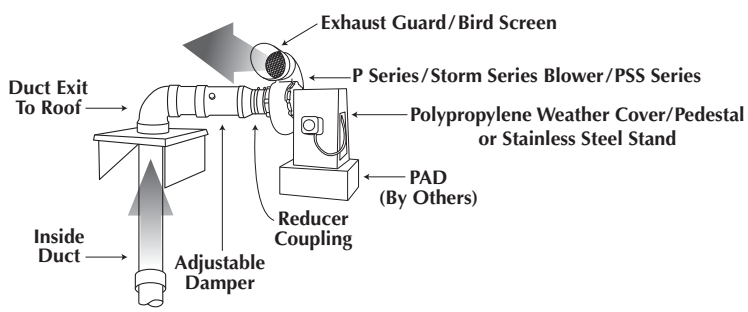


### MOUNTING PSS SERIES TO SUPPORT STAND

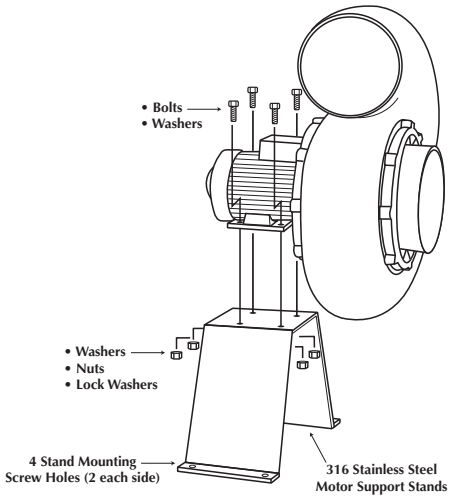

# PLASTEC VENTILATION, INC.

## Installation, Operation & Maintenance Manual
## ILLUSTRATIONS

## PLASTEC JET SERIES

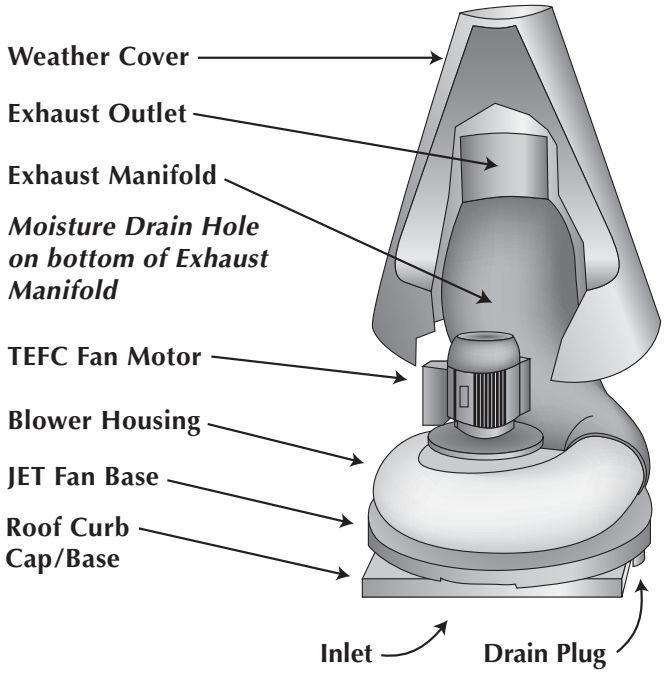


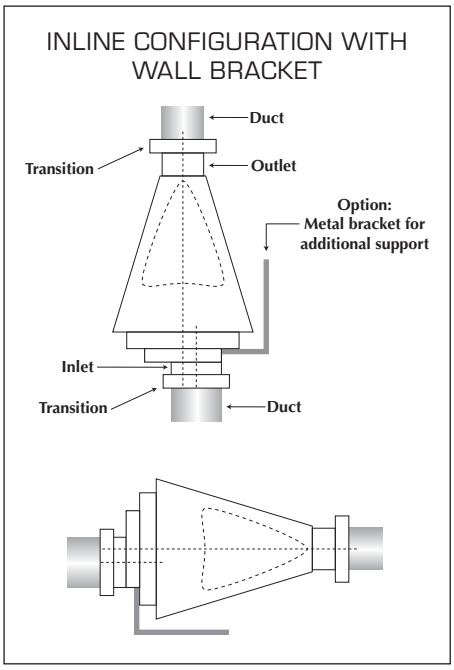


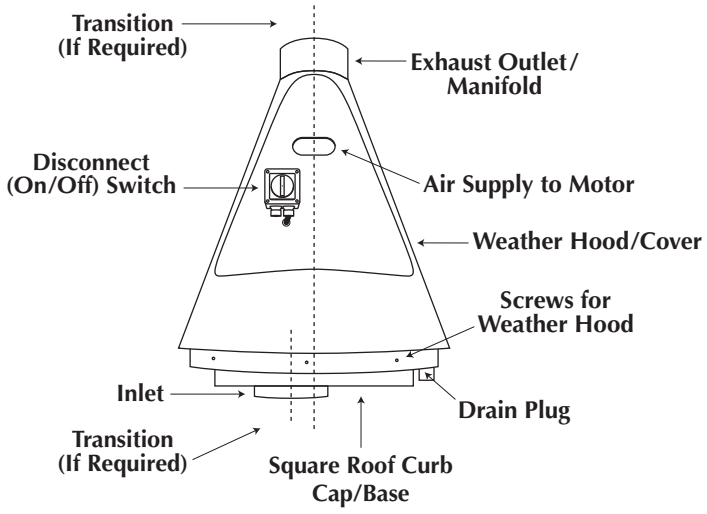


FRONT VIEW

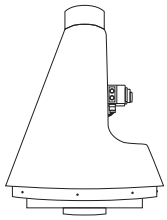

SIDE VIEW

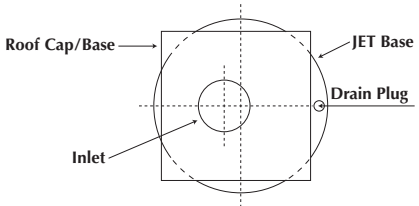


BOTTOM VIEW

# PLASTEC VENTILATION, INC.

## Installation, Operation & Maintenance Manual
## ILLUSTRATIONS

## ROOF UNIT 15 - ROOF UNIT 30 KIT ASSEMBLY

1) 

2) 

3) 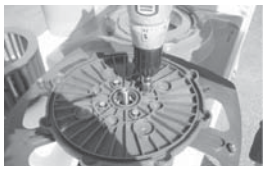

4) 

5) 

6) 

7) 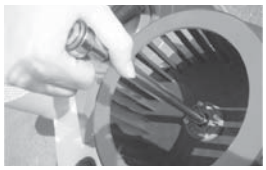

8) 

9) 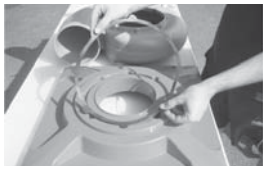

10) 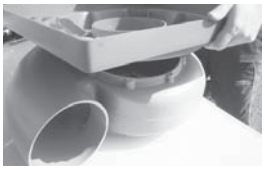

11) 

12) 

13) 

14) 

15) 

16) 

17) 

18) 

19) 

20) 

21) 

22) 

23) 

24) 

25) 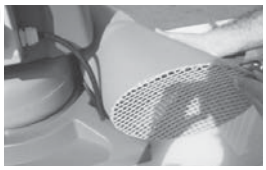

26) 

# PLASTEC VENTILATION, INC.

## Installation, Operation & Maintenance Manual
## ILLUSTRATIONS

## ROOF UNIT 15 - ROOF UNIT 30 KIT ASSEMBLY

**1)** Components of Roof Kit: Roof Curb Cap, Motor Cap, Cap Bracket, Exhaust Guard

**2)** Place the cap bracket on the motor with the screwing inserts upwards.

**3)** Fix the motor flange.

**4)** Place the O-ring seal.

**5)** Place the impeller.

**6)** Push in the impeller.

**7)** Screw the hub cap on the motor shaft.

**8)** Install the hub cap.

**9)** Place the roof curb cap O-ring seal.

**10)** Place the roof curb cap on the housing.

**11)** Screw the roof curb cap to the housing.

**12)** Turn over the housing. Reinforce the base before placing the roof curb cap to support.

**13)** Place the motor/impeller part.

**14-17)** Screw the motor flange and the cap bracket on the housing indicated in the pictures.

**18)** Do the correct wiring between the switch and the motor, respecting tension.

**19)** Screw back on the terminal box lid.

**20-21)** Place the motor cap and secure with screws.

**22-24)** Attach switch with screws on the flat side of the motor cap.

**25)** Place the exhaust cap on the outlet and attach with 4 screws.

**26)** Finished Assembly.

# PLASTEC VENTILATION, INC.

## Installation, Operation & Maintenance Manual
## ILLUSTRATIONS

## ROOF UNIT 35 KIT ASSEMBLY

1)

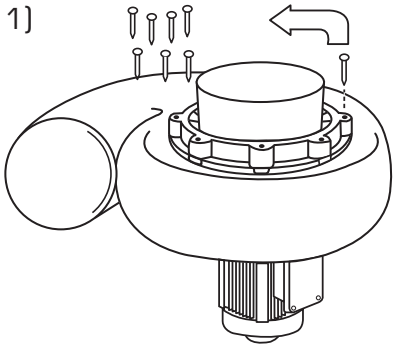

2)

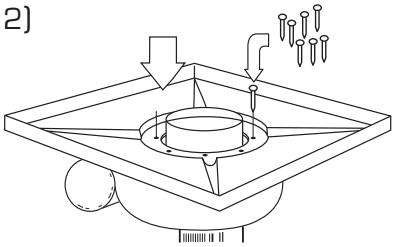

3)

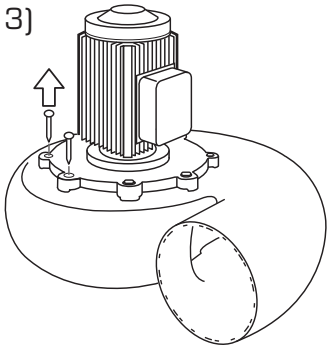

4a)

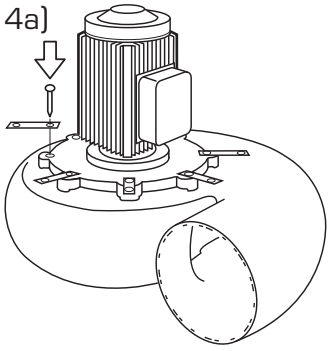

4b)

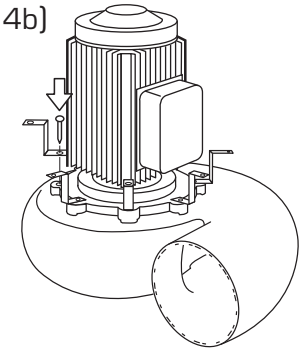

5)

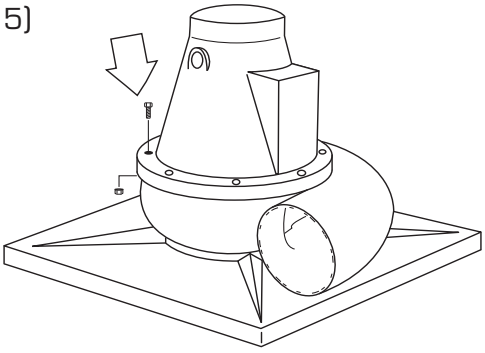

6)

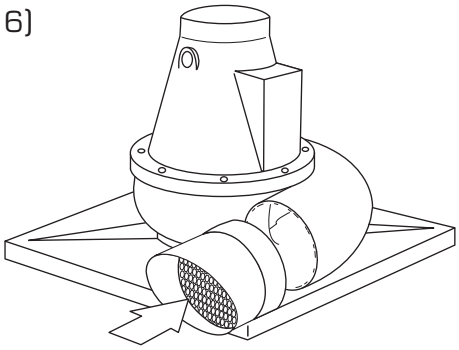

**1)** Remove inlet screws.

**2)** Place roof cap on inlet and secure with inlet screws.

**3)** Remove applicable motor plate screws where brackets fit.

**4)** (a & b) Attach brackets using motor plate screws.

**5)** Attach motor weather cover to brackets using bolts, washers and nuts. (After installing electrical cable.)

**6)** Complete assembly by installing outlet guard/bird screen using screws.

# PLASTEC VENTILATION, INC.

## Installation, Operation & Maintenance Manual
## ILLUSTRATIONS

## ATTACHMENT OF PLASTEC FAN TO WEATHER HOOD

1. The motor feet should point vertically upwards for attachment to the underside of the hood top. Ensure that the fan discharge is correctly orientated in relation to the motor feet.
2. It is recommended that the motor is connected to the disconnect switch prior to assembly of motor and weather hood, otherwise access to the terminals may be difficult.
3. Insert the four bolts into the holes in the weather cover. Prevent them from falling out by fitting the barbed washers.
4. Secure weather hood to the motor by means of nuts, large washers and lock washers. This is best accomplished by placing the fan housing on a horizontal surface with the motor shaft vertical, then introduce the holes in the hood to the bolts you have fitted to the motor feet.
5. Ensure that the weather hood is installed in an upright position and that the drain holes in the base panel are clear.

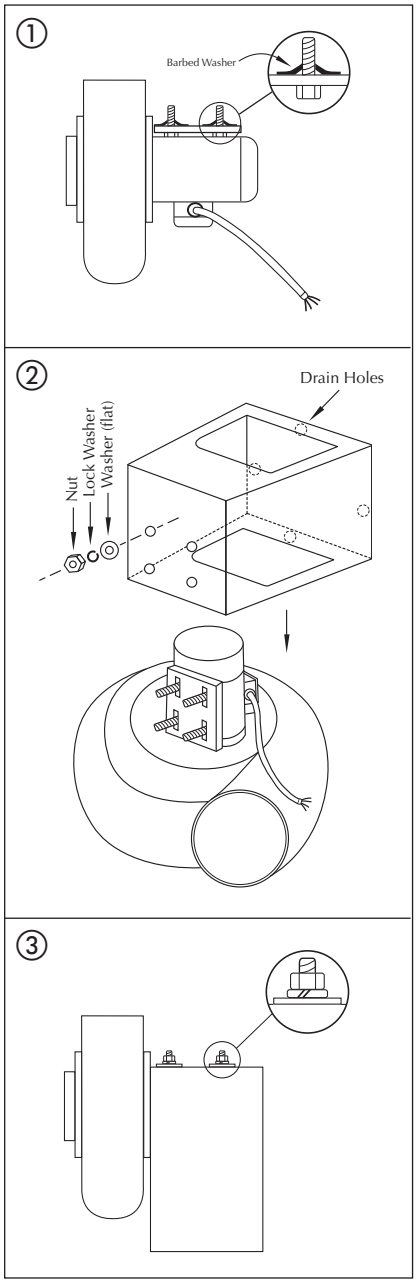


***Rotation and Discharge for Centrifugal Fans***

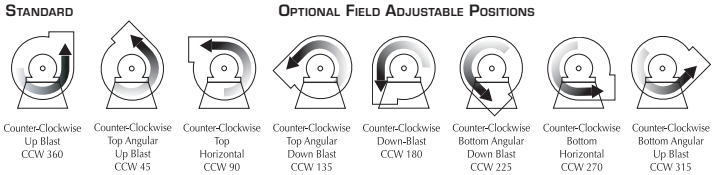


***Notes:***

(1) Direction of rotation is determined from the drive side of fan. ***Standard position is up-blast CCW 360.***

(2) On single inlet fans, drive side is always considered as the opposite fan inlet.

# *PMP*

## *MODEL A201, BALL VALVE*

LEFT BLANK

PMP PRECISION VALVE INC.

# 2 Piece Ball Valve Full Port

**A201**

**1/4"-2" 1000 WOG**
**2-1/2"-3" 800 WOG**

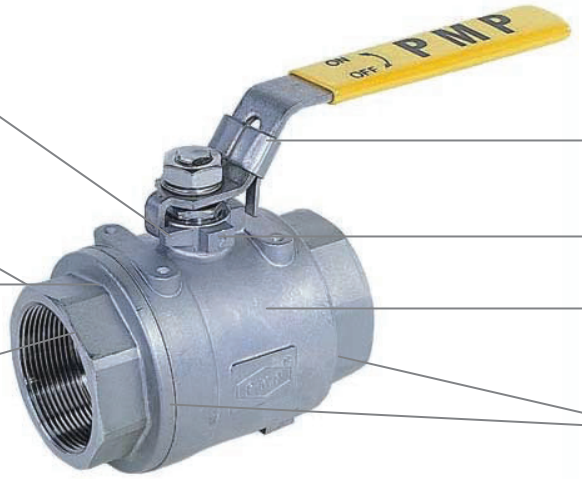


- Adjustable PTFE Packing
- Investment Cast CF8M Body
- PTFE Body Seal
- Full Bore Design
- Stainless Steel Latch Lock Handle
- Blow-out Proof Stem
- Solid 316 Stainless Steel Ball
- Bi-Directional RPTFE Seats

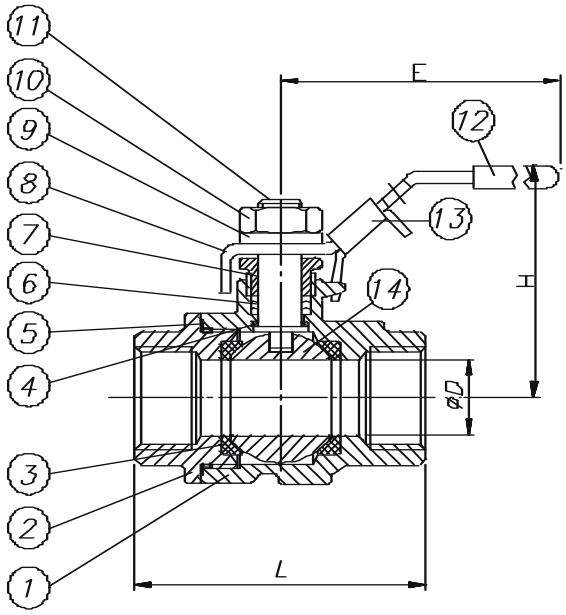


| NO | PART NAME | QTY | SPECIFICATION | |
|---|---|---|---|---|
| 1 | BODY | 1 | WCB | CF8M |
| 2 | END CAP | 1 | WCB | CF8M |
| 3 | SEATS | 2 | RPTFE | RPTFE |
| 4 | THRUST WASHER | 1 | PTFE | PTFE |
| 5 | BODY GASKET | 1 | PTFE | PTFE |
| 6 | STEM PACKING | 3 | PTFE | PTFE |
| 7 | PACKING GLAND | 1 | SS304 | SS304 |
| 8 | HANDLE | 1 | C.S. | SS304 |
| 9 | HANDLE WASHER | 1 | C.S. | SS304 |
| 10 | HANDLE NUT | 1 | C.S. | SS304 |
| 11 | STEM | 1 | SS304 | SS316 |
| 12 | HANDLE SLEEVE | 1 | PLASTIC | PLASTIC |
| 13 | LOCKING DEVICE | 1 | C.S. | SS304 |
| 14 | BALL | 1 | SS304 | SS316 |

| SIZE | | 1/4" | 3/8" | 1/2" | 3/4" | 1" | 1-1/4" | 1-1/2" | 2" | 2-1/2" | 3" |
|---|---|---|---|---|---|---|---|---|---|---|---|
| D | in | 0.46 | 0.5 | 0.6 | 0.79 | 0.99 | 1.26 | 1.5 | 1.97 | 2.56 | 3.15 |
| | mm | 11.6 | 12.5 | 15 | 20 | 25 | 32 | 38 | 50 | 65 | 80 |
| L | in | 2.09 | 2.12 | 2.67 | 2.89 | 3.37 | 4.05 | 4.2 | 4.79 | 7.18 | 8.03 |
| | mm | 53.09 | 53.85 | 67.82 | 73.41 | 85.6 | 102.87 | 106.68 | 121.67 | 182.38 | 203.97 |
| H | in | 2.13 | 2.13 | 2.41 | 2.66 | 2.96 | 3.12 | 3.33 | 3.78 | 4.97 | 5.34 |
| | mm | 54 | 54 | 61 | 67.5 | 75 | 79 | 84.5 | 96 | 126 | 136 |
| E | in | 3.82 | 3.82 | 3.94 | 4.81 | 5.71 | 5.91 | 7.17 | 7.17 | 9.85 | 9.85 |
| | mm | 97 | 97 | 100 | 122 | 145 | 150 | 182 | 182 | 250 | 250 |

PMP Precision Valve Company Ltd. Is a progressive supplier of current products. The features, materials of construction and dimensional data as detailed in this bulletin are intended for your reference only, and should not be relied upon unless confirmed in writing by PMP Precision Valve Co. Ltd.. Certified dimensional drawings are available upon order receipt.

LEFT BLANK

# *PRIMARY FLUID SYSTEM*

## *MODEL IQ-56-PVC, INJECTION QUILL*

LEFT BLANK

# PRIMARY FLUID SYSTEMS INC.

1050 COOKE BLVD., BURLINGTON, ONTARIO L7T 4A8
TEL:(905)333-8743 FAX:(905)333-8746
1-800-776-6580
*Email: primary@primaryfluid.com*
*Website: www.primaryfluid.com*


REV.4

# Metering Pump Injection Quills Instructions

Primary Fluid Systems Inc. introduces the Injection Quill, the newest addition to their line of Metering Pump Accessories.
The injection quill is ideal for the injection of chemicals into the center stream of a process pipeline. This provides for a more homogeneous mix to take place in the pipeline. Each quill has a built in stainless steel spring-loaded check, to help prevent back siphoning.
The injection quill is available in two sizes, 6" length suitable for 4"-6" pipe diameters and 8" length suitable for 8"-10" pipe diameters. The connection for both sizes is ½" NPT, BSPT, Flanged or Spigoted.
Six (6) materials of construction are available that provide compatibility for most chemicals injected. Each quill comes standard with a stainless steel spring, except Hastelloy C the standard is Hastelloy. Optional spring and ball materials are available at an extra charge (consult factory) or the quill may be ordered without a spring or ball. (See list on next page) (Pressure and temperature are dependent on the material of construction and vary from 150 and 3000 PSIG and 60º C (140ºF) and 260º C (500ºF).

Typical Installation

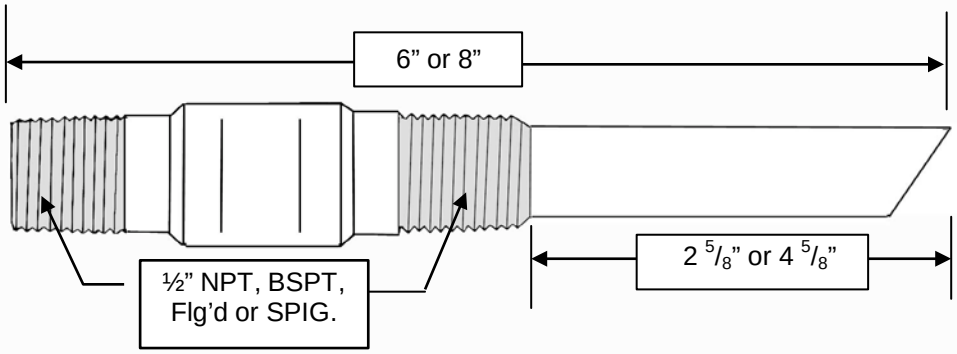


Figure A

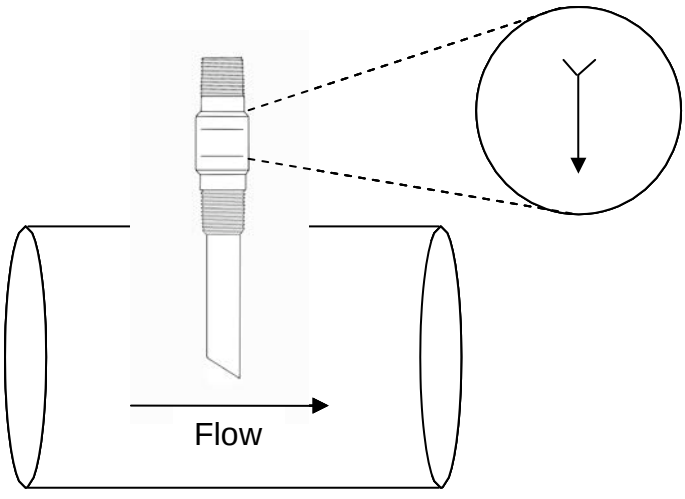

## Injection Quill Instructions continued …

1. Install injection quill using the appropriate piping compound and PTFE tape.
2. All injection quills come standard spring assisted. It is recommended, however, if you order a quill without a spring that they be installed in the process line at a 6 o'clock position. This will assist in the check valve seating.
3. 6" length quills are suitable for 4"-6" pipe diameters. Pipe sizes smaller than 4", the quill can be trimmed so that the injection quill is in the centerline of the process pipe. 8" length quills are suitable for 8"-10" pipe diameters.
4. As per the diagram on the previous page, figure (A), install the injection quill in the process so that the stamped arrow in the body is facing downstream. This positions the angle face of the quill into the process stream, increasing the dispersion of the chemical into the process fluid.
5. An isolation valve installed behind the injection quill is recommended for easy maintenance.

| Model | Size (length) | Body Material | Ball Check Material | Check Spring Material | Pressure* Max. PSIG | Temperature Max. |
|---|---|---|---|---|---|---|
| IQ-56-PVC | 6" | PVC | CERAMIC | 316S/S | 150* | 140°F (60°C) |
| IQ-56-CPVC | 6" | CPVC | CERAMIC | 316S/S | 150* | 210°F (98°C) |
| IQ-56-PP | 6" | PP | CERAMIC | 316S/S | 150* | 195°F (90°C) |
| IQ-56-PVDF | 6" | PVDF | CERAMIC | 316S/S | 150* | 260°F (125°C) |
| IQ-56-316S/S | 6" | 316S/S | 316S/S | 316S/S | 3000* | 500°F (260°C) |
| IQ-56-HASTC | 6" | HASTC | HASTC | HASTC | 3000* | 500°F (260°C) |
| IQ-58-PVC | 8" | PVC | CERAMIC | 316S/S | 150* | 140°F (60°C) |
| IQ-58-CPVC | 8" | CPVC | CERAMIC | 316S/S | 150* | 210°F (98°C) |
| IQ-58-PP | 8" | PP | CERAMIC | 316S/S | 150* | 195°F (90°C) |
| IQ-58-PVDF | 8" | PVDF | CERAMIC | 316S/S | 150* | 260°F (125°C) |
| IQ-58-316S/S | 8" | 316S/S | 316S/S | 316S/S | 3000* | 500°F (260°C) |
| IQ-58-HASTC | 8" | HASTC | HASTC | HASTC | 3000* | 500°F (260°C) |

**MAXIMUM PSIG RATING BASED ON 73°F (23°C). SEE PAGE 4 OF INJECTION QUILL PRICE LIST FOR TEMP CORRECTION FACTOR.*

**NOTE:** Check spring is made of 316S/S material, the injection quill may be ordered with less spring if not chemically compatible with product being pumped.
Hastelloy C and Titanium Beta C springs are available from stock.
Other spring materials available on special request, please contact the factory for costs.
316S/S, Hastelloy C, Titanium Gr2, PVDF and Teflon balls available from stock.

### Metering Pump PFS Injection Quills Standard Features

- built in, spring loaded check
- 6 materials of construction
- Simple installation, using ½" NPT, BSPT, Flg'd or SPIG. connections
- Available in 2 sizes, 6" or 8" length
- Pressure range to 3000 PSIG

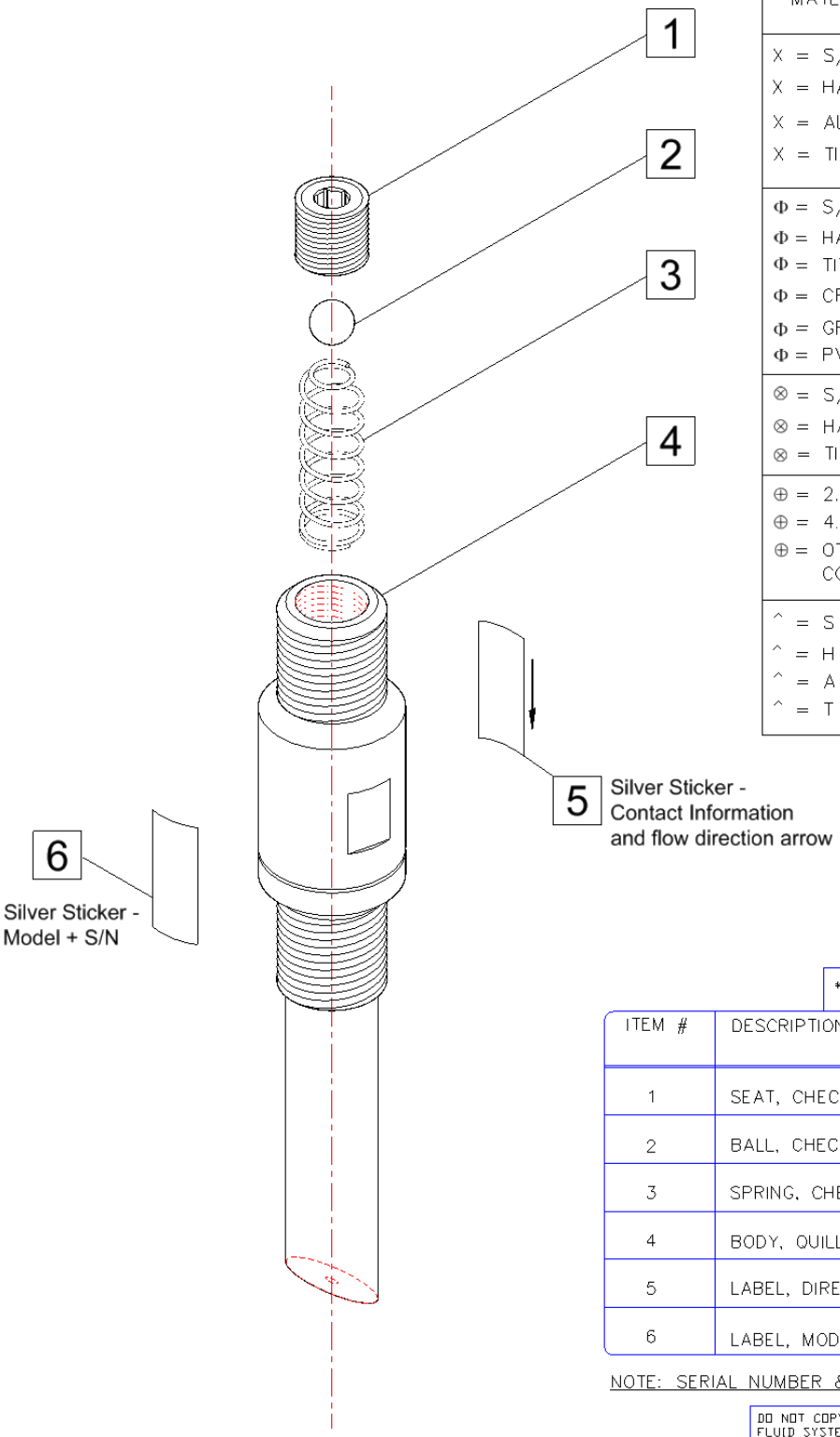


| MATERIAL/SIZE CODING |
|---|
| X = S/S6 = (316 STAINLESS STEEL)<br>X = HAST = (HASTELLOY C276)<br>X = ALL20 = (ALLOY20)<br>X = TITA = (TITANIUM ) |
| Φ = S/S6 = (316 STAINLESS STEEL)<br>Φ = HAST = (HASTELLOY C276)<br>Φ = TITA = (TITANIUM)<br>Φ = CR = (CERAMIC)<br>Φ = GFPTF = (25% GF PTFE)<br>Φ = PVDF = (PVDF) |
| ⊗ = S/S6 = (316 STAINLESS STEEL)<br>⊗ = HAST = (HASTELLOY C276)<br>⊗ = TITA = (TITANIUM) |
| ⊕ = 2.625 (2-5/8) INSERTION UNITS<br>⊕ = 4.625 (4-5/8) INSERTION UNITS<br>⊕ = OTHER THAN STANDARD LENGTH CONTACT FACTORY |
| ^ = S = (316 STAINLESS STEEL)<br>^ = H = (HASTELLOY C276)<br>^ = A = (ALLOY20)<br>^ = T = (TITANIUM) |

* ADD SUFFIX -25 FOR 1/4" ORIFICE

| ITEM # | DESCRIPTION | PART# |
|---|---|---|
| 1 | SEAT, CHECK | IQ-1X-SEAT |
| 2 | BALL, CHECK | IQ-1 Φ -BALL |
| 3 | SPRING, CHECK | IQ-1 ⊗ -SPRING |
| 4 | BODY, QUILL, W/ CHECK* | IQ-5- ⊕ - ^ |
| 5 | LABEL, DIRECTION, SILVER | IQ-LABEL-DIR |
| 6 | LABEL, MODEL + SERIAL # | MSLABEL |

NOTE: SERIAL NUMBER & MODEL REQUIRED FOR PARTS ORDER

DO NOT COPY WITHOUT PRIOR WRITTEN APPROVAL FROM PRIMARY FLUID SYSTEMS INC.

PRIMARY FLUID SYSTEMS INC.

1050 Cooke Blvd., Burlington, Ontario L7T 4A8

PFS INJECTION QUILL
EXPLODED ALLOY PARTS VIEW

| DATE ISSUED: 19-OCT-11 | SCALE: NTS | SHEET: 1 OF 1 |
|---|---|---|
| PROJECT: INJECTION QUILL | | DRAWN BY: BCB |
| APPROVED BY: | DWG NO.: IQ-A-5075NPT-1325-L-XPL | REV.#: 4 |

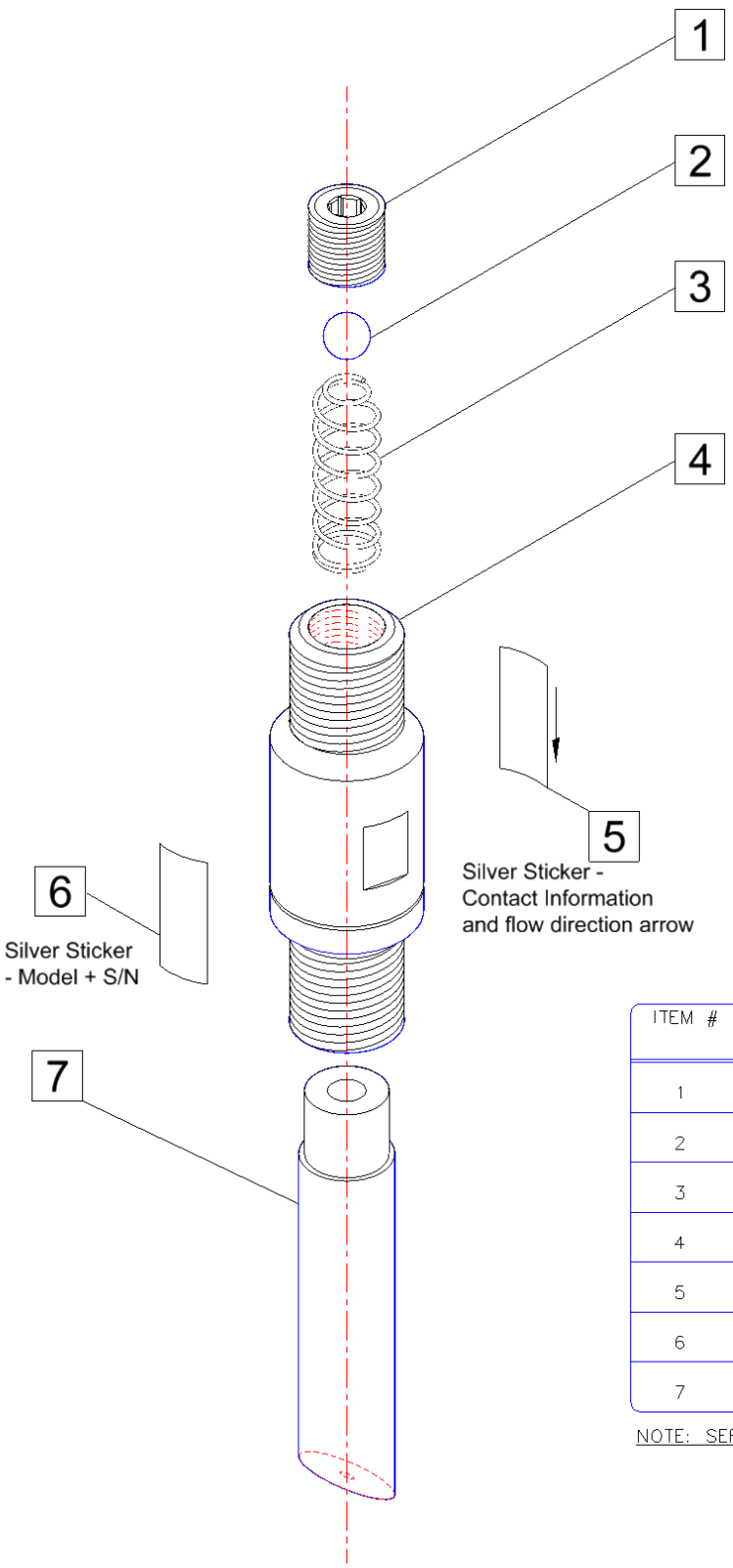


| MATERIAL/SIZE CODING |
|---|
| X = PVC = ( PVC ) |
| X = CPVC = ( CPVC CORZAN) |
| X = PP = ( POLYPROPYLENE ) |
| X = PVDF = ( PVDF ) |
| Φ = CR = (CERAMIC) |
| Φ = GFPTF = (25% GF PTFE) |
| Φ = PVDF = (PVDF) |
| Φ = S/S6 = (316 STAINLESS STEEL) |
| Φ = HAST = (HASTELLOY C276) |
| Φ = TITA = (TITANIUM) |
| ⊗ = S/S6 = (316 STAINLESS STEEL) |
| ⊗ = HAST = (HASTELLOY C276) |
| ⊗ = TITA = (TITANIUM) |
| # = PVC = ( PVC ) |
| # = CPVC = ( CPVC CORZAN) |
| ^ = P = ( PVC ) |
| ^ = C = ( CPVC CORZAN ) |
| ^ = PP = ( POLYPROPYLENE ) |
| ^ = K = ( PVDF ) |
| ⊕ = 2.625 (2-5/8) INSERTION UNITS |
| ⊕ = 4.625 (4-5/8) INSERTION UNITS |
| ⊕ = OTHER THAN STANDARD LENGTH CONTACT FACTORY |
| ∅ = 0 (USED WITH PVC AND CPVC UNITS) |
| ∅ = 5 (USED WITH PP AND PVDF UNITS) |

* ONLY USED WITH PVC AND CPVC UNITS
** ADD SUFFIX -25 FOR 1/4" ORIFICE

| ITEM # | DESCRIPTION | PART# |
|---|---|---|
| 1 | SEAT, CHECK | IQ-1X-SEAT |
| 2 | BALL, CHECK | IQ-1Φ-BALL |
| 3 | SPRING, CHECK | IQ-1⊗-SPRING |
| 4 | BODY, CHECK* | IQ-BODY-# |
| 5 | LABEL, DIRECTION, SILVER | IQ-LABEL-DIR |
| 6 | LABEL, MODEL + SERIAL # | MSLABEL |
| 7 | QUILL** | IQ-∅-⊕ - ^ |

NOTE: SERIAL NUMBER & MODEL REQUIRED FOR PARTS ORDER

DO NOT COPY WITHOUT PRIOR WRITTEN APPROVAL FROM PRIMARY FLUID SYSTEMS INC.

PRIMARY FLUID SYSTEMS INC.
1050 Cooke Blvd., Burlington, Ontario L7T 4A8

PFS INJECTION QUILL
EXPLODED POLY PARTS VIEW

| | | |
|---|---|---|
| DATE ISSUED: 19-OCT-11 | SCALE: NTS | SHEET: 1 OF 1 |
| PROJECT: INJECTION QUILL | | DRAWN BY: BCB |
| APPROVED BY: | DWG NO.: IQ-P-5075NPT-1325-L-XPL | REV.#: 4 |

# *SEW EURODRIVE*

## *RF97 R57 AR71 /W DRN71 M4/C/DH/RI, GEARMOTOR COMBINATION*
## *RF87 R57 AR71 /W DRN71 M4/C/DH/RI, GEARMOTOR COMBINATION*

LEFT BLANK

SEW EURODRIVE

# Assembly and Operating Instructions



## Gear Unit Series R..7, F..7, K..7, K..9, S..7, SPIROPLAN® W

Edition 04/2018

25803530/EN



# Table of contents


**1 General information ..... 5**
1.1 About this documentation ..... 5
1.2 Structure of the safety notes ..... 5
1.3 Rights to claim under limited warranty ..... 6
1.4 Exclusion of liability ..... 7
1.5 Product names and trademarks ..... 7
1.6 Copyright notice ..... 7

**2 Safety notes ..... 8**
2.1 Preliminary information ..... 8
2.2 Duties of the user ..... 8
2.3 Target group ..... 8
2.4 Designated use ..... 9
2.5 Transportation/storage ..... 9
2.6 Installation/assembly ..... 10
2.7 Startup/operation ..... 10
2.8 Inspection/maintenance ..... 10

**3 Gear unit structure ..... 11**
3.1 Basic structure of helical gear units R..07 – R..167 ..... 11
3.2 Basic structure of parallel-shaft helical gear units F..27 – F..157 ..... 12
3.3 Basic structure of helical-bevel gear units K..19/K..29 ..... 13
3.4 Basic structure of helical-bevel gear units K..39/K..49 ..... 15
3.5 Basic structure of helical-bevel gear units K..37 – K..187 ..... 16
3.6 Basic structure of helical-worm gear units S..37 – S..97 ..... 17
3.7 Basic structure of SPIROPLAN® gear units W..10 – W..30 ..... 18
3.8 Basic structure of SPIROPLAN® gear units W..37 – W..47 ..... 19
3.9 Nameplate/type designation ..... 20
3.10 Designs and options – R, F, K, S, W gear units ..... 23

**4 Mechanical installation ..... 26**
4.1 Prerequisites for installation ..... 26
4.2 Installing the gear unit ..... 28
4.3 Gear unit with solid shaft ..... 37
4.4 Torque arms for shaft-mounted gear units ..... 39
4.5 Mounting shaft-mounted gear units with splined hollow shaft ..... 44
4.6 Shaft-mounted gear unit with keyway ..... 45
4.7 Shaft-mounted gear unit with shrink disk ..... 50
4.8 Shaft-mounted gear units with TorqLOC® ..... 53
4.9 Mounting the cover ..... 66
4.10 Coupling of AM adapters ..... 68
4.11 AQ. adapter coupling ..... 73
4.12 EWH adapters ..... 76
4.13 AD Input shaft assembly ..... 79
4.14 Direct mounting of a motor on a gear unit ..... 83
4.15 Accessory equipment ..... 86


25803530/EN – 04/2018

**5 Startup ..... 99**
5.1 Inverter-operated gearmotors ..... 99
5.2 Checking the oil level ..... 99
5.3 Pseudo-leakage at shaft seals ..... 100
5.4 Helical-worm gear units and SPIROPLAN® W gear units ..... 101
5.5 Helical/parallel-shaft helical/helical-bevel gear units ..... 102
5.6 Gear units with backstop ..... 103
5.7 Components made of elastomers with fluorocarbon rubber ..... 104

**6 Inspection/maintenance ..... 106**
6.1 Wearing parts ..... 108
6.2 Inspection/maintenance intervals ..... 110
6.3 Lubricant change intervals ..... 111
6.4 Maintenance of AL/AM/AQ./EWH adapter ..... 111
6.5 AD input shaft assembly maintenance ..... 112
6.6 Inspection/maintenance for the gear unit ..... 113

**7 Mounting positions ..... 129**
7.1 Designation of the mounting positions ..... 129
7.2 Churning losses and thermal rating ..... 130
7.3 Change of mounting position ..... 130
7.4 Universal mounting position M0 ..... 131
7.5 Mounting position MX ..... 131
7.6 Mounting position sheets ..... 132

**8 Technical data ..... 167**
8.1 Extended storage ..... 167
8.2 Lubricants ..... 169

**9 Malfunctions and remedies ..... 188**
9.1 Gear units ..... 189
9.2 Adapters AM/AQ./AL/EWH ..... 190
9.3 AD input shaft assembly ..... 190
9.4 Service ..... 191
9.5 Waste disposal ..... 191

**10 Address list ..... 192**

**Index ..... 203**

25803530/EN – 04/2018

# 1 General information

## 1.1 About this documentation

**The current version of the documentation is the original.**

This documentation is an integral part of the product. The documentation is written for all employees who assemble, install, start up, and service this product.

Make sure this documentation is accessible and legible. Ensure that persons responsible for the machinery and its operation as well as persons who work on the product independently have read through the documentation carefully and understood it. If you are unclear about any of the information in this documentation or require further information, contact SEW-EURODRIVE.

## 1.2 Structure of the safety notes

### 1.2.1 Meaning of signal words

The following table shows the grading and meaning of the signal words for safety notes.

| Signal word | Meaning | Consequences if disregarded |
|---|---|---|
| ⚠ **DANGER** | Imminent hazard | Severe or fatal injuries |
| ⚠ **WARNING** | Possible dangerous situation | Severe or fatal injuries |
| ⚠ **CAUTION** | Possible dangerous situation | Minor injuries |
| **NOTICE** | Possible damage to property | Damage to the product or its environment |
| **INFORMATION** | Useful information or tip: Simplifies handling of the product. | |

### 1.2.2 Structure of section-related safety notes

Section-related safety notes do not apply to a specific action but to several actions pertaining to one subject. The hazard symbols used either indicate a general hazard or a specific hazard.

This is the formal structure of a safety note for a specific section:



**SIGNAL WORD**

Type and source of hazard.

Possible consequence(s) if disregarded.

- Measure(s) to prevent the hazard.

25803530/EN – 04/2018

**Meaning of the hazard symbols**

The hazard symbols in the safety notes have the following meaning:

| Hazard symbol | Meaning |
|---|---|
|  | General hazard |
|  | Warning of dangerous electrical voltage |
|  | Warning of hot surfaces |
|  | Warning of risk of crushing |
|  | Warning of suspended load |
|  | Warning of automatic restart |

### 1.2.3 Structure of embedded safety notes

Embedded safety notes are directly integrated into the instructions just before the description of the dangerous action.

This is the formal structure of an embedded safety note:

⚠ **SIGNAL WORD** Type and source of hazard. Possible consequence(s) if disregarded. Measure(s) to prevent the hazard.

## 1.3 Rights to claim under limited warranty

Read the information in this documentation. This is essential for fault-free operation and fulfillment of any rights to claim under limited warranty. Read the documentation before you start working with the product.

25803530/EN – 04/2018

## 1.4 Exclusion of liability

Read the information in this documentation, otherwise safe operation is impossible. You must comply with the information contained in this documentation to achieve the specified product characteristics and performance features. SEW-EURODRIVE assumes no liability for injury to persons or damage to equipment or property resulting from non-observance of these operating instructions. In such cases, SEW-EURODRIVE assumes no liability for defects.

## 1.5 Product names and trademarks

The brands and product names in this documentation are trademarks or registered trademarks of their respective titleholders.

## 1.6 Copyright notice

© 2018 SEW-EURODRIVE. All rights reserved. Unauthorized reproduction, modification, distribution or any other use of the whole or any part of this documentation is strictly prohibited.

25803530/EN – 04/2018

# 2 Safety notes

## 2.1 Preliminary information

The following general safety notes have the purpose to avoid injury and damage to property. They primarily apply to the use of products described in this documentation. If you use additional components also observe the relevant warning and safety notes.

## 2.2 Duties of the user

As the user, you must ensure that the basic safety notes are observed and complied with. Make sure that persons responsible for the machinery and its operation as well as persons who work on the device independently have read through the documentation carefully and understood it.

As the user, you must ensure that all of the work listed in the following is carried out only by qualified specialists:

- Setup and installation
- Installation and connection
- Startup
- Maintenance and repairs
- Shutdown
- Disassembly

Ensure that the persons who work on the product pay attention to the following regulations, conditions, documentation, and information:

- National and regional safety and accident prevention regulations
- Warning and safety signs on the product
- All other relevant project planning documents, installation and startup instructions, and wiring diagrams
- Do not assemble, install or operate damaged products
- All system-specific specifications and conditions

Ensure that systems in which the product is installed are equipped with additional monitoring and protection devices. Observe the applicable safety regulations and legislation governing technical work equipment and accident prevention regulations.

## 2.3 Target group

Specialist for mechanical work

Any mechanical work may only be performed by adequately qualified specialists. Specialists in the context of this documentation are persons familiar with the design, mechanical installation, troubleshooting, and maintenance of the product who possess the following qualifications:

- Qualification in the mechanical area in accordance with the national regulations
- Familiarity with this documentation

25803530/EN – 04/2018

Specialist for electrotechnical work

Any electrotechnical work may only be performed by electrically skilled persons with a suitable education. Electrically skilled persons in the context of this documentation are persons familiar with electrical installation, startup, troubleshooting, and maintenance of the product who possess the following qualifications:

- Qualification in the electrotechnical area in accordance with the national regulations
- Familiarity with this documentation

Additional qualification

In addition to that, these persons must be familiar with the valid safety regulations and laws, as well as with the requirements of the standards, directives, and laws specified in this documentation. The persons must have the express authorization of the company to operate, program, parameterize, label, and ground units, systems, and circuits in accordance with the standards of safety technology.

Instructed persons

All work in the areas of transportation, storage, operation and waste disposal must be carried out by persons who are trained appropriately. The purpose of the instruction is that the persons are capable of performing the required tasks and work steps in a safe and correct manner.

## 2.4 Designated use

The product is intended for use in industrial and commercial systems.

In case of installation in electrical systems or machines, startup of the product is prohibited until it is determined that the machine meets the requirements stipulated in the local laws and directives. For Europe, Machinery Directive 2006/42/EC as well as the EMC Directive 2014/30/EU apply.

Using these products in potentially explosive atmospheres is prohibited, unless specifically designated otherwise.

## 2.5 Transportation/storage

Inspect the shipment for damage as soon as you receive the delivery. Inform the shipping company immediately about any damage. If the product is damaged, it must not be assembled, installed or started up.

Observe the storage information on climatic conditions as given in chapter "Storage conditions" (→ 🗎 167).

The permissible storage temperature is -30 °C to +50 °C.

If the product is not immediately installed, it must be stored in a dry and dust-free location. The product can be stored for up to 9 months without requiring any special measures before startup. Do not store the product outdoors.

The installed lifting eyebolts are in accordance with DIN 580. Observe the loads and regulations specified there. The tension force vector of the slings must not exceed a 45° angle in accordance with DIN 580.

The lifting eyes are designed to carry only the weight of the product. Do not mount any additional loads. If the product has several lifting eyes or lifting eyebolts, then you should use all lifting eyes and lifting eyebolts for attaching transport ropes. Tighten the screwed-in lifting eyes.

The gear units K..167 and K..187 have no lifting eyes and are supplied without lifting eyebolts. Use alternative, suitable slings.

25803530/EN – 04/2018

Use suitable, sufficiently rated handling equipment, that can be used for further transport.

## 2.6 Installation/assembly

Ensure that the product is installed and cooled according to the regulations in the documentation.

Protect the product from strong mechanical strain. The product and its mounting parts must never protrude into the path of persons or vehicles. Ensure that components are not deformed, particularly during transportation and handling. Electric components must not be mechanically damaged or destroyed.

The following applications are prohibited unless the device is explicitly designed for such use:

- Operation in applications with impermissibly high mechanical vibration and shock loads in excess of the regulations stipulated in EN 61800-5-1
- Use in environments with harmful oils, acids, gases, vapors, dust, radiation, etc.

Observe the danger due to static overdetermination. Gear units with foot (e.g. KA19/29B, KA127/157B or FA127/157B) must not be fastened via the torque arm and the foot plate at the same time. Gearmotors must also not be fastened to the foot plate of the gear unit (e.g. KA19/29B, KA127/157B or FA127/157B, R gear unit with foot-mounted motor) and the foot plate of the motor at the same time.

## 2.7 Startup/operation

Check the oil level before startup as described in chapter "Inspection/maintenance" (→ 🗎 106).

Check that the direction of rotation is correct in the **decoupled** state. Listen out for unusual grinding noises as the shaft rotates.

Secure the keys for the test run without output elements.

Do not deactivate monitoring and protection devices even for a test run.

Switch off the gearmotor if in doubt whenever changes occur in relation to normal operation (e.g. increased temperatures, unusual noises, vibrations). Determine the cause. It may be necessary to contact SEW-EURODRIVE.

## 2.8 Inspection/maintenance

Observe the information in chapter "Inspection/maintenance" (→ 🗎 106).

25803530/EN – 04/2018

# 3 Gear unit structure

## INFORMATION

The following figures are block diagrams. Their purpose is only to make it easier to assign components to the spare parts lists. Discrepancies may occur depending on the gear unit size and version.

## 3.1 Basic structure of helical gear units R..07 – R..167

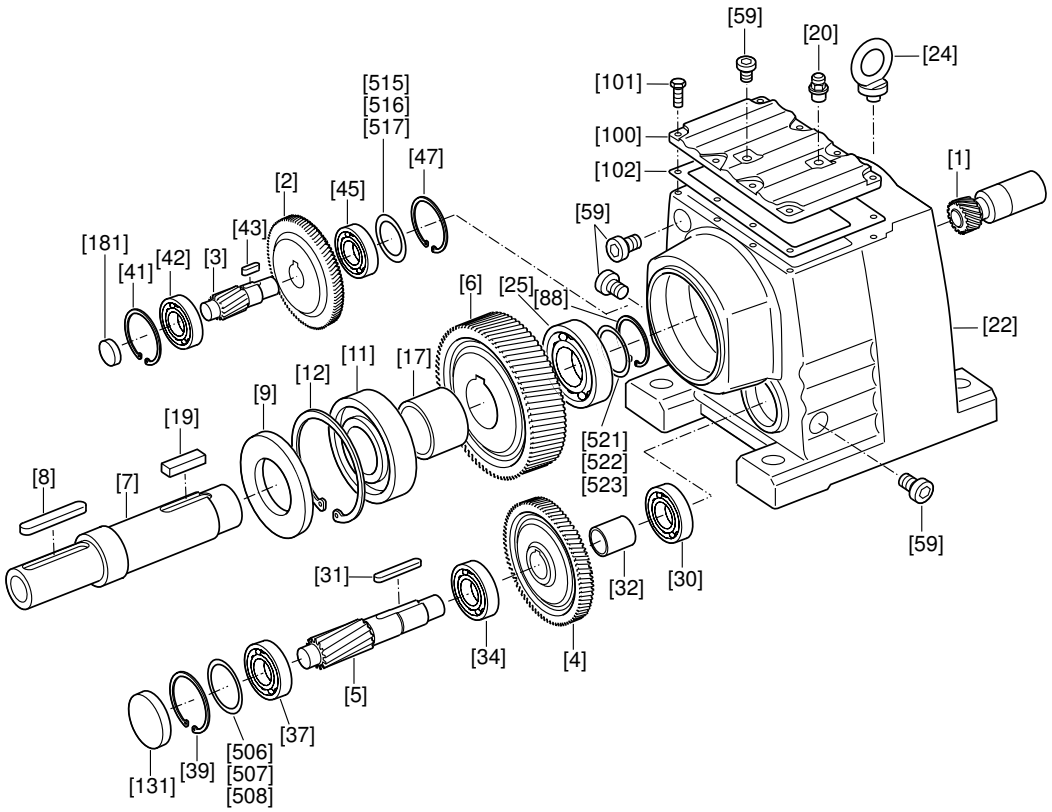


18014398528676235

[1] Pinion
[2] Gear
[3] Pinion shaft
[4] Gear
[5] Pinion shaft
[6] Gear
[7] Output shaft
[8] Key
[9] Oil seal
[11] Rolling bearing
[12] Retaining ring
[17] Spacer tube
[19] Key
[20] Breather valve
[22] Gear unit housing
[24] Eyebolt
[25] Rolling bearing
[30] Rolling bearing
[31] Key
[32] Spacer tube
[34] Rolling bearing
[37] Rolling bearing
[39] Retaining ring
[41] Retaining ring
[42] Rolling bearing
[43] Key
[45] Rolling bearing
[47] Retaining ring
[59] Screw plug
[88] Retaining ring
[100] Inspection cover
[101] Hex head screw
[102] Gasket
[131] Closing cap
[181] Closing cap
[506] Shim
[507] Shim
[508] Shim
[515] Shim
[516] Shim
[517] Shim
[521] Shim
[522] Shim
[523] Shim

25803530/EN – 04/2018

## 3.2 Basic structure of parallel-shaft helical gear units F..27 – F..157

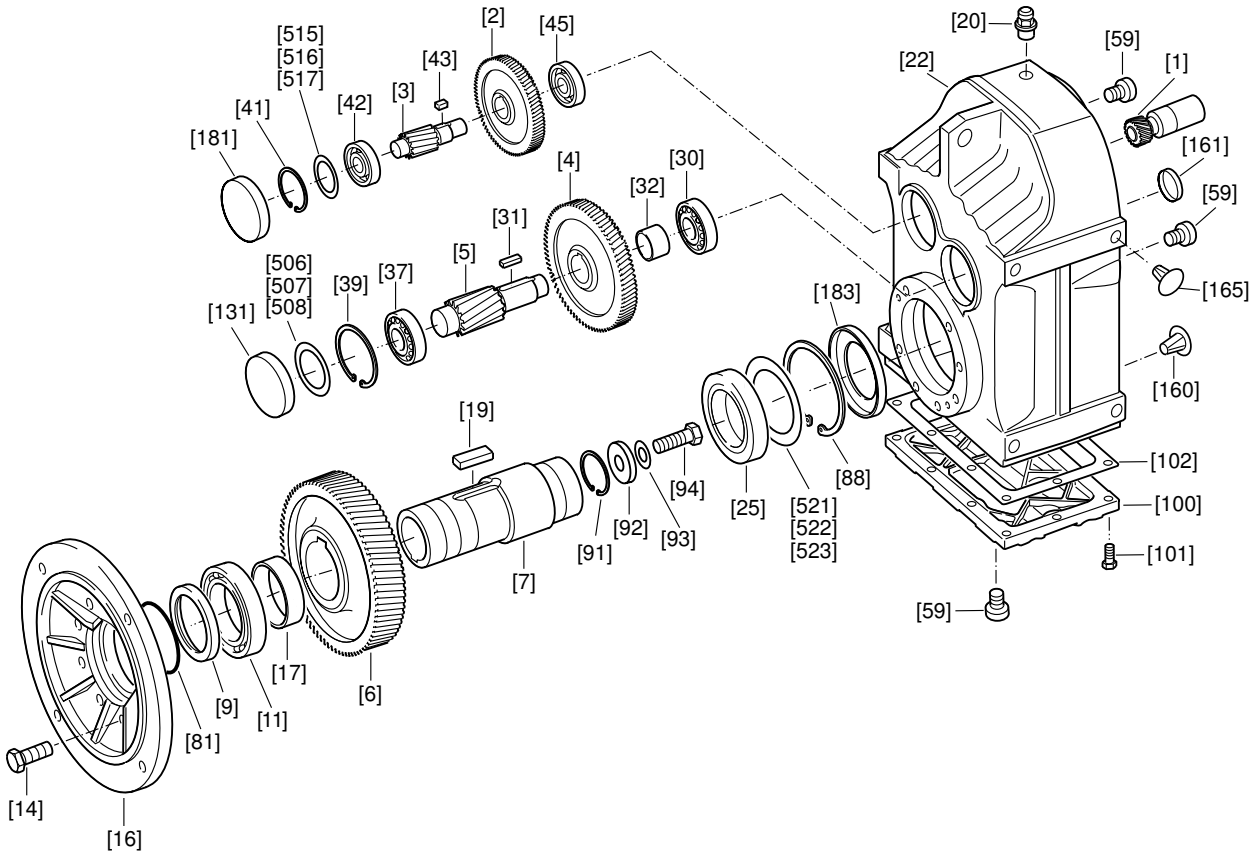


*9007199274039051*

[1] Pinion
[2] Gear
[3] Pinion shaft
[4] Gear
[5] Pinion shaft
[6] Gear
[7] Hollow shaft
[9] Oil seal
[11] Rolling bearing
[14] Hex head screw
[16] Output flange
[17] Spacer tube
[19] Key
[20] Breather valve
[22] Gear unit housing
[25] Rolling bearing
[30] Rolling bearing
[31] Key
[32] Spacer tube
[37] Rolling bearing
[39] Retaining ring
[41] Retaining ring
[42] Rolling bearing
[43] Key
[45] Rolling bearing
[59] Screw plug
[81] Shield ring
[88] Retaining ring
[91] Retaining ring
[92] Washer
[93] Lock washer
[94] Hex head screw
[100] Inspection cover
[101] Hex head screw
[102] Gasket
[131] Closing cap
[160] Closing plug
[161] Closing cap
[165] Closing plug
[181] Closing cap
[183] Oil seal
[506] Shim
[507] Shim
[508] Shim
[515] Shim
[516] Shim
[517] Shim
[521] Shim
[522] Shim
[523] Shim

25803530/EN – 04/2018

## 3.3 Basic structure of helical-bevel gear units K..19/K..29

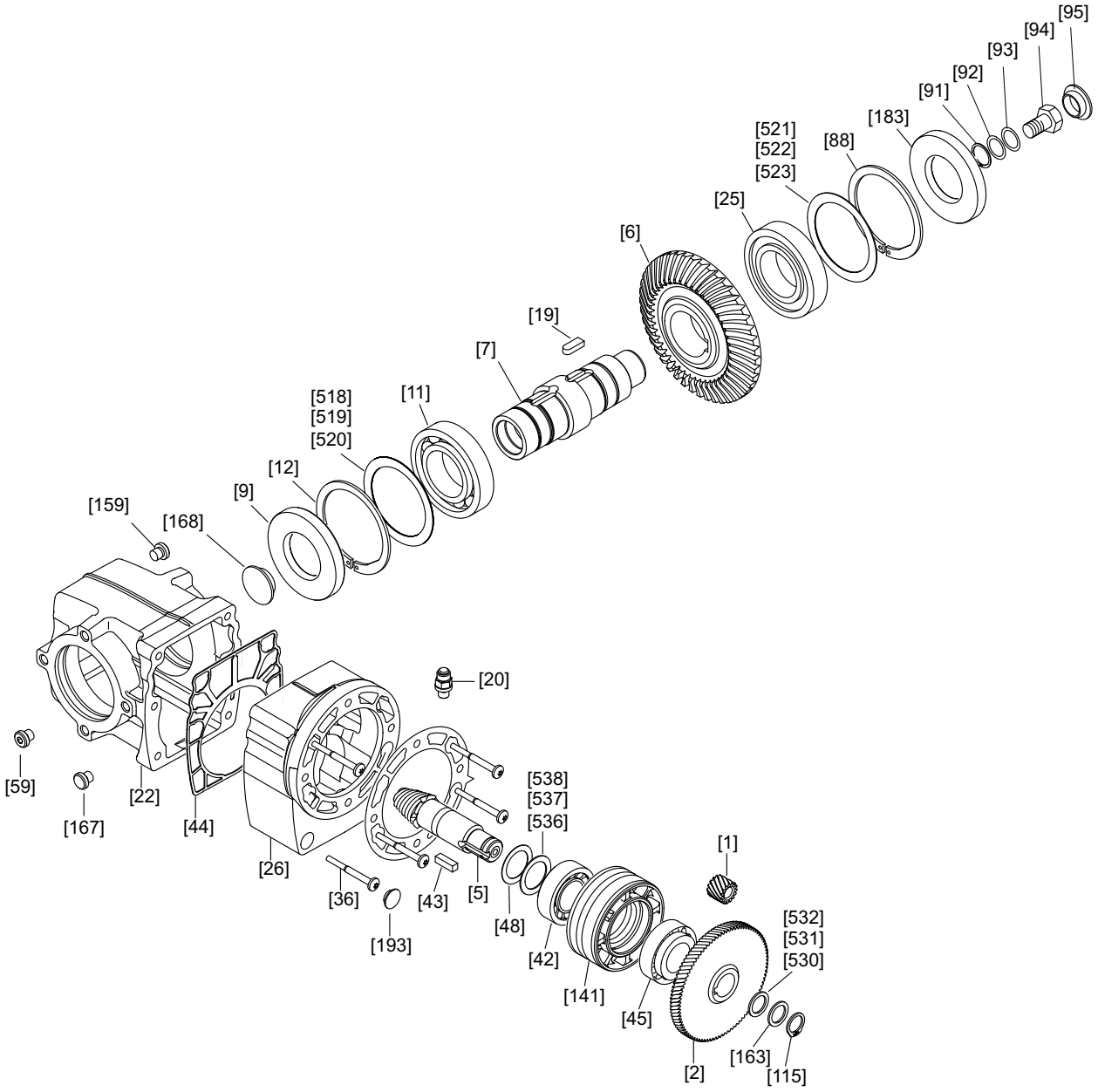


*9007206676351499*

25803530/EN – 04/2018

[1] Pinion
[2] Gear
[5] Pinion shaft
[6] Gear
[7] Hollow shaft
[9] Oil seal
[11] Rolling bearing
[12] Retaining ring
[19] Key
[20] Breather valve
[22] Gear unit housing
[25] Deep groove ball bearing
[26] Housing of 1st stage
[36] Stud
[42] Tapered roller bearing
[43] Key
[44] Seal
[45] Tapered roller bearing
[50] Bevel gear set
[59] Screw plug
[88] Retaining ring
[91] Retaining ring
[92] Washer
[93] Lock washer
[94] Hex head screw
[95] Protection cap
[115] Retaining ring
[141] Bushing
[159] Closing plug
[163] Supporting ring
[167] Closing plug
[168] Protection cap
[183] Oil seal
[193] Closing plug
[518] Shim
[519] Shim
[520] Shim
[521] Shim
[522] Shim
[523] Shim
[530] Shim
[531] Shim
[532] Shim
[536] Shim
[537] Shim
[538] Shim

25803530/EN – 04/2018

## 3.4 Basic structure of helical-bevel gear units K..39/K..49

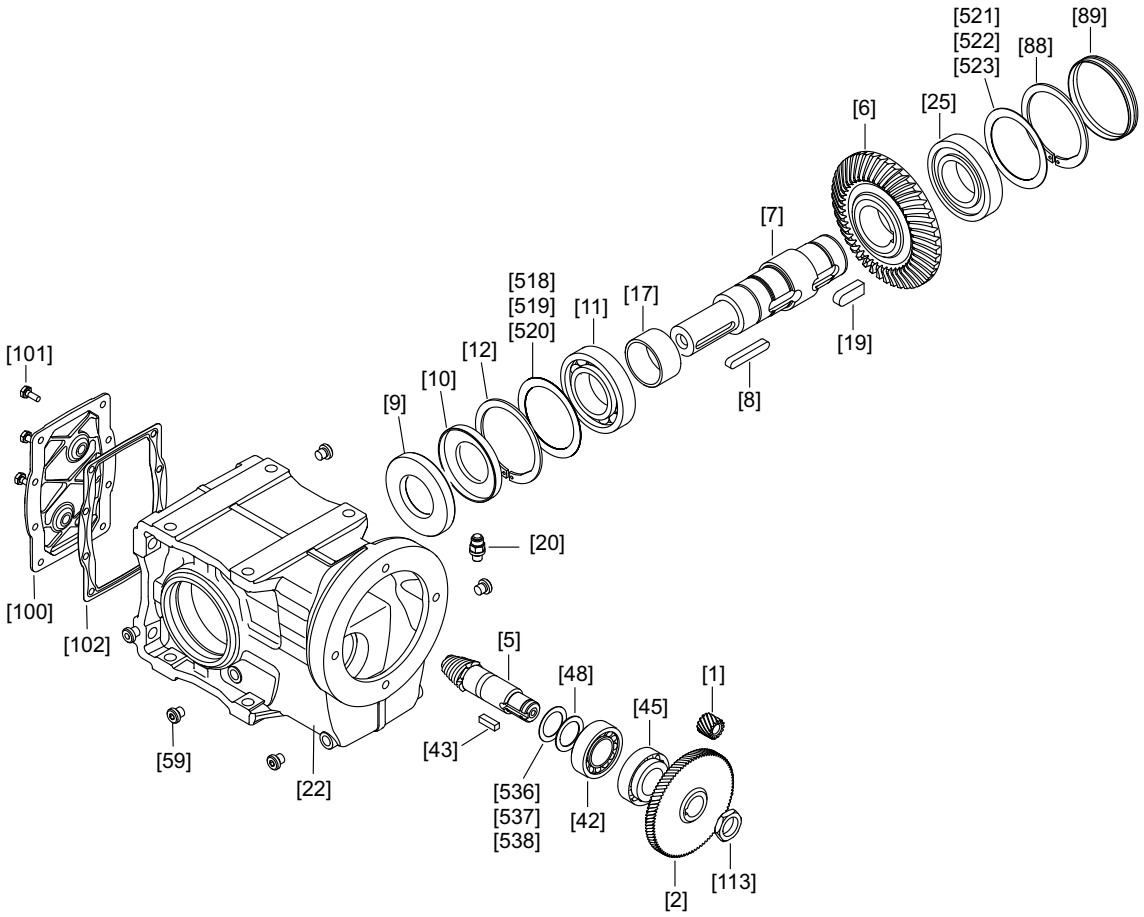


*14457456395*

| | | | | | | | |
|---|---|---|---|---|---|---|---|
| [1] | Pinion | [12] | Retaining ring | [48] | Supporting ring | [518] | Shim |
| [2] | Gear | [17] | Spacer tube | [50] | Bevel gear set | [519] | Shim |
| [5] | Pinion shaft | [19] | Key | [59] | Screw plug | [520] | Shim |
| [6] | Gear | [20] | Breather valve | [88] | Retaining ring | [521] | Shim |
| [7] | Hollow shaft | [22] | Gear unit housing | [89] | Closing cap | [522] | Shim |
| [8] | Key | [25] | Deep groove ball bearing | [100] | Inspection cover | [523] | Shim |
| [9] | Oil seal | [42] | Tapered roller bearing | [101] | Hex head screw | [536] | Shim |
| [10] | Oil seal | [43] | Key | [102] | Gasket | [537] | Shim |
| [11] | Deep groove ball bearing | [45] | Tapered roller bearing | [113] | Slotted nut | [538] | Shim |

25803530/EN – 04/2018

## 3.5 Basic structure of helical-bevel gear units K..37 – K..187

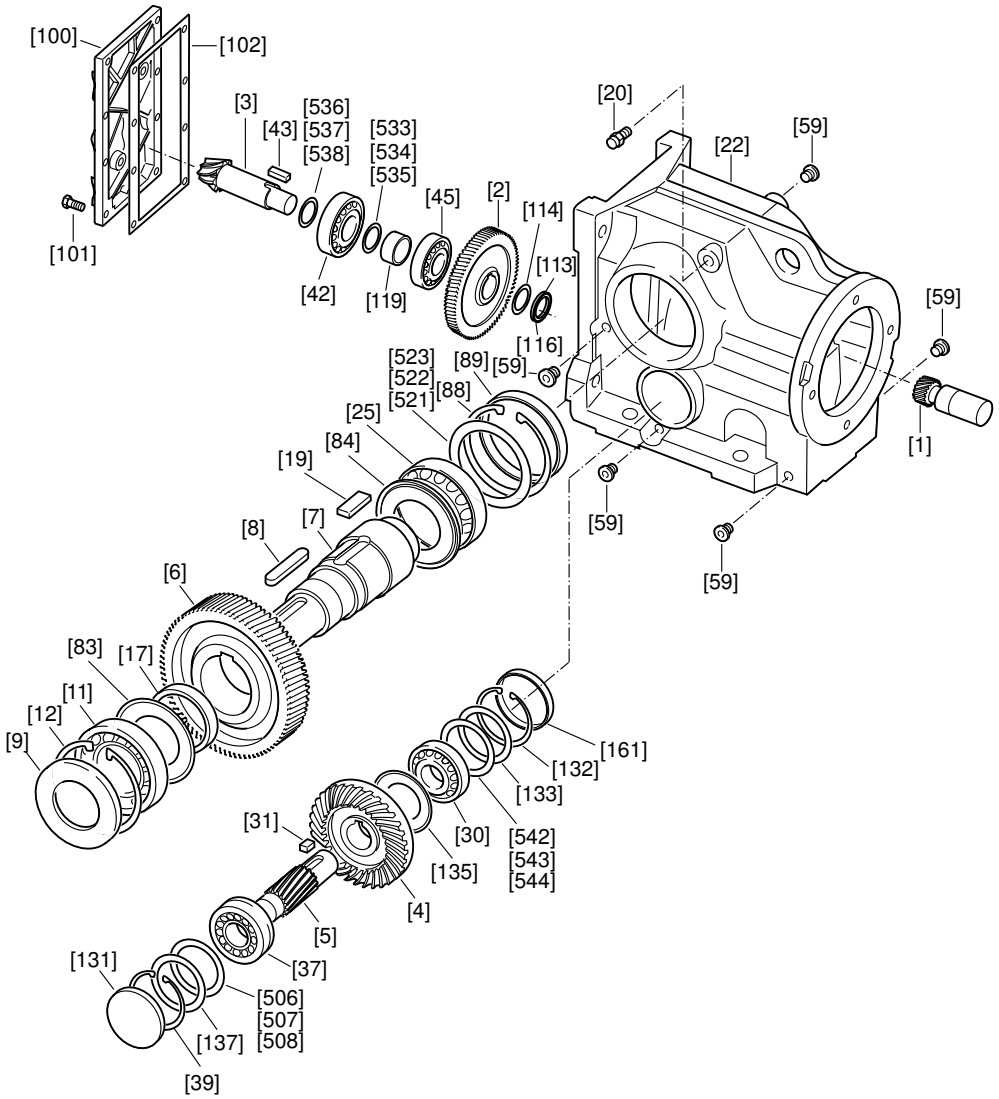


*9007199274042123*

| | | | | | | | |
|---|---|---|---|---|---|---|---|
| [1] | Pinion | [25] | Rolling bearing | [102] | Gasket | [522] | Shim |
| [2] | Gear | [30] | Rolling bearing | [113] | Slotted nut | [523] | Shim |
| [3] | Pinion shaft | [31] | Key | [114] | Multi-tang washer | [533] | Shim |
| [4] | Gear | [37] | Rolling bearing | [116] | Thread lock | [534] | Shim |
| [5] | Pinion shaft | [39] | Retaining ring | [119] | Spacer tube | [535] | Shim |
| [6] | Gear | [42] | Rolling bearing | [131] | Closing cap | [536] | Shim |
| [7] | Output shaft | [43] | Key | [132] | Retaining ring | [537] | Shim |
| [8] | Key | [45] | Rolling bearing | [133] | Supporting ring | [538] | Shim |
| [9] | Oil seal | [59] | Screw plug | [135] | Shield ring | [542] | Shim |
| [11] | Rolling bearing | [83] | Shield ring | [137] | Supporting ring | [543] | Shim |
| [12] | Retaining ring | [84] | Shield ring | [161] | Closing cap | [544] | Shim |
| [17] | Spacer tube | [88] | Retaining ring | [506] | Shim | | |
| [19] | Key | [89] | Closing cap | [507] | Shim | | |
| [20] | Breather valve | [100] | Inspection cover | [508] | Shim | | |
| [22] | Gear unit housing | [101] | Hex head screw | [521] | Shim | | |

25803530/EN – 04/2018

## 3.6 Basic structure of helical-worm gear units S..37 – S..97

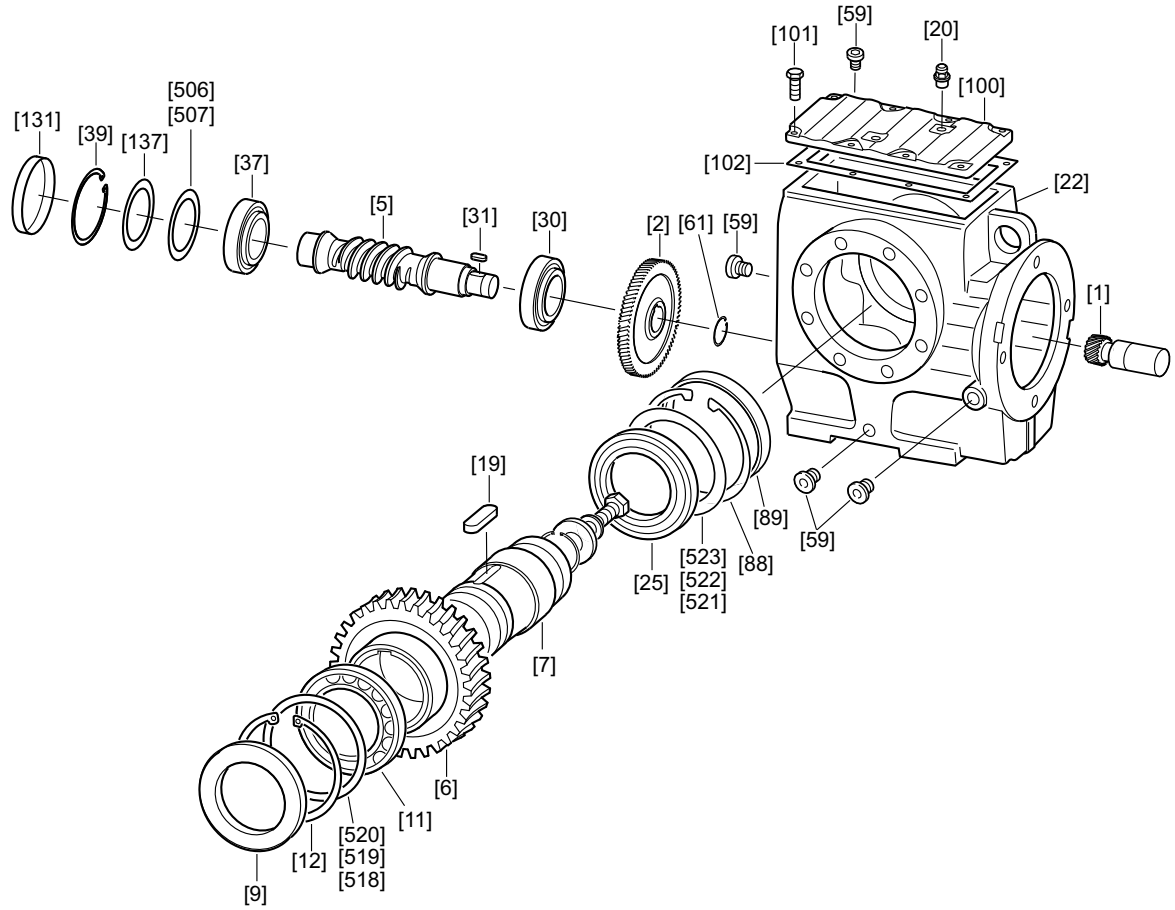


*18014398528786187*

| | | | | | | | |
|---|---|---|---|---|---|---|---|
| [1] | Pinion | [20] | Breather valve | [88] | Retaining ring | [518] | Shim |
| [2] | Gear | [22] | Gear unit housing | [89] | Closing cap | [519] | Shim |
| [5] | Worm | [25] | Rolling bearing | [100] | Gear unit cover | [520] | Shim |
| [6] | Worm gear | [30] | Rolling bearing | [101] | Hex head screw | [521] | Shim |
| [7] | Output shaft | [31] | Key | [102] | Seal | [522] | Shim |
| [9] | Oil seal | [37] | Rolling bearing | [131] | Closing cap | [523] | Shim |
| [11] | Rolling bearing | [39] | Retaining ring | [137] | Supporting ring | | |
| [12] | Retaining ring | [59] | Screw plug | [506] | Shim | | |
| [19] | Key | [61] | Retaining ring | [507] | Shim | | |

25803530/EN – 04/2018

## 3.7 Basic structure of SPIROPLAN® gear units W..10 – W..30

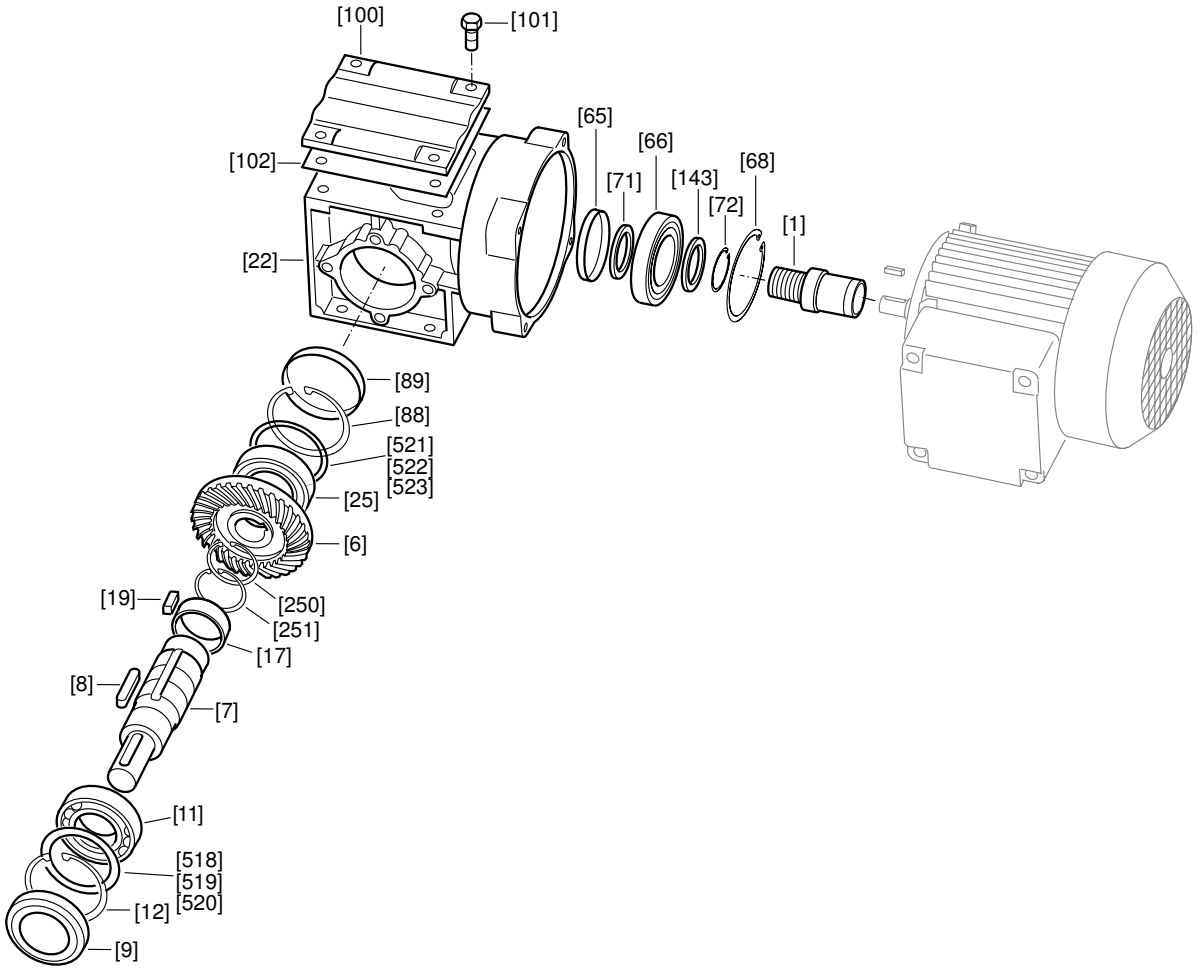


*9007199274048267*

[1] Pinion
[6] Gear
[7] Output shaft
[8] Key
[9] Oil seal
[11] Rolling bearing
[12] Retaining ring
[17] Spacer tube
[19] Key
[22] Gear unit housing
[25] Rolling bearing
[65] Oil seal
[66] Rolling bearing
[68] Retaining ring
[71] Supporting ring
[72] Retaining ring
[88] Retaining ring
[89] Closing cap
[100] Inspection cover
[101] Hex head screw
[102] Gasket
[143] Supporting ring
[250] Retaining ring
[251] Retaining ring
[518] Shim
[519] Shim
[520] Shim
[521] Shim
[522] Shim
[523] Shim

25803530/EN – 04/2018

## 3.8 Basic structure of SPIROPLAN® gear units W..37 – W..47

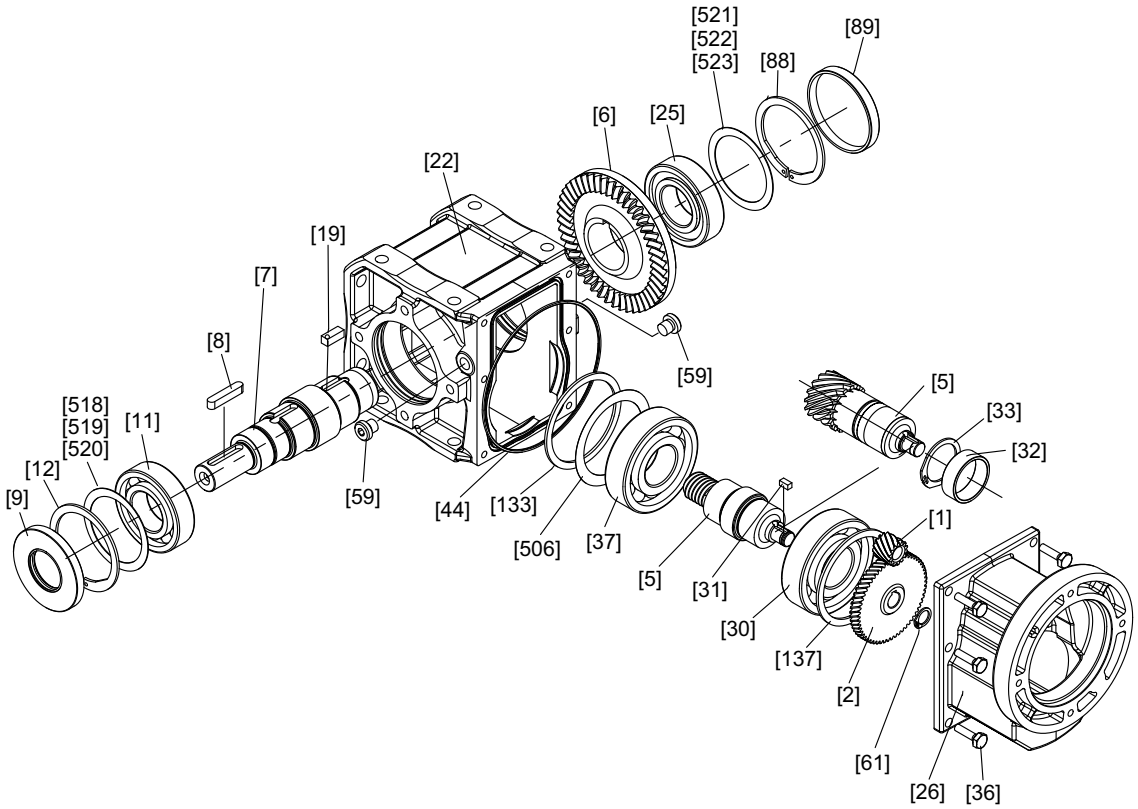


18014399115354379

| | | | | | | | |
|---|---|---|---|---|---|---|---|
| [1] | Pinion | [22] | Gear unit housing | [59] | Screw plug | [521] | Shim |
| [2] | Gear | [25] | Deep groove ball bearing | [61] | Retaining ring | [522] | Shim |
| [5] | Pinion shaft | [26] | Housing stage 1 | [88] | Retaining ring | [523] | Shim |
| [6] | Gear | [30] | Deep groove ball bearing | [89] | Closing cap | | |
| [7] | Output shaft | [31] | Key | [133] | Shim | | |
| [8] | Key | [32] | Spacer tube | [137] | Shim | | |
| [9] | Oil seal | [33] | Retaining ring | [506] | Shim | | |
| [11] | Deep groove ball bearing | [36] | Hex head screw | [518] | Shim | | |
| [12] | Retaining ring | [37] | Deep groove ball bearing | [519] | Shim | | |
| [19] | Key | [44] | O-ring | [520] | Shim | | |

25803530/EN – 04/2018

## 3.9 Nameplate/type designation

### 3.9.1 Gear unit nameplate

The following figure shows an example of a nameplate for a helical-bevel gear unit with input adapter:

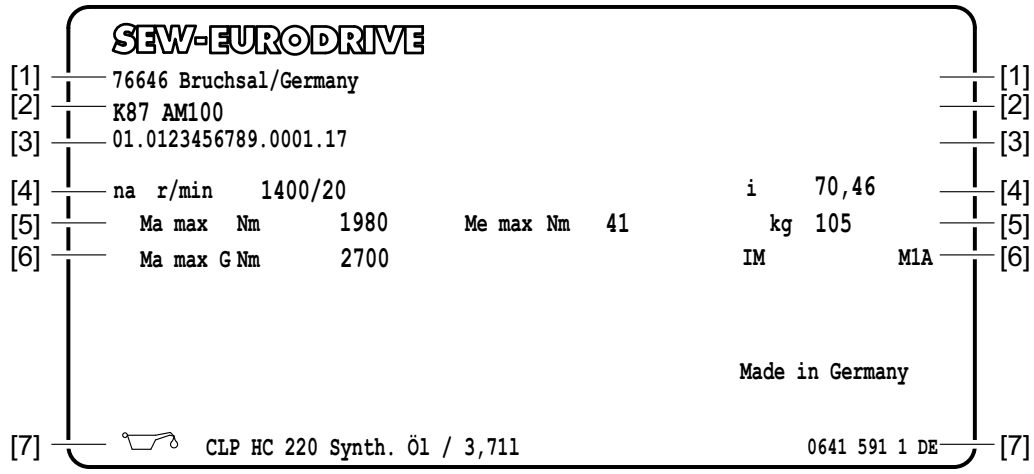


*20682047115*

[1] • Address
[2] • Type designation of the gear unit
[3] • Production number
[4] • Input rated speed/rotational speed at the output shaft of the gear unit in $min^{-1}$
• Gear unit ratio
[5] • Minimum permissible output torque of the gear unit/adapter combination in Nm
• Maximum permissible driving torque in Nm
• Mass in kg
[6] • Maximum permissible output torque of the open gear unit without additional component in Nm
• Mounting position
[7] • Oil type and oil fill volume
• Nameplate number

**Explanation of the production number:**

| 01. | 0123456789. | 0001. | 17 |
|---|---|---|---|
| Sales organization | Order number | Item number | Year of manu-facture |

### 3.9.2 Type designation of the gear unit

A helical-bevel gear unit with AQA adapter, for example, has the following type designation:

| Example: K37/R AQA 80 /1 | | |
|---|---|---|
| Gear unit type | **K** | Helical-bevel gear units |
| Gear unit size | **37** | 19 – 49; 37 – 187 |
| Option | **/R** | e.g. option /R for servo drives: Reduced rotational clearance |

25803530/EN – 04/2018

| Example: K37/R AQA 80 /1 | | |
|---|---|---|
| Adapter | **AQA** | e.g. adapter for servo drives:<br>AQA: Adapter with keyway<br>AQH: Adapter with clamping ring hub |
| Adapter size | **80** | |
| Variants | **/1** | |

### 3.9.3 DRN.. gearmotor nameplate

The following figure shows an example nameplate of a DRN.. gearmotor.

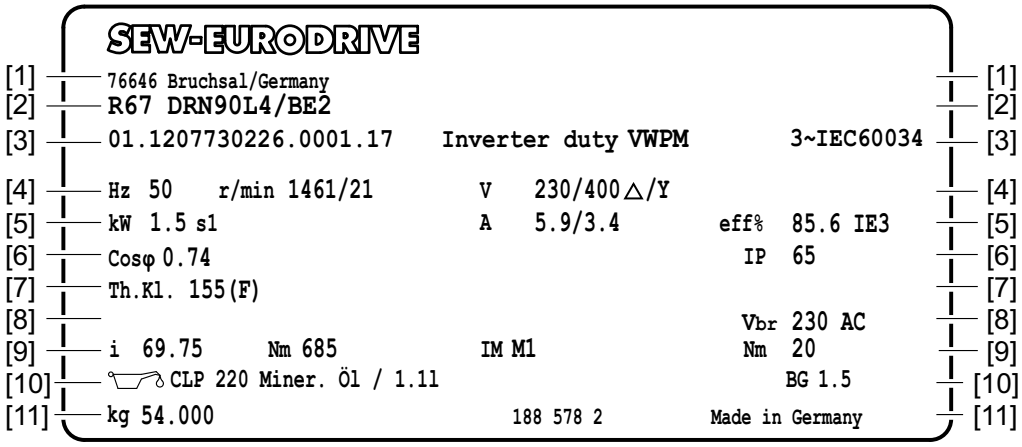


*20683265035*

[1] • Address
[2] • Type designation gearmotor
[3] • Production number
• Suitability for inverter operation
• Number of phases and underlying rated and power standard
[4] • Rated frequency /Hz
• Rated speed of the motor/rotational speed of the gear unit output shaft /$min^{-1}$
• Nominal voltage /V
[5] • Rated power /kW and operating mode
• Rated current /A
• Efficiency /%
• Energy efficiency class
[6] • Power factor
• Degree of protection according to IEC 60034-5
[7] • Thermal class
[8] • Brake voltage /V
[9] • Gear unit ratio
• Output torque /Nm
• Mounting position
• Nominal braking torque /Nm
[10] • Oil type and oil fill volume /l
• Brake control
[11] • Mass /kg
• Nameplate
• Country of production

### 3.9.4 Type designation of a DRN.. gearmotor

The type designation of the gearmotor starts from the component on the output end.

For instance, a multi-stage helical-bevel gearmotor with temperature sensor in the motor winding has the following type designation:

| **Example: K107R77DRN100LS4 /TF** | | |
|---|---|---|
| Gear unit type | K | 1. Gear unit |
| Gear unit size | 107 | |
| Gear unit series | R | 2. Gear unit |
| Gear unit size | 77 | |
| Motor series | DRN.. | Motor |
| Motor size | 100 | |
| Length | LS | |
| Number of poles | 4 | |
| Motor option temperature sensor | /TF | Option |

Example: DRN.. gearmotor

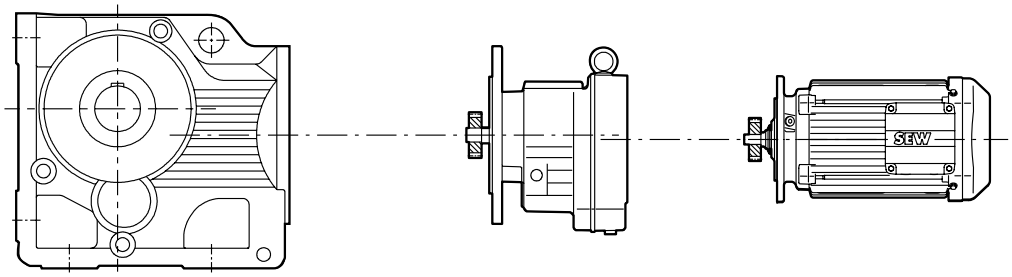


K107 R77 DRN100LS4/TF

*20684745867*

## 3.10 Designs and options – R, F, K, S, W gear units

Below an overview of type designations for R, F, K, S, and W gear units and their options.

### 3.10.1 Helical gear units

| Designation | Description |
|---|---|
| RX.. | Single-stage foot-mounted design, output shaft with key |
| RXF.. | Single-stage B5 flange-mounted design, output shaft with key |
| R.. | Foot-mounted design, output shaft with key |
| R..F | Foot- and B5 flange-mounted design, output shaft with key |
| RF.. | B5 flange-mounted design, output shaft with key |
| RZ.. | B14 flange-mounted design, output shaft with key |
| RM.. | B5 flange-mounted design with extended bearing hub, output shaft with key |

### 3.10.2 Parallel-shaft helical gear units

| Designation | Description |
|---|---|
| F.. | Foot-mounted design, output shaft with key |
| FA..B | Foot-mounted design, hollow shaft with keyway |
| FH..B | Foot-mounted design, hollow shaft with shrink disk |
| FV..B | Foot-mounted design, splined hollow shaft to DIN 5480 |
| FF.. | B5 flange-mounted design, output shaft with key |
| FAF.. | B5 flange-mounted design, hollow shaft with keyway |
| FHF.. | B5 flange-mounted design, hollow shaft with shrink disk |
| FVF.. | B5 flange-mounted design, splined hollow shaft to DIN 5480 |
| FA.. | Hollow shaft with keyway |
| FH.. | Hollow shaft with shrink disk |
| FT.. | Hollow shaft with TorqLOC® hollow shaft mounting system |
| FV.. | Splined hollow shaft to DIN 5480 |
| FZ.. | B14 flange-mounted design, output shaft with key |
| FAZ.. | B14 flange-mounted design, hollow shaft with keyway |
| FHZ.. | B14 flange-mounted design, hollow shaft with shrink disk |
| FVZ.. | B14 flange-mounted design, splined hollow shaft to DIN 5480 |
| FM.. | B5 flange-mounted design with extended bearing hub, output shaft with key |
| FAM.. | B5 flange-mounted design with extended bearing hub, hollow shaft with keyway |

25803530/EN – 04/2018

### 3.10.3 Helical-bevel gear units

| Designation | |
|---|---|
| K.. | Foot-mounted design, output shaft with key |
| KA..B | Foot-mounted design, hollow shaft with keyway |
| KAF..B | B5 flange-mounted design, foot-mounted design, hollow shaft with keyway |
| KF..B | B5 flange-mounted design, foot-mounted design, output shaft with key |
| KH..B | Foot-mounted design, hollow shaft with shrink disk |
| KHF..B | B5 flange-mounted design, foot-mounted design, hollow shaft with shrink disk |
| KV..B | Foot-mounted design, splined hollow shaft to DIN 5480 |
| KF.. | B5 flange-mounted design, output shaft with key |
| KAF.. | B5 flange-mounted design, hollow shaft with keyway |
| KHF.. | B5 flange-mounted design, hollow shaft with shrink disk |
| KVF.. | B5 flange-mounted design, splined hollow shaft to DIN 5480 |
| KA.. | Hollow shaft with keyway |
| KH.. | Hollow shaft with shrink disk |
| KT.. | Hollow shaft with TorqLOC® hollow shaft mounting system |
| KV.. | Splined hollow shaft to DIN 5480 |
| KZ.. | B14 flange-mounted design, output shaft with key |
| KAZ.. | B14 flange-mounted design, hollow shaft with keyway |
| KHZ.. | B14 flange-mounted design, hollow shaft with shrink disk |
| KVZ.. | B14 flange-mounted design, splined hollow shaft to DIN 5480 |
| KM.. | B5 flange-mounted design with extended bearing hub, output shaft with key |
| KAM.. | B5 flange-mounted design with extended bearing hub, hollow shaft with keyway |

### 3.10.4 Helical-worm gear units

| Designation | Description |
|---|---|
| S.. | Foot-mounted design, output shaft with key |
| SF.. | B5 flange-mounted design, output shaft with key |
| SAF.. | B5 flange-mounted design and hollow shaft with keyway |
| SHF.. | B5 flange-mounted design and hollow shaft with shrink disk |
| SA.. | Hollow shaft with keyway |
| SH.. | Hollow shaft with shrink disk |
| ST.. | Hollow shaft with TorqLOC® hollow shaft mounting system |
| SAZ.. | B14 flange-mounted design and hollow shaft with keyway |

25803530/EN – 04/2018

| Designation | Description |
|---|---|
| SHZ.. | B14 flange-mounted design and hollow shaft with shrink disk |

### 3.10.5 SPIROPLAN® gear units

| Designation | Description |
|---|---|
| W.. | Foot-mounted design, output shaft with key |
| WF.. | B5 flange-mounted design, output shaft with key |
| WAF.. | B5 flange-mounted design and hollow shaft with keyway |
| WA.. | Hollow shaft with keyway |
| WA..B | Foot-mounted design and hollow shaft with keyway |
| WH..B | Foot-mounted design and hollow shaft with shrink disk |
| WHF.. | B5 flange-mounted design and hollow shaft with shrink disk |
| WH.. | Hollow shaft with shrink disk |
| WT.. | Hollow shaft with TorqLOC® hollow shaft mounting system |

### 3.10.6 Options

R, F and K gear units:

| Designation | Description |
|---|---|
| /R | Reduced backlash |

K, S and W gear units:

| Designation | Description |
|---|---|
| /T | With torque arm |

F gear units:

| Designation | Description |
|---|---|
| /G | With rubber buffer |

### 3.10.7 Condition monitoring

| Designation | Description |
|---|---|
| /DUO | Diagnostic Unit Oil = Oil aging sensor |
| /DUV40A | Diagnostic Unit Vibration = Vibration sensor |

25803530/EN – 04/2018

# 4 Mechanical installation

## 4.1 Prerequisites for installation

**NOTICE**

Damage to the gear unit/gearmotor due to improper installation

Damage to property

- Observe the following notes.

Make sure that the following requirements are met before you start installing the unit:

- The drive has not been damaged during transportation or storage.
- The entries on the nameplate of the gearmotor match the voltage supply system.
- In case of abrasive ambient conditions, the output side oil seals must be protected against wear.
- Output shafts and flange surfaces must be completely free from anti-corrosion agent and any kind of pollution. Use a commercially available solvent to clean the flange surfaces. Note that solvent damages the oil seal. Do not let the solvent come into contact with the sealing lips of the oil seals!
- **For standard drives:**
  - Check if the gear unit/gearmotor is designed for the ambient temperature. For the application limits refer to the technical documentation, the nameplate or the lubricant table (see chapter "Lubricant table" (→ 🗎 170)).
  - Make sure the environment contains no hazardous substances (oils, acids, gases, vapors, dusts,...) or radiation.
- **For special designs:**
  - Check if the gear unit/gearmotor is designed for the ambient temperature. You find the application limits on the nameplate.
- **For worm/SPIROPLAN® gearmotors:**
  - Note that no large external mass moments of inertia must be present, which could exert a retrodriving load on the gear unit.
  - Note the self-locking at η' (retrodriving) < 0.5.

    Calculation of η': η' = 2- 1/η
- **Servomotor mounting:**
  - The drive may only be mounted if it is ensured that after the mounting the drive will be sufficiently ventilated. Ventilation prevents heat build-up.

25803530/EN – 04/2018

### 4.1.1 Required tools/resources

The following tools and resources are required for the mechanical installation:

- Wrench
- Torque wrench for:
  - Gear unit mounting
  - Shrink disks
  - Motor adapter AQH or EWH
  - Input shaft assembly with centering shoulder
- Mounting device
- Compensation elements (shims and spacing rings)
- Fasteners for input and output elements
- Lubricant (e.g. NOCO® fluid)
- Threadlocker compound for input cover with centering shoulder (e.g. Loctite® 243)

## INFORMATION

Standard parts are not included in the delivery.

### 4.1.2 Installation tolerances

| Shaft end | Flanges |
|---|---|
| Diameter tolerance according to DIN 748<br>• ISO k6 for solid shafts with Ø ≤ 50 mm<br>• ISO m6 for solid shafts with Ø > 50 mm<br>• ISO H7 for hollow shafts<br>• Centering bore in accordance with DIN 332, shape DR | Centering shoulder tolerance to DIN 42948<br>• ISO j6 with b1 ≤ 230 mm<br>• ISO h6 with b1 > 230 mm |

25803530/EN – 04/2018

## 4.2 Installing the gear unit



**⚠ CAUTION**

Risk of injury due to improper installation/disassembly

Severe personal injury and damage to property

- Work on the gear unit only when the machine is not in use.
- Secure the drive unit against unintentional power-up.
- Prevent heavy component parts (e.g. shrink disks) against falling during installation/disassembly.



**⚠ CAUTION**

Risk of injury due to protruding gear unit parts

Severe injuries

- Keep a sufficient safety distance to the gear unit/gearmotor.



**⚠ CAUTION**

Danger due to static overdetermination if gear units with foot (e.g. KA19/29B, KA127/157B or FA127/157B) are mounted both via the torque arm and via the foot plate.

Risk of injuries and damage to property

- Especially with the KA.9B/T variant, it is not permitted to use the foot plates and the torque arm at the same time.
- Attach the KA.9B/T design only via the torque arm.
- Attach the K.9 or KA.9B design only via the foot plate.
- If you want to use foot plates and torque arms for mounting, contact SEW-EURODRIVE.



**⚠ CAUTION**

Danger due to static overdetermination in the case of gearmotors when the gear unit is attached to the foot plate (e.g. KA19/29B, KA127/157B or FA127/157B, R gear unit with foot-mounted motor) and the motor is attached to the foot plate as well.

Risk of injuries and damage to property

- Attach only the gear unit or only the motor to the foot plate.

**NOTICE**

Damage to gear unit/gearmotor due to cold air currents. Condensed water in the gear unit can cause damage.

Damage to property

- Protect the gear unit from direct cold air currents.



**INFORMATION**

When installing the gear unit, make sure that the oil level and drain plugs as well as the breather valves are easily accessible!

25803530/EN – 04/2018

Mounting position

The gear unit or gearmotor is only allowed to be installed in the specified mounting position. Observe the information on the nameplate. SPIROPLAN® gear units of sizes W10 – W30 are mounting position-independent.

Oil level

Check the mounting position-dependent oil level; see chapter "Inspection/maintenance work on the gear unit" (→ 🗎 113). The gear units are filled with the required oil quantity at the factory. There may be slight deviations at the oil level plug as a result of the mounting position, which are permitted within the manufacturing tolerances.

**Adjust the lubricant fill quantities and the position of the breather valve accordingly in the event of a change of mounting position.** Observe chapter Lubricant fill quantities and chapter "Mounting positions" (→ 🗎 129).

Contact SEW-EURODRIVE in case of the following mounting position changes:

- Mounting position change to M4: Depending on the operating mode of the drive, an oil expansion tank can be necessary (see chapter "Oil expansion tank" (→ 🗎 93)).
- Changing the mounting position of K gear units to M5 or M6 or within these mounting positions
- Changing the mounting position of size S47 – S97 S gear units to mounting positions M2 and M3
- Changing the mounting positions of R gear units to mounting position M2.

Submounting

The support structure must have the following characteristics:

- Level
- Vibration damping
- Torsionally rigid

The following table shows the maximally permitted flatness defect for foot- and flange-mounting (guide values based on DIN ISO 1101):

| Gear unit size | Flatness defect |
|---|---|
| ≤ 67 | max. 0.4 mm |
| 77 – 107 | max. 0.5 mm |
| 127 – 147 | max. 0.7 mm |
| 157 – 187 | max. 0.8 mm |

Do not twist housing legs and mounting flanges against each other. Observe the permitted overhung and axial loads! Observe the "Project Planning" section in the gear unit/gearmotor catalog for calculating the permitted overhung and axial loads.

25803530/EN – 04/2018

Strength class of the screws

Always mount gearmotors using screws of strength class 8.8. The gearmotors in flange-mounted design and in foot-/flange-mounted design listed in the following table are an exception. Always use screws of strength class 10.9 for these gearmotors. Use suitable washers.

| Gear unit | Flange Ø in mm | Strength class of the screws |
|---|---|---|
| RF37/R37F | 120 | 10.9 |
| RF47/R47F | 140 | |
| RF57/R57F | 160 | |
| FF/FAF77<br>KF/KAF77 | 250 | |
| FM/FAM67, FM/FAM77<br>KM/KAM67, KM/KAM77 | 300 | |
| FM/FAM87<br>KM/KAM87 | 350 | |
| FM/FAM97<br>KM/KAM97 | 400 | |
| RF147<br>FM/FAM107<br>KM/KAM107 | 450 | |
| RF167<br>FM/FAM127<br>KM/KAM127 | 550 | |
| FM/FAM157<br>KM/KAM157 | 660 | |
| RZ37 – RZ87 | 60ZR – 130ZR | |

Corrosion protection for screw connections

Use plastic inserts (2 – 3 mm thick) if there is a risk of electrochemical corrosion between the gear unit and the driven machine. The material used must have an electrical leakage resistance < $10^9$ Ω. Electrochemical corrosion can occur between various metals, for example, cast iron and stainless steel. Also install the bolts with plastic washers! Additionally ground the housing. Use grounding screws on the motor.

25803530/EN – 04/2018

### 4.2.1 Tightening torques for retaining screws

Mount the gearmotors with the following tightening torques:

| Screw/nut | Tightening torque ± 10%<br>Strength class 8.8<br>Nm |
|---|---|
| M6 | 11 |
| M8 | 27 |
| M10 | 54 |
| M12 | 93 |
| M16 | 230 |
| M20 | 464 |
| M24 | 798 |
| M30 | 1597 |
| M36 | 2778 |
| M42 | 3995 |
| M48 | 6022 |
| M56 | 9650 |

Mount the specified gearmotors in flange-mounted design with the following increased tightening torques:

| Flange Ø mm | Gear unit | Screw/nut | Tightening torque ± 10%<br>Strength class 10.9<br>Nm |
|---|---|---|---|
| 120 | RF37 | M6 | 17 |
| 140 | RF37/RF47 | M8 | 40 |
| 160 | RF57 | M8 | 40 |
| 300 | FM/FAM67,<br>FM/FAM77<br>KM/KAM67,<br>KM/KAM77 | M12 | 137 |
| 350 | FM/FAM87<br>KM/KAM87 | M16 | 338 |
| 400 | FM/FAM97<br>KM/KAM97 | M16 | 338 |
| 450 | FM/FAM107<br>KM/KAM107 | M16 | 338 |
| 450 | RF147 | M20 | 661 |
| 550 | FM/FAM127<br>KM/KAM127 | M16 | 338 |
| 550 | RF167 | M20 | 661 |

25803530/EN – 04/2018

| Flange Ø mm | Gear unit | Screw/nut | Tightening torque ± 10% Strength class 10.9 Nm |
|---|---|---|---|
| 660 | FM/FAM157<br>KM/KAM157 | M20 | 661 |
| 60ZR | RZ37 | M8 | 40 |
| 70ZR | RZ47 | M8 | 40 |
| 80ZR | RZ57 | M10 | 79 |
| 95ZR | RZ67 | M10 | 79 |
| 110ZR | RZ77 | M10 | 79 |
| 130ZR | RZ87 | M12 | 137 |
| 250 | FF77/KF77/ FAF77/ KAF77 | M12 | 137 |

### 4.2.2 Tightening torques for oil level plugs, oil drain plugs, screw plugs, breather valves and oil sight glasses

Observe the tightening torques in the following table when screwing in:

| Thread | Tightening torque Nm |
|---|---|
| M10 × 1 | 8 |
| M12 × 1.5 | 14 |
| M22 × 1.5 | 45 |
| M33 × 2 | 100 |
| M42 × 2 | 160 |

25803530/EN – 04/2018

### 4.2.3 Gear unit mounting

## INFORMATION

If you use the gear unit in flange-mounted design or foot/flange-mounted design in connection with VARIBLOC® variable-speed gear units, use screws of 10.9 quality and suitable washers for flange mounting on the customer side.

To improve the friction contact between flange and mounting surface, SEW-EURODRIVE recommends anaerobic gaskets or an anaerobic glue.

## INFORMATION

With the gear units KAZ/KZ/FAZ/FZ 107-157, remove the 4 transport protection screws from the B14 flange. The 2 recessed screws **must** remain in the B14 flange.

**Foot-mounted gear unit**

The following table shows the thread sizes of the foot-mounted gear units depending on the gear unit type and size:

| Screw | Gear unit type | | | | | |
|---|---|---|---|---|---|---|
| | R/R..F | RX | F/FH..B/ FA..B | K/KH..B/KV..B/ KA..B | S | W |
| M6 | 07 | – | – | 19 | – | 10/20 |
| M8 | 17/27/37 | – | 27/37 | 29 | 37 | 30/37/47 |
| M10 | – | 57 | 47 | 37/39/47/49 | 47/57 | – |
| M12 | 47/57/67 | 67 | 57/67 | 57/67 | 67 | – |
| M16 | 77/87 | 77/87 | 77/87 | 77 | 77 | – |
| M20 | 97 | 97/107 | 97 | 87 | 87 | – |
| M24 | 107 | – | 107 | 97 | 97 | – |
| M30 | 127/137 | – | 127 | 107/167 | – | – |
| M36 | 147/167 | – | 157 | 127/157/187 | – | – |

**Gear unit with B14 flange-mounted design and/or hollow shaft**

The following table shows the thread sizes of the gear units with B14 flange and/or hollow shaft depending on the gear unit type and size:

| Screw | Gear unit type | | | | |
|---|---|---|---|---|---|
| | RZ | FZ/FAZ/FHZ/ FVZ | KZ/KAZ/KHZ/ KVZ | SA/SAZ/SHZ | WA |
| M6 | 07/17/27 | – | – | 37 | 10/20/30[1)] |
| M8 | 37/47 | 27/37/47 | 37/47 | 47/57 | 37 |
| M10 | 57/67 | – | – | – | 47 |
| M12 | 77/87 | 57/67/77 | 57/67/77 | 67/77 | – |
| M16 | – | 87/97 | 87/97 | 87/97 | – |
| M20 | – | 107/127 | 107/127 | – | – |

25803530/EN – 04/2018

| Screw | Gear unit type | | | | |
|---|---|---|---|---|---|
| | RZ | FZ/FAZ/FHZ/ FVZ | KZ/KAZ/KHZ/ KVZ | SA/SAZ/SHZ | WA |
| M24 | – | 157 | 157 | – | – |

1) For the W30 design mounted directly on a CMP.. motor or mounted via an EWH.. adapter, the thread size is M8.

**Gear unit with B5 flange-mounted design**

The following table shows the thread sizes of the gear units with B5 flange depending on the gear unit type, size and flange diameter:

| Ø flange mm | Screw | Gear unit type | | | | | |
|---|---|---|---|---|---|---|---|
| | | RF/R..F/RM | FF/FAF/ FHF/FVF | FM/FAM KM/KAM | KF/KAF/ KHF/KVF | SF/SAF/ SHF | WF/WAF/ WHF |
| 80 | M6 | – | – | – | – | – | 10 |
| 110 | M8 | – | – | – | – | – | 20 |
| 120 | M6 | 07/17/27 | – | – | – | 37 | 10/20/30/37 |
| 120 | M8 | – | – | – | 19 | – | – |
| 140 | M8 | 07/17/27/37/47 | – | – | – | – | – |
| 160 | M8 | 07/17/27/37/47 | 27/37 | – | 19/37 | 37/47 | 30/37/47 |
| 160 | M10 | – | – | – | 29/39 | – | – |
| 200 | M10 | 37/47/57/67 | 47 | – | 29/47 | 57/67 | – |
| 200 | M12 | – | – | – | 49 | – | – |
| 250 | M12 | 57/67/77/87 | 57/67 | – | 57/67 | 77 | – |
| 300 | M12 | 67/77/87 | 77 | 67/77 | 77 | – | – |
| 350 | M16 | 77/87/97/107 | 87 | 87 | 87 | 87 | – |
| 400 | M16 | – | – | 97 | – | – | – |
| 450 | M16 | 97/107/127/137/ 147 | 97/107 | 107 | 97/107 | 97 | – |
| 550 | M16 | 107/127/137/ 147/167 | 127 | 127 | 127 | – | – |
| 660 | M20 | 147/167 | 157 | 157 | 157 | – | – |

### 4.2.4 Installation in damp locations or outdoors

## NOTICE

Paint can block the breather valve and damage the sealing lips of the oil seals.

Damage to property.

- Thoroughly cover the breather valve and sealing lip of the oil seals with strips prior to painting/re-painting.
- Remove the strips after painting.

25803530/EN – 04/2018

Drives are supplied in corrosion-resistant designs with an according surface protection coating for use in damp areas or outdoors.

- Repair any damage to the paint work (e.g. on the breather valve or the lifting eyes).
- When mounting the motors onto AM, AQ adapters and to AR, AT start-up couplings and slip clutches, seal the flange areas with a suitable sealant (e.g. Loctite® 574).
- In case of setup outdoors, the drives must not be exposed to direct sunlight. Install appropriate protection devices e.g. a cover or a canopy. The protection device must not cause heat build-up.
- The system operator must ensure that no foreign objects (e.g. falling objects or coverings) affect the operation of the gear unit.

### 4.2.5 Gear unit venting

## NOTICE

Dirt and dust in the environment affect the function of the breather valve.

Potential damage to property.

- Check the breather valve function regularly and replace it if necessary.
- In case of high dirt and dust load use a breather filter instead of a breather valve.

The following table lists gear units that do not require venting:

| Gear unit | Mounting position |
|---|---|
| R..07 | M1/M2/M3/M5/M6 |
| R..17/R..27/F..27 | M1/M3/M5/M6 |
| W..10/W..20/W..30 | M1 – M6 |
| W..37/W..47 | M1/M2/M3/M5/M6 |
| K..19/K..29 | M1/M2/M3/M5/M6 |

All other gear units are delivered with a breather valve suitable to the mounting position and activated.

**Exceptions:**

- The following gear units are delivered with a screw plug on the provided breather hole:
  - Gear unit with pivoted mounting position (dynamic)
  - Gear unit for mounting in an inclined position (stationary)
  - Mounting position MX

  A breather valve is supplied in a separate plastic bag attached to the gear unit. Before startup, replace the highest screw plug with the breather valve provided. Observe for this the tightening torques in chapter "Tightening torques for oil level plugs, oil drain plugs, screw plugs, breather valves and oil sight glasses" (→ 🗎 32).
- For **gear head units** and **gear units with pivoted mounting position** with venting on the input end, a breather valve is supplied in a plastic bag.
- **Enclosed gear units** are delivered without a breather valve.

- Gear units with gear unit venting on fixed piping, with expansion tank, and with ventilation filter are delivered without a breather valve.
- In some countries, the breather valve is installed, but not activated due to possible pressure fluctuations during transport. In such cases the transport protection must be removed. This activates the breather valve (see chapter "Activating the breather valve" (→ 🗎 36)).

**Activating the breather valve**

1. Before startup, check whether the transport protection on the breather valve has been removed and the valve is therefore activated. The following figure shows a breather valve with transport protection:

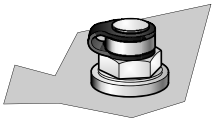

2. Remove the transport protection.

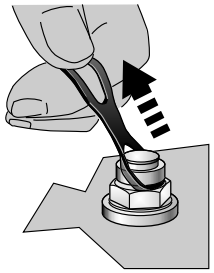

⇨ The following figure shows an activated breather valve:

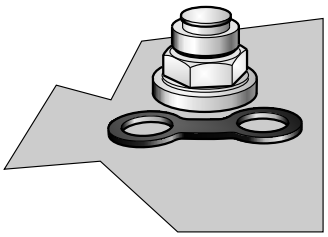

### 4.2.6 Painting the gear unit

## NOTICE

Paint can block the breather valve and damage the sealing lips of the oil seals.

Damage to property.

- Thoroughly cover the breather valve and sealing lip of the oil seals with strips prior to painting/re-painting.
- Remove the strips after painting.

25803530/EN – 04/2018

## 4.3 Gear unit with solid shaft

### 4.3.1 Assembling input and output elements

**NOTICE**

Damage to bearing, housing or shafts due to incorrect mounting

Possible damage to property.

- Only use a mounting device for installing input and output elements (see chapter "Using the mounting device" (→ 🗎 37)). Use the threaded centering bore at the shaft end.
- Never force belt pulleys, couplings, pinions, etc. onto the shaft end by hitting them with a hammer.
- During the installation of belt pulleys, make sure the belt is tensioned correctly in accordance with the manufacturer's instructions.
- Make sure the transmission elements are balanced after fitting and do not give rise to any impermissible radial or axial forces. For the approved values, refer to the catalog "Gearmotors" or "Explosion-Proof Drives".

**INFORMATION**

Mounting is easier if you first apply lubricant to the output element or heat it up briefly to 80 – 100 °C.

**Using a mounting device**

The following figure shows a mounting device for installing couplings or hubs on gear unit or motor shaft ends. Should you be able to tighten the screw without any problems, you may not need the thrust bearing on the mounting device.

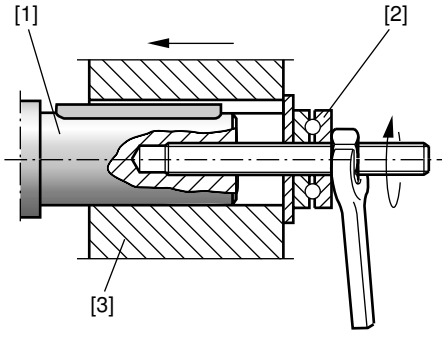


211368587

[1] Gear shaft end
[2] Thrust bearing
[3] Coupling hub

### Avoiding excessive overhung loads

To avoid high overhung loads, mount gears and sprockets according to figure **B**.

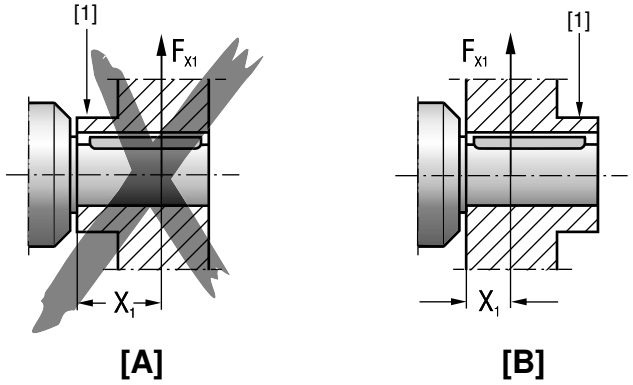


211364235

[1] Hub
[A] Incorrect assembly
$F_{X1}$ Overhung load at point X1
[B] Correct assembly

## 4.3.2 Mounting of couplings

### ⚠ CAUTION

Risk of injury due to moving drive elements, such as belt pulleys or couplings, during operation.

Risk of jamming and crushing.

- Equip the input and output elements with a touch guard.

Adjust the following misalignments according to the coupling manufacturer's specifications when mounting couplings:

a) Maximum and minimum clearance

b) Axial misalignment

c) Angular misalignment

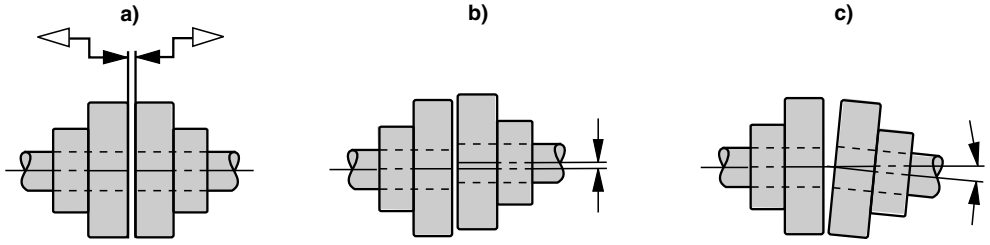


211395595

25803530/EN – 04/2018

## 4.4 Torque arms for shaft-mounted gear units

### NOTICE

Damage to gear unit due to improper installation

Damage to the gear unit

- Do not place torque arms under strain during installation.
- Always use bolts of quality 8.8 to fasten torque arms.

The following figure shows the mounted torque arm without tension:

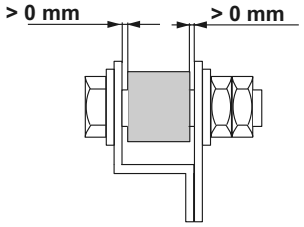


### 4.4.1 Mounting torque arms for parallel-shaft helical gear units

The following figure shows the torque support for parallel-shaft helical gear units in loose state.

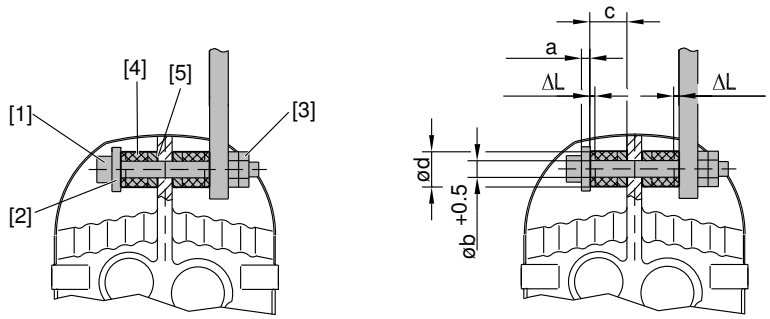


*36028797230330379*

[1] Screw
[2] Washer
[3] Nuts
[4] Rubber buffer
[5] Metal side of the rubber buffer

a Washer width
b Rubber buffer inner diameter
c Rubber buffer length in loose state
d Rubber buffer diameter
ΔL Preload per rubber buffer in tightened state

Proceed as follows:

1. Make sure that the metal sides of the rubber buffers lay against the gear unit.
2. Use screws [1] and washers [2] according to the following table.
3. Secure the screw connection with a nut [3].
4. Tighten the screw [1] until the preload "Δ L" of the rubber buffers is reached according to the table:

| Gear unit | Washer | Rubber buffer | | | |
|---|---|---|---|---|---|
| | a | d | b | c | Δ L |
| | mm | mm | mm | mm | mm |
| F..27 /G | 5 | 40 | 12.5 | 20 | 1 |
| F..37 /G | 5 | 40 | 12.5 | 20 | 1 |
| F..47 /G | 5 | 40 | 12.5 | 20 | 1.5 |
| F..57 /G | 5 | 40 | 12.5 | 20 | 1.5 |
| F..67 /G | 5 | 40 | 12.5 | 20 | 1.5 |
| F..77 /G | 10 | 60 | 21.0 | 30 | 1.5 |
| F..87 /G | 10 | 60 | 21.0 | 30 | 1.5 |
| F..97 /G | 12 | 80 | 25.0 | 40 | 2 |
| F..107 /G | 12 | 80 | 25.0 | 40 | 2 |
| F..127 /G | 15 | 100 | 32.0 | 60 | 3 |
| F..157 /G | 15 | 120 | 32.0 | 60 | 3 |

### 4.4.2 Mounting torque arms for helical-bevel gear unit K..19 – K..49

The following figure shows the torque support for the helical-bevel gear units K..19 – K..49:

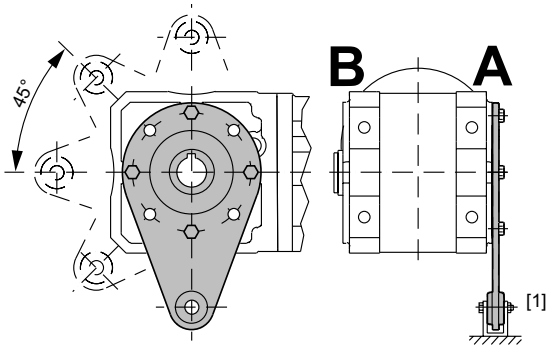


[1] Bushing

A Connection side
B Connection side

Observe the following points during assembly:

- Apply bearings to both sides of the bushing [1].
- Mount connection side B so that it mirrors side A.
- Use screws and tightening torques according to the following table:

| Gear unit | Screws | Tightening torque ± 10% |
|---|---|---|
| | | Nm |
| K..19 /T | 4 × M8 × 20 – 8.8 | 27 |
| K..29 /T | 4 × M8 × 22 – 8.8 | 27 |
| K..39 /T | 4 × M10 × 30 – 8.8 | 54 |
| K..49 /T | 4 × M12 × 35 – 8.8 | 93 |

25803530/EN – 04/2018

### 4.4.3 Mounting torque arms for helical-bevel gear unit K..37 – K..157

The following figure shows the torque support for the helical-bevel gear units K..37 – K..157.

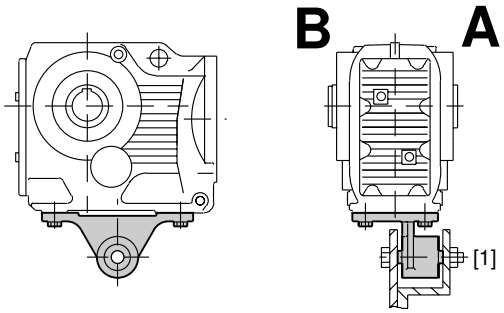


*27021597975585035*

[1] Bushing

A Connection side
B Connection side

Proceed as follows:

1. Apply bearings to both sides of the bushing [1].
2. Mount connection side B so that it mirrors side A.
3. Use screws and tightening torques according to the following table:

| Gear unit | Screws | Tightening torque ± 10%<br>Nm |
|---|---|---|
| K..37 /T | 4 × M10 × 25 – 8.8 | 54 |
| K..47 /T | 4 × M10 × 30 – 8.8 | 54 |
| K..57 /T | 4 × M12 × 35 – 8.8 | 93 |
| K..67 /T | 4 × M12 × 35 – 8.8 | 93 |
| K..77 /T | 4 × M16 × 40 – 8.8 | 230 |
| K..87 /T | 4 × M16 × 40 – 8.8 | 230 |
| K..97 /T | 4 × M20 × 50 – 8.8 | 464 |
| K..107 /T | 4 × M24 × 60 – 8.8 | 796 |
| K..127 /T | 4 × M36 × 130 – 8.8 | 2778 |
| K..157 /T | 4 × M36 × 130 – 8.8 | 2778 |

25803530/EN – 04/2018

### 4.4.4 Mounting torque arms for helical-worm gear units

The following figure shows the toque support for helical-worm gear units.

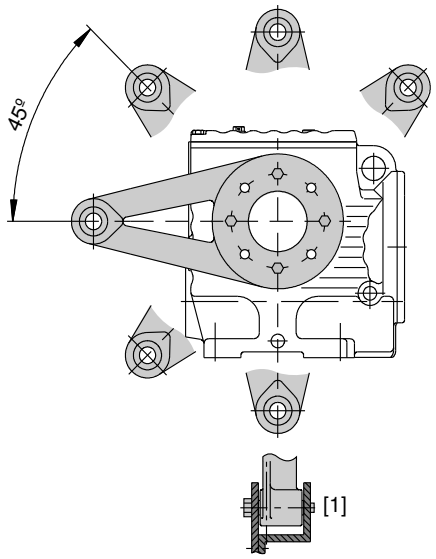


*18014398720973707*

[1] Bushing

Proceed as follows:

1. Apply bearings to both sides of the bushing [1].
2. Use screws and tightening torques according to the following table:

| Gear unit | Screws | Tightening torque ± 10%<br>Nm |
|---|---|---|
| S..37 /T | 4 × M6 × 16 – 8.8 | 11 |
| S..47 /T | 4 × M8 × 25 – 8.8 | 27 |
| S..57 /T | 6 × M8 × 25 – 8.8 | 27 |
| S..67 /T | 4 × M12 × 35 – 8.8 | 93 |
| S..77 /T | 4 × M12 × 35 – 8.8 | 93 |
| S..87 /T | 4 × M16 × 45 – 8.8 | 230 |
| S..97 /T | 4 × M16 × 50 – 8.8 | 230 |

25803530/EN – 04/2018

### 4.4.5 Mounting torque arms for SPIROPLAN® W gear units

The following figure shows the toque support for SPIROPLAN® W gear units.

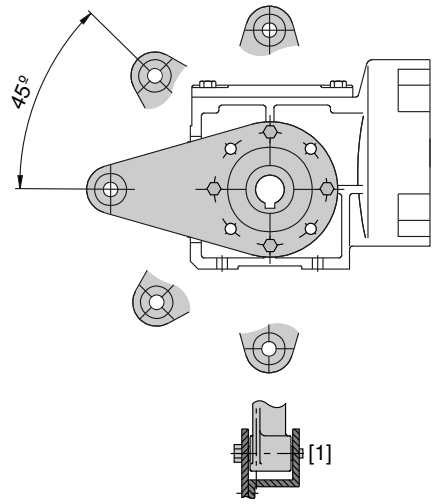


*18014398720971531*

[1] Bushing

Proceed as follows:

1. Apply bearings to both sides of the bushing [1].
2. Use screws and tightening torques according to the following table:

| Gear unit | Screws | Tightening torque ± 10%<br>Nm |
|---|---|---|
| W..10 /T | 4 × M6 × 16 – 8.8 | 11 |
| W..20 /T | 4 × M6 × 16 – 8.8 | 11 |
| W..30 /T | 4 × M6 × 16 – 8.8 | 11 |
| W..37 /T | 4 × M8 × 20 – 8.8 | 27 |
| W..47 /T | 4 x M10 × 20 – 8.8 | 54 |

25803530/EN – 04/2018

## 4.5 Mounting shaft-mounted gear units with splined hollow shaft

### INFORMATION

Concerning the configuration of the customer shaft, please also refer to the design notes in the "Gearmotors" catalog.

Proceed as follows:

1. Apply NOCO® fluid. Spread carefully.

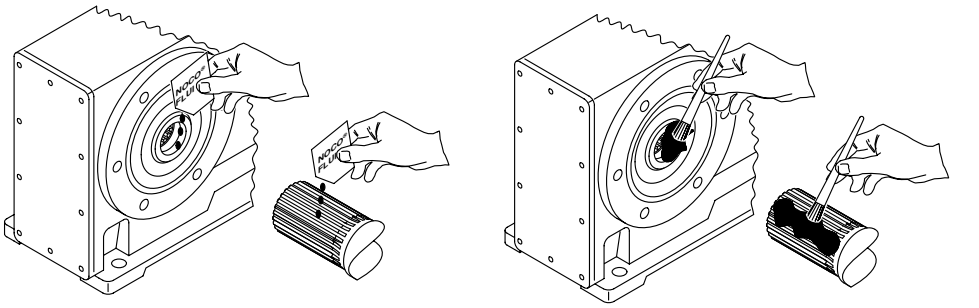

*20685469067*

2. Install the shaft and secure it axially. For easier mounting, use a mounting device.

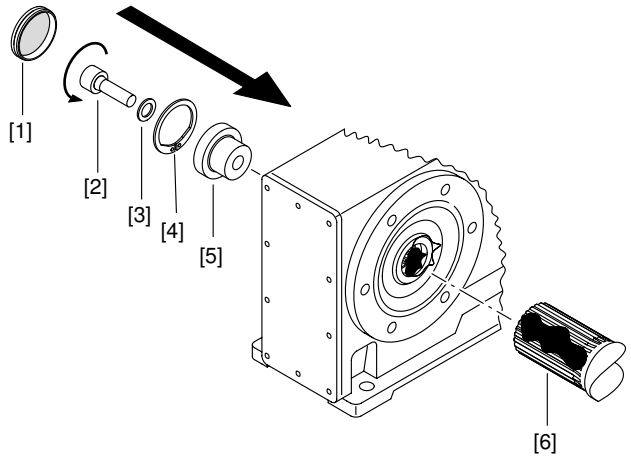


*20685473931*

[1] Closing plug
[2] Cap screw
[3] Supporting ring
[4] Retaining ring
[5] Washer

25803530/EN – 04/2018

## 4.6 Shaft-mounted gear unit with keyway

### INFORMATION

Concerning the design of the customer shaft, please also refer to the design notes in the "Gearmotors" catalog.

### 4.6.1 Mounting shaft-mounted gear units with keyway

Proceed as follows:

1. Apply NOCO® fluid. Spread carefully.

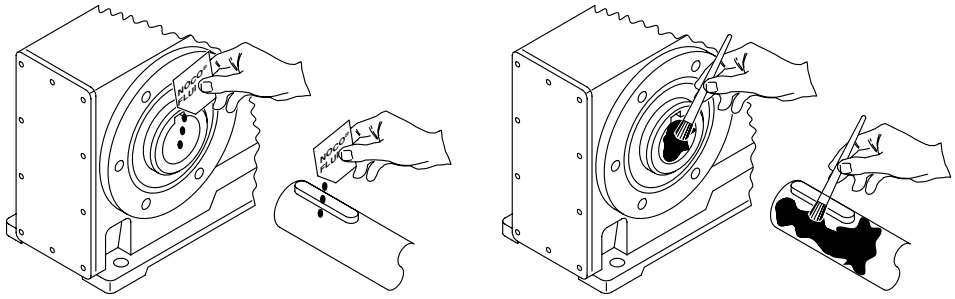

*9007199466257163*

2. Install the shaft and secure it axially. For easier mounting, use a mounting device. Proceed according to one of the **3 mounting types**, depending on the scope of delivery.

**A) Mounting a customer shaft (standard scope of delivery):**

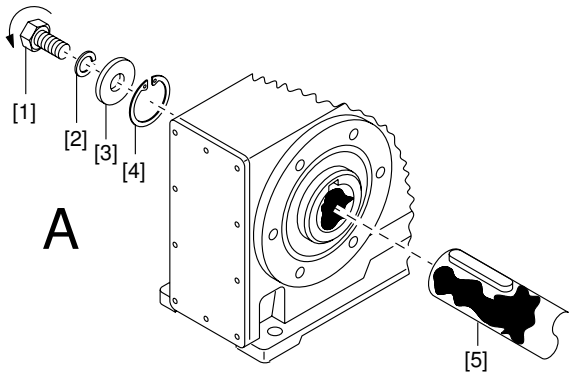


*9007199466259339*

[1] Short retaining screw (standard scope of delivery)
[2] Lock washer
[3] Washer
[4] Retaining ring
[5] Customer shaft

**B) Mounting customer shaft with contact shoulder using the SEW-EURODRIVE assembly/disassembly kit:**

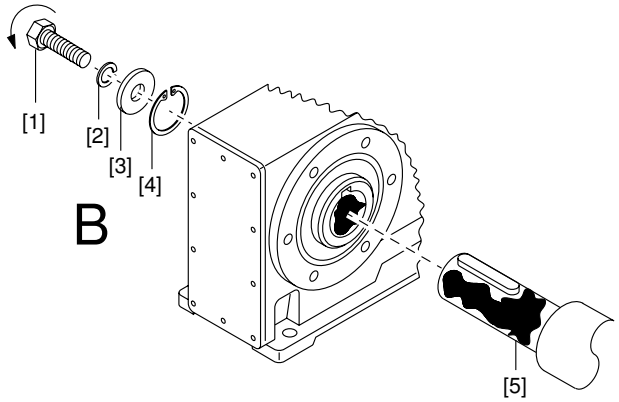


*9007199466261515*

[1] Retaining screw
[2] Lock washer
[3] Washer
[4] Retaining ring
[5] Customer shaft with contact shoulder

**C) Mounting customer shaft without contact shoulder using the SEW-EURODRIVE assembly/disassembly kit:**

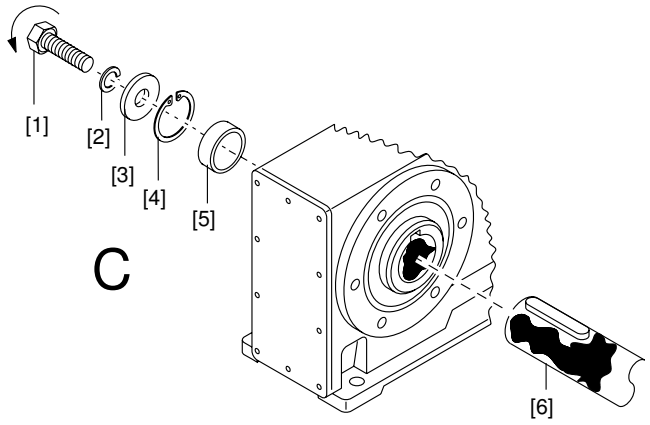


*9007199466263691*

[1] Retaining screw
[2] Lock washer
[3] Washer
[4] Retaining ring
[5] Spacer tube
[6] Customer shaft without contact shoulder

3. Tighten the retaining screw to the appropriate torque. Observe the tightening torques specified in the following table.

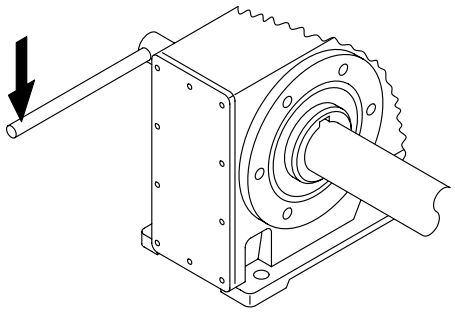

*9007199466265867*

| Screw | Tightening torque<br>Nm |
|---|---|
| M5 | 5 |
| M6 | 8 |
| M10/12 | 20 |
| M16 | 40 |
| M20 | 80 |
| M24 | 200 |

## INFORMATION

To avoid contact corrosion, SEW-EURODRIVE recommends that the customer shaft should be lathed down between the 2 contact surfaces.

### 4.6.2 Removing the shaft-mounted gear unit

This description is only applicable if the gear unit was assembled using the SEW-EURODRIVE assembly/disassembly kit (see step 2 of "Mounting the shaft-mounted gear unit" (→ 🗎 45)).

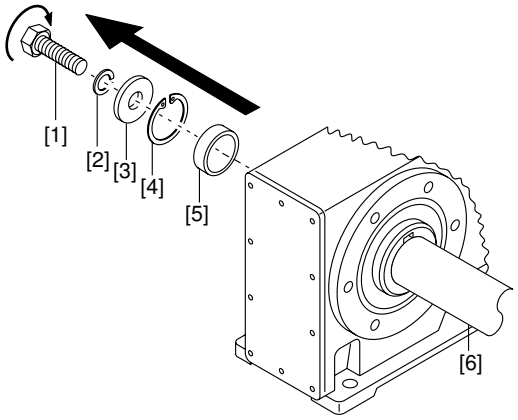


*9007199466268043*

[1] Retaining screw
[2] Lock washer
[3] Washer
[4] Retaining ring
[5] Spacer tube
[6] Customer shaft

Proceed as follows:

1. Loosen the retaining screw [1].
2. Remove parts [2] to [4] and, if applicable, the spacer tube [5].
3. Insert the forcing washer [8] and the fixed nut [7] from the SEW-EURODRIVE assembly/disassembly kit between the customer shaft [6] and the retaining ring [4] (see "SEW-EURODRIVE assembly/disassembly kit" (→ 🗎 49)).

25803530/EN – 04/2018

4. Re-install the retaining ring [4].
5. Re-install the retaining screw [1]. Press the gear unit off the shaft by tightening the screw.

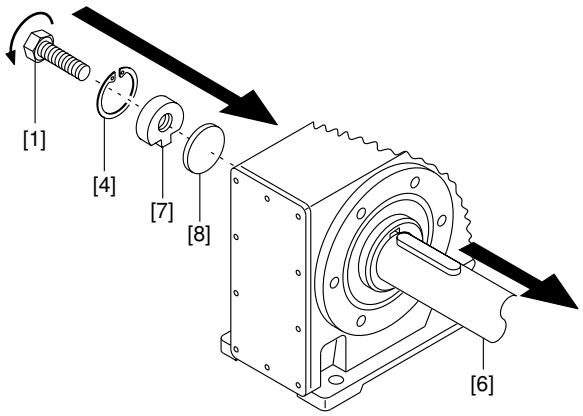


*9007199466270219*

[1] Retaining screw
[4] Retaining ring
[6] Customer shaft
[7] Fixed nut
[8] Forcing washer

25803530/EN – 04/2018

### 4.6.3 Assembly/disassembly kit by SEW-EURODRIVE

Applies only if the installation/removal kit was previously used for installation.

1. Loosen the retaining screw [5].
2. Remove the retaining ring [4] and, if used, the spacer tube.
3. Insert the forcing washer [2] and the fixed nut [3] between the customer shaft [1] and retaining ring [4] as shown in the following figure.
4. Re-insert the retaining ring [4].
5. Re-install the retaining screw [5]. Now you can force the gear unit off the shaft.

The following figure shows the SEW-EURODRIVE assembly/disassembly kit.

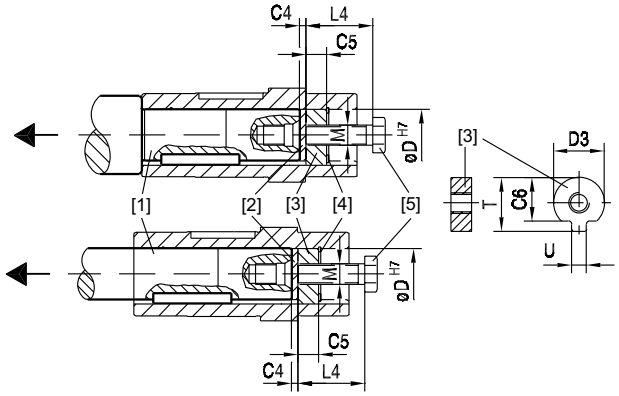


*27021606946895115*

[1] Customer shaft
[2] Forcing washer
[3] Fixed nut for disassembly
[4] Retaining ring
[5] Retaining screw

Dimensions and part numbers of the assembly/disassembly kit:

| Type | $D^{H7}$ mm | M[1)] | C4 mm | C5 mm | C6 mm | $U^{-0.5}$ mm | $T^{-0.5}$ mm | $D3^{-0.5}$ mm | L4 mm | Part number of the assembly/disassembly kit |
|---|---|---|---|---|---|---|---|---|---|---|
| WA..10 | 16 | M5 | 5 | 5 | 12 | 4.5 | 18 | 15.7 | 50 | 6437125 |
| WA..20 | 18 | M6 | 5 | 6 | 13.5 | 5.5 | 20.5 | 17.7 | 25 | 643682X |
| WA..20, WA..30, SA..37, WA..37, KA..19 | 20 | M6 | 5 | 6 | 15.5 | 5.5 | 22.5 | 19.7 | 25 | 6436838 |
| FA..27, SA..47, WA..47, KA..29 | 25 | M10 | 5 | 10 | 20 | 7.5 | 28 | 24.7 | 35 | 6436846 |
| FA..37, KA..29, KA..37, KA..39, SA..47, SA..57, WA..47, | 30 | M10 | 5 | 10 | 25 | 7.5 | 33 | 29.7 | 35 | 6436854 |
| FA..47, KA..39, KA..47, KA..49, SA..57 | 35 | M12 | 5 | 12 | 29 | 9.5 | 38 | 34.7 | 45 | 6436862 |
| FA..57, KA..57, FA..67, KA..49, KA..67, SA..67 | 40 | M16 | 5 | 12 | 34 | 11.5 | 41.9 | 39.7 | 50 | 6436870 |
| SA..67 | 45 | M16 | 5 | 12 | 38.5 | 13.5 | 48.5 | 44.7 | 50 | 6436889 |
| FA..77, KA..77, SA..77 | 50 | M16 | 5 | 12 | 43.5 | 13.5 | 53.5 | 49.7 | 50 | 6436897 |
| FA..87, KA..87, SA..77, SA..87 | 60 | M20 | 5 | 16 | 56 | 17.5 | 64 | 59.7 | 60 | 6436900 |
| FA..97, KA..97, SA..87, SA..97 | 70 | M20 | 5 | 16 | 65.5 | 19.5 | 74.5 | 69.7 | 60 | 6436919 |
| FA..107, KA..107, SA..97 | 90 | M24 | 5 | 20 | 80 | 24.5 | 95 | 89.7 | 70 | 6436927 |

1) Retaining screw

25803530/EN – 04/2018

## 4.7 Shaft-mounted gear unit with shrink disk

### 4.7.1 Mounting the shaft-mounted gear unit

**NOTICE**

Deformation of the hollow shaft due to tightening the locking screws without first installing the shaft.

Damage to the hollow shaft.

- Never tighten the screws without the shaft installed.

Proceed as follows:

1. Slightly loosen the locking screws. Do not remove the locking screws completely.

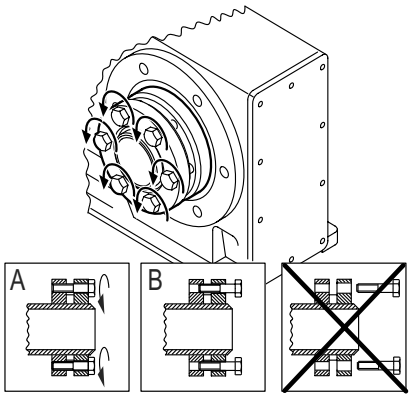


*9007199466274571*

2. Carefully **degrease** the hollow shaft bore and the input shaft using a commercial solvent.

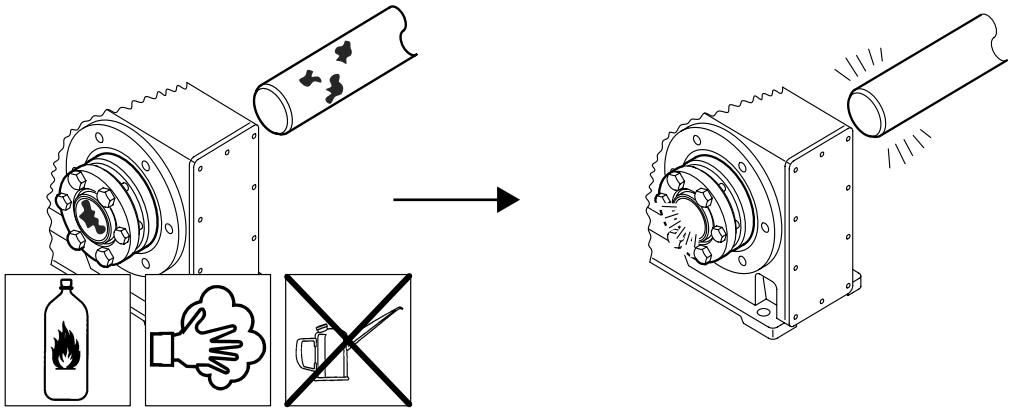

*9007199466276747*

3. Only apply NOCO® fluid to the input shaft around the bushing.

**NOTICE**

The hollow shaft mounting system is without function if NOCO® fluid is applied directly to the bushing. When the input shaft is installed, NOCO® fluid can get into the clamping area of the shrink disk.

Possible damage to property

- Never apply NOCO® fluid directly to the bushing. The clamping area of the shrink disk must be absolutely free of grease.

25803530/EN – 04/2018

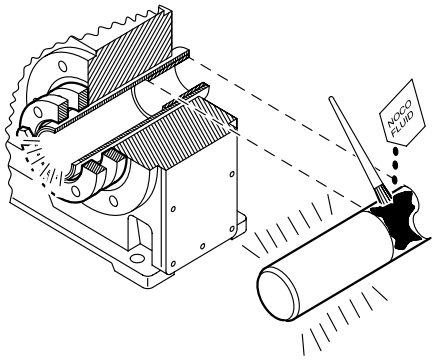


*9007199466281099*

4. Install the input shaft. Proceed as follows to do so:

- Make sure that the outer rings of the shrink disk are plane-parallel.
- In the case of a gear unit with shaft shoulder, mount the shrink disk at the shaft shoulder up to the stop.
- In the case of a gear unit without shaft shoulder, mount the shrink disk at a distance of 1 mm to 2 mm from the gear unit housing.
- Tighten the locking screws with the specified tightening torque according to the following table. Tighten the screws in several turns. Tighten screws one after the other, not in diametrically opposite sequence.

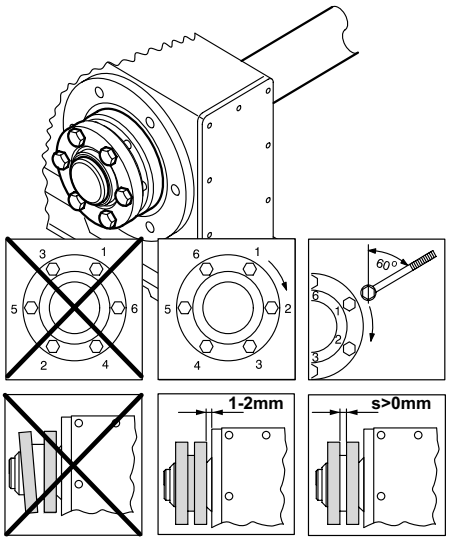


*211542283*

## INFORMATION

The exact values for the tightening torques are shown on the shrink disk.

## INFORMATION

Standard shrink disks and stainless steel shrink disks have the same tightening torques.

| Gear unit type | | | | Locking screw ISO 4014/ISO 4017/ ISO 4762 | Tightening torque ± 4% Nm |
|---|---|---|---|---|---|
| KH.. | FH.. | SH.. | WH.. | | |
| 19/29 | 27 | 37 | 37 | M5 | 5 |

| Gear unit type | | | | Locking screw ISO 4014/ISO 4017/ ISO 4762 | Tightening torque ± 4% Nm |
|---|---|---|---|---|---|
| KH.. | FH.. | SH.. | WH.. | | |
| 37/39/47/49/57/67/77 | 37/47/57/67/77 | 47/57/67/77 | 47 | M6 | 12 |
| 87/97 | 87/97 | 87/97 | – | M8 | 30 |
| 107 | 107 | – | – | M10 | 59 |
| 127/157 | 127/157 | – | – | M12 | 100 |
| 167 | – | – | – | M16 | 250 |
| 187 | – | – | – | M20 | 470 |

5. After installation, make sure the remaining gap "s" between the outer rings of the shrink disk is > 0 mm.
6. To prevent corrosion, grease the outside of the hollow shaft around the shrink disk.

### 4.7.2 Removing the shaft-mounted gear unit

Proceed as follows:

1. To prevent the outer rings from jamming, loosen the locking screws for a quarter turn, one after the other.
2. Steadily loosen the locking screws one after the other, but do not remove the locking screws completely.
3. If rust has formed on the shaft in front of the hub, remove the rust.
4. Remove the shaft or pull the hub off the shaft.
5. Remove the shrink disk from the hub.

## INFORMATION

There is no need to dismantle removed shrink disks before they are reinstalled.

### 4.7.3 Cleaning and lubricating shaft-mounted gear units

Proceed as follows:

1. If the shrink disk is dirty, clean and lubricate the shrink disk.
2. Lubricate the tapered surfaces. Use one of the following solid lubricants:

| Lubricant (Mo S2) | Sold as |
|---|---|
| Molykote 321 (lube coat) | Spray |
| Molykote spray (powder spray) | Spray |
| Molykote G Rapid | Spray or paste |
| Aemasol MO 19P | Spray or paste |
| Aemasol DIO-sétral 57 N (lube coat) | Spray |

3. Grease the locking screws with a multipurpose grease such as Molykote BR 2.

25803530/EN – 04/2018

## 4.8 Shaft-mounted gear units with TorqLOC®

### NOTICE

With a fixed flange or foot mounting, stress can build up in the drive train because of the possible tolerance adjustment of the TorqLOC® shaft.

Damage to property

- A flange or foot mounting is only allowed for TorqLOC® mounting if it is ensured that no static overdetermination can occur. Tolerance adjustment of the shaft must be possible.

### INFORMATION

In case of flange mounting, installing the clamping ring may not be possible depending on the size.

#### 4.8.1 Mounting a customer shaft without contact shoulder

Proceed as follows:

1. Clean the customer shaft and the inside of the hollow shaft. Ensure that all traces of grease or oil are removed.
2. Install the stop ring and the bushing on the customer shaft.

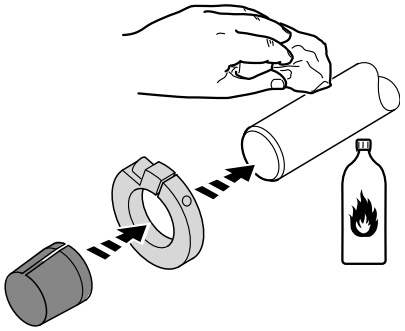

211941003

3. Attach the torque arm to the drive unit. Note the information in chapter "Torque arm for shaft-mounted gear units" (→ 🗎 39).

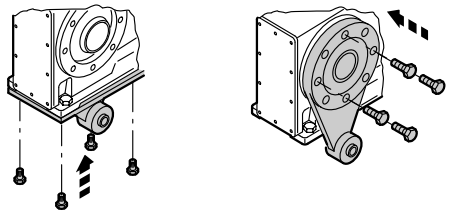

**K..7** **S../W../K..9**

20622111627

25803530/EN – 04/2018

4. Apply NOCO® fluid directly to the bushing. Spread carefully.

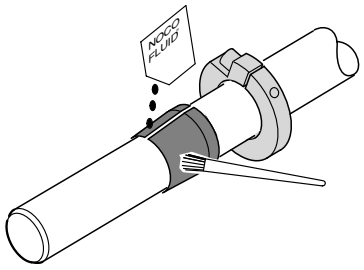


*211938827*

5. Push the gear unit onto the customer shaft.

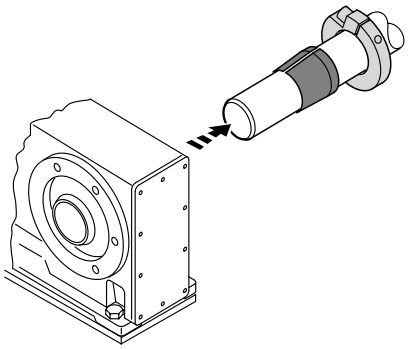

*9007199466677643*

6. Preassemble the torque arm. Do not firmly tighten the screws.

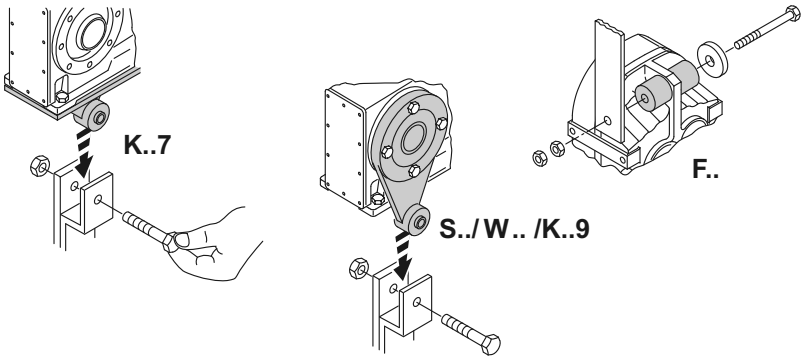


*36028797230907147*

7. Push the bushing into the gear unit up to the stop.

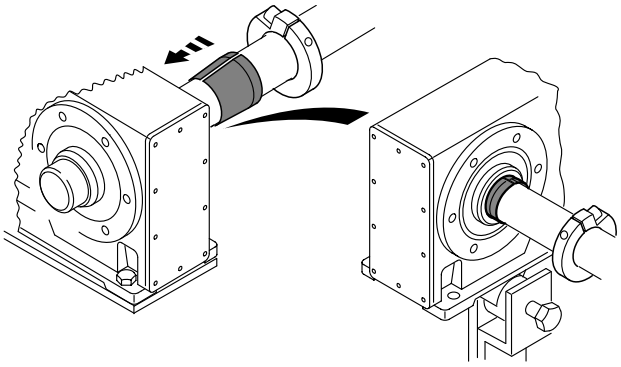

*9007199466686347*

25803530/EN – 04/2018

8. Secure the bushing with the stop ring. Attach the stop ring to the bushing with the respective tightening torque. Refer to the following table for the suitable tightening torque.

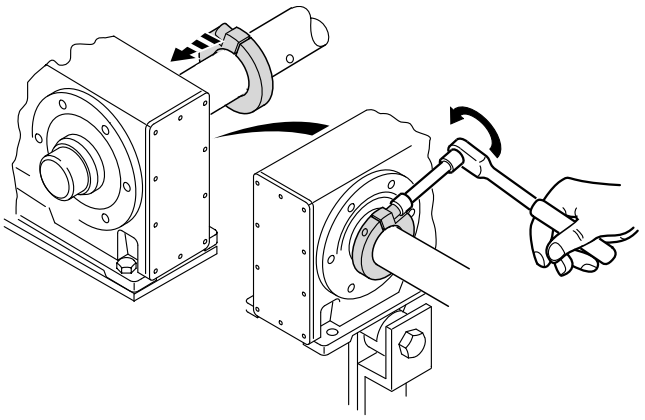

*9007199466741899*

| Gear unit type | | | | Tightening torque Nm | |
|---|---|---|---|---|---|
| FT.. | KT.. | ST.. | WT.. | Standard | Stainless steel |
| – | – | 37 | 37 | 10 | 10 |
| 37 | 37 | 47 | 47 | 10 | 10 |
| 47 | 39/47 | 57 | – | 10 | 10 |
| 57/67 | 49/57/67 | 67 | – | 25 | 25 |
| 77 | 77 | 77 | – | 25 | 25 |
| 87 | 87 | 87 | – | 25 | 25 |
| 97 | 97 | 97 | – | 25 | 25 |
| 107 | 107 | – | – | 38 | 38 |
| 127 | 127 | – | – | 65 | 65 |
| 157 | 157 | – | – | 150 | 150 |

9. Make sure that all screws are loosened and slide the shrink disk onto the hollow shaft.

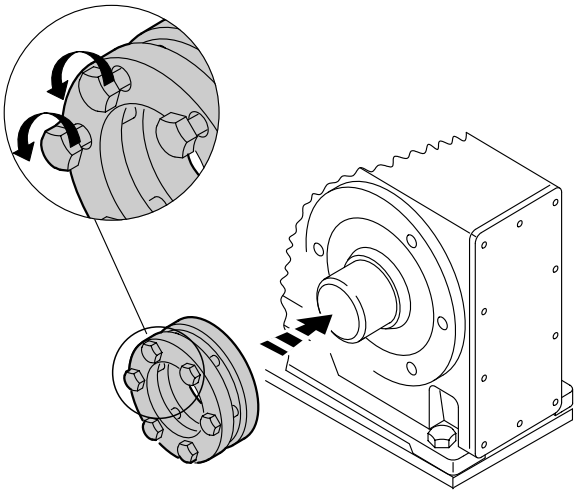

*9007199466744075*

10. Slide the counter bushing onto the customer shaft and into the hollow shaft.

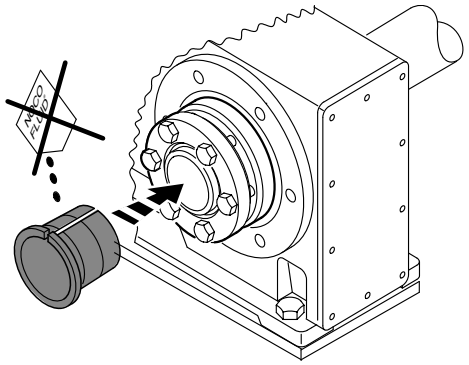

*9007199466746251*

11. In the case of a gear unit **with shaft shoulder**, mount the shrink disk at the shaft shoulder up to the stop. In the case of a gear unit **without shaft shoulder**, mount the shrink disk at a distance of 1 mm to 2 mm from the gear unit housing.
12. Tap lightly on the flange of the counter bushing to ensure that the bushing is fitted securely in the hollow shaft.

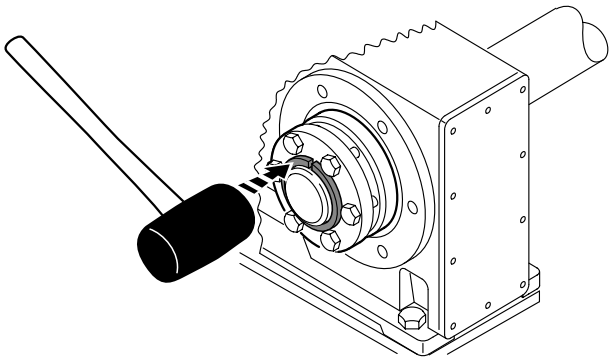

*9007199466748427*

13. Make sure that the customer shaft is seated in the counter bushing.

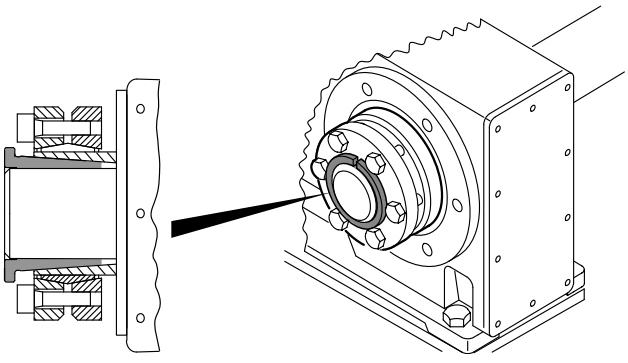

*9007199466750603*

25803530/EN – 04/2018

14. Manually tighten the screws of the shrink disk. Make sure that the outer rings of the shrink disk are plane-parallel.

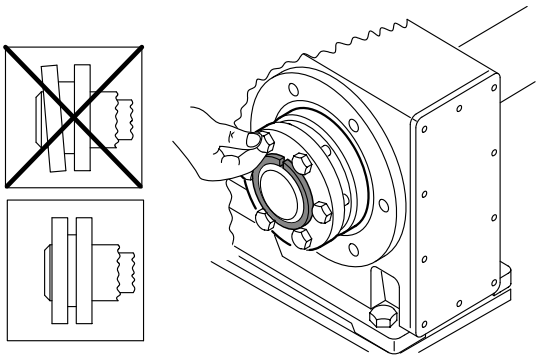

*9007199466752779*

15. Tighten the locking screws with the specified tightening torque according to the following table. Tighten the screws by working round several times from one bolt to the next (not in diametrically opposite sequence).

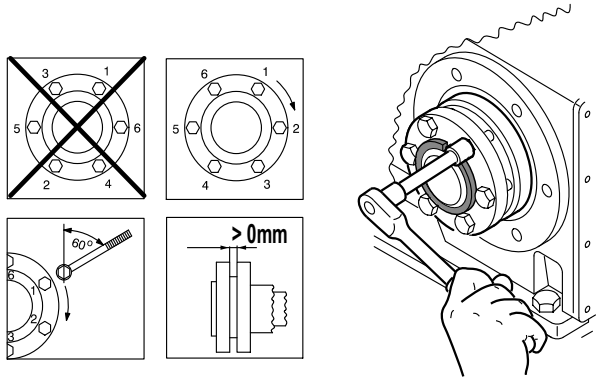


*18014398721495947*

## INFORMATION

The exact values for the tightening torques are shown on the shrink disk.

## INFORMATION

Standard shrink disks and stainless steel shrink disks have the same tightening torques.

| Gear unit type | | | | Locking screw | Tightening torque ± 4% |
|---|---|---|---|---|---|
| FT.. | KT.. | ST.. | WT.. | ISO 4762 | Nm |
| – | – | 37 | 37 | M5 | 4 |
| 37 | 37 | 47 | 47 | M6 | 12 |
| 47/57/67 | 39/47/49/57/67 | 57/67 | - | M6 | 12 |
| 77/87/97 | 77/87/97 | 77/87/97 | – | M8 | 30 |
| 107 | 107 | – | – | M10 | 59 |
| 127/157 | 127/157 | – | – | M12 | 100 |

16. After installation, make sure the remaining gap "s" between the outer rings of the shrink disk is > 0 mm.

17. Make sure that the remaining gap between counter bushing and hollow shaft end, as well as between hollow shaft end and the stop ring is > 0 mm.

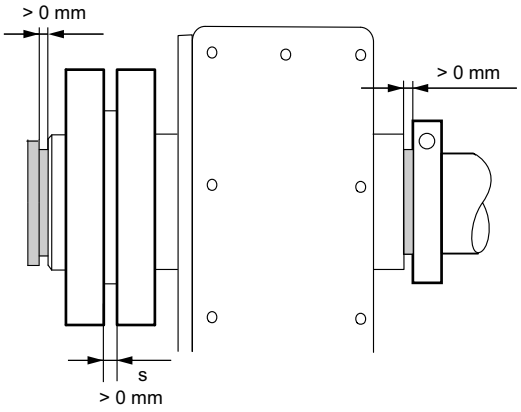


*27021600112884107*

18. Tighten the torque arm. Note the information in chapter "Torque arm for shaft-mounted gear units" (→ 🗎 39).

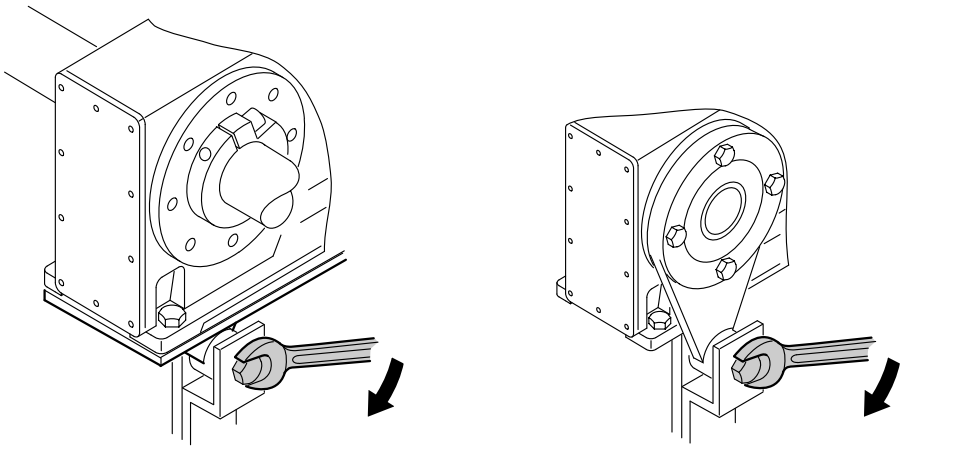

*20623147019*

25803530/EN – 04/2018

### 4.8.2 Mounting a customer shaft with contact shoulder

1. Clean the customer shaft and the inside of the hollow shaft. Ensure that all traces of grease or oil are removed.

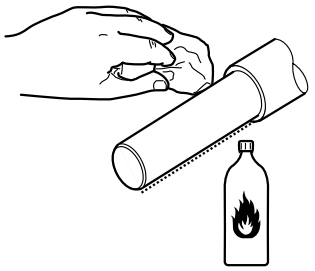

*9007214342258187*

2. Attach the torque arm to the drive unit. Note the information in chapter "Torque arm for shaft-mounted gear units" (→ 🗎 39).

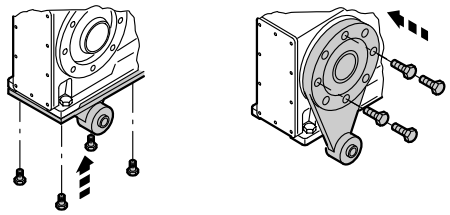

**K..7** **S../W../K..9**

*20622111627*

3. Slide the bushing onto the customer shaft.

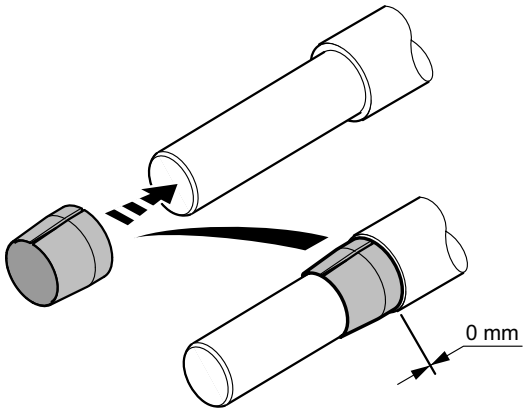


*2349377035*

4. Apply NOCO® fluid directly to the bushing. Spread carefully.

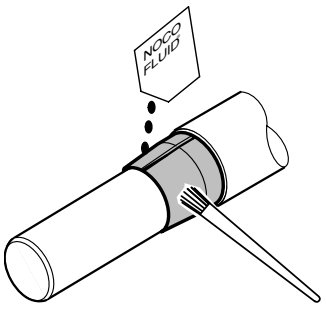


*2349367435*

5. Push the gear unit onto the customer shaft.

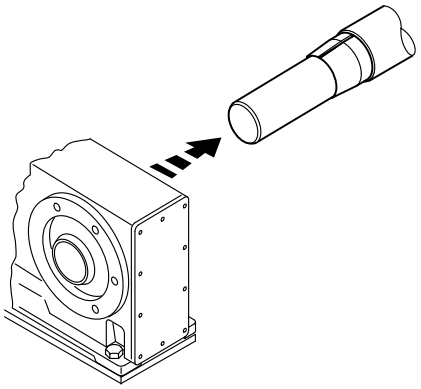

*5129650443*

6. Ensure that all screws are loosened. Slide the shrink disk onto the hollow shaft.

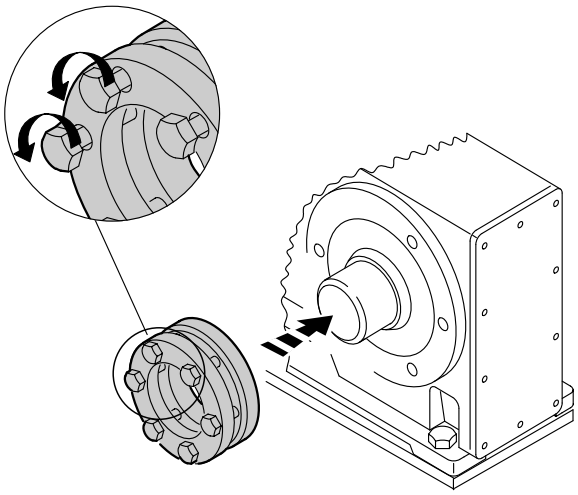

*9007199466744075*

7. Slide the counter bushing onto the customer shaft and into the hollow shaft.

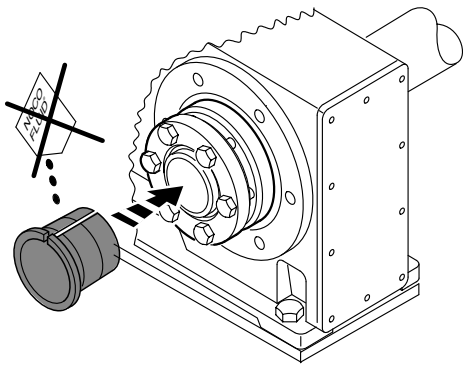

*9007199466746251*

8. In the case of a gear unit **with shaft shoulder**, mount the shrink disk at the shaft shoulder up to the stop. In the case of a gear unit **without shaft shoulder**, mount the shrink disk at a distance of 1 mm to 2 mm from the gear unit housing.

25803530/EN – 04/2018

9. Tap lightly on the flange of the counter bushing to ensure that the bushing is fitted securely in the hollow shaft.

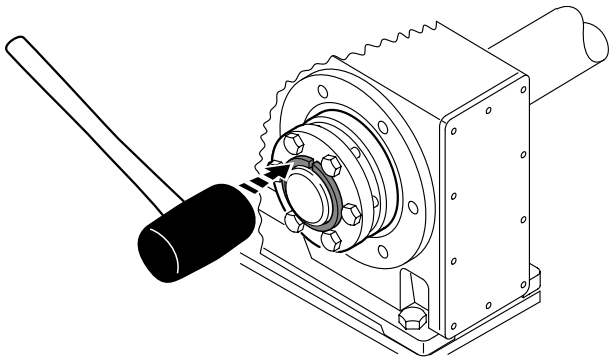

*9007199466748427*

10. Make sure that the customer shaft is seated in the counter bushing.

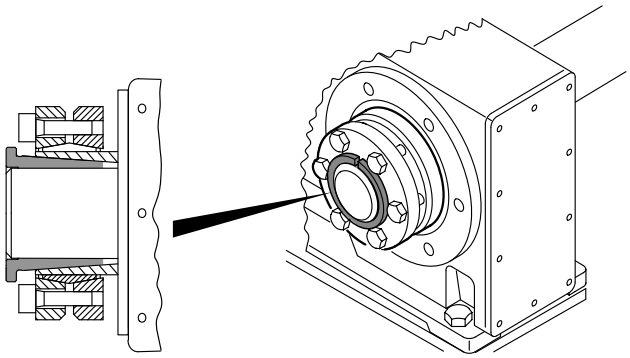

*9007199466750603*

11. Manually tighten the screws of the shrink disk. Make sure that the outer rings of the shrink disk are plane-parallel.

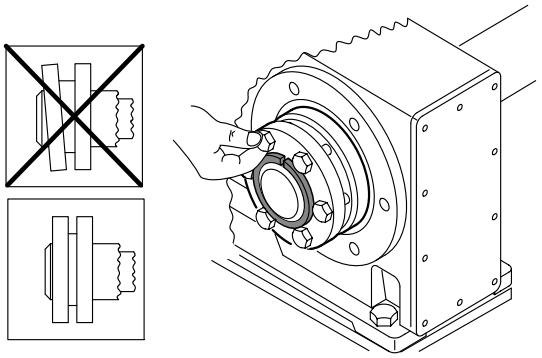

*9007199466752779*

25803530/EN – 04/2018

12. Tighten the locking screws with the specified tightening torque according to the following table. Tighten the screws by working round several times from one bolt to the next (not in diametrically opposite sequence).

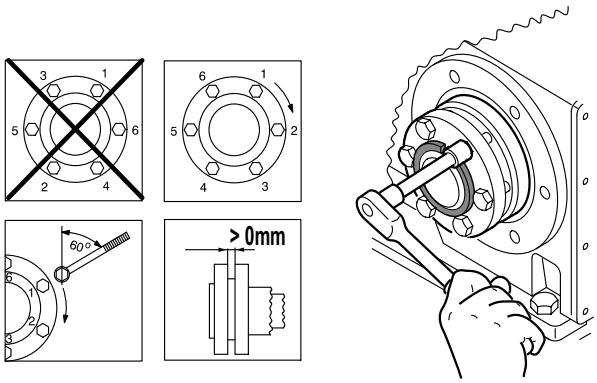


*18014398721495947*

## INFORMATION

The exact values for the tightening torques are shown on the shrink disk.

## INFORMATION

Standard shrink disks and stainless steel shrink disks have the same tightening torques.

| Gear unit type | | | | Locking screw | Tightening torque ± 4% |
|---|---|---|---|---|---|
| FT.. | KT.. | ST.. | WT.. | ISO 4762 | Nm |
| – | – | 37 | 37 | M5 | 4 |
| 37 | 37 | 47 | 47 | M6 | 12 |
| 47/57/67 | 39/47/49/57/67 | 57/67 | - | M6 | 12 |
| 77/87/97 | 77/87/97 | 77/87/97 | – | M8 | 30 |
| 107 | 107 | – | – | M10 | 59 |
| 127/157 | 127/157 | – | – | M12 | 100 |

13. After installation, make sure the remaining gap "s" between the outer rings of the shrink disk is > 0 mm.

25803530/EN – 04/2018

14. Make sure that the remaining gap between counter bushing and hollow shaft end, as well as between the hollow shaft end and customer shaft shoulder is > 0 mm.

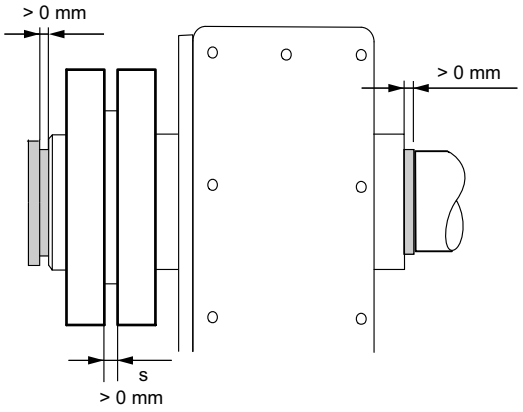


*22017650059*

15. Mount the torque arm and firmly tighten it. Note the information in chapter "Torque arm for shaft-mounted gear units" (→ 🗎 39).

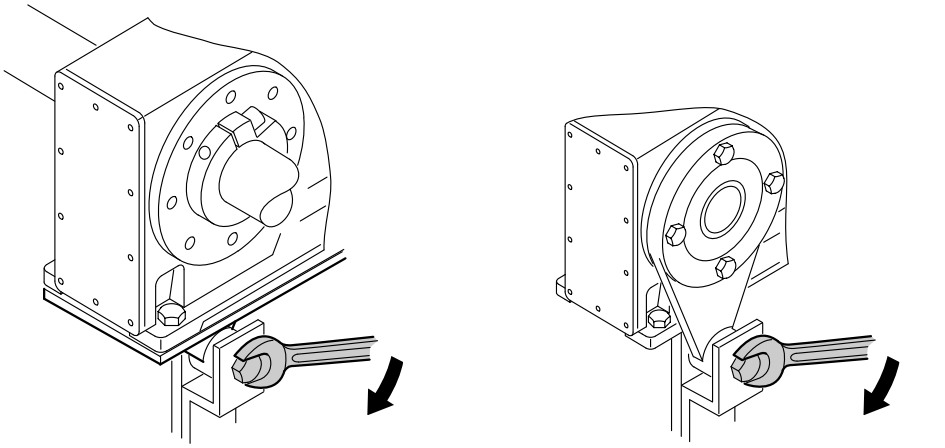

*20623147019*

### 4.8.3 Removing the shaft-mounted gear unit



**⚠ CAUTION**

Risk of burns caused by hot surfaces

Severe injuries

- Let the units cool down before working on them.

Proceed as follows:

1. To prevent the outer rings from jamming, loosen the locking screws for a quarter turn, one after the other.

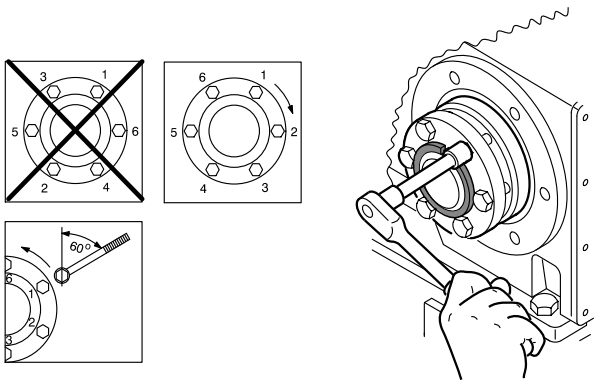


*2903644171*

2. Unscrew the locking screws evenly one after the other. Do not remove the locking screws completely.
3. Remove the conical steel bushing. If required, use the outer rings as pullers. Proceed as follows to do so:
   - Remove all the locking screws.
   - Screw the respective number of screws in the tapped holes of the shrink disk.
   - Support the inner ring against the gear unit housing.
   - Pull off the conical steel bushing by tightening the screws.
4. Remove the gear unit from the shaft.

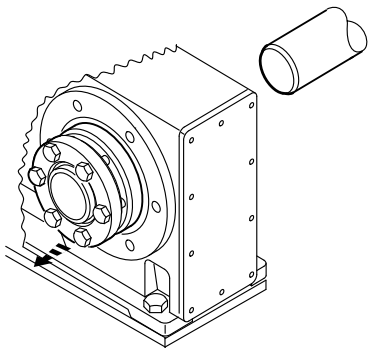

*9007202158521227*

5. Remove the shrink disk from the hub.

## INFORMATION



There is no need to dismantle removed shrink disks before they are reinstalled.

25803530/EN – 04/2018

### 4.8.4 Cleaning and lubricating shaft-mounted gear units

- If the shrink disk is dirty, clean and lubricate the shrink disk.
- Lubricate the tapered surfaces with one of the following solid lubricants:

| Lubricant (Mo S2) | Sold as |
|---|---|
| Molykote 321 (lube coat) | Spray |
| Molykote spray (powder spray) | Spray |
| Molykote G Rapid | Spray or paste |
| Aemasol MO 19P | Spray or paste |
| Aemasol DIO-sétral 57 N (lube coat) | Spray |

- Grease the locking screws with a multipurpose grease such as Molykote BR 2.

25803530/EN – 04/2018

## 4.9 Mounting the cover



**⚠ CAUTION**

Injury due to assembly work during operation.

Injury

- Before you begin working on the unit, disconnect the motor from the power supply. Safeguard the drive against unintentional restart.

### 4.9.1 Mounting the rotating cover

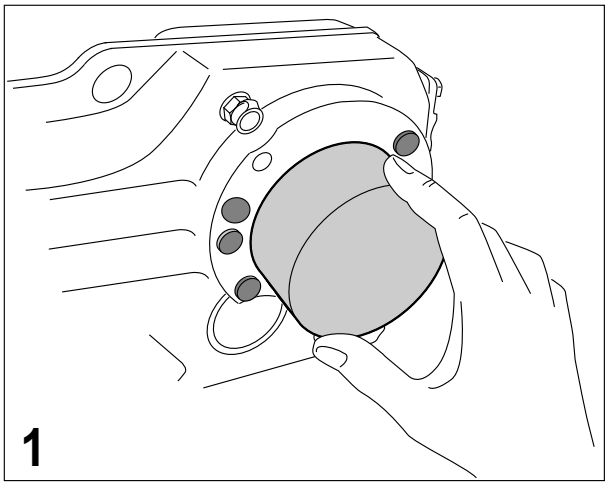


*662284299*

1. Slide the rotating cover onto the shrink disk until it snaps in.

### 4.9.2 Mounting the fixed cover

Proceed as follows:

1. Remove the plastic plug on the gear unit housing (see figure 1).

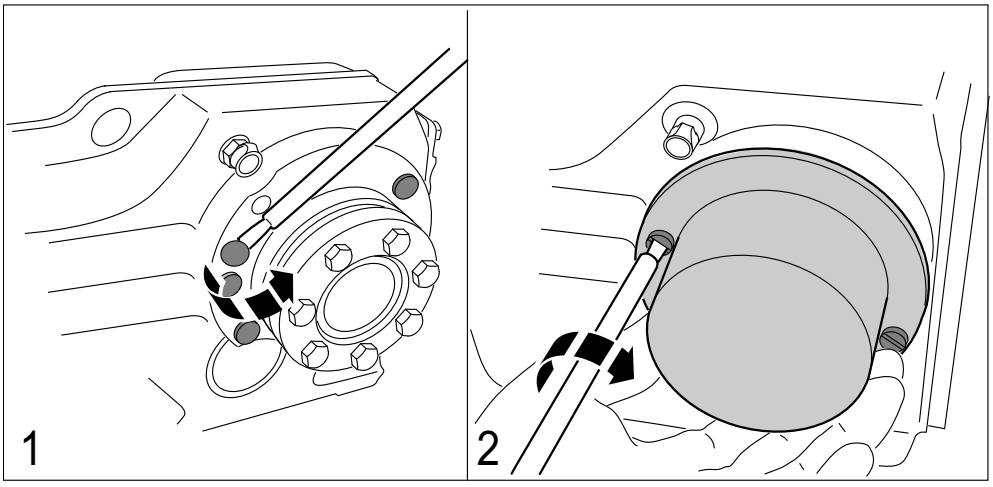


*9007199273238539*

2. Use the delivered screws to mount the cover to the gear unit housing (see figure 2).

25803530/EN – 04/2018

### 4.9.3 Operation without cover

In certain application cases, e.g. with a through-shaft, a cover cannot be installed. The cover is not necessary if the system or unit manufacturer provides corresponding components to guarantee for compliance with the required degree of protection. If this results in additional maintenance, the manufacturer has to describe this in the operating instructions for the system or component.

25803530/EN – 04/2018

## 4.10 Coupling of AM adapters

### 4.10.1 Mounting the IEC adapter AM63 – 280/NEMA adapter AM56 – 365

**NOTICE**

Damage to the adapter due to ingress of moisture or dirt (e.g. dust) when a motor/drive is attached to the adapter.

Damage to the adapter

- Seal the adapter with an anaerobic fluid seal.
- When the motor/drive to be attached has openings or bores that provide access to the inside of the adapter, seal these against dust or liquid.

**INFORMATION**

To avoid contact corrosion, SEW-EURODRIVE recommends to apply NOCO® fluid to the motor shaft before mounting the coupling half.

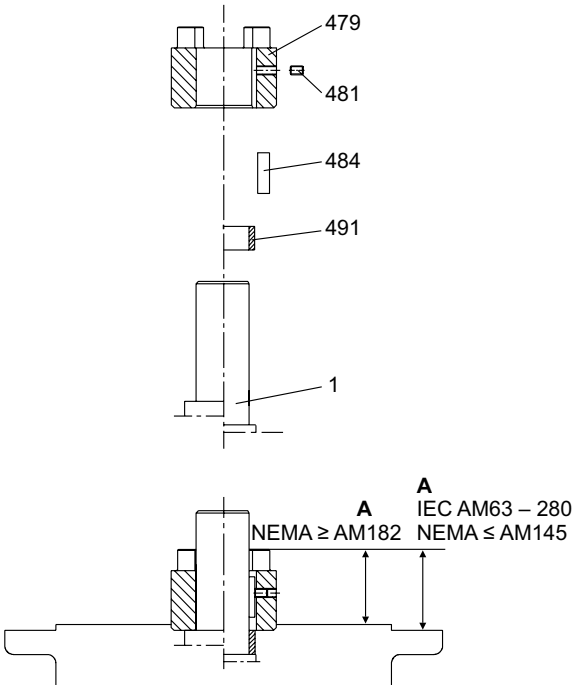


*20577139211*

[1] Motor shaft
[479] Coupling half
[481] Set screw
[484] Key
[491] Spacer tube

Proceed as follows:

1. Clean the motor shaft and flange surfaces of the motor and the adapter.
2. Remove the key from the motor shaft. Replace the key from the motor shaft with the supplied key [484] (not AM63 and AM250).
3. Heat the coupling half [479] to approx. 80 °C – 100 °C and push the coupling half onto the motor shaft. Position as follows:

- IEC adapter AM63 – 225 until stop at motor shaft shoulder.

25803530/EN – 04/2018

- IEC adapter AM250 – 280 to distance "A". The values for the distance "A" are listed in the following table.
- NEMA adapter with spacer tube [491] to distance "A". The values for the distance "A" are listed in the following table.

4. Secure the key and coupling half using the set screw [481] on the motor shaft. Refer to the following table for the required tightening torque "$T_A$".
5. Check the position of the coupling half. The values for the distance "A" are listed in the following table.
6. Seal the contact surfaces between the adapter and motor using a suitable sealing compound.
7. Mount the motor on the adapter. Ensure that the coupling claws of the adapter shaft are engaged in the plastic cam ring.

| **AM..IEC** | 63/71 | 80/90 | 100/112 | 132 | 160/180 | 200 | 225 | 250/280 |
|---|---|---|---|---|---|---|---|---|
| **A /mm** | 24.5 | 31.5 | 41.5 | 54 | 76 | 78.5 | 93.5 | 139 |
| **$T_A$ /Nm** | 1.5 | 1.5 | 4.8 | 4.8 | 10 | 17 | 17 | 17 |
| **Thread** | M4 | M4 | M6 | M6 | M8 | M10 | M10 | M10 |
| **AM..NEMA** | 56 | 143/145 | 182/184 | 213/215 | 254/256 | 284/286 | 324/326 | 364/365 |
| **A /mm** | 46 | 43 | 55 | 63.5 | 78.5 | 85.5 | 107 | 107 |
| **$T_A$ /Nm** | 1.5 | 1.5 | 4.8 | 4.8 | 10 | 17 | 17 | 17 |
| **Thread** | M4 | M4 | M6 | M6 | M8 | M10 | M10 | M10 |

**Permitted loads**

## NOTICE

Overloading of the gear unit due to excessive weight or excessive power rating of an attached motor.

Gear unit failure

- Note that the load data specified in the following table are not to be exceeded.
- Make sure that the approved power rating (torque and speed) on the adapter is observed according to the nameplate.

## NOTICE

Danger due to static overdetermination when motors are additionally attached via a foot plate.

Damage to property

- A motor attached at the foot relieves the interface on the adapter, but you have to make sure that the attached foot-mounted motor is attached to the customer's construction stress-free.

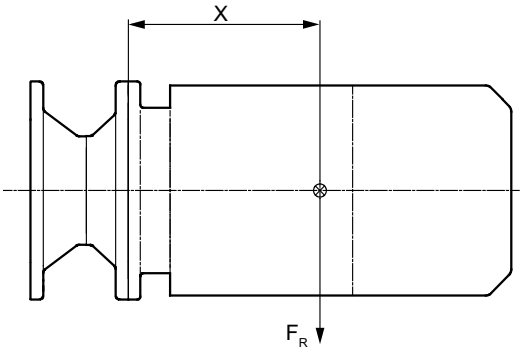


*9007199273254411*

⊗ Motor's center of gravity
X Distance from adapter flange – motor center
$F_R$ Overhung load

*Permitted loads for gear unit series R..7, F..7, K..7, K..9, and S..7:*

| Adapter type | | x[1] | $F_R$[1] N | |
|---|---|---|---|---|
| IEC | NEMA | mm | IEC adapter | NEMA adapter |
| AM63/71 | AM56 | 77 | 530 | 410 |
| AM80/90 | AM143/145 | 113 | 420 | 380 |
| AM100/112 | AM182/184 | 144 | 2000 | 1760 |
| AM132[2] | AM213/2152[2] | 186 | 1600 | 1250 |
| AM132.. | AM213/215 | | 4700 | 3690 |
| AM160/180 | AM254/286 | 251 | 4600 | 4340 |
| AM200/225 | AM324-AM365 | 297 | 5600 | 5250 |
| AM250/280 | - | 390 | 11200 | – |

1) If the center of gravity distance x increases, the maximum permitted weight $F_{R\_max}$ of the attached motor must be reduced linearly. If this center of gravity distance x is reduced, it is not permitted to increase the maximum permitted weight $F_{R\_max}$.

2) Diameter of the adapter output flange: 160 mm

*Permitted loads for gear unit series SPIROPLAN® W37 – W47*

| Adapter type | | x[1] | $F_R$[1] N | |
|---|---|---|---|---|
| IEC | NEMA | mm | IEC adapter | NEMA adapter |
| AM63/71 | AM56 | 115 | 140 | 120 |
| AM80/90 | AM143/145 | 151 | 270 | 255 |

1) If the center of gravity distance x increases, the maximum permitted weight $F_{R\_max}$ of the attached motor must be reduced linearly. If this center of gravity distance x is reduced, it is not permitted to increase the maximum permitted weight $F_{R\_max}$.

25803530/EN – 04/2018

*Permissible power ratings and mass moments of inertia*

The following table shows the permitted power ratings and mass moments of inertia:

| Adapter type | | $P_m$ [1] | $J_{Adapter}$ |
|---|---|---|---|
| IEC | NEMA | kW | kg × m² |
| AM63 | – | 0.25 | $0.44 \times 10^{-4}$ |
| AM71 | AM56 | 0.37 | $0.44 \times 10^{-4}$ |
| AM80 | AM143 | 0.75 | $1.9 \times 10^{-4}$ |
| AM90 | AM145 | 1.5 | $1.9 \times 10^{-4}$ |
| AM100 | AM182 | 3 | $5.2 \times 10^{-4}$ |
| AM112 | AM184 | 4 | $5.2 \times 10^{-4}$ |
| AM132S/M | AM213/215 | 7.5 | $19 \times 10^{-4}$ |
| AM132ML | – | 9.2 | $19 \times 10^{-4}$ |
| AM160 | AM254/256 | 15 | $91 \times 10^{-4}$ |
| AM180 | AM284/286 | 22 | $90 \times 10^{-4}$ |
| AM200 | AM324/326 | 30 | $174 \times 10^{-4}$ |
| AM225 | AM364/365 | 45 | $174 \times 10^{-4}$ |
| AM250 | – | 55 | $173 \times 10^{-4}$ |
| AM280 | – | 90 | $685 \times 10^{-4}$ |

1) Maximum rated power of the attached standard electric motor at 1400 1/min

### 4.10.2 AM adapter with AM../RS backstop

Check the direction of rotation of the drive prior to mounting or startup. In case of a wrong direction of rotation, contact SEW-EURODRIVE.

The backstop is maintenance-free in operation. Backstops have a minimum lift-off speed depending on the size (see following table).

## NOTICE

If the speed is below the minimum lift-off speed of the drive, the backstop is subject to wear and heats up.

Possible damage to property.

- In nominal operation the lift-off speed of the drive must not drop below the specified minimum.
- During startup or braking, the lift-off speed of the drive may drop below the minimum levels.

| Type | Maximum locking torque of the backstop<br>Nm | Minimum lift-off speed<br>$min^{-1}$ |
|---|---|---|
| AM80/90/RS<br>AM143/145/RS | 65 | 820 |

25803530/EN – 04/2018

| Type | Maximum locking torque of the backstop<br>Nm | Minimum lift-off speed<br>$min^{-1}$ |
|---|---|---|
| AM100/112/RS<br>AM182/184/RS | 425 | 620 |
| AM132/RS<br>AM213/215/RS | 850 | 530 |
| AM160/180/RS<br>AM254/286/RS | 1450 | 480 |
| AM200/225/RS<br>AM324-365/RS | 1950 | 450 |
| AM250/280/RS | 1950 | 450 |

### 4.10.3 Mounting of third-party motors at AM and AR/AL adapters

If a third-party motor is mounted, the customer must ensure that the permitted weight and the power at the adapter are adhered to according to the operating instructions. For information on the permitted loads, refer to chapter "Permitted loads" (→ 🗎 69).

| Type | X[1)]<br>mm | $F_R$[1)]<br>N |
|---|---|---|
| AR/AL71 | 77 | 375 |
| AR/AL80/90 | 113 | 320 |
| AR/AL100/112 | 144 | 1560 |
| AR/AL132[2)] | 186 | 1230 |
| AR/AL132 | 186 | 3630 |
| AR/AL160/180 | 251 | 3540 |

[1)] If the center of gravity distance x increases, the maximum permitted weight $F_{R\_max}$ of the attached motor must be reduced linearly. If the center of gravity distance x decreases, the maximum permitted weight $F_{R\_max}$ must not be increased.

[2)] Diameter of the adapter output flange: 160 mm

### 4.10.4 AM adapter with foot-mounted motor

A foot-mounted motor reduces the loads at the adapter interface. The foot-mounted motor at the adapter must be installed without tensions at the customer construction.

25803530/EN – 04/2018

## 4.11 AQ. adapter coupling

### 4.11.1 Mount adapter AQA80 – 190 (with keyway)/Adapter AQH80 – 190 (without keyway)

## NOTICE

Damage to the adapter due to ingress of moisture or dirt (e.g. dust) when a motor/drive is attached to the adapter.

Damage to the adapter

- Seal the adapter with an anaerobic fluid seal.
- When the motor/drive to be attached has openings or bores that provide access to the inside of the adapter, seal these against dust or liquid.

## INFORMATION

**For AQA:** To avoid contact corrosion, SEW-EURODRIVE recommends applying NOCO® fluid to the motor shaft before mounting the coupling half.

**For AQH**: Using NOCO® fluid is not approved.

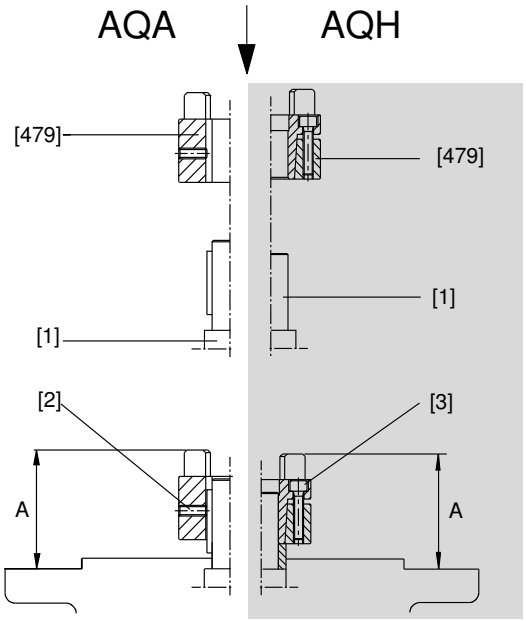


*9007199466855947*

[1] Motor shaft
[2] Lock washer
[3] Washer
[479] Coupling half

Proceed as follows:

1. Clean the motor shaft and flange surfaces of the motor and the adapter.
2. **AQH design:** Loosen the screws of the coupling half [479] and loosen the conical connection.
3. **AQA/AQH design:** Heat the coupling half to approx. 80 °C – 100 °C and push the coupling half onto the motor shaft up to distance "A". The values for the distance "A" are listed in the table in chapter "Setting standards and tightening torques" (→ 🗎 74).

4. **AQH design:** Tighten the screws evenly in diametrically opposite sequence, working round several times. The values for the tightening torque "$T_A$" are listed in the table in chapter "Setting standards and tightening torques" (→ 🗎 74).
5. **AQA design:** Secure the coupling half using the set screw (see figure).
6. Check the position of the coupling half. The values for the distance "A" are listed in the table in chapter "Setting standards and tightening torques" (→ 🗎 74).
7. Mount the motor onto the adapter, making sure that the claws of the two coupling halves engage in each other.
   ⇨ The force that must be applied when joining the two coupling halves is dissipated after final assembly, so there is no risk of any axial load being applied to adjacent bearings.

### 4.11.2 Setting standards and tightening torques

| Type | Coupling Ø | Distance A | Screws | | Tightening torque $T_A$ Nm | |
|---|---|---|---|---|---|---|
| | mm | mm | AQA | AQH | AQA | AQH |
| **AQA /AQH 80 /1 /2 /3** | 19 | 44.5 | M5 | 6 × M4 | 2 | 4 |
| **AQA /AQH 100 /1 /2** | | 39 | | | | |
| **AQA /AQH 100 /3 /4** | | 53 | | | | |
| **AQA /AQH 115 /1 /2** | | 62 | | | | |
| **AQA /AQH 115 /3** | 24 | 62 | M5 | 4 × M5 | 2 | 9 |
| **AQA /AQH 140 /1 /2** | | 62 | | | | |
| **AQA /AQH 140 /3 /4** | 28 | 74.5 | M8 | 8 × M5 | 10 | 9 |
| **AQA /AQH 160 /1** | | 74.5 | | | | |
| **AQA /AQH 190 /1 /2** | | 76.5 | | | | |
| **AQA /AQH 190 /3** | 38 | 100 | M8 | 8 × M6 | 10 | 14 |

### 4.11.3 Permitted loads

## NOTICE

Overloading of the gear unit due to excessive weight or excessive power rating of an attached motor.

Gear unit failure

- Note that the load data specified in the following table are not to be exceeded.
- Make sure that the approved power rating (torque and speed) on the adapter is observed according to the nameplate.

25803530/EN – 04/2018

## NOTICE

Danger due to static overdetermination when motors are additionally attached via a foot plate.

Damage to property

- A motor attached at the foot relieves the interface on the adapter, but you have to make sure that the attached foot-mounted motor is attached to the customer's construction stress-free.

The following figure shows the permitted force application points for the permitted maximum weights:

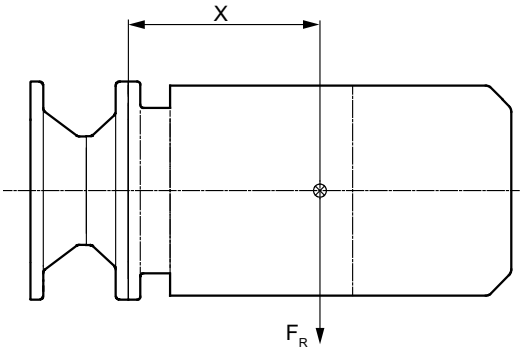


*9007199273254411*

⊗ Motor's center of gravity
X Adapter flange – motor center distance
$F_R$ Overhung load

| Type | x[1)] mm | $F_R$[1)] N |
|---|---|---|
| AQ80 | 77 | 370 |
| AQ100/1/2 | 113 | 350 |
| AQ100/3/4 | 113 | 315 |
| AQ115 | 113 | 300 |
| AQ140/1/2 | 144 | 1550 |
| AQ140/3 | 144 | 1450 |
| AQ160 | 144 | 1450 |
| AQ190/1/2[2)] | 186 | 1250 |
| AQ190/3[2)] | 186 | 1150 |
| AQ190/1/2 | 186 | 3750 |
| AQ190/3 | 186 | 3400 |

1) Maximum load values for connection screws of strength class 8.8. If the center of gravity distance x increases, the maximum permitted weight $F_{R\_max}$ of the attached motor must be reduced linearly. If the center of gravity distance x decreases, the maximum permitted weight $F_{R\_max}$ must not be increased.

2) Diameter of the adapter output flange: 160 mm

## 4.12 EWH adapters

### 4.12.1 Adapter EWH01 – 03

**NOTICE**

Damage to the adapter due to ingress of moisture or dirt (e.g. dust) when a motor/drive is attached to the adapter.

Damage to the adapter

- Seal the adapter with an anaerobic fluid seal.
- When the motor/drive to be attached has openings or bores that provide access to the inside of the adapter, seal these against dust or liquid.

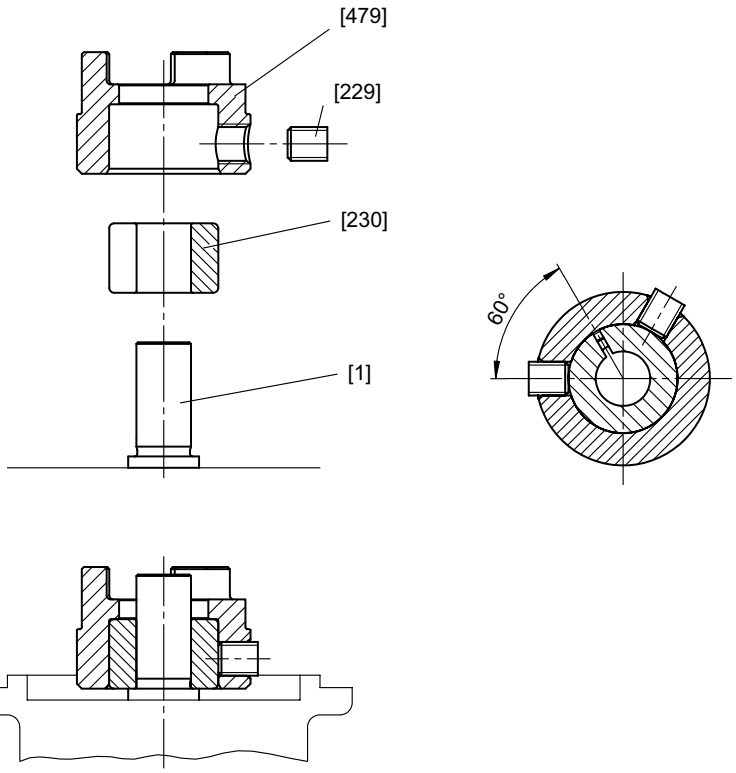


*4557485195*

| | | | |
|---|---|---|---|
| [1] | Motor shaft | [230] | Motor shaft sleeve |
| [229] | Clamping screws | [479] | Coupling half |

1. Clean and de-grease the hollow shaft hole of the coupling half [479], the motor shaft sleeve [230], and the motor shaft [1].
2. Insert the motor shaft sleeve [230] into the coupling half [479] so that the slot of the motor shaft sleeve [230] is at a 60° angle to the two clamping screws [229].
3. Push the coupling half [479] until it reaches the shoulder of the motor shaft.
4. Tighten the clamping screws [229] one after the other with a suitable torque wrench, first to 25% of the tightening torque specified in the following table.
5. Tighten the two clamping screws [229] to the full specified tightening torque.

25803530/EN – 04/2018

| Adapter type | Motor shaft diameter<br>mm | Number of clamping screws | Tightening torque of the clamping screw<br>Nm | Wrench size<br>mm |
|---|---|---|---|---|
| EWH01 | 9 | 2 | 6 | 3 |
| EWH01 | 11 | 2 | 10 | 4 |
| EWH02 | 11; 14; 16 | 2 | 10 | 4 |
| EWH03 | 11; 14; 16 | 2 | 10 | 4 |

### 4.12.2 Permitted loads

## NOTICE

Overloading of the gear unit due to excessive weight or excessive power rating of an attached motor.

Gear unit failure

- Note that the load data specified in the following table are not to be exceeded.
- Make sure that the approved power rating (torque and speed) on the adapter is observed according to the nameplate.

## NOTICE

Danger due to static overdetermination when motors are additionally attached via a foot plate.

Damage to property

- A motor attached at the foot relieves the interface on the adapter, but you have to make sure that the attached foot-mounted motor is attached to the customer's construction stress-free.

The following figure shows the permitted force application points for the permitted maximum weights:

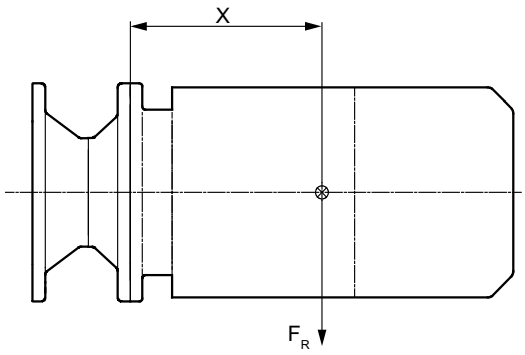


*9007199273254411*

⊗ Motor's center of gravity
X Distance from adapter flange to the middle of the motor
$F_R$ Overhung load

| Type | $x^{1)}$<br>mm | $F_R{}^{1)}$<br>N |
|---|---|---|
| **EWH01** | 113 | 40 |

| Type | x[1)] mm | $F_R$[1)] N |
|---|---|---|
| **EWH02** | 120 | 56 |
| **EWH03** | 120 | 56 |

1) Maximum load values for connection screws of strength class 8.8. If the center of gravity distance x increases, the maximum permitted weight $F_{R\_max}$ of the attached motor must be reduced linearly. If the center of gravity distance x decreases, the maximum permitted weight $F_{R\_max}$ must not be increased.

25803530/EN – 04/2018

## 4.13 AD Input shaft assembly

Observe chapter "Mounting the drive components and output elements" (→ 🗎 37) when installing drive components.

### 4.13.1 Mounting the cover with motor platform AD../P

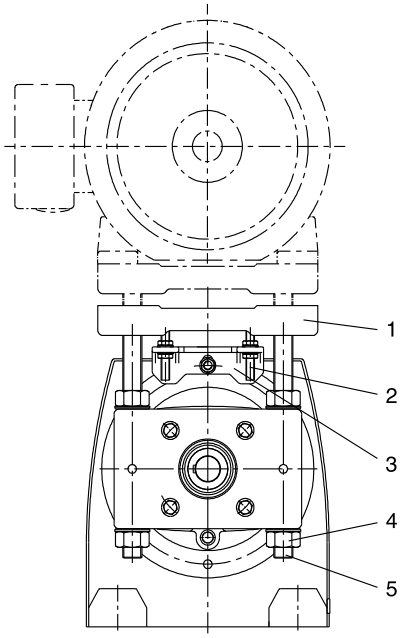


*212119307*

[1] Motor platform
[2] Stud bolt (only AD6/P / AD7/P)
[3] Support (only AD6/P / AD7/P)
[4] Nut
[5] Threaded column

To mount the motor and to adjust the motor platform proceed as follows:

1. Set the motor platform [1] to the required mounting position by evenly tightening the adjusting nuts [4].
2. If necessary, remove the lifting eyebolt/lifting eye of the helical gear unit to reach the lowest adjustment position. Touch up any damage to the paint work.
3. Align the motor on the motor platform [1] so that the shaft ends are in line. Attach the motor.
4. Mount the drive component onto the input side shaft end and the motor shaft.
5. Align drive component, shaft end and motor shaft. If necessary correct the motor position again.
6. Put on the traction elements (V-belt, chain, etc.) and apply a preload by evenly adjusting the motor platform [1]. Do not stress the motor platform and the columns against each other when doing this.
7. To fasten the threaded columns [5] tighten the nuts [4] that are not used for adjustment.

25803530/EN – 04/2018

### 4.13.2 Special aspects of AD6/P and AD7/P

Proceed as follows:

1. Unscrew the nuts on the threaded bolts [2] before adjustment to allow the threaded bolts [2] to move axially in the support [3] without restriction.
2. Only tighten the nuts when the final adjustment position is reached.

## INFORMATION

Do not adjust the motor platform [1] via the support [3].

### 4.13.3 AD../ZR input shaft assembly with centering shoulder

Mounting applications on the input shaft assembly with centering shoulder

1. Prepare screws of a suitable length for attaching the application. The following figure shows the screw length l = t + a. **Round off the result to the next smaller standard length**.

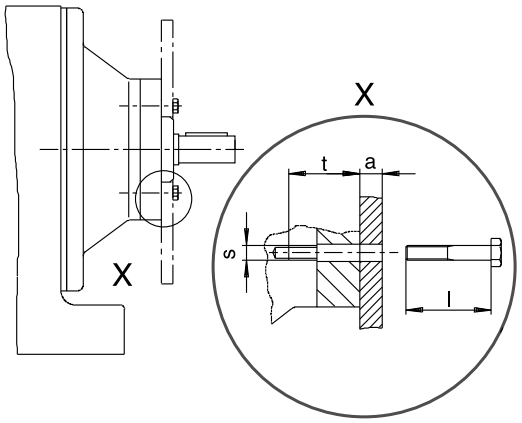


18014398721603467

a Strength of the additional element
t Screw-in depth (see table)
s Retaining thread (see table)

2. Remove the retaining screw from the centering shoulder
3. Clean the contact surface and the centering shoulder.
4. Clean the threads of the new bolts and apply a thread locking compound (e.g. Loctite® 243) to the first few threads.
5. Place the application on the centering shoulder. Tighten the retaining screws with the specified tightening torque "$T_A$" (see following table).

| Type | Screw-in depth t<br>mm | Retaining thread | Tightening torque $T_A$ for connection screws of strength class 8.8<br>Nm |
|---|---|---|---|
| **AD2/ZR** | 25.5 | M8 | 27 |
| **AD3/ZR** | 31.5 | M10 | 54 |
| **AD4/ZR** | 36 | M12 | 93 |
| **AD5/ZR** | 44 | M12 | 93 |
| **AD6/ZR** | 48.5 | M16 | 230 |

25803530/EN – 04/2018

| Type | Screw-in depth t<br>mm | Retaining thread | Tightening torque $T_A$ for connection screws of strength class 8.8<br>Nm |
|---|---|---|---|
| **AD7/ZR** | 49 | M20 | 464 |
| **AD8/ZR** | 42 | M12 | 93 |

**Permitted loads**

The following figure shows the permitted force application points for the permitted maximum weights:

## NOTICE

Overloading of the gear unit due to excessive weight or excessive power rating of an attached motor.

Gear unit failure

- Note that the load data specified in the following table are not to be exceeded.
- Make sure that the approved power rating (torque and speed) on the adapter is observed according to the nameplate.

## NOTICE

Danger due to static overdetermination when motors are additionally attached via a foot plate.

Damage to property

- A motor attached at the foot relieves the interface on the adapter, but you have to make sure that the attached foot-mounted motor is attached to the customer's construction stress-free.

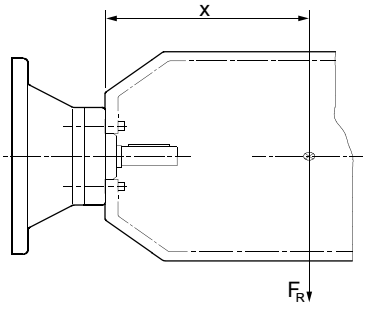


⊗ Motor's center of gravity
X Distance from adapter flange – motor center
$F_R$ Overhung load

| Type | x[1)]<br>mm | $F_R$[1)]<br>N |
|---|---|---|
| **AD2/ZR** | 193 | 330 |
| **AD3/ZR** | 274 | 1400 |
| **AD4/ZR**[2)] | 361 | 1120 |
| **AD4/ZR** | | 3300 |

| Type | x[1)] mm | $F_R$[1)] N |
|---|---|---|
| **AD5/ZR** | 487 | 3200 |
| **AD6/ZR** | 567 | 3900 |
| **AD7/ZR** | 663 | 10000 |
| **AD8/ZR** | 516 | 4300 |

1) Maximum load values for connection screws of strength class 8.8. If the center of gravity distance x increases, the maximum permitted weight $F_{R\_max}$ of the attached motor must be reduced linearly. If the center of gravity distance x decreases, the maximum permitted weight $F_{R\_max}$ must not be increased.

2) Diameter of the adapter output flange: 160 mm

### 4.13.4 Cover with backstop AD../RS

Check the direction of rotation of the drive prior to mounting or startup. In case of a wrong direction of rotation, contact SEW-EURODRIVE.

The backstop is maintenance-free in operation. Backstops have a minimum lift-off speed depending on the size (see following table).

## NOTICE

If the speed is below the minimum lift-off speed of the drive, the backstop is subject to wear and heats up.

Possible damage to property.

- In nominal operation the lift-off speed of the drive must not drop below the specified minimum.
- During startup or braking, the lift-off speed of the drive may drop below the minimum levels.

| Type | Maximum locking torque of the backstop Nm | Minimum lift-off speed $min^{-1}$ |
|---|---|---|
| **AD2/RS** | 65 | 820 |
| **AD3/RS** | 425 | 620 |
| **AD4/RS** | 850 | 530 |
| **AD5/RS** | 1450 | 480 |
| **AD6/RS** | 1950 | 450 |
| **AD7/RS** | 1950 | 450 |
| **AD8/RS** | 1950 | 450 |

25803530/EN – 04/2018

## 4.14 Direct mounting of a motor on a gear unit

### INFORMATION

Secure all pinions on the motor or input shaft with Loctite® 649 even if a retaining ring is additionally present.

If the pinion is already fastened to the shaft, start cleaning the sealing surface (step 6).

Joining the pinion to the motor or input shaft

1. Clean and degrease the shaft and the bore of the pinion.
2. Apply Loctite® 649 to the shaft after the securing hole over the entire area of the circumference.

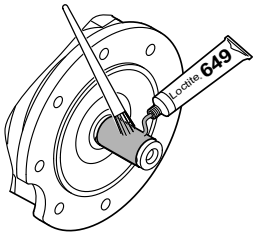


22763067787

3. Warm the pinion up to **at least** 100 °C to a **maximum of** 130 °C.
4. Push the pinion onto the shaft.
5. Secure the pinion on the shaft with the retaining ring.

Cleaning the sealing surfaces

6. Remove oils, grease, irregularities of the surface, rust and old Loctite® residue from the flange surfaces.

Sealing threads that lead into the housing interior

To prevent oil from escaping after installation, flange threads that lead into the housing interior must be sealed!

7. Clean and degrease thread through bores that lead into the housing interior and their studs.
8. Apply Loctite® 574 or Loctite® 5188 (selection according to the table at the end of the chapter) in a continuous ring on the upper threads of the flange thread and the stud.

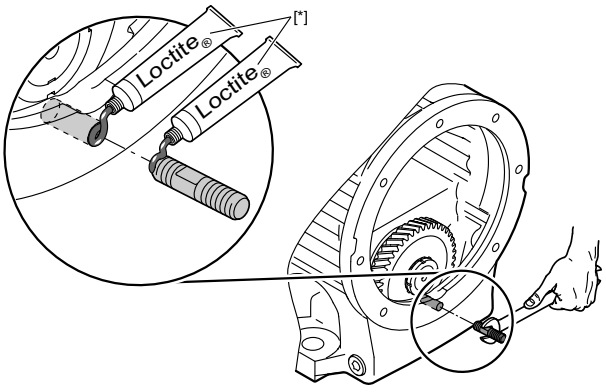


22795758347

[*] Loctite® according to the table at the end of the chapter

Screwing in the studs

9. Screw the studs into the thread up to the shoulder.

25803530/EN – 04/2018

10. Remove any excess Loctite® (see following diagram) from the sealing surface 60 minutes after screwing in at the latest.

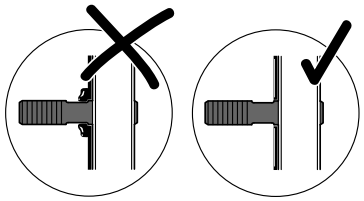

22347379211

Sealing the flange surface

## INFORMATION

Always apply the sealant over a large area in narrow places and on the gear units R97, R107, R127, F97 or F107.

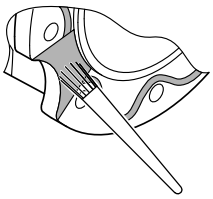

11. Only distribute Loctite® 574 or Loctite® 5188 (selection according to the table at the end of the chapter) to one of the sealing surfaces. Apply the sealant in beads or over a large area without gaps. Use a suitable application tool that does not contaminate the sealing surface, for example, a non-shedding brush or a short-hair lamb's wool roller.

Joining flange surfaces

12. Join the flange surfaces together. Next, **immediately** tighten the nuts with the specified torque (see the table at the end). If you tighten the nuts too late, the sealing film can tear.
13. The sealant must harden for 30 minutes and must not come into contact with the gear oil.

**Tightening torques**

| Screw/nut | Tightening torque<br>Nm |
|---|---|
| M6 | 11.3 |
| M8 | 27.3 |
| M10 | 54 |
| M12 | 93 |
| M16 | 230 |

**Selection and use of Loctite®**

| Sealant | Use | Suitability | Batch size | Part number |
|---|---|---|---|---|
| Loctite® 649 | Locking agent for pinions | All gear units | 50 ml | 09120998 |

25803530/EN – 04/2018

| Sealant | Use | Suitability | Batch size | Part number |
|---|---|---|---|---|
| Loctite® 574 | Surface sealing agent | All gear units except for R97 – R127, F97, F107 | 7 ml | 09102558 |
| Loctite® 5188 | | R97 – R127, F97, F107 | 50 ml | 03207013 |

25803530/EN – 04/2018

## 4.15 Accessory equipment

### 4.15.1 AR.. and AT.. centrifugal and friction couplings

**AR.. friction coupling**

Drives with a slip clutch consist of a standard gear unit and motor/variable speed gearmotor with an adapter installed between them. This adapter accommodates the slip clutch. In gearmotors with a double gear unit, the slip clutch may be located between the first and second gear units. On delivery, the slip torque is set individually according to the drive selection.

The following figure shows a drive with slip clutch and W speed monitor:

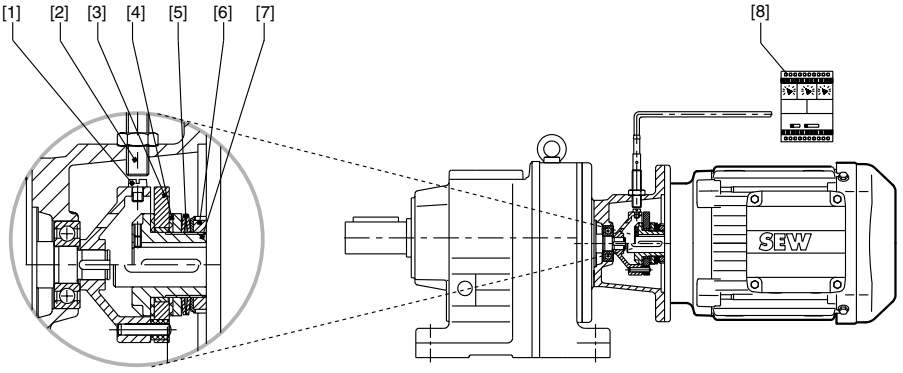


*1901048587*

[1] Trip cam
[2] Incremental encoder
[3] Driving disk
[4] Friction lining
[5] Cup spring
[6] Slotted nut
[7] Friction hub
[8] Speed monitor

**W speed monitor:**

The speed monitor is used with constant-speed gearmotors and is connected to the incremental encoder in the adapter.

**WS slip monitor:**

The slip monitor is used with the following components:

- Speed-controlled motors with speed sensor
- VARIBLOC® variable-speed gear units

## INFORMATION

For further information about the AR.. coupling, refer to the "Start-up coupling and slip clutch AR.. and AT.." operating instructions.

**AT.. hydraulic centrifugal coupling**

Hydraulic centrifugal couplings are fluid couplings based on the Föttinger principle. They consist of 2 hinged hemispheres with blades separated by a tight gap.

The applied torque is transmitted by the inertial force of the streaming fluid. This fluid circulates within a closed circuit, between the pump wheel (primary side) [12] on the driving shaft (motor shaft) and the turbine wheel (secondary side) [9] on the driven shaft (gear unit input shaft).

25803530/EN – 04/2018

The following figure shows the structure of a drive with hydraulic centrifugal coupling:

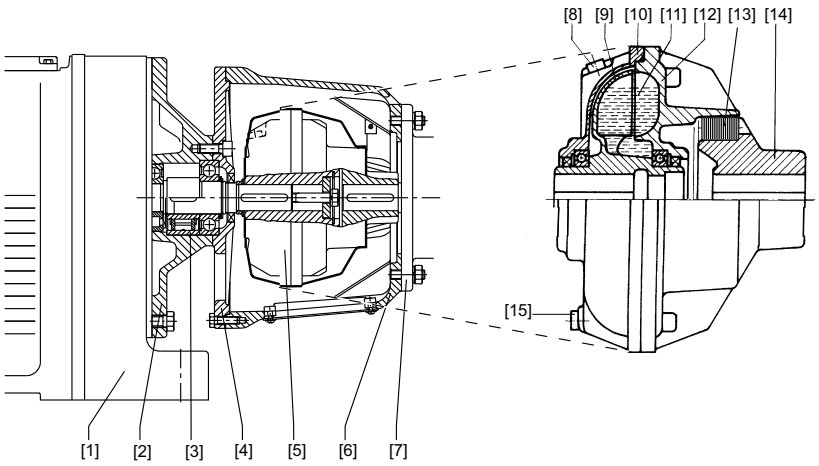


*9007201155884683*

| | | | | | |
|---|---|---|---|---|---|
| [1] | Gear unit | [6] | Extended housing complete | [11] | Operating fluid (hydraulic oil) |
| [2] | Basic flange complete | [7] | Motor | [12] | Pump wheel |
| [3] | Backstop (optional) | [8] | Filler plug | [13] | Elastic components |
| [4] | Intermediate flange | [9] | Turbine wheel | [14] | Flexible connection coupling |

## INFORMATION

For detailed information about the AT.. coupling, refer to the "Start-up coupling and slip clutch AR.. and AT.." operating instructions.

### 4.15.2 Diagnostic units /DUV and /DUO

**Diagnostic unit DUO**

DUO10A comprises a diagnostic unit and a temperature sensor. The temperature sensor (PT100 or PT1000 resistance sensor) is positioned in the gear unit oil to record the oil's temperature. The diagnostic units uses the oil temperature values to calculate the remaining service life of the oil.

The diagnostic unit continuously records the gear unit temperature and calculates the remaining service life for the selected oil type immediately. For this purpose, the diagnostic unit must be supplied with a 24 V voltage supply. Times when the diagnostic unit is switched off are not included in the forecast.

The following figure shows the DUO10A diagnostic unit:

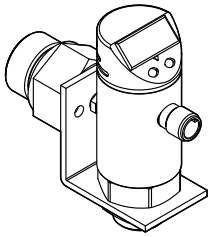

## INFORMATION

For further information on the evaluation unit, refer to the manual "DUV30A Diagnostic Unit".

**Vibration SmartCheck /DUV40A**

Vibration SmartCheck vibration monitoring is used to detect damage of gear units and gearmotors early (e.g. bearing damage or imbalances). For this purpose, permanent frequency-selective monitoring of the gearmotor is used. Apart from the vibration analysis, additional measured values of up to 3 signal encoders can be detected, recorded and analyzed. The additional signals can be used as reference values for signal analysis e.g. to trigger time or event-based measuring tasks. After the analysis and depending on user-defined alarm limits, the system can switch outputs and display the state using LEDs.

Vibration SmartCheck is configured using the FAG SmartWeb software. If you use several Vibration SmartCheck systems, you can control them via the FAG software SmartUtility Light centrally from one PC.

The full version of the SmartUtility software allows you to open sensors directly via the FAG SmartWeb software, to analyze measurement data in the SmartUtility Viewer and to download configurations or uploading configurations on other devices.

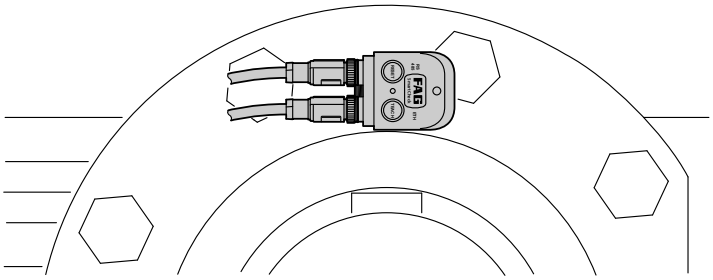

## INFORMATION

Further information about the evaluation unit and accessories can be found in the "Vibration SmartCheck" supplement (installation instructions).

25803530/EN – 04/2018

### 4.15.3 Gear unit heater for gear unit series R..7, F..7, and K..7

An oil heating can be required in order to allow for a smooth startup in the event of a cold start at low ambient temperatures. An oil heating is available with an external or an integrated thermostat depending on the gear unit design.

The heater is screwed into the gear unit housing and is controlled via a thermostat. The limit temperature of the thermostat below which the oil must be heated, is set depending on the respective lubricant.

The following figure shows a gear unit with heater and external thermostat:

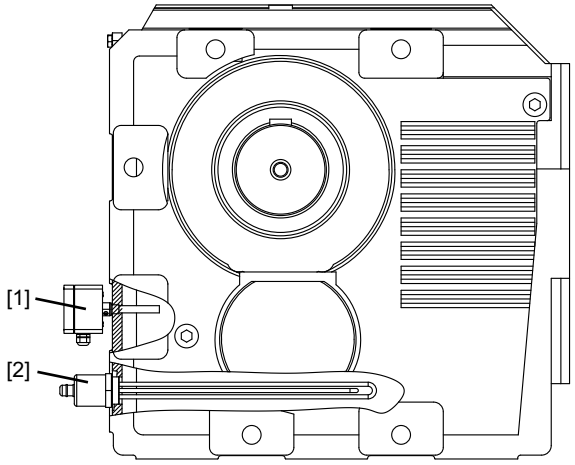


*2060553483*

[1] Thermostat [2] Heater

## INFORMATION

For further information regarding gear unit heaters, refer to the addendum "Gear unit heaters for gear unit series R..7, F..7 and K..7" to the operating instructions "Gear unit series R..7, F..7, K..7, K..9, S..7, SPIROPLAN® W".

### 4.15.4 Flange coupling

Flange couplings [1] are rigid couplings for connecting 2 shafts [2].

Flange couplings are suitable for operation in both directions of rotation, but cannot compensate any shaft misalignments.

Torque between shaft and coupling is transmitted via a cylindrical interference fit. The two coupling halves are mounted together at the flanges. The couplings are equipped with several disassembly bores [3] for removing the interference fit hydraulically.

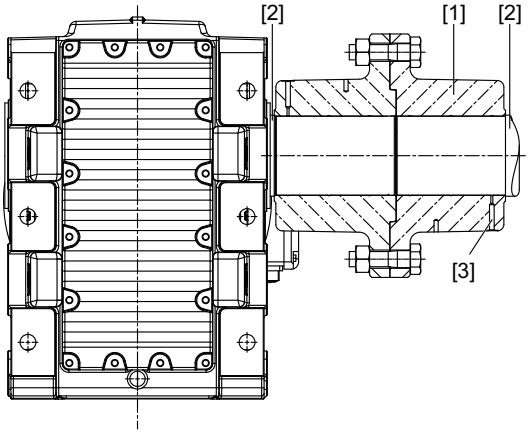


*27021601961007627*

[1] Rigid flange coupling
[2] Customer and gear shaft
[3] Disassembly bores

## INFORMATION

For detailed information about the rigid flange coupling, refer to the "Gear Unit Series R..7, F..7, K..7, S..7, and SPIROPLAN® W – Rigid flange coupling" addendum to the operating instructions.

### 4.15.5 Regreasing the labyrinth seal

Labyrinth seals are used to protect the oil seal in case of very high dust load or other abrasive substances.

**Output shaft**

The following figure shows an example of a regreasable radial labyrinth seal (taconite).

- Single oil seal with radial labyrinth seal
- Used in **very dusty** environments with abrasive particles

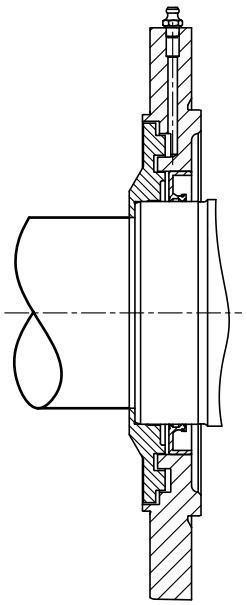

*9007204406135947*

## INFORMATION

The gear shaft must rotate during relubrication.

**Position of greasing points**

Regreasable sealing systems are usually equipped with taper greasing nipples according to DIN 71412 A. Relubrication must be carried out at regular intervals. The greasing points are located near the output shaft, see following figure:

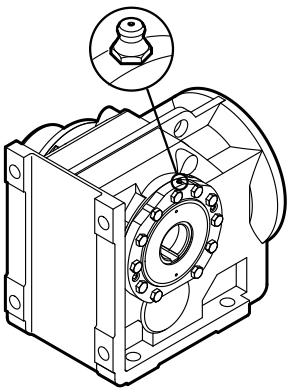

*4986644747*

#### Refilling grease

Regreasable sealing systems can be refilled with lubricating grease. Use moderate pressure to force grease into each lubrication point until new grease leaks out of the sealing gap.

Used grease, including contaminants and sand, is in this way pressed out of the sealing gap.

## INFORMATION

Immediately remove the old grease that leaked out.

#### Inspection and maintenance intervals

Observe the following inspection and maintenance intervals for the regreasing of labyrinth seals:

| Time interval | What to do? |
|---|---|
| Every 3000 operating hours, at least every 6 months | Fill regreasable sealing systems with grease. |

#### Technical data

*Sealing and rolling bearing grease*

The table shows the lubricants recommended by SEW-EURODRIVE:

| Area of operation | Ambient temperature | Manufacturer | Type |
|---|---|---|---|
| Standard | -40 °C to +80 °C | Fuchs | Renolit CX-TOM 15[1)] |
| | -40 °C to +80 °C | Klüber | Petamo GHY 133 N |
| [2)] | -40 °C to +40 °C | Bremer & Leguil | Cassida Grease GTS 2 |
| [3)] | -20 °C to +40 °C | Fuchs | Plantogel 2S |

1) Bearing grease based on semi-synthetic base oil
2) Lubricant for the food processing industry
3) Easily biodegradable lubricant for environmentally sensitive areas

## INFORMATION

The following grease quantities are required:

- **For fast-running bearings (gear unit input side):** Fill the cavities between the rolling elements one-third full with grease.
- **For slow-running bearings (gear unit output side):** Fill the cavities between the rolling elements two-thirds full with grease.

## INFORMATION

If a customer wants to use a grease that is not listed in the above table, the customer has to make sure that it is suitable for the intended application.

25803530/EN – 04/2018

### 4.15.6 Oil drain valve

The gear unit is equipped with an oil drain plug as standard. An oil drain valve can optionally be installed, that enables attaching a drain pipe for changing the gear unit oil.

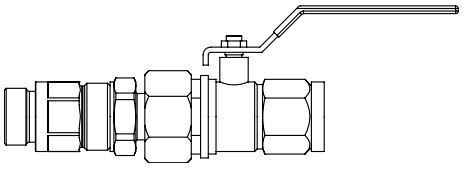

*4984750475*

### 4.15.7 Oil expansion tank

The oil expansion tank allows the lubricant or air space of the gear unit to expand. This means no lubricant can escape the breather valve at high operating temperatures.

SEW-EURODRIVE recommends to use oil expansion tanks for gear units and gearmotors in M4 mounting position and for input speeds > 2000 $min^{-1}$.

The following figure shows the oil expansion tank of a gearmotor.

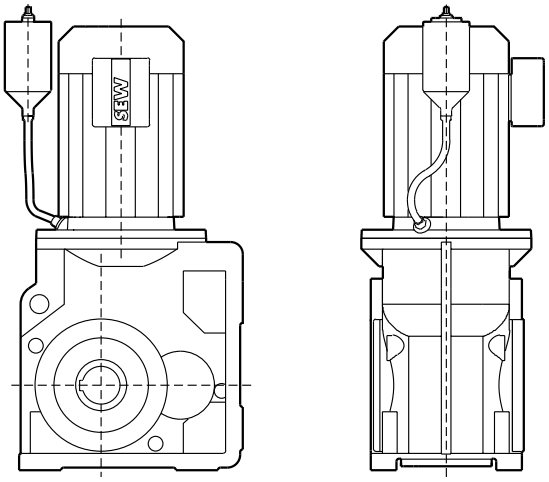


*4979181323*

The oil expansion tank is delivered as assembly kit for mounting onto the gearmotor. In case of limited space or of gear units without motor, the oil expansion tank can also be mounted to nearby machine parts.

## INFORMATION

Transverse acceleration is not permitted for gear units with expansion tank with fixed piping for third party motors and servomotors.

For further information, contact your SEW-EURODRIVE sales representative.

### 4.15.8 Oil-air cooler for splash lubrication /OAC

If the thermal rating of the naturally cooled gear unit is not sufficient, an oil-air cooling system can be used.

The cooling system is delivered without electrical wiring and piping as a complete unit on a base frame for separate installation.

The standard scope of delivery of the cooling system includes:

- Pump with directly mounted asynchronous motor
- Oil-air heat exchanger
- Temperature switch with 2 switching points

SEW-EURODRIVE uses oil-air cooling systems for standard gear units in sizes OAC 005 and OAC 010.

The following figure shows an example of a standard parallel-shaft helical gear unit next to an oil-air cooler.

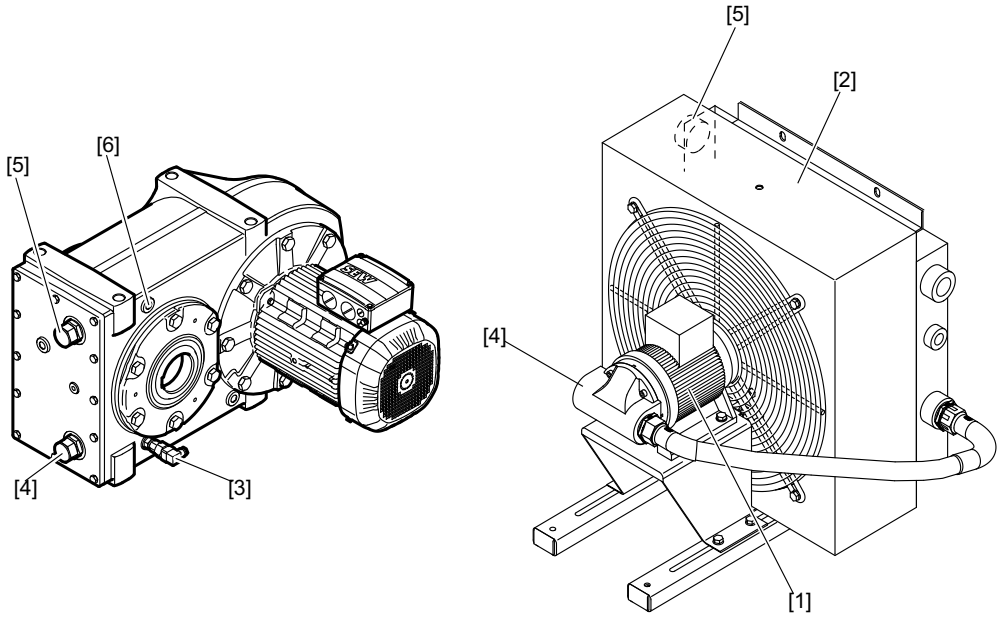


*9007208235792395*

| | | | |
|---|---|---|---|
| [1] | Motor for pump and fan | [4] | Suction pipe connections |
| [2] | Oil-air heat exchanger | [5] | Pressure pipe connections |
| [3] | Temperature switch with 2 switching points | [6] | Option: Oil expansion tank connection |

## INFORMATION

For more information on the cooling system, refer to the addendum to the operating instructions "Gear unit series R..7, F..7, K..7, K..9, S..7 and SPIROPLAN® W: Oil-air cooler for splash lubrication /OAC".

25803530/EN – 04/2018

### 4.15.9 Agitator design

**Relubrication of the agitator design**

A relubrication of the output shaft bearing is offered as an option for the agitator drives FM.., FAM.., KM.. and KAM...

*Position of greasing points*

## INFORMATION

The gear shaft must turn during the relubrication procedure.

Regreasable sealing systems are usually equipped with taper greasing nipples according to DIN 71412 A. The following figure shows the position of the greasing points:

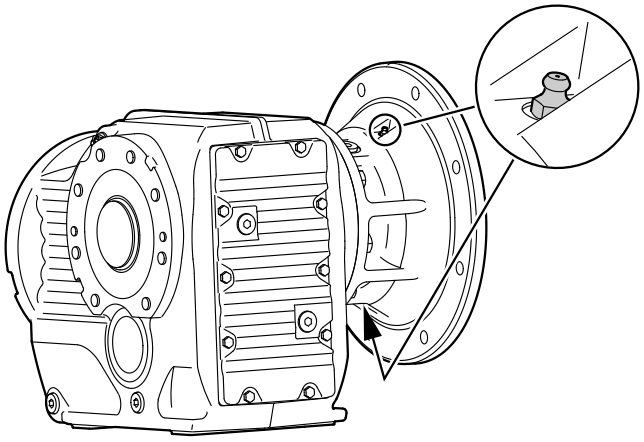

*23563258507*

*Maintenance interval and grease quantities*

Relubricate the agitator design after 5000 operating hours. The number of relubrication procedures is limited to 5x. Observe the information on the required grease quantities in the following table:

| Size | Grease quantity for relubrication<br>g |
|---|---|
| 67 | 7 |
| 77 | 15 |
| 87 | 15 |
| 97 | 23 |
| 107 | 50 |
| 127 | 48 |
| 157 | 66 |

The table shows the lubricants recommended by SEW-EURODRIVE:

| Area of operation | Ambient temperature | Manufac-turer | Type |
|---|---|---|---|
| Standard | -40 °C to +80 °C | Fuchs | Renolit CX-TOM 15[1)] |
| | -40 °C to +80 °C | Klüber | Petamo GHY 133 N |
|  2) | -40 °C to +40 °C | Bremer & Leguil | Cassida Grease GTS 2 |
|  3) | -20 °C to +40 °C | Fuchs | Plantogel 2S |

1) Bearing grease based on semi-synthetic base oil
2) Lubricant for the food processing industry
3) Easily biodegradable lubricant for environmentally sensitive areas

## INFORMATION

If a customer wants to use a grease that is not listed in the above table, the customer has to make sure that it is suitable for the intended application.

**Leak sensor (Drywell design) with the agitator design**

A Drywell design with level sensor is offered as an option for the agitator drives FM.., FAM.., KM.. and KAM...

One of the two following sensors is used, depending on the gear unit size:

*Level sensor for sizes 67 – 97*

**Electrical connection**

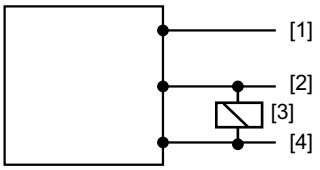


*23527583115*

[1] DC 12 V – 32 V
[2] Output
[3] Load
[4] 0 V

**Pin assignment**

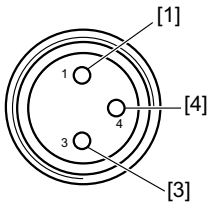


*23527590411*

[1] DC 12 V – 32 V
[4] Output
[3] Load

25803530/EN – 04/2018

**Dimensions**

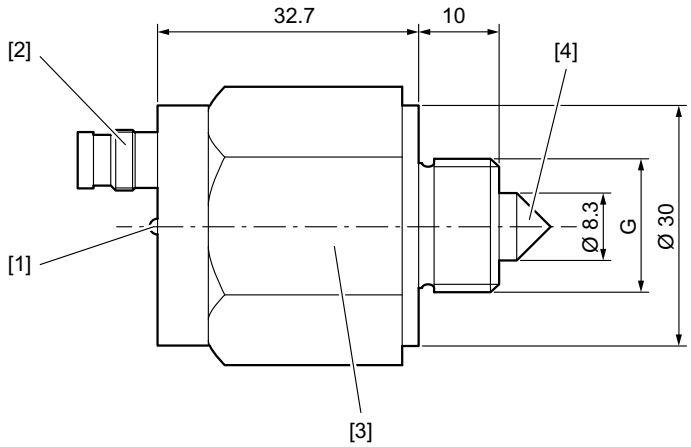


*23563256075*

[1] LED function indicator
[2] M8×1 circular connector; 3-pin (alternatively cable termination)
[3] Wrench size: 30
[4] Glass prism

**Technical data**

| | |
|---|---|
| Measuring accuracy | ± 0.5 mm |
| Minimum distance of the glass tip to an opposite surface | ≥ 10 mm |
| Mounting position | Any |
| Optical display of the switching status | 1 LED |
| Process connection | Male thread G3/8", G 1/2" or M12x1 |

For more information, please contact SEW-EURODRIVE.

*Level sensor for sizes 107 – 157*

**Electrical connection**

M12 plug-in connection:

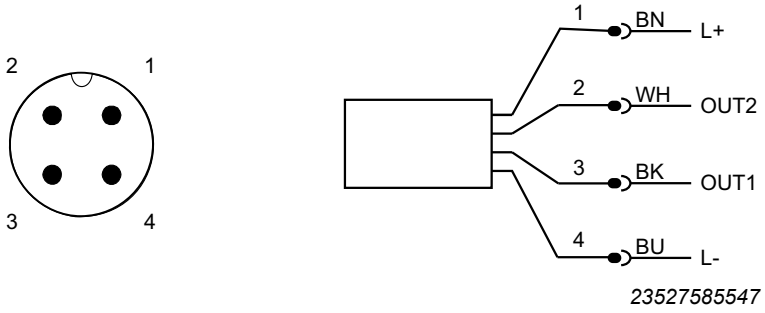


*23527585547*

OUT1: Switching output/IO link/teach
OUT2: Switching output

25803530/EN – 04/2018

**Dimensions**

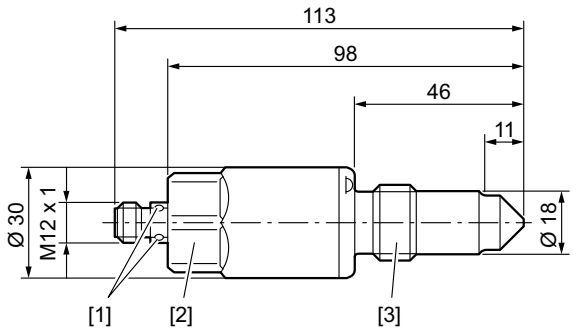


*23563253643*

[1] LED
[2] Tightening torque 20 – 25 Nm
[3] G 1/2

Tightening torque 20 – 25 Nm

**Technical data**

- Plug-in connection
- Process connection G 1/2 A
- Gold-plated contacts
- 2 switching outputs

25803530/EN – 04/2018

# 5 Startup



**⚠ CAUTION**

Damage to the gear unit due to improper startup.

Possible damage to property.

- Observe the following information.

- Check the correct oil level before startup; see chapter "Inspection/maintenance work on the gear unit" (→ 🗎 113).
- The oil level plugs and oil drain plugs, as well as the breather plugs and breather valves must be freely accessible.
- Observe the maximum and rms values of project planning during startup of gear units with servomotor. The buyer is obliged to make the data available to the end user.
- The most important technical data is provided on the nameplate. Additional data relevant for operation is available in drawings and the order confirmation.
- After gear unit setup, ensure that all retaining screws are tight.
- Make sure that the alignment has not changed after tightening the mounting elements.
- Prior to startup, ensure that rotating shafts as well as couplings are equipped with suitable protective covers.
- If the gear unit has an oil sight glass to monitor the oil level, the oil sight glass must be protected against damage.
- It is essential that there is no open fire or risk of sparks when working on the gear unit.
- Protect the gear unit from falling objects.
- Remove transport protection prior to startup.
- Strictly observe the safety notes in the individual chapters.

## 5.1 Inverter-operated gearmotors

For gear units with servomotor, the maximum and r.m.s. values of project planning must be observed during startup. The buyer is obliged to make the data available to the user.

## 5.2 Checking the oil level

Before startup, make sure that the oil level corresponds to the mounting position. Observe the chapter "Checking the oil level and changing the oil" (→ 🗎 113).

If the gear unit is equipped with an oil sight glass, you can also determine the oil level at the oil sight glass.

25803530/EN – 04/2018

## NOTICE

Damage to the gear unit due to oil leaking from the damaged oil sight glass.

Possible damage to the unit

- Attach a protective device to prevent the oil sight glass from being damaged by mechanical impacts.

1. Observe the information in chapter General information.
2. Check the oil level at the oil sight glass according to the following figure:

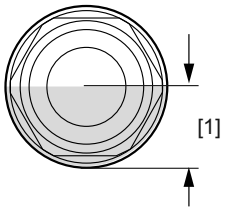


4158756363

[1] The oil level must be within this range.

3. Proceed as follows if the oil level is too low:
   - Open the respective oil fill plug, see chapter "Inspection/maintenance for the gear unit" (→ 🗎 113).
   - Fill in new oil of the same type via the oil fill plug up to the mark.
   - Screw in the oil fill plug.

Before startup, make sure that the oil level corresponds to the mounting position. Observe the chapter "Checking the oil level and changing the oil" (→ 🗎 113).

## 5.3 Pseudo-leakage at shaft seals

Due to their operating principle, seals between moving surfaces at shaft passages cannot be completely tight, as a lubricant film must form during operation. The lubricant film between shaft and sealing lip keeps the built-up of heat and wear on the sealing system to a minimum and ensures the intended service life. The optimum sealing properties are only achieved after the run-in phase.

25803530/EN – 04/2018

## 5.4 Helical-worm gear units and SPIROPLAN® W gear units

### 5.4.1 Run-in period

SPIROPLAN® and helical-worm gear units require a run-in period of at least 48 h before reaching their maximum efficiency. A separate run-in period applies for each direction of rotation if the gear unit is operated in both directions of rotation. The table shows the average power reduction during the run-in period.

**Helical-worm gear units**

| | Worm | |
|---|---|---|
| | **i range** | **η reduction** |
| **1-start** | Approx. 50 – 280 | Approx. 12% |
| **2-start** | Approx. 20 – 75 | Approx. 6% |
| **3-start** | Approx. 20 – 90 | Approx. 3% |
| **4-start** | – | – |
| **5-start** | Approx. 6 – 25 | Approx. 3% |
| **6-start** | Approx. 7 – 25 | Approx. 2% |

**SPIROPLAN® gear units**

| W10/W20/W30 | | W37/W47 | |
|---|---|---|---|
| **i range** | **η reduction** | **i range** | **η reduction** |
| Approx. 35 – 75 | Approx. 15% | | |
| Approx. 20 – 35 | Approx. 10% | | |
| Approx. 10 – 20 | Approx. 8% | Approx. 30 – 70 | Approx. 8% |
| Approx. 8 | Approx. 5% | Approx. 10 – 30 | Approx. 5% |
| Approx. 6 | Approx. 3% | Approx. 3 – 10 | Approx. 3% |

### 5.4.2 Helical-worm gear unit with projecting worm shaft

**⚠ CAUTION**



Risk of injury due to rotating parts

Injury

- Before you operate the helical-worm gear unit using the inserted handwheel or the hand crank, de-energize the drive.
- If the handwheel or the hand crank remains attached to the shaft during operation, take appropriate measures to prevent injuries.

25803530/EN – 04/2018

The following figure shows a helical-worm gearmotor with projecting worm shaft:

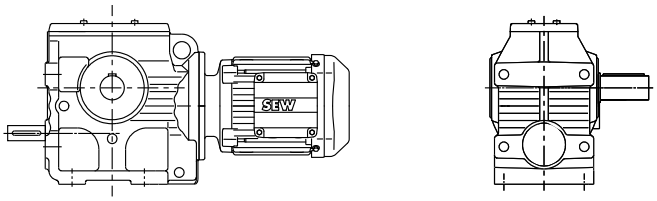


*15050784011*

## 5.5 Helical/parallel-shaft helical/helical-bevel gear units

If the gear units were installed according to chapter "Mechanical installation" (→ 🗎 26), no special startup notes must be observed for helical, parallel-shaft helical and helical-bevel gear units.

25803530/EN – 04/2018

## 5.6 Gear units with backstop

### NOTICE

Operating the motor in the blocking direction could destroy the backstop.

Possible damage to property

- Do not start up the motor in the blocking direction. Before motor startup, make sure the current supply of the motor for the direction of rotation is connected accordingly.
- For control purposes, operation in blocking direction with half the output torque is permitted once.

The purpose of a backstop is to prevent unwanted directions of rotation. During operation, the backstop permits rotation only in the specified direction.

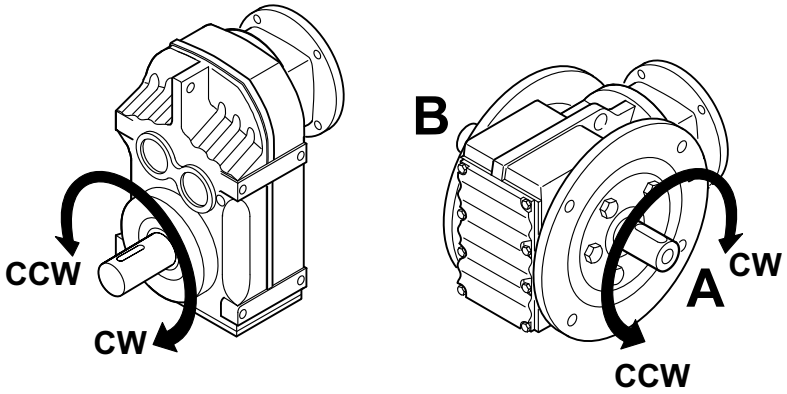


*659173899*

The permitted direction of rotation is indicated by a direction arrow on the housing:

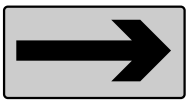

*15985405835*

A replacement label is enclosed for the customer.

In right-angle gear units, you also have to indicate whether the direction of rotation is given looking onto the A or B-side.

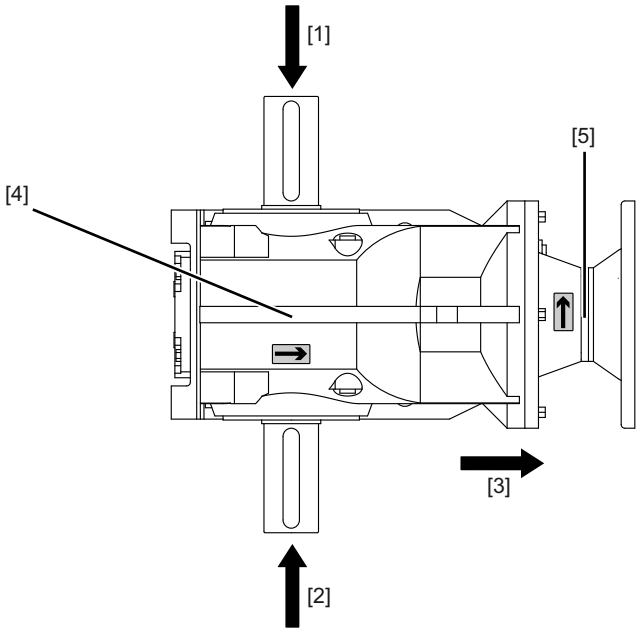


16117549579

[1] Viewing direction Direction of rotation Output B
[2] Viewing direction Direction of rotation Output A and A+B
[3] Viewing direction Direction of rotation Input end
[4] Gear unit
[5] Adapter/cover with RS option

## 5.7 Components made of elastomers with fluorocarbon rubber



**⚠ CAUTION**

Health risk due to dangerous gases, vapors, and residue created by heating fluorocarbon rubber to > 200 °C.

Damage to health.

- Make sure that components made of fluorocarbon rubber are not exposed to temperatures > 200 °C. Remove the components, if necessary.
- Avoid inhaling fluorocarbon rubber gases and vapors as well as skin and eye contact.
- Avoid contact with the cooled-down fluorocarbon rubber, as dangerous residue has formed while it was heated.

Under normal operating conditions and at temperatures up to 200 °C, fluorocarbon rubber is very stable and safe. However, when heated to more than 300 °C, e.g. by fire or the flame of a cutting torch, fluorocarbon rubber forms harmful gases and vapors as well as residue.

The following components of R..7, F..7, K..7, K..9, S..7, and SPIROPLAN® W gear units can contain elastomers made of fluorocarbon rubber:

- Oil seals

25803530/EN – 04/2018

- Breather valve
- Screw plugs

The user is responsible for safe handling during the service life including eco-friendly disposal.

SEW-EURODRIVE is not responsible for damage caused by improper handling.

25803530/EN – 04/2018

# 6 Inspection/maintenance



**⚠ WARNING**

Risk of injury if the drive starts up unintentionally.

Severe or fatal injuries

- Disconnect the drive from the power supply before you start working on the unit.
- Prevent the drive from starting up unintentionally for example, by locking the key switch or removing the fuses from the current supply.



**⚠ WARNING**

Risk of injury if preloaded shaft connections are loosened.

Severe or fatal injuries

- Before releasing any shaft connections, make sure there is no active torsional torque present that could lead to tension within the system.



**⚠ WARNING**

Risk of burns due to hot gear unit and hot gear unit lubricant

Severe injuries

- Let the gear unit cool down before you start working on it.
- Carefully remove the oil level plug and the oil drain plug.

**NOTICE**

Loss of lubricant qualities due to filling of wrong lubricant

Damage to the gear unit

- Do not mix synthetic lubricants and mineral lubricants.
- Do not mix different synthetic lubricants.
- As standard lubricant use mineral oil.

**NOTICE**

Damage to oil seal caused by cleaning the gear unit with a high pressure device.

Gear unit damage.

- Do not clean the gear unit with a high-pressure cleaning device.

**NOTICE**

Damage to gear unit due to ingress of foreign objects during maintenance and inspection work

Gear unit failure

- Prevent foreign particles from entering into the gear unit during maintenance and inspection work.

25803530/EN – 04/2018

## INFORMATION

Maintain the inspection and maintenance intervals. This is necessary to ensure operational safety.

## INFORMATION

Perform a safety check and functional check following maintenance and repair work.

25803530/EN – 04/2018

## 6.1 Wearing parts

**Gearing**

If you observe the SEW-EURODRIVE design criteria and the inspection and maintenance intervals, then the gearing components of the gear units will be wear-free after the run-in period. The worm gearing is an exception for design reasons. Depending on the operating conditions, material on the tooth flanks of the worm gear is removed to different extents. The main influencing factors are:

- Rotational speed
- Load
- Operating temperature
- Lubricant (type, viscosity, additives, pollution)
- Switching frequency

For information on the worm gearing service life under certain operating conditions, contact SEW-EURODRIVE.

**Rolling bearing**

Rolling bearings in the gear unit, adapter and input shaft assembly have a limited service life, even under ideal operating conditions. This nominal bearing service life is a solely statistical value. The actual service life of an individual bearing may deviate greatly from this value. The main influencing factors are:

- Rotational speed
- Equivalent bearing load
- Operating temperature
- Lubricant (type, viscosity, additives, pollution)
- Lubricant supply of the bearing
- Misalignment under operating load

Therefore the rolling bearings must be inspected regularly. Observe the corresponding inspection and maintenance intervals in the chapters "Inspection/maintenance intervals" (→ 🗎 110), "Lubricant change intervals" (→ 🗎 111), "Maintenance of AL/AM/AQ./EWH adapter" (→ 🗎 111) and "AD input shaft assembly maintenance" (→ 🗎 112).

For information on the nominal bearing service life under certain operating conditions, contact SEW-EURODRIVE.

**Lubricants**

Lubricants are subject to aging. Their service life is limited depending on the load conditions.

The service life significantly depends on the oil operating temperature. The dependency of lubricant change intervals and operating temperature is depicted in the figure in chapter "Lubricant change intervals" (→ 🗎 111).

**Oil seals**

Oil seals are contact seals that seal unit housings at emerging elements, such as shafts, from the environment. Oils seals are wear parts with a service life that is influenced by the following factors, among others:

- Shaft speed and circumferential velocity at the sealing lip
- Ambient conditions (temperature, dust, humidity, pressure, chemicals, radiation)
- Lubricant (type, viscosity, additives, pollution)
- Surface quality of the sealing
- Lubricant supply of the sealing
- Oil seal material

25803530/EN – 04/2018

Due to the various influencing factors it is not possible to predict the service life. Therefore the oil seals must be inspected regularly. Observe the corresponding inspection and maintenance intervals in the chapters "Inspection/maintenance intervals" (→ 🗎 110), "Lubricant change intervals" (→ 🗎 111), "Maintenance of AL/AM/AQ./EWH adapter" (→ 🗎 111) and "AD input shaft assembly maintenance" (→ 🗎 112).

Cam ring/ coupling ring

The couplings used in the AM, AL, AQ. and EWH adapters are designed to be positive, puncture-proof and low-maintenance claw couplings. They have an impact and vibration-absorbing cam ring (AM, EWH) or coupling ring (AQ., AL). The service life is determined by the following factors, among others:

- Ambient conditions (temperature, chemicals, radiation)
- Operational conditions (switching frequency, impact characteristics)

Adhere to the corresponding inspection and maintenance intervals in chapter "Maintenance of AL/AM/AQ./EWH adapter" (→ 🗎 111).

**Rubber buffer**

The rubber buffer is required for shaft-mounted gear units of the F and W gear unit types for torque support. Rubber buffers are wear parts with a service life that is influenced by the following factors:

- Load
- Ambient conditions
  - Temperature
  - Humidity
  - Aggressive chemicals, e.g. ozone
- Switching frequency
- Impact characteristics

**Flexible bushing**

A so-called flexible bushing is required for the torque arm of the S and K gear unit types. Flexible bushings are wear parts with a service life that is influenced by the following factors:

- Load
- Ambient conditions
  - Temperature
  - Humidity
  - Aggressive chemicals, e.g. ozone
- Switching frequency
- Impact characteristics

25803530/EN – 04/2018

## 6.2 Inspection/maintenance intervals

The following table lists the obligatory intervals and the corresponding measures:

| Time interval | What to do? |
|---|---|
| • Every 3000 hours of operation, at least every 6 months | • Check oil and oil level<br>• Check running noise for possible bearing damage<br>• Visual inspection of the seals for leakage<br>• Check that all screw plugs, any oil sight glass, the breather valve and the gear unit cover screws are tight.<br>• For gear units with a torque arm: Check and replace the rubber buffers, if necessary |
| • Depending on the operating conditions (see illustration in chapter "Lubricant change intervals" (→ 🖹 111)), every 3 years at the latest<br>• according to oil temperature | • Change mineral oil<br>• Replace bearing grease (recommendation)<br>• Replace oil seal (do not install it in the same track) |
| • Depending on the operating conditions (see illustration in chapter "Lubricant change intervals" (→ 🖹 111)), every 5 years at the latest<br>• according to oil temperature | • Change synthetic oil<br>• Replace bearing grease (recommendation)<br>• Replace oil seal (do not install it in the same track) |
| • Varying (depending on external factors) | • Touch up or renew the surfaces / anti-corrosion coating |

**Exceptions**

The following gear units are lubricated for life. A scheduled oil change is not necessary:

- Helical gear units R07, R17, R27
- Parallel-shaft helical gear unit F27
- SPIROPLAN® gear units

25803530/EN – 04/2018

## 6.3 Lubricant change intervals

The following image depicts the change intervals for standard gear units under normal ambient conditions. In case of special designs under severe/aggressive ambient conditions, change the lubricant more frequently.

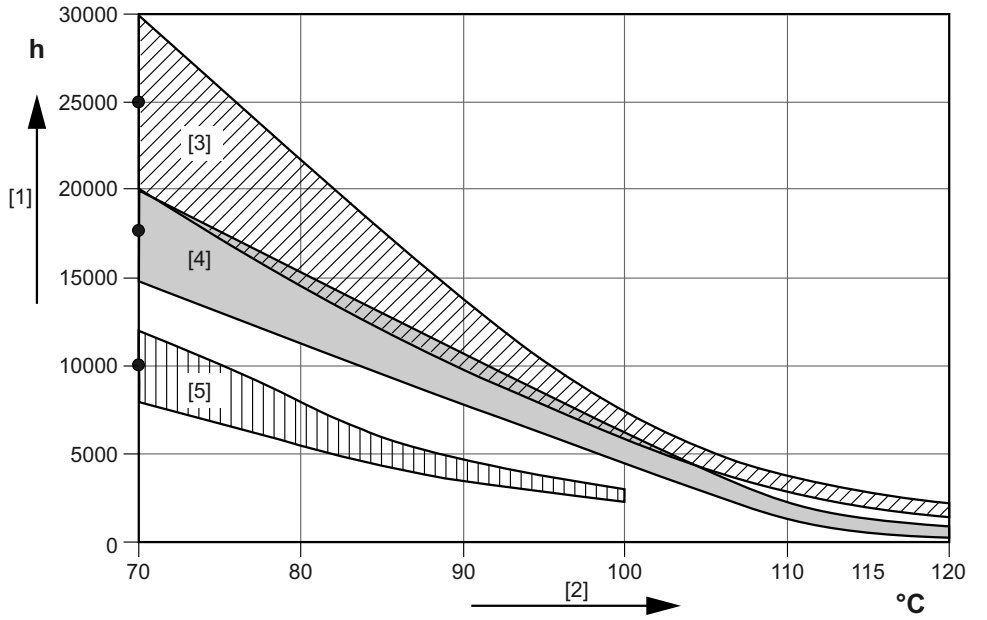


18014398528211595

[1] Operating hours
[2] Sustained oil bath temperature
• Average value per oil type at 70 °C
[3] CLP PG/CLP PG NSF H1
[4] CLP HC/ CLP HC NSF H1
[5] CLP (CC)/E

## 6.4 Maintenance of AL/AM/AQ./EWH adapter

The following table lists the obligatory intervals and the corresponding measures:

| Time interval | What to do? |
|---|---|
| • Every 3000 hours of operation, at least every 6 months | • Check the running noises to detect possible bearing damage.<br>• Visually check the adapter for leakage. |
| • After 10 000 operating hours | • Check the rotational clearance.<br>• Visually check the cam ring (AM, EWH) or coupling ring (AQ., AL). |
| • After 10 000 operating hours with NBR/FKM oil seals<br>• After 20 000 operating hours with Premium Sine Seal (PSS) adapter oil seals: | • Change the bearing grease.<br>• Change the oil seal. With standard NBR or FKM oil seals, the new oil seal must not be fitted on the previous track. This is allowed with Premium Sine Seal (PSS) adapter oil seals. |

## 6.5 AD input shaft assembly maintenance

The following table lists the obligatory intervals and the corresponding measures:

| Time interval | What to do? |
|---|---|
| • Every 3000 hours of operation, at least every 6 months | • Check the running noises to detect possible bearing damage.<br>• Visually check the adapter for leakage. |
| • After 10000 operating hours | • Change the bearing grease.<br>• Change the oil seal. Do not mount it in the same track. |

25803530/EN – 04/2018

## 6.6 Inspection/maintenance for the gear unit

### 6.6.1 Checking the oil level and changing the oil

The procedure when checking the oil level and changing the oil depends on gear unit type, size and mounting position. Determine the code letter (A, B, C, D or E) in the following table in regard of gear unit type and size. Use the code letter to find the reference for the procedure for the corresponding gear unit in the 2nd table.

| Gear unit type | Size | Code letter for chapter "Checking the oil level and changing the oil" | | | | | |
|---|---|---|---|---|---|---|---|
| | | M1 | M2 | M3 | M4 | M5 | M6 |
| R | R..07 – 27 | B | | | | | |
| | R..37 / R..67 | A | | | | | |
| | R..47 / R..57 | A | | | | B | A |
| | R..77 – 167 | A | | | | | |
| | RX..57 – 107 | A | | | | | |
| F | F..27 | B | | | | | |
| | F..37 – 157 | A | | | | | |
| K | K..19 / K..29 | C | | | | | |
| | K..39 / K49 | A | | | | | |
| | K..37 – 187 | A | | | | | |
| S | S..37 | C | | | | | |
| | S..47 – 97 | A | | | | | |
| W | W..10 – 30 | B | | | | | |
| | W..37 – 47 | D | | | E | D | |

| Code letter | Chapter "Checking the oil level and changing the oil" | Reference |
|---|---|---|
| **A:** | • Helical gear units...<br>• Parallel-shaft helical gear units...<br>• Helical-bevel gear units...K..39 / K..49, K..37 – 187<br>• Helical-worm gear units... S..47 – 97<br>**With oil level plug** | (→ 🗎 114) |
| **B:** | • Helical gear units...<br>• Parallel-shaft helical gear units...<br>• SPIROPLAN® gear units...<br>**Without oil level plug, with cover plate** | (→ 🗎 117) |
| **C:** | • S..37 helical-worm gear unit<br>• Helical-bevel gear units K..19 / K..29<br>**Without oil level plug, without cover plate** | (→ 🗎 121) |
| **D:** | • SPIROPLAN® W..37 / W..47<br>**In mounting positions M1, M2, M3, M5, M6 with oil level plug** | (→ 🗎 124) |

25803530/EN – 04/2018

| Code letter | Chapter "Checking the oil level and changing the oil" | Reference |
|---|---|---|
| **E:** | • SPIROPLAN® W..37 / W..47...<br>**In mounting position M4 without oil level plug and cover plate** | (→ 🗎 126) |

Refer to chapter "Mounting positions" (→ 🗎 129) for notes on the mounting positions.

You cannot check the oil level of gear units in pivoted mounting position. The gear units are delivered with the correct oil level. Observe the designations and fill quantities on the nameplate if you have to change the oil.

### 6.6.2 A: Helical, parallel-shaft helical, helical-bevel and helical-worm gear units with oil level plug

**Checking the oil level at the oil level plug**

Proceed as follows to check the oil level of the gear unit:

1. Observe the notes in chapter Information on gear unit inspection/maintenance.
2. Determine the position of the oil level plug and the breather valve using the mounting position sheets. See chapter "Mounting positions" (→ 🗎 129).
3. Place a container underneath the oil level plug.
4. Slowly remove the oil level plug. Small amounts of oil may leak out as the permitted maximum oil level is higher than the lower edge of the oil level bore.
5. Check the oil level according to the following figure and the corresponding table.

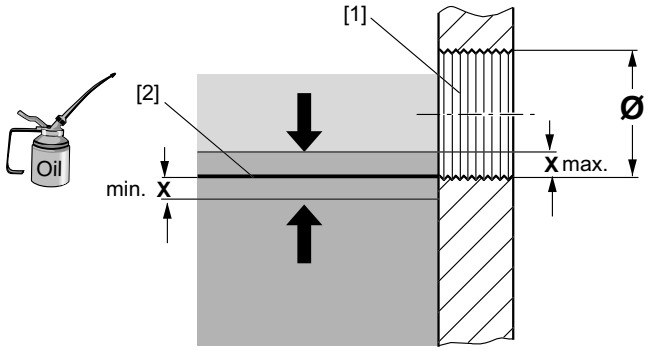


634361867

[1] Oil level bore
[2] Ideal oil level
X min/max oil level

| Ø oil level bore | Approved fluctuation "x" of the oil level mm |
|---|---|
| M10 × 1 | 1.5 |
| M12 × 1.5 | 2 |
| M22 × 1.5 | 3 |
| M33 × 2 | 4 |
| M42 × 2 | 5 |

6. Proceed as follows if the oil level is too low:
   - Fill in fresh oil of the same type (contact SEW-EURODRIVE if necessary) via the breather bore, up to the lower edge of the oil level bore.

25803530/EN – 04/2018

- Re-insert the breather valve. Observe for this the tightening torques in chapter "Tightening torques for oil level plugs, oil drain plugs, screw plugs, breather valves and oil sight glasses" (→ 🗎 32).

7. Screw in the oil level plug again. Observe for this the tightening torques in chapter "Tightening torques for oil level plugs, oil drain plugs, screw plugs, breather valves and oil sight glasses" (→ 🗎 32).

#### Checking the oil via the oil drain plug

Proceed as follows to check the gear unit oil:

1. Observe the notes in chapter Information on gear unit inspection/maintenance.
2. Determine the position of the oil drain plug using the mounting position sheets. See chapter "Mounting positions" (→ 🗎 129).
3. Remove a little oil from the oil drain plug.
4. Check the oil consistency:
   - Viscosity
   - If you can see that the oil is heavily contaminated, SEW-EURODRIVE recommends to change the oil even if this is outside the service intervals specified in "Inspection and maintenance intervals" (→ 🗎 110).
5. Check the oil level. See chapter "Checking the oil level via the oil level plug" (→ 🗎 114).

#### Changing the oil via the oil drain plug and the breather valve



**⚠ WARNING**

Risk of burns due to hot gear unit and hot gear unit oil.

Serious injuries.

- Let the gear unit cool down before you start working on it. Due to the better flowability, the gear unit oil should still be warm so that the gear unit can be drained best.

1. Observe the notes in chapter Information on gear unit inspection/maintenance.
2. Determine the position of the oil drain plug, the oil level plug and the breather valve using the mounting position sheets. See chapter "Mounting positions" (→ 🗎 129).
3. Place a container underneath the oil drain plug.
4. Remove the oil level plug, the breather valve and the oil drain plug.
5. Drain all the oil.
6. Re-insert the oil drain plug. Observe for this the tightening torques in chapter "Tightening torques for oil level plugs, oil drain plugs, screw plugs, breather valves and oil sight glasses" (→ 🗎 32).
7. Fill in fresh oil of the same type (contact SEW-EURODRIVE if necessary) via the breather bore. Do not mix different synthetic lubricants!
   - Observe the oil fill quantities according to the specifications on the nameplate or according to the mounting position. See chapter Lubricant fill quantities.
   - Check the oil level at the oil level plug.

25803530/EN – 04/2018

8. Re-insert the oil level plug and the breather valve. Observe for this the tightening torques in chapter "Tightening torques for oil level plugs, oil drain plugs, screw plugs, breather valves and oil sight glasses" (→ 🗎 32).

25803530/EN – 04/2018

### 6.6.3 B: Helical, parallel shaft helical, SPIROPLAN® gear units without oil level plug with cover plate

**Checking the oil level via the cover plate**

For gear units without oil level bore, the oil level is checked via the cover plate opening. Proceed as follows:

1. Observe the notes in chapter Information on gear unit inspection/maintenance.
2. To position the cover plate on the top, place the gear unit in the following mounting position:
   - R07 – R57 in M1 mounting position
   - F27 in M3 mounting position
   - W10 – W30 in M1 mounting position
3. Loosen the screws [1] of the cover plate [2] and remove the cover plate [2] and the corresponding gasket [3] (see following figure).

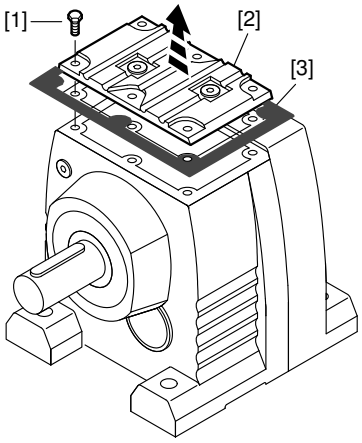


*9007199273384203*

4. Determine the vertical distance "x" between oil level and sealing surface of the gear unit housing (see following figure).

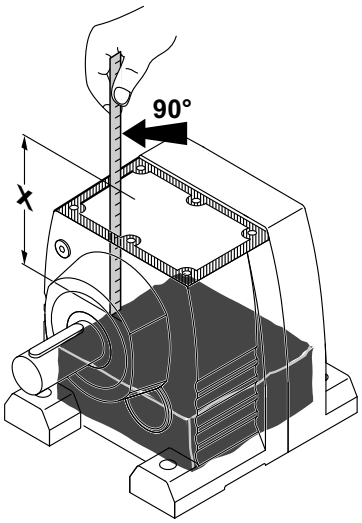


*9007199273387275*

5. Compare the determined value "x" to the max. distance between oil level and sealing surface of the gear unit housing specified in the following table. Adjust the fill level if required.

| Gear unit type | | Max. distance x in mm between oil level and sealing surface of the gear unit housing for mounting position | | | | | |
|---|---|---|---|---|---|---|---|
| | | M1 | M2 | M3 | M4 | M5 | M6 |
| R07 | 2 stages | 52 ± 1 | 27 ± 1 | 27 ± 1 | 27 ± 1 | 27 ± 1 | 27 ± 1 |
| | 3 stages | 49 ± 1 | 21 ± 1 | 21 ± 1 | 21 ± 1 | 21 ± 1 | 21 ± 1 |
| R17 | 2 stages | 63 ± 1 | 18 ± 1 | 46 ± 1 | 18 ± 1 | 46 ± 1 | 46 ± 1 |
| | 3 stages | 58 ± 1 | 11 ± 2 | 40 ± 2 | 11 ± 2 | 40 ± 2 | 40 ± 2 |
| R27 | 2 stages | 74 ± 1 | 22 ± 1 | 45 ± 1 | 22 ± 1 | 45 ± 1 | 45 ± 1 |
| | 3 stages | 76 ± 1 | 19 ± 1 | 42 ± 1 | 19 ± 1 | 42 ± 1 | 42 ± 1 |
| R47 | 2 stages | – | – | – | – | 39 ± 1 | – |
| | 3 stages | – | – | – | – | 32 ± 1 | – |
| R57 | 2 stages | – | – | – | – | 32 ± 1 | – |
| | 3 stages | – | – | – | – | 28 ± 1 | – |
| F27 | 2 stages | 78 ± 1 | 31 ± 1 | 72 ± 1 | 56 ± 1 | 78 ± 1 | 78 ± 1 |
| | 3 stages | 71 ± 1 | 24 ± 1 | 70 ± 1 | 45 ± 1 | 71 ± 1 | 71 ± 1 |
| | | Irrespective of mounting position | | | | | |
| W10 | | 12 ± 1 | | | | | |
| W20 | | 19 ± 1 | | | | | |
| W30 | | 31 ± 1 | | | | | |

6. Close the gear unit after the oil level check:
   - Re-attach the seal of the cover plate. Make sure that the sealing surfaces are clean and dry.
   - Screw on the cover plate. Tighten the cover plate screw connections working from the inside to the outside. Tighten the cover plate screw connections in the sequence depicted in the following figure. Tighten the cover plate screw connections with the specified tightening torque according to the following table. Repeat the tightening procedure until the screws are properly tightened. To avoid damaging the cover plate, use only impulse wrenches or torque wrenches. Do not use impact screwdrivers.

25803530/EN – 04/2018

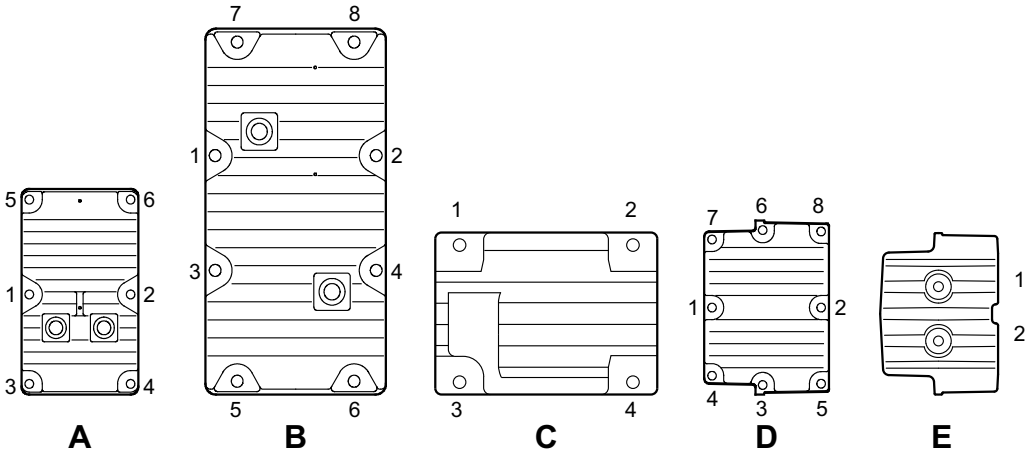


*27021597782872715*

| Gear unit type | Image | Retaining thread | Tightening torque $T_N$ Nm | Minimum tightening torque $T_{min}$ Nm |
|---|---|---|---|---|
| R/RF07/17 | E | M6 | 11 | 7 |
| R/RF27 | D | | | |
| R/RF47/57 | A | | | |
| F27 | B | | | |
| W10 | C | M5 | 6 | 4 |
| W20 | C | M6 | 11 | 7 |
| W30 | A | | | |

**Checking the oil via cover plate**

Proceed as follows to check the gear unit oil:

1. Observe the notes in chapter Information on gear unit inspection/maintenance.
2. Open the cover plate of the gear unit according to chapter "Checking the oil level via the cover plate" (→ 🗎 117).
3. Take an oil sample via the cover plate opening.
4. Check the oil consistency.
   - Viscosity
   - If you can see that the oil is heavily contaminated, SEW-EURODRIVE recommends to change the oil even if this is outside the service intervals specified in "Inspection and maintenance intervals" (→ 🗎 113).
5. Check the oil level. See chapter "Checking the oil level via the cover plate" (→ 🗎 117).
6. Screw on the cover plate. Observe the order and the tightening torques according to chapter "Checking the oil level via the cover plate" (→ 🗎 117).

### Changing the oil via the cover plate



**⚠ WARNING**

Risk of burns due to hot gear unit and hot gear unit oil.

Serious injuries.

- Let the gear unit cool down before you start working on it. Due to the better flowability, the gear unit oil should still be warm so that the gear unit can be drained best.

1. Observe the notes in chapter Information on gear unit inspection/maintenance.
2. Open the cover plate of the gear unit according to chapter "Checking the oil level via the cover plate".
3. Completely drain the oil into a container via the cover plate opening.
4. Fill in fresh oil of the same type (contact SEW-EURODRIVE if necessary) via the cover plate. Do not mix different synthetic lubricants.
   - Fill in the oil as specified on the nameplate or the order confirmation.
5. Check the oil level.
6. Screw on the cover plate. Observe the order and the tightening torques according to chapter "Checking the oil level via the cover plate" (→ 🗎 117).

25803530/EN – 04/2018

### 6.6.4 C: Helical-worm gear units S..37 and helical-bevel gear units K..19/K..29 without oil level plug and cover plate

**Checking the oil level via screw plug**

The gear units S..37, K..19, and K..29 are not equipped with an oil level plug or a cover plate. This is why the oil level is checked via the control bore.

1. Observe the notes in chapter Information on gear unit inspection/maintenance.
2. Place the gear unit in the mounting position stated in the following table. Thus the control bore always points upwards.

| Gear unit | Mounting position |
|---|---|
| S..37 | M5/M6 |
| K19/29 | M6 |

3. Remove the screw plug [1] as shown in the following figure.

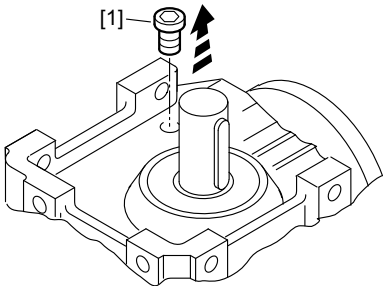


*18655371*

4. Insert the dipstick vertically via the control bore all the way to the bottom of the gear unit housing. Vertically pull the dipstick out of the control bore, as shown in the following figure.

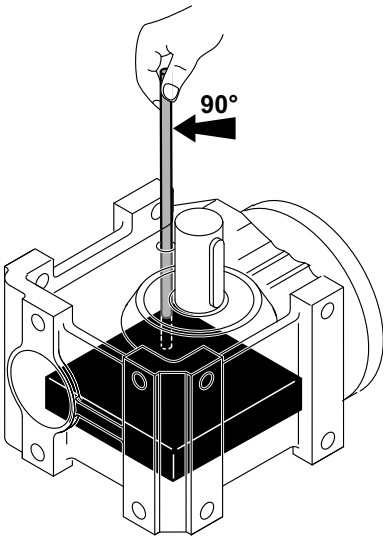


*18658699*

5. Determine the size of the section "x" of the dipstick covered with lubricant using a slide-gauge as depicted in the following figure.

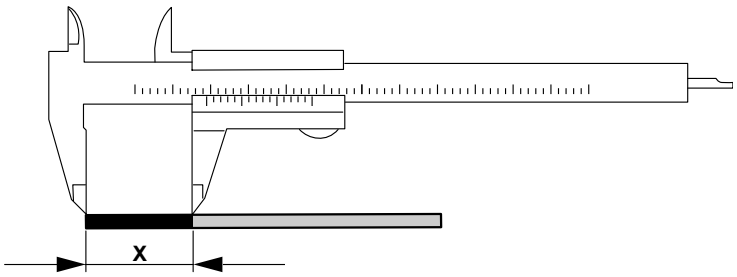


18661771

6. Compare the determined value "x" to the min. value depending on the mounting position specified in the following table. Correct the fill level if required.

| Gear unit type | Oil level = wetted section "x" in mm of the dipstick<br>Mounting position | | | | | |
|---|---|---|---|---|---|---|
| | M1 | M2 | M3 | M4 | M5 | M6 |
| K..19 | 33 ± 1 | 33 ± 1 | 33 ± 1 | 35 ± 1 | 33 ± 1 | 33 ± 1 |
| K..29 | 50 ± 1 | 50 ± 1 | 50 ± 1 | 63 ± 1 | 50 ± 1 | 50 ± 1 |
| S..37 | 10 ± 1 | 24 ± 1 | 34 ± 1 | 37 ± 1 | 24 ± 1 | 24 ± 1 |

7. Re-insert and tighten the screw plug. Observe for this the tightening torques in chapter "Tightening torques for oil level plugs, oil drain plugs, screw plugs, breather valves and oil sight glasses" (→ 🗎 32).

**Checking the oil via the screw plug**

1. Observe the notes in chapter Information on gear unit inspection/maintenance.
2. Open the screw plug of the gear unit according to chapter "Checking the oil level via screw plug" (→ 🗎 121).
3. Take an oil sample via the screw plug bore.
4. Check the oil consistency.
   - Viscosity
   - If you can see that the oil is heavily contaminated, SEW-EURODRIVE recommends to change the oil even if this is outside the service intervals specified in "Inspection and maintenance intervals" (→ 🗎 110).
5. Check the oil level. See chapter "Checking the oil level via screw plug" (→ 🗎 121).
6. Re-insert and tighten the screw plug. Observe for this the tightening torques in chapter "Tightening torques for oil level plugs, oil drain plugs, screw plugs, breather valves and oil sight glasses" (→ 🗎 32).

25803530/EN – 04/2018

### Changing the oil via the screw plug



**⚠ WARNING**

Risk of burns due to hot gear unit and hot gear unit oil.

Serious injuries.

- Let the gear unit cool down before you start working on it. Due to the better flowability, the gear unit oil should still be warm so that the gear unit can be drained best.

1. Observe the notes in chapter Information on gear unit inspection/maintenance.
2. Open the cover plate of the gear unit according to chapter "Checking the oil level via the screw plug".
3. Completely drain the oil via the screw plug bore.
4. Fill in fresh oil of the same type (contact SEW-EURODRIVE if necessary) via the control bore. You must not mix different synthetic lubricants.
   - Observe the oil quantity specified on the nameplate or according to the mounting position. Observe chapter Lubricant fill quantities.
5. Check the oil level.
6. Re-insert and tighten the screw plug. Observe for this the tightening torques in chapter "Tightening torques for oil level plugs, oil drain plugs, screw plugs, breather valves and oil sight glasses" (→ 🗎 32).

25803530/EN – 04/2018

### 6.6.5 D: SPIROPLAN® W..37/W..47 in mounting position M1, M2, M3, M5, M6 with oil level plug

**Checking the oil level at the oil level plug**

Proceed as follows to check the oil level of the gear unit:

1. Observe the notes in chapter Information on gear unit inspection/maintenance.
2. Set up the gear unit in M1 mounting position.
3. Slowly remove the oil level plug (see following figure). Small amounts of oil may leak out.

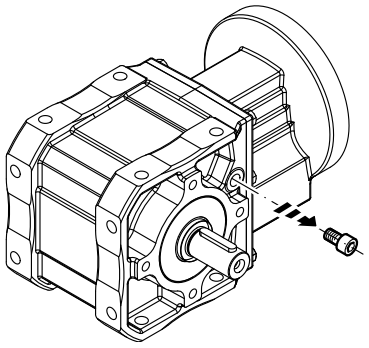

*787235211*

4. Check the oil level according to the following figure.

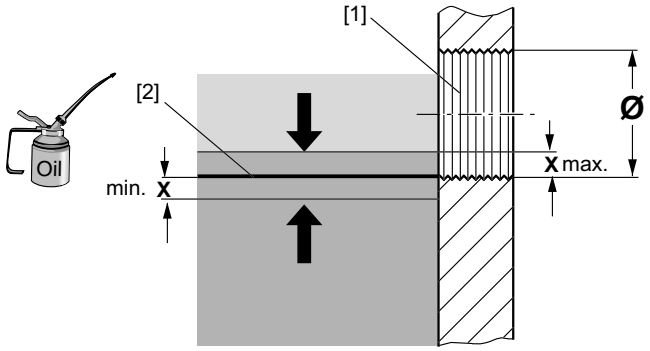


*634361867*

[1] Oil level bore [2] Ideal oil level

| Ø oil level bore | Fluctuation "x" for minimum and maximum fill level in mm |
|---|---|
| **M10 × 1** | 1.5 |

5. In case the oil level is too low, fill in fresh oil of the same type (contact SEW-EURODRIVE if necessary) via the oil level bore, up to the lower edge of the oil level bore.
6. Screw in the oil level plug again. Observe for this the tightening torques in chapter "Tightening torques for oil level plugs, oil drain plugs, screw plugs, breather valves and oil sight glasses" (→ 🗎 32).

**Checking the oil level at the oil level plug**

Proceed as follows to check the oil of the gear unit:

1. Observe the notes in chapter Information on gear unit inspection/maintenance.

25803530/EN – 04/2018

2. Remove some oil at the oil level plug.
3. Check the oil consistency.
   - Viscosity
   - If you can see that the oil is heavily contaminated, SEW-EURODRIVE recommends to change the oil even if this is outside the service intervals specified in "Inspection and maintenance intervals" (→ 🗎 110).
4. Check the oil level. See previous chapter.

**Changing the oil at the oil level plug**



**⚠ WARNING**

Risk of burns due to hot gear unit and hot gear unit oil.

Serious injuries.

- Let the gear unit cool down before you start working on it. Due to the better flowability, the gear unit oil should still be warm so that the gear unit can be drained best.

1. Observe the notes in chapter Information on gear unit inspection/maintenance.
2. Set up the gear unit in M5 or M6 mounting position. See chapter "Mounting positions" (→ 🗎 129).
3. Place a container underneath the oil level plug.
4. Remove the oil level plugs on the A- and B-side of the gear unit.
5. Drain all the oil.
6. Re-insert the lower oil level plug. Observe for this the tightening torques in chapter "Tightening torques for oil level plugs, oil drain plugs, screw plugs, breather valves and oil sight glasses" (→ 🗎 32).
7. Fill in new oil of the same type (contact SEW-EURODRIVE if necessary) via the upper oil level plug. You must not mix different synthetic lubricants.
   - Observe the oil fill quantities according to the specifications on the nameplate or according to the mounting position. See chapter Lubricant fill quantities.
   - Check the oil level according to chapter "Checking the oil level via oil level plug"
8. Re-insert the upper oil level plug. Observe for this the tightening torques in chapter "Tightening torques for oil level plugs, oil drain plugs, screw plugs, breather valves and oil sight glasses" (→ 🗎 32).

25803530/EN – 04/2018

### 6.6.6 E: SPIROPLAN® W..37 / W..47 in mounting position M4 without oil level plug and cover plate

**Checking the oil level via screw plug**

The W37 / W47 gear units are not equipped with an oil level plug or a cover plate. This is why the oil level is checked via the control bore.

1. Observe the notes in chapter Information on gear unit inspection/maintenance.
2. Set up the gear unit in M5 or M6 mounting position. See chapter "Mounting positions" (→ 🗎 129).
3. Remove the screw plug.
4. Insert the dipstick vertically via the control bore all the way to the bottom of the gear unit housing. Mark the point on the dipstick where it exits the gear unit. Pull out the dipstick vertically (see following figure).

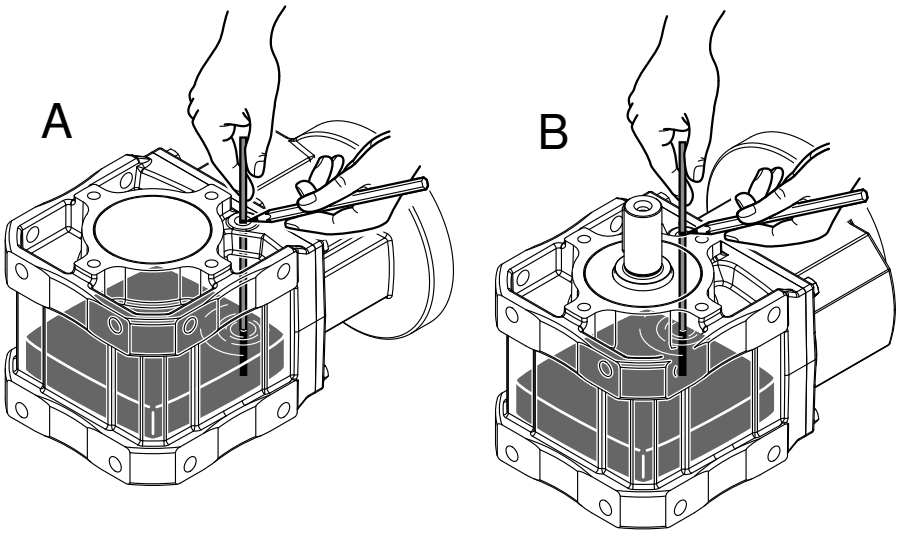


*784447371*

5. Determine the section "x" between the wetted part and the marking using a caliper (see following figure).

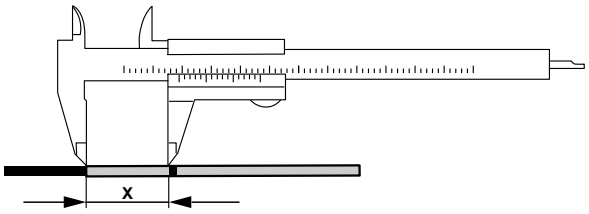


*9007200039761803*

6. Compare the determined value "x" to the min. value depending on the mounting position specified in the following table. Correct the fill level if required.

| Gear unit type | Oil level = section "x" in mm of the dipstick<br>Mounting position during check | |
|---|---|---|
| | M5<br>Lying on the A-side | M6<br>Lying on the B-side |
| W37 in M4 mounting position | 37 ± 1 | 29 ± 1 |
| W47 in M4 mounting position | 41 ± 1 | 30 ± 1 |

25803530/EN – 04/2018

7. Re-insert and tighten the screw plug. Observe for this the tightening torques in chapter "Tightening torques for oil level plugs, oil drain plugs, screw plugs, breather valves and oil sight glasses" (→ 🗎 32).

#### Checking the oil via the screw plug

Proceed as follows to check the oil of the gear unit:

1. Observe the notes in chapter Information on gear unit inspection/maintenance.
2. Remove a little oil at the oil screw plug.
3. Check the oil consistency:
   - Viscosity
   - If you can see that the oil is heavily contaminated, SEW-EURODRIVE recommends to change the oil even if this is outside the service intervals specified in "Inspection and maintenance intervals" (→ 🗎 110).
4. Check the oil level. See previous chapter.

#### Changing the oil via the screw plug



**⚠ WARNING**

Risk of burns due to hot gear unit and hot gear unit oil.

Serious injuries.

- Let the gear unit cool down before you start working on it. Due to the better flowability, the gear unit oil should still be warm so that the gear unit can be drained best.

1. Observe the notes in chapter Information on gear unit inspection/maintenance.
2. Set up the gear unit in M5 or M6 mounting position. See chapter "Mounting positions" (→ 🗎 129).
3. Place a container underneath the screw plug.
4. Remove the screw plugs on the A- and B-side of the gear unit.
5. Drain all the oil.
6. Re-insert the lower screw plug. Observe for this the tightening torques in chapter "Tightening torques for oil level plugs, oil drain plugs, screw plugs, breather valves and oil sight glasses" (→ 🗎 32).
7. Fill in fresh oil of the same type (contact SEW-EURODRIVE if necessary) via the upper screw plug. You must not mix different synthetic lubricants.
   - For the required oil quantity, refer to the nameplate or chapter Lubricant fill quantities.
   - Check the oil level according to chapter "Checking the oil level via oil level plug".
8. Re-insert the upper screw plug. Observe for this the tightening torques in chapter "Tightening torques for oil level plugs, oil drain plugs, screw plugs, breather valves and oil sight glasses" (→ 🗎 32).

25803530/EN – 04/2018

### 6.6.7 Replacing the oil seal

**NOTICE**

Damage to oil seal when mounted below 0 °C.

Damage to oil seal.

- Store oil seals at ambient temperatures over 0 °C.
- If necessary, heat the oil seal before mounting it.

Proceed as follows:

1. Ensure that there is a sufficient grease reservoir between the dust lip and sealing lip, depending on the gear unit design.
2. If you use double oil seals, the space has to be filled with grease for one third.

### 6.6.8 Painting the gear unit

**NOTICE**

Paint can block the breather valve and damage the sealing lips of the oil seals.

Damage to property

- Thoroughly cover the breather valve and sealing lip of the oil seals with strips prior to painting/re-painting.
- Remove the strips after painting.

25803530/EN – 04/2018

# 7 Mounting positions

## 7.1 Designation of the mounting positions

The following illustration shows the SEW-EURODRIVE mounting positions M1 – M6:

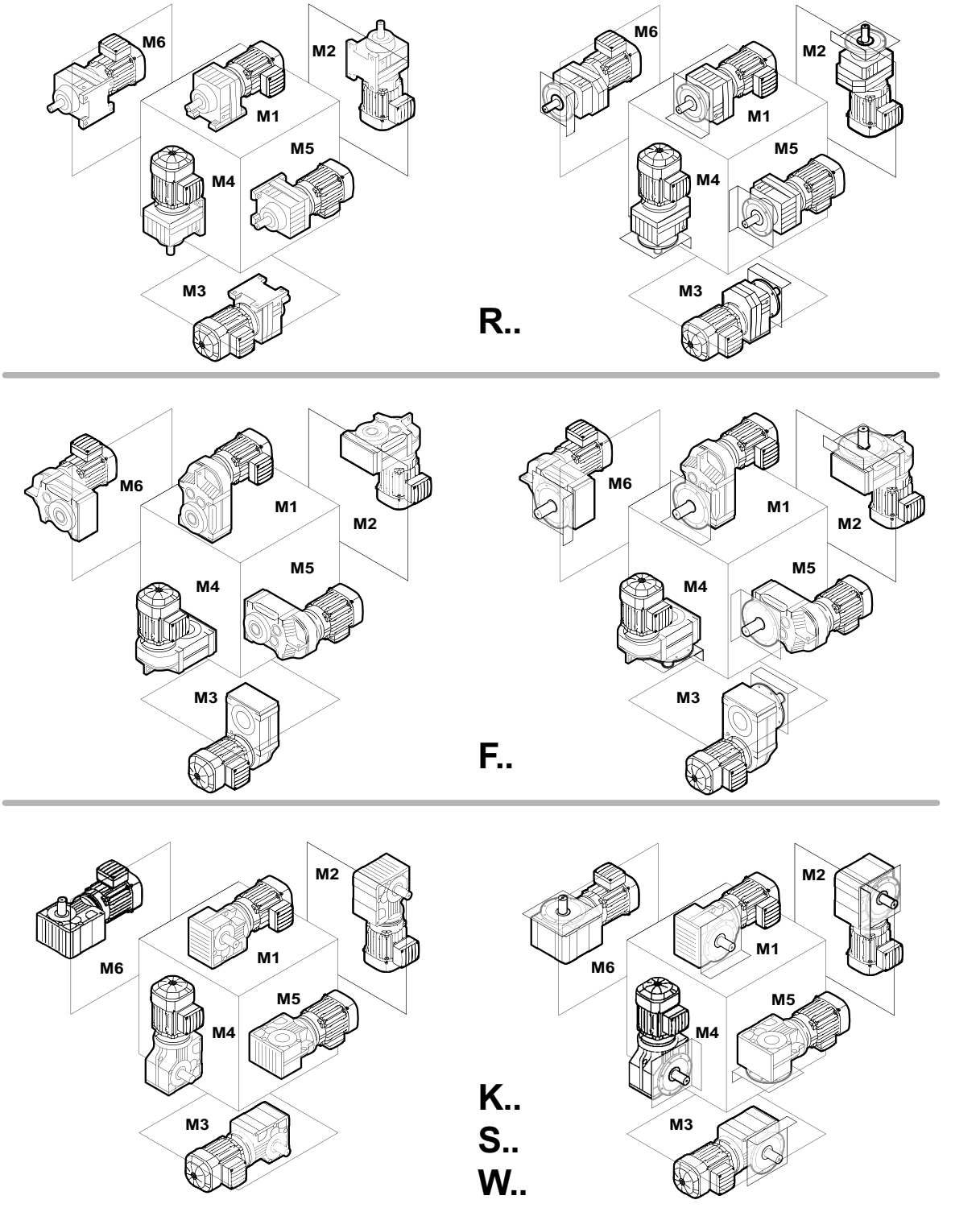


25803530/EN – 04/2018

## 7.2 Churning losses and thermal rating

* (→ 🗎 X)

Churning losses may occur with the following conditions. They must be considered during thermal check:

- A mounting position where the first gear unit stage is fully immersed in the lubricant. The respective mounting positions of the gear units are indicated with a * in chapter "Mounting position sheets" (→ 🗎 132).
- A high mean input speed and thus a high circumferential velocity of the gear wheels of the input gear stage.

If one or both requirements are met, determine the requirements of the application and the corresponding operating conditions (see chapter "Data for calculating the thermal rating" (→ 🗎 130)) and contact SEW-EURODRIVE. SEW-EURODRIVE can calculate the thermal rating based on the actual operating conditions. The thermal rating of the gear unit can be increased by appropriate measure e.g. by using a synthetic lubricant with higher thermal endurance properties.

### INFORMATION

To reduce churning losses to a minimum, use gear units preferably in M1 mounting position.

### 7.2.1 Data for calculating the thermal rating

The following information is required for calculating the thermal rating:

**Gear unit type and design:**

- Gear unit ratio i
- Mean input speed $\overline{n}_e$ or mean output speed $\overline{n}_a$ in $min^{-1}$
- Effective motor torque $M_{eff}$ in Nm
- Input motor power $P_e$ in kW
- Mounting position M1 – M6 or pivoting angle

**Installation site:**

- Ambient temperature $T_{amb}$ in °C
- In small, closed rooms or in large rooms (halls) or outdoors

**Installation on site:**

- Space-critical or well ventilated
- Steel or concrete base

## 7.3 Change of mounting position

Make sure to read the following information when you operate the gearmotor in a mounting position other than the one indicated in the order:

- Adjust the lubricant fill quantity to the changed mounting position.
- Adjust the position of the breather valve.
- When changing the mounting position to M4: Contact SEW-EURODRIVE. Depending on the drive's operating mode, an oil expansion tank might be necessary (see chapter "Oil expansion tank" (→ 🗎 93)).
- For helical-bevel gearmotors: Contact SEW-EURODRIVE if you want to change to mounting position M5 or M6, independent of the initial mounting position.

25803530/EN – 04/2018

- For helical-worm gearmotors: Contact SEW-EURODRIVE when changing to mounting position M2 or M3.
- For helical gearmotors: Contact SEW-EURODRIVE when changing to mounting position M2.
- If you change the mounting position to a mounting position that requires more oil, SEW-EURODRIVE recommends to perform a thermal check/project planning again.

## 7.4 Universal mounting position M0

SPIROPLAN® W10 – W30 gear units can be ordered with M0 universal mounting position. These small SPIROPLAN® gear units are entirely enclosed due to their small size and have no breather valve. You can use them in any mounting position M1 – M6 without having to adjust the gear unit.

All W10 – W30 gear units of one size have the same oil fill quantity.

## 7.5 Mounting position MX

Mounting position MX is available for all gear units of the sizes R..7, F..7, K..7, K..9, S..7 and SPIROPLAN® W..7.

In contrast to the M0 mounting position, gear units in MX mounting position must be adjusted according to the mounting position prior to startup.

For mounting position MX, the gear units are delivered with the maximally possible amount of oil and sealed with oil screw plugs. A breather valve is included with each drive. The oil fill volume must be adapted according to the mounting position of the gear unit (see chapter Lubricant fill quantities). Customers will also have to mount the enclosed breather valve at the proper location depending on the mounting position, see chapter Mounting position sheets. For screwing in the breather valve, observe the corresponding tightening torque in chapter "Tightening torques for oil level plugs, oil drain plugs, screw plugs, breather valves and oil sight glasses" (→ 🗎 32).

Check for the correct oil level before startup, as described in chapter Checking the oil level and changing the oil.

### 7.5.1 Compound gear units in MX mounting position

In MX mounting position, both gear units (primary and subsequent gear unit) are in the same mounting position.

25803530/EN – 04/2018

## 7.6 Mounting position sheets

### 7.6.1 Key to the mounting position sheets

## INFORMATION

The positions of the breather valve, oil level plug, and oil drain plug specified in the mounting position sheets are binding and comply with the assembly specifications.

The motors are only depicted symbolically on the mounting position sheets.

## INFORMATION

**For gear units with solid shaft:** The displayed shaft is always on the A-side.

**For shaft-mounted gear units:** The shaft with dashed lines represents the customer shaft. The output side ( = shaft position) is always shown on the A-side.

## INFORMATION

SPRIOPLAN® gearmotors are not dependent on the mounting position, except for W..37 and W..47 gearmotors in mounting position M4. However, mounting positions M1 to M6 are also shown for SPIROPLAN® gearmotors to assist you in working with this documentation.

## INFORMATION

SPIROPLAN® gearmotors W..10 to W..30 cannot be equipped with breather valves, oil level plugs or oil drain plugs.

SPIROPLAN® gearmotors W..37 and W..47 are equipped with breather valves in mounting position M4 and with oil drain plugs in mounting position M2.

## INFORMATION

Some gear units can be supplied in mounting position M0. In this case, the gear unit is delivered in a universal mounting position and can be adjusted to various mounting positions by the customer. It may be necessary to contact SEW-EURODRIVE.

**Symbols used**

The following table shows the icons used in the mounting position sheets.

| Icon | Meaning |
|---|---|
|  | Breather valve |
| 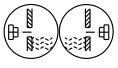 | Oil level plug [1] |
|  | Oil drain plug |

1) Does not apply to the 1st gear unit (large gear unit) of compound gear units. See chapter "Position of the oil level plug of compound gear units".

25803530/EN – 04/2018

### 7.6.2 Position of the oil level plug of compound gear units

To ensure sufficient lubrication of the first gear unit (larger gear unit) in case of compound gear units, the following gear units have a higher oil level in the specified mounting positions:

- Helical gear unit type R..R in mounting position M1 and M2
- Helical-worm gear unit type S..R in mounting position M3

The oil level plugs are located at the following positions, deviating from the specifications on the mounting position sheets:

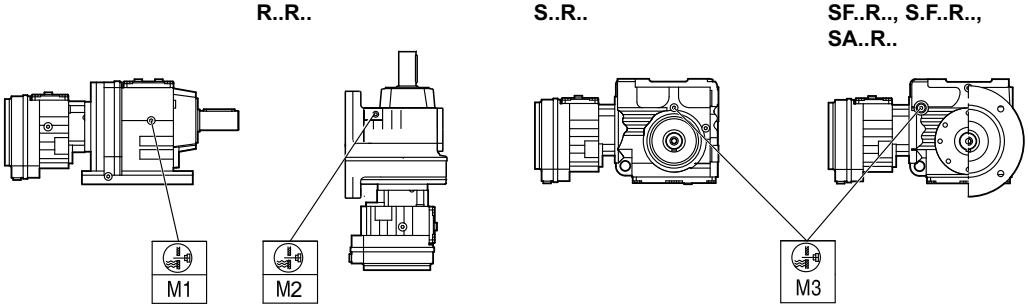


*15987248395*

| Icon | Meaning |
|---|---|
|  | Oil level plug |

### 7.6.3 Mounting positions of helical gearmotors

**RX57-RX107**

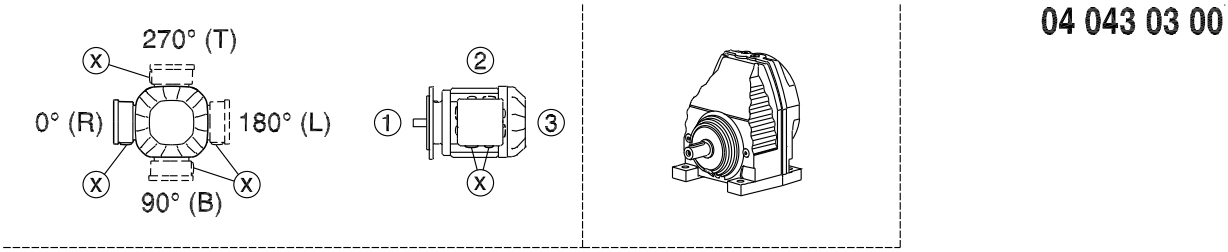


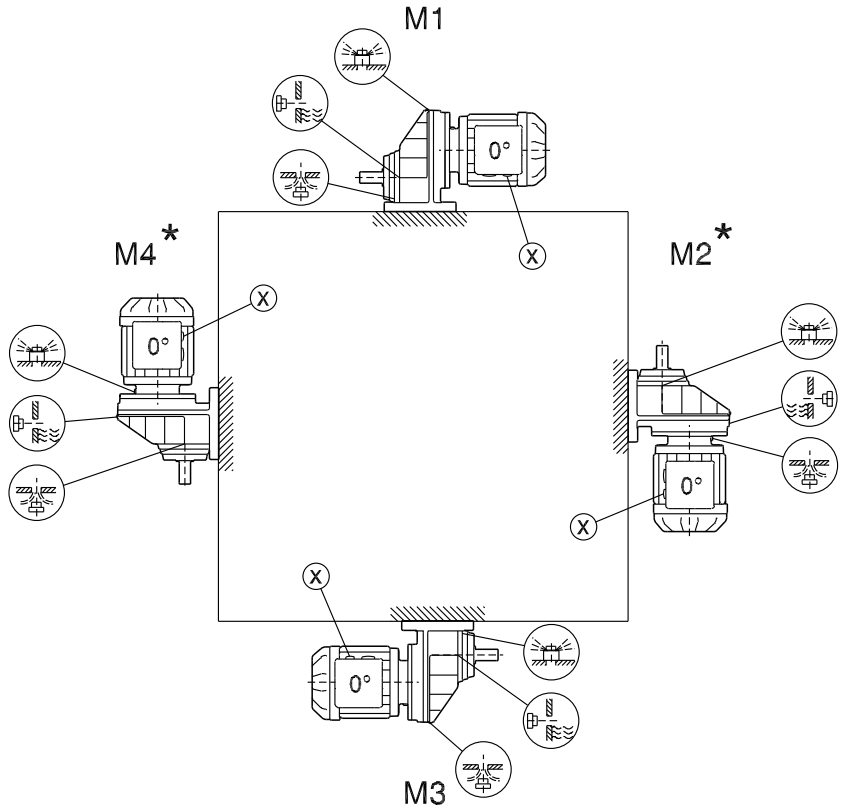


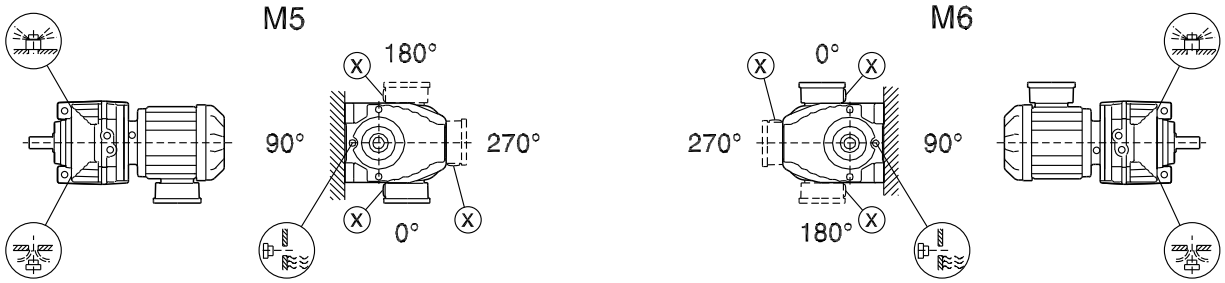


* (→ 🗎 130)

25803530/EN – 04/2018

**RXF57-RXF107**

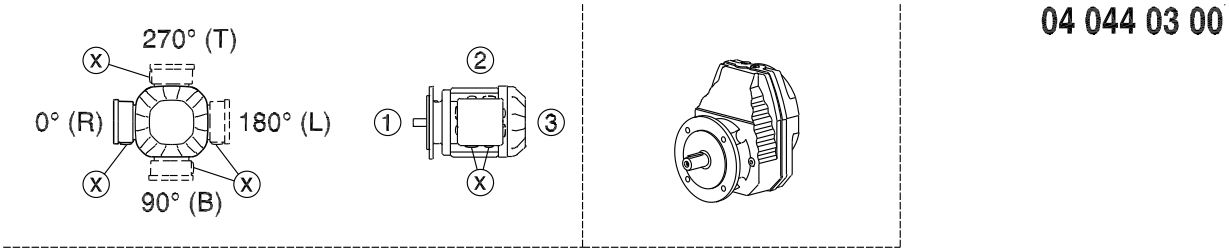


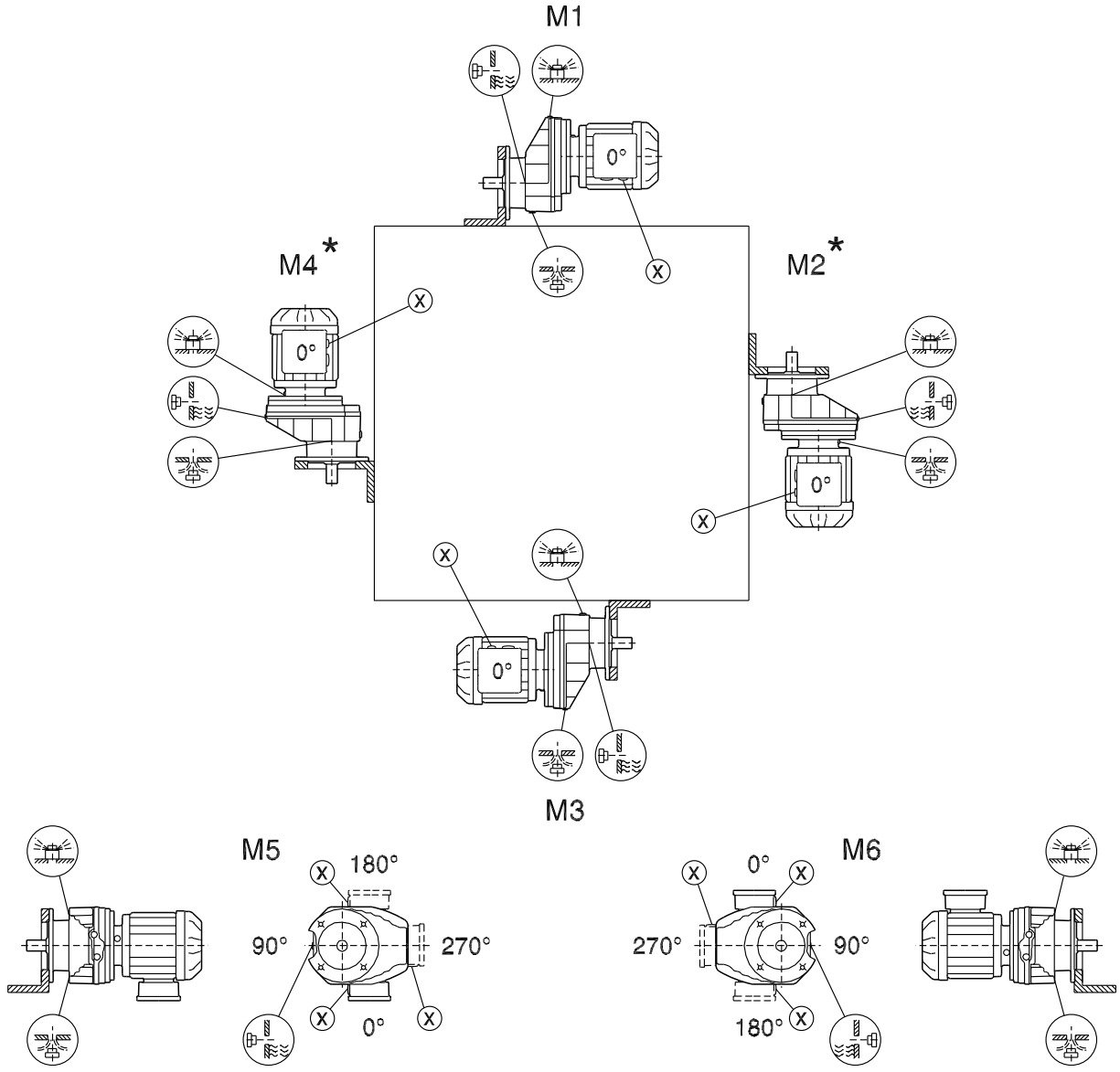


* (→ 130)

**R07-R167**

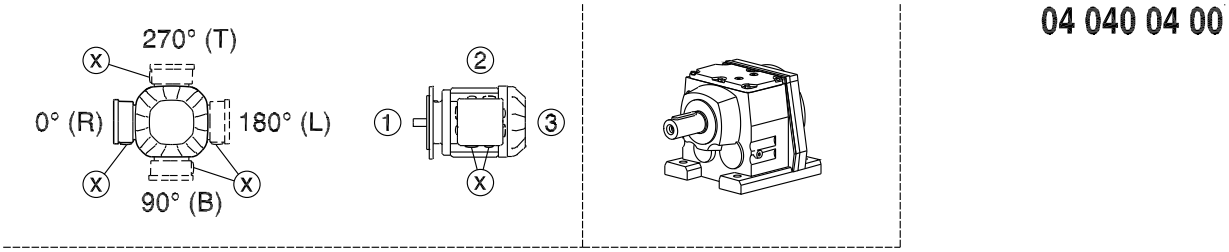


04 040 04 00

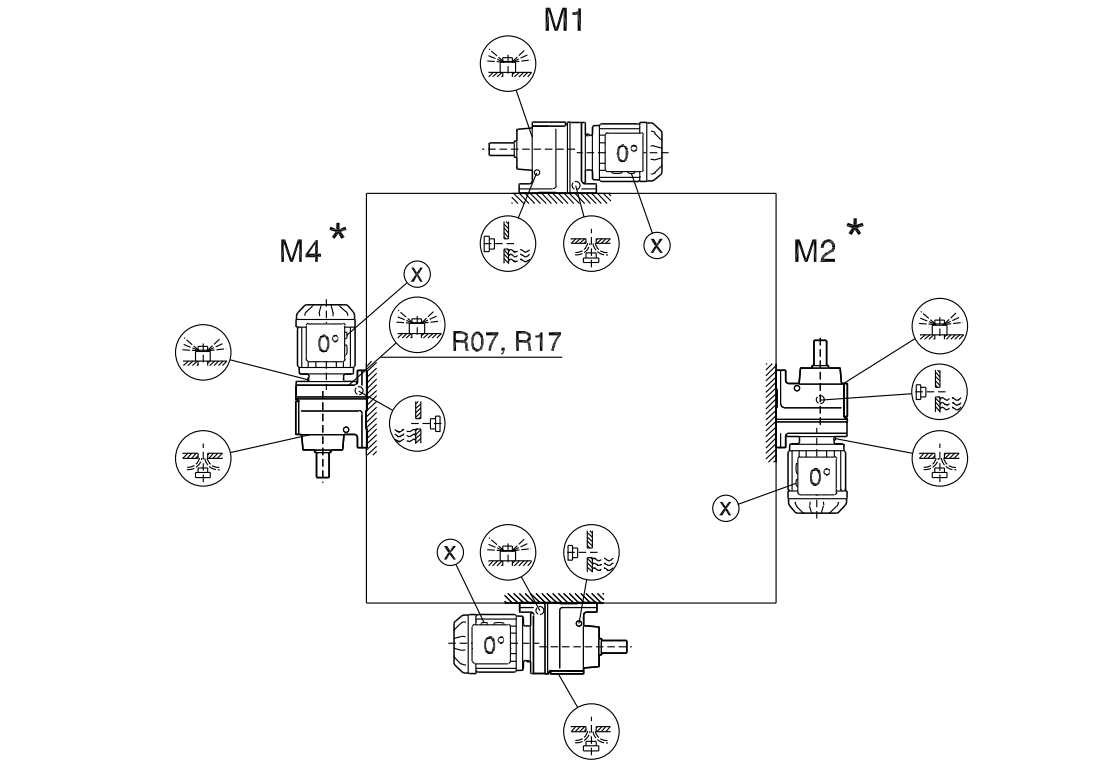


| | | |
|---|---|---|
| R07 | ⊗ | M1, M2, M3, M5, M6 |
| R17, R27 | ⊗ | M1, M3, M5, M6 |
| R07, R17, R27 | ⊗ ⊗ | |
| R47, R57 | ⊗ | M5 |

* (→ 🗎 130)

25803530/EN – 04/2018

**RF07-RF167, RZ07-RZ87**

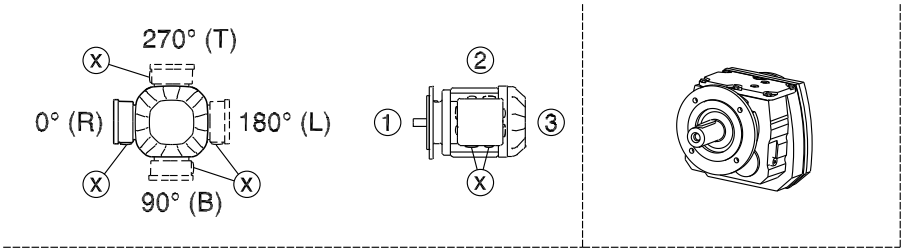


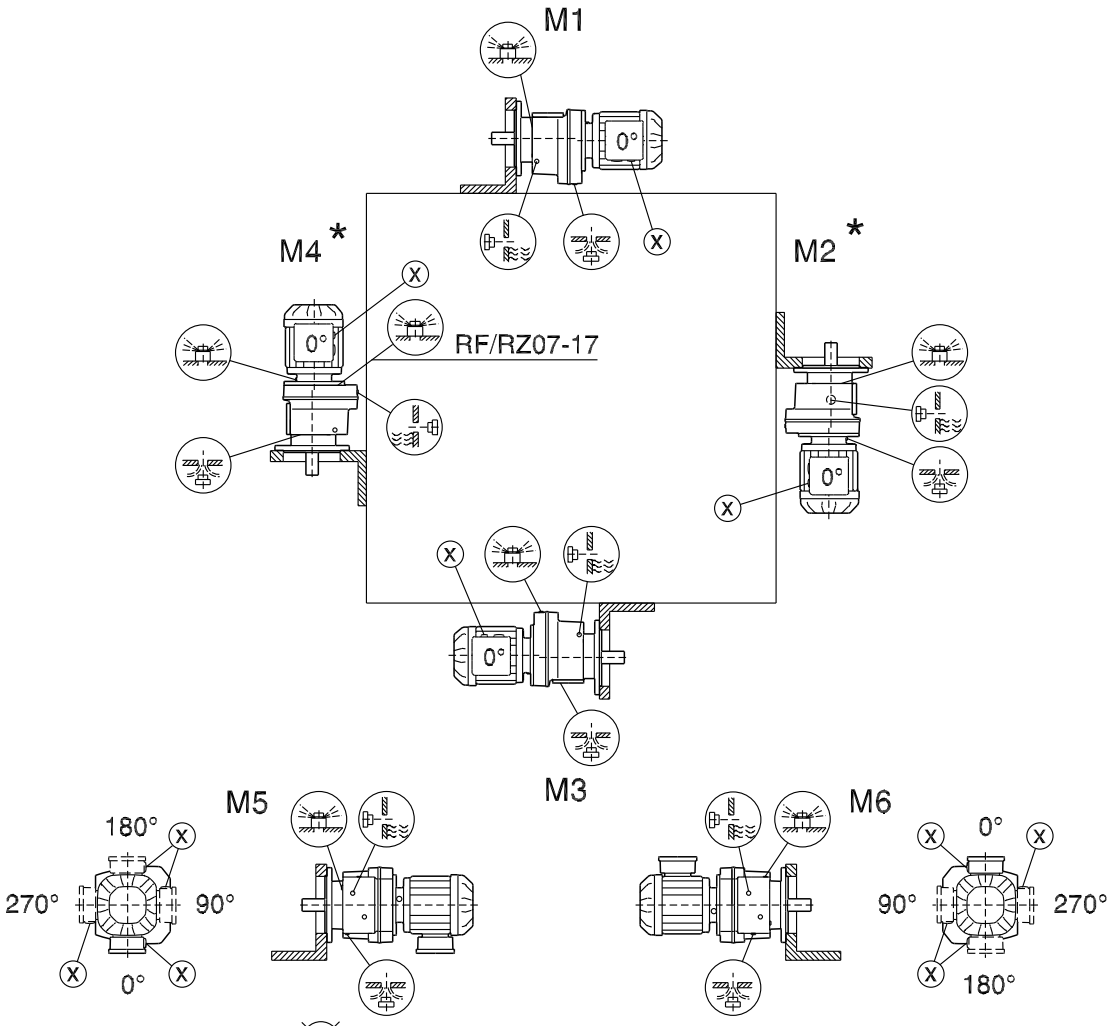


| | |
|---|---|
| RF/RZ07 | M1, M2, M3, M5, M6 |
| RF/RZ17, 27 | M1, M3, M5, M6 |
| RF/RZ07, 17, 27 | |
| RF/RZ47, 57 | M5 |

* (→ 🗎 130)

25803530/EN – 04/2018

**R07F-R87F**

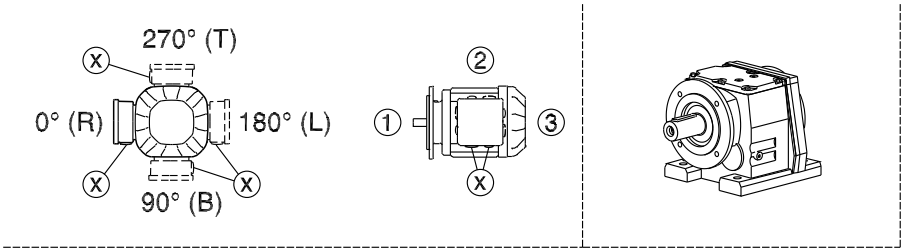


04 042 04 00

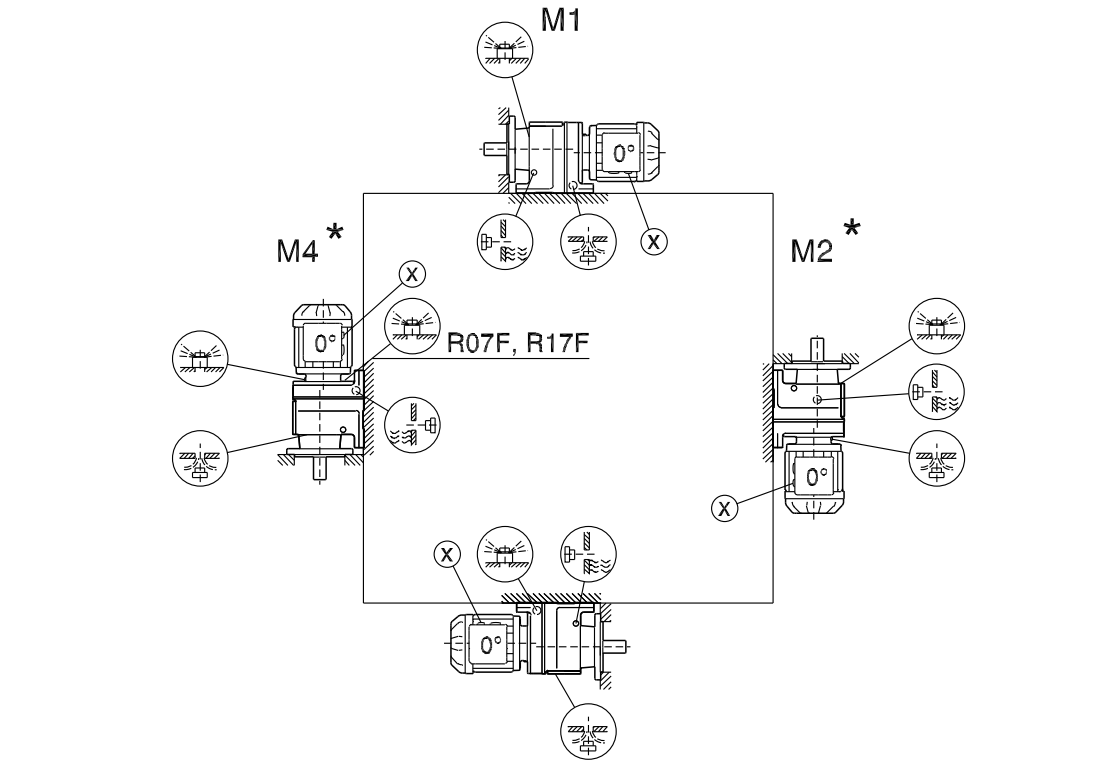


| | | |
|---|---|---|
| R07F | ⊗ | M1, M2, M3, M5, M6 |
| R17F, R27F | ⊗ | M1, M3, M5, M6 |
| R07F, R17F, R27F | ⊗ | ⊗ |
| R47F, R57F | ⊗ | M5 |

* (→ 🗎 130)

25803530/EN – 04/2018

### 7.6.4 Mounting positions of parallel-shaft helical gearmotors

**F/FA..B/FH27B-157B, FV27B-107B**

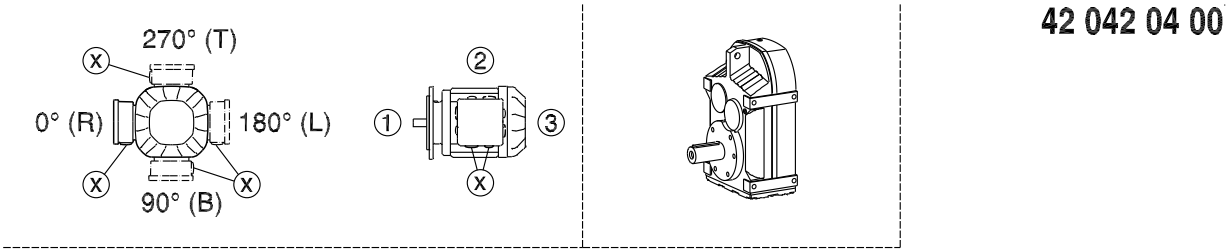


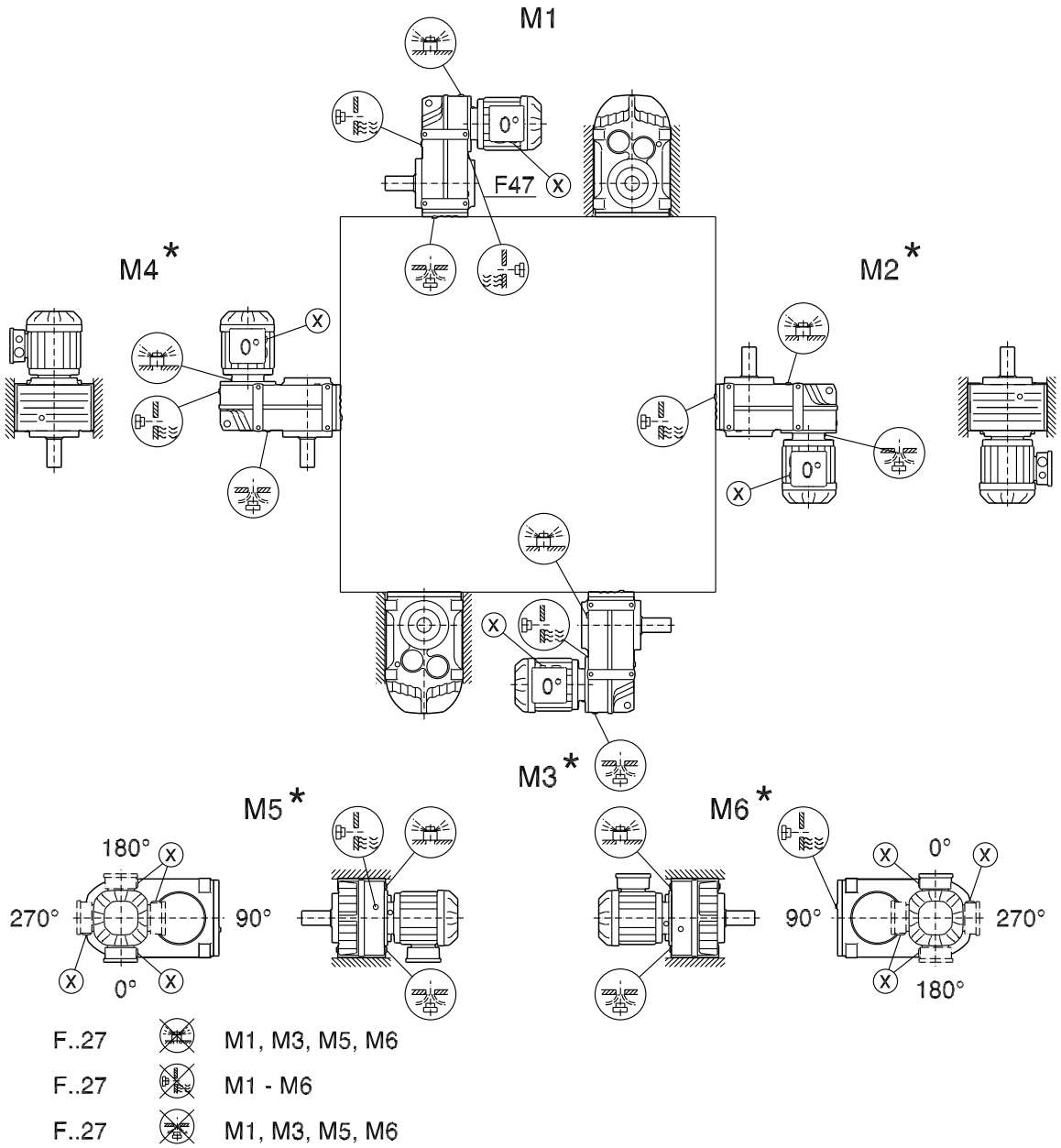


| | | |
|---|---|---|
| F..27 | | M1, M3, M5, M6 |
| F..27 | | M1 - M6 |
| F..27 | | M1, M3, M5, M6 |

* (→ 🗎 130)

25803530/EN – 04/2018

**FF/FAF/FHF/FZ/FAZ/FHZ27-157, FVF/FVZ27-107, FM/FAM67-157**

42 043 04 00

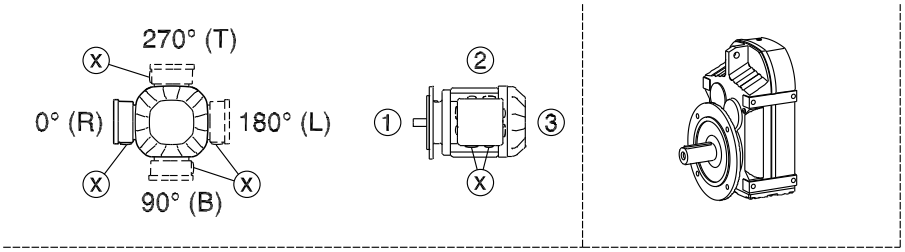


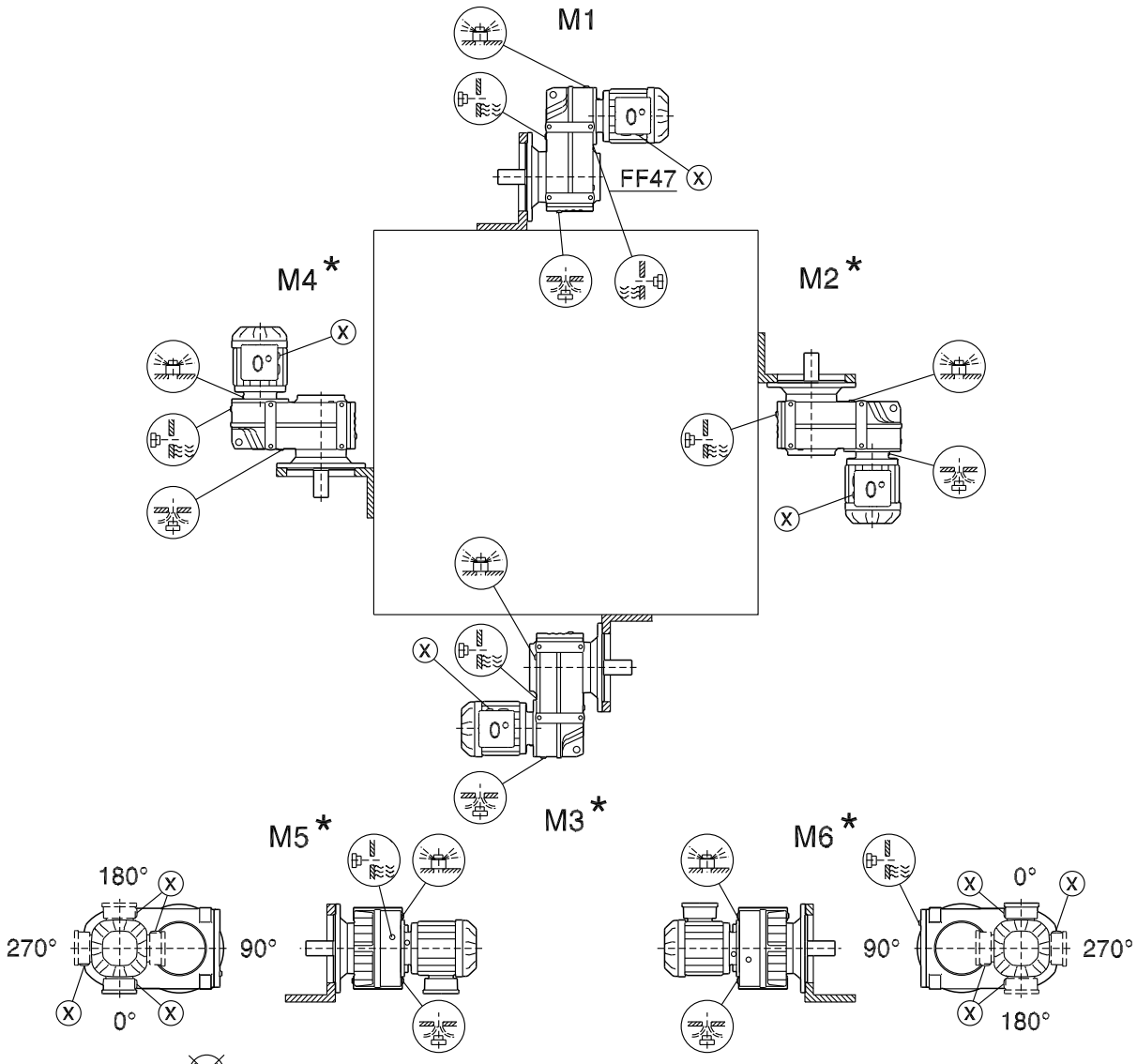


| | | |
|---|---|---|
| F..27 | | M1, M3, M5, M6 |
| F..27 | | M1 - M6 |
| F..27 | | M1, M3, M5, M6 |

* (→ 130)

25803530/EN – 04/2018

**FA/FH27-157, FV27-107, FT37-97**

42 044 04 00

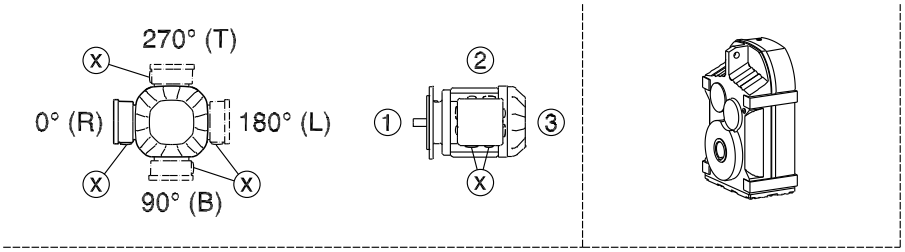


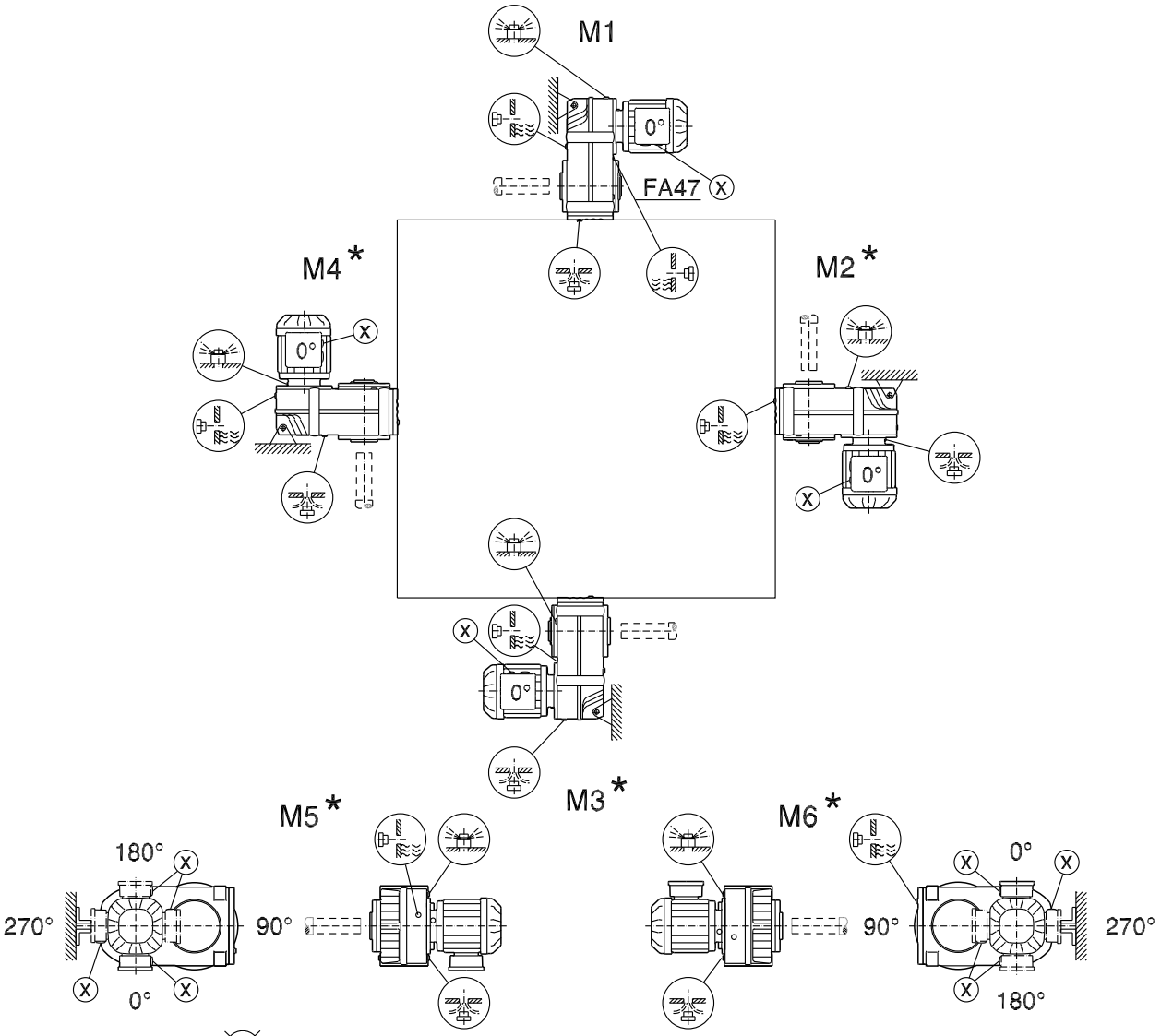


| | | |
|---|---|---|
| F..27 | | M1, M3, M5, M6 |
| F..27 | | M1 - M6 |
| F..27 | | M1, M3, M5, M6 |

* (→ 130)

25803530/EN – 04/2018

### 7.6.5 Mounting positions of helical-bevel gearmotors

**K/KA..B/KH19B-29B**

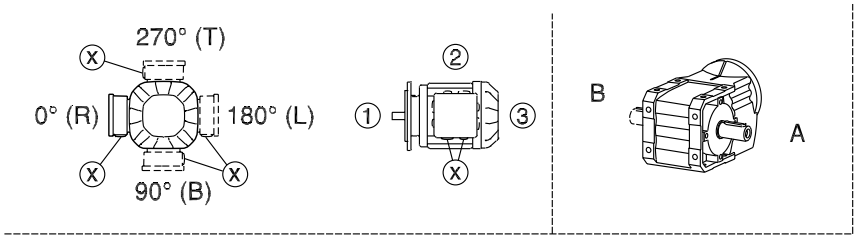


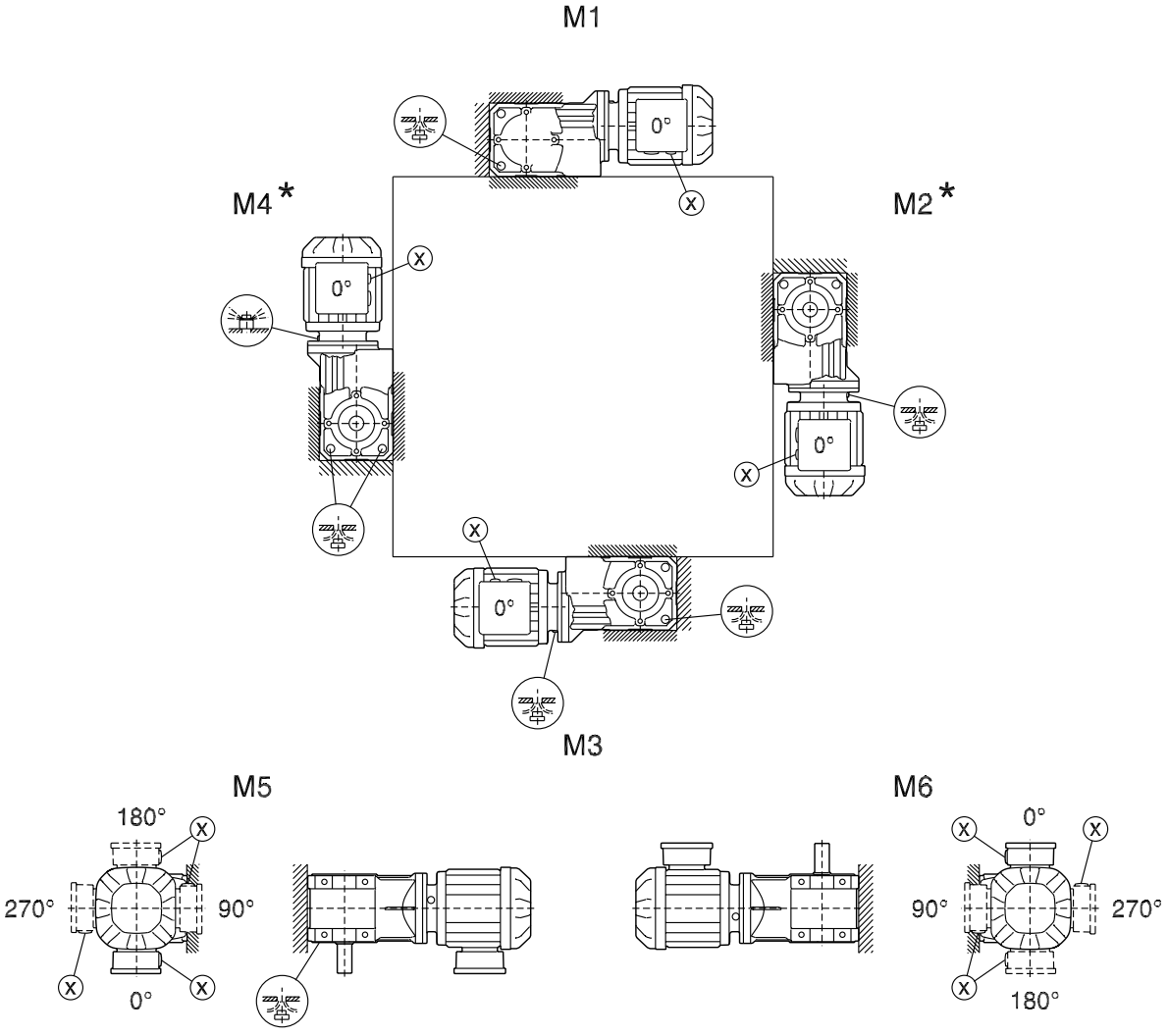


* (→ 130)

25803530/EN – 04/2018

**KF..B/KAF..B/KHF19B-29B**

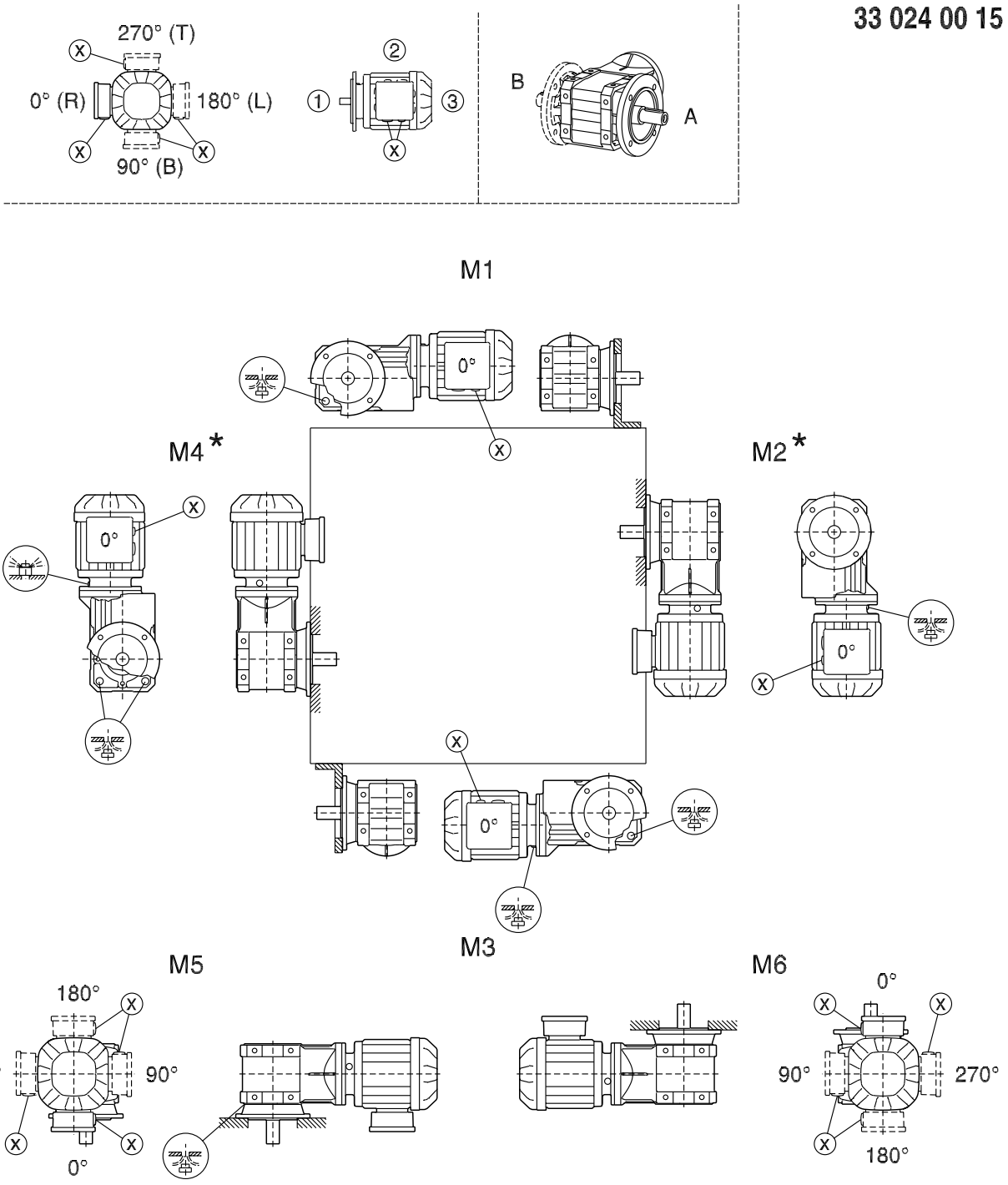


* (→ 🗎 130)

**KA..B/KH19B-29B**

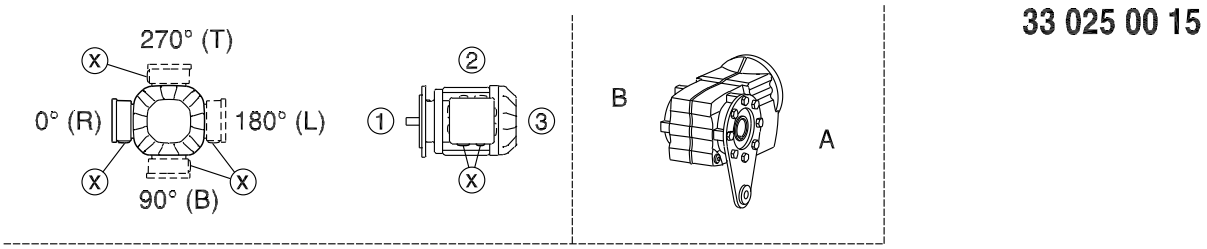


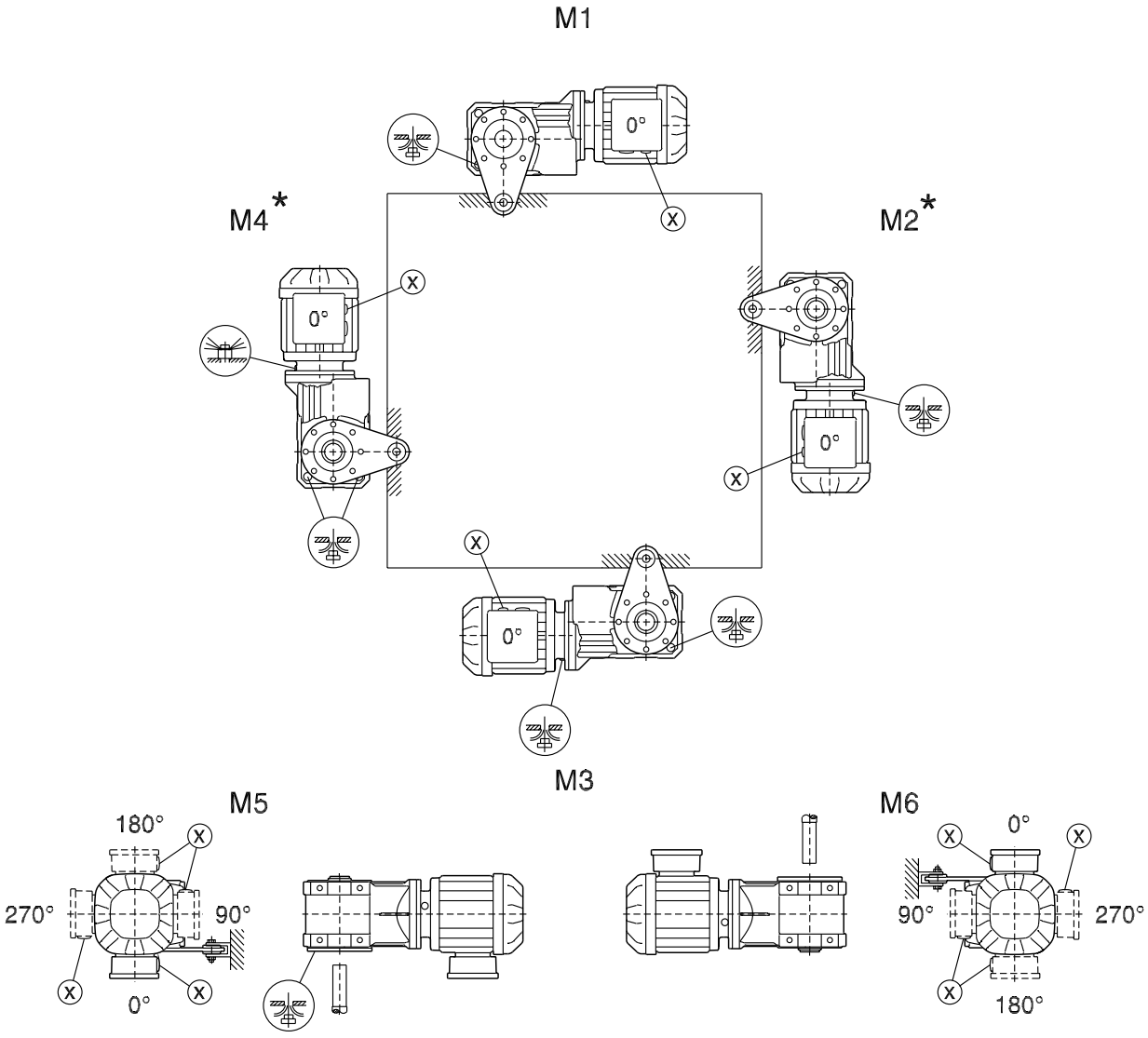





* (→ 130)

25803530/EN – 04/2018

**KF/KAF/KHF19-29**

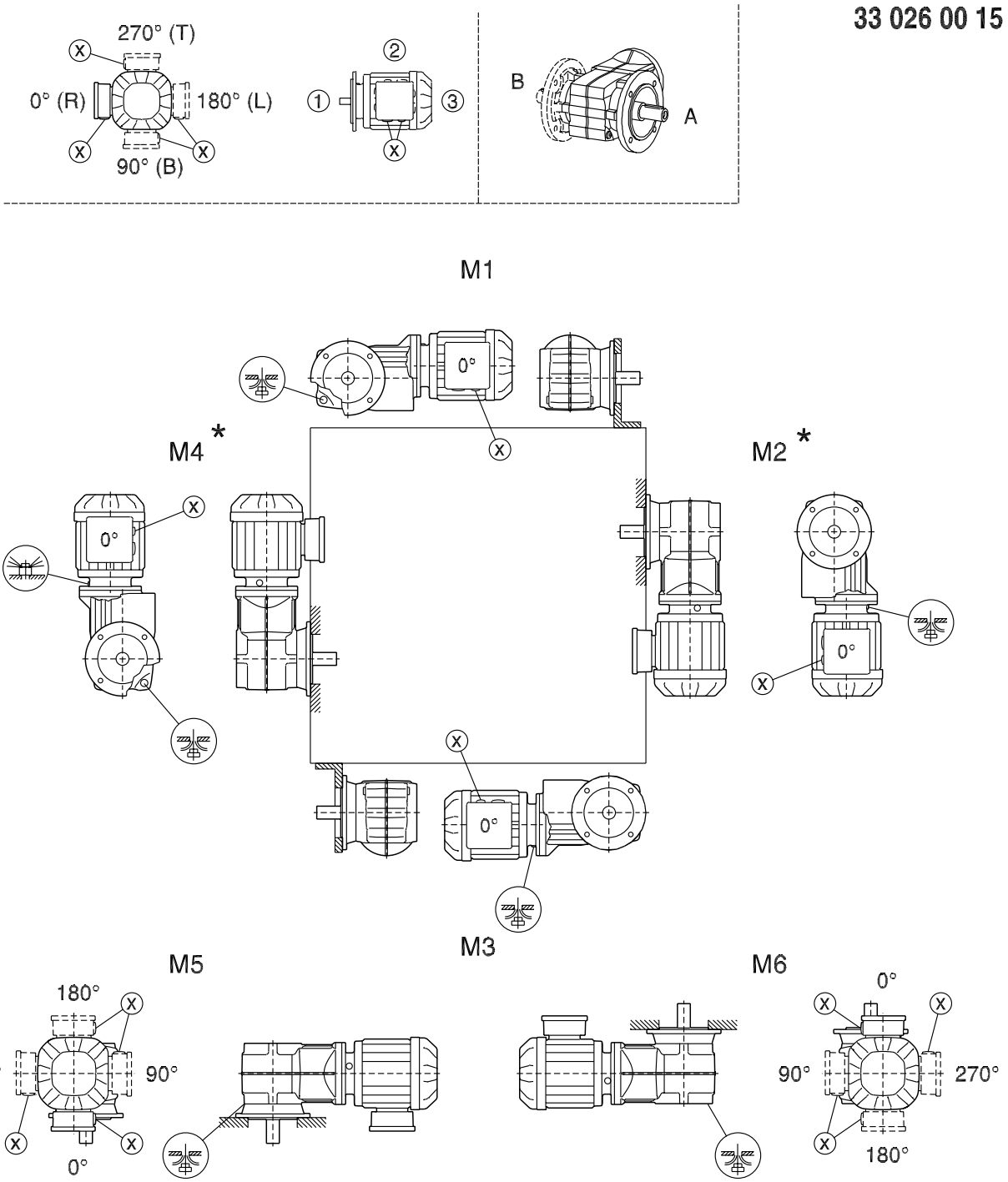


* (→ 🗎 130)

25803530/EN – 04/2018

**KA/KH19-29**

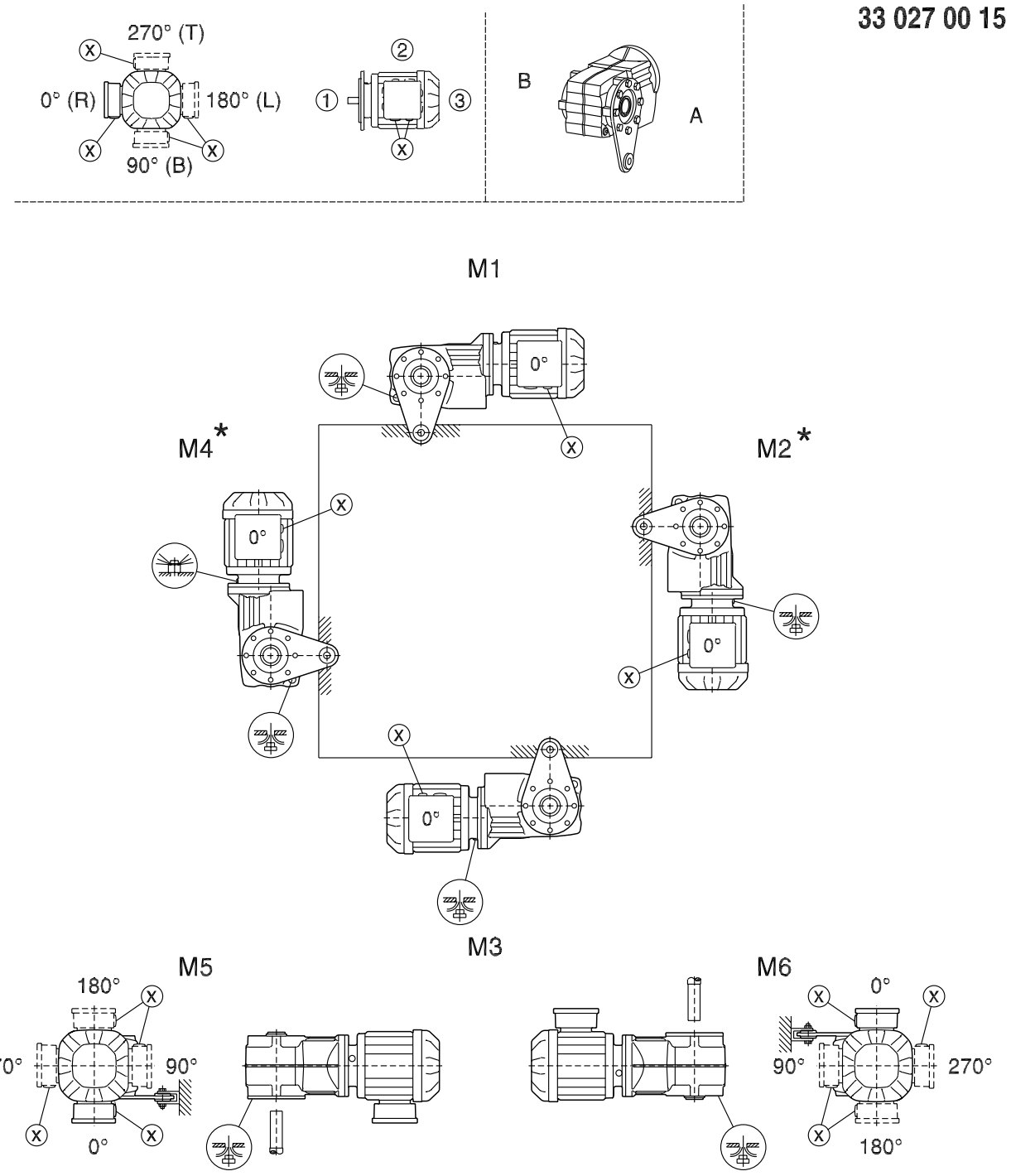


* (→ 130)

25803530/EN – 04/2018

**K/KA..B39-49**

33 092 02 14

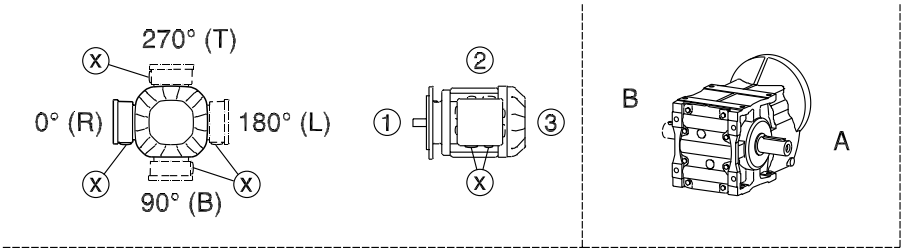


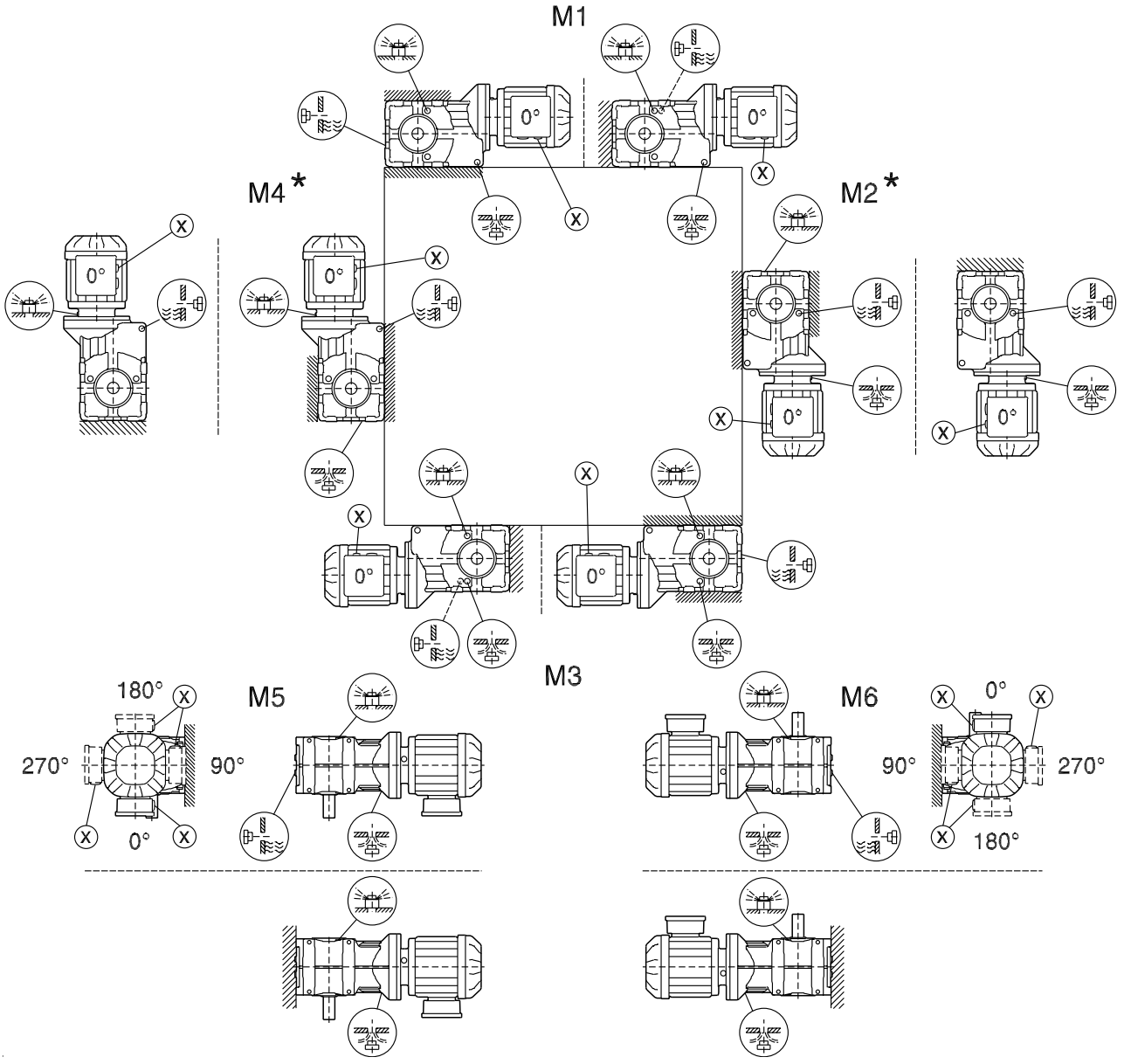


* (→ 🖹 130)

25803530/EN – 04/2018

**KF/KAF/KHF39-49**

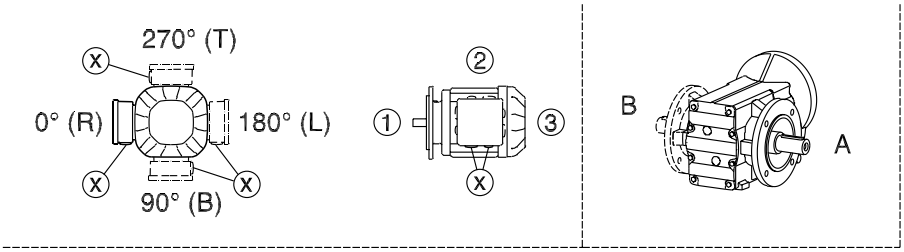


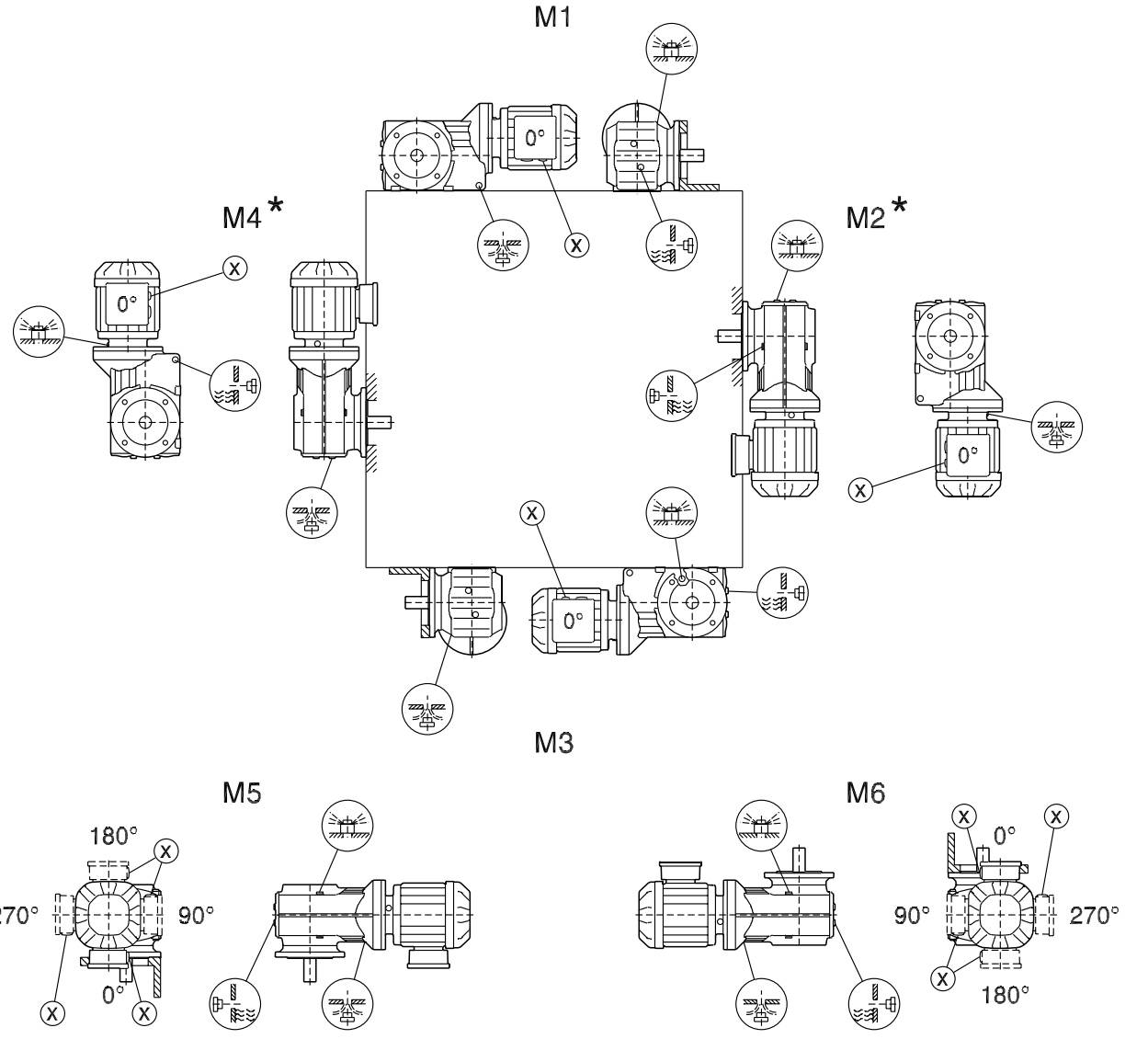


* (→ 130)

25803530/EN – 04/2018

**KA/KH/KT39-49**

33 094 01 14

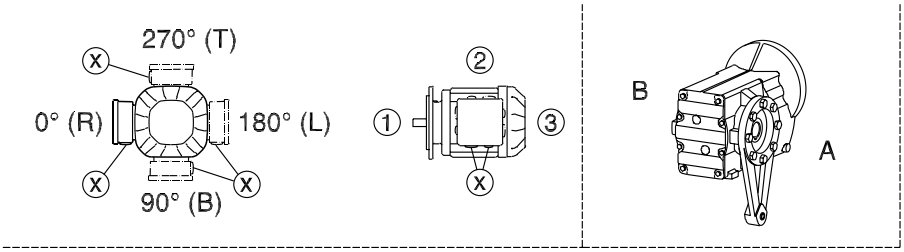


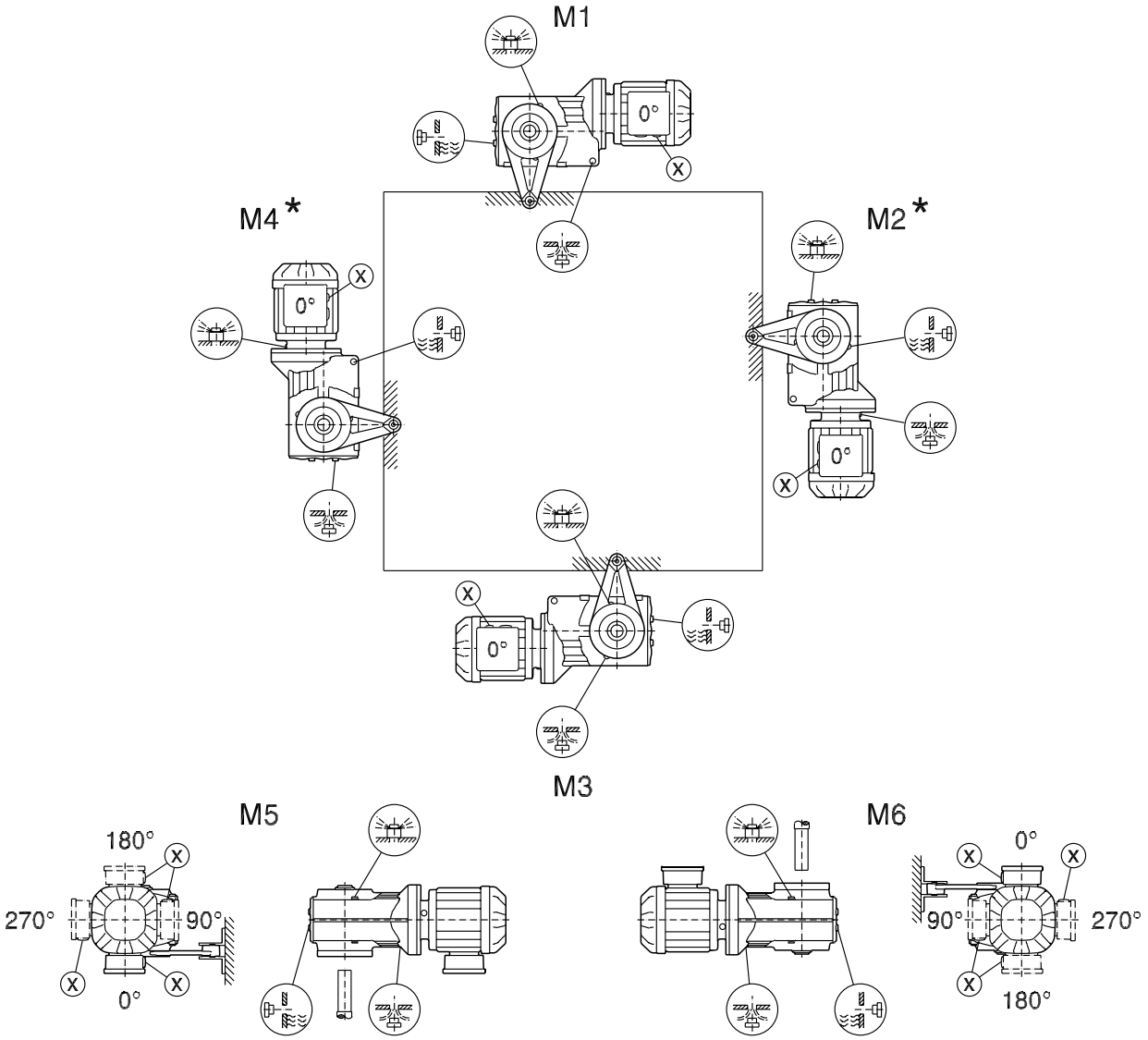


* (→ 🗎 130)

**K/KA..B/KH47B-157B, KV47B-107B**

34 025 05 00

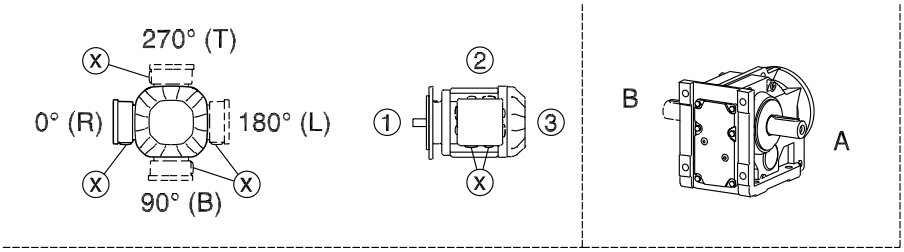


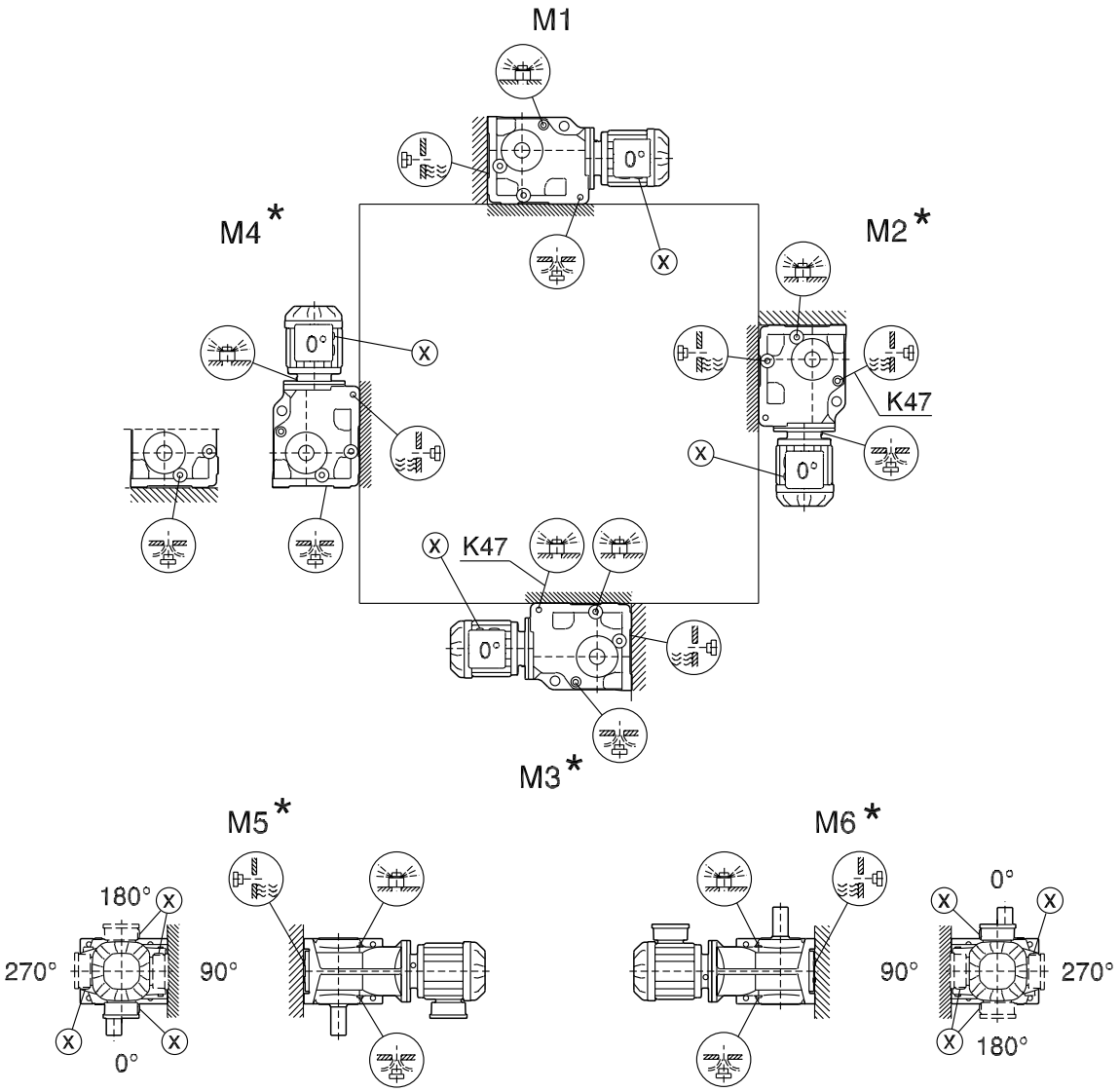


* (→ 🗎 130)

25803530/EN – 04/2018

**K167-187, KH167B-187B**

34 026 05 00

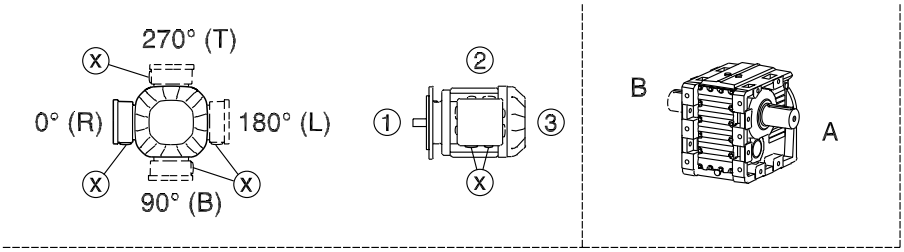


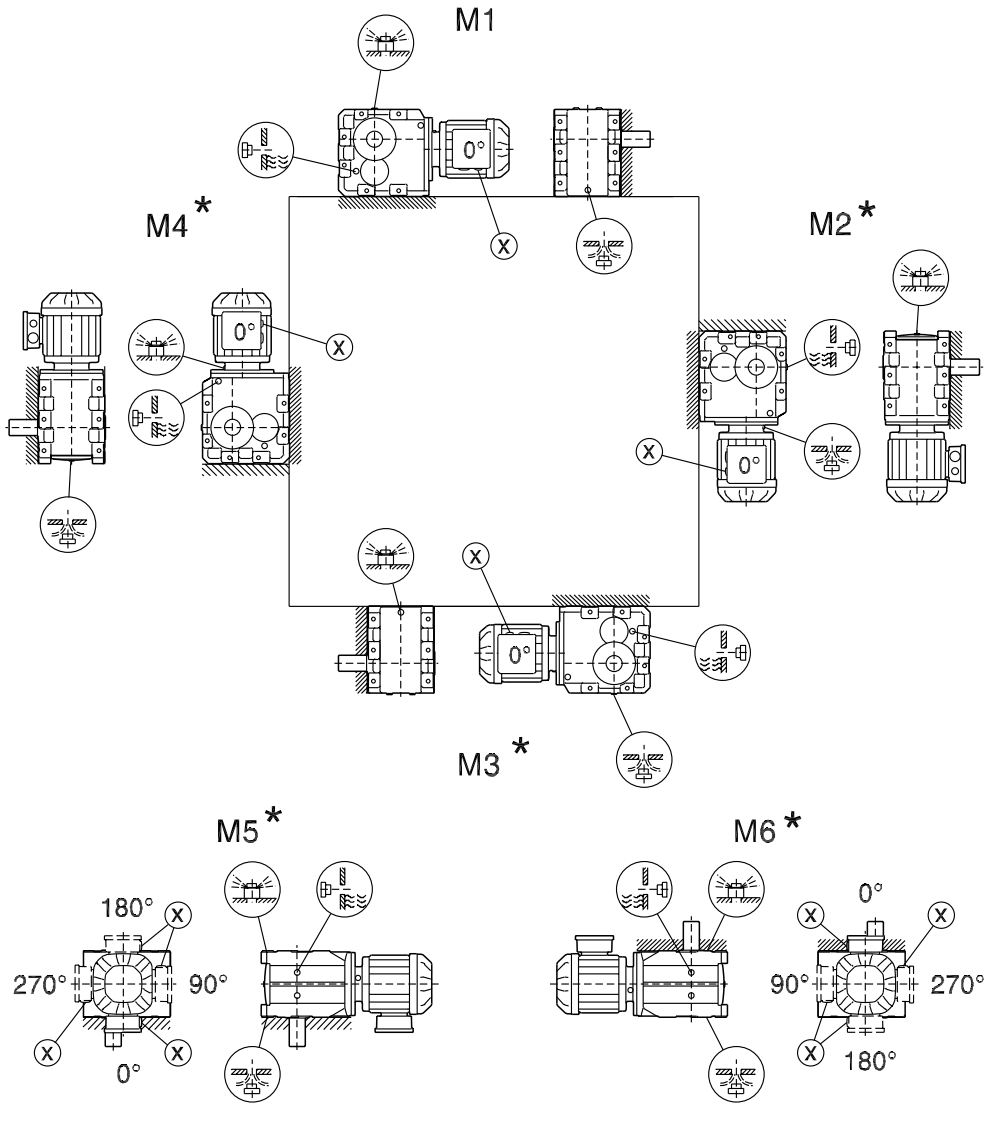


* (→ 🗎 130)

**KF/KAF/KHF/KZ/KAZ/KHZ37–157, KVF/KVZ37–107, KM/KAM67–157**

34 027 04 00

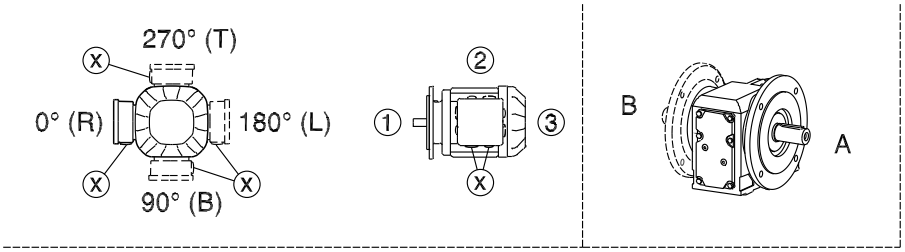


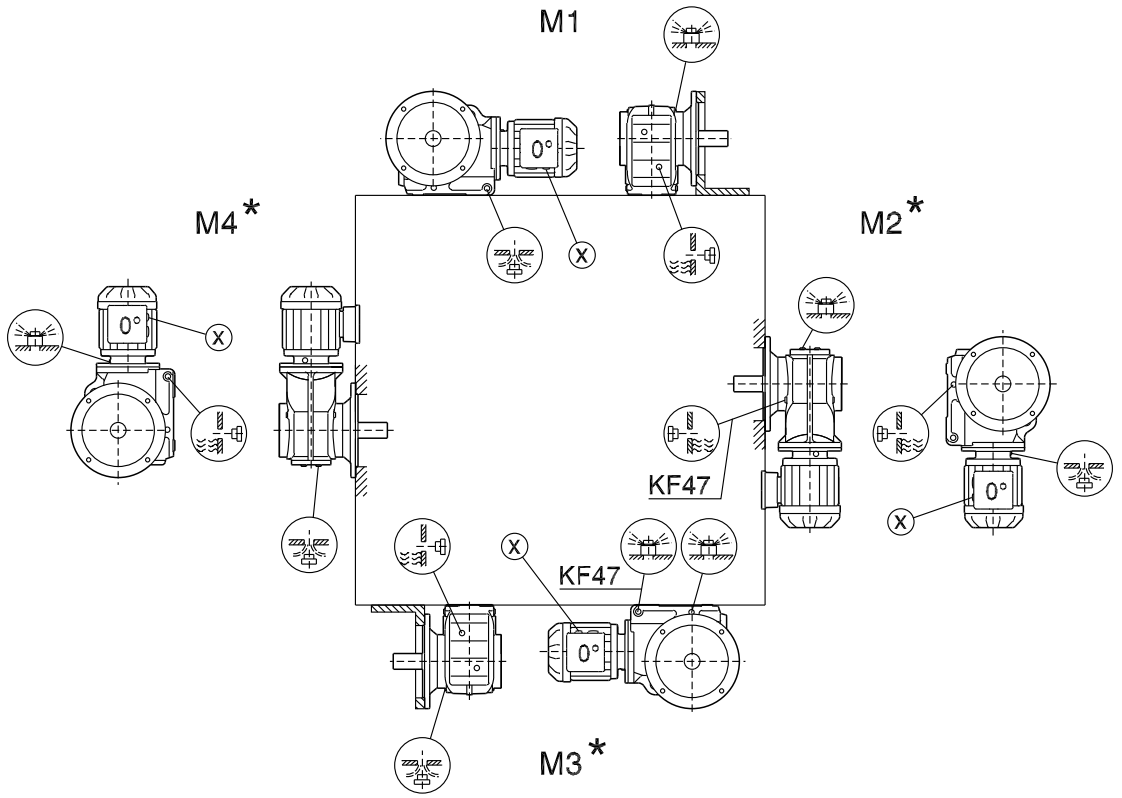


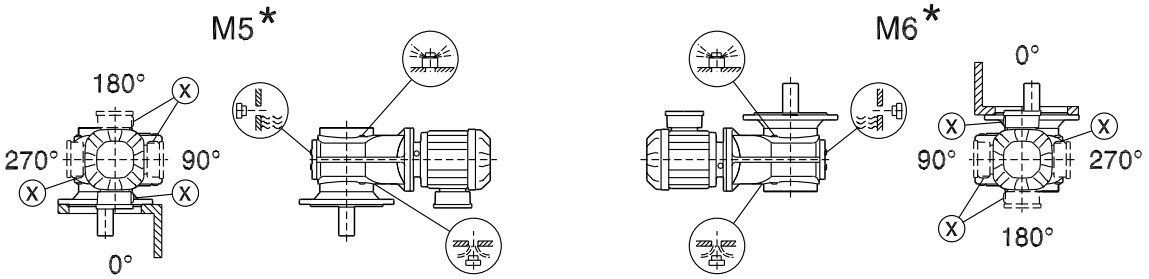


* (→ 🗎 130)

25803530/EN – 04/2018

**KA/KH37-157, KV37-107, KT37-97**

39 025 05 00

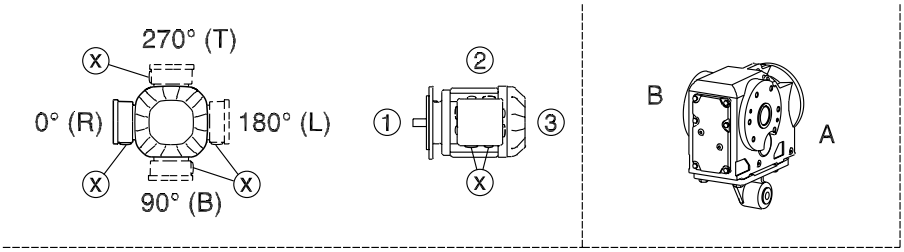


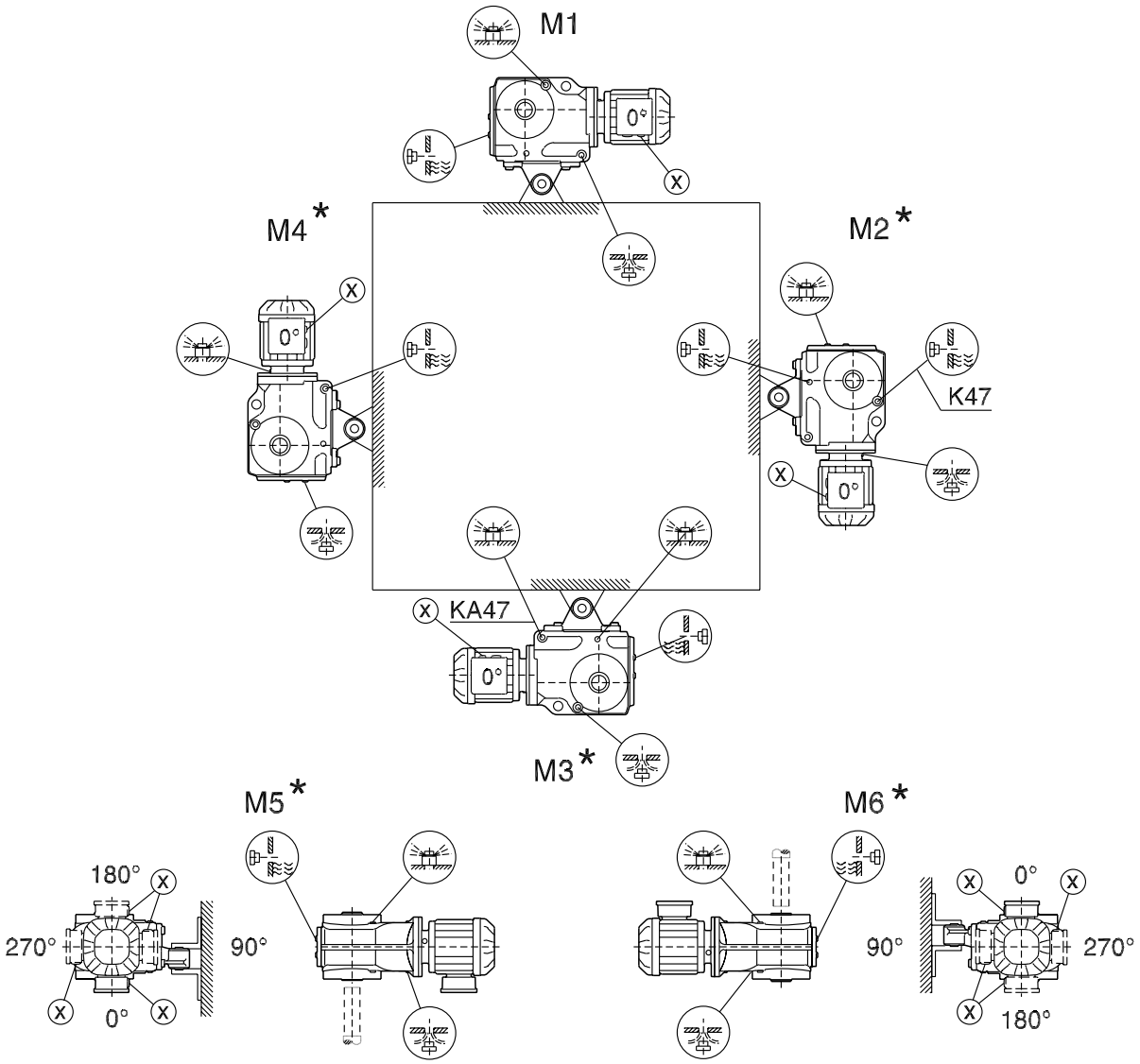


* (→ 130)

25803530/EN – 04/2018

**KH167-187**

39 026 05 00

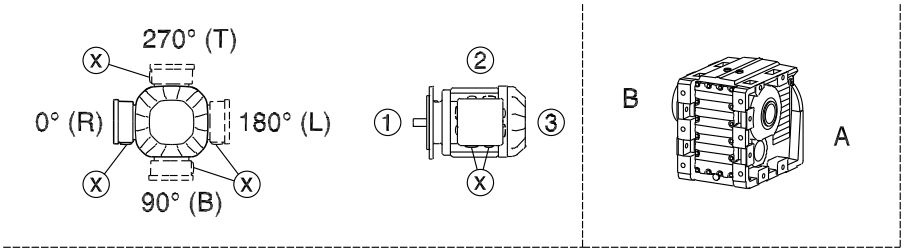


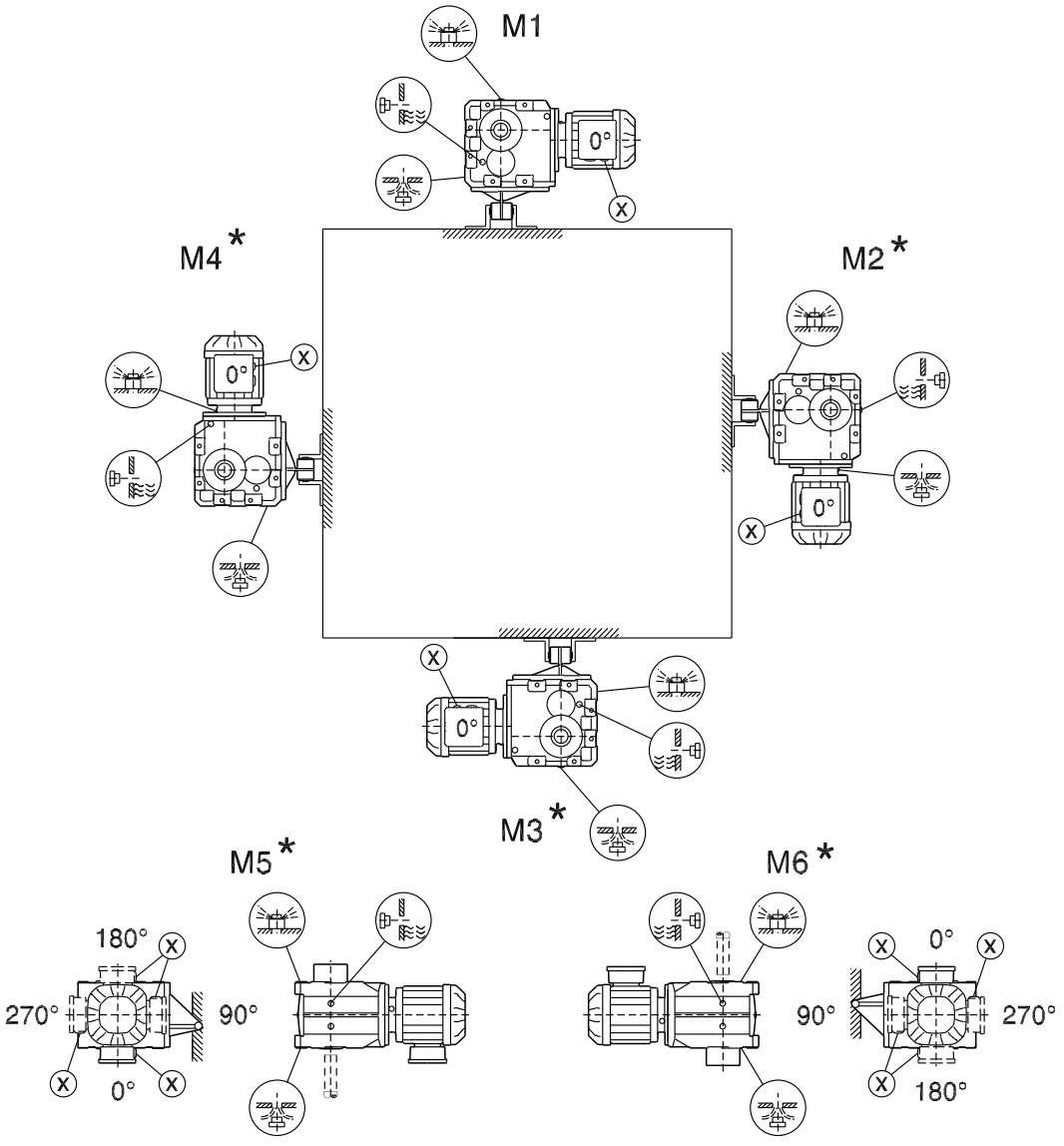


* (→ 🗎 130)

25803530/EN – 04/2018

### 7.6.6 Mounting positions of helical-worm gearmotors

**S37**

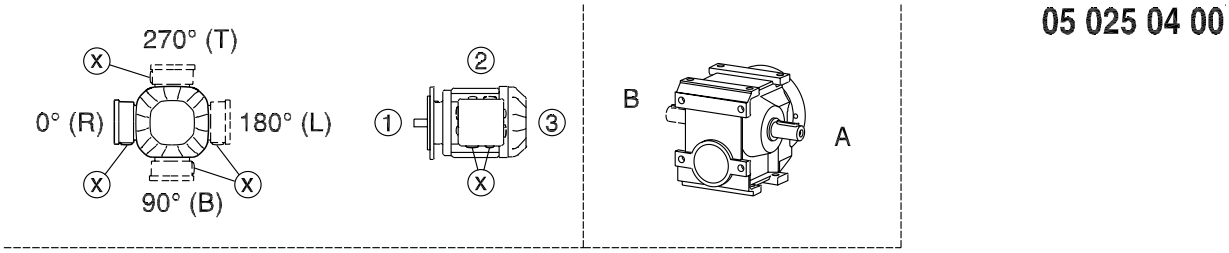


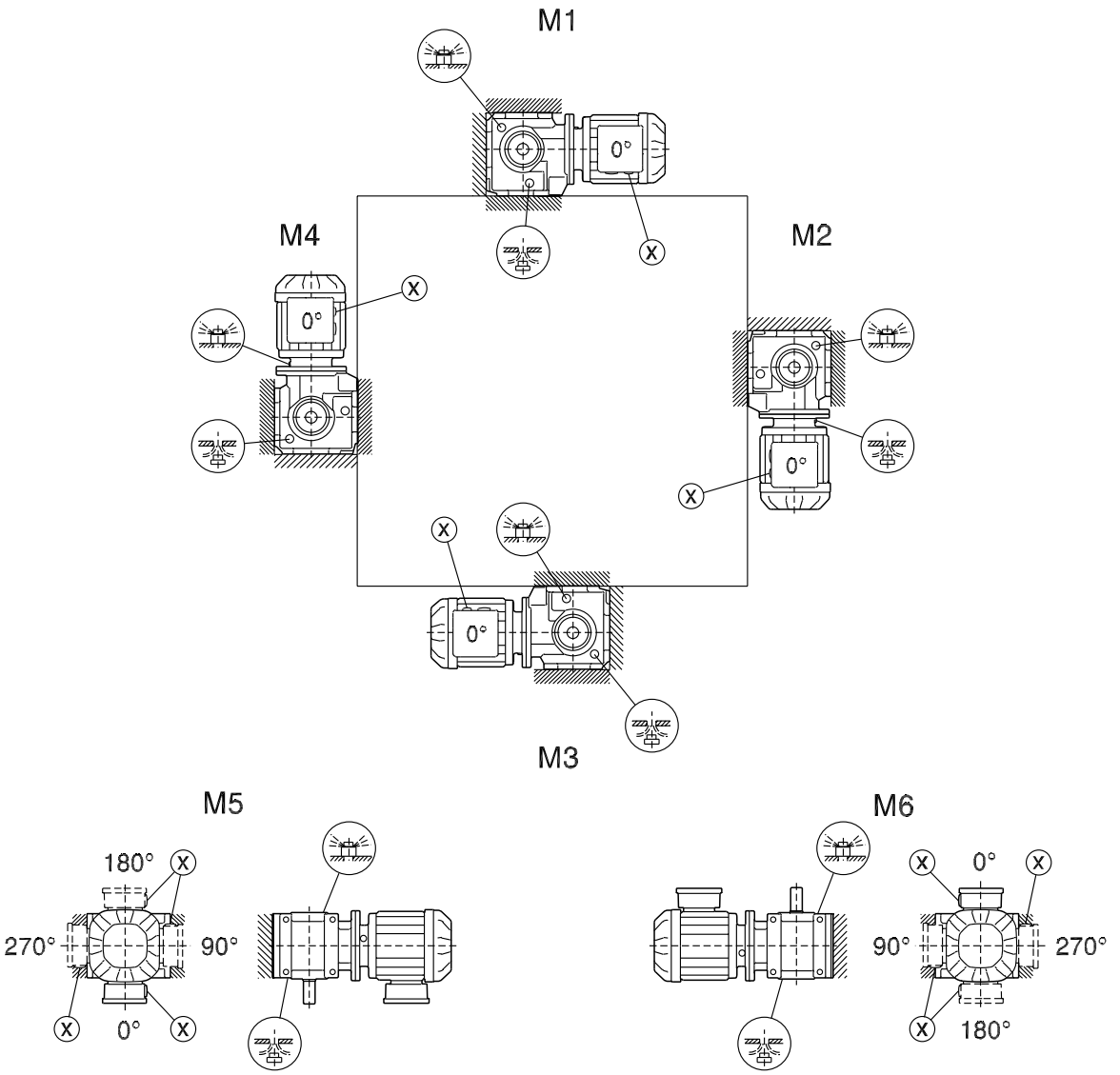


25803530/EN – 04/2018

**S47-S97**

05 026 04 00

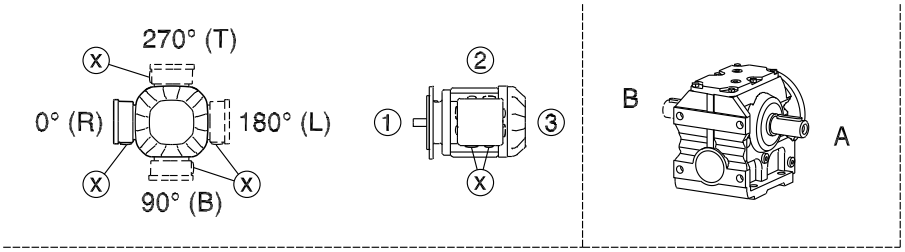


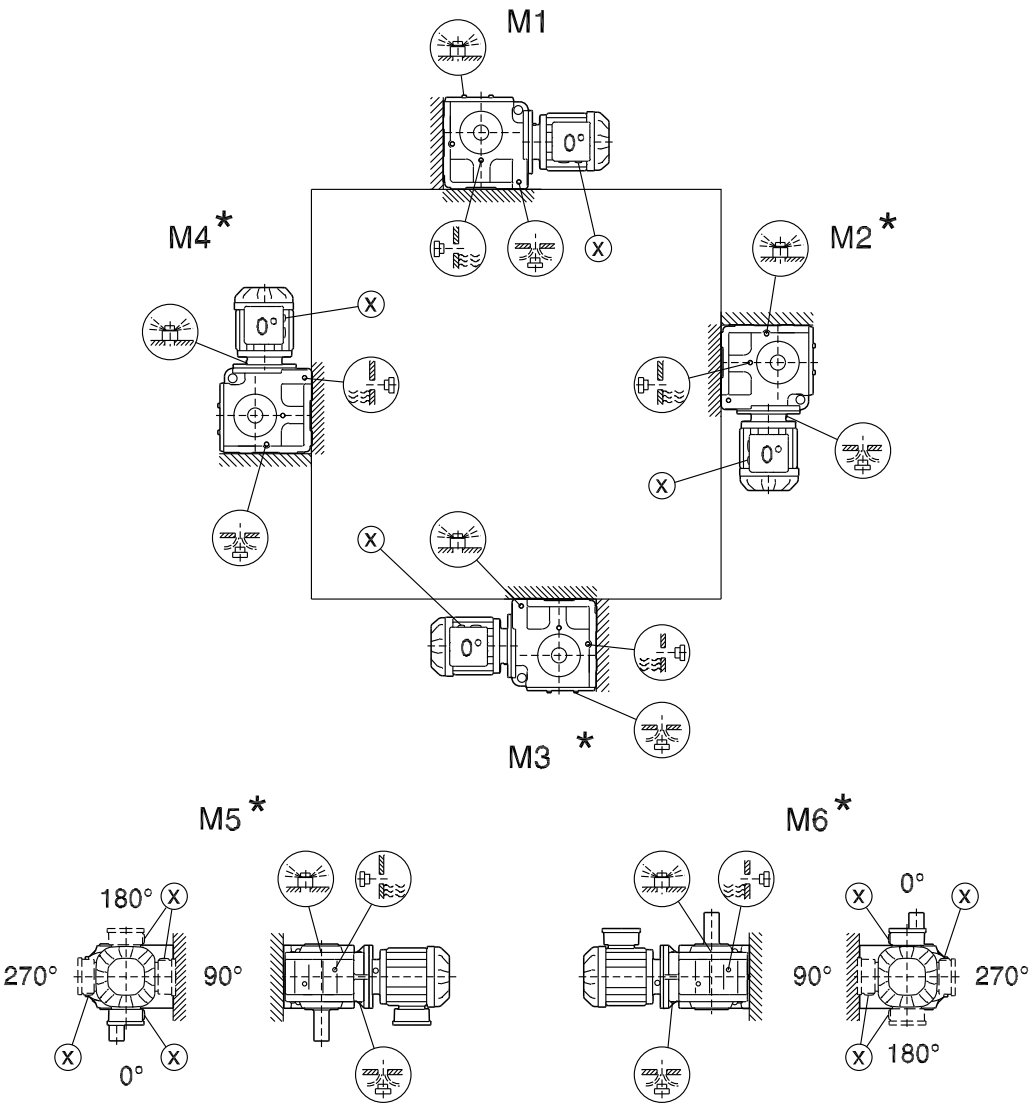


* (→ 130)

**SF/SAF/SHF37**

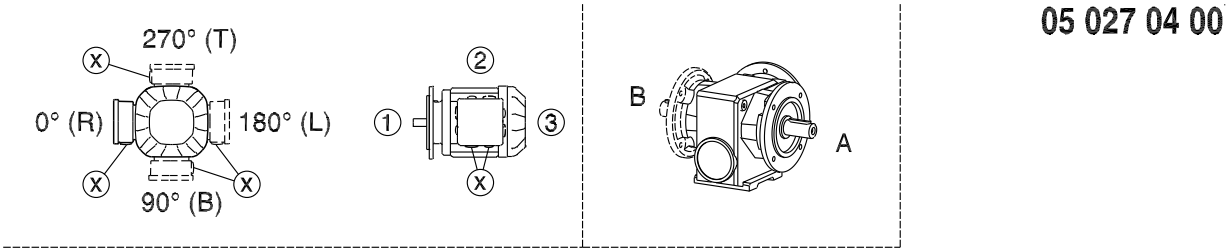


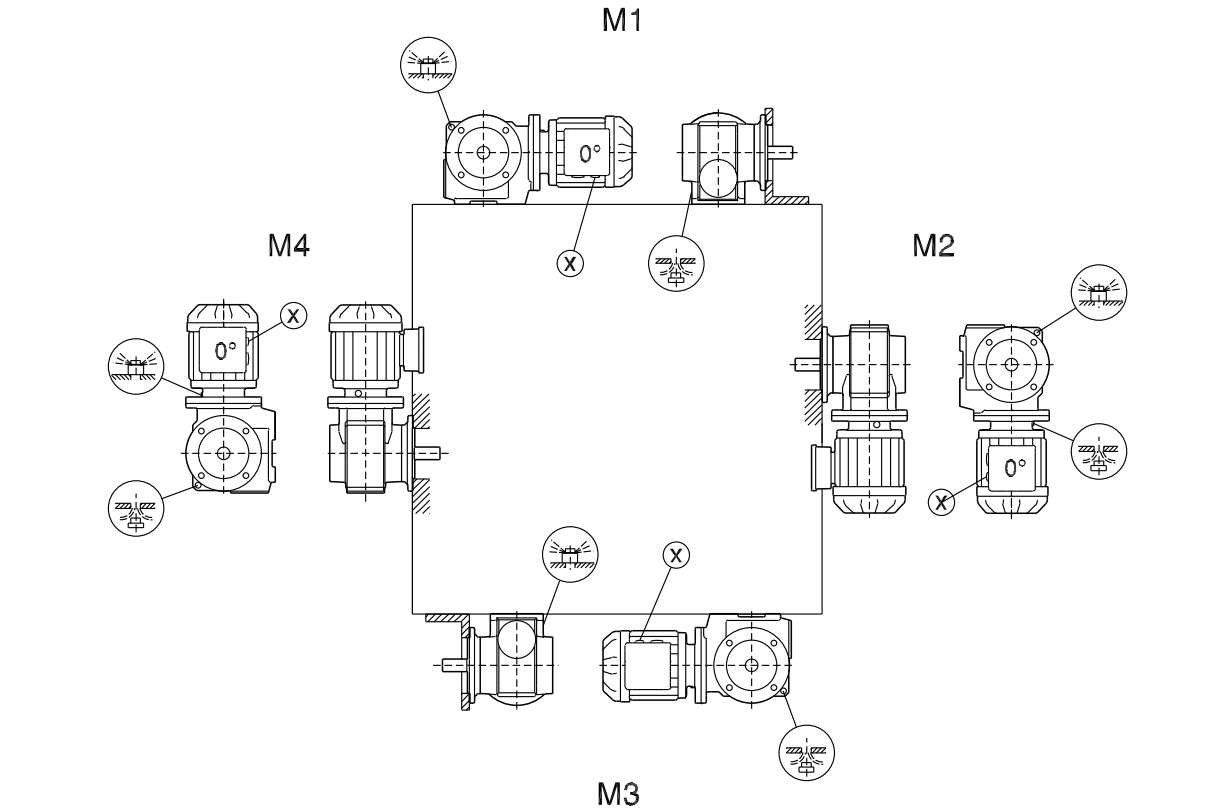


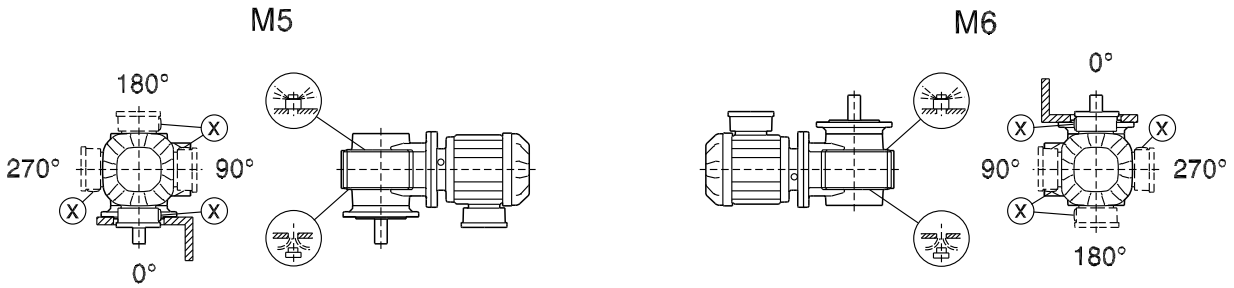


25803530/EN – 04/2018

**SF/SAF/SHF/SAZ/SHZ47-97**

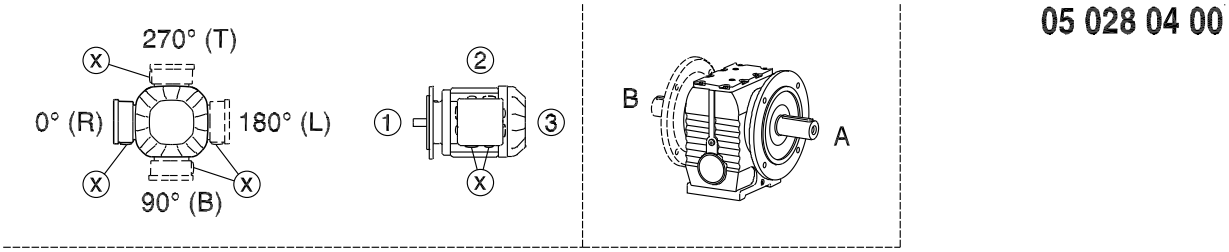


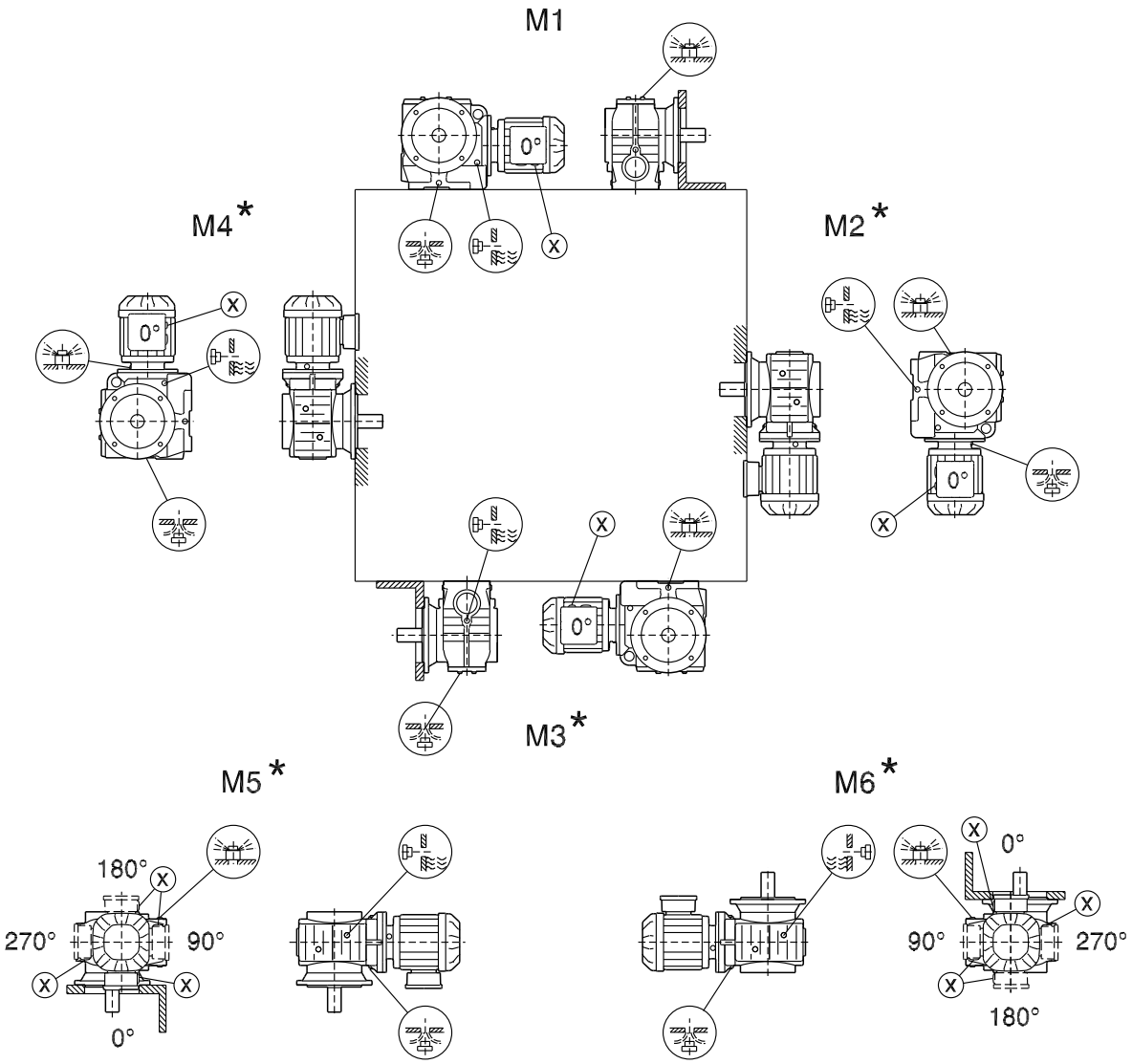


* (→ 🗎 130)

25803530/EN – 04/2018

**SA/SH/ST37**

28 020 05 00

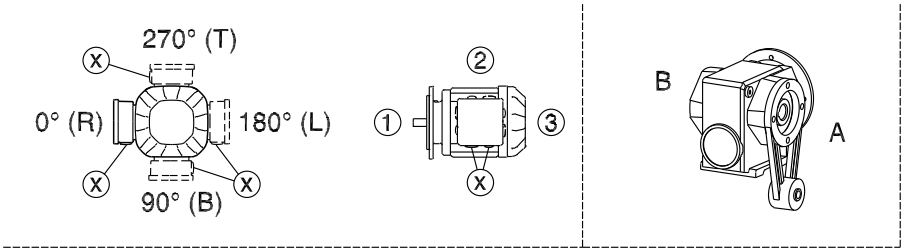


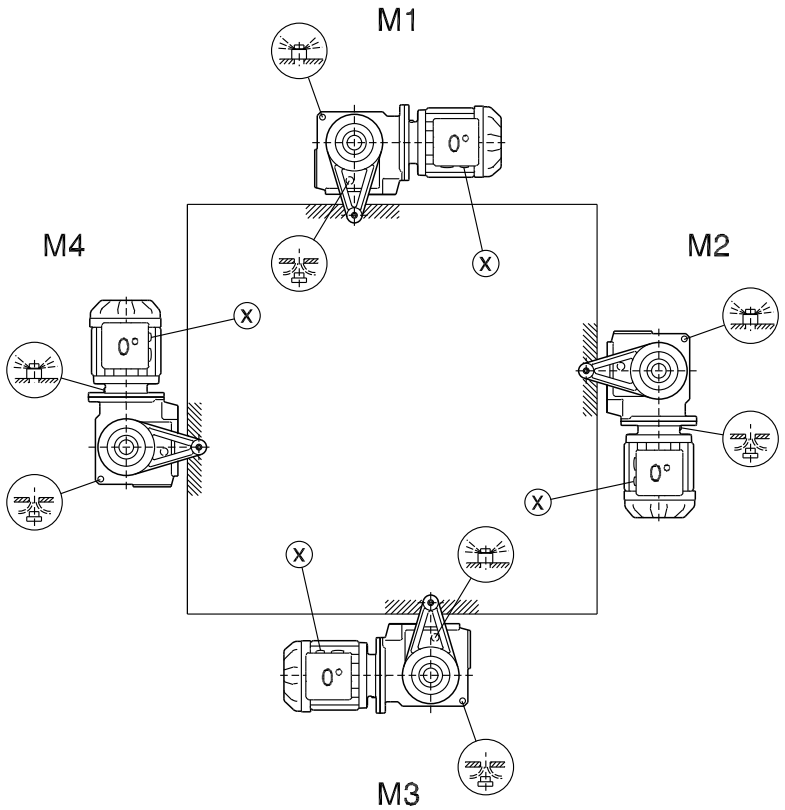


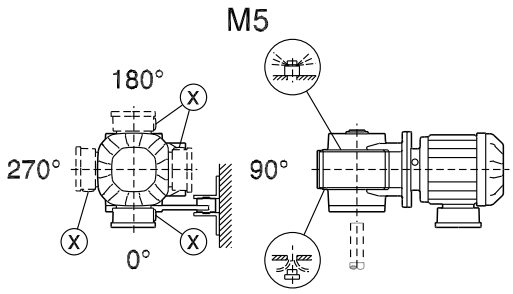


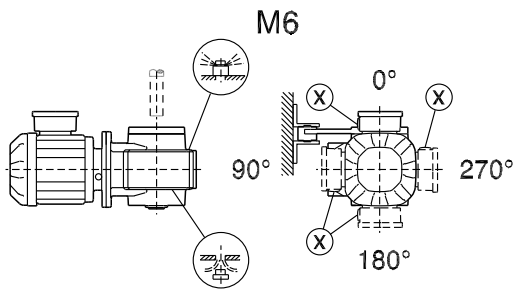


25803530/EN – 04/2018

**SA/SH/ST47-97**

28 021 04 00

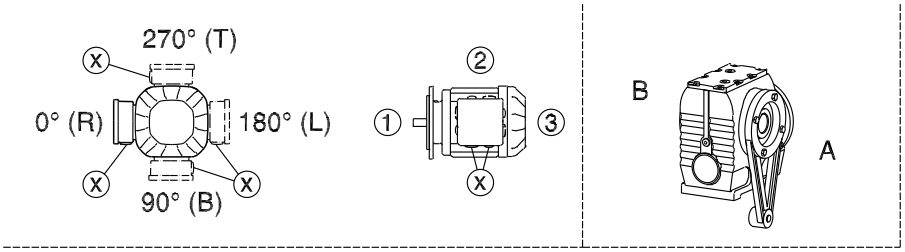


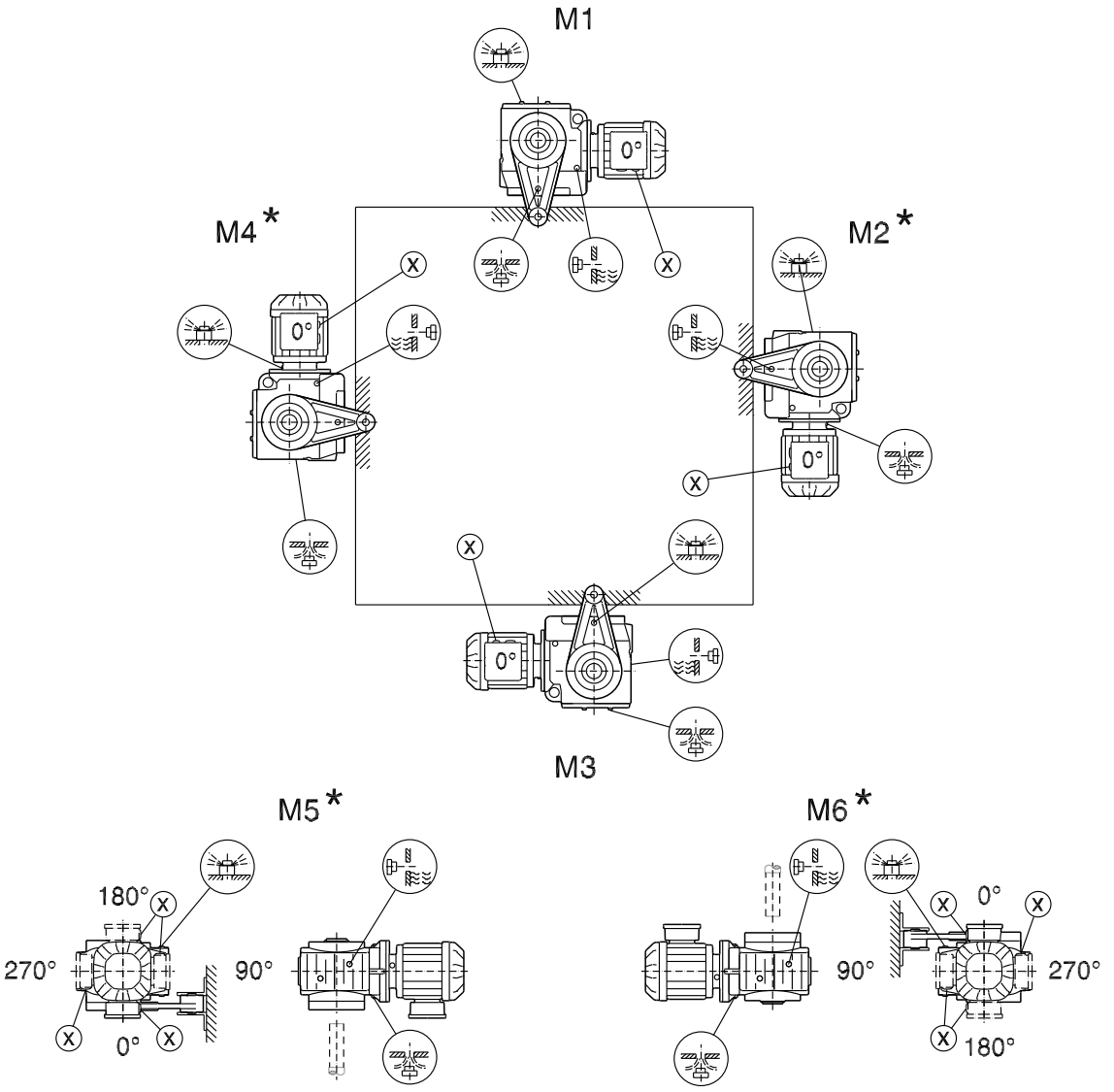


* (→ 🗎 130)

25803530/EN – 04/2018

### 7.6.7 Mounting positions of SPIROPLAN® gearmotors

**W10-30**

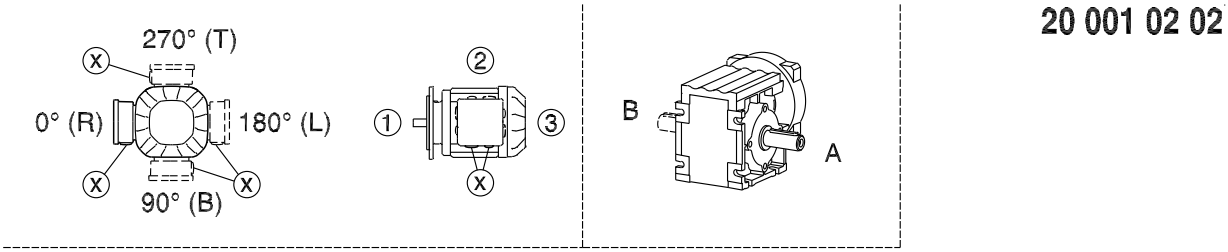


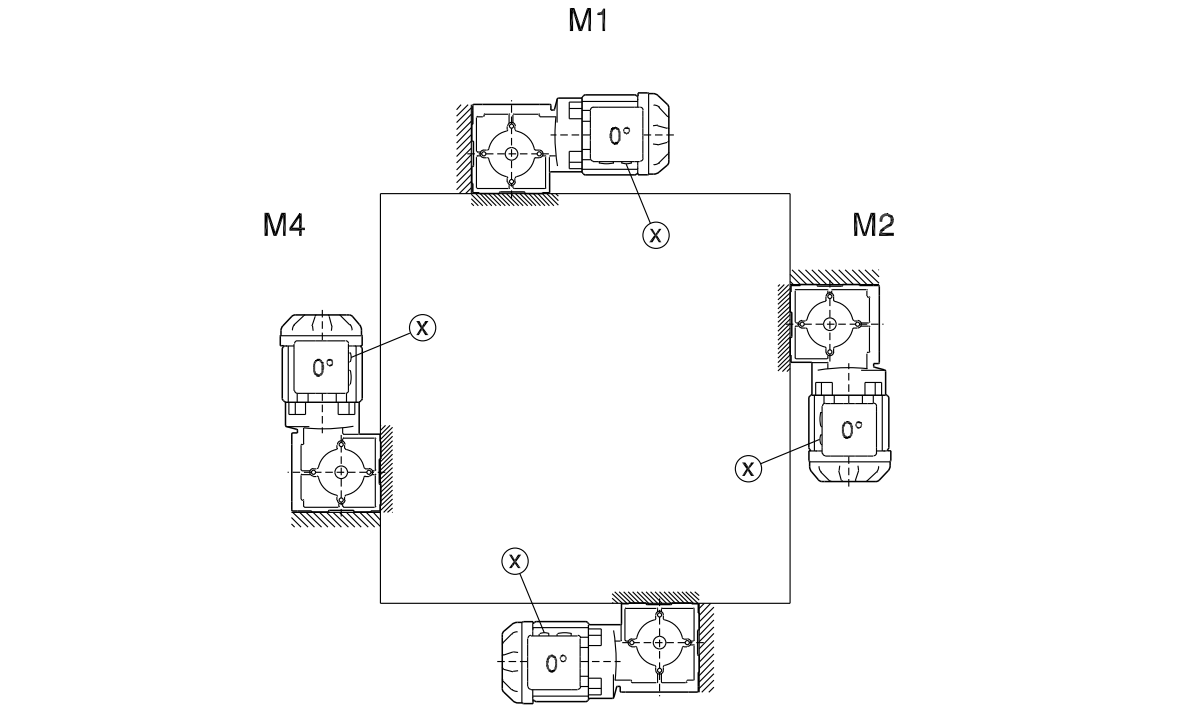


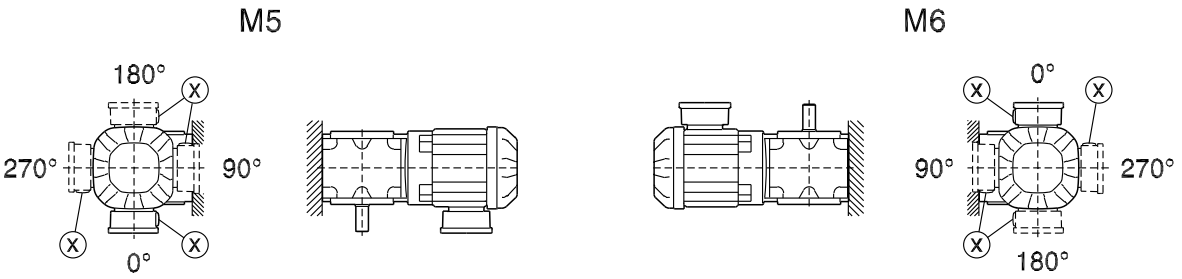


25803530/EN – 04/2018

**WF10-30**

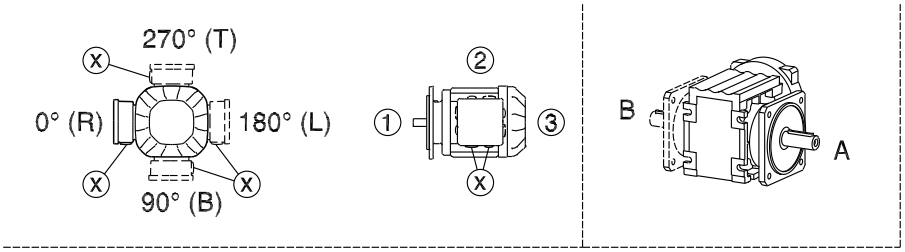
20 002 02 02
270° (T)
0° (R)
180° (L)
90° (B)
X
1
2
3
B
A

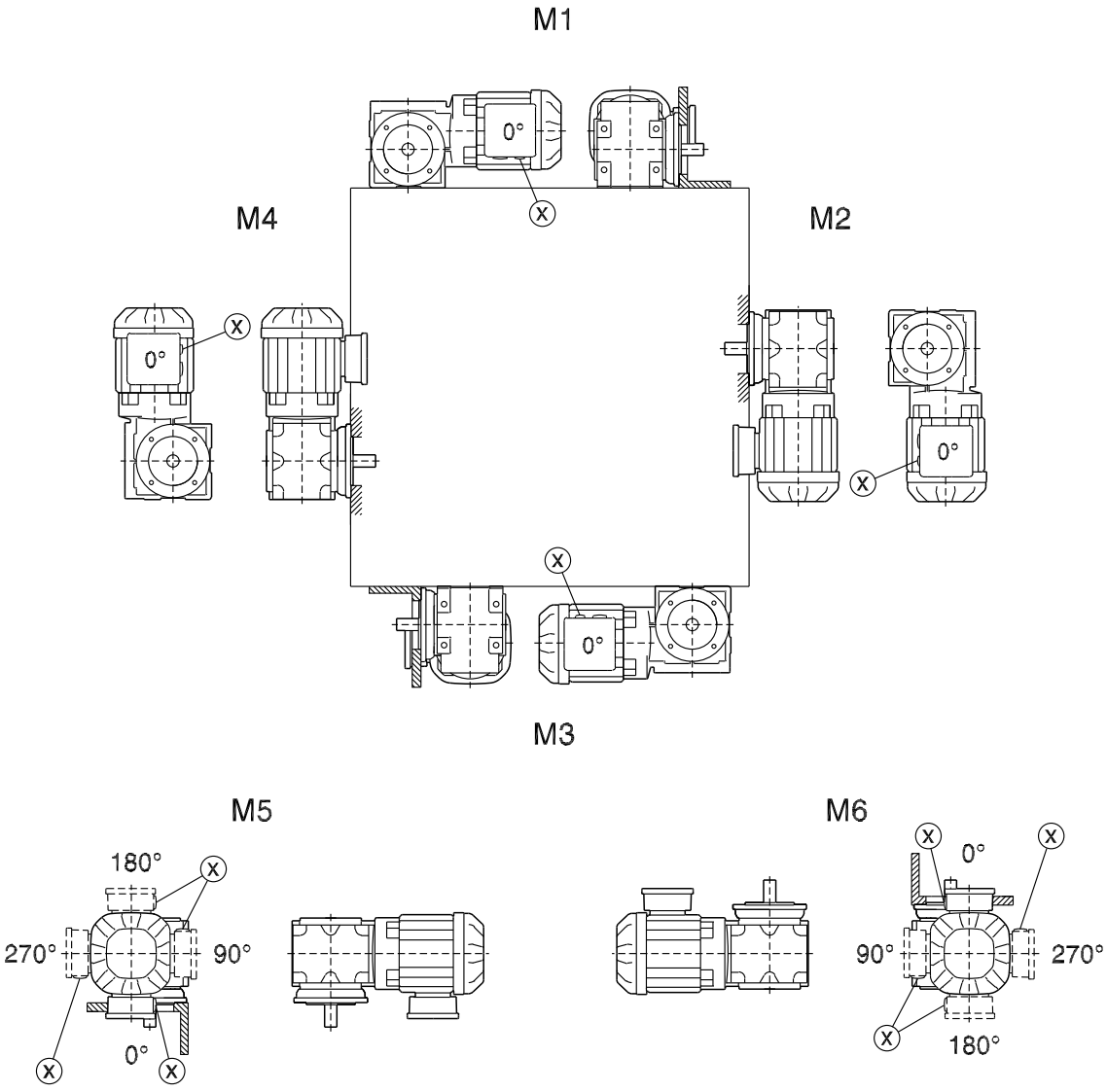
M1
M4
M2
M3
M5
M6
0°
X
180°
270°
90°

**WA10-30**

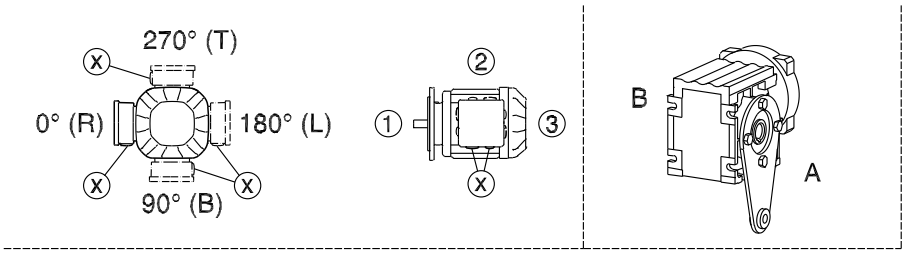


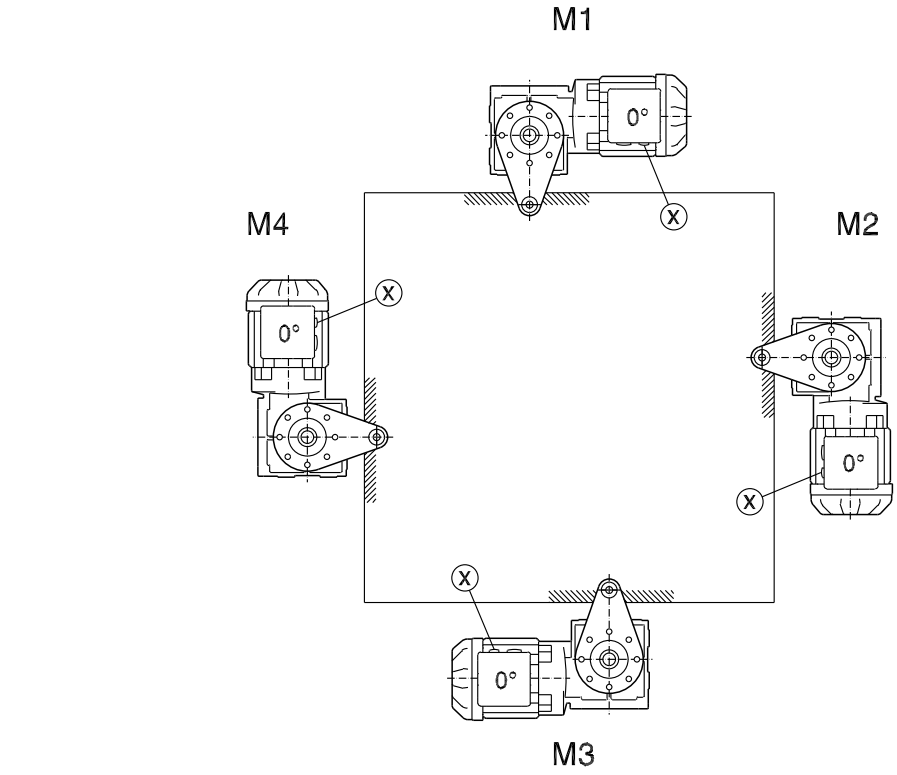


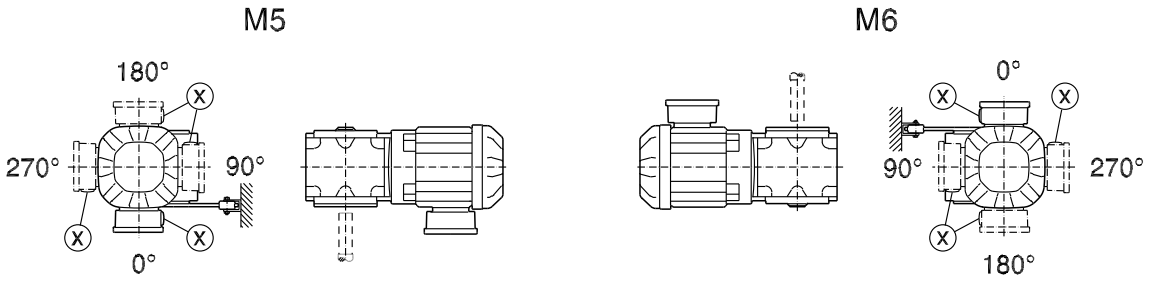


25803530/EN – 04/2018

**W/WA..B/WH37B-47B**

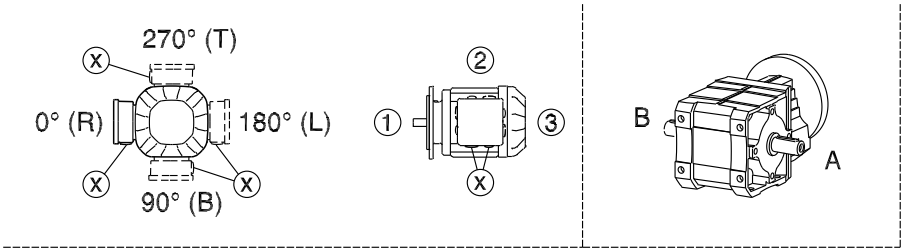


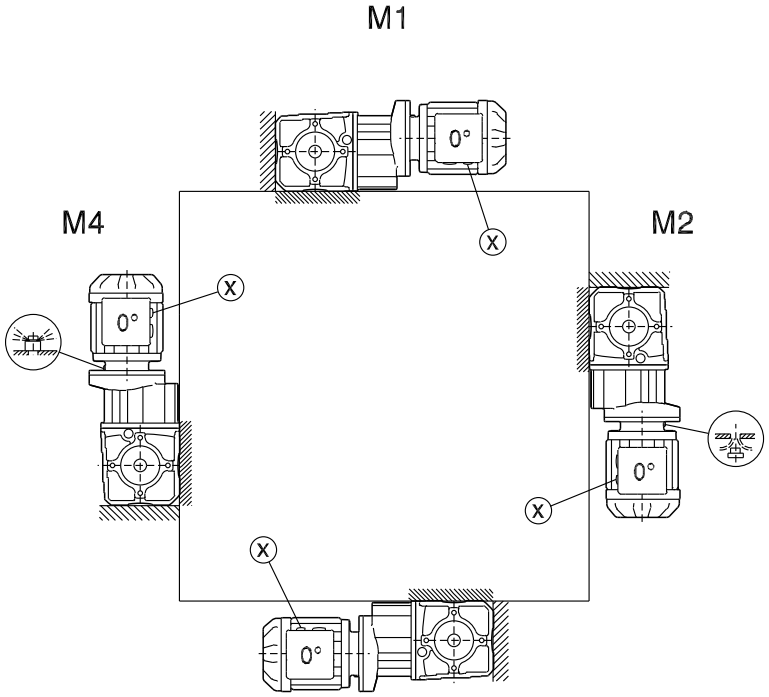


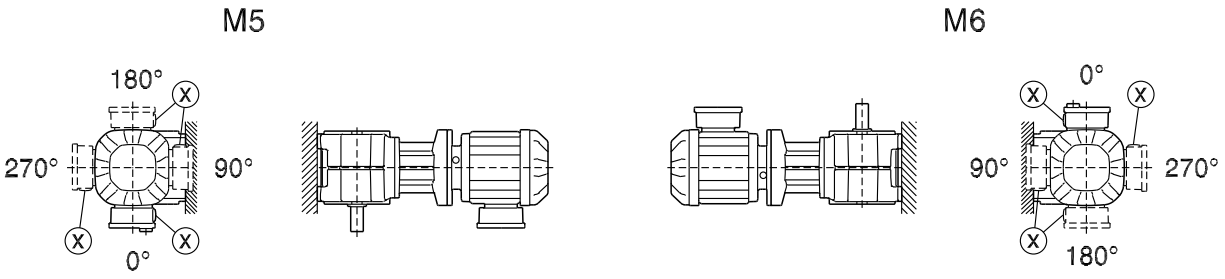


25803530/EN – 04/2018

**WF/WAF/WHF37-47**

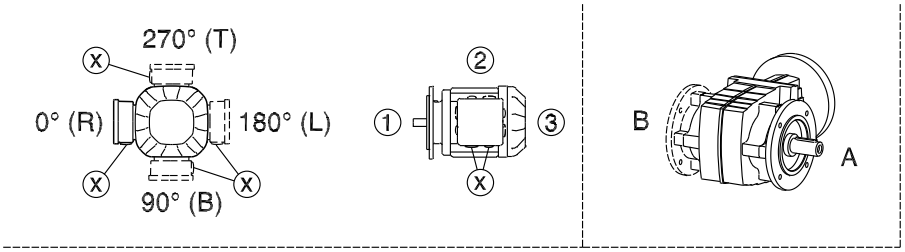


M1

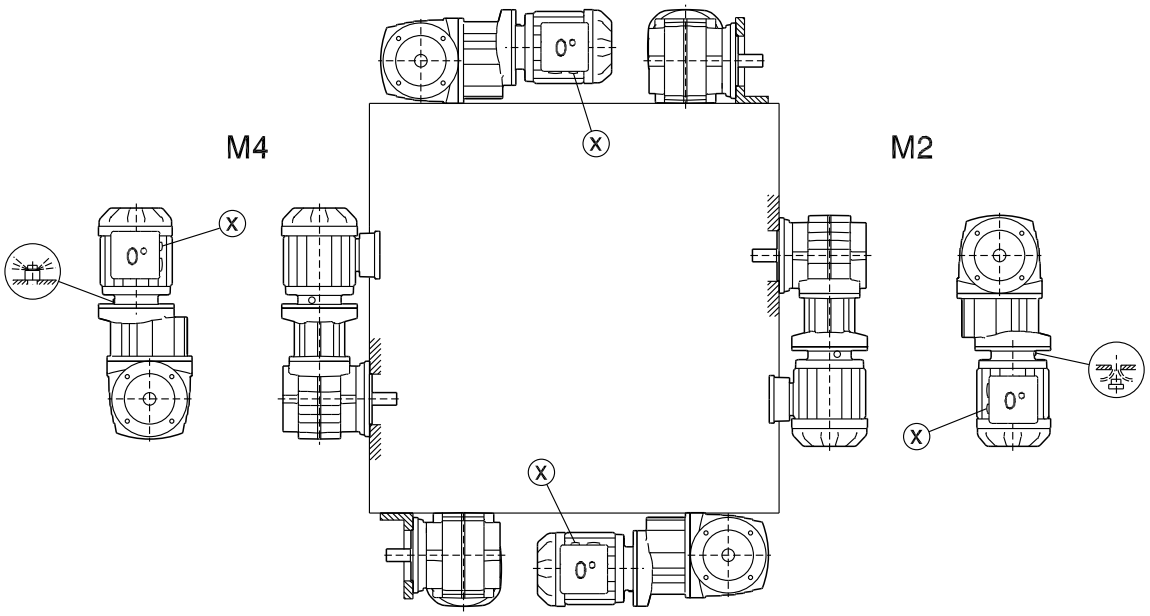


M4

M2

M3

M5

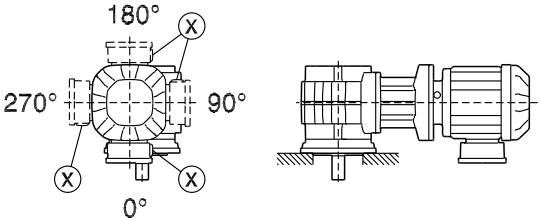


M6

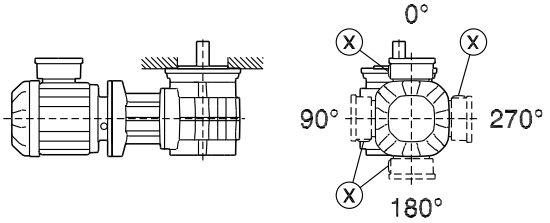


25803530/EN – 04/2018

**WA/WH/WT37-47**

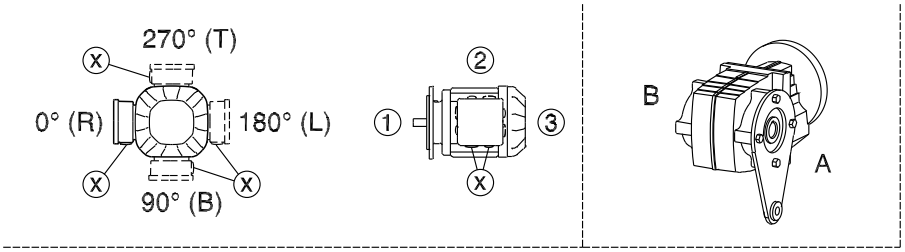


M1

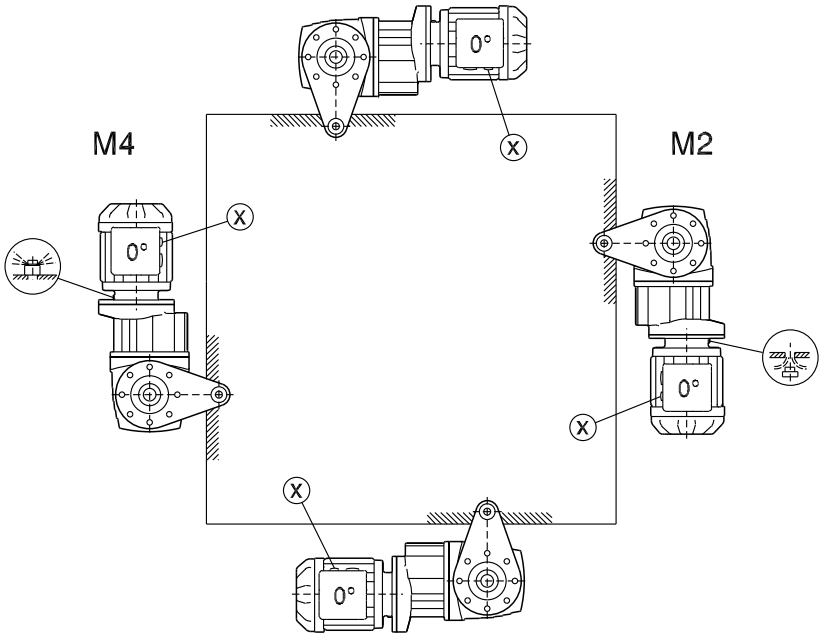


M4

M2

M3

M5

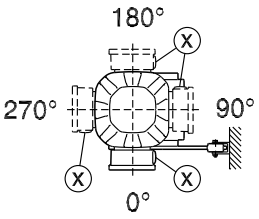


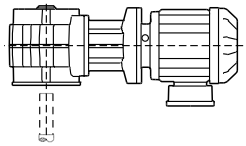

M6

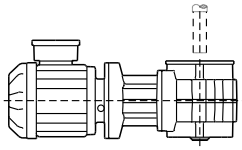

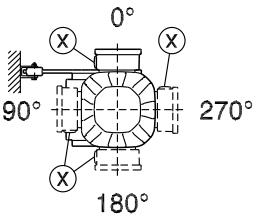


25803530/EN – 04/2018

# 8 Technical data

## 8.1 Extended storage

### INFORMATION

For storage periods longer than 9 months, SEW-EURODRIVE recommends the "extended storage" gear unit type. Gear units in this design are designated with a corresponding label.

### INFORMATION

The gear units must remain tightly sealed until taken into operation to prevent the VCI anti-corrosion agent from evaporating.

For gear units of the "extended storage" design, the following measures are taken:

- A VCI anti-corrosion agent (**v**olatile **c**orrosion **i**nhibitors) is added to the lubricant.

  Please note that this VCI anti-corrosion agent is only effective in a temperature range of -25 °C to +50 °C.
- The flange contact surfaces and shaft ends are also treated with an anti-corrosion agent.

Observe the storage conditions specified in the following table for extended storage.

### 8.1.1 Storage conditions

| Climate zone | Packaging[1)] | Storage[2)] | Storage duration |
|---|---|---|---|
| Temperate (Europe, USA, Canada, China and Russia, excluding tropical zones) | Packed in containers, with desiccant and moisture indicator sealed in the plastic wrap. | Under roof, protected against rain and snow, no shock loads. | Up to 3 years with regular checks on the packaging and moisture indicator (relative atmospheric humidity < 50%). |
| | Open | Under roof and enclosed at constant temperature and atmospheric humidity (5 °C < $\vartheta$ < 50 °C, < 50% relative humidity).<br>No sudden temperature fluctuations. Controlled ventilation with filter (free from dust and dirt). No aggressive vapors, no shocks. | 2 years or more with regular inspections. Check for cleanness and mechanical damage during the inspection. Check corrosion protection. |

25803530/EN – 04/2018

| Climate zone | Packaging[1)] | Storage[2)] | Storage duration |
|---|---|---|---|
| Tropical (Asia, Africa, Central and South America, Australia, New Zealand excluding temperate zones) | Packed in containers, with desiccant and moisture indicator sealed in the plastic wrap.<br>Protected against insect damage and mildew by chemical treatment. | Under roof, protected against rain and shocks. | Up to 3 years with regular checks on the packaging and moisture indicator (relative atmospheric humidity < 50%). |
| | Open | Under roof and enclosed at constant temperature and atmospheric humidity (5 °C < ϑ < 50 °C, relative humidity < 50%).<br>No sudden temperature fluctuations. Controlled ventilation with filter (free from dust and dirt). No aggressive vapors, no shocks. Protected against insect damage. | 2 years or more with regular inspections. Check for cleanness and mechanical damage during the inspection. Check corrosion protection. |

1) The packaging must be carried out by an experienced company using the packaging materials that have been explicitly specified for the particular application.

2) SEW-EURODRIVE recommends to store the gear units according to the mounting position.

25803530/EN – 04/2018

## 8.2 Lubricants

Unless a special arrangement is made, SEW-EURODRIVE supplies the drives with a lubricant fill adapted for the specific gear unit and mounting position. The mounting position (M1 – M6, see chapter "Mounting positions" (→ 🗎 129)) must be specified in the order. You must adapt the lubricant fill in case of any subsequent changes made to the mounting position (see chapter Lubricant fill quantities).

### 8.2.1 Bearing greases

The gear unit rolling bearings are given a factory-fill with the greases listed below. SEW-EURODRIVE recommends re-greasing the rolling bearings with a grease filling at the same time as changing the oil.

The table shows the lubricants recommended by SEW-EURODRIVE:

| Area of operation | Ambient temperature | Manufacturer | Type |
|---|---|---|---|
| Standard | -40 °C to +80 °C | Fuchs | Renolit CX-TOM 15[1)] |
| | -40 °C to +80 °C | Klüber | Petamo GHY 133 N |
|  2) | -40 °C to +40 °C | Bremer & Leguil | Cassida Grease GTS 2 |
|  3) | -20 °C to +40 °C | Fuchs | Plantogel 2S |

1) Bearing grease based on semi-synthetic base oil
2) Lubricant for the food processing industry
3) Easily biodegradable lubricant for environmentally sensitive areas

## INFORMATION

The following grease quantities are required:

- **For fast-running bearings (gear unit input side):** Fill the cavities between the rolling elements one-third full with grease.
- **For slow-running bearings (gear unit output side):** Fill the cavities between the rolling elements two-thirds full with grease.

### 8.2.2 Lubricant table

## NOTICE

Selecting improper lubricants may damage the gear unit.

Possible damage to property.

- Observe the following information.

- The oil viscosity and type (mineral/synthetic) that are to be used are determined by SEW-EURODRIVE specifically for each order. This information is noted in the order confirmation and on the gear unit's nameplate.

  If you use other lubricants for the gear units and/or use the lubricants at temperatures outside the recommended temperature range, SEW-EURODRIVE does not assume liability.

  The lubricant recommendation in the lubricant table in no way represents a guarantee regarding the quality of the lubricant delivered by each respective supplier. Each lubricant manufacturer is responsible for the quality of their product.
- Do not mix synthetic lubricants.
- Do not mix synthetic and mineral lubricants.
- Oils of the same viscosity class from different manufacturers do not have the same characteristics. In particular, the minimally and maximally permitted oil bath temperatures are manufacturer-specific. These temperatures are specified in the lubricant tables.
- The values specified in the lubricant tables apply as of the time of printing of this document. The data of the lubricants are subject to dynamic change on the part of the lubricant manufacturers. For up-to-date information about the lubricants, visit:

  **www.sew-eurodrive.de/lubricants**

**Information on table structure**

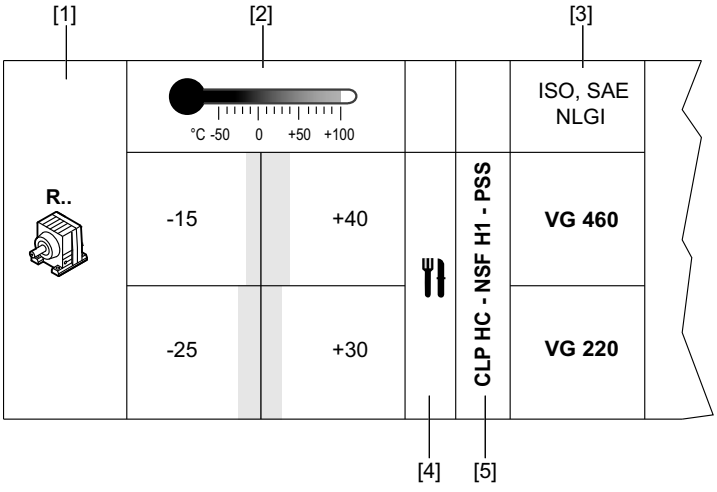


*18014416412986635*

[1] Gear unit type
[2] Ambient temperature range
[3] Viscosity class
[4] Note on special approvals
[5] Lubricant type

25803530/EN – 04/2018

The specified ambient temperatures are guide values for the preselection of a suitable lubricant. The exact upper and lower temperature limits for project planning are specified in the table with the respective trade name.

### Information on the various lubricants

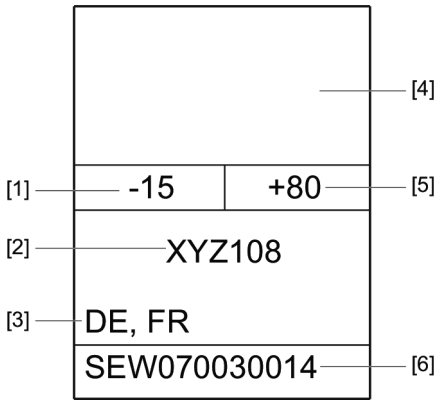


*9007217272258699*

[1] Lowest oil sump temperature in °C, **going below this value during operation is not permitted**
[2] Trade name
[3] Factory filling for the listed countries
BR: Brazil
CN: China
DE: Germany
FR: France
US: United States of America
[4] Manufacturer
[5] Highest oil sump temperature in °C. The service life will be considerably reduced when exceeded. Observe the lubricant change intervals according to chapter "Lubricant change intervals" (→ 🗎 111).
[6] Approvals regarding compatibility of the lubricant with approved oil seals

### Lubricant compatibility with oil seal

| Approval | Explanation |
|---|---|
| SEW07004_ _13: | A lubricant especially recommended with regard to compatibility with the approved oil seals. The lubricant exceeds the state-of-the-art requirements regarding elastomer compatibility. |

**Approved application temperature range of the oil seals**

| Oil seal<br>Material class | Permitted<br>Oil sump temperature |
|---|---|
| NBR | -45 °C to +80 °C |
| FKM | -25 °C to +115 °C |
| FKM-PSS | -25 °C to +115 °C |

25803530/EN – 04/2018

**Limitations of use** of oil seals with the specific lubricant are described in the following table:

| Material class | | | Manufacturer | | Material | |
|---|---|---|---|---|---|---|
| S | 1 | NBR | 1 | Freudenberg | | 72 NBR 902 |
| | | | 2 | Trelleborg | | 4NV11 |
| | 2 | FKM | 1 | Freudenberg | 1 | 75 FKM 585 |
| | | | | | 2 | 75 FKM 170055 |
| | | | 2 | Trelleborg | 1 | VCBVR |

**Examples:**

**S11**: Only the elastomer 72NBR902 of the Freudenberg company meets the requirements of the approval in conjunction with the specific lubricant.

**S2**: Only the elastomer FKM meets the requirements of the approval in conjunction with the specific lubricant.

**Key**

The following table shows the abbreviations and icons used in the lubricant table and explains what they mean:

| Abbreviation/ icon | Meaning |
|---|---|
| | Synthetic lubricant (marked gray) |
| | Mineral lubricants |
| CLP | Mineral oil |
| CLP PG | Polyglycol (PG) |
| CLP HC | Synthetic hydrocarbons – polyalphaolefin (PAO) |
| E | Ester-based oil |
|  | Lubricant for the food processing industry – NSF-H1-compliant |
|  | Easily biodegradable oil for environmentally sensitive areas |
|  | Lubricant suitable for ATEX environment. |
| 1) | Helical-worm gear units with CLP-PG: Contact SEW-EURODRIVE |
| 2) | Special lubricant for SPIROPLAN® gear units only |
| 3) | SEW $f_B \geq 1.2$ required |
| 4) | Observe the critical starting behavior at low temperatures |
| Oil seal | Oil seal |
| PSS | Oil seal type PSS (Premium Sine Sealing). The addendum "PSS" at the lubricant type signals compatibility with the sealing system. |

25803530/EN – 04/2018

### Lubricant table for R.., F.., and K..7 gear units

The lubricant table is valid at the day this document is published. Refer to **www.sew-eurodrive.de/lubricants** for the latest tables.

Observe the thermal limit of the oil seal material, see chapter "Lubricant compatibility with oil seal" (→ 🗎 171).

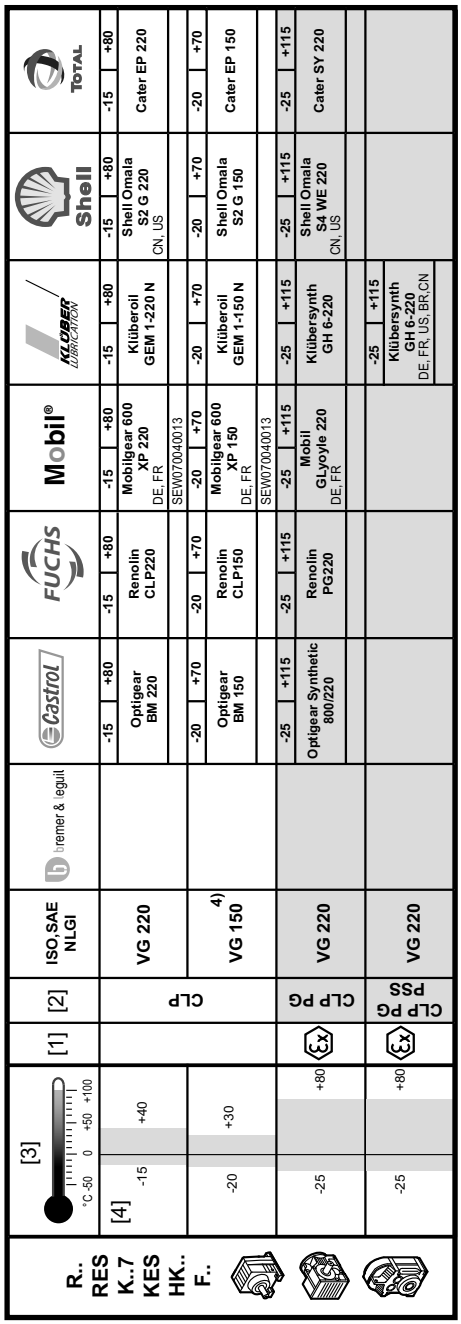


*18014416885322635*

[1] Note on special approvals
[2] Oil type
[3] Ambient temperature range
[4] Standard

The lubricant table is valid at the day this document is published. Refer to **www.sew-eurodrive.de/lubricants** for the latest tables.

Observe the thermal limit of the oil seal material, see chapter "Lubricant compatibility with oil seal" (→ 🖹 171).

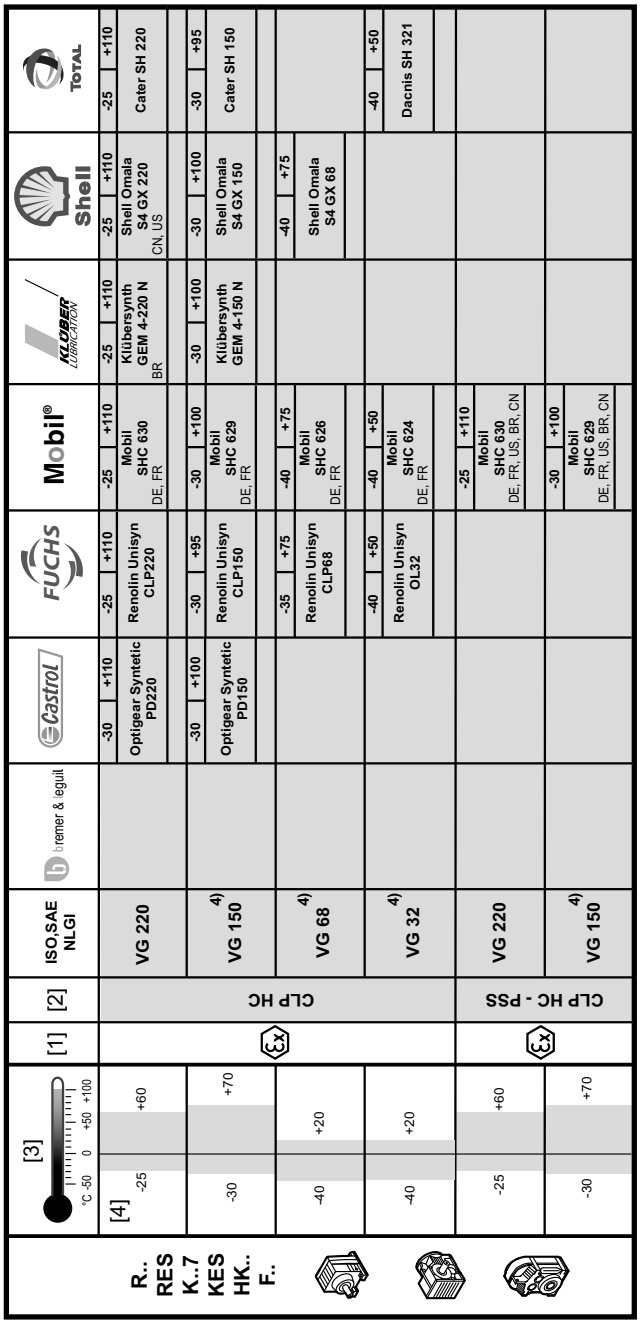


*18014416885325323*

[1] Note on special approvals
[2] Oil type
[3] Ambient temperature range
[4] Standard

25803530/EN – 04/2018

The lubricant table is valid at the day this document is published. Refer to **www.sew-eurodrive.de/lubricants** for the latest tables.

Observe the thermal limit of the oil seal material, see chapter "Lubricant compatibility with oil seal" (→ 🗎 171).

| R.. RES K..7 KES HK.. F.. | [3] °C -50 0 +50 +100 | [4] | [1] | [2] | ISO,SAE NLGI | bremer & leguit | Castrol | FUCHS | Mobil® | KLÜBER LUBRICATION | Shell | TOTAL |
|---|---|---|---|---|---|---|---|---|---|---|---|---|
| | | -15 | | CLP HC - NSF H1 | VG 460 | -15 +100 Cassida Fluid GL 460 | -15 +100 Optileb GT 460 DE, FR SEW070040013 | | | -15 +105 Klüberoil 4UH1-460 N | | |
| | | -25 | | | VG 220 | -25 +80 Cassida Fluid GL 220 | -25 +80 Optileb GT 220 DE, FR SEW070040013 | | | -25 +80 Klüberoil 4UH1-220 N | | |
| | | -35 | | | VG 68 4) | -40 +50 Cassida Fluid HF 68 | -35 +50 Optileb HY 68 DE, FR | | | -35 +50 Klüberoil 4UH1-68 N | | |
| | | -40 | | | VG 32 4) | -40 +30 Cassida Fluid HF 32 | -40 +30 Optileb HY 32 DE, FR | | | -40 +30 KlüberSummit HySynFG32 | | |
| | | -15 | | CLP HC - NSF H1 - PSS | VG 460 | | -15 +100 Optileb GT 460 DE, FR, US, BR, CN SEW070040013 | | | | | |
| | | -25 | | | VG 220 | | -25 +80 Optileb GT 220 DE, FR, US, BR, CN SEW070040013 | | | | | |
| | | -20 | | E | VG 460 | | | -20 +80 Plantogear 460 S DE, FR | | -20 +80 Klüberbio CA2-460 | | |

22849825931

[1] Note on special approvals
[2] Oil type
[3] Ambient temperature range
[4] Standard

25803530/EN – 04/2018

### Lubricant table for K..9 gear units

The lubricant table is valid at the day this document is published. Refer to **www.sew-eurodrive.de/lubricants** for the latest tables.

Observe the thermal limit of the oil seal material, see chapter "Lubricant compatibility with oil seal" (→ 🖹 171).

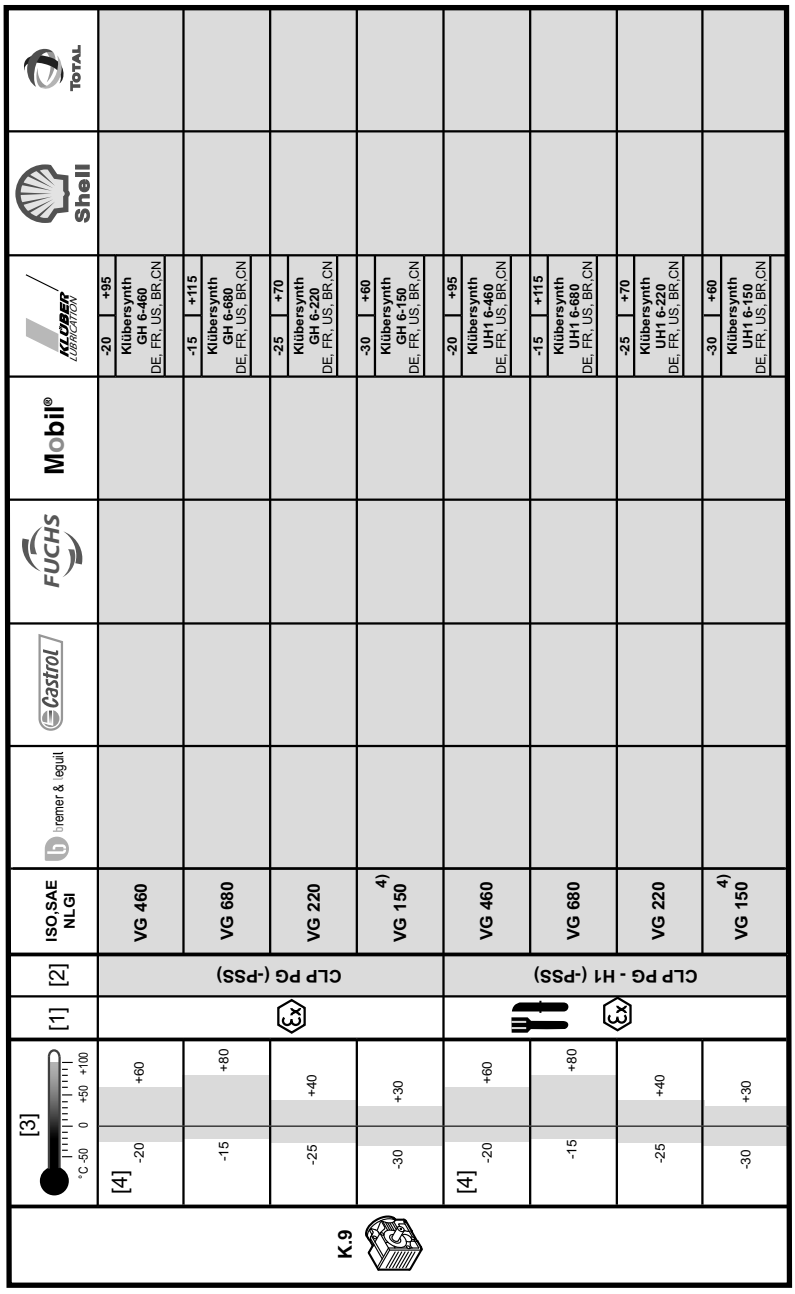


*18014416450433419*

[1] Note on special approvals
[2] Oil type
[3] Ambient temperature range
[4] Standard

25803530/EN – 04/2018

### Lubricant table for S.. gear units

The lubricant table is valid at the day this document is published. Refer to **www.sew-eurodrive.de/lubricants** for the latest tables.

Observe the thermal limit of the oil seal material, see chapter "Lubricant compatibility with oil seal" (→ 🗎 171).

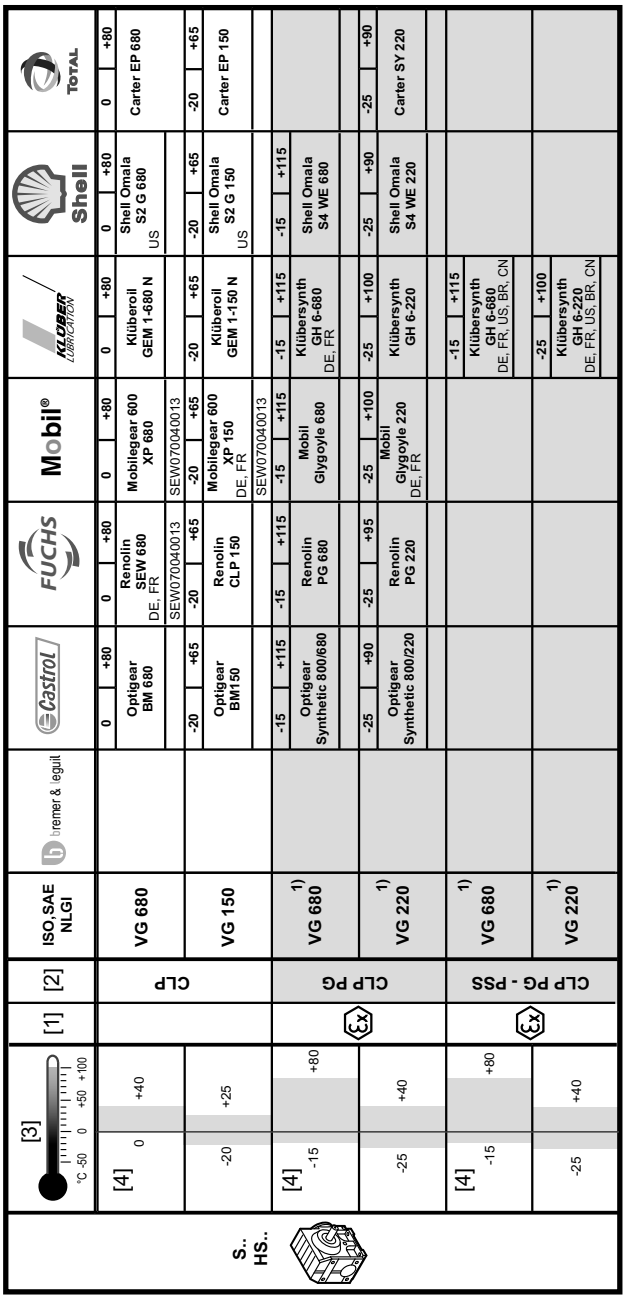


*22849829131*

[1] Note on special approvals
[2] Oil type
[3] Ambient temperature range
[4] Standard

The lubricant table is valid at the day this document is published. Refer to **www.sew-eurodrive.de/lubricants** for the latest tables.

Observe the thermal limit of the oil seal material, see chapter "Lubricant compatibility with oil seal" (→ 171).

| S.. HS.. | [3] °C -50 0 +50 +100 | [1] | [2] | ISO,SAE NLGI | bremer & leguil | Castrol | FUCHS | Mobil® | KLÜBER LUBRICATION | Shell | TOTAL |
|---|---|---|---|---|---|---|---|---|---|---|---|
| | [4] -15 +60 | | CLP HC | VG 460 | | -20 +110 Optigear Synthetic PD 460 | -15 +100 Renolin Unisyn CLP 460 | -20 +105 Mobil SHC 634 DE, FR | -15 +105 Klübersynth GEM 4-460 N | -15 +105 Shell Omala S4 GX 460 | -15 +105 Carter SH 460 |
| | -30 +40 | | | 4) VG 150 | | -30 +75 Optigear Synthetic PD 150 | -30 +70 Renolin Unisyn CLP 150 | -30 +75 Mobil SHC 629 DE, FR | -30 +70 Klübersynth GEM 4-150 N | -30 +75 Shell Omala S4 GX 150 | -30 +70 Carter SH 150 |
| | -40 +30 | | | 4) VG 68 | | | -35 +50 Renolin Unisyn CLP 68 | -40 +55 Mobil SHC 626 DE, FR | | -40 +50 Shell Omala S4 GX 68 | |
| | -40 +10 | | | 4) VG 32 | | | -40 +30 Renolin Unisyn OL 32 | -40 +30 Mobil SHC 624 DE, FR | | | -40 +30 Dacnis SH 32 |
| | [4] -15 +60 | | CLP HC - PSS | VG 460 | | | | -20 +105 Mobil SHC 634 DE, FR, US, BR, CN | | | |
| | -30 +40 | | | 4) VG 150 | | | | -30 +75 Mobil SHC 629 DE, FR, US, BR, CN | | | |

22849831563

[1] Note on special approvals
[2] Oil type
[3] Ambient temperature range
[4] Standard

25803530/EN – 04/2018

The lubricant table is valid at the day this document is published. Refer to **www.sew-eurodrive.de/lubricants** for the latest tables.

Observe the thermal limit of the oil seal material, see chapter "Lubricant compatibility with oil seal" (→ 171).

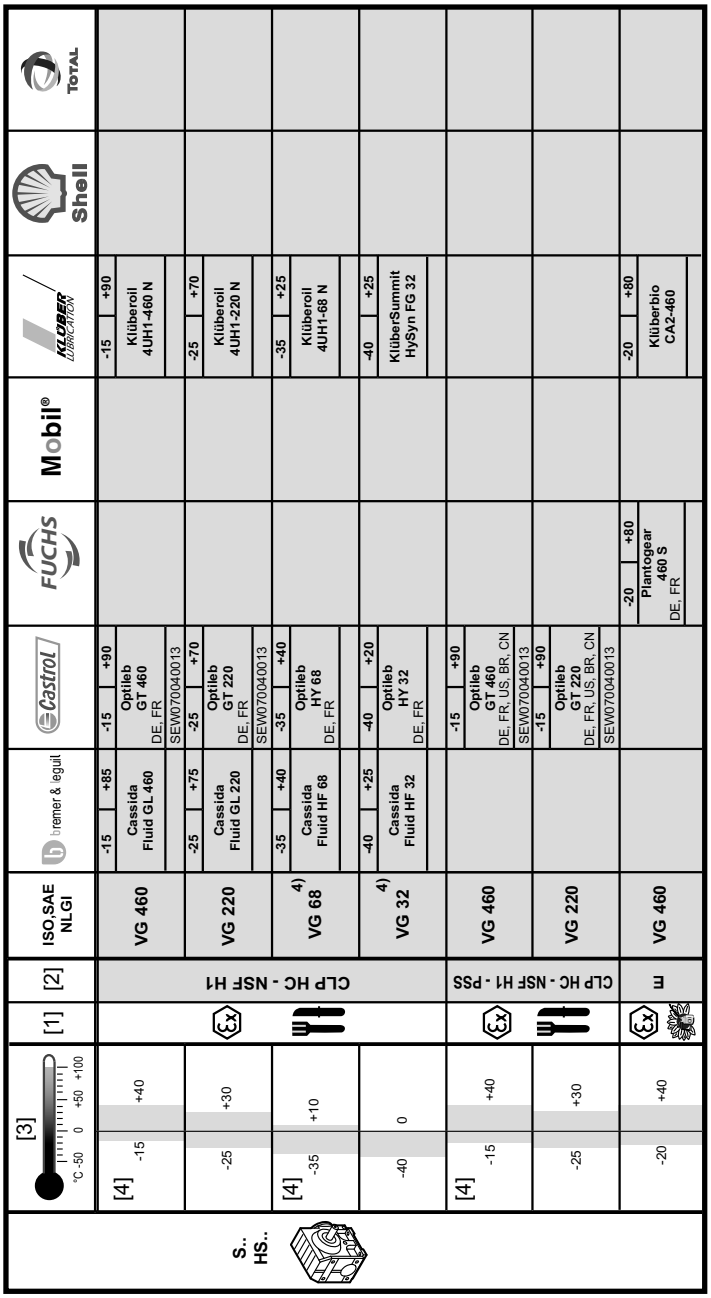


*22849833995*

[1] Note on special approvals
[2] Oil type
[3] Ambient temperature range
[4] Standard

### Lubricant table for W.. gear units

The lubricant table is valid at the day this document is published. Refer to **www.sew-eurodrive.de/lubricants** for the latest tables.

Observe the thermal limit of the oil seal material, see chapter "Lubricant compatibility with oil seal" (→ 🗎 171).

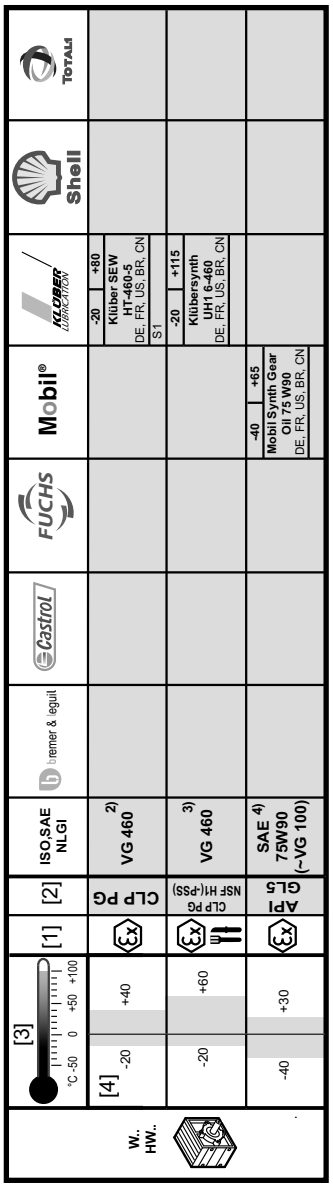


*9007217630712971*

[1] Note on special approvals
[2] Oil type
[3] Ambient temperature range
[4] Standard

### 8.2.3 Lubricant fill quantities

## INFORMATION

The specified fill quantities are **guide values**. The exact values vary depending on the number of gear stages and gear ratio. Check the oil level plug for the exact oil quantity.

## INFORMATION

Unless a special arrangement is made, SEW-EURODRIVE supplies the drives with a lubricant fill adapted for the specific mounting position. The mounting position (see chapter "Designation of the mounting positions" (→ 🗎 129)) must therefore be specified in the drive order.

When the mounting position is changed, the lubricant fill quantity must be adapted accordingly (see the following chapters). Consequently, a mounting position may only be **changed** after consultation with SEW-EURODRIVE, **otherwise your rights to claim under limited warranty no longer apply.**

The following tables show guide values for lubricant fill quantities in relation to the mounting position M1 – M6.

25803530/EN – 04/2018

### Helical (R) gear units

R.., R..F

| Gear units | Fill quantity in liters | | | | | |
|---|---|---|---|---|---|---|
| | M1[1)] | M2 | M3 | M4 | M5 | M6 |
| R07 | 0.12 | 0.20 | | | | |
| R17 | 0.25 | 0.55 | 0.35 | 0.55 | 0.35 | 0.40 |
| R27 | 0.25/0.40 | 0.70 | 0.50 | 0.70 | 0.50 | |
| R37 | 0.30/0.95 | 0.85 | 0.95 | 1.05 | 0.75 | 0.95 |
| R47 | 0.70/1.50 | 1.60 | 1.50 | 1.65 | 1.50 | |
| R57 | 0.80/1.70 | 1.90 | 1.70 | 2.10 | 1.70 | |
| R67 | 1.10/2.30 | 2.40 | 2.80 | 2.90 | 1.80 | 2.00 |
| R77 | 1.20/3.00 | 3.30 | 3.60 | 3.80 | 2.50 | 3.40 |
| R87 | 2.30/6.0 | 6.4 | 7.2 | | 6.3 | 6.5 |
| R97 | 4.60/9.8 | 11.7 | | 13.4 | 11.3 | 11.7 |
| R107 | 6.0/13.7 | 16.3 | 16.9 | 19.2 | 13.2 | 15.9 |
| R127 | 6.4/17 | 18.3 | 18.2 | 22.0 | 16.8 | 17.9 |
| R137 | 10.0/25.0 | 28.0 | 29.5 | 31.5 | 25.0 | |
| R147 | 15.4/40.0 | 46.5 | 48.0 | 52.0 | 39.5 | 41.0 |
| R167 | 27.0/70.0 | 82.0 | 78.0 | 88.0 | 66.0 | 69.0 |

1) The larger gear unit of compound gear units must be filled with the larger oil volume.

RF.., RZ..

| Gear units | Fill quantity in liters | | | | | |
|---|---|---|---|---|---|---|
| | M1[1)] | M2 | M3 | M4 | M5 | M6 |
| RF07 | 0.12 | 0.20 | | | | |
| RF17 | 0.25 | 0.55 | 0.35 | 0.55 | 0.35 | 0.40 |
| RF27 | 0.25/0.40 | 0.70 | 0.50 | 0.70 | 0.50 | |
| RF37 | 0.35/0.95 | 0.90 | 0.95 | 1.05 | 0.75 | 0.95 |
| RF47 | 0.65/1.50 | 1.60 | 1.50 | 1.65 | 1.50 | |
| RF57 | 0.80/1.70 | 1.80 | 1.70 | 2.00 | 1.70 | |
| RF67 | 1.20/2.50 | 2.50 | 2.70 | 2.80 | 1.90 | 2.10 |
| RF77 | 1.20/2.60 | 3.10 | 3.30 | 3.60 | 2.40 | 3.00 |
| RF87 | 2.40/6.0 | 6.4 | 7.1 | 7.2 | 6.3 | 6.4 |
| RF97 | 5.1/10.2 | 11.9 | 11.2 | 14.0 | 11.2 | 11.8 |
| RF107 | 6.3/14.9 | 15.9 | 17.0 | 19.2 | 13.1 | 15.9 |
| RF127 | 6.6/16.0 | 18.3 | 18.2 | 21.4 | 15.9 | 17.0 |
| RF137 | 9.5/25.0 | 27.0 | 29.0 | 32.5 | 25.0 | |
| RF147 | 16.4/42.0 | 47.0 | 48.0 | 52.0 | 42.0 | 42.0 |
| RF167 | 26.0/70.0 | 82.0 | 78.0 | 88.0 | 65.0 | 71.0 |

1) The larger gear unit of compound gear units must be filled with the larger oil volume.

RX..

| Gear unit | Fill quantity in liters | | | | | |
|---|---|---|---|---|---|---|
| | M1 | M2 | M3 | M4 | M5 | M6 |
| RX57 | 0.60 | 0.80 | 1.30 | | 0.90 | |
| RX67 | 0.80 | | 1.70 | 1.90 | 1.10 | |
| RX77 | 1.10 | 1.50 | 2.60 | 2.70 | 1.60 | |
| RX87 | 1.70 | 2.50 | 4.80 | | 2.90 | |
| RX97 | 2.10 | 3.40 | 7.4 | 7.0 | 4.80 | |
| RX107 | 3.90 | 5.6 | 11.6 | 11.9 | 7.7 | |

RXF..

| Gear unit | Fill quantity in liters | | | | | |
|---|---|---|---|---|---|---|
| | M1 | M2 | M3 | M4 | M5 | M6 |
| RXF57 | 0.50 | 0.80 | 1.10 | | 0.70 | |

25803530/EN – 04/2018

| Gear unit | Fill quantity in liters | | | | | |
|---|---|---|---|---|---|---|
| | M1 | M2 | M3 | M4 | M5 | M6 |
| RXF67 | 0.70 | 0.80 | 1.50 | 1.40 | 1.00 | |
| RXF77 | 0.90 | 1.30 | 2.40 | 2.00 | 1.60 | |
| RXF87 | 1.60 | 1.95 | 4.90 | 3.95 | 2.90 | |
| RXF97 | 2.10 | 3.70 | 7.1 | 6.3 | 4.80 | |
| RXF107 | 3.10 | 5.7 | 11.2 | 9.3 | 7.2 | |

### Parallel shaft helical (F) gear units

F.., FA..B, FH..B, FV..B

| Gear unit | Fill quantity in liters | | | | | |
|---|---|---|---|---|---|---|
| | M1 | M2 | M3 | M4 | M5 | M6 |
| F..27 | 0.60 | 0.80 | 0.65 | 0.70 | 0.60 | 0.60 |
| F..37 | 0.95 | 1.25 | 0.70 | 1.25 | 1.00 | 1.10 |
| F..47 | 1.50 | 1.80 | 1.10 | 1.90 | 1.50 | 1.70 |
| F..57 | 2.60 | 3.50 | 2.10 | 3.50 | 2.80 | 2.90 |
| F..67 | 2.70 | 3.80 | 1.90 | 3.80 | 2.90 | 3.20 |
| F..77 | 5.90 | 7.30 | 4.30 | 8.00 | 6.00 | 6.30 |
| F..87 | 10.8 | 13.0 | 7.70 | 13.8 | 10.8 | 11.0 |
| F..97 | 18.5 | 22.5 | 12.6 | 25.2 | 18.5 | 20.0 |
| F..107 | 24.5 | 32.0 | 19.5 | 37.5 | 27.0 | 27.0 |
| F..127 | 39.5 | 51.7 | 31.5 | 60.1 | 45.6 | 44.2 |
| F..157 | 69.0 | 104.0 | 63.0 | 105.0 | 86.0 | 78.0 |

FF..

| Gear unit | Fill quantity in liters | | | | | |
|---|---|---|---|---|---|---|
| | M1 | M2 | M3 | M4 | M5 | M6 |
| FF27 | 0.60 | 0.80 | 0.65 | 0.70 | 0.60 | 0.60 |
| FF37 | 1.00 | 1.25 | 0.70 | 1.30 | 1.00 | 1.10 |
| FF47 | 1.60 | 1.85 | 1.10 | 1.90 | 1.50 | 1.70 |
| FF57 | 2.30 | 3.10 | 1.70 | 3.10 | 2.30 | 2.40 |
| FF67 | 2.70 | 3.80 | 1.90 | 3.80 | 2.90 | 3.20 |
| FF77 | 5.90 | 7.30 | 4.30 | 8.10 | 6.00 | 6.30 |
| FF87 | 10.8 | 13.2 | 7.80 | 14.1 | 11.0 | 11.2 |
| FF97 | 19.0 | 22.5 | 12.6 | 25.6 | 18.9 | 20.5 |
| FF107 | 25.5 | 32.0 | 19.5 | 38.5 | 27.5 | 28.0 |
| FF127 | 40.6 | 51.6 | 31.5 | 61.2 | 46.3 | 44.9 |
| FF157 | 72.0 | 105.0 | 64.0 | 106.0 | 87.0 | 79.0 |

FA.., FH.., FV.., FAF.., FAZ.., FHF.., FZ.., FHZ.., FVF.., FVZ.., FT.., FM.., FAM..

| Gear unit | Fill quantity in liters | | | | | |
|---|---|---|---|---|---|---|
| | M1 | M2 | M3 | M4 | M5 | M6 |
| F..27 | 0.60 | 0.80 | 0.65 | 0.70 | 0.60 | 0.60 |
| F..37 | 0.95 | 1.25 | 0.70 | 1.25 | 1.00 | 1.10 |
| F..47 | 1.50 | 1.80 | 1.10 | 1.90 | 1.50 | 1.70 |
| F..57 | 2.70 | 3.50 | 2.10 | 3.40 | 2.90 | 3.00 |
| F..67 | 2.70 | 3.80 | 1.90 | 3.80 | 2.90 | 3.20 |
| F..77 | 5.90 | 7.30 | 4.30 | 8.00 | 6.00 | 6.30 |
| F..87 | 10.8 | 13.0 | 7.70 | 13.8 | 10.8 | 11.0 |
| F..97 | 18.5 | 22.5 | 12.6 | 25.2 | 18.5 | 20.0 |
| F..107 | 24.5 | 32.0 | 19.5 | 37.5 | 27.0 | 27.0 |
| F..127 | 38.3 | 50.9 | 31.5 | 59.7 | 44.7 | 43.3 |
| F..157 | 68.0 | 103.0 | 62.0 | 104.0 | 85.0 | 77.0 |

25803530/EN – 04/2018

### Helical-bevel (K) gear units

## INFORMATION

All K..19 and K..29 gear units have a universal mounting position, which means that K..19 and K..29 gear units of the same design are filled with the same oil quantity independent of the mounting position. An exception to this is the M4 mounting position.

K.., KA..B, KH..B, KV..B

| Gear unit | Fill quantity in liters | | | | | |
|---|---|---|---|---|---|---|
| | M1 | M2 | M3 | M4 | M5 | M6 |
| K..19 | 0.40 | | | 0.45 | 0.40 | |
| K..29 | 0.70 | | | 0.85 | 0.70 | |
| K..39 | 0.90 | 1.70 | 1.55 | 1.9 | 1.55 | 1.30 |
| K..49 | 1.70 | 3.40 | 2.80 | 4.20 | 3.15 | 2.80 |
| K..37 | 0.50 | 1.00 | | 1.25 | 0.95 | |
| K..47 | 0.80 | 1.30 | 1.50 | 2.00 | 1.60 | |
| K..57 | 1.10 | 2.20 | | 2.80 | 2.30 | 2.10 |
| K..67 | 1.10 | 2.40 | 2.60 | 3.45 | 2.60 | |
| K..77 | 2.20 | 4.10 | 4.40 | 5.80 | 4.20 | 4.40 |
| K..87 | 3.70 | 8.0 | 8.70 | 10.90 | 8.0 | |
| K..97 | 7.0 | 14.0 | 15.70 | 20.0 | 15.70 | 15.50 |
| K..107 | 10.0 | 21.0 | 25.50 | 33.50 | 24.0 | |
| K..127 | 21.0 | 41.50 | 44.0 | 54.0 | 40.0 | 41.0 |
| K..157 | 31.0 | 65.0 | 68.0 | 90.0 | 62.0 | 63.0 |
| K..167 | 33.0 | 97.0 | 109.0 | 127.0 | 89.0 | 86.0 |
| K..187 | 53.0 | 156.0 | 174.0 | 207.0 | 150.0 | 147.0 |

KF..

| Gear unit | Fill quantity in liters | | | | | |
|---|---|---|---|---|---|---|
| | M1 | M2 | M3 | M4 | M5 | M6 |
| KF19 | 0.40 | | | 0.45 | 0.40 | |
| KF29 | 0.70 | | | 0.85 | 0.70 | |
| KF39 | 0.90 | 1.70 | 1.55 | 1.9 | 1.55 | 1.30 |
| KF49 | 1.70 | 3.40 | 2.80 | 4.20 | 3.15 | 2.80 |
| KF37 | 0.50 | 1.10 | | 1.50 | 1.00 | |
| KF47 | 0.80 | 1.30 | 1.70 | 2.20 | 1.60 | |
| KF57 | 1.20 | 2.20 | 2.40 | 3.15 | 2.50 | 2.30 |
| KF67 | 1.10 | 2.40 | 2.80 | 3.70 | 2.70 | |
| KF77 | 2.10 | 4.10 | 4.40 | 5.90 | 4.50 | |
| KF87 | 3.70 | 8.20 | 9.0 | 11.90 | 8.40 | |
| KF97 | 7.0 | 14.70 | 17.30 | 21.50 | 15.70 | 16.50 |
| KF107 | 10.0 | 21.80 | 25.80 | 35.10 | 25.20 | |
| KF127 | 21.0 | 41.50 | 46.0 | 55.0 | 41.0 | |
| KF157 | 31.0 | 66.0 | 69.0 | 92.0 | 62.0 | 63.0 |

KA.., KH.., KV.., KAF.., KHF.., KVF.., KZ.., KAZ.., KHZ.., KVZ.., KT.., KM.., KAM..

| Gear unit | Fill quantity in liters | | | | | |
|---|---|---|---|---|---|---|
| | M1 | M2 | M3 | M4 | M5 | M6 |
| K..19 | 0.40 | | | 0.45 | 0.40 | |
| K..29 | 0.70 | | | 0.85 | 0.70 | |
| K..39 | 0.90 | 1.70 | 1.55 | 1.9 | 1.55 | 1.30 |
| K..49 | 1.70 | 3.40 | 2.80 | 4.20 | 3.15 | 2.80 |
| K..37 | 0.50 | 1.00 | | 1.40 | 1.00 | |
| K..47 | 0.80 | 1.30 | 1.60 | 2.15 | 1.60 | |
| K..57 | 1.20 | 2.20 | 2.40 | 3.15 | 2.70 | 2.40 |

25803530/EN – 04/2018

| Gear unit | Fill quantity in liters | | | | | |
|---|---|---|---|---|---|---|
| | M1 | M2 | M3 | M4 | M5 | M6 |
| K..67 | 1.10 | 2.40 | 2.70 | 3.70 | 2.60 | |
| K..77 | 2.10 | 4.10 | 4.60 | 5.90 | 4.40 | |
| K..87 | 3.70 | 8.20 | 8.80 | 11.10 | 8.0 | |
| K..97 | 7.0 | 14.70 | 15.70 | 20.0 | 15.70 | |
| K..107 | 10.0 | 20.50 | 24.0 | 32.40 | 24.0 | |
| K..127 | 21.0 | 41.50 | 43.0 | 52.0 | 40.0 | |
| K..157 | 31.0 | 65.0 | 68.0 | 90.0 | 62.0 | 63.0 |
| K..167 | 33.0 | 97.0 | 109.0 | 127.0 | 89.0 | 86.0 |
| K..187 | 53.0 | 156.0 | 174.0 | 207.0 | 150.0 | 147.0 |

### Helical-worm (S) gear units

S..

| Gear unit | Fill quantity in liters | | | | | |
|---|---|---|---|---|---|---|
| | M1 | M2 | M3[1)] | M4 | M5 | M6 |
| S37 | 0.25 | 0.40 | 0.50 | 0.55 | 0.40 | |
| S47 | 0.35 | 0.80 | 0.70/0.90 | 1.00 | 0.80 | |
| S57 | 0.50 | 1.20 | 1.00/1.20 | 1.45 | 1.30 | |
| S67 | 1.00 | 2.00 | 2.20/3.10 | 3.10 | 2.60 | 2.60 |
| S77 | 1.90 | 4.20 | 3.70/5.4 | 5.9 | 4.40 | |
| S87 | 3.30 | 8.1 | 6.9/10.4 | 11.3 | 8.4 | |
| S97 | 6.8 | 15.0 | 13.4/18.0 | 21.8 | 17.0 | |

1) The larger gear unit of multi-stage gear units must be filled with the larger oil quantity.

25803530/EN – 04/2018

SF..

| Gear unit | Fill quantity in liters | | | | | |
|---|---|---|---|---|---|---|
| | M1 | M2 | M3[1)] | M4 | M5 | M6 |
| SF37 | 0.25 | 0.40 | 0.50 | 0.55 | 0.40 | |
| SF47 | 0.40 | 0.90 | 0.90/1.05 | 1.05 | 1.00 | |
| SF57 | 0.50 | 1.20 | 1.00/1.50 | 1.55 | 1.40 | |
| SF67 | 1.00 | 2.20 | 2.30/3.00 | 3.20 | 2.70 | |
| SF77 | 1.90 | 4.10 | 3.90/5.8 | 6.5 | 4.90 | |
| SF87 | 3.80 | 8.0 | 7.1/10.1 | 12.0 | 9.1 | |
| SF97 | 7.4 | 15.0 | 13.8/18.8 | 22.6 | 18.0 | |

1) The larger gear unit of multi-stage gear units must be filled with the larger oil quantity.

SA.., SH.., SAF.., SHZ.., SAZ.., SHF.., ST..

| Gear unit | Fill quantity in liters | | | | | |
|---|---|---|---|---|---|---|
| | M1 | M2 | M3[1)] | M4 | M5 | M6 |
| S..37 | 0.25 | 0.40 | 0.50 | | 0.40 | |
| S..47 | 0.40 | 0.80 | 0.70/0.90 | 1.00 | 0.80 | |
| S..57 | 0.50 | 1.10 | 1.00/1.50 | 1.50 | 1.20 | |
| S..67 | 1.00 | 2.00 | 1.80/2.60 | 2.90 | 2.50 | |
| S..77 | 1.80 | 3.90 | 3.60/5.0 | 5.8 | 4.50 | |
| S..87 | 3.80 | 7.4 | 6.0/8.7 | 10.8 | 8.0 | |
| S..97 | 7.0 | 14.0 | 11.4/16.0 | 20.5 | 15.7 | |

1) The larger gear unit of multi-stage gear units must be filled with the larger oil quantity.

### SPIROPLAN® (W) gear units

## INFORMATION

SPIROPLAN® gear units W..10 to W..30 have a universal mounting position, which means that gear units of the same design are filled with the same oil quantity independent of the mounting position.

The oil fill quantity of SPIROPLAN® gear units W..37 and W..47 in mounting position M4 is different from that of the other mounting positions.

W.., WA..B, WH..B

| Gear unit | Fill quantity in liters | | | | | |
|---|---|---|---|---|---|---|
| | M1 | M2 | M3 | M4 | M5 | M6 |
| W..10 | 0.16 | | | | | |
| W..20 | 0.24 | | | | | |
| W..30 | 0.40 | | | | | |
| W..37 | 0.50 | | | 0.70 | 0.50 | |
| W..47 | 0.90 | | | 1.40 | 0.90 | |

WF..

| Gear unit | Fill quantity in liters | | | | | |
|---|---|---|---|---|---|---|
| | M1 | M2 | M3 | M4 | M5 | M6 |
| WF10 | 0.16 | | | | | |
| WF20 | 0.24 | | | | | |
| WF30 | 0.40 | | | | | |
| WF37 | 0.50 | | | 0.70 | 0.50 | |
| WF47 | 0.90 | | | 1.55 | 0.90 | |

25803530/EN – 04/2018

WA.., WAF..,WH.., WT.., WHF..

| Gear unit | Fill quantity in liters | | | | | |
|---|---|---|---|---|---|---|
| | M1 | M2 | M3 | M4 | M5 | M6 |
| W..10 | 0.16 | | | | | |
| W..20 | 0.24 | | | | | |
| W..30 | 0.40 | | | | | |
| W..37 | 0.50 | | | 0.70 | 0.50 | |
| W..47 | 0.80 | | | 1.40 | 0.80 | |

25803530/EN – 04/2018

# 9 Malfunctions and remedies



**⚠ WARNING**

Risk of death or injury if the drive starts up unintentionally.

Severe or fatal injuries.

- De-energize the motor before you start working on the unit.
- Secure the motor against unintended power-up.



**⚠ CAUTION**

Risk of burns due to hot gear unit and hot gear unit oil.

Serious injuries.

- Let the gear unit cool down before you start working on it.
- Carefully remove the oil level plug and the oil drain plug.

**NOTICE**

Damage to gear unit/gearmotor due to improper operation.

Damage to the gear unit/gearmotor.

- Repair works at SEW-EURODRIVE gear units may only be performed by qualified personnel. In the context of this documentation, qualified personnel are persons who are familiar with the "Technical regulations on operating safety" (TRBS).
- Drive and motor may only be disconnected by qualified personnel.
- Contact SEW-EURODRIVE.

25803530/EN – 04/2018

## 9.1 Gear units

| Fault | Possible cause | Measure |
|---|---|---|
| Unusual, regular running noise | • Meshing/grinding noise: Bearing damage | • Check oil consistency, change bearings |
| | • Knocking noise: Irregularity in the gearing | • Consult SEW-EURODRIVE |
| | • Deformation of the housing upon tightening | • Check the gear unit mounting for possible deformation and correct if necessary |
| | • Noise generated by insufficient stiffness of the gear unit foundation | • Reinforce the gear unit foundation |
| Unusual, irregular running noises | • Foreign objects in the oil | • Check the oil consistency<br>• Stop the drive, contact SEW-EURODRIVE |
| Oil leaking from inspection cover | • Seal of the inspection cover leaking | • Tighten the screws of the inspection cover and observe the gear unit. Contact SEW-EURODRIVE if oil is still leaking. |
| | • Seal defective | • Contact SEW-EURODRIVE. |
| Small amounts of oil leak from the oil seal during run-in phase. | • Function-related pseudo-leakage | • There is no fault. Remove with soft, lint-free cloth and keep monitoring it. |
| Film of moisture around the dust lip of the oil seal | • Function-related pseudo-leakage | • There is no fault. Remove with soft, lint-free cloth and keep monitoring it. |
| Oil leaking from the oil seal. | • Oil seal leaking/defective | • Check sealing system. It may be necessary to contact SEW-EURODRIVE. |
| Oil leaking from motor (e.g. terminal box or fan) | • Too much oil | • Check oil level, correct if necessary |
| | • Gear unit not ventilated | • Vent gear unit |
| | • Oil seal leaking/defective | • Check sealing system. It may be necessary to contact SEW-EURODRIVE. |
| Oil leaking from flange | • Flange gasket leaking/defective | • Check sealing system. It may be necessary to contact SEW-EURODRIVE. |
| | • Too much oil | • Check oil level, correct if necessary |
| | • Gear unit not ventilated | • Vent gear unit |
| Oil leaking from breather valve. | • Too much oil. | • Check oil quantity, correct if necessary |
| | • Function-related oil mist | • There is no fault. |
| | • Drive not installed in proper mounting position. | • Install breather valve correctly and adjust the oil level. |
| | • Frequent cold starts (oil foaming) and/or high oil level. | • Install oil expansion tank. |
| Output shaft does not turn although the motor is running or the input shaft is rotated. | • Shaft-hub connection in the gear unit interrupted. | • Send in the gear unit/gearmotor for repair |

## 9.2 Adapters AM/AQ./AL/EWH

| Fault | Possible cause | Measure |
|---|---|---|
| Unusual, regular running noise | • Meshing/grinding noise: Bearing damage | • Contact SEW-EURODRIVE. |
| Oil leaking. | • Seal defective | • Contact SEW-EURODRIVE. |
| Output shaft does not turn although the motor is running or the input shaft is rotated. | • Shaft-hub connection in the gear unit interrupted. | • Send in the gear unit/gearmotor for repair. |
| Change in running noise and/or vibrations | • Spider wear, short-term torque transmission through metal contact | • Change the spider. |
| | • Screws to secure hub axially are loose | • Tighten the screws |
| Premature wear of spider | • Contact with aggressive fluids/ oils; ozone influence; excessive ambient temperatures, etc. that can change the physical properties of the spider. | • Contact SEW-EURODRIVE. |
| | • Impermissibly high ambient/contact temperature for the spider; maximum permitted temperature: -20 °C to +80 °C. | • Contact SEW-EURODRIVE. |
| | • Overload | • Contact SEW-EURODRIVE. |

## 9.3 AD input shaft assembly

| Fault | Possible cause | Measure |
|---|---|---|
| Unusual, regular running noise. | • Meshing/grinding noise: Bearing damage. | • Contact SEW-EURODRIVE. |
| Oil is leaking. | • Seal defective. | • Contact SEW-EURODRIVE. |
| Output shaft does not turn although the input shaft is rotated. | • Shaft-hub connection in gear unit or cover interrupted. | • Send the gear unit to SEW-EURODRIVE for repair. |

25803530/EN – 04/2018

## 9.4 Service

If you require customer service, include the following information:

- Nameplate data (complete)
- Nature and extent of the problem
- Time the failure occurred and any accompanying circumstances
- Presumed cause
- A digital picture of the failure, if possible

## 9.5 Waste disposal

Dispose gear units in accordance with the material structure and the regulations in force:

- As steel scrap
  - Housing parts
  - Gears
  - Shafts
  - Rolling bearing
- Parts of the worm gears are made of non-ferrous metals. Dispose of the worm gears appropriately.
- Collect used oil and dispose of it according to the regulations in force.

25803530/EN – 04/2018

# 10 Address list

| | | | |
|---|---|---|---|
| **Algeria** | | | |
| Sales | Algiers | REDUCOM Sarl<br>16, rue des Frères Zaghnoune<br>Bellevue<br>16200 El Harrach Alger | Tel. +213 21 8214-91<br>Fax +213 21 8222-84<br>http://www.reducom-dz.com<br>info@reducom-dz.com |
| **Argentina** | | | |
| Assembly<br>Sales | Buenos Aires | SEW EURODRIVE ARGENTINA S.A.<br>Ruta Panamericana Km 37.5, Lote 35<br>(B1619IEA) Centro Industrial Garín<br>Prov. de Buenos Aires | Tel. +54 3327 4572-84<br>Fax +54 3327 4572-21<br>http://www.sew-eurodrive.com.ar<br>sewar@sew-eurodrive.com.ar |
| **Australia** | | | |
| Assembly<br>Sales<br>Service | Melbourne | SEW-EURODRIVE PTY. LTD.<br>27 Beverage Drive<br>Tullamarine, Victoria 3043 | Tel. +61 3 9933-1000<br>Fax +61 3 9933-1003<br>http://www.sew-eurodrive.com.au<br>enquires@sew-eurodrive.com.au |
| | Sydney | SEW-EURODRIVE PTY. LTD.<br>9, Sleigh Place, Wetherill Park<br>New South Wales, 2164 | Tel. +61 2 9725-9900<br>Fax +61 2 9725-9905<br>enquires@sew-eurodrive.com.au |
| **Austria** | | | |
| Assembly<br>Sales<br>Service | Vienna | SEW-EURODRIVE Ges.m.b.H.<br>Richard-Strauss-Straße 24<br>1230 Wien | Tel. +43 1 617 55 00-0<br>Fax +43 1 617 55 00-30<br>http://www.sew-eurodrive.at<br>sew@sew-eurodrive.at |
| **Bangladesh** | | | |
| Sales | Bangladesh | SEW-EURODRIVE INDIA PRIVATE LIMITED<br>345 DIT Road<br>East Rampura<br>Dhaka-1219, Bangladesh | Tel. +88 01729 097309<br>salesdhaka@seweurodrivebangladesh.com |
| **Belarus** | | | |
| Sales | Minsk | Foreign unitary production enterprise SEW-EURODRIVE<br>RybalkoStr. 26<br>220033 Minsk | Tel. +375 17 298 47 56 / 298 47 58<br>Fax +375 17 298 47 54<br>http://www.sew.by<br>sales@sew.by |
| **Belgium** | | | |
| Assembly<br>Sales<br>Service | Brussels | SEW-EURODRIVE n.v./s.a.<br>Researchpark Haasrode 1060<br>Evenementenlaan 7<br>3001 Leuven | Tel. +32 16 386-311<br>Fax +32 16 386-336<br>http://www.sew-eurodrive.be<br>info@sew-eurodrive.be |
| Service Competence Center | Industrial Gears | SEW-EURODRIVE n.v./s.a.<br>Rue de Parc Industriel, 31<br>6900 Marche-en-Famenne | Tel. +32 84 219-878<br>Fax +32 84 219-879<br>http://www.sew-eurodrive.be<br>service-IG@sew-eurodrive.be |
| **Brazil** | | | |
| Production<br>Sales<br>Service | São Paulo | SEW-EURODRIVE Brasil Ltda.<br>Estrada Municipal José Rubim, 205 – Rodovia Santos Dumont Km 49<br>Indaiatuba – 13347-510 – SP | Tel. +55 19 3835-8000<br>sew@sew.com.br |
| Assembly<br>Sales<br>Service | Rio Claro | SEW-EURODRIVE Brasil Ltda.<br>Rodovia Washington Luiz, Km 172<br>Condomínio Industrial Conpark<br>Caixa Postal: 327<br>13501-600 – Rio Claro / SP | Tel. +55 19 3522-3100<br>Fax +55 19 3524-6653<br>montadora.rc@sew.com.br |
| | Joinville | SEW-EURODRIVE Brasil Ltda.<br>Rua Dona Francisca, 12.346 – Pirabeiraba<br>89239-270 – Joinville / SC | Tel. +55 47 3027-6886<br>Fax +55 47 3027-6888<br>filial.sc@sew.com.br |
| **Bulgaria** | | | |
| Sales | Sofia | BEVER-DRIVE GmbH<br>Bogdanovetz Str.1<br>1606 Sofia | Tel. +359 2 9151160<br>Fax +359 2 9151166<br>bever@bever.bg |

25803530/EN – 04/2018

| | | | |
|---|---|---|---|
| **Cameroon** | | | |
| Sales | Douala | SEW-EURODRIVE S.A.R.L.<br>Ancienne Route Bonabéri<br>P.O. Box<br>B.P 8674<br>Douala-Cameroun | Tel. +237 233 39 02 10<br>Fax +237 233 39 02 10<br>sew@sew-eurodrive-cm |
| **Canada** | | | |
| Assembly<br>Sales<br>Service | Toronto | SEW-EURODRIVE CO. OF CANADA LTD.<br>210 Walker Drive<br>Bramalea, ON L6T 3W1 | Tel. +1 905 791-1553<br>Fax +1 905 791-2999<br>http://www.sew-eurodrive.ca<br>l.watson@sew-eurodrive.ca |
| | Vancouver | SEW-EURODRIVE CO. OF CANADA LTD.<br>Tilbury Industrial Park<br>7188 Honeyman Street<br>Delta, BC V4G 1G1 | Tel. +1 604 946-5535<br>Fax +1 604 946-2513<br>b.wake@sew-eurodrive.ca |
| | Montreal | SEW-EURODRIVE CO. OF CANADA LTD.<br>2555 Rue Leger<br>Lasalle, PQ H8N 2V9 | Tel. +1 514 367-1124<br>Fax +1 514 367-3677<br>a.peluso@sew-eurodrive.ca |
| **Chile** | | | |
| Assembly<br>Sales<br>Service | Santiago de Chile | SEW-EURODRIVE CHILE LTDA<br>Las Encinas 1295<br>Parque Industrial Valle Grande<br>LAMPA<br>Santiago de Chile<br>P.O. Box<br>Casilla 23 Correo Quilicura - Santiago - Chile | Tel. +56 2 2757 7000<br>Fax +56 2 2757 7001<br>http://www.sew-eurodrive.cl<br>ventas@sew-eurodrive.cl |
| **China** | | | |
| Production<br>Assembly<br>Sales<br>Service | Tianjin | SEW-EURODRIVE (Tianjin) Co., Ltd.<br>No. 78, 13th Avenue, TEDA<br>Tianjin 300457 | Tel. +86 22 25322612<br>Fax +86 22 25323273<br>http://www.sew-eurodrive.cn<br>info@sew-eurodrive.cn |
| Assembly<br>Sales<br>Service | Suzhou | SEW-EURODRIVE (Suzhou) Co., Ltd.<br>333, Suhong Middle Road<br>Suzhou Industrial Park<br>Jiangsu Province, 215021 | Tel. +86 512 62581781<br>Fax +86 512 62581783<br>suzhou@sew-eurodrive.cn |
| | Guangzhou | SEW-EURODRIVE (Guangzhou) Co., Ltd.<br>No. 9, JunDa Road<br>East Section of GETDD<br>Guangzhou 510530 | Tel. +86 20 82267890<br>Fax +86 20 82267922<br>guangzhou@sew-eurodrive.cn |
| | Shenyang | SEW-EURODRIVE (Shenyang) Co., Ltd.<br>10A-2, 6th Road<br>Shenyang Economic Technological Development Area<br>Shenyang, 110141 | Tel. +86 24 25382538<br>Fax +86 24 25382580<br>shenyang@sew-eurodrive.cn |
| | Taiyuan | SEW-EURODRIVE (Taiyuan) Co,. Ltd.<br>No.3, HuaZhang Street,<br>TaiYuan Economic & Technical Development Zone<br>ShanXi, 030032 | Tel. +86-351-7117520<br>Fax +86-351-7117522<br>taiyuan@sew-eurodrive.cn |
| | Wuhan | SEW-EURODRIVE (Wuhan) Co., Ltd.<br>10A-2, 6th Road<br>No. 59, the 4th Quanli Road, WEDA<br>430056 Wuhan | Tel. +86 27 84478388<br>Fax +86 27 84478389<br>wuhan@sew-eurodrive.cn |
| | Xi'An | SEW-EURODRIVE (Xi'An) Co., Ltd.<br>No. 12 Jinye 2nd Road<br>Xi'An High-Technology Industrial Development Zone<br>Xi'An 710065 | Tel. +86 29 68686262<br>Fax +86 29 68686311<br>xian@sew-eurodrive.cn |
| Sales<br>Service | Hong Kong | SEW-EURODRIVE LTD.<br>Unit No. 801-806, 8th Floor<br>Hong Leong Industrial Complex<br>No. 4, Wang Kwong Road<br>Kowloon, Hong Kong | Tel. +852 36902200<br>Fax +852 36902211<br>contact@sew-eurodrive.hk |

25803530/EN – 04/2018

| | | | |
|---|---|---|---|
| **Colombia** | | | |
| Assembly<br>Sales<br>Service | Bogota | SEW-EURODRIVE COLOMBIA LTDA.<br>Calle 17 No. 132-18<br>Interior 2 Bodega 6, Manzana B<br>Santafé de Bogotá | Tel. +57 1 54750-50<br>Fax +57 1 54750-44<br>http://www.sew-eurodrive.com.co<br>sew@sew-eurodrive.com.co |
| **Croatia** | | | |
| Sales<br>Service | Zagreb | KOMPEKS d. o. o.<br>Zeleni dol 10<br>10 000 Zagreb | Tel. +385 1 4613-158<br>Fax +385 1 4613-158<br>kompeks@inet.hr |
| **Czech Republic** | | | |
| Assembly<br>Sales<br>Service | Hostivice | SEW-EURODRIVE CZ s.r.o.<br>Floriánova 2459<br>253 01 Hostivice | Tel. +420 255 709 601<br>Fax +420 235 350 613<br>http://www.sew-eurodrive.cz<br>sew@sew-eurodrive.cz |
| | Drive Service Hotline / 24 Hour Service | +420 800 739 739 (800 SEW SEW) | Service<br>Tel. +420 255 709 632<br>Fax +420 235 358 218<br>servis@sew-eurodrive.cz |
| **Denmark** | | | |
| Assembly<br>Sales<br>Service | Copenhagen | SEW-EURODRIVEA/S<br>Geminivej 28-30<br>2670 Greve | Tel. +45 43 95 8500<br>Fax +45 43 9585-09<br>http://www.sew-eurodrive.dk<br>sew@sew-eurodrive.dk |
| **Egypt** | | | |
| Sales<br>Service | Cairo | Copam Egypt<br>for Engineering & Agencies<br>Building 10, Block 13005, First Industrial Zone,<br>Obour City Cairo | Tel. +202 44812673 / 79 (7 lines)<br>Fax +202 44812685<br>http://www.copam-egypt.com<br>copam@copam-egypt.com |
| **Estonia** | | | |
| Sales | Tallin | ALAS-KUUL AS<br>Reti tee 4<br>75301 Peetri küla, Rae vald, Harjumaa | Tel. +372 6593230<br>Fax +372 6593231<br>http://www.alas-kuul.ee<br>veiko.soots@alas-kuul.ee |
| **Finland** | | | |
| Assembly<br>Sales<br>Service | Hollola | SEW-EURODRIVE OY<br>Vesimäentie 4<br>15860 Hollola | Tel. +358 201 589-300<br>Fax +358 3 780-6211<br>http://www.sew-eurodrive.fi<br>sew@sew.fi |
| Service | Hollola | SEW-EURODRIVE OY<br>Keskikankaantie 21<br>15860 Hollola | Tel. +358 201 589-300<br>Fax +358 3 780-6211<br>http://www.sew-eurodrive.fi<br>sew@sew.fi |
| Production<br>Assembly | Karkkila | SEW Industrial Gears Oy<br>Santasalonkatu 6, PL 8<br>03620 Karkkila, 03601 Karkkila | Tel. +358 201 589-300<br>Fax +358 201 589-310<br>http://www.sew-eurodrive.fi<br>sew@sew.fi |
| **France** | | | |
| Production<br>Sales<br>Service | Hagenau | SEW-USOCOME<br>48-54 route de Soufflenheim<br>B. P. 20185<br>67506 Haguenau Cedex | Tel. +33 3 88 73 67 00<br>Fax +33 3 88 73 66 00<br>http://www.usocome.com<br>sew@usocome.com |
| Production | Forbach | SEW-USOCOME<br>Zone industrielle<br>Technopôle Forbach Sud<br>B. P. 30269<br>57604 Forbach Cedex | Tel. +33 3 87 29 38 00 |
| | Brumath | SEW-USOCOME<br>1 Rue de Bruxelles<br>67670 Mommenheim Cedex | Tel. +33 3 88 37 48 00 |
| Assembly<br>Sales<br>Service | Bordeaux | SEW-USOCOME<br>Parc d'activités de Magellan<br>62 avenue de Magellan – B. P. 182<br>33607 Pessac Cedex | Tel. +33 5 57 26 39 00<br>Fax +33 5 57 26 39 09 |

25803530/EN – 04/2018

| | | | |
|---|---|---|---|
| **France** | | | |
| | Lyon | SEW-USOCOME<br>75 rue Antoine Condorcet<br>38090 Vaulx-Milieu | Tel. +33 4 74 99 60 00<br>Fax +33 4 74 99 60 15 |
| | Nantes | SEW-USOCOME<br>Parc d'activités de la forêt<br>4 rue des Fontenelles<br>44140 Le Bignon | Tel. +33 2 40 78 42 00<br>Fax +33 2 40 78 42 20 |
| | Paris | SEW-USOCOME<br>Zone industrielle<br>2 rue Denis Papin<br>77390 Verneuil l'Étang | Tel. +33 1 64 42 40 80<br>Fax +33 1 64 42 40 88 |
| **Gabon** | | | |
| Sales | Libreville | SEW-EURODRIVE SARL<br>183, Rue 5.033.C, Lalala à droite<br>P.O. Box 15682<br>Libreville | Tel. +241 03 28 81 55<br>+241 06 54 81 33<br>http://www.sew-eurodrive.cm<br>sew@sew-eurodrive.cm |
| **Germany** | | | |
| Headquarters<br>Production<br>Sales | Bruchsal | SEW-EURODRIVE GmbH & Co KG<br>Ernst-Blickle-Straße 42<br>76646 Bruchsal | Tel. +49 7251 75-0<br>Fax +49 7251 75-1970<br>http://www.sew-eurodrive.de<br>sew@sew-eurodrive.de |
| Production / Industrial Gears | Bruchsal | SEW-EURODRIVE GmbH & Co KG<br>Christian-Pähr-Str. 10<br>76646 Bruchsal | Tel. +49 7251 75-0<br>Fax +49 7251 75-2970 |
| Production | Graben | SEW-EURODRIVE GmbH & Co KG<br>Ernst-Blickle-Straße 1<br>76676 Graben-Neudorf | Tel. +49 7251 75-0<br>Fax +49 7251-2970 |
| | Östringen | SEW-EURODRIVE GmbH & Co KG, Werk Östringen<br>Franz-Gurk-Straße 2<br>76684 Östringen | Tel. +49 7253 9254-0<br>Fax +49 7253 9254-90<br>oestringen@sew-eurodrive.de |
| Service Competence Center | Mechanics / Mechatronics | SEW-EURODRIVE GmbH & Co KG<br>Ernst-Blickle-Straße 1<br>76676 Graben-Neudorf | Tel. +49 7251 75-1710<br>Fax +49 7251 75-1711<br>scc-mechanik@sew-eurodrive.de |
| | Electronics | SEW-EURODRIVE GmbH & Co KG<br>Ernst-Blickle-Straße 42<br>76646 Bruchsal | Tel. +49 7251 75-1780<br>Fax +49 7251 75-1769<br>scc-elektronik@sew-eurodrive.de |
| Drive Technology Center | North | SEW-EURODRIVE GmbH & Co KG<br>Alte Ricklinger Straße 40-42<br>30823 Garbsen (Hannover) | Tel. +49 5137 8798-30<br>Fax +49 5137 8798-55<br>dtc-nord@sew-eurodrive.de |
| | East | SEW-EURODRIVE GmbH & Co KG<br>Dänkritzer Weg 1<br>08393 Meerane (Zwickau) | Tel. +49 3764 7606-0<br>Fax +49 3764 7606-30<br>dtc-ost@sew-eurodrive.de |
| | South | SEW-EURODRIVE GmbH & Co KG<br>Domagkstraße 5<br>85551 Kirchheim (München) | Tel. +49 89 909552-10<br>Fax +49 89 909552-50<br>dtc-sued@sew-eurodrive.de |
| | West | SEW-EURODRIVE GmbH & Co KG<br>Siemensstraße 1<br>40764 Langenfeld (Düsseldorf) | Tel. +49 2173 8507-30<br>Fax +49 2173 8507-55<br>dtc-west@sew-eurodrive.de |
| Drive Center | Berlin | SEW-EURODRIVE GmbH & Co KG<br>Alexander-Meißner-Straße 44<br>12526 Berlin | Tel. +49 306331131-30<br>Fax +49 306331131-36<br>dc-berlin@sew-eurodrive.de |
| | Ludwigshafen | SEW-EURODRIVE GmbH & Co KG<br>c/o BASF SE<br>Gebäude W130 Raum 101<br>67056 Ludwigshafen | Tel. +49 7251 75 3759<br>Fax +49 7251 75 503759<br>dc-ludwigshafen@sew-eurodrive.de |
| | Saarland | SEW-EURODRIVE GmbH & Co KG<br>Gottlieb-Daimler-Straße 4<br>66773 Schwalbach Saar – Hülzweiler | Tel. +49 6831 48946 10<br>Fax +49 6831 48946 13<br>dc-saarland@sew-eurodrive.de |
| | Ulm | SEW-EURODRIVE GmbH & Co KG<br>Dieselstraße 18<br>89160 Dornstadt | Tel. +49 7348 9885-0<br>Fax +49 7348 9885-90<br>dc-ulm@sew-eurodrive.de |

25803530/EN – 04/2018

| | | | |
|---|---|---|---|
| **Germany** | | | |
| | Würzburg | SEW-EURODRIVE GmbH & Co KG<br>Nürnbergerstraße 118<br>97076 Würzburg-Lengfeld | Tel. +49 931 27886-60<br>Fax +49 931 27886-66<br>dc-wuerzburg@sew-eurodrive.de |
| Drive Service Hotline / 24 Hour Service | | | 0 800 SEWHELP<br>0 800 7394357 |
| **Great Britain** | | | |
| Assembly<br>Sales<br>Service | Normanton | SEW-EURODRIVE Ltd.<br>DeVilliers Way<br>Trident Park<br>Normanton<br>West Yorkshire<br>WF6 1GX | Tel. +44 1924 893-855<br>Fax +44 1924 893-702<br>http://www.sew-eurodrive.co.uk<br>info@sew-eurodrive.co.uk |
| | Drive Service Hotline / 24 Hour Service | | Tel. 01924 896911 |
| **Greece** | | | |
| Sales | Athens | Christ. Boznos & Son S.A.<br>12, K. Mavromichali Street<br>P.O. Box 80136<br>18545 Piraeus | Tel. +30 2 1042 251-34<br>Fax +30 2 1042 251-59<br>http://www.boznos.gr<br>info@boznos.gr |
| **Hungary** | | | |
| Sales<br>Service | Budapest | SEW-EURODRIVE Kft.<br>Csillaghegyí út 13.<br>1037 Budapest | Tel. +36 1 437 06-58<br>Fax +36 1 437 06-50<br>http://www.sew-eurodrive.hu<br>office@sew-eurodrive.hu |
| **Iceland** | | | |
| Sales | Reykjavik | Varma & Vélaverk ehf.<br>Knarrarvogi 4<br>104 Reykjavík | Tel. +354 585 1070<br>Fax +354 585)1071<br>http://www.varmaverk.is<br>vov@vov.is |
| **India** | | | |
| Registered Office<br>Assembly<br>Sales<br>Service | Vadodara | SEW-EURODRIVE India Private Limited<br>Plot No. 4, GIDC<br>POR Ramangamdi • Vadodara - 391 243<br>Gujarat | Tel. +91 265 3045200<br>Fax +91 265 3045300<br>http://www.seweurodriveindia.com<br>salesvadodara@seweurodriveindia.com |
| Assembly<br>Sales<br>Service | Chennai | SEW-EURODRIVE India Private Limited<br>Plot No. K3/1, Sipcot Industrial Park Phase II<br>Mambakkam Village<br>Sriperumbudur - 602105<br>Kancheepuram Dist, Tamil Nadu | Tel. +91 44 37188888<br>Fax +91 44 37188811<br>saleschennai@seweurodriveindia.com |
| | Pune | SEW-EURODRIVE India Private Limited<br>Plant: Plot No. D236/1,<br>Chakan Industrial Area Phase- II,<br>Warale, Tal- Khed,<br>Pune-410501, Maharashtra | Tel. +91 21 35 628700<br>Fax +91 21 35 628715<br>salespune@seweurodriveindia.com |
| **Indonesia** | | | |
| Sales | Medan | PT. Serumpun Indah Lestari<br>Jl.Pulau Solor no. 8, Kawasan Industri Medan II<br>Medan 20252 | Tel. +62 61 687 1221<br>Fax +62 61 6871429 / +62 61 6871458 / +62 61 30008041<br>sil@serumpunindah.com<br>serumpunindah@yahoo.com<br>http://www.serumpunindah.com |
| | Jakarta | PT. Cahaya Sukses Abadi<br>Komplek Rukan Puri Mutiara Blok A no 99,<br>Sunter<br>Jakarta 14350 | Tel. +62 21 65310599<br>Fax +62 21 65310600<br>csajkt@cbn.net.id |
| | Jakarta | PT. Agrindo Putra Lestari<br>JL.Pantai Indah Selatan, Komplek Sentra Industri Terpadu, Pantai indah Kapuk Tahap III, Blok E No. 27<br>Jakarta 14470 | Tel. +62 21 2921-8899<br>Fax +62 21 2921-8988<br>aplindo@indosat.net.id<br>http://www.aplindo.com |

25803530/EN – 04/2018

| | | | |
|---|---|---|---|
| **Indonesia** | | | |
| | Surabaya | PT. TRIAGRI JAYA ABADI<br>Jl. Sukosemolo No. 63, Galaxi Bumi Permai<br>G6 No. 11<br>Surabaya 60111 | Tel. +62 31 5990128<br>Fax +62 31 5962666<br>sales@triagri.co.id<br>http://www.triagri.co.id |
| | Surabaya | CV. Multi Mas<br>Jl. Raden Saleh 43A Kav. 18<br>Surabaya 60174 | Tel. +62 31 5458589<br>Fax +62 31 5317220<br>sianhwa@sby.centrin.net.id<br>http://www.cvmultimas.com |
| **Ireland** | | | |
| Sales<br>Service | Dublin | Alperton Engineering Ltd.<br>48 Moyle Road<br>Dublin Industrial Estate<br>Glasnevin, Dublin 11 | Tel. +353 1 830-6277<br>Fax +353 1 830-6458<br>http://www.alperton.ie<br>info@alperton.ie |
| **Israel** | | | |
| Sales | Tel Aviv | Liraz Handasa Ltd.<br>Ahofer Str 34B / 228<br>58858 Holon | Tel. +972 3 5599511<br>Fax +972 3 5599512<br>http://www.liraz-handasa.co.il<br>office@liraz-handasa.co.il |
| **Italy** | | | |
| Assembly<br>Sales<br>Service | Milan | SEW-EURODRIVE di R. Blickle & Co.s.a.s.<br>Via Bernini,14<br>20020 Solaro (Milano) | Tel. +39 02 96 980229<br>Fax +39 02 96 980 999<br>http://www.sew-eurodrive.it<br>milano@sew-eurodrive.it |
| **Ivory Coast** | | | |
| Sales | Abidjan | SEW-EURODRIVE SARL<br>Ivory Coast<br>Rue des Pêcheurs, Zone 3<br>26 BP 916 Abidjan 26 | Tel. +225 21 21 81 05<br>Fax +225 21 25 30 47<br>info@sew-eurodrive.ci<br>http://www.sew-eurodrive.ci |
| **Japan** | | | |
| Assembly<br>Sales<br>Service | Iwata | SEW-EURODRIVE JAPAN CO., LTD<br>250-1, Shimoman-no,<br>Iwata<br>Shizuoka 438-0818 | Tel. +81 538 373811<br>Fax +81 538 373814<br>http://www.sew-eurodrive.co.jp<br>sewjapan@sew-eurodrive.co.jp<br>hamamatsu@sew-eurodrive.co.jp |
| **Kazakhstan** | | | |
| Sales | Almaty | SEW-EURODRIVE LLP<br>291-291A, Tole bi street<br>050031, Almaty | Tel. +7 (727) 350 5156<br>Fax +7 (727) 350 5156<br>http://www.sew-eurodrive.kz<br>sew@sew-eurodrive.kz |
| | Tashkent | SEW-EURODRIVE LLP<br>Representative office in Uzbekistan<br>96A, Sharaf Rashidov street,<br>Tashkent, 100084 | Tel. +998 71 2359411<br>Fax +998 71 2359412<br>http://www.sew-eurodrive.uz<br>sew@sew-eurodrive.uz |
| | Ulaanbaatar | IM Trading LLC<br>Narny zam street 62<br>Sukhbaatar district,<br>Ulaanbaatar 14230 | Tel. +976-77109997<br>Fax +976-77109997<br>imt@imt.mn |
| **Kenya** | | | |
| Sales | Nairobi | SEW-EURODRIVE Pty Ltd<br>Transnational Plaza, 5th Floor<br>Mama Ngina Street<br>P.O. Box 8998-00100<br>Nairobi | Tel. +254 791 398840<br>http://www.sew-eurodrive.co.tz<br>info@sew.co.tz |
| **Latvia** | | | |
| Sales | Riga | SIA Alas-Kuul<br>Katlakalna 11C<br>1073 Riga | Tel. +371 6 7139253<br>Fax +371 6 7139386<br>http://www.alas-kuul.lv<br>info@alas-kuul.com |

25803530/EN – 04/2018

| | | | |
|---|---|---|---|
| **Lebanon** | | | |
| Sales (Lebanon) | Beirut | Gabriel Acar & Fils sarl<br>B. P. 80484<br>Bourj Hammoud, Beirut | Tel. +961 1 510 532<br>Fax +961 1 494 971<br>ssacar@inco.com.lb |
| Sales (Jordan, Kuwait , Saudi Arabia, Syria) | Beirut | Middle East Drives S.A.L. (offshore)<br>Sin El Fil.<br>B. P. 55-378<br>Beirut | Tel. +961 1 494 786<br>Fax +961 1 494 971<br>http://www.medrives.com<br>info@medrives.com |
| **Lithuania** | | | |
| Sales | Alytus | UAB Irseva<br>Statybininku 106C<br>63431 Alytus | Tel. +370 315 79204<br>Fax +370 315 56175<br>http://www.irseva.lt<br>irmantas@irseva.lt |
| **Luxembourg** | | | |
| representation: Belgium | | | |
| **Macedonia** | | | |
| Sales | Skopje | Boznos DOOEL<br>Dime Anicin 2A/7A<br>1000 Skopje | Tel. +389 23256553<br>Fax +389 23256554<br>http://www.boznos.mk |
| **Malaysia** | | | |
| Assembly<br>Sales<br>Service | Johor | SEW-EURODRIVE SDN BHD<br>No. 95, Jalan Seroja 39, Taman Johor Jaya<br>81000 Johor Bahru, Johor<br>West Malaysia | Tel. +60 7 3549409<br>Fax +60 7 3541404<br>sales@sew-eurodrive.com.my |
| **Mexiko** | | | |
| Assembly<br>Sales<br>Service | Quéretaro | SEW-EURODRIVE MEXICO S.A. de C.V.<br>SEM-981118-M93<br>Tequisquiapan No. 102<br>Parque Industrial Quéretaro<br>C.P. 76220<br>Querétaro, México | Tel. +52 442 1030-300<br>Fax +52 442 1030-301<br>http://www.sew-eurodrive.com.mx<br>scmexico@seweurodrive.com.mx |
| Sales<br>Service | Puebla | SEW-EURODRIVE MEXICO S.A. de C.V.<br>Calzada Zavaleta No. 3922 Piso 2 Local 6<br>Col. Santa Cruz Buenavista<br>C.P. 72154<br>Puebla, México | Tel. +52 (222) 221 248<br>http://www.sew-eurodrive.com.mx<br>scmexico@seweurodrive.com.mx |
| **Mongolia** | | | |
| Technical Office | Ulaanbaatar | IM Trading LLC<br>Narny zam street 62<br>Union building, Suite A-403-1<br>Sukhbaatar district,<br>Ulaanbaatar 14230 | Tel. +976-77109997<br>Tel. +976-99070395<br>Fax +976-77109997<br>http://imt.mn/<br>imt@imt.mn |
| **Morocco** | | | |
| Sales<br>Service | Bouskoura | SEW-EURODRIVE Morocco<br>Parc Industriel CFCIM, Lot 55 and 59<br>Bouskoura | Tel. +212 522 88 85 00<br>Fax +212 522 88 84 50<br>http://www.sew-eurodrive.ma<br>sew@sew-eurodrive.ma |
| **Namibia** | | | |
| Sales | Swakopmund | DB Mining & Industrial Services<br>Einstein Street<br>Strauss Industrial Park<br>Unit1<br>Swakopmund | Tel. +264 64 462 738<br>Fax +264 64 462 734<br>anton@dbminingnam.com |
| **Netherlands** | | | |
| Assembly<br>Sales<br>Service | Rotterdam | SEW-EURODRIVE B.V.<br>Industrieweg 175<br>3044 AS Rotterdam<br>Postbus 10085<br>3004 AB Rotterdam | Tel. +31 10 4463-700<br>Fax +31 10 4155-552<br>Service: 0800-SEWHELP<br>http://www.sew-eurodrive.nl<br>info@sew-eurodrive.nl |

25803530/EN – 04/2018

| | | | |
|---|---|---|---|
| **New Zealand** | | | |
| Assembly<br>Sales<br>Service | Auckland | SEW-EURODRIVE NEW ZEALAND LTD.<br>P.O. Box 58-428<br>82 Greenmount drive<br>East Tamaki Auckland | Tel. +64 9 2745627<br>Fax +64 9 2740165<br>http://www.sew-eurodrive.co.nz<br>sales@sew-eurodrive.co.nz |
| | Christchurch | SEW-EURODRIVE NEW ZEALAND LTD.<br>30 Lodestar Avenue, Wigram<br>Christchurch | Tel. +64 3 384-6251<br>Fax +64 3 384-6455<br>sales@sew-eurodrive.co.nz |
| **Nigeria** | | | |
| Sales | Lagos | Greenpeg Nig. Ltd<br>Plot 296A, Adeyemo Akapo Str. Omole GRA<br>Ikeja Lagos-Nigeria | Tel. +234-701-821-9200-1<br>http://www.greenpegltd.com<br>bolaji.adekunle@greenpegltd.com |
| **Norway** | | | |
| Assembly<br>Sales<br>Service | Moss | SEW-EURODRIVE A/S<br>Solgaard skog 71<br>1599 Moss | Tel. +47 69 24 10 20<br>Fax +47 69 24 10 40<br>http://www.sew-eurodrive.no<br>sew@sew-eurodrive.no |
| **Pakistan** | | | |
| Sales | Karachi | Industrial Power Drives<br>Al-Fatah Chamber A/3, 1st Floor Central Commercial Area,<br>Sultan Ahmed Shah Road, Block 7/8,<br>Karachi | Tel. +92 21 452 9369<br>Fax +92-21-454 7365<br>seweurodrive@cyber.net.pk |
| **Paraguay** | | | |
| Sales | Fernando de la Mora | SEW-EURODRIVE PARAGUAY S.R.L<br>De la Victoria 112, Esquina nueva Asunción<br>Departamento Central<br>Fernando de la Mora, Barrio Bernardino | Tel. +595 991 519695<br>Fax +595 21 3285539<br>sewpy@sew-eurodrive.com.py |
| **Peru** | | | |
| Assembly<br>Sales<br>Service | Lima | SEW EURODRIVE DEL PERU S.A.C.<br>Los Calderos, 120-124<br>Urbanizacion Industrial Vulcano, ATE, Lima | Tel. +51 1 3495280<br>Fax +51 1 3493002<br>http://www.sew-eurodrive.com.pe<br>sewperu@sew-eurodrive.com.pe |
| **Philippines** | | | |
| Sales | Makati | P.T. Cerna Corporation<br>4137 Ponte St., Brgy. Sta. Cruz<br>Makati City 1205 | Tel. +63 2 519 6214<br>Fax +63 2 890 2802<br>mech_drive_sys@ptcerna.com<br>http://www.ptcerna.com |
| **Poland** | | | |
| Assembly<br>Sales<br>Service | Łódź | SEW-EURODRIVE Polska Sp.z.o.o.<br>ul. Techniczna 5<br>92-518 Łódź | Tel. +48 42 293 00 00<br>Fax +48 42 293 00 49<br>http://www.sew-eurodrive.pl<br>sew@sew-eurodrive.pl |
| | Service | Tel. +48 42 293 0030<br>Fax +48 42 293 0043 | 24 Hour Service<br>Tel. +48 602 739 739 (+48 602 SEW SEW)<br>serwis@sew-eurodrive.pl |
| **Portugal** | | | |
| Assembly<br>Sales<br>Service | Coimbra | SEW-EURODRIVE, LDA.<br>Av. da Fonte Nova, n.º 86<br>3050-379 Mealhada | Tel. +351 231 20 9670<br>Fax +351 231 20 3685<br>http://www.sew-eurodrive.pt<br>infosew@sew-eurodrive.pt |
| **Romania** | | | |
| Sales<br>Service | Bucharest | Sialco Trading SRL<br>str. Brazilia nr. 36<br>011783 Bucuresti | Tel. +40 21 230-1328<br>Fax +40 21 230-7170<br>sialco@sialco.ro |
| **Russia** | | | |
| Assembly<br>Sales<br>Service | St. Petersburg | ЗАО «СЕВ-ЕВРОДРАЙФ»<br>а. я. 36<br>195220 Санкт-Петербург | Tel. +7 812 3332522 / +7 812 5357142<br>Fax +7 812 3332523<br>http://www.sew-eurodrive.ru<br>sew@sew-eurodrive.ru |

25803530/EN – 04/2018

| | | | |
|---|---|---|---|
| **Sambia** | | | |
| representation: South Africa | | | |
| **Senegal** | | | |
| Sales | Dakar | SENEMECA<br>Mécanique Générale<br>Km 8, Route de Rufisque<br>B.P. 3251, Dakar | Tel. +221 338 494 770<br>Fax +221 338 494 771<br>http://www.senemeca.com<br>senemeca@senemeca.sn |
| **Serbia** | | | |
| Sales | Belgrade | DIPAR d.o.o.<br>Ustanicka 128a<br>PC Košum, IV floor<br>11000 Beograd | Tel. +381 11 347 3244 / +381 11 288 0393<br>Fax +381 11 347 1337<br>office@dipar.rs |
| **Singapore** | | | |
| Assembly<br>Sales<br>Service | Singapore | SEW-EURODRIVE PTE. LTD.<br>No 9, Tuas Drive 2<br>Jurong Industrial Estate<br>Singapore 638644 | Tel. +65 68621701<br>Fax +65 68612827<br>http://www.sew-eurodrive.com.sg<br>sewsingapore@sew-eurodrive.com |
| **Slovakia** | | | |
| Sales | Bratislava | SEW-Eurodrive SK s.r.o.<br>Rybničná 40<br>831 06 Bratislava | Tel.+421 2 33595 202, 217, 201<br>Fax +421 2 33595 200<br>http://www.sew-eurodrive.sk<br>sew@sew-eurodrive.sk |
| | Košice | SEW-Eurodrive SK s.r.o.<br>Slovenská ulica 26<br>040 01 Košice | Tel. +421 55 671 2245<br>Fax +421 55 671 2254<br>Mobile +421 907 671 976<br>sew@sew-eurodrive.sk |
| **Slovenia** | | | |
| Sales<br>Service | Celje | Pakman - Pogonska Tehnika d.o.o.<br>UI. XIV. divizije 14<br>3000 Celje | Tel. +386 3 490 83-20<br>Fax +386 3 490 83-21<br>pakman@siol.net |
| **South Africa** | | | |
| Assembly<br>Sales<br>Service | Johannesburg | SEW-EURODRIVE (PROPRIETARY) LIMITED<br>Eurodrive House<br>Cnr. Adcock Ingram and Aerodrome Roads<br>Aeroton Ext. 2<br>Johannesburg 2013<br>P.O.Box 90004<br>Bertsham 2013 | Tel. +27 11 248-7000<br>Fax +27 11 248-7289<br>http://www.sew.co.za<br>info@sew.co.za |
| | Cape Town | SEW-EURODRIVE (PROPRIETARY) LIMITED<br>Rainbow Park<br>Cnr. Racecourse & Omuramba Road<br>Montague Gardens<br>Cape Town<br>P.O.Box 36556<br>Chempet 7442 | Tel. +27 21 552-9820<br>Fax +27 21 552-9830<br>Telex 576 062<br>bgriffiths@sew.co.za |
| | Durban | SEW-EURODRIVE (PROPRIETARY) LIMITED<br>48 Prospecton Road<br>Isipingo<br>Durban<br>P.O. Box 10433, Ashwood 3605 | Tel. +27 31 902 3815<br>Fax +27 31 902 3826<br>cdejager@sew.co.za |
| | Nelspruit | SEW-EURODRIVE (PROPRIETARY) LIMITED<br>7 Christie Crescent<br>Vintonia<br>P.O.Box 1942<br>Nelspruit 1200 | Tel. +27 13 752-8007<br>Fax +27 13 752-8008<br>robermeyer@sew.co.za |
| **South Korea** | | | |
| Assembly<br>Sales<br>Service | Ansan | SEW-EURODRIVE KOREA CO., LTD.<br>7, Dangjaengi-ro,<br>Danwon-gu,<br>Ansan-si, Gyeonggi-do, Zip 425-839 | Tel. +82 31 492-8051<br>Fax +82 31 492-8056<br>http://www.sew-eurodrive.kr<br>master.korea@sew-eurodrive.com |

25803530/EN – 04/2018

| | | | |
|---|---|---|---|
| **South Korea** | | | |
| | Busan | SEW-EURODRIVE KOREA CO., LTD.<br>28, Noksansandan 262-ro 50beon-gil,<br>Gangseo-gu,<br>Busan, Zip 618-820 | Tel. +82 51 832-0204<br>Fax +82 51 832-0230 |
| **Spain** | | | |
| Assembly<br>Sales<br>Service | Bilbao | SEW-EURODRIVE ESPAÑA, S.L.<br>Parque Tecnológico, Edificio, 302<br>48170 Zamudio (Vizcaya) | Tel. +34 94 43184-70<br>http://www.sew-eurodrive.es<br>sew.spain@sew-eurodrive.es |
| **Sri Lanka** | | | |
| Sales | Colombo | SM International (Pte) Ltd<br>254, Galle Raod<br>Colombo 4, Sri Lanka | Tel. +94 1 2584887<br>Fax +94 1 2582981 |
| **Swaziland** | | | |
| Sales | Manzini | C G Trading Co. (Pty) Ltd<br>PO Box 2960<br>Manzini M200 | Tel. +268 2 518 6343<br>Fax +268 2 518 5033<br>engineering@cgtrading.co.sz |
| **Sweden** | | | |
| Assembly<br>Sales<br>Service | Jönköping | SEW-EURODRIVE AB<br>Gnejsvägen 6-8<br>553 03 Jönköping<br>Box 3100 S-550 03 Jönköping | Tel. +46 36 34 42 00<br>Fax +46 36 34 42 80<br>http://www.sew-eurodrive.se<br>jonkoping@sew.se |
| **Switzerland** | | | |
| Assembly<br>Sales<br>Service | Basel | Alfred Imhof A.G.<br>Jurastrasse 10<br>4142 Münchenstein bei Basel | Tel. +41 61 417 1717<br>Fax +41 61 417 1700<br>http://www.imhof-sew.ch<br>info@imhof-sew.ch |
| **Taiwan** | | | |
| Sales | Taipei | Ting Shou Trading Co., Ltd.<br>6F-3, No. 267, Sec. 2<br>Tung Huw S. Road<br>Taipei | Tel. +886 2 27383535<br>Fax +886 2 27368268<br>Telex 27 245<br>sewtwn@ms63.hinet.net<br>http://www.tingshou.com.tw |
| | Nan Tou | Ting Shou Trading Co., Ltd.<br>No. 55 Kung Yeh N. Road<br>Industrial District<br>Nan Tou 540 | Tel. +886 49 255353<br>Fax +886 49 257878<br>sewtwn@ms63.hinet.net<br>http://www.tingshou.com.tw |
| **Tanzania** | | | |
| Sales | Daressalam | SEW-EURODRIVE PTY LIMITED TANZANIA<br>Plot 52, Regent Estate<br>PO Box 106274<br>Dar Es Salaam | Tel. +255 0 22 277 5780<br>Fax +255 0 22 277 5788<br>http://www.sew-eurodrive.co.tz<br>info@sew.co.tz |
| **Thailand** | | | |
| Assembly<br>Sales<br>Service | Chonburi | SEW-EURODRIVE (Thailand) Ltd.<br>700/456, Moo.7, Donhuaroh<br>Muang<br>Chonburi 20000 | Tel. +66 38 454281<br>Fax +66 38 454288<br>sewthailand@sew-eurodrive.com |
| **Tunisia** | | | |
| Sales | Tunis | T. M.S. Technic Marketing Service<br>Zone Industrielle Mghira 2<br>Lot No. 39<br>2082 Fouchana | Tel. +216 79 40 88 77<br>Fax +216 79 40 88 66<br>http://www.tms.com.tn<br>tms@tms.com.tn |
| **Turkey** | | | |
| Assembly<br>Sales<br>Service | Kocaeli-Gebze | SEW-EURODRİVE Hareket<br>Sistemleri San. Ve TIC. Ltd. Sti<br>Gebze Organize Sanayi Böl. 400 Sok No. 401<br>41480 Gebze Kocaeli | Tel. +90 262 9991000 04<br>Fax +90 262 9991009<br>http://www.sew-eurodrive.com.tr<br>sew@sew-eurodrive.com.tr |

25803530/EN – 04/2018

| | | | |
|---|---|---|---|
| **United Arab Emirates** | | | |
| Sales<br>Service | Dubai | SEW-EURODRIVE FZE<br>PO Box 263835<br>Office No. S3A1SR03<br>Jebel Ali Free Zone – South,<br>Dubai, United Arab Emirates | Tel. +971 (0)4 8806461<br>Fax +971 (0)4 8806464<br>http://www.sew-eurodrive.ae<br>info@sew-eurodrive.ae |
| **Ukraine** | | | |
| Assembly<br>Sales<br>Service | Dnipropetrovsk | ООО «СЕВ-Евродрайв»<br>ул. Рабочая, 23-В, офис 409<br>49008 Днепр | Tel. +380 56 370 3211<br>Fax +380 56 372 2078<br>http://www.sew-eurodrive.ua<br>sew@sew-eurodrive.ua |
| **Uruguay** | | | |
| Assembly<br>Sales | Montevideo | SEW-EURODRIVE Uruguay, S. A.<br>Jose Serrato 3569 Esqina Corumbe<br>CP 12000 Montevideo | Tel. +598 2 21181-89<br>Fax +598 2 21181-90<br>sewuy@sew-eurodrive.com.uy |
| **USA** | | | |
| Production<br>Assembly<br>Sales<br>Service | Southeast Region | SEW-EURODRIVE INC.<br>1295 Old Spartanburg Highway<br>P.O. Box 518<br>Lyman, S.C. 29365 | Tel. +1 864 439-7537<br>Fax Sales +1 864 439-7830<br>Fax Production +1 864 439-9948<br>Fax Assembly +1 864 439-0566<br>Fax Confidential/HR +1 864 949-5557<br>http://www.seweurodrive.com<br>cslyman@seweurodrive.com |
| Assembly<br>Sales<br>Service | Northeast Region | SEW-EURODRIVE INC.<br>Pureland Ind. Complex<br>2107 High Hill Road, P.O. Box 481<br>Bridgeport, New Jersey 08014 | Tel. +1 856 467-2277<br>Fax +1 856 845-3179<br>csbridgeport@seweurodrive.com |
| | Midwest Region | SEW-EURODRIVE INC.<br>2001 West Main Street<br>Troy, Ohio 45373 | Tel. +1 937 335-0036<br>Fax +1 937 332-0038<br>cstroy@seweurodrive.com |
| | Southwest Region | SEW-EURODRIVE INC.<br>3950 Platinum Way<br>Dallas, Texas 75237 | Tel. +1 214 330-4824<br>Fax +1 214 330-4724<br>csdallas@seweurodrive.com |
| | Western Region | SEW-EURODRIVE INC.<br>30599 San Antonio St.<br>Hayward, CA 94544 | Tel. +1 510 487-3560<br>Fax +1 510 487-6433<br>cshayward@seweurodrive.com |
| | Wellford | SEW-EURODRIVE INC.<br>148/150 Finch Rd.<br>Wellford, S.C. 29385 | Tel. +1 864 439-7537<br>Fax +1 864 661 1167<br>IGOrders@seweurodrive.com |
| | Additional addresses for service provided on request! | | |
| **Vietnam** | | | |
| Sales | Ho Chi Minh City | Nam Trung Co., Ltd<br>Huế - South Vietnam / Construction Materials<br>250 Binh Duong Avenue, Thu Dau Mot Town,<br>Binh Duong Province<br>HCM office: 91 Tran Minh Quyen Street<br>District 10, Ho Chi Minh City | Tel. +84 8 8301026<br>Fax +84 8 8392223<br>khanh-nguyen@namtrung.com.vn<br>http://www.namtrung.com.vn |
| | Hanoi | MICO LTD<br>Quảng Trị - North Vietnam / All sectors except Construction Materials<br>8th Floor, Ocean Park Building, 01 Dao Duy Anh St, Ha Noi, Viet Nam | Tel. +84 4 39386666<br>Fax +84 4 3938 6888<br>nam_ph@micogroup.com.vn<br>http://www.micogroup.com.vn |

25803530/EN – 04/2018

# Index


## A

AD input shaft assembly ..... 79
AD, input shaft assembly ..... 79
Adapter EWH ..... 76
Adjustment in mounting position ..... 29
Agitator
  Maintenance intervals ..... 95
  Relubrication ..... 95
Agitator drive
  Strength class of the screws ..... 30
AM adapter ..... 68
  Foot-mounted motor ..... 72
  Mounting of third-party motors ..... 72
  Permitted load ..... 72
AM IEC adapter ..... 68
AM NEMA adapter ..... 68
Ambient conditions ..... 104
AQ adapter ..... 73
AQ adapter coupling ..... 73
AQ. adapter
  Permitted loads ..... 74
  Setting standards and tightening torques ..... 74
AR.. slip clutch ..... 86
Assembly
  Safety notes ..... 10
AT.. start-up coupling ..... 86

## B

Backstop ..... 103
Bearing greases ..... 169
Breather valve ..... 29
  Compound gear unit ..... 133

## C

Change in mounting position ..... 29
Changing oil ..... 113
Changing the mounting position ..... 130, 169
Checking the oil level ..... 99, 113
  At the breather plug. ..... 126
  At the oil level plug. ..... 114, 124, 125, 127
  Via the breather plug ..... 121
  Via the cover plate ..... 117
Churning losses ..... 130
Compound gear unit
  Breather valve ..... 133
  Oil drain plug ..... 133
  Oil level plug ..... 133
  Screw plug bore ..... 133
Condition monitoring ..... 25, 88
Copyright notice ..... 7
Coupling of AM adapter ..... 68
Coupling, rigid flange coupling ..... 90
Cover AD ..... 79
Customer service ..... 191

## D

Designated use ..... 9
Diagnostic unit
  DUO ..... 87
  Vibration SmartCheck ..... 88
Direct mounting ..... 83
DUO, diagnostic unit ..... 87

## E

Efficiency ..... 101, 130
Elastomers ..... 104
Embedded safety notes ..... 6
EWH adapter ..... 76
Exclusion of liability ..... 7
Extended storage ..... 167

## F

Failure
  Running noise ..... 189, 190
Features ..... 86
Flatness defect ..... 29
Fluid couplings ..... 86
Fluorocarbon rubber ..... 104
For mounting to gear units ..... 83
Föttinger principle ..... 86

## G

Gaskets ..... 100
Gear unit heating ..... 89
Gear unit mounting ..... 33
  Strength class ..... 30
Gear unit painting ..... 36
Gear unit structure ..... 11


25803530/EN – 04/18

Helical gear units ..... 11
Helical-bevel gear units K..7 ..... 16
Helical-bevel gear units K..9 ..... 13, 15
Helical-worm gear units ..... 17
Parallel-shaft helical gear units ..... 12
SPIROPLAN® gear units W..10 – W..30 ..... 18
SPIROPLAN® gear units W..37 – W..47 ..... 19
Gear unit venting ..... 35
Gear unit with solid shaft ..... 37
Grease filling ..... 169

## H

Hazard symbols
Meaning ..... 6
Heater ..... 89
Helical gear units ..... 11
Type designation ..... 23
Helical gearmotors
Mounting positions ..... 134
Helical-bevel gear units ..... 13, 15
Type designation ..... 24
Helical-bevel gear units K..7 ..... 16
Helical-bevel gearmotors
Mounting positions ..... 142
Helical-worm gear units ..... 17
Type designation ..... 24
Helical-worm gearmotors
Mounting positions ..... 155

## I

Input and output elements
High overhung loads ..... 38
Mounting ..... 37
Using a mounting device ..... 37
Inspection ..... 106
Inspection intervals
Gear unit ..... 110
Inspection work
AD Input shaft assembly ..... 112
AL/AM/AQ./EWH adapter ..... 111
Changing oil ..... 113
Checking the oil level ..... 113
Gear unit ..... 113
Oil check ..... 113
Installation
Couplings ..... 38
Input and output elements ..... 37
Mechanical ..... 26
Installation tolerances ..... 27
Installing the gear unit ..... 28

## L

Labyrinth seal ..... 91
Leakage ..... 100
Lubricant
Compatibility with oil seals ..... 171
Determining change intervals ..... 111
Lubricant table ..... 170
Lubricant change intervals ..... 111
Lubricant fill quantities ..... 181
Lubricant table
Notes ..... 170
Lubricants ..... 169

## M

Maintenance ..... 106
Agitator ..... 95
Maintenance intervals
Gear unit ..... 110
Maintenance tasks
AL/AM/AQ./EWH adapter ..... 111
Changing oil ..... 113
Checking the oil level ..... 113
Oil check ..... 113
Maintenance works
AD Input shaft assembly ..... 112
Gear unit ..... 113
Malfunctions ..... 188
AD Input shaft assembly ..... 190
Adapters AM/AQ. /AL/EWH ..... 190
Gear unit ..... 189
Mechanical installation ..... 26
Motor mounting ..... 83
Mounting position
Mounting position M0 ..... 131
Mounting position MX ..... 131
Mounting position sheets ..... 129
Mounting position sheets, key ..... 132
Mounting positions ..... 129
Designation ..... 129
Helical gearmotors ..... 134
Helical-bevel gearmotors ..... 142


25803530/EN – 04/18

Helical-worm gearmotors ..... 155
Parallel-shaft helical gearmotors ..... 139
SPIROPLAN® gearmotors ..... 161
Mounting shaft-mounted gear units with keyway 45
Mounting shaft-mounted gear units with splined hollow shaft ..... 44

## N

Nameplate ..... 20
Notes
Designation in the documentation ..... 5
Meaning of the hazard symbols ..... 6

## O

Oil check ..... 113
Oil drain plug
Compound gear unit ..... 133
Oil drain valve ..... 93
Oil expansion tank ..... 93
Oil level plug
Compound gear unit ..... 133
Oil quantity ..... 181
Oil seal
Lubricant compatibility ..... 171
Oil seals ..... 26
Oil sight glass ..... 99
Optional equipment ..... 86
Options ..... 86
Type designation ..... 25

## P

Painting gear units ..... 128
Painting the gear unit ..... 36
Parallel-shaft helical gear units ..... 12
Type designation ..... 23
Parallel-shaft helical gearmotors
Mounting positions ..... 139
Performance data ..... 20
Product names ..... 7
Pseudo-leakage ..... 100

## R

Relubrication ..... 91
Repair ..... 188, 191
Resources ..... 27
Rights to claim under limited warranty ..... 6
Rigid flange coupling ..... 90
Run-in period ..... 101

## S

Safety notes
Assembly ..... 10
Designated use ..... 9
Designation in the documentation ..... 5
Meaning of the hazard symbols ..... 6
Preliminary information ..... 8
Setup ..... 10
Storage ..... 9
Structure of embedded ..... 6
Structure of the section-related ..... 5
Transportation ..... 9
Screw plug bore
Compound gear unit ..... 133
Section-related safety notes ..... 5
Service ..... 191
Shaft-mounted gear unit ..... 39
TorqLOC® ..... 53
Shaft-mounted gear units
Keyway ..... 45
Shrink disk ..... 50
Splined hollow shaft ..... 45
Signal words in safety notes ..... 5
Solid shaft ..... 37
SPIROPLAN® gear unit
Mounting position M0 ..... 131
SPIROPLAN® gear units
Type designation ..... 25
SPIROPLAN® gear units W..10 – W..30 ..... 18
SPIROPLAN® gear units W..37 – W..47 ..... 19
SPIROPLAN® gearmotors
Mounting positions ..... 161
Startup ..... 99
Start-up coupling, AT ..... 86
Storage ..... 9
Strength class
Gear unit mounting ..... 30
Structure
Helical gear units ..... 11
Helical-bevel gear units K..7 ..... 16
Helical-bevel gear units K..9 ..... 13, 15
Helical-worm gear units ..... 17
Parallel-shaft helical gear units ..... 12
SPIROPLAN® gear units W..10 – W..30 ..... 18


25803530/EN – 04/18

SPIROPLAN® gear units W..37 – W..47 ..... 19

## T

Target group ..... 8
Technical data ..... 167
Thermal rating ..... 130
Tightening torques ..... 31
Tools ..... 27
TorqLOC® ..... 53
Torque arms ..... 39
Torque arms for shaft-mounted gear units ..... 39
Helical-worm gear units ..... 42
K..37 – K..157 helical-bevel gear units ..... 41
Parallel-shaft helical gear units ..... 39
SPIROPLAN® W gear units ..... 43
Trademarks ..... 7
Transportation ..... 9
Type designation ..... 20, 22
Helical gear units ..... 23
Helical-bevel gear units ..... 24
Helical-worm gear units ..... 24
Options ..... 25
Parallel-shaft helical gear units ..... 23
SPIROPLAN® gear units ..... 25

## U

Universal mounting position M0 ..... 131
Using a mounting device ..... 37

## V

Ventilation ..... 35
Venting ..... 35
Vibration SmartCheck ..... 88

## W

Waste disposal ..... 191

25803530/EN – 04/18

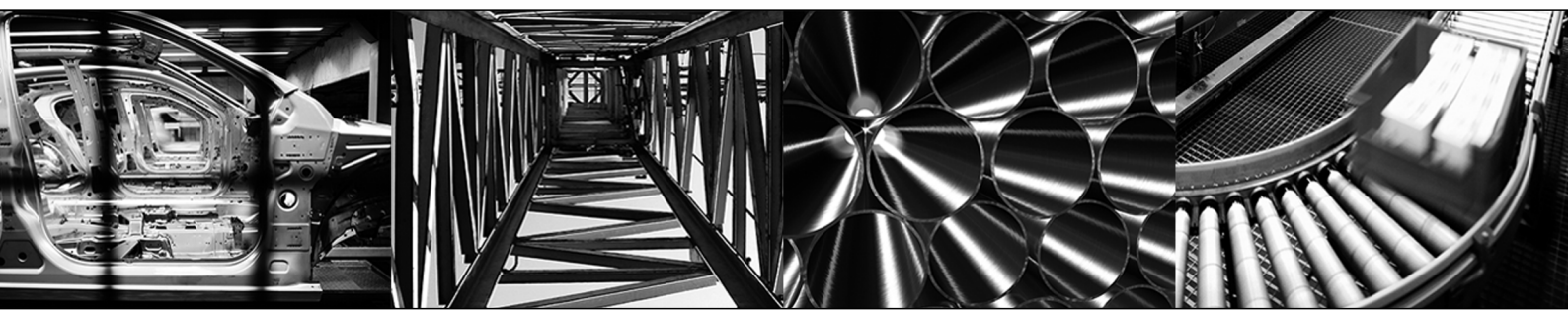



**SEW-EURODRIVE**
**Driving the world**

SEW-EURODRIVE GmbH & Co KG
Ernst-Blickle-Str. 42
76646 BRUCHSAL
GERMANY
Tel. +49 7251 75-0
Fax +49 7251 75-1970
sew@sew-eurodrive.com
➞ **www.sew-eurodrive.com**

# *SEW EURODRIVE*

## *MODEL DRN71 M4/C/DH/RI, MOTOR*

LEFT BLANK

SEW EURODRIVE

# Operating Instructions




## AC Motors

DR..71 – 315, DRN63 – 315, DR2..56 – 80

Edition 06/2019

25957074/EN



# Contents

**1 General information ..... 6**
1.1 About this documentation ..... 6
1.2 Structure of the safety notes ..... 6
1.3 Rights to claim under limited warranty ..... 8
1.4 Product names and trademarks ..... 8
1.5 Copyright notice ..... 8
1.6 Other applicable documentation ..... 8

**2 Safety notes ..... 9**
2.1 Preliminary information ..... 9
2.2 Duties of the user ..... 9
2.3 Target group ..... 10
2.4 Designated use ..... 10
2.5 Transportation/storage ..... 11
2.6 Installation/assembly ..... 12
2.7 Electric work ..... 13
2.8 Startup/operation ..... 14

**3 Motor structure ..... 15**
3.1 Basic structure ..... 15
3.2 Basic design of DR2..56 motors ..... 16
3.3 Basic design of DRN63, DR2..63 motors ..... 17
3.4 Basic design of DR..71 – 132, DRN71 – 132S, DR2..71 – 80 motors ..... 18
3.5 Basic structure DR..160 – 180, DRN132M – 180 motors ..... 19
3.6 Basic structure DR..200 – 225, DRN200 – 225 motors ..... 20
3.7 Basic structure DR..250 – 280, DRN250 – 280 motors ..... 21
3.8 Basic structure DR..315, DRN315 motors ..... 22
3.9 Nameplate ..... 23
3.10 Type designation ..... 26
3.11 Designs and options ..... 27
3.12 Functional safety ..... 31

**4 Mechanical installation ..... 32**
4.1 Before you start ..... 32
4.2 Preliminary work after longer periods of storage ..... 33
4.3 Motor installation notes ..... 37
4.4 Installation tolerances ..... 39
4.5 Assembling the input elements ..... 39
4.6 Encoder mounting adapter ..... 40
4.7 Terminal box ..... 44
4.8 Retrofitting (option /F.A) or modifying (option /F.B) motor feet ..... 48
4.9 Direct mounting of a motor on a gear unit ..... 53
4.10 Options ..... 56

**5 Electrical installation ..... 62**
5.1 General information ..... 62
5.2 Wiring diagrams and terminal assignment diagrams ..... 63

25957074/EN – 06/2019

5.3 Wiring notes ... 63
5.4 Special aspects for operation with a frequency inverter ... 64
5.5 Exterior grounding at the terminal box, LF grounding ... 66
5.6 Improving the grounding (EMC), HF grounding ... 67
5.7 Special aspects in switching operation ... 71
5.8 Special aspects of torque motors and low-speed motors ... 71
5.9 Special aspects of DRK.. single-phase motors ... 72
5.10 Notes regarding the connection of the motor ... 74
5.11 Connecting the motor via terminal block ... 75
5.12 Connecting the motor plug connector ... 84
5.13 Connecting the motor via terminal strip ... 90
5.14 Connecting the brake ... 94
5.15 Options ... 103

**6 Startup ... 118**
6.1 Before startup ... 119
6.2 Motors with reinforced bearing ... 119
6.3 Motors with backstop /RS ... 120

**7 Inspection/maintenance ... 121**
7.1 Inspection and maintenance intervals ... 123
7.2 Bearing lubrication ... 125
7.3 Reinforced bearings ... 126
7.4 Motor and brake maintenance – preliminary work ... 127
7.5 Inspection/maintenance work for DR..71 – 315, DRN63 – 315, DR2..56 – 80 motors ... 173
7.6 Inspection/maintenance work for DR..71 – 315, DRN63 – 315, DR2..56 – 80 brakemotors ... 175
7.7 Inspection/maintenance work diagnostic unit /DUB ... 205
7.8 Inspection/maintenance work diagnostic unit /DUE ... 209
7.9 Altering the blocking direction on motors with a backstop ... 219

**8 Technical data ... 222**
8.1 Braking torques ... 222
8.2 Braking work, working air gap, and brake lining carrier thickness ... 225
8.3 Operating currents ... 226
8.4 Resistors ... 230
8.5 Brake control ... 234
8.6 Permitted rolling bearings ... 242
8.7 Lubricant tables ... 244
8.8 Encoders ... 246
8.9 Diagnostic unit /DUE ... 260
8.10 Characteristic safety values ... 261
8.11 S1 duty cycle DRK.. single-phase motor ... 262

**9 Malfunctions ... 263**
9.1 General information ... 263
9.2 Motor malfunctions ... 264
9.3 Brake malfunctions ... 266

25957074/EN – 06/2019

9.4 Malfunctions when operated with a frequency inverter ..... 267
9.5 Disposal ..... 268
9.6 Customer service ..... 268

**10 Appendix ..... 269**
10.1 Wiring diagrams ..... 269
10.2 Auxiliary terminals ..... 285

**11 Address list ..... 286**

**Index ..... 297**

25957074/EN – 06/2019

# 1 General information

## 1.1 About this documentation

**The current version of the documentation is the original.**

This documentation is an integral part of the product. The documentation is intended for all employees who perform work on the product.

Make sure this documentation is accessible and legible. Ensure that persons responsible for the systems and their operation as well as persons who work on the product independently have read through the documentation carefully and understood it. If you are unclear about any of the information in this documentation, or if you require further information, contact SEW-EURODRIVE.

## 1.2 Structure of the safety notes

### 1.2.1 Meaning of signal words

The following table shows the grading and meaning of the signal words for safety notes.

| Signal word | Meaning | Consequences if disregarded |
|---|---|---|
| ⚠ **DANGER** | Imminent hazard | Severe or fatal injuries |
| ⚠ **WARNING** | Possible dangerous situation | Severe or fatal injuries |
| ⚠ **CAUTION** | Possible dangerous situation | Minor injuries |
| **NOTICE** | Possible damage to property | Damage to the product or its environment |
| **INFORMATION** | Useful information or tip: Simplifies handling of the product. | |

### 1.2.2 Structure of section-related safety notes

Section-related safety notes do not apply to a specific action but to several actions pertaining to one subject. The hazard symbols used either indicate a general hazard or a specific hazard.

This is the formal structure of a safety note for a specific section:



**SIGNAL WORD**

Type and source of hazard.

Possible consequence(s) if disregarded.

- Measure(s) to prevent the hazard.

25957074/EN – 06/2019

**Meaning of the hazard symbols**

The hazard symbols in the safety notes have the following meaning:

| Hazard symbol | Meaning |
|---|---|
|  | General hazard |
|  | Warning of dangerous electrical voltage |
|  | Warning of hot surfaces |
|  | Warning of automatic restart |

### 1.2.3 Structure of embedded safety notes

Embedded safety notes are directly integrated into the instructions just before the description of the dangerous action.

This is the formal structure of an embedded safety note:

⚠ **SIGNAL WORD** Type and source of hazard. Possible consequence(s) if disregarded. Measure(s) to prevent the hazard.

25957074/EN – 06/2019

## 1.3 Rights to claim under limited warranty

Read the information in this documentation. This is essential for fault-free operation and fulfillment of any rights to claim under limited warranty. Read the documentation before you start working with the product.

## 1.4 Product names and trademarks

The brands and product names in this documentation are trademarks or registered trademarks of their respective titleholders.

## 1.5 Copyright notice

© 2019 SEW-EURODRIVE. All rights reserved. Unauthorized reproduction, modification, distribution or any other use of the whole or any part of this documentation is strictly prohibited.

## 1.6 Other applicable documentation

Observe the corresponding documentation for all further components.

### 1.6.1 DR..71 – 315, DRN63 – 315, DR2..56 – 80 AC motors

The following publications and documents have to be observed as well:

- Wiring diagrams provided with the motor
- "Gear Unit Series R..7, F..7, K..7, K..9, S..7, SPIROPLAN® W" operating instructions for gearmotors
- Catalogs for AC motors
- Catalogs for gearmotors
- Addendum to the operating instructions "Safety Encoders and Safety Brakes, AC Motors DR.., DRN.., DR2.., EDR.., EDRN.. – Functional Safety"
- "Project Planning for BE.. Brakes" manual – DR.., DRN.., DR2.., EDR.., EDRN.. AC Motors – Standard Brake/Safety Brake"
- If required, "MOVIMOT® MM..D Functional Safety" manual

25957074/EN – 06/2019

# 2 Safety notes

## 2.1 Preliminary information

The following general safety notes serve the purpose of preventing injury to persons and damage to property. They primarily apply to the use of products described in this documentation. If you use additional components, also observe the relevant warning and safety notes.

## 2.2 Duties of the user

As the user, you must ensure that the basic safety notes are observed and complied with. Make sure that persons responsible for the machinery and its operation as well as persons who work on the device independently have read through the documentation carefully and understood it.

As the user, you must ensure that all of the work listed in the following is carried out only by qualified specialists:

- Setup and installation
- Installation and connection
- Startup
- Maintenance and repairs
- Shutdown
- Disassembly

Ensure that the persons who work on the product pay attention to the following regulations, conditions, documentation, and information:

- National and regional safety and accident prevention regulations
- Warning and safety signs on the product
- All other relevant project planning documents, installation and startup instructions, and wiring diagrams
- Do not assemble, install or operate damaged products
- All system-specific specifications and conditions

Ensure that systems in which the product is installed are equipped with additional monitoring and protection devices. Observe the applicable safety regulations and legislation governing technical work equipment and accident prevention regulations.

25957074/EN – 06/2019

## 2.3 Target group

Specialist for mechanical work

Any mechanical work may only be performed by adequately qualified specialists. Specialists in the context of this documentation are persons familiar with the design, mechanical installation, troubleshooting, and maintenance of the product who possess the following qualifications:

- Qualification in the mechanical area in accordance with the national regulations
- Familiarity with this documentation

Specialist for electrotechnical work

Any electrotechnical work may only be performed by electrically skilled persons with a suitable education. Electrically skilled persons in the context of this documentation are persons familiar with electrical installation, startup, troubleshooting, and maintenance of the product who possess the following qualifications:

- Qualification in the electrotechnical area in accordance with the national regulations
- Familiarity with this documentation

Additional qualification

In addition to that, these persons must be familiar with the valid safety regulations and laws, as well as with the requirements of the standards, directives, and laws specified in this documentation.

The persons must have the express authorization of the company to operate, program, parameterize, label, and ground devices, systems, and circuits in accordance with the standards of safety technology.

Instructed persons

All work in the areas of transportation, storage, operation and waste disposal must be carried out by persons who are trained appropriately. The purpose of the instruction is that the persons are capable of performing the required tasks and work steps in a safe and correct manner.

## 2.4 Designated use

The product is intended for use in industrial and commercial systems.

In the case of installation in electrical systems or machines, it is prohibited to start the proper operation of the product until it is determined that the machine meets the requirements stipulated in the local laws and directives.

The standards given in the declaration of conformity apply to the product.

25957074/EN – 06/2019

## 2.5 Transportation/storage

Inspect the shipment for damage as soon as you receive the delivery. Inform the shipping company immediately about any damage. If the product is damaged, it must not be assembled, installed or started up.

The lifting eyebolts are designed to carry only the weight of the motor without gear unit. Tighten installed lifting eyebolts. Mounted gear units have separate suspension attachments, which must be used according to the gear unit operating instructions when lifting the gearmotor. Do not mount any additional loads.

The installed lifting eyebolts are in accordance with DIN 580. Observe the loads and regulations specified there. The tension force vector of the slings must not exceed a 45° angle in accordance with DIN 580.

If necessary, use suitable, sufficiently dimensioned handling equipment.

Observe the following notes when transporting the device:

- Always use all attachment points if available. The attachment points are designed to carry only the mass of the product. Severe or fatal injuries. Do not apply any additional loads.
- Ensure that the product is not subject to mechanical impact.

If the product is not immediately installed, it must be stored in a dry and dust-free location. The product can be stored for up to 9 months without requiring any special measures before startup. Do not store the product outdoors.

Do not transport or store the product on the fan guard.

25957074/EN – 06/2019

## 2.6 Installation/assembly

Note the following points during installation:

- Make sure that the supports are even, the foot and flange mounting is correct and if there is direct coupling, align with precision.
- Avoid resonance between the rotational frequency and the double supply system frequency.
- Release brake (for motors with mounted brake).
- Turn the rotor by hand and listen for unusual grinding noise.
- Check the direction of rotation in decoupled state.
- Only install or remove belt pulleys and couplings using suitable devices (heat up). Cover the belt pulleys and couplings with a touch guard. Avoid unacceptable belt tension.
- Establish any necessary pipe connections.
- Mounting positions with the shaft end pointing upward must be equipped with a cover to prevent foreign objects from falling into the fan. Ensure that ventilation openings are not obstructed and that used air cannot be drawn in again straight away. The same applies to air from adjacent units.

See also the information in chapter "Mechanical installation" (→ 🗎 32).

### 2.6.1 Restrictions of use

The following applications are prohibited unless the device is explicitly designed for such use:

- Use in potentially explosive atmospheres
- Use in areas exposed to harmful oils, acids, gases, vapors, dust, and radiation

25957074/EN – 06/2019

## 2.7 Electric work

### 2.7.1 Carrying out electric work safely

Observe the following information to carry out electric work safely during installation and maintenance:

- Electric work may only be carried out by electrically skilled persons.
- Always adhere to the 5 safety rules for working on electrical components:
  - Disconnect
  - Secure the drive against restart
  - Check that no voltage is applied
  - Ground and short-circuit it
  - Cover or safeguard neighboring live parts
- When the device is switched on, dangerous voltages are present at all power connections as well as at any connected cables and terminals. This also applies even when the product is inhibited and the motor is at standstill.

### 2.7.2 Electrical connection

Exceeding the stated tolerances in EN 60034-1 (VDE 0530, Part 1) – voltage ± 5%, frequency ± 2%, curve shape, symmetry – increases the heating and influences electromagnetic compatibility. Adhere to the standard EN 50110. Observe other applicable national regulations, such as DIN VDE 0105 for Germany.

Observe the wiring information and differing data on the nameplate as well as the provided wiring diagram.

The connection must be a permanently secure electrical connection (no protruding wire ends). Use the corresponding cable end equipment. Establish a safe PE connection. When the motor is connected, the distances to non-insulated and live parts must not be shorter than the minimum values according to IEC 60664 and national regulations. With low voltage, the distances should be no shorter than the following values, in compliance with IEC 60664:

| Nominal voltage $V_N$ | Distance |
|---|---|
| ≤ 500 V | 3 mm |
| ≤ 690 V | 5.5 mm |

The terminal box must be free from foreign objects, dirt and humidity. Unused cable entry openings and the connection box itself must be sealed so that they are dust- and water-proof.

Secure the key(s) for the test run without output elements.

When operating low-voltage machines with brakes, check that the brake is functioning properly before startup.

Observe the notes in chapter "Electrical installation".

25957074/EN – 06/2019

## 2.8 Startup/operation

Risk of burns: The surface temperature of the product can exceed 60 °C during operation. Do not touch the product during operation. Let the product cool down before touching it.

Do not deactivate monitoring and protection devices of the machine or system even for a test run.

Depending on the degree of protection, products may have live, uninsulated, and sometimes moving or rotating parts, as well as hot surfaces during operation.

Make sure that any existing transport protection is removed.

In the event of deviations from normal operation, switch the product off. Possible deviations are increased temperatures, noise, or vibration, for example. Determine the cause. Contact SEW-EURODRIVE if necessary.

Ensure that the terminal box is closed and screwed down before applying the supply voltage.

Additional preventive measures may be required for applications with increased hazard potential. Be sure to check the effectiveness of the protection devices after every modification.

Mechanical blocking or internal protective functions of the product can cause a motor standstill. Removing the cause of this problem can result in the drive re-starting. Disconnect the product from the power supply before you start with troubleshooting.

Overheating of motors with backstop /RS

With low motor speeds, the centrifugal forces are so low that the backstop sprags brush against the inner and outer ring. This causes overheating of the friction surfaces.

- Do not permanently operate motors with backstop /RS below lift-off speed.

25957074/EN – 06/2019

# 3 Motor structure

## 3.1 Basic structure

The following figures are schematic representations. Motor size and design may cause deviations.

25957074/EN – 06/2019

## 3.2 Basic design of DR2..56 motors

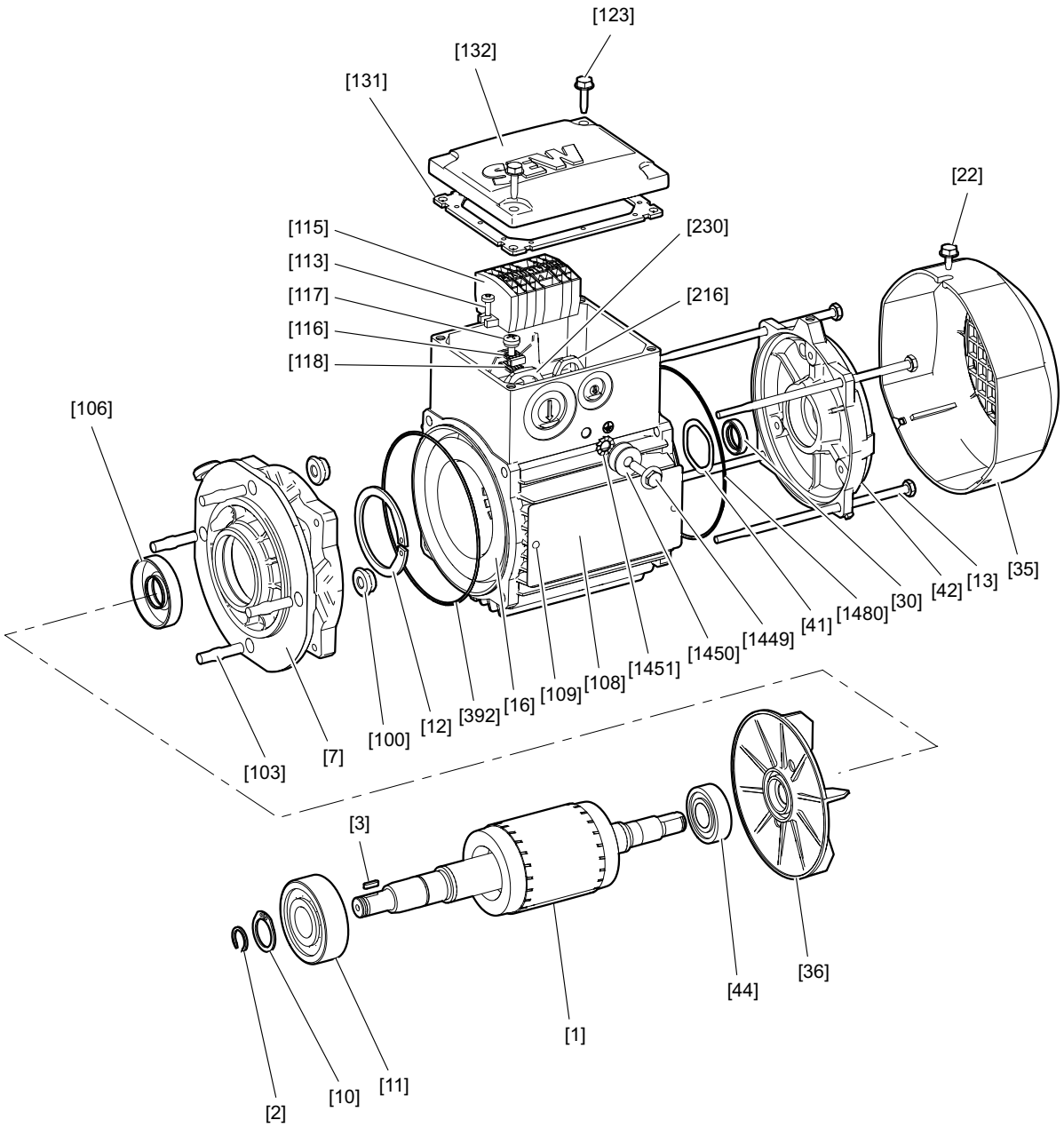


*26857323531*

| | | | | | | | |
|---|---|---|---|---|---|---|---|
| [1] | Rotor | [22] | Hex head screw | [106] | Oil seal | [131] | Gasket for cover |
| [2] | Retaining ring | [30] | Oil seal | [108] | Nameplate | [132] | Terminal box cover |
| [3] | Key | [35] | Fan guard | [109] | Grooved pin | [216] | Hex nut |
| [7] | Flanged endshield | [36] | Fan | [113] | Cylinder head screw | [230] | Hex nut |
| [10] | Retaining ring | [41] | Equalizing ring | [115] | Terminal board | [392] | O-ring |
| [11] | Deep groove ball bearing | [42] | Rear endshield | [116] | Terminal clip | [1449] | Hex head screw |
| [12] | Retaining ring | [44] | Deep groove ball bearing | [117] | Flat head screw | [1450] | Washer |
| [13] | Cap screw | [100] | Hex nut | [118] | Washer | [1451] | Serrated lock washer |
| [16] | Stator | [103] | Stud | [123] | Hex head screw | [1480] | O-ring |

25957074/EN – 06/2019

## 3.3 Basic design of DRN63, DR2..63 motors

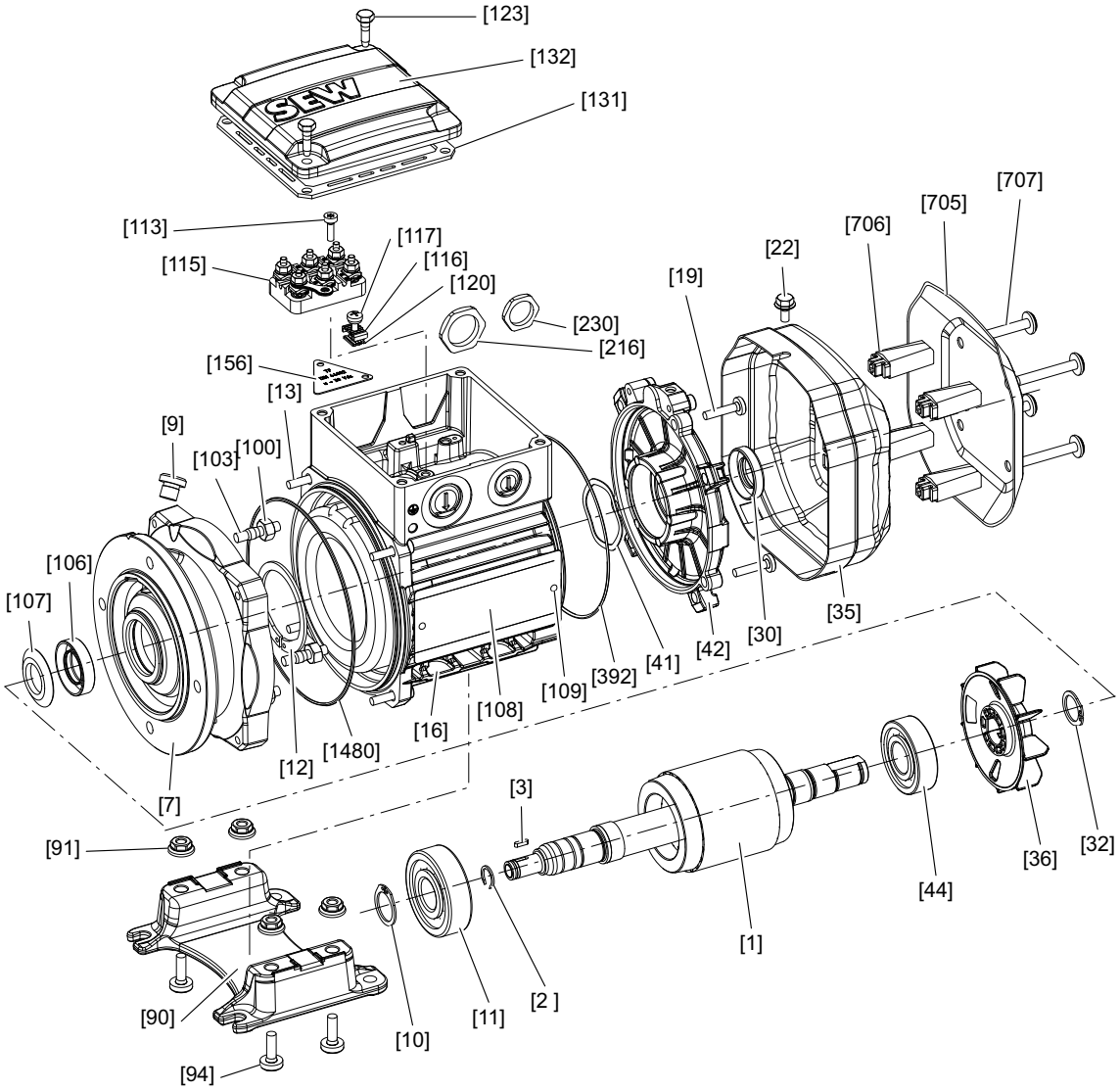


*22297409803*

| | | | | | | | |
|---|---|---|---|---|---|---|---|
| [1] | Rotor | [22] | Hex head screw | [100] | Hex nut | [123] | Hex head screw |
| [2] | Retaining ring | [30] | Oil seal | [103] | Stud | [131] | Gasket for cover |
| [3] | Key | [32] | Retaining ring | [106] | Oil seal | [132] | Terminal box cover |
| [7] | Flanged endshield | [35] | Fan guard | [107] | Oil flinger | [156] | Information sign |
| [9] | Screw plug | [36] | Fan | [108] | Nameplate | [216] | Hex nut |
| [10] | Retaining ring | [41] | Equalizing ring | [109] | Grooved pin | [230] | Hex nut |
| [11] | Deep groove ball bearing | [42] | B-side endshield | [113] | Cylinder head screw | [392] | O-ring |
| [12] | Retaining ring | [44] | Deep groove ball bearing | [115] | Terminal board | [705] | Canopy |
| [13] | Cap screw | [90] | Bed plate | [116] | Terminal clip | [706] | Spacer |
| [16] | Stator | [91] | Hex nut | [117] | Flat head screw | [707] | Hex head screw |
| [19] | Pan head screw | [94] | Flat head screw | [120] | Support plate | [1480] | O-ring |

25957074/EN – 06/2019

## 3.4 Basic design of DR..71 – 132, DRN71 – 132S, DR2..71 – 80 motors

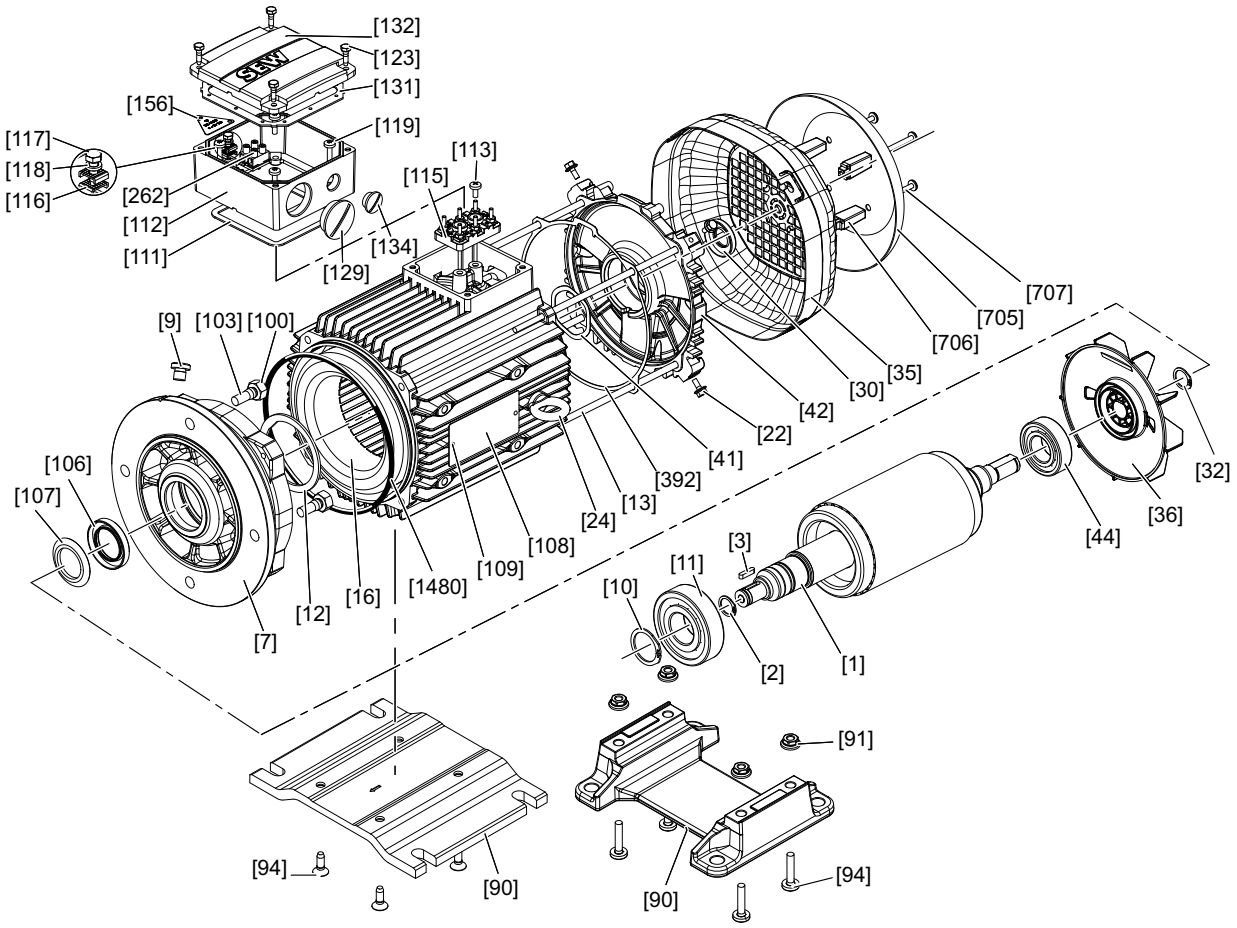


*18014411878699915*

| | | | | | | | |
|---|---|---|---|---|---|---|---|
| [1] | Rotor | [32] | Retaining ring | [107] | Oil flinger | [123] | Hex head screw |
| [2] | Retaining ring | [35] | Fan guard | [108] | Nameplate | [129] | Screw plug with O-ring |
| [3] | Key | [36] | Fan | [109] | Grooved pin | [131] | Gasket for cover |
| [7] | Flanged endshield | [41] | Equalizing ring | [111] | Gasket for lower part | [132] | Terminal box cover |
| [9] | Screw plug | [42] | B-side endshield | [112] | Terminal box lower part | [134] | Screw plug with O-ring |
| [10] | Retaining ring | [44] | Deep groove ball bearing | [113] | Pan head screw | [156] | Information sign |
| [11] | Deep groove ball bearing | [90] | Bed plate | [115] | Terminal board | [262] | Terminal clip |
| [12] | Retaining ring | [91] | Hex nut | [116] | Terminal clip | [392] | Gasket |
| [13] | Cap screw | [94] | Screw | | | [705] | Canopy |
| [16] | Stator | [100] | Hex nut | [117] | Hex head screw | [706] | Spacer |
| [22] | Hex head screw | [103] | Stud | [118] | Lock washer | [707] | Pan head screw |
| [24] | Lifting eyebolt | [106] | Oil seal | [119] | Pan head screw | [1480] | O-ring |
| [30] | Oil seal | | | | | | |

25957074/EN – 06/2019

## 3.5 Basic structure DR..160 – 180, DRN132M – 180 motors

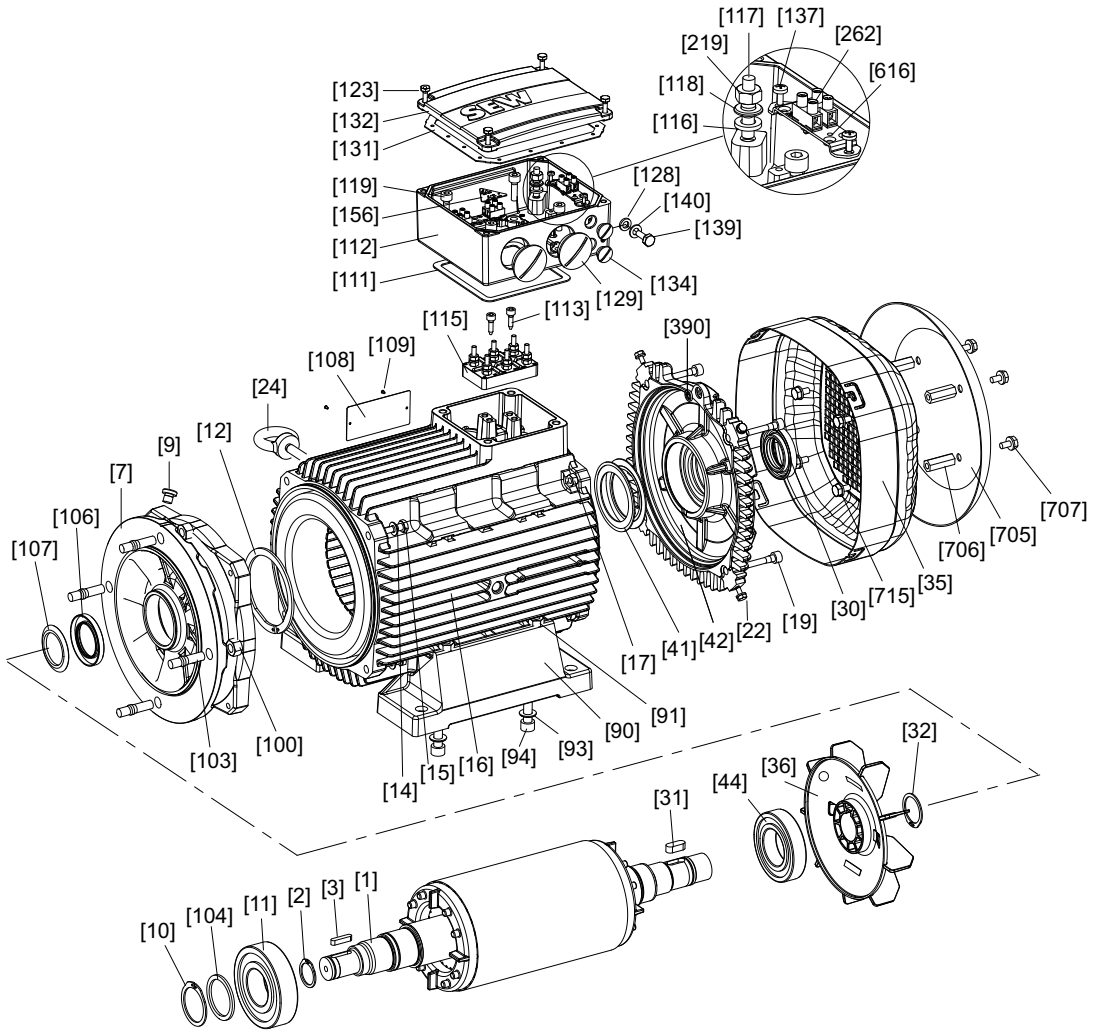


*18014399036804619*

| | | | | | | | |
|---|---|---|---|---|---|---|---|
| [1] | Rotor | [31] | Key | [108] | Nameplate | [132] | Terminal box cover |
| [2] | Retaining ring | [32] | Retaining ring | [109] | Grooved pin | [134] | Screw plug with O-ring |
| [3] | Key | [35] | Fan guard | [111] | Gasket for lower part | [137] | Screw |
| [7] | Flange | [36] | Fan | [112] | Terminal box lower part | [139] | Hex head screw |
| [9] | Screw plug | [41] | Cup spring | [113] | Screw | [140] | Washer |
| [10] | Retaining ring | [42] | Rear endshield | [115] | Terminal board | [156] | Information label |
| [11] | Deep groove ball bearing | [44] | Deep groove ball bearing | [116] | Serrated lock washer | [219] | Hex nut |
| [12] | Retaining ring | [90] | Foot | [117] | Stud | [262] | Connection terminal |
| [14] | Washer | [91] | Hex nut | [118] | Washer | [390] | O-ring |
| [15] | Hex head screw | [93] | Washer | [119] | Cap screw | [616] | Retaining plate |
| [16] | Stator | [94] | Cap screw | [123] | Hex head screw | [705] | Canopy |
| [17] | Hex nut | [100] | Hex nut | [128] | Serrated lock washer | [706] | Spacer |
| [19] | Cap screw | [103] | Stud | [129] | Screw plug with O-ring | [707] | Hex head screw |
| [22] | Hex head screw | [104] | Supporting ring | [131] | Gasket for cover | [715] | Hex head screw |
| [24] | Eyebolt | [106] | Oil seal | | | | |
| [30] | Sealing ring | [107] | Oil flinger | | | | |

## 3.6 Basic structure DR..200 – 225, DRN200 – 225 motors

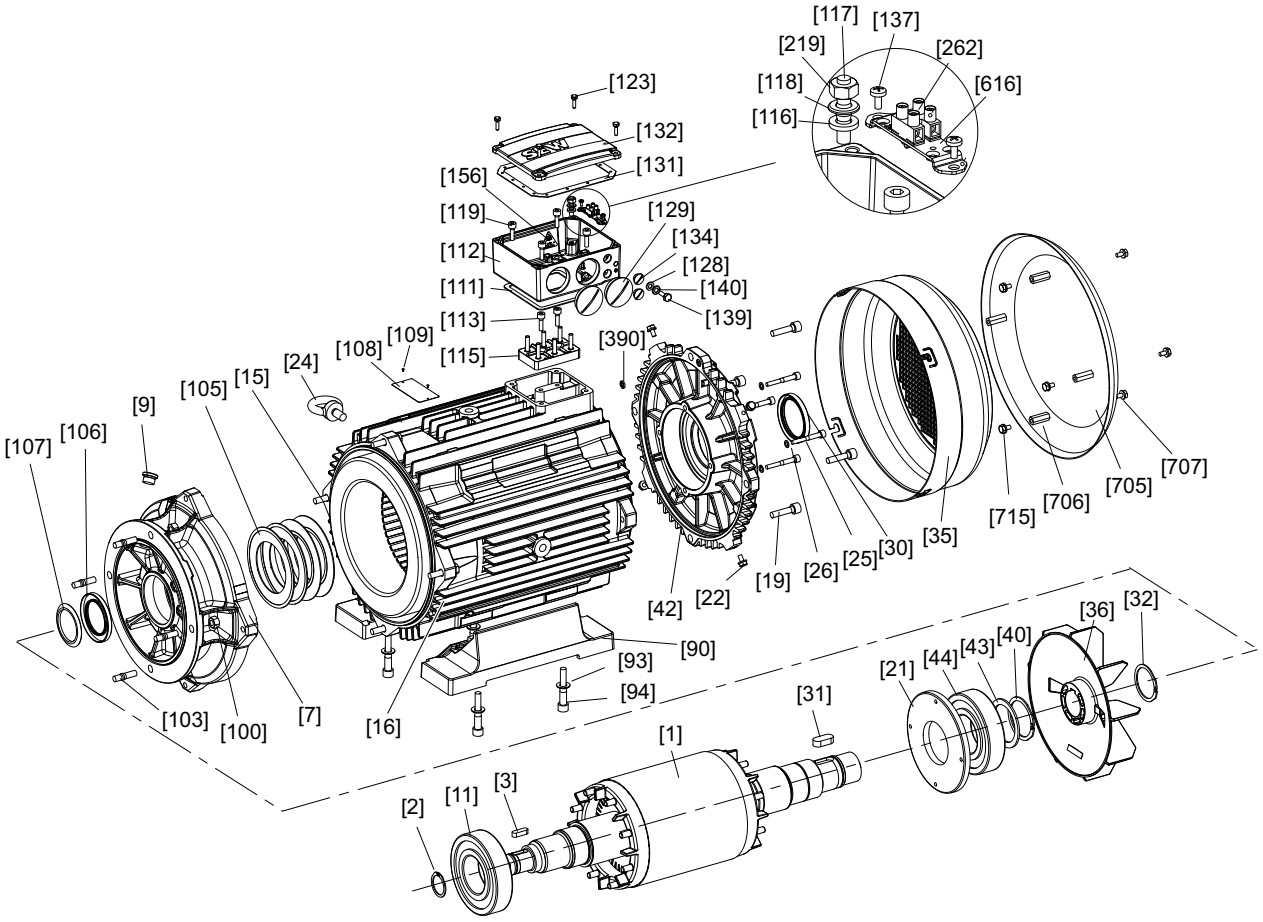


*9007200332597387*

| | | | | | | | |
|---|---|---|---|---|---|---|---|
| [1] | Rotor | [31] | Key | [107] | Oil flinger | [132] | Terminal box cover |
| [2] | Retaining ring | [32] | Retaining ring | [108] | Nameplate | [134] | Screw plug |
| [3] | Key | [35] | Fan guard | [109] | Grooved pin | [137] | Screw |
| [7] | Flange | [36] | Fan | [111] | Gasket for lower part | [139] | Hex head screw |
| [9] | Screw plug | [40] | Retaining ring | [112] | Terminal box lower part | [140] | Washer |
| [11] | Deep groove ball bearing | [42] | Rear endshield | [113] | Cap screw | [156] | Information label |
| [15] | Hex head screw | [43] | Supporting ring | [115] | Terminal board | [219] | Hex nut |
| [16] | Stator | [44] | Deep groove ball bearing | [116] | Serrated lock washer | [262] | Connection terminal |
| [19] | Cap screw | [90] | Foot | [117] | Stud | [390] | O-ring |
| [21] | Oil seal flange | [93] | Washer | [118] | Washer | [616] | Retaining plate |
| [22] | Hex head screw | [94] | Cap screw | [119] | Cap screw | [705] | Canopy |
| [24] | Eyebolt | [100] | Hex nut | [123] | Hex head screw | [706] | Spacer bolt |
| [25] | Cap screw | [103] | Stud | [128] | Serrated lock washer | [707] | Hex head screw |
| [26] | Shield ring | [105] | Cup spring | [129] | Screw plug | [715] | Hex head screw |
| [30] | Oil seal | [106] | Oil seal | [131] | Gasket for cover | | |

25957074/EN – 06/2019

## 3.7 Basic structure DR..250 – 280, DRN250 – 280 motors

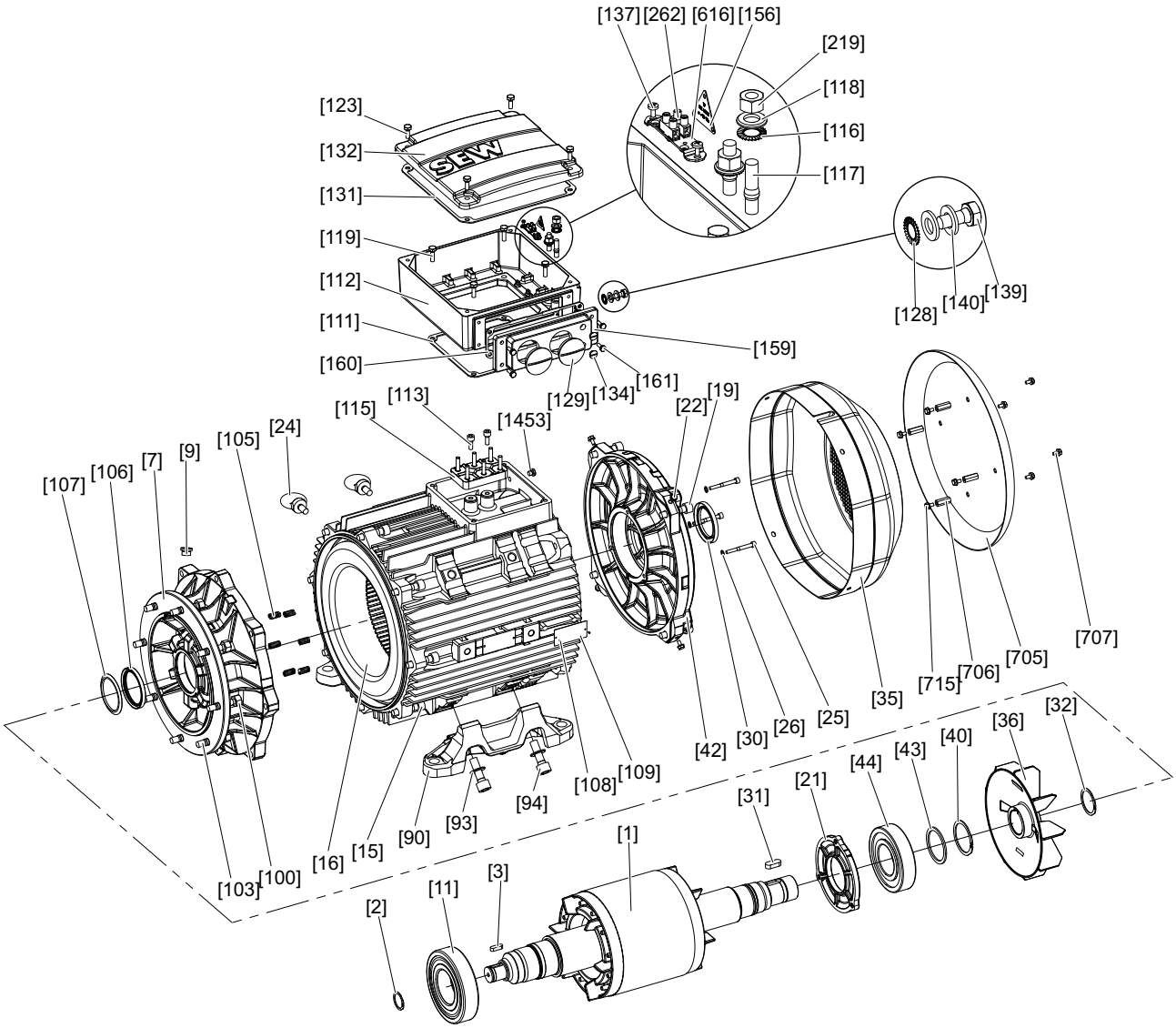


*9007206690410123*

| | | | | | | | |
|---|---|---|---|---|---|---|---|
| [1] | Rotor | [32] | Retaining ring | [108] | Nameplate | [134] | Screw plug |
| [2] | Retaining ring | [35] | Fan guard | [109] | Grooved pin | [137] | Screw |
| [3] | Key | [36] | Fan | [111] | Gasket for lower part | [139] | Hex head screw |
| [7] | Flange | [40] | Retaining ring | [112] | Terminal box lower part | [140] | Washer |
| [9] | Screw plug | [42] | B-side endshield | [113] | Cap screw | [156] | Information sign |
| [11] | Deep groove ball bearing | [43] | Supporting ring | [115] | Terminal board | [159] | Connection piece |
| [15] | Cap screw | [44] | Deep groove ball bearing | [116] | Serrated lock washer | [160] | Connection piece seal |
| [16] | Stator | [90] | Foot | [117] | Stud | [161] | Hex head screw |
| [19] | Cap screw | [93] | Washer | [118] | Washer | [219] | Hex nut |
| [21] | Oil seal flange | [94] | Cap screw | [119] | Hex head screw | [262] | Connection terminal |
| [22] | Hex head screw | [100] | Hex nut | [123] | Hex head screw | [616] | Retaining plate |
| [24] | Lifting eyebolt | [103] | Stud | [128] | Serrated lock washer | [705] | Canopy |
| [25] | Cap screw | [105] | Compression spring | [129] | Screw plug | [706] | Spacer bolt |
| [26] | Shield ring | [106] | Oil seal | [131] | Gasket for cover | [707] | Hex head screw |
| [30] | Oil seal | [107] | Oil flinger | [132] | Terminal box cover | [715] | Hex head screw |
| [31] | Key | | | | | [1453] | Screw plug |

## 3.8 Basic structure DR..315, DRN315 motors

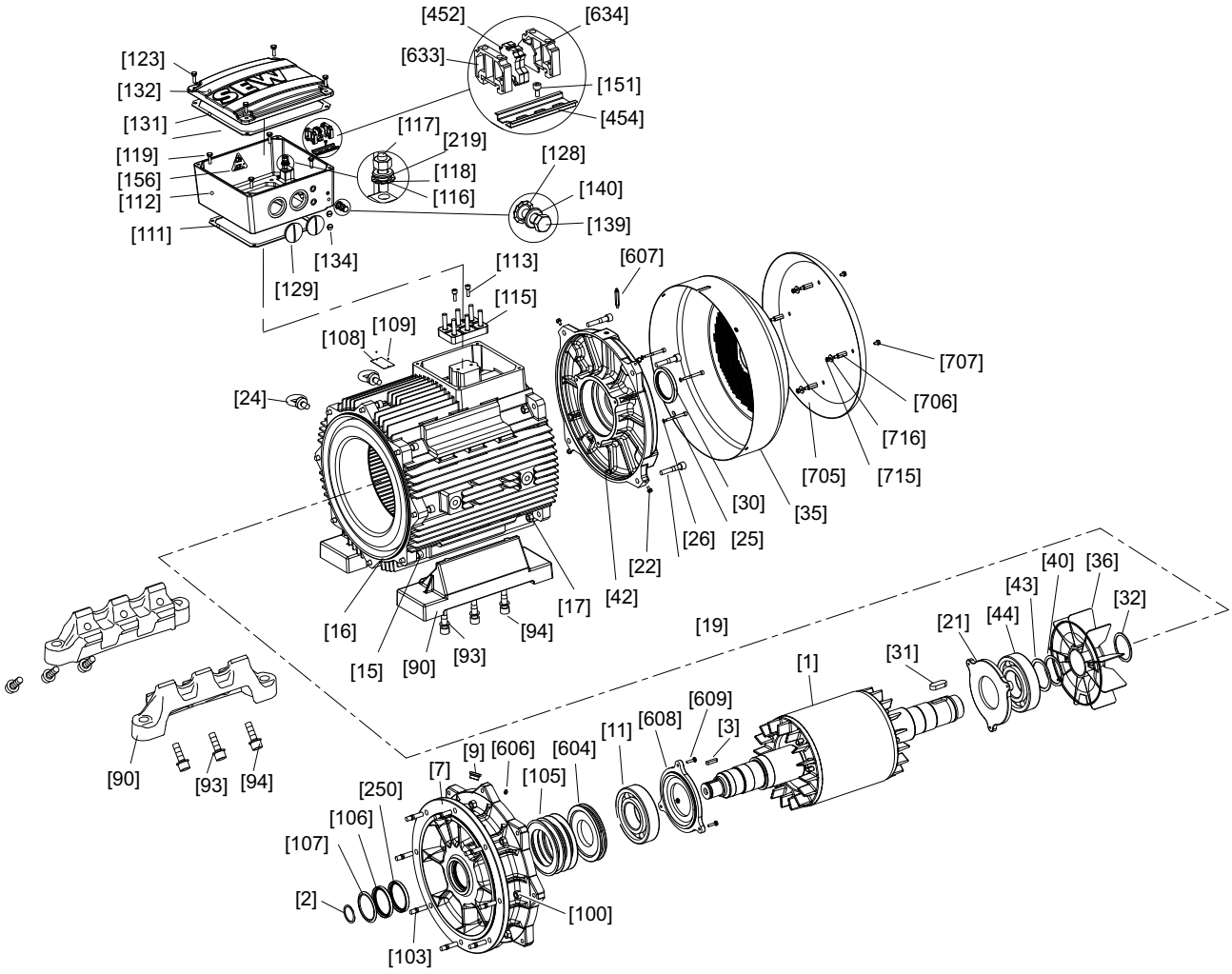


*45035996625703563*

| | | | | | | | |
|---|---|---|---|---|---|---|---|
| [1] | Rotor | [32] | Retaining ring | [111] | Gasket for lower part | [156] | Information sign |
| [2] | Retaining ring | [35] | Fan guard | [112] | Terminal box lower part | [219] | Hex nut |
| [3] | Key | [36] | Fan | [113] | Cap screw | [250] | Oil seal |
| [7] | Flange | [40] | Retaining ring | [115] | Terminal board | [452] | Terminal strip |
| [9] | Screw plug | [42] | B-side endshield | [116] | Serrated lock washer | [454] | Mounting rail |
| [11] | Rolling bearing | [43] | Supporting ring | [117] | Stud | [604] | Lubrication ring |
| [15] | Cap screw | [44] | Rolling bearing | [118] | Washer | [606] | Grease nipple |
| [16] | Stator | [90] | Foot | [119] | Hex head screw | [607] | Grease nipple |
| [17] | Hex nut | [93] | Washer | [123] | Hex head screw | [608] | Oil seal flange |
| [19] | Cap screw | [94] | Cap screw | [128] | Serrated lock washer | [609] | Hex head screw |
| [21] | Oil seal flange | [100] | Hex nut | [129] | Screw plug | [633] | End bracket |
| [22] | Hex head screw | [103] | Stud | [131] | Gasket for cover | [634] | End plate |
| [24] | Eyebolt | [105] | Cup spring | [132] | Terminal box cover | [705] | Canopy |
| [25] | Cap screw | [106] | Oil seal | [134] | Screw plug | [706] | Spacer bolt |
| [26] | Shield ring | [107] | Oil flinger | [139] | Hex head screw | [707] | Hex head screw |
| [30] | Oil seal | [108] | Nameplate | [140] | Washer | [715] | Hex nut |
| [31] | Key | [109] | Grooved pin | [151] | Cap screw | [716] | Washer |

25957074/EN – 06/2019

## 3.9 Nameplate

### 3.9.1 DRN.. motor nameplate

The following figure shows an example of a nameplate:

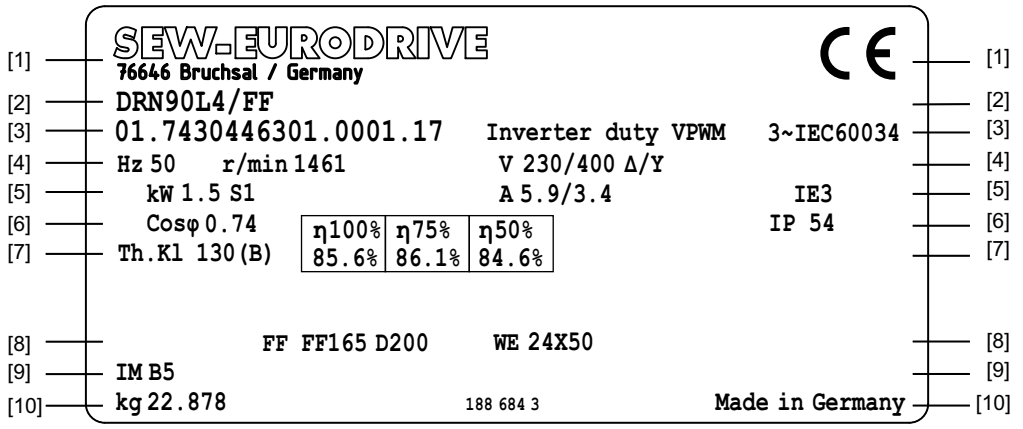


*9007220942512011*

| Line | Information |
|---|---|
| [1] | • Manufacturer, address<br>• CE label |
| [2] | • Type designation |
| [3] | • Serial number<br>• Suitability for inverter operation<br>• Number of phases and underlying rating and performance standard |
| [4] | • Rated frequency<br>• Rated speed<br>• Nominal voltage |
| [5] | • Rated power and operating mode<br>• Rated current<br>• IE class |
| [6] | • Power factor<br>• Degree of protection according to IEC 60034-5 |
| [7] | • Thermal class<br>• Rated efficiency for motors included in the validity of the IEC 60034-30-1 standard |
| [8] | • Flange<br>• Shaft end |
| [9] | • Mounting position |
| [10] | • Weight<br>• Part number nameplate<br>• Country of manufacture |

### 3.9.2 DRN.. global motor nameplate

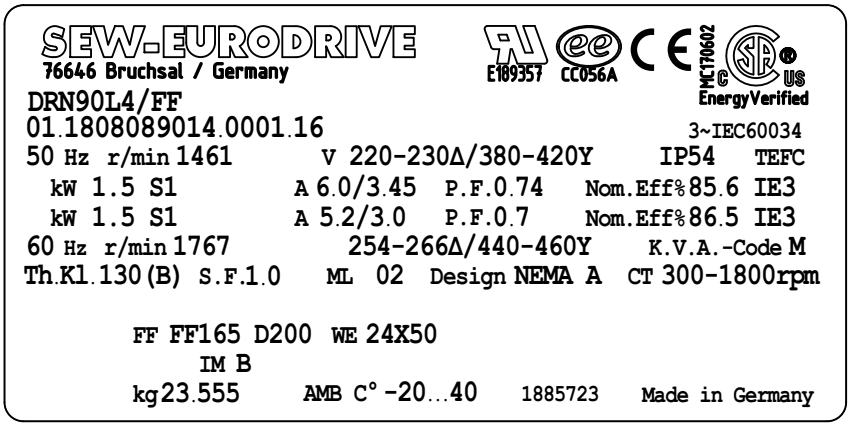


*9007216697981707*

### 3.9.3 Markings

The following table lists all the markings that can be provided on a nameplate or attached to the motor, and an explanation of what they mean.

| | |
|---|---|
| CE | CE mark to state compliance with European guidelines, such as the Low Voltage Directive. |
| UR | UR logo to confirm that UL (Underwriters Laboratory) is informed about the registered components; register number by UL: E189357 |
| CC056A | DoE mark to confirm compliance with US-American efficiency limit values for AC motors. |
| c UL US LISTED | UL logo to confirm that a component is UL (Underwriters Laboratory) tested, also valid for CSA in conjunction with the register number |
| MC170602 c SA US Energy Verified | CSAe mark to confirm compliance with the Canadian efficiency limit values for AC motors |
| CCC | CCC logo to confirm the adherence to the Chinese regulation for small appliances |
| VIK | VIK mark to confirm the compliance with the directive of the German Association of Energy and Power Industry (V.I.K.) |
| FS 02 | FS logo with 2-digit number for identification of installed functional safety motor options |
| EAC | EAC mark (EurAsian Conformity)<br>Confirms compliance with the technical regulations of the economic and customs union of Russia, Belarus, Kazakhstan, Armenia. |

25957074/EN – 06/2019

| | |
|---|---|
| UA.TR. 013 | UA.TR mark to confirm compliance with the technical regulations of the country Ukraine. |
| IE2 EU REGULATION 640/2009 USE WITH VARIABLE SPEED DRIVE ONLY! 1364 171 9 | Motors with this mark may only be operated with frequency inverter (VSD = Variable Speed Drive) according to regulation 640/2009. |
| | BIS mark<br>Confirmation of compliance with the Indian standard IS 12615. |
|  | CEL mark showing energy efficiency in the Chinese grade classification. |
|  | KEL mark confirming the requirements of REELS (Regulation of Energy Efficiency and Labeling Standard). |
| RENDIMENTO E FATOR DE POTÊNCIA APROVADOS PELO INMETRO<br>PROCEL<br>NBR - 17094-1<br>INMETRO<br>Registro INMETRO no: 005431/2015 | ENCE mark (Brazil)<br>Confirmation of compliance with the Brazilian efficiency limit values for AC motors. |

### 3.9.4 Serial number

The following table lists the structure of a serial number:

| **Example: 01. 12212343 01. 0001. 18** | |
|---|---|
| 01. | Sales organization |
| 12212343 | Order number (8 digits) |
| 01. | Order item (2 digits) |
| 0001 | Quantity (4 digits) |
| 18 | End digits of the year of manufacture (2 digits) |

## 3.10 Type designation

The following table shows the structure of a motor type designation:

| **DRN132M4/BE11/HR/FI/TF** | |
|---|---|
| **DR** | Product family |
| **N** | Code for product line identification |
| **132**M | Size |
| **4** | Number of poles |
| /**BE11** | Brake |
| **/HR** | Manual brake release |
| **/FI** | Output option |
| **/TF** | Thermal motor protection |

### 3.10.1 Designation of the motors

| **Designation** | |
|---|---|
| DRS.. | Standard motor, Standard Efficiency IE1 |
| DR2S.. | Standard motor, Standard Efficiency IE1 (2nd generation) |
| DRE.. | Energy-efficient motor, High Efficiency IE2 |
| DRP.. | Energy-efficient motor, Premium Efficiency IE3 |
| DRN.. | Energy-efficient motor, Premium Efficiency IE3 |
| DRU.. | Energy-efficient motor, Super Premium Efficiency IE4 |
| DRL.. | Asynchronous servomotor |
| DR2L.. | Asynchronous servomotor (2nd generation) |
| DRK.. | Single-phase operation with running capacitor |
| DRM.. | Torque motor: AC motor for operation at speed n = 0 |
| DR2M.. | Torque motor: AC motor for operation at speed n = 0 (2nd generation) |
| DR..J | Line start permanent magnet motor |
| 56 – 315 | Nominal sizes:<br>56, 63, 71, 80, 90, 100, 112, 132, 160, 180, 200, 225, 250, 280, 315 |
| K, S, M, L,<br>MC, LC,<br>ME, MS, MK, H, LS, LM | Lengths |
| R, Q<br>P, I<br>B | Power designation (identification of motors with the same size but with different power) |
| 2, 4, 6, 8, 8/2, 8/4, 4/2, 12 | Number of poles |

25957074/EN – 06/2019

## 3.11 Designs and options

### 3.11.1 Output variants

| Designation | Description |
|---|---|
| /FI | IEC foot-mounted motor |
| /F.A /F.B | Universal foot-mounted motor |
| /FG | 7series integral motor, as stand-alone motor |
| /FF | IEC flange-mounted motor with bore |
| /FT | IEC flange-mounted motor with threads |
| /FL | General flange-mounted motor (other than IEC) |
| /FM | 7-series integral motor with IEC feet |
| /FE | IEC flange-mounted motor with bore and IEC feet |
| /FY | IEC flange-mounted motor with threads and IEC feet |
| /FK | General flange-mounted motor (deviating from IEC) with feet |
| /FC | C-face flange-mounted motor, dimensions in inch |

### 3.11.2 Mechanical attachments

| Designation | Description |
|---|---|
| /BE..[1)] | Spring-loaded brake with specification of size |
| /HR | Manual brake release of the brake, re-engaging |
| /HF | Manual brake release, lockable |
| /RS | Backstop |
| /MSW | MOVISWITCH® |
| /MM03 – MM40 | MOVIMOT® |
| /MO | MOVIMOT® option(s) |
| /MI | Motor identification module for MOVIMOT® |

1) Also available in design for functional safety

### 3.11.3 Temperature sensor / temperature detection

| Designation | Description |
|---|---|
| /TF | Temperature sensor (PTC thermistor or PTC resistor) |
| /TH | Thermostat (bimetallic switch) |
| /KY | 1 KTY84 – 130 sensor |
| /PT | 1 or 3 PT100 sensor(s) |
| /PK | PT1000 temperature sensor |

25957074/EN – 06/2019

### 3.11.4 Encoder

| Designation | Description |
|---|---|
| /ES7S[1], /EG7S[1], /EH7S | Add-on speed sensor with sin/cos interface |
| /EV7S | Add-on speed sensor ES7S with sin/cos interface, spread shaft via mounting adapter for third-party encoders |
| /ES7R, /EG7R, /EH7R | Add-on speed sensor with TTL(RS422) interface, U = 9 – 26 V |
| /EV7R | Add-on speed sensor ES7S with TTL(RS422) interface, spread shaft via mounting adapter for third-party encoders |
| /ES7C, /EG7C, /EH7C | Add-on speed sensor with HTL interface |
| /EI7C[1], /EI76, /EI72, /EI71 | Built-in incremental encoder with HTL interface and 24/6/2/1 period(s) |
| /EI8C, /EI8R | Built-in incremental encoder with HTL interface and 1024 periods |
| /AS7W[1], /AG7W[1] | Add-on absolute encoder, RS485 interface (multi-turn) and sin/cos interface |
| /AV7W | Add-on absolute encoder AS7W with RS485 interface (multi-turn), spread shaft via mounting adapter for third-party encoders |
| /AS7Y[1], /AG7Y[1], /AH7Y[1] | Add-on absolute encoder, SSI interface (multi-turn) and sin/cos interface |
| /AV7Y | Add-on absolute encoder AS7Y with SSI interface (multi-turn), spread shaft via mounting adapter for third-party encoders |
| /ES7A, /EG7A | Mounting adapter for speed sensors with solid shaft |
| /EV2T, /EV2R, /EV2S, /EV2C | Add-on incremental encoder with solid shaft |
| /EH7T | Add-on speed sensor with TTL(RS422) interface |
| /EK8S, /EK8R, /EK8C | Incremental encoder |
| /AK8Y, /AK8W, /AK8H | Multi-turn absolute encoder |
| /EV8S, /EV8R, /EV8C | Incremental encoder |
| /AV8Y, /AV8W, /AV8H | Multi-turn absolute encoder |
| /XV.A | Mounting adapter for third-party speed sensors |
| /XV.. | Mounted third-party speed sensors |
| /XH.A | Mounting adapter for third-party hollow-shaft encoders |

1) Also available in design for functional safety

25957074/EN – 06/2019

### 3.11.5 Connection alternatives

| Designation | Description |
|---|---|
| /IS | Integrated plug connector |
| /ISU | Integrated plug connector – Design with only the lower part of the plug connector |
| /ASE. | HAN 10ES plug connector on terminal box with single-locking latch (cage clamp contacts on the motor side) |
| /ASB. | HAN 10ES plug connector on terminal box with double-locking latch (cage clamp contacts on the motor side) |
| /ACE. | HAN 10E plug connector on terminal box with single-locking latch (crimp contacts on the motor side) |
| /ACB. | HAN 10E plug connector on terminal box with double-locking latch (crimp contacts on the motor side) |
| /AME. /ABE. /ADE. /AKE. | HAN Modular 10B plug connector on terminal box with single-locking latch (crimp contacts on the motor side) |
| /AMB. /ABB. /ADB. /AKB. | HAN Modular 10B plug connector on terminal box with double-locking latch (crimp contacts on the motor side) |
| /KCC | 6 or 10-pole terminal strip with cage clamp contacts |
| /KC1 | C1-profile-compliant connection of the electrified monorail drive (VDI guideline 3643), for more compact connection areas. |
| /IV | Other industrial plug connectors according to customer specifications |

### 3.11.6 Ventilation

| Designation | Description |
|---|---|
| /V | Forced cooling fan |
| /Z | Additional inertia (flywheel fan) |
| /AL | Metal fan |
| /U | Non-ventilated (without fan) |
| /OL | Non-ventilated (closed B-side) |
| /C | Canopy for the fan guard |
| /LF | Air filter |
| /LN | Low-noise fan guard |

### 3.11.7 Bearing

| Designation | Description |
|---|---|
| /NS | Relubrication device |
| /ERF | Reinforced bearings on A-side with rolling bearing |
| /NIB | Insulated bearing B-side |

25957074/EN – 06/2019

### 3.11.8 Condition monitoring

| Designation | Description |
|---|---|
| /DUB | Mount-on microswitch for monitoring function and wear of the brake (Diagnostic Unit Brake) |
| /DUE | Eddy-current sensor for function and wear monitoring of the brake (Diagnostic Unit Eddy Current) |

### 3.11.9 Other additional features

| Designation | Description |
|---|---|
| /DH | Condensation drain hole |
| /RI | Reinforced winding insulation |
| /RI2 | Reinforced winding insulation with increased resistance against partial discharge |
| /2W | 2nd shaft end on the motor/brakemotor |

25957074/EN – 06/2019

## 3.12 Functional safety

Motors from SEW-EURODRIVE are optionally available with functionally safe motor options. These are designed for implementing safety functions.

SEW-EURODRIVE labels a functionally safe motor option at the drive with an FS logo and a 2-digit number on the motor nameplate. The number is a code that indicates which components in the drive are safety-related. This allows to uniquely identify an available functionally safe motor option via the motor nameplate.

| FS logo | Available functionally safe motor option | | |
|---|---|---|---|
| | Decentralized inverters | Safety brake | Safety encoder |
| FS 01 | X | | |
| FS 02 | | X | |
| FS 04 | | | X |
| FS 07 | X | | X |
| FS 11 | | X | X |

If the FS logo, e.g. with the code "FS-11" is present on the motor nameplate, the combination of safety encoder and safety brake is available for the motor. If an FS logo is available, adhere to the information specified in the corresponding documentation.

If the drive bears the FS logo on the nameplate, adhere to the information in the following document:

- Addendum to the operating instructions "Safety Encoders and Safety Brakes, AC Motors DR.., DRN.., DR2.., EDR.., EDRN.. – Functional Safety"

To determine the safety level for systems and machines yourself, refer to the characteristic safety values in chapter "Characteristic safety values".

25957074/EN – 06/2019

# 4 Mechanical installation

## 4.1 Before you start

### INFORMATION

Observe the safety notes in chapter 2 of this documentation for the mechanical installation.

### INFORMATION

The mounting position for installation must correspond with the specifications on the nameplate.

Install the drive only if the following conditions are met:

- The specifications on the nameplate of the drive correspond to the supply system or the output voltage of the inverter.
- The drive is undamaged (no damage caused by transportation or storage).
- All transport protection has been removed.
- You are certain that the following requirements have been met:
  - Ambient temperature according to the nameplate.

    Note that the temperature range of the gear unit may also be restricted (see "Gear unit" operating instructions).

    Any differing specifications on the nameplate must be observed.
  - No oils, acids, gases, vapors, dusts, radiations, etc.
  - Max. installation altitude 1000 m above sea level.

    Observe the section "Designated use" in chapter 2.
  - Note the restrictions for encoders.
  - Special design: Drive configured in accordance with ambient conditions.

The aforementioned information refers to standard orders. The conditions might be different when you order drives other than the standard. Refer to the order confirmation for deviating conditions.

Functional safety

If the drive has the FS logo on the nameplate, observe the information on mechanical installation in the corresponding addendum to the operating instructions.

25957074/EN – 06/2019

## 4.2 Preliminary work after longer periods of storage

Depending on the duration and ambient conditions during storage, corrosion, aging of lubricants, embrittlement of sealing elements, and moisture absorption in the insulation can occur.

Perform the described measures on any drives that have been stored for longer than 9 months.

**Corrosion**

- Check for damage to the motor and/or components (coating, shafts, connection and fastening parts).
- Correct the corrosion damage.

**Embrittlement of seals**

- Visually inspect seals and look for fissures, hardening, and embrittlement.
- Replace any damaged seals.

**Reduced grease service life**

If the drives are stored for longer than a year, the service life of the bearing grease is reduced due to aging and de-oiling of the lubricant.

- Check the condition and usability of the rolling bearings.
- Replace any damaged rolling bearings.

**Reduced grease quantity**

- If motors are stored for longer than 5 years, regrease them according to the specifications on the motor nameplate using a relubrication device.

**Moisture absorption**

- Check to see that the wiring space of the motor is dry and clean.
- Remove moisture and dirt.
- If the motor has absorbed moisture, measure the insulation resistance (see chapter "Measuring the insulation resistance" (→ 🗎 34)) and dry the motor (see chapter "Drying the motor" (→ 🗎 35)).

### 4.2.1 Checking the brake

If motors with brake have been stored or non-operational for longer than 9 months, check their function before taking them into operation.

25957074/EN – 06/2019

### 4.2.2 Measuring the insulation resistance

The insulation resistance (see following figure) varies greatly depending on the temperature.

If the measured resistance is within the range of the limit characteristic curve (depending on the ambient temperature), the insulation resistance is sufficient. If the value is below the limit characteristic curve, dry the motor.

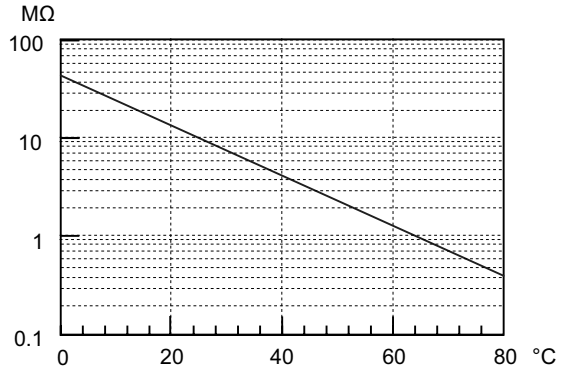


*18014398682805003*

25957074/EN – 06/2019

### 4.2.3 Drying the motor

Use either warm air or an isolation transformer to dry the motor.

## INFORMATION

The motors of size 56 and DR..J motors must be dried only by warm air.

## ⚠ WARNING

Risk of crushing due to torque at the motor shaft.

Severe or fatal injuries.

- Only use warm air for drying DR..J motors.

**Drying the motor with warm air**

1. Dry the motor with warm air.
2. End the drying process when the minimum insulation resistance is exceeded.

**Dry the motor with an isolation transformer**

1. Connect the windings in series.
2. Auxiliary AC voltage supply max. 10% of the nominal voltage with max. 20% of the rated current

*Connect the windings in series: R13 wiring diagram*

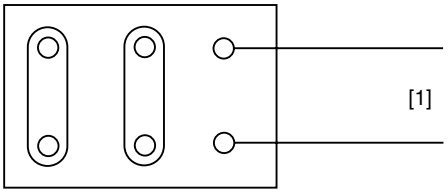


*2336250251*

[1] Transformer

*Connect the windings in series: wiring diagram R72*

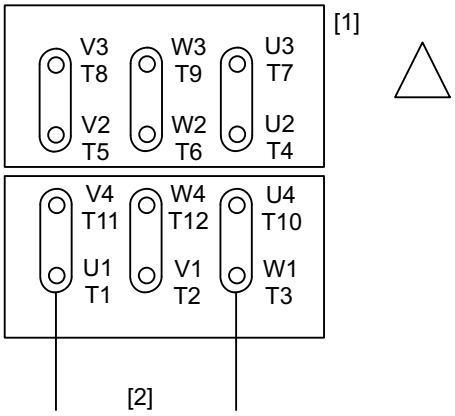


*2343045259*

[1] Motor terminal boards [2] Transformer

25957074/EN – 06/2019

*Connect the windings in series: Wiring diagram R76*

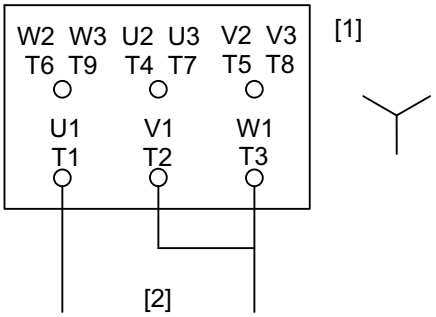


*2343047179*

[1] Motor terminal boards [2] Transformer

*Connect the windings in series: Wiring diagram C13*

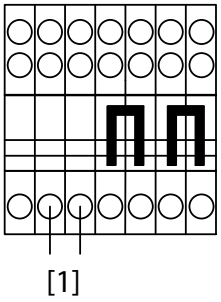


*3955447819*

[1] Transformer

*Connect the windings in series: Wiring diagram A13*

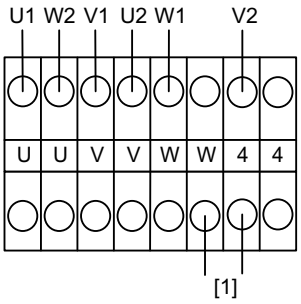


*27511350155*

[1] Transformer

25957074/EN – 06/2019

## 4.3 Motor installation notes



**⚠ CAUTION**

Sharp edges due to open keyway.

Risk of cutting injuries.

- Insert the key into the keyway.
- Pull a protective tubing over the shaft.

**NOTICE**

Improper assembly may damage the drive and corresponding components.

The drive system might be damaged.

- Observe the following information.

- Remove any anti-corrosion agent and dirt from motor shaft ends and flange surfaces. Use a commercially available solvent. Do not allow the solvent to come in contact with the bearings or sealing rings.
- Only install the gearmotor in the specified mounting position on a level, vibration-free and torsionally rigid support structure.
- The mounting position for installation must correspond with the specifications on the nameplate.
- Make sure that there is sufficient clearance around the motor to provide an adequate cooling air supply, and that the motor does not draw in warm exhaust air from other units.
- Align the motor and the driven machine carefully in order to prevent the output shaft from being exposed to unacceptable strain. Observe the permitted overhung and axial forces.
- Do not jolt or hammer the shaft end.
- Use an appropriate cover, e.g. option /C "Canopy", to prevent objects or fluids entering motors in vertical mounting positions (M4/V1).
- Balance components for subsequent mounting on the shaft with a half key (motor shafts are balanced with a half key).
- Existing condensation drain holes are sealed with closing plugs. If contaminated, the condensation drain holes must be checked for proper functioning on a regular basis and cleaned if required.

25957074/EN – 06/2019

### 4.3.1 Mounting the motor with aluminum feet

To mount motors with a foot made of aluminum, you have to use washers with an outer diameter that is at least twice the screw diameter (e.g. DIN EN ISO 7090).

Use bolts of strength class 8.8 up to max. 10.9.

Tightening torque according to VDI 2230-1.

| Motors | Maximum permitted screw lengths |
|---|---|
| DRN63 – DRN71 | M6 × 20 |
| DR2..63 – DR2..71MS | M6 × 20 |
| DRN80 – 90 | M8 × 20 |
| DR2..71M – DR2..80 | M10 × 25 |
| DRN100 – 132S | M10 × 25 |

DRN/DR2..63 motors

With DRN/DR2..63 motors, the aluminum foot is slotted in the front due to the limited space.

Position the screws beforehand or fasten the foot with stud bolts.

### 4.3.2 Installation in damp locations or outdoors

- Use suitable cable glands for the incoming cable (use reducing adapters if necessary) according to the installation instructions.
- If possible, arrange the terminal box in such a way that the cable entries are pointing downwards.
- Seal the cable entry properly.
- Clean the sealing surfaces of the terminal box and the terminal box cover carefully before re-assembly; replace embrittled gaskets.
- If required, touch up the corrosion protection (especially at the eyebolts).
- Check the degree of protection.
- Protect the shaft against corrosion using a suitable anti-corrosion agent.

25957074/EN – 06/2019

## 4.4 Installation tolerances

| Shaft end | Flanges |
|---|---|
| Diameter tolerance according to EN 50347<br>• ISO j6 with Ø ≤ 28 mm<br>• ISO k6 with Ø ≥ 38 mm up to ≤ 48 mm<br>• ISO m6 at Ø ≥ 55 mm<br>• Centering bore according to DIN 332, shape DR | Centering shoulder tolerance according to EN 50347<br>• ISO j6 with Ø ≤ 250 mm<br>• ISO h6 with Ø ≥ 300 mm |

## 4.5 Assembling the input elements

Drive components that are installed on the motor shaft end, e.g. pinions, must be warmed up prior to assembly in order to prevent damage, e.g. to the encoder of stand-alone motors.



**⚠ WARNING**

Unsecured key skidding out of the keyway.

Severe or fatal injuries due to flying parts.

- Only operate the motor with attached customer output element (e.g. gear unit), or with a suitably secured key.

25957074/EN – 06/2019

## 4.6 Encoder mounting adapter

If a drive was ordered with encoder mounting adapter, SEW-EURODRIVE will deliver the drive with enclosed coupling. Do not connect the coupling for operation without the encoder.

### 4.6.1 Mounting the XV../EV.. encoder mounting adapter to DR..71 – 225, DRN80 – 225 motors

If you have ordered the XV.. or EV.. encoder mounting adapter, the adapter [A] and the coupling [B – E] are enclosed with the motor and are to be assembled by the customer.

The following figure shows how to assemble the coupling and the adapter:

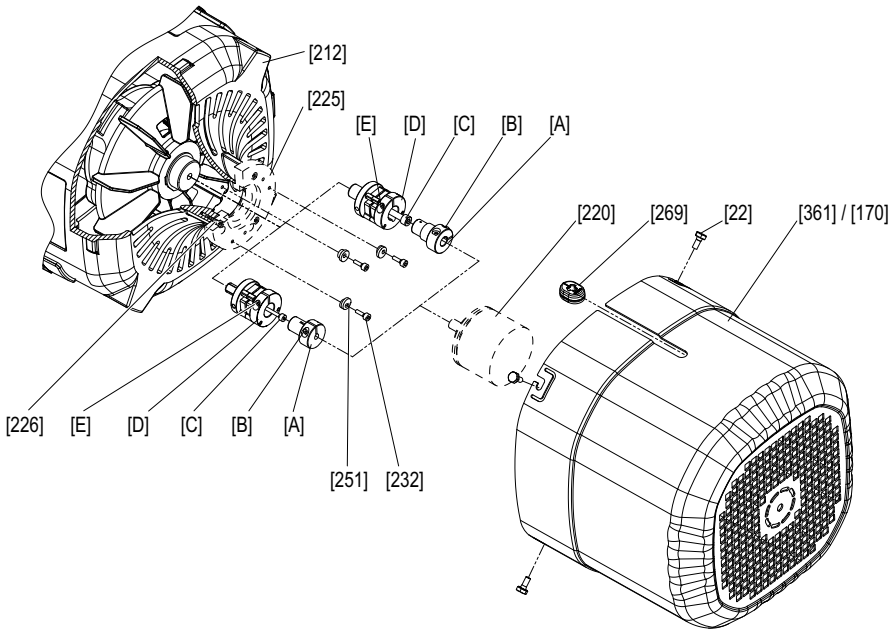


*9007202887904779*

[22] Screw
[170] Forced cooling fan guard
[212] Fan guard with encoder mount
[220] Encoder
[225] Intermediate flange (XV1A)
[232] Screws (XV1A, XV2A)
[251] Conical spring washers (XV1A, XV2A)
[361] Safety cover
[269] Cable grommet
[A] Adapters
[B] Retaining screw
[C] Central retaining screw
[D] Coupling (spread- or solid shaft coupling)
[E] Retaining screw
[226] Screw

25957074/EN – 06/2019

**Mounting the XV../EV.. encoder mounting adapter to DR..71 – 225, DRN80 – 225 motors**

1. Remove the safety cover [361], or the forced cooling fan if required.
2. **For XV2A, XV3A, and XV4A:** Remove the intermediate flange [225].
3. Screw the coupling [D] to the bore at the shaft end using screw [C].
4. Plug the adapter [A] onto the pin of the encoder [220].
5. Tighten the central retaining screw [B].
6. **For XV2A, XV3A, XV4A:** Mount the intermediate flange [225] using the screws [226].
7. Plug the encoder [220] with adapter [A] onto the coupling [D].
8. Tighten the retaining screw [E].
9. **For XV1A, XV2A:** Re-install the retaining screws [232] with conical spring washers.
10. **For XV3A, XV4A:** Installed by the customer via bores in the encoder plate.

| Motor | Screw | Tightening torque |
|---|---|---|
| DR..71 – 132<br>DRN80 – 132S | [C] | 3 Nm |
| DR..160 – 225<br>DRN132M – 225: | [C] | 8 Nm |
| All | [226] | 3 Nm |
| All | [B] | 3 Nm |
| All | [E] | 3 Nm |
| All | [232] | 3 Nm |

25957074/EN – 06/2019

### 4.6.2 Mounting the XV../EV.. encoder mounting adapter to DR..250 – 280, DRN250 – 280 motors

If you have ordered the XV../EV.. encoder mounting adapter, the coupling [233] is enclosed with the motor and must be installed by the customer.

The following figure shows an example of how the coupling is installed:

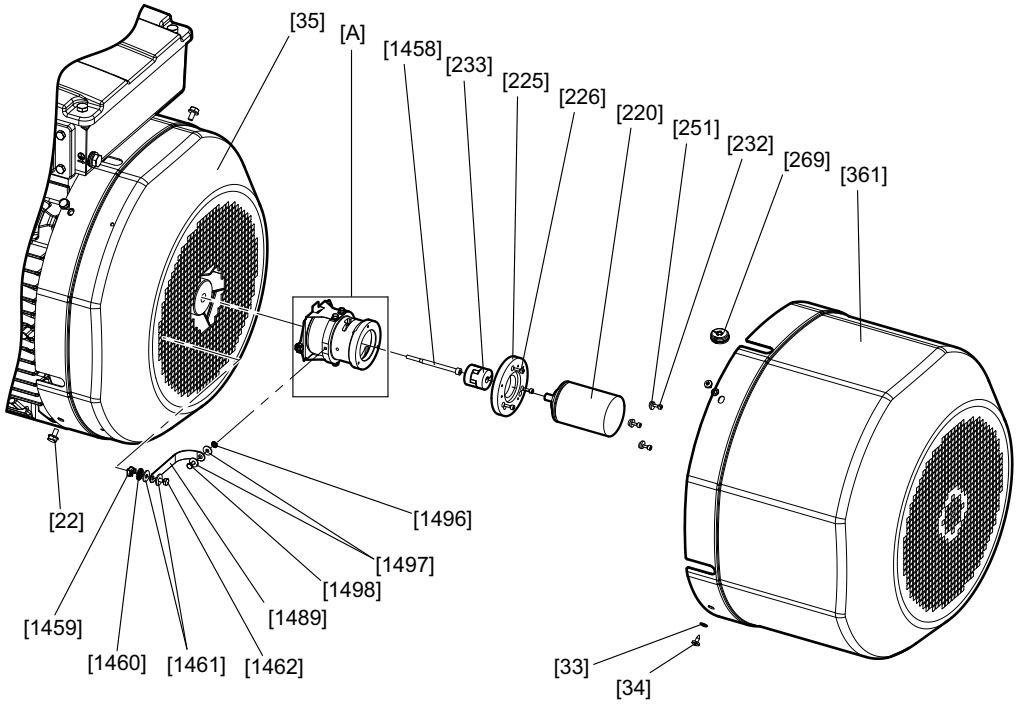


*18014406225445899*

| | | | |
|---|---|---|---|
| [22] | Screw | [361] | Safety cover (normal/long) |
| [33] | Washer | [1458] | Screw |
| [34] | Screw | [1459] | Cage nut |
| [35] | Fan guard | [1460] | Serrated lock washer |
| [220] | Encoder | [1461] | Washer |
| [225] | Intermediate flange (optional) | [1462] | Screw |
| [226] | Screw | [1489] | Ground strap |
| [232] | Screws (.V1A, .V2A) | [1496] | Serrated lock washer |
| [233] | Coupling | [1497] | Washer |
| [251] | Conical spring washers (.V1A, .V2A) | [1498] | Screw |
| [269] | Cable grommet | [A] | Encoder mounting adapter |

25957074/EN – 06/2019

**Mounting encoders to XV../EV.. encoder mounting adapters at DR..250 – 280, DRN250 – 280 motors**

1. Remove the safety cover [361], or the forced cooling fan if required.
2. Place the coupling [233] onto the pin of the encoder mounting adapter [A].
3. Tighten the screw of the coupling [233] via the slots in the encoder mounting adapter.
4. **For XV2A, XV3A, XV4A:** Mount the intermediate flange [225] to the encoder mounting adapter [A] using screw [226].
5. **For XV1A, XV2A:** Insert the screws [232] with eccentric disk spring washers [251] in the encoder mounting adapter [A].
6. Fasten the encoder [220] to the encoder mounting adapter [A] or the intermediate flange [225].
7. Plug the encoder [220] into the coupling [233].
8. To secure the eccentric disks [251], insert the screws [232].
9. **For XV1A, XV2A:** Tighten the screws [232] while turning the eccentric disks [251] in clockwise direction into the groove of the encoder [220].
10. Tighten the screw of the coupling [233].
11. Insert the encoder cable into the cable grommet [269].
12. Insert the cable grommet [269] into the recess of the safety cover [361] or the forced cooling fan.
13. Mount the safety cover [361] onto the forced cooling fan.

| Motor | Screw | Tightening torque |
|---|---|---|
| DR..250 – 280<br>DRN250 – 280 | Screw of the coupling [233] | 3 Nm |
| DR..250 – 280<br>DRN250 – 280 | [226] | 3 Nm |
| DR..250 – 280<br>DRN250 – 280 | [232] | 3 Nm |

### 4.6.3 XH.A encoder mounting adapter

The XH1A, XH7A and XH8A encoder mounting adapters for hollow shaft encoders are premounted on delivery.

To mount the encoder, proceed as described in chapter "Motor and brake maintenance – preliminary work" (→ 🗎 127).

25957074/EN – 06/2019

## 4.7 Terminal box

### 4.7.1 Turning the terminal box

The following figure shows the structure of the terminal box variant with terminal board:

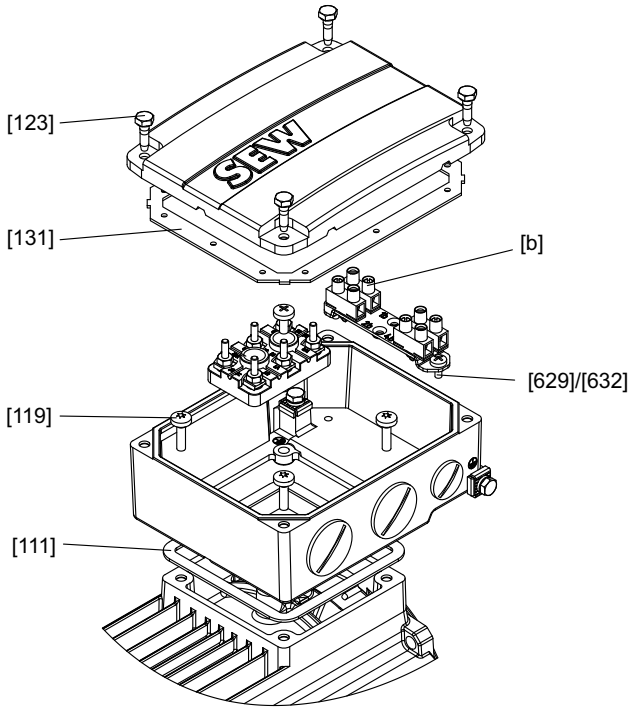


*9007206616947979*

[111] Gasket
[119] Terminal box lower part hex head screws (4 x)
[123] Terminal box cover hex head screws (4 x)
[131] Gasket
[b] Terminal
[629]/ [632] Screws

Proceed as follows to turn the terminal box:

1. Loosen the screws [123] of the terminal box cover. Remove the terminal box cover.
2. Remove the screws [629]/[632].
3. Remove the terminal [b].
4. Remove the retaining screws [119] of the terminal box.
5. Clean the sealing surfaces at the stator shoulder, terminal box lower part and terminal box cover.
6. Check the gaskets [111] and [131] for damages.
7. Replace any damaged seals.
8. ⚠ **DANGER!** Electric shock due to damaged cables. Severe or fatal injuries. When installing the terminal box lower part or the terminal board, make sure the cables are not crushed or twisted. Do not use sharp or pointed objects to align the cables.
   Turn the terminal box to the required position.
9. Make sure that the gasket is positioned correctly [111].

25957074/EN – 06/2019

10. Attach the terminal box lower part.
11. Apply the corresponding tightening torque to tighten the screws [119] of the terminal box lower part.
12. Refer to chapter "Appendix" (→ 🗎 269) for the arrangement of the auxiliary terminals.
13. Secure terminal [b] with screws [629]/[632].
14. Make sure that the gasket is positioned correctly [131].
15. Attach the terminal box cover to the terminal box lower part.
16. Apply the corresponding tightening torque to tighten the screw [123] of the terminal box cover.
17. To make sure that the cables have not been damaged, perform an insulation test after reassembly, see chapter "Preliminary work after longer periods of storage" (→ 🗎 33).

**Tightening torques of the terminal box lower part**

| Motor | Screw | Tightening torque |
|---|---|---|
| | | Nm |
| DR..71 – 132<br>DRN71 – 132S<br>DR2..71– 80 | [119] | 5 |
| DR..160 – 225<br>DRN132M – 225 | [119] | 27.3 |
| DR..250 – 315<br>DRN250 – 315 | [119] | 54 |

**Tightening torques of the terminal box cover**

| Motor | Screw | Tightening torque |
|---|---|---|
| | | Nm |
| DR2..56 | [123] | 3 |
| DR..71 – 132<br>DRN63 – 132S<br>DR2..63– 80 | [123] | 4 |
| Aluminum<br>DR..160 – 225<br>DRN132M – 225 | [123] | 11.3 |
| Gray cast iron<br>DR..160 – 225<br>DRN132M – 225 | [123] | 27.3 |
| DR..250 – 315<br>DRN250 – 315 | [123] | 54 |

25957074/EN – 06/2019

### 4.7.2 Terminal box with NPT thread

In terminal boxes with NPT thread, cable glands cannot always be screwed in all the way (up to the O-ring).

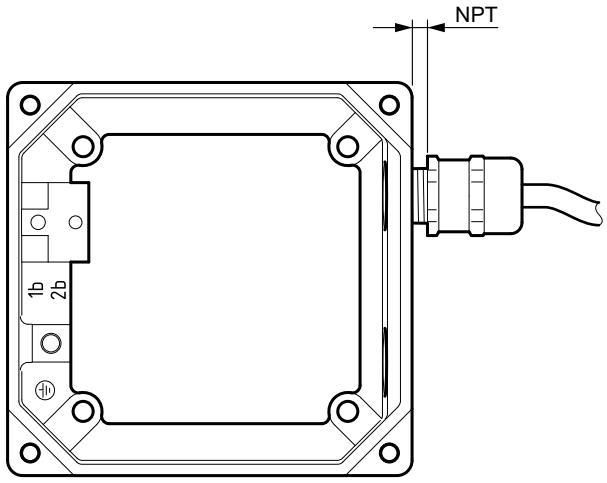


*14949925387*

For applications in wet areas, SEW-EURODRIVE recommends using metric screw fittings.

25957074/EN – 06/2019

### 4.7.3 Breaking open knock-outs

In order to be able to insert cables into the terminal box, the prepared knock-outs must be broken open.

✓ Required tools: Screwdriver or chisel.

1. **NOTICE!** Damage to the terminal box or fragments inside the motor. Possible physical damage. Exercise caution when breaking open the knock-outs.
   Break open the knock-out [K] by using a chisel or screwdriver.
2. Check the opening for residual burr. If any residual burr is present, remove it by using a suitable tool.

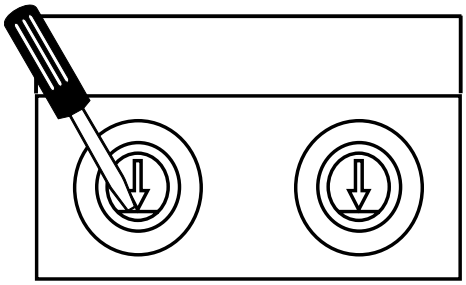

*9007200052610443*

25957074/EN – 06/2019

## 4.8 Retrofitting (option /F.A) or modifying (option /F.B) motor feet

### 4.8.1 DRN71 – 132S, DR2..71 – 80 motors

The following figure shows a motor with option /F.A (retrofit foot).

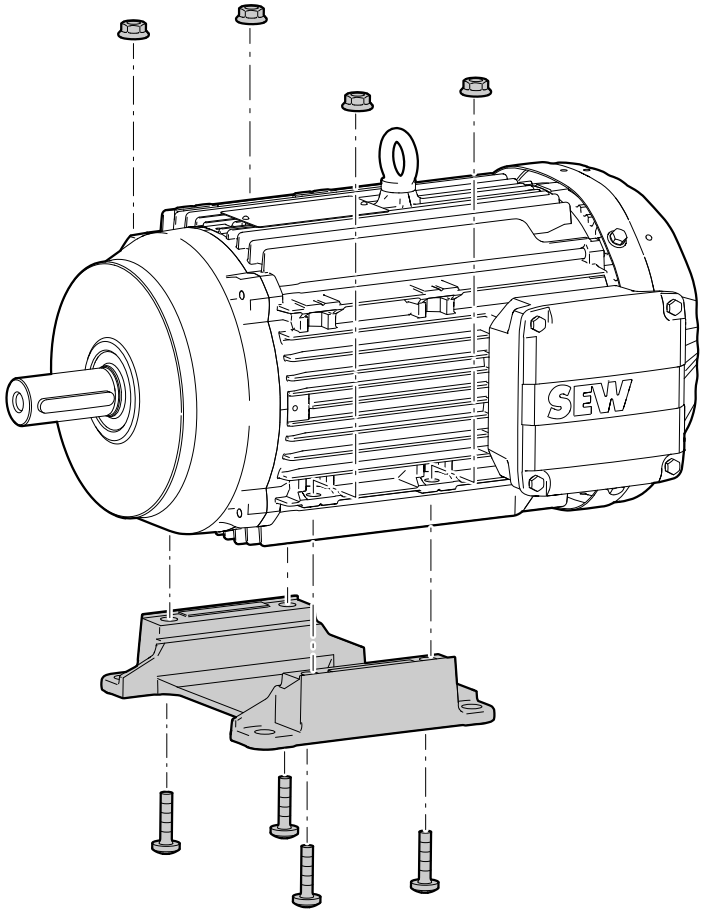


*22845053579*

✓ The contact surfaces at the foot [90] and stator [16] are painted.

1. Observe the following figure when selecting the contact surfaces. The figure illustrates the possible terminal box positions with reference to the retrofittable motor feet.

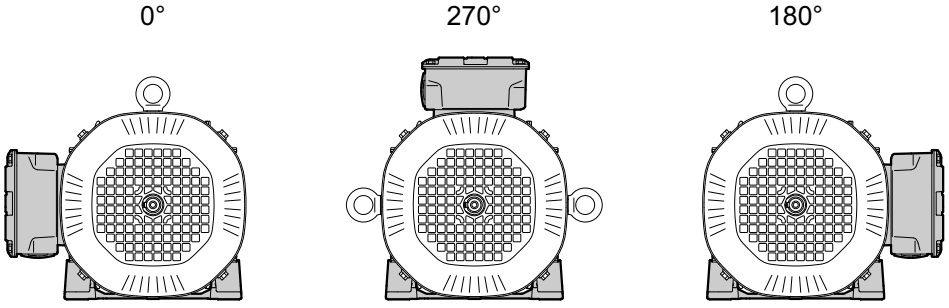


*22845056011*

2. Remove the paint from the stator [16] contact surface where the foot is to be screwed on.
3. Apply a thin layer of corrosion protection to the contact surfaces after the paint has been removed.
4. Remove the paint from the contact surfaces of the foot [90].

25957074/EN – 06/2019

5. Apply a thin layer of corrosion protection to the contact surfaces after the paint has been removed.
6. Attach the foot [90] to the motor using the screws [94] and washers [91]. Tighten the screws in diametrically opposite sequence. The screws are micro-encapsulated. This is why you have to screw in and tighten the screws quickly.
7. If necessary, you can apply paint or corrosion protection at the joint after attaching the foot [90].

**Changing the motor foot position**

For converting the motor foot to another position, observe the following points:

- After removing the screws [94], check for damage to the thread or other similar damage.
- When changing the position of the motor foot, apply corrosion protection to unpainted surfaces.

**Tightening torques**

| Motor | Screw | Tightening torque |
|---|---|---|
| DRN71 – 90, DR2..71 – 80 | M6 | 11.3 Nm |
| DRN100 – 132S | M8 | 27.3 Nm |

25957074/EN – 06/2019

### 4.8.2 DR..250 – 315, DRN..225 – 315 motors

The following figure shows a motor with option /F.A (retrofit feet).

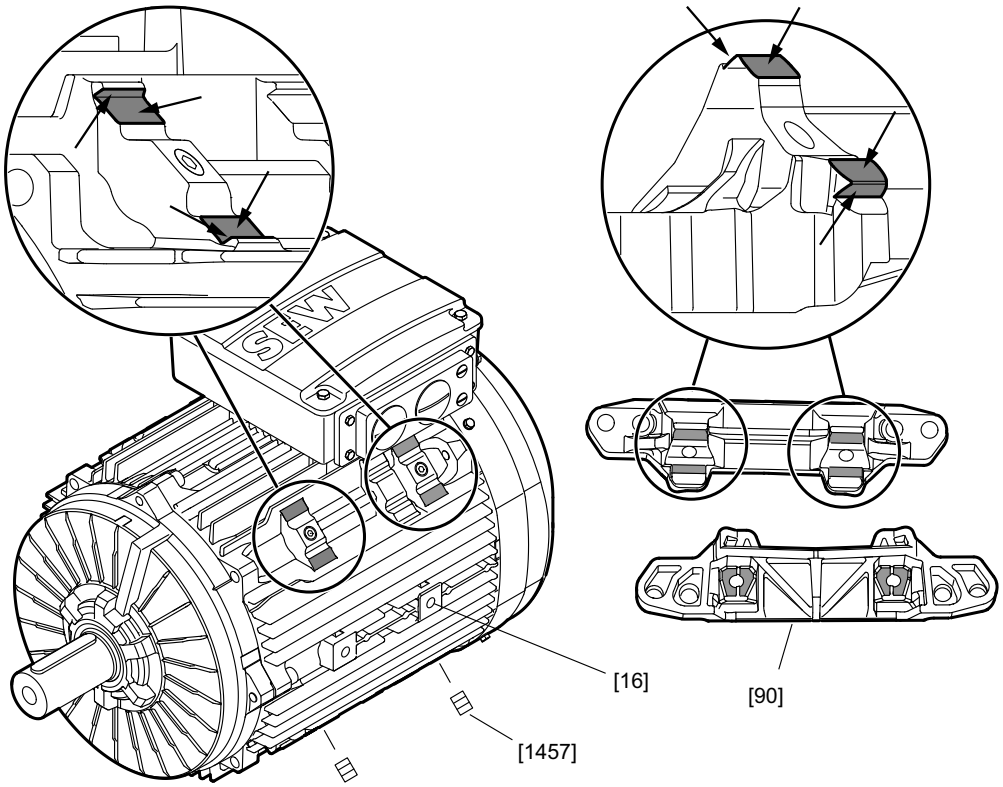


*18014406536422539*

| | | | |
|---|---|---|---|
| [16] | Stator | [1457] | Set screw |
| [90] | Foot | | Remove the paint from the marked surfaces. |

✓ The tapped holes of the foot mounting surfaces are closed with set screws [1457]. The contact surfaces at the feet [90] and stator [16] are painted.

1. Observe the following figure when selecting the contact surfaces. The figure illustrates the possible terminal box positions with reference to the retrofittable motor feet.

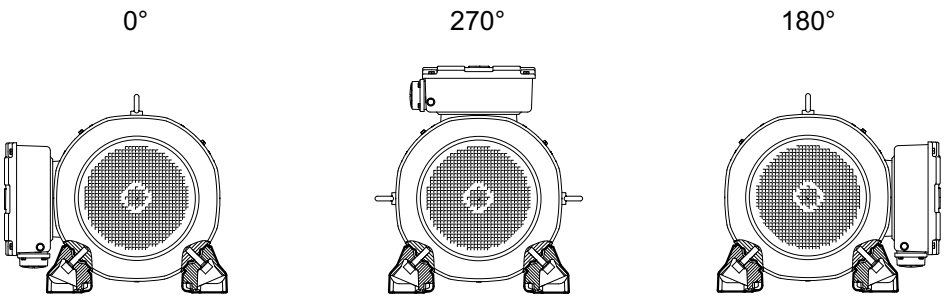


*9007211165643403*

2. Remove the set screws [1457] from those threads into which you will screw the foot screws [94].
   - ⇨ Sizes 250 – 280: 8 set screws
   - ⇨ Size 315: 12 set screws

25957074/EN – 06/2019

3. Remove the paint from the contact surfaces of the stator [16] where the feet are to be screwed on.
   - ⇨ Sizes 250 – 280: 8 surfaces
   - ⇨ Size 315: 12 surfaces
4. Apply a thin layer of corrosion protection to the contact surfaces after the paint has been removed.
5. Remove the paint from the contact surfaces of the feet [90].
6. Apply a thin layer of corrosion protection to the contact surfaces after the paint has been removed.
7. Attach the feet [90] to the motor using the screws [94] and washers [93]. The screws are micro-encapsulated. This is why you have to screw in and tighten the screws quickly.
8. Apply paint or corrosion protection at the parting line after attaching the feet [90].

**Changing motor feet positions**

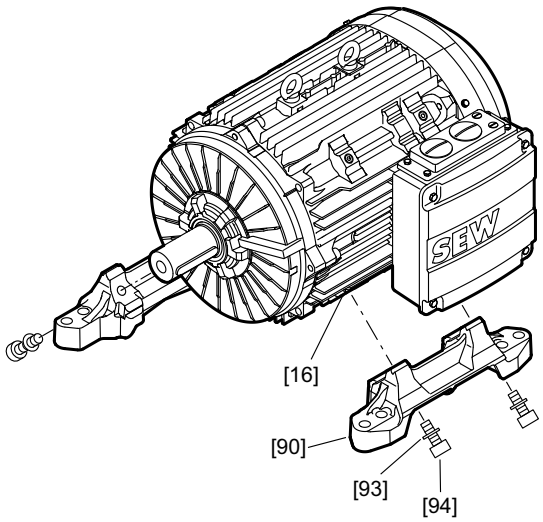


*9007206996709387*

[16] Stator
[90] Foot
[93] Washer
[94] Screw

For converting the motor feet to another position, observe the following points:

- After removing the screws [94], check for damage to the thread or other similar damage.
- Remove the old micro-encapsulation.
- Clean the threads of the screws [94].
- Apply a high-strength thread locker to the screw threads [94] before inserting the screws again.
- The set screws removed from the new mounting position can be reused for the bores of the old mounting position. After inserting the set screw [1457] into the open tapped holes in the stator [16], paint or corrosion protection can be applied on the bare joining surfaces of the stator.
- When the position of the motor feet is changed, apply corrosion protection to the unpainted surfaces.

25957074/EN – 06/2019

### Tightening torques

| Motor | Screw | Tightening torque |
|---|---|---|
| DRN225 | M16 | 230 Nm |
| DR..250/DRN250 | M20 | 464 Nm |
| DR..280/DRN280 | M20 | 464 Nm |
| DR..315/DRN315 | M20 | 464 Nm |

25957074/EN – 06/2019

## 4.9 Direct mounting of a motor on a gear unit

### INFORMATION

Secure all pinions on the motor or input shaft with Loctite® 649 even if a retaining ring is additionally present.

If the pinion is already fastened to the shaft, start cleaning the sealing surface (step 6).

Joining the pinion to the motor or input shaft

1. Clean and degrease the shaft and the bore of the pinion.
2. Apply Loctite® 649 to the shaft after the securing hole over the entire area of the circumference.

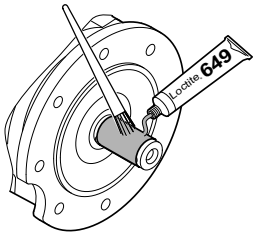


22763067787

3. Warm the pinion up to **at least** 100 °C to a **maximum of** 130 °C.
4. Push the pinion onto the shaft.
5. Secure the pinion on the shaft with the retaining ring.

Cleaning the sealing surfaces

6. Remove oils, grease, irregularities of the surface, rust and old Loctite® residue from the flange surfaces.

Sealing threads that lead into the housing interior

To prevent oil from escaping after installation, flange threads that lead into the housing interior must be sealed!

7. Clean and degrease thread through bores that lead into the housing interior and their studs.
8. Apply Loctite® 574 or Loctite® 5188 (selection according to the table at the end of the chapter) in a continuous ring on the upper threads of the flange thread and the stud.

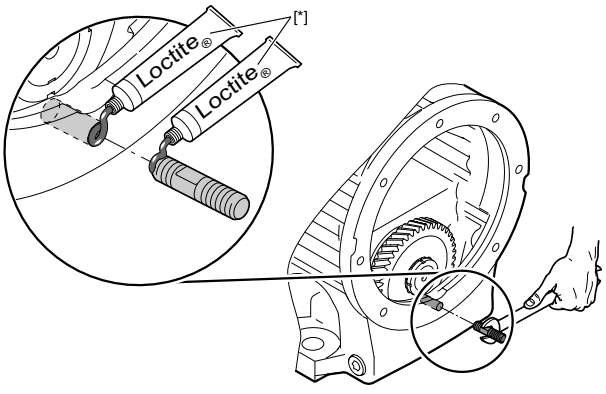


22795758347

[*] Loctite® according to the table at the end of the chapter

Screwing in the studs

9. Screw the studs into the thread up to the shoulder.

25957074/EN – 06/2019

10. Remove any excess Loctite® (see following diagram) from the sealing surface 60 minutes after screwing in at the latest.

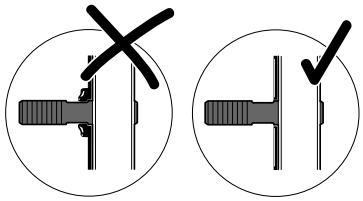

*22347379211*

Sealing the flange surface

## INFORMATION

Always apply the sealant over a large area in narrow places and on the gear units R97, R107, R127, F97 or F107.

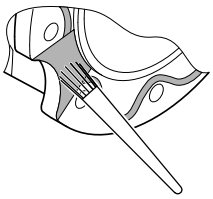

11. Only distribute Loctite® 574 or Loctite® 5188 (selection according to the table at the end of the chapter) to one of the sealing surfaces. Apply the sealant in beads or over a large area without gaps. Use a suitable application tool that does not contaminate the sealing surface, for example, a non-shedding brush or a short-hair lamb's wool roller.

Joining flange surfaces

12. Join the flange surfaces together. Next, **immediately** tighten the nuts with the specified torque (see the table at the end). If you tighten the nuts too late, the sealing film can tear.
13. The sealant must harden for 30 minutes and must not come into contact with the gear oil.

25957074/EN – 06/2019

### 4.9.1 Tightening torques

| Screw/nut | Tightening torque<br>Nm |
|---|---|
| M6 | 11.3 |
| M8 | 27.3 |
| M10 | 54 |
| M12 | 93 |
| M16 | 230 |

### 4.9.2 Selection and use of Loctite®

| Sealant | Use | Suitability | Batch size | Part number |
|---|---|---|---|---|
| Loctite® 649 | Locking agent for pinions | All gear units | 50 ml | 09120998 |
| Loctite® 574 | Surface sealing agent | All gear units except for R97 – R127, F97, F107 | 7 ml | 09102558 |
| Loctite® 5188 | | R97 – R127, F97, F107 | 50 ml | 03207013 |

25957074/EN – 06/2019

## 4.10 Options

### 4.10.1 /HR, /HF Manual brake release

The option manual brake release /HR, /HF is preinstalled and set at the factory for some brake sizes. If your drive was not delivered with manual brake release and you wish to retrofit it, observe the instructions in chapter "Retrofitting the /HR, /HF manual brake release" (→ 🗎 203).

**Activating and loosening the /HF manual brake release**



**⚠ WARNING**

No brake function due to activated manual brake release.

Severe or fatal injuries.

- Before startup, make sure that the hand lever has been removed or secured against unintentional activation to prevent unintentional brake release during operation.

You can use the option /HF (lockable manual brake release) to continuously mechanically release the BE.. brake with a set screw and a releasing lever.

On delivery, the set screw is inserted far enough to not fall out and to not affect the brake performance. The set screw is self-locking. This prevents it from unintended turning in or from falling out.

In case of BE03 brakes, the set screw is stored in the grommets between the stator fins.

*Activating the /HF manual brake release with BE03 brake*

Proceed as follows:

1. Screw in the set screw until there is no more clearance at the releasing lever.
2. To release the brake manually, screw in the set screw by 1/2 – 1 turn.

*Activating the /HF manual brake release with BE05 – BE122 brake*

Proceed as follows:

1. Screw in the set screw until there is no more clearance at the releasing lever.
2. To release the brake manually, screw in the set screw by 1/4 – 1/2 turn.

*Loosening the /HF manual brake release with BE03 brake*

Proceed as follows:

1. Remove the set screw completely from the thread.
2. Fasten the set screw between the stator fins with both grommets.

*Loosening the /HF manual brake release with BE05 – BE122 brake*

Proceed as follows:

1. Loosen the set screw at least until the floating clearance of the manual brake release has completely returned, see chapter "Retrofitting the /HR, /HF manual brake release".

25957074/EN – 06/2019

**Activating and loosening the /HR manual brake release**



## ⚠ WARNING

No brake function due to activated manual brake release.

Severe or fatal injuries.

- Before startup, make sure that the hand lever has been removed or secured against unintentional activation to prevent unintentional brake release during operation.

You can use the option /HF manual brake release to mechanically release the BE.. brake for a short time via a combination of releasing lever and hand lever. It is designed with a spring mechanism, so that it reengages automatically.

During assembly, the mechanics inside the fan guard is preset at the factory. A hand lever is included in the delivery that is attached to the stator housing.

*Activating the /HR manual brake release*

Proceed as follows:

1. Remove the hand lever from the stator housing.
2. Screw the thread of the hand lever completely into the thread of the releasing lever.
3. To release the brake, pull the hand lever in the direction away from the terminal box. The correct direction of use is indicated by an arrow symbol on the fan guard or on the closing part on the fan guard opening.

*Loosening the /HR manual brake release*



## INFORMATION

The releasing procedure can be performed with usual force application, do not apply too much force to the lever to avoid damage to the drive.

Proceed as follows:

1. Let go of the lever in the actuated state. The lever automatically reengages to the initial position and the brake is applied.
2. Screw out the hand lever and keep it safe. With motors of sizes 63 – 280, you can attach the hand lever to the stator housing with the provided grommets or clamps.

25957074/EN – 06/2019

### 4.10.2 Air filter /LF

The air filter is a filter fleece that is installed in front of the fan grille. It can be easily removed and installed for cleaning purposes.

The attached air filter prevents dust and other particles that are drawn in by the air flow from being distributed. It also prevents that the ducts between the cooling fins become clogged with dust.

In very dusty environments, the air filter protects the cooling fins from dirt or from becoming clogged.

The air filter must be cleaned or replaced depending on the amount of dust in the environment. No maintenance intervals can be specified due to the individuality of each drive and the environment where it is installed.

| Technical data | Air filter |
|---|---|
| Approvals | All certifications |
| Ambient temperature | -40 °C to +100 °C |
| Filter material | Viledon PSB290SG4 |

25957074/EN – 06/2019

### 4.10.3 Mounting adapter for measuring nipple

Depending on the respective order specifications, SEW-EURODRIVE delivers the drives as follows:

- With bore
- With bore and included measuring nipples for vibration measurement.

The following figure shows a motor with bores and inserted measuring nipples [1]:

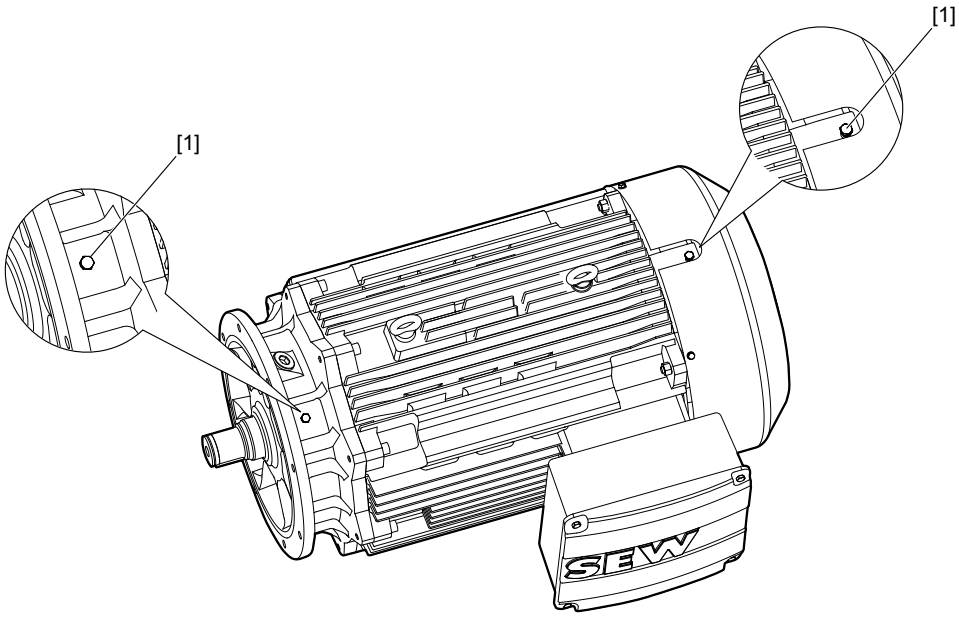


*9007201960947467*

[1] Bore with inserted measuring nipples

Proceed as follows to connect the customer measuring device:

1. Remove the protective plugs from the bores.
2. Insert the measuring nipple in the bores of the motor and screw in the measuring nipple with a tightening torque of 15 Nm.
3. Plug the mounting adapter of the measuring unit into the measuring nipple.

### 4.10.4 Second shaft end with optional cover

SEW-EURODRIVE delivers motors with the 2nd shaft end option /2W with the key inserted and secured by transport protection.

**⚠ WARNING**

Unsecured key skidding out of the keyway.

Severe or fatal injuries due to flying parts.

- Only operate the motor with a suitably secured key.

**⚠ WARNING**

Rotating shaft end or attachments.

Severe or fatal injuries.

- Only start the motor with installed protective cover at the second shaft end.

The protection cover must meet the impact resistance requirements of EN 60079-0 (VDE 0170-1):2014-06, chapter 26.4.2.

As an option, SEW-EURODRIVE can also provide the safety cover [361] for the 2nd motor shaft end already installed at the DR..71 – 280 and DRN63 – 280 motors. This is not included in the delivery as standard.

The following figure shows the dimensions of the optional cover.

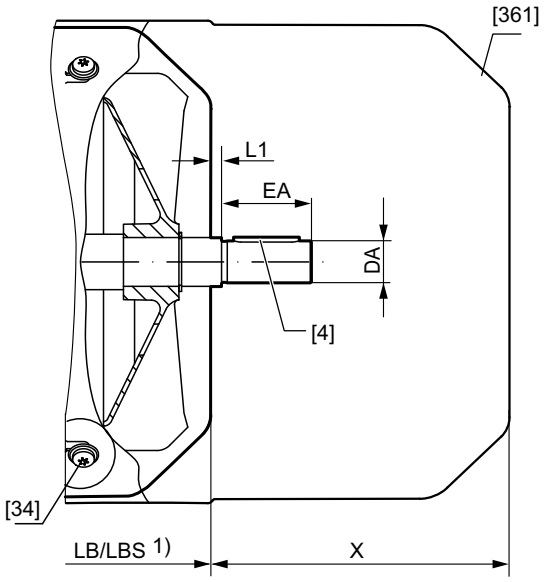


*18014402029073931*

[4] Keyway
[34] Tapping screw
[361] Safety cover
LB/LBS Length of the motor/brakemotor
1) Refer to the "AC Motors" catalog for dimensions

25957074/EN – 06/2019

**Dimensions**

| Motors | | | DA | EA | L1 | X |
|---|---|---|---|---|---|---|
| DR.. | DRN.. | DR2.. | mm | mm | mm | mm |
| – | DRN63 | DR2..63 | 11 | 23 | 2 | 78 |
| – | DRN63 /BE | DR2..63 /BE | | | | |
| DR..71 | DRN71 | DR2..71 | 11 | 23 | 2 | 91.5 |
| DR..71 /BE | DRN71 /BE | DR2..71 /BE | | | | 88 |
| DR..80 | DRN80 | DR2..80 | 14 | 30 | 2 | 95.5 |
| DR..80 /BE | DRN80 /BE | DR2..80 /BE | | | | 94.5 |
| DR..90 | DRN90 | – | 14 | 30 | 2 | 88.5 |
| DR..90 /BE | DRN90 /BE | – | | | | 81 |
| DR..100 | DRN100 | – | 14 | 30 | 2 | 87.5 |
| DR..100 /BE | DRN100 /BE | – | | | | 81 |
| DR..112 – 132 | DRN112 – 132S | – | 19 | 40 | 3.5 | 125 |
| DR..112 – 132 /BE | DRN112 – 132S /BE | – | | | | 120.5 |
| DR..160 | DRN132M/L | – | 28 | 60 | 4 | 193 |
| DR..160 /BE | DRN132M/L /BE | – | | | | 187 |
| DR..180 | DRN160 – 180 | – | 38 | 80 | 4 | 233 |
| DR..180 /BE | DRN160 – 180 /BE | – | | | | 236 |
| DR..200 – 225 | DRN200 – 225 | – | 48 | 110 | 5 | 230 |
| DR..200 – 225 /BE | DRN200 – 225 /BE | – | | | | 246 |
| DR..250 – 280 | DRN250 – 280 | – | 55 | 110 | 3 | 243.5 |
| DR..250 – 280 /BE | DRN250 – 280 /BE | – | | | | |

25957074/EN – 06/2019

# 5 Electrical installation

## 5.1 General information



**⚠ WARNING**

Electric shock due to incorrect installation.

Severe or fatal injuries.

- Use switch contacts in utilization category AC-3 according to EN 60947-4-1 for switching the motor.
- Use switch contacts to switch the brake. Depending on brake type and type design, the switch contacts meet the specifications in the following utilization categories:
  - Switch contacts for the supply voltage for operation with AC voltage: AC-3 according to EN 60947-4-1, or AC-15 according to EN 60947-5-1.
  - Switch contact for the supply voltage for operation with DC voltage: Preferably AC-3 or DC-3 according to EN 60947-4-1. As an alternative, contacts in utilization category DC-13 according to EN 60947-5-1 are also permitted.
  - Switch contacts for optional cut-off in the DC circuit: AC-3 according to EN 60947-4-1.
- When motors are powered by inverters, you must adhere to the wiring instructions in the frequency inverter operating instructions.

25957074/EN – 06/2019

## 5.2 Wiring diagrams and terminal assignment diagrams

Connect the motor as shown in the wiring connection diagrams provided with the motor. You can obtain the valid wiring diagrams free of charge from SEW-EURODRIVE.

### INFORMATION

Do not connect or start up the motor if the wiring diagram is missing.

## 5.3 Wiring notes

During installation observe the safety notes in chapter 2 and 5.

### 5.3.1 Protecting the brake control system against interference

Brake cables must always be routed separately from other unshielded power cables with phased currents to prevent interference with brake control. In particular, power cables with phased currents include:

- Output cables from frequency inverters and servo inverters, soft start units and brake units
- Supply cables for braking resistors and similar options

For line-operated motors and when using AC and DC circuit cut-off, the connection between the brake rectifier and the external switch contact must be in a different power cable that is separate from the motor power supply.

### 5.3.2 Protecting the motor protection devices against interference

Adhere to the following points to protect motor protection devices by SEW-EURODRIVE against interference:

- You may route separately shielded supply cables together with switched-mode power cables in one cable.
- Do not route unshielded supply cables together with switched-mode power lines in one cable.

25957074/EN – 06/2019

## 5.4 Special aspects for operation with a frequency inverter

When motors are powered from inverters, you must observe the wiring instructions issued by the inverter manufacturer. You must also observe the operating instructions for the frequency inverter.

### 5.4.1 Motors with SEW-EURODRIVE frequency inverter

Operation of the motor on SEW-EURODRIVE frequency inverters has been tested. The required dielectric strength values of the motors were confirmed and the startup routines adjusted to the motor data. You can operate the motor with any frequency inverter from SEW-EURODRIVE. To do this, start up the motor as described in the operating instructions for the frequency inverter.

### 5.4.2 Motor with non-SEW inverter

Operating SEW-EURODRIVE motors on third-party frequency inverters is permitted if the pulse voltages at the motor terminals indicated in the following figure are not exceeded.

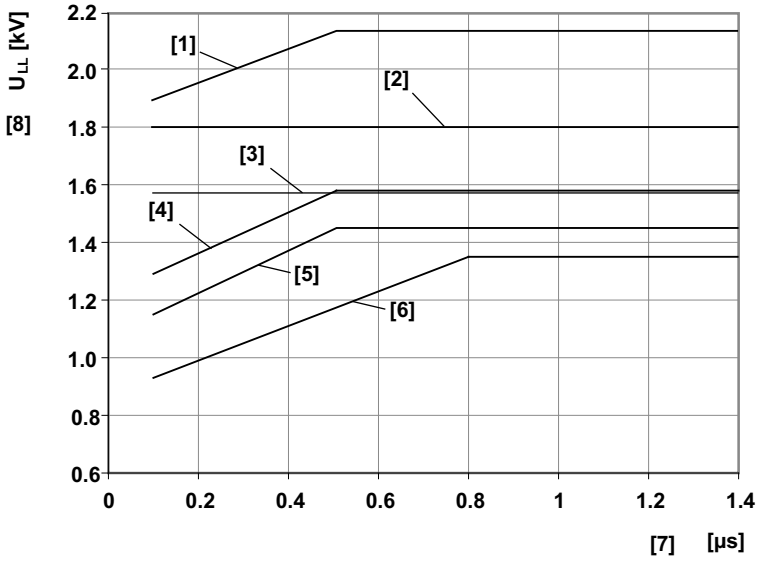


*9007203235332235*

[1] Permitted pulse voltage for DR.., DRN.. motors with reinforced insulation and increased resistance against partial discharge (/RI2)
[2] Permitted pulse voltage for DR.., DRN.. motors with reinforced insulation (/RI)
[3] Permitted pulse voltage according to NEMA MG1 part 31, $V_N \leq 500$ V
[4] Permitted pulse voltage according IEC 60034-25, limit value curve A for nominal voltage $V_N \leq 500$ V, star connection
[5] Permitted pulse voltage according IEC 60034-25, limit value curve A for nominal voltage $V_N \leq 500$ V, delta connection
[6] Permitted pulse voltage according to IEC 60034-17
[7] Voltage rise time
[8] Permitted pulse voltage

The insulation class depends on the voltage.

- ≤ 500 V = standard insulation
- ≤ 600 V = /RI
- > 600 V – 690 V = /RI2

25957074/EN – 06/2019

## INFORMATION

Compliance with the following limit values must be checked and considered:

- The supply voltage level at the third-party inverter
- The threshold of the brake chopper voltage
- The operating mode of the motor (motor mode/generator mode)

→ If the permitted pulse voltage is exceeded, you must install limiting measures, such as filters, chokes or special motor cables. Consult the manufacturer of the frequency inverter.

25957074/EN – 06/2019

## 5.5 Exterior grounding at the terminal box, LF grounding

In addition to the interior PE connection, a LF grounding cable can be attached to the outside of the terminal box. It is not installed as standard.

LF grounding can be ordered as completely pre-installed at the factory. For this, an aluminum or gray cast iron terminal box designed for brake connections is required for DR..71 – 132, DRN71 – 132S, DR2..71 – 80 motors. For DR..160 – 225, DRN132M – 225 motors, this option can be combined with all terminal box types.

The option can be combined with "HF grounding" (→ 🗎 67).

**DR..71 – 132, DRN71 – 132S, DR2..71 – 80 motors**

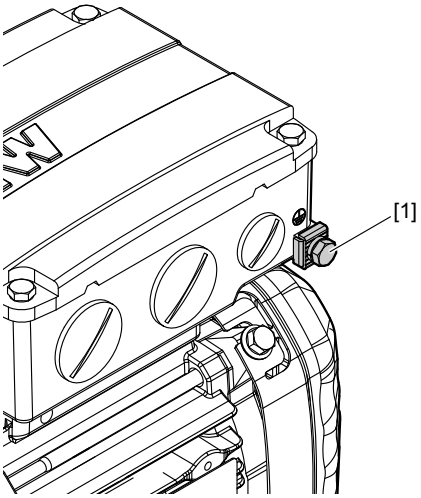


*9007207279069579*

[1] LF grounding at the terminal box

**DR..160 – 225, DRN132M – 225 motors**

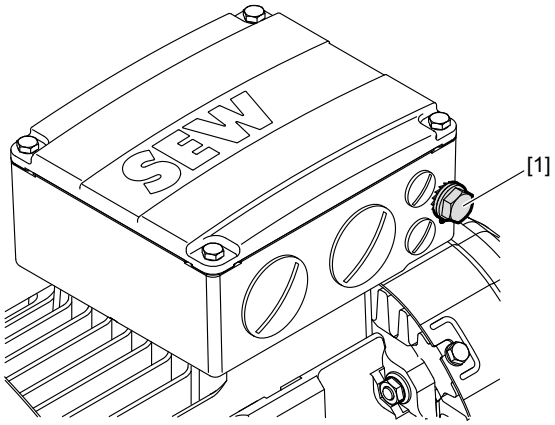


*8026938379*

[1] LF grounding at the terminal box

25957074/EN – 06/2019

## 5.6 Improving the grounding (EMC), HF grounding

For improved, low-impedance grounding at high frequencies, we recommend using the following connections with corrosion protected connection elements:

HF grounding is not installed as standard.

The HF grounding option can be combined with LF grounding at the terminal box.

If you require LF grounding in addition to HF grounding, you can connect the conductor to the same point.

The HF grounding option can be ordered as follows:

- Completely pre-assembled at the factory
- As "grounding terminal" kit for customer installation; part numbers listed in the following table.

| Motors | Part number of "Grounding terminal" kit |
|---|---|
| DRN63, DR2..56 – 63 | 21014817 |
| DR..71 – 100M,<br>DRN71 – 100LS,<br>DR2..71 – 80 | 21015988 |
| DR..100L – 132, DRN100L – 132S | 13633945 |
| DR..160 – 225, DRN132M – 225<br>with aluminum terminal box | |

## INFORMATION

If 2 or more ground straps are used, you have to attach them with a longer screw. The specified tightening torques refer to a strap thickness of t ≤ 3 mm.

### 5.6.1 DRN63, DR2..56 – 63 motors with HF(+LF) grounding

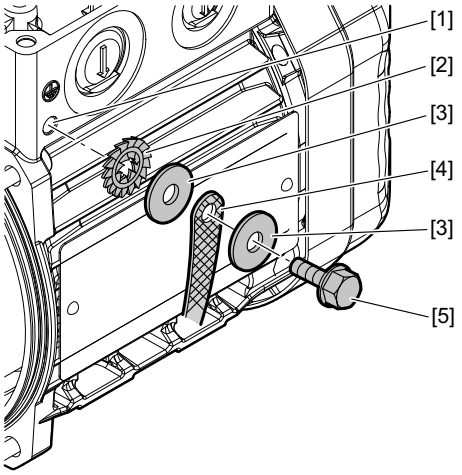


*22297406859*

[1] Use of the pre-cast bore at the stator housing
[2] Serrated lock washer
[3] Disk ISO 7093
[4] Ground strap (not included in the delivery)
[5] Self-tapping screw DIN 7500 M5 × 16, tightening torque 5 Nm

25957074/EN – 06/2019

### 5.6.2 DR..71 – 80, DRN71 – 80, DR2..71 – 80 motors with HF(+LF) grounding

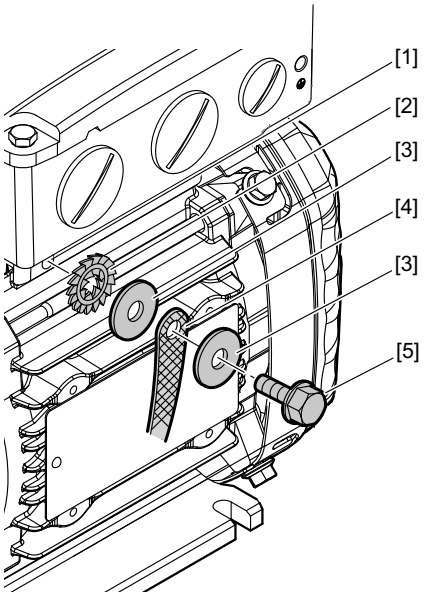


*8026768011*

[1] Use of the pre-cast bore at the stator housing
[2] Serrated lock washer
[3] Disk ISO 7093
[4] Ground strap (not included in the delivery)
[5] Self-tapping screw DIN 7500 M6 × 16, tightening torque 10 Nm

### 5.6.3 DR..90, DRN90 motors with HF(+LF) grounding

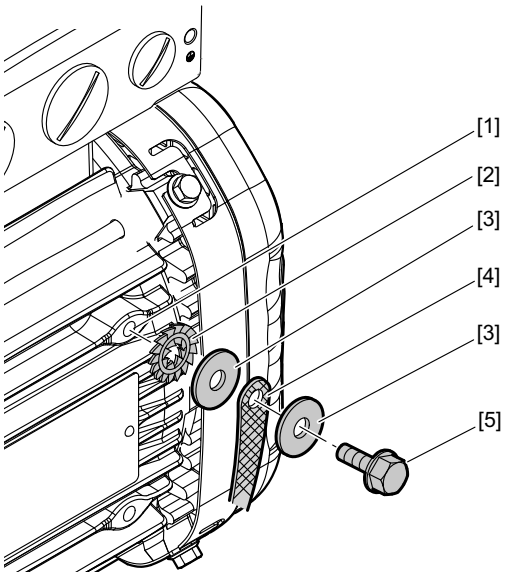


*8026773131*

[1] Use of the pre-cast bore at the stator housing
[2] Serrated lock washer
[3] Disk ISO 7093
[4] Ground strap (not included in the delivery)
[5] Self-tapping screw DIN 7500 M6 × 16, tightening torque 10 Nm

25957074/EN – 06/2019

### 5.6.4 DR..100M, DRN100LS motors with HF(+LF) grounding

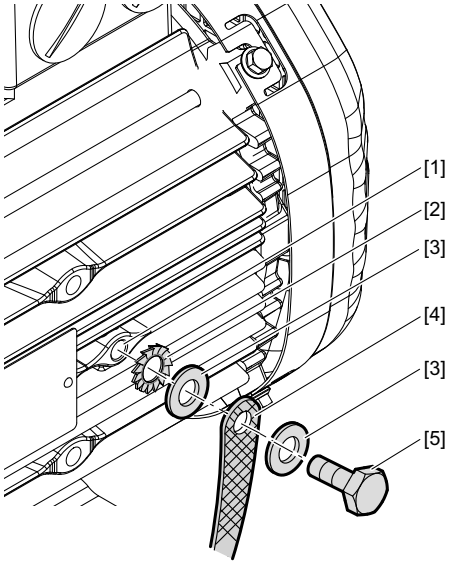


*18014402064551947*

[1] Use of the pre-cast bore at the stator housing
[2] Serrated lock washer
[3] Disk ISO 7093
[4] Ground strap (not included in the delivery)
[5] Self-tapping screw DIN 7500 M6 × 16, tightening torque 10 Nm

### 5.6.5 DR..100L – 132, DRN100LM – 132S motors with HF(+LF) grounding

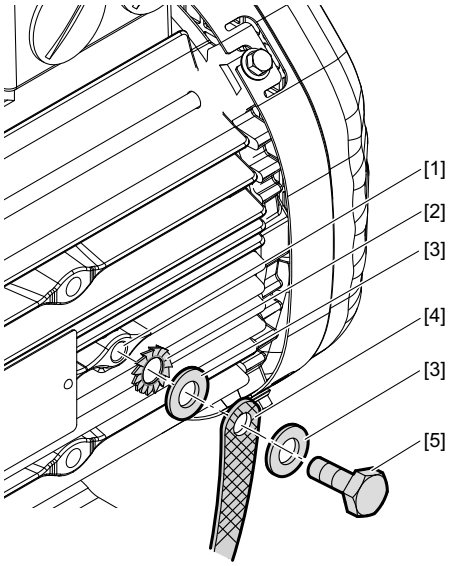


*18014402064551947*

[1] Use of tapped hole for lifting eyes
[2] Serrated lock washer DIN 6798
[3] Washer ISO 7089/ISO 7090
[4] Ground strap (not included in the delivery)
[5] Hex head screw ISO 4017 M8 × 18, tightening torque 10 Nm

25957074/EN – 06/2019

### 5.6.6 DR..160 – 315, DRN132M – 315 motors with HF(+LF) grounding

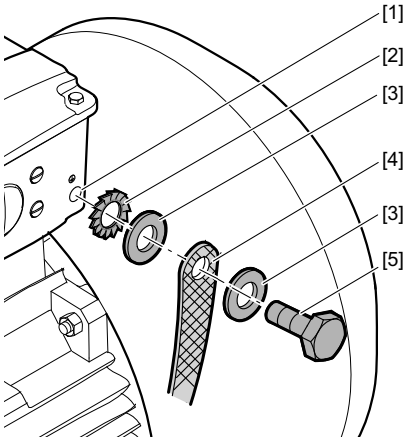


*9007202821668107*

[1] Use of the tapped holes at the terminal box
[2] Serrated lock washer DIN 6798
[3] Washer ISO 7089/ISO 7090
[4] Ground strap (not included in the delivery)
[5]
- Hex head screw ISO 4017 M8 × 18 (with aluminum terminal boxes of DR..160 – 225, DRN132M – 225 motors), tightening torque 10 Nm
- Hex head screw ISO 4017 M10 × 25 (with gray cast iron terminal boxes of DR..160 – 225, DRN132M – 225 motors), tightening torque 10 Nm
- Hex head screw ISO 4017 M12 x 30 (terminal boxes of DR../DRN250 – 315 motors), tightening torque 15.5 Nm

25957074/EN – 06/2019

## 5.7 Special aspects in switching operation

When the motors are used in switching operation, possible interference of the switchgear must be excluded by ensuring suitable wiring. According to EN 60204 (electrical equipment of machines), motor windings must have interference suppression to protect the numerical or programmable logic controllers. As it is primarily switching operations that cause interference, SEW-EURODRIVE recommends installing protective circuit in the switching devices.

If the drive has been delivered with a suppressor circuitry in the motor, you must observe the provided wiring diagram.

## 5.8 Special aspects of torque motors and low-speed motors

Due to the design of DRM.., DR2M.. torque motors and low-speed motors, very high induction voltages may be generated when they are switched off. Consequently, SEW-EURODRIVE recommends using the varistor circuit shown below for protection. The size of the varistors depends, amongst other factors, on the starting frequency.

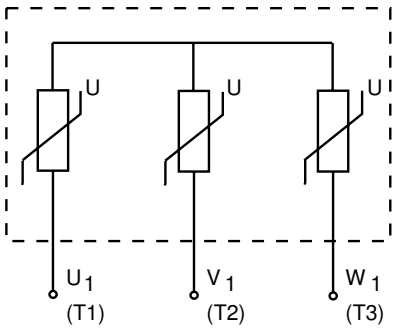


*2454566155*

## 5.9 Special aspects of DRK.. single-phase motors

### Scope of delivery and motor design

DRK.. single-phase motors are delivered with installed running capacitor in the terminal box. Starting relay, centrifugal switch or start-up capacitor are not supplied.

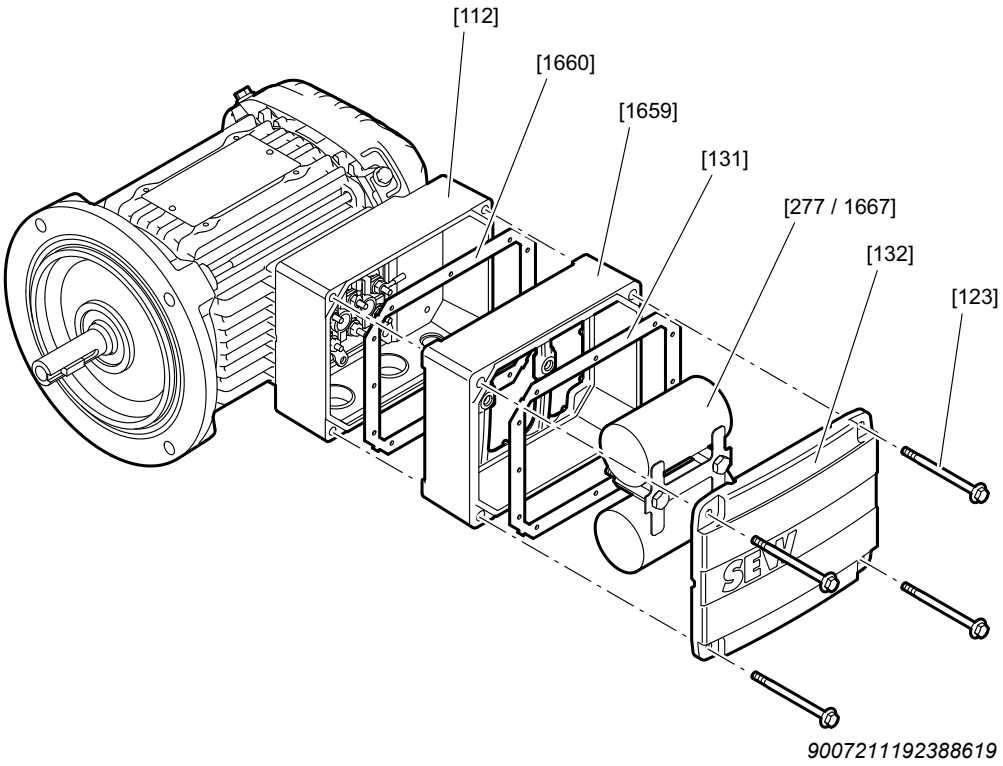


*9007211192388619*

| | | | |
|---|---|---|---|
| [112] | Terminal box | [277]/[1667] | Capacitor |
| [1660] | Seal | [132] | Terminal box cover |
| [1659] | Adapter piece | [123] | Screw |
| [131] | Seal | | |

25957074/EN – 06/2019

### 5.9.1 Connecting DRK.. single-phase motors



**⚠ WARNING**

Electric shock due to charged capacitor.

Severe or fatal injuries.

- After disconnection from the power supply, wait 5 seconds before opening the terminal box.

DRK.. single-phase motors are delivered with 1 or 2 installed and connected running capacitors. The data specified in chapter "Technical data" (→ 🗎 262) apply.

## INFORMATION



If a running capacitor installed by SEW-EURODRIVE must be replaced, only use capacitors with the same technical data.

## INFORMATION



Start-up against the complete rated torque is not possible with only the running capacitors.

Parts which are not supplied must be ordered from specialist retailers and must be connected according to the corresponding instructions and "wiring diagrams" (→ 🗎 284).

Proceed as follows during connection:

- Remove terminal box cover [132]
- Remove adapter piece [1659] with the running capacitors [277]/[1667]
- Perform the connection according to supplied wiring diagrams.

25957074/EN – 06/2019

## 5.10 Notes regarding the connection of the motor

### INFORMATION

It is essential to comply with the valid wiring diagram. Do not connect or start up the motor if this wiring diagram is missing. You can obtain the valid wiring diagrams free of charge from SEW-EURODRIVE.

### ⚠ WARNING



Danger due to contaminated terminal box.

Severe or fatal injuries.

- Seal the terminal box and unused cable entries against dust and humidity.
- Remove present foreign objects, dirt and humidity from the terminal box.

Observe the following points when connecting the motor:

- Check cable cross section
- Arrange terminal links correctly
- Screw on the connections and the PE conductor correctly
- Make sure that the connection cables are not cramped to avoid damage to the cable insulation.
- Observe air gaps, see chapter "Electrical connection" (→ 🗎 13)
- In the terminal box: Check winding connections and tighten them if necessary
- Perform the connection in accordance with the enclosed wiring diagram
- Avoid protruding wire ends
- Connect the motor according to the prescribed direction of rotation

25957074/EN – 06/2019

## 5.11 Connecting the motor via terminal block

### 5.11.1 According to wiring diagram R13

**Arrangement of terminal links with 人 connection**

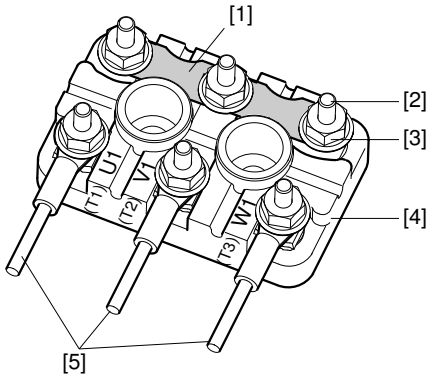


*27021598003155723*

**Arrangement of terminal links with △ connection**

DR..71 – 280, DRN63 – 280, DR2..63 – 80 motors
(single-sided supply):

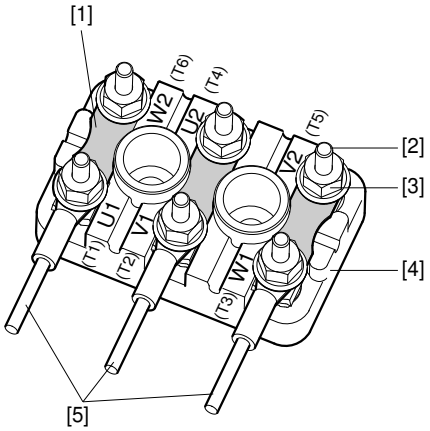


*9007199493672075*

DR../DRN250 – 315 motors
(double-sided supply):

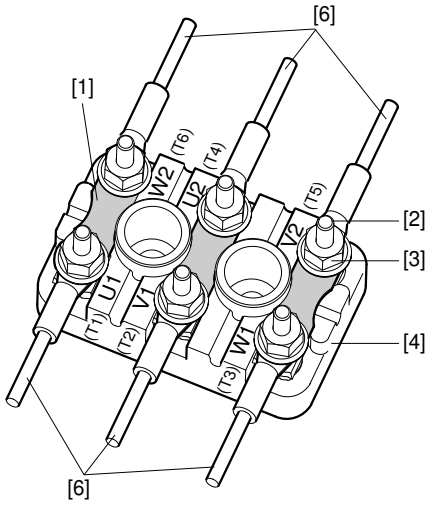


*9007199734852747*

[1] Terminal link
[2] Terminal studs
[3] Flange nut
[4] Terminal board
[5] Customer connection
[6] Customer connection with divided connection cable

## INFORMATION

For DR../DRN250 – 315 motors, SEW-EURODRIVE recommends a double-sided supply for load currents higher than

- M12: 250 A
- M16: 315 A

25957074/EN – 06/2019

### 5.11.2 According to wiring diagram R76

**Arrangement of terminal links with ⅄ connection**

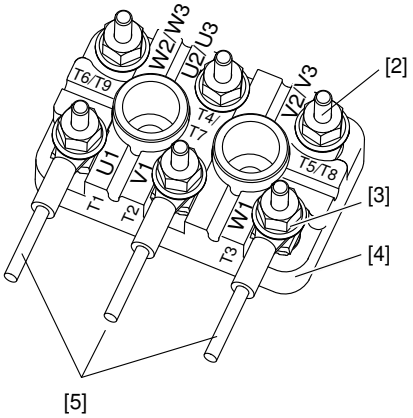


*2319075083*

**Arrangement of terminal links with ⅄⅄ connection**

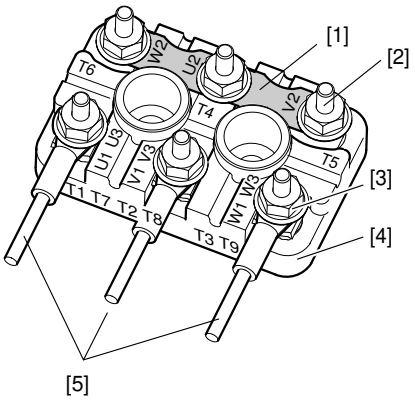


*9007201591100811*

[1] Terminal link
[2] Terminal studs
[3] Flange nut
[4] Terminal board
[5] Customer connection

## INFORMATION

Three winding lead ends must be rewired to change from high to low voltage:

The lines designated U3 (T7), V3 (T8) and W3 (T9) must be reconnected.

- U3 (T7) from U2 (T4) to U1 (T1)
- V3 (T8) from V2 (T5 ) to V1 (T2)
- W3 (T9) from W2 (T6) to W1 (T3)

→ Changing from low to high voltage is carried out in reverse order. In both cases, the customer connection is made to U1 (T1), V1 (T2) and W1 (T3). You can change the direction of rotation by interchanging 2 supply cables.

### 5.11.3 According to wiring diagram R72

**Arrangement of terminal links with △ connection**

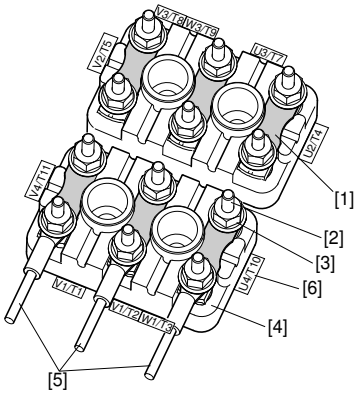


*18014400828555147*

**Arrangement of terminal links with △△ connection**

DR..71 – 280, DRN63 – 280, DR2..63 – 80 motors
(single-sided supply):

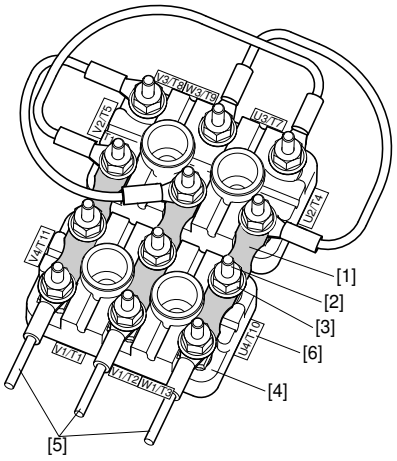


*18014400845874315*

DR../DRN250 – 315 motors
(double-sided supply):

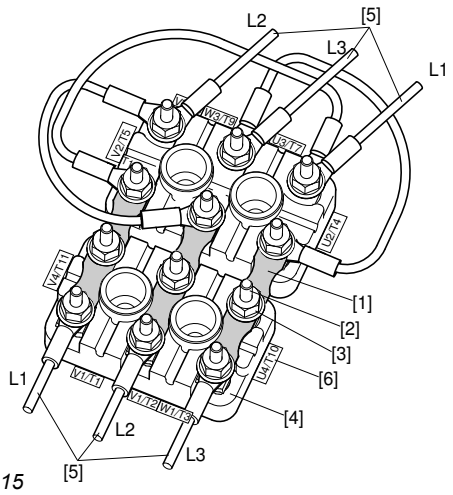


*9007208157343883*

[1] Terminal link
[2] Terminal studs
[3] Flange nut
[4] Terminal board
[5] Customer connection
[6] Wiring designation plate
L1 Conductor 1
L2 Conductor 2
L3 Conductor 3

## INFORMATION

For DR../DRN250 – 315 motors, SEW-EURODRIVE recommends a double-sided supply for load currents higher than

- M10: 160 A

### 5.11.4 Connection variants via terminal block

The motors are supplied and connected differently depending on the electrical design. Arrange the terminal links as shown in the wiring diagram and screw them on firmly. Observe the tightening torques specified in the following tables.

| DRN63, DR2..63 motors | | | | | | | |
|---|---|---|---|---|---|---|---|
| **Terminal stud** | **Tightening torque hex nut** | **Connection** | **Design** | **Connection type** | **Scope of delivery** | **PE connection screw** | **PE design** |
| **Ø** | | **Cross section** | | | | **Ø** | |
| **M4** | **1.6 Nm** | **≤ 1.5 mm²** | **1a** | **Conductor end sleeve** | **Preassembled terminal links** | M4 | 6 |
| | | **≤ 2.5 mm²** | **1a** | **Solid wire** | **Preassembled terminal links** | | |
| | | **≤ 6 mm²** | **1b** | **Ring cable lug** | **Preassembled terminal links** | | |
| | | ≤ 6 mm² | 2 | Ring cable lug | Connection accessories enclosed | | |
| **DR..71 – 100, DRN71 – 100, DR2..71 – 80 motors** | | | | | | | |
| **Terminal stud** | **Tightening torque hex nut** | **Connection** | **Design** | **Connection type** | **Scope of delivery** | **PE connection screw** | **PE design** |
| **Ø** | | **Cross section** | | | | **Ø** | |
| **M4** | **1.6 Nm** | **≤ 1.5 mm²** | **1a** | **Conductor end sleeve** | **Preassembled terminal links** | M5 | 4 |
| | | **≤ 2.5 mm²** | **1a** | **Solid wire** | **Preassembled terminal links** | | |
| | | **≤ 6 mm²** | **1b** | **Ring cable lug** | **Preassembled terminal links** | | |
| | | ≤ 6 mm² | 2 | Ring cable lug | Connection accessories enclosed | | |
| M5 | 2.0 Nm | ≤ 2.5 mm² | 1a | Solid wire Conductor end sleeve | Preassembled terminal links | | |
| | | ≤ 16 mm² | 1b | Ring cable lug | Preassembled terminal links | | |
| | | ≤ 16 mm² | 2 | Ring cable lug | Connection accessories enclosed | | |
| M6 | 3.0 Nm | ≤ 35 mm² | 3 | Ring cable lug | Connection accessories enclosed | | |
| **DR..112 – 132, DRN112 – 132M motors** | | | | | | | |
| **Terminal stud** | **Tightening torque hex nut** | **Connection by customer** | **Design** | **Connection type** | **Scope of delivery** | **PE connection screw** | **PE design** |
| **Ø** | | **Cross section** | | | | **Ø** | |
| **M5** | **2.0 Nm** | **≤ 2.5 mm²** | **1a** | **Solid wire Conductor end sleeve** | **Preassembled terminal links** | M5 | 4 |
| | | **≤ 16 mm²** | **1b** | **Ring cable lug** | **Preassembled terminal links** | | |
| | | ≤ 16 mm² | 2 | Ring cable lug | Connection accessories enclosed | | |
| M6 | 3.0 Nm | ≤ 35 mm² | 3 | Ring cable lug | Connection accessories enclosed | | |
| **DR..160, DRN132L motors** | | | | | | | |
| **Terminal stud** | **Tightening torque hex nut** | **Connection by customer** | **Design** | **Connection type** | **Scope of delivery** | **PE connection screw** | **PE design** |
| **Ø** | | **Cross section** | | | | **Ø** | |
| **M6** | **3.0 Nm** | **≤ 35 mm²** | **3** | **Ring cable lug** | **Connection accessories enclosed** | M8 | 5 |
| M8 | 6.0 Nm | ≤ 70 mm² | 3 | Ring cable lug | Connection accessories enclosed | M10 | 5 |

25957074/EN – 06/2019

| DR..180 – 225, DRN160 – 225 motors | | | | | | | |
|---|---|---|---|---|---|---|---|
| **Terminal stud Ø** | **Tightening torque hex nut** | **Connection by customer Cross section** | **Design** | **Connection type** | **Scope of delivery** | **PE terminal stud Ø** | **PE design** |
| **M8** | **6.0 Nm** | **≤ 70 mm²** | **3** | **Ring cable lug** | **Connection accessories enclosed** | M8 | 5 |
| M10 | 10 Nm | ≤ 95 mm² | 3 | Ring cable lug | Connection accessories enclosed | M10 | 5 |
| M12 | 15.5 Nm | ≤ 95 mm² | 3 | Ring cable lug | Connection accessories enclosed | M10 | 5 |
| **DR../DRN250 – 280 motors** | | | | | | | |
| **Terminal stud Ø** | **Tightening torque hex nut** | **Connection by customer Cross section** | **Design** | **Connection type** | **Scope of delivery** | **PE terminal stud Ø** | **PE design** |
| **M10** | **10 Nm** | **≤ 95 mm²** | **3** | **Ring cable lug** | **Connection accessories enclosed** | M12 | 5 |
| **M12** | **15.5 Nm** | **≤ 95 mm²** | **3** | **Ring cable lug** | **Connection accessories enclosed** | M12 | 5 |
| **DR../DRN315 motors** | | | | | | | |
| **Terminal stud Ø** | **Tightening torque hex nut** | **Connection by customer Cross section** | **Design** | **Connection type** | **Scope of delivery** | **PE terminal stud Ø** | **PE design** |
| **M12** | **15.5 Nm** | **≤ 95 mm²** | **3** | **Ring cable lug** | **Premounted connection pieces** | M12 | 5 |
| **M16** | **30 Nm** | **≤ 120 mm²** | | | | | |

The designs in bold print apply to S1 operation for the standard voltages and standard frequencies according to the data in the catalog. Other designs may have different connections, for example, different terminal stud diameters and/or a different scope of delivery.

25957074/EN – 06/2019

**Variant 1a**

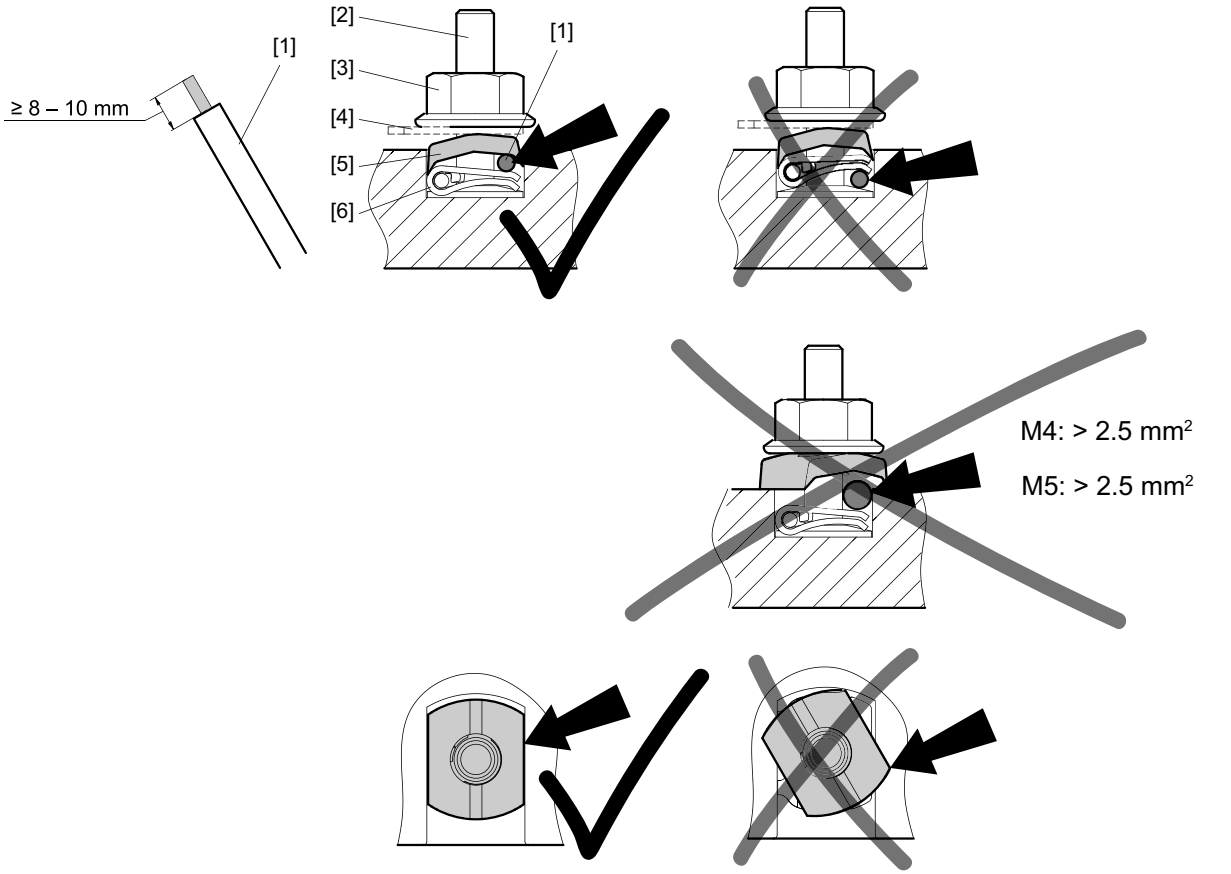


*36028797107830923*

[1] External connection
[2] Terminal stud
[3] Flange nut
[4] Terminal link
[5] Terminal washer
[6] Winding connection with Stocko terminal

**Variant 1b:**

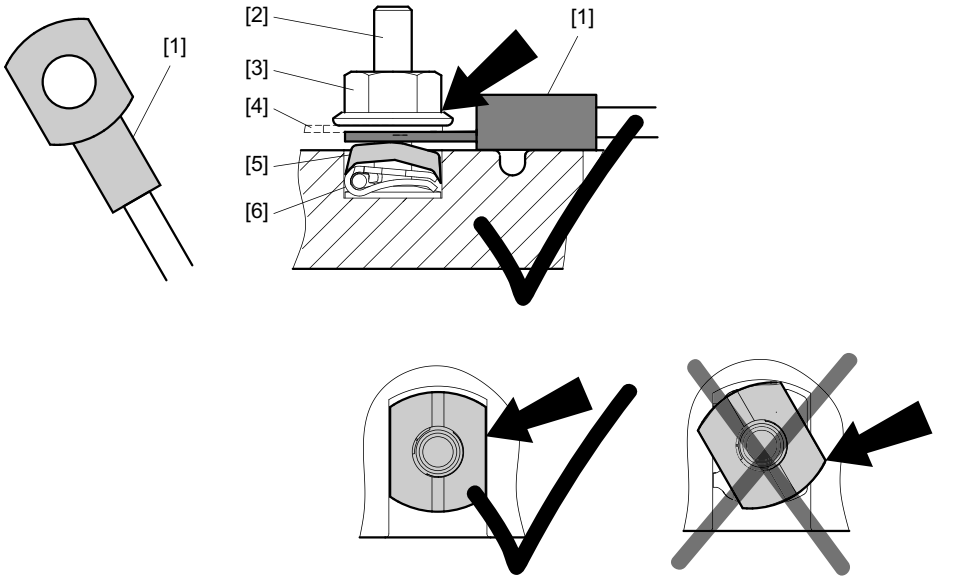


*18014398598346763*

[1] External connection with ring cable lug, according to DIN 46237 or DIN 46234, for example
[2] Terminal stud
[3] Flange nut
[4] Terminal link
[5] Terminal washer
[6] Winding connection with Stocko terminal

**Variant 2**

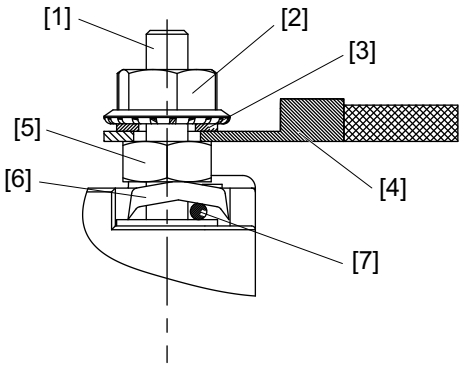


*9007199440180363*

[1] Terminal board
[2] Flange nut
[3] Terminal link
[4] External connection with ring cable lug, according to DIN 46237 or DIN 46234, for example
[5] Bottom nut
[6] Terminal washer
[7] Winding connection

**Variant 3**

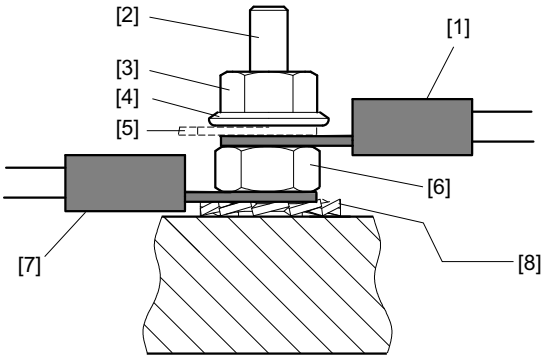


*9007199454382091*

[1] External connection with ring cable lug, according to DIN 46237 or DIN 46234, for example
[2] Terminal stud
[3] Upper nut
[4] Washer
[5] Terminal link
[6] Bottom nut
[7] Winding connection with ring cable lug
[8] Serrated lock washer

**Variant 4**

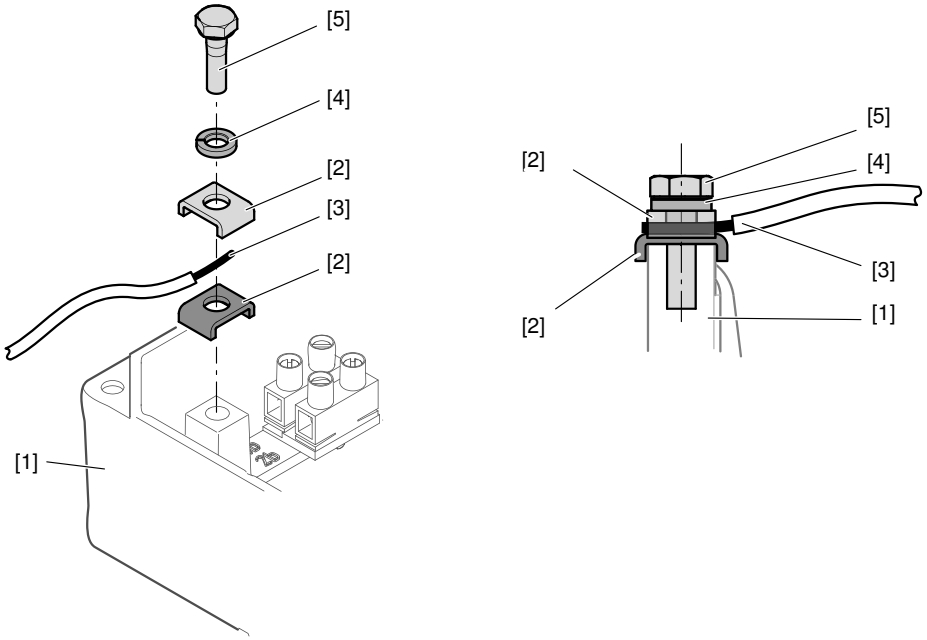


*18014399649088651*

[1] Terminal box
[2] Terminal clip
[3] PE conductor
[4] Lock washer
[5] Hex head screw

25957074/EN – 06/2019

**Variant 5**

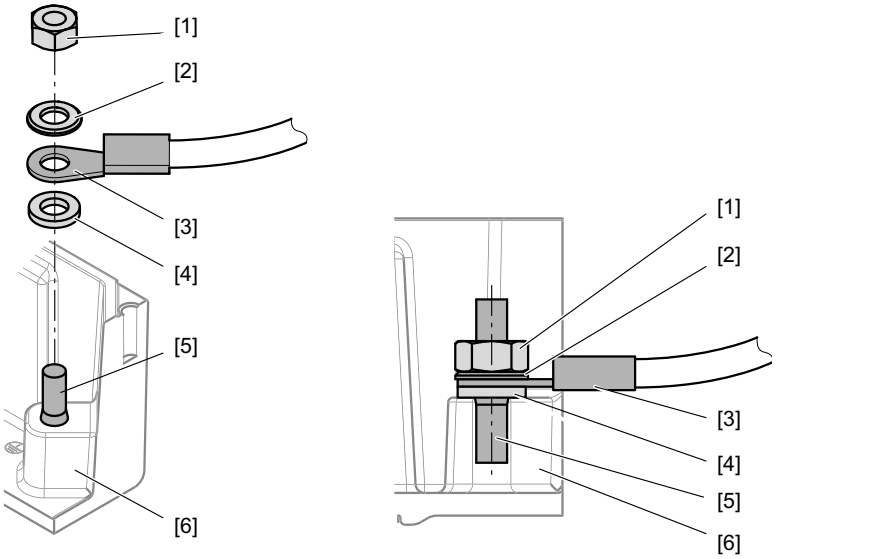


*1139608587*

[1] Hex nut
[2] Washer
[3] PE conductor on cable lug
[4] Serrated lock washer
[5] Stud
[6] Terminal box

**Variant 6**

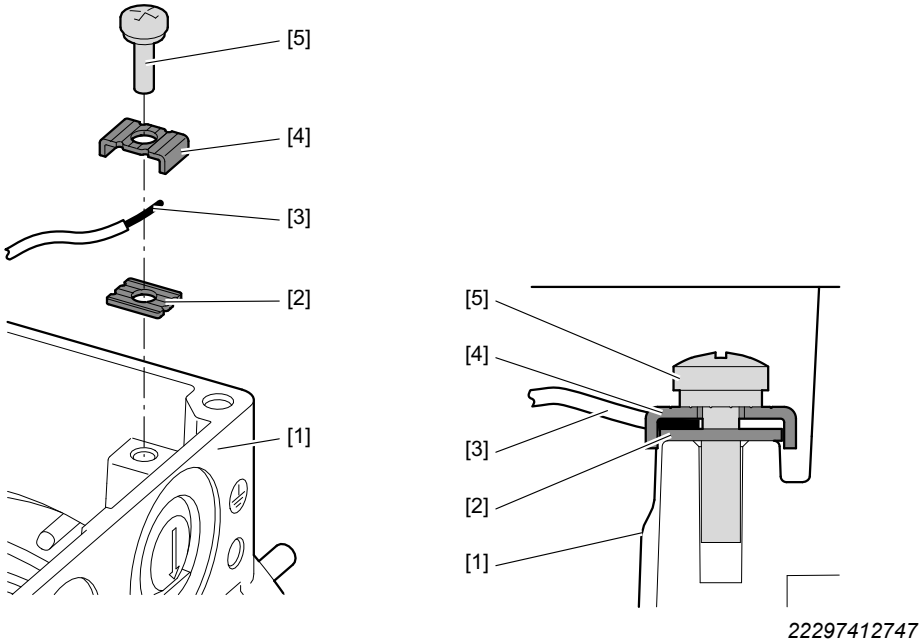


*22297412747*

[1] Terminal box
[2] Support plate
[3] PE conductor
[4] Terminal clip
[5] Flat head screw

25957074/EN – 06/2019

## 5.12 Connecting the motor plug connector

### 5.12.1 IS/ISU plug connector

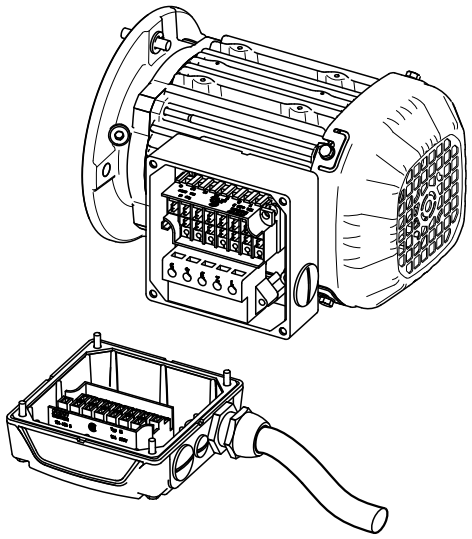

*1009070219*

The lower part of the /IS, /ISU plug connector option is completely prewired at the factory, including the additional features such as brake control.

The upper connector section of the /IS option is included in the scope of delivery. It must be connected according to the wiring diagram.

The /ISU option is delivered without the upper connector section.

The /IS, /ISU plug connector option has CSA approval up to 600 V. Note for application according to CSA regulations: Tighten the M3 clamping screws with a tightening torque of 0.5 Nm.

#### Cable cross section

Make sure that the type of cable complies with the applicable regulations. The rated currents are specified on the nameplate. The cable cross sections that can be used are listed in the following table.

| Without variable terminal link | With variable terminal link | Link cable | Double assignment (Motor and brake/SR) |
|---|---|---|---|
| 0.25 – 4.0 $mm^2$ | 0.25 – 2.5 $mm^2$ | Max. 1.5 $mm^2$ | max. 1 × 2.5 and 1 × 1.5 $mm^2$ |

25957074/EN – 06/2019

**Wiring the upper section of the plug connector**

- Loosen the housing cover screws:
  - Remove the housing cover
- Loosen the screws from the upper section of the plug connection:
  - Remove upper connector section from the cover
- Strip the insulation off the connection cable:
  - Strip off about 9 mm of insulation
- Pass the cable through the cable gland

*Wiring up as shown in wiring diagram R83*

- Connect the lines as shown in the wiring diagram:
  - Tighten the clamping screws with a tightening torque of 0.5 Nm.
- Install the plug connector (see chapter "Installing the connector" (→ 🗎 87))

*Wiring up as shown in wiring diagram R81*

**For ⅄/△ startup:**

- Connect with 6 lines:
  - Tighten the clamping screws carefully.
  - Motor contactors in the control cabinet
- Install the plug connector (see chapter "Installing the connector" (→ 🗎 87))

**For ⅄ or △ operation:**

- Connect as shown in the wiring diagram
- Install the variable terminal link as shown in the following figures according to the desired motor operation (⅄ or △)
- Install the plug connector (see chapter "Installing the connector" (→ 🗎 87))

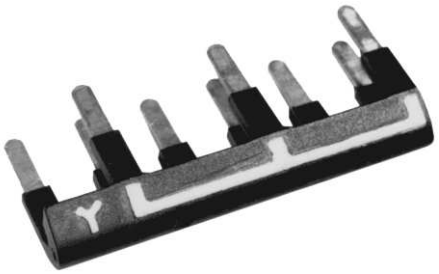

*9007200053347851*

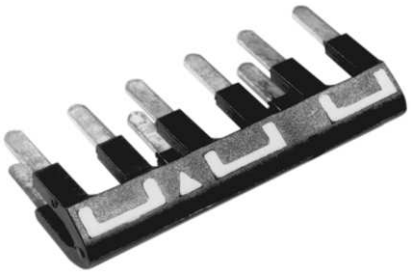

*9007200053349515*

*Brake control system BSR – preparing the variable terminal link*

**For ⅄operation:**

On the ⅄ side of the variable terminal link as shown in the following figure: Remove only the bare metal pin of the marked prong horizontally – install a touch guard!

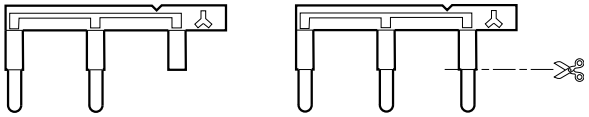

*9007200053520139*

**For △operation:**

On the △ side of the variable terminal link as shown in the following figure: Completely remove two prongs horizontally.

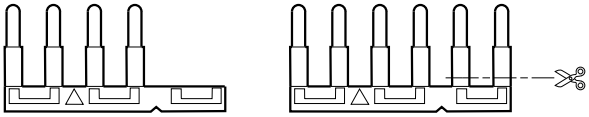

*9007200053518475*

*Wiring according to the R81 wiring diagram for ⅄ or △ operation with double terminal assignment*

- At terminal for double assignment:
  - Connect the link cable
- When operation is as required:
  - Insert the link cable in the variable terminal link
- Installing the variable terminal link
- At terminal for double assignment:
  - Connect the motor lead above the variable terminal link
- Connect the other lines as shown in the wiring diagram
- Install the plug connector (see chapter "Installing the connector" (→ 🗎 87))

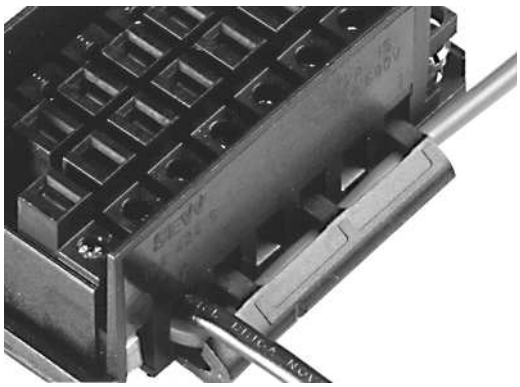

*9007200053521803*

25957074/EN – 06/2019

### Installing the plug connector

The housing cover of the IS plug connector can be screwed onto the lower housing part depending on the required position of the cable lead. You have to install the upper part in the housing cover according to the position of the lower part:

1. Define the required mounting position.
2. Install the upper section of the plug connector into the housing cover in accordance with the mounting position.
3. Close the plug connector.
4. Tighten the cable gland.
5. Check all screws of tightening and contact connections for tight fit.



**⚠ WARNING**

No grounding due to incorrect installation.

Severe or fatal injuries.

- Tighten the retaining screws of the IS plug connector properly with 2 Nm as these screws also act as protective earth contacts.



IS female connector

*9007200053719819*

*Mounting position of the upper section of the plug connector in the housing cover*

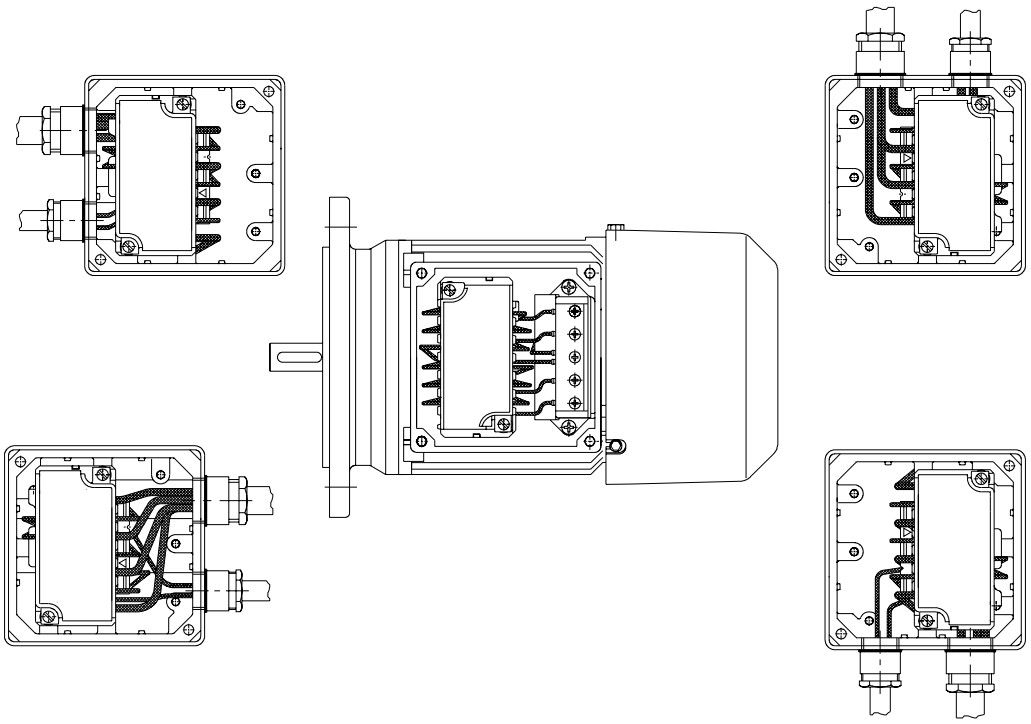

*9007200053526155*

25957074/EN – 06/2019

### 5.12.2 AB.., AD.., AM.., AK.., AC.., AS.. plug connectors

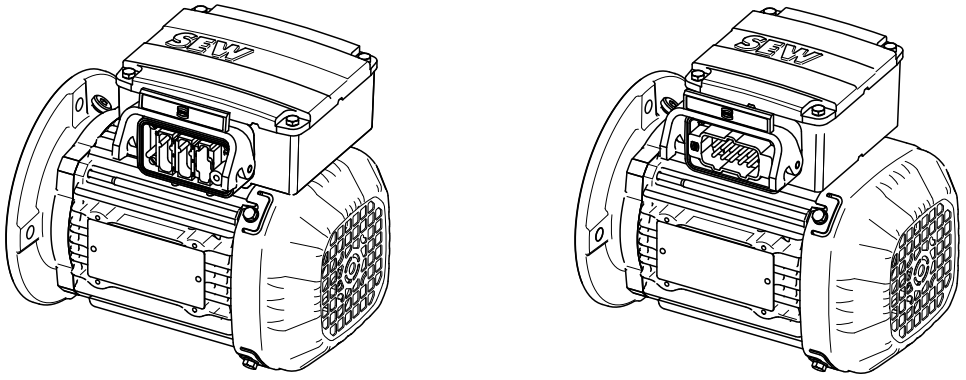

1009065611

The installed AB.., AD.., AM.., AK.., AC.. and AS.. connector systems are based on the connector systems made by Harting.

- AB.., AD.., AM.., AK.. Han Modular®
- AC.., AS.. Han 10E / 10ES

The connectors are located at the side of the terminal box. They are locked either using two clamps or one clamp on the terminal box.

The internal motor wiring is performed at the factory according to the order information. The mating connector must be prefabricated by the user.

The mating connector (grommet housing) with socket contacts is not included in the delivery.

## INFORMATION

The degree of protection is only guaranteed if the mating connector is plugged in and locked.

## 5.13 Connecting the motor via terminal strip

### 5.13.1 According to wiring diagram R10

1. Connect the motor according to the enclosed wiring diagram.
2. Check the maximum cable cross section.
   - ⇨ 2.5 mm² rigid
   - ⇨ 2.5 mm² flexible
   - ⇨ 1.5 mm² flexible with conductor end sleeve
3. The stripping length must be 8 – 9 mm.
4. Connect the protective earth as described in chapter "Variant 6" (→ 🗎 83).

**Arrangement of the terminal leads for 人 connection**

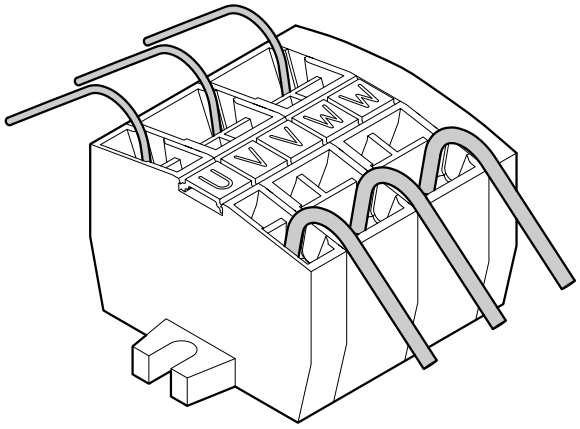


*27830157963*

25957074/EN – 06/2019

### 5.13.2 According to wiring diagram R12

1. Connect the motor according to the enclosed wiring diagram.
2. Check the maximum cable cross section.
   - ⇨ 2.5 mm² rigid
   - ⇨ 2.5 mm² flexible
   - ⇨ 1.5 mm² flexible with conductor end sleeve
3. The stripping length must be 8 – 9 mm.
4. Connect the protective earth as described in chapter "Variant 6" (→ 🗎 83).

**Arrangement of the terminal leads for ⅄ connection**

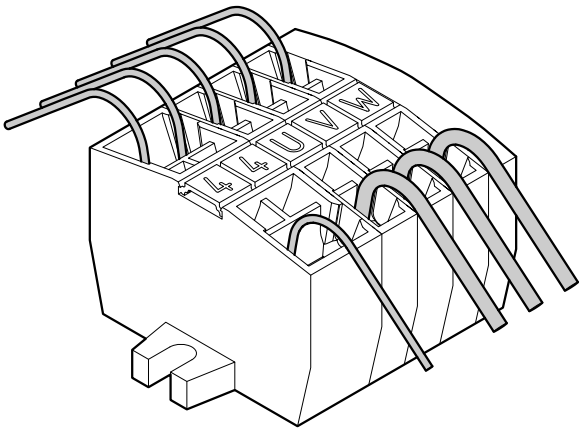


*27830161547*

**Arrangement of the terminal leads for △ connection**

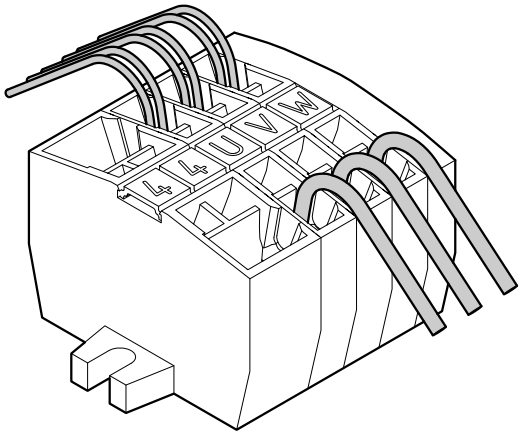


*27830154379*

25957074/EN – 06/2019

### 5.13.3 According to wiring diagram C13 with terminal strip /KCC

1. Connect the motor according to the enclosed wiring diagram.
2. Check the maximum cable cross section.
   - ⇨ 4 mm² rigid
   - ⇨ 4 mm² flexible
   - ⇨ 2.5 mm² flexible with conductor end sleeve
3. Check the winding connections in the terminal box and tighten them, if necessary.
4. The stripping length must be 10 – 12 mm.

**Arrangement of terminal links with ⅄ connection**

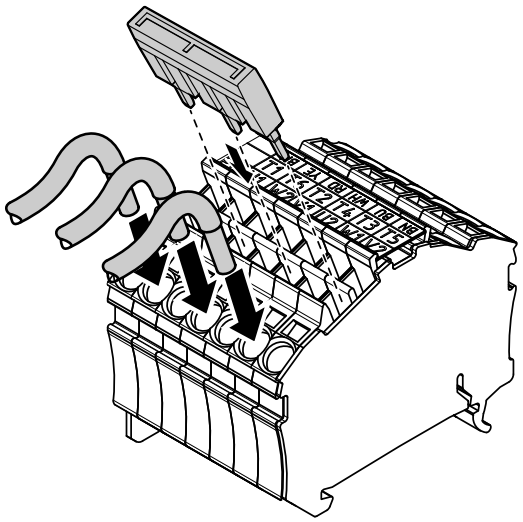

*18014399506064139*

**Arrangement of terminal links with △ connection**

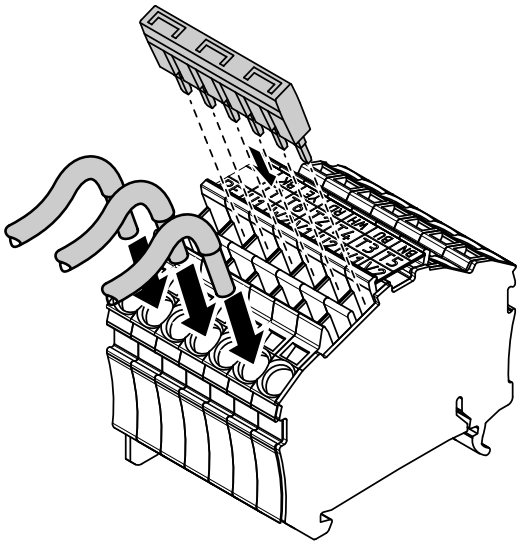

*18014399506066059*

25957074/EN – 06/2019

### 5.13.4 According to wiring diagram C12 with KC1 terminal strip

1. Connect the motor according to the enclosed wiring diagram.
2. Check the maximum cable cross section.
   - ⇨ 2.5 mm² rigid
   - ⇨ 2.5 mm² flexible
   - ⇨ 1.5 mm² flexible with conductor end sleeve
3. The stripping length must be 8 – 9 mm.

**Arrangement of the terminal leads for ⅄ connection**

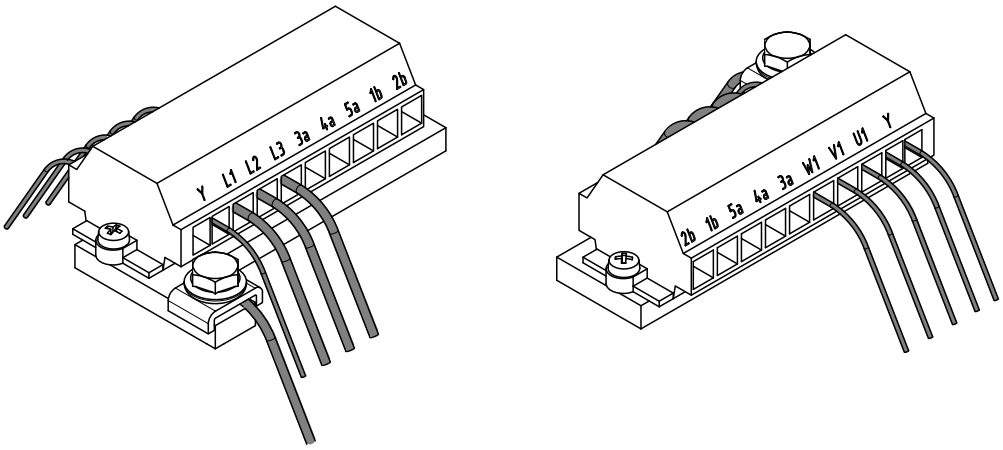


*18014399512138379*

**Arrangement of the terminal leads for △ connection**

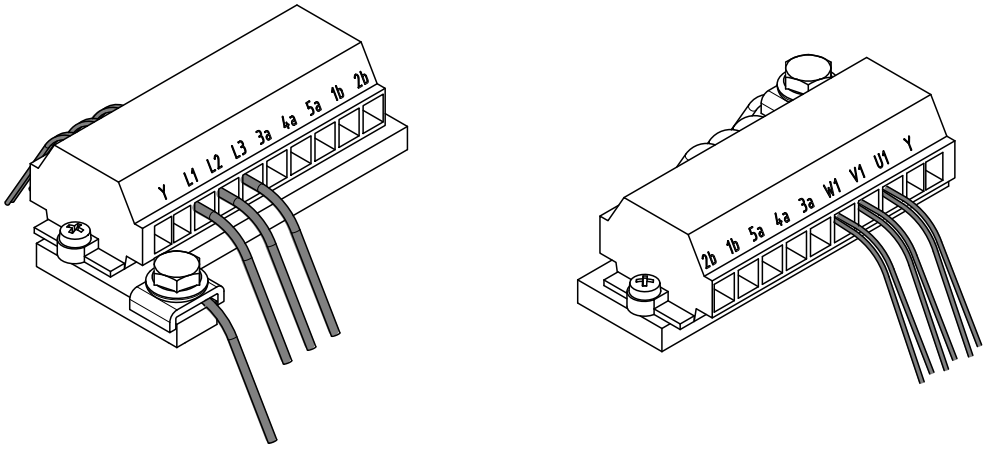


*18014399512140299*

25957074/EN – 06/2019

## 5.14 Connecting the brake

The BE.. brakes are powered by energized DC voltage and are released electrically. The brake is applied mechanically when the voltage supply is disconnected.

### ⚠ WARNING



Delayed brake application or unintentional brake release due to incorrect control or connection.

Severe or fatal injuries, e.g. due to falling hoist.

- Comply with the applicable regulations issued by the relevant employer's liability insurance association regarding phase failure protection and the associated circuit/circuit modification.
- Connect the brake according to the enclosed wiring diagram.
- In case of emergency off, always disconnect all poles of the brake control from the supply voltage.
- Only use suitable contactors with sufficient contact rating (utilization category according to EN 60947-4-1/EN 60947-5-1, see chapter "Brake voltage supply" (→ 🗎 96)).
- For contactor selection, observe the inductive load to switch, and the high current load while switching the brake.

### 5.14.1 Connecting the brake control

The brake is powered by a brake control system with protection circuit. The brake control is either installed in the motor's terminal box or in the control cabinet. If the motor is prepared for the brake control in the control cabinet, the brake supply cables are connected to a terminal strip in the motor terminal box.

Screw terminals are usually used as terminals on the terminal strip or on the brake control. Terminals with cage clamp technology can also be used.

The connectable cable cross sections are restricted to 2.5 $mm^2$. If you use larger cable cross sections due to application reasons, additional intermediate terminals must be used.

The brake is internally connected to the motor PE. An additional connection for the brake is not necessary.

### ⚠ WARNING



Delayed brake application or unintentional brake release due to incorrect control or connection.

Severe or fatal injuries, e.g. due to falling hoist.

- Observe the specifications of this documentation for connecting the brake.
- If you are uncertain about brake control, voltage supply type and design, or overvoltage and short circuit protection, contact the plant manufacturer or SEW-EURODRIVE.

25957074/EN – 06/2019

### 5.14.2 Permitted brake controls

## INFORMATION

The following specifications refer to motors designed for operation at ambient temperatures of -20 °C to +40 °C, and with thermal class 130 (B) or 155 (F). Deviations may occur depending in the installed motor options.

In individual cases, always also observe the additional specifications in the order confirmation and on the motor nameplate.

The brake is designed for operation with AC voltage or DC voltage, depending on the design. A brake control by SEW-EURODRIVE is used that is either installed in the motor terminal box or in the control cabinet.

BE02 – 2 brakes can also be operated without brake control by SEW-EURODRIVE with DC voltage. Observe the information on the motor nameplate. In this case, a suitable overvoltage protection must be installed at the terminal strips in the terminal box using varistors. The varistors are not included in the scope of delivery of the motor. Observe the project planning notes from SEW-EURODRIVE.

The following brake control types are not permitted:

- Operation with AC voltage without brake control by SEW-EURODRIVE with BE02 – 122 brakes.
- Operation with DC voltage without brake control by SEW-EURODRIVE with BE5 – BE122 brakes.
- Operation with third-party brake control systems.

For an overview of available brake controls by SEW-EURODRIVE and of the technical data, refer to chapter "Brake control" (→ 🗎 234).

## ⚠ WARNING

Severe or fatal injuries

Great and unexpected elongation of the stopping distance.

- Operate each brake with a separate brake control.
- Observe the notes on dimensioning in the catalog, or contact SEW-EURODRIVE.

### 5.14.3 Optional separation of DC and AC circuits

In case of brakes operated with AC voltage, make sure the disconnection type designated by the manufacturer is applied correctly during the brake connection. The following types are distinguished:

- Cut-off in the AC circuit with normal application time
- Cut-off in AC circuit and DC circuit with shortened application time

The correct switch-off type must be ensured by a respective wiring. Certain brake controls by SEW-EURODRIVE realize the same AC and DC cut-off via integrated switching relays (e.g. BMP1.5), or via mounted relays (e.g. BSR or BUR).

The switch-off type is specified on the included wiring diagrams by a pictogram.

25957074/EN – 06/2019



**⚠ WARNING**

Delayed brake application or unintentional ongoing brake release due to incorrect switch-off.

Severe or fatal injuries, e.g. due to falling hoist or extended coasting.

- During project planning, consider the required cut-off type and the effects on the expected stopping distance in particular.
- Only use the faster cut-off in the DC and AC circuit for hoists and hoist-like applications.
- When you are not sure if the application is a hoist-like application, contact SEW-EURODRIVE.
- Make sure that the configured cut-off type (AC or AC-DC) is implemented correctly during startup, regardless of the type of application.

### 5.14.4 Brake voltage supply

The brake voltage supply must match the values specified on the nameplate of the motor. The brake must be supplied via the designated brake control.

The specifications on the nameplate have a tolerance of +/-5% of the stated nominal value, or of the mean value of the stated connection range. Observe order-specific deviations.

Make sure the voltage supply is sufficiently stable by using cable cross sections and voltage sources that are dimensioned accordingly. Make sure the supply voltage does not drop below 90% of the nominal value during starting. This could be caused by an increased inrush current, see chapter "Operating currents" (→ 🗎 226).

In case of single-speed drives (not pole-changing) operated directly at the supply system (meaning without frequency inverter or soft start devices), the brake supply voltage can also be taken from the terminal board of the motor. Adhere to the following restrictions:

- The nominal brake voltage must either match the phase-to-neutral voltage, or the phase-to-phase voltage of the motor (observe nameplate and motor switching type).
- In case of hoists or hoist-like applications, the BSR.. brake control must be used for cut-off in the DC and AC circuits.
- For combinations with BMP3.1 brake control (BE60 – 122) a voltage supply via the terminal board is not permitted.

**INFORMATION**



In variable-speed motors and motors operated with soft start devices, the brake voltage must not be picked up at the motor terminal board because the voltage there is not constant.

25957074/EN – 06/2019

### 5.14.5 Switching equipment

The high current utilization during switching the brake (inductive load) requires suitable contactors/switch contacts, to obtain the correct function of the brake.

Depending on brake type and type design, the switch contacts must meet the specifications in the following utilization categories:

- Switch contacts for the supply voltage at AC voltage operation: AC-3 according to EN 60947-4-1, or AC-15 according to EN 60947-5-1.
- Switch contact for the supply voltage at DC voltage operation: Preferably AC-3 or DC-3 according to EN 60947-4-1. As an alternative, contacts in utilization category DC-13 according to EN 60947-5-1 are also permitted.
- Switch contacts for optional separation on DC side: AC-3 according to EN 60947-4-1.

Observe the specifications on the provided wiring diagram.

Using a semi-conductor relay is not permitted.

### 5.14.6 Brake controls with functional control input

In addition to the voltage supply, the optional brake controls of the BMK.., BMKB.. and BMV.. series offer a control input for a DC 24 V signal with which the brakes can be switched via a PLC.

It is a purely functional input that is not "functionally safe" with respect to safety technology.

Due to their operating principle, fault states can occur in these devices that lead to unintentional ongoing brake release, even if the control voltage has been switched off.

**⚠ WARNING**



Unintentional ongoing brake release due to unrecognized malfunction of the brake control.

Severe or fatal injuries, e.g. due to falling hoist or extended coasting.

- Always disconnect all poles of the supply and control voltage for hoists and hoist-like applications.
- Ensure that a malfunction of the control input can be detected through additional, suitable diagnostic measures e.g. by monitoring the braking current to meet increased safety and reliability requirements.
- Use the BST.. brake control for functional safety applications.
- If you have any questions regarding the handling of the control input, contact SEW-EURODRIVE.

25957074/EN – 06/2019

### 5.14.7 Damage protection against overvoltage and short circuit

To obtain protection against overvoltage damages (e.g. due to short circuit), a sufficiently dimensioned fusing must be used at the supply cables.

Observe the notes on dimensioning in the catalog, or contact SEW-EURODRIVE.

### 5.14.8 Connecting diagnostic unit /DUB

Connect the diagnostic unit as shown in the wiring connection diagrams provided with the motor. The maximum permitted connection voltage is AC 250 V with a maximum current of 6 A. With low voltage, the maximum voltage is AC 24 V or DC 24 V with max. 0.1 A. A subsequent change to low voltage is not permitted.

| Function monitoring | Wear monitoring | Function and wear monitoring |
|---|---|---|
| 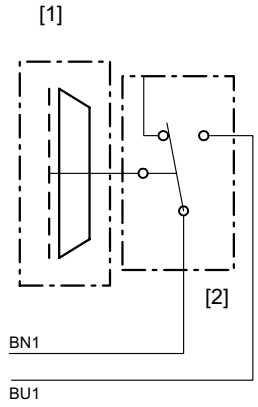 | 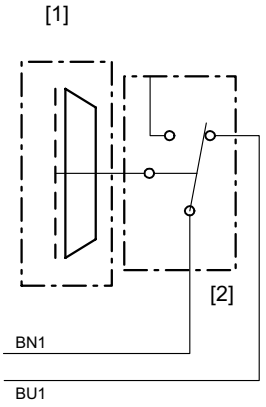 | 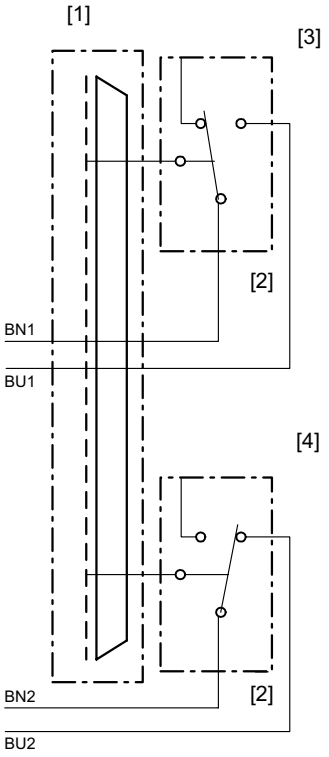 |

| | | | | | |
|---|---|---|---|---|---|
| [1] | Brake | [1] | Brake | [1] | Brake |
| [2] | Microswitch MP321-1MS | [2] | Microswitch MP321-1MS | [2] | Microswitch MP321-1MS |
| | | | | [3] | Function monitoring |
| | | | | [4] | Wear monitoring |

25957074/EN – 06/2019

### 5.14.9 Connecting the diagnostic unit /DUE option for function and wear monitoring

The /DUE diagnostic unit (Diagnostic Unit Eddy Current) is a contactless measuring system for function and wear monitoring of the brake and the continuous measurement of the current working air gap.

The measuring system consists of:

- Sensor, integrated in the magnet body of the brake
- Evaluation unit in the motor terminal box that is supplied via a DC 24 V voltage.

If the diagnostic unit /DUE was ordered, the function and wear monitoring is preinstalled and calibrated at the factory. The customer must connect the diagnostic unit, see wiring diagram. The switching point of the wear monitoring is preset to the maximum permitted value. According to the table in chapter "Evaluation unit" (→ 🗎 210), a reduced value can also be set.

For the status of the evaluation unit, refer to chapter "Retrofitting the /DUE diagnostic unit for function and wear monitoring" (→ 🗎 209).

Information on retrofitting the /DUE diagnostic unit can be found in chapter "Retrofitting the /DUE diagnostic unit for function and wear monitoring" (→ 🗎 209).

#### Connecting the evaluation unit

The maximum permitted cable cross section at terminals "k" of the evaluation unit is 1.5 $mm^2$ with conductor end sleeve without plastic collar, 0.75 $mm^2$ with plastic collar. The recommended cable cross section at terminals "k" is 0.5 $mm^2$ with conductor end sleeve with plastic collar.

## INFORMATION

Use shielded cables to wire the evaluation unit. Connect the shield to the GND potential, or use the shield plate at the user's signal evaluation.

SEW-EURODRIVE recommends routing the power cable of the drive and the cable of the diagnostic unit separately.

- Unless they are shielded, sensor cables must always be routed separately from other power cables with phased currents.
- Provide the appropriate equipotential bonding between drive and control cabinet.

Important characteristics of the cable to be used are:

- Total shielding (outer shield) of the cable
- 100 m maximum length for fixed installation
- 50 m maximum length for cable carrier installation

The required number of cores depends on the type of function/signals that are to be transferred to the higher-level controller and then processed.

At the factory, the diagnostic unit /DUE is pre-installed, calibrated and set to the wear limit permitted for the brake. The diagnostic unit has to be calibrated again after service or maintenance work such as sensor replacement or replacement of the evaluation electronics. The calibration can be take place directly at the evaluation electronics (at the terminal box) or alternatively via the higher-level controller. In the second case, the required signals for calibration have to be routed to the higher-level controller.

25957074/EN – 06/2019

The reference ground GND and the reference ground analog output AGND have the same potential. In case this potential is not treated separately in the application, AGND is not necessary.

| Number of required cores | Function | Abbreviation |
|---|---|---|
| 3 | Voltage supply | DC 24 V |
| | Reference ground | GND |
| | Digital output function | FCT |
| 3 | Voltage supply | DC 24 V |
| | Reference ground | GND |
| | Digital output wear | WEAR |
| 4 | Voltage supply | DC 24 V |
| | Reference ground | GND |
| | Digital output function | FCT |
| | Digital output wear | WEAR |
| 4 | Voltage supply | DC 24 V |
| | Reference ground | GND |
| | Analog output current air gap | OUT |
| | Reference ground analog output | AGND |
| 6 | Voltage supply | DC 24 V |
| | Reference ground | GND |
| | Digital output function | FCT |
| | Digital output wear | WEAR |
| | Analog output current air gap | OUT |
| | Reference ground analog output | AGND |
| 8 | Voltage supply | DC 24 V |
| | Reference ground | GND |
| | Digital output function | FCT |
| | Digital output wear | WEAR |
| | Analog output current air gap | OUT |
| | Reference ground analog output | AGND |
| | Calibration zero value | ZERO |
| | Calibration of infinite value | INF |

## INFORMATION

If the calibration inputs ZERO and/or INF are routed to the outside to a PLC or a controller, they have to be continuously connected to AGND in normal operation to avoid EMC interferences in the calibration cables.

25957074/EN – 06/2019

## INFORMATION

Signal outputs of the evaluation unit /DUE that are switched may not be used as voltage supply for other evaluation units /DUE or comparable systems. Each evaluation unit /DUE has to be supplied with voltage separately.

### Designation of the components

The system comprises a sensor and single-channel evaluation unit. The function monitoring of the brake is realized via a digital signal (NO contact). A digital output (NC contact) signals if the wear limit was reached. Further, a current output allows for continuous monitoring of the brake wear.

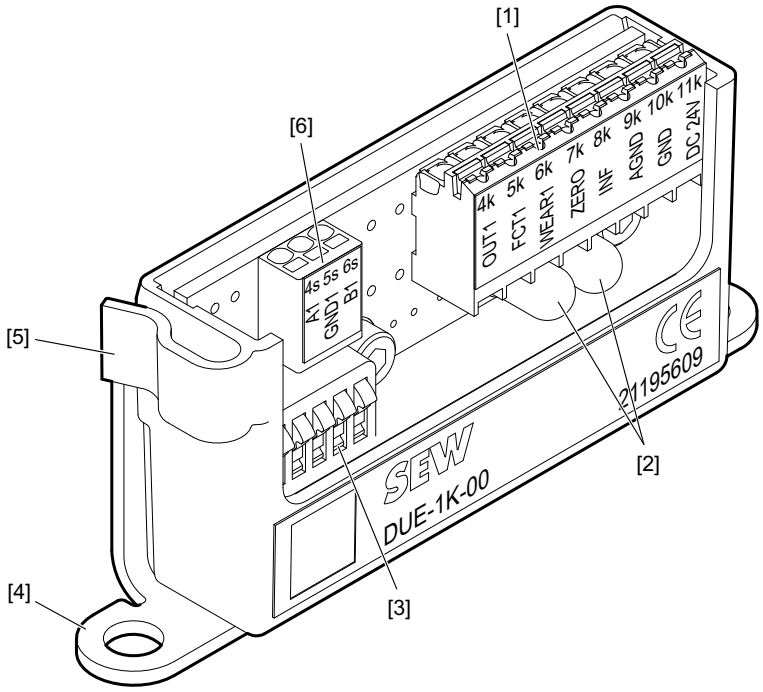


*14950549515*

[1] Terminals 4k – 11k
[2] LEDs for function and wear, brake
[3] DIP switches S1 – S5
[4] Fastening of terminal box (PE)
[5] Line clip
[6] Terminals 4s – 6s

The connection designation of the terminals are as follows:

| Terminal | Designation | Description | Color coding |
|---|---|---|---|
| 4s | A1 | Sensor 1 connection 1 | Brown (BN) |
| 5s | GND1 | Sensor 1 shield | Black (BK) |
| 6s | B1 | Sensor 1 connection 2 | White (WH) |

| Terminal | Designation | Description |
|---|---|---|
| 4k | OUT1 | Analog output working air gap brake |
| 5k | FCT1 | Digital output function brake |
| 6k | WEAR1 | Digital output wear brake |

| Terminal | Designation | Description |
|---|---|---|
| 7k | ZERO | Input calibration zero value |
| 8k | INF | Input calibration infinite value |
| 9k | AGND | Signal ground AGND |
| 10k | GND | Ground potential GND |
| 11k | DC 24 V | DC 24 V supply |

The LEDs have the follow meaning:

| LEDs | Designation | Description |
|---|---|---|
| Green [2] | FCT1 | The brake is open. Electromagnet is active. Pressure plate is in contact with magnet body. |
| Red [2] | WEAR1 | The current working air gap of the brake reached or exceeded the preset maximum working air gap. |

25957074/EN – 06/2019

## 5.15 Options

Connect the options as shown in the wiring connection diagrams provided with the motor. You can obtain the valid wiring diagrams free of charge from SEW-EURODRIVE.

### INFORMATION

Do not connect any options if the wiring diagram is missing.

#### 5.15.1 Temperature sensor /TF

### NOTICE

Impermissible heating of the motor due to defective /TF temperature sensor.

Damage to property.

- Do not connect any voltages > 30 V to the /TF temperature sensor.
- Observe the provided wiring diagram for the connection of the temperature sensor /TF.

The PTC thermistors comply with DIN 44082.

Resistance measurement check (measuring instrument with V ≤ 2.5 V or I < 1 mA):

- Standard measured values: 20 – 500 Ω, hot resistance > 4000 Ω

When using the temperature sensor for thermal monitoring, the evaluation function must be activated to maintain reliable isolation of the temperature sensor circuit. The thermal protection function must become active in case of overtemperature.

If there is a 2nd terminal box for the /TF temperature sensor, this is where you must connect the temperature sensor.

Observe the provided wiring diagram for connecting the temperature sensor /TF. If the wiring diagram is not enclosed, you can obtain it from SEW-EURODRIVE free of charge.

25957074/EN – 06/2019

The figure below shows the characteristic curve of /TF with reference to the nominal response temperature (referred to as $T_{NF}$).

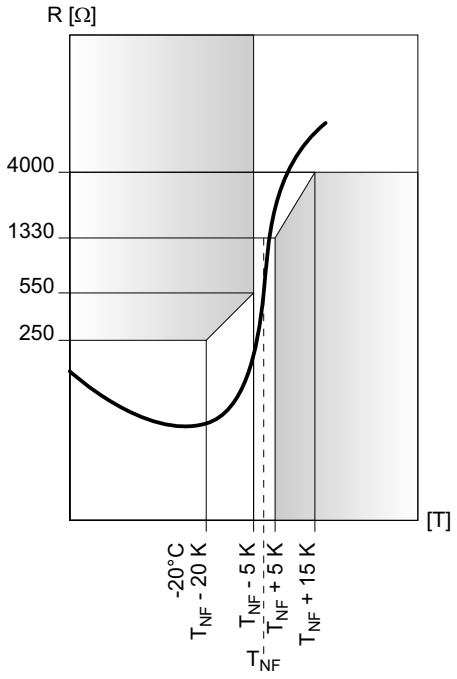


*5470153483*

### 5.15.2 /TH winding thermostats

The thermostats are connected in series as standard and open when the permitted winding temperature is exceeded. They can be connected in the drive monitoring loop.

| | AC V | DC V | |
|---|---|---|---|
| Voltage U in V | 250 | 60 | 24 |
| Current (cos ϕ = 1.0) in A | 2.5 | 1.0 | 1.6 |
| Current (cos ϕ = 0.6) in A | 1.6 | | |
| Contact resistance max. 1 Ω at DC 5 V/1 mA | | | |

25957074/EN – 06/2019

### 5.15.3 Temperature detection /KY (KTY84 – 130)

## NOTICE

Excessive self-heating of the temperature sensor can damage the insulation of the temperature detection as well as the motor winding.

The drive system might be damaged.

- Use currents > 3 mA in the KTY circuit.
- Observe the correct connection of the KTY to ensure correct evaluation of the temperature detection.
- Observe the polarity during connection.

The characteristic curve in the following figure shows the resistance curve subject to the motor temperature with a measuring current of 2 mA and correct pole connection:

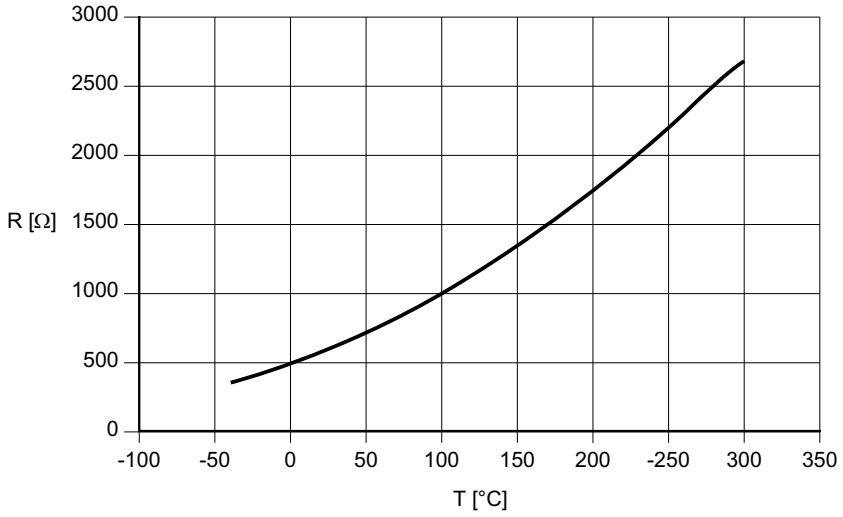


*1140975115*

| Technical data | KTY84 – 130 |
|---|---|
| Connection | Red (+)<br>Blue (−) |
| Total resistance at 20 – 25 °C | 540 Ω < R < 640 Ω |
| Test current | < 3 mA |

### 5.15.4 Temperature sensor /PT (PT100)

## NOTICE

Excessive self-heating of the temperature detection can damage the insulation of the temperature detection as well as the motor winding.

The drive system might be damaged.

- Avoid currents > 3 mA in the circuit of the PT100.
- Observe the correct connection of the PT100 to ensure correct evaluation of the temperature detection.

The characteristic curve in the following figure shows the resistance curve subject to the motor temperature.

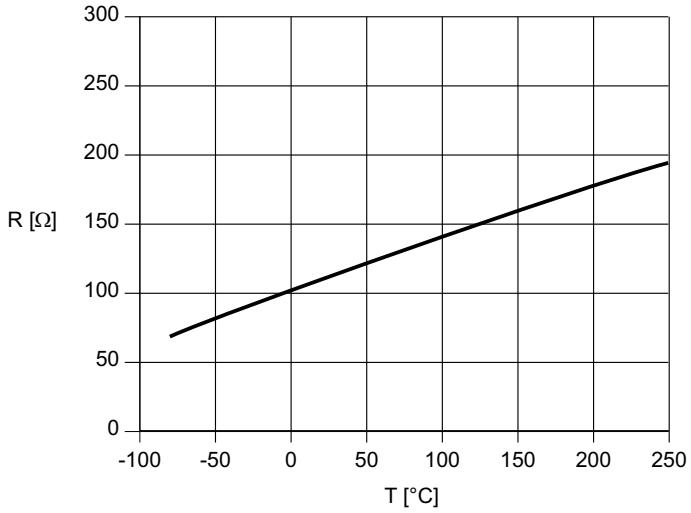


*1145838347*

| Technical data | PT100 |
|---|---|
| Connection | Red/white |
| Resistance at 20 – 25 °C per PT100 | 107.8 Ω < R < 109.7 Ω |
| Test current | < 3 mA |

25957074/EN – 06/2019

### 5.15.5 Temperature detection /PK (PT1000)

## NOTICE

Excessive self-heating of the temperature sensor can damage the insulation of the temperature detection as well as the motor winding.

The drive system might be damaged.

- Avoid currents > 3 mA in the circuit of the PT1000.
- Observe the correct connection of the PT1000 to ensure correct evaluation of the temperature detection.

The characteristic curve in the following figure shows the resistance curve subject to the motor temperature.

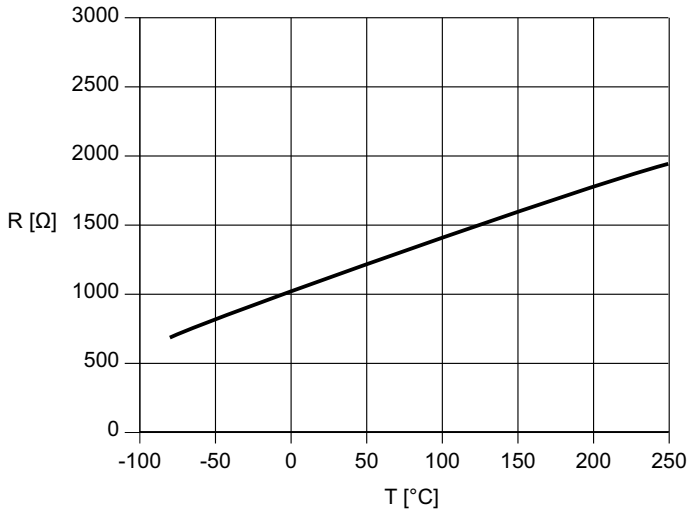


*17535480203*

| Technical data | PT1000 |
|---|---|
| Connection | Black/red |
| Resistance at 20 – 25 °C per PT1000 | 1077 Ω < R < 1098 Ω |
| Test current | < 3 mA |

### 5.15.6 Forced cooling fan /V

- Connection in separate terminal box
- Max. connection cross section 3 × 1.5 mm² (3 × AWG 15)
- Cable gland M16 × 1.5

| Motors | Operating mode/connection | Frequency Hz | Voltage V |
|---|---|---|---|
| DR..71 – 132, DRN71 – 132, DR2..71 – 80 | 1 ~ AC[1] (△) | 50 | 100 – 127 |
| DR..71 – 132, DRN71 – 132, DR2..71 – 80 | 3 ~ AC ⅄ | 50 | 175 – 220 |
| DR..71 – 132, DRN71 – 132, DR2..71 – 80 | 3 ~ AC △ | 50 | 100 – 127 |
| DR..71 – 180, DRN71 – 180, DR2..71 – 80 | 1 ~ AC[1] (△) | 50 | 230 – 277 |
| DR..71 – 315, DRN71 – 315, DR2..71 – 80 | 3 ~ AC ⅄ | 50 | 346 – 500 |
| DR..71 – 315, DRN71 – 315, DR2..71 – 80 | 3 ~ AC △ | 50 | 200 – 290 |

1) Steinmetz circuit

| Motors | Operating mode/connection | Frequency Hz | Voltage V |
|---|---|---|---|
| DR..71 – 132, DRN71 – 132, DR2..71 – 80 | 1 ~ AC[1] (△) | 60 | 100 – 135 |
| DR..71 – 132, DRN71 – 132, DR2..71 – 80 | 3 ~ AC ⅄ | 60 | 175 – 230 |
| DR..71 – 132, DRN71 – 132, DR2..71 – 80 | 3 ~ AC △ | 60 | 100 – 135 |
| DR..71 – 180, DRN71 – 180, DR2..71 – 80 | 1 ~ AC[1] (△) | 60 | 230 – 277 |
| DR..71 – 315, DRN71 – 315, DR2..71 – 80 | 3 ~ AC ⅄ | 60 | 380 – 575 |
| DR..71 – 315, DRN71 – 315, DR2..71 – 80 | 3 ~ AC △ | 60 | 220 – 330 |

1) Steinmetz circuit

25957074/EN – 06/2019

| Motors | Operating mode/connection | Voltage<br>V |
|---|---|---|
| DR..71 – 132,<br>DRN80 – 132,<br>DR2..71 – 80 | DC 24 V | 24 |

## INFORMATION

For information on how to connect the /V forced cooling fan, refer to chapter "Forced cooling fan /V" (→ 🗎 282).

25957074/EN – 06/2019

### 5.15.7 UWU52A switched-mode power supply

The forced cooling fan design V for DC 24 V furthermore includes the UWU52A switched-mode power supply, if you have ordered it. It can be ordered using the part number from SEW-EURODRIVE, even after the order has been placed.

The following figure depicts the UWU52A switched-mode power supply:

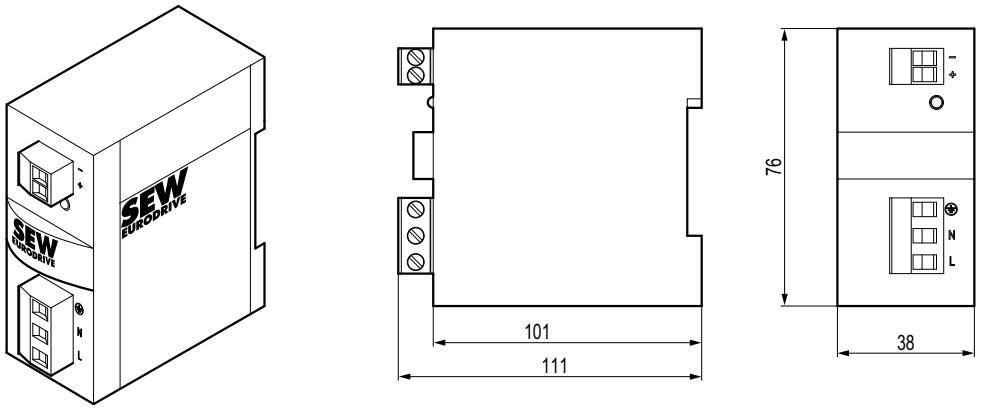


*576533259*

| | |
|---|---|
| Input | AC 110 – 240 V<br>1.04 – 0.61 A<br>50/60 Hz |
| | DC 110 – 300 V<br>0.65 – 0.23 A |
| Output | DC 24 V<br>2.5 A (40 °C) |
| | DC 24 V<br>2.0 A (55 °C) |
| Connection | Screw terminals 1.5 – 2.5 $mm^2$, separable |
| Degree of protection | IP20<br>Mounting on EN 60715 TH35 mounting rail in the control cabinet |
| Part number | 01881817 |

25957074/EN – 06/2019

### 5.15.8 Overview of add-on encoders

Refer to the wiring diagrams for information on how to connect add-on encoders:

| Encoder | Motors | Encoder type | Mounting type | Supply DC V | Signal | Wiring diagram |
|---|---|---|---|---|---|---|
| ES7S | DR..71 – 132<br>DRN80 – 132S | Incremental | Shaft-centered | 7 – 30 | 1 $V_{PP}$ sin/cos | 68180xx08 |
| ES7R | DR..71 – 132<br>DRN80 – 132S | Incremental | Shaft-centered | 7 – 30 | TTL (RS422) | 68179xx08 |
| ES7C | DR..71 – 132<br>DRN80 – 132S | Incremental | Shaft-centered | 4.5 – 30 | HTL/TTL (RS422) | 68179xx08 |
| AS7W | DR..71 – 132<br>DRN80 – 132S | Absolute value | Shaft-centered | 7 – 30 | 1 $V_{pp}$ sin/cos+ RS485 | 68181xx08 |
| AS7Y | DR..71 – 132<br>DRN80 – 132S | Absolute value | Shaft-centered | 7 – 30 | 1 $V_{pp}$ sin/cos + SSI | 68182xx08 |
| EG7S | DR..160 – 280<br>DRN132M – 280 | Incremental | Shaft-centered | 7 – 30 | 1 $V_{PP}$ sin/cos | 68180xx08 |
| EG7R | DR..160 – 280<br>DRN132M – 280 | Incremental | Shaft-centered | 7 – 30 | TTL (RS422) | 68179xx08 |
| EG7C | DR..160 – 280<br>DRN132M – 280 | Incremental | Shaft-centered | 4.5 – 30 | HTL/TTL (RS422) | 68179 xx08 |
| AG7W | DR..160 – 280<br>DRN132M – 280 | Absolute value | Shaft-centered | 7 – 30 | 1 $V_{pp}$ sin/cos+ RS485 | 68181xx08 |
| AG7Y | DR..160 – 280,<br>DRN132M – 280 | Absolute value | Shaft-centered | 7 – 30 | 1 $V_{pp}$ sin/cos + SSI | 68182xx08 |
| EH7S | DR../DRN315 | Incremental | Shaft-centered | 10 – 30 | 1 $V_{PP}$ sin/cos | 08511xx08 |
| EH7C | DR../DRN315 | Incremental | Shaft-centered | 10 – 30 | HTL | 08511xx08 |
| EH7R | DR../DRN315 | Incremental | Shaft-centered | 10 – 30 | TTL (RS422) | 08511xx08 |
| EH7T | DR../DRN315 | Incremental | Shaft-centered | 5 | TTL (RS422) | 08511xx08 |
| AH7Y | DR../DRN315 | Absolute value | Shaft-centered | 9 – 30 | TTL (RS422) +SSI | 08259xx07 |
| EV7S | DR..71 – 280<br>DRN80 – 280 | Incremental | Flange centered | 7 – 30 | 1 $V_{PP}$ sin/cos | 68180xx08 |
| EV7R | DR..71 – 280<br>DRN80 – 280 | Incremental | Flange centered | 7 – 30 | TTL (RS422) | 68179xx08 |
| EV7C | DR..71 – 280<br>DRN80 – 280 | Incremental | Flange centered | 4.5 – 30 | HTL/TTL (RS422) | 68179xx08 |
| AV7W | DR..71 – 280<br>DRN80 – 280 | Absolute value | Flange centered | 7 – 30 | 1 $V_{pp}$ sin/cos+ RS485 | 68181xx08 |
| AV7Y | DR..71 – 280<br>DRN80 – 280 | Absolute value | Flange centered | 7 – 30 | 1 $V_{pp}$ sin/cos + SSI | 68182xx08 |
| EK8S | DRN71 – 315<br>DR2..71 – 80 | Incremental | Shaft-centered | 7 – 30 | 1 $V_{PP}$ sin/cos | 63278995 |
| EK8C | DRN71 – 315<br>DR2..71 – 80 | Incremental | Shaft-centered | 4.5 – 30 | HTL/TTL (RS-422) | 63279010 |

25957074/EN – 06/2019

| En-coder | Motors | Encoder type | Mounting type | Supply DC V | Signal | Wiring dia-gram |
|---|---|---|---|---|---|---|
| EK8R | DRN71 – 315<br>DR2..71 – 80 | Incremental | Shaft-centered | 7 – 30 | TTL (RS-422) | 63279029 |
| AK8W | DRN71 – 315<br>DR2..71 – 80 | Absolute value | Shaft-centered | 7 – 30 | 1 $V_{PP}$ sin/cos + RS485 | 63279037 |
| AK8Y | DRN71 – 315<br>DR2..71 – 80 | Absolute value | Shaft-centered | 7 – 30 | 1 $V_{PP}$ sin/cos + SSI | 63279045 |
| AK8H | DRN71 – 315<br>DR2..71 – 80 | Absolute value | Shaft-centered | 7 – 12 | sin/cos + RS485 HIPERFACE® | 63279053 |
| EV8S | DRN71 – 280<br>DR2..71 – 80 | Incremental | Flange centered | 7 – 30 | 1 $V_{PP}$ sin/cos | 63278995 |
| EV8C | DRN71 – 280<br>DR2..71 – 80 | Incremental | Flange centered | 4.5 – 30 | HTL / TTL (RS-422) | 63279010 |
| EV8R | DRN71 – 280<br>DR2..71 – 80 | Incremental | Flange centered | 7 – 30 | TTL (RS-422) | 63279029 |
| AV8W | DRN71 – 280<br>DR2..71 – 80 | Absolute value | Flange centered | 7 – 30 | 1 $V_{PP}$ sin/cos + RS485 | 63279037 |
| AV8Y | DRN71 – 280<br>DR2..71 – 80 | Absolute value | Flange centered | 7 – 30 | 1 $V_{PP}$ sin/cos + SSI | 63279045 |
| AV8H | DRN71 – 280<br>DR2..71 – 80 | Absolute value | Flange centered | 7 – 12 | sin/cos + RS485 HIPERFACE® | 63279053 |

## INFORMATION

- Maximum oscillation load for encoders ≤ 10 g ≈ 100 m/s² (10 Hz to 2 kHz)
- Shock resistance = 100 g ≈ 1000 m/s² for DR..71 – 132, DRN80 – 132S motors
- Shock resistance = 200 g ≈ 2000 m/s² for DR..160 – 315, DRN132M – 315 motors

25957074/EN – 06/2019

### 5.15.9 Overview of optical status messages for built-in encoders

## INFORMATION

Refer to the wiring diagram for information on how to connect the built-in encoder.

- Observe the information in chapter "Wiring diagrams" (→ 🗎 269) for connection via terminal strip.
- Refer to the enclosed wiring diagram when connecting the EI7. built-in encoder via the M12 connector.
- Refer to the enclosed wiring diagram when connecting the EI8. built-in encoder via the M23 connector.

| Encoder | Motors | Supply in DC V | Signals |
|---|---|---|---|
| EI71 | DR..71 – 132<br>DRN71 – 132S<br>DR2..71 – 80<br>DRN63 (only EI7C) | 9 – 30 | HTL 1 period/revolution |
| EI72 | | 9 – 30 | HTL 2 periods/revolution |
| EI76 | | 9 – 30 | HTL 6 periods/revolution |
| EI7C | | 9 – 30 | HTL 24 periods/revolution |
| EI8R | DRN71 – 132S<br>DR2..71 – 80 | 7 – 30 | TTL (RS-422) 1024 periods/revolution |
| EI8C | DRN71 – 132S<br>DR2..71 – 80 | 7 – 30 | HTL 1024 periods/revolution |

25957074/EN – 06/2019

### EI7. B – visual feedback

The EI7. encoders use 2 bi-colored LEDs (red + green each) for visual feedback on the operating state.

#### LED H1 (at cable output of the encoder) – status and errors

The green LED indicates the status or the configuration of the encoder. It flashes. The flashing frequency indicates the set number of periods.

| LED H1 green | |
|---|---|
| **Frequency** | **Status/configuration** |
| LED off | Encoder without voltage or faulty |
| 0.6 Hz | EI71 (1 period per revolution) |
| 1.2 Hz | EI71 (2 periods per revolution) |
| 3 Hz | EI76 (6 periods per revolution) |
| 15 Hz | EI7C (24 periods per revolution) |
| LED lit continuously | Encoder defective |

The red LED is lit when the encoder detects an error.

| LED H1 red | |
|---|---|
| **Flash code** | **Meaning** |
| 10 s with 1 Hz and 2 s continuous | No valid number of periods can be set |
| other | Output driver signals a fault (e.g. short circuit or overtemperature) |

**The H2 LED gives visual feedback on the signal track status.**

| LED color | Track A | Track B | Track A | Track B |
|---|---|---|---|---|
| Orange (green and red) | 0 | 0 | 1 | 1 |
| Red | 0 | 1 | 1 | 0 |
| Green | 1 | 0 | 0 | 1 |
| Off | 1 | 1 | 0 | 0 |

### EI8. – visual feedback

The EI8. built-in encoders report their operating state visually via a duo LED.

| LED light pattern | Meaning |
|---|---|
| Off | Encoder not supplied or defective |
| Permanent green light | Encoder operational, no errors |
| Red/orange, permanent or flashing light | Encoder reports self-diagnostic information or an error.<br>The content depends on the color pattern and frequency. |

25957074/EN – 06/2019

| Diagnostics<br>LED color orange/red | Meaning and measures |
|---|---|
| Red | Encoder diagnostics has detected an error.<br>Permanently lit: Error regarding the internal encoder sensors (incremental sensors)<br>Flashes 5 Hz: Error regarding the internal encoder sensors (index sensors):<br>• Check the encoder and pole ring for damage or magnetizable contamination and replace or clean if necessary.<br>• Check the fan to ensure it is seated correctly and check the distance between the pole ring and encoder. If necessary, readjust and resecure the fan and pole ring (see chapter "Removing and mounting built-in encoder EI8." (→ 🗎 167)).<br>Flashes 1 Hz: Error regarding the encoder module electrical interface:<br>• Short circuit/overcurrent of the signal tracks: Eliminate the short circuit or limit the output current of the encoder module.<br>• Interference on the signal tracks: Eliminate the external interference. Observe the information regarding connection technology. |
| Orange | Encoder diagnostics signals a warning (function of the encoder is given, maintenance may be required)<br>Permanently lit: Warning regarding the internal encoder sensors (incremental sensors).<br>• Implement any necessary measures (see "Diagnostics red") as maintenance measures.<br>Flashes 1 Hz: Warning regarding the internal memory (encoder signal correction).<br>• The encoder signal correction is reinitialized every time the encoder is started. |

If none of the measures are successful, please contact the SEW-EURODRIVE Service department in the event of an error. In this case, decommission the built-in encoder.

25957074/EN – 06/2019

### 5.15.10 Installation notes for encoders

When connecting the encoder to the inverter, observe the provided wiring diagrams and the information in these operating instructions as well as the operating instructions/wiring diagrams of the inverter and the operating instructions/wiring diagrams provided with the third-party encoder.

Proceed as described in chapter "Motor and brake maintenance – preliminary work" (→ 🗎 127) to mount the encoders. Observe the following information:

- Maximum line length (inverter to encoder):
  - 100 m with a capacitance per unit length core – shield ≤ 110 nF/km
  - 100 m with a capacitance per unit length core – core ≤ 85 nF/km
- Core cross-section: 0.20 – 0.5 $mm^2$; recommendation ≥ 0.25 $mm^2$
- Use shielded cable with twisted pair cores and apply shield over large area on both ends:
  - In the cable gland of the encoder connection cover or in the encoder connector
  - To the inverter on the electronics shield clamp and to the housing of the D-sub connector
- Install the encoder cables separately from the power cables, maintaining a distance of at least 200 mm.
- Compare the operating voltage with the permitted operating voltage range on the encoder nameplate. Deviations in the operating voltage may overheat and damage the encoder.
- SEW-EURODRIVE recommends the use of stabilized voltage sources and separate supply systems for encoder or other sensor components and active components such as switches and light barriers.
- Supplies with voltage transients and interferences higher than the supply voltage $U_B$ are not permitted.
- Observe the clamping area of 5 to 10 mm of the cable gland of the connection cover. If you use cables with a different cross section, you have to replace the provided cable gland with another suitable EMC-compliant cable gland.
- The cable glands for the cable entry must meet the following conditions:
  - Cramping area is suitable for the used cable(s)
  - The IP degree of protection of the encoder connection is at least as high as the IP degree of protection of the actual encoder
  - The operating temperature range matches the designated ambient temperature range.
- Check the flawless state and the proper seat of the connection cover gasket.
- Tighten the screws of the connection cover with a tightening torque of 2.25 Nm.

25957074/EN – 06/2019

**Minimum requirements for encoder cables**

Make sure that self-assembled cables fulfill the following requirements:

- Cross section of voltage supply cable:
  - At least 0.25 $mm^2$ for cable lengths up to 50 m.
  - At least 0.5 $mm^2$ for cable lengths up to 100 m.
- Cross section of the signal wire:
  - At least 0.25 $mm^2$.
- Capacitance per unit length:
  - Maximum 70 pF/m – core/core.
  - Maximum 120 pF/m – core/shield.
- The cable must be shielded.
- Differential signals must be routed via twisted wires e.g. Data+ and Data-.

### 5.15.11 Anti-condensation heating

To protect a shutdown motor from freezing up (rotor blockage) or condensation inside the motor, it can be equipped with an optional anti-condensation heating. The anti-condensation heating consists of strip heaters that are integrated in the winding overhang and supplied with voltage when the motor is switched off. The motor is heated by the current flowing through the strip heaters.

The strip heaters are controlled according to the following principle:

- Motor switched off → anti-condensation heating activated
- Motor switched on → anti-condensation heating deactivated

Observe the permitted voltage according to the nameplate and the enclosed terminal assignment diagram.

25957074/EN – 06/2019

# 6 Startup

## INFORMATION

- It is essential to comply with the safety notes in chapter 2 during installation.
- In case of problems, refer to chapter "Malfunctions" (→ 🗎 263).

If components with functional safety are installed in the motor, observe the following safety note:

## ⚠ WARNING



Disabling functional safety devices.

Severe or fatal injuries.

- Only qualified personnel is allowed to carry out work on functional safety components.
- Any work on functional safety components must be carried out by strictly observing the specifications in the operating instructions at hand and the respective addendum to the operating instructions. Otherwise, the warranty will become void.

## ⚠ WARNING



Electric shock due to incorrect installation.

Severe or fatal injuries.

- Use switch contacts in utilization category AC-3 according to EN 60947-4-1 for switching the motor.
- When motors are powered by inverters, you must adhere to the wiring instructions in the frequency inverter operating instructions.

## ⚠ CAUTION



The surfaces on the drive can be very hot during operation.

Risk of burns.

- Let the motor cool down sufficiently before you start working on it.

## NOTICE

The maximum limit torque ($M_{pk}$) and the maximum current ($I_{max}$) may not be exceeded, not even for acceleration.

The drive system might be damaged.

- Limit the maximum current at the inverter.

## INFORMATION

Limit the maximum speed at the inverter. For information on the procedure, refer to the documentation of the inverter.

25957074/EN – 06/2019



SEW EURODRIVE

## INFORMATION

When using DR..250 – 280, DRN250 – 280 motors with BE brake and encoder, observe the following information:

- Only operate the brake as holding brake.
- The brake may only be applied when the speed is ≤ 20 $min^{-1}$. For higher speeds, please contact SEW-EURODRIVE.
- Emergency stops from higher motor speeds are permitted.

## 6.1 Before startup

Prior to startup make sure that:

- The drive is undamaged and not blocked.
- Any transport locks have been removed.
- The measures stipulated in chapter "Preliminary work after longer periods of storage" (→ 🗎 33) are performed after storage periods longer than 9 months.
- All connections have been made correctly.
- The direction of rotation of the motor/gearmotor is correct.
  - Motor rotating clockwise: U, V, W (T1, T2, T3) to L1, L2, L3
- All protective covers are installed correctly.
- All motor protection equipment is active and set for the rated motor current.
- There are no other sources of danger.
- Loose elements like keys are appropriately secured.
- The brake is not manually released.
  - The set screw of /HF option is loosened correctly.
  - The hand lever of the /HR option has been removed and correctly attached to the stator using the designated clamps.

## 6.2 Motors with reinforced bearing

## NOTICE

Damage to bearings due to impermissible heating of bearing and motor.

Bearing damage.

- Do not operate cylindrical roller bearings without overhung load.

25957074/EN – 06/2019

## 6.3 Motors with backstop /RS

An /RS backstop is used to block/prevent a direction of rotation of the motor. The direction of rotation is indicated by an arrow on the fan guard of the motor or on the device housing.

Observe the direction of rotation of the end shaft and the number of stages when you mount the motor to the gear unit. Do not start up the motor in blocking direction (note the correct phase angle when connecting the motor). For inspection purposes, you can operate the backstop once with half the motor voltage in blocking direction.

If a conversion is required to change the blocking direction, follow the instructions in chapter "Altering the blocking direction on motors with a backstop" (→ 🗎 219).

25957074/EN – 06/2019

# 7 Inspection/maintenance



**⚠ WARNING**

Risk of injury if the drive starts up unintentionally.

Severe or fatal injuries.

- Before you start working on the unit, disconnect the motor and all connected options from the power supply.
- Secure the motor against unintended power-up.



**⚠ CAUTION**

Inhaling, swallowing brake abrasion when releasing the brake.

Irritation of the respiratory tract and respiratory organs.

- ✓ Wear a respirator of class FFP2 during the maintenance of brakemotors.
- Avoid swirling of the brake abrasion.
- Remove the brake abrasion with suitable extraction systems or damp cloths that bind dust.
- Make sure that there is adequate ventilation in the work environment.



**⚠ CAUTION**

The surfaces on the drive can be very hot during operation.

Risk of burns.

- Let the motor cool down sufficiently before you start working on it.

**NOTICE**

Damage to the oil seals if the temperature is too low during installation.

Possible damage to the oil seals.

- Before assembly, make sure that ambient temperature and the temperature of the oil seal are not below 0 °C.



**INFORMATION**

Apply grease with a grease depot to the lip of the oil seal before assembly. For further information on lubricants, refer to chapter "Order information for lubricants, anti-corrosion agents and sealants" (→ 🗎 245).



**INFORMATION**

Friction disks at brakemotors may only be replaced by the SEW-EURODRIVE service.

Repairs

Only SEW-EURODRIVE repair workshops or plants that provide the necessary expertise may repair or modify the motor/brakemotor.

Before you take the motor back into operation, check to see if the regulations have been adhered to. Confirm the compliance with a corresponding identification on the motor or by issuing a test report.

25957074/EN – 06/2019

Always perform safety and functional checks following all maintenance and repair work (thermal protection).

25957074/EN – 06/2019

## 7.1 Inspection and maintenance intervals

The following table lists the inspection and maintenance intervals:

| Device/part of device | Time interval | What to do? |
|---|---|---|
| Brake BE02 | • **If used as a working brake:**<br>At least every 3000 operating hours[1)]<br>• **If used as a holding brake:**<br>Every 0.5 to 4 years, depending on the operating conditions[1)] | Inspect the brake<br>• Measure the brake lining carrier thickness<br>• Inspect the switch contacts and replace them, if necessary (e.g. in case of burnout) |
| Brake BE03 | • **If used as a working brake:**<br>At least every 3000 operating hours[1)]<br>• **If used as a holding brake:**<br>Every 0.5 to 4 years, depending on the operating conditions[1)] | Inspect the brake<br>• Measure the working air gap<br>• Inspect the switch contacts and replace them, if necessary (e.g. in case of burnout) |
| Brakes BE05 – BE122 | • **If used as a working brake:**<br>At least every 3000 operating hours[1)]<br>• **If used as a holding brake:**<br>Every 0.5 to 4 years, depending on the operating conditions[1)] | Inspect the brake:<br>• Measure the brake disk thickness<br>• Brake disk, lining<br>• Measure and set the working air gap<br>• Pressure plate<br>• Driver/gearing<br>• Pressure rings<br>• Suck off any abrasion<br>• Inspect the switch contacts and replace them, if necessary (e.g. in case of burnout) |
| Motor | • **Every 10000 operating hours**[2)3)] | Motor inspection:<br>• Check rolling bearing and change if necessary<br>• Replace the oil seal<br>• Clean the cooling air ducts |
| Drive | • Differing[3)] | • Touch up or renew the surface/anti-corrosion coating<br>• Check and clean the air filter.<br>• If applicable, clean condensation drain hole at the bottom of the fan guard<br>• Clean clogged bores |
| Connection cables | • Regularly | Inspect cables<br>• Check for damages and replace the connection cable if necessary. |

1) Wear times are subject to many factors and can be quite short. The system manufacturer must calculate the required inspection/maintenance intervals individually in accordance with the project planning documents.

2) For the DR../DRN225 – 315 motors with relubrication device, note the shortened relubrication periods in chapter "Bearing lubrication".

3) The interval depends on outer influences and can be very short, e.g. in the event of high dust concentration in the environment.

If you open the motor during inspection/maintenance, you have to clean it before you close it.

25957074/EN – 06/2019

## 7.2 Bearing lubrication

### 7.2.1 Bearing lubrication for DR..71 – 280, DRN63 – 280, DR2..56 – 80 motors

In standard design, the bearings are lubricated for life.

### 7.2.2 Bearing lubrication for DR..250 – 315, DRN225 – 315 motors with relubrication device /NS

Motors of nominal sizes 225, 250, 280, and 315 can be equipped with a relubrication device. The following figure shows the positions of the lubrication devices.

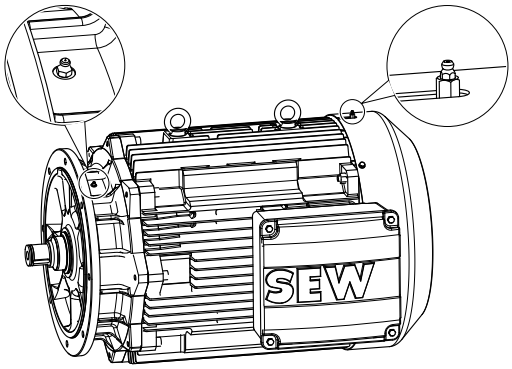


*9007199630094091*

Under normal operating conditions and at an ambient temperature between -20 °C to +40 °C, SEW-EURODRIVE uses Mobil Polyrex EM (K2P-20 DIN 51825), a polyurea-based mineral high-performance, high-temperature grease for initial lubrication.

For motors in the low temperature range up to -40 °C, SEW-EURODRIVE uses SKF GXN or LGHP2, which are also a polyurea-based mineral greases.

**Relubrication**

The grease can be purchased from SEW-EURODRIVE in 400 g cartridges. For the relevant order information, refer to chapter "Order information for lubricants, anti-corrosion agents and sealants" (→ 🗎 245).

## INFORMATION

Only mix lubricants of the same thickness type, the same base oil and the same consistency (NLGI class).

Grease the motor bearings in accordance with the information on the lubricant plate. The used grease collects inside the motor and should be removed every 6 to 8 relubrication cycles during an inspection. Each time you relubricate the bearings, ensure that the bearing is two-thirds full.

Start up the motors slowly after lubrication so that the grease is distributed evenly.

The relubrication channels leading the grease from the grease nipples to the bearings must always be filled with grease. This is usually ensured be adhering to the relubrication intervals. During maintenance work, the grease may remain in the channels and does not need to be removed.

25957074/EN – 06/2019

**Re-lubrication period**

For the relubrication intervals of the bearings, adhere to the requirements stated in the table:

- Ambient temperature: -20 °C to +40 °C
- Rated speed that corresponds to that of a 4-pole AC motor
- Normal load

In case of higher ambient temperatures, higher speeds, or larger loads, the relubrication intervals are shorter. Use 1.5 times of the stated quantity for the initial filling.

The relubrication channels leading the grease from the grease nipples to the bearings must always be filled with grease. This is usually ensured be adhering to the relubrication intervals. During maintenance work, the grease may remain in the channels and does not need to be removed.

| Motors with option | Horizontal mounting position | | Vertical mounting position | |
|---|---|---|---|---|
| | Duration | Quantity | Duration | Quantity |
| **DR../DRN225 – 315 /NS** | 5000 h | 50 g | 3000 h | 70 g |
| **DR../DRN225 – 315 /ERF /NS** | 3000 h | 50 g | 2000 h | 70 g |

## 7.3 Reinforced bearings

### NOTICE

Damage to bearings due to impermissible heating of bearing and motor.

Bearing damage.

- Do not operate cylindrical roller bearings without overhung load.

In the /ERF (reinforced bearing) option, cylindrical rolling bearings are installed on the A-side. The reinforced bearings must have overhung load applied to them and must never be operated without overhung load.

The reinforced bearings are only offered with the /NS (relubrication) option so as to facilitate optimal lubrication of the bearing.

Observe the notes on bearing lubrication in chapter "Bearing lubrication for DR..250 – 315, DRN225 – 315 motors with relubrication device /NS" (→ 🗎 125).

25957074/EN – 06/2019

## 7.4 Motor and brake maintenance – preliminary work



**⚠ WARNING**

Risk of injury if the drive starts up unintentionally.

Severe or fatal injuries.

- Before you start working on the unit, disconnect the motor and all connected options from the power supply.
- Secure the motor against unintended power-up.

### 7.4.1 Removing/installing the fan guard for DRN63 – 71, DR2..63 – 71 motors

The fan guard for DRN63 – 71, DR2..63 – 71 motors is attached using clips.

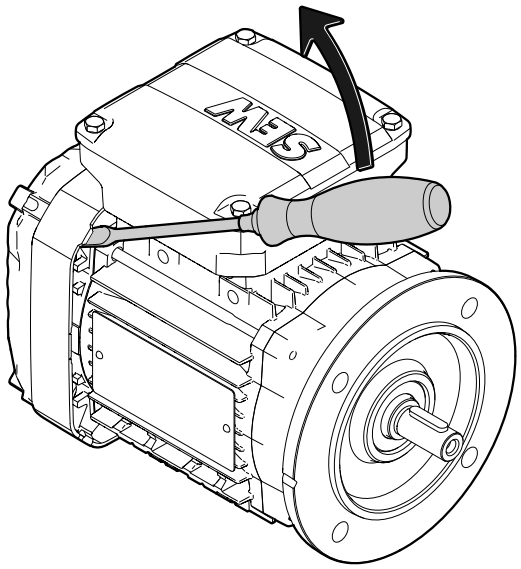

*9007222099799435*

#### Removing the fan guard

Proceed as follows to remove the fan guard:

1. Using a suitable tool, lever out at least 2 adjacent detents.
   - ⇨ **With EI.. encoder option**: Lever out the detent pair opposite of the terminal box.
2. Pull the detents over the latching cams of the endshield.
   - ⇨ In case of DRN63, DR2..63, loosening all 4 fan guard connections may be required to remove the fan guard, depending on the option.

To request for a replacement in case the fan guard is damaged, contact SEW-EURODRIVE.

#### Reassembly

- ✓ The rectangular marking on the fan guard [2] must point in direction of the terminal box [1].

1. Evenly push the detents of the fan guard onto the latching cams until they snap in.

25957074/EN – 06/2019

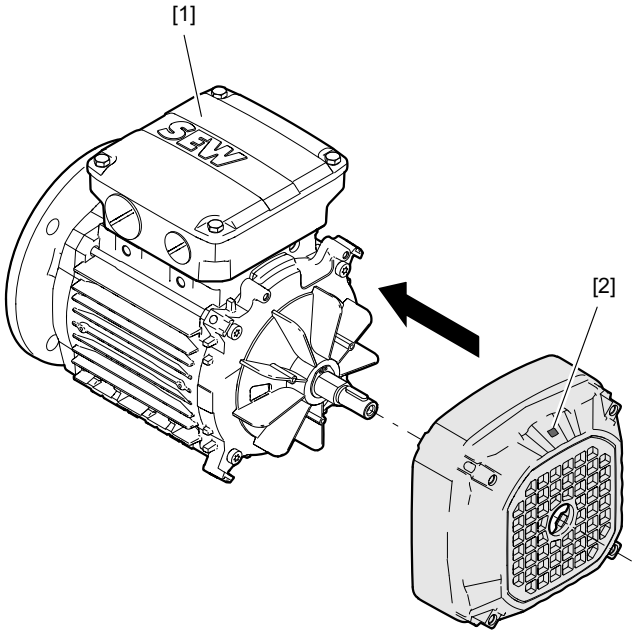


27830526347

### 7.4.2 Removing/installing the plastic fan for DR..71, DRN63 – 71, DR2..56 – 71 motors

The plastic fan [2] for DR..71, DRN63 – 71, DR2..56 – 71 motors is attached using clips.

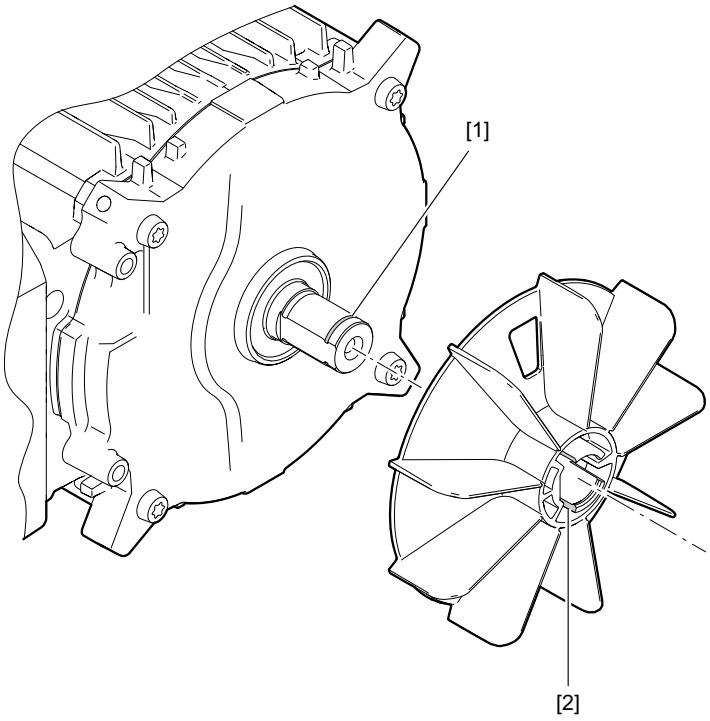


23761871115

**Removing the fan**

Proceed as follows to remove the plastic fan:

✓ Required tools: 1 puller.

25957074/EN – 06/2019

1. Pull off the fan [2] from the shaft [1] using the puller.
   ⇨ The detent is pulled out of the latching groove.
2. Check that the detent of the fan is not damaged.

To request a replacement in case the fan is damaged, please contact SEW-EURODRIVE.

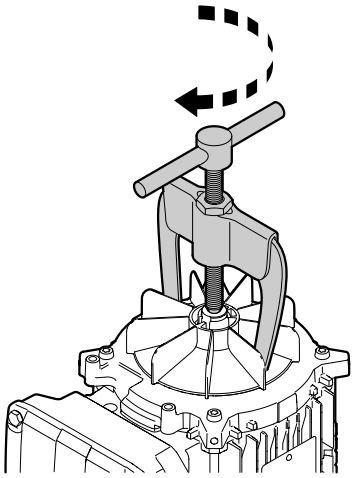

*23761866251*

**Reassembly**

✓ Required tools: 1 hammer, 1 hammer insertion tool.

1. Position the fan centrally on the shaft using the precentering.
2. Mount the fan to the shaft using the plain hammer insertion tool and the hammer. The hammer insertion tool must not be placed on the detent but must have a larger diameter.
   ⇨ When the detent snaps into the latching groove, a click can be clearly heard.
3. Check if the detent is snapped into the latching groove.

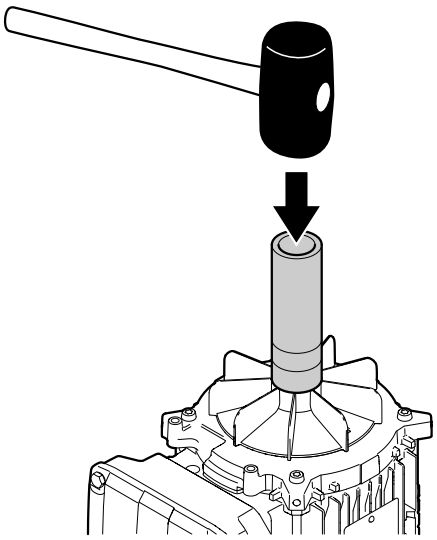

*23761868683*

25957074/EN – 06/2019

### 7.4.3 Removing rotary encoders from DR..71 – 132, DRN80 – 132S motors

The following figure illustrates the disassembly procedure using the ES7. rotary encoder as an example:

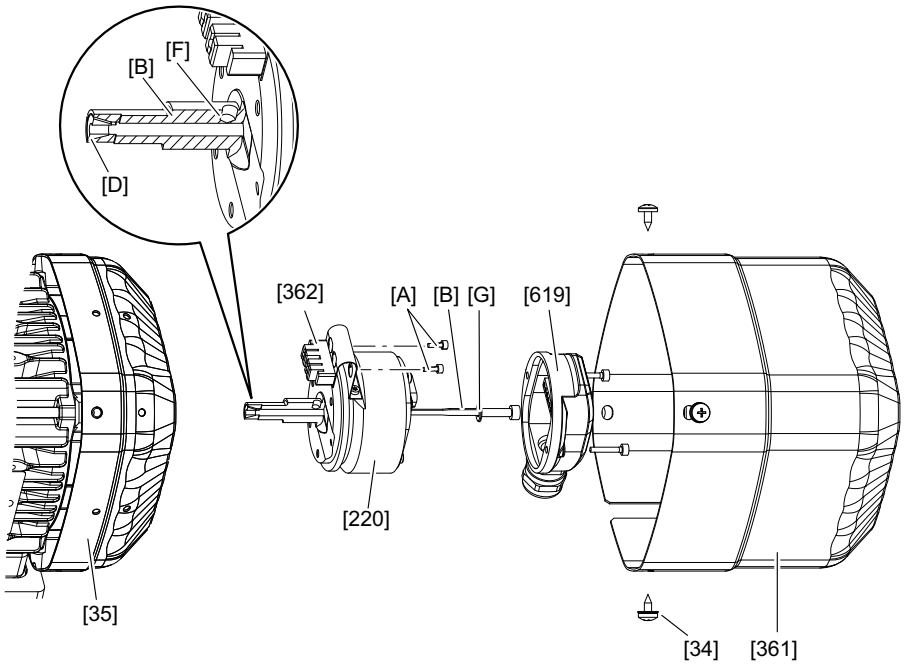


*9007201837842187*

[34] Tapping screw
[35] Fan guard
[220] Encoder
[361] Safety cover
[362] Expansion anchor
[619] Connection cover
[A] Retaining screws for the torque bracket
[B] Central retaining screw
[D] Cone
[F] Bore
[G] Tooth lock washer

**Disassembling ES7./AS7.encoders**

1. Remove the safety cover [361], or the forced cooling fan if required.
2. Loosen the screws of the connection cover [619] and remove it. Do not disconnect the encoder cable.
3. Make sure the cone [D] doesn't fall out while the central retaining screw [B] is loosened. Loosen the central retaining screw [B] by 2 – 3 turns. Loosen the cone [D] by tapping lightly onto the screw head.
4. To loosen the expansion anchor [362], remove the retaining screw of the torque bracket [A]. Carefully pull the encoder [220] from the rotor bore.

**Reassembly**

1. Apply a contact corrosion prevention compound, e.g. NOCO® fluid to the encoder pin.
2. Place the expansion anchor [362] at the torque bracket of the encoder.
3. Push the encoder into the bore in the shaft end to the stop.
4. Tighten the central retaining screw [B] with the inserted tooth lock washer [G].
   ⇨ Tightening torque 2.75 Nm.
5. Press the expansion anchor [362] into the fan guard [35] and check if it is seated correctly.
6. Screw the retaining screws of the torque bracket [A] into the expansion anchor [362] until the stop. Tighten the retaining screws of the torque bracket [A].
   ⇨ Tightening torque 2.25 Nm.
7. Screw on the connection cover [619].
   ⇨ Tightening torque 2.25 Nm.
8. Mount the safety cover [361] onto the forced cooling fan.

25957074/EN – 06/2019

### 7.4.4 Removing rotary encoders from DR..160 – 280, DRN132M – 280 motors

The following figure illustrates the disassembly procedure using the EG7. rotary encoder as an example:

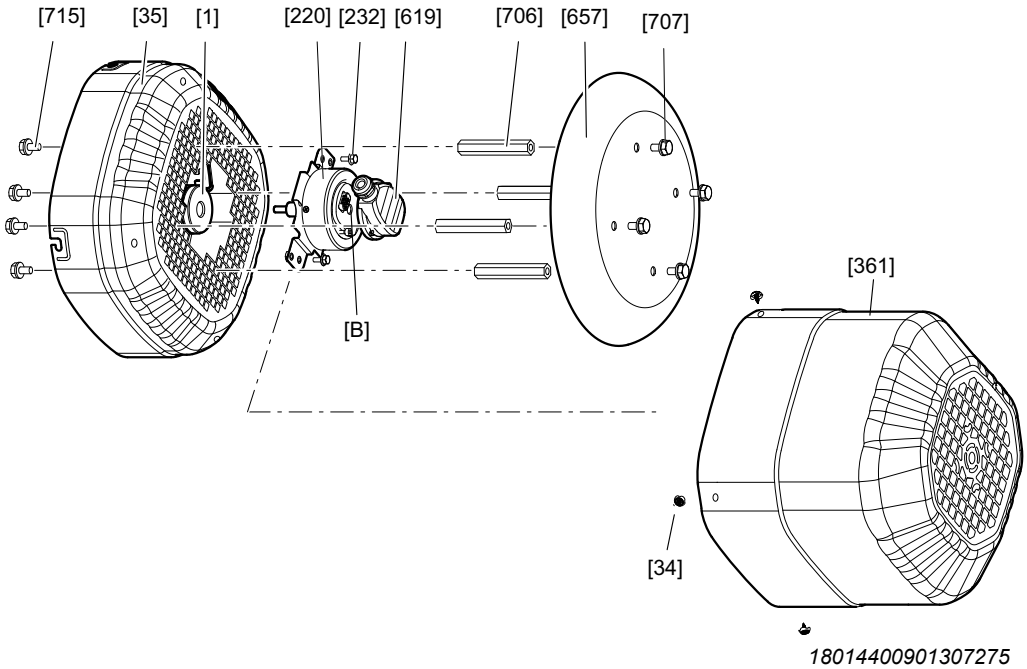


*18014400901307275*

| | | | |
|---|---|---|---|
| [1] | Rotor | [B] | Central retaining screw |
| [34] | Tapping screw | [619] | Connection cover |
| [35] | Fan guard | [657] | Canopy |
| [220] | Encoder | [706] | Spacer bolt |
| [232] | Screws | [707] [715] | Screws |
| [361] | Safety cover | [A] | Screws |

**Removing EG7., AG7. encoders**

1. Proceed as follows, depending on the design:
   - ⇨ **With canopy:** Remove the screws [707] to disassemble the canopy [657]. If required, counter using a hexagon wrench SW13 on the spacer bolt [706].
   - ⇨ **Without canopy:** Remove the screws [34] to disassemble the safety cover [361].
2. Remove the forced cooling fan if required.
3. Loosen the screws of the connection cover [619] and remove it. Do not disconnect the encoder cable.
4. Remove the retaining screws of the torque bracket [232].
5. Loosen the central retaining screw [B] by 2 – 3 turns to pull off the encoder [220].

**Reassembly**

1. Apply a contact corrosion prevention compound, e.g. NOCO® fluid to the encoder pin.
2. Push the encoder into the bore in the shaft end to the stop.
3. Tighten the central retaining screw [B] with the inserted tooth lock washer [G].
   ⇨ Tightening torque 8 Nm.
4. Tighten the retaining screws of the torque bracket [232].
   ⇨ Tightening torque 6 Nm.
5. Screw on the connection cover [619].
   ⇨ Tightening torque 2.25 Nm.
6. Mount the safety cover [361] onto the forced cooling fan.
7. Mount the canopy [657] if necessary.

25957074/EN – 06/2019

### 7.4.5 Removing the rotary encoder from DR..160 – 225, DRN132M – 315 motors with /V forced cooling fan option

The following figure illustrates the disassembly procedure using the EG7. rotary encoder as an example:

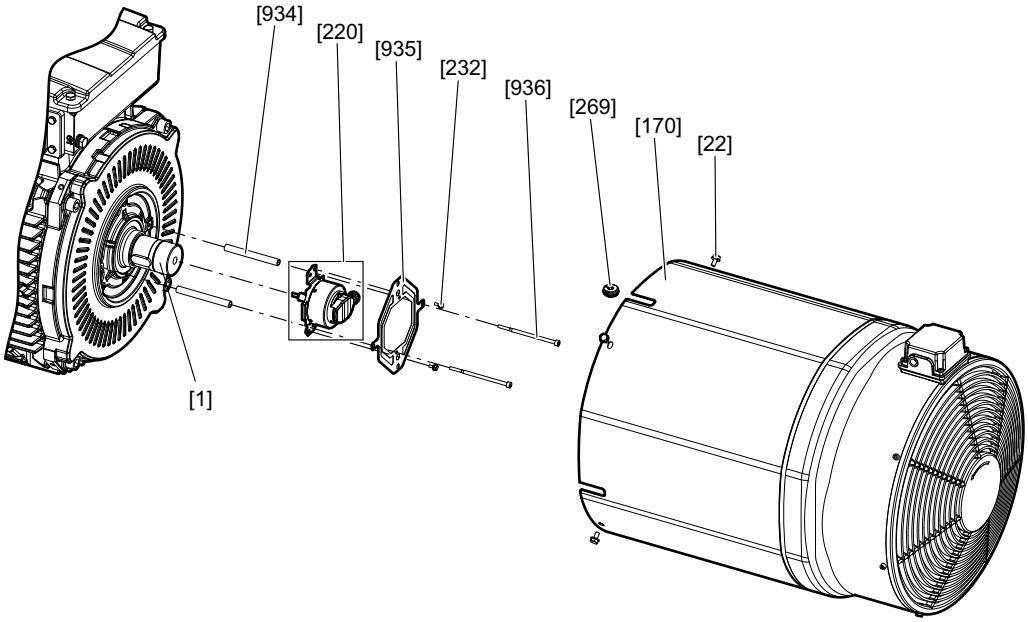


*9007206970702987*

| | | | |
|---|---|---|---|
| [22] | Screw | [935] | Torque bracket |
| [170] | Forced cooling fan guard | [936] | Screw |
| [232] | Screws | [934] | Spacer bushing |
| [269] | Cable grommet | [220] | Encoder |

**Removing EG7., AG7. encoders**

1. Remove the screws [22] to disassemble the forced cooling fan [170].
2. Remove the cable grommet [269] with the encoder cable from the forced cooling fan [170].
3. Remove the screws [232] and [936] to disassemble the torque bracket [935].
4. Loosen the screws of the connection cover [619] and remove it. Do not disconnect the encoder cable.
5. Loosen the central retaining screw [B] by 2 – 3 turns to pull off the encoder [220].

**Reassembly**

1. Apply a contact corrosion prevention compound, e.g. NOCO® fluid to the encoder pin.
2. Push the encoder into the bore in the shaft end to the stop.
3. Tighten the central retaining screw [B] with the inserted tooth lock washer [G].
   ⇨ Tightening torque 8 Nm.
4. Place the torque bracket [935] onto the spacer bushing [934] and tighten the screws [936].
   ⇨ Tightening torque 11 Nm.
5. Tighten the retaining screws of the torque bracket [232].
   ⇨ Tightening torque 6 Nm.
6. Insert the cable grommet [269] into the forced cooling fan [170].
7. Mount the forced cooling fan [170] and tighten the screws [22].
   ⇨ Tightening torque 28 Nm.

25957074/EN – 06/2019

### 7.4.6 Removing rotary encoders from DR..315, DRN315 motors

The following figure illustrates the disassembly procedure using the EH7. and AH7. rotary encoders as an example:

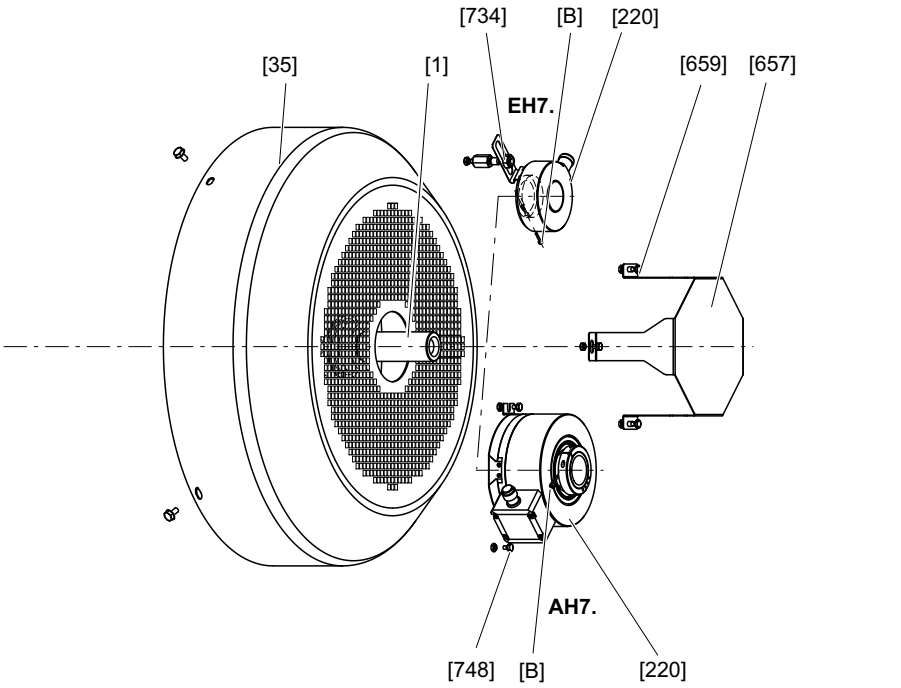


*18014398917111435*

| | | | |
|---|---|---|---|
| [35] | Fan guard | [659] | Screw |
| [220] | Encoder | [734] | Nut |
| [B] | Central retaining screw | [748] | Screw |
| [657] | Cover plate | | |

**Removing EH7., AH7. encoders**

1. Remove the screws [659] to disassemble the cover plate [657].
2. Depending on the design, remove the encoder [220] from the fan guard [35] as follows:
   - ⇨ **EH7.:** Remove the nut [734].
   - ⇨ **AH7.:** Remove screw [748].
3. Loosen the central retaining screw [B] by 2 – 3 turns to pull off the encoder [220].

25957074/EN – 06/2019

**Reassembly**

1. Push the encoder into the bore in the shaft end to the stop.
2. Tighten the central retaining screw [B].
   - ⇨ **EH7.:** Tightening torque 3 Nm.
   - ⇨ **AH7.:** Tightening torque 2 Nm.
3. Proceed as follows, depending on encoder:
   - ⇨ **EH7.:** Install the nut [734].
   - ⇨ **AH7.:** Insert and tighten screw [748].
4. Mount the cover plate [657] using the screws [659].

25957074/EN – 06/2019

### 7.4.7 Mounting/removing rotary encoders with XV../EV../AV.. encoder mounting adapter for DR..71 – 225, DRN71 – 225, DR2..71 – 80 motors

The following figure illustrates the disassembly procedure using a third-party encoder as an example:

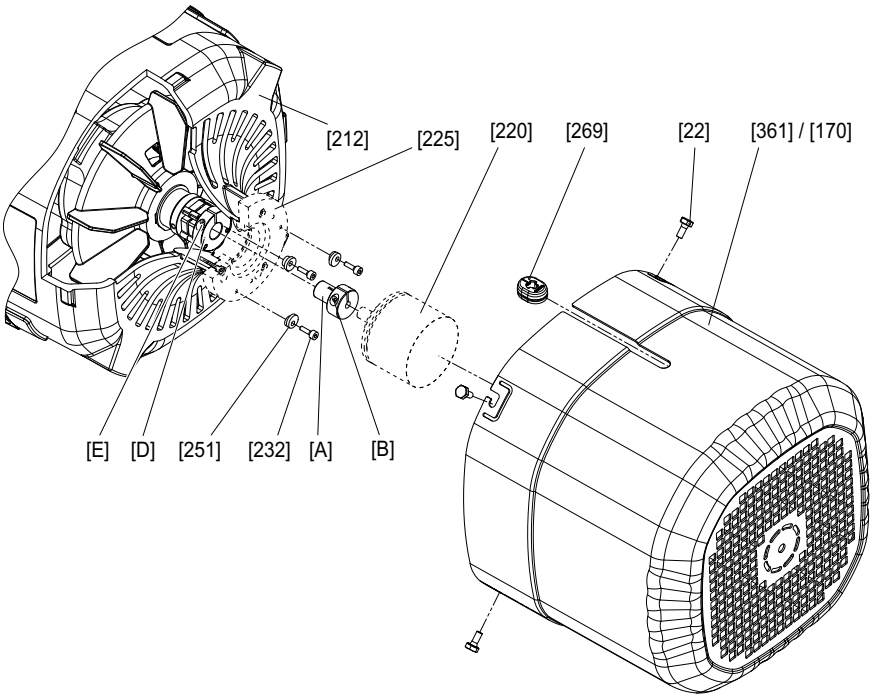


*9007202887906699*

| | | | |
|---|---|---|---|
| [22] | Screw | [361] | Safety cover (normal/long) |
| [170] | Forced cooling fan guard | [269] | Cable grommet |
| [212] | Fan guard with encoder mount | [A] | Adapter |
| [220] | Encoder | [B] | Clamping screw |
| [225] | Intermediate flange (not with XV1A) | [D] | Coupling (spread- or solid shaft coupling) |
| [232] | Retaining screws (enclosed with XV1A and XV2A) | [E] | Clamping screw |
| [251] | Conical spring washers (enclosed with XV1A and XV2A) | | |

#### Removing the XV.., EV.., AV.. encoders

1. Remove the safety cover [361], or the forced cooling fan if required.
2. Loosen the retaining screws [232] and turn the conical spring washers [251] outwards.
3. Loosen the clamping screw [E] of the coupling.
4. Remove adapter [A] and encoder [220].

#### Reassembly

1. Proceed as described in chapter "Encoder mounting adapter" (→ 🗎 40) to mount the encoder.

### 7.4.8 Mounting/removing rotary encoders with XV../EV../AV.. encoder mounting adapter for DR..250 – 280, DRN250 – 280 motors

The following figure illustrates the disassembly procedure using a third-party encoder as an example:

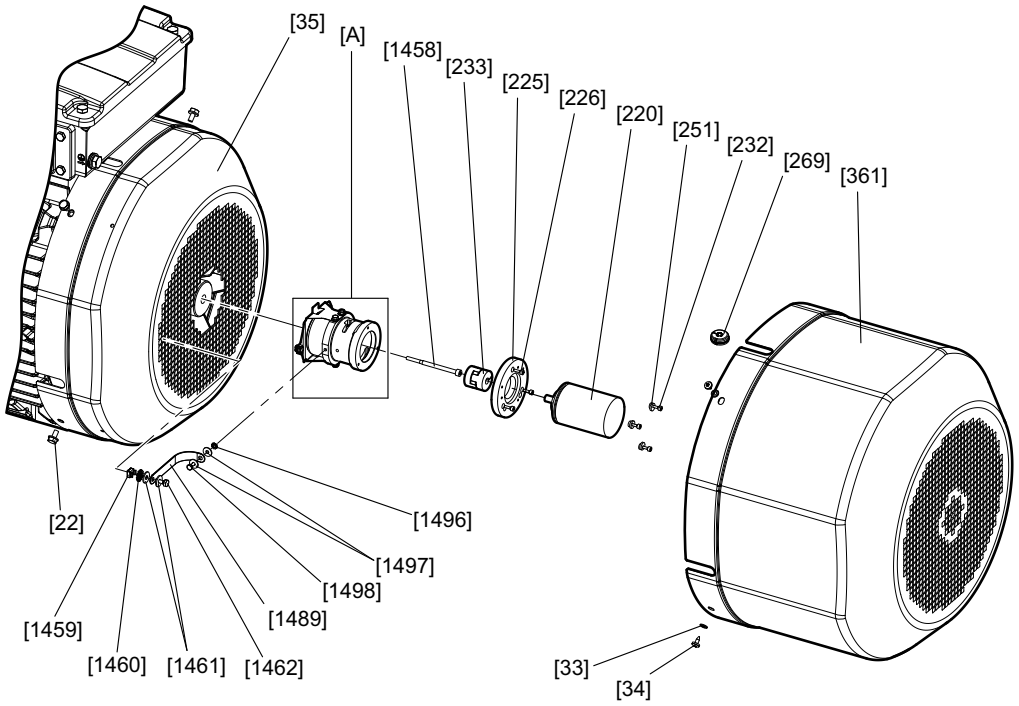


*18014406225445899*

| | | | |
|---|---|---|---|
| [22] | Screw | [361] | Safety cover (normal/long) |
| [33] | Washer | [1458] | Screw |
| [34] | Screw | [1459] | Cage nut |
| [35] | Fan guard | [1460] | Serrated lock washer |
| [220] | Encoder | [1461] | Washer |
| [225] | Intermediate flange (optional) | [1462] | Screw |
| [226] | Screw | [1489] | Ground strap |
| [232] | Screws (enclosed with .V1A and .V2A) | [1496] | Serrated lock washer |
| [233] | Coupling | [1497] | Washer |
| [251] | Conical spring washers (enclosed with .V1A and .V2A) | [1498] | Screw |
| [269] | Cable grommet | [A] | Encoder mounting adapter |

#### Removing the encoder mounting adapter

1. Remove the screws [34] to disassemble the safety cover [361].
2. Remove the encoder [220], see chapter "Removing EV.., AV.. encoders" (→ 🗎 141).
3. In order to remove the ground strap [1489] from the encoder mounting adapter [A], loosen the serrated lock washer [1496], washer [1497], and screw [1498].
4. Remove the screws [22] to disassemble the fan guard [35].
5. Loosen the screw [1458] to remove the encoder mounting adapter [A].
   - ⇨ **If the encoder mounting adapter cannot easily be removed:** Screw an M6 set screw (length 20 – 35 mm) hand tight in the rotor bore. Screw an M8 set screw (length > 10 mm) into the same bore and push the encoder mounting adapter [A] off the rotor [1]. Remove the M6 set screw from the rotor bore.

25957074/EN – 06/2019

**Removing EV.., AV.. encoders**

1. Remove the screws [34] to disassemble the safety cover [361].
2. Pull out the cable grommet [269] together with the encoder cable from the safety cover [361].
3. Loosen the retaining screws [232] and turn the conical spring washers [251] outwards.
4. Loosen the screw at the coupling clamping hub [233] at the encoder end, the screw can be accessed through the slots of the encoder mounting adapter [A].
5. Remove the encoder [220] from the encoder mounting adapter [A] or the intermediate flange [225].

**Reassembly**

1. Proceed as described in chapter "Encoder mounting adapter" (→ 🗎 40) to mount the encoder.

## INFORMATION

When re-installing the fan guard [35], make sure that the torque is supported:

The damping elements [1486] on both sides of the encoder mounting adapter [A] must engage with the ventilation grid (see figure below). The torque plate [935] must protrude from the grid to the left and to the right of the damping element.

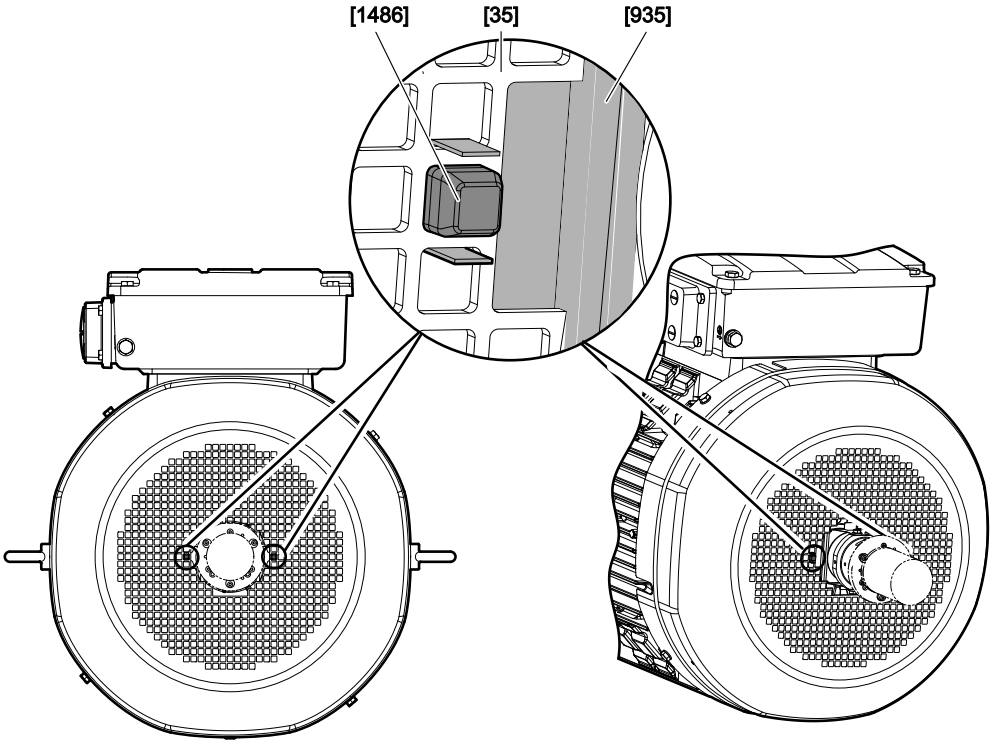


*9007207498780299*

### 7.4.9 Mounting/removing the rotary encoder with EV../AV../XV.. encoder mounting adapter for DR..250 – 280, DRN250 – 280 motors with /V forced cooling fan option

The following figure illustrates the disassembly procedure using a third-party encoder as an example:

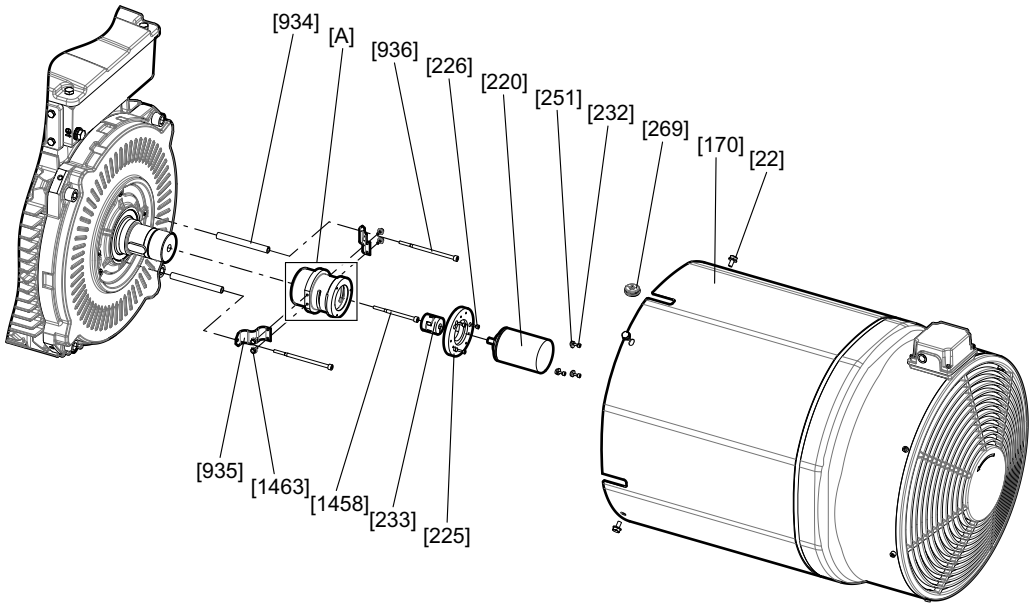


*7715965835*

| | | | |
|---|---|---|---|
| [22] | Screw | [269] | Cable grommet |
| [170] | Forced cooling fan guard | [934] | Spacer bushing |
| [220] | Encoder | [935] | Torque bracket |
| [225] | Intermediate flange (optional) | [936] | Screw |
| [226] | Screw | [1458] | Screw |
| [232] | Screws (enclosed with .V1A and .V2A) | [1463] | Screw |
| [233] | Coupling | [A] | Encoder mounting adapter |
| [251] | Conical spring washers (enclosed with .V1A and .V2A) | | |

**Removing the encoder mounting adapter**

1. Remove the screws [22] to disassemble the forced cooling fan [170].
2. Remove the cable grommet [269] with the encoder cable from the forced cooling fan [170].
3. Loosen the retaining screws [232] and turn the conical spring washers [251] outwards.
4. Loosen the screw at the coupling clamping hub [233] at the encoder end, the screw can be accessed through the slots of the encoder mounting adapter [A].
5. Remove the encoder [220] from the encoder mounting adapter [A] or the intermediate flange [225].
6. Loosen the screws [1458] and [936] to remove the encoder mounting adapter [A]. The torque brackets [935] and screws [1463] can remain at the encoder mounting adapter [A].
   - ⇨ **If the encoder mounting adapter cannot easily be removed:** Screw an M6 set screw (length 20 – 35 mm) hand tight in the rotor bore. Screw an M8 set screw (length > 10 mm) into the same bore and push the encoder mounting adapter [A] off the rotor [1]. Remove the M6 set screw from the rotor bore.

25957074/EN – 06/2019

**Removing EV.., AV.., and XV. encoders**

1. Remove the screws [22] to disassemble the forced cooling fan [170].
2. Remove the cable grommet [269] with the encoder cable from the forced cooling fan [170].
3. Loosen the retaining screws [232] and turn the conical spring washers [251] outwards.
4. Loosen the screw at the coupling clamping hub [233] at the encoder end, the screw can be accessed through the slots of the encoder mounting adapter [A].
5. Remove the encoder [220] from the encoder mounting adapter [A] or the intermediate flange [225].

**Reassembly**

1. Proceed as described in chapter "Encoder mounting adapter" (→ 🗎 40) to mount the encoder.

25957074/EN – 06/2019

### 7.4.10 Mounting/removing hollow shaft encoders with XH.A encoder mounting adapter for DR..71 – 225, DRN71 – 225, DR2..71 – 80 motors

The following figure illustrates the disassembly procedure using a third-party encoder as an example:

Encoder mounting with XH1A encoder mounting adapter

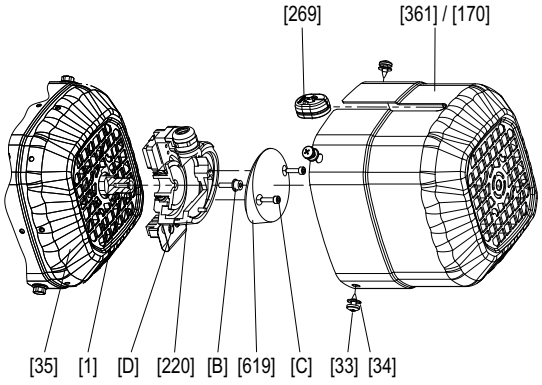


Encoder mounting with XH7A and XH8A encoder mounting adapter

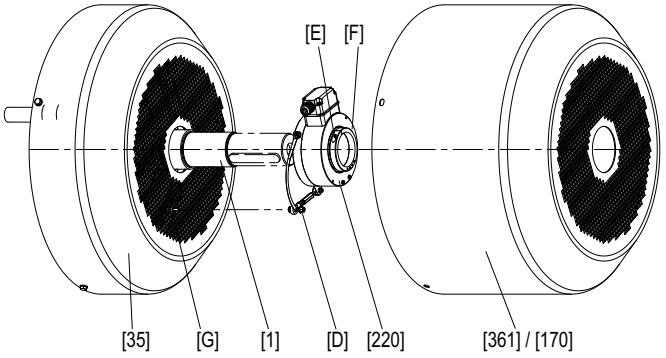


*9007202887902859*

| | | | |
|---|---|---|---|
| [1] | Rotor | [B] | Central retaining screw |
| [33] | Tapping screw | [619] | Connection cover |
| [34] | Washer | [C] | Screw connection cover |
| [35] | Fan guard | [D] | Torque bracket screws |
| [170] | Forced cooling fan guard | [E] | Screw |
| [220] | Encoder | [F] | Clamping ring |
| [269] | Cable grommet | [G] | Nut of the torque bracket |
| [361] | Safety cover | | |

**Removing hollow shaft encoders form XH1A encoder mounting adapter**

1. Remove the safety cover [361], or the forced cooling fan if required.
2. Loosen the screws of the connection cover [619] and remove it. Do not disconnect the encoder cable.
3. Screw out the central retaining screw [B].
4. Remove the torque bracket screws [D].
5. Pull the torque bracket off.
6. Remove the encoder [220] from the shaft end.

25957074/EN – 06/2019

**Removing hollow shaft encoders from XH7A and XH8A encoder mounting adapter**

1. Remove the safety cover [361], or the forced cooling fan if required.
2. Loosen the screw [E] from clamping ring [F].
3. Remove the torque bracket screws [D].
4. Remove the encoder [220] from the shaft end.

**Reassembly of hollow shaft encoders to XH1A encoder mounting adapter**

1. Push the encoder [220] on the shaft end.
2. Screw in the screw [D] to mount the torque bracket.
3. Tighten the central retaining screw [B].
   ⇨ Tightening torque 2.9 Nm
4. Screw on the connection cover [619].
   ⇨ Tightening torque 3 Nm.
5. Mount the safety cover [361] onto the forced cooling fan.

**Reassembly of hollow shaft encoders to XH7A and XH8A encoder mounting adapter**

1. Push the encoder [220] on the shaft end.
2. Screw in the screw [D] to mount the torque bracket.
3. Remove the screw [E] from clamping ring [F].
   ⇨ Tightening torque 5 Nm.
4. Mount the safety cover [361] onto the forced cooling fan.

25957074/EN – 06/2019

### 7.4.11 Encoder mounting adapter EK8A

The encoder mounting adapter EK8A...

Content of the accessory bag [1634]

- Screws [232] for fastening the torque arm of the encoder [220]
- from size DRN180: Insulation coupling [1891]

#### Mounting the encoder mounting adapter EK8A

1. Unscrew the screws [22].
2. Remove the fan guard [35] from the motor.
3. Remove the protection cap [1143] from the recess of the fan guard [35].
   ⇨ Dispose of the protection cap [1143].
4. Remove the closing plug [950] from the rotor [1].
   ⇨ Dispose of the closing plug [950].

Then proceed with the installation process as described in chapter "Mounting cone shaft encoders EK8./AK8.".

25957074/EN – 06/2019

### 7.4.12 Removing and mounting cone shaft encoders of motors DRN71 – 132S, DR2..17 – 80

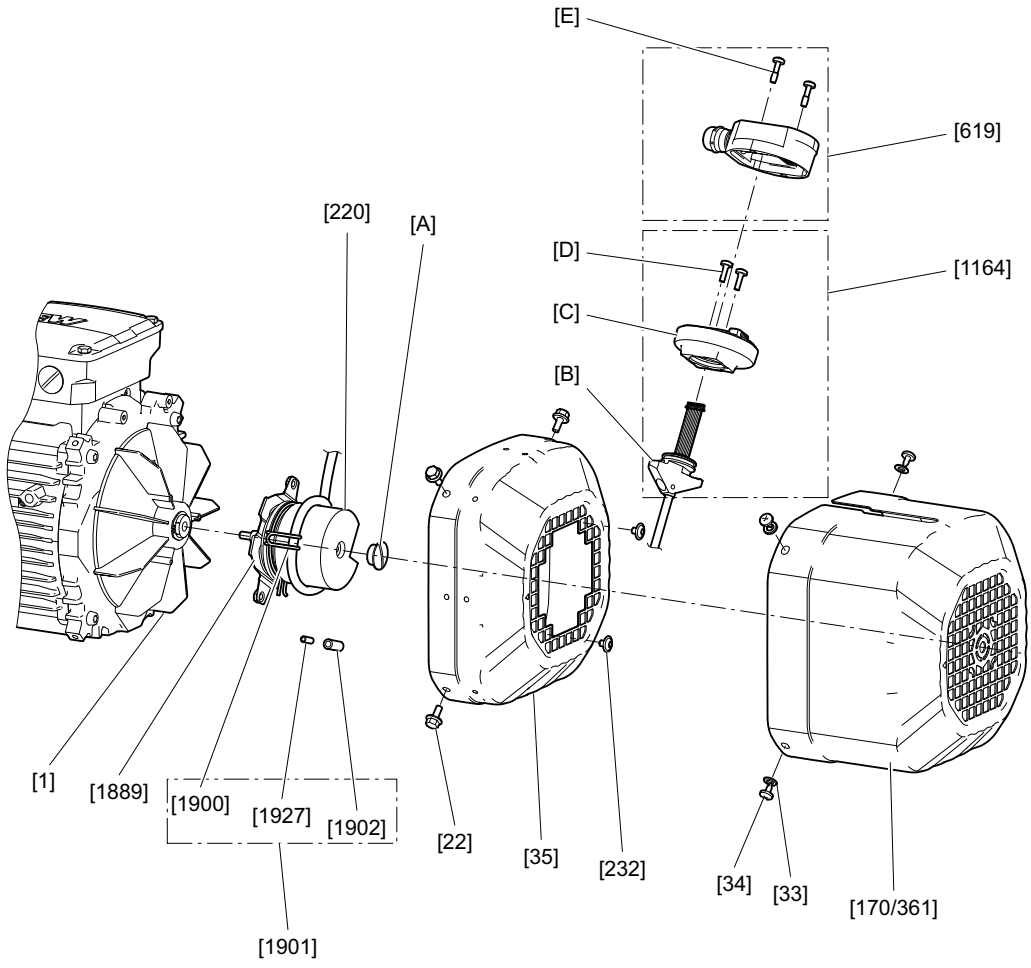


*28519543819*

| | | | |
|---|---|---|---|
| [1] | Rotor | [1889] | Torque arm |
| [22] | Screw (hexagonal) | [1900] | Cable retainer |
| [33] | Washer | [1901] | Accessory bag |
| [34] | Screw (cross recess) | [1902] | Threaded sleeve |
| [35] | Fan guard | [1927] | Set screw |
| [170] | Forced cooling fan | [A] | Screw plug |
| [220] | Encoder | [B] | T-slot nut |
| [232] | Screw (hexalobular) | [C] | Lower part |
| [361] | Safety cover | [D] | Screw |
| [619] | Connection cover | [E] | Screw |
| [1164] | Connection adapter | | |

**Removing encoder EK8./AK8.**

1. Unscrew the screws [E].
2. Remove the connection cover [619] from the connection adapter [1164].
3. Loosen the screws [D] in the lower part [C].
   ⇨ Only unscrew the screws [D] to such an extent that the connection adapter [1164] can be moved in the recess of the safety cover [361].
4. Unscrew the screws [34].
5. Remove the safety cover [361] from the motor. When doing this, slide the connection adapter [1164] out of the recess.

6. Unscrew the screws [232].
7. Unscrew the screws [22].
8. Remove the fan guard [35] over the encoder [220]. Guide the connection adapter [1164] with the signal cable through the cutout of the fan guard [35].
9. Unscrew the central screw plug [A] of the encoder [220].
10. Loosen the central retaining screw of the encoder [220].
    ⇨ If the central retaining screw of the encoder [220] cannot be loosened, counter-tighten the spanner flat SW10 of the encoder shaft.
11. Loosen the cone connection.
    ⇨ Encoder EK8., AK8W, AK8Y: To loosen the cone connection, continue turning the central retaining screw of the encoder [220] counterclockwise.
    ⇨ Encoder AK8H: Continue turning the central retaining screw of the encoder [220] counterclockwise. To loosen the cones, screw an M6 screw (≥ 70 mm long) into the bore.
12. Remove the encoder [220] from the rotor [1].

**Mounting encoder EK8./AK8.**

1. Clean the cone of the encoder [220] and the rotor [1].
2. Remove the central screw plug [A].
3. Insert the encoder [220] into the conical bore of the rotor [1].
4. To secure the encoder [220] in place, tighten the central retaining screw.
    ⇨ Counter-tighten the spanner flat SW 30 of the insulation coupling.
    ⇨ Tightening torque 3.3 Nm.
5. To seal the encoder [220], screw in the central screw plug [A].
    ⇨ Tightening torque 1.8 Nm.
6. Mount the fan guard [35] over the encoder [220]. When doing this, guide the connection adapter [1164] with the signal line through the central grille cutout of the fan guard [35].
7. Use the screws [22] to secure the fan guard [35] to the rear endshield or brake endshield [42] of the motor.
    ⇨ For metal hoods: Tightening torque 3.3 Nm.
    ⇨ For plastic hoods: Tightening torque 2 Nm.
8. Screw the screws [232] through the grille of the fan guard [35] and into the nuts of the torque arm [1889].
    ⇨ If you need to turn the encoder [220] in order for the screws to reach the nuts of the torque arm, turn the encoder [220] clockwise.
    ⇨ Make sure the signal cable is of a sufficient length so that the connection adapter [1164] can be inserted into the recess of the safety cover [361].
    ⇨ Tightening torque 3.3 Nm.
9. Push the connection adapter [1164] up to the end of the recess facing away from the motor.

25957074/EN – 06/2019

10. Place the safety cover [361] onto the fan guard [35].
    ⇨ The arrow that is cast in the lower part [C] of the connection adapter [1164] indicates the direction of the subsequent cable outlet for the connection cover [619].
    ⇨ If you wish to change the direction of the cable outlet: Unscrew the screws [D]. Twist the lower part [C] against the T-slot nut [B]. Screw in the screws [D]. When doing so, only tighten the screws [D] lightly.
11. Secure the safety cover [361] in place by using the screws [34].
    ⇨ Tightening torque 2 Nm.
12. Turn the connection adapter [1164] clockwise up to the stop.
13. Secure the connection adapter [1164] in place by tightening the screws [D].
    ⇨ Tightening torque 2 Nm.
14. Place the connection cover [619] onto the connection adapter [1164].
15. Screw the screws [E] through the bore in the connection cover [619] and into the bore in the connection adapter [1164].
    ⇨ Tightening torque 2.5 Nm

**Removing encoder EK8./AK8. with optional forced cooling fan**

1. Unscrew the screws [E].
2. Remove the connection cover [619] from the connection adapter [1164].
3. Loosen the screws [D] in the lower part [C].
    ⇨ Only unscrew the screws [D] to such an extent that the connection adapter [1164] can be moved in the recess of the forced cooling fan [170].
4. Loosen the screws [22].
5. Unscrew the screws [34].
6. Remove the forced cooling fan [170] from the motor. When doing this, slide the connection adapter [1164] out of the recess.
7. Unscrew the screws [232].
8. Remove the signal cable from the slot of the cable retainer [1900].
9. Unscrew the screws [22].
10. Remove the fan guard [35] over the encoder [220]. Guide the connection adapter [1164] with the signal cable through the cutout of the fan guard [35].
11. Unscrew the central screw plug [A] of the encoder [220].
12. Loosen the central retaining screw of the encoder [220].
    ⇨ If the central retaining screw of the encoder [220] cannot be loosened, counter-tighten the spanner flat SW10 of the encoder shaft.
13. Loosen the cone connection.
    ⇨ Encoder EK8., AK8W, AK8Y: To loosen the cone connection, continue turning the central retaining screw of the encoder [220] counterclockwise.
    ⇨ Encoder AK8H: Continue turning the central retaining screw of the encoder [220] counterclockwise. To loosen the cones, screw an M6 screw (≥ 70 mm long) into the bore.
14. Remove the encoder [220] from the rotor [1].

25957074/EN – 06/2019

**Mounting encoder EK8./AK8. with optional forced cooling fan**

1. Clean the cone of the encoder [220] and the rotor [1].
2. Remove the central screw plug [A].
3. Insert the encoder [220] into the conical bore of the rotor [1].
4. To secure the encoder [220] in place, tighten the central retaining screw.
   - ⇨ Counter-tighten the spanner flat SW10 of the encoder shaft.
   - ⇨ Tightening torque 3.3 Nm.
5. To seal the encoder [220], screw in the central screw plug [A].
   - ⇨ Tightening torque 1.8 Nm.
6. Mount the fan guard [35] over the encoder [220]. When doing this, guide the connection adapter [1164] with the signal line through the central grille cutout of the fan guard [35].
7. Attach the screws [22] of the fan guard [35] to the rear endshield or brake endshield [42] of the motor.
8. Screw the screws [232] through the grille of the fan guard [35] and into the nuts of the torque arm [1889].
   - ⇨ If you need to turn the encoder [220] in order for the screws to reach the nuts of the torque arm, turn the encoder [220] clockwise.
   - ⇨ Make sure the signal cable is of a sufficient length so that the connection adapter [1164] can be inserted into the recess of the forced cooling fan [170].
   - ⇨ Tightening torque 3.3 Nm.
9. ⚠ **CAUTION!**
   Improper installation can cause damage to the equipment. Risk of damage to the signal cable. Insert the signal cable into the slot of the cable retainer [1900] in such a way that the signal cable does not come into contact with the rotating forced cooling fan.
10. To turn the cable retainer [1900], loosen the set screw [1927].
11. To secure the cable retainer [1900] in place, tighten the set screw [1927].
    - ⇨ Tightening torque 1.8 Nm.
12. Place the forced cooling fan [170] onto the fan guard [35].
13. Insert the connection adapter [1164] into the recess of the forced cooling fan [170]. The standard alignment of the recess points towards the terminal box.
    - ⇨ The arrow that is cast in the lower part [C] of the connection adapter [1164] indicates the direction of the subsequent cable outlet for the connection cover [619].
    - ⇨ If you wish to change the direction of the cable outlet: Unscrew the screws [D]. Twist the lower part [C] against the T-slot nut [B]. Screw in the screws [D]. When doing so, only tighten the screws [D] lightly.
14. Use the screws [22] to secure the fan guard [35] to the rear endshield or brake endshield [42] of the motor.
    - ⇨ For metal hoods: Tightening torque 3.3 Nm.
    - ⇨ For plastic hoods: Tightening torque 2 Nm.
15. Secure the forced cooling fan with the screws [34].
    - ⇨ Tightening torque 2 Nm.

25957074/EN – 06/2019

16. Push the connection adapter [1164] up to the end of the recess facing away from the motor.
17. Turn the connection adapter [1164] clockwise up to the stop.
18. Secure the connection adapter [1164] in place by tightening the screws [D].
    ⇨ Tightening torque 2 Nm.
19. Place the connection cover [619] onto the connection adapter [1164].
20. Screw the screws [E] through the bore in the connection cover [619] and into the bore in the connection adapter [1164].
    ⇨ Tightening torque 2.5 Nm

25957074/EN – 06/2019

### 7.4.13 Removing and mounting cone shaft encoders of motors DRN132M – 315

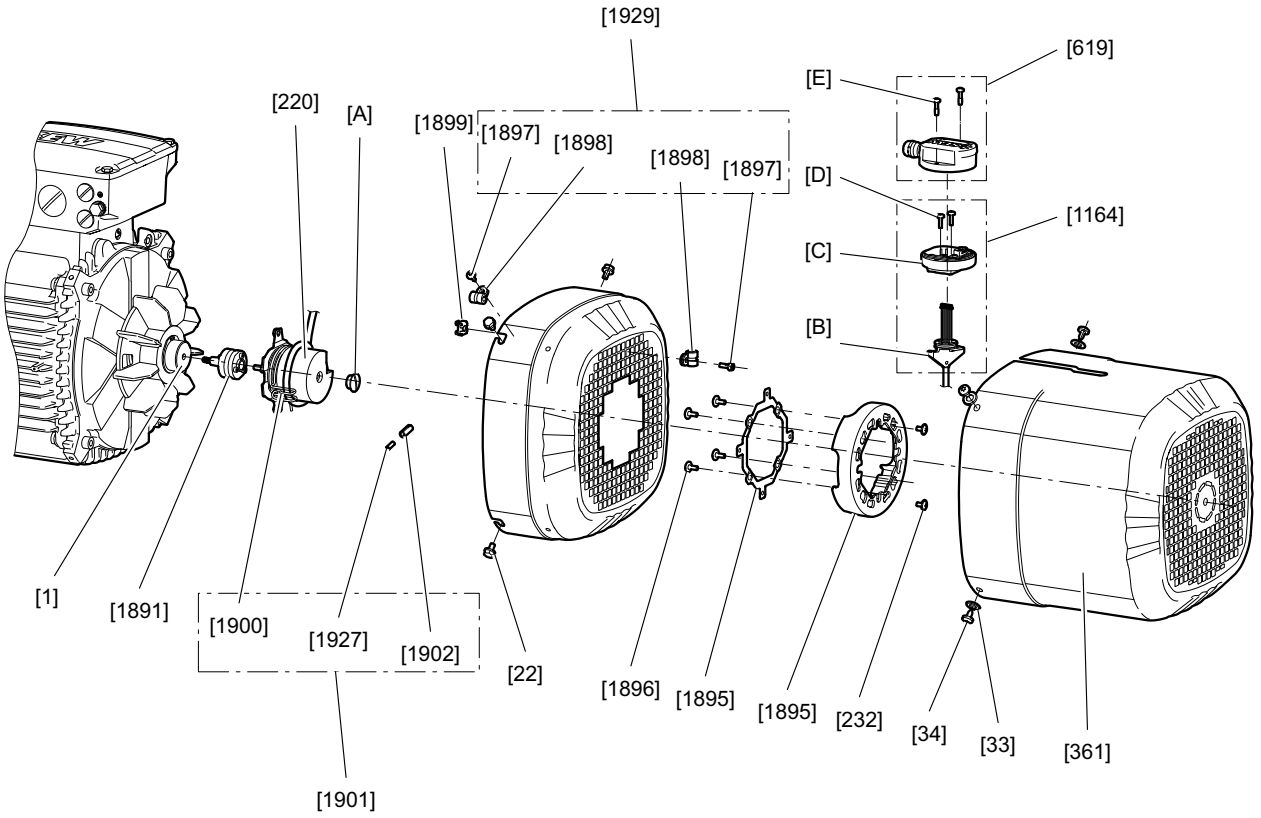


*28534173707*

| | | | |
|---|---|---|---|
| [1] | Rotor | [1898] | Clamp |
| [22] | Screw (hexagonal) | [1899] | Cage nut |
| [33] | Washer | [1900] | Cable retainer |
| [34] | Screw (cross recess) | [1901] | Accessory bag |
| [220] | Encoder | [1902] | Threaded sleeve |
| [232] | Screw (hexalobular) | [1927] | Set screw |
| [361] | Safety cover | [1929] | Accessory bag |
| [619] | Connection cover | [A] | Screw plug |
| [1164] | Connection adapter | [B] | T-slot nut |
| [1891] | Insulation coupling | [C] | Lower part |
| [1895] | Support ring/spacer ring | [D] | Screw |
| [1896] | Screw (hexalobular) | [E] | Screw |
| [1897] | Screw (hexagon socket) | | |

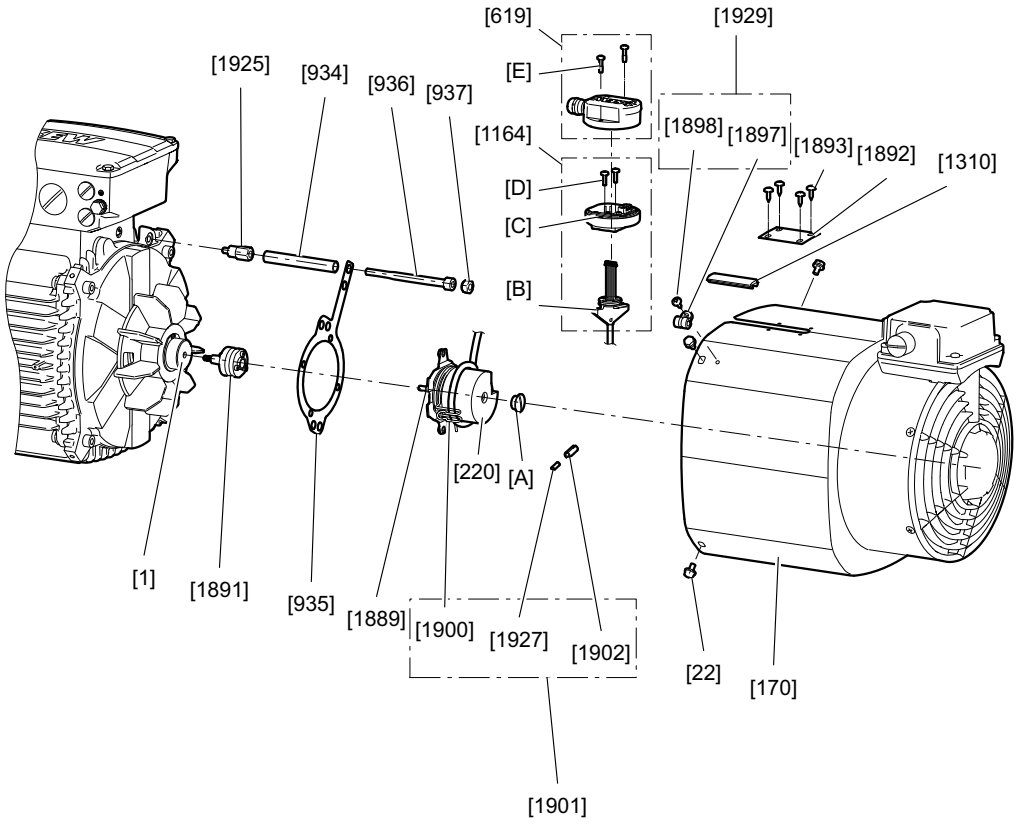


9007227798834699

| | | | |
|---|---|---|---|
| [1] | Rotor | [1892] | Support plate |
| [22] | Screw (hexagonal) | [1893] | Screw (cross recess) |
| [33] | Washer | [1897] | Screw (hexagon socket) |
| [34] | Screw (cross recess) | [1900] | Cable retainer |
| [220] | Encoder | [1901] | Accessory bag |
| [232] | Screw (hexalobular) | [1902] | Threaded sleeve |
| [361] | Safety cover | [1925] | Spacer bolt |
| [619] | Connection cover | [1927] | Set screw |
| [934] | Spacer bushing | [1929] | Accessory bag |
| [935] | Torque arm | [A] | Screw plug |
| [936] | Cap screw | [B] | T-slot nut |
| [937] | Hex nut | [C] | Lower part |
| [1310] | Sealing strip | [D] | Screw |
| [1889] | Torque arm | [E] | Screw |

**Removing encoder EK8./AK8.**

1. Unscrew the screws [E].
2. Remove the connection cover [619] from the connection adapter [1164].
3. Loosen the screws [D] in the lower part [C].
   ⇨ Only unscrew the screws [D] to such an extent that the connection adapter [1164] can be moved in the recess of the safety cover [361].
4. Unscrew the screws [34].
5. Remove the safety cover [361] from the motor. When doing this, slide the connection adapter [1164] out of the recess.
6. Unscrew the screws [232].
7. Unscrew the screws [22].

8. Remove the fan guard [35] over the encoder [220]. Guide the connection adapter [1164] with the signal cable through the cutout of the fan guard [35].
9. Unscrew the central screw plug [A] of the encoder [220].
10. Loosen the central retaining screw of the encoder [220].
    ⇨ If the central retaining screw of the encoder [220] cannot be loosened, counter-tighten the spanner flat SW10 of the encoder shaft.
11. Loosen the cone connection.
    ⇨ Encoder EK8., AK8W, AK8Y: To loosen the cone connection, continue turning the central retaining screw of the encoder [220] counterclockwise.
    ⇨ Encoder AK8H: Continue turning the central retaining screw of the encoder [220] counterclockwise. To loosen the cones, screw an M6 screw (≥ 70 mm long) into the bore.
12. Remove the encoder [220] from the rotor [1].
13. For optional insulation coupling: Remove the encoder [220] from the insulation coupling [1891].

**Mounting encoder EK8./AK8.**

1. Clean the cone of the encoder [220] and the rotor [1].
2. For optional insulation coupling: Clean the cones of the insulation coupling [1891].
3. Remove the central screw plug [A].
4. For optional insulation coupling: The insulation coupling [1891] must be mounted before the encoder is mounted. Insert the insulation coupling [1891] into the conical bore of the rotor [1]. To secure the insulation coupling in place, tighten the central retaining screw.
    ⇨ Counter-tighten the spanner flat SW 30 of the insulation coupling.
    ⇨ Tightening torque 3.3 Nm.
5. Insert the encoder [220] into the conical bore of the rotor [1].
6. For optional insulation coupling: Insert the encoder [220] into the conical opening of the insulation coupling [1891].
7. To secure the encoder [220] in place, tighten the central retaining screw.
    ⇨ Counter-tighten the spanner flat SW10 of the encoder shaft.
    ⇨ Tightening torque 3.3 Nm.
8. To seal the encoder [220], screw in the central screw plug [A].
    ⇨ Tightening torque 1.8 Nm.
9. Mount the fan guard [35] over the encoder [220]. When doing this, guide the connection adapter [1164] with the signal line through the central grille cutout of the fan guard [35].
10. Use the screws [22] to secure the fan guard [35] to the rear endshield or brake endshield [42] of the motor.
    ⇨ DRN132M – L: Tightening torque 11.3 Nm.
    ⇨ DRN160 – 280: Tightening torque 27.3 Nm.
    ⇨ DRN315: Secure the screws [22] in place with medium-strength thread locker. Tightening torque 5 Nm.

25957074/EN – 06/2019

11. Screw the screws [232] through the support ring/spacer ring [1895] and the grille of the fan guard [35] and into the nuts of the torque arm [1889].
    - ⇨ Make sure the signal cable is of a sufficient length so that the connection adapter [1164] can be inserted into the recess of the safety cover [361].
    - ⇨ Tightening torque 3.3 Nm.
12. Place the safety cover [361] onto the fan guard [35].
    - ⇨ The standard alignment of the recess points towards the terminal box.
    - ⇨ The arrow that is cast in the lower part [C] of the connection adapter [1164] indicates the direction of the subsequent cable outlet for the connection cover [619].
    - ⇨ If you wish to change the direction of the cable outlet: Unscrew the screws [D]. Twist the lower part [C] against the T-slot nut [B]. Screw in the screws [D]. When doing so, only tighten the screws [D] lightly.
13. Secure the safety cover [361] in place by using the screws [34].
    - ⇨ Tightening torque 4.5 Nm
14. Push the connection adapter [1164] up to the end of the recess facing away from the motor.
15. Turn the connection adapter [1164] clockwise up to the stop.
16. Secure the connection adapter [1164] in place by tightening the screws [D].
    - ⇨ Tightening torque 2 Nm.
17. Place the connection cover [619] onto the connection adapter [1164].
18. Screw the screws [E] through the bore in the connection cover [619] and into the bore in the connection adapter [1164].
    - ⇨ Tightening torque 2.5 Nm

**Removing encoder EK8./AK8. with optional forced cooling fan**

1. For motors EDRN250 – 315: If the screws [1893] are present, unscrew the screws. Remove the support plate [1892]. Slide the sealing strip [1310]**/[1965]** out of the recess.
2. Unscrew the screws [E].
3. Remove the connection cover [619] from the connection adapter [1164].
4. Loosen the screws [D] in the lower part [C].
    - ⇨ Only unscrew the screws [D] to such an extent that the connection adapter [1164] can be moved in the recess of the forced cooling fan [170].
5. Unscrew the screws [22].
6. Remove the forced cooling fan [170] from the motor. When doing this, slide the connection adapter [1164] out of the recess.
7. Unscrew the screws [232].
8. Remove the signal cable from the slot of the cable retainer [1900].
9. To remove the torque arm [935], loosen the screw [936]/hex nut [937]. Guide the connection adapter [1164] with the signal cable through the cutout of the torque arm [935].
10. Loosen the central retaining screw of the encoder [220].
    - ⇨ If the central retaining screw of the encoder [220] cannot be loosened, counter-tighten the spanner flat SW10 of the encoder shaft.

25957074/EN – 06/2019

11. Loosen the cone connection.
    - ⇨ Encoder EK8., AK8W, AK8Y: To loosen the cone connection, continue turning the central retaining screw of the encoder [220] counterclockwise.
    - ⇨ Encoder AK8H: Continue turning the central retaining screw of the encoder [220] counterclockwise. To loosen the cones, screw an M6 screw (≥ 70 mm long) into the bore.
12. Remove the encoder [220] from the rotor [1].
13. For optional insulation coupling: Remove the encoder [220] from the insulation coupling [1891].

**Mounting encoder EK8./AK8. with optional forced cooling fan**

1. Clean the cone of the encoder [220] and the rotor [1].
2. For optional insulation coupling: Clean the cones of the insulation coupling [1891].
3. Remove the central screw plug [A].
4. For optional insulation coupling: The insulation coupling [1891] must be mounted before the encoder is mounted. Insert the insulation coupling [1891] into the conical bore of the rotor [1]. To secure the insulation coupling in place, tighten the central retaining screw.
    - ⇨ Counter-tighten the spanner flat SW10 of the encoder shaft.
    - ⇨ Tightening torque 3.3 Nm.
5. Insert the encoder [220] into the conical bore of the rotor [1].
6. For optional insulation coupling: Insert the encoder [220] into the conical opening of the insulation coupling [1891].
7. To secure the encoder [220] in place, tighten the central retaining screw.
    - ⇨ Counter-tighten the spanner flat SW10 of the encoder shaft.
    - ⇨ Tightening torque 3.3 Nm.
8. To seal the encoder [220], screw in the central screw plug [A].
    - ⇨ Tightening torque 1.8 Nm.
9. Guide the torque arm [935] over the connection adapter [1164] and the encoder [220].
10. For optional insulation coupling: Mount the spacer bolt [1625].
    - ⇨ M6 screw: Tightening torque 11.3 Nm.
    - ⇨ M8 screw: Tightening torque 27.3 Nm.
11. When mounting the torque arm [935], make sure it is aligned centrally to the encoder [220]. Screw in the screw [936]/hex nut [937] with the spacer bushings [934].
    - ⇨ M6 screw: Tightening torque 11.3 Nm.
    - ⇨ M8 screw: Tightening torque 27.3 Nm.
12. ⚠ **CAUTION!**
    Improper installation can cause damage to the equipment. Risk of damage to the signal cable. Insert the signal cable into the slot of the cable retainer [1900] in such a way that the signal cable does not come into contact with the rotating forced cooling fan.
13. To turn the cable retainer [1900], loosen the set screw [1927].

25957074/EN – 06/2019

14. To secure the cable retainer [1900] in place, tighten the set screw [1927].
    ⇨ Tightening torque 1.8 Nm.
15. To secure the torque arm [1889] of the encoder in place, screw the screws [232] into the bores of the torque arm [935].
    ⇨ Make sure the signal cable is of a sufficient length so that the connection adapter [1164] can be inserted into the recess of the forced cooling fan [170].
16. Place the forced cooling fan [170] onto the rear endshield or brake endshield [42].
17. Insert the connection adapter [1164] into the recess of the forced cooling fan [170]. The standard alignment of the recess points towards the terminal box.
    ⇨ The arrow that is cast in the lower part [C] of the connection adapter [1164] indicates the direction of the subsequent cable outlet for the connection cover [619].
    ⇨ If you wish to change the direction of the cable outlet: Unscrew the screws [D]. Twist the lower part [C] against the T-slot nut [B]. Screw in the screws [D]. When doing so, only tighten the screws [D] lightly.
18. Use the screws [22] to secure the forced cooling fan [170] to the rear endshield or brake endshield [42] of the motor.
    ⇨ DRN132M – L: Tightening torque 11.3 Nm.
    ⇨ DRN160 – 280: Tightening torque 27.3 Nm.
    ⇨ DRN315: Secure the screws [22] in place with medium-strength thread locker. Tightening torque 5 Nm.
19. Push the connection adapter [1164] up to the end of the recess facing away from the motor.
20. For motors EDRN250 – 315: To secure the support plate [1892] in place, screw in the screws [1893]. Slide the sealing strip [1310]/[1965] into the recess.
21. Secure the connection adapter [1164] in place by tightening the screws [D].
    ⇨ Tightening torque 2 Nm.
22. Place the connection cover [619] onto the connection adapter [1164].
23. Screw the screws [E] through the bore in the connection cover [619] and into the bore in the connection adapter [1164].
    ⇨ Tightening torque 2.5 Nm

25957074/EN – 06/2019

### 7.4.14 Removing and mounting encoder EV8./AV8. with coupling from motors DRN71 – 225

**Removing encoder EV8./AV8. with coupling**

1. Unscrew the screws [E].
2. Remove the connection cover [619] from the connection adapter [1164].
3. Loosen the screws [D] in the lower part [C].
   ⇨ Only unscrew the screws [D] to such an extent that the connection adapter [1164] can be moved in the recess of the safety cover [361].
4. Unscrew the screws [22].
5. Remove the safety cover [361] from the motor. When doing this, slide the connection adapter [1164] out of the recess.
6. Unscrew the screws [232].
7. Remove the eccentric disks [251] from the circumferential groove of the encoder [220].
8. Unscrew the central screw plug [A] of the encoder [220].
9. Loosen the central retaining screw of the encoder [220].
   ⇨ If the central retaining screw of the encoder [220] cannot be loosened, exert counter-pressure at the Ø 4.1 mm bore of the rear coupling half.
10. Remove the encoder [220] from the coupling [233].

**Mounting encoder EV8./AV8. with coupling**

1. Remove the central screw plug [A].
2. If the closing plate [646] is present: Unscrew the screws [232] and remove the closing plate [646].
3. Clean the cone of the rotor [1], the encoder [220] and the coupling [233].
4. Insert the coupling [233] into the conical bore of the rotor.
5. To secure the coupling [233] in place, screw in the central retaining screw [F].
   ⇨ Tightening torque 4 Nm
   ⇨ Exert counter-pressure at the Ø 4.1 mm bore of the rear coupling half.
6. To remove the torque arm [1889] from the encoder, unscrew the screws [1888].
7. Remove the central screw plug [A].
   ⇨ For size DRN132M/L: Place the spacer ring [225] between the encoder [220] and the fan guard with encoder mount [212].
8. Insert the encoder [220] into the coupling half with conical bore [233].
9. To secure the encoder [220] in place, tighten the central retaining screw.
   ⇨ Tightening torque 3.3 Nm.
   ⇨ Exert counter-pressure at the Ø 4.1 mm bore of the rear coupling half.
10. To seal the encoder [220], screw in the central screw plug [A].
    ⇨ Tightening torque 1.8 Nm.
11. To secure the eccentric disks [251], insert the screws [232].
12. Tighten the screws [232] while turning the eccentric disks [251] in clockwise direction into the groove of the encoder [220].
    ⇨ Tightening torque 2.25 Nm.

25957074/EN – 06/2019

⇨ Make sure the signal cable is of a sufficient length so that the connection adapter [1164] can be inserted into the recess of the safety cover [361].

13. Insert the connection adapter [1164] into the recess of the safety cover [361]. The standard alignment of the recess points towards the terminal box.
14. Place the safety cover [361] onto the fan guard [35].
    ⇨ The arrow that is cast in the lower part [C] of the connection adapter [1164] indicates the direction of the subsequent cable outlet for the connection cover [619].
    ⇨ If you wish to change the direction of the cable outlet: Unscrew the screws [D]. Twist the lower part [C] against the T-slot nut [B]. Screw in the screws [D]. When doing so, only tighten the screws [D] lightly.
15. Secure the safety cover [361] in place by using the screws [22].
    ⇨ DRN71 – 132S: Tightening torque 3.3 Nm
    ⇨ DRN132M – L: Tightening torque 11.3 Nm
    ⇨ DRN160 – 225: Tightening torque 27.3 Nm
16. Push the connection adapter [1164] up to the end of the recess facing away from the motor.
17. Turn the connection adapter [1164] clockwise up to the stop.
18. Secure the connection adapter [1164] in place by tightening the screws [D].
    ⇨ Tightening torque 2 Nm.
19. Place the connection cover [619] onto the connection adapter [1164].
20. Screw the screws [E] through the bore in the connection cover [619] and into the bore in the connection adapter [1164].
    ⇨ Tightening torque 2.5 Nm

**Removing encoder EV8./AV8. with coupling and optional forced cooling fan**

1. Unscrew the screws [E].
2. Remove the connection cover [619] from the connection adapter [1164].
3. Loosen the screws [D] in the lower part [C].
   ⇨ Only unscrew the screws [D] to such an extent that the connection adapter [1164] can be moved in the recess of the safety cover [361].
4. Loosen the screws [22].
5. Unscrew the screws [34].
6. Remove the forced cooling fan [170] from the motor. When doing this, slide the connection adapter [1164] out of the recess.
7. Remove the signal cable from the slot of the cable retainer [1900].
8. Unscrew the screws [232].
9. Remove the eccentric disks [251] from the circumferential groove of the encoder [220].
10. Unscrew the central screw plug [A] of the encoder [220].
11. Loosen the central retaining screw of the encoder [220].
    ⇨ If the central retaining screw of the encoder [220] cannot be loosened, exert counter-pressure at the Ø 4.1 mm bore of the rear coupling half.
12. Remove the encoder [220] from the coupling [233].

25957074/EN – 06/2019

**Mounting encoder EV8./AV8. with coupling and optional forced cooling fan**

1. Remove the central screw plug [A].
2. If the closing plate [646] is present: Unscrew the screws [232] and remove the closing plate [646].
3. Clean the cone of the rotor [1], the encoder [220] and the coupling [233].
4. Insert the coupling [233] into the conical bore of the rotor.
5. To secure the coupling [233] in place, screw in the central retaining screw [F].
   - ⇨ Tightening torque 3.3 Nm.
   - ⇨ Exert counter-pressure at the Ø 4.1 mm bore of the rear coupling half.
6. To remove the torque arm [1889] from the encoder, unscrew the screws [1888].
7. Remove the central screw plug [A].
   - ⇨ For size DRN132M/L: Place the spacer ring [225] between the encoder [220] and the fan guard with encoder mount [212].
8. Insert the encoder [220] into the coupling half with conical bore [233].
9. To secure the encoder [220] in place, tighten the central retaining screw.
   - ⇨ Tightening torque 3.3 Nm.
   - ⇨ Exert counter-pressure at the Ø 4.1 mm bore of the rear coupling half.
10. To seal the encoder [220], screw in the central screw plug [A].
    - ⇨ Tightening torque 1.8 Nm.
11. To secure the eccentric disks [251], insert the screws [232].
12. Tighten the screws [232] while turning the eccentric disks [251] in clockwise direction into the groove of the encoder [220].
    - ⇨ Tightening torque 2.25 Nm.
    - ⇨ Make sure the signal cable is of a sufficient length so that the connection adapter [1164] can be inserted into the recess of the forced cooling fan [170].
13. ⚠ **CAUTION!**
    Improper installation can cause damage to the equipment. Risk of damage to the signal cable. Insert the signal cable into the slot of the cable retainer [1900] in such a way that the signal cable does not come into contact with the rotating forced cooling fan.
14. To turn the cable retainer [1900], loosen the set screw [1927].
15. To secure the cable retainer [1900] in place, tighten the set screw [1927].
    - ⇨ Tightening torque 1.8 Nm.
16. Place the forced cooling fan [170] onto the fan guard with encoder mount [212].
17. Insert the connection adapter [1164] into the recess of the forced cooling fan [170]. The standard alignment of the recess points towards the terminal box.
    - ⇨ The arrow that is cast in the lower part [C] of the connection adapter [1164] indicates the direction of the subsequent cable outlet for the connection cover [619].
    - ⇨ If you wish to change the direction of the cable outlet: Unscrew the screws [D]. Twist the lower part [C] against the T-slot nut [B]. Screw in the screws [D]. When doing so, only tighten the screws [D] lightly.

25957074/EN – 06/2019

18. Use the screws [22] to secure the forced cooling fan [170] to the fan guard with encoder mount [212] of the motor.
    - ⇨ DRN71 – 132S: Tightening torque 3.3 Nm
    - ⇨ DRN132M – L: Tightening torque 11.3 Nm
    - ⇨ DRN160 – 225: Tightening torque 27.3 Nm
19. Push the connection adapter [1164] up to the end of the recess facing away from the motor.
20. Turn the connection adapter [1164] clockwise up to the stop.
21. Secure the connection adapter [1164] in place by tightening the screws [D].
    - ⇨ Tightening torque 2 Nm.
22. Place the connection cover [619] onto the connection adapter [1164].
23. Screw the screws [E] through the bore in the connection cover [619] and into the bore in the connection adapter [1164].
    - ⇨ Tightening torque 2.5 Nm

25957074/EN – 06/2019

### 7.4.15 Removing and mounting encoder EV8./AV8. with coupling from motors DRN250 – 280

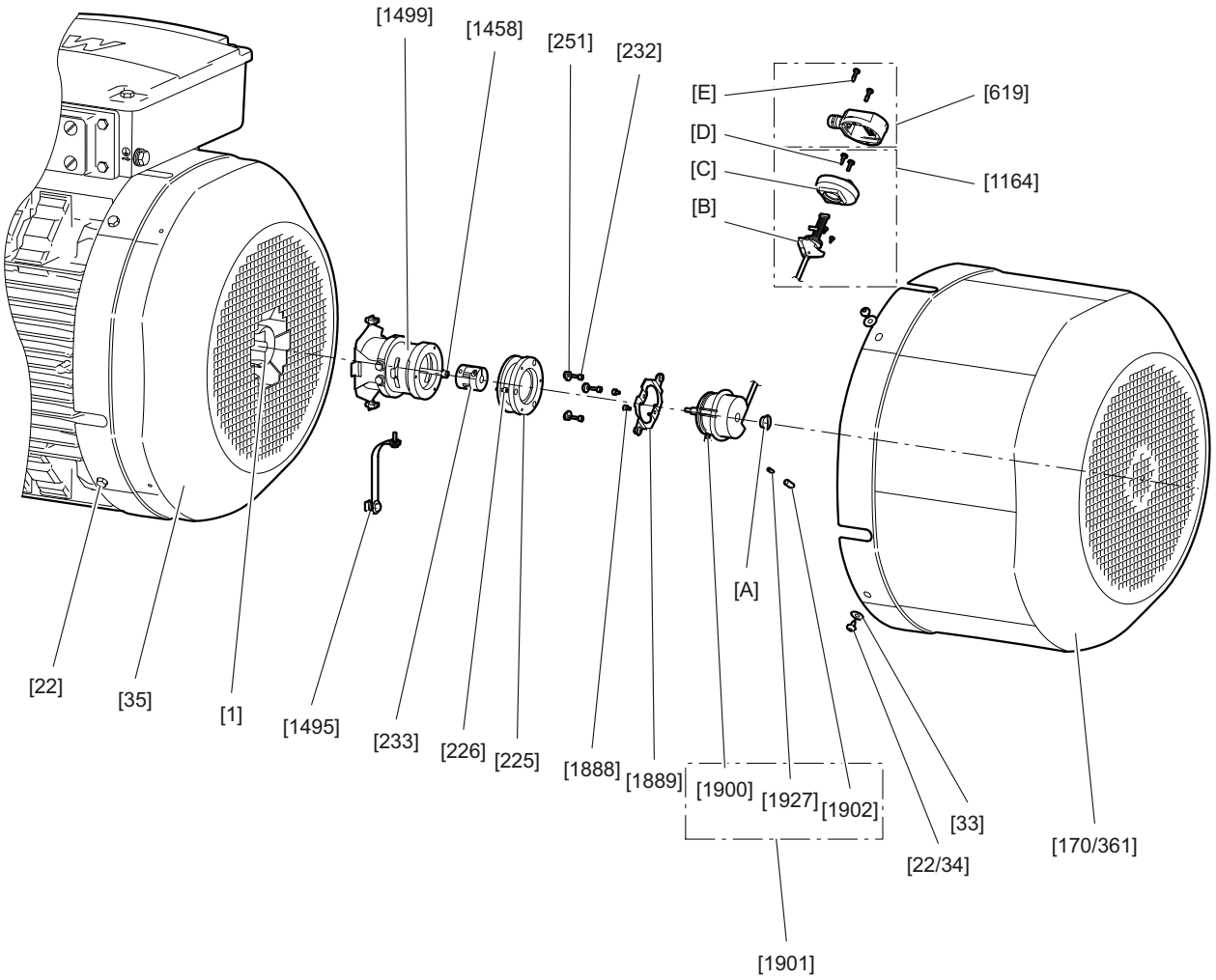


28588932107

| | | | |
|---|---|---|---|
| [1] | Rotor | [1499] | Encoder mounting adapter |
| [22] | Screw (hexagonal) | [1495] | Ground strap SET |
| [33] | Washer | [1888] | |
| [34] | Screw (cross recess) | [1898] | Clamp |
| [35] | Fan guard | [1899] | Cage nut |
| [170] | Forced cooling fan | [1900] | Cable retainer |
| [225] | Intermediate flange | [1901] | Accessory bag |
| [226] | Cap screw | [1902] | Threaded sleeve |
| [232] | Screw (hexalobular) | [1927] | Set screw |
| [233] | Coupling | [A] | Screw plug |
| [251] | Conical spring washer | [B] | T-slot nut |
| [361] | Safety cover | [C] | Lower part |
| [619] | Connection cover | [D] | Screw |
| [1164] | Connection adapter | [E] | Screw |
| [1458] | Cap screw | | |

**Removing encoder EV8./AV8. with coupling**

1. Unscrew the screws [E].
2. Remove the connection cover [619] from the connection adapter [1164].

25957074/EN – 06/2019

3. Loosen the screws [D] in the lower part [C].
   ⇨ Only unscrew the screws [D] to such an extent that the connection adapter [1164] can be moved in the recess of the safety cover [361].
4. Unscrew the screws [34].
5. Remove the safety cover [361] from the motor. When doing this, slide the connection adapter [1164] out of the recess.
6. Unscrew the screws [232].
7. Remove the eccentric disks [251] from the circumferential groove of the encoder [220].
8. Remove the encoder [220] from the intermediate flange [225].
9. Unscrew the central screw plug [A] of the encoder [220].
10. Loosen the central retaining screw of the encoder [220].
11. Remove the encoder with the mounted rear coupling half [233] from the mounting adapter [1499].
    ⇨ If the central retaining screw of the encoder [220] cannot be loosened, counter-tighten the spanner flat SW10 of the encoder shaft.
12. Remove the encoder [220] from the coupling [233].

**Mounting encoder EV8./AV8. with coupling**

1. Clean the cone of the rotor [1], the encoder mounting adapter [1499] and the coupling [233].
2. Insert the encoder mounting adapter [1499] into the conical bore of the rotor [1].
3. To secure the encoder mounting adapter [1499] in place, screw in the central retaining screw [1458].
   ⇨ Tightening torque 3.3 Nm.
4. Use the screws [22] to secure the fan guard [35] to the rear endshield or brake endshield [42] of the motor.
   ⇨ While doing so, the plastic dampers [1486] of the torque arm for the encoder mounting adapter [1499] must engage into the grille of the fan guard [35].
   ⇨ Tightening torque 27.3 Nm.
5. To secure the ground strap [1495] to the encoder mounting adapter [1499], screw in the screw [1498].
   ⇨ Tightening torque 6.5 Nm
6. To secure the ground strap [1495] to the fan guard [35], screw the screw [1462] into the cage nut [1459].
   ⇨ Tightening torque 11.3 Nm.
7. Place the coupling half with cylindrical internal bore [233] onto the inner pin of the encoder mounting adapter [1499].
8. To secure the coupling half with cylindrical internal bore [233] in place, screw the screw into the conical spring washer of the coupling [233].
   ⇨ Tightening torque 3.3 Nm.
9. To secure the intermediate flange [225] to the encoder mounting adapter [1499], screw in the screw [226].
   ⇨ Tightening torque 3.3 Nm.

25957074/EN – 06/2019

10. To remove the torque arm [1889] from the encoder, unscrew the screws [1888].
11. Remove the central screw plug [A].
12. Insert the encoder [220] into the coupling half with conical bore [233].
13. To secure the encoder [220] in place, tighten the central retaining screw.
    - ⇨ Tightening torque 3.3 Nm.
    - ⇨ Counter-tighten the spanner flat SW10 of the encoder shaft.
14. To seal the encoder [220], screw in the central screw plug [A].
    - ⇨ Tightening torque 1.8 Nm.
15. Insert the encoder [220] with mounted coupling half into the centering of the intermediate flange [225]. The two coupling halves must interlock via the plastic coupling star.
16. To secure the eccentric disks [251], insert the screws [232].
17. Tighten the screws [232] while turning the eccentric disks [251] in clockwise direction into the groove of the encoder [220].
    - ⇨ Tightening torque 2.25 Nm.
    - ⇨ Make sure the signal cable is of a sufficient length so that the connection adapter [1164] can be inserted into the recess of the safety cover [361].
18. Insert the connection adapter [1164] into the recess of the safety cover [361]. The standard alignment of the recess points towards the terminal box.
19. Place the safety cover [361] onto the fan guard [35].
    - ⇨ The arrow that is cast in the lower part [C] of the connection adapter [1164] indicates the direction of the subsequent cable outlet for the connection cover [619].
    - ⇨ If you wish to change the direction of the cable outlet: Unscrew the screws [D]. Twist the lower part [C] against the T-slot nut [B]. Screw in the screws [D]. When doing so, only tighten the screws [D] lightly.
20. Secure the safety cover [361] in place by using the screws [34].
    - ⇨ Tightening torque 4.5 Nm
21. Push the connection adapter [1164] up to the end of the recess facing away from the motor.
22. Turn the connection adapter [1164] clockwise up to the stop.
23. Secure the connection adapter [1164] in place by tightening the screws [D].
    - ⇨ Tightening torque 2 Nm.
24. Place the connection cover [619] onto the connection adapter [1164].
25. Screw the screws [E] through the bore in the connection cover [619] and into the bore in the connection adapter [1164].
    - ⇨ Tightening torque 2.5 Nm

**Removing encoder EV8./AV8. with coupling and optional forced cooling fan**

1. Unscrew the screws [E].
2. Remove the connection cover [619] from the connection adapter [1164].
3. Loosen the screws [D] in the lower part [C].
   - ⇨ Only unscrew the screws [D] to such an extent that the connection adapter [1164] can be moved in the recess of the forced cooling fan [170].

25957074/EN – 06/2019

4. Unscrew the screws [22].
5. Remove the forced cooling fan [170] from the motor. When doing this, slide the connection adapter [1164] out of the recess.
6. If necessary, loosen the set screw [1927].
7. Remove the signal cable from the slot of the cable retainer [1900].
8. Unscrew the screws [232].
9. Remove the eccentric disks [251] from the circumferential groove of the encoder [220].
10. Remove the encoder [220] from the intermediate flange [225].
11. Unscrew the central screw plug [A] of the encoder [220].
12. Loosen the central retaining screw of the encoder [220].
13. Remove the encoder with the mounted rear coupling half [233] from the mounting adapter [1499].
    ⇨ If the central retaining screw of the encoder [220] cannot be loosened, counter-tighten the spanner flat SW10 of the encoder shaft.
14. Remove the encoder [220] from the coupling [233].

**Mounting encoder EV8./AV8. with coupling and optional forced cooling fan**

1. Clean the cone of the rotor [1], the encoder mounting adapter [1499] and the coupling [233].
2. Insert the encoder mounting adapter [1499] into the conical bore of the rotor [1].
3. To secure the encoder mounting adapter [1499] in place, screw in the central retaining screw [1458].
    ⇨ Tightening torque 3.3 Nm.
4. Use the screws [1485] to secure the torque arm [935] to the mounting adapter [1499].
    ⇨ Tightening torque 6 Nm.
5. Use the sleeves [934], screws [936] and washers [1666] to secure the torque arm [935] to the rear endshield or brake endshield [42].
    ⇨ Tightening torque 11.3 Nm.
6. Use the screws [22] to secure the fan guard [35] to the rear endshield or brake endshield [42] of the motor.
    ⇨ While doing so, the plastic dampers [1486] of the torque arm for the encoder mounting adapter [1499] must engage into the grille of the fan guard [35].
    ⇨ Tightening torque 27.3 Nm.
7. Place the coupling half with cylindrical internal bore [233] onto the inner pin of the encoder mounting adapter [1499].
8. To secure the coupling half with cylindrical internal bore [233] in place, screw the screw into the conical spring washer of the coupling [233].
    ⇨ Tightening torque 3.3 Nm.
9. To secure the intermediate flange [225] to the encoder mounting adapter [1499], screw in the screw [226].
    ⇨ Tightening torque 3.3 Nm.
10. To remove the torque arm [1889] from the encoder, unscrew the screws [1888].

25957074/EN – 06/2019

11. Remove the central screw plug [A].
12. Insert the encoder [220] into the coupling half with conical bore [233].
13. To secure the encoder [220] in place, tighten the central retaining screw.
    ⇨ Tightening torque 3.3 Nm.
    ⇨ Counter-tighten the spanner flat SW10 of the encoder shaft.
14. To seal the encoder [220], screw in the central screw plug [A].
    ⇨ Tightening torque 1.8 Nm.
15. Insert the encoder [220] with mounted coupling half into the centering of the intermediate flange [225]. The two coupling halves must interlock via the plastic coupling star.
16. To secure the eccentric disks [251], insert the screws [232].
17. Tighten the screws [232] while turning the eccentric disks [251] in clockwise direction into the groove of the encoder [220].
    ⇨ Tightening torque 2.25 Nm.
    ⇨ Make sure the signal cable is of a sufficient length so that the connection adapter [1164] can be inserted into the recess of the safety cover [361].
18. ⚠ **CAUTION!**
    Improper installation can cause damage to the equipment. Risk of damage to the signal cable. Insert the signal cable into the slot of the cable retainer [1900] in such a way that the signal cable does not come into contact with the rotating forced cooling fan.
19. To turn the cable retainer [1900], loosen the set screw [1927].
20. To secure the cable retainer [1900] in place, tighten the set screw [1927].
    ⇨ Tightening torque 1.8 Nm.
21. Insert the connection adapter [1164] into the recess of the forced cooling fan [170]. The standard alignment of the recess points towards the terminal box.
    ⇨ The arrow that is cast in the lower part [C] of the connection adapter [1164] indicates the direction of the subsequent cable outlet for the connection cover [619].
    ⇨ If you wish to change the direction of the cable outlet: Unscrew the screws [D]. Twist the lower part [C] against the T-slot nut [B]. Screw in the screws [D]. When doing so, only tighten the screws [D] lightly.
22. Use the screws [22] to secure the forced cooling fan [170] to the rear endshield or brake endshield [42] of the motor.
    ⇨ Tightening torque 27.3 Nm.
23. Push the connection adapter [1164] up to the end of the recess facing away from the motor.
24. For motors EDRN250 – 315: To secure the support plate [1892] in place, screw in the screws [1893]. Slide the sealing strip [1310]/[1965] into the recess.
25. Secure the connection adapter [1164] in place by tightening the screws [D].
    ⇨ Tightening torque 2 Nm.
26. Place the connection cover [619] onto the connection adapter [1164].
27. Screw the screws [E] through the bore in the connection cover [619] and into the bore in the connection adapter [1164].
    ⇨ Tightening torque 2.5 Nm

25957074/EN – 06/2019

### 7.4.16 Removing and mounting built-in encoder EI8.

A centering ring is required when mounting the built-in encoder EI8. You can order the centering ring via the following part number:

| Motor | Built-in encoder | Part number |
|---|---|---|
| DRN71 – 132S<br>DR2..71 – 80 | Centering ring EI8. | 22659129 |

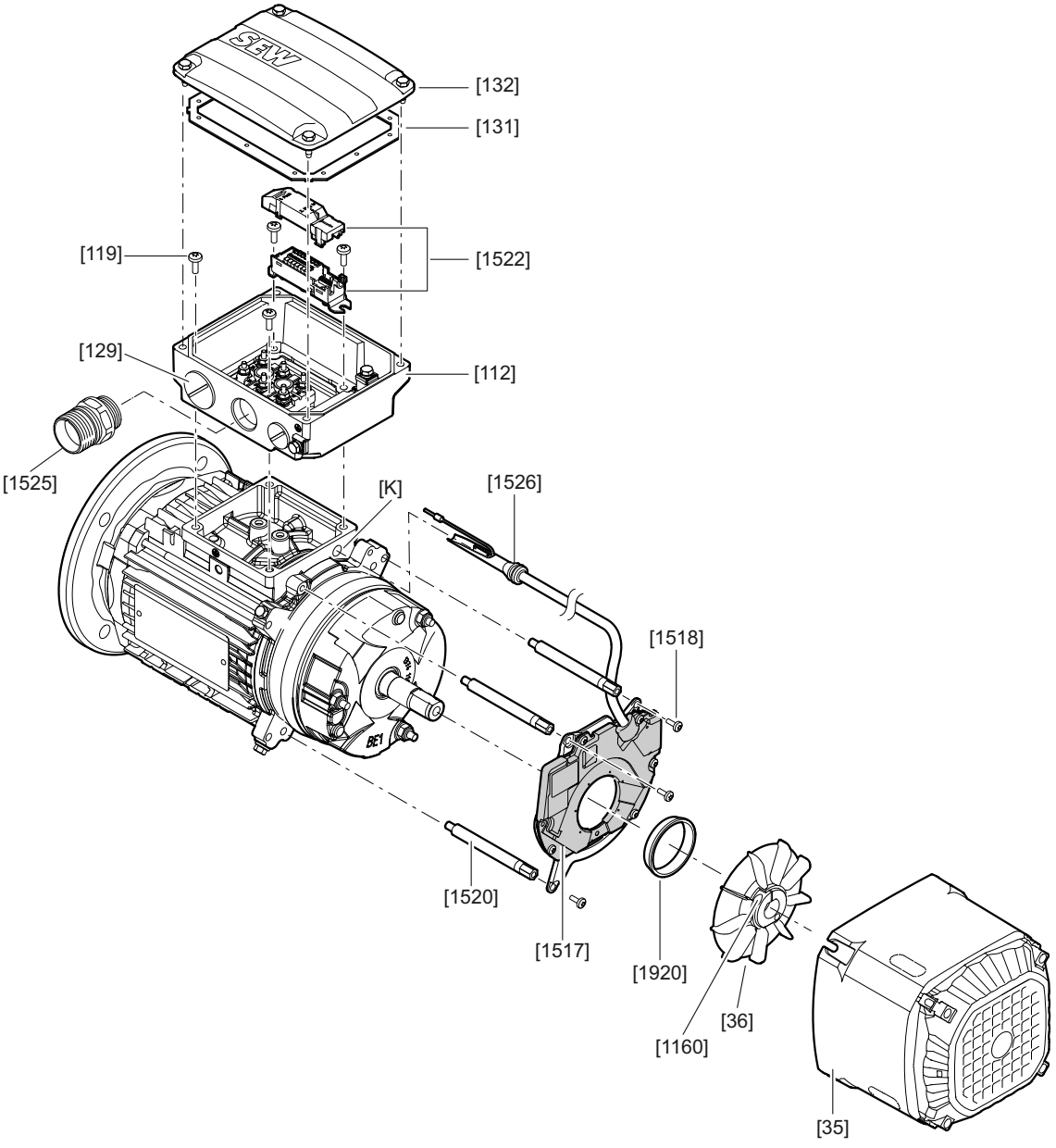


*9007227690175499*

| | | | | | |
|---|---|---|---|---|---|
| [35] | Fan guard | [132] | Terminal box cover | [1525] | M23 plug connector |
| [36] | Fan, complete | [1160] | Cap screw | [1526] | Grommet |
| [112] | Terminal box lower part | [1517] | Encoder module | [1920] | Centering ring (aid) |
| [119] | Screw | [1518] | Flat head screw | [K] | Knock-out |
| [129] | Screw plug | [1520] | Spacer | | |
| [131] | Gasket for cover | [1522] | Connection unit | | |

**Removing EI8. with connection unit**

✓ Required resources: Screwdriver

1. Remove the forced cooling fan if required.
2. Remove the screws [22] to disassemble the fan guard [35].
3. Loosen the radial clamping screw [1160]:
   - ⇨ DRN71 – 100: M3 with cylinder head
   - ⇨ DRN112/132S: M4 with cylinder head
4. Remove the fan [36] with bushing and pole ring from the shaft end.
5. Remove the 3 x M4 pan head screws [1518] of the encoder module [1517].
6. If present, remove the hexagonal spacers [1520] (SW8).
7. Unscrew the screws [123] to remove the terminal box cover [132].
8. Remove the cover of the connection unit [1522] by pressing the cover on both sides behind the cable entry.
9. Disconnect the 10-pin board connector.
10. Pull the jack of the encoder cable from the connector.
11. Unscrew the grounding element of the encoder cable.
12. **NOTICE!** Possible defect of the encoder module. Physical damage can occur. Do not pull directly on the encoder module.
    To remove the encoder module [1517] from the motor, pull the encoder cable out of the grommet [1526] and the opening of the knock-out [K].

**Mounting EI8. with connection unit**

- ✓ Required resources: Feeler gauge, screwdriver, centering ring [1920]

1. Unscrew the screws [123] to remove the terminal box cover [132].
2. **NOTICE!** Damage to the terminal box or fragments inside the motor. Possible physical damage. Exercise caution when breaking open the knock-outs.
   Break open the knock-out [K] by using a chisel or screwdriver.
3. **NOTICE!** Damage to the connector. Possible physical damage. Do not subject the connector to excessive tension.
   Pull the grommet [1526] with encoder cable through the knock-out [K].
   - ⇨ The grommet must engage into the opening of the knock-out [K].
4. If necessary, screw the hexagonal spacers [1520] into the brake endshield.
   - ⇨ Tightening torque 5 Nm.
5. Place the centering ring [1920] onto the pole ring.
6. Push the encoder module [1517] onto the shaft end.
7. Push the fan [36] with bushing and pole ring onto the shaft end.
8. Center the encoder module [1517] with the centering ring [1920] radially to the shaft.
9. Use 3 pan head screws [1518] to secure the encoder module [1517] to the brake endshield or, if applicable, to the hexagonal spacers [1520].
   - ⇨ Tightening torque 2.5 Nm
10. Remove the fan [36] with bushing and pole ring from the shaft end and remove the centering ring [1920].
11. Push the fan [36] with bushing and pole ring onto the shaft end.

25957074/EN – 06/2019

12. To set the distance of 1 mm between the encoder module [1517] and the pole ring, insert a feeler gauge into the designated notch [A].

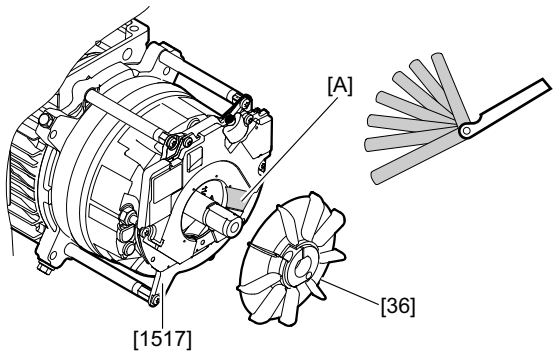


*28744408843*

13. Tighten the clamping screw [1160].
    - ⇨ DRN71 – 100, DR2..71 – 80: Tightening torque 1.2 Nm
    - ⇨ DRN112 – 132S: Tightening torque 3.3 Nm
14. Route the encoder cable in the terminal box in such a way that it is not crushed or improperly subjected to stress.
15. Remove the cover of the connection unit [1522] by pressing the cover on both sides behind the cable entry.
16. Apply the shielding of the encoder cable onto the Stocko terminal.
17. Place the connection unit [1522] in the terminal box.
18. To secure the connection unit [1522] in place, screw the Stocko terminal [1] and the shield plate tightly in the terminal box.
    - ⇨ Tightening torque 5 Nm.

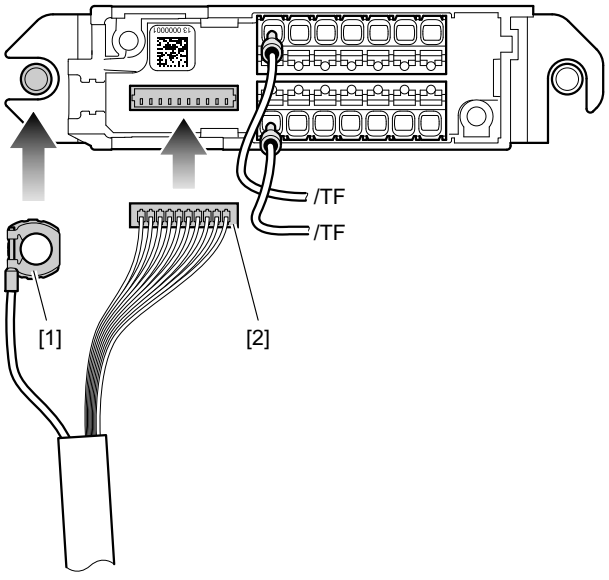


*28759192843*

19. Insert the jack of the encoder cable [2] into the connector on the board and insert the encoder cable into the hollow of the connection unit [1522], which serves as strain relief. If applicable, connect the temperature sensor /TF.
20. Connect the customer's evaluation unit for the encoder to the connection unit [1522] with a shield plate.
21. Connect the supply voltage to the encoder module [1517].

22. Attach the cover of the connection unit [1522].
23. Check the visual feedback of the status LED for the encoder module [1517].
    - ⇨ LED lights up green: The encoder module [1517] has been installed correctly and you can continue with the assembly process.
    - ⇨ LED lights up red: Switch off the supply voltage. Set the distance of 1 mm between the encoder module [1517] and the pole ring again. Switch the supply voltage back on. If the status LED still lights up red, please contact the SEW-EURODRIVE Service department.
24. Mount the terminal box cover [132] using the screws [123] (4xM5 SW8).
    - ⇨ Tightening torque 4 Nm
25. Mount the fan guard [35] with the screws [22].
    - ⇨ Tightening torque 2 Nm.
26. Mount the forced cooling fan if applicable.

**Removing EI8. with M23 plug connector**

- ✓ Required resources: Screwdriver

1. Remove the forced cooling fan if required.
2. Remove the screws [22] to disassemble the fan guard [35].
3. Loosen the radial clamping screw [1160]:
   - ⇨ DRN71 – 100: M3 with cylinder head
   - ⇨ DRN112/132S: M4 with cylinder head
4. Remove the fan [36] with bushing and pole ring from the shaft end.
5. Remove the 3 x M4 pan head screws [1518] of the encoder module [1517].
6. If present, remove the hexagonal spacers [1520] (SW8).
7. Unscrew the screws [123] to remove the terminal box cover [132].
8. Remove the protective cover of the M23 plug connector [1525] on the inside of the terminal box.
9. Pull the jack of the encoder cable from the connector.
10. Remove the grounding element of the encoder.
11. **NOTICE!** Possible defect of the encoder module. Physical damage can occur. Do not pull directly on the encoder module.
    To remove the encoder module [1517] from the motor, pull the encoder cable out of the grommet [1526] and the opening of the knock-out [K].

**Mounting EI8. with M23 plug connector**

- ✓ Required resources: Feeler gauge, screwdriver, centering ring [1920]

1. Unscrew the screws [123] to remove the terminal box cover [132].
2. **NOTICE!** Damage to the terminal box or fragments inside the motor. Possible physical damage. Exercise caution when breaking open the knock-outs.
   Break open the knock-out [K] by using a chisel or screwdriver.
3. **NOTICE!** Damage to the connector. Possible physical damage. Do not subject the connector to excessive tension.
   Pull the grommet [1526] with encoder cable through the knock-out [K].
   - ⇨ The grommet must engage into the opening of the knock-out [K].

25957074/EN – 06/2019

4. If necessary, screw the hexagonal spacers [1520] into the brake endshield.
   ⇨ Tightening torque 5 Nm.
5. Place the centering ring [1920] onto the pole ring.
6. Push the encoder module [1517] onto the shaft end.
7. Push the fan [36] with bushing and pole ring onto the shaft end.
8. Center the encoder module [1517] with the centering ring [1920] radially to the shaft.
9. Use 3 pan head screws [1518] to secure the encoder module [1517] to the brake endshield or, if applicable, to the hexagonal spacers [1520].
   ⇨ Tightening torque 2.5 Nm
10. Remove the fan [36] with bushing and pole ring from the shaft end and remove the centering ring [1920].
11. Push the fan [36] with bushing and pole ring onto the shaft end.
12. To set the distance of 1 mm between the encoder module [1517] and the pole ring, insert a feeler gauge into the designated notch [A].

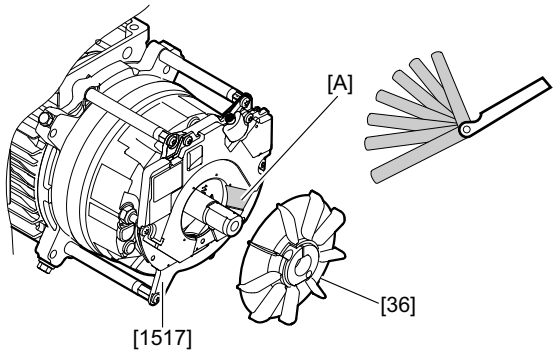


*28744408843*

13. Tighten the clamping screw [1160].
    ⇨ DRN71 – 100, DR2..71 – 80: Tightening torque 1.2 Nm
    ⇨ DRN112 – 132S: Tightening torque 3.3 Nm
14. Route the encoder cable in the terminal box in such a way that it is not crushed or improperly subjected to stress.
15. Remove the protective cover of the M23 plug connector [1525] on the inside of the terminal box.
16. Insert the jack of the encoder cable into the connector on the board.
17. Connect the shielding of the encoder cable [2] and, if applicable, the temperature sensor /TF to the screw terminal.

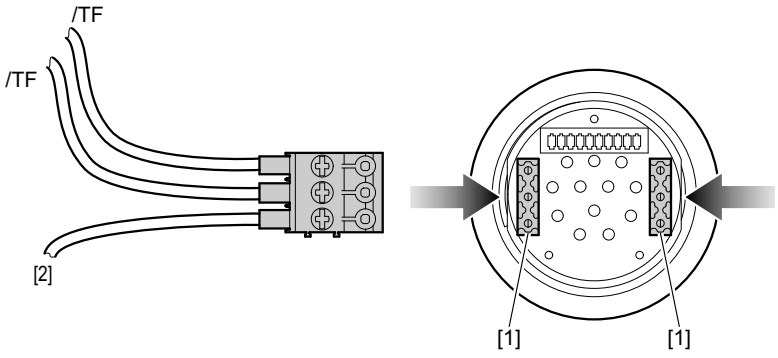


*28759196427*

18. Insert the screw terminal (with the connection side facing outwards) into one of the two plug connectors [1] on the printed circuit board.
19. Attach the protective cover of the M23 plug connector [1525] to the inside of the terminal box.
20. Connect the evaluation unit for the encoder via the M23 plug connector [1525].
21. Connect the supply voltage to the encoder module [1517].
22. Check the visual feedback of the status LED for the encoder module [1517].
    - ⇨ LED lights up green: The encoder module [1517] has been installed correctly and you can continue with the assembly process.
    - ⇨ LED lights up red: Switch off the supply voltage. Set the distance of 1 mm between the encoder module [1517] and the pole ring again. Switch the supply voltage back on. If the status LED still lights up red, please contact the SEW-EURODRIVE Service department.
23. Mount the terminal box cover [132] using the screws [123] (4xM5 SW8).
    - ⇨ Tightening torque 4 Nm
24. Mount the fan guard [35] with the screws [22].
    - ⇨ Tightening torque 2 Nm.
25. Mount the forced cooling fan if applicable.

25957074/EN – 06/2019

## 7.5 Inspection/maintenance work for DR..71 – 315, DRN63 – 315, DR2..56 – 80 motors

For the position numbers used in the following descriptions, refer to chapter "Motor structure" (→ 🗎 15).

### 7.5.1 Working steps for inspecting DR..71 – 315, DRN63 – 315, DR2..56 – 80 motors

1. Before starting to perform any work on the motor, disconnect the motor and all mounted options from the power supply before and secure the motor against unintentional power-up.
2. With gearmotors: Remove the motor from the gear unit.

   Remove pinion and oil flinger [107].
3. Remove the forced cooling fan and rotary encoder, if installed (see chapter "Preliminary work for motor and brake maintenance" (→ 🗎 127)).
4. Remove fan guard [35] and fan [36].
5. Remove stator:
   - **DRN63, DR2..63 motors**: Removing the cap screw [19].
   - **DR..71 – 132, DRN71 – 132S, DR2..56, 71 – 80 motors:** Remove cap screws [13] from flanged endshield [7] and rear endshield [42]. Remove stator [16] from flanged endshield [7].
   - **DR..160 – 180, DRN132M – 180 motors:** Loosen cap screw [19] and remove rear endshield [42]. Loosen hex head screw [15] and remove stator from flanged endshield.
   - **DR..200 – 225, DRN200 – 225 motors**
     - Loosen hex head screw [15] and remove flanged endshield [7] from stator.
     - Loosen cap screws [19] and remove the complete rotor [1] together with the rear endshield [42].
     - Loosen cap screws [25] and remove the complete rotor [1] from the rear endshield [42].
   - **DR..250 – 280, DRN250 – 280 motors** without option /ERF or /NS
     - Loosen cap screws [15] and remove the flange [7].
     - Loosen cap screws [19] and remove the rear endshield [42] together with the rotor [1].
     - Loosen cap screws [25] and remove the rear endshield [42] from the rotor [1].
   - **DR..250 – 280, DRN250 – 280 motors with** option /ERF or /NS, or **DR../ DRN315**
     - Loosen cap screws [19] and [25] and remove the rear endshield [42].
     - Loosen cap screws [15] and remove the flange [7] together with the rotor [1].

       Apply tension or pressure mainly via the rotor [1], carry the flange [7] evenly.
     - Loosen hex head screws [609] and remove the flange [7] from the rotor [1].
     - Before disassembly, preferably protect the oil seal seat from damage using adhesive tape or a protective sleeve.
6. Visual inspection: Is there any moisture or gear unit oil inside the stator?
   - If not, proceed with step 9.
   - If there is moisture, proceed with step 7.

25957074/EN – 06/2019

- If there is gear oil, have the motor repaired by a specialist workshop

7. If there is moisture inside the stator:
   - With gearmotors: Remove the motor from the gear unit.
   - With motors without a gear unit: Remove the A-flange.
   - Remove the rotor [1].
8. Clean the winding, dry it and check it electrically, see chapter "Drying the motor" (→ 🗎 35).
9. Replace the rolling bearing [11], [44] with permitted rolling bearing types, see chapter "Permitted rolling bearings" (→ 🗎 242).

   Apply tension or pressure to the inner ring of the bearings.
10. **DR..250 – 280, DRN225 – 280 motors with** option /ERF or /NS, or for **DR../ DRN315**
    - Fill the rolling bearing with grease until it is two-thirds full, see chapter "Bearing lubrication" (→ 🗎 125)
    - Notice: Place the oil seal flange [608] and [21] onto the rotor shaft before installing the bearings.
    - Mount the motor vertically starting on the A-side.
    - Place the springs [105] and lubrication ring [604] into the bearing bore of the flange [7].
    - Hang the rotor [1] onto the B-side thread, and guide it into the flange [7].
    - Fasten the oil seal flange [608] to the flange [7] using the hex head screws [609].
11. Reseal the shaft:
    - A-side: Replace the oil seal [106].
    - B-side: Replace the oil seal [30].

      Coat the sealing lip with grease (Klüber Petamo GHY 133).
12. Reseal the stator seat:
    - Seal the sealing surface with duroplastic sealing compound (operating temperature -40 °C to +180 °C), such as "SEW L Spezial".
    - **DR..71 – 132, DRN71 – 132S, DR2..71 – 80 motors**: Replace the seal [392].
    - **DR..71 – 132, DRN63 – 132S, DR2..56 – 80 motors**: Replace the O-ring [1480] if it is deformed or damaged. As an alternative, use e.g. "SEW L Spezial" instead of the O-ring.
    - **DRN63, DR2..56 – 63 motors**: Replace the O-ring [392] if it is deformed or damaged. As an alternative, use a duroplastic sealing compound, e.g. "SEW L Spezial" instead of the O-ring.
13. Install the motor and options.

25957074/EN – 06/2019

## 7.6 Inspection/maintenance work for DR..71 – 315, DRN63 – 315, DR2..56 – 80 brakemotors

### 7.6.1 Basic structure of DR2..56 brakemotors

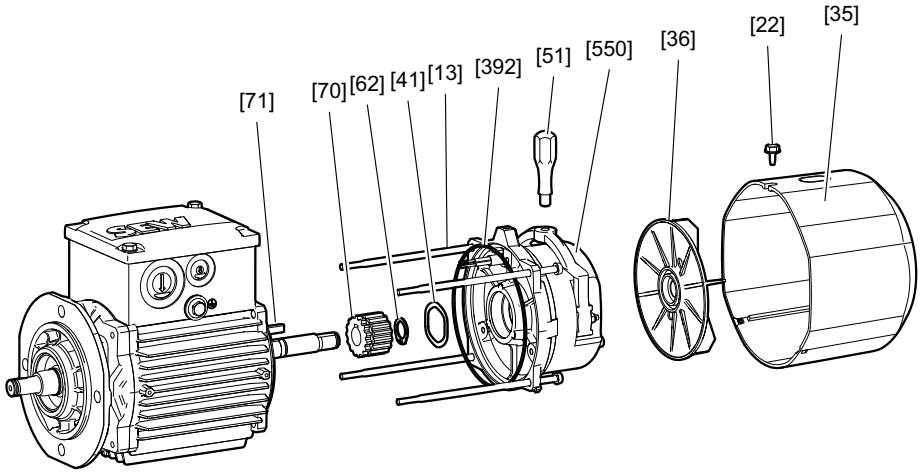


*26860872715*

| | | | | | |
|---|---|---|---|---|---|
| [13] | Cap screw | [41] | Equalizing ring | [71] | Key |
| [22] | Hex head screw | [51] | Hand lever (/HR) | [392] | Gasket |
| [35] | Fan guard | [62] | Retaining ring | [550] | Pre-assembled brake |
| [36] | Fan wheel | [70] | Driver | | |

### 7.6.2 General structure of DR..71 – 80, DRN63 – 80, DR2..63 – 80 brakemotors

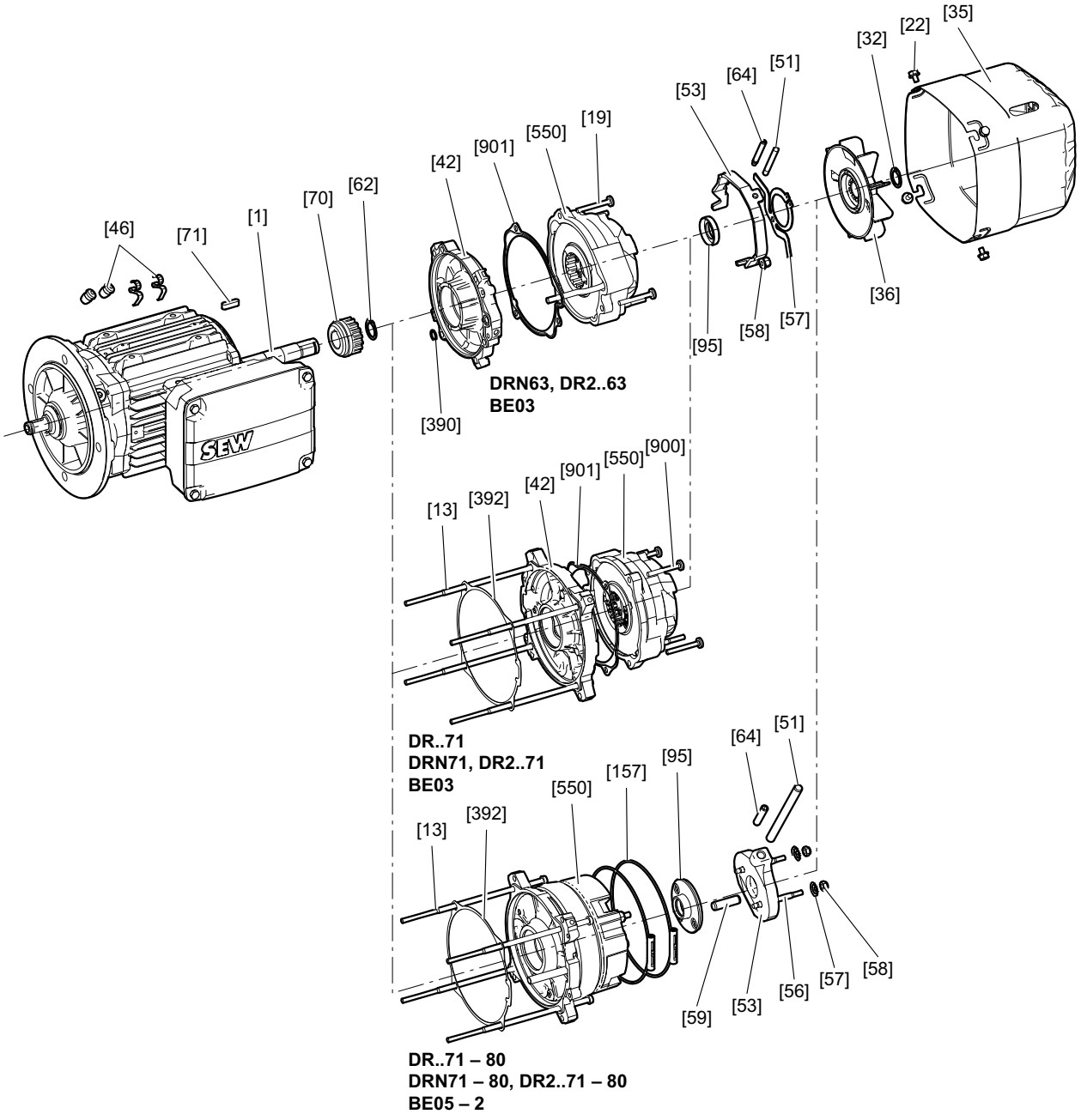


*36028797193164939*

| | | | | | |
|---|---|---|---|---|---|
| [1] | Motor | [51] | Hand lever (/HR) | [70] | Driver |
| [13] | Cap screw | [53] | Releasing lever | [71] | Key |
| [19] | Screw | [56] | Stud | [95] | Sealing ring |
| [22] | Hex head screw | [57] | Conical spring | [157] | Clamping strap (optional) |
| [32] | Retaining ring | [58] | Hex nut | [392] | Gasket |
| [35] | Fan guard | [59] | Parallel pin | [550] | Pre-assembled brake |
| [36] | Fan wheel | [62] | Retaining ring | [900] | Screw |
| [42] | Brake endshield | [64] | Set screw (/HF) | [901] | Flat gasket |
| [46] | Clip | | | | |

25957074/EN – 06/2019

### 7.6.3 Basic structure of DR..90 – 132, DRN90 – 132S brakemotors

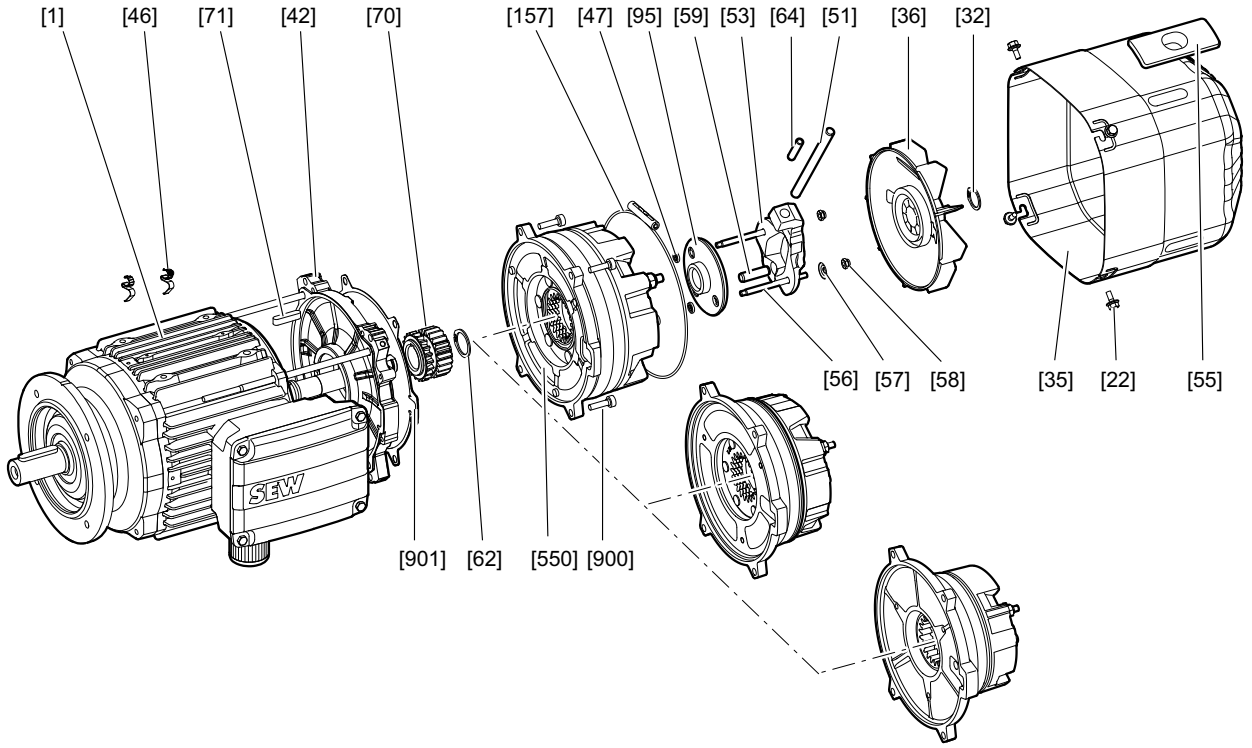


*18014398689463947*

| | | | | | |
|---|---|---|---|---|---|
| [1] | Motor | [56] | Stud | [71] | Key |
| [22] | Hex head screw | [57] | Conical spring | [95] | Sealing ring |
| [32] | Retaining ring | [58] | Hex nut | [157] | Clamping strap (optional) |
| [35] | Fan guard | [59] | Parallel pin | [550] | Pre-assembled brake |
| [36] | Fan wheel | [62] | Retaining ring | [900] | Screw |
| [42] | Brake endshield | [64] | Set screw (/HF) | [901] | Gasket |
| [46] | Bracket | [70] | Driver | | |
| [47] | O-ring | | | | |
| [51] | Hand lever (/HR) | | | | |
| [53] | Releasing lever | | | | |
| [55] | Closing piece fan guard (DR..112 – 132, DRN112 – 132S) | | | | |

25957074/EN – 06/2019

### 7.6.4 Basic structure of DR..160 – 315, DRN132M – 315 brakemotors

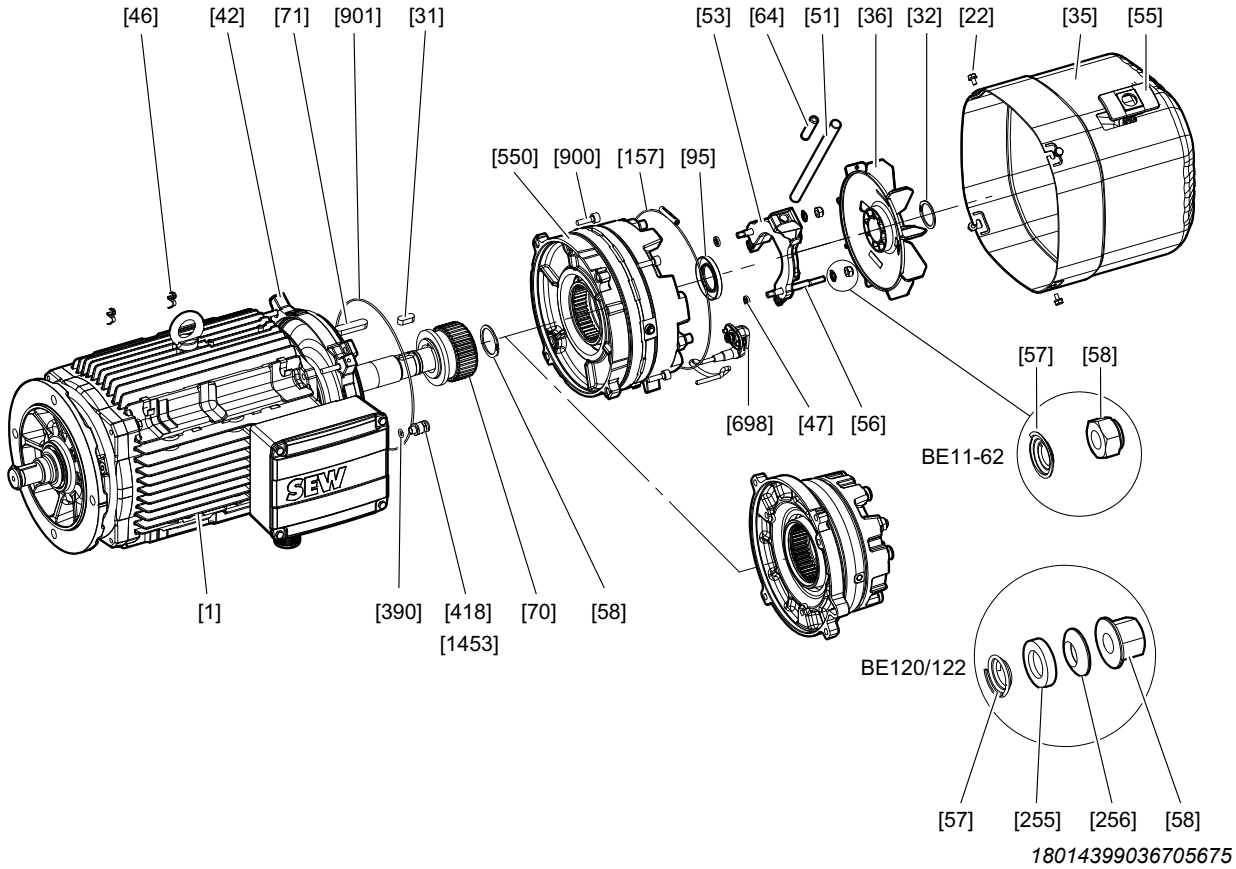


| | | | | | |
|---|---|---|---|---|---|
| [1] | Motor with brake endshield | [53] | Releasing lever | [95] | Sealing ring |
| [22] | Hex head screw | [55] | Closing piece | [157] | Clamping strap (optional) |
| [31] | Key | [56] | Stud | [255] | Conical seat |
| [32] | Retaining ring | [57] | Conical spring | [256] | Spherical washer |
| [35] | Fan guard | [58] | Hex nut | [390] | O-ring (DR..160 – 225, DRN132M – 225) |
| [36] | Fan | [58] | Adjusting nut | [418] | Cable gland |
| [42] | Brake endshield | [62] | Retaining ring | [550] | Pre-assembled brake |
| [46] | Bracket | [64] | Set screw (/HF) | [698] | Connector complete (BE20-BE122) |
| [47] | O-ring | [70] | Driver | [900] | Screw |
| [51] | Hand lever | [71] | Key | [901] | O-ring/seal (DR..160 – 225, DRN132M – 225) |
| | | | | [1453] | Grommet (for DRN180 instead of [418]) |
| | | | | [1607] | O-ring (DR..250 –280/DRN250 – 280) |

25957074/EN – 06/2019

### 7.6.5 Working steps for inspecting DR..71 – 315, DRN63 – 315, DR2..63 – 80 brakemotors

1. Before starting to perform any work on the motor, disconnect the motor and all mounted options from the power supply before and secure the motor against unintentional power-up.
2. With gearmotors: Remove the motor from the gear unit. Remove pinion and oil flinger [107].
3. Remove forced cooling fan and rotary encoder, if installed. See chapter "Motor and brake maintenance – preliminary work" (→ 🗎 127).
4. Remove the fan guard with encoder mount or fan guard [35] and the fan wheel [36].
5. If applicable, disassemble the sensors of the /DUE option, see chapter "Removing the /DUE diagnostic unit" (→ 🗎 209).
6. **DR..90 – 315, DRN63– 315, DR2..56 – 80 motors**: Remove the brake cpl. [550] (if applicable) with mounted /HR, /HF option manual brake release.
   - **BE02 – 11**: Remove terminal box cover, loosen brake cable and microswitch supply cable of the /DUB option from the terminals.
   - **BE20 – 122**: Loosen locking screws of the brake plug connector [698] and remove plug connector.
   - Loosen screws [13]/[19]/[900], press brake [550] off the endshield [42], and carefully lift off the brake.
7. Remove stator:
   - **DR..71 – 132, DRN63 – 132S, DR2..63 – 80 motors:** Remove cap screws [13] from flanged endshield [7] and rear endshield [42]. Remove stator [16] from flanged endshield [7].
   - **DR..160 – 180, DRN132M – 180 motors:** Loosen cap screw [19] and remove rear endshield [42]. Loosen hex head screw [15] and remove stator from flanged endshield.
   - **DR..200 – 225, DRN200 – 225 motors**
     – Loosen hex head screw [15] and remove flanged endshield [7] from stator.
     – Loosen cap screws [19] and remove the complete rotor [1] together with the rear endshield [42].
     – Loosen cap screws [25] and remove the complete rotor [1] from the rear endshield [42].
   - **DR..250 – 280, DRN250 – 280 motors** without option /ERF or /NS
     – Loosen cap screws [15] and remove the flange [7].
     Apply tension or pressure to the rotor [1], carry the flange [7] evenly.
     – Loosen cap screws [19] and remove the rear endshield [42] together with the rotor [1].
     – Loosen cap screws [25] and remove the rear endshield [42] from the rotor [1].
   - **DR..250 – 280, DRN250 – 280 motors** with option /ERF or /NS, or **DR../ DRN315 motors**
     – Loosen cap screws [19] and [25] and remove the rear endshield [42].
     – Loosen cap screws [15] and remove the flange [7] together with the rotor [1].
     – Loosen hex head screws [609] and remove the flange [7] from the rotor [1].

25957074/EN – 06/2019

– Before disassembly, preferably protect the oil seal seat from damage using adhesive tape or a protective sleeve.

8. Pull the stator back by approx. 3 to 4 cm.
9. Visual inspection: Is there any moisture or gear unit oil inside the stator?
   - If not, proceed with step 11.
   - If there is moisture, proceed with step 10.
   - If there is gear oil, have the motor repaired by a specialist workshop.
10. If there is moisture inside the stator:
    - With gearmotors: Remove the motor from the gear unit
    - With motors without a gear unit: Remove the A-flange
    - Remove the rotor [1]
    - Clean the winding, dry it and check it electrically, see chapter "Drying the motor" (→ 🗎 35).
11. Remove the driver from the shaft.
12. Replace the rolling bearing [11], [44] with permitted rolling bearing types, see chapter "Permitted rolling bearings" (→ 🗎 242).

    Apply tension or pressure to the inner ring of the bearings.
13. Install key [71] and driver [70]:
    - Preheat the driver to allow for easier installation (joining temperature +85 °C to +115 °C).
    - **DR..71, DRN63 – 71, DR2..63 – 71 motors**: Clean the driver seat at the rotor [1] before installation. Glue in the driver using Loctite 649. Join the retaining ring [62] flush to the driver. Protect the sealing surface for the oil seal against scratches.
    - **DR..80 – 315, DRN80 – 315, DR2..56, 80 motors**: Clean the driver at the rotor [1] and coat with anti-corrosion agent NOCO® fluid before fitting. Next, mount the retaining ring [62].
14. Seal the stator again and install it:
    - **DR..71 – 132, DRN63 – 132S, DR2..56 – 80 motors**: Replace the seal [392].
    - **DRN63, DR2..63, DRN132M – 225 and DR..160-225 motors:** Replace O-ring [390].
    - **DR..160 – 315, DRN132M – 315 motors**: Seal the sealing surfaces with duroplastic sealing compound (operating temperature -40 °C to +180 °C), such as "SEW-L-Spezial".
15. **DR..250 – 280, DRN225 – 280 motors with** option /ERF or /NS, or with **DR../ DRN315 motors**
    - Fill the rolling bearing with grease until it is two-thirds full, see chapter "Bearing lubrication" (→ 🗎 125).
    - Notice: Place the oil seal flange [608], [21] onto the rotor shaft before installing the bearings.
    - Mount the motor vertically starting on the A-side.
    - Place the springs [105] and lubrication ring [604] into the bearing bore of the flange [7].
    - Hang the rotor [1] onto the B-side thread, and guide it into the flange [7].

25957074/EN – 06/2019

- Fasten the oil seal flange [608] to the flange [7] using the hex head screws [609].
- Screw in the stator [16] and flange [7] with screws [15].

  Notice: Protect the winding overhang from damage.
- Before mounting the rear endshield, screw in the M8 set screw (approximately 200 mm) into the oil seal flange [21].
- Before mounting the rear endshield [42], insert the set screw in through a bore for the screw [25]. Screw rear endshield to stator [16] using cap screws [19] and hex nuts [17]. Lift the oil seal flange [21] with the set screw, and fasten using 2 screws [25]. Remove the set screw and screw in the remaining screws [25].

16. Reseal the shaft:
    - Replace the oil seal [106] on the A-side.
    - **DR..315, DRN315 motors with /FG option:** Replace the oil seal [250] on the A-side.
    - **DR..250 – 315, DRN250 – 315, DRN225 motors with /NS option:** Replace the oil seal [30] on B-side
    - Apply suitable grease to the sealing lip, see chapter "Order information for lubricants, anti-corrosion agents and sealants" (→ 🗎 245).
17. Seal the friction disk of the brake [550] again at the brake endshield [42]:
    - **DRN63 – 71, DR2..63– 71 motors with BE03 brake:** Replace flat gasket [901].
    - **DR..90 – 132, DRN90 – 132S motors:** Replace gasket [901]
    - **DR..160 – 280, DRN132M – 280 motors**: Replace O-ring [901] or [1607].
    - **DR..315, DRN315 motors**: Seal the sealing surface with duroplastic sealing compound (operating temperature -40 °C to +180 °C), such as "SEW L Spezial".
18. Reinstall the brake [550]: Insert the brake cable into the terminal box when installing the brake. Install the brake. Observe the alignment of the brake. (Cams at the endshield, manual brake release position).
    - **BE03 brake**: The self-tapping screws must be distributed and tightened around the brake evenly to prevent the mounted brake from being tilted.
    - **DRN63, DR2..63/BE03 motors**: Tighten screw [19] M5x35 (self-tapping) with a tightening torque of 5 Nm. The screws can be reused.
    - **DRN71, DR2..71/BE03 motors**: Tighten screw [900] M5x20 (self-tapping) with a tightening torque of 5 Nm. New screws must be used each time the brake is mounted again.
    - **DR..71 – 80, DRN71 – 80, DR2..56, 71– 80 motors**: Install cap screws [13]. Tightening torque: 5 Nm
    - **DR..90 – 315, DRN90 – 315 motors**: Install cap screws [900].

| Motors | DR..90 – 100, DRN90 – 100 | DR..112 – 160, DRN112 – 132 | DR..180, DRN160 – 180 | DR..200 – 225, DRN200 – 225 | DR..250 – 315, DRN250 – 315 |
|---|---|---|---|---|---|
| Tightening torque | 10.3 Nm | 25.5 Nm | 50 Nm | 87.3 Nm | 230 Nm |

19. Connect the brake connection cable.
    - **BE02 – 11**: Reconnect the brake cable according to the wiring diagram.

- **BE20 – 122**: Plug in the brake plug connector [698] again. Tighten the retaining screws again (tightening torque: 3 Nm)

20. **DR..71 – 315, DRN63 – 315, DR2..63 – 80 motors:** Apply suitable grease to the sealing ring [95], see chapter "Order information for lubricants, anti-corrosion agents and sealants" (→ 🗎 245).
21. If applicable: Install sensors of the /DUE option and recalibrate the zero value. See chapter "Retrofitting the /DUE diagnostic unit for function and wear monitoring" (→ 🗎 209).
22. Install the fan wheel [36] and the fan guard [35]. Install available optional equipment.
23. With gearmotors: Replace oil flinger [107] and install the pinion.

25957074/EN – 06/2019

### 7.6.6 Basic structure of BE02 brakes

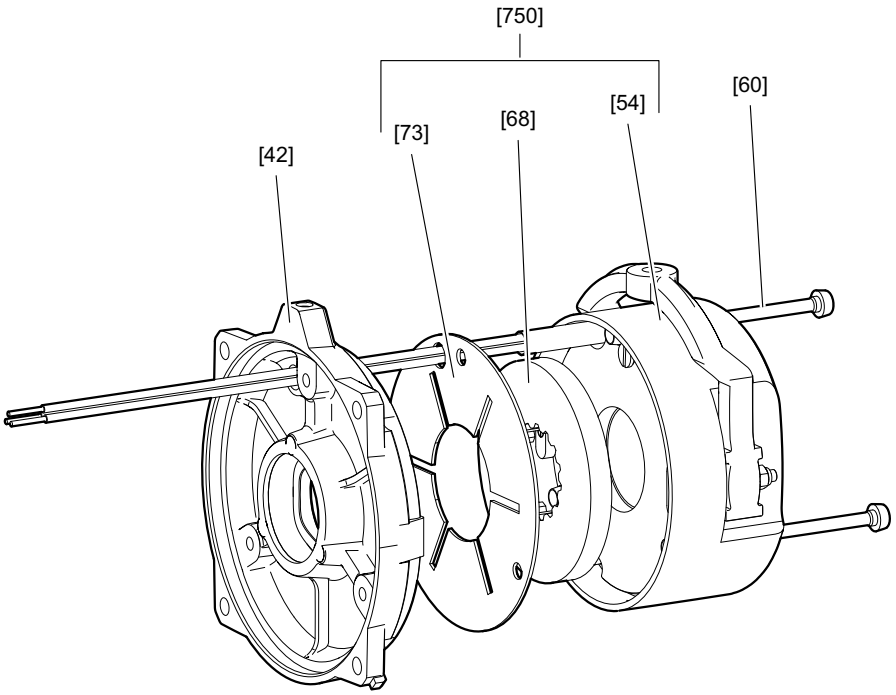


*26860869131*

| | | | |
|---|---|---|---|
| [42] | Brake endshield | [68] | Brake lining |
| [54] | Magnet body, complete | [73] | Friction plate |
| [60] | Cap screw | [750] | Pre-assembled brake |

25957074/EN – 06/2019

### 7.6.7 Basic structure of BE03 brakes

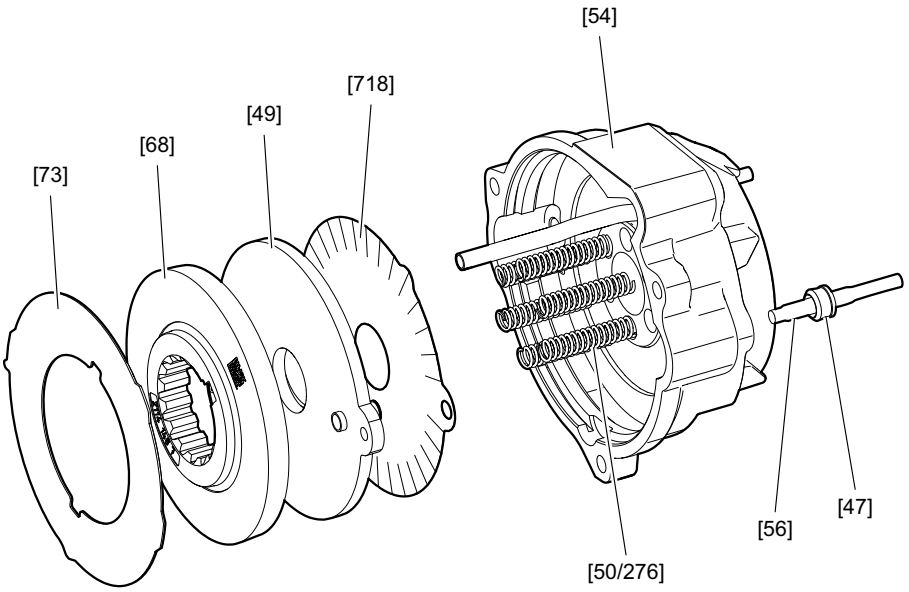


*22473863947*

| | | | | | |
|---|---|---|---|---|---|
| [47] | Sealing element | [54] | Magnet body, complete | [73] | Friction plate |
| [49] | Pressure plate | [56] | Stud | [276] | Brake spring |
| [50] | Brake spring | [68] | Brake disk (complete) | [718] | Damping plate |

25957074/EN – 06/2019

### 7.6.8 Basic structure of BE05 – 2 brakes

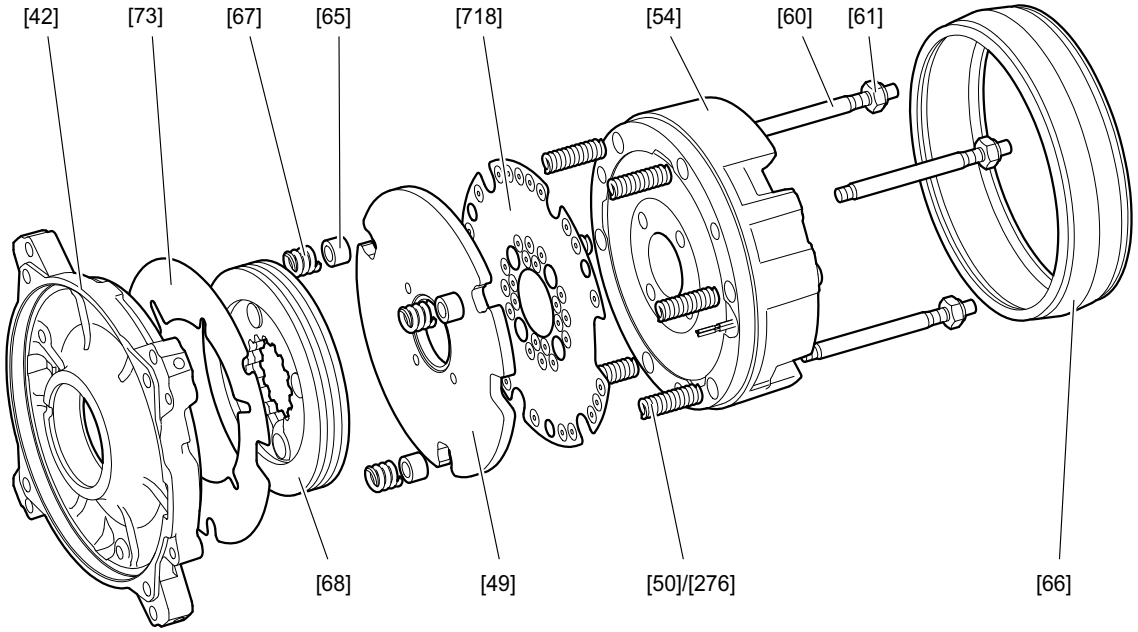


*27021598292600715*

| | | | | | |
|---|---|---|---|---|---|
| [42] | Brake endshield | [61] | Hex nut | [73] | Niro sheet metal |
| [49] | Pressure plate | [65] | Pressure ring | [276] | Brake spring (blue) |
| [50] | Brake spring (normal) | [66] | Sealing strip | [718] | Damping plate |
| [54] | Magnet body, complete | [67] | Counter spring | | |
| [60] | Stud | [68] | Brake lining carrier | | |

### 7.6.9 Basic structure of BE05 – 20 brakes

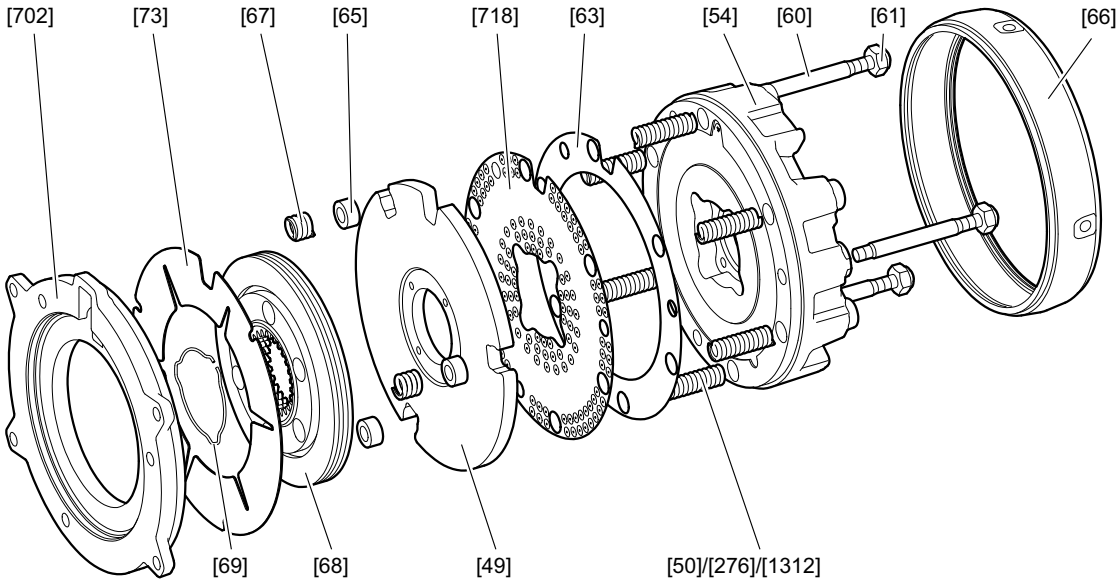


*36028797193166603*

| | | | | | |
|---|---|---|---|---|---|
| [49] | Pressure plate | [65] | Pressure ring | [276] | Brake spring (blue) |
| [50] | Brake spring (normal) | [66] | Sealing strip | [702] | Friction disk |
| [54] | Magnet body, complete | [67] | Counter spring | [718] | Damping plate (BE05 – 11) |
| [60] | Stud | [68] | Brake lining carrier | [1312] | Brake spring (white) |
| [61] | Hex nut | [69] | Circular spring/clasp (BE5 – 20) | | |
| [63] | Pole sheet | [73] | Niro sheet metal | | |

25957074/EN – 06/2019

### 7.6.10 Basic structure of BE30, 60, 120 brakes

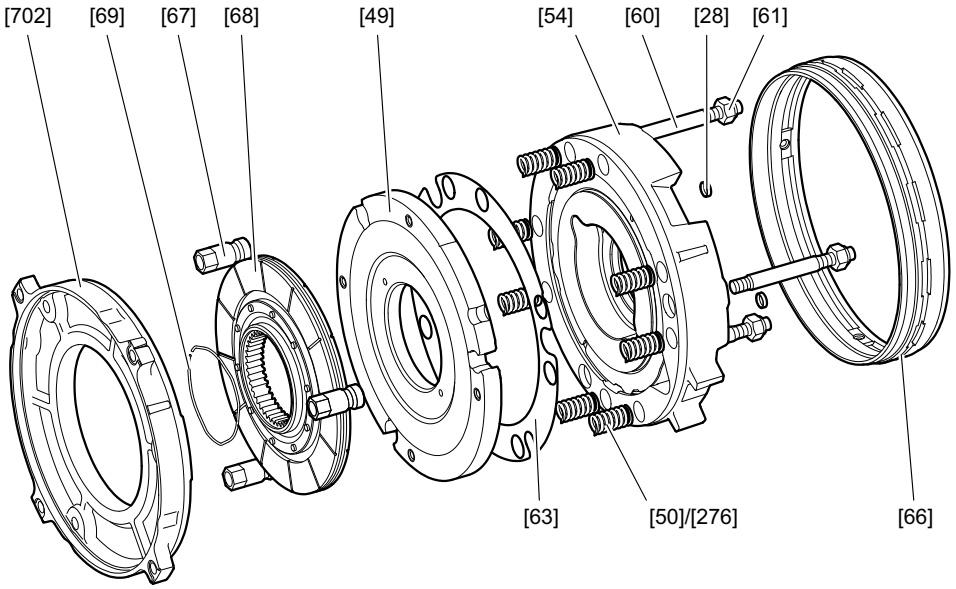


*18234907019*

| | | | | | |
|---|---|---|---|---|---|
| [28] | Closing cap | [61] | Hex nut | [69] | Circular spring |
| [49] | Pressure plate | [63] | Pole sheet | [276] | Brake spring (blue) |
| [50] | Brake spring (normal) | [66] | Sealing strip | [702] | Friction disk |
| [54] | Magnet body, complete | [67] | Setting sleeve | | |
| [60] | Stud | [68] | Complete brake disk | | |

25957074/EN – 06/2019

### 7.6.11 Basic structure of BE32, 62, 122 brakes

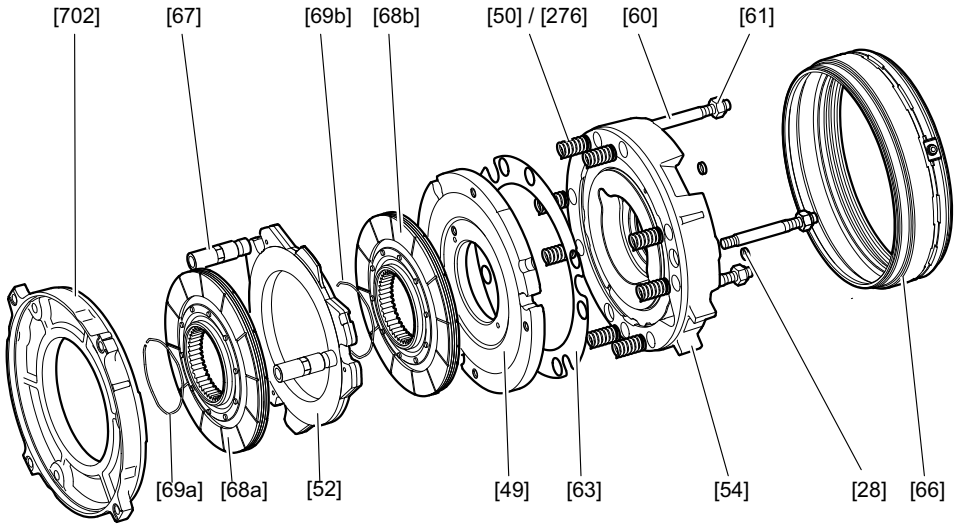


18234909451

| | | | | | |
|---|---|---|---|---|---|
| [28] | Closing cap | [61] | Hex nut | [69a] | Circular spring |
| [49] | Pressure plate | [63] | Pole sheet | [69b] | Circular spring |
| [50] | Brake spring (normal) | [66] | Sealing strip | [276] | Brake spring (blue) |
| [52] | Brake plate complete | [67] | Setting sleeve | [702] | Friction disk |
| [54] | Magnet body, complete | [68a] | Complete brake disk | | |
| [60] | Stud | [68b] | Complete brake disk | | |

25957074/EN – 06/2019

### 7.6.12 Measuring the wear of the BE02 brake

The working air gap of BE02 brakes cannot be adjusted. Check the brake lining carrier thickness during maintenance.

Replacing individual parts of the brake is not permitted.

✓ The motor and all connected options are disconnected from the power supply.

✓ The motor is protected against unintended restart.

1. Loosen the screws [60].
2. Remove the complete magnet body [54] with pressure plate and, if applicable, installed manual brake release from the brake endshield [42].
3. Make sure the brake springs [50]/[276] and friction plates [73] do not fall out.
4. Remove the brake lining carrier [68] and measure its thickness "d".

⇨ Replace the brake if the lining thickness is below the minimum permitted value. For the values, refer to chapter "Braking work, working air gap, and brake lining carrier thickness" (→ 🗎 225).

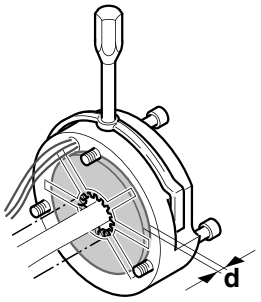


*26854192139*

### 7.6.13 Measuring the wear of BE03 brakes

The working air gap of BE03 brakes cannot be adjusted. Check the stroke of the pressure plate during maintenance.

Replacing individual parts of the brake is not permitted.

✓ The motor and all connected options are disconnected from the power supply.

✓ The motor is protected against unintended restart.

1. Measure the dimension "X" at the stroke of the studs when the brake is released or applied using a depth gauge or slide gauge.

   ⇨ The difference between both values is the working air gap.

⇨ The maximum permitted working air gap is 0.65 mm. Replace the brake in case this value is exceeded.

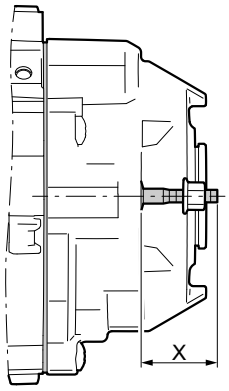


*23652168459*

### 7.6.14 Setting the working air gap of BE05 – BE122 brakes

1. Before starting to perform any work on the motor, disconnect the motor and all mounted options from the power supply before and secure the motor against unintentional power-up.
2. Remove the following:
   - Forced cooling fan and rotary encoder, if installed, see chapter "Motor and brake maintenance – preliminary work" (→ 🗎 127).
   - Fan guard with encoder mount or fan guard [35]
3. Push the sealing strip [66] aside,
   - Loosen the clamping strap [157] to do this, if necessary
   - Vacuum any abrasion
4. Measure the brake lining carrier [68]:
   - For the minimum thickness of the brake lining carrier, see chapter "Technical data" (→ 🗎 222).
   - If necessary, replace the brake lining carrier according to chapter "Replacing the brake lining carrier of BE05 – BE122 brakes" (→ 🗎 193).
5. **BE30 – 122:** Loosen the setting sleeve [67] by turning it towards the rear end-shield.
6. Measure the working air gap A (see the following figure)

   (use a feeler gauge and measure at three points offset by 120°):
   - **BE05 – 11**: between pressure plate [49] and damping plate [718]
   - **BE20 – 122**: between pressure plate [49] and magnet body [54]

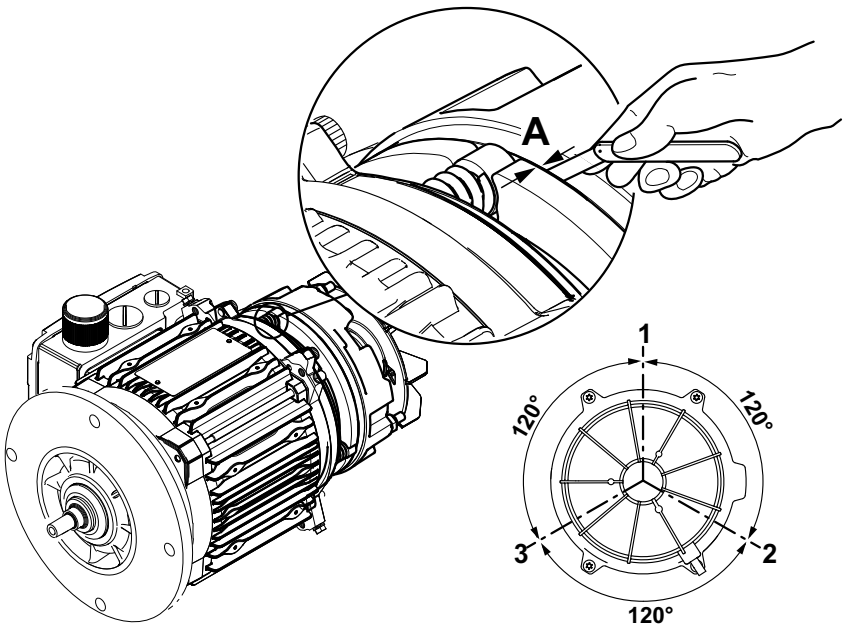


*27021597944201611*

   - **BE05 – 20:** Tighten the hex nuts [61] until the working air gap is set correctly, see chapter "Braking work, working air gap, and brake lining carrier thickness" (→ 🗎 225).

- **BE30 – 122:** Tighten the hex nuts [61] until the working air gap is initially 0.05 – 0.1 mm larger than the desired setting value (for default values, see chapter "Braking work, working air gap, and brake lining carrier thickness" (→ 🗎 225)). For example, with a desired air gap of 0.4 mm, the preset value must be 0.45 – 0.5 mm.

7. **BE30 – 122:** Evenly apply the setting sleeves [67] to the friction disk [900] by screwing them out of the magnet body.

   Tighten the hex nut [61] with the following tightening torque. Lastly, check the settings of the working air gap and adjust it if necessary.

| Brake | Tightening torque |
|---|---|
| BE30 – BE32 | 93 Nm |
| BE60 – BE62 | 40 Nm |
| BE120 – BE122 | 230 Nm |

8. If you are mounting the **BE32, BE62, BE122** to a motor with vertical motor axis, set the 3 springs of the brake plate [52] to the following dimension:

| Brake | Dimension X in mm |
|---|---|
| BE32 | 7.3 |
| BE62 | 10.0 |
| BE122 | 10.0 |

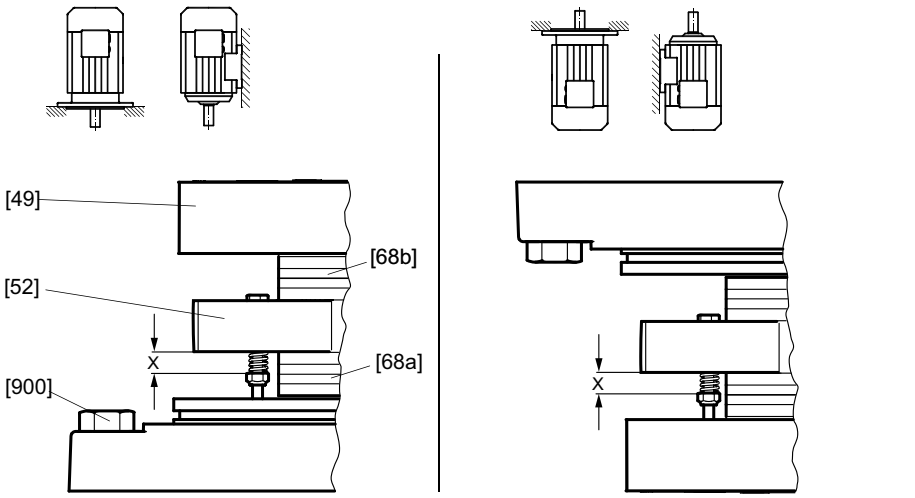


*27021598220181131*

9. Refit the sealing strip [66] and reinstall the dismantled parts.

25957074/EN – 06/2019

### 7.6.15 Replacing the brake lining carrier of BE05 – BE122 brakes

In addition to the brake elements listed in column "BE brake", see chapter "Inspection and maintenance intervals" (→ 🗎 123), check the hex nuts [61] for wear when you replace the brake lining carrier. You must always replace the hex nuts [61] when you replace the brake lining carrier.

## INFORMATION

- With DR..71 – 80, DRN71 – 80 motors with BE05 – 2 brake, the brake cannot be removed from the motor because the BE brake is directly installed on the brake endshield of the motor.

1. Disconnect the motor and all mounted options from the power supply before starting to work, and secure the motor against unintentional power-up.
2. Remove the following:
   - Forced cooling fan and rotary encoder, if installed, see chapter "Motor and brake maintenance – preliminary work" (→ 🗎 127).
   - Fan guard with encoder mount or fan guard [35], retaining ring [32]/[62] and fan [36]
3. Remove the brake cable
   - **BE05 – 11:** Loosen the terminal box cover and unfasten the brake cable from the rectifier.
   - **BE20 – 122:** Loosen locking screws of the brake plug connector [698] and remove plug connector.
4. Remove the rubber sealing collar [66]
5. Remove manual brake release if necessary.
   - Adjusting nuts [58], conical springs [57], studs [56], releasing lever [53], conical seat [255], spherical washer [256]
6. Loosen the hex nuts [61], carefully pull off the magnet body [54] (brake cable!) and take out the brake springs [50]/[276]/[1312].
7. **BE05 – 11:** Remove the damping plate [718], pressure plate [49] and brake lining carrier [68]

   **BE20, BE30, BE60, BE120:** Remove the pressure plate [49], pole sheet [63] and brake lining carrier [68]

   **BE32, BE62, BE122:** Remove the pressure plate [49], brake lining carrier [68a] and [68b], and the brake plate [52].
8. Clean the brake components.
9. Install new brake lining carrier(s).
10. Brake parts are installed as described in chapter "Working steps for inspecting DR..71 – 315, DRN63 – 315, DR2..63 – 80 brakemotors" (→ 🗎 179).
    - Except for the fan and the fan guard, because the working air gap has to be set first, see chapter "Setting the working air gap of BE05 – BE122 brakes" (→ 🗎 191).
11. In case of manual brake release: Use the adjusting nuts to adjust the floating clearance "s" between the conical springs (pressed flat) and the adjusting nuts (see chapter "Retrofitting the /HR, /HF manual brake release" (→ 🗎 203).



**⚠ WARNING**

No braking due to incorrectly set floating clearance "s".

Severe or fatal injuries.

- Make sure the floating clearance "s" is correctly set, so that the pressure plate can move up as the brake lining wears.

12. Put the sealing strip [66] in place and re-install the dismantled parts.



**INFORMATION**

After replacing the brake disk, the maximum braking torque is reached only after several cycles.

#### 7.6.16 Changing the braking torque of BE05 – BE122 brakes

You can alter the braking torque in stages. This can be done in various ways:

- By changing the type and number of brake springs
- By changing the complete magnet (only possible for BE05 and BE1)
- By changing the brake (from motor size 90)
- By changing to a double disk brake (only possible for BE30, BE60, BE120)

For possible braking torque steps, refer to chapter "Technical data" (→ 🗎 222).

25957074/EN – 06/2019

### 7.6.17 Changing the brake spring of BE05 – BE122 brakes

1. Disconnect the motor and all mounted options from the power supply before starting to work, and secure the motor against unintentional power-up.
2. Remove the following:
   - Forced cooling fan and rotary encoder, if installed, see chapter "Motor and brake maintenance – preliminary work" (→ 🗎 127).
   - Fan guard with encoder mount or fan guard [35], retaining ring [32]/[62] and fan [36]
3. Remove the brake cable.
   - **BE05 – 11:** Remove the terminal box cover. Remove the brake cable from the rectifier.
   - **BE20 – 122:** Loosen the locking screws of the brake plug connector [698]. Remove the plug connector.
4. Remove the sealing strip [66] and (if necessary) the manual brake release:
   - Setting nuts [58], conical springs [57], studs [56], releasing lever [53], conical seat [255], spherical washer [256]
5. Unfasten the hex nuts [61] and pull off the magnet body [54]
   - By approx. 50 mm (watch the brake cable!)
6. Replace or add brake springs [50/276/1312]
   - Arrange brake springs symmetrically
7. Brake parts are installed as described in chapter "Working steps for inspecting DR..71 – 315, DRN63 – 315, DR2..63 – 80 brakemotors" (→ 🗎 179).
   - Except for the fan and the fan guard, because the working air gap has to be set first, see chapter "Setting the working air gap of BE05 – BE122 brakes" (→ 🗎 191).
8. In case of manual brake release: Use the adjusting nuts to adjust the floating clearance "s" between the conical springs (pressed flat) and the adjusting nuts (see chapter "Retrofitting the /HR, /HF manual brake release" (→ 🗎 203).

**⚠ WARNING**



No braking due to incorrectly set floating clearance "s".

Severe or fatal injuries.

- Make sure the floating clearance "s" is correctly set, so that the pressure plate can move up as the brake lining wears.

9. Put the sealing strip [66] in place and re-install the dismantled parts.

**INFORMATION**



Replace the setting sleeves [58] if the removal procedure is repeated.

### 7.6.18 Changing the magnet body of BE05 – BE122 brakes

1. Disconnect the motor and all mounted options from the power supply before starting to work, and secure the motor against unintentional power-up.
2. Remove the following:
   - Forced cooling fan and rotary encoder, if installed, see chapter "Motor and brake maintenance – preliminary work" (→ 🗎 127).
   - Fan guard with encoder mount or fan guard [35], retaining ring [32]/[62] and fan [36]
3. Remove the rubber sealing collar [66] and the manual brake release:
   - Setting nuts [58], conical coil springs [57], studs [56], releasing lever [53], parallel pin [59].
4. Remove the brake cable
   - **BE05 – 11:** Loosen the terminal box cover and unfasten the brake cable from the rectifier.
   - **BE20 – 122:** Loosen locking screws of the brake plug connector [698] and remove plug connector.
5. Loosen hex nuts [61], remove complete magnet body [54], remove brake springs [50]/[276]/[1312].
6. Install new magnet body with brake springs. For the possible braking torque steps, refer to chapter "Technical data" (→ 🗎 222).
7. Brake parts are installed as described in chapter "Working steps for inspecting DR..71 – 315, DRN63 – 315, DR2..63 – 80 brakemotors" (→ 🗎 179).
   - Except for the fan and the fan guard, because the working air gap has to be set first, see chapter "Setting the working air gap of BE05 – BE122 brakes" (→ 🗎 191).
8. In case of manual brake release: Use the adjusting nuts to adjust the floating clearance "s" between the conical springs (pressed flat) and the adjusting nuts (see chapter "Retrofitting the /HR, /HF manual brake release" (→ 🗎 203).

**⚠ WARNING**



No braking due to incorrectly set floating clearance "s".

Severe or fatal injuries.

- Make sure the floating clearance "s" is correctly set, so that the pressure plate can move up as the brake lining wears.

9. Put the sealing strip [66] in place and re-install the dismantled parts.
10. Replace the brake control in the event of an interturn short circuit or a short circuit to frame.

## INFORMATION



Replace the setting sleeves [58] if the removal procedure is repeated.

25957074/EN – 06/2019

### 7.6.19 Replacing BE02 brakes with DR2..56 motors

✓ The motor and all connected options are disconnected from the power supply.

✓ The motor is protected against unintended restart.

1. Disassemble the following parts:
   - ⇨ Forced cooling fan and rotary encoder, if installed, see chapter "Motor and brake maintenance – preliminary work" (→ 🗎 127).
   - ⇨ Fan guard with encoder mount [212] or fan guard [35], retaining ring [32]/[62] and fan [36]
2. Remove the terminal box cover and loosen the brake cable from the brake control/ terminals. Attach trailing wire to brake cables, if necessary.
3. Remove the screws and brake (with brake endshield if necessary) from the stator.
   - ⇨ DR2..56: Screws [13]
4. Replace gasket [392]. Observe the alignment of the gasket.
5. If necessary, replace driver [70], key [71], and retaining ring [62], see chapter "Working steps for inspecting DR..71 – 315, DRN63 – 315, DR2..63 – 80 brakemotors" (→ 🗎 179).
6. Insert the brake cable of the new brake into the terminal box.
7. Position the new brake. Make sure the cable outlet and brake lining carrier gearing are correctly aligned.
8. Refasten the brake using the screws.
   - ⇨ Cap screws [13]
   - ⇨ Tightening torque 3.3 Nm.
   - ⇨ Tolerance ±10%.
9. Install the disassembled parts of the motor.

25957074/EN – 06/2019

### 7.6.20 Replacing BE03 brakes for DRN63 – 71 and DR2..63 – 71 motors

✓ The motor and all connected options are disconnected from the power supply.

✓ The motor is protected against unintended restart.

1. Disassemble the following parts:
   - ⇨ Forced cooling fan and rotary encoder, if installed, see chapter "Motor and brake maintenance – preliminary work" (→ 🗎 127).
   - ⇨ Fan guard with encoder mount [212] or fan guard [35], retaining ring [32]/[62] and fan [36]
2. Remove the terminal box cover and loosen the brake cable from the brake control/ terminals. Attach trailing wire to brake cables, if necessary.
3. Remove the screws and brake (with brake endshield if necessary) from the stator.
   - ⇨ DRN63, DR2..63 motors: Screws [19]
   - ⇨ DRN71, DR2..71 motors: Screws [900]
4. Replace the gasket [901]. Observe the alignment of the gasket, if necessary.
5. If necessary, replace driver [70], key [71], and retaining ring [62], see chapter "Working steps for inspecting DR..71 – 315, DRN63 – 315, DR2..63 – 80 brakemotors" (→ 🗎 179).
6. Insert the brake cable of the new brake into the terminal box.
7. Position the new brake. Make sure the cable outlet and brake lining carrier gearing are correctly aligned.
8. Fasten the brake using screws [19] or [900]. Distribute the screws around the brake and tighten them one after the other.
   - ⇨ DRN63, DR2..63 motors: The screws [19] can be reused. Tightening torque 5 Nm, tolerance ±10%
   - ⇨ DRN71, DR2..71 motors: Use new screws [900]. Tightening torque 5 Nm, tolerance ±10%
9. Seal the shaft.
10. Replace the sealing ring [95].
11. Apply grease to the sealing lip, see chapter "Order information for lubricants, anti-corrosion agents and sealants" (→ 🗎 245).
12. ⚠ **DANGER!** No braking due to incorrectly set floating clearance "s". Severe or fatal injuries. Make sure the floating clearance "s" is set correctly so that the pressure plate can move up as the brake lining wears.
    Manual brake release option: Set the floating clearance "s" using the adjusting nuts, see chapter "Retrofitting the /HR, /HF manual brake release" (→ 🗎 203).
13. Install the disassembled parts of the motor.

25957074/EN – 06/2019

### 7.6.21 Replacing BE05 – 2 brakes for DR..71 – 80, DRN80, DR2..80 motors

✓ The motor and all connected options are disconnected from the power supply.

✓ The motor is protected against unintended restart.

1. Disassemble the following parts:
   - ⇨ Forced cooling fan and rotary encoder, if installed, see chapter "Motor and brake maintenance – preliminary work" (→ 🗎 127).
   - ⇨ Fan guard with encoder mount [212] or fan guard [35], retaining ring [32]/[62] and fan [36]
2. Remove the terminal box cover and loosen the brake cable from the brake control/ terminals. Attach trailing wire to brake cables, if necessary.
3. Remove the screws and brake (with brake endshield if necessary) from the stator.
   - ⇨ DR..71 – 80, DRN80, DR2..80: Screws [13]
4. Replace gasket [392]. Observe the alignment of the gasket.
5. If necessary, replace driver [70], key [71], and retaining ring [62], see chapter "Working steps for inspecting DR..71 – 315, DRN63 – 315, DR2..63 – 80 brakemotors" (→ 🗎 179).
6. Insert the brake cable of the new brake into the terminal box.
7. Position the new brake. Make sure the cable outlet and brake lining carrier gearing are correctly aligned.
8. Refasten the brake using the screws.
   - ⇨ Cap screws [13]
   - ⇨ Tightening torque 5 Nm.
   - ⇨ Tolerance ±10%.
9. Seal the shaft.
10. Replace the sealing ring [95].
11. Apply grease to the sealing lip, see chapter "Order information for lubricants, anti-corrosion agents and sealants" (→ 🗎 245).
12. For designs with corrosion protection /KS and/or IP56/66, the clamping straps of the disassembled brake have to be mounted to the new brake [550]. Seal studs with SEW-L-Spezial, see chapter "Order information for lubricants, anti-corrosion agents and sealants" (→ 🗎 245).
13. ⚠ **DANGER!** No braking due to incorrectly set floating clearance "s". Severe or fatal injuries. Make sure the floating clearance "s" is set correctly so that the pressure plate can move up as the brake lining wears.
    Manual brake release option: Set the floating clearance "s" using the adjusting nuts, see chapter "Retrofitting the /HR, /HF manual brake release" (→ 🗎 203).
14. Diagnostic unit option /DUE: Insert the sensor [1151] into the magnet body [54] of the new brake using the screw fitting. Fasten the cable with the terminal [1152/1153] at the magnet body in a way that the sensor cable cannot touch the fan wheel [36]. Then calibrate the zero value, see chapter "Zero value calibration" (→ 🗎 217).
15. Install the disassembled parts of the motor.

25957074/EN – 06/2019

### 7.6.22 Replacing BE05 – 62 brakes for DR..90 – 225, DRN90 – 225 motors

✓ The motor and all connected options are disconnected from the power supply.

✓ The motor is protected against unintended restart.

1. Disassemble the following parts:
   - ⇨ Forced cooling fan and rotary encoder, if installed, see chapter "Motor and brake maintenance – preliminary work" (→ 🗎 127).
   - ⇨ Fan guard with encoder mount [212] or fan guard [35], retaining ring [32]/[62] and fan [36]
2. Loosen the brake cable.
   - ⇨ BE05 – 11: Remove the terminal box cover and loosen the brake cable from the brake control/terminals.
   - ⇨ BE20 – 62: Loosen locking screws of the brake plug connector [698] and remove plug connector.
3. Remove the screws and brake (with brake endshield if necessary) from the stator.
4. Replace the gasket [901]. Observe the alignment of the gasket, if necessary.
5. If necessary, replace driver [70], key [71], and retaining ring [62], see chapter "Working steps for inspecting DR..71 – 315, DRN63 – 315, DR2..63 – 80 brakemotors" (→ 🗎 179).
6. BE05 – 11: Insert the brake cable of the new brake into the terminal box.
7. Position the new brake. Make sure the cable outlet and brake lining carrier gearing are correctly aligned.
   - ⇨ BE20 – 62 with manual brake release option: It is important that the manual brake release is positioned properly.
8. Refasten the brake using the screws.
   - ⇨ Cap screws [900]
   - ⇨ Tightening torque for DR..90 – 100, DRN90 – 100: 10.3 Nm
   - ⇨ Tightening torque for DR..112 – 160, DRN112 – 132: 25.5 Nm
   - ⇨ Tightening torque for DR..180, DRN160 – 180: 50 Nm
   - ⇨ Tightening torque for DR..200 – 225, DRN200 – 225: 87.3 Nm
   - ⇨ Tolerance ±10%.
9. Seal the shaft.
10. Replace the sealing ring [95].
11. Apply grease to the sealing lip, see chapter "Order information for lubricants, anti-corrosion agents and sealants" (→ 🗎 245).
12. BE20 – 62: Insert the plug connector [698] into the brake and fasten using screws.
    - ⇨ Tightening torque 3 Nm.
13. For designs with corrosion protection /KS and/or IP56/66, the clamping straps of the disassembled brake have to be mounted to the new brake [550]. Seal studs with SEW-L-Spezial, see chapter "Order information for lubricants, anti-corrosion agents and sealants" (→ 🗎 245).
14. ⚠ **DANGER!** No braking due to incorrectly set floating clearance "s". Severe or fatal injuries. Make sure the floating clearance "s" is set correctly so that the pressure plate can move up as the brake lining wears.
    Manual brake release option: Set the floating clearance "s" using the adjusting nuts, see chapter "Retrofitting the /HR, /HF manual brake release" (→ 🗎 203).

25957074/EN – 06/2019

15. Diagnostic unit option /DUE: Insert the sensor [1151] into the magnet body [54] of the new brake using the screw fitting. Fasten the cable with the terminal [1152/1153] at the magnet body in a way that the sensor cable cannot touch the fan wheel [36]. Then calibrate the zero value, see chapter "Zero value calibration" (→ 🗎 217).
16. Install the disassembled parts of the motor.

25957074/EN – 06/2019

### 7.6.23 Replacing BE60 – 122 brakes for DR..250 – 315, DRN250 – 315 motors

✓ The motor and all connected options are disconnected from the power supply.

✓ The motor is protected against unintended restart.

1. Disassemble the following parts:
   - ⇨ Forced cooling fan and rotary encoder, if installed, see chapter "Motor and brake maintenance – preliminary work" (→ 🗎 127).
   - ⇨ Fan guard with encoder mount [212] or fan guard [35], retaining ring [32]/[62] and fan [36]
2. Unscrew the locking screws of the brake plug connector [698] and remove the plug connector.
3. Remove the screws and brake (with brake endshield if necessary) from the stator.
   - ⇨ DR..250 – 280, DRN250 – 280 motors: Replace the O-ring [1607].
4. If necessary, replace driver [70], key [71], and retaining ring [62], see chapter "Working steps for inspecting DR..71 – 315, DRN63 – 315, DR2..63 – 80 brakemotors" (→ 🗎 179).
5. Seal the shaft.
6. Replace the sealing ring [95].
7. Apply grease to the sealing lip, see chapter "Order information for lubricants, anti-corrosion agents and sealants" (→ 🗎 245).
8. Position the new brake. Make sure the cable outlet and brake lining carrier gearing are correctly aligned.
   - ⇨ Manual brake release option: It is important that the manual brake release is positioned properly.
9. Refasten the brake using the screws.
   - ⇨ Cap screws [900]
   - ⇨ Tolerance ±10%.
10. For designs with corrosion protection /KS and/or IP56/66, the clamping straps of the disassembled brake have to be mounted to the new brake [550]. Seal studs with SEW-L-Spezial, see chapter "Order information for lubricants, anti-corrosion agents and sealants" (→ 🗎 245).
11. Insert plug connector [698] in the brake and fasten using screws.
    - ⇨ Tightening torque 3 Nm.
12. ⚠ **DANGER!** No braking due to incorrectly set floating clearance "s". Severe or fatal injuries. Make sure the floating clearance "s" is set correctly so that the pressure plate can move up as the brake lining wears.
    Manual brake release option: Set the floating clearance "s" using the adjusting nuts, see chapter "Retrofitting the /HR, /HF manual brake release" (→ 🗎 203).
13. Diagnostic unit option /DUE: Insert the sensor [1151] into the magnet body [54] of the new brake using the screw fitting. Fasten the cable with the terminal [1152/1153] at the magnet body in a way that the sensor cable cannot touch the fan wheel [36]. Then calibrate the zero value, see chapter "Zero value calibration" (→ 🗎 217).
14. Install the disassembled parts of the motor.

25957074/EN – 06/2019

### 7.6.24 Retrofitting the /HR, /HF manual brake release

## INFORMATION

With BE02 brakes, the manual brake release can only be retrofitted if the brake is completely replaced.

✓ The motor and all connected options are disconnected from the power supply.

✓ The motor is protected against unintended restart.

1. Disassemble the following parts:
   - ⇨ Forced cooling fan and rotary encoder, if installed, see chapter "Motor and brake maintenance – preliminary work" (→ 🗎 127).
   - ⇨ Fan guard with encoder mount [212] or fan guard [35], retaining ring [32]/[62] and fan [36]
2. Mount the manual brake release.
   - ⇨ BE03: Position the releasing lever [53] and the spring plate [53] correctly. Mount the flange nut [58]. Attach the hand lever [51]/set screw [64] to the stator using the grommets.
   - ⇨ BE05 – BE11: Remove the old sealing ring [95]. Screw in the studs [56] and glue them. Insert the sealing rings for the manual brake release [95]. Hammer in the parallel pin [59]. Install the releasing lever [53], the conical springs [57] and the adjusting nuts [58].
   - ⇨ BE20 – BE62: Insert O-rings [47] into the magnet body. Screw in the studs [56] and glue them. Install the releasing lever [53], the conical springs [57] and the adjusting nuts [58].
   - ⇨ BE120 – BE122: Insert O-rings [47] in the magnet body. Screw in the studs [56] and glue them.
3. ⚠ **DANGER!** No braking due to incorrectly set floating clearance "s". Severe or fatal injuries. Make sure the floating clearance "s" is set correctly so that the pressure plate can move up as the brake lining wears.
   Set the floating clearance "s" using the adjusting nuts or flange nuts.
   - ⇨ BE03: Between releasing lever and flange nut (see following illustration).
   - ⇨ BE05 – 122: Between conical springs (pressed flat) and adjusting nuts (see following illustration).

| BE03 | BE05 – 122 |
|---|---|
| 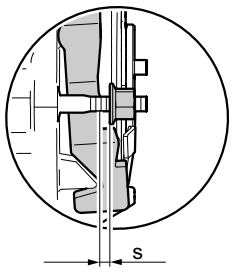 | 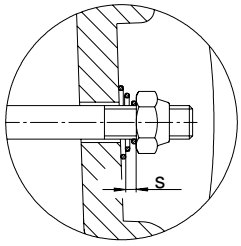 |

| Brake | Floating clearance s<br>mm |
|---|---|
| BE03 | 2.2 |
| BE05, BE1, BE2 | 1.5 |

| Brake | Floating clearance s<br>mm |
|---|---|
| BE5 | 1.7 |
| BE11, BE20, BE30, BE32, BE60, BE62, BE120, BE122 | 2 |

4. Install the disassembled parts of the motor.

25957074/EN – 06/2019

## 7.7 Inspection/maintenance work diagnostic unit /DUB

### 7.7.1 Basic structure of diagnostic unit /DUB on DR..90 – 315 motors with BE..

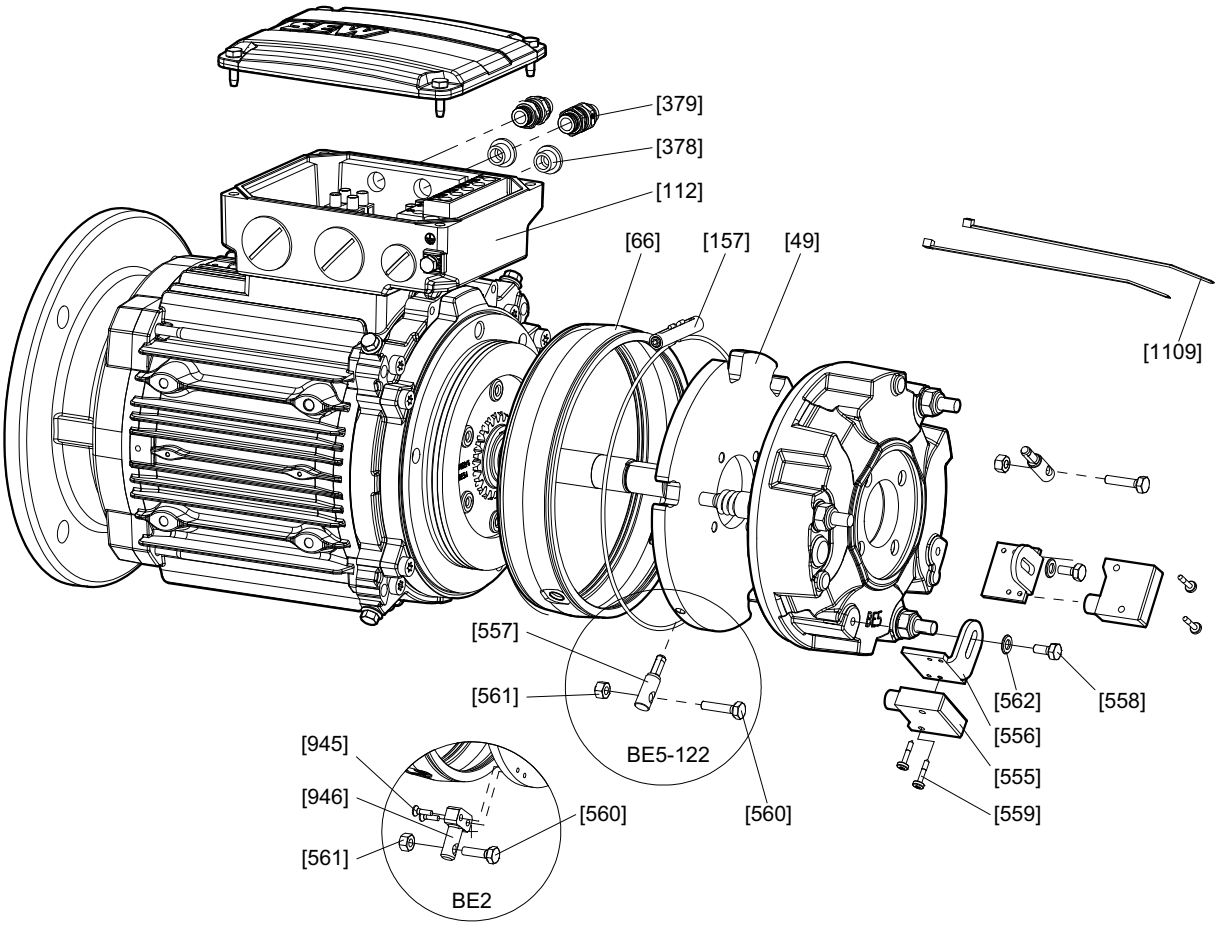


*18014399594797835*

| | | | | | |
|---|---|---|---|---|---|
| [49] | Pressure plate for DUB | [555] | Microswitch | [561] | Hex nut |
| [66] | Sealing strip for DUB | [556] | Angle bracket | [562] | Shim |
| [112] | Terminal box lower part | [557] | Bolt (BE5 and larger) | [945] | Hex head screw (BE2) |
| [157] | Clamping strap (BE2 – 11) | [558] | Hex head screw | [946] | Mounting plate (BE2) |
| [378] | Screw plug | [559] | Pan head screw | [1109] | Cable ties |
| [379] | Screw fitting | [560] | Hex head screw | | |

25957074/EN – 06/2019

### 7.7.2 Inspection/maintenance work diagnostic unit /DUB



**⚠ WARNING**

Risk of injury if the drive starts up unintentionally.

Severe or fatal injuries.

- Before you start working on the unit, disconnect the motor and all connected options from the power supply.
- Secure the motor against unintended power-up.



**INFORMATION**

Brakes equipped with the /DUB option have at least one microswitch. These can be used for function monitoring or setting a wear monitoring. If 2 microswitches are mounted to one brake, both monitoring statuses can be realized. In this case, first set the switch for wear monitoring, then the switch for function monitoring.



**INFORMATION**

The specifications provided in the tables on setting the wear monitoring refer to the maximum permitted working air gap for brakemotors without safety options at brake and encoder, see chapter "Braking work, working air gap, and brake lining carrier thickness" (→ 🗎 225). Deviating values apply to brakemotors with the specified safety options. Observe the information in the addendum to the operating instructions "Safety Encoders and Safety Brakes – AC Motors DR.., DRN.., DR2.., EDR.., EDRN.. – Functional Safety".

25957074/EN – 06/2019

### 7.7.3 Inspection/maintenance work at the /DUB diagnostic unit with microswitch for function monitoring

1. Check the working air gap according to chapter "Setting the working air gap of BE05 – BE122 brakes" (→ 🗎 191) and adjust it if necessary.
2. Screw the hex head screw [560] against the actuator of the microswitch [555] until it trips (brown, blue contacts closed).

   While screwing, install hex nut [561] to eliminate the longitudinal play from the thread.
3. Turn the hex head screw [560] back until the microswitch [555] switches back (contacts brown-blue open). Depending on the brake size, screw out the hex head screw [560] by the specified angle to set the switching hysteresis.

| Brake | Angle |
|---|---|
| BE2, BE5, BE11, BE20, BE30, BE60 | 60° |
| BE32, BE62 | 90° |
| BE120, BE122 | 105° |

- After reaching the respective end position, tighten the hex nut [561] against the bolts [557]/[945] while holding the hex head screw [560] to keep it in the correct position.
- Switch the brake on and off several times. Check whether the microswitch opens and closes reliably in any motor shaft position. Therefore, change the position of the motor shaft manually several times. In case of incorrect switching, the setting procedure may require to be repeated.
- Check if the cables are routed firmly and if they require additional fastening in form of cable ties [1109]. Make sure the cables are routed in a sufficient distance to the fan wheel of the motor.
- Install the previously removed motor parts again.

25957074/EN – 06/2019

### 7.7.4 Inspection/maintenance of the diagnostic unit /DUB with microswitch for wear monitoring

1. Check the working air gap according to chapter "Setting the working air gap of BE05 – BE122 brakes" (→ 🗎 191) and adjust it if necessary.
2. Screw the hex head screw [560] against the actuator of the microswitch [555] until it trips (brown, blue contacts closed).

   While screwing, install hex nut [561] to eliminate the longitudinal play from the thread.
3. Screw the hex head screw [560] further in from the actuated switching point, so that the microswitch [555] remains activated (contact brown-blue closed). Depending on the brake size, screw the hex head screw [560] further in by the specified angle to set the wear point:

| Brake | Standard brake without safety encoder | With safety brake or safety encoder |
|---|---|---|
| BE2 | 135° | 135° |
| BE5 | 270° | 180° |
| BE11, BE20, BE30, BE32, BE60, BE62 | 360° | |
| BE120 | 270° | 135° |
| BE122 | 180° | 90° |

- After reaching the respective end position, tighten the hex nut [561] against the bolts [557]/[945] while holding the hex head screw [560] to keep it in the correct position.
- Check if the cables are routed firmly and if they require additional fastening in form of cable ties [1109]. Make sure the cables are routed in a sufficient distance to the fan wheel of the motor.
- Install the previously removed motor parts again.

25957074/EN – 06/2019

## 7.8 Inspection/maintenance work diagnostic unit /DUE

### 7.8.1 Basic structure of diagnostic unit /DUE

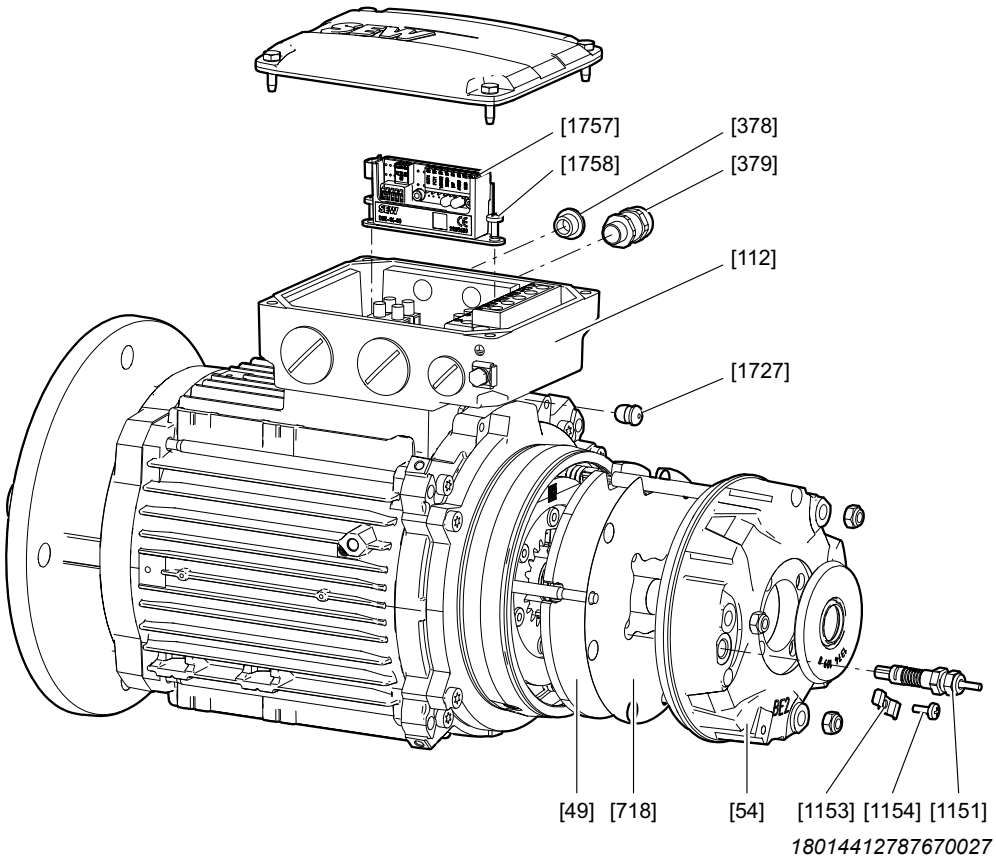


*18014412787670027*

| | | | |
|---|---|---|---|
| [49] | Pressure plate for /DUE (BE20 and higher) | [1151] | Distance sensor |
| [54] | Magnet body complete for /DUE | [1153] | Spring (BE20 – 122) |
| [112] | Terminal box lower part | [1154] | Mushroom head screw (BE20 – 122) |
| [378] | Screw plug (DRN200 – 315) | [1757] | Evaluation unit |
| [379] | Screw fitting (DRN200 – 315) | [1758] | Screw |
| [718] | Dampening plate (BE1 – 11) | [1727] | Grommet (DRN80 – 180) |

### 7.8.2 Removing the /DUE diagnostic unit

1. Remove forced cooling fan and rotary encoder, if installed, see chapter "Motor and brake maintenance – preliminary work" (→ 🗎 127).
2. Remove the fan guard [35] / fan guard with encoder mount [212], or the forced cooling fan [170] by loosening the retaining screws [22].
3. If applicable: Remove the retaining ring [32] and the fan wheel [36] using a suitable tool.
4. Loosen the screw [1154] for the cable fixture clamp [1153].
5. Loosen the union nut of the sensor screw fitting. The sensor cable is free.
6. Loosen the sensor [1151] on the mounting flange. Remove the sensor.

### 7.8.3 Retrofitting the /DUE diagnostic unit for function and wear monitoring

Designation

For the component designation of the evaluation unit, refer to chapter "Designation of the components" (→ 🗎 101).

Conditions

The /DUE diagnostic unit can only be retrofitted for motor sizes 80 – 315 with brakes BE1 – 122 under the following conditions:

- Exchange of the existing brake without /DUE preparation for a new brake with /DUE preparation.
- Conversion of the terminal box to create room for the evaluation unit of the /DUE diagnostic unit.
- Retrofitting of the evaluation and sensor unit, see chapter "Evaluation unit" (→ 🗎 210).

Whether and to what extent the first two measures in the list are to be carried out depends greatly on the respective motor design. To identify the components that need to be replaced, please contact SEW-EURODRIVE.

**Evaluation unit**

The evaluation unit has a 5-pin DIP switch that is labeled with the numbers 1 to 5. Use it to set the measuring range and the maximum permitted wear limit (maximum working air gap).

If the brake is used in combination with a safety encoder, or if the brake is designed as safety brake, the setting values for the wear limit are reduced. For the new values, refer to the addendum to the operating instructions for safety brakes and safety encoders.

To activate the DIP switch ≙1, push the switch upwards. To deactivate the DIP switch ≙ 0, push the switch downwards.

The following table shows the DIP switch settings of the evaluation unit for the maximum working air gap.

| S1 | S2 | S3 | S4 | S5 | Wear limit | BE1 – 2 brake | BE5 brake |
|---|---|---|---|---|---|---|---|
| **Sensor Ø 6 mm** | | | | | | | |
| **0** | **0** | **0** | **0** | **0** | 1.2 mm | | |
| **0** | **0** | **0** | **0** | **1** | 1.1 mm | | |
| **0** | **0** | **0** | **1** | **0** | 1.0 mm | | |
| **0** | **0** | **0** | **1** | **1** | 0.9 mm | | X |
| **0** | **0** | **1** | **0** | **0** | 0.8 mm | | |
| **0** | **0** | **1** | **0** | **1** | 0.7 mm | | |
| **0** | **0** | **1** | **1** | **0** | 0.6 mm | X | |
| **0** | **0** | **1** | **1** | **1** | 0.5 mm | | |
| **S1** | **S2** | **S3** | **S4** | **S5** | **Wear limit** | **BE11 – 122 brake** | |
| **Sensor Ø 8 mm** | | | | | | | |
| **1** | **0** | **0** | **0** | **0** | 1.2 mm | X | |
| **1** | **0** | **0** | **0** | **1** | 1.1 mm | | |
| **1** | **0** | **0** | **1** | **0** | 1.0 mm | | |
| **1** | **0** | **0** | **1** | **1** | 0.9 mm | | |
| **1** | **0** | **1** | **0** | **0** | 0.8 mm | | |
| **1** | **0** | **1** | **0** | **1** | 0.7 mm | | |
| **1** | **0** | **1** | **1** | **0** | 0.6 mm | | |
| **1** | **0** | **1** | **1** | **1** | 0.5 mm | | |

X Factory setting
Setting possible in addition

25957074/EN – 06/2019

*Setting and mounting the evaluation unit*

✓ The motor and all connected options are disconnected from the power supply.

✓ The motor is protected against unintended restart.

1. Set the wear limit using the DIP switches.
2. Screw the evaluation unit into the terminal box after consultation with SEW-EURODRIVE.
3. Connect the sensor, see chapter "Connecting the sensor" (→ 🗎 213).
4. Calibrate the infinite value, see chapter "Calibrating the infinite value" (→ 🗎 215).
5. Install the sensor in the brake, see chapter "Installing the sensor" (→ 🗎 216).
6. Route the cable, see chapter "Cable routing" (→ 🗎 217).
7. Calibrate the zero value, see chapter "Zero value calibration" (→ 🗎 217).
8. To check the function, measure the voltage via terminal 5k to 10k. Switch the brake and check if 24 V are applied.
9. To check if the working air gap is within the permitted range, measure the current between terminals 4k and 10k. Compare the value to the range in the diagram in chapter "Output signals for function and wear monitoring" (→ 🗎 214).

**Connecting electronics**

The function and wear monitoring is connected according to the following wiring diagram. The maximum permitted cable cross section at terminals "k" is 1.5 mm² with conductor end sleeve without plastic collar, 0.75 mm² with plastic collar. The recommended cable cross section at terminal "k" is 0.5 mm² with conductor end sleeve with plastic collar.

## INFORMATION

Use shielded cables to wire the evaluation unit. Connect the shield to the GND potential, or use the shield plate at the user's signal evaluation.

- Unless they are shielded, sensor cables must always be routed separately from other power cables with phased currents.
- Provide for a suitable equipotential bonding between drive and control cabinet.

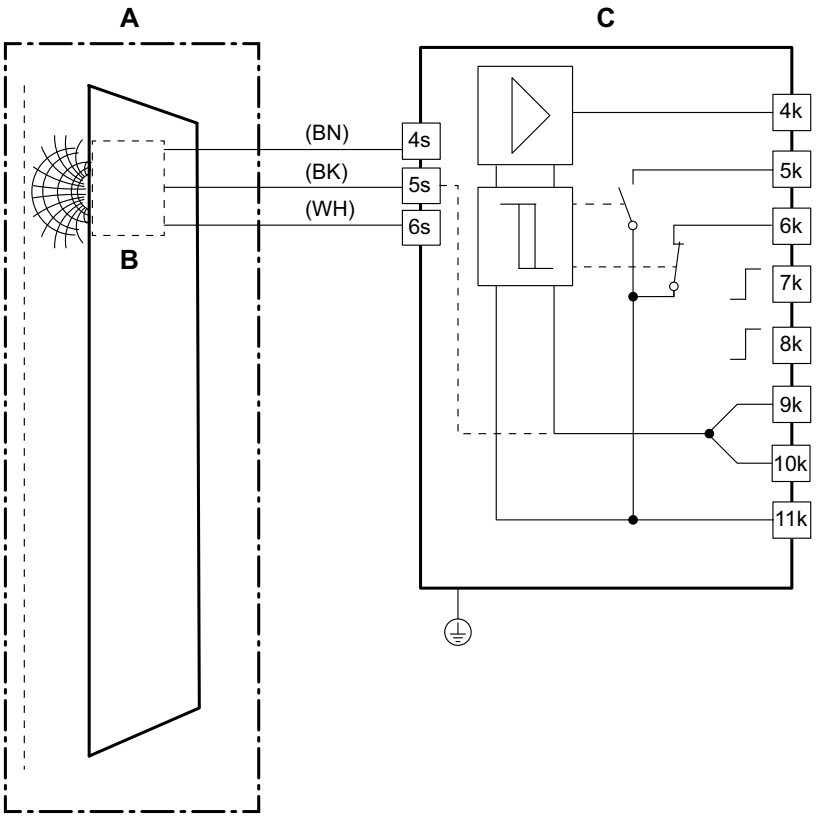


*18014412038672651*

| | | | |
|---|---|---|---|
| [A] | Brake | [4k] | Analog output wear 1 (air gap) |
| [B] | Eddy current sensor | [5k] | Digital output function 1 (NO contact) |
| [C] | Evaluation unit | [6k] | Digital output wear 1 (NC contact) |
| | | [7k] | Input calibration zero value |
| [4s] | Connection sensor A1 (brown cable) | [8k] | Input calibration infinite value |
| [5s] | Connection sensor GND 1 (black cable) | [9k] | Signal ground AGND |
| [6s] | Connection sensor B1 (white cable) | [10k] | Ground potential GND |
| | | [11k] | DC 24 V supply |

The evaluation unit is supplied with DC 24 V via the terminals GND [10k] and DC 24 V [11k].

Brake monitoring provides digital signals for:

- Function FCT1 [5k] and wear WEAR1 [6k] of the brake.

The working air gap can be monitored continuously via the analog signal (4 – 20 mA) regarding the signal ground [9k]:

- Terminal OUT1 [4k]

Use terminals ZERO [7k] and INF [8k] for calibration.

## INFORMATION

If values deviate from the factory setting, the wear point setting must be adjusted. See chapter "Evaluation unit" (→ 🗎 210).

25957074/EN – 06/2019

*Connecting the sensor*

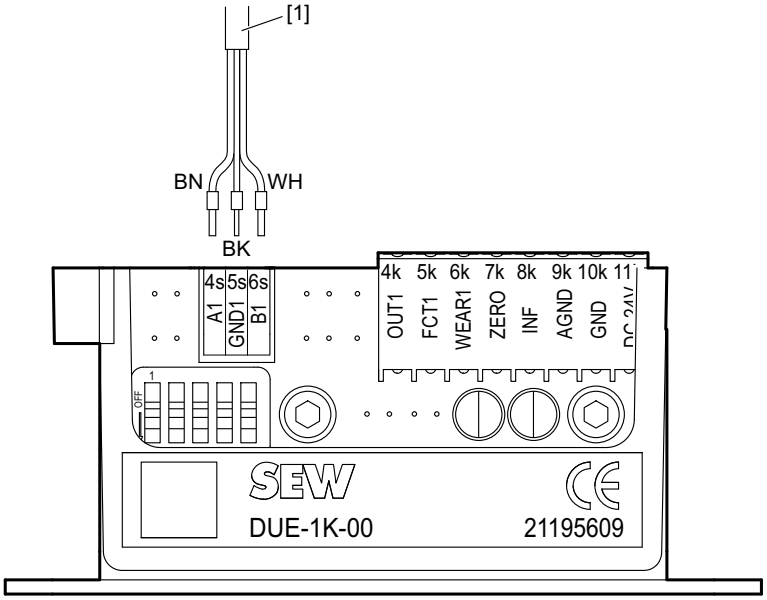


*9007214229800843*

[1] Brake sensor

The connection cross section of the sensor is 0.14 mm². The litz wires of the sensor cables must be equipped with conductor end sleeves. The cable shield must be isolated against other potentials using a heat shrink tubing. The litz wires can be pushed into the terminals without using tools. Put the sensor cables in the provided line clip, see figure in chapter "Calibrating the infinite value" (→ 🗎 215). To remove the sensor cables, use an electronic screwdriver to disengage the clips.

*Output signals for function and wear monitoring*

The diagnostic unit /DUE provides an analog signal (4 – 20 mA, DIN IEC 60381-1) for the current working air gap of the brake.

**D6**

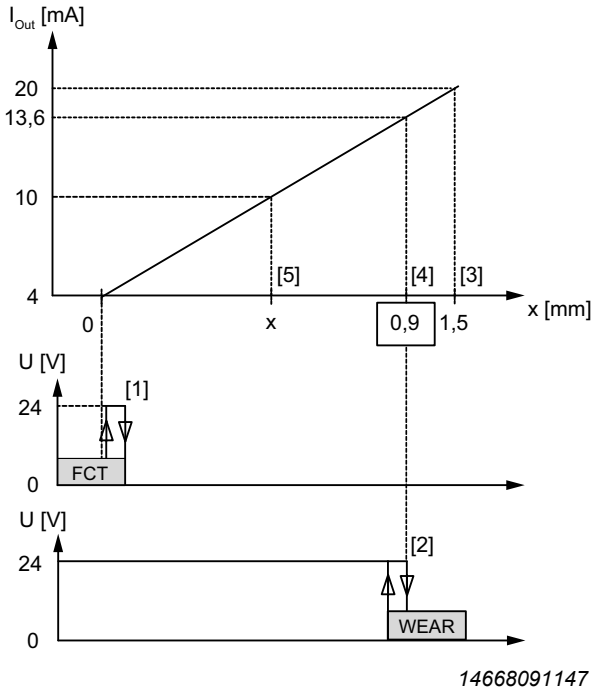


14668091147

**D8**

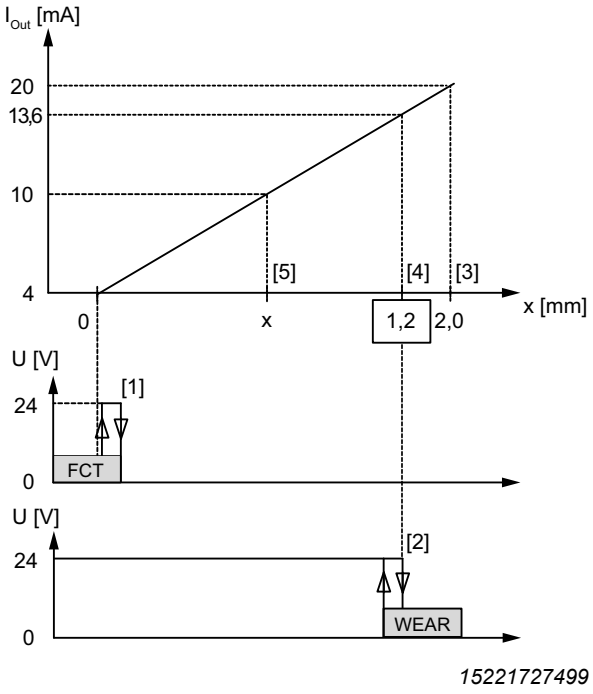


15221727499

[1] FCT: Digital output function (DC 24 V, DIN EN 61131-2)
[2] WEAR: Digital output wear (DC 24 V, DIN EN 61131-2)
[3] Measuring range of the sensor
[4] Max. working air gap of the brake (exemplary)
[5] Currently measured working air gap (exemplary)

25957074/EN – 06/2019

### Calibrating the infinite value

Before you can install the sensor in the brake, the electronics must be calibrated to the actual cable length. During calibration of the infinite value, electronics is adjusted to the sensor cable length. Electronics is reset and previous settings are overwritten.

The sensor must be removed from the brake for the following steps.

Procedure to calibrate the infinite value for the sensor:

1. Make sure that no metallic objects are within a 10 cm radius from the sensor head. The mounting springs may be in contact with the back of the sensor head during calibration.
2. Connect the supply voltage to INF (8k) and AGND (9k) for approx. 5 s. You can use GND (10k) as reference potential instead of AGND (9k). The evaluation unit is supplied via the calibration input during calibration.

The analog output OUT1 signals 0 mA during the calibration procedure.

The infinite value was successfully calibrated when OUT1 (4k) displays 20 mA. The red LED briefly flashes once per second as visual signal.

The corresponding wiring diagram for the calibration process.

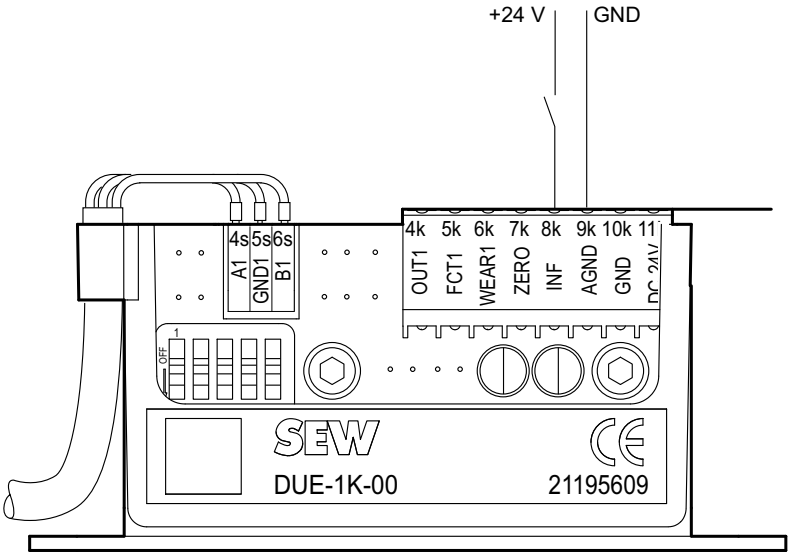


*14975067787*

During calibration, the digital outputs WEAR1 (6k), FCT1 (5k) send a 0 signal which may lead to error messages (wear limit reached).

#### Installing the sensor

After calibration, the eddy current sensor can be installed in the magnet body of the brake. When installing the sensor, make sure that the sensor head can be inserted in the stepped bore without pressure being applied.

First install the lower part of the cable gland. Then mount the upper part of the cable gland.

## INFORMATION

To ensure that the sensor is correctly inserted in the stepped bore, twist the sensor carefully with the cable before screwing in the cable gland. Protect the sensor cable against damage.

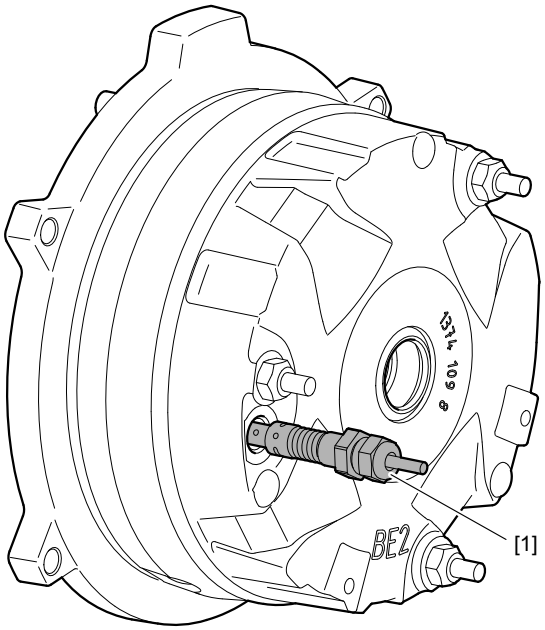


*15126940043*

[1] Brake sensor

25957074/EN – 06/2019

### Cable routing

Prevent the cable from colliding with the fan cable. If necessary, attach the cable to the included clamping strap [157] on the brake using cable ties.

### Zero value calibration

During calibration of the zero value, the current working air gap with released (open) brake is written to the evaluation unit. The electronics are reset and previous settings are overwritten. You can save the zero value again at any time without changing the infinite value.

Procedure for calibrating the zero value:

1. Open the brake.
2. Apply the supply voltage to ZERO (7k) and AGND (9k) for approx. 3 seconds. Electronics is in calibration mode. You can use GND (10k) as reference potential instead of AGND (9k). The evaluation unit is supplied via the calibration input during calibration.

The evaluation unit saves the smallest working air gap of the brake. Each write process is indicated by a brief flashing of the red LED.

The activated calibration mode is indicated by the following LED state:

| LED | State |
|---|---|
| Green [6] | Off |
| Red [6] | Flashing (2 Hz) |

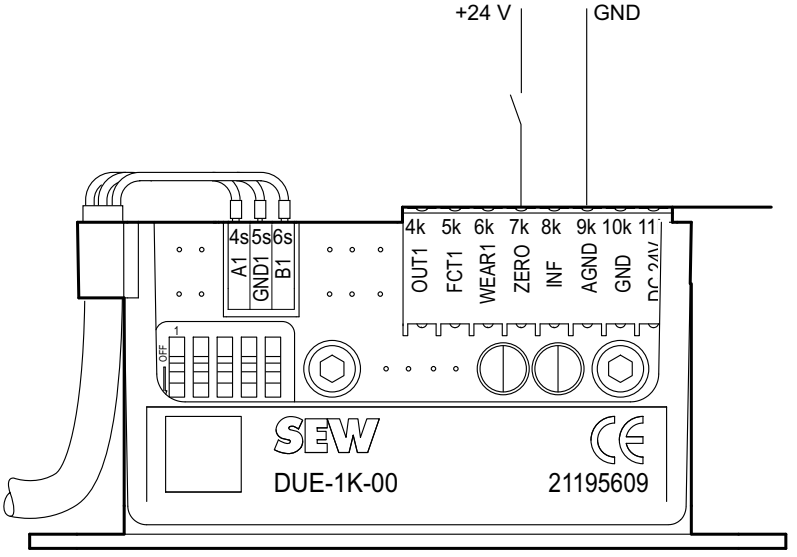


*14977696651*

During calibration, the digital outputs WEAR1 (6k), FCT1 (5k) send a 0 signal which may lead to error messages (wear limit reached).

The analog output OUT1 (4k) signals 0 mA during the calibration procedure. After successful calibration, the value is saved. The output has 4 mA with released brake. If a smaller value is available within 3 seconds, the last value is deleted and the new value is saved. The 4 mA at the output remain unchanged.

### Status messages of the evaluation unit

| Brake | Sensor | Calibration | | LEDs and outputs | | | | | State |
|---|---|---|---|---|---|---|---|---|---|
| | | ZERO | INF | Green | Red | FCT | WEAR | OUT | |
| Open | Installed | – | – | To | Off | HI | HI | 3.6 – 5.6 mA | Brake open, no wear |
| Go to | Installed | – | – | Off | Off | LO | HI | 6 – 20 mA | Brake closed, no wear |
| Go to | Installed | – | – | Off | To | LO | LO | 6 – 20 mA | Brake closed, set wear limit of brake reached |
| – | – | – | – | Off | To | LO | LO | >20 mA | Measuring range exceeded or sensor not connected correctly |
| – | Not installed | – | HI | Off | Blinking 1 Hz | LO | LO | 0 mA | Infinite value calibration active |
| – | Not installed | – | HI | Off | Flashing 1 Hz | LO | LO | 20 mA | Infinite calibration successful |
| – | – | – | – | Blinking 1 Hz | Blinking 1 Hz | Clock 1 Hz | Clock 1 Hz | 0 mA | Not completely calibrated:<br>• ZERO calibration missing<br>• Delivery state (both calibrations missing) |
| Open | Installed | HI | – | Off | Blinking 2 Hz | LO | LO | 0 mA | Zero value calibration active |
| Open | Installed | HI | – | Off | Blinking 2 Hz | LO | LO | 4 mA | First zero value calibration successful |
| Open | Installed | HI | – | Off | Flickering | LO | LO | 4 mA | Smaller zero value detected and saved |

25957074/EN – 06/2019

## 7.9 Altering the blocking direction on motors with a backstop

### 7.9.1 Basic structure of DR..71 – 80, DRN71 – 80, DR2..71 – 80 motors with backstop

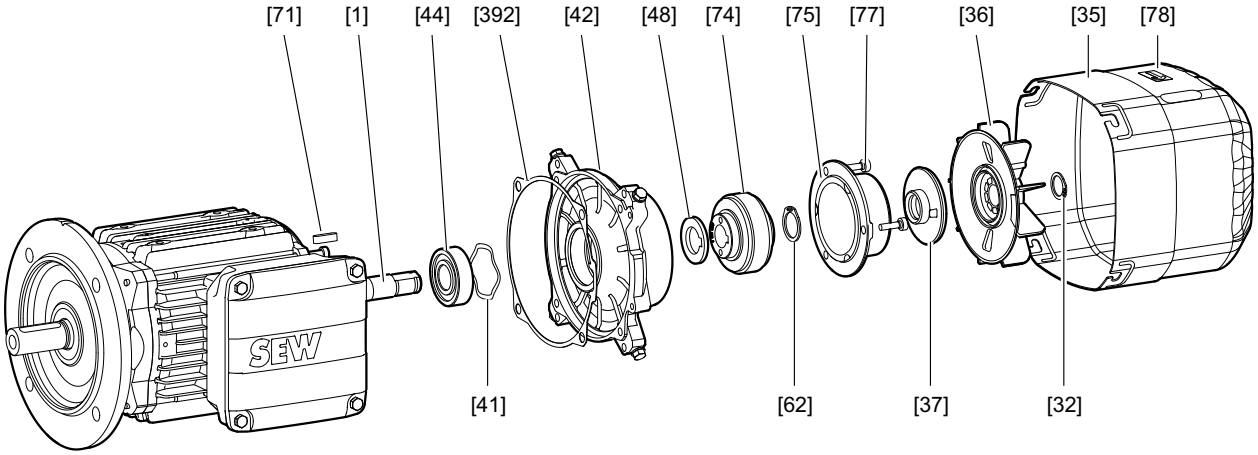


*18014399652340235*

| | | | |
|---|---|---|---|
| [1] | Motor with brakemotor | [48] | Spacing ring (only DR../DRN/DR2..80) |
| [32] | Retaining ring | [62] | Retaining ring (only DR../DRN/ DR2..80) |
| [35] | Fan guard | [71] | Key |
| [36] | Fan wheel | [74] | Backstop |
| [37] | Sealing ring | [75] | Sealing flange |
| [41] | Equalizing ring | [77] | Cap screw |
| [42] | Backstop endshield, complete | [78] | Direction of rotation information sign |
| [44] | Deep groove ball bearing | [392] | Gasket |

25957074/EN – 06/2019

### 7.9.2 Basic structure of DR..90 – 315, DRN63, 90 – 315, DR2..63 motors with backstop

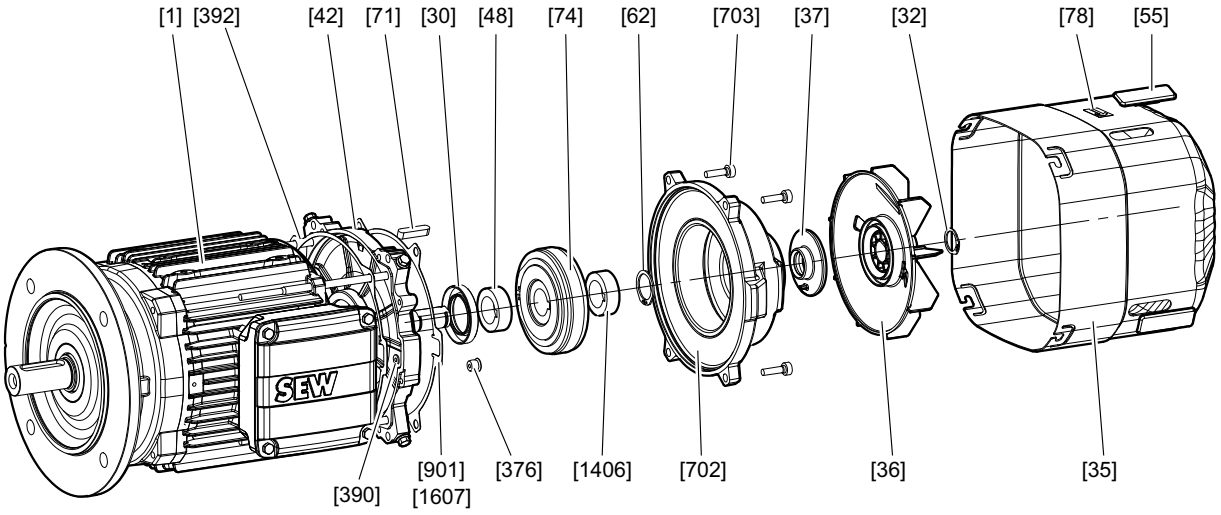


*18014399652338315*

| | | | |
|---|---|---|---|
| [1] | Motor | [74] | Backstop |
| [30] | Sealing ring (DR../DRN250-315) | [78] | Information sign for direction of rotation |
| [32] | Retaining ring | | |
| [35] | Fan guard | [702] | Backstop housing |
| [36] | Fan wheel | [703] | Cap screw |
| [37] | Sealing ring | [376] | Screw plug (DR..160 – 315, DRN132M – 315) |
| [42] | Brake endshield | [392] | O-ring (with DRN63, DR..63)<br>Seal (DR..90 – 132, DRN90 – 132S) |
| [48] | Spacing ring | [901] | Seal (DR..90 – 225, DRN90 – 225) |
| [55] | Closing piece (from DR../ DRN112) | [1406] | Spacing ring (DR..250 – 315, DRN250 – 315) |
| [62] | Retaining ring (from DR../DRN90) | [1607] | O-ring (DR..250 – 280, DRN250 – 280) |
| [71] | Key | | |

25957074/EN – 06/2019

### 7.9.3 Changing the blocking direction

Proceed as follows to change the blocking direction:

✓ The motor and all connected options are disconnected from the power supply.

✓ The motor is protected against unintended restart.

1. Disassemble the following parts:
   - ⇨ Forced cooling fan and rotary encoder, if installed, see chapter "Motor and brake maintenance – preliminary work" (→ 🗎 127).
   - ⇨ Fan guard with encoder mount [212] or fan guard [35], retaining ring [32]/[62] and fan [36]
   - ⇨ **DR..71 – 80, DRN71 – 80, DR2..71 – 80 motors:** Sealing flange [75].
   - ⇨ **DR..90 – 315, DRN63, 90 – 315, DR2..63 motors:** Backstop housing, complete [702].
2. Remove the retaining ring [62] and, if necessary, the spacing ring [1406].
3. Dismount the backstop [74] using a puller.
4. To alter the blocking direction, turn around the backstop [74].
5. Check the old grease. If necessary, replace the grease as specified below.
   - ⇨ **DRN63 – 71, DR2..63 – 71 motors**: Glue in the backstop [74] with Loctite 648/649.
   - ⇨ **DR..71 – 315, DRN80 – 315, DR2..80 motors:** Press on the backstop [74].
6. Mount the retaining ring [62].
7. Mount the following parts:
   - ⇨ **DR..71 –80, DRN71 – 80, DR2..71 – 80 motors:** Apply SEW-L-Spezial sealant to the sealing flange [75]. Mount the sealing flange [75].
   - ⇨ **DR..90 – 315, DRN63, 90 – 315, DR2..63 motors:** Replace the gasket [901], O-ring [1607], and if necessary sealing ring [37]. Mount the complete backstop housing [702].
8. Install the disassembled parts of the motor.
9. Replace the label [78] indicating the direction of rotation.

#### Lubricating the backstop

The backstop is greased at the factory with the corrosion protection low-viscosity grease LBZ 1. If you want to use another grease, make sure it complies with NLGI class 00/000 with a base oil viscosity of 42 $mm^2/s$ at 40 °C on a lithium saponified and mineral oil base. The application temperature range is from -50 °C to +90 °C. See the following table for the amount of grease required:

| **DR.. motors** | **71** | **80** | **90/100** | **112/132** | **160** | **180** | **200/225** | **250/280** | **315** |
|---|---|---|---|---|---|---|---|---|---|
| **DRN.. motors** | **63/71** | **80** | **90/100** | **112/132S** | **132M/L** | **160/180** | **200/225** | **250/280** | **315** |
| **DR2.. motors** | **63/71** | **80** | **–** | **–** | **–** | **–** | **–** | **–** | **–** |
| Amount of grease in g | 9 | 11 | 15 | 20 | 30 | 45 | 80 | 80 | 120 |

The tolerance regarding the grease level is ± 30%.

# 8 Technical data

## 8.1 Braking torques

The following table shows the possible braking torque combinations for various sizes of the BE05 – 122 brake. For BE02 and BE03 brakes, the braking torques of each brake are preset at the factory and cannot be adjusted.

### ⚠ WARNING



Insufficient or excessive braking torque due to impermissible spring pack.

Severe or fatal injuries.

- Maintenance work may only be performed by a trained specialist.
- In case of a conversion, make sure the selected spring set generates nominal braking torques that are permitted for your drive combination and are suitable for the application.
- Observe the project planning note in the manual "Project Planning for BE.. Brakes – DR.., DRN.., DR2.., EDR.., EDRN.. AC Motors – Standard Brake/Safety Brake", or contact SEW-EURODRIVE.

| Brake | Part number Damping plate [718] Pole sheet [63] | Braking torque settings | | | | | |
|---|---|---|---|---|---|---|---|
| | | Braking torque | Type and number of brake springs | | | Purchase order numbers for brake springs | |
| | | Nm | Normal [50] | Blue [276] | White [1312] | Normal | Blue/white |
| **BE05** | 13740563 | 5.0 | 3 | – | – | 0135017X | 13741373 |
| | | 3.5 | – | 6 | – | | |
| | | 2.5 | – | 4 | – | | |
| | | 1.8 | – | 3 | – | | |
| **BE1** | 13740563<br>13749862[1)] | 10 | 6 | – | – | 0135017X | 13741373 |
| | | 7.0 | 4 | 2 | – | | |
| | | 5.0 | 3 | – | – | | |
| **BE2** | 13740199<br>13749870[1)] | 20 | 6 | – | – | 13740245 | 13740520 |
| | | 14 | 2 | 4 | – | | |
| | | 10 | 2 | 2 | – | | |
| | | 7.0 | – | 4 | – | | |
| | | 5.0 | – | 3 | – | | |
| **BE5** | 13740695<br>13749889[1)] | 55 | 6 | – | – | 13740709 | 13740717 |
| | | 40 | 2 | 4 | – | | |
| | | 28 | 2 | 2 | – | | |
| | | 20 | – | – | 6 | | 13747738 |
| | | 14 | – | – | 4 | | |
| **BE11** | 13741713<br>13749854[1)] | 110 | 6 | – | – | 13741837 | 13741845 |
| | | 80 | 2 | 4 | – | | |
| | | 55 | 2 | 2 | – | | |
| | | 40 | – | 4 | – | | |
| | 13741713 + 13746995<br>13749854[1)] + 13746995 | 28 | – | 3 | – | | |
| | 13741713 + 13746995<br>13749854[1)] + 13746995 | 20 | – | – | 4 | | 13747789 |

25957074/EN – 06/2019

| Brake | Part number Damping plate [718] Pole sheet [63] | Braking torque settings | | | | | |
|---|---|---|---|---|---|---|---|
| | | Braking torque | Type and number of brake springs | | | Purchase order numbers for brake springs | |
| | | Nm | Normal [50] | Blue [276] | White [1312] | Normal | Blue/white |
| **BE20** | – | 200 | 6 | – | – | 13743228 | 13742485 |
| | – | 150 | 4 | 2 | – | | |
| | – | 110 | 3 | 3 | – | | |
| | – | 80 | 3 | – | – | | |
| | 13749307 | 55 | – | 4 | – | | |
| | 13746758 | 40 | – | 3 | – | | |
| **BE30** | – | 300 | 8 | – | – | 01874551 | 13744356 |
| | – | 200 | 4 | 4 | – | | |
| | – | 150 | 4 | – | – | | |
| | – | 100 | – | 8 | – | | |
| | 13749455 | 75 | – | 6 | – | | |
| **BE32** | – | 600 | 8 | – | – | 01874551 | 13744356 |
| | – | 500 | 6 | 2 | – | | |
| | – | 400 | 4 | 4 | – | | |
| | – | 300 | 4 | – | – | | |
| | – | 200 | – | 8 | – | | |
| | 13749455 | 150 | – | 6 | – | | |
| | 13749455 | 100 | – | 4 | – | | |
| **BE60** | – | 600 | 8 | – | – | 01868381 | 13745204 |
| | – | 500 | 6 | 2 | – | | |
| | – | 400 | 4 | 4 | – | | |
| | – | 300 | 4 | – | – | | |
| | – | 200 | – | 8 | – | | |
| **BE62** | – | 1200 | 8 | – | – | 01868381 | 13745204 |
| | – | 1000 | 6 | 2 | – | | |
| | – | 800 | 4 | 4 | – | | |
| | – | 600 | 4 | – | – | | |
| | – | 400 | – | 8 | – | | |
| **BE120** | – | 1000 | 8 | – | – | 13608770 | 13608312 |
| | – | 800 | 6 | 2 | – | | |
| | – | 600 | 4 | 4 | – | | |
| | – | 400 | 4 | – | – | | |
| **BE122** | – | 2000 | 8 | – | – | 13608770 | 13608312 |
| | – | 1600 | 6 | 2 | – | | |
| | – | 1200 | 4 | 4 | – | | |
| | – | 800 | 4 | – | – | | |

1) For option /DUE

25957074/EN – 06/2019

### 8.1.1 Brake spring layout

The following table shows the brake spring layout:

| **BE05 – 11:** | | | | | |
|---|---|---|---|---|---|
| 6 springs | 3 + 3 springs | 4 + 2 springs | 2 + 2 springs | 4 springs | 3 springs |
| 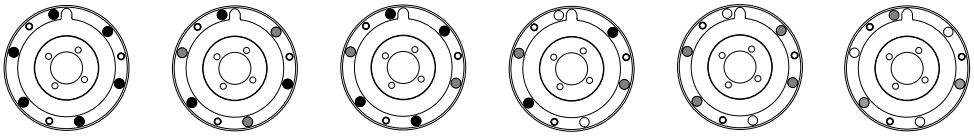 | | | | | |
| **BE20:** | | | | | |
| 6 springs | 4 + 2 springs | 3 + 3 springs | 4 springs | 3 springs | |
| 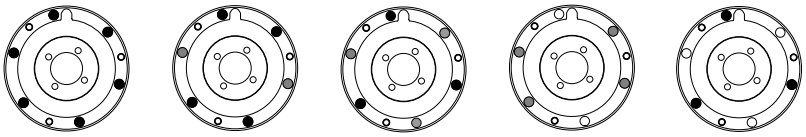 | | | | | |
| **BE30 – 122:** | | | | | |
| 8 springs | 4 + 4 springs | 6 + 2 springs | 6 springs | 4 springs | |
| 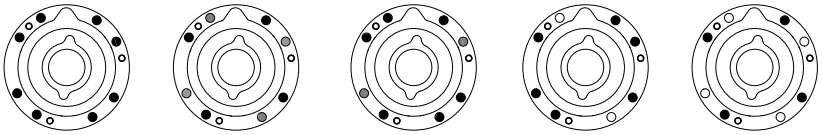 | | | | | |

25957074/EN – 06/2019

## 8.2 Braking work, working air gap, and brake lining carrier thickness

If the brake is used in combination with a safety encoder, or if the brake is designed as safety brake, the maximum values for the working air gap and for the braking work until maintenance are reduced. For the new values, refer to the addendum to the operating instructions for safety brakes and safety encoders.

| Brake | Braking work until maintenance[1] | Working air gap | | Brake lining carrier |
|---|---|---|---|---|
| | | min.[2] | maximum | minimum |
| | $10^6$ J | mm | mm | mm |
| **BE02** | 15 | –[3] | –[3] | min. 5.4 for 0.8 Nm<br>min. 5.6 for 1.2 Nm |
| **BE03** | 200 | 0.25 | 0.65 | –[3] |
| **BE05** | 120 | 0.25 | 0.6 | 11.0 |
| **BE1** | 120 | 0.25 | 0.6 | 11.0 |
| **BE2** | 180 | 0.25 | 0.6 | 11.0 |
| **BE5** | 390 | 0.25 | 0.9 | 11.0 |
| **BE11** | 640 | 0.3 | 1.2 | 12.5 |
| **BE20** | 1000 | 0.3 | 1.2 | 12.5 |
| **BE30** | 1500 | 0.3 | 1.2 | 12.5 |
| **BE32** | 1500 | 0.4 | 1.2 | 12.5 |
| **BE60** | 2500 | 0.3 | 1.2 | 14.0 |
| **BE62** | 2500 | 0.4 | 1.2 | 14.0 |
| **BE120** | 390 | 0.6 | 1.2 | 14.0 |
| **BE122** | 390 | 0.8 | 1.2 | 14.0 |

1) The specified values are nominal values that were determined during rating operation. The actual braking work that can be reached before maintenance may vary depending on the actual load during operation.
2) When checking the working air gap, note: After a test run, parallelism tolerances on the brake lining carrier may give rise to deviations of ±0.15 mm.
3) The brake lining carrier cannot be replaced. When the minimum brake lining carrier thickness/maximum working air gap is reached, the brake must be replaced.

### INFORMATION

In case of drives with BE32, BE62, or BE122 brake in pivoted mounting position, the specified value may be reduced by up to 50%, depending on the pivoting angle.

25957074/EN – 06/2019

## 8.3 Operating currents

### 8.3.1 General information on determining operating currents

The tables in this chapter list the operating currents of BE.. brakes at different voltages.

The acceleration current $I_B$ (= inrush current) flows only for a short time (approx. 160 ms for BE02 – BE62, 400 ms for BE60 – BE122 with BMP3.1 brake control) when the brake is released. No increased inrush current occurs when using BG.., BS24 or BMS.. brake control and direct DC voltage supply without control unit (only possible with brake size BE02 – BE2).

The values for the holding currents $I_H$ are rms values. Only use current measurement units that are designed to measure rms values.



## INFORMATION

The following operating currents and power consumption values are nominal values. They refer to a coil temperature of +20 °C.

Operating currents and power consumption usually decrease during normal operation due to heating of the brake coil.

Note that the actual operating currents can be higher by up to 25% depending on the ambient temperature and with coil temperatures below +20 °C.

### 8.3.2 Legend

The following tables list the operating currents of the brakes at different voltages.

The following values are specified:

| | |
|---|---|
| $P_B$ | Nominal value of the electric power consumption in the brake coil in watt. |
| $U_N$ | Nominal voltage (rated voltage range) of the brake in V (AC or DC). |
| $I_H$ | Nominal holding current in A (AC). rms value of the braking current in the supply cable to the SEW-EURODRIVE brake control. |
| $I_{DC}$ | Nominal holding current in A (DC) in the brake cable with direct DC voltage supply<br>or<br>Nominal holding current in A (DC) in the brake cable with DC 24 V supply via BS24, BSG, or BMV. |
| $I_B$ | Acceleration current in ampere (AC or DC) when operated with SEW brake control for high-speed excitation. |
| $I_B/I_H$ | Inrush current ratio ESV. |
| $I_B/I_{DC}$ | Inrush current ratio ESV for DC 24 V supply with BSG or BMV. |

25957074/EN – 06/2019

### 8.3.3 BE02, BE03, BE05, BE1, BE2 brakes

| | BE02 | BE03 | BE05, BE1 | BE2 |
|---|---|---|---|---|
| Nominal power brake coil in W | 25 | 25 | 30 | 41 |
| Inrush current ratio ESV | 4 | 4 | 4 | 4 |

| Nominal voltage (rated voltage range) $V_N$ | | BE02 | | BE03 | | BE05, BE1 | | BE2 | |
|---|---|---|---|---|---|---|---|---|---|
| | | $I_H$ | $I_{DC}$ | $I_H$ | $I_{DC}$ | $I_H$ | $I_{DC}$ | $I_H$ | $I_{DC}$ |
| AC V | DC V | AC A | DC A | AC A | DC A | AC A | DC A | AC A | DC A |
| 24 (23 – 26) | 10 | – | – | 2.18 | 2.83 | 2.25 | 2.90 | 2.95 | 3.80 |
| 60 (57 – 63) | 24 | – | 0.72 | 0.8 | 1.08 | 0.90 | 1.17 | 1.18 | 1.53 |
| 120 (111 – 123) | 48 | – | – | 0.41 | 0.54 | 0.45 | 0.59 | 0.59 | 0.77 |
| 184 (174 – 193) | 80 | – | – | 0.27 | 0.35 | 0.29 | 0.37 | 0.38 | 0.49 |
| 208 (194 – 217) | 90 | – | – | 0.24 | 0.31 | 0.26 | 0.33 | 0.34 | 0.43 |
| 230 (218 – 243) | 96 | 0.14 | 0.18 | 0.22 | 0.28 | 0.23 | 0.30 | 0.30 | 0.39 |
| 254 (244 – 273) | 110 | – | – | 0.20 | 0.26 | 0.20 | 0.27 | 0.27 | 0.35 |
| 290 (274 – 306) | 125 | – | – | 0.18 | 0.23 | 0.18 | 0.24 | 0.24 | 0.31 |
| 330 (307 – 343) | 140 | – | – | 0.16 | 0.20 | 0.16 | 0.21 | 0.21 | 0.28 |
| 360 (344 – 379) | 160 | – | – | 0.13 | 0.18 | 0.14 | 0.19 | 0.19 | 0.25 |
| 400 (380 – 431) | 180 | 0.08 | 0.10 | 0.11 | 0.15 | 0.13 | 0.17 | 0.17 | 0.22 |
| 460 (432 – 484) | 200 | 0.07 | 0.09 | 0.10 | 0.13 | 0.11 | 0.15 | 0.15 | 0.19 |
| 500 (485 – 542) | 220 | – | – | 0.09 | 0.12 | 0.10 | 0.13 | 0.14 | 0.18 |
| 575 (543 – 600) | 250 | – | – | 0.08 | 0.11 | 0.09 | 0.12 | 0.12 | 0.16 |

25957074/EN – 06/2019

### 8.3.4 Brakes BE5, BE11, BE20, BE30, BE32, BE60, BE62

| | BE5 | BE11 | BE20 | BE30, BE32 | BE60, BE62 |
|---|---|---|---|---|---|
| Nominal power brake coil in W | 50 | 70 | 95 | 120 | 195 |
| Inrush current ratio ESV | 5.9 | 6.6 | 7.5 | 8.5 | 9.2 |

| Nominal voltage (rated voltage range) $V_N$ | | BE5 | BE11 | BE20 | BE30, BE32 | BE60, BE62 |
|---|---|---|---|---|---|---|
| | | $I_H$ | $I_H$ | $I_H$ | $I_H$ | $I_H$ |
| AC V | DC V | AC A | AC A | AC A | AC A | AC A |
| 60 (57 – 63) | 24 | 1.28 | 2.05 | 2.55 | – | – |
| 120 (111 – 123) | – | 0.64 | 1.04 | 1.28 | 1.66 | – |
| 184 (174 – 193) | – | 0.41 | 0.66 | 0.81 | 1.05 | – |
| 208 (194 – 217) | – | 0.37 | 0.59 | 0.72 | 0.94 | 1.50 |
| 230 (218 – 243) | – | 0.33 | 0.52 | 0.65 | 0.84 | 1.35 |
| 254 (244 – 273) | – | 0.29 | 0.47 | 0.58 | 0.75 | 1.20 |
| 290 (274 – 306) | – | 0.26 | 0.42 | 0.51 | 0.67 | 1.12 |
| 330 (307 – 343) | – | 0.23 | 0.37 | 0.46 | 0.59 | 0.97 |
| 360 (344 – 379) | – | 0.21 | 0.33 | 0.41 | 0.53 | 0.86 |
| 400 (380 – 431) | – | 0.18 | 0.30 | 0.37 | 0.47 | 0.77 |
| 460 (432 – 484) | – | 0.16 | 0.27 | 0.33 | 0.42 | 0.68 |
| 500 (485 – 542) | – | 0.15 | 0.24 | 0.29 | 0.38 | 0.60 |
| 575 (543 – 600) | – | 0.13 | 0.22 | 0.26 | 0.34 | 0.54 |

25957074/EN – 06/2019

### 8.3.5 Brake BE120, BE122

| | BE120, BE122 |
|---|---|
| Nominal power brake coil in W | 220 |
| Inrush current ratio ESV | 6 |

| Nominal voltage (rated voltage range) $V_N$ | BE120, BE122 |
|---|---|
| | $I_H$ |
| AC V | AC A |
| 230 (218 – 243) | 1.45 |
| 254 (244 – 273) | 1.30 |
| 290 (274 – 306) | 1.16 |
| 360 (344 – 379) | 0.92 |
| 400 (380 – 431) | 0.82 |
| 460 (432 – 484) | 0.73 |
| 500 (485 – 542) | 0.65 |
| 575 (543 – 600) | 0.58 |

25957074/EN – 06/2019

## 8.4 Resistors

The depicted values apply to the standard temperature range of -20 to +40 °C. Deviating resistances may occur in other temperature ranges, especially in case of drives with permitted temperature above +60 °C, or in case of non-ventilated drives, due to modified winding configurations. The values are available from SEW-EURODRIVE on request.

### 8.4.1 Resistance measurement BE02, BE03, BE05, BE1, BE2, BE5, BE30, BE32, BE60, BE62

**Cut-off in the AC circuit**

The following illustration shows how to measure resistance with cut-off in the AC circuit.

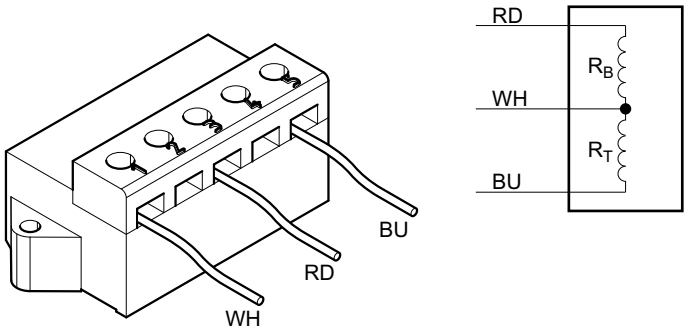


*9007199497350795*

**Cut-off in the DC and AC circuits**

The following illustration shows how to measure resistance with cut-off in the DC and AC circuits.

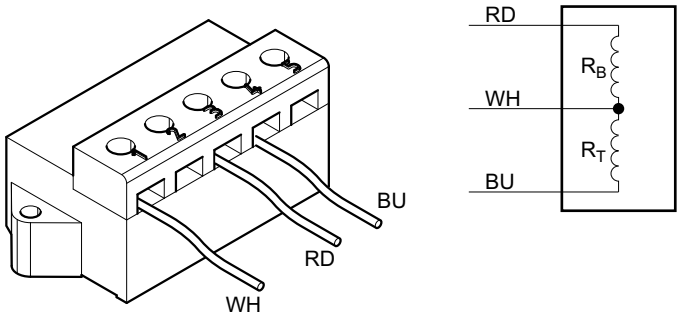


*18014398752093451*

| | | | |
|---|---|---|---|
| BS | Accelerator coil | RD | Red |
| TS | Coil section | WH | White |
| $R_B$ | Accelerator coil resistance at 20 °C in Ω | BU | Blue |
| $R_T$ | Coil section resistance at 20 °C in Ω | | |
| $U_N$ | Nominal voltage (rated voltage range) | | |

## INFORMATION

When measuring the resistance of the coil section ($R_{Sec}$) or the acceleration coil ($R_{Acc}$), remove the white conductor from the brake rectifier; if it remains connected, the internal resistance of the brake rectifier will cause erroneous results.

25957074/EN – 06/2019

### 8.4.2 Brakes BE02, BE03, BE05, BE1, BE2

| | BE02 | BE03 | BE05, BE1 | BE2 |
|---|---|---|---|---|
| Nominal power brake coil in W | 25 | 25 | 32 | 43 |
| Inrush current ratio ESV | 4 | 4 | 4 | 4 |

| Nominal voltage (rated voltage range) $V_N$ | | BE02 | | BE03 | | BE05, BE1 | | BE2 | |
|---|---|---|---|---|---|---|---|---|---|
| AC V | DC V | $R_B$ | $R_T$ | $R_B$ | $R_T$ | $R_B$ | $R_T$ | $R_B$ | $R_T$ |
| 60 (57 – 63) | 24 | 8.5 | 24 | 6 | 20 | 4.85 | 14.8 | 3.60 | 11.0 |
| 120 (111 – 123) | 48 | – | – | 25 | 78 | 19.4 | 59.0 | 14.4 | 44.0 |
| 184 (174 – 193) | 80 | – | – | 62 | 191 | 48.5 | 148 | 36.0 | 110 |
| 208 (194 – 217) | 90 | – | – | 78 | 241 | 61.0 | 187 | 45.5 | 139 |
| 230 (218 – 243) | 96 | 121 | 345 | 96 | 296 | 77.0 | 235 | 58.0 | 174 |
| 254 (244 – 273) | 110 | – | – | 119 | 367 | 97.0 | 296 | 72.0 | 220 |
| 290 (274 – 306) | 125 | – | – | 150 | 462 | 122 | 372 | 91 | 275 |
| 330 (307 – 343) | 140 | – | – | 191 | 589 | 154 | 469 | 115 | 350 |
| 360 (344 – 379) | 160 | – | – | 247 | 762 | 194 | 590 | 144 | 440 |
| 400 (380 – 431) | 180 | 375 | 1070 | 326 | 1004 | 244 | 743 | 182 | 550 |
| 460 (432 – 484) | 200 | 580 | 1650 | 412 | 1270 | 308 | 935 | 230 | 690 |
| 500 (485 – 542) | 220 | – | – | 512 | 1580 | 387 | 1178 | 290 | 870 |
| 575 (543 – 600) | 250 | – | – | 645 | 1989 | 488 | 1483 | 365 | 1100 |

25957074/EN – 06/2019

### 8.4.3 Brakes BE5, BE11, BE20, BE30, BE32, BE60, BE62

| | BE5 | BE11 | BE20 | BE30, BE32 | BE60, BE62 |
|---|---|---|---|---|---|
| Nominal power brake coil in W | 49 | 77 | 95 | 120 | 195 |
| Inrush current ratio ESV | 5.9 | 6.6 | 7.5 | 8.5 | 9.2 |

| **Nominal voltage (rated voltage range) $V_N$** | **BE5** | | **BE11** | | **BE20** | | **BE30, BE32** | | **BE60, BE62** | |
|---|---|---|---|---|---|---|---|---|---|---|
| **AC V** | **$R_B$** | **$R_T$** | **$R_B$** | **$R_T$** | **$R_B$** | **$R_T$** | **$R_B$** | **$R_T$** | **$R_B$** | **$R_T$** |
| 60 (57 – 63) | 2.20 | 10.5 | 1.22 | 7.0 | 0.9 | 5.7 | – | – | – | – |
| 120 (111 – 123) | 8.70 | 42.0 | 4.90 | 28.0 | 3.4 | 22.8 | 2.3 | 17.2 | – | – |
| 184 (174 – 193) | 22.0 | 105 | 12.3 | 70 | 8.5 | 57.2 | 5.8 | 43.2 | – | – |
| 208 (194 – 217) | 27.5 | 132 | 15.5 | 88 | 10.7 | 72.0 | 7.3 | 54.4 | 4.0 | 32.6 |
| 230 (218 – 243) | 34.5 | 166 | 19.5 | 111 | 13.5 | 90.6 | 9.2 | 68.5 | 5.0 | 41.0 |
| 254 (244 – 273) | 43.5 | 210 | 24.5 | 139 | 17.0 | 114.1 | 11.6 | 86.2 | 6.3 | 51.6 |
| 290 (274 – 306) | 55.0 | 265 | 31.0 | 175 | 21.4 | 143.6 | 14.6 | 108.6 | 7.9 | 65.0 |
| 330 (307 – 343) | 69.0 | 330 | 39.0 | 220 | 26.9 | 180.8 | 18.4 | 136.7 | 10.0 | 81.8 |
| 360 (344 – 379) | 87.0 | 420 | 49 | 280 | 33.2 | 223 | 23.1 | 172.1 | 12.6 | 103 |
| 400 (380 – 431) | 110 | 530 | 62 | 350 | 42.7 | 287 | 29.1 | 216.6 | 15.8 | 130 |
| 460 (432 – 484) | 138 | 660 | 78 | 440 | 53.2 | 357 | 35.1 | 261.8 | 19.9 | 163 |
| 500 (485 – 542) | 174 | 830 | 98 | 550 | 67.7 | 454 | 45.2 | 336.4 | 25.1 | 205 |
| 575 (543 – 600) | 220 | 1050 | 123 | 700 | 83.5 | 559 | 56.3 | 419.2 | 31.6 | 259 |

25957074/EN – 06/2019

### 8.4.4 Resistance measurement BE120, BE122

The following illustration shows how to measure resistance with BMP 3.1.

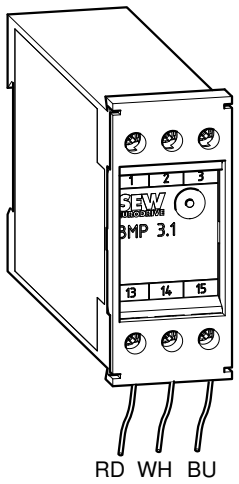


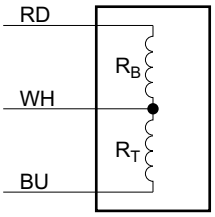


| | | | |
|---|---|---|---|
| BS | Accelerator coil | RD | Red |
| TS | Coil section | WH | White |
| $R_B$ | Accelerator coil resistance at 20 °C in Ω | BU | Blue |
| $R_T$ | Coil section resistance at 20 °C in Ω | | |
| $V_N$ | Nominal voltage (rated voltage range) | | |

## INFORMATION

When measuring the resistance of the coil section ($R_{Sec}$) or the acceleration coil ($R_{Acc}$), remove the white conductor from the brake rectifier; if it remains connected, the internal resistance of the brake rectifier will cause erroneous results.

### 8.4.5 Brake BE120, BE122

| | BE120, BE122 |
|---|---|
| Nominal power brake coil in W | 220 |
| Inrush current ratio ESV | 6 |

| **Nominal voltage (rated voltage range) $V_N$** | **BE120, BE122** | |
|---|---|---|
| **AC V** | **$R_B$** | **$R_T$** |
| 230 (218 – 243) | 7.6 | 37.9 |
| 254 (244 – 273) | 9.6 | 47.7 |
| 290 (274 – 306) | 12.1 | 60.1 |
| 360 (344 – 379) | 19.2 | 95.2 |
| 400 (380 – 431) | 24.2 | 119.9 |
| 460 (432 – 484) | 30.4 | 150.9 |
| 500 (485 – 542) | 38.3 | 189.9 |
| 575 (543 – 600) | 48.2 | 239.1 |

25957074/EN – 06/2019

## 8.5 Brake control

The depicted combinations apply to drives in insulation class B or F, and to the standard temperature range of -20 °C to +40 °C.

For the brake control assigned to your drive, refer to the specifications on the motor nameplate.

### INFORMATION

The depicted combinations may be limited depending in the present drive configuration (e.g. insulation class H, deviating temperature ranges, etc.). In case of a conversion, check if brake control is permitted for your drive combination. Contact SEW-EURODRIVE if necessary.

### 8.5.1 Permitted combinations

The table below shows the standard and optional combinations of brakes and brake rectifiers.

| | | BE02 | BE03 with DRN63 | BE03 | BE05 | BE1 | BE2 |
|---|---|---|---|---|---|---|---|
| BG.. | BG 1.2 | X | X | – | – | – | – |
| | BG 1.4 | – | – | X[3] | X[3] | X[3] | X[3] |
| | Size 1.5 | – | – | X[1] | X[1] | X[1] | X[1] |
| | BG 2.4 | X | X | – | – | – | – |
| | BG 3 | – | – | X[2] | X[2] | X[2] | X[2] |
| BGE.. | BGE 1.4 | – | – | o | o | o | o |
| | BGE 1.5 | – | – | • | • | • | • |
| | BGE 3 | – | – | • | • | • | • |
| BS.. | BS 24 | – | – | X | X | X | X |
| BMS.. | BMS 1.4 | o | o | o | o | o | o |
| | BMS 1.5 | • | • | • | • | • | • |
| | BMS 3 | • | • | • | • | • | • |
| BME.. | BME 1.4 | o | o | o | o | o | o |
| | BME 1.5 | • | • | • | • | • | • |
| | BME 3 | • | • | • | • | • | • |
| BMH.. | BMH 1.4 | o | o | o | o | o | o |
| | BMH 1.5 | • | • | • | • | • | • |
| | BMH 3 | • | • | • | • | • | • |
| BMK.. | BMK 1.4 | o | o | o | o | o | o |
| | BMK 1.5 | • | • | • | • | • | • |
| | BMK 3 | • | • | • | • | • | • |
| BMKB.. | BMKB 1.5 | • | • | • | • | • | • |
| BMP.. | BMP 1.4 | o | o | o | o | o | o |
| | BMP 1.5 | • | • | • | • | • | • |
| | BMP 3 | • | • | • | • | • | • |
| | BMP 3.1 | – | – | – | – | – | – |
| BMV.. | BMV 5 | • | • | • | • | • | • |
| BSG.. | BSG | – | – | • | • | • | • |

25957074/EN – 06/2019

| | | BE02 | BE03 with DRN63 | BE03 | BE05 | BE1 | BE2 |
|---|---|---|---|---|---|---|---|
| BSR.. | BG 1.2 + SR10 | • | • | – | – | – | – |
| | BG 2.4 + SR10 | • | • | – | – | – | – |
| | BGE1.5 + SR10 | – | – | • | • | • | – |
| | BGE 1.4 + SR 15 | – | – | o | o | o | o |
| | BGE 3 + SR 11 | – | – | • | • | • | • |
| | BGE 3 + SR 15 | – | – | • | • | • | • |
| | BGE3 + SR10 | – | – | • | • | • | – |
| | BGE 1.5 + SR 11 | – | – | • | • | • | • |
| | BGE 1.5 + SR 15 | – | – | • | • | • | • |
| BUR.. | BG 1.2 + UR10 | • | • | – | – | – | – |
| | BG 2.4 + UR10 | • | • | – | – | – | – |
| | BGE 3 + UR 11 | – | – | • | • | • | • |
| | BGE 1.5 + UR 15 | – | – | • | • | • | • |
| BST.. | BST 0.6S | • | • | • | • | • | • |
| | BST 0.7S | • | • | • | • | • | • |
| | BST 1.2S | • | • | • | • | • | • |
| | | **BE5** | **BE11** | **BE20** | **BE30, BE32** | **BE60, BE62** | **BE120, BE122** |
| BG.. | BG 1.2 | – | – | – | – | – | – |
| | BG 1.4 | – | – | – | – | – | – |
| | Size 1.5 | – | – | – | – | – | – |
| | BG 2.4 | – | – | – | – | – | – |
| | BG 3 | – | – | – | – | – | – |
| BGE.. | BGE 1.4 | X[3] | X[3] | X[3] | X[3] | X[3] | – |
| | BGE 1.5 | X[1] | X[1] | X[1] | X[1] | X | – |
| | BGE 3 | X[2] | X[2] | X[2] | X[2] | X | – |
| BS.. | BS 24 | – | – | – | – | – | – |
| BMS.. | BMS 1.4 | – | – | – | – | – | – |
| | BMS 1.5 | – | – | – | – | – | – |
| | BMS 3 | – | – | – | – | – | – |
| BME.. | BME 1.4 | o | o | o | o | o | – |
| | BME 1.5 | • | • | • | • | X | – |
| | BME 3 | • | • | • | • | X | – |
| BMH.. | BMH 1.4 | o | o | o | o | – | – |
| | BMH 1.5 | • | • | • | • | – | – |
| | BMH 3 | • | • | • | • | – | – |
| BMK.. | BMK 1.4 | o | o | o | o | – | – |
| | BMK 1.5 | • | • | • | • | – | – |
| | BMK 3 | • | • | • | • | – | – |
| BMKB.. | BMKB 1.5 | • | • | • | • | – | – |
| BMP.. | BMP 1.4 | o | o | o | o | – | – |
| | BMP 1.5 | • | • | • | • | – | – |
| | BMP 3 | • | • | • | • | – | – |
| | BMP 3.1 | – | – | – | – | • | X |
| BMV.. | BMV 5 | • | • | • | – | – | – |
| BSG.. | BSG | X | X | X | – | – | – |

| | | BE5 | BE11 | BE20 | BE30, BE32 | BE60, BE62 | BE120, BE122 |
|---|---|---|---|---|---|---|---|
| BSR.. | BG 1.2 + SR10 | – | – | – | – | – | – |
| | BG 2.4 + SR10 | – | – | – | – | – | – |
| | BGE1.5 + SR10 | – | – | – | – | – | – |
| | BGE 1.4 + SR 15 | o | o | o | o | – | – |
| | BGE 3 + SR 11 | • | • | – | – | – | – |
| | BGE 3 + SR 15 | • | • | • | • | – | – |
| | BGE3 + SR10 | – | – | – | – | – | – |
| | BGE 1.5 + SR 11 | • | • | – | – | – | – |
| | BGE 1.5 + SR 15 | • | • | • | • | – | – |
| BUR.. | BG 1.2 + UR10 | – | – | – | – | – | – |
| | BG 2.4 + UR10 | – | – | – | – | – | – |
| | BGE 3 + UR 11 | • | – | – | – | – | – |
| | BGE 1.5 + UR 15 | • | • | • | • | – | – |
| BST.. | BST 0.6S | • | • | • | • | – | – |
| | BST 0.7S | • | • | • | • | – | – |
| | BST 1.2S | • | • | • | • | – | – |

X Standard version

$X^1$ Standard design with nominal brake voltage of 150 – 500 $V_{AC}$

$X^2$ Standard design with nominal brake voltage of 24/42 – 150 $V_{AC}$

$X^3$ Standard design with nominal brake voltage of 575 $V_{AC}$

• Can be selected

o Optional with AC 575 V nominal brake voltage

– Not permitted

25957074/EN – 06/2019

### 8.5.2 Motor terminal box

The following table shows the technical data of the brake controls for installation in the terminal box. The different housings have different colors (= color code) to make them easier to distinguish.

**BG..**

Half-wave rectifier without electronic switching.

| Type | Nominal voltage | Nominal output current $I_L$ | Part number | Color code |
|---|---|---|---|---|
| BG1.4 | AC 230 – 575 V | DC 1.0 A | 08278814 | Jet black |
| BG1.2 | AC 90 – 500 V | DC 1.2 A | 08269920 | Jet black |
| BG1.5 | AC 150 – 500 V | DC 1.5 A | 08253846 | Jet black |
| BG2.4 | AC 24 – 90 V | DC 2.4 A | 08270198 | Mahogany brown |
| BG3 | AC 24 – 500 V | DC 2.8 A | 08253862 | Mahogany brown |

**BGE..**

Half-wave rectifier with electronic switching.

| Type | Nominal voltage | Nominal output current $I_L$ | Part number | Color code |
|---|---|---|---|---|
| BGE1.4 | AC 230 – 575 V | DC 1.0 A | 08278822 | Vermilion |
| BGE1.5 | AC 150 – 500 V | DC 1.5 A | 08253854 | Vermilion |
| BGE3 | AC 42 – 150 V | DC 2.8 A | 08253870 | Light blue |

**BSR..**

Half-wave rectifier + current relay for switch-off in the DC circuit.

| Type | Nominal voltage | Nominal output current $I_L$ | Part number | Color code |
|---|---|---|---|---|
| BGE1.5 + SR10 | AC 150 – 500 V | DC 1.0 A | 08253854<br>0826760X | Jet black<br>Gray |
| BGE1.5 + SR11 | AC 150 – 500 V | DC 1.0 A | 08253854<br>08267618 | Jet black<br>Gray |
| BGE1.5 + SR15 | AC 150 – 500 V | DC 1.0 A | 08253854<br>08267626 | Jet black<br>Gray |
| BG1.2 + SR10 | AC 90 – 500 V | DC 1.0 A | 08269920<br>0826760X | Jet black<br>Gray |
| BG1.2 + SR11 | AC 90 – 500 V | DC 1.0 A | 08269920<br>08267618 | Jet black<br>Gray |

25957074/EN – 06/2019

| Type | Nominal voltage | Nominal output current $I_L$ | Part number | Color code |
|---|---|---|---|---|
| BG2.4 + SR10 | AC 42 – 90 V | DC 1.0 A | 08270198<br>0826760X | Mahogany brown<br>Gray |
| BGE3 + SR11 | AC 42 – 150 V | DC 1.0 A | 20253870<br>08267618 | Mahogany brown<br>Gray |
| BGE3 + SR15 | AC 42 – 150 V | DC 1.0 A | 08253870<br>08267626 | Mahogany brown<br>Gray |

**BUR..**

Half-wave rectifier with voltage relay for switch-off in the DC circuit.

| Type | Nominal voltage | Nominal output current $I_L$ | Part number | Color code |
|---|---|---|---|---|
| BG1.2 + UR15 | AC 150 – 500 V | DC 1.0 A | 08269920<br>0826760X | Jet black<br>Gray |
| BGE1.5 + UR15 | AC 150 – 500 V | DC 1.0 A | 08253854<br>08267596 | Vermilion<br>Gray |
| BG2.4 + UR11 | AC 42 – 150 V | DC 1.0 A | 08270198<br>08267588 | Mahogany brown<br>Gray |
| BGE3 + UR11 | AC 42 – 150 V | DC 1.0 A | 08253870<br>08267588 | Light blue<br>Gray |

**BS24**

Varistor overvoltage protection.

| Type | Nominal voltage | Nominal output current $I_L$ | Part number | Color code |
|---|---|---|---|---|
| BS24 | DC 24 V | DC 5.0 A | 08267634 | Water blue |

**BSG..**

Electronic switching.

| Type | Nominal voltage | Nominal output current $I_L$ | Part number | Color code |
|---|---|---|---|---|
| BSG | DC 24 V | DC 5.0 A | 08254591 | Pure white |

25957074/EN – 06/2019

**BMP..**

Half-wave rectifier with electronic switching and integrated voltage relay for cut-off in the DC circuit.

| Type | Nominal voltage | Nominal output current $I_L$ | Part number | Color code |
|---|---|---|---|---|
| BMP3.1[1)] | AC 230 – 575 V | DC 2.8 A | 08295077 | – |

1) Only sizes 250 – 315

25957074/EN – 06/2019

### 8.5.3 Control cabinet

The following tables list the technical data of brake control systems for installation in the control cabinet. The different housings have different colors (= color code) to make them easier to distinguish.

**BMS..**

Half-wave rectifier without electronic switching.

| Type | Nominal voltage | Nominal output current $I_L$ | Part number | Color code |
|---|---|---|---|---|
| BMS1.4 | AC 230 – 575 V | DC 1.0 A | 08298300 | Tar black |
| BMS1.5 | AC 150 – 500 V | DC 1.5 A | 08258023 | Tar black |
| BMS3 | AC 42 – 150 V | DC 3.0 A | 08258031 | Mahogany brown |

**BME..**

Half-wave rectifier with electronic switching.

| Type | Nominal voltage | Nominal output current $I_L$ | Part number | Color code |
|---|---|---|---|---|
| BME1.4 | AC 230 – 575 V | DC 1.0 A | 08298319 | Vermilion |
| BME1.5 | AC 150 – 500 V | DC 1.5 A | 08257221 | Vermilion |
| BME3 | AC 42 – 150 V | DC 3.0 A | 0825723X | Light blue |

**BMH..**

Half-wave rectifier with electronic switching and heating function

| Type | Nominal voltage | Nominal output current $I_L$ | Part number | Color code |
|---|---|---|---|---|
| BMH1.4 | AC 230 – 575 V | DC 1.0 A | 08298343 | Signal green |
| BMH1.5 | AC 150 – 500 V | DC 1.5 A | 0825818X | Signal green |
| BMH3 | AC 42 – 150 V | DC 3.0 A | 08258198 | Zinc yellow |

**BMP..**

Half-wave rectifier with electronic switching and integrated voltage relay for cut-off in the DC circuit.

| Type | Nominal voltage | Nominal output current $I_L$ | Part number | Color code |
|---|---|---|---|---|
| BMP1.4 | AC 230 – 575 V | DC 1.0 A | 08298327 | Light gray |
| BMP1.5 | AC 150 – 500 V | DC 1.5 A | 08256853 | Light gray |
| BMP3 | AC 42 – 150 V | DC 3.0 A | 08265666 | Light green |

25957074/EN – 06/2019

| Type | Nominal voltage | Nominal output current $I_L$ | Part number | Color code |
|---|---|---|---|---|
| BMP3.1 | AC 230 – 575 V | DC 2.8 A | 08295077 | – |

**BMK..**

Half-wave rectifier with electronic switching, DC 24 V control input, and cut-off in the DC circuit.

| Type | Nominal voltage | Nominal output current $I_L$ | Part number | Color code |
|---|---|---|---|---|
| BMK1.4 | AC 230 – 575 V | DC 1.0 A | 08298335 | Water blue |
| BMK1.5 | AC 150 – 500 V | DC 1.5 A | 08264635 | Water blue |
| BMK3 | AC 42 – 150 V | DC 3.0 A | 08265674 | Light pink |

**BMKB..**

Half-wave rectifier with electronic switching, DC 24 V control input, rapid cut-off and LED status display.

| Type | Nominal voltage | Nominal output current $I_L$ | Part number | Color code |
|---|---|---|---|---|
| BMKB1.5 | AC 150 – 500 V | DC 1.5 A | 08281602 | Water blue |

**BMV..**

Brake control unit with electronic switching, DC 24 V control input and fast cut-off.

| Type | Nominal voltage | Nominal output current $I_L$ | Part number | Color code |
|---|---|---|---|---|
| BMV5 | DC 24 V | DC 5.0 A | 13000063 | Pure white |

**BST..**

Safe brake control with electronic switching, DC 24 V control input and safe DC 24 V control input. Supply via the DC link of the inverter.

| Type | Nominal voltage | Nominal output current $I_L$ | Part number | Color code |
|---|---|---|---|---|
| BST0.6S | AC 460 V | DC 0.6 A | 08299714 | – |
| BST0.7S | AC 400 V | DC 0.7 A | 13000772 | – |
| BST1.2S | AC 230 V | DC 1.2 A | 13001337 | – |

25957074/EN – 06/2019

## 8.6 Permitted rolling bearings

### 8.6.1 Rolling bearing for DR..71 – 280 motors

| Motors | A-side bearing | | B-side bearing | |
|---|---|---|---|---|
| | AC motor | Gearmotor | AC motor | Brakemotor |
| **DR..71** | 6204-2Z-C3 | 6303-2Z-C3 | 6203-2Z-C3 | 6203-2RS-C3 |
| **DR..80** | 6205-2Z-C3 | 6304-2Z-C3 | 6304-2Z-C3 | 6304-2RS-C3 |
| **DR..90 – 100** | 6306-2Z-C3 | | 6205-2Z-C3 | 6205-2RS-C3 |
| **DR..112 – 132** | 6308-2Z-C3 | | 6207-2Z-C3 | 6207-2RS-C3 |
| **DR..160** | 6309-2Z-C3 | | 6209-2Z-C3 | 6209-2RS-C3 |
| **DR..180** | 6312-2Z-C3 | | 6213-2Z-C3 | 6213-2RS-C3 |
| **DR..200 – 225** | 6314-2Z-C3 | | 6314-2Z-C3 | 6314-2RS-C3 |
| **DR..250 – 280** | 6317-2Z-C4 | | 6315-2Z-C3 | 6315-2RS-C3 |

### 8.6.2 Rolling bearings for DRN63 – 280, DR2..56 – 80 motors

| Motors | A-side bearing | | B-side bearing | |
|---|---|---|---|---|
| | AC motor | Gearmotor | AC motor | Brakemotor |
| **DR2..56** | – | 6302-2Z-C3 | 6002-2Z-C3 | 6002-2RS-C3 |
| **DRN63**<br>**DR2..63** | 6202-2Z-C3 | 6303-2Z-C3 | 6203-2Z-C3 | 6203-2Z-C3 |
| **DRN71**<br>**DR2..71** | 6204-2Z-C3 | | 6203-2Z-C3 | |
| **DRN80**<br>**DR2..80** | 6205-2Z-C3 | 6304-2Z-C3 | 6304-2Z-C3 | 6304-2RS-C3 |
| **DRN90** | 6305-2Z-C3 | | 6205-2Z-C3 | 6205-2RS-C3 |
| **DRN100** | 6306-2Z-C3 | | 6205-2Z-C3 | 6205-2RS-C3 |
| **DRN112** | 6308-2Z-C3 | | 6207-2Z-C3 | 6207-2RS-C3 |
| **DRN132S** | 6308-2Z-C3 | 6308-2Z-C3 | 6207-2Z-C3 | 6207-2RS-C3 |
| **DRN132M/L** | 6308-2Z-C3 | 6309-2Z-C3 | 6209-2Z-C3 | 6209-2RS-C3 |
| **DRN160** | 6310-2Z-C3 | 6312-2Z-C3 | 6212-2Z-C3 | 6212-2RS-C3 |
| **DRN180** | 6311-2Z-C3 | 6312-2Z-C3 | 6212-2Z-C3 | 6212-2RS-C3 |
| **DRN200** | 6312-2Z-C3 | 6314-2Z-C3 | 6314-2Z-C3 | 6314-2RS-C3 |
| **DRN225** | 6314-2Z-C3 | | 6314-2Z-C3 | 6314-2RS-C3 |
| **DRN250 – 280** | 6317-2Z-C4 | | 6315-2Z-C3 | |

25957074/EN – 06/2019

### 8.6.3 Rolling bearing for DR..315, DRN315 motors

| Motors | A-side bearing | | B-side bearing | |
|---|---|---|---|---|
| | AC motor | Gearmotor | AC motor | Gearmotor |
| **DR..315K, DRN315S** | 6319-C3 | 6319-C3 | 6319-C3 | 6319-C3 |
| **DR..315S, DRN315M** | | | | |
| **DR..315M, DRN315L** | 6319-C3 | 6322-C3 | 6319-C3 | 6322-C3 |
| **DR..315L, DRN315H** | | | | |

### 8.6.4 Rolling bearing for DR..250 – 315, DRN250 – 315 motors, with reinforced bearings /ERF

| Motors | A-side bearing | B-side bearing | |
|---|---|---|---|
| | | AC motor | Gearmotor |
| **DR..250 – 280, DRN250 – 280** | NU317E-C3 | 6315-C3 | |
| **DR..315K, DRN315S** | NU319E | 6319-C3 | 6319-C3 |
| **DR..315S, DRN315M** | | | |
| **DR..315M, DRN315L** | | | 6322-C3 |
| **DR..315L, DRN315H** | | | |

### 8.6.5 Rolling bearing for DR..200 – 315, DRN200 – 315 motors, with current-insulated rolling bearings /NIB

| Motors | B-side bearing | |
|---|---|---|
| | AC motor | Gearmotor |
| **DR..200 – 225, DRN200 – 225** | 6314-C3-EI | 6314-C3-EI |
| **DR..250 – 280, DRN250 – 280** | 6315-Z-C3-EI | 6315-Z-C3-EI |
| **DR..315K, DRN315S** | 6319-C3-EI | 6319-C3-EI |
| **DR..315S, DRN315M** | | |
| **DR..315M, DRN315L** | | 6322-C3-EI |
| **DR..315L, DRN315H** | | |

25957074/EN – 06/2019

## 8.7 Lubricant tables

### 8.7.1 Lubricant table for rolling bearings

**INFORMATION**

Use of wrong bearing grease can damage the bearings.

**Motors with sealed bearings**

The bearings are 2Z or 2RS closed bearings and cannot be relubricated. They are used for DR..71 – 280, DRN63 – 280, DR256 – 80 motors.

| | Ambient temperature | Manufacturer | Type | DIN designation |
|---|---|---|---|---|
| Motor rolling bearings | -20 °C to +80 °C | Mobil | Polyrex EM[1)] | K2P-20 |
| | +20 °C to +100 °C | Klüber | Barrierta L55/2[2)] | KX2U |
| | -40 °C to +60 °C | Kyodo Yushi | Multemp SRL[2)] | KE2N-40 |
| | -20 °C to +60 °C | SKF | LHT23[2)] | KE2N-40 |

1) Mineral lubricant (= mineral-based bearing grease)

2) Synthetic lubricant (= synthetic-based bearing grease)

**Motors with open bearings**

Motors in the sizes DR..315 and DRN315 always have open bearings. If DR..250 – 280 and DRN225 – 280 motors have the relubrication option /NS, these sizes also have open bearings.

| | Ambient temperature | Manufacturer | Type | DIN designation |
|---|---|---|---|---|
| Rolling bearing | -20 °C to +80 °C | Mobil | Polyrex EM[1)] | K2P-20 |
| | -40 °C to +60 °C | SKF | LGHP 2[1)] | K2N-40 |

1) Mineral lubricant (= mineral-based bearing grease)

25957074/EN – 06/2019

### 8.7.2 Order information for lubricants, anti-corrosion agents and sealants

Lubricants, anti-corrosion agents, and sealants may be obtained directly from SEW-EURODRIVE using the following order numbers.

| Usage | Manufacturer | Type | Quantity | Order number |
|---|---|---|---|---|
| **Lubricant for rolling bearings** | Mobil | Polyrex EM | 400 g | 09101470 |
| | SKF | LGHP2 | 400 g | 09101276 |
| **Lubricant for sealing rings** | | | | |
| Material: NBR/FKM | Klüber | Petamo GHY 133N | 10 g | 04963458 |
| | FUCHS LUBRITECH | Gleitmo 100 S | 1 kg | 03258092 |
| Material: EPDM/EPP | Klüber | Klübersynth BLR 46-122 | 10 g | 03252663 |
| **Corrosion protection and lubricant** | SEW-EURODRIVE | NOCO® fluid | 5.5 g | 09107819 |
| **Sealant** | Marston Domsel | SEW-L-Spezial | 80 g | 09112286 |

25957074/EN – 06/2019

## 8.8 Encoders

### 8.8.1 Incremental encoder E.7S – sin/cos

| Encoder | | ES7S | EV7S | EG7S | EH7S |
|---|---|---|---|---|---|
| Supply voltage | $U_B$ | DC 7 V – 30 V | | | |
| Max. current consumption | $I_{in}$ | 140 $mA_{RMS}$ | | | |
| Max. pulse frequency | $f_{max}$ | 150 kHz | | | 180 kHz |
| Incremental tracks, periods per revolution | A, B | 1024 (10 bits) | | | |
| | C | 1 | | | |
| Position resolution, increments per revolution | A, B | | | | |
| Output amplitude per track | $U_{high}$ | 1 $V_{PP}$ | | | |
| | $U_{low}$ | | | | |
| Signal output | | sin/cos | | | |
| Output current per track | $I_{out}$ | 10 $mA_{RMS}$ | | | |
| Pulse duty factor according to IEC 60469-1, n = constant | | – | | | |
| Phase offset A: B n = constant | | 90° ± 3° | | | 90° ± 10° |
| Accuracy[1)] | | 0.0194° | – | 0.0194° | – |
| Vibration resistance according to EN 60088-2-6 | | ≤ 100 $m/s^2$ | | | |
| Shock resistance according to EN 60088-2-27 | | ≤ 1000 $m/s^2$ | | ≤ 2000 $m/s^2$ | |
| Maximum speed | $n_{max}$ | 6000 $min^{-1}$ | | | |
| Duration until fault message (disabled outputs)[2)] | | 25 ms | – | 25 ms | – |
| Activation time of rotary encoder internal diagnostics after switching on | | – | | | |
| Degree of protection in accordance with EN 60529 | | IP66 | | | IP65 |
| Connection | | Terminal box on incremental encoder | | | 12-pin plug connector |
| Ambient temperature | °C | -30 to +60 | -30 to +80 | -30 to +60 | -40 to +60 |

1) Due to the stiffness of the torque arm, you have to take into account an automatically resetting ±0.6° twist (depending of the direction of rotation) of the encoder housing compared to the encoder shaft.

2) Sin/cos encoders have a self-diagnostics function. If an error is detected, the sensor reports it by deactivating the output signals to the encoder evaluation unit.

25957074/EN – 06/2019

### 8.8.2 Incremental encoder E.7R – TTL (RS422), 9 V ≤ $U_B$ ≤ 30 V

| Encoder | | ES7R | EV7R | EG7R | EH7R |
|---|---|---|---|---|---|
| Supply voltage | $U_B$ | DC 7 V – 30 V | | | DC 10 V – 30 V |
| Max. current consumption | $I_{in}$ | 160 $mA_{RMS}$ | | | 140 $mA_{RMS}$ |
| Max. pulse frequency | $f_{max}$ | 120 kHz | | | 300 kHz |
| Incremental tracks, periods per revolution | A, B | 1024 (10 bits) | | | |
| | C | 1 | | | |
| Position resolution, increments per revolution | A, B | 4096 (12 bits) | | | |
| Output amplitude per track | $U_{high}$ | ≥ DC 2.5 V | | | |
| | $U_{low}$ | ≤ DC 0.5 V | | | |
| Signal output | | TTL (RS422) | | | |
| Output current per track | $I_{out}$ | 25 $mA_{RMS}$ | | | 20 $mA_{RMS}$ |
| Pulse duty factor according to IEC 60469-1, n = constant | | 50% ± 10% | | | |
| Phase offset A: B n = constant | | 90° ± 20° | | | |
| Vibration resistance according to EN 60088-2-6 | | ≤ 100 $m/s^2$ | | | |
| Shock resistance according to EN 60088-2-27 | | ≤ 1000 $m/s^2$ | | ≤ 2000 $m/s^2$ | |
| Maximum speed | $n_{max}$ | 6000 $min^{-1}$ | | | 6000 $min^{-1}$<br>2500 $min^{-1}$ at 60 °C |
| Degree of protection in accordance with EN 60529 | | IP66 | | | IP65 |
| Connection | | Terminal box on incremental encoder | | | 12-pin plug connector |
| Ambient temperature | °C | -30 to +60 | -30 to +60 | | -40 to +60 |

### 8.8.3 Incremental encoder E.7C – HTL

| Encoder | | ES7C | EV7C | EG7C | EH7C |
|---|---|---|---|---|---|
| Supply voltage | $U_B$ | DC 4.75 V – 30 V | | | DC 10 V – 30 V |
| Max. current consumption | $I_{in}$ | 240 $mA_{RMS}$ | | | 225 $mA_{RMS}$ |
| Max. pulse frequency | $f_{max}$ | 120 kHz | | | 300 kHz |
| Incremental tracks, periods per revolution | A, B | 1024 (10 bits) | | | |
| | C | 1 | | | |
| Position resolution, increments per revolution | A, B | 4096 (12 bits) | | | |
| Output amplitude per track | $U_{high}$ | $V_B$ -2.5 V | | $V_B$ -2.5 V | $V_B$ -2 V |
| | $U_{low}$ | ≤ DC 1.1 V | | | ≤ DC 2.5 V |
| Signal output | | HTL/TTL (RS422) | | HTL/TTL (RS422) | HTL |
| Output current per track | $I_{out}$ | 60 $mA_{RMS}$ | | | 30 $mA_{RMS}$ |
| Pulse duty factor according to IEC 60469-1, n = constant | | 50% ± 10% | | | 50% ± 20% |
| Phase offset A: B n = constant | | 90° ± 20° | | | |
| Vibration resistance according to EN 60088-2-6 | | ≤ 100 $m/s^2$ | | | |
| Shock resistance according to EN 60088-2-27 | | ≤ 1000 $m/s^2$ | | ≤ 2000 $m/s^2$ | |
| Maximum speed | $n_{max}$ | 6000 $min^{-1}$ | | | 6000 $min^{-1}$<br>2500 $min^{-1}$ at 60 °C |
| Degree of protection in accordance with EN 60529 | | IP66 | | | IP65 |
| Connection | | Terminal box on incremental encoder | | | 12-pin plug connector |
| Ambient temperature | °C | -30 to +60 | | -30 to +60 | -40 to +60 |

25957074/EN – 06/2019

### 8.8.4 Incremental encoder E.7T – TTL (RS422) at $U_B$ = 5 V

| Encoder | | EH7T |
|---|---|---|
| Supply voltage | $U_B$ | DC 5 V |
| Max. current consumption | $I_{in}$ | 140 mA |
| Max. pulse frequency $f_{max}$ | kHz | 300 |
| Incremental tracks, periods per revolution | A, B | 1024 (10 bits) |
| | C | 1 |
| Position resolution, increments per revolution | A, B | 4096 (12 bits) |
| Output amplitude | $U_{high}$ | ≥ DC 2.5 V |
| | $U_{low}$ | ≤ DC 0.5 V |
| Signal output | | TTL (RS422) |
| Output current per track | $I_{out}$ | 20 mA |
| Pulse duty factor according to IEC 60469-1, n = constant | | 50% ± 20% |
| Phase offset A: B<br>n = constant | | 90° ± 20° |
| Vibration resistance according to EN 60088-2-6 at 10 Hz – 2 kHz | | ≤ 100 $m/s^2$ |
| Shock resistance according to EN 60088-2-27 | | ≤ 2000 $m/s^2$ |
| Maximum speed | $n_{max}$ | 6000 $min^{-1}$<br>2500 $min^{-1}$ at 60 °C |
| Degree of protection according to EN 60529 | | IP65 |
| Connection | | 12-pin plug connector |
| Ambient temperature | °C | -40 to +60 |

25957074/EN – 06/2019

### 8.8.5 Incremental encoder E.8.

| Encoder | | EK8S<br>EV8S<br>1) | EK8R<br>EV8R<br>2) | EK8C<br>EV8C |
|---|---|---|---|---|
| Supply voltage | $U_B$ | DC 7 V – 30 V | | DC 4.75 V – 30 V |
| Supply voltage for functional safety applications | $U_{B\_FS}$ | DC 7 V – 30 V | – | |
| Maximum current consumption, free of load | $I_{in}$ | 100 mA (at $U_B$ = 7 V) | | |
| Max. pulse frequency | $f_{pulse\_max}$ | 150 kHz | 120 kHz | |
| Direction of rotation | | A before B when looking at the motor output shaft in clockwise rotation | | |
| Incremental tracks, periods per revolution | A, B | 1024 (10 bits) | | |
| | C | 1 | | |
| Position resolution, increments per revolution | A, B | 4096 (12 bits) | | |
| Voltage output signal differential (peak-to-peak) (A' = A - $\overline{A}$; B' = B - $\overline{B}$) | $U_{t\_diff}$ | 1 V ± 10% | – | |
| Voltage output signal non-differential (peak-to-peak) | $U_t$ | 0.5 V ± 10% | $U_{Low}$ ≤ 0.5 V<br>$U_{High}$ ≥ 2.5 V | $U_B$ ≤ 6 V:<br>$U_{Low}$ ≤ 0.5 V<br>$U_{High}$ ≥ 2.5 V<br>$U_B$ > 6 V:<br>$U_{Low}$ ≤ 3 V<br>$U_{High}$ ≥ $U_B$ - 2.5 V |
| Signal level output, offset nominal against 0 V (A, B, C, $\overline{A}$, $\overline{B}$, $\overline{C}$)V | $U_{t\_o}$ | 2.5 V ± 0.3 V | – | |
| Signal output | | sin/cos | TTL (RS422) | HTL |
| Load resistance/load current differential | $R_L/I_L$ | 120 Ω ± 10% | | $U_B$ 6 V:<br>120 Ω ± 10%<br>UB > 6 V:<br>1 – 3 kΩ |
| Resistance between tracks and reference ground | $R_{gnd}$ | ≥ 1 kΩ | – | |
| Load capacitance, output | $C_o$ | ≤ 20 nF | – | – |
| Voltage output signal, differential (C' = C - $\overline{C}$) (peak-to-peak) | $U_{t\_diff}$<br>e | 0.3 – 1.4 V | – | – |
| C track offset | g | 192 mV ± 5 mV | – | – |
| Voltage output signal, non-differential (C,$\overline{C}$) (peak-to-peak) | $U_{t\_C}$ | – | $U_{Low}$ ≤ 0.5 V<br>$U_{High}$ ≥ 2.5 V | $U_B$ ≤ 6 V:<br>$U_{Low}$ ≤ 0.5 V<br>$U_{High}$ ≥ 2.5 V<br>$U_B$ > 6 V:<br>$U_{Low}$ ≤ 3 V<br>$U_{High}$ ≥ $U_B$ - 2.5 V |
| Phase angle track C', n = constant | k, l | k = 180° ± 90°<br>l = 180° ± 90° | – | – |
| Signal width track C | $W_C$ | see figure | 90° electrical | |
| Signal logic track C | | see figure | C = log 1, when A = B = log 1 | |
| Pulse duty factor according to IEC 60469-1, n = constant | | – | 50 % ± 10% | |
| Phase offset A: B; $\overline{A}$ : $\overline{B}$ n = constant | d | 90° ± 2° | 90° ± 20° | |
| Accuracy of the incremental section[3)] | | 0.0194° (70 ") | 0.033° (120 ") | |
| Vibration resistance according to EN 60068-2-6 | | ≤ 10 g (f > 18.5 Hz) | | |
| Shock resistance according to EN 60068-2-27 | | ≤ 100 g (t = 6 ms, 18 pulses) | | |
| Maximum speed | $n_{max}$ | 6000 $min^{-1}$ | | |
| Maximum line length | | 100 m | 300 m | 100 m |

25957074/EN – 06/2019

| Encoder | | EK8S<br>EV8S<br>1) | EK8R<br>EV8R<br>2) | EK8C<br>EV8C |
|---|---|---|---|---|
| Duration until fault message (disabled outputs)[4] | | ≤ 25 ms | – | |
| Activation time of rotary encoder internal diagnostics after switching on | | ≤ 200 ms | – | |
| Degree of protection in accordance with EN 60529 | | IP66 | | |
| Installation altitude | h | ≤ 4000 m above sea level | | |
| Corrosion protection, surface protection | | KS, OS1 – OS4, OSG | | |
| Connection | | Integrated encoder plug connector on the fan guard (can be pre-assembled and plugged in the field) | | |
| Ambient temperature of motor | $T_{amb}$ | -30 to +60 °C | | |
| Electronic nameplate | | RS485 (serial, asynchronous); 1920 bytes | – | – |

1) see figure "Sin/cos signals and phase relationship"
2) see figure "HTL/TTL signals and phase relationship"
3) Due to the stiffness of the torque arm, you have to take into account an automatically resetting ±0.6° twist (depending of the direction of rotation) of the encoder housing compared to the encoder shaft.
4) Sin/cos encoders have a self-diagnostics function. If an error is detected, the sensor reports it by deactivating the output signals to the encoder evaluation unit.

### Sin/cos signals and phase relationship

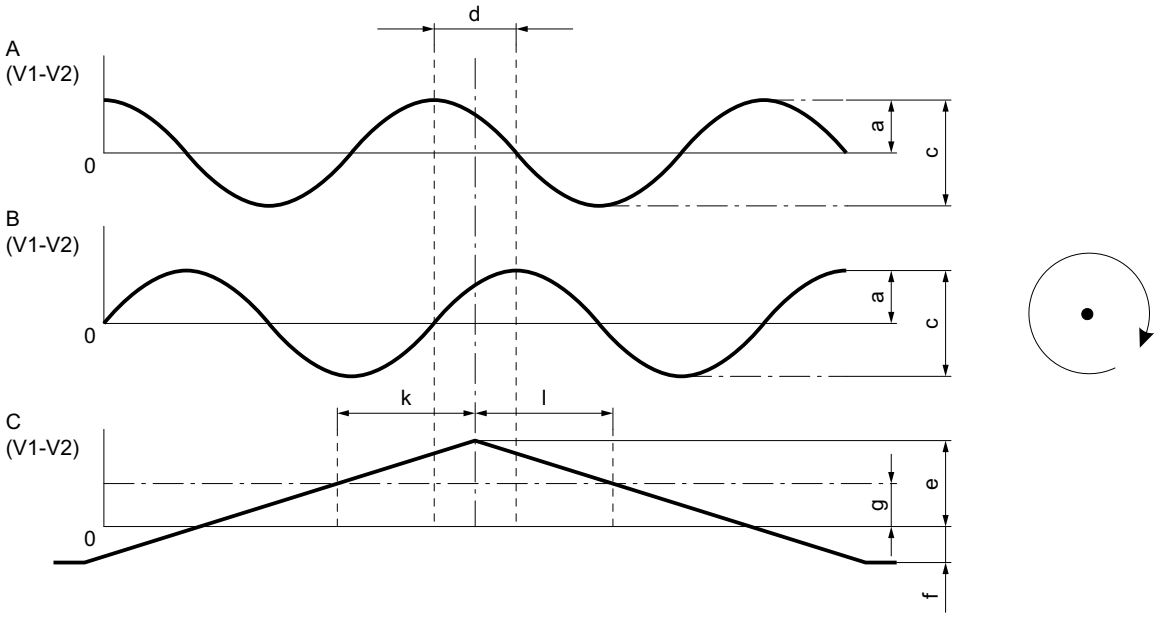


*28352869387*

25957074/EN – 06/2019

**HTL/TTL signals and phase relationship**

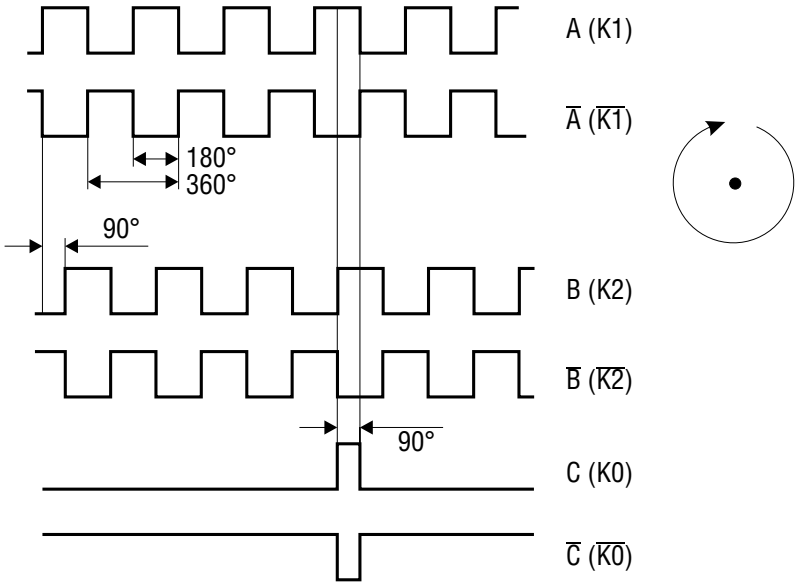


*1369276939*

25957074/EN – 06/2019

### 8.8.6 Incremental encoder EI.7

| Encoder | | EI71<br>EI72<br>EI76<br>EI7C | EI8R | EI8C |
|---|---|---|---|---|
| Supply voltage | $U_B$ | DC 9 V – 30 V | DC 7 V – 30 V | |
| Supply voltage for FS applications | $U_{B\_FS}$ | DC 19.2 V – 30 V | – | |
| Max. current consumption, free of load | $I_{in}$ | 120 mA | 100 mA | |
| Max. pulse frequency | $f_{pulse\_max}$ | 1.44 kHz | 102.4 kHz | |
| Direction of rotation | | A before B when looking at the motor output shaft in clockwise rotation | | |
| Incremental tracks, periods per revolution | A, B | 1, 2, 6, 24<br>(size 63: 24 only)<br>(EI7C FS: 24 only) | 1024 (10 bits) | |
| | C | – | 1 | |
| Position resolution, increments per revolution | A, B | 4, 8, 24, 96<br>(size 63: 96 only)<br>(EI7C FS: 96 only) | 4096 (12 bits) | |
| Voltage output signal differential (peak-to-peak)<br>(A' = A - $\overline{A}$; B' = B - $\overline{B}$) | $U_{t\_diff}$ | – | – | |
| Voltage output signal non-differential (peak-to-peak) | $U_t$ | $U_{Low} \le 3$ V<br>$U_{High} \ge U_B - 3.5$ V | $U_{Low} \le 0.5$ V<br>$U_{High} \ge 2.5$ V | $U_{Low} \le 3$ V<br>$U_{High} \ge U_B - 3.5$ V |
| Signal level output, offset nominal against 0 V (A, B, C, $\overline{A}$, $\overline{B}$, $\overline{C}$)V | $U_{t\_o}$ | – | – | |
| Signal output | | HTL | TTL (RS422) | HTL |
| Load resistance/load current differential | $R_L/I_L$ | 60 mA | 25 mA | 60 mA |
| Resistance between tracks and reference ground | $R_{gnd}$ | – | – | – |
| Load capacitance, output | $C_o$ | – | – | – |
| Voltage output signal, differential (C' = C - $\overline{C}$) (peak-to-peak) | $U_{t\_diff}$ e[1)] | – | – | – |
| C track offset | g[1)] | – | – | – |
| Voltage output signal, non-differential (C,$\overline{C}$) (peak-to-peak) | $U_{t\_C}$ | – | $U_{Low} \le 0.5$ V<br>$U_{High} \ge 2.5$ V | $U_{Low} \le 3$ V<br>$U_{High} \ge U_B - 2.5$ V |
| Phase angle track C', n = constant | k, l[1)] | – | – | – |
| Signal width track C | $W_C$[1)] | – | 90° electrical | |
| Signal logic track C | | – | C = log 1 when A = B = log 1 | |
| Pulse duty factor according to IEC 60469-1, n = constant | | 50 % ± 20% | 50 % ± 10% | |
| Phase offset A: B; $\overline{A}$ : $\overline{B}$ n = constant | d[1)] | 90° ± 20° | 90° ± 20° | |
| Accuracy of the incremental section | | 3.75° (225 ") | 0.2° (720 ") | |
| Vibration resistance according to EN 60068-2-6 | | ≤ 10 g (f > 18.5 Hz) | | |
| Shock resistance according to EN 60068-2-27 | | ≤ 100 g (t = 6 ms, 18 pulses) | | |
| Maximum permissible external magnetic field (outer contour of motor) | | 25 mT/20 kA/m | | |
| Maximum speed | $n_{max}$ | 3600 $min^{-1}$ | 6000 $min^{-1}$ | |
| Maximum line length | | 100 m | | |
| Duration until error message (disabled outputs) | | – | – | |

| Encoder | | EI71<br>EI72<br>EI76<br>EI7C | EI8R | EI8C |
|---|---|---|---|---|
| Activation time of rotary encoder internal diagnostics after switching on | | – | – | |
| Degree of protection in accordance with EN 60529 | | IP66 | | |
| Installation altitude | h | ≤ 4000 m above sea level | | |
| Corrosion protection, surface protection | | KS, OS1 – OS4, OSG | | |
| Connection | | Size 63:<br>M12 (8-pin)<br>Size 71 – 132S:<br>M12 (8- or 4-pin)<br>or<br>connection unit (can be pre-assembled in the field) in a terminal box | M23 or connection unit (can be pre-assembled in the field) in a terminal box | |
| Ambient temperature of motor | $T_{amb}$ | -30 to +60 °C | | |
| Electronic nameplate | | – | – | – |
| Other technical data | | On request | | |

1) relating to measurements in figure "Sin/cos signals and phase relationship"

25957074/EN – 06/2019

### 8.8.7 Multi-turn absolute encoder A.7Y – SSI (multi-turn) + sin/cos or TTL (RS422)

| Encoder | | AS7Y | AV7Y | AG7Y | AH7Y |
|---|---|---|---|---|---|
| Supply voltage | $U_B$ | DC 7 V – 30 V | | | DC 9 V – 30 V |
| Max. current consumption | $I_{in}$ | 140 mA | | | 150 mA |
| Max. pulse frequency | $f_{limit}$ | 200 kHz | | | 120 kHz |
| Incremental tracks, periods per revolution | A, B | 2048 (11 bits) | | | |
| | C | – | | | – |
| Output amplitude per track | $U_{high}$ | 1 $V_{PP}$ | | | ≥ DC 2.5 $V_{PP}$ |
| | $U_{low}$ | | | | ≤ DC 0.5 $V_{PP}$ |
| Signal output | | sin/cos | | | TTL (RS422) |
| Output current per track | $I_{out}$ | 10 mA | | | 20 mA |
| Pulse duty factor according to IEC 60469-1, n = constant | | – | | | 50 ± 20% |
| Phase offset A: B n = constant | | 90° ± 3° | | | 90° ± 20° |
| Accuracy of the incremental section[1] | | 0.0194° | | | – |
| Accuracy of the absolute section | | ±1 LSB (Least Significant Bit) | | | – |
| Scanning code | | Gray code | | | |
| Position resolution, increments per revolution | A, B | 8192 (13 bits) | | | |
| Position resolution of the absolute section, increments per revolution | | 4096 (12 bits) | | | |
| Multi-turn resolution | | 4096 revolutions (12 bits) | | | |
| Data transmission | | Synchronous, serial (SSI) | | | |
| Serial data output | | Driver to EIA RS422 | | | Driver to EIA RS485 |
| Serial pulse input | | Recommended receiver to EIA RS422 | | | Optocoupler, recommended driver to EIA RS485 |
| Clock frequency | | Permitted range: 100 – 2000 kHz (max. 100 m cable length with 300 kHz) | | | |
| Clock-pulse space period | | 12 – 30 µs | | | |
| Vibration resistance according to EN 60088-2-6 | | ≤ 100 $m/s^2$ | | | |
| Shock resistance according to EN 60088-2-27 | | ≤ 1000 $m/s^2$ | | | ≤ 2000 $m/s^2$ |
| Maximum speed | $n_{max}$ | 6000 $min^{-1}$ | | 6000 $min^{-1}$ at $T_U$ to 40 °C<br>4500 $min^{-1}$ at $T_U$ > 40 °C | 3500 $min^{-1}$ |
| Duration until fault message (disabled outputs)[2] | | 25 ms + 3/4 revolution | | | – |
| Activation time of rotary encoder internal diagnostics after switching on | | – | | | |
| Degree of protection in accordance with EN 60529 | | IP66 | | | IP56 |
| Connection | | Terminal strip in pluggable connection cover | | | Terminal strip on encoder |
| Ambient temperature | °C | -30 to +60 | | | -20 to +40 |

1) Due to the stiffness of the torque arm, you have to take into account an automatically resetting ±0.6° twist (depending of the direction of rotation) of the encoder housing compared to the encoder shaft.

2) Absolute encoders AS7Y, AV7Y, and AG7Y have a self-diagnostics function. If an error is detected, the sensor reports it by deactivating the output signals to the encoder evaluation unit.

### 8.8.8 Multi-turn absolute encoder A.7W – RS485 (multi-turn) + sin/cos

| Encoder | | AS7W | AV7W | AG7W |
|---|---|---|---|---|
| Supply voltage | $U_B$ | DC 7 V – 30 V | | |
| Max. current consumption | $I_{in}$ | 150 mA | | |
| Max. pulse frequency | $f_{max}$ | 200 kHz | | |
| Incremental tracks, periods per revolution | A, B | 2048 (11 bits) | | |
| | C | – | | |
| Output amplitude per track | $U_{high}$ / $U_{low}$ | 1 $V_{PP}$ | | |
| Signal output | | sin/cos | | |
| Output current per track | $I_{out}$ | 10 mA | | |
| Pulse duty factor according to IEC 60469-1, n = constant | | – | | |
| Phase offset A: B<br>n = constant | | 90° ± 3° | | |
| Accuracy of the incremental section[1)] | | 0.0194° | | |
| Accuracy of the absolute section | | ±1 LSB (Least Significant Bit) | | |
| Scanning code | | Binary code | | |
| Position resolution, increments per revolution | A, B | 8192 (13 bits) | | |
| Multi-turn resolution | | 65536 revolutions (16 bits) | | |
| Data transmission | | RS485 | | |
| Serial data output | | Driver to EIA RS485 | | |
| Serial pulse input | | Recommended driver to EIA RS485 | | |
| Clock frequency | | 9600 baud | | |
| Clock-pulse space period | | – | | |
| Vibration resistance according to EN 60088-2-6 | | ≤ 100 m/s² | | |
| Shock resistance according to EN 60088-2-27 | | ≤ 1000 m/s² | | ≤ 2000 m/s² |
| Maximum speed | $n_{max}$ | 6000 min$^{-1}$ | 6000 min$^{-1}$ at $T_U$ to 40 °C<br>4500 min$^{-1}$ at $T_U$ > 40 °C | 6000 min$^{-1}$ |
| Duration until fault message (disabled outputs)[2)] | | 25 ms + 3/4 revolution | | |
| Activation time of rotary encoder internal diagnostics after switching on | | – | | |
| Degree of protection in accordance with EN 60529 | | IP66 | | |
| Connection | | Terminal strip in pluggable connection cover | | |
| Ambient temperature | °C | -30 to +60 | | |

1) Due to the stiffness of the torque arm, you have to take into account an automatically resetting ±0.6° twist (depending of the direction of rotation) of the encoder housing compared to the encoder shaft.

2) Absolute encoders AS7W, AV7W, and AG7W have a self-diagnostics function. If an error is detected, the sensor reports it by deactivating the output signals to the encoder evaluation unit.

25957074/EN – 06/2019

### 8.8.9 Multi-turn absolute encoder A.8.

| Encoder | | AK8Y<br>AV8Y<br>1) | AK8W<br>AV8W<br>1) | AK8H<br>AV8H<br>1)2) |
|---|---|---|---|---|
| Supply voltage | $U_B$ | DC 7 V – 30 V | | DC 7 V – 12 V |
| Supply voltage for FS applications | $U_{B\_FS}$ | DC 7 V – 30 V | | – |
| Max. current consumption, free of load | $I_{in}$ | 100 mA (at $U_B$ = 7 V) | | 80 mA |
| Max. pulse frequency | $f_{pulse\_max}$ | 200 kHz | | |
| Direction of rotation | | A before B when looking at the motor output shaft in clockwise rotation | | |
| Incremental tracks, periods per revolution | A, B | 2048 (11 bits) | | 1024 (10 bits) |
| | C | – | | |
| Position resolution, increments per revolution | A, B | 4096 (12 bits)<br>(SSI, RS422) | 65536 (16 bits)<br>(RS485) | 32768 (15 bits)<br>HIPERFACE® |
| Voltage output signal differential (peak-to-peak)<br>(A' = A - $\overline{A}$; B' = B - $\overline{B}$ | $U_{t\_diff}$ | 1 V ± 10% | | HIPERFACE® |
| Voltage output signal non-differential (peak-to-peak) | $U_t$ | 0.5 V ± 10% | | |
| Signal level output, offset nominal against 0 V<br>(A, B, C, $\overline{A}$, $\overline{B}$, $\overline{C}$)V | $U_{t\_o}$ | 2.5 V ± 0.3 V | | |
| Signal output | | sin/cos + SSI, RS422 | sin/cos + RS485 | |
| Load resistance/load current differential | $R_L/I_L$ | 120 Ω ± 10% | | |
| Resistance between track and reference ground | $R_{gnd}$ | ≥ 1 kΩ | | |
| Load capacitance, output | | ≤ 20 nF | | |
| Voltage output signal, differential (C' = C - $\overline{C}$) (peak-to-peak)<br>e | $U_{t\_diff}$ | – | – | |
| C track offset | g | – | – | |
| Voltage output signal, non-differential (C,$\overline{C}$) (peak-to-peak) | $U_{t\_C}$ | – | – | |
| Phase angle track C',<br>n = constant | k, l | – | – | |
| Signal width track C | $W_C$ | – | – | – |
| Signal logic track C | | – | – | – |
| Pulse duty factor according to IEC 60469-1, n = constant | | – | | – |
| Phase offset A: B; $\overline{A}$ : $\overline{B}$<br>n = constant | | 90° ± 2° | | HIPERFACE® |
| Accuracy of the incremental section[3)] | | 0.0194° (70 ") | | ± 0.0144° (± 52 ") |
| Accuracy of the absolute section | | ±1 LSB (Least Significant Bit) | | |
| Scanning code/counting direction | | Gray code, ascending with the direction of rotation specified above | Binary code, ascending with the direction of rotation specified above | – |
| Multi-turn resolution | | 4096 revolutions (12 bits) | 65536 revolutions (16 bits) | 4096 revolutions (12 bits) |
| Communication, interface | | SSI (synchronous, serial) | RS485 (asynchronous, serial) | HIPERFACE® |
| Communication, modules | | Driver to EIA RS422 | Driver to EIA RS485 | |
| Clock frequency/bandwidth | | 100 – 800 kHz (100 m cable length with maximum 300 kHz) | 9600 baud | HIPERFACE® |
| Clock-pulse space period | | 12 – 30 µs | – | |
| Vibration resistance according to EN 60068-2-6 | | ≤ 10 g (f > 18.5 Hz) | | |

| Encoder | | AK8Y<br>AV8Y<br>1) | AK8W<br>AV8W<br>1) | AK8H<br>AV8H<br>1)2) |
|---|---|---|---|---|
| Shock resistance according to EN 60068-2-27 | | ≤ 100 g (t = 6 ms, 18 pulses) | | |
| Maximum speed | $n_{max}$ | 6000 $min^{-1}$ | | |
| Maximum line length | | 100 m | | |
| Duration until fault message (disabled outputs)[4] | | ≤ 25 ms + 3/4 revolution | | HIPERFACE® |
| Activation time of rotary encoder internal diagnostics after switching on | | 200 ms | | HIPERFACE® |
| Degree of protection in accordance with EN 60529 | | IP66 | | |
| Installation altitude | h | ≤ 4000 m above sea level | | ≤ 2000 m above sea level |
| Corrosion protection, surface protection | | KS, OS1 – OS4, OSG | | |
| Connection | | Integrated encoder plug connector on the fan guard (can be pre-assembled and plugged in the field) | | |
| Ambient temperature of motor | $T_{amb}$ | -30 to +60 °C | | |
| Electronic nameplate | | – | RS485 (serial, asynchronous); 1920 bytes | HIPERFACE®; 1792 bytes |
| Other technical data | | On request | | |

1) see figure "Sin/cos signals and phase relationship"
2) Please observe the specification for the HIPERFACE® interface, Sick AG
3) Due to the stiffness of the torque arm, you have to take into account an automatically resetting ±0.6° twist (depending of the direction of rotation) of the encoder housing compared to the encoder shaft.
4) Absolute encoders A.8. and AG7Y have a self-diagnostics function. If an error is detected, the sensor reports it by deactivating the output signals to the encoder evaluation unit.

### Sin/cos signals and phase relationship

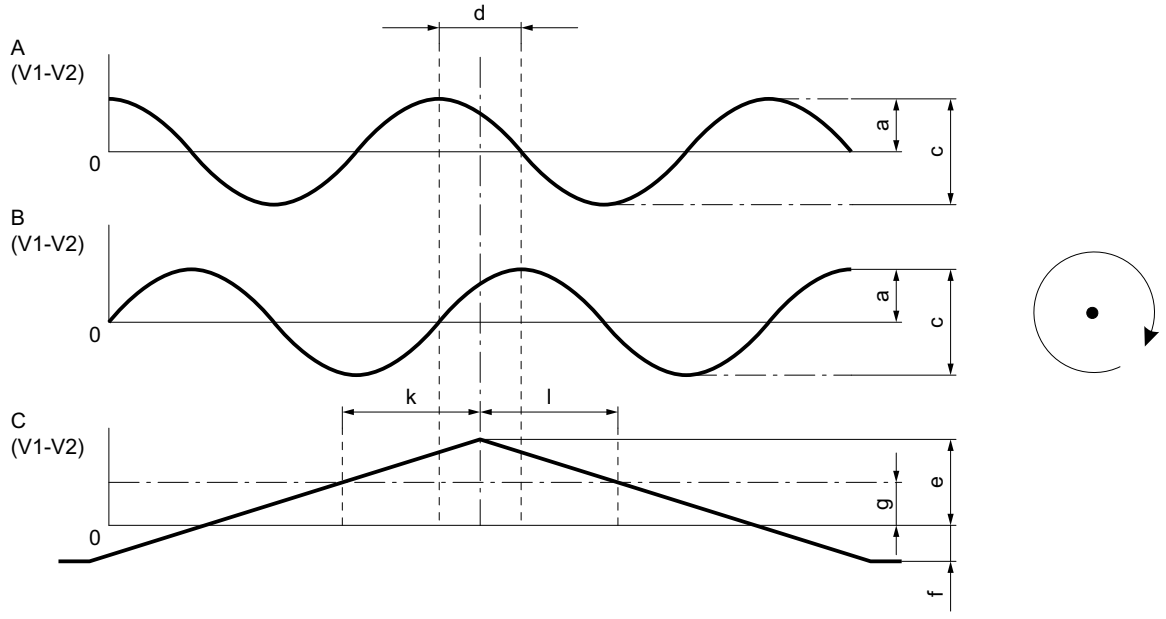


*28352869387*

### HTL/TTL signals and phase relationship

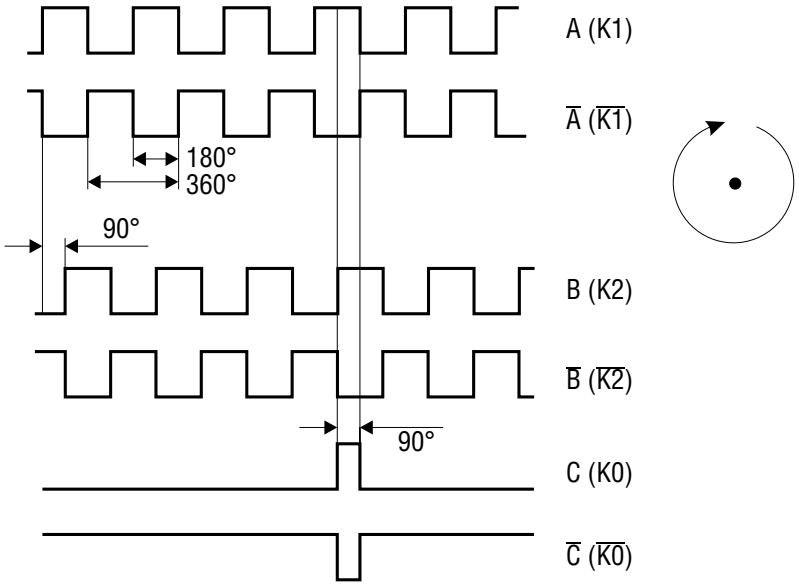


*1369276939*

## 8.9 Diagnostic unit /DUE

| Sensors | | Ø 6 mm | Ø 8 mm |
|---|---|---|---|
| | | DUE-d6-00 | DUE-d8-00 |
| Measuring range (MB) | mm | 1.5 | 2.0 |
| Protection class | | IP66 | IP66 |
| Operating temperature (sensor and cable) | | -50 to +150 °C | -50 to +150 °C |

| Evaluation unit | | | DUE-1K-00 |
|---|---|---|---|
| Part number | | | 21195609 |
| Signal outputs (1 channel) | | | OUT1: 4 – 20 mA<br>FCT1: DC 24 V (150 mA)<br>WEAR1: DC 24 V (150 mA) |
| Current consumption | Max. | mA | 320 |
| | Min. | mA | 40 |
| Supply voltage | | | DC 24 V (±15%) |
| Electromagnetic compatibility | | | DIN EN 61800-3 |
| Operating temperature (evaluation unit) | | | -40 to +105 °C |
| Humidity | | | ≤ 90% rF |
| Protection class | | | IP20 (in the closed terminal box up to IP66) |

25957074/EN – 06/2019

## 8.10 Characteristic safety values

### 8.10.1 Characteristic safety values for BE.. brakes

The values specified in the following table apply to BE.. brakes in standard applications.

| | Characteristic safety values according to EN ISO 13849-1 | |
|---|---|---|
| **Classification** | Category B | |
| **System structure** | 1-channel (Cat. B) | |
| **$MTTF_D$ value** | Calculation via $B_{10D}$ value | |
| **$B_{10D}$ value** | BE02 | $1.5 \times 10^6$ |
| | BE03 | $20 \times 10^6$ |
| | BE05 | $16 \times 10^6$ |
| | BE1 | $12 \times 10^6$ |
| | BE2 | $8 \times 10^6$ |
| | BE5 | $6 \times 10^6$ |
| | BE11 | $3 \times 10^6$ |
| | BE20 | $2 \times 10^6$ |
| | BE30 | $1.5 \times 10^6$ |
| | BE32 | $1.5 \times 10^6$ |
| | BE60 | $1 \times 10^6$ |
| | BE62 | $1 \times 10^6$ |
| | BE120 | $0.25 \times 10^6$ |
| | BE122 | $0.25 \times 10^6$ |

SEW-EURODRIVE offers BE.. brakes also as safety brakes up to size BE32. For more information, consult the addendum to the operating instructions "Safety Encoders and Safety Brakes – AC Motors DR.., DRN.., DR2.., EDR.., EDRN.. – Functional Safety".

25957074/EN – 06/2019

## 8.11 S1 duty cycle DRK.. single-phase motor

The following section describes the data for DRK.. single-phase motor in S1 continuous duty.

The specified starting torques result from the connection of a running capacitor or a running capacitor with start-up capacitor connected in parallel, respectively.

| S1 operation at 1500/1800 $min^{-1}$ 230 V) | | | | | | | | | |
|---|---|---|---|---|---|---|---|---|---|
| | | | | | | | $M_A/M_N$ with $C_B$ | $C_A$ for $M_A/M_N$ | |
| Motors | | $P_N$ | $n_N$ | $I_N$ | cos φ | $C_B$ | | 100% | 150% |
| | Hz | kW | $min^{-1}$ | A | | µF | % | µF | µF |
| DRK71S4 | 50 | 0.18 | 1450 | 1.53 | 0.81 | 20 | 50 | 14 | 25 |
| | 60 | | 1755 | 1.38 | 0.87 | 18 | 45 | 14 | 25 |
| DRK71M4 | 50 | 0.25 | 1455 | 2.05 | 0.80 | 25 | 45 | 16 | 35 |
| | 60 | | 1760 | 1.80 | 0.89 | 25 | 50 | 14 | 30 |
| DRK80S4 | 50 | 0.37 | 1420 | 2.40 | 0.98 | 18 | 50 | 12 | 25 |
| | 60 | | 1730 | 2.45 | 0.94 | 15 | 45 | 12 | 20 |
| DRK80M4 | 50 | 0.55 | 1430 | 3.45 | 0.97 | 25 | 50 | 12 | 30 |
| | 60 | | 1740 | 3.45 | 0.94 | 20 | 50 | 12 | 25 |
| DRK90M4 | 50 | 0.75 | 1430 | 4.75 | 0.93 | 15+15 | 50 | 20 | 40 |
| | 60 | | 1740 | 4.80 | 0.90 | 25 | 50 | 18 | 35 |
| DRK90L4 | 50 | 1.1 | 1415 | 6.6 | 0.97 | 20+25 | 50 | 30 | 70 |
| | 60 | | 1725 | 6.8 | 0.93 | 15+20 | 55 | 30 | 50 |

$C_B$ Running capacitor

$C_A$ Start-up capacitor

25957074/EN – 06/2019

# 9 Malfunctions

## 9.1 General information



**⚠ WARNING**

Risk of injury if the drive starts up unintentionally.

Severe or fatal injuries.

- Before you start working on the unit, disconnect the motor and all connected options from the power supply.
- Secure the motor against unintended power-up.



**⚠ CAUTION**

The surfaces on the drive can be very hot during operation.

Risk of burns.

- Let the motor cool down sufficiently before you start working on it.

**NOTICE**

Improper troubleshooting measures may damage the drive.

The drive system might be damaged.

- Use only genuine spare parts in accordance with the valid parts list.

25957074/EN – 06/2019

## 9.2 Motor malfunctions

| Fault | Possible cause | Measure |
|---|---|---|
| Motor does not start up | Supply cable interrupted | Check the connections and (intermediate) terminal points, correct if necessary |
| | Brake does not release | See chapter "Brake malfunctions" |
| | Supply cable fuse has blown | Replace fuse |
| | Motor protection (switch) has triggered | Check that the motor protection (switch) is set correctly; current specification is on the nameplate |
| | Motor protection does not trip | Check motor protection control |
| | Error in control or in the control process | Observe the switching sequence; correct if necessary |
| Motor only starts with difficulty or does not start at all | Motor power designed for delta connection but connected in star | Correct the connection from star to delta;<br>Observe wiring diagram |
| | Motor power designed for star-star connection but only connected in star | Correct the connection from star to star-star;<br>Observe wiring diagram |
| | Voltage or frequency differs considerably from the setpoint, at least when switching on the motor | Provide better power supply system; reduce the power supply load;<br>Check cross section of supply cable, replace with cable of larger cross section if necessary |
| Motor does not start in star connection, only in delta connection | Star connection does not provide sufficient torque | If the delta inrush current is not too high (observe the regulations of the power supplier), start up directly in delta;<br>Check the project planning and use a larger motor or special design if necessary. Contact SEW-EURODRIVE. |
| | Contact fault on star/delta switch | Check the switch, replace if necessary;<br>Check the connections |
| Incorrect direction of rotation | Motor connected incorrectly | Swap 2 phases of the motor supply cable |
| Motor hums and has high current consumption | Brake does not release | See chapter "Brake malfunctions" |
| | Winding defective | Send motor to specialist workshop for repair |
| | Rotor rubbing | Send motor to specialist workshop for repair |
| Fuses blow or motor protection trips immediately | Short circuit in the motor supply cable | Eliminate short circuit |
| | Supply cables connected incorrectly | Correct the connection;<br>Observe wiring diagram |
| | Short circuit in the motor | Send motor to specialist workshop for repair |
| | Ground fault on motor | Send motor to specialist workshop for repair |

25957074/EN – 06/2019

| Fault | Possible cause | Measure |
|---|---|---|
| Severe speed loss under load | Motor overload | Measure power, check project planning and use larger motor or reduce load if necessary |
| | Voltage drops | Check cross section of supply cable, replace with cable of larger cross section if necessary |
| Motor heats up excessively (measure temperature) | Overload | Measure power, check project planning and use larger motor or reduce load if necessary |
| | Insufficient cooling | Provide a cooling air supply or clear cooling air passages, retrofit forced cooling fan if necessary. Check the air filter, clean or replace if necessary |
| | Ambient temperature too high | Observe the permitted temperature range, reduce the load if necessary |
| | Motor in delta connection instead of star connection as intended | Correct the wiring, observe the wiring diagram |
| | Loose contact in supply cable (one phase missing) | Tighten loose contact, check connections, observe wiring diagram |
| | Fuse defective | Look for and rectify cause; replace fuse |
| | Line voltage deviates from the rated motor voltage by more than 5% (range A) / 10% (range B) | Adjust motor to line voltage |
| | Operating mode (S1 to S10, DIN 57530) exceeded, e.g. caused by excessive switching frequency | Adjust the operating mode of the motor to the required operating conditions; consult a professional to determine the proper drive, if necessary |
| Loud noises | Ball bearing compressed, dirty or damaged | Realign motor and the driven machine, inspect rolling bearing and replace if necessary. |
| | Vibration of rotating parts | Look for the cause, possibly an imbalance; correct the cause, observe method for balancing |
| | Foreign bodies in cooling air ducts | Clean cooling air ducts |
| | For DR.. motors with rotor designation "J": Load too high | Reduce the load |

25957074/EN – 06/2019

## 9.3 Brake malfunctions

| Fault | Possible cause | Measure |
|---|---|---|
| Brake does not release | Incorrect voltage on brake control unit | Apply the correct voltage; brake voltage specified on the nameplate. |
| | Brake control unit failed | Renew brake control, check resistors and isolation of the brake coils.<br>Check switchgear, replace if necessary. |
| | Maximum permitted working air gap exceeded because brake lining worn down. | Measure and set working air gap.<br>If the brake disk is too thin, replace the brake disk. |
| | Voltage drop along supply cable > 10% | Provide correct connection voltage: brake voltage specifications on the nameplate. Check the cross section of the brake supply cable, increase cross section if necessary. |
| | Inadequate cooling, brake overheating | Provide for cooling air supply or clear cooling air passages, check air filter, clean or replace if necessary. Replace type BG brake rectifier with type BGE. |
| | Brake coil has interturn short circuit or a short circuit to frame | Check resistors and isolation of the brake coils;<br>Replace complete brake and brake control (specialist workshop);<br>Check switchgear, replace if necessary. |
| | Rectifier defective | Replace rectifier and brake coil; it may be more economical to replace the complete brake. |
| Brake does not brake | Working air gap not correct | Measure and set working air gap.<br>If the brake disk is too thin, replace the brake disk. |
| | Brake lining worn | Replace entire brake lining carrier. |
| | Incorrect braking torque | Check the dimensioning and, if necessary, change braking torque by type and number of brake springs, or by selecting a different brake. |
| Brake does not brake | Working air gap so large that setting nuts for the manual release come into contact | Set the working air gap. |
| | Manual brake release device not set correctly | Set the setting nuts for the manual release correctly. |
| | Brake locked by manual brake release HF | Loosen the set screw, remove if needed. |
| Brake is applied with time lag | Brake is switched only on AC voltage side | Switch both the DC and AC circuits (e.g. by retrofitting a SR current relay to BSR or a UR voltage relay to BUR);<br>Observe wiring diagram. |

25957074/EN – 06/2019

| Fault | Possible cause | Measure |
|---|---|---|
| Noises in vicinity of brake | Gearing wear on the brake disk or the driver caused by jerky start-up | Check the project planning, replace the brake disk if necessary.<br>Have a specialist workshop replace the carrier. |
| | Alternating torques due to incorrectly set inverter | Check correct setting of inverter according to its operating instructions, correct if necessary. |

## 9.4 Malfunctions when operated with a frequency inverter

The symptoms described in chapter "Motor malfunctions" (→ 🗎 264) can also occur when the motor is operated with a frequency inverter. Refer to the frequency inverter operating instructions for the meaning of the problems that occur and to find information about rectifying the problems.

25957074/EN – 06/2019

## 9.5 Disposal

Dispose of the motors in accordance with the material structure and the regulations in force:

- Iron
- Aluminum
- Copper
- Plastics
- Electronic parts
- Oil and grease (not mixed with solvents)

## 9.6 Customer service

**Have the following information available if you require customer service assistance:**

- Nameplate data (complete)
- Nature and extent of the problem
- Time the failure occurred and any accompanying circumstances
- Assumed cause
- Ambient conditions e.g.:
  - Ambient temperature
  - Humidity
  - Installation altitude
  - Dirt
  - etc.

25957074/EN – 06/2019

# 10 Appendix

## 10.1 Wiring diagrams

### INFORMATION

The motor should be connected as shown in the connection wiring diagram or the terminal assignment diagram, which are supplied with the motor. The following section only shows a selection of the common types of connections. You can obtain the relevant wiring diagrams free of charge from SEW-EURODRIVE.

#### 10.1.1 Delta and star connection in wiring diagram R13 (68001 xx 06)

For all motors with one speed, direct on-line, or ⅄/△ start-up.

**Delta connection**

The following illustration shows the △ connection for lower voltage.

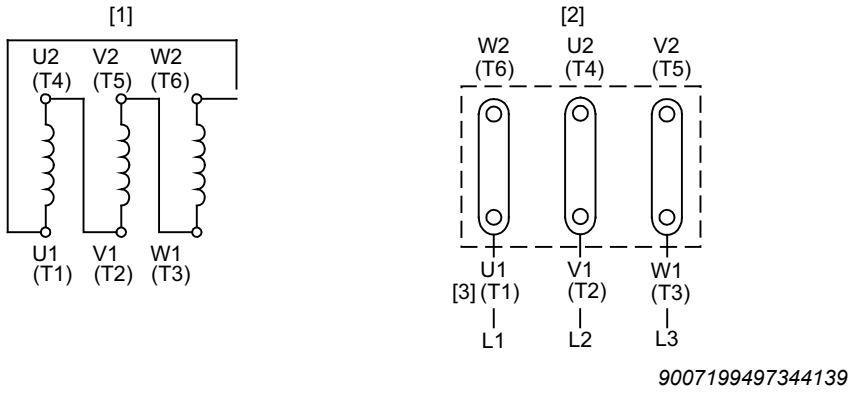


*9007199497344139*

[1] Motor winding
[2] Motor terminal board
[3] Supply cables

**Star connection**

The following illustration shows the ⅄ connection for high voltage.

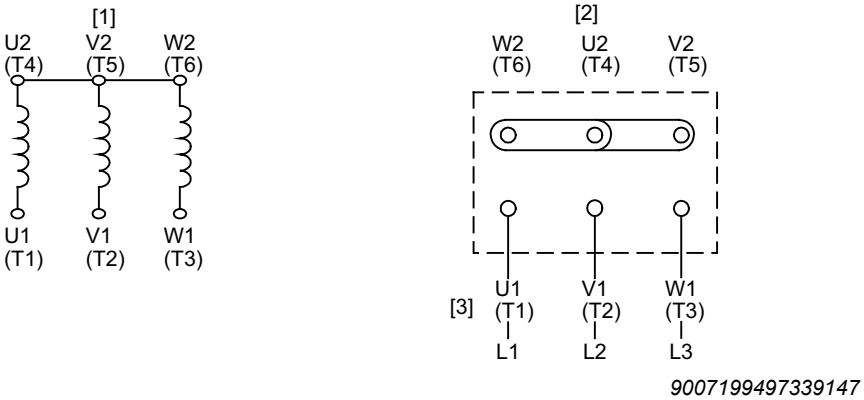


*9007199497339147*

[1] Motor winding
[2] Motor terminal board
[3] Supply cables

Proceed as follows to reverse the direction of rotation:

1. Swap the supply cables L1 – L2.

25957074/EN – 06/2019

### 10.1.2 Delta connection with wiring diagram R72 (68192 xx 09)

For all motors with one speed and direct power-on.

**Delta connection, Double-delta connection**

The following figure shows the △ connection for high voltages and the △△ connection for lower voltages.

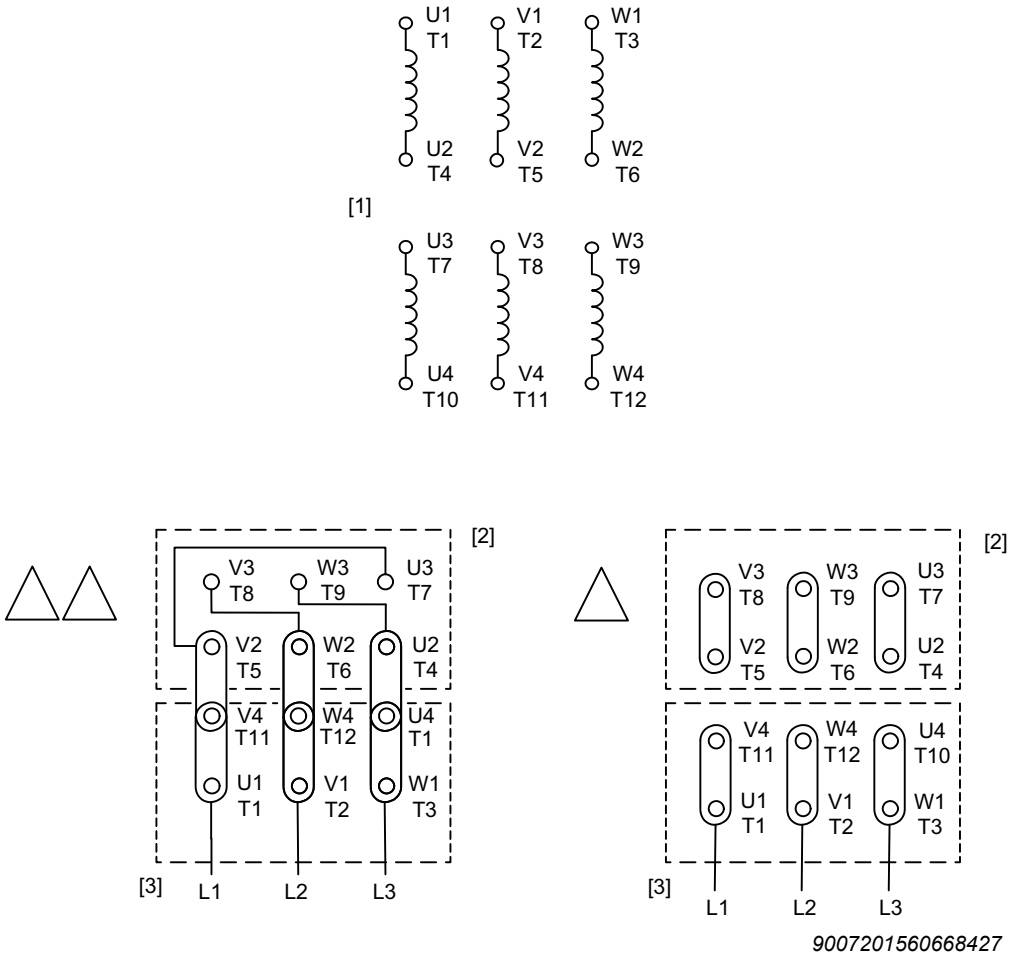


[1] Motor winding
[2] Motor terminal board
[3] Supply cables

Proceed as follows to reverse the direction of rotation:

1. Swap the supply cables L1 – L2.

### 10.1.3 Star connection with wiring diagram R76 (68043 xx 06)

For all motors with one speed and direct power-on.

**Star connection, double-star connection**

The following figure shows the ⅄ connection for high voltages and the ⅄ ⅄ connection for lower voltages.

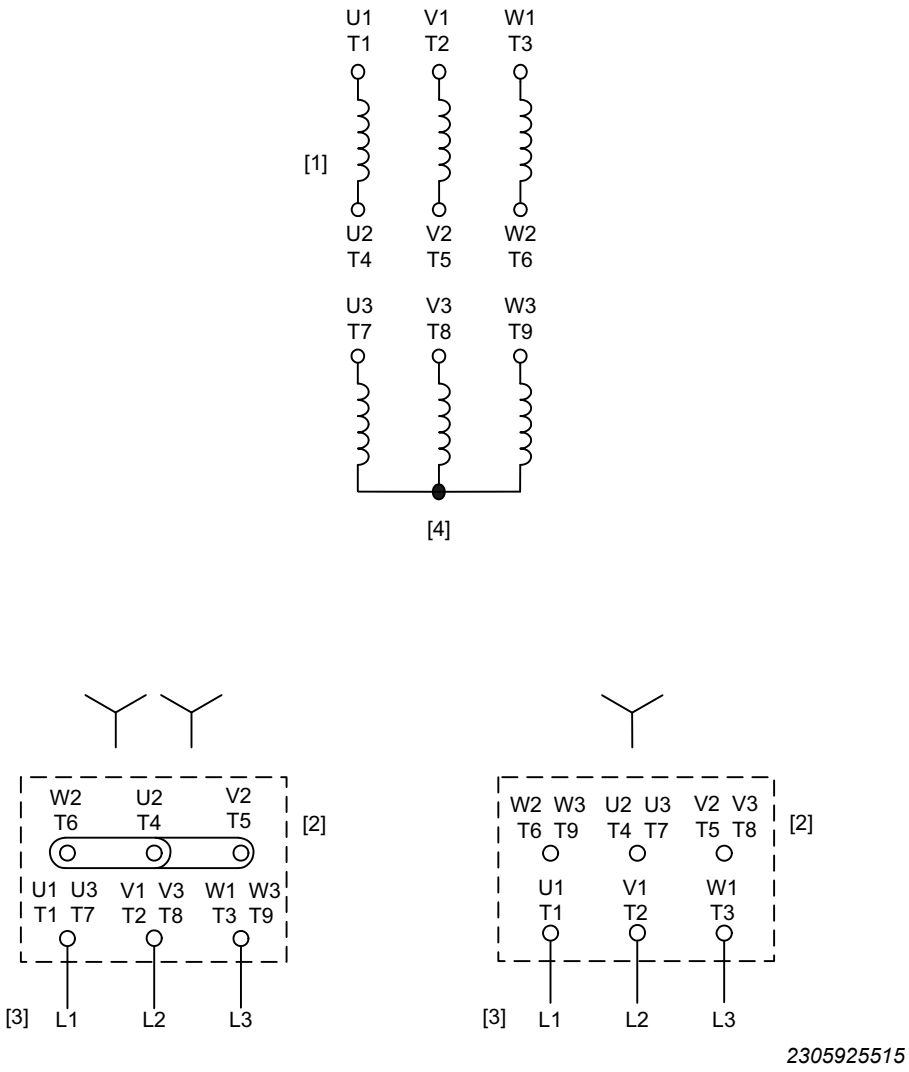


*2305925515*

[1] Motor winding
[2] Motor terminal board
[3] Supply cables
[4] Star point connected in motor

Proceed as follows to reverse the direction of rotation:

1. Swap the supply cables L1 – L2.

### 10.1.4 Motor protection with /TF or /TH for DR..71 – 280, DRN63 – 280, DR2..63 – 80 motors

## INFORMATION

The following shows an example terminal assignment. The actual terminal assignment is included in the motor delivery as wiring diagram.

**/TF, /TH**

The following figures show examples for connection of motor protection with /TF PTC thermistor sensors or /TH bimetallic thermostats.

Either a two-pole connection terminal or a five-pole terminal strip is available for connecting to the trip switch.

**Example: /TF, /TH to 2-pin terminal strip**

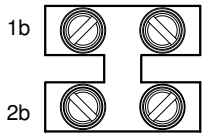


*9007199728684427*

| 1b | 2b |
|---|---|
| TF/TH | TF/TH |

**Example: 2 × /TF, /TH to 5-pin terminal strip**

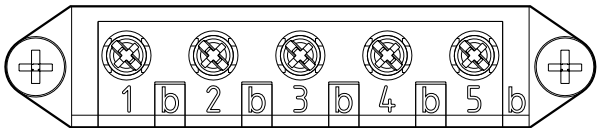


*18014398983427083*

| 1b | 2b | 3b | 4b | 5b |
|---|---|---|---|---|
| 1.TF/TH | 1.TF/TH | 2.TF/TH | 2.TF/TH | – |

**2 × /TF, /TH with anti-condensation heating**

The following illustration shows the connection of the motor protection with 2 /TF PTC thermistor sensors or /TH bimetallic thermostats and Hx anti-condensation heating.

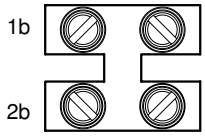


*9007199728684427*

| 1b | 2b |
|---|---|
| Hx | Hx |

25957074/EN – 06/2019

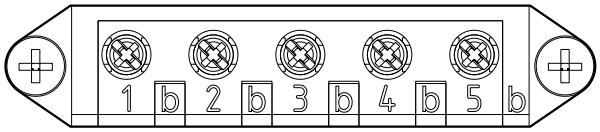


*18014398983427083*

| 1b | 2b | 3b | 4b | 5b |
|---|---|---|---|---|
| 1.TF/TH | 1.TF/TH | 2.TF/TH | 2.TF/TH | – |

### 10.1.5 Motor protection with /TF or /TH for DR..315, DRN315 motors

## INFORMATION

The following shows an example terminal assignment. The actual terminal assignment is included in the motor delivery as wiring diagram.

**/TF, /TH**

The following figures show examples for connection of motor protection with /TF PTC thermistor sensors or /TH bimetallic thermostats.

Depending on the version, an "x-pin" terminal strip is available for connection to the trip switch.

**Example: /TF, /TH to terminal strip**

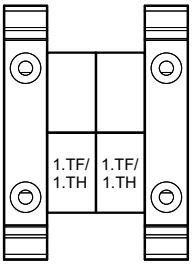


*473405707*

**Example: 2x /TF, /TH to terminal strip**

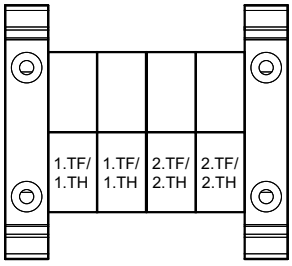


*473410187*

25957074/EN – 06/2019

### 10.1.6 EI7.B built-in encoder

**Connection via terminal strip**

The encoder is equipped with a 10-pole terminal strip for connection:

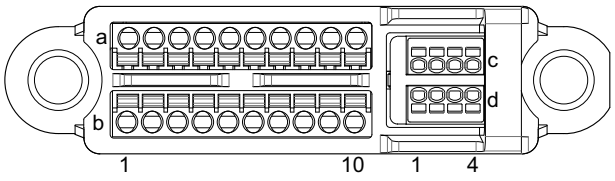


*9007207579353739*

## INFORMATION

The ranges 1a – 10a, 1c – 4c and 1d – 4d have been pre-configured by SEW-EURODRIVE. The must not be changed.

Range 1b – 10b is intended for customer adjustments.

**Basic connection**:

Connections 1a – 10a, 1c – 4c and 1d – 4d lead to the encoder or to the motor.

Connections 1b – 10b lead to the cable gland.

| | 1 | 2 | 3 | 4 | 5 | 6 | 7 | 8 | 9 | 10 | 1 | 2 | 3 | 4 | |
|---|---|---|---|---|---|---|---|---|---|---|---|---|---|---|---|
| a | TF1[1] | TF1[1] | TF2[1] Opt. | TF2[1] Opt. | +UB[1] (GY) | GND[1] (PK) | A[1] (BN) | $\overline{A}$[1] (WH) | $\overline{B}$[1] (YE) | B[1] (GN) | see below | | | | c |
| b | TF1 | TF1 | TF2 Opt. | TF2 Opt. | +UB | GND | A | $\overline{A}$ | B | $\overline{B}$ | see below | | | | d |

1) Pre-configured by SEW-EURODRIVE. Do not alter the setting!

| Pin assignment EI7**C** B | | | | |
|---|---|---|---|---|
| 1 | 2 | 3 | 4 | |
| GND_ Config (BU)[1] | n. c.[1] | n. c.[1] | n. c.[1] | c |
| EI7C[1] (RD) | n. c.[1] | n. c.[1] | n. c.[1] | d |

| Pin assignment EI7**6** B | | | | |
|---|---|---|---|---|
| 1 | 2 | 3 | 4 | |
| GND_ Config (BU)[1] | n. c.[1] | n. c.[1] | n. c.[1] | c |
| n. c.[1] | EI76[1] (RD) | n. c.[1] | n. c.[1] | d |

1) Pre-configured by SEW-EURODRIVE. Do not alter the setting!

| Pin assignment EI7**2** B | | | | |
|---|---|---|---|---|
| 1 | 2 | 3 | 4 | |
| GND_ Config (BU)[1] | n. c.[1] | n. c.[1] | n. c.[1] | c |
| n. c.[1] | n. c.[1] | EI72[1] (RD) | n. c.[1] | d |

| Pin assignment EI7**1** B | | | | |
|---|---|---|---|---|
| 1 | 2 | 3 | 4 | |
| GND_ Config (BU)[1] | n. c.[1] | n. c.[1] | n. c.[1] | c |
| n. c.[1] | n. c.[1] | n. c.[1] | EI71[1] (RD) | d |

1) Pre-configured by SEW-EURODRIVE. Do not alter the setting!

25957074/EN – 06/2019

### Connection via M12 plug connector

A 8-pin or a 4-pin M12 plug connector is available for the connection.

| 4-pin M12 plug connector AVSE | | 8-pin M12 plug connector AVRE | |
|---|---|---|---|
| • A coded<br>• Male<br>  | Pin 1: $+U_B$<br>Pin 2: B<br>Pin 3: GND<br>Pin 4: A | • A coded<br>• Male<br> 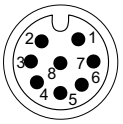 | Pin 1: $+U_B$<br>Pin 2: GND<br>Pin 3: A<br>Pin 4: $\overline{A}$<br>Pin 5: B<br>Pin 6: $\overline{B}$<br>Pin 7: TF1<br>Pin 8: TF1 |

25957074/EN – 06/2019

### 10.1.7 BGE..; BS..; BSG..; BUR.. brake control

**BG../BGE..**

Wiring diagram B100

The following illustration shows the wiring for BG.. and BGE.. brake rectifiers for the AC-side shut-off as well as the DC and AC-side shutoff.

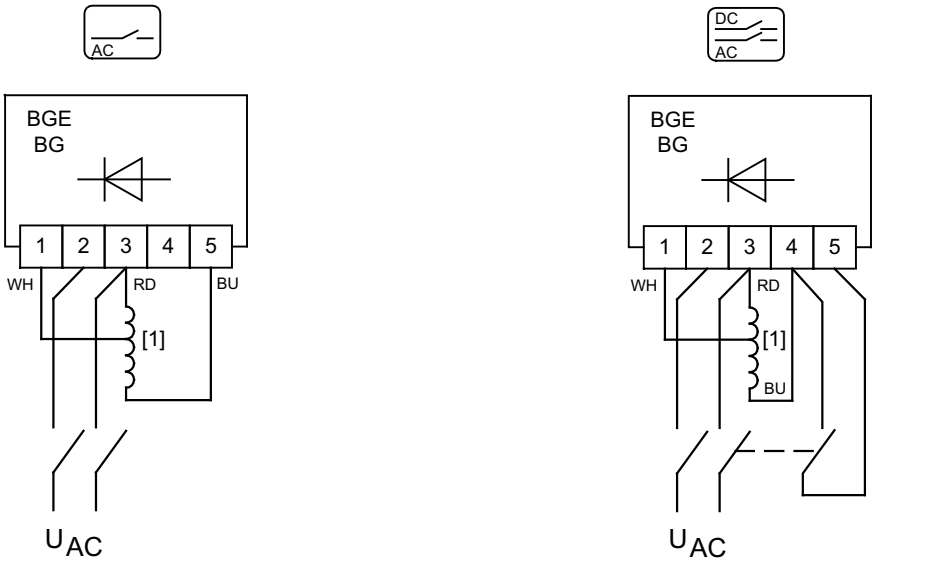


*242604811*

[1] Brake coil

**BS24/BSG..**

Wiring diagram B100

The following illustration shows the DC 24 V connection of the BS24 brake protection or BSG.. control unit.

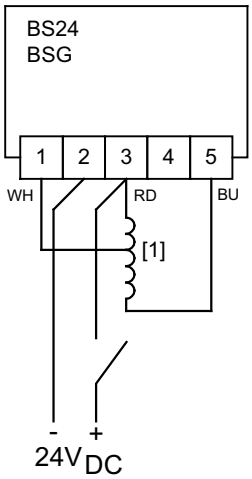


*9007199497347467*

[1] Brake coil

**BUR**

## NOTICE

Malfunction caused by incorrect brake connection for frequency inverter operation.

The drive system might be damaged.

- Do not connect the brake to the terminal board of the motor.

Wiring diagram B100

The following figure shows the wiring for BUR.. brake control

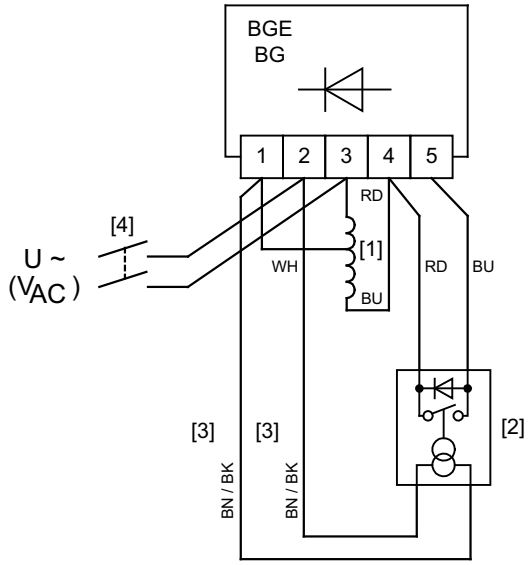


242608139

[1] Brake coil
[2] UR11/UR15 voltage relay

BN = UR 11 (42 – 150 V)
BK = UR 15 (150 – 500 V)

25957074/EN – 06/2019

### 10.1.8 BSR.. brake control

**Brake voltage = phase-to-neutral voltage**

BSR.. brake control for single speed drives in line operation (basic wiring diagram R13)

Wiring diagram R13A/R13B

The white interconnecting wires are the ends of a converter loop and, depending on the motor connection, must be connected to the motor terminal block instead of the △ or ⅄ bridge.

The following figure shows the factory wiring for BSR.. brake control.

For example

Motor: AC 230 V/AC 400 V

Brake: AC 230 V

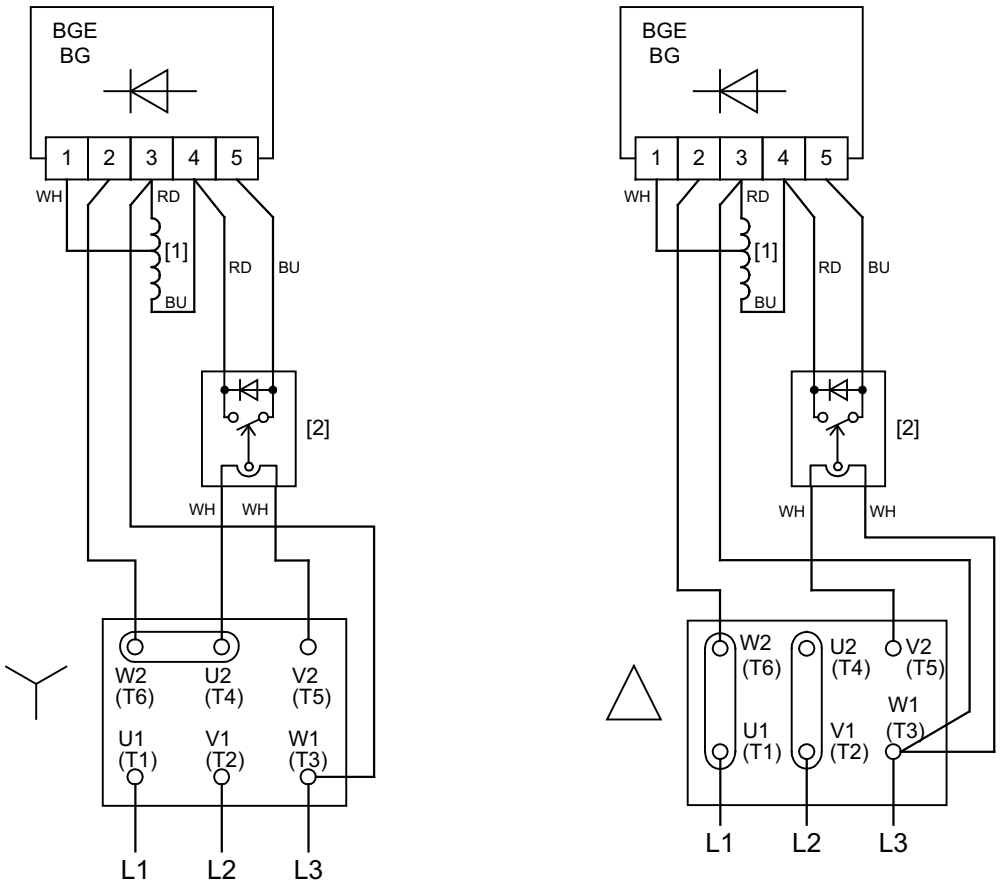


*18014398752081803*

[1] Brake coil
[2] SR10/11/15/19 current relay

### Brake voltage = Line voltage

Wiring diagram R13C

The white interconnecting wires are the ends of a converter loop and, depending on the motor connection, must be connected to the motor terminal block instead of one of the ⅄ bridges before startup.

The following figure shows the factory wiring for BSR.. brake control:

Example

Motor: AC 400 V

Brake: AC 400 V

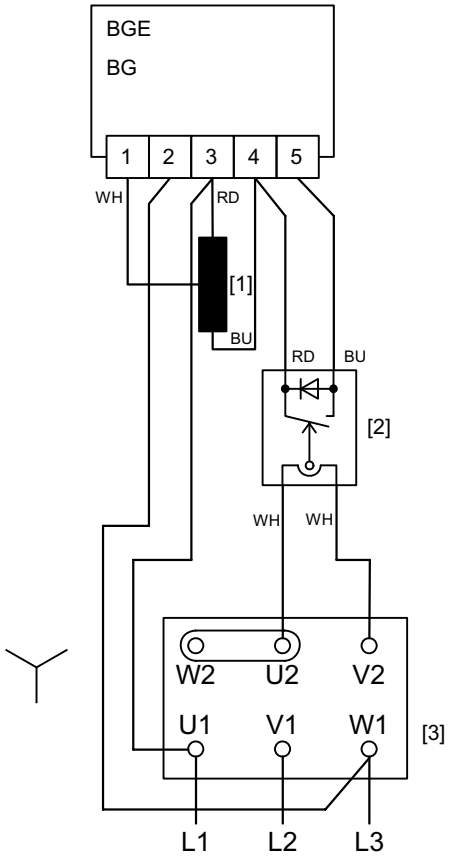


*17564599179*

[1] Brake coil
[2] SR10/11/15/19 current relay
[3] Terminal board

### Further wiring diagrams for BSR.. brake control

Wiring diagrams for BSR.. brake control in combination with the following drives are available from SEW-EURODRIVE upon request.

- Multi-voltage motors according to basic wiring diagram R76 or R72
- Single speed drive with cage clamp terminal /KCC (basic wiring diagram A13 or C13)

25957074/EN – 06/2019

### 10.1.9 BMP3.1 brake control in the terminal box

## INFORMATION

Separate supply cables are required for the voltage supply.

**BMP3.1**

The following illustration shows the wiring for the BMP3.1 brake rectifier for cut-off in the AC circuit and cut-off in the DC and AC circuit.

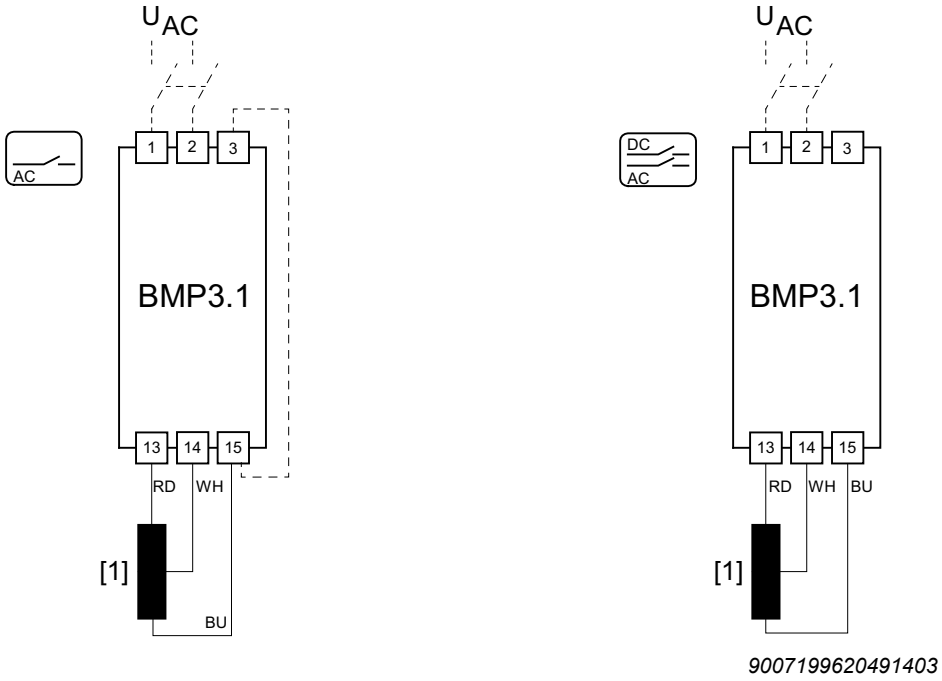


*9007199620491403*

[1] Brake coil

### 10.1.10 Forced cooling fan /V

#### Delta Steinmetz

The following figure shows the wiring of the V forced cooling fan for delta-Steinmetz connection for 1-phase operation.

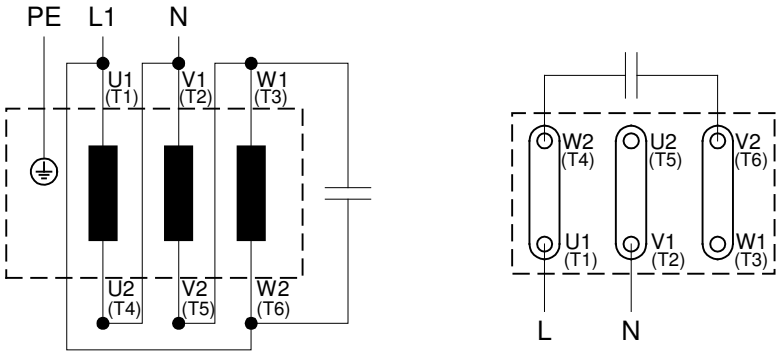


*9007199778089483*

#### Star connection

The following figure shows the wiring of the /V forced cooling fan for star connection.

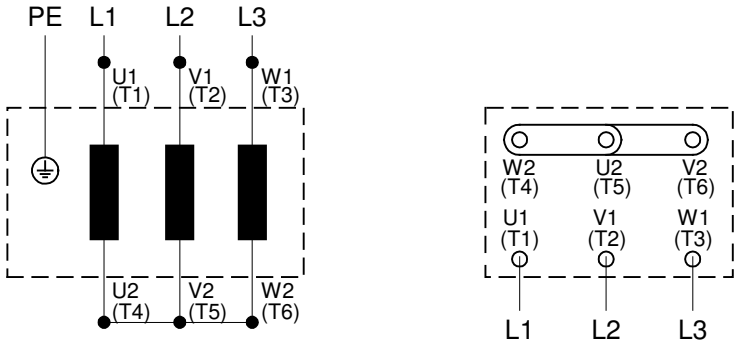


*9007199778091147*

#### Delta connection

The following figure shows the wiring of the /V forced cooling fan for delta connection.

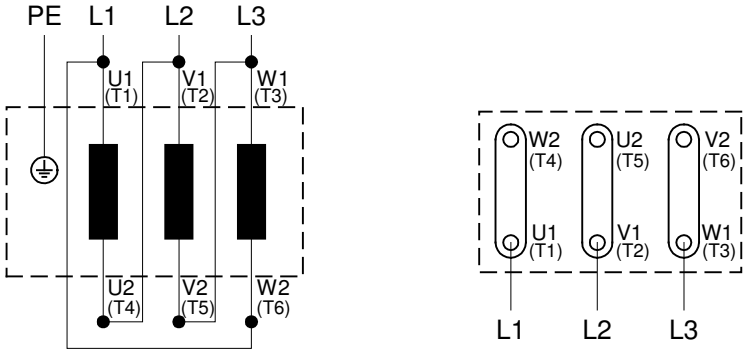


*18014399032833803*

25957074/EN – 06/2019

### DC 24 V connection

The following figure shows the wiring of the /V forced cooling fan for DC 24 V.

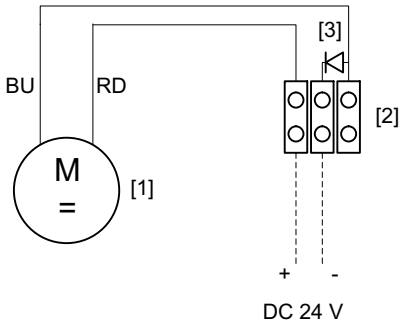


*9007201648125067*

[1] Forced cooling fan
[2] Terminal strip
[3] Polarity reversal protection diode

## NOTICE

Damage to the forced cooling fan due to incorrect connection.

The drive system might be damaged.

- Observe the polarity when connecting the forced cooling fan.

25957074/EN – 06/2019

### 10.1.11 DRK... single-phase motor

**ER10 wiring diagram**

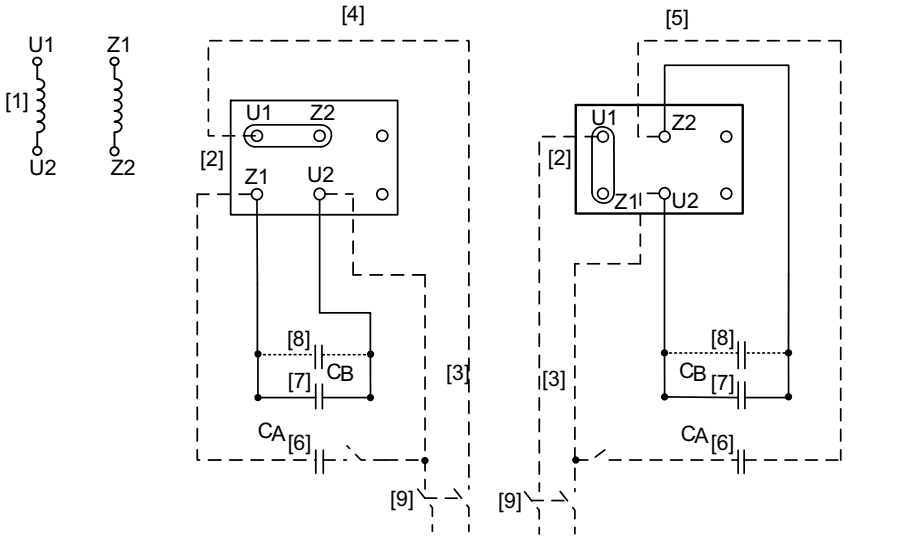


11919510027

| | | | |
|---|---|---|---|
| [1] | Motor winding | [6] | Starting capacitor, switchable |
| [2] | Motor terminal | [7] | Running capacitor |
| [3] | Incoming cables | [8] | Further running capacitors (if available) |
| [4] | Counterclockwise rotation | | |
| [5] | CW rotation, connected at factory | [9] | All-pole power switch |

**ER11 wiring diagram**

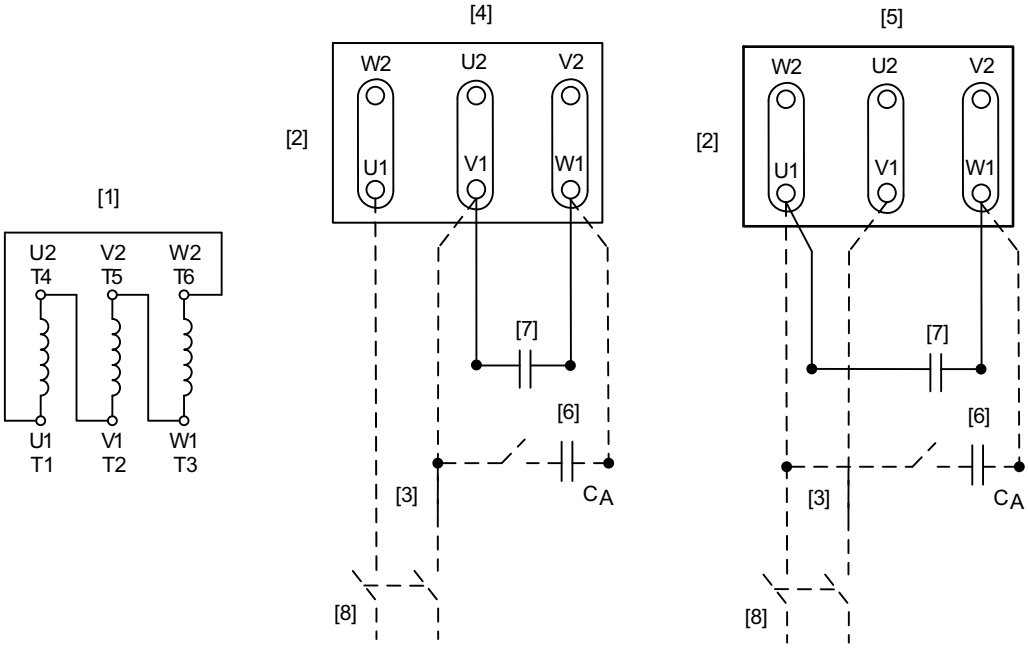


11919511947

| | | | |
|---|---|---|---|
| [1] | Motor winding | [5] | CW rotation, connected at factory |
| [2] | Motor terminal board | [6] | Starting capacitor, switchable |
| [3] | Incoming cables | [7] | Running capacitor |
| [4] | Counterclockwise rotation | [8] | All-pole power switch |

25957074/EN – 06/2019

## 10.2 Auxiliary terminals

The following figure shows the arrangement of the auxiliary terminals for the different terminal box positions.

Terminal box position 2 and X, here X[1)]

Terminal box position 1 and 3, here 3

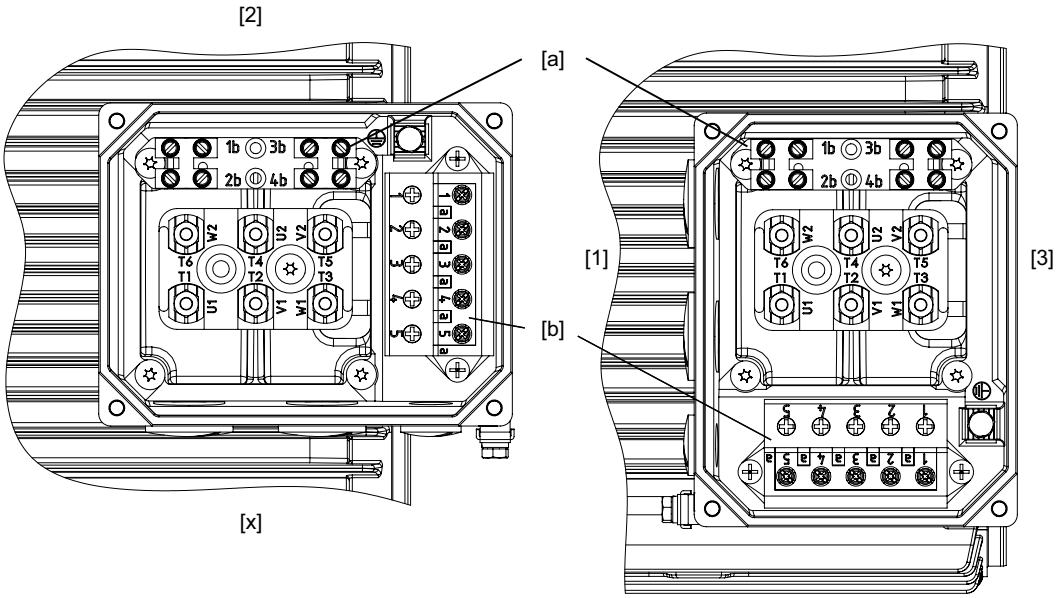


*9007202826949515*

1) If auxiliary terminal 2 is not provided, you can install auxiliary terminal 1 in the same position.

| | | | |
|---|---|---|---|
| [1] | Terminal box position 1 | [X] | Terminal box position X |
| [2] | Terminal box position 2 | [a] | Auxiliary terminal 1 |
| [3] | Terminal box position 3 | [b] | Auxiliary terminal 2 |

Regardless of the terminal box position, auxiliary terminal 1 must always be mounted parallel to the terminal board.

The terminal structure can vary depending on the terminal box design.

# 11 Address list

| | | | |
|---|---|---|---|
| **Argentina** | | | |
| Assembly<br>Sales | Buenos Aires | SEW EURODRIVE ARGENTINA S.A.<br>Ruta Panamericana Km 37.5, Lote 35<br>(B1619IEA) Centro Industrial Garín<br>Prov. de Buenos Aires | Tel. +54 3327 4572-84<br>Fax +54 3327 4572-21<br>http://www.sew-eurodrive.com.ar<br>sewar@sew-eurodrive.com.ar |
| **Australia** | | | |
| Assembly<br>Sales<br>Service | Melbourne | SEW-EURODRIVE PTY. LTD.<br>27 Beverage Drive<br>Tullamarine, Victoria 3043 | Tel. +61 3 9933-1000<br>Fax +61 3 9933-1003<br>http://www.sew-eurodrive.com.au<br>enquires@sew-eurodrive.com.au |
| | Sydney | SEW-EURODRIVE PTY. LTD.<br>9, Sleigh Place, Wetherill Park<br>New South Wales, 2164 | Tel. +61 2 9725-9900<br>Fax +61 2 9725-9905<br>enquires@sew-eurodrive.com.au |
| **Austria** | | | |
| Assembly<br>Sales<br>Service | Vienna | SEW-EURODRIVE Ges.m.b.H.<br>Richard-Strauss-Straße 24<br>1230 Wien | Tel. +43 1 617 55 00-0<br>Fax +43 1 617 55 00-30<br>http://www.sew-eurodrive.at<br>sew@sew-eurodrive.at |
| **Bangladesh** | | | |
| Sales | Bangladesh | SEW-EURODRIVE INDIA PRIVATE LIMITED<br>345 DIT Road<br>East Rampura<br>Dhaka-1219, Bangladesh | Tel. +88 01729 097309<br>salesdhaka@seweurodrivebangladesh.com |
| **Belarus** | | | |
| Sales | Minsk | Foreign unitary production enterprise SEW-EURODRIVE<br>RybalkoStr. 26<br>220033 Minsk | Tel. +375 17 298 47 56 / 298 47 58<br>Fax +375 17 298 47 54<br>http://www.sew.by<br>sales@sew.by |
| **Belgium** | | | |
| Assembly<br>Sales<br>Service | Brussels | SEW-EURODRIVE n.v./s.a.<br>Researchpark Haasrode 1060<br>Evenementenlaan 7<br>3001 Leuven | Tel. +32 16 386-311<br>Fax +32 16 386-336<br>http://www.sew-eurodrive.be<br>info@sew-eurodrive.be |
| Service Competence Center | Industrial Gears | SEW-EURODRIVE n.v./s.a.<br>Rue du Parc Industriel, 31<br>6900 Marche-en-Famenne | Tel. +32 84 219-878<br>Fax +32 84 219-879<br>http://www.sew-eurodrive.be<br>service-IG@sew-eurodrive.be |
| **Brazil** | | | |
| Production<br>Sales<br>Service | São Paulo | SEW-EURODRIVE Brasil Ltda.<br>Estrada Municipal José Rubim, 205 – Rodovia Santos Dumont Km 49<br>Indaiatuba – 13347-510 – SP | Tel. +55 19 3835-8000<br>sew@sew.com.br |
| Assembly<br>Sales<br>Service | Rio Claro | SEW-EURODRIVE Brasil Ltda.<br>Rodovia Washington Luiz, Km 172<br>Condomínio Industrial Conpark<br>Caixa Postal: 327<br>13501-600 – Rio Claro / SP | Tel. +55 19 3522-3100<br>Fax +55 19 3524-6653<br>montadora.rc@sew.com.br |
| | Joinville | SEW-EURODRIVE Brasil Ltda. Jvl / Ind<br>Rua Dona Francisca, 12.346 – Pirabeiraba<br>89239-270 – Joinville / SC | Tel. +55 47 3027-6886<br>Fax +55 47 3027-6888<br>filial.sc@sew.com.br |
| **Bulgaria** | | | |
| Sales | Sofia | BEVER-DRIVE GmbH<br>Bogdanovetz Str.1<br>1606 Sofia | Tel. +359 2 9151160<br>Fax +359 2 9151166<br>bever@bever.bg |

25957074/EN – 06/2019

| | | | |
|---|---|---|---|
| **Cameroon** | | | |
| Sales | Douala | SEW-EURODRIVE S.A.R.L.<br>Ancienne Route Bonabéri<br>P.O. Box<br>B.P 8674<br>Douala-Cameroun | Tel. +237 233 39 02 10<br>Fax +237 233 39 02 10<br>sew@sew-eurodrive-cm |
| **Canada** | | | |
| Assembly<br>Sales<br>Service | Toronto | SEW-EURODRIVE CO. OF CANADA LTD.<br>210 Walker Drive<br>Bramalea, ON L6T 3W1 | Tel. +1 905 791-1553<br>Fax +1 905 791-2999<br>http://www.sew-eurodrive.ca<br>l.watson@sew-eurodrive.ca |
| | Vancouver | SEW-EURODRIVE CO. OF CANADA LTD.<br>Tilbury Industrial Park<br>7188 Honeyman Street<br>Delta, BC V4G 1G1 | Tel. +1 604 946-5535<br>Fax +1 604 946-2513<br>b.wake@sew-eurodrive.ca |
| | Montreal | SEW-EURODRIVE CO. OF CANADA LTD.<br>2001 Ch. de l'Aviation<br>Dorval<br>Quebec H9P 2X6 | Tel. +1 514 367-1124<br>Fax +1 514 367-3677<br>n.paradis@sew-eurodrive.ca |
| **Chile** | | | |
| Assembly<br>Sales<br>Service | Santiago de Chile | SEW-EURODRIVE CHILE LTDA<br>Las Encinas 1295<br>Parque Industrial Valle Grande<br>LAMPA<br>Santiago de Chile<br>P.O. Box<br>Casilla 23 Correo Quilicura - Santiago - Chile | Tel. +56 2 2757 7000<br>Fax +56 2 2757 7001<br>http://www.sew-eurodrive.cl<br>ventas@sew-eurodrive.cl |
| **China** | | | |
| Production<br>Assembly<br>Sales<br>Service | Tianjin | SEW-EURODRIVE (Tianjin) Co., Ltd.<br>No. 78, 13th Avenue, TEDA<br>Tianjin 300457 | Tel. +86 22 25322612<br>Fax +86 22 25323273<br>http://www.sew-eurodrive.cn<br>info@sew-eurodrive.cn |
| Assembly<br>Sales<br>Service | Suzhou | SEW-EURODRIVE (Suzhou) Co., Ltd.<br>333, Suhong Middle Road<br>Suzhou Industrial Park<br>Jiangsu Province, 215021 | Tel. +86 512 62581781<br>Fax +86 512 62581783<br>suzhou@sew-eurodrive.cn |
| | Guangzhou | SEW-EURODRIVE (Guangzhou) Co., Ltd.<br>No. 9, JunDa Road<br>East Section of GETDD<br>Guangzhou 510530 | Tel. +86 20 82267890<br>Fax +86 20 82267922<br>guangzhou@sew-eurodrive.cn |
| | Shenyang | SEW-EURODRIVE (Shenyang) Co., Ltd.<br>10A-2, 6th Road<br>Shenyang Economic Technological Development Area<br>Shenyang, 110141 | Tel. +86 24 25382538<br>Fax +86 24 25382580<br>shenyang@sew-eurodrive.cn |
| | Taiyuan | SEW-EURODRIVE (Taiyuan) Co,. Ltd.<br>No.3, HuaZhang Street,<br>TaiYuan Economic & Technical Development Zone<br>ShanXi, 030032 | Tel. +86-351-7117520<br>Fax +86-351-7117522<br>taiyuan@sew-eurodrive.cn |
| | Wuhan | SEW-EURODRIVE (Wuhan) Co., Ltd.<br>10A-2, 6th Road<br>No. 59, the 4th Quanli Road, WEDA<br>430056 Wuhan | Tel. +86 27 84478388<br>Fax +86 27 84478389<br>wuhan@sew-eurodrive.cn |
| | Xi'An | SEW-EURODRIVE (Xi'An) Co., Ltd.<br>No. 12 Jinye 2nd Road<br>Xi'An High-Technology Industrial Development Zone<br>Xi'An 710065 | Tel. +86 29 68686262<br>Fax +86 29 68686311<br>xian@sew-eurodrive.cn |
| Sales<br>Service | Hong Kong | SEW-EURODRIVE LTD.<br>Unit No. 801-806, 8th Floor<br>Hong Leong Industrial Complex<br>No. 4, Wang Kwong Road<br>Kowloon, Hong Kong | Tel. +852 36902200<br>Fax +852 36902211<br>contact@sew-eurodrive.hk |

25957074/EN – 06/2019

| | | | |
|---|---|---|---|
| **Colombia** | | | |
| Assembly<br>Sales<br>Service | Bogota | SEW-EURODRIVE COLOMBIA LTDA.<br>Calle 17 No. 132-18<br>Interior 2 Bodega 6, Manzana B<br>Santafé de Bogotá | Tel. +57 1 54750-50<br>Fax +57 1 54750-44<br>http://www.sew-eurodrive.com.co<br>sew@sew-eurodrive.com.co |
| **Croatia** | | | |
| Sales<br>Service | Zagreb | KOMPEKS d. o. o.<br>Zeleni dol 10<br>10 000 Zagreb | Tel. +385 1 4613-158<br>Fax +385 1 4613-158<br>kompeks@inet.hr |
| **Czech Republic** | | | |
| Assembly<br>Sales<br>Service | Hostivice | SEW-EURODRIVE CZ s.r.o.<br>Floriánova 2459<br>253 01 Hostivice | Tel. +420 255 709 601<br>Fax +420 235 350 613<br>http://www.sew-eurodrive.cz<br>sew@sew-eurodrive.cz |
| | Drive Service Hotline / 24 Hour Service | +420 800 739 739 (800 SEW SEW) | Service<br>Tel. +420 255 709 632<br>Fax +420 235 358 218<br>servis@sew-eurodrive.cz |
| **Denmark** | | | |
| Assembly<br>Sales<br>Service | Copenhagen | SEW-EURODRIVEA/S<br>Geminivej 28-30<br>2670 Greve | Tel. +45 43 95 8500<br>Fax +45 43 9585-09<br>http://www.sew-eurodrive.dk<br>sew@sew-eurodrive.dk |
| **Egypt** | | | |
| Sales<br>Service | Cairo | Copam Egypt<br>for Engineering & Agencies<br>Building 10, Block 13005, First Industrial Zone,<br>Obour City Cairo | Tel. +202 44812673 / 79 (7 lines)<br>Fax +202 44812685<br>http://www.copam-egypt.com<br>copam@copam-egypt.com |
| **Estonia** | | | |
| Sales | Tallin | ALAS-KUUL AS<br>Reti tee 4<br>75301 Peetri küla, Rae vald, Harjumaa | Tel. +372 6593230<br>Fax +372 6593231<br>http://www.alas-kuul.ee<br>veiko.soots@alas-kuul.ee |
| **Finland** | | | |
| Assembly<br>Sales<br>Service | Hollola | SEW-EURODRIVE OY<br>Vesimäentie 4<br>15860 Hollola | Tel. +358 201 589-300<br>Fax +358 3 780-6211<br>http://www.sew-eurodrive.fi<br>sew@sew.fi |
| Service | Hollola | SEW-EURODRIVE OY<br>Keskikankaantie 21<br>15860 Hollola | Tel. +358 201 589-300<br>Fax +358 3 780-6211<br>http://www.sew-eurodrive.fi<br>sew@sew.fi |
| | Tornio | SEW-EURODRIVE Oy<br>Lossirannankatu 5<br>95420 Tornio | Tel. +358 201 589 300<br>Fax +358 3 780 6211<br>http://www.sew-eurodrive.fi<br>sew@sew.fi |
| Production<br>Assembly | Karkkila | SEW Industrial Gears Oy<br>Santasalonkatu 6, PL 8<br>03620 Karkkila, 03601 Karkkila | Tel. +358 201 589-300<br>Fax +358 201 589-310<br>http://www.sew-eurodrive.fi<br>sew@sew.fi |
| **France** | | | |
| Production<br>Sales<br>Service | Hagenau | SEW-USOCOME<br>48-54 route de Soufflenheim<br>B. P. 20185<br>67506 Haguenau Cedex | Tel. +33 3 88 73 67 00<br>Fax +33 3 88 73 66 00<br>http://www.usocome.com<br>sew@usocome.com |
| Production | Forbach | SEW-USOCOME<br>Zone industrielle<br>Technopôle Forbach Sud<br>B. P. 30269<br>57604 Forbach Cedex | Tel. +33 3 87 29 38 00 |
| | Brumath | SEW-USOCOME<br>1 Rue de Bruxelles<br>67670 Mommenheim Cedex | Tel. +33 3 88 37 48 00 |

25957074/EN – 06/2019

| | | | |
|---|---|---|---|
| **France** | | | |
| Assembly<br>Sales<br>Service | Bordeaux | SEW-USOCOME<br>Parc d'activités de Magellan<br>62 avenue de Magellan – B. P. 182<br>33607 Pessac Cedex | Tel. +33 5 57 26 39 00<br>Fax +33 5 57 26 39 09 |
| | Lyon | SEW-USOCOME<br>75 rue Antoine Condorcet<br>38090 Vaulx-Milieu | Tel. +33 4 74 99 60 00<br>Fax +33 4 74 99 60 15 |
| | Nantes | SEW-USOCOME<br>Parc d'activités de la forêt<br>4 rue des Fontenelles<br>44140 Le Bignon | Tel. +33 2 40 78 42 00<br>Fax +33 2 40 78 42 20 |
| | Paris | SEW-USOCOME<br>Zone industrielle<br>2 rue Denis Papin<br>77390 Verneuil l'Étang | Tel. +33 1 64 42 40 80<br>Fax +33 1 64 42 40 88 |
| **Gabon** | | | |
| Sales | Libreville | SEW-EURODRIVE SARL<br>183, Rue 5.033.C, Lalala à droite<br>P.O. Box 15682<br>Libreville | Tel. +241 03 28 81 55<br>+241 06 54 81 33<br>http://www.sew-eurodrive.cm<br>sew@sew-eurodrive.cm |
| **Germany** | | | |
| Headquarters<br>Production<br>Sales | Bruchsal | SEW-EURODRIVE GmbH & Co KG<br>Ernst-Blickle-Straße 42<br>76646 Bruchsal | Tel. +49 7251 75-0<br>Fax +49 7251 75-1970<br>http://www.sew-eurodrive.de<br>sew@sew-eurodrive.de |
| Production / Industrial Gears | Bruchsal | SEW-EURODRIVE GmbH & Co KG<br>Christian-Pähr-Str. 10<br>76646 Bruchsal | Tel. +49 7251 75-0<br>Fax +49 7251 75-2970 |
| Production | Graben | SEW-EURODRIVE GmbH & Co KG<br>Ernst-Blickle-Straße 1<br>76676 Graben-Neudorf | Tel. +49 7251 75-0<br>Fax +49 7251-2970 |
| | Östringen | SEW-EURODRIVE GmbH & Co KG, Werk Östringen<br>Franz-Gurk-Straße 2<br>76684 Östringen | Tel. +49 7253 9254-0<br>Fax +49 7253 9254-90<br>oestringen@sew-eurodrive.de |
| Service Competence Center | Mechanics / Mechatronics | SEW-EURODRIVE GmbH & Co KG<br>Ernst-Blickle-Straße 1<br>76676 Graben-Neudorf | Tel. +49 7251 75-1710<br>Fax +49 7251 75-1711<br>scc-mechanik@sew-eurodrive.de |
| | Electronics | SEW-EURODRIVE GmbH & Co KG<br>Ernst-Blickle-Straße 42<br>76646 Bruchsal | Tel. +49 7251 75-1780<br>Fax +49 7251 75-1769<br>scc-elektronik@sew-eurodrive.de |
| Drive Technology Center | North | SEW-EURODRIVE GmbH & Co KG<br>Alte Ricklinger Straße 40-42<br>30823 Garbsen (Hannover) | Tel. +49 5137 8798-30<br>Fax +49 5137 8798-55<br>dtc-nord@sew-eurodrive.de |
| | East | SEW-EURODRIVE GmbH & Co KG<br>Dänkritzer Weg 1<br>08393 Meerane (Zwickau) | Tel. +49 3764 7606-0<br>Fax +49 3764 7606-30<br>dtc-ost@sew-eurodrive.de |
| | South | SEW-EURODRIVE GmbH & Co KG<br>Domagkstraße 5<br>85551 Kirchheim (München) | Tel. +49 89 909552-10<br>Fax +49 89 909552-50<br>dtc-sued@sew-eurodrive.de |
| | West | SEW-EURODRIVE GmbH & Co KG<br>Siemensstraße 1<br>40764 Langenfeld (Düsseldorf) | Tel. +49 2173 8507-30<br>Fax +49 2173 8507-55<br>dtc-west@sew-eurodrive.de |
| Drive Center | Berlin | SEW-EURODRIVE GmbH & Co KG<br>Alexander-Meißner-Straße 44<br>12526 Berlin | Tel. +49 306331131-30<br>Fax +49 306331131-36<br>dc-berlin@sew-eurodrive.de |
| | Hamburg | SEW-EURODRIVE GmbH & Co KG<br>Hasselbinnen 11<br>22869 Schenefeld | Tel. +49 40 298109-60<br>Fax +49 40 298109-70<br>tb-hamburg@sew-eurodrive.de |
| | Ludwigshafen | SEW-EURODRIVE GmbH & Co KG<br>c/o BASF SE<br>Gebäude W130 Raum 101<br>67056 Ludwigshafen | Tel. +49 7251 75 3759<br>Fax +49 7251 75 503759<br>dc-ludwigshafen@sew-eurodrive.de |

25957074/EN – 06/2019

| | | | |
|---|---|---|---|
| **Germany** | | | |
| | Saarland | SEW-EURODRIVE GmbH & Co KG<br>Gottlieb-Daimler-Straße 4<br>66773 Schwalbach Saar – Hülzweiler | Tel. +49 6831 48946 10<br>Fax +49 6831 48946 13<br>dc-saarland@sew-eurodrive.de |
| | Ulm | SEW-EURODRIVE GmbH & Co KG<br>Dieselstraße 18<br>89160 Dornstadt | Tel. +49 7348 9885-0<br>Fax +49 7348 9885-90<br>dc-ulm@sew-eurodrive.de |
| | Würzburg | SEW-EURODRIVE GmbH & Co KG<br>Nürnbergerstraße 118<br>97076 Würzburg-Lengfeld | Tel. +49 931 27886-60<br>Fax +49 931 27886-66<br>dc-wuerzburg@sew-eurodrive.de |
| Drive Service Hotline / 24 Hour Service | | | 0 800 SEWHELP<br>0 800 7394357 |
| **Great Britain** | | | |
| Assembly<br>Sales<br>Service | Normanton | SEW-EURODRIVE Ltd.<br>DeVilliers Way<br>Trident Park<br>Normanton<br>West Yorkshire<br>WF6 1GX | Tel. +44 1924 893-855<br>Fax +44 1924 893-702<br>http://www.sew-eurodrive.co.uk<br>info@sew-eurodrive.co.uk |
| | Drive Service Hotline / 24 Hour Service | | Tel. 01924 896911 |
| **Greece** | | | |
| Sales | Athens | Christ. Boznos & Son S.A.<br>12, K. Mavromichali Street<br>P.O. Box 80136<br>18545 Piraeus | Tel. +30 2 1042 251-34<br>Fax +30 2 1042 251-59<br>http://www.boznos.gr<br>info@boznos.gr |
| **Hungary** | | | |
| Sales<br>Service | Budapest | SEW-EURODRIVE Kft.<br>Csillaghegyí út 13.<br>1037 Budapest | Tel. +36 1 437 06-58<br>Fax +36 1 437 06-50<br>http://www.sew-eurodrive.hu<br>office@sew-eurodrive.hu |
| **Iceland** | | | |
| Sales | Reykjavik | Varma & Vélaverk ehf.<br>Knarrarvogi 4<br>104 Reykjavík | Tel. +354 585 1070<br>Fax +354 585)1071<br>http://www.varmaverk.is<br>vov@vov.is |
| **India** | | | |
| Registered Office<br>Assembly<br>Sales<br>Service | Vadodara | SEW-EURODRIVE India Private Limited<br>Plot No. 4, GIDC<br>POR Ramangamdi • Vadodara - 391 243<br>Gujarat | Tel. +91 265 3045200<br>Fax +91 265 3045300<br>http://www.seweurodriveindia.com<br>salesvadodara@seweurodriveindia.com |
| Assembly<br>Sales<br>Service | Chennai | SEW-EURODRIVE India Private Limited<br>Plot No. K3/1, Sipcot Industrial Park Phase II<br>Mambakkam Village<br>Sriperumbudur - 602105<br>Kancheepuram Dist, Tamil Nadu | Tel. +91 44 37188888<br>Fax +91 44 37188811<br>saleschennai@seweurodriveindia.com |
| | Pune | SEW-EURODRIVE India Private Limited<br>Plant: Plot No. D236/1,<br>Chakan Industrial Area Phase- II,<br>Warale, Tal- Khed,<br>Pune-410501, Maharashtra | Tel. +91 21 35 628700<br>Fax +91 21 35 628715<br>salespune@seweurodriveindia.com |
| Sales<br>Service | Gurgaon | SEW-EURODRIVE India Private Limited<br>Drive Center Gurugram<br>Plot no 395, Phase-IV, UdyogVihar<br>Gurugram , 122016 Haryana | Tel. +91 99588 78855<br>salesgurgaon@seweurodriveindia.com |
| **Indonesia** | | | |
| Sales | Medan | PT. Serumpun Indah Lestari<br>Jl.Pulau Solor no. 8, Kawasan Industri Medan II<br>Medan 20252 | Tel. +62 61 687 1221<br>Fax +62 61 6871429 / +62 61 6871458 / +62 61 30008041<br>sil@serumpunindah.com<br>serumpunindah@yahoo.com<br>http://www.serumpunindah.com |

25957074/EN – 06/2019

| | | | |
|---|---|---|---|
| **Indonesia** | | | |
| | Jakarta | PT. Cahaya Sukses Abadi<br>Komplek Rukan Puri Mutiara Blok A no 99,<br>Sunter<br>Jakarta 14350 | Tel. +62 21 65310599<br>Fax +62 21 65310600<br>csajkt@cbn.net.id |
| | Jakarta | PT. Agrindo Putra Lestari<br>JL.Pantai Indah Selatan, Komplek Sentra Industri Terpadu, Pantai indah Kapuk Tahap III, Blok E No. 27<br>Jakarta 14470 | Tel. +62 21 2921-8899<br>Fax +62 21 2921-8988<br>aplindo@indosat.net.id<br>http://www.aplindo.com |
| | Surabaya | PT. TRIAGRI JAYA ABADI<br>Jl. Sukosemolo No. 63, Galaxi Bumi Permai G6 No. 11<br>Surabaya 60111 | Tel. +62 31 5990128<br>Fax +62 31 5962666<br>sales@triagri.co.id<br>http://www.triagri.co.id |
| | Surabaya | CV. Multi Mas<br>Jl. Raden Saleh 43A Kav. 18<br>Surabaya 60174 | Tel. +62 31 5458589<br>Fax +62 31 5317220<br>sianhwa@sby.centrin.net.id<br>http://www.cvmultimas.com |
| **Ireland** | | | |
| Sales<br>Service | Dublin | Alperton Engineering Ltd.<br>48 Moyle Road<br>Dublin Industrial Estate<br>Glasnevin, Dublin 11 | Tel. +353 1 830-6277<br>Fax +353 1 830-6458<br>http://www.alperton.ie<br>info@alperton.ie |
| **Israel** | | | |
| Sales | Tel Aviv | Liraz Handasa Ltd.<br>Ahofer Str 34B / 228<br>58858 Holon | Tel. +972 3 5599511<br>Fax +972 3 5599512<br>http://www.liraz-handasa.co.il<br>office@liraz-handasa.co.il |
| **Italy** | | | |
| Assembly<br>Sales<br>Service | Milan | SEW-EURODRIVE di R. Blickle & Co.s.a.s.<br>Via Bernini,14<br>20020 Solaro (Milano) | Tel. +39 02 96 980229<br>Fax +39 02 96 980 999<br>http://www.sew-eurodrive.it<br>milano@sew-eurodrive.it |
| **Ivory Coast** | | | |
| Sales | Abidjan | SEW-EURODRIVE SARL<br>Ivory Coast<br>Rue des Pêcheurs, Zone 3<br>26 BP 916 Abidjan 26 | Tel. +225 21 21 81 05<br>Fax +225 21 25 30 47<br>info@sew-eurodrive.ci<br>http://www.sew-eurodrive.ci |
| **Japan** | | | |
| Assembly<br>Sales<br>Service | Iwata | SEW-EURODRIVE JAPAN CO., LTD<br>250-1, Shimoman-no,<br>Iwata<br>Shizuoka 438-0818 | Tel. +81 538 373811<br>Fax +81 538 373814<br>http://www.sew-eurodrive.co.jp<br>sewjapan@sew-eurodrive.co.jp<br>hamamatsu@sew-eurodrive.co.jp |
| **Kazakhstan** | | | |
| Sales<br>Service | Almaty | SEW-EURODRIVE LLP<br>291-291A, Tole bi street<br>050031, Almaty | Tel. +7 (727) 350 5156<br>Fax +7 (727) 350 5156<br>http://www.sew-eurodrive.kz<br>sew@sew-eurodrive.kz |
| | Tashkent | SEW-EURODRIVE LLP<br>Representative office in Uzbekistan<br>96A, Sharaf Rashidov street,<br>Tashkent, 100084 | Tel. +998 71 2359411<br>Fax +998 71 2359412<br>http://www.sew-eurodrive.uz<br>sew@sew-eurodrive.uz |
| | Ulaanbaatar | IM Trading LLC<br>Olympic street 28B/3<br>Sukhbaatar district,<br>Ulaanbaatar 14230 | Tel. +976-77109997<br>Fax +976-77109997<br>imt@imt.mn |
| **Latvia** | | | |
| Sales | Riga | SIA Alas-Kuul<br>Katlakalna 11C<br>1073 Riga | Tel. +371 6 7139253<br>Fax +371 6 7139386<br>http://www.alas-kuul.lv<br>info@alas-kuul.com |

25957074/EN – 06/2019

| | | | |
|---|---|---|---|
| **Lebanon** | | | |
| Sales (Lebanon) | Beirut | Gabriel Acar & Fils sarl<br>B. P. 80484<br>Bourj Hammoud, Beirut | Tel. +961 1 510 532<br>Fax +961 1 494 971<br>ssacar@inco.com.lb |
| Sales (Jordan, Kuwait , Saudi Arabia, Syria) | Beirut | Middle East Drives S.A.L. (offshore)<br>Sin El Fil.<br>B. P. 55-378<br>Beirut | Tel. +961 1 494 786<br>Fax +961 1 494 971<br>http://www.medrives.com<br>info@medrives.com |
| **Lithuania** | | | |
| Sales | Alytus | UAB Irseva<br>Statybininku 106C<br>63431 Alytus | Tel. +370 315 79204<br>Fax +370 315 56175<br>http://www.irseva.lt<br>irmantas@irseva.lt |
| **Luxembourg** | | | |
| Representation: Belgium | | | |
| **Macedonia** | | | |
| Sales | Skopje | Boznos DOOEL<br>Dime Anicin 2A/7A<br>1000 Skopje | Tel. +389 23256553<br>Fax +389 23256554<br>http://www.boznos.mk |
| **Malaysia** | | | |
| Assembly<br>Sales<br>Service | Johor | SEW-EURODRIVE SDN BHD<br>No. 95, Jalan Seroja 39, Taman Johor Jaya<br>81000 Johor Bahru, Johor<br>West Malaysia | Tel. +60 7 3549409<br>Fax +60 7 3541404<br>sales@sew-eurodrive.com.my |
| **Mexico** | | | |
| Assembly<br>Sales<br>Service | Quéretaro | SEW-EURODRIVE MEXICO S.A. de C.V.<br>SEM-981118-M93<br>Tequisquiapan No. 102<br>Parque Industrial Quéretaro<br>C.P. 76220<br>Querétaro, México | Tel. +52 442 1030-300<br>Fax +52 442 1030-301<br>http://www.sew-eurodrive.com.mx<br>scmexico@seweurodrive.com.mx |
| Sales<br>Service | Puebla | SEW-EURODRIVE MEXICO S.A. de C.V.<br>Calzada Zavaleta No. 3922 Piso 2 Local 6<br>Col. Santa Cruz Buenavista<br>C.P. 72154<br>Puebla, México | Tel. +52 (222) 221 248<br>http://www.sew-eurodrive.com.mx<br>scmexico@seweurodrive.com.mx |
| **Mongolia** | | | |
| Technical Office | Ulaanbaatar | IM Trading LLC<br>Olympic street 28B/3<br>Sukhbaatar district,<br>Ulaanbaatar 14230 | Tel. +976-77109997<br>Tel. +976-99070395<br>Fax +976-77109997<br>http://imt.mn/<br>imt@imt.mn |
| **Morocco** | | | |
| Sales<br>Service | Bouskoura | SEW-EURODRIVE Morocco<br>Parc Industriel CFCIM, Lot 55 and 59<br>Bouskoura | Tel. +212 522 88 85 00<br>Fax +212 522 88 84 50<br>http://www.sew-eurodrive.ma<br>sew@sew-eurodrive.ma |
| **Namibia** | | | |
| Sales | Swakopmund | DB MINING & INDUSTRIAL SUPPLIES CC<br>Einstein Street<br>Strauss Industrial Park<br>Unit1<br>Swakopmund | Tel. +264 64 462 738<br>Fax +264 64 462 734<br>anton@dbminingnam.com |
| **Netherlands** | | | |
| Assembly<br>Sales<br>Service | Rotterdam | SEW-EURODRIVE B.V.<br>Industrieweg 175<br>3044 AS Rotterdam<br>Postbus 10085<br>3004 AB Rotterdam | Tel. +31 10 4463-700<br>Fax +31 10 4155-552<br>Service: 0800-SEWHELP<br>http://www.sew-eurodrive.nl<br>info@sew-eurodrive.nl |

25957074/EN – 06/2019

| | | | |
|---|---|---|---|
| **New Zealand** | | | |
| Assembly<br>Sales<br>Service | Auckland | SEW-EURODRIVE NEW ZEALAND LTD.<br>P.O. Box 58-428<br>82 Greenmount drive<br>East Tamaki Auckland | Tel. +64 9 2745627<br>Fax +64 9 2740165<br>http://www.sew-eurodrive.co.nz<br>sales@sew-eurodrive.co.nz |
| | Christchurch | SEW-EURODRIVE NEW ZEALAND LTD.<br>30 Lodestar Avenue, Wigram<br>Christchurch | Tel. +64 3 384-6251<br>Fax +64 3 384-6455<br>sales@sew-eurodrive.co.nz |
| **Nigeria** | | | |
| Sales | Lagos | Greenpeg Nig. Ltd<br>Plot 296A, Adeyemo Akapo Str. Omole GRA<br>Ikeja Lagos-Nigeria | Tel. +234-701-821-9200-1<br>http://www.greenpegltd.com<br>bolaji.adekunle@greenpegltd.com |
| **Norway** | | | |
| Assembly<br>Sales<br>Service | Moss | SEW-EURODRIVE A/S<br>Solgaard skog 71<br>1599 Moss | Tel. +47 69 24 10 20<br>Fax +47 69 24 10 40<br>http://www.sew-eurodrive.no<br>sew@sew-eurodrive.no |
| **Pakistan** | | | |
| Sales | Karachi | Industrial Power Drives<br>Al-Fatah Chamber A/3, 1st Floor Central Commercial Area,<br>Sultan Ahmed Shah Road, Block 7/8,<br>Karachi | Tel. +92 21 452 9369<br>Fax +92-21-454 7365<br>seweurodrive@cyber.net.pk |
| **Paraguay** | | | |
| Sales | Fernando de la Mora | SEW-EURODRIVE PARAGUAY S.R.L<br>De la Victoria 112, Esquina nueva Asunción<br>Departamento Central<br>Fernando de la Mora, Barrio Bernardino | Tel. +595 991 519695<br>Fax +595 21 3285539<br>sewpy@sew-eurodrive.com.py |
| **Peru** | | | |
| Assembly<br>Sales<br>Service | Lima | SEW EURODRIVE DEL PERU S.A.C.<br>Los Calderos, 120-124<br>Urbanizacion Industrial Vulcano, ATE, Lima | Tel. +51 1 3495280<br>Fax +51 1 3493002<br>http://www.sew-eurodrive.com.pe<br>sewperu@sew-eurodrive.com.pe |
| **Philippines** | | | |
| Sales | Makati | P.T. Cerna Corporation<br>4137 Ponte St., Brgy. Sta. Cruz<br>Makati City 1205 | Tel. +63 2 519 6214<br>Fax +63 2 890 2802<br>mech_drive_sys@ptcerna.com<br>http://www.ptcerna.com |
| **Poland** | | | |
| Assembly<br>Sales<br>Service | Łódź | SEW-EURODRIVE Polska Sp.z.o.o.<br>ul. Techniczna 5<br>92-518 Łódź | Tel. +48 42 293 00 00<br>Fax +48 42 293 00 49<br>http://www.sew-eurodrive.pl<br>sew@sew-eurodrive.pl |
| | Service | Tel. +48 42 293 0030<br>Fax +48 42 293 0043 | 24 Hour Service<br>Tel. +48 602 739 739 (+48 602 SEW SEW)<br>serwis@sew-eurodrive.pl |
| **Portugal** | | | |
| Assembly<br>Sales<br>Service | Coimbra | SEW-EURODRIVE, LDA.<br>Av. da Fonte Nova, n.º 86<br>3050-379 Mealhada | Tel. +351 231 20 9670<br>Fax +351 231 20 3685<br>http://www.sew-eurodrive.pt<br>infosew@sew-eurodrive.pt |
| **Romania** | | | |
| Sales<br>Service | Bucharest | Sialco Trading SRL<br>str. Brazilia nr. 36<br>011783 Bucuresti | Tel. +40 21 230-1328<br>Fax +40 21 230-7170<br>sialco@sialco.ro |
| **Russia** | | | |
| Assembly<br>Sales<br>Service | St. Petersburg | ЗАО «СЕВ-ЕВРОДРАЙФ»<br>а. я. 36<br>195220 Санкт-Петербург | Tel. +7 812 3332522 / +7 812 5357142<br>Fax +7 812 3332523<br>http://www.sew-eurodrive.ru<br>sew@sew-eurodrive.ru |

25957074/EN – 06/2019

| | | | |
|---|---|---|---|
| **Senegal** | | | |
| Sales | Dakar | SENEMECA<br>Mécanique Générale<br>Km 8, Route de Rufisque<br>B.P. 3251, Dakar | Tel. +221 338 494 770<br>Fax +221 338 494 771<br>http://www.senemeca.com<br>senemeca@senemeca.sn |
| **Serbia** | | | |
| Sales | Belgrade | DIPAR d.o.o.<br>Ustanicka 128a<br>PC Košum, IV floor<br>11000 Beograd | Tel. +381 11 347 3244 / +381 11 288 0393<br>Fax +381 11 347 1337<br>office@dipar.rs |
| **Singapore** | | | |
| Assembly<br>Sales<br>Service | Singapore | SEW-EURODRIVE PTE. LTD.<br>No 9, Tuas Drive 2<br>Jurong Industrial Estate<br>Singapore 638644 | Tel. +65 68621701<br>Fax +65 68612827<br>http://www.sew-eurodrive.com.sg<br>sewsingapore@sew-eurodrive.com |
| **Slovakia** | | | |
| Sales | Bratislava | SEW-Eurodrive SK s.r.o.<br>Rybničná 40<br>831 06 Bratislava | Tel.+421 2 33595 202, 217, 201<br>Fax +421 2 33595 200<br>http://www.sew-eurodrive.sk<br>sew@sew-eurodrive.sk |
| | Košice | SEW-Eurodrive SK s.r.o.<br>Slovenská ulica 26<br>040 01 Košice | Tel. +421 55 671 2245<br>Fax +421 55 671 2254<br>Mobile +421 907 671 976<br>sew@sew-eurodrive.sk |
| **Slovenia** | | | |
| Sales<br>Service | Celje | Pakman - Pogonska Tehnika d.o.o.<br>UI. XIV. divizije 14<br>3000 Celje | Tel. +386 3 490 83-20<br>Fax +386 3 490 83-21<br>pakman@siol.net |
| **South Africa** | | | |
| Assembly<br>Sales<br>Service | Johannesburg | SEW-EURODRIVE (PROPRIETARY) LIMITED<br>Eurodrive House<br>Cnr. Adcock Ingram and Aerodrome Roads<br>Aeroton Ext. 2<br>Johannesburg 2013<br>P.O.Box 90004<br>Bertsham 2013 | Tel. +27 11 248-7000<br>Fax +27 11 248-7289<br>http://www.sew.co.za<br>info@sew.co.za |
| | Cape Town | SEW-EURODRIVE (PROPRIETARY) LIMITED<br>Rainbow Park<br>Cnr. Racecourse & Omuramba Road<br>Montague Gardens<br>Cape Town<br>P.O.Box 36556<br>Chempet 7442 | Tel. +27 21 552-9820<br>Fax +27 21 552-9830<br>Telex 576 062<br>bgriffiths@sew.co.za |
| | Durban | SEW-EURODRIVE (PROPRIETARY) LIMITED<br>48 Prospecton Road<br>Isipingo<br>Durban<br>P.O. Box 10433, Ashwood 3605 | Tel. +27 31 902 3815<br>Fax +27 31 902 3826<br>cdejager@sew.co.za |
| | Nelspruit | SEW-EURODRIVE (PROPRIETARY) LIMITED<br>7 Christie Crescent<br>Vintonia<br>P.O.Box 1942<br>Nelspruit 1200 | Tel. +27 13 752-8007<br>Fax +27 13 752-8008<br>robermeyer@sew.co.za |
| **South Korea** | | | |
| Assembly<br>Sales<br>Service | Ansan | SEW-EURODRIVE KOREA CO., LTD.<br>7, Dangjaengi-ro,<br>Danwon-gu,<br>Ansan-si, Gyeonggi-do, Zip 425-839 | Tel. +82 31 492-8051<br>Fax +82 31 492-8056<br>http://www.sew-eurodrive.kr<br>master.korea@sew-eurodrive.com |
| | Busan | SEW-EURODRIVE KOREA CO., LTD.<br>28, Noksansandan 262-ro 50beon-gil,<br>Gangseo-gu,<br>Busan, Zip 618-820 | Tel. +82 51 832-0204<br>Fax +82 51 832-0230 |

25957074/EN – 06/2019

| | | | |
|---|---|---|---|
| **Spain** | | | |
| Assembly<br>Sales<br>Service | Bilbao | SEW-EURODRIVE ESPAÑA, S.L.<br>Parque Tecnológico, Edificio, 302<br>48170 Zamudio (Vizcaya) | Tel. +34 94 43184-70<br>http://www.sew-eurodrive.es<br>sew.spain@sew-eurodrive.es |
| **Sri Lanka** | | | |
| Sales | Colombo | SM International (Pte) Ltd<br>254, Galle Raod<br>Colombo 4, Sri Lanka | Tel. +94 1 2584887<br>Fax +94 1 2582981 |
| **Swaziland** | | | |
| Sales | Manzini | C G Trading Co. (Pty) Ltd<br>Simunye street<br>Matsapha, Manzini | Tel. +268 7602 0790<br>Fax +268 2 518 5033<br>charles@cgtrading.co.sz<br>www.cgtradingswaziland.com |
| **Sweden** | | | |
| Assembly<br>Sales<br>Service | Jönköping | SEW-EURODRIVE AB<br>Gnejsvägen 6-8<br>553 03 Jönköping<br>Box 3100 S-550 03 Jönköping | Tel. +46 36 34 42 00<br>Fax +46 36 34 42 80<br>http://www.sew-eurodrive.se<br>jonkoping@sew.se |
| **Switzerland** | | | |
| Assembly<br>Sales<br>Service | Basel | Alfred Imhof A.G.<br>Jurastrasse 10<br>4142 Münchenstein bei Basel | Tel. +41 61 417 1717<br>Fax +41 61 417 1700<br>http://www.imhof-sew.ch<br>info@imhof-sew.ch |
| **Taiwan** | | | |
| Sales | Taipei | Ting Shou Trading Co., Ltd.<br>6F-3, No. 267, Sec. 2<br>Tung Huw S. Road<br>Taipei | Tel. +886 2 27383535<br>Fax +886 2 27368268<br>Telex 27 245<br>sewtwn@ms63.hinet.net<br>http://www.tingshou.com.tw |
| | Nan Tou | Ting Shou Trading Co., Ltd.<br>No. 55 Kung Yeh N. Road<br>Industrial District<br>Nan Tou 540 | Tel. +886 49 255353<br>Fax +886 49 257878<br>sewtwn@ms63.hinet.net<br>http://www.tingshou.com.tw |
| **Tanzania** | | | |
| Sales | Daressalam | SEW-EURODRIVE PTY LIMITED TANZANIA<br>Plot 52, Regent Estate<br>PO Box 106274<br>Dar Es Salaam | Tel. +255 0 22 277 5780<br>Fax +255 0 22 277 5788<br>http://www.sew-eurodrive.co.tz<br>info@sew.co.tz |
| **Thailand** | | | |
| Assembly<br>Sales<br>Service | Chonburi | SEW-EURODRIVE (Thailand) Ltd.<br>700/456, Moo.7, Donhuaroh<br>Muang<br>Chonburi 20000 | Tel. +66 38 454281<br>Fax +66 38 454288<br>sewthailand@sew-eurodrive.com |
| **Tunisia** | | | |
| Sales | Tunis | T. M.S. Technic Marketing Service<br>Zone Industrielle Mghira 2<br>Lot No. 39<br>2082 Fouchana | Tel. +216 79 40 88 77<br>Fax +216 79 40 88 66<br>http://www.tms.com.tn<br>tms@tms.com.tn |
| **Turkey** | | | |
| Assembly<br>Sales<br>Service | Kocaeli-Gebze | SEW-EURODRİVE Hareket<br>Sistemleri San. Ve TIC. Ltd. Sti<br>Gebze Organize Sanayi Böl. 400 Sok No. 401<br>41480 Gebze Kocaeli | Tel. +90 262 9991000 04<br>Fax +90 262 9991009<br>http://www.sew-eurodrive.com.tr<br>sew@sew-eurodrive.com.tr |
| **Ukraine** | | | |
| Assembly<br>Sales<br>Service | Dnipropetrovsk | SEW-EURODRIVE, LLC<br>Robochya str., bld. 23-B, office 409<br>49008 Dnipro | Tel. +380 56 370 3211<br>Fax +380 56 372 2078<br>http://www.sew-eurodrive.ua<br>sew@sew-eurodrive.ua |

25957074/EN – 06/2019

| | | | |
|---|---|---|---|
| **United Arab Emirates** | | | |
| Drive Technology Center | Dubai | SEW-EURODRIVE FZE<br>PO Box 263835<br>Jebel Ali Free Zone – South,<br>P.O. Box<br>Dubai, United Arab Emirates | Tel. +971 (0)4 8806461<br>Fax +971 (0)4 8806464<br>info@sew-eurodrive.ae |
| **Uruguay** | | | |
| Assembly<br>Sales | Montevideo | SEW-EURODRIVE Uruguay, S. A.<br>Jose Serrato 3569 Esqina Corumbe<br>CP 12000 Montevideo | Tel. +598 2 21181-89<br>Fax +598 2 21181-90<br>sewuy@sew-eurodrive.com.uy |
| **USA** | | | |
| Production<br>Assembly<br>Sales<br>Service | Southeast Region | SEW-EURODRIVE INC.<br>1295 Old Spartanburg Highway<br>P.O. Box 518<br>Lyman, S.C. 29365 | Tel. +1 864 439-7537<br>Fax Sales +1 864 439-7830<br>Fax Production +1 864 439-9948<br>Fax Assembly +1 864 439-0566<br>Fax Confidential/HR +1 864 949-5557<br>http://www.seweurodrive.com<br>cslyman@seweurodrive.com |
| Assembly<br>Sales<br>Service | Northeast Region | SEW-EURODRIVE INC.<br>Pureland Ind. Complex<br>2107 High Hill Road, P.O. Box 481<br>Bridgeport, New Jersey 08014 | Tel. +1 856 467-2277<br>Fax +1 856 845-3179<br>csbridgeport@seweurodrive.com |
| | Midwest Region | SEW-EURODRIVE INC.<br>2001 West Main Street<br>Troy, Ohio 45373 | Tel. +1 937 335-0036<br>Fax +1 937 332-0038<br>cstroy@seweurodrive.com |
| | Southwest Region | SEW-EURODRIVE INC.<br>3950 Platinum Way<br>Dallas, Texas 75237 | Tel. +1 214 330-4824<br>Fax +1 214 330-4724<br>csdallas@seweurodrive.com |
| | Western Region | SEW-EURODRIVE INC.<br>30599 San Antonio St.<br>Hayward, CA 94544 | Tel. +1 510 487-3560<br>Fax +1 510 487-6433<br>cshayward@seweurodrive.com |
| | Wellford | SEW-EURODRIVE INC.<br>148/150 Finch Rd.<br>Wellford, S.C. 29385 | Tel. +1 864 439-7537<br>Fax +1 864 661 1167<br>IGOrders@seweurodrive.com |
| | Additional addresses for service provided on request! | | |
| **Vietnam** | | | |
| Sales | Ho Chi Minh City | SEW-EURODRIVE PTE. LTD. RO at Hochiminh City<br>Floor 8, KV I, Loyal building, 151-151 Bis Vo Thi Sau street, ward 6, District 3, Ho Chi Minh City, Vietnam | Tel. +84 937 299 700<br><br>huytam.phan@sew-eurodrive.com |
| | Hanoi | MICO LTD<br>Quảng Trị - North Vietnam / All sectors except Construction Materials<br>8th Floor, Ocean Park Building, 01 Dao Duy Anh St, Ha Noi, Viet Nam | Tel. +84 4 39386666<br>Fax +84 4 3938 6888<br>nam_ph@micogroup.com.vn<br>http://www.micogroup.com.vn |
| **Zambia** | | | |
| Representation: South Africa | | | |

25957074/EN – 06/2019

# Index

## Icons

/DUB (Diagnostic Unit Brake) ..... 206
/V forced cooling fan ..... 108

## Numerical

2nd shaft end ..... 60

## A

AB.., AD.., AM.., AK.., AC.., AS plug connectors 89
Add-on encoder ..... 111
AG7. ..... 111
AH7. ..... 111
Air filter /LF ..... 58
Anti-condensation heating
  /Hx ..... 117
Appendix ..... 269
AS7. ..... 111
Auxiliary terminals, arrangement ..... 285

## B

Backstop ..... 219
BE05 – 2 ..... 185
Bearing
  Reinforced ..... 126
Bearing lubrication ..... 125
Brake
  BE05 – 2 ..... 185
  BE05 – 20 ..... 186
  BE120 ..... 187
  BE122 ..... 188
  BE30 ..... 187
  BE32 ..... 188
  BE60 ..... 187
  BE62 ..... 188
  Braking torques ..... 225
  Braking work ..... 225
  Operating currents BE.. brake ..... 226
  Working air gap ..... 225
Brake connection ..... 94
Brake control ..... 63, 234
  BG.. ..... 277
  BGE.. ..... 277
  BMP3.1 ..... 281
  BSG.. ..... 277
  BSR ..... 279
  BUR.. ..... 277
  Connection ..... 94
  Control cabinet ..... 240
  Motor terminal box ..... 237
  Motor wiring compartment ..... 237
Brake exchange
  DR.71 – 80, DRN80, DR2..80 ..... 197, 199
Brake malfunctions ..... 266
Brake rectifier combinations ..... 234
Brakemotor structure
  DR..160 – 315, DRN132M – 315 ..... 178
  DR..71 – 80, DRN63 – 80, DR2..63 – 80 ..... 176
  DR..90 – 132, DRN90 – 132S ..... 177
  DR2..56 ..... 175
Braking torques ..... 225
Braking work ..... 225
Built-in encoder ..... 113, 275

## C

Cable gland
  NPT ..... 46
Changing the blocking direction ..... 219
Changing the brake lining carrier
  BE05 – 122 ..... 193
Changing the brake spring
  BE05 – 122 ..... 195
Changing the braking torque
  BE05 – 122 ..... 194
Changing the magnet body
  BE05 – 122 ..... 196
Characteristic safety values ..... 261
Characteristic values ..... 261
Condensation drain holes ..... 37
Connecting diagnostic unit /DUB ..... 98
Connecting diagnostic unit /DUE ..... 211
Connecting the motor ..... 74
  AB.., AD.., AM.., AK.., AC.., AS plug connectors ..... 89
  IS plug connector ..... 84
  Terminal box ..... 75, 76, 77
  via plug connector ..... 84
  via terminal board ..... 75
  via terminal strip ..... 90

25957074/EN – 06/19

Connection
Variants ... 29
Cooling air supply ... 37
Copyright notice ... 8
Customer service ... 268

D

Delta connection
R13 ... 269
R72 ... 271
Design
DR..315, DRN315 ... 22
Motor ... 22
Designated use ... 10
Diagnostic unit /DUE ... 210
Direct mounting ... 53
Disassembly
Diagnostic unit /DUE ... 209
Drive components, installation ... 39
DRK.. ... 72
DRK.. single-phase motor
S1 operation ... 262
DRK... single-phase motor
Wiring diagram ... 284
Drying
Motor ... 35
DUB (Diagnostic Unit Brake) ... 98

E

EG7. ... 111
EH7. ... 111
EI7 ... 275
Electrical connection ... 13
Electrical installation ... 62
Minimum requirements for encoder cables .. 117
Embedded safety notes ... 7
EMC ... 67
Encoder ... 28, 111
AG7. ... 111
AH7. ... 111
AS7 ... 111
EG7. ... 111
EH7. ... 111
EI7. ... 113
EI8. ... 113
ES7 ... 111
Mounting adapter ... 40
Technical data ... 246
Encoder cable ... 117
Encoder cable requirements ... 117
Encoder connection ... 116
Encoder mounting adapter ... 42
Equipment, accessory ... 103
ES7 ... 111
EV. ... 40

F

Failure ... 263
Faults ... 263
For mounting to gear units ... 53
Forced cooling fan
Wiring diagram ... 282
Forced cooling fan /V ... 108
Frequency inverter operation ... 64

G

Grounding ... 67
at the terminal box ... 66
NF ... 66

H

Hazard symbols
Meaning ... 7
Hollow shaft rotary encoder ... 43
HR/HF manual brake release, retrofitting .... 56, 203
Hx ... 117

I

Improving the grounding ... 67
Inspecting the brakemotor
DR.63 – 315, DRN80 – 315 ... 179
Inspecting the motor
DR..71 – 315, DRN80 – 315 ... 173
Inspection ... 121
/DUB ... 206
Inspection intervals ... 123
Installation
In damp locations or outdoors ... 38
Measuring nipple ... 59
Tolerances ... 39
XH.A encoder mounting adapter ... 43

25957074/EN – 06/19



SEW EURODRIVE

Installation notes
Encoder ... 116
Installation tolerances ... 39
Installation, conditions ... 32
Insulation resistance ... 34
Insulation, reinforced ... 64
Intervals for inspection and maintenance ... 123
IS plug connector ... 84
Isolation transformer ... 35
ISU plug connector ... 84

## K

KTY84-130 temperature sensor ... 105

## L

LF
Air filter ... 58
Low-speed motors ... 71
Lubricant table ... 244
Lubrication ... 125

## M

Maintenance ... 121
Maintenance intervals ... 123
Malfunctions when operating with a frequency inverter ... 267
Mark, nameplate ... 24
Measuring nipple mounting adapter ... 59
Mechanical installation ... 32
Minimum requirements for encoder cables ... 117
Motor
Connect via terminal board ... 75
Connecting the terminal strip ... 90
Connecting via plug connector ... 84
Connection ... 74
Drying ... 35
Setup ... 37
Motor design
DR..315, DRN315 ... 22
Motor designation ... 26
Motor feet
Retrofitting/modifying motor feet ... 48
Motor malfunctions ... 264
Motor mounting ... 53
Motor protection ... 273, 274
TF ... 273, 274
TH ... 273, 274
Motor protection device ... 63
Motor structure
DR..160 – 180, DRN132M – 180 ... 19
DR..200 – 225, DRN200 – 225 ... 20
DR..250 – 280, DRN250 – 280 ... 21
DR..71 – 132, DRN71 – 132S, DR2..71 – 80 . 18
Mounting ... 37
Mounting adapter ... 40, 42
Encoder ... 40
Measuring nipple ... 59
XH.A ... 144
XV ... 140, 142
XV.A ... 139
Mounting XH.A ... 43

## N

Nameplate ... 23
Mark ... 24
Notes
Designation in the documentation ... 6
Meaning of the hazard symbols ... 7

## O

Operation
Safety notes ... 14
Operation with frequency inverter ... 64
Optical status messages ... 113
Options ... 27
Electrical ... 103
Mechanical ... 56

## P

Plug connector ... 84
AB.., AD.., AM.., AK.., AC.., AS ... 89
IS ... 84
ISU ... 84
Port dimensions
Encoder ... 116
Preliminary work for motor and brake maintenance ... 127
Product names ... 8
PT100 ... 106
PT100 temperature detection ... 106
PT1000 ... 107
PT1000 temperature detection ... 107

25957074/EN – 06/19

Pulse voltages ..... 64

## R

Reinforced bearings ..... 119, 126
Relubrication ..... 125
Relubrication device ..... 125
Relubrication intervals ..... 126
Removing rotary encoder ..... 131, 133, 135, 137
  EG7. and AG7. ..... 133, 135
  EH7. and AH7. ..... 137
  ES7. and AS7. ..... 131
Removing the absolute encoder ..... 139, 140, 142
Removing the encoder
  ..... 131, 133, 135, 137, 139, 140, 142, 144
  EG7. and AG7. ..... 133, 135
  EH7. and AH7. ..... 137
  ES7. and AS7. ..... 131
  EV.., AV.., and XV.. ..... 139, 140, 142
  EV.., AV.., and XV.A ..... 139
Removing the hollow shaft encoder ..... 144
Removing the incremental encoder ... 139, 140, 142
  EV.., AV.., and XV.. ..... 140, 142
  EV.., AV.., and XV.A ..... 139
Removing the special encoder ..... 139, 140, 142
Resistance ..... 230
Resistance measurement of the brake ..... 230, 233
Retrofitting the HR/HF manual brake release
  ..... 56, 203
Rights to claim under limited warranty ..... 8
Rolling bearing ..... 242
RS ..... 219

## S

Safety cover ..... 60
Safety notes
  Designated use ..... 10
  Designation in the documentation ..... 6
  Electrical connection ..... 13
  Meaning of the hazard symbols ..... 7
  Preliminary information ..... 9
  Setup ..... 12
  Storage ..... 11
  Structure of embedded ..... 7
  Structure of section-related ..... 6
Second shaft end ..... 60
Section-related safety notes ..... 6
Serial number ..... 25
Setting the working air gap
  BE05 – 122 ..... 191
Setup ..... 12, 37
Signal words in safety notes ..... 6
Single-phase motor ..... 72
Special design ..... 32
Special features
  Low-speed motors ..... 71
  Switching operation ..... 71
  Torque motors ..... 71
Star connection
  R13 ..... 269
  R76 ..... 272
Startup ..... 118
  Safety notes ..... 14
Status message evaluation unit ..... 218
Storage
  Reinforced ..... 119
Storage, extended ..... 34
Strip heater ..... 117
Structure
  Brakemotor ..... 175, 176, 177, 178
  DR..160 – 315, DRN132M – 315 with BE .... 178
  DR..160 – 180, DRN132M – 180 ..... 19
  DR..200 – 225, DRN200 – 225 ..... 20
  DR..250 – 280, DRN250 – 280 ..... 21
  DR..71 – 132, DRN71 – 132S, DR2..71 – 80 . 18
  DR..71 – 80, DRN63 – 80, DR2..63 – 80 with BE
  ..... 176
  DR..90 – 132, DRN90 – 132S with BE ..... 177
  DR2..56 with BE ..... 175
  DUB ..... 205
  Motor ..... 18, 19, 20, 21
  Motors ..... 15
Switch contacts ..... 118
Switching operation ..... 71

## T

Target group ..... 10
Technical data ..... 222
Technical data BE.. brake
  Operating currents BE.. brake ..... 226
Terminal arrangement ..... 285
Terminal board ..... 75

25957074/EN – 06/19

Terminal box
Rotate ... 44
Terminal box positions ... 285
Terminal strip ... 90
TF ... 103, 273, 274
TF temperature sensor ... 103
TH ... 104, 273, 274
TH winding thermostats ... 104
Torque motors ... 71
Trademarks ... 8
Transportation ... 11
Type designation ... 26
Bearing ... 29
Connection variants ... 29
Encoder ... 28
Mechanical attachments ... 27
Other additional features ... 30
Output variants ... 27
Temperature sensor ... 27
Ventilation ... 29
Type designation DR..
Condition monitoring ... 30
Types
Overview ... 27

## U

UWU51A switched-mode power supply ... 110

## W

Waste disposal ... 268
Wear ... 123
Wiring diagram
BMP3.1 ... 281
Wiring diagrams ... 269
BG.. ... 277
BGE.. ... 277
BS24 ... 277
BSG.. ... 277
BSR ... 279
R13 delta connection ... 269, 271
R76 star connection ... 272
Star connection R13 ... 269
TF ... 273, 274
TH ... 273, 274
Working air gap ... 225

## X

XV.. ... 40

25957074/EN – 06/19

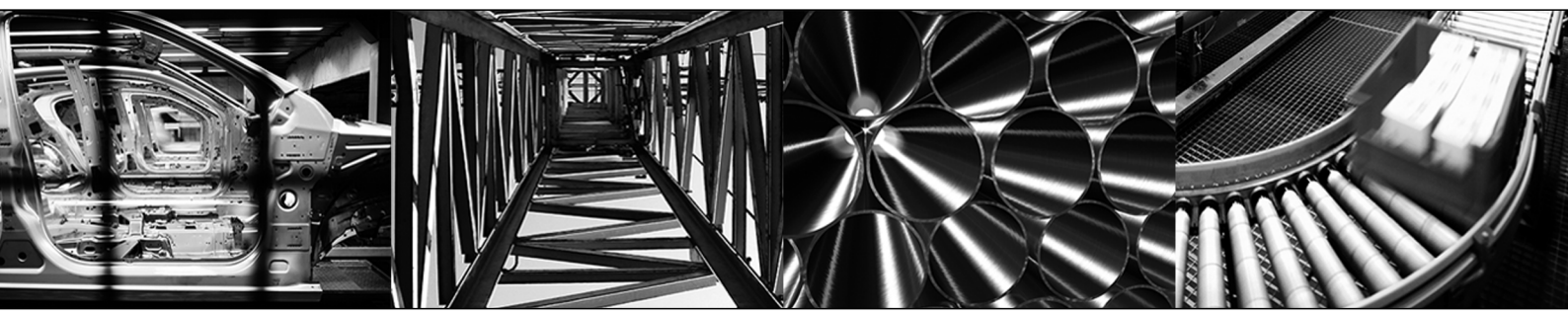



**SEW-EURODRIVE**
**Driving the world**

SEW-EURODRIVE GmbH & Co KG
Ernst-Blickle-Str. 42
76646 BRUCHSAL
GERMANY
Tel. +49 7251 75-0
Fax +49 7251 75-1970
sew@sew-eurodrive.com
➞ **www.sew-eurodrive.com**

# *SEW EURODRIVE*

## *MODEL AR71, FRICTION COUPLING*

LEFT BLANK

SEW EURODRIVE

# Operating Instructions



## AR.. and AT.. Centrifugal and Friction Couplings

Edition 12/2010

17036011 / EN







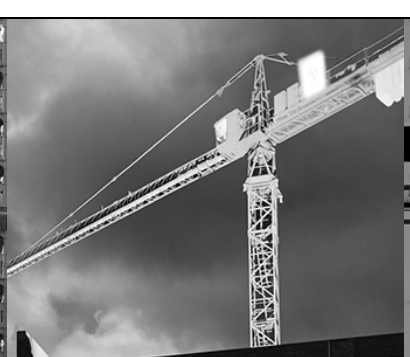


MAX.GW.
TARE
MAX.CW.
CU.CAP.
KKFU 144794 3
42G1



# Contents


**1 General Information ..... 5**
1.1 How to use this documentation ..... 5
1.2 Structure of the safety notes ..... 5
1.3 Rights to claim under warranty ..... 6
1.4 Exclusion of liability ..... 6
1.5 Copyright ..... 6
1.6 Product name and trademarks ..... 6
**2 Safety Notes ..... 7**
2.1 Preliminary information ..... 7
2.2 General information ..... 7
2.3 Target group ..... 8
2.4 Designated use ..... 8
2.5 Other applicable documentation ..... 9
2.6 Transport/storage ..... 9
2.7 Installation ..... 10
2.8 Electrical connection ..... 10
2.9 Startup/operation ..... 11
**3 Structure ..... 12**
3.1 Drive with AR.. friction coupling ..... 12
3.2 Drive with AT.. hydraulic centrifugal coupling ..... 14
3.3 Nameplate ..... 16
3.4 Unit designation ..... 17
**4 Mechanical Installation ..... 18**
4.1 Required tools/resources ..... 18
4.2 Prerequisites for assembly ..... 18
4.3 Drive with AR.. friction coupling ..... 18
4.4 Drive with AT.. hydraulic centrifugal coupling ..... 21
**5 Startup/Operation ..... 22**
5.1 Drive with AR.. friction coupling ..... 24
**6 Inspection/Maintenance ..... 27**
6.1 Preliminary work ..... 27
6.2 Inspection and maintenance intervals ..... 28
6.3 Drive with AR.. friction coupling ..... 29
6.4 Drive with AT.. hydraulic centrifugal coupling ..... 32
**7 Malfunctions ..... 38**
7.1 Drive with AR.. friction coupling – malfunctions ..... 38
7.2 Drive with AT.. hydraulic centrifugal coupling – malfunctions ..... 38
7.3 Customer service ..... 39
7.4 Disposal ..... 39





**8 Technical Data ..... 40**
8.1 Lubricants ..... 40
**9 Address List ..... 41**
**Index ..... 51**

# 1 General Information

## *1.1 How to use this documentation*

The documentation is an integral part of the product and contains important information on operation and service. The documentation is written for all employees who assemble, install, startup, and service this product.

The documentation must be accessible and legible. Make sure that persons responsible for the system and its operation, as well as persons who work independently on the unit, have read through the documentation carefully and understood it. If you are unclear about any of the information in this documentation, or if you require further information, contact SEW-EURODRIVE.

## *1.2 Structure of the safety notes*

### 1.2.1 Meaning of the signal words

The following table shows the grading and meaning of the signal words for safety notes, notes on potential risks of damage to property, and other notes.

| Signal word | Meaning | Consequences if disregarded |
|---|---|---|
| ⚠ **DANGER** | Imminent danger | Severe or fatal injuries |
| ⚠ **WARNING** | Possible dangerous situation | Severe or fatal injuries |
| ⚠ **CAUTION** | Possible dangerous situation | Minor injuries |
| **NOTICE** | Possible damage to property | Damage to the drive system or its environment |
| **INFORMATION** | Useful information or tip: Simplifies the handling of the drive system. | |

### 1.2.2 Structure of the section-related safety notes

Section safety notes do not apply to a specific action, but to several actions pertaining to one subject. The used symbols indicate either a general or a specific hazard.

This is the formal structure of a section safety note:



**⚠ SIGNAL WORD**

Type and source of danger.

Possible consequence(s) if disregarded.

- Measure(s) to prevent the danger.

### 1.2.3 Structure of the embedded safety notes

Embedded safety notes are directly integrated in the instructions just before the description of the dangerous action.

This is the formal structure of an embedded safety note:

- ⚠ **SIGNAL WORD** Nature and source of hazard.

  Possible consequence(s) if disregarded.

  – Measure(s) to prevent the danger.

## 1.3 Rights to claim under warranty

A requirement of fault-free operation and fulfillment of any rights to claim under limited warranty is that you adhere to the information in the documentation. Read the documentation before you start working with the unit!

## 1.4 Exclusion of liability

You must comply with the information contained in this documentation to ensure safe operation of the electric motors and to achieve the specified product characteristics and performance features. SEW-EURODRIVE assumes no liability for injury to persons or damage to equipment or property resulting from non-observance of the documentation. In such cases, any liability for defects is excluded.

## 1.5 Copyright

© 2010 - SEW-EURODRIVE. All rights reserved.

Copyright law prohibits the unauthorized duplication, modification, distribution, and use of this document, in whole or in part.

## 1.6 Product name and trademarks

The brands and product names contained within this publication are trademarks or registered trademarks of the titleholders.

# 2 Safety Notes

The following basic safety notes must be read carefully to prevent injury to persons and damage to property. The operator must ensure that the basic safety notes are read and adhered to. Make sure that persons responsible for the system and its operation, as well as persons who work independently on the unit, have read through the operating instructions carefully and understood them. If you are unclear about any of the information in this documentation or if you require further information, please contact SEW-EURODRIVE.

## *2.1 Preliminary information*

The following safety notes are primarily concerned with the use of the following components: AR.. and AT.. centrifugal and friction couplings. If using gearmotors, please also refer to the safety notes for gear units in the corresponding operating instructions.

Also observe the supplementary safety notes in the individual sections of this documentation.

## *2.2 General information*

**⚠ WARNING**

During operation, the motors and gearmotors can have live, bare (in the event of open connectors/terminal boxes) and movable or rotating parts as well as hot surfaces, depending on their enclosure.

Severe or fatal injuries.

- All work related to transportation, storage, installation, assembly, connection, startup, maintenance and repair may only be carried out by qualified personnel, in strict observance of:
  - The relevant detailed operating instructions
  - The warning and safety signs on the motor/gearmotor
  - All other project planning documents, operating instructions and wiring diagrams related to the drive
  - The specific regulations and requirements for the system
  - The national/regional regulations governing safety and the prevention of accidents
- Never install damaged products
- Immediately report any damage to the shipping company

Removing the required protection cover or the housing without authorization, improper use as well as incorrect installation or operation may result in severe injuries to persons or damage to property.

This documentation provides additional information.

## 2.3 Target group

Any mechanical work may only be performed by adequately qualified personnel. Qualified staff in the context of this documentation are persons familiar with the design, mechanical installation, troubleshooting and servicing of the product who possess the following qualifications:

- Training in mechanical engineering, e.g. as a mechanic or mechatronics technician (final examinations must have been passed).
- They are familiar with these operating instructions.

Any electronic work may only be performed by adequately qualified electricians. Qualified electricians in the context of this documentation are persons familiar with electrical installation, startup, troubleshooting and servicing of the product who possess the following qualifications:

- Training in electrical engineering, e.g. as an electrician, electronics or mechatronics technician (final examinations must have been passed).
- They are familiar with these operating instructions.

All work in further areas of transportation, storage, operation and waste disposal must only be carried out by persons who are trained appropriately.

All qualified personnel must wear appropriate protective clothing.

## 2.4 Designated use

These drives and couplings are intended for industrial systems.

When installed in machines, startup of the drives and couplings (i.e. start of designated operation) is prohibited until it is determined that the machine meets the requirements stipulated in Directive 2006/42/EC (Machinery Directive).

Use in potentially explosive atmospheres is prohibited, unless measures are expressly taken to make it possible.

The ambient conditions must comply with all the specifications on the nameplate.

## 2.5 Other applicable documentation

The following publications and documents have to be observed as well:

- Wiring diagrams provided with the gearmotor
- "Gear Unit Series R..7, F..7, K..7, S..7, SPIROPLAN® W" operating instructions
- "DR.71 – 225, 315 AC Motors" operating instructions

## 2.6 Transport/storage

Inspect the shipment for any damage that may have occurred in transit as soon as you receive the delivery. Inform the shipping company immediately. It may be necessary to preclude startup.

Tighten the eyebolts securely. They are designed to only carry the weight of the motor/ gearmotor; do not attach any additional loads.

The built-in lifting eyebolts comply with DIN 580. Always observe the loads and regulations listed in this standard. If the gearmotor is equipped with two eyebolts, then both of these should be used for transportation. In this case, the tension force vector of the slings must not exceed a 45° angle according to DIN 580.

Use suitable, sufficiently rated handling equipment if required. Reattach these in the case of further transportation.

Store the drive and the coupling in a dry, dust-free environment if they are not to be installed straight away. The drive and the coupling can be stored for one year without requiring any special measures before startup.

## 2.7 Installation

Make sure that the supports are even, the foot and flange mounting is correct and if there is direct coupling, align with precision. Resonances between the rotational frequency and the double network frequency caused by the structure are to be avoided. Release the brake (if installed), turn rotor manually, check for unusual grinding noise. Check the direction of rotation in decoupled status.

Only install or remove belt pulleys and couplings using suitable devices (heat up) and cover with a touch guard. Avoid improper belt tension.

Make the pipe connections that may eventually be required. Mounting positions with shaft ends pointing upwards should be equipped with a cover to prevent foreign objects from falling into the fan. Ensure that ventilation openings are not obstructed and that used air, including air from adjacent units, cannot be drawn in again straight away.

Observe the notes in the "Mechanical Installation" section.

## 2.8 Electrical connection

All work may only be carried out by qualified personnel. During work, the low-voltage machine must be on standstill, enabled, and safeguarded against an accidental restart. This also applies to auxiliary circuits (e.g. anti-condensation heating or forced cooling fan).

Check that the motor is de-energized!

Exceeding the tolerances in EN 60034-1 (VDE 0530, part 1) – voltage + 5%, frequency + 2%, curve shape, symmetry – increases the heating and influences electromagnetic compatibility. Also comply with EN 50110 (where necessary, observe other applicable national regulations, such as DIN VDE 0105 for Germany).

Observe the wiring information and differing data on the nameplate as well as the wiring diagram in the terminal box.

The connection should be a continuous secure electrical connection (no protruding wire ends); use the cable end equipment intended for this purpose. Establish a secure protective earth connection. When the motor is connected, the distances to non-insulated and live parts must not be shorter than the minimum values according to IEC 60664 and national regulations. With low voltage, the distances should be no shorter than the following values, in compliance with IEC 60664:

| Nominal voltage $V_N$ | Distance |
|---|---|
| ≤ 500 V | 3 mm |
| ≤ 690 V | 5.5 mm |

The terminal box must be free of foreign objects, dirt and humidity. Unused cable entry openings and the box itself must be closed so that they are dust and water proof. Secure keys for test mode without output elements. When operating low-voltage machines with brakes, check that the brake is functioning correctly before startup.

Observe the notes in the "Electrical Installation" chapter.

## *2.9 Startup/operation*

Whenever changes to normal operation occur, such as increased temperatures, noise, vibrations, etc., you should determine the cause. Consult the manufacturer if required. Never deactivate protection devices, even in test mode. Switch off the motor if you are not sure.

Regularly clean air ducts in dusty or dirty environments.

# 3 Structure

## 3.1 Drive with AR.. friction coupling

Drives with a torque limiting coupling consist of a standard gear unit and motor/variable speed gearmotor with an adapter installed between them. This adapter accommodates the friction coupling. In gearmotors with a multi-stage gear unit, the torque limiting coupling may be located between the first and second gear units.

Via the friction lining [4] of the driving disk [3], the input friction hub [7] with cup springs [5] and slotted nut [6] drives the output coupling plate with connecting pin. On delivery, the slip torque is set individually according to the drive specifications.

### 3.1.1 W speed monitor

The following figure shows a drive with friction coupling and W: speed monitor

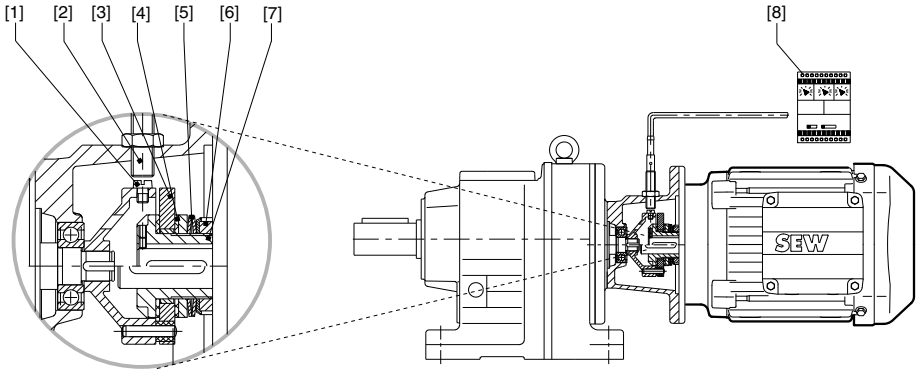


1901048587

| | | | | | |
|---|---|---|---|---|---|
| [1] | Trigger cam | [4] | Friction lining | [7] | Slip hub |
| [2] | Encoder | [5] | Spring washer | [8] | Speed monitor |
| [3] | Driving disk | [6] | Slotted nut | | |

The speed monitor [8] is used with constant-speed gearmotors and is connected to the encoder [2] in the adapter.

The speed of the coupling plate at the output end is picked up by an encoder [2] and passed on to a monitoring unit [8]. Speed monitors and slip monitors are used as monitoring units. You can install them together with contactors, safety devices, etc. on a 35 mm standard rail (according to DIN EN 50 022) in a control cabinet or mounted via 2 bores.

**INFORMATION**

For information on the W speed monitor, please refer to the separate operating instructions of the manufacturer.

### 3.1.2 WS slip monitor

The slip monitor [8] is used with the following components:

- speed-controlled motors with speed sensor
- VARIBLOC® variable-speed gear units

Input 1 of the slip monitor is connected to the encoder of the adapter. Depending on the application, either the encoder of the speed-controlled motor or the VARIBLOC® variable speed gear unit is connected to input 2 of the slip monitor.

the input and output speed is compared in order to determine the slip of the frictional coupling. The slip monitor compares the pulses from input 1 and input 2. Slip is signaled when the difference between the pulses within a certain cycle time exceeds the specified sensitivity value.

The following figure shows an adapter with friction torque and WS slip monitor for speed-controlled motors:

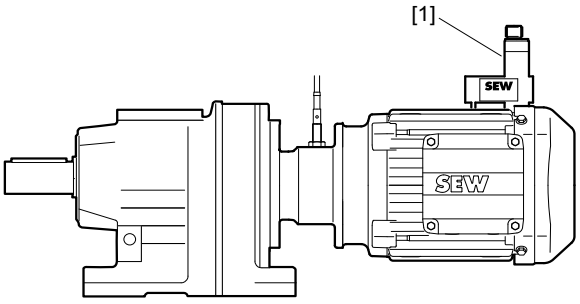


1901140235

[1] Encoder

For speed-controlled motors with speed sensor, the slip monitor (input 2) is connected to the encoder [1].

The following figure shows an adapter with friction torque and WS slip monitor for VARIBLOC®:

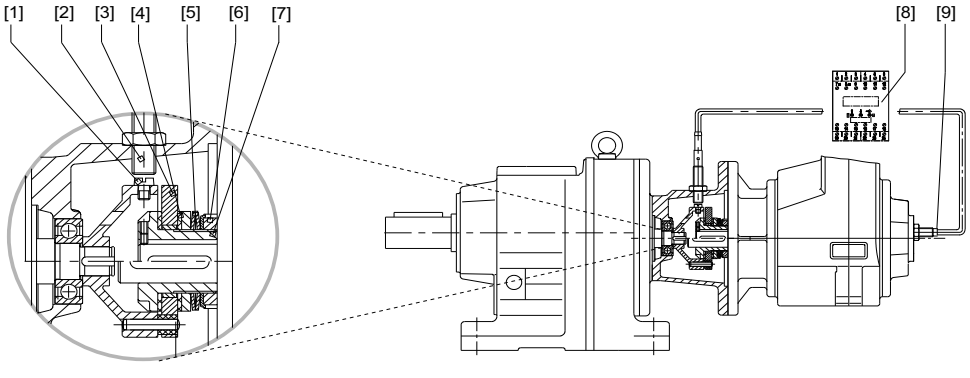


1901054731

| | | | | | |
|---|---|---|---|---|---|
| [1] | Trigger cam | [4] | Friction lining | [7] | Slip hub |
| [2] | Encoder | [5] | Spring washer | [8] | Slip monitor |
| [3] | Driving disk | [6] | Slotted nut | [9] | Encoder IG |

**INFORMATION**

For information on the WS slip monitor, refer to the separate operating instructions of the manufacturer.

## *3.2 Drive with AT.. hydraulic centrifugal coupling*

The following figure shows the structure of a drive with hydraulic centrifugal coupling:

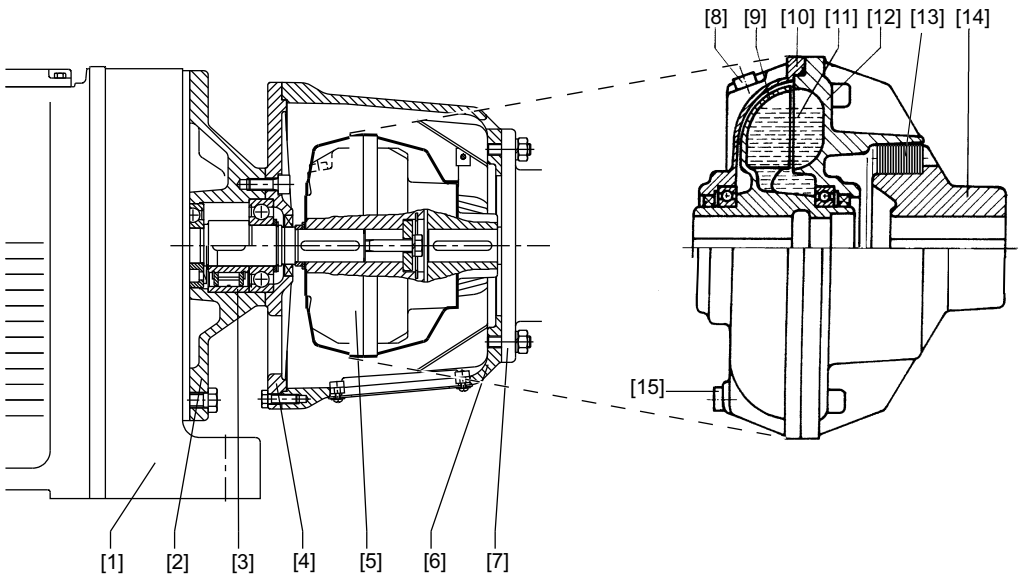


1901143691

[1] Gear unit
[2] Basic flange complete
[3] Backstop (optional)
[4] Intermediate flange
[5] Hydraulic centrifugal coupling
[6] Extended housing complete
[7] Motor
[8] Filler plug
[9] Turbine wheel
[10] Coupling half
[11] Operating fluid (hydraulic oil)
[12] Pump wheel
[13] Elastic components
[14] Flexible connecting coupling
[15] Fusible safety plug

Hydraulic centrifugal couplings are fluid couplings based on the Föttinger principle. They consist of 2 hinged hemispheres with blades separated by a tight gap.

The applied torque is transmitted by the inertial force of the streaming fluid. This fluid circulates within a closed circuit, between the pump wheel (primary side) [12] on the driving shaft (motor shaft) and the turbine wheel (secondary side) [9] on the driven shaft (gear unit input shaft).

A speed difference (slip) is required in order to maintain the oil circulation, and thus to transmit the torque. The hydraulic centrifugal coupling will not transmit torque if the slip is zero.

The following figure shows the structure of a drive with hydraulic centrifugal coupling and BM(G) brake:

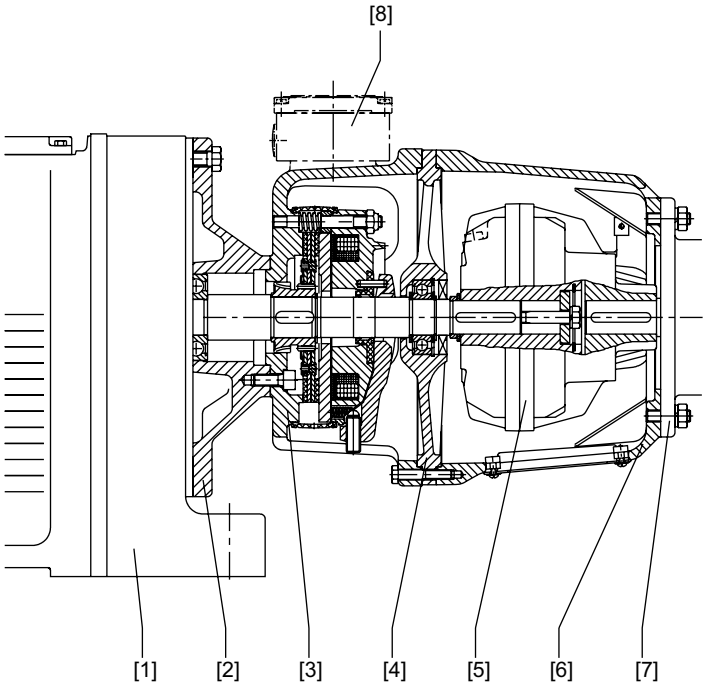


[1] Gear unit
[2] Basic flange complete
[3] Brake bearing flange with integrated brake complete
[4] Bearing flange
[5] Hydraulic centrifugal coupling
[6] Extended housing complete
[7] Motor
[8] Terminal box, brake

## 3.3 Nameplate

### 3.3.1 Adapter AR..

The following figure shows a sample nameplate for AR.. adapters:

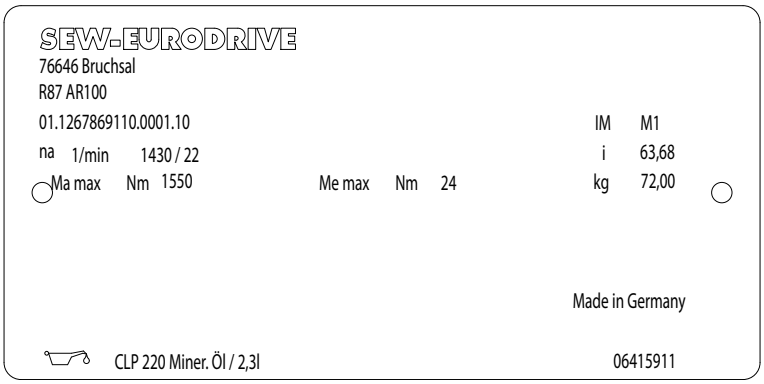


3542422667

| | | | |
|---|---|---|---|
| $n_a$ | Permitted maximum input speed/output speed in rpm | IM | Mounting position |
| $M_{amax}$ | Permitted maximum output torque in Nm | i | Gear unit reduction ratio |
| $M_{emax}$ | Permitted maximum input torque in Nm | kg | Weight |

### 3.3.2 Adapter AT..

The following figure shows a sample nameplate for AT.. adapters:

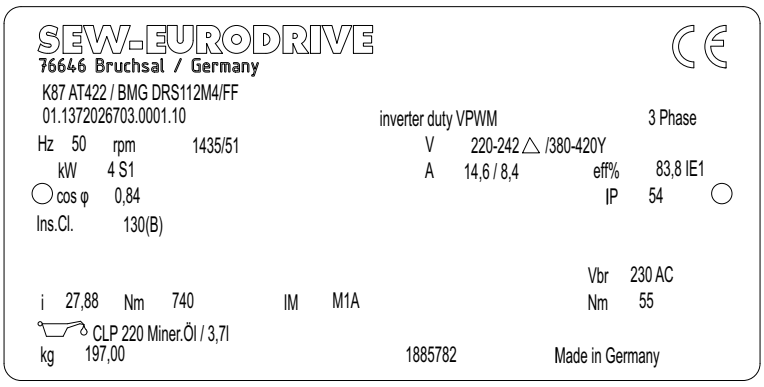


3540692747

| | | | |
|---|---|---|---|
| f | Frequency in Hz | $M_{apk}$ | Permitted maximum output torque in Nm |
| $n_{epk}$ | Permitted maximum input speed/output speed in rpm | IM | Mounting position |
| $P_N$ | Nominal power $P_N$ in kW | ⅄ / △ | Connection type |
| S | Operating mode | I | Current in A |
| cos φ | Power factor | eff% | Efficiency |
| Iso.Kl | Thermal class | IE | Efficiency class Standard Efficiency |
| i | Gear unit reduction ratio | IP | Degree of protection |

## 3.4 Unit designation

### 3.4.1 Adapter AR..

An AR.. adapter, for example, has the following type designation:

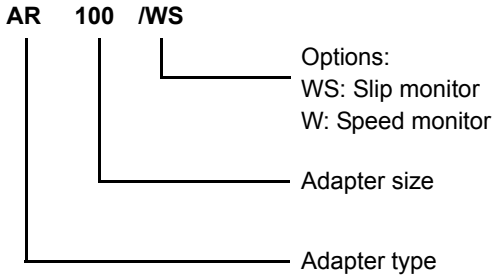


### 3.4.2 Adapter AT..

An AT.. adapter, for example, has the following type designation:

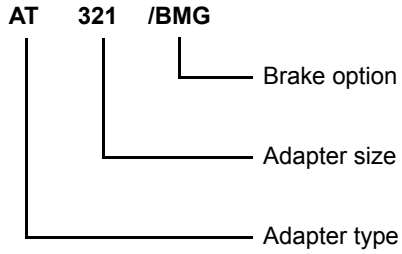

# 4 Mechanical Installation

## 4.1 Required tools/resources

- Standard tools
- Spanner wrench
- Mounting/dismantling tool
- Torque wrench

## 4.2 Prerequisites for assembly



**⚠ CAUTION**

Risk of injury due to protruding gear unit parts.

Minor injuries.

- Keep a sufficient safety distance to the gear unit/gearmotor.

## 4.3 Drive with AR.. friction coupling



**⚠ NOTICE**

Improper assembly may cause damages to the gear unit and the coupling.

Possible damage to property

- Do closely observe the notes in this chapter.

- Make sure that the machine is at standstill before you work on the gear unit and the coupling. Secure the drive unit against unintentional power-up.
- Protect the gear unit from direct cold air currents. Condensation may cause water to accumulate in the oil.

### 4.3.1 Encoder installation

1. Remove the fan guard from the driving motor
2. Slowly turn the motor and adapter shaft end until you can see a control cam (= head of the pan head screw) in the tapped hole.
3. Screw in the encoder until contact is made with the control cam.
4. Turn the encoder [1] back by 2 turns (corresponds to a clearance of 2 mm)

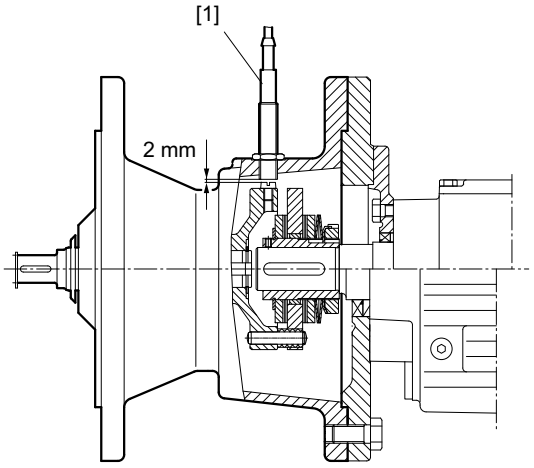


1901850507

5. Secure the encoder with a lock nut on the outside of the encoder.
6. Check: Slowly turn the motor and adapter shaft end.

   The encoder is installed correctly if the control cams do not contact the encoder.
7. Mount fan guard.

### 4.3.2 Connecting monitoring devices



**⚠ WARNING**

Interference voltages due to improper cabling.

Severe or fatal injuries.

- Do not lay incoming cables in multicore cables.
- Do not exceed the maximum cable length of 500 m at a cross section of 1.5 $mm^2$.
- Use shielded cables if there is a risk of interference from power current or control cables and if the lines are longer than 10 m.

1. Encoder connection

   **For version with W speed monitor:**

   - Connect the encoder of the adapter to the speed monitor.
     - via three-core cable

   → Encoder generates 1 pulse per revolution

   **For version with WS slip monitor:**

   - Connect the encoders of the adapter and motor to the slip monitor.
     - Encoder of the adapter to terminals 4, 5, 6 (input 1) using a three-core cable
     - With speed-controlled motor:

       Encoder to terminals 5, 6, 11 (Input 2) via three-core cable
     - with VARIBLOC®:

       Encoder to terminals 5, 6, 11 (Input 2) via three-core cable

   → Depending on the respective encoder, the motor encoder generates the following pulses per revolution

| Encoder type | EI71 | EI72 | EI76 | NV11 | NV12 | NV16 |
|---|---|---|---|---|---|---|
| Motors | DR.71 – 132 | | | DT71 – DV132S | | |
| Pulse(s) | 1 | 2 | 6 | 1 | 2 | 6 |

2. Connect the speed or slip monitor according to the manufacturer instructions (refer to the enclosed operating instructions).

## 4.4 Drive with AT.. hydraulic centrifugal coupling



**⚠ NOTICE**

Improper assembly may cause damages to the gear unit and the coupling.

Possible damage to property

- Do closely observe the notes in this chapter.

- Make sure that the machine is at standstill before you work on the gear unit and the coupling. Secure the drive unit against unintentional power-up.
- Protect the gear unit and the coupling from direct cold air currents. Condensation may cause water to accumulate in the oil.

### 4.4.1 Brake connection



**INFORMATION**

Comply with the applicable regulations issued by the relevant employer's liability insurance association regarding phase failure protection and the associated circuit/circuit modification!

The brake is released electrically. The brake is applied mechanically when the voltage is switched off.



**INFORMATION**

In view of the DC voltage to be switched and the high level of current load, it is essential to use either special brake contactors or AC contactors with contacts in utilization category AC-3 to EN 60947-4-1.

Proceed as follows to connect the brake:

1. Connect the brake according to the provided wiring diagram
2. **For variant with manual brake release:**
   - For variant with self-reengaging manual brake release: Screw in hand lever
   - For variant with lockable manual brake release: Screw in the setscrew

### 4.4.2 Brake control connection

The DC disk brake is powered from a brake control system with protection circuit. It is located in the terminal box/IS lower part or must be installed in the control cabinet. Observe the EMC notes in the "AC motors DR.71-225, 315" operating instructions.

1. Connect the brake controller according to the wiring diagram supplied with the brake.
2. Check cable cross sections – brake currents (see chapter "Technical Data" in the "AC motors DR.71-225, 315" manual)

# 5 Startup/Operation



**⚠ WARNING**

Thermal overload due to blocked drive.

Severe injuries.

- Switch off the drive immediately.



**⚠ WARNING**

Danger of burns and blindness due to spouting liquid from fusible screw plug.

Severe injuries.

- Switch off the drive immediately.
- Observe the permitted maximum ambient temperature.
- Wear safety goggles.
- Avoid contact with the lubricant



**⚠ WARNING**

Damage due to incorrect speed or incorrect coupling filling.

Possible injury.

- Do only operate the coupling with the fill quantity specified in the order confirmation.
- Never operate the coupling without lubricant.
- Consult SEW-EURODRIVE if you require a stationary operation with an operating point different from the specified one.
- The lubricant must correspond to the specifications in chapter "Lubricants".



**⚠ WARNING**

Danger of fire and explosion due to sparks caused by worn elastic components.

Serious injury.

- Check elastic components regularly and replace them if necessary.



**⚠ WARNING**

Damage due to high speeds.

Possible injury.

- Provide for a device that safely prevents excessive speeds, e.g. brake or backstop.



**⚠ WARNING**

Irreparable damage to the bearings of the hydraulic centrifugal coupling due to insufficient lubrication.

Serious injury.

- In order to ensure the lubrication of the bearings of adapter types AT311 – AT542, the drive unit must be set to standstill once a week.



**NOTICE**

Possible damage and danger of fire due to lubrication spouting from the fusible screw plug.

Possible damage to the unit.

- Switch off the drive immediately.
- Protect adjacent electric devices with a splash guard.
- Avoid hot machine parts, heating devices, sparks or open fire in the vicinity of fusible screw plugs.
- Immediately remove leaked oil and solder of the fusible screw and provide for a catch basin if required.
- Replace the fusible screw plug and the lubricant once the fusible screw plug has triggered.



**NOTICE**

Thermal overload during the starting phase of the coupling.

Potential damage to property

- Make sure to provide for sufficient breaks between the starting phases.
- Set coupling to standstill at least once a week.



**INFORMATION**

Make sure that the heat caused by the power loss is ≤ the heat that can be dissipated for the corresponding speed. The temperature mainly depends on the local operating conditions (frequency of starts, ambient temperature, design of the fusible screw plug) and should not exceed -90 °C in continuous operation.

**Prior to startup, make sure that**

- all parts of the drive and the coupling (especially the protective covers) have been mounted properly.
- all connections are have been established properly.
- the drive is not blocked.
- no other sources of danger are present.
- the switching time between star and delta is a short as possible (2 – 5 s) if you operate the drive in star-delta connection.
- **for hydraulic centrifugal coupling:**

  that the fill quantity is correct after a longer storage period. The required oil quantity is specified on the order confirmation.

## 5.1 Drive with AR.. friction coupling

### 5.1.1 Setting the W speed monitor

The following figure shows the front of the speed monitor:

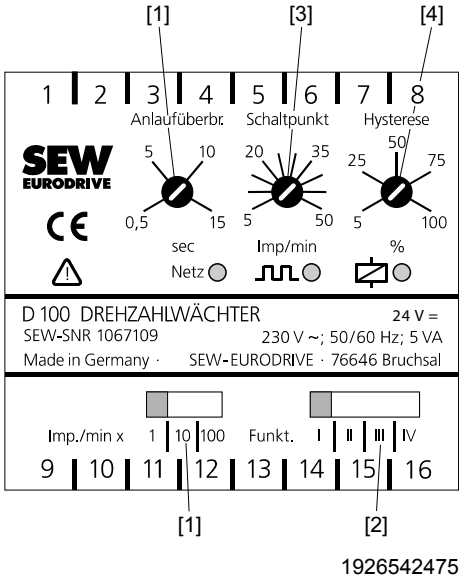


1926542475

[1] Switching speed
[2] Switching function
[3] Starting lag
[4] Hysteresis

1. Perform settings on the speed monitor according to the following table:

| Settings | | Description | Setting measures / values |
|---|---|---|---|
| [1] | Switching speed | allows for an exact setting of the desired value<br>Note:<br>If the drive stalls, you can achieve the shortest possible slip times by setting the switching speed slightly below the rated speed. | Rough adjustment with step switch (1, 10, 100)<br>Fine adjustment with potentiometer (5 – 50)<br>Example:<br>Step switch "100", potentiometer setting "13":<br>Switching speed = 100 x 13 = 1300 Imp/min |
| [2] | Switching function | Defines the properties of monitoring function II = speed below set speed; the LED lights up when relay has picked up. | setting to function II |
| [3] | Starting lag | You can avoid error messages during motor startup by setting a delay. | – |
| [4] | Hysteresis | Difference between the switch-on and switch-off point of the relay. | monitoring of the speed undercut: Potentiometer setting "5%" |

2. **Functional check**: Set the switching speed on the potentiometer in monitoring electronics. The value must exceed the rated speed.

   → The setting is correct if the relay in the speed monitor triggers.

LED messages:

| LED | Message |
|---|---|
| 1 | lights up when relay has picked up |
| 2 | lights up if there is an input pulse |
| 3 | lights up if operating voltage is correct. |

*Relay position*

| Function | Relay position | | |
|---|---|---|---|
| | when speed is | | for normal operation and start bypass |
| | exceeded | too low | |
| I | | 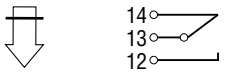  | 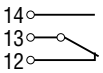  |
| II | | 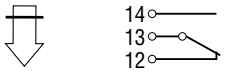  | 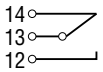  |
| III | 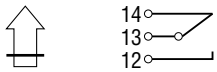  | | 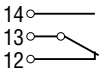  |
| IV | 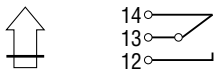  | | 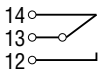  |

### 5.1.2 Setting the WS slip monitor

**INFORMATION**

- The specified parameters are recommendations for safe operation. Depending on the type of control of the existing plant, you may have to adjust the parameters.
- Observe the operating instructions of the slip monitor.

The parameters mentioned below cause a fast cut-off in the event of the slightest slip. If slip is intended temporarily during normal operation of the system, for instance with short torque impulses caused by load fluctuations, then the parameters must be modified accordingly.

The x in some parameter designations stands as placeholder for sensor input 1 or 2.

- The encoder of the adapter is connected to input 1.
- The encoder of the variable-speed gear unit or frequency-controlled motor is connected to input 2.

| Parameters | Meaning | Value | Factory setting | Comment |
|---|---|---|---|---|
| FOx | Switching function of outputs 1 and 2 | F4 | Yes | Relay picked-up in normal operation and during start bypass. |
| CTx | Cycle time | 0.0 (s) | Yes | |
| NCx | Number of trigger cams | NC1 1<br>NC2 2 | No | Setting for operation of the adapter with VARIBLOC® variable-speed gear unit |
| | Number of trigger cams | NC1 1 | No | Setting for operation of the adapter with motor. Number of pulses of input 2 depends on the proximity switch used on the motor (page 20). |
| | | NC2 . | No | |
| STP | Start bypass time | 3.0 (s) | No | Output relay remains picked-up during that time in order to allow for coupling slip during the start of a plant without cut-off.<br>Under favorable conditions, i.e. with low external mass moments of inertia and low drive utilization in normal operation, this time can be reduced or even set to 0.0 s. This has to be evaluated vie tests under nominal load. |
| SOP | Memory function of the outputs | 1 | No | With this setting, after a cut-off, the outputs are reset via a reset on the front of the speed monitor. This function may have to be adapted to the respective plant control and processes. |
| OPP | Simultaneous switching of outputs 1 and 2 | 1 | No | Both outputs drop in the event of slip. |
| DIM | Display format | 0 | Yes | Display in rpm |
| VER | Software version | - | - | Query option regarding the installed software version |
| SPx | Max. number of differential pulses | 1 | Yes | Slip is signaled after a differential pulse |
| DTx | Delay time of the outputs | 0.0 (s) | Yes | No switch-off delay |
| FTx | Impulse relay function | 0.0 (s) | Yes | Impulse time not active |

# 6 Inspection/Maintenance

## *6.1 Preliminary work*

Observe the following notes before you start with the inspection/maintenance work.



**⚠ WARNING**

Risk of crushing if the drive starts up unintentionally.

Severe or fatal injuries.

- Disconnect the gearmotor from the power supply before starting work and protect it against unintentional re-start.



**⚠ WARNING**

Danger of burns due to hot gear unit, hot coupling and hot gear unit oil.

Severe injuries.

- Let the gear unit cool and the coupling down before you begin with your work.
- Only remove the oil level and oil drain plug very carefully.



**NOTICE**

Filling in the wrong gear unit or coupling oil may result in significantly different lubricant characteristics.

Potential damage to property

- Do not mix different synthetic lubricants and do not mix synthetic with mineral lubricants.
- Mineral oil is used as standard lubricant.
- The lubricant must correspond to the specifications in chapter "Lubricants".



**NOTICE**

Improper maintenance may cause damages to the gear unit and the coupling.

Possible damage to property.

- All work on the gear unit and the coupling may only be carried out by qualified personnel.
- Observe the notes in this chapter.

- Use original spare parts only.
- Strict adherence to the inspection and maintenance intervals is absolutely necessary to ensure safe working conditions.
- Before releasing shaft connections, be sure that there are no active torsional moments present (tensions within the system).
- Prevent foreign bodies from entering into the gear unit and the coupling during the maintenance/inspection work.

- Do not clean the gear unit and the coupling with a high-pressure cleaning system as water might enter and the seals might be damaged.
- Perform safety and function tests following all maintenance and repair work.

## *6.2 Inspection and maintenance intervals*

| Unit / unit part | Time interval | Required steps | Chapter |
|---|---|---|---|
| Hydraulic centrifugal coupling | every 500 operating hours, at the latest after 3 months. | Check drive for irregularities. | – |
| | 3 months after startup at the latest, then annually, however, after 4000 hours of operation at the latest[1)] | replace worn elastic components of the coupling if required. | see, "Adjusting and changing elastic components" (page 33) |
| | after 5 years | Change elastic components | see, "Adjusting and changing elastic components" (page 33) |
| | every 15000 hours of operation | Inspect oil and change it if necessary | see "Inspecting/changing the oil" (page 34) |
| Adapter with centrifugal coupling with brake BM(G) | The periods of wear are affected by many factors and may be short.<br>Calculate the required inspection/maintenance intervals in accordance with the project planning documents. | Inspect the brake<br>• Working air gap<br>• Brake disk<br>Suck off any abrasion<br>Inspect the switch elements and replace them if necessary (e.g. in case of burn-out) | see "Removing the hydraulic centrifugal coupling" (page 36) and operating instructions "AC Motors DR.71 – 225, 315" |
| Adapter with frictional coupling | at least every 3 000 hours of operation | Inspect and replace the friction lining and cup springs, adjust the slip torque if necessary | See "Inspection/maintenance of the drive with AR.. frictional coupling" (page 29) |

1) Should you, based on the existing wear, expect the elastic components to show a wear of 80% of the tabular value (page 33) by the next check, you have to replace the elastic components or plan shorter maintenance intervals. Observe increased wear due to changing operating conditions.

## 6.3 Drive with AR.. friction coupling

### 6.3.1 Inspecting/replacing the friction lining, adjusting the slip torque



**⚠ WARNING**

Risk of crushing if the drive starts up unintentionally.

Severe or fatal injuries.

- Before starting work, isolate the motor and, if installed, the forced cooling fan from the power supply.
- Safeguard against accidental startup.
- Carefully observe the steps described below.

Use a torque wrench with a suitable connection piece for checking and adjusting the slip torque, see table (page 31) for setting values.

The following figure shows the structure of the frictional coupling:

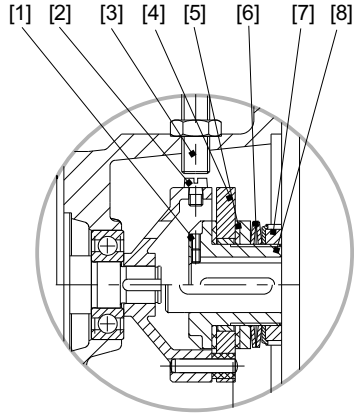


1926826763

| | | | |
|---|---|---|---|
| [1] | Locking screw | [5] | Friction lining |
| [2] | Cylinder head screw | [6] | Spring washer |
| [3] | Proximity switch | [7] | Slotted nut |
| [4] | Friction disk | [8] | Slip hub |

The following figure shows the rough torque adjustment:

**AR71 – 115**

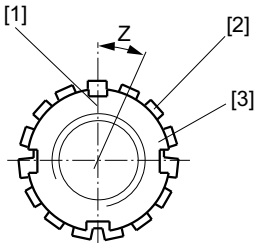


**AR132 – 195**

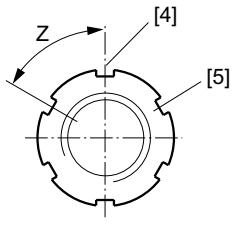


1926829451

| | | | |
|---|---|---|---|
| [1] | Marking | [4] | Markings (driving disk) |
| [2] | Lock washer (cam) | [5] | Slotted nut |
| [3] | Slotted nut | | |

1. Disconnect the motor/variable speed gearmotor from the adapter
2. Unscrew the safety screw [1], pull the friction hub [8] off the shaft extension.
3. Clamp the friction hub [8] in a vise.
4. **with AR 71 – 115:** Unscrew the lock washer [10].

   **with AR 132 – 195:** Unscrew the clamping screw on the slotted round nut [7]
5. Loosen the slotted round nut until you can easily adjust the frictional coupling manually.
6. **with AR 71 – 115:** Mark the position of the slotted round nut [11].

   **with AR 132 – 195:** Mark the driving disk [12].
7. Unscrew and remove the slotted round nut, remove the cup springs [6].

   Important: Note the sequence of the cup springs.
8. Inspect the friction lining [5]: replace if worn.

   ⚠ **NOTICE** Irreparable damage to the surface due to lubricant on the friction surface.

   Potential damage to property.

   - Do not allow any lubricants to get onto the friction surface.
9. Inspect the cup springs [6]: replace if burned out.
10. Reinstall the cup springs [6] (in the same sequence as before).
11. Screw on the slotted round nut up to the mark.
12. Measure and adjust if required

    **with a torque wrench**

    - Connect the torque wrench to the hole in the hub
    - Measure the torque (in both directions), if necessary readjust using the slotted round nut

    **Rough adjustment without torque wrench**

    - Use the hook spanner to set the torque limiting coupling.
    - Slip torque according to value "Z" (see the following table), calculated from the marking

      **with AR 71 – 115:** = Number of cams on the lock washer

      **with AR 132 – 195:** = Number of slots in the slotted nut
13. Secure the slotted round nut with the lock washer or clamping screw.
14. Proceed the other way round to assemble the drive.

### 6.3.2 Slip torques AR..

| Adapter type | Cup springs | | | Setting range in | No. of cams or slots "Z" | | | | | | | | | | | | | | | | | | | | | |
|---|---|---|---|---|---|---|---|---|---|---|---|---|---|---|---|---|---|---|---|---|---|---|---|---|---|---|
| | Number | Thickness in mm | Sequence [1] | Nm | 1 | 2 | 3 | 4 | 5 | 6 | 7 | 8 | 9 | 10 | 11 | 12 | 13 | 14 | 15 | 16 | 17 | 18 | 19 | 20 | 21 |
| | | | | | Slip torque $M_R$ in Nm | | | | | | | | | | | | | | | | | | | | |
| AR71 | 4 | 0.6 | 1 | 1.0-2.0 | | | | | | 1.0 | 1.4 | 1.6 | 1.8 | 2.0 | | | | | | | | | | | |
| | | | 2 | 2.1-4.0 | | | | | | 2.1 | - | 2.4 | 2.6 | 3.2 | 3.4 | 3.8 | 4 | | | | | | | | |
| | 3 | | 3 | 4.1-6.0 | | | 4.1 | 5.0 | 5.8 | 6.0 | | | | | | | | | | | | | | | |
| AR80 | 4 | 0.6 | 1 | 1.0-2.0 | | | | | | 1.0 | 1.4 | 1.6 | 2.8 | 2.0 | | | | | | | | | | | |
| | | | 2 | 2.1-4.0 | | | | | | 2.1 | - | 2.4 | 2.6 | 3.2 | 3.4 | 3.8 | 4.0 | | | | | | | | |
| | 3 | | 3 | 4.1-6.0 | | | 4.1 | 5.0 | 5.8 | 6.0 | | | | | | | | | | | | | | | |
| | 4 | 0.9 | 2 | 6.1-16 | | | | 6.0 | 8.0 | 9.0 | 10 | 11 | 12 | 13 | 14 | 15 | 16 | | | | | | | | |
| AR85 AR90 AR95 | 4 | 0.6 | 2 | 2.0-4.0 | | | | 2.0 | 2.4 | 3.0 | 3.6 | 3.8 | 4.0 | | | | | | | | | | | | |
| | 3 | | 3 | 4.1-6.0 | | | 4.1 | 5.0 | 5.8 | 6.0 | | | | | | | | | | | | | | | |
| | 4 | 0.9 | 2 | 6.1-16 | | | | 6.0 | 8.0 | 9.0 | 10 | 11 | 12 | 13 | 14 | 15 | 16 | | | | | | | | |
| | 2 | 1.1 | 3 | 17-24 | | | 16 | 20 | 24 | | | | | | | | | | | | | | | | |
| AR100 | 6 | 0.7 | 2 | 5.0-13 | | | | | | | 5.0 | 6.0 | 8.0 | 9.0 | 10 | 11 | 12 | 13 | | | | | | | |
| AR105 AR112 AR115 | 2 | 1.45 | 2 | 14-35 | | | | | | 14 | 16 | 17 | 18 | 20 | 22 | 23 | 24 | 26 | 27 | 28 | - | 30 | 31 | 32 | 35 |
| | | | 3 | 36-80 | | | | | | 36 | 41 | 45 | 48 | 54 | 58 | 60 | | | | | | | | | |
| AR132S/M AR132ML AR135 AR145 | 4 | 1.5 | 1 | 15-32 | | | | 15 | 18 | 22 | 24 | 26 | - | 28 | 30 | 32 | | | | | | | | | |
| | | | 2 | 33-65 | | | 33 | 40 | 50 | 58 | 67 | | | | | | | | | | | | | | |
| | | | 3 | 66-130 | | 68 | 100 | 120 | 135 | | | | | | | | | | | | | | | | |
| AR160 | 4 | 1.5 | 1 | 30-45 | | | | | | | | | | 32 | 36 | 38 | 40 | 41 | 42 | 40 | 44 | 45 | | | |
| | | | 2 | 46-85 | | | 46 | 48 | 60 | 65 | 70 | 75 | 80 | 85 | | | | | | | | | | | |
| | 2 | 2.7 | 2 | 86-200 | | | | | 86 | 90 | 110 | 125 | 135 | 150 | 160 | 180 | 190 | 200 | | | | | | | |
| AR165 AR180 | 4 | 1.5 | 1 | 30-45 | | | | | | | | | | 32 | 36 | 38 | 40 | 41 | 42 | 44 | 45 | | | | |
| | | | 2 | 46-85 | | | 40 | 48 | 60 | 65 | 70 | 75 | 80 | 85 | | | | | | | | | | | |
| AR185 AR195 | 2 | 2.7 | 2 | 86-200 | | | | | 86 | 90 | 110 | 125 | 135 | 150 | 160 | 170 | 180 | 190 | 200 | | | | | | |
| | | | 3 | 201-300 | | | 200 | 280 | 300 | | | | | | | | | | | | | | | | |

1) For sequence of cup springs, refer to the legend below

1 Double alternating sequence ()()
2 Alternating sequence ()
3 Aligned sequence ))

### 6.3.3 Replacing the encoder of the adapter



**⚠ WARNING**

Risk of crushing if the drive starts up unintentionally.

Severe or fatal injuries.

- Before starting work, isolate the motor and, if installed, the forced cooling fan from the power supply.
- Safeguard against accidental startup.
- Carefully observe the steps described below.

The switching output of the encoder is contactless, thus the service life is not limited by the switching frequency. Proceed as follows if you have to replace it anyway:

1. Remove the fan guard from the driving motor.
2. Remove the encoder connection.
3. Loosen the lock nut on the encoder and remove the old encoder.
4. Install the new encoder, see chapter "Assembly" > "Installing the encoder" (page 19)
5. Connect the encoder to the speed and slip monitor.
6. Mount fan guard.

## *6.4 Drive with AT.. hydraulic centrifugal coupling*

### 6.4.1 Tightening torques of the screws

The following figure shows an AT..centrifugal coupling:

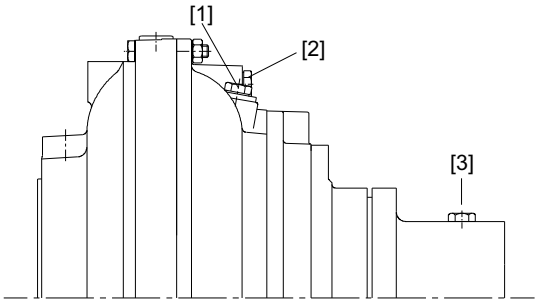


[1] Filler screw
[2] Fusible screw plug
[3] Retaining screw

The hydraulic centrifugal coupling is equipped with fusible screw plugs, filling plugs and retaining screws. During maintenance, it is important to adhere to the tightening torques specified in the table below precisely to ensure the coupling is working and does not leak.

| Adapter type | Fusible screw plug | | | Filling plug | | Retaining screw | |
|---|---|---|---|---|---|---|---|
| | Screw size | Trigger temperature[1] [°C] / color | Tightening torques [Nm] | Screw size | Tightening torques [Nm] | Screw size | Tightening torques [Nm] |
| AT311 - 312 | M8 | (110 / Yellow) 140 / red (160 / Green) | 8 | M10 | 13 | M6 | 9 |
| AT321 - 522 | M10 | | 13 | M12x1.5 | 20 | M8 | 23 |
| AT541 - 542 | | | | M14x1.5 | 30 | M12 | 68 |

1) Fusible screw plugs for the temperatures in brackets are available on request

### 6.4.2 Check and replace elastic components

1. Turn the coupling until the elastic components are free from load.
2. Provide for markings on the coupling and the coupling half on the motor side.
3. Turn the coupling in the opposite direction until the elastic components are free from load.
4. Measure the distance between the markings in circumferential direction on the outside diameter of the coupling and the coupling half on the moor side.
5. Note down the measured distance.

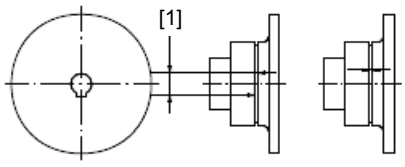


3374766347

[1] Measured distance

The following table shows the permitted distance values:

| Coupling size | Measured distance in mm |
|---|---|
| AT311, AT312 | < 6 |
| AT421, AT422, AT522 | < 6 |
| AT541, AT542 | < 8 |

You must replace the elastic components if the measured distance exceeds the listed values.

Proceed as follows to replace the elastic components:

1. Remove the motor.
2. Remove the old elastic components
3. Install new elastic components.
4. Reattach the motor.

### 6.4.3 Inspecting/changing the oil



**⚠ WARNING**

Risk of crushing if the drive starts up unintentionally.

Severe or fatal injuries.

- Before starting work, isolate the motor and, if installed, the forced cooling fan from the power supply.
- Safeguard against accidental startup.
- Carefully observe the steps described below.



**⚠ WARNING**

The surface temperatures on the coupling can be very high during operation.

Danger of burns.

- Let the motor and the coupling cool down before you start your work.

Only use hydraulic oils that correspond to the specified technical data (page 40).

1. Remove the cover, place a collecting vessel underneath
2. Remove the filling plug and the fusible screw plug for the air balance
3. Drain some oil at the filling plug or the fusible screw plug.
4. Check the oil properties.
   - Viscosity
   - Oil ageing
   - If OK, close the filling plug and the fusible screw plug and install the cover
5. **With horizontal coupling**
   - Turn the coupling until the hole of the filling plug is in a vertical position and drain old oil
   - fill in new oil
   - Screw in filling plug

   **With vertical coupling**
   - Drain old oil
   - Screw in filling plug
   - Fill in new oil via the opening of the fusible screw plug
6. Screw in fusible screw plug and install the cover.

### 6.4.4 Replacing defective fuses



**⚠ WARNING**

Risk of crushing if the drive starts up unintentionally.

Severe or fatal injuries.

- Before starting work, isolate the motor and, if installed, the forced cooling fan from the power supply.
- Safeguard against accidental startup.
- Carefully observe the steps described below.



**⚠ WARNING**

The surface temperatures on the coupling can be very high during operation.

Danger of burns.

- Let the motor and the coupling cool down before you start your work.

The fuse trips in the event of a malfunction of the working machine that causes the centrifugal coupling to heat up excessively. This empties the coupling housing, and prevents damage to the drive.

Proceed as follows to replace the fusible screw plugs:

1. Remove the cover, place a collecting vessel underneath
2. Remove the filling plug and the defective fusible screw plug.
3. drain the remaining oil
4. **With horizontal coupling**
   - Turn the coupling until the hole of the filling plug is in a vertical position
   - fill in new oil
   - Screw in filling plug

   **With vertical coupling**
   - Screw in filling plug
   - Fill in new oil via the opening of the fusible screw plug
5. Screw in new fusible screw plug

   Use original fuses (page 32) only.
6. Mount the cover, observe the tightening torques (page 32)

### 6.4.5 Replacing the hydraulic centrifugal coupling

**NOTICE**

Material damage or leakage due to improper coupling assembly.

Potential damage to property.

- Never install or remove the coupling via the housing.

The following figure shows how to remove the centrifugal coupling:

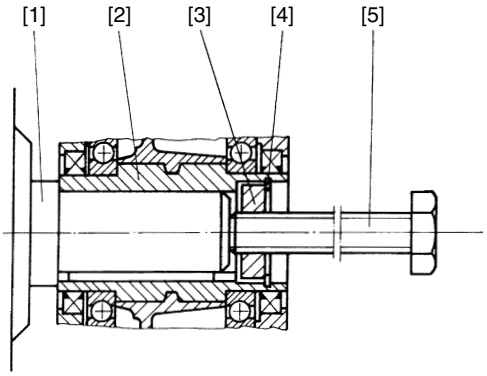


1926863371

[1] Gear unit input shaft
[2] Hydraulic centrifugal coupling (steel hub)
[3] Puller disk (holding disk)
[4] Retaining ring
[5] Threaded puller spindle

1. Remove drive motor.
2. Remove holding screw.
3. Use the mounting/dismantling tool to remove the coupling via the coupling hub.
4. **With brakemotors:** Brake inspection/maintenance, see "DR.71-225, 315 AC Motors" operating instructions.

The following figure shows how to install the centrifugal coupling:

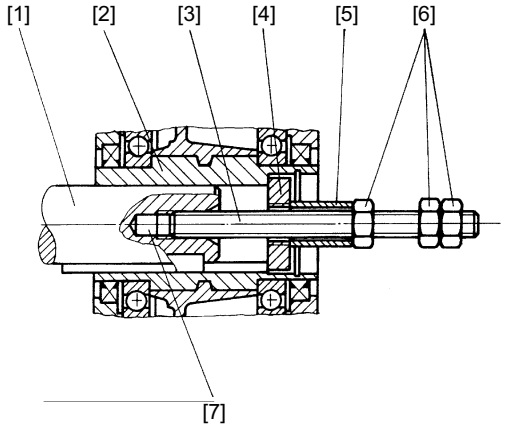


1926867979

[1] Gear unit input shaft
[2] Hydraulic centrifugal coupling
[3] Threaded pusher spindle
[4] Holding disk
[5] Spacer tube
[6] Hex nut
[7] Center hole in accordance with DIN 332, sheet 2

Proceed as follows to install the centrifugal coupling:

1. Mount the coupling.
2. Mount the holding disk.
3. Mount the drive motor.

# 7 Malfunctions

## 7.1 Drive with AR.. friction coupling – malfunctions

| Malfunction | Possible causes | Solution |
|---|---|---|
| No display | Encoder on adapter is defective | Measure input pulses,<br>• replace encoder of the adapter if required, see chapter "Inspection/ Maintenance", "Changing the encoder of the adapter" (page 32) |
| | For VARIBLOC® with slip monitor:<br>• Encoder defective<br>• Sensing distance of proximity switch too big<br>With speed-controlled motor:<br>• Encoder defective | • Replace encoder of the motor |
| Slip torque is not reached | Cup springs burned out or installed incorrectly after maintenance | Inspect cup springs, see chapter "Inspection/Maintenance", "Inspecting/replacing friction lining, adjusting the slip torque" (page 29) |
| | Friction lining worn | Inspect friction lining, see "Inspecting/ replacing friction lining, adjusting the slip torque" (page 29) |

## 7.2 Drive with AT.. hydraulic centrifugal coupling – malfunctions

| Malfunction | Possible causes | Solution |
|---|---|---|
| Drive does not start up | too little or too much oil | Check and correct filling, see "Inspecting/ changing the oil" (page 34) |
| Coupling heats up excessively | Too much slip at the coupling due to overload | Check motor current and reduce load if necessary |
| | too little or too much oil | Check and correct filling<br>see "Inspecting/changing the oil" (page 34) |
| Oil leaking | Defective fuse due to overheating | Check and replace fuse, see chapter "Inspection/Maintenance", "Replacing defective fuses" (page 35)<br>Replace lubricant<br>Remove cause of overheating |
| | Coupling leaking | Tighten the screws, observe the tightening torques<br>see chapter "Inspection/Maintenance", "Tightening torques" (page 32) |
| Significant wear of the elastic components of the hydraulic centrifugal coupling | Excessive temperatures | avoid/remove cause of excessive temperature<br>Check and replace elastic components (page 33) |
| | Contact with aggressive media | Avoid/remove aggressive media<br>Check and replace elastic components (page 33)<br>Check coupling parts for damages and replace them, if necessary |
| Wear or breakage of the coupling drivers | Worn elastic components | replace damaged coupling parts and check and replace elastic components (page 33)<br>Reduce maintenance intervals for elastic components |
| Plant with hydraulic centrifugal coupling does not run smoothly | Defective or worn elastic components | Check and replace elastic components (page 33) |

## 7.3 Customer service

**Have the following information to hand if you require the assistance of our customer service:**

- Nameplate data (complete)
- Type and extent of the problem
- Time the problem occurred and any accompanying circumstances
- Fill quantity specifications of the AT.. coupling (see order confirmation)
- Assumed cause
- Environmental conditions e.g.:
  - Ambient temperature
  - Humidity
  - Installation altitude
  - Dirt
  - etc.

## 7.4 Disposal

Dispose of the parts in accordance with the material structure and the regulations in force for instance as:

- Iron
- Aluminum
- Copper
- Plastics
- Electronic parts
- Oil and grease (not mixed with solvents)

# 8 Technical Data

## 8.1 Lubricants

On delivery, the couplings are filled with the required lubricant type and quantity.



**⚠ WARNING**

Tripping fusible screw plugs due to incorrect lubricant type or quantity.

Serious injury.

- Observe the fill quantity specified on the order confirmation.
- Observe the following specifications regarding hydraulic oils.

Only use hydraulic oils that comply with the specifications in the following table. Do not mix different lubricants. The required oil quantity is specified on the order confirmation.

| **Requirements for hydraulic oil** | |
|---|---|
| Viscosity | ISO VG 32 |
| Pour point | < -24 °C |
| Starting viscosity | < 15 000 $mm^2/s$ |
| Flash point | ≥ 180 °C / ≥ 200 °C[1)] |
| Raffinate | Highly age-resistant |
| Compatibility | NBR and FPM/FKM gaskets |

1) Fusible screw plug ≥ 160 °C

# 9 Address List

| Germany | | | |
|---|---|---|---|
| **Headquarters**<br>**Production**<br>**Sales** | **Bruchsal** | SEW-EURODRIVE GmbH & Co KG<br>Ernst-Blickle-Straße 42<br>D-76646 Bruchsal<br>P.O. Box<br>Postfach 3023 • D-76642 Bruchsal | Tel. +49 7251 75-0<br>Fax +49 7251 75-1970<br>http://www.sew-eurodrive.de<br>sew@sew-eurodrive.de |
| **Production / Industrial Gears** | **Bruchsal** | SEW-EURODRIVE GmbH & Co KG<br>Christian-Pähr-Str.10<br>D-76646 Bruchsal | Tel. +49 7251 75-0<br>Fax +49 7251 75-2970 |
| **Service Competence Center** | **Central** | SEW-EURODRIVE GmbH & Co KG<br>Ernst-Blickle-Straße 1<br>D-76676 Graben-Neudorf | Tel. +49 7251 75-1710<br>Fax +49 7251 75-1711<br>sc-mitte@sew-eurodrive.de |
| | **North** | SEW-EURODRIVE GmbH & Co KG<br>Alte Ricklinger Straße 40-42<br>D-30823 Garbsen (near Hannover) | Tel. +49 5137 8798-30<br>Fax +49 5137 8798-55<br>sc-nord@sew-eurodrive.de |
| | **East** | SEW-EURODRIVE GmbH & Co KG<br>Dänkritzer Weg 1<br>D-08393 Meerane (near Zwickau) | Tel. +49 3764 7606-0<br>Fax +49 3764 7606-30<br>sc-ost@sew-eurodrive.de |
| | **South** | SEW-EURODRIVE GmbH & Co KG<br>Domagkstraße 5<br>D-85551 Kirchheim (near München) | Tel. +49 89 909552-10<br>Fax +49 89 909552-50<br>sc-sued@sew-eurodrive.de |
| | **West** | SEW-EURODRIVE GmbH & Co KG<br>Siemensstraße 1<br>D-40764 Langenfeld (near Düsseldorf) | Tel. +49 2173 8507-30<br>Fax +49 2173 8507-55<br>sc-west@sew-eurodrive.de |
| | **Electronics** | SEW-EURODRIVE GmbH & Co KG<br>Ernst-Blickle-Straße 42<br>D-76646 Bruchsal | Tel. +49 7251 75-1780<br>Fax +49 7251 75-1769<br>sc-elektronik@sew-eurodrive.de |
| | **Drive Service Hotline / 24 Hour Service** | | +49 180 5 SEWHELP<br>+49 180 5 7394357 |
| | Additional addresses for service in Germany provided on request! | | |

| France | | | |
|---|---|---|---|
| **Production**<br>**Sales**<br>**Service** | **Haguenau** | SEW-USOCOME<br>48-54 route de Soufflenheim<br>B. P. 20185<br>F-67506 Haguenau Cedex | Tel. +33 3 88 73 67 00<br>Fax +33 3 88 73 66 00<br>http://www.usocome.com<br>sew@usocome.com |
| **Production** | **Forbach** | SEW-USOCOME<br>Zone industrielle<br>Technopôle Forbach Sud<br>B. P. 30269<br>F-57604 Forbach Cedex | Tel. +33 3 87 29 38 00 |
| **Assembly**<br>**Sales**<br>**Service** | **Bordeaux** | SEW-USOCOME<br>Parc d'activités de Magellan<br>62 avenue de Magellan - B. P. 182<br>F-33607 Pessac Cedex | Tel. +33 5 57 26 39 00<br>Fax +33 5 57 26 39 09 |
| | **Lyon** | SEW-USOCOME<br>Parc d'affaires Roosevelt<br>Rue Jacques Tati<br>F-69120 Vaulx en Velin | Tel. +33 4 72 15 37 00<br>Fax +33 4 72 15 37 15 |
| | **Nantes** | SEW-USOCOME<br>Parc d'activités de la forêt<br>4 rue des Fontenelles<br>F-44140 Le Bignon | Tel. +33 2 40 78 42 00<br>Fax +33 2 40 78 42 20 |

| France | | | |
|---|---|---|---|
| | **Paris** | SEW-USOCOME<br>Zone industrielle<br>2 rue Denis Papin<br>F-77390 Verneuil l'Etang | Tel. +33 1 64 42 40 80<br>Fax +33 1 64 42 40 88 |
| | Additional addresses for service in France provided on request! | | |

| Algeria | | | |
|---|---|---|---|
| **Sales** | **Alger** | REDUCOM Sarl<br>16, rue des Frères Zaghnoune<br>Bellevue<br>16200 El Harrach Alger | Tel. +213 21 8214-91<br>Fax +213 21 8222-84<br>info@reducom-dz.com<br>http://www.reducom-dz.com |

| Argentina | | | |
|---|---|---|---|
| **Assembly**<br>**Sales**<br>**Service** | **Buenos Aires** | SEW EURODRIVE ARGENTINA S.A.<br>Centro Industrial Garin, Lote 35<br>Ruta Panamericana Km 37,5<br>1619 Garin | Tel. +54 3327 4572-84<br>Fax +54 3327 4572-21<br>sewar@sew-eurodrive.com.ar<br>http://www.sew-eurodrive.com.ar |

| Australia | | | |
|---|---|---|---|
| **Assembly**<br>**Sales**<br>**Service** | **Melbourne** | SEW-EURODRIVE PTY. LTD.<br>27 Beverage Drive<br>Tullamarine, Victoria 3043 | Tel. +61 3 9933-1000<br>Fax +61 3 9933-1003<br>http://www.sew-eurodrive.com.au<br>enquires@sew-eurodrive.com.au |
| | **Sydney** | SEW-EURODRIVE PTY. LTD.<br>9, Sleigh Place, Wetherill Park<br>New South Wales, 2164 | Tel. +61 2 9725-9900<br>Fax +61 2 9725-9905<br>enquires@sew-eurodrive.com.au |

| Austria | | | |
|---|---|---|---|
| **Assembly**<br>**Sales**<br>**Service** | **Wien** | SEW-EURODRIVE Ges.m.b.H.<br>Richard-Strauss-Strasse 24<br>A-1230 Wien | Tel. +43 1 617 55 00-0<br>Fax +43 1 617 55 00-30<br>http://www.sew-eurodrive.at<br>sew@sew-eurodrive.at |

| Belarus | | | |
|---|---|---|---|
| **Sales** | **Minsk** | SEW-EURODRIVE BY<br>RybalkoStr. 26<br>BY-220033 Minsk | Tel.+375 17 298 47 56 / 298 47 58<br>Fax +375 17 298 47 54<br>http://www.sew.by<br>sales@sew.by |

| Belgium | | | |
|---|---|---|---|
| **Assembly**<br>**Sales**<br>**Service** | **Brussels** | **SEW Caron-Vector**<br>Research park Haasrode<br>Evenementenlaan 7<br>BE-3001 Leuven | Tel. +32 16 386-311<br>Fax +32 16 386-336<br>http://www.sew-eurodrive.be<br>info@sew-eurodrive.be |
| **Service Competence Center** | **Industrial Gears** | **SEW Caron-Vector**<br>Rue de Parc Industriel, 31<br>BE-6900 Marche-en-Famenne | Tel. +32 84 219-878<br>Fax +32 84 219-879<br>http://www.sew-eurodrive.be<br>service-wallonie@sew-eurodrive.be |
| | **Antwerp** | **SEW Caron-Vector**<br>Glasstraat, 19<br>BE-2170 Merksem | Tel. +32 3 64 19 333<br>Fax +32 3 64 19 336<br>http://www.sew-eurodrive.be<br>service-antwerpen@sew-eurodrive.be |

| Brazil | | | |
|---|---|---|---|
| **Production**<br>**Sales**<br>**Service** | **Sao Paulo** | SEW-EURODRIVE Brasil Ltda.<br>Avenida Amâncio Gaiolli, 152 - Rodovia Presidente Dutra Km 208<br>Guarulhos - 07251-250 - SP<br>SAT - SEW ATENDE - 0800 7700496 | Tel. +55 11 2489-9133<br>Fax +55 11 2480-3328<br>http://www.sew-eurodrive.com.br<br>sew@sew.com.br |

| Bulgaria | | | |
|---|---|---|---|
| **Sales** | **Sofia** | BEVER-DRIVE GmbH<br>Bogdanovetz Str.1<br>BG-1606 Sofia | Tel. +359 2 9151160<br>Fax +359 2 9151166<br>bever@mail.bg |

| Cameroon | | | |
|---|---|---|---|
| **Sales** | **Douala** | Electro-Services<br>Rue Drouot Akwa<br>B.P. 2024<br>Douala | Tel. +237 33 431137<br>Fax +237 33 431137<br>electrojemba@yahoo.fr |

| Canada | | | |
|---|---|---|---|
| **Assembly**<br>**Sales**<br>**Service** | **Toronto** | SEW-EURODRIVE CO. OF CANADA LTD.<br>210 Walker Drive<br>Bramalea, ON L6T 3W1 | Tel. +1 905 791-1553<br>Fax +1 905 791-2999<br>http://www.sew-eurodrive.ca<br>l.watson@sew-eurodrive.ca |
| | **Vancouver** | SEW-EURODRIVE CO. OF CANADA LTD.<br>Tilbury Industrial Park<br>7188 Honeyman Street<br>Delta, BC V4G 1G1 | Tel. +1 604 946-5535<br>Fax +1 604 946-2513<br>b.wake@sew-eurodrive.ca |
| | **Montreal** | SEW-EURODRIVE CO. OF CANADA LTD.<br>2555 Rue Leger<br>Lasalle, PQ H8N 2V9 | Tel. +1 514 367-1124<br>Fax +1 514 367-3677<br>a.peluso@sew-eurodrive.ca |
| | Additional addresses for service in Canada provided on request! | | |

| Chile | | | |
|---|---|---|---|
| **Assembly**<br>**Sales**<br>**Service** | **Santiago de Chile** | SEW-EURODRIVE CHILE LTDA.<br>Las Encinas 1295<br>Parque Industrial Valle Grande<br>LAMPA<br>RCH-Santiago de Chile<br>P.O. Box<br>Casilla 23 Correo Quilicura - Santiago - Chile | Tel. +56 2 75770-00<br>Fax +56 2 75770-01<br>http://www.sew-eurodrive.cl<br>ventas@sew-eurodrive.cl |

| China | | | |
|---|---|---|---|
| **Production**<br>**Assembly**<br>**Sales**<br>**Service** | **Tianjin** | SEW-EURODRIVE (Tianjin) Co., Ltd.<br>No. 46, 7th Avenue, TEDA<br>Tianjin 300457 | Tel. +86 22 25322612<br>Fax +86 22 25323273<br>info@sew-eurodrive.cn<br>http://www.sew-eurodrive.com.cn |
| **Assembly**<br>**Sales**<br>**Service** | **Suzhou** | SEW-EURODRIVE (Suzhou) Co., Ltd.<br>333, Suhong Middle Road<br>Suzhou Industrial Park<br>Jiangsu Province, 215021 | Tel. +86 512 62581781<br>Fax +86 512 62581783<br>suzhou@sew-eurodrive.cn |
| | **Guangzhou** | SEW-EURODRIVE (Guangzhou) Co., Ltd.<br>No. 9, JunDa Road<br>East Section of GETDD<br>Guangzhou 510530 | Tel. +86 20 82267890<br>Fax +86 20 82267922<br>guangzhou@sew-eurodrive.cn |
| | **Shenyang** | SEW-EURODRIVE (Shenyang) Co., Ltd.<br>10A-2, 6th Road<br>Shenyang Economic Technological Development Area<br>Shenyang, 110141 | Tel. +86 24 25382538<br>Fax +86 24 25382580<br>shenyang@sew-eurodrive.cn |
| | **Wuhan** | SEW-EURODRIVE (Wuhan) Co., Ltd.<br>10A-2, 6th Road<br>No. 59, the 4th Quanli Road, WEDA<br>430056 Wuhan | Tel. +86 27 84478388<br>Fax +86 27 84478389<br>wuhan@sew-eurodrive.cn |

| China | | | |
|---|---|---|---|
| | **Xi'An** | SEW-EURODRIVE (Xi'An) Co., Ltd.<br>No. 12 Jinye 2nd Road<br>Xi'An High-Technology Industrial Development Zone<br>Xi'An 710065 | Tel. +86 29 68686262<br>Fax +86 29 68686311<br>xian@sew-eurodrive.cn |
| | Additional addresses for service in China provided on request! | | |

| Colombia | | | |
|---|---|---|---|
| **Assembly**<br>**Sales**<br>**Service** | **Bogotá** | SEW-EURODRIVE COLOMBIA LTDA.<br>Calle 22 No. 132-60<br>Bodega 6, Manzana B<br>Santafé de Bogotá | Tel. +57 1 54750-50<br>Fax +57 1 54750-44<br>http://www.sew-eurodrive.com.co<br>sewcol@sew-eurodrive.com.co |

| Croatia | | | |
|---|---|---|---|
| **Sales**<br>**Service** | **Zagreb** | KOMPEKS d. o. o.<br>Zeleni dol 10<br>HR 10 000 Zagreb | Tel. +385 1 4613-158<br>Fax +385 1 4613-158<br>kompeks@inet.hr |

| Czech Republic | | | |
|---|---|---|---|
| **Sales** | **Prague** | SEW-EURODRIVE CZ S.R.O.<br>Business Centrum Praha<br>Lužná 591<br>CZ-16000 Praha 6 - Vokovice | Tel. +420 255 709 601<br>Fax +420 220 121 237<br>http://www.sew-eurodrive.cz<br>sew@sew-eurodrive.cz |

| Denmark | | | |
|---|---|---|---|
| **Assembly**<br>**Sales**<br>**Service** | **Copenhagen** | SEW-EURODRIVEA/S<br>Geminivej 28-30<br>DK-2670 Greve | Tel. +45 43 9585-00<br>Fax +45 43 9585-09<br>http://www.sew-eurodrive.dk<br>sew@sew-eurodrive.dk |

| Egypt | | | |
|---|---|---|---|
| **Sales**<br>**Service** | **Cairo** | Copam Egypt<br>for Engineering & Agencies<br>33 El Hegaz ST, Heliopolis, Cairo | Tel. +20 2 22566-299 + 1 23143088<br>Fax +20 2 22594-757<br>http://www.copam-egypt.com/<br>copam@datum.com.eg |

| Estonia | | | |
|---|---|---|---|
| **Sales** | **Tallin** | ALAS-KUUL AS<br>Reti tee 4<br>EE-75301 Peetri küla, Rae vald, Harjumaa | Tel. +372 6593230<br>Fax +372 6593231<br>veiko.soots@alas-kuul.ee |

| Finland | | | |
|---|---|---|---|
| **Assembly**<br>**Sales**<br>**Service** | **Lahti** | SEW-EURODRIVE OY<br>Vesimäentie 4<br>FIN-15860 Hollola 2 | Tel. +358 201 589-300<br>Fax +358 3 780-6211<br>http://www.sew-eurodrive.fi<br>sew@sew.fi |
| **Production**<br>**Assembly** | **Karkkila** | SEW Industrial Gears Oy<br>Valurinkatu 6, PL 8<br>FI-03600 Karkkila, 03601 Karkkila | Tel. +358 201 589-300<br>Fax +358 201 589-310<br>sew@sew.fi<br>http://www.sew-eurodrive.fi |

| Gabon | | | |
|---|---|---|---|
| **Sales** | **Libreville** | ESG Electro Services Gabun<br>Feu Rouge Lalala<br>1889 Libreville<br>Gabun | Tel. +241 741059<br>Fax +241 741059<br>esg_services@yahoo.fr |

| Great Britain | | | |
|---|---|---|---|
| **Assembly**<br>**Sales**<br>**Service** | **Normanton** | SEW-EURODRIVE Ltd.<br>Beckbridge Industrial Estate<br>P.O. Box No.1<br>Normanton, West-Yorkshire<br>WF6 1QR | Tel. +44 1924 893-855<br>Fax +44 1924 893-702<br>http://www.sew-eurodrive.co.uk<br>info@sew-eurodrive.co.uk |

| Greece | | | |
|---|---|---|---|
| **Sales**<br>**Service** | **Athens** | Christ. Boznos & Son S.A.<br>12, K. Mavromichali Street<br>P.O. Box 80136<br>GR-18545 Piraeus | Tel. +30 2 1042 251-34<br>Fax +30 2 1042 251-59<br>http://www.boznos.gr<br>info@boznos.gr |

| Hong Kong | | | |
|---|---|---|---|
| **Assembly**<br>**Sales**<br>**Service** | **Hong Kong** | SEW-EURODRIVE LTD.<br>Unit No. 801-806, 8th Floor<br>Hong Leong Industrial Complex<br>No. 4, Wang Kwong Road<br>Kowloon, Hong Kong | Tel. +852 36902200<br>Fax +852 36902211<br>contact@sew-eurodrive.hk |

| Hungary | | | |
|---|---|---|---|
| **Sales**<br>**Service** | **Budapest** | SEW-EURODRIVE Kft.<br>H-1037 Budapest<br>Kunigunda u. 18 | Tel. +36 1 437 06-58<br>Fax +36 1 437 06-50<br>office@sew-eurodrive.hu |

| India | | | |
|---|---|---|---|
| **Registered Office**<br>**Assembly**<br>**Sales**<br>**Service** | **Vadodara** | SEW-EURODRIVE India Private Limited<br>Plot No. 4, GIDC<br>POR Ramangamdi • Vadodara - 391 243<br>Gujarat | Tel. +91 265 3045200, +91 265 2831086<br>Fax +91 265 3045300, +91 265 2831087<br>http://www.seweurodriveindia.com<br>sales@seweurodriveindia.com<br>subodh.ladwa@seweurodriveindia.com |
| **Assembly**<br>**Sales**<br>**Service** | **Chennai** | SEW-EURODRIVE India Private Limited<br>Plot No. K3/1, Sipcot Industrial Park Phase II<br>Mambakkam Village<br>Sriperumbudur - 602105<br>Kancheepuram Dist, Tamil Nadu | Tel. +91 44 37188888<br>Fax +91 44 37188811<br>c.v.shivkumar@seweurodriveindia.com |

| Ireland | | | |
|---|---|---|---|
| **Sales**<br>**Service** | **Dublin** | Alperton Engineering Ltd.<br>48 Moyle Road<br>Dublin Industrial Estate<br>Glasnevin, Dublin 11 | Tel. +353 1 830-6277<br>Fax +353 1 830-6458<br>info@alperton.ie<br>http://www.alperton.ie |

| Israel | | | |
|---|---|---|---|
| **Sales** | **Tel-Aviv** | Liraz Handasa Ltd.<br>Ahofer Str 34B / 228<br>58858 Holon | Tel. +972 3 5599511<br>Fax +972 3 5599512<br>http://www.liraz-handasa.co.il<br>office@liraz-handasa.co.il |

| Italy | | | |
|---|---|---|---|
| **Assembly**<br>**Sales**<br>**Service** | **Solaro** | SEW-EURODRIVE di R. Blickle & Co.s.a.s.<br>Via Bernini,14<br>I-20020 Solaro (Milano) | Tel. +39 02 96 9801<br>Fax +39 02 96 799781<br>http://www.sew-eurodrive.it<br>sewit@sew-eurodrive.it |

| Ivory Coast | | | |
|---|---|---|---|
| **Sales** | **Abidjan** | SICA<br>Société industrielle & commerciale pour l'Afrique<br>165, Boulevard de Marseille<br>26 BP 1115 Abidjan 26 | Tel. +225 21 25 79 44<br>Fax +225 21 25 88 28<br>sicamot@aviso.ci |

| Japan | | | |
|---|---|---|---|
| **Assembly**<br>**Sales**<br>**Service** | **Iwata** | SEW-EURODRIVE JAPAN CO., LTD<br>250-1, Shimoman-no,<br>Iwata<br>Shizuoka 438-0818 | Tel. +81 538 373811<br>Fax +81 538 373855<br>http://www.sew-eurodrive.co.jp<br>sewjapan@sew-eurodrive.co.jp |

| Kazakhstan | | | |
|---|---|---|---|
| **Sales** | **Almaty** | ТОО "СЕВ-ЕВРОДРАЙВ"<br>пр.Райымбека, 348<br>050061 г. Алматы<br>Республика Казахстан | Тел. +7 (727) 334 1880<br>Факс +7 (727) 334 1881<br>http://www.sew-eurodrive.kz<br>sew@sew-eurodrive.kz |

| Latvia | | | |
|---|---|---|---|
| **Sales** | **Riga** | SIA Alas-Kuul<br>Katlakalna 11C<br>LV-1073 Riga | Tel. +371 6 7139253<br>Fax +371 6 7139386<br>http://www.alas-kuul.com<br>info@alas-kuul.com |

| Lebanon | | | |
|---|---|---|---|
| **Sales** | **Beirut** | Gabriel Acar & Fils sarl<br>B. P. 80484<br>Bourj Hammoud, Beirut | Tel. +961 1 510 532<br>Fax +961 1 494 971<br>ssacar@inco.com.lb |
| Jordan<br>Kuwait<br>Saudi Arabia<br>Syria | **Beirut** | Middle East Drives S.A.L. (offshore)<br>Sin El Fil.<br>B. P. 55-378<br>Beirut | Tel. +961 1 494 786<br>Fax +961 1 494 971<br>info@medrives.com<br>http://www.medrives.com |

| Lithuania | | | |
|---|---|---|---|
| **Sales** | **Alytus** | UAB Irseva<br>Statybininku 106C<br>LT-63431 Alytus | Tel. +370 315 79204<br>Fax +370 315 56175<br>info@irseva.lt<br>http://www.sew-eurodrive.lt |

| Luxembourg | | | |
|---|---|---|---|
| **Assembly**<br>**Sales**<br>**Service** | **Brussels** | **SEW Caron-Vector**<br>Research park Haasrode<br>Evenementenlaan 7<br>BE-3001 Leuven | Tel. +32 16 386-311<br>Fax +32 16 386-336<br>http://www.sew-eurodrive.be<br>info@sew-eurodrive.be |

| Malaysia | | | |
|---|---|---|---|
| **Assembly**<br>**Sales**<br>**Service** | **Johore** | SEW-EURODRIVE SDN BHD<br>No. 95, Jalan Seroja 39, Taman Johor Jaya<br>81000 Johor Bahru, Johor<br>West Malaysia | Tel. +60 7 3549409<br>Fax +60 7 3541404<br>sales@sew-eurodrive.com.my |

| Mexico | | | |
|---|---|---|---|
| **Assembly**<br>**Sales**<br>**Service** | **Quéretaro** | SEW-EURODRIVE MEXICO SA DE CV<br>SEM-981118-M93<br>Tequisquiapan No. 102<br>Parque Industrial Quéretaro<br>C.P. 76220<br>Quéretaro, México | Tel. +52 442 1030-300<br>Fax +52 442 1030-301<br>http://www.sew-eurodrive.com.mx<br>scmexico@seweurodrive.com.mx |

| Morocco | | | |
|---|---|---|---|
| **Sales** | **Casablanca** | Afit<br>Route D'El Jadida<br>KM 14 RP8<br>Province de Nouaceur<br>Commune Rurale de Bouskoura<br>MA 20300 Casablanca | Tel. +212 522633700<br>Fax +212 522621588<br>fatima.haquiq@premium.net.ma<br>http://www.groupe-premium.com |

| Netherlands | | | |
|---|---|---|---|
| **Assembly**<br>**Sales**<br>**Service** | **Rotterdam** | VECTOR Aandrijftechniek B.V.<br>Industrieweg 175<br>NL-3044 AS Rotterdam<br>Postbus 10085<br>NL-3004 AB Rotterdam | Tel. +31 10 4463-700<br>Fax +31 10 4155-552<br>http://www.vector.nu<br>info@vector.nu |

| New Zealand | | | |
|---|---|---|---|
| **Assembly**<br>**Sales**<br>**Service** | **Auckland** | SEW-EURODRIVE NEW ZEALAND LTD.<br>P.O. Box 58-428<br>82 Greenmount drive<br>East Tamaki Auckland | Tel. +64 9 2745627<br>Fax +64 9 2740165<br>http://www.sew-eurodrive.co.nz<br>sales@sew-eurodrive.co.nz |
| | **Christchurch** | SEW-EURODRIVE NEW ZEALAND LTD.<br>10 Settlers Crescent, Ferrymead<br>Christchurch | Tel. +64 3 384-6251<br>Fax +64 3 384-6455<br>sales@sew-eurodrive.co.nz |

| Norway | | | |
|---|---|---|---|
| **Assembly**<br>**Sales**<br>**Service** | **Moss** | SEW-EURODRIVE A/S<br>Solgaard skog 71<br>N-1599 Moss | Tel. +47 69 24 10 20<br>Fax +47 69 24 10 40<br>http://www.sew-eurodrive.no<br>sew@sew-eurodrive.no |

| Pakistan | | | |
|---|---|---|---|
| **Sales** | **Karachi** | Industrial Power Drives<br>Al-Fatah Chamber A/3, 1st Floor Central Commercial Area,<br>Sultan Ahmed Shah Road, Block 7/8,<br>Karachi | Tel. +92 21 452 9369<br>Fax +92-21-454 7365<br>seweurodrive@cyber.net.pk |

| Peru | | | |
|---|---|---|---|
| **Assembly**<br>**Sales**<br>**Service** | **Lima** | SEW DEL PERU MOTORES REDUCTORES S.A.C.<br>Los Calderos, 120-124<br>Urbanizacion Industrial Vulcano, ATE, Lima | Tel. +51 1 3495280<br>Fax +51 1 3493002<br>http://www.sew-eurodrive.com.pe<br>sewperu@sew-eurodrive.com.pe |

| Poland | | | |
|---|---|---|---|
| **Assembly**<br>**Sales**<br>**Service** | **Lodz** | SEW-EURODRIVE Polska Sp.z.o.o.<br>ul. Techniczna 5<br>PL-92-518 Łódź | Tel. +48 42 676 53 00<br>Fax +48 42 676 53 45<br>http://www.sew-eurodrive.pl<br>sew@sew-eurodrive.pl |
| | **24 Hour Service** | | Tel. +48 602 739 739<br>(+48 602 SEW SEW)<br>serwis@sew-eurodrive.pl |

| Portugal | | | |
|---|---|---|---|
| **Assembly**<br>**Sales**<br>**Service** | **Coimbra** | SEW-EURODRIVE, LDA.<br>Apartado 15<br>P-3050-901 Mealhada | Tel. +351 231 20 9670<br>Fax +351 231 20 3685<br>http://www.sew-eurodrive.pt<br>infosew@sew-eurodrive.pt |

| Romania | | | |
|---|---|---|---|
| **Sales**<br>**Service** | **Bucharest** | Sialco Trading SRL<br>str. Madrid nr.4<br>011785 Bucuresti | Tel. +40 21 230-1328<br>Fax +40 21 230-7170<br>sialco@sialco.ro |

| Russia | | | |
|---|---|---|---|
| **Assembly**<br>**Sales**<br>**Service** | **St. Petersburg** | ZAO SEW-EURODRIVE<br>P.O. Box 36<br>195220 St. Petersburg Russia | Tel. +7 812 3332522 +7 812 5357142<br>Fax +7 812 3332523<br>http://www.sew-eurodrive.ru<br>sew@sew-eurodrive.ru |

| Senegal | | | |
|---|---|---|---|
| **Sales** | **Dakar** | SENEMECA<br>Mécanique Générale<br>Km 8, Route de Rufisque<br>B.P. 3251, Dakar | Tel. +221 338 494 770<br>Fax +221 338 494 771<br>senemeca@sentoo.sn<br>http://www.senemeca.com |

| Serbia | | | |
|---|---|---|---|
| **Sales** | **Beograd** | DIPAR d.o.o.<br>Ustanicka 128a<br>PC Košum, IV floor<br>SCG-11000 Beograd | Tel. +381 11 347 3244 / +381 11 288 0393<br>Fax +381 11 347 1337<br>office@dipar.rs |

| Singapore | | | |
|---|---|---|---|
| **Assembly**<br>**Sales**<br>**Service** | **Singapore** | SEW-EURODRIVE PTE. LTD.<br>No 9, Tuas Drive 2<br>Jurong Industrial Estate<br>Singapore 638644 | Tel. +65 68621701<br>Fax +65 68612827<br>http://www.sew-eurodrive.com.sg<br>sewsingapore@sew-eurodrive.com |

| Slovakia | | | |
|---|---|---|---|
| **Sales** | **Bratislava** | SEW-Eurodrive SK s.r.o.<br>Rybničná 40<br>SK-831 06 Bratislava | Tel. +421 2 33595 202<br>Fax +421 2 33595 200<br>sew@sew-eurodrive.sk<br>http://www.sew-eurodrive.sk |
| | **Žilina** | SEW-Eurodrive SK s.r.o.<br>Industry Park - PChZ<br>ulica M.R.Štefánika 71<br>SK-010 01 Žilina | Tel. +421 41 700 2513<br>Fax +421 41 700 2514<br>sew@sew-eurodrive.sk |
| | **Banská Bystrica** | SEW-Eurodrive SK s.r.o.<br>Rudlovská cesta 85<br>SK-974 11 Banská Bystrica | Tel. +421 48 414 6564<br>Fax +421 48 414 6566<br>sew@sew-eurodrive.sk |
| | **Košice** | SEW-Eurodrive SK s.r.o.<br>Slovenská ulica 26<br>SK-040 01 Košice | Tel. +421 55 671 2245<br>Fax +421 55 671 2254<br>sew@sew-eurodrive.sk |

| Slovenia | | | |
|---|---|---|---|
| **Sales**<br>**Service** | **Celje** | Pakman - Pogonska Tehnika d.o.o.<br>UI. XIV. divizije 14<br>SLO - 3000 Celje | Tel. +386 3 490 83-20<br>Fax +386 3 490 83-21<br>pakman@siol.net |

| South Africa | | | |
|---|---|---|---|
| **Assembly**<br>**Sales**<br>**Service** | **Johannesburg** | SEW-EURODRIVE (PROPRIETARY) LIMITED<br>Eurodrive House<br>Cnr. Adcock Ingram and Aerodrome Roads<br>Aeroton Ext. 2<br>Johannesburg 2013<br>P.O.Box 90004<br>Bertsham 2013 | Tel. +27 11 248-7000<br>Fax +27 11 494-3104<br>http://www.sew.co.za<br>info@sew.co.za |

| South Africa | | | |
|---|---|---|---|
| | **Cape Town** | SEW-EURODRIVE (PROPRIETARY) LIMITED<br>Rainbow Park<br>Cnr. Racecourse & Omuramba Road<br>Montague Gardens<br>Cape Town<br>P.O.Box 36556<br>Chempet 7442<br>Cape Town | Tel. +27 21 552-9820<br>Fax +27 21 552-9830<br>Telex 576 062<br>cfoster@sew.co.za |
| | **Durban** | SEW-EURODRIVE (PROPRIETARY) LIMITED<br>2 Monaco Place<br>Pinetown<br>Durban<br>P.O. Box 10433, Ashwood 3605 | Tel. +27 31 700-3451<br>Fax +27 31 700-3847<br>cdejager@sew.co.za |
| | **Nelspruit** | SEW-EURODRIVE (PTY) LTD.<br>7 Christie Crescent<br>Vintonia<br>P.O.Box 1942<br>Nelspruit 1200 | Tel. +27 13 752-8007<br>Fax +27 13 752-8008<br>robermeyer@sew.co.za |

| South Korea | | | |
|---|---|---|---|
| **Assembly**<br>**Sales**<br>**Service** | **Ansan-City** | SEW-EURODRIVE KOREA CO., LTD.<br>B 601-4, Banweol Industrial Estate<br>1048-4, Shingil-Dong<br>Ansan 425-120 | Tel. +82 31 492-8051<br>Fax +82 31 492-8056<br>http://www.sew-korea.co.kr<br>master.korea@sew-eurodrive.com |
| | **Busan** | SEW-EURODRIVE KOREA Co., Ltd.<br>No. 1720 - 11, Songjeong - dong<br>Gangseo-ku<br>Busan 618-270 | Tel. +82 51 832-0204<br>Fax +82 51 832-0230<br>master@sew-korea.co.kr |

| Spain | | | |
|---|---|---|---|
| **Assembly**<br>**Sales**<br>**Service** | **Bilbao** | SEW-EURODRIVE ESPAÑA, S.L.<br>Parque Tecnológico, Edificio, 302<br>E-48170 Zamudio (Vizcaya) | Tel. +34 94 43184-70<br>Fax +34 94 43184-71<br>http://www.sew-eurodrive.es<br>sew.spain@sew-eurodrive.es |

| Sweden | | | |
|---|---|---|---|
| **Assembly**<br>**Sales**<br>**Service** | **Jönköping** | SEW-EURODRIVE AB<br>Gnejsvägen 6-8<br>S-55303 Jönköping<br>Box 3100 S-55003 Jönköping | Tel. +46 36 3442 00<br>Fax +46 36 3442 80<br>http://www.sew-eurodrive.se<br>jonkoping@sew.se |

| Switzerland | | | |
|---|---|---|---|
| **Assembly**<br>**Sales**<br>**Service** | **Basel** | Alfred Imhof A.G.<br>Jurastrasse 10<br>CH-4142 Münchenstein bei Basel | Tel. +41 61 417 1717<br>Fax +41 61 417 1700<br>http://www.imhof-sew.ch<br>info@imhof-sew.ch |

| Thailand | | | |
|---|---|---|---|
| **Assembly**<br>**Sales**<br>**Service** | **Chonburi** | SEW-EURODRIVE (Thailand) Ltd.<br>700/456, Moo.7, Donhuaroh<br>Muang<br>Chonburi 20000 | Tel. +66 38 454281<br>Fax +66 38 454288<br>sewthailand@sew-eurodrive.com |

| Tunisia | | | |
|---|---|---|---|
| **Sales** | **Tunis** | T. M.S. Technic Marketing Service<br>Zone Industrielle Mghira 2<br>Lot No. 39<br>2082 Fouchana | Tel. +216 79 40 88 77<br>Fax +216 79 40 88 66<br>http://www.tms.com.tn<br>tms@tms.com.tn |

| Turkey | | | |
|---|---|---|---|
| **Assembly**<br>**Sales**<br>**Service** | **Istanbul** | SEW-EURODRIVE<br>Hareket Sistemleri San. ve Tic. Ltd. Sti.<br>Bagdat Cad. Koruma Cikmazi No. 3<br>TR-34846 Maltepe ISTANBUL | Tel. +90 216 4419163 / 4419164<br>Fax +90 216 3055867<br>http://www.sew-eurodrive.com.tr<br>sew@sew-eurodrive.com.tr |

| Ukraine | | | |
|---|---|---|---|
| **Sales**<br>**Service** | **Dnepropetrovsk** | SEW-EURODRIVE<br>Str. Rabochaja 23-B, Office 409<br>49008 Dnepropetrovsk | Tel. +380 56 370 3211<br>Fax +380 56 372 2078<br>http://www.sew-eurodrive.ua<br>sew@sew-eurodrive.ua |

| United Arab Emirates | | | |
|---|---|---|---|
| **Sales**<br>**Service** | **Sharjah** | Copam Middle East (FZC)<br>Sharjah Airport International Free Zone<br>P.O. Box 120709<br>Sharjah | Tel. +971 6 5578-488<br>Fax +971 6 5578-499<br>copam_me@eim.ae |

| USA | | | |
|---|---|---|---|
| **Production**<br>**Assembly**<br>**Sales**<br>**Service**<br>**Corporate Offices** | **Southeast Region** | SEW-EURODRIVE INC.<br>1295 Old Spartanburg Highway<br>P.O. Box 518<br>Lyman, S.C. 29365 | Tel. +1 864 439-7537<br>Fax Sales +1 864 439-7830<br>Fax Manufacturing +1 864 439-9948<br>Fax Assembly +1 864 439-0566<br>Fax Confidential/HR +1 864 949-5557<br>http://www.seweurodrive.com<br>cslyman@seweurodrive.com |
| **Assembly**<br>**Sales**<br>**Service** | **Northeast Region** | SEW-EURODRIVE INC.<br>Pureland Ind. Complex<br>2107 High Hill Road, P.O. Box 481<br>Bridgeport, New Jersey 08014 | Tel. +1 856 467-2277<br>Fax +1 856 845-3179<br>csbridgeport@seweurodrive.com |
| | **Midwest Region** | SEW-EURODRIVE INC.<br>2001 West Main Street<br>Troy, Ohio 45373 | Tel. +1 937 335-0036<br>Fax +1 937 332-0038<br>cstroy@seweurodrive.com |
| | **Southwest Region** | SEW-EURODRIVE INC.<br>3950 Platinum Way<br>Dallas, Texas 75237 | Tel. +1 214 330-4824<br>Fax +1 214 330-4724<br>csdallas@seweurodrive.com |
| | **Western Region** | SEW-EURODRIVE INC.<br>30599 San Antonio St.<br>Hayward, CA 94544 | Tel. +1 510 487-3560<br>Fax +1 510 487-6433<br>cshayward@seweurodrive.com |
| | Additional addresses for service in the USA provided on request! | | |

| Venezuela | | | |
|---|---|---|---|
| **Assembly**<br>**Sales**<br>**Service** | **Valencia** | SEW-EURODRIVE Venezuela S.A.<br>Av. Norte Sur No. 3, Galpon 84-319<br>Zona Industrial Municipal Norte<br>Valencia, Estado Carabobo | Tel. +58 241 832-9804<br>Fax +58 241 838-6275<br>http://www.sew-eurodrive.com.ve<br>ventas@sew-eurodrive.com.ve<br>sewfinanzas@cantv.net |

| Vietnam | | | |
|---|---|---|---|
| **Sales** | **Ho Chi Minh City** | Nam Trung Co., Ltd<br>91 - 93 Tran Minh Quyen Street,<br>District 10, HCMC | Tel. +84 8 8301026<br>Fax +84 8 8392223<br>namtrungco@hcm.vnn.vn |



# Index


**A**

AC contactors ....21
Assembly
  Monitoring device ....20
AT centrifugal coupling ....14

**B**

Bearing lubrication ....22
Brake contactors ....21
Brake control connection ....21
Brake, BM(G) ....15

**C**

Cabling ....20
Centrifugal coupling
  Replacement ....36
  with BM(G) brake ....15
Centrifugal coupling AT ....21
Cleaning ....28
Connection
  Brake ....21
  Brake control ....21
  Slip monitor ....20
  Speed monitor ....20
Copyright ....6
Customer service ....39

**D**

Designated use ....8
Disposal ....39

**E**

Electrical connection ....10
Embedded safety notes ....5
Encoder ....12
  Switching output ....32
Encoder connection ....20
Encoder installation ....19
Errors
  Couplings ....38

**F**

Filling plug ....33
Fluid couplings ....14
Föttinger principle ....14
Friction coupling, AR ....12, 18
  Inspection and maintenance ....29
  Structure ....12
Friction lining
  Replacement ....29
Fuse
  Replacement ....35
  Screw ....32
Fusible screw plug ....22, 33

**G**

General safety notes ....7

**H**

Heating of the centrifugal coupling ....35
Hydraulic centrifugal coupling ....14, 21
  Inspection and maintenance ....32
  Replacement ....36
Hydraulic oils ....40
Hysteresis
  Setting ....24

**I**

Incremental encoder ....12, 13
Inspecting/changing the oil ....34
Inspection ....27
Inspection intervals ....28
Installation ....10
  AR friction coupling ....18
  AT hydraulic centrifugal coupling ....21
  Encoder ....19
Interference voltage
  Prevention ....20
Intervals for maintenance and inspection ....28

**L**

Leakage ....36
LEDs ....25
Lubricant properties ....27
Lubricants ....40
Lubrication, bearings ....22

**M**

Maintenance ....27
Maintenance intervals ....28

Malfunctions
Couplings ..... 38
Manual brake release ..... 21
Messages ..... 25
Monitoring device
Connection ..... 20

**N**

Nameplate ..... 16
Nomenclature ..... 17
Notes
Designation in the documentation ..... 5

**O**

Oil quantity ..... 23
Oils, lubricants ..... 40
Operating fluid ..... 40
Operating instructions, additional ..... 9
Overspeed, relay position ..... 25

**P**

Parameters ..... 26
Parameters for slip monitor ..... 26
Power loss ..... 23
Pulse encoder ..... 13

**R**

Relay position ..... 25
Replacing the encoder of the adapter ..... 32
Retaining screw ..... 33

**S**

Safety notes ..... 7
Designated use ..... 8
Designation in the documentation ..... 5
Electrical connection ..... 10
General information ..... 7
Installation ..... 10
Operation ..... 10
Structure of the embedded safety notes ..... 5
Structure of the section-related safety notes ..... 5
Transport ..... 9
Section-related safety notes ..... 5
Sensor input ..... 26
Setting
Slip monitor ..... 26
Shaft connections ..... 27
Signal words in the safety notes ..... 5
Slip ..... 13, 14, 26
Slip monitor
Setting ..... 26
WS ..... 13
Slip torque ..... 12, 31
Adjustment ..... 29
Spare parts ..... 27
Speed
Constant ..... 12
Controlled ..... 13
Speed monitor
Setting ..... 24
Structure ..... 12
Speed undercut, relay position ..... 25
Speed-controlled motors ..... 13
Start bypass ..... 25
Starting frequency ..... 32
Starting lag
Setting ..... 24
Starting up drives with friction coupling ..... 26
Startup ..... 22
Drive with friction coupling ..... 24
Storage time ..... 23
Switching function II
Setting ..... 24
Switching speed
Setting ..... 24
Switching time ..... 23

**T**

Temperature, fusible screw plug ..... 33
Tightening torques ..... 32
Tightness of the centrifugal coupling ..... 32
Tools ..... 18
Transport ..... 9

**U**

Unit designation ..... 17

**V**

Variable-speed gear unit ..... 13
VARIBLOC® ..... 13

**W**

Waste ..... 39
Wear of the elastic components ..... 28
Wiring diagrams, additional ..... 9








**SEW-EURODRIVE**
**Driving the world**

SEW-EURODRIVE GmbH & Co KG
P.O. Box 3023
D-76642 Bruchsal/Germany
Phone +49 7251 75-0
Fax +49 7251 75-1970
sew@sew-eurodrive.com

➞ **www.sew-eurodrive.com**

SEW EURODRIVE

# Revision



## AR.. and AT.. Start-up Coupling and Slip Clutch

Edition 08/2018

25835548/EN



# 1 Revision

## 1.1 Information

### INFORMATION

This revision contains additions or changes to the operating instructions "AR.. and AT.. Start-up Coupling and Slip Clutch", edition 12/2010, part number 17036011/EN:

- Tightening torques for motor/adapter mounting
- Chapter 5.1.1 "Setting speed monitor W" is replaced.

## 1.2 Tightening torques for motor/adapter mounting

Fasten the motors to the adapters with the following tightening torques:

| Screw size | Strength class | Tightening torque Nm |
|---|---|---|
| M5 | 8.8 | 7 |
| M6 | | 11 |
| M8 | | 27 |
| M10 | | 54 |
| M12 | | 93 |
| M16 | | 230 |

## 1.3 Setting the W speed monitor

1. Hysteresis/monitoring for speed undercut: Set the difference between switch-on point and switch-off point of the relay at the potentiometer to 5%.
2. **Functional test**: Set the switching speed on the potentiometer of the monitoring electronics. The value must be higher than the rated speed.

   → If the relay in the speed monitor responds, the settings are correct.

### INFORMATION

For further settings, refer to the attached operating instructions of the speed monitor.

25835548/EN – 08/2018

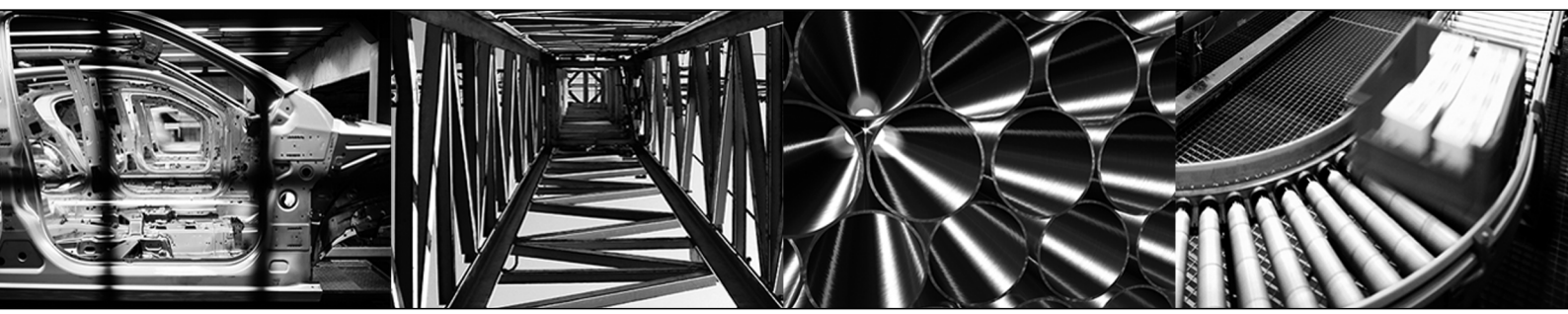



**SEW-EURODRIVE**
**Driving the world**

SEW-EURODRIVE GmbH & Co KG
Ernst-Blickle-Str. 42
76646 BRUCHSAL
GERMANY
Tel. +49 7251 75-0
Fax +49 7251 75-1970
sew@sew-eurodrive.com
➞ **www.sew-eurodrive.com**

# *SWAN*

## *AMI CODES-II, FREE CHLORINE ANALYZER*

LEFT BLANK

ANALYTICAL INSTRUMENTS

A-96.250.571 / 171120

# Operator's Manual

**Firmware V6.20 and higher**

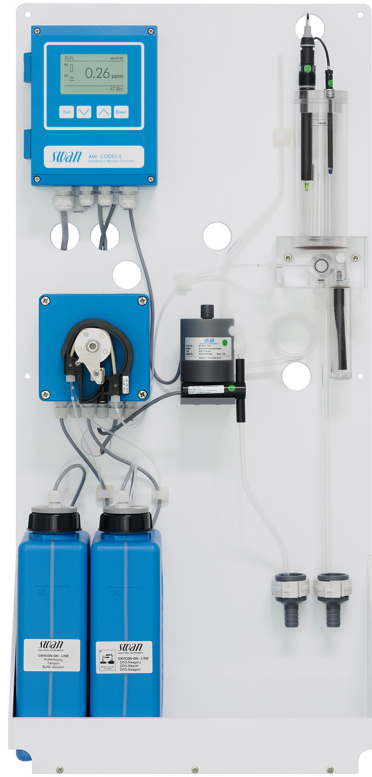

SWISS MADE

AMI Codes-II

**Customer Support**
Swan and its representatives maintain a fully trained staff of technical specialists around the world. For any technical question, contact your nearest Swan representative, or the manufacturer:

Swan Analytische Instrumente AG
Studbachstrasse 13
8340 Hinwil
Switzerland

Internet: www.swan.ch
E-mail: support@swan.ch

**Document Status**

| **Title:** | AMI Codes-II Operator's Manual | |
|---|---|---|
| **ID:** | A-96.250.571 | |
| **Revision** | **Issue** | |
| 00 | April 2010 | |
| 01 | June 2010 | |
| 02 | Aug. 2013 | Update to Rev. 5.30, mainboard V2.4 |
| 03 | June 2016 | Update to Rev. 6.00, mainboard V2.5 |
| 04 | June 2020 | Mainboard V2.6 |

© 2020, Swan Analytische Instrumente AG, Switzerland, all rights reserved.

The information contained in this document is subject to change without notice.

## Table of Contents


**1. Safety Instructions . . . . . 6**
1.1. Warning Notices . . . . . 7
1.2. General Safety Regulations . . . . . 9
1.3. Restrictions for use . . . . . 10

**2. Product Description . . . . . 11**
2.1. Instrument Specification . . . . . 15
2.2. Instrument Overview . . . . . 17

**3. Installation . . . . . 18**
3.1. Installation Check List . . . . . 18
3.2. Mounting of Instrument Panel . . . . . 19
3.3. Connecting Sample and Waste . . . . . 19
3.3.1 FEP Tube at Sample Inlet . . . . . 19
3.3.2 FEP Tube at Sample Outlet . . . . . 20
3.4. Installation of Flow Cell . . . . . 21
3.5. Install the pH Option . . . . . 22
3.5.1 pH as Option ex works . . . . . 22
3.5.2 pH Option as Retrofit Kit . . . . . 23
3.6. Electrical Connections . . . . . 26
3.6.1 Connection Diagram . . . . . 28
3.6.2 Power Supply . . . . . 29
3.7. Input . . . . . 30
3.8. Relay Contacts . . . . . 30
3.8.1 Alarm Relay . . . . . 30
3.8.2 Relay 1 and 2 . . . . . 31
3.9. Signal Outputs . . . . . 33
3.9.1 Signal Output 1 and 2 (current outputs) . . . . . 33
3.10 Interface Options . . . . . 33
3.10.1 Signal Output 3 . . . . . 34
3.10.2 Profibus, Modbus Interface . . . . . 34
3.10.3 HART Interface . . . . . 35
3.10.4 USB Interface . . . . . 35

**4. Instrument Setup . . . . . 36**
4.1. Prepare Reagents . . . . . 36
4.2. Peristaltic Pump . . . . . 36
4.3. Establish Sample Flow . . . . . 37
4.4. Fill or Flush Reagent System . . . . . 38
4.5. Programming . . . . . 38
4.6. Calibration . . . . . 39

**5. Operation . . . . . 40**
5.1. Keys . . . . . 40
5.2. Display . . . . . 41
5.3. Software Structure . . . . . 42
5.4. Changing Parameters and values . . . . . 43

**6. Maintenance . . . . . 44**
6.1. Maintenance Schedule . . . . . 44
6.2. Stop of Operation for Maintenance . . . . . 45
6.3. Refill or replace Reagents . . . . . 46
6.3.1 Reagents for Free Chlorine, Chlorine Dioxide, Bromine and Iodine . . . . . 49
6.3.2 Reagents for Measuring Monochloramine and Ozone . . . . . 50
6.4. Verification . . . . . 51
6.5. Calibration . . . . . 52
6.6. Cleaning the protective Filter . . . . . 55
6.7. Cleaning the Photometer . . . . . 56
6.8. Cleaning the Flow Cell . . . . . 57
6.8.1 Disassemble the Flow Cell . . . . . 57
6.8.2 Assemble the Flow Cell . . . . . 58
6.9. Maintenance of pH sensor . . . . . 59
6.10. Tube Replacement . . . . . 60
6.10.1 Replace the Pump Tubes . . . . . 60
6.10.2 Replace the Reagent Tubes . . . . . 62
6.11. Longer Stop of Operation . . . . . 63

**7. Troubleshooting . . . . . 64**
7.1. General Instructions . . . . . 64
7.2. Calibration Errors . . . . . 65
7.2.1 Process calibration DIS . . . . . 65
7.2.2 Process pH . . . . . 65
7.2.3 Standard pH . . . . . 65
7.3. Error List . . . . . 66
7.4. Opening the peristaltic pump housing . . . . . 70
7.5. Replacing Fuses . . . . . 71

**8. Program Overview . . . . . 72**
8.1. Messages (Main Menu 1) . . . . . 72
8.2. Diagnostics (Main Menu 2) . . . . . 72
8.3. Maintenance (Main Menu 3) . . . . . 74
8.4. Operation (Main Menu 4) . . . . . 75
8.5. Installation (Main Menu 5) . . . . . 75

**9. Program List and Explanations . . . . . 78**
1 Messages . . . . . 78
2 Diagnostics . . . . . 78
3 Maintenance . . . . . 80
4 Operation . . . . . 83
5 Installation . . . . . 84
**10. Material Safety Data sheets . . . . . 97**
10.1. Reagents . . . . . 97
**11. Default Values . . . . . 98**
**12. Index . . . . . 101**
**13. Notes . . . . . 103**

# AMI Codes-II–Operator's Manual

This document describes the main steps for instrument setup, operation and maintenance.

## 1. Safety Instructions

**General**

The instructions included in this section explain the potential risks associated with instrument operation and provide important safety practices designed to minimize these risks.
If you carefully follow the information contained in this section, you can protect yourself from hazards and create a safer work environment.
More safety instructions are given throughout this manual, at the respective locations where observation is most important. Strictly follow all safety instructions in this publication.

**Target audience**

Operator: Qualified person who uses the equipment for its intended purpose.
Instrument operation requires thorough knowledge of applications, instrument functions and software program as well as all applicable safety rules and regulations.

**OM Location**

Keep the AMI Operator's Manual in proximity of the instrument.

**Qualification, Training**

To be qualified for instrument installation and operation, you must:

- read and understand the instructions in this manual as well as the Material Safety Data Sheets.
- know the relevant safety rules and regulations.

## 1.1. Warning Notices

The symbols used for safety-related notices have the following meaning:



**DANGER**

Your life or physical wellbeing are in serious danger if such warnings are ignored.

- Follow the prevention instructions carefully.



**WARNING**

Severe injuries or damage to the equipment can occur if such warnings are ignored.

- Follow the prevention instructions carefully.



**CAUTION**

Damage to the equipment, minor injury, malfunctions or incorrect process values can be the consequence if such warnings are ignored.

- Follow the prevention instructions carefully.

**Mandatory Signs**

The mandatory signs in this manual have the following meaning:



Safety goggles



Safety gloves

**Warning Signs** The warning signs in this manual have the following meaning:


Electrical shock hazard


Corrosive


Harmful to health


Flammable


Warning general


Attention general

## 1.2. General Safety Regulations

**Legal Requirements**

The user is responsible for proper system operation. All precautions must be followed to ensure safe operation of the instrument.

**Spare Parts and Disposables**

Use only official SWAN spare parts and disposables. If other parts are used during the normal warranty period, the manufacturer's warranty is voided.

**Modifications**

Modifications and instrument upgrades shall only be carried out by an authorized Service Technician. SWAN will not accept responsibility for any claim resulting from unauthorized modification or alteration.



**WARNING**

**Electrical Shock Hazard**

If proper operation is no longer possible, the instrument must be disconnected from all power lines, and measures must be taken to prevent inadvertent operation.

- To prevent from electrical shock, always make sure that the ground wire is connected.
- Service shall be performed by authorized personnel only.
- Whenever electronic service is required, disconnect instrument power and power of devices connected to.
  - relay 1,
  - relay 2,
  - alarm relay



**WARNING**

For safe instrument installation and operation you must read and understand the instructions in this manual.



**WARNING**

Only SWAN trained and authorized personnel shall perform the tasks described in this document.

## 1.3. Restrictions for use

The sample must not contain any particles, which may block the flow cell. Sufficient sample flow is coercive for the correct function of the instrument.
If the sample contains only little disinfectant concentrations, or there is the danger of biological growth, we recommend to use the optional Cleaning module from Swan.

**WARNING**



**Health hazard**

Some reagents are etching and can cause severe burns or eye damage.

- For safe handling of the reagents you must read and understand the instructions in this manual, as well as the Material Safety Data Sheets (MSDS)

**Download MSDS**

The current Material Safety Data Sheets (MSDS) for the below listed Reagents are available for downloading at **www.swan.ch**.

- OXYCON ON-LINE DPD
- OXYCON ON-LINE Buffer
- OXYCON ON-LINE KI
- Buffer solution pH 4
- Buffer solution pH 7
- Buffer solution pH 9

# 2. Product Description

**Application Range**

The AMI Codes-II analyzer is a complete monitoring system for the automatic, continuous measurement and dosing control of chlorine and other disinfectants based on the DPD colorimetric method AWWA 4500 Cl-G and on EN ISO 7393-2.
It can be used for measuring disinfectants in:

- Potable water
- Swimming pools
- Cooling water
- Effluent
- Seawater

It is also applicable for water containing additives like corrosion inhibitors, cyanuric acids and antiscalants.
For the determination of free chlorine, chlorine dioxide, bromine and iodine the reagents:

- Oxycon on-line DPD
- Oxycon on-line Buffer

are needed.
The measurement of monochloramine or ozone requires an additional reagent:

- Oxycon on-line KI; which is added to Oxycon on-line Buffer

**Disinfectant Measurement**

| Disinfectant | Measuring range | Accuracy |
|---|---|---|
| **Ozone** | 0.05–1.00 ppm | ±0.01 ppm |
| **HOCl / free chlorine / Monochloramine** | 0.00–1.00 ppm<br>1.00–3.00 ppm<br>3.00–5.00 ppm | ±0.01 ppm<br>±0.06 ppm<br>±0.20 ppm |
| **Chlorine dioxide / Iodine / Bromine** | 0.00–2.00 ppm<br>2.00–6.00 ppm | ±0.02 ppm<br>±0.12 ppm |

**Signal Outputs**

Two signal outputs programmable for measured values (freely scaleable, linear or bilinear) or as continuous control output (control parameters programmable).
Current loop: 0/4–20 mA
Maximal burden: 510 Ω
Third signal output available as an option. The third signal output can be operated as a current source or as a current sink (selectable via switch).

| | |
|---|---|
| **Relay** | Two potential-free contacts programmable as limit switches for measuring values, controllers or timer for system cleaning with automatic hold function. Both contacts can be set as normally open or normally closed with a jumper.<br>Maximum load: 1 A/250 VAC |
| **Alarm Relay** | One potential free contact.<br>Alternatively:<br>◆ Open during normal operation, closed on error and loss of power.<br>◆ Closed during normal operation, open on error and loss of power.<br>Summary alarm indication for programmable alarm values and instrument faults. |
| **Input** | For potential-free contact to freeze the measuring value or to interrupt control in automated installations (hold function or remote-off) |
| **Special Feature** | Possibility to interrupt the measurement by activating the input. See Program List and Explanation, 5.3.4, p. 94. |
| **Safety Features** | No data loss after power failure. All data is saved in non-volatile memory. Over voltage protection of in- and outputs. Galvanic separation of measuring inputs and signal outputs. |
| **Communication Interface (optional)** | ◆ USB Interface for logger download<br>◆ Third signal output (can be used in parallel to the USB interface)<br>◆ RS485 with Fieldbus protocol Modbus or Profibus DP<br>◆ HART interface |
| **pH** | Optional pH measurement is possible (pH correction or calibration). |
| **Relay Box** | The AMI Relay Box is designed for the direct power supply and activation of dosing devices which are controlled with an AMI transmitter, e. g. to connect two solenoid valves or one motor valve for disinfectant addition. |
| **Cleaning Module** | Optional module for automatic chemical cleaning. |

**Fluidics**

The sample flows through the sample inlet [F] and the filter vessel [G] into the constant head [A]. Adjust the flow regulating valve [D] so that always a small part of the sample flows through the overflow tube [B] into the drain [H]. A part of the sample flows through the photometer inlet [C] into the mixing chamber [E], where the reagents [J] and [K] are added by the peristaltic pump [O] and mixed with the sample. The mixed sample flows through the photometer [N] and disinfectant is measured. If KI and buffer are mixed in the reagent canister [K] monochloramine is measured.

After the measurement the sample flows through the outlet of the photometer where it will be aerated through air inlet [P] to generate bubbles. Then the sample flows through the bubble detector [M] into the photometer drain [I].

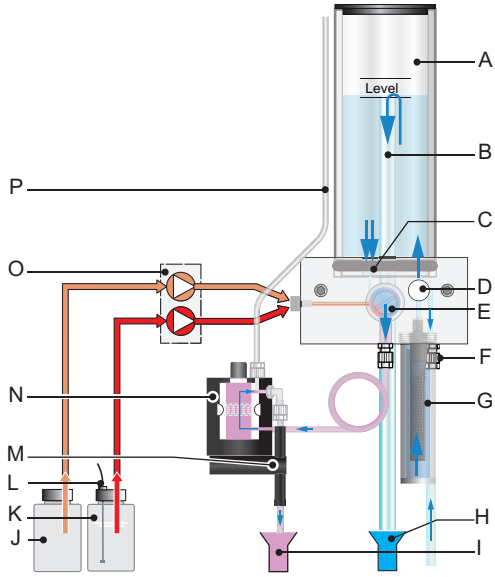


***A*** *Constant head*
***B*** *Overflow tube*
***C*** *Photometer inlet*
***D*** *Flow regulating valve*
***E*** *Mixing chamber*
***F*** *Sample inlet*
***G*** *Inlet Filter*
***H*** *Constant head drain*
***I*** *Photometer drain*
***J*** *Reagent Oxycon on-line DPD*
***K*** *Reagent Oxycon on-line Buffer*
***L*** *Reagent level detector*
***M*** *Air bubble detector*
***N*** *Photometer*
***O*** *Peristaltic pump*
***P*** *Photometer air inlet*

**Time interval of a measurement**

The measuring interval can be set between 1 and 12 minutes. The time sequence of a measurement with a measuring interval of 5 min is shown in the diagram below.
The blue bar represents the sample which flows continuously through the photometer. A short time before the measurement starts, a zero point measurement is performed. Then the peristaltic pump starts and a small portion of the reagents [J] and [K] is pumped into the mixing chamber. Shortly after, when the mixture is in the photometer, the sample is measured.

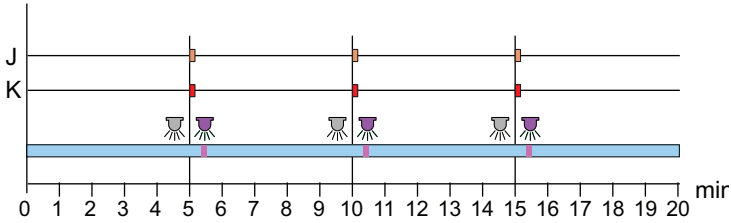


***J*** *OXYCON ON-LINE DPD*
***K*** *OXYCON ON-LINE Buffer Solution*
*Zero point measurement*
*Sample measurement*

## 2.1. Instrument Specification

| | | |
|---|---|---|
| **Power Supply** | AC variant: | 100–240 VAC (± 10%)<br>50/60 Hz (± 5%) |
| | DC variant: | 10–36 VDC |
| | Power consumption: | max. 35 VA |
| **Transmitter specifications** | Housing: | aluminum, with a protection degree of IP 66 / NEMA 4X |
| | Ambient temperature: | −10 to +50 °C |
| | Storage and transport: | −30 to +85 °C |
| | Humidity: | 10–90% rel., non condensing |
| | Display: | backlit LCD, 75 x 45 mm |
| **Sample requirements** | Flow rate: | min. 10 l/h |
| | Temperature: | 5–50 °C |
| | Inlet pressure: | 0.15–2 bar |
| | Outlet pressure: | pressure-free |

***Note:*** *No oil, no grease, no sand.*

| | | |
|---|---|---|
| **On-site requirements** | The analyzer site must permit connections to: | |
| | Sample inlet: | Tube 6 x 8 mm |
| | Sample outlet: | 1/2” hose nozzle for flexible tube diam. 20x15 mm |

| | | |
|---|---|---|
| **Measuring Range** | Ozone | Accuracy |
| | 0.05–1.00 ppm | ± 0.01 ppm |
| | HOCl, free chlorine, monochloramine | |
| | 0.00–1.00 ppm | ± 0.01 ppm |
| | 1.00–3.00 ppm | ± 0.06 ppm |
| | 3.00–5.00 ppm | ± 0.20 ppm |
| | Chlorine dioxide, iodine, bromine | |
| | 0.00–2.00 ppm | ± 0.02 ppm |
| | 2.00–6.00 ppm | ± 0.12 ppm |

**Dimensions**

| | |
|---|---|
| Panel: | PVC |
| Dimensions: | 280x850x400 mm |
| Screws: | 5 mm or 6 mm diameter |
| Weight: | 12.0 kg without reagents and sample water<br>17.0 kg with reagents and sample water |

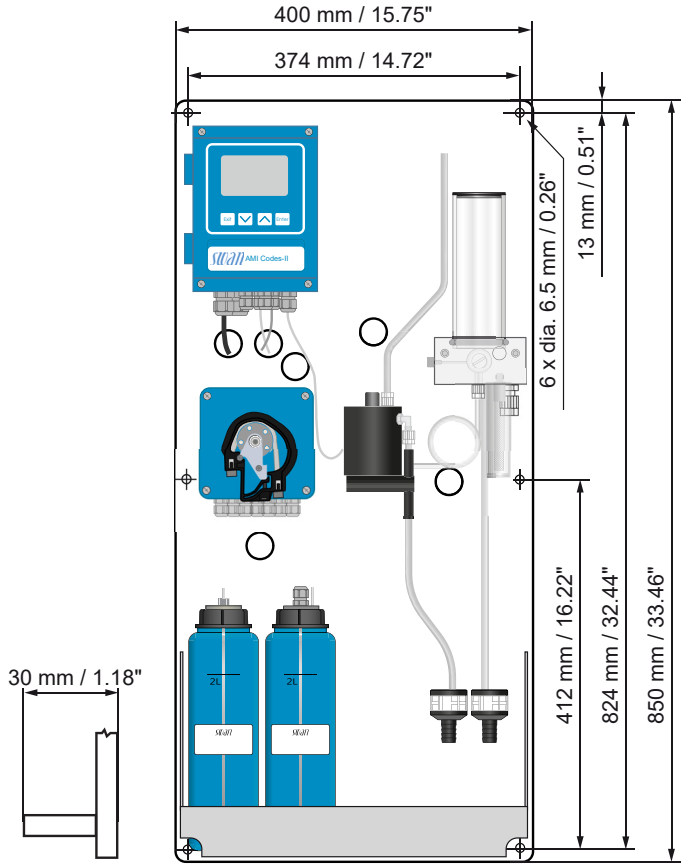

## 2.2. Instrument Overview

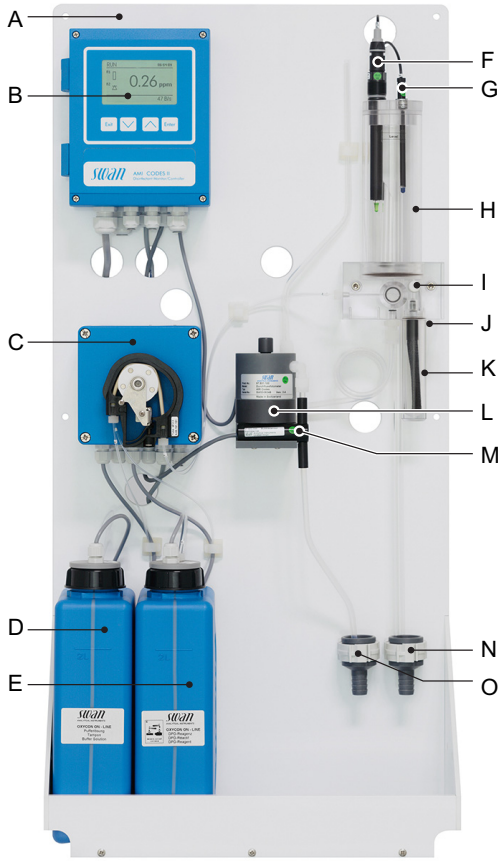


***A*** *Panel*
***B*** *Transmitter*
***C*** *Peristaltic pump*
***D*** *Reagent Oxycon on-line DPD*
***E*** *Reagent Oxycon on-line Buffer*
***F*** *pH sensor*
***G*** *Temperature sensor*
***H*** *Constant head*
***I*** *Flow regulating valve*
***J*** *Sample inlet*
***K*** *Inlet filter*
***L*** *Photometer*
***M*** *Air bubble detector*
***N*** *Constant head drain*
***O*** *Photometer drain*

# 3. Installation

## 3.1. Installation Check List

| | |
|---|---|
| **On site requirements** | AC variant: 100–240 VAC (± 10%), 50/60 Hz (± 5%).<br>DC variant: 10–36 VDC.<br>Power consumption: 35 VA maximum.<br>Protective earth connection required.<br>Sample line with sufficient sample flow and pressure (see Instrument Specification, p. 15). |
| **Installation** | Mount the instrument in vertical position.<br>Display should be at eye-level.<br>Mount the filter, filter vessel, and constant head cover. Connect the sample and waste line. See Connecting Sample and Waste, p. 19. |
| **Electrical wiring** | Do not switch on the Instrument until all electrical connections have been completed.<br>Connect all external devices like limit switches, current loops and pumps.<br>Connect power cord.<br>See Electrical Connections, p. 26. |
| **If ordered: pH option** | See Install the pH Option, p. 22. |
| **Reagents** | Prepare reagents. See Refill or replace Reagents, p. 46.<br>Insert the suction lances. |
| **Power-up** | Lock pump tubes.<br>Turn on the sample flow and wait until the flow cell is completely filled.<br>Switch on power.<br>Start <Fill system>. |
| **Instrument setup** | Program all parameters for external devices (interface, recorders, etc.) and for instrument operation (limits, alarms, measuring interval). |
| **pH sensor calibration** | If ordered: Calibrate pH sensor. See Process pH, p. 52. |

| | |
|---|---|
| **Process calibration** | Make 3 manual measurements. Use a high quality photometer, e.g. Chematest from Swan. Calculate average value and compare this value to the value indicated by the AMI. If necessary, correct the value. The zero point is done automatically before each measurement. |

## 3.2. Mounting of Instrument Panel

The first part of this chapter describes the preparing and placing of the system for use.

- The instrument must only be installed by trained personnel.
- Mount the instrument in vertical position.
- For ease of operation mount it so that the display is at eye level.
- For the installation a kit containing the following installation material is available:
  - 6 Screws 6x60 mm
  - 6 Dowels
  - 6 Washers 6.4/12 mm

**Mounting requirements**

The instrument is only intended for indoor installation.
For dimensions see Dimensions, p. 16.

## 3.3. Connecting Sample and Waste

### 3.3.1 FEP Tube at Sample Inlet

Use plastic tube (FEP, PA, or PE 6 x 8 mm) to connect the sample line.

**Mounting of SERTO fitting**

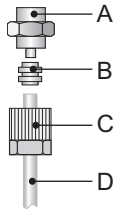


***A*** *Screw connection*
***B*** *Compression ferrule*
***C*** *Knurled nut*
***D*** *Flexible tube*

### 3.3.2 FEP Tube at Sample Outlet



**WARNING**

**Risk of water pollution**

The drain of the photometer outlet contains DPD.

- At no means recirculate it into the water system.

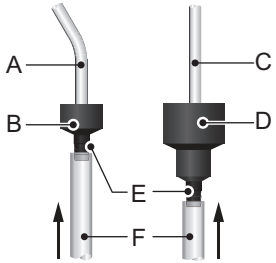


***A*** *Tube from photometer*
***B*** *Drain Photometer*
***C*** *Tube from constant head*
***D*** *Drain constant head*
***E*** *Hose nozzles*
***F*** *1/2" tubes*

Connect the 1/2" tubes [F] to the hose nozzles [E] and place them into a pressure free drain with sufficient capacity.

## 3.4. Installation of Flow Cell

**CAUTION**

**Fragile Part**
Handle the constant head tube with care.

To avoid damage during the transport, the constant head tube [C] of the AMI Codes-II is not installed.

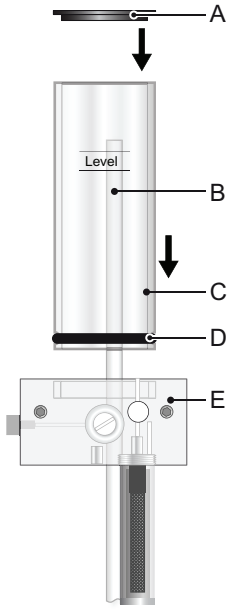


***A*** *Constant head cover*
***B*** *Overflow tube*
***C*** *Constant head tube*
***D*** *Gasket*
***E*** *Flow cell block*

To install the constant head tube proceed as follows:

1. Unpack the constant head tube [C].
2. Push the constant head tube into the flow cell block [E].
3. Put the constant head cover [A] onto the constant head tube.
4. Check if the overflow tube [B] is aligned with the upper Level mark.

## 3.5. Install the pH Option

### 3.5.1 pH as Option ex works

If the pH option was ordered with the AMI Codes-II, the pH sensor cable as well as the temperature sensor are already connected to the AMI transmitter.

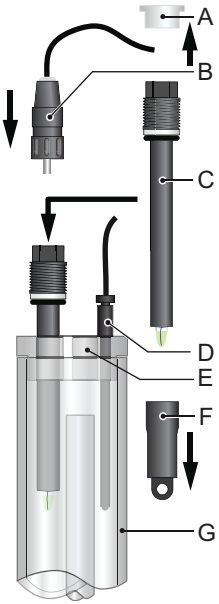


***A*** *Connector cap*
***B*** *Connector*
***C*** *pH Sensor*
***D*** *Temperature sensor*
***E*** *Constant head cover*
***F*** *Protective cap*
***G*** *Constant head*

1. Carefully pull off the protective cap [F] from the pH sensor [C] by turning it clockwise.
2. Store the protective cap in safe place.
3. Rinse the pH sensor tip with clean water.
4. Insert the pH sensor into one of the holes in the constant head cover [E].
5. Insert temperature sensor [D] into the small hole.
6. Remove the connector cap from the connector of the pH sensor. Store it in safe place.
7. Screw the connector [B] onto the pH sensor.

### 3.5.2 pH Option as Retrofit Kit

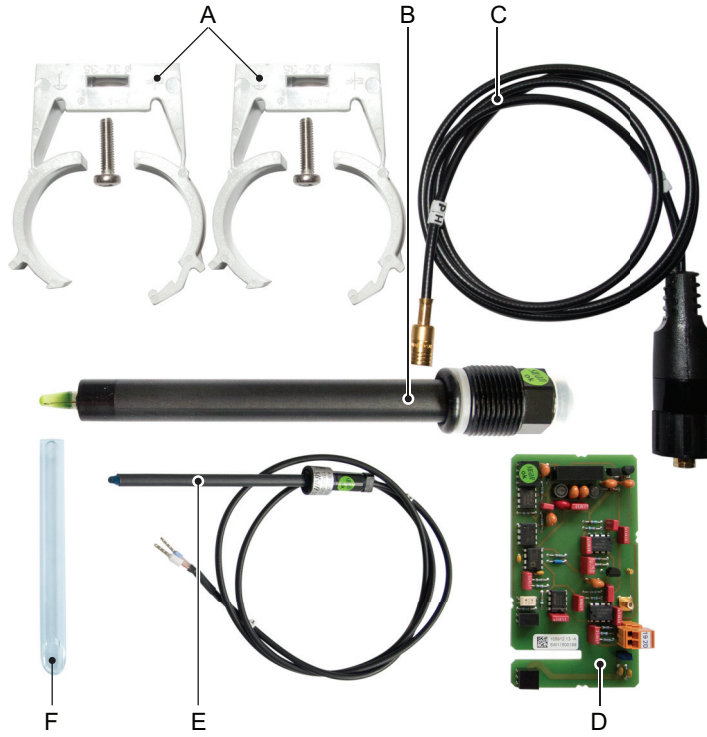


***A*** *2 Clamps with screws*
***B*** *pH sensor*
***C*** *Sensor cable*
***D*** *Front end PCB*
***E*** *Temperature sensor*
***F*** *Short overflow tube*



**WARNING**

**Risk of electrical shock.**
Do not perform any work on electrical components if the transmitter is switched on. Failure to follow safety instructions can result in serious injury or death.

**1** Screw the clamps for calibration solution onto the panel. Use the already drilled holes [A].

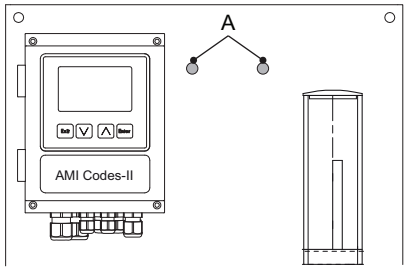


**2** Stop sample flow. Wait until flow cell is empty.

**3** Switch off the AMI transmitter (disconnect power).

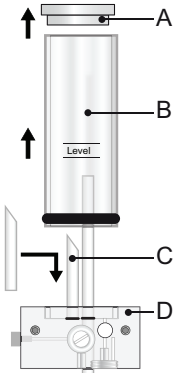


***A*** *Constant head cover*
***B*** *Constant head tube*
***C*** *Short overflow tube*
***D*** *Flow cell block*

**4** Remove the constant head cover [A] and the constant head tube [B] from the flow cell block [D].

**5** Insert the short overflow tube [C] into the outlet hole leading to the photometer.

**6** Install the constant head tube and the constant head cover.

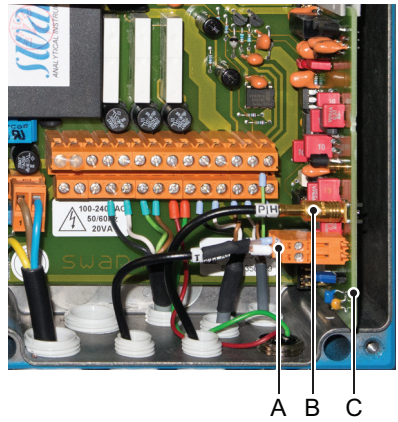


***A*** *Temperature sensor plug*
***B*** *pH sensor plug*
***C*** *Frontend PCB*

**7** Open the cover of the AMI transmitter housing.

**8** Install the frontend PCB.

**9** Feed the cable of the pH sensor through one of the cable glands (see Cable thicknesses, p. 26) into the AMI transmitter housing.

**10** Connect it to the BNC socket.

**11** Feed the cable of the Temperature sensor through one of the cable glands into the AMI transmitter housing.

**12** Connect the temperature sensor cable to the plug as follows: Terminal 19: line, Terminal 20: shield.

**13** Close the cover of the AMI transmitter housing.

**14** Carefully pull off the protective cap [F] from the pH sensor [C].

**15** Insert the pH sensor into one of the holes in the constant head cover [E].

**16** Insert temperature sensor [D] into the small hole.

**17** Remove the connector cap from the connector of the pH sensor. Store cap in safe place.

**18** Screw the connector [B] onto the pH sensor.

**19** Turn on sample flow and wait until flow cell has been filled completely.

**20** Switch power ON. The instrument automatically detects the front end PCB during start-up.

## 3.6. Electrical Connections



**WARNING**

**Risk of electrical shock.**

Do not perform any work on electrical components if the transmitter is switched on. Failure to follow safety instructions can result in serious injury or death.

- Always turn off power before manipulating electric parts.
- Grounding requirements: Only operate the instrument from a power outlet which has a ground connection.
- Make sure the power specification of the instrument corresponds to the power on site.

**Cable thicknesses**

In order to comply with IP66, use the following cable thicknesses.

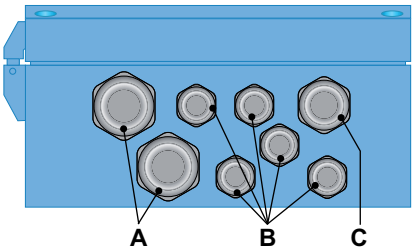


***A*** *PG 11 cable gland: cable $Ø_{outer}$ 5–10 mm*
***B*** *PG 7 cable gland: cable $Ø_{outer}$ 3–6.5 mm*
***C*** *PG 9 cable gland: cable $Ø_{outer}$ 4–8 mm*

***Note:*** *Protect unused cable glands*

**Wire**

- For power and relays: Use max. 1.5 $mm^2$ / AWG 14 stranded wire with end sleeves.
- For signal outputs and input: Use 0.25 $mm^2$ / AWG 23 stranded wire with end sleeves.



**WARNING**

**External Voltage.**

Externally supplied devices connected to relay 1 or 2 or to the alarm relay can cause electrical shocks

- Make sure that the devices connected to the following contacts are disconnected from the power before resuming installation.
  - relay 1
  - relay 2
  - alarm relay



**WARNING**

To prevent from electrical shock, do not connect the instrument to the power unless the ground wire (PE) is connected.



**WARNING**

The mains of the AMI Transmitter must be secured by a main switch and appropriate fuse or circuit breaker.

### 3.6.1 Connection Diagram

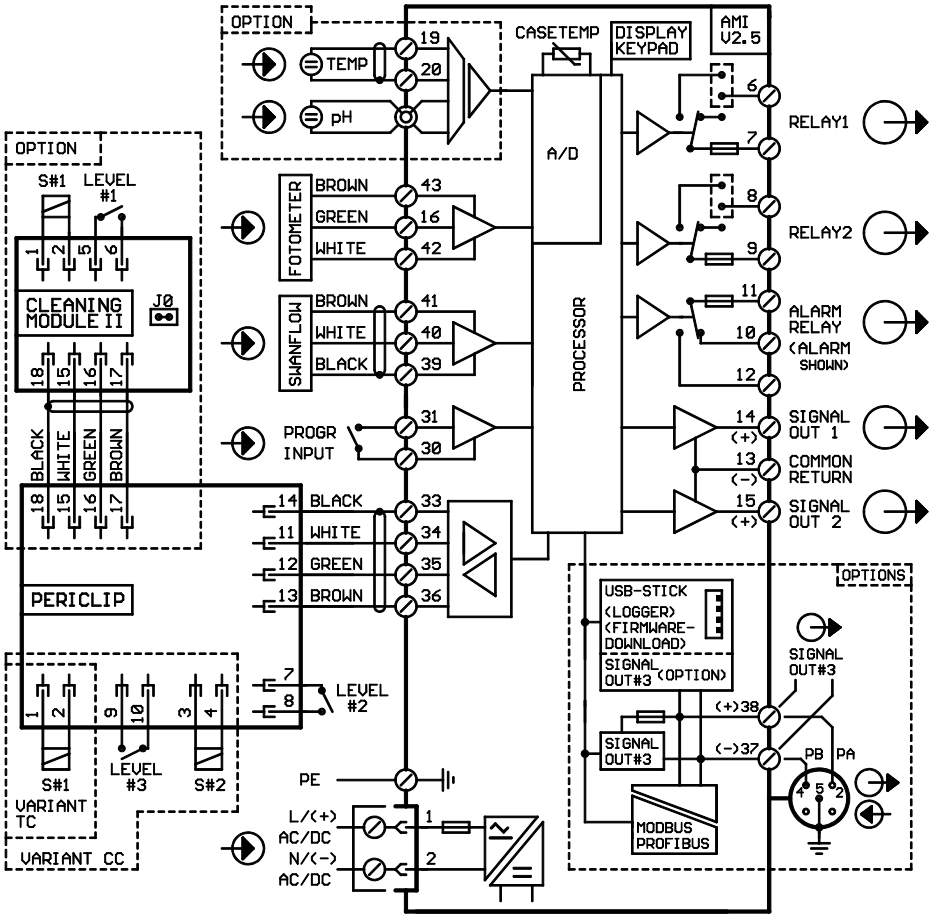


**CAUTION**

Use only the terminals shown in this diagram, and only for the mentioned purpose. Use of any other terminals will cause short circuits with possible corresponding consequences to material and personnel.

### 3.6.2 Power Supply



**WARNING**

**Electrical shock hazard**

Installation and maintenance of electrical parts must be performed by professionals. Always turn off power before manipulating electric parts.

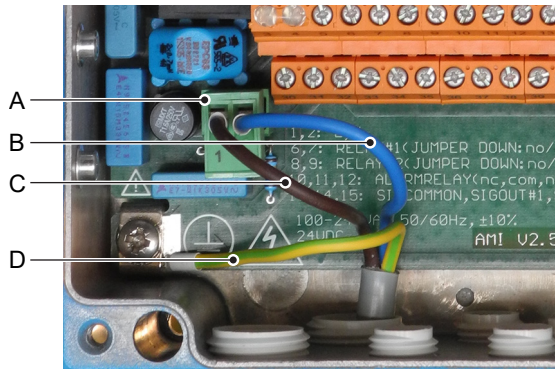


***A*** *Power supply connector*
***B*** *Neutral conductor, Terminal 2*
***C*** *Phase conductor, Terminal 1*
***D*** *Protective earth PE*

***Note:*** *The protective earth wire (Ground) has to be connected to the grounding terminal.*

**Installation requirements**

The installation must meet the following requirements.

- Mains cable to comply with standards IEC 60227 or IEC 60245; flammable rating FV1
- Mains equipped with an external switch or circuit-breaker
  - near the instrument
  - easily accessible to the operator
  - marked as interrupter for AMI Codes-II

## 3.7. Input

***Note:*** *Use only potential-free (dry) contacts.*
*The total resistance (sum of cable resistance and resistance of the relay contact) must be less than 50 Ω.*

Terminals 30 and 31
If the signal output is set to hold, the measurement is interrupted if input is active.
For programming see menu Installation 5.3.4, p. 94.

## 3.8. Relay Contacts

### 3.8.1 Alarm Relay

***Note:*** *Max. load 1 A/250 VAC*

Alarm output for system errors.
Error codes see Troubleshooting, p. 64.

***Note:*** *With certain alarms and certain settings of the AMI transmitter the alarm relay does not switch. The error, however, is shown on the display.*

| | Terminals | Description | Relay connection |
|---|---|---|---|
| **NC**[1)] Normally Closed | 10/11 | Active (opened) during normal operation.<br>Inactive (closed) on error and loss of power. | 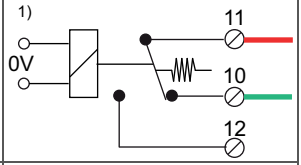 |
| **NO** Normally Open | 12/11 | Active (closed) during normal operation.<br>Inactive (opened) on error and loss of power. | 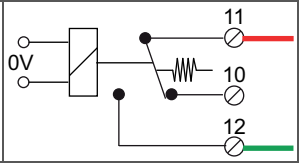 |

1) *usual use*

### 3.8.2 Relay 1 and 2

***Note:*** *Max. load 1 A/250 VAC*

Relay 1 and 2 can be configured as normally open or as normally closed. Standard for both relays is normally open. To configure a Relay as normally closed, set the jumper in the upper position.

***Note:*** *Some error codes and the instrument status may influence the status of the relays described below.*

| Relay config. | Terminals | Jumper pos. | Description | Relay configuration |
|---|---|---|---|---|
| Normally Open | 6/7: Relay 1<br>8/9: Relay 2 |  | Inactive (opened) during normal operation and loss of power.<br>Active (closed) when a programmed function is executed. | 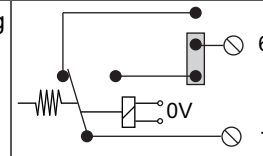 |
| Normally Closed | 6/7: Relay 1<br>8/9: Relay 2 |  | Inactive (closed) during normal operation and loss of power.<br>Active (opened) when a programmed function is executed. | 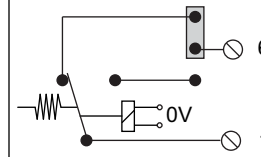 |

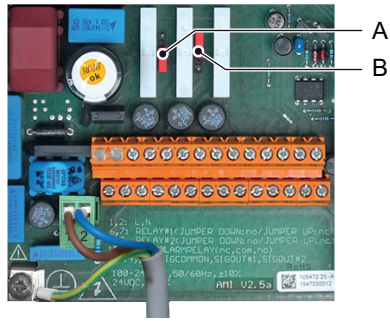


***A*** *Jumper set as normally open (standard setting)*
***B*** *Jumper set as normally closed*

For programming see menu Installation 5.3.2 and 5.3.3, p. 90.

**CAUTION**

**Risk of damage of the relays in the AMI Transmitter due to heavy inductive load.**

Heavy inductive or directly controlled loads (solenoid valves, dosing pumps) may destroy the relay contacts.

- To switch inductive loads > 0.1 A use an AMI relay box available as an option or suitable external power relays.

**Inductive load**

Small inductive loads (max 0.1 A) as for example the coil of a power relay can be switched directly. To avoid noise voltage in the AMI Transmitter it is mandatory to connect a snubber circuit in parallel to the load.
A snubber circuit is not necessary if an AMI relay box is used.

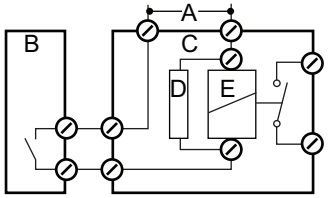


***A*** *AC or DC power supply*
***B*** *AMI Transmitter*
***C*** *External power relay*
***D*** *Snubber*
***E*** *Power relay coil*

**Resistive load**

Resistive loads (max. 1 A) and control signals for PLC, impulse pumps and so on can be connected without further measures.

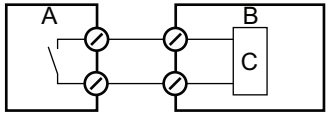


***A*** *AMI Transmitter*
***B*** *PLC or controlled pulse pump*
***C*** *Logic*

**Actuators**

Actuators, like motor valves, are using both relays: One relay contact is used for opening, the other for closing the valve, i.e. with the 2 relay contacts available, only one motor valve can be controlled. Motors with loads bigger than 0.1 A must be controlled via external power relays or an AMI relay box.

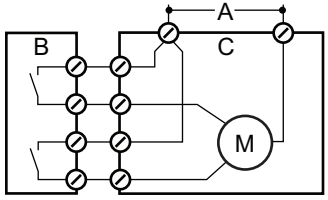


***A*** *AC or DC power supply*
***B*** *AMI Transmitter*
***C*** *Actuator*

## 3.9. Signal Outputs

### 3.9.1 Signal Output 1 and 2 (current outputs)

***Note:*** *Max. burden 510 Ω*
*If signals are sent to two different receivers, use signal isolator (loop isolator).*

Signal output 1: Terminals 14 (+) and 13 (-)
Signal output 2: Terminals 15 (+) and 13 (-)
For programming see Program List and Explanations, p. 78, Menu Installation

## 3.10 Interface Options

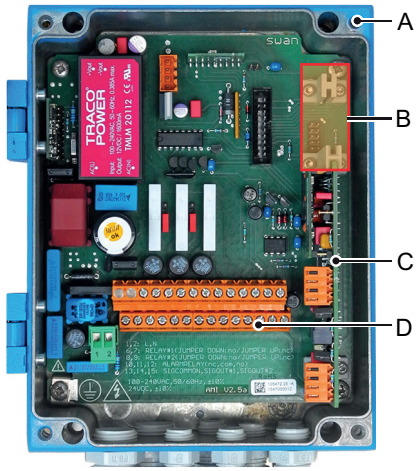


***A*** *AMI Transmitter*
***B*** *Slot for interfaces*
***C*** *Frontend PCB*
***D*** *Screw terminals*

The slot for interfaces can be used to expand the functionality of the AMI instrument with either:

- a third signal output
- a Profibus or Modbus connection
- a HART connection
- a USB interface

### 3.10.1 Signal Output 3

Terminals 38 (+) and 37 (-).
Requires the additional board for the third signal output 0/4–20 mA. The third signal output can be operated as a current source or as a current sink (switchable via switch [A]). For detailed information see the corresponding installation instruction.

***Note:*** *Max. burden 510 Ω.*

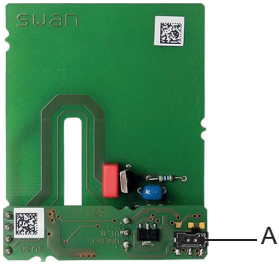


Third signal output 0/4 - 20 mA PCB

*A Operating mode selector switch*

### 3.10.2 Profibus, Modbus Interface

Terminal 37 PB, Terminal 38 PA
To connect several instruments by means of a network or to configure a PROFIBUS DP connection, consult the PROFIBUS manual. Use appropriate network cable.

***Note:*** *The switch must be ON, if only one instrument is installed, or on the last instrument in the bus.*

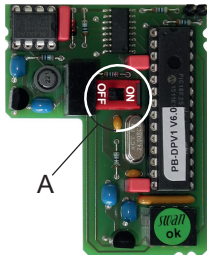


Profibus, Modbus Interface PCB (RS 485)

*A On - OFF switch*

### 3.10.3 HART Interface

Terminals 38 (+) and 37 (-).
The HART interface PCB allows for communication via the HART protocol. For detailed information, consult the HART manual.

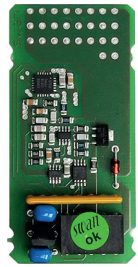

HART Interface PCB

### 3.10.4 USB Interface

The USB Interface is used to store Logger data and for Firmware upload. For detailed information see the corresponding installation instruction.
The optional third signal output 0/4–20 mA PCB [B] can be plugged onto the USB interface and used in parallel.

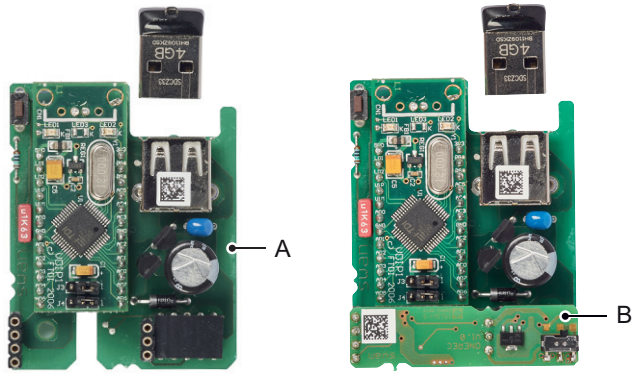


USB Interface

*A USB interface PCB*
*B Third signal output 0/4 - 20 mA PCB*

# 4. Instrument Setup

After installation according to checklist proceed as following:

## 4.1. Prepare Reagents

1 Prepare reagents. See Refill or replace Reagents, p. 46.
2 Insert the suction lances into the canisters.

## 4.2. Peristaltic Pump

The instrument is delivered with opened occlusion frames.

1 Activate the peristaltic pump tubes by closing the occlusion frames [B].

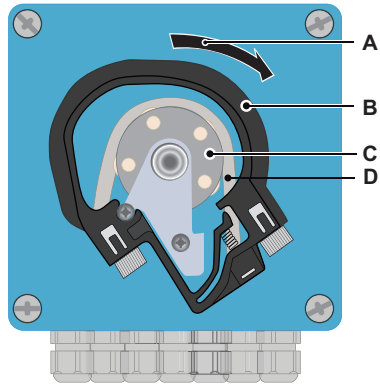


***A*** *Turn to lock*
***B*** *Occlusion frame*
***C*** *Rotor*
***D*** *Pump tube*

## 4.3. Establish Sample Flow

**WARNING**

**Water pollution**

The drain of the photometer outlet contains DPD.

- At no means recirculate it into the water system.

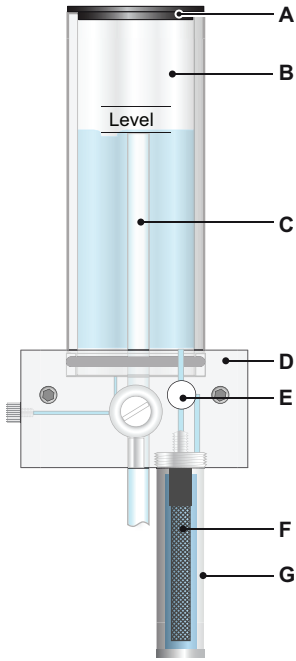


***A*** *Cover*
***B*** *Constant head tube*
***C*** *Overflow tube*
***D*** *Flow cell block*
***E*** *Flow regulating valve*
***F*** *Filter*
***G*** *Filter vessel*

1. Open the flow regulating valve [E] and wait until the flow cell is completely filled.
2. Switch on power.
3. Adjust the sample flow so that always a small part of the sample drains off through the overflow tube.
4. Start <Fill system>, see Fill or Flush Reagent System, p. 38.

## 4.4. Fill or Flush Reagent System

Fill or flush the reagent tubing:

- upon the initial instrument setup,
- after refilling the reagent canisters,
- before a system shut-down to flush the system with demineralized water until no more reagent is left in the system.

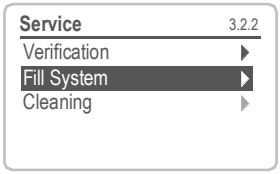


Navigate to menu< Maintenance / Service/Fill system>.
Press [Enter].

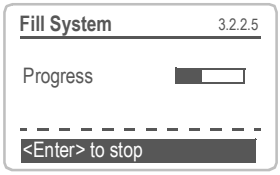


The peristaltic pump is activated for 1.5 minutes.

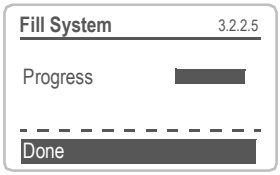


Press [Exit] 4 x to go back to the operating mode.

1 Check tubing and flow cell for leaks and repair if necessary.

2 Let the instrument run continuously for 1 hour.

## 4.5. Programming

**Programming**

Program all parameters for external devices (interface, recorders, etc.)
Program all parameters for instrument operation (disinfectant, limits, alarms).
Program the DPD value of the Verikit in menu <Installation/Sensors/Ref. Verification>.
If pH option is installed, program the two buffers you want to use for calibration in menu <Installation/Sensors/Standards>.
See Program List and Explanations, p. 78.

## 4.6. Calibration

1 Calibrate pH sensor (if pH option is installed).
See Standard pH, p. 54.

2 Perform process calibration.
See Process Calibration of DIS, p. 52

**If ordered: Calibration of pH sensor**

The instrument should be operating for 1 h before performing a pH calibration.
Program the two buffers you want to use for calibration (Installation/ Sensors/Standards). Calibrate the pH sensor with two buffers, e.g. pH 7.00 and pH 9.00. See chapter Calibration, p. 52 for details.

**Process DIS**

Use Chematest (or equivalent photometer) to determine the sample disinfectant concentration. Take the sample directly from the flow cell. Determine the sample disinfectant value by 3 manual DPD measurements and calculating the average value. Compare this value to the value indicated by the AMI Codes-II.
Take into account the accuracy of your manual measurement. Only correct the instrument if the difference is significant. Perform process DIS if necessary. See chapter Calibration, p. 52 for details.

# 5. Operation

## 5.1. Keys

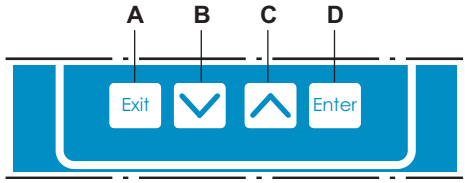


**A** to exit a menu or command (rejecting any changes)
to move back to the previous menu level

**B** to move DOWN in a menu list and to decrease digits

**C** to move UP in a menu list and to increase digits

**D** to open a selected sub-menu
to accept an entry

**Program Access, Exit**

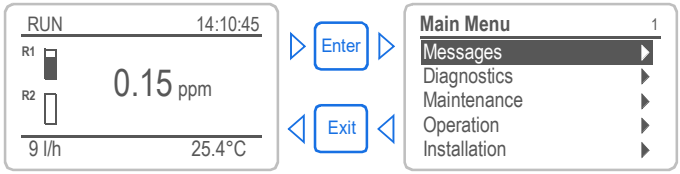

## 5.2. Display

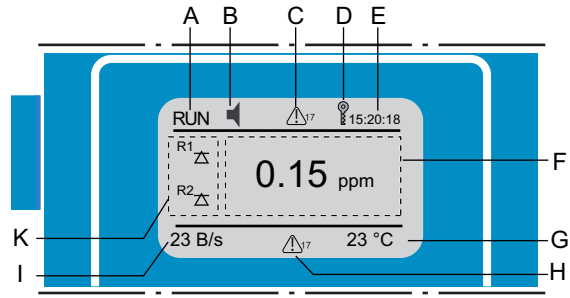


**A** RUN — normal operation

HOLD — input closed or cal delay: Instrument on hold (shows status of signal outputs).

OFF — input closed: control/limit is interrupted (shows status of signal outputs).

**B** ERROR — Error — Fatal Error

**C** Reagent low, indicates remaining reagents in % (17 % = 340 ml)

**D** Keys locked, transmitter control via Profibus

**E** Time

**F** Process values

**G** Sample Temperature

**H** Cleaning solution low, indicates remaining cleaning solution in %

**I** Sample flow in B/s

**K** Relay status

### Relay status, symbols

upper/lower limit not yet reached

upper/lower limit reached

control upw./downw. no action

control upw./downw. active, dark bar indicates control intensity

motor valve closed

motor valve: open, dark bar indicates approx. position

timer

timer: timing active (hand rotating)

## 5.3. Software Structure

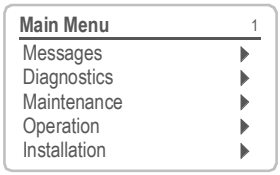


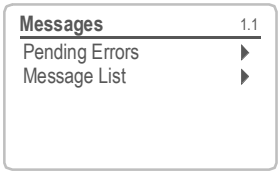


Menu **Messages 1**
Reveals pending errors as well as an event history (time and state of events that have occurred at an earlier point of time).
Contains user-relevant data.

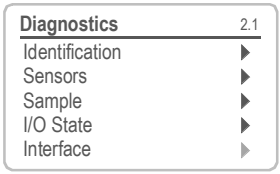


Menu **Diagnostics 2**
Provides user-relevant instrument and sample data.

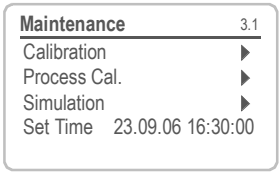


Menu **Maintenance 3**
For instrument calibration, relay and signal output simulation, and to set the instrument time.
Used by service personnel.

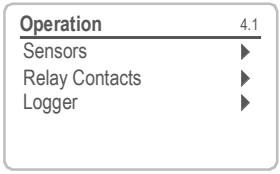


Menu **Operation 4**
User relevant parameters that might need to be modified during daily routine. Normally password protected and used by the process-operator.
Subset of menu 5 - Installation, but process-related.

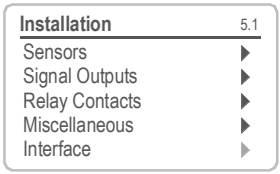


Menu **Installation 5**
For initial instrument set up by SWAN authorized person, to set all instrument parameters. Can be protected by means of password.

## 5.4. Changing Parameters and values

### Changing parameters

The following example shows how to change the logger interval:

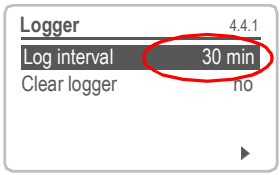


1 Select the parameter you want to change.

2 Press [Enter]

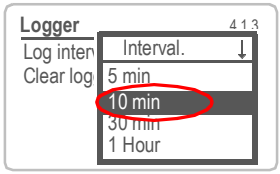


3 Press [▲] or [▼] key to highlight the required parameter.

4 Press [Enter] to confirm the selection or [Exit] to keep the previous parameter).

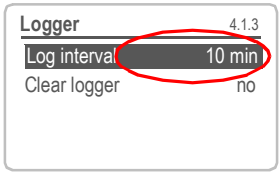


⇒ *The selected parameter is highlighted but not saved yet.*

5 Press [Exit].

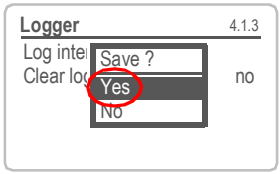


⇒ *Yes is highlighted.*

6 Press [Enter] to save the new parameter.
⇒ *The system reboots, the new parameter is set.*

### Changing values

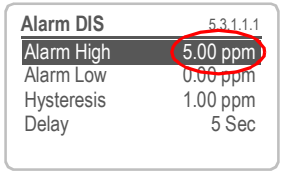


1 Select the value you want to change.

2 Press [Enter].

3 Set required value with [▲] or [▼] key.

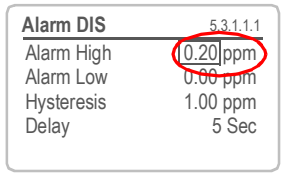


4 Press [Enter] to confirm the new value.

5 Press [Exit].
⇒ *Yes is highlighted.*

6 Press [Enter] to save the new value.

# 6. Maintenance

## 6.1. Maintenance Schedule

| | |
|---|---|
| **Daily (dirty water) up to every 2 weeks (clean water)** | Check sample supply for dirt.<br>Clean all filters and strainers, if necessary.<br>Clean AMI Codes protection filter, if necessary.<br>Check sample flow (see also Troubleshooting, p. 64). |
| **Every 2–4 weeks** | Clean reagent canisters and prepare new reagents.<br>Let instrument run for 1 h. Make 3 manual measurements.<br>Compare average value to displayed value. If necessary, perform process calibration. |
| **Monthly** | Recommendation: Check photometer with verification kit Verification, p. 51 |
| **Yearly** | Exchange reagent pump tubes, see Tube Replacement, p. 60. |
| **By occurrence:** | E020, FOME dirty: Cleaning the Photometer, p. 56<br>E022, Reagent empty: Refill or replace Reagents, p. 46<br>E065, Reagents low: Refill or replace Reagents, p. 46 |

If pH option is installed:

| | |
|---|---|
| **Weekly** | Perform a process calibration, see Process pH, p. 52. |
| **Every 2 months:** | Perform a standard calibration, see Standard pH, p. 54. |

## 6.2. Stop of Operation for Maintenance

**1** Put the suction lances into a bucket with clean water.

**2** Start <Fill system>.
⇒ *The reagent tubes are flushed with water.*

**3** Remove the suction lances from the water.

**4** Start <Fill system> again.
⇒ *The water will be pumped out of the reagent tubes.*

**5** Stop sample flow.

**6** Wait until level in flow cell is empty.

**7** Shut off power of the instrument.

If pH option is installed:

**8** Remove the pH sensor [A] from the flow cell.

**9** Fill the protective cap [B] with water.

**10** Put the protective cap onto the sensor tip.

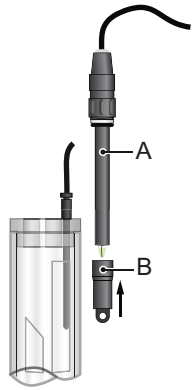


***A*** *pH sensor*
***B*** *Protective cap*

## 6.3. Refill or replace Reagents

The liquid level in canister 2 is monitored. The following messages are displayed:

| | |
|---|---|
| Canister almost empty | Maintenance E065 - Reagents low and the remaining reagent volume in % (starting at 17 % = 340 ml). |
| Canister empty | Error E022 - Reagent empty |

***Note:*** *Before refilling the reagents, rinse the canisters with demineralized water.*

**Reagent consumption**

The 2 liter reagent canister will last for 15 days of operation (with measurement interval of 2 minutes). The provided reagent set (for 8 canisters) therefore lasts for 4 months of operation.
As the reagent consumption is not linear find further examples below:

| Measuring interval | Duration per canister | Duration per reagent set |
|---|---|---|
| **1 minute** | ~ 7 days | 2 months |
| **2 minutes** | ~ 15 days | 4 months |
| **4 minutes** | ~ 22 days | 5 months |
| **6 minutes** | ~ 33 days | 8 months |



**WARNING**

**Health hazard**

Some reagents can cause severe burns or eye damage.

- For safe handling of the reagents you must read and understand the Material Safety Data Sheets (MSDS), see Material Safety Data sheets, p. 97.

## Oxycon On-line DPD



**WARNING**

**Severe eye irritation and severe skin irritation.**

Concentrated Oxycon On-line DPD contains more than 10% mineral acids.

- Do not swallow.
- Avoid any contact with eyes and skin.
- Wear protective goggles,
- Wear protective gloves.
- IF IN EYES: Rinse cautiously with water for several minutes. Remove contact lenses, if present and easy to do. Continue rinsing.
- Immediately call a POISON CENTER or doctor/physician.

## Oxycon On-line Buffer

Contains citric acid potassium salt, do not swallow.

## Oxycon On-line KI



**CAUTION**

**Severe eye and skin irritation**

This product is corrosive and causes severe burns.

- Harmful if swallowed.
- Avoid any contact with eyes and skin
- IF IN EYES: Rinse cautiously with water for several minutes. Remove contact lenses, if present and easy to do. Continue rinsing.

## Canister set up

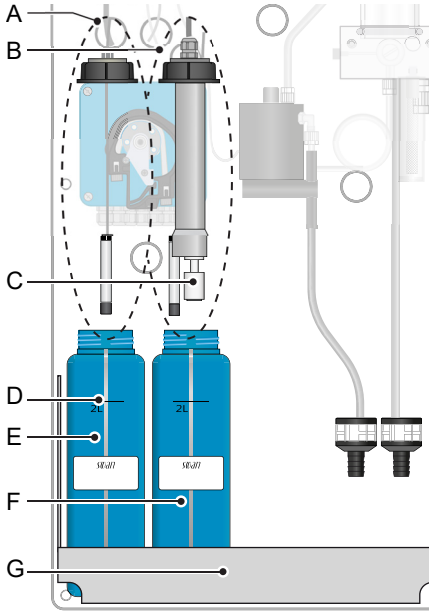


***A*** *Suction lance without level detector (canister 1)*
***B*** *Suction lance with level detector (canister 2)*
***C*** *Level detector*
***D*** *2 L mark*
***E*** *Canister 1: Oxycon on-line DPD*
***F*** *Canister 2: Oxycon on-line Buffer Holder*
***G***

### 6.3.1 Reagents for Free Chlorine, Chlorine Dioxide, Bromine and Iodine

To prepare 2 l of reagents the following chemicals are necessary:

- 1 x 50 ml of Oxycon On-line DPD
- 1 x 240 g of Oxycon On-line Buffer
- 4 liters of demineralized water

**Prepare Oxycon On-line DPD**

1. Rinse the canister [E] labelled “OXYCON ON LINE DPD-Reagent” with demineralized water.
2. Fill the canister up to the 2 liter mark [D] with demineralized water.
3. Slowly pour the content of one bottle of concentrate Oxycon On-line DPD (50 ml) into the canister.
   ⚠ *Avoid splashing!*
4. Close the canister with the screw cover and tighten it well.
5. Mix the demineralized water and the reagents well.
6. Put the canister [E] into the holder [G].
7. Remove the screw cover, insert the suction lance [A] and tighten the screw cover.

**Prepare Oxycon On-line Buffer**

1. Rinse the canister [F] labelled “OXYCON ON LINE Buffer” solution with demineralized water.
2. Fill the canister up to the 2 liter mark [D] with demineralized water.
3. Slowly pour the content of one bag of buffer Oxycon On-line (240 gr) into the canister.
   ⚠ *Avoid splashing!*
4. Close the canister with the screw cover and tighten it well.
5. Mix the demineralized water and the reagents well.
6. Put canister [F] into holder [G].
7. Remove the screw cover and insert the suction lance [B] and tighten the screw cover.

**Start-up**

Fill reagent system. See Fill or Flush Reagent System, p. 38.

### 6.3.2 Reagents for Measuring Monochloramine and Ozone

To prepare 2 l of reagents the following chemicals are necessary:

- 1 x 50 ml of Oxycon On-line DPD
- 1 x 240 g of Oxycon On-line Buffer
- 1 x 60 g of Oxycon On-line KI
- 4 liters of demineralized water

**Prepare Oxycon On-line DPD**

1. Rinse the canister [E] labelled OXYCON ON LINE DPD-Reagent with demineralized water.
2. Fill the canister up to the 2 liter mark with demineralized water.
3. Slowly pour the content of a bottle of concentrate Oxycon On-line DPD into the canister.
   ⚠ *Avoid splashing!*
4. Close the canister with the screw cover and tighten it well.
5. Mix the demineralized water and the reagents well.
6. Put the canister [E] into the holder [G].
7. Remove the screw cover, insert the suction lance [A] and tighten the screw cover.

**Prepare Oxycon On-line Buffer & KI**

1. Rinse the canister [F] labelled “OXYCON ON LINE Buffer” solution with demineralized water.
2. Fill the canister up to the 2 liter mark with demineralized water.
3. Slowly pour the content of one bag of Oxycon On-line Buffer into the canister.
   ⚠ *Avoid splashing!*
4. Add the content of one bag Oxycon On-line KI to the same canister.
5. Close the canister with the screw cover and tighten it well.
6. Mix the demineralized water and the reagents well.
7. Put the canister [F] into the holder [G].
8. Remove the screw cover, insert the suction lance [B] and tighten the screw cover.

**Start-up**

Fill reagent system. See Fill or Flush Reagent System, p. 38.

## 6.4. Verification

The “Verification kit for AMI Photometer” is available as an accessory. An optical window with a precisely determined absorbance value is placed into the light beam of the photometer. The actual measured absorbance will be compared to the reference value labeled on each kit.




**Set reference value**

Prior to performing the verification the DPD reference value, e.g. 0.255, needs to be set in menu 5.1.4 <Installation>/<Sensors>/<Ref. Verification>.

**Verification procedure**

Follow the dialog in menu 3.2.1 <Maintenance>/<Service>/<Verification>.

***Note:*** *Start any time, if a measuring cycle is in progress wait for next prompt.*

1. Stop sample flow by closing regulating valve. Wait for next prompt: Constant head will be drained and an automatic zero will be defined.
2. Open cuvette of the photometer and insert the verification filter. [Enter] to continue.
3. Align the triangle shape either to the front– or backside and adjust for minimal absorbance (see AMI Display).
4. Press [Enter] to save the verification measurement. The verification is successful if the difference is within the limits. [Enter] to continue.
5. Remove filter, close cuvette and open regulating valve. [Enter] to finish and [Exit] to the main display.

**Verification history**

Can be reviewed in menu 2.2.1.5 <Diagnostics>/<Sensors>/<Photometer>/<Ver. History>

## 6.5. Calibration

**Process Calibration of DIS**

***Note:*** *Perform process calibration for free chlorine / total residual chlorine only if:*

- *the sample concentration is close to the desired process value (stable value)*
- *you are sure that the reagents are mixed completely and correctly*
- *if the difference to the manual measurement is significant.*
- *Keep in mind the accuracy of your manual measurement.*

Use Chematest (or equivalent photometer) to determine the sample disinfectant concentration. Determine the sample disinfectant value by performing 3 manual DPD measurements and calculating the average value. Compare this value to the value indicated by the AMI Codes-II.
Enter process value (mg/l = ppm) under menu 3.1.1, p. 80 for Process DIS

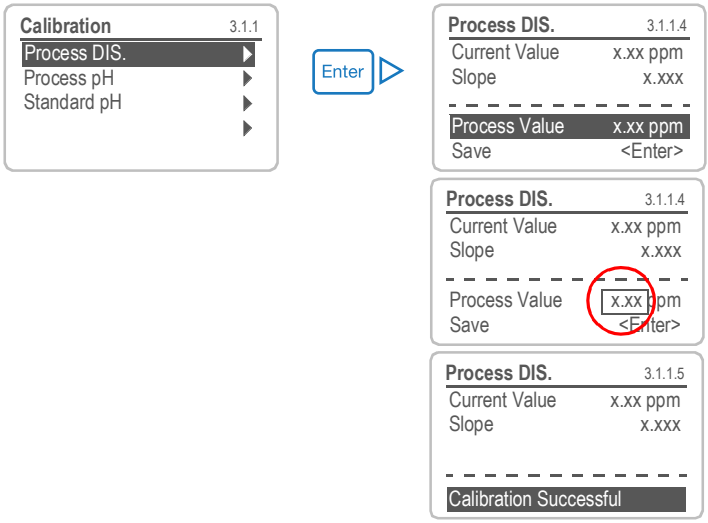


Press 3 x [Exit]

Possible error message see Calibration Errors, p. 65.

**Zero** A zero is automatically done before each measurement.

**Process pH** Use a Chematest photometer (or equivalent) to determine the sample pH value.

***Note:*** *Make sure that your reference instrument is correctly calibrated!*

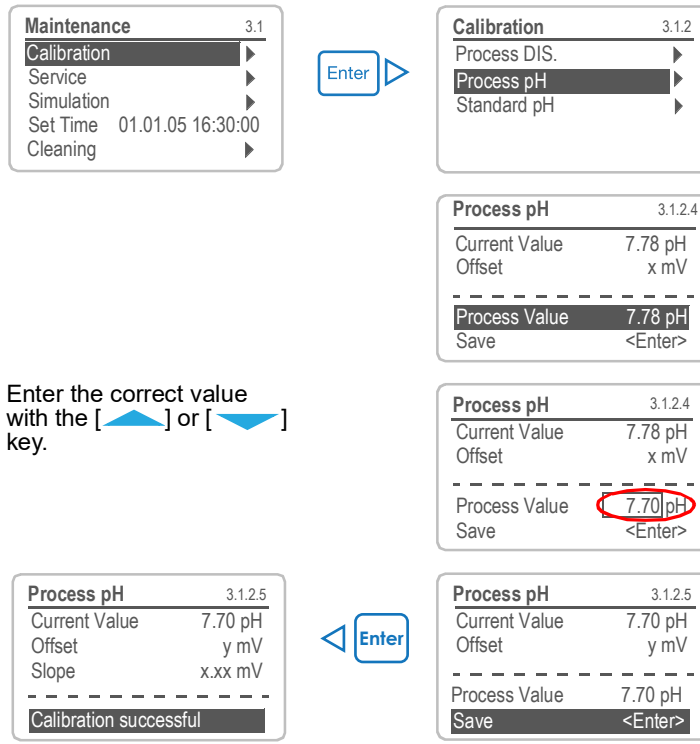


Possible error message see Calibration Errors, p. 65.

## Standard pH

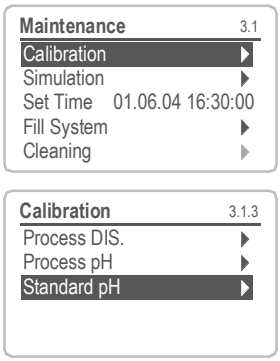


1 Navigate to menu <Maintenance>/ <Calibration>.
2 Press [Enter].
3 Remove the pH sensor from the flow cell.
4 Follow the instructions on the display.

**Display instructions**

1 Rinse and dry the pH sensor and put it into standard 1
2 Standard 1, current value (Progress is shown).
3 Rinse and dry the pH sensor and put it in standard 2
4 Standard 2, current value (Progress is shown)
5 Rinse and dry the pH sensor and put it into the flow cell

Possible error message see Calibration Errors, p. 65.

## 6.6. Cleaning the protective Filter

Switch off the instrument according to instructions in Stop of Operation for Maintenance, p. 45.

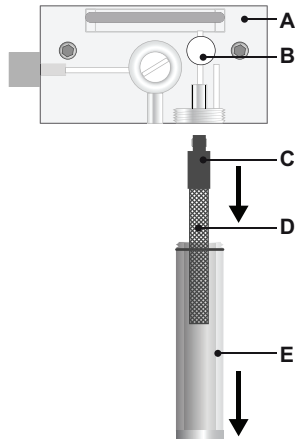


***A*** *Flow cell block*
***B*** *Flow regulating valve*
***C*** *Filter shaft*
***D*** *Filter*
***E*** *Filter vessel*

Normally the filter in your sample supply line will retain most debris. If the filter shows deposits, proceed as follows:

**1** Close the main tap of the sample inlet.
**2** Close flow regulating valve [B].
**3** Unscrew and remove the filter vessel [E] from the flow cell block [A].
**4** Hold the filter [D] on the shaft [C] and unscrew and remove it.
**5** Backwash the filter under pressure of tap water.
**6** Clean the outside of the filter.
**7** Install the filter and the filter vessel again.
**8** Establish the sample flow.
**9** Adjust sample flow with the regulating valve.

## 6.7. Cleaning the Photometer

Clean the photometer after indication by alarm (E020, FOME dirty). Switch off the instrument according to instructions in Stop of Operation for Maintenance, p. 45.

**Material** Small brush.

**Procedure**

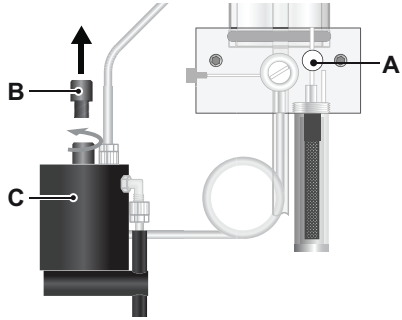


***A*** *Flow regulating valve*
***B*** *Photometer cover*
***C*** *Photometer*
***D*** *Brush*

1. Close the flow regulating valve [A].
2. Wait until the sample flow through the photometer has stopped
3. Unscrew the cover [B] from the photometer [C].

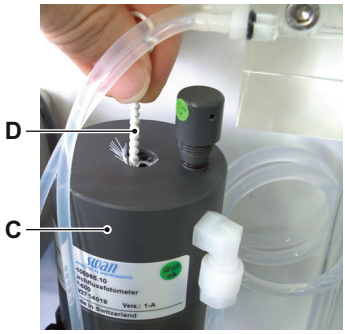


4. Clean the Photometer with a small brush [D].
5. Screw the cover to the photometer.
6. Open the flow regulating valve.

Clean the photometer after indication by alarm (E020, FOME dirty).

## 6.8. Cleaning the Flow Cell

**CAUTION**

**Acrylic glass parts are fragile and scratch-sensitive.**
Possible damage of acrylic glass parts due to scrubbing materials.

- Never use organic solvents or scrubbing materials to clean acrylic glass parts.
- Use soft detergent and rinse well. Eliminate lime deposits with a common household deliming agent in standard concentration.
- Do not drop the constant head tube

### 6.8.1 Disassemble the Flow Cell

The flow cell can be disassembled easily. Before disassembling the flow cell, switch off the instrument according to instructions in Stop of Operation for Maintenance, p. 45.

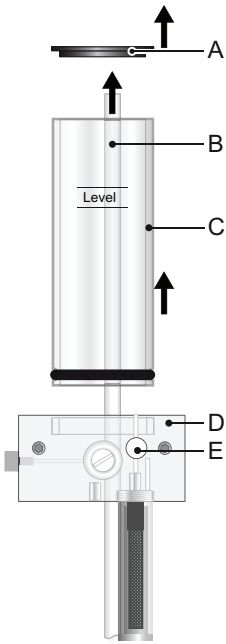


***A*** *Constant head cover*
***B*** *Overflow tube*
***C*** *Constant head tube*
***D*** *Flow cell block*
***E*** *Flow regulating valve*

**Cleaning**

1 Switch off the instrument according to instructions in Stop of Operation for Maintenance, p. 45

2 If installed remove the pH sensor and the temperature sensor.

3 Remove the constant head cover [A].

4 Remove the constant head tube [C] from the flow cell block.

5 Pull the overflow tube [B] out of the flow cell block [D].

6 Clean all acrylic parts with a soft brush (bottle cleaner) and soapy water.

7 Remove lime deposits with a common household deliming agent with standard concentrations.

### 6.8.2 Assemble the Flow Cell

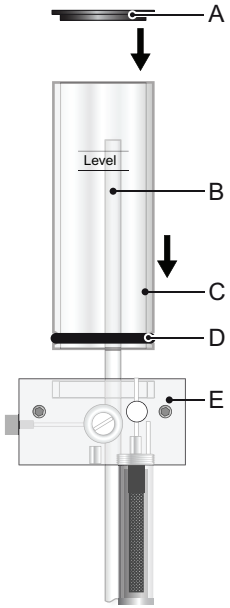


***A*** *Constant head cover*
***B*** *Overflow tube*
***C*** *Constant head tube*
***D*** *Gasket*
***E*** *Flow cell block*

1 Replace the gasket [D] before reassembling the flow cell.

***Note:*** *A film of teflon paste (e.g. Fomblin from Solvay Solexis) on the gaskets improves tightness and life time.*

2 Push the overflow tube [B] through the flow cell block as far as it reaches the drain.

3 Install the constant head tube [C] onto the flow cell block.

4 Put the cover onto the constant head tube.

5 Align the overflow tube with the upper level mark.

## 6.9. Maintenance of pH sensor

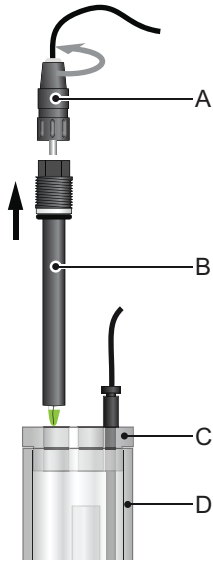


***A*** *Connector*
***B*** *pH sensor shaft*
***C*** *Flow cell cover*
***D*** *Flow cell*

**Clean pH sensor**

1 Remove the pH sensor [B] from the flow cell.

2 Unscrew and remove the connector [A] from the pH sensor.

⚠ *Prevent the connectors from getting wet*

3 If necessary wipe the pH sensor shaft and the green tip cautiously with a soft, clean, and damp paper tissue.

4 Remove grease with a tissue moistened with alcohol.

5 If the sensor is very dirty put it into 1% diluted hydrochloric acid for 1 min.

⚠ *CAUTION! hydrochloric acid is corrosive!*

6 Rinse the pH sensor with clean water.

## 6.10. Tube Replacement

### 6.10.1 Replace the Pump Tubes

The pump tube [D] of the peristaltic pump is exposed to a minimal wear. It is therefore recommended to exchange the pump tube annually.

**CAUTION**

**Pollution of reagents possible.**

If the occlusion frames are opened during operation, already mixed reagents will flow back into the reagent canisters and pollute the reagents.

- Never open the occlusion frames if the instrument is in operation.
- Proceed according to Stop of Operation for Maintenance, p. 45 before opening the occlusion frames.

**Overview**

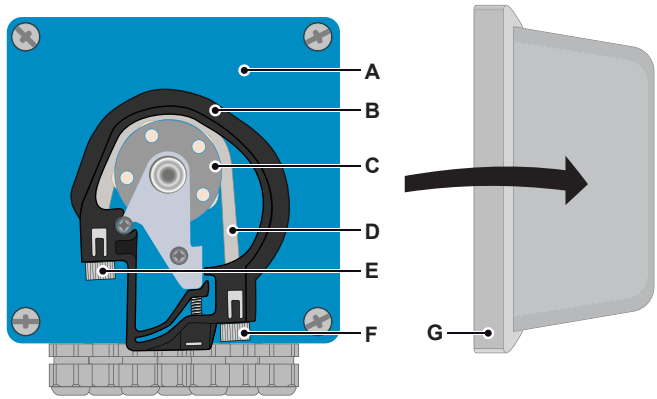


***A*** *Pump housing*
***B*** *Occlusion frame closed*
***C*** *Rotor*
***D*** *Pump tube*
***E*** *Pump inlet*
***F*** *Pump outlet*
***G*** *Protection cap*

**Dismount pump tubes**

The pump tube can easily be dismounted and mounted. Proceed as follows:

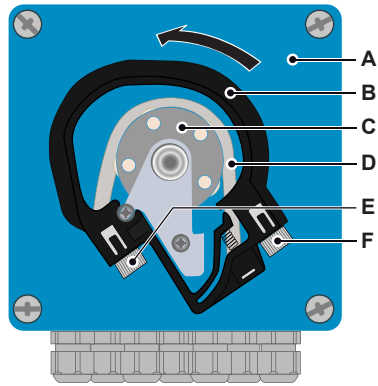


***A*** *Pump housing*
***B*** *Occlusion frame open*
***C*** *Rotor*
***D*** *Pump tube*
***E*** *Pump inlet*
***F*** *Pump outlet*

**1** Switch off the instrument according to instructions in Stop of Operation for Maintenance, p. 45.

**2** Remove the protection cap.

**3** Open the occlusion frames [B] by turning them counter-clockwise.

**4** Remove the pump tubes [D] from the rotor [C] by pulling the complete occlusion frames [B] out of the holder.

**5** Disconnect the reagent tubes from the old pump tubes and connect them to the new pump tubes

**6** Install the new pump tubes by pushing the occlusion frames onto the holder.

**7** Lock the occlusion frames. Check that the occlusion frames and the tubes are aligned perpendicular to the axis of the rotor.

**8** Insert the suction lances into the corresponding containers.

**9** Start the <Fill system> function.

### 6.10.2 Replace the Reagent Tubes

**Tube numbering**

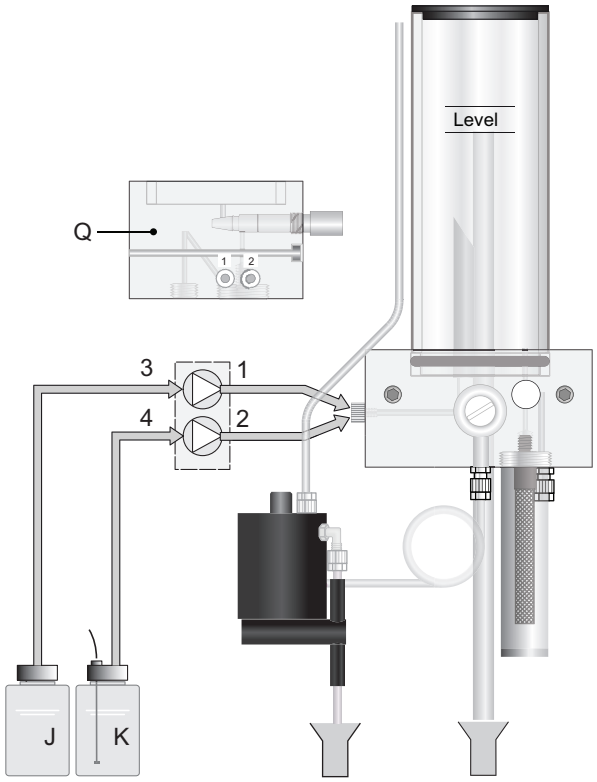


| Nr. | from | to |
|---|---|---|
| 1 | Pump outlet: rear frame | Flow cell block: connection 1<br>*see Flow cell block side view Q* |
| 2 | Pump outlet: front frame | Flow cell block: connection 2<br>*see Flow cell block side view Q* |
| 3 | Reagent canister (J)<br>Oxycon on-line DPD | Pump inlet: rear frame |
| 4 | Reagent canister (K)<br>Oxycon on-line Buffer / KI | Pump inlet: front frame |

## 6.11. Longer Stop of Operation

1 Put the suction lances into bucket with clean water.

2 Start <Fill system>.
⇒ *The reagent tubes are flushed with water.*

3 Remove the suction lance from the water.

4 Start <Fill system> again.
⇒ *The water will be pumped out of the reagent tubes.*

5 Stop sample flow.

6 Wait until level in flow cell has fallen to the shorter tube inside the cell.

7 Shut off power of the instrument.

8 Empty the flow cell completely.

9 Open the occlusion frames of the peristaltic pump, see Replace the Pump Tubes, p. 60.

If pH option is installed

10 Unscrew and remove the connector from the pH sensor.

11 Put the connector cap onto the sensor connector.

12 Fill 3.5 molar KCl (if not available: water) into the rubber cap.

13 Remove the pH sensor from the flow cell and place the rubber cap on the tip of the sensor



**CAUTION**

**Damage of pH sensor**

Wrong storage will damage the pH sensor.

- Never store the pH sensor dry.
- Store the pH sensor with tip pointing downwards in a frost-protected room.

# 7. Troubleshooting

This chapter provides some hints to make trouble shooting easier. For any detailed information how to handle or clean parts please see Maintenance, p. 44. For any detailed information how to program the instrument please see Program List and Explanations, p. 78.

## 7.1. General Instructions

***Note:*** *The sample for the manual measurement (with DPD) must be taken directly from the flow cell.*
*If you need further help please contact your dealer. Note serial number of instrument and all diagnostic values before doing so.*

**Diagnostic values**

Zero photometry: 10'000–16'000 Hz (mostly near 16 000 Hz)
Slope photometry: 0.8–1.2
pH offset: New pH sensor: near 0, old pH sensor ± 50 mV
pH slope: typically: 55–62 mV/pH unit.

**Frequently asked questions**

| Problem | Possible Reasons |
|---|---|
| **Unstable values** | ◆ Sample taken too close to feeding line<br>◆ Sample flow too irregular or too low |
| **Codes display higher or lower than manual measurement** | ◆ Wrong manual measurement or old chemicals have been used. Repeat the verification.<br>◆ Reagents of AMI Codes mixed wrongly or not completely |
| **Sample flow alarm, but there is sample** | ◆ Check sample flow at photometer outlet. It must be at least 100 ml/min. For that place the photometer outlet tube into a measuring cup for 1 minute.<br>◆ Check sample line for pressure fluctuation.<br>◆ Check for regular air bubble pattern.<br>◆ Check flow alarm values in menu 5.3.1.3, p. 89) |

## 7.2. Calibration Errors

### 7.2.1 Process calibration DIS

**Possible error message**

Slope error:

| Possible cause | Corrective Action |
|---|---|
| Wrong manual measurement. | Repeat the manual measurement. Use fresh reagents. |
| ◆ Wrong reagent mixture<br>◆ Reagents not completely solved in water. | ◆ Make a correct mixture.<br>◆ Mix long and intensively. |

### 7.2.2 Process pH

**Possible error message**

Offset error:

| Possible cause | Corrective Action |
|---|---|
| Manual measurement wrong. | Repeat the manual measurement. |
| Slope of last calibration wrong. | Set default calibration values, see 5.4.2, p. 95.<br>Repeat the calibration |
| pH sensor dirty, old or defect. | Clean or replace pH sensor, see Maintenance of pH sensor, p. 59. |
| Cable connector corroded. | Replace cable and sensor. |

### 7.2.3 Standard pH

**Possible error message**

Offset error or Slope error:

| Possible cause | Corrective Action |
|---|---|
| Old, dirty or wrong buffer solutions. | Check buffers expiration date if necessary order new buffer. |
| Verify programmed buffer values with the values of the buffer solution used. | Change programmed buffer values or use correct buffer solution. |
| pH sensor dirty, old or defect. | Clean or replace pH sensor, see Maintenance of pH sensor, p. 59. |
| Cable connector corroded. | Replace cable and sensor. |

## 7.3. Error List

**Error**
Non-fatal Error. Indicates an alarm if a programmed value is exceeded.
Such Errors are marked **E0xx** (bold and black).
**Fatal Error** (blinking symbol)
Control of dosing devices is interrupted.
The indicated measured values are possibly incorrect.
Fatal Errors are divided in the following two categories:

- Errors which disappear if correct measuring conditions are recovered (i.e. Sample Flow low).
  Such Errors are marked **E0xx** (bold and orange)
- Errors which indicate a hardware failure of the instrument.
  Such Errors are marked **E0xx** (bold and red)

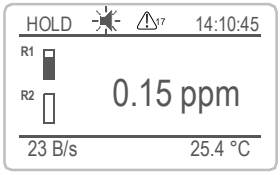


**Error or fatal Error**
Error not yet acknowledged.
Check **Pending Errors 1.1.5** and take corrective action.

**Reagent level low**
Indicates the remaining reagent in percent

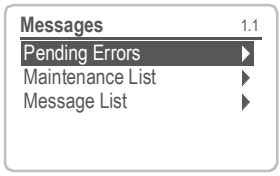


Navigate to <Messages>/ <Pending Errors>

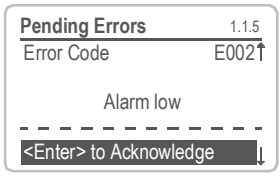


Press [ENTER] to acknowledge the Pending Errors.
⇒*The Error is reset and saved in the Message List.*

| Error | Description | Corrective action |
|---|---|---|
| **E001** | DIS. Alarm high | – check process<br>– check programmed value in menu 5.3.1.1.1, p. 88 |
| **E002** | DIS. Alarm Low | – check process<br>– check programmed value in menu 5.3.1.1.25, p. 88 |
| **E003** | pH Alarm high | – check process<br>– correct/calibrate pH sensor, see Calibration, p. 52<br>– check programmed value in menu, see 5.3.1.2.1, p. 89 |
| **E004** | pH Alarm low | – check process<br>– correct/calibrate pH sensor, see Calibration, p. 52<br>– check programmed value in menu, see 5.3.1.2.21, p. 89 |
| **E005** | DIS. too high | – check process |
| **E007** | Sample Temp. high | – check sample temperature<br>– check programmed value in menu 5.3.1.4.1, p. 89 |
| **E008** | Sample Temp. low | – check sample temperature<br>– check programmed value in menu 5.3.1.4.2, p. 90 |
| **E009** | Sample Flow high | – check sample input pressure<br>– readjust sample flow<br>– check programmed value in menu 5.3.1.3.x, p. 89 |
| **E010** | Sample Flow low | – check sample input pressure<br>– readjust sample flow<br>– clean instrument, see Cleaning the protective Filter, p. 55<br>– check programmed value in menu 5.3.1.3.x, p. 89 |

| Error | Description | Corrective action |
|---|---|---|
| **E011** | Temp. shorted | – check wiring of temperature sensor, see Connection Diagram, p. 28<br>– check temperature sensor |
| **E012** | Temp. disconnected | – check wiring of temperature sensor, see Connection Diagram, p. 28<br>– check temperature sensor |
| **E013** | Case Temp. high | – check case/environment temperature<br>– check programmed value in menu 5.3.1.5, p. 90 |
| **E014** | Case Temp. low | – check case/environment temperature<br>– check programmed value in menu 5.3.1.6, p. 90 |
| **E017** | Control Timeout | – check control device or programming in Installation, Relay contact, Relay 1/2 5.3.2 and 5.3.3, p. 90 |
| **E018** | Reagent Pump | – shut off power<br>– check wiring, see Connection Diagram, p. 28 |
| **E019** | Photometer not connected | – shut off power<br>– check wiring of photometer, see Connection Diagram, p. 28 |
| **E020** | Photometer dirty | – check process,<br>– clean photometer, see Cleaning the Photometer, p. 56 |
| **E021** | DIS. invalid | – This error appears after start-up and will disappear after the first valid measurement is finished. |
| **E022** | Reagent empty | – refill reagents, see Refill or replace Reagents, p. 46 |
| **E023** | Cleaning solution | – refill cleaning solution |
| **E024** | Input active | – See If Fault Yes is programmed in Menu 5.3.4, p. 94 |
| **E026** | IC LM75 | – call service |
| **E028** | Signal output open | – check wiring on signal outputs 1 and 2 |

| Error | Description | Corrective action |
|---|---|---|
| **E030** | EEprom Frontend | – call service |
| **E031** | Calibration Recout | – call service |
| **E032** | Wrong Frontend | – call service |
| **E033** | Power-on | – none, normal status |
| **E034** | Power-down | – none, normal status |
| **E065** | DPD / Buffer | – Operating display, upper status line. The number next to the triangle, indicates the remaining reagents in %. Refill reagents on time. See Refill or replace Reagents, p. 46 |
| **E067** | Cleaning Solution | – Operating display, upper status line. The number next to the triangle indicates the remaining cleaning solution in %. Refill cleaning solution on time. |

## 7.4. Opening the peristaltic pump housing

For some electrical connections (e.g. when replacing suction lances), it is necessary to open the housing of the peristaltic pump. To do this, proceed as follows:

1. Switch off the analyzer according to Stop of Operation for Maintenance, p. 45.
2. Remove the protection cap and all pump tubes as described in Dismount pump tubes, p. 61.
3. Unscrew the 4 screws of the peristaltic pump housing and remove the cover.
4. Disconnect the motor connector [A].

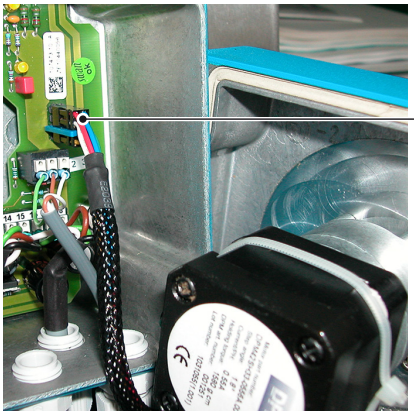


***A*** *Motor connector*

5. Feed the cable into the housing through one of the PG7 cable glands.
6. Connect the cable to the terminal block of the peristaltic pump according to Connection Diagram, p. 28.
7. Reassemble in reverse order.

## 7.5. Replacing Fuses

**WARNING**

**External Voltage.**

External supplied devices connected to relay 1 or 2 or to the alarm relay can cause electrical shocks.

- Make sure that the devices connected to the following contacts are disconnected from the power before resuming installation.
  - relay 1
  - relay 2
  - alarm relay

When a fuse has blown, find out the cause and fix it before replacing it with a new one.
Use tweezers or needle-nosed pliers to remove the defective fuse.
Use original fuses provided by SWAN only.

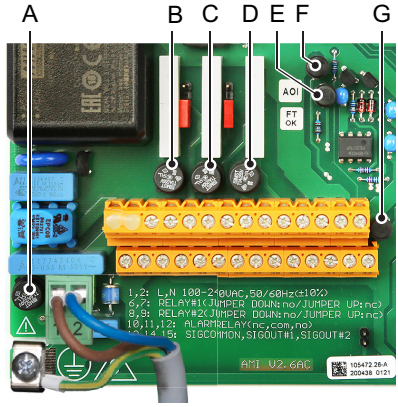


***A*** *AC variant: 1.6 AT/250V Instrument power supply*
*DC variant: 3.15 AT/250 V Instrument power supply*
***B*** *1.0 AT/250V Relay 1*
***C*** *1.0 AT/250V Relay 2*
***D*** *1.0 AT/250V Alarm relay*
***E*** *1.0 AF/125V Signal output 2*
***F*** *1.0 AF/125V Signal output 1*
***G*** *1.0 AF/125V Signal output 3*

# 8. Program Overview

For explanations about each parameter of the menus see Program List and Explanations, p. 78.

- Menu 1 **Messages** informs about pending errors and maintenance tasks and shows the error history. Password protection possible. No settings can be modified.
- Menu 2 **Diagnostics** is always accessible for everybody. No password protection. No settings can be modified.
- Menu 3 **Maintenance** is for service: Calibration, simulation of outputs and set time/date. Please protect with password.
- Menu 4 **Operation** is for the user, allowing to set limits, alarm values, etc. The presetting is done in the menu Installation (only for the System engineer). Please protect with password.
- Menu 5 **Installation**: Defining assignment of all inputs and outputs, measuring parameters, interface, passwords, etc. Menu for the system engineer. Password strongly recommended.

## 8.1. Messages (Main Menu 1)

| | | | |
|---|---|---|---|
| **Pending Errors** 1.1* | *Pending Errors* | 1.1.5* | * Menu numbers |
| **Maintenance List** 1.2* | *Maintenance List* | 1.2.5* | |
| **Message List** 1.3* | *Number* | 1.3.1* | |
| | *Date, Time* | | |

## 8.2. Diagnostics (Main Menu 2)

| | | | |
|---|---|---|---|
| **Identification** 2.1* | *Designation* | *AMI Codes-II* | |
| | *Version* | *V6.20 - 08/16* | |
| | **Peripherals** 2.1.3* | *PeriClip 1 / 1.03* | 2.1.3.1* |
| | | *PeriClip 2* | only with cleaning module |

| | | | | |
|---|---|---|---|---|
| | **Factory Test** 2.1.4* | *Instrument* *Motherboard* *Front End* | 2.1.4.1* | * Menu numbers |
| | **Operating Time** 2.1.5* | *Years / Days / Hours / Minutes / Seconds* | | 2.1.5.1* |
| **Sensors** 2.2* | **Photometer** 2.2.1* | *Current Value* *(Raw value)* *Absorbance* | | |
| | | **Cal. History** 2.2.1.4* | *Number* *Date, Time* *Slope* | 2.2.1.4.1* |
| | | **Ver. History** 2.2.1.5* | *Number* *Date, Time* *Absorbance* *Reference value* | 2.2.1.5.1* |
| | **pH Electrode** 2.2.2* | *Current Value* *(Raw value)* | | |
| | | **Cal. History** 2.2.2.5* | *Number* *Date, Time* *Offset* *Slope* | 2.2.2.5.1* |
| | **Miscellaneous** 2.2.3* | *Case Temp.* | 2.2.3.1* | |
| **Sample** 2.3* | *Sample ID* *Sample Flow / (Raw value)* *Temperature / (Nt5k)* | 2.3.1* | | |
| **I/O State** 2.4* | *Alarm Relay* *Relay 1/2* *Input* *Signal Output 1/2* | 2.4.1* 2.4.2* | | |
| **Interface** 2.5* | *Protocol* *Baud rate* | 2.5.1* | | (only with RS485 interface) |

## 8.3. Maintenance (Main Menu 3)

| | | | | |
|---|---|---|---|---|
| **Calibration** | **Process DIS** | *Current Value* | | * Menu numbers |
| 3.1* | 3.1.1* | *Slope* | | |
| | | *Process Value* | 3.1.1.4* | |
| | **Process pH** | *Current Value* | | |
| | 3.1.2* | *Offset* | | |
| | | *Process Value* | 3.1.2.4* | |
| | **Standard pH** | *(Progress)* | 3.1.3.5* | |
| | 3.1.3* | | | |
| **Service** | **Verification** | *(Progress)* | 3.2.1.1* | |
| 3.2* | 3.2.1* | | | |
| | **Fill System** | *(Progress)* | 3.2.2.5* | |
| | 3.2.2* | | | |
| **Simulation** | *Alarm Relay* | 3.3.1* | | |
| 3.3* | *Relay 1* | 3.3.2* | | |
| | *Relay 2* | 3.3.3* | | |
| | *Signal Output 1* | 3.3.4* | | |
| | *Signal Output 2* | 3.3.5* | | |
| **Set Time** | *(Date), (Time)* | | | |
| 3.4* | | | | |
| **Cleaning** | **Parameters** | **Mode** | 3.5.1.1* | |
| 3.5* | 3.5.1* | **Interval** | *Interval* | 3.5.1.20* |
| | | 3.5.1.1* | *Delay* | 3.5.1.3* |
| | | | *Signal Outputs* | 3.5.1.4* |
| | | | *Output/Control* | 3.5.1.5* |
| | | **Daily** | *Start time* | 3.5.1.21 |
| | | 3.5.1.1* | *Delay* | 3.5.1.3* |
| | | | *Signal Outputs* | 3.5.1.4* |
| | | | *Output/Control* | 3.5.1.5* |
| | | **Weekly** | **Calendar** | *Start time* |
| | | 3.5.1.1* | *Delay* | *Mo. to Su* |
| | | | *Signal Outputs* | 3.5.1.4* |
| | | | *Output/Control* | 3.5.1.5 |
| | | *Off* | 3.5.1.1* | |

| | | | | |
|---|---|---|---|---|
| | **Fill Channel 11** 3.5.2* | *(Progress)* | 3.5.2.5* | * Menu numbers |
| | **Fill Channel 12** 3.5.3* | *(Progress)* | 3.5.3.5* | |

## 8.4. Operation (Main Menu 4)

| | | | | |
|---|---|---|---|---|
| **Sensors** 4.1* | *Filter Time Const.* | 4.1.1* | | |
| | *Hold after Cal.* | 4.1.2* | | |
| | *Meas. Interval* | 4.1.3* | | |
| | *Default pH* | 4.1.4* | | |
| **Relay Contacts** 4.2* | **Alarm Relay** 4.2.1* | **Alarm DIS** 4.2.1.1* | *Alarm High* | 4.2.1.1.1* |
| | | | *Alarm Low* | 4.2.1.1.26* |
| | | | *Hysteresis* | 4.2.1.1.36* |
| | | | *Delay* | 4.2.1.1.46* |
| | | **Alarm pH** 4.2.1.2* | *Alarm High* | 4.2.1.2.1* |
| | | | *Alarm Low* | 4.2.1.2.x* |
| | | | *Hysteresis* | 4.2.1.2.x* |
| | | | *Delay* | 4.2.1.2.x* |
| | **Relay 1& 2** 4.2.2* & 4.2.3* | *Setpoint* | 4.2.x.x* | |
| | | *Hysteresis* | 4.2.x.x* | |
| | | *Delay* | 4.2.x.x* | |
| | **Input** 4.2.4* | *Active* | 4.2.4.1* | |
| | | *Signal Outputs* | 4.2.4.2* | |
| | | *Output / Control* | 4.2.4.3* | |
| | | *Fault* | 4.2.4.4* | |
| | | *Delay* | 4.2.4.5* | |
| **Logger** 4.3* | *Log Interval* | 4.3.1* | | |
| | *Clear Logger* | 4.3.2* | | |

## 8.5. Installation (Main Menu 5)

| | | |
|---|---|---|
| **Sensors** 5.1* | *Disinf.* | 5.1.1* |
| | *Dimension* | 5.1.2* |
| | *Interpolation* | 5.1.3* |
| | *Ref. Verification* | 5.1.4* |

| | | | | |
|---|---|---|---|---|
| | **Standards** | *Standard 1* | 5.1.50.1* | * Menu numbers |
| | 5.1.50* | *Standard 2* | 5.1.50.2* | |
| | **Cleaning** | 1 solution | 5.1.6.1* | |
| | 5.1.6* | 2 solutions | 5.1.6.2* | |
| **Signal Outputs** | **Signal Output 1 & 2** | *Parameter* | 5.2.1.1 & 5.2.2.1* | |
| 5.2* | 5.2.1* & 5.2.2* | *Current Loop* | 5.2.1.2 & 5.2.2.2* | |
| | | *Function* | 5.2.1.3 & 5.2.2.3* | |
| | | **Scaling** | *Range Low* | 5.2.x.40.x* |
| | | 5.2.x.40 | *Range High* | 5.2.x.40.x* |
| **Relay Contacts** | **Alarm Relay** | **Alarm DIS** | *Alarm High* | 5.3.1.1.1* |
| 5.3* | 5.3.1* | 5.3.1.1* | *Alarm Low* | 5.3.1.1.x* |
| | | | *Hysteresis* | 5.3.1.1.x* |
| | | | *Delay* | 5.3.1.1.x* |
| | | **Alarm pH** | *Alarm High* | 5.3.1.2.1* |
| | | 5.3.1.2* | *Alarm Low* | 5.3.1.2.x* |
| | | | *Hysteresis* | 5.3.1.2.x* |
| | | | *Delay* | 5.3.1.2.x* |
| | | **Sample Flow** | *Flow Alarm* | 5.3.1.3.1* |
| | | 5.3.1.3* | *Alarm High* | 5.3.1.3.x* |
| | | | *Alarm Low* | 5.3.1.3.x* |
| | | **Sample Temp.** | *Alarm High* | 5.3.1.4.1* |
| | | 5.3.1.4* | *Alarm Low* | 5.3.1.4.x* |
| | | *Case Temp. high* | 5.3.1.5* | |
| | | *Case Temp. low* | 5.3.1.6* | |
| | **Relay 1 & 2** | *Function* | 5.3.2.1 & 5.3.3.1* | |
| | 5.3.2* & 5.3.3* | *Parameter* | 5.3.2.x & 5.3.3.x* | |
| | | *Setpoint* | 5.3.2.x & 5.3.3.x* | |
| | | *Hysteresis* | 5.3.2.x & 5.3.3.x* | |
| | | *Delay* | 5.3.2.x & 5.3.3.x* | |
| | **Input** | *Active* | 5.3.4.1* | |
| | 5.3.4* | *Signal Outputs* | 5.3.4.2* | |
| | | *Output/Control* | 5.3.4.3* | |
| | | *Fault* | 5.3.4.4* | |
| | | *Delay* | 5.3.4.5* | |

| | | | | |
|---|---|---|---|---|
| **Miscellaneous** | *Language* | 5.4.1* | | * Menu numbers |
| 5.4* | *Set defaults* | 5.4.2* | | |
| | *Load Firmware* | 5.4.3* | | |
| | **Password** | *Messages* | 5.4.4.1* | |
| | 5.4.4* | *Maintenance* | 5.4.4.2* | |
| | | *Operation* | 5.4.4.3* | |
| | | *Installation* | 5.4.4.4* | |
| | *Sample ID* | 5.4.5* | | |
| | *Line Break Detection* | 5.4.6* | | |
| **Interface** | *Protocol* | 5.5.1* | | (only with RS485 |
| 5.5* | *Device Address* | 5.5.21* | | interface) |
| | *Baud Rate* | 5.5.31* | | |
| | *Parity* | 5.5.41* | | |

# 9. Program List and Explanations

## 1 Messages

### 1.1 Pending Errors

1.1.5 Provides the list of active errors with their status (active, acknowledged). If an active error is acknowledged, the alarm relay is active again. Cleared errors are moved to the Message list.

### 1.2 Maintenance List

1.2.5 Demands necessary maintenance, e.g. preparing new reagents.

### 1.3 Message List

1.3.1 Shows the error history: Error code, date and time of issue and status (active, acknowledged, cleared). 65 errors are memorized. Then the oldest error is cleared to save the newest error (circular buffer).

## 2 Diagnostics

In diagnostics mode, the values can only be viewed, not modified.

### 2.1 Identification

**Designation**: View the designation of instrument.
**Version**: Firmware of instrument (e.g. V6.20-08/16)

**2.1.3** **Peripherals**: PeriClip 1: Firmware of peristaltic pump (e.g. 1.03)

**2.1.4** **Factory Test**: Test date of the instrument, motherboard and frontend. QC factory test.

**2.1.5** **Operating Time**: years/days/hours/minutes/seconds

### 2.2 Sensors

**2.2.1** **Photometer:**

*Current value*: Shows the actual photometer signal [ppm].
*Raw value*: Shows the actual photometer signal [Hz].
*Absorbance*: Process value, depends on sample.

2.2.1.4 **Cal. History:** Shows the diagnostic values of the last calibrations.
*Number*: Calibration counter.
*Date, Time*: Date and time of the calibration.
*Slope*: Slope is a correction factor calculated on the basis of a process calibration.
Range: 0.8–1.2

2.2.1.5 **Ver. History:** Shows the verification values of the last verifications:
*Number*: Verification counter.
*Date, Time*: Date and time of the verification.
*Absorbance*: Measured absorbance of the reference kit.
*Reference value*: True value of the reference kit according to label.

**2.2.2 pH Electrode:** Only available if pH option is installed.
*Current Value:* Shows the actually measured pH value.
*Raw value:* Shows the actual electrode voltage in mV.

2.2.2.5 **Cal. History:** Shows the calibration values of the last pH sensor calibrations. Offset in mV and slope in mV/pH.
*Number*: Calibration counter.
*Date, Time*: Date and time of the calibration.
*Offset*: Vertical shift above or below the zero point.
*Slope*: Characteristic of the pH sensor expressed in mV/pH.The calculated slope is used for the entire measuring range of the electrode.

| | |
|---|---|
| Typical offset of pH electrode: | < +/- 30 mV. |
| Max. tolerated offset: | < +/- 60 mV |
| Typical slope of pH electrode: | 55–65 mV/pH unit. |
| Max. limits: | 40–65 mV/pH |

**2.2.3 Miscellaneous**:

2.2.3.1 *Case Temp:* Shows the current temperature in [°C] inside the transmitter.

## 2.3 Sample

**2.3.1 Sample ID:** Shows the identification assigned to a sample. This identification is defined by the user to identify the location of the sample.
**Sample Flow:** Shows the actual sample flow in B/s (bubbles per second)]. The Sample flow must be above 5 B/s.
**Temperature:** Actual temperature in °C and in Ohm *(NT5K)*

## 2.4 I/O State

Shows current status of all in- and outputs.

2.4.1/2.4.2

| | |
|---|---|
| *Alarm Relay:* | Active or inactive |
| *Relay 1 and 2:* | Active or inactive |
| *Input:* | Open or closed |
| *Signal Output 1 and 2:* | Actual current in mA |
| *Signal Output 3:* | Actual current in mA (if option is installed) |

## 2.5 Interface

Only available if optional interface is installed.
Review programmed communication settings.

# 3 Maintenance

## 3.1 Calibration

In this menu, you can correct measuring values (all disinfectants and pH) or calibrate offset and slope of pH electrode.

**3.1.1** **Process DIS**: Possibility to correct the disinfectant value. See Process Calibration of DIS, p. 52, for more details.

**3.1.2** **Process pH**: Only available if pH option has been installed. Correction of pH electrode. See Process Calibration of DIS, p. 52, for details.

**3.1.3** **Standard pH:** Only available if pH option has been installed. Calibration of pH electrode with the two standard solutions programmed in Installation 5.1.3. See Standard pH, p. 54, for details.

## 3.2 Service

**3.2.1** Verification: Performs a verification using the reference kit. Follow dialog. See Verification, p. 51

**3.2.2** Fill System: Activates the reagent pump.

## 3.3 Simulation

To simulate a value or a relay state, select

- alarm relay,
- relay 1or 2
- signal output 1 or 2

with the [▲] or [▼] key.
Press the [Enter] key.
Change the value or state of the selected item with the [▲] or [▼] key.
Press the [Enter] key.
⇒ *The value is simulated by the relay/signal output.*

| | |
|---|---|
| *Alarm Relay:* | Active or inactive |
| *Relay 1 and 2:* | Active or inactive |
| *Signal Output 1 and 2:* | Actual current in mA |
| *Signal Output 3:* | Actual current in mA (if option is installed) |

At the absence of any key activities, the instrument will switch back to normal mode after 20 min. If you quit the menu, all simulated values will be reset.

## 3.4 Set Time

Adjust date and time.

## 3.5 Cleaning

Automatic cleaning process using the optional Cleaning Module-II. Cleaning is not possible if one of the following errors is active:

- E009/E010 Sample flow high/low
- E023 Cleaning solution

### 3.5.1 Parameters

3.5.1.1 *Mode:* The following modes can be chosen: interval, daily, weekly or off.

If Mode = Interval

3.5.1.20 *Interval:* Select one of the following cleaning intervals:
1 h, 2 h, 3 h, 4 h, 6 h, 8 h, 12 h.

3.5.1.3 *Delay:* During cleaning plus the delay time, the status of the signal and control outputs is as set in 3.5.1.4 and 3.5.1.5.
Range: 0–6000 s

3.5.1.4 *Signal Outputs:* Select the operation mode of the signal outputs during cleaning:

*Cont.:* Signal outputs continue to issue the measured value.

*Hold:* Signal outputs hold the last valid measured value. Measurement is interrupted. Errors, except fatal errors, are not issued.

*Off:* Signal outputs are switched off (set to 0 or 4 mA). Errors, except fatal errors, are not issued.

3.5.1.5 *Output/Control:* Relay or signal output:

*Cont.:* Controller continues normally.

*Hold:* Controller continues based on the last valid value.

*Off:* Controller is switched off.

If Mode = daily

The start of the daily cleaning cycle can be set to any time of day.

3.5.1.21 *Start time:* Time of the automatic start of the cleaning process.
Range: 00:00:00–23:59:59

3.5.1.3 *Delay:* see mode interval.
3.5.1.4 *Signal Outputs:* see mode interval.
3.5.1.5 *Output/Control:* see mode interval.

If Mode = weekly

The start of the automatic cleaning cycle can be set to one or more weekdays and any time of day. The programmed time of day is valid for all selected weekdays.

**3.5.1.22 Calendar:**

3.5.1.22.1 Start time: Time of the automatic start of the cleaning process (valid for all selected weekdays).
3.5.1.22.2 Monday: Possible settings: on or off
to
3.5.1.22.8 Sunday: Possible settings: on or off

3.5.1.3 *Delay:* see mode interval.
3.5.1.4 *Signal Outputs:* see mode interval.
3.5.1.5 *Output/Control:* see mode interval.

all modes

**3.7.2** *Fill Channel 11:* Activates the cleaning pump and switches the valve to cleaning solution 1 (right canister).

**3.7.3** *Fill Channel 12:* Activates the cleaning pump and switches the valve to cleaning solution 2 (left canister).

# 4 Operation

## 4.1 Sensors

4.1.1 *Filter Time Constant:* Used to damp noisy signals. The higher the filter time constant, the slower the system reacts to changes of the measured value.
Range: 5–300 sec

4.1.2 *Hold after Cal:* Delay permitting the instrument to stabilize again after calibration. During calibration- plus hold-time, the signal outputs are frozen (held on last valid value), alarm values, limits are not active.
Range: 0–6‘000 sec

4.1.3 *Meas. Interval:* Measurement interval for disinfectants.
Range: 1 to 12 min

4.1.4 *Default pH*: If the pH value of the sample is known it can be entered in this menu.This menu only appears if the pH option is not installed.
Range: 0–14 pH

## 4.2 Relay Contacts

See 5.3 Relay Contacts, p. 88

## 4.3 Logger

The instrument is equipped with an internal logger. The data can be copied to a PC with an USB stick if option USB interface is installed.
The logger can save approx. 1500 data records. The records consist of: Date, time, alarms, measured value, measured value uncompensated, temperature, flow.
Range: 1 second to 1 hour

4.3.1 *Log Interval:* Select a convenient log interval. Consult the table below to estimate the max logging time. The logging buffer is designed as circular buffer. If the buffer is full, the oldest data record is erased to make room for the newest one.
If the logger interval is set to event driven, a data record of every valid measurement is saved. The interval corresponds with the measuring interval.

| **Interval** | 1 s | 5 s | 1 min | 5 min | 10 min | 30 min | 1 h | Event Driven |
|---|---|---|---|---|---|---|---|---|
| **Time** | 25 min | 2 h | 25 h | 5 d | 10 d | 31 d | 62 d | |

4.3.2 *Clear Logger:* If confirmed with **yes**, the complete logger data is deleted. A new data series is started.

# 5 Installation

## 5.1 Sensors

5.1.1 *Disinf:* Select the disinfectant in use. Available disinfectants are:
- Free chlorine
- Hypochl. acid
- Ozone
- Chlorine dioxide
- Bromine
- Iodine
- Monochloramine

5.1.2 *Dimension*: The measuring value can be displayed as ppm or mg/l

5.1.3 *Interpolation:*
Yes: Display and output of free chlorine value changes linearly between two measuring points. Select this mode if you encounter problems with the controller of free chlorine.
no: Step response of display and output between two measuring points.

5.1.4 *Ref. Verification:* Set absorbance value of verification kit according to label.
Range: 0.200–0.600

**5.1.5** **Standards:** Program the two standard solutions for the calibration of the pH electrode. If pH electrode is not connected the programmed standards are not active.
Range: 1.00 pH–13.00 pH

**5.1.6** **Cleaning:** Program whether the cleaning module uses one or two solutions.
Range: 1 solution, 2 solutions

## 5.2 Signal Outputs

**5.2.1 and 5.2.2** **Signal Output 1 and 2:** Assign process value, the current loop range and a function to each signal output.

***Note:*** *The navigation in the menu <Signal Output 1> and <Signal Output 2> is equal. For reason of simplicity only the menu numbers of Signal Output 1 are used in the following.*

5.2.1.1 *Parameter:* Assign one of the process values to the signal output.
Available values:
- DIS
- pH
- Temperature
- Sample flow

5.2.1.2 *Current Loop:* Select the current range of the signal output.
Make sure the connected device works with the same current range.
Available ranges: 0–20 mA or 4–20 mA

5.2.1.3 *Function:* Define if the signal output is used to transmit a process value or to drive a control unit. Available functions are:

- Linear, bilinear or logarithmic for process values.
  See As process values, p. 85
- Control upwards or control downwards for controllers.
  See As control output, p. 86

**As process values**

The process value can be represented in 3 ways: linear, bilinear or logarithmic. See graphs below.

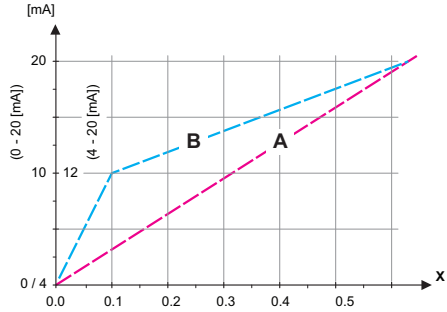


***A*** *linear*
***B*** *bilinear*
***X*** *Measured value*

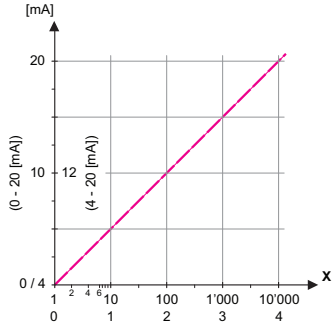


***X*** *Measured value (logarithmic)*

**5.2.1.40** **Scaling:** Enter beginning and end point (Range low & high) of the linear or logarithmic scale. In addition, the midpoint for the bilinear scale.

**Parameter DIS:**

5.2.1.40.10 *Range low*: 0–10 ppm or 0–10 mg/l

5.2.1.40.20 *Range high:* 0–10 ppm or 0–10 mg/l

**Parameter pH**

5.2.1.40.11 *Range low*: 0 –14 pH

5.2.1.40.21 *Range high*: 0 –14 pH

**Parameter Temperature**

5.2.1.40.12 *Range low*: -30 to +120 °C

5.2.1.40.22 *Range high*: -30 to +120 °C

**Parameter Sample flow**

5.2.1.40.13 *Range low*: 0 –600 B/s

5.2.1.40.23 *Range high*: 0 –600 B/s

**As control output**

Signal outputs can be used for driving control units. We distinguish different kinds of controls:

- *P-controller:* The controller action is proportional to the deviation from the setpoint. The controller is characterized by the P-Band. In the steady-state, the setpoint will never be reached. The deviation is called steady-state error.
  Parameters: setpoint, P-Band
- *PI-controller:* The combination of a P-controller with an I-controller will minimize the steady-state error. If the reset time is set to zero, the I-controller is switched off.
  Parameters: setpoint, P-Band, reset time.
- *PD-controller:* The combination of a P-controller with a D-controller will minimize the response time to a fast change of the process value. If the derivative time is set to zero, the D-controller is switched off.
  Parameters: setpoint, P-Band, derivative time.
- *PID-controller:* The combination of a P-, an I - and a D-controller allows a proper control of the process.
  Parameters: setpoint, P-Band, reset time, derivative time.

Ziegler-Nichols method for the optimization of a PID controller:
**Parameters**: Setpoint, P-Band, Reset time, Derivative time

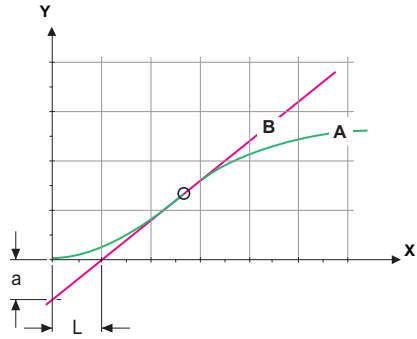


***A*** *Response to maximum control output* ***Xp*** *= 1.2/a*
***B*** *Tangent on the inflection point* ***Tn*** *= 2L*
***X*** *Time* ***Tv*** *= L/2*

The point of intersection of the tangent with the respective axis will result in the parameters a and L.
Consult the manual of the control unit for connecting and programming details. Choose control upwards or downwards.

### Control upwards/downwards

*Setpoint:* User-defined process value (Measured value or flow)
*P-Band:* Range below (upwards control) or above (downwards control) the set-point, within the dosing intensity is reduced from 100% to 0% to reach the set-point without overshooting.

**5.2.1.43** Control Parameters: if Parameters = DIS
5.2.1.43.10 *Setpoint*: 0–5 ppm or 0–5 mg/l
5.2.1.43.20 *P-Band*: 0–5 ppm 0–5 mg/l

**5.2.1.43** Control Parameters: if Parameters = pH
5.2.1.43.11 *Setpoint*: 0 –14 pH
5.2.1.43.21 *P-Band*: 0 –14 pH

**5.2.1.43** Control Parameters: if Parameters = Temperature
5.2.1.43.12 *Setpoint*: -30 to +120 °C
5.2.1.43.22 *P-Band*: 0 to +100 °C

**5.2.1.43** Control Parameters: if Parameters = Sample Flow
5.2.1.43.13 *Setpoint*: 0–600 B/s
5.2.1.43.23 *P-Band*: 0 –200 B/s

*Reset time:* The reset time is the time till the step response of a single I-controller will reach the same value as it will be suddenly reached by a P-controller.
Range: 0–9'000 sec
*Derivative time:* The derivative time is the time till the ramp response of a single P-controller will reach the same value as it will be suddenly reached by a D-controller.
Range: 0–9'000 sec
*Control timeout:* If a controller action (dosing intensity) is constantly over 90% during a defined period of time and the process value does not come closer to the setpoint, the dosing process will be stopped for safety reasons.
Range: 0–720 min

## 5.3 Relay Contacts

**5.3.1** **Alarm Relay:** The alarm relay is used as cumulative error indicator. Under normal operating conditions the contact is active.
The contact is inactive at:

- Power loss
- Detection of system faults like defective sensors or electronic parts
- High case temperature
- Lack of reagents
- Process values out of programmed ranges.

Program alarm levels, hysteresis values and delay times for the following parameters:

- DIS
- pH
- Temperature
- Sample flow

The alarm values of Sample Flow and Temperature can be programmed in menu as well (5.3.1.3, p. 89 or 5.3.1.4, p. 89)

**5.3.1.1** **Alarm DIS.**

5.3.1.1.1 *Alarm High:* If the measured value rises above the alarm high value, the alarm relay is activated and E001 is displayed in the message list. Range: 0.00–10.00 ppm

5.3.1.1.25 *Alarm Low:* If the measured value falls below the alarm low value, the alarm relay is activated and E002 is displayed in the message list.
Range: 0.00–10.00 ppm

5.3.1.1.35 *Hysteresis:* Within the hyst. range, the relay does not switch. This prevents damage of relays contacts when the measured value fluctuates around the alarm value.
Range. 0.00–10.00 ppm

5.3.1.1.45 *Delay:* Duration, the activation of the alarm relay is retarded after the measuring value has risen above/fallen below the programmed alarm.
Range: 0.00–28‘800 sec

**5.3.1.2 Alarm pH:** Only available if pH option is installed. Define the measuring value, which should issue an alarm high respectively low.

5.3.1.2.1 *Alarm High:* If the measured value rises above the alarm high value, the alarm relay is activated and E003 is displayed in the message list.
Range: 0–14.00 pH

5.3.1.2.21 *Alarm Low:* If the measured value falls below the alarm low value, the alarm relay is activated and E004 is displayed in the message list
Range: 0–14.00 pH

5.3.1.2.31 *Hysteresis:* Within the hyst. range, the relay does not switch. This prevents damage of relays contacts when the measured value fluctuates around the alarm value
Range: 0–14.00 pH

5.3.1.2.41 Delay: Duration, the activation of the alarm relay is retarded after the measuring value has risen above/fallen below the programmed alarm.
Range: 0–28‘800 sec

**5.3.1.3 Sample Flow:** Define at which sample flow a flow alarm should be issued.

5.3.1.3.1 *Flow Alarm:* Program if the alarm relay should be activated if there is a flow alarm. Choose between yes or no. The flow alarm will always be indicated in the display, pending error list, saved in the message list and the logger.
Available values: Yes or no

> ***Note:*** *Sufficient flow is essential for a correct measurement. We recommend to program yes.*

5.3.1.3.x *Alarm High:* If the measuring values rises above the programmed value E009 will be issued.
Range: 100–600 B/s

5.3.1.3.x *Alarm Low:* If the measuring values falls below the programmed value E010 will be issued.
Range: 5–80 B/s

**5.3.1.4 Sample Temperature:** Only available if pH option is installed. Define the measuring value, which should issue an alarm high respectively low.

5.3.1.4.1 *Alarm High:* If the sample temperature rises above the programmed value E007 is issued.
Range: 30–70 °C

5.3.1.4.2 *Alarm Low:* If the sample temperature falls below the programmed value E008 is issued.
Range: 0–20 °C

**5.3.1.5** *Case Temp. high:* Set the alarm high value for temperature of electronics housing. If the value rises above the programmed value E013 is issued.
Range: 30–75 °C

**5.3.1.6** *Case Temp. low:* Set the alarm low value for temperature of electronics housing. If the value falls below the programmed value E014 is issued.
Range: -10 to + 20 °C

**5.3.2 and 5.3.3** **Relay 1 and 2:** The contacts can be set as normally open or normally closed with a jumper. See Relay 1 and 2, p. 31.
The function of the relay contacts 1 and 2 is defined by the user.

***Note:*** *The navigation in the menu <Relay 1> and <Relay 2> is equal. For reason of simplicity only the menu numbers of Relay 1 are used in the following.*

**1** First select the functions as:
- Limit upper/lower,
- Control upwards/downwards,
- Timer
- Fieldbus
- End of Batch (relay 2 only)

**2** Then enter the necessary data depending on the selected function.

5.3.2.1 Function = Limit upper/lower:

When the relays are used as upper or lower limit switches, program the following:

5.3.2.20 *Parameter:* select a process value

5.3.2.300 *Setpoint*: If the measured value rises above respectively falls below the set-point, the relay is activated.

| Parameter | Range |
|---|---|
| DIS | 0–5 ppm |
| pH | 0–14.00 pH |
| Temperature | -30 to +120 °C |
| Sample flow | 0–600 B/s |

5.3.2.400 *Hysteresis:* within the hysteresis range, the relay does not switch. This prevents damage of relay contacts when the measured value fluctuates around the alarm value.

| Parameter | Range |
|---|---|
| DIS | 0–5 ppm |
| pH | 0–14.00 pH |
| Temperature | 0 to +100 °C |
| Sample flow | 0–200 B/s |

5.3.2.50 *Delay:* Duration, the activation of the alarm relay is retarded after the measuring value has risen above/fallen below the programmed alarm.
Range. 0–600 sec

5.3.2.1 Function = Control upwards/downwards:

The relays may be used to drive control units such as solenoid valves, membrane dosing pumps or motor valves. When driving a motor valve both relays are needed, relay 1 to open and relay 2 to close the valve.

5.3.2.22 *Parameter:* Choose on of the following process values.

- DIS
- pH
- Temperature
- Sample Flow

**5.3.2.32** **Settings***:* Choose the respective actuator:

- Time proportional
- Frequency
- Motor valve

| | |
|---|---|
| 5.3.2.32.1 | Actuator = Time proportional |
| | Examples of metering devices that are driven time proportional are solenoid valves, peristaltic pumps.<br>Dosing is controlled by the operating time. |
| 5.3.2.32.20 | *Cycle time:* duration of one control cycle (on/off change).<br>Range: 0–600 sec. |
| 5.3.2.32.30 | *Response time:* Minimal time the metering device needs to react.<br>Range: 0–240 sec. |
| **5.3.2.32.4** | **Control Parameters**<br>Range for each Parameter same as 5.2.1.43, p. 87 |
| 5.3.2.32.1 | Actuator = Frequency |
| | Examples of metering devices that are pulse frequency driven are the classic membrane pumps with a potential free triggering input.<br>Dosing is controlled by the repetition speed of dosing shots. |
| 5.3.2.32.21 | *Pulse frequency:* Max. pulses per minute the device is able to respond to. Range: 20–300/min. |
| **5.3.2.32.31** | **Control Parameters**<br>Range for each Parameter same as 5.2.1.43, p. 87 |
| 5.3.2.32.1 | Actuator = Motor valve |
| | Dosing is controlled by the position of a motor driven mixing valve. |
| 5.3.2.32.22 | *Run time:* Time needed to open a completely closed valve<br>Range: 5–300 sec. |
| 5.3.2.32.32 | *Neutral zone:* Minimal response time in % of the runtime. If the requested dosing output is smaller than the response time, no change will take place.<br>Range: 1–20 % |
| **5.3.2.32.4** | **Control Parameters**<br>Range for each Parameter same as 5.2.1.43, p. 87 |
| 5.3.2.1 | Function = Timer: |
| | The relay will be active repetitively depending on the programmed time scheme. |
| 5.3.2.24 | *Mode:* Operating mode (interval, daily, weekly) |

5.3.2.24 *Interval*

5.3.2.340 *Interval:* The interval can be programmed within a range of 1–1'440 min.

5.3.2.44 *Run Time*: Enter the time the relay stays active.
Range: 5–32'400 sec.

5.3.2.54 *Delay*: during run time plus the delay time the signal and control outputs are held in the operating mode programmed below.
Range: 0–6'000 sec.

5.3.2.6 *Signal Outputs*: Select operating mode of the signal output:

*Cont.:* Signal outputs continue to issue the measured value.

*Hold:* Signal outputs hold the last valid measured value. Measurement is interrupted. Errors, except fatal errors, are not issued.

*Off:* Signal outputs are switched off (set to 0 or 4 mA). Errors, except fatal errors, are not issued.

5.3.2.7 *Output/Control*: Select operating mode of the controller output:

*Cont.:* Controller continues normally.

*Hold:* Controller continues based on the last valid value.

*Off:* Controller is switched off.

5.3.2.24 *daily*

The relay contact can be activated daily, at any time of a day.

5.3.2.341 *Start time*: to set the start time proceed as follows:

**1** Press [Enter], to set the hours.

**2** Set the hour with the [▲] or [▼] keys.

**3** Press [Enter], to set the minutes.

**4** Set the minutes with the [▲] or [▼] keys.

**5** Press [Enter], to set the seconds.

**6** Set the seconds with the [▲] or [▼] keys.

Range: 00:00:00–23:59:59

5.3.2.44 *Run Time*: see Interval

5.3.2.54 *Delay*: see Interval

5.3.2.6 *Signal Outputs*: see Interval

5.3.2.7 *Output/Control*: see Interval

5.3.2.24 *weekly*

The relay contact can be activated at one or several days, of a week. The daily starting time is valid for all days.

**5.3.2.342** **Calendar**:

5.3.2.342.1 *Start time*: The programmed start time is valid for each of the programmed days. To set the start time see 5.3.2.341, p. 93.
Range: 00:00:00–23:59:59

5.3.2.342.2 *Monday*: Possible settings, on or off
to

5.3.2.342.8 *Sunday*: Possible settings, on or off

5.3.2.44 *Run Time*: see Interval

5.3.2.54 *Delay*: see Interval

5.3.2.6 *Signal Outputs*: see Interval

5.3.2.7 *Output/Control*: see Interval

5.3.2.1 Function = Fieldbus:

The relay will be switched via the Profibus input. No further parameters are needed.

5.3.3.1 Function = End of Batch

This function is only available on relay 2. It is used to communicate with canal switching instruments from third-party suppliers. The relay closes for 1 sec. after each valid measurement. If End of Batch is selected, no further selection is possible.

**5.3.4** **Input:** The functions of the relays and signal outputs can be defined depending on the position of the input contact, i.e. no function, closed or open.

5.3.4.1 *Active:* Define when the input should be active:

| | |
|---|---|
| *No:* | Input is never active. |
| *When closed* | Input is active if the input relay is closed |
| *When open:* | Input is active if the input relay is open |

5.3.4.2 *Signal Outputs:* Select the operation mode of the signal outputs when the relay is active:

| | |
|---|---|
| *Cont.:* | Signal outputs continue to issue the measured value. |
| *Hold:* | Signal outputs issue the last valid measured value. Measurement is interrupted. Errors, except fatal errors, are not issued. |
| *Off:* | Set to 0 or 4 mA respectively. Errors, except fatal errors, are not issued. |

5.3.4.3 *Output/Control:* (relay or signal output):

| | |
|---|---|
| *Cont.:* | Controller continues normally. |
| *Hold:* | Controller continues on the last valid value. |
| *Off:* | Controller is switched off. |

5.3.4.4 *Fault:*

| | |
|---|---|
| *No:* | No message is issued in pending error list and the alarm relay does not close when input is active. Message E024 is stored in the message list. |
| *Yes:* | Message E024 is issued and stored in the message list. The Alarm relay closes when input is active. |

5.3.4.5 *Delay:* Time which the instrument waits, after the input is deactivated, before returning to normal operation.
Range: 0–6‘000 sec

## 5.4 Miscellaneous

5.4.1 *Language:* Set the desired language.
Available settings: German/English/French/Spanish

5.4.2 *Set defaults:* Reset the instrument to factory default values in three different ways:

- **Calibration:** Sets calibration values back to default. All other values are kept in memory.
- **In parts:** Communication parameters are kept in memory. All other values are set back to default values.
- **Completely:** Sets back all values including communication parameters.

5.4.3 *Load Firmware:* Firmware updates should be done by instructed service personnel only.

5.4.4 **Password:** Select a password different from 0000 to prevent unauthorized access to the menus “Messages”, “Maintenance”, “Operation” and “Installation”.
Each menu may be protected by a *different* password.
If you forgot the passwords, contact the closest SWAN representative.

5.4.5 *Sample ID:* Identify the process value with any meaning full text, such as KKS number.

5.4.6 *Line Break Detection:* If activated, error message E028 is shown in case of line break on signal outputs 1 and 2.

## 5.5 Interface

Select one of the following communication protocols. Depending on your selection, different parameters must be defined.

**5.5.1** *Protocol:* **Profibus**

| | | |
|---|---|---|
| 5.5.20 | Device address: | Range: 0–126 |
| 5.5.30 | ID-Nr.: | Range: Analyzer; Manufacturer; Multivariable |
| 5.5.40 | Local operation: | Range: Enabled, Disabled |

**5.5.1** *Protocol:* **Modbus RTU**

| | | |
|---|---|---|
| 5.5.21 | Device address: | Range: 0–126 |
| 5.5.31 | Baud Rate: | Range: 1200–115200 Baud |
| 5.5.41 | Parity: | Range: none, even, odd |

**5.5.1** *Protocol:* **USB-Stick:**
Only visible if an USB interface is installed. No further settings are possible.

**5.5.1** *Protocol:* **HART**

| | | |
|---|---|---|
| 5.5.24 | Device address: | Range: 0–63 |

# 10. Material Safety Data sheets

## 10.1. Reagents

| | |
|---|---|
| Catalogue No.: | A-85.410.120 |
| Product name: | OXYCON ON-LINE DPD |
| Catalogue No.: | A-85.410.120 |
| Product name: | OXYCON ON-LINE Buffer |
| Catalogue No: | A-85.419.200 |
| Product name: | OXYCON ON-LINE KI |
| Catalogue No.: | A-85.112.300 |
| Product name: | Calibration Solution pH 4 |
| Catalogue No.: | A-85.113.300 |
| Product name: | Calibration Solution pH 7 |
| Catalogue No: | A-85.114.300 |
| Product name: | Calibration Solution pH 9 |

**Download MSDS**

The current Material Safety Data Sheets (MSDS) for the above listed Reagents are available for downloading at **www.swan.ch**.

# 11. Default Values

***Note:*** *The parameter Cleaning is only visible if the optional Cleaning Module is connected to the AMI Codes II.*
*The parameters pH and Temperature are only visible if the pH option is installed.*

**Operation:**

| | |
|---|---|
| Sensors: | Filter Time Const.: ..... 30 s |
| | Hold after Cal.: ..... 120 s |
| | Meas. Interval: ..... 5 min |
| | Default pH *(If pH option is not installed)* ..... 7.00 pH |
| Alarm Relay | ..... same as in Installation |
| Relay 1 and 2 | ..... same as in Installation |
| Input | ..... same as in Installation |
| Logger: | Logger Interval: ..... Event Driven |
| | Clear Logger: ..... no |

**Installation:**

| | |
|---|---|
| Sensor: | Disinf: ..... Free chlorine |
| | Dimension ..... ppm |
| | Interpolation: ..... yes |
| | Ref. Verification: ..... 0.255 |
| | Standard: Standard 1: ..... 7.00 pH |
| | Standard: Standard 2: ..... 9.00 pH |
| | Cleaning ..... 2 Solutions |
| Signal Output 1&2 | Parameter: ..... DIS. |
| | Current loop: ..... 4–20 mA |
| | Function: ..... linear |
| | Scaling: Range low: ..... 0.00 ppm |
| | Scaling: Range high: ..... 5.00 ppm |
| | Scaling: pH: Range low: ..... 0.00 pH |
| | Scaling: pH: Range high: ..... 14.00 pH |
| | Scaling: Temperature: Range low: ..... 0.0 °C |
| | Scaling: Temperature: Range high: ..... 50.0 °C |
| | Scaling: Sample Flow: Range low: ..... 0 B/s |
| | Scaling: Sample Flow: Range high: ..... 200 B/s |
| Alarm Relay | Alarm DIS.: |
| | Alarm high: ..... 5.00 ppm |
| | Alarm low: ..... 0.00 ppm |
| | Hysteresis: ..... 0.10 ppm |
| | Delay: ..... 5 s |

pH: Alarm high: ..... 14.00 pH
pH: Alarm low: ..... 0.00 pH
pH: Hysteresis: ..... 0.10 pH
pH: Delay: ..... 5 s

Sample Flow: Flow Alarm: ..... yes
Sample Flow: Alarm High: ..... 500 B/s
Sample Flow: Alarm Low: ..... 5 B/s

Sample Temp.: Alarm High: ..... 55 °C
Sample Temp.: Alarm Low: ..... 5 °C

Case temp. high: ..... 65 °C
Case temp. low: ..... 0 °C

Relay 1 and 2

Function: ..... Limit upper
Parameter: ..... DIS.
Setpoint: ..... 5.00 ppm
Hysteresis: ..... 0.10 ppm
Delay: ..... 30 s

**If Function = Control upw. or dnw:**

Parameter: ..... **DIS**
Settings: Actuator: ..... Frequency
Settings: Pulse Frequency: ..... 120/min
Settings: Control Parameters: Setpoint: ..... 5.00 ppm
Settings: Control Parameters: P-band: ..... 0.10 ppm

Parameter: ..... **pH**
Settings: Actuator: ..... Frequency
Settings: Pulse Frequency: ..... 120/min
Settings: Control Parameters: Setpoint: ..... 7.00 pH
Settings: Control Parameters: P-band: ..... 0.10 pH

Parameter: ..... **Temperature**
Settings: Actuator: ..... Frequency
Settings: Pulse Frequency: ..... 120/min
Settings: Control Parameters: Setpoint: ..... 30 °C
Settings: Control Parameters: P-band: ..... 1 °C

Parameter: ..... **Sample Flow**
Settings: Actuator: ..... Frequency
Settings: Pulse Frequency: ..... 120/min
Settings: Control Parameters: Setpoint: ..... 200 B/s
Settings: Control Parameters: P-band: ..... 20 B/s

*Common settings*

Settings: Control Parameters: Reset time: ..... 0 s
Settings: Control Parameters: Derivative Time: ..... 0 s
Settings: Control Parameters: Control Timeout: ..... 0 min

| | |
|---|---|
| | Settings: Actuator: ..... Time proportional |
| | Cycle time: ..... 60 s |
| | Response time: ..... 10 s |
| | Settings: Actuator ..... Motor valve |
| | Run time: ..... 60 s |
| | Neutral zone: ..... 5% |
| | **If Function = Timer:** |
| | Mode: ..... Interval |
| | Interval: ..... 1 min |
| | Mode: ..... daily |
| | Start time: ..... 00.00.00 |
| | Mode: ..... weekly |
| | Calendar; Start time: ..... 00.00.00 |
| | Calendar; Monday to Sunday: ..... Off |
| | Run time: ..... 10 s |
| | Delay: ..... 5 s |
| | Signal output: ..... cont |
| | Output/Control: ..... cont |
| Input: | Active ..... when closed |
| | Signal Outputs ..... hold |
| | Output/Control ..... off |
| | Fault ..... no |
| | Delay ..... 10 s |
| Miscellaneous | Language: ..... English |
| | Set default: ..... no |
| | Load firmware: ..... no |
| | Password: ..... for all modes 0000 |
| | Sample ID: ..... - - - - - - - - |
| | Line break detection ..... no |

# 12. Index

**A**
Accuracy . . . . . 11
Alarm
DIS . . . . . 88
pH . . . . . 89
Sample flow . . . . . 89
Sample temperature . . . . . 89
Alarm Relay . . . . . 12, 30, 88
Application range . . . . . 11

**C**
Cable thicknesses . . . . . 26
Cal. History . . . . . 79
Calendar . . . . . 94
Calibration
DIS . . . . . 52, 80
pH . . . . . 39, 52, 80
Changing values . . . . . 43
Cleaning module . . . . . 12
Current outputs . . . . . 33

**D**
Disinfectant . . . . . 11, 84

**E**
Electrical wiring . . . . . 18

**F**
Fill System . . . . . 38, 80
Flow Alarm . . . . . 64, 89
Fluidics . . . . . 13

**H**
HART . . . . . 35

**I**
Input . . . . . 12, 30
Instrument Setup . . . . . 18
Interface
HART . . . . . 35
Modbus . . . . . 34
Profibus . . . . . 34
USB . . . . . 35
Interpolation . . . . . 84, 98
Interrupt measurement . . . . . 12

**L**
Logger . . . . . 83, 98

**M**
Measurement interval . . . . 46, 83, 98
Measuring range . . . . . 11, 15
Message List . . . . . 78
Modbus . . . . . 34
Mounting requirements . . . . . 19

**O**
On-site requirements . . . . . 15, 18

**P**
Pending Errors . . . . . 78
pH Electrode . . . . . 18, 39, 59, 79
pH gain . . . . . 64
pH Measurement . . . . . 12, 79
pH offset . . . . . 64
Power Supply . . . . . 15
Process calibration . . . . . 19
Process DIS . . . . . 39, 52, 80
Process pH . . . . . 52, 80
Profibus . . . . . 35

**R**
Reagent consumption . . . . . 46
Relay . . . . . 12, 90, 99
Relay Box. . . . . 12

**S**
Sample Flow . . . . . 37, 79, 89
Sample requirements . . . . . 15
Sample Temperature . . . . . 89
Signal Outputs . . . . . 11, 33, 84
Simulation . . . . . 80
Slope photometry . . . . . 64
Software . . . . . 42
Standard pH . . . . . 54, 80
Standards. . . . . 84

**T**
Terminals . . . . . 28, 30–31, 34
Tube numbering . . . . . 62

**U**
USB Interface . . . . . 35

**V**
Ver. History . . . . . 79
Verification. . . . . 51, 80, 84

**W**
Wire . . . . . 26

**Z**
Zero photometry . . . . . 64

# 13. Notes

swan
ANALYTICAL INSTRUMENTS

A-96.250.571 / 171120

## Swan Products - Analytical Instruments for:




**Swan** is represented worldwide by subsidiary companies and distributors and cooperates with independent representatives all over the world. For contact information, please scan the QR code.

Swan Analytical Instruments · CH-8340 Hinwil
www.swan.ch · swan@swan.ch

SWISS MADE



AMI Codes-II

# *SWAN*

## *AMI CODES-II TC, TOTAL CHLORINE ANALYZER*

LEFT BLANK

ANALYTICAL INSTRUMENTS

A-96.250.631 / 191120

# Operator’s Manual

**Firmware V6.20 and higher**



SWISS MADE

AMI Codes-II TC

**Customer Support**
Swan and its representatives maintain a fully trained staff of technical specialists around the world. For any technical question, contact your nearest Swan representative, or the manufacturer:

Swan Analytische Instrumente AG
Studbachstrasse 13
8340 Hinwil
Switzerland

Internet: www.swan.ch
E-mail: support@swan.ch

**Document Status**

| **Title:** | AMI Codes-II TC Operator's Manual | |
|---|---|---|
| **ID:** | A-96.250.631 | |
| **Revision** | **Issue** | |
| 01 | November 2010 | First edition |
| 02 | December 2013 | Update to Rev. 5.40, mainboard V2.4 |
| 03 | May 2017 | Update to Rev. 6.00, mainboard V2.5 |
| 04 | June 2020 | Mainboard V2.6 |

© 2020, Swan Analytische Instrumente AG, Switzerland, all rights reserved.

The information contained in this document is subject to change without notice.

## Table of Contents


**1. Safety Instructions . . . . . 6**
1.1. Warning Notices . . . . . 7
1.2. General Safety Regulations . . . . . 9
1.3. Restrictions for use . . . . . 10

**2. Product Description . . . . . 11**
2.1. Instrument Specification . . . . . 17
2.2. Instrument Overview . . . . . 19

**3. Installation . . . . . 20**
3.1. Installation Check List . . . . . 20
3.2. Mounting of Instrument Panel . . . . . 21
3.3. Connecting Sample and Waste . . . . . 21
3.3.1 FEP Tube at Sample Inlet . . . . . 21
3.3.2 FEP Tube at Sample Outlet . . . . . 22
3.4. Installation of Flow Cell . . . . . 23
3.5. Install the Option pH . . . . . 24
3.5.1 pH as Option ex works . . . . . 24
3.5.2 pH Option as Retrofit Kit . . . . . 25
3.6. Electrical Connections . . . . . 28
3.6.1 Connection Diagram . . . . . 30
3.6.2 Power Supply . . . . . 31
3.7. Input . . . . . 32
3.8. Relay Contacts . . . . . 32
3.8.1 Alarm Relay . . . . . 32
3.8.2 Relay 1 and 2 . . . . . 33
3.9. Signal Outputs . . . . . 35
3.9.1 Signal Output 1 and 2 (current outputs) . . . . . 35
3.10 Interface Options . . . . . 35
3.10.1 Signal Output 3 . . . . . 36
3.10.2 Profibus, Modbus Interface . . . . . 36
3.10.3 HART Interface . . . . . 37
3.10.4 USB Interface . . . . . 37

**4. Instrument Setup . . . . . 38**
4.1. Prepare Reagents . . . . . 38
4.2. Peristaltic Pump . . . . . 38
4.3. Establish Sample Flow . . . . . 39
4.4. Fill or Flush Reagent System . . . . . 40
4.5. Programming . . . . . 40
4.6. Calibration . . . . . 41

**5. Operation . . . . . 42**
5.1. Keys . . . . . 42
5.2. Display . . . . . 43
5.3. Software Structure . . . . . 44
5.4. Changing Parameters and values . . . . . 45

**6. Maintenance . . . . . 46**
6.1. Maintenance Schedule . . . . . 46
6.2. Stop of Operation for Maintenance . . . . . 47
6.3. Refill or replace Reagents . . . . . 48
6.3.1 Reagents for Measuring Total Chlorine . . . . . 51
6.4. Verification . . . . . 52
6.5. Calibration . . . . . 53
6.6. Cleaning the protective Filter . . . . . 56
6.7. Cleaning the Photometer . . . . . 57
6.8. Cleaning the Flow Cell . . . . . 58
6.8.1 Disassemble the Flow Cell . . . . . 58
6.8.2 Assemble the Flow Cell . . . . . 59
6.9. Maintenance of pH sensor . . . . . 60
6.10. Tube Replacement . . . . . 61
6.10.1 Replace the Pump Tubes . . . . . 61
6.10.2 Replace the Reagent Tubes . . . . . 63
6.11. Cleaning the solenoid valve . . . . . 64
6.12. Longer Stop of Operation . . . . . 66

**7. Troubleshooting . . . . . 67**
7.1. General Instructions . . . . . 67
7.2. Calibration Errors . . . . . 68
7.2.1 Process calibration tc2 . . . . . 68
7.2.2 Process pH . . . . . 68
7.2.3 Standard pH . . . . . 68
7.3. Error List . . . . . 69
7.4. Opening the peristaltic pump housing . . . . . 74
7.5. Replacing Fuses . . . . . 75

**8. Program Overview . . . . . 76**
8.1. Messages (Main Menu 1) . . . . . 76
8.2. Diagnostics (Main Menu 2) . . . . . 77
8.3. Maintenance (Main Menu 3) . . . . . 78
8.4. Operation (Main Menu 4) . . . . . 79
8.5. Installation (Main Menu 5) . . . . . 80

**9. Program List and Explanations . . . . . 82**
1 Messages . . . . . 82
2 Diagnostics . . . . . 82
3 Maintenance . . . . . 84
4 Operation . . . . . 87
5 Installation . . . . . 88
**10. Material Safety Data sheets . . . . . 103**
10.1. Reagents . . . . . 103
**11. Default Values . . . . . 104**
**12. Index . . . . . 108**
**13. Notes . . . . . 110**

# AMI Codes-II TC–Operator's Manual

This document describes the main steps for instrument setup, operation and maintenance.

## 1. Safety Instructions

**General**

The instructions included in this section explain the potential risks associated with instrument operation and provide important safety practices designed to minimize these risks.
If you carefully follow the information contained in this section, you can protect yourself from hazards and create a safer work environment.
More safety instructions are given throughout this manual, at the respective locations where observation is most important. Strictly follow all safety instructions in this publication.

**Target audience**

Operator: Qualified person who uses the equipment for its intended purpose.
Instrument operation requires thorough knowledge of applications, instrument functions and software program as well as all applicable safety rules and regulations.

**OM Location**

Keep the AMI Operator's Manual in proximity of the instrument.

**Qualification, Training**

To be qualified for instrument installation and operation, you must:

- read and understand the instructions in this manual as well as the Material Safety Data Sheets.
- know the relevant safety rules and regulations.

## 1.1. Warning Notices

The symbols used for safety-related notices have the following meaning:



**DANGER**

Your life or physical wellbeing are in serious danger if such warnings are ignored.

- Follow the prevention instructions carefully.



**WARNING**

Severe injuries or damage to the equipment can occur if such warnings are ignored.

- Follow the prevention instructions carefully.



**CAUTION**

Damage to the equipment, minor injury, malfunctions or incorrect process values can be the consequence if such warnings are ignored.

- Follow the prevention instructions carefully.

**Mandatory Signs**

The mandatory signs in this manual have the following meaning:



Safety goggles



Safety gloves

**Warning Signs** The warning signs in this manual have the following meaning:


Electrical shock hazard


Corrosive


Harmful to health


Flammable


Warning general


Attention general

## 1.2. General Safety Regulations

**Legal Requirements**

The user is responsible for proper system operation. All precautions must be followed to ensure safe operation of the instrument.

**Spare Parts and Disposables**

Use only official SWAN spare parts and disposables. If other parts are used during the normal warranty period, the manufacturer's warranty is voided.

**Modifications**

Modifications and instrument upgrades shall only be carried out by an authorized Service Technician. SWAN will not accept responsibility for any claim resulting from unauthorized modification or alteration.



**WARNING**

**Electrical Shock Hazard**

If proper operation is no longer possible, the instrument must be disconnected from all power lines, and measures must be taken to prevent inadvertent operation.

- To prevent from electrical shock, always make sure that the ground wire is connected.
- Service shall be performed by authorized personnel only.
- Whenever electronic service is required, disconnect instrument power and power of devices connected to.
  - relay 1,
  - relay 2,
  - alarm relay



**WARNING**

For safe instrument installation and operation you must read and understand the instructions in this manual.



**WARNING**

Only SWAN trained and authorized personnel shall perform the tasks described in this document.

## 1.3. Restrictions for use

The sample must not contain any particles that may block the flow cell. Sufficient sample flow is coercive for the correct function of the instrument.
If the sample contains only little disinfectant concentrations, or there is the danger of biological growth, we recommend to use the optional Cleaning module from Swan.

**WARNING**



**Health hazard**

Some reagents are etching and can cause severe burns or eye damage.

- For safe handling of the reagents you must read and understand the instructions in this manual, as well as the Material Safety Data Sheets (MSDS)

**Download MSDS**

The current Material Safety Data Sheets (MSDS) for the below listed Reagents are available for downloading at **www.swan.ch**.

- OXYCON ON-LINE DPD
- OXYCON ON-LINE Buffer
- OXYCON ON-LINE KI
- Buffer solution pH 4
- Buffer solution pH 7
- Buffer solution pH 9

# 2. Product Description

**Application Range**

The AMI Codes-II TC is a complete monitoring system for the automatic, continuous measurement and dosing control of chlorine based on the DPD colorimetric method APHA 4500 Cl-G and on EN ISO 7393-2.
It can be used for measuring disinfectants in:

- Pools and sanitary water
- Cooling water
- Waste water effluent

It is also applicable for water containing additives like corrosion inhibitors, cyanuric acid and antiscaleants.
Determines total chlorine (tc1 and tc2) and calculates dichloramine.
Necessary reagents:

- Oxycon on-line DPD
- Oxycon on-line Buffer
- Oxycon on-line KI

**Disinfectant Measurement**

| Disinfectant | Measuring range | Accuracy |
|---|---|---|
| **Total chlorine** (Standard Mode) | 0.00–1.00 ppm<br>1.00–3.00 ppm<br>3.00–5.00 ppm | ± 0.01 ppm<br>± 0.06 ppm<br>± 0.20 ppm |
| **Total chlorine** (Extended Mode) | 0.0–10 ppm | ± 10% |

**Operating Modes**

Two operating modes are available depending on the desired measuring range. Default mode “Standard” for concentrations up to 5 ppm. Select “Extended” for measurements up to 10 ppm which will lead to higher reagent consumption.

**Signal Outputs**

Two signal outputs programmable for measured values (freely scaleable, linear or bilinear) or as continuous control output (control parameters programmable).
Current loop: 0/4–20 mA
Maximal burden: 510 Ω
Third signal output available as an option. The third signal output can be operated as a current source or as a current sink (selectable via switch).

| | |
|---|---|
| **Relay** | Two potential-free contacts programmable as limit switches for measuring values, controllers or timer for system cleaning with automatic hold function. Both contacts can be used as normally open or normally closed.<br>Maximum load: 1 A/250 VAC |
| **Alarm Relay** | One potential free contact.<br>Alternatively:<br>◆ Open during normal operation, closed on error and loss of power.<br>◆ Closed during normal operation, open on error and loss of power.<br>Summary alarm indication for programmable alarm values and instrument faults. |
| **Input** | For potential-free contact to freeze the measuring value or to interrupt control in automated installations (hold function or remote-off). |
| **Special Feature** | Possibility to interrupt the measurement by activating the input. See Program List and Explanation, 5.3.4, p. 100. |
| **Safety Features** | No data loss after power failure. All data is saved in non-volatile memory. Over voltage protection of in- and outputs.Galvanic separation of measuring inputs and signal outputs. |
| **Communication Interface (optional)** | ◆ USB Interface for logger download.<br>◆ Third signal output (can be used in parallel to the USB interface)<br>◆ RS485 with Fieldbus protocol Modbus or Profibus DP<br>◆ HART interface |
| **pH** | Optional pH measurement is possible (pH correction or calibration). |
| **Relay Box** | The AMI Relay Box is designed for the direct power supply and activation of dosing devices which are controlled with an AMI transmitter, e. g. to connect two solenoid valves or one motor valve for disinfectant additions. |
| **Cleaning Module** | Optional module for automatic chemical cleaning. |

**Glossary** Abbreviations used for the chlorine forms measured:

| Abbr. | Term | Comment |
|---|---|---|
| **tc1** | Total chlorine 1 | Immediate reaction of DPD + KI (mainly monochloramine) |
| **tc2** | Total chlorine 2 | Reaction with DPD + KI after 2 min. reaction |
| **cdc** | Calculated dichloramine | cdc = tc2 - tc1 |
| **pH/T** | pH and Temperature | (Optional) |
| **B/s** | Bubbles per second | Sample flow |

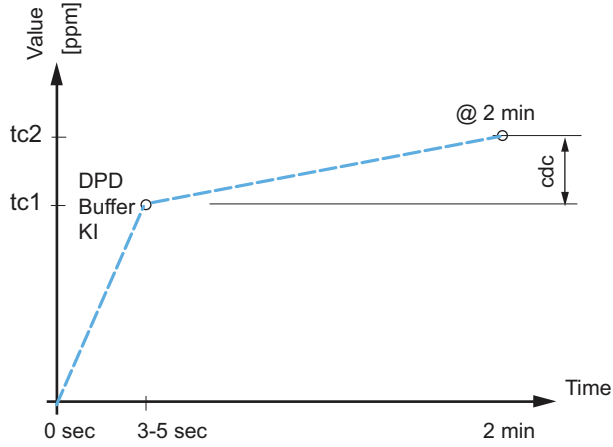

| | |
|---|---|
| **Fluidics** | The sample flows through the sample inlet [P] and the inlet filter [H] into the constant head [A]. Adjust the flow regulating valve [F] so that always a small part of the sample flows through the overflow tube [B] into the constant head drain [O]. |
| Total chlorine 1 | Here the reagents [L] and [M] are added. Sample and reagent flow through the photometer [J] and total chlorine 1 is measured. |
| Total chlorine 2 | To ensure the necessary reaction time of 2 min. for the determination of total chlorine 2, the sample flow is stopped by the solenoid valve [G]. After the time has elapsed, total chlorine 2 is measured and the solenoid valve [G] opens again.<br>After the measurement the sample flows through the outlet of the photometer where it will be aerated through air inlet [I] to generate bubbles. Then the sample flows through the bubble detector [K] into the photometer drain [N]. |

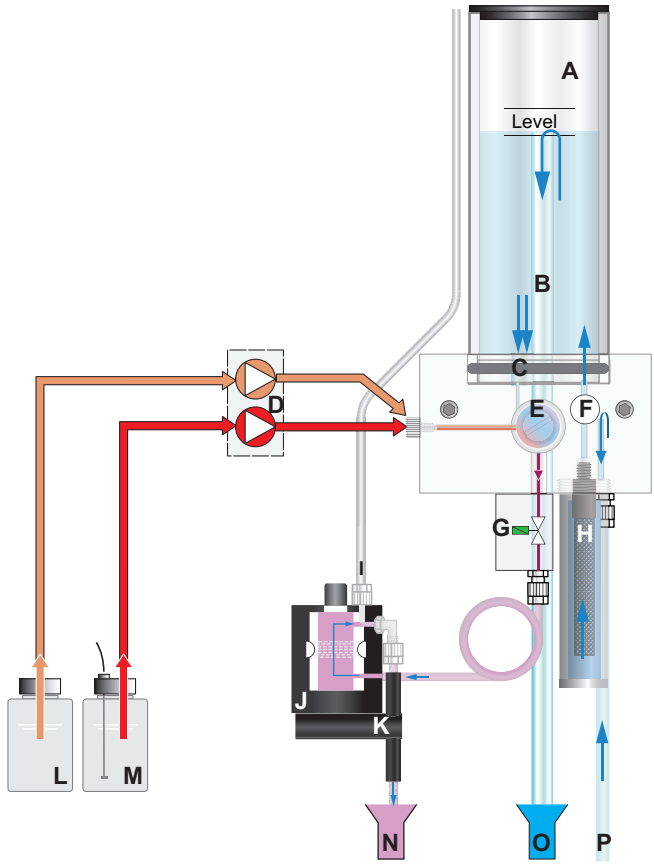


| | | | |
|---|---|---|---|
| ***A*** | *Constant head* | ***I*** | *Photometer air inlet* |
| ***B*** | *Overflow tube* | ***J*** | *Photometer* |
| ***C*** | *Photometer inlet* | ***K*** | *Air bubble detector* |
| ***D*** | *Peristaltic pump* | ***L*** | *Reagent Oxycon on-line DPD* |
| ***E*** | *Mixing chamber* | ***M*** | *Reagent Oxycon on-line Buffer* |
| ***F*** | *Flow regulating valve* | ***N*** | *Photometer drain* |
| ***G*** | *Solenoid valve* | ***O*** | *Constant head drain* |
| ***H*** | *Inlet Filter* | ***P*** | *Sample inlet* |

**Time interval of a measurement**

The measuring interval can be set between 3 and 60 minutes. The time sequence of a measurement with a measuring interval of 5 min is shown in the diagram below.
The blue bar represents the flowing sample. A short time before the measurement starts, a zero point measurement is performed. Then the peristaltic pump starts and a small portion of the reagents [L] and [M] is pumped into the mixing chamber.
A short time after, when the mixture is in the photometer, the solenoid valve [G] is energized and the sample flow through the potometer is stopped. Immediately after that, the total chlorine 1 is measured. After 120 sec. the total chlorine 2 is measured. After the measurement is finished, the solenoid valve [G] is de-energized and sample flows through the photometer until the next measurement starts.

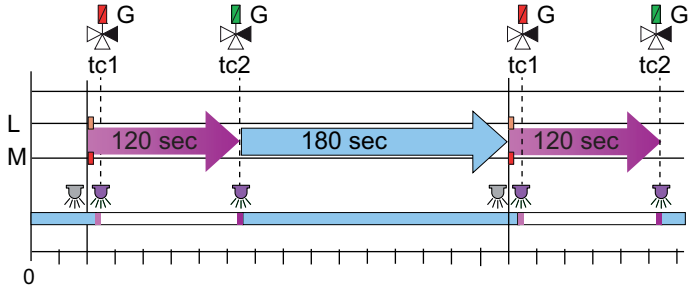

## 2.1. Instrument Specification

| | | |
|---|---|---|
| **Power Supply** | AC variant: | 100–240 VAC (± 10%)<br>50/60 Hz (± 5%) |
| | DC variant | 10–36 VDC |
| | Power consumption: | max. 35 VA |
| **Transmitter specifications** | Housing: | aluminum, with a protection degree of IP 66 / NEMA 4X |
| | Ambient temperature: | −10 to +50 °C |
| | Storage and transport: | −30 to +85 °C |
| | Humidity: | 10–90% rel., non condensing |
| | Display: | backlit LCD, 75 x 45 mm |
| **Sample requirements** | Flow rate: | min. 10 l/h |
| | Temperature: | 5 - 50 °C (41 - 122 °F) |
| | Inlet pressure: | 0.15 - 2 bar (2 - 28 PSI) |
| | Outlet pressure: | pressure free |

***Note:*** *No oil, no grease, no sand.*

| | | |
|---|---|---|
| **On-site requirements** | The analyzer site must permit connections to: | |
| | Sample inlet: | Tube 6 x 8 mm |
| | Sample outlet: | 2 Drains, 1/2” hose nozzle for flexible tube diam. each 20x15 mm |

**Dimensions**

| | |
|---|---|
| Panel: | PVC |
| Dimensions: | 400x850x200 mm |
| Screws: | 5 mm or 6 mm diameter |
| Weight: | 12.0 kg / 26.5 lbs without reagents and sample water<br>17.0 kg / 37.5 lbs with reagents and sample water |

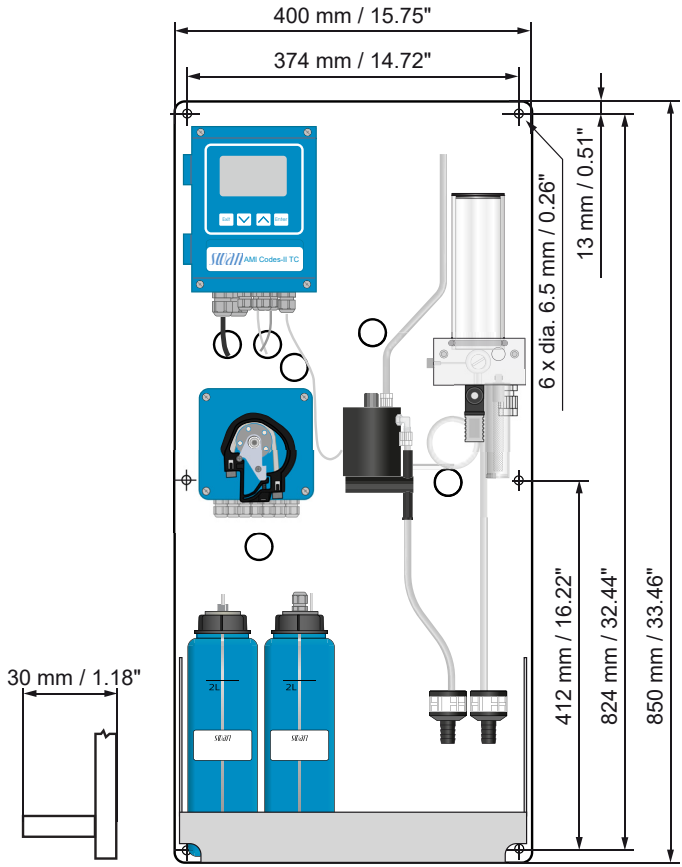

## 2.2. Instrument Overview

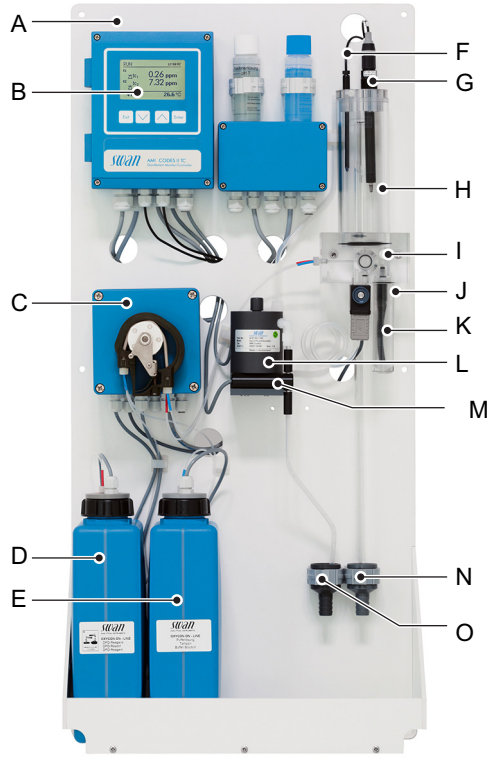


***A*** *Panel*
***B*** *Transmitter*
***C*** *Peristaltic pump*
***D*** *Reagent Oxycon on-line DPD*
***E*** *Reagent Oxycon on-line Buffer & Reagent Oxycon on-line KI*
***F*** *Temperature sensor*
***G*** *pH sensor*
***H*** *Constant head*
***I*** *Flow regulating valve*
***J*** *Sample inlet*
***K*** *Inlet filter*
***L*** *Photometer*
***M*** *Air bubble detector*
***N*** *Constant head drain*
***O*** *Photometer drain*

# 3. Installation

## 3.1. Installation Check List

| | |
|---|---|
| **On-site requirements** | AC variant: 100–240 VAC (± 10%), 50/60 Hz (± 5%)<br>DC variant: 10–36 VDC<br>Power consumption: 35 VA maximum.<br>Protective earth connection required.<br>Sample line with sufficient sample flow and pressure (see Instrument Specification, p. 17). |
| **Installation** | Mount the instrument in vertical position.<br>Display should be at eye-level.<br>Mount the filter, filter vessel, and constant head cover. Connect the sample and waste line. See Connecting Sample and Waste, p. 21 |
| **Electrical Wiring** | Do not switch on the Instrument until all electrical connections are made.<br>Connect all external devices like limit switches, current loops and pumps.<br>Connect power cord.<br>See Electrical Connections, p. 28. |
| **If ordered: Option pH** | See Install the Option pH, p. 24. |
| **Reagents** | Prepare reagents. See Refill or replace Reagents, p. 48.<br>Insert the suction lances. |
| **Power-up** | Close the occlusion frames of the peristaltic pump.<br>Turn on the sample flow and wait until the flow cell is completely filled.<br>Switch on power.<br>Start <Fill system> see Fill or Flush Reagent System, p. 40. |
| **Instrument Setup** | Program all parameters for external devices (interface, recorders, etc.). Program all parameters for instrument operation (limits, alarms, measuring interval). |
| **Run-in period** | Let the instrument run continuously for 1 h. |
| **pH sensor calibration** | If ordered: Calibrate pH sensor. See Standard pH, p. 55 |

| | |
|---|---|
| **Process calibration** | Make 3 manual measurements. Use a high quality photometer, e.g. Chematest from Swan. Calculate the average value and compare this value with the measuring value of the AMI Monitor. If necessary, correct the value. The zero point is done automatically before each measurement. |

## 3.2. Mounting of Instrument Panel

The first part of this chapter describes the preparing and placing of the instrument for use.

- The instrument must only be installed by trained personnel.
- Mount the instrument in vertical position.
- For ease of operation mount it so that the display is at eye level.
- For the installation a kit containing the following installation material is available:
  - 6 Screws 6x60 mm
  - 6 Dowels
  - 6 Washers 6.4/12 mm

**Mounting requirements**

The instrument is only intended for indoor installation.
For dimensions see Dimensions, p. 18.

## 3.3. Connecting Sample and Waste

### 3.3.1 FEP Tube at Sample Inlet

Use plastic tube (FEP, PA, or PE 6 x 8 mm) to connect the sample line.

**Mounting of SERTO fitting**

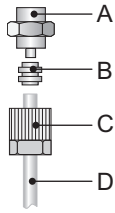


***A*** *Screw connection*
***B*** *Compression ferrule*
***C*** *Knurled nut*
***D*** *Flexible tube*

### 3.3.2 FEP Tube at Sample Outlet



**WARNING**

**Risk of water pollution**

The drain of the photometer outlet contains DPD.

- At no means recirculate it into the water system.

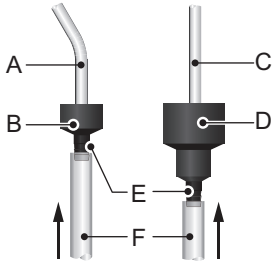


***A*** *Tube from photometer*
***B*** *Drain Photometer*
***C*** *Tube from constant head*
***D*** *Drain constant head*
***E*** *Hose nozzles*
***F*** *1/2" tubes*

Connect the 1/2" tubes [F] to the hose nozzles [E] and place them into a pressure free drain with sufficient capacity.

## 3.4. Installation of Flow Cell

**CAUTION**

**Fragile Part**
Handle the constant head tube with care.

To avoid damage during the transport, the constant head tube [C] of the AMI Codes-II TC is not installed.

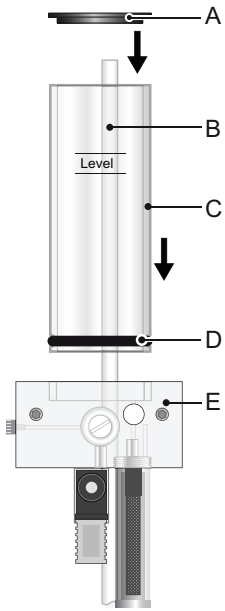


***A*** *Constant head cover*
***B*** *Overflow tube*
***C*** *Constant head tube*
***D*** *Gasket*
***E*** *Flow cell block*

To install the constant head tube proceed as follows:

1. Unpack the constant head tube [C].
2. Push the constant head tube into the flow cell block [E].
3. Put the constant head cover [A] onto the constant head tube.
4. Check if the overflow tube [B] is aligned with the upper level mark.

## 3.5. Install the Option pH

### 3.5.1 pH as Option ex works

If the pH option was ordered with the AMI Codes-II TC, the pH sensor cable as well as the temperature sensor are already connected to the AMI transmitter.

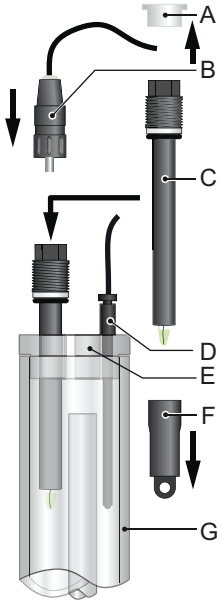


***A*** *Connector cap*
***B*** *Connector*
***C*** *pH Sensor*
***D*** *Temperature sensor*
***E*** *Constant head cover*
***F*** *Protective cap*
***G*** *Constant head*

1. Carefully pull off the protective cap [F] from the pH sensor [C] by turning it clockwise.
2. Store the protective cap in a safe place.
3. Rinse the pH sensor tip with clean water.
4. Insert the pH sensor into one of the holes in the constant head cover [E].
5. Insert temperature sensor [D] into the small hole.
6. Remove the connector cap from the connector of the pH sensor. Store it in safe place.
7. Screw the connector [B] onto the pH sensor.

### 3.5.2 pH Option as Retrofit Kit

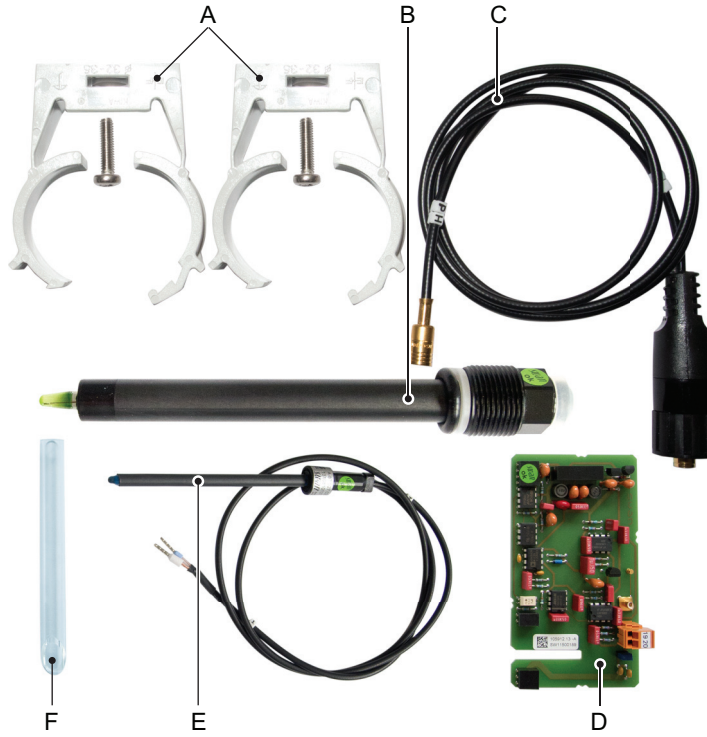


***A*** *2 Clamps with screws*
***B*** *pH sensor*
***C*** *Sensor cable*
***D*** *Frontend PCB*
***E*** *Temperature sensor*
***F*** *Short overflow tube*

**WARNING**

**Risk of electrical shock.**
Do not perform any work on electrical components if the transmitter is switched on. Failure to follow safety instructions could result in serious injury or death.

1 Screw the clamps for calibration solution onto the panel. Use the already drilled holes [A].

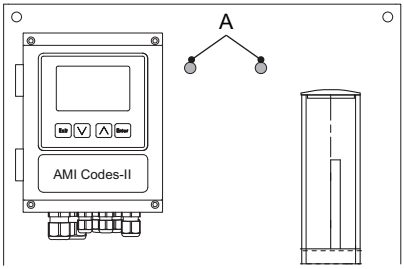


2 Stop sample flow. Wait until flow cell is empty.

3 Switch off the AMI transmitter (disconnect power).

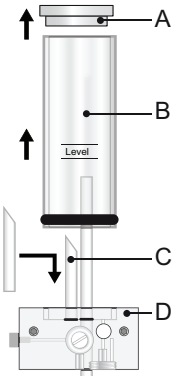


***A*** *Constant head cover*
***B*** *Constant head tube*
***C*** *Short overflow tube*
***D*** *Flow cell block*

4 Remove the constant head cover [A] and the constant head tube [B] from the flow cell block [D].

5 Insert the short overflow tube [C] into the outlet hole leading to the photometer.

6 Install the constant head tube and the constant head cover.

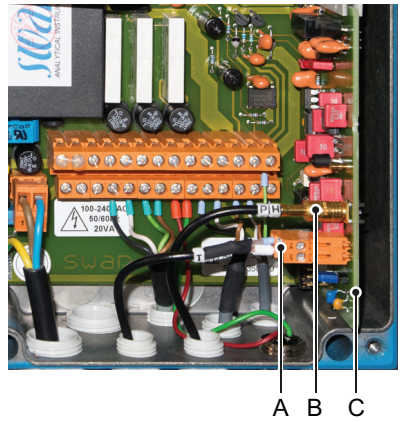


***A*** *Front end PCB*
***B*** *pH sensor plug*
***C*** *Temperature sensor plug*

**7** Open the cover of the AMI transmitter housing.

**8** Install the front end PCB.

**9** Feed the cable of the pH sensor through one of the cable glands (see Cable thicknesses, p. 28) into the AMI transmitter housing.

**10** Connect it to the BNC socket.

**11** Feed the cable of the Temperature sensor through one of the cable glands into the AMI transmitter housing.

**12** Connect the temperature sensor cable to the plug as follows:
- Terminal 19: line
- Terminal 20: shield.

**13** Close the cover of the AMI transmitter housing.

**14** Turn on sample flow and wait until flow cell has been filled completely.

**15** Switch power ON. The instrument automatically detects the front end PCB during start-up.

## 3.6. Electrical Connections



**WARNING**

**Risk of electrical shock.**

Do not perform any work on electrical components if the transmitter is switched on. Failure to follow safety instructions could result in serious injury or death.

- Always turn off power before manipulating electric parts.
- Grounding requirements: Only operate the instrument from a power outlet which has a ground connection.
- Make sure the power specification of the instrument corresponds to the power on site.

**Cable thicknesses**

In order to comply with IP66, use the following cable thicknesses

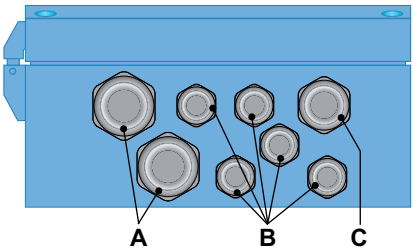


***A*** *PG 11 cable gland: cable $Ø_{outer}$ 5–10 mm*
***B*** *PG 7 cable gland: cable $Ø_{outer}$ 3–6.5 mm*
***C*** *PG 9 cable gland: cable $Ø_{outer}$ 4–8 mm*

***Note:*** *Protect unused cable glands*

**Wire**

- For Power and Relays: Use max. 1.5 $mm^2$ / AWG 14 stranded wire with end sleeves.
- For Signal Outputs and Input: Use 0.25 $mm^2$ / AWG 23 stranded wire with end sleeves.



**WARNING**

**External Voltage.**

Externally supplied devices connected to relay 1 or 2 or to the alarm relay can cause electrical shocks

- Make sure that the devices connected to the following contacts are disconnected from the power before resuming installation.
  - relay 1
  - relay 2
  - alarm relay



**WARNING**

To prevent from electrical shock, do not connect the instrument to the power unless the ground wire (PE) is connected.



**WARNING**

The mains of the AMI Transmitter must be secured by a main switch and appropriate fuse or circuit breaker.

### 3.6.1 Connection Diagram

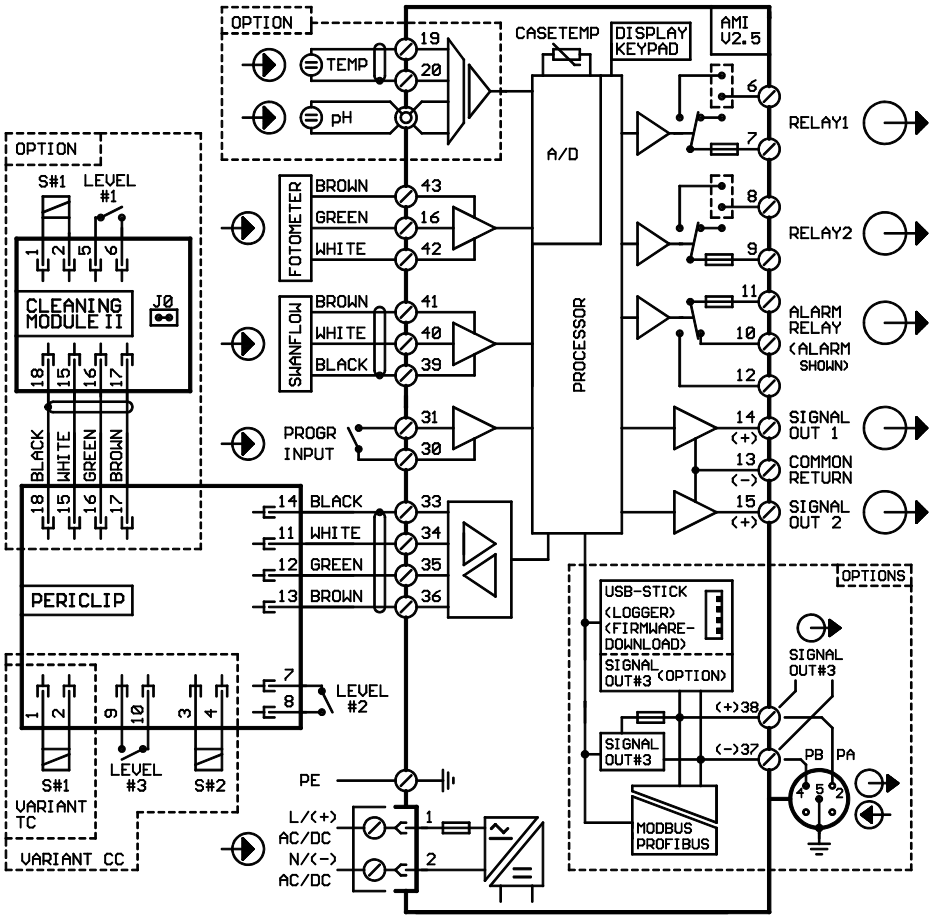


**CAUTION**

Use only the terminals shown in this diagram, and only for the mentioned purpose. Use of any other terminals will cause short circuits with possible corresponding consequences to material and personnel.

### 3.6.2 Power Supply

**WARNING**

**Electrical shock hazard**

Installation and maintenance of electrical parts must be performed by professionals. Always turn off power before manipulating electric parts.

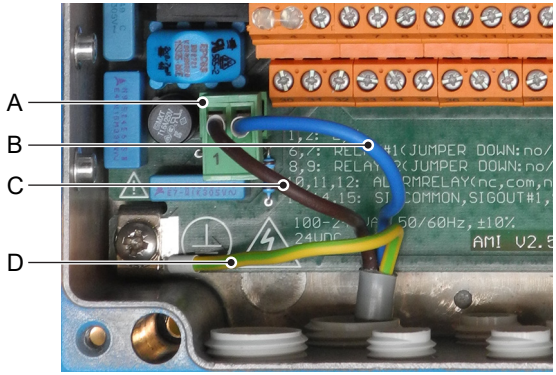


***A*** *Power supply connector*
***B*** *Neutral conductor, Terminal 2*
***C*** *Phase conductor, Terminal 1*
***D*** *Protective earth PE*

***Note:*** *The protective earth wire (Ground) has to be connected to the grounding terminal.*

**Installation requirements**

The installation must meet the following requirements.

- Mains cable to comply with standards IEC 60227 or IEC 60245; flammable rating FV1
- Mains equipped with an external switch or circuit-breaker
  - near the instrument
  - easily accessible to the operator
  - marked as interrupter for AMI Codes-II TC

## 3.7. Input

***Note:*** *Use only potential-free (dry) contacts.*
*The total resistance (sum of cable resistance and resistance of the relay contact) must be less than 50 Ω.*

Terminals 30 and 31
For programming see Program List and Explanations, p. 82.

## 3.8. Relay Contacts

### 3.8.1 Alarm Relay

***Note:*** *Max. load 1 A / 250 VAC*

Alarm output for system errors.
Error codes see Troubleshooting, p. 67.

***Note:*** *With certain alarms and certain settings of the AMI transmitter the alarm relay does not switch. The error, however, is shown on the display.*

| | Terminals | Description | Relay connection |
|---|---|---|---|
| **NC**[1] Normally Closed | 10/11 | Active (opened) during normal operation. Inactive (closed) on error and loss of power. | 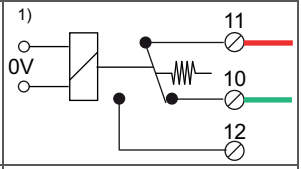 |
| **NO** Normally Open | 12/11 | Active (closed) during normal operation. Inactive (opened) on error and loss of power. | 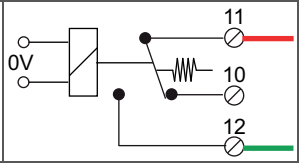 |

1) *usual use*

### 3.8.2 Relay 1 and 2

***Note:*** *Max. load 1 A/250 VAC*

Relay 1 and 2 can be configured as normally open or as normally closed. Standard for both relays is normally open. To configure a Relay as normally closed, set the jumper in the upper position.

***Note:*** *Some error codes and the instrument status may influence the status of the relays described below.*

| Relay config. | Terminals | Jumper pos. | Description | Relay configuration |
|---|---|---|---|---|
| Normally Open | 6/7: Relay 1<br>8/9: Relay 2 |  | Inactive (opened) during normal operation and loss of power.<br>Active (closed) when a programmed function is executed. | 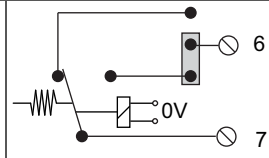 |
| Normally Closed | 6/7: Relay 1<br>8/9: Relay 2 |  | Inactive (closed) during normal operation and loss of power.<br>Active (opened) when a programmed function is executed. | 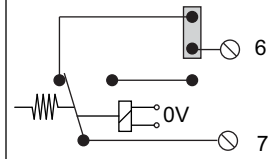 |

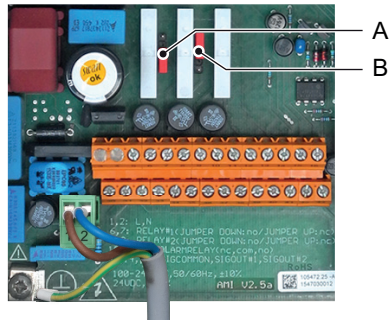


***A*** *Jumper set as normally open (standard setting)*
***B*** *Jumper set as normally closed*

For programming see Program List and Explanations, p. 82, Menu Installation

**CAUTION**

**Risk of damage of the relays in the AMI Transmitter due to heavy inductive load.**

Heavy inductive or directly controlled loads (solenoid valves, dosing pumps) may destroy the relay contacts.

- To switch inductive loads > 0.1 A use an AMI relay box available as an option or suitable external power relays.

**Inductive load**

Small inductive loads (max 0.1 A) as for example the coil of a power relay can be switched directly. To avoid noise voltage in the AMI Transmitter it is mandatory to connect a snubber circuit in parallel to the load.
A snubber circuit is not necessary if an AMI relaybox is used.

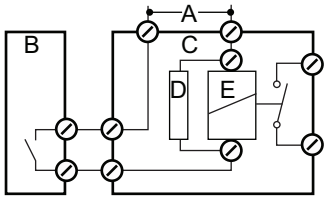


***A*** *AC or DC power supply*
***B*** *AMI Transmitter*
***C*** *External power relay*
***D*** *Snubber*
***E*** *Power relay coil*

**Resistive load**

Resistive loads (max. 1 A) and control signals for PLC, impulse pumps and so on can be connected without further measures

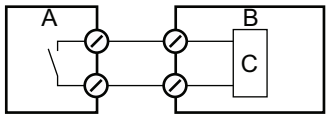


***A*** *AMI Transmitter*
***B*** *PLC or controlled pulse pump*
***C*** *Logic*

**Actuators**

Actuators, like motor valves, are using both relays: One relay contact is used for opening, the other for closing the valve, i.e. with the 2 relay contacts available, only one motor valve can be controlled. Motors with loads bigger than 0.1 A must be controlled via external power relays or an AMI relay box.

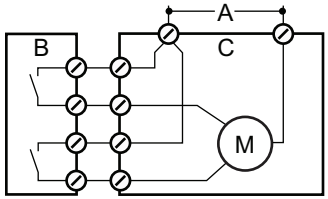


***A*** *AC or DC power supply*
***B*** *AMI Transmitter*
***C*** *Actuator*

## 3.9. Signal Outputs

### 3.9.1 Signal Output 1 and 2 (current outputs)

***Note:*** *Max. burden 510 Ω*
*If signals are sent to two different receivers, use signal isolator (loop isolator).*

Signal output 1: Terminals 14 (+) and 13 (-)
Signal output 2: Terminals 15 (+) and 13 (-)
For programming see Program List and Explanations, p. 82, Menu Installation

## 3.10 Interface Options

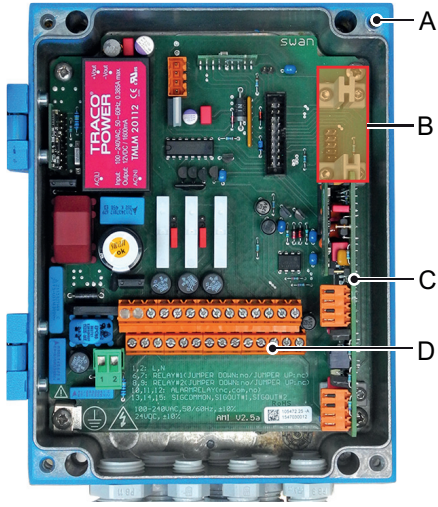


***A*** *AMI Transmitter*
***B*** *Slot for interfaces*
***C*** *Frontend PCB*
***D*** *Screw terminals*

The slot for interfaces can be used to expand the functionality of the AMI instrument with either:

- Third signal output
- a Profibus or Modbus connection
- a HART connection
- a USB Interface

### 3.10.1 Signal Output 3

Terminals 38 (+) and 37 (-).
Requires the additional board for the third signal output 0/4–20 mA. The third signal output can be operated as a current source or as a current sink (switchable via switch [A]). For detailed information see the corresponding installation instruction.

***Note:*** *Max. burden 510 Ω.*

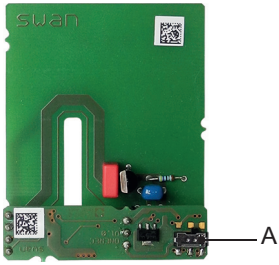


Third signal output 0/4 - 20 mA PCB

***A*** *Operating mode selector switch*

### 3.10.2 Profibus, Modbus Interface

Terminal 37 PB, Terminal 38 PA
To connect several instruments by means of a network or to configure a PROFIBUS DP connection, consult the PROFIBUS manual. Use appropriate network cable.

***Note:*** *The switch must be ON, if only one instrument is installed, or on the last instrument in the bus.*

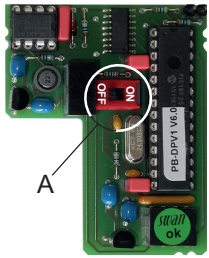


Profibus, Modbus Interface PCB (RS 485)

***A*** *On - OFF switch*

### 3.10.3 HART Interface

Terminals 38 (+) and 37 (-).
The HART interface PCB allows for communication via the HART protocol. For detailed information, consult the HART manual.

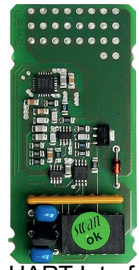

HART Interface PCB

### 3.10.4 USB Interface

The USB Interface is used to store Logger data and for Firmware upload. For detailed information see the corresponding installation instruction.
The optional third signal output 0/4 – 20 mA PCB [B] can be plugged onto the USB interface and used in parallel.

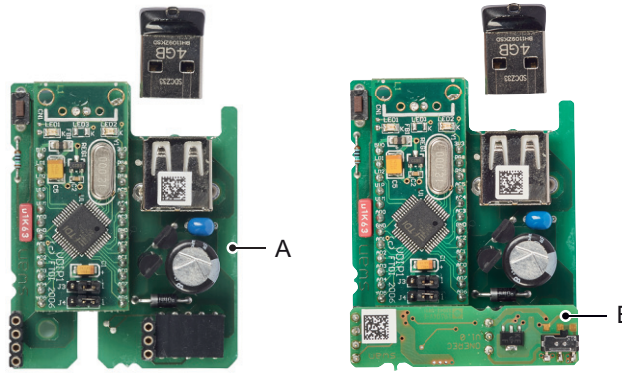


USB Interface

***A*** *USB interface PCB*
***B*** *Third signal output 0/4 - 20 mA PCB*

# 4. Instrument Setup

After installation according to checklist proceed as follows:

## 4.1. Prepare Reagents

1 Prepare reagents. See Refill or replace Reagents, p. 48.
2 Insert the suction lances into the canisters.

## 4.2. Peristaltic Pump

The instrument is delivered with opened occlusion frames.

1 Activate the peristaltic pump tubes by closing the occlusion frames [B].

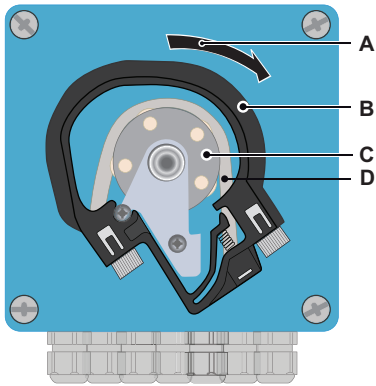


***A*** *Turn to lock*
***B*** *Occlusion frame*
***C*** *Rotor*
***D*** *Pump tube*

## 4.3. Establish Sample Flow

**WARNING**

**Water pollution**

The drain of the photometer outlet contains DPD.

- At no means recirculate it into the water system.

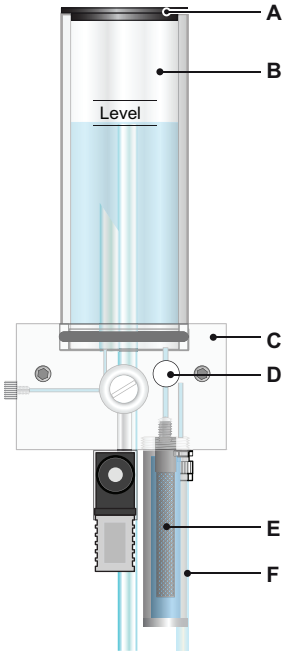


***A*** *Cover*
***B*** *Constant head tube*
***C*** *Flow cell block*
***D*** *Flow regulating valve*
***E*** *Filter*
***F*** *Filter vessel*

1. Open the flow regulating valve (D) and wait until the flow cell is completely filled.
2. Switch on power.
3. Adjust the sample flow so that always a small part of the sample drains off through the overflow tube.
4. Start <Fill system>, see Fill or Flush Reagent System, p. 40.

## 4.4. Fill or Flush Reagent System

Fill or flush the reagent tubing:

- upon the initial instrument setup,
- after refilling the reagent canisters,
- before a system shut-down to flush the system with demineralized water until no more reagent is left in the system.

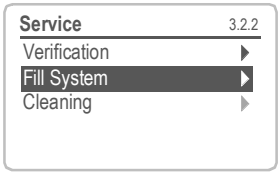


Navigate to menu< Maintenance / Service / Fill system>.
Press [Enter].

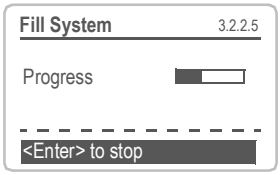


The peristaltic pump is activated for 1.5 minutes.

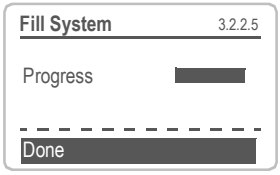


Press [Exit] 4 x to go back to the operating mode.

1 Check tubing and flow cell for leaks and repair if necessary.

2 Let the instrument run continuously for 1 hour.

## 4.5. Programming

**Programming**

Program all parameters for external devices (interface, recorders, etc.)
Program all parameters for instrument operation (disinfectant, limits, alarms).
Program the DPD value of the Verikit in menu <Installation / Sensors / Ref. Verification>.
If pH option is installed, program the two buffers you want to use for calibration in menu <Installation / Sensors / Standards>.
See Program List and Explanations, p. 82.

## 4.6. Calibration

1 Calibrate pH sensor (if option pH is installed).
See Standard pH, p. 55.

2 Perform process calibration.
See Process Calibration of tc 2, p. 53

**If ordered: Calibration of pH sensor**

The instrument should be operating for 1h before performing a pH calibration.

**Process DIS**

Let the instrument run for 1 h.
Use CHEMATEST (or equivalent photometer) to determine the sample disinfectant concentration. Take the sample directly from the flow cell. Determine the sample disinfectant value by 3 manual DPD measurements. Calculate the average value. Compare this value to the value, indicated by the AMI.
Keep in mind the accuracy of your manual measurement. Only correct the instrument if the difference is significant.
Perform process DIS if necessary. See chapter Calibration, p. 53 for details.

# 5. Operation

## 5.1. Keys

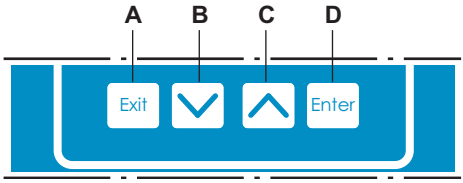


**A** to exit a menu or command (rejecting any changes)
to move back to the previous menu level

**B** to move DOWN in a menu list and to decrease digits

**C** to move UP in a menu list and to increase digits

**D** to open a selected sub-menu
to accept an entry

**Program Access, Exit**

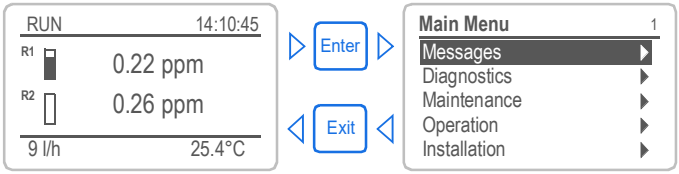

## 5.2. Display

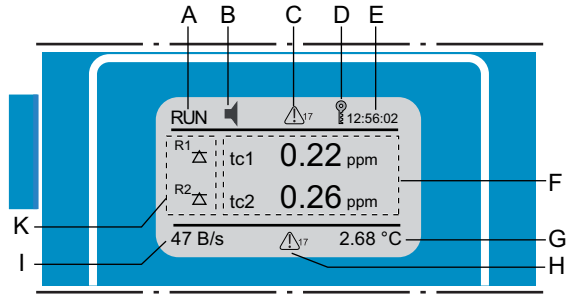


**A** RUN — normal operation

HOLD — input closed or cal delay: Instrument on hold (shows status of signal outputs).

OFF — input closed: control/limit is interrupted (shows status of signal outputs).

**B** ERROR — Error — Fatal Error

**C** Reagent low, indicates remaining reagents in % (17 % = 340 ml)

**D** Keys locked, transmitter control via Profibus

**E** Time

**F** Process values

**G** Sample Temperature

**H** Cleaning solution low, indicates remaining cleaning solution in %

**I** Sample flow in B/s

**K** Relay status

### Relay status, symbols

upper/lower limit not yet reached

upper/lower limit reached

control upw./downw. no action

control upw./downw. active, dark bar indicates control intensity

motor valve closed

motor valve: open, dark bar indicates approx. position

timer

timer: timing active (hand rotating)

## 5.3. Software Structure

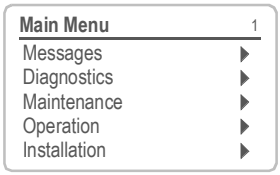


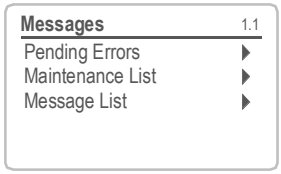


Menu **Messages 1**
Reveals pending errors as well as an event history (time and state of events that have occurred at an earlier point of time).
It contains user relevant data.

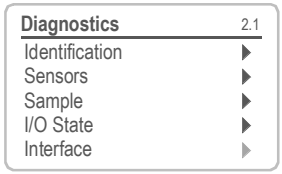


Menu **Diagnostics 2**
Provides user relevant instrument and sample data.

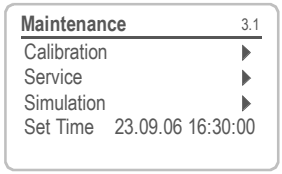


Menu **Maintenance 3**
For instrument calibration, relay and signal output simulation, and to set the instrument time.
It is used by the service personnel.

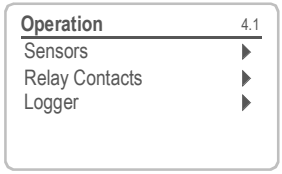


Menu **Operation 4**
User relevant parameters that might need to be modified during daily routine. Normally password protected and used by the process-operator.
Subset of menu 5 - Installation, but process-related.

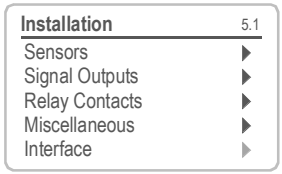


Menu **Installation 5**
For initial instrument set up by SWAN authorized person, to set all instrument parameters. Can be protected by means of password.

## 5.4. Changing Parameters and values

**Changing parameters**

The following example shows how to change the logger interval:

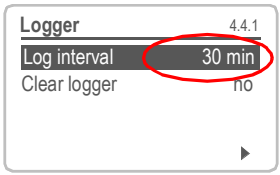


1 Select the parameter you want to change.

2 Press [Enter].

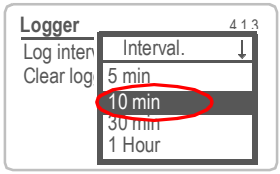


3 Press [▲] or [▼] key to highlight the required parameter.

4 Press [Enter] to confirm the selection or [Exit] to keep the previous parameter).

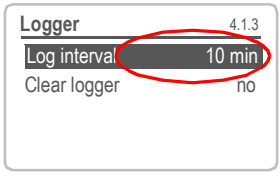


⇒ *The selected parameter is highlighted but not saved yet.*

5 Press [Exit].

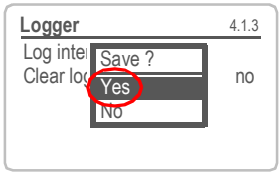


⇒ *Yes is highlighted.*

6 Press [Enter] to save the new parameter.
⇒ *The system reboots, the new parameter is set.*

**Changing values**

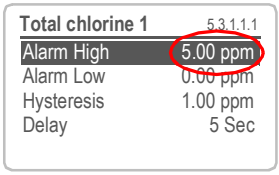


1 Select the value you want to change.

2 Press [Enter].

3 Set required value with [▲] or [▼] key.

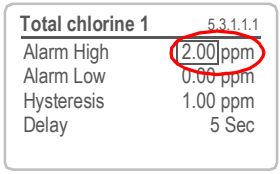


4 Press [Enter] to confirm the new value.

5 Press [Exit].
⇒ *Yes is highlighted.*

6 Press [Enter] to save the new value.

# 6. Maintenance

## 6.1. Maintenance Schedule

| | |
|---|---|
| **Daily (dirty water)<br>up to every<br>2 weeks (clean water)** | Check sample supply for dirt.<br>Clean all filters and strainers, if necessary.<br>Clean AMI Codes protection filter, if necessary.<br>Check sample flow (see also Troubleshooting, p. 67). |
| **Every 4–6 weeks** | Clean reagent canisters and prepare new reagents.<br>Let instrument run for 1 h. Make 3 manual measurements.<br>Compare average value to displayed value. If necessary, perform process calibration. |
| **Monthly** | Recommendation: Check photometer with verification kit Verification, p. 52. |
| **Yearly** | Exchange reagent pump tubes. |
| **By occurrence** | E020, FOME dirty: Cleaning the Photometer, p. 57.<br>E065, Reagents low: Refill or replace Reagents, p. 48.<br>E022, Reagent empty: Refill or replace Reagents, p. 48. |

If pH option is installed:

| | |
|---|---|
| **Weekly** | Perform a process calibration, see Process pH, p. 54. |
| **Every 2 months:** | Perform a standard calibration, see Standard pH, p. 55. |

## 6.2. Stop of Operation for Maintenance

**1** Put the suction lances into a bucket with clean water.

**2** Start <Fill system>.
⇒ *The reagent tubes are flushed with water.*

**3** Remove the suction lances from the water.

**4** Start <Fill system> again.
⇒ *The water will be pumped out of the reagent tubes.*

**5** Stop sample flow.

**6** Wait until the flow cell is empty.

**7** Shut off power of the instrument.

If pH option is installed:

**8** Remove the pH sensor [A] from the flow cell.

**9** Fill the protective cap [B] with water.

**10** Put the protective cap onto the sensor tip.

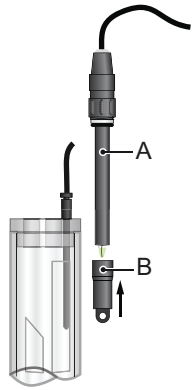


***A*** *pH sensor*
***B*** *Protective cap*

## 6.3. Refill or replace Reagents

The liquid level in canister 2 is monitored. The following messages are displayed:

| | |
|---|---|
| canister almost empty | Maintenance E065 - Reagents low and the remaining reagent volume in % (starting at 17 % = 340 ml). |
| canister empty | Error E022 - Reagent empty |

***Note:*** *Before refilling the reagents, rinse the canisters with demineralized water.*

**Reagent consumption**

The reagent consumption depends on the selected measuring interval and on the selected operating mode (measuring range: Standard / Extended). Below you will find some examples:

| **Measuring interval** | **Duration per canister (measuring range: standard)** | **Duration per canister (measuring range: extended)** |
|---|---|---|
| **3 minutes** | 13–19 days | 8–11 days |
| **5 minutes** | 22–32 days | 13–19 days |
| **10 minutes** | 44–63 days | 26–38 days |
| **20 minutes** | 88–126 days | 53–76 days |

The provided reagent set is sufficient for 8 canister fillings.

**WARNING**



**Health hazard**

Some reagents can cause severe burns or eye damage.

- For safe handling of the reagents you must read and understand the Material Safety Data Sheets (MSDS), see Material Safety Data sheets, p. 103

## Oxycon On-line DPD







**WARNING**

**Severe eye irritation and severe skin irritation.**

Concentrated Oxycon On-line DPD contains more than 10% mineral acids.

- Do not swallow.
- Avoid any contact with eyes and skin.
- Wear protective goggles,
- Wear protective gloves.
- IF IN EYES: Rinse cautiously with water for several minutes. Remove contact lenses, if present and easy to do. Continue rinsing.
- Immediately call a POISON CENTER or doctor/ physician.

## Oxycon On-line Buffer

Contains citric acid potassium salt, do not swallow.

## Oxycon On-line KI



**CAUTION**

**Severe eye irritation and skin irritation.**

This product is corrosive and causes severe burns.

- Harmful if swallowed.
- Avoid any contact with eyes and skin
- IF IN EYES: Rinse cautiously with water for several minutes. Remove contact lenses, if present and easy to do. Continue rinsing.

## Canister set up

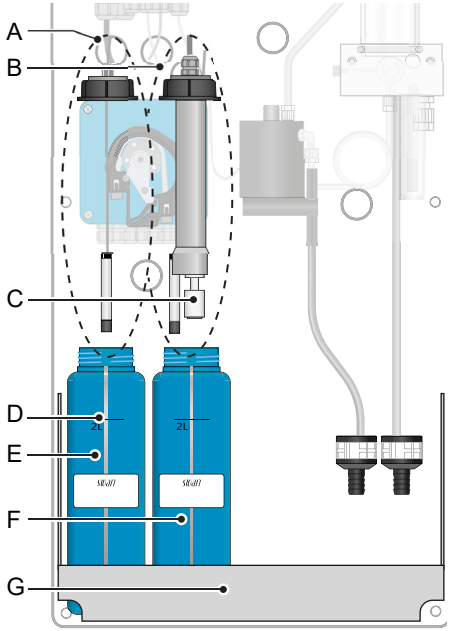


***A*** *Suction lance without level detector (canister 1)*
***B*** *Suction lance with level detector (canister 2)*
***C*** *Level detector*
***D*** *2 L mark*
***E*** *Canister 1: Oxycon on-line DPD*
***F*** *Canister 2: Oxycon on-line Buffer*
***G*** *Holder*

### 6.3.1 Reagents for Measuring Total Chlorine

Reagents needed:

- 1 x 50 ml of Oxycon On-line DPD
- 1 x 240 gr of Oxycon On-line Buffer
- 1 x 60 gr of Reagent Oxycon On-line KI
- 4 liters demineralized water

**Prepare Oxycon On-line DPD**

1. Rinse the canister [E] labelled OXYCON ON LINE DPD-Reagent with demineralized water.
2. Fill the canister up to the 2 liter mark with demineralized water.
3. Slowly pour the content of one bottle of concentrate Oxycon On-line DPD (50 ml) into the canister.
   ⚠ *Avoid splashing!*
4. Close the canister with the screw cover and tighten it well.
5. Mix the demineralized water and the reagents well.
6. Put the canister [E] into the holder [G].
7. Remove the screw cover, insert suction lance [A] and tighten the screw cover.

**Prepare Oxycon On-line Buffer & KI**

1. Rinse the canister [F] labelled “OXYCON ON LINE Buffer” solution with demineralized water.
2. Fill the canister up to the 2 liter mark with demineralized water.
3. Slowly pour the content of one bag of Oxycon On-line Buffer into the canister.
   ⚠ *Avoid splashing!*
4. Add the content of one bag Oxycon On-line KI to the same canister.
5. Close the canister with the screw cover and tighten it well.
6. Mix the demineralized water and the reagents well.
7. Put the canister [F] into the holder [G].
8. Remove the screw cover and insert suction lance [B]. Tighten the screw cover.
9. Fill reagent system. See Fill or Flush Reagent System, p. 40.

## 6.4. Verification

The “Verification kit for AMI Photometer” is available as an accessory. An optical window with a precisely determined absorbance value is placed into the light beam of the photometer. The actual measured absorbance will be compared to the reference value labeled on each kit.




**Set reference value:** Prior to performing the verification the DPD reference value, e.g. 0.255, needs to be set in menu 5.1.4 <Installation>\<Sensors>\<Ref. Verification>.

**Verification procedure:** Basically follow the dialog in menu 3.2.1 <Maintenance>\<Service>\<Verification>.

***Note:*** *Start any time, if a measuring cycle is in progress wait for next prompt.*

1. Stop sample flow by closing regulating valve. Wait for next prompt: Constant head will be drained and an automatic zero will be defined.
2. Open cuvette of the photometer and insert the verification filter. Press [Enter] to continue.
3. Align the triangle shape either to the front or backside and adjust for minimal absorbance (see AMI Display).
4. Press [Enter] to save the verification measurement. The verification is successful if the difference is within the limits. Press [Enter] to continue.
5. Remove filter, close cuvette and open regulating valve. [Enter] to finish and [Exit] to the main display.

**Verification history:** Can be reviewed in menu 2.2.1.5 <Diagnostics>\<Sensors>\<Photometer>\<Ver. History>

## 6.5. Calibration

**Process Calibration of tc 2**

***Note:*** *Perform process calibration for total chlorine only if:*

- *the sample concentration is close to the desired process value (stable value)*
- *you are sure that the reagents are mixed completely and correctly*
- *if the difference to the manual measurement is significant.*
- *Keep in mind the accuracy of your manual measurement.*

Use CHEMATEST (or equivalent photometer) to determine the sample disinfectant concentration. Determine the sample disinfectant value by 3 manual DPD measurements. Calculate the average value. Compare this value to the value indicated by the AMI transmitter.

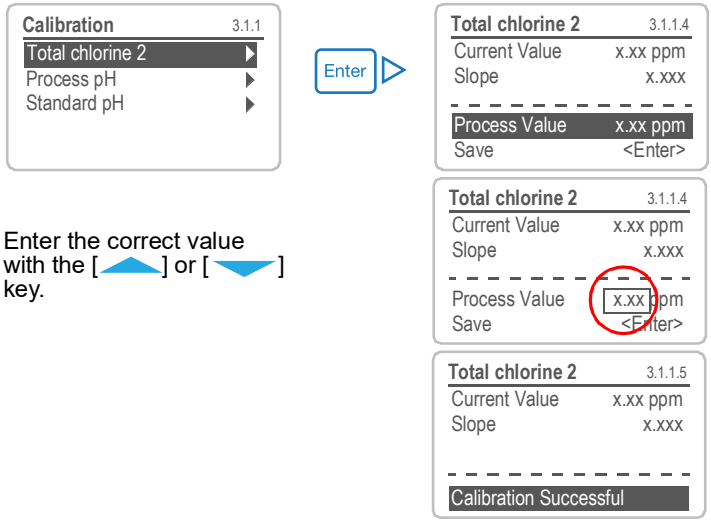


Enter the correct value with the [▲] or [▼] key.

Press 3 x [Exit]

Possible error message see Calibration Errors, p. 68.

**Zero** A zero is automatically done before each measurement.

**Process pH**

Use a Chematest photometer (or equivalent) to determine the sample pH value.

***Note:*** *Make sure your reference instrument is calibrated correctly!*

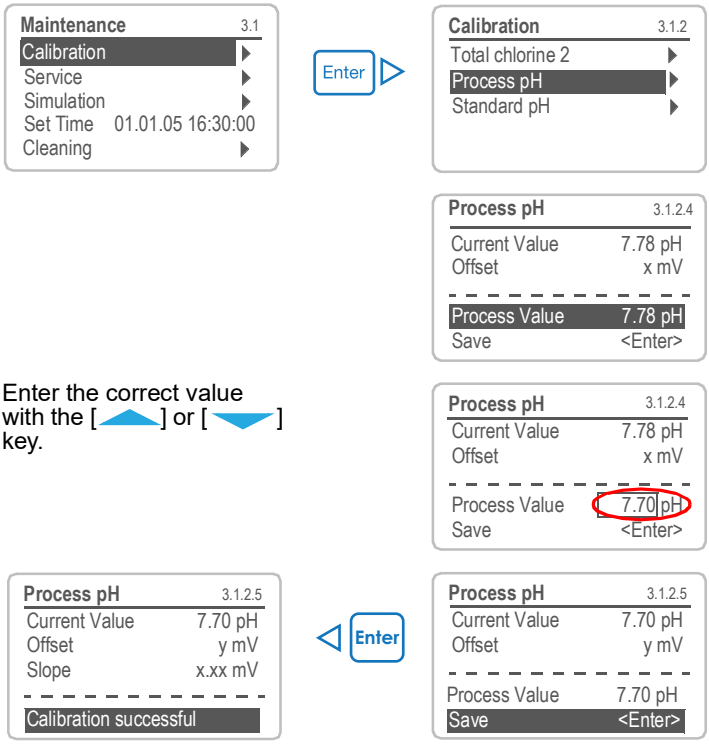


Possible error message see Calibration Errors, p. 68.

## Standard pH

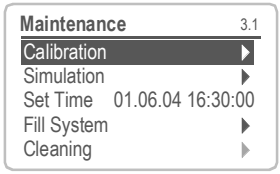


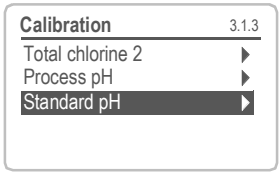


1. Navigate to menu <Maintenance>/ <Calibration>.
2. Press [Enter].
3. Remove the pH sensor from the flow cell.
4. Follow the instructions on the display.

### Display instructions

1. Rinse and dry the pH sensor and put it into standard 1
2. Standard 1, current value (Progress is shown).
3. Rinse and dry the pH sensor and put it in standard 2
4. Standard 2, current value (Progress is shown)
5. Rinse and dry the pH sensor and put it into the flow cell

Possible error message see Calibration Errors, p. 68

## 6.6. Cleaning the protective Filter

Switch off the instrument according to instructions in Stop of Operation for Maintenance, p. 47.

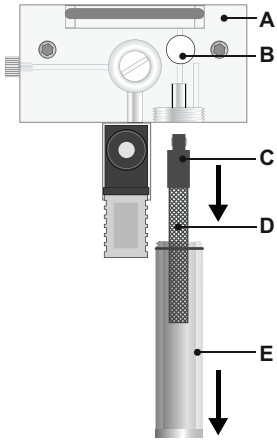


***A*** *Flow cell block*
***B*** *Flow regulating valve*
***C*** *Filter shaft*
***D*** *Filter*
***E*** *Filter vessel*

Normally the filter in your sample supply line will retain most debris. If the filter shows deposits, proceed as follows:

1. Close the main tap of the sample inlet.
2. Close the flow regulating valve [B].
3. Unscrew the filter vessel [E] from the flow cell block [A].
4. Hold the filter [D] on the shaft [C] and unscrew it from the filter vessel.
5. Backwash the filter under pressure of tap water.
6. Clean the outside of the filter.
7. Install the filter and the filter vessel again.
8. Open the flow regulating valve.
9. Adjust sample flow with the regulating valve.

## 6.7. Cleaning the Photometer

Clean the photometer after indication by alarm (E020, FOME dirty). Switch off the instrument according to instructions in Stop of Operation for Maintenance, p. 47.

**Material** Small brush.

**Procedure**

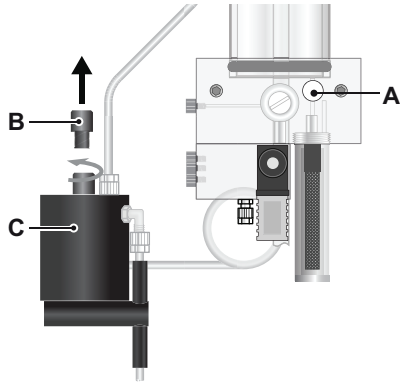


*A Flow regulating valve*
*B Photometer cover*
*C Photometer*
*D Brush*

1 Close the flow regulating valve [A].
2 Wait until the sample flow through the photometer has stopped.
3 Unscrew the cover [B] from the photometer [C].

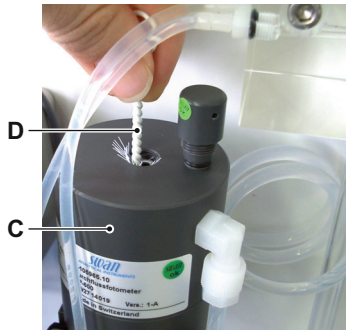


4 Clean the Photometer with a small brush [D].
5 Screw the cover to the photometer.
6 Open the flow regulating valve.

## 6.8. Cleaning the Flow Cell

**CAUTION**

**Acrylic glass parts are fragile and scratch-sensitive.**
Possible damage of acrylic glass parts due to scrubbing materials.

- Never use organic solvents or scrubbing materials to clean acrylic glass parts.
- Use soft detergent and rinse well. Eliminate lime deposits with a common household deliming agent in standard concentration.
- Do not drop the constant head tube

### 6.8.1 Disassemble the Flow Cell

The flow cell can be disassembled easily. Before disassembling the flow cell, switch off the instrument according to instructions in Stop of Operation for Maintenance, p. 47.

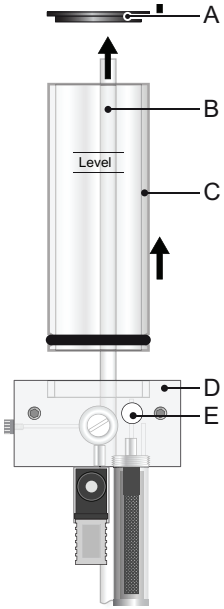


***A*** *Constant head cover*
***B*** *Overflow tube*
***C*** *Constant head tube*
***D*** *Flow cell block*
***E*** *Flow regulating valve*

**Cleaning**

1. Switch off the instrument according to instructions in Stop of Operation for Maintenance, p. 47
2. Remove the constant head cover [A].
3. Pull the overflow tube [B] out of the flow cell block [D]
4. Remove the constant head tube [C] from the flow cell block.
5. Clean all acrylic parts with a soft brush (bottle cleaner) and soapy water.
6. Remove lime deposits with a common household deliming agent with standard concentrations.

### 6.8.2 Assemble the Flow Cell

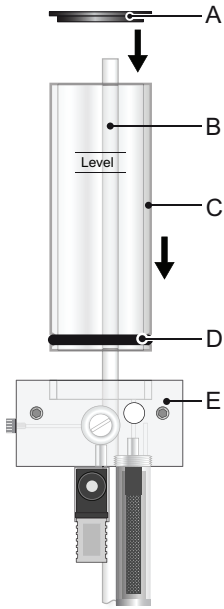


***A*** *Constant head cover*
***B*** *Overflow tube*
***C*** *Constant head tube*
***D*** *Gasket*
***E*** *Flow cell block*

1. Replace the gasket [D] before reassembling the flow cell.

   ***Note:*** *A film of teflon paste (e.g. Fomblin from Solvay Solexis) on the gaskets improves tightness and life time.*
2. Push the overflow tube [B] through the flow cell block as far as it reaches the drain.

3 Install the constant head tube [C] onto the flow cell block.
4 Put the cover onto the constant head tube.
5 Align the overflow tube with the upper level mark.

## 6.9. Maintenance of pH sensor

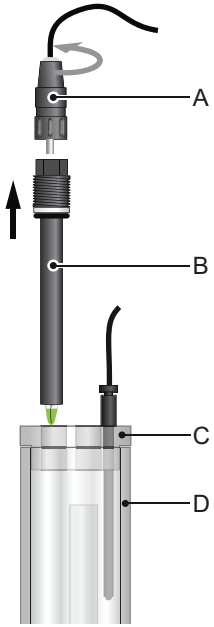


***A*** *Connector*
***B*** *pH sensor shaft*
***C*** *Flow cell cover*
***D*** *Flow cell*

**Clean pH sensor**

1 Remove the pH sensor [B] from the flow cell.
2 Unscrew and remove the connector [A] from the pH sensor.
⚠ *Prevent the connectors from getting wet*
3 If necessary wipe the pH sensor shaft and the green tip cautiously with a soft, clean, and damp paper tissue.
4 Remove grease with a tissue moistened with alcohol.
5 If the sensor is very dirty put it into 1% diluted hydrochloric acid for 1 min.
⚠ *CAUTION! hydrochloric acid is corrosive!*
6 Rinse the pH sensor with clean water.

## 6.10. Tube Replacement

### 6.10.1 Replace the Pump Tubes

The pump tube [D] of the peristaltic pump is exposed to a minimal wear. It is therefore recommended to exchange the pump tube annually.

**CAUTION**

**Pollution of reagents possible.**

If the occlusion frames are opened during operation, already mixed reagents will flow back into the reagent canisters and pollute the reagents.

- Never open the occlusion frames if the instrument is in operation.
- Proceed according to Stop of Operation for Maintenance, p. 47 before opening the occlusion frames.

**Overview**

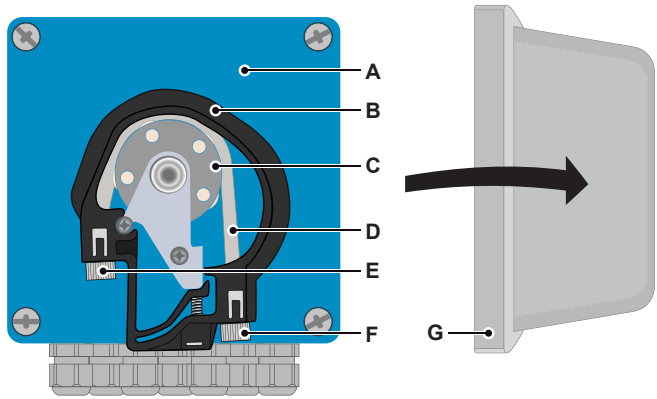


***A*** *Pump housing*
***B*** *Occlusion frame closed*
***C*** *Rotor*
***D*** *Pump tube*
***E*** *Pump inlet*
***F*** *Pump outlet*
***G*** *Protection cap*

**Dismount pump tubes**

The pump tube can easily be dismounted and mounted. Proceed as follows:

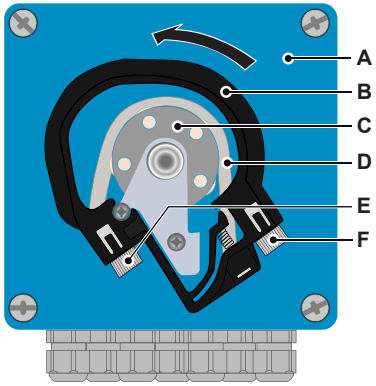


***A*** *Pump housing*
***B*** *Occlusion frame open*
***C*** *Rotor*
***D*** *Pump tube*
***E*** *Pump inlet*
***F*** *Pump outlet*

1. Switch off the instrument according to instructions in Stop of Operation for Maintenance, p. 47.
2. Remove the protection cap.
3. Open the occlusion frames [B] by turning them counter-clockwise.
4. Remove the pump tubes [D] from the rotor [C] by pulling the complete occlusion frames [B] out of the holder.

**Install new pump tubes**

1. Disconnect the reagent tubes from the old pump tubes and connect them to the new pump tubes
2. Install the new pump tubes by pushing the occlusion frames onto the holder.
3. Lock the occlusion frames. Check that the occlusion frames and the tubes are aligned perpendicular to the axis of the rotor.
4. Insert the suction lances into the corresponding containers.
5. Start the <Fill system> function.

### 6.10.2 Replace the Reagent Tubes

**Tube numbering**

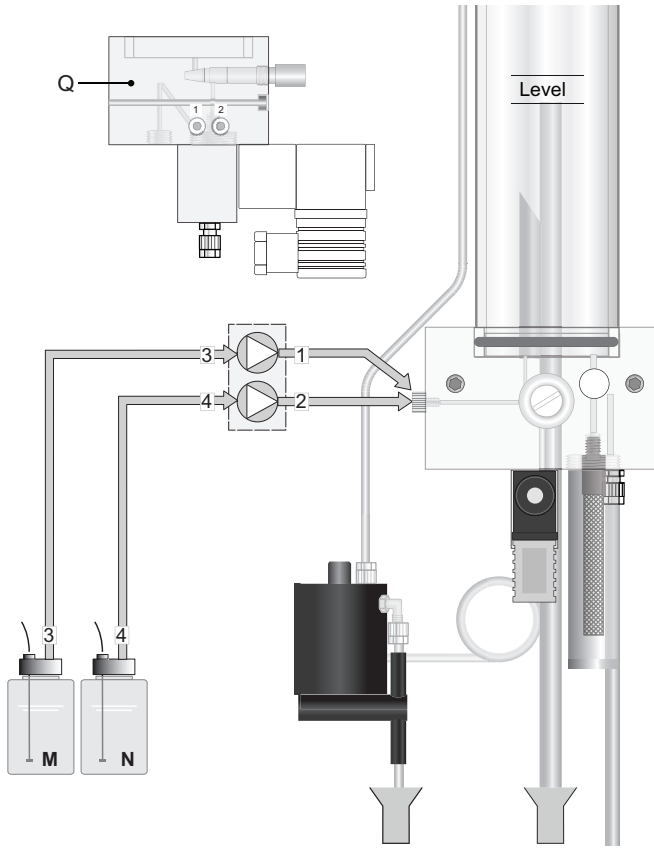


| No. | from | to |
|---|---|---|
| **1** | Pump outlet rear frame | Flow cell block, connection 1<br>*see Flow cell block side view Q* |
| **2** | Pump outlet front frame | Flow cell block, connection 2<br>*see Flow cell block side view Q* |
| **3** | Reagent canister (M)<br>Oxycon on-line DPD | Pump inlet rear frame |
| **4** | Reagent canister (N)<br>Oxycon on-line Buffer | Pump inlet front frame |

## 6.11. Cleaning the solenoid valve

**Disassemble the solenoid valve**

The solenoid valves are mounted at the bottom of the flow cell block. The solenoid valve should be disassembled if it does not switch anymore or if it is clogged.

1 Switch off the instrument according to instructions in Stop of Operation for Maintenance, p. 47

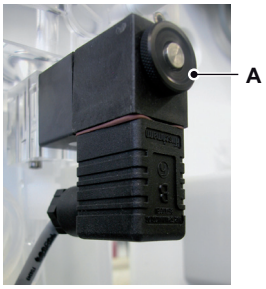


2 Loosen the nut (A).

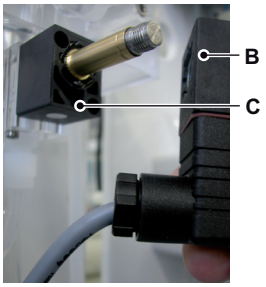


3 Remove the solenoid coil (B) from the valve body (C).

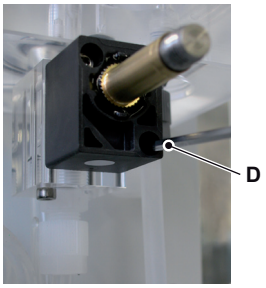


4 Loosen the fixing screws of the valve body with a 2.5 mm Allen key (D).

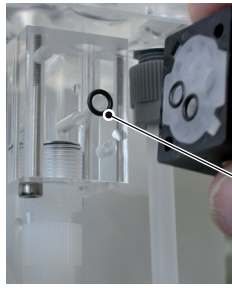


***Note:*** *The O-rings inside the valve body may stick on the flow cell and fall down if the valve body is removed.*

**5** Remove the valve body from the flow cell.

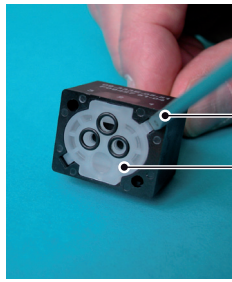


**6** Remove the base plate (G) with a screw driver size 0 (F).

*⇒The membrane (H) is now visible.*

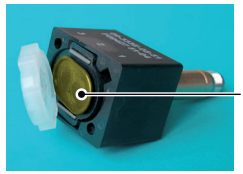


**7** Clean base plate (G) and membrane (H) with clean water.

**Assemble** Assemble the solenoid valve in reverse order.

## 6.12. Longer Stop of Operation

1 Put the suction lances into a bucket with clean water.
2 Start <Fill system>.
⇒ *The reagent tubes are flushed with water.*
3 Remove the suction lance from the water.
4 Start <Fill system> again.
⇒ *The water will be pumped out of the reagent tubes.*
5 Stop sample flow.
6 Wait until level in flow cell has fallen to the shorter tube inside the cell.
7 Shut off power of the instrument.
8 Empty the flow cell completely.
9 Open the occlusion frames of the peristaltic pump, see Replace the Pump Tubes, p. 61.

If option pH is installed

10 Unscrew and remove the connector from the pH sensor.
11 Put the connector cap onto the sensor connector.
12 Fill 3.5 molar KCl (if not available: water) into the rubber cap.
13 Remove the pH sensor from the flow cell and place the rubber cap on the tip of the sensor.



**CAUTION**

**Damage of pH sensor**

Wrong storage will damage the pH sensor.

- Never store the pH sensor dry.
- Store the pH sensor with tip pointing downwards in a frost-protected room.

# 7. Troubleshooting

This chapter provides some hints to make troubleshooting easier. For any detailed information how to handle or clean parts please see Maintenance, p. 46. For any detailed information how to program the instrument please see Program List and Explanations, p. 82.

## 7.1. General Instructions

***Note:*** *The sample for the manual measurement (with DPD) must be taken directly from the flow cell.*
*If you need further help please contact your dealer. Note serial number of instrument and all diagnostic values before doing so.*

**Diagnostic values**

Zero photometry: 10'000–16'000 Hz (mostly near 16 000 Hz)
Slope photometry: 0.8–1.2
pH offset: New pH sensor: near 0, old pH sensor > ± 50 mV
pH slope: typically: 55–62 mV/pH unit.

**Frequently asked questions**

| Problem | Possible Reasons |
|---|---|
| **Unstable values** | ◆ Sample taken too close to feeding line<br>◆ Sample flow too irregular or too low |
| **Codes display higher or lower than manual measurement** | ◆ Wrong manual measurement or old chemicals have been used. Repeat the verification.<br>◆ Reagents of AMI Codes mixed wrongly or not completely |
| **Sample flow alarm, but there is sample** | ◆ Check sample flow at photometer outlet. It must be at least 100 ml/min. For that place the photometer outlet tube into a measuring cup for 1 minute.<br>◆ Check sample line for pressure fluctuation.<br>◆ Check for regular air bubble pattern.<br>◆ Check flow alarm values in menu 5.3.1.3, p. 94) |

## 7.2. Calibration Errors

### 7.2.1 Process calibration tc2

**Possible error message**

Slope error:

| Possible cause | Corrective Action |
|---|---|
| Wrong manual measurement. | Repeat the manual measurement. Use fresh reagents. |
| ◆ Wrong reagent mixture<br>◆ Reagents not completely solved in water. | ◆ Make a correct mixture.<br>◆ Mix long and intensively. |

### 7.2.2 Process pH

**Possible error message**

Offset error:

| Possible cause | Corrective Action |
|---|---|
| Manual measurement wrong. | Repeat the manual measurement. |
| Slope of last calibration wrong. | |
| pH sensor dirty, old or defect. | Clean or replace pH sensor, see Maintenance of pH sensor, p. 60. |
| Cable connector corroded. | Replace cable and sensor. |

### 7.2.3 Standard pH

**Possible error message**

Offset error or Slope error:

| Possible cause | Corrective Action |
|---|---|
| Old, dirty or wrong buffer solutions. | Check buffers expiration date if necessary order new buffer. |
| Verify programmed buffer values with the values of the buffer solution used. | Change programmed buffer values or use correct buffer solution. |
| pH sensor dirty, old or defect. | Clean or replace pH sensor, see Maintenance of pH sensor, p. 60. |
| Cable connector corroded. | Replace cable and sensor. |

## 7.3. Error List

**Error**
Non-fatal Error. Indicates an alarm if a programmed value is exceeded.
Such Errors are marked **E0xx** (bold and black).

**Fatal Error** (blinking symbol)
Control of dosing devices is interrupted.
The indicated measured values are possibly incorrect.
Fatal Errors are divided in the following two categories:

- Errors which disappear if correct measuring conditions are recovered (i.e. Sample Flow low).
  Such Errors are marked **E0xx** (bold and orange)
- Errors which indicate a hardware failure of the instrument.
  Such Errors are marked **E0xx** (bold and red)

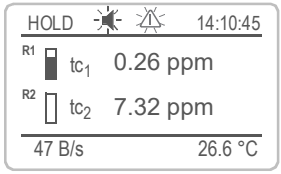


**Error or fatal Error**
Error not yet acknowledged.
Check **Pending Errors 1.1.5** and take corrective action.

**Reagent level low**
Indicates the remaining reagent in percent

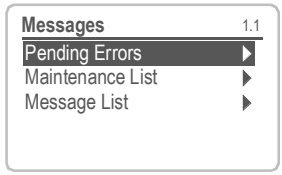


Navigate to menu <Messages>/ <Pending Errors>.

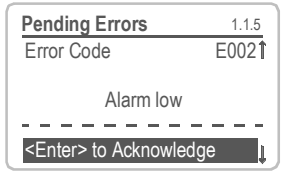


Press [ENTER] to acknowledge the Pending Errors.

⇒ *The Error is reset and saved in the Message List.*

| Error | Description | Corrective action |
|---|---|---|
| **E001** | Alarm high tc1<br>(Total chlorine 1) | – check process<br>– check programmed value, see 5.3.1.1.1.1, p. 93 |
| **E002** | Alarm low tc1<br>(Total chlorine 1) | – check process<br>– check programmed value, see 5.3.1.1.1.25, p. 93 |
| **E003** | Alarm high tc2<br>(Total chlorine 2) | – check process<br>– check programmed value, see 5.3.1.1.2.1, p. 93 |
| **E004** | Alarm low tc2<br>(Total chlorine 2) | – check process<br>– check programmed value, see 5.3.1.1.2.25, p. 94 |
| **E005** | Alarm high cdc | – check process<br>– check programmed value, see 5.3.1.1.3.1, p. 94 |
| **E006** | Alarm low cdc | – check process<br>– check programmed value, see 5.3.1.1.3.25, p. 94 |
| **E007** | Sample Temp.high | – check sample temperature<br>– check programmed value 5.3.1.2.1, p. 94 |
| **E008** | Sample Temp. low | – check sample temperature<br>– check programmed value 5.3.1.2.25, p. 94 |
| **E009** | Sample Flow high | – check Inlet pressure<br>– readjust sample flow<br>– check program value 5.3.1.3.2, p. 95 |

| Error | Description | Corrective action |
|---|---|---|
| E010 | Sample Flow low | – check Inlet pressure<br>– readjust sample flow<br>– clean instrument, see Cleaning the protective Filter, p. 56<br>– check program value 5.3.1.3.35, p. 95 |
| E011 | Temp. shorted | – check wiring of temperature sensor, see Connection Diagram, p. 30<br>– check temperature sensor |
| E012 | Temp. disconnected | – check wiring of temperature sensor, see Connection Diagram, p. 30<br>– check temperature sensor |
| E013 | Case Temp. high | – check case/environment temperature<br>– check program value |
| E014 | Case Temp. low | – check case/environment temperature<br>– check program value |
| E015 | Valve 1 defective | – check Valve 1, see Cleaning the solenoid valve, p. 64 |
| E016 | DIS invalid | – This error appears after start-up and will disappear after the first valid measurement is finished. |
| E017 | Control Timeout | – check control device or programming in Installation, Relay contact, Relay 1 and 2 5.3.2/3, p. 95 |
| E018 | Reagent Pump | – shut off power<br>– check wiring, see Connection Diagram, p. 30 |
| E019 | Photometer not connected | – shut off power<br>– check wiring, see Connection Diagram, p. 30 |

| Error | Description | Corrective action |
|---|---|---|
| E020 | Photometer dirty | – check process<br>– clean the photometer, see Cleaning the Photometer, p. 57 |
| E021 | Absorbance too high | – Appears if disinf. value is too high<br>– Check dosing system or process |
| E022 | Reagent empty | – refill reagents,<br>see Refill or replace Reagents, p. 48 |
| E023 | Cleaning Solution | – refill cleaning solution |
| E024 | Input active | – See If Fault Yes is programmed in Menu 5.3.4, p. 100 |
| E026 | IC LM75 | – call service |
| E028 | Signal output open | – check wiring on signal outputs 1 and 2 |
| E030 | EEprom Frontend | – call service |
| E031 | Calibration Recout | – call service |
| E032 | Wrong Frontend | – call service |
| E033 | Alarm high pH | – check process<br>– check programmed value, see 5.3.1.4.1, p. 95 |
| E034 | Alarm low pH | – check process<br>– check programmed value, see 5.3.1.4.25, p. 95 |

| Error | Description | Corrective action |
|---|---|---|
| **E049** | Power-on | – none, normal status |
| **E050** | Power-down | – none, normal status |
| **E065** | DPD / Buffer | – Operating display, upper status line. The number next to the triangle, indicates the remaining reagents in %. Refill reagents on time. See Refill or replace Reagents, p. 48. |
| **E067** | Cleaning Solution | – Operating display, lower status line. The number next to the triangle, indicates the remaining cleaning solution in %. Refill cleaning solution on time. |

## 7.4. Opening the peristaltic pump housing

For some electrical connections (e.g. when replacing suction lances), it is necessary to open the housing of the peristaltic pump. To do this, proceed as follows:

1. Switch off the analyzer according to Stop of Operation for Maintenance, p. 47.
2. Remove the protection cap and all pump tubes as described in Dismount pump tubes, p. 62.
3. Unscrew the 4 screws of the peristaltic pump housing and remove the cover.
4. Disconnect the motor connector [A].

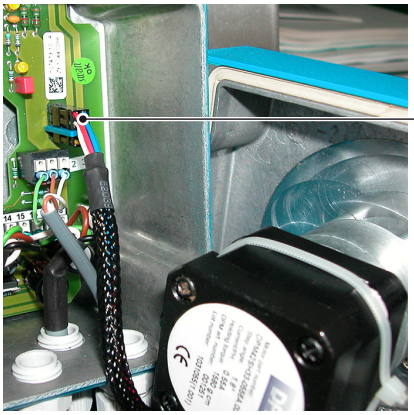


***A*** *Motor connector*

5. Feed the cable into the housing through one of the PG7 cable glands.
6. Connect the cable to the terminal block of the peristaltic pump according to Connection Diagram, p. 30.
7. Reassemble in reverse order.

## 7.5. Replacing Fuses

**WARNING**

**External Voltage.**

External supplied devices connected to relay 1 or 2 or to the alarm relay can cause electrical shocks.

- Make sure that the devices connected to the following contacts are disconnected from the power before resuming installation.
  - relay 1
  - relay 2
  - alarm relay

When a fuse has blown, find out the cause and fix it before replacing it with a new one.
Use tweezers or needle-nosed pliers to remove the defective fuse.
Use original fuses provided by SWAN only.

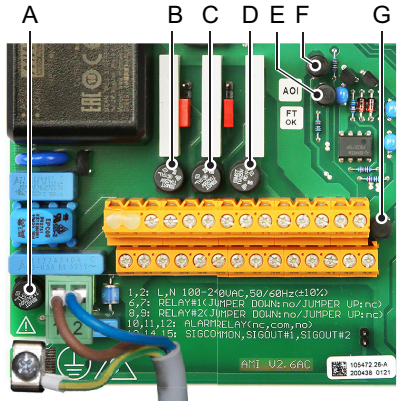


***A*** *AC variant: 1.6 AT/250 V Instrument power supply*
*DC variant: 3.15 AT/250 V Instrument power supply*
***B*** *1.0 AT/250V Relay 1*
***C*** *1.0 AT/250V Relay 2*
***D*** *1.0 AT/250V Alarm relay*
***E*** *1.0 AF/125V Signal output 2*
***F*** *1.0 AF/125V Signal output 1*
***G*** *1.0 AF/125V Signal output 3*

# 8. Program Overview

For explanations about each parameter of the menus see Program List and Explanations, p. 82.

- Menu 1 **Messages** informs about pending errors and maintenance tasks and shows the error history. Password protection possible. No settings can be modified.
- Menu 2 **Diagnostics** is always accessible for everybody. No password protection. No settings can be modified.
- Menu 3 **Maintenance** is for service: Calibration, simulation of outputs and set time/date. Please protect with password.
- Menu 4 **Operation** is for the user, allowing to set limits, alarm values, etc. The presetting is done in the menu Installation (only for the System engineer). Please protect with password.
- Menu 5 **Installation**: Defining assignment of all inputs and outputs, measuring parameters, interface, passwords, etc. Menu for the system engineer. Password strongly recommended.

## 8.1. Messages (Main Menu 1)

| | | | |
|---|---|---|---|
| **Pending Errors** 1.1* | *Pending Errors* | 1.1.5* | * Menu numbers |
| **Maintenance List** 1.2* | *Maintenance List* | 1.2.5* | |
| **Message List** 1.3* | *Number* | 1.3.1* | |
| | *Date, Time* | | |

## 8.2. Diagnostics (Main Menu 2)

| | | | | |
|---|---|---|---|---|
| **Identification** | *Designation* | *AMI Codes-II TC* | | * Menu numbers |
| 2.1* | *Version* | *V6.20 - 05/18* | | |
| | **Peripherals** | *PeriClip 1 / 1.06* | 2.1.3.1* | |
| | 2.1.3* | *PeriClip 2* | only with cleaning module | |
| | **Factory Test** | *Instrument* | 2.1.4.1* | |
| | 2.1.4* | *Motherboard* | | |
| | | *Front End* | | |
| | **Operating Time** | *Years / Days / Hours / Minutes / Seconds* | | 2.1.5.1* |
| | 2.1.5* | | | |
| **Sensors** | **Photometer** | *Absorbance* | | |
| 2.2* | 2.2.1* | *(Raw value) Hz* | | |
| | | **Cal. History** | *Number* | 2.2.1.4.1* |
| | | 2.2.1.4* | *Date, Time* | |
| | | | *Factor fc* | |
| | | | *Factor tc* | |
| | | **Ver. History** | *Number* | 2.2.1.5.1* |
| | | 2.2.1.5* | *Date, Time* | |
| | | | *Absorbance* | |
| | | | *Reference value* | |
| | **pH Electrode** | *Current Value / (Raw value)* | | |
| | 2.2.2* | **Cal. History** | *Number* | 2.2.2.5.1* |
| | | 2.2.2.5* | *Date, Time* | |
| | | | *Offset / Slope* | |
| | **Miscellaneous** | *Case Temp.* | 2.2.3.1* | |
| | 2.2.3* | | | |
| **Sample** | *Sample ID* | 2.3.1* | | |
| 2.3* | *Sample Flow B/s* | | | |
| | *(Raw value) Hz* | | | |
| | *Temperature / (Nt5k)* | | | only with option pH |
| **I/O State** | *Alarm Relay* | 2.4.1* | | |
| 2.4* | *Relay 1 & 2* | 2.4.2* | | |
| | *Input* | | | |
| | *Signal Output 1 & 2* | | | |
| **Interface** | *Protocol* | 2.5.1* | | (only with RS485 |
| 2.5* | *Baud rate* | | | interface) |

## 8.3. Maintenance (Main Menu 3)

| | | | | |
|---|---|---|---|---|
| **Calibration** | **Total chlorine 2** | *Current Value* | | * Menu numbers |
| 3.1* | 3.1.1* | *Factor* | | |
| | | *Process Value* | 3.1.1.4* | |
| | **Process pH** | *Current Value* | | |
| | 3.1.2* | *Offset* | | |
| | | *Process Value* | 3.1.2.4* | |
| | **Standard pH** | *(Progress)* | 3.1.3.5* | |
| | 3.1.3* | | | |
| **Service** | **Verification** | *(Progress)* | 3.2.1.1* | |
| 3.2* | 3.2.1* | | | |
| | **Fill System** | *(Progress)* | 3.2.2.5* | |
| | 3.2.2* | | | |
| **Simulation** | *Alarm Relay* | 3.3.1* | | |
| 3.3* | *Relay 1* | 3.3.2* | | |
| | *Relay 2* | 3.3.3* | | |
| | *Signal Output 1* | 3.3.4* | | |
| | *Signal Output 2* | 3.3.5* | | |
| | *Valve* | 3.3.6* | | |
| **Set Time** | *(Date), (Time)* | | | |
| 3.4* | | | | |
| **Cleaning** | **Parameters** | **Mode** | 3.5.1.1* | |
| 3.5* | 3.5.1* | **Interval** | *Interval* | 3.5.1.20* |
| | | 3.5.1.1* | *Delay* | 3.5.1.3* |
| | | | *Signal Outputs* | 3.5.1.4* |
| | | | *Output/Control* | 3.5.1.5* |
| | | **Daily** | *Start time* | 3.5.1.21 |
| | | 3.5.1.1* | *Delay* | 3.5.1.3* |
| | | | *Signal Outputs* | 3.5.1.4* |
| | | | *Output/Control* | 3.5.1.5* |
| | | **Weekly** | *Calendar* | Start time |
| | | 3.5.1.1* | *Delay* | Mo. to Su |
| | | | *Signal Outputs* | 3.5.1.4* |
| | | | *Output/Control* | 3.5.1.5 |
| | | Off | 3.5.1.1* | |

| | | | | |
|---|---|---|---|---|
| | Fill Channel 11 3.5.2* | *(Progress)* | 3.5.2.5* | * Menu numbers |
| | Fill Channel 12 3.5.3* | *(Progress)* | 3.5.3.5* | |

## 8.4. Operation (Main Menu 4)

| | | | | |
|---|---|---|---|---|
| **Sensors** 4.1* | *Filter Time Const.* | 4.1.1* | | |
| | *Hold after Cal.* | 4.1.2* | | |
| | *Meas. Interval* | 4.1.3* | | |
| | *Default pH* | 4.1.4* | | |
| **Relay Contacts** 4.2* | **Alarm Relay** 4.2.1* | **Total chlorine 1** 4.2.1.1* | *Alarm High* | 4.2.1.1.1* |
| | | | *Alarm Low* | 4.2.1.1.25* |
| | | | *Hysteresis* | 4.2.1.1.35* |
| | | | *Delay* | 4.2.1.1.45* |
| | | **Total chlorine 2** 4.2.1.2* | *Alarm High* | 4.2.1.2.1* |
| | | | *Alarm Low* | 4.2.1.2.25* |
| | | | *Hysteresis* | 4.2.1.2.35* |
| | | | *Delay* | 4.2.1.2.45* |
| | | **Calc. Dichl.** 4.2.1.3* | *Alarm High* | 4.2.1.3.1* |
| | | | *Alarm Low* | 4.2.1.3.25* |
| | | | *Hysteresis* | 4.2.1.3.35* |
| | | | *Delay* | 4.2.1.3.45* |
| | | **Alarm pH** 4.2.1.4* | *Alarm High* | 4.2.1.4.1* |
| | | | *Alarm Low* | 4.2.1.4.25* |
| | | | *Hysteresis* | 4.2.1.4.35* |
| | | | *Delay* | 4.2.1.4.45* |
| | **Relay 1 & 2** 4.2.2* & 4.2.3* | *Setpoint* | 4.2.x.100* | |
| | | *Hysteresis* | 4.2.x.200* | |
| | | *Delay* | 4.2.x.30* | |
| | **Input** 4.2.4* | *Active* | 4.2.4.1* | |
| | | *Signal Outputs* | 4.2.4.2* | |
| | | *Output / Control* | 4.2.4.3* | |
| | | *Fault* | 4.2.4.4* | |
| | | *Delay* | 4.2.4.5* | |
| **Logger** 4.3* | *Log Interval* | 4.3.1* | | |
| | *Clear Logger* | 4.3.2* | | |
| | *Eject USB Stick* | 4.3.3* | *(If USB interface is installed)* | |

| | | | | |
|---|---|---|---|---|
| **Display** | **Screen 1** | *Row 1* | 4.4.1.1* | * Menu numbers |
| 4.4* | 4.4.1* | *Row 2* | 4.4.1.2* | |
| | | *Row 3* | 4.4.1.3* | |
| | **Screen 2** | *Row 1* | 4.4.2.1* | |
| | 4.4.2* | *Row 2* | 4.4.2.2* | |
| | | *Row 3* | 4.4.2.3* | |

## 8.5. Installation (Main Menu 5)

| | | | | | |
|---|---|---|---|---|---|
| **Sensors** | *Dimension* | 5.1.1* | | | |
| 5.1* | *Ref. Verification* | 5.1.2* | | | |
| | *Meas. Range* | 5.1.3* | | | |
| | **Standards** | *Standard 1* | 5.1.4.1* | *only with pH option* | |
| | 5.1.4* | *Standard 2* | 5.1.4.2* | | |
| | *Cleaning* | 5.1.5 | | *only with Cleaning Module* | |
| **Signal Outputs** | **Signal Output 1 & 2** | *Parameter* | 5.2.1.1 & 5.2.2.1* | | |
| 5.2* | 5.2.1* & 5.2.2* | *Current Loop* | 5.2.1.2 & 5.2.2.2* | | |
| | | *Function* | 5.2.1.3 & 5.2.2.3* | | |
| | | **Scaling** | *Range Low* | 5.2.x.40.10* | |
| | | 5.2.x.40 | *Range High* | 5.2.x.40.20* | |
| **Relay Contacts** | **Alarm Relay** | **Disinfection** | **Total chlorine 1** | *Alarm High* | 5.3.1.1.1.1* |
| 5.3* | 5.3.1* | 5.3.1.1* | 5.3.1.1.1* | *Alarm Low* | 5.3.1.1.1.25* |
| | | | | *Hysteresis* | 5.3.1.1.1.35* |
| | | | | *Delay* | 5.3.1.1.1.45* |
| | | | **Total chlorine 2** | *Alarm High* | 5.3.1.1.2.1* |
| | | | 5.3.1.1.2* | *Alarm Low* | 5.3.1.1.2.25* |
| | | | | *Hysteresis* | 5.3.1.1.2.35* |
| | | | | *Delay* | 5.3.1.1.2.45* |
| | | | **Calc. Dichl.** | *Alarm High* | 5.3.1.1.3.1* |
| | | | 5.3.1.1.3* | *Alarm Low* | 5.3.1.1.3.25* |
| | | | | *Hysteresis* | 5.3.1.1.3.35* |
| | | | | *Delay* | 5.3.1.1.3.45* |
| | | **Sample Flow** | *Flow Alarm* | 5.3.1.3.1* | |
| | | 5.3.1.3* | *Alarm High* | 5.3.1.3.2* | |
| | | | *Alarm Low* | 5.3.1.3.35* | |
| | | *Case Temp. high* | 5.3.1.5* | | |

| | | | | |
|---|---|---|---|---|
| | | *Case Temp. low* | 5.3.1.6* | |
| | | **Temperature** | *Alarm High* | 5.3.1.5.1* |
| | | 5.3.1.5* | *Alarm Low* | 5.3.1.5.25* |
| | | **pH** | *Alarm High* | 5.3.1.6.1* |
| | | 5.3.1.6* | *Alarm Low* | 5.3.1.6.25* |
| | | | *Hysteresis* | 5.3.1.6.35* |
| | | | *Delay* | 5.3.1.6.45* |
| | **Relay 1 & 2** | *Function* | 5.3.2.1 & 5.3.3.1* | |
| | 5.3.2* & 5.3.3* | *Parameter* | 5.3.2.x & 5.3.3.x* | |
| | | *Setpoint* | 5.3.2.x & 5.3.3.x* | |
| | | *Hysteresis* | 5.3.2.x & 5.3.3.x* | |
| | | *Delay* | 5.3.2.x & 5.3.3.x* | |
| | **Input** | *Active* | 5.3.4.1* | |
| | 5.3.4* | *Signal Outputs* | 5.3.4.2* | |
| | | *Output/Control* | 5.3.4.3* | |
| | | *Fault* | 5.3.4.4* | |
| | | *Delay* | 5.3.4.5* | |
| **Miscellaneous** | *Language* | 5.4.1* | | *Menu numbers |
| 5.4* | *Set defaults* | 5.4.2* | | |
| | *Load Firmware* | 5.4.3* | | |
| | **Password** | *Messages* | 5.4.4.1* | |
| | 5.4.4* | *Maintenance* | 5.4.4.2* | |
| | | *Operation* | 5.4.4.3* | |
| | | *Installation* | 5.4.4.4* | |
| | *Sample ID* | 5.4.5* | | |
| | *Line Break Detection* | 5.4.6* | | |
| **Interface** | *Protocol* | 5.5.1* | | (only with RS485 |
| 5.5* | *Device Address* | 5.5.21* | | interface) |
| | *Baud Rate* | 5.5.31* | | |
| | *Parity* | 5.5.41* | | |

# 9. Program List and Explanations

## 1 Messages

### 1.1 Pending Errors

1.1.5 Provides the list of active errors with their status (active, acknowledged). If an active error is acknowledged, the alarm relay is active again. Cleared errors are moved to the Message list.

### 1.2 Maintenance List

1.2.5 Demands necessary maintenance, e.g. preparing new reagents.

### 1.2 Message List

1.3.1 Shows the error history: Error code, date / time of issue and status (active, acknowledged, cleared). 65 errors are memorized. Then the oldest error is cleared to save the newest error (circular buffer).

## 2 Diagnostics

In diagnostics mode, the values can only be viewed, not modified.

### 2.1 Identification

**Designation**: View the Designation of instrument.
**Version**: Firmware of instrument (e.g. V6.20-05/18)

**2.1.3** **Peripherals**: PeriClip 1: Firmware of peristaltic pump (e.g. 1.06)

**2.1.4** **Factory Test**: Test date of the Instrument, Motherboard and Frontend. QC factory test.

**2.1.5** **Operating Time**: Years/Days/Hours/Minutes/Seconds

### 2.2 Sensors

**2.2.1** **Photometer:**

*Absorbance*: Process value, depends on sample.
*Raw value*: Shows the actual photometer signal in Hz.

**2.2.1.4** **Cal. History:** Shows the diagnostic values of the last calibrations.
*Number*: Counter for the calibrations
*Date, Time*: Date and time assigned to a number.
*Slope*: Slope photometer: 0.8–1.2

**2.2.1.5** **Ver. History:** Shows the verification values of the last verifications:
*Number*: Calibration counter.
*Date, Time*: Date and time of the calibration.
*Absorbance*: Measured absorbance of the reference kit.
*Reference value*: True value of the reference kit according to label.

**2.2.2** **pH Electrode:** Only if option pH is installed.
*Current Value:* Shows the actual measured pH value.
*Raw value:* Shows the actual electrode voltage in mV.

**2.2.2.5** **Cal. History:** Shows the calibration values of the last pH sensor calibrations. Offset in mV and slope in mV/pH.

| | |
|---|---|
| Typical offset of pH electrode: | < ± 30 mV. |
| Max. tolerated offset: | < ± 60 mV |
| Typical slope of pH electrode: | 55–65 mV/pH unit. |
| Max. limits: | 40–65 mV/pH |

**2.2.3** **Miscellaneous**:

2.2.3.1 *Case Temp:* Shows the current temperature in °C inside the transmitter.

## 2.3 Sample

2.3.1 *Sample ID*: Shows the identification assigned to a sample. This identification is defined by the user to identify the location of the sample.
*Sample Flow*: Shows the actual sample flow in B/s (bubbles per second). Sample flow must be above 5 B/s.
*Raw value*: Shows the raw value of the sample flow in Hz.
*Temperature*: Only if option pH is installed.
Actual sample temperature in °C and in Ohm *(NT5K)*

## 2.4 I/O State

Shows current status of all in- and outputs.

2.4.1/2.4.2

| | |
|---|---|
| *Alarm Relay:* | Active or inactive |
| *Relay 1 & 2:* | Active or inactive |
| *Input:* | Open or closed |
| *Signal Output 1 & 2:* | Actual current in mA |
| *Signal Output 3:* | Actual current in mA (if option is installed) |

## 2.5 Interface

Only available if optional interface is installed.
Shows the programmed communication settings.

# 3 Maintenance

## 3.1 Calibration

In this menu, you can correct measuring values (disinfectant and pH) or calibrate offset and slope of pH electrode.

**3.1.1** **Total chlorine 2:** Possibility to correct the disinfectant value. See Process Calibration of tc 2, p. 53, for more details.

**3.1.2** **Process pH:** Only available, if option pH has been installed. Correction of pH electrode. See Process Calibration of tc 2, p. 53, for details.

**3.1.3** **Standard pH:** Only available, if option pH has been installed. Calibration of pH electrode with the two standard solutions programmed in Installation 5.1.3. See Standard pH, p. 55, for details.

## 3.2 Service

**3.2.1** **Verification:** Performs a verification using the reference kit. Follow dialog. See Verification, p. 52.

**3.2.2** **Fill System:** Activates the reagent pump. The function Fill System is used to fill or flush the reagent tubes.

## 3.3 Simulation

To simulate a value or a relay state, select the

- alarm relay,
- relay 1 or 2
- signal output 1 or 2
- valve 1

with the [▲] or [▼] key.

Press the [Enter] key.

Change the value or state of the selected item with the [▲] or [▼] key.

Press the [Enter] key.
⇒ *The value is simulated by the relay/signal output.*

| | |
|---|---|
| *Alarm Relay:* | Active or inactive |
| *Relay 1 & 2:* | Active or inactive |
| *Signal Output 1 & 2:* | Actual current in mA |
| *Signal Output 3:* | Actual current in mA (if option is installed) |
| *Valve 1* | Active or inactive |

At the absence of any key activities, the instrument will switch back to normal mode after 20 min. If you quit the menu, all simulated values will be reset.

## 3.4 Set Time

Adjust date and time.

## 3.5 Cleaning

Automatic cleaning process using the optional Cleaning Module-II. Cleaning is not possible if one of the following errors is active:
- E009/E010 Sample flow high/low
- E023 Cleaning solution

### 3.5.1 Parameters

3.5.1.1 *Mode:* The following modes can be chosen: interval, daily, weekly or off.

If Mode = Interval

3.5.1.20 *Interval:* Select one of the following cleaning intervals:
1 h, 2 h, 3 h, 4 h, 6 h, 8 h, 12 h.

3.5.1.3 *Delay:* During cleaning plus the delay time, the status of the signal and control outputs is as set in 3.5.1.4 and 3.5.1.5.
Range: 0–6000 s

3.5.1.4 *Signal Outputs:* Select the operation mode of the signal outputs during cleaning:

| | |
|---|---|
| *Cont.:* | Signal outputs continue to issue the measured value. |
| *Hold:* | Signal outputs hold the last valid measured value. Measurement is interrupted. Errors, except fatal errors, are not issued. |
| *Off:* | Signal outputs are switched off (set to 0 or 4 mA). Errors, except fatal errors, are not issued. |

3.5.1.5 *Output/Control:* Relay or signal output:

*Cont.:* Controller continues normally.

*Hold:* Controller continues based on the last valid value.

*Off:* Controller is switched off.

If Mode = daily

The start of the daily cleaning cycle can be set to any time of day.

3.5.1.21 *Start time:* Time of the automatic start of the cleaning process. Range: 00:00:00–23:59:59

3.5.1.3 *Delay:* see mode interval.

3.5.1.4 *Signal Outputs:* see mode interval.

3.5.1.5 *Output/Control:* see mode interval.

If Mode = weekly

The start of the automatic cleaning cycle can be set to one or more weekdays and any time of day. The programmed time of day is valid for all selected weekdays.

**3.5.1.22 Calendar:**

3.5.1.22.1 Start time: Time of the automatic start of the cleaning process (valid for all selected weekdays).

3.5.1.22.2 Monday: Possible settings: on or off
to

3.5.1.22.8 Sunday: Possible settings: on or off

3.5.1.3 *Delay:* see mode interval.

3.5.1.4 *Signal Outputs:* see mode interval.

3.5.1.5 *Output/Control:* see mode interval.

all modes

**3.7.2** *Fill Channel 11:* Activates the cleaning pump and switches the valve to cleaning solution 1 (right canister).

**3.7.3** *Fill Channel 12:* Activates the cleaning pump and switches the valve to cleaning solution 2 (left canister).

# 4 Operation

## 4.1 Sensors

4.1.1 *Filter Time Constant:* Used to damp noisy signals. The higher the filter time constant, the slower the system reacts to changes of the measured value.
Range: 5–300 sec

4.1.2 *Hold after Cal:* Delay permitting the instrument to stabilize again after calibration. During calibration- plus hold-time, the signal outputs are frozen (held on last valid value), alarm values, limits are not active.
Range: 0–6‘000 sec

4.1.3 *Meas. Interval*: The measuring interval of “Total chlorine 2” can be set according to the process requirements.
Range: 3–60 min

4.1.4 *Default pH*: If the pH value of the sample is known it can be entered in this menu. This menu only appears if the pH option is not installed.
Range: 0–14 pH

## 4.2 Relay Contacts

See 5.3 Relay Contacts, p. 93.

## 4.3 Logger

The instrument is equipped with an internal logger. The data can be copied to a PC with an USB stick if option USB interface is installed. The logger can save approx. 1500 data records. Records consists of: Date, time, alarms, measured value, measured value uncompensated, temperature, flow.
Range: 1 Second to 1 hour

4.3.1 *Log Interval:* Select a convenient log interval. Consult the table below to estimate the max logging time. When the login buffer is full, the oldest data record is erased to make room for the newest one. (circular buffer)

| **Interval** | 1 s | 5 s | 1 min | 5 min | 10 min | 30 min | 1 h | Event Driven |
|---|---|---|---|---|---|---|---|---|
| **Time** | 25 min | 2 h | 25 h | 5 d | 10 d | 31 d | 62 d | |

4.3.2 *Clear Logger:* If confirmed with **yes**, the complete logger data is deleted. A new data series is started.

## 4.4 Display

Process values are displayed on two screens. Toggle screens with the [▲] key. Each screen displays max. 3 process values.

**4.4.1** Screen 1

4.4.1.1 Row 1

4.4.1.2 Row 2

4.4.1.3 Row 3

Possible settings for all rows are:

- None
- Total chlorine 1
- Total chlorine 2
- Calc. dichloramine
- pH

**4.4.2** Screen 2
Same as screen 1.

# 5 Installation

## 5.1 Sensors

5.1.1 *Dimension*: The measuring value can be displayed as ppm or mg/l

5.1.2 *Ref. Verification:* Set absorbance value of verification kit according to label.
Range: 0.200–0.600

5.1.3 *Meas. Range*: available settings are standard or extended.

- select “standard” for application up to 5 ppm
- select “extended” for applications up to 10 ppm

***Note:*** *The reagent consumption of the instrument is higher if the measuring mode extended is set.*

**5.1.5** **Cleaning:** Program whether the cleaning module uses one or two solutions.
Range: 1 solution, 2 solutions

## 5.2 Signal Outputs

**5.2.1 & 5.2.2** **Signal Output 1 and 2:** Assign process value, the current loop range and a function to each signal output.

***Note:*** *The navigation in the menu <Signal Output 1> and <Signal Output 2> is equal. For reason of simplicity only the menu numbers of Signal Output 1 are used in the following.*

5.2.1.1 *Parameter:* Assign one of the process values to the signal output. Available values:

- Total chlorine 1
- Total chlorine 2
- Calc. dichloramine (*Calculated dichloramine*)
- Temperature
- Sample flow
- pH

5.2.1.2 *Current Loop:* Select the current range of the signal output. Make sure the connected device works with the same current range. Available ranges: 0–20 mA or 4–20 mA

5.2.1.3 *Function:* Define if the signal output is used to transmit a process value or to drive a control unit. Available functions are:

- Linear, bilinear or logarithmic for process values.
  See As process values, p. 89
- Control upwards or control downwards for controllers.
  See As control output, p. 91

**As process values**

The process value can be represented in 3 ways: linear, bilinear or logarithmic. See graphs below.

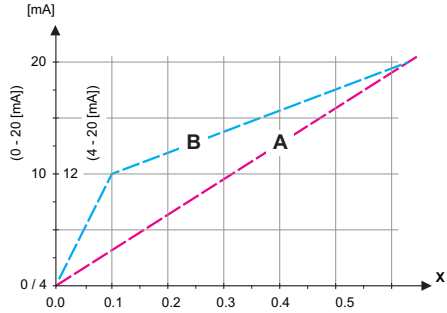


***A*** *linear*
***B*** *bilinear*
***X*** *Measured value*

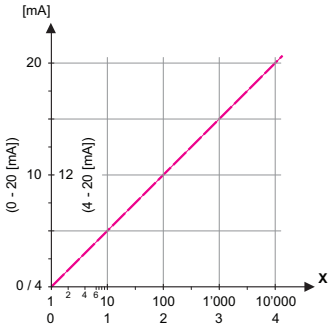


***X*** *Measured value (logarithmic)*

**5.2.1.40** **Scaling:** Enter beginning and end point (Range low & high) of the linear or logarithmic scale. In addition, the midpoint for the bilinear scale.

**Parameter Total chlorine 1**

5.2.1.40.10 *Range low*: 0–20 ppm or 0–20 mg/l
5.2.1.40.20 *Range high:* 0–20 ppm or 0–20 mg/l

**Parameter Total chlorine 2**

5.2.1.40.11 *Range low*: 0–20 ppm or 0–20 mg/l
5.2.1.40.21 *Range high:* 0–20 ppm or 0–20 mg/l

**Parameter Calc. dichloramine**

5.2.1.40.12 *Range low*: 0–20 ppm or 0–20 mg/l
5.2.1.40.22 *Range high:* 0–20 ppm or 0–20 mg/l

**Parameter Temperature**

5.2.1.40.13 *Range low*: -30 to +120 °C
5.2.1.40.23 *Range high*: -30 to +120 °C

**Parameter Sample flow**

5.2.1.40.14 *Range low*: 0 –600 B/s
5.2.1.40.24 *Range high*: 0 –600 B/s

**Parameter pH**

5.2.1.40.15 *Range low*: 0 –14 pH
5.2.1.40.25 *Range high*: 0 –14 pH

**As control output**

Signal outputs can be used for driving control units. We distinguish different kinds of controls:

- *P-controller:* The controller action is proportional to the deviation from the setpoint. The controller is characterized by the P-Band. In the steady-state, the setpoint will never be reached. The deviation is called steady-state error.
  Parameters: setpoint, P-Band
- *PI-controller:* The combination of a P-controller with an I-controller will minimize the steady-state error. If the reset time is set to zero, the I-controller is switched off.
  Parameters: setpoint, P-Band, reset time.
- *PD-controller:* The combination of a P-controller with a D-controller will minimize the response time to a fast change of the process value. If the derivative time is set to zero, the D-controller is switched off.
  Parameters: setpoint, P-Band, derivative time.
- *PID-controller:* The combination of a P-, an I - and a D-controller allows a proper control of the process.
  Parameters: setpoint, P-Band, reset time, derivative time.

Ziegler-Nichols method for the optimization of a PID controller:
**Parameters**: Setpoint, P-Band, Reset time, Derivative time

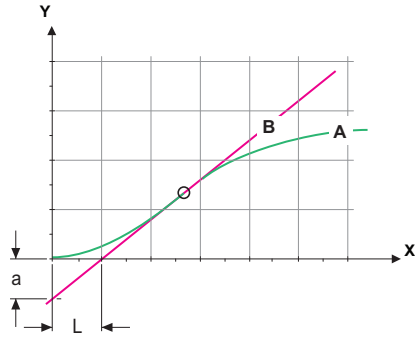


***A*** *Response to maximum control output* ***Xp*** *= 1.2/a*
***B*** *Tangent on the inflection point* ***Tn*** *= 2L*
***X*** *Time* ***Tv*** *= L/2*

The point of intersection of the tangent with the respective axis will result in the parameters a and L.
Consult the manual of the control unit for connecting and programming details. Choose control upwards or downwards.

### Control upwards/downwards

*Setpoint:* User-defined process value (Measured value or flow)
*P-Band:* Range below (upwards control) or above (downwards control) the set-point, within the dosing intensity is reduced from 100% to 0% to reach the set-point without overshooting.

**5.2.1.43** Control Parameters: if Parameters = Total chlorine 1
5.2.1.43.10 *Setpoint*: 0–20 ppm or 0–20 mg/l
5.2.1.43.20 *P-Band*: 0–20 ppm 0–20 mg/l

**5.2.1.43** Control Parameters: if Parameters = Total chlorine 2
5.2.1.43.11 *Setpoint*: 0–20 ppm or 0–20 mg/l
5.2.1.43.21 *P-Band*: 0–20 ppm 0–20 mg/l

**5.2.1.43** Control Parameters: if Parameters = Calc. dichloramine
5.2.1.43.12 *Setpoint*: 0–20 ppm or 0–20 mg/l
5.2.1.43.22 *P-Band*: 0–20 ppm 0–20 mg/l

**5.2.1.43** Control Parameters: if Parameters = Temperature
5.2.1.43.13 *Setpoint*: -30 to +120 °C
5.2.1.43.23 *P-Band*: 0–100 °C

**5.2.1.43** Control Parameters: if Parameters = Sample Flow
5.2.1.43.14 *Setpoint*: 0–600 B/s
5.2.1.43.24 *P-Band*: 0–200 B/s

**5.2.1.43** Control Parameters: if Parameters = pH
5.2.1.43.15 *Setpoint*: 0 –14 pH
5.2.1.43.25 *P-Band*: 0 –14 pH

5.2.1.43.3 *Reset time:* The reset time is the time till the step response of a single I-controller will reach the same value as it will be suddenly reached by a P-controller.
Range: 0–9'000 sec

5.2.1.43.4 *Derivative time:* The derivative time is the time till the ramp response of a single P-controller will reach the same value as it will be suddenly reached by a D-controller.
Range: 0–9'000 sec

5.2.1.43.5 *Control timeout:* If a controller action (dosing intensity) is constantly over 90% during a defined period of time and the process value does not come closer to the setpoint, the dosing process will be stopped for safety reasons.
Range: 0–720 min

## 5.3 Relay Contacts

**5.3.1** **Alarm Relay:** The alarm relay is used as cumulative error indicator. Under normal operating conditions the contact is active.
The contact is inactive at:

- Power loss
- Detection of system faults like defective sensors or electronic parts
- High case temperature
- Lack of reagents
- Process values out of programmed ranges.

Program alarm levels, hysteresis values and delay times for the following parameters:

- Total chlorine 1
- Total chlorine 2
- Calc. dichloramine (*Calculated dichloramine*)
- Temperature
- Sample flow
- pH

**5.3.1.1 Disinfection**

**5.3.1.1.1 Total chlorine 1**

5.3.1.1.1.1 *Alarm High:* If the measured value rises above the alarm high value, the alarm relay is activated and E001 is displayed in the message list. Range: 0.00–20.00 ppm

5.3.1.1.1.25 *Alarm Low:* If the measured value falls below the alarm low value, the alarm relay is activated and E002 is displayed in the message list.
Range: 0.00–20.00 ppm

5.3.1.1.1.35 *Hysteresis:* Within the hyst. range, the relay does not switch. This prevents damage of relays contacts when the measured value fluctuates around the alarm value.
Range. 0.00–20.00 ppm

5.3.1.1.1.45 *Delay:* Duration, the activation of the alarm relay is retarded after the measuring value has risen above/fallen below the programmed alarm.
Range: 0.00–28‘800 sec

**5.3.1.1.2 Total chlorine 2**

5.3.1.1.2.1 *Alarm High:* If the measured value rises above the alarm high value, the alarm relay is activated and E003 is displayed in the message list. Range: 0.00–20.00 ppm

5.3.1.1.2.25 *Alarm Low:* If the measured value falls below the alarm low value, the alarm relay is activated and E004 is displayed in the message list.
Range: 0.00–20.00 ppm

5.3.1.1.2.35 *Hysteresis:* Within the hyst. range, the relay does not switch. This prevents damage of relays contacts when the measured value fluctuates around the alarm value.
Range. 0.00–20.00 ppm

5.3.1.1.2.45 *Delay:* Duration, the activation of the alarm relay is retarded after the measuring value has risen above/fallen below the programmed alarm.
Range: 0.00–28‘800 sec

**5.3.1.1.3 Calc. dichl.**

5.3.1.1.3.1 *Alarm High:* If the measured value rises above the alarm high value, the alarm relay is activated and E005 is displayed in the message list. Range: 0.00–20.00 ppm

5.3.1.1.3.25 *Alarm Low:* If the measured value falls below the alarm low value, the alarm relay is activated and E006 is displayed in the message list. Range: 0.00–20.00 ppm

5.3.1.1.3.35 *Hysteresis:* Within the hyst. range, the relay does not switch. This prevents damage of relays contacts when the measured value fluctuates around the alarm value.
Range. 0.00–20.00 ppm

5.3.1.1.2.45 *Delay:* Duration, the activation of the alarm relay is retarded after the measuring value has risen above/fallen below the programmed alarm.
Range: 0.00–28‘800 sec

**5.3.1.2 Sample Temp.:** Only available if pH option is installed. Define the measuring value, which should issue an alarm high respectively low.

5.3.1.2.1 *Alarm High:* If the sample temperature rises above the programmed value E007 is issued. and low (E008)
Range: 30–70 °C

5.3.1.2.25 *Alarm Low:* If the sample temperature falls below the programmed value E008 is issued.
Range: 0–20 °C

**5.3.1.3 Sample Flow:** Define at which sample flow a flow alarm should be issued.

5.3.1.3.1 *Flow Alarm:* Program whether the alarm relay should be activated if there is a flow alarm. The flow alarm will always be indicated in the display, pending error list, saved in the message list and the logger.
Available values: Yes or No

***Note:*** *Sufficient flow is essential for a correct measurement. We recommend to program yes.*

5.3.1.3.2 *Alarm High:* If the measuring values rises above the programmed value E009 will be issued.
Range: 100–600 B/s

5.3.1.3.35 *Alarm Low:* If the measuring values falls below the programmed value E010 will be issued.
Range: 5–80 B/s

**5.3.1.4** **Alarm pH:** Only available if pH option is installed. Define the measuring value, which should issue an alarm high respectively low.

5.3.1.4.1 *Alarm High:* If the measured value rises above the alarm high value, the alarm relay is activated and E033 is displayed in the message list.
Range: 0–14 pH

5.3.1.4.25 *Alarm Low:* If the measured value falls below the alarm low value, the alarm relay is activated and E034 is displayed in the message list
Range: 0–14 pH

5.3.1.4.35 *Hysteresis:* Within the hyst. range, the relay does not switch. This prevents damage of relays contacts when the measured value fluctuates around the alarm value
Range: 0–14 pH

5.3.1.4.45 Delay: Duration, the activation of the alarm relay is retarded after the measuring value has risen above/fallen below the programmed alarm.
Range: 0–28‘800 sec

5.3.1.5 *Case Temp. high*: Set the alarm high value for temperature of electronics housing. If the value rises above the programmed value E013 is issued.
Range: 30–75 °C

5.3.1.6 *Case Temp. low*: Set the alarm low value for temperature of electronics housing. If the value falls below the programmed value E014 is issued.
Range: -10 to +20 °C

**5.3.2/3** **Relay 1 and 2:** The contacts can be set as normally open or normally closed with a jumper. See Relay 1 and 2, p. 33.
The function of relay contacts 1 or 2 are defined by the user.

***Note:*** *The navigation in the menu <Relay 1> and <Relay 2> is equal. For reason of simplicity only the menu numbers of Relay 1 are used in the following.*

**1** First select the functions as:
- Limit upper/lower,
- Control upwards/downwards,
- Timer
- Fieldbus
- End of Batch (relay 2 only)

**2** Then enter the necessary data depending on the selected function.

5.3.2.1 Function = Limit upper/lower:

When the relays are used as upper or lower limit switches, program the following:

5.3.2.20 *Parameter:* select a process value

5.3.2.300 *Setpoint*: If the measured value rises above respectively falls below the set-point, the relay is activated.

| Parameter | Range |
|---|---|
| Total chlorine 1 | 0–20 ppm |
| Total chlorine 2 | 0–20 ppm |
| Calc. dichloramine | 0–20 ppm |
| Temperature | -30 to +120 °C |
| Sample flow | 0–600 B/s |
| pH | 0–14 pH |

5.3.2.400 *Hysteresis:* within the hysteresis range, the relay does not switch. This prevents damage of relay contacts when the measured value fluctuates around the alarm value.

| Parameter | Range |
|---|---|
| Total chlorine 1 | 0–20 ppm |
| Total chlorine 2 | 0–20 ppm |
| Calc. dichloramine | 0–20 ppm |
| Temperature | 0 to +100 °C |
| Sample flow | 0–200 B/s |
| pH | 0–14 pH |

5.3.2.50 *Delay:* Duration, the activation of the alarm relay is retarded after the measuring value has risen above/fallen below the programmed alarm.
Range. 0–600 sec

5.3.2.1 Function = Control upwards/downwards:

The relays may be used to drive control units such as solenoid valves, membrane dosing pumps or motor valves. When driving a motor valve both relays are needed, relay 1 to open and relay 2 to close the valve.

5.3.2.22 *Parameter:* Choose on of the following process values.
- Total chlorine 1
- Total chlorine 2
- Calc. dichloramine
- pH
- Temperature
- Sample Flow

**5.3.2.32** **Settings***:* Choose the respective actuator:
- Time proportional
- Frequency
- Motor valve

5.3.2.32.1 Actuator = Time proportional

Examples of metering devices that are driven time proportional are solenoid valves, peristaltic pumps.
Dosing is controlled by the operating time.

5.3.2.32.20 *Cycle time:* duration of one control cycle (on/off change).
Range: 0–600 sec.

5.3.2.32.30 *Response time:* Minimal time the metering device needs to react.
Range: 0–240 sec.

**5.3.2.32.4** **Control Parameters**
Range for each Parameter same as 5.2.1.43, p. 92

5.3.2.32.1 Actuator = Frequency

Examples of metering devices that are pulse frequency driven are the classic membrane pumps with a potential free triggering input.
Dosing is controlled by the repetition speed of dosing shots.

5.3.2.32.21 *Pulse frequency:* Max. pulses per minute the device is able to respond to. Range: 20–300/min.

**5.3.2.32.31** **Control Parameters**
Range for each Parameter same as 5.2.1.43, p. 92

5.3.2.32.1 Actuator = Motor valve

Dosing is controlled by the position of a motor driven mixing valve.

5.3.2.32.22 *Run time:* Time needed to open a completely closed valve
Range: 5–300 sec.

5.3.2.32.32 *Neutral zone:* Minimal response time in % of the runtime. If the requested dosing output is smaller than the response time, no change will take place.
Range: 1–20 %

**5.3.2.32.4 Control Parameters**
Range for each Parameter same as 5.2.1.43, p. 92

5.3.2.1 Function = Timer:

The relay will be active repetitively depending on the programmed time scheme.

5.3.2.24 *Mode:* Operating mode (interval, daily, weekly)

5.3.2.24 *Interval*

5.3.2.340 *Interval:* The interval can be programmed within a range of 1–1'440 min.

5.3.2.44 *Run Time*: Enter the time the relay stays active.
Range: 5–32'400 sec.

5.3.2.54 *Delay*: during run time plus the delay time the signal and control outputs are held in the operating mode programmed below.
Range: 0–6'000 sec.

5.3.2.6 *Signal Outputs*: Select operating mode of the signal output:

*Cont.:* Signal outputs continue to issue the measured value.

*Hold:* Signal outputs hold the last valid measured value. Measurement is interrupted. Errors, except fatal errors, are not issued.

*Off:* Signal outputs are switched off (set to 0 or 4 mA). Errors, except fatal errors, are not issued.

5.3.2.7 *Output/Control*: Select operating mode of the controller output:

*Cont.:* Controller continues normally.

*Hold:* Controller continues based on the last valid value.

*Off:* Controller is switched off.

5.3.2.24 *daily*

The relay contact can be activated daily, at any time of a day.

5.3.2.341 *Start time*: to set the start time proceed as follows:

**1** Press [Enter], to set the hours.

**2** Set the hour with the [▲] or [▼] keys.

**3** Press [Enter], to set the minutes.

**4** Set the minutes with the [▲] or [▼] keys.

**5** Press [Enter], to set the seconds.

**6** Set the seconds with the [▲] or [▼] keys.

Range: 00:00:00–23:59:59

5.3.2.44 *Run Time*: see Interval

5.3.2.54 *Delay*: see Interval

5.3.2.6 *Signal Outputs*: see Interval

5.3.2.7 *Output/Control*: see Interval

5.3.2.24 *weekly*

The relay contact can be activated at one or several days, of a week. The daily starting time is valid for all days.

**5.3.2.342** **Calendar**:

5.3.2.342.1 *Start time*: The programmed start time is valid for each of the programmed days. To set the start time see 5.3.2.341, p. 99.
Range: 00:00:00–23:59:59

5.3.2.342.2 *Monday*: Possible settings, on or off
to

5.3.2.342.8 *Sunday*: Possible settings, on or off

5.3.2.44 *Run Time*: see Interval

5.3.2.54 *Delay*: see Interval

5.3.2.6 *Signal Outputs*: see Interval

5.3.2.7 *Output/Control*: see Interval

5.3.2.1 Function = Fieldbus:

The relay will be switched via the Profibus input. No further parameters are needed.

5.3.2.1 Function = End of Batch:

This function is only available on relay 2. It is used to communicate with canal switching instruments from third-party suppliers. The relay closes for 1 sec. after each valid measurement. If End of Batch is selected, no further selection is possible.

**5.3.4** **Input:** The functions of the relays and signal outputs can be defined depending on the position of the input contact, i.e. no function, closed or open.

5.3.4.1 *Active:* Define when the input should be active:
The measurement is interrupted during the time the input is active.

| | |
|---|---|
| *No:* | Input is never active. |
| *When closed* | Input is active if the input relay is closed |
| *When open:* | Input is active if the input relay is open |

5.3.4.2 *Signal Outputs:* Select the operation mode of the signal outputs when the relay is active:

| | |
|---|---|
| *Cont.:* | Signal outputs continue to issue the measured value. |
| *Hold:* | Signal outputs issue the last valid measured value. Measurement is interrupted. Errors, except fatal errors, are not issued. |
| *Off:* | Set to 0 or 4 mA respectively. Errors, except fatal errors, are not issued. |

5.3.4.3 *Output/Control:* (relay or signal output):

| | |
|---|---|
| *Cont.:* | Controller continues normally. |
| *Hold:* | Controller continues on the last valid value. |
| *Off:* | Controller is switched off. |

5.3.4.4 *Fault:*

| | |
|---|---|
| *No:* | No message is issued in pending error list and the alarm relay does not close when input is active. Message E024 is stored in the message list. |
| *Yes:* | Message E024 is issued and stored in the message list. The Alarm relay closes when input is active. |

5.3.4.5 *Delay:* Time which the instrument waits, after the input is deactivated, before returning to normal operation.
Range: 0–6‘000 sec

## 5.4 Miscellaneous

5.4.1 *Language:* Set the desired language.
Available settings: German / English / French / Spanish

5.4.2 *Set defaults:* Reset the instrument to factory default values in three different ways:

- **Calibration:** Sets calibration values back to default. All other values are kept in memory.
- **In parts:** Communication parameters are kept in memory. All other values are set back to default values.
- **Completely:** Sets back all values including communication parameters.

5.4.3 *Load Firmware:* Firmware updates should be done by instructed service personnel only.

5.4.4 **Password:** Select a password different from 0000 to prevent unauthorized access to the menus “Messages”, “Maintenance”, “Operation” and “Installation”.
Each menu may be protected by a *different* password.
If you forgot the passwords, contact the closest SWAN representative.

5.4.5 *Sample ID:* Identify the process value with any meaning full text, such as KKS number.

5.4.6 *Line Break Detection:* Define if message E028 should be issued in case of a line break on signal output 1 or 2.
Choose between <Yes> or <No>.

## 5.5 Interface

Select one of the following communication protocols. Depending on your selection, different parameters must be defined.

**5.5.1** *Protocol:* **Profibus**

| | | |
|---|---|---|
| 5.5.20 | Device address: | Range: 0–126 |
| 5.5.30 | ID-Nr.: | Range: Analyzer; Manufacturer; Multivariable |
| 5.5.40 | Local operation: | Range: Enabled, Disabled |

**5.5.1** *Protocol:* **Modbus RTU**

| | | |
|---|---|---|
| 5.5.21 | Device address: | Range: 0–126 |
| 5.5.31 | Baud Rate: | Range: 1200–115 200 Baud |
| 5.5.41 | Parity: | Range: none, even, odd |

**5.5.1** *Protocol:* **USB-Stick:**

Only visible if an USB interface is installed. No further settings are possible.

**5.5.1** *Protocol:* **HART**

Device address: Range: 0–63

# 10. Material Safety Data sheets

## 10.1. Reagents

| | |
|---|---|
| Catalogue No.: | A-85.410.120 |
| Product name: | OXYCON ON-LINE DPD |
| Catalogue No.: | A-85.410.120 |
| Product name: | OXYCON ON-LINE Buffer |
| Catalogue No.: | A-85.419.200 |
| Product name: | OXYCON ON-LINE KI |
| Catalogue No.: | A-85.112.300 |
| Product name: | Calibration Solution pH 4 |
| Catalogue No.: | A-85.113.300 |
| Product name: | Calibration Solution pH 7 |
| Catalogue No.: | A-85.114.300 |
| Product name: | Calibration Solution pH 9 |

**Download MSDS** The current Material Safety Data Sheets (MSDS) for the above listed Reagents are available for downloading at **www.swan.ch**.

# 11. Default Values

***Note:*** *The parameter Cleaning is only visible if an optional Cleaning Module is connected to the AMI Codes II.*
*The parameters pH and Temperature are only visible if the option pH is installed.*

**Operation:**

| | |
|---|---|
| Sensors: | Filter Time Const.: ..... 30 s |
| | Hold after Cal.: ..... 120 s |
| | Meas. Interval: ..... 10 min |
| | Default pH (*If pH option is not installed*) ..... 7.00 pH |
| Alarm Relay | ..... same as in Installation |
| Relay 1 and 2 | ..... same as in Installation |
| Input | ..... same as in Installation |
| Logger: | Logger Interval: ..... Event Driven |
| | Clear Logger: ..... no |
| Display: | Screen 1 and 2; Row 1: ..... Total chlorine 1 |
| | Screen 1 and 2; Row 2: ..... Total chlorine 2 |
| | Screen 1 and 2; Row 3: ..... None |

**Installation:**

| | |
|---|---|
| Sensor: | Dimension: ..... ppm |
| | Ref. Verification: ..... 0.255 |
| | Meas. Range: ..... Standard |
| | Standards: |
| | Standard 1 ..... pH 7 |
| | Standard 2 ..... pH 9 |
| | Cleaning ..... 2 Solutions |
| Signal Output 1 & 2 | Parameter: ..... Total chlorine 1 |
| | Current loop: ..... 4 - 20 mA |
| | Function: ..... linear |
| | Scaling, Total chlorine 1 & 2: Range low: ..... 0.00 ppm |
| | Scaling, Total chlorine 1 & 2: Range high: ..... 5.00 ppm |
| | Scaling, Calc. dichloramine: Range low: ..... 0.00 ppm |
| | Scaling, Calc. dichloramine: Range high: ..... 5.00 ppm |
| | Scaling: Temperature: Range low: ..... 0.0 °C |
| | Scaling: Temperature: Range high: ..... 50.0 °C |
| | Scaling: pH: Range low: ..... 0.00 pH |
| | Scaling: pH: Range high: ..... 14.00 pH |
| | Scaling: Sample Flow: Range low: ..... 0 B/s |
| | Scaling: Sample Flow: Range high: ..... 200 B/s |

| | |
|---|---|
| Alarm Relay | Alarm Disinfection.: |
| | Total chlorine 1, Alarm high: 20.00 ppm |
| | Total chlorine 1, Alarm low: 0.00 ppm |
| | Total chlorine 1, Hysteresis: 0.10 ppm |
| | Total chlorine 1, Delay: 5 s |
| | Total chlorine 2, Alarm high: 20.00 ppm |
| | Total chlorine 2, Alarm low: 0.00 ppm |
| | Total chlorine 2, Hysteresis: 0.10 ppm |
| | Total chlorine 2, Delay: 5 s |
| | Calc. Dichl., Alarm high: 20.00 ppm |
| | Calc. Dichl., Alarm low: 0.00 ppm |
| | Calc. Dichl., Hysteresis: 0.10 ppm |
| | Calc. Dichl., Delay: 5 s |
| | Sample Temp.: Alarm High: 55 °C |
| | Sample Temp.: Alarm Low: 5 °C |
| | Sample Flow: Flow Alarm: yes |
| | Sample Flow: Alarm High: 500 B/s |
| | Sample Flow: Alarm Low: 10 B/s |
| | pH: Alarm high: 14.00 pH |
| | pH: Alarm low: 0.00 pH |
| | pH: Hysteresis: 0.10 pH |
| | pH: Delay: 5 s |
| | Case temp. high: 65 °C |
| | Case temp. low: 0 °C |
| Relay 1 and 2 | Function: Limit upper |
| | Parameter: Total chlorine 1 |
| | Setpoint: 20.00 ppm |
| | Hysteresis: 0.10 ppm |
| | Delay: 30 s |
| | **If Function = Control upw. or dnw:** |
| | Parameter: **Total chlorine 1** |
| | Settings: Actuator: Frequency |
| | Settings: Pulse Frequency: 120/min |
| | Settings: Control Parameters: Setpoint: 20.00 ppm |
| | Settings: Control Parameters: P-band: 0.10 ppm |
| | Parameter: **Total chlorine 2** |
| | Settings: Actuator: Frequency |
| | Settings: Pulse Frequency: 120/min |
| | Settings: Control Parameters: Setpoint: 20.00 ppm |
| | Settings: Control Parameters: P-band: 0.10 ppm |

Parameter:.....**Calc. Dichl.**
Settings: Actuator: ..... Frequency
Settings: Pulse Frequency: .....120/min
Settings: Control Parameters: Setpoint:..... 20.00 ppm
Settings: Control Parameters: P-band: ..... 0.10 ppm

Parameter:.....**Temperature**
Settings: Actuator: ..... Frequency
Settings: Pulse Frequency: .....120/min
Settings: Control Parameters: Setpoint:..... 30 °C
Settings: Control Parameters: P-band: ..... 1 °C

Parameter:.....**Sample Flow**
Settings: Actuator: ..... Frequency
Settings: Pulse Frequency: .....120/min
Settings: Control Parameters: Setpoint:.....200 B/s
Settings: Control Parameters: P-band: .....20 B/s

Parameter:.....**pH**
Settings: Actuator: ..... Frequency
Settings: Pulse Frequency: .....120/min
Settings: Control Parameters: Setpoint:.....7 pH
Settings: Control Parameters: P-band: .....0.1 pH

*Common settings*
Settings: Control Parameters: Reset time:.....0 s
Settings: Control Parameters: Derivative Time: .....0 s
Settings: Control Parameters: Control Timeout:.....0 min

Settings: Actuator: .....Time proportional
Cycle time: .....60 s
Response time: .....10 s

Settings: Actuator ..... Motor valve
Run time: .....60 s
Neutral zone: ..... 5%

**If Function = Timer:**
Mode:.....Interval
Interval: .....1 min

Mode: .....daily
Start time:..... 00.00.00

Mode:..... weekly
Calendar; Start time: ..... 00.00.00
Calendar; Monday to Sunday:.....Off

Run time: .....10 s
Delay: .....5 s

| | | |
|---|---|---|
| | Signal output: | cont |
| | Output/Control: | cont |
| Input: | Active | when closed |
| | Signal Outputs | hold |
| | Output/Control | off |
| | Fault | no |
| | Delay | 10 s |
| Miscellaneous | Language: | English |
| | Set default: | no |
| | Load firmware: | no |
| | Password: | for all modes 0000 |
| | Sample ID: | - - - - - - - - |
| | Line break detection | no |

# 12. Index

**A**
Alarm
pH . . . . . 95
Sample flow . . . . . 94
Alarm Relay . . . . . 12, 32, 93
Application range . . . . . 11

**C**
Cable thicknesses . . . . . 28
Cal. History . . . . . 83
Calendar . . . . . 99
Calibration
pH . . . . . 41, 54, 84
Changing values . . . . . 45
Cleaning module . . . . . 12
Current outputs . . . . . 35

**D**
Disassemble the solenoid valve . . . 64
Disinfectant . . . . . 11

**E**
Electrical wiring . . . . . 20

**F**
Fill System . . . . . 40, 84
Flow Alarm . . . . . 67, 94
Fluidics . . . . . 14

**H**
HART . . . . . 37

**I**
Input . . . . . 12, 32
Instrument Setup . . . . . 20
Interface
HART . . . . . 37
Modbus . . . . . 36
Profibus . . . . . 36
USB . . . . . 37
Interrupt measurement . . . . . 12

**L**
Logger . . . . . 87, 104

**M**
Measurement interval . . . . . 48, 104
Message List . . . . . 82
Modbus . . . . . 36
Mounting requirements . . . . . 21

**O**
On-site requirements . . . . . 17, 20

**P**
Pending Errors . . . . . 82
pH Electrode . . . . . 20, 41, 60, 83
pH gain . . . . . 67
pH Measurement . . . . . 12, 83
pH offset . . . . . 67
Power Supply . . . . . 17
Process calibration . . . . . 21
Process DIS . . . . . 41
Process pH . . . . . 54, 84
Profibus . . . . . 37

**R**
Reagent consumption . . . . . 48
Relay . . . . . 12, 95, 105
Relay Box . . . . . 12

**S**
Sample Flow . . . . . 39, 83, 94
Sample requirements . . . . . 17
Signal Outputs . . . . . 11, 35, 88
Simulation . . . . . 84
Slope photometry. . . . . 67
Software . . . . . 44
Solenoid valve . . . . . 64
Standard pH. . . . . 55, 84

**T**
Terminals . . . . . 30, 32–33, 36
Tube numbering . . . . . 63

**U**
USB Interface . . . . . 37

**V**
Ver. History. . . . . 82
Verification . . . . . 52, 84, 88

**W**
Wire . . . . . 28

**Z**
Zero photometry . . . . . 67

# 13. Notes

swan
ANALYTICAL INSTRUMENTS

A-96.250.631 / 191120

## Swan Products - Analytical Instruments for:




**Swan** is represented worldwide by subsidiary companies and distributors and cooperates with independent representatives all over the world. For contact information, please scan the QR code.

Swan Analytical Instruments · CH-8340 Hinwil
www.swan.ch · swan@swan.ch

SWISS MADE



AMI Codes-II TC

# *THETYS*

## *MODEL UV500, WATER ANALYSER*

LEFT BLANK

# ON LINE WATER ANALYSER

UV500




TETHYS INSTRUMENTS

# OPERATING MANUAL

# Safety warning and liability



Chemicals used as reagent or as used as cleaning solution or used to prepare calibration solutions might be toxic, corrosive or irritant. Refer to the material safety data sheets (MSDS) for each chemical. Wear protection glass and gloves.



**To prevent electric shock:**

- Connect this instrument only at a properly grounded power socket
- Unplug the power cord before any servicing, wiring or any operation inside the instrument
- Keep the door locked by the key



The documentation and/or Product are provided on an “as is” basis only and may contain deficiencies or inadequacies. The Documentation and/or Product are provided without warranty of any kind, express or implied.

The manufacturer or its suppliers shall, regardless of any legal theory upon which the claim is based, not be liable for any consequential, incidental, direct, indirect, punitive or other damages whatsoever (including, without limitation, damages for loss of business profits, business interruption, loss of business information or data, or other pecuniary loss) arising out the use of or inability to use the Documentation and/or Product, even if the manufacturer or its suppliers has been advised of the possibility of such damages.

# Contents

**1 Quick start ..... 8**

**2 Installation ..... 10**

2.1 Fixing ..... 10
2.2 Hydraulic connections ..... 11
2.3 Flow diagrams ..... 12
2.4 Electrical connections ..... 15

2.4.1 4-20 mA output ..... 16
2.4.2 Wi-Fi ..... 17
2.4.3 Ethernet ..... 18
2.4.4 RS232 ..... 19
2.4.5 RS485 ..... 20
2.4.6 pH probe ..... 21
2.4.7 Conductivity probe ..... 21
2.4.8 4-20 mA input ..... 22
2.4.9 Relay module ..... 22
2.4.10 Logical input ..... 23
2.4.11 Mains ..... 24
2.4.12 USB ..... 24

**3 Operating ..... 25**

3.1 Overview ..... 25
3.2 Screens overview ..... 25
3.3 Process screen ..... 26
3.4 Alarm screen ..... 31
3.5 Timing screen ..... 35
3.6 Auto-calibration ..... 43
3.7 Communication screen ..... 45
3.8 Regional setting screen ..... 54
3.9 Factory screen ..... 57

**4 Principle, test and recalibration ..... 63**

4.1 **Ammoniac**
4.1.1 Principle ..... 63
4.1.2 Test ..... 64
4.1.3. Recalibration ..... 76

4.2 **Chlorophyll A**
4.2.1 Principle ..... 77

4.2.2 Test ..... 77
4.2.3. Recalibration ..... 88

4.3 **Colour by spectrograph**
4.4.1 Principle ..... 89
4.4.2 Test ..... 90
4.4.3. Recalibration ..... 100

4.4 **Conductivity**
4.4.1 Principle ..... 101
4.4.2 Test ..... 102
4.4.3. Recalibration ..... 110

4.5 **Dissolved oxygen**
4.5.1 Principle ..... 111
4.5.2 Test ..... 112
4.5.3. Recalibration ..... 120

4.6 **Hydrocarbons**
4.6.1 Principle ..... 121
4.6.2 Test ..... 122
4.6.3. Recalibration ..... 132

4.7 **Hydrogen sulphide**
4.7.1 Principle ..... 133
4.7.2 Test ..... 134
4.7.3. Recalibration ..... 145

4.8 **Input 4-20 mA**
4.8.1 Principle ..... 146
4.8.2 Test ..... 145
4.8.3. Recalibration ..... 154

4.9 **Nitrate by spectrograph**
4.9.1 Principle ..... 155
4.9.2 Test ..... 156
4.9.3. Recalibration ..... 166

4.10 **Oxidation-reduction potential**
4.10.1 Principle ..... 167

4.10.2 Test ..... 168
4.10.3. Recalibration ..... 176

4.11 **pH**
4.11.1 Principle ..... 177
4.11.2 Test ..... 177
4.11.3. Recalibration ..... 186

4.12 **Phosphate by spectrograph**
4.12.1 Principle ..... 187
4.12.2 Test ..... 188
4.12.3. Recalibration ..... 199

4.13 **Rhodamine**
4.13.1 Principle ..... 200
4.13.2 Test ..... 201
4.13.3. Recalibration ..... 211

4.14 **Spectrum UV-VIS**
4.14.1 Principle ..... 212
4.14.2 Test ..... 213

4.15 **Temperature**
4.15.1 Principle ..... 219
4.15.2 Test ..... 220
4.15.3. Recalibration ..... 228

4.16 **Turbidity by UV absorption with spectrograph**
4.16.1 Principle ..... 229
4.16.2 Test ..... 230
4.16.3. Recalibration ..... 239

4.17 **Turbidity by nephelometry**
4.17.1 Principle ..... 240
4.17.2 Test ..... 241
4.17.3. Recalibration ..... 249

4.18 **Turbidity by external probe**
4.18.1 Principle ..... 250
4.18.2 Test ..... 251

4.18.3. Recalibration ..... 258

4.19 **UV254 by spectrograph**
4.19.1 Principle ..... 259
4.19.2 Test ..... 260
4.19.3. Recalibration ..... 271

**5 Maintenance, troubleshooting and measuring errors ..... 272**

5.1 General ..... 272
5.2 Ammoniac ..... 273
5.3 Chlorophyll A ..... 275
5.4 Colour by spectrograph ..... 277
5.5 Conductivity ..... 279
5.6 Dissolved oxygen ..... 280
5.7 Hydrocarbons ..... 282
5.8 Hydrogen sulphide ..... 284
5.9 Input 4-20 mA ..... 286
5.10 Nitrate by spectrograph ..... 287
5.11 Oxidation-reduction potential ..... 289
5.12 pH ..... 290
5.13 Phosphate by spectrograph ..... 291
5.14 Rhodamine ..... 293
5.15 Spectrum UV-VIS ..... 295
5.16 Temperature ..... 296
5.17 Turbidity by UV absorption with spectrograph ..... 297
5.18 Turbidity by nephelometry ..... 299
5.19 Turbidity by external probe ..... 301
5.20 UV254 by spectrograph ..... 302

**6 Specifications ..... 303**

6.1 General ..... 303
6.2 Ammoniac ..... 306
6.3 Chlorophyll A ..... 307
6.4 Colour by spectrograph ..... 308
6.5 Conductivity ..... 309
6.6 Dissolved oxygen ..... 310
6.7 Hydrocarbons ..... 311

6.8 Hydrogen sulphide ..... 312
6.9 Input 4-20 mA ..... 313
6.10 Nitrate by spectrograph ..... 314
6.11 Oxidation-reduction potential ..... 315
6.12 pH ..... 316
6.13 Phosphate by spectrograph ..... 317
6.14 Rhodamine ..... 318
6.15 Spectrum UV-VIS ..... 318
6.16 Temperature ..... 320
6.17 Turbidity by UV absorption with spectrograph ..... 321
6.18 Turbidity by nephelometry ..... 322
6.19 Turbidity by external probe ..... 323
6.20 UV254 by spectrograph ..... 324

---

# 1 Quick start

## Step 1

Unpack the analyser, check that nothing has been damaged during the transportation and fix it on a wall. The dimensions are given on chapter 2.

## Step 2

Connect the sample inlet and outlet with plastic tubing, ID 6.4 mm (1/4”) OD 9.6 mm (3/8”).
Refer to chapter 2 for inlet and outlet location if necessary.
Assemble the fitting elements as below:

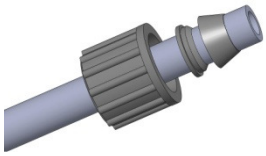

With the peristaltic sampling pump, the inlet pressure must be limited to 1 Bar (equiv. to 1000 hPa or 15 psi)

## Step 3

Depending on the options, refer to chapter 2 to connect the 4-20 mA output or the RS232 cable or the RS485 cable or the Ethernet cable. If a Wi-Fi link has been chosen as an option, check that the antenna is properly fixed on the right side of the enclosure.

## Step 4

Connect the power cable to a grounded power socket.

To avoid electric shock, the analyser must be connected to the earth via the power socket.

## Step 5

Check that the date and time on the bottom right of the screen are correct. If not, refer to chapter 3 for setting date and time.

# Step 6

Refer to chapter 3 to configure the optional interface (4-20 mA or RS232 or RS485 or Ethernet or Wi-Fi).

# Step 7

The default mode is the stopped mode (no automatic measurements, no automatic cleaning).

Set the measuring mode (continuous, periodic or extern) depending of the application (refer to chapter no 3, timing screen).

The analyser is factory calibrated and is now ready to start the measurements.

For checking and recalibration, refer to chapter 4 for each individual parameter.

# 2 Installation

## 2.1 Fixing

Make 4 holes in the panel or in the wall for 8 mm diameter screws according to the pattern below:

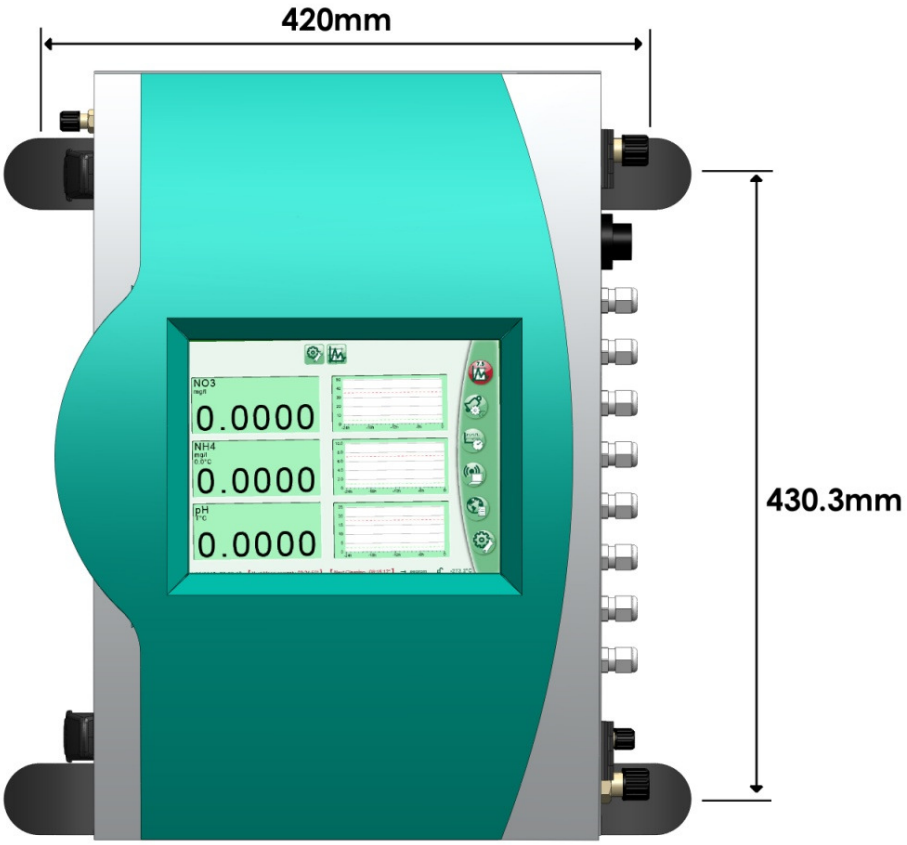

## 2.2 Hydraulic connections

Refer to the drawing and table below for the hydraulic connections.
Flow diagrams are given on the chapter 2.3 for different measuring configurations.

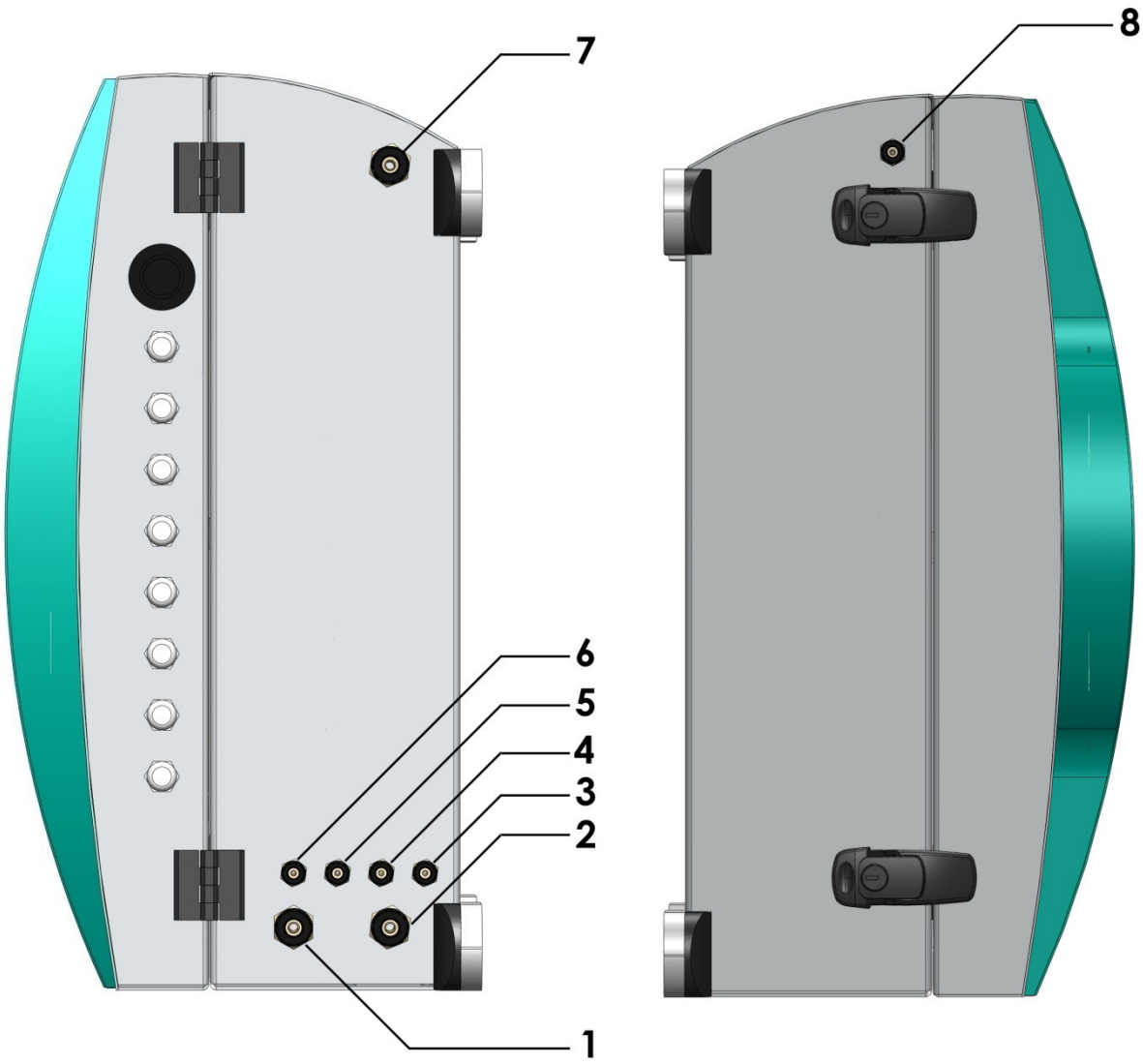


| | |
|---|---|
| **1** | Sample outlet (if NH4 or H2S parameter) |
| **2** | Sample Inlet |
| **3** | Cleaning solution inlet (H2SO4 5% otherwise specified) |
| **4** | NaOH 10% (only if NH4 parameter) |
| **5** | HCl 10% (only if H2S parameter) |
| **6** | Reagent (for PO4 only) |
| **7** | Sample outlet (without NH4 or H2S parameter) |
| **8** | Air inlet (if NH4 or H2S parameter) |

The sample inlet and outlet must be connected with plastic tubing, ID 6.4 mm (1/4”) OD 9.6 mm (3/8”).

Reagents or cleaning solution must be connected with plastic tubing, ID 3.2 mm (1/8”) OD 6.4 mm (1/4”)

The double-ring fittings must be assembled on the tubing as shown below:

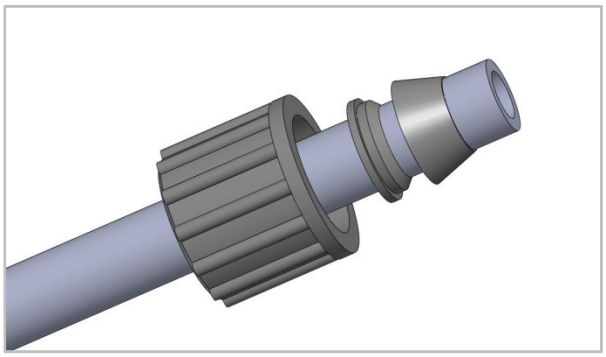

## 2.3 Flow diagrams for different configurations

A) All optical measurements except NH4, H2S and PO4

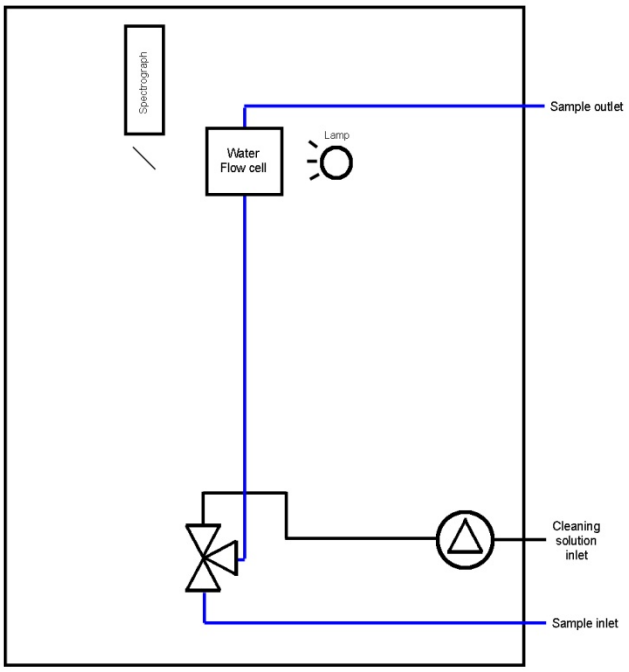

B) NH4 and/or H2S only

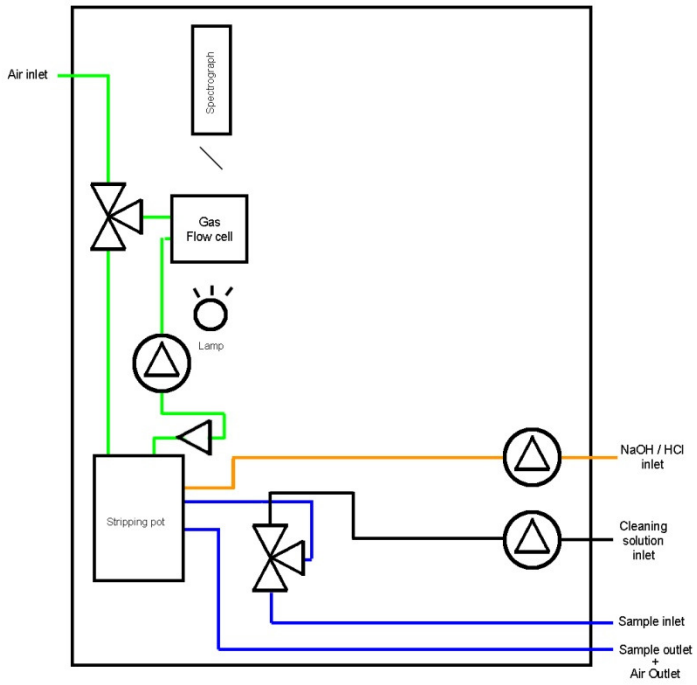


C) NH4 and/or H2S with other optical measurements, except PO4

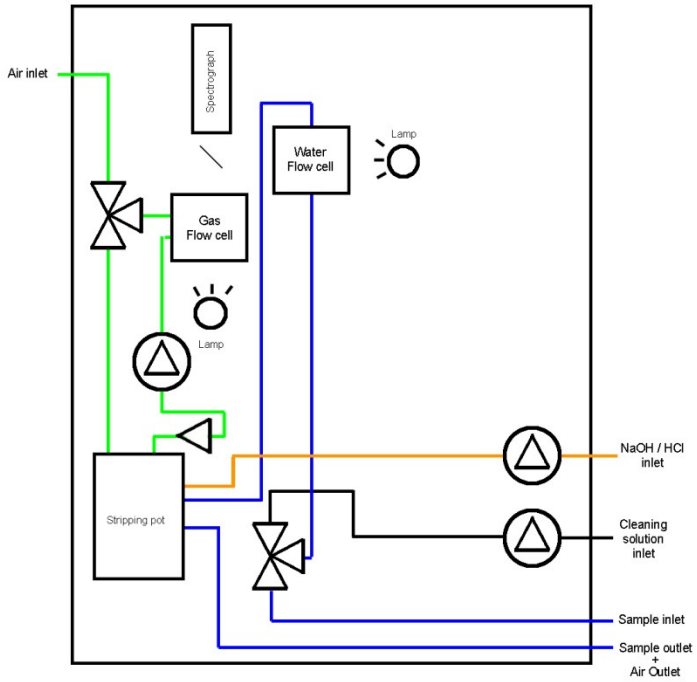

D) PO4 only or PO4 with other optical measurement except NH4 and H2S

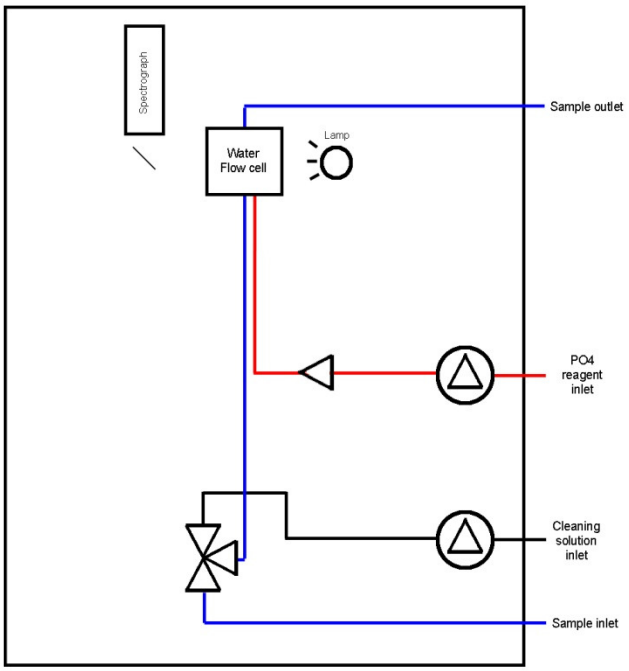


E) PO4, NH4 and/or H2S and other optical measurements

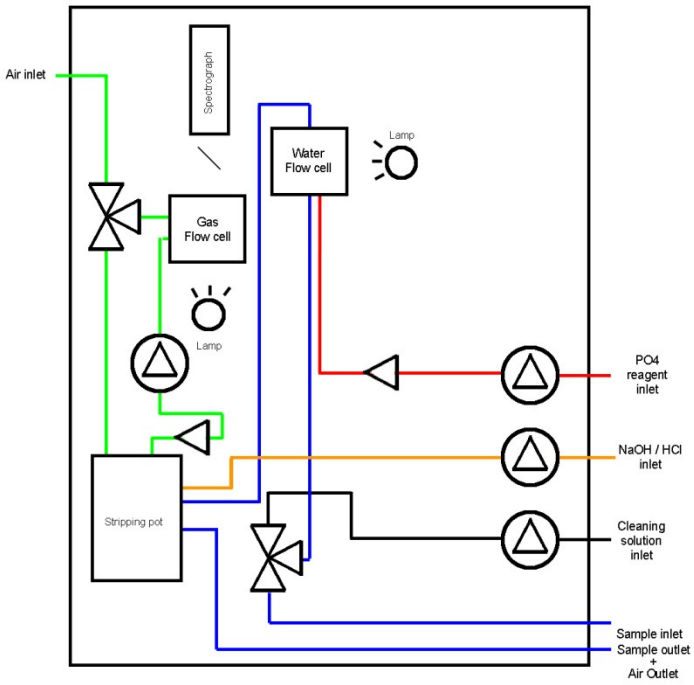

## 2.4 Electrical connections

All the cable must be connected using the glands as show below.

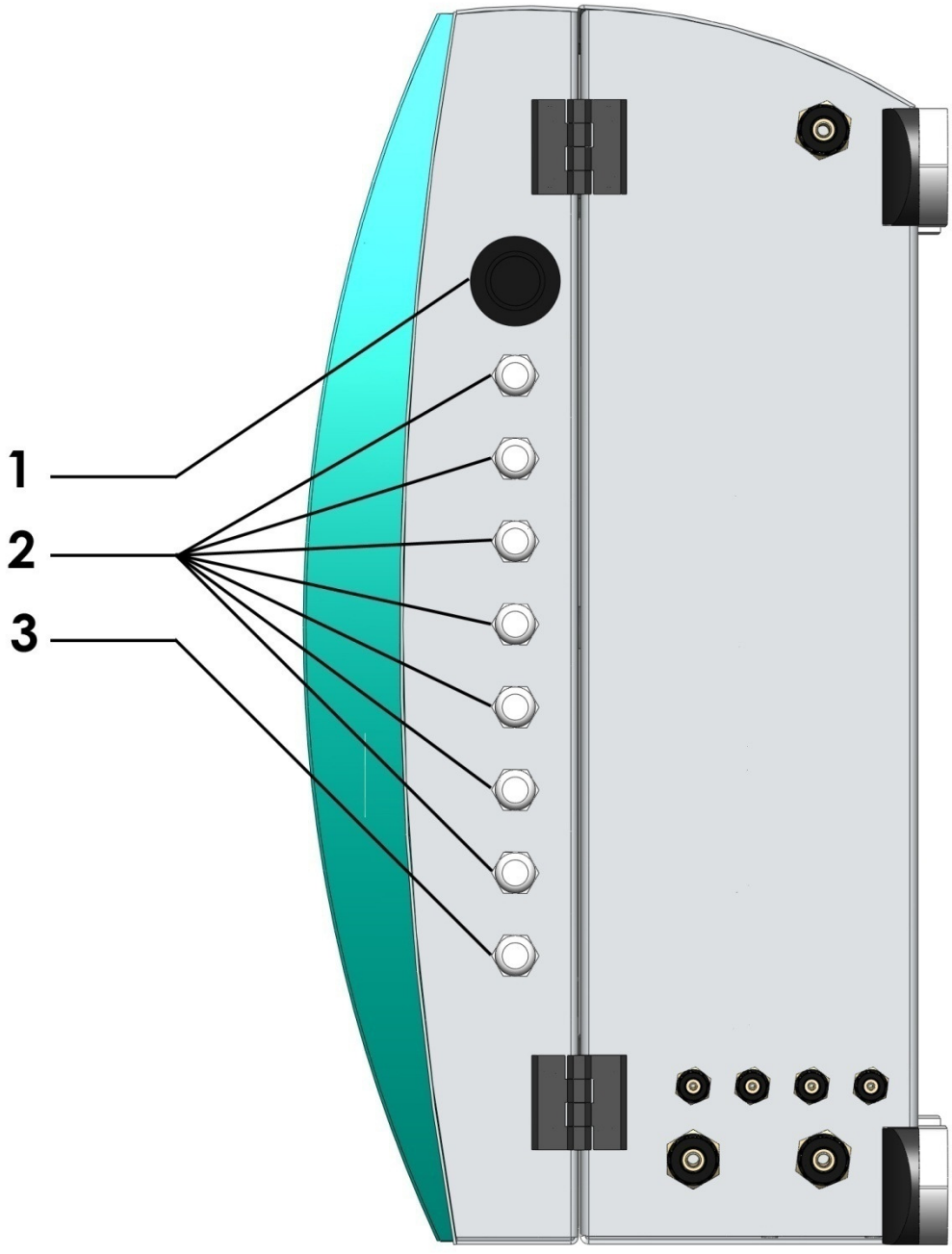


| | |
|---|---|
| **1** | USB key connector |
| **2** | Glands for inputs/outputs |
| **3** | Gland for the power cable |

### 2.4.1 4-20 mA output (optional)

The module OUT4-20-500 delivers an active 4-20 mA signal for PLC, recorders or SCADA system. Each OUT4-20-500 module is affected to one measuring channel.

Refer to chapter 3 to set up the 4-20 mA module position and scale values for each channel.

The maximum allowed charge is 500 ohm.



No voltage must be applied on the 4-20 mA output.

The output has a galvanic insulation by optocouplers up to 1 KV DC.

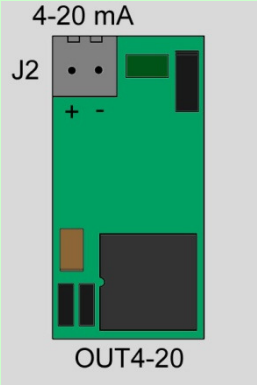


Screw terminal J2

| | |
|---|---|
| Pin 1 | 4-20 mA output (+) |
| Pin 2 | 4-20 mA output (-) |

Note: pin 1 on left side

Max load: 500 Ω

### 2.4.2 Wi-Fi port (optional)

The Wi-Fi module follows the IEEE 802.11b standard and is internally connected to a SMA connector on the right side of the analyser.

The 2.4 GHz antenna must be fixed on this SMA connector as represented below.

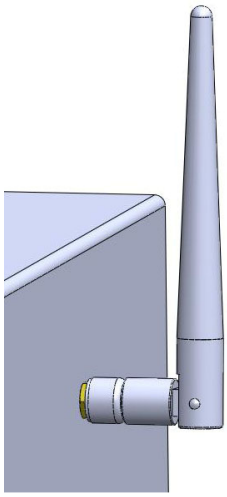

Refer to chapter 3 (communications) to enable the Wi-Fi communication and to set up the network name (SSID) and the WEP key.

The Wi-Fi module follows the standards listed on the table below.

| | **Standards** |
|---|---|
| **Emissions** | AS/NZS 3548<br>AS/NZS 3548 CISPR 22<br>Japan IOH<br>003NY04115 0000<br>003GZ04064 0000<br>FCC Part 15 Subpart C<br>(FCC ID: MCQ-50M880)<br>IC RSS 210 (IC:1846A-50M880)<br>FCC Part 15 Subpart B<br>ICES-003<br>EN 55022<br>EN 61000-4-2<br>EN 61000-4-3<br>EN 61000-4-6<br>EN 301 489-3<br>EN 300 328<br>VCCI |
| **Immunity** | EN 55024 |
| **Safety** | UL 60950-1<br>CSA 22.2 No. 60950--1<br>EN 60950 |

### 2.4.3 Ethernet port (optional)

The Ethernet module provide a RJ-45 jack that meets the ISO 8877 requirements for 10/100BASE-T. See the following figure and table for pin orientation and pin assignments.

Refer to chapter 3 (communications) to select the Ethernet port and to set up the IP address and mask.

The RJ-45 cable must go through the PG16 gland (biggest).

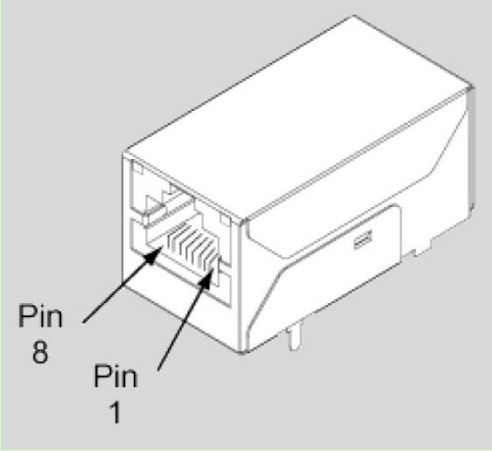


RJ-45 pin assignment

| | | |
|---|---|---|
| Pin 1 | TXD+ | Transmit data + |
| Pin 2 | TXD- | Transmit data - |
| Pin 3 | RXD+ | Receive data + |
| Pin 4 | EPWR+ | Power from switch + |
| Pin 5 | EPWR+ | Power from switch + |
| Pin 6 | RXD- | Receive data + |
| Pin 7 | EPWR- | Power from switch - |
| Pin 8 | EPWR- | Power from switch - |

### 2.4.4 RS232 port

The RS232 port has a Sub-D 9 pins male connector and is located on the screen board DSP500, position J15.

Refer to chapter 3 (communications) to select the communication mode and the baud rate.
The format is always **8 bit, no parity, 1 bit stop**.

To connect this port to a laptop (directly or through or a USB adaptor), use a null cable (pin 2 to pin 3, pin 3 to pin 2, pin 5 to pin 5).

See the following table for pin assignments.

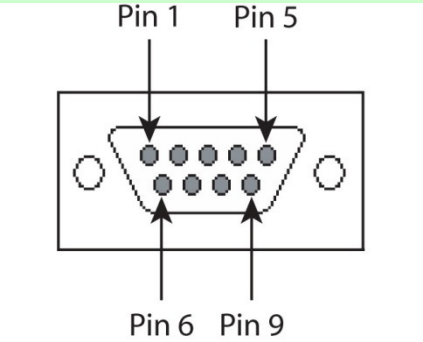


RS232 port – Sub-D9 pin assignment

| | | |
|---|---|---|
| Pin 1 | DCD | (unused) |
| Pin 2 | RXD | Receive data |
| Pin 3 | TXD | Transmit data |
| Pin 4 | DTR | (unused) |
| Pin 5 | GND | Ground |
| Pin 6 | DSR | (unused) |
| Pin 7 | RTS | (unused) |
| Pin 8 | CTS | (unused) |
| Pin 9 | RI | (unused) |

Note 1: Pin 4 and 6 are connected together
Note 2: Pin 7 and 8 are connected together

### 2.4.5 RS485 port

The RS485 port has a 6-pin screw terminal located on the screen board DSP500, position J16 as shown below:

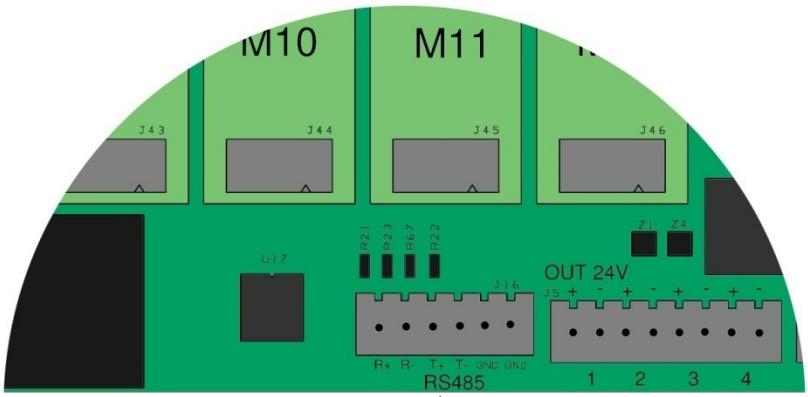


**RS485**

Refer to chapter 3 (communications) to select the communication mode and the baud rate.
The format is always **8 bit, no parity, 1 bit stop**.

See the following table for pin assignments.
Pin 5 or 6 may be used to connect the RS485 cable shielding.

RS485 port – Pin assignment

| | | |
|---|---|---|
| Pin 1 | RX+ | Receive data + |
| Pin 2 | RX- | Receive data - |
| Pin 3 | TX+ | Transmit data + |
| Pin 4 | TX- | Transmit data - |
| Pin 5 | GND | Ground |
| Pin 6 | GND | Ground |

Note: pin 1 on left side

### 2.4.6 pH module (optional)

The module PH500 accepts the direct connection of a pH electrode on the screw terminal J2.

For automatic temperature compensation, the Pt100* sensor of the electrode must be connected on J3.

Note 1: if J3 stay unconnected, the temperature is preset at 25 °C.
Note 2: the maximal recommended length for the cable is 10 meters (30 feet).
(*) platinum resistive element of 100 ohm at 0° C

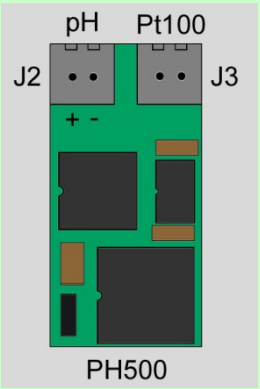


Screw terminal J2

| | |
|---|---|
| Pin 1 | pH input (+) |
| Pin 2 | pH input (-) |

Note: pin 1 on left side

Screw terminal J3

| | |
|---|---|
| Pin 1 | Pt100 input |
| Pin 2 | Pt100 input |

Note: pin 1 on left side

### 2.4.7 Conductivity module (optional)

The module COND500 accepts the direct connection of a conductivity electrode on the screw terminal J2. Conductivity constant of K=0.01, K=0.1, K=1 and K=10 are accepted, refer to chapter 4 to setup the right constant.

For automatic temperature compensation, the Pt100* sensor of the electrode must be connected on J3. Refer to chapter 4 to adjust the temperature coefficient.

Note 1: if J3 stay unconnected, the temperature is preset at 25 °C.
Note 2: the maximal recommended length for the cable is 10 meters (30 feet).
(*) platinum resistive element of 100 ohm at 0° C

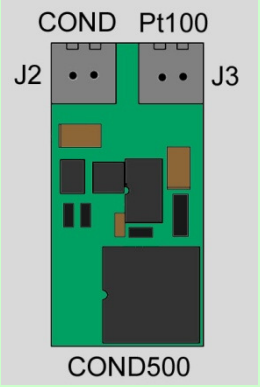


Screw terminal J2

| | |
|---|---|
| Pin 1 | Cond. input |
| Pin 2 | Cond. input |

Note: pin 1 on left side

Screw terminal J3

| | |
|---|---|
| Pin 1 | Pt100 input |
| Pin 2 | Pt100 input |

Note: pin 1 on left side

### 2.4.8 4-20 mA input module (optional)

The module IN4-20-500 accepts the connection of a 4-20 mA output from any probe or external measuring system. The floating input is insulated by optocouplers.

A 15V DC output (insulated, max 20 mA) is available on the connector J3. This output must be used for any probe with electrical contact to the water sample (example: chlorine probe).

A 12V DC output (non insulated, max 200 mA) is available on the connector J4. Do not use this output to supply probe with electrical contact to the water sample.

Refer to chapter 4 to set proper label, unit and scale factor of the measuring channel attached to this module.

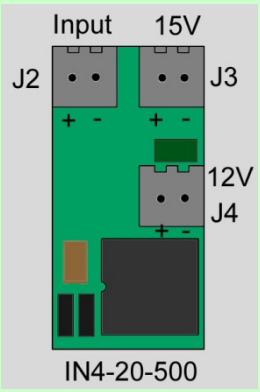


Screw terminal J2

| | |
|---|---|
| Pin 1 | 4-20 mA input (+) |
| Pin 2 | 4-20 mA input (-) |

Note: pin 1 on left side

Input impedance: 100 Ω

Screw terminal J3

| | |
|---|---|
| Pin 1 | +15V |
| Pin 2 | 0V (floating) |

Note: pin 1 on left side

**Max current: 20 mA**

Screw terminal J4

| | |
|---|---|
| Pin 1 | +12V |
| Pin 2 | 0V (ground) |

Note: pin 1 on left side

**Max current: 200 mA**

### 2.4.9 Relay module (optional)

The module RELAY500 gives on J2 a normally closed (NC) and a normally open (NO) relay contacts for different functions. Refer to chapter 4 to select the right function, threshold, etc....

A 24V DC output is available on the screw terminal J3 (total max current 1A). This output can be used for example to power external pumps or valve for a multiplexing system.

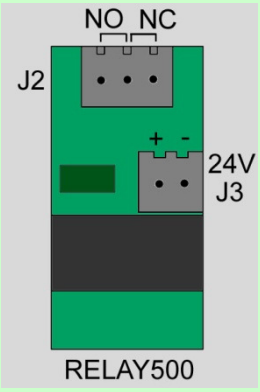


Screw terminal J2

| | |
|---|---|
| Pin 1 | NO contact |
| Pin 2 | Common |
| Pin 3 | NC contact |

Note: pin 1 on left side

Contact rating:
5A @ 277VAC/30VDC resistive

Screw terminal J3

| | |
|---|---|
| Pin 1 | +24V DC |
| Pin 2 | 0V (ground) |

Note: pin 1 on left side

Total current max: 1 A

### 2.4.10 Logical input module (optional)

The module LOGIC500 accepts two logical signals from a PLC to control the measurement cycles.

The START input is used to start a measurement cycle for all the channels when a pulse (6 to 48V DC) is received. The minimum pulse width is 200 mS. The external measuring mode must be selected.

The INHIBIT input is used to stop and inhibit any further automatic measurement (periodic mode or continuous mode) as long as this input is maintained high (6 to 48 VDC).

Note: as these two input signals refer to different measuring mode, it has no sense to use both of them on a same application.

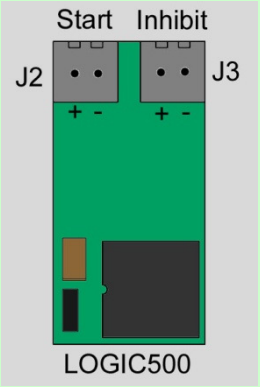


Screw terminal J2

| | |
|---|---|
| Pin 1 | Start input (+) |
| Pin 2 | Start input (-) |

Note: pin 1 on left side

Level: 6 to 48 VDC
Input impedance: 10 KΩ

Screw terminal J3

| | |
|---|---|
| Pin 1 | Inhibit input (+) |
| Pin 2 | Inhibit input (+) |

Note: pin 1 on left side

Level: 6 to 48 VDC
Input impedance: 10 KΩ

### 2.4.11 Mains connection

Before connecting the power cord, check that the voltage written on the serial number plate corresponds to the mains voltage.

To avoid electric shock, the analyser must be connected to the earth via the power socket. Check that the power socked is earthed.

Disconnect the power cord or mains before any wiring, connection or maintenance operation inside the analyser.

If all the conditions above are satisfied, plug the power cord into a grounded power socket.

If the power cord needs to be changed or removed, the mains must be connected to the screen board DSP500 on the screw terminal J1 as follows:

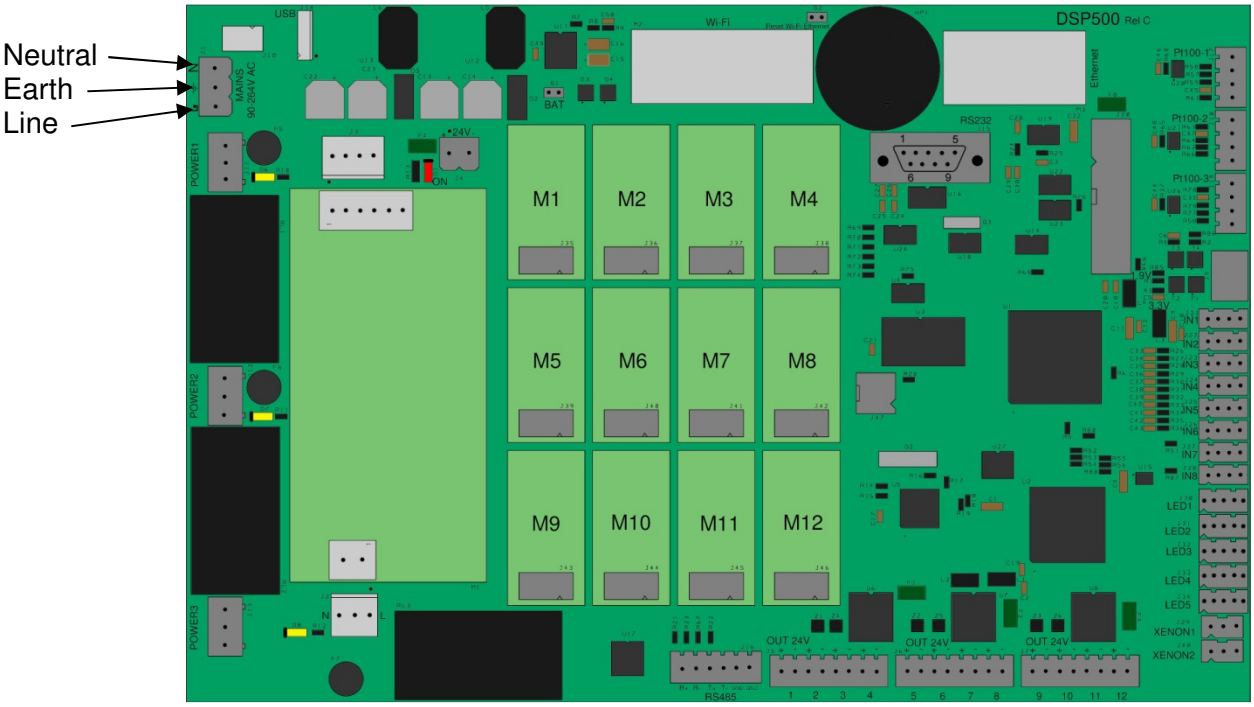


### 2.4.12 USB

A USB key (memory stick) can be connected on the USB connector type A represented on the drawing of the section 2.4 for measurements download, configuration download or upload, or for upgrading the analyser software. Refer to the Operating section for using the USB key.

Disconnect the USB key as soon as the operation if finished as USB connection is not watertight.

# 3 Operating

## 3.1 Overview

When powered on, the analyser displays the process screen after a fast hardware check.

Then the measurements start automatically and the process values and graphs are updated as soon as necessary (except in stopped mode that is the default mode after delivery, see on the timing screen to change the mode).

## 3.2 Screens overview

To change of screen, press on one of the following button as shown below.
A login is required on the first time. The default password is 123 in user mode and 456 in administrator mode.

The timing, communication, regional setting and factory screens are accessible only in administrator mode.

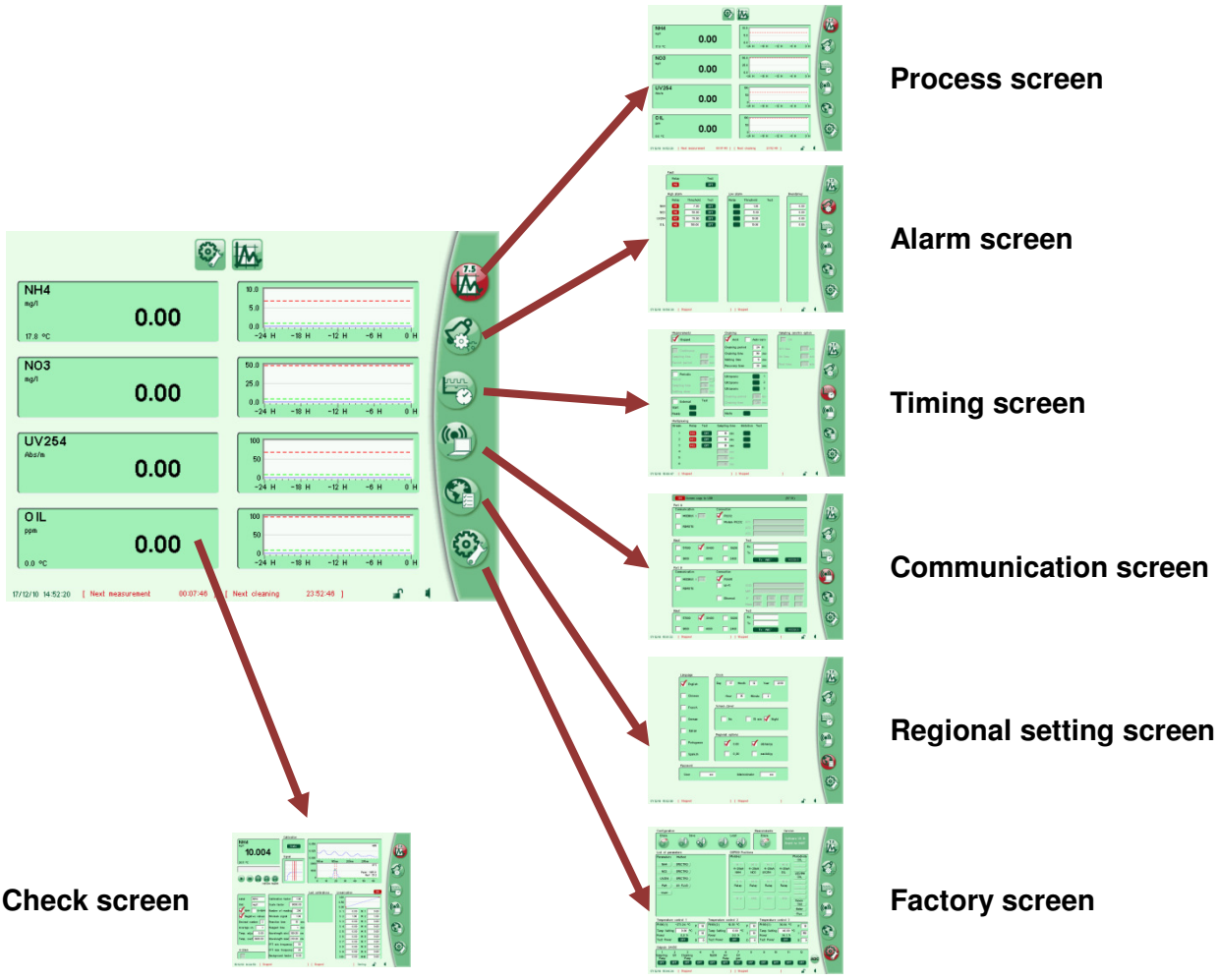

### 3.3 Process screen

The process screen is the basic screen of the analyser. It is display a few seconds after power on and remains displayed all the time unless another screen has been selected. The **default password** for login is **123** in user mode and **456** in administrator mode.

This screen displays the very last measurement for all the active channels on the left side and the graph of the recorded measurements on the right side.

If the screen saver mode has been selected, the backlight of the screen will be cut automatically when no key has been activated for 15 minutes or during the night time, depending of the screen saver mode. All the functions (measurement, cleaning, temperature control...) remain active during the screen saving time. To reactivate the screen, press anywhere on the screen.

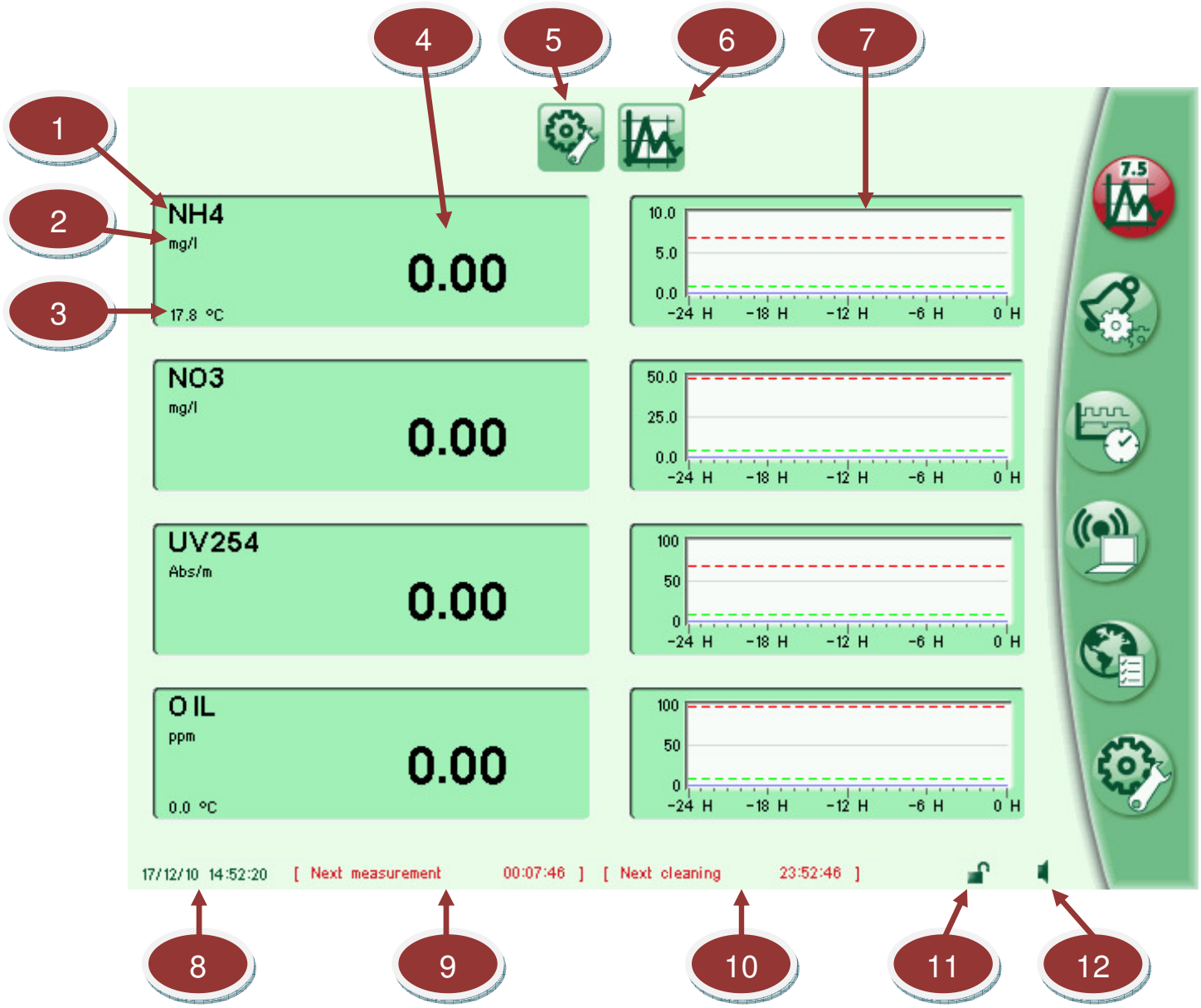




### Label of the measuring channel

The label is automatically set when the channel is created. It can be modified in the check screen.




### Unit of the measuring channel

The unit is automatically set when the channel is created. It can be modified in the **check screen**.




### Temperature

Display the auxiliary temperature measurement of the channel. It concerns only the channels with automatic temperature compensation (NH4, H2S, PO4, PAH, Chl. A, pH and conductivity).




### Channel value

This value is the very last measurement done for each channel. The number of digit can be modified in the **check screen**. By default, negative values resulting from normal measuring fluctuations or from a wrong zero are displayed. They can be eliminated and replace by zero by changing a setting on the **check screen**.




### Adjustment - checking

This key gives access to the check screen for each channel checking or calibration. Then the value display area must be pressed to select the right channel.
Alternatively as a shortcut, the value display area can be pressed directly.




### Graph display or zoom

This key gives access to a full screen zoom of the historical graph. The channel must be selected by pressing or on the value area or on the graph, depending on the total number of channels.




### Recorded measurement graph

This graph shows the last measurements over the selected time scale. The red dot line corresponds to the high alarm threshold defined in the **alarm screen**, while the green dot line correspond to the low alarm threshold.
The Y scale of the graph is automatic, but cannot be lower than the high threshold. If the high threshold is not used as an alarm, it can be reduced in order to increase the Y scale for a better resolution on low measurements.

To view a zoom of the graph, press anywhere on the graph area. Refer to the **zoom screen** for more details.




### Date and time field

This field displays the current date and time. To change the date or the date format, refer to the regional setting screen.




### Measurements schedule field

Depending on the measuring mode, this field displays information about the measurements schedule.

If an inhibit signal is send to the LOGIC500 logical input module (for any mode except the stopped mode), this field displays “Held” otherwise display will be as follows:

a) For continuous mode, this field displays “Measuring...” followed by the label of the channel being currently acquired

b) For periodic mode:
- Between measurement cycle, the time remaining for the next measuring cycle is displayed, example: “Next measurement: 00:03:24” means that the next measuring cycle will occur in 3 min and 24 sec.

- During sampling time, this field displays “Sampling...”

- During settling down time (if any), this field displays “Settling down...”

- During measurement, the currently measured parameter is displayed, for example: “Measuring NO3...”

c) For external mode:
- As long as no measuring cycle is engaged, this field displays “Waiting...”

- If a measuring cycle command has been received from the LOGIC500 logical input module or through MODBUS communication, a measuring cycle starts and the display is one of the following:

  - During sampling time, this field displays “Sampling...”

- During settling down time (if any), this field displays “Settling down...”

- During measurement, the currently measured parameter is displayed, for example: “Measuring NO3...”

d) For stopped mode, this field displays “Stopped”.




## Cleaning schedule field

Depending on the cleaning method, this field displays information about the cleaning schedule.

a) Manual cleaning (automatic cleaning deactivated)

This field displays “No cleaning”.

b) Acid cleaning method

- Between cleaning cycle, the time remaining for the next cleaning cycle is displayed, example: “Next cleaning: 01:03:24” means that the next cleaning cycle will occur in 1 hours 3 min and 24 sec.

- During purging by acid, the time remaining is displayed, example: “Purging... 00:00:15” means that purging will continue during 15 sec.

- During the waiting time, the time remaining is displayed, example: “Waiting... 00:00:05” means that waiting time will continue during 5 sec.

- During zeroing (if any), This field displays “Zeroing...”

- During the recovery time, the time remaining is displayed, example: “Recovery... 00:00:20” means that recovery will continue during 20 sec.

c) Ultrasonic method

- Between cleaning cycle, the time remaining for the next cleaning cycle is displayed, example: “Next cleaning: 01:03:24” means that the next cleaning cycle will occur in 1 hours 3 min and 24 sec.

- During cleaning by acid, the time remaining is displayed, example: “Cleaning... 00:00:15” means that cleaning will continue during 15 sec.

- During the recovery time, the time remaining is displayed, example: “Recovery... 00:00:20” means that recovery will continue during 20 sec.




### Login / logout statement

An open padlock means that a user is currently logged, should be in user mode or super user mode. To logout, press on this icon. The analyser automatically logout after 15 minutes without action on the touch screen.

A close padlock means that the analyser is currently logout. Press anywhere in the touch screen to start a login procedure.

**3.4 Alarm screen**

The alarm screen shows for each channel the high and low alarm thresholds including eventual boundaries as well as the “fault” relay number (if any) and “ready” relay number (if any).




### Mute mode

This field select or deselect the mute mode. In mute mode, the loudspeaker is bared.

### 3.4 Alarm screen

The alarm screen enables to set the high and low alarm threshold, as well as the boundaries. The relay modules (if any) are displayed as a reminder for the external wiring.

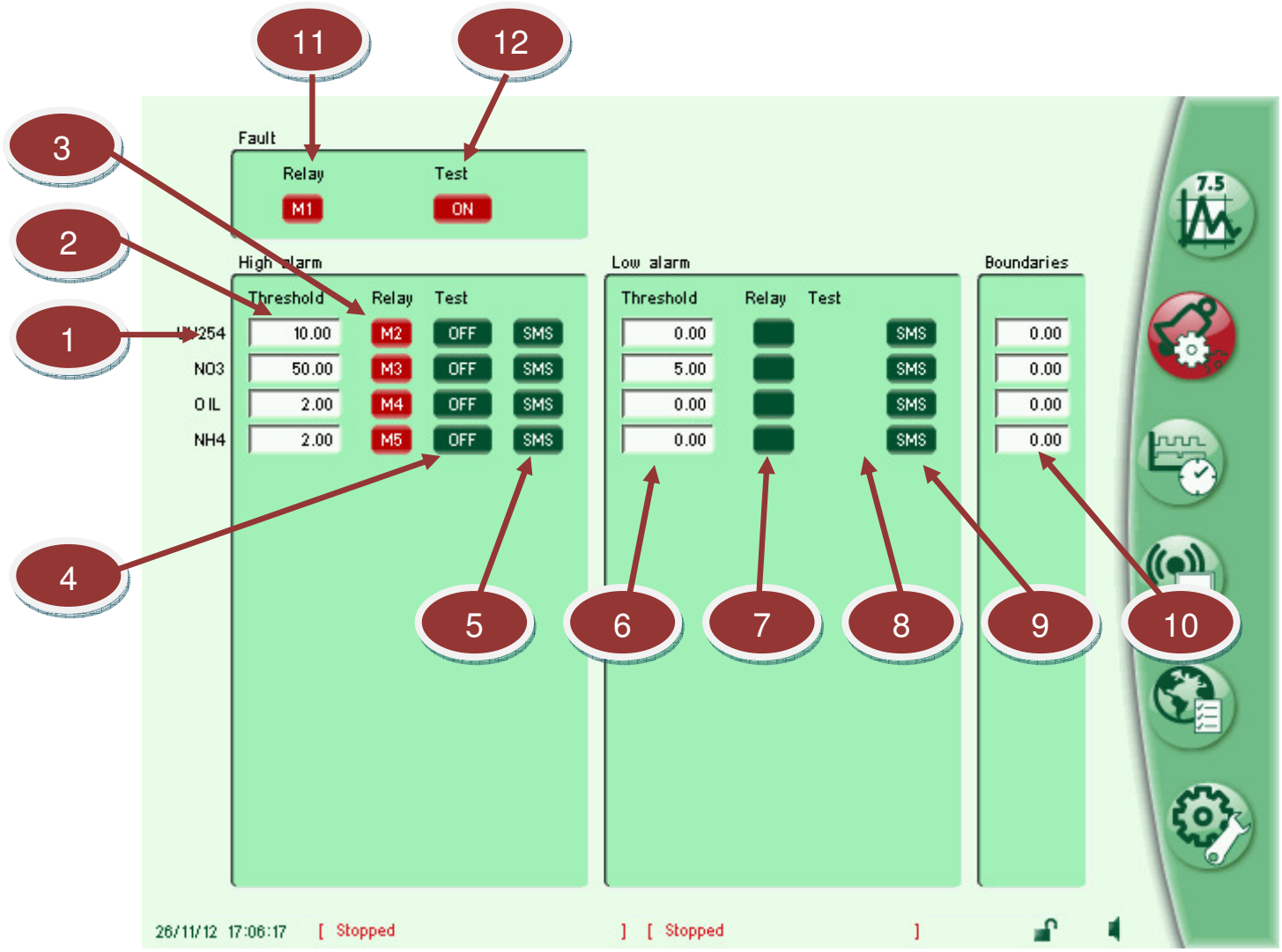


### 1 Label of the measuring channel

Each measuring channel is listed in the alarm screen. The label can be modified in the **check screen** if necessary.

## 2 High alarm value

The high alarm level can be changed by pressing on this field. A default value is preset when the channel is created. The high alarm level is primary used to fix the high limit represented by a red dot line on the recorded measurement graph. The limit is used as the minimum graph scale.

The secondary use is to drive a high alarm relay if the relay button has been activated and if a relay module has been installed on the selected module socket. In this case, the relay will be activated as soon as the measurement overpass the high alarm value and will stay activated until the measurement goes down below this value after subtracting the boundary value.

Refer to installation section for the relay wiring. Both functions NO (Normally Open) and NC (Normally Closed) are available.

## 3 Relay position

The relay position refers to one of the 12 module's socket positions on the DSP500 main board. Refer to installation section for socket drawing on the DSP500 board.

Note: this button remains empty if no relay module has been installed (option).

## 4 ON-OFF test button

This button shows the current position of the optional alarm relay. It can be used to activate or deactivate the concerned relay for test purpose only. The relay recovers its expected state after 5 seconds or when the alarm screen is left.

Note: this button exists only if a relay has been installed (option).

## 5 SMS acknowledgment and settings (high alarm)

If the analyser is equipped of a phone line or GMS modem, an SMS message can be send if one of the channels overpass the high threshold alarm or underpass the low threshold alarm.

This button open the popup below that enable to set the phone number and message:



Once a SMS have been send, this button remains activated (red) and no further SMS will be send until this button is acknowledged and go back inactivated (green).

Only one SMS can be defined.




### Low alarm value

The low alarm level can be changed by pressing on this field. A default value is preset when the channel is created. The low alarm level is primary used to fix the low limit represented by a green dot line on the recorded measurement graph.

The secondary use is to drive a low alarm relay if the relay button has been activated and if a relay module has been installed on the selected module socket. In this case, the relay will be activated as soon as the measurement underpass the low alarm value and will stay activated until the measurement goes down below this value after adding the boundary value.

Refer to installation section for the relay wiring. Both functions NO (Normally Open) and NC (Normally Closed) are available.




### Relay position

The relay position refers to one of the 12 module's socket positions on the DSP500 main board. Refer to installation section for socket drawing on the DSP500 board.

Note: this button remains empty if no relay has been installed (option).




### ON-OFF test button

This button shows the current position of the optional alarm relay. It can be used to activate or deactivate the concerned relay for test purpose only. The relay recovers its expected state after 5 seconds or when the alarm screen is left.

Note: this button exists only if a relay has been installed (option).




### SMS acknowledgment and settings (low alarm)

Refer to button no 5, same function for low alarm.




### Boundaries

The purpose of boundary is avoiding too frequent changes of state of the alarm relays what can harm process devices like pumps or electric-valves. The boundary value is subtracted from the

high level value before leaving the high alarm state and reciprocally added to the low alarm level before leaving the low alarm state as shown on the example below for the high level only:

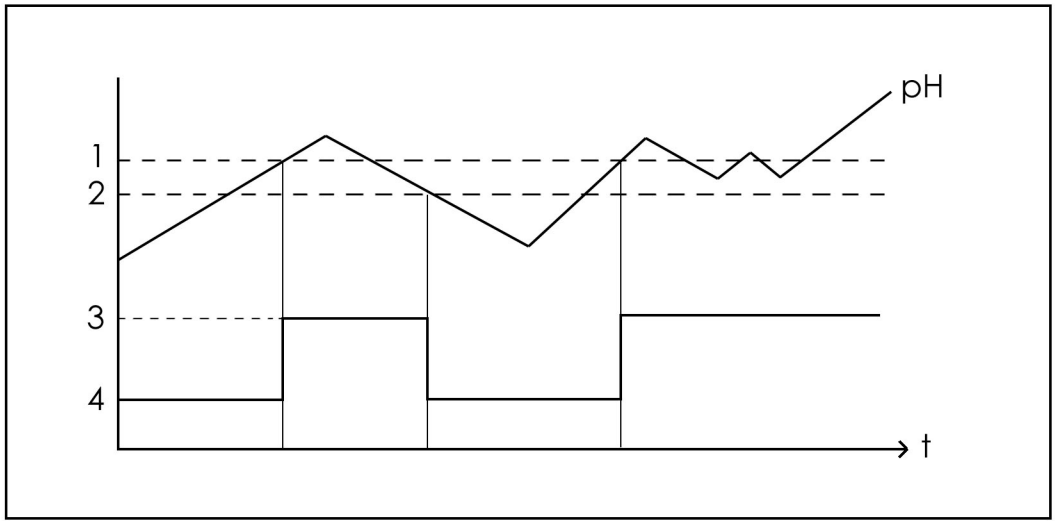


| | |
|---|---|
| 1 | High alarm value |
| 2 | High alarm value - boundary |
| 3 | Alarm relay activated |
| 4 | Alarm relay deactivated |




## Fault relay position

The relay position refers to one of the 12 module's socket positions on the DSP500 main board. Refer to installation section for socket drawing on the DSP500 board.

The fault relay is activated as soon as a measurement error occurs on any of the channel and stays activated as long as an error is still pending. The errors are automatically clear on the next measuring cycle.

Note: this button exists only if a relay has been installed (option).




## ON-OFF test button

This button shows the current position of the optional alarm relay. It can be used to activate or deactivate the concerned relay for test purpose only. The relay recovers its expected state after 5 seconds or when the alarm screen is left.

Note: this button exists only if a relay has been installed (option).

### 3.5 Timing screen

This screen allows selecting the proper measuring and cleaning mode and then to set or change all the timing values, including for the multiplexing function if used.

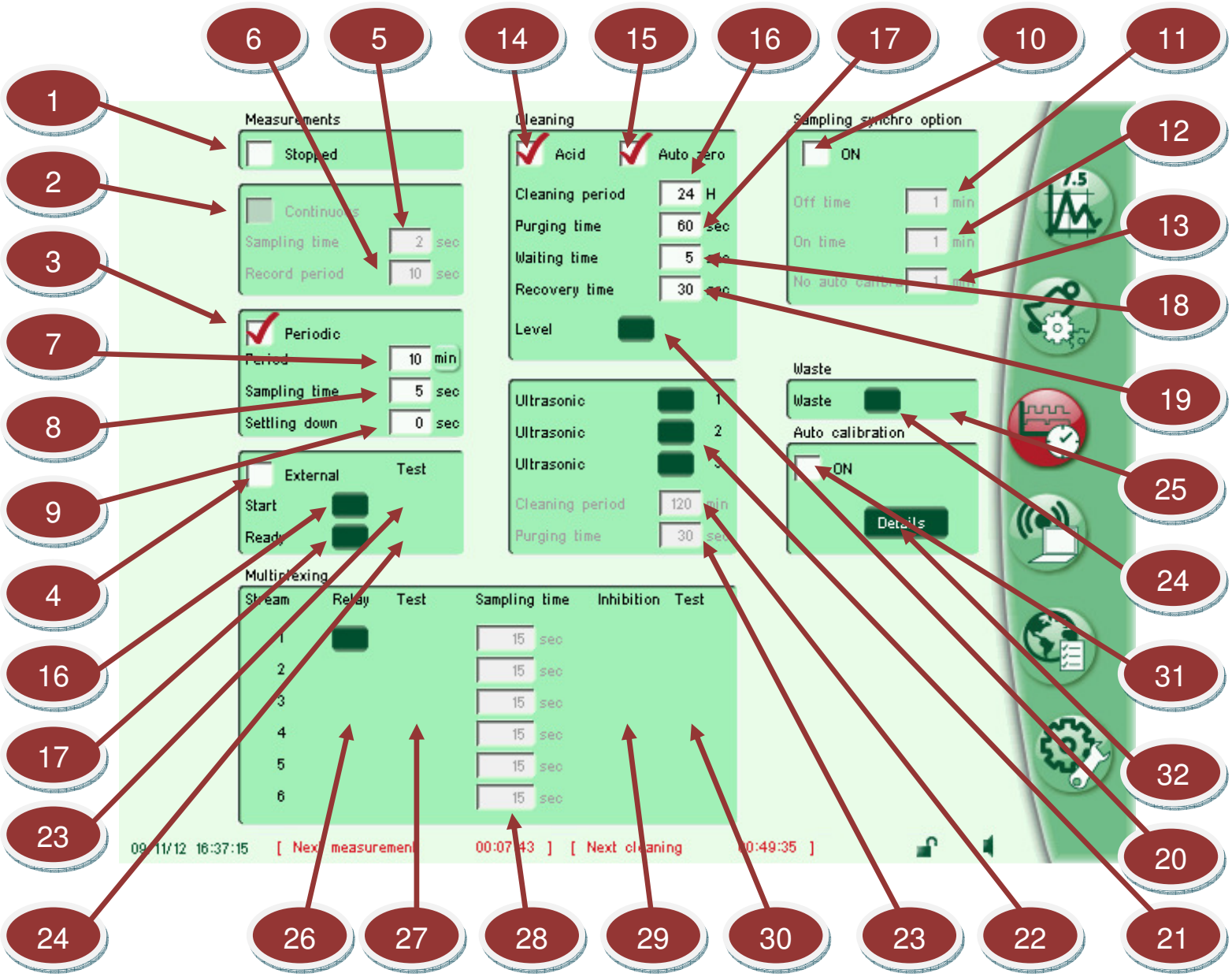




### Stopped mode

In this mode, all the automatic measurements or automatic cleaning cycles are stopped.
This mode can be use during maintenance operations or for doing manual measurements only.




### Continuous measuring mode

In this mode, the measurements are continuously updated at the highest possible rate. The display and the 4-20 mA output (if any) are updated every second.

The measurements are stored in the internal memory as an average during the period defined in the “record period” field.

If some of the measuring channels are not compatible with the continuous mode (as NH4 or PO4 for example) the continuous mode will not be available for selection or will be automatically updated in periodic mode.

The measurement can be held at anytime if a high level voltage has been applied on the inhibit input of the LOGIC500 module (if any).




### Periodic measuring mode

In this mode, the measurements are done at a specific period of time define in the “period” field.

The display and the 4-20 mA output (if any) are updated at the end of the measurement cycle. The measurements are stored in the internal memory at each cycle.

If the measuring cycle time is higher than the defined period, a new measurement will start immediately after the previous one.

The measurement can be held at anytime if an high level voltage has been applied on the inhibit input of the LOGIC500 module (if any).




### External measuring mode

In this mode, the measurements are started or by a pulse (>0.3 sec) send to the start input of the LOGIC500 module, or by sending a value of 1 in the start measurement address by a MODBUS communication.




### Sampling time for continuous mode

In continuous mode only, the sampling pump is running every 15 seconds during a time defined in this field. To preserve the tubing life time, put a value as low as possible like 2 or 3 seconds to just renew the sample.




### Record period

In continuous mode only, the recorded value is the average of the measurements during the period defined in this filed.




### Sampling time for periodic mode

In periodic mode only, the sampling pump is running before every measuring cycle during a time defined in this field.




### Measuring period

In periodic mode only, the measuring cycle occurs with a period of time defined in this filed.




### Settling down time

In periodic mode only, it's possible to add a settling down time defined in this filed after the sampling and before the measurement to allow suspended solid to go down.

This mode concerns only a few specific applications, in all other cases, let the default value of 0.




### External sampling synchronisation

In periodic mode only, it's possible to synchronize a second external sampling pump through a relay if this function is activated.

The sampling chronogram is shown below:

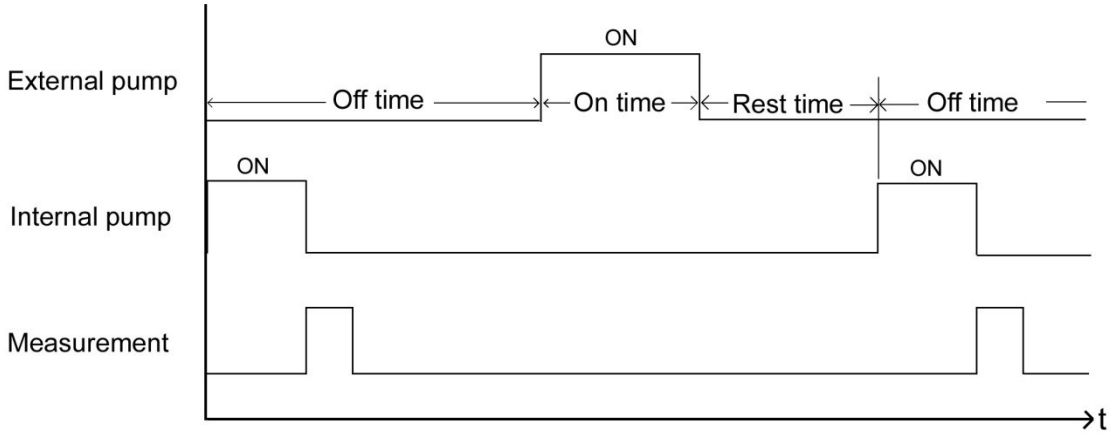


## 11 Off time

In periodic mode only and if the external sampling function is activated, this field set the off time for the external pump starting at the beginning of internal sampling.

## 12 On time

In periodic mode only and if the external sampling function is activated, this field set the on time for the external pump starting at the end of the off time.

## 13 Rest time

In periodic mode only and if the external sampling function is activated, this field set the rest time for the external pump starting at the end of the on time.

The rest time allows suspended solids in the sample to settling down before the internal sampling.




## Acid cleaning function

If activated, the acid cleaning will start automatically according to the defined period.
Acid cleaning is mandatory for NH4 and H2S measurements regarding the risk of deposit inside the outlet tubing.




## Auto zero

If acid cleaning is available, an auto-zero can be performed automatically on the acid cleaning solution if selected.



If the auto-zero is selected, the cleaning solution must be prepared with pure water and analysis grade acid to get a correct zeroing.




## Cleaning period for acid cleaning

This field contains the period of time between two cleaning cycles.
The recommended period is 24 hours.




## Cleaning time for acid cleaning

This field contains the pumping time of the cleaning solution.
The default value is 60 seconds. It is recommended to keep this default value unless authorized by the manufacturer.



A too short cleaning time may cause a bad zeroing with the auto-zeroing function.
Keep the default value of 60 seconds for a good zeroing.




## Waiting time after acid cleaning

This field contains the waiting time between the end of the cleaning solution pumping and the zeroing to enable any bubbles produced by the cleaning pump to go up.
The default value is 5 seconds. It is recommended to keep this default value unless authorized by the manufacturer.




## Recovery time after acid cleaning

This field contains the recovery time before starting again the measurements on the sample after a cleaning operation. The default value is 30 seconds. It is recommended to keep this default value unless authorized by the manufacturer.



A too short recovery time may cause erratic measurements during the few seconds that follow a cleaning cycle.
Keep the default value of 30 seconds for a good sample recovery.




## Level detection module

A logical input module (LOGIC500) may be used to monitor the level inside the cleaning solution tank. In this case, the module position must be declared in this button. If a DC voltage is applied on the start input of the LOGIC500 module (low level in the tank), the cleaning cycle is aborted and no auto zero is performed. Additionally, a message "No cleaning" is displayed in front of each concerned measurement.




## Ultrasonic cleaning module

This button shows the ultrasonic module position. It can be set or changed only by the manufacturer.

Note: this button remains empty if no ultrasonic module is provided (option).




## Cleaning period for ultrasonic cleaning

This field contains the period of time between two ultrasonic cleaning cycles.
The recommended period is 2 hours. It is recommended to keep this default value unless authorized by the manufacturer.




## Cleaning time for ultrasonic cleaning

This field contains the ultrasonic cleaning time.
The default value is 30 seconds. It is recommended to keep this default value unless authorized by the manufacturer.

### 24 Waste collect relay module

This button shows the relay module position that drives an electric-valve to collect the sample after analysis when reagents are use (example PO4 measurement). It can be set or changed only by the manufacturer.

Note: this button remains empty if no module is provided (option).

### 25 ON-OFF test button

This button shows the current position of the optional waste collect relay. It can be used to activate or deactivate this relay for test purpose only. The relay recovers its expected state after 5 seconds or when the timing screen is left.

Note: this button exists only if a relay has been installed (option).

### 26 Multiplexing relay modules

Theses buttons show the relay module positions that drives external electric-valve (not provided) to select a specific sample stream over several streams. They can be set or changed only by the manufacturer.

Note: theses buttons remain empty if no module are provided (option).

### 27 ON-OFF test buttons

These buttons show the current position of the multiplexing relays. They can be used to activate or deactivate theses relays for test purpose only. Each relay recovers its expected state after 5 seconds or when the timing screen is left.

Note: this button exists only if a relay has been installed (option).

### 28 Sampling times for multiplexing

These fields contains the sampling time of each stream for multiplexing purpose.
The default value is 15 seconds. It must be adjusted depending on the flow of each stream to get a good renew of the sample.



A too short sampling time may cause erratic measurements as the measured stream may contain a part of the previous stream.




## Multiplexing inhibition module

This button shows the logical input module position that enable to inhibit a specific stream to be measured (for example if no sample is available). It can be set or changed only by the manufacturer.

Note: this button remains empty if no module is provided (option).




## Inhibition test buttons

These buttons show the current states of the inhibition inputs of the logical input modules for testing purpose.

Note: this button exists only if an inhibition module (LOGIC500) has been installed (option).




## Auto-calibration activation

This button allows to activate the auto-calibration function. Before activating, check that the parameters are correctly configured on the auto-calibration screen by pressing on the "details" button.

Note: A special hardware must be installed prior this function can be used (option).




## Auto-configuration details button

This button displays the auto-calibration screen described on the next section.

### 3.6 Auto-calibration

The auto-calibration function allow a periodic calibration of a specified channel with a standard solution. A specific hardware (option) is installed on the analyser that consists to additional valves and pumps.
The standard value must be entered on the screen below before using this function.
The auto-calibration period and the standard circulation time are adjustable.

During the auto-calibration cycle, a new calibration factor is calculated and recorded on the calibration history (refer to check screen).
At the end of the auto-calibration cycle, the sample is renewed during the recovery time defined in the timing screen for the cleaning.

The calibration is aborted if the difference between the standard measurement and its value are more than a specified difference in percent to avoid wrong calibration (example: standard tank empty). In this case, a warning message in red "No auto-calibration" is displayed near the concerned parameter on the process screen.

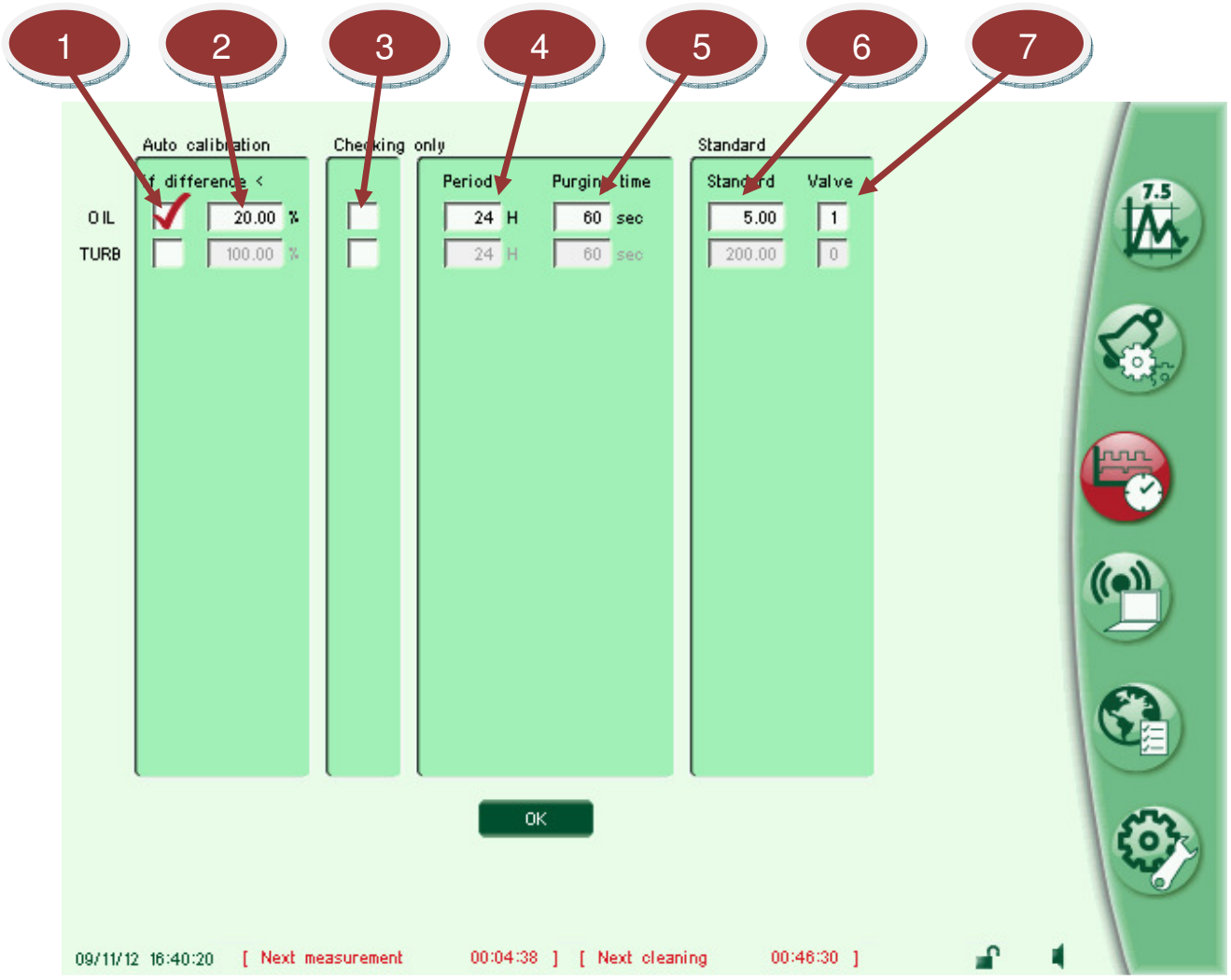




### Auto-calibration mode

When selected, the channel will perform an auto-calibration on a standard solution with the period specified in the period field.




### Maximal authorized difference between measurement and standard

If the difference in percent between the standard measurement and the standard value is more than this value, the auto-calibration is aborted and a warning in displayed on the concerned channel on the process screen.




### Checking only function

If this function is activated, the calibration factor remain unchanged. The measurement of the standard is just stored in a special register that can be read under the Modbus protocol.




### Auto-calibration period

The auto-calibration is performed under this specified period in hours. The maximum and recommended period is 24 hours.




### Standard circulation time

The standard circulate in the flow cell during this time to purge the previous sample. Recommended time is 60 seconds.




### Standard value

This value is used to recalculate a new calibration factor during the auto-calibration cycle.




### Valve number

The valve number (starting at 1) must be specified for each channel using the auto-calibration function.

### 3.7 Communication screen

This screen allows setting or changing the communication settings for the two internal serial ports of the microcontroller, port A and port B. By default, no communication is activated.

Port A is dedicated to the RS232 port only.
Port B may be affected to the RS485 port or the Wi-Fi module plugged on the DSP500 board (option) or the Ethernet module plugged on the DSP500 board (option).

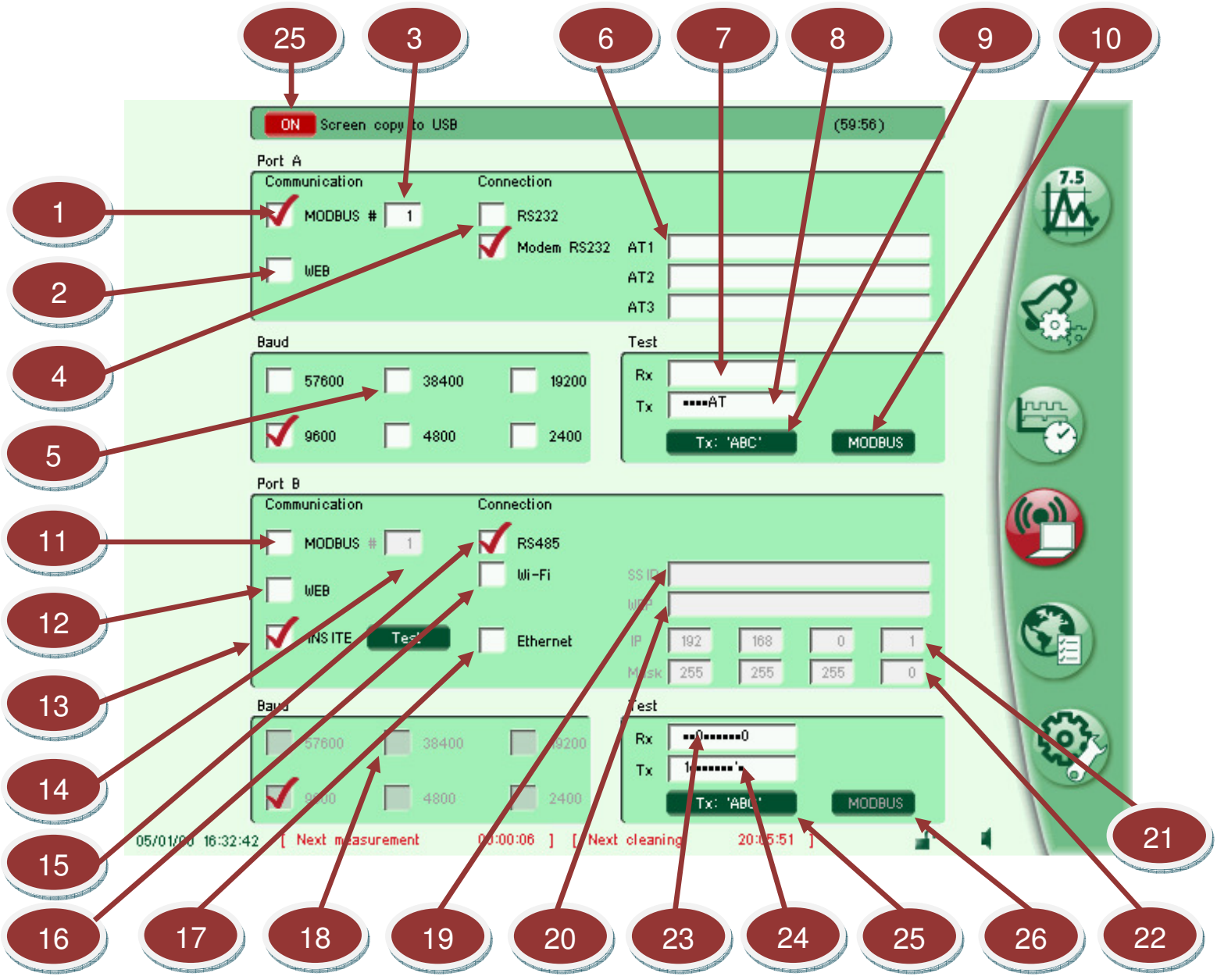

## 1 Remote mode

When selected, the remote communication mode allows driving the analyser at a distance by a PC laptop. A special software Netscan500 must be installed before on the PC.

The connection thought the RS232 allows a communication at a short distance only (<10 meters) for demonstration purpose with a beamer for example.
For longer distance, a phone modem or GSM modem must be connected on the RS232 port.

## 2 MODBUS mode

When selected, the MODBUS communication mode allows reading the last measurements or the error codes as well as starting a new measuring or cleaning cycle. The MODBUS protocol is a standard and simple protocol implemented on most of the SCADA systems. If necessary, the full protocol can be downloaded at www.modbus.org .

Basic frames using the function no 3 as shown below allows to read the measurements:

Request from the master unit:

| | | | | |
|---|---|---|---|---|
| Slave number | 3 | Address of first byte | NB of bytes | CRC16 |

Answer from the analyser:

| | | | | | | |
|---|---|---|---|---|---|---|
| Slave number | 3 | NB of read bytes | 1st byte | 2nd byte | ..... | CRC16 |

A CRC16 is used to check the integrity of the frame.
The frames must be in binary mode (also named RTU mode), not in ASCII mode.

**Addresses of the last measurements:**

| Decimal address | Hexadecimal address | Value for |
|---|---|---|
| 16<br>17 | 10H<br>11H | Channel 1 |
| 18<br>19 | 12H<br>13H | Channel 2 |
| 20<br>21 | 14H<br>15H | Channel 3 |
| ..... | ..... | ..... |
| 46<br>47 | 2EH<br>2FH | Channel 16 |

**Addresses of the error code:**

| Decimal address | Hexadecimal address | Value for | Length (byte) |
|---|---|---|---|
| 48 | 30H | Channel 1 | 4 |
| 49 | 31H | Channel 2 | 4 |
| 50 | 32H | Channel 3 | 4 |
| …… | …… | …… | ……. |
| 63 | 3FH | Channel 16 | 4 |

The measurement values follows the floating point standard IEEE754, format single 32 bit (4 bytes), higher first, lower last. Invalid codes are 1 byte long.

**Address for starting of a measurement cycle:**

| Decimal address | Hexadecimal address | Value to write | Length (byte) |
|---|---|---|---|
| 64 | 40H | 1 | 1 |

A reading at address 30H returns 0 only when the measurement is finished.

**Address for starting of a cleaning cycle:**

| Decimal address | Hexadecimal address | Value to write | Length (byte) |
|---|---|---|---|
| 65 | 41H | 1 | 1 |

A reading at address 31H returns 0 only when the measurement is finished.




## MODBUS slave number

Each device on a MODBUS network has a specific number. This number can be entered in this field. The default value is 1.




### Direct RS232 or RS232 modem mode

Select the modem mode if and only if a phone or GSM modem is connected on the RS232 port.




### Port A Baud rate

The baud rate must be fixed strictly in accordance with the system connected on the RS232 port and generally at the higher speed compatible with the media capacity.




### Modem initialisation sequences

Up to 3 Hayes initialization sequences can be entered in these fields. Theses sequences are send to the modem each time that the analyser is power on.
After entering theses sequence, put off and on again the analyser to send them to the modem.




### Received characters window

The 10 last received characters are displayed in this window for test purpose only. Non ASCII characters are represented by a filled black square.




### Transmitted characters window

The 10 last transmitted characters are displayed in this window for test purpose only. Non ASCII characters are represented by a filled black square.




### Transmit test

Pressing on this key transmit “ABC” characters on the port for test purpose only.

## 10 MODBUS test

Pressing on this key displays the MODBUS test screen as below if MODBUS mode is enable. It displays the diagnostic MODBUS counters updated continuously at each received frame as well as the time and date of the last received frame.

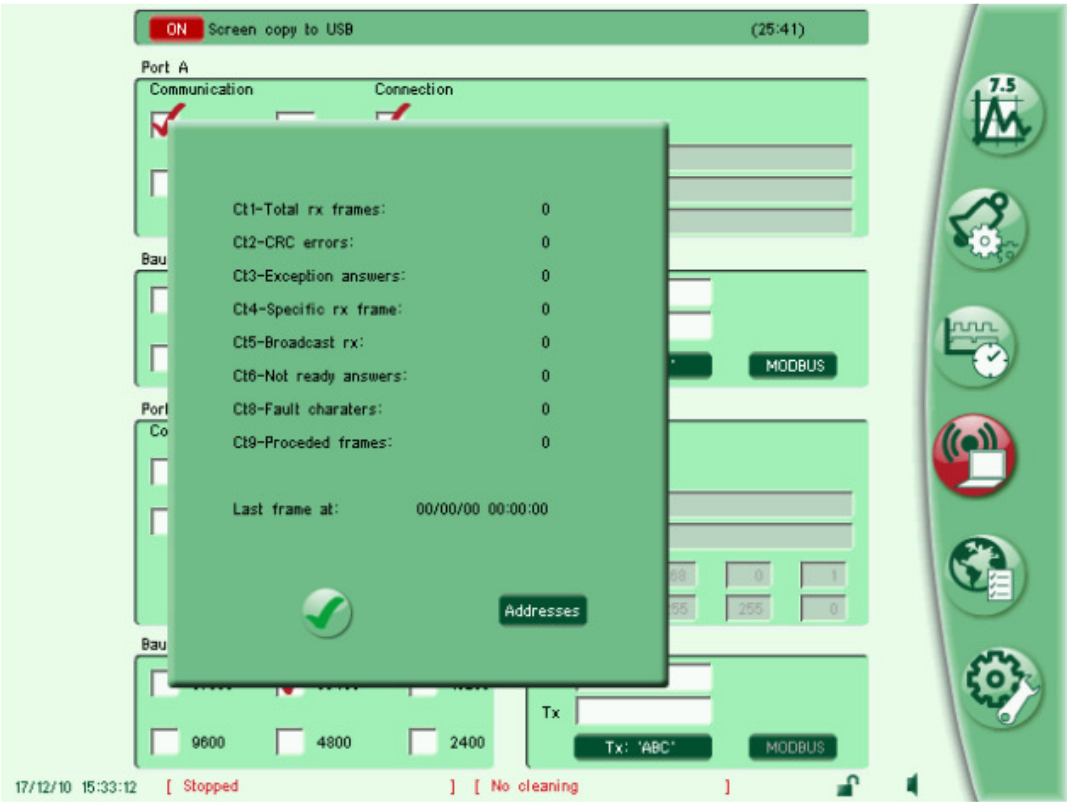


**Counter 1** displays the total number of valid frames received, whatever they are intended or not for the analyser.

**Counter 2** displays the number of frames received with a CRC error, whatever they are intended or not for the analyser.

**Counter 3** displays the number exception answers preceded. Exception answer is produced in case of unrecognized command or wrong parameter on a received frame.

**Counter 4** displays the number of valid frames received specifically intended for the analyser.

**Counter 5** displays the number of valid broadcast frames received. Broadcast frame are not usual.

**Counter 6** is not in use (for compatibility only).

**Counter 8** displays the number of characters received with a format error, whatever they are intended or not for the analyser.

**Counter 9** displays the number of frames proceeds for which an answer has been sent to the host.

The Modbus addresses of the channels and other functions can be visualized by pressing on the “addresses” key as shown below:

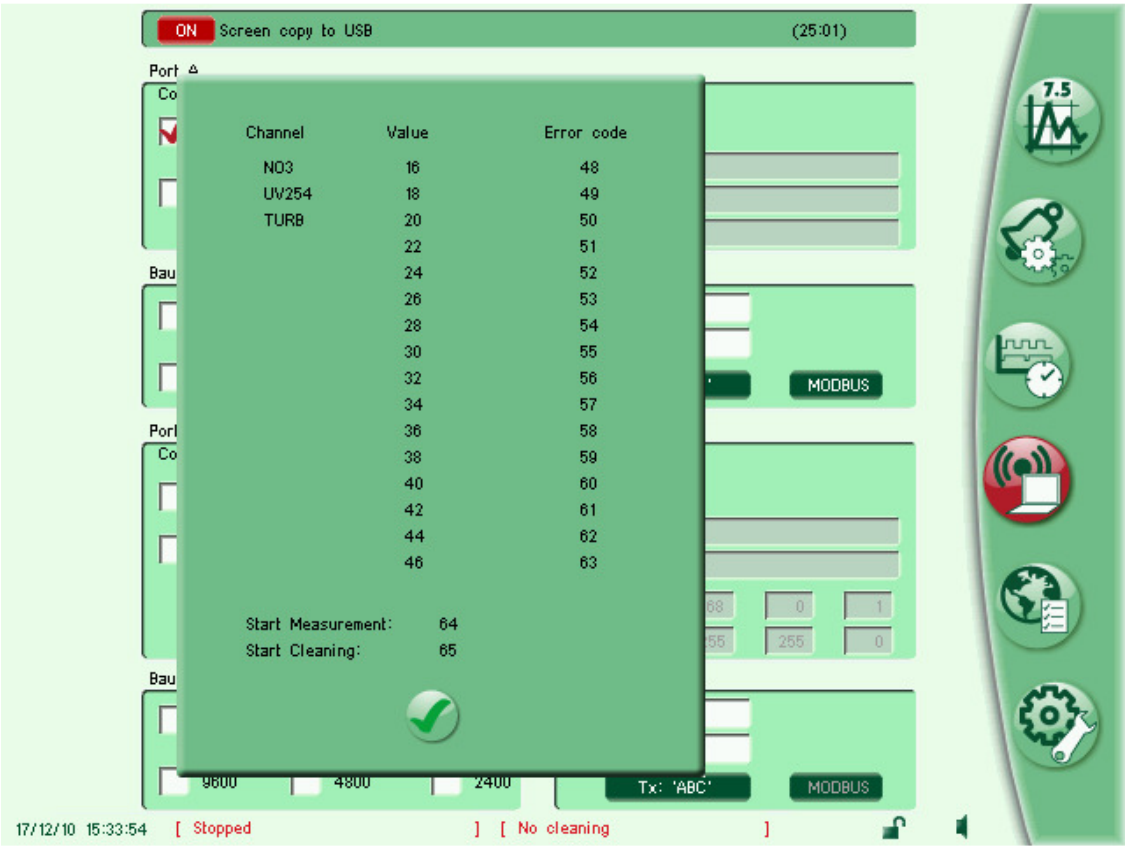


## 11 Remote mode

When selected, the remote communication mode allows driving the analyser at a distance by a PC laptop. A special software Netscan500 must be installed before on the PC.

The maximal cable length on the RS485 port is 1200 m (4000 ft).

## 12 MODBUS mode

Refer to the screen number 2 for the MODBUS protocol details and addresses.

## 13 INSITE probe mode

This mode is automatically selected if RS485 external probes are used.

Deselecting this mode will stop the normal operation on these RS485 probes.

The TEST key on the right displays the current probe status attached to each channel as show on the left.
A SCAN button enable to display all the connected probes in case their Modbus address is unknown as show on the right.

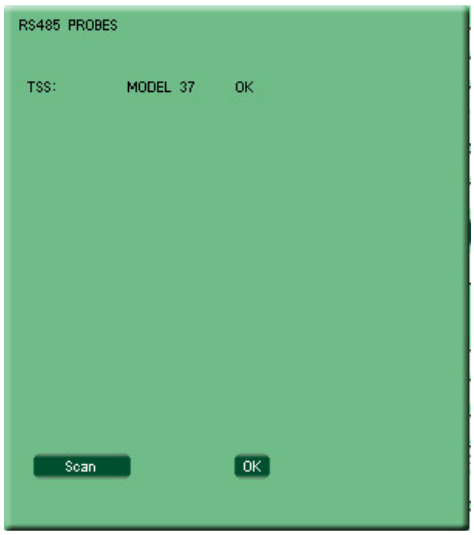


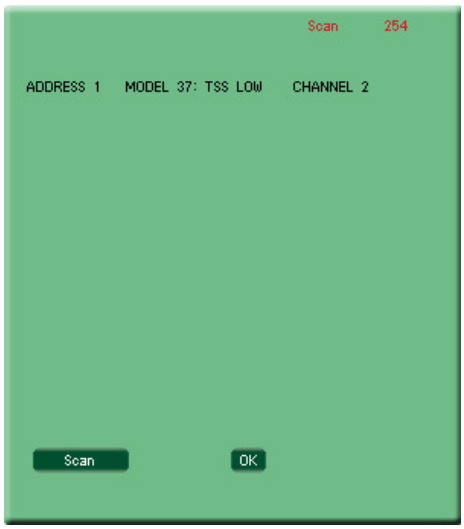


## 14 MODBUS slave number

Each device on a MODBUS network has a specific number. This number can be entered in this field. The default value is 1.

## 15 RS485 interface selection

The port B can be use through an RS485 interface located on the DSP500 board. Refer to the installation section for wiring.

If the RS485 interface is selected, Wi-Fi interface or Ethernet interface are desactivated, even if the optional module(s) has been installed on the DSP500 board.




## Wi-Fi interface selection

The port B can be use through an optional Wi-Fi interface module located on the DSP500 board. The module output is connected to an external antenna on the side of the analyser.

If the Wi-Fi interface is selected, RS485 interface or Ethernet interface are deactivated, even if the optional module has been installed on the DSP500 board.




## Ethernet interface selection

The port B can be use through an optional Ethernet interface module located on the DSP500 board.
If the Ethernet interface is selected, RS485 interface or Wi-Fi interface are deactivated, even if the optional module has been installed on the DSP500 board.




## Baud rate for RS485

The baud rate must be fixed strictly in accordance with the system connected on the RS485 port and generally at the higher speed compatible with the media capacity. This baud rate does not apply for the Wi-Fi or for the Ethernet interface.




## Wi-Fi SSID

The Wi-Fi network name (SSID) must be entered in this field before using the Wi-Fi communication. All devices linked by the same Wi-Fi network must have the same SSID.




## Wi-Fi WEP key

The Wi-Fi networks are generally encrypted using a WEP key to protect data privacy. The WEP key of the network must be entered in this field before using the Wi-Fi communication.

Both 64 bits keys (10 characters) and 128 bits keys (26 characters) are accepted.
If no WEP key are used (unsecured network), leave this field blank.

The Wi-Fi module is reinitialised each time new parameters are entered, so the new parameters are taken in account within a few seconds.

### 21 Ethernet IP address

Use this series of fields to enter the Ethernet IP address in accordance with the network parameters. The Ethernet module is reinitialised each time new parameters are entered, so the new parameters are taken in account within a few seconds.

### 22 Ethernet IP mask

Use this series of fields to enter the address mask in accordance with the network parameters. The Ethernet module is reinitialised each time new parameters are entered, so the new parameters are taken in account within a few seconds.

### 23 Received characters window

The 10 last received characters are displayed in this window for test purpose only. Non ASCII characters are represented by a filled black square.

### 24 Transmitted characters window

The 10 last transmitted characters are displayed in this window for test purpose only. Non ASCII characters are represented by a filled black square.

### 25 Transmit test button

Pressing on this key transmit “ABC” characters on the port for test purpose only.

### 26 MODBUS test

Pressing on this key displays the MODBUS test screen. Refer to the arrow number 10 above.

### 3.8 Regional setting screen

This screen allows setting or changing the regional settings like the language, date, decimal separator, date format as well as miscellaneous parameters as screen saver and display appearance.

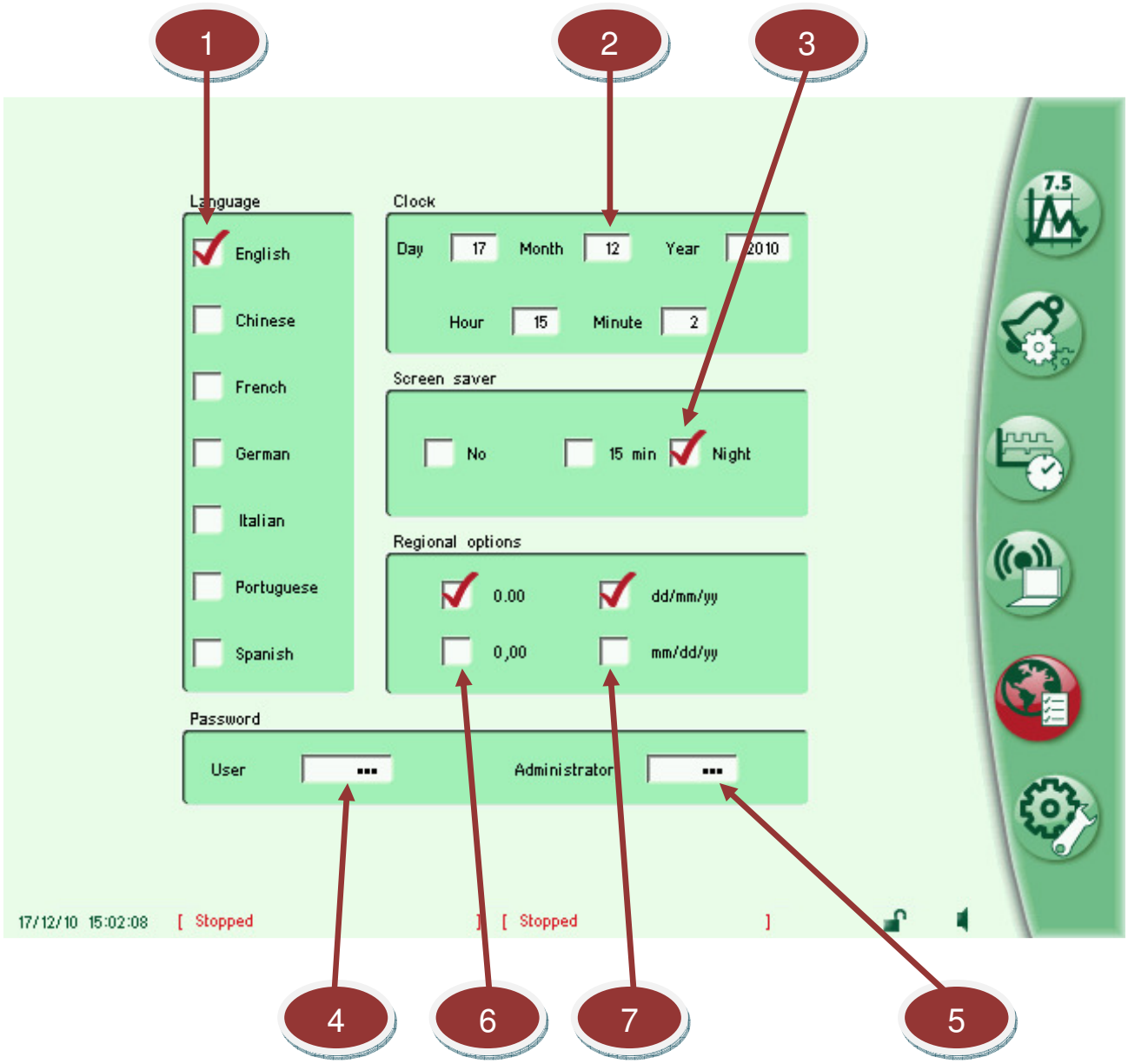




## Language selection

Choose the appropriate language using this series of button. The change is immediate.




## Clock update

Update the date and time using theses series of fields. The change is immediate and all engaged measuring cycle or cleaning cycle will be aborted and automatically rescheduled according to the new date and time.




## Screen saver

These series of button configures the screen saver mode:

- **No**: there no screen saver. The screen stay back lighted all the time.

- **15 min**: the screen back light turns off after 15 minutes of touch screen inactivity. All the functions like measurements, cleaning, and communication remain active. Press anywhere in the screen to reactivate the screen back light.

- **Night**: the screen back light turns off after 7 pm until 7 am. All the functions like measurements, cleaning, and communication remain active. Press anywhere in the screen to reactivate the screen back light.




## User password

This field allows changing the user level password. The default password is 123.
The user level allows the access only to measurements display and basic parameters as alarm levels.




## Administrator password

This field allows changing the administrator level password. The default password is 456.
The administrator level allows the access to all the parameters.




## Decimal separator

This button allows choosing a point or a comma as decimal separator for the recorded measurement field.




## Date format

This button allows choosing between the usual date format (day/month/year) or the American date format (month/day/year).

### 3.9 Factory screen

It allows backup or restoring the complete analyser configuration internally in a flash memory or externally on a USB key, to set or delete measuring channels, to change the thermal control parameters, to test the 24V DC output and other hardware.

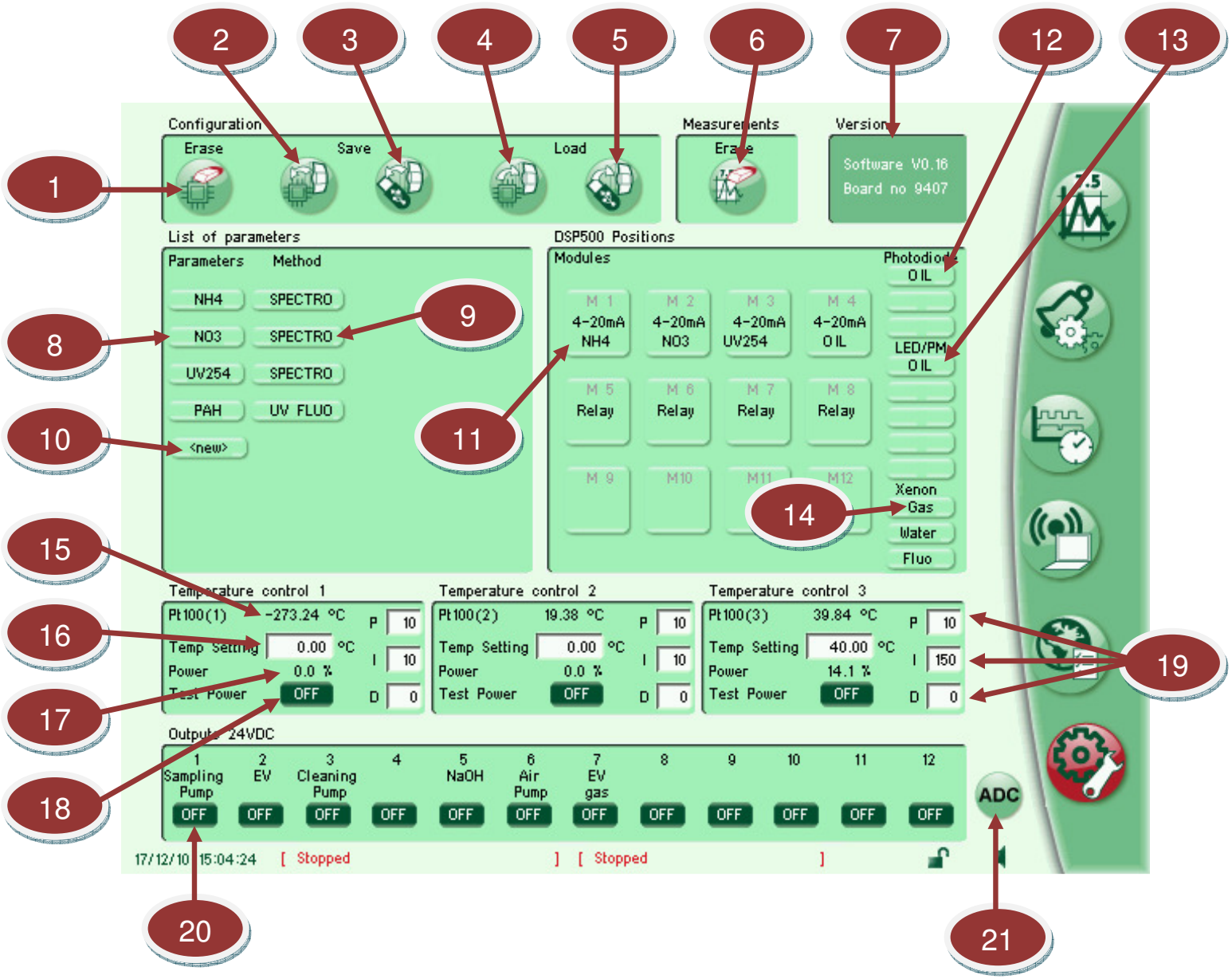




### Delete all

This button reset completely the analyser configuration, including channels, calibration, alarms, communications, timings and regional settings.



This function is reserved to the manufacturer and protected by a code.




### Backup on EEPROM

This button allows backup the complete analyser configuration, including channels, calibration, alarms, communications, timings and regional settings on the internal flash memory (EEPROM).




### Backup on USB key

This button allows backup the complete analyser configuration, including channels, calibration, alarms, communications, timings and regional settings on a USB key.

After pressing this button, the analyser waits for the connection of a USB key. Press on any key to cancel this function.




### Restore from EEPROM

This button allows backup the complete analyser configuration, including channels, calibration, alarms, communications, timings and regional settings from the internal flash memory (EEPROM).




### Restore from USB key

This button allows restoring the complete analyser configuration, including channels, calibration, alarms, communications, timings and regional settings from a USB key.

After pressing this button, the analyser waits for the connection of a USB key. Press on any key to cancel this function.




## Stored measurements deleting

This button clears all the stored measurements inside the internal memory.




## Software version and board number

This area displays the software version and the DSP500 board number.




## Channels list and deleting button

Theses buttons display the list of the measuring channels.
Pressing on one of theses buttons allows deleting the corresponding measuring channel.



This button is reserved to the manufacturer and protected by a code.




## Channels method

Theses buttons display the method used for the measuring channels in case of different method available, for example “SPECTRO” for spectrograph, “LED” for LED source.




## Channel adding

Theses buttons allows adding a measuring channel if the corresponding hardware has been installed before.



This button is reserved to the manufacturer and protected by a code.




## Module function

Theses buttons display the function and the position allocated by the manufacturer to each of the 12 modules that can be plugged on the DSP500 board. For the 4-20 mA outputs, the corresponding channel is display on the second line.



These buttons are reserved to the manufacturer and protected by a code.




## Photodiode connector position

Theses buttons display the position allocated by the manufacturer to the photodiodes connectors for each channel using a photodiode.
Theses buttons stay blank if no photodiodes are used.



These buttons are reserved to the manufacturer and protected by a code.




## LED or PM position

Theses buttons display the position allocated by the manufacturer to each channel using a photomultiplier board (PM) or a LED board.
These buttons stay blank if no PM or LED are used.



These buttons are reserved to the manufacturer and protected by a code.




## Xenon lamp connector position

Theses buttons display the position allocated by the manufacturer for the xenon lamps.

The top position is always allocated to the gas phase measurements (NH4, H2S) while the second is for absorbance measurements on the water sample (NO3, UV245, Colour, PO4) and the third one for fluorescence (PAH/Oil, Chlorophyll).




### Measured temperature (temperature channels 1,2,3)

This field display the temperature measured on each of the 3 temperature channels.

Note: If no Pt100 probe is connected, a temperature close to -273 °C is displayed.




### Temperature set point (temperature channels 1,2,3)

This field allows setting or changing the temperature set point for each of the 3 temperature control loop. They can be used or not depending of the configuration.



These buttons are reserved to the manufacturer and protected by a code.




### Output power percentage (temperature channels 1,2,3)

This field shows the present power output value in percent for each of the 3 temperature control loop. 100% means the output is on all the time, 0% means the output is off all the time. For intermediate values, the output is on during the percent value of a periodic cycle of about 2 seconds.




### Output ON or OFF for testing (temperature channels 1,2,3)

This button turn on or off the power output for each of the 3 temperature control loop for testing purpose only.

Note: the output automatically resume to the normal state after 5 seconds.




### PID parameters (temperature channels 1,2,3)

This button displays the popup below where the PID parameters can be changed for each of the 3 temperature control loop.



These buttons are reserved to the manufacturer and protected by a code.




## ON/OFF status and test for 24V outputs

Theses button display the current state of each of the 12 outputs. Theses outputs are driving internal pumps and valves depending on the configuration as indicated above each button.

Pressing on one of these keys put ON or OFF the corresponding output for testing purpose only.



Action on the outputs may cause unpredictable results on an engaged measuring cycle. It's recommended to stop first any measurement by selecting the stopped mode on the timing screen.




## ADC values

This area displays the 16 channels of the internal ADC (Analogue to Digital Converter) of the DSP. These values are for the manufacturer only.

# 4 Principle, test and recalibration

The next section describes parameter by parameter the measuring principle and also explains how to check the measurement and how to recalibrate it if necessary.

### 4.1 Ammoniac (NH4+)

#### 4.1 .1 Principle

The measuring principle is based on the analysis of the UV absorption spectrum of the ammonia gas (NH3) in equilibrium with the dissolved ammonia gas in the water sample.

A small quantity of sodium hydroxide (NaOH) is added to the sample to increasing the pH above 11 where most of the NH4+ is transformed in NH3 (>99.9%).

The UV light is generated by a pulsed xenon lamp to reach an ultra long life time.
The absorption spectrum is performed by a concave grating coupled to a 2048 pixels CCD (Charge-Coupled Device).

A Fast Fourier Transform (FFT) is applied on the absorption spectrum to extract the periodic peaks specific to the ammonia gas.

Automatic temperature compensation is done using a Pt100 temperature probe on the sample.

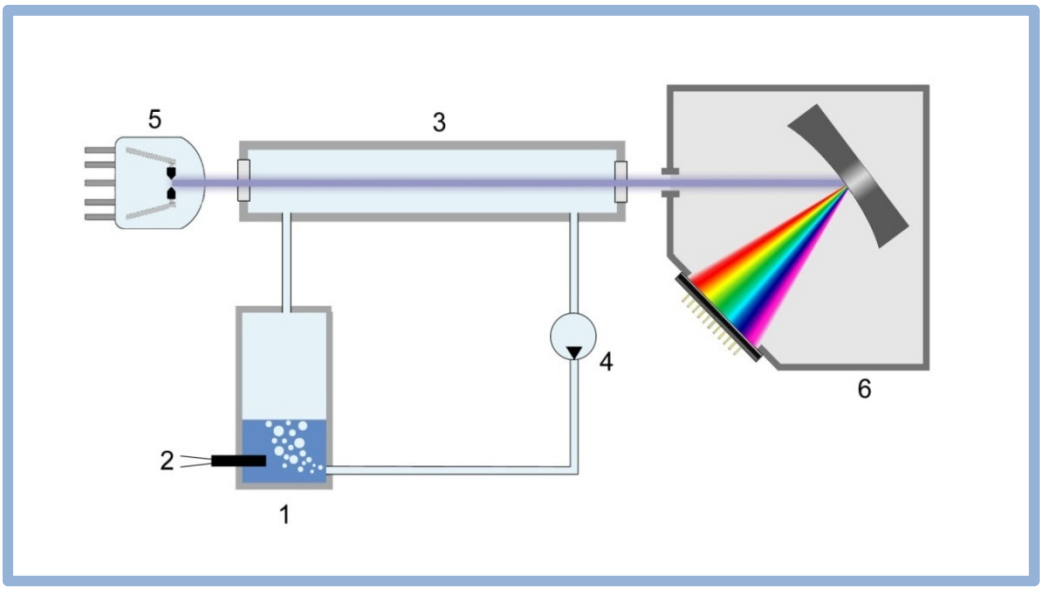


| | | | |
|---|---|---|---|
| 1 | Sample with NaOH | 4 | Air pump |
| 2 | Temperature probe | 5 | Xenon lamp |
| 3 | Gas flow cell | 6 | Spectrograph with grating and CCD |

### 4.1 .2 Test

From the process screen, press on the “tools” icon and then on the channel to test, or directly to the channel area as a shortcut.

If you are logged in user mode, the parameters are masked. You must be logged in administrator mode to access to the parameters (default password is 456).

The check screen as below is displayed. It corresponds to the last measurement done (automatic or manual) concerning the concentration or error code, sample temperature, lamp spectrum, absorbance spectrum and FFT spectrum.

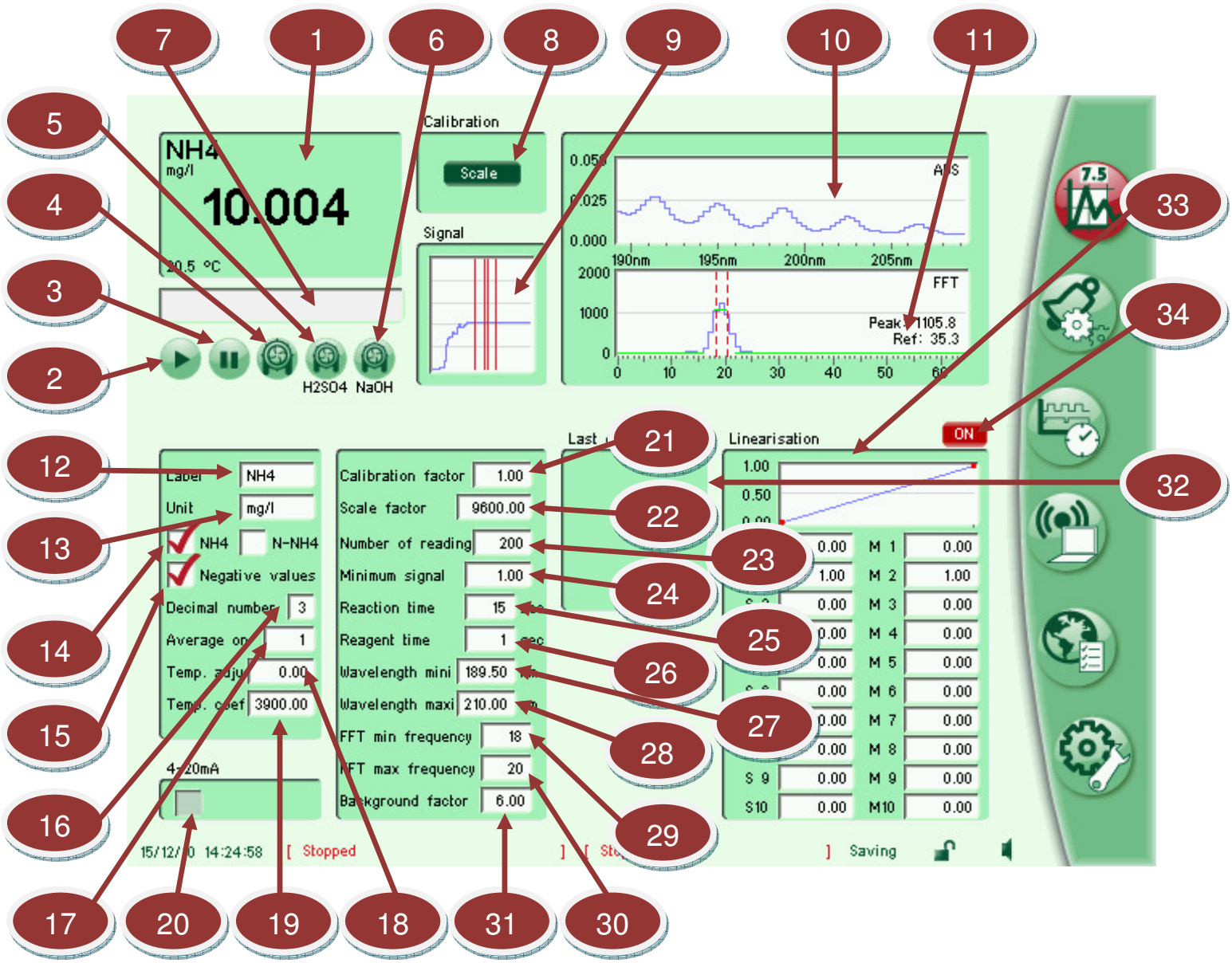




## Measurement window

This window displays the last measured value (or the error code in case of error, refer to troubleshooting section) with proper label and unit, as well as the sample temperature read during the measurement.

During a measuring cycle, the last measured value is display in light green until replaced by the new value in black.

The number of decimal can be adjusted, refer to the field below.




## Start button

Pressing on this button starts a manual measuring cycle. It can be aborted at any time by pressing on the stop button. At the end of the cycle, a new value will be displayed on the measurement window.

The process value on the process screen will not be updated by this measurement to avoid any interference with the plant supervisor system, same concerning the MODBUS channel's value, 4-20 mA output and alarm relays (if any).




## Stop button

Pressing on this button stop and aborts any engaged measuring cycle. It can also be used to stop the sampling pump or the cleaning pump or the ultrasonic cleaning (if any).




## Sampling pump button

Pressing on this button starts the sampling pump. The pump will stop automatically after 10 seconds. It can also be stopped at any time by pressing on the stop button.

Note: this button is deactivated during a measuring cycle.




## Cleaning pump button

Pressing on this button starts the cleaning pump. The pump will stop automatically after the time defined in the acid "cleaning time" field of the timing screen.
It can also be stopped at any time by pressing on the stop button.

Note: this button is deactivated during a measuring cycle.




## NaOH pump button

Pressing on this button starts the NaOH pump for testing purpose or to fill the tubing after installation. The pump will stop automatically after 10 seconds.
It can also be stopped at any time by pressing on the stop button.

Note: this button is deactivated during a measuring cycle.




## Measuring cycle steps display

During a measuring cycle, this area displays the different steps of the cycle with an associated countdown timer or counter.
During the ammonia measurements, the steps are:

1) **Purging:** the gas flow cell is purged by external ambient air

2) **Zeroing:** the reference spectrum on air is acquired

3) **Sampling:** the sample is renewed inside in the stripping pot

4) **Reagent:** the NaOH is added to the sample inside the stripping pot

5) **Stripping:** the gas flow cell is placed in a close loop with the stripping pot

6) **Measuring:** the spectrum is acquired on the gas coming through the sample, and then the concentration is computed and displayed

7) **Purging:** the gas flow cell is purged again by external ambient air to remove humidity




## Scale button

This button is used to calibrate the analyser on a standard solution.

A new calibration factor is calculated after entering the standard value.
The calibration history will be updated with the time and date of the calibration attached to the new calibration factor.

For more details, refer to the “calibration” section.

# 9 Signal graph

This graph displays the lamp spectrum get during the last measuring cycle. It is updated during the measuring cycle when the lamp is flashing.

For more details or to investigate about the signal, press anywhere on the graph to zoom it as below:

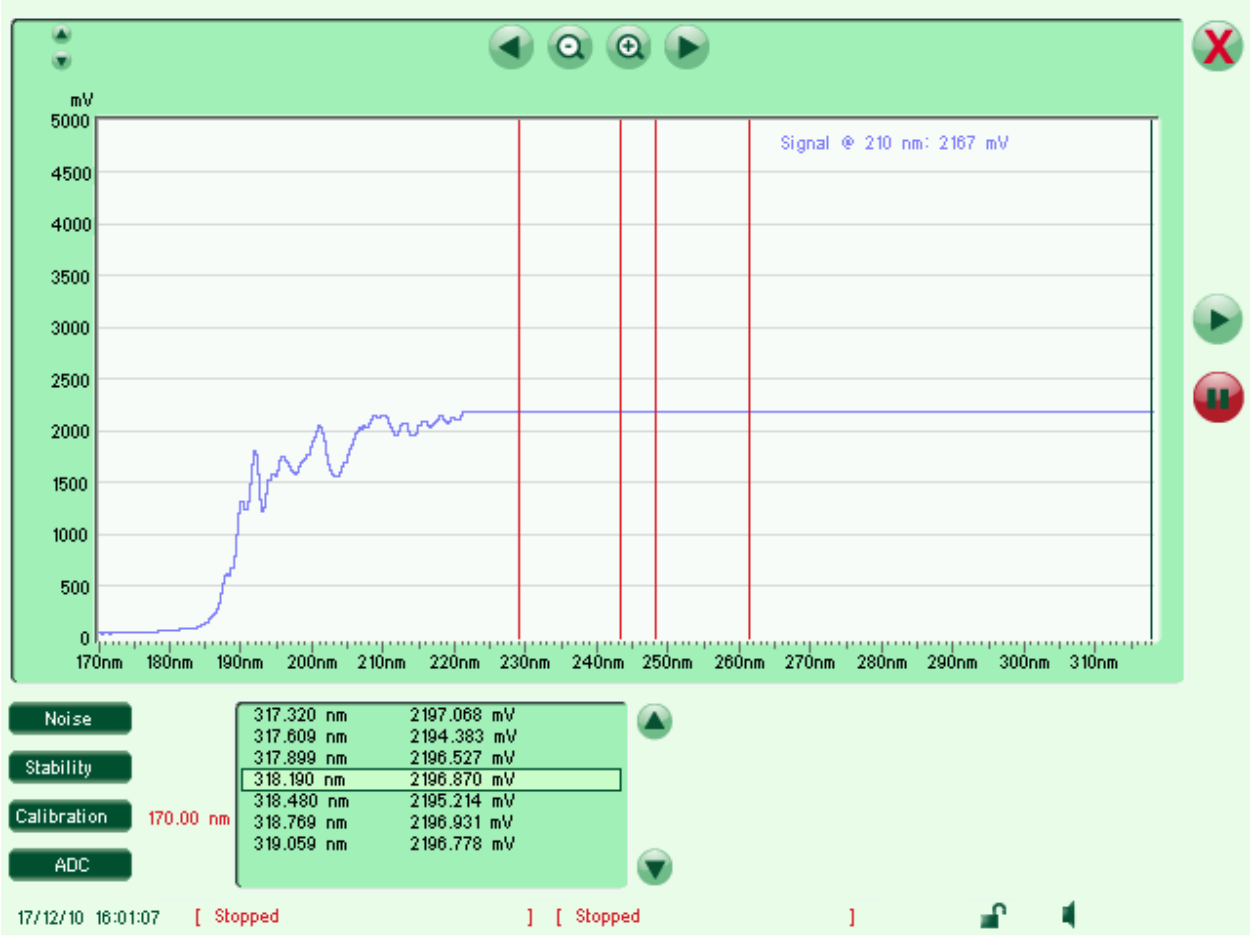


The signal is normally saturated for wavelength above 215 nm as ammonia measurement is performed at lower wavelength.

It's recommended to have a signal at 210 nm above 1000 to get a good repeatability, but measurement can still be done for signal as low as 100 if the repeatability is not critical as on waste water for values above 1 mg/l.

If the light signal is too high, an alarm message is displayed on the top left corner.

The values can be read by moving the cursor with the vertical arrows.

## 10 Absorbance spectrum

This graph displays the absorbance spectrum get during the last measuring cycle. It is displayed in light grey during a measuring cycle until updated.

For more details or to investigate about the absorbance spectrum, press anywhere on the graph to zoom it as below:

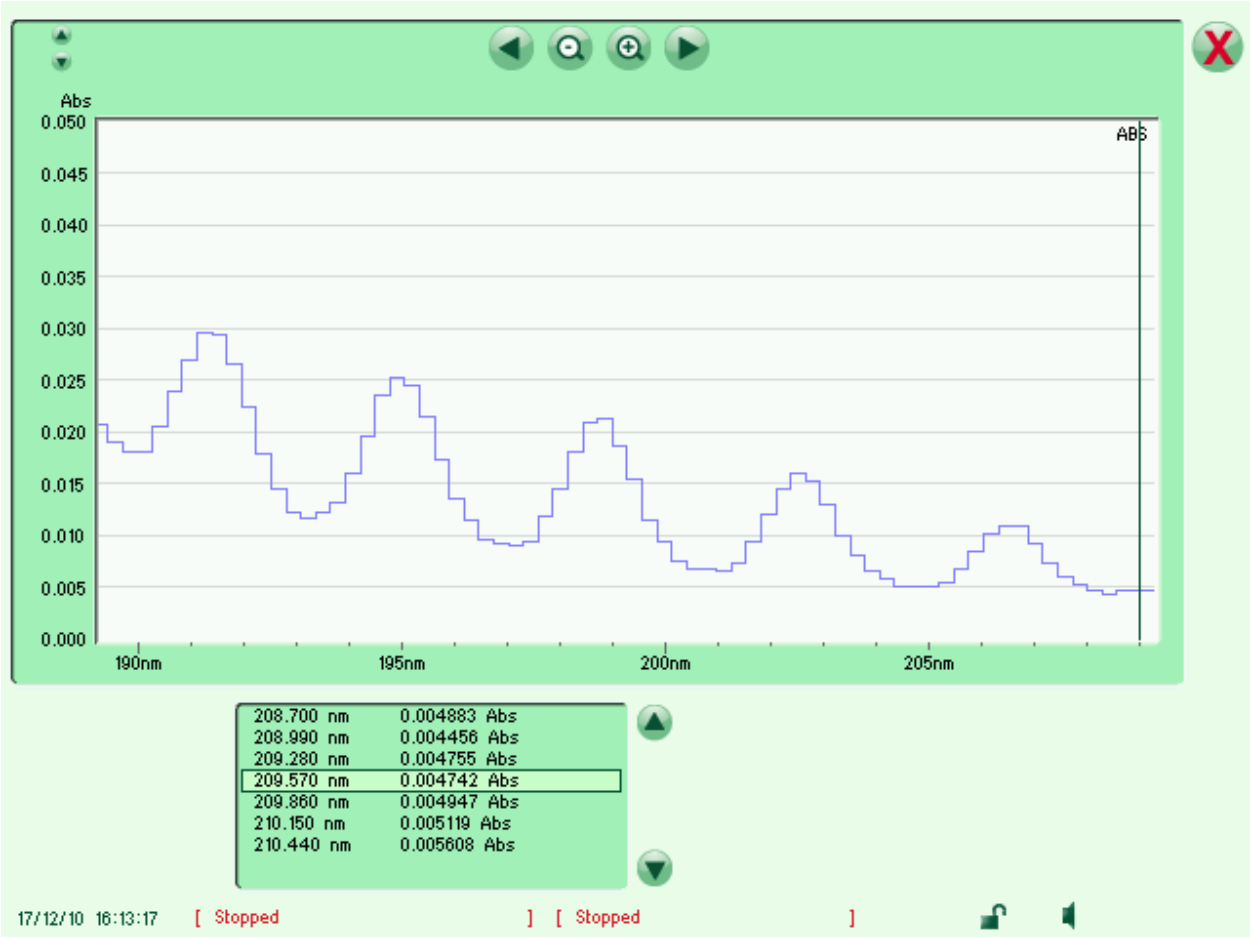


The values can be read by moving the cursor with the vertical arrows.

If necessary, use the horizontal arrows to displace the graph or press on the graph to zoom it. The Y scale is automatic but may be override by the small arrows located above the Y axis.

# 11 FFT spectrum

This graph displays the FFT spectrum get during the last measuring cycle. It is displayed in light grey during a measuring cycle until updated.

For more details or to investigate about the FFT spectrum, press anywhere on the graph to zoom it as below:

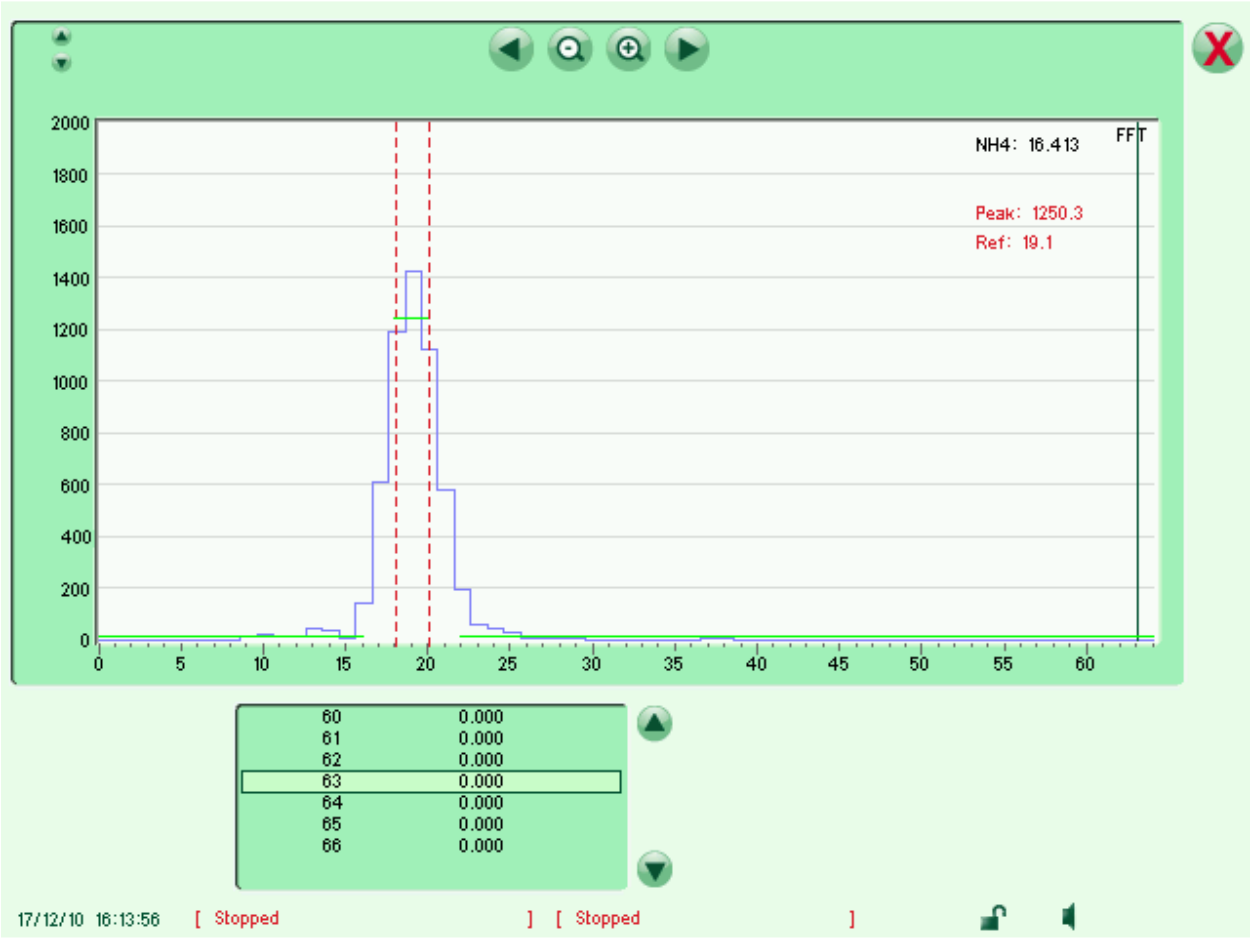


The peak value is the average FFT value inside the NH3 band (red dot lines).
The ref value is the average FFT value outside the NH3 band.
They are represented by the green lines.

The values can be read by moving the cursor with the vertical arrows.

If necessary, use the horizontal arrows to displace the graph or press on the graph to zoom it.
The Y scale is automatic but may be override by the small arrows located above the Y axis.




## Label

This field allows changing the channel label displayed with the measurement. The label size is limited to 6 characters.




## Unit

This field allows changing the channel unit displayed with the measurement. The unit size is limited to 6 characters.




## Display mode

This button allows selecting the concentration display mode as NH4 (default mode) or as N of NH4.
If N-NH4 is selected, the NH4 concentrations are multiplied by 14/18=0.7777 before displaying and the label is automatically updated to “N-NH4”.
The measurements previously stored in the internal memory will keep their values in NH4.




## Negative values displayed

Negatives values are possible for most of the measurements as they result of normal fluctuations if the measurement is close to zero.

By default, the display of negative values is allowed as negative values may also result from a wrong zero and consequently it may be useful to be aware of such problem when seeing strongly negative values.

But as negative values have no theoretical meaning, it’s possible to replace them by zero by deselecting this function.




## Number of decimal

This field allows changing the number of decimal displayed for the measurement value to remove not significant decimals.

Note: this choice does not affect the measurements stored in the internal memory.

## 17 Number of averaging

The measurement as displayed on the process screen (or read under MODBUS protocol or available on the 4-20 mA output) can be formed by the average over a number of basic measurements defined by the field.
It can be useful to improve the repeatability of the measurements if the response time is not critical.

By default, no averaging is performed and this field contains a value of 1.

## 18 Temperature adjustment

The temperature of the sample given by the internal temperature probe can be adjusted by this field. This adjustment is not important as any difference of temperature is taken in account during the calibration. But if this value is changed, a new calibration must be done.

## 19 Temperature coefficient

The sample temperature affects directly the NH3 liquid/gas ratio. This coefficient is used for the temperature compensation. It can be change only by the manufacturer.

## 20 4-20 mA output

This button indicates if a 4-20 mA output has been installed or not for this channel (option).

If a module has been installed, its position is displayed on the right. Pressing on this button shows the popup below that enable to test the 4-20 mA output by pressing on the “test” button.

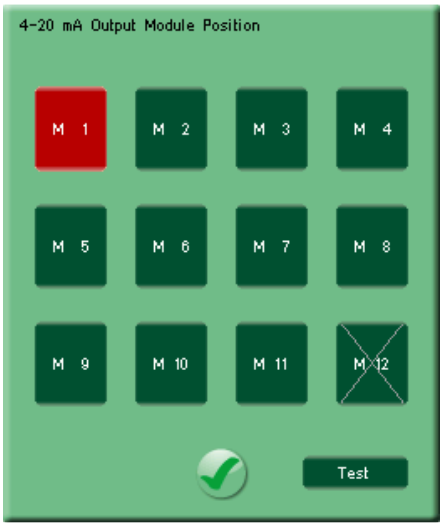

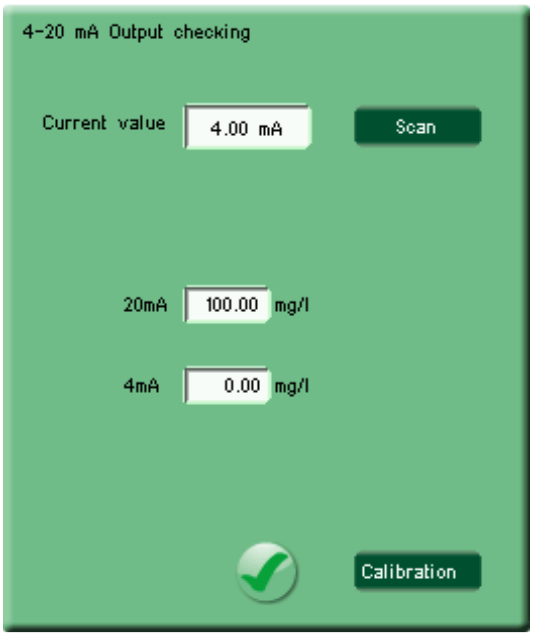


The current value of the 4-20 mA output is displayed on the top, based on the last process measurement (but not on the test measurement to avoid disturbances on the process supervisor system).

The “scan” key allows scanning the 4-20 mA output mA by mA for testing purpose only.

The scale value for 20 mA and 4 mA are displayed below. These preset values can be changed by pressing on these fields.

If the output value doesn’t mach exactly with the theoretical value, it’s possible to calibrate the output by pressing on the “calibration” key. Then real values for 4 and 20 mA must be entered.

Note: position M12 is not available for the 4-20 mA output modules.




## Calibration factor

This field allows changing the calibration factor of the channel.
Precautions must be taken before changing this value.

This factor is normally changed automatically while doing a calibration by pressing on the “scale” button and then recorded in the calibration history. This multiplying factor is taken in account as the last step before displaying the measurement value.



Note: this factor must be set to 1.0 before doing a new linearization curve




## Scale factor

This field allows changing the scale factor of the channel.
Precautions must be taken before changing this value.

This factor is normally determined in factory to transform the basic measurement to a scaled value in the final unit, mg/l for example.
It is has no reason to be changed except if internal elements are replaced.




## Number of readings

This field allows changing the number of basic readings averaged to obtain one final measurement.

Increasing this value improve the repeatability but increase also the measuring time.
Depending on the application, it can be exceptionally increased or decreased.




## Minimum signal

This field fix the minimum light signal value over the wavelength range taken in account for the measurement. An error will be displayed if the signal over the wavelength range is lower than this value.




## Reaction time

This field allows changing the stripping time before measuring.

Precautions must be taken before changing this value.
It can be use very exceptionally in case of change of pump or for special experimentation.




## Reagent time

This field allows changing the reagent pumping.

Precautions must be taken before changing this value.
It can be use exceptionally in case of special sample with high salinity.




### Wavelength mini

This field allows changing the minimal wavelength taken in account for the measurement.

Precautions must be taken before changing this value.
It can be use very exceptionally to avoid a known interference on the absorbance spectrum.




### Wavelength max

This field allows changing the maximal wavelength taken in account for the measurement.

Precautions must be taken before changing this value.
It can be use very exceptionally to avoid known interference on the absorbance spectrum.




### FFT min frequency

This field allows changing the minimal frequency off the FFT taken in account for the measurement.

Precautions must be taken before changing this value.
It can be use very exceptionally to fit the NH3 FFT peak inside the active frequency band.




### FFT max frequency

This field allows changing the maximal frequency off the FFT taken in account for the measurement.

Precautions must be taken before changing this value.
It can be use very exceptionally to fit the NH3 FFT peak inside the active frequency band.




### Background factor

This field allows changing the multiplying background factor of the FFT off-band signal.

Precautions must be taken before changing this value.
It can be use very exceptionally to centre on zero the measurements on zero water or to compensate a know interference.

## 32 Last calibration window

This window displays the 10 last calibrations done with the date, time and new calibration factor.

## 33 Linearity graph and values

This area concerns the linearity compensation applied on the rough measurements.

The Beer-Lambert law used on most of the measurements is not linear for high concentrations due to a light mask effect. Therefore it's necessary to introduce a correction before displaying the final concentration. This correction is based on the linearity curve represented on the top.

The Y-axis corresponds to the rough measurements entered on the M1 to M10 fields while the X-axis corresponds to the standard or final measurement, entered on the S1 to S10 fields.

The M1-M10 and S1-S10 values must be strictly increasing. It's highly recommended to put 0,0 as starting values for S1 and M1. The final value is linearly extrapolated between these points.

## 34 Linearity ON/OFF

This button allows deactivating temporary the linearity curve (OFF), for example to redo a new linearity curve.
The linearity curve is automatically reactivated (ON) when leaving the check screen.

### 4.1 .3 Recalibration

The analyser is factory calibrated. However, periodical checking is recommended and a recalibration might be necessary after several months depending of the conditions of use.

To recalibrate the analyser, proceed as follow:

- Prepare a 10 mg/l NH4 standard. For this weight 2.944 g of dried ammonium chloride (ClNH4) and dilute in 1litre of distilled water to obtain a mere solution of 1g/l NH4. Then take 10 ml of this mere solution and complete to 1 litre of distilled water.

- Do at least 3 manual measurements on this 10 mg/l standard using the check screen. The last two measurements must be close together with less than 5% of difference.

- Press on the “scale” button of the check screen (as describe above) and then enter the standard value on the keypad.

The calibration is finished. A new calibration factor has been calculated and has been recorded inside the calibration history displayed on the check screen.

This new calibration factor will be taken in account for all the further measurements.

## 4.2 Chlorophyll A

### 4.2 .1 Principle

The measuring principle is based on the red light fluorescence that is a typical characteristic of the chlorophyll A

The light is generated by a pulsed xenon lamp to reach an ultra long life time.
The excitation filter limits the bandwidth of the excitation light, while the emission filter selects the specific fluorescent light.

The detection is done by a high sensitivity photomultiplier.

A second detector (optional) is used to compensate the eventual absorbance of the sample due to turbidity.

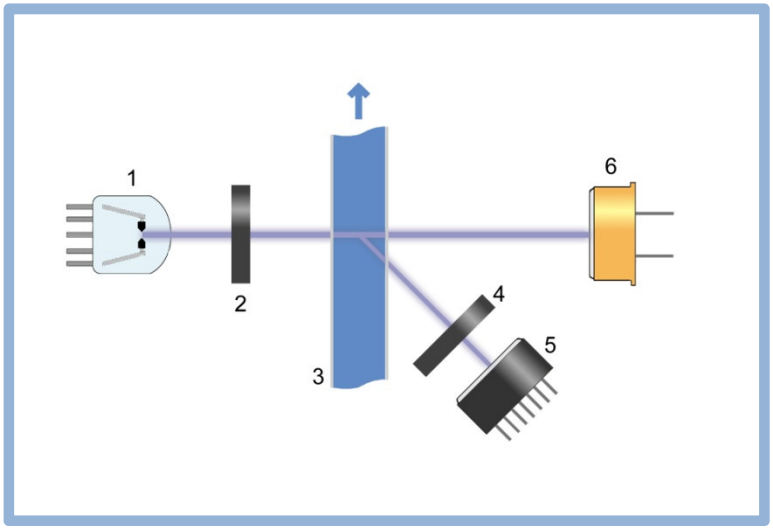


| | | | |
|---|---|---|---|
| 1 | Xenon UV lamp | 4 | Emission filter |
| 2 | Excitation filter | 5 | Photomultiplier |
| 3 | Flow cell | 6 | Photo detector |

### 4.2 .2 Test

From the process screen, press on the “tools” icon and then on the channel to test, or directly to the channel area as a shortcut.

If you are logged in user mode, the parameters are masked. You must be logged in administrator mode to access to the parameters (default password is 456).

The check screen as below is displayed. The concentration or error code corresponds to the last measurement done, while signal values and graph are updated continuously.

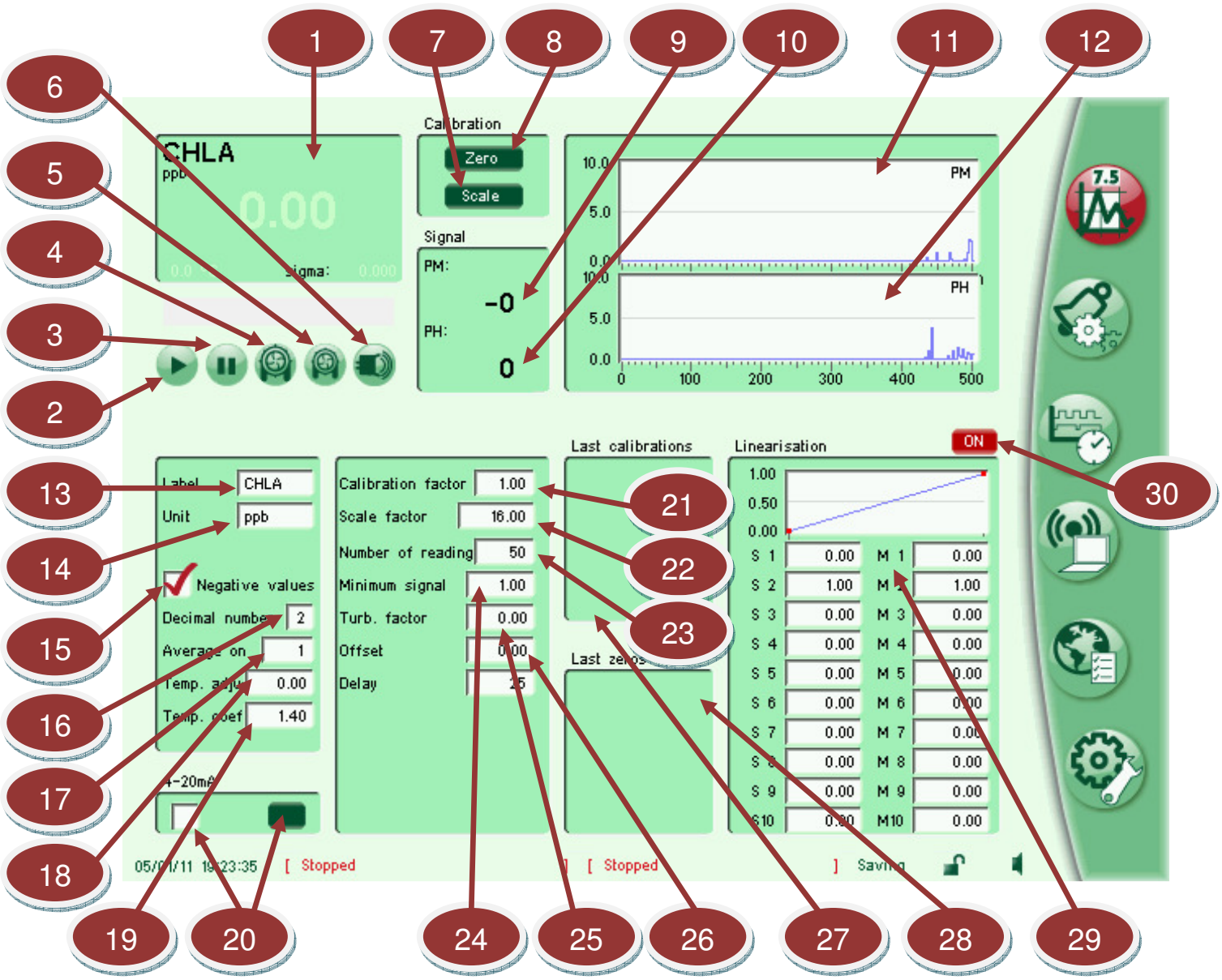




## Measurement window

This window displays the last measured value (or the error code in case of error, refer to troubleshooting section) with proper label and unit, as well as the sample temperature and standard deviation (sigma) obtained on the elemental acquisitions.

During a measuring cycle, the last measured value is display in light green until replaced by the new value in black.

The number of decimal can be adjusted, refer to the field below.




## Start button

Pressing on this button starts a manual measuring cycle. It can be aborted at any time by pressing on the stop button. At the end of the cycle, a new value will be displayed on the measurement window.

The process value on the process screen will not be updated by this measurement to avoid any interference with the plant supervisor system, same concerning the MODBUS channel's value, 4-20 mA output and alarm relays (if any).




## Stop button

Pressing on this button stop and aborts any engaged measuring cycle. It can also be used to stop the sampling pump or cleaning pump.




## Sampling pump button

Pressing on this button starts the sampling pump. The pump will stop automatically after 10 seconds. It can also be stopped at any time by pressing on the stop button.

Note: this button is deactivated during a measuring cycle.




## Cleaning pump button

Pressing on this button starts the cleaning pump. The pump will stop automatically after the time defined in the acid "cleaning time" field of the timing screen.
It can also be stopped at any time by pressing on the stop button.

Note: this button is deactivated during a measuring cycle.




## Ultrasonic cleaning button

Pressing on this button starts the ultrasonic cleaning. The cleaning will stop automatically after the time defined in the ultrasonic “cleaning time” field of the timing screen.
It can also be stopped at any time by pressing on the stop button.

Note: this button is deactivated during a measuring cycle.




## Scale button

This button is used to calibrate the analyser on a standard solution.



To avoid a wrong calibration, check the zero or redo a zero before doing a calibration.

A new calibration factor is calculated after entering the standard value.
The calibration history will be updated with the time and date of the calibration attached to the new calibration factor.

For more details, refer to the “recalibration” section.




## Zero button

This button is used for zeroing the measurement.



Put first pure water inside the flow cell before pressing on this button.

Note: an auto-zero is performed automatically during each acid cleaning if this option is selected on the timing screen.

## 9 PM signal

This window displays the PM signal continuously. This signal corresponds to the fluorescent light re-emitted by the chlorophyll A.

On pure water, this signal is normally close to zero with fluctuations of a few tens of mV.

When the light signal added to the darkness signal reach 3000 mV, a message "**OVL!**" in red is displayed to indicate a saturation of the acquisition system.

It might be caused by an over-range concentration of the sample or by ambient light if the door of the analyser is opened with a high level of ambient light (sun, daylight).

## 10 Photo detector signal

This window displays the photo detector signal continuously (optional). This signal corresponds to the excitation light of the sample. It is use to compensate an eventual absorption of the excitation blue light by the sample, for example due to turbidity.

On pure water, the signal must normally be in a 200 mV to 2000 mV range.

When the light signal added to the darkness signal reach 3000 mV, a message "**OVL!**" in red is displayed to indicate a saturation of the acquisition system.
It might be caused by ambient light if the door of the analyser is opened with a high level of ambient light (sun, daylight).

## 11 PM Signal graph

This graph displays the PM signal continuously updated. This signal corresponds to the fluorescent light re-emitted by the chlorophyll A.

For more details or to investigate about the signal, press anywhere on the graph to zoom it as below:




The average signal value in mV and its standard deviation (sigma) on the last 500 acquisitions are displayed on the bottom right of the screen.

The values can be read by moving the cursor with the vertical arrows. After reading, restart the acquisitions by pressing on the “play” button if necessary.

If necessary, use the horizontal arrows to displace the graph or press on the graph to zoom it. The Y scale is automatic but may be override by the small arrows placed above the Y axis.




## Photo detector signal graph

This graph displays the photo detector signal continuously updated. This signal corresponds to the excitation light of the sample.

For more details or to investigate about the signal, press anywhere on the graph to zoom it. Refer to PM signal graph for the zoom display.




## Label

This field allows changing the channel label displayed with the measurement. The label size is limited to 6 characters.




## Unit

This field allows changing the channel unit displayed with the measurement. The label size is limited to 6 characters.




## Negative values displayed

Negatives values are possible for most of the measurements as they result of normal fluctuations if the measurement is close to zero.

By default, the display of negative values is allowed as negative values may also result from a wrong zero and consequently it may be useful to be aware of such problem when seeing strongly negative values.

But as negative values have no theoretical meaning, it's possible to replace them by zero by deselecting this function.




## Number of decimals

This field allows changing the number of decimal displayed for the measurement value to remove not significant decimals.

Note: this choice does not affect the measurements stored in the internal memory.




### Number of averaging

The measurement as displayed on the process screen (or read under MODBUS protocol or available on the 4-20 mA output) can be formed by the average over a number of basic measurements defined by the field.
It can be useful to improve the repeatability of the measurements if the response time is not critical.

By default, no averaging is performed and this field contains a value of 1.




### Temperature adjustment

The temperature of the sample given by the internal temperature probe can be adjusted by this field. This adjustment is not important as any difference of temperature is taken in account during the calibration. But if this value is changed, a new calibration must be done.




### Temperature coefficient

The fluorescence is affected by the temperature. This coefficient is used for the temperature compensation.




### 4-20 mA output

This button indicates if a 4-20 mA output has been installed or not for this channel (option).

If a module has been installed, its position is displayed on the right. Pressing on this button shows the popup below that enable to test the 4-20 mA output by pressing on the “test” button.

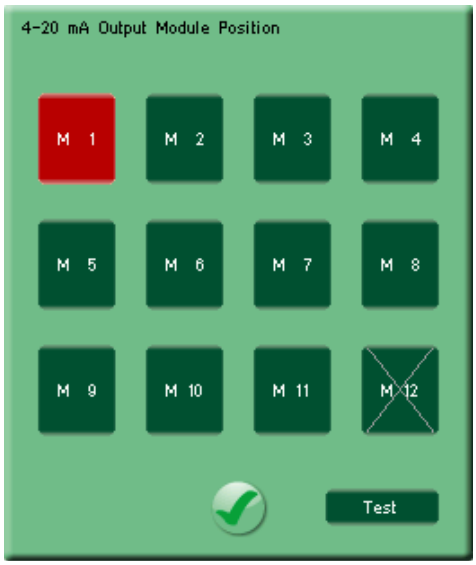


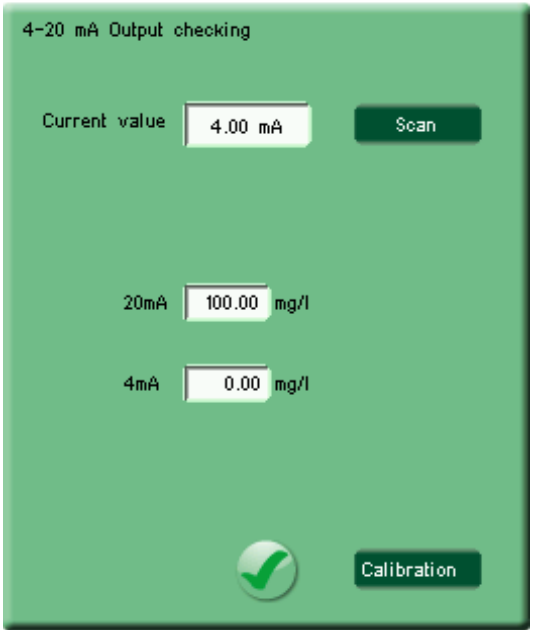


The current value of the 4-20 mA output is displayed on the top, based on the last process measurement (but not on the test measurement to avoid disturbances on the process supervisor system).

The “scan” key allows scanning the 4-20 mA output mA by mA for testing purpose only.

The scale value for 20 mA and 4 mA are displayed below. These preset values can be changed by pressing on these fields.

If the output value doesn’t mach exactly with the theoretical value, it’s possible to calibrate the output by pressing on the “calibration” key. Then real values for 4 and 20 mA must be entered.

Note: position M12 is not available for the 4-20 mA output modules.




## Calibration factor

This field allows changing the calibration factor of the channel.
Precautions must be taken before changing this value.

This factor is normally changed automatically while doing a calibration by pressing on the "scale" button and then recorded in the calibration history. This multiplying factor is taken in account as the last step before displaying the measurement value.



Note: this factor must be set to 1.0 before doing a new linearization curve




## Scale factor

This field allows changing the scale factor of the channel.
Precautions must be taken before changing this value.

This factor is normally determined in factory to transform the basic measurement to a scaled value in the final unit, mg/l for example.
It is has no reason to be changed except if internal elements are replaced.




## Number of readings

This field allows changing the number of basic readings averaged to obtain one final measurement.

Increasing this value improve the repeatability but increase also the measuring time.
Depending on the application, it can be exceptionally increased or decreased.




## Minimum signal

This field fix the minimum light signal value over the wavelength range taken in account for the measurement. An error will be displayed if the signal over the wavelength range is lower than this value.




## Turbidity factor

This field enable a compensation of the excitation light loses due to turbidity.
A value of 1.0 corresponds to a basic compensation.




## Offset

This field show the internal offset applied on the signal for the zeroing.
It is updated at each zeroing and has not to be changed.
It can be used for troubleshooting by the manufacturer.




## Last calibration window

This window displays the 10 last calibrations done with the date, time and new calibration factor.




## Last zeros window

This window displays the 10 last zeros done with the date, time and zero value adjustment, whatever manually or by an automatic cleaning cycle.

Note: a strong zero adjustment value might reveal an abnormal zeroing operation.




## Linearity graph and values

This area concerns the linearity compensation applied on the rough measurements.

The Beer-Lambert law used on most of the measurements is not linear for high concentrations due to a light mask effect. Therefore it's necessary to introduce a correction before displaying the final concentration. This correction is based on the linearity curve represented on the top.

The Y-axis corresponds to the rough measurements entered on the M1 to M10 fields while the X-axis corresponds to the standard or final measurement, entered on the S1 to S10 fields.

The M1-M10 and S1-S10 values must be strictly increasing. It's highly recommended to put 0.0 and 0.0 as starting values for S1 and M1. The final value is linearly extrapolated between these points.




## Linearity ON/OFF

This button allows deactivating temporary the linearity curve (OFF), for example to redo a new linearity curve.
The linearity curve is automatically reactivated (ON) when leaving the check screen.

### 4.2 .3 Recalibration

The analyser is factory calibrated. However, periodical checking is recommended and a recalibration might be necessary after several months depending of the conditions of use.

To recalibrate the analyser, proceed as follow:

- Prepare a 1 mg/l standard of Chlorophyll A (example Sigma Aldrich C5753-1MG, dissolution in alcohol is recommended)

- Do a manual measurement using the check screen (as described above)

- Press on the “scale” button of the check screen and then enter the standard value

The calibration is finished. A new calibration factor has been calculated and has been recorded inside the calibration history displayed on the check screen.

This new calibration factor will be taken in account for all the further measurements.

## 4.3 Colour by spectrograph

### 4.3.1 Principle

The measuring principle is based on the blue light absorption to the Beer-Lambert law:

$$[C] = k \cdot \log\left(\frac{I_0}{I_1}\right)$$

With $[C]$: Sample concentration
$k$: Absorption coefficient (molecule specific)
$I_0$: Light intensity before the sample
$I_1$: Light intensity after of the sample

The light is generated by a pulsed xenon lamp to reach an ultra long life time.
The absorption spectrum is performed by a concave grating coupled to a 2048 pixels CCD (Charge-Coupled Device).

A double-wavelength algorithm allows compensating the turbidity or a deposit inside the flow cell.

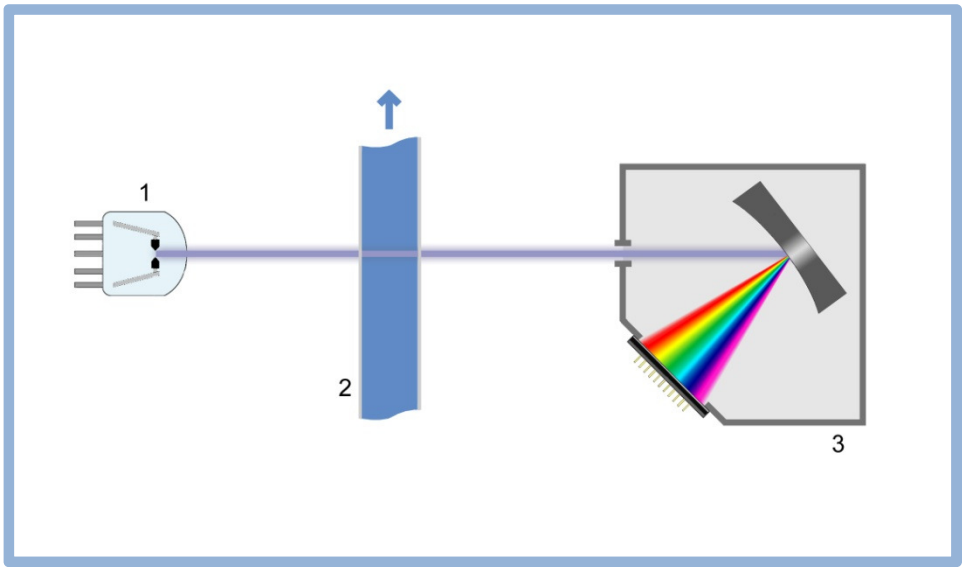


| | |
|---|---|
| 1 | Xenon flash lamp |
| 2 | Sample flow cell |
| 3 | Spectrograph with concave grating and CCD detector |

### 4.3.2 Test

From the process screen, press on the “tools” icon and then on the channel to test, or directly to the channel area as a shortcut.

If you are logged in user mode, the parameters are masked. You must be logged in administrator mode to access to the parameters (default password is 456).

The check screen as below is displayed. The concentration or error code corresponds to the last measurement done, as well as the signal and absorbance graphs.

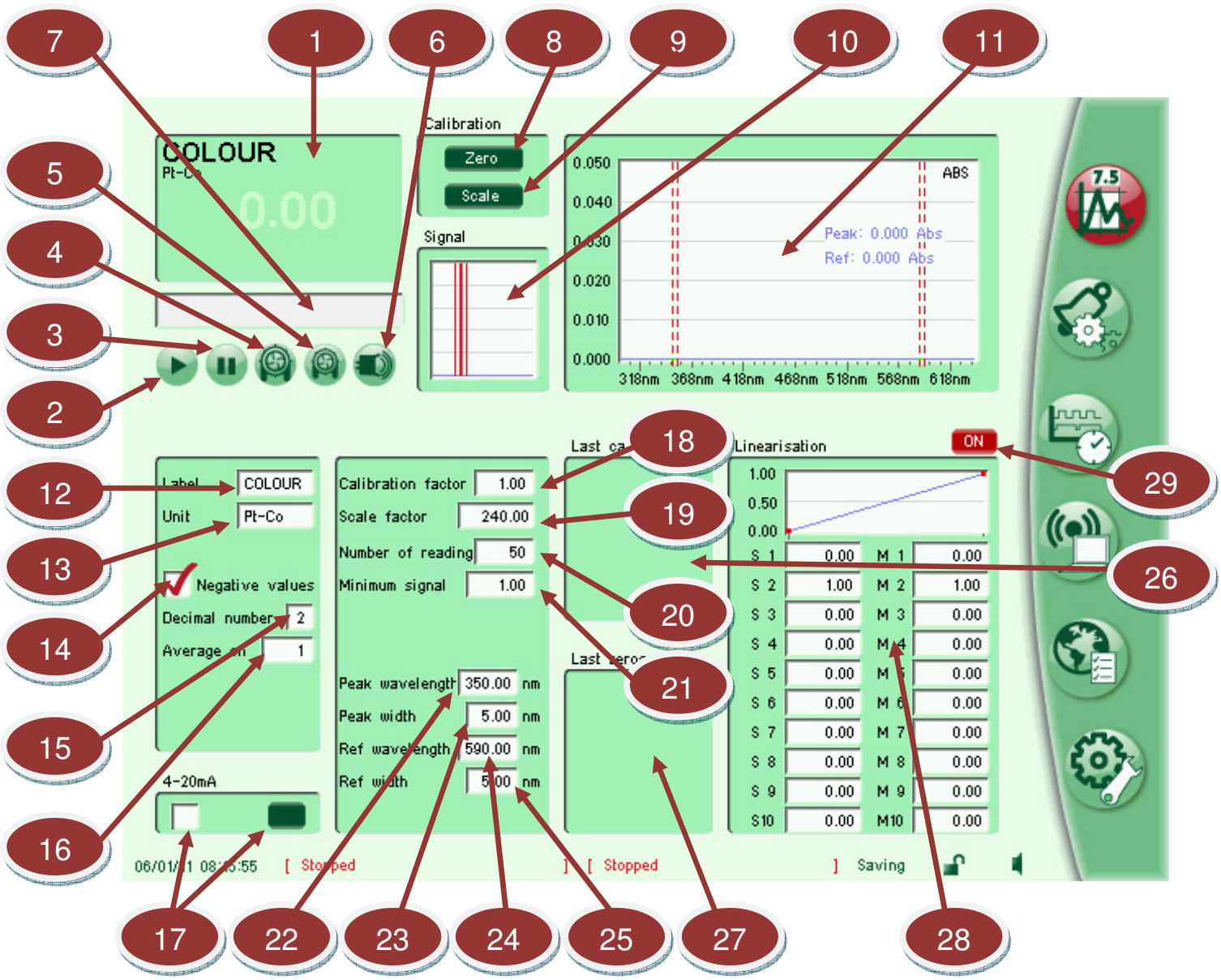




## Measurement window

This window displays the last measured value (or the error code in case of error, refer to troubleshooting section) with proper label and unit.

During a measuring cycle, the last measured value is display in light green until replaced by the new value in black.

The number of decimal can be adjusted, refer to the field below.




## Start button

Pressing on this button starts a manual measuring cycle. It can be aborted at any time by pressing on the stop button. At the end of the cycle, a new value will be displayed on the measurement window.

The process value on the process screen will not be updated by this measurement to avoid any interference with the plant supervisor system, same concerning the MODBUS channel's value, 4-20 mA output and alarm relays (if any).




## Stop button

Pressing on this button stop and aborts any engaged measuring cycle. It can also be used to stop the sampling pump or the cleaning pump.




## Sampling pump button

Pressing on this button starts the sampling pump. The pump will stop automatically after 10 seconds. It can also be stopped at any time by pressing on the stop button.

Note: this button is deactivated during a measuring cycle.




## Cleaning pump button

Pressing on this button starts the cleaning pump. The pump will stop automatically after the time defined in the acid "cleaning time" field of the timing screen.
It can also be stopped at any time by pressing on the stop button.

Note: this button is deactivated during a measuring cycle.




## Ultrasonic cleaning button

Pressing on this button starts the ultrasonic cleaning. The cleaning will stop automatically after the time defined in the ultrasonic “cleaning time” field of the timing screen.
It can also be stopped at any time by pressing on the stop button.

Note: this button is deactivated during a measuring cycle.




## Measuring cycle steps display

During a measuring cycle or a zeroing cycle, this area displays a counter of the elemental acquisitions preceded by the message “measuring…” or “zeroing…” respectively.




## Zero button

This button is used for zeroing the measurement.



Put first pure water inside the flow cell before pressing on this button.

Note: an auto-zero is performed automatically during each acid cleaning if this option is selected on the timing screen.




## Scale button

This button is used to calibrate the analyser on a standard solution.



To avoid a wrong calibration, check the zero or redo a zero before doing a calibration.

A new calibration factor is calculated after entering the standard value.
The calibration history will be updated with the time and date of the calibration attached to the new calibration factor.

For more details, refer to the “recalibration” section.

## 10 Signal graph

This graph displays the lamp spectrum get during the last measuring cycle. It is updated during the measuring cycle when the lamp is flashing.

For more details or to investigate about the signal, press anywhere on the graph to zoom it as below:

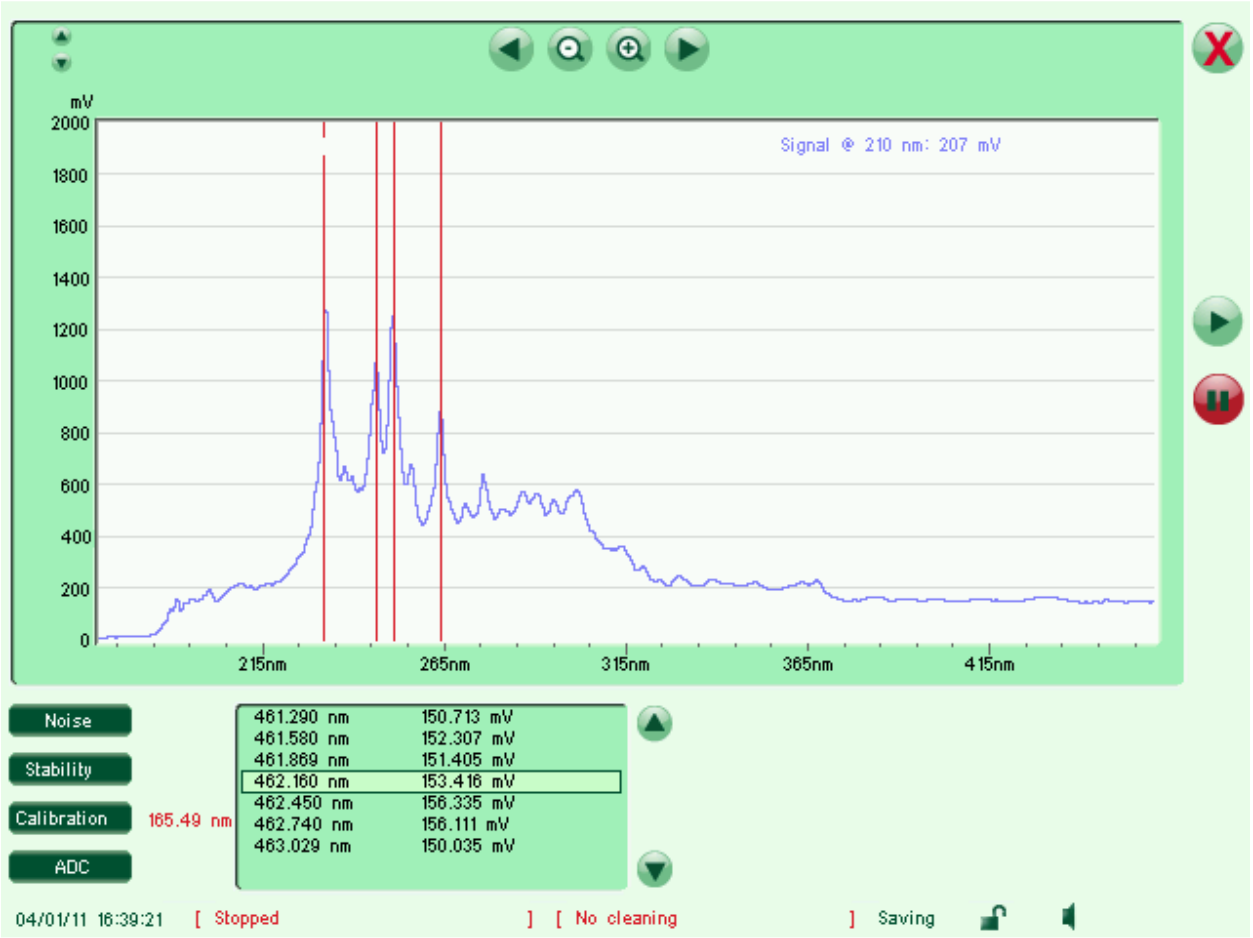


To acquire again the lamp signal, press on the “play” button.

With pure water inside the flow cell, the signal must not be saturated (below 2000 mV) on the two wavelengths bands used for the absorbance calculation defined as “Peak wavelength” and “Ref wavelength” on the check screen. Otherwise, an error will occur during the measuring cycle.

The values can be read by moving the cursor with the vertical arrows.

If necessary, use the horizontal arrows to displace the graph or press on the graph to zoom it. The Y scale is automatic but may be override by the small arrows placed above the Y axis.

## 11 Absorbance spectrum

This graph displays the absorbance spectrum get during the last measuring cycle. It is displayed in light grey during a measuring cycle until updated.

For more details or to investigate about the absorbance spectrum, press anywhere on the graph to zoom it as below:

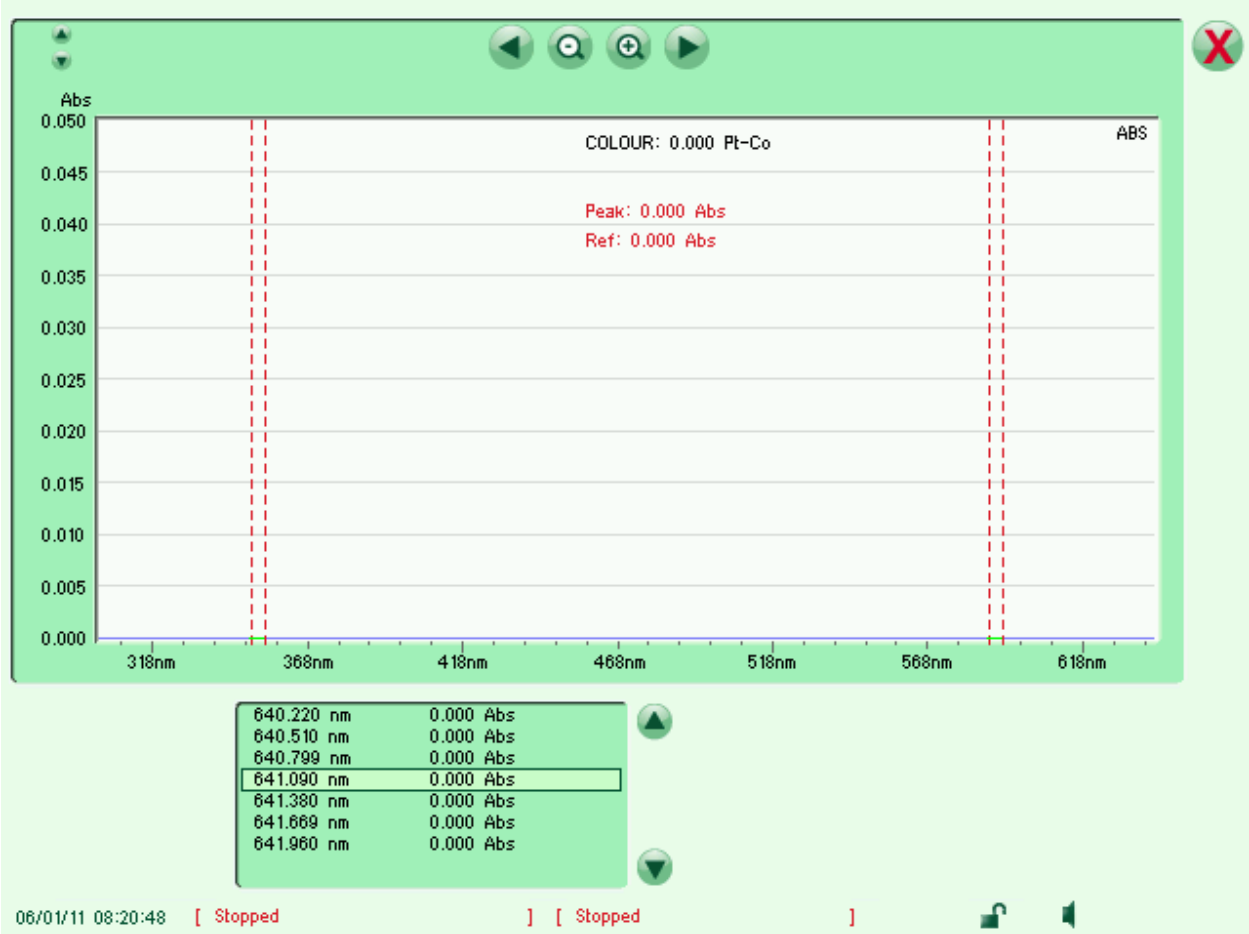


The average absorbance for the peak wavelength band and for the reference wavelength band are represented by a green line and displayed above the curve.

The difference is used to calculate the final concentration.

The values can be read by moving the cursor with the vertical arrows.

If necessary, use the horizontal arrows to displace the graph or press on the graph to zoom it. The Y scale is automatic but may be override by the small arrows placed above the Y axis.




### Label

This field allows changing the channel label displayed with the measurement. The label size is limited to 6 characters.




### Unit

This field allows changing the channel unit displayed with the measurement. The label size is limited to 6 characters.




### Negative values displayed

Negatives values are possible for most of the measurements as they result of normal fluctuations if the measurement is close to zero.

By default, the display of negative values is allowed as negative values may also result from a wrong zero and consequently it may be useful to be aware of such problem when seeing strongly negative values.

But as negative values have no theoretical meaning, it's possible to replace them by zero by deselecting this function.




### Number of decimals

This field allows changing the number of decimal displayed for the measurement value to remove not significant decimals.

Note: this choice does not affect the measurements stored in the internal memory.




### Number of averaging

The measurement as displayed on the process screen (or read under MODBUS protocol or available on the 4-20 mA output) can be formed by the average over a number of basic measurements defined by the field.
It can be useful to improve the repeatability of the measurements if the response time is not critical.

By default, no averaging is performed and this field contains a value of 1.

## 17 4-20 mA output

This button indicates if a 4-20 mA output has been installed or not for this channel (option).

If a module has been installed, its position is displayed on the right. Pressing on this button shows the popup below that enable to test the 4-20 mA output by pressing on the “test” button.

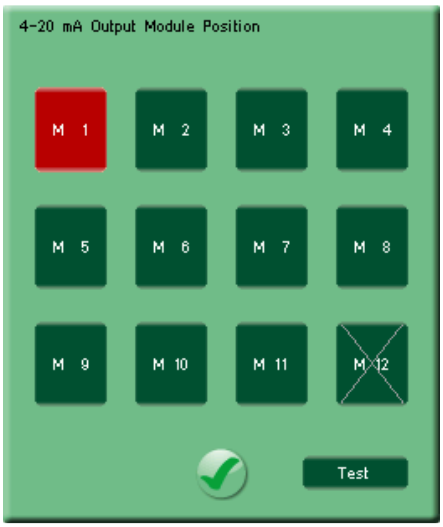


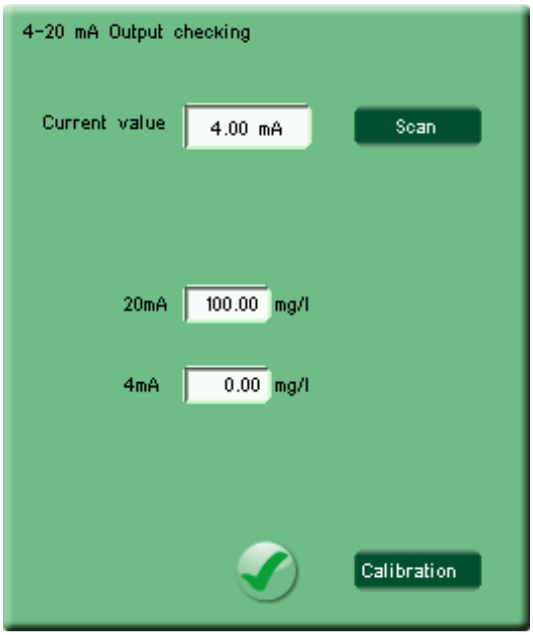

The current value of the 4-20 mA output is displayed on the top, based on the last process measurement (but not on the test measurement to avoid disturbances on the process supervisor system).

The “scan” key allows scanning the 4-20 mA output mA by mA for testing purpose only.

The scale value for 20 mA and 4 mA are displayed below. These preset values can be changed by pressing on these fields.

If the output value doesn’t mach exactly with the theoretical value, it’s possible to calibrate the output by pressing on the “calibration” key. Then real values for 4 and 20 mA must be entered.

Note: position M12 is not available for the 4-20 mA output modules.




### Calibration factor

This field allows changing the calibration factor of the channel.
Precautions must be taken before changing this value.

This factor is normally changed automatically while doing a calibration by pressing on the “scale” button and then recorded in the calibration history. This multiplying factor is taken in account as the last step before displaying the measurement value.



Note: this factor must be set to 1.0 before doing a new linearization curve




### Scale factor

This field allows changing the scale factor of the channel.
Precautions must be taken before changing this value.

This factor is normally determined in factory to transform the basic measurement to a scaled value in the final unit, mg/l for example.
It is has no reason to be changed except if internal elements are replaced.




### Number of readings

This field allows changing the number of basic readings averaged to obtain one final measurement.

Increasing this value improve the repeatability but increase also the measuring time.
Depending on the application, it can be exceptionally increased or decreased.




### Minimum signal

This field fix the minimum light signal value over the wavelength range taken in account for the measurement. An error will be displayed if the signal over the wavelength range is lower than this value.




### Peak wavelength

This field allows changing the peak wavelength taken in account for the measurement. It corresponds to a wavelength absorbed by yellow colour of the sample.

The default value is 350 nm. It can be changed exceptionally to avoid a known interference.




### Peak width

This field allows changing the width band of the peak wavelength taken in account for the measurement.

It may be exceptionally enlarged or reduced to avoid a known.




### Reference wavelength

This field allows changing the reference wavelength taken in account for the measurement.
It corresponds normally to a wavelength where the colour sample doesn't absorb.

The default value is 590 nm. It can be changed exceptionally to avoid a known interference.




### Reference width

This field allows changing the width band of the reference wavelength taken in account for the measurement.

It may be exceptionally enlarged or reduced to avoid a known interference.

### 26 Last calibration window

This window displays the 10 last calibrations done with the date, time and new calibration factor.

### 27 Last zero window

This window displays the 10 last calibrations done with the date, time and new calibration factor.

### 28 Linearity graph and values

This area concerns the linearity compensation applied on the rough measurements.

The Beer-Lambert law used on most of the measurements is not linear for high concentrations due to a light mask effect. Therefore it's necessary to introduce a correction before displaying the final concentration. This correction is based on the linearity curve represented on the top.

The Y-axis corresponds to the rough measurements entered on the M1 to M10 fields while the X-axis corresponds to the standard or final measurement, entered on the S1 to S10 fields.

The M1-M10 and S1-S10 values must be strictly increasing. It's highly recommended to put 0.0 and 0.0 as starting values for S1 and M1. The final value is linearly extrapolated between these points.

### 28 Linearity ON/OFF

This button allows deactivating temporary the linearity curve (OFF), for example to redo a new linearity curve.
The linearity curve is automatically reactivated (ON) when leaving the check screen.

### 4.4.3 Recalibration

The analyser is factory calibrated. However, periodical checking is recommended and a recalibration might be necessary after several months depending of the conditions of use.

To recalibrate the analyser, proceed as follow:

- Take a Pt-Co standard of 100 Pt-Co units

- Do a manual measurement on this standard using the check screen (as describe above).

- Press on the “scale” button of the check screen and then enter the standard value on the keypad.

The calibration is finished. A new calibration factor has been calculated and has been recorded inside the calibration history displayed on the check screen.

This new calibration factor will be taken in account for all the further measurements.

## 4.4 Conductivity

### 4.4.1 Principle

The conductivity is the reciprocal of resistance and is determined by the ratio current/voltage according to Ohm's law.

$$C = \frac{1}{R} = \frac{l_{amps}}{l_{volt}}$$

The conductivity is measured in Siemens by two immersed electrodes of an area A separated by a distance d.

Since the measured conductivity depends on the electrode geometry, the measured conductivity must be multiplied by the cell constant to obtain the specific conductivity expressed in Siemens per centimeter (S/cm).

The cell constant is defined by: $k = \frac{d}{A}$

The conductivity of a solution is proportional to its ion concentration, as long as there is no ionic interaction.

Typical specific conductivity and cell constant:

| Solution | Specific conductivity (µS/cm) |
|---|---|
| Absolute pure water | 0.055 |
| Boiler water | 1 |
| Tap water | 50 |
| Ocean water | 50,000 |

| Application | Typical range (µS/cm) | Recommended Cell constant K |
|---|---|---|
| Ultra-pure water | 0 to 2 | 0.01 |
| Pure water, boiler | 1 to 200 | 0.1 |
| River, tap water | 10 to 2,000 | 1 |
| Sea water, effluents | 1,000 to 200,000 | 10 |

As conductivity depends of the temperature, a temperature sensor is generally include in the electrode (100 Ohm Platinum resistor) and must be connected to the instrument for automatic temperature compensation (ATC).

The default coefficient is 2% per ºC but may be modified according to the solution typical coefficient obtain experimentally.

### 4.4.2 Test

From the process screen, press on the “tools” icon and then on the channel to test, or directly to the channel area as a shortcut.

If you are logged in user mode, the parameters are masked. You must be logged in administrator mode to access to the parameters (default password is 456).

The check screen as below is displayed. The conductivity (or error code), signals and history graph are continuously updated.

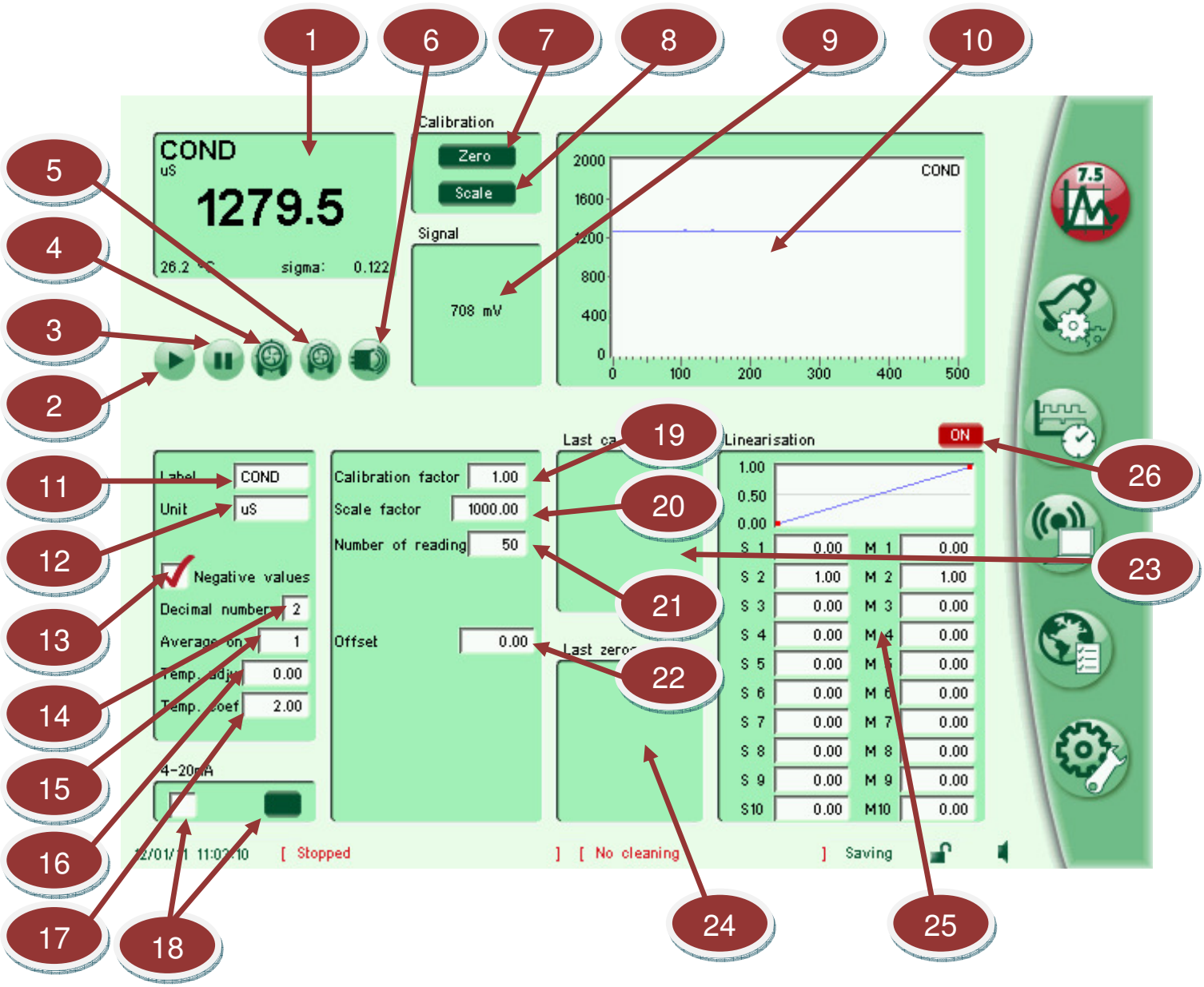




### Measurement window

This window displays the last measured value (or the error code in case of error, refer to troubleshooting section) with proper label and unit.

During an automatic measuring cycle, the measured value is display in light green until replaced by the new value in black.

The number of decimal can be adjusted, refer to the field below.




### Start button

This button is not used for this parameter.




### Stop button

Pressing on this button stops the sampling pump or the cleaning pump.




### Sampling pump button

Pressing on this button starts the sampling pump. The pump will stop automatically after 10 seconds. It can also be stopped at any time by pressing on the stop button.




### Cleaning pump button

Pressing on this button starts the cleaning pump. The pump will stop automatically after the time defined in the acid “cleaning time” field of the timing screen.
It can also be stopped at any time by pressing on the stop button.




### Ultrasonic cleaning button

Pressing on this button starts the ultrasonic cleaning. The cleaning will stop automatically after the time defined in the ultrasonic “cleaning time” field of the timing screen.
It can also be stopped at any time by pressing on the stop button.




## Zero button

This button is used for zeroing the measurement.



Put first pure water on the electrode.
Alternatively, disconnect the electrode.




## Scale button

This button is used for calibrating the electrode on a high value.



Wait that the electrode stabilizes on the standard solution before calibrating. It may take several minutes, especially if the electrode was dry before using.



To avoid a wrong calibration, calibrate first the electrode on the zero point (as described above).

A new calibration factor is calculated after entering the standard value.
The calibration history will be updated with the time and date of the calibration attached to the new calibration factor.

For more details, refer to the “recalibration” section.




## Signal value

This area displays the conductivity in mV read on the channel of the conductivity module.

## 10 Conductivity history graph

This area displays the conductivity value over the last 500 acquisitions, starting when the check screen appears.

For more details or to investigate about the signal, press anywhere on the graph to zoom it as below:

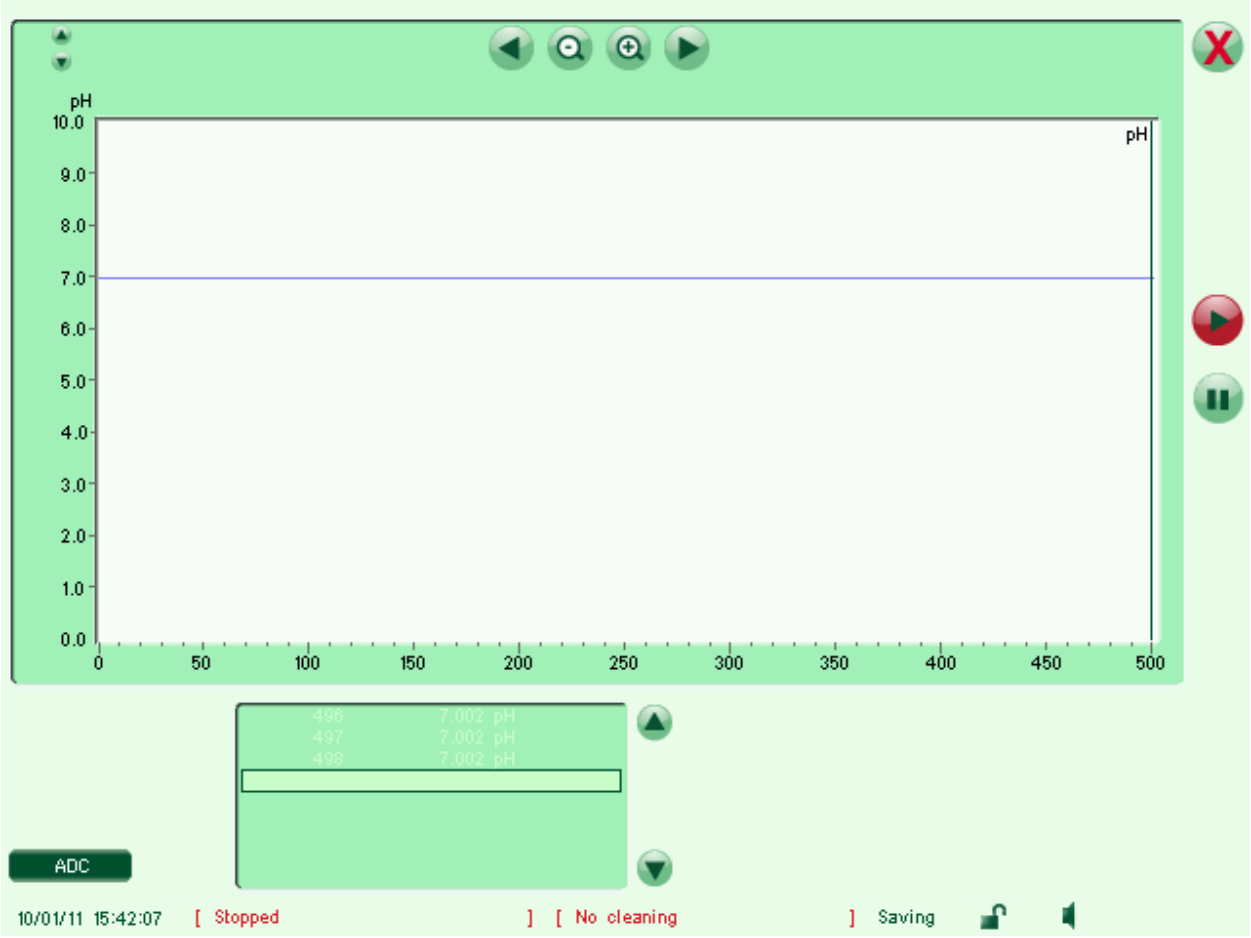


The values can be read by moving the cursor with the vertical arrows.

If necessary, use the horizontal arrows to displace the graph or press on the graph to zoom it. The Y scale is automatic but may be override by the small arrows placed above the Y axis.




### Label

This field allows changing the channel label displayed with the measurement. The label size is limited to 6 characters.




### Unit

This field allows changing the channel unit displayed with the measurement. The label size is limited to 6 characters.




### Negative values displayed

Negatives values are possible for most of the measurements as they result of normal fluctuations if the measurement is close to zero.

By default, the display of negative values is allowed as negative values may also result from a wrong zero and consequently it may be useful to be aware of such problem when seeing strongly negative values.

But as negative values have no theoretical meaning, it's possible to replace them by zero by deselecting this function.




### Number of decimals

This field allows changing the number of decimal displayed for the measurement value to remove not significant decimals.

Note: this choice does not affect the measurements stored in the internal memory.




### Number of averaging

The measurement as displayed on the process screen (or read under MODBUS protocol or available on the 4-20 mA output) can be formed by the average over a number of basic measurements defined by the field.
It can be useful to improve the repeatability of the measurements if the response time is not critical.

By default, no averaging is performed and this field contains a value of 1.

## 16 Temperature adjustment

The temperature of the sample given by the internal temperature probe can be adjusted by this field. This adjustment is not important as any difference of temperature is taken in account during the calibration. But if this value is changed significantly, a new calibration must be done.

## 17 Temperature coefficient

The conductivity is affected by the temperature. This coefficient is used for the temperature compensation. The default value is 2%. It may be adjusted depending of the solution.

## 18 4-20 mA output

This button indicates if a 4-20 mA output has been installed or not for this channel (option).

If a module has been installed, its position is displayed on the right. Pressing on this button shows the popup below that enable to test the 4-20 mA output by pressing on the “test” button.

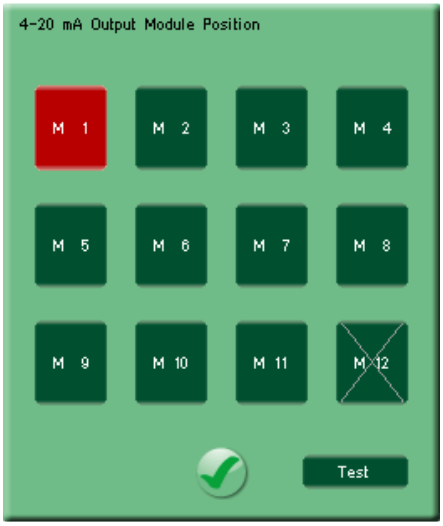

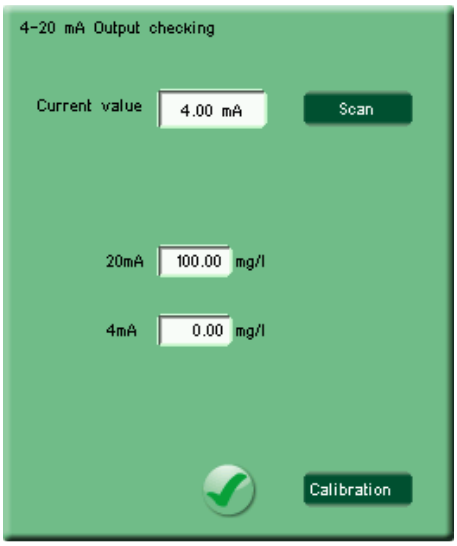


The current value of the 4-20 mA output is displayed on the top, based on the last process measurement (but not on the test measurement to avoid disturbances on the process supervisor system).

The “scan” key allows scanning the 4-20 mA output mA by mA for testing purpose only.

The scale value for 20 mA and 4 mA are displayed below. These preset values can be changed by pressing on these fields.

If the output value doesn’t mach exactly with the theoretical value, it’s possible to calibrate the output by pressing on the “calibration” key. Then real values for 4 and 20 mA must be entered.

Note: position M12 is not available for the 4-20 mA output modules.

### 19 Calibration factor

This field allows changing the calibration factor of the channel.
Precautions must be taken before changing this value.

This factor is normally changed automatically while doing a calibration by pressing on the “scale” button and then recorded in the calibration history. This multiplying factor is taken in account as the last step before displaying the measurement value.

### 20 Scale factor

This field allows changing the scale factor of the channel.
Precautions must be taken before changing this value.

This factor is normally determined in factory to transform the basic measurement to a scaled value in the final unit, mg/l for example.

It is has no reason to be changed except if internal elements are replaced.




### Number of readings

This field allows changing the number of basic readings averaged to obtain one final measurement.

Increasing this value improve the repeatability but increase also the measuring time.
Depending on the application, it can be exceptionally increased or decreased.




### Offset

This field show the internal offset applied on the signal for the zeroing.
It is updated at each zeroing and has not to be changed.
It can be used for troubleshooting by the manufacturer.




### Last calibration window

This window displays the 10 last calibrations done with the date, time and new calibration factor.




### Last zero window

This window displays the 10 last calibrations done with the date, time and new calibration factor.




### Linearity graph and values

This area concerns the linearity compensation applied on the rough measurements.

The Y-axis corresponds to the rough measurements entered on the M1 to M10 fields while the X-axis corresponds to the standard or final measurement, entered on the S1 to S10 fields.

The M1-M10 and S1-S10 values must be strictly increasing. It's highly recommended to put 0.0 and 0.0 as starting values for S1 and M1. The final value is linearly extrapolated between these points.




### Linearity ON/OFF

This button allows deactivating temporary the linearity curve (OFF), for example to redo a new linearity curve.
The linearity curve is automatically reactivated (ON) when leaving the check screen.

### 4.4.3 Recalibration

The conductivity electrode must be checked on a regular base depending on the condition of use, and recalibrated if necessary.

To recalibrate the electrode, proceed as follow:

- Put the electrode in pure water

- Do manual measurement using the check screen (as describe above), wait for the stabilisation of the conductivity value, then press on the ZERO key.

- Put the electrode in a standard solution for conductivity

- Do manual measurement on this buffer using the check screen, wait for the stabilisation of the conductivity, then press on the SCALE key and enter the standard value on the keypad.

The calibration is finished. New offset and calibration factors has been calculated and has been recorded inside the zero and calibration history displayed on the check screen.

These new calibration factors will be taken in account for all the further measurements.

## 4.5 Dissolved oxygen

### 4.5.1 Principle

The measuring principle is based on the fluorescence quenching by oxygen of a special polymer membrane in contact with the sample. The light is emitted by a LED while two detectors with red and blue filters are measuring the fluorescent light (red) and the reference light (blue).

In presence of oxygen, the fluorescence decreases that decreases the signal on the red detector.

Two models of probes are available:

- The model VISIFERM DO120 delivers a 4-20 mA signal that must be connected to a 4-20 mA input module. This module also delivers the 12V DC voltage to supply the probe.

- The model 31 that as a RS485 interface. A special cable is necessary to connect this probe to the RS485 port for DSP500 release A to D.

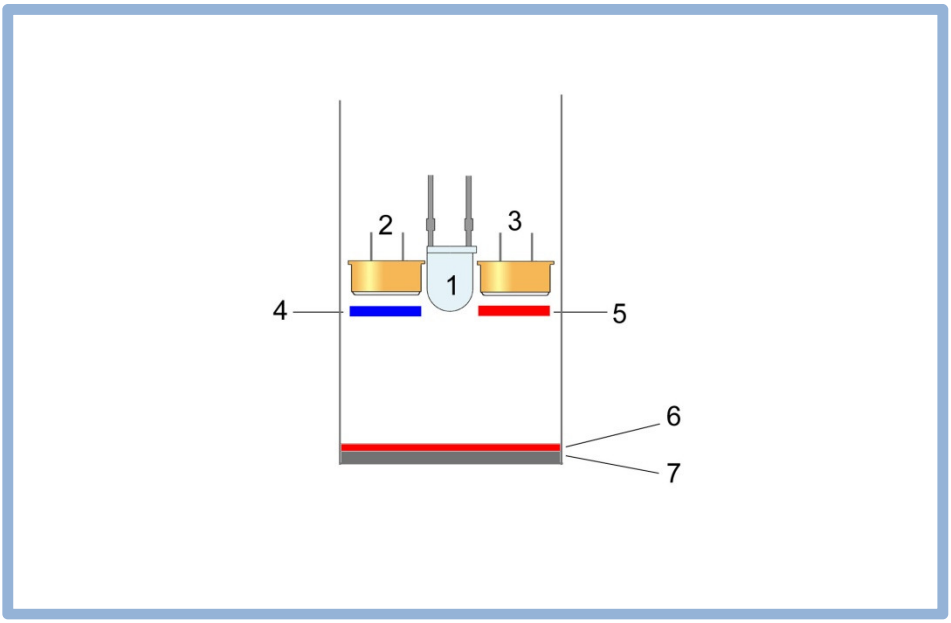


| | | | |
|---|---|---|---|
| 1 | LED light source | 5 | Red filter |
| 2 | Fluorescence photo detector | 6 | Luminophore |
| 3 | Reference photo detector | 7 | Insulation membrane |
| 4 | Blue filter | | |

### 4.5.2 Test

From the process screen, press on the “tools” icon and then on the channel to test, or directly to the channel area as a shortcut.
If you are logged in user mode, the parameters are masked. You must be logged in administrator mode to access to the parameters (default password is 456).

The check screen as below is displayed. The dissolved oxygen value, signals and history graph are continuously updated.

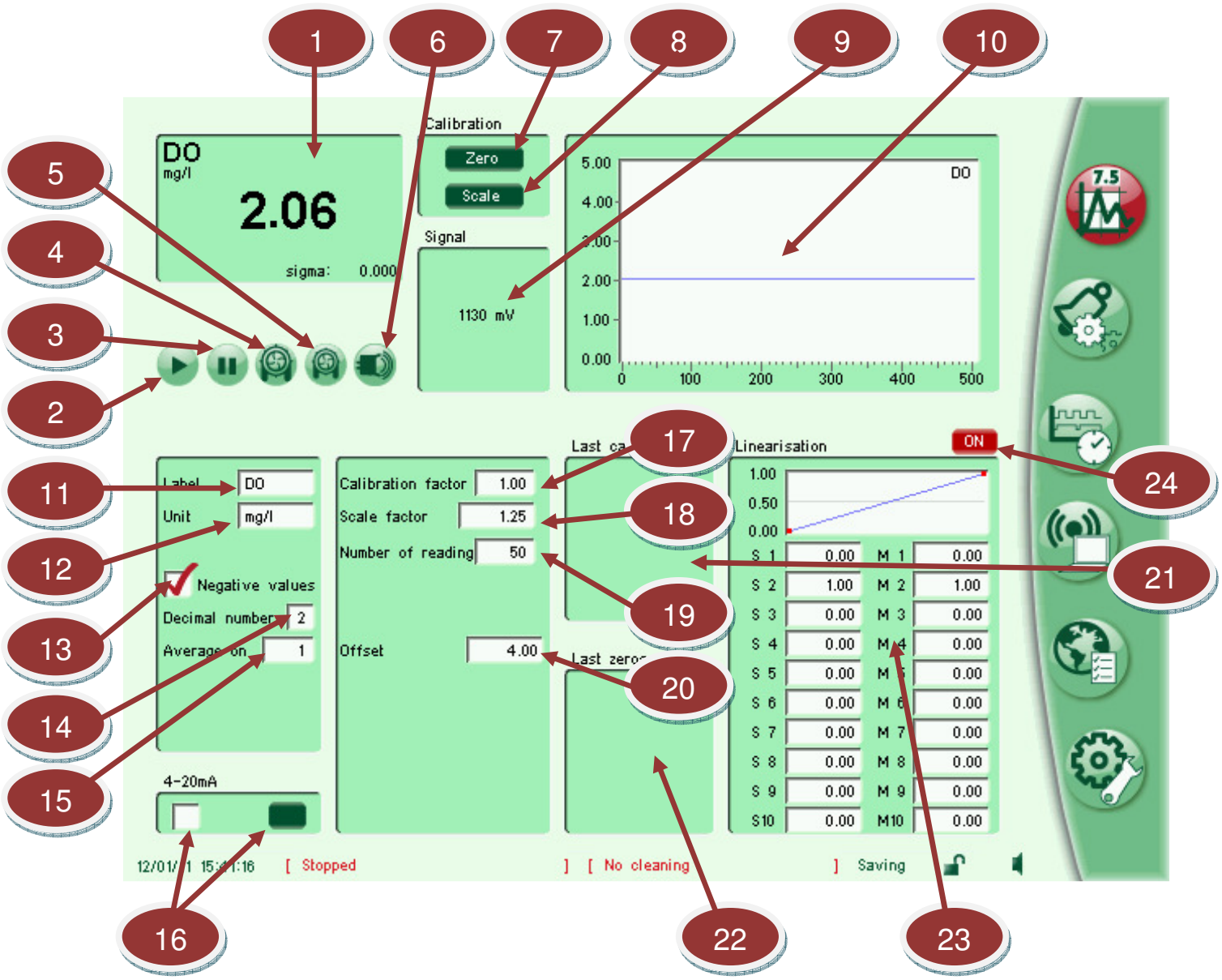




### Measurement window

This window displays the last measured value (or the error code in case of error, refer to troubleshooting section) with proper label and unit.

During an automatic measuring cycle, the measured value is display in light green until replaced by the new value in black.

The number of decimal can be adjusted, refer to the field below.




### Start button

This button is not used for this parameter.




### Stop button

Pressing on this button stops the sampling pump or the cleaning pump.




### Sampling pump button

Pressing on this button starts the sampling pump. The pump will stop automatically after 10 seconds. It can also be stopped at any time by pressing on the stop button.




### Cleaning pump button

Pressing on this button starts the cleaning pump. The pump will stop automatically after the time defined in the acid “cleaning time” field of the timing screen.
It can also be stopped at any time by pressing on the stop button.




### Ultrasonic cleaning button

Pressing on this button starts the ultrasonic cleaning. The cleaning will stop automatically after the time defined in the ultrasonic “cleaning time” field of the timing screen.
It can also be stopped at any time by pressing on the stop button.

## 7 Zero button

This button is used for zeroing the measurement.

Put first the DO electrode in a sample without oxygen.

## 8 Scale button

This button is used for calibrating the DO electrode on a high value (air for example).

To avoid a wrong calibration, calibrate first the connected device on the zero point (as described above).

A new calibration factor is calculated after entering the standard value.
The calibration history will be updated with the time and date of the calibration attached to the new calibration factor.

For more details, refer to the “recalibration” section.

## 9 Signal value (A) or reset probe (B)

A) For 4-20 mA output probe, this area displays the signal in mV read on the input channel of the 4-20 mA input module.

B) For RS485 probe, this button enable to reset the probe with the popup displayed below.
This function must be used normally only the first time that a new probe is connected.
Only one RS485 probe must be connected for this operation.

It set inside the probe the serial baud rate, the Modbus address and some configuration parameters. If this function failed, it must be renewed after disconnecting and reconnecting the probe to insure that the probe take in account the proper baud rate after power on.



## 10 Input history graph

This area displays the dissolved oxygen values over the last 500 acquisitions, starting when the check screen appears.

For more details or to investigate about the signal, press anywhere on the graph to zoom it as below:

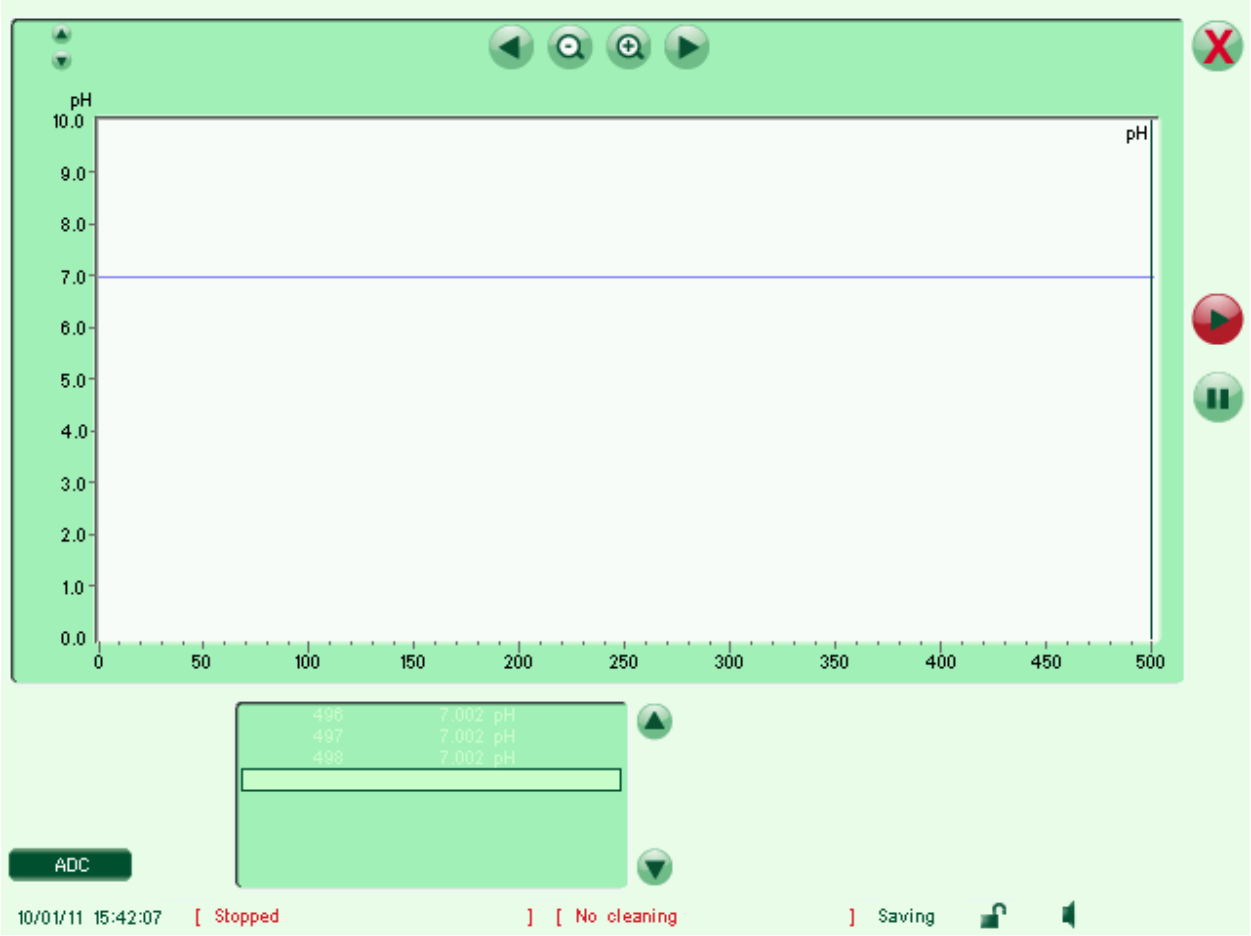


The values can be read by moving the cursor with the vertical arrows.

If necessary, use the horizontal arrows to displace the graph or press on the graph to zoom it. The Y scale is automatic but may be override by the small arrows placed above the Y axis.




### Label

This field allows changing the channel label displayed with the measurement. The label size is limited to 6 characters.




### Unit

This field allows changing the channel unit displayed with the measurement. The label size is limited to 6 characters.




### Negative values displayed

Negatives values are possible for most of the measurements as they result of normal fluctuations if the measurement is close to zero.

By default, the display of negative values is allowed as negative values may also result from a wrong zero and consequently it may be useful to be aware of such problem when seeing strongly negative values.

But as negative values have no theoretical meaning, it's possible to replace them by zero by deselecting this function.




### Number of decimals

This field allows changing the number of decimal displayed for the measurement value to remove not significant decimals.

Note: this choice does not affect the measurements stored in the internal memory.




### Number of averaging

The measurement as displayed on the process screen (or read under MODBUS protocol or available on the 4-20 mA output) can be formed by the average over a number of basic measurements defined by the field.
It can be useful to improve the repeatability of the measurements if the response time is not critical.

By default, no averaging is performed and this field contains a value of 1.

## 16 4-20 mA output

This button indicates if a 4-20 mA output has been installed or not for this channel (option).

If a module has been installed, its position is displayed on the right. Pressing on this button shows the popup below that enable to test the 4-20 mA output by pressing on the “test” button.

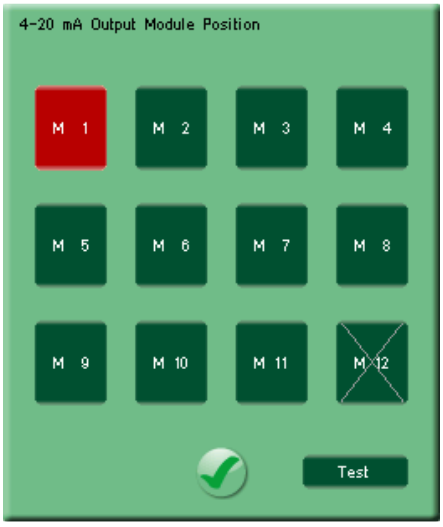


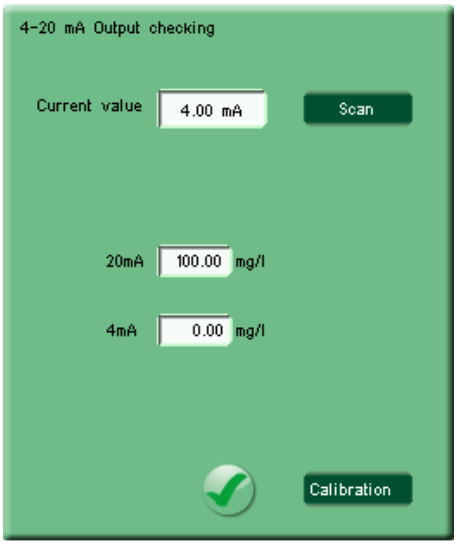


The current value of the 4-20 mA output is displayed on the top, based on the last process measurement (but not on the test measurement to avoid disturbances on the process supervisor system).

The “scan” key allows scanning the 4-20 mA output mA by mA for testing purpose only.

The scale value for 20 mA and 4 mA are displayed below. These preset values can be changed by pressing on these fields.

If the output value doesn't mach exactly with the theoretical value, it's possible to calibrate the output by pressing on the "calibration" key. Then real values for 4 and 20 mA must be entered.

Note: position M12 is not available for the 4-20 mA output modules.




### Calibration factor

This field allows changing the calibration factor of the channel.
Precautions must be taken before changing this value.

This factor is normally changed automatically while doing a calibration by pressing on the "scale" button and then recorded in the calibration history. This multiplying factor is taken in account as the last step before displaying the measurement value.




### Scale factor (A) or probe Modbus address (B)

A) For the 4-20 mA output model, this field allows changing the scale factor of the channel.
Precautions must be taken before changing this value.

This factor is normally determined in factory to transform the basic measurement to a scaled value in the final unit, mg/l for example.
It is has no reason to be changed except if internal elements are replaced.

B) For RS485 probe, this field is the Modbus address of the probe. It must not be changed unless a new robe having a different Modbus address is connected.

To reinitialise a probe with the defined Modbus address, press on the "Reset" key.




### Number of readings (only the 4-20 mA output probe)

This field allows changing the number of basic readings averaged to obtain one final measurement.

Increasing this value improve the repeatability but increase also the measuring time.
Depending on the application, it can be exceptionally increased or decreased.




### Offset

This field show the internal offset applied on the signal for the zeroing.
It is updated at each zeroing and has not to be changed.
It can be used for troubleshooting by the manufacturer.




## Last calibration window

This window displays the 10 last calibrations done with the date, time and new calibration factor.




## Last zero window

This window displays the 10 last calibrations done with the date, time and new calibration factor.




## Linearity graph and values

This area concerns the linearity compensation applied on the rough measurements.

Normally, no linearization is necessary with the DO probe.

The Y-axis corresponds to the rough measurements entered on the M1 to M10 fields while the X-axis corresponds to the standard or final measurement, entered on the S1 to S10 fields.

The M1-M10 and S1-S10 values must be strictly increasing. It's highly recommended to put 0.0 and 0.0 as starting values for S1 and M1. The final value is linearly extrapolated between these points.




## Linearity ON/OFF

This button allows deactivating temporary the linearity curve (OFF), for example to redo a new linearity curve.
The linearity curve is automatically reactivated (ON) when leaving the check screen.

### 4.5.3 Recalibration

The DO probe must be checked on a regular base depending of the application, and recalibrated if necessary.

To recalibrate the probe, proceed as follow:

- Put the probe on zero-oxygen solution. A zero solution can be prepared by dissolving 10 g of sodium sulfite into 300 ml of pure water and adding "a shake" of cobalt chloride, which acts as a catalyst.

- Do a manual measurement using the check screen (as describe above), wait that the value stabilizes (it may takes a few minutes) then press on the ZERO key.

- Put the probe on air, the membrane must be dry.

- Do a manual measurement using the check screen, wait that the value stabilizes then press on the SCALE key and enter the value as explained below on the keypad.

If the unit is in mg/l, refer to the table below to enter the appropriate value depending of the probe temperature:

| Temperature(°C) | Solubility of oxygen (mg/l) |
|---|---|
| 0 | 14.6 |
| 5 | 12.7 |
| 10 | 11.3 |
| 15 | 10.1 |
| 20 | 9.1 |
| 25 | 8.2 |
| 30 | 7.5 |
| 35 | 6.9 |
| 40 | 6.4 |

If the unit is in %, the value must be 100%

The calibration is finished. New offset and calibration factors has been calculated and has been recorded inside the zero and calibration history displayed on the check screen.

These new calibration factors will be taken in account for all the further measurements.

## 4.6 Hydrocarbons

### 4.6 .1 Principle

The measuring principle is based on the UV light fluorescence that is a typical characteristic of the mono or poly aromatics hydrocarbons (PAH)

The UV light is generated by a pulsed xenon lamp to reach an ultra long life time.
The excitation filter limits the bandwidth of the excitation light, while the emission filter selects the specific fluorescent light.

The detection is done by a high sensitivity photomultiplier.

A second detector (optional) is used to compensate the eventual absorbance of the sample due for example to organic matter.

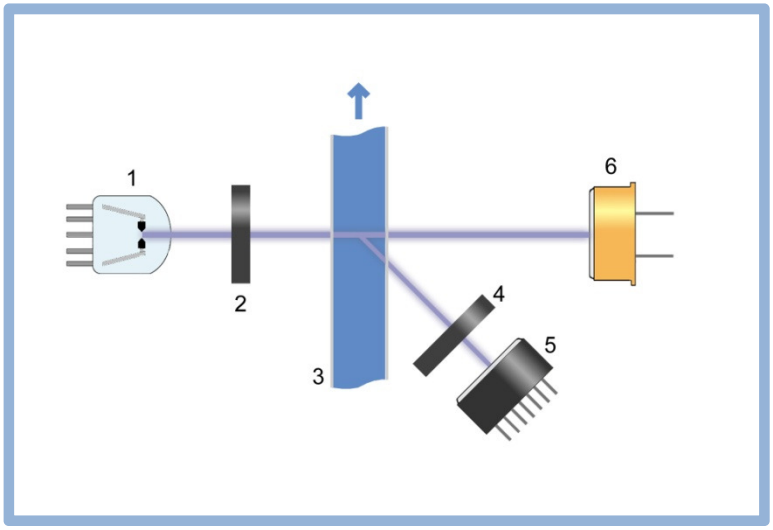


| | | | |
|---|---|---|---|
| 1 | Xenon UV lamp | 4 | Emission filter |
| 2 | Excitation filter | 5 | Photomultiplier |
| 3 | Flow cell | 6 | Photo detector |

### 4.6.2 Test

From the process screen, press on the “tools” icon and then on the channel to test, or directly to the channel area as a shortcut.

If you are logged in user mode, the parameters are masked. You must be logged in administrator mode to access to the parameters (default password is 456).

The check screen as below is displayed. The concentration or error code corresponds to the last measurement done, while signal values and graph are updated continuously.

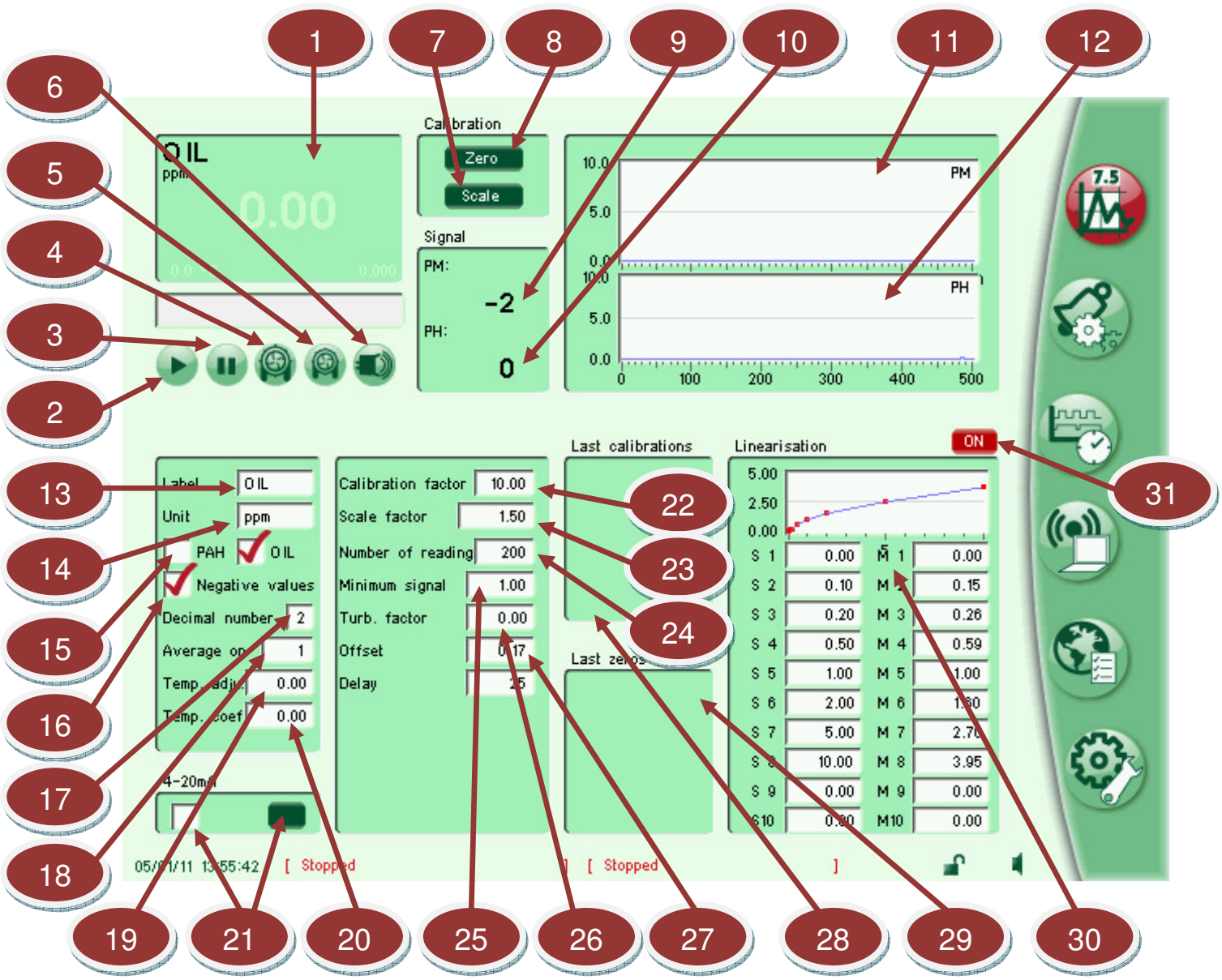




## Measurement window

This window displays the last measured value (or the error code in case of error, refer to troubleshooting section) with proper label and unit, as well as the sample temperature and standard deviation (sigma) obtained on the elemental acquisitions.

During a measuring cycle, the last measured value is display in light green until replaced by the new value in black.

The number of decimal can be adjusted, refer to the field below.




## Start button

Pressing on this button starts a manual measuring cycle. It can be aborted at any time by pressing on the stop button. At the end of the cycle, a new value will be displayed on the measurement window.

The process value on the process screen will not be updated by this measurement to avoid any interference with the plant supervisor system, same concerning the MODBUS channel's value, 4-20 mA output and alarm relays (if any).




## Stop button

Pressing on this button stop and aborts any engaged measuring cycle. It can also be used to stop the sampling pump or cleaning pump.




## Sampling pump button

Pressing on this button starts the sampling pump. The pump will stop automatically after 10 seconds. It can also be stopped at any time by pressing on the stop button.

Note: this button is deactivated during a measuring cycle.




## Cleaning pump button

Pressing on this button starts the cleaning pump. The pump will stop automatically after the time defined in the acid "cleaning time" field of the timing screen.
It can also be stopped at any time by pressing on the stop button.

Note: this button is deactivated during a measuring cycle.




## Ultrasonic cleaning button

Pressing on this button starts the ultrasonic cleaning. The cleaning will stop automatically after the time defined in the ultrasonic “cleaning time” field of the timing screen.
It can also be stopped at any time by pressing on the stop button.

Note: this button is deactivated during a measuring cycle.




## Scale button

This button is used to calibrate the analyser on a standard solution.



To avoid a wrong calibration, check the zero or redo a zero before doing a calibration.

A new calibration factor is calculated after entering the standard value.
The calibration history will be updated with the time and date of the calibration attached to the new calibration factor.

For more details, refer to the “recalibration” section.




## Zero button

This button is used for zeroing the measurement.



Put first pure water inside the flow cell before pressing on this button.

Note: an auto-zero is performed automatically during each acid cleaning if this option is selected on the timing screen.




## PM signal

This window displays the PM signal continuously. This signal corresponds to the fluorescent light re-emitted by the aromatics hydrocarbons contained in the sample.

On pure water, this signal is normally close to zero with fluctuations of a few tens of mV.

When the light signal added to the darkness signal reach 3000 mV, a message "**OVL!**" in red is displayed to indicate a saturation of the acquisition system.

It might be caused by an over-range concentration of the sample.




## Photo detector signal

This window displays the photo detector signal continuously (optional). This signal corresponds to the excitation light of the sample. It is use to compensate an eventual absorption of the excitation light at 254 nm by the sample, for example organic matter.

On pure water, the signal must normally be in a 200 mV to 2000 mV range.

When the light signal added to the darkness signal reach 3000 mV, a message "**OVL!**" in red is displayed to indicate a saturation of the acquisition system.
It might be caused by ambient light if the door of the analyser is opened with a high level of ambient light (sun, daylight).

## 11 PM Signal graph

This graph displays the PM signal continuously updated. This signal corresponds to the fluorescent light re-emitted by the aromatics hydrocarbons contained in the sample.

For more details or to investigate about the signal, press anywhere on the graph to zoom it as below:




The average signal value in mV and its standard deviation (sigma) on the last 500 acquisitions are displayed on the bottom right of the screen.

The values can be read by moving the cursor with the vertical arrows. After reading, restart the acquisitions by pressing on the “play” button if necessary.

If necessary, use the horizontal arrows to displace the graph or press on the graph to zoom it. The Y scale is automatic but may be override by the small arrows placed above the Y axis.




## Photo detector signal graph

This graph displays the photo detector signal continuously updated. This signal corresponds to the excitation light of the sample.

For more details or to investigate about the signal, press anywhere on the graph to zoom it. Refer to PM signal graph for the zoom display.




## Label

This field allows changing the channel label displayed with the measurement. The label size is limited to 6 characters.




## Unit

This field allows changing the channel unit displayed with the measurement. The label size is limited to 6 characters.




## Display mode

This button allows selecting the concentration display mode as PAH or as OIL (default mode).

If OIL is selected, the calibration factor is preset to a value of 10 to take in account a predetermined ratio of 10% of aromatic hydrocarbons in the sample.

The measurements previously stored in the internal memory keep their original values.




## Negative values displayed

Negatives values are possible for most of the measurements as they result of normal fluctuations if the measurement is close to zero.

By default, the display of negative values is allowed as negative values may also result from a wrong zero and consequently it may be useful to be aware of such problem when seeing strongly negative values.

But as negative values have no theoretical meaning, it's possible to replace them by zero by deselecting this function.




### Number of decimals

This field allows changing the number of decimal displayed for the measurement value to remove not significant decimals.

Note: this choice does not affect the measurements stored in the internal memory.




### Number of averaging

The measurement as displayed on the process screen (or read under MODBUS protocol or available on the 4-20 mA output) can be formed by the average over a number of basic measurements defined by the field.
It can be useful to improve the repeatability of the measurements if the response time is not critical.

By default, no averaging is performed and this field contains a value of 1.




### Temperature adjustment

The temperature of the sample given by the internal temperature probe can be adjusted by this field. This adjustment is not important as any difference of temperature is taken in account during the calibration. But if this value is changed, a new calibration must be done.




### Temperature coefficient

The fluorescence is affected by the temperature. This coefficient is used for the temperature compensation.




### 4-20 mA output

This button indicates if a 4-20 mA output has been installed or not for this channel (option).

If a module has been installed, its position is displayed on the right. Pressing on this button shows the popup below that enable to test the 4-20 mA output by pressing on the “test” button.

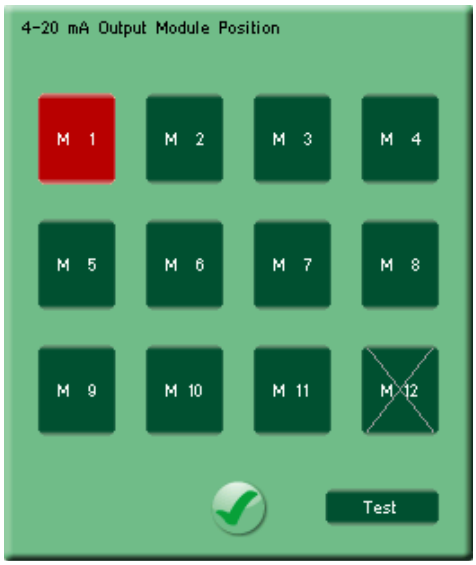


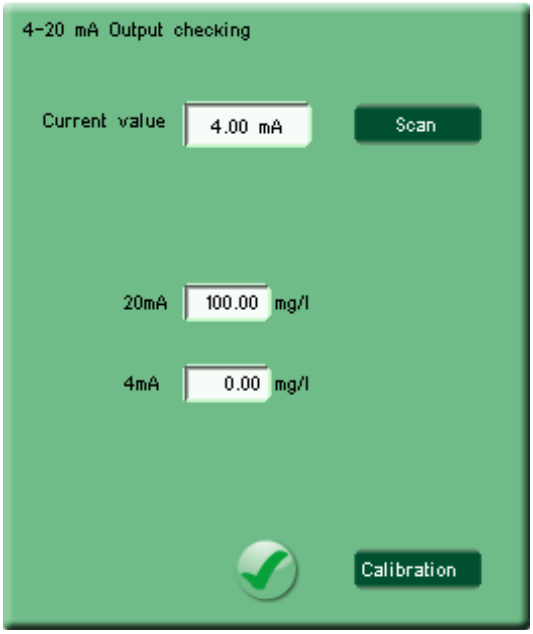


The current value of the 4-20 mA output is displayed on the top, based on the last process measurement (but not on the test measurement to avoid disturbances on the process supervisor system).

The “scan” key allows scanning the 4-20 mA output mA by mA for testing purpose only.

The scale value for 20 mA and 4 mA are displayed below. These preset values can be changed by pressing on these fields.

If the output value doesn’t mach exactly with the theoretical value, it’s possible to calibrate the output by pressing on the “calibration” key. Then real values for 4 and 20 mA must be entered.

Note: position M12 is not available for the 4-20 mA output modules.




## Calibration factor

This field allows changing the calibration factor of the channel.
Precautions must be taken before changing this value.

This factor is normally changed automatically while doing a calibration by pressing on the "scale" button and then recorded in the calibration history. This multiplying factor is taken in account as the last step before displaying the measurement value.



Note: this factor must be set to 1.0 before doing a new linearization curve




## Scale factor

This field allows changing the scale factor of the channel.
Precautions must be taken before changing this value.

This factor is normally determined in factory to transform the basic measurement to a scaled value in the final unit, mg/l for example.
It is has no reason to be changed except if internal elements are replaced.




## Number of readings

This field allows changing the number of basic readings averaged to obtain one final measurement.

Increasing this value improve the repeatability but increase also the measuring time.
Depending on the application, it can be exceptionally increased or decreased.




## Minimum signal

This field fix the minimum light signal value over the wavelength range taken in account for the measurement. An error will be displayed if the signal over the wavelength range is lower than this value.




## Turbidity factor

This field enable a compensation of the excitation light loses due to turbidity, organic matter.
A value of 1.0 corresponds to a basic compensation.




### Offset

This field show the internal offset applied on the signal for the zeroing.
It is updated at each zeroing and has not to be changed.
It can be used for troubleshooting by the manufacturer.




### Last calibration window

This window displays the 10 last calibrations done with the date, time and new calibration factor.




### Last zeros window

This window displays the 10 last zeros done with the date, time and zero value adjustment, whatever manually or by an automatic cleaning cycle.

Note: a strong zero adjustment value might reveal an abnormal zeroing operation.




### Linearity graph and values

This area concerns the linearity compensation applied on the rough measurements.

The Beer-Lambert law used on most of the measurements is not linear for high concentrations due to a light mask effect. Therefore it's necessary to introduce a correction before displaying the final concentration. This correction is based on the linearity curve represented on the top.

The Y-axis corresponds to the rough measurements entered on the M1 to M10 fields while the X-axis corresponds to the standard or final measurement, entered on the S1 to S10 fields.

The M1-M10 and S1-S10 values must be strictly increasing. It's highly recommended to put 0.0 and 0.0 as starting values for S1 and M1. The final value is linearly extrapolated between these points.




### Linearity ON/OFF

This button allows deactivating temporary the linearity curve (OFF), for example to redo a new linearity curve.
The linearity curve is automatically reactivated (ON) when leaving the check screen.

### 4.6.3 Recalibration

The analyser is factory calibrated on phenol. Depending on the aromatic ratio of the sample a recalibration based on a laboratory measurement is generally recommended.

To recalibrate the analyser, proceed as follow:

- Collect about two litres of a significant sample in two different bottles

- Do a laboratory analysis on one of the two bottles.

- When the result is obtained, do a manual measurement on the remaining sample using the check screen describe above.

- Press on the “scale” button of the check screen and then enter the sample value determined by the laboratory on the keypad.

The calibration is finished. A new calibration factor has been calculated and has been recorded inside the calibration history displayed on the check screen.

This new calibration factor will be taken in account for all the further measurements.

## 4.7 Hydrogen sulphide (H2S)

### 4.7 .1 Principle

The measuring principle is based on the analysis of the UV absorption spectrum of the hydrogen sulphide gas (H2S) in equilibrium with the dissolved hydrogen sulphide gas in the water sample.

A small quantity of hydrochloric acid (HCl) is added to the sample to decreasing the pH below 1 where most of the $S_2^-$ is transformed in H2S (>99.9%).

The UV light is generated by a pulsed xenon lamp to reach an ultra long life time.
The absorption spectrum is performed by a concave grating coupled to a 2048 pixels CCD (Charge-Coupled Device).

A two-wavelength method is applied to measure the H2S concentration.

Automatic temperature compensation is done using a Pt100 temperature probe on the sample.

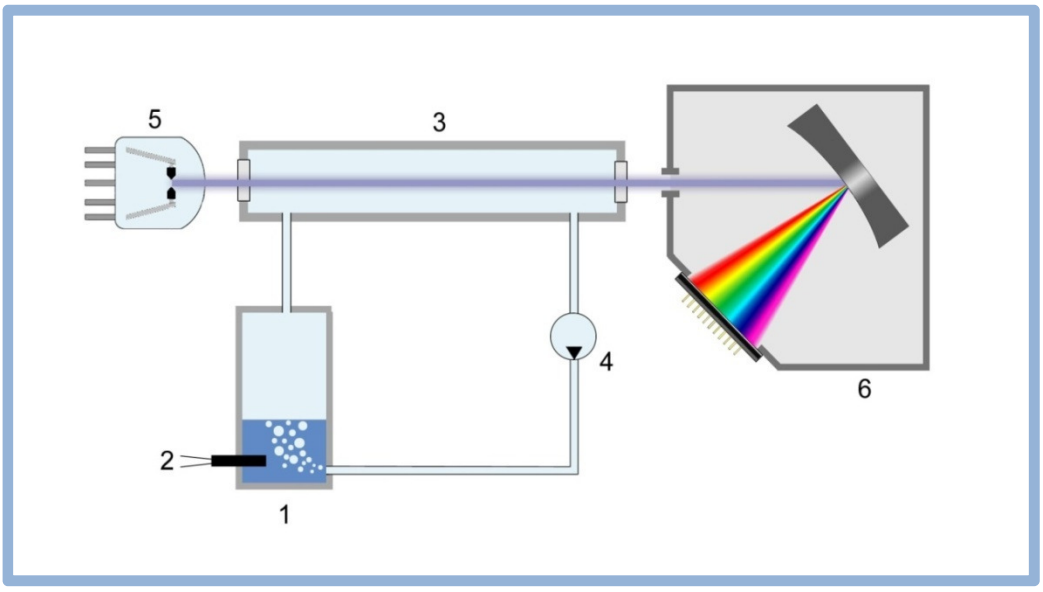


| | | | |
|---|---|---|---|
| 1 | Sample with HCl | 4 | Air pump |
| 2 | Temperature probe | 5 | Xenon lamp |
| 3 | Gas flow cell | 6 | Spectrograph with grating and CCD |

### 4.7 .2 Test

From the process screen, press on the “tools” icon and then on the channel to test, or directly to the channel area as a shortcut.

If you are logged in user mode, the parameters are masked. You must be logged in administrator mode to access to the parameters (default password is 456).

The check screen as below is displayed. It corresponds to the last measurement done (automatic or manual) concerning the concentration or error code, sample temperature, lamp spectrum, absorbance spectrum and FFT spectrum.

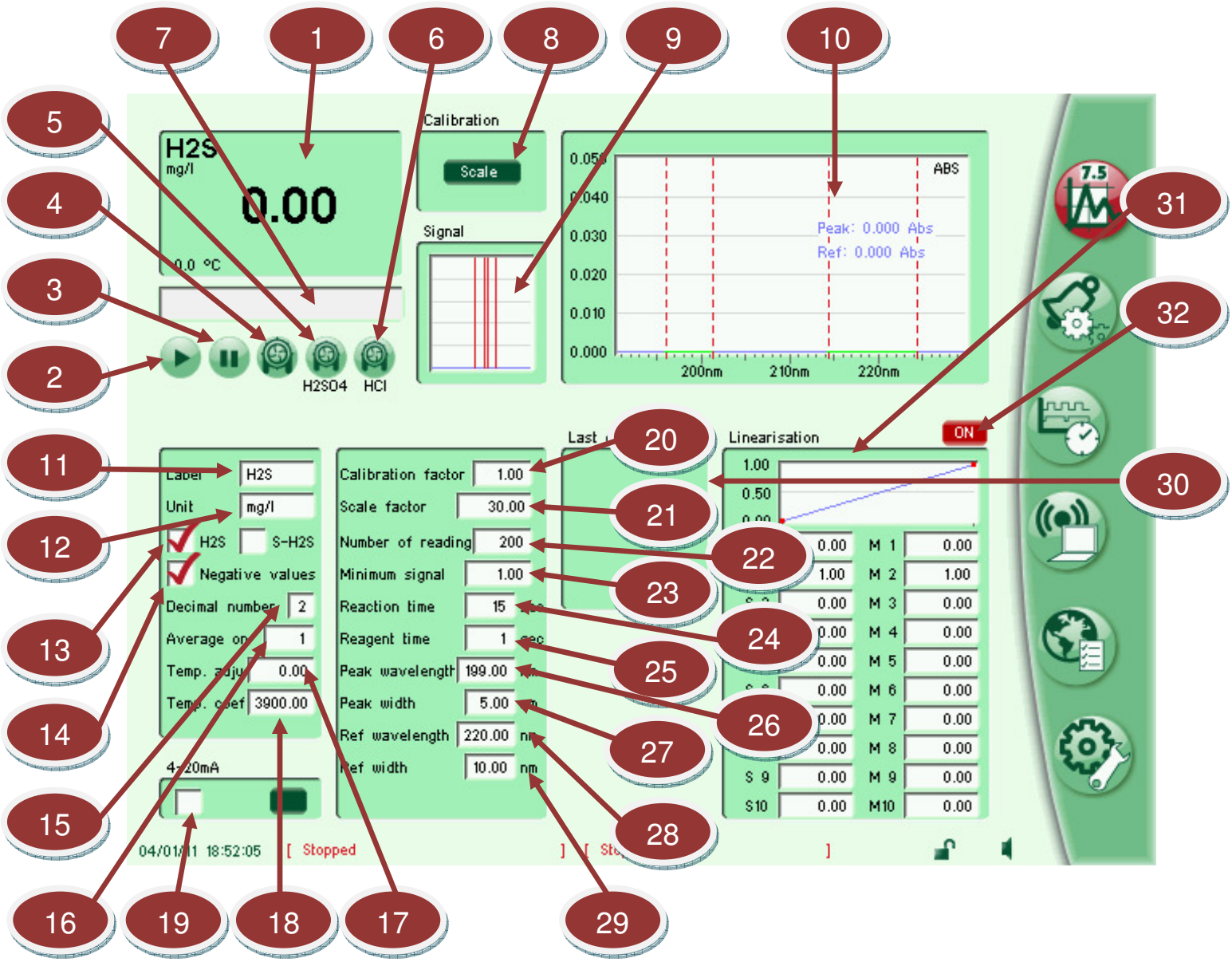




## Measurement window

This window displays the last measured value (or the error code in case of error, refer to troubleshooting section) with proper label and unit, as well as the sample temperature read during the measurement.

During a measuring cycle, the last measured value is display in light green until replaced by the new value in black.

The number of decimal can be adjusted, refer to the field below.




## Start button

Pressing on this button starts a manual measuring cycle. It can be aborted at any time by pressing on the stop button. At the end of the cycle, a new value will be displayed on the measurement window.

The process value on the process screen will not be updated by this measurement to avoid any interference with the plant supervisor system, same concerning the MODBUS channel's value, 4-20 mA output and alarm relays (if any).




## Stop button

Pressing on this button stop and aborts any engaged measuring cycle. It can also be used to stop the sampling pump or the cleaning pump or the ultrasonic cleaning (if any).




## Sampling pump button

Pressing on this button starts the sampling pump. The pump will stop automatically after 10 seconds. It can also be stopped at any time by pressing on the stop button.

Note: this button is deactivated during a measuring cycle.




## Cleaning pump button

Pressing on this button starts the cleaning pump. The pump will stop automatically after the time defined in the acid "cleaning time" field of the timing screen.
It can also be stopped at any time by pressing on the stop button.

Note: this button is deactivated during a measuring cycle.




## HCl pump button

Pressing on this button starts the HCl pump for testing purpose or to fill the tubing after installation. The pump will stop automatically after 10 seconds.
It can also be stopped at any time by pressing on the stop button.

Note: this button is deactivated during a measuring cycle.




## Measuring cycle steps display

During a measuring cycle, this area displays the different steps of the cycle with an associated countdown timer or counter.
During the ammonia measurements, the steps are:

1) **Purging:** the gas flow cell is purged by external ambient air

2) **Zeroing:** the reference spectrum on air is acquired

3) **Sampling:** the sample is renewed inside in the stripping pot

4) **Reagent:** the HCl is added to the sample inside the stripping pot

5) **Stripping:** the gas flow cell is placed in a close loop with the stripping pot

6) **Measuring:** the spectrum is acquired on the gas coming through the sample, and then the concentration is computed and displayed

7) **Purging:** the gas flow cell is purged again by external ambient air to remove humidity




## Scale button

This button is used to calibrate the analyser on a standard solution.

A new calibration factor is calculated after entering the standard value.
The calibration history will be updated with the time and date of the calibration attached to the new calibration factor.

For more details, refer to the “calibration” section.

# 9 Signal graph

This graph displays the lamp spectrum get during the last measuring cycle. It is updated during the measuring cycle when the lamp is flashing.

For more details or to investigate about the signal, press anywhere on the graph to zoom it as below:

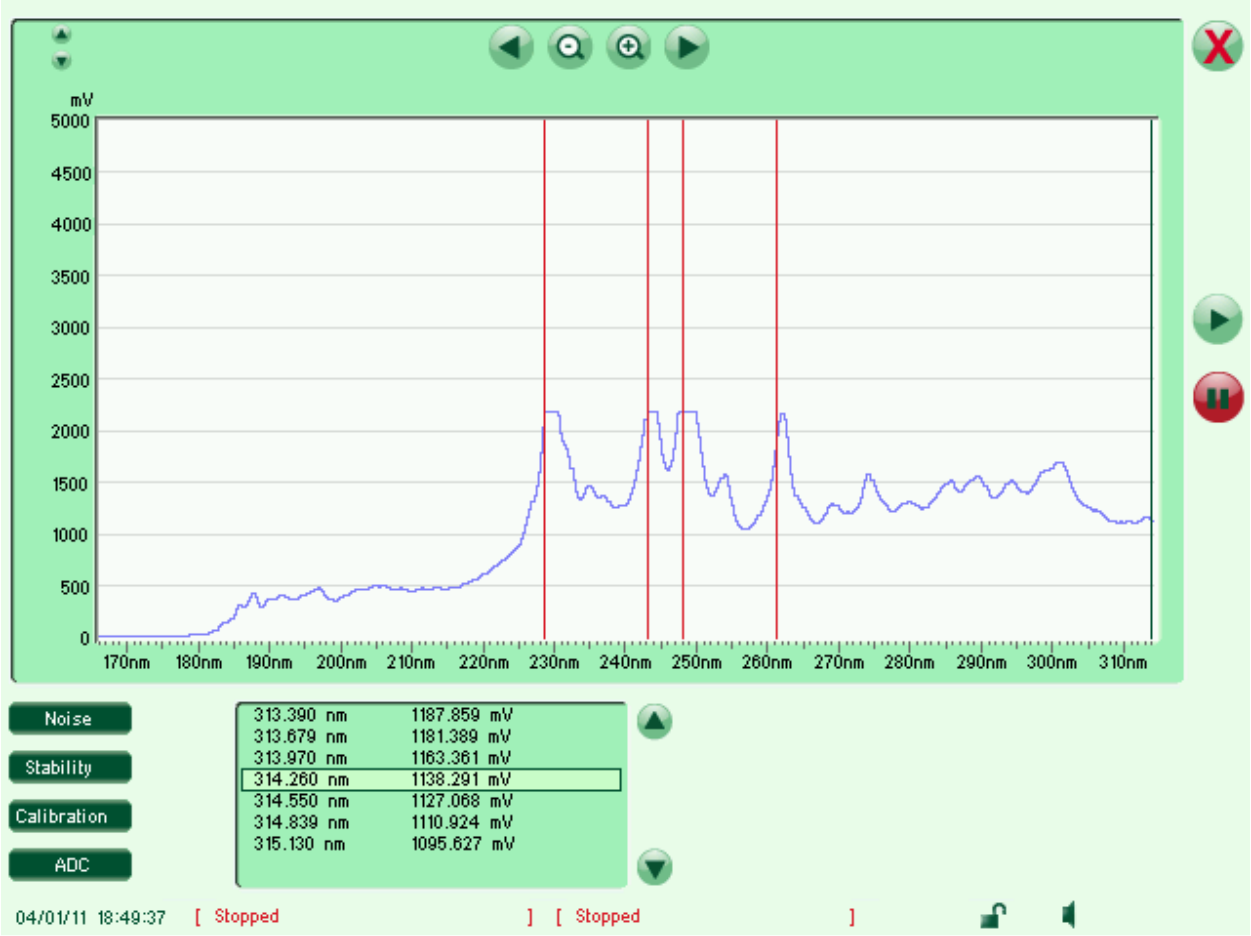


The signal must not be saturated (below 2000 mV) for the wavelengths used by the measurement, that are below 225 nm.

It's recommended to have a signal at 210 nm around 500 mV to get a good repeatability, but measurement can still be done for signal as low as 100 mV if the repeatability is less critical.

If the light signal is too high, an alarm message is displayed on the top left corner.

The values can be read by moving the cursor with the vertical arrows.

## 10 Absorbance spectrum

This graph displays the absorbance spectrum get during the last measuring cycle. It is displayed in light grey during a measuring cycle until updated.

For more details or to investigate about the absorbance spectrum, press anywhere on the graph to zoom it as below:




The values can be read by moving the cursor with the vertical arrows.

If necessary, use the horizontal arrows to displace the graph or press on the graph to zoom it. The Y scale is automatic but may be override by the small arrows located above the Y axis.




### Label

This field allows changing the channel label displayed with the measurement. The label size is limited to 6 characters.




### Unit

This field allows changing the channel unit displayed with the measurement. The unit size is limited to 6 characters.




### Display mode

This button allows selecting the concentration display mode as H2S (default mode) or as S of H2S.
If S-H2S is selected, the H2S concentrations are multiplied by 32/34=0.941 before displaying and the label is automatically updated to “S-H2S”.
The measurements previously stored in the internal memory will keep their values in H2S.




### Negative values displayed

Negatives values are possible for most of the measurements as they result of normal fluctuations if the measurement is close to zero.

By default, the display of negative values is allowed as negative values may also result from a wrong zero and consequently it may be useful to be aware of such problem when seeing strongly negative values.

But as negative values have no theoretical meaning, it’s possible to replace them by zero by deselecting this function.




### Number of decimal

This field allows changing the number of decimal displayed for the measurement value to remove not significant decimals.

Note: this choice does not affect the measurements stored in the internal memory.




## Number of averaging

The measurement as displayed on the process screen (or read under MODBUS protocol or available on the 4-20 mA output) can be formed by the average over a number of basic measurements defined by the field.
It can be useful to improve the repeatability of the measurements if the response time is not critical.

By default, no averaging is performed and this field contains a value of 1.




## Temperature adjustment

The temperature of the sample given by the internal temperature probe can be adjusted by this field. This adjustment is not important as any difference of temperature is taken in account during the calibration. But if this value is changed, a new calibration must be done.




## Temperature coefficient

The sample temperature affects directly the H2S liquid/gas ratio. This coefficient is used for the temperature compensation. It can be change only by the manufacturer.




## 4-20 mA output

This button indicates if a 4-20 mA output has been installed or not for this channel (option).

If a module has been installed, its position is displayed on the right. Pressing on this button shows the popup below that enable to test the 4-20 mA output by pressing on the “test” button.

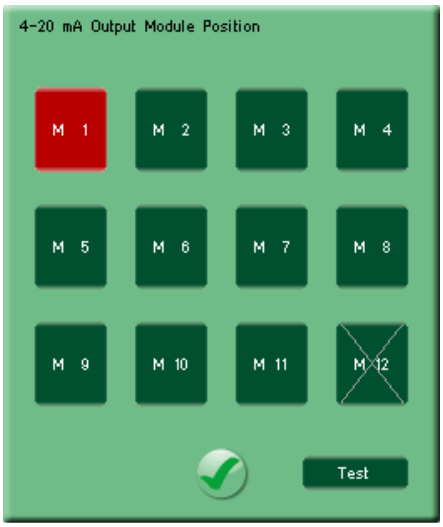


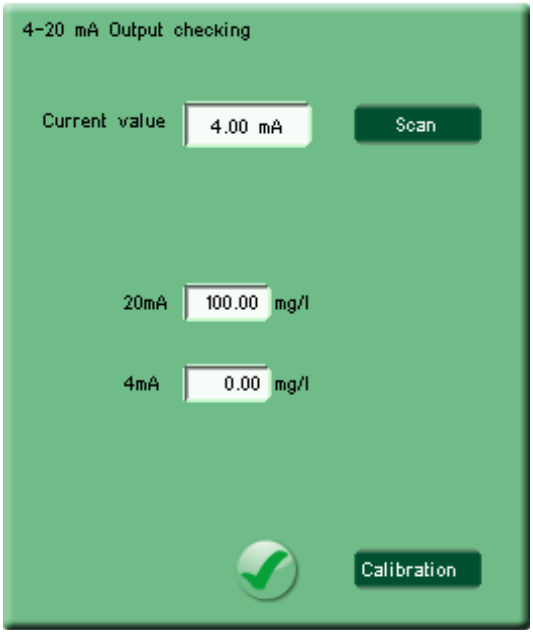


The current value of the 4-20 mA output is displayed on the top, based on the last process measurement (but not on the test measurement to avoid disturbances on the process supervisor system).

The “scan” key allows scanning the 4-20 mA output mA by mA for testing purpose only.

The scale value for 20 mA and 4 mA are displayed below. These preset values can be changed by pressing on these fields.

If the output value doesn’t mach exactly with the theoretical value, it’s possible to calibrate the output by pressing on the “calibration” key. Then real values for 4 and 20 mA must be entered.

Note: position M12 is not available for the 4-20 mA output modules.




## Calibration factor

This field allows changing the calibration factor of the channel.
Precautions must be taken before changing this value.

This factor is normally changed automatically while doing a calibration by pressing on the "scale" button and then recorded in the calibration history. This multiplying factor is taken in account as the last step before displaying the measurement value.



Note: this factor must be set to 1.0 before doing a new linearization curve




## Scale factor

This field allows changing the scale factor of the channel.
Precautions must be taken before changing this value.

This factor is normally determined in factory to transform the basic measurement to a scaled value in the final unit, mg/l for example.
It is has no reason to be changed except if internal elements are replaced.




## Number of readings

This field allows changing the number of basic readings averaged to obtain one final measurement.

Increasing this value improve the repeatability but increase also the measuring time.
Depending on the application, it can be exceptionally increased or decreased.




## Minimum signal

This field fix the minimum light signal value over the wavelength range taken in account for the measurement. An error will be displayed if the signal over the wavelength range is lower than this value.




## Reaction time

This field allows changing the stripping time before measuring.

Precautions must be taken before changing this value.
It can be use very exceptionally in case of change of pump or for special experimentation.




### Reagent time

This field allows changing the reagent pumping.

Precautions must be taken before changing this value.
It can be use exceptionally in case of special sample with high salinity.




### Peak wavelength

This field allows changing the peak wavelength taken in account for the measurement. It corresponds to the absorbance peak of H2S.

It can be changed exceptionally to avoid a known interference or to decrease the sensitivity.




### Peak width

This field allows changing the width band of the peak wavelength taken in account for the measurement.

It may be exceptionally enlarged or reduced to avoid a known interference.




### Reference wavelength

This field allows changing the reference wavelength taken in account for the measurement.
It corresponds normally to a wavelength where the H2S doesn't absorb.

It can be changed exceptionally to avoid a known interference or to decrease the sensitivity.




### Reference width

This field allows changing the width band of the reference wavelength taken in account for the measurement.

It may be exceptionally enlarged or reduced to avoid a known interference.




## Last calibration window

This window displays the 10 last calibrations done with the date, time and new calibration factor.




## Linearity graph and values

This area concerns the linearity compensation applied on the rough measurements.

The Beer-Lambert law used on most of the measurements is not linear for high concentrations due to a light mask effect. Therefore it's necessary to introduce a correction before displaying the final concentration. This correction is based on the linearity curve represented on the top.

The Y-axis corresponds to the rough measurements entered on the M1 to M10 fields while the X-axis corresponds to the standard or final measurement, entered on the S1 to S10 fields.

The M1-M10 and S1-S10 values must be strictly increasing. It's highly recommended to put 0,0 as starting values for S1 and M1. The final value is linearly extrapolated between these points.




## Linearity ON/OFF

This button allows deactivating temporary the linearity curve (OFF), for example to redo a new linearity curve.
The linearity curve is automatically reactivated (ON) when leaving the check screen.

### 4.7.3 Recalibration

The analyser is factory calibrated. However, periodical checking is recommended and a recalibration might be necessary after several months depending of the conditions of use.

To recalibrate the analyser, proceed as follow:

- Prepare a 10 mg/l H2S standard. For this weight 2.434 g of dried Na2S and dilute in 1litre of distilled water to obtain a mere solution of 1g/l. Then take 10 ml of this mere solution and complete to 1 litre of distilled water.

- Do at least 3 manual measurements on this 10 mg/l standard using the check screen. The last two measurements must be close together with less than 5% of difference.

- Press on the “scale” button of the check screen (as describe above) and then enter the standard value on the keypad.

The calibration is finished. A new calibration factor has been calculated and has been recorded inside the calibration history displayed on the check screen.

This new calibration factor will be taken in account for all the further measurements.

### 4.8 Input 4-20 mA

#### 4.8.1 Principle

The 4-20mA input give in percent the current value on a 4-20 mA loop connected to another instrument. The load resistance is 100 ohm.

#### 4.9.2 Test

From the process screen, press on the “tools” icon and then on the channel to test, or directly to the channel area as a shortcut.
If you are logged in user mode, the parameters are masked. You must be logged in administrator mode to access to the parameters (default password is 456).

The check screen as below is displayed. The input value, signals and history graph are continuously updated.

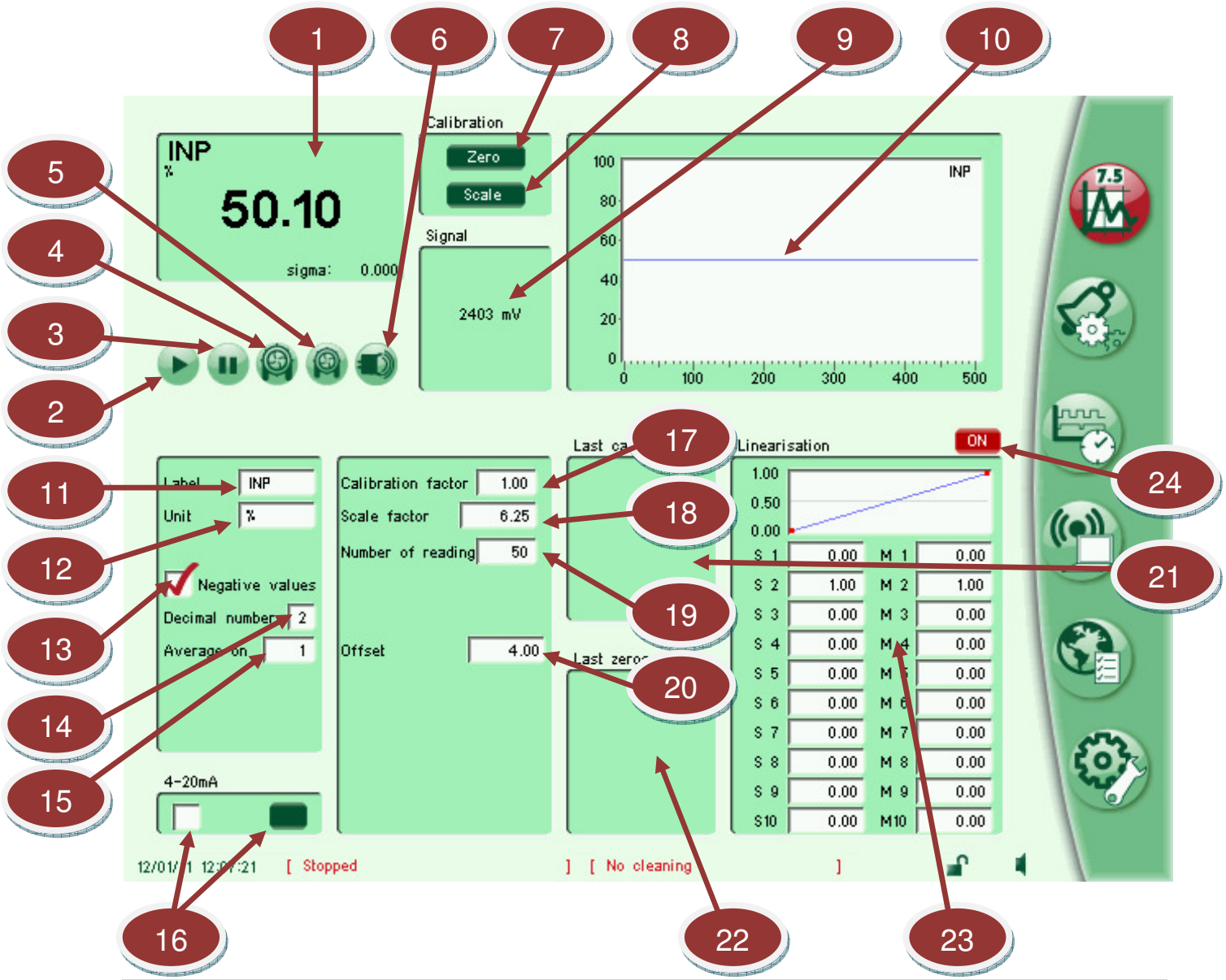




### Measurement window

This window displays the last measured value (or the error code in case of error, refer to troubleshooting section) with proper label and unit.

During an automatic measuring cycle, the measured value is display in light green until replaced by the new value in black.

The number of decimal can be adjusted, refer to the field below.




### Start button

This button is not used for this parameter.




### Stop button

Pressing on this button stops the sampling pump or the cleaning pump.




### Sampling pump button

Pressing on this button starts the sampling pump. The pump will stop automatically after 10 seconds. It can also be stopped at any time by pressing on the stop button.




### Cleaning pump button

Pressing on this button starts the cleaning pump. The pump will stop automatically after the time defined in the acid “cleaning time” field of the timing screen.
It can also be stopped at any time by pressing on the stop button.




### Ultrasonic cleaning button

Pressing on this button starts the ultrasonic cleaning. The cleaning will stop automatically after the time defined in the ultrasonic “cleaning time” field of the timing screen.
It can also be stopped at any time by pressing on the stop button.




## Zero button

This button is used for zeroing the measurement.



Assume first that the connected device gives a zero measurement.
Alternatively, connect a 4 mA generator on the input.




## Scale button

This button is used for calibrating the connected device on a high value.



To avoid a wrong calibration, calibrate first the connected device on the zero point (as described above).

A new calibration factor is calculated after entering the standard value.
The calibration history will be updated with the time and date of the calibration attached to the new calibration factor.

For more details, refer to the “recalibration” section.




## Signal value

This area displays the signal in mV read on the input of the 4-20 mA input module.

## 10 Input history graph

This area displays the 4-20 mA input value over the last 500 acquisitions, starting when the check screen appears.

For more details or to investigate about the signal, press anywhere on the graph to zoom it as below:

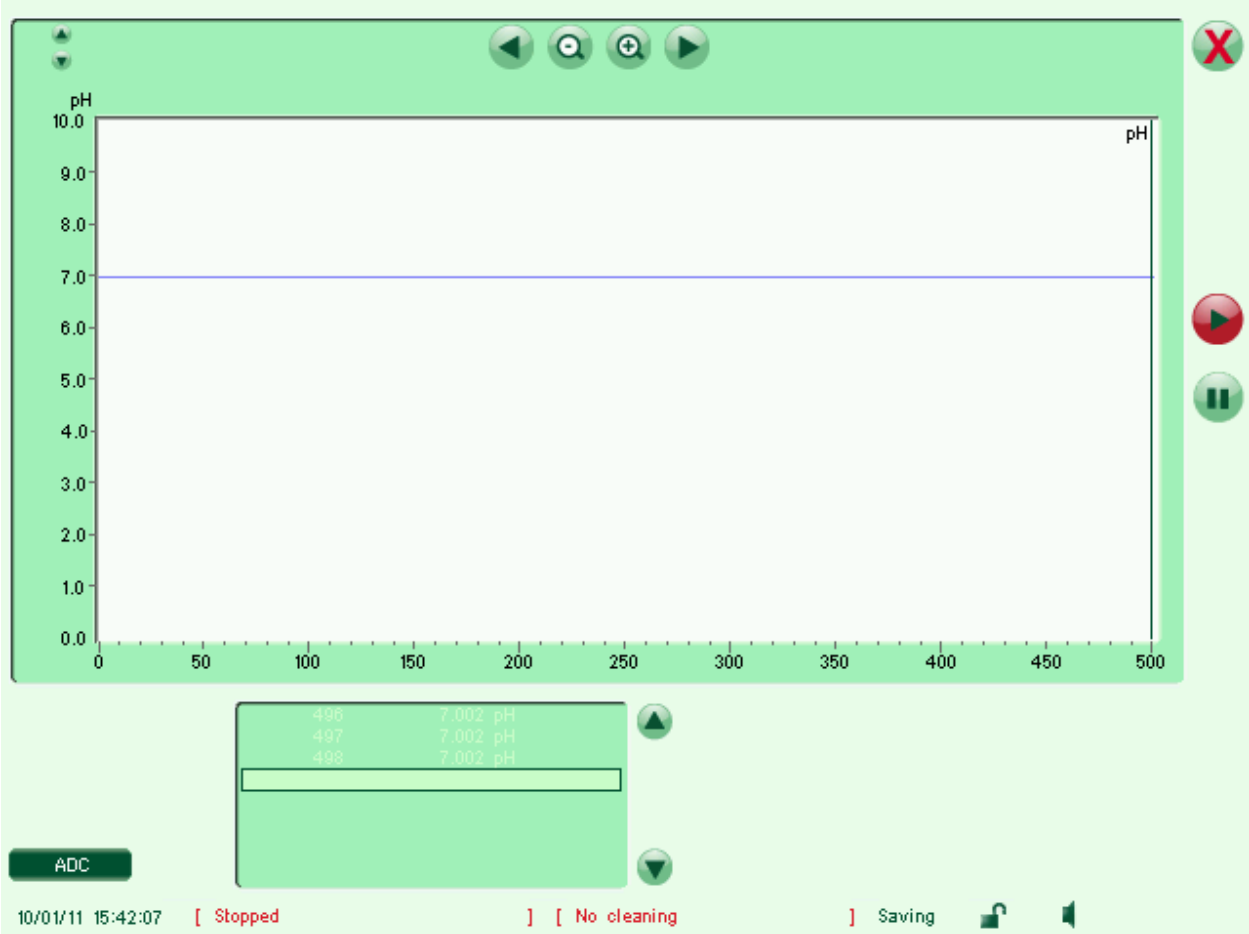


The values can be read by moving the cursor with the vertical arrows.

If necessary, use the horizontal arrows to displace the graph or press on the graph to zoom it. The Y scale is automatic but may be override by the small arrows placed above the Y axis.




### Label

This field allows changing the channel label displayed with the measurement. The label size is limited to 6 characters.




### Unit

This field allows changing the channel unit displayed with the measurement. The label size is limited to 6 characters.




### Negative values displayed

Negatives values are possible for most of the measurements as they result of normal fluctuations if the measurement is close to zero.

By default, the display of negative values is allowed as negative values may also result from a wrong zero and consequently it may be useful to be aware of such problem when seeing strongly negative values.

But as negative values have no theoretical meaning, it's possible to replace them by zero by deselecting this function.




### Number of decimals

This field allows changing the number of decimal displayed for the measurement value to remove not significant decimals.

Note: this choice does not affect the measurements stored in the internal memory.




### Number of averaging

The measurement as displayed on the process screen (or read under MODBUS protocol or available on the 4-20 mA output) can be formed by the average over a number of basic measurements defined by the field.
It can be useful to improve the repeatability of the measurements if the response time is not critical.

By default, no averaging is performed and this field contains a value of 1.

## 16 4-20 mA output

This button indicates if a 4-20 mA output has been installed or not for this channel (option).

If a module has been installed, its position is displayed on the right. Pressing on this button shows the popup below that enable to test the 4-20 mA output by pressing on the “test” button.

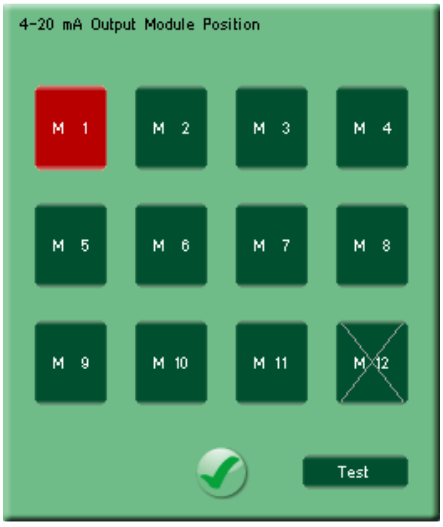


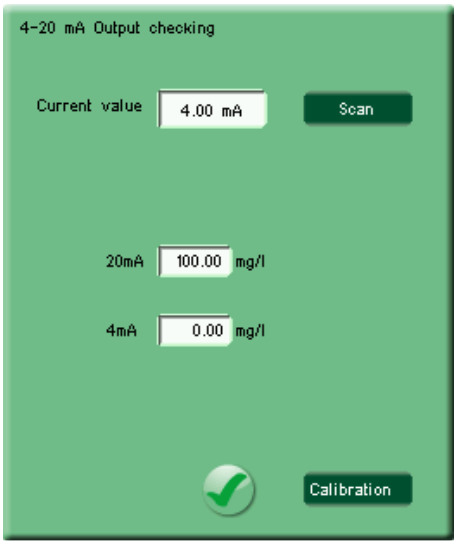


The current value of the 4-20 mA output is displayed on the top, based on the last process measurement (but not on the test measurement to avoid disturbances on the process supervisor system).

The “scan” key allows scanning the 4-20 mA output mA by mA for testing purpose only.

The scale value for 20 mA and 4 mA are displayed below. These preset values can be changed by pressing on these fields.

If the output value doesn't mach exactly with the theoretical value, it's possible to calibrate the output by pressing on the "calibration" key. Then real values for 4 and 20 mA must be entered.

Note: position M12 is not available for the 4-20 mA output modules.




### Calibration factor

This field allows changing the calibration factor of the channel.
Precautions must be taken before changing this value.

This factor is normally changed automatically while doing a calibration by pressing on the "scale" button and then recorded in the calibration history. This multiplying factor is taken in account as the last step before displaying the measurement value.




### Scale factor

This field allows changing the scale factor of the channel.
Precautions must be taken before changing this value.

This factor is normally determined in factory to transform the basic measurement to a scaled value in the final unit, mg/l for example.
It is has no reason to be changed except if internal elements are replaced.




### Number of readings

This field allows changing the number of basic readings averaged to obtain one final measurement.

Increasing this value improve the repeatability but increase also the measuring time.
Depending on the application, it can be exceptionally increased or decreased.




### Offset

This field show the internal offset applied on the signal for the zeroing.
It is updated at each zeroing and has not to be changed.
It can be used for troubleshooting by the manufacturer.




### Last calibration window

This window displays the 10 last calibrations done with the date, time and new calibration factor.




## Last zero window

This window displays the 10 last calibrations done with the date, time and new calibration factor.




## Linearity graph and values

This area concerns the linearity compensation applied on the rough measurements.

It is necessary only if the connected device needs a linearization curve.

The Y-axis corresponds to the rough measurements entered on the M1 to M10 fields while the X-axis corresponds to the standard or final measurement, entered on the S1 to S10 fields.

The M1-M10 and S1-S10 values must be strictly increasing. It's highly recommended to put 0.0 and 0.0 as starting values for S1 and M1. The final value is linearly extrapolated between these points.




## Linearity ON/OFF

This button allows deactivating temporary the linearity curve (OFF), for example to redo a new linearity curve.
The linearity curve is automatically reactivated (ON) when leaving the check screen.

### 4.8.3 Recalibration

The 4-20 mA input can be recalibrated to take in account a drift of the connected device.

To recalibrate the input, proceed as follow:

- Assume that the connected device is measuring a zero standard (or alternatively replace by a 4 mA generator)

- Do a manual measurement using the check screen (as describe above) then press on the ZERO key.

- Assume that the connected device is measuring a known standard (or alternatively replace by a 20 mA generator)

- Do a manual measurement using the check screen, then press on the SCALE key and enter the standard value on the keypad.

The calibration is finished. New offset and calibration factors has been calculated and has been recorded inside the zero and calibration history displayed on the check screen.

These new calibration factors will be taken in account for all the further measurements.

## 4.9 Nitrate by spectrograph

### 4.9.1 Principle

The measuring principle is based on the UV light absorption around 220 nm according to the Beer-Lambert law:

$$[C] = k \cdot \log\left(\frac{I_0}{I_1}\right)$$

With $[C]$: Sample concentration
$k$: Absorption coefficient (molecule specific)
$I_0$: Light intensity before the sample
$I_1$: Light intensity after of the sample

The UV light is generated by a pulsed xenon lamp to reach an ultra long life time.
The absorption spectrum is performed by a concave grating coupled to a 2048 pixels CCD (Charge-Coupled Device).

A double-wavelength algorithm allows compensating the turbidity or a deposit inside the flow cell.

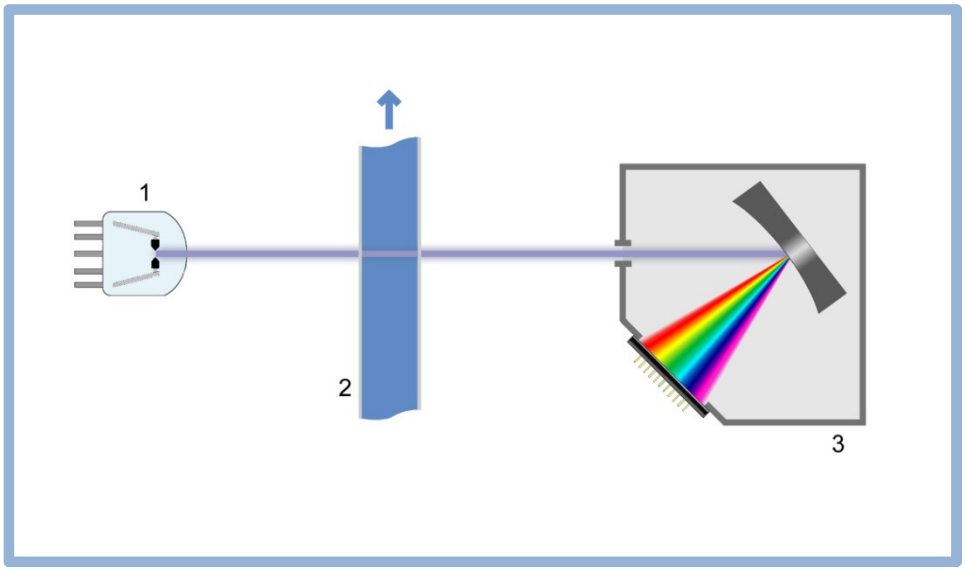


| | |
|---|---|
| 1 | Xenon flash lamp |
| 2 | Sample flow cell |
| 3 | Spectrograph with concave grating and CCD detector |

### 4.9.2 Test

From the process screen, press on the “tools” icon and then on the channel to test, or directly to the channel area as a shortcut.

If you are logged in user mode, the parameters are masked. You must be logged in administrator mode to access to the parameters (default password is 456).

The check screen as below is displayed. The concentration or error code corresponds to the last measurement done, as well as the signal and absorbance graphs.

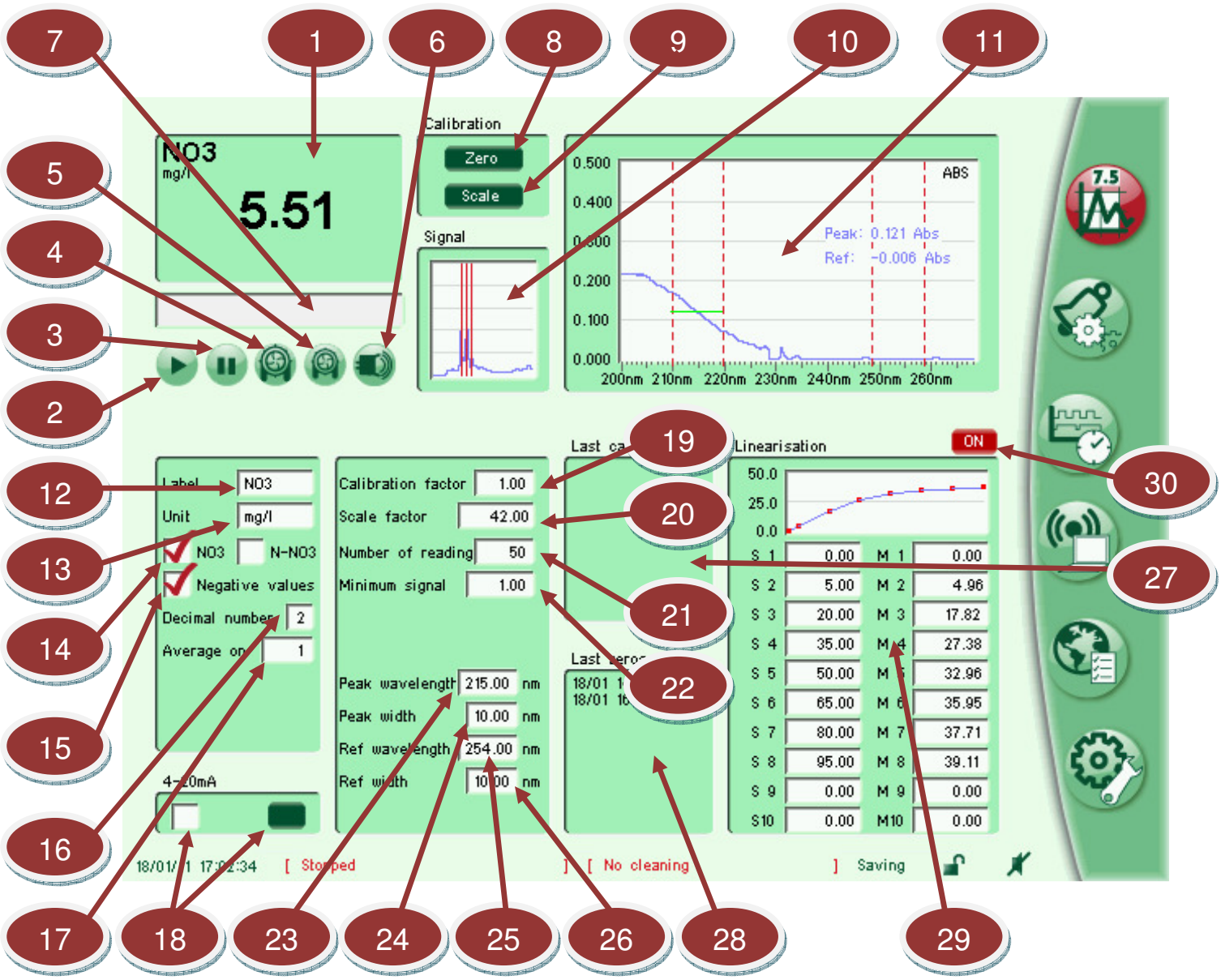




## Measurement window

This window displays the last measured value (or the error code in case of error, refer to troubleshooting section) with proper label and unit.

During a measuring cycle, the last measured value is display in light green until replaced by the new value in black.

The number of decimal can be adjusted, refer to the field below.




## Start button

Pressing on this button starts a manual measuring cycle. It can be aborted at any time by pressing on the stop button. At the end of the cycle, a new value will be displayed on the measurement window.

The process value on the process screen will not be updated by this measurement to avoid any interference with the plant supervisor system, same concerning the MODBUS channel's value, 4-20 mA output and alarm relays (if any).




## Stop button

Pressing on this button stop and aborts any engaged measuring cycle. It can also be used to stop the sampling pump or the cleaning pump.




## Sampling pump button

Pressing on this button starts the sampling pump. The pump will stop automatically after 10 seconds. It can also be stopped at any time by pressing on the stop button.

Note: this button is deactivated during a measuring cycle.




## Cleaning pump button

Pressing on this button starts the cleaning pump. The pump will stop automatically after the time defined in the acid "cleaning time" field of the timing screen.
It can also be stopped at any time by pressing on the stop button.

Note: this button is deactivated during a measuring cycle.




## Ultrasonic cleaning button

Pressing on this button starts the ultrasonic cleaning. The cleaning will stop automatically after the time defined in the ultrasonic “cleaning time” field of the timing screen.
It can also be stopped at any time by pressing on the stop button.

Note: this button is deactivated during a measuring cycle.




## Measuring cycle steps display

During a measuring cycle or a zeroing cycle, this area displays a counter of the elemental acquisitions preceded by the message “measuring…” or “zeroing…” respectively.




## Zero button

This button is used for zeroing the measurement.



Put first pure water inside the flow cell before pressing on this button.

Note: an auto-zero is performed automatically during each acid cleaning if this option is selected on the timing screen.




## Scale button

This button is used to calibrate the analyser on a standard solution.



To avoid a wrong calibration, check the zero or redo a zero before doing a calibration.

A new calibration factor is calculated after entering the standard value.
The calibration history will be updated with the time and date of the calibration attached to the new calibration factor.

For more details, refer to the “recalibration” section.

## 10 Signal graph

This graph displays the lamp spectrum get during the last measuring cycle. It is updated during the measuring cycle when the lamp is flashing.

For more details or to investigate about the signal, press anywhere on the graph to zoom it as below:

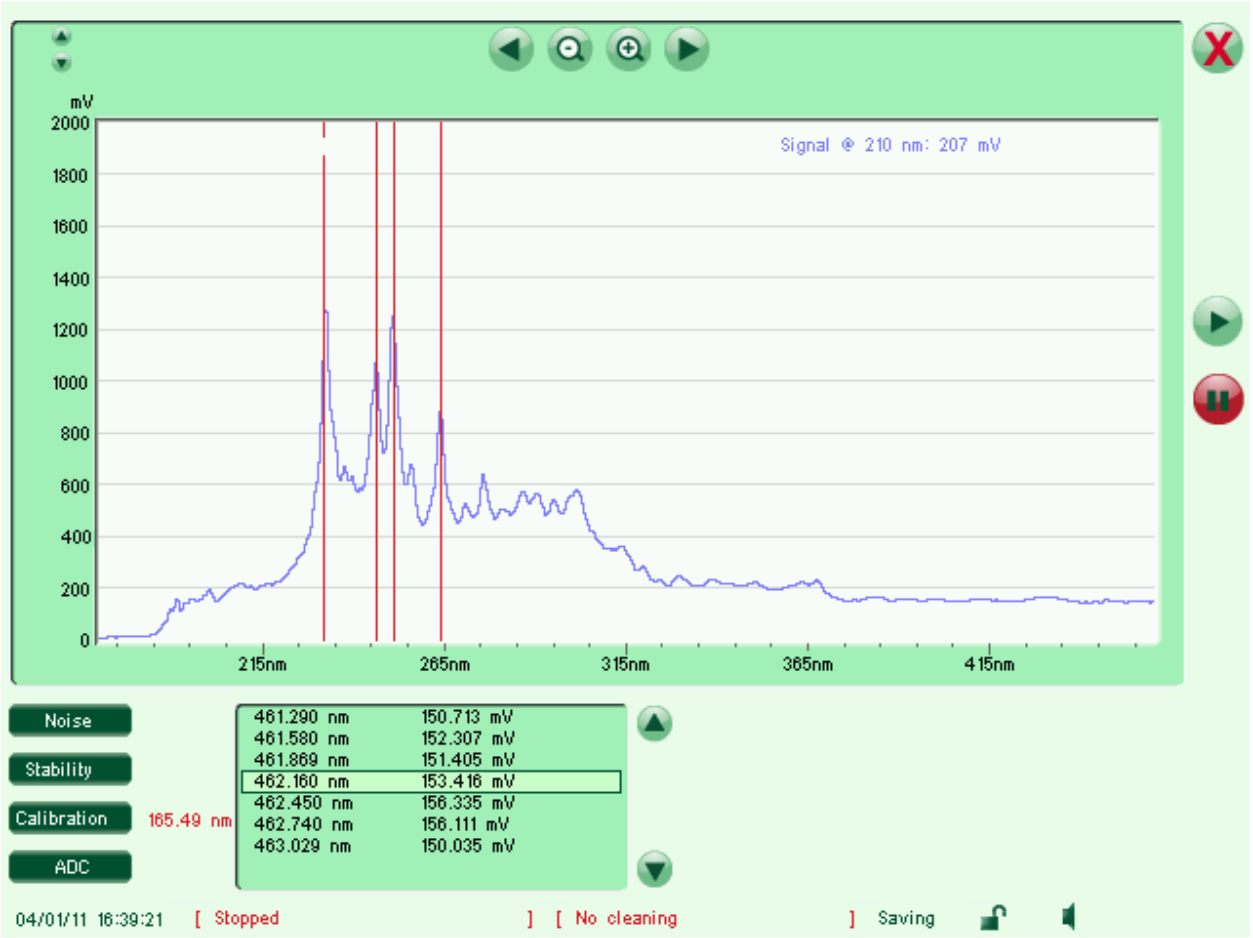


To acquire again the lamp signal, press on the “play” button.

With pure water inside the flow cell, the signal must not be saturated (below 2000 mV) on the two wavelengths bands used for the absorbance calculation defined as “Peak wavelength” and “Ref wavelength” on the check screen. Otherwise, an error will occur during the measuring cycle.

The values can be read by moving the cursor with the vertical arrows.

If necessary, use the horizontal arrows to displace the graph or press on the graph to zoom it. The Y scale is automatic but may be override by the small arrows placed above the Y axis.

# 11 Absorbance spectrum

This graph displays the absorbance spectrum get during the last measuring cycle. It is displayed in light grey during a measuring cycle until updated.

For more details or to investigate about the absorbance spectrum, press anywhere on the graph to zoom it as below:

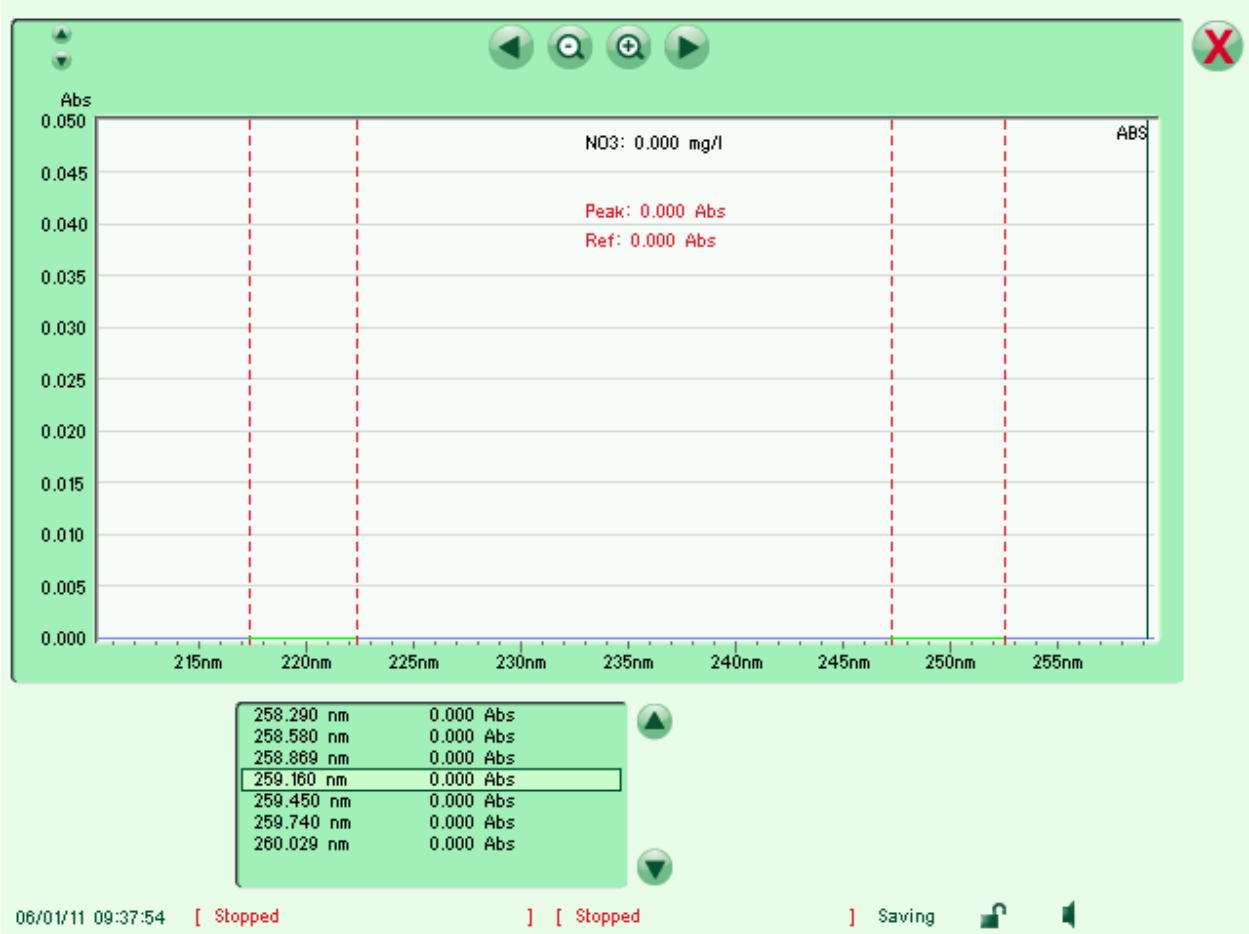


The average absorbance for the peak wavelength band and for the reference wavelength band are represented by a green line and displayed above the curve.

The difference is used to calculate the final concentration.

The values can be read by moving the cursor with the vertical arrows.

If necessary, use the horizontal arrows to displace the graph or press on the graph to zoom it. The Y scale is automatic but may be override by the small arrows placed above the Y axis.




## Label

This field allows changing the channel label displayed with the measurement. The label size is limited to 6 characters.




## Unit

This field allows changing the channel unit displayed with the measurement. The label size is limited to 6 characters.




## Display mode

This button allows selecting the concentration display mode as NO3 (default mode) or as N of NO3.
If N-NO3 is selected, the NO3 concentrations are multiplied by 14/62=0.2258 before displaying and the label is automatically updated to “N-NO3”.
The measurements previously stored in the internal memory will keep their original values.




## Negative values displayed

Negatives values are possible for most of the measurements as they result of normal fluctuations if the measurement is close to zero.

By default, the display of negative values is allowed as negative values may also result from a wrong zero and consequently it may be useful to be aware of such problem when seeing strongly negative values.

But as negative values have no theoretical meaning, it’s possible to replace them by zero by deselecting this function.




## Number of decimals

This field allows changing the number of decimal displayed for the measurement value to remove not significant decimals.

Note: this choice does not affect the measurements stored in the internal memory.

## 17 Number of averaging

The measurement as displayed on the process screen (or read under MODBUS protocol or available on the 4-20 mA output) can be formed by the average over a number of basic measurements defined by the field.
It can be useful to improve the repeatability of the measurements if the response time is not critical.

By default, no averaging is performed and this field contains a value of 1.

## 18 4-20 mA output

This button indicates if a 4-20 mA output has been installed or not for this channel (option).

If a module has been installed, its position is displayed on the right. Pressing on this button shows the popup below that enable to test the 4-20 mA output by pressing on the “test” button.

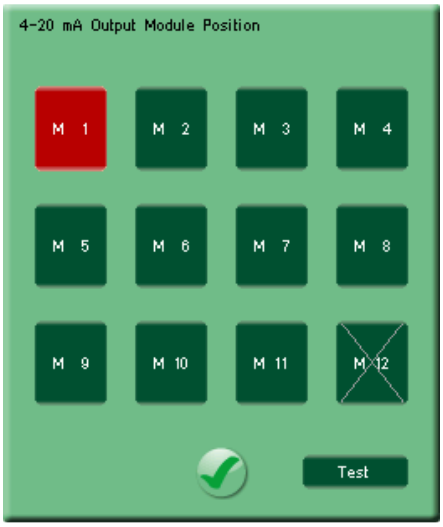

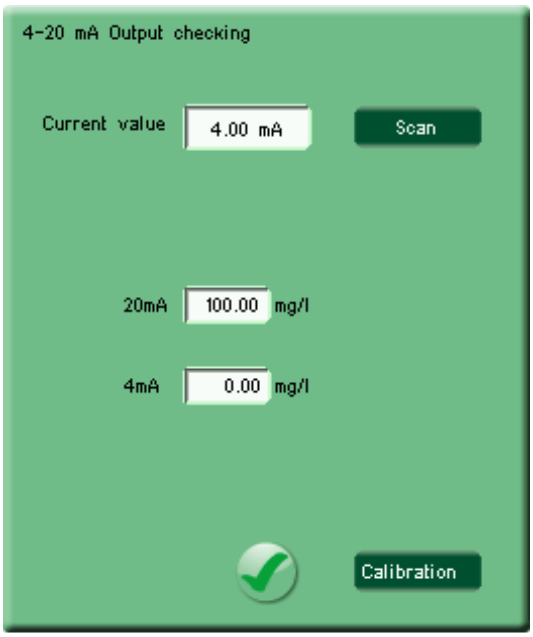


The current value of the 4-20 mA output is displayed on the top, based on the last process measurement (but not on the test measurement to avoid disturbances on the process supervisor system).

The “scan” key allows scanning the 4-20 mA output mA by mA for testing purpose only.

The scale value for 20 mA and 4 mA are displayed below. These preset values can be changed by pressing on these fields.

If the output value doesn’t mach exactly with the theoretical value, it’s possible to calibrate the output by pressing on the “calibration” key. Then real values for 4 and 20 mA must be entered.

Note: position M12 is not available for the 4-20 mA output modules.




## Calibration factor

This field allows changing the calibration factor of the channel.
Precautions must be taken before changing this value.

This factor is normally changed automatically while doing a calibration by pressing on the “scale” button and then recorded in the calibration history. This multiplying factor is taken in account as the last step before displaying the measurement value.



Note: this factor must be set to 1.0 before doing a new linearization curve




## Scale factor

This field allows changing the scale factor of the channel.
Precautions must be taken before changing this value.

This factor is normally determined in factory to transform the basic measurement to a scaled value in the final unit, mg/l for example.
It is has no reason to be changed except if internal elements are replaced.




## Number of readings

This field allows changing the number of basic readings averaged to obtain one final measurement.

Increasing this value improve the repeatability but increase also the measuring time.
Depending on the application, it can be exceptionally increased or decreased.




## Minimum signal

This field fix the minimum light signal value over the wavelength range taken in account for the measurement. An error will be displayed if the signal over the wavelength range is lower than this value.




## Peak wavelength

This field allows changing the peak wavelength taken in account for the measurement. It corresponds to a wavelength absorbed by nitrate.

The default value is 220 nm. It can be changed exceptionally to avoid a known interference or to reduce the sensitivity for high range measurements.




## Peak width

This field allows changing the width band of the peak wavelength taken in account for the measurement.

It may be exceptionally enlarged or reduced to avoid a known interference.

### 25 Reference wavelength

This field allows changing the reference wavelength taken in account for the measurement.
It corresponds normally to a wavelength where the nitrate doesn't absorb.

The default value is 254 nm to compensate the organic matter. It can be changed exceptionally to avoid a known interference.

### 26 Reference width

This field allows changing the width band of the reference wavelength taken in account for the measurement.

It may be exceptionally enlarged or reduced to avoid a known interference.

### 27 Last calibration window

This window displays the 10 last calibrations done with the date, time and new calibration factor.

### 28 Last zero window

This window displays the 10 last calibrations done with the date, time and new calibration factor.

### 29 Linearity graph and values

This area concerns the linearity compensation applied on the rough measurements.

The Beer-Lambert law used on most of the measurements is not linear for high concentrations due to a light mask effect. Therefore it's necessary to introduce a correction before displaying the final concentration. This correction is based on the linearity curve represented on the top.

The Y-axis corresponds to the rough measurements entered on the M1 to M10 fields while the X-axis corresponds to the standard or final measurement, entered on the S1 to S10 fields.

The M1-M10 and S1-S10 values must be strictly increasing. It's highly recommended to put 0.0 and 0.0 as starting values for S1 and M1. The final value is linearly extrapolated between these points.




**Linearity ON/OFF**

This button allows deactivating temporary the linearity curve (OFF), for example to redo a new linearity curve.
The linearity curve is automatically reactivated (ON) when leaving the check screen.

### 4.9.3 Recalibration

The analyser is factory calibrated. However, periodical checking is recommended and a recalibration might be necessary after several months depending of the conditions of use.

To recalibrate the analyser, proceed as follow:

- Prepare a 50 mg/l NO3 standard. For this weight 1.629 g of dried KNO3 and dilute in 1litre of distilled water to obtain a mere solution of 1g/l. Then take 50 ml of this mere solution and complete to 1 litre of distilled water.

- Do a manual measurement on this standard using the check screen (as describe above).

- Press on the “scale” button of the check screen and then enter the standard value on the keypad.

The calibration is finished. A new calibration factor has been calculated and has been recorded inside the calibration history displayed on the check screen.

This new calibration factor will be taken in account for all the further measurements.

## 4.10 Oxidation-reduction potential (ORP)

### 4.10.1 Principle

The reduction potential is a measure of the tendency of the solution to either gain or lose electrons when it is subject to change by introduction of a new species.

A solution with a higher (more positive) reduction potential than the new species will have a tendency to gain electrons from the new species (i.e. to be reduced by oxidizing the new species) and a solution with a lower (more negative) reduction potential will have a tendency to lose electrons to the new species (i.e. to be oxidized by reducing the new species).

The method of measurement is based on the potential between two half-cells (reference and sensing) containing a conductor immersed in an appropriate electrolyte solution and ended by a conductive glass membrane. These two half-cells are generally combined in a single body electrode.

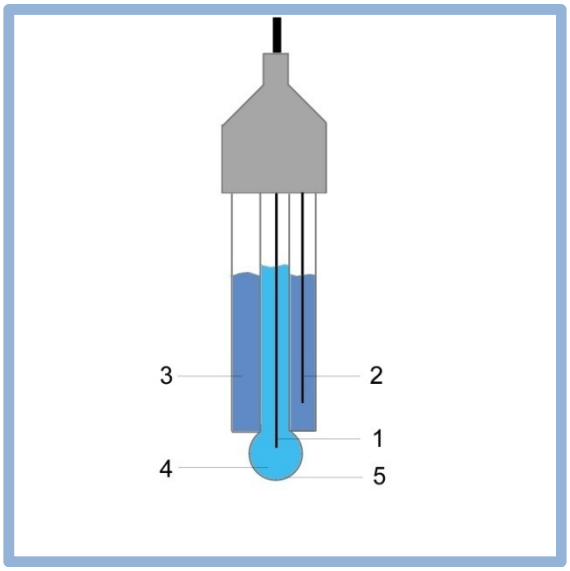


| | | | |
|---|---|---|---|
| 1 | Internal electrode | 4 | Internal electrolyte solution |
| 2 | Reference electrode | 5 | Glass bulb |
| 3 | Reference electrolyte solution | | |

### 4.10.2 Test

From the process screen, press on the “tools” icon and then on the channel to test, or directly to the channel area as a shortcut.

If you are logged in user mode, the parameters are masked. You must be logged in administrator mode to access to the parameters (default password is 456).

The check screen as below is displayed. The concentration (or error code), signals and history graph are continuously updated.

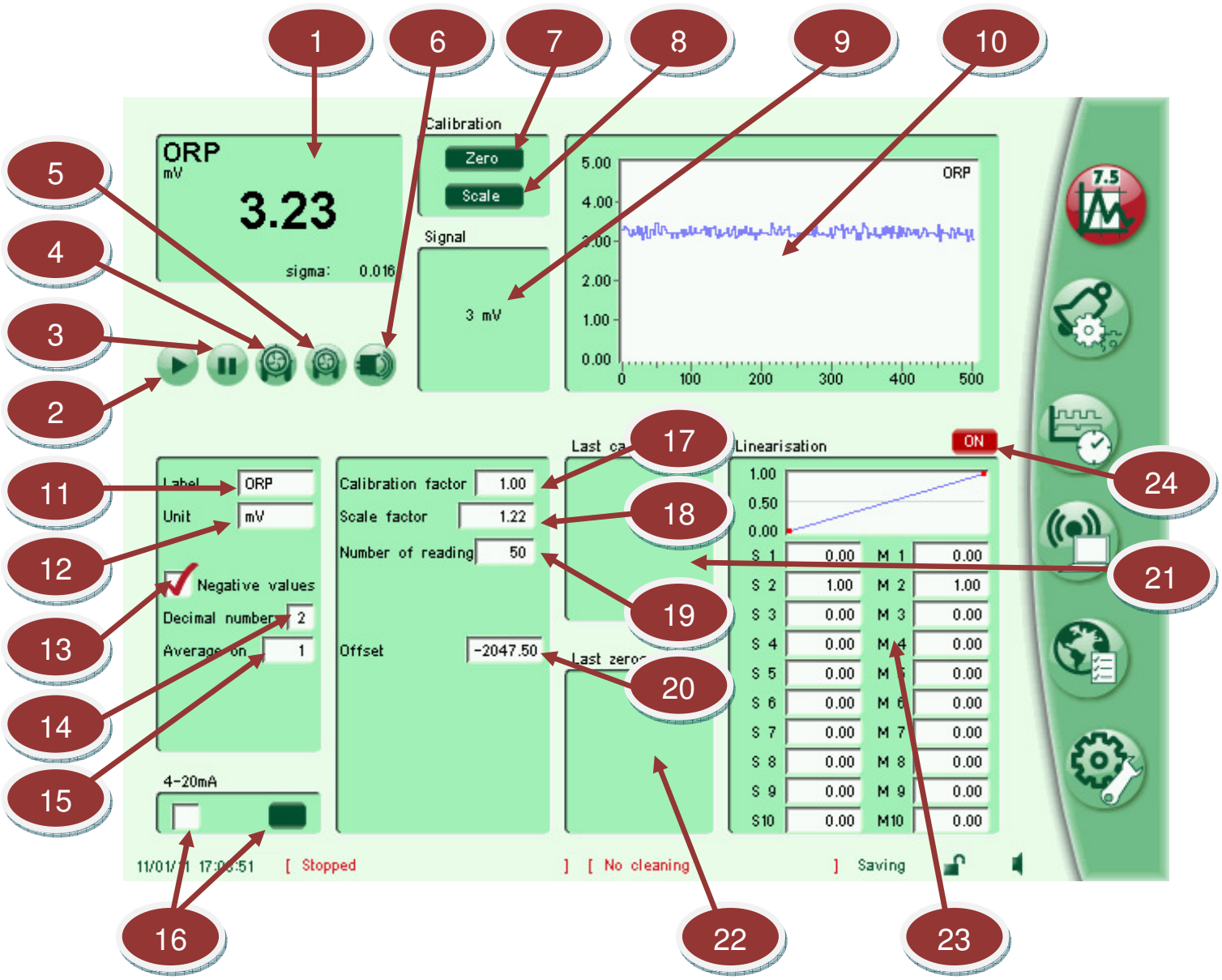




### Measurement window

This window displays the last measured value (or the error code in case of error, refer to troubleshooting section) with proper label and unit.

During an automatic measuring cycle, the measured value is display in light green until replaced by the new value in black.

The number of decimal can be adjusted, refer to the field below.




### Start button

This button is not used for this parameter.




### Stop button

Pressing on this button stops the sampling pump or the cleaning pump.




### Sampling pump button

Pressing on this button starts the sampling pump. The pump will stop automatically after 10 seconds. It can also be stopped at any time by pressing on the stop button.




### Cleaning pump button

Pressing on this button starts the cleaning pump. The pump will stop automatically after the time defined in the acid “cleaning time” field of the timing screen.
It can also be stopped at any time by pressing on the stop button.




### Ultrasonic cleaning button

Pressing on this button starts the ultrasonic cleaning. The cleaning will stop automatically after the time defined in the ultrasonic “cleaning time” field of the timing screen.
It can also be stopped at any time by pressing on the stop button.




## Zero button

This button is used for zeroing the measurement.



Put first pure water inside the flow cell before pressing on this button.
Alternatively, replace the electrode by a strap.




## Scale button

This button is used for calibrating the electrode on a high value.



Wait that the electrode stabilizes on the standard before calibrating. It may take several minutes.



To avoid a wrong calibration, calibrate first the electrode on the low value point (as described above).

A new calibration factor is calculated after entering the standard value.
The calibration history will be updated with the time and date of the calibration attached to the new calibration factor.

For more details, refer to the “recalibration” section.




## Signal value

This area displays the ORP signal in mV read on the input of the pH module.

## 10 ORP history graph

This area displays the pH value over the last 500 acquisitions, starting when the check screen appears.

For more details or to investigate about the signal, press anywhere on the graph to zoom it as below:

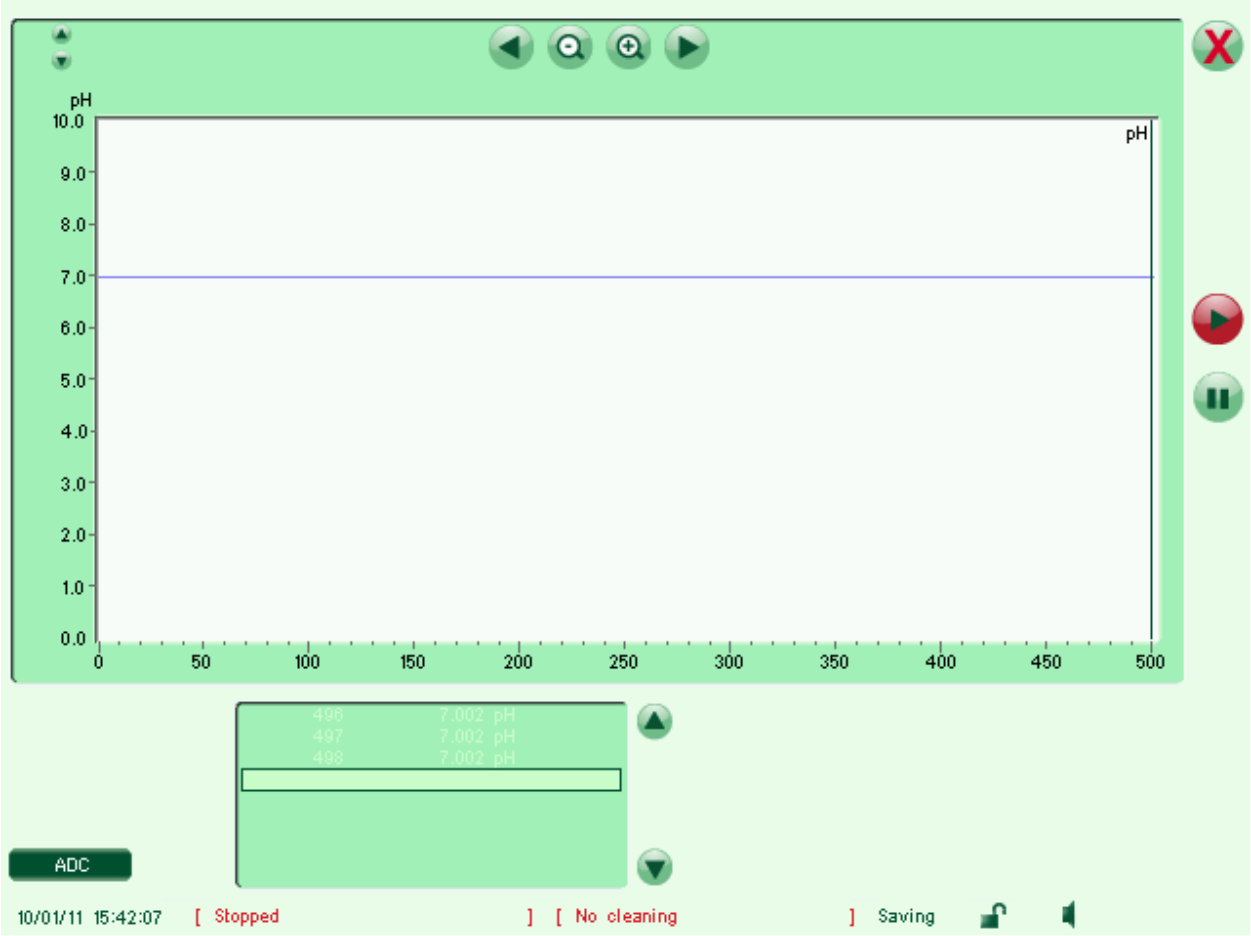


The values can be read by moving the cursor with the vertical arrows.

If necessary, use the horizontal arrows to displace the graph or press on the graph to zoom it. The Y scale is automatic but may be override by the small arrows placed above the Y axis.




### Label

This field allows changing the channel label displayed with the measurement. The label size is limited to 6 characters.




### Unit

This field allows changing the channel unit displayed with the measurement. The label size is limited to 6 characters.




### Negative values displayed

Negatives values are possible for most of the measurements as they result of normal fluctuations if the measurement is close to zero.

By default, the display of negative values is allowed as negative values may also result from a wrong zero and consequently it may be useful to be aware of such problem when seeing strongly negative values.

But as negative values have no theoretical meaning, it's possible to replace them by zero by deselecting this function.




### Number of decimals

This field allows changing the number of decimal displayed for the measurement value to remove not significant decimals.

Note: this choice does not affect the measurements stored in the internal memory.




### Number of averaging

The measurement as displayed on the process screen (or read under MODBUS protocol or available on the 4-20 mA output) can be formed by the average over a number of basic measurements defined by the field.
It can be useful to improve the repeatability of the measurements if the response time is not critical.

By default, no averaging is performed and this field contains a value of 1.

## 16 4-20 mA output

This button indicates if a 4-20 mA output has been installed or not for this channel (option).

If a module has been installed, its position is displayed on the right. Pressing on this button shows the popup below that enable to test the 4-20 mA output by pressing on the “test” button.

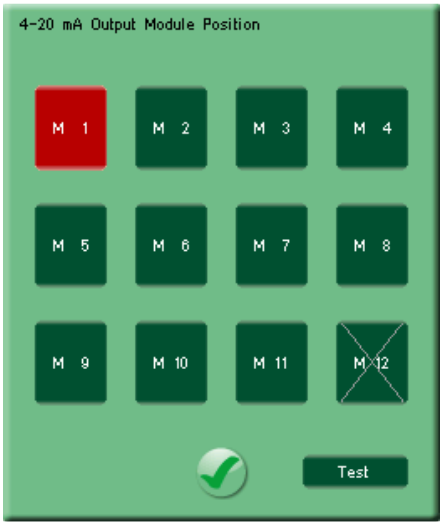


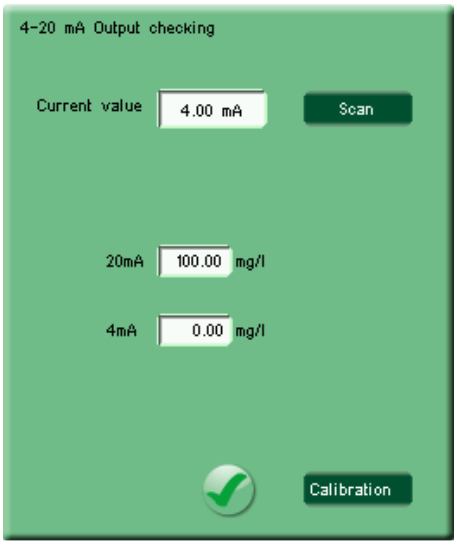


The current value of the 4-20 mA output is displayed on the top, based on the last process measurement (but not on the test measurement to avoid disturbances on the process supervisor system).

The “scan” key allows scanning the 4-20 mA output mA by mA for testing purpose only.

The scale value for 20 mA and 4 mA are displayed below. These preset values can be changed by pressing on these fields.

If the output value doesn't mach exactly with the theoretical value, it's possible to calibrate the output by pressing on the "calibration" key. Then real values for 4 and 20 mA must be entered.

Note: position M12 is not available for the 4-20 mA output modules.




### Calibration factor

This field allows changing the calibration factor of the channel.
Precautions must be taken before changing this value.

This factor is normally changed automatically while doing a calibration by pressing on the "scale" button and then recorded in the calibration history. This multiplying factor is taken in account as the last step before displaying the measurement value.




### Scale factor

This field allows changing the scale factor of the channel.
Precautions must be taken before changing this value.

This factor is normally determined in factory to transform the basic measurement to a scaled value in the final unit, mg/l for example.
It is has no reason to be changed except if internal elements are replaced.




### Number of readings

This field allows changing the number of basic readings averaged to obtain one final measurement.

Increasing this value improve the repeatability but increase also the measuring time.
Depending on the application, it can be exceptionally increased or decreased.




### Offset

This field show the internal offset applied on the signal for the zeroing.
It is updated at each zeroing and has not to be changed.
It can be used for troubleshooting by the manufacturer.




### Last calibration window

This window displays the 10 last calibrations done with the date, time and new calibration factor.




## Last zero window

This window displays the 10 last calibrations done with the date, time and new calibration factor.




## Linearity graph and values

This area concerns the linearity compensation applied on the rough measurements.

Normally, no linearity correction is necessary for the ORP measurement.

The Y-axis corresponds to the rough measurements entered on the M1 to M10 fields while the X-axis corresponds to the standard or final measurement, entered on the S1 to S10 fields.

The M1-M10 and S1-S10 values must be strictly increasing. It's highly recommended to put 0.0 and 0.0 as starting values for S1 and M1. The final value is linearly extrapolated between these points.




## Linearity ON/OFF

This button allows deactivating temporary the linearity curve (OFF), for example to redo a new linearity curve.
The linearity curve is automatically reactivated (ON) when leaving the check screen.

### 4.10.3 Recalibration

The ORP electrode must be checked on a regular base depending on the condition of use, and recalibrated if necessary.

To recalibrate the electrode, proceed as follow:

- Put the electrode in a zero buffer solution (or alternatively replace the electrode by a strap)

- Do manual measurement on this buffer using the check screen (as describe above), wait for the stabilisation of the ORP value, then press on the ZERO key.

- Put the electrode in a standard buffer solution

- Do manual measurement on this buffer using the check screen, wait for the stabilisation of the pH value, then press on the SCALE key and enter the standard value on the keypad.

The calibration is finished. New offset and calibration factors has been calculated and has been recorded inside the zero and calibration history displayed on the check screen.

These new calibration factors will be taken in account for all the further measurements.

## 4.11 pH

### 4.11.1 Principle

The pH of a solution is the negative logarithm of the molar concentration of dissolved hydronium ions ($H_3O^+$).

The method of measurement is based on the potential between two half-cells (reference and sensing) containing a conductor immersed in an appropriate electrolyte solution and ended by a conductive glass membrane. These two half-cells are generally combined in a single body electrode.
The voltage between the half-cell follows the Nernst equation:

$$V = V_0 + 2{,}3\frac{RT}{nF} \cdot \log\frac{[H^+{}_m]}{[H^+{}_{ref}]}$$

With $V_0$: voltage of the reference half-cell, R: ideal gas constant, T: absolute temperature, n :valence, F: Faraday constant, $H^+_m$: concentration of $H^+$ in the measured solution, $H^+_{ref}$: reference concentration of $H^+$.

At 25ºC, one pH unit corresponds to 59.16 mV. At pH 7, the output is 0V (for all temperatures).

As pH depends of temperature, a temperature sensor is generally include in the electrode (100 Ohm or 1000 Ohm Platinum resistor) and connected to the instrument for automatic temperature compensation (ATC).

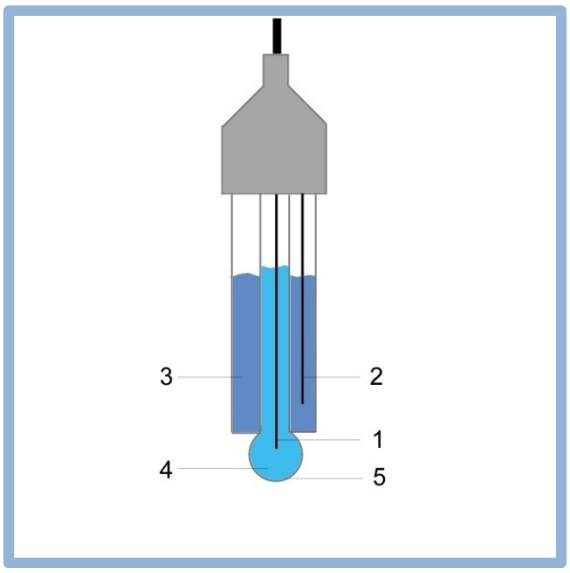


| | | | |
|---|---|---|---|
| 1 | Internal electrode | 4 | Internal electrolyte solution |
| 2 | Reference electrode | 5 | Glass bulb |
| 3 | Reference electrolyte solution | | |

### 4.11.2 Test

From the process screen, press on the “tools” icon and then on the channel to test, or directly to the channel area as a shortcut.

If you are logged in user mode, the parameters are masked. You must be logged in administrator mode to access to the parameters (default password is 456).

The check screen as below is displayed. The concentration (or error code), signals and history graph are continuously updated.

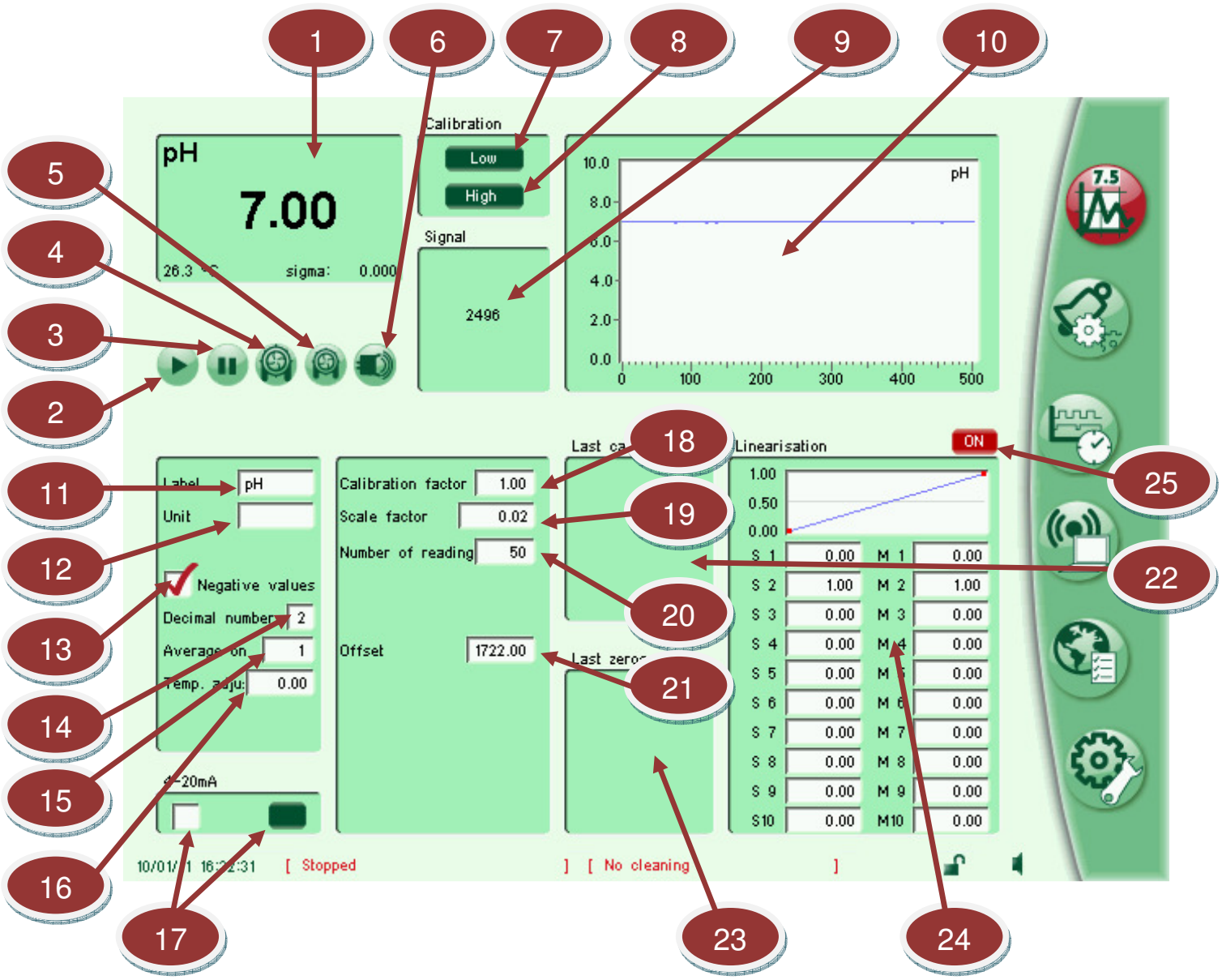




### Measurement window

This window displays the last measured value (or the error code in case of error, refer to troubleshooting section) with proper label and unit.

During an automatic measuring cycle, the measured value is display in light green until replaced by the new value in black.

The number of decimal can be adjusted, refer to the field below.




### Start button

This button is not used for this parameter.




### Stop button

Pressing on this button stops the sampling pump or the cleaning pump.




### Sampling pump button

Pressing on this button starts the sampling pump. The pump will stop automatically after 10 seconds. It can also be stopped at any time by pressing on the stop button.




### Cleaning pump button

Pressing on this button starts the cleaning pump. The pump will stop automatically after the time defined in the acid “cleaning time” field of the timing screen.
It can also be stopped at any time by pressing on the stop button.




### Ultrasonic cleaning button

Pressing on this button starts the ultrasonic cleaning. The cleaning will stop automatically after the time defined in the ultrasonic “cleaning time” field of the timing screen.
It can also be stopped at any time by pressing on the stop button.




## Low button

This button is used for calibrating the measurement on a low value, for example a buffer solution of 4.0 pH.



Wait that the electrode stabilizes on the standard before calibrating. It may take several minutes.

A new offset is automatically calculated after entering the standard value.
The zeroing history will be updated with the time and date of the calibration attached to the new offset calculated.




## High button

This button is used for calibrating the measurement on a high value, for example a buffer solution of 10.0 pH.



Wait that the electrode stabilizes on the standard before calibrating. It may take several minutes.



To avoid a wrong calibration, calibrate first the electrode on the low value point (as described above).

A new calibration factor is calculated after entering the standard value.
The calibration history will be updated with the time and date of the calibration attached to the new calibration factor.

For more details, refer to the “recalibration” section.




## Signal value

This area displays the pH signal in mV read on the input of the pH module. It corresponds to a theoretical value of 0 mV for a pH of 7, -414 mV for a pH of 14 and +414 mV for a pH of 0.

## 10 pH history graph

This area displays the pH value over the last 500 acquisitions, starting when the check screen appears.

For more details or to investigate about the signal, press anywhere on the graph to zoom it as below:

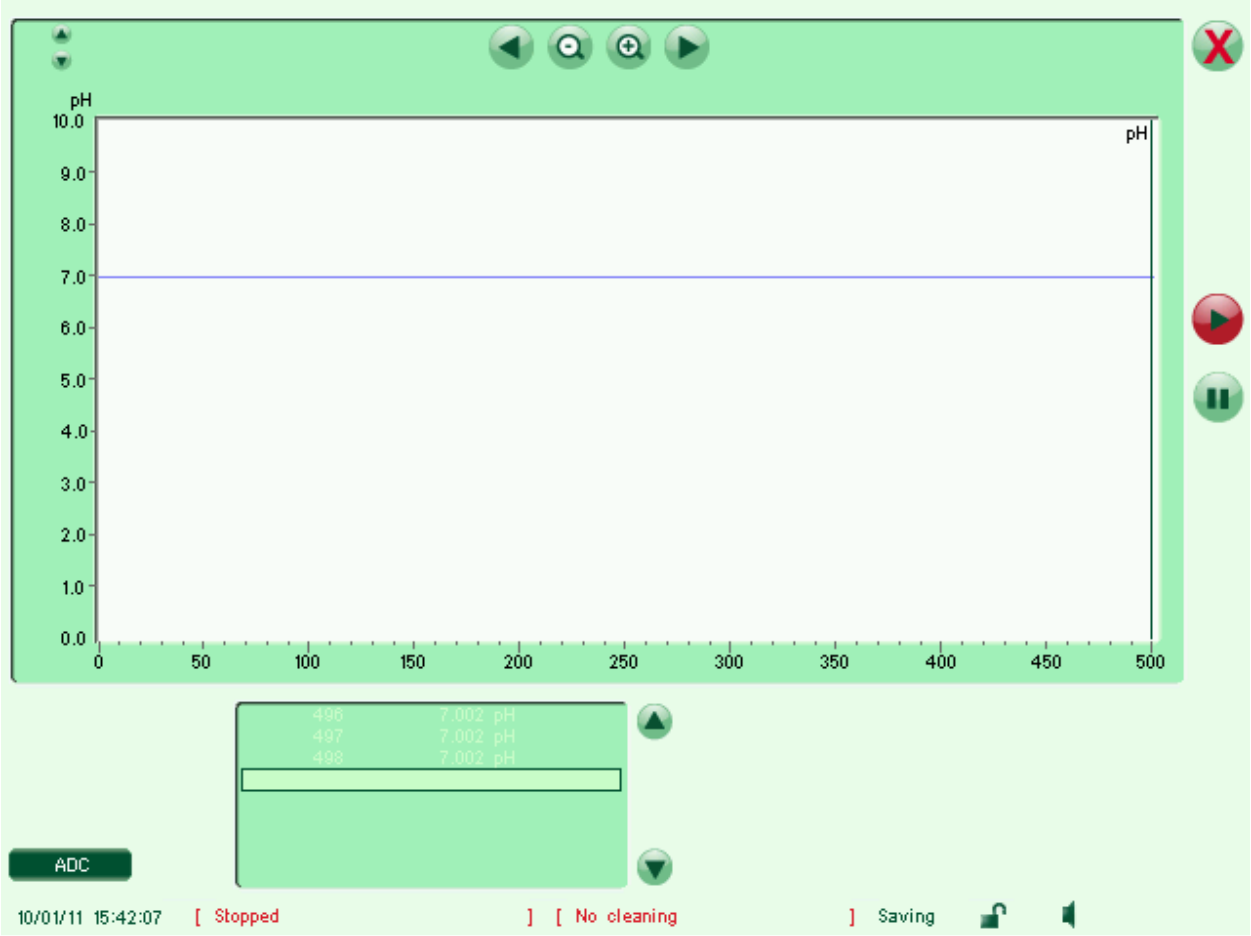


The values can be read by moving the cursor with the vertical arrows.

If necessary, use the horizontal arrows to displace the graph or press on the graph to zoom it. The Y scale is automatic but may be override by the small arrows placed above the Y axis.




### Label

This field allows changing the channel label displayed with the measurement. The label size is limited to 6 characters.




### Unit

This field allows changing the channel unit displayed with the measurement. The label size is limited to 6 characters.




### Negative values displayed

Negatives values are possible for most of the measurements as they result of normal fluctuations if the measurement is close to zero.

By default, the display of negative values is allowed as negative values may also result from a wrong zero and consequently it may be useful to be aware of such problem when seeing strongly negative values.

But as negative values have no theoretical meaning, it's possible to replace them by zero by deselecting this function.




### Number of decimals

This field allows changing the number of decimal displayed for the measurement value to remove not significant decimals.

Note: this choice does not affect the measurements stored in the internal memory.




### Number of averaging

The measurement as displayed on the process screen (or read under MODBUS protocol or available on the 4-20 mA output) can be formed by the average over a number of basic measurements defined by the field.
It can be useful to improve the repeatability of the measurements if the response time is not critical.

By default, no averaging is performed and this field contains a value of 1.

## 16 Temperature adjustment

The temperature of the sample given by the internal temperature probe can be adjusted by this field. This adjustment is not important as any difference of temperature is taken in account during the calibration. But if this value is changed significantly, a new calibration must be done.

## 17 4-20 mA output

This button indicates if a 4-20 mA output has been installed or not for this channel (option).

If a module has been installed, its position is displayed on the right. Pressing on this button shows the popup below that enable to test the 4-20 mA output by pressing on the “test” button.

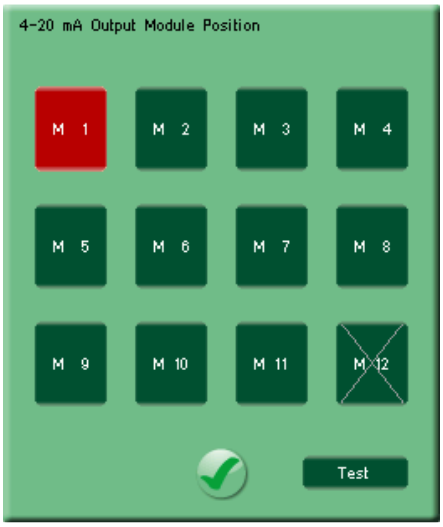


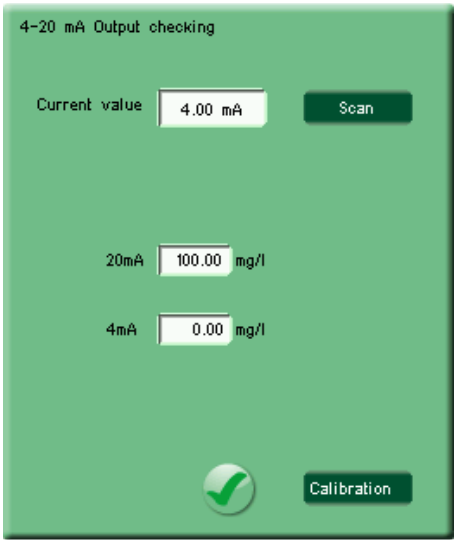

The current value of the 4-20 mA output is displayed on the top, based on the last process measurement (but not on the test measurement to avoid disturbances on the process supervisor system).

The “scan” key allows scanning the 4-20 mA output mA by mA for testing purpose only.

The scale value for 20 mA and 4 mA are displayed below. These preset values can be changed by pressing on these fields.

If the output value doesn’t mach exactly with the theoretical value, it’s possible to calibrate the output by pressing on the “calibration” key. Then real values for 4 and 20 mA must be entered.

Note: position M12 is not available for the 4-20 mA output modules.




### Calibration factor

This field allows changing the calibration factor of the channel.
Precautions must be taken before changing this value.

This factor is normally changed automatically while doing a calibration by pressing on the “scale” button and then recorded in the calibration history. This multiplying factor is taken in account as the last step before displaying the measurement value.




### Scale factor

This field allows changing the scale factor of the channel.
Precautions must be taken before changing this value.

This factor is normally determined in factory to transform the basic measurement to a scaled value in the final unit, mg/l for example.
It is has no reason to be changed except if internal elements are replaced.




### Number of readings

This field allows changing the number of basic readings averaged to obtain one final measurement.

Increasing this value improve the repeatability but increase also the measuring time.
Depending on the application, it can be exceptionally increased or decreased.




### Offset

This field show the internal offset applied on the signal for the zeroing.
It is updated at each zeroing and has not to be changed.

It can be used for troubleshooting by the manufacturer.

### 22 Last calibration window

This window displays the 10 last calibrations done with the date, time and new calibration factor.

### 23 Last zero window

This window displays the 10 last calibrations done with the date, time and new calibration factor.

### 24 Linearity graph and values

This area concerns the linearity compensation applied on the rough measurements.

Normally, no linearity correction is necessary for the pH measurement.

The Y-axis corresponds to the rough measurements entered on the M1 to M10 fields while the X-axis corresponds to the standard or final measurement, entered on the S1 to S10 fields.

The M1-M10 and S1-S10 values must be strictly increasing. It's highly recommended to put 0.0 and 0.0 as starting values for S1 and M1. The final value is linearly extrapolated between these points.

### 25 Linearity ON/OFF

This button allows deactivating temporary the linearity curve (OFF), for example to redo a new linearity curve.
The linearity curve is automatically reactivated (ON) when leaving the check screen.

### 4.11.3 Recalibration

The pH electrode must be checked on a regular base depending on the condition of use, and recalibrated if necessary.

To recalibrate the electrode, proceed as follow:

- Put the electrode in a pH 4.0 buffer solution

- Do manual measurement on this buffer using the check screen (as describe above), wait for the stabilisation of the pH value, then press on the LOW key and enter the standard value on the keypad.

- Put the electrode in a pH 10.0 buffer solution

- Do manual measurement on this buffer using the check screen, wait for the stabilisation of the pH value, then press on the HIGH key and enter the standard value on the keypad.

The calibration is finished. New offset and calibration factors has been calculated and has been recorded inside the zero and calibration history displayed on the check screen.

These new calibration factors will be taken in account for all the further measurements.

## 4.12 Phosphate by spectrograph

### 4.12 .1 Principle

The measuring principle is based on colorimetry. A small quantity of reagent is injected on the sample and after a fixed reaction time the developed colour is measured by the light absorption according to the Beer-Lambert law:

$$[C] = k \cdot \log\left(\frac{I_0}{I_1}\right)$$

With $[C]$: Sample concentration
$k$: Absorption coefficient (molecule specific)
$I_0$: Light intensity before the sample
$I_1$: Light intensity after of the sample

The light is generated by a pulsed xenon lamp to reach an ultra long life time.

The absorption spectrum is performed by a concave grating coupled to a 2048 pixels CCD (Charge-Coupled Device).

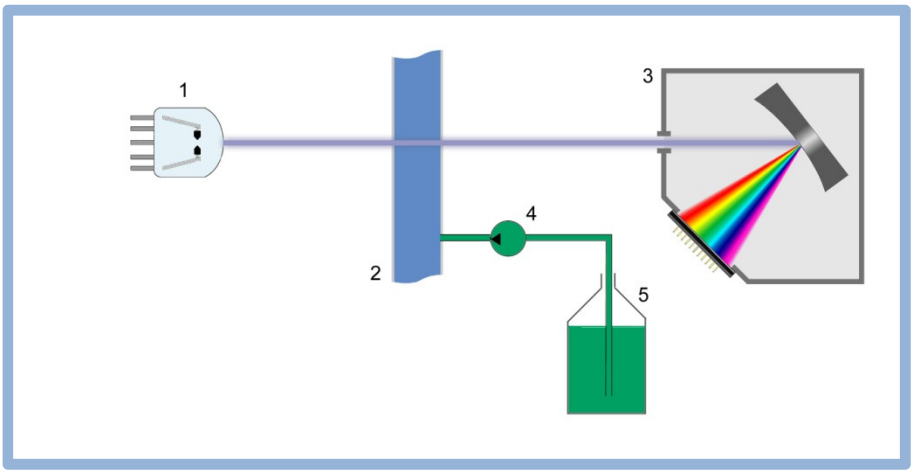


| | | | |
|---|---|---|---|
| 1 | Xenon lamp | 4 | Reagent pump |
| 2 | Flow cell | 5 | Reagent tank |
| 3 | Spectrograph | | |

### 4.12 .2 Test

From the process screen, press on the “tools” icon and then on the channel to test, or directly to the channel area as a shortcut.

If you are logged in user mode, the parameters are masked. You must be logged in administrator mode to access to the parameters (default password is 456).

The check screen as below is displayed. The concentration or error code corresponds to the last measurement done, as well as the signal graph and reaction graph.

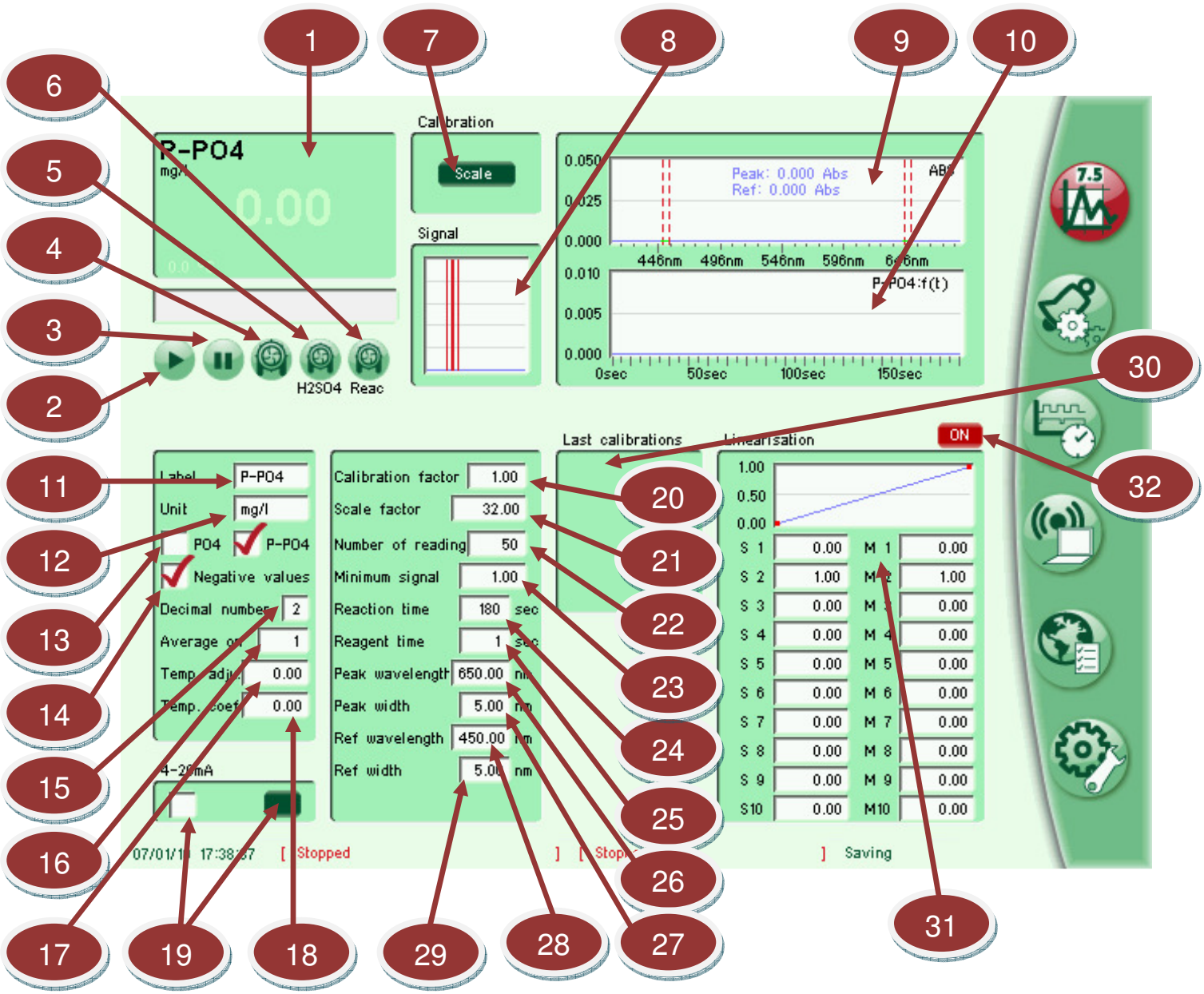




## Measurement window

This window displays the last measured value (or the error code in case of error, refer to troubleshooting section) with proper label and unit, as well as the standard deviation (sigma) obtained on the elemental acquisitions.

During a measuring cycle, the last measured value is display in light green until replaced by the new value in black.

The number of decimal can be adjusted, refer to the field below.




## Start button

Pressing on this button starts a manual measuring cycle. It can be aborted at any time by pressing on the stop button. At the end of the cycle, a new value will be displayed on the measurement window.

The process value on the process screen will not be updated by this measurement to avoid any interference with the plant supervisor system, same concerning the MODBUS channel's value, 4-20 mA output and alarm relays (if any).




## Stop button

Pressing on this button stop and aborts any engaged measuring cycle. It can also be used to stop the sampling pump or cleaning pump.




## Sampling pump button

Pressing on this button starts the sampling pump. The pump will stop automatically after 10 seconds. It can also be stopped at any time by pressing on the stop button.

Note: this button is deactivated during a measuring cycle.




## Cleaning pump button

Pressing on this button starts the cleaning pump. The pump will stop automatically after the time defined in the acid "cleaning time" field of the timing screen.
It can also be stopped at any time by pressing on the stop button.

Note: this button is deactivated during a measuring cycle.




## Reagent pump button

Pressing on this button starts the reagent pump for testing purpose or to fill the tubing after installation. The pump will stop automatically after 10 seconds.
It can also be stopped at any time by pressing on the stop button.

Note: this button is deactivated during a measuring cycle.




## Scale button

This button is used to calibrate the analyser on a standard solution.



To avoid a wrong calibration, check the zero or redo a zero before doing a calibration.

A new calibration factor is calculated after entering the standard value.
The calibration history will be updated with the time and date of the calibration attached to the new calibration factor.

For more details, refer to the “recalibration” section.

# 8 Signal graph

This graph displays the lamp spectrum get during the last measuring cycle. It is updated during the measuring cycle when the lamp is flashing.

For more details or to investigate about the signal, press anywhere on the graph to zoom it as below:

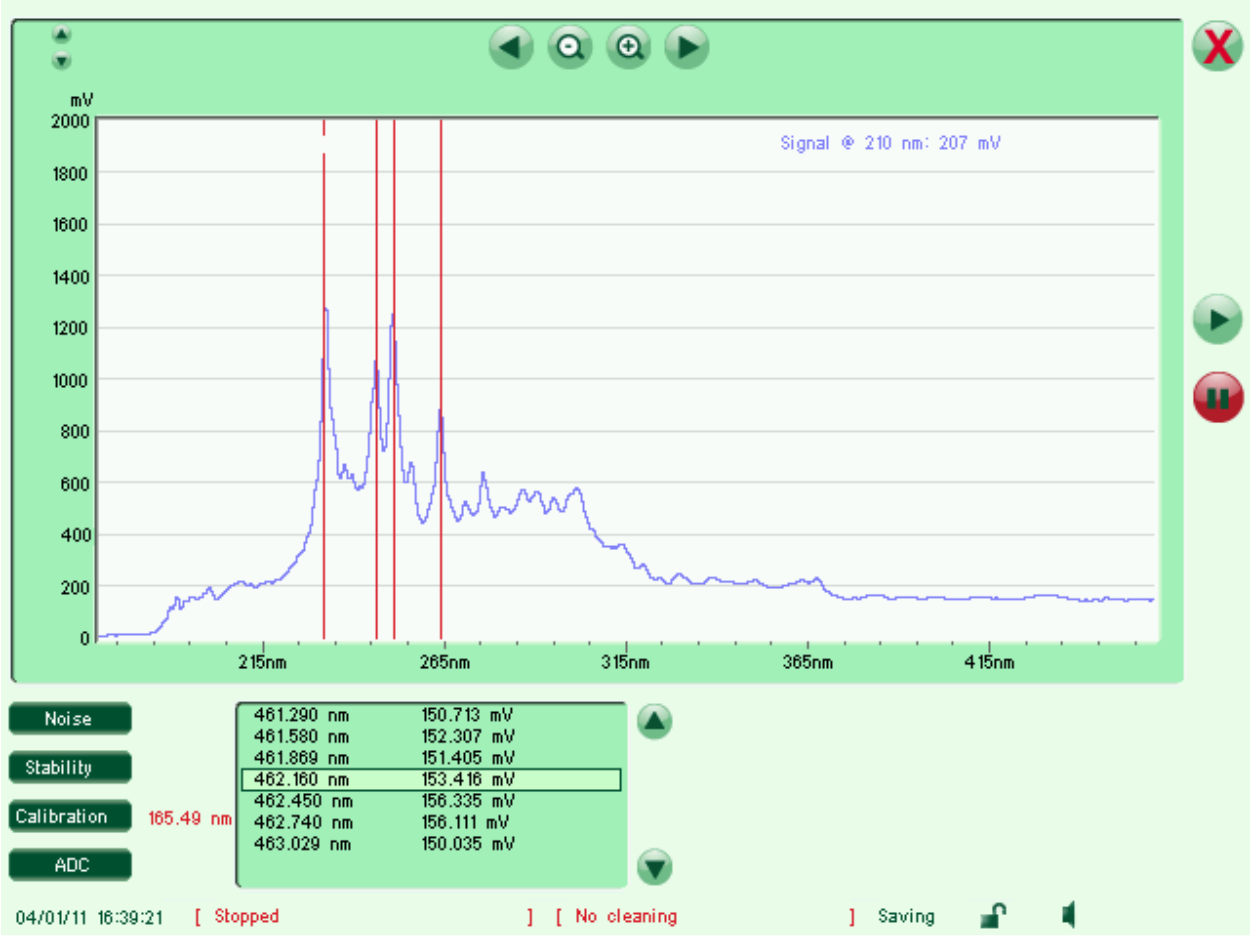


To acquire again the lamp signal, press on the “play” button.

With pure water inside the flow cell, the signal must not be saturated (below 2000 mV) on the two wavelengths bands used for the absorbance calculation defined as “Peak wavelength” and “Ref wavelength” on the check screen. Otherwise, an error will occur during the measuring cycle.

The values can be read by moving the cursor with the vertical arrows.

If necessary, use the horizontal arrows to displace the graph or press on the graph to zoom it. The Y scale is automatic but may be override by the small arrows placed above the Y axis.

## 9 Absorbance spectrum

This graph displays the absorbance spectrum get during the last measuring cycle. It is displayed in light grey during a measuring cycle until updated.

For more details or to investigate about the absorbance spectrum, press anywhere on the graph to zoom it as below:




The average absorbance for the peak wavelength band and for the reference wavelength band are represented by a green line and displayed above the curve.

The difference is used to calculate the final concentration.

The values can be read by moving the cursor with the vertical arrows.

If necessary, use the horizontal arrows to displace the graph or press on the graph to zoom it. The Y scale is automatic but may be override by the small arrows placed above the Y axis.

## 10 Reaction graph

This graph shows the PO4 measured concentration all along the reaction time for checking the reaction development.

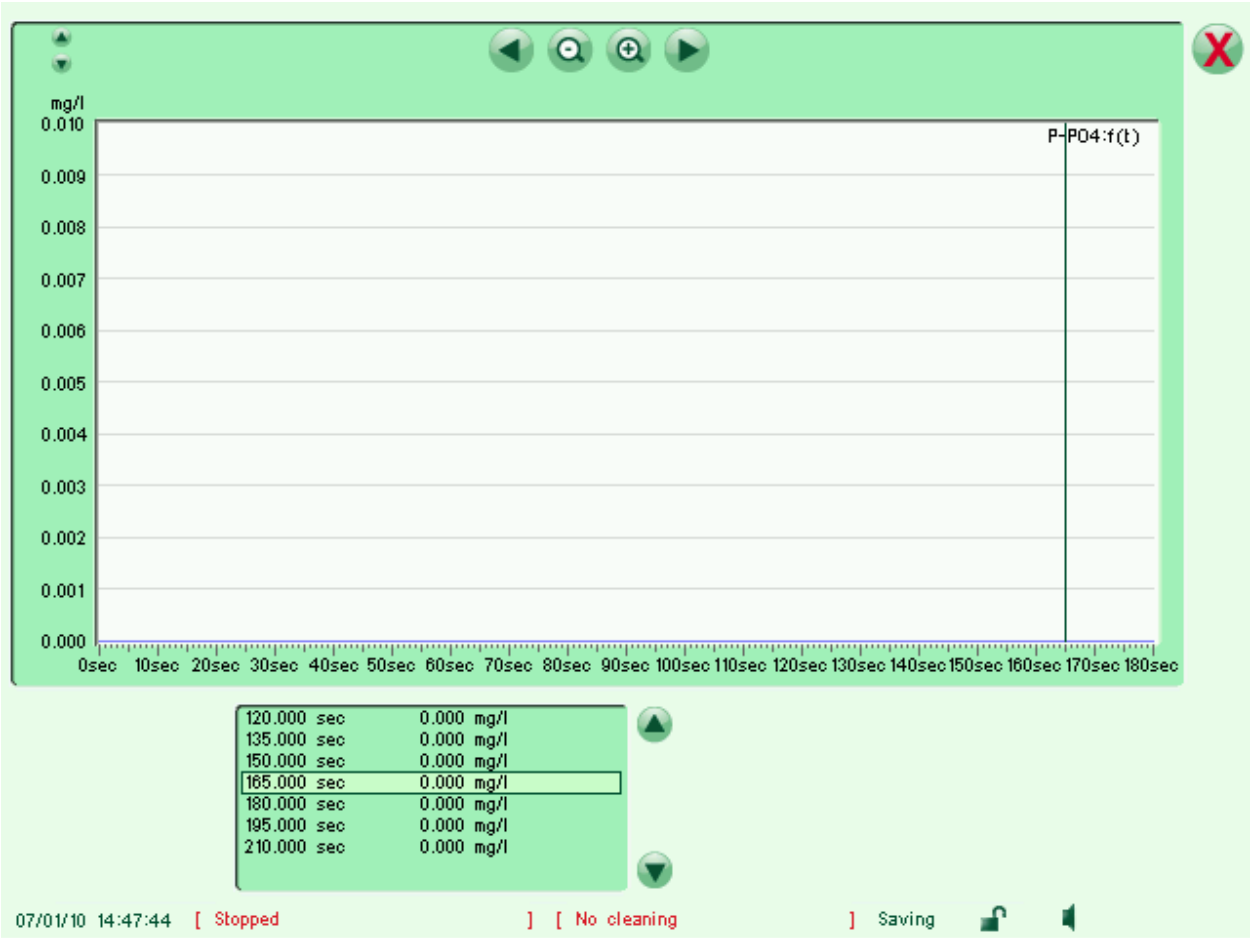


## 11 Label

This field allows changing the channel label displayed with the measurement. The label size is limited to 6 characters.

## 12 Unit

This field allows changing the channel unit displayed with the measurement. The label size is limited to 6 characters.




### Display mode

This button allows selecting the concentration display mode as P of PO4 (default mode) or as PO4.
If P-PO4 is selected, the PO4 concentrations are multiplied by 32/96=0.3333 before displaying and the label is automatically updated to “P-PO4”.
The measurements previously stored in the internal memory will keep their original values.




### Negative values displayed

Negatives values are possible for most of the measurements as they result of normal fluctuations if the measurement is close to zero.

By default, the display of negative values is allowed as negative values may also result from a wrong zero and consequently it may be useful to be aware of such problem when seeing strongly negative values.

But as negative values have no theoretical meaning, it’s possible to replace them by zero by deselecting this function.




### Number of decimals

This field allows changing the number of decimal displayed for the measurement value to remove not significant decimals.

Note: this choice does not affect the measurements stored in the internal memory.




### Number of averaging

The measurement as displayed on the process screen (or read under MODBUS protocol or available on the 4-20 mA output) can be formed by the average over a number of basic measurements defined by the field.
It can be useful to improve the repeatability of the measurements if the response time is not critical.

By default, no averaging is performed and this field contains a value of 1.

## 17 Temperature adjustment

The temperature of the sample given by the internal temperature probe can be adjusted by this field. This adjustment is not important as any difference of temperature is taken in account during the calibration. But if this value is changed significantly, a new calibration must be done.

## 18 Temperature coefficient

The colorimetric result is slightly affected by the temperature. This coefficient is used for the temperature compensation.

## 19 4-20 mA output

This button indicates if a 4-20 mA output has been installed or not for this channel (option).

If a module has been installed, its position is displayed on the right. Pressing on this button shows the popup below that enable to test the 4-20 mA output by pressing on the “test” button.

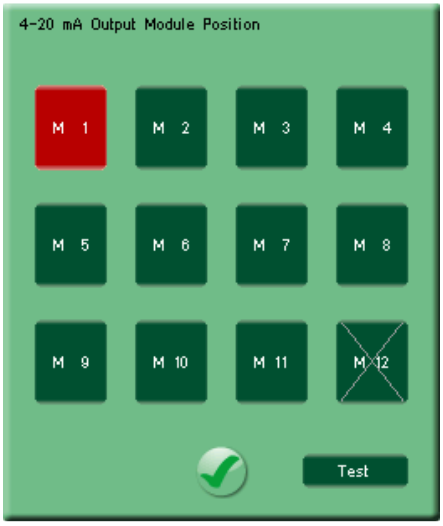

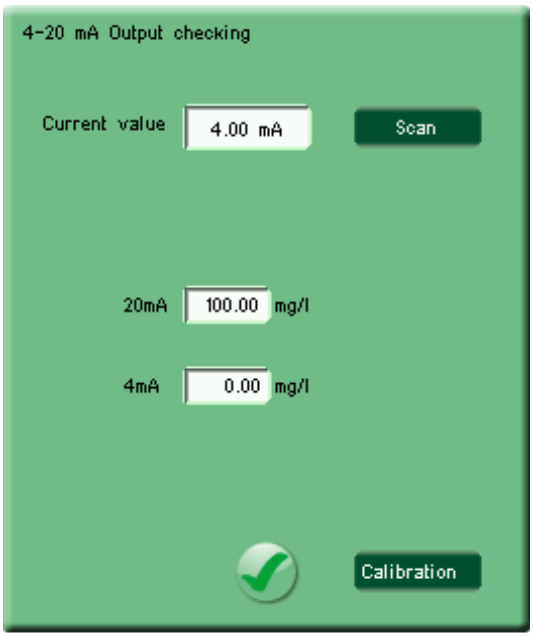


The current value of the 4-20 mA output is displayed on the top, based on the last process measurement (but not on the test measurement to avoid disturbances on the process supervisor system).

The “scan” key allows scanning the 4-20 mA output mA by mA for testing purpose only.

The scale value for 20 mA and 4 mA are displayed below. These preset values can be changed by pressing on these fields.

If the output value doesn’t mach exactly with the theoretical value, it’s possible to calibrate the output by pressing on the “calibration” key. Then real values for 4 and 20 mA must be entered.

Note: position M12 is not available for the 4-20 mA output modules.




## Calibration factor

This field allows changing the calibration factor of the channel.
Precautions must be taken before changing this value.

This factor is normally changed automatically while doing a calibration by pressing on the “scale” button and then recorded in the calibration history. This multiplying factor is taken in account as the last step before displaying the measurement value.



Note: this factor must be set to 1.0 before doing a new linearization curve




## Scale factor

This field allows changing the scale factor of the channel.
Precautions must be taken before changing this value.

This factor is normally determined in factory to transform the basic measurement to a scaled value in the final unit, mg/l for example.
It is has no reason to be changed except if internal elements are replaced.




## Number of readings

This field allows changing the number of basic readings averaged to obtain one final measurement.

Increasing this value improve the repeatability but increase also the measuring time.
Depending on the application, it can be exceptionally increased or decreased.




## Minimum signal

This field fix the minimum light signal value over the wavelength range taken in account for the measurement. An error will be displayed if the signal over the wavelength range is lower than this value.




## Reaction time

This field allows changing the reaction time before measuring.

Precautions must be taken before changing this value as an incomplete reaction time can affect the result.




## Reagent time

This field allows changing the reagent pumping.

Precautions must be taken before changing this value as improper reagent concentration might affect the result.




### Peak wavelength

This field allows changing the peak wavelength taken in account for the measurement. It corresponds to a wavelength absorbed by developed colour inside the sample.

It can be changed exceptionally to avoid a known interference or to reduce the sensitivity.




### Peak width

This field allows changing the width band of the peak wavelength taken in account for the measurement.

It may be exceptionally enlarged or reduced to avoid a known interference.




### Reference wavelength

This field allows changing the reference wavelength taken in account for the measurement. It corresponds normally to a wavelength where developed colour inside the sample doesn't absorb.

It can be changed exceptionally to avoid a known interference.




### Reference width

This field allows changing the width band of the reference wavelength taken in account for the measurement.

It may be exceptionally enlarged or reduced to avoid a known interference.




### Last calibration window

This window displays the 10 last calibrations done with the date, time and new calibration factor.




### Linearity graph and values

This area concerns the linearity compensation applied on the rough measurements.

The Beer-Lambert law used on most of the measurements is not linear for high concentrations due to a light mask effect. Therefore it's necessary to introduce a correction before displaying the final concentration. This correction is based on the linearity curve represented on the top.

The Y-axis corresponds to the rough measurements entered on the M1 to M10 fields while the X-axis corresponds to the standard or final measurement, entered on the S1 to S10 fields.

The M1-M10 and S1-S10 values must be strictly increasing. It's highly recommended to put 0.0 and 0.0 as starting values for S1 and M1. The final value is linearly extrapolated between these points.




### Linearity ON/OFF

This button allows deactivating temporary the linearity curve (OFF), for example to redo a new linearity curve.
The linearity curve is automatically reactivated (ON) when leaving the check screen.

#### 4.12 .3 Recalibration

The analyser is factory calibrated. However, periodical checking is recommended and a recalibration might be necessary after several months depending of the conditions of use.

To recalibrate the analyser, proceed as follow:

- Prepare a 1 mg/l P-PO4 standard. For this weight 4.39 g of dried potassium phosphate (KH2PO4) and dilute in 1litre of distilled water to obtain a mere solution of 1g/l NH4.

Then take 1 ml of this mere solution and complete to 1 litre of distilled water.

- Do a manual measurement on this standard using the check screen (as describe above).

- Press on the "scale" button of the check screen and then enter the standard value on the keypad.

The calibration is finished. A new calibration factor has been calculated and has been recorded inside the calibration history displayed on the check screen.

This new calibration factor will be taken in account for all the further measurements.

## 4.13 Rhodamine

### 4.13 .1 Principle

The measuring principle is based on the orange light fluorescence that is a typical characteristic of the Rhodamine.

The light is generated by a pulsed xenon lamp to reach an ultra long life time.
The excitation filter limits the bandwidth of the excitation light, while the emission filter selects the specific fluorescent light.

The detection is done by a high sensitivity photomultiplier.

A second detector (optional) is used to compensate the eventual absorbance of the sample due to turbidity.

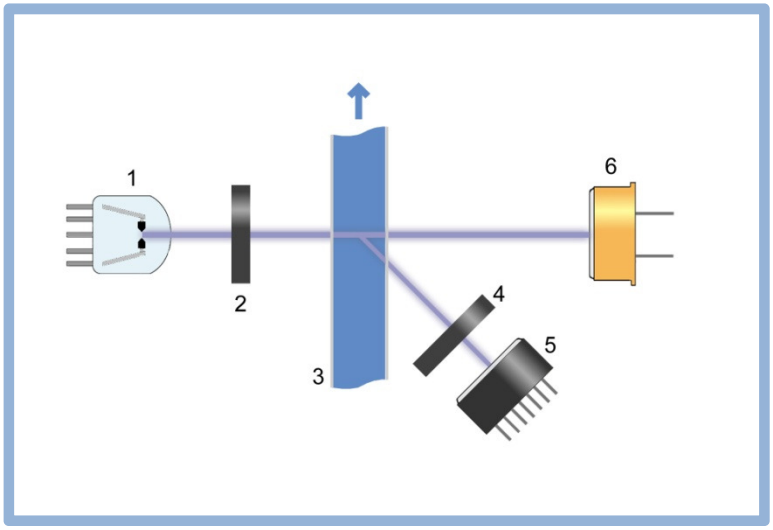


| | | | |
|---|---|---|---|
| 1 | Xenon UV lamp | 4 | Emission filter |
| 2 | Excitation filter | 5 | Photomultiplier |
| 3 | Flow cell | 6 | Photo detector |

### 4.13 .2 Test

From the process screen, press on the “tools” icon and then on the channel to test, or directly to the channel area as a shortcut.

If you are logged in user mode, the parameters are masked. You must be logged in administrator mode to access to the parameters (default password is 456).

The check screen as below is displayed. The concentration or error code corresponds to the last measurement done, while signal values and graph are updated continuously.

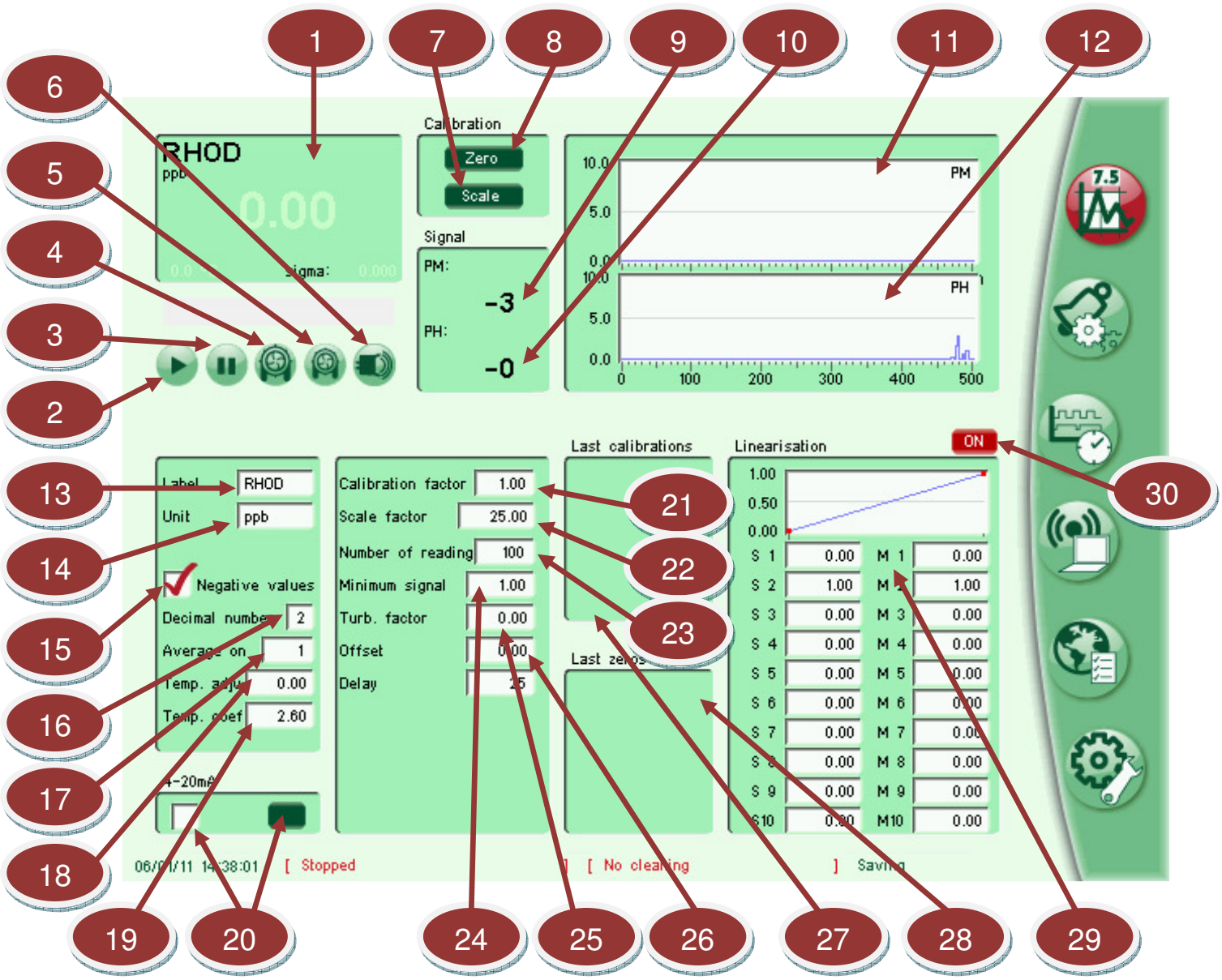




## Measurement window

This window displays the last measured value (or the error code in case of error, refer to troubleshooting section) with proper label and unit, as well as the sample temperature and standard deviation (sigma) obtained on the elemental acquisitions.

During a measuring cycle, the last measured value is display in light green until replaced by the new value in black.

The number of decimal can be adjusted, refer to the field below.




## Start button

Pressing on this button starts a manual measuring cycle. It can be aborted at any time by pressing on the stop button. At the end of the cycle, a new value will be displayed on the measurement window.

The process value on the process screen will not be updated by this measurement to avoid any interference with the plant supervisor system, same concerning the MODBUS channel's value, 4-20 mA output and alarm relays (if any).




## Stop button

Pressing on this button stop and aborts any engaged measuring cycle. It can also be used to stop the sampling pump or cleaning pump.




## Sampling pump button

Pressing on this button starts the sampling pump. The pump will stop automatically after 10 seconds. It can also be stopped at any time by pressing on the stop button.

Note: this button is deactivated during a measuring cycle.




## Cleaning pump button

Pressing on this button starts the cleaning pump. The pump will stop automatically after the time defined in the acid "cleaning time" field of the timing screen.
It can also be stopped at any time by pressing on the stop button.

Note: this button is deactivated during a measuring cycle.




## Ultrasonic cleaning button

Pressing on this button starts the ultrasonic cleaning. The cleaning will stop automatically after the time defined in the ultrasonic “cleaning time” field of the timing screen.
It can also be stopped at any time by pressing on the stop button.

Note: this button is deactivated during a measuring cycle.




## Scale button

This button is used to calibrate the analyser on a standard solution.



To avoid a wrong calibration, check the zero or redo a zero before doing a calibration.

A new calibration factor is calculated after entering the standard value.
The calibration history will be updated with the time and date of the calibration attached to the new calibration factor.

For more details, refer to the “recalibration” section.




## Zero button

This button is used for zeroing the measurement.



Put first pure water inside the flow cell before pressing on this button.

Note: an auto-zero is performed automatically during each acid cleaning if this option is selected on the timing screen.

## 9 PM signal

This window displays the PM signal continuously. This signal corresponds to the fluorescent light re-emitted by the Rhodamine.

On pure water, this signal is normally close to zero with fluctuations of a few tens of mV.

When the light signal added to the darkness signal reach 3000 mV, a message "**OVL!**" in red is displayed to indicate a saturation of the acquisition system.

It might be caused by an over-range concentration of the sample or by the ambient light if the door of the analyser is opened with a high level of ambient light (sun, daylight).

## 10 Photo detector signal

This window displays the photo detector signal continuously (optional). This signal corresponds to the excitation light of the sample. It is use to compensate an eventual absorption of the excitation blue light by the sample, for example due to turbidity.

On pure water, the signal must normally be in a 200 mV to 2000 mV range.

When the light signal added to the darkness signal reach 3000 mV, a message "**OVL!**" in red is displayed to indicate a saturation of the acquisition system.
It might be caused by ambient light if the door of the analyser is opened with a high level of ambient light (sun, daylight).

## 11 PM Signal graph

This graph displays the PM signal continuously updated. This signal corresponds to the fluorescent light re-emitted by the Rhodamine.

For more details or to investigate about the signal, press anywhere on the graph to zoom it as below:




The average signal value in mV and its standard deviation (sigma) on the last 500 acquisitions are displayed on the bottom right of the screen.

The values can be read by moving the cursor with the vertical arrows. After reading, restart the acquisitions by pressing on the “play” button if necessary.

If necessary, use the horizontal arrows to displace the graph or press on the graph to zoom it. The Y scale is automatic but may be override by the small arrows placed above the Y axis.




## Photo detector signal graph

This graph displays the photo detector signal continuously updated. This signal corresponds to the excitation light of the sample.

For more details or to investigate about the signal, press anywhere on the graph to zoom it. Refer to PM signal graph for the zoom display.




## Label

This field allows changing the channel label displayed with the measurement. The label size is limited to 6 characters.




## Unit

This field allows changing the channel unit displayed with the measurement. The label size is limited to 6 characters.




## Negative values displayed

Negatives values are possible for most of the measurements as they result of normal fluctuations if the measurement is close to zero.

By default, the display of negative values is allowed as negative values may also result from a wrong zero and consequently it may be useful to be aware of such problem when seeing strongly negative values.

But as negative values have no theoretical meaning, it's possible to replace them by zero by deselecting this function.




## Number of decimals

This field allows changing the number of decimal displayed for the measurement value to remove not significant decimals.

Note: this choice does not affect the measurements stored in the internal memory.




### Number of averaging

The measurement as displayed on the process screen (or read under MODBUS protocol or available on the 4-20 mA output) can be formed by the average over a number of basic measurements defined by the field.
It can be useful to improve the repeatability of the measurements if the response time is not critical.

By default, no averaging is performed and this field contains a value of 1.




### Temperature adjustment

The temperature of the sample given by the internal temperature probe can be adjusted by this field. This adjustment is not important as any difference of temperature is taken in account during the calibration. But if this value is changed, a new calibration must be done.




### Temperature coefficient

The fluorescence is affected by the temperature. This coefficient is used for the temperature compensation.




### 4-20 mA output

This button indicates if a 4-20 mA output has been installed or not for this channel (option).

If a module has been installed, its position is displayed on the right. Pressing on this button shows the popup below that enable to test the 4-20 mA output by pressing on the “test” button.

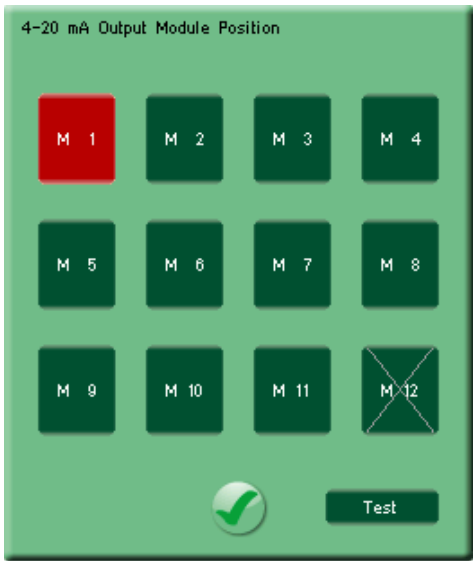


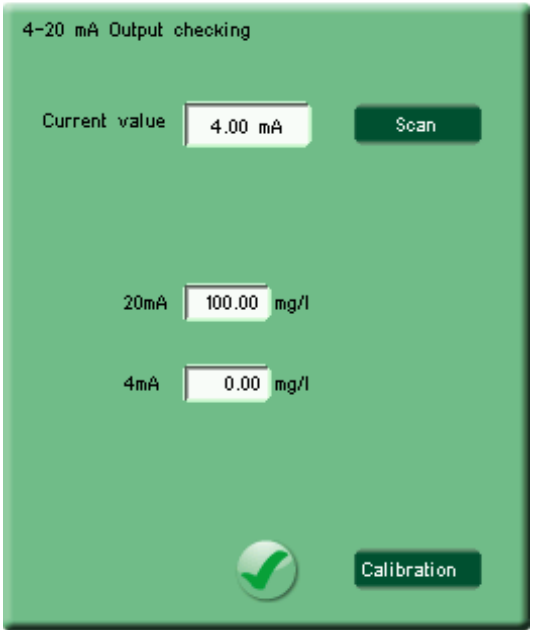


The current value of the 4-20 mA output is displayed on the top, based on the last process measurement (but not on the test measurement to avoid disturbances on the process supervisor system).

The “scan” key allows scanning the 4-20 mA output mA by mA for testing purpose only.

The scale value for 20 mA and 4 mA are displayed below. These preset values can be changed by pressing on these fields.

If the output value doesn’t mach exactly with the theoretical value, it’s possible to calibrate the output by pressing on the “calibration” key. Then real values for 4 and 20 mA must be entered.

Note: position M12 is not available for the 4-20 mA output modules.




## Calibration factor

This field allows changing the calibration factor of the channel.
Precautions must be taken before changing this value.

This factor is normally changed automatically while doing a calibration by pressing on the "scale" button and then recorded in the calibration history. This multiplying factor is taken in account as the last step before displaying the measurement value.



Note: this factor must be set to 1.0 before doing a new linearization curve




## Scale factor

This field allows changing the scale factor of the channel.
Precautions must be taken before changing this value.

This factor is normally determined in factory to transform the basic measurement to a scaled value in the final unit, mg/l for example.
It is has no reason to be changed except if internal elements are replaced.




## Number of readings

This field allows changing the number of basic readings averaged to obtain one final measurement.

Increasing this value improve the repeatability but increase also the measuring time.
Depending on the application, it can be exceptionally increased or decreased.




## Minimum signal

This field fix the minimum light signal value over the wavelength range taken in account for the measurement. An error will be displayed if the signal over the wavelength range is lower than this value.




## Turbidity factor

This field enable a compensation of the excitation light loses due to turbidity.
A value of 1.0 corresponds to a basic compensation.




### Offset

This field show the internal offset applied on the signal for the zeroing.
It is updated at each zeroing and has not to be changed.
It can be used for troubleshooting by the manufacturer.




### Last calibration window

This window displays the 10 last calibrations done with the date, time and new calibration factor.




### Last zeros window

This window displays the 10 last zeros done with the date, time and zero value adjustment, whatever manually or by an automatic cleaning cycle.

Note: a strong zero adjustment value might reveal an abnormal zeroing operation.




### Linearity graph and values

This area concerns the linearity compensation applied on the rough measurements.

The Beer-Lambert law used on most of the measurements is not linear for high concentrations due to a light mask effect. Therefore it's necessary to introduce a correction before displaying the final concentration. This correction is based on the linearity curve represented on the top.

The Y-axis corresponds to the rough measurements entered on the M1 to M10 fields while the X-axis corresponds to the standard or final measurement, entered on the S1 to S10 fields.

The M1-M10 and S1-S10 values must be strictly increasing. It's highly recommended to put 0.0 and 0.0 as starting values for S1 and M1. The final value is linearly extrapolated between these points.




### Linearity ON/OFF

This button allows deactivating temporary the linearity curve (OFF), for example to redo a new linearity curve.
The linearity curve is automatically reactivated (ON) when leaving the check screen.

### 4.13 .3 Recalibration

The analyser is factory calibrated. However, periodical checking is recommended and a recalibration might be necessary after several months depending of the conditions of use.

To recalibrate the analyser, proceed as follow:

- Prepare a 1 mg/l standard of Rhodamine

- Do a manual measurement using the check screen (as described above)

- Press on the “scale” button of the check screen and then enter the standard value

The calibration is finished. A new calibration factor has been calculated and has been recorded inside the calibration history displayed on the check screen.

This new calibration factor will be taken in account for all the further measurements.

## 4.14 UV-VIS spectrum

### 4.14.1 Principle

The measuring principle is based on the full UV-visible light absorption according to the Beer-Lambert law:

$$[C] = k \cdot \log\left(\frac{I_0}{I_1}\right)$$

With $[C]$: Sample concentration
$k$: Absorption coefficient (molecule specific)
$I_0$: Light intensity before the sample
$I_1$: Light intensity after of the sample

The light is generated by a pulsed xenon lamp to reach an ultra long life time.
The absorption spectrum is performed by a concave grating coupled to a 2048 pixels CCD (Charge-Coupled Device).

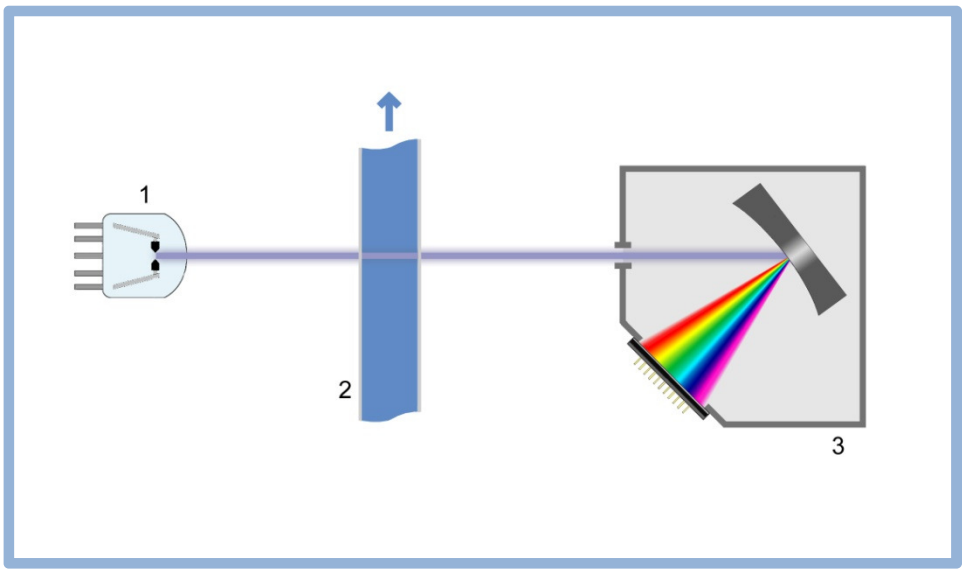


| | |
|---|---|
| 1 | Xenon flash lamp |
| 2 | Sample flow cell |
| 3 | Spectrograph with concave grating and CCD detector |

### 4.14.2 Test

From the process screen, press on the “tools” icon and then on the channel to test, or directly to the channel area as a shortcut.

If you are logged in user mode, the parameters are masked. You must be logged in administrator mode to access to the parameters (default password is 456).

The check screen as below is displayed.

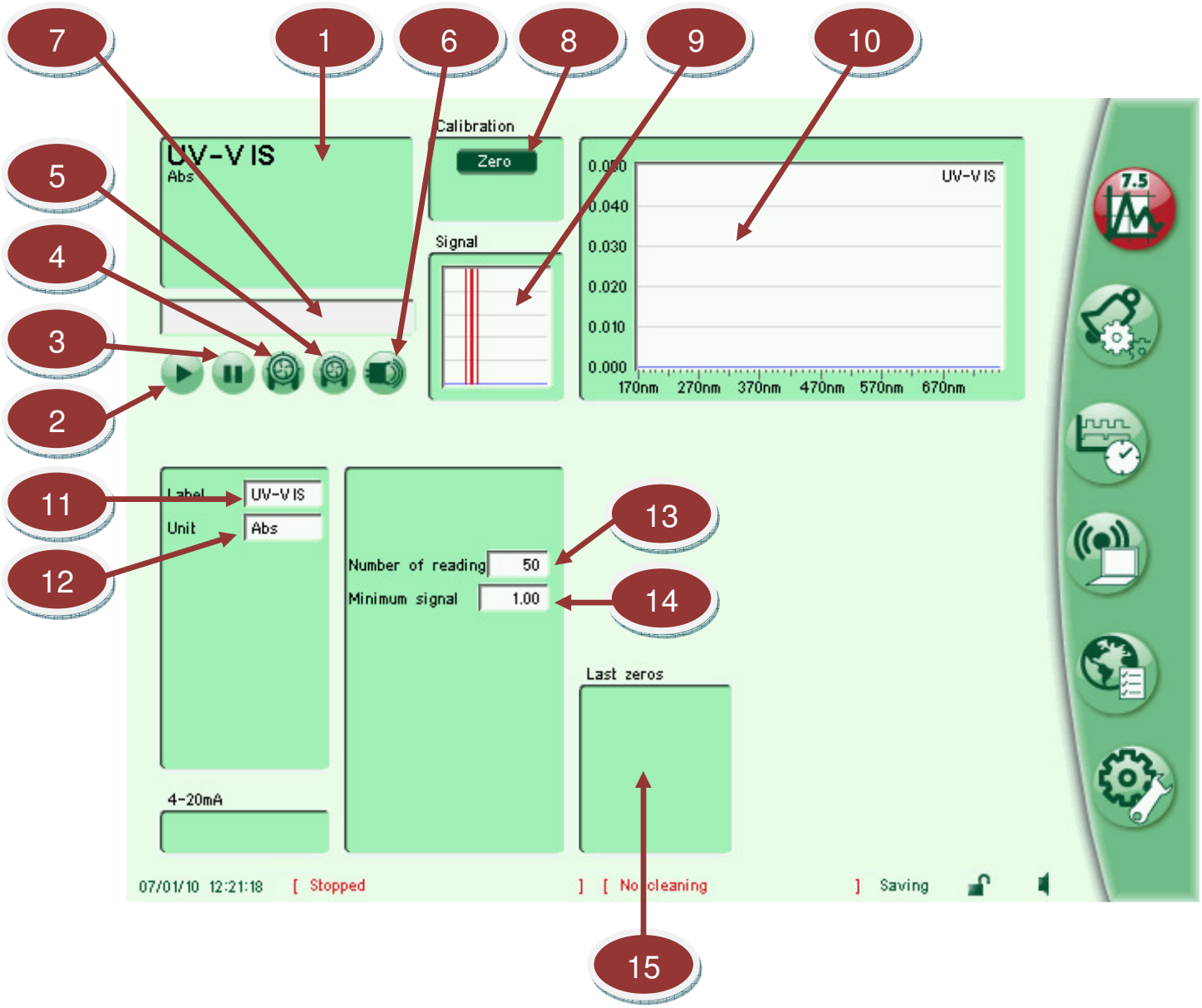




### Measurement window

This window displays only the label and unit as no measured value is attached to the full UV-VIS spectrum. In case of a measuring error, the error code is written, refer to troubleshooting section.




### Start button

Pressing on this button starts a manual measuring cycle. It can be aborted at any time by pressing on the stop button. At the end of the cycle, a new value will be displayed on the measurement window.

The process value on the process screen will not be updated by this measurement to avoid any interference with the plant supervisor system, same concerning the MODBUS channel's value, 4-20 mA output and alarm relays (if any).




### Stop button

Pressing on this button stop and aborts any engaged measuring cycle. It can also be used to stop the sampling pump or the cleaning pump.




### Sampling pump button

Pressing on this button starts the sampling pump. The pump will stop automatically after 10 seconds. It can also be stopped at any time by pressing on the stop button.

Note: this button is deactivated during a measuring cycle.




### Cleaning pump button

Pressing on this button starts the cleaning pump. The pump will stop automatically after the time defined in the acid "cleaning time" field of the timing screen.
It can also be stopped at any time by pressing on the stop button.

Note: this button is deactivated during a measuring cycle.




## Ultrasonic cleaning button

Pressing on this button starts the ultrasonic cleaning. The cleaning will stop automatically after the time defined in the ultrasonic “cleaning time” field of the timing screen.
It can also be stopped at any time by pressing on the stop button.

Note: this button is deactivated during a measuring cycle.




## Measuring cycle steps display

During a measuring cycle or a zeroing cycle, this area displays a counter of the elemental acquisitions preceded by the message “measuring…” or “zeroing…” respectively.




## Zero button

This button is used for zeroing the measurement.



Put first pure water inside the flow cell before pressing on this button.

Note: an auto-zero is performed automatically during each acid cleaning if this option is selected on the timing screen.

## 9 Signal graph

This graph displays the lamp spectrum get during the last measuring cycle. It is updated during the measuring cycle when the lamp is flashing.

For more details or to investigate about the signal, press anywhere on the graph to zoom it as below:

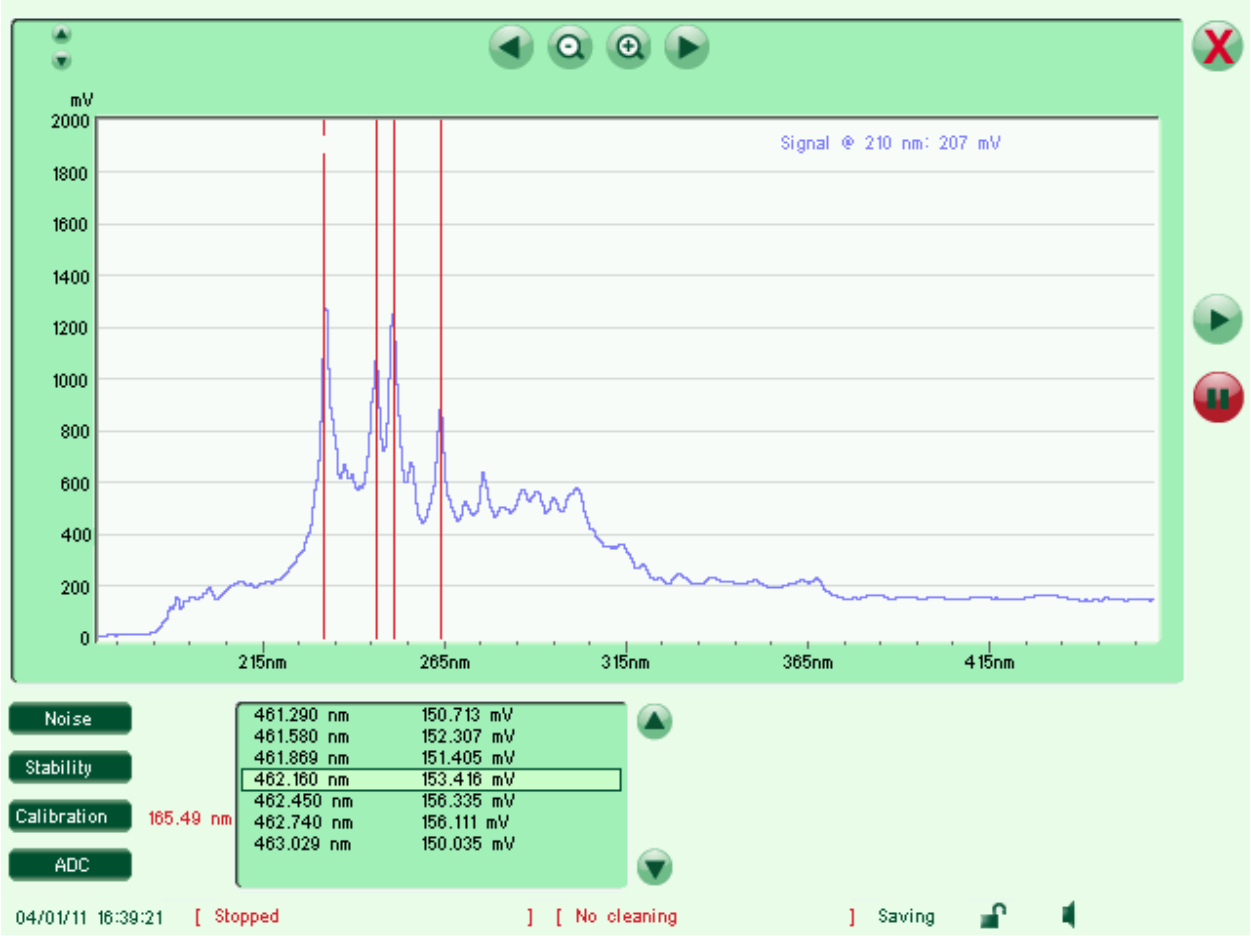


To acquire again the lamp signal, press on the “play” button.

With pure water inside the flow cell, the signal must not be saturated (below 2000 mV) over the full spectrum, otherwise, an error will occur during the measuring cycle.

The values can be read by moving the cursor with the vertical arrows.

If necessary, use the horizontal arrows to displace the graph or press on the graph to zoom it. The Y scale is automatic but may be override by the small arrows placed above the Y axis.

## 10 Absorbance spectrum

This graph displays the absorbance spectrum get during the last measuring cycle. It is displayed in light grey during a measuring cycle until updated.

For more details or to investigate about the absorbance spectrum, press anywhere on the graph to zoom it as below:

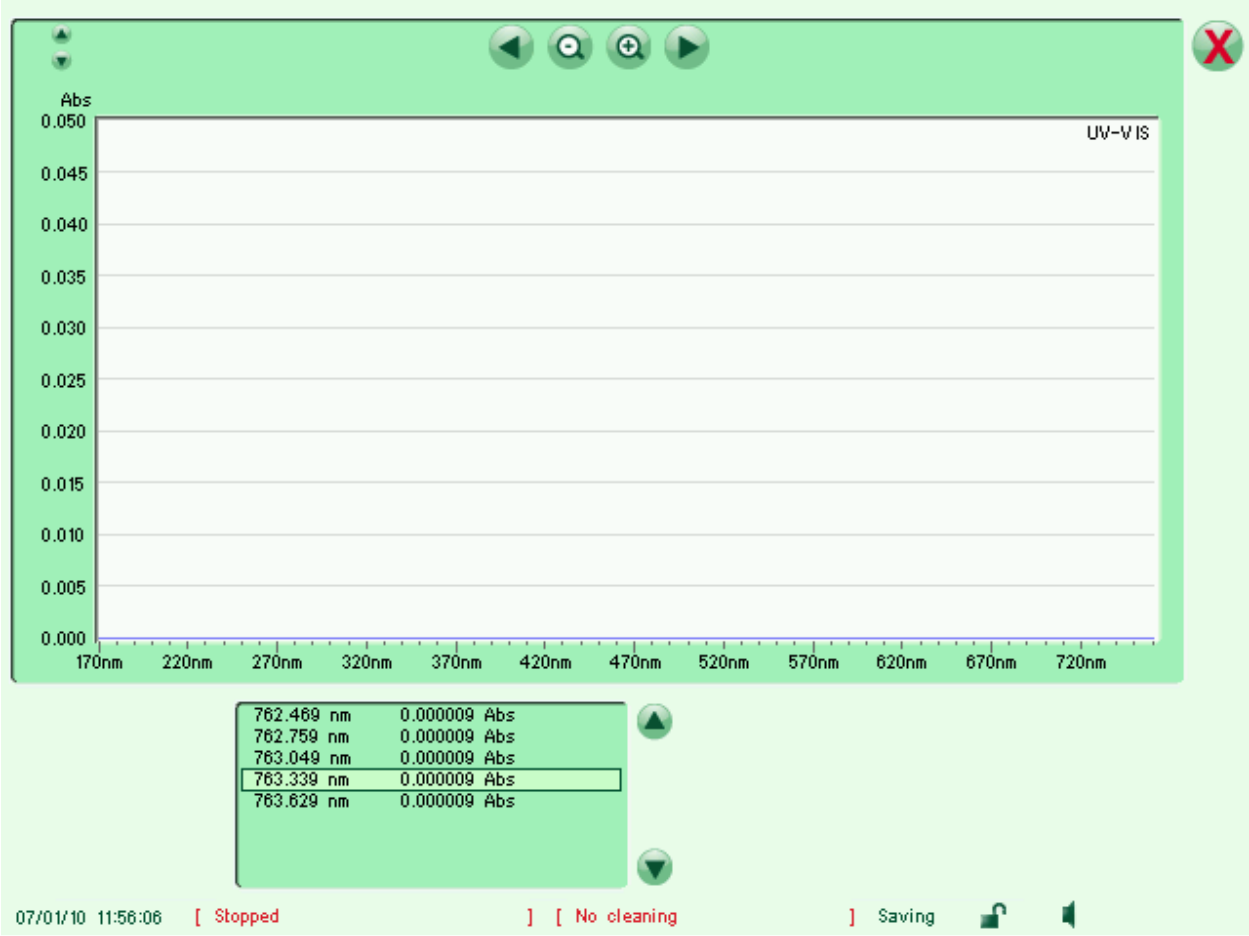


The values can be read by moving the cursor with the vertical arrows.

If necessary, use the horizontal arrows to displace the graph or press on the graph to zoom it. The Y scale is automatic but may be override by the small arrows placed above the Y axis.




### Label

This field allows changing the channel label displayed with the measurement. The label size is limited to 6 characters.




### Unit

This field allows changing the channel unit displayed with the measurement. The label size is limited to 6 characters.




### Number of readings

This field allows changing the number of basic readings averaged to obtain one final measurement.

Increasing this value improve the repeatability but increase also the measuring time. Depending on the application, it can be exceptionally increased or decreased.




### Minimum signal

This field fix the minimum light signal value over the wavelength range taken in account for the measurement. An error will be displayed if the signal over the wavelength range is lower than this value.




### Last zero window

This window displays the 10 last calibrations done with the date, time and new calibration factor.

## 4.15 Temperature

### 4.15.1 Principle

The temperature measurement is based on the resistance measurement of a standard platinum element of 100 ohm at 0°C (Pt100). This element is generally included in a pH or conductivity electrode.

The table below shows the Pt 100 resistance in ohm for temperature between 0°C and 100°C.

| °C | 0 | 1 | 2 | 3 | 4 | 5 | 6 | 7 | 8 | 9 |
|---|---|---|---|---|---|---|---|---|---|---|
| 0 | 100.00 | 100.39 | 100.78 | 101.17 | 101.56 | 101.95 | 102.34 | 102.73 | 103.12 | 103.51 |
| 10 | 103.90 | 104.29 | 104.68 | 105.07 | 105.46 | 105.85 | 106.24 | 106.63 | 107.02 | 107.40 |
| 20 | 107.79 | 108.18 | 108.57 | 108.96 | 109.35 | 109.73 | 110.12 | 110.51 | 110.90 | 111.28 |
| 30 | 111.67 | 112.06 | 112.45 | 112.83 | 113.22 | 113.61 | 113.99 | 114.38 | 114.77 | 115.15 |
| 40 | 115.54 | 115.93 | 116.31 | 116.70 | 117.08 | 117.47 | 117.85 | 118.24 | 118.62 | 119.01 |
| 50 | 119.40 | 119.78 | 120.16 | 120.55 | 120.93 | 121.32 | 121.70 | 122.09 | 122.47 | 122.86 |
| 60 | 123.24 | 123.62 | 124.01 | 124.39 | 124.77 | 125.16 | 125.54 | 125.92 | 126.31 | 126.69 |
| 70 | 127.07 | 127.45 | 127.84 | 128.22 | 128.60 | 128.98 | 129.37 | 129.75 | 130.13 | 130.51 |
| 80 | 130.89 | 131.27 | 131.66 | 132.04 | 132.42 | 132.80 | 133.18 | 133.56 | 133.94 | 134.32 |
| 90 | 134.70 | 135.08 | 135.46 | 135.84 | 136.22 | 136.60 | 136.98 | 137.36 | 137.74 | 138.12 |

### 4.15.2 Test

From the process screen, press on the “tools” icon and then on the channel to test, or directly to the channel area as a shortcut.

If you are logged in user mode, the parameters are masked. You must be logged in administrator mode to access to the parameters (default password is 456).

The check screen as below is displayed. The temperature (or error code), signals and history graph are continuously updated.

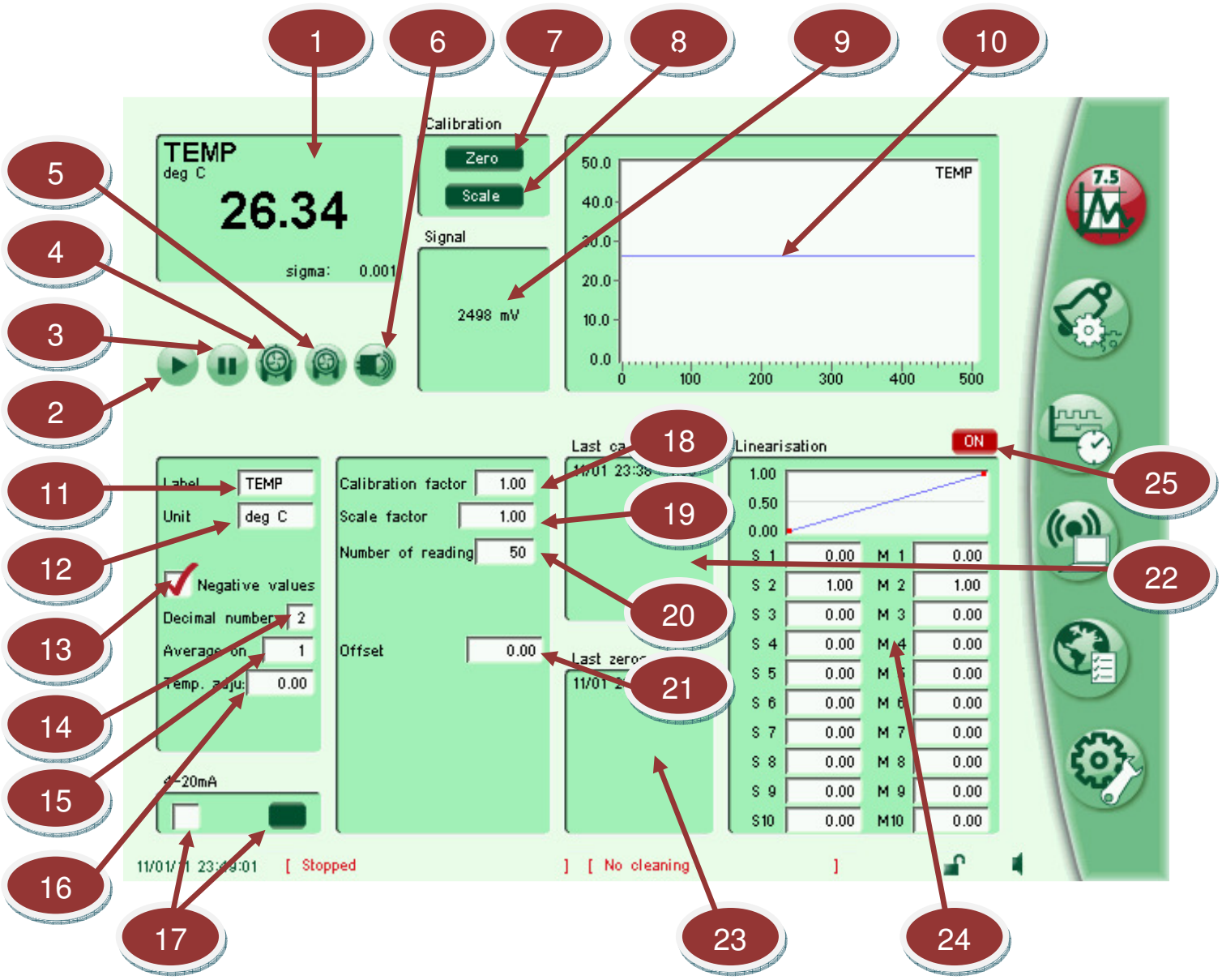




### Measurement window

This window displays the last measured value (or the error code in case of error, refer to troubleshooting section) with proper label and unit.

During an automatic measuring cycle, the measured value is display in light green until replaced by the new value in black.

The number of decimal can be adjusted, refer to the field below.




### Start button

This button is not used for this parameter.




### Stop button

Pressing on this button stops the sampling pump or the cleaning pump.




### Sampling pump button

Pressing on this button starts the sampling pump. The pump will stop automatically after 10 seconds. It can also be stopped at any time by pressing on the stop button.




### Cleaning pump button

Pressing on this button starts the cleaning pump. The pump will stop automatically after the time defined in the acid “cleaning time” field of the timing screen.
It can also be stopped at any time by pressing on the stop button.




### Ultrasonic cleaning button

Pressing on this button starts the ultrasonic cleaning. The cleaning will stop automatically after the time defined in the ultrasonic “cleaning time” field of the timing screen.
It can also be stopped at any time by pressing on the stop button.




## Zero button

This button is used for zeroing the measurement.



Put first the temperature element at 0°C in a Dewar filled with ice and water.




## Scale button

This button is used to calibrate the temperature element with a reference thermometer.



To avoid a wrong calibration, check the zero or redo a zero before doing a calibration.

A new calibration factor is calculated after entering the standard value.
The calibration history will be updated with the time and date of the calibration attached to the new calibration factor.

For more details, refer to the “recalibration” section.




## Signal value

This area displays the signal in mV read on the temperature channel of the electrode module.

## 10 Temperature history graph

This area displays the temperature over the last 500 acquisitions, starting when the check screen appears.

For more details or to investigate about the signal, press anywhere on the graph to zoom it as below:

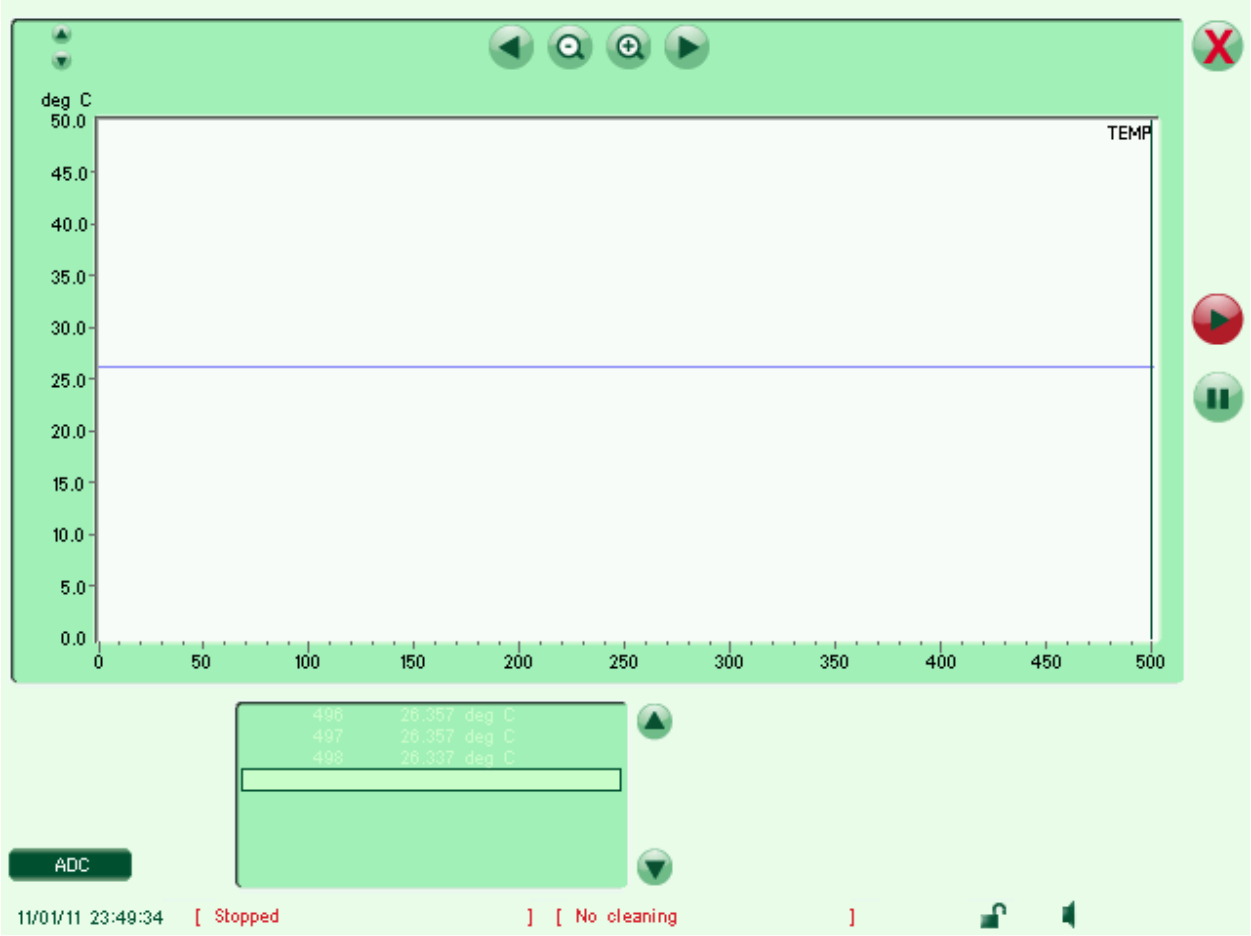


The values can be read by moving the cursor with the vertical arrows.

If necessary, use the horizontal arrows to displace the graph or press on the graph to zoom it. The Y scale is automatic but may be override by the small arrows placed above the Y axis.




### Label

This field allows changing the channel label displayed with the measurement. The label size is limited to 6 characters.




### Unit

This field allows changing the channel unit displayed with the measurement. The label size is limited to 6 characters.




### Negative values displayed

Negatives values are possible for most of the measurements as they result of normal fluctuations if the measurement is close to zero.

By default, the display of negative values is allowed as negative values may also result from a wrong zero and consequently it may be useful to be aware of such problem when seeing strongly negative values.

But as negative values have no theoretical meaning, it's possible to replace them by zero by deselecting this function.




### Number of decimals

This field allows changing the number of decimal displayed for the measurement value to remove not significant decimals.

Note: this choice does not affect the measurements stored in the internal memory.




### Number of averaging

The measurement as displayed on the process screen (or read under MODBUS protocol or available on the 4-20 mA output) can be formed by the average over a number of basic measurements defined by the field.
It can be useful to improve the repeatability of the measurements if the response time is not critical.

By default, no averaging is performed and this field contains a value of 1.

## 16 Temperature adjustment

The temperature can be adjusted with a reference thermometer without doing a complete calibration by entering an offset value in this field.

## 17 4-20 mA output

This button indicates if a 4-20 mA output has been installed or not for this channel (option).

If a module has been installed, its position is displayed on the right. Pressing on this button shows the popup below that enable to test the 4-20 mA output by pressing on the “test” button.

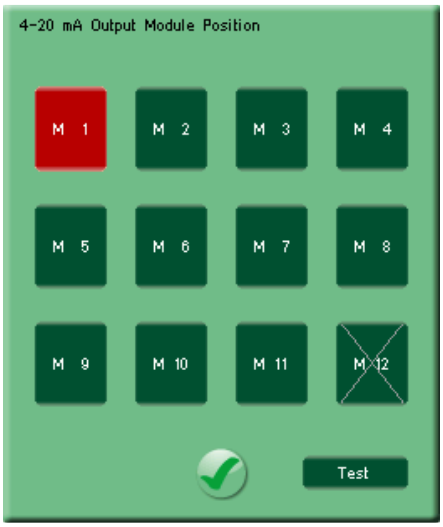


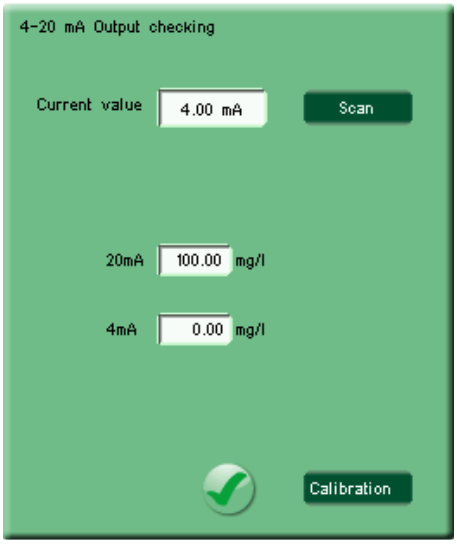

The current value of the 4-20 mA output is displayed on the top, based on the last process measurement (but not on the test measurement to avoid disturbances on the process supervisor system).

The “scan” key allows scanning the 4-20 mA output mA by mA for testing purpose only.

The scale value for 20 mA and 4 mA are displayed below. These preset values can be changed by pressing on these fields.

If the output value doesn’t mach exactly with the theoretical value, it’s possible to calibrate the output by pressing on the “calibration” key. Then real values for 4 and 20 mA must be entered.

Note: position M12 is not available for the 4-20 mA output modules.




### Calibration factor

This field allows changing the calibration factor of the channel.
Precautions must be taken before changing this value.

This factor is normally changed automatically while doing a calibration by pressing on the “scale” button and then recorded in the calibration history. This multiplying factor is taken in account as the last step before displaying the measurement value.




### Scale factor

This field allows changing the scale factor of the channel.
Precautions must be taken before changing this value.

This factor is normally determined in factory to transform the basic measurement to a scaled value in the final unit.
It is has no reason to be changed except if internal elements are replaced.




### Number of readings

This field allows changing the number of basic readings averaged to obtain one final measurement.

Increasing this value improve the repeatability but increase also the measuring time.
Depending on the application, it can be exceptionally increased or decreased.




### Offset

This field show the internal offset applied on the signal for the zeroing.
It is updated at each zeroing and has not to be changed.

It can be used for troubleshooting by the manufacturer.




### Last calibration window

This window displays the 10 last calibrations done with the date, time and new calibration factor.




### Last zero window

This window displays the 10 last calibrations done with the date, time and new calibration factor.




### Linearity graph and values

This area concerns the linearity compensation applied on the rough measurements.

Normally, no linearity correction is necessary for the temperature measurement on the water temperature range 0 to 100°C.

The Y-axis corresponds to the rough measurements entered on the M1 to M10 fields while the X-axis corresponds to the standard or final measurement, entered on the S1 to S10 fields.

The M1-M10 and S1-S10 values must be strictly increasing. It's highly recommended to put 0.0 and 0.0 as starting values for S1 and M1. The final value is linearly extrapolated between these points.




### Linearity ON/OFF

This button allows deactivating temporary the linearity curve (OFF), for example to redo a new linearity curve.
The linearity curve is automatically reactivated (ON) when leaving the check screen.

### 4.15.3 Recalibration

The temperature probe is factory calibrated with an accuracy of +/- 1°C. It can be recalibrated if a higher accuracy is requested.

To recalibrate the electrode, proceed as follow:

- Put the temperature probe in a Dewar filled of ice and water

- Do manual measurement using the check screen (as describe above), wait for the stabilisation of the temperature value, and then press on the ZERO key.

- Put the temperature probe in a Dewar filled of water at a temperature between 50°C and 80°C with a reference thermometer inside

- Do manual measurement using the check screen, wait for the stabilisation of the temperature value, then press on the SCALE key and enter the value given by the reference thermometer on the keypad.

The calibration is finished. New offset and calibration factors has been calculated and has been recorded inside the zero and calibration history displayed on the check screen.

These new calibration factors will be taken in account for all the further measurements.

## 4.16 Turbidity by UV absorption with spectrograph

### 4.16.1 Principle

The measuring principle is based on the light absorption to the Beer-Lambert law:

$$[C] = k \cdot \log\left(\frac{I_0}{I_1}\right)$$

With $[C]$: Sample concentration
$k$: Absorption coefficient (molecule specific)
$I_0$: Light intensity before the sample
$I_1$: Light intensity after of the sample

The light is generated by a pulsed xenon lamp to reach an ultra long life time.
The absorption spectrum is performed by a concave grating coupled to a 2048 pixels CCD (Charge-Coupled Device).

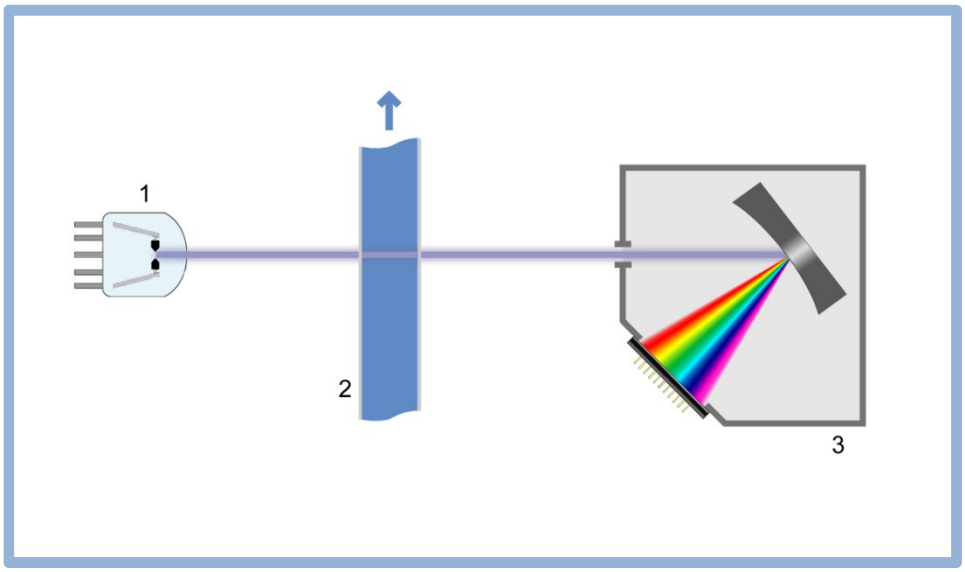


| | |
|---|---|
| 1 | Xenon flash lamp |
| 2 | Sample flow cell |
| 3 | Spectrograph with concave grating and CCD detector |

### 4.16.2 Test

From the process screen, press on the “tools” icon and then on the channel to test, or directly to the channel area as a shortcut.

If you are logged in user mode, the parameters are masked. You must be logged in administrator mode to access to the parameters (default password is 456).

The check screen as below is displayed. The concentration or error code corresponds to the last measurement done, as well as the signal and absorbance graphs.

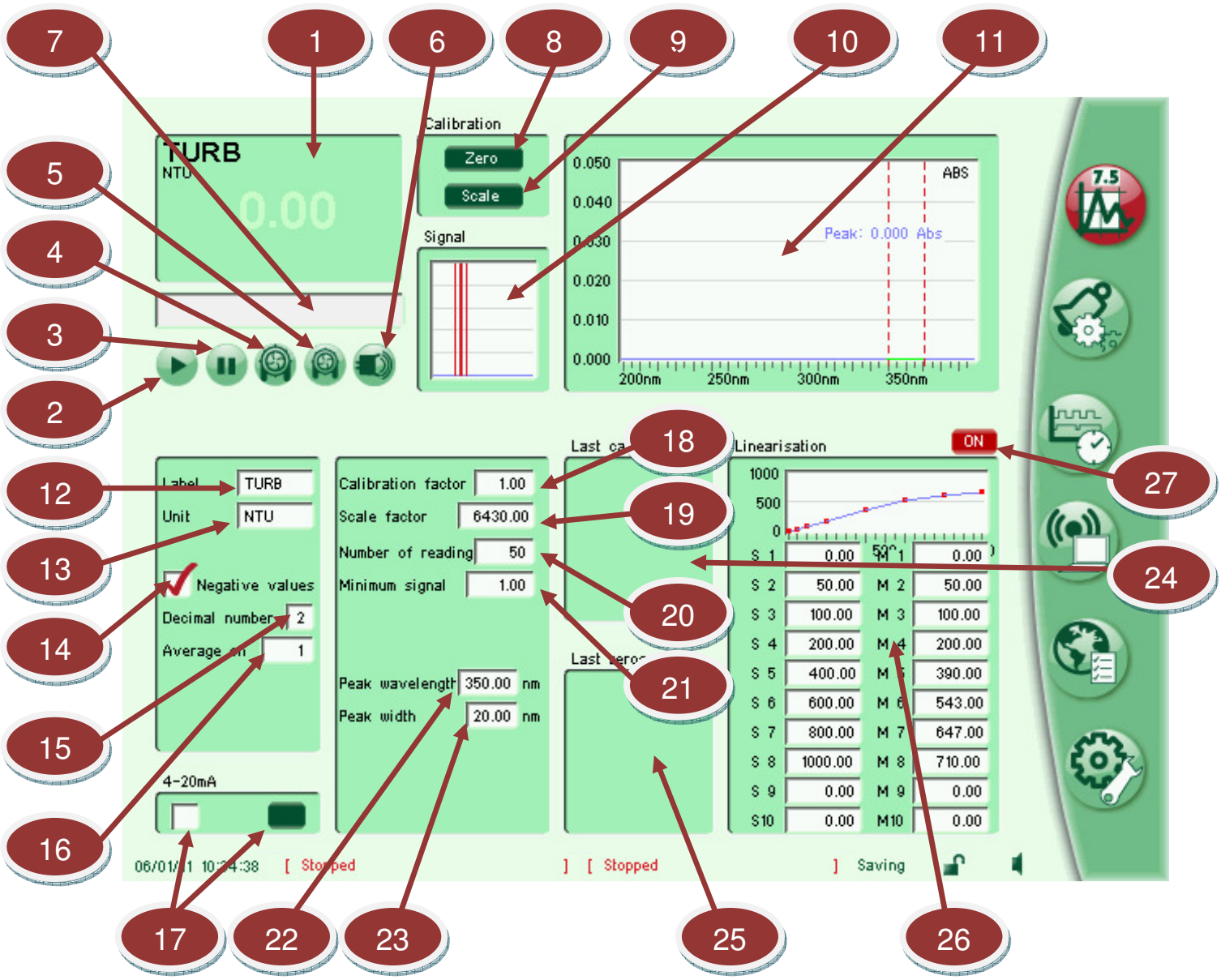




## Measurement window

This window displays the last measured value (or the error code in case of error, refer to troubleshooting section) with proper label and unit.

During a measuring cycle, the last measured value is display in light green until replaced by the new value in black.

The number of decimal can be adjusted, refer to the field below.




## Start button

Pressing on this button starts a manual measuring cycle. It can be aborted at any time by pressing on the stop button. At the end of the cycle, a new value will be displayed on the measurement window.

The process value on the process screen will not be updated by this measurement to avoid any interference with the plant supervisor system, same concerning the MODBUS channel's value, 4-20 mA output and alarm relays (if any).




## Stop button

Pressing on this button stop and aborts any engaged measuring cycle. It can also be used to stop the sampling pump or the cleaning pump.




## Sampling pump button

Pressing on this button starts the sampling pump. The pump will stop automatically after 10 seconds. It can also be stopped at any time by pressing on the stop button.

Note: this button is deactivated during a measuring cycle.




## Cleaning pump button

Pressing on this button starts the cleaning pump. The pump will stop automatically after the time defined in the acid "cleaning time" field of the timing screen.
It can also be stopped at any time by pressing on the stop button.

Note: this button is deactivated during a measuring cycle.




## Ultrasonic cleaning button

Pressing on this button starts the ultrasonic cleaning. The cleaning will stop automatically after the time defined in the ultrasonic “cleaning time” field of the timing screen.
It can also be stopped at any time by pressing on the stop button.

Note: this button is deactivated during a measuring cycle.




## Measuring cycle steps display

During a measuring cycle or a zeroing cycle, this area displays a counter of the elemental acquisitions preceded by the message “measuring…” or “zeroing…” respectively.




## Zero button

This button is used for zeroing the measurement.



Put first pure water inside the flow cell before pressing on this button.

Note: an auto-zero is performed automatically during each acid cleaning if this option is selected on the timing screen.




## Scale button

This button is used to calibrate the analyser on a standard solution.



To avoid a wrong calibration, check the zero or redo a zero before doing a calibration.

A new calibration factor is calculated after entering the standard value.
The calibration history will be updated with the time and date of the calibration attached to the new calibration factor.

For more details, refer to the “recalibration” section.

## 10 Signal graph

This graph displays the lamp spectrum get during the last measuring cycle. It is updated during the measuring cycle when the lamp is flashing.

For more details or to investigate about the signal, press anywhere on the graph to zoom it as below:

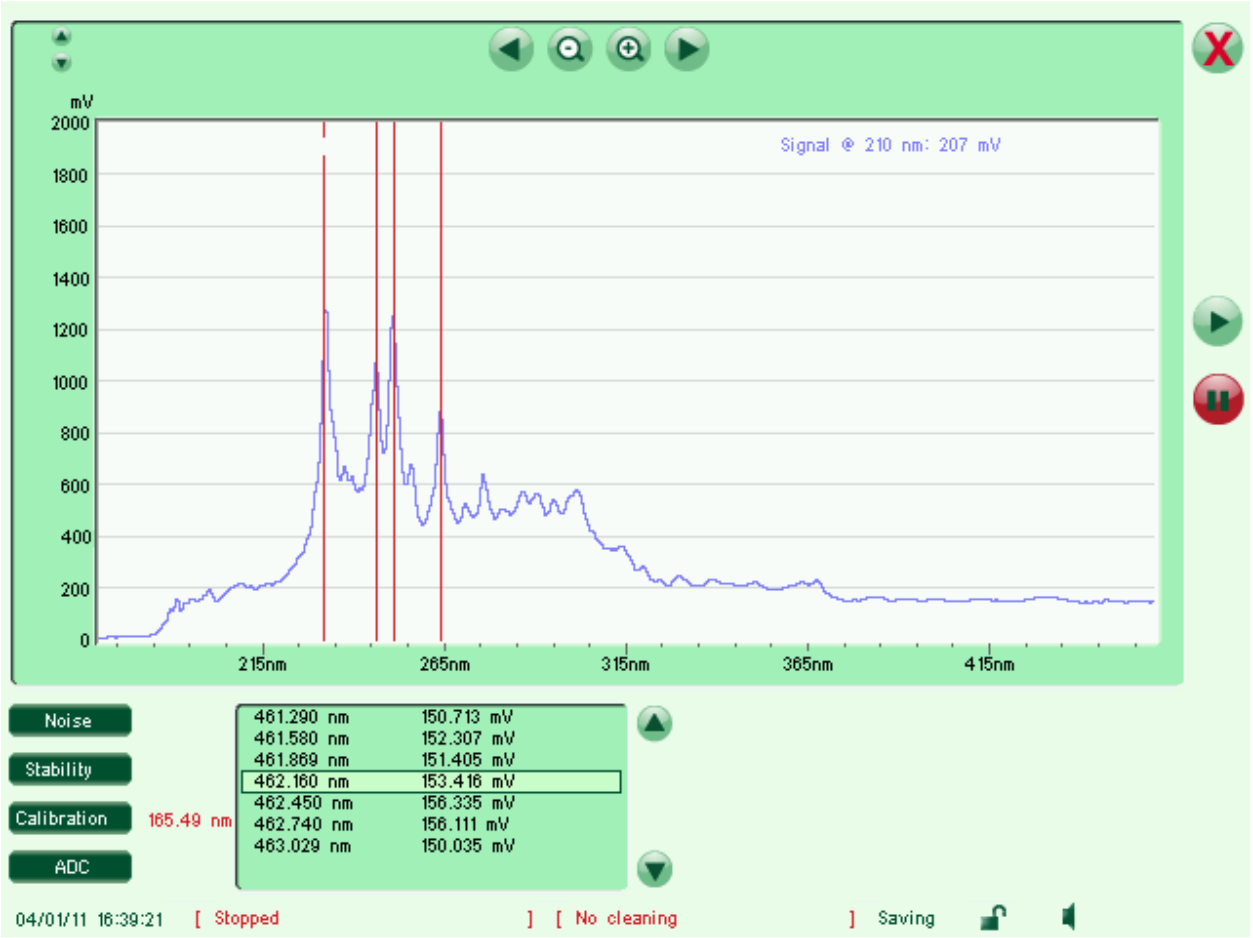


To acquire again the lamp signal, press on the “play” button.

With pure water inside the flow cell, the signal must not be saturated (below 2000 mV) on the two wavelengths bands used for the absorbance calculation defined as “Peak wavelength” and “Ref wavelength” on the check screen. Otherwise, an error will occur during the measuring cycle.

The values can be read by moving the cursor with the vertical arrows.

If necessary, use the horizontal arrows to displace the graph or press on the graph to zoom it. The Y scale is automatic but may be override by the small arrows placed above the Y axis.

# 11 Absorbance spectrum

This graph displays the absorbance spectrum get during the last measuring cycle. It is displayed in light grey during a measuring cycle until updated.

For more details or to investigate about the absorbance spectrum, press anywhere on the graph to zoom it as below:

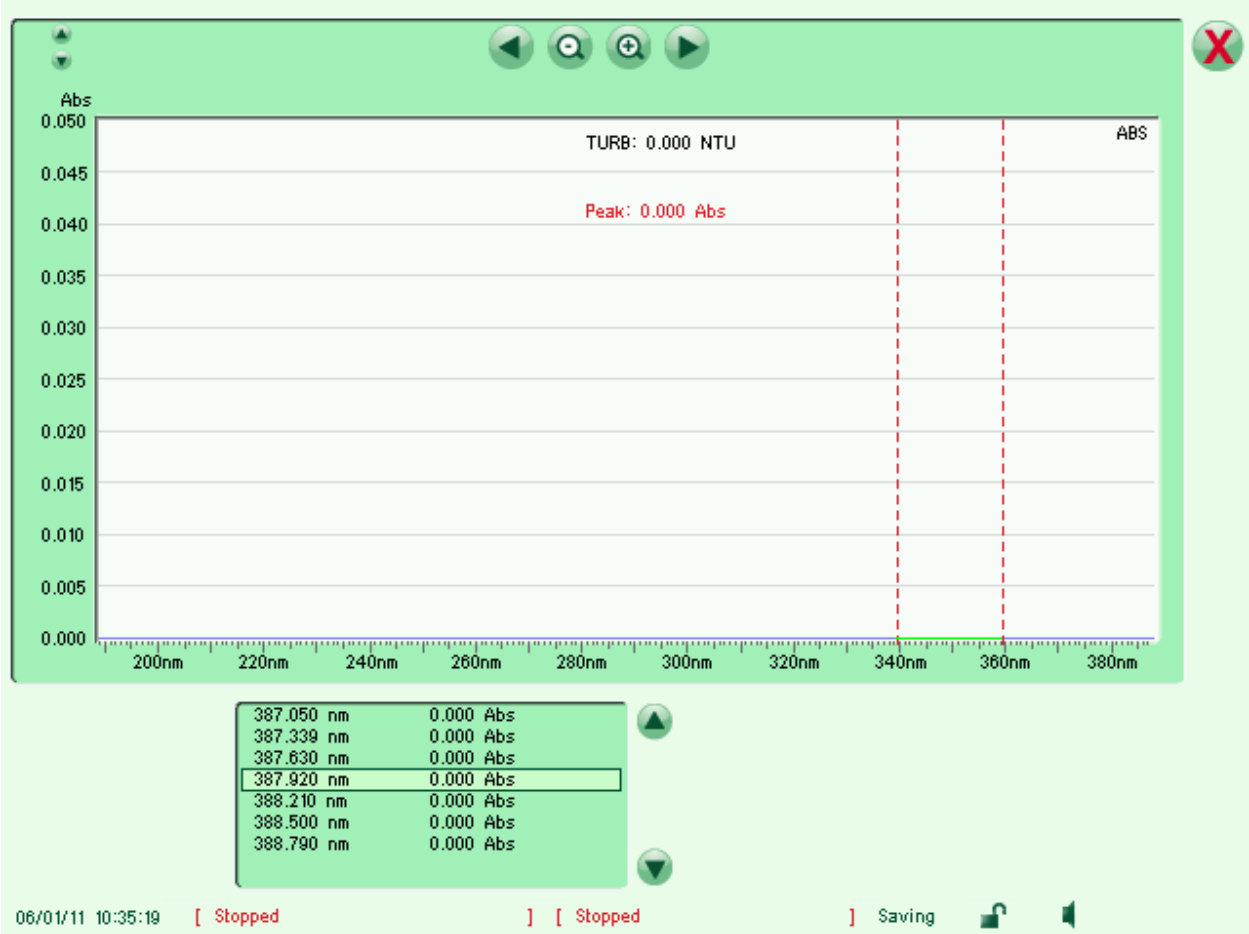


The average absorbance for the peak wavelength band is represented by a green line and displayed above the curve.

The values can be read by moving the cursor with the vertical arrows.

If necessary, use the horizontal arrows to displace the graph or press on the graph to zoom it. The Y scale is automatic but may be override by the small arrows placed above the Y axis.




### Label

This field allows changing the channel label displayed with the measurement. The label size is limited to 6 characters.




### Unit

This field allows changing the channel unit displayed with the measurement. The label size is limited to 6 characters.




### Negative values displayed

Negatives values are possible for most of the measurements as they result of normal fluctuations if the measurement is close to zero.

By default, the display of negative values is allowed as negative values may also result from a wrong zero and consequently it may be useful to be aware of such problem when seeing strongly negative values.

But as negative values have no theoretical meaning, it's possible to replace them by zero by deselecting this function.




### Number of decimals

This field allows changing the number of decimal displayed for the measurement value to remove not significant decimals.

Note: this choice does not affect the measurements stored in the internal memory.




### Number of averaging

The measurement as displayed on the process screen (or read under MODBUS protocol or available on the 4-20 mA output) can be formed by the average over a number of basic measurements defined by the field.
It can be useful to improve the repeatability of the measurements if the response time is not critical.

By default, no averaging is performed and this field contains a value of 1.

## 17 4-20 mA output

This button indicates if a 4-20 mA output has been installed or not for this channel (option).

If a module has been installed, its position is displayed on the right. Pressing on this button shows the popup below that enable to test the 4-20 mA output by pressing on the “test” button.

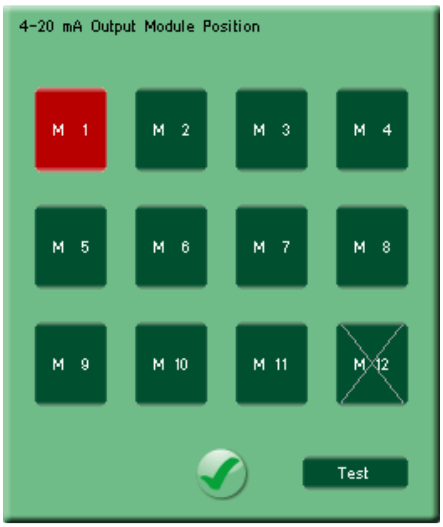


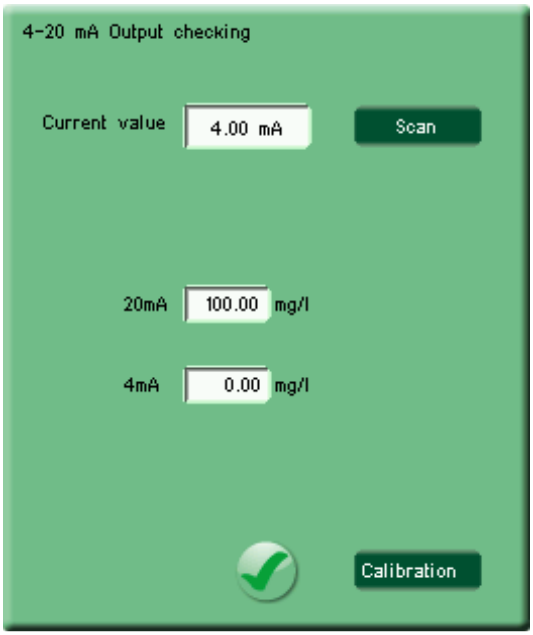

The current value of the 4-20 mA output is displayed on the top, based on the last process measurement (but not on the test measurement to avoid disturbances on the process supervisor system).

The “scan” key allows scanning the 4-20 mA output mA by mA for testing purpose only.

The scale value for 20 mA and 4 mA are displayed below. These preset values can be changed by pressing on these fields.

If the output value doesn’t mach exactly with the theoretical value, it’s possible to calibrate the output by pressing on the “calibration” key. Then real values for 4 and 20 mA must be entered.

Note: position M12 is not available for the 4-20 mA output modules.




### Calibration factor

This field allows changing the calibration factor of the channel.
Precautions must be taken before changing this value.

This factor is normally changed automatically while doing a calibration by pressing on the “scale” button and then recorded in the calibration history. This multiplying factor is taken in account as the last step before displaying the measurement value.



Note: this factor must be set to 1.0 before doing a new linearization curve




### Scale factor

This field allows changing the scale factor of the channel.
Precautions must be taken before changing this value.

This factor is normally determined in factory to transform the basic measurement to a scaled value in the final unit, mg/l for example.
It is has no reason to be changed except if internal elements are replaced.




### Number of readings

This field allows changing the number of basic readings averaged to obtain one final measurement.

Increasing this value improve the repeatability but increase also the measuring time.
Depending on the application, it can be exceptionally increased or decreased.

### 21 Minimum signal

This field fix the minimum light signal value over the wavelength range taken in account for the measurement. An error will be displayed if the signal over the wavelength range is lower than this value.

### 22 Peak wavelength

This field allows changing the peak wavelength taken in account for the measurement. It corresponds to a wavelength band used to determine the turbidity of the sample.

The default value is 350 nm. It can be changed exceptionally to avoid a known interference.

### 23 Peak width

This field allows changing the width band of the peak wavelength taken in account for the measurement.

It may be exceptionally enlarged or reduced to avoid a known.

### 24 Last calibration window

This window displays the 10 last calibrations done with the date, time and new calibration factor.

### 25 Last zero window

This window displays the 10 last calibrations done with the date, time and new calibration factor.

### 26 Linearity graph and values

This area concerns the linearity compensation applied on the rough measurements.

The Beer-Lambert law used on most of the measurements is not linear for high concentrations due to a light mask effect. Therefore it's necessary to introduce a correction before displaying the final concentration. This correction is based on the linearity curve represented on the top.

The Y-axis corresponds to the rough measurements entered on the M1 to M10 fields while the X-axis corresponds to the standard or final measurement, entered on the S1 to S10 fields.

The M1-M10 and S1-S10 values must be strictly increasing. It's highly recommended to put 0.0 and 0.0 as starting values for S1 and M1. The final value is linearly extrapolated between these points.




**Linearity ON/OFF**

This button allows deactivating temporary the linearity curve (OFF), for example to redo a new linearity curve.
The linearity curve is automatically reactivated (ON) when leaving the check screen.

### 4.16.3 Recalibration

The analyser is factory calibrated. However, periodical checking is recommended and a recalibration might be necessary after several months depending of the conditions of use.

To recalibrate the analyser, proceed as follow:

- Take a turbidity standard (formazine for example) representative of the measuring range

- Do a manual measurement on this standard using the check screen (as describe above).

- Press on the "scale" button of the check screen and then enter the standard value on the keypad.

The calibration is finished. A new calibration factor has been calculated and has been recorded inside the calibration history displayed on the check screen.

This new calibration factor will be taken in account for all the further measurements.

## 4.17 Turbidity by nephelometry with laser diode

### 4.17.1 Principle

The measuring principle is based on nephelometric method.

The light beam is generated by a pulsed laser diode while the light detection is performed by a photodiode detector placed at 90° from the light beam as represented below:

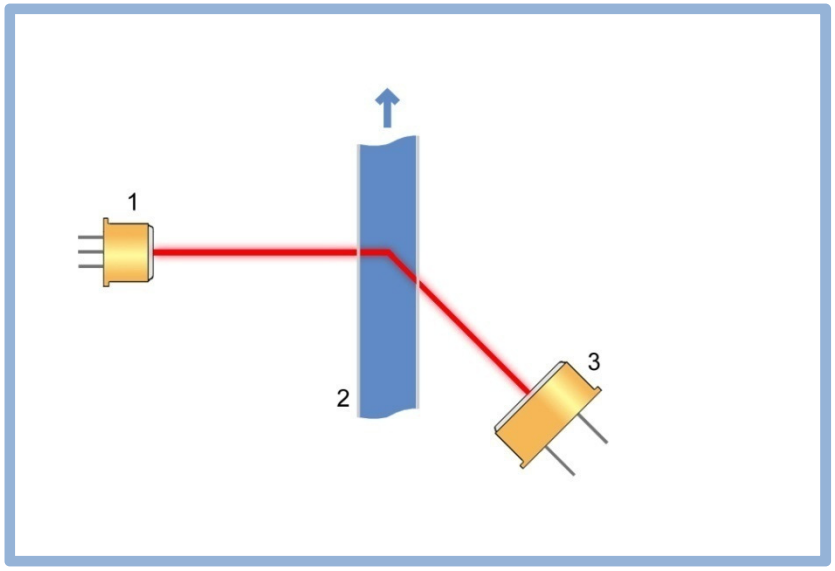


| | |
|---|---|
| 1 | Laser diode source |
| 2 | Sample flow cell |
| 3 | Photo detector |

### 4.17.2 Test

From the process screen, press on the “tools” icon and then on the channel to test, or directly to the channel area as a shortcut.

If you are logged in user mode, the parameters are masked. You must be logged in administrator mode to access to the parameters (default password is 456).

The check screen as below is displayed. The concentration or error code corresponds to the last measurement done, while the signal and signal graph are continuously updated.

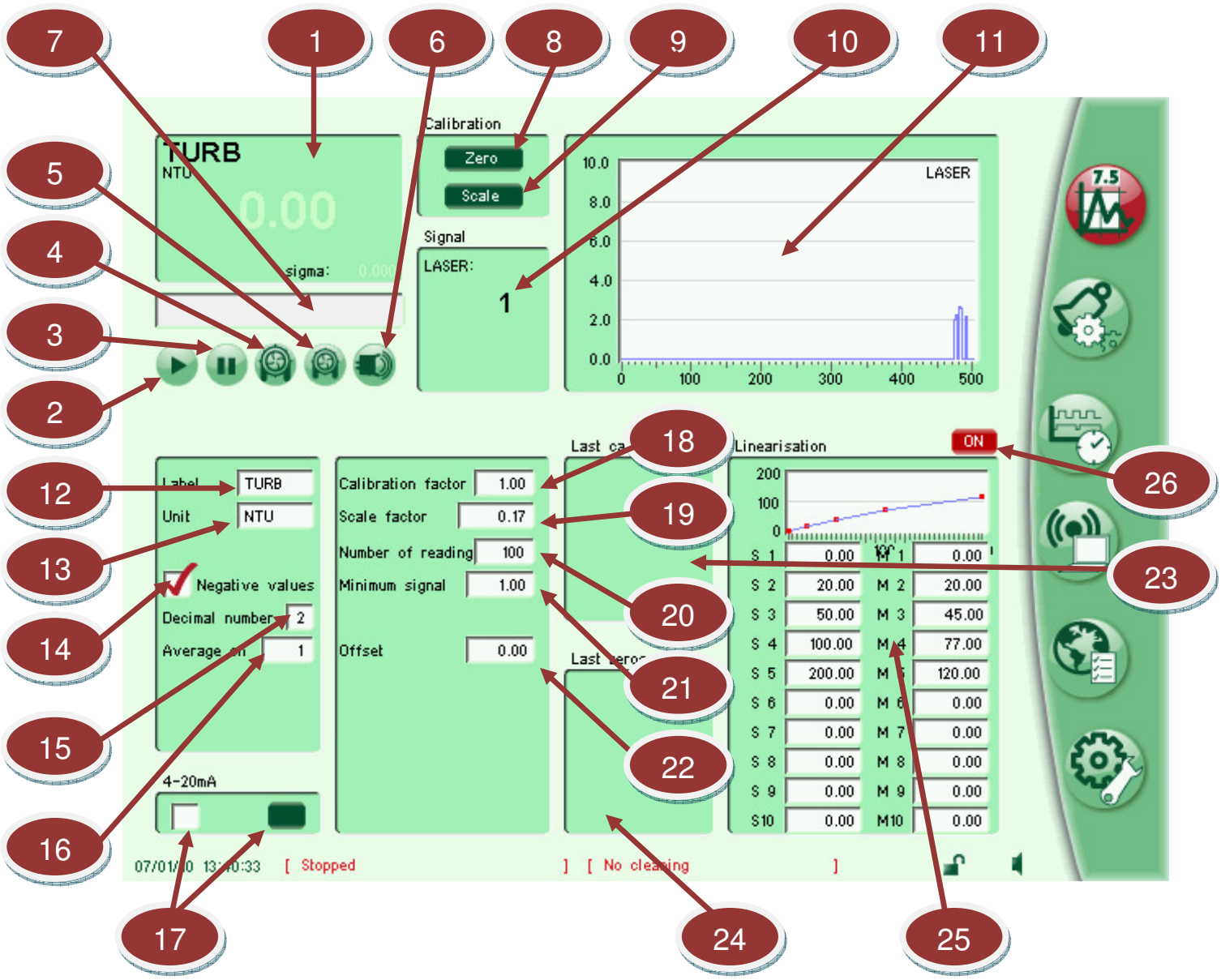




## Measurement window

This window displays the last measured value (or the error code in case of error, refer to troubleshooting section) with proper label and unit.

During a measuring cycle, the last measured value is display in light green until replaced by the new value in black.

The number of decimal can be adjusted, refer to the field below.




## Start button

Pressing on this button starts a manual measuring cycle. It can be aborted at any time by pressing on the stop button. At the end of the cycle, a new value will be displayed on the measurement window.

The process value on the process screen will not be updated by this measurement to avoid any interference with the plant supervisor system, same concerning the MODBUS channel's value, 4-20 mA output and alarm relays (if any).




## Stop button

Pressing on this button stop and aborts any engaged measuring cycle. It can also be used to stop the sampling pump or the cleaning pump.




## Sampling pump button

Pressing on this button starts the sampling pump. The pump will stop automatically after 10 seconds. It can also be stopped at any time by pressing on the stop button.

Note: this button is deactivated during a measuring cycle.




## Cleaning pump button

Pressing on this button starts the cleaning pump. The pump will stop automatically after the time defined in the acid "cleaning time" field of the timing screen.
It can also be stopped at any time by pressing on the stop button.

Note: this button is deactivated during a measuring cycle.




## Ultrasonic cleaning button

Pressing on this button starts the ultrasonic cleaning. The cleaning will stop automatically after the time defined in the ultrasonic “cleaning time” field of the timing screen.
It can also be stopped at any time by pressing on the stop button.

Note: this button is deactivated during a measuring cycle.




## Measuring cycle steps display

During a measuring cycle or a zeroing cycle, this area displays a counter of the elemental acquisitions preceded by the message “measuring…” or “zeroing…” respectively.




## Zero button

This button is used for zeroing the measurement.



Put first pure water inside the flow cell before pressing on this button.

Note: an auto-zero is performed automatically during each acid cleaning if this option is selected on the timing screen.




## Scale button

This button is used to calibrate the analyser on a standard solution.



To avoid a wrong calibration, check the zero or redo a zero before doing a calibration.

A new calibration factor is calculated after entering the standard value.
The calibration history will be updated with the time and date of the calibration attached to the new calibration factor.

For more details, refer to the “recalibration” section.

## 10 Photo detector signal

This window displays the photo detector signal continuously. This signal corresponds to the light re-emitted by the turbidity of the sample from the laser diode.
On pure water, the signal must normally stay below 100 mV.

When the light signal added to the darkness signal reach 3000 mV, a message "**OVL!**" in red is displayed to indicate a saturation of the acquisition system. It might be due to an over-ranged sample.

## 11 Signal graph

This graph displays the light signal re-emitted by the turbidity of the sample from the laser diode.

For more details or to investigate about the signal, press anywhere on the graph to zoom it as below:

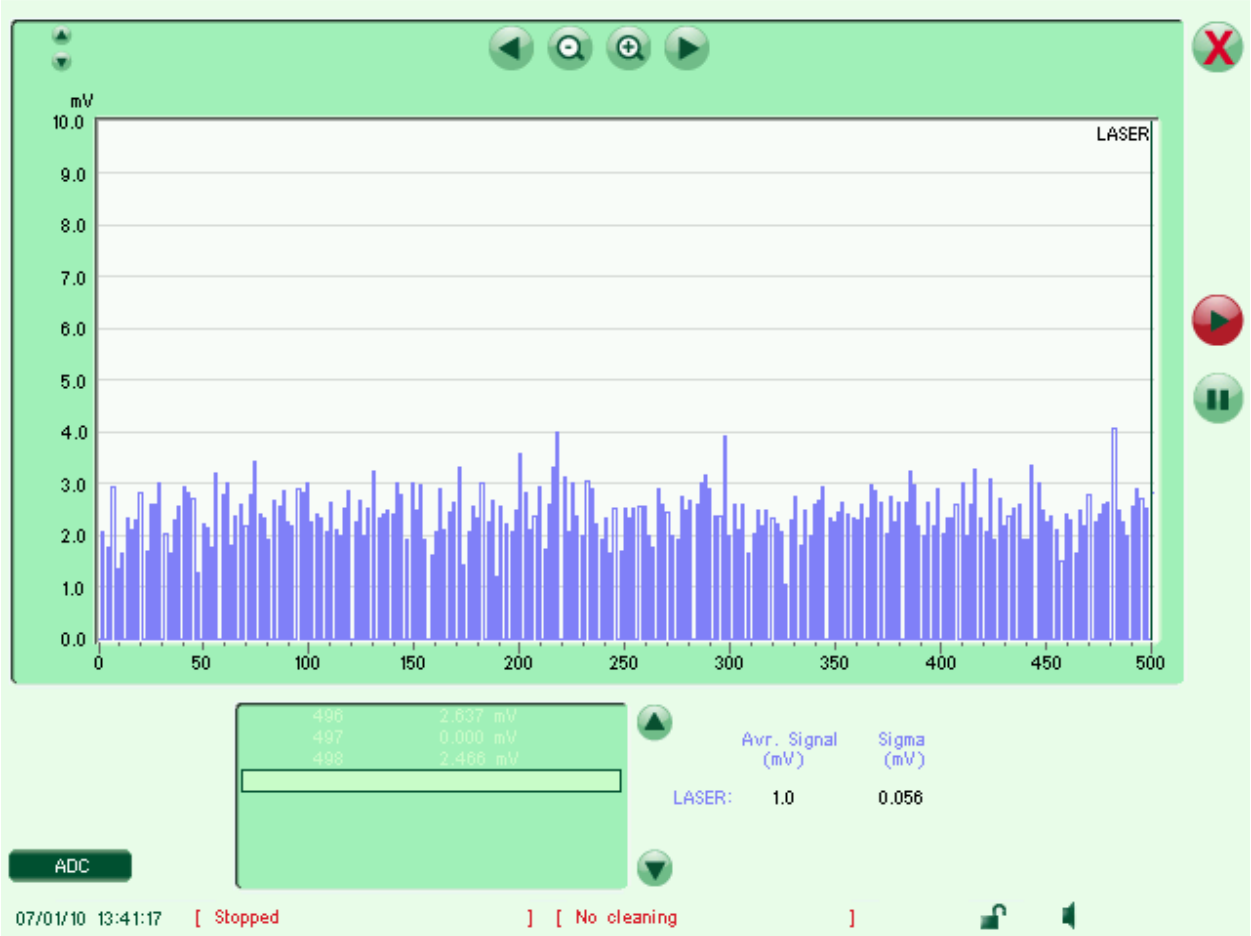

The average signal value in mV and its standard deviation (sigma) on the last 500 acquisitions are displayed on the bottom right of the screen.

The values can be read by moving the cursor with the vertical arrows. After reading, restart the acquisitions by pressing on the “play” button if necessary.

If necessary, use the horizontal arrows to displace the graph or press on the graph to zoom it. The Y scale is automatic but may be override by the small arrows placed above the Y axis.




### Label

This field allows changing the channel label displayed with the measurement. The label size is limited to 6 characters.




### Unit

This field allows changing the channel unit displayed with the measurement. The label size is limited to 6 characters.




### Negative values displayed

Negatives values are possible for most of the measurements as they result of normal fluctuations if the measurement is close to zero.

By default, the display of negative values is allowed as negative values may also result from a wrong zero and consequently it may be useful to be aware of such problem when seeing strongly negative values.

But as negative values have no theoretical meaning, it’s possible to replace them by zero by deselecting this function.




### Number of decimals

This field allows changing the number of decimal displayed for the measurement value to remove not significant decimals.

Note: this choice does not affect the measurements stored in the internal memory.

## 16 Number of averaging

The measurement as displayed on the process screen (or read under MODBUS protocol or available on the 4-20 mA output) can be formed by the average over a number of basic measurements defined by the field.
It can be useful to improve the repeatability of the measurements if the response time is not critical.

By default, no averaging is performed and this field contains a value of 1.

## 17 4-20 mA output

This button indicates if a 4-20 mA output has been installed or not for this channel (option).

If a module has been installed, its position is displayed on the right. Pressing on this button shows the popup below that enable to test the 4-20 mA output by pressing on the “test” button.

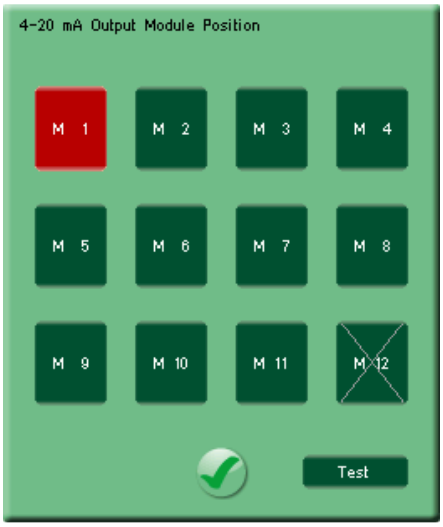

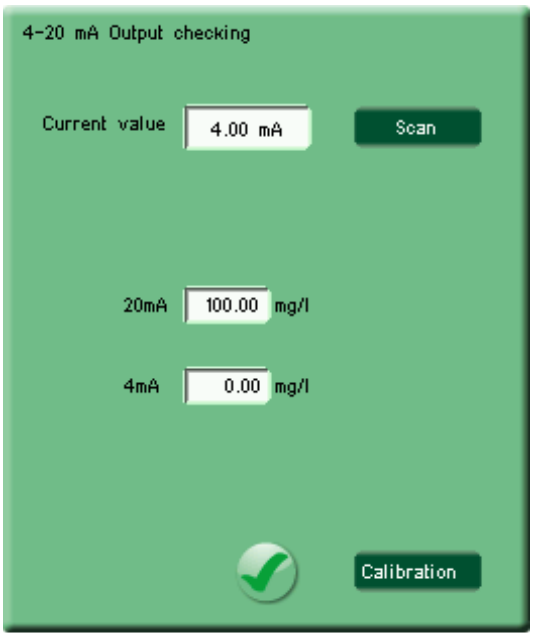


The current value of the 4-20 mA output is displayed on the top, based on the last process measurement (but not on the test measurement to avoid disturbances on the process supervisor system).

The “scan” key allows scanning the 4-20 mA output mA by mA for testing purpose only.

The scale value for 20 mA and 4 mA are displayed below. These preset values can be changed by pressing on these fields.

If the output value doesn’t mach exactly with the theoretical value, it’s possible to calibrate the output by pressing on the “calibration” key. Then real values for 4 and 20 mA must be entered.

Note: position M12 is not available for the 4-20 mA output modules.




## Calibration factor

This field allows changing the calibration factor of the channel.
Precautions must be taken before changing this value.

This factor is normally changed automatically while doing a calibration by pressing on the “scale” button and then recorded in the calibration history. This multiplying factor is taken in account as the last step before displaying the measurement value.



Note: this factor must be set to 1.0 before doing a new linearization curve




### Scale factor

This field allows changing the scale factor of the channel.
Precautions must be taken before changing this value.

This factor is normally determined in factory to transform the basic measurement to a scaled value in the final unit, mg/l for example.
It is has no reason to be changed except if internal elements are replaced.




### Number of readings

This field allows changing the number of basic readings averaged to obtain one final measurement.

Increasing this value improve the repeatability but increase also the measuring time.
Depending on the application, it can be exceptionally increased or decreased.




### Minimum signal

This field fix the minimum light signal value over the wavelength range taken in account for the measurement. An error will be displayed if the signal over the wavelength range is lower than this value.




### Offset

This field show the internal offset applied on the signal for the zeroing.
It is updated at each zeroing and has not to be changed.
It can be used for troubleshooting by the manufacturer.




### Last calibration window

This window displays the 10 last calibrations done with the date, time and new calibration factor.




### Last zero window

This window displays the 10 last calibrations done with the date, time and new calibration factor.




### Linearity graph and values

This area concerns the linearity compensation applied on the rough measurements.

The Beer-Lambert law used on most of the measurements is not linear for high concentrations due to a light mask effect. Therefore it's necessary to introduce a correction before displaying the final concentration. This correction is based on the linearity curve represented on the top.

The Y-axis corresponds to the rough measurements entered on the M1 to M10 fields while the X-axis corresponds to the standard or final measurement, entered on the S1 to S10 fields.

The M1-M10 and S1-S10 values must be strictly increasing. It's highly recommended to put 0.0 and 0.0 as starting values for S1 and M1. The final value is linearly extrapolated between these points.




### Linearity ON/OFF

This button allows deactivating temporary the linearity curve (OFF), for example to redo a new linearity curve.
The linearity curve is automatically reactivated (ON) when leaving the check screen.

#### 4.17.3 Recalibration

The analyser is factory calibrated. However, periodical checking is recommended and a recalibration might be necessary after several months depending of the conditions of use.

To recalibrate the analyser, proceed as follow:

- Take a turbidity standard (formazine for example) representative of the measuring range

- Do a manual measurement on this standard using the check screen (as describe above).

- Press on the "scale" button of the check screen and then enter the standard value on the keypad.

The calibration is finished. A new calibration factor has been calculated and has been recorded inside the calibration history displayed on the check screen.

This new calibration factor will be taken in account for all the further measurements.

## 4.18 Turbidity by external probe

### 4.18.1 Principle

The measuring principle is based on infra-red light absorption on a determined optical path.

The probe deliver directly a TSS value through a RS485 port under Modbus protocol. However it may be recalibrated depending of the application.

Two models of probes are available:

- Model 36 with 10 mm optical path for high range: 0 to 30,000 mg/l TSS
- Model 37 with 25 mm optical path for low range: 0 to 1,500 mg/l TSS



High range model 36



Low range model 37

### 4.18.2 Test

From the process screen, press on the “tools” icon and then on the channel to test, or directly to the channel area as a shortcut.

If you are logged in user mode, the parameters are masked. You must be logged in administrator mode to access to the parameters (default password is 456).

The check screen as below is displayed. The concentration or error code corresponds to the last measurement done, while the signal and signal graph are continuously updated.

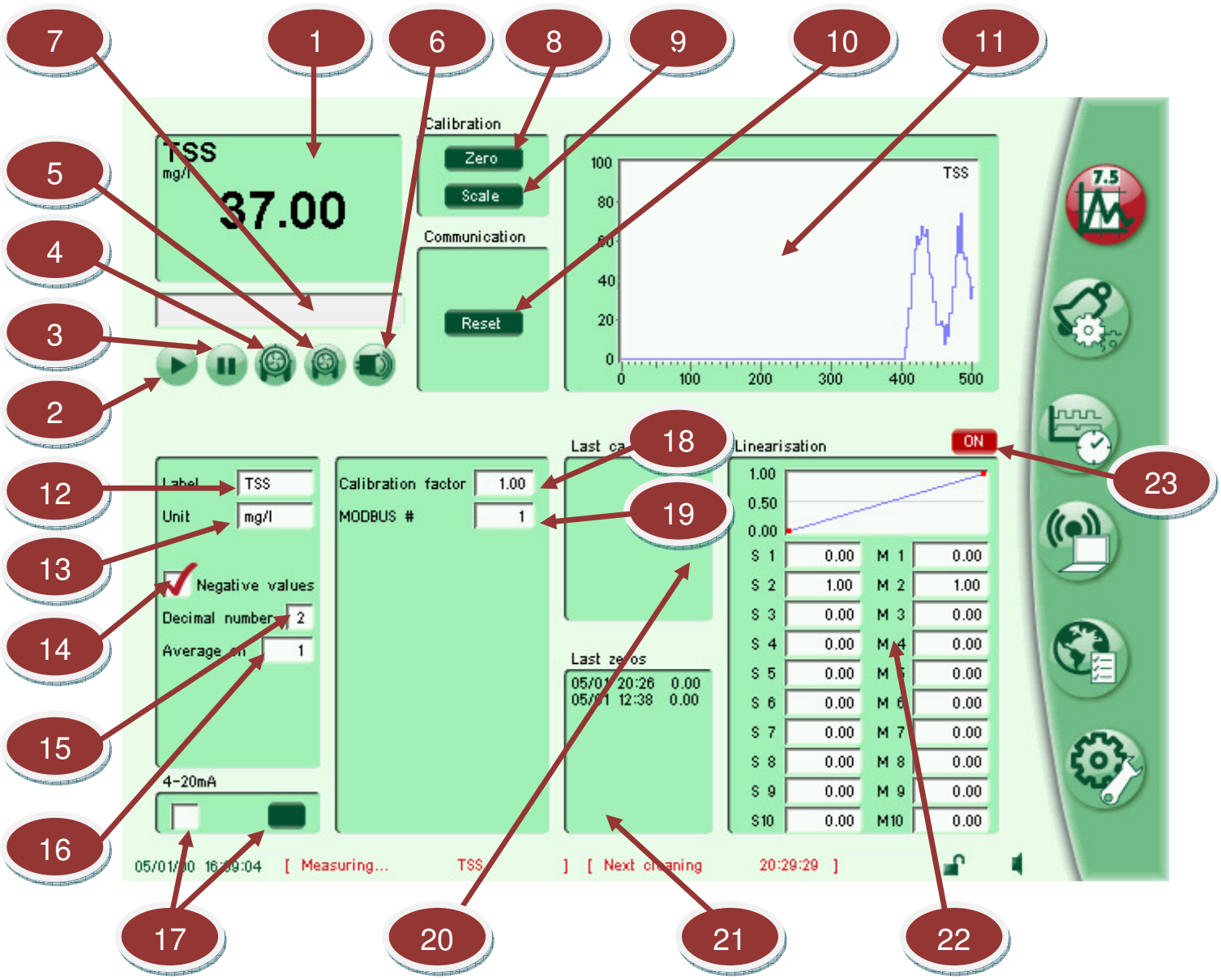




## Measurement window

This window displays the last measured value (or the error code in case of error, refer to troubleshooting section) with proper label and unit.

During a measuring cycle, the last measured value is display in light green until replaced by the new value in black.

The number of decimal can be adjusted, refer to the field below.




## Start button

Pressing on this button starts a manual measuring cycle. It can be aborted at any time by pressing on the stop button. At the end of the cycle, a new value will be displayed on the measurement window.

The process value on the process screen will not be updated by this measurement to avoid any interference with the plant supervisor system, same concerning the MODBUS channel's value, 4-20 mA output and alarm relays (if any).




## Stop button

Pressing on this button stop and aborts any engaged measuring cycle. It can also be used to stop the sampling pump or the cleaning pump.




## Sampling pump button

Pressing on this button starts the sampling pump. The pump will stop automatically after 10 seconds. It can also be stopped at any time by pressing on the stop button.

Note: this button is deactivated during a measuring cycle.




## Cleaning pump button

Pressing on this button starts the cleaning pump. The pump will stop automatically after the time defined in the acid "cleaning time" field of the timing screen.
It can also be stopped at any time by pressing on the stop button.

Note: this button is deactivated during a measuring cycle.




## Ultrasonic cleaning button

Pressing on this button starts the ultrasonic cleaning. The cleaning will stop automatically after the time defined in the ultrasonic “cleaning time” field of the timing screen.
It can also be stopped at any time by pressing on the stop button.

Note: this button is deactivated during a measuring cycle.




## Measuring cycle steps display

During a measuring cycle or a zeroing cycle, this area displays a counter of the elemental acquisitions preceded by the message “measuring…” or “zeroing…” respectively.




## Zero button

This button is used for zeroing the measurement.



Put first pure water inside the flow cell before pressing on this button.

Note: an auto-zero is performed automatically during each acid cleaning if this option is selected on the timing screen.




## Scale button

This button is used to calibrate the analyser on a standard solution.



To avoid a wrong calibration, check the zero or redo a zero before doing a calibration.

A new calibration factor is calculated after entering the standard value.
The calibration history will be updated with the time and date of the calibration attached to the new calibration factor.

For more details, refer to the “recalibration” section.

## 10 Reset probe

This button enable to reset the probe with the popup displayed below.
This function must be used normally only the first time that a new probe is connected.
Only one RS485 probe must be connected for this operation.

It set inside the probe the serial baud rate, the Modbus address and some configuration parameters. If this function failed, it must be renewed after disconnecting and reconnecting the probe to insure that the probe take in account the proper baud rate after power on.




## 11 TSS graph

This graph displays the last 500 acquired TSS values since the check screen has been activated.

For more details, press anywhere on the graph to zoom it.

## 12 Label

This field allows changing the channel label displayed with the measurement. The label size is limited to 6 characters.

## 13 Unit

This field allows changing the channel unit displayed with the measurement. The label size is limited to 6 characters.




## Negative values displayed

Negatives values are possible for most of the measurements as they result of normal fluctuations if the measurement is close to zero.

By default, the display of negative values is allowed as negative values may also result from a wrong zero and consequently it may be useful to be aware of such problem when seeing strongly negative values.

But as negative values have no theoretical meaning, it's possible to replace them by zero by deselecting this function.




## Number of decimals

This field allows changing the number of decimal displayed for the measurement value to remove not significant decimals.

Note: this choice does not affect the measurements stored in the internal memory.




## Number of averaging

The measurement as displayed on the process screen (or read under MODBUS protocol or available on the 4-20 mA output) can be formed by the average over a number of basic measurements defined by the field.
It can be useful to improve the repeatability of the measurements if the response time is not critical.

By default, no averaging is performed and this field contains a value of 1.




## 4-20 mA output

This button indicates if a 4-20 mA output has been installed or not for this channel (option).

If a module has been installed, its position is displayed on the right. Pressing on this button shows the popup below that enable to test the 4-20 mA output by pressing on the "test" button.

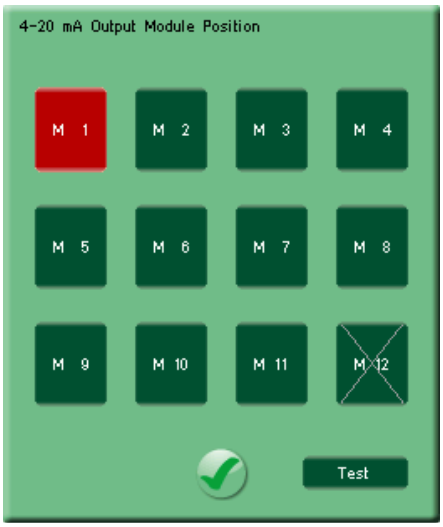


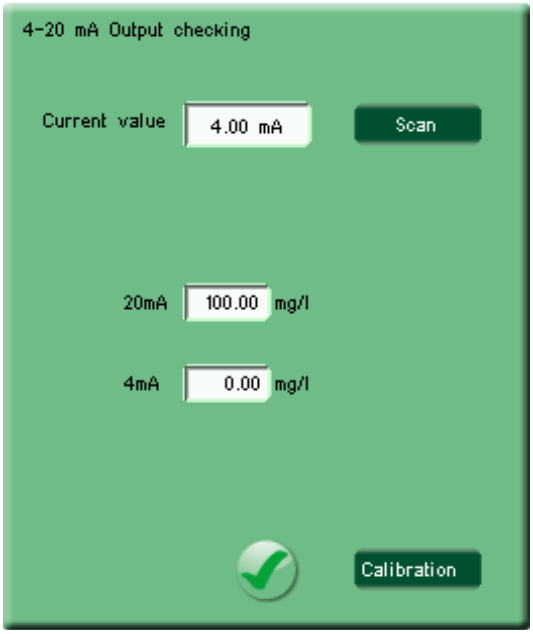


The current value of the 4-20 mA output is displayed on the top, based on the last process measurement (but not on the test measurement to avoid disturbances on the process supervisor system).

The “scan” key allows scanning the 4-20 mA output mA by mA for testing purpose only.

The scale value for 20 mA and 4 mA are displayed below. These preset values can be changed by pressing on these fields.

If the output value doesn’t mach exactly with the theoretical value, it’s possible to calibrate the output by pressing on the “calibration” key. Then real values for 4 and 20 mA must be entered.

Note: position M12 is not available for the 4-20 mA output modules.

### 18 Calibration factor

This field allows changing the calibration factor of the channel.
Precautions must be taken before changing this value.

This factor is normally changed automatically while doing a calibration by pressing on the “scale” button and then recorded in the calibration history. This multiplying factor is taken in account as the last step before displaying the measurement value.



Note: this factor must be set to 1.0 before doing a new linearization curve

### 19 Probe Modbus address

This field is the Modbus address of the probe. It must not be changed unless a new robe having a different Modbus address is connected.

To reinitialise a probe with the defined Modbus address, press on the "Reset" key.

### 20 Last calibration window

This window displays the 10 last calibrations done with the date, time and new calibration factor.

### 21 Last zero window

This window displays the 10 last calibrations done with the date, time and new calibration factor.

### 22 Linearity graph and values

This area concerns the linearity compensation applied on the rough measurements.

The Beer-Lambert law used on most of the measurements is not linear for high concentrations due to a light mask effect. Therefore it’s necessary to introduce a correction before displaying the final concentration. This correction is based on the linearity curve represented on the top.

The Y-axis corresponds to the rough measurements entered on the M1 to M10 fields while the X-axis corresponds to the standard or final measurement, entered on the S1 to S10 fields.

The M1-M10 and S1-S10 values must be strictly increasing. It's highly recommended to put 0.0 and 0.0 as starting values for S1 and M1. The final value is linearly extrapolated between these points.




**Linearity ON/OFF**

This button allows deactivating temporary the linearity curve (OFF), for example to redo a new linearity curve.
The linearity curve is automatically reactivated (ON) when leaving the check screen.

### 4.18.3 Recalibration

The probe is factory calibrated in TSS. However, depending of the application, the relation between the absorbed light and TSS may varies.

To recalibrate the probe on a specific water sample, proceed as follow:

- Make a manual measurement and take this sample to make a laboratory TSS measurement

- Press on the "scale" button of the check screen, then enter the laboratory value on the keypad followed by the previously measured value.

The calibration is finished. A new calibration factor has been calculated and has been recorded inside the calibration history displayed on the check screen.

This new calibration factor will be taken in account for all the further measurements.

## 4.19 UV254 by spectrograph

### 4.19.1 Principle

The measuring principle is based on the UV light absorption at 254 nm according to the Beer-Lambert law:

$$[C] = k \cdot \log\left(\frac{I_0}{I_1}\right)$$

With $[C]$: Sample concentration
$k$: Absorption coefficient (molecule specific)
$I_0$: Light intensity before the sample
$I_1$: Light intensity after of the sample

The UV light is generated by a pulsed xenon lamp to reach an ultra long life time.
The absorption spectrum is performed by a concave grating coupled to a 2048 pixels CCD (Charge-Coupled Device).

A double-wavelength algorithm allows compensating the turbidity or a deposit inside the flow cell.

The UV light absorption at 254 nm is generally well correlated with the organic matter contents on natural water (rivers, lakes) and municipal wastewater as well as wastewater on food and paper industries.

After checking the correlation and after having introduced the right calibration factor, the measurements can be displayed as COD measurement, or even BOD or TOC measurement.

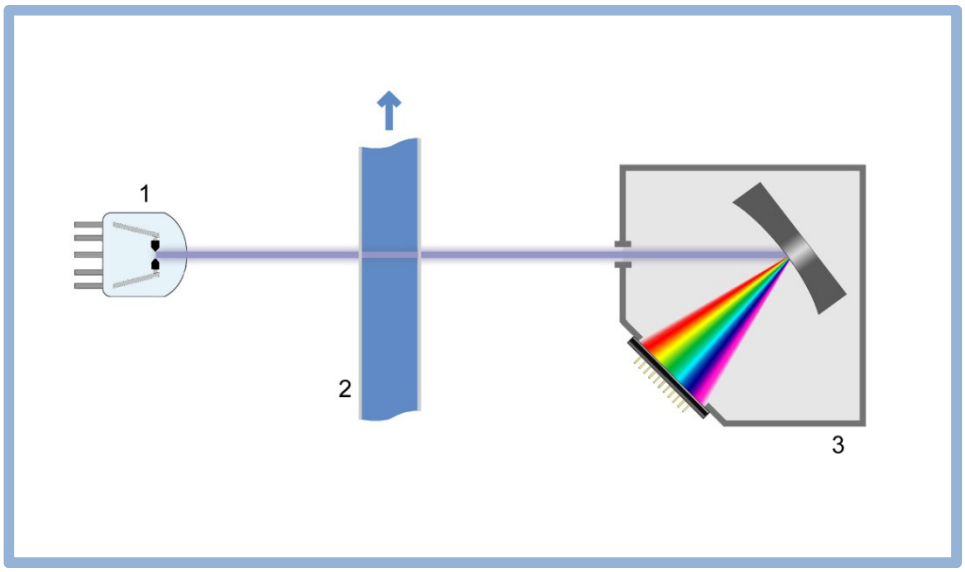


| | |
|---|---|
| 1 | Xenon flash lamp |
| 2 | Sample flow cell |
| 3 | Spectrograph with concave grating and CCD detector |

### 4.19.2 Test

From the process screen, press on the “tools” icon and then on the channel to test, or directly to the channel area as a shortcut.

If you are logged in user mode, the parameters are masked. You must be logged in administrator mode to access to the parameters (default password is 456).

The check screen as below is displayed. The concentration or error code corresponds to the last measurement done, as well as the signal and absorbance graphs.

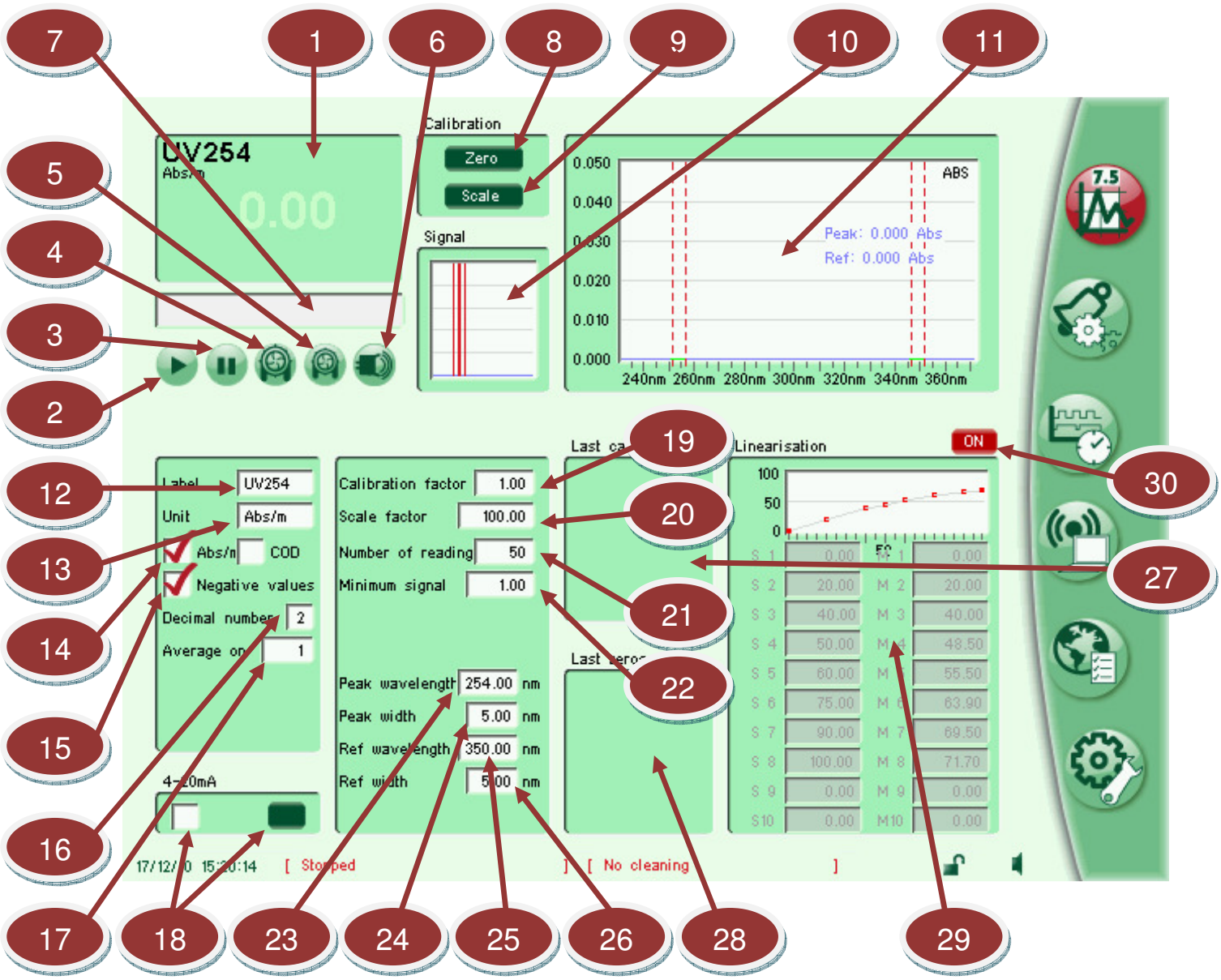




## Measurement window

This window displays the last measured value (or the error code in case of error, refer to troubleshooting section) with proper label and unit.

During a measuring cycle, the last measured value is display in light green until replaced by the new value in black.

The number of decimal can be adjusted, refer to the field below.




## Start button

Pressing on this button starts a manual measuring cycle. It can be aborted at any time by pressing on the stop button. At the end of the cycle, a new value will be displayed on the measurement window.

The process value on the process screen will not be updated by this measurement to avoid any interference with the plant supervisor system, same concerning the MODBUS channel's value, 4-20 mA output and alarm relays (if any).




## Stop button

Pressing on this button stop and aborts any engaged measuring cycle. It can also be used to stop the sampling pump or the cleaning pump.




## Sampling pump button

Pressing on this button starts the sampling pump. The pump will stop automatically after 10 seconds. It can also be stopped at any time by pressing on the stop button.

Note: this button is deactivated during a measuring cycle.




## Cleaning pump button

Pressing on this button starts the cleaning pump. The pump will stop automatically after the time defined in the acid "cleaning time" field of the timing screen.
It can also be stopped at any time by pressing on the stop button.

Note: this button is deactivated during a measuring cycle.




## Ultrasonic cleaning button

Pressing on this button starts the ultrasonic cleaning. The cleaning will stop automatically after the time defined in the ultrasonic “cleaning time” field of the timing screen.
It can also be stopped at any time by pressing on the stop button.

Note: this button is deactivated during a measuring cycle.




## Measuring cycle steps display

During a measuring cycle or a zeroing cycle, this area displays a counter of the elemental acquisitions preceded by the message “measuring…” or “zeroing…” respectively.




## Zero button

This button is used for zeroing the measurement.



Put first pure water inside the flow cell before pressing on this button.

Note: an auto-zero is performed automatically during each acid cleaning if this option is selected on the timing screen.




## Scale button

This button is used to calibrate the analyser on a standard solution.



To avoid a wrong calibration, check the zero or redo a zero before doing a calibration.

A new calibration factor is calculated after entering the standard value.
The calibration history will be updated with the time and date of the calibration attached to the new calibration factor.

For more details, refer to the “recalibration” section.

## 10 Signal graph

This graph displays the lamp spectrum get during the last measuring cycle. It is updated during the measuring cycle when the lamp is flashing.

For more details or to investigate about the signal, press anywhere on the graph to zoom it as below:

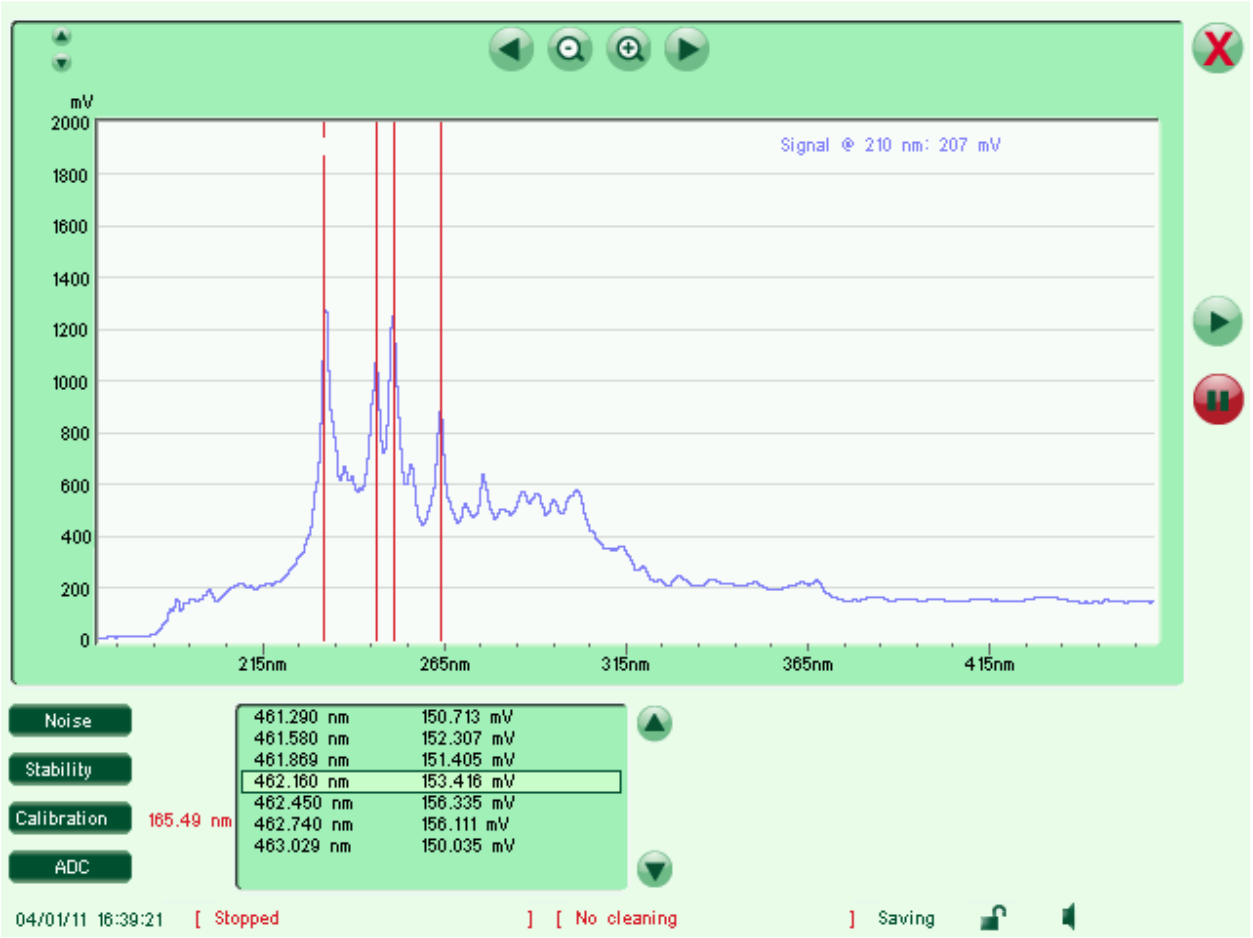


To acquire again the lamp signal, press on the “play” button.

With pure water inside the flow cell, the signal must not be saturated (below 2000 mV) on the two wavelengths bands used for the absorbance calculation defined as “Peak wavelength” and “Ref wavelength” on the check screen. Otherwise, an error will occur during the measuring cycle.

The values can be read by moving the cursor with the vertical arrows.

If necessary, use the horizontal arrows to displace the graph or press on the graph to zoom it. The Y scale is automatic but may be override by the small arrows placed above the Y axis.

# 11 Absorbance spectrum

This graph displays the absorbance spectrum get during the last measuring cycle. It is displayed in light grey during a measuring cycle until updated.

For more details or to investigate about the absorbance spectrum, press anywhere on the graph to zoom it as below:




The average absorbance for the peak wavelength band and for the reference wavelength band are represented by a green line and displayed above the curve.

The difference is used to calculate the final concentration.

The values can be read by moving the cursor with the vertical arrows.

If necessary, use the horizontal arrows to displace the graph or press on the graph to zoom it. The Y scale is automatic but may be override by the small arrows placed above the Y axis.




## Label

This field allows changing the channel label displayed with the measurement. The label size is limited to 6 characters.




## Unit

This field allows changing the channel unit displayed with the measurement. The label size is limited to 6 characters.




## Display mode

This button allows selecting the concentration display mode as Abs/m (default mode) or as COD if the correlation between UV absorbance and COD has been settled.

If COD is selected, the calibration factor is preset to 0.5 (typical value for river water), the linearization curve is taken in account and the label is automatically updated to “COD”.
The measurements previously stored in the internal memory will keep their values in Abs/m.




## Negative values displayed

Negatives values are possible for most of the measurements as they result of normal fluctuations if the measurement is close to zero.

By default, the display of negative values is allowed as negative values may also result from a wrong zero and consequently it may be useful to be aware of such problem when seeing strongly negative values.

But as negative values have no theoretical meaning, it’s possible to replace them by zero by deselecting this function.




## Number of decimals

This field allows changing the number of decimal displayed for the measurement value to remove not significant decimals.

Note: this choice does not affect the measurements stored in the internal memory.

## 17 Number of averaging

The measurement as displayed on the process screen (or read under MODBUS protocol or available on the 4-20 mA output) can be formed by the average over a number of basic measurements defined by the field.
It can be useful to improve the repeatability of the measurements if the response time is not critical.

By default, no averaging is performed and this field contains a value of 1.

## 18 4-20 mA output

This button indicates if a 4-20 mA output has been installed or not for this channel (option).

If a module has been installed, its position is displayed on the right. Pressing on this button shows the popup below that enable to test the 4-20 mA output by pressing on the “test” button.

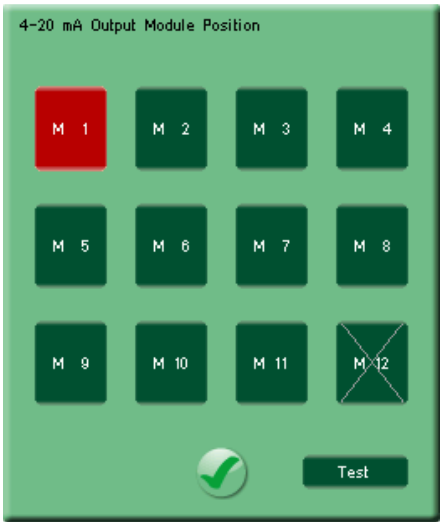

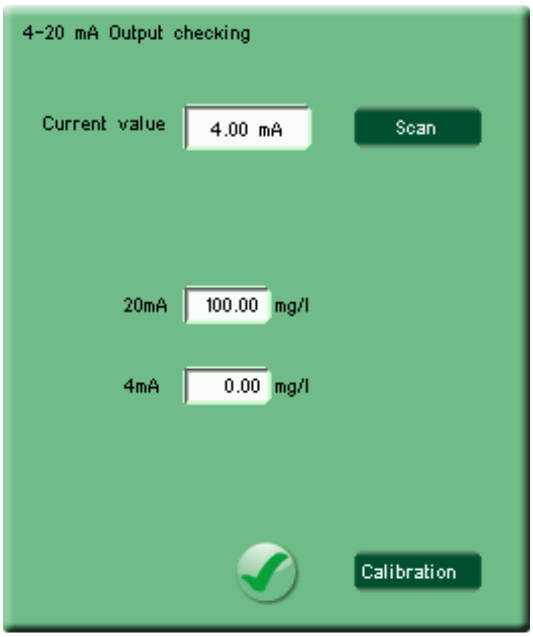


The current value of the 4-20 mA output is displayed on the top, based on the last process measurement (but not on the test measurement to avoid disturbances on the process supervisor system).

The “scan” key allows scanning the 4-20 mA output mA by mA for testing purpose only.

The scale value for 20 mA and 4 mA are displayed below. These preset values can be changed by pressing on these fields.

If the output value doesn’t mach exactly with the theoretical value, it’s possible to calibrate the output by pressing on the “calibration” key. Then real values for 4 and 20 mA must be entered.

Note: position M12 is not available for the 4-20 mA output modules.




## Calibration factor

This field allows changing the calibration factor of the channel.
Precautions must be taken before changing this value.

This factor is normally changed automatically while doing a calibration by pressing on the “scale” button and then recorded in the calibration history. This multiplying factor is taken in account as the last step before displaying the measurement value.



Note: this factor must be set to 1.0 before doing a new linearization curve




## Scale factor

This field allows changing the scale factor of the channel.
Precautions must be taken before changing this value.

This factor is normally determined in factory to transform the basic measurement to a scaled value in the final unit, mg/l for example.
It is has no reason to be changed except if internal elements are replaced.




## Number of readings

This field allows changing the number of basic readings averaged to obtain one final measurement.

Increasing this value improve the repeatability but increase also the measuring time.
Depending on the application, it can be exceptionally increased or decreased.




## Minimum signal

This field fix the minimum light signal value over the wavelength range taken in account for the measurement. An error will be displayed if the signal over the wavelength range is lower than this value.




## Peak wavelength

This field allows changing the peak wavelength taken in account for the measurement. It corresponds to a wavelength absorbed by organic matter.

The default value is 254 nm. It can be changed exceptionally to avoid a known interference or to improve the COD correlation if a study has been carry on previously.




## Peak width

This field allows changing the width band of the peak wavelength taken in account for the measurement.

It may be exceptionally enlarged or reduced to avoid a known interference or to improve the COD correlation.




### Reference wavelength

This field allows changing the reference wavelength taken in account for the measurement.
It corresponds normally to a wavelength where the organic matter doesn't absorb.

The default value is 350 nm. It can be changed exceptionally to avoid a known interference or to improve the COD correlation if a study has been carry on previously.




### Reference width

This field allows changing the width band of the reference wavelength taken in account for the measurement.

It may be exceptionally enlarged or reduced to avoid a known interference or to improve the COD correlation.




### Last calibration window

This window displays the 10 last calibrations done with the date, time and new calibration factor.




### Last zero window

This window displays the 10 last calibrations done with the date, time and new calibration factor.




### Linearity graph and values

This area concerns the linearity compensation applied on the rough measurements.

The Beer-Lambert law used on most of the measurements is not linear for high concentrations due to a light mask effect. Therefore it's necessary to introduce a correction before displaying the final concentration. This correction is based on the linearity curve represented on the top.

The Y-axis corresponds to the rough measurements entered on the M1 to M10 fields while the X-axis corresponds to the standard or final measurement, entered on the S1 to S10 fields.

The M1-M10 and S1-S10 values must be strictly increasing. It's highly recommended to put 0.0 and 0.0 as starting values for S1 and M1. The final value is linearly extrapolated between these points.




### Linearity ON/OFF

This button allows deactivating temporary the linearity curve (OFF), for example to redo a new linearity curve.
The linearity curve is automatically reactivated (ON) when leaving the check screen.

### 4.19.3 Recalibration

The analyser is factory calibrated in Abs/m.

As measurements are often given in COD unit, a specific calibration directly on the sample must be done. The default calibration factor of 0.5 applies only for river water. Municipal wastewater or industrial wastewater may have a very different factor.

To calibrate the analyser, proceed as follow:

- Take 2 litres of the sample at an expected significant concentration according to the process

- Proceed to a COD laboratory measurement with one litre only of the sample (keep the second litre on a cold place if the laboratory measurement is not done the same day)

- Use the second litre for the analyser and do at least two measurements on this sample using the check screen. The last two measurements must be close together with less than 2% of difference.

- Press on the “scale” button of the check screen and then enter the laboratory COD value on the keypad.

The calibration is finished. A new calibration factor has been calculated and has been recorded inside the calibration history displayed on the check screen.

This new calibration factor will be taken in account for all the further measurements.

# 5 Maintenance and troubleshooting

## 5.1 General

The maintenance is limited to the replacement of the peristaltic pump tubing and to the refilling of the cleaning or reagent solution, depending on the configuration.

The period of replacement of the pump tubing depends on the use. A weekly checking is recommended. The typical lifetime with Pharmed® tubing is estimated to about 1000 hours of continuous operation.

General troubleshooting:



**Disconnect the power cord before servicing!**

| **Symptoms** | **Checking / Origin** |
|---|---|
| The screen remains totally black after connecting the power cord.<br>**AND**<br>The red LED D1 on the DSP500 board is OFF. | - Check the power socket<br>- Check J1 connector (mains input, high voltage!)<br>- Check J2 connector on the DSP500 (mains input for the power supply, high voltage!)<br>- Check J3 connector (24V output from the power supply)<br>- Failure on the power supply of the DSP500 board |
| The screen remains totally black after connecting the power cord.<br>**AND**<br>The red LED D1 on the DSP500 board is ON. | - Check the backlight connector of the screen J10.<br>- Failure off the DSP500 board. |
| The screen is lighted but nothing is displayed. | - Check the screen connector J8 on the rear of the DSP500 board<br>- Failure off the DSP500 board. |

## 5.2 Ammonia

Maintenance

The maintenance is limited to refilling of the 10% NaOH solution and the 5% H2SO4 cleaning solution.

Troubleshooting

| Symptoms | Origin |
|---|---|
| value is too low | - No water in the flow cell (clogging, bad inlet connection, fault in the peristaltic pump)<br>- No NaOH (check NaOH tank, peristaltic pump, tubes and fittings).<br>- Bad temperature compensation (check the displayed temperature of the sample).<br>- Check the display unit: NH4 or N of NH4.<br>- Condensation inside the gas flow cell (no trace of water must be visible on the gas circuit)<br>- Check the instrument with a standard. |
| Value is too high | - Check the display unit: NH4 or N of NH4.<br>- Bad temperature compensation (check the displayed temperature of the sample).<br>- Check the instrument with a standard. |
| Unstable value | - Deposit or dirty on the optical parts (lens and/or windows), check the light level at 210 nm (zoom on the signal graph of the check screen)<br>- Moving optical part (check manually after transportation).<br>- Bad calibration, check with a standard. |

Measuring errors

| Error no | Signification | Origin / Remediation |
|---|---|---|
| 1 | The temperature of the heated parts is lower than 5 °C of the set point | - Wait about 15 minutes after power on. The temperature is displayed on the bottom line of the screen<br>- Check the temperature probe connection on J19 “PT100-3” of the DSP500 board (no connection gives a temperature of about -273 °C)<br>- Check the heater connection on J13 “POWER3” of the DSP500 board, warning  High voltage!<br>- Failure on the heater (replace) |
| 2 | No signal from the spectrograph | - Check the spectrograph connection on J20 of the DSP500 board<br>- Failure on the spectrograph cable (replace)<br>- Failure on the spectrograph board (replace) |
| 3 | The light level on the spectrograph is too high on the wavelengths used for the measurement | - Check the light level (zoom on the signal graph of the check screen), the light level can be slightly adjusted by moving the lamp holder or the flow cell<br>- Failure on the CCD500 board (replace) |
| 4 | The light level on the spectrograph is too low on the wavelengths used for the measurement | - Water inside the gas flow cell (dismount and dry all the gas circuit, check that there is no clogging on the outlet)<br>- Failure on the xenon lamp circuit if no flashes are visible during the measurement, check the connection of the XENON500 board on J26 “XENON1” of the DSP500 board (the orange neon lamp on the XENON500 board must always be on, if not replace the XENON500 board) and check the lamp connection on the XENON500 board (J2) |

## 5.3 Chlorophyll A

Maintenance

The maintenance is limited to refilling of the 5% H2SO4 cleaning solution.

Troubleshooting

| Symptoms | Origin |
|---|---|
| Negative value | - Bad zero or auto-zero: the cleaning solution has been prepared with polluted water or fault in the acid cleaning system (no flow, pump failure).<br>- No water in the flow cell (clogging, bad inlet connection, fault in the peristaltic pump) |
| Value is too low | - No water in the flow cell (clogging, bad inlet connection, fault in the peristaltic pump)<br>- Bubbles in the sample (check peristaltic pump inlet fitting).<br>- Bad zero or auto-zero: cleaning solution has been prepared with polluted water or fault in the acid cleaning system (no flow, pump failure).<br>- Bad calibration: check or redo calibration. |
| Value is too high | - Bad calibration: check or redo a calibration. |
| Unstable value | - Deposit or dirty on the flow cell, check the light level on the check screen<br>- Moving optical part (check manually after transportation).<br>- Bad calibration, check with a standard. |

Measuring errors

| Error no | Signification | Origin / Remediation |
|---|---|---|
| 1 | No signal from the photomultiplier | - Check the photomultiplier connection on one of the position J30 to J34 (“LED1” to “LED5”) of the DSP500 board according to the position displayed on the factory screen<br>- Failure on the photomultiplier cable (repair or replace)<br>- Failure on the photomultiplier board (replace) |
| 2 | No signal from the photo detector | - Check the photo detector connection on one of the position J21 to J25 (“IN1” to “IN5”) of the DSP500 board according to the position displayed on the factory screen<br>- Failure on the photo detector cable (repair or replace)<br>- Failure on the photo detector board (replace) |
| 3 | The light level coming from the photomultiplier is too high | - Sample concentration over range, check again with pure water<br>- Check that there is no bubble inside the flow cell, if yes check the fittings<br>- Failure on the photomultiplier cable (repair or replace)<br>- Failure on the photomultiplier board (replace) |
| 4 | The light level coming from the reference photo detector is too high | - Check that there is no bubble inside the flow cell, if yes check the fittings<br>- Failure on the photo detector cable (repair or replace)<br>- Failure on the photo detector board (replace) |
| 5 | Reserved | |
| 6 | The light level coming from the reference photo detector is too low | - Sample concentration over range, check again with pure water<br>- Sample turbidity too high, check again with pure water<br>- Failure on the photo detector cable (repair or replace)<br>- Failure on the photo detector board (replace) |

## 5.4 Colour by spectrograph

Maintenance

The maintenance is limited to refilling of the 5% H2SO4 cleaning solution.

Troubleshooting

| Symptoms | Origin |
|---|---|
| Negative value | - Bad zero or auto-zero: the cleaning solution has been prepared with polluted water or fault in the acid cleaning system (no flow, pump failure).<br>- No water in the flow cell (clogging, bad inlet connection, fault in the peristaltic pump) |
| Value is too low | - No water in the flow cell (clogging, bad inlet connection, fault in the peristaltic pump)<br>- Bubbles in the sample (check peristaltic pump inlet fitting).<br>- Bad zero or auto-zero: cleaning solution has been prepared with polluted water or fault in the acid cleaning system (no flow, pump failure)<br>- Bad calibration: check or redo a calibration |
| Value is too high | - Bad calibration: check or redo a calibration. |
| Unstable value | - Deposit or dirty on the flow cell, check the light level on the check screen<br>- Moving optical part (check manually after transportation).<br>- Bad calibration, check with a standard. |

Measuring errors

| Error no | Signification | Origin / Remediation |
|---|---|---|
| 1 | reserved | |
| 2 | No signal from the spectrograph | - Check the spectrograph connection on the connector J20 of the DSP500 board<br>- Failure on the spectrograph cable (repair or replace)<br>- Failure on the spectrograph board (replace) |
| 3 | The light level on the used bands of wavelengths is too high | - Check that there is no bubble inside the flow cell, if yes check the fittings<br>- Failure on the spectrograph cable (repair or replace)<br>- Failure on the spectrograph board (replace) |
| 4 | The light level on the used bands of wavelengths is too low | - Sample concentration over range, check again with pure water<br>- Sample turbidity too high, check again with pure water<br>- Deposit or dirty on the flow cell<br>- Failure on the xenon lamp circuit if no flashes are visible during the measurement, check the connection of the XENON500 board on J27 “XENON2” of the DSP500 board (the orange neon lamp on the XENON500 board must always be on, if not replace the XENON500 board) and check the lamp connection on the XENON500 board (J2) |

## 5.5 Conductivity

Maintenance

The conductivity probe must be cleaned on a regular base (at least weekly) depending of the application.

Troubleshooting

| Symptoms | Origin |
|---|---|
| Negative value | - Bad zero |
| Value is too low | - No water in contact with the electrodes<br>- Dirty on the electrodes<br>- Bad calibration: check or redo a calibration |
| Value is too high | - Bad calibration: check or redo a calibration. |
| Unstable value | - Electrical interference on the probe cable, put the probe cable away from power cables |

Measuring errors

| Error no | Signification | Origin / Remediation |
|---|---|---|
| 1 | Over range | - Check on pure water<br>- Failure on the conductivity board (replace) |

## 5.6 Dissolved oxygen

Maintenance

The dissolved oxygen probe must be cleaned on a regular base (at least weekly) depending of the application.

Troubleshooting

| Symptoms | Origin |
|---|---|
| Negative value | - Bad zero |
| Value is too low | - Dirty on the probe<br>- Bad calibration: check or redo a calibration |
| Value is too high | - No water in contact with the probe<br>- Bad calibration: check or redo a calibration. |

Measuring errors (only for RS485 probe)

| Error | Signification | Origin / Remediation |
|---|---|---|
| 1 | Probe disconnected or not responding | - Check the connection<br>- Uninitialized probe (new probe): do the probe reset sequence in the check screen |
| 2 | Main photodiode saturated (circuit or sensor coating damaged) | - Replace |
| 3 | Main photodiode negative (excessive electrical noise or damage) | - Check radio frequencies interferences<br>- Replace |
| 4 | Reference photodiode saturated (circuit or sensor coating damaged) | - Replace |
| 5 | Reference photodiode negative (excessive electrical noise or damage) | - Check radio frequencies interferences<br>- Replace |
| 6 | Temperature error. (Thermistor is damaged) | - Replace |

| | | |
|---|---|---|
| 7 | Temperature error. (Temperature is out of range.) | - Check sample temperature<br>- Replace |

## 5.7 Hydrocarbons

Maintenance

The maintenance is limited to refilling of the 5% H2SO4 cleaning solution.

Troubleshooting

| Symptoms | Origin |
|---|---|
| Negative value | - Bad zero or auto-zero: the cleaning solution has been prepared with polluted water or fault in the acid cleaning system (no flow, pump failure).<br>- No water in the flow cell (clogging, bad inlet connection, fault in the peristaltic pump) |
| Value is too low | - No water in the flow cell (clogging, bad inlet connection, fault in the peristaltic pump)<br>- Bubbles in the sample (check peristaltic pump inlet fitting).<br>- Bad zero or auto-zero: cleaning solution has been prepared with polluted water or fault in the acid cleaning system (no flow, pump failure).<br>- Bad calibration: check or redo calibration. |
| Value is too high | - Bad calibration: check or redo a calibration. |
| Unstable value | - Deposit or dirty on the flow cell, check the light level on the check screen<br>- Moving optical part (check manually after transportation).<br>- Bad calibration, check with a standard. |

Measuring errors

| Error no | Signification | Origin / Remediation |
|---|---|---|
| 1 | No signal from the photomultiplier | - Check the photomultiplier connection on one of the position J30 to J34 (“LED1” to “LED5”) of the DSP500 board according to the position displayed on the factory screen<br>- Failure on the photomultiplier cable (repair or replace)<br>- Failure on the photomultiplier board (replace) |
| 2 | No signal from the photo detector | - Check the photo detector connection on one of the position J21 to J25 (“IN1” to “IN5”) of the DSP500 board according to the position displayed on the factory screen<br>- Failure on the photo detector cable (repair or replace)<br>- Failure on the photo detector board (replace) |
| 3 | The light level coming from the photomultiplier is too high | - Sample concentration over range, check again with pure water<br>- Check that there is no bubble inside the flow cell, if yes check the fittings<br>- Failure on the photomultiplier cable (repair or replace)<br>- Failure on the photomultiplier board (replace) |
| 4 | The light level coming from the reference photo detector is too high | - Check that there is no bubble inside the flow cell, if yes check the fittings<br>- Failure on the photo detector cable (repair or replace)<br>- Failure on the photo detector board (replace) |
| 5 | Reserved | |
| 6 | The light level coming from the reference photo detector is too low | - Sample concentration over range, check again with pure water<br>- Sample turbidity too high, check again with pure water<br>- Failure on the photo detector cable (repair or replace)<br>- Failure on the photo detector board (replace) |

## 5.8 Hydrogen sulphide

Maintenance

The maintenance is limited to refilling of the 10% HCl solution and the 5% H2SO4 cleaning solution.

Troubleshooting

| Symptoms | Origin |
|---|---|
| value is too low | - No water in the flow cell (clogging, bad inlet connection, fault in the peristaltic pump)<br>- No HCl (check HCl tank, peristaltic pump, tubes and fittings).<br>- Bad temperature compensation (check the displayed temperature of the sample).<br>- Check the display unit: H2S or S of H2S.<br>- Condensation inside the gas flow cell (no trace of water must be visible on the gas circuit)<br>- Check the instrument with a standard. |
| Value is too high | - Check the display unit: H2S or S of H2S.<br>- Bad temperature compensation (check the displayed temperature of the sample).<br>- Check the instrument with a standard. |
| Unstable value | - Deposit or dirty on the optical parts (lens and/or windows), check the light level at 210 nm (zoom on the signal graph of the check screen)<br>- Moving optical part (check manually after transportation).<br>- Bad calibration, check with a standard. |

Measuring errors

| Error no | Signification | Origin / Remediation |
|---|---|---|
| 1 | The temperature of the heated parts is lower than 5 °C of the set point | - Wait about 15 minutes after power on. The temperature is displayed on the bottom line of the screen<br>- Check the temperature probe connection on J19 “PT100-3” of the DSP500 board (no connection gives a temperature of about -273 °C)<br>- Check the heater connected on J13 “POWER3” of the DSP500 board, warning  High voltage!<br>- Failure on the heater (replace) |
| 2 | No signal from the spectrograph | - Check the spectrograph connection on J20 of the DSP500 board<br>- Failure on the spectrograph cable (replace)<br>- Failure on the spectrograph board (replace) |
| 3 | The light level on the spectrograph is too high on the wavelengths used for the measurement | - Check the light level (zoom on the signal graph of the check screen), the light level can be slightly adjusted by moving the lamp holder or the flow cell<br>- Failure on the CCD500 board (replace) |
| 4 | The light level on the spectrograph is too low on the wavelengths used for the measurement | - Water inside the gas flow cell (dismount and dry all the gas circuit, check that there is no clogging on the outlet)<br>- Failure on the xenon lamp circuit if no flashes are visible during the measurement, check the connection of the XENON500 board on J26 “XENON1” of the DSP500 board (the orange neon lamp on the XENON500 board must always be on, if not replace the XENON500 board) and check the lamp connection on the XENON500 board (J2) |

## 5.9 Input 4-20 mA

Maintenance

No maintenance is required.

Troubleshooting

| Symptoms | Origin |
|---|---|
| Negative value | - Bad zero a value below 4 mA |
| Value is too low | - Bad calibration: check or redo a calibration |
| Value is too high | - Bad calibration: check or redo a calibration. |

Measuring errors

| Error no | Signification | Origin / Remediation |
|---|---|---|
| | Reserved | |

## 5.10 Nitrate by spectrograph

Maintenance

The maintenance is limited to refilling of the 5% H2SO4 cleaning solution.

Troubleshooting

| Symptoms | Origin |
|---|---|
| Negative value | - Bad zero or auto-zero: the cleaning solution has been prepared with polluted water or fault in the acid cleaning system (no flow, pump failure).<br>- No water in the flow cell (clogging, bad inlet connection, fault in the peristaltic pump) |
| Value is too low | - No water in the flow cell (clogging, bad inlet connection, fault in the peristaltic pump)<br>- Bubbles in the sample (check peristaltic pump inlet fitting).<br>- Bad zero or auto-zero: cleaning solution has been prepared with polluted water or fault in the acid cleaning system (no flow, pump failure)<br>- Check the mode NO3 or N-NO3<br>- Bad calibration: check or redo a calibration |
| Value is too high | - Bad calibration: check or redo a calibration.<br>- Check the mode NO3 or N-NO3<br>- Interferences in the sample |
| Unstable value | - Deposit or dirty on the flow cell, check the light level on the check screen<br>- Moving optical part (check manually after transportation).<br>- Bad calibration, check with a standard. |

Measuring errors

| Error no | Signification | Origin / Remediation |
|---|---|---|
| 1 | reserved | |
| 2 | No signal from the spectrograph | - Check the spectrograph connection on the connector J20 of the DSP500 board<br>- Failure on the spectrograph cable (repair or replace)<br>- Failure on the spectrograph board (replace) |
| 3 | The light level on the used bands of wavelengths is too high | - Check that there is no bubble inside the flow cell, if yes check the fittings<br>- Failure on the spectrograph cable (repair or replace)<br>- Failure on the spectrograph board (replace) |
| 4 | The light level on the used bands of wavelengths is too low | - Sample concentration over range, check again with pure water<br>- Sample turbidity too high, check again with pure water<br>- Deposit or dirty on the flow cell<br>- Failure on the xenon lamp circuit if no flashes are visible during the measurement, check the connection of the XENON500 board on J27 “XENON2” of the DSP500 board (the orange neon lamp on the XENON500 board must always be on, if not replace the XENON500 board) and check the lamp connection on the XENON500 board (J2) |

## 5.11 Oxidation-reduction potential

Maintenance

The ORP probe must be cleaned on a regular base (at least weekly) depending of the application.

Troubleshooting

| Symptoms | Origin |
|---|---|
| Negative value | - Bad calibration<br>- ORP probe disconnected |
| Value is too low | - Bad calibration: check or redo a calibration |
| Value is too high | - Bad calibration: check or redo a calibration. |
| Unstable value | - Electrical interference on the probe cable, put the probe cable away from power cables<br>- Dirty on the electrode |

Measuring errors

| Error no | Signification | Origin / Remediation |
|---|---|---|
| 1 | Over range | - Probe disconnected<br>- Failure on the pH-ORP board (replace) |

## 5.12 pH

Maintenance

The pH probe must be cleaned on a regular base (at least weekly) depending of the application.

Troubleshooting

| Symptoms | Origin |
|---|---|
| Negative value | - Bad calibration<br>- pH probe disconnected |
| Value is too low | - Bad calibration: check or redo a calibration |
| Value is too high | - Bad calibration: check or redo a calibration. |
| Unstable value | - Electrical interference on the probe cable, put the probe cable away from power cables<br>- Dirty on the electrode |

Measuring errors

| Error no | Signification | Origin / Remediation |
|---|---|---|
| 1 | Over range | - Probe disconnected<br>- Failure on the pH board (replace) |

## 5.13 Phosphate by spectrograph

Maintenance

The maintenance is limited to refilling of the one or two reagent bottles and the 5% H2SO4 cleaning solution.

Troubleshooting

| Symptoms | Origin |
|---|---|
| Negative value | - Very high turbidity on the sample that is not totally compensated |
| Value is too low | - No water in the flow cell (clogging, bad inlet connection, fault in the peristaltic pump)<br>- No reagent or fault in the reagent injection (pump failure, check-valve clogged)<br>- Interference in the sample<br>- Bad calibration: check or redo calibration. |
| Value is too high | - Bad calibration: check or redo a calibration.<br>- Interference in the sample |
| Unstable value | - Deposit or dirty on the flow cell, check the light level on the check screen<br>- Moving optical part (check manually after transportation).<br>- Bad calibration, check with a standard. |

Measuring errors

| Error no | Signification | Origin / Remediation |
|---|---|---|
| 1 | reserved | |
| 2 | No signal from the spectrograph | - Check the spectrograph connection on the connector J20 of the DSP500 board<br>- Failure on the spectrograph cable (repair or replace)<br>- Failure on the spectrograph board (replace) |
| 3 | The light level on the used bands of wavelengths is too high | - Check that there is no bubble inside the flow cell, if yes check the fittings<br>- Failure on the spectrograph cable (repair or replace)<br>- Failure on the spectrograph board (replace) |
| 4 | The light level on the used bands of wavelengths is too low | - Sample concentration over range, check again with pure water<br>- Sample turbidity too high, check again with pure water<br>- Deposit or dirty on the flow cell<br>- Failure on the xenon lamp circuit if no flashes are visible during the measurement, check the connection of the XENON500 board on J27 “XENON2” of the DSP500 board (the orange neon lamp on the XENON500 board must always be on, if not replace the XENON500 board) and check the lamp connection on the XENON500 board (J2) |
| 9 | Alarm for no reagent | - Refill the reagent tank<br>- Check the level detector connection |

## 5.14 Rhodamine

Maintenance

The maintenance is limited to refilling of the 5% H2SO4 cleaning solution.

Troubleshooting

| Symptoms | Origin |
|---|---|
| Negative value | - Bad zero or auto-zero: the cleaning solution has been prepared with polluted water or fault in the acid cleaning system (no flow, pump failure).<br>- No water in the flow cell (clogging, bad inlet connection, fault in the peristaltic pump) |
| Value is too low | - No water in the flow cell (clogging, bad inlet connection, fault in the peristaltic pump)<br>- Bubbles in the sample (check peristaltic pump inlet fitting).<br>- Bad zero or auto-zero: cleaning solution has been prepared with polluted water or fault in the acid cleaning system (no flow, pump failure).<br>- Bad calibration: check or redo calibration. |
| Value is too high | - Bad calibration: check or redo a calibration. |
| Unstable value | - Deposit or dirty on the flow cell, check the light level on the check screen<br>- Moving optical part (check manually after transportation).<br>- Bad calibration, check with a standard. |

Measuring errors

| Error no | Signification | Origin / Remediation |
|---|---|---|
| 1 | No signal from the photomultiplier | - Check the photomultiplier connection on one of the position J30 to J34 (“LED1” to “LED5”) of the DSP500 board according to the position displayed on the factory screen<br>- Failure on the photomultiplier cable (repair or replace)<br>- Failure on the photomultiplier board (replace) |
| 2 | No signal from the photo detector | - Check the photo detector connection on one of the position J21 to J25 (“IN1” to “IN5”) of the DSP500 board according to the position displayed on the factory screen<br>- Failure on the photo detector cable (repair or replace)<br>- Failure on the photo detector board (replace) |
| 3 | The light level coming from the photomultiplier is too high | - Sample concentration over range, check again with pure water<br>- Check that there is no bubble inside the flow cell, if yes check the fittings<br>- Failure on the photomultiplier cable (repair or replace)<br>- Failure on the photomultiplier board (replace) |
| 4 | The light level coming from the reference photo detector is too high | - Check that there is no bubble inside the flow cell, if yes check the fittings<br>- Failure on the photo detector cable (repair or replace)<br>- Failure on the photo detector board (replace) |
| 5 | Reserved | |
| 6 | The light level coming from the reference photo detector is too low | - Sample concentration over range, check again with pure water<br>- Sample turbidity too high, check again with pure water<br>- Failure on the photo detector cable (repair or replace)<br>- Failure on the photo detector board (replace) |

## 5.15 Spectrum UV-VIS

Maintenance

The maintenance is limited to refilling of the 5% H2SO4 cleaning solution.

Measuring errors

| Error no | Signification | Origin / Remediation |
|---|---|---|
| 1 | reserved | |
| 2 | No signal from the spectrograph | - Check the spectrograph connection on the connector J20 of the DSP500 board<br>- Failure on the spectrograph cable (repair or replace)<br>- Failure on the spectrograph board (replace) |
| 3 | The light level on some wavelengths is too high | - Check that there is no bubble inside the flow cell, if yes check the fittings<br>- Failure on the spectrograph cable (repair or replace)<br>- Failure on the spectrograph board (replace) |
| 4 | The light level on some wavelengths is too low | - Sample concentration over range, check again with pure water<br>- Sample turbidity too high, check again with pure water<br>- Deposit or dirty on the flow cell<br>- Failure on the xenon lamp circuit if no flashes are visible during the measurement, check the connection of the XENON500 board on J27 “XENON2” of the DSP500 board (the orange neon lamp on the XENON500 board must always be on, if not replace the XENON500 board) and check the lamp connection on the XENON500 board (J2) |

## 5.16 Temperature

Maintenance

No maintenance is required.

Troubleshooting

| Symptoms | Origin |
|---|---|
| Value is too low | - Bad calibration: check or redo a calibration |
| Value is too high | - Bad calibration: check or redo a calibration. |

Measuring errors

| Error no | Signification | Origin / Remediation |
|---|---|---|
| 1 | Probe disconnected | - Check the connection of the temperature probe<br>- Failure on the temperature module (replace) |
| 2 | Probe short-circuited | - Check the probe with an ohmmeter, the value must be in a 100 to 120 ohm range, if not replace the probe<br>- Failure on the temperature module (replace) |

## 5.17 Turbidity by UV absorption with spectrograph

Maintenance

The maintenance is limited to refilling of the 5% H2SO4 cleaning solution.

Troubleshooting

| Symptoms | Origin |
|---|---|
| Negative value | - Bad zero or auto-zero: the cleaning solution has been prepared with polluted water or fault in the acid cleaning system (no flow, pump failure).<br>- No water in the flow cell (clogging, bad inlet connection, fault in the peristaltic pump) |
| Value is too low | - No water in the flow cell (clogging, bad inlet connection, fault in the peristaltic pump)<br>- Bubbles in the sample (check peristaltic pump inlet fitting).<br>- Bad zero or auto-zero: cleaning solution has been prepared with polluted water or fault in the acid cleaning system (no flow, pump failure)<br>- Bad calibration: check or redo a calibration |
| Value is too high | - Bad calibration: check or redo a calibration. |
| Unstable value | - Deposit or dirty on the flow cell, check the light level on the check screen<br>- Moving optical part (check manually after transportation).<br>- Bad calibration, check with a standard. |

Measuring errors

| Error no | Signification | Origin / Remediation |
|---|---|---|
| 1 | reserved | |
| 2 | No signal from the spectrograph | - Check the spectrograph connection on the connector J20 of the DSP500 board<br>- Failure on the spectrograph cable (repair or replace)<br>- Failure on the spectrograph board (replace) |
| 3 | The light level on the used bands of wavelengths is too high | - Check that there is no bubble inside the flow cell, if yes check the fittings<br>- Failure on the spectrograph cable (repair or replace)<br>- Failure on the spectrograph board (replace) |
| 4 | The light level on the used bands of wavelengths is too low | - Sample concentration over range, check again with pure water<br>- Sample turbidity too high, check again with pure water<br>- Deposit or dirty on the flow cell<br>- Failure on the xenon lamp circuit if no flashes are visible during the measurement, check the connection of the XENON500 board on J27 “XENON2” of the DSP500 board (the orange neon lamp on the XENON500 board must always be on, if not replace the XENON500 board) and check the lamp connection on the XENON500 board (J2) |

## 5.18 Turbidity by nephelometry

Maintenance

The maintenance is limited to refilling of the 5% H2SO4 cleaning solution.

Troubleshooting

| Symptoms | Origin |
|---|---|
| Negative value | - Bad zero or auto-zero: the cleaning solution has been prepared with polluted water or fault in the acid cleaning system (no flow, pump failure) |
| Value is too low | - No water in the flow cell (clogging, bad inlet connection, fault in the peristaltic pump)<br>- Bad zero or auto-zero: cleaning solution has been prepared with polluted water or fault in the acid cleaning system (no flow, pump failure)<br>- Bad calibration: check or redo a calibration |
| Value is too high | - Bubbles in the sample (check peristaltic pump inlet fitting).<br>- Bad calibration: check or redo a calibration. |
| Unstable value | - Deposit or dirty on the flow cell, check the light level on the check screen<br>- Moving optical part (check manually after transportation).<br>- Bad calibration, check with a standard. |

Measuring errors

| Error no | Signification | Origin / Remediation |
|---|---|---|
| 1 | No signal from the peak photo detector | - Check the photo detector connection on one of the position J21 to J25 (“IN1” to “IN5”) of the DSP500 board according to the position displayed on the factory screen<br>- Failure on the photo detector cable (repair or replace)<br>- Failure on the photo detector board (replace) |
| 2 | The light level coming from the peak photo detector is too high | - Check that there is no bubble inside the flow cell, if yes check the fittings<br>- Failure on the photo detector cable (repair or replace)<br>- Failure on the photo detector board (replace) |
| 3 | No reference light from the laser diode board | - Check the LED connection on one of the position J30 to J34 (“LED1” to “LED5”) of the DSP500 board according to the position displayed on the factory screen<br>- Failure on the laser diode cable (repair or replace)<br>- Failure on the laser diode board (replace) |

## 5.19 Turbidity by external probe

Maintenance

A cleaning must be done on a regular base, or by pressurised air or manually.

Troubleshooting

| Symptoms | Origin |
|---|---|
| Value is too low | - Probe not immerged<br>- Bad zero: the zero solution was turbid<br>- Bad calibration: check or redo a calibration |
| Value is too high | - Bad calibration: check or redo a calibration<br>- Dirty on the optical windows |
| Unstable value | - Deposit or dirty on the flow cell<br>- Bad calibration, re check with a standard |

Measuring errors

| Error no | Signification | Origin / Remediation |
|---|---|---|
| 1 | Probe disconnected or not responding | - Check the connection<br>- Uninitialized probe (new probe): do the probe reset sequence in the check screen |
| 2 | Faulty sensor LED | - Replace |
| 3 | TSS value out of range | - Dirty on the optical windows<br>- Check the sample, change the probe model |
| 4 | TSS negative (re-zero sensor) | - Redo a zero |

## 5.20 UV254 by spectrograph

Maintenance

The maintenance is limited to refilling of the 5% H2SO4 cleaning solution.

Troubleshooting

| Symptoms | Origin |
|---|---|
| Negative value | - Bad zero or auto-zero: the cleaning solution has been prepared with polluted water or fault in the acid cleaning system (no flow, pump failure).<br>- No water in the flow cell (clogging, bad inlet connection, fault in the peristaltic pump) |
| Value is too low | - No water in the flow cell (clogging, bad inlet connection, fault in the peristaltic pump)<br>- Bubbles in the sample (check peristaltic pump inlet fitting).<br>- Bad zero or auto-zero: cleaning solution has been prepared with polluted water or fault in the acid cleaning system (no flow, pump failure)<br>- Bad calibration: check or redo a calibration |
| Value is too high | - Bad calibration: check or redo a calibration. |
| Unstable value | - Deposit or dirty on the flow cell, check the light level on the check screen<br>- Moving optical part (check manually after transportation).<br>- Bad calibration, check with a standard. |

Measuring errors

| Error no | Signification | Origin / Remediation |
|---|---|---|
| 1 | reserved | |
| 2 | No signal from the spectrograph | - Check the spectrograph connection on the connector J20 of the DSP500 board<br>- Failure on the spectrograph cable (repair or replace)<br>- Failure on the spectrograph board (replace) |
| 3 | The light level on the used bands of wavelengths is too high | - Check that there is no bubble inside the flow cell, if yes check the fittings<br>- Failure on the spectrograph cable (repair or replace)<br>- Failure on the spectrograph board (replace) |
| 4 | The light level on the used bands of wavelengths is too low | - Sample concentration over range, check again with pure water<br>- Sample turbidity too high, check again with pure water<br>- Deposit or dirty on the flow cell<br>- Failure on the xenon lamp circuit if no flashes are visible during the measurement, check the connection of the XENON500 board on J27 “XENON2” of the DSP500 board (the orange neon lamp on the XENON500 board must always be on, if not replace the XENON500 board) and check the lamp connection on the XENON500 board (J2) |

# 6 Specifications

## 6.1 General

| | |
|---|---|
| *Sample temperature:* | 0 ºC to 80 ºC, except NH4 or H2S: 0 ºC to 40 ºC |
| *Sample pressure:* | 5 bar (5000 hPa or 75 psi) |
| *Wet materials:* | Polypropylene (PP), quartz, glass, PTFE |
| *Sample Inlet/outlet:* | Double ring fittings for semi-rigid plastic tubing<br>External diameter (OD) 9.6 mm (3/8")<br>Internal diameter (ID) 6.4 mm (1/4") |
| *Reagent Inlet/outlet:* | Barbed fittings for soft plastic tubing<br>Internal diameter (ID) 3.2 to 4 mm |
| *Cleaning solution: (optional)* | Recommended: 5% sulphuric acid ($H_2SO_4$)<br>(Up to 20% for special applications)<br>Typical consumption: 100 ml per day |
| *Ultrasonic cleaning: (optional)* | Piezo ceramic 50-70 KHz<br>Adjustable time and power |
| *Display:* | Colour TFT LCD, Size: 10.4", resolution: 640 x 480 pixels<br>LED backlight with screen saver<br>Resistive touch screen |
| *Memory:* | 4000 records (up to 16 measurement channels) with date and time |
| *Communication:* | - RS232 - MODBUS protocol or proprietary remote control protocol<br>- RS485 - MODBUS protocol or proprietary remote control protocol<br><br>- Wi-Fi (IEEE 802.11b), optional, SMA connector with antenna<br>Distance: about 30 meters indoors<br>MODBUS protocol or proprietary remote control protocol<br><br>- Ethernet (10/100BASE-T) optional, RJ45 connector<br>MODBUS protocol or proprietary remote control protocol |
| *USB port* | For USB memory keys, any format (FAT16, FAT32)<br>Standard USB connector type A with IP68 protective cap<br>- Recorded measurement downloads (compatible with Excel®)<br>- Complete configuration backup/restore (proprietary format)<br>- Screen copy in BMP format (compatible with Windows®) |

| | |
|---|---|
| Outputs: | Active 4-20 mA (optional), load 500 ohm maxi, resolution 0.005 mA,<br>Individual galvanic isolation<br>Connection on removable screw terminals |
| *Relays:* | Normally open (NO) and normally closed (NC) contacts<br>Contact rating: 5A @ 277VAC/30VDC resistive<br>Connection on removable screw terminals |
| *Extensions:* | 12 internal sockets for input modules (electrodes, 4-20 mA input),<br>output modules (4-20 mA) or relays modules |
| *Power supply:* | 90-264 VAC / maxi 100 VA / 50-60Hz |
| *Operating limits:* | 0 to 50 ºC |
| *Safety standard:* | IEC 61010-1, EN 61010-1 |
| *EMC standard:* | EN61326/A1/A2/A3, IEC61000-3-2, IEC61000-3-3, IEC61000-4-2,<br>IEC61000-4-3, IEC61000-4-4, IEC61000-4-5, IEC61000-4-6, IEC61000-4-11 |
| *Enclosure:* | IP65 / Nema 4X, stainless steel 316L with painting |
| *Dimensions:* | 525 x 345 x 260 mm |
| *Weight:* | 25 kg approx. (depending of the configuration) |

## 6.2 Ammonia

### Specifications

Calibrated range: 0 – 50 mg/l NH4+

Measuring range: 0 – 150 mg/l NH4+

Measuring time: 2 to 4 minutes

Accuracy: +/- 5%

Repeatability as sigma

- At 10 mg/l:
- At 0.5 mg/l:
- Around zero:

Lower detection limit as 3 x sigma:

NaOH concentration: 10% (not critical, 5% to 20% range)

NaOH consumption: 2 ml per measurement

### Interferences

No interferences from suspended solid, colour or turbidity

High concentration of solvents or aromatics hydrocarbons may cause a zero offset.
This effect may be compensated by an adjustment of the wavelengths and background factor on the check screen.

## 6.3 Chlorophyll A

**Specifications**

Calibrated range:

Measuring range:

Measuring time: 10 seconds

Accuracy: +/- 5%

Repeatability as sigma

- At full calibrated range:
- At 50% of the calibrated range:
- At 10% of the calibrated range:
- At zero:

Lower detection limit as 3x sigma:

**Interferences**

High levels of turbidity may decrease the sensitivity

## 6.4 Colour by spectrograph

### Specifications

| Flow cell | 30 mm | 10 mm | 1 mm |
|---|---|---|---|
| Scale factor | | | |
| Calibration factor | | | |
| | | | |
| **Calibrated range** | | | |
| **Measuring range** | | | |
| **Accuracy** | | | |
| **Measuring time** | | | |
| **Repeatability (sigma):** (1,2) | | | |
| **At full calibrated range** | | | |
| **At 50% of calibrated range** | | | |
| **At 10% of calibrated range** | | | |
| **Around zero** | | | |
| | | | |
| **Detection limit (3 x sigma)** | | | |

Note 1: Theses values are typical values, not guaranteed values
Note 2: Theses values are been obtained on clear samples, turbidity may affect theses values

### Interferences

No interference

## 6.5 Conductivity

**Specifications**

Calibrated range: 0 – 1000 µS (for K=1 cell)

Measuring range: 0 – 1000 µS (for K=1 cell)

Measuring time: 2 seconds

Accuracy: +/- 5%

Repeatability as sigma

- At full calibrated range:
- At 50% of the calibrated range:
- At 10% of the calibrated range:
- At zero:

Lower detection limit as 3x sigma:

**Interferences**

No known interferences

## 6.6 Dissolved oxygen

### Specifications

| | |
|---|---|
| Calibrated range: | 0 – 25 mg/l O2 |
| Measuring range: | 0 – 25 mg/l O2 |
| Measuring time: | 95% in less than 60 seconds |
| Accuracy: | +/- 5% |
| Repeatability: | +/- 0.1 mg/l |

### Interferences

No known interferences

## 6.7 Hydrocarbons

**Specifications**

Calibrated range: 0 – 10 ppm of phenol

Measuring range: 0 – 10 ppm of phenol

Measuring time: 10 seconds

Accuracy: +/- 5%

Repeatability as sigma

- At full calibrated range:
- At 50% of the calibrated range:
- At 10% of the calibrated range:
- At zero:

Lower detection limit as 3x sigma:

**Interferences**

High levels of organic matter or turbidity may decrease the sensitivity

## 6.8 Hydrogen sulphide

### Specifications

Calibrated range:

Measuring range:

Measuring time: 2 to 4 minutes

Accuracy: +/- 5%

Repeatability as sigma

- At full calibrated range:
- At 50% of the calibrated range:
- At 10% of the calibrated range:
- At zero:

Lower detection limit as 3x sigma:

HCl concentration: 10% (not critical, 5% to 20% range)

HCl consumption: 2 ml per measurement

### Interferences

No interferences from suspended solid, colour or turbidity

High concentration of solvents or aromatics hydrocarbons may cause an effect.
This effect may be partially compensated by an adjustment of the wavelengths on the check screen.

## 6.9 Input 4-20 mA

**Specifications**

| | |
|---|---|
| Input resistance: | 100 ohm |
| Measuring range: | 0 – 20 mA |
| Measuring time: | 2 seconds |
| Accuracy: | +/- 5% |

Repeatability as sigma

- At full calibrated range:
- At zero:

## 6.10 Nitrate by spectrograph

**Specifications with 3 mm flow cell (typical)**

| | |
|---|---|
| Calibrated range: | 0 – 100 mg/l NO3 |
| Measuring range: | 0 – 120 mg/l NO3 |
| Measuring time: | 12 seconds |
| Accuracy: | +/- 5% |

Short term repeatability
as standard deviation (sigma)

| | |
|---|---|
| - At full calibrated range: | 0.7 mg/l NO3 |
| - At 50% of the calibrated range: | 0.4 mg/l NO3 |
| - At 5% of the calibrated range: | 0.04 mg/l NO3 |
| - At zero: | 0.03 mg/l NO3 |

Lower detection limit as 3 x sigma: 0.1 mg/l NO3

**Interferences**

High level of organic matter (like industrial waste water) may interfere.
For low level like river water, the interference is generally negligible.



The measurement is the sum of the nitrite (NO2) and nitrate (NO3) ions.
The concentration of NO2 is generally negligible on natural water.

## 6.11 Oxidation-reduction potential

### Specifications

Measuring range: -2000 mV to +2000 mV

Measuring time: 2 seconds

Accuracy: +/- 5%

Repeatability as sigma

- At -2000 mV:
- At zero:
- At +2000 mV:

### Interferences

The pH of the solution may interfere

## 6.12 pH

### Specifications

Measuring range: 0 to 14

Measuring time: 30 seconds

Accuracy: +/- 5%

Repeatability as sigma

- At pH 7:

### Interferences

## 6.13 Phosphate by spectrograph

**Specifications for ascorbic method**

Calibrated range: 0 – 2 mg/l P-PO4

Measuring range:

Measuring time: 180 seconds

Accuracy: +/- 5%

Repeatability as sigma

- At full calibrated range:
- At 50% of the calibrated range:
- At 10% of the calibrated range:
- At zero:

Lower detection limit as 3x sigma:

**Interferences**

Arsenates, hexavalent chromium and nitrites may interfere.

## 6.14 Rhodamine

**Specifications**

Calibrated range:

Measuring range:

Measuring time: 10 seconds

Accuracy: +/- 5%

Repeatability as sigma

- At full calibrated range:
- At 50% of the calibrated range:
- At 10% of the calibrated range:
- At zero:

Lower detection limit as 3x sigma:

**Interferences**

High levels of turbidity may decrease the sensitivity

## 6.15 Spectrum UV-VIS

**Specifications**

| | |
|---|---|
| Measuring range: | 180 nm – 760 nm |
| Resolution: | 0.3 nm |
| Measuring time: | 10 seconds |
| Flow cell: | 1 to 30 mm (standard sizes: 1, 10, 30 mm) |
| Repeatability: | +/- Abs |

## 6.16 Temperature

**Specifications**

Calibrated range:

| | |
|---|---|
| Measuring range: | 0 - 100°C |
| Measuring time: | 2 seconds |
| Accuracy: | +/- 1 °C |

Repeatability as sigma at 25°C:

## 6.17 Turbidity by UV absorption with spectrograph

### Specifications

| | | | |
|---|---|---|---|
| Flow cell | | | |
| Scale factor | | | |
| Calibration factor | | | |
| | | | |
| **Calibrated range** | | | |
| **Measuring range** | | | |
| **Accuracy** | | | |
| **Measuring time** | | | |
| **Repeatability (sigma):** (2,3) | | | |
| **At full calibrated range** | | | |
| **At 50% of calibrated range** | | | |
| **At 10% of calibrated range** | | | |
| **Around zero** | | | |
| | | | |
| **Detection limit (3 x sigma)** | | | |

Note 1: Rough municipal waste water (ww)
Note 2: Theses values are typical values, not guaranteed values
Note 3: Theses values are been obtained on clear samples, turbidity may affect theses values

### Interferences

High concentrations of metallic ions or colour may interfere.
The absorbing wavelength can be modified in the check screen to avoid a specific interference.

## 6.18 Turbidity by nephelometry

### Specifications

Calibrated range:

Measuring range:

Measuring time: 10 seconds

Accuracy: +/- 5%

Repeatability as sigma

- At full calibrated range:
- At 50% of the calibrated range:
- At 10% of the calibrated range:
- At zero:

Lower detection limit as 3x sigma:

### Interferences

Unknown.

## 6.19 Turbidity by external probe

**Specifications**

**Model 36**

| | |
|---|---|
| Range: | 0 - 30,000 mg/l TSS |
| Measuring time: | 10 seconds |
| Accuracy: | +/- 5% or +/- 100 mg/l whichever is greater |
| Repeatability: | +/- 1% or +/- 2 mg/l whichever is greater |

**Model 37**

| | |
|---|---|
| Range: | 0 - 1,500 mg/l TSS |
| Measuring time: | 10 seconds |
| Accuracy: | +/- 5% or +/- 2 mg/l whichever is greater |
| Repeatability: | +/- 1% or +/- 2 mg/l whichever is greater |

## 6.20 UV254 by spectrograph

### Specifications

| Flow cell | | | | | | |
|---|---|---|---|---|---|---|
| Mode | Abs/m | COD river | Abs/m | COD river | Abs/m | COD ww(1) |
| Scale factor | | | | | | |
| Calibration factor | 1.0 | 0.5 | 1.0 | 0.5 | 1.0 | 8.0 |
| | | | | | | |
| **Calibrated range** | | | | | | |
| **Measuring range** | | | | | | |
| **Accuracy** | | | | | | |
| **Measuring time** | | | | | | |
| **Repeatability (sigma):** (2,3) | | | | | | |
| **At full calibrated range** | | | | | | |
| **At 50% of calibrated range** | | | | | | |
| **At 10% of calibrated range** | | | | | | |
| **Around zero** | | | | | | |
| | | | | | | |
| **Detection limit (3 x sigma)** | | | | | | |

Note 1: Rough municipal waste water (ww)
Note 2: Theses values are typical values, not guaranteed values
Note 3: Theses values are been obtained on clear samples, turbidity may affect theses values

### Interferences

1) Abs/m mode

Possible interference with high concentrations of metallic ions when measuring organic matter

2) COD mode

Each molecule has a specific UV/COD ratio. Display as COD can be done only on solutions having a relatively constant molecules ratio like river water, municipal waste water, food and paper industries.
It is recommended to carry out a correlation study before using the analyser in COD mode.



Some molecules like linear hydrocarbons, alcohols and glucose have no UV absorption and consequently are not detected.

---

# *VEOLIA*

## *MODEL MA40, HYDROCYCLONE*

LEFT BLANK

# MA HYDROCYCLONE

## INSTALLATION & MAINTENANCE

## MANUAL

**VEOLIA WATER**
L'Aquarène
1, Place Montgolfier
94417 Saint-Maurice cedex
France
Tel : +33(0)1 45 11 55 55
Fax : +33(0)1 45 11 55 00

www.veoliawaterst.com

## TABLE OF CONTENTS

1. INTRODUCTION ..... 3
2. GENERALITIES ..... 3
2.1. Types of MA hydrocyclone ..... 3
2.2. Material ..... 3
2.3. Layout and weight of the hydrocyclones ..... 4
3. INSTALLATION ..... 7
3.1. Reception and storage ..... 7
3.2. Installation instructions ..... 7
3.3. Hydrocyclone assembly ..... 7
4. OPERATION ..... 9
4.1. Interchangeable parts ..... 10
4.2. Service water ..... 11
5. MAINTENANCE ..... 12
6. APPENDIX: FUNCTIONING CURVES ..... 13

# 1. INTRODUCTION

MA hydrocyclones have been developed and patented by VWS. They are manufactured by Exsto in France and are distributed by Opalium and Aquafab.

They are used for all Actiflo® applications. Their main characteristic is the injection of service water at the bottom part of the hydrocyclone to increases the cyclone efficiency.

# 2. GENERALITIES

## 2.1. Types of MA hydrocyclone

Different sizes of MA hydrocyclone are available:

- MA0.5 for an inlet flow of 0.1 to 0.35$m^3$/h (inlet pressure of 0.8 to 3.5bar)
- MA1 for an inlet flow of 0.4 to 1$m^3$/h (inlet pressure of 0.5 to 2.5bar)
- MA5 for an inlet flow of 4 to 6$m^3$/h (inlet pressure of 0.6 to 1.5bar)
- MA10 for an inlet flow of 8-14$m^3$/h (inlet pressure of 0.6 to 1.8bar)
- MA20 for an inlet flow of 16-30$m^3$/h (inlet pressure of 0.6 to 2bar)
- MA40 for an inlet flow of 35-60$m^3$/h (inlet pressure of 1.25 to 3bar)
- MA80 for an inlet flow of 60 to 115-120$m^3$/h, to be confirmed by future tests (inlet pressure of 1 to 3bar)
- MA120 (available soon) for an inlet flow of 100-150$m^3$/h

Caution: If the flow range of the hydrocyclone is not respected, the performance will decrease (high sand losses).

## 2.2. Material

MA hydrocyclone body is made of Polyurethane MDI ether (PU TM 390). This material is suitable for drinking water applications (DWI agreement in the UK, renewal of the French certification in progress, NSF agreement to be done in the future). Seals are made of EPDM and nuts and bolts of SS.

Note: If the hydrocyclone is exposed to UV, it can turn yellow, but this has no impact on the properties of the material.

The suitable temperature range for the hydrocyclones is from -20°C to +60°C. If this range is not respected, there will be modifications of the mechanical properties of the material.

There are some chemical incompatibilities with MA hydrocyclones. The following chemical resistance is given for a water temperature of 20°C . The higher the temperature is, the lower is the chemical resistance.

Products to be avoided whatever the concentration:

- Chlorinated solvents (methylene chloride, chloroform, trichloroethane,..)
- Aromatic chlorinated solvents (chlorobenzene,…)
- Other solvents (THF, DMF, NMP, DMSO and pyridine)
- Ketones (MEK or MIBK)

Products to be avoided above a certain concentration:

- Weak acids (acetic, citric, boric, stearic): 3% maximum
- Strong acids (hydrochloric, sulphuric): 3% maximum
- Mineral acids (sodium bisulphate and phosphoric acid): 3% maximum
- Oxidant solutions:
  - Bleach (continuous): 0.5% maximum
  - Bleach (shock): 3% maximum
  - Sodium nitrate: 3% maximum
- Alkaline solutions:
  - Caustic soda: 3% maximum
  - Lime slurry: saturated
- Alcohol:
  - Ethanol and iso-propanol: 5% maximum
  - Methanol

There are no chemical incompatibilities with:

- Ferric chloride and aluminium chloride
- Oil and grease

### 2.3. Layout and weight of the hydrocyclones

MA 10 to 80 hydrocyclones have the same layout with different dimensions. MA0.5, MA1 and MA5 have some specificities. Next figures show the MA hydrocyclones layout.

**Table 1: Dimensions and weights of the different hydrocyclones**

| | MA0.5 | MA1 | MA5 | MA10 | MA20 | MA40 | MA80 |
|---|---|---|---|---|---|---|---|
| Feed inlet | 10.8mm | 15.8mm | 1'' | 2" | 2" ½ | 4'' | 4'' |
| Overflow outlet | 10.8mm | 15.8mm | 1''½ | 2" | 2" ½ | 4'' | 6'' |
| Service water inlet | 10.8mm | 15.8mm | ½'' | ¾'' | ¾'' | ¾'' | 1'' |
| Total height (L1*) | 147mm | 224mm | 445mm | 606mm | 796mm | 1116mm | 1293mm |
| Total diameter (L2*) | 45mm | 60mm | 150mm | 210mm | 260mm | 400mm | 470mm |
| Body diameter (L3*) | - | - | - | 145mm | 190mm | 280mm | 350mm |
| Feed inlet to the top of the cyclone (L4*) | 12.5mm | 14.5mm | 104mm | 133.2mm | 137.5mm | 223mm | 233mm |
| Service water inlet to the top of the cyclone (L5*) | 71mm | 131.5mm | 315mm | 442.5mm | 577.5mm | 820mm | 970mm |
| Feed inlet to the centre of the cyclone (L6*) | 52.5mm | 65mm | 128mm | 166mm | 191mm | 320mm | 350mm |
| Weight | 250g | 650g | 6.2kg | 10.5kg | 18.2kg | 66kg | 105kg |

** : see next figures*

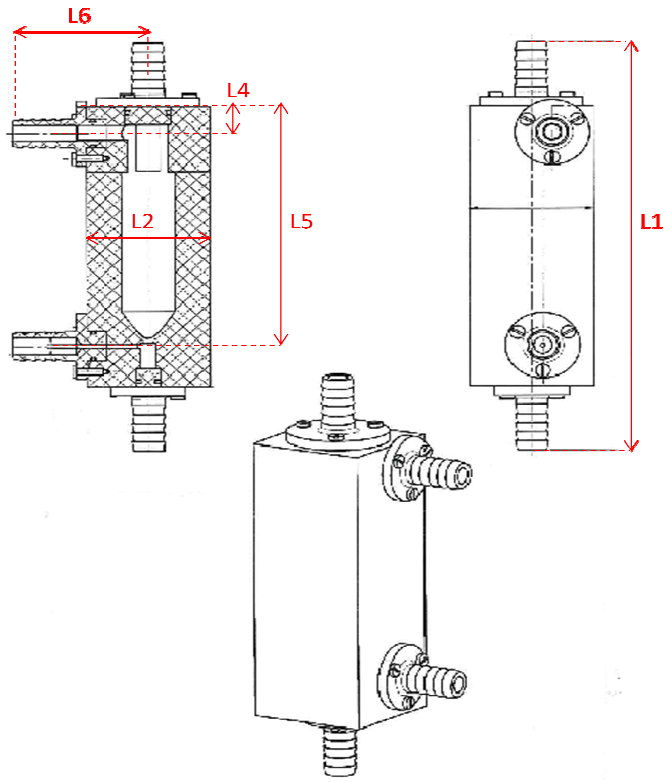


**Figure 1 : Layout of MA0.5 and MA1**

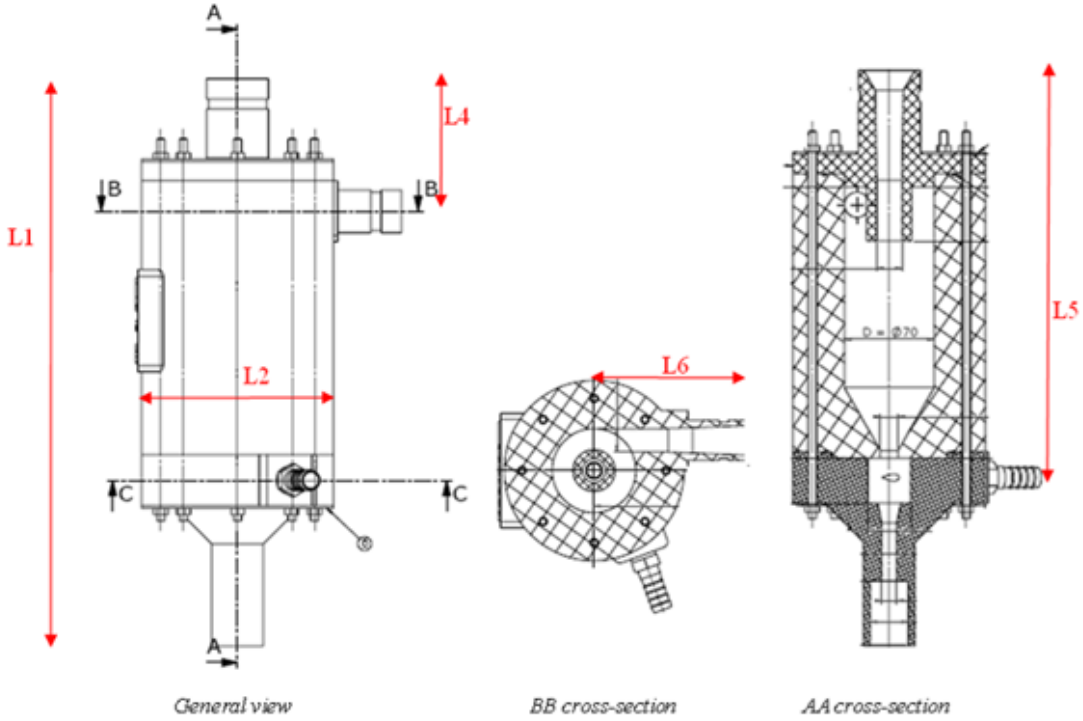


**Figure 2 : Layout of MA5**

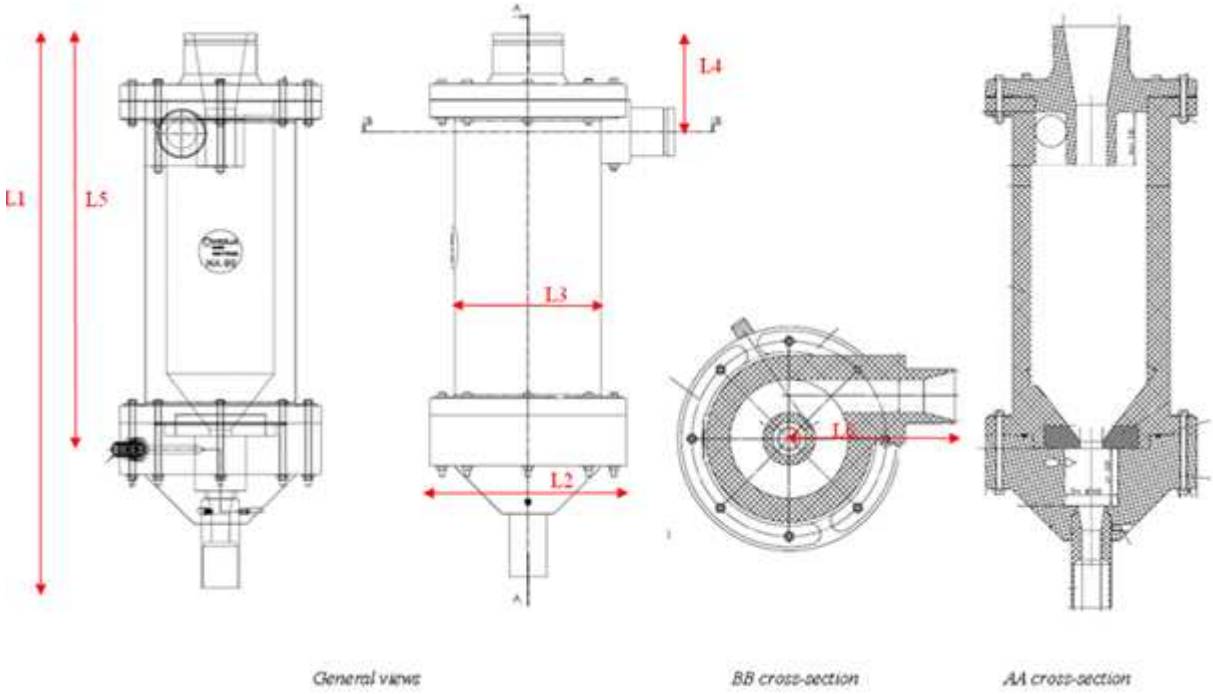


**Figure 3 : Layout of MA10, 20, 40 and 80**

The MA hydrocyclone has various connections:

- A feed inlet with Victaulic connection
- A service water inlet with barbed hose fitting
- An overflow with Victaulic connection
- An underflow nozzle

Note: MA0.5 and MA1 hydrocyclones have four barbed hose fittings (feed, overflow, underflow and service water inlet).

# 3. INSTALLATION

## 3.1. Reception and storage

Before starting installation, check that the material is not damaged and the delivery is correct:

- There are no cracks
- There are no air bubbles in the polyurethane
- The model and number of parts is correct
- Material certificates are available

If the equipment has to be stored on site, take into account following recommendations:

- Temperature between 5 and 50℃
- Relative humidity between 5 and 95% without condensation.
- Sheltered from light and UV
- Keep away from ignition sources
- Maximum storage of 2 years

## 3.2. Installation instructions

When installing the hydrocyclone:

- Make sure that the hydrocyclone is perfectly vertical
- Avoid knocking the hydrocyclone
- Install the hydrocyclone with its support
- Once the support assembly is set up, connect the different pipes

The Victaulic connections can compensate a slight misalignment. Avoid excessive misalignment which will generate stress and could break the cyclone.

A customized connection pipe with a groove for Victaulic is supplied by Aquafab to connect the hydrocyclone inlet and overflow to the recirculation line. It is made in PEHD. Other materials are available under request.

## 3.3. Hydrocyclone assembly

MA hydrocyclones are made of polyurethane. When assembling the different parts of the cyclone together, it is important to respect the maximal tightening torques while screwing the bolts; otherwise there can be squashing, buckling and shape changing problems. The use of a torque wrench is highly recommended. The following table shows the maximal tightening torques for the different hydrocyclones.

**Table 1 : Maximal tightening torques for the different hydrocyclones**

| | MA5 | MA10 | MA20 | MA40 | MA80 |
|---|---|---|---|---|---|
| Nuts & bolts between overflow and cyclone body | 4Nm Max | 6Nm Max | 8Nm Max | 16Nm Max | 24Nm Max |
| Nuts & bolts between the underflow and the cyclone body | 4Nm Max | 2Nm Max | 8Nm Max | 16Nm Max | 24Nm Max |
| Service water connection | 1Nm Max | 1Nm Max | 1Nm Max | 1Nm Max | 1Nm Max |
| Nozzle | 1Nm Max | 1Nm Max | 1Nm Max | 1Nm Max | 1Nm Max |

MA hydrocyclones are delivered already mounted. The only part of the cyclone that should be assembled on site is the service water connection. Teflon tap or a sealing gel should be applied to the threads before screwing the connection to the hydrocyclone. It is important to respect the maximum tightening torque (see previous table).

It is possible to remove the overflow and underflow parts from the body of the cyclone (to change them when they are worn out). When re-assembling the new parts, do not screw nut & bolts one after the other clockwise, but screw opposite nuts & bolts one after the other (see tightening sequence in the next figure) and tight progressively the nuts, repeating the tightening sequence several times. This will avoid deformation problems.

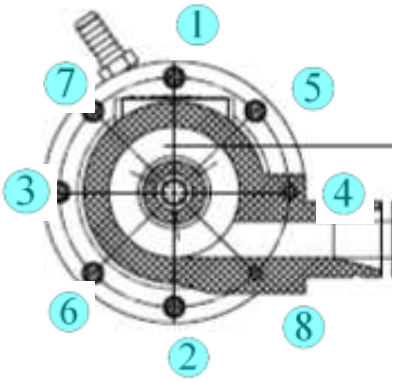


**Figure 4. Nuts & bolts screwing sequence (MA5, 10 and 20, similar for MA40 and 80)**

## 4. OPERATION

The MA hydrocyclone is used for separating the microsand from the sludge in the Actiflo process. The cyclone creates a centrifugal force in the sludge and microsand flow which separates both: the sludge exist the cyclone through the overflow at the top, while the microsand leaves through the bottom underflow.

The MA hydrocyclone characteristic is the injection of service water at the bottom part of the cyclone to wash the microsand. This avoids most of the associated sludge to return into the Actiflo process and process efficiency is increased.

The flow distribution in a MA hydrocyclone is shown next:

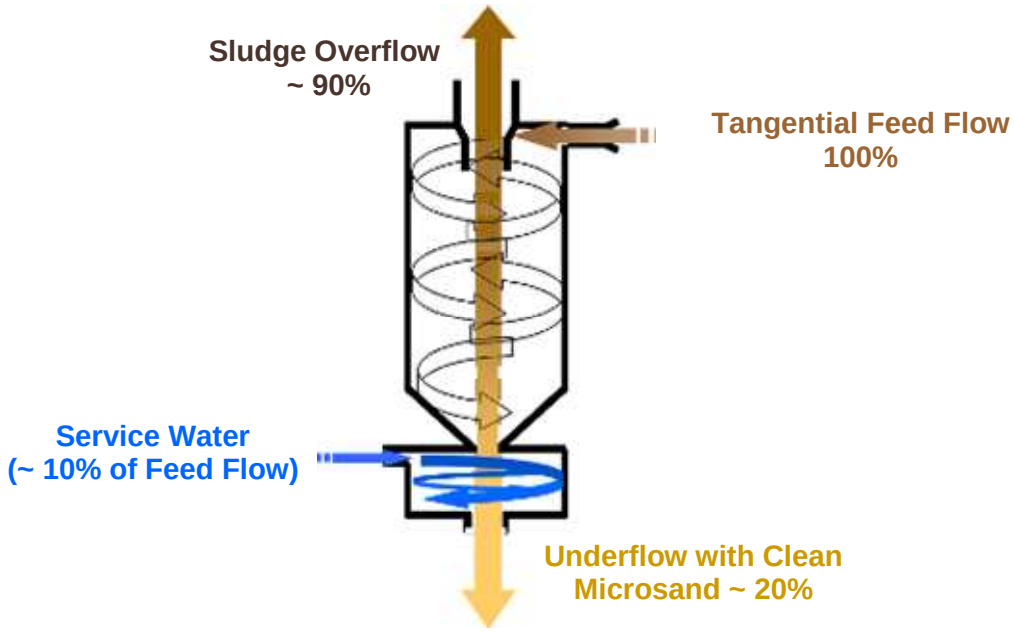


**Figure 5: Flow distribution of MA hydrocyclone**

The maximum SS concentration at the inlet of the hydrocyclone (which is mainly sand and a little amount of sludge) is 200g/L, ideally 30-120g/L.

The cut-off size of MA hydrocyclone is between 30 and 60microns in normal operation (depends on the inlet flow and inlet pressure).

Typically, the sand loss at the overflow of the cyclone is 1/1000 of the feed flow concentration (with sand for drinking water application; for sand for wastewater applications, sand losses should be lower).

The MA hydrocyclones performance is shown on the functioning curves in the Appendix. Check the typical flow distribution values and operating pressure.

The performance of the cyclone (sand loss for example) can be optimised by:

- Increasing the feed flow and pressure, as long as they stay in the cyclone operating range (if the flow is too big, the hydrocyclone is completely full of water and there is no vortex effect any longer).
- Choosing the appropriate diameters of the interchangeable overflow and underflow parts (MA20, MA40 and MA80). See next section.

### 4.1. Interchangeable parts

To better adapt their performance, hydrocyclones MA20, 40 and 80 are equipped with interchangeable parts of different diameters for the overflow and underflow. Next table shows the available sizes.

Note: The use of interchangeable parts with different inner diameters does not affect the connection diameters of the hydrocyclone.

**Table 2. MA20, 40 and 80 interchangeable parts (overflow and underflow)**

| | MA20 | MA40 | MA80 |
|---|---|---|---|
| Overflow diameter D1 (mm) | 37 | 51 | 65 |
| | 42 | 56 | 70 |
| | 47 | 61 | 75 |
| Underflow diameter D2 (mm) | 25 | 35 | 45 |
| | 30 | 40 | 50 |
| | 35 | 45 | 55 |

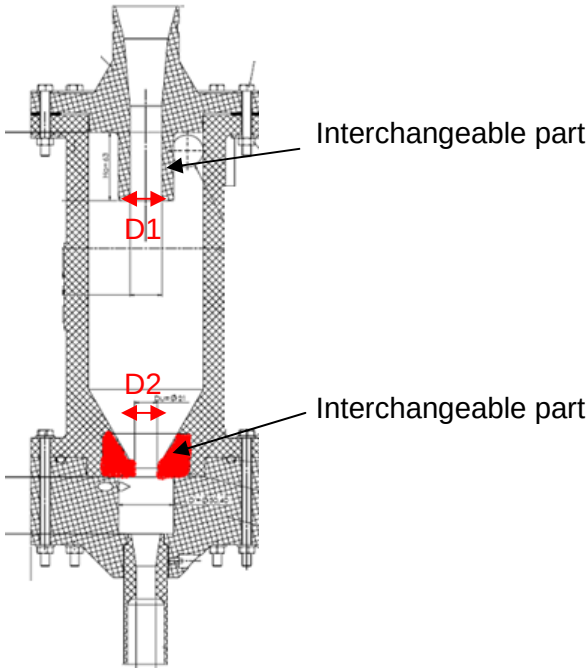


**Figure 6. Interchangeable parts**

The diameter of the overflow opening affects the cut-off efficiency and the hydrocyclone headloss whereas the underflow diameter has influence on the cut-off efficiency and flow. The

lower the underflow opening is, the lower the water underflow is: the SS flow remains constant, but the underflow SS concentration raises. If the underflow opening is too small, the cut-off efficiency drops (no more vortex effect).

Change the overflow and underflow nozzles if necessary. To ensure that the hydrocyclone functions properly:

- Check the headloss of the cyclone. If it is too high, the overflow piece should be changed for one with a larger diameter.
- Check the underflow of the cyclone. It should be umbrella shaped. If it is not the case, the underflow interchangeable part should be changed for one with a larger diameter.
- Take a sample of the overflow to ensure that it is free of sand (in a sludge test cone, for example). If the sand loss is visible, the overflow/underflow nozzles should be changed for a smaller overflow diameter and/or larger underflow diameter.

### 4.2. Service water

Service water requirements:

- Quality: 20 µm filtered water
- Pressure: Sand and sludge recirculation flow inlet pressure + 0.5bar
- Flow: 10% of the inlet flow

The service water pipe is generally a flexible plastic one (Tricoclair for example) and it is fixed to the hydrocyclone with a clamp.

It is highly recommended to have a rotameter in the service water feed line in order to check the inlet flow and a solenoid valve interlocked to the recirculation pump.

## 5. MAINTENANCE

It is recommended to check regularly the separation performance of the hydrocyclone. A drop in the separation performance can be due to abrasion problems in the underflow caused by the microsand. In this case and depending on the type of hydrocyclone, the whole cyclone or the worn part should be replaced.

By experience, the interchangeable wear part at the bottom of the cyclone should be changed approximately every 2-3 years (see next figure, part in red).

Cyclones and spare parts can be ordered: wear part of the cyclone (2-3 weeks of delay), nozzle (2-3 weeks of delay) or other parts (longer delay).

The required maintenance time to change the interchangeable wear part depends of the size of the cyclone and of the site.

- MA10: ~1hour
- MA20: ~2h
- MA40 & MA80: ~1/2 day

Note: MA0.5, MA1 and MA5 hydrocyclones have no interchangeable wear parts, the whole cyclone should be changed when worn. MA0.5 and MA1 models suffer more abrasion and replacement rate is higher.

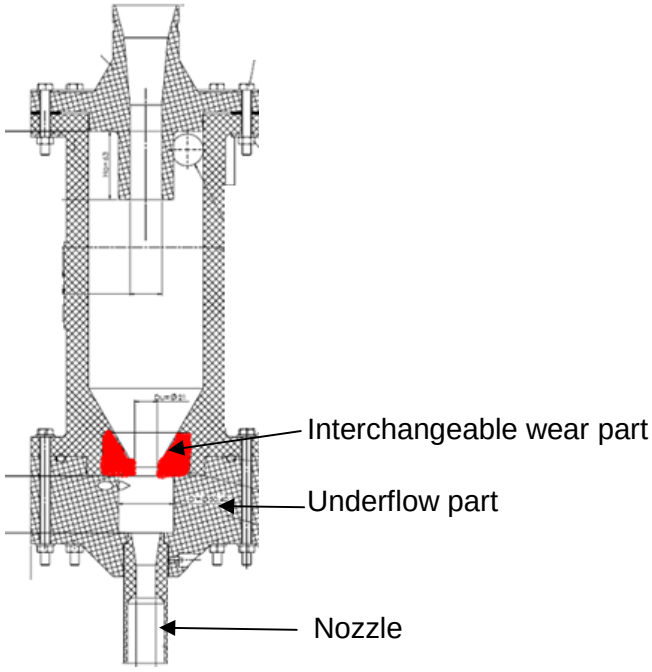


**Figure 7. Spare parts**

There is no need to grease or to change the seals.

# 6. APPENDIX: FUNCTIONING CURVES

## MA0.5: range from 100 to 350 L/h

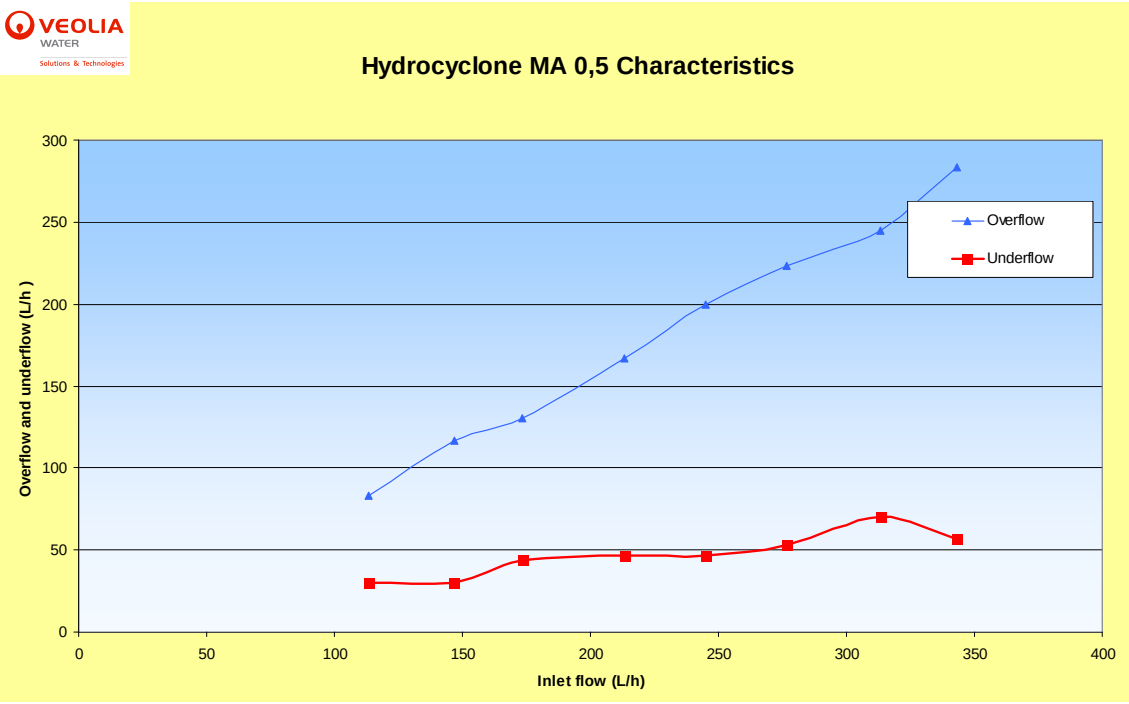


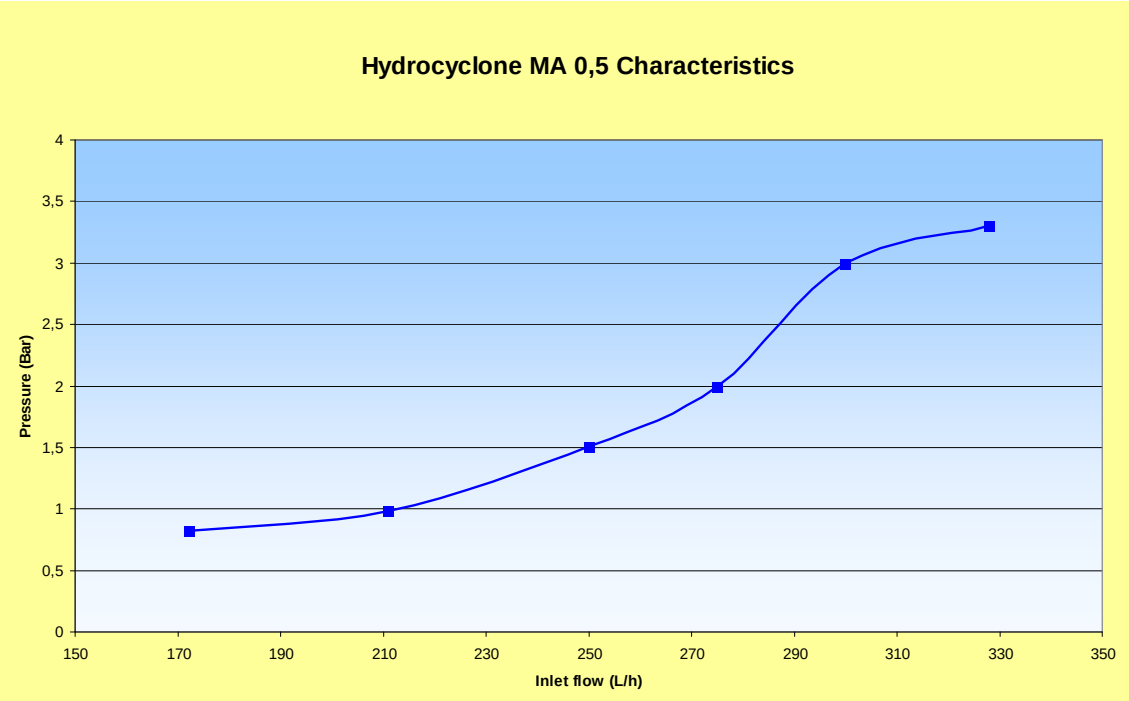

**MA1: range from 400 to 1000 L/h**

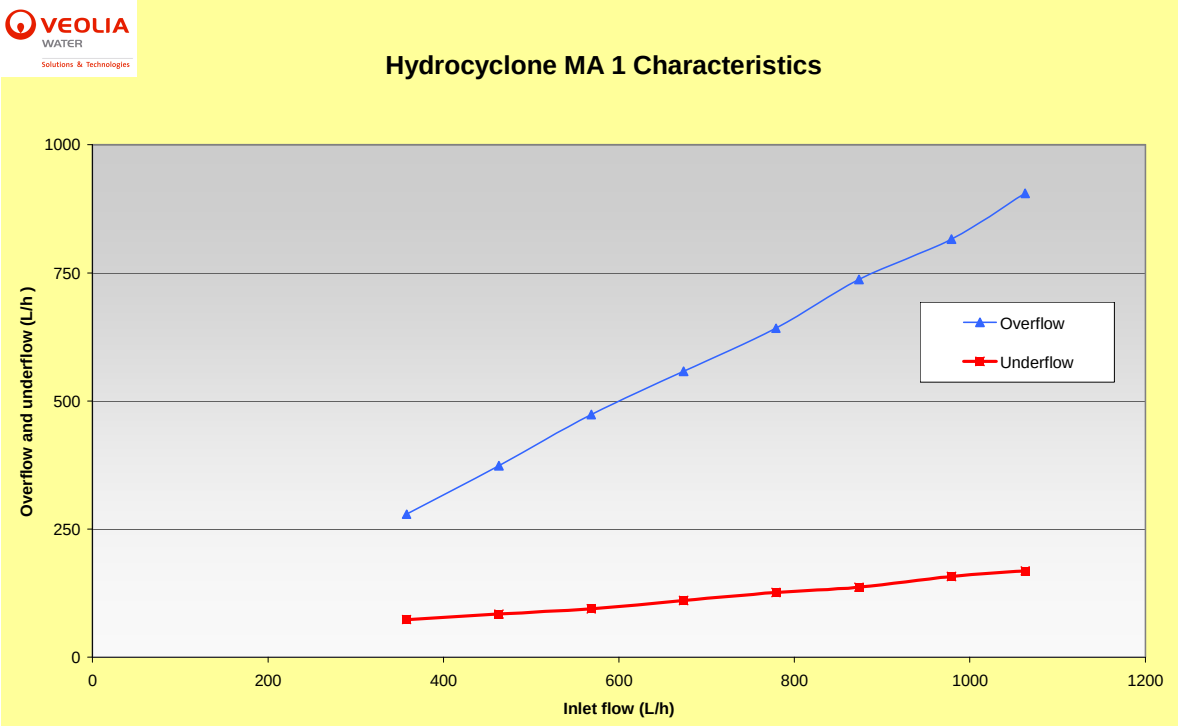


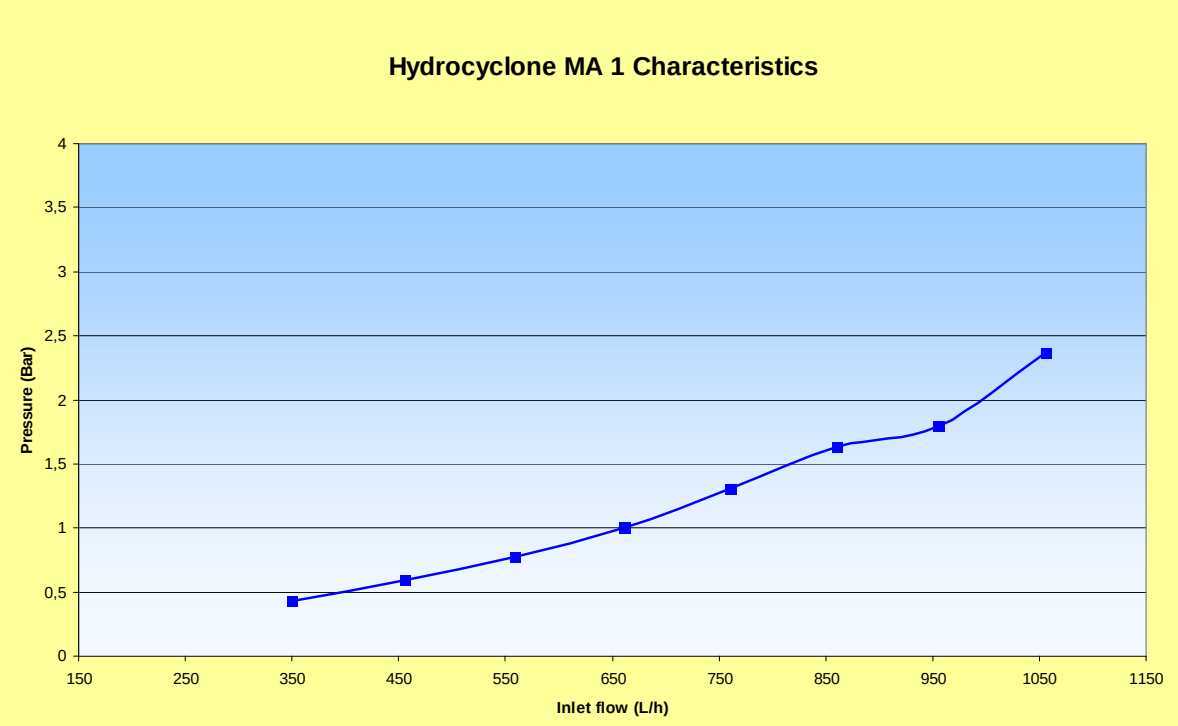

**MA5: range from 4 to 6 $m^3/h$**

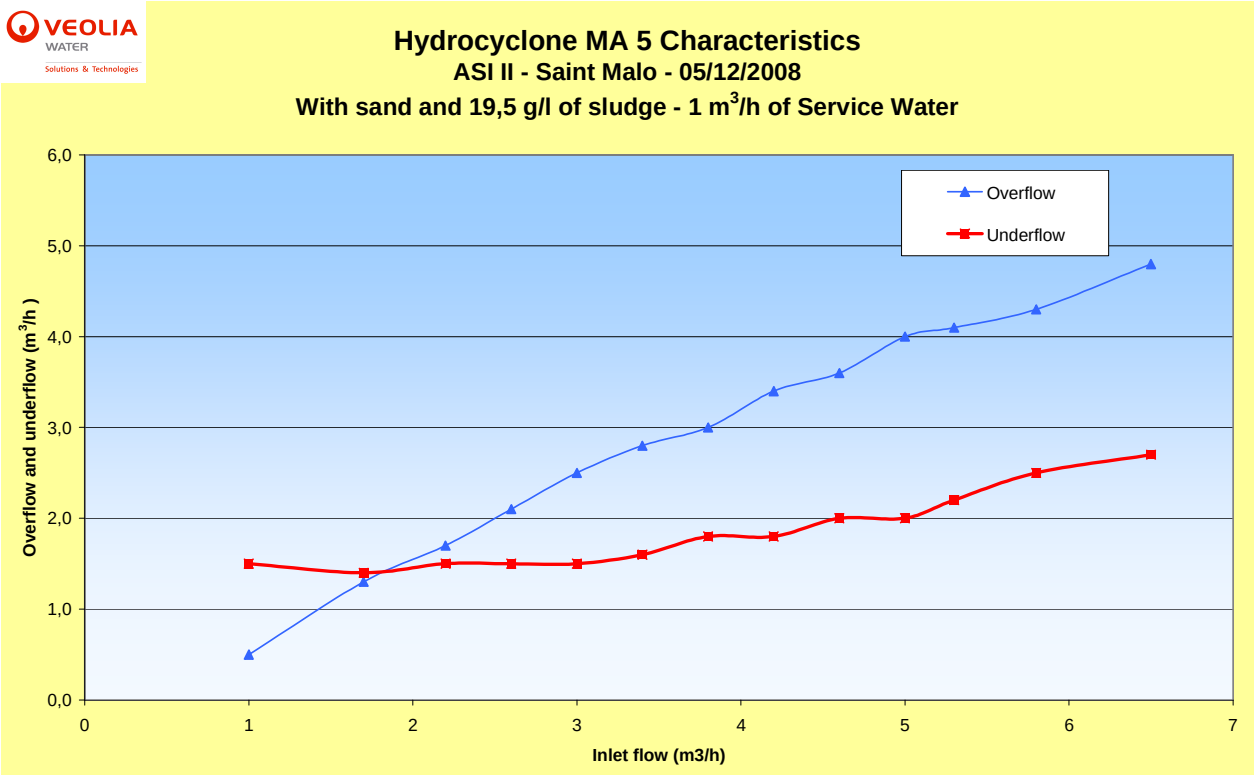


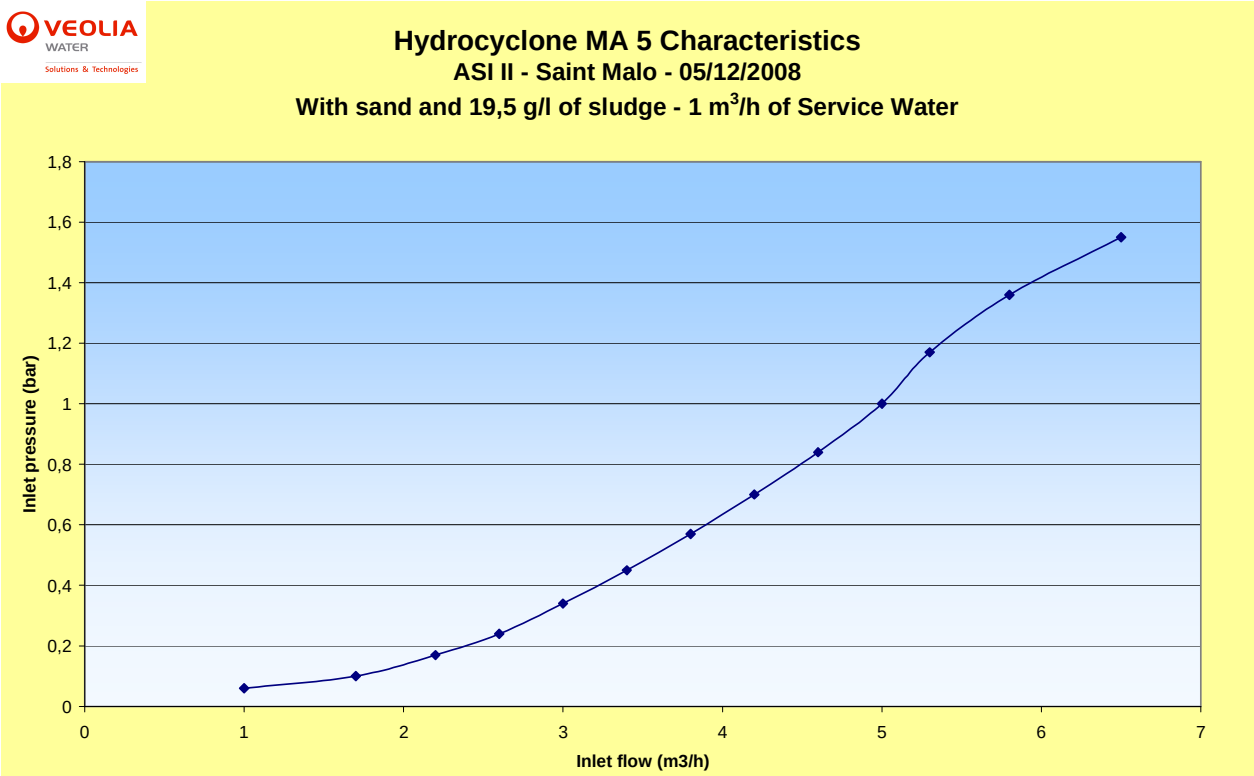

**MA10: range from 8 to 14 m$^3$/h**

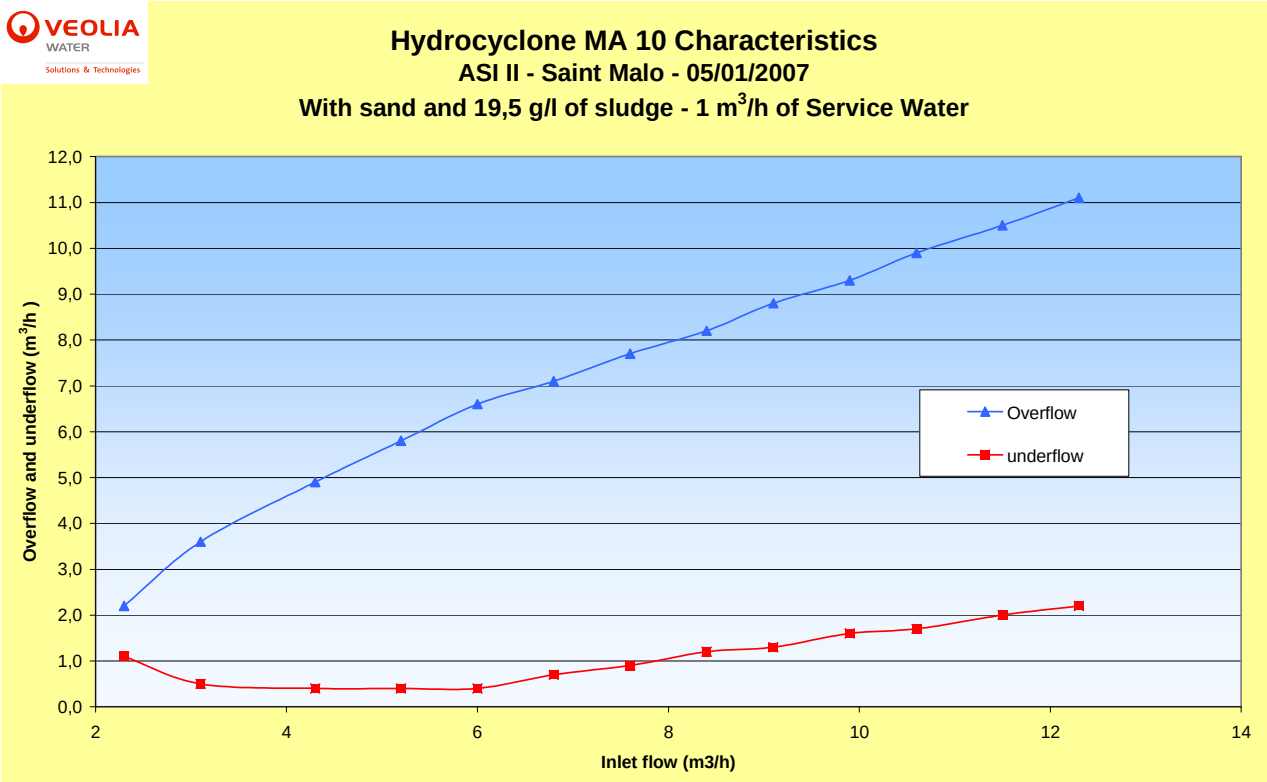


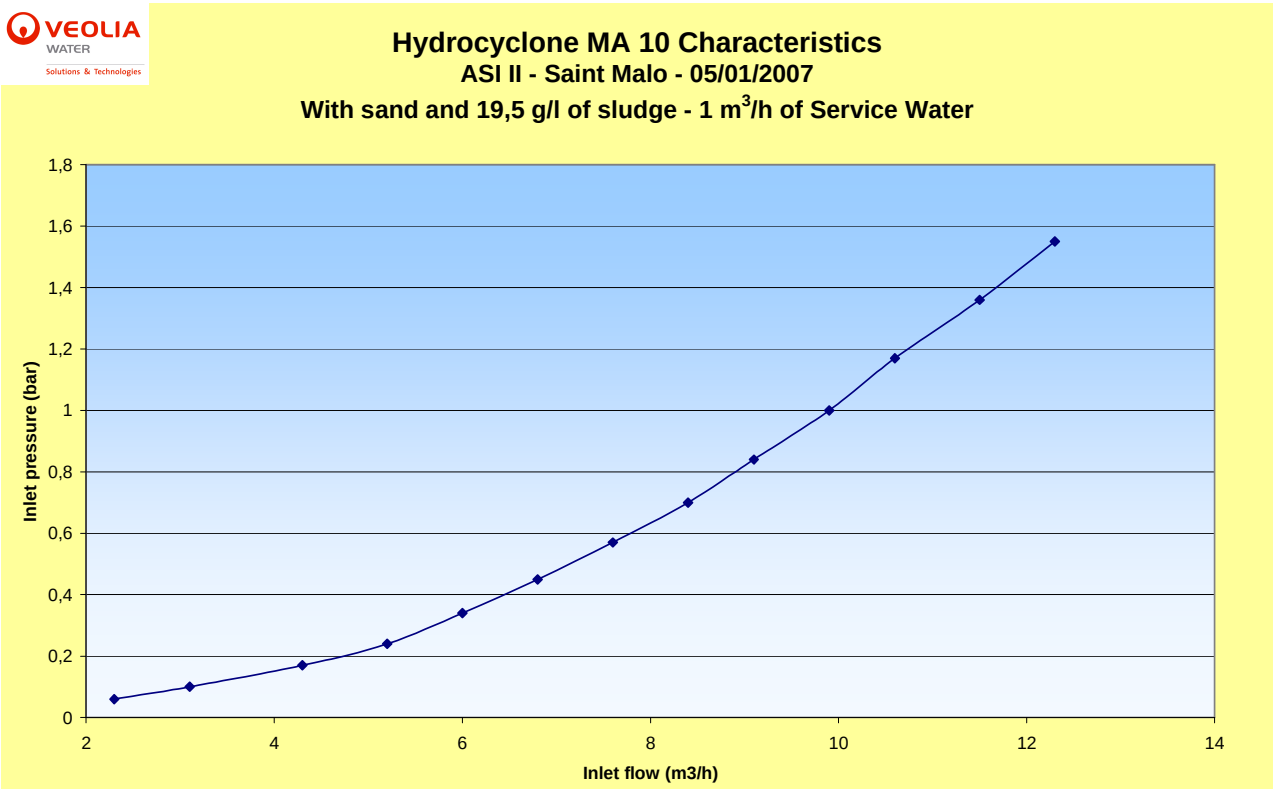

**MA20: range from 16 to 30 m$^3$/h**

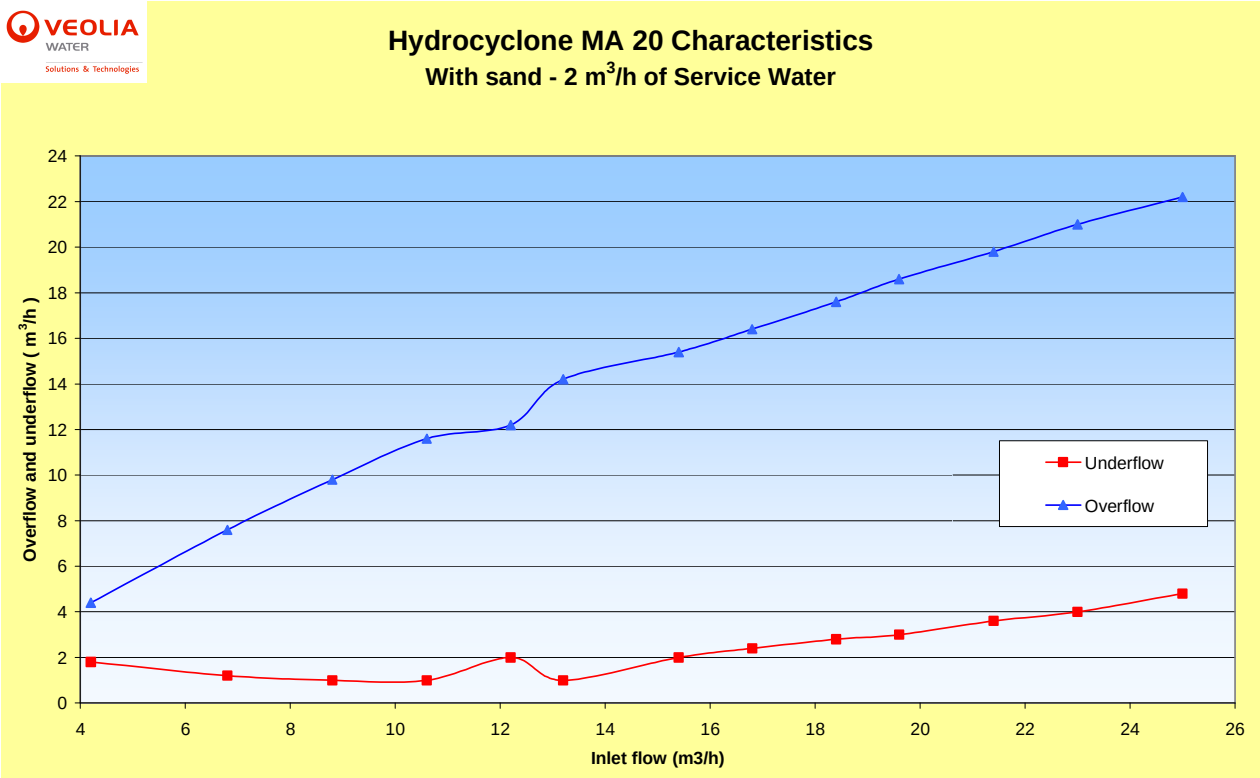


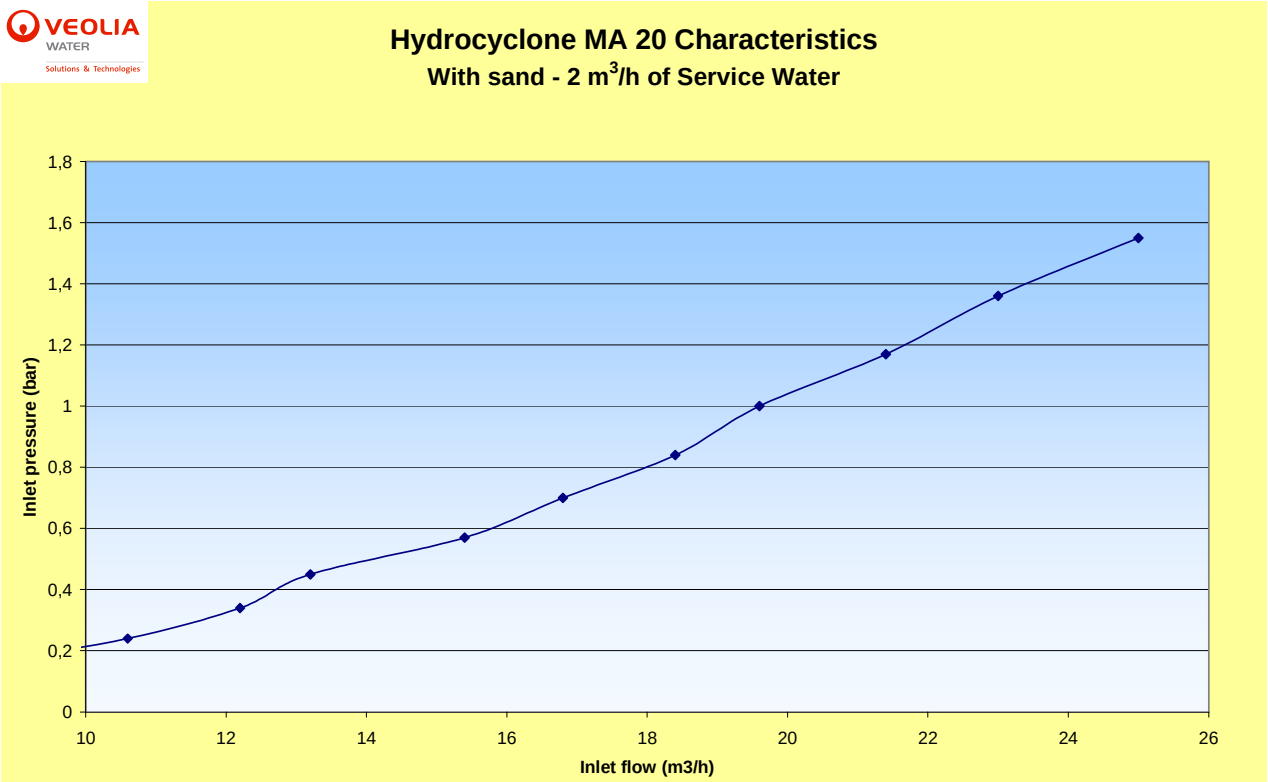

**MA40: range from 35 to 60 m$^3$/h**

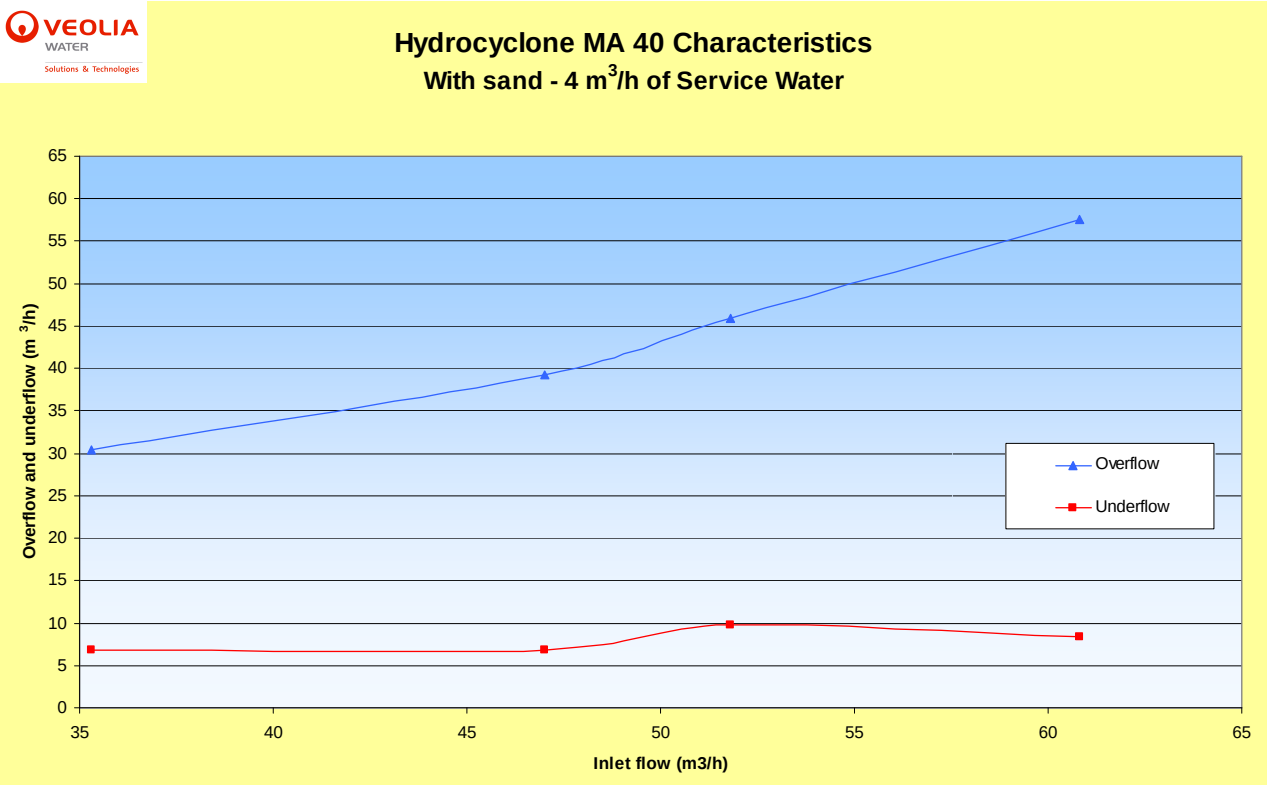


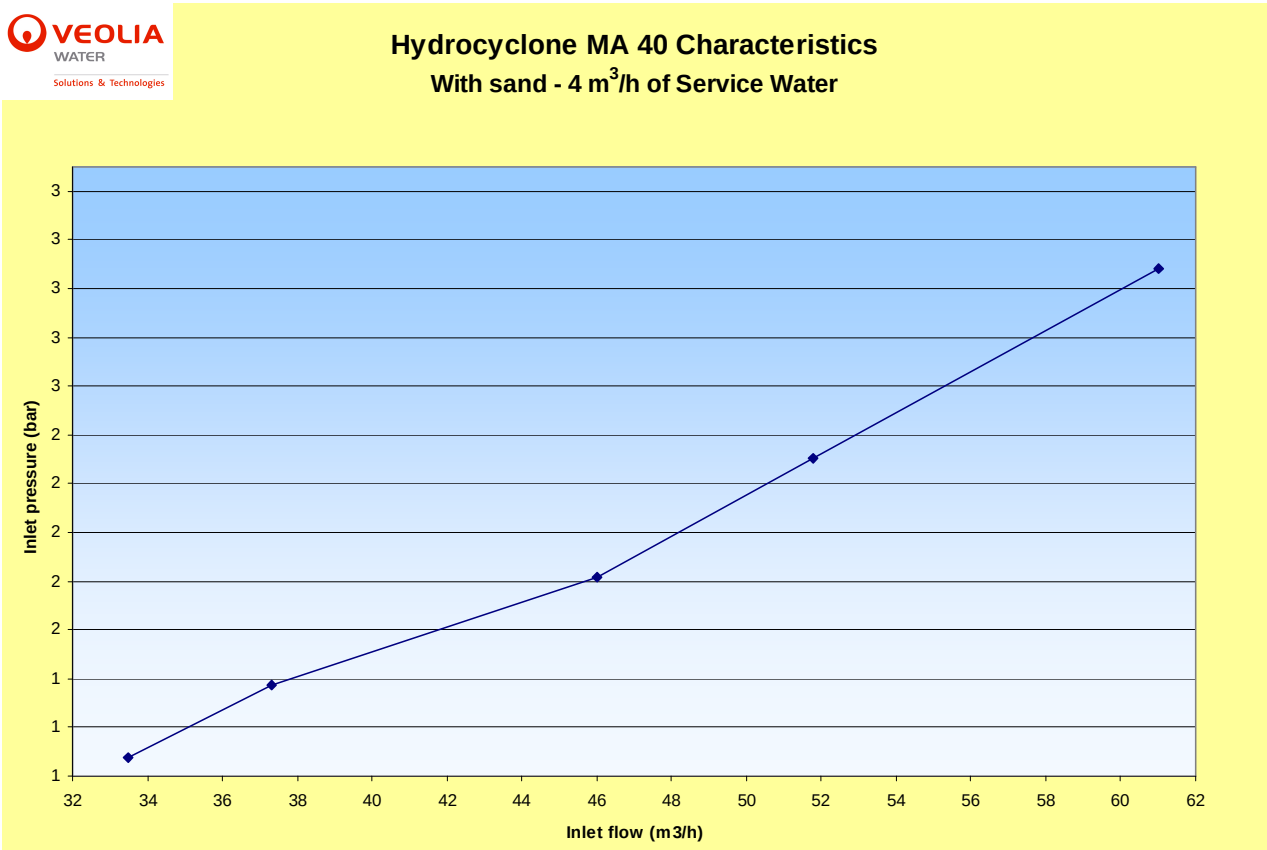

**MA80: range from 60 to 115-120 $m^3/h$, to be confirmed by future tests**

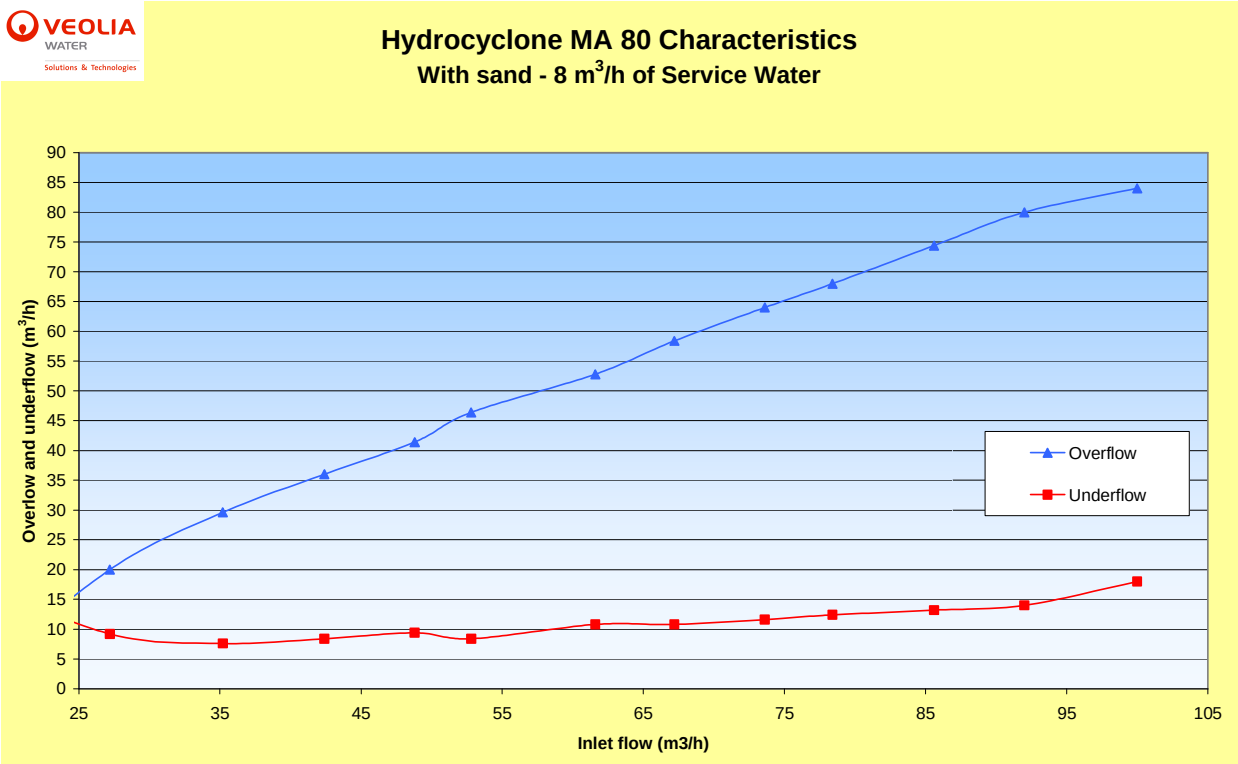


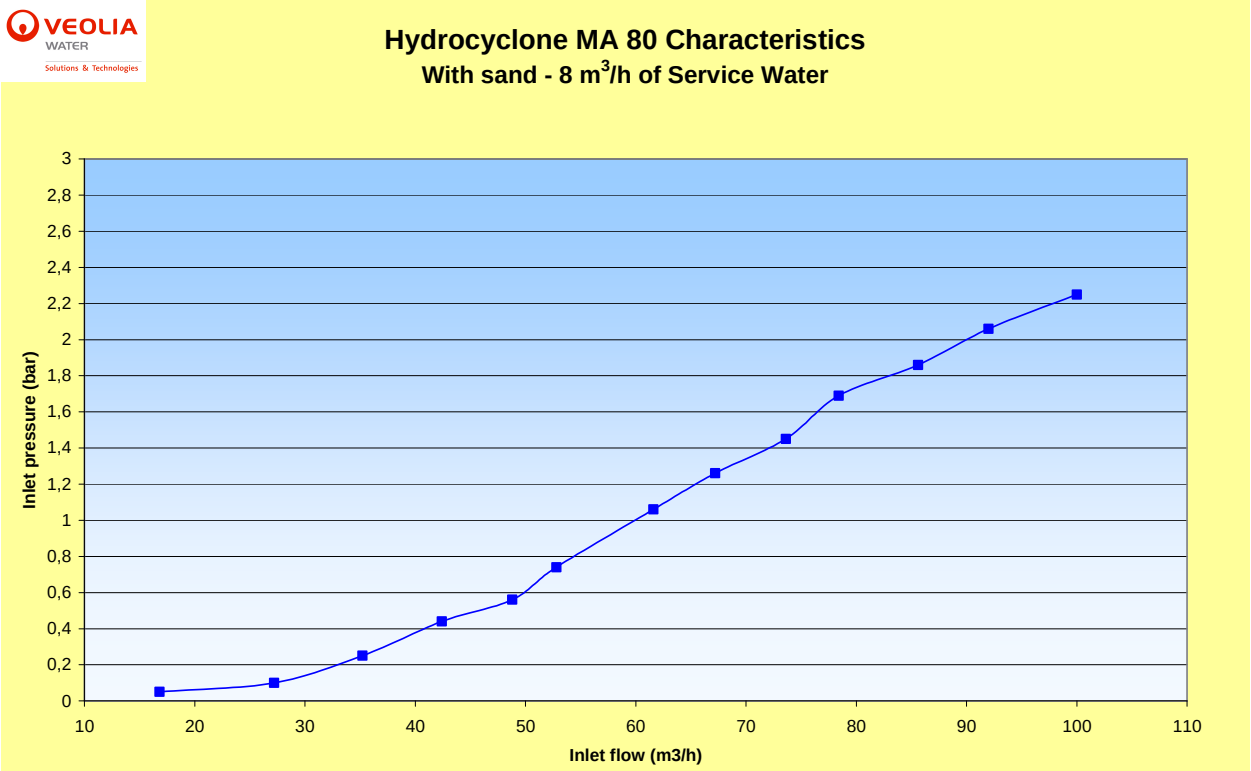

LEFT BLANK

# *VEOLIA*

## *HYDROTECH, MODEL HPF2218-1F, DISCFILTER*

LEFT BLANK

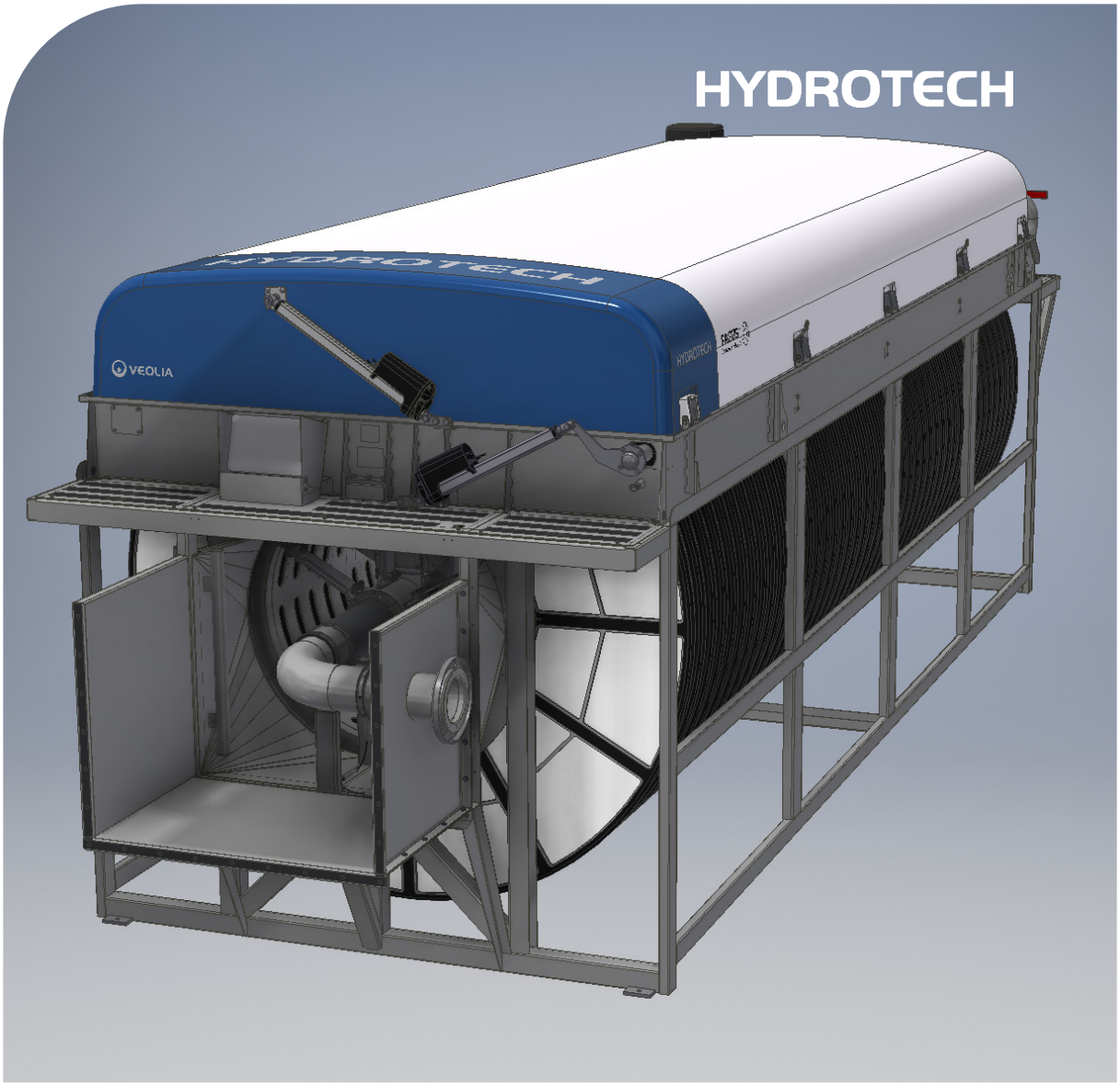


# Discfilter HPF2200 - series , PFLC

*Operation and maintenance manual*

Revision: 2020-08-26

VEOLIA

# Table of contents


1. INTRODUCTION 5

2. SAFETY INSTRUCTIONS 6

2.1 Warning symbols 6

2.2 CE marking 6

2.3 Conversion 7

2.4 Personnel requirements 7

2.5 Emergency stop 7

2.6 Electrical safety 7

2.7 Safety instructions 8

3. HYDROTECH DISCFILTER HPF2200 SERIES 9

3.1 Reception 9

3.2 Storage 9

3.3 Overview 10

3.3.1 HPF2200 type 1, filter with tank 10

3.3.2 HPF2200 type 2, filter without tank 12

3.4 Identifying the filter 14

3.4.1 Definition of filter type 14

4. GENERAL INSTALLATION INSTRUCTIONS 15

4.1 Lifting the equipment 15

4.2 Installation site 17

4.2.1 Outdoor installation 17

4.2.2 Foundations 17

4.3 Electrical connection 17

4.4 Equipotential bonding 18

4.5 Checking drum rotation 18

4.6 Pipe connections 18

5. START UP AND OPERATION 19

5.1 Check procedures during start-up 19

5.2 Automatic settings 20

5.2.1 Level differences 21

5.2.2 Operating mode AUTO – Automatic level control 21

5.2.3 Operating mode REMOTE – Remote control 21

5.2.4 Service mode HAND 22

5.3 Backwash system 22

6. FUNCTION 23

6.1 Intended use 23

6.2 Non-intended use 23

6.3 Filtration and backwash process 23

7. MAINTENANCE/SERVICE 24

7.1 Backwash system 24

7.1.1 Servicing conventional nozzles 24

7.2 Cleaning the Hydrotech strainer 26

7.3 Bearings 27

7.3.1 Lubrication of swivel 27

7.3.2 Lubricating drum bearings 27

7.3.3 Checking drum bearing wear 28

7.4 Filter panels 29

7.4.1 Additional cleaning 29

7.4.2 Chemical cleaning of filter panels 30

7.4.4 Changing filter panels 32

7.5 Drive chain 35

7.5.1 Checking and tensioning the drive chain 35

7.5.2 Using the chain tensioner to achieve correct tension 36

7.5.3 Replacing the drive chain 38

7.6 Drive unit 38

7.7 Inlet gasket 38

7.7.1 Checking the inlet gasket 38

7.7.2 Replacing the inlet gasket 39

7.8 Lifting the drum 39

7.8.1 Use of the front drum lifter 39

7.8.1 Use of the rear drum lifter 40

7.8.2 Lifting the drum on filters with tank 41

8. MAINTENANCE SCHEDULE 42

Symbols used on Hydrotech filters 43

Manuals & technical information 44

# 1. INTRODUCTION

This manual contains instructions for the operation and maintenance of Hydrotech Discfilters in the HPF2200 series with PFLC automation.

Pay attention to all warning symbols that appear in this manual. If this information is ignored it may result in serious personal injury and/or damage to equipment.

The manual must always be available to the personnel working with the equipment.

It is important that:

► The manual and other relevant documents are kept throughout the life of the equipment.

The manual and other relevant documents are a part of the equipment.

The following documents (manuals) are a part of the equipment:

- Operation & Maintenance Manual
- Automatic System Manual

► All applicable personnel must read the manuals carefully.

# 2. SAFETY INSTRUCTIONS

Hydrotech Discfilters in the HPF2200 series are designed for safe operation provided they are installed correctly and used in accordance with the enclosed instructions. The equipment must be installed correctly and adapted in accordance with local regulations. This equipment is designed for use by one or more operators. You must read the relevant sections of this manual before using the equipment or carrying out maintenance work.

► Pay attention to all warning symbols that appear in this manual. If this information is ignored it may result in serious personal injury and/or damage to equipment.

► Assume all electrical equipment to be live.

► Assume all hoses and pipes to be pressurised.

► Before carrying out maintenance work, the main power switch (see Figure 2.3) must be turned to the OFF (0) position and locked with a padlock.

► Maintenance and service may only be performed by authorised personnel.

► Adequate lighting should be used while operating the filter and when working in close proximity to the filter.

## 2.1 Warning symbols



*Figur 2.1*

Warning symbols are used in this manual to draw attention to potentially dangerous situations:



*Figur 1*

*Information that warns you of a potential risk of personal injury and/or damage to equipment.*

Warning stickers (see Figure 2.1) are attached to the filter to warn personnel and act as a reminder to keep hands and fingers away from the filter's moving parts.

## 2.2 CE marking

CE

*Figur 2.2*

This equipment is CE marked (see Figure 2.2), which guarantees that the equipment is designed, manufactured and described in accordance with the requirements set out in the EU Machinery Directive.

## 2.3 Conversion

The CE marking does not include any components that are not approved by Hydrotech AB and which are used in conversion/reconstruction of the equipment.

The warning symbols and CE marking must be attached where they are fully visible. If any part of the equipment with a warning symbol is replaced, a new symbol must be attached in the same position. Damaged symbols and CE markings must be replaced immediately.

## 2.4 Personnel requirements

Only personnel trained for the equipment and conversant with local regulations may perform service and maintenance, in order to avoid personal injury and damage to the equipment. Service and maintenance personnel may only handle those parts of the equipment they have been trained for.

The operator may need to work inside the safety barrier and in the safety zone during maintenance and set-up before operation.

## 2.5 Emergency stop

The filter is equipped with an emergency stop and a main power switch (see Figure 2.3).

In the event of a power outage, turn the main power switch to the OFF (0) position to prevent the filter drum from unintentionally starting when the power returns.

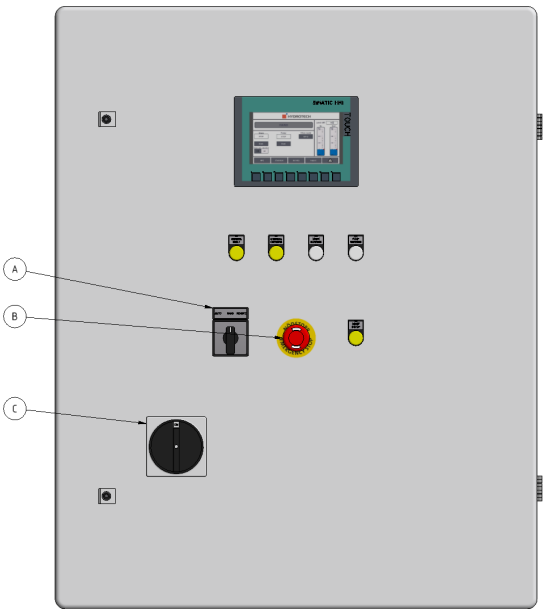


*Figure 2.3 Hydrotech control cabinet PFLC.*
*A. Mode selector*
*B. Emergency stop*
*C. Main power switch*

## 2.6 Electrical safety

Electrical installation must be carried out by a qualified electrician and in accordance with local regulations.

The filter tank or the frame must be connected to ground. Also see section 4.4.

The main power switch/emergency stop must be fitted in accordance with applicable regulations.

## 2.7 Safety instructions

The filter is activated by turning the main power switch to the ON (1) position and then selecting AUTO, REMOTE or HAND with the mode selector on the front of the control cabinet.

NB See instructions in section 5.1.



*Turn the main power switch to the OFF (0) position and lock it with a padlock before performing any work on the filter.*



*Access to the filter by unauthorised persons is strictly prohibited. Outdoor installations must be fenced in.*



*The drum can start rotating without warning if automatic control is activated. Moving parts must not be touched.*

Safety guards are fitted around the power transmission. Make sure these are secured and correctly fitted.



*Spray from the backwash water may contain harmful substances.*

Measured noise levels from the filter are less than 74 dB (A). Personnel should use appropriate protection, when necessary, in accordance with local regulations.

# 3. HYDROTECH DISCFILTER HPF2200 SERIES

## 3.1 Reception

Once the equipment has been delivered and received it must be checked for transport damage. Document any transport damage before further handling of the equipment. The consignment note, manual and spare part kit are attached to the equipment. Check all parts against the consignment note. Some parts may be delivered unassembled. Handle fragile parts with care. Refer to section 4.1 before lifting the equipment.

## 3.2 Storage

Some precautions must be taken to prevent damage to equipment if a long storage time is necessary (several weeks or more):

► The equipment should preferably be stored indoors, in a frost-free area.

► The filter must be protected against direct sunlight if stored outdoors. Heat and UV radiation can damage the filter panels and the control panel touch screen.

► If the filters are delivered inside plastic covered wooden crates, a special type of corrosion can occur if stored outdoors, especially in coastal areas. The moisture inside the plastic acts as an anode and the exposed dry components as a cathode. In these areas, filters must therefore be unpacked immediately upon delivery.

# 3.3 Overview

## 3.3.1 HPF2200 type 1, filter with tank

NB Also see section 3.3.2 (HPF2200 type 2, filter without tank) where several filter parts are shown.

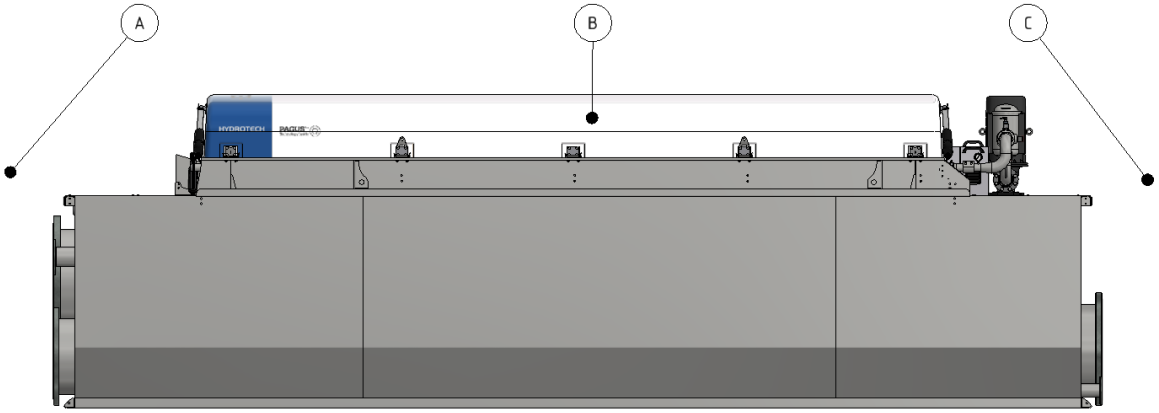


*Figure 3.1 Hydrotech Discfilter in HPF2200 series type 1 (side view).*
*A. Inlet side*
*B. Filter cover*
*C. Drive side*

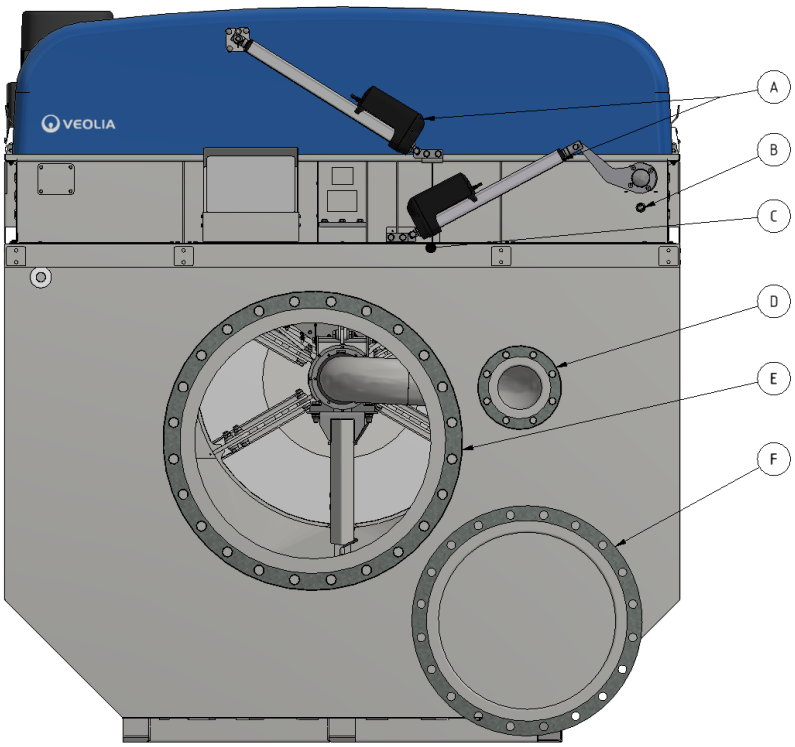


*Figure 3.2 Hydrotech Discfilter in HPF2200 series type 1 (inlet side).*
*A. Linnear actuators, for opening the cover and unfolding the spray bar ramp*
*B. Connection, chemical cleaning*
*C. Lubrication point*
*D. Sludge outlet*
*E. Inlet*
*F. Outlet, separate emergency overflow (bypass) (optional)*

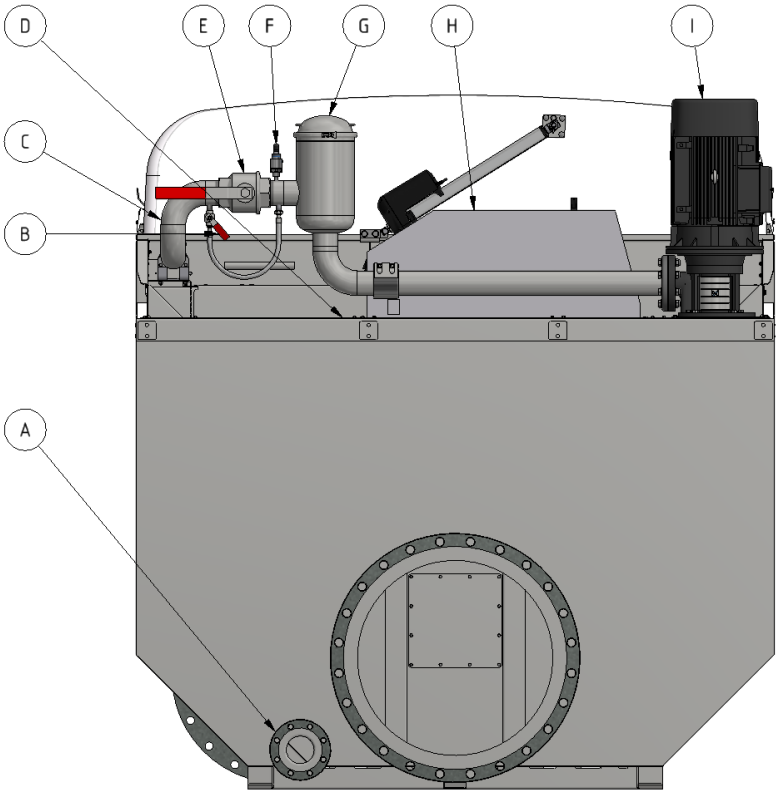


*Figure 3.3 Hydrotech Discfilter in HPF2200 series type 1 (outlet side).*
*A. Drain valve*
*B. Bypass valve for nozzle check*
*C. Manometer*
*D. Lubrication point*
*E. Shut off valve for backwash pipe*
*F. Pressure transmittor - dry running protection for pump*
*G. Strainer*
*H. Drive unit*
*I. Backwash pump*

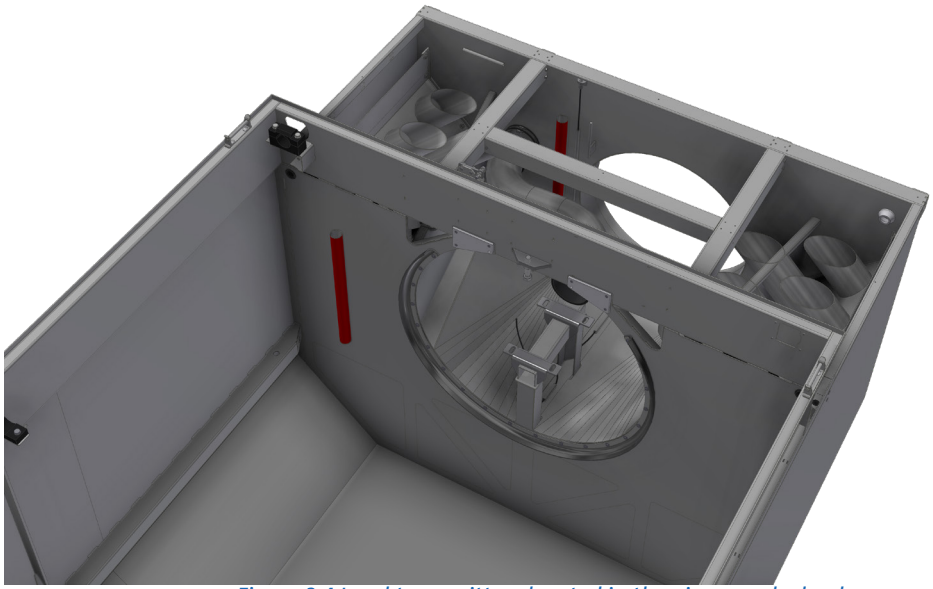

*Figure 3.4 Level transmittors located in the pipes marked red.*

## 3.3.2 HPF2200 type 2, filter without tank

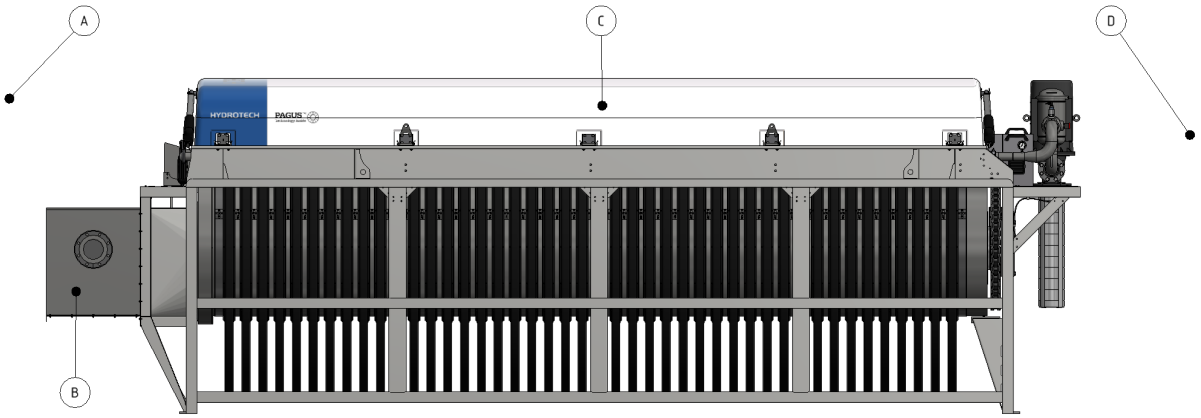


*Figure 3.5 Hydrotech Discfilter in HPF2200 series type 2 (side view).*
*A.Inlet side*
*B. Inlet passage*
*C. Filter cover*
*D. Outlet side*

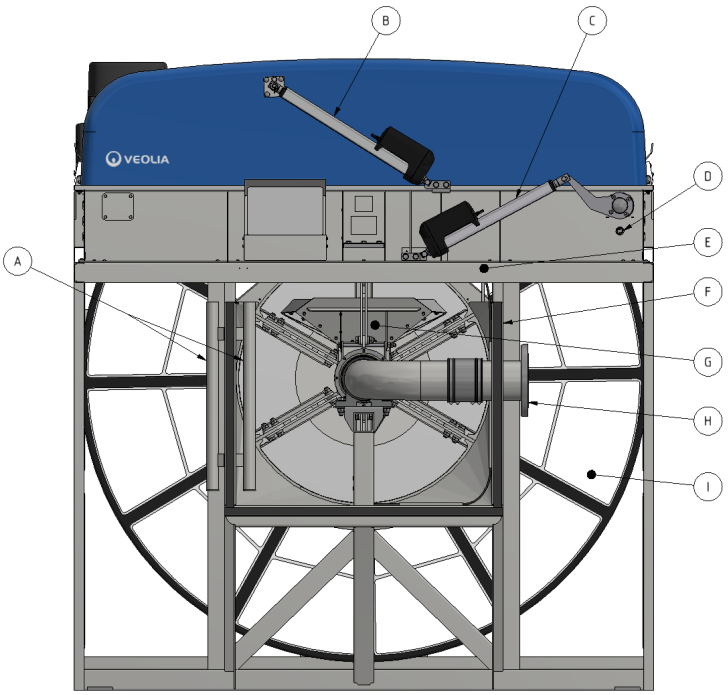


*Figure 3.6 Hydrotech Discfilter in HPF2200 series type 2 (inlet side).*
*A. Mounts for level transmittors*
*B. Linear actuator for opening cover*
*C. Linear actuator for unfolding the spray bar ramp*
*D. Connection for chemical cleaning*
*E. Lubrication point*
*F. Inlet channel*
*G. Sludge through*
*H. Sludge outlet*
*I. Filter panel*

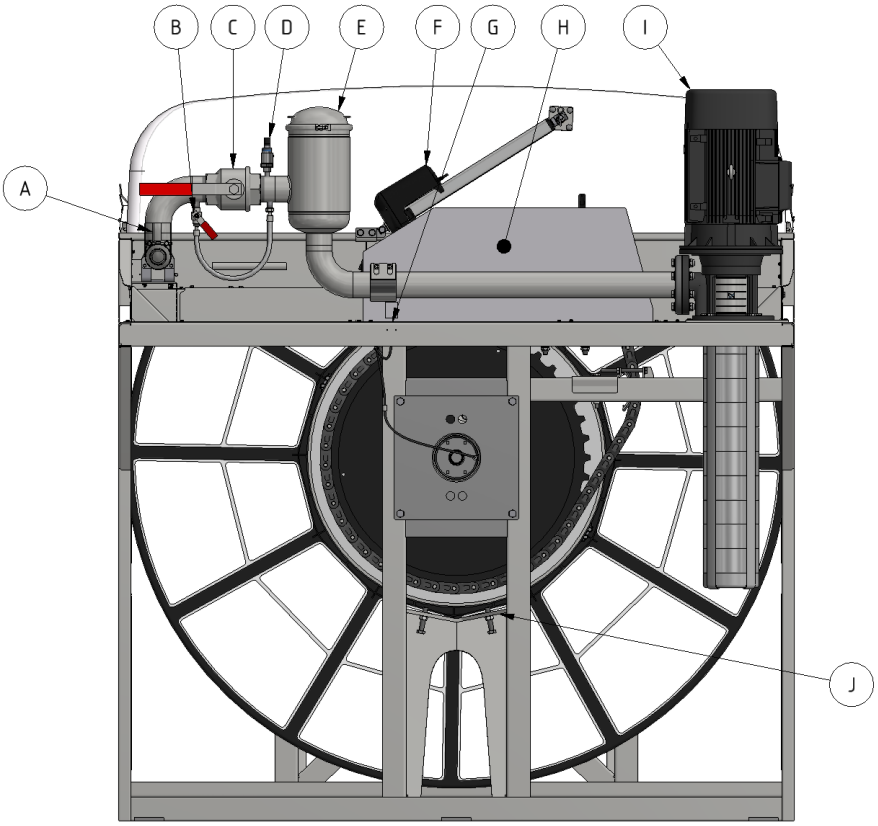


*Figure 3.7 Hydrotech Discfilter in HPF2200 series type 2 (outlet side).*
*A. Manometer*
*B. Bypass valve for nozzle check*
*C. Shut off valve for nozzle check*
*D. Pressure transmittor - dry running protection for pump*
*E. Strainer*
*F. Linear actuator for opening filter cover*
*G. Lubrication point*
*H. Drive motor*
*I. Backwash pump*
*J. Drum lifter*

## 3.4 Identifying the filter

Filter type, serial number and year of manufacture are stated on the marking plate. The filter type and serial number are also stated on the front of this manual.




*Figure 3.8 Filter marking plate.*

### 3.4.1 Definition of filter type

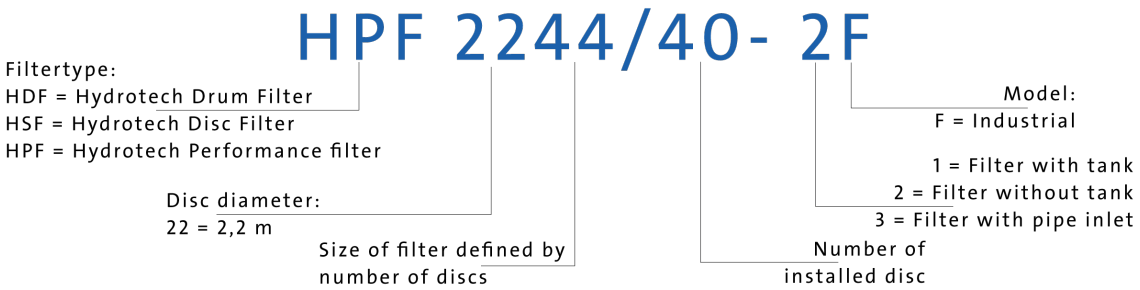


*Figure 3.9 Definition of filter type.*

# 4. GENERAL INSTALLATION INSTRUCTIONS

## 4.1 Lifting the equipment

► A forklift truck with long forks must be used when lifting filters in wooden crates.

► Filters with a tank can be lifted using a crane or overhead crane by using the filter's lifting lugs, or with a forklift truck.

*WARNING! The work area must be fenced off before unloading, in accordance with local regulations, to prevent unauthorised access.*

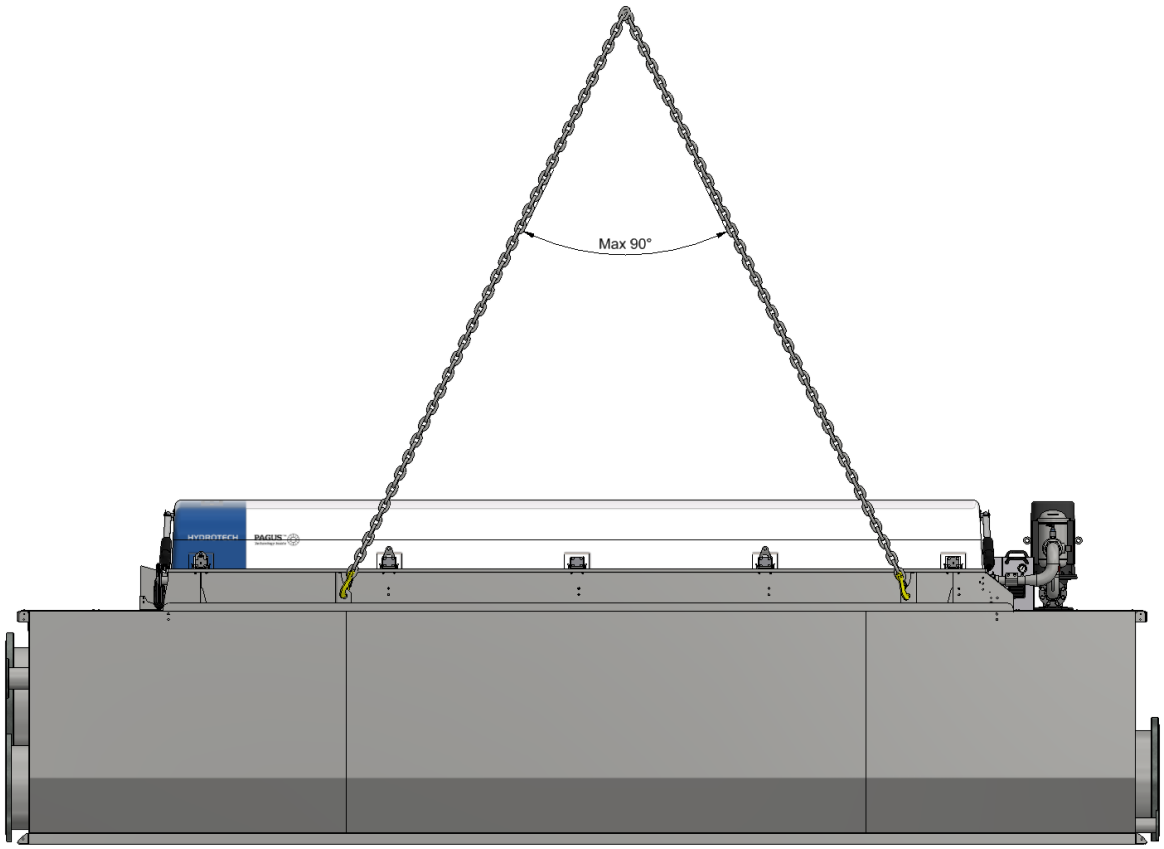


*Figure 4.1 Lifting Hydrotech Discfilter in HPF2200 series type 1 (with tank).*

► Filters without a tank can be lifted using a crane or overhead crane by using the filter's lifting lugs or by the use of a forklift.

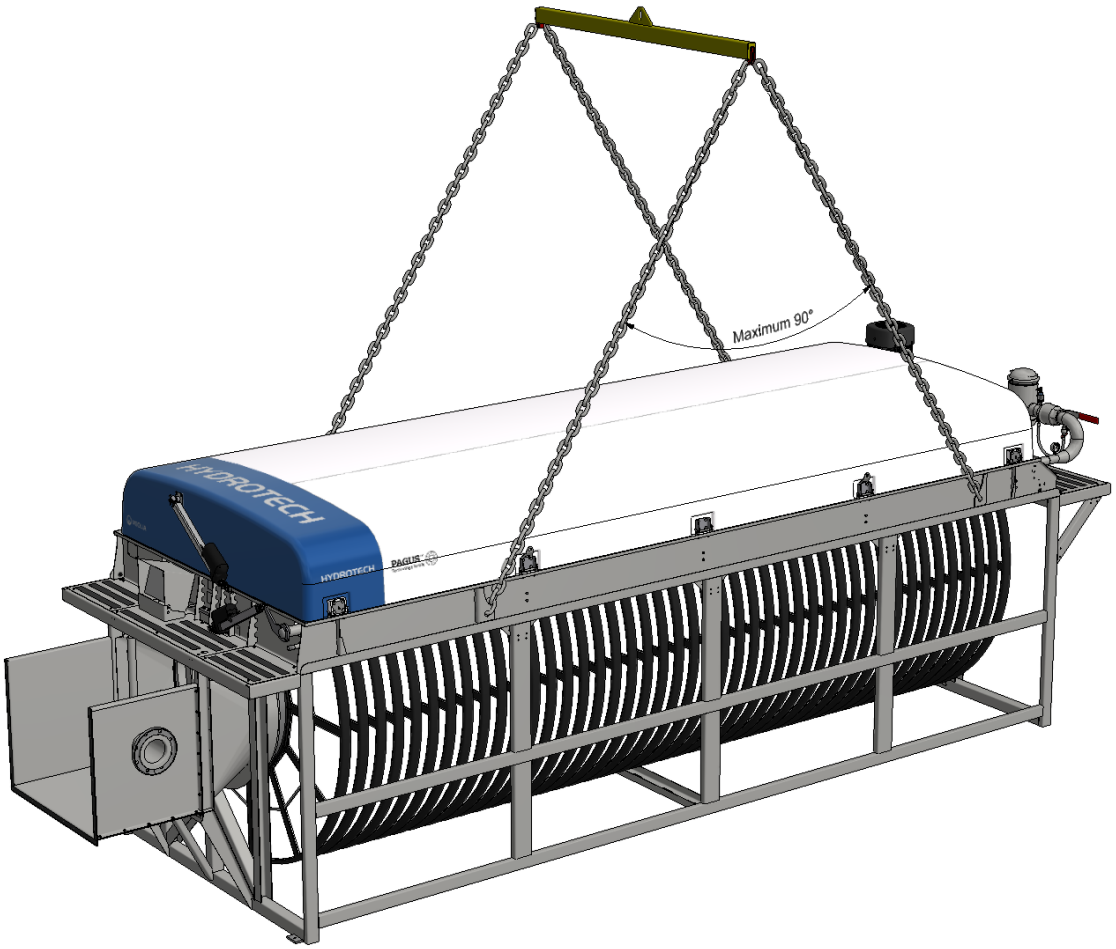


*Figure 4.2 Shows how lifting devices are attached (filter without tank).*

## 4.2 Installation site

### 4.2.1 Outdoor installation

In the event of outdoor installation it is important to protect the filter panels against direct sunlight, as heat and UV radiation otherwise can cause damage to the filter panels. The same applies to the control panel touch screen.

The equipment must be protected against temperatures below freezing point. At water temperatures above +5°C and air temperatures above -10°C the filter cover provides sufficient protection. At lower water and air temperatures, filter installation should be indoors.

### 4.2.2 Foundations

► The filter must be installed on a flat surface that offers sufficient load bearing capacity.

► The filter is to be bolted to the foundation.

► The filter must be level in both directions (see Figure 4.4).

► 600 mm wide aisles should be laid out around the filter to permit easy access to the filter during service work.

► The gap between the filter and the concrete structure must be sealed for safety reasons and to keep out foreign objects that can cause blockages in the backwash system.

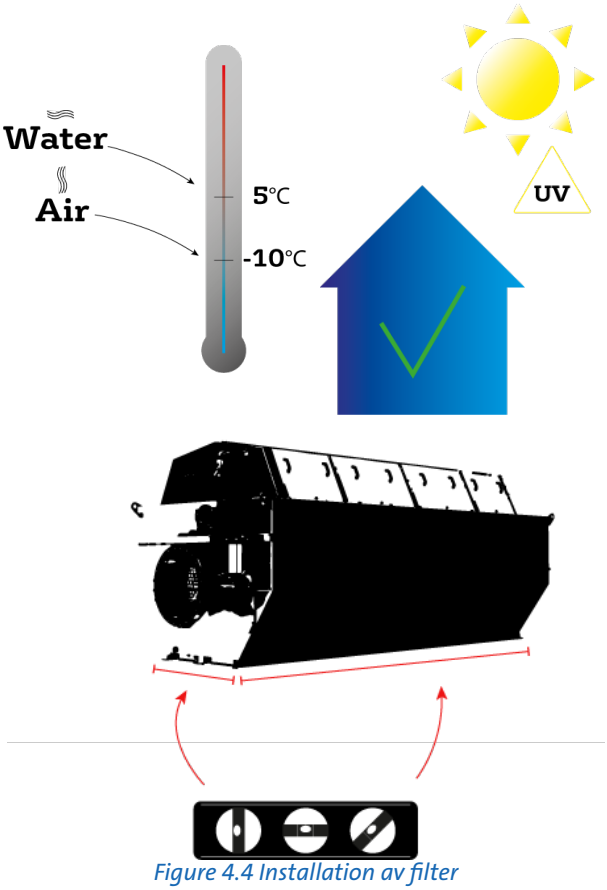


*Figure 4.4 Installation av filter*

## 4.3 Electrical connection

*Qualified electricians must perform all electrical work.*

Electrical connection must be done in accordance with local regulations. Check that the settings on the motor protection correspond with the motor data.

*Section 4.5 must be read before starting the filter's drum rotation.*

## 4.4 Equipotential bonding

The Hydrotech Discfilter and associated equipment should be protected with a suitable system for equipotential bonding. This is very important to prevent galvanic corrosion. Ideally use a cable with a cross section of 10–16 mm2. The cable should be connected to the same electrical potential as the drive system.

## 4.5 Checking drum rotation

Start drum rotation and check that the drum rotates in the same direction as the rotation arrow on the drive unit cover.

## 4.6 Pipe connections

Piping for reject should have a minimum inclination of 1%.

# 5. START UP AND OPERATION

## 5.1 Check procedures during start-up

1. Check that the drive unit cover is installed correctly.

2. Set the mode selector to the HAND position (see F in Figure 5.2).

3. Set the main power switch to the ON (1) position (see I in Figure 5.2).

4. Start the drum rotation on the operator panel main menu (see Figure 5.1 and Figure 5.2).

5. Open the water supply a little so that the water can slowly run into the filter drum. Make sure that the difference in water level between the inside and outside of the filter drum does not exceed 450 mm (see section 5.2.1). If the filter cloth becomes clogged, it may be necessary to fill the filter tank/chamber with water from an external source or to remove a filter panel and fill the filter tank/chamber with unfiltered water.

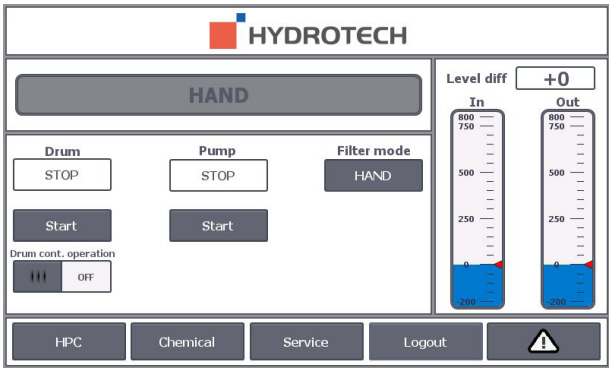

*Figure 5.1 Main menu on electrical cabinet operator panel. (Indication of current backwash pressure is an option.)*

*WARNING! A greater difference in water level between the inside and outside of the filter drum than 450 mm will damage the filter.*

6. When the water level inside the filter tank/chamber exceeds the suction pipe of the pump (or, the suction pipe if a CR- pump has been installed), the pump must be started by pressing “Start” on the operator panel main menu (see Figure 5.1). NB Also read section 2.7.

*WARNING! The backwash pump must not be started until the water level has reached the suction pipe of the pump (or, the suction pipe connected to the pump if using a CR- pump), otherwise the pump will run dry and fail.*

7. If the water level inside the filter tank/chamber reaches the overflow wall, turn the mode selector from HAND position to either REMOTE or AUTO (see section 5.2).

8. Open the water supply fully.

If the filter is operated using automatic level control, it may be necessary to calibrate the level sensor in order for the filter to be run optimally (see “Automatic System Manual HPF2200”).

## 5.2 Automatic settings

The control system for the HPF2200 series must be equipped with a frequency converter on the drive unit. This is factory calibrated if delivered from Hydrotech. To perform a soft start of the drive motor, the frequency converter settings must be min. 5 sec “ramp up” and min. 3 sec ”ramp down”. The filter works with 50 Hz or 60 Hz as standard, depending on region of delivery.

If the filter is equipped with a Hydrotech standard control, the filter has three operating modes:

1. Automatic level control (AUTO mode).

2. Remote control (REMOTE mode).

3. Service mode (HAND mode).

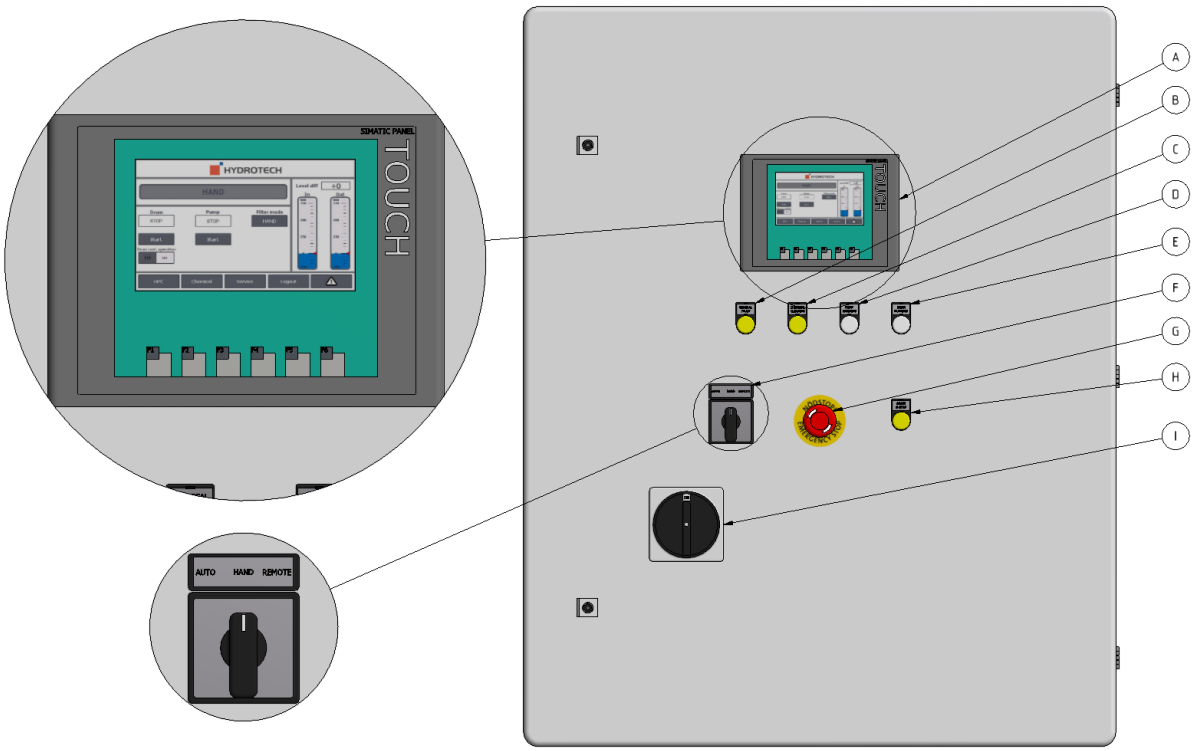


*Figure 5.2 Front of the control cabinet.*
*A. Operator panel*
*B. Warning lamp: Fault indicator*
*C. Warning lamp: Chemical cleaning*
*D. Indicator lamp: Drum operation*
*E. Indicator lamp: Pump operation*
*F. Mode selector (Auto/Hand/Remote)*
*G. Emergency stop*
*H. Reset button for emergency stop*
*I. Main power switch*

Turn the mode selector to select the appropriate operating mode (see Figure 5.2, detail F).

## 5.2.1 Level differences

The maximum permitted difference between the water levels inside and outside the drum is 250 mm during normal operation (see Figure 5.4). The recommended level difference is 100–200 mm.

If an even flow after the filter is required, the filter must be run with a small level difference.

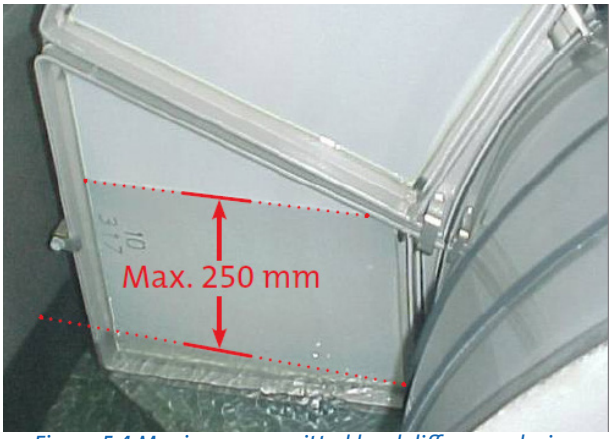

*Figure 5.4 Maximum permitted level difference during operation.*

*The filter must be installed so that the level difference in the event of operating disturbances under no circumstances exceeds 450 mm.*

*The filter must be run so that the level difference during normal operation does not exceed 250 mm.*

*Prolonged operation with a greater level difference will significantly shorten the life of the filter panels and other vital parts.*

## 5.2.2 Operating mode AUTO – Automatic level control

With automatic level control, drum rotation and the backwash pump are activated once the level difference between filtered and unfiltered water exceeds an adjustable value. The filter is force-started if the filter has stood still for an extended period of time. If an external backwash water supply is used, the level sensor can control a solenoid valve instead of a pump.

The water level inside the drum will vary when AUTO mode has been selected. The water level is at its lowest immediately after a backwash cycle and then rises until drum rotation and backwashing start.

## 5.2.3 Operating mode REMOTE – Remote control

In REMOTE operating mode, the filter can be controlled remotely. In remote control mode, the filter can either be controlled as if in AUTO operating mode or using an external controller, see the “Automatic System Manual”.

## 5.2.4 Service mode HAND

HAND is only a service mode.

In order to operate the filter in HAND mode, the following steps must be implemented:

1. Turn the mode selector shown in Figure 5.2 to the HAND position.

2. Once the mode selector has been turned to HAND, “HAND” will be shown in the operator panel main menu, see Figure 5.5. Press the drum “Start” button, see Figure 5.5.

3. Press the pump “Start” button, see Figure 5.5.

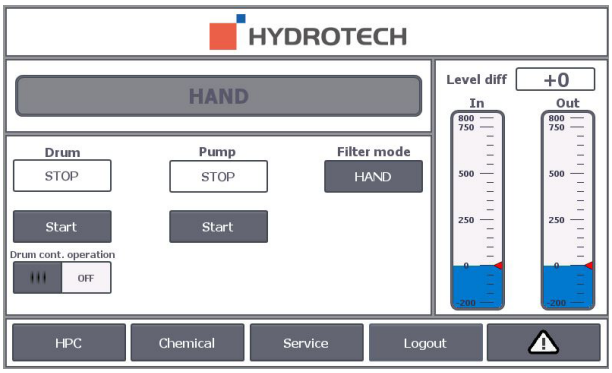


*Figure 5.5 Main menu on electrical cabinet operator panel. (Indication of current backwash pressure is an option.)*

The operator panel main menu also shows the water levels of unfiltered (In) and filtered water (Out), as well as the level difference between them (Level Diff).

## 5.3 Backwash system

NB Prior to servicing, read section 2.7.

The system pressure for backwashing must be set to 6–9 (preferably above 6,5) bar. Newly connected pipe systems for external backwash water should be rinsed through before they are connected to the filter. Check that the nozzles are not blocked, see section 7.1.

# 6. FUNCTION

## 6.1 Intended use

The filter is designed and manufactured to remove solid particles in unpressurised water flow systems. The filter is not a pressure vessel.

## 6.2 Non-intended use

Unless approved in writing by Hydrotech, the filter must not be used to filter liquids other than water. The filter must not be installed in an environment with an explosive atmosphere or another risk of explosion, such as high concentrations of dust.

## 6.3 Filtration and backwash process

A brief description of the process is given below.

1. The water to be filtered flows with gravity from the inside of the filter drum out to the filter segments.

2. Solid particles are separated from the water using a filter medium attached to both sides of the filter segments, whilst clean water passes through the filter medium to the outside of the filter segment.

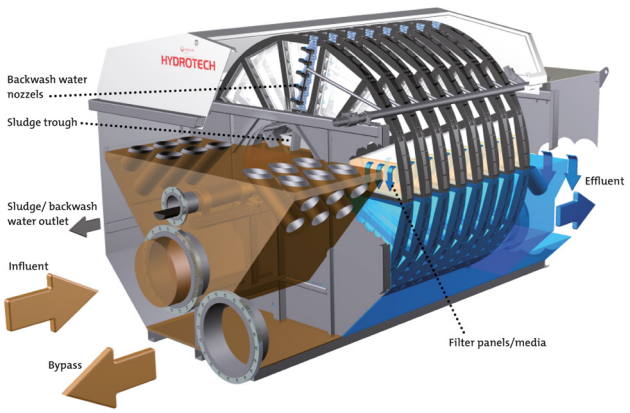


*Figure 6.1 Disc filter function.*

3. Operating mode AUTO – The solid particles trapped on the inside of the filter medium gradually reduce the water flow through the filter panel. The water level on the inside of the drum begins to rise. When the level difference between filtered and unfiltered water exceeds the set value, drum rotation and backwashing start. Operating mode REMOTE – The filter is controlled as in AUTO operating mode or using external control (e.g. time-controlled drum rotation and backwashing). Operating mode HAND – Drum rotation and backwashing are started manually.

4. The backwash nozzles spray wash water on the outside of the filter panels. The solid particles that accumulate are washed from the filter panels to the sludge channel, at the same time as the drum rotates.

5. The removed particles and backwash water flow with gravity out of the filter.

# 7. MAINTENANCE/SERVICE

## 7.1 Backwash system

The most common cause of operating disruptions in the backwash system is clogged nozzles. Clogging is caused by particles in the wash water and/or by e.g. biofouling in the pipe system.

### 7.1.1 Servicing conventional nozzles

1. Set the mode selector to the HAND position.

2. Open the cover on the side where the backwash pipe is located.

3. Extend the backwash ramp (see Figure 7.2).

3. Open the bypass valve (see Figure 7.1).

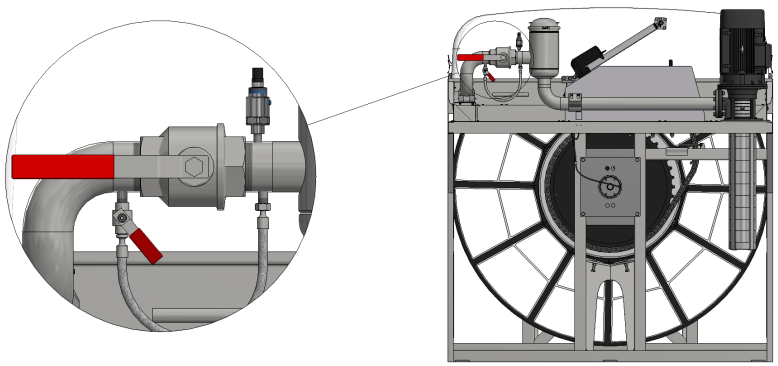

*Figure 7.1 Main valve and bypass valve for checking the nozzles.*

4. Close the main valve. The water flow can later be adjusted with the bypass valve so that it flows a little, yet with a constant flow through the nozzles. This makes it easy to determine which nozzles that needs to be cleaned.

5. Start drum rotation and the backwash pump.

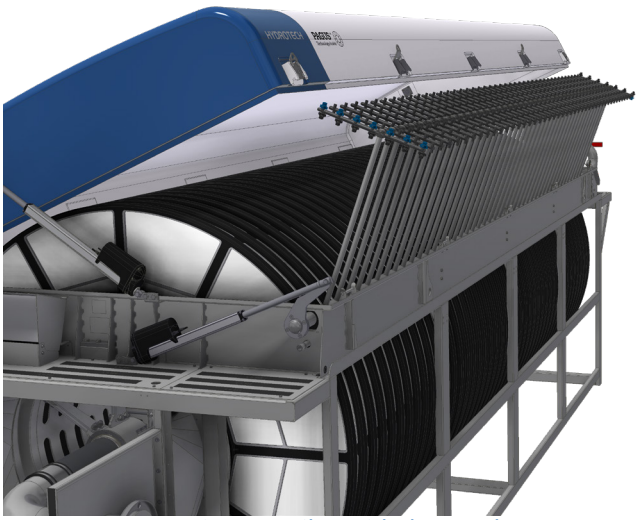

*Figure 7.2 Filter with the spraybar ramp extended*

8. Check whether any of the nozzles are clogged by checking whether water runs through them. Clogged nozzles are cleaned as follows:

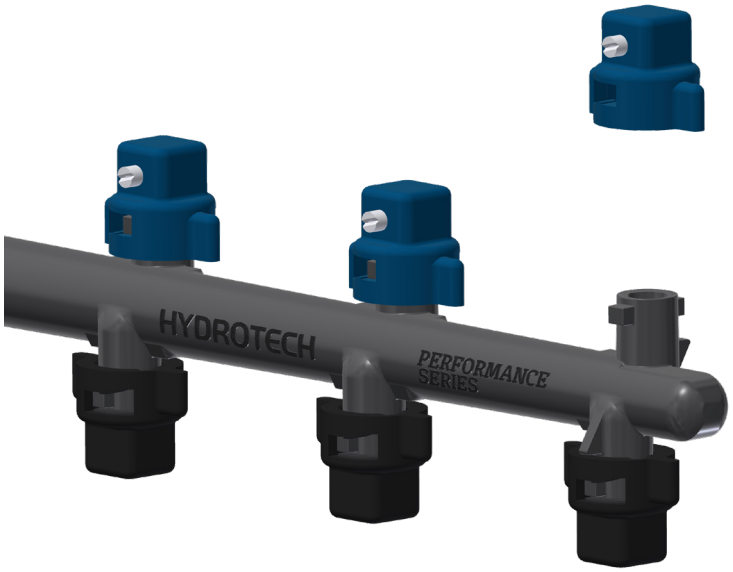


*Figure 7.3 Nozzle components.*

9. Remove the nozzle nut by turning it a ¼ turn anticlockwise. Exercise care not to lose the rubber seal.

10. Clean the tip of the nozzle with compressed air or a plastic brush. Never use a wire brush, metal pins or similar as these can damage the nozzle.

11. Assemble the parts in the reverse order. Make sure the nozzle nut reaches the stop position when turned a ¼ turn, clockwise.

12. Place the backwash ramp in its original position.

13. Open the main valve to the backwash water.

14. Close the cover.

15. Before restarting operations. Check the placement of the spraying arms and verify that no arms has been bent out of position during the check of the nozzles.

16. Start operations again as set out in section 5.1.

*WARNING! It is important that the nozzle nuts (see Figure 7.3) are refitted correctly after the nozzles have been cleaned.*

## 7.2 Cleaning the Hydrotech strainer

NB Prior to servicing, read section 2.7.

If the pressure gauge indicates a pressure that is more than 0.5 bar below normal pressure, it's time to clean the Hydrotech strainer.

1. Turn the main power switch to the OFF (0) position and lock with a padlock.

2. Loosen the wing nut and remove the clamping ring (B in figure 7.5).

3. Lift off the wash water filter cover (A in figure 7.5).

4. Remove and clean the filter insert.

5. Secure the filter insert in the cover.

6. Refit the cover/filter insert and the clamping ring.

7. Start operation in accordance with section 5.1.

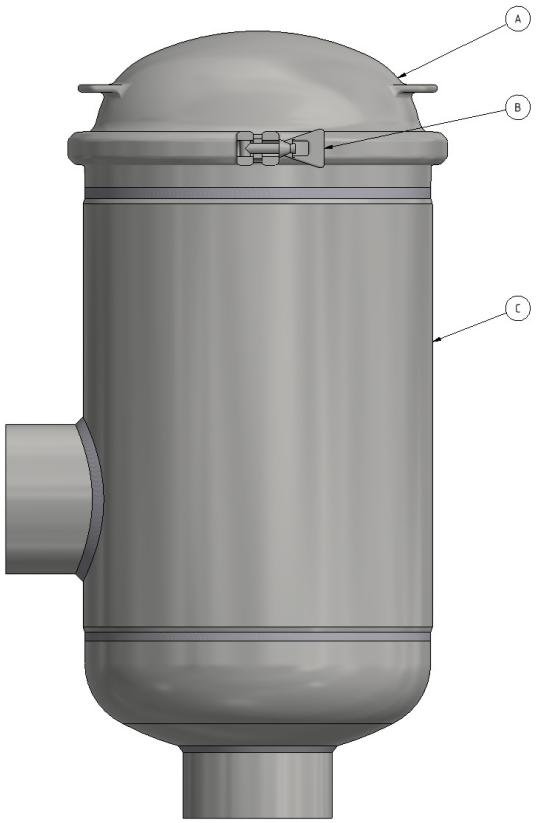


*Figure 7.5 Hydrotech wash water filter.*
*A. Cover*
*B. Wing nut*
*C.Strainer*

## 7.3 Bearings



*Figure 7.6*

NB Prior to servicing, read section 2.7.

Stickers indicating the lubrication points are attached to the filter, see Figure 7.6.

### 7.3.1 Lubrication of swivel

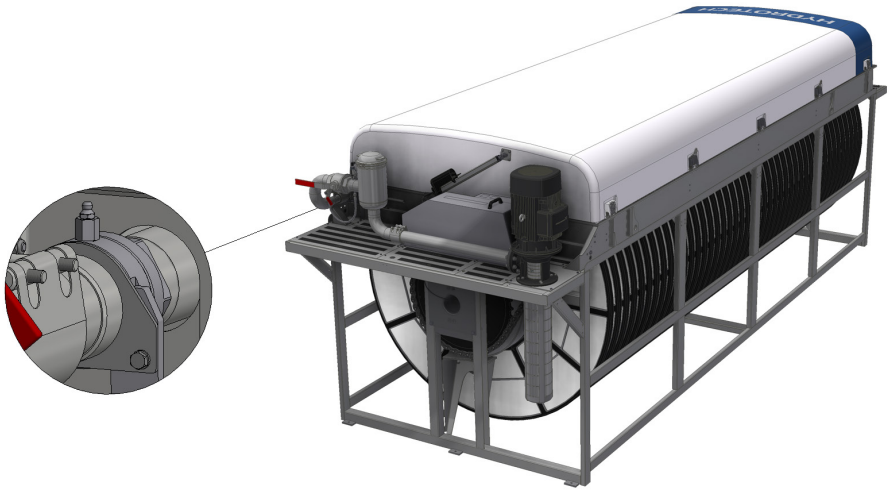

*Figure 7.7 Location of the swivel.*

The swivel makes up the bearing between the backwash pipe and the connecting pipe for the backwash water (see Figure 7.7 & 7.8).

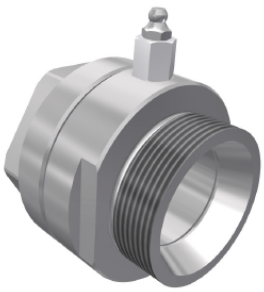

*Figure 7.7 Swivel*

The swivel's lubrication points are shown in Figure 3.3 and Figure 3.6.

### 7.3.2 Lubricating drum bearings

The bearings' lubrication nipples are fitted on the outside of the filter. The drum must rotate when the bearings are lubricated.

Lubricate the drum bearings according to the recommendations in chapter 8. The lubrication points are shown in Figure 3.2, 3.3, 3.6 and 3.7.

## 7.3.3 Checking drum bearing wear

1. Turn the main power switch to the OFF (0) position and lock with a padlock.

2. Drain the chamber/filter tank.

3. Check the drum bearings with respect to wear. If the distance between the bearing housing (A) and the shaft (B) is less than 22 mm (see Figure 7.8), the drum bearing must be replaced.

4. Contact your supplier if the drum bearings need to be replaced.

5. Start operations again as set out in section 5.1.

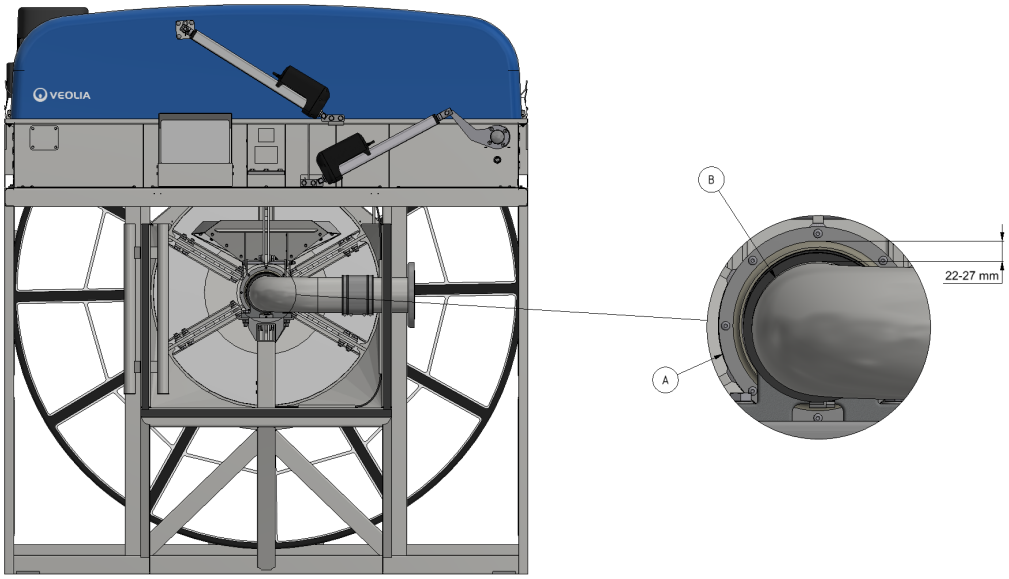


*Figure 7.8 Drum bearing housing on inlet side.*

## 7.4 Filter panels

NB Prior to servicing, read section 2.7.

### 7.4.1 Additional cleaning

Additional cleaning of the filter panels may be necessary. The need for additional cleaning becomes clear if the frequency of automatic backwash starts increases. Additional cleaning can be chemical cleaning or cleaning with a high pressure washer.



*When using a high pressure washer a wash pressure of max. 80 bar may be used. Maximum allowed water temperature is 60 °C. Never hold the cleaning nozzle directly against the filter media.*

A chemical cleaning programme can be started in accordance with section 7.4.2.

## 7.4.2 Chemical cleaning of filter panels

Long-term clogging of the filter media can be caused by, among other things, iron, calcium or organic fouling. This clogging can normally be removed through chemical cleaning. Three proven products that do not affect the life of the filter media are dilute hydrochloric acid (HCl), dilute sodium hypochlorite (NaClO) and dilute sodium hydroxide (NaOH).

*The use of other types of cleaning agents can cause damage to equipment.*

*The cleaning products must not be mixed. If, for example, HCl and NaClO are mixed this produces toxic chlorine gas. HCl and NaOH are highly corrosive. For safety advice, see applicable local regulations.*

For more detailed instructions, please contact your supplier.

Hydrotech Discfilters in the HPF2200 series as standard are prepared with a chemical ramp to make removal of long-term clogging of the filter media possible.

The Hydrotech chemical trolley HCT (option) is connected to the chemical ramp connection (see Figure 3.2 and Figure 3.6). The control system is prepared and programmed for connection of a dosage system. After completing electrical and mechanical connection, chemical cleaning is started as follows:

1. Turn the mode selector to “HAND”.

2. Select “Login” (if the user is not already logged in) and log in using your user name and password.

3. Select “Chemical” on the operator panel, see Figure 7.11.

4. Set the number of full cleaning cycles to be completed, see Figure 7.12.

5. Select “Start” to start the chemical cleaning programme, see Figure 7.12. (Settings are found under “Settings”, see Automatic System Manual.)

6. Once chemical cleaning has been completed, re-start operation as described in section 5.1.

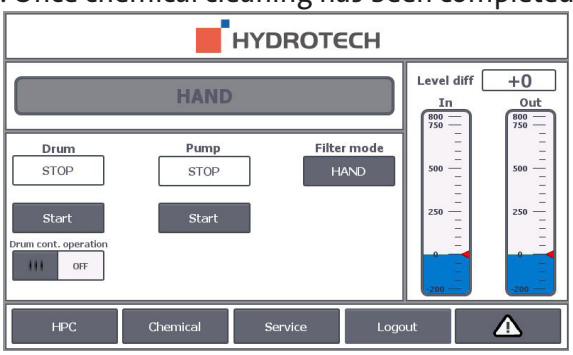


Figure 7.11 Main menu in HAND operating mode.

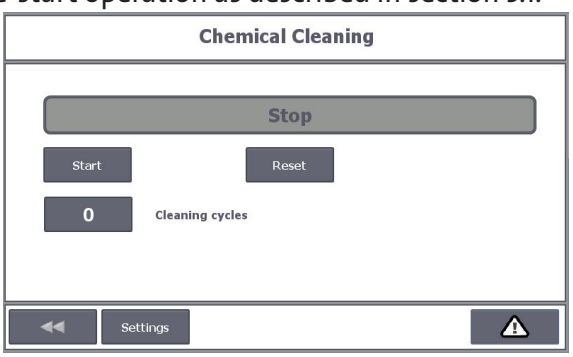


Figure 7.12 “Chemical cleaning” window.

If necessary clean the chemical ramp nozzles as described below:

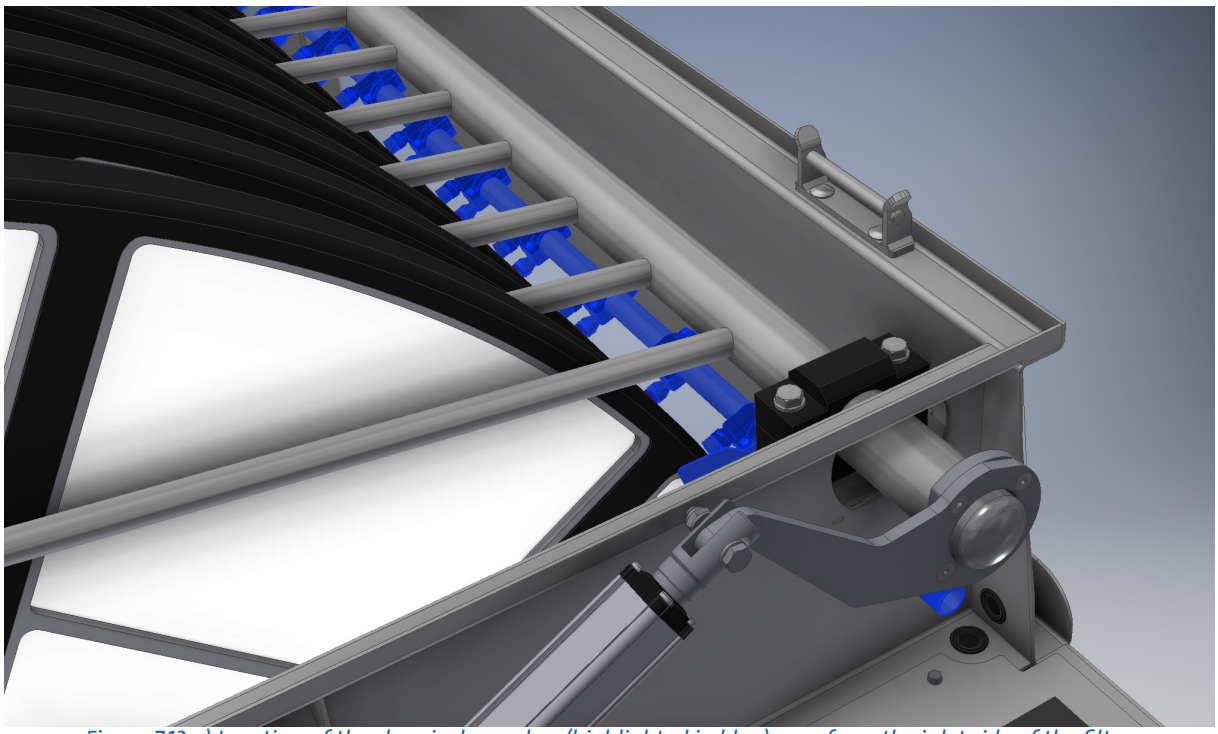

*Figure 7.13 a) Location of the chemical spraybar (highlighted in blue) seen from the inlet side of the filter.*

1. Turn the main power switch to the OFF (0) position and lock with a padlock.

2. Remove the nozzle by turning it ¼ turn anticlockwise (see Figure 7.13 b).

3. Clean the nozzle with compressed air or a plastic brush.

*Never use a wire brush, metal pins or similar as these can damage the nozzle.*

4. Refit the nozzle on the chemical ramp.

5. Start operations again as set out in section 5.1.

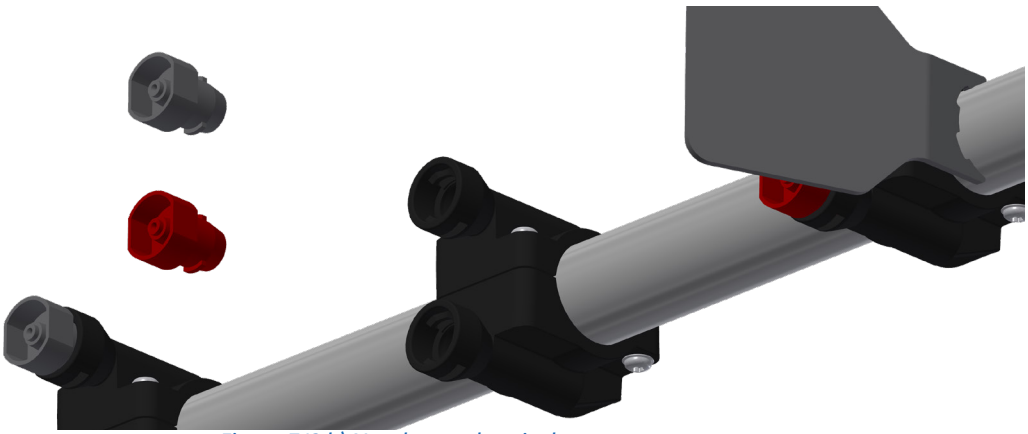

*Figure 7.13 b) Nozzles on chemical ramp.*

## 7.4.4 Changing filter panels

When replacing the filter panels it is important to maintain the balance of the drum. Remove/ refit every other filter panel. This prevents unintentional rotation of the drum and reduces the load on the drive chain and gearbox.

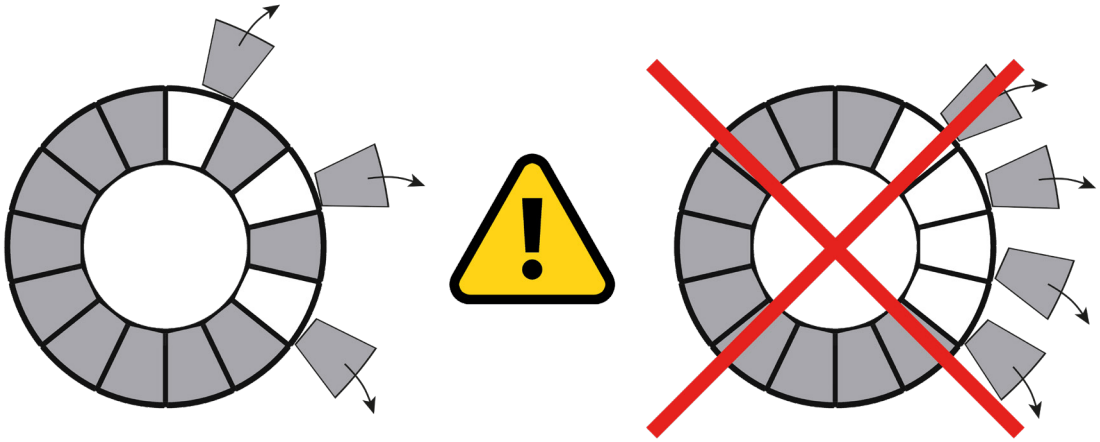

*Figure 7.14 Correct way of changing filter panels.*

*NEVER remove or refit all filter panels on just ONE side of the disc (see Figure 7.14).*

1. Turn the mode selector to “HAND”.

2. Select “Service” on the operator panel, see Figure 7.15.

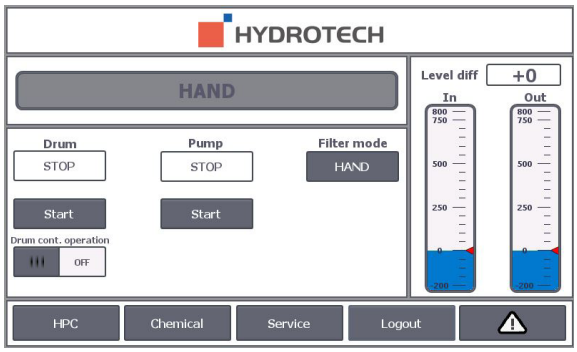


*Figure 7.15 Main menu in HAND operating mode.*

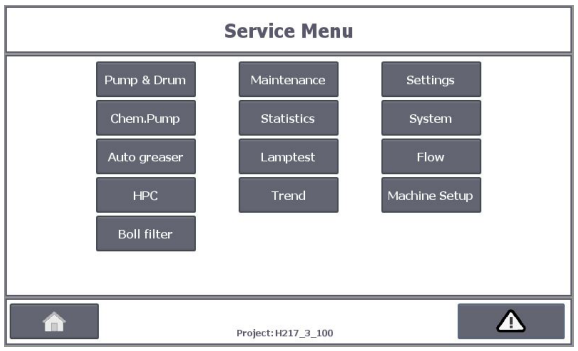


*Figure 7.16 Service menu.*

3. Select “Pump & Drum”, see Figure 7.16. Use the “Jog Fwd” and “Jog Bwd” buttons to set the drum to the desired mode, see Figure 7.17.

4. Turn the safety switch to the OFF (0) position and lock in the OFF (0) position with a padlock.

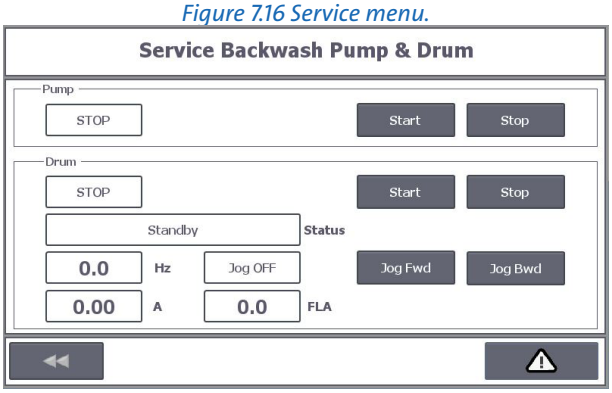


*Figure 7.17 “Service Backwash Pump & Drum”.*

5. Undo the filter segment cover screw and remove the cover, see Figure 7.18).



*Figure 7.18 The filter segment cover is removed.*

6. Pull out the filter panel (see Figure 7.19).



*Figure 7.19 The filter panel is pulled out.*

7. Insert a new filter panel and press in until it touches the bottom.

NB Filter panels with steel frames must be positioned with the filter cloth facing inwards (see Figure 7.20).

*Incorrect installation of the filter panels can cause damage to the filter segments.*

8. Replace the filter segment cover and tighten the screws.

*Maximum tightening torque: 3 Nm.*

9. Fit the remaining filter panels and covers in the same manner.

10. Start operations again as set out in section 5.1.

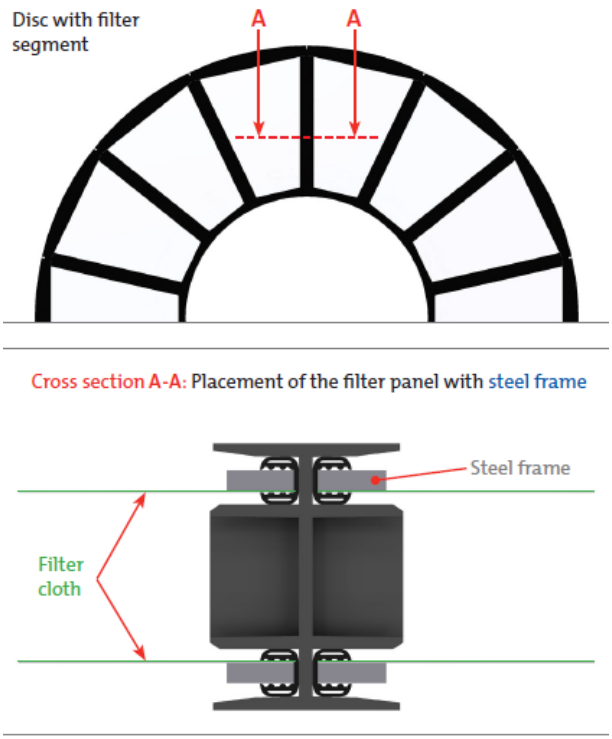


*Figure 7.20 Location of filter panel with steel or plastic frame.*

## 7.5 Drive chain

NB Prior to servicing, read section 2.7.

The filter is equipped with a chain drive. For technical data, see Appendices A and D.

### 7.5.1 Checking and tensioning the drive chain

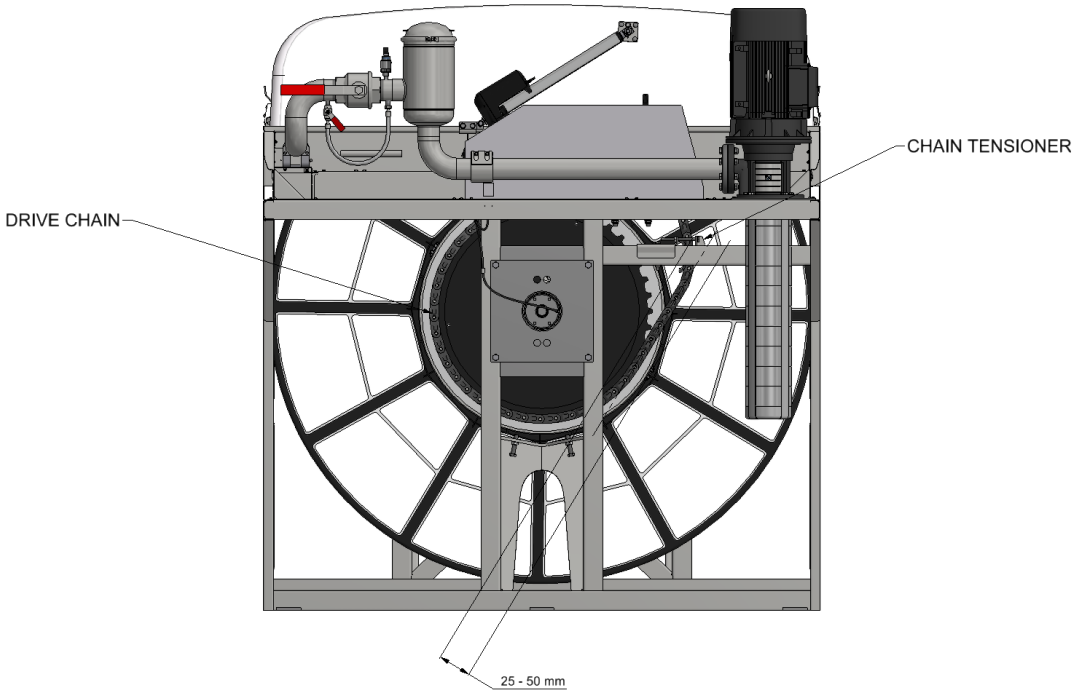


*Figure 7.21 Displaying the correct slack of the drive chain and position of the tensioner.*

1. Turn the main power switch to the OFF (0) position and lock with a padlock.

2. Remove the motor cover to access the chain.

3. Stretch the chain by turning the drum by hand in the non operational direction.

4. Check the tension of the chain's return section; it must be possible to move it between 25 and 50 mm, see Figure 7.21.

5. Adjust the chain setting, if necessary, with use of the chain tensioner, see figure 7.22.

6. Start operations again as described in section 5.1.

## 7.5.2 Using the chain tensioner to achieve correct tension

1. Turn the main power switch to the OFF (0) position and lock with a padlock.

2. Remove the motor cover to access the chain.

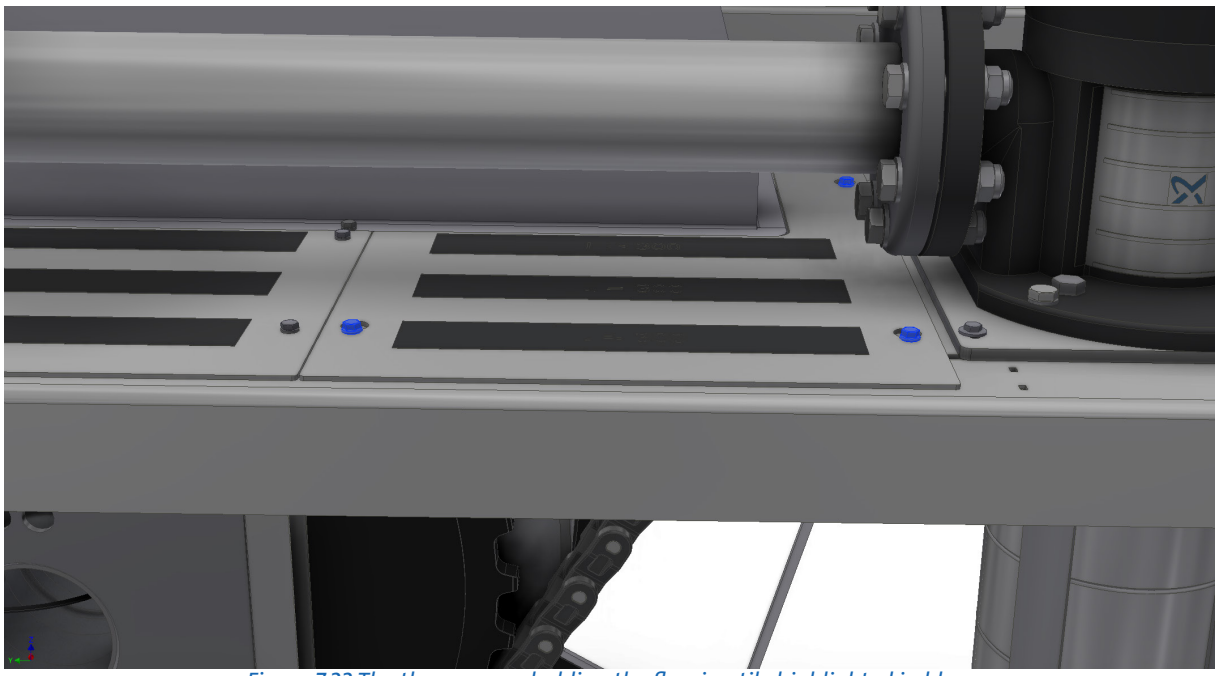

*Figure 7.22 The three screws holding the flooring tile highlighted in blue.*

3. Remove the flooring tile with the three screws marked blue in figure 7.22. This is done by releasing the tension of the screw and the sliding the tile towards the end of the filter. Then lift the tile to get access down below.



*Figure 7.23 Detailed view of the chain tensioner.*

4. Loosen the two screws to the left in figure 7.22. The screws are loosend enough when the chain tensioner is able to move freely. Be careful when loosening the screws so that the bracket underneath the beam dont fall off. Loosen the nut on the adjustment screw.

5. Adjust the long screw until the chain gets the correct amount of tension.

6. Secure the chain tensioner by tightening the nut onn the adjustmen screw, then tighten the screws to the beam again.

7. Start operations again as described in section 5.1.

### 7.5.3 Replacing the drive chain

1. Turn the main power switch to the OFF position and lock with a padlock.

2. Get maximum amount of slack on the drive chain by using the chain tensioner. For further information of how to use the chain tensioner, read section 7.5.2.

3. Split and remove the drive chain.

4. Fit the new drive chain.

5. Adjust drive chain tension in accordance with section 7.5.2.

6. Start operations again as set out in section 5.1.

## 7.6 Drive unit

NB Prior to servicing, read section 2.7.

For information about the drive unit, see Appendix D.

## 7.7 Inlet gasket

NB Prior to servicing, read section 2.7.

### 7.7.1 Checking the inlet gasket

1. Turn the main power switch to the OFF (0) position and lock with a padlock.

2. Lower the water level in the filter until the whole inlet gasket is accessible.

3. Make sure the inlet gasket rests against the inside of the drum.

4. Inspect the inlet gasket for damage and wear (see Figure 7.24).

5. If necessary, replace the inlet gasket in accordance with section 7.7.2.



*Figure 7.24 Inlet gasket.*

6. Start operations again as set out in section 5.1.

### 7.7.2 Replacing the inlet gasket

1. Turn the main power switch to the OFF (0) position and lock with a padlock.

2. Lower the water level in the filter until the whole inlet gasket is accessible.

3. Note how the inlet gasket is fitted before it is dismantled.

4. Loosen the screws and nuts holding the inlet gasket in position.

5. Remove the inlet gasket.

6. Fit a new inlet gasket.

7. Start operations again as set out in section 5.1.

## 7.8 Lifting the drum

The filter is equipped with two drumlifting devices, each located at the gables of the filter, that is to be used when lifting the drum.

### 7.8.1 Use of the front drum lifter

The front drum lifter is placed along the centreline of the filter, on a bracket behind the horizontal beam above the inlet channel. The screw marked in blue in figure 7.8.1 displays where the front drum lifter is located.

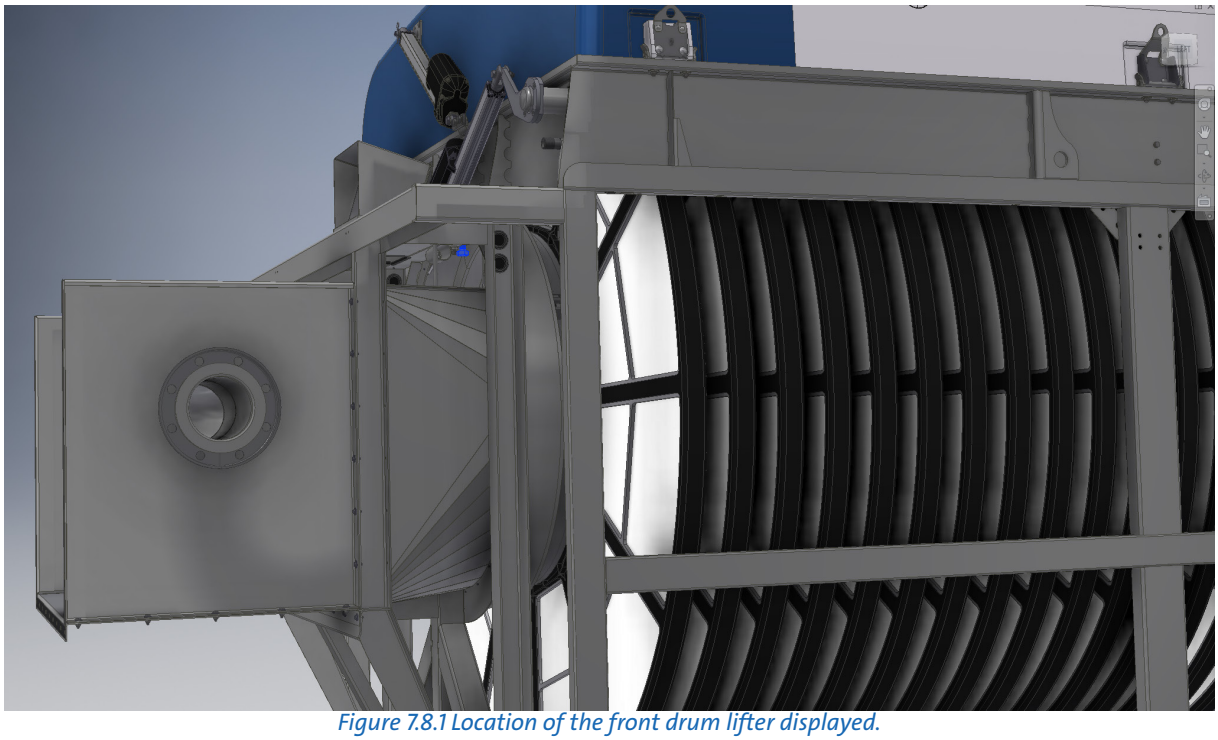

*Figure 7.8.1 Location of the front drum lifter displayed.*

The drum lifter is operated by tightening the screw (the screw marked blue, in figure 7.8.2). This will push on the center of the inside ring of the drum, lifting it vertically.

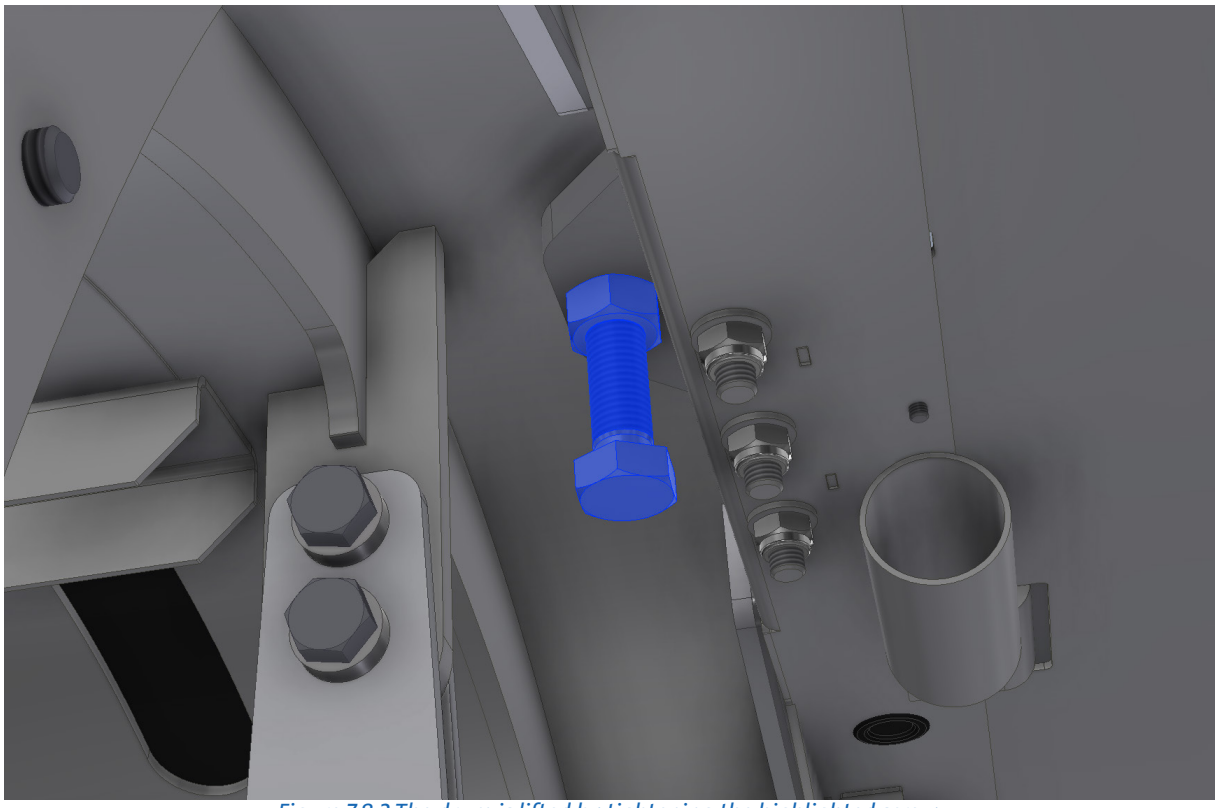

*Figure 7.8.2 The drum is lifted by tightening the highlighted screw.*

## 7.8.1 Use of the rear drum lifter

The location of the rear drumlifter is displayed in figure 7.8.3 below.

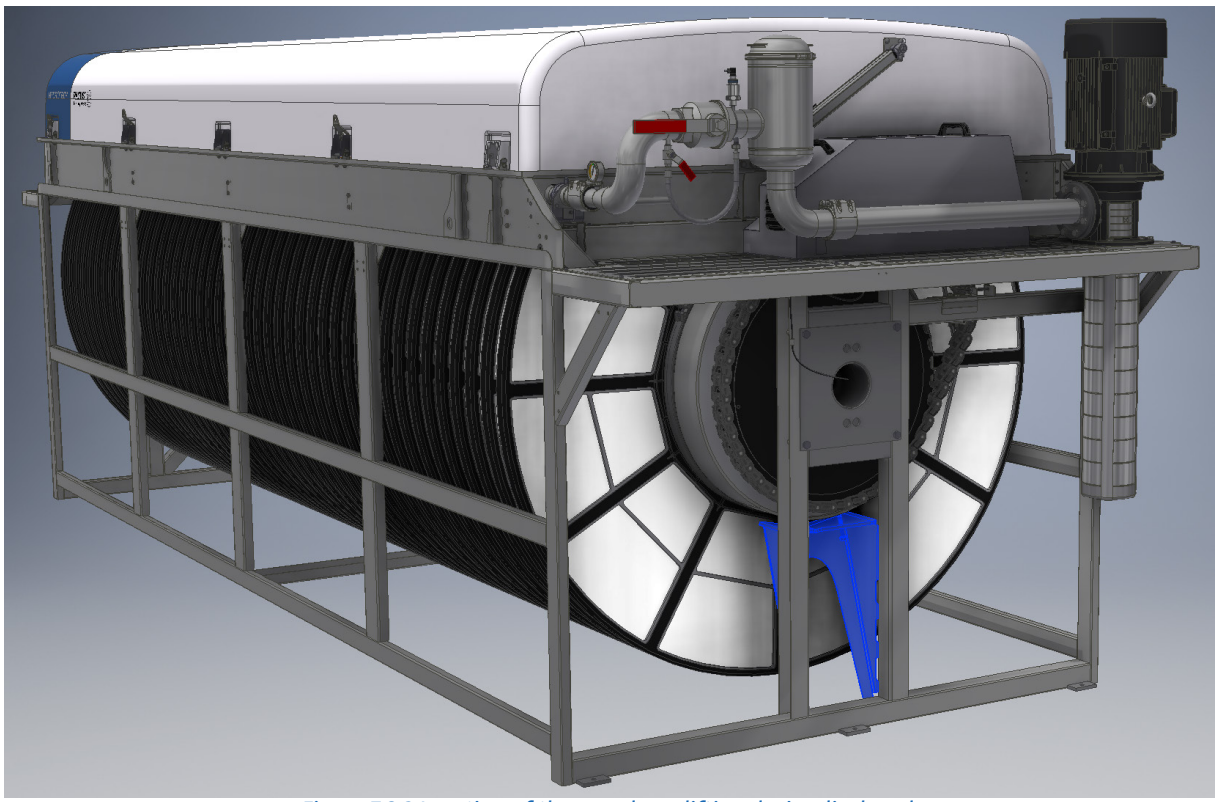

*Figure 7.8.3 Location of the rear drum lifting device displayed.*

The rear drum lifter is opeated in the same way as the front drum lifter, but instead of one screw placed in the center of the drum, there is now two screws lifting the drum.

Tighten one screw at the time, and lift the drum slowly by taking turns on the two screws so that the drum is being held close to the centreline of the filter during the entire process.

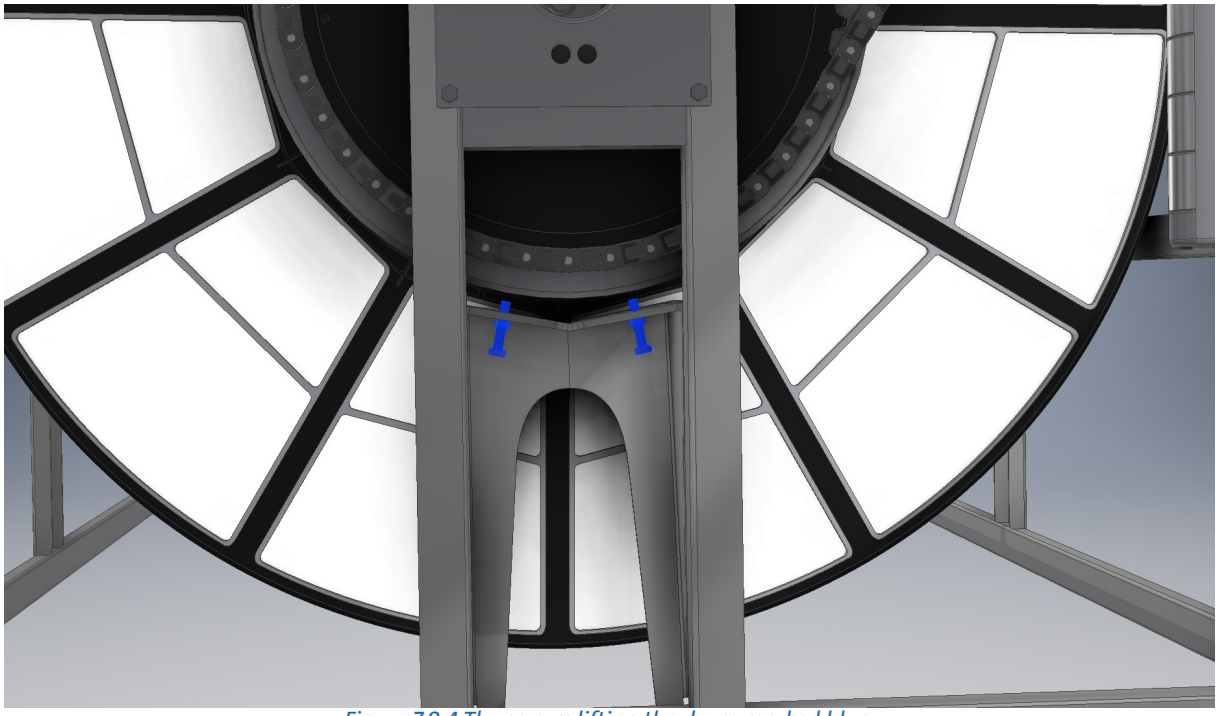

*Figure 7.8.4 The screws lifting the drum marked blue.*

## 7.8.2 Lifting the drum on filters with tank

The procedure for lifting the drum on a filter with tank is the same as for the frame version of the filter.

On the inlet side of the filter the drum lifter can be accessed by lifting the center flooring tile marked blue in figure 7.8.5.

On the effluent side of the filter the plate marked blue in figure 7.8.6 must be removed to access the drum lifter.



*Figure 7.8.5 Accessing the front drum lifter.*

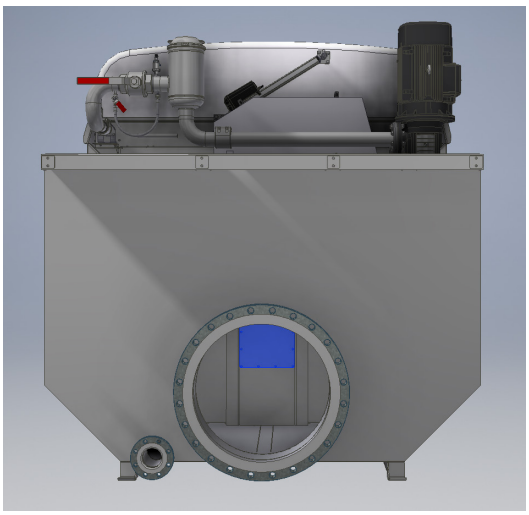

*Figure 7.8.6 Accessing the rear drum lifter.*

# 8. MAINTENANCE SCHEDULE

| Check/Action | Maintenance interval |
|---|---|
| Check whether the wash water filter is clogged. See section 7.2. | The interval is based on experience from the application in question. (When the backwash water pressure drops 0.5 bar below the normal value.) |
| Check the filter panels for clogging and damage. See section 7.4. | Once a week or another interval based on experience from the application in question. |
| Inspect the inside of the filter: Make sure no large objects that can get caught in the drum, filter segments or sludge trough have entered the filter. Also check that the reject does not accumulate (sediment) in the sludge trough.<br><br>NB Prior to servicing, read section 2.7. Remove large objects and rinse the sludge trough.<br><br>*WARNING! Turn the main power switch to the OFF position and lock in the OFF position with a padlock.* | Once a week or another interval based on experience from the application in question. |
| Rinse the metal surfaces of the filter structure with clean water. Clean (uncontaminated) metal surfaces minimise corrosion, particularly in salt water applications. | Twice a month or another interval based on experience from the application in question. |
| Check the nozzles with respect to clogging. See section 7.1. | Twice a month or another interval based on experience from the application in question. |
| Lubricate the swivel to the backwash pipe using grease of the type NLGI:2 (e.g. Molykote Multilub, Rembrandt EP or equivalent grease). See section 7.3.1. | Twice a month with continuous drum rotation. Once a month with intermittent drum operation. |
| Lubricate the drum bearings (on the inlet and drive side) using grease of the type NLGI:2 (e.g. Molykote Multilub, Rembrandt EP or equivalent grease). See section 7.3.2. | Twice a month with continuous drum rotation. Once a month with intermittent drum operation. |
| Check drive chain tension and condition. See section 7.5.1 | Four times a year with continuous drum rotation. Twice a year with intermittent drum rotation. |
| Check the drive unit's oil level. See section 7.6. | Twice a year. |
| Check the wear on the drum bearing. See section 7.3.3. | Once a year. |
| Check the inlet gasket. See section 7.7. | Once a year. |
| Change the gearbox oil. Oil type: ISO viscosity VG 680 (e.g. Omala oil 680 (Shell) or equivalent gearbox oil). Also see Appendix D. | See Appendix D. |

# Symbols used on Hydrotech filters



Symbol is displaying equipotential earth bonding points on the filter.



Symbol shown at lubrication points on the filter. Read the manual for further information about lubrication.



Symbol displaying moving parts. Negligence to comply with safety regulations may lead to injury.



This symbol is placed where certain attention is needed when handling the filter. Read the manual for further information.

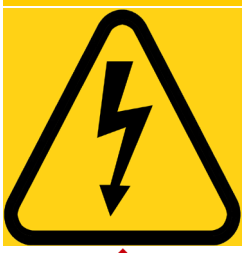

Warning for high voltage. Always assume all electrical equipment to be live and



Used as a warning where corrosive fluids is used. Always use appropriate safety equipment when handling corrosive products.

# Manuals & technical information

For further information regarding Hydrotech filters or any other product used together with Hydrotech filters, please visit www.hydrotech.se. Click on ”Manuals & technical information”.

Locate the desired product manual and select manual by clicking on one of the language options. The manual will open in a new browser tab where the option to save the manual also can be found.

| Description - Hydrotech Order No.: S109975 | Qty. |
|---|---|
| | |
| HPF2218-1F S32205/AISI316L, Disc filter (S/N: 11549) | 1 |
| (Separate Bypass) | |
| Measure drawing: 10982-A | |
| | |
| Power supply: 3x575 V, 60 Hz | |
| | |
| Filter panels: 10 µm | |
| (Polyester cloth/PPG frame) | |
| | |
| Inlet: ANSI 24" | |
| Outlet: ANSI 20" | |
| Separate bypass: ANSI 20" | |
| Solids outlet: ANSI 6", Reduced thickness | |
| Hole pattern according to B16.5 150lbs | |
| AISI316L welding collar, AISI316L loose flanges. | |
| | |
| Cover: GRP | |
| | |
| Filter straps, S32205 | |
| | |
| Grease nippels, AISI316L | |
| Voltage: 330/575V D/Y 440-460V D/Y 60 Hz | |
| Rated current: 3,2/1,85A 0.69 cos phi | |
| Efficiency grade: IE3 | |
| Motor effect: 1.1 kW | |
| RPM: 1762/9,3 | |
| Insulation grade: 155(F) / 55 | |
| CSA-approved | |
| Surface treatment acc. to OS1 | |
| Synthetic oil | |
| (Does not fulfill the requirement for IEEE 841) | |
| | |
| Pipe for chemical cleaning of the filter panels. | |
| | |
| PVC-piping for 2 pcs CRT16-5 pumps | |
| (Including isolation valves) | |
| | |
| Backwash strainer: Hydrotech (200 µm) | |
| (Cartridge in AISI316L) | |
| | |
| Spare parts kit | |
| | |
| Manual HPF2200 PFC EN (1 set/shipment) | |
| | |
| Level sensor FMX21-CD121CGD15A-CSA-approved | |
| (2 pcs (1 inlet, 1 effluent)) | |
| | |
| Telemecanique, XMLA010A2S11 (CE, UL, CSA, CCC,EAC) | |
| | |

| Description - Hydrotech Order No.: S109975 | | Qty. |
|---|---|---|
| Pump CRT16-5 APAE-DQQE, 3x575V 60Hz | 265, CE, CURUS, IE3, IP55, 60 °C | 1 |
| Titanium, B 265 ASTM | | |
| DQQE, PJE-connection | | |
| Rated voltage: 3x575V 60Hz | | |
| Rated power: 7,5 kW | | |
| (Does not fulfill the requirement for IEEE 841) | | |
| ---------- | | |
| | | |
| | | |
| | | |
| | | |

# SERVICE
# HPF2206/44-2F

Thank you for choosing a Hydrotech filter.

It is a reliable machine that will run for a long time with minimum care and service. Indeed, any mechanical equipment requires annual maintenance in order to operate efficiently and with as little down time as possible. This is also the case with your Hydrotech Discfilter HPF2206/44-2F.

On the next pages, you will find recommendations for maintenance, parts to change and drawings.

If you don't have the possibility to do the maintenance yourself, Hydrotech will be pleased to send you a service offer or recommend a reliable technician that can assist you.

Apart from the periodic maintenance mentioned in the **Operation & Maintenance manual** we recommend a large service every fifth year where at least all parts in the **5 year service kit** are replaced.

To order spare parts or a service from Hydrotech and also to get the latest updated prices, contact Hydrotech.

# SERVICE
# HPF2206/44-2F

5 year service kit

| Art. N° | N° on drawing | Description | Qty |
|---|---|---|---|
| 1008030 | 22398-A pos.4 & 4295-D pos.5 | Slide bearing for drum | 2 |
| 1012535 | 22398-A pos.6 | Rubber sealing for inlet shaft | 1 |
| 1010585 | 22398-A pos.8 | V-sealing, V-180A | 1 |
| 1008139 | 4295-D pos.3 | Axial bearing | 1 |
| 1008493 | 4295-D pos.6 | Rubber sealing for outlet shaft | 1 |
| 1019684 | 22020-A pos.11 | Sprocket wheel on motor Z=14 | 1 |
| 1025389 | 22020-A pos.10 | Excenter wheel for backwash bar | 1 |
| 1010967 | 22026-A pos.7 | Manometer | 1 |
| 1000808 | 22153-A pos.1 | Bearing for backwash bar | 2 |
| 1012730 | 22023-A pos.4 | Swivel connection, 2” | 1 |
| 1006903 | 3826-B pos.4 | Strainer cartridge, 200 µm | 1 |
| 1025398 | 22111-A pos.3 | Rubber lip seal on drum inlet | 1 |
| 1008141 | 22111-A pos.5 | Guidingblocks Drum, T=8 mm | 2 |

Strategic spare parts

| Art. N° | N° on drawing | Description | Qty |
|---|---|---|---|
| 1024919 | 22023-A pos.6 | Backwash nozzles | 14/disc |
| | 22402-A pos.1 or .2 | Filter panels | 24/disc |
| 1025397 | 22020-A pos.13 | Drive chain | 1 |
| 1013116 | 22020-A pos.12 | Sprocket wheel drum | 1 |

Critical spare parts

| Art. N° | N° on drawing | Description | Qty |
|---|---|---|---|
| | | Backwash pump | 1 |
| | | Drive unit | 1 |

**Definitions:**

**5 year service kit:**

Parts to be changed after 5 years of operation

**Strategic spare parts:**

Parts with short lead time (always on Hydrotech stock) which are vital for the operation of the unit.

**Critical spare parts:**

Parts with long lead time which are vital for the operation of the unit, contact Hydrotech for precise delivery time.

PROPERTY OF DRAWINGS AND PRESCRIPTIONS
All property, rights and use remain to HYDROTECH AB, Sweden
General conditions and use for this drawing is in accordance to ORGALIME S2000

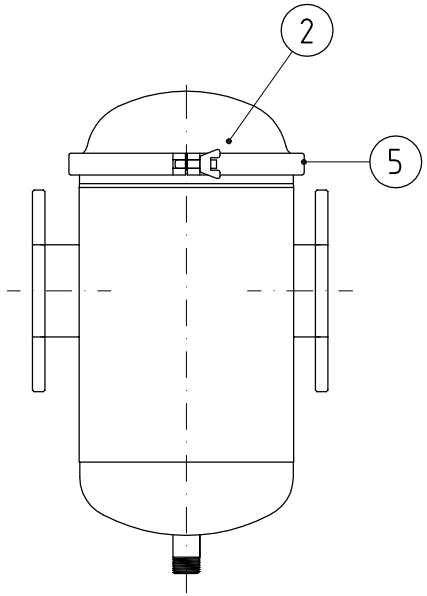


Flanged

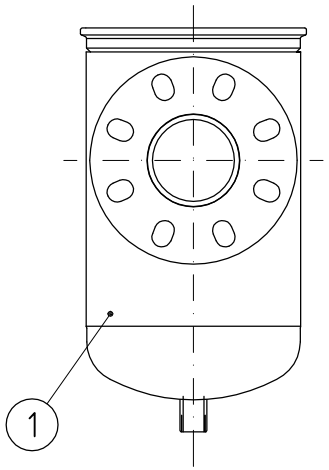


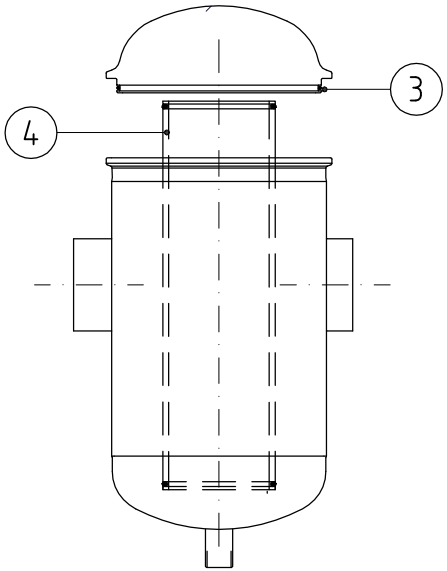


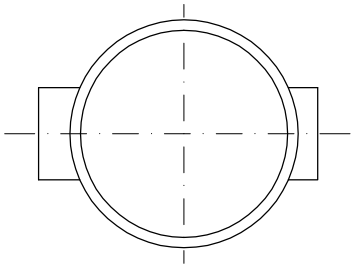

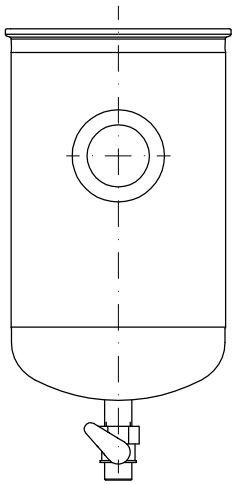

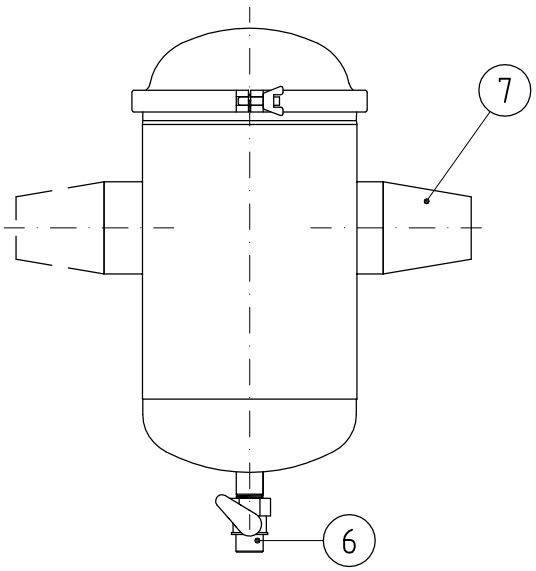


For welding

| Part no. | Quantity | Name | Material | Mod.-nr Blank Dimension | Remark |
|---|---|---|---|---|---|
| 7 | 1 | Reducer | AISI 316L | 88.9/60.3 | |
| 6 | 1 | Valve | | 3/4" | Art. No. 1011050 |
| 5 | 1 | Clamp ring | AISI 316L | ⌀200/217 | Art. No. 1013204 |
| 4 | 1 | Strainer cage | 316 / PP | 200 micron | Art. No. 1006903 |
| 3 | 1 | O-ring | Nitrile | 180x4,0 | Art. No. 1013194 |
| 2 | 1 | Top cap | AISI 316L | | Draw. No. 3927 |
| 1 | 1 | Filter house | AISI 316L | | Draw. No. 3550 |

| Designer | Drawn by | Copy | Controlled by | Stand. | Approved | Scale | Replaces | Replaced by |
|---|---|---|---|---|---|---|---|---|
| Per | Per | | | ISO 2768-m | | 1:5 | | |

HYDROTECH

3" Strainer
Assembly drawing
Can replace 3" Amiad

Date 071015

Draw. no. 3826 Edition B

| Ed. | Change and/or message no. | Date | Made by | c-m no. |
|---|---|---|---|---|

PROPERTY OF DRAWINGS AND PRESCRIPTIONS
All property rights and use remain to HYDROTECH AB Sweden
General conditions and use for this drawing is in accordance to ORGALIME S2000

With flush connection

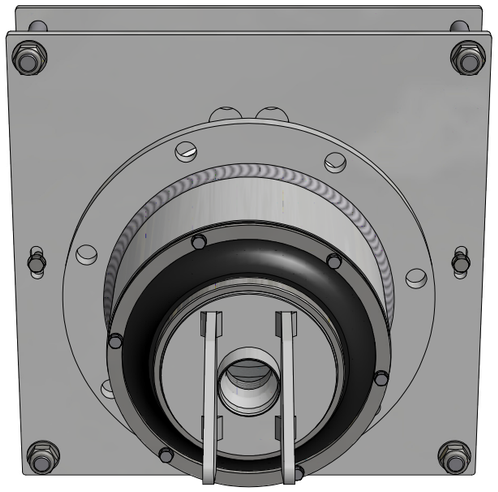

Scale 1 : 5

Without flush connection

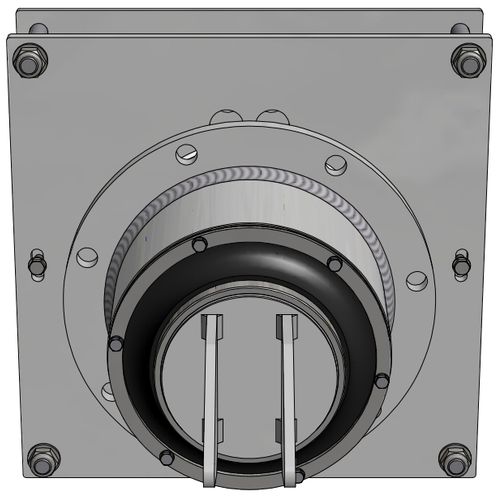

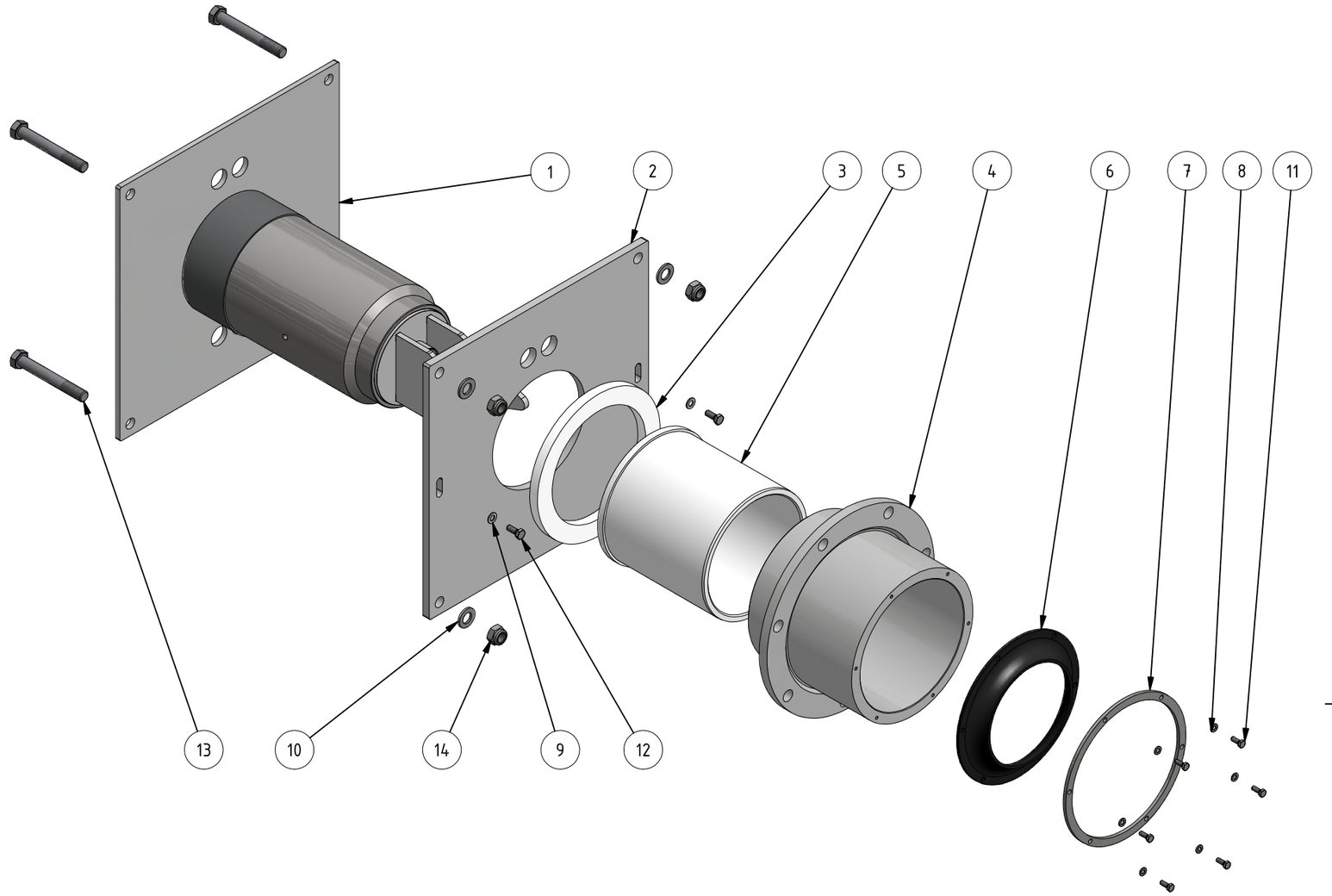


| Ed. | Change and/or message no. | Date | Made by | c-m no. |
|---|---|---|---|---|
| D | Exploded view added | 2014-02-19 | MB | |
| C | New drw. no. in parts list | 2012-11-12 | JJ | |
| B | Option with flush connection added | 2012-04-04 | JJ | |

| Part no. | Qty | Name | Material | Mod.-nr Blank Dimension Mass | Remark |
|---|---|---|---|---|---|
| 14 | 4 | Nut locking | A4 | M6NM M16 | Art. no. 350350 |
| 13 | 4 | Screw | A4 | M6S M16x120D | Art. no. 1008650 |
| 12 | 2 | Screw | A4 | M6S M8x20H | Art. no. 350870 |
| 11 | 6 | Screw | A4 | M6S M6x16H | Art. no. 350780 |
| 10 | 4 | Washer | A4 | 17x30x3,0 | Art. no. 350570 |
| 9 | 2 | Washer | A4 | 8,4x16x1,6 | Art. no. 350540 |
| 8 | 6 | Washer | A4 | 6,4x12x1,6 | Art. no. 350530 |
| 7 | 1 | Retaining Ring | | | Drw. no. 5139 |
| 6 | 1 | Seal for Effluent Bearing | | | Drw. no. 2939 |
| 5 | 1 | Slide Bearing | | | Drw. no. 2918 |
| 4 | 1 | Effluent bearing house | | | Drw. no. 5140 |
| 3 | 1 | Axial bearing | | | Drw. no. 5136 |
| 2 | 1 | Effluent center shaft bracket | | | Drw. no. 2938 |
| 1 | B | Effluent center shaft | | | Drw. no. 4970 |

| Designer | Drawn by | Copy | Controlled by | Stand. | Approved | Scale | Replaces | Replaced by |
|---|---|---|---|---|---|---|---|---|
| | JJ | | | ISO 2768-m | | | | |

HYDROTECH

Assembly Effluent Bearing

HSF2200, HSF2600

Date 2010-05-03

Draw. no. 4295 Edition D

PROPERTY OF DRAWINGS AND PRESCRIPTIONS
All property rights and use remain to HYDROTECH AB Sweden
General conditions and use for this drawing is in accordance to ORGALIME S2000

Scale 1 : 10

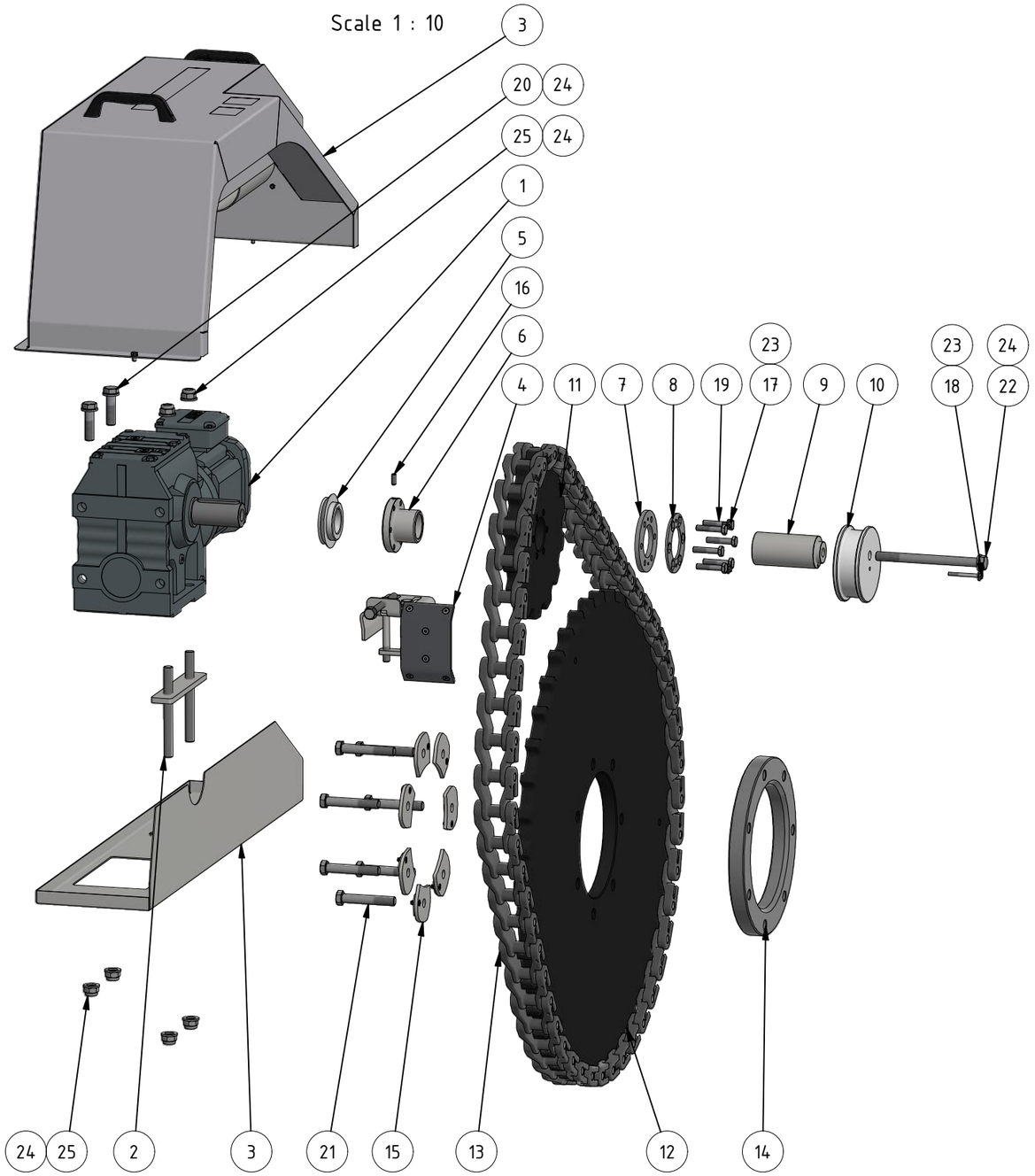


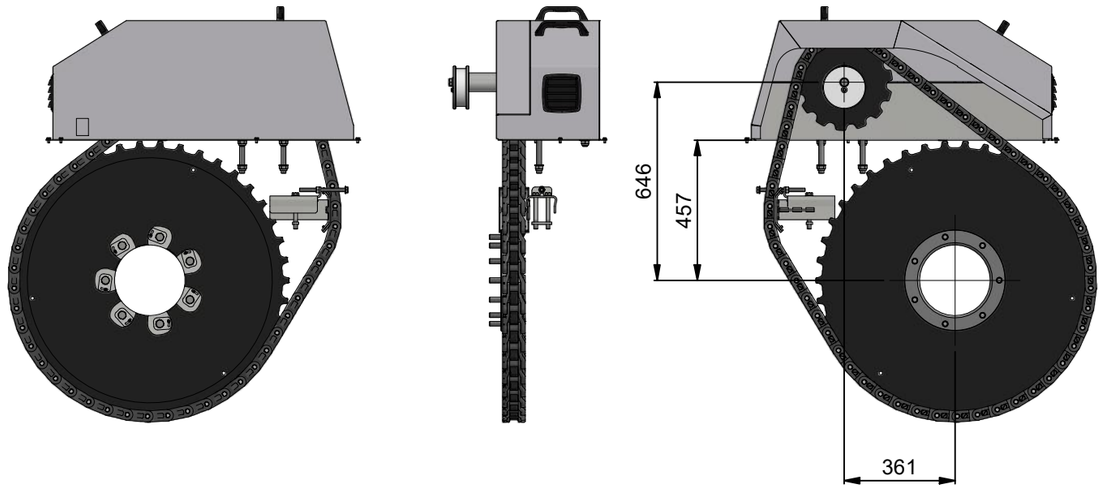


S77DRN90S4 M1B is used
for mirrored filter units

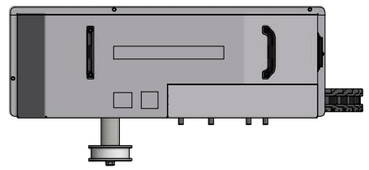

| Pos no | Qty | Name | Material | Dimension | Remark |
|---|---|---|---|---|---|
| 25 | 6 | Nut locking | A4 | M6NM M16 | Art. no. 350350 |
| 24 | 9 | Washer | A4 | 17x30x3,0 | Art. no. 350570 |
| 23 | 3 | Washer | A4 | 6,4x18x1,6 | Art. no. 350532 |
| 22 | 1 | Screw | A4 | M6S M16x200D | Art. no. 1009031 |
| 21 | 7 | Screw | Bumax 88 (A4) | M6S M16x100D | Art. no. 1014574 |
| 20 | 2 | Screw | A4 | M6S M16x60D | Art. no. 351660 |
| 19 | 6 | Screw | A4 | M6S M10x50D | Art. no. 350990 |
| 18 | 1 | Screw | A4 | M6S M6x60D | Art. no. 350830 |
| 17 | 2 | Screw | A4 | M6S M6x12H | Art. no. 350770 |
| 16 | 1 | Screw | A4 | MSK6SS M8x20 | Art. no. 352120 |
| 15 | 7 | Washer with locking device | | | Drw. no. 5735 |
| 14 | 1 | Spacer | | | Drw. no. 4369 |
| 13 | 1 | HT78 Chain L=53 Links | | | Drw. no. 20977 |
| 12 | 1 | Drive sprocket | | Z = 42 | Drw. no. 4200 |
| 11 | 1 | Drive sprocket | | Z = 14 | Drw. no. 4271 |
| 10 | 1 | Excenter wheel | | | Drw. no. 22046 |
| 9 | 1 | Spacer for backwash drive | | | Drw. no. 22045 |
| 8 | 1 | Locking Plate | | | Drw. no. 5205 |
| 7 | 1 | Flange for Hub | | | Drw. no. 5201 |
| 6 | 1 | Hub Ø45 shaft | | | Drw. no. 3724 |
| 5 | 1 | Reject ring | | | Drw. no. 3167 |
| 4 | 1 | Chain tensioner assembly | | | Drw. no. 22036 |
| 3 | 1 | Motor cover assembly | | | Drw. no. 22057 |
| 2 | 1 | Attachment bracket for motor | | | Drw. no. 22044 |
| 1 | 1 | S77DRN90S4 M1A | | | |

| Designer | Drawn by | Projection method | Controlled by | Stand. | Approved | Scale | Sheet size | Replaced by |
|---|---|---|---|---|---|---|---|---|
| JJ | JJ | | | ISO 2768-m | | 1 : 20 | A3 | |

HYDROTECH

Drive assembly

Discfilter HPF2200

| Sheet | Date |
|---|---|
| 1 / 1 | 2019-10-16 |

| Draw. no. | Edition |
|---|---|
| 22020 | A |

PROPERTY OF DRAWINGS AND PRESCRIPTIONS
All property rights and use remain to HYDROTECH AB Sweden
General conditions and use for this drawing is in accordance to ORGALIME S2000

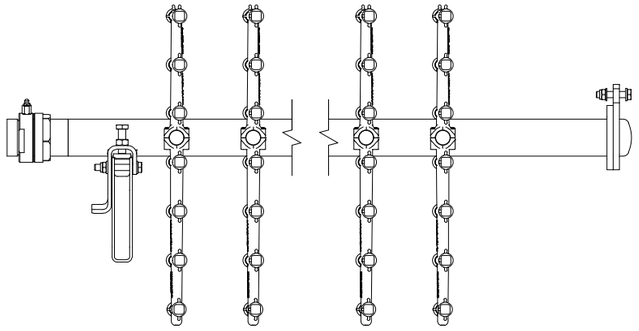

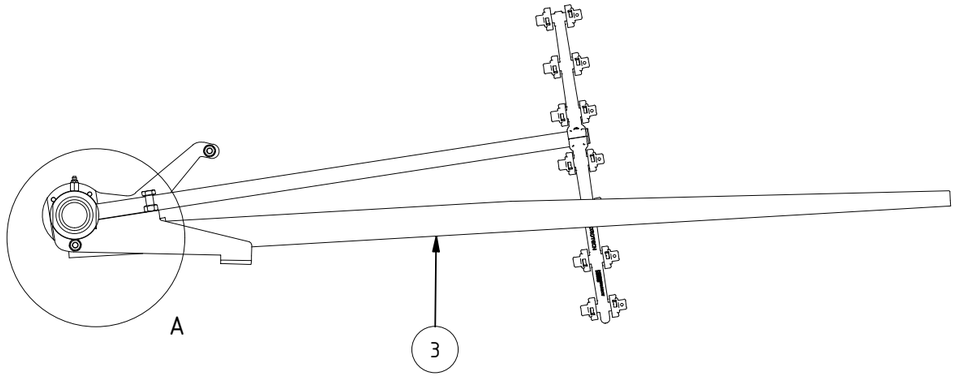


A ( 1 : 4 )

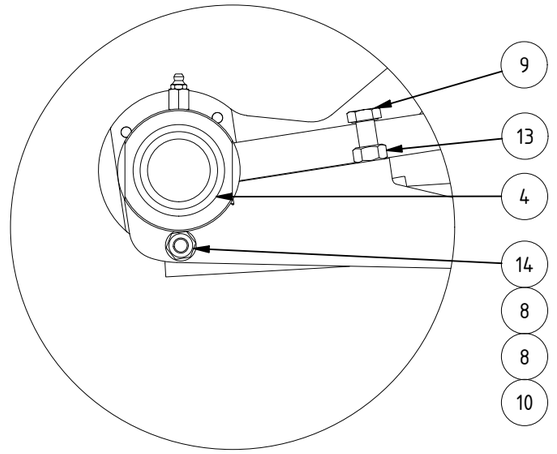


| Filter model | A | B |
|---|---|---|
| HPF2206 | 7 | 84 |
| HPF2208 | 9 | 112 |
| HPF2210 | 11 | 140 |
| HPF2212 | 13 | 168 |
| HPF2214 | 15 | 196 |
| HPF2216 | 17 | 224 |
| HPF2218 | 19 | 252 |
| HPF2220 | 21 | 280 |
| HPF2222 | 23 | 308 |
| HPF2224 | 25 | 336 |
| HPF2226 | 27 | 364 |
| HPF2228 | 29 | 392 |
| HPF2230 | 31 | 420 |
| HPF2232 | 33 | 448 |
| HPF2234 | 35 | 476 |
| HPF2236 | 37 | 504 |
| HPF2238 | 39 | 532 |
| HPF2240 | 41 | 560 |
| HPF2242 | 43 | 588 |
| HPF2244 | 45 | 616 |

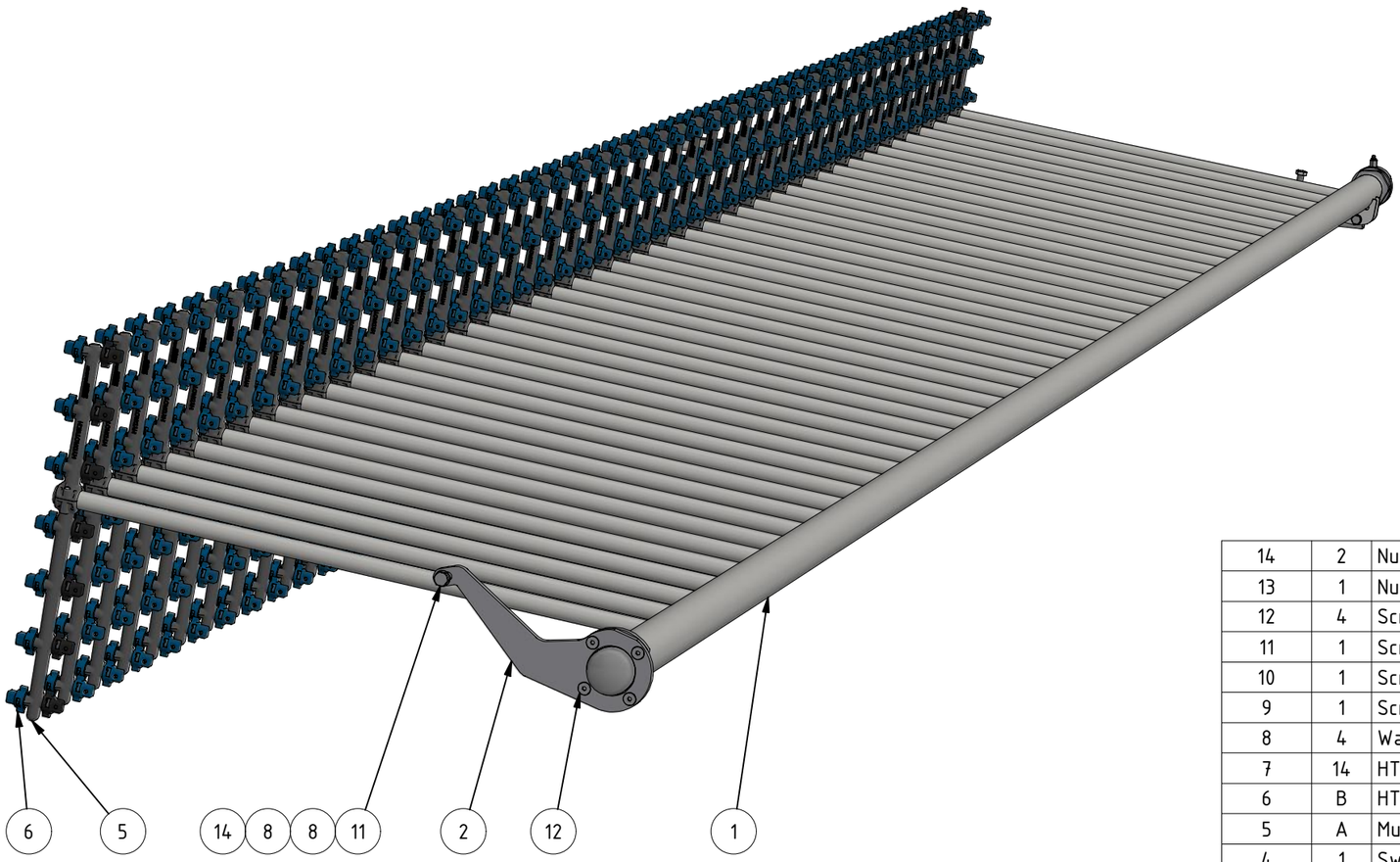


| Pos no | Qty | Name | Material | Dimension | Remark |
|---|---|---|---|---|---|
| 14 | 2 | Nut locking | A4 | M6NM M10 | Art. no. 350330 |
| 13 | 1 | Nut | A4 | M6M M12 | Art. no. 350140 |
| 12 | 4 | Screw | A4 | MF6S M8x20H | Art. no. 1015412 |
| 11 | 1 | Screw | A4 | M6S M10x50D | Art. no. 350990 |
| 10 | 1 | Screw | A4 | M6S M10x70D | Art. no. 351000 |
| 9 | 1 | Screw | A4 | M6S M12x40H | Art. no. 351040 |
| 8 | 4 | Washer | A4 | 10,5x20x2 | Art. no. 350550 |
| 7 | 14 | HT Nozzle blind, incl seal | | | Drw. no. 22217 |
| 6 | B | HT Nozzle blue, incl seal | | | Drw. no. 22007 |
| 5 | A | Multiple nozzle holder | | | Drw. no. 22010 |
| 4 | 1 | Swivel | | | Drw. no. 3942 |
| 3 | 1 | Lever for spray bar drive | | | Drw. no. 22052 |
| 2 | 1 | Lever arm for actuator | | | Drw. no. 4514 |
| 1 | 1 | Spray bar | | | Drw. no. 22011 |

| Designer | Drawn by | Projection method | Controlled by | Stand. | Approved | Scale | Sheet size | Replaced by |
|---|---|---|---|---|---|---|---|---|
| JJ | JJ | | | ISO 2768-m | | 1 : 10 | A3 | |

HYDROTECH

Spray bar assembly

Discfilter HPF2200

| Sheet | Date |
|---|---|
| 1 / 1 | 2019-10-11 |

| Draw. no. | Edition |
|---|---|
| 22023 | A |

PROPERTY OF DRAWINGS AND PRESCRIPTIONS
All property rights and use remain to HYDROTECH AB Sweden
General conditions and use for this drawing is in accordance to ORGALIME S2000

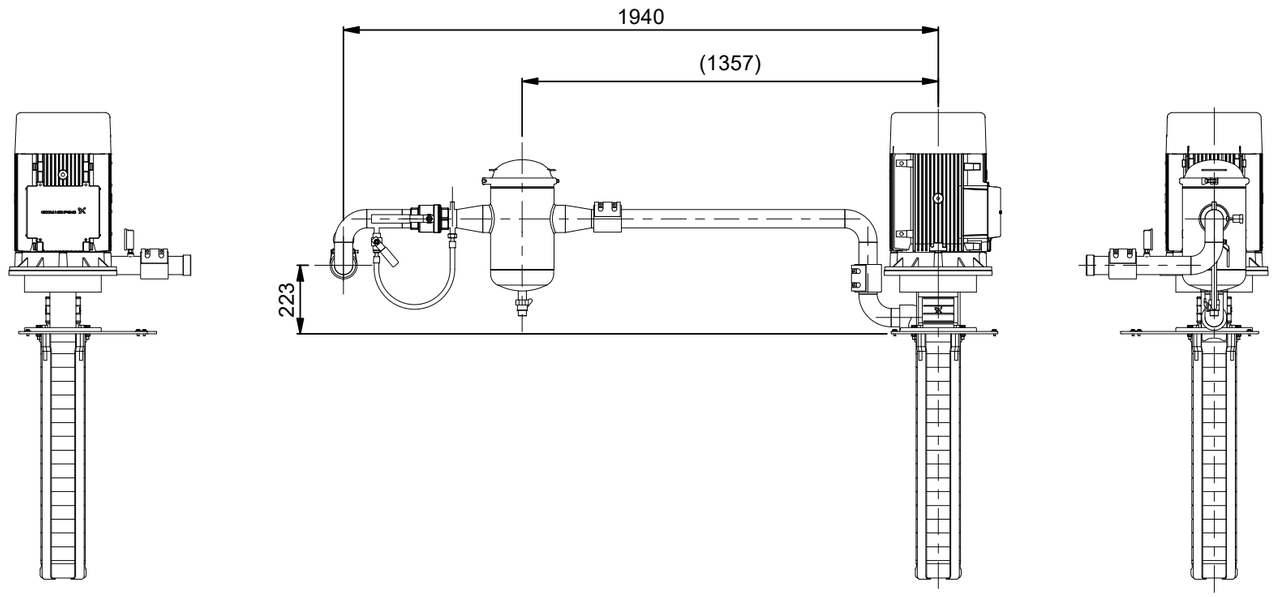


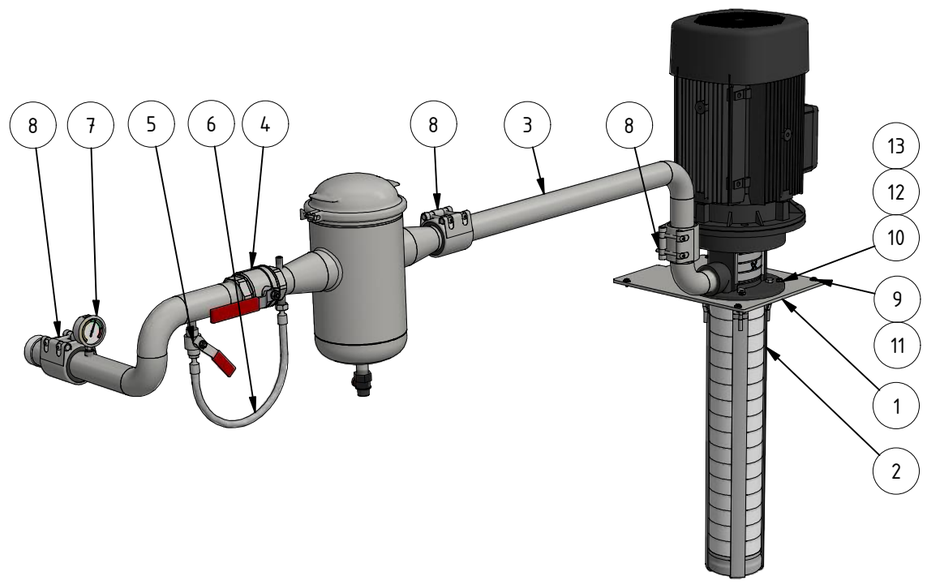


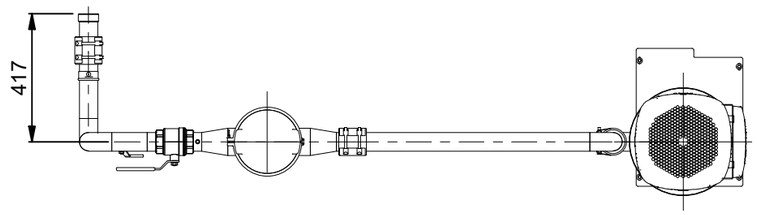


| Pos no | Qty | Name | Material | Dimension | Remark |
|---|---|---|---|---|---|
| 13 | 4 | Nut locking | A4 | M6NM M8 | Art. no. 350320 |
| 12 | 4 | Bolt | A4 | M6S M8x40 | Art. no. 350890 |
| 11 | 4 | Screw | A4 | M6S M6x16H | Art. no. 350780 |
| 10 | 8 | Washer | A4 | 8,4x16x1,6 | Art. no. 350540 |
| 9 | 4 | Washer | A4 | 6,4x18x1,6 | Art. no. 350532 |
| 8 | 3 | Teekay Axilock | | Ø60,3 | Art. no. 1008807 |
| 7 | 1 | Manometer | | R¼" | Art. no. 1010967 |
| 6 | 1 | Braided Hose | | 3/8" L=450 | Art. no. 1006827 |
| 5 | 1 | Ball Valve, 2-piece | | G3/8" L=55 | Art. no. 1004875 |
| 4 | 1 | Ball Valve, 2-piece | | G2" | Art. no. 277580 |
| 3 | 1 | Backwash plumbing, welded parts | | | Drw. no. 22216 |
| 2 | 1 | Pump MTR10/15/20 | | | |
| 1 | 1 | Pump bracket, MTR10,15,20,32 | | | Drw. no. 22220 |

| Designer | Drawn by | Projection method | Controlled by | Stand. | Approved | Scale | Sheet size | Replaced by |
|---|---|---|---|---|---|---|---|---|
| JJ | JJ | | | ISO 2768-m | | 1 : 20 | A3 | |

HYDROTECH

Backwash plumbing
MTR10/15/20
Discfilter HPF2200

| Sheet | Date |
|---|---|
| 1 / 1 | 2020-02-18 |

| Draw. no. | Edition |
|---|---|
| 22026 | A |

PROPERTY OF DRAWINGS AND PRESCRIPTIONS
All property rights and use remain to HYDROTECH AB Sweden
General conditions and use for this drawing is in accordance to ORGALIME S2000

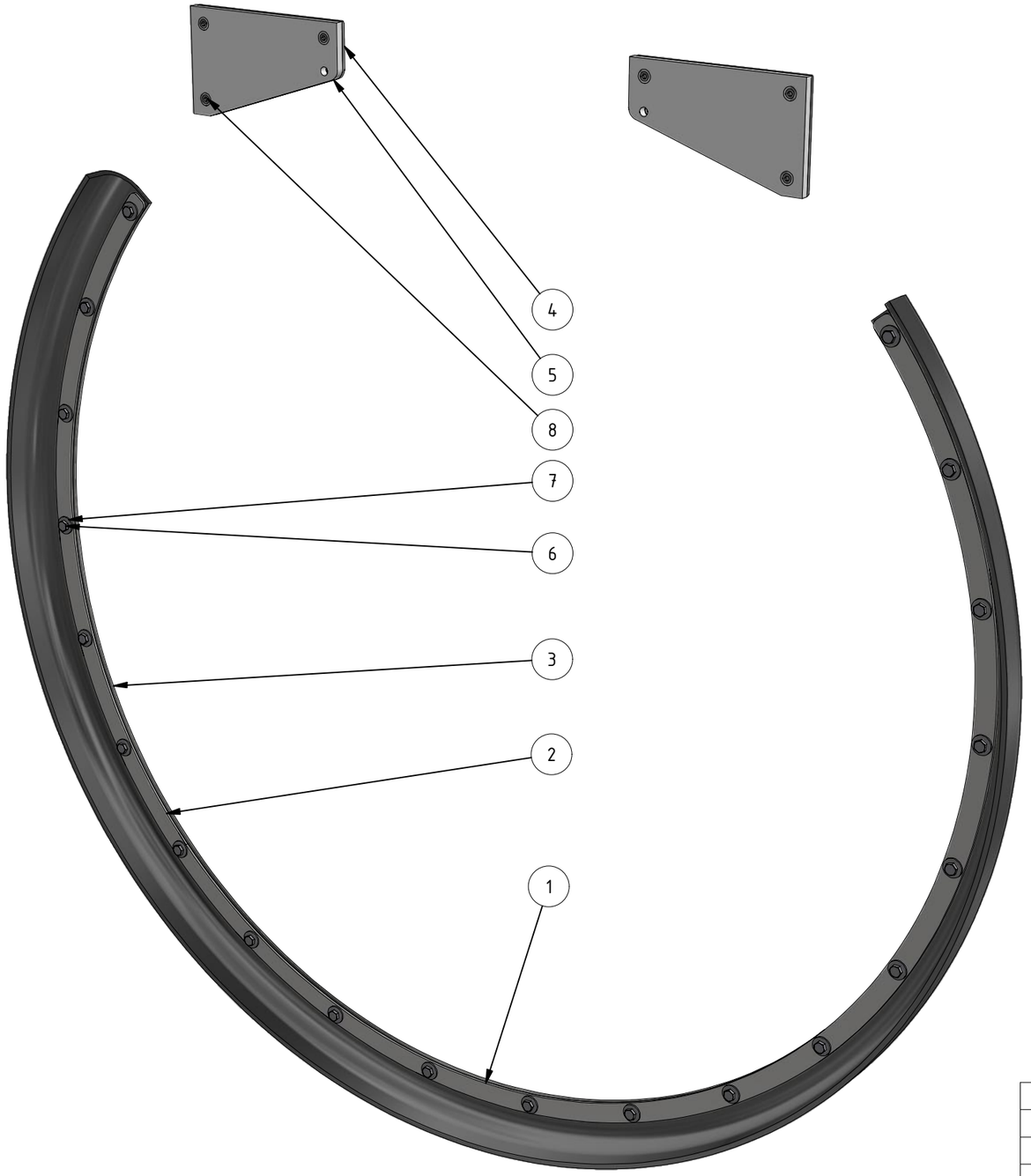


| Pos no | Qty | Name | Material | Dimension | Remark |
|---|---|---|---|---|---|
| 8 | 6 | Screw | A4 | MF6S M6x16H | Art. no. 1008790 |
| 7 | 20 | Washer | A4 | 6,4x18x1,6 | Art. no. 350532 |
| 6 | 20 | Screw | A4 | M6S M6x16H | Art. no. 350780 |
| 5 | 2 | Spacer for axial bearing, t=8 | | | Drw. no. 2941 |
| 4 | 2 | Spacer for axial bearing, t=3 | | | Drw. no. 3141 |
| 3 | 1 | Rubber lip for inlet | | | Drw. no. 2412 |
| 2 | 2 | Clamp bar, side part | | | Drw. no. 22113 |
| 1 | 1 | Clamp bar, center part | | | Drw. no. 22112 |

| Designer | Drawn by | Projection method | Controlled by | Stand. | Approved | Scale | Sheet size | Replaced by |
|---|---|---|---|---|---|---|---|---|
| JJ | JJ | | | ISO 2768-m | | 1 : 5 | A3 | |

HYDROTECH

Inlet drum seal assembly

Discfilter HPF2200

| Sheet | Date |
|---|---|
| 1 / 1 | 2019-10-07 |

| Draw. no. | Edition |
|---|---|
| 22111 | A |

PROPERTY OF DRAWINGS AND PRESCRIPTIONS
All property rights and use remain to HYDROTECH AB Sweden
General conditions and use for this drawing is in accordance to ORGALIME S2000

| Ed. | Change and/or message no. | Rev date | Made by | c-m no. |
|---|---|---|---|---|
| B | New upper part | 2020-02-26 | JJ | |

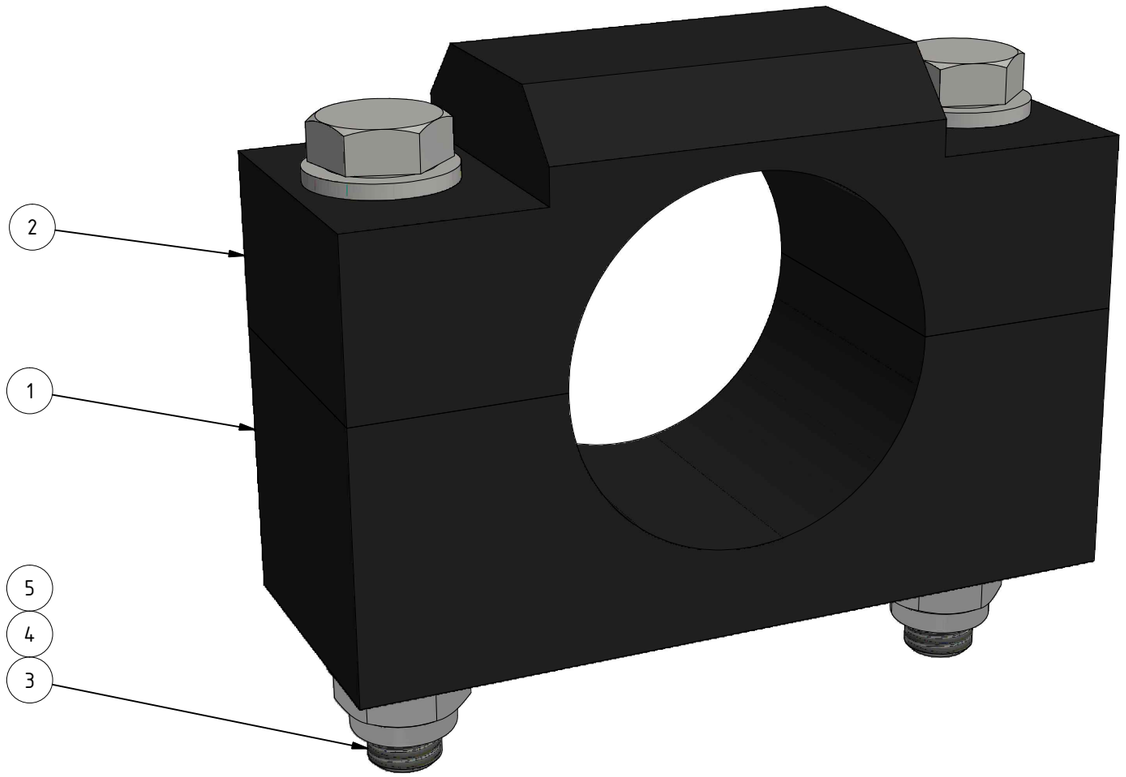


| Pos no | Qty | Name | Material | Dimension | Remark |
|---|---|---|---|---|---|
| 5 | 2 | Nut locking | A4 | M6NM M12 | Art. no. 350340 |
| 4 | 4 | Washer | A4 | 13x24x2,5 | Art. no. 350560 |
| 3 | 2 | Screw | A4 | M6S M12x100D | Art. no. 351060 |
| 2 | 1 | Bearing for spray bar, upper part | | | Drw. no. 22221 |
| 1 | 1 | Bearing for spray bar | | | Drw. no. 1672 |

| Designer | Drawn by | Projection method | Controlled by | Stand. | Approved | Scale | Sheet size | Replaced by |
|---|---|---|---|---|---|---|---|---|
| JJ | JJ | | | ISO 2768-m | | 1 : 1 | A3 | |

HYDROTECH

B□□r□□□ □□r □□r□□ □□r □□□□m□□□

D□□□□□□r HPF2200

| Sheet | Date |
|---|---|
| 1 / 1 | 2019-10-10 |

| Draw. no. | Edition |
|---|---|
| 22153 | B |

PROPERTY OF DRAWINGS AND PRESCRIPTIONS
All property rights and use remain to HYDROTECH AB Sweden
General conditions and use for this drawing is in accordance to ORGALIME S2000

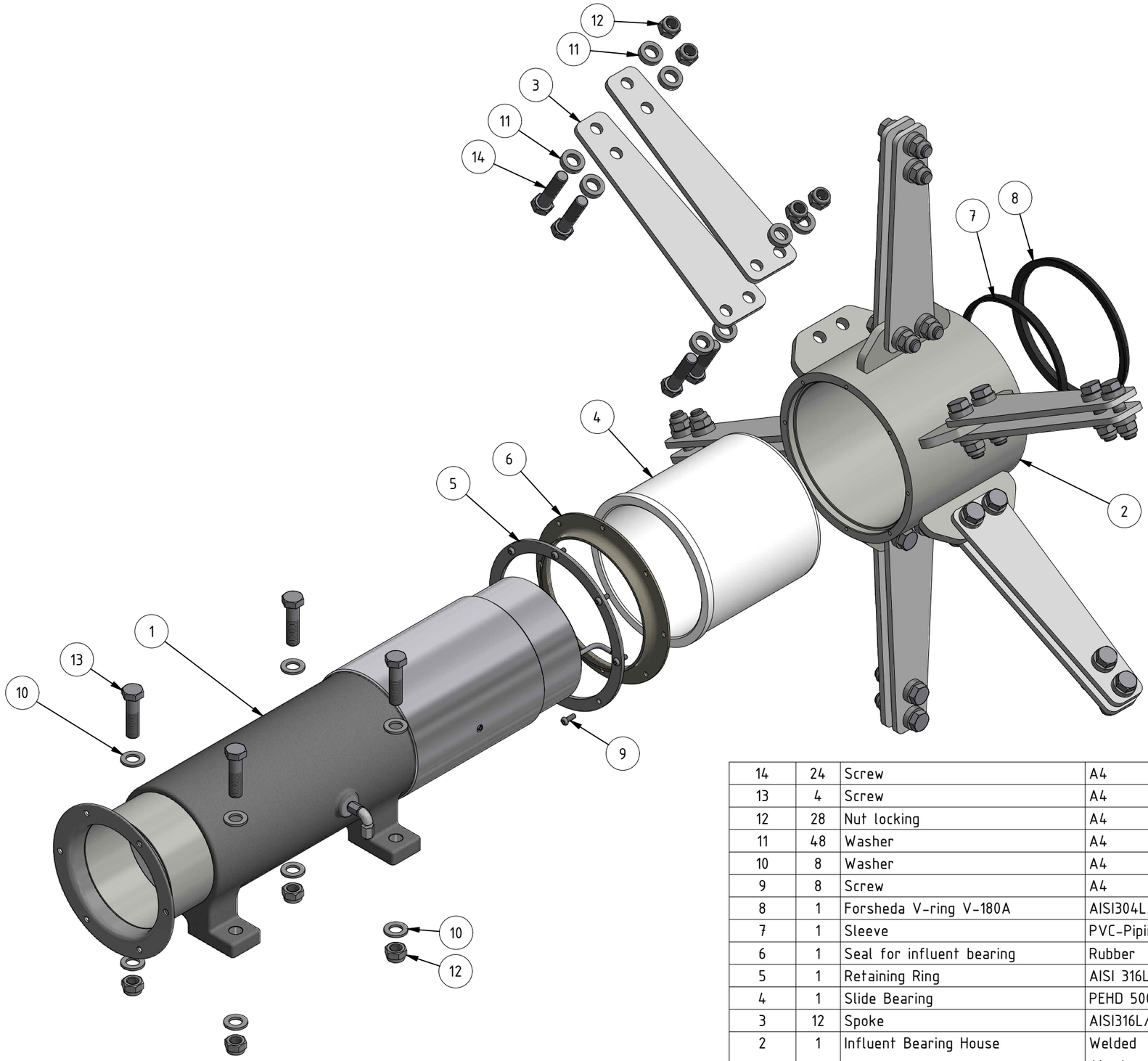


| Pos no | Qty | Name | Material | Dimension | Remark |
|---|---|---|---|---|---|
| 14 | 24 | Screw | A4 | M6S M16x65D | Art. no. 1017683 |
| 13 | 4 | Screw | A4 | M6S M16x60D | Art. no. 351660 |
| 12 | 28 | Nut locking | A4 | M6NM M16 | Art. no. 350350 |
| 11 | 48 | Washer | A4 | 18x30x8 | Art. no. 1017685 |
| 10 | 8 | Washer | A4 | 17x30x3,0 | Art. no. 350570 |
| 9 | 8 | Screw | A4 | MK6S M6x16H | Art. no. 1005612 |
| 8 | 1 | Forsheda V-ring V-180A | AISI304L/316L | | Art. no. 1010585 |
| 7 | 1 | Sleeve | PVC-Piping | | Drw. no. 3351 |
| 6 | 1 | Seal for influent bearing | Rubber | | Drw. no. 3350 |
| 5 | 1 | Retaining Ring | AISI 316L | | Drw. no. 5138 |
| 4 | 1 | Slide Bearing | PEHD 500 | | Drw. no. 2918 |
| 3 | 12 | Spoke | AISI316L/2205 | | Drw. no. 22159 |
| 2 | 1 | Influent Bearing House | Welded Aluminum-6061 | | Drw. no. 22160 |
| 1 | 1 | Influent centershaft | Default | | Drw. no. 4894 |

| Designer | Drawn by | Projection method | Controlled by | Stand. | Approved | Scale | Sheet size | Replaced by |
|---|---|---|---|---|---|---|---|---|
| | ES | | | ISO 2768-m | | | A3 | |

HYDROTECH

Assembly Influent Bearing
Exploded view
Disc Filter HPF2200

| Sheet | Date |
|---|---|
| 1 / 1 | 2020-04-20 |

| Draw. no. | Edition |
|---|---|
| 22398 | A |

PROPERTY OF DRAWINGS AND PRESCRIPTIONS
All property rights and use remain to HYDROTECH AB Sweden
General conditions and use for this drawing is in accordance to ORGALIME S2000

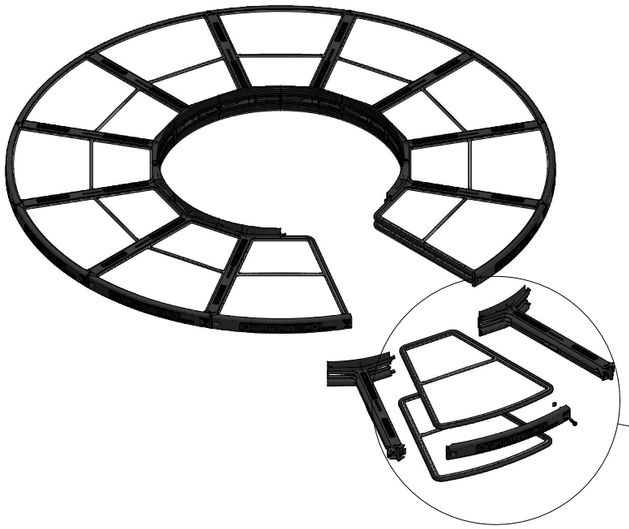

A

A ( 1:5 )

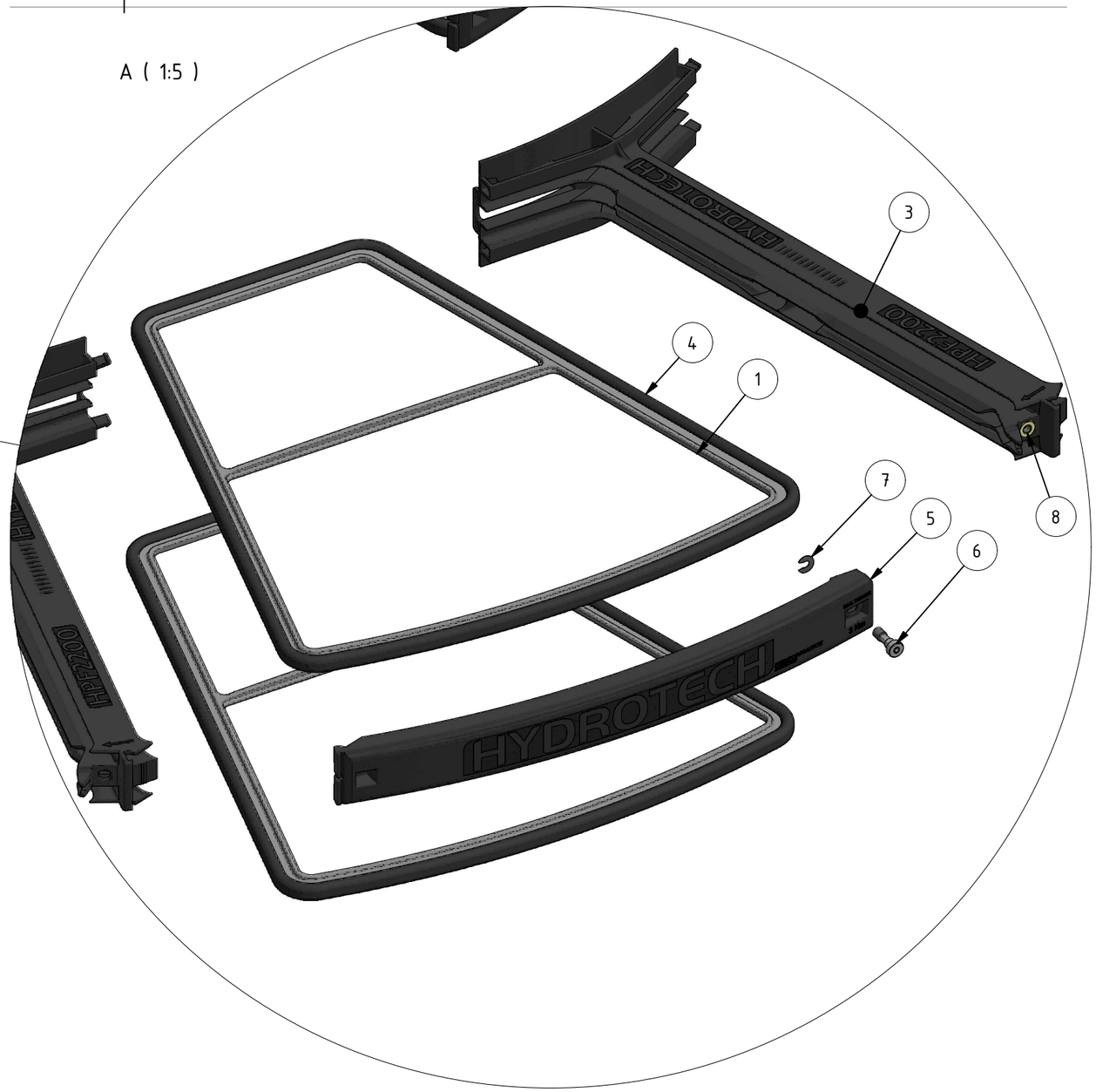


| Type | A | B |
|---|---|---|
| PPG | 24 | 0 |
| Steel | 0 | 24 |

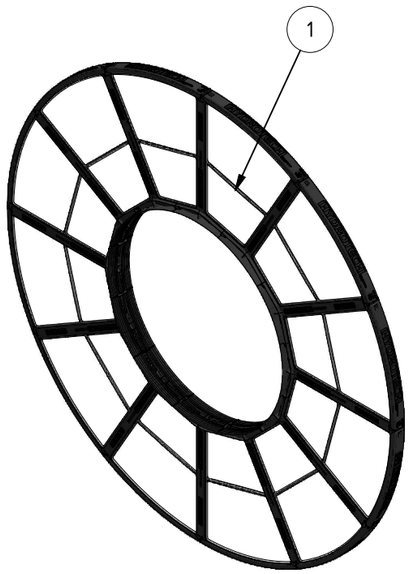


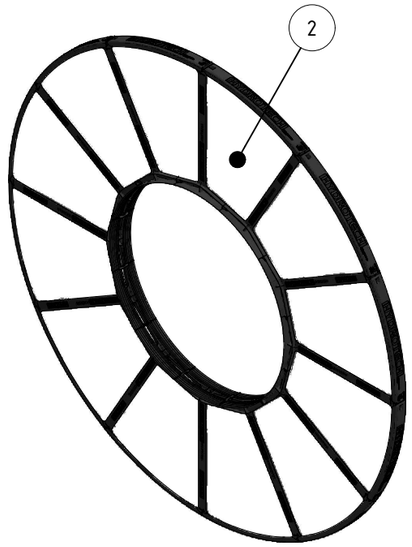


| Pos no | Qty | Name | Material | Dimension | Remark |
|---|---|---|---|---|---|
| 8 | 12 | Nut | | M6M M10 | Art. no. 1005609 |
| 7 | 12 | Clip | | | Drw. no. 3934 |
| 6 | 12 | Disc cover screw | | | Drw. no. 22006 |
| 5 | 12 | Disc cover | | | Drw. no. 22002 |
| 4 | 24 | Seal for filter panel | | | Art. no. 1024995 |
| 3 | 12 | Disc segment | | | Drw. no. 22001 |
| 2 | B | Steel filter panel | | | Drw. no. 22226, Art. no. A |
| 1 | A | PPG Filter panel | | | Drw. no. 22004, Art. no. A |

| Designer | Drawn by | Projection method | Controlled by | Stand. | Approved | Scale | Sheet size | Replaced by |
|---|---|---|---|---|---|---|---|---|
| | ES | | | ISO 2768-m | | | A3 | |

HYDROTECH

| Sheet | Date |
|---|---|
| 1 / 1 | 2020-04-21 |

| Draw. no. | Edition |
|---|---|
| 22402 | A |

**This page is intentionally left blank**

# SERVICE
# HSF2204/24-1F-2F

## Checklist / service report

**To be done on every visit**

☐ Check backwash pressure

Remarks: _____

☐ Check panels for damage

Remarks: _____

☐ Visually inspect the inside of the unit

Remarks: _____

☐ Check the nozzles for clogging

Remarks: _____

☐ Lubricate all grease points of the unit

Remarks: _____

☐ Check drive chain tension

Remarks: _____

☐ Visually inspect the outside of the unit, clean if needed

Remarks: _____

# SERVICE
# HSF2204/24-1F-2F

**To be done on yearly visit**

☐ Check oil condition in drive unit according to separate manual

Remarks: _____

☐ Check drum bearings for wear

Remarks: _____

☐ Check shaft gaskets for wear

Remarks: _____

☐ Check inlet gasket for wear

Remarks: _____

# CR, CRI, CRN, CRT

Installation and operating instructions




be
think
innovate

GRUNDFOS

Table of contents

English (US)
Installation and operating instructions . . . . . 3

Español (MX)
Instrucciones de instalación y operación . . . . . 30

Français (CA)
Notice d'installation et de fonctionnement . . . . . 59

**Original installation and operating instructions.**

## CONTENTS


| | | Page |
|---|---|---|
| **1.** | **Limited warranty** | **4** |
| **2.** | **Symbols used in this document** | **4** |
| **3.** | **Introduction** | **4** |
| **4.** | **Shipment inspection** | **5** |
| 4.1 | Lifting instructions | 5 |
| 4.2 | Ensure you have the right pump | 5 |
| 4.3 | Checking the condition of the pump | 5 |
| 4.4 | Electrical requirements | 5 |
| **5.** | **Identification** | **6** |
| 5.1 | Nameplate data | 6 |
| 5.2 | Type keys | 6 |
| **6.** | **Applications** | **9** |
| **7.** | **Operating conditions** | **9** |
| 7.1 | Ambient temperature and altitude | 9 |
| 7.2 | Liquid temperatures | 9 |
| 7.3 | Minimum inlet pressures | 9 |
| 7.4 | Maximum inlet pressures | 10 |
| 7.5 | Maximum operating pressures | 11 |
| **8.** | **Installation** | **12** |
| 8.1 | Pump location | 12 |
| 8.2 | Foundation | 12 |
| 8.3 | Pump mounting | 13 |
| 8.4 | Suction pipe | 13 |
| 8.5 | Discharge pipe | 13 |
| 8.6 | Bypass | 14 |
| 8.7 | Flange forces and torques | 14 |
| 8.8 | Minimum continuous duty flow rates [gpm] | 15 |
| 8.9 | Check valves | 16 |
| 8.10 | Temperature rise | 16 |
| 8.11 | Electrical connection | 16 |
| 8.12 | Motors | 16 |
| 8.13 | Position of terminal box | 16 |
| 8.14 | Field wiring | 16 |
| 8.15 | Motor protection | 17 |
| **9.** | **Commissioning** | **17** |
| 9.1 | Priming | 17 |
| 9.2 | Startup | 18 |
| **10.** | **Operation** | **18** |
| 10.1 | Operating parameters | 18 |
| 10.2 | Pump cycling | 18 |
| 10.3 | Boiler feed installations | 18 |
| 10.4 | Frost protection | 18 |
| **11.** | **Maintaining the pump** | **18** |
| **12.** | **Maintaining the motor** | **19** |
| 12.1 | Motor inspection | 19 |
| 12.2 | Motor lubrication | 19 |
| 12.3 | Recommended lubricant | 19 |
| 12.4 | Lubricating chart (for motors with grease zerks) | 19 |
| 12.5 | Lubricating procedure | 20 |
| **13.** | **Replacing the motor** | **20** |
| 13.1 | Disassembly | 20 |
| 13.2 | Assembly | 20 |
| **14.** | **Parts list** | **23** |
| 14.1 | Spare parts | 23 |
| **15.** | **Preliminary electrical tests** | **23** |
| 15.1 | Supply voltage | 23 |
| 15.2 | Current | 24 |
| 15.3 | Insulation resistance | 24 |
| **16.** | **Startup of pump with air-cooled top (Cool-Top®)** | **25** |
| **17.** | **Diagnosing specific problems** | **26** |
| **18.** | **Worksheet for three-phase motors** | **29** |
| **19.** | **Disposal** | **29** |




***Warning***

***Prior to installation, read these installation and operating instructions. Installation and operation must comply with local regulations and accepted codes of good practice.***



***Warning***

***Electrical work: All electrical work should be performed by a qualified electrician in accordance with the latest edition of national, state, and local codes and regulations.***



***Warning***

***Shock Hazard: A faulty motor or wiring can cause electrical shock that could be fatal, whether touched directly or conducted through standing water. For this reason, proper grounding of the pump to the power supply's grounding terminal is required for safe installation and operation. In all installations, the above-ground metal plumbing should be connected to the power supply ground as described in Article 250-80 of the National Electrical Code.***

## 1. Limited warranty

Products manufactured by GRUNDFOS PUMPS CORPORATION (Grundfos) are warranted to the original user only to be free of defects in material and workmanship for a period of 24 months from date of installation, but not more than 30 months from date of manufacture. Grundfos' liability under this warranty shall be limited to repairing or replacing at Grundfos' option, without charge, F.O.B. Grundfos' factory or authorized service station, any product of Grundfos' manufacture. Grundfos will not be liable for any costs of removal, installation, transportation, or any other charges which may arise in connection with a warranty claim. Products which are sold but not manufactured by Grundfos are subject to the warranty provided by the manufacturer of said products and not by Grundfos' warranty. Grundfos will not be liable for damage or wear to products caused by abnormal operating conditions, accident, abuse, misuse, unauthorized alteration or repair, or if the product was not installed in accordance with Grundfos' printed installation and operating instructions.

To obtain service under this warranty, the defective product must be returned to the distributor or dealer of Grundfos' products from which it was purchased together with proof of purchase and installation date, failure date, and supporting installation data. Unless otherwise provided, the distributor or dealer will contact Grundfos or an authorized service station for instructions.
Any defective product to be returned to Grundfos or a service station must be sent freight prepaid; documentation supporting the warranty claim and/or a Return Material Authorization must be included if so instructed.

GRUNDFOS WILL NOT BE LIABLE FOR ANY INCIDENTAL OR CONSEQUENTIAL DAMAGES, LOSSES, OR EXPENSES ARISING FROM INSTALLATION, USE, OR ANY OTHER CAUSES. THERE ARE NO EXPRESS OR IMPLIED WARRANTIES, INCLUDING MERCHANTABILITY OR FITNESS FOR A PARTICULAR PURPOSE, WHICH EXTEND BEYOND THOSE WARRANTIES DESCRIBED OR REFERRED TO ABOVE.

Some jurisdictions do not allow the exclusion or limitation of incidental or consequential damages and some jurisdictions do not allow limit actions on how long implied warranties may last. Therefore, the above limitations or exclusions may not apply to you. This warranty gives you specific legal rights and you may also have other rights which vary from jurisdiction to jurisdiction.

## 2. Symbols used in this document



***Warning***

***If these safety instructions are not observed, it may result in personal injury.***



***Warning***

***If these instructions are not observed, it may lead to electric shock with consequent risk of serious personal injury or death.***

Caution ***If these safety instructions are not observed, it may result in malfunction or damage to the equipment.***

Note ***Notes or instructions that make the job easier and ensure safe operation.***

## 3. Introduction

The CR range is based on the inline multistage centrifugal pump first pioneered by Grundfos. CR is available in four basic materials and over one million configurations. CR is suitable for pumping water and water-like liquids in industry, petrochemical plants, water treatment plants, commercial buildings, and many other applications. Some of the outstanding characteristics of CR are:

- superior efficiency
- reliability
- easy maintenance
- compact size and small footprint
- quiet operation.

## 4. Shipment inspection

Examine the components carefully to make sure no damage has occurred to the pump during shipment. Ensure that the pump is NOT dropped or mishandled.

### 4.1 Lifting instructions

Caution ***Do not use the lifting eyes of the motor for lifting the entire pump and motor assembly.***

Lift pump assembly with lifting straps that pass through the motor stool. Ensure that the load is not applied to the pump shaft.

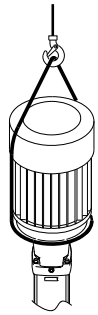

TM04 0339 0608

**Fig. 1** Correct lifting of a CR pump

### 4.2 Ensure you have the right pump

Check the pump nameplate to make sure that it is the one you ordered.

- **CR:** Centrifugal pump; all parts in contact with the pumped liquid are made of standard cast iron and AISI 304 stainless steel
- **CRI:** Centrifugal pump; all parts in contact with the pumped liquid are made of AISI 304 stainless steel
- **CRN:** Centrifugal pump; all parts in contact with the pumped liquid are made of AISI 316 stainless steel
- **CRT:** Centrifugal pump; all parts in contact with the pumped liquid are made of titanium
- **CRE:** Centrifugal pump with a Grundfos MLE variable frequency drive motor.

### 4.3 Checking the condition of the pump

The packing in which your pump arrived is specially designed for your pump to prevent damage during shipment. As a precaution, leave the pump in the packing until you are ready to install it. Examine the pump for any damage that may have occurred during shipping. Examine any other parts of the shipment as well for any visible damage.

Note ***If the shipment consists of a complete unit (motor attached to pump end), the position of the coupling connecting the pump shaft to the motor shaft is set to factory specifications. No adjustment is required. If the shipment is a pump end without motor, follow the adjustment procedures in section 13. Replacing the motor.***

**Pump without motor (CR, CRI, CRN 1s, 1, 3, 5, 10, 15, and 20 only):**

If you purchased a pump end without motor, the shaft seal has been set from factory. Do not loosen the three set screws on the shaft seal when attaching the motor.

**Pump without motor (CR, CRN 32, 45, 64, 90, 120, and 150 only):**

If you purchased a pump end without motor, you must install the shaft seal. The shaft seal is protected in its own box inside the pump packing crate. To protect the shaft and bearings during shipment, a transport protector is used. Remove the transport protector prior to installation of the shaft seal. Read the seal installation instructions which are included in the pump packing.

### 4.4 Electrical requirements



***Warning***

***Electrical work: All electrical work should be performed by a qualified electrician in accordance with the current national, state, and local codes and regulations.***



***Warning***

***Shock hazard: A faulty motor or faulty wiring can cause electric shock that could be fatal, whether the motor is touched directly or the current is conducted through standing water. For this reason, safe installation and operation require proper grounding of the pump to the power supply ground (earth) terminal.***

***In all installations, connect the above-ground metal plumbing to the power supply ground terminal as described in Article 250-80 of the National Electrical Code.***

Verify the power supply to make sure that the voltage, phases and frequency match those of the pump. The proper operating voltage and other electrical information appear on the motor nameplate. These motors are designed to run on - 10 %/+ 10 % of the rated nameplate voltage. For dual-voltage motors, the motor should be internally connected to operate on the voltage closest to the 10 % rating, i.e., a 208 V motor should be wired according to the 208 V wiring diagram. The wiring diagram can be found on either a plate attached to the motor or on a label inside the terminal box cover.

Caution ***Do not operate the pump if voltage variations are greater than - 10 % /+ 10 %.***

## 5. Identification

### 5.1 Nameplate data

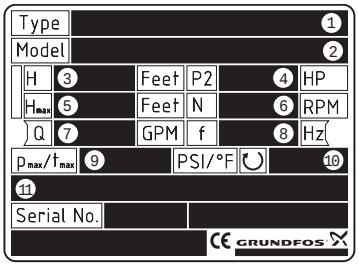


1. Type designation
2. Model, material number, production number
3. Head in feet at rated flow
4. Rated motor hp
5. Head at zero flow
6. Rated rpm
7. Rated flow
8. Rated frequency
9. Maximum pressure and maximum liquid temperature
10. Direction of rotation
11. Production country

TM04 3895 2609

**Fig. 1** Example of nameplate CR, CRI, CRN, CRT

Specification of the model line in nameplates:

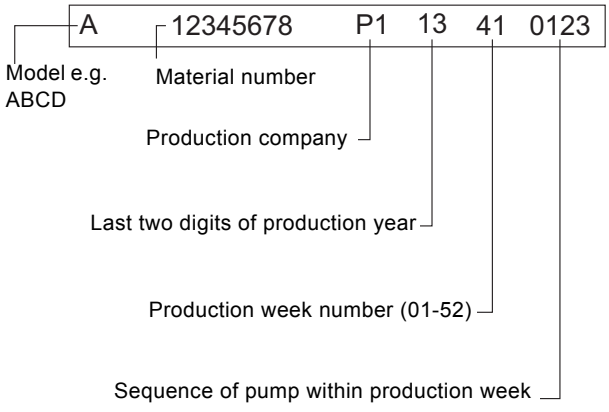


TM04 3904 3913

**Fig. 2** Key to model line in nameplates

### 5.2 Type keys

#### 5.2.1 CR, CRI, CRN 1s, 1, 3, 5, 10, 15, and 20

| Example | CR 3- | 10 | A | FG | A | E | HQQE |
|---|---|---|---|---|---|---|---|
| Type range: CR, CRI, CRN | | | | | | | |
| Rated flow rate in [$m^3$/h] (x 5 gpm) | | | | | | | |
| Number of impellers | | | | | | | |
| Code for pump version | | | | | | | |
| Code for pipe connection | | | | | | | |
| Code for materials | | | | | | | |
| Code for rubber parts | | | | | | | |
| Code for shaft seal | | | | | | | |

#### 5.2.2 CR, CRN 32, 45, 64, 90, 120, and 150

| Example | CR 32- | 2- | 1 | A | G | A | E | KUBE |
|---|---|---|---|---|---|---|---|---|
| Pump range: CR, CRN | | | | | | | | |
| Rated flow rate in [$m^3$/h] (x 5 gpm) | | | | | | | | |
| Number of impellers | | | | | | | | |
| Number of reduced-diameter impellers | | | | | | | | |
| Code for pump version | | | | | | | | |
| Code for pipe connection | | | | | | | | |
| Code for materials | | | | | | | | |
| Code for rubber parts | | | | | | | | |
| Code for shaft seal | | | | | | | | |

#### 5.2.3 CRT 2, 4, 8, and 16

| Example | CRT | 16- | 30 | /2 | A | G | A | AUUE |
|---|---|---|---|---|---|---|---|---|
| Pump range: CRT | | | | | | | | |
| Rated flow rate in [$m^3$/h] (x 5gpm) | | | | | | | | |
| Number of stages x 10 | | | | | | | | |
| Code for impellers (used only if the pump has fewer impellers than stages) | | | | | | | | |
| Code for pump version | | | | | | | | |
| Code for pipe connection | | | | | | | | |
| Code for materials | | | | | | | | |
| Code for shaft seal and rubber parts | | | | | | | | |

### 5.2.4 Codes

| Example | | A | -G | -A | -E | -H | QQ | E |
|---|---|---|---|---|---|---|---|---|
| **Pump version** | | | | | | | | |
| A | Basic version[1)] | | | | | | | |
| B | Oversize motor | | | | | | | |
| E | Certificate/approval | | | | | | | |
| F | CR pump for high temperatures (air-cooled top assembly) | | | | | | | |
| H | Horizontal version | | | | | | | |
| HS | High-pressure pump with high-speed MLE motor | | | | | | | |
| I | Different pressure rating | | | | | | | |
| J | Pump with different max. speed | | | | | | | |
| K | Pump with low NPSH | | | | | | | |
| M | Magnetic drive | | | | | | | |
| N | Fitted with sensor | | | | | | | |
| P | Undersize motor | | | | | | | |
| R | Horizontal version with bearing bracket | | | | | | | |
| SF | High-pressure pump | | | | | | | |
| T | Oversize motor (two flange sizes bigger) | | | | | | | |
| U | NEMA version[1)] | | | | | | | |
| X | Special version[2)] | | | | | | | |
| **Pipe connection** | | | | | | | | |
| A | Oval flange, Rp thread | | | | | | | |
| B | Oval flange, NPT thread | | | | | | | |
| CA | FlexiClamp (CRI(E), CRN(E) 1, 3, 5, 10, 15, 20) | | | | | | | |
| CX | Triclamp (CRI(E), CRN(E) 1, 3, 5, 10, 15, 20) | | | | | | | |
| F | DIN flange | | | | | | | |
| G | ANSI flange | | | | | | | |
| J | JIS flange | | | | | | | |
| N | Changed diameter of ports | | | | | | | |
| P | PJE coupling | | | | | | | |
| X | Special version | | | | | | | |
| **Materials** | | | | | | | | |
| A | Basic version | | | | | | | |
| D | Carbon-graphite filled PTFE (bearings) | | | | | | | |
| G | Wetted parts, AISI 316 | | | | | | | |
| GI | All parts stainless steel, wetted parts, AISI 316 | | | | | | | |
| I | Wetted parts, AISI 304 | | | | | | | |
| II | All parts stainless steel, wetted parts, AISI 304 | | | | | | | |
| K | Bronze (bearings) | | | | | | | |
| S | SiC bearings + PTFE neck rings | | | | | | | |
| X | Special version | | | | | | | |
| **Code for rubber parts** | | | | | | | | |
| E | EPDM | | | | | | | |
| F | FXM | | | | | | | |
| K | FFKM | | | | | | | |
| V | FKM | | | | | | | |

| Example | | A | -G | -A | -E | -H | QQ | E |
|---|---|---|---|---|---|---|---|---|
| **Shaft seal** | | | | | | | | |
| A | O-ring seal with fixed driver | | | | | | | |
| B | Rubber bellows seal | | | | | | | |
| E | Cartridge seal with O-ring | | | | | | | |
| H | Balanced cartridge seal with O-ring | | | | | | | |
| K | Metal bellows cartridge seal | | | | | | | |
| O | Double seal, back-to-back | | | | | | | |
| P | Double seal, tandem | | | | | | | |
| X | Special version | | | | | | | |
| B | Carbon, synthetic resin-impregnated | | | | | | | |
| H | Cemented tungsten carbide, embedded (hybrid) | | | | | | | |
| Q | Silicon carbide | | | | | | | |
| U | Cemented tungsten carbide | | | | | | | |
| X | Other ceramics | | | | | | | |
| E | EPDM | | | | | | | |
| F | FXM | | | | | | | |
| K | FFKM | | | | | | | |
| V | FKM | | | | | | | |

1) In August 2003 the NEMA version pump code was discontinued for all material numbers created by Grundfos manufacturing companies in North America. The NEMA version pump code will still remain in effect for existing material numbers. NEMA version pumps built in North America after this change will have either an A or a U as the pump version code depending on the date the material number was created.

2) If a pump incorporates more than two pump versions, the code for the pump version is X. X also indicates special pump versions not listed above.

## 6. Applications

Compare the pump's nameplate data or its performance curve with the application in which you plan to install it. Make sure the application falls within the following limits.

| Type | Application/liquid |
|---|---|
| **CR** | Hot and chilled water, boiler feed, condensate return, glycols and solar thermal liquids. |
| **CRI/CRN** | Deionized, demineralized and distilled water. Brackish water and other liquids unsuitable for contact with iron or copper alloys. (Consult manufacturer for specific liquid compatibilities.) |
| **CRN-SF** | High-pressure washdown, reverse osmosis or other high-pressure applications. |
| **CRT** | Salt water, chloride based liquids and liquids approved for titanium. |

## 7. Operating conditions

### 7.1 Ambient temperature and altitude

If the ambient temperature exceeds the maximum temperature limits of the pump or the pump is installed at an altitude exceeding the altitude values in the chart below, the motor must not be fully loaded due to the risk of overheating.

Overheating may result from excessive ambient temperatures or the low density and consequently low cooling effect of the air at high altitudes. In such cases, it may be necessary to use a motor with a higher rated output ($P_2$).

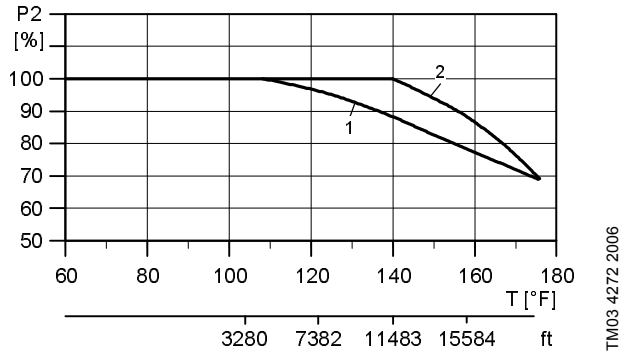


**Fig. 3** Relationship between motor output ($P_2$) and ambient temperature/altitude

**Legend**

| Pos. | Description |
|---|---|
| 1 | NEMA standard-efficiency motors |
| 2 | NEMA premium-efficiency motors |

**Example:** From fig. 3 it appears that $P_2$ must be reduced to 88 % when a pump with a NEMA premium-efficiency ML motor is installed 15,584 feet above sea level. At an ambient temperature of 167 °F, $P_2$ of a standard-efficiency motor must be reduced to 74 % of rated output.

In cases where both the maximum temperature and the maximum altitude are exceeded, the derating factors must be multiplied. Example: 0.89 x 0.89 = 0.79.

### 7.2 Liquid temperatures

| Pump | Liquid temperature |
|---|---|
| CR, CRI, CRN 1s, 3, 5, 10, 15, and 20 | -4 - +248 °F (-20 - +120 °C) |
| CR, CRN 32, 45, 64, and 90* | -22 - +248 °F (-30 - +120 °C) |
| CR, CRN 120 and 150* (up to 60 hp) | -22 - +248 °F (-30 - +120 °C) |
| CR, CRN 120 and 150 (75 and 100 hp) | 32-248 °F (0-120 °C) |
| CRT 2, 4, 8, 16 | -4 - +248 °F (-20 - +120 °C) |
| CRN-SF | -4 - +221 °F (-15 - +105 °C) |
| Pumps with Cool-Top™ | up to 356 °F (180 °C) |

All motors are designed for continuous duty in 104 °F (40 °C) ambient air conditions. For higher ambient temperature conditions, consult Grundfos.

* We recommend xUBE shaft seals for temperatures above 200 °F. Pumps with KUHE hybrid shaft seals can only operate up to 200 °F (90 °C). Pumps with xUUE shaft seals can be operated down to -40 °F (-40 °C). ("x" is the seal type).

### 7.3 Minimum inlet pressures

| | |
|---|---|
| **All CR, CRI, CRN** | NPSHR + 2 feet |
| **CRN-SF** | 29 psi (2 bar) |

### 7.4 Maximum inlet pressures

| Pump type | Stages | | Max. [psi (bar)] |
|---|---|---|---|
| | 60 Hz | 50 Hz | |
| CR, CRI, CRN 1s | 2-27 | 2-36 | 145 (10) |
| CR, CRI, CRN 1 | 2-25 | 2-36 | 145 (10) |
| | 27 | | 217 (15) |
| CR, CRI, CRN 3 | 2-17 | 2-29 | 145 (10) |
| | 19-25 | 31-36 | 217 (15) |
| CR, CRI, CRN 5 | 2-9 | 3-16 | 145 (10) |
| | 10-24 | 18-36 | 217 (15) |
| CR, CRI, CRN 10 | 1-5 | 1-6 | 116 (8) |
| | 6-17 | 7-22 | 145 (10) |
| CR, CRI, CRN 15 | 1-2 | 1-3 | 116 (8) |
| | 3-12 | 4-17 | 145 (10) |
| CR, CRI, CRN 20 | 1 | 1-3 | 116 (8) |
| | 2-10 | 4-17 | 145 (10) |
| CR, CRN 32 | 1-1 - 2 | 1-1 - 4 | 58 (4) |
| | 3-2 - 6 | 5-2 - 10 | 145 (10) |
| | 7-2 - 11-2 | 11-14 | 217 (15) |
| CR, CRN 45 | 1-1 - 1 | 1-1 - 2 | 58 (4) |
| | 2-2 - 3 | 3-2 - 5 | 145 (10) |
| | 4-2 - 8-1 | 6-2 - 13-2 | 217 (15) |
| CR, CRN 64 | 1-1 | 1-1 - 2-2 | 58 (4) |
| | 1 - 2-1 | 2-1 - 4-2 | 145 (10) |
| | 2 - 5-2 | 4-1 - 8-1 | 217 (15) |
| CR, CRN 90 | | 1-1 - 1 | 58 (4) |
| | 1-1 - 1 | 2-2 - 3-2 | 145 (10) |
| | 2-2 - 4-1 | 3-6 | 217 (15) |
| CR, CRN 120 | 1-1 - 1 | 1 - 2-1 | 145 (10) |
| | 2-2 - 3 | 2 - 5-1 | 217 (15) |
| | 4-1 - 5-1 | 6-1 - 7 | 290 (20) |
| CR, CRN 150 | 1-1 | 1-1 - 1 | 145 (10) |
| | 1-2 | 2-1 - 4-1 | 217 (15) |
| | 3-2 - 4-2 | 5-2 - 6 | 290 (20) |
| CRT 2 | 2-6 | 2-11 | 145 (10) |
| | 7-18 | 13-26 | 217 (15) |
| CRT 4 | 1-7 | 1-12 | 145 (10) |
| | 8-16 | 14-22 | 217 (15) |
| CRT 8 | 1-16 | 1-20 | 145 (10) |
| CRT 16 | 2-10 | 2-16 | 145 (10) |
| CRN-SF | all | all | 72 (5)* |
| | | | 362 (25)** |

* While pump is off or during start-up.

** During operation.

### 7.5 Maximum operating pressures

250 °F (194 °F for CRN-SF)

| Pump type/ connection | Stages | | Max. [psi (bar)] |
|---|---|---|---|
| | 60 Hz | 50 Hz | |
| **CR, CRI, CRN 1s** | | | |
| Oval flange | 1-17 | 1-23 | 232 (16) |
| FGJ, PJE | 1-27 | 1-36 | 362 (25) |
| **CR, CRI, CRN 1** | | | |
| Oval flange | 1-17 | 1-23 | 232 (16) |
| FGJ, PJE | 1-27 | 1-36 | 362 (25) |
| **CR, CRI, CRN 3** | | | |
| Oval flange | 1-17 | 1-23 | 232 (16) |
| FGJ, PJE | 1-27 | 1-36 | 362 (25) |
| **CR, CRI, CRN 5** | | | |
| Oval flange | 1-16 | 1-22 | 232 (16) |
| FGJ, PJE | 1-24 | 1-36 | 362 (25) |
| **CR, CRI 10** | | | |
| Oval flange CR | 1-6 | | 145 (10) |
| Oval flange, CRI | 1-10 | 1-16 | 232 (16) |
| FGJ, GJ, PJE | 1-10 | 1-16 | 232 (16) |
| FGJ, GJ, PJE | 12-17 | 17-22 | 362 (25) |
| **CRN 10** | | | |
| All | 1-17 | 1-22 | 362 (25) |
| **CR, CRI 15** | | | |
| Oval flange | 1-5 | 1-7 | 145 (10) |
| FGJ, GJ, PJE | 1-8 | 1-10 | 232 (16) |
| FGJ, GJ, PJE | 9-12 | 12-17 | 362 (25) |
| **CRN 15** | | | |
| All | 1-12 | 1-17 | 362 (25) |
| **CR, CRI 20** | | | |
| Oval flange | 1-5 | 1-7 | 145 (10) |
| FGJ, GJ, PJE | 1-7 | 1-10 | 232 (16) |
| FGJ, GJ, PJE | 8-10 | 12-17 | 362 (25) |
| **CRN 20** | | | |
| All | 1-10 | 1-17 | 362 (25) |
| **CR, CRN 32** | | | |
| | 1-1 - 5 | 1-1 - 7 | 232 (16) |
| | 6-2 - 11-2 | 8-2 - 14 | 435 (30) |
| **CR, CRN 45** | | | |
| | 1-1 - 4-2 | 1-1 - 5 | 232 (16) |
| | 4-2 - 8-1 | 6-2 - 13-2 | 435 (30) |
| **CR, CRN 64** | | | |
| | 1-1 - 3 | 1-1 - 5 | 232 (16) |
| | 4-2 - 5-2 | 6-2 - 8-1 | 435 (30) |
| **CR, CRN 90** | | | |
| | 1-1 - 3 | 1-1 - 4 | 232 (16) |
| | 4-2 - 4-1 | 5-2 - 6 | 435 (30) |
| **CR, CRN 120** | | | |
| | 1-1 - 3 | | 232 (16) |
| | 4-2 - 5-2 | 1-1 - 5-2 | 435 (30) |
| **CR, CRN 150** | | | |
| | 1-1 - 3 | | 232 (16) |
| | 4-1 - 4-2 | 1-1 - 4-2 | 435 (30) |
| **CRT 2** | 2-18 | 2-26 | 305 (21) |
| **CRT 4** | 1-16 | 1-22 | 305 (21) |
| **CRT 8** | 1-8 | 1-12 | 232 (16) |
| | 10-16 | 14-20 | 362 (25) |
| **CRT 16** | 1-8 | 1-8 | 232 (16) |
| | 10-12 | 10-16 | 362 (25) |

Consult Grundfos in case of other operating conditions.

## 8. Installation

***Warning***

***Do not turn on the power supply until the pump is properly installed.***

### 8.1 Pump location

Locate the pump in a dry, well-ventilated, frost-free area which is not subject to extreme variation in temperature.

Make sure the pump is mounted at least 6 inches (150 mm) clear of any obstruction or hot surfaces.

The motor requires an adequate air supply to prevent overheating and adequate vertical space to remove the motor for repair.

In open systems requiring suction lift, locate the pump as close to the liquid source as possible to reduce friction loss in pipes.

### 8.2 Foundation

Use concrete or similar foundation material to provide a secure, stable mounting base for the pump.

See table below for bolt hole center line dimensions for the various pump types.

Secure the pump to the foundation using all four bolts and shim pump base to assure the pump is vertical and all four pads on the base are properly supported (uneven surfaces can result in pump base breakage when mounting bolts are tightened).

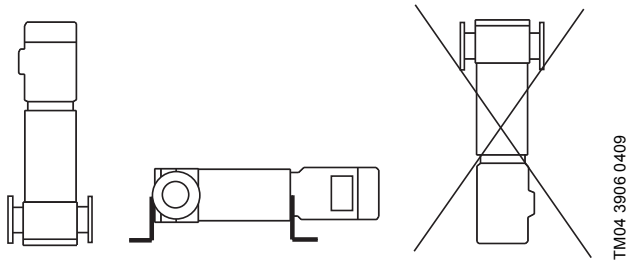


**Fig. 4** Pump position

The pump can be installed vertically or horizontally. See fig. 4.

Ensure that an adequate supply of cool air reaches the motor cooling fan. The motor must never fall below the horizontal plane.

Arrows on the pump base show the direction of flow of liquid through the pump.

To minimize possible noise from the pump, it is advisable to fit expansion joints on either side of the pump and anti-vibration mountings between the foundation and the pump.

Note ***Make sure the vent plug is located in the uppermost position.***

Fit isolating valves on either side of the pump to avoid draining the system if the pump needs to be cleaned, repaired or replaced.

**Base and bolt hole center line dimensions**

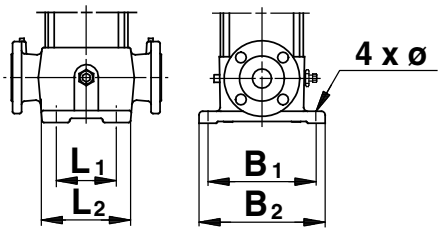


| Pump type | L1 | | L2 | | B1 | | B2 | | ø | |
|---|---|---|---|---|---|---|---|---|---|---|
| | [inches] | [mm] | [inches] | [mm] | [inches] | [mm] | [inches] | [mm] | [inches] | [mm] |
| CR 1s, 1, 3, 5 | 3 15/16 | 100 | 5 11/16 | 145 | 7 1/16 | 180 | 8 11/16 | 220 | 1/2 | 13 |
| CRI, CRN 1s 1, 3, 5 CRT 2, 4 | 3 15/16 | 100 | 5 7/8 | 150 | 7 1/16 | 180 | 8 11/16 | 220 | 1/2 | 13 |
| CR 10, 15, 20 | 5 1/8 | 130 | 6 15/16 | 176 | 8 7/16 | 215 | 10 1/16 | 256 | 9/16 | 13.5 |
| CRN 10, 15, 20 CRT 8, 16 | 5 1/8 | 130 | 7 7/8 | 200 | 8 7/16 | 215 | 9 3/4 | 248 | 1/2 | 13 |
| CR 32 | 6 11/16 | 170 | 8 3/4 | 223 | 9 7/16 | 240 | 11 3/4 | 298 | 9/16 | 14 |
| CRN 32 | 6 11/16 | 170 | 8 7/8 | 226 | 9 7/16 | 240 | 11 3/4 | 298 | 9/16 | 14 |
| CR 45, 64 | 7 1/2 | 190 | 9 3/4 | 248 | 10 1/2 | 266 | 13 1/16 | 331 | 9/16 | 14 |
| CRN 45, 64 | 7 1/2 | 190 | 9 7/8 | 251 | 10 1/2 | 266 | 13 1/16 | 331 | 9/16 | 14 |
| CR, CRN 90 | 7 13/16 | 199 | 10 1/4 | 261 | 11 | 280 | 13 11/16 | 348 | 9/16 | 14 |
| CR, CRN 120, 150 | 10 13/16 | 275 | 13 9/16 | 344 | 14 15/16 | 380 | 18 9/16 | 472 | 11/16 | 18 |

## 8.3 Pump mounting

***Warning***

***CR, CRI, CRN pumps are shipped with covered suction and discharge ports. Remove the covers before the pipes are connected to the pump.***

### 8.3.1 Recommended installation torques

| Pump type | Recommended foundation torque [ft-lbs] | Recommended flange torque [ft-lbs] |
|---|---|---|
| CR, CRI, CRN 1s/1/3/ 5 and CRT 2/4 | 30 | 37-44 |
| CR, CRI, CRN 10/15/ 20 and CRT 8/16 | 37 | 44-52 |
| CR, CRN 32/45/64/90/ 120/150 | 52 | 52-59 |

## 8.4 Suction pipe

The suction pipe should be adequately sized and run as straight and short as possible to keep friction losses to a minimum (minimum of four pipe diameters straight run prior to the suction flange). Avoid using unnecessary fittings, valves or accessory items. Use butterfly valves in the suction line only when it is necessary to isolate a pump because of a flooded suction condition. This would occur if the water source is above the pump. See fig. 5 and fig. 6. Flush piping prior to pump installation to remove loose debris.

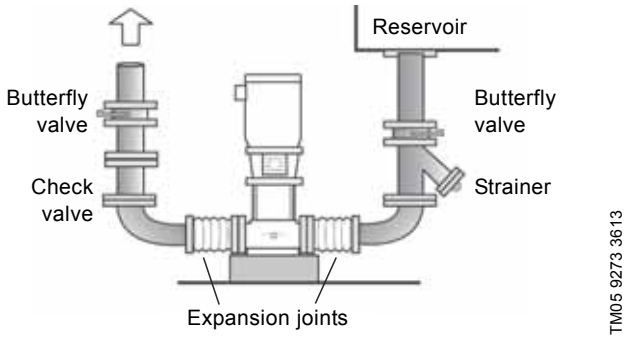


**Fig. 5** Flooded suction

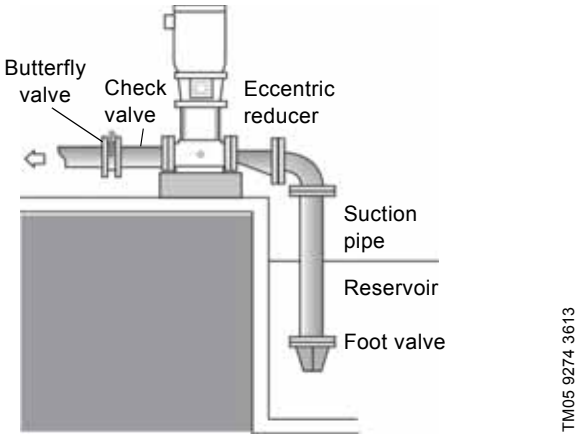


**Fig. 6** Suction lift*

* The suction pipe should have a fitting on it for priming. CRN-SF pumps cannot be used for suction lift.

### 8.4.1 Suction pipe sizes

The following recommended suction pipe sizes are the smallest sizes which should be used with any specific CR pump type.

Verify the suction pipe size in each installation to ensure that good pipe practices are being observed and excess friction losses are not encountered.

High temperatures may require larger diameter pipes to reduce friction and improve NPHSA.

| Pump type | Min. suction pipe size | |
|---|---|---|
| CR, CRI, CRN 1s, 1, 3; CRT 2 | 1" | Nominal diameter acc. to ANSI schedule 40 |
| CR, CRI, CRN 5; CRT 4 | 1 - 1/4" | Nominal diameter acc. to ANSI schedule 40 |
| CR, CRI, CRN 10, 15, 20; CRT 8, 16 | 2" | Nominal diameter acc. to ANSI schedule 40 |
| CR, CRN 32 | 2 - 1/2" | Nominal diameter acc. to ANSI schedule 40 |
| CR, CRN 45 | 3" | Nominal diameter acc. to ANSI schedule 40 |
| CR, CRN64, 90 | 4" | Nominal diameter acc. to ANSI schedule 40 |
| CR, CRN 120, 150 | 5" | Nominal diameter acc. to ANSI schedule 40 |

## 8.5 Discharge pipe

We suggest to install a check valve and a isolating valve in the discharge pipe.

Pipe, valves and fittings should be at least the same diameter as the discharge pipe or sized in accordance with good piping practices to reduce excessive flow velocities and friction losses in pipes.

Caution ***The pressure rating of pipes, valves and fittings must be equal to or greater than the maximum system pressure.***

Before installing the pump, pressure check the discharge piping to at least the maximum pressure the pump is capable of generating or as required by codes or local regulations.

Whenever possible, avoid high pressure-loss fittings, such as elbows or branch tees directly on either side of the pump. The piping should be adequately supported to reduce thermal and mechanical stresses on the pump.

According to good installation practices, clean the system thoroughly and flush it of all foreign materials and sediment prior to pump installation. Furthermore, never install the pump at the lowest point of the system due to the natural accumulation of dirt and sediment. If there is excessive sediment or suspended particles, we recommend that a strainer or filter is used. Grundfos recommends that pressure gauges are installed on suction and discharge flanges or in pipes to monitor pump and system performance.

***Warning***

***To avoid problems with water hammer, do not use quick-closing valves in CRN-SF applications.***

## 8.6 Bypass

Install a bypass in the discharge pipe if there is any risk that the pump may operate against a closed valve in the discharge line. Flow through the pump is required to ensure that adequate cooling and lubrication of the pump is maintained.
See *7.3 Minimum inlet pressures* for minimum flow rates.

Elbows should be at least 12" from the bypass opening to prevent erosion.

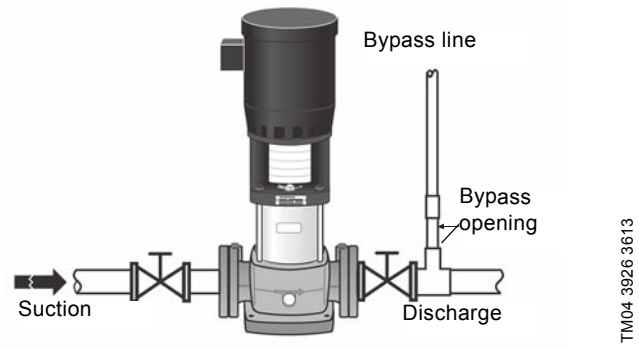


**Fig. 7** Recommended bypass arrangement

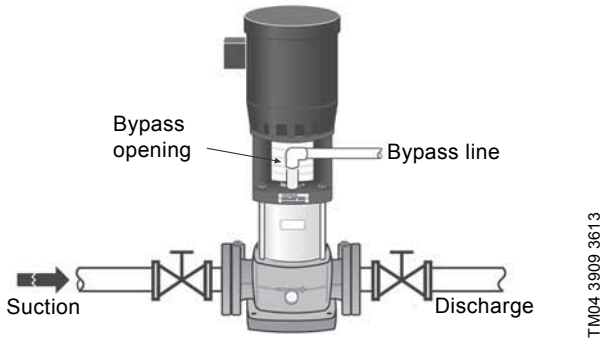


**Fig. 8** Optional bypass arrangement

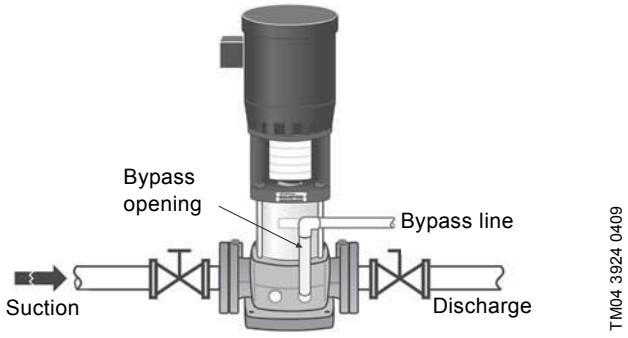


**Fig. 9** Optional bypass arrangement for CR, CRN 32, 45, 64 and CR 90, 120 and 150 only

## 8.7 Flange forces and torques

If not all loads reach the maximum permissible value stated in the tables after fig. 10, one of these values may exceed the normal limit. Contact Grundfos for further information.

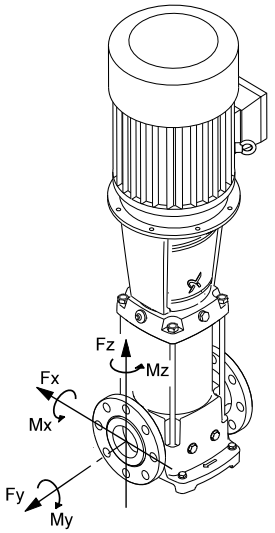


Y-direction: Direction of chamber stack
Z-direction: 90 ° from inlet/outlet
X-direction: Inlet/outlet

**Fig. 10** Flange forces and torques

| Flange | CR, CRI, CRN | Force [F] | | |
|---|---|---|---|---|
| | | Y-direction [lb] | Z-direction [lb] | X-direction [lb] |
| 1 1/4" | 1s to 5 | 171 | 263 | 175 |
| 2" | 10, 15 and 20 | 303 | 371 | 337 |
| 2 1/2" | 32 | 382 | 466 | 422 |
| 3" | 45 | 461 | 562 | 506 |
| 4" | 64 and 90 | 607 | 753 | 674 |
| 5", 6" | 120 and 150 | 607 | 753 | 674 |

| Flange | CR, CRI, CRN | Torque [M] | | |
|---|---|---|---|---|
| | | Y-direction [ft-lb] | Z-direction [ft-lb] | X-direction [ft-lb] |
| 1 1/4" | 1s to 5 | 605 | 715 | 900 |
| 2" | 10, 15 and 20 | 738 | 848 | 1,033 |
| 2 1/2" | 32 | 793 | 904 | 1,106 |
| 3" | 45 | 848 | 959 | 1,180 |
| 4" | 64 and 90 | 922 | 1,069 | 1,291 |
| 5", 6" | 120 and 150 | 922 | 1,069 | 1,291 |

### 8.8 Minimum continuous duty flow rates [gpm]

| Pump type | min. °F to 176 °F (min. °C to 80 °C) | at 210 °F (at 99 °C) | at 248 °F (at 120 °C) | at 356 °F (at 180 °C) |
|---|---|---|---|---|
| CR, CRI, CRN 1s | 0.5 | 0.7 | 1.2 | 1.2* |
| CR, CRI, CRN 1 | 0.9 | 1.3 | 2.3 | 2.3* |
| CR, CRI, CRN 3 | 1.6 | 2.4 | 4.0 | 4.0* |
| CR, CRI, CRN 5 | 3.0 | 4.5 | 7.5 | 7.5* |
| CR, CRI, CRN 10 | 5.5 | 8.3 | 14 | 14* |
| CR, CRI, CRN 15 | 9.5 | 14 | 24 | 24* |
| CR, CRI, CRN 20 | 11 | 17 | 28 | 28* |
| CR, CRN 32 | 14 | 21 | 35 | 35* |
| CR, CRN 45 | 22 | 33 | 55 | 55* |
| CR, CRN 64 | 34 | 51 | 85 | 85* |
| CR, CRN 90 | 44 | 66 | 110 | 110* |
| CR, CRN 120 | 60 | 90 | N/A | N/A |
| CR, CRN 150 | 75 | 115 | N/A | N/A |
| CRT 2 | 1.3 | 2.0 | 3.3 | N/A |
| CRT 4 | 3.0 | 4.5 | 7.5 | N/A |
| CRT 8 | 4.0 | 6.0 | 10 | N/A |
| CRT 16 | 8.0 | 12 | 20 | N/A |

* Grundfos Cool-Top® is only available in the following pump types:

| Pump type | CR 1s | CR 1 | CR 3 | CR 5 | CR 10 | CR 15 | CR 20 | CR 32 | CR 45 | CR 64 | CR 90 |
|---|---|---|---|---|---|---|---|---|---|---|---|
| Standard (CR) | | | | | | | | ● | ● | ● | ● |
| I version (CRI) | ● | ● | ● | ● | ● | ● | ● | | | | |
| N version (CRN) | ● | ● | ● | ● | ● | ● | ● | ● | ● | ● | ● |

## 8.9 Check valves

A check valve may be required on the discharge side of the pump to prevent the pump inlet pressure from being exceeded.

When a pump with no check valve is stopped because there is no demand on the system (all valves are closed), the high system pressure on the discharge side of the pump will "find" its way back to the inlet of the pump.

This is especially critical for CRN-SF applications because of the very high discharge pressures involved. As a result, most CRN-SF installations require a check valve on the discharge piping.

## 8.10 Temperature rise

It may sometimes be necessary to stop the flow through a pump during operation.

When the flow is stopped, the power to the pump is transferred to the pumped liquid as heat, causing a temperature rise in the liquid.

The result is risk of overheating and consequent damage to the pump. The risk depends on the temperature of the pumped liquid and for how long the pump is operating without flow. See the following temperature rise table.

| Pump type | Time for temperature rise of 18 °F (10 °C) | |
|---|---|---|
| | Seconds | Minutes |
| **CR 1s, 1, 3** | 210 | 3.5 |
| **CR 5** | 240 | 4.0 |
| **CR 10** | 210 | 3.5 |
| **CR 15** | 150 | 2.5 |
| **CR 20** | 120 | 2.0 |
| **CR 32, 45, 64, 90, 120, 150** | 60 | 1.0 |

**Conditions/reservations**

The listed times are subject to the following conditions/ reservations:

- No exchange of heat with the surroundings.
- The pumped liquid is water with a specific heat capacity of 1.0 $^{Btu}/_{lb.}$ °F (4.18 $^{kJ}/_{kg}$ °C).
- Pump parts (chambers, impellers and shaft) have the same heat capacity as water.
- The water in the base and the pump head is not included.

These reservations should give sufficient safety margin against excessive temperature rise.

The maximum temperature must not exceed the pump maximum temperature rating.

## 8.11 Electrical connection

***Warning***

***The safe operation of this pump requires that it is grounded in accordance with the National Electrical Code and local codes and regulations. Connect the ground conductor to the grounding screw in the terminal box and then to the ACCEPTABLE grounding point. All electrical work must be performed by a qualified electrician in accordance with the latest edition of the National Electrical Code and local codes and regulations.***

## 8.12 Motors

Grundfos CR pumps are supplied with heavy-duty, 2-pole (3600 rpm), ODP (open drip-proof) or TEFC (totally enclosed fan cooled), NEMA C frame motors selected to our rigid specifications.

Motors with other enclosure types and for other voltages and frequencies are available on a special-order basis.

CRN-SF pumps are supplied with an IEC (metric) type motor with a reverse thrust bearing.

If you replace the pump, but keep a motor previously used on another CR pump, be sure to read *12. Maintaining the motor* for proper adjustment of the coupling height.

## 8.13 Position of terminal box

The motor terminal box can be turned to any of four positions in steps of 90 °.

To rotate the terminal box, remove the four bolts securing the motor to the pump but do not remove the coupling. Turn the motor to the desired position; replace and securely tighten the four bolts. See fig. 11.

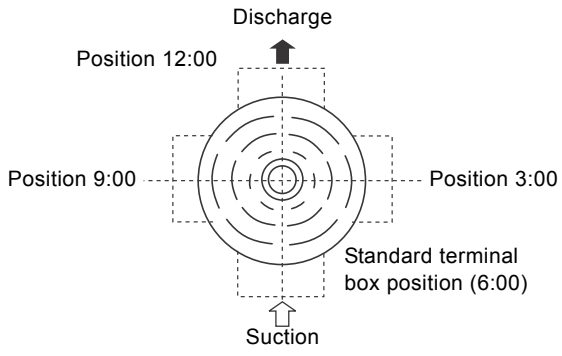


**Fig. 11** Motor terminal box positions (top view)

## 8.14 Field wiring

Lead sizes should be based on the current carrying properties of conductors required by the latest edition of the National Electrical Code or local regulations. Direct-on-line (DOL) starting is approved due to the extremely short run-up time of the motor and the low moment of inertia of the pump and motor. If DOL starting is not acceptable and reduced starting current is required, use an auto transformer, resistance starter or soft starter. We suggest to use a fused disconnect for each pump in case standby pumps are installed.

## 8.15 Motor protection

### 8.15.1 Single-phase motors

All CR pumps with single phase motors, except 10 hp, are equipped with multi-voltage, squirrel cage induction motors which include built-in thermal protection.

### 8.15.2 Three-phase motors

CR pumps with three-phase motors must be used with the proper size and type of motor-protective circuit breaker to ensure the motor is protected against damage from low voltage, phase failure, current unbalance and overloads.

Use a properly sized circuit breaker with manual reset and ambient-temperature compensated extra-quick trip in all three phases. The overload protection should be set and adjusted to the full-load current rating of the motor. Under no circumstances should the overload protection be set to a higher value than the full-load current shown on the motor nameplate. This will void the warranty.

Set overload protection for auto transformers and resistance starters in accordance with the recommendations of the manufacturer.

Three-phase MLE motors (CRE-pumps) require only fuses as circuit breaker. They do not require a motor-protective circuit breaker. Check for phase unbalance (worksheet is provided. See section *18. Worksheet for three-phase motors*).

**Caution** ***Standard allowable phase unbalance is 5 %.***

### 8.15.3 CRN-SF

The CRN-SF is typically operated in series with a feed pump. Because the maximum allowable inlet pressure of the CRN-SF increases from 73 psi (when pump is off and during start-up) to 365 psi (during operation), use a control device to start the CRN-SF pump one second before the feed pump starts. Similarly, the CRN-SF must stop one second after the feed pump stops. See CRN-SF start-up timeline below.

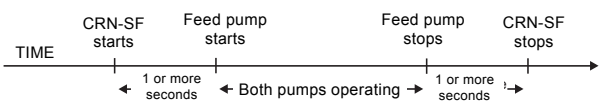


**Fig. 12** CRN-SF start-up

## 9. Commissioning

### 9.1 Priming

To prime the pump in a closed system or an open system where the water source is above the pump, close the pump isolating valve(s) and open the priming plug on the pump head. See fig. 13, fig. 14, and fig. 15.

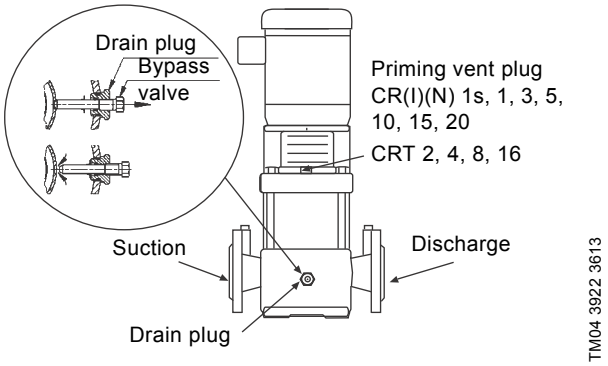


**Fig. 13** Position of plugs and bypass valve

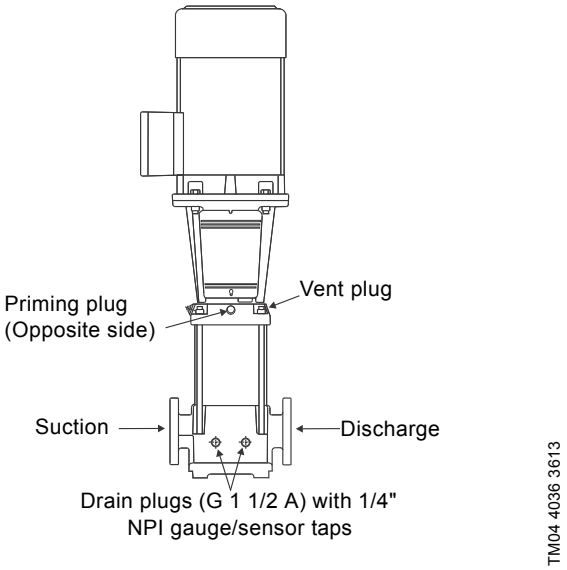


**Fig. 14** Position of plugs CR, CRN 32, 45, 64, 90, 120, 150

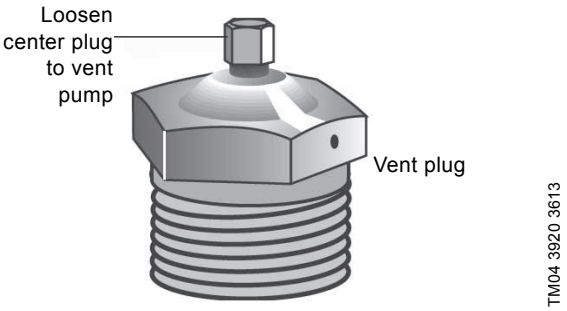


**Fig. 15** Vent plug

In open systems where the water level is below the pump inlet, the suction pipe and pump must be filled with liquid and vented before starting the pump.

1. Close the discharge isolating valve and remove the priming plug.
2. Pour water through the priming hole until the suction pipe and pump are completely filled with liquid. If the suction pipe does not slope downwards away from the pump, the air must be purged while priming the pump.
3. Replace the priming plug and tighten securely.

### 9.2 Startup

1. Gradually open the isolating valve in the suction line until a steady stream of airless water runs out of the priming hole.
2. Close the plug and tighten securely.
3. Completely open the isolating valves.

For pumps with Cool-Top®, see section *16. Startup of pump with air-cooled top (Cool-Top®)*.

Follow these steps:

1. Switch off the power supply.
2. Check to make sure the pump has been filled and vented.
3. Remove the coupling guard and rotate the pump shaft by hand to make sure it turns freely.
4. Verify that the electrical connections are in accordance with the wiring diagram on the motor.
5. Switch on the power and observe the direction of rotation. When viewed from above, the pump should rotate counter-clockwise (clockwise for CRN-SF).
6. To reverse the direction of rotation, first switch off the power supply.
7. On three-phase motors, interchange any two phases of the power supply.
   On single-phase motors, see wiring diagram on the nameplate. Change wiring as required.
8. Switch on the power again and check for proper direction of rotation. Once direction of rotation has been verified, switch off the power again. Do not attempt to reinstall the coupling guards while the motor is on. Replace the coupling guard if the direction of rotation is correct. When the guards are in place, the power can be switched on again.

Note

***For CR, CRI, CRN 1s to 5 it is advisable to open the bypass valve during start-up. See fig. 13. The bypass valve connects the suction and discharge sides of the pump, thus making the filling procedure easier. Close the bypass valve when operation is stable.***

Caution

***Motors should not be run unloaded or uncoupled from the pump at any time; damage to the motor bearings will occur.***

***Do not start the pump before priming or venting the pump. See fig. 15. Never let the pump run dry.***

## 10. Operation

### 10.1 Operating parameters

CR multi-stage centrifugal pumps installed in accordance with these instructions and sized for correct performance will operate efficiently and provide years of service. The pumps are water-lubricated and do not require any external lubrication or inspection. The motors may require periodic lubrication as described in section *12. Maintaining the motor*.

Under no circumstances should the pump be operated for any prolonged periods of time without flow through the pump. This can result in motor and pump damage due to overheating. A properly sized relief valve should be installed to allow sufficient liquid to circulate through the pump to provide adequate cooling and lubrication of the pump bearings and seals.

### 10.2 Pump cycling

Pump cycling should be checked to ensure the pump is not starting more often than the following max. starts per hour:

Grundfos ML motors:

- 200 times per hour on 1/3 to 5 hp models
- 100 times per hour on 7 1/2 to 15 hp models
- 40 times per hour on 20 to 30 hp models.

Baldor motors:

- 20 times per hour on 1/3 to 5 hp models
- 15 times per hour on 7 1/2 to 15 hp models
- 10 times per hour on 20 to 100 hp models.

Rapid cycling is a major cause of premature motor failure due to overheating of the motor. If necessary, adjust controller to reduce the frequency of starts and stops.

### 10.3 Boiler feed installations

If the pump is used as a boiler feed pump, make sure the pump is capable of supplying sufficient water throughout its entire evaporation and pressure ranges. Where modulating control valves are used, a bypass around the pump must be installed to ensure pump lubrication. See section *7.3 Minimum inlet pressures*.

### 10.4 Frost protection

If the pump is installed in an area where frost could occur, the pump and system should be drained during freezing temperatures to avoid damage. To drain the pump, close the isolating valves, remove the priming plug and drain plug at the base of the pump. Do not refit the plugs until the pump is to be used again. Always replace the drain plug with the original or an exact replacement. Do not replace with a standard plug. Internal recirculation will occur, reducing the output pressure and flow.

## 11. Maintaining the pump

Depending on the conditions and operating time, make the following checks at regular intervals:

- Check that the pump meets the required performance and is operating smoothly and quietly.
- Check that there are no leaks, particularly at the shaft seal.
- Check that the motor is not overheating.
- Remove and clean all strainers or filters in the system.
- Check that the tripping function of the motor overload protection works.
- Check the operation of all controls.
- If the pump is not operated for unusually long periods, maintain the pump in accordance with these instructions. In addition, if the pump is not drained, the pump shaft should be manually rotated or run for short periods of time at monthly intervals.
- In severe-duty applications, pump life may be extended by performing one of the following actions:
  - Drain the pump after each use.
  - Flush the pump with water or other liquid that is compatible with the pump materials and process liquid.
  - Disassemble the pump and thoroughly rinse or wash components in contact with the pumped liquid with water or other liquid that is compatible with the pump materials and process liquid.

If the pump fails to operate or there is a loss of performance, see to *section 17. Diagnosing specific problems*.

## 12. Maintaining the motor



***Warning***

***Before starting work on the motor, make sure that all power supplies to the motor have been switched off and that they cannot be accidentally switched on. Electric shock can cause serious or fatal injury. Only qualified personnel should attempt installation, operation, and maintenance of this equipment.***

### 12.1 Motor inspection

Inspect the motor approximately every 500 hours of operation or every three months, whichever occurs first. Keep the motor clean and the ventilation openings clear.

Go through the following steps during each inspection:

1. Check that the motor is clean. Check that the interior and exterior of the motor are free of dirt, oil, grease, water, etc. Oily residue, paper, pulp, textile lint, etc. can accumulate and block motor ventilation. If the motor is not properly ventilated, overheating can occur and cause early motor failure.
2. Use an ohmmeter periodically to ensure that the winding insulation is OK. Record the ohmmeter readings, and immediately investigate any significant drop in insulation resistance.
3. Check all electrical connections to be sure that they are tightened securely.

### 12.2 Motor lubrication

Electric motors are pre-lubricated from factory and do not require additional lubrication at start-up. Motors without external grease zerks have sealed bearings that cannot be re-lubricated.
Motors with grease zerks should only be lubricated with approved types of grease. Do not over-grease the bearings. Over-greasing will cause increased bearing heat and can result in bearing or motor failure. Do not mix oil-based grease and silicon grease in motor bearings.

Bearing grease will lose its lubricating ability over time.
The lubricating ability of a grease depends primarily on the type of grease, the size of the bearings, the speed at which the bearings operate and the severity of the operating conditions.

Good results can be obtained if the following recommendations are used in your maintenance program. It should also be noted that multistage pumps, pumps running to the left of the performance curve, and certain pump ranges may have higher thrust loads. Pumps with high thrust loads should be greased according to the next service interval level.



***Warning***

***The grease outlet plug MUST be removed before adding new grease.***

### 12.3 Recommended lubricant

| Severity of duty | Ambient temperature (max.) | Environment | Approved types of grease |
|---|---|---|---|
| Standard | 104 °F (40 °C) | Clean, little corrosion | Grundfos ML motors are greased for life, or the grease type will be stated on the nameplate.<br>Baldor motors are greased with Polyrex EM (Exxon Mobile). |
| Severe | 122 °F (50 °C) | Moderate dirt, corrosion | |
| Extreme | > 122 °F (50 °C) or class H insulation | Severe dirt, abrasive dust, corrosion | |

### 12.4 Lubricating chart (for motors with grease zerks)

New motors that have been stored for a year or more should be regreased according to the following table:

| NEMA (IEC) frame size | Service intervals [hours] | | | Weight of grease [oz (grams)] | Volume of grease [$in^3$ (teaspoons)] |
|---|---|---|---|---|---|
| | Standard duty | Severe duty | Extreme duty | | |
| Up to and incl. 210 (132) | 5500 | 2750 | 550 | 0.30 (8.4) | 0.6 (2) |
| Over 210 up to and incl. 280 (180) | 3600 | 1800 | 360 | 0.61 (17.4) | 1.2 (3.9) |
| Over 280 up to and incl. 360 (225) | 2200 | 1100 | 220 | 0.81 (23.1) | 1.5 (5.2) |
| Over 360 (225) | 2200 | 1100 | 220 | 2.12 (60.0) | 4.1 (13.4) |

### 12.5 Lubricating procedure

Caution

***Keep grease free from dirt to avoid damage to motor bearings. If the environment is extremely dirty, contact Grundfos, the motor manufacturer, or an authorized service center for additional information.***

***Do not mix dissimilar types of grease.***

1. Clean all grease zerks. If the motor does not have grease zerks, the bearing is sealed and cannot be greased externally.
2. If the motor is equipped with a grease outlet plug, remove it. This will allow the old grease to be displaced by the new grease. If the motor is stopped, add the recommended amount of grease. If the motor is to be lubricated while running, add a slightly greater quantity of grease.
3. Add grease SLOWLY taking approximately one minute until new grease appears at the shaft hole in the flange or grease outlet plug. Never add more than 1 1/2 times the amount of grease shown in the lubricating chart.

Note

***If new grease does not appear at the shaft hole or grease outlet, the outlet passage may be blocked. Contact Grundfos service center or certified motor shop.***

4. Let motors equipped with a grease outlet plug run for 20 minutes before replacing the plug.

## 13. Replacing the motor

Caution

***Motors used on CR pumps are specifically selected to our rigid specifications. Replacement motors must be of the same frame size, should be equipped with the same or better bearings and have the same service factor. Failure to follow these recommendations may result in premature motor failure.***

If the motor is damaged due to bearing failure, burning or electrical failure, observe the following instructions as to how to remove the motor and how to mount the replacement motor.

***Warning***

***Before starting work on the motor, make sure that the mains switch has been switched off. It must be ensured that the power supply cannot be accidentally switched on.***

### 13.1 Disassembly

Proceed as follows:

1. Disconnect the power supply leads from the motor. Remove the coupling guards.

Note

***For CR 1s, 1, 3, 5, 10, 15, and 20: Do not loosen the three hexagon socket head cap screws securing the shaft seal.***

2. Use the proper metric hexagon key to loosen the four cap screws in the coupling. Remove coupling halves completely. On CR 1s-CR 20, the shaft pin can be left in the pump shaft. CR, CRN 32, 45, 64, 90, 120, and 150 do not have a shaft pin.
3. Use the correct size spanner to loosen and remove the four mounting bolts joining motor and pump.
4. Lift the motor straight up until the shaft has cleared the motor stool.

### 13.2 Assembly

Proceed as follows:

1. Remove key from motor shaft, if present, and discard.
2. Thoroughly clean the surfaces of the motor and pump mounting flanges. The motor and shaft must be clean of all oil or grease and other contaminants where the coupling attaches. Place the motor on top of the pump.
3. Turn the terminal box to the desired position by rotating the motor.
4. Insert the four mounting bolts, then tighten diagonally and evenly:
   – for 3/8" bolts (1/2 - 2 hp), torque = 17 ft-lb
   – for 1/2" bolts (3 - 40 hp), torque = 30 ft-lb
   – for 5/8" bolts (50 - 100 hp), torque = 59 ft-lb
   – follow instructions for particular pump model in sections *13.2.2 CR 1s, 1, 3, and 5* to *13.2.5 CR, CRN 32, 45, 64, 90, 120, and 150*.

#### 13.2.1 Torque specifications

**Torque specifications for CR, CRI, CRN 1s, 1, 3, 5, 10, 15, and 20 CRT 2, 4, 8, and 16**

| Coupling screw size | Minimum torque |
|---|---|
| M6 | 10 ft-lb |
| M8 | 23 ft-lb |
| M10 | 46 ft-lb |

### 13.2.2 CR 1s, 1, 3, and 5

1. Insert shaft pin into shaft hole.
2. Mount the coupling halves onto shaft and shaft pin.
3. Fit the coupling screws and leave loose. Check that the gaps on either side of the coupling are even and that the motor shaft keyway is centered in the coupling half as shown in fig. 16.
4. Tighten the screws to the correct torque. See section *13.2.1 Torque specifications*.

### 13.2.3 CR 10, 15 and 20

1. Insert shaft pin into shaft hole.
2. Insert plastic shaft seal spacer beneath shaft seal collar.
3. Mount the coupling halves onto shaft and shaft pin.
4. Fit the coupling screws and leave loose. Check that the gaps on either side of the coupling are even and that the motor shaft keyway is centered in the coupling half as shown in fig. 16.
5. Tighten the screws to the correct torque. See section *13.2.1 Torque specifications*.
6. Remove plastic shaft seal spacer and hang it on inside of coupling guard.

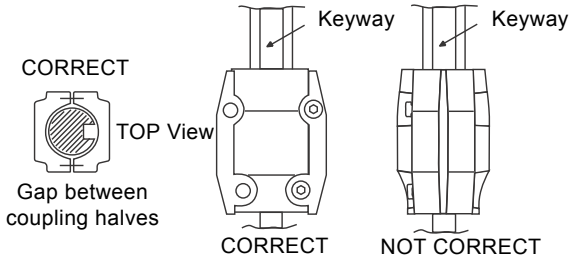


**Fig. 16** Coupling adjustment all CR, CRI, CRN, CRT

### 13.2.4 CRT 2, 4, 8 and 16

1. Mount coupling halves. Make sure the shaft pin is located in the pump shaft.
2. Put the cap screws loosely back into the coupling halves.
3. Using a large screwdriver, raise the pump shaft by placing the tip of the screwdriver under the coupling and carefully raising the coupling to its highest point. See fig. 17.

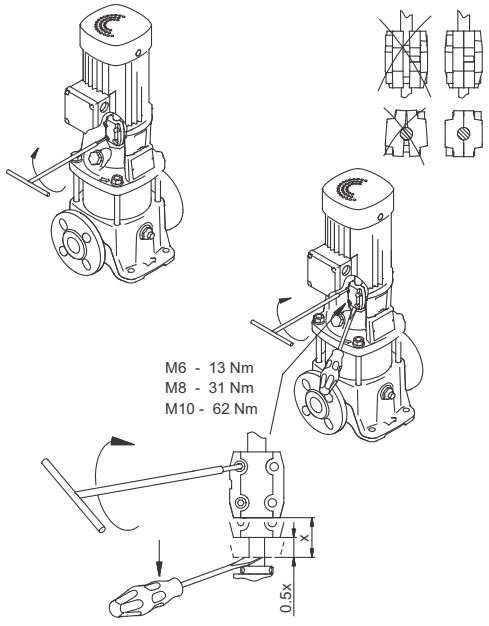


**Fig. 17** Coupling adjustment CRT 2, 4, 8, and 16

**Note** ***The shaft can only be raised approximately 0.20 inches (5 mm).***

4. Now lower the shaft halfway back the distance you just raised it and tighten the coupling screws (finger tight) while keeping the coupling gap equal on both sides. When the screws are tight enough to keep the coupling in place, then cross-tighten the screws.
   - Note the clearance below the coupling.
   - Raise the coupling as far as it will go.
   - Lower it halfway back down (1/2 the distance you just raised it).
   - Tighten screws (see torque specifications).

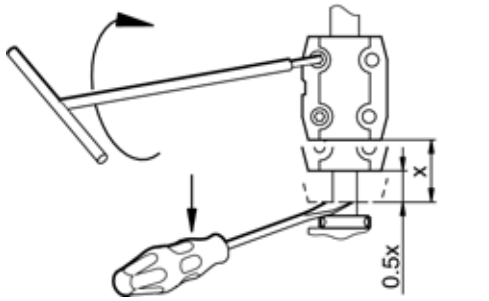


**Fig. 18** Coupling adjustment clearance CRT 2, 4, 8, and 16

### 13.2.5 CR, CRN 32, 45, 64, 90, 120, and 150

1. Make sure pump shaft is all the way down. Tighten the set screws on the mechanical shaft seal.
2. Place the plastic adjusting fork under the cartridge seal collar. See fig. 19.

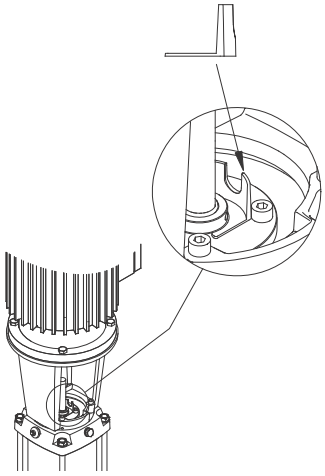


**Fig. 19** Coupling adjustment CR, CRN 32, 45, 64, 90, 120, and 150

3. Fit the coupling on the shaft so that the top of the pump shaft is flush with the bottom of the coupling chamber. See fig. 20.

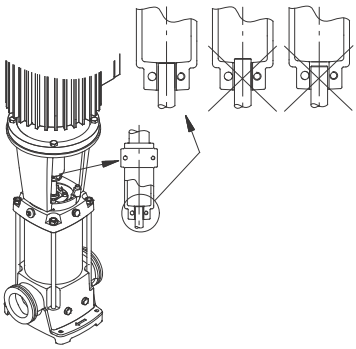


**Fig. 20** Coupling adjustment, CR, CRN 32, 45, 64, 90, 120, and 150

Caution ***To avoid damaging the coupling halves, ensure that the motor shaft keyway is centered in the coupling half as shown in fig. 16.***

4. Lubricate the coupling screws with an anti-seize, lubricating compound. Tighten the coupling screws (finger tight) while keeping the coupling gap equal on both sides and the motor shaft keyway centered in the coupling half as shown in fig. 16. When the screws are tight enough to keep the coupling in place, then cross-tighten the screws.
5. Tighten coupling screws to 62 ft-lbs (75 and 100 hp motors to 74 ft-lbs). Remove the adjusting fork from under the cartridge seal collar and replace it to the storage location. See fig. 21.

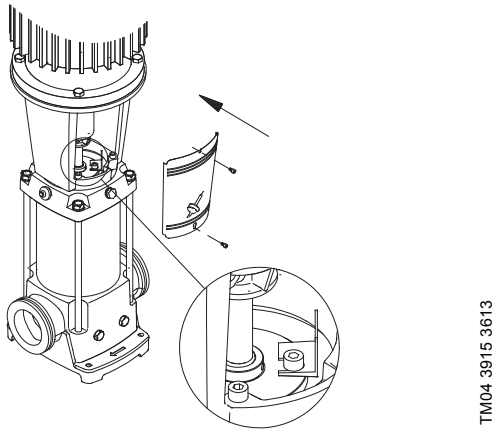


**Fig. 21** Adjusting fork storage CR, CRN 32, 45, 64, 90, 120, and 150

6. Check to see that the gaps between the coupling halves are equal. Loosen and readjust, if necessary.
7. Make sure the pump shaft can be rotated by hand. If the shaft cannot be rotated or it jams, disassemble and check for misalignment.
8. Prime the pump.
9. Follow the wiring diagram on the motor label for the correct motor wiring combination which matches your supply voltage. Once this has been confirmed, reconnect the power supply leads to the motor.
10. Check the direction of rotation by bump-starting the motor. Direction of rotation must be left to right (counter-clockwise) when looking directly at the coupling.
11. Switch off the power, then mount the coupling guards. When the coupling guards have been mounted, the power can be switched on again.

## 14. Parts list

Grundfos offers an extensive parts list for each CR pump model. A parts list typically covers the following items:

- a diagram of pump parts which we recommend to have on hand for future maintenance
- a list of prepacked service kits covering the pump components most likely to be exposed to wear over time
- complete chamber stacks needed to replace the rotating assembly of each model.

These parts lists are available separately from the Grundfos literature warehouse or as a set with extensive service instructions in the Grundfos CR Service Manuals.



TM05 9272 3613

**Fig. 22** Prepacked chamber stack kits



TM04 3916 1609

**Fig. 23** Prepacked flange kits

### 14.1 Spare parts

Grundfos offers an extensive list of spare parts for CR pumps. For a current list of these parts, see Grundfos All Product Spare Parts/Service Kits Price List, part number L-SK-SL-002.

## 15. Preliminary electrical tests

***Warning***



***When working with electrical circuits, use caution to avoid electrical shock. It is recommended that rubber gloves and boots be worn, and metal terminal boxes and motors are grounded before any work is done. For your protection, always disconnect the pump from its power source before handling.***

### 15.1 Supply voltage

#### 15.1.1 How to measure the supply voltage

Use a voltmeter (set to the proper scale) to measure the voltage at the pump terminal box or starter. On single-phase units, measure between power leads L1 and L2 (or L1 and N for 115 volt units). On three-phase units, measure between:

– Power leads L1 and L2
– Power leads L2 and L3
– Power leads L3 and L1.

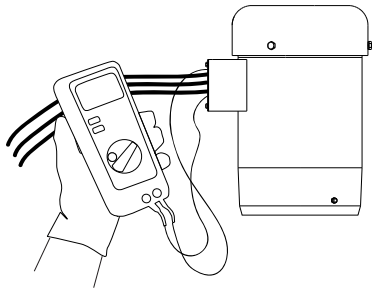

TM04 3911 2609

**Fig. 24** Measuring supply voltage

#### 15.1.2 Meaning of supply voltage measurement

When the motor is under load, the voltage should be within + 10 %/- 10 % of the nameplate voltage. Larger voltage variation may cause winding damage. Large variations in the voltage indicate a poor electrical supply and the pump should not be operated until these variations have been corrected. If the voltage constantly remains high or low, the motor should be changed to the correct supply voltage.

## 15.2 Current

### 15.2.1 How to measure the current

Use an ammeter (set on the proper scale) to measure the current on each power lead at the terminal box or starter. See the motor nameplate for amp draw information. Current should be measured when the pump is operating at constant discharge pressure.

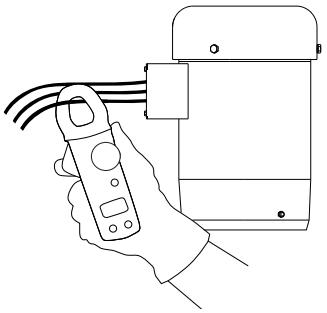

TM04 3908 2609

**Fig. 25** Measuring current

### 15.2.2 Meaning of current measurement

If the amp draw exceeds the listed service factor amps (SFA) or if the current unbalance is greater than 5 % between each leg on three-phase units, check for the following faults:

| Fault | Remedy |
|---|---|
| Burned contacts in the motor-protective circuit breaker. | Replace contacts. |
| Loose terminals in motor-protective circuit breaker or terminal box or possibly defective lead. | Tighten terminals or replace lead. |
| Too high or too low supply voltage. | Reestablish correct supply voltage. |
| Motor windings are short-circuited or grounded. (Check winding and insulation resistances). | Remove cause of short circuit or grounding. |
| Pump is damaged causing motor overload. | Replace defective pump parts. |

## 15.3 Insulation resistance

### 15.3.1 How to measure the insulation resistance

Turn off power and disconnect the supply power leads in the pump terminal box. Using an ohmmeter or megohmmeter, set the scale selector to R x 100K and zero-adjust the meter.
Measure and record the resistance between each of the terminals and ground.

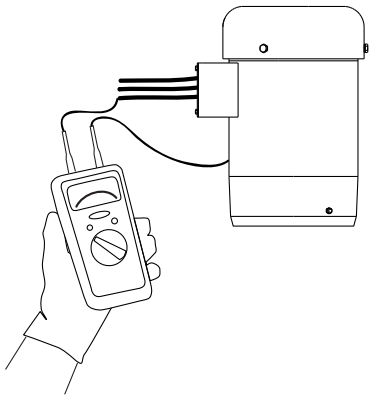

TM04 3907 2609

**Fig. 26** Measuring insulation resistance

### 15.3.2 Meaning of insulation resistance measurement

Motors of all hp, voltage, phase and cycle duties have the same value of insulation resistance. Resistance values for new motors must exceed 1,000,000 ohms. If they do not, the motor should be repaired or replaced.

## 16. Startup of pump with air-cooled top (Cool-Top®)

Caution ***Do not start the pump until it has been filled with liquid and vented.***

***Warning***

***Pay attention to the direction of the vent hole and ensure that the escaping liquid does not cause injury to persons or damage to the motor or other components. In hot-liquid installations, pay special attention to the risk of injury caused by scalding hot liquid. We recommend you to connect a drain pipe to the 1/2" air vent in order to lead the hot water/steam to a safe place.***

| Step | | Action |
|---|---|---|
| 1 | 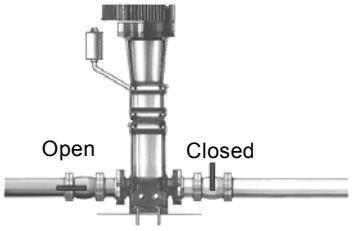 TM02 4151 5001 | The air-cooled top should only be started up with cold liquid.<br>Close the isolating valve on the discharge side and open the isolating valve on the suction side of the pump. |
| 2 | 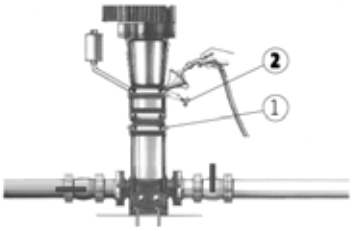 TM02 4153 1503 | Remove the priming plug from the air-cooled chamber (pos. 2) and slowly fill the chamber with liquid.<br><br>When the chamber is completely filled with liquid, replace the priming plug and tighten securely. |
| 3 | 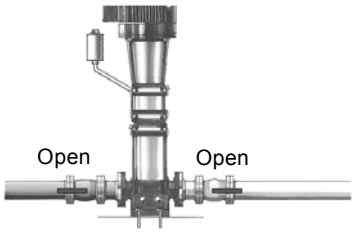 TM02 5907 1503 | Open the isolating valve on the discharge side of the pump.<br>The valve may have to be partially closed when the pump is started if there is no counter pressure (i.e. boiler not up to pressure). |
| 4 | 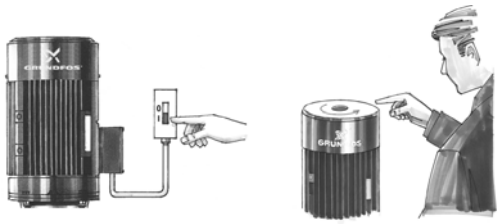 TM01 1406 3702 - TM01 1405 4497 | Start the pump and check the direction of rotation.<br><br>See the correct direction of rotation of the pump on the motor fan cover.<br><br>If the direction of rotation is wrong, interchange any two of the incoming power supply leads.<br><br>After 3 to 5 minutes, the air vent has been filled with liquid.<br><br>Note ***During start-up of a cold pump with hot liquid, it is normal that a few drops of liquid are leaking from the sleeve.*** |

## 17. Diagnosing specific problems

***Warning***

***Before removing the terminal box cover and before removing/dismantling the pump, make sure that the power supply has been switched off and that it cannot be accidentally switched on.***

| Problem | Possible cause | Remedy |
|---|---|---|
| 1. The pump does not run. | a) No power to motor. | Check voltage to motor terminal box. If no voltage to motor, check starter panel for tripped circuits and reset circuits. |
| | b) Fuses blown or circuit breaker tripped. | Turn off power and remove fuses. Check for continuity with ohmmeter. Replace blown fuses or reset circuit breaker. If new fuses blow or circuit breaker trips, the electrical installation, motor and wires must be checked. |
| | c) Motor starter overload protection burned or tripped out. | Check for voltage on line and load side of starter. Replace or reset burned motor protection. Inspect starter for other damage. If protection trips again, check the supply voltage and starter holding coil. |
| | d) Starter does not energize. | Energize control circuit and check for voltage to the holding coil. If no voltage, check control circuit fuses. If voltage, check holding coil for short circuits. Replace bad coil. |
| | e) Defective control devices. | Check that all safety and pressure switches function correctly. Inspect contacts in control devices. Replace worn or defective parts or control devices. |
| | f) Motor is defective. | Turn off power and disconnect wiring. Measure the lead-to-lead resistances with ohmmeter (RX-1). Measure lead-to-ground values with ohmmeter (RX-100K). Record measured values. If an open or grounded winding is found, remove motor and repair or replace it. |
| | g) Defective capacitor (single-phase motors). | Turn off power and discharge capacitor. Check with ohmmeter (RX-100K). When the meter is connected to the capacitor, the needle should jump towards 0 ohms and slowly drift back to infinity (h). Replace capacitor if defective. |
| | h) Pump is blocked or seized. | Turn off power and manually rotate pump shaft. If shaft does not rotate easily, check coupling setting and adjust as necessary. If shaft rotation is still tight, remove pump and inspect. Disassemble and repair the pump. |

| Problem | Possible cause | Remedy |
|---|---|---|
| 2. The pump runs but at reduced performance or does not deliver water. | a) Wrong direction of rotation. | Check wiring for proper connections. Correct wiring. |
| | b) Pump is not primed or is air-bound. | Turn pump off, close isolation valve(s) and remove priming plug. Check liquid level. Refill the pump, replace plug and start the pump. Long suction lines must be filled before starting the pump. |
| | c) Strainers, check or foot valves are clogged. | Remove strainer, screen or check valve and inspect. Clean and replace. Reprime pump. |
| | d) Suction lift too large. | Install compound pressure gauge at the suction side of the pump. Start pump and compare reading to performance data. Reduce suction lift by lowering pump, increase suction line size or removing high friction loss devices. |
| | e) Suction and/or discharge pipes leaking. (Pump spins backwards when turned off) | Air in suction pipe. Suction pipe, valves and fittings must be airtight. Repair any leaks and retighten all loose fittings. |
| | f) Pump worn. | Install pressure gauge, start pump, gradually close the discharge valve and read pressure at shutoff. Convert measured pressure (in psi) to head (in feet): (Measured psi x 2.31 ft/psi = ___ ft). Refer to the specific pump curve for shutoff head for that pump model. If head is close to curve, pump is probably OK. If not, remove pump and inspect. |
| | g) Pump impeller or guide vane is clogged. | Disassemble and inspect pump passageways. Remove any foreign materials found. |
| | h) Incorrect drain plug installed. | If the proper drain plug is replaced with a standard plug, water will recirculate internally. Replace with proper plug. |
| | i) Improper coupling setting. | Check/reset the coupling. See page 18. |
| 3. Pump cycles too much | a) Pressure switch is not properly adjusted or is defective. | Check that pressure switch is set and functions correctly. Check voltage across closed contacts. Readjust switch or replace if defective. |
| | b) Level control is not properly adjusted or is defective. | Check that level control is set and functions correctly. Readjust setting (refer to level control manufacturer's data). Replace if defective. |
| | c) Insufficient air charging or leaking tank or piping. | Pump air into tank or diaphragm chamber. Check diaphragm for leaks. Check tank and piping for leaks with soap and water solution. Check air-to-water volume. Repair as necessary. |
| | d) Tank is too small. | Check tank size and air volume in tank. Tank volume should be approximately 10 gallons for each gpm of pump performance. The normal air volume is 2/3 of the total tank volume at the pump cut-in pressure. Replace tank with one of correct size. |
| | e) Pump is oversized. | Install pressure gauges on or near pump suction and discharge ports. Start and run pump under normal conditions, record gauge readings. Convert psi to feet (Measured psi x 2.31 ft/psi = ____ ft) Refer to the specific pump curve for that model, ensure that total head is sufficient to limit pump delivery within its design flow range. Throttle pump discharge flow if necessary. |

| Problem | Possible cause | Remedy |
|---|---|---|
| 4. Fuses blow or circuit breakers or overload relays trip | a) Tank is too small. | Check voltage at starter panel and motor. If voltage varies more than - 10 %/+ 10 %, contact power company. Check wire sizing. |
| | b) Motor overload protection set too low. | Cycle pump and measure amperage. Increase size of overload protection or adjust trip setting to maximum motor nameplate (full load) current. |
| | c) Three-phased current is imbalanced. | Check current draw on each lead to the motor. Must be within - 5 %/+ 5 %. If not, check motor and wiring. Rotating all leads may eliminate this problem. |
| | d) Motor short-circuited or grounded. | Turn off power and disconnect wiring. Measure the lead-to-lead resistance with an ohmmeter (RX-1). Measure lead-to-ground values with an ohmmeter (RX-100K) or a megaohmmeter. Record values. If an open or grounded winding is found, remove the motor, repair and/or replace. |
| | e) Wiring or connections are faulty. | Check proper wiring and loose terminals. Tighten loose terminals. Replace damaged wires. |
| | f) Pump is blocked or seized. | Turn off power and manually rotate pump shaft. If shaft does not rotate easily, check coupling setting and adjust as necessary. If shaft rotation is still tight, remove pump and inspect. Disassemble and repair the pump. |
| | g) Defective capacitor (single-phase motors). | Turn off power and discharge capacitor. Check with ohmmeter (RX-100K). When the meter is connected to the capacitor, the needle should jump towards 0 ohms and slowly drift back to infinity ( ∞ ). Replace capacitor if defective. |
| | h) Motor overload protection devices at higher ambient temperature than motor. | Use a thermometer to check the ambient temperature near overload protection devices and motor. Record these values. If ambient temperature at motor is lower than at overload protection devices, especially where temperature at overload protection devices is above 104 °F (40 °C), replace standard protection devices with ambient-compensated protection devices. |

## 18. Worksheet for three-phase motors

Below is a worksheet for calculating current unbalance on a three-phase hookup. Use the calculations below as a guide.

Note

***Current unbalance should not exceed 5 % at service factor load or 10 % at rated input load. If the unbalance cannot be corrected by rolling the leads, the source of the unbalance must be located and corrected. If, on the three possible hookups, the leg farthest from the average stays on the same power lead, most of the unbalance is coming from the power source. However, if the reading farthest from the averages moves with the same motor lead, the primary source of unbalance is on the "motor side" of the starter. In this instance, consider if the cause can be a damaged cable, an untight cable splice, a poor connection, or a faulty motor winding.***

| Explanation and examples | |
|---|---|
| Here is an example of current readings at maximum pump loads on each leg of a three-wire hookup. You must make calculations for all three hookups. To begin, add up all three readings for hookup numbers 1, 2, and 3. | **Hookup 1**<br>T1 = 51 amps<br>T2 = 46 amps<br>T3 = 53 amps<br>TOTAL = 150 |
| Divide the total by three to obtain the average. | **Hookup 1**<br>50 amps<br>3 \| 150 amps |
| Calculate the greatest current difference from the average. | **Hookup 1**<br>50 amps<br>— 46 amps<br>4 amps |
| Divide this difference by the average to obtain the percentage of the unbalance.<br>In this case, the current unbalance for **Hookup 1** is 8 %. | **Hookup 1**<br>.08 or 8 %<br>50 \| 4.00 amps |

**Blank worksheet**

| Hookup 1 | Hookup 2 | Hookup 3 |
|---|---|---|
| $L_1$ to $T_1$ = ___ amps | $L_1$ to $T_3$ = ___ amps | $L_1$ to $T_2$ = ___ amps |
| $L_2$ to $T_2$ = ___ amps | $L_2$ to $T_1$ = ___ amps | $L_2$ to $T_3$ = ___ amps |
| $L_3$ to $T_3$ = ___ amps | $L_3$ to $T_2$ = ___ amps | $L_3$ to $T_1$ = ___ amps |
| TOTAL = ___ amps | TOTAL = ___ amps | TOTAL = ___ amps |

| Hookup 1 | Hookup 2 | Hookup 3 |
|---|---|---|
| ___ amps | ___ amps | ___ amps |
| 3 \| ___ amps | 3 \| ___ amps | 3 \| ___ amps |

| Hookup 1 | Hookup 2 | Hookup 3 |
|---|---|---|
| ___ amps | ___ amps | ___ amps |
| ___ amps | ___ amps | ___ amps |
| ___ amps | ___ amps | ___ amps |

| Hookup 1 | Hookup 2 | Hookup 3 |
|---|---|---|
| ___ or ___ % | ___ or ___ % | ___ or ___ % |
| ___ \| ___ amps | ___ \| ___ amps | ___ \| ___ amps |

## 19. Disposal

This product or parts of it must be disposed of in an environmentally sound way:

1. Use the public or private waste collection service.
2. If this is not possible, contact the nearest Grundfos company or service workshop.

Subject to alterations.

**Grundfos Kansas City**
17100 West 118th Terrace
Olathe, Kansas 66061
Phone: +1-913-227-3400
Fax: +1-913-227-3500

www.grundfos.us

**Grundfos Canada**
2941 Brighton Road
Oakville, Ontario L6H 6C9 Canada
Phone: +1-905 829 9533
Fax: +1-905 829 9512

www.grundfos.ca

**Grundfos México**
Boulevard TLC No. 15
Parque Industrial Stiva Aeropuerto
C.P. 66600 Apodaca, N.L. Mexico
Phone: +011-52-81-8144 4000
Fax: +011-52-81-8144 4010

www.grundfos.mx

© Copyright Grundfos Holding A/S

The name Grundfos, the Grundfos logo, and **be think innovate** are registered trademarks owned by Grundfos Holding A/S or Grundfos A/S, Denmark. All rights reserved worldwide.

L-CR-TL-001

| |
|---|
| **98419736** 0114 |
| ECM: 1122180 |

**This page is intentionally left blank**

# Low voltage motors
# Installation, operation, maintenance and safety manual



Installation, operation, maintenance and safety manual ..... EN 3

More languages – see web site www.abb.com/motors&generators > Motors > Document library

Power and productivity
for a better world™

**This page is intentionally left blank**

# Low voltage motors

## Installation, operation, maintenance and safety manual

**Contents** **Page**


**1. Introduction ..... 5**
1.1 Declaration of Conformity ..... 5
1.2 Validity ..... 5
**2. Safety considerations ..... 5**
**3. Handling ..... 6**
3.1 Reception ..... 6
3.2 Transportation and storage ..... 6
3.3 Lifting ..... 6
3.4 Motor weight ..... 6
**4. Installation and commissioning ..... 7**
4.1 General ..... 7
4.2 Motors with other than deep groove ball bearings ..... 7
4.3 Insulation resistance check ..... 7
4.4 Foundation ..... 7
4.5 Balancing and fitting coupling halves and pulleys ..... 8
4.6 Mounting and alignment of the motor ..... 8
4.7 Radial forces and belt drives ..... 8
4.8 Motors with drain plugs for condensation ..... 8
4.9 Cabling and electrical connections ..... 8
4.9.1 Connections for different starting methods ..... 9
4.9.2 Connections of auxiliaries ..... 9
4.10 Terminals and direction of rotation ..... 9
**5. Operation ..... 10**
5.1 General ..... 10

**6. Low voltage motors in variable speed operation ..... 11**
6.1 Introduction ..... 11
6.2 Winding insulation ..... 11
6.2.1 Selection of winding insulation for ABB converters ..... 11
6.2.2 Selection of winding insulation with all other converters ..... 11
6.3 Thermal protection ..... 11
6.4 Bearing currents ..... 11
6.4.1 Elimination of bearing currents with ABB converters ..... 11
6.4.2 Elimination of bearing currents with all other converters ..... 12
6.5 Cabling, grounding and EMC ..... 12
6.6 Operating speed ..... 12
6.7 Motors in variable speed applications ..... 12
6.7.1 General ..... 12
6.7.2 Motor loadability with AC_8_ _ – series of converters with DTC control ..... 12
6.7.3 Motor loadability with AC_5_ _ – series of converter ..... 12
6.7.4 Motor loadability with other voltage source PWM-type converters ..... 12
6.7.5 Short time overloads ..... 13
6.8 Rating plates ..... 13
6.9 Commissioning the variable speed application ..... 13
**7. Maintenance ..... 14**
7.1 General inspection ..... 14
7.1.1 Standby motors ..... 14
7.2 Lubrication ..... 14
7.2.1 Motors with permanently greased bearings ..... 14
7.2.2 Motors with regreasable bearings ..... 15
7.2.3 Lubrication intervals and amounts ..... 15
7.2.4 Lubricants ..... 17
**8. After Sales Support ..... 18**
8.1 Spare parts ..... 18
8.2 Dismantling, re-assembly and rewinding ..... 18
8.3 Bearings ..... 18
**9. Environmental requirements ..... 18**
**10. Troubleshooting ..... 19**
**11. Figures ..... 21**

# 1. Introduction

**NOTE!**
These instructions must be followed to ensure safe and proper installation, operation and maintenance of the motor. They should be brought to the attention of anyone who installs, operates or maintains the motor or associated equipment. The motor is intended for installation and use by qualified personnel, familiar with health and safety requirements and national legislation. Ignoring these instructions may invalidate all applicable warranties.

## 1.1 Declaration of Conformity

The conformity of the end product according to Directive 2006/42/EC (Machinery) has to be established by the commissioning party when the motor is fitted to the machinery.

## 1.2 Validity

These instructions are valid for the following ABB electrical machine types, in both motor and generator operation:

series MT*, MXMA,
series M1A*, M2A*/M3A*, M2B*/M3B*, M4B*, M2C*/M3C*, M2F*/M3F*, M2L*/M3L*, M2M*/M3M*, M2Q*, M2R*/M3R*, M2V*/M3V*
in frame sizes 56 - 450.

There is a separate manual for e.g. Ex motors ‘Low voltage motors for explosive atmospheres: Installation, operation and maintenance and safety manual (3GZF500730-47)

Additional information is required for some machine types due to special application and/or design considerations.

Additional manual is available for the following motors:
– roller table motors
– water cooled motors
– smoke extraction motors
– brake motors
– motors for high ambient temperatures
– motors in marine applications for mounting on open deck of ships or offshore units

# 2. Safety considerations

The motor is intended for installation and use by qualified personnel, familiar with health and safety requirements and national legislation.

Safety equipment necessary for the prevention of accidents at the installation and operating site must be provided in accordance with local regulations.

**WARNING!**
Emergency stop controls must be equipped with restart lockouts. After emergency stop a new start command can take effect only after the restart lockout has been intentionally reset.

**Points to be observed:**

1. Do not step on the motor.
2. The temperature of the outer casing of the motor may be hot to the touch during normal operation and especially after shut-down.
3. Some special motor applications may require additional instructions (e.g. when supplied by frequency converter).
4. Observe rotating parts of the motor.
5. Do not open terminal boxes while energized.

# 3. Handling

## 3.1 Reception

Immediately upon receipt, check the motor for external damage (e.g. shaft-ends, flanges and painted surfaces) and, if found, inform the forwarding agent without delay.

Check all rating plate data, especially voltage and winding connections (star or delta). The type of bearing is specified on the rating plate of all motors except the smallest frame sizes.

In the case of a variable speed drive application check the maximum loadability allowed according to frequency stamped on the motor's second rating plate.

## 3.2 Transportation and storage

The motor should always be stored indoors (above –20 °C), in dry, vibration-free and dust-free conditions. During transportation, shocks, falls and humidity should be avoided. In other conditions, please contact ABB.

Unprotected machined surfaces (shaft-ends and flanges) should be treated against corrosion.

It is recommended that shafts are rotated periodically (once per quarter) by hand to prevent grease migration.

Anti-condensation heaters, if fitted, are recommended to be used to avoid water condensing in the motor.

The motor must not be subject to any external vibrations at standstill so as to avoid causing damage to the bearings.

Motors fitted with cylindrical-roller and/or angular contact bearings must be fitted with locking devices during transport.

## 3.3 Lifting

All ABB motors above 25 kg are equipped with lifting lugs or eyebolts.

Only the main lifting lugs or eyebolts of the motor should be used for lifting the motor. They must not be used to lift the motor when it is attached to other equipment.

Lifting lugs for auxiliaries (e.g. brakes, separate cooling fans) or terminal boxes must not be used for lifting the motor. Because of different output, mounting arrangements and auxiliary equipment, motors with the same frame may have a different center of gravity.

Damaged lifting lugs must not be used. Check that eyebolts or integrated lifting lugs are undamaged before lifting.

Lifting eyebolts must be tightened before lifting. If needed, the position of the eyebolt can be adjusted using suitable washers as spacers.

Ensure that proper lifting equipment is used and that the sizes of the hooks are suitable for the lifting lugs.

Care must be taken not to damage auxiliary equipment and cables connected to the motor.

Remove eventual transport jigs fixing the motor to the pallet.

Specific lifting instructions are available from ABB.

**WARNING!**
During lifting, mounting or maintenance work, all necessary safety considerations shall be in place and special attention to be taken that nobody will be subject to lifted load.

## 3.4 Motor weight

The total motor weight can vary within the same frame size (center height) depending on different output, mounting arrangement and auxiliaries.

The following table shows estimated maximum weights for machines in their basic versions as a function of frame material.

The actual weight of all ABB's motors, except the smallest frame sizes (56 and 63), is shown on the rating plate.

| Frame size | Aluminum<br>Weight kg | Cast iron<br>Weight kg | Add. for brake |
|---|---|---|---|
| 56 | 4.5 | – | – |
| 63 | 6 | – | – |
| 71 | 8 | 13 | 5 |
| 80 | 14 | 20 | 8 |
| 90 | 20 | 30 | 10 |
| 100 | 32 | 40 | 16 |
| 112 | 36 | 50 | 20 |
| 132 | 93 | 90 | 30 |
| 160 | 149 | 130 | 30 |
| 180 | 162 | 190 | 45 |
| 200 | 245 | 275 | 55 |
| 225 | 300 | 360 | 75 |
| 250 | 386 | 405 | 75 |
| 280 | 425 | 800 | – |
| 315 | – | 1700 | – |
| 355 | – | 2700 | – |
| 400 | – | 3500 | – |
| 450 | – | 4500 | – |

If the motor is equipped with a separate fan, contact ABB for the weight.

# 4. Installation and commissioning

**WARNING!**
Disconnect and lock out before working on the motor or the driven equipment.

## 4.1 General

All rating plate values must be carefully checked to ensure that the motor protection and connection will be properly done.

When starting the motor for the first time or after it has been in storage more than 6 months, apply the specified quantity of grease.

See section “7.2.2 Motors with re-greasable bearings” for more details.

When fitted in a vertical position with the shaft pointing downwards, the motor must have a protective cover to prevent foreign objects and fluid from falling into the ventilation openings. This task can also be achieved by a separate cover not fixed to the motor. In this case, the motor must have a warning label.

## 4.2 Motors with other than deep groove ball bearings

Remove transport locking if employed. Turn the shaft of the motor by hand to check free rotation, if possible.

**Motors equipped with cylindrical roller bearings:**

Running the motor with no radial force applied to the shaft may damage the roller bearing due to “sliding”,

**Motors equipped with angular contact ball bearing:**

Running the motor with no axial force applied in the right direction in relation to the shaft may damage the angular contact bearing.

**WARNING!**
For motors with angular contact bearings the axial force must not by any means change direction.

The type of bearing is specified on the rating plate.

## 4.3 Insulation resistance check

Measure insulation resistance (IR) before commissioning, after long periods of standstill or storage when winding dampness may be suspected. IR shall be measured directly on the motor terminals with the supply cables disconnected in order to avoid them affecting the result.

Insulation resistance should be used as a trend indicator to determine changes in the insulation system. In new machines the IR is usually thousands of Mohms and thus following the change of IR is important so as to know the condition of the insulation system. Typically, the IR should not be below 10 MΩ and in no case below 1 MΩ (measured with 500 or 1000 VDC and corrected to 25 °C). The insulation resistance value is halved for each 20 °C increase in temperature.

Figure 1, in chapter 11, can be used for the insulation correction to the desired temperature.

**WARNING!**
To avoid risk of electrical shock, the motor frame must be grounded and the windings should be discharged against the frame immediately after each measurement.

If the reference resistance value is not attained, the winding is too damp and must be oven dried. The oven temperature should be 90 °C for 12-16 hours followed by 105 °C for 6-8 hours.

If fitted drain hole plugs must be removed and closing valves must be opened during heating. After heating, make sure the plugs are refitted. Even if the drain plugs are fitted, it is recommended to disassemble the end shields and terminal box covers for the drying process.

Windings drenched in seawater normally need to be rewound.

## 4.4 Foundation

The end user has full responsibility for preparation of the foundation.

Metal foundations should be painted to avoid corrosion.

Foundations must be even and sufficiently rigid to withstand possible short circuit forces.

They must be designed and dimensioned to avoid the transfer of vibration to the motor and vibration caused by resonance. See figure below.

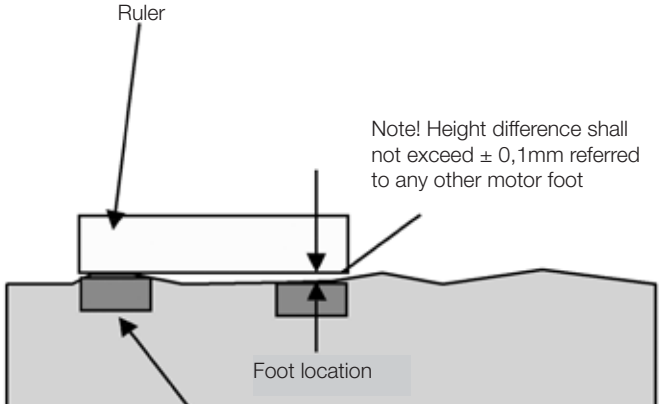

## 4.5 Balancing and fitting coupling halves and pulleys

As standard, balancing of the motor has been carried out using half key.

Coupling halves or pulleys must be balanced after machining the keyways. Balancing must be done in accordance with the balancing method specified for the motor.

Coupling halves and pulleys must be fitted on the shaft by using suitable equipment and tools which do not damage the bearings and seals.

Never fit a coupling half or pulley by hammering or removing it by using a lever pressed against the body of the motor.

## 4.6 Mounting and alignment of the motor

Ensure that there is enough space for free airflow around the motor. It is recommended to have a clearance between the fan cover and the wall etc. of at least ½ of the air intake of the fan cover. Additional information may be found from the product catalog or from the dimension drawings available on our web pages: www.abb.com/motors&generators.

Correct alignment is essential to avoid bearing, vibration and possible shaft failures.

Mount the motor on the foundation using the appropriate bolts or studs and place shim plates between the foundation and the feet.

Align the motor using appropriate methods.

If applicable, drill locating holes and fix the locating pins into position.

Mounting accuracy of coupling half: check that clearance b is less than 0.05 mm and that the difference a1 to a2 is also less than 0.05 mm. See figure 2.

Re-check the alignment after final tightening of the bolts or studs.

Do not exceed permissible loading values for bearings as stated in the product catalogs.

Check that the motor has sufficient airflow. Ensure that no nearby objects or direct sunshine radiate additional heat to the motor.

For flange mounted motors (e.g. B5, B35, V1), make sure that the construction allows sufficient air flow on the outer surface of the flange.

## 4.7 Radial forces and belt drives

Belts must be tightened according to the instructions of the supplier of the driven equipment. However, do not exceed the maximum belt forces (i.e. radial bearing loading) stated in the relevant product catalogs.

**WARNING!**
Excessive belt tension will damage bearings and can cause shaft damage.

## 4.8 Motors with drain plugs for condensation

Check that drain holes and plugs face downwards. In vertical position mounted motors, the drain plugs may be in horizontal position.

Motors with sealable plastic drain plugs are delivered in an open position. In very dusty environments, all drain holes should be closed.

## 4.9 Cabling and electrical connections

The terminal box on standard single speed motors normally contains six winding terminals and at least one earth terminal.

In addition to the main winding and earthing terminals, the terminal box can also contain connections for thermistors, heating elements or other auxiliary devices.

Suitable cable lugs must be used for the connection of all main cables. Cables for auxiliaries can be connected into their terminal blocks as such.

Motors are intended for fixed installation only. Unless otherwise specified, cable entry threads are metric. The IP class of the cable gland must be at least the same as those of the terminal boxes.

Certified conduit hub or cable connector has to be used at the time of installation.

**NOTE!**
Cables should be mechanically protected and clamped close to the terminal box to fulfill the appropriate requirements of IEC/EN 60079-0 and local installation standards.

Unused cable entries must be closed with blanking elements according to the IP class of the terminal box.

The degree of protection and diameter are specified in the documents relating to the cable gland.

**WARNING!**
Use appropriate cable glands and seals in the cable entries according to the type and diameter of the cable.

Earthing must be carried out according to local regulations before the motor is connected to the supply voltage.

The earth terminal on the frame has to be connected to PE (protective earth) with a cable as shown in Table 5 of IEC/EN 60034-1:

***Minimum cross-sectional area of protective conductors***

| Cross-sectional area of phase conductors of the installation, S, [mm$^2$] | Minimum cross-sectional area of the corresponding protective conductor, S, [mm$^2$] |
|---|---|
| 4 | 4 |
| 6 | 6 |
| 10 | 10 |
| 16 | 16 |
| 25 | 25 |
| 35 | 25 |
| 50 | 25 |
| 70 | 35 |
| 95 | 50 |
| 120 | 70 |
| 150 | 70 |
| 185 | 95 |
| 240 | 120 |
| 300 | 150 |
| 400 | 185 |

In addition, earthing or bonding connection facilities on the outside of electrical apparatus must provide effective connection of a conductor with a cross-sectional area of at least 4 mm$^2$.

The cable connection between the network and motor terminals must meet the requirements stated in the national standards for installation or in the standard IEC/EN 60204-1 according to the rated current indicated on the rating plate.

**NOTE!**
When the ambient temperature exceeds +50 °C, cables having permissible operating temperature of +90 °C as minimum shall be used. Also all other conversion factors depending on the installation conditions shall be taken into account while sizing the cables.

Ensure that the motor protection corresponds to the environment and weather conditions. For example, make sure that water cannot enter the motor or the terminal boxes.

The seals of terminal boxes must be placed correctly in the slots provided to ensure the correct IP class. A leak could lead to penetration of dust or water, creating a risk of flashover to live elements.

### *4.9.1 Connections for different starting methods*

The terminal box on standard single speed motors normally contains six winding terminals and at least one earth terminal. This enables the use of DOL- or Y/D –starting.

For two-speed and special motors, the supply connection must follow the instructions inside the terminal box or in the motor manual.

The voltage and connection are stamped on the rating plate.

**Direct-on-line starting (DOL):**

Y or D winding connections may be used.

For example, 690 VY, 400 VD indicates Y-connection for 690 V and D-connection for 400 V.

**Star/Delta (Wye/Delta) starting (Y/D):**

The supply voltage must be equal to the rated voltage of the motor when using a D-connection.

Remove all connection links from the terminal block.

**Other starting methods and severe starting conditions:**

In cases where other starting methods e.g. converter or soft starter will be used in the duty types of S1 and S2, it is considered that the device is “isolated from the power system when the electrical machine is running” as in the standard IEC 60079-0 and thermal protection is optional.

### *4.9.2 Connections of auxiliaries*

If a motor is equipped with thermistors or other RTDs (Pt100, thermal relays, etc.) and auxiliary devices, it is recommended they be used and connected by appropriate means. For certain applications, it is mandatory to use thermal protection. More detailed information can be found in the documents delivered with the motor. Connection diagrams for auxiliary elements and connection parts can be found inside the terminal box.

The maximum measuring voltage for the thermistors is 2.5 V. The maximum measuring current for Pt100 is 5 mA. Using a higher measuring voltage or current may cause errors in readings or a damaged temperature detector.

The insulation of thermal sensors fulfills the requirements of basic insulation.

## 4.10 Terminals and direction of rotation

The shaft rotates clockwise when viewing the shaft face at the motor drive end, and the line phase sequence – L1, L2, L3 – is connected to the terminals as shown in figure 3.

To alter the direction of rotation, interchange any two connections on the supply cables.

If the motor has a unidirectional fan, ensure that it rotates in the same direction as the arrow marked on the motor.

# 5. Operation

## 5.1 General

The motors are designed for the following conditions unless otherwise stated on the rating plate:

- Motors are to be installed in fixed installations only.
- Normal ambient temperature range is from –20 °C to +40 °C.
- Maximum altitude is 1000 m above sea level.
- The variation of the supply voltage and frequency may not exceed the limits mentioned in relevant standards. Tolerance for supply voltage is ±5 %, and for frequency ±2 % according to the figure 4 (EN / IEC 60034-1, paragraph 7.3, Zone A). Both extreme values are not supposed to occur at the same time.

The motor can only be used in applications for which it is intended. The rated nominal values and operation conditions are shown on the motor rating plates. In addition, all requirements of this manual and other related instructions and standards must be followed.

If these limits are exceeded, motor data and construction data must be checked. Please contact ABB for further information.

**WARNING!**
Ignoring any instructions or maintenance of the apparatus may jeopardize safety and thus prevent the use of the motor.

# 6. Low voltage motors in variable speed operation

## 6.1 Introduction

This part of the manual provides additional instructions for motors used in frequency converter supplies. The motor is intended to operate from a single frequency converter supply and not motors running in parallel from one frequency converter. Instructions given by the converter manufacturer shall be followed.

Additional information may be required by ABB to decide on the suitability for some motor types used in special applications or with special design modifications.

## 6.2 Winding insulation

Variable speed drives create higher voltage stresses than the sinusoidal supply on the winding of the motor. Therefore, the winding insulation of the motor as well as the filter at the converter output must be dimensioned according following instructions.

### *6.2.1 Selection of winding insulation for ABB converters*

In the case of ABB e.g. AC_8_ _-series and AC_5_ _-series single drives with a diode supply unit (uncontrolled DC voltage), the selection of winding insulation and filters can be made according to table 6.1.

### *6.2.2 Selection of winding insulation with all other converters*

The voltage stresses must be limited below accepted limits. Please contact the system supplier to ensure the safety of the application. The influence of possible filters must be taken into account while dimensioning the motor.

## 6.3 Thermal protection

Most of the motors covered by this manual are equipped with PTC thermistors or other type of RTD's in the stator windings. It is recommended to connect those to the frequency converter. Read more in chapter 4.9.2.

## 6.4 Bearing currents

Insulated bearings or bearing constructions, common mode filters and suitable cabling and grounding methods must be used according to the following instructions and using table 6.1.

### *6.4.1 Elimination of bearing currents with ABB converters*

In case of ABB frequency converter e.g. AC_8_ _- and AC_5_ _-series with a diode supply unit, the methods according to table 6.1 must be used to avoid harmful bearing currents in motors.

| | **$P_N$ < 100 kW** | **$P_N \geq$ 100 kW or IEC315 ≤ Frame size ≤ IEC355** | **$P_N \geq$ 350 kW or IEC400 ≤ Frame size ≤ IEC450** |
|---|---|---|---|
| $U_N \leq$ 500 V | Standard motor | Standard motor<br>+ Insulated N-bearing | Standard motor<br>+ Insulated N-bearing<br>+ Common mode filter |
| 500V > $U_N \leq$ 600V | Standard motor<br>+ dU/dt –filter (reactor)<br>OR<br>Reinforced insulation | Standard motor<br>+ dU/dt –filter (reactor)<br>+ Insulated N-bearing<br>OR<br>Reinforced insulation<br>+ Insulated N-bearing | Standard motor<br>+ Insulated N-bearing<br>+ dU/dt –filter (reactor)<br>+ Common mode filter<br>OR<br>Reinforced insulation<br>+ Insulated N-bearing<br>+ Common mode filter |
| 500V > $U_N \leq$ 600V<br>(cable length > 150 m) | Standard motor | Standard motor<br>+ Insulated N-bearing | Standard motor<br>+ Insulated N-bearing<br>+ Common mode filter |
| 600V > $U_N \leq$ 690V | Reinforced insulation<br>+ dU/dt –filter (reactor) | Reinforced insulation<br>+ dU/dt –filter (reactor)<br>+ Insulated N-bearing | Reinforced insulation<br>+ Insulated N-bearing<br>+ dU/dt –filter (reactor)<br>+ Common mode filter |
| 600V > $U_N \leq$ 690V<br>(cable length > 150 m) | Reinforced insulation | Reinforced insulation<br>+ Insulated N-bearing | Reinforced insulation<br>+ Insulated N-bearing<br>+ Common mode filter |

*Table 6.1 Selection of winding insulation for ABB converters*

Please contact ABB for more information on resistor braking and converters with controlled supply units.

**NOTE!**
Insulated bearings which have aluminum oxide coated inner and/or outer bores or ceramic rolling elements are recommended. Aluminum oxide coatings shall also be treated with a sealant to prevent dirt and humidity penetrating into the porous coating. For the exact type of bearing insulation, see the motor's rating plate. Changing the bearing type or insulation method without ABB's permission is prohibited.

### *6.4.2 Elimination of bearing currents with all other converters*

The user is responsible for protecting the motor and driven equipment from harmful bearing currents. Instructions described in chapter 6.4.1 can be used as guideline, but their effectiveness cannot be guaranteed in all cases.

## 6.5 Cabling, grounding and EMC

To provide proper grounding and to ensure compliance with any applicable EMC requirements, motors above 30 kW shall be cabled by shielded symmetrical cables and EMC glands, i.e. cable glands providing 360° bonding.

Symmetrical and shielded cables are highly recommended also for smaller motors. Make the 360° grounding arrangement at all the cable entries as described in the instructions for the glands. Twist the cable shields into bundles and connect to the nearest ground terminal/bus bar inside the terminal box, converter cabinet, etc.

**NOTE!**
Proper cable glands providing 360° bonding must be used at all termination points such as motor, converter, possible safety switch, etc.

For motors of frame size IEC 280 and above, additional potential equalization between the motor frame and the driven equipment is needed, unless both are mounted on a common steel base. In this case, the high frequency conductivity of the connection provided by the steel base should be checked by, for example, measuring the potential difference between the components.

More information about grounding and cabling of variable speed drives can be found in the manual "Grounding and cabling of the drive system" (Code: 3AFY 61201998).

## 6.6 Operating speed

For speeds higher than the nominal speed stated on the motor's rating plate or in the respective product catalog, ensure that either the highest permissible rotational speed of the motor or the critical speed of the whole application is not exceeded.

## 6.7 Motors in variable speed applications

### *6.7.1 General*

With ABB's frequency converters, the motors can be dimensioned by using ABB's DriveSize dimensioning program. The tool is downloadable from the ABB website (www.abb.com/motors&generators).

For application supplied by other converters, the motors must be dimensioned manually. For more information, please contact ABB.

The loadability curves (or load capacity curves) are based on nominal supply voltage. Operation in under or over voltage conditions may influence on the performance of the application.

### *6.7.2 Motor loadability with AC_8_ _ – series of converters with DTC control*

The loadability curves presented in Figures 5a – 5d are valid for ABB AC_8_ _-series converters with uncontrolled DC-voltage and DTC-control. The figures show the approximate maximum continuous output torque of the motors as a function of supply frequency. The output torque is given as a percentage of the nominal torque of the motor. The values are indicative and exact values are available on request.

**NOTE!**
The maximum speed of the motor and application may not be exceeded!

### *6.7.3 Motor loadability with AC_5_ _ – series of converter*

The loadability curves presented in Figures 6a – 6d are valid for AC_5_ _ -series converters. The figures show the approximate maximum continuous output torque of the motors as a function of supply frequency. The output torque is given as a percentage of the nominal torque of the motor. The values are indicative and exact values are available on request.

**NOTE!**
The maximum speed of the motor and application may not be exceeded!

### 6.7.4 Motor loadability with other voltage source PWM-type converters

For other converters, with uncontrolled DC voltage and minimum switching frequency of 3 kHz (200…500 V), the dimensioning instructions as mentioned in chapter 6.7.3 can be used as guidelines. However, it shall be noted that the actual thermal loadability can also be lower. Please contact the manufacturer of the converter or the system supplier.

**NOTE!**
The actual thermal loadability of a motor may be lower than shown by guideline curves.

### 6.7.5 Short time overloads

ABB motors can usually be temporarily overloaded as well as used in intermittent duties. The most convenient method to dimension such applications is to use the DriveSize tool.

## 6.8 Rating plates

The usage of ABB's motors in variable speed applications do not usually require additional rating plates. The parameters required for commissioning the converter can be found from the main rating plate. In some special applications, however, the motors can be equipped with additional rating plates for variable speed applications. Those include the following information:

– speed range
– power range
– voltage and current range
– type of torque (constant or quadratic)
– and converter type and required minimum switching frequency.

## 6.9 Commissioning the variable speed application

The commissioning of the variable speed application must be done according to the instructions of the frequency converter and local laws and regulations. The requirements and limitations set by the application must also be taken into account.

All parameters needed for setting the converter must be taken from the motor rating plates. The most often needed parameters are:

– nominal voltage
– nominal current
– nominal frequency
– nominal speed
– nominal power

**NOTE!**
In case of missing or inaccurate information, do not operate the motor before ensuring correct settings!

ABB recommends using all the suitable protective features provided by the converter to improve the safety of the application. Converters usually provide features such as (names and availability of features depend on manufacturer and model of the converter):

– minimum speed
– maximum speed
– acceleration and deceleration times
– maximum current
– maximum torque
– stall protection

# 7. Maintenance

**WARNING!**
Voltage may be connected at standstill inside the terminal box for heating elements or direct winding heating.

## 7.1 General inspection

1. Inspect the motor at regular intervals, at least once a year. The frequency of checks depends on, for example, the humidity level of the ambient air and on the local weather conditions. This can initially be determined experimentally and must then be strictly adhered to.
2. Keep the motor clean and ensure free ventilation airflow. If the motor is used in a dusty environment, the ventilation system must be regularly checked and cleaned.
3. Check the condition of shaft seals (e.g. V-ring or radial seal) and replace if necessary.
4. Check the condition of connections and mounting and assembly bolts.
5. Check the bearing condition by listening for any unusual noise, vibration measurement, bearing temperature, inspection of spent grease or SPM bearing monitoring. Pay special attention to bearings when their calculated rated life time is coming to an end.

When signs of wear are noticed, dismantle the motor, check the parts and replace if necessary. When bearings are changed, replacement bearings must be of the same type as those originally fitted. The shaft seals have to be replaced with seals of the same quality and characteristics as the originals when changing bearings.

In the case of the IP 55 motor and when the motor has been delivered with a plug closed, it is advisable to periodically open the drain plugs in order to ensure that the way out for condensation is not blocked and allows condensation to escape from the motor. This operation must be done when the motor is at a standstill and has been made safe to work on.

### *7.1.1 Standby motors*

If the motor is in standby for a longer period of time on a ship or in other vibrating environment the following measures have to be taken:

1. The shaft must be rotated regularly every 2 weeks (to be reported) by means of starting up of the system. In case a start-up is not possible, for any reason, at least the shaft has to be turned by hand in order to achieve a different position once a week. Vibrations caused by other vessel's equipment will cause bearing pitting which should be minimized by regular operation/hand turning.
2. The bearing must be greased while rotating the shaft every year (to be reported). If the motor has been provided with roller bearing at the driven end, the transport lock must be removed before rotating the shaft. The transport locking must be remounted in case of transportation.
3. All vibrations must be avoided to prevent a bearing from failing. All instructions in the motor instruction manual for commissioning and maintenance have to be followed. The warranty will not cover the winding and bearing damages if these instructions have not been followed.

## 7.2 Lubrication

**WARNING!**
Beware of all rotating parts!

**WARNING!**
Grease can cause skin irritation and eye inflammation. Follow all safety precautions specified by the manufacturer of the grease.

Bearing types are specified in the respective product catalogs and on the rating plate of all motors, except smaller frame sizes.

Reliability is a vital issue for bearing lubrication intervals. ABB uses mainly the $L_1$ -principle (i.e. that 99 % of the motors are certain to make the life time) for lubrication.

### *7.2.1 Motors with permanently greased bearings*

Bearings are usually permanently greased bearings of 1Z, 2Z, 2RS or equivalent.

As a guide, adequate lubrication for sizes up to 250 can be achieved for the following duration, according to $L_1$. For duties with higher ambient temperatures, please contact ABB. The informative formula to change the $L_1$ values roughly to $L_{10}$ values: $L_{10} = 2.0 \times L_1$.

Duty hours for permanently greased bearings at ambient temperatures of 25 °C and 40 °C are:

| Frame size | Poles | Duty hours at 25 °C | Duty hours at 40 °C |
|---|---|---|---|
| 56 | 2 | 52 000 | 33 000 |
| 56 | 4–8 | 65 000 | 41 000 |
| 63 | 2 | 49 000 | 31 000 |
| 63 | 4–8 | 63 000 | 40 000 |
| 71 | 2 | 67 000 | 42 000 |
| 71 | 4–8 | 100 000 | 56 000 |
| 80–90 | 2 | 100 000 | 65 000 |
| 80–90 | 4–8 | 100 000 | 96 000 |
| 100–112 | 2 | 89 000 | 56 000 |
| 100–112 | 4–8 | 100 000 | 89 000 |
| 132 | 2 | 67 000 | 42 000 |
| 132 | 4–8 | 100 000 | 77 000 |
| 160 | 2 | 60 000 | 38 000 |
| 160 | 4–8 | 100 000 | 74 000 |
| 180 | 2 | 55 000 | 34 000 |
| 180 | 4–8 | 100 000 | 70 000 |
| 200 | 2 | 41 000 | 25 000 |
| 200 | 4–8 | 95 000 | 60 000 |
| 225 | 2 | 36 000 | 23 000 |
| 225 | 4–8 | 88 000 | 56 000 |
| 250 | 2 | 31 000 | 20 000 |
| 250 | 4–8 | 80 000 | 50 000 |

Data is valid up to 60 Hz.

### *7.2.2 Motors with regreasable bearings*

**Lubrication information plate and general lubrication advice**

If the motor is equipped with a lubrication information plate, follow the given values.

Greasing intervals regarding mounting, ambient temperature and rotational speed are defined on the lubrication information plate.

During the first start or after a bearing lubrication a temporary temperature rise may appear, approximately 10 to 20 hours.

Some motors may be equipped with a collector for old grease. Follow the special instructions given for the equipment.

**A. Manual lubrication**

**Regreasing while the motor is running**
- Remove grease outlet plug or open closing valve if fitted.
- Be sure that the lubrication channel is open.
- Inject the specified amount of grease into the bearing.
- Let the motor run for 1-2 hours to ensure that all excess grease is forced out of the bearing. Close the grease outlet plug or closing valve, if fitted.

**Regreasing while the motor is at a standstill**
If it is not possible to re-grease the bearings while the motors are running, lubrication can be carried out while the motor is at a standstill.
- In this case, use only half the amount of grease and then run the motor for a few minutes at full speed.
- When the motor has stopped, apply the rest of the specified amount of grease to the bearing.
- After 1–2 running hours, close the grease outlet plug or closing valve, if fitted.

**B. Automatic lubrication**

The grease outlet plug must be removed permanently with automatic lubrication or open closing valve, if fitted.

ABB recommends only the use of electromechanical systems.

The amount of grease per lubrication interval stated in the table should be multiplied by three if a central lubrication system is used. When using a smaller automatic re-grease unit (one or two cartridges per motor) the normal amount of grease can be used.

When 2-pole motors are automatically re-greased, the note concerning lubricant recommendations for 2-pole motors in the Lubricants chapter should be followed.

The used grease should be suitable for automatic lubrication. The automatic lubrication system deliverer and the grease manufacturer's recommendations should check.

**Calculation example of amount of grease for automatic lubrication system**

Central lubrication system: Motor IEC M3_P 315_ 4-pole in 50 Hz network, re-lubrication interval according to Table is 7600 h/55 g (DE) and 7600 h/40 g (NDE):

(DE) RLI = 55 g/7600 h*3*24 = 0,52 g/day

(NDE) RLI = 40 g/7600 h*3*24 = 0,38 g/day

**Calculation example of amount of grease for single automation lubrication unit (cartridge)**

(DE) RLI = 55 g/7600 h*24 = 0,17 g/day

(NDE) RLI = 40 g/7600 h*24 = 0,13 g/day

RLI = Re-lubrication interval, DE = Drive end,
NDE = Non drive end

### *7.2.3 Lubrication intervals and amounts*

Lubrication intervals for vertical motors are half of the values shown in the table below.

As a guide, adequate lubrication can be achieved for the following duration, according to $L_1$. For duties with higher ambient temperatures please contact ABB. The informative formula to change the $L_1$ values roughly to $L_{10}$ values is $L_{10} = 2.0 \times L_1$, with manual lubrication.

The lubrication intervals are based on a bearing operating temperature of 80 °C (ambient temperature +25 °C).

**NOTE!**
An increase in the ambient temperature raises the temperature of the bearings correspondingly. The interval values should be halved for a 15 °C increase in bearing temperature and may be doubled for a 15 °C decrease in bearing temperature.

Higher speed operation, e.g. in frequency converter applications, or lower speed with heavy load will require shorter lubrication intervals.

**WARNING!**
The maximum operating temperature of the grease and bearings, +110 °C, must not be exceeded. The designed maximum speed of the motor must not be exceeded.

| Frame size | Amount of grease g/bearing | kW | 3600 r/min | 3000 r/min | kW | 1800 r/min | 1500 r/min | kW | 1000 r/min | kW | 500-900 r/min |
|---|---|---|---|---|---|---|---|---|---|---|---|
| | **Ball bearings, lubrication intervals in duty hours** | | | | | | | | | | |
| 112 | 10 | all | 10 000 | 13 000 | all | 18 000 | 21 000 | all | 2 5 000 | all | 28 000 |
| 132 | 15 | all | 9 000 | 11 000 | all | 17 000 | 19 000 | all | 23 000 | all | 26 500 |
| 160 | 25 | ≤ 18,5 | 9 000 | 12000 | ≤ 15 | 18 000 | 21 500 | ≤ 11 | 24 000 | all | 24 000 |
| 160 | 25 | > 18,5 | 7 500 | 1 0000 | > 15 | 15 000 | 18 000 | > 11 | 22 500 | all | 24 000 |
| 180 | 30 | ≤ 22 | 7 000 | 9 000 | ≤ 22 | 15 500 | 18 500 | ≤ 15 | 24 000 | all | 24 000 |
| 180 | 30 | > 22 | 6 000 | 8 500 | > 22 | 14 000 | 17 000 | > 15 | 21 000 | all | 24 000 |
| 200 | 40 | ≤ 37 | 5 500 | 8 000 | ≤ 30 | 14 500 | 17 500 | ≤ 22 | 23 000 | all | 24 000 |
| 200 | 40 | > 37 | 3 000 | 5 500 | > 30 | 10 000 | 12 000 | > 22 | 16 000 | all | 20 000 |
| 225 | 50 | ≤ 45 | 4 000 | 6 500 | ≤ 45 | 13 000 | 16 500 | ≤ 30 | 22 000 | all | 24 000 |
| 225 | 50 | > 45 | 1 500 | 2 500 | > 45 | 5 000 | 6 000 | > 30 | 8 000 | all | 10 000 |
| 250 | 60 | ≤ 55 | 2 500 | 4 000 | ≤ 55 | 9 000 | 11 500 | ≤ 37 | 15 000 | all | 18 000 |
| 250 | 60 | > 55 | 1 000 | 1 500 | > 55 | 3 500 | 4 500 | > 37 | 6 000 | all | 7 000 |
| 280[1)] | 60 | all | 2 000 | 3 500 | – | – | – | – | – | – | – |
| 280[1)] | 60 | – | – | – | all | 8 000 | 10 500 | all | 14 000 | all | 17 000 |
| 280 | 35 | all | 1 900 | 3 200 | | – | – | | – | | – |
| 280 | 40 | | – | – | all | 7 800 | 9 600 | all | 13 900 | all | 15 000 |
| 315 | 35 | all | 1 900 | 3 200 | | – | – | | – | | – |
| 315 | 55 | | – | - | all | 5 900 | 7 600 | all | 11 800 | all | 12 900 |
| 355 | 35 | all | 1 900 | 3 200 | | – | – | | – | | – |
| 355 | 70 | | – | - | all | 4 000 | 5 600 | all | 9 600 | all | 10 700 |
| 400 | 40 | all | 1 500 | 2 700 | | – | – | | – | | – |
| 400 | 85 | | – | – | all | 3 200 | 4 700 | all | 8 600 | all | 9 700 |
| 450 | 40 | all | 1 500 | 2 700 | | – | – | | – | | – |
| 450 | 95 | | – | – | all | 2 500 | 3 900 | all | 7 700 | all | 8 700 |

| | | | | | | | | | | | |
|---|---|---|---|---|---|---|---|---|---|---|---|
| | **Roller bearings, lubrication intervals in duty hours** | | | | | | | | | | |
| 160 | 25 | ≤ 18,5 | 4 500 | 6 000 | ≤ 15 | 9 000 | 10 500 | ≤ 11 | 12 000 | all | 12 000 |
| 160 | 25 | > 18,5 | 3 500 | 5 000 | > 15 | 7 500 | 9 000 | > 11 | 11 000 | all | 12 000 |
| 180 | 30 | ≤ 22 | 3 500 | 4 500 | ≤ 22 | 7 500 | 9 000 | ≤ 15 | 12 000 | all | 12 000 |
| 180 | 30 | > 22 | 3 000 | 4 000 | > 22 | 7 000 | 8 500 | > 15 | 10 500 | all | 12 000 |
| 200 | 40 | ≤ 37 | 2 750 | 4 000 | ≤ 30 | 7 000 | 8 500 | ≤ 22 | 11 500 | all | 12 000 |
| 200 | 40 | > 37 | 1 500 | 2 500 | > 30 | 5 000 | 6 000 | > 22 | 8 000 | all | 10 000 |
| 225 | 50 | ≤ 45 | 2 000 | 3 000 | ≤ 45 | 6 500 | 8 000 | ≤ 30 | 11 000 | all | 12 000 |
| 225 | 50 | > 45 | 750 | 1 250 | > 45 | 2 500 | 3 000 | > 30 | 4 000 | all | 5 000 |
| 250 | 60 | ≤ 55 | 1 000 | 2 000 | ≤ 55 | 4 500 | 5 500 | ≤ 37 | 7 500 | all | 9 000 |
| 250 | 60 | > 55 | 500 | 750 | > 55 | 1 500 | 2 000 | > 37 | 3 000 | all | 3 500 |
| 280[1)] | 60 | all | 1 000 | 1 750 | – | – | – | – | – | – | – |
| 280[1)] | 70 | – | – | – | all | 4 000 | 5 250 | all | 7 000 | all | 8 500 |
| 280 | 35 | all | 900 | 1 600 | | – | – | | – | | – |
| 280 | 40 | | – | – | all | 4 000 | 5 300 | all | 7 000 | all | 8 500 |
| 315 | 35 | all | 900 | 1 600 | | – | – | | – | | – |
| 315 | 55 | | - | - | all | 2 900 | 3 800 | all | 5 900 | all | 6 500 |
| 355 | 35 | all | 900 | 1 600 | | – | – | | – | | – |
| 355 | 70 | | - | - | all | 2 000 | 2 800 | all | 4 800 | all | 5 400 |
| 400 | 40 | all | – | 1 300 | | – | – | | – | | – |
| 400 | 85 | | – | – | all | 1 600 | 2 400 | all | 4 300 | all | 4 800 |
| 450 | 40 | all | – | 1 300 | | – | – | | – | | – |
| 450 | 95 | | – | – | all | 1 300 | 2 000 | all | 3 800 | all | 4 400 |

[1)] M3AA

### 7.2.4 Lubricants

**WARNING!**
**Do not mix different types of grease.**
Incompatible lubricants may cause bearing damage.

When re-greasing, use only special ball bearing grease with the following properties:

– good quality grease with lithium complex soap and with mineral- or PAO-oil
– base oil viscosity 100-160 cST at 40 °C
– consistency NLGI grade 1.5 - 3 *)
– temperature range –30 °C - +120 °C, continuously

*) A stiffer end of scale is recommended for vertical mounted motors or in hot conditions.

The above mentioned grease specification is valid if the ambient temperature is above –30 °C or below +55 °C, and the bearing temperature is below 110 °C; otherwise, consult ABB regarding suitable grease.

Grease with the correct properties is available from all major lubricant manufacturers.

Admixtures are recommended, but a written guarantee must be obtained from the lubricant manufacturer, especially concerning EP admixtures, that admixtures do not damage bearings or the properties of lubricants at the operating temperature range.

**WARNING!**
In general, lubricants containing EP admixtures are not recommended. In some cases it can cause harm in the bearing, therefore its use has to be evaluated case by case together with lubricant suppliers.

The following high performance greases can be used:
– Mobil Unirex N2 or N3 (lithium complex base)
– Mobil Mobilith SHC 100 (lithium complex base)
– Shell Gadus S5 V 100 2 (lithium complex base)
– Klüber Klüberplex BEM 41-132 (special lithium base)
– FAG Arcanol TEMP110 (lithium complex base)
– Lubcon Turmogrease L 802 EP PLUS (special lithium base)
– Total Multis Complex S2 A (lithium complex base)

**NOTE!**
Always use high speed grease for high speed 2-pole motors where the speed factor is higher than 480,000 (calculated as Dm x n where Dm = average bearing diameter, mm; n = rotational speed, r/min).

The following greases can be used for high speed cast iron motors but not mixed with lithium complex greases:

– Klüber Klüber Quiet BQH 72-102 (polyurea base)
– Lubcon Turmogrease PU703 (polyurea base)

If other lubricants are used, check with the manufacturer that the qualities correspond to those of the above mentioned lubricants. The lubrication intervals are based on the listed high performance greases above. Using other greases can reduce the interval.

# 8. After Sales Support

## 8.1 Spare parts

Unless otherwise stated, spare parts must be original parts or approved by ABB.

When ordering spare parts, the motor serial number, full type designation and product code, as stated on the rating plate, must be specified.

## 8.2 Dismantling, re-assembly and rewinding

Rewinding should always be carried out by qualified repair shops.

Smoke venting and other special motors should not be rewound without first contacting ABB.

## 8.3 Bearings

Special care should be taken with the bearings.

These must be removed using pullers and fitted by heating or using special tools.

Bearing replacement is described in detail in a separate instruction leaflet available from the ABB Sales Office.

Any directions placed on the motor, such as labels, must be followed. The bearing types indicated on the rating plate must not be changed.

**NOTE!**
Any repair by the end user, unless expressly approved by the manufacturer, releases the manufacturer from responsibility to conformity.

# 9. Environmental requirements

Most of ABB's motors have a sound pressure level not exceeding 82 dB (A) (± 3 dB) at 50 Hz.

Values for specific motors can be found in the relevant product catalogs. At 60 Hz sinusoidal supply, the values are approximately 4 dB(A) higher compared to 50 Hz values stated in the product catalogs.

For sound pressure levels at frequency converter supplies, please contact ABB.

When motor(s) need to be scrapped or recycled, appropriate means, local regulations and laws must be followed.

# 10. Troubleshooting

These instructions do not cover all details or variations in equipment nor provide information for every possible condition to be met in connection with installation, operation or maintenance. Should additional information be required, please contact the nearest ABB Sales Office.

## Motor troubleshooting chart

Your motor service and any troubleshooting must be handled by qualified persons who have the proper tools and equipment.

| TROUBLE | CAUSE | WHAT TO DO |
|---|---|---|
| Motor fails to start | Blown fuses | Replace fuses with proper type and rating. |
| | Overload trips | Check and reset overload in starter. |
| | Improper power supply | Check to see that power supplied agrees with motor rating plate and load factor. |
| | Improper line connections | Check connections against diagram supplied with motor. |
| | Open circuit in winding or control switch | Indicated by humming sound when switch is closed. Check for loose wiring connections and ensure that all control contacts are closing. |
| | Mechanical failure | Check to see if motor and drive turn freely.<br>Check bearings and lubrication. |
| | Short circuited stator | Contact ABB<br>or<br>Ensure that the supply is disconnected and grounding for work done, disconnect the cables and measure the insulation resistance. |
| | Poor stator coil connection | Indicated by blown fuses. Motor must be rewound.<br>Remove end shields and locate fault. |
| | Motor may be overloaded | Reduce load. |
| Motor stalls | One phase may be open | Check lines for open phase. |
| | Wrong application | Change type or size. Consult equipment supplier. |
| | Overload | Reduce load. |
| | Low voltage | Ensure the rating plate voltage is maintained. Check connection. |
| | Open circuit | Fuses blown. Check overload relay, stator and push buttons. |
| Motor runs and then dies down | Power failure | Check for loose connections to line, fuses and control. |
| Motor does not accelerate up to nominal speed | Not applied properly | Consult equipment supplier for proper type. |
| | Voltage too low at motor terminals because of line drop | Use higher voltage or transformer terminals or reduce load.<br>Check connections. Check conductors for proper size. |
| | Starting load too high | Check the motor's starts against "no load". |
| | Broken rotor bars or loose rotor | Look for cracks near the rings. A new rotor may be required, as repairs are usually temporary. |
| | Open primary circuit | Locate fault with testing device and repair. |

| TROUBLE | CAUSE | WHAT TO DO |
|---|---|---|
| Motor takes too long to accelerate and/or draws high current | Excessive load | Reduce load. |
| | Low voltage during start | Check for high resistance. Make sure that an adequate cable size is used. |
| | Defective squirrel cage rotor | Replace with new rotor. |
| | Applied voltage too low | Correct power supply. |
| Wrong rotation direction | Wrong sequence of phases | Reverse connections at motor or at switchboard. |
| Motor overheats while running | Overload | Reduce load. |
| | Frame or ventilation openings may be full of dirt and prevent proper ventilation of motor | Open vent holes and check for a continuous stream of air from the motor. |
| | Motor may have one phase open | Check to make sure that all leads and cables are well connected. |
| | Grounded coil | Motor must be rewound. |
| | Unbalanced terminal voltage | Check for faulty leads, connections and transformers. |
| Motor vibrates | Motor misaligned | Realign. |
| | Weak support | Strengthen base. |
| | Coupling out of balance | Balance coupling. |
| | Driven equipment unbalanced | Rebalance driven equipment. |
| | Defective bearings | Replace bearings. |
| | Bearings not in line | Repair motor |
| | Balancing weights shifted | Rebalance rotor. |
| | Contradiction between balancing of rotor and coupling (half key - full key) | Rebalance coupling or rotor. |
| | Poly phase motor running single phase | Check for open circuit. |
| | Excessive end play | Adjust bearing or add shim. |
| Scraping noise | Fan rubbing end shield or fan cover | Correct fan mounting. |
| | Loose on bedplate | Tighten holding bolts. |
| Noisy operation | Air gap not uniform | Check and correct end shield fits or bearing fits. |
| | Rotor unbalance | Rebalance rotor. |
| Hot bearings | Bent or sprung shaft | Straighten or replace shaft. |
| | Excessive belt pull | Decrease belt tension. |
| | Pulleys too far away from shaft shoulder | Move pulley closer to motor bearing. |
| | Pulley diameter too small | Use larger pulleys. |
| | Misalignment | Correct by realignment of the drive. |
| | Insufficient grease | Maintain proper quality and amount of grease in bearing. |
| | Deterioration of grease or lubricant contaminated | Remove old grease, wash bearings thoroughly in kerosene and replace with new grease. |
| | Excess lubricant | Reduce quantity of grease, bearing should not be more than half full. |
| | Overloaded bearing | Check alignment, side and end thrust. |
| | Broken ball or rough races | Replace bearing, clean housing thoroughly first. |

# 11. Figures

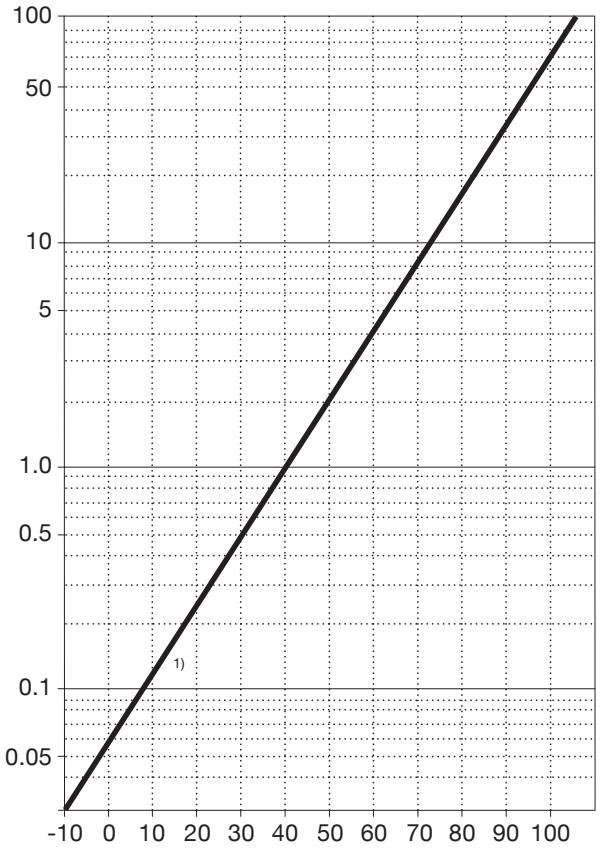


**Key**

X-axis: Winding temperature, Celsius Degrees

Y-axis: Insulation Resistance Temperature Coefficient, ktc

1) To correct observed insulation resistance, $R_i$, to 40 °C multiply it by the temperature coefficient $k_{tc}$. $R_{i\ 40\ °C} = R_i$ x

Figure 1. Diagram illustrating the insulation resistance dependence from the temperature and how to correct the measured insulation resistance to the temperature of 40 °C.

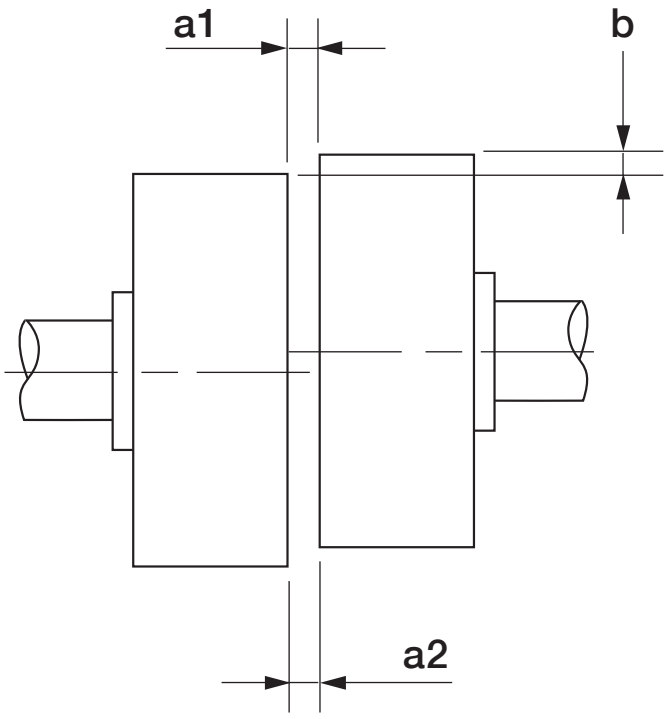


Figure 2. Mounting of half-coupling or pulley

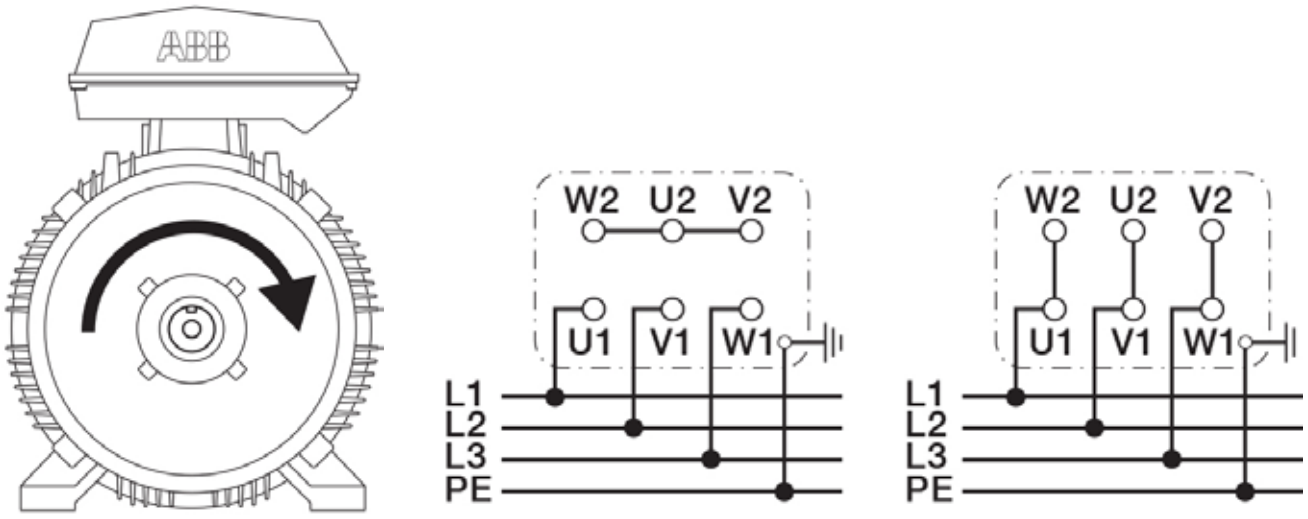


Figure 3. Connection of terminals for main supply

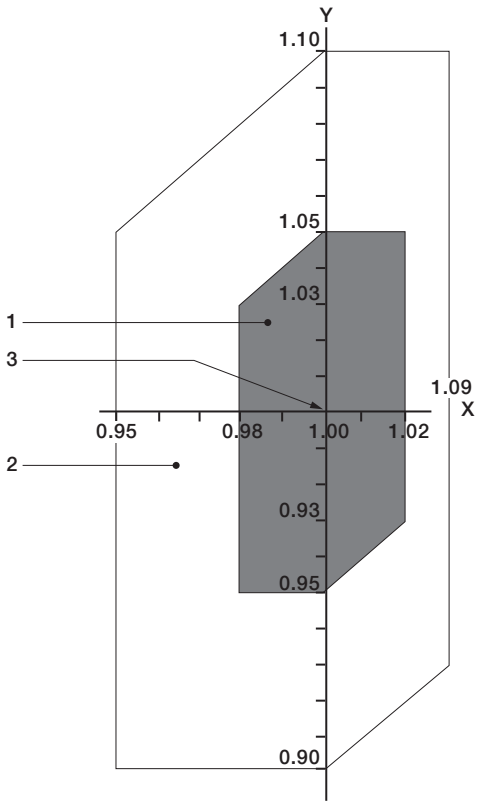


**Key**

| | |
|---|---|
| X axis | frequency p.u. |
| Y axis | voltage p.u. |
| 1 | zone A |
| 2 | zone B (outside zone A) |
| 3 | rating point |

Figure 4. Voltage and frequency deviation in zones A and B

## Guideline loadability curves with converters with DTC control

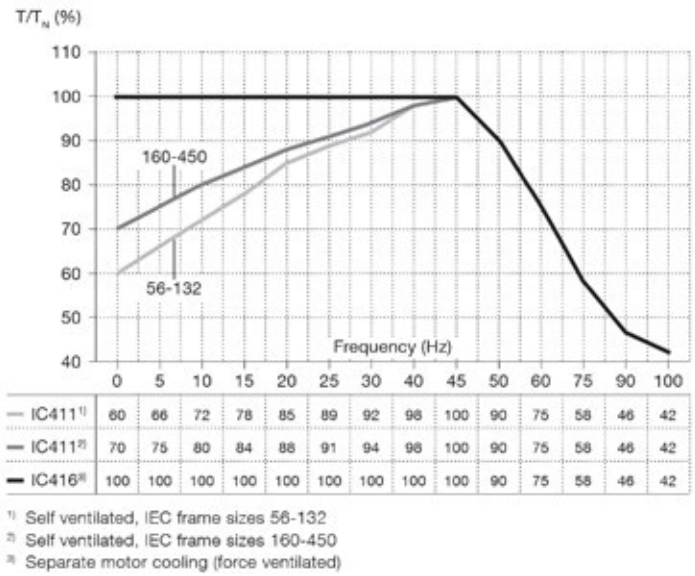


| | | | | | | | | | | | | | | |
|---|---|---|---|---|---|---|---|---|---|---|---|---|---|---|
| Frequency (Hz) | 0 | 5 | 10 | 15 | 20 | 25 | 30 | 40 | 45 | 50 | 60 | 75 | 90 | 100 |
| IC411[1] | 60 | 66 | 72 | 78 | 85 | 89 | 92 | 98 | 100 | 90 | 75 | 58 | 46 | 42 |
| IC411[2] | 70 | 75 | 80 | 84 | 88 | 91 | 94 | 98 | 100 | 90 | 75 | 58 | 46 | 42 |
| IC416[3] | 100 | 100 | 100 | 100 | 100 | 100 | 100 | 100 | 100 | 90 | 75 | 58 | 46 | 42 |

[1] Self ventilated, IEC frame sizes 56-132
[2] Self ventilated, IEC frame sizes 160-450
[3] Separate motor cooling (force ventilated)

Figure 5a. Conventer with DTC control, 50 Hz, temperature rise B

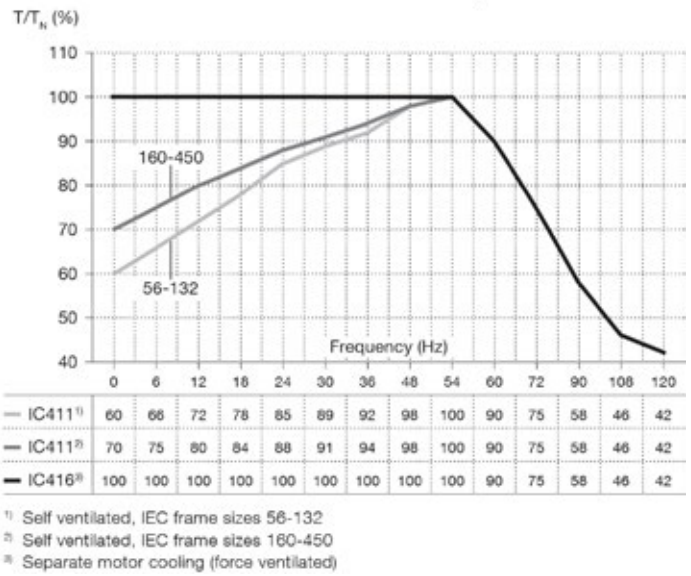


| | | | | | | | | | | | | | | |
|---|---|---|---|---|---|---|---|---|---|---|---|---|---|---|
| Frequency (Hz) | 0 | 6 | 12 | 18 | 24 | 30 | 36 | 48 | 54 | 60 | 72 | 90 | 108 | 120 |
| IC411[1] | 60 | 66 | 72 | 78 | 85 | 89 | 92 | 98 | 100 | 90 | 75 | 58 | 46 | 42 |
| IC411[2] | 70 | 75 | 80 | 84 | 88 | 91 | 94 | 98 | 100 | 90 | 75 | 58 | 46 | 42 |
| IC416[3] | 100 | 100 | 100 | 100 | 100 | 100 | 100 | 100 | 100 | 90 | 75 | 58 | 46 | 42 |

[1] Self ventilated, IEC frame sizes 56-132
[2] Self ventilated, IEC frame sizes 160-450
[3] Separate motor cooling (force ventilated)

Figure 5b. Conventer with DTC control, 60 Hz, temperature rise B

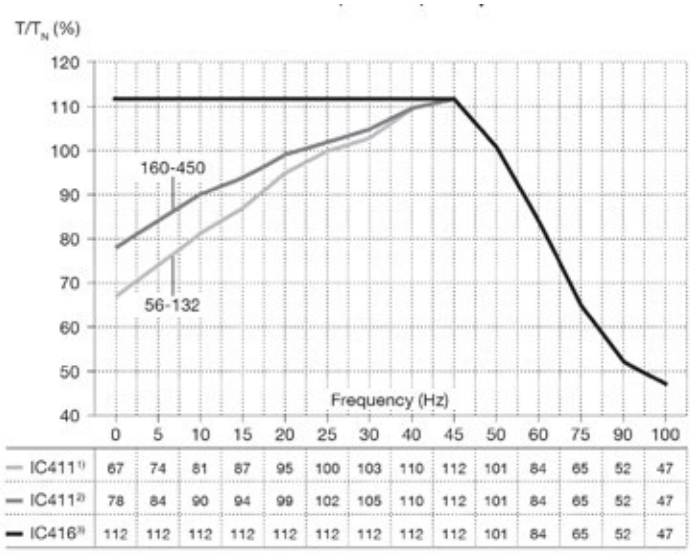


| | | | | | | | | | | | | | | |
|---|---|---|---|---|---|---|---|---|---|---|---|---|---|---|
| Frequency (Hz) | 0 | 5 | 10 | 15 | 20 | 25 | 30 | 40 | 45 | 50 | 60 | 75 | 90 | 100 |
| IC411[1] | 67 | 74 | 81 | 87 | 95 | 100 | 103 | 110 | 112 | 101 | 84 | 65 | 52 | 47 |
| IC411[2] | 78 | 84 | 90 | 94 | 99 | 102 | 105 | 110 | 112 | 101 | 84 | 65 | 52 | 47 |
| IC416[3] | 112 | 112 | 112 | 112 | 112 | 112 | 112 | 112 | 112 | 101 | 84 | 65 | 52 | 47 |

[1] Self ventilated, IEC frame sizes 56-132
[2] Self ventilated, IEC frame sizes 160-450
[3] Separate motor cooling (force ventilated)

Figure 5c. Conventer with DTC control, 50 Hz, temperature rise F

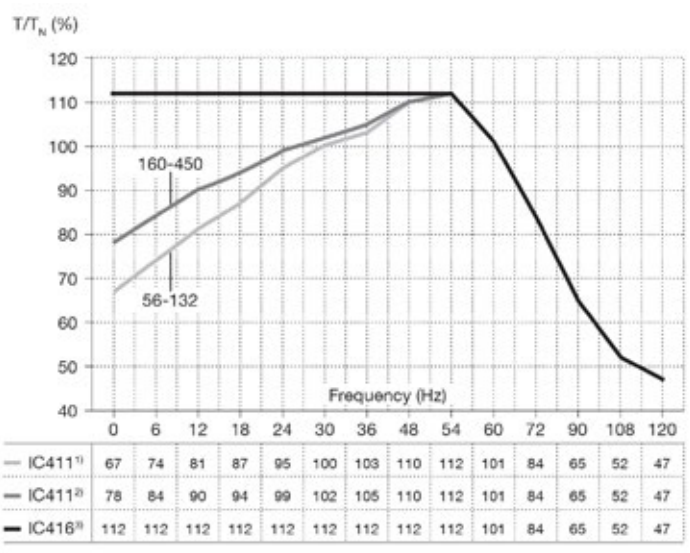


| | | | | | | | | | | | | | | |
|---|---|---|---|---|---|---|---|---|---|---|---|---|---|---|
| Frequency (Hz) | 0 | 6 | 12 | 18 | 24 | 30 | 36 | 48 | 54 | 60 | 72 | 90 | 108 | 120 |
| IC411[1] | 67 | 74 | 81 | 87 | 95 | 100 | 103 | 110 | 112 | 101 | 84 | 65 | 52 | 47 |
| IC411[2] | 78 | 84 | 90 | 94 | 99 | 102 | 105 | 110 | 112 | 101 | 84 | 65 | 52 | 47 |
| IC416[3] | 112 | 112 | 112 | 112 | 112 | 112 | 112 | 112 | 112 | 101 | 84 | 65 | 52 | 47 |

[1] Self ventilated, IEC frame sizes 56-132
[2] Self ventilated, IEC frame sizes 160-450
[3] Separate motor cooling (force ventilated)

Figure 5d. Conventer with DTC control, 60 Hz, temperature rise F

## Guideline loadability curves with other voltage source PWM type

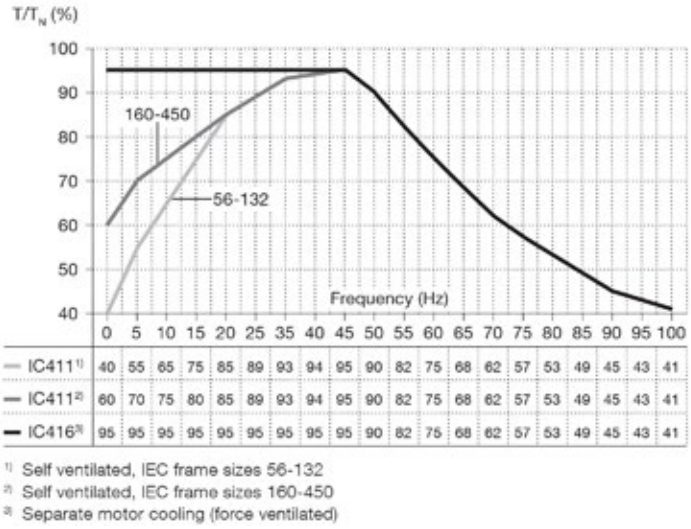


| | | | | | | | | | | | | | | | | | | | |
|---|---|---|---|---|---|---|---|---|---|---|---|---|---|---|---|---|---|---|---|
| Frequency (Hz) | 0 | 5 | 10 | 15 | 20 | 25 | 35 | 40 | 45 | 50 | 55 | 60 | 65 | 70 | 75 | 80 | 85 | 90 | 95 | 100 |
| IC411[1] | 40 | 55 | 65 | 75 | 85 | 89 | 93 | 94 | 95 | 90 | 82 | 75 | 68 | 62 | 57 | 53 | 49 | 45 | 43 | 41 |
| IC411[2] | 60 | 70 | 75 | 80 | 85 | 89 | 93 | 94 | 95 | 90 | 82 | 75 | 68 | 62 | 57 | 53 | 49 | 45 | 43 | 41 |
| IC416[3] | 95 | 95 | 95 | 95 | 95 | 95 | 95 | 95 | 95 | 90 | 82 | 75 | 68 | 62 | 57 | 53 | 49 | 45 | 43 | 41 |

[1] Self ventilated, IEC frame sizes 56-132
[2] Self ventilated, IEC frame sizes 160-450
[3] Separate motor cooling (force ventilated)

Figure 6a. Other voltage source PWM type converter, 50 Hz, temperature rise B

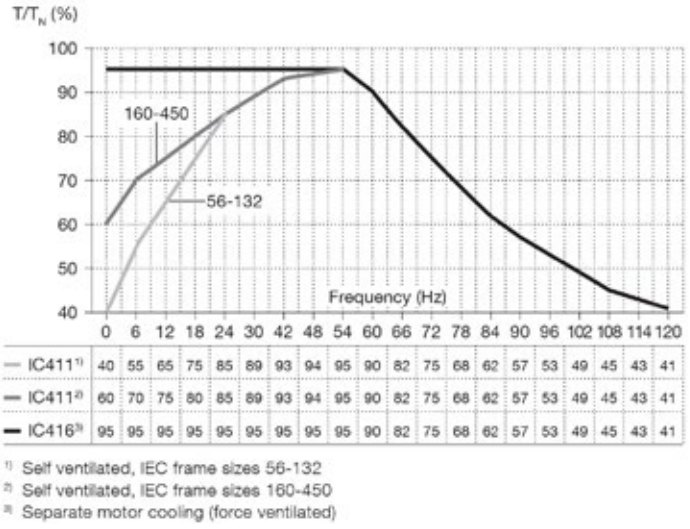


| | | | | | | | | | | | | | | | | | | | |
|---|---|---|---|---|---|---|---|---|---|---|---|---|---|---|---|---|---|---|---|
| Frequency (Hz) | 0 | 6 | 12 | 18 | 24 | 30 | 42 | 48 | 54 | 60 | 66 | 72 | 78 | 84 | 90 | 96 | 102 | 108 | 114 | 120 |
| IC411[1] | 40 | 55 | 65 | 75 | 85 | 89 | 93 | 94 | 95 | 90 | 82 | 75 | 68 | 62 | 57 | 53 | 49 | 45 | 43 | 41 |
| IC411[2] | 60 | 70 | 75 | 80 | 85 | 89 | 93 | 94 | 95 | 90 | 82 | 75 | 68 | 62 | 57 | 53 | 49 | 45 | 43 | 41 |
| IC416[3] | 95 | 95 | 95 | 95 | 95 | 95 | 95 | 95 | 95 | 90 | 82 | 75 | 68 | 62 | 57 | 53 | 49 | 45 | 43 | 41 |

[1] Self ventilated, IEC frame sizes 56-132
[2] Self ventilated, IEC frame sizes 160-450
[3] Separate motor cooling (force ventilated)

Figure 6b. Other voltage source PWM type converter, 60 Hz, temperature rise B

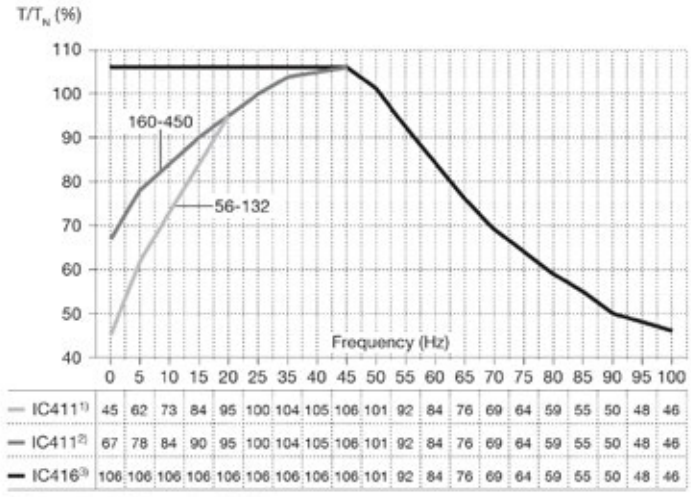


| | | | | | | | | | | | | | | | | | | | |
|---|---|---|---|---|---|---|---|---|---|---|---|---|---|---|---|---|---|---|---|
| Frequency (Hz) | 0 | 5 | 10 | 15 | 20 | 25 | 35 | 40 | 45 | 50 | 55 | 60 | 65 | 70 | 75 | 80 | 85 | 90 | 95 | 100 |
| IC411[1] | 45 | 62 | 73 | 84 | 95 | 100 | 104 | 105 | 106 | 101 | 92 | 84 | 76 | 69 | 64 | 59 | 55 | 50 | 48 | 46 |
| IC411[2] | 67 | 78 | 84 | 90 | 95 | 100 | 104 | 105 | 106 | 101 | 92 | 84 | 76 | 69 | 64 | 59 | 55 | 50 | 48 | 46 |
| IC416[3] | 106 | 106 | 106 | 106 | 106 | 106 | 106 | 106 | 106 | 101 | 92 | 84 | 76 | 69 | 64 | 59 | 55 | 50 | 48 | 46 |

[1] Self ventilated, IEC frame sizes 56-132
[2] Self ventilated, IEC frame sizes 160-450
[3] Separate cooling (force ventilated)

Figure 6c. Other voltage source PWM type converter, 50 Hz, temperature rise F

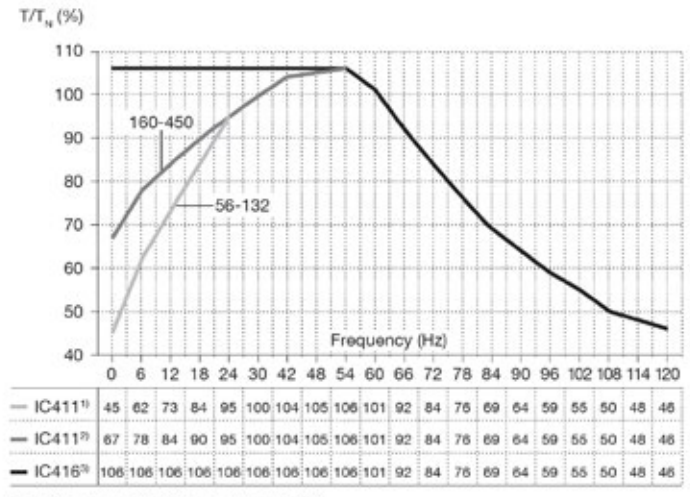


| | | | | | | | | | | | | | | | | | | | |
|---|---|---|---|---|---|---|---|---|---|---|---|---|---|---|---|---|---|---|---|
| Frequency (Hz) | 0 | 6 | 12 | 18 | 24 | 30 | 42 | 48 | 54 | 60 | 66 | 72 | 78 | 84 | 90 | 96 | 102 | 108 | 114 | 120 |
| IC411[1] | 45 | 62 | 73 | 84 | 95 | 100 | 104 | 105 | 106 | 101 | 92 | 84 | 76 | 69 | 64 | 59 | 55 | 50 | 48 | 46 |
| IC411[2] | 67 | 78 | 84 | 90 | 95 | 100 | 104 | 105 | 106 | 101 | 92 | 84 | 76 | 69 | 64 | 59 | 55 | 50 | 48 | 46 |
| IC416[3] | 106 | 106 | 106 | 106 | 106 | 106 | 106 | 106 | 106 | 101 | 92 | 84 | 76 | 69 | 64 | 59 | 55 | 50 | 48 | 46 |

[1] Self ventilated, IEC frame sizes 56-132
[2] Self ventilated, IEC frame sizes 160-450
[3] Separate motor cooling (force ventilated)

Figure 6d. Other voltage source PWM type converter, 60 Hz, temperature rise F

# Contact us

**www.abb.com/motors&generators**

We reserve the right to make technical changes or modify the contents of this document without prior notice. With regard to purchase orders, the agreed particulars shall prevail. ABB does not accept any responsibility what so ever for potential errors or possible lack of information in this document.

We reserve all rights in this document and in the subject matter and illustrations contained herein. Any reproduction,disclosure to third parties or utilization of its contents – in whole or in parts – is forbidden without prior written consent of ABB.

**© Copyright 2016 ABB.**
All rights reserved.

3GZF500730-85 Rev G EN 07-2016

Power and productivity
for a better world™

**This page is intentionally left blank**

**Dimensions - Encombrements - Abmessungen - Dimensiones - Dimensioni - Atravancamentos**
**Mounting details - Fixations - Befestigung - Fijación - Quote di fissaggio - montagem**

1mm = 0.0394in.

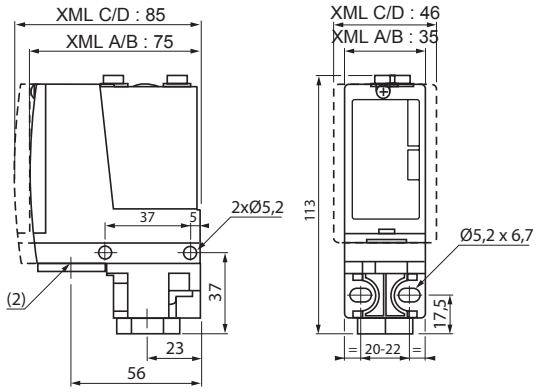


XML A/BM01/M05/010/020/035/070/160/300/500 - XML A004
XML C/D010/020/035/070/160/300/500

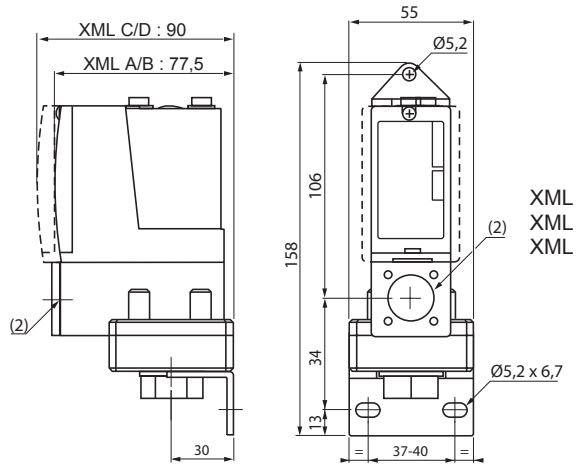


XML AM02/002
XML B004…
XML C/DM02/002/004

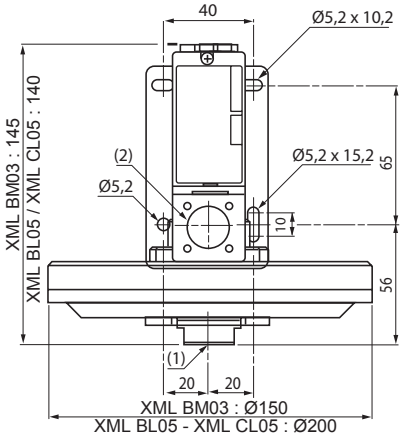


XML BM03/BL05/CL05

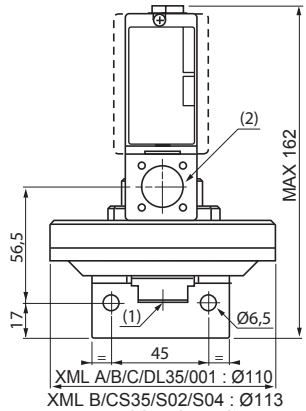


XML A/B/C/DL35/001
XML B/CS35/S02/S04/S10/S20

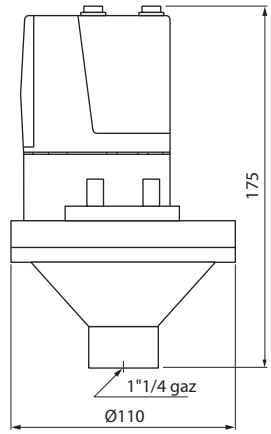


XML BL35P

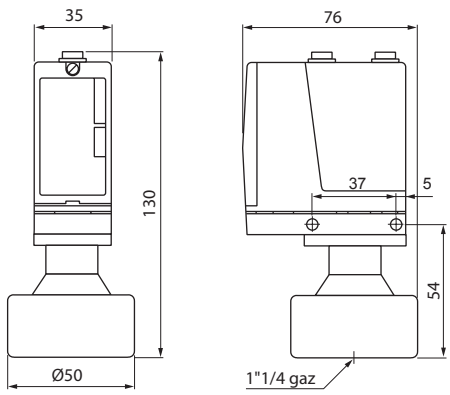


XML-A004/010/020/035P
XML-BM05

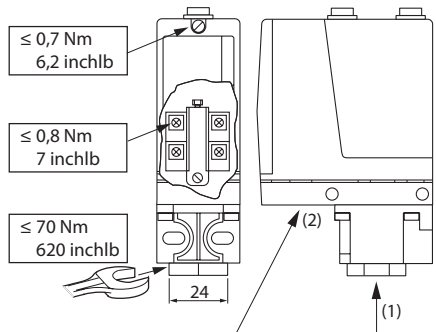


| | | |
|---|---|---|
| XML .....1 | PG13.5 DIN46255 | 1/4" Gaz ISO228 |
| XML .....2 | M20 BS4568 | G 1/4" ISO228 BS2779 |
| XML .....3 | 1/2"-14 NPT ANSI B2-1 | 1/4"-18NPTF ANSIB1.20.3 |
| XML .....4 | 1/2" PF JIS B0202 | 1/4" PT JIS B0203 |

## CAUTION / ATTENTION / VORSICHT / AVISO / ATTENZIONE

| | | |
|---|---|---|
| **Equipment damaged**<br>Use the equipment within the characteristics mentioned in catalogue<br>**Failure to follow these instructions can result equipment damage.** | **Equipement endommagé**<br>Utilisez l'équipement en respectant les caractéristiques mentionnées dans le catalogue.<br>**Le non-respect de ces instructions peut provoquer des dommages matériels.** | **Gerät beschädigt**<br>Verwenden Sie das Gerät innerhalb der im Katalog aufgeführten Kenndaten<br>**Die Nichtbeachtung dieser Anweisungen kann zu Materialschäden führen.** |
| **Equipo dañado**<br>Utilice el equipo dentro de los límites de las características que se mencionan en el catálogo<br>**Si no se siguen estas instrucciones pueden producirse daños en el equipo.** | **Apparecchiatura danneggiata**<br>Utilizzare l'apparecchiatura secondo le caratteristiche citate nel catalogo<br>**Il mancato rispetto di queste istruzioni può danni alle apparecchiature.** | |

(EN) Electrical equipment should be installed, operated, serviced, and maintained only by qualified personnel. No responsibility is assumed by Schneider Electric for any consequences arising out of the use of this material.

(FR) Les équipements électriques doivent être installés, exploités et entretenus par un personnel qualifié. Schneider Electric n'assume aucune responsabilité des conséquences éventuelles découlant de l'utilisation de cette documentation.

(DE) Elektrische Geräte dürfen nur von Fachpersonal installiert, betrieben, gewartet und instand gesetzt werden. Schneider Electric haftet nicht für Schäden, die aufgrund der Verwendung dieses Materials entstehen.

(ES) Sólo el personal de servicio cualificado podrá instalar, utilizar, reparar y mantener el equipo eléctrico. Schneider Electric no asume las responsabilidades que pudieran surgir como consecuencia de la utilización de este material.

(IT) Le apparecchiature elettriche devono essere installate, usate e riparate solo da personale qualificato. Schneider Electric non assume nessuna responsabilità per qualunque conseguenza derivante dall'uso di questo materiale.


© 2011 Schneider Electric. "All Rights Reserved."

**Pressure switches - Pressostats - Druckwaechter - Presostatos - Pressostati - Pressostatos**

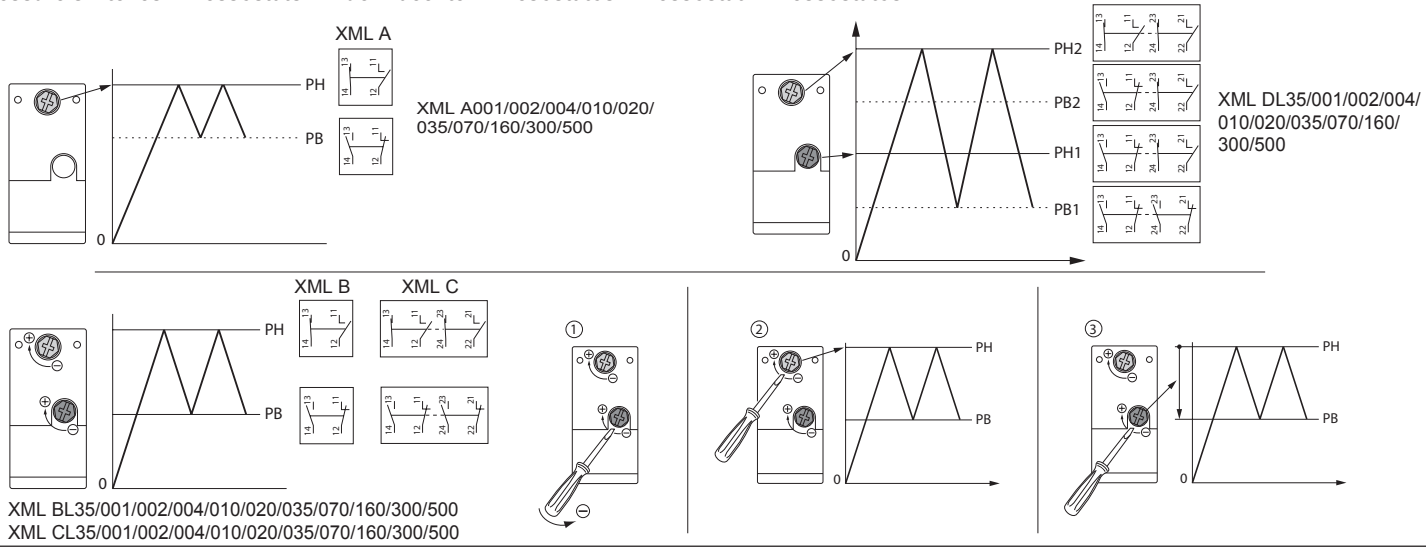


**Vacuum switches - Vacuostats - Vakuumschalter - Vacuostatos - Vacuostati - Vacuostatos**

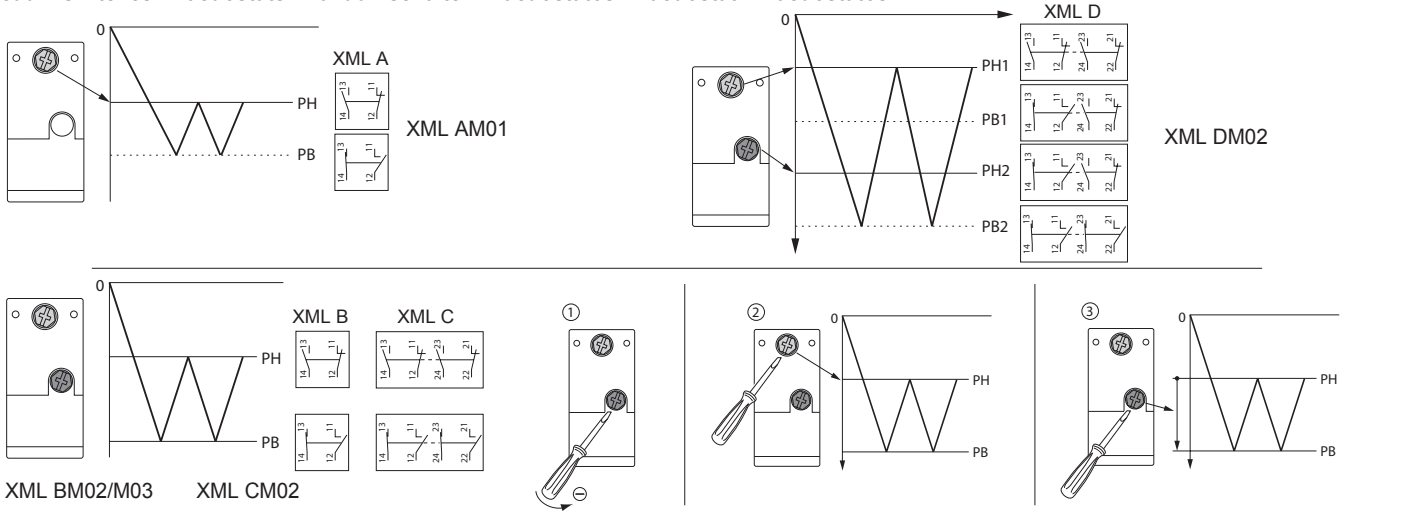


**Vacuum pressure switches - Vacuopressostats - Vakuum Druckwaechter - Vacuo Presostatos - Vacuo Pressostati - Vacuo Pressostatos**

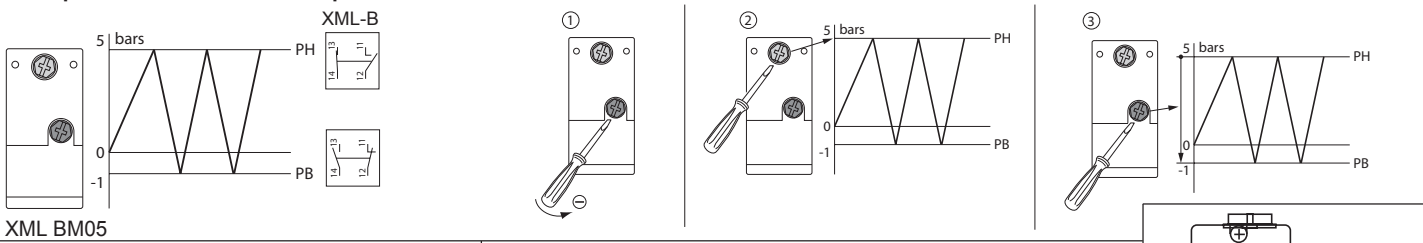


**XML A/B Wiring diagram - Schémas de raccordement - Anschlußpläne -Esquemas - Schema di cablaggio - Esquemas de ligação**

Connector - Connecteur - Steckverbinder - Conector - connettore - Ligador

DIN 43650

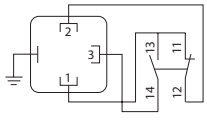

M12

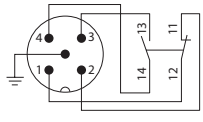

| | |
|---|---|
| PH | High setting point - Point haut - Oberer Schaltpunkt - Punto de disparo superior - Punto di scatto superiore |
| PB | Low setting point - Point bas - Unterer Schaltpunkt - Punto de disparo inferior - Punto di scatto inferiore |

| | |
|---|---|
| Adjustable / Réglable / Einstellbar Regulable / Regolabile | Not adjustable / Non réglable / Nicht einstellbar / No regulable / Non regolabile |

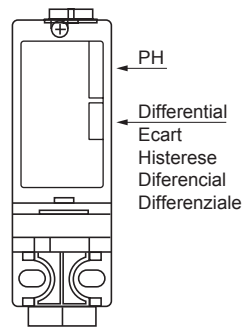


## ⚠ DANGER / DANGER / GEFAHR / PELIGRO / PERICOLO

| | | |
|---|---|---|
| **HAZARD OF ELECTRIC SHOCK, EXPLOSION, OR ARC FLASH**<br>Disconnect all power before servicing equipment.<br>**Failure to follow these instructions will result in death or serious injury.** | **RISQUE D'ELECTROCUTION, D'EXPLOSION OU D'ARC ELECTRIQUE**<br>Couper l'alimentation avant de travailler sur cet appareil.<br>**Le non-respect de ces instructions provoquera la mort ou des blessures graves.** | **STROMSCHLAG-, EXPLOSIONS- ODER LICHTBOGENGEFAHR**<br>Vor dem Arbeiten an dem Gerät dessen Stromversorgung abschalten.<br>**Die Nichtbeachtung dieser Anweisungen führt zu Tod oder schwerer Körperverletzung**. |
| **RIESGO DE ELECTROCUCIÓN, EXPLOSIÓN O ARCO ELÉCTRICO**<br>Desconecte toda alimentaciónantes de realizar el servicio.<br>**Si no se siguen estas instrucciones provocará lesiones graves o incluso la muerte.** | **RISCHIO DI SCOSSA ELETTRICA, DI ESPLOSIONE O DI OFTALMIA DA FLASH**<br>Scollegare l'apparecchio dalla presa di corrente prima di qualsiasi intervento.<br>**Il mancato rispetto di queste istruzioni provocherà morte o gravi infortuni.** | |

Printed in

# Info card

Inductive sensors

This info card is to be regarded as a supplement to the main position sensors catalogue and to the individual data sheets. For further information and contact addresses please visit our homepage at **www.ifm.com**.

## Intended use

While in use the products are exposed to influences which may have an effect on function, life, quality and reliability of the product.

It is the customer's responsibility to ensure that the products are suitable for the intended application. This applies in particular to applications in hazardous areas and with adverse environmental influence such as pressure, chemicals, temperature fluctuations, moisture and radiation as well as mechanical stress, especially if the products are not installed properly.

Using the products in applications where the safety of people depends on the function of the product is not permitted. Non-compliance may result in death or serious injuries.

## Operating principle of an inductive proximity switch

Coil and capacitor form an LC resonant circuit, also called basic sensor.

Eddy current losses in electrically-conductive materials are used for a switching signal.

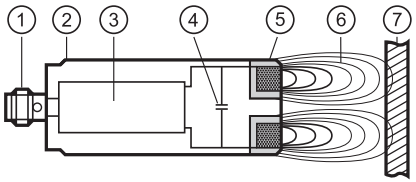


① Connection
② Housing
③ Downstream electronics
④ Capacitor
⑤ Coil
⑥ Alternating electromagnetic field = active zone
⑦ Target = electrically conductive material

## Important Glossary

| | |
|---|---|
| Active zone / active face | Area above the sensing face in which the sensor reacts to the approach of the target. |
| Output function | Normally open: object within the active zone > output is switched.<br>Normally closed: object within the active zone > output is blocked.<br>Programmable: choice between normally closed or normally open.<br>Positive switching: positive output signal (to L-).<br>Negative switching: negative output signal (to L+). |
| Rated insulation voltage | AC units depending on UB: 140 V AC or 250 V AC<br>DC units with protection class II: 250 V AC<br>DC units with protection class III: 60 V DC |
| Rated short-circuit current | for short-circuit-proof units: 100 A |
| Rated impulse withstand voltage | AC units depending on UB: 140 V AC = 2.5 kV or 250 V AC = 4 kV (≙ overvoltage category III)<br>DC units with protection class II: 4 kV (≙ overvoltage category III)<br>DC units with protection class III: 0.8 kV (≙ overvoltage category II) |
| Power-on delay time | The time the sensor needs to be ready for operation after application of the operating voltage (in the millisecond range). |

1D2226 / 06 11 / 2018



| | |
|---|---|
| Operating voltage | The voltage range in which the sensor functions reliably. A stabilised and smoothed direct voltage should be used! Take into account residual ripple! |
| Utilisation category | AC units: AC-140 (control of small electromagnetic loads with holding currents < 200 mA)<br>DC units: DC-13 (control of solenoids) |
| Hysteresis | Difference between the switch-on and the switch-off point. |
| Short-circuit protection | ifm sensors which are protected against excessive current by means of a pulsed short-circuit protection. The inrush current of incandescent lamps, electronic relays and low resistance loads may cause this protection to cut in and turn the sensor off! |
| Standard target | Square-shaped steel plate (e.g. S235JR) of a thickness of 1 mm with a side length equal to the diameter of the sensing face or 3 x $S_n$, depending on which value is the highest. |
| Product standard | IEC 60947-5-2 |
| Repeatability | Difference between any two $S_r$ measurements. Max. 10 % of $S_r$. |
| Leakage current | Current for the internal supply of 2-wire units; also flows through the load when the output is blocked. |
| Switch point drift | The shifting of the switch point owing to changes in the ambient temperature. |
| Switching frequency | Damping with standard target at half $S_n$. The ratio damped to undamped (tooth to gap) = 1 : 2. |
| Protection rating | IPxy According to IEC 60529<br>IP68 Test condition: 1 m water depth for 7 days<br>IP69K To ISO 20653 (replacement for DIN 40050-9) |
| Current consumption | Current for the internal supply of 3-wire DC units. |
| Transport and storage conditions | Unless otherwise indicated in the data sheet, the following applies:<br>Transport and storage temperature:<br>Min. = - 40 °C.<br>Max. = max. ambient temperature according to the data sheet.<br>The relative air humidity (RH) must not exceed 50 % at +70 °C.<br>At lower temperatures, a higher air humidity is permissible.<br>Shelf life: 5 years.<br>Transport and storage height: no restrictions. |
| Degree of soiling | Inductive proximity sensors are designed for degree of soiling 3. |
| Maintenance, repair and disposal | If used correctly, no maintenance and repair measures are necessary.<br>Only the manufacturer is allowed to repair the unit.<br>After use dispose of the unit in an environmentally friendly way in accordance with the applicable national regulations. |

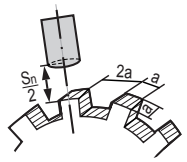


UK

# Info card

Inductive sensors

## Sensing range (referred to the standard target)

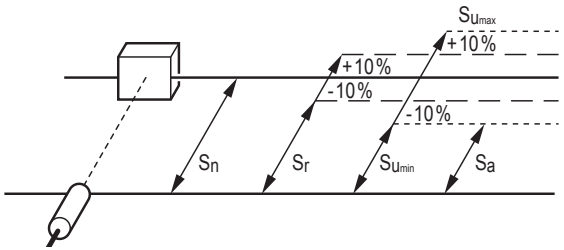


| | |
|---|---|
| Nominal sensing range $S_n$ | = characteristic value of the unit |
| Real sensing range $S_r$ | = individual deviation at room temperature between 90 % and 110 % of $S_n$ |
| Useful sensing range $s_u$ | = switch point drift between 90 % ($S_{umin} = S_a$) and 110 % ($S_{umax}$) of $S_r$ |
| Reliable sensing range = operating distance $S_a$: | = reliably switched between 0 % and 81 % of $S_n$ |
| Safe switch-off distance | = $S_{umax}$ + max. hysteresis = 143 % of $S_n$ |

Correction factors

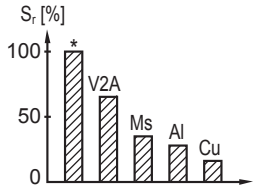


* Standard target

Values → data sheet
Exception K1 units:
Same sensing range for all

Influence of the target size

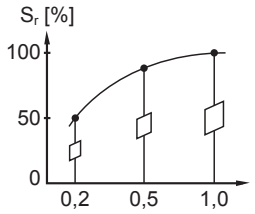


x axis: ratio actual target / standard target

## Lateral approach and ranges (valid for structural steel, e.g. S235JR)

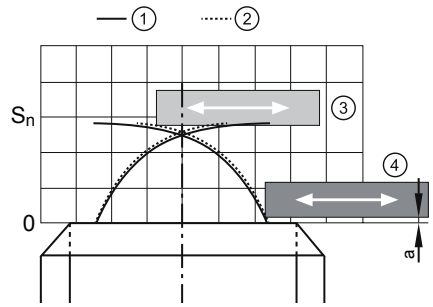


① Typical switch-on curve (for slow approach)
② Typical switch-off curve (for slow approach)
③ Poor repeatability
④ Good repeatability

Good repeatability of the switch point means: The closer the target is positioned to the sensing face, the better.

General recommendation:
a = 10 % of the nominal sensing range

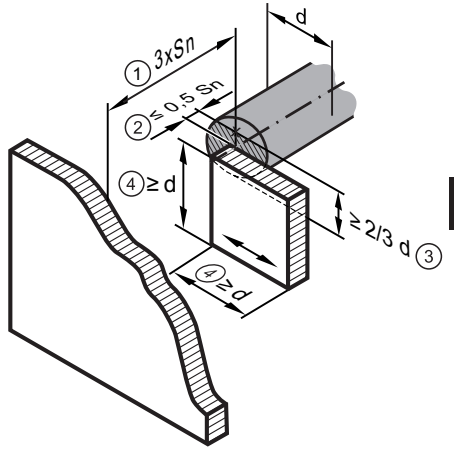


① Distance to the background
② Recommended target distance
③ Recommended degree of coverage of the sensing face
④ Recommended target size

## Tips on flush and non-flush mounting in metal

**Installation instructions cylindrical designs**

Flush:

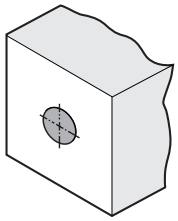

Non-flush:

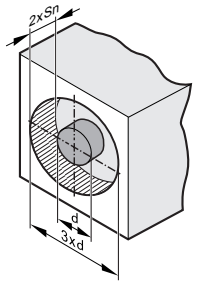


UK

# Info card

Inductive sensors

## Installation instructions rectangular designs

Flush:

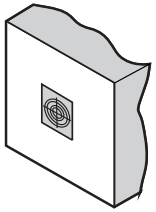

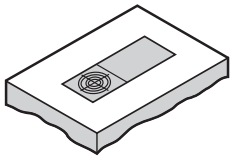

Non-flush:

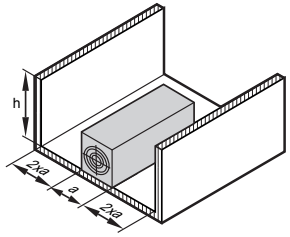


h = any

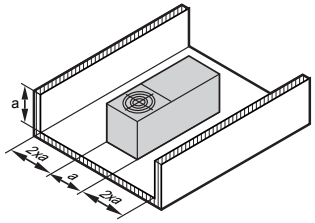


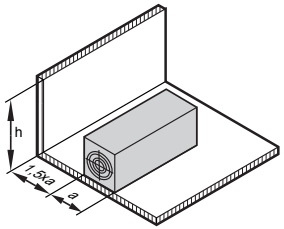


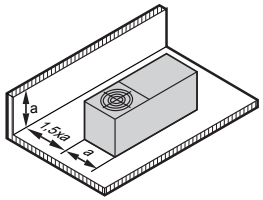


If the required clear space is not observed for non-flush units, the sensor is predamped. This may lead to permanent switching.

Possibly deviating installation instructions for rectangular units with increased sensing range
→ Notes on mounting and operation.

## Minimum clearance for installing units of the same type (side-by-side installation)

Applies to cylindrical and rectangular sensors.

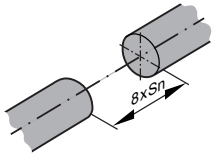


Flush:

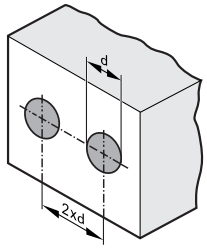


Non-flush:

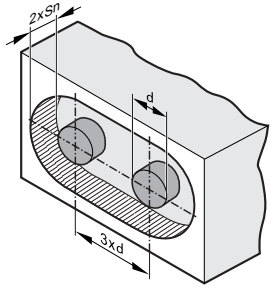


The minimum distance between units may only be disregarded for units with different oscillator frequencies or different sensing principles.



## Electrical connection

The unit must be connected by a qualified electrician.

① Use a miniature fuse according to the technical data sheet, if specified.
Recommendation: Check the safe functioning of the unit after a short circuit.
② Negative switching
③ Positive switching
④ Sensor 1
⑤ Sensor n

UK

### Connection systems

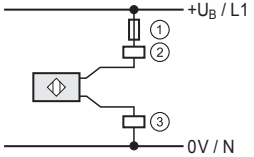


Two-wire technology
(negative **or** positive switching)

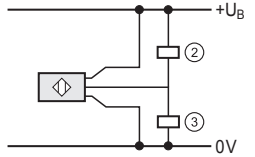


3-wire technology
(negative **or** positive switching)

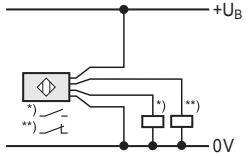


4-wire technology
(positive switching, normally closed and normally open)

### Series connection (AND)

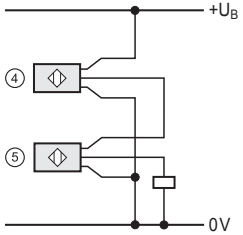


**Series connection of 3-wire units**
Max. 4 units. Power-on delay times, voltage drops and current consumptions add up. $U_{B\,min}$ (sensor) and $U_{HIGH\,min}$ (load) must remain unchanged.

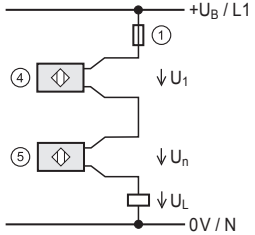


**Series connection of 2-wire units**
Not recommended because of undefined operation when blocked! Use special types which can be connected in series (max. 2 units).
Voltage drops add up.

# Info card

Inductive sensors

**Parallel connection (OR)**

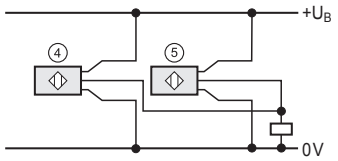


**Parallel connection 3-wire units**
The current consumption of all non-switched units adds up. The units can be used in combination with mechanical switches.

**Parallel connection 2-wire units**
Not possible.

**Configuration of cables and connectors**

Colours: BK: black, BN brown, BU: blue, WH: white

Standard configuration for 3-wire DC:

| | | Cable | Terminal chamber | US-100 plug |
|---|---|---|---|---|
| L+ | | BN | 1 / 3 | Pin 1 / BN |
| L– | | BU | 2 / 4 | Pin 3 / BU |
| Output |  | BK | X | Pin 2 / WH<br>Pin 4 / BK |

**Pin connection of the US-100 connections (view onto the plug of the unit)**

Pin 4: BK
Pin 1: BN



Pin 3: BU
Pin 2: WH

For the cable and the pin configuration as well as the unit data of special versions please refer to the wiring diagrams in our main catalogue for position sensors.

BA00380P/00/EN/18.18
71397579
2018-03-01

Valid as of version
01.00.zz



# Operating Instructions
# **Waterpilot FMX21**

Hydrostatic level measurement
4 to 20 mA HART

HART COMMUNICATION PROTOCOL

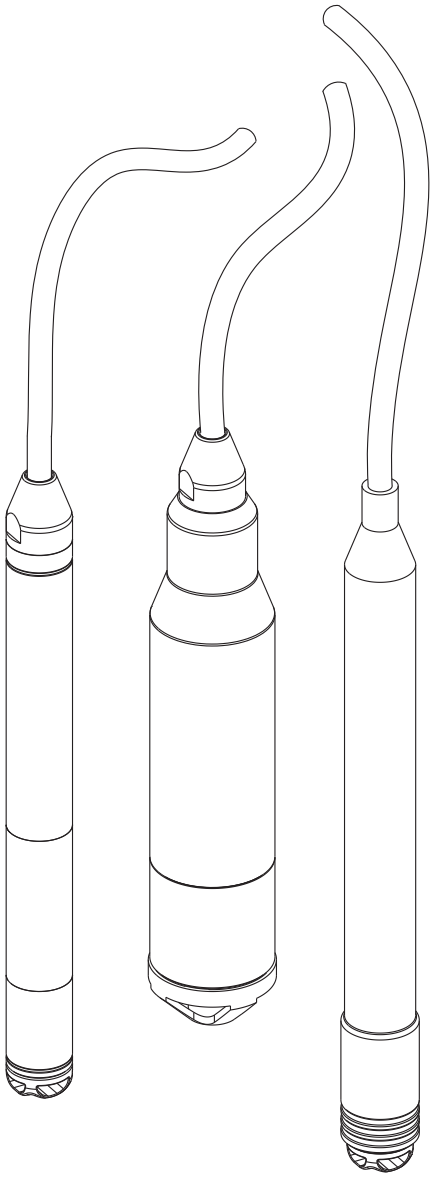

Endress+Hauser
People for Process Automation

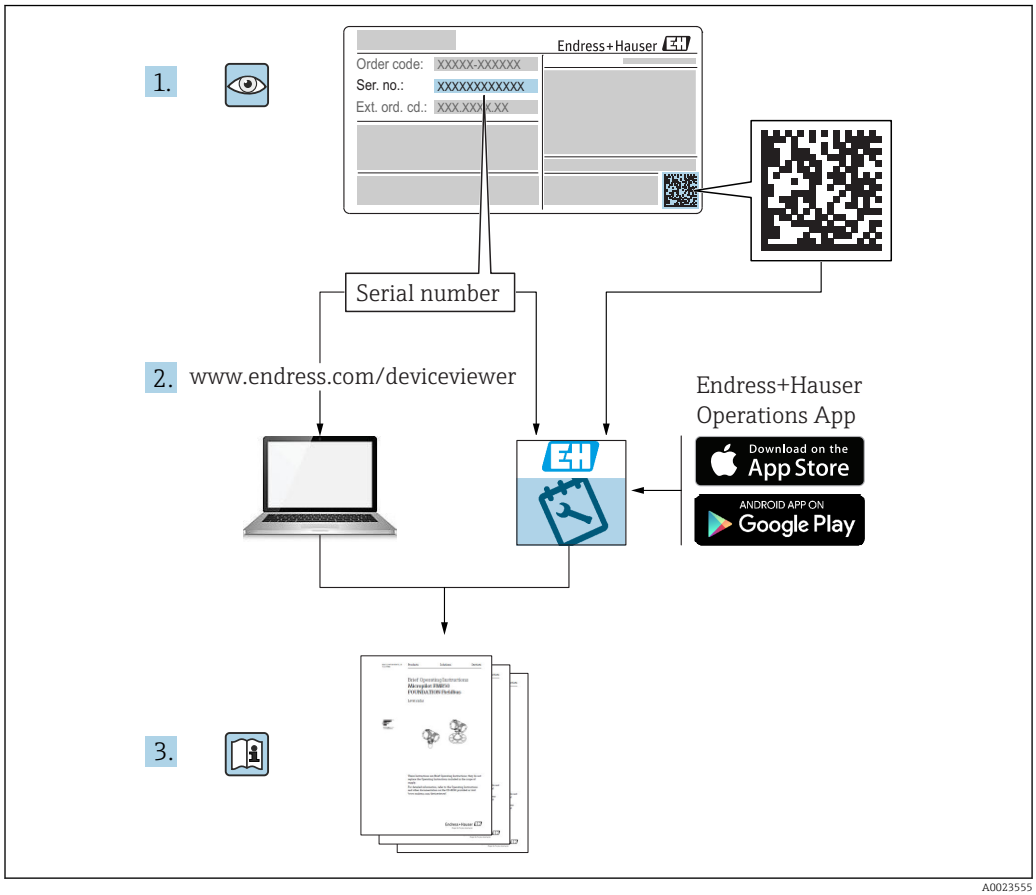


- Make sure the document is stored in a safe place such that it is always available when working on or with the device.
- To avoid danger to individuals or the facility, read the "Basic safety instructions" section carefully, as well as all other safety instructions in the document that are specific to working procedures.
- The manufacturer reserves the right to modify technical data without prior notice. Your Endress+Hauser distributor will supply you with current information and updates to these Instructions.

# Table of contents


1 About this document . . . . . 5
1.1 Document function . . . . . 5
1.2 Symbols used . . . . . 5
1.3 Registered trademarks . . . . . 6
1.4 Supplementary documentation . . . . . 7
1.5 Terms and abbreviations . . . . . 8
1.6 Turn down calculation . . . . . 9

2 Basic safety instructions . . . . . 10
2.1 Requirements concerning the staff . . . . . 10
2.2 Designated use . . . . . 10
2.3 Workplace safety . . . . . 10
2.4 Operational safety . . . . . 10
2.5 Product safety . . . . . 11

3 Product description . . . . . 12
3.1 Function . . . . . 12

4 Incoming acceptance and product identification . . . . . 13
4.1 Incoming acceptance . . . . . 13
4.2 Product identification . . . . . 14
4.3 Nameplates . . . . . 15
4.4 Identification of sensor type . . . . . 16
4.5 Storage and transport . . . . . 16
4.6 Scope of delivery . . . . . 17

5 Installation . . . . . 18
5.1 Installation conditions . . . . . 18
5.2 Additional mounting instructions . . . . . 19
5.3 Dimensions . . . . . 19
5.4 Mounting the Waterpilot with a mounting clamp . . . . . 20
5.5 Mounting the Waterpilot with a cable mounting screw . . . . . 21
5.6 Mounting the terminal box . . . . . 22
5.7 Mounting the TMT182 temperature head transmitter with terminal box . . . . . 22
5.8 Mounting the terminal strip for the Pt100 passive (without TMT182) . . . . . 23
5.9 Inserting the cable into the RIA15 field housing . . . . . 24
5.10 Cable marking . . . . . 24
5.11 Cable shortening kit . . . . . 25
5.12 Post-installation check . . . . . 25

6 Electrical connection . . . . . 26
6.1 Connecting the device . . . . . 26
6.2 Supply voltage . . . . . 30
6.3 Cable specifications . . . . . 30
6.4 Power consumption . . . . . 30
6.5 Current consumption . . . . . 31
6.6 Connecting the measuring unit . . . . . 31
6.7 Post-connection check . . . . . 35

7 Operation options . . . . . 36
7.1 Overview of operating options . . . . . 36
7.2 Operating concept . . . . . 37
7.3 Structure of the operating menu . . . . . 38
7.4 Locking/unlocking operation . . . . . 38
7.5 Resetting to factory settings (reset) . . . . . 39

8 Integrating device via HART® protocol . . . . . 41
8.1 HART process variables and measured values . . . . . 41
8.2 Device variables and measured values . . . . . 42

9 Commissioning . . . . . 43
9.1 Post-installation check and function check . . . 43
9.2 Unlocking/locking configuration . . . . . 43
9.3 Commissioning . . . . . 43
9.4 Measuring mode selection . . . . . 43
9.5 For selecting the pressure engineering unit . . . 44
9.6 Position adjustment . . . . . 44
9.7 Configuring the damping . . . . . 45
9.8 Configuring pressure measurement . . . . . 46
9.9 Configuring level measurement . . . . . 48
9.10 Automatic density compensation . . . . . 59
9.11 Linearization . . . . . 62
9.12 Manual entry of a linearization table via operating tool . . . . . 65
9.13 Backing up or duplicating the device data . . . . 66
9.14 Operation and settings via RIA15 . . . . . 66

10 Diagnostics and troubleshooting . . . 70
10.1 Troubleshooting . . . . . 70
10.2 Diagnostic events in the operating tool . . . . . 70
10.3 Troubleshooting specific to Waterpilot FMX21 with optional Pt100 . . . . . 74
10.4 Troubleshooting specific to TMT182 temperature head transmitter . . . . . 74
10.5 Response of output to errors . . . . . 75
10.6 Firmware history . . . . . 75

11 Maintenance . . . . . 76
11.1 Exterior cleaning . . . . . 76

12 Repairs . . . . . 77
12.1 General notes . . . . . 77
12.2 Spare parts . . . . . 77
12.3 Return . . . . . 77

12.4 Disposal . . . . . 77

**13 Overview of the operating menu . . . . 78**

13.1 Overview of parameters in the "Expert" menu . . . . . 81

**14 Description of device parameters . . . 86**

14.1 Expert → System . . . . . 86
14.2 Expert → System → Instrument info . . . . . 87
14.3 Expert → System → Management . . . . . 89
14.4 Expert → Measurement → Measuring mode . . 89
14.5 Expert → Measurement → Basic setup . . . . . 90
14.6 Expert → Measurement → Pressure . . . . . 92
14.7 Expert → Measurement → Level . . . . . 94
14.8 Expert → Measurement → Linearization . . . . . 99
14.9 Expert → Measurement → Sensor limits . . . . 102
14.10 Expert → Measurement → Sensor trim . . . . . 103
14.11 Expert → Output → Current output . . . . . 104
14.12 Expert→ Communication → HART config. . . . 108
14.13 Expert→ Communication → HART info . . . . . 110
14.14 Expert→ Communication → HART output . . . 112
14.15 Expert→ Communication → HART input . . . . 115
14.16 Expert → Application . . . . . 117
14.17 Expert → Diagnosis . . . . . 118
14.18 Expert → Diagnosis → Diagnostic list . . . . . 120
14.19 Expert → Diagnosis→ Event logbook . . . . . 121
14.20 Expert → Diagnosis → Simulation . . . . . 122

**15 Accessories . . . . . 124**

15.1 Service-specific accessories . . . . . 125

**16 Technical data . . . . . 126**

16.1 Input . . . . . 126
16.2 Output . . . . . 129
16.3 Performance characteristics . . . . . 132
16.4 Environment . . . . . 134
16.5 Process . . . . . 136
16.6 Additional technical data . . . . . 137

**Index . . . . . 138**

# 1 About this document

## 1.1 Document function

These Operating Instructions contain all the information that is required in various phases of the life cycle of the device: from product identification, incoming acceptance and storage, to mounting, connection, operation and commissioning through to troubleshooting, maintenance and disposal.

## 1.2 Symbols used

### 1.2.1 Safety symbols

| Symbol | Meaning |
|---|---|
| DANGER | **DANGER!**<br>This symbol alerts you to a dangerous situation. Failure to avoid this situation will result in serious or fatal injury. |
| WARNING | **WARNING!**<br>This symbol alerts you to a dangerous situation. Failure to avoid this situation can result in serious or fatal injury. |
| CAUTION | **CAUTION!**<br>This symbol alerts you to a dangerous situation. Failure to avoid this situation can result in minor or medium injury. |
| NOTICE | **NOTE!**<br>This symbol contains information on procedures and other facts which do not result in personal injury. |

### 1.2.2 Electrical symbols

| Symbol | Meaning | Symbol | Meaning |
|---|---|---|---|
| ⎓ | Direct current | ~ | Alternating current |
| ⎓ ~ | Direct current and alternating current | ⏚ | **Ground connection**<br>A grounded terminal which, as far as the operator is concerned, is grounded via a grounding system. |
| ⏚ | **Protective ground connection**<br>A terminal which must be connected to ground prior to establishing any other connections. | ⏚ | **Equipotential connection**<br>A connection that has to be connected to the plant grounding system: This may be a potential equalization line or a star grounding system depending on national or company codes of practice. |

### 1.2.3 Tool symbols

| Symbol | Meaning |
|---|---|
|  <br>A0011220 | Flat blade screwdriver |
|  <br>A0011219 | Phillips screwdriver |

| Symbol | Meaning |
|---|---|
|  A0011221 | Allen key |
|  A0011222 | Open-ended wrench |

### 1.2.4 Symbols for certain types of information

| Symbol | Meaning |
|---|---|
|  | **Permitted**<br>Procedures, processes or actions that are permitted. |
|  | **Preferred**<br>Procedures, processes or actions that are preferred. |
|  | **Forbidden**<br>Procedures, processes or actions that are forbidden. |
|  | **Tip**<br>Indicates additional information. |
|  | Reference to documentation |
|  | Reference to page |
|  | Reference to graphic |
| 1. , 2. , 3. ... | Series of steps |
|  | Result of a step |
|  | Help in the event of a problem |
|  | Visual inspection |

### 1.2.5 Symbols in graphics

| Symbol | Meaning |
|---|---|
| **1, 2, 3 ...** | Item numbers |
| 1. , 2. , 3. ... | Series of steps |
| **A, B, C, ...** | Views |
| **A-A, B-B, C-C, ...** | Sections |

## 1.3 Registered trademarks

### 1.3.1 GORE-TEX®

Trademark of W.L. Gore & Associates, Inc., USA.

### 1.3.2 TEFLON®

Trademark of E.I. Du Pont de Nemours & Co., Wilmington, USA.

### 1.3.3 HART®

Registered trademark of the FieldComm Group, Austin, USA

### 1.3.4 FieldCare®

Trademark of Endress+Hauser Process Solutions AG.

### 1.3.5 DeviceCare®

Trademark of Endress+Hauser Process Solutions AG.

### 1.3.6 iTEMP®

Trademark of Endress+Hauser Wetzer GmbH + Co. KG, Nesselwang, D..

## 1.4 Supplementary documentation

The document types listed are available:
In the Download Area of the Endress+Hauser Internet site: www.endress.com → Download

### 1.4.1 Technical Information (TI): planning aid for your device

Waterpilot: TI00431P

RIA15: TI01043K

The document contains all the technical data on the device and provides an overview of the accessories and other products that can be ordered for the device.

### 1.4.2 Brief Operating Instructions (KA): getting the 1st measured value quickly

FMX21 4 to 20 mA HART - KA01189P:

The Brief Operating Instructions contain all the essential information from incoming acceptance to initial commissioning.

### 1.4.3 Safety Instructions (XA)

Depending on the approval, the following Safety Instructions (XA) are supplied with the device. They are an integral part of the Operating Instructions.

| Directive | Type of protection | Category | Documentation | Option [1] |
|---|---|---|---|---|
| ATEX | Ex ia IIC | II 2 G | XA00454P | BD |
| ATEX | Ex nA IIC | II 3 G | XA00485P | BE |
| IECEx | Ex ia IIC | n/a | XA00455P | IC |
| CSA C/US | Ex ia IIC | n/a | ZD00232P (960008976) | CE |
| FM | AEx ia IIC | n/a | ZD00231P (960008975) | FE |

| Directive | Type of protection | Category | Documentation | Option [1] |
|---|---|---|---|---|
| NEPSI | Ex ia IIC | n/a | XA00456P | NA |
| INMETRO | Ex ia IIC | n/a | XA01066P | MA |

1) Product Configurator order code for "Approval"

The nameplate indicates the Safety Instructions (XA) that are relevant to the device.

## 1.5 Terms and abbreviations

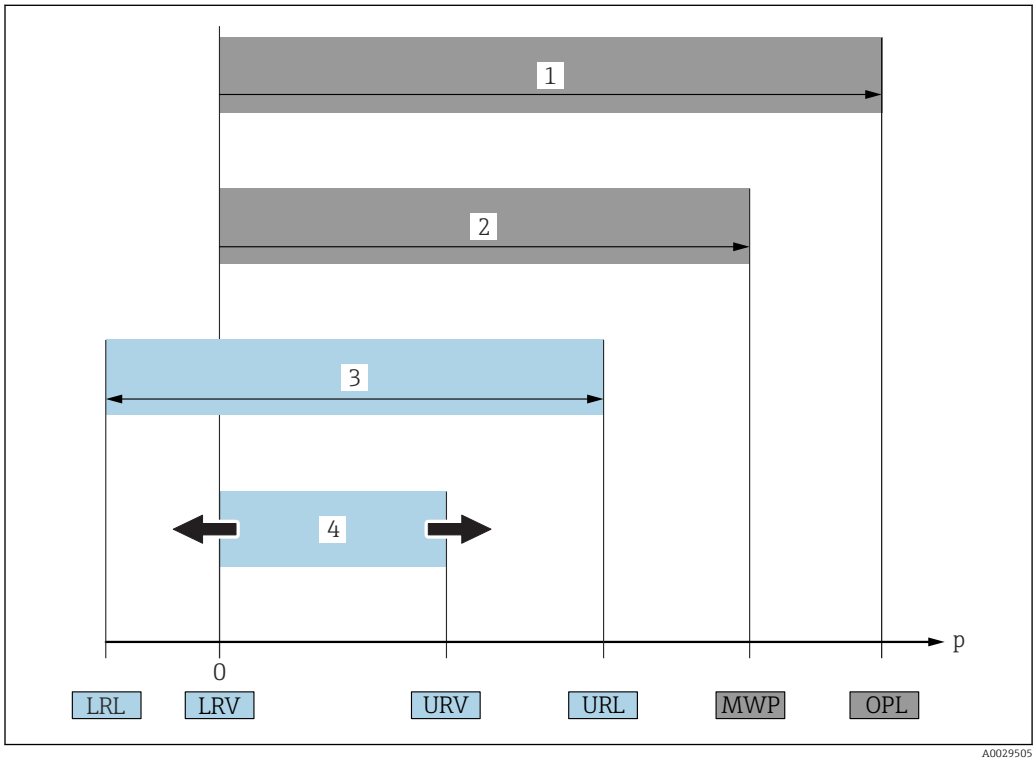


| Item | Term/abbreviation | Explanation |
|---|---|---|
| 1 | OPL | The OPL (over pressure limit = sensor overload limit) for the measuring device depends on the lowest-rated element, with regard to pressure, of the selected components, i.e. the process connection has to be taken into consideration in addition to the measuring cell. Also observe pressure-temperature dependency.<br>The OPL may only be applied for a limited period of time. |
| 2 | MWP | The MWP (maximum working pressure) for the sensors depends on the lowest-rated element, with regard to pressure, of the selected components, i.e. the process connection has to be taken into consideration in addition to the measuring cell. Also observe pressure-temperature dependency.<br>The MWP may be applied at the device for an unlimited period.<br>The MWP can also be found on the nameplate. |
| 3 | Maximum sensor measuring range | Span between LRL and URL<br>This sensor measuring range is equivalent to the maximum calibratable/adjustable span. |
| 4 | Calibrated/adjusted span | Span between LRV and URV<br>Factory setting: 0 to URL<br>Other calibrated spans can be ordered as customized spans. |
| p | - | Pressure |
| - | LRL | Lower range limit |
| - | URL | Upper range limit |
| - | LRV | Lower range value |

| Item | Term/abbreviation | Explanation |
|---|---|---|
| - | URV | Upper range value |
| - | TD (turn down) | Turn down<br>Example - see the following section. |
| - | PE | Polyethylene |
| - | FEP | Fluorinated ethylene propylene |
| - | PUR | Polyurethane |

## 1.6 Turn down calculation

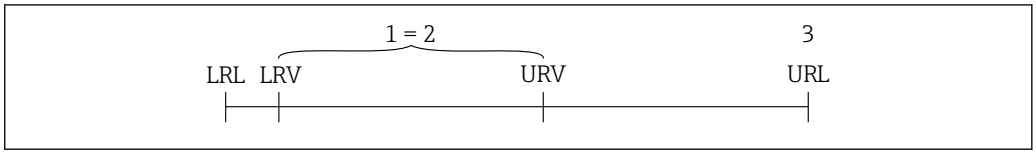


*1 Calibrated/adjusted span*
*2 Zero point-based span*
*3 URL sensor*

**Example**

- Sensor:10 bar (150 psi)
- Upper range value (URL) = 10 bar (150 psi)

Turn down (TD):

- Calibrated/adjusted span: 0 to 5 bar (0 to 75 psi)
- Lower range value (LRV) = 0 bar (0 psi)
- Upper range value (URV) = 5 bar (75 psi)

$$TD = \frac{URL}{|URV - LRV|}$$

$$TD = \frac{10 \text{ bar } (150 \text{ psi})}{|5 \text{ bar } (75 \text{ psi}) - 0 \text{ bar } (0 \text{ psi})|} = 2$$

In this example, the TD is 2:1.
This span is based on the zero point.

# 2 Basic safety instructions

## 2.1 Requirements concerning the staff

The personnel for installation, commissioning, diagnostics and maintenance must fulfill the following requirements:
- Trained, qualified specialists: must have a relevant qualification for this specific function and task
- Are authorized by the plant owner/operator
- Are familiar with federal/national regulations
- Before beginning work, the specialist staff must have read and understood the instructions in the Operating Instructions and supplementary documentation as well as in the certificates (depending on the application)
- Following instructions and basic conditions

The operating personnel must fulfill the following requirements:
- Being instructed and authorized according to the requirements of the task by the facility's owner-operator
- Following the instructions in these Operating Instructions

## 2.2 Designated use

### 2.2.1 Application and media

The Waterpilot FMX21 is a hydrostatic pressure sensor for measuring the level of fresh water, wastewater and salt water. The temperature is measured simultaneously in the case of sensor versions with a Pt100 resistance thermometer.

An optional temperature head transmitter converts the Pt100 signal to a 4 to 20 mA signal with superimposed digital communication protocol HART 6.0.

### 2.2.2 Incorrect use

The manufacturer is not liable for damage caused by improper or non-designated use.

Verification for borderline cases:
- For special fluids and fluids for cleaning, Endress+Hauser is glad to provide assistance in verifying the corrosion resistance of fluid-wetted materials, but does not accept any warranty or liability.

## 2.3 Workplace safety

For work on and with the device:
- Wear the required personal protective equipment according to federal/national regulations.
- Switch off the supply voltage before connecting the device.

## 2.4 Operational safety

Risk of injury!
- Operate the device in proper technical condition and fail-safe condition only.
- The operator is responsible for interference-free operation of the device.

### Modifications to the device

Unauthorized modifications to the device are not permitted and can lead to unforeseeable dangers.
- If, despite this, modifications are required, consult with Endress+Hauser.

### Repairs

To ensure continued operational safety and reliability,
- Carry out repairs on the device only if they are expressly permitted.
- Observe federal/national regulations pertaining to repair of an electrical device.
- Use original spare parts and accessories from Endress+Hauser only.

### Hazardous area

To eliminate danger to persons or the facility when the device is used in the approval-related area (e.g. explosion protection, pressure vessel safety):
- Check the nameplate to verify if the device ordered can be put to its intended use in the approval-related area.
- Observe the specifications in the separate supplementary documentation that is an integral part of these Instructions.

## 2.5 Product safety

This measuring device is designed in accordance with good engineering practice to meet state-of-the-art safety requirements, has been tested, and left the factory in a condition in which it is safe to operate.

It meets general safety standards and legal requirements. It also complies with the EC directives listed in the device-specific EC Declaration of Conformity. Endress+Hauser confirms this by affixing the CE mark to the device.

# 3 Product description

## 3.1 Function

The ceramic measuring cell is a dry measuring cell i.e. the pressure acts directly on the robust, ceramic process isolating diaphragm of the Waterpilot FMX21. Changes in air pressure are guided via a pressure compensation tube through the extension cable to the rear of the ceramic process isolating diaphragm and are compensated for. A pressure-dependent change in capacitance, caused by the movement of the process isolating diaphragm, is measured at the electrodes of the ceramic carrier. The electronics unit then converts this to a signal that is proportional to the pressure and linear to the level.

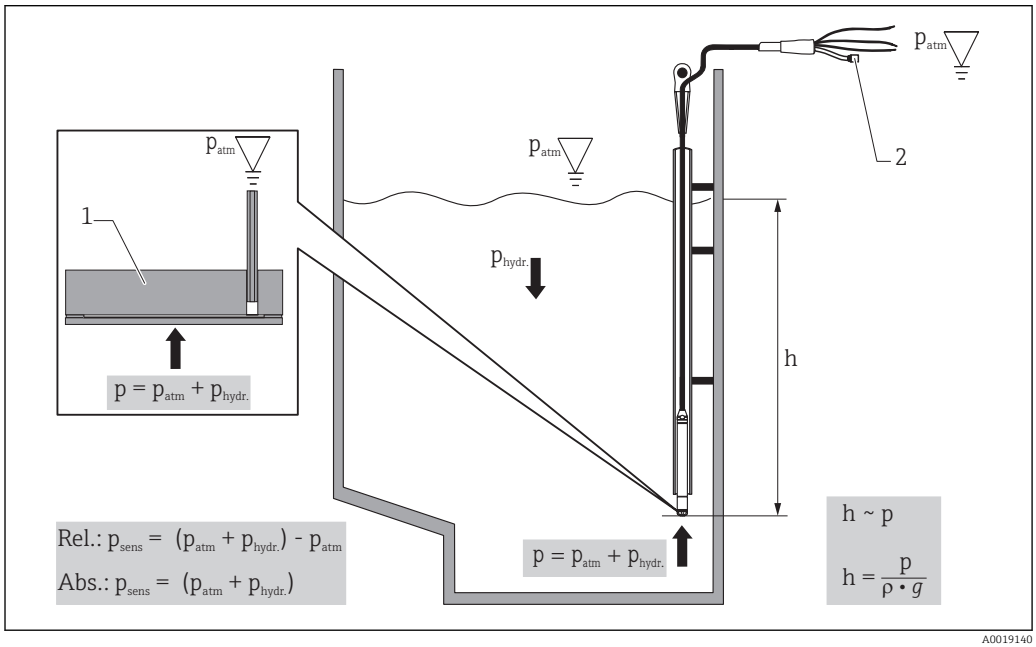


*1 Ceramic measuring cell*
*2 Pressure compensation tube*
*h Height level*
*p Total pressure = atmospheric pressure + hydrostatic pressure*
*ρ Density of the medium*
*g Acceleration due to gravity*
$P_{hydr.}$ *Hydrostatic pressure*
$P_{atm}$ *Atmospheric pressure*
$P_{sens}$ *Pressure displayed on the sensor*

# 4 Incoming acceptance and product identification

## 4.1 Incoming acceptance

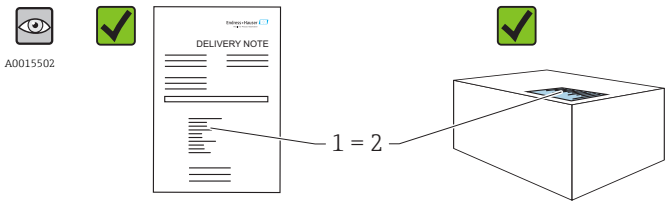


A0016870

Is the order code on the delivery note (1) identical to the order code on the product sticker (2)?

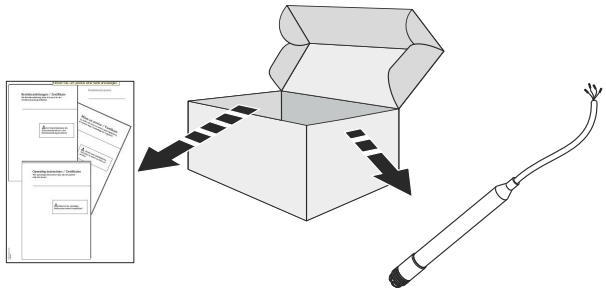

A0026535




A0026536

Are the goods undamaged?

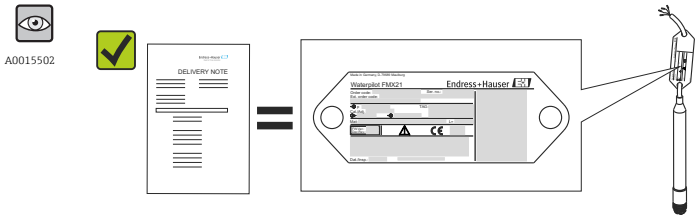


A0026537

Do the data on the nameplate correspond to the order specifications and the delivery note?

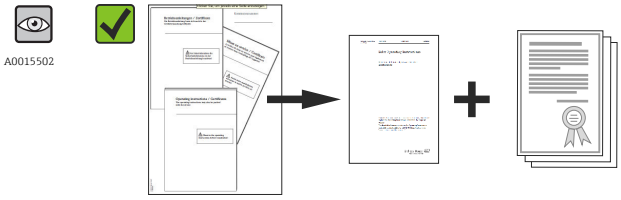

A0015502

A0022106

Is the documentation available?
If required (see nameplate): Are the safety instructions (XA) present?

If one of these conditions does not apply, please contact your Endress+Hauser sales office.

## 4.2 Product identification

The following options are available for identification of the measuring device:
- Nameplate specifications
- Order code with breakdown of the device features on the delivery note
- Enter serial number of nameplates in *W@M Device Viewer* (www.endress.com/deviceviewer): All details on the measuring device are displayed.

For an overview of the technical documentation provided, enter the serial number from the nameplates in the *W@M Device Viewer* (www.endress.com/deviceviewer)

### 4.2.1 Manufacturer address

Endress+Hauser SE+Co. KG
Hauptstraße 1
79689 Maulburg, Germany

Address of the manufacturing plant: See nameplate.

# 4.3 Nameplates

## 4.3.1 Nameplates on extension cable

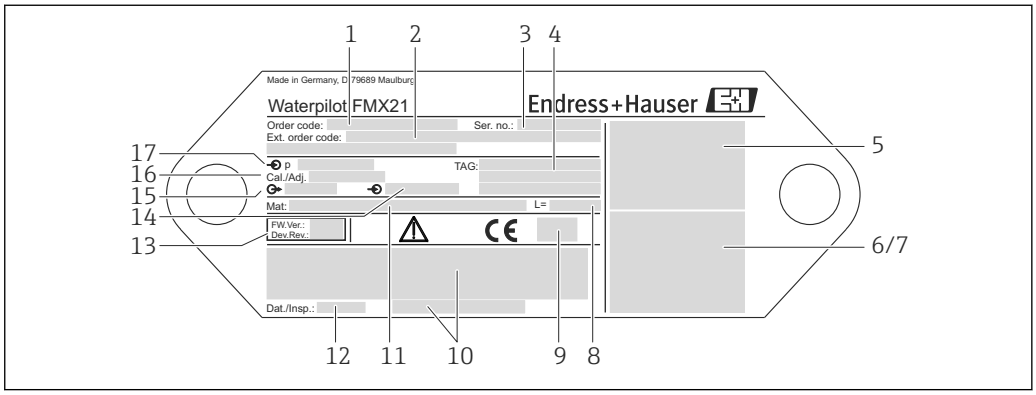


A0018802

1 *Order code (shortened for reordering); The meaning of the individual letters and digits is explained in the order confirmation details.*
2 *Extended order number (complete)*
3 *Serial number (for clear identification)*
4 *TAG (device tag)*
5 *FMX21 connection diagram*
6 *Pt100 connection diagram (optional)*
7 *Warning (hazardous area), (optional)*
8 *Length of extension cable*
9 *Approval symbol, e.g. CSA, FM, ATEX (optional)*
10 *Text for approval (optional)*
11 *Materials in contact with process*
12 *Test date (optional)*
13 *Software version/device version*
14 *Supply voltage*
15 *Output signal*
16 *Set measuring range*
17 *Nominal measuring range*

### Additional nameplate for devices with approvals

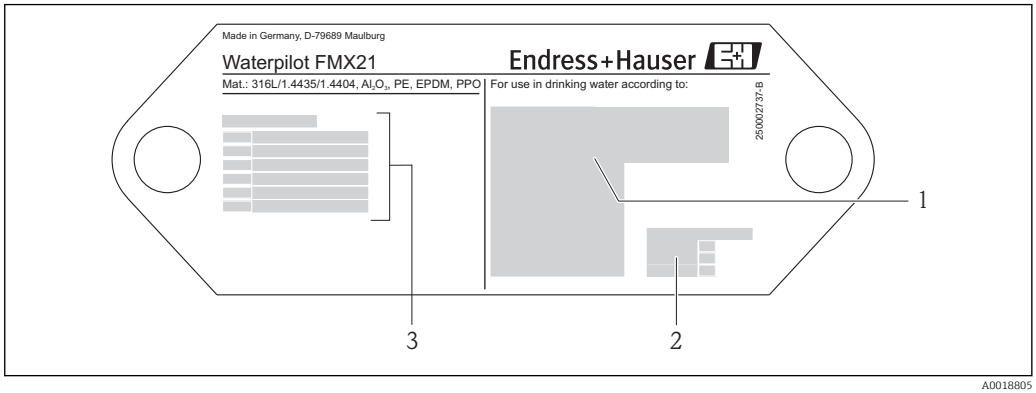


A0018805

1 *Approval symbol (drinking water approval)*
2 *Reference to associated documentation*
3 *Approval number (marine approval)*

### 4.3.2 Additional nameplate for devices with external diameter 22 mm (0.87 in) and 42 mm (1.65 in)

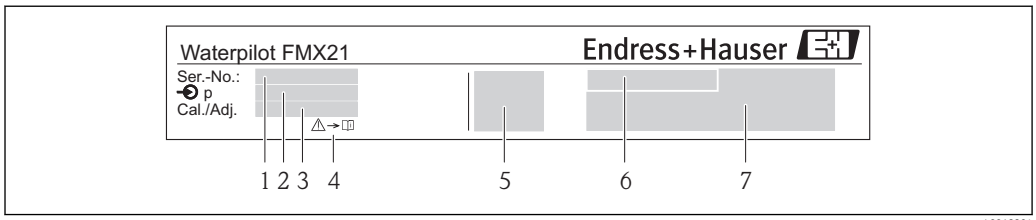


1 *Serial number*
2 *Nominal measuring range*
3 *Set measuring range*
4 *CE mark or approval symbol*
5 *Certificate number (optional)*
6 *Text for approval (optional)*
7 *Reference to documentation*

## 4.4 Identification of sensor type

With gauge pressure or absolute pressure sensors, the "Pos. zero adjust" parameter is displayed in the operating menu. With absolute pressure sensors, the "Calib. offset" parameter is displayed in the operating menu.

## 4.5 Storage and transport

### 4.5.1 Storage conditions

Use original packaging.

Store the measuring device in clean and dry conditions and protect from damage caused by shocks (EN 837-2).

**Storage temperature range**

*FMX21 + Pt100 (optional)*

−40 to +80 °C (−40 to +176 °F)

*Cable*

(when mounted in a fixed position)
- With PE: −30 to +70 °C (−22 to +158 °F)
- With FEP: −30 to +80 °C (−22 to +176 °F)
- With PUR: −40 to +80 °C (−40 to +176 °F)

*Terminal box*

−40 to +80 °C (−40 to +176 °F)

*TMT182 temperature head transmitter (optional) for FMX21 4 to 20 mA HART*

−40 to +100 °C (−40 to +212 °F)

### 4.5.2 Transporting the product to the measuring point

**⚠ WARNING**

**Incorrect transport!**

Device or cable may become damaged, and there is a risk of injury!

- ▶ Transport measuring device in the original packaging.
- ▶ Follow the safety instructions and transport conditions for devices weighing more than 18 kg (39.6 lbs).

## 4.6 Scope of delivery

The scope of delivery comprises:

- Waterpilot FMX21, optionally with integrated Pt100 resistance thermometer
- Optional accessories

Documentation supplied:

- The Operating Instructions BA00380P are available on the internet. → see: www.de.endress.com → Downloads.
- Brief Operating Instructions KA01189P
- Final inspection report
- Drinking water approvals (optional): SD00289P, SD00319P, SD00320P
- Devices that are suitable for use in hazardous areas: Additional documentation e.g. Safety instructions (XA, ZD)

# 5 Installation

## 5.1 Installation conditions

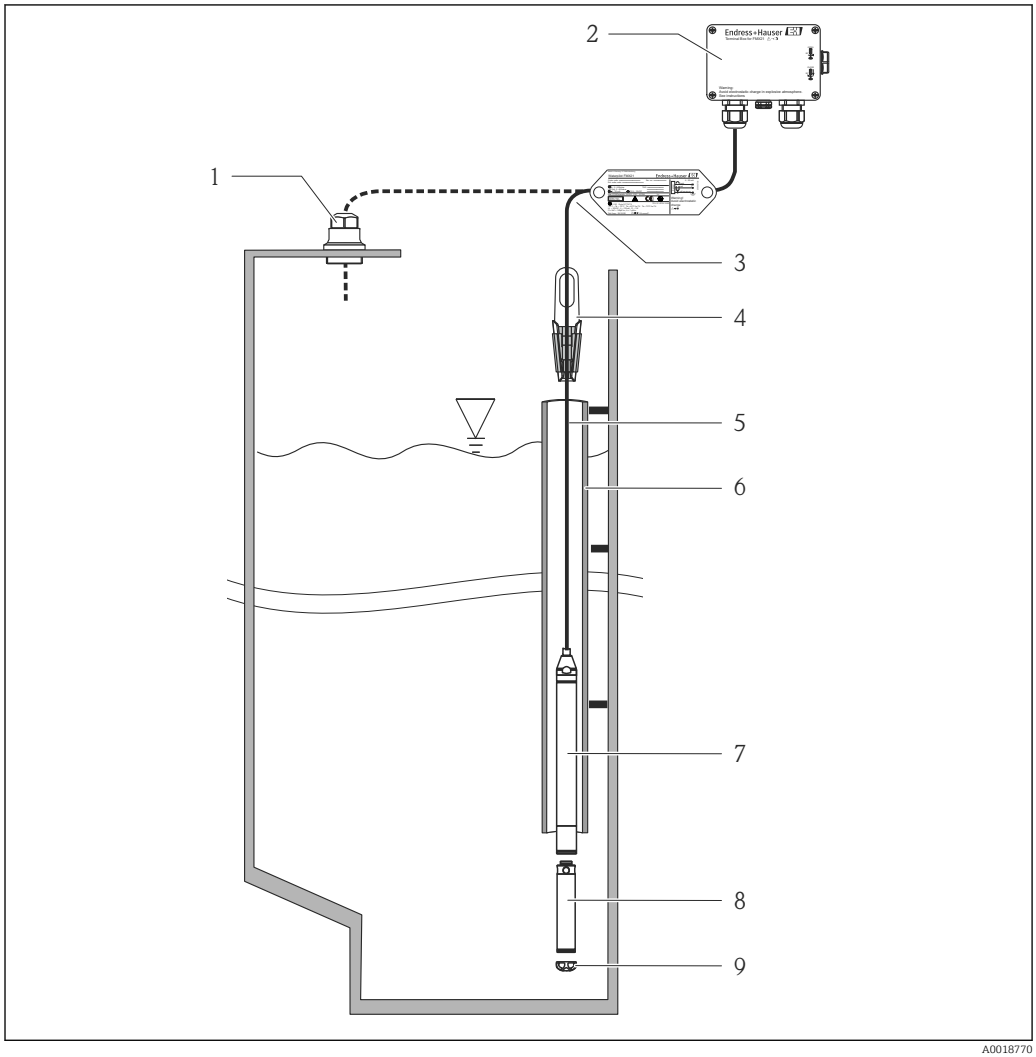


1 *Cable mounting screw (can be ordered as an accessory)*
2 *Terminal box (can be ordered as an accessory)*
3 *Bending radius of extension cable > 120 mm (4.72 in)*
4 *Mounting clamp (can be ordered as an accessory)*
5 *Extension cable*
6 *Guide tube*
7 *Waterpilot FMX21*
8 *Additional weight can be ordered as an accessory for the FMX21 with external diameter of 22 mm (0.87 in) and 29 mm (1.14 in)*
9 *Protection cap*

## 5.2 Additional mounting instructions

- Cable length
  - Customer-specific in meters or feet.
  - Limited cable length when performing installation with freely suspended device with cable mounting screw or mounting clamp, as well as for FM/CSA approval: max. 300 m (984 ft).
- Sideways movement of the level probe can result in measuring errors. For this reason, install the probe at a point free from flow and turbulence, or use a guide tube. The internal diameter of the guide tube should be at least 1 mm (0.04 in) greater than the external diameter of the selected FMX21.
- To avoid mechanical damage to the measuring cell, the device is equipped with a protection cap.
- The cable must end in a dry room or a suitable terminal box. The terminal box from Endress+Hauser provides humidity and climatic protection and is suitable for installation outdoors → 🖹 124.
- Cable length tolerance: < 5 m (16 ft): ±17.5 mm (0.69 in); > 5 m (16 ft): ±0.2 %
- If the cable is shortened, the filter at the pressure compensation tube must be reattached. Endress+Hauser offers a cable shortening kit for this purpose → 🖹 124 (documentation SD00552P/00/A6).
- Endress+Hauser recommends using twisted, shielded cable.
- In shipbuilding applications, measures are required to restrict the spread of fire along cable looms.
- The length of the extension cable depends on the intended level zero point. The height of the protection cap must be taken into consideration when designing the layout of the measuring point. The level zero point (E) corresponds to the position of the process isolating diaphragm. Level zero point = E; tip of probe = L (see the following diagram).

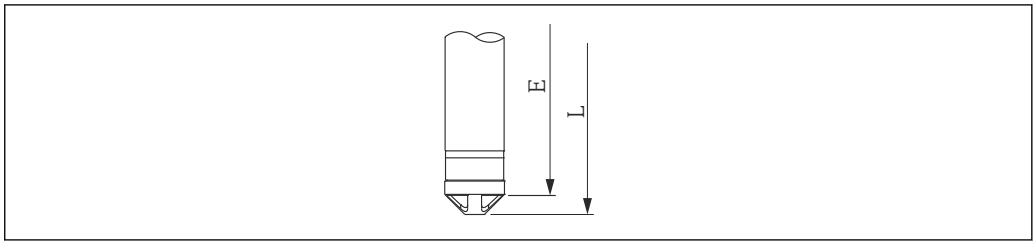


A0026013

## 5.3 Dimensions

For dimensions, please refer to the Technical Information TI00431P/00/EN, "Mechanical construction" section (see also: www.de.endress.com → Downloads → Media Type: Documentation).

## 5.4 Mounting the Waterpilot with a mounting clamp

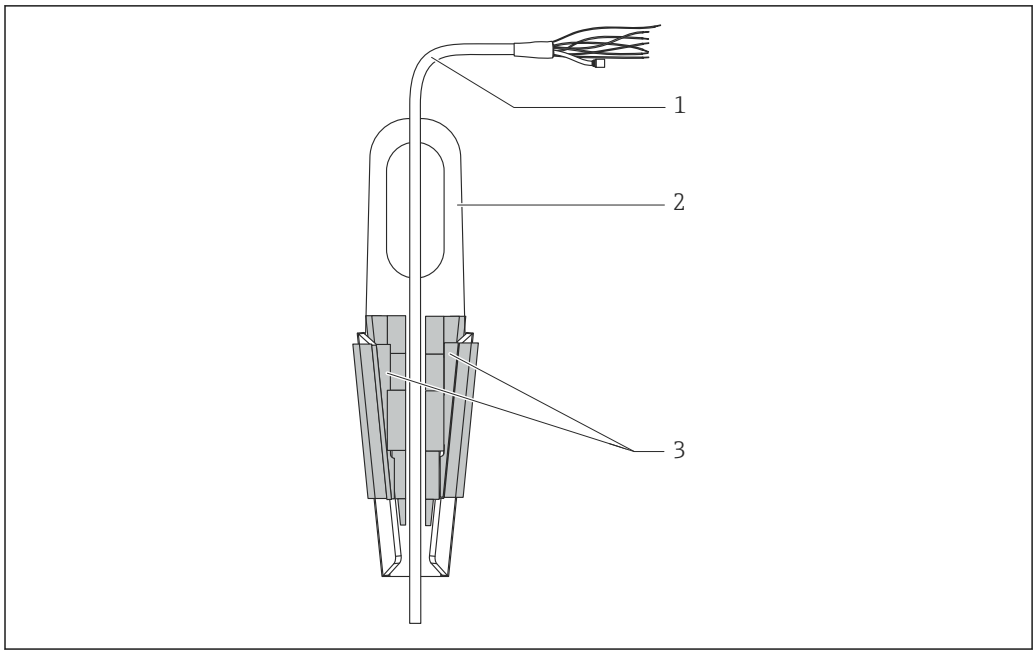


*1 Extension cable*
*2 Suspension clamp*
*3 Clamping jaws*

### 5.4.1 Mounting the suspension clamp:

1. Mount the suspension clamp (item 2). Take the weight of the extension cable (item 1) and the device into account when selecting the fastening point.
2. Push up the clamping jaws (item 3). Place the extension cable (item 1) between the clamping jaws as shown in the graphic.
3. Hold the extension cable (item 1) in position and push the clamping jaws (item 3) back down. Tap the clamping jaws gently from above to fix them in place.

## 5.5 Mounting the Waterpilot with a cable mounting screw

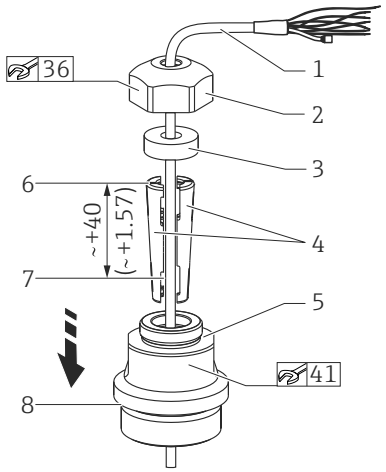


1 *Extension cable*
2 *Cover for cable mounting screw*
3 *Sealing ring*
4 *Clamping sleeves*
5 *Adapter for cable mounting screw*
6 *Top edge of clamping sleeve*
7 *Desired length of extension cable and Waterpilot probe prior to assembly*
8 *After assembly, item 7 is located next to the mounting screw with G 1½" thread: height of sealing surface of the adapter or NPT 1½" thread height of thread run-out of adapter*

Engineering unit mm (in). Illustrated with G 1½" thread.

If you want to lower the level probe to a certain depth, position the top edge of the clamping sleeve 40 mm (4.57 in) higher than the required depth. Then push the extension cable and the clamping sleeve into the adapter as described in Step 6 in the following section.

### 5.5.1 Mounting the cable mounting screw with a G 1½" or NPT 1½" thread:

1. Mark the desired length of extension cable on the extension cable.
2. Insert the probe through the measuring aperture and carefully lower on the extension cable. Fix the extension cable to prevent it from slipping.
3. Slide the adapter (item 5) over the extension cable and screw it tightly into the measuring aperture.
4. Slide the sealing ring (item 3) and cover (item 2) onto the cable from above. Press the sealing ring into the cover.
5. Place the clamping sleeves (item 4) around the extension cable (item 1) at the marked point as illustrated in the graphic.
6. Slide the extension cable with the clamping sleeves (item 4) into the adapter (item 5)
7. Fit the cover (item 2) with the sealing ring (item 3) onto the adapter (item 5) and securely screw together with the adapter.

To remove the cable mounting screw, perform this sequence of steps in reverse.

**⚠ CAUTION**

**Risk of injury!**

▶ Use only in unpressurized vessels.

## 5.6 Mounting the terminal box

The optional terminal box is mounted using four screws (M4). For the dimensions of the terminal box, please see the Technical Information TI00431P/00/ EN, "Mechanical construction" section (see also: www.de.endress.com → Downloads → Media Type: Documentation).

## 5.7 Mounting the TMT182 temperature head transmitter with terminal box

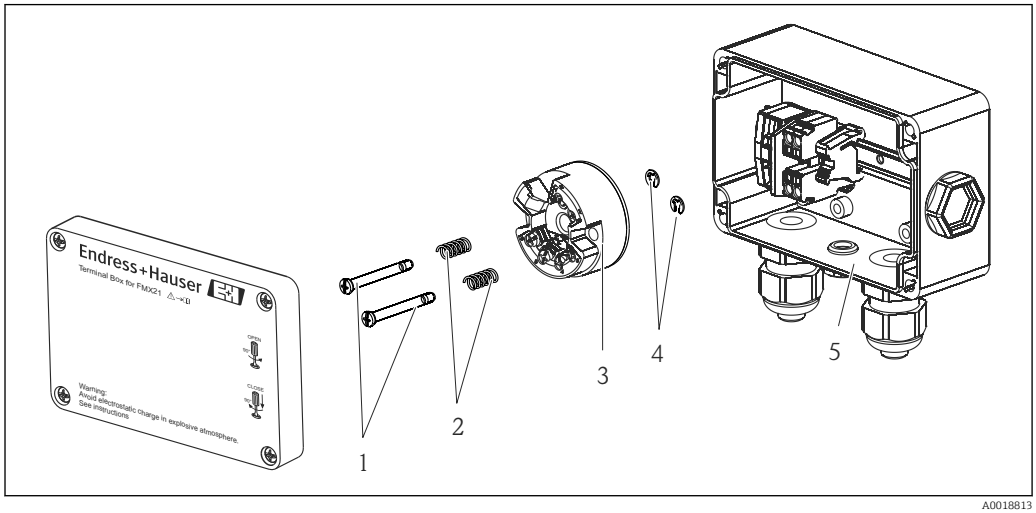


1 *Mounting screws*
2 *Mounting springs*
3 *TMT182 temperature head transmitter*
4 *Circlips*
5 *Terminal box*

Only open the terminal box with a screwdriver.

**⚠ WARNING**

**Risk of explosion!**

▶ The TMT182 is not designed for use in hazardous areas.

### 5.7.1 Mounting the temperature head transmitter:

1. Guide the mounting screws (item 1) with the mounting springs (item 2) through the bore of the temperature head transmitter (item 3)
2. Secure the mounting screws with the circlips (item 4). Circlips, mounting screws and springs are included in the scope of delivery for the temperature head transmitter.
3. Screw the temperature head transmitter into the field housing tightly. (Width of screwdriver blade max. 6 mm (0.24 in))

**NOTICE**

**Avoid damage to the temperature head transmitter.**

▶ Do not overtighten the mounting screw.

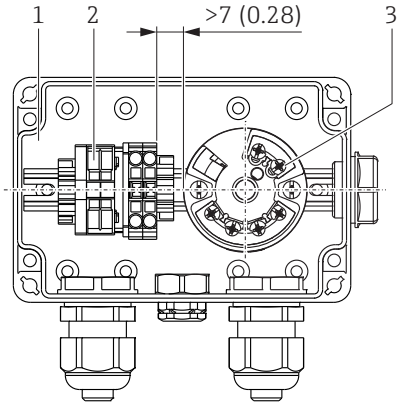


*1 Terminal box*
*2 Terminal strip*
*3 TMT182 temperature head transmitter*

Engineering unit mm (in)

**NOTICE**

**Incorrect connection!**

- A distance of >7 mm (> 0.28) must be maintained between the terminal strip and the TMT182 temperature head transmitter.

## 5.8 Mounting the terminal strip for the Pt100 passive (without TMT182)

If the FMX21 with optional Pt100 is supplied without the optional TMT182 temperature head transmitter, a terminal strip is provided with the terminal box for the purpose of wiring the Pt100.

**⚠ WARNING**

**Risk of explosion!**

- The Pt100, as well as the terminal strip, are not designed for use in hazardous areas.

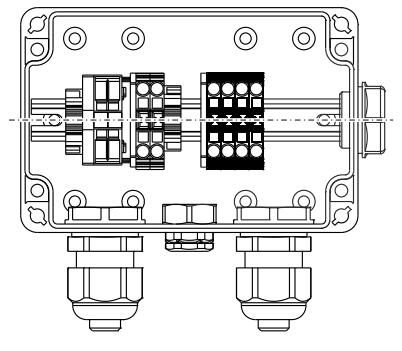

## 5.9 Inserting the cable into the RIA15 field housing

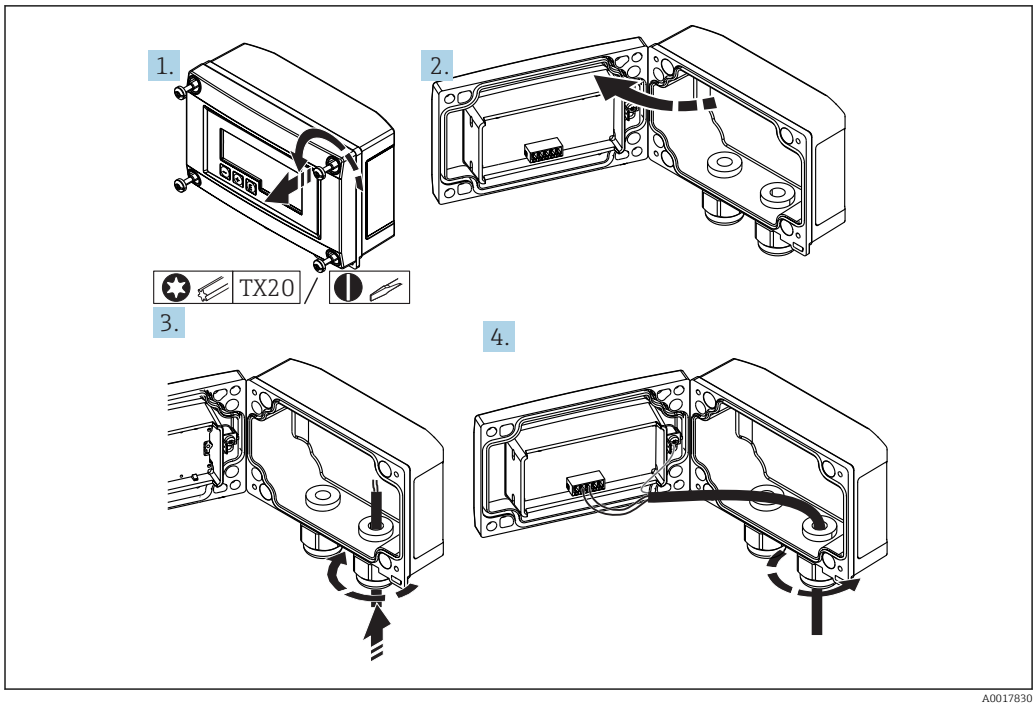


A0017830

Inserting the cable, field housing, connection without transmitter power supply (example)

1. Release the housing screws
2. Open the housing
3. Open the cable gland (M16) and insert the cable
4. Connect the cable including the functional grounding and close the cable gland

Compensation of the atmospheric pressure must be ensured for the installation. A black, vented cable gland is supplied for this purpose.

If using the communication resistor module in the RIA15, the cable of the FMX21 must be inserted into the right gland when connecting the FMX21 so that the integrated pressure compensation tube is not pinched.

## 5.10 Cable marking

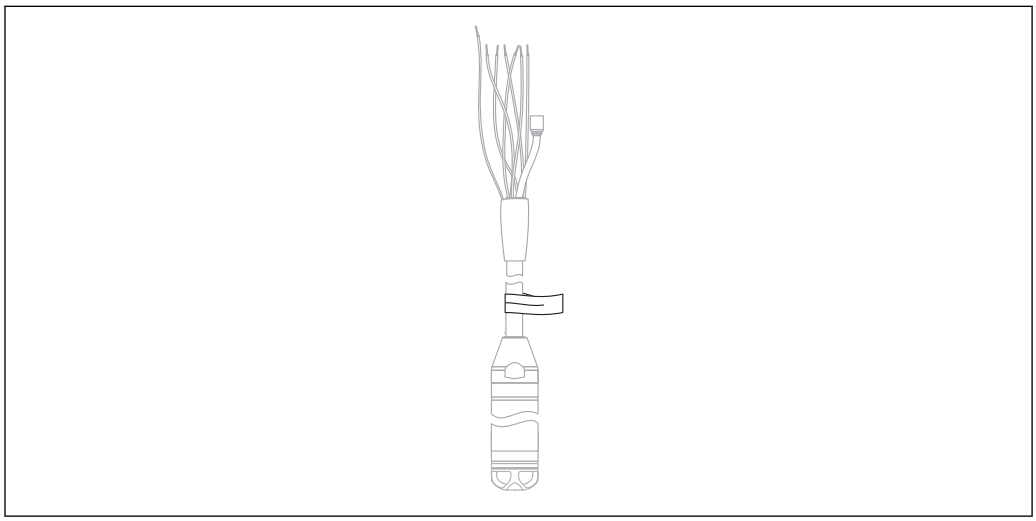

A0030955

- To make installation easier, Endress+Hauser marks the extension cable if a customer-specific length has been ordered.
  Ordering information: Product Configurator order code for "Service", option "IR" or "IS".
- Cable marking tolerance (distance to lower end of level probe):
  Cable length < 5 m (16 ft): ±17.5 mm (0.69 in)
  Cable length > 5 m (16 ft): ±0.2 %
- Material: PET, stick-on label: acrylic
- Immunity to temperature change: −30 to +100 °C (−22 to +212 °F)

**NOTICE**

**The marking is used exclusively for installation purposes.**

▶ The mark must be thoroughly removed without trace in the case of devices with drinking water approval. The extension cable must not be damaged in the process.

Not for use of the FMX21 in hazardous areas.

## 5.11 Cable shortening kit

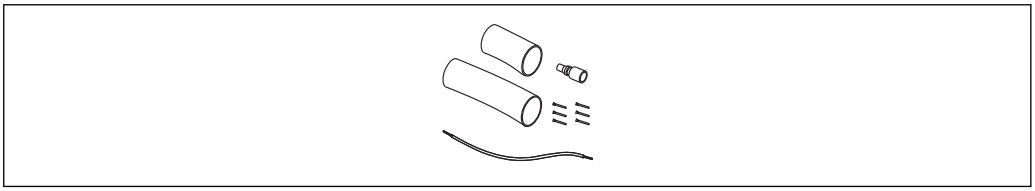

A0030948

The cable shortening kit is used to shorten a cable easily and professionally.

The cable shortening kit is not designed for the FMX21 with FM/CSA approval.

- Ordering information: Product Configurator order code for "Accessories enclosed", option "PW"
- Associated documentation SD00552P/00/A6.

## 5.12 Post-installation check

| | |
|---|---|
| ❑ | Is the device undamaged (visual inspection)? |
| ❑ | Does the device conform to the measuring point specifications?<br>For example:<br>▪ Process temperature<br>▪ Process pressure<br>▪ Ambient temperature<br>▪ Measuring range |
| ❑ | Are the measuring point identification and labeling correct (visual inspection)? |
| ❑ | Check that all screws are firmly seated. |

# 6 Electrical connection

**⚠ WARNING**

**Electrical safety is compromised by an incorrect connection!**

- When using the measuring device in a hazardous area, the relevant national standards and guidelines as well as the Safety Instructions (XAs) or installation or control drawings (ZDs) must be adhered to. All data relating to explosion protection can be found in separate documentation which is available on request. This documentation is supplied with the devices as standard → 🖹 7

## 6.1 Connecting the device

**⚠ WARNING**

**Electrical safety is compromised by an incorrect connection!**

- The supply voltage must match the supply voltage specified on the nameplate → 🖹 15
- Switch off the supply voltage before connecting the device.
- The cable must end in a dry room or a suitable terminal box. The IP66/IP67 terminal box with GORE-TEX® filter from Endress+Hauser is suitable for outdoor installation.→ 🖹 22
- Connect the device in accordance with the following diagrams. Reverse polarity protection is integrated in the Waterpilot FMX21 and the temperature head transmitter. Changing the polarities will not result in the destruction of the devices.
- A suitable circuit breaker should be provided for the device in accordance with IEC/EN 61010.

### 6.1.1 Waterpilot with Pt100

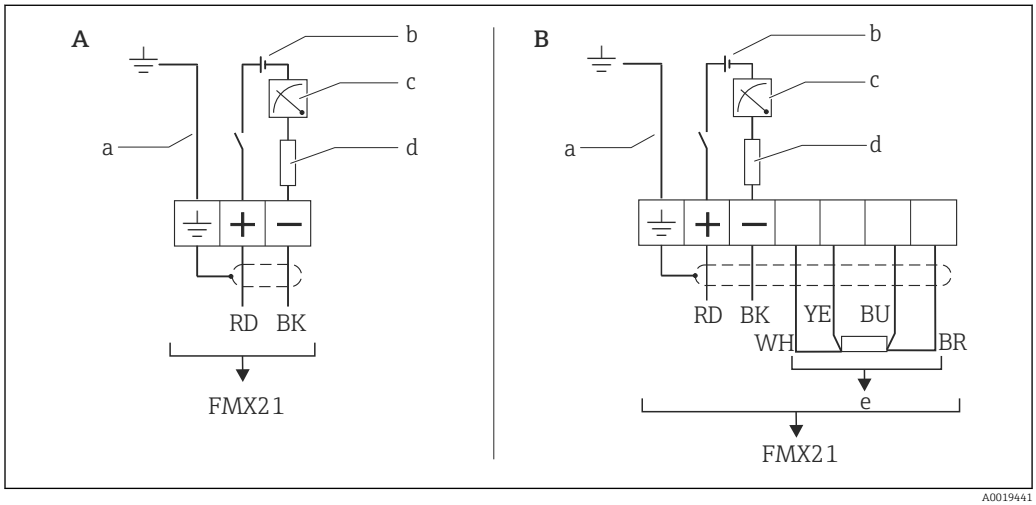


*A Waterpilot FMX21*
*B Waterpilot FMX21 with Pt100 (not for use in hazardous areas); option "NB", Product Configurator order code for "Accessories"*
*a Not for the FMX21 with external diameter of 29 mm (1.14 in)*
*b 10.5 to 30 V DC (hazardous area), 10.5 to 35 V DC*
*c 4...20 mA*
*d Resistance ($R_L$)*
*e Pt100*

### 6.1.2 Waterpilot with Pt100 and TMT182 temperature head transmitter for FMX21 4 to 20 mA HART

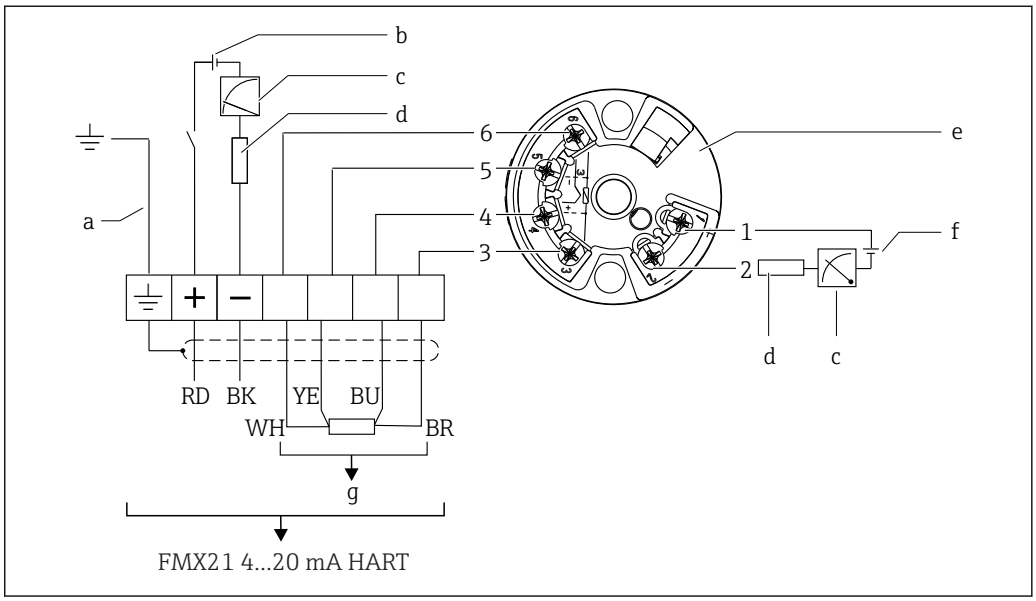


*a Not for the FMX21 with external diameter of 29 mm (1.14 in)*
*b 10.5 to 35 V DC*
*c 4...20 mA*
*d Resistance ($R_L$)*
*e TMT182 temperature head transmitter (4 to 20 mA) (not for use in hazardous areas)*
*f 11.5 to 35 V DC*
*g Pt100*
*1...6 Pin assignment*

Ordering information:

Pt100: Product Configurator order code for "Accessories mounted", option "NB"

TMT182: Product Configurator order code for "Accessories enclosed", option "PT"

### 6.1.3 Waterpilot FMX21 with RIA15

The RIA15 remote display can be ordered together with the device.

**Product structure, feature 620 "Accessory enclosed":**
- Option R4 "Remote display RIA15 non-hazardous area, field housing"
- Option R5 "Remote display RIA15 Ex= explosion protection approval, field housing"

Compensation of the atmospheric pressure must be ensured for the installation. A black, vented cable gland is supplied for this purpose.

The RIA15 process display unit is loop-powered and does not require any external power supply.

**The voltage drop to be taken into account is:**
- ≤1 V in the standard version with 4 to 20 mA communication
- ≤1.9 V with HART communication
- and an additional 2.9 V if display light is used

| | Circuit diagram / Description |
|---|---|
| Waterpilot FMX21 connection, HART communication and RIA15 **without** backlight | 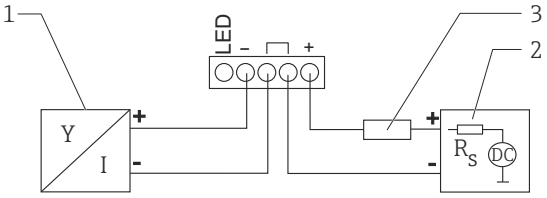 1 *Waterpilot FMX21 block diagram, HART with RIA15 process display unit without light*<br>*1 Waterpilot FMX21*<br>*2 Power supply*<br>*3 HART resistance* |
| Waterpilot FMX21 connection, HART communication and RIA15 **with** backlight | 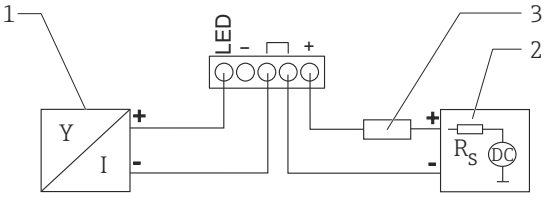 2 *Waterpilot FMX21 block diagram, HART with RIA15 process display unit with light*<br>*1 Waterpilot FMX21*<br>*2 Power supply*<br>*3 HART resistance* |

### 6.1.4 Waterpilot FMX21, RIA15 with installed HART communication resistor module

The HART communication module for installation in the RIA15 can be ordered together with the device.

**Product structure, feature 620 "Accessory enclosed":**
- Option R6 "HART communication resistor hazardous / non-hazardous area"
- The **voltage drop** to be taken into account is max. **7 V**

Compensation of the atmospheric pressure must be ensured for the installation. A black, vented cable gland is supplied for this purpose.

| | **Circuit diagram / Description** |
|---|---|
| Waterpilot FMX21 connection and RIA15 **without** backlight | 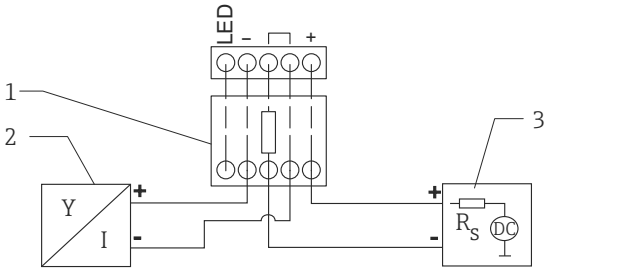 3 *Waterpilot FMX21 block diagram, RIA15 without light, HART communication resistor module*<br>*1 HART communication resistor module*<br>*2 Waterpilot FMX21*<br>*3 Power supply* |
| Waterpilot FMX21 connection and RIA15 **with** backlight | 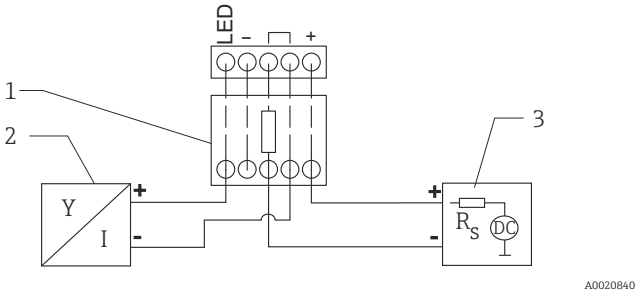 4 *Waterpilot FMX21 block diagram, RIA15 with light, HART communication resistor module*<br>*1 HART communication resistor module*<br>*2 Waterpilot FMX21*<br>*3 Power supply* |

### 6.1.5 Wire colors

RD = red, BK = black, WH = white, YE = yellow, BU = blue, BR = brown

### 6.1.6 Connection data

Connection classification as per IEC 61010-1:
- Overvoltage category 1
- Pollution level 1

#### Connection data in the hazardous area

See relevant XA.

## 6.2 Supply voltage

**⚠ WARNING**

**Supply voltage might be connected!**
Risk of electric shock and/or explosion!

- ▶ When using the measuring device in hazardous areas, installation must comply with the corresponding national standards and regulations as well as the Safety Instructions.
- ▶ All explosion protection data are given in separate documentation which is available upon request. The Ex documentation is supplied as standard with all devices approved for use in explosion hazardous areas.

### 6.2.1 FMX21 + Pt100 (optional)

- 10.5 to 35 V (not hazardous areas)
- 10.5 to 30 V (hazardous areas)

### 6.2.2 TMT182 temperature head transmitter (optional) for FMX21 4 to 20 mA HART

11.5 to 35 V DC

## 6.3 Cable specifications

Endress+Hauser recommends using shielded, twisted-pair two-wire cables.

The probe cables are shielded for device versions with outer diameters of 22 mm (0.87 in) and 42 mm (1.65 in).

### 6.3.1 FMX21 + Pt100 (optional)

- Commercially available instrument cable
- Terminals, terminal box: 0.08 to 2.5 $mm^2$ (28 to 14 AWG)

### 6.3.2 TMT182 temperature head transmitter (optional) for FMX21 4 to 20 mA HART

- Commercially available instrument cable
- Terminals, terminal box: 0.08 to 2.5 $mm^2$ (28 to 14 AWG)
- Transmitter connection: max. 1.75 $mm^2$ (15 AWG)

## 6.4 Power consumption

### 6.4.1 FMX21 + Pt100 (optional)

- ≤ 0.805 W at 35 V DC (non-hazardous area)
- ≤ 0.690 W at 30 V DC (hazardous area)

### 6.4.2 TMT182 temperature head transmitter (optional) for FMX21 4 to 20 mA HART

≤ 0.805 W at 35 V DC

## 6.5 Current consumption

### 6.5.1 FMX21 + Pt100 (optional)

Max. current consumption: ≤ 23 mA
Min. current consumption: ≥ 3.6 mA

### 6.5.2 TMT182 temperature head transmitter (optional) for FMX21 4 to 20 mA HART

- Max. current consumption: ≤ 23 mA
- Min. current consumption: ≥ 3.5 mA

## 6.6 Connecting the measuring unit

### 6.6.1 Overvoltage protection

To protect the Waterpilot and the TMT182 temperature head transmitter from large interference voltage peaks, Endress+Hauser recommends installing overvoltage protection upstream and downstream of the display and/or evaluation unit as shown in the graphic.

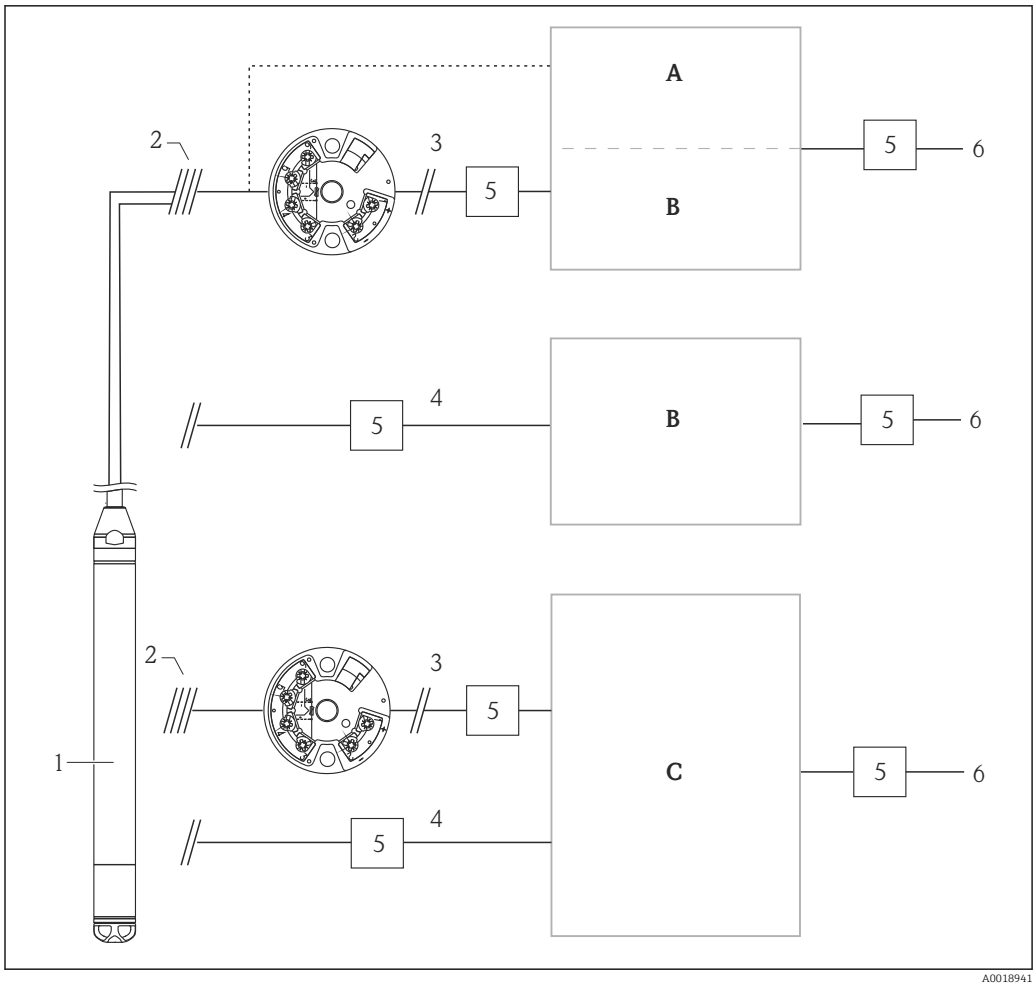


*A Power supply, display and evaluation unit with one input for Pt100*
*B Power supply, display and evaluation unit with one input for 4 to 20 mA*
*C Power supply, display and evaluation unit with two inputs for 4 to 20 mA*
*1 Waterpilot FMX21 HART*
*2 Connection for integrated Pt100 in the FMX21*
*3 4 to 20 mA HART (temperature)*
*4 4 to 20 mA HART (level)*
*5 Overvoltage protection, e.g. HAW from Endress+Hauser (not for use in hazardous areas.)*
*6 Power supply*

Further information on the TMT182 temperature head transmitter for HART applications from Endress+Hauser can be found in the Technical Information TI00078R/09/EN.

### 6.6.2 Connecting the Commubox FXA195

The Commubox FXA195 connects transmitters with the HART protocol to the USB interface of a computer. This enables remote operation of the transmitter using the Endress+Hauser operating program FieldCare/DeviceCare. Power is supplied to the Commubox via the USB port. The Commubox is also suitable for connecting to intrinsically safe circuits. For further information, see the Technical Information TI00404F/00/EN.

### 6.6.3 Connecting the Field Xpert SFX

Compact, flexible and robust industrial handheld terminal for remote configuration and for obtaining measured values via the HART current output (4 to 20 mA). For details, see Operating Instructions BA00060S/04/EN.

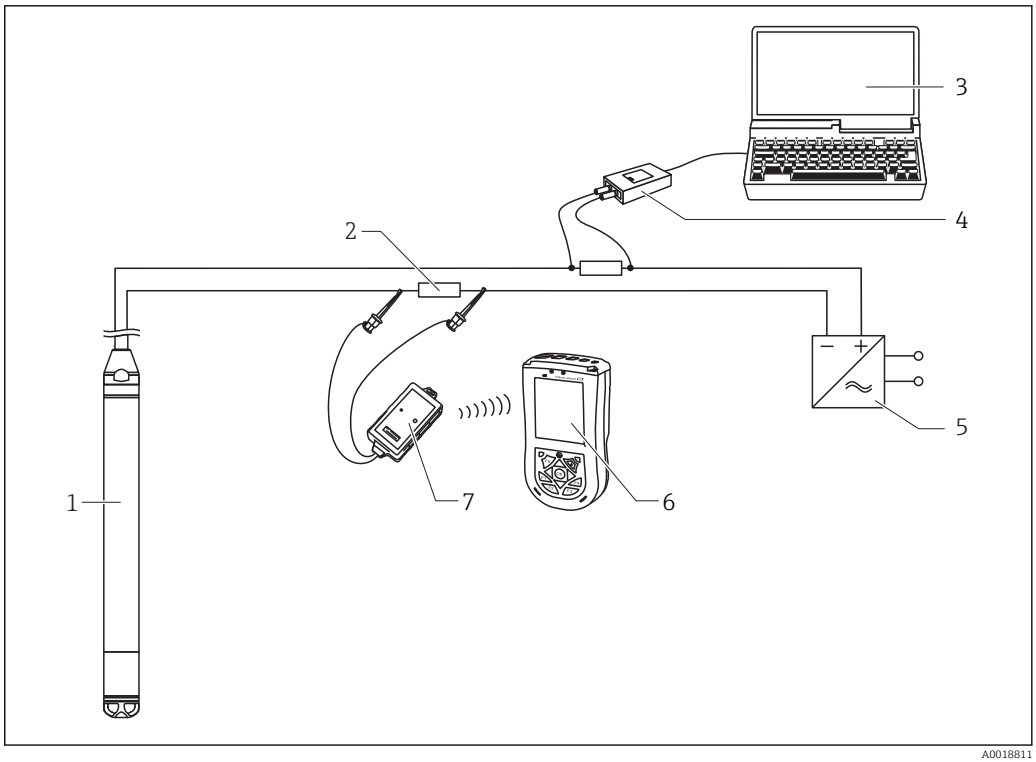


1 *Waterpilot FMX21*
2 *Required communication resistor ≥ 250 Ω*
3 *Computer with operating tool (e.g. FieldCare)*
4 *Commubox FXA195 (USB)*
5 *Transmitter power supply unit, e.g. RN221N (with communication resistor)*
6 *Field Xpert SFX*
7 *VIATOR Bluetooth modem with connecting cable*

Only use certified operating devices in hazardous area!

**WARNING**

**Risk of explosion!**

- Do not change the battery of the handheld terminal in the hazardous area.
- When using the measuring device in hazardous areas, installation must comply with the corresponding national standards and regulations and the Safety Instructions (XAs) or the Installation or Control Drawings (ZDs).

### 6.6.4 Connecting for air pressure compensation with external measured value

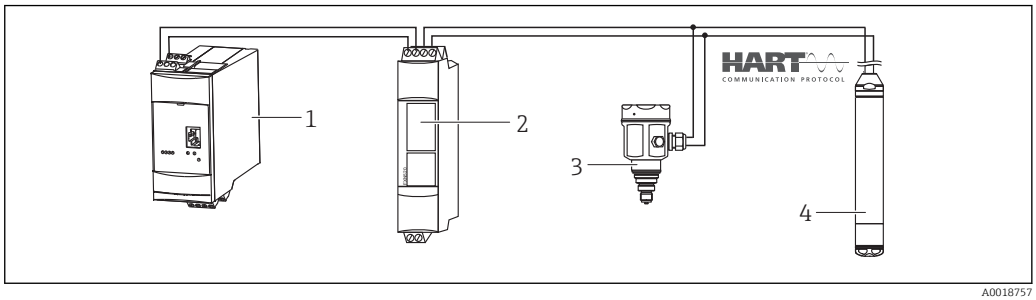


1 *Fieldgate FXA520*
2 *Multidrop Connector FXN520*
3 *Cerabar*
4 *Waterpilot FMX21*

For applications in which condensation may occur, the use of an absolute pressure probe is recommended. For level measurement using an absolute pressure probe, the measured value is affected by fluctuations in the ambient air pressure. To correct the resulting measured error, you can connect an external absolute pressure sensor (e.g. Cerabar) to the HART signal line, switch the Waterpilot to burst mode and operate the Cerabar in the "Electr. Delta P" mode.

When you switch on the "Electr. Delta P" application, the external absolute pressure sensor calculates the difference between the two pressure signals and can thus determine the level precisely. Only one level measured value can be corrected in this way.

For additional information, see → 57.

If using intrinsically safe devices, the regulations which apply to interconnecting intrinsically safe circuits as outlined in IEC 60079-14 (proof of intrinsic safety) must be observed.

### 6.6.5 Connecting an external temperature sensor/temperature head transmitter for density compensation

The Waterpilot FMX21 can correct measured errors that result from fluctuations in the density of the water caused by temperature. Users can choose from the following options:

#### Use the internally measured sensor temperature of the FMX21

The internally measured sensor temperature is calculated in the Waterpilot FMX21 for density compensation. The level signal is thus corrected according to the density characteristic line of water.

#### Use the optional internal Pt100 temperature sensor for density compensation in a suitable HART master (e.g. PLC)

The Waterpilot FMX21 is available with an optional Pt100 temperature sensor. Endress +Hauser additionally offers the TMT182 temperature head transmitter to convert the Pt100 signal to a 4 to 20 mA HART signal. The temperature and pressure signal is queried by a HART master (e.g. PLC), where a corrected level value can be generated using a stored linearization table or density function (of a chosen medium).

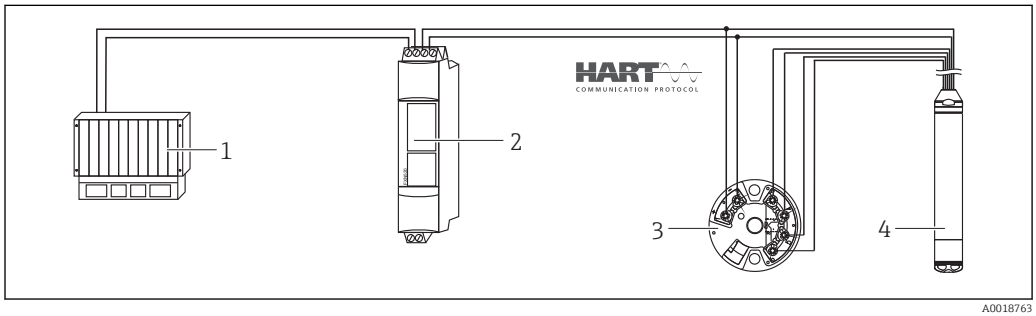


*1 HART master, e.g. PLC (programmable logic controller)*
*2 Multidrop Connector FXN520*
*3 TMT182 temperature head transmitter*
*4 Waterpilot FMX21*

#### Use an external temperature signal which is transmitted to the FMX21 via HART burst mode

The Waterpilot FMX21 is available with an optional Pt100 temperature sensor. With this option, the signal of the Pt100 is evaluated with a HART-compliant temperature head transmitter (min. HART 5.0) that supports the burst mode. The temperature signal can

thus be transmitted to the FMX21. The FMX21 uses this signal for density correction of the level signal.

The TMT182 temperature head transmitter is not suitable for this configuration.

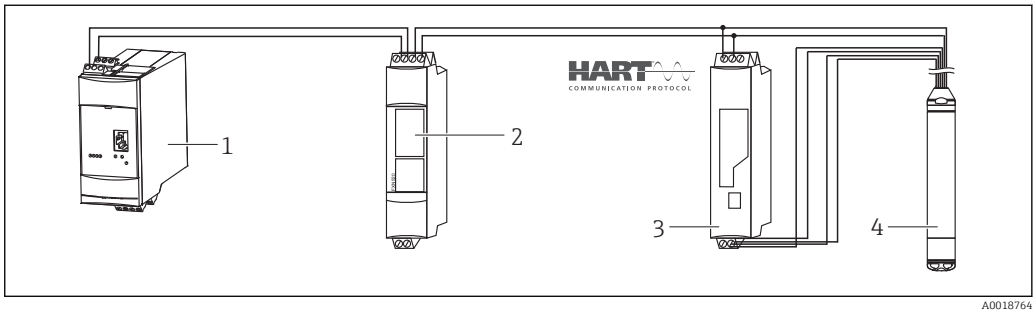


*1 Fieldgate FXA520*
*2 Multidrop Connector FXN520*
*3 HART-compatible temperature transmitter (e.g. TMT82)*
*4 Waterpilot FMX21*

Without additional compensation due to the anomaly of water, errors of up to 4% may occur at a temperature of +70 °C (+158 °F), for example. With density compensation, this error can be decreased to 0.5 % in the entire temperature range from 0 to +70 °C (+32 to +158 °F).

For additional information, see → 59.

For further information on the devices, please refer to the relevant Technical Information:
- TI01010T: TMT82 temperature transmitter (4 to 20 mA HART)
- TI00369F: Fieldgate FXA520
- TI00400F: Multidrop Connector FXN520

## 6.7 Post-connection check

| | |
|---|---|
| ❑ | Is the device or cable undamaged (visual check)? |
| ❑ | Do the cables comply with the requirements ? |
| ❑ | Do the cables have adequate strain relief? |
| ❑ | Are all cable glands installed, securely tightened and leak-tight? |
| ❑ | Does the supply voltage match the specifications on the nameplate? |
| ❑ | Is the terminal assignment correct ? |

# 7 Operation options

Endress+Hauser offers comprehensive measuring point solutions with display and/or evaluation units for the Waterpilot FMX21 HART and TMT182 temperature head transmitter.

Your Endress+Hauser service organization would be glad to be of service if you have any other questions. Contact addresses can be found on the website at www.endress.com/worldwide

## 7.1 Overview of operating options

### 7.1.1 Operation using Endress+Hauser operating program

**FieldCare**

The FieldCare operating program is an Endress+Hauser asset management tool based on FDT technology. With FieldCare, you can configure all Endress+Hauser devices as well as devices from other manufacturers that support the FDT standard.

Hardware and software requirements can be found on the Internet:

www.de.endress.com → Search: FieldCare → FieldCare → Technical data.

FieldCare supports the following functions:
- Configuration of transmitters in online/offline mode
- Loading and saving device data (upload/download)
- Documentation of the measuring point

Connection options:
- HART via Commubox FXA195 and USB interface of a computer
- HART via Fieldgate FXA520

- Further information on FieldCare and software download can be found on the internet (www.de.endress.com ® Downloads ® Text Search: FieldCare).
- Connecting the Commubox FXA195
- As not all internal device dependencies can be mapped in offline operation, the consistency of the parameters must be checked once again before they are transmitted to the device.

**DeviceCare**

*Function scope*

Tool for connecting and configuring Endress+Hauser field devices.

The fastest way to configure Endress+Hauser field devices is with the dedicated "DeviceCare" tool. Together with the device type managers (DTMs) it presents a convenient, comprehensive solution.

For details, see Innovation brochure IN01047S

### 7.1.2 Operation via Field Xpert SFX

Compact, flexible and robust industrial handheld terminal for remote configuration and for obtaining measured values via the HART current output or FOUNDATION Fieldbus. For details, see the Operating Instructions BA00060S/04.

### 7.1.3 Operation via RIA15

The RIA15 can be used as a local display unit and for the basic configuration of the Waterpilot FMX21 hydrostatic level sensor via HART.

The following parameters can be configured on the FMX21 using the 3 operating keys on the front of the RIA15:
- Pressure engineering unit, level, temperature
- Zero adjustment (only for gauge pressure sensors)
- Empty and full pressure adjustment
- Empty and full level adjustment
- Reset to factory defaults

Further information on the operating parameters → 67

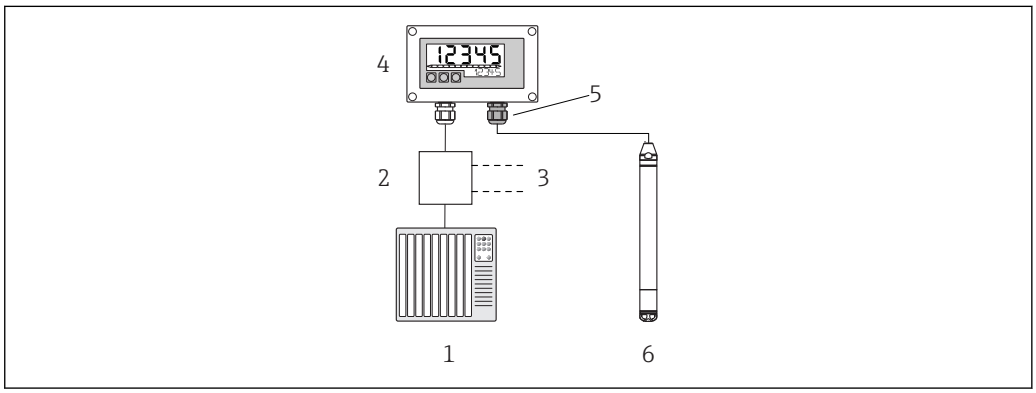


5 *Remote operation of the Waterpilot FMX21 via the RIA15*

*1 PLC*
*2 Transmitter power supply, e.g. RN221N (with communication resistor)*
*3 Connection for Commubox FXA195 and Field Communicator 375, 475*
*4 RIA15 loop-powered process display unit*
*5 Cable gland M16 with pressure compensation membrane*
*6 Waterpilot FMX21*

## 7.2 Operating concept

Operation with an operating menu is based on an operation concept with "user roles" .

| User role | Meaning |
|---|---|
| Operator | Operators are responsible for the devices during normal "operation". This is usually limited to the reading of process values. If the work with the devices goes beyond reading, it concerns simple, application-specific functions that are used in operation. Should an error occur, these users simple forward the information on the errors but do not intervene themselves. |
| Maintenance | Service engineers usually work with the devices in the phases following device commissioning. They are primarily involved in maintenance and troubleshooting activities for which simple settings have to be made at the device. Technicians work with the devices over the entire life cycle of the product. Thus, commissioning and advanced settings and configurations are some of the tasks they have to carry out. |
| Expert | Experts work with the devices over the entire life cycle of the device, but, in part, have high requirements on the devices. Individual parameters/functions from the overall functionality of the devices are required for this purpose time and again. In addition to technical, process-oriented tasks, experts can also perform administrative tasks (e.g. user administration). "Experts" can avail of the entire parameter set. |

## 7.3 Structure of the operating menu

| User role | Submenu | Meaning/use |
|---|---|---|
| Operator | Display/ operat. | Contains parameters that are needed to configure the measured value display (selecting the values displayed, display format, etc.). With this submenu, users can change the measured value display without affecting the actual measurement. |
| Maintenance | setup | Contains all the parameters that are needed to commission measuring operations. This submenu has the following structure:<br>▪ **Standard setup parameters**<br>A wide range of parameters, which can be used to configure a typical application, is available at the start. The measuring mode selected determines which parameters are available. After making settings for all these parameters, the measuring operation should be completely configured in the majority of cases.<br>▪ **"Extended setup" submenu**<br>The "Extended setup" submenu contains additional parameters for more in-depth configuration of the measurement operation, for conversion of the measured value and for scaling the output signal. This menu is split into additional submenus depending on the measuring mode selected. |
| Maintenance | Diagnosis | Contains all the parameters that are needed to detect and analyze operating errors. This submenu has the following structure:<br>▪ **Diagnostic list**<br>contains up to 10 currently pending error messages.<br>▪ **Event logbook**<br>contains the last 10 error messages (no longer pending).<br>▪ **Instrument info**<br>contains information for identifying the device.<br>▪ **Measured values**<br>contains all current measured values.<br>▪ **Simulation**<br>Is used to simulate pressure, level, current and alarm/warning.<br>▪ **Enter reset code** |
| Expert | Expert | Contains all the parameters of the device (including those already in one of the submenus). The "Expert" submenu is structured by the function blocks of the device. It thus contains the following submenus:<br>▪ **System**<br>contains all device parameters that do not affect either measurement or integration into a distributed control system.<br>▪ **Measurement**<br>contains all parameters for configuring the measurement.<br>▪ **Output**<br>contains all parameters for configuring the current output.<br>▪ **Communication**<br>contains all parameters for configuring the HART interface.<br>▪ **Diagnosis**<br>contains all parameters required to detect and analyze operating errors. |

## 7.4 Locking/unlocking operation

Once you have entered all the parameters, you can lock your entries against unauthorized and undesired access.

The "Operator code" parameter is used to lock/unlock the device.

**Operator code**

**Navigation** Setup → Extended setup → Operator code

**Read permission** Operator/Service engineers/Expert

**Write permission** Operator/Service engineers/Expert

**Description** Use this function to enter a code to lock or unlock operation.

**User entry**
- To lock: Enter a number ≠ the release code (value range: 1 to 65535).
- To unlock: Enter the release code.

**Factory setting** 0

**Note** The release code is "0" in the order configuration. Another release code can be defined in the "Code definition" parameter. If the user has forgotten the release code, the release code can be visible by entering the number "5864".

The release code is defined in the "Code definition" parameter.

**Code definition**

**Navigation** Setup → Extended setup → Code definition

**Read permission** Operator/Service engineers/Expert

**Write permission** Operator/Service engineers/Expert

**Description** Use this function to enter a release code with which the device can be unlocked.

**User entry** A number from 0 to 9999

**Factory setting** 0

**Note** The device setup can also be disabled on the RIA15 via a 4-digit user code.
Additional information is available in the RIA15 Operating Instructions BA01170K.

## 7.5 Resetting to factory settings (reset)

By entering a certain code, you can completely or partially reset the entries for the parameters to the factory settings [1)]. Enter the code via the "Enter reset code" parameter (menu path: "Diagnosis" → "Enter reset code").

There are various reset codes for the device. The following table illustrates which parameters are reset by the particular reset codes. To perform a reset, operation must be unlocked (see the "Locking/unlocking operation" section ).→ 38

Any customer-specific configuration carried out at the factory is not affected by a reset (customer-specific configuration remains). If you want to change the customer-specific configuration carried out at the factory, please contact Endress+Hauser Service. As there is no separate service level, the order code and serial number can be changed without a specific release code.

1) . The factory setting for the individual parameters is specified in the parameter description

| Reset code [1] | Description and effect |
|---|---|
| 62 | **PowerUp reset (warm start)**<br>▪ The device is restarted.<br>▪ Data is read back anew from the EEPROM (process is reinitialized).<br>▪ Any simulation which may be running is ended. |
| 333 | **User reset**<br>▪ This code resets all the parameters apart from:<br>- Device tag<br>- Linearization table<br>- Operating hours<br>- Event logbook<br>- Curr. trim 4 mA<br>- Curr. trim 20 mA<br>▪ Any simulation which may be running is ended.<br>▪ The device is restarted. |
| 7864 | **Total reset**<br>▪ This code resets all the parameters apart from:<br>- Operating hours<br>- Event logbook<br>▪ Any simulation which may be running is ended.<br>▪ The device is restarted. |

1) To be entered in "System" → "Management" → "Enter reset code"

After a "Total reset" in FieldCare you have to press the "refresh" button in order to ensure that the measuring units are also reset.

# 8 Integrating device via HART® protocol

*Version data for the device*

| | | |
|---|---|---|
| Firmware version | 01.00.zz | ▪ On the title page of the Operating instructions<br>▪ On nameplate → 🖹 15<br>▪ **Firmware Version** parameter<br>Diagnosis→ Instrument info → Firmware version |
| Manufacturer ID | 17 (0x11) | **Manufacturer ID.** parameter<br>Diagnosis → Instrument info→ Manufacturer ID |
| Device type code | 36 (0x24) | **Device type code** parameter<br>Diagnosis → Instrument info → Device type code |
| HART protocol revision | 6.0 | --- |
| Device revision | 1 | ▪ On nameplate → 🖹 15<br>▪ **Device revision** parameter<br>Diagnosis→ Instrument info → Device revision |

The suitable device description file (DD) for the individual operating tools is listed in the table below, along with information on where the file can be acquired.

*Operating tools*

| Operating tool | Reference sources for device descriptions (DD and DTM) |
|---|---|
| FieldCare | ▪ www.endress.com → Downloads area<br>▪ CD–ROM (contact Endress+Hauser)<br>▪ DVD (contact Endress+Hauser) |
| AMS Device Manager<br>(Emerson Process Management) | www.endress.com → Downloads area |
| SIMATIC PDM<br>(Siemens) | www.endress.com → Downloads area |
| Field Communicator 375, 475<br>(Emerson Process Management) | Use update function of handheld terminal |

## 8.1 HART process variables and measured values

The following numbers are assigned to the process variables in the factory:

| Process variable | Pressure | Level | |
|---|---|---|---|
| | | Linear | Table active |
| First process variable<br>(Primary variable) | 0<br>(Pressure measured) | 8<br>(Level before linearization) | 9<br>(Tank content) |
| Second process variable<br>(Secondary variable) | 2<br>(Corrected press.) | 0<br>(Pressure measured) | 8<br>(Level before linearization) |

| Process variable | Pressure | Level | |
|---|---|---|---|
| | | Linear | Table active |
| Third process variable (Tertiary variable) | 3 (Sensor pressure) | 2 (Corrected press.) | 0 (Pressure measured) |
| Fourth process variable (Quaternary variable) | 4 (Sensor temp.) | | |

The assignment of the device variables to the process variable is displayed in the **Expert → Communication → HART output** menu.

The assignment of the device variables to the process variable (SV, TV, QV) can be changed using HART command 51.

An overview of the possible device variables can be found in the following section.

## 8.2 Device variables and measured values

The following measured values are assigned to the individual device variables:

| Device variable code | Device variable | Measured value | Operating mode |
|---|---|---|---|
| 0 | PRESSURE_1_FINAL_VALUE | Pressure measured | All |
| 1 | PRESSURE_1_AFTER_DAMPING | Pressure af.damp | All |
| 2 | PRESSURE_1_AFTER_CALIBRATION | Corrected press. | All |
| 3 | PRESSURE_1_AFTER_SENSOR | Corrected press. | All |
| 4 | MEASURED_TEMPERATURE_1 | Sensor temp. | All |
| 8 | MEASURED_LEVEL_AFTER_ SIMULATION | Level before lin. | Only level |
| 9 | MEASURED_TANK_CONTENT_AFTER_ SIMULATION | Tank content | Only level |
| 10 | CORRECTED_MEASUREMENT_ DENSITY | Process density | Only level |
| 12 | HART_INPUT_VALUE [1)] | HART input val. | - |
| 251 | None (no device variable is mapped) | - | All (but only for quaternary variable) |

1) Cannot be selected as an output

The device variables can be queried from a HART® master using HART® command 9 or 33.

# 9 Commissioning

NOTICE

**If a pressure smaller than the minimum permitted pressure or greater than the maximum permitted pressure is present at the device, the following messages are output in succession:**

- "S140 Working range P" or "F140 Working range P" (depending on the setting in the "Alarm behav. P" parameter)
- "S841 Sensor range" or "F841 Sensor range" (depending on the setting in the "Alarm behav. P" parameter)
- "S971 Adjustment" (depending on setting in "Alarm behav. P" parameter

## 9.1 Post-installation check and function check

Before commissioning your measuring point, ensure that the post-installation and post-connection check have been performed.

- "Post-installation check" checklist→ 25
- "Post-connection check" checklist→ 35

## 9.2 Unlocking/locking configuration

If the device is locked to prevent configuration, it must first be unlocked.

### 9.2.1 Locking/unlocking software

If the device is locked via the software (device access code), the key symbol appears in the measured value display. If an attempt is made to write to a parameter, a prompt for the device access code appears. To unlock, enter the user-defined device access code.

## 9.3 Commissioning

Commissioning comprises the following steps:

- Function check→ 43
- Selection of the measuring mode and pressure unit → 43
- Position adjustment → 44
- Configuring measurement:
  - Pressure measurement→ 46
  - Level measurement → 48

## 9.4 Measuring mode selection

The device is configured for the "Pressure" measuring mode as standard. The measuring range and the unit in which the measured value is transmitted correspond to the data on the nameplate.

WARNING

**Changing the measuring mode affects the span (URV)**

This situation can result in product overflow.

- If the measuring mode is changed, the setting for the span (URV) must be checked in the "Setup" operating menu and readjusted if necessary.

| **Measuring mode** |
|---|

**Navigation** Setup → Measuring mode

**Write permission** Operator/Service engineers/Expert

**Description** Select the measuring mode.
The operating menu is structured differently depending on the measuring mode selected.

**Options**
- Pressure
- Level

**Factory setting** Level

## 9.5 For selecting the pressure engineering unit

**Press. eng. unit**

**Navigation** Setup → Press. eng. unit

**Write permission** Operator/Service engineers/Expert

**Description** Select the pressure engineering unit. If a new pressure engineering unit is selected, all pressure-specific parameters are converted and displayed with the new unit.

**Options**
- mbar, bar
- mmH2O, mH2O, inH2O
- ftH2O
- Pa, kPa, MPa
- psi
- mmHg, inHg
- kgf/cm$^2$

**Factory setting** mbar or bar depending on the nominal measuring range of the sensor module, or as per order specifications.

## 9.6 Position adjustment

The pressure resulting from the orientation of the device can be corrected here.

**Pos. zero adjust (gauge pressure sensor)**

**Navigation** Setup → Pos. zero adjust

**Write permission** Operator/Service engineers/Expert

**Description** Position adjustment – the pressure difference between zero (set point) and the measured pressure need not be known.

**Options**
- Confirm
- Cancel

**Example**
- Measured value = 2.2 mbar (0.033 psi)
- You correct the measured value via the "Pos. zero adjust" parameter with the "Confirm" option. This means that you are assigning the value 0.0 to the pressure present.
- Measured value (after pos. zero adjust) = 0.0 mbar
- The current value is also corrected.

**Factory setting** Cancel

**Calib. offset**

**Write permission** Service engineers/Expert

**Description** Position adjustment – the pressure difference between the set point and the measured pressure must be known.

**Example**
- Measured value = 982.2 mbar (14.73 psi)
- You correct the measured value with the value entered (e.g. 2.2 mbar (0.033 psi)) via the "Calib. Offset" parameter. This means that you are assigning the value 980.0 (14.7 psi) to the pressure present.
- Measured value (after pos. zero adjust) = 980.0 mbar (14.7 psi)
- The current value is also corrected.

**Factory setting** 0.0

## 9.7 Configuring the damping

The output signal follows measured value changes with the delay time. This can be configured via the operating menu.

**Damping**

**Navigation** Setup → Damping

**Write permission** Operator/Service engineers/Expert
(if the "Damping" DIP switch is set to "on")

**Description** Enter damping time (time constant τ) ("Damping" DIP switch set to "on")
Display damping time (time constant τ) ("Damping" DIP switch set to "off").
The damping affects the speed at which the measured value reacts to changes in pressure.

**Input range** 0.0 to 999.0 s

**Factory setting** 2.0 sec. or according to order specifications

## 9.8 Configuring pressure measurement

### 9.8.1 Calibration with reference pressure (wet calibration)

**Example:**

In this example, a device with a 400 mbar (6 psi) sensor module is configured for the 0 to +300 mbar (0 to 4.5 psi) measuring range, i.e. 0 mbar and 300 mbar (4.5 psi) are assigned, respectively, to the 4 mA value and the 20 mA value.

**Prerequisite:**

The pressure values 0 mbar and 300 mbar (4.5 psi) can be specified. For example, the device is already installed.

Due to the orientation of the device, there may be pressure shifts in the measured value, i.e. the measured value is not zero in a pressureless condition. For information on how to perform position adjustment, see → 44.

| | Description |
|---|---|
| 1 | Select the "Pressure" measuring mode via the "Measuring Mode" parameter.<br>Menu path: Setup → Measuring mode<br><br>**WARNING**<br>**Changing the measuring mode affects the span (URV)**<br>This situation can result in product overflow.<br>► If the measuring mode is changed, the setting for the span (URV) must be checked in the "Setup" operating menu and readjusted if necessary. |
| 2 | Select a pressure unit via the "Press eng. unit" parameter, here "mbar" for example.<br>Menu path: Setup → Press. eng. unit |
| 3 | The pressure for the LRV (4 mA value) is present at the device, here 0 mbar for example |
| | Select the "Get LRV" parameter.<br>Menu path: Setup → Extended setup → Current output → Get LRV |
| | Confirm the present value by selecting "Apply". The present pressure value is assigned to the lower current value (4 mA). |
| 4 | The pressure for the URV (20 mA value) is present at the device, here 300 mbar (4.5 psi) for example. |
| | Select the "Get URV" parameter.<br>Menu path: Setup → Extended setup → Current output → Get URV |
| | Confirm the present value by selecting "Apply". The present pressure value is assigned to the upper current value (20 mA). |
| 5 | Result:<br>The measuring range is configured for 0 to +300 mbar (0 to 4.5 psi). |

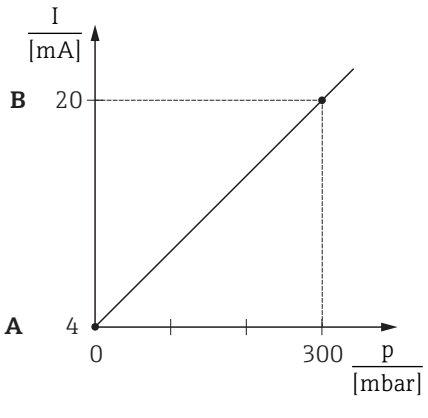


*A See table, step 3.*
*B See table, step 4.*

### 9.8.2 Calibration without reference pressure (dry calibration)

**Example:**

In this example, a device with a 400 mbar (6 psi) sensor module is configured for the 0 to +300 mbar (0 to 4.5 psi) measuring range, i.e. 0 mbar and 300 mbar (4.5 psi) are assigned, respectively, to the 4 mA value and the 20 mA value.

**Prerequisite:**

This is a theoretical calibration, i.e. the pressure values for the lower and upper range are known.

Due to the orientation of the device, there may be pressure shifts in the measured value, i.e. the measured value is not zero in a pressureless condition. For information on how to perform position adjustment, see → 44.

| | Description |
|---|---|
| 1 | Select the "Pressure" measuring mode via the "Measuring Mode" parameter.<br>Menu path: Setup → Measuring mode<br><br>**WARNING**<br>**Changing the measuring mode affects the span (URV)**<br>This situation can result in product overflow.<br>▶ If the measuring mode is changed, the setting for the span (URV) must be checked in the "Setup" operating menu and readjusted if necessary. |
| 2 | Select a pressure unit via the "Press eng. unit" parameter, here "mbar" for example.<br>Menu path: Setup → Press. eng. unit |
| 3 | Select the "Set LRV" parameter.<br>Menu path: Setup → Extended setup → Current output → Set LRV |
| | Enter the value for the "Set LRV" parameter (here 0 mbar) and confirm. This pressure value is assigned to the lower current value (4 mA). |
| 4 | Select the "Set URV" parameter.<br>Menu path: Setup → Extended setup → Current output → Set URV |
| | Enter the value for the "Set URV" parameter, here 300 mbar (4.5 psi), and confirm. This pressure value is assigned to the upper current value (20 mA). |
| 5 | Result:<br>The measuring range is configured for 0 to +300 mbar (0 to 4.5 psi). |

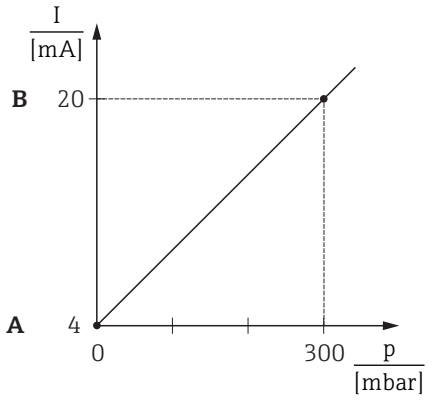


*A* *See table, step 3.*
*B* *See table, step 4.*

# 9.9 Configuring level measurement

## 9.9.1 Information on level measurement

**You have a choice of two methods for calculating the level: "In pressure" and "In height". The table in the "Overview of level measurement" section that follows provides you with an overview of these two measuring tasks.**

- The limit values are not checked, i.e. the values entered must be appropriate for the sensor module and the measuring task for the device to be able to measure correctly.
- Customer-specific units are not possible.
- The values entered for "Empty calib./Full calib.", "Empty pressure/Full pressure", "Empty height/Full height" and "Set LRV/Set URV" must be at least 1% apart. The value will be rejected, and a message displayed, if the values are too close together.

## 9.9.2 Overview of level measurement

| Measuring task | Level selection | Measured variable options | Description | Measured value display |
|---|---|---|---|---|
| Calibration is performed by entering two pressure-level value pairs. | "In pressure" | Via the "Output unit" parameter: %, level, volume or mass units | ▪ Calibration with reference pressure (wet calibration) → 🖹 50<br>▪ Calibration without reference pressure (dry calibration)→ 🖹 48 | The measured value display and the "Level before lin" parameter display the measured value. |
| Calibration is performed by entering the density and two height-level value pairs. | "In height" | | ▪ Calibration with reference pressure (wet calibration) → 🖹 54<br>▪ Calibration without reference pressure (dry calibration)→ 🖹 52 | |

## 9.9.3 "In pressure" level selection Calibration without reference pressure (dry calibration)

**Example:**

In this example, the volume in a tank should be measured in liters. The maximum volume of 1 000 l (264 gal) corresponds to a pressure of 400 mbar (6 psi).

The minimum volume of 0 liters corresponds to a pressure of 0 mbar since the process isolating diaphragm of the probe is at the start of the level measuring range.

**Prerequisite:**

- The measured variable is in direct proportion to the pressure.
- This is a theoretical calibration i.e. the pressure and volume values for the lower and upper calibration point must be known.

- The values entered for "Empty calib./Full calib.", "Empty pressure/Full pressure" and "Set LRV/Set URV" must be at least 1% apart. The value will be rejected, and a message displayed, if the values are too close together. Further limit values are not checked, i.e. the values entered must be appropriate for the sensor module and the measuring task for the device to be able to measure correctly.
- Due to the orientation of the device, there may be pressure shifts in the measured value, i.e. when the vessel is empty or partly filled, the measured value is not zero. For information on how to perform position adjustment, see → 🖹 44.

| | Description |
|---|---|
| 1 | Select the "Level" measuring mode via the "Measuring mode" parameter.<br>Menu path: Setup → Measuring mode<br><br>**⚠ WARNING**<br>**Changing the measuring mode affects the span (URV)**<br>This situation can result in product overflow.<br>▶ If the measuring mode is changed, the setting for the span (URV) must be checked in the "Setup" operating menu and readjusted if necessary. |
| 2 | Select a pressure unit via the "Press eng. unit" parameter, here "mbar" for example.<br>Menu path: Setup → Press. eng. unit |
| 3 | Select the "In pressure" level mode via the "Level selection" parameter.<br>Menu path: Setup → Extended setup → Level → Level selection. |
| 4 | Select a volume unit via the "Output unit" parameter, here "l" (liters) for example.<br>Menu path: Setup → Extended setup → Level → Output unit |
| 5 | Select the "Dry" option via the "Calibration mode" parameter.<br>Menu path: Setup → Extended setup → Level → Calibration mode |
| 6 | Enter the volume value for the lower calibration point via the "Empty calib." parameter, here 0 liters for example.<br>Menu path: Setup → Extended setup → Level → Empty calib. |
| 7 | Enter the pressure value for the lower calibration point via the "Empty pressure" parameter, here "0 mbar" for example.<br>Menu path: Setup → Extended setup → Level → Empty pressure |
| 8 | Enter the volume value for the upper calibration point via the "Full calib." parameter, here 1 000 l (264 gal) for example.<br>Menu path: Setup → Extended setup → Level → Full calib. |
| 9 | Enter the pressure value for the upper calibration point via the "Full pressure" parameter, here 400 mbar (6 psi) for example.<br>Menu path: Setup → Extended setup → Level → Full pressure |
| 10 | "Adjust density" contains the factory setting 1.0 but can be changed if required. The value pairs subsequently entered must correspond to this density.<br>Menu path: Setup → Extended setup → Level → Adjust density |
| 11 | Set the volume value for the lower current value (4 mA) via the "Set LRV" parameter (0 l).<br>Menu path: Setup → Extended setup → Current output → Set LRV |
| 12 | Set the volume value for the upper current value (20 mA) via the "Set URV" parameter(1 000 l (264 gal)).<br>Menu path: Setup → Extended setup → Current output → Set URV |

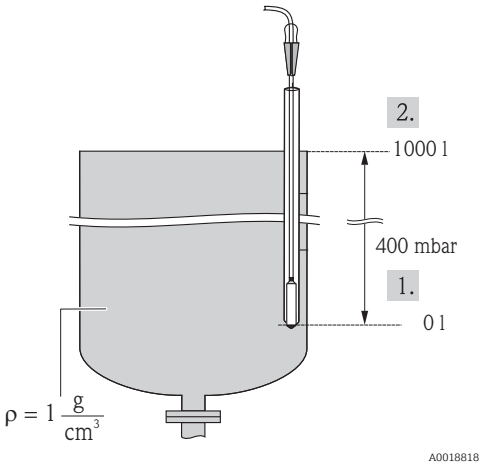


*1 See table, steps 6 and 7.*
*2 See table, steps 8 and 9.*

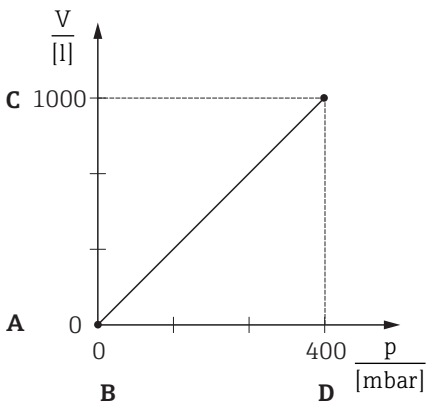


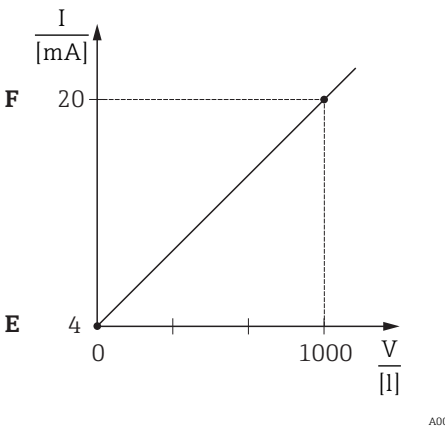


*A See table, step 6.*
*B See table, step 7.*
*C See table, step 8.*
*D See table, step 9.*
*E See table, step 11*
*F See table, step 12*

| | Description | |
|---|---|---|
| 13 | If the process uses a medium other than that on which the calibration was based, the new density must be specified in the "Process density" parameter.<br>Menu path: Setup → Extended setup → Current output → Process density. | |
| 14 | If density correction is required, assign the temperature probe in the "Auto dens. corr." parameter. A density correction is only possible for water. A temperature-density curve that is saved in the device is used. For this reason, the "Adjust density" (step 10) and "Process density" (step 13) parameters are not used here.<br>Menu path: Expert → Application → Level → Auto dens. corr. | |
| 15 | Result:<br>The measuring range is configured for 0 to 1 000 l (0 to 264 gal). | |

For this level mode, the measured variables %, level, volume and mass are available, see "Output unit" → 94.

### 9.9.4 "In pressure" level selection Calibration with reference pressure (wet calibration)

**Example:**

In this example, the level in a tank should be measured in "m". The maximum level is 3 m (9.8 ft).

The pressure range is derived from the level and the density of the medium. In this situation, the device sets the pressure range to 0 to +300 mbar (0 to 4.5 psi).

**Prerequisite:**

- The measured variable is in direct proportion to the pressure.
- The tank can be filled and emptied.

The values entered for "Empty calib./Full calib." and" Set LRV/Set URV" and the pressures present must be at least 1% apart. The value will be rejected, and a message displayed, if the values are too close together. Other limit values are not checked, i.e. the values entered must be appropriate for the sensor and the measuring task for the device to be able to measure correctly.

| | Description |
|---|---|
| 1 | Perform "position adjustment"→ 🖹 44. |
| 2 | Select the "Level" measuring mode via the "Measuring mode" parameter.<br>Menu path: Setup → Measuring mode<br><br>**⚠ WARNING**<br>**Changing the measuring mode affects the span (URV)**<br>This situation can result in product overflow.<br>▶ If the measuring mode is changed, the setting for the span (URV) must be checked in the "Setup" operating menu and readjusted if necessary. |
| 3 | Select a pressure unit via the "Press eng. unit" parameter, here "mbar" for example.<br>Menu path: Setup → Press. eng. unit |
| 4 | Select the "In pressure" level mode via the "Level selection" parameter.<br>Menu path: Setup → Extended setup → Level → Level selection. |
| 5 | If density correction is required, assign the temperature probe in the "Auto dens. corr." parameter.<br>Menu path: Expert → Application → Auto dens. corr.<br>A density correction is only possible for water. A temperature-density curve that is saved in the device is used. For this reason, the "Adjust density" (step 8) and "Process density" (step 13) parameters are not used here. |
| 6 | Select a level unit via the "Output unit" parameter, here "m" for example.<br>Menu path: Setup → Extended setup → Level → Output unit |
| 7 | Select the "Wet" option via the "Calibration mode" parameter.<br>Menu path: Setup → Extended setup → Level → Calibration mode |
| 8 | If the calibration is performed with a medium other than the process medium, enter the density of the calibration medium in the "Adjust density" parameter.<br>Menu path: Setup → Extended setup → Level → Adjust density<br><br>ℹ The process density can be changed only if automatic density correction is switched off (see step 5). |
| 9 | The hydrostatic pressure for the lower calibration point is present at the device, here "0 mbar" for example. |
| | Select the "Empty calib." parameter.<br>Menu path: Setup → Extended setup → Level → Empty calib. |
| | Enter the level value, here 0 m for example. The pressure value present is assigned to the lower level value by confirming the value. |
| 10 | The hydrostatic pressure for the upper calibration point is present at the device, here<br>300 mbar (4.35 psi) for example. |

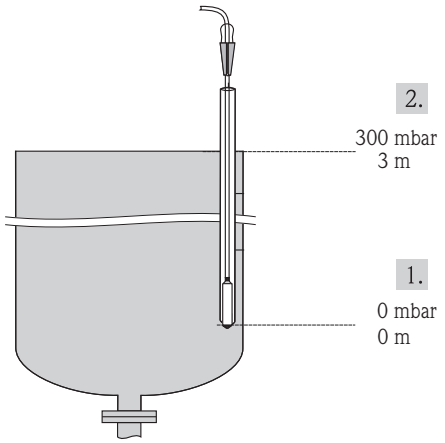


*1 See table, step 9.*
*2 See table, step 10.*

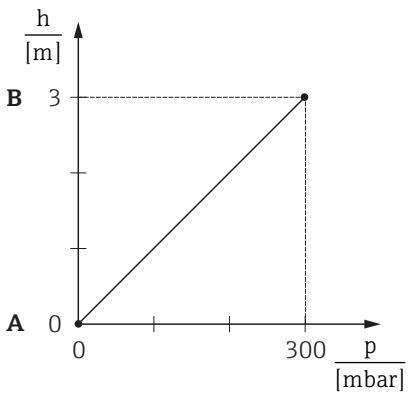


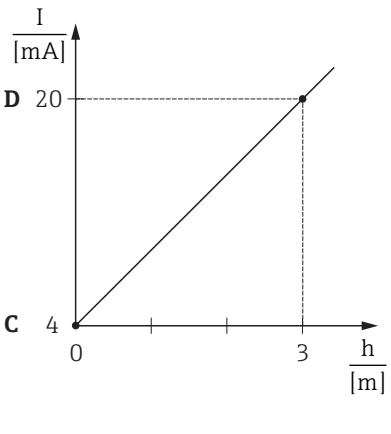


*A See table, step 9.*
*B See table, step 10.*
*C See table, step 11.*
*D See table, step 12.*

| | Description | |
|---|---|---|
| | Select the "Full calib." parameter.<br>Menu path: Setup → Extended setup → Level → Full calib. | |
| | Enter the level value, here 3 m (9.8 ft) for example. The pressure value present is assigned to the upper level value by confirming the value. | |
| 11 | Use the "Set LRV" parameter to set the level value for the lower current value (4 mA), here "0 m" for example.<br>Menu path: Setup → Extended setup → Current output → Set LRV | |
| 12 | Use the "Set URV" parameter to set the upper current value (20 mA) (3 m (9.8 ft)).<br>Menu path: Setup → Extended setup → Current output → Set URV | |
| 12 | If the process uses a medium other than that on which the calibration was based, the new density must be specified in the "Process density" parameter.<br>Menu path: Setup → Extended setup → Level → Process density.<br>The process density can be changed only if automatic density correction is switched off (see step 5). | |
| 13 | Result:<br>The measuring range is configured for 0 to 3 m (0 to 9.8 ft). | |

For this level mode, the measured variables %, level, volume and mass are available, see "Output unit". → 94.

### 9.9.5 "In height" level selection Calibration without reference pressure (dry calibration)

**Example:**

In this example, the volume in a tank should be measured in liters. The maximum volume of 1 000 l (264 gal) corresponds to a level of 4 m (13 ft). The minimum volume of 0 liter corresponds to a level of 0 m since the process isolating diaphragm of the probe is at the start of the level measuring range.

**Prerequisite:**

- The measured variable is in direct proportion to the pressure.
- This is a theoretical calibration i.e. the height and volume values for the lower and upper calibration point must be known.

- The values entered for "Empty calib./Full calib.", "Empty height/Full height" and" Set LRV/Set URV" must be at least 1% apart. The value will be rejected, and a message displayed, if the values are too close together. Other limit values are not checked, i.e. the values entered must be appropriate for the sensor and the measuring task for the device to be able to measure correctly.
- Due to the orientation of the device, there may be pressure shifts in the measured value, i.e. when the vessel is empty or partly filled, the measured value is not zero. For information on how to perform position adjustment, see → 44.

| | Description |
|---|---|
| 1 | Select the "Level" measuring mode via the "Measuring mode" parameter.<br>Menu path: Setup → Measuring mode<br><br>**⚠ WARNING**<br>**Changing the measuring mode affects the span (URV)**<br>This situation can result in product overflow.<br>▶ If the measuring mode is changed, the setting for the span (URV) must be checked in the "Setup" operating menu and readjusted if necessary. |
| 2 | Select a pressure unit via the "Press eng. unit" parameter, here "mbar" for example.<br>Menu path: Setup → Press. eng. unit |
| 3 | Select the "In height" level mode via the "Level selection" parameter.<br>Menu path: Setup → Extended setup → Level → Level selection. |
| 4 | If density correction is required, assign the temperature probe in the "Auto dens. corr." parameter.<br>Menu path: Setup → Extended setup → Level → Level selection. |
| 4 | Select a volume unit via the "Output unit" parameter, here "l" (liters) for example.<br>Menu path: Setup → Extended setup → Level → Output unit<br>A density correction is only possible for water. A temperature-density curve that is saved in the device is used. For this reason, the "Adjust density" (step 12) and "Process density" (step 15) parameters are not used here. |
| 5 | Select a volume unit via the "Output unit" parameter, here "l" (liters) for example.<br>Menu path: Setup → Extended setup → Level → Output unit |
| 6 | Select a level unit via the "Height unit" parameter, here "m" for example.<br>Menu path: Setup → Extended setup → Level → Height unit |
| 7 | Select the "Dry" option via the "Calibration mode" parameter.<br>Menu path: Setup → Extended setup → Level → Calibration mode |
| 8 | Enter the volume value for the lower calibration point via the "Empty calib." parameter, here 0 liters for example.<br>Menu path: Setup → Extended setup → Level → Empty calib. |
| 9 | Enter the height value for the lower calibration point via the "Empty height" parameter, here 0 m for example.<br>Menu path: Setup → Extended setup → Level → Empty height |
| 10 | Enter the volume value for the upper calibration point via the "Full calib." parameter, here 1 000 l (264 gal) for example.<br>Menu path: Setup → Extended setup → Level → Full calib. |

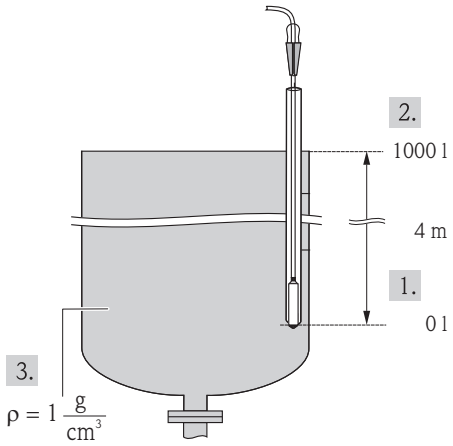


*1 See table, steps 10 and 11.*
*2 See table, steps 13 and 14.*
*3 See table, step 12*

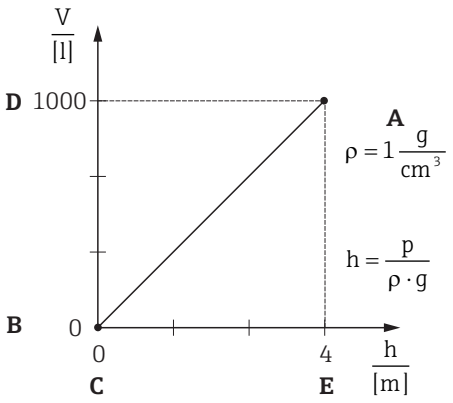


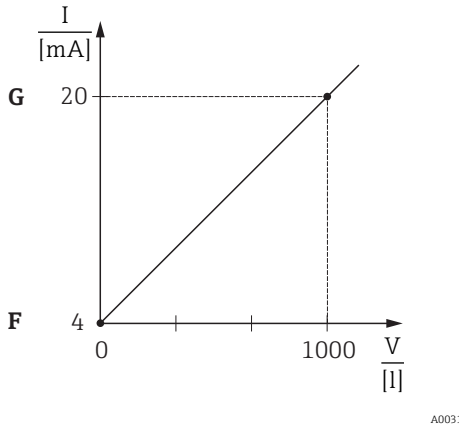


*A See table, step 12.*
*B See table, step 8.*
*C See table, step 9.*
*D See table, step 10.*
*E See table, step 11.*
*F See table, step 13.*
*G See table, step 14.*

| | Description | |
|---|---|---|
| 11 | Enter the height value for the upper calibration point via the "Full height" parameter, here 4 m (13 ft) for example.<br>Menu path: Setup → Extended setup → Level → Full height | |
| 12 | Enter the density of the medium via the "Adjust density" parameter, here "1 g/cm³" (1 SGU) for example.<br>Menu path: Setup → Extended setup → Level → Adjust density | |
| 13 | Set the volume value for the lower current value (4 mA) via the "Set LRV" parameter (0 l).<br>Menu path: Setup → Extended setup → Current output → Set LRV | |
| 14 | Set the volume value for the upper current value (20 mA) via the "Set URV" parameter (1 000 l (264 gal)).<br>Menu path: Setup → Extended setup → Current output → Set URV | |
| 15 | If the process uses a medium other than that on which the calibration was based, the new density must be specified in the "Process density" parameter.<br>Menu path: Setup → Extended setup → Current output → Process density.<br>The process density can only be changed if automatic density correction is switched off (see Step 4). | |
| 16 | Result:<br>The measuring range is configured for 0 to 1 000 l (0 to 264 gal). | |

For this level mode, the measured variables %, level, volume and mass are available, see "Output unit". → 94.

### 9.9.6 "In height" level selection Calibration with reference pressure (wet calibration)

**Example:**

In this example, the volume in a tank should be measured in liters. The maximum volume of 1 000 l (264 gal) corresponds to a level of 4 m (13 ft).

The minimum volume of 0 liter corresponds to a level of 0 m since the process isolating diaphragm of the probe is at the start of the level measuring range. The density of the fluid is 1 g/cm³ (1 SGU).

**Prerequisite:**

- The measured variable is in direct proportion to the pressure.
- The tank can be filled and emptied.

The values entered for "Empty calib./Full calib." and" Set LRV/Set URV" and the pressures present must be at least 1% apart. The value will be rejected, and a message displayed, if the values are too close together. Other limit values are not checked, i.e. the values entered must be appropriate for the sensor and the measuring task for the device to be able to measure correctly.

| | Description |
|---|---|
| 1 | Perform "position adjustment"→ 🖹 44. |
| 2 | Select the "Level" measuring mode via the "Measuring mode" parameter.<br>Menu path: Setup → Measuring mode<br><br>**⚠ WARNING**<br>**Changing the measuring mode affects the span (URV)**<br>This situation can result in product overflow.<br>▶ If the measuring mode is changed, the setting for the span (URV) must be checked in the "Setup" operating menu and readjusted if necessary. |
| 3 | Select the "In height" level mode via the "Level selection" parameter.<br>Menu path: Setup → Extended setup → Level → Level selection. |
| 4 | If density correction is required, assign the temperature probe in the "Auto dens. corr." parameter.<br>Menu path: Expert → Application → Auto dens. corr.<br>A density correction is only possible for water. A temperature-density curve that is saved in the device is used. For this reason, the "Adjust density" (step 11) and "Process density" (step 14) parameters are not used here. |
| 5 | Select a pressure unit via the "Press eng. unit" parameter, here "mbar" for example.<br>Menu path: Setup → Press. eng. unit |
| 6 | Select a volume unit via the "Output unit" parameter, here "l" (liters) for example<br>Menu path: Setup → Extended setup → Level → Output unit |
| 7 | Select a height unit via the "Height unit" parameter, here "m" for example.<br>Menu path: Setup → Extended setup → Level → Height unit |
| 8 | Select the "Wet" option via the "Calibration mode" parameter.<br>Menu path: Setup → Extended setup → Level → Calibration mode |
| 9 | The hydrostatic pressure for the lower calibration point is present at the device, here "0 mbar" for example. |
| | Enter the volume value for the lower calibration point via the "Empty calib." parameter, here "0 liters" for example.<br>Menu path: Setup → Extended setup → Level → Empty calib. |
| 10 | The hydrostatic pressure for the upper calibration point is present at the device, here "400 mbar (6 psi)" for example. |
| | Enter the volume value for the upper calibration point via the "Full calib." parameter, here 1 000 l (264 gal) for example.<br>Menu path: Setup → Extended setup → Level → Full calib. |

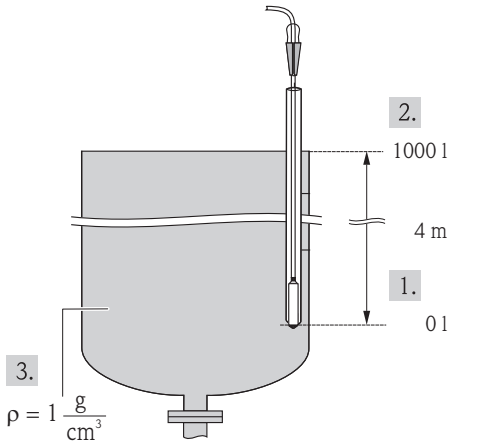


*1 See table, step 9.*
*2 See table, step 10.*
*3 See table, step 11.*

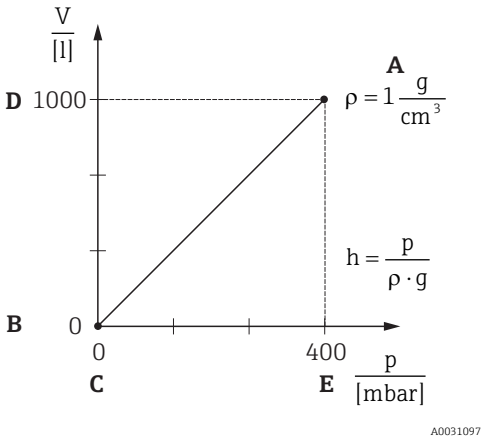


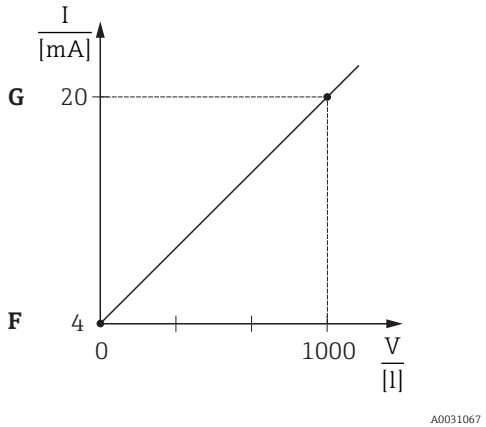


*A See table, step 11.*
*B See table, step 9.*
*C See table, step 9.*
*D See table, step 10.*

| | Description | |
|---|---|---|
| 11 | If the calibration is performed with a medium other than the process medium, enter the density of the calibration medium in the "Adjust density" parameter, here 1 g/cm³ (1 SGU) for example.<br>Menu path: Setup → Extended setup → Level → Adjust density<br>The process density can only be changed if automatic density correction is switched off (see Step 4). | *E See table, step 10.*<br>*F See table, step 12.*<br>*G See table, step 13.* |
| 12 | Set the volume value for the lower current value (4 mA) via the "Set LRV" parameter (0 l).<br>Menu path: Setup → Extended setup → Current output → Set LRV | |
| 13 | Set the volume value for the upper current value (20 mA) via the "Set URV" parameter(1 000 l (264 gal)).<br>Menu path: Setup → Extended setup → Current output → Set URV | |
| 14 | If the process uses a medium other than that on which the calibration was based, the new density must be specified in the "Process density" parameter.<br>Menu path: Setup → Extended setup → Level → Process density.<br>The process density can only be changed if automatic density correction is switched off (see Step 4). | |
| 15 | Result:<br>The measuring range is configured for 0 to 1 000 l (0 to 264 gal). | |

For this level mode, the measured variables %, level, volume and mass are available, see "Output unit". → 94.

## 9.9.7 Calibration with partially filled vessel (wet calibration)

**Example:**

This example explains a wet calibration for cases in which it is not possible to empty the vessel and then fill it to 100%.

During this wet calibration, a level of 20% is used as the calibration point for "Empty" and a level of "25%" is used as the calibration point for "Full".

The calibration is then extended to 0% to 100% and lower range-value (LRV)/upper range-value (URV) are adapted accordingly.

**Prerequisite:**

- The default value in level mode for the calibration mode is "Wet".
- This value can be adjusted: Menu path: Setup → Extended setup → Level → Calibration mode

| | Description | |
|---|---|---|
| 1 | Select the "Level" measuring mode via the "Measuring mode" parameter.<br>Menu path: Setup → Measuring mode<br><br>**⚠ WARNING**<br>**Changing the measuring mode affects the span (URV)**<br>This situation can result in product overflow.<br>▶ If the measuring mode is changed, the setting for the span (URV) must be checked in the "Setup" operating menu and readjusted if necessary. | 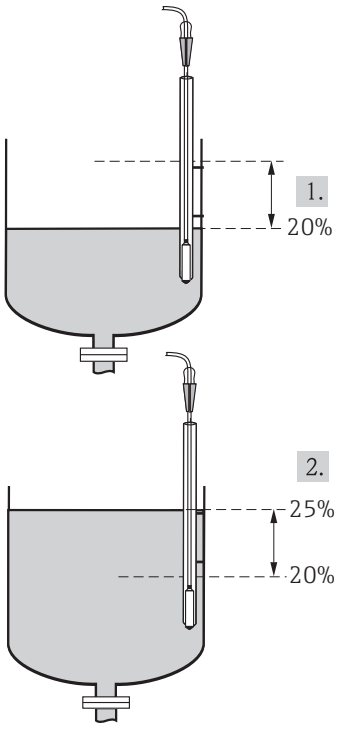 <br>*1 See table, step 2*<br>*2 See table, step 3* |
| 2 | Set the value for "Empty calib." with the acting pressure for the level, e.g. 20%<br>Menu path: Setup → Extended setup → Level → Empty calib. | |
| 3 | Set the value for "Full calib." with the acting pressure for the level, e.g. 25%.<br>Menu path: Setup → Extended setup → Level → Full calib. | |
| 4 | The values for the pressure when the vessel is full or empty are measured automatically during adjustment. The transmitter automatically sets the pressure values that are most suitable for "Empty calib." and "Full calib." as the minimum and maximum pressure which generates the output current. For this reason, the correct upper-range value (URV) and the correct lower-range value (LRV) must be set. | |

**If the process uses a medium other than that on which the calibration was based, the new density must be specified in the "Process density" parameter. In this case, you have to enter the various densities via the following menu path:**
- Setup → Extended setup → Level→ Adjust Density (034) (e.g. 1.0 kg/l for water)
- Setup → Extended setup → Level → Process Density (035) (e.g. 0.8 kg/l for oil)

### 9.9.8 Level measurement with absolute pressure probe and external pressure signal (electrical differential pressure)

Example:

In this example, a Waterpilot FMX21 and a Cerabar M (each with an absolute pressure measuring cell) are connected via the common communication bus. The level can thus be measured in a deep well, with simultaneous compensation for the effect of atmospheric pressure.

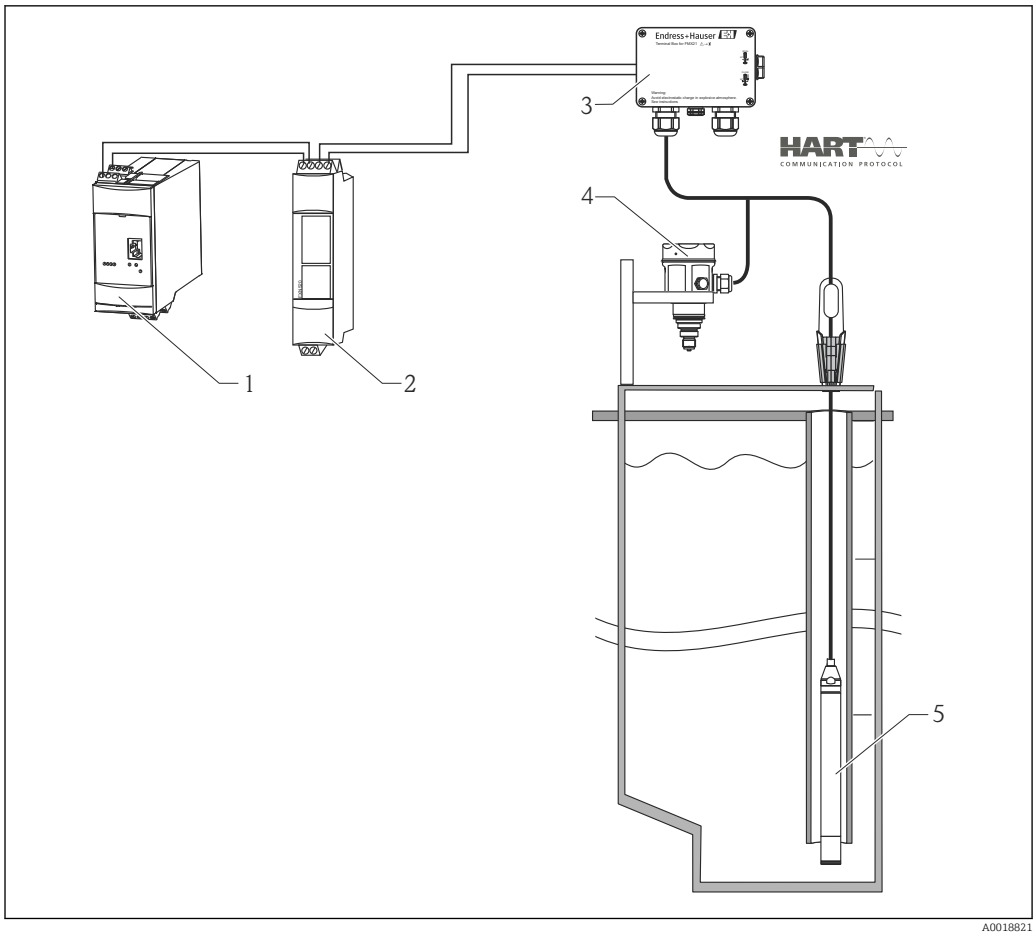


1 *Fieldgate FXA520*
2 *Multidrop Connector FXN520*
3 *Terminal box (can be ordered as an accessory)*
4 *Cerabar M absolute pressure (level)*
5 *Waterpilot absolute pressure (pressure)*

| | **Sensor level adjustment (Waterpilot)** |
|---|---|
| 1 | Select the "Pressure" measuring mode via the "Measuring Mode" parameter.<br>Menu path: Setup → Measuring mode<br><br>**⚠ WARNING**<br>**Changing the measuring mode affects the span (URV)**<br>This situation can result in product overflow.<br>► If the measuring mode is changed, the setting for the span (URV) must be checked in the "Setup" operating menu and readjusted if necessary. |
| 2 | Select a pressure unit via the "Press eng. unit" parameter, here "mbar" for example.<br>Menu path: Setup → Press. eng. unit |
| 3 | The sensor is unpressurized, perform a position adjustment → 📄 44 |
| 4 | Switch on burst mode via the "Burst mode" parameter.<br>Menu path: Expert → Communication → HART config |
| 5 | Set the output current to "Fixed" 4.0 mA via the "Current Mode" parameter.<br>Menu path: Expert → Communication → HART config |
| 6 | Configure an address ≠0 using the "Bus address" parameter, e.g. bus address = 1.<br>(HART 5.0 master: Range 0 to 15, where address = 0 calls up the "Signaling" setting; HART 6.0 master: Range 0 to 63)<br>Menu path: Expert → Communication → HART config |

| | Sensor level adjustment (Cerabar) |
|---|---|
| 1 | Select the "Level" measuring mode via the "Measuring mode" parameter.<br>Menu path: Setup → Measuring mode<br><br>**⚠ WARNING**<br>**Changing the measuring mode affects the span (URV)**<br>This situation can result in product overflow.<br>▶ If the measuring mode is changed, the setting for the span (URV) must be checked in the "Setup" operating menu and readjusted if necessary. |
| 2 | Select a pressure unit via the "Press eng. unit" parameter, here "mbar" for example.<br>Menu path: Setup → Press. eng. unit |
| 3 | The sensor is unpressurized, perform a position adjustment → 🖹 44 |
| 4 | Set the output current to "Fixed" 4.0 mA via the "Current Mode" parameter.<br>Menu path: Expert → Communication → HART config |
| 5 | Configure an address ≠0 using the "Bus address" parameter, e.g. bus address = 2.<br>(HART 5.0 master: Range 0 to 15, where address = 0 calls up the "Signaling" setting; HART 6.0 master: Range 0 to 63)<br>Menu path: Expert → Communication → HART config |
| 6 | Activate the reading of a value sent externally in burst mode via the "Electr. Delta P" parameter.<br>Menu path: Expert → Application |
| 7 | Perform level adjustment (wet or dry) |
| 8 | Result: The measured value output by the atmospheric pressure sensor equals the level in the deep well (differential signal) and can be read out by means of a HART request for the address of the atmospheric pressure sensor. |

- It is not permissible to reverse the assignment of the measuring points to the direction of communication.
- The measured value of the transmitting device (via burst) must always be greater than the measured value of the receiving device (via "Electr. Delta P" mode).
- Adjustments that involve an offset in the pressure values (e.g. position adjustment, trim) must always suit the individual sensor and the sensor's orientation irrespective of the "Electr. Delta P" application.
- Other settings result in non-permitted use of the "Electr. Delta P" mode and can lead to incorrect measured values.

## 9.10 Automatic density compensation

### 9.10.1 Automatic density compensation with the internally measured sensor temperature

Example:

In this example, a Waterpilot FMX21 is used for level measurement in water. The change in the water density caused by changing temperatures is automatically factored into the level signal by activating the automatic density compensation.

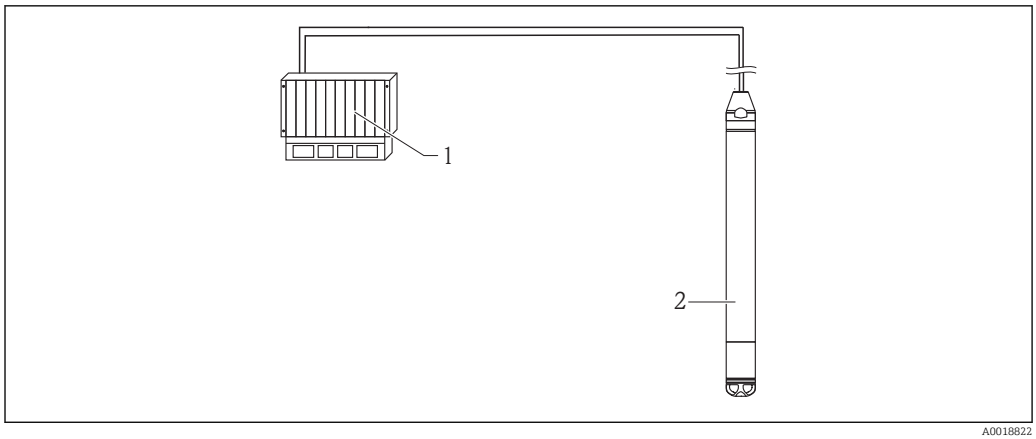


*1 HART master, e.g. PLC (programmable logic controller)*
*2 Waterpilot FMX21*

| | Waterpilot adjustment for level measurement |
|---|---|
| 1 | Select the "Level" measuring mode via the "Measuring mode" parameter.<br>Menu path: Setup → Measuring mode<br><br>**⚠ WARNING**<br>**Changing the measuring mode affects the span (URV)**<br>This situation can result in product overflow.<br>▶ If the measuring mode is changed, the setting for the span (URV) must be checked in the "Setup" operating menu and readjusted if necessary. |
| 2 | Select a pressure unit via the "Press eng. unit" parameter, here "mbar" for example.<br>Menu path: Setup → Press. eng. unit |
| 3 | The sensor is unpressurized, perform a position adjustment → 🖹 44 |
| 4 | Set the "Auto dens. corr." parameter to Sensor temperature.<br>Menu path: Expert → Application |
| 5 | Perform level adjustment (wet or dry) |
| 6 | Result: The measured value output by the Waterpilot corresponds to the level in the deep well corrected by means of the density characteristic line of water. |

### 9.10.2 Automatic density compensation using an integrated Pt100 for calculation in a suitable HART master (e.g. PLC)

Example:

In this example, the FMX21 with an integrated Pt100 is connected via the common communication bus to any temperature head transmitter with HART communication (e.g. TMT182). The temperature and pressure signal is transmitted to the HART master (e.g. PLC), where a corrected level value can be generated using a stored linearization table or density function (of a chosen medium). A pressure signal and a temperature signal can thus be generated with a chosen density function to compensate for a level.

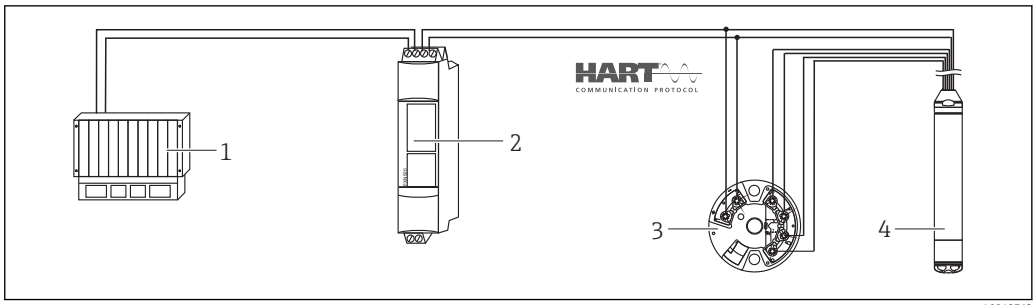


1 *HART master, PLC (programmable logic controller)*
2 *Multidrop Connector FXN520*
3 *TMT182 temperature head transmitter*
4 *Waterpilot FMX21*

| | Waterpilot adjustment for level measurement |
|---|---|
| 1 | Select the "Level" measuring mode via the "Measuring mode" parameter.<br>Menu path: Setup → Measuring mode<br><br>**⚠ WARNING**<br>**Changing the measuring mode affects the span (URV)**<br>This situation can result in product overflow.<br>▶ If the measuring mode is changed, the setting for the span (URV) must be checked in the "Setup" operating menu and readjusted if necessary. |
| 2 | Select a pressure unit via the "Press eng. unit" parameter, here "mbar" for example.<br>Menu path: Setup → Press. eng. unit |
| 3 | The sensor is unpressurized, perform a position adjustment → 🖹 44 |
| 4 | Set the output current to "Fixed" 4.0 mA via the "Current Mode" parameter.<br>Menu path: Expert → Communication → HART config |
| 5 | Perform level adjustment (wet or dry) |
| 6 | Configure an address ≠0 using the "Bus address" parameter, e.g. bus address = 1.<br>(HART 5.0 master: Range 0 to 15, where address = 0 calls up the "Signaling" setting; HART 6.0 master: Range 0 to 63)<br>Menu path: Expert → Communication → HART config<br><br>ℹ The output current of the temperature head transmitter used must also be set to "Fixed" and have a HART address other than zero (e.g. address = 2). |
| 7 | Switch on burst mode via the "Burst mode" parameter.<br>Menu path: Expert → Communication → HART config |
| 8 | Result: by balancing the pressure signal and temperature signal in a suitable HART master (e.g. PLC), a corrected level value can be determined for any medium by using a suitable density function. |

### 9.10.3 Automatic density compensation using an external temperature signal for calculation in the FMX21

Example:

In this example, the FMX21 with an integrated Pt100 is connected to a HART-compliant temperature transmitter via the common communication bus. With this option, the signal of the Pt100 is evaluated with a HART-compliant temperature head transmitter (min. HART 5.0) that supports the burst mode. The change in the water density caused by changing temperatures is automatically factored into the level signal by activating the automatic density compensation.

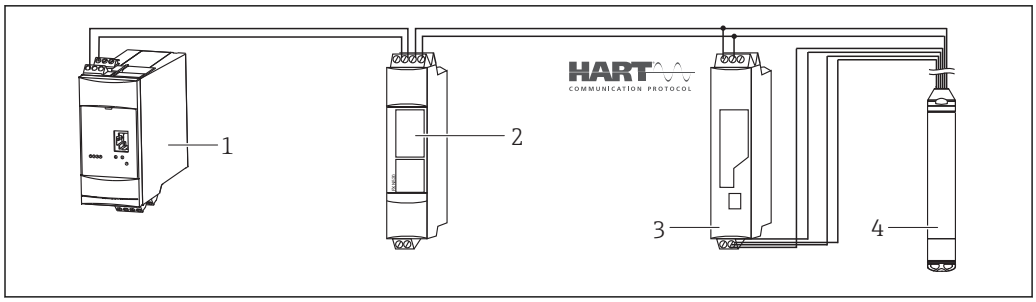


A0018764

1 *Fieldgate FXA520*
2 *Multidrop Connector FXN520*
3 *HART-compatible temperature transmitter (e.g. TMT82)*
4 *Waterpilot FMX21*

| | **Configuring the HART-compliant temperature head transmitter (min. HART 5.0) with burst function** |
|---|---|
| | The output current of the temperature transmitter used should be set to "Fixed" and a HART address other than zero (e.g. address = 1) must be set. The burst function must then be switched on with HART command 1. This step should be performed before the procedure described below in order to avoid a HART input error of the FMX21 being output during commissioning. |
| 1 | Select the "Level" measuring mode via the "Measuring mode" parameter.<br>Menu path: Setup → Measuring mode<br><br>**⚠ WARNING**<br>**Changing the measuring mode affects the span (URV)**<br>This situation can result in product overflow.<br>► If the measuring mode is changed, the setting for the span (URV) must be checked in the "Setup" operating menu and readjusted if necessary. |
| 2 | Select a pressure unit via the "Press eng. unit" parameter, here "mbar" for example.<br>Menu path: Setup → Press. eng. unit |
| 3 | The sensor is unpressurized, perform a position adjustment → 🖹 44 |
| 4 | Set the "Auto dens. corr." parameter to "External value".<br>Menu path: Expert → Application |
| 5 | Perform level adjustment (wet or dry) |
| | Result: The measured value output by the Waterpilot corresponds to the level in the deep well corrected by means of the density characteristic line of water. |

The TMT182 temperature head transmitter is not suitable for this configuration.

## 9.11 Linearization

### 9.11.1 Semi-automatic entry of a linearization table

**Example:**

In this example, the volume in a tank with a conical outlet should be measured in $m^3$.

**Prerequisite:**

- The tank can be filled or emptied. The linearization characteristic must rise or fall continuously.
- The "Level" measuring mode has been selected.
- A level calibration has been performed.
- For a description of the parameters mentioned, see the "Description of device parameters" section→ 86.

**WARNING**

**Changing the measuring mode affects the span (URV)**

This situation can result in product overflow.

- ▶ If the measuring mode is changed, the setting for the span (URV) must be checked in the "Setup" operating menu and readjusted if necessary.

| | Description | |
|---|---|---|
| 1 | Select the "Semiautom. entry" option via the "Lin. mode" parameter.<br>Menu path: Setup → Extended setup → Linearization → Lin. mode | 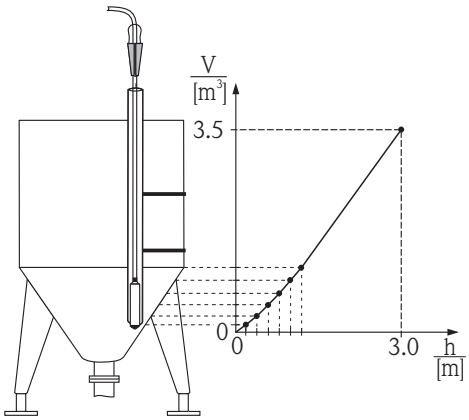 A0018843 |
| 2 | Select using the "Unit before lin." e.g. $m^3$.<br>Menu path: Setup → Extended setup → Linearization → Unit after lin. | |
| 3 | Fill the tank to the height of the 1st point. | |
| 4 | Enter the number of the point in the table using the "Line-numb" parameter e.g. 1.<br>Menu path: Setup → Extended setup → Linearization → Line numb | 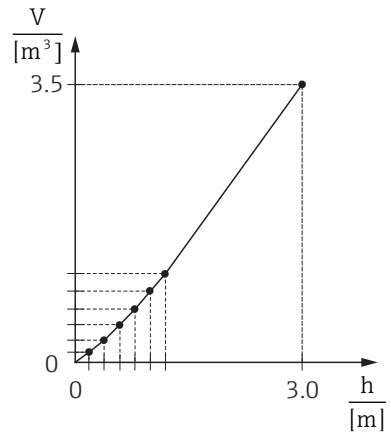 A0031098 |
| | The current level is displayed via the "X-value" parameter.<br>Menu path: Setup → Extended setup → Linearization → X-val | |
| | Using the "Y-val." parameter, enter the corresponding volume value, here 0 $m^3$ for example, and confirm the value.<br>Menu path: Setup → Extended setup → Linearization → Y-val | |
| 5 | To enter another point in the table, continue filling the tank and select the "Next point" option via the "Edit table" parameter. Enter the next point as explained in Step 4.<br>Menu path: Setup → Extended setup → Linearization → Edit table | 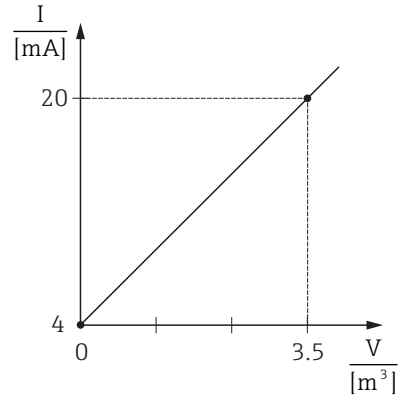 A0031031 |

| | Description | |
|---|---|---|
| 6 | Once all the points have been entered in the table, select the "Activate table" option via the "Lin. mode" parameter.<br>Menu path: Setup → Extended setup → Linearization → Lin. mode | |
| 7 | Result:<br>Result: The measured value after linearization is displayed. | |

- Error message F510 "Linearization" and alarm current as long as the table is being entered and until the table is activated.
- The lower-range value (= 4mA) is defined by the smallest point in the table. The upper-range value (= 20mA) is defined by the largest point in the table.
- Using the parameters "Set LRV" and "Set URV", you can change the allocation of the volume/mass values to the current values.

## 9.11.2 Manual entry of a linearization table

**Example:**

In this example, the volume in a tank with a conical outlet should be measured in $m^3$.

**Prerequisite:**

- This is a theoretical calibration, i.e. the points for the linearization table are known.
- The "Level" measuring mode has been selected.
- A level calibration has been performed.
- The linearization characteristic must rise or fall continuously.
- For a description of the parameters mentioned, see the "Description of device parameters" section→ 86.

**WARNING**

**Changing the measuring mode affects the span (URV)**

This situation can result in product overflow.

▶ If the measuring mode is changed, the setting for the span (URV) must be checked in the "Setup" operating menu and readjusted if necessary.

| | Description | |
|---|---|---|
| 1 | Select the "Manual entry" option via the "Lin. mode" parameter.<br>Menu path: Setup → Extended setup → Linearization → Lin. mode | 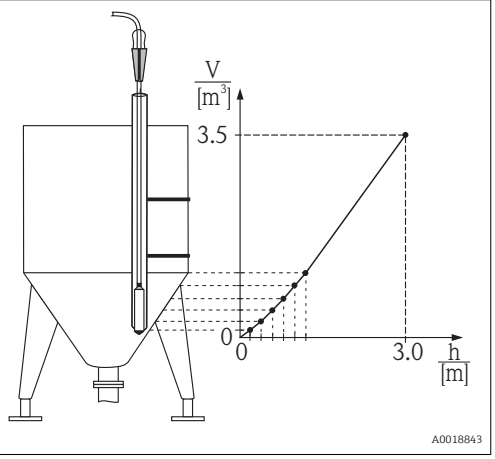 |
| 2 | Select using the "Unit after lin." e.g. $m^3$.<br>Menu path: Setup → Extended setup → Linearization → Unit after lin. | |

| | Description | |
|---|---|---|
| 3 | Enter the number of the point in the table using the "Line-numb" parameter e.g. 1.<br>Menu path: Setup → Extended setup → Linearization → Line numb | 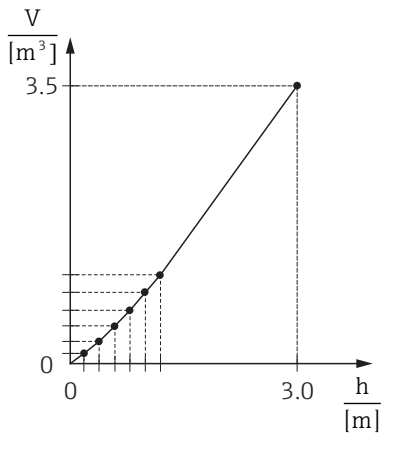 <br>A0031098<br> 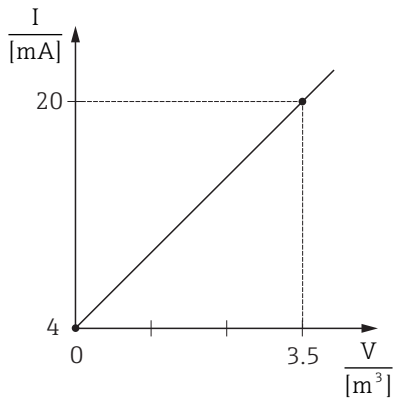 <br>A0031031 |
| | The level is entered via the "X-value" parameter, here 0 m for example. Confirm your entry.<br>Menu path: Setup → Extended setup → Linearization → X-val | |
| | Using the "Y-val." parameter, enter the corresponding volume value, here 0 $m^3$ for example, and confirm the value.<br>Menu path: Setup → Extended setup → Linearization → Y-val | |
| 4 | To enter another point in the table, select the "Next point" option via the "Edit table" parameter. Enter the next point as explained in Step 3.<br>Menu path: Setup → Extended setup → Linearization → Edit table | |
| 5 | Once all the points have been entered in the table, select the "Activate table" option via the "Lin. mode" parameter.<br>Menu path: Setup → Extended setup → Linearization → Lin. mode | |
| 6 | Result:<br>Result: The measured value after linearization is displayed. | |

- Error message F510 "Linearization" and alarm current as long as the table is being entered and until the table is activated.
- Error message F511/F512 "Linearization" and alarm current as long as the linearization table consists of fewer than 2 points.
- The lower-range value (= 4mA) is defined by the smallest point in the table. The upper-range value (= 20mA) is defined by the largest point in the table.
- Using the parameters "Set LRV" and "Set URV", you can change the allocation of the volume/mass values to the current values.

## 9.12 Manual entry of a linearization table via operating tool

Using an operating tool based on FDT technology (e.g. FieldCare), you can enter linearization using a module specially designed for this purpose. This provides you with an overview of the selected linearization, even during entry. In addition, it is possible to configure different tank shapes in FieldCare ("Device operation" → "Device functions" → "Additional functions" → "Linearization table" menu).

The linearization table may also be entered manually point by point in the operating tool menu (see Section → 86).

## 9.13 Backing up or duplicating the device data

**The following options are available to you with an operating tool that is based on FDT technology (e.g. FieldCare):**
- Storage/recovery of configuration data.
- Duplication of device parameters.
- Transfer of all relevant parameters when replacing electronic inserts.

Use the following parameter for this:

**Download select. (visible only in FieldCare)**

**Navigation** Expert → System → Management → Download select.

**Write permission** Operator/Service engineers/Expert

**Description** Selection of data packages for up/download function in Fieldcare and PDM.

**Prerequisite** DIP switch set to "SW" and "Damping" set to "on". If you download using the factory setting "Configuration copy", all parameters required for a measurement will be downloaded. The functionality of the "Electronics replace" setting is reserved for Endress+Hauser Service and can be accessed only if the correct device access code is entered.

**Options**
- Configuration copy: This option overwrites general configuration parameters with the exception of the serial number, order number, calibration, pos. zero adjust, application and day information.
- Device replacement: This option overwrites general configuration parameters with the exception of the serial number, order number, calibration and position adjustment.
- Electronics replace: This option overwrites general configuration parameters.

**Factory setting** Configuration copy

## 9.14 Operation and settings via RIA15

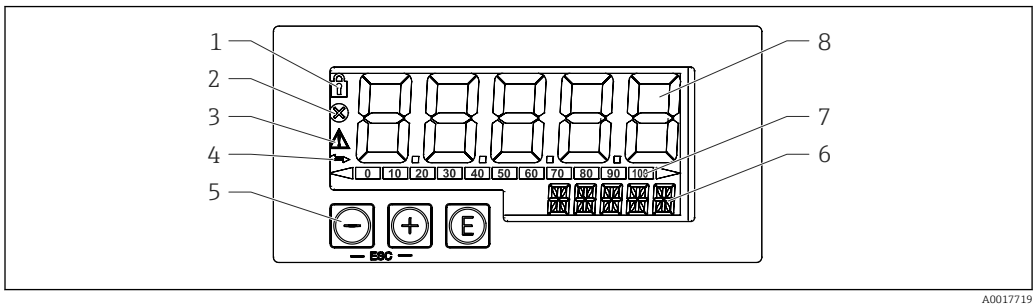


*6 Display and operating elements of the process display unit*

*1 Symbol: operating menu disabled*
*2 Symbol: error*
*3 Symbol: warning*
*4 Symbol: HART communication active*
*5 Operating keys "-", "+", "E"*
*6 14-segment display for unit/TAG*
*7 Bar graph with indicators for under range and over range*
*8 5-digit 7-segment display for measured value, digit height 17 mm (0.67 in)*

The device is operated using three operating keys on the front of the housing. The device setup can be disabled with a 4-digit user code. If the setup is disabled, a padlock symbol appears on the display when an operating parameter is selected.

| | |
|---|---|
|  A0017716 | Enter key; calling up the operating menu, confirming the option/setting parameters in the operating menu |
|  A0017715 | Selecting and setting/changing values in the operating menu; pressing the '-' and '+' keys simultaneously takes the user back up a menu level. The configured value is not saved. |
|  A0017714 | |

## 9.14.1 Operating functions

The operating functions of the process display unit are divided into the following menus. The individual parameters and settings are described in the "Commissioning" section.



If the operating menu is disabled by means of a user code, the individual menus and parameters can be displayed but not changed. To change a parameter, the user code must be entered. As the display unit can only display digits in the 7-segment display and not alphanumeric characters, the procedure for number parameters is different to that for text parameters. If the operating position contains only numbers as parameters, the operating position is displayed in the 14-segment display and the configured parameter is displayed in the 7-segment display. To edit, press the 'E'-button followed by the user code. If the operating position contains text parameters, only the operating position is initially displayed in the 14-segment display. If the 'E' button is pressed again, the configured parameter is displayed in the 14-segment display. To edit, press the '+' button followed by the user code.

| | |
|---|---|
| Setup (SETUP) | Basic device settings |
| Diagnostics (DIAG) | Device information, display of error messages |
| Expert (EXPRT) | Expert settings for device setup. The Expert menu is protected from editing by an access code (default 0000). |

## 9.14.2 Operating modes

The process display unit can be used in two different operating modes:

- 4 to 20 mA mode:
  In this operating mode, the process display unit is incorporated into the 4 to 20 mA current loop and measures the transmitted current. The variable calculated based on the current value and range limits is displayed in digital form on the 5-digit LCD. In addition, the associated unit and a bar graph can be displayed.
- HART mode:
  The display unit is powered via the current loop.
  The FMX21 can be adjusted under the "Level" menu (see operating matrix). The measured value displayed corresponds to the measured level.
  HART communication operates according to the master/slave principle.

For additional information, see BA01170K.

## 9.14.3 Operating matrix

After power-up:

- Press the E key twice
  - The "Level" menu is then available

Using the following operating matrix, a display in percent can be set. To do this, select "Mode" parameter => 4-20 and "Unit" parameter =>%

| **Setup -> Level (LEVEL) menu** | | | | | |
|---|---|---|---|---|---|
| **The LEVEL menu is only visible if the RIA15 has been ordered with the "Level" option and the display unit is operated in the HART mode (MODE = HART). The basic settings for the Waterpilot FMX21 level sensor can be made via the RIA15 with this menu.** | | | | | |
| **RIA15 parameter** | | **Corresponds to parameter of FMX21** | **Values (default=bold)** | **Visible with** | **Description** |
| LEVEL [1] | | Level before linearization | | Level option<br>MODE = HART<br>FMX21<br>connected | This menu contains the parameters for configuring the pressure measuring device for hydrostatic level measurement, FMX21.<br>The basic settings for the FMX21 can be made via the RIA15 with this menu.<br>Once the LEVEL menu item is opened, the following parameters are automatically adjusted for easier operation:<br>▪ Measuring mode: Level<br>▪ Calibration mode: Dry<br>▪ Level selection: In pressure<br>▪ Lin mode: Linear<br>It is possible to reset these parameters to the factory default settings by performing a reset. |
| | PUNIT | Press. eng. unit | **mbar** [2]<br>**bar** [2]<br>kPa<br>PSI | | Use this function to select the unit for pressure |
| | LUNIT | Output unit | **%**<br>m<br>inch<br>feet | | Use this function to select the unit for level |
| | TUNIT | Temperature unit | **°C**<br>°F<br>K | | Use this function to select the unit for temperature |
| | ZERO | Pos. zero adjust | **NO**<br>YES | Gauge pressure sensor | For performing a position adjustment (gauge pressure sensor).<br>The value 0.0 is assigned to the pressure value present. The current value is also corrected. |
| | P_LRV | Empty pressure | -1999.9 to 9999.9<br>Default:<br>Gauge pressure sensor:<br>Sensor LRL<br>Absolute pressure sensor:<br>0 | | Pressure empty calibration using keys -,+,E<br>More in-depth description / valid value range: any value in the range indicated [1] [3]<br>Number of decimal places depends on the configured pressure unit. |
| | P_URV | Full pressure | -1999.9 ... 9999.9<br>Default: Sensor URL | | Pressure full calibration using keys -,+,E<br>More in-depth description / valid value range: any value in the range indicated [1] [3]<br>Number of decimal places depends on the configured pressure unit. |
| | EMPTY | Empty calib. | -1999.9 to 9999.9<br>Default: 0 | | Level empty calibration using keys -,+, E<br>More in-depth description / valid value range: any value in the range indicated [1] [3]<br>Number of decimal places depends on the configured level unit. |
| | FULL | Full calib. | -1999.9 ... 9999.9<br>Default: 100 | | Level full calibration using keys -,+, E<br>More in-depth description / valid value range: any value in the range indicated [1] [3]<br>Number of decimal places depends on the configured level unit. |

| Setup -> Level (LEVEL) menu | | | | | |
|---|---|---|---|---|---|
| **The LEVEL menu is only visible if the RIA15 has been ordered with the "Level" option and the display unit is operated in the HART mode (MODE = HART). The basic settings for the Waterpilot FMX21 level sensor can be made via the RIA15 with this menu.** | | | | | |
| **RIA15 parameter** | | **Corresponds to parameter of FMX21** | **Values (default=bold)** | **Visible with** | **Description** |
| | LEVEL | Level before linearization | Measured value | | Displays the measured level<br>Number of decimal places depends on the configured level unit. |
| | RESET | Enter reset code | **NO**<br>YES | | Reset the FMX21 to factory defaults |

1) If the measured value that is read out is too large, it is displayed as "9999.9", for example. To display a valid measured value, the pressure unit (PUNIT) (or level unit (LUNIT)) must be set to suit the measuring range.
2) Default: depends on the sensor nominal range or as per order specifications
3) The values entered for "Empty calib./Full calib.", "Empty pressure/Full pressure" and "Set LRV/Set URV" must be at least 1% apart. The value will be rejected, and a message displayed, if the values are too close together. Further limit values are not checked, i.e. the values entered must be appropriate for the sensor module and the measuring task for the device to be able to measure correctly.

Any additional settings such as linearizations must be made using FieldCare or DeviceCare.

Additional information is available in the RIA15 Operating Instructions BA01170K.

# 10 Diagnostics and troubleshooting

## 10.1 Troubleshooting

*General errors*

| Error | Possible cause | Solution |
|---|---|---|
| Device is not responding. | Supply voltage does not match the specification on the nameplate. | Apply correct voltage. |
| | Supply voltage has incorrect polarity. | Reverse polarity of supply voltage. |
| | Connecting cables are not in contact with the terminals. | Check the connection of the cables and correct if necessary. |
| Output current < 3.6 mA | Signal line is not wired correctly. Electronics unit is defective. | Check wiring. |
| Device measures incorrectly. | Configuration error. | Check and correct parameter configuration (see below). |
| HART communication is not working. | Communication resistor missing or incorrectly installed. | Install the communication resistor (250 Ω) correctly. |
| | Commubox is connected incorrectly. | Connect Commubox correctly. |
| | Commubox is not set to "HART". | Set Commubox selector switch to "HART". |
| RIA15 no display | The polarity of the supply voltage is wrong | Correct the polarity |
| RIA15 no display | The cables do not contact the terminals properly | Ensure electrical contact between the cable and the terminal |
| RIA15 no display | RIA15 defective | Replace RIA15 |
| RIA15 start sequence keeps running through | Supply voltage too low | ▪ Increase supply voltage<br>▪ Switch off backlight |

## 10.2 Diagnostic events in the operating tool

### 10.2.1 Diagnostic message

Faults detected by the self-monitoring system of the measuring device are displayed as a diagnostic message in alternation with the measured value display.

#### Status signals

The table → 📄 71 lists the messages that may occur. The ALARM STATUS parameter shows the message with the highest priority. The device has four different status information codes according to NE107:

| | |
|---|---|
| F<br>A0013956 | **"Failure"**<br>A device error has occurred. The measured value is no longer valid. |
| M<br>A0013957 | **"Maintenance required"**<br>Maintenance is required. The measured value remains valid. |
| C<br>A0013959 | **"Function check"**<br>The device is in service mode (e.g. during a simulation). |
| S<br>A0013958 | **"Out of specification"**<br>The device is being operated:<br>▪ Outside its technical specifications (e.g. during warm-up or cleaning).<br>▪ Outside of the configuration carried out by the user (e.g. level outside configured span) |

**Diagnostic event and event text**

The fault can be identified by means of the diagnostic event.

The event text helps you by providing information on the fault.

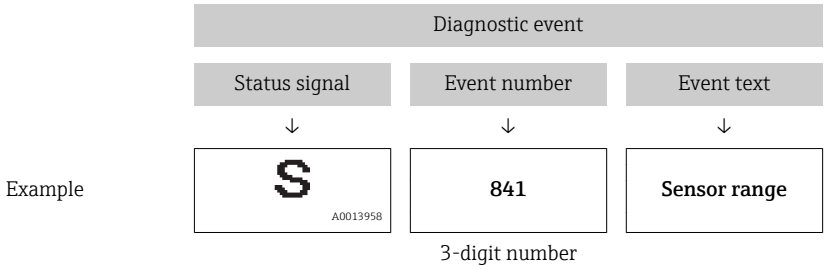


If two or more diagnostic events are pending simultaneously, only the diagnostic message with the highest priority is shown.

Other diagnostic messages that are pending can be viewed in the **Diagnostic list** submenu → 120.

Past diagnostic messages that are no longer pending are shown in the **Event logbook** submenu→ 121.

## 10.2.2 Diagnostic event in the RIA15

A diagnostic event of the Waterpilot FMX21 is not directly shown in the RIA15. The fault F911 only appears directly on the RIA15 in the event of an Waterpilot FMX21 alarm.

**Displaying a FMX21 diagnostic event in the RIA15**

1. Navigate to: DIAG/TERR
2. Press E
3. Press ⊕
4. Press E
5. Press ⊕ 3 times
6. Press E
   ↳ The diagnostic event from the Waterpilot FMX21 is shown on the RIA15 display.

## 10.2.3 List of diagnostic events

*General messages*

| Diagnostic event | | Reason | Corrective measure |
|---|---|---|---|
| Code | Description | | |
| 0 | No error | - | - |

*"F" messages*

| Diagnostic event | | Reason | Corrective measure |
|---|---|---|---|
| Code | Description | | |
| F002 | Sensor unknown | Sensor does not suit the device (electronic sensor nameplate). | Contact Endress+Hauser Service |
| F062 | Sensor conn. | ▪ Faulty sensor.<br>▪ Electromagnetic effects are greater than specifications in the technical data. This message appears for a short time only. | ▪ Check the sensor module cable<br>▪ Contact Endress+Hauser Service |
| F081 | Initialization | ▪ Faulty sensor.<br>▪ Electromagnetic effects are greater than specifications in the technical data. This message appears for a short time only. | ▪ Check sensor cable<br>▪ Contact Endress+Hauser Service |
| F083 | Memory content | ▪ Faulty sensor.<br>▪ Electromagnetic effects outside the permitted range. This message appears for a short time only. | ▪ Restart the device<br>▪ Contact Endress+Hauser Service |
| F140 | Working range P | ▪ Overpressure and low pressure present.<br>▪ Electromagnetic effects outside the permitted range.<br>▪ Faulty sensor. | ▪ Check the process pressure<br>▪ Check sensor range |
| F261 | Electronic module | ▪ Main electronics defective.<br>▪ Fault in the main electronics. | Restart the device |
| F282 | Memory | ▪ Fault in the main electronics.<br>▪ Main electronics defective. | Restart the device |
| F283 | Memory content | ▪ Main electronics defective.<br>▪ Electromagnetic effects are greater than specifications in the technical data.<br>▪ The supply voltage is disconnected when writing.<br>▪ An error occurred when writing. | Perform a reset |
| F411 | Up-/download | ▪ File is defective.<br>▪ During the download, the data are not correctly transmitted to the processor, e.g. because of open cable connections, spikes (ripple) on the supply voltage or electromagnetic effects. | ▪ Repeat download<br>▪ Use other file<br>▪ Perform a reset |
| F510 | Linearization | The linearization table is being edited. | ▪ Conclude entries<br>▪ Select "linear" |
| F511 | Linearization | The linearization table consists of less than 2 points. | ▪ Table too small<br>▪ Correct table<br>▪ Activate table |
| F512 | Linearization | The linearization table is not monotonic increasing or decreasing. | ▪ Table not monotonic<br>▪ Correct table<br>▪ Activate table |
| F841 | Sensor range | ▪ Overpressure or low pressure present.<br>▪ Faulty sensor. | ▪ Check the pressure value<br>▪ Contact Endress+Hauser Service |
| F882 | Input signal | External measured value is not received or displays a failure status. | ▪ Check the bus<br>▪ Check source device<br>▪ Check the setting |

*"M" messages*

| Diagnostic event | | Reason | Corrective measure |
|---|---|---|---|
| Code | Description | | |
| M002 | Sens. unknown | Sensor does not suit the device (electronic sensor nameplate). Device continues measuring. | Contact Endress+Hauser Service |
| M283 | Memory content | ▪ Cause as indicated for F283.<br>▪ Correct measurement can continue as long as you do not need the peakhold indicator function. | Perform a reset |
| M431 | Adjustment | The calibration performed would cause the sensor nominal range to be exceeded or undershot. | ▪ Check the measuring range<br>▪ Check position adjustment<br>▪ Check the setting |
| M434 | Scaling | ▪ Values for calibration (e.g. lower range value and upper range value) are too close together.<br>▪ Lower-range value and/or upper-range value exceed or fall below the range limits of the sensor.<br>▪ The sensor was replaced and the customer-specific configuration does not suit the sensor module.<br>▪ Unsuitable download carried out. | ▪ Check the measuring range<br>▪ Check the setting<br>▪ Contact Endress+Hauser Service |
| M438 | Data set | ▪ The supply voltage is disconnected when writing.<br>▪ An error occurred when writing. | ▪ Check the setting<br>▪ Restart the device |
| M882 | Input signal | External measured value displays a warning status. | ▪ Check the bus<br>▪ Check the source device<br>▪ Check the setting |

*"C" messages*

| Diagnostic event | | Reason | Corrective measure |
|---|---|---|---|
| Code | Description | | |
| C412 | Backup in prog. | Downloading. | Wait for download to complete. |
| C482 | Simul. output | Simulation of the current output is switched on, i.e. the device is not measuring at present. | End the simulation |
| C484 | Error simul. | Fault state simulation is switched on, i.e. the device is not measuring at present. | End the simulation |
| C485 | Measure simul. | Simulation is switched on, i.e. the device is not measuring at present. | End the simulation |
| C824 | Process pressure | ▪ Overpressure or low pressure present.<br>▪ Electromagnetic effects outside the permitted range. This message appears for a short time only. | ▪ Check the pressure value<br>▪ Restart the device<br>▪ Perform a reset |

*"S" messages*

| Diagnostic event | | Reason | Corrective measure |
|---|---|---|---|
| Code | Description | | |
| S110 | Operational range T | ▪ High temperature or low temperature present.<br>▪ Electromagnetic effects outside the permitted range.<br>▪ Faulty sensor. | ▪ Check process temperature<br>▪ Check the temperature range |
| S140 | Working range P LP/HP | ▪ Overpressure or low pressure present.<br>▪ Electromagnetic effects outside the permitted range.<br>▪ Faulty sensor. | ▪ Check the process pressure<br>▪ Check sensor range |

| Diagnostic event | | Reason | Corrective measure |
|---|---|---|---|
| Code | Description | | |
| S822 | Process temp. LP/HP | ▪ The temperature measured in the sensor is higher than the upper nominal temperature of the sensor.<br>▪ The temperature measured in the sensor is lower than the lower nominal temperature of the sensor. | ▪ Check temperature<br>▪ Check the setting |
| S841 | Sensor range | ▪ Overpressure or low pressure present.<br>▪ Faulty sensor. | ▪ Check the pressure value<br>▪ Contact Endress+Hauser Service |
| S971 | Adjustment | ▪ The current is outside the permitted range from 3.8 to 20.5 mA.<br>▪ The present pressure value is outside the configured measuring range (but within the sensor module range, if applicable).<br>▪ The calibration performed would cause the sensor nominal range to be exceeded or undershot. | ▪ Check the pressure value<br>▪ Check the measuring range<br>▪ Check the setting |

## 10.3 Troubleshooting specific to Waterpilot FMX21 with optional Pt100

| Error description | Reason | Corrective action |
|---|---|---|
| No measuring signal | 4 to 20 mA cable not connected correctly | Connect device as per → 🖹 26. |
| | No power supplied via the 4 to 20 mA cable | Check current loop. |
| | Supply voltage too low (min. 10.5 V DC) | ▪ Check supply voltage.<br>▪ Overall resistance greater than max. load resistance |
| | Waterpilot is defective | Replace the Waterpilot. |
| Temperature measured value is inaccurate/incorrect (only for Waterpilot FMX21 with Pt100) | Pt100 connected in 2-wire circuit, cable resistance was not compensated for | ▪ Compensate the cable resistance.<br>▪ Connect Pt100 as 3-wire or 4-wire circuit. |

## 10.4 Troubleshooting specific to TMT182 temperature head transmitter

| Error description | Reason | Corrective action |
|---|---|---|
| No measuring signal | 4 to 20 mA cable not connected correctly | Connect device as per → 🖹 26. |
| | No power supplied via the 4 to 20 mA cable | Check current loop. |
| | Supply voltage too low (min. 10.5 V DC) | ▪ Check supply voltage.<br>▪ Overall resistance greater than max. load resistance |
| Failure current ≤ 3.6 mA or ≥ 21 mA | Pt100 not connected correctly | Connect device as per → 🖹 26. |
| | 4 to 20 mA cable not connected correctly | Connect device as per → 🖹 26. |
| | Pt100 resistance thermometer defective | Replace the Waterpilot. |

| Error description | Reason | Corrective action |
|---|---|---|
| | Temperature head transmitter defective | Replace the temperature head transmitter. |
| Measured value is inaccurate/ incorrect | Pt100 connected in 2-wire circuit, cable resistance was not compensated for (for more information see BA00139R) | ▪ Compensate the cable resistance.<br>▪ Connect Pt100 as 3-wire or 4-wire circuit. |

## 10.5 Response of output to errors

**The behavior of the current output in case of fault is defined by the following parameters:**

- "Alarm behav. P (050)"
- "Output fail mode (190)"
- "Max. alarm curr. (052)"

## 10.6 Firmware history

| Date | Firmware version | Modifications | Documentation |
|---|---|---|---|
| 05.2009 | 01.00.zz | Original firmware.<br>Compatible with:<br>▪ FieldCare version 2.02.00 and higher<br>▪ Field Communicator DXR375 with Device Rev.: 1, DD Rev.: 1 | BA00380P/00/EN/03.09 |
| | | | BA00380P/00/EN/07.09 |
| | | | BA00380P/00/EN/08.09 |
| | | | BA00380P/00/EN/13.11 |
| | | | BA00380P/00/EN/14.13 |
| | | | BA00380P/00/EN/15.15 |
| | | | BA00380P/00/EN/16.16 |
| | | | BA00380P/00/EN/17.16 |
| | | | BA00380P/00/EN/18.18 |

# 11 Maintenance

- Terminal box: Keep the GORE-TEX® filter free from contamination
- FMX21 extension cable: Keep the Teflon filter in the pressure compensation tube free from contamination
- Check the process isolating diaphragm for buildup at suitable intervals.

## 11.1 Exterior cleaning

**Please note the following points when cleaning the device:**

- The cleaning agents used should not corrode the surface and the seals.
- Mechanical damage to the process isolating diaphragm, e.g. due to sharp objects, must be avoided.
- Only clean the terminal box with water or with a cloth dampened with very diluted ethanol.

# 12 Repairs

## 12.1 General notes

### 12.1.1 Repair concept

Repairs are not possible.

### 12.1.2 Replacing a device

Once a complete device has been replaced, the parameters can be transferred back into the device using FieldCare:

Prerequisite: The configuration of the old device was saved previously to the computer using FieldCare.

You can continue to measure without performing a new calibration.

## 12.2 Spare parts

All the spare parts for the measuring device along with the order code are listed In the *W@M Device Viewer* (www.endress.com/deviceviewer) and can be ordered. If available, users can also download the associated Installation Instructions.

Measuring device serial number:
- Is located on the nameplate of the device.
- Can be read out via the "Serial number" parameter in the "Instrument info" submenu.

## 12.3 Return

The measuring device must be returned in the event of a factory calibration, or if the wrong device has been ordered or delivered.

As an ISO-certified company and also due to legal regulations, Endress+Hauser is obliged to follow certain procedures when handling any returned products that have been in contact with medium. To ensure swift, safe and professional device returns, please read the return procedures and conditions on the Endress+Hauser website at www.services.endress.com/return-material

▶ Select country.
  ↳ The web site of the responsible sales office opens with all of the relevant information relating to returns.

1. If the desired country is not listed:
   Click on the "Choose your location" link.
   ↳ An overview of Endress+Hauser sales offices and representatives opens.
2. Contact your Endress+Hauser sales office or representative.

## 12.4 Disposal

When disposing, separate and recycle the device components based on the materials.

# 13 Overview of the operating menu

Depending on the parameter configuration, not all submenus and parameters are available. Information on this can be found in the parameter description under "Prerequisite".

| Setup | Description |
|---|---|
| Operating mode | → 89 |
| Press. eng. unit | → 91 |
| Corrected press. | → 93 |
| Pos. zero adjust (relative pressure sensor) | → 90 |
| Calib. offset (absolute pressure sensor) | → 90 |
| Empty calib. ("Level" measuring mode and "Calibration mode" = wet) | → 95 |
| Full calib. ("Level" measuring mode and "Calibration mode" = wet") | → 96 |
| Set LRV ("Pressure" measuring mode) | → 92 |
| Set URV ("Pressure" measuring mode) | → 92 |
| Damping | → 90 |
| Level before Lin ("Level" measuring mode) | → 98 |
| Pressure af.damp | → 93 |

| Setup → | Extended setup | Description |
|---|---|---|
| | Code definition | → 86 |
| | Device tag | → 87 |
| | Operator code | → 86 |

| Setup → | Extended setup → | Level ("Level" measuring mode) | Description |
|---|---|---|---|
| | | Level selection | → 94 |
| | | Output unit | → 94 |
| | | Height unit | → 94 |
| | | Calibration mode | → 95 |
| | | Empty calib. | → 95 |
| | | Empty pressure | → 95 |
| | | Empty height | → 96 |
| | | Full calib. | → 96 |
| | | Full pressure | → 96 |
| | | Full height | → 97 |
| | | Adjust density | → 97 |
| | | Process density | → 98 |
| | | Level before lin | → 98 |

| Setup → | Extended setup → | Linearization | Description |
|---|---|---|---|
| | | Lin. mode | → 99 |
| | | Unit after lin. | → 99 |
| | | Line-numb: | → 99 |

| Setup → | Extended setup → | Linearization | Description |
|---|---|---|---|
| | | X-val | → 100 |
| | | Y-val | → 100 |
| | | Edit table | → 100 |
| | | Tank description | → 101 |
| | | Tank content | → 101 |

| Setup → | Extended setup → | Current output | Description |
|---|---|---|---|
| | | Alarm behav. P | → 104 |
| | | Output fail mode | → 104 |
| | | Max. alarm curr. | → 104 |
| | | Set min. current | → 105 |
| | | Output current | → 104 |
| | | Get LRV (only "Pressure") | → 105 |
| | | Set LRV | → 105 |
| | | Get URV (only "Pressure") | → 105 |
| | | Set URV | → 106 |

| Diagnosis | Description |
|---|---|
| Diagnostic code | → 118 |
| Last diag. code | → 118 |
| Min. meas. press. | → 118 |
| Max. meas. press. | → 118 |

| Diagnosis → | Diagnostics List | Description |
|---|---|---|
| | Diagnostic 1 | → 120 |
| | Diagnostic 2 | → 120 |
| | Diagnostic 3 | → 120 |
| | Diagnostics 4 | → 120 |
| | Diagnostics 5 | → 120 |
| | Diagnostics 6 | → 120 |
| | Diagnostics 7 | → 120 |
| | Diagnostics 8 | → 120 |
| | Diagnostics 9 | → 120 |
| | Diagnostics 10 | → 120 |

| Diagnosis → | Event logbook | Description |
|---|---|---|
| | Last diag. 1 | → 121 |
| | Last diag. 2 | → 121 |
| | Last diag. 3 | → 121 |
| | Last diag. 4 | → 121 |
| | Last diag. 5 | → 121 |
| | Last diag. 6 | → 121 |

| Diagnosis → | Event logbook | Description |
|---|---|---|
| | Last diag. 7 | → 121 |
| | Last diag. 8 | → 121 |
| | Last diag. 9 | → 121 |
| | Last diag. 10 | → 121 |

| Diagnosis → | Instrument Info | Description |
|---|---|---|
| | Firmware Version | → 87 |
| | Serial number | → 87 |
| | Ext. order code | → 87 |
| | Order Identifier | → 88 |
| | Cust. tag number | → 87 |
| | Device tag | → 87 |
| | ENP version | → 88 |
| | Config. counter | → 119 |
| | LRL sensor | → 102 |
| | URL sensor | → 102 |
| | Manufacturer ID | → 110 |
| | Device type code | → 110 |
| | Device revision | → 110 |

| Diagnosis → | Measured values | Description |
|---|---|---|
| | Level before lin | → 98 |
| | Tank content | → 101 |
| | Pressure measured | → 92 |
| | Sensor pressure | → 92 |
| | Corrected press. | → 93 |
| | Pressure af.damp | → 93 |
| | Sensor temp. | → 91 |

| Diagnosis → | Simulation | Description |
|---|---|---|
| | Simulation mode | → 122 |
| | Sim. pressure | → 122 |
| | Sim. level | → 122 |
| | Sim. tank cont. | → 123 |
| | Sim. current | → 123 |
| | Sim. alarm/warning | → 123 |

| Diagnosis → | Enter reset code | Description |
|---|---|---|
| | Enter reset code | → 89 |

## 13.1 Overview of parameters in the "Expert" menu

The following table lists all of the parameters that can be included in the "Expert" menu. The page reference indicates where a description of the parameter can be found in the manual.

Depending on the device version and the parameter configuration, not all submenus and parameters are available in every device. Information on this can be found in the parameter description under "Prerequisite".

| Expert → | System | Description |
|---|---|---|
| | Code definition | → 86 |
| | Operator code | → 86 |

| Expert → | System→ | Instrument Info | Description |
|---|---|---|---|
| | | Cust. tag number | → 87 |
| | | Device tag | → 87 |
| | | Serial number | → 87 |
| | | Firmware Version | → 87 |
| | | Ext. order code | → 87 |
| | | Order Identifier | → 88 |
| | | ENP version | → 88 |
| | | Electr.Serial No | → 88 |
| | | Sensor serial no. | → 88 |

| Expert → | System→ | Administration | Description |
|---|---|---|---|
| | | Enter reset code | → 89 |

| Expert → | Measurement | Description |
|---|---|---|
| | Operating mode | → 89 |

| Expert → | Measurement→ | Basic Setup | Description |
|---|---|---|---|
| | | Pos. zero adjust | → 90 |
| | | Calib. Offset | → 90 |
| | | Damping | → 90 |
| | | Press. eng. unit | → 91 |
| | | Temp. Eng. Unit | → 91 |
| | | Sensor temp. | → 91 |

| Expert → | Measurement→ | Pressure | Description |
|---|---|---|---|
| | | Set LRV | → 92 |
| | | Set URV | → 92 |
| | | Pressure measured | → 92 |
| | | Sensor pressure | → 92 |
| | | Corrected press. | → 93 |
| | | Pressure af.damp | → 93 |

| Expert → | Measurement→ | Level | Description |
|---|---|---|---|
| | | Level selection | → 94 |
| | | Output unit | → 94 |
| | | Height unit | → 94 |
| | | Calibration mode | → 95 |
| | | Empty calib. | → 95 |
| | | Empty pressure | → 95 |
| | | Empty height | → 96 |
| | | Full calib. | → 96 |
| | | Full pressure | → 96 |
| | | Full height | → 97 |
| | | Density unit | → 97 |
| | | Adjust density | → 97 |
| | | Process density | → 98 |
| | | Level before lin. | → 98 |

| Expert → | Measurement→ | Linearization | Description |
|---|---|---|---|
| | | Lin. mode | → 99 |
| | | Unit after lin. | → 99 |
| | | Line-numb: | → 99 |
| | | X-val | → 100 |
| | | Y-val | → 100 |
| | | Edit table | → 100 |
| | | Tank description | → 101 |
| | | Tank content | → 101 |

| Expert → | Measurement→ | Sensor limits | Description |
|---|---|---|---|
| | | Lower range limit | → 102 |
| | | URL sensor | → 102 |

| Expert → | Measurement→ | Sensor trim | Description |
|---|---|---|---|
| | | Lo trim measured | → 103 |
| | | Hi trim measured | → 103 |
| | | Lo Trim Sensor | → 103 |
| | | Hi Trim Sensor | → 103 |

| Expert → | Output→ | Current output | Description |
|---|---|---|---|
| | | Output current | → 104 |
| | | Alarm behav. P | → 104 |
| | | Output fail mode | → 104 |
| | | Max. alarm curr. | → 104 |
| | | Set min. current | → 105 |

| Expert → | Output→ | Current output | Description |
|---|---|---|---|
| | | Get LRV ("Pressure" only) | → 105 |
| | | Set LRV | → 105 |
| | | Get URV ("Pressure" only) | → 105 |
| | | Set URV | → 106 |
| | | Startcurrent | → 106 |
| | | Curr. Trim 4 mA | → 106 |
| | | Curr. Trim 20 mA | → 107 |
| | | Offset Trim 4 mA | → 107 |
| | | Offset Trim 20 mA | → 107 |

| Expert → | Communication→ | HART Config | Description |
|---|---|---|---|
| | | Burst Mode | → 108 |
| | | Burst Option | → 108 |
| | | Current Mode | → 108 |
| | | Bus Address | → 108 |
| | | Preamble Number | → 109 |

| Expert → | Communication→ | HART Info | Description |
|---|---|---|---|
| | | Device type code | → 110 |
| | | Device revision | → 110 |
| | | Manufacturer ID | → 110 |
| | | HART version | → 110 |
| | | Descriptor | → 110 |
| | | HART Message | → 110 |
| | | HART Date | → 111 |

| Expert → | Communication→ | HART Output | Description |
|---|---|---|---|
| | | Primary value is | → 112 |
| | | Primary value | → 112 |
| | | Secondary val. is | → 112 |
| | | Secondary value | → 112 |
| | | Third value is | → 113 |
| | | Third value | → 113 |
| | | 4th value is | → 113 |
| | | 4th value | → 114 |

| Expert → | Communication→ | HART Input | Description |
|---|---|---|---|
| | | HART input val. | → 115 |
| | | HART input stat. | → 115 |

| Expert → | Communication→ | HART Input | Description |
|---|---|---|---|
| | | HART input unit | → 115 |
| | | HART input form. | → 115 |

| Expert → | Application | | Description |
|---|---|---|---|
| | | Electr. Delta P | → 117 |
| | | Fixed ext. value | → 117 |
| | | Auto dens. corr. | → 117 |

| Expert → | Diagnosis | Description |
|---|---|---|
| | Diagnostic code | → 118 |
| | Last diag. code | → 118 |
| | Reset Logbook | → 118 |
| | Min. meas. press. | → 118 |
| | Max. meas. press. | → 118 |
| | Reset Peakhold | → 119 |
| | Operating hours | → 119 |
| | Config. counter | → 119 |

| Expert → | Diagnosis→ | Diagnostics List | Description |
|---|---|---|---|
| | | Diagnostic 1 | → 120 |
| | | Diagnostic 2 | → 120 |
| | | Diagnostic 3 | → 120 |
| | | Diagnostics 4 | → 120 |
| | | Diagnostics 5 | → 120 |
| | | Diagnostics 6 | → 120 |
| | | Diagnostics 7 | → 120 |
| | | Diagnostics 8 | → 120 |
| | | Diagnostics 9 | → 120 |
| | | Diagnostics 10 | → 120 |

| Expert → | Diagnosis→ | Event logbook | Description |
|---|---|---|---|
| | | Last diag. 1 | → 121 |
| | | Last diag. 2 | → 121 |
| | | Last diag. 3 | → 121 |
| | | Last diag. 4 | → 121 |
| | | Last diag. 5 | → 121 |
| | | Last diag. 6 | → 121 |
| | | Last diag. 7 | → 121 |
| | | Last diag. 8 | → 121 |
| | | Last diag. 9 | → 121 |
| | | Last diag. 10 | → 121 |

| Expert → | Diagnosis→ | Simulation | Description |
|---|---|---|---|
| | | Simulation mode | → 122 |
| | | Sim. pressure | → 122 |
| | | Sim. level | → 122 |
| | | Sim. tank cont. | → 123 |
| | | Sim. current | → 123 |
| | | Sim. alarm/warning | → 123 |

# 14 Description of device parameters

## 14.1 Expert → System

### Operator code

**Write permission** Operators/Service engineers/Expert

**Description** Use this function to enter a code to lock or unlock operation.

**User entry**
- To lock: Enter a number ≠ the release code (value range: 1 to 9999).
- To unlock: Enter the release code.

**Note** The release code is "0" in the order configuration. Another release code can be defined in the "Code definition" parameter. If the user has forgotten the release code, the release code can be visible by entering the number "5864".

**Factory setting** 0

### Code definition

**Write permission** Operators/Service engineers/Expert

**Description** Use this function to enter a release code with which the device can be unlocked.

**Options** A number from 0 to 9999

**Factory setting** 0

## 14.2 Expert → System → Instrument info

### Cust. tag number

**Write permission** Operators/Service engineers/Expert

**Description** Enter the device tag, e.g. TAG number (max. 8 alphanumeric characters).

**Factory setting** No entry or according to order specifications

### Device tag

**Write permission** Operators/Service engineers/Expert

**Description** Enter the device tag, e.g. TAG number (max. 32 alphanumeric characters).

**Factory setting** No entry or according to order specifications

### Serial number

**Write permission** Parameter is read only. Only Endress+Hauser Service has write permission.

**Description** Displays the serial number of the device (11 alphanumeric characters).

### Firmware Version

**Write permission** No write permissions. Parameter is read only.

**Description** Displays the firmware version.

### Ext. order code

**Write permission** Parameter is read only. Only Endress+Hauser Service has write permission.

**Description** Displays extended order number.

**Factory setting** According to order specifications

### Order identifier

**Write permission** Parameter is read only. Only Endress+Hauser Service has write permission.

**Description** Displays the order identifier.

**Factory setting** According to order specifications

### ENP version

**Write permission** No write permissions. Parameter is read only.

**Description** Displays the ENP version
(ENP = electronic nameplate)

### Electr.serial no.

**Write permission** No write permissions. Parameter is read only.

**Description** Displays the serial number of the main electronics (11 alphanumeric characters).

### Sensor serial no.

**Write permission** No write permissions. Parameter is read only.

**Description** Displays the serial number of the main electronics (11 alphanumeric characters).

## 14.3 Expert → System → Management

### Enter reset code

**Write permission** Operators/Service engineers/Expert

**Description** Reset parameters completely or partially to the factory values or order configuration by entering a reset code, see "Resetting to factory settings (reset)" section.→ 39

**Factory setting** 0

## 14.4 Expert → Measurement → Measuring mode

### Measuring mode

**WARNING**

**Changing the measuring mode affects the span (URV)**
This situation can result in product overflow.
- If the measuring mode is changed, the setting for the span (URV) must be checked in the "Setup" operating menu and readjusted if necessary.

**Write permission** Operators/Service engineers/Expert

**Description** Select the measuring mode. The operating menu is structured differently depending on the measuring mode selected.

**Options**
- Pressure
- Level

**Factory setting** Pressure or according to order specifications

## 14.5 Expert → Measurement → Basic setup

### Pos. zero adjust

**Write permission** Operators/Service engineers/Expert

**Description** Position adjustment – the pressure difference between zero (set point) and the measured pressure need not be known.

**Example**
- Measured value = 2.2 mbar (0.033 psi)
- You correct the measured value via the "Pos. zero adjust" parameter with the "Confirm" option. This means that you are assigning the value 0.0 to the pressure present.
- Measured value (after position adjustment) = 0.0 mbar
- The current value is also corrected.

**Options**
- Confirm
- Cancel

**Factory setting** Cancel

### Calib. offset

**Write permission** Service engineers/Expert

**Description** Position adjustment – the pressure difference between the set point and the measured pressure must be known.

**Example**
- Measured value = 982.2 mbar (14.73 psi)
- You correct the measured value with the value entered (e.g. 2.2 mbar (0.033 psi)) via the "Calib. Offset" parameter. This means that you are assigning the value 980.0 (14.7 psi) to the pressure present.
- Measured value (after pos. zero adjust) = 980.0 mbar (14.7 psi)
- The current value is also corrected.

**Factory setting** 0.0

### Damping

**Write permission** Operators/Service engineers/Expert
(if the "Damping" DIP switch is set to "on")

**Description** Enter damping time (time constant τ).
The damping affects the speed at which the measured value reacts to changes in pressure.

**Input range** 0.0 to 999.0 s

**Factory setting** 2.0 sec. or according to order specifications

### Press. eng. unit

**Write permission** Operators/Service engineers/Expert

**Description** Select the pressure engineering unit. If a new pressure engineering unit is selected, all pressure-specific parameters are converted and displayed with the new unit.

**Options**
- mbar, bar
- mmH2O, mH2O, inH2O
- ftH2O
- Pa, kPa, MPa
- psi
- mmHg, inHg
- kgf/cm$^2$

**Factory setting** mbar or bar depending on the nominal measuring range of the sensor module, or as per order specifications

### Temp. eng. unit

**Write permission** Service engineers/Expert

**Description** Select the unit for the temperature measured values.

**Options**
- °C
- °F
- K

**Note** The setting affects the unit for the "Sensor temp." parameter.

**Factory setting** °C

### Sensor temp.

**Write permission** No write permissions. Parameter is read only.

**Description** Displays the temperature currently measured in the sensor module. This can deviate from the process temperature.

# 14.6 Expert → Measurement → Pressure

## Set LRV

**Write permission** Operators/Service engineers/Expert

**Description** Set the pressure value, level or content for the lower current value (4 mA).

**Factory setting**
- 0.0 % in Level measuring mode
- 0.0 mbar/bar or in accordance with ordering information in Pressure measuring mode

## Set URV

**Write permission** Operators/Service engineers/Expert

**Description** Set the pressure value, level or content for the upper current value (20 mA).

**Factory setting**
- 100.0 % in Level measuring mode
- URL Sensor or according to ordering information in Pressure measuring mode

## Meas. pressure

**Write permission** No write permissions. Parameter is read only.

**Description** Displays the measured pressure after sensor trim, position adjustment and damping.

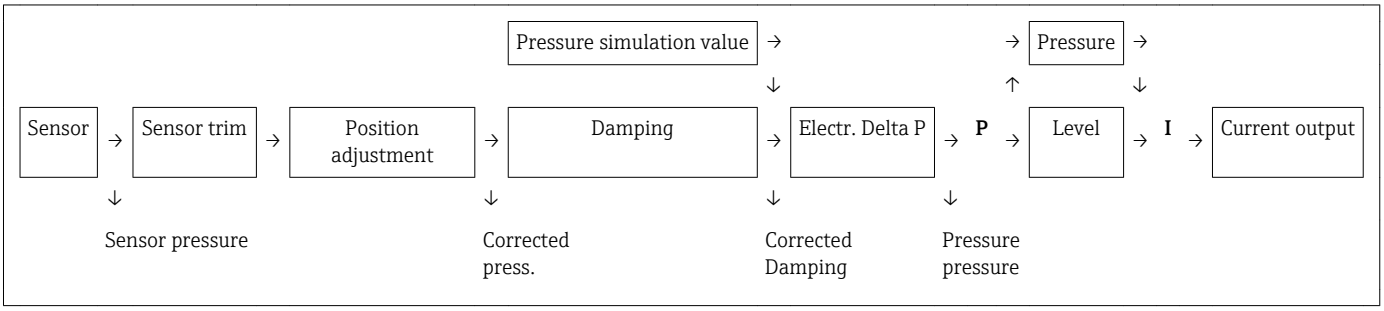


## Sensor pressure

**Write permission** No write permissions. Parameter is read only.

**Description** Displays the measured pressure before the sensor trim.

**Corrected press.**

**Write permission** No write permissions. Parameter is read only.

**Description** Displays the measured pressure after sensor trim and position adjustment.

**Pressure af.damp**

**Write permission** No write permissions. Parameter is read only.

**Description** Displays the measured pressure after sensor trim, position adjustment and damping.

## 14.7 Expert → Measurement → Level

### Level selection

**Write permission** Operators/Service engineers/Expert

**Description** Select the method for calculating the level

**Options**
- In pressure
  If this option is selected, specify two pressure/level value pairs. The level value is displayed directly in the unit that you select via the "Output unit" parameter.
- In height
  If this option is selected, specify two height/level value pairs. From the measured pressure, the device first calculates the height using the density. This information is then used to calculate the level in the "Output unit" selected using the two value pairs specified.

**Factory setting** In pressure

### Output unit

**Description** Select the unit for the measured value display for the level before linearization.

**Note** The selected unit is used only to describe the measured value i.e. when a new output unit is selected, the measured value is not converted.

**Example**
- Current measured value: 0.3 ft
- New output unit: m
- New measured value: 0.3 m

**Options**
- %
- mm, cm, dm, m
- ft, inch
- $m^3$, $in^3$
- l, hl
- $ft^3$
- gal, Igal
- kg, t
- lb

**Factory setting** %

### Height unit

**Write permission** Operators/Service engineers/Expert

**Description** Select the height unit. The measured pressure is converted to the selected height unit using the "Adjust Density" parameter.

**Prerequisite** "Level selection" = "In height"

**Options**
- mm
- m
- in
- ft

**Factory setting** m

## Calibration mode

**Write permission** Operators/Service engineers/Expert

**Description** Select the calibration mode.

**Options**
- Wet
  Wet calibration takes place by filling and emptying the vessel. In the case of two different levels, the level, volume, mass or percentage value entered is assigned to the pressure measured at this point in time ("Empty calib." and "Full calib." parameters).
- Dry
  Dry calibration is a theoretical calibration. For this calibration, you specify two pressure-level value pairs or height-level value pairs via the following parameters: "Empty calib.", "Empty pressure", "Empty height", "Full calib.", "Full pressure", "Full height".

**Factory setting** Wet

## Empty calib.

**Write permission** Operators/Service engineers/Expert

**Description** Enter the output value for the lower calibration point (vessel is empty). The unit defined in "Output unit" must be used.

**Note**
- In the case of wet calibration, the level (e.g. vessel empty or partially filled) must actually be available. The associated pressure is then automatically recorded by the device.
- In the case of dry calibration, the level (vessel empty) does not have to be available. For the "In pressure" level selection, the associated pressure must be entered in the "Empty pressure" parameter. The associated height must be entered in the "Empty height" parameter for the "In height" level selection.

**Factory setting** 0.0

## Empty pressure

**Write permission** Operators/Service engineers/Expert

**Description** Enter the pressure value for the lower calibration point (vessel empty). See also "Empty calib.".

**Prerequisite**
- "Level selection" = In pressure
- "Calibration mode" = Dry -> entry
- "Calibration mode" = Wet -> display

**Factory setting** 0.0

### Empty height

**Write permission** Operators/Service engineers/Expert

**Description** Enter the height value for the lower calibration point (vessel empty). The unit is selected via the "Height unit" parameter.

**Prerequisite**
- "Level selection" = "In height"
- "Calibration mode" = Dry -> entry
- "Calibration mode" = Wet -> display

**Factory setting** 0.0

### Full calib.

**Write permission** Operators/Service engineers/Expert

**Description** Enter the output value for the upper calibration point (vessel full). The unit defined in "Output unit" must be used.

**Note**
- In the case of wet calibration, the level (e.g. vessel full or partially filled) must actually be available. The associated pressure is then automatically recorded by the device.
- In the case of dry calibration, the level (vessel full) does not have to be available. For the "In pressure" level selection, the associated pressure must be entered in the "Full pressure" parameter. The associated height has to be entered in the "Full height" parameter for the "In height" level selection.

**Factory setting** 100.0

### Full pressure

**Write permission** Operators/Service engineers/Expert

**Description** Enter the pressure value for the upper calibration point (vessel full). See also "Full calib.".

**Prerequisite**
- "Level selection" = In pressure
- "Calibration mode" = Dry -> entry
- "Calibration mode" = Wet -> display

**Factory setting** URL of the sensor module

## Full height

**Write permission** Operators/Service engineers/Expert

**Description** Enter the height value for the upper calibration point (vessel full). The unit is selected via the "Height unit" parameter.

**Prerequisite**
- "Level selection" = "In height"
- "Calibration mode" = Dry -> entry
- "Calibration mode" = Wet -> display

**Factory setting** URL is converted to a level unit

## Density unit

**Write permission** Service engineers/Expert

**Description** Displays the density unit. The measured pressure is converted to a height using the "Height unit", "Adjust density" and "Process density" parameters.

**Options**
- $g/cm^3$
- $kg/m^3$
- $kg/dm^3$
- $lb/in^3$
- $lb/ft^3$

**Factory setting** $g/cm^3$

## Adjust density

**Write permission** Operators/Service engineers/Expert

**Description** Enter the density of the medium used to perform the calibration. The measured pressure is converted to a height using the "Height unit" and "Adjust density" parameters.
Input: Auto dens. corr. = Off
Display: Auto dens. corr. ≠ Off

**Factory setting** 1.0

### Process density

**Write permission** Operators/Service engineers/Expert

**Description** Enter a new density value for density correction. The calibration was carried out with the medium water, for example. Now the vessel is to be used for another medium with another density. The calibration is corrected appropriately by entering the new density value in the "Process Density" parameter.
Input: Auto dens. corr. = Off
Display: Auto dens. corr. ≠ Off

**Note** If, after completing a wet calibration, you change to dry calibration using the "Calibration mode" parameter, the density for the "Adjust density" and "Process density" parameters must be entered correctly before changing the calibration mode.

**Factory setting** 1.0

### Level before lin.

**Write permission** No write permissions. Parameter is read only.

**Description** Displays the level value prior to linearization.

## 14.8 Expert → Measurement → Linearization

### Lin. mode

**Write permission** Operators/Service engineers/Expert

**Description** Select the linearization mode.

**Options**
- Linear
  The level is output without being converted beforehand. "Level before lin" is output.
- Erase table
  The existing linearization table is deleted.
- Manual entry (sets the table to edit mode, an alarm is output):
  The value pairs of the table (X-value and Y-value) are entered manually.
- Semi-automatic entry (sets the table to edit mode, an alarm is output):
  The vessel is emptied or filled in stages in this entry mode. The device automatically records the level value (X-value). The associated volume, mass or % value is entered manually (Y-value).
- Activate table
  The table entered is activated and checked with this option. The device shows the level after linearization.

**Factory setting** Linear

### Unit after lin.

**Write permission** Operators/Service engineers/Expert

**Description** Select volume unit, mass, height or % (unit of the Y-value).

**Options**
- %
- cm, dm, m, mm
- hl
- $in^3$, $ft^3$, $m^3$,
- l
- in, ft
- kg, t
- lb
- gal
- Igal

**Factory setting** %

### Line-numb

**Write permission** Operators/Service engineers/Expert

**Description** Enter the number of the current point in the table. Subsequent entries in "X-val" and "Y-val" relate to this point.

**Input range** 1...32

## X-val

**Write permission** Operators/Service engineers/Expert

**Description** Enter the X-value (level before linearization) for the specific point in the table and confirm.

**Note**
- If "Lin. mode" = "Manual", the level value must be entered.
- If "Lin. mode" = "Semiautomatic", the level value is displayed and must be confirmed by entering the paired Y-value.

## Y-value

**Write permission** Operators/Service engineers/Expert

**Description** Enter the Y-value (value after linearization) for the specific point in the table. The unit is determined by "Unit after lin.".

**Note** The linearization table must be monotonic (increasing or decreasing).

## Edit table

**Write permission** Operators/Service engineers/Expert

**Description** Select the function for entering the table.

**Options**
- Next point: Enter the next point.
- Current point: stay on the current point to correct a mistake for example.
- Last input point: skip back to previous point to correct a mistake for example.
- Insert point: Insert an additional point (see example below).
- Delete point: Delete the current point (see example below).

**Example**

**Add point, in this case between the 4th and 5th point for example**
- Select point 5 via the "Line-numb" parameter.
- Select the "Insert point" option via the "Edit table" parameter.
- Point 5 is displayed for the "Line-numb" parameter. Enter new values for the "X-val" and "Y-val" parameters.

**Delete point, in this case the 5th point for example**
- Select point 5 via the "Line-numb" parameter.
- Select the "Delete point" option via the "Edit table" parameter.
- The 5th point is deleted. All of the following points are pushed up one number i.e. following deletion, the 6th point becomes Point 5.

**Factory setting** Current point

## Tank description

**Write permission** Operators/Service engineers/Expert

**Description** Enter the tank description (max. 32 alphanumeric characters)

## Tank content

**Write permission** No write permissions. Parameter is read only.

**Description** Displays the level value after linearization.

## 14.9 Expert → Measurement → Sensor limits

### LRL sensor

**Write permission** No write permissions. Parameter is read only.

**Description** Displays the lower-range limit of the sensor.

### URL sensor

**Write permission** No write permissions. Parameter is read only.

**Description** Displays the upper-range limit of the sensor.

## 14.10 Expert → Measurement → Sensor trim

### Lo trim measured

**Write permission** Parameter is read only. Only Endress+Hauser Service has write permission.

**Description** Displays the reference pressure present to be accepted for the lower calibration point.

### Hi trim measured

**Write permission** Parameter is read only. Only Endress+Hauser Service has write permission.

**Description** Displays the reference pressure present to be accepted for the upper calibration point.

### Lo trim sensor

**Write permission** No write permissions. Parameter is read only.

**Description** Sensor module recalibration by entering a target pressure while simultaneously and automatically accepting a reference pressure present for the lower calibration point.

### Hi trim sensor

**Write permission** No write permissions. Parameter is read only.

**Description** Sensor module recalibration by entering a target pressure while simultaneously and automatically accepting a reference pressure present for the upper calibration point.

## 14.11 Expert → Output → Current output

### Output current

**Write permission** Operators/Service engineers/Expert

**Description** Displays the current current value.

### Alarm behav. P

**Write permission** Operators/Service engineers/Expert

**Description** Configure the response of the current output if sensor module limits are overshot or undershot.

**Options**
- Warning
  The device continues to measure. An error message is displayed.
- Alarm
  The output signal assumes a value that can be specified by the "Output fail mode" function.

**Factory setting** Warning

### Output fail mode

**Write permission** Operators/Service engineers/Expert

**Description** Select Output fail mode. In the event of an alarm, the current assumes the current value specified with this parameter.

**Options**
- Max: can be set from 21 to 23 mA, see also "High alarm curr."
- Hold: last measured value is held.
- Min: 3.6 mA

**Factory setting** Max (22 mA)

### Max. alarm curr.

**Write permission** Operators/Service engineers/Expert

**Description** Enter the current value for maximum alarm current. See also "Output fail mode".

**Input range** 21 to 23 mA

**Factory setting** 22 mA

### Set min. current

**Write permission** Operators/Service engineers/Expert

**Description** Enter lower current limit.
Some switching units accept no current smaller than 4.0 mA.

**Options**
- 3.8 mA
- 4.0 mA

**Factory setting** 3.8 mA

### Get LRV

**Write permission** Operators/Service engineers/Expert

**Description** Set the lower-range value – reference pressure is present at the device. The pressure for the lower current value (4 mA) is present at the device. Use the "Confirm" option to assign the lower current value to the applied pressure value.

**Prerequisite:** Pressure measuring mode

**Options**
- Cancel
- Confirm

**Factory setting** Cancel

### Set LRV

**Write permission** Operators/Service engineers/Expert

**Description** Set the pressure value, level or content for the lower current value (4 mA).

**Factory setting**
- 0.0 % in Level measuring mode
- 0.0 mbar/bar or in accordance with ordering information in Pressure measuring mode

### Get URV (pressure measuring mode)

**Write permission** Operators/Service engineers/Expert

**Description** Set the upper-range value – reference pressure is present at the device. The pressure for the upper current value (20 mA) is present at the device. Use the "Confirm" option to assign the applied pressure value to the upper current value.

**Prerequisite:** Pressure measuring mode

**Options**
- Cancel
- Confirm

**Factory setting** Cancel

### Set URV

**Write permission** Operators/Service engineers/Expert

**Description** Set the pressure value, level or content for the upper current value (20 mA).

**Factory setting**
- 100.0 % in Level measuring mode
- URL Sensor or according to ordering information in Pressure measuring mode

### Startcurrent

**Write permission** Service engineers/Expert

**Description** Entry of the start current. This setting also applies in the HART Multidrop mode.

**Options**
- 12 mA
- Max alarm (22 mA, cannot be set)

**Factory setting** 12 mA

### Curr. trim 4mA

**Write permission** Service engineers/Expert

**Description** Enter the pressure value for the lower point (4 mA) of the current partial regression lines. Using this parameter and "Curr. trim 20 mA", you can adapt the current output to the transmission conditions.

**Options** Carry out the current trim for the lower point as follows.
- Select the "Current" option in the "Simulation mode" parameter.
- In the "Sim current" parameter, configure the "4 mA value".
- Enter the current value measured using the switching unit in the "Curr. trim 4mA" parameter.

**Input range** Measured current ±0.2 mA

**Factory setting** 4 mA

### Curr. trim 20mA

**Write permission** Service engineers/Expert

**Description** Enter the pressure value for the upper point (20 mA) of the current partial regression lines. Using this parameter and "Curr. Trim 4 mA", you can adapt the current output to the transmission conditions.

**Options** Carry out the current trim for the upper point as follows:
- Select the "Current" option in the "Simulation mode" parameter.
- In the "Sim current" parameter, configure the value "20 mA".
- Enter the current value measured using the switching unit in the "Curr. trim 20mA" parameter.

**Input range** Measured current ±1 mA

**Factory setting** 20 mA

### Offset trim 4mA

**Write permission** Service engineers/Expert

**Description** Display/enter the difference between 4 mA and the value entered for the parameter "Curr. trim 4mA".

**Factory setting** 0

### Offset trim 20mA

**Write permission** Service engineers/Expert

**Description** Display/enter the difference between 20 mA and the value entered for the parameter "Curr. trim 20mA".

**Factory setting** 0

## 14.12 Expert→ Communication → HART config.

### Burst mode

**Write permission** Service engineers/Expert

**Description** Switching burst mode on and off.

**Options**
- On
- Off

**Factory setting** Off

### Burst option

**Write permission** Service engineers/Expert

**Description** You can use this parameter to define which command is sent to the master.

**Options**
- 1 (HART command 1)
- 2 (HART command 2)
- 3 (HART command 3)
- 9 (HART command 9)
- 33 (HART command 33)

**Factory setting** 1 (HART command 1)

### Current mode

**Write permission** Service engineers/Expert

**Description** Configure current mode for HART communication.

**Options**
- Signaling
  Measured value transmission by the current value
- Fixed
  Fixed current 4.0 mA (Multidrop mode)
  (Measured value transmission via HART digital communication only)

**Factory setting** Signaling

### Bus address

**Write permission** Service engineers/Expert

**Description** Use this function to enter the address via which a data exchange is to take place via HART protocol. (HART 5.0 master: Range 0 to 15, where address = 0 calls up the "Signaling" setting; HART 6.0 master: Range 0 to 63)

**Factory setting** 0

## Preamble number

**Write permission** Service engineers/Expert

**Description** Use this function to enter the number of preambles in the HART protocol. (Synchronization of the modem components along a transmission path, each modem component could "swallow" one byte, at least 2 bytes must be the preamble.)

**Input range** 2...20

**Factory setting** 5

## 14.13 Expert→ Communication → HART info

### Device type code

**Write permission** No write permissions. Parameter is read only.

**Description** Display of the numerical ID of the device
Waterpilot FMX21: 36

### Device revision

**Write permission** No write permissions. Parameter is read only.

**Description** Display of Device Revision (e.g. 1)

### Manufacturer ID

**Write permission** No write permissions. Parameter is read only.

**Description** Displays the HART manufacturer ID in a decimal digit format.
Here: 17 (Endress+Hauser)

### HART version

**Write permission** No write permissions. Parameter is read only.

**Description** Displays HART version .
Waterpilot FMX21: 6

### Description

**Write permission** Service engineers/Expert

**Description** Enter the tag description (max. 16 alphanumeric characters)

### HART message

**Write permission** Service engineers/Expert

**Description** Enter the message (max. 32 alphanumeric characters) Upon request from the master, this message is sent via the HART protocol.

## HART date

**Write permission** Service engineers/Expert

**Description** Enter the date of the last configuration change.

**Factory setting** DD/MM/YY (date of the final test)

## 14.14 Expert→ Communication → HART output

### Primary value is

**Write permission** No write permissions. Parameter is read only.

**Description** Indicates which measured value is transmitted via the HART protocol as the primary process value.

**Factory setting** Depending on the selected measuring mode, the following measured values can be displayed:
- "Pressure" measuring mode: "Meas. pressure"
- "Level" measuring mode, Lin. mode "Linear": "Level before Lin"
- "Level" measuring mode, Lin. mode "Activate table": "Tank content"

### Primary value

**Write permission** No write permissions. Parameter is read only.

**Description** The primary value is displayed.

### Secondary val.is

**Write permission** No write permissions. Parameter is read only.

**Description** Indicates which measured value is transmitted via the HART protocol as the secondary process value. The process value is configured via HART command 51.

**Factory setting**
- "Pressure" measuring mode: "Corrected press."
- "Level" measuring mode, "Linear" lin. mode: "Meas. pressure"
- "Level" measuring mode, Lin. mode "Activate table": "Level before linearization"

**Display** Depending on the selected measuring mode, the following measured values can be displayed:
- "Meas. pressure"
- "Sensor pressure"
- "Corrected press."
- "Pressure af.damp"
- "Sensor temp."
- "Level before Lin"
- "Tank content"
- "Process density" (corrected)

### Secondary value

**Write permission** No write permissions. Parameter is read only.

**Description** The secondary value is displayed.

**Third value is**

**Write permission** No write permissions. Parameter is read only.

**Description** Indicates which measured value is transmitted via the HART protocol as the third process value. The process value is configured via HART command 51.

**Factory setting**
- "Pressure" measuring mode: "Sensor pressure"
- "Level" measuring mode, "Linear" lin. mode: "Corrected press."
- "Level" measuring mode, "Activate table" lin. mode: "Meas. pressure"

**Display** Depending on the selected measuring mode, the following measured values can be displayed:
- "Meas. pressure"
- "Sensor pressure"
- "Corrected press."
- "Pressure af.damp"
- "Sensor temp."
- "Level before Lin"
- "Tank content"
- "Process density" (corrected)

**Third value is**

**Write permission** No write permissions. Parameter is read only.

**Description** The third value is displayed.

**4th value is**

**Write permission** No write permissions. Parameter is read only.

**Description** Indicates which measured value is transmitted via the HART protocol as the fourth process value. The process value is configured via HART command 51.

**Factory setting**
- "Pressure" measuring mode: "Sensor temp"
- "Level" measuring mode, "Linear" lin. mode: "Sensor temp."
- "Level" measuring mode, "Activate table" lin. mode: "Sensor temp."

**Display** Depending on the selected measuring mode, the following measured values can be displayed:

- "Meas. pressure"
- "Sensor pressure"
- "Corrected press."
- "Pressure af.damp"
- "Sensor temp."
- "Level before Lin"
- "Tank content"
- "Process density" (corrected)

**4th value**

**Write permission** No write permissions. Parameter is read only.

**Description** The fourth value is displayed.

## 14.15 Expert→ Communication → HART input

### HART input value

**Write permission** No write permissions. Parameter is read only.

**Description** Display of the HART input value

### HART input stat.

**Write permission** No write permissions. Parameter is read only.

**Description** Display of the HART input status
Bad / Uncertain / Good

### HART input unit

**Write permission** No write permissions. Parameter is read only.

**Description** Display of the unit for the HART input value.

**Display**
- Unknown
- mbar, bar
- mmH2O, ftH2O, inH2O
- Pa, hPa, kPa, MPa
- psi
- mmHg, inHg
- Torr
- g/cm$^2$, kg/cm$^2$
- lb/ft$^2$
- atm
- °C, °F, K, R

**Factory setting** Unknown

### HART input form.

**Write permission** Operators/Service engineers/Expert

**Description** Number of decimal places of the displayed input value.

**Options**

- x.x
- x.xx
- x.xxx
- x.xxxx
- x.xxxxx

**Factory setting**

x.x

## 14.16 Expert → Application

### Electr. Delta P

**Write permission** Operators/Service engineers/Expert

**Description** For switching the Electr. Delta P application off or on with an external or constant value.

**Options**
- Off
- External value
- Constant

**Factory setting** Off

### Fixed ext. value

**Write permission** Operators/Service engineers/Expert

**Description** Use this function to enter the constant value. The value refers to "HART input unit"

**Factory setting** 0.0

### Auto dens. corr.

**Write permission** Operators/Service engineers/Expert

**Description** For switching the auto dens. corr. application off or on with an external or internal temperature value.
Before performing a calibration (dry or wet), auto-density compensation must be switched on if this function is to be used. As soon as "Auto dens. corr." is switched on, the field for entering the "Process density" and "Adjust density" is disabled.
The calibration density remains the last value until it is overwritten by a calibration. The process density remains the last value until it is overwritten when the system recalculates the value.
Automatic density compensation is performed for the 0 to 70 °C (32 to 158 °F) temperature range. The density values for water are used for this density compensation.

**Prerequisite** Level mode

**Options**
- Off
- Sensor temperature
- External value (only if Off or Constant is selected for Electr. Delta P)

**Factory setting**
- Off
- On (if the option "IC" was selected in the "Service" order code when ordering)

## 14.17 Expert → Diagnosis

### Diagnostic code

**Write permission** No write permissions. Parameter is read only.

**Description** Displays the diagnostic message with the highest priority currently present.

### Last diag. code

**Write permission** No write permissions. Parameter is read only.

**Description** Displays the last diagnostic message that occurred and was rectified.

**Note**
- Digital communication: the last message is displayed.
- Use the "Reset logbook" parameter to clear the messages listed in the parameter "Last diag. code".

### Reset logbook

**Write permission** Service engineers/Expert

**Description** Use this parameter to reset all messages of the parameter "Last diag. code" and the event logbook "Last diag. 1" to "Last diag. 10".

**Options**
- Cancel
- Confirm

**Factory setting** Cancel

### Min. meas. press.

**Write permission** No write permissions. Parameter is read only.

**Description** Displays the lowest pressure value measured (peakhold indicator). You can reset this indicator by means of the "Reset peakhold" parameter.

### Max. meas. press.

**Write permission** No write permissions. Parameter is read only.

**Description** Displays the highest pressure value measured (peakhold indicator). You can reset this indicator by means of the "Reset peakhold" parameter.

### Reset peakhold

**Write permission** Service engineers/Expert

**Description** You can reset the "Min. meas. press." and "Max. meas. press." indicators with this parameter.

**Options**
- Cancel
- Confirm

**Factory setting** Cancel

### Operating hours

**Write permission** No write permissions. Parameter is read only.

**Description** Displays the hours of operation. This parameter cannot be reset.

### Config. counter

**Write permission** Operators/Service engineers/Expert

**Description** Displays the configuration counter.
This counter is increased by one every time a parameter or group is changed. The counter counts up to 65535 and then starts again at zero.

## 14.18 Expert → Diagnosis → Diagnostic list

**Diagnostic 1 (075)**
**Diagnostic 2 (076)**
**Diagnostic 3 (077)**
**Diagnostic 4 (078)**
**Diagnostic 5 (079)**
**Diagnostic 6 (080)**
**Diagnostic 7 (081)**
**Diagnostic 8 (082)**
**Diagnostic 9 (083)**
**Diagnostic 10 (084)**

**Write permission** No write permissions. Parameter is read only.

**Description** This parameter contains up to ten diagnosis messages that are currently pending, arranged in order of priority.

## 14.19 Expert → Diagnosis→ Event logbook

**Last diag. 1 (085)**
**Last diag. 2 (086)**
**Last diag. 3 (087)**
**Last diag. 4 (088)**
**Last diag. 5 (089)**
**Last diag. 6 (090)**
**Last diag. 7 (091)**
**Last diag. 8 (092)**
**Last diag. 9 (093)**
**Last diag. 10 (094)**

**Write permission**

No write permissions. Parameter is read only.

**Description**

This parameter contains the last 10 diagnosis messages to occur and be rectified. They can be reset using the "Reset logbook" parameter.
Errors which have occurred multiple times are displayed once only.
Errors may also appear multiple times if another error has occurred in the meantime. The messages are displayed in chronological order.

# 14.20 Expert → Diagnosis → Simulation

## Simulation mode

**Write permission** Operators/Service engineers/Expert

**Description** Switch on simulation and select the simulation mode. When changing the measuring mode or the "Lin. mode" level type or when the device is restarted, any simulation that may be running is switched off.

**Options**
- None
- Pressure →see this table, "Sim. pressure" parameter
- Level, → see this table, "Sim. level" parameter
- Tank content, → see this table, "Sim. tank cont." parameter
- Current, → see this table, "Sim. current" parameter
- Alarm/warning, → see this table, "Sim. error no."

**Factory setting** None

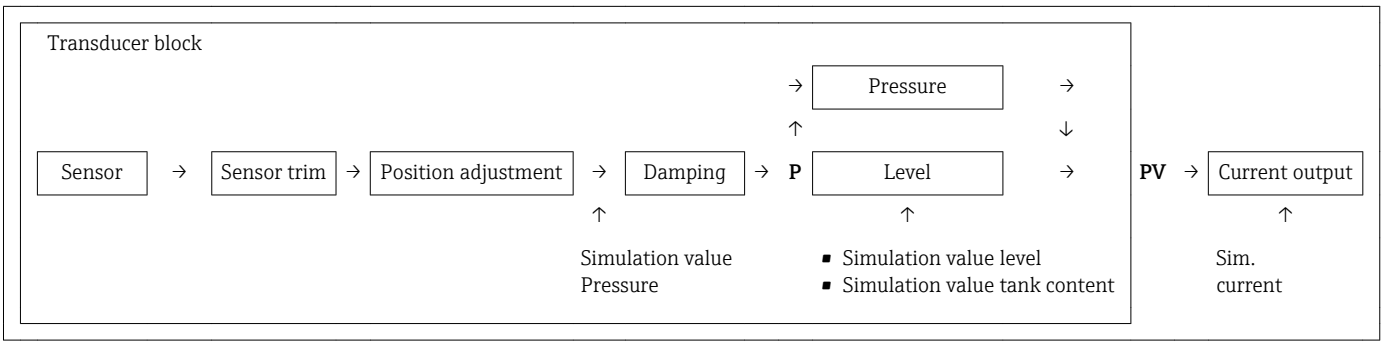


## Sim. pressure

**Write permission** Operators/Service engineers/Expert

**Description** Enter the simulation value. See also "Simulation mode".

**Prerequisite** "Simulation mode" = Pressure

**Value at switch-on** Current pressure measured value

## Sim. level

**Write permission** Operators/Service engineers/Expert

**Description** Enter the simulation value. See also "Simulation mode".

**Prerequisite** "Measuring mode" = Level and "Simulation mode" = Level

**Value at switch-on** Current level measured value

### Sim. tank cont.

**Write permission** Operators/Service engineers/Expert

**Description** Enter the simulation value. See also "Simulation mode".

**Prerequisite** "Measuring Mode" = level, Lin mode "Activate table" and "Simulation Mode" = Tank content

**Value at switch-on** Current tank content

### Sim. current

**Write permission** Operators/Service engineers/Expert

**Description** Enter the simulation value. See also "Simulation mode".

**Prerequisite** "Simulation Mode" = Current value

**Value at switch-on** Current current value

### Sim. alarm/warning

**Write permission** Operators/Service engineers/Expert

**Description** Enter the simulation value. See also "Simulation mode".

**Prerequisite** "Simulation Mode" = Alarm/Warning

**Factory setting:** 484 (Simulation active)

# 15 Accessories

**⚠ CAUTION**

**Observe the additional information in the individual sections!**

- For additional information, see the sections "Mechanical construction" (in Technical Information TI00431P), "Environment", → 134, "Process" → 136 and "Installation" → 18.

| Designation | Diagram | Description | Order number / ordering information |
|---|---|---|---|
| Suspension clamp | 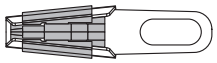 A0030950 | For easy installation of the FMX21, Endress+Hauser offers a mounting clamp . | ▪ 52006151<br>▪ Product Configurator order code for "Accessory enclosed", option "PO" |
| Terminal box | 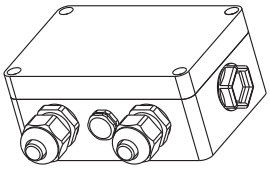 A0030967 | Terminal box for terminal strip, temperature head transmitter and Pt100. | ▪ 52006152<br>▪ Product Configurator order code for "Accessories enclosed", option "PS" |
| 4-terminal strip/terminals | 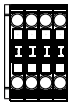 A0030951 | 4-terminal strip for wiring | 52008938 |
| TMT182 temperature head transmitter for FMX21 4 to 20 mA HART | 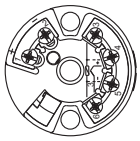 A0030952 | PC-programmable (PCP) temperature head transmitter for the conversion of various input signals | ▪ 51001023<br>▪ Product Configurator order code for "Accessories enclosed", option "PT" |
| Cable mounting screws | A B 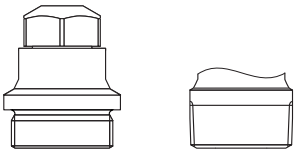 A0030953<br>*A G 1½" A*<br>*B NPT 1½"* | Endress+Hauser offers a cable mounting screw for easy FMX21 mounting and to seal the measuring aperture. | ▪ G 1½" A<br>– 52008264<br>– Product Configurator order code for "Accessories enclosed", option "PQ"<br>▪ NPT 1½"<br>– 52009311<br>– Product Configurator order code for "Accessories enclosed", option "PR" |
| Additional weight for FMX21 with outer diameter 22 mm (0.87 in) or 29 mm (1.14 in) | 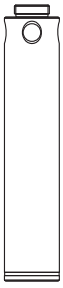 A0030954 | Endress+Hauser offers additional weights to prevent sideways movement that results in measuring errors, or to make it easier to lower the device in a guide tube. | ▪ 52006153<br>▪ Product Configurator order code for "Accessories enclosed", option "PU" |
| Cable shortening kit | 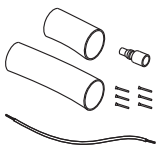 A0030948 | The cable shortening kit is used to shorten a cable easily and professionally. | ▪ 71222671<br>▪ Product Configurator order code for "Accessories enclosed", option "PW" |

| Designation | Diagram | Description | Order number / ordering information |
|---|---|---|---|
| Testing adapter for FMX21 with outer diameter 22 mm (0.87 in) or 29 mm (1.14 in) | 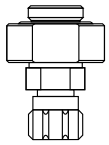 A0030956 | Endress+Hauser offers a testing adapter to ease function-testing of the level probes. | ▪ 52011868<br>▪ Product Configurator order code for "Accessories enclosed", option "PV" |
| Testing adapter for FMX21 with outer diameter 42 mm (1.65 in) | 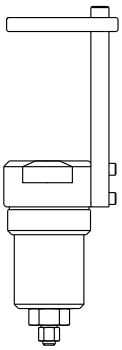 A0030957 | Endress+Hauser offers a testing adapter to ease function-testing of the level probes.<br>▪ Observe the maximum pressure for compressed air hose and maximum overload for level probe<br>▪ Maximum pressure for the quick coupling piece provided: 10 bar (145 psi) | 71110310 |
| RIA15 in the field housing | 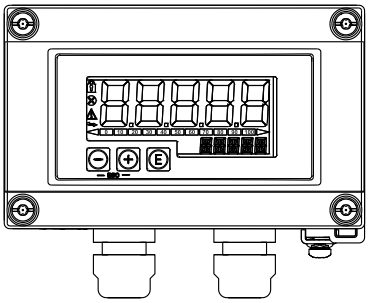 A0036164 | Remote display RIA15 non-hazardous | Product structure, feature 620 "Accessory enclosed", option R4 "Remote display RIA15 non-hazardous area, field housing" |
| | | Remote display RIA15 hazardous | Product structure, feature 620 "Accessory enclosed", option R5 "Remote display RIA15 Ex= explosion protection approval, field housing" |
| HART communication resistor | 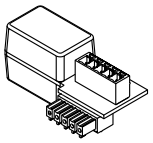 A0036165 | HART communication resistor, hazardous / non-hazardous area, for use with RIA15 | Product structure, feature 620 "Accessory enclosed", option R6 "HART communication resistor hazardous / non-hazardous area" |

## 15.1 Service-specific accessories

| Accessories | Description |
|---|---|
| DeviceCare SFE100 | Configuration tool for HART, PROFIBUS and FOUNDATION Fieldbus field devices<br>Technical Information TI01134S<br>DeviceCare is available for download at www.software-products.endress.com. You need to register in the Endress+Hauser software portal to download the application. |
| FieldCare SFE500 | FDT-based plant asset management tool<br>FieldCare can configure all smart field units in your plant and helps you manage them. By using the status information, FieldCare is also a simple but effective way of checking the status and condition of the field devices.<br>Technical Information TI00028S |

# 16 Technical data

## 16.1 Input

### 16.1.1 Measured variable

**FMX21 + Pt100 (optional)**

- Hydrostatic pressure of a liquid
- Pt100: Temperature

**TMT182 temperature head transmitter (optional) for FMX21 4 to 20 mA HART**

Temperature

### 16.1.2 Measuring range

- Customer-specific measuring ranges or calibration that has been preset in the factory
- Temperature measurement of −10 to +70 °C (+14 to +158 °F) with Pt100 (optional)

**Relative pressure**

| Sensor measuring range [bar (psi)] | Lowest calibratable span [1] [bar (psi)] | Vacuum resistance [$bar_{abs}$ ($psi_{abs}$)] | Option [2] |
|---|---|---|---|
| 0.1 (1.5) | 0.01 (0.15) | 0.3 (4.5) | 1C |
| 0.2 (3.0) | 0.02 (0.3) | 0.3 (4.5) | 1D |
| 0.4 (6.0) | 0.04 (1.0) | 0 | 1F |
| 0.6 (9.0) | 0.06 (1.0) | 0 | 1G |
| 1.0 (15.0) | 0.1 (1.5) | 0 | 1H |
| 2.0 (30.0) | 0.2 (3.0) | 0 | 1K |
| 4.0 (60.0) | 0.4 (6.0) | 0 | 1M |
| 10.0 (150) [3] | 1.0 (15) | 0 | 1P |
| 20.0 (300) [3] | 2.0 (30) | 0 | 1Q |

1) Largest turn down that can be configured at the factory: 10:1, higher turn down can be configured on request or in the device (for FMX21 4 to 20 mA HART).
2) Product Configurator order code for "Sensor range"
3) These measuring ranges are not available for the special version with plastic insulation, external diameter of 29 mm (1.14 in).

**Absolute pressure**

| Sensor measuring range [bar (psi)] | Lowest calibratable span [1] [bar (psi)] | Vacuum resistance [$bar_{abs}$ ($psi_{abs}$)] | Option [2] |
|---|---|---|---|
| 2.0 (30.0) | 0.2 (3.0) | 0 | 2K |
| 4.0 (60.0) | 0.4 (6.0) | 0 | 2M |

| Sensor measuring range [bar (psi)] | Lowest calibratable span [1] [bar (psi)] | Vacuum resistance [$bar_{abs}$ ($psi_{abs}$)] | Option [2] |
|---|---|---|---|
| 10.0 (150) [3] | 1.0 (15) | 0 | 2P |
| 20.0 (300) [3] | 2.0 (30) | 0 | 2Q |

1) Largest turn down that can be configured at the factory: 10:1, higher turn down can be configured on request or in the device (for FMX21 4 to 20 mA HART).
2) Product Configurator order code for "Sensor range"
3) These measuring ranges are not available for the special version with plastic insulation, external diameter of 29 mm (1.14 in).

### 16.1.3 Input signal

**FMX21 + Pt100 (optional)**

- Change in capacitance
- Pt100: Change in resistance

**TMT182 temperature head transmitter (optional) for FMX21 4 to 20 mA HART**

Pt100 resistance signal, 4 wire

## 16.2 Output

### 16.2.1 Output signal

**FMX21 + Pt100 (optional)**

- 4 to 20 mA HART with superimposed digital communication protocol HART 6.0, 2-wire for hydrostatic pressure measured value.
  Ordering information: Product Configurator order code for "Output", option "2"
  Options:
  – Max. alarm (factory setting 22mA): can be set from 21 to 23 mA
  – Hold measured value: last measured value is held
  – Min. alarm: 3.6 mA
- Pt100: temperature-dependent resistance value

**TMT182 temperature head transmitter (optional) for FMX21 4 to 20 mA HART**

4 to 20 mA HART with superimposed digital communication protocol HART 5.0 for temperature measured value, 2-wire

### 16.2.2 Signal range

3.8 mA to 20.5 mA

### 16.2.3 Maximum load for FMX21 4 to 20 mA HART

The maximum load resistance depends on the supply voltage (U) and must be determined individually for each current loop, see formula and diagrams for FMX21 and temperature head transmitter. The total resistance resulting from the resistances of the connected devices, the connecting cable and, where applicable, the resistance of the extension cable may not exceed the load resistance value.

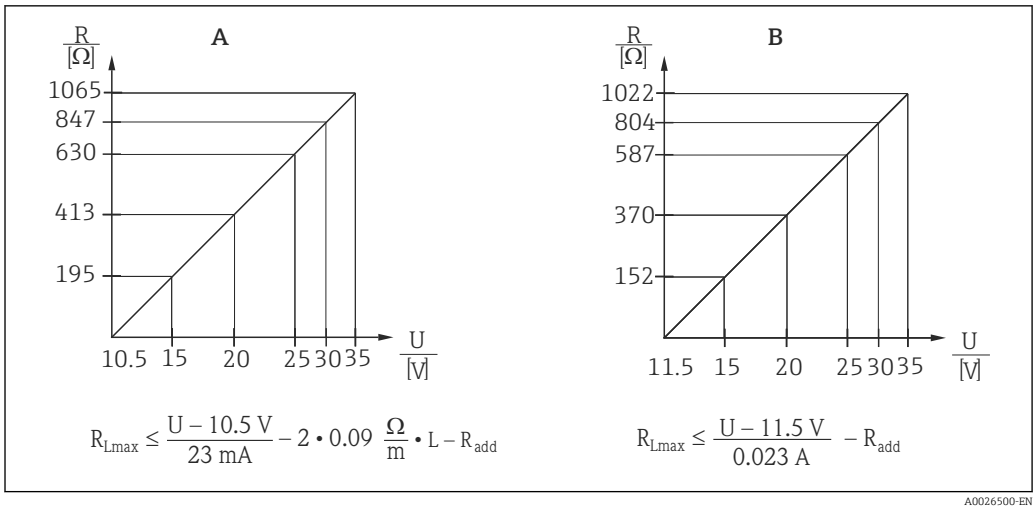


*A FMX21 4 to 20 mA HART load chart for estimating the load resistance. Additional resistances, such as the resistance of the extension cable, have to be subtracted from the value calculated as shown in the equation.*
*B Load diagram for TMT182 temperature head transmitter for estimating the load resistance. Additional resistances must be subtracted from the value calculated as shown in the equation*
*$R_{Lmax}$ Max. load resistance [Ω]*
*$R_{add}$ Additional resistances such as resistance of evaluating device and/or display unit, cable resistance [Ω]*
*U Supply voltage [V]*
*L Basic length of extension cable [m] (cable resistance per wire 0.09 Ω/m)*

- When using the measuring device in hazardous areas, installation must comply with the corresponding national standards and regulations and the Safety Instructions or Installation or Control Drawings (XA).
- When operating via a handheld terminal or via a PC with an operating program, a minimum communication resistance of 250 Ω must be taken into account.

### 16.2.4 Protocol-specific data for FMX21 4 to 20 mA HART

| | |
|---|---|
| Manufacturer ID | 17 (11 hex) |
| Device type code | 25 (19 hex) |
| Device revision | 01 (01 hex) - SW version 01.00.zz |
| HART specification | 6 |
| DD revision | 01 |
| Device description files (DTM, DD) | Information and files under:<br>▪ www.endress.com<br>▪ www.fieldcommgroup.org |
| HART load | Min. 250 Ω |
| HART device variables | The dynamic variables SV, TV and QV may be assigned to any device variable:<br>**Standard process values for SV, TV (second and third device variable) are dependent on the measuring mode:**<br>▪ Pressure<br>▪ Level<br>**Standard process value for QV (fourth device variable) is the sensor temperature:**<br>Temperature<br>**Measured values for PV (first device variable) are dependent on the measuring mode:**<br>▪ Pressure<br>▪ Level<br>▪ Tank content |
| Supported functions | ▪ Burst mode<br>▪ Additional transmitter status<br>▪ Device locking<br>▪ Alternative measuring modes<br>▪ Catch variable<br>▪ Long tag |

## 16.3 Performance characteristics

### 16.3.1 Reference operating conditions

**FMX21 + Pt100 (optional)**

- As per IEC 60770
- Ambient temperature $T_U$ = constant, in the range of +21 to +33 °C (+70 to +91 °F)
- Humidity φ = constant, in the range of 20 to 80 % rH
- Ambient pressure $p_U$ = constant, in the range of 860 to 1060 mbar (12.47 to 15.37 psi)
- Position of measuring cell constant, vertical in the range of ±1°
- Input of LOW SENSOR TRIM and HIGH SENSOR TRIM for lower range value and upper range value (only for HART)
- Supply voltage constant: 21 V DC to 27 V DC
- Load with HART: 250 Ω
- Pt100: DIN EN 60770, $T_U$ = +25 °C (+77 °F)

**TMT182 temperature head transmitter (optional) for FMX21 4 to 20 mA HART**

Calibration temperature +25 °C (+77 °F) ±5 K

### 16.3.2 Reference accuracy

**FMX21 + Pt100 (optional)**

The reference accuracy comprises the non-linearity after limit point configuration, hysteresis and non-reproducibility in accordance IEC 60770.

Standard version [2]:
Setting ±0.2 %
– to TD 5:1: < 0.2 % of set span
– from TD 5:1 to TD 20:1 ±(0.02 x TD+0.1)

Platinum version [3]:
- Setting ±0.1 % (optional)
  – to TD 5:1: < 0.1 % of set span
  – from TD 5:1 to TD 20:1 ±(0.02 x TD)
- Class B as per DIN EN 60751
  Pt100: max. ±1 K

**TMT182 temperature head transmitter (optional) for FMX21 4 to 20 mA HART**

- ±0.2 K
- With Pt100: max. ±0.9 K

### 16.3.3 Resolution

Current output: 1 µA

**Reading cycle**

HART commands: on average 2 to 3 per second

2) Ordering information: Product Configurator order code for "Reference accuracy", option "G"
3) Ordering information: Product Configurator order code for "Reference accuracy", option "D"

### 16.3.4 Long-term stability

**FMX21 + Pt100 (optional)**

- ≤ 0.1 % of URL/year
- ≤ 0.25 % of URL/5 years

**TMT182 temperature head transmitter (optional) for FMX21 4 to 20 mA HART**

≤ 0.1 K per year

### 16.3.5 Influence of medium temperature

- Thermal change in the zero output and the output span:
  0 to +30 °C (+32 to +86 °F): < (0.15 + 0.15 x TD)% of set span
  −10 to +70 °C (+14 to +158 °F): < (0.4 + 0.4 x TD)% of set span
- Temperature coefficient ($T_K$) of the zero output and the output span
  −10 to +70 °C (+14 to +158 °F): 0.1 % / 10 K of URL

### 16.3.6 Warm-up period

**FMX21 + Pt100 (optional)**

- FMX21: < 6 s
- Pt100: 300 s

**TMT182 temperature head transmitter (optional) for FMX21 4 to 20 mA HART**

4 s

### 16.3.7 Response time

**FMX21 + Pt100 (optional)**

- FMX21: 400 ms (T90 time), 500 ms (T99 time)
- Pt100: 160 s (T90 time), 300 s (T99 time)

## 16.4 Environment

### 16.4.1 Ambient temperature range

**FMX21 + Pt100 (optional)**

- With external diameter of 22 mm (0.87 in) and 42 mm (1.65 in):
  −10 to +70 °C (+14 to +158 °F) (= medium temperature)
- With external diameter of29 mm (1.14 in):
  0 to +50 °C (+32 to +122 °F) (= medium temperature)

**Cable**

(when mounted in a fixed position)
- With PE: −30 to +70 °C (−22 to +158 °F)
- With FEP: −40 to +70 °C (−40 to +158 °F)
- With PUR: −40 to +70 °C (−40 to +158 °F)

**Terminal box**

−40 to +80 °C (−40 to +176 °F)

**TMT182 temperature head transmitter (optional) for FMX21 4 to 20 mA HART**

−40 to +85 °C (−40 to +185 °F)

Temperature head transmitter 2-wire, configured for a measuring range of −20 to +80 °C (−4 to +176 °F). This configuration offers a temperature range of 100 K which can be easily mapped. Please note that the Pt100 resistance temperature detector is suitable for a temperature range of −10 to +70 °C (14 to +158 °F)

The TMT182 temperature head transmitter is not designed for use in hazardous areas incl. CSA GP.

### 16.4.2 Storage temperature range

**FMX21 + Pt100 (optional)**

−40 to +80 °C (−40 to +176 °F)

**Cable**

(when mounted in a fixed position)
- With PE: −30 to +70 °C (−22 to +158 °F)
- With FEP: −30 to +80 °C (−22 to +176 °F)
- With PUR: −40 to +80 °C (−40 to +176 °F)

**Terminal box**

−40 to +80 °C (−40 to +176 °F)

**TMT182 temperature head transmitter (optional) for FMX21 4 to 20 mA HART**

−40 to +100 °C (−40 to +212 °F)

### 16.4.3 Degree of protection

**FMX21 + Pt100 (optional)**

IP68, permanently hermetically sealed at 20 bar (290 psi) (~200 m $H_2O$)

**Terminal box (optional)**

IP66, IP67

**TMT182 temperature head transmitter (optional) for FMX21 4 to 20 mA HART**

IP00, condensation permitted

### 16.4.4 Electromagnetic compatibility (EMC)

**FMX21 + Pt100 (optional)**

- EMC in accordance with all relevant requirements of EN 61326 series. For details, refer to the Declaration of Conformity.
- Maximum deviation: < 0.5 % of span.

**TMT182 temperature head transmitter (optional) for FMX21 4 to 20 mA HART**

EMC in accordance with all relevant requirements of EN 61326 series. For details, refer to the Declaration of Conformity.

### 16.4.5 Overvoltage protection

**FMX21 + Pt100 (optional)**

- Integrated overvoltage protection as per EN 61000-4-5 (500 V symmetrical/1000 V asymmetrical)
- Overvoltage protection ≥ 1.0 kV, external if necessary

**TMT182 temperature head transmitter (optional) for FMX21 4 to 20 mA HART**

Provide overvoltage protection, externally if necessary (see Technical Information).

## 16.5 Process

### 16.5.1 Medium temperature range

**FMX21 + Pt100 (optional)**

- With external diameter of 22 mm (0.87 in) and 42 mm (1.65 in):
  −10 to +70 °C (+14 to +158 °F)
- With external diameter of 29 mm (1.14 in):
  0 to +50 °C (+32 to +122 °F)

**TMT181 temperature head transmitter (optional) for FMX21 4 to 20 mA HART**

−40 to +85 °C (−40 to +185 °F)

(= ambient temperature), install temperature head transmitter outside the medium.

Temperature head transmitter 2-wire, configured for a measuring range of −20 to +80 °C (−4 to +176 °F). This configuration offers a temperature range of 100 K which can be easily mapped. Please note that the Pt100 resistance temperature detector is suitable for a temperature range of −10 to +70 °C (14 to +158 °F)

The TMT182 temperature head transmitter is not designed for use in hazardous areas incl. CSA GP.

### 16.5.2 Medium temperature limit

**FMX21 + Pt100 (optional)**

With external diameter of 22 mm (0.87 in) and 42 mm (1.65 in):
−20 to +70 °C (−4 to +158 °F)

In hazardous areas incl. CSA GP, the medium temperature limit is −10 to +70 °C (+14 to +158 °F).

With external diameter of29 mm (1.14 in): 0 to +50 °C (+32 to +122 °F)

The FMX21 may be operated in this temperature range. The specification values, such as accuracy, may be exceeded.

### 16.5.3 Pressure specifications

**⚠ WARNING**

**The maximum pressure for the measuring device depends on the lowest-rated element with regard to pressure.**

- For pressure specifications, see the "Measuring range" section and the "Mechanical construction" section.
- The measuring device must be operated only within the specified limits!
- The Pressure Equipment Directive (2014/68/EU) uses the abbreviation "PS". The abbreviation "PS" corresponds to the MWP (maximum working pressure) of the measuring device.
- MWP (maximum working pressure): The MWP (maximum working pressure) is specified on the nameplate. This value refers to a reference temperature of +20 °C (+68 °F) and may be applied to the device for an unlimited time. Observe temperature dependency of the MWP.
- OPL (Over Pressure Limit = sensor overload limit): The test pressure corresponds to the over pressure limit of the sensor and may only be applied for a limited time period to ensure measurement within specification and in order to avoid permanent damage. In the case of sensor range and process connections where the over pressure limit (OPL) of the process connection is smaller than the nominal value of the sensor, the device is set at the factory, at the very maximum, to the OPL value of the process connection. If you want to use the entire sensor range, select a process connection with a higher OPL value.
- avoid steam hammering! Steam hammering can cause zero point drifts. Recommendation: Residue (such as condensation or drops of water) can remain on the process isolating diaphragm after CIP cleaning and lead to local steam hammering if steam cleaning is performed again. In practice, drying the process isolating diaphragm (e.g. by blowing) has proved to prevent steam hammering.

## 16.6 Additional technical data

See Technical Information TI00431P.

# Index


## 0 ... 9

4th value . . . . . 114
4th value is . . . . . 113

## A

Accessories
  Service-specific . . . . . 125
Adjust density . . . . . 97
Alarm behav. P . . . . . 104
Application . . . . . 10
Auto dens. corr. . . . . 117

## B

Burst Mode . . . . . 108
Burst Option . . . . . 108
Bus Address . . . . . 108

## C

Calib. Offset . . . . . 45, 90
Calibration mode . . . . . 95
CE mark (declaration of conformity) . . . . . 11
Cleaning . . . . . 76
Code definition . . . . . 86
Config. counter . . . . . 119
Configuration of a level measurement . . . . . 48
Configuration of a pressure measurement . . . . . 46
Configure measuring mode . . . . . 43
Configure pressure engineering unit . . . . . 44
Configuring level measurement . . . . . 48
Configuring pressure measurement . . . . . 46
Corrected press. . . . . 93
Curr. trim 4mA . . . . . 106
Curr. trim 20mA . . . . . 107
Current Mode . . . . . 108
Cust. tag number . . . . . 87

## D

Damping . . . . . 45, 90
Declaration of Conformity . . . . . 11
Density correction . . . . . 117
Density unit . . . . . 97
Description . . . . . 110
Designated use . . . . . 10
Device replacement . . . . . 77
Device revision . . . . . 110
Device tag . . . . . 87
Device type code . . . . . 110
DeviceCare . . . . . 36
Diagnostic 1 (075) . . . . . 120
Diagnostic 2 (076) . . . . . 120
Diagnostic 3 (077) . . . . . 120
Diagnostic 4 (078) . . . . . 120
Diagnostic 5 (079) . . . . . 120
Diagnostic 6 (080) . . . . . 120
Diagnostic 7 (081) . . . . . 120
Diagnostic 8 (082) . . . . . 120
Diagnostic 9 (083) . . . . . 120
Diagnostic 10 (084) . . . . . 120
Diagnostic code . . . . . 118
Diagnostic event . . . . . 71
Diagnostic event in the RIA15 . . . . . 71
Diagnostic events . . . . . 70
Diagnostic message . . . . . 70
Diagnostics
  Symbols . . . . . 70

## E

Edit table . . . . . 100
Electr. Delta P . . . . . 117
Electr.serial no. . . . . 88
Empty calib. . . . . 95
Empty height . . . . . 96
Empty pressure . . . . . 95
ENP version . . . . . 88
Enter reset code . . . . . 89
Event text . . . . . 71
Ext. order code . . . . . 87
Exterior cleaning . . . . . 76

## F

Firmware Version . . . . . 87
Fixed ext. value . . . . . 117
Full calib. . . . . 96
Full height . . . . . 97
Full pressure . . . . . 96

## G

Get LRV . . . . . 105
Get URV (pressure measuring mode) . . . . . 105

## H

HART Date . . . . . 111
HART input form. . . . . 115
HART input stat. . . . . 115
HART input unit . . . . . 115
HART input val. . . . . 115
HART Message . . . . . 110
HART version . . . . . 110
HART® protocol
  Operating tools . . . . . 41
  Process variables . . . . . 41
  Version data for the device . . . . . 41
Height unit . . . . . 94
Hi trim measured . . . . . 103
Hi trim sensor . . . . . 103

## L

Last diag. 1 (085) . . . . . 121
Last diag. 2 (086) . . . . . 121
Last diag. 3 (087) . . . . . 121
Last diag. 4 (088) . . . . . 121
Last diag. 5 (089) . . . . . 121
Last diag. 6 (090) . . . . . 121
Last diag. 7 (091) . . . . . 121

Last diag. 8 (092) . . . . . 121
Last diag. 9 (093) . . . . . 121
Last diag. 10 (094) . . . . . 121
Last diag. code . . . . . 118
Level before lin. . . . . 98
Level selection . . . . . 94
Lin. mode . . . . . 99
Line-numb. . . . . 99
Lo trim measured . . . . . 103
Lo trim sensor . . . . . 103
Local display
see Diagnostic message
see In alarm condition
LRL sensor . . . . . 102

M
Maintenance . . . . . 76
Manufacturer ID . . . . . 110
Max. alarm curr. . . . . 104
Max. meas. press. . . . . 118
Media . . . . . 10
Menu
Overview . . . . . 78, 81
Parameter description . . . . . 86
Min. meas. press. . . . . 118

N
Nameplate . . . . . 15

O
Offset trim 4mA . . . . . 107
Offset trim 20mA . . . . . 107
Operating hours . . . . . 119
Operating menu
Overview . . . . . 78, 81
Parameter description . . . . . 86
Operating mode . . . . . 89
Operational safety . . . . . 10
Operator code . . . . . 86
Order Identifier . . . . . 88
Output current . . . . . 104
Output fail mode . . . . . 104
Output unit . . . . . 94

P
Pos. zero adjust . . . . . 90
Preamble Number . . . . . 109
Press. eng. unit . . . . . 91
Pressure af.damp . . . . . 93
Pressure measured . . . . . 92
Primary value . . . . . 112
Primary value is . . . . . 112
Process density . . . . . 98
Product safety . . . . . 11

R
Repair concept . . . . . 77
Replacing a device . . . . . 77
Reset Logbook . . . . . 118
Reset Peakhold . . . . . 119

S
Safety Instructions
Basic . . . . . 10
Safety Instructions (XA) . . . . . 7
Secondary val. is . . . . . 112
Secondary value . . . . . 112
Sensor pressure . . . . . 92
Sensor serial no. . . . . 88
Sensor temp. . . . . 91
Serial number . . . . . 87
Set LRV . . . . . 92, 105
Set min. current . . . . . 105
Set URV . . . . . 92, 106
Sim. alarm/warning . . . . . 123
Sim. current . . . . . 123
Sim. level . . . . . 122
Sim. pressure . . . . . 122
Sim. tank cont. . . . . 123
Simulation mode . . . . . 122
Spare parts . . . . . 77
Nameplate . . . . . 77
Staff
Requirements . . . . . 10
Startcurrent . . . . . 106
Status signals . . . . . 70

T
Tank content . . . . . 101
Tank description . . . . . 101
Temp. Eng. Unit . . . . . 91
Third value . . . . . 113
Third value is . . . . . 113
Troubleshooting . . . . . 70

U
Unit after lin. . . . . 99
URL sensor . . . . . 102
Use of the measuring devices
Borderline cases . . . . . 10
Incorrect use . . . . . 10
Using measuring device
see Designated use

W
W@M Device Viewer . . . . . 77
Workplace safety . . . . . 10

X
X-value . . . . . 100

Y
Y-value . . . . . 100




www.addresses.endress.com

Endress+Hauser

People for Process Automation

USER MANUAL

TECHLINE®
IMPROVING FLEXIBILITY

# ACTUATOR LA36



*To learn more about LINAK, please visit:*
**www.linak.com**

LINAK®
WE IMPROVE YOUR LIFE

**This page is intentionally left blank**

# Contents


Preface ..... 5

LINAK application policy ..... 6

## Chapter 1

Safety instructions ..... 7-8

## Chapter 2

Mounting guidelines ..... 9-10

Mounting of cables ..... 11

Electrical installation: ..... 12

- Recommended fuse ..... 12
- Actuator without feedback ..... 13
- Actuator with:
  - Endstop signal output ..... 14-15
  - Relative positioning - Dual Hall ..... 16-17
  - Endstop signals and relative positioning - Dual Hall ..... 18-19
  - Relative positioning - Single Hall ..... 20-21
  - Endstop signals and relative positioning - Single Hall ..... 22-23
  - Absolute positioning - Analogue feedback ..... 24-25
  - Endstop signals and absolute positioning - Analogue feedback ..... 26-27
  - Absolute positioning - Mechanical potentiometer feedback ..... 28-29
  - Endstop signals and absolute positioning - Mechanical potentiometer feedback ..... 30-31
  - Absolute positioning - PWM ..... 32-33
  - Endstop signals and absolute positioning - PWM ..... 34-35
  - IC Basic ..... 36-38
  - IC Advanced - with BusLink ..... 39-41
- Correct wiring of Power GND and Signal GND for IC Basic and IC Advanced ..... 42
- Actuator with Parallel ..... 43-45
- The parallel system ..... 46-47
- System monitoring for Parallel ..... 48
- Alignment of the parallel actuator system ..... 48
- Parallel manual service mode ..... 49

# Contents

## Chapter 3

Troubleshooting ..... 50-51
Troubleshooting for Parallel ..... 52-54

## Chapter 4

Specifications ..... 55
Usage ..... 55
Actuator dimensions ..... 56
Built-in dimensions ..... 57
Manual Hand Crank ..... 58
Speed and current curves: ..... 59-61
    12V motor ..... 59
    24V motor ..... 60
    36V motor ..... 61
Label for LA36 ..... 62
Key to symbols ..... 63
LA36 Ordering example Econ ..... 64
LA36 Ordering example ..... 65

## Chapter 5

Maintenance ..... 66
Repair ..... 66
Main groups of disposal ..... 66
Warranty ..... 67
Declarations of conformity ..... 68-70
Declaration of incorporation of partly completed machinery ..... 71
Adresses ..... 72

# Preface

Dear User,

We are delighted that you have chosen a product from LINAK®.
LINAK systems are high-tech products based on many years of experience in the manufacture and development of actuators, electric control boxes, controls, and chargers.

This user manual does not address the end-user, but is intended as a source of information for the manufacturer of the equipment or system only, and it will tell you how to install, use and maintain your LINAK electronics. It is the responsibility of the manufacturer of the end-use product to provide a User Manual where relevant safety information from this manual is passed on to the end-user.

We are sure that your LINAK product/system will give you many years of problem-free operation. Before our products leave the factory they undergo full function and quality testing. Should you nevertheless experience problems with your LINAK product/system, you are always welcome to contact your local dealer. LINAK subsidiaries and some distributors situated all over the world have authorised service centres, which are always ready to help you.

LINAK provides a warranty on all its products. This warranty, however, is subject to correct use in accordance with the specifications, maintenance being done correctly and any repairs being carried out at a service centre, which is authorised to repair LINAK products.
Changes in installation and use of LINAK products/systems can affect their operation and durability. The products are not to be opened by unauthorised personnel.

The User Manual has been written based on our present technical knowledge. We are constantly working on updating the information and we therefore reserve the right to carry out technical modifications.

**LINAK A/S**

## LINAK application policy

The purpose of the application policy is to define areas of responsibilities in relation to applying a LINAK product defined as hardware, software, technical advice, etc. related to an existing or a new customer application.

LINAK products as defined above are applicable for a wide range of applications within Medical, Furniture, Desk, and Industry areas. Yet, LINAK cannot know all the conditions under which LINAK products will be installed, used, and operated, as each individual application is unique.

The suitability and functionality of the LINAK product and its performance under varying conditions (application, vibration, load, humidity, temperature, frequency, etc.) can only be verified by testing, and shall ultimately be the responsibility of the LINAK customer using any LINAK product.

LINAK shall be responsible solely that LINAK products comply with the specifications set out by LINAK and it shall be the responsibility of the LINAK customer to ensure that the specific LINAK product can be used for the application in question.

# Chapter 1

## Safety instructions

Please read this safety information carefully:

Be aware of the following three symbols throughout the user manual:

**Warning!**
Failing to follow these instructions can cause accidents resulting in serious personal injury.

**Recommendations**
Failing to follow these instructions can result in the actuator suffering damage or being ruined.

**Additional information**
Usage tips or additional information that is important in connection with the use of the actuator.

Furthermore, ensure that all staff who are to connect, mount, or use the actuator are in possession of the necessary information and that they have access to this user manual.

Persons who do not have the necessary experience or knowledge of the product/products must not use the product/products. Besides, persons with reduced physical or mental abilities must not use the product/products, unless they are under surveillance or they have been thoroughly instructed in the use of the apparatus by a person who is responsible for the safety of these persons.

Moreover, children must be under surveillance to ensure that they do not play with the product.

**Before you start mounting/dismounting, ensure that the following points are observed:**

- The actuator is not in operation.
- The actuator is free from loads that could be released during this work.

**Before you put the actuator into operation, check the following:**

- The actuator is correctly mounted as indicated in the relevant user instructions.
- The equipment can be freely moved over the actuator's whole working area.
- The actuator is connected to a mains electricity supply/transformer with the correct voltage and which is dimensioned and adapted to the actuator in question.
- Ensure that the voltage applied matches to the voltage specified on the actuator label.
- Ensure that the connection bolts can withstand the wear.
- Ensure that the connection bolts are secured safely.

**During operation, please be aware of the following:**

- Listen for unusual sounds and watch out for uneven running. Stop the actuator immediately if anything unusual is observed.
- Do not sideload the actuator.
- Only use the actuator within the specified working limits.
- Do not step or kick on the actuator.

**When the equipment is not in use:**

- Switch off the mains supply in order to prevent unintentional operation.
- Check regularly for extraordinary wear.

**Classification**

The equipment is not suitable for use in the presence of a flammable anaesthetic mixture with air or with oxygen or nitrous oxide.



## Warnings

- Do not sideload the actuator.
- When mounting the LA36 in the application ensure that the bolts can withstand the wear and that they are secured safely.
- If irregularities are observed, the actuator must be replaced.



## Recommendations

- Do not place load on the actuator housing and do prevent impact or blows, or any other form of stress to the housing.
- Ensure that the cable cover is mounted correctly. Use 1.5Nm torque.
- Ensure that the duty cycle and the usage temperatures for LA36 actuators are respected.
- Ensure that the cable cannot be squeezed, pulled or subjected to any other stress.
- Furthermore, it will be good practice to ensure that the actuator is fully retracted in the "normal" position. The reason is that there will be a vacuum inside the actuator if it is extended which over time can lead to water entering the actuator.
- If the actuator (without integrated controller) is mounted in an application where a mechanical stop prevents the endstop switches in the actuator from being activated, the actuator must be equipped with an electrical safety device (current monitoring) or external limit switch.

# Chapter 2

## Mounting guidelines

LINAK® linear actuators are quickly and easily mounted by slipping pins through the holes on each end of the units and into brackets on the machine frame and the load.

The mounting pins must be parallel to each other as shown in Figure 1. Pins, which are not parallel to each other, may cause the actuator to bend and be damaged.

The load should act along the stroke axis of the actuator since off centre loads may cause bending and lead to premature failure. See Figure 2.

Make sure the mounting pins are supported in both ends. Failure to do so could shorten the life of the actuator. Also, avoid applying a skew load on the actuator.

The actuator can rotate around the pivot point in the front and rear end. If this is the case it is of high importance that the actuator is able to move freely over the full stroke length, both during the development and during daily operation. Please pay special attention to the area around the housing where parts can be trapped and cause damages to the application and actuator.

In applications with high dynamic forces LINAK recommends not to use the fully extended or retracted position over longer time, as this can damage the endstop system permanently.

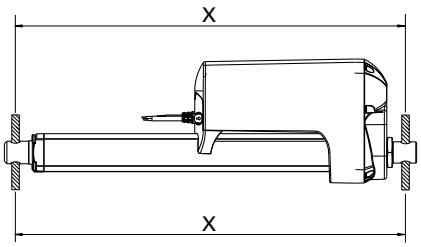


*Figure 1*

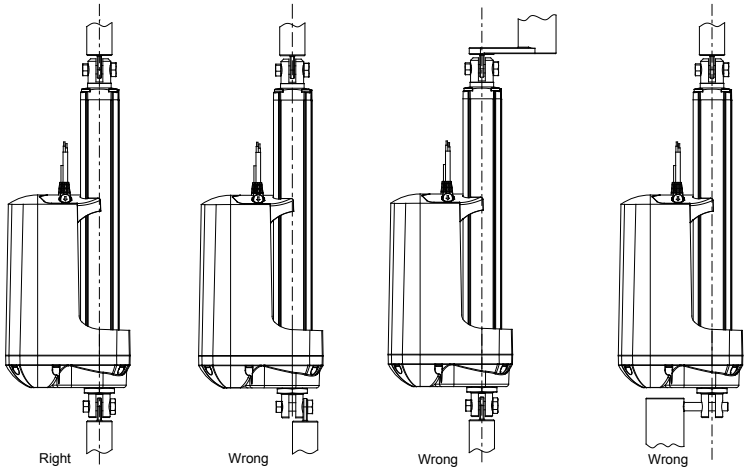


*Figure 2*

## Mounting guidelines

- The mounting pins must have the correct dimension
- The bolts and nuts must be made of a high quality steel grade (e.g. 10.8). No thread on the bolt inside the back fixture or the piston rod eye
- Bolts and nuts must be protected so there is no risk for them to fall out
- Do not use a torque that is too high when mounting the bolts for the back fixture or he piston rod eye. This will stress the fixtures

**Please note:**
**The piston rod eye is only allowed to turn 0-90 degrees.**

**Instruction concerning the turning of the piston rod eye:**
When mounting and taking into use, it is not permitted to make excessive turns of the piston rod eye. In cases where the eye is not positioned correctly, it is permitted to first screw the eye down to its bottom position, at a maximum torque of 2Nm (1), and thereafter a maximum 90 degrees turn outwards again (2).

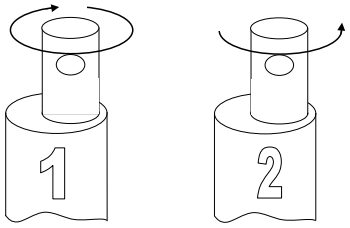


**Warning!**
**If the actuator is used for pull in an application where personal injury can occur, the following is valid:**
It is the application manufacturer's responsibility to incorporate a suitable safety arrangement, which will prevent personal injury from occurring, if the actuator should fail

**Warning!**
**LINAK's actuators are not designed for use within the following fields:**

- Offshore installations
- Aeroplanes and other aircraft
- Nuclear power generation

## Mounting of cables

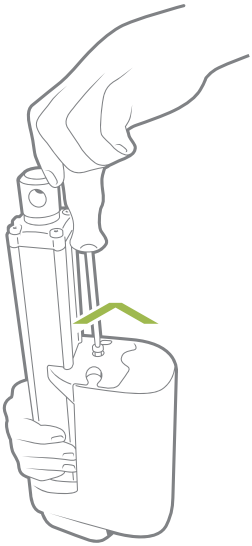

1. Unscrew the cover and remove the two blind plugs.

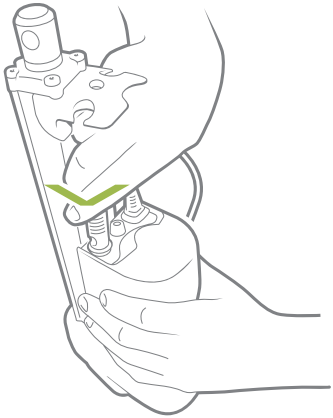

2. Plug in the power cable and/or the signal cable.

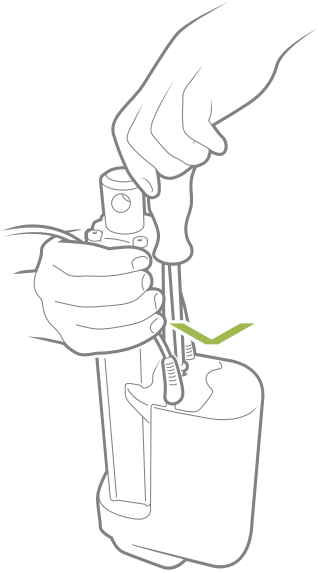

3. Slide the cover onto the actuator.

   The torque of the cover screw is approx. 1.5 ± 0.3 Nm

   TORX 25IP

When changing the cables on a LINAK actuator, it is important that this is done carefully, in order to protect the plugs and pins. Before the new cable is mounted, we recommend that the socket is greased with vaseline, to keep the high IP protection and ensure an easy mounting. Please be sure that the plug is in the right location and fully pressed in before the cable lid is mounted.

Please note that if the cables are mounted and dismounted more than 3 times the plugs can be damaged. Therefore, we recommend that such cables are discarded and replaced.

We recommend to take some precaution and design the wire connection in a way, where the cable end is kept inside a closed, protected area to guarantee the high IP protection.

## Electrical installation



- To ensure maximum self-locking ability, please be sure that the motor is shorted when stopped.
  Actuators with integrated controller have this feature incorporated.
- When using soft stop on a DC-motor, a short peak of higher voltage will be sent back towards the power supply. It is important when selecting the power supply that it does not turn off the output, when this backwards load dump occurs.



The power supply for actuators without integrated controller must be monitored externally and cut off in case of overload.

## Recommended fuse for actuators without integrated controller

| Type | Spindle Pitch (mm) | Thrust max. Push/Pull (N) | Typical Amp. at full load (A) | | | Recommended fuse | | |
|---|---|---|---|---|---|---|---|---|
| | | | 36V | 24V | 12V | 36V | 24V | 12V |
| 36080xxxxxxAxxxxH... | 8 | 10000 | - | - | 22.0 | - | - | 44.0 |
| 36120xxxxxxAxxxxF... | 12 | 2600 | - | - | 21.0 | - | - | 42.0 |
| 36120xxxxxxAxxxxG... | 12 | 4500 | - | - | 20.7 | - | - | 41.4 |
| 36120xxxxxxAxxxxH... | 12 | 6800 | - | - | 21.0 | - | - | 42.0 |
| 36200xxxxxxAxxxxF... | 20 | 1700 | - | - | 22.0 | - | - | 44.0 |
| 36200xxxxxxAxxxxE... | 20 | 500 | - | - | 20.0 | - | - | 40.0 |
| 36080xxxxxxBxxxxH... | 8 | 1000 | - | 10.4 | - | - | 20.8 | - |
| 36120xxxxxxBxxxxF... | 12 | 2600 | - | 10.4 | - | - | 20.8 | - |
| 36120xxxxxxBxxxxG... | 12 | 4500 | - | 10.2 | - | - | 20.4 | - |
| 36120xxxxxxBxxxxH... | 12 | 6800 | - | 10.3 | - | - | 20.6 | - |
| 36200xxxxxxBxxxxF... | 20 | 1700 | - | 10.3 | - | - | 20.6 | - |
| 36200xxxxxxBxxxxE... | 20 | 500 | - | 10.0 | - | - | 20.0 | - |
| 36080xxxxxxCxxxxH... | 8 | 10000 | 8.0 | - | - | 16.0 | - | - |
| 36120xxxxxxCxxxxF... | 12 | 2600 | 8.0 | - | - | 16.0 | - | - |
| 36120xxxxxxCxxxxG... | 12 | 4500 | 8.0 | - | - | 16.0 | - | - |
| 36120xxxxxxCxxxxH... | 12 | 6800 | 8.0 | - | - | 16.0 | - | - |
| 36200xxxxxxCxxxxF... | 20 | 1700 | 8.0 | - | - | 16.0 | - | - |
| 36200xxxxxxCxxxxE... | 20 | 500 | 8.0 | - | - | 16.0 | - | - |

## Actuator without feedback

## Connection diagram:

Fig. 1 : 36xxxxx00/10xxxxxx
36xxxxxxx000xx-xxxxxxxxxxxxxxx

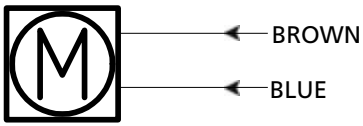


## I/O specifications:

| Input/Output | Specification | Comments |
|---|---|---|
| Description | Permanent magnetic DC motor.<br>See connection diagram, fig. 1 above |  |
| Brown | 12, 24 or 36VDC (+/-)<br>12V ± 20%<br>24V ± 10%<br>36V ± 10% | To extend actuator:<br>Connect Brown to positive<br>To retract actuator:<br>Connect Brown to negative |
| Blue | Under normal conditions:<br>12V, max. 26A depending on load<br>24V, max. 13A depending on load<br>36V, max. 10A depending on load | To extend actuator:<br>Connect Blue to negative<br>To retract actuator:<br>Connect Blue to positive |
| Red | Not to be connected | |
| Black | Not to be connected | |
| Green | Not to be connected | |
| Yellow | Not to be connected | |
| Violet | Not to be connected | |
| White | Not to be connected | |

## Actuator with endstop signal output

## Connection diagram:

Fig. 2 : 36xxxxx20xxxxxx
36xxxxxxx000xx-xxxxxxxxxxxxxxx

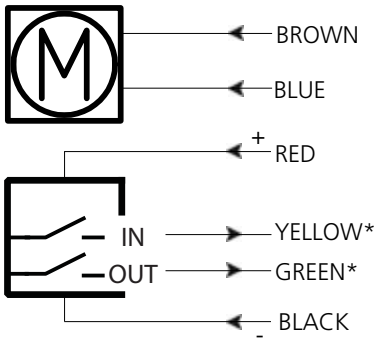


*YELLOW/GREEN:
Endstop signals out are NOT potential free!

If you wish to use the endstop signals, you will have to keep power on the brown, blue, red and black wires, otherwise the signal will be lost.

## Actuator with endstop signal output

## I/O specifications:

| Input/Output | Specification | Comments |
|---|---|---|
| Description | The actuator can be equipped with electronically controlled endstop signals out.<br>See connection diagram, fig. 2 on page 14 |  |
| Brown | 12, 24 or 36VDC (+/-)<br>12V ± 20%<br>24V ± 10%<br>36V ± 10% | To extend actuator:<br>Connect Brown to positive<br>To retract actuator:<br>Connect Brown to negative |
| Blue | Under normal conditions:<br>12V, max. 26A depending on load<br>24V, max. 13A depending on load<br>36V, max. 10A depending on load | To extend actuator:<br>Connect Blue to negative<br>To retract actuator:<br>Connect Blue to positive |
| Red | Signal power supply (+)<br>12-24VDC | Current consumption:<br>Max. 40mA, also when the actuator is not running |
| Black | Signal power supply GND (-) | |
| Green | Endstop signal out | Output voltage min. $V_{IN}$ - 2V<br>Source current max. 100mA<br>NOT potential free |
| Yellow | Endstop signal in | |
| Violet | Not to be connected | |
| White | Not to be connected | |

## Actuator with relative positioning - Dual Hall

## Connection diagram:

Fig. 3 : 36xxxxx0H/1Hxxxxxx
36xxxxxxxH00xx-xxxxxxxxxxxxxxx

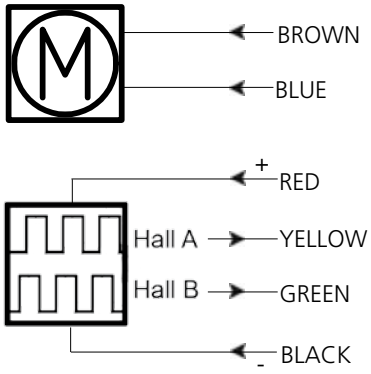

## Actuator with relative positioning - Dual Hall
## I/O specifications:

<table>
<tr><th>Input/Output</th><th colspan="2">Specification</th><th>Comments</th></tr>
<tr><td>Description</td><td colspan="2">The actuator can be equipped with Dual Hall that gives a relative positioning feedback signal when the actuator moves.<br>See connection diagram, fig. 3, page 16</td><td> 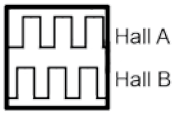
</td></tr>
<tr><td>Brown</td><td colspan="2" rowspan="2">12, 24 or 36VDC (+/-)<br>12V ± 20%<br>24V ± 10%<br>36V ± 10%<br>Under normal conditions:<br>12V, max. 26A depending on load<br>24V, max. 13A depending on load<br>36V, max. 10A depending on load</td><td>To extend actuator:<br>Connect Brown to positive<br>To retract actuator:<br>Connect Brown to negative</td></tr>
<tr><td>Blue</td><td>To extend actuator:<br>Connect Blue to negative<br>To retract actuator:<br>Connect Blue to positive</td></tr>
<tr><td>Red</td><td colspan="2">Signal power supply (+)<br>12-24VDC</td><td rowspan="2">Current consumption:<br>Max. 40mA, also when the actuator is not running</td></tr>
<tr><td>Black</td><td colspan="2">Signal power supply GND (-)</td></tr>
<tr><td>Green</td><td>Hall B</td><td rowspan="2">Movement per single hall pulse:<br>LA362C Actuator = 0.4 mm per pulse<br>LA363C Actuator = 0.7 mm per pulse<br>LA363B Actuator = 1.0 mm per pulse<br>LA363A Actuator = 1.7 mm per pulse<br>LA365A Actuator = 2.9 mm per pulse</td><td rowspan="2">The Hall sensor signals are generated by the turning of the actuator gearing. These signals can be fed into a PLC (Programmable Logic Controller). In the PLC the quadrature signals can be used to register the direction and position of the piston rod.<br>Output voltage min. $V_{IN}$ - 1V<br>Current output 12mA<br>Overvoltage on the motor can result in shorter pulses.<br>N.B. For more precise measurements, please contact LINAK A/S.</td></tr>
<tr><td>Yellow</td><td>Hall A</td></tr>
<tr><td>Violet</td><td colspan="3">Not to be connected</td></tr>
<tr><td>White</td><td colspan="3">Not to be connected</td></tr>
<tr><td>Diagram of Dual Hall:</td><td colspan="3"> 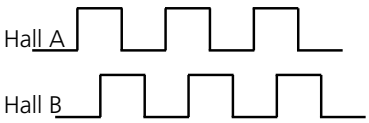

Fig. 3.1</td></tr>
</table>

## Actuator with endstop signals and relative positioning - Dual Hall

## Connection diagram:

Fig. 4 : 36xxxxx2Hxxxxxx
36xxxxxxxH00xx-xxxxxxxxxxxxxxx

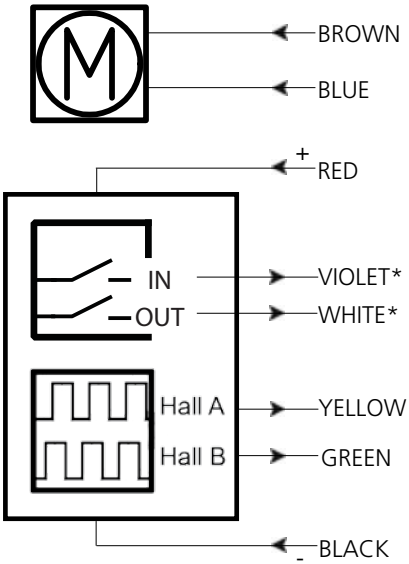


*VIOLET/WHITE:
Endstop signals out are NOT potential free!

If you wish to use the endstop signals, you will have to keep power on the brown, blue, red and black wires, otherwise the signal will be lost.

## Actuator with endstop signals and relative positioning - Dual Hall I/O specifications:

<table>
<tr><th>Input/Output</th><th colspan="2">Specification</th><th>Comments</th></tr>
<tr><td>Description</td><td colspan="2">The actuator can be equipped with Dual Hall that gives a relative positioning feedback signal when the actuator moves.<br>See connection diagram, fig. 4, page 18</td><td> 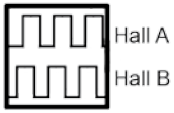
</td></tr>
<tr><td>Brown</td><td colspan="2" rowspan="2">12, 24 or 36VDC (+/-)<br>12V ± 20%<br>24V ± 10%<br>36V ± 10%<br><br>Under normal conditions:<br>12V, max. 26A depending on load<br>24V, max. 13A depending on load<br>36V, max. 10A depending on load</td><td>To extend actuator:<br>Connect Brown to positive<br>To retract actuator:<br>Connect Brown to negative</td></tr>
<tr><td>Blue</td><td>To extend actuator:<br>Connect Blue to negative<br>To retract actuator:<br>Connect Blue to positive</td></tr>
<tr><td>Red</td><td colspan="2">Signal power supply (+)<br>12-24VDC</td><td rowspan="2">Current consumption:<br>Max. 40mA, also when the actuator is not running</td></tr>
<tr><td>Black</td><td colspan="2">Signal power supply GND (-)</td></tr>
<tr><td>Green</td><td>Hall B</td><td rowspan="2">Movement per single hall pulse:<br>LA362C Actuator = 0.4 mm per pulse<br>LA363C Actuator = 0.7 mm per pulse<br>LA363B Actuator = 1.0 mm per pulse<br>LA363A Actuator = 1.7 mm per pulse<br>LA365A Actuator = 2.9 mm per pulse</td><td rowspan="2">The Hall sensor signals are generated by the turning of the actuator gearing. These signals can be fed into a PLC (Programmable Logic Controller). In the PLC the quadrature signals can be used to register the direction and position of the piston rod.<br>Output voltage min. $V_{IN}$ - 1V<br>Current output 12mA<br>Overvoltage on the motor can result in shorter pulses.<br>N.B. For more precise measurements, please contact LINAK A/S.</td></tr>
<tr><td>Yellow</td><td>Hall A</td></tr>
<tr><td>Violet</td><td colspan="2">Endstop signal in</td><td rowspan="2">Output voltage min. $V_{IN}$ - 2V<br>Source current max. 30mA<br>NOT potential free</td></tr>
<tr><td>White</td><td colspan="2">Endstop signal out</td></tr>
<tr><td>Diagram of Dual Hall:</td><td colspan="3"> 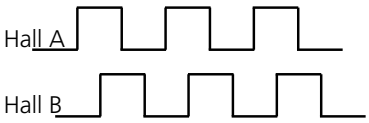

Fig. 4.1</td></tr>
</table>

## Actuator with relative positioning - Single Hall

## Connection diagram:

Fig. 5 : 36xxxxx0K/1Kxxxxxx
36xxxxxxxK00xx-xxxxxxxxxxxxxxx

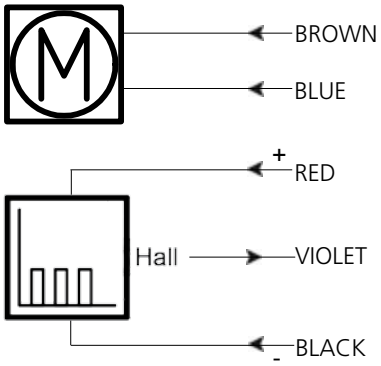

## Actuator with relative positioning - Single Hall
## I/O specifications:

<table>
<tr><th>Input/Output</th><th>Specification</th><th>Comments</th></tr>
<tr><td>Description</td><td>The actuator can be equipped with Single Hall that gives a relative positioning feedback signal when the actuator moves.<br>See connection diagram, fig. 5, page 20</td><td> 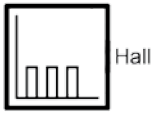
</td></tr>
<tr><td>Brown</td><td>12, 24 or 36VDC (+/-)<br>12V ± 20%<br>24V ± 10%<br>36V ± 10%</td><td>To extend actuator:<br>Connect Brown to positive<br>To retract actuator:<br>Connect Brown to negative</td></tr>
<tr><td>Blue</td><td>Under normal conditions:<br>12V, max. 26A depending on load<br>24V, max. 13A depending on load<br>36V, max. 10A depending on load</td><td>To extend actuator:<br>Connect Blue to negative<br>To retract actuator:<br>Connect Blue to positive</td></tr>
<tr><td>Red</td><td>Signal power supply (+)<br>12-24VDC</td><td rowspan="2">Current consumption:<br>Max. 40mA, also when the actuator is not running</td></tr>
<tr><td>Black</td><td>Signal power supply GND (-)</td></tr>
<tr><td>Green</td><td colspan="2">Not to be connected</td></tr>
<tr><td>Yellow</td><td colspan="2">Not to be connected</td></tr>
<tr><td rowspan="2">Violet</td><td>Single Hall output (PNP)<br>Movement per Single Hall pulse:<br>LA362C: Actuator = 0.1 mm per count<br>LA363C: Actuator = 0.2 mm per count<br>LA363B: Actuator = 0.3 mm per count<br>LA363A: Actuator = 0.4 mm per count<br>LA365A: Actuator = 0.7 mm per count<br>Frequency:<br>Frequency is 30-125 Hz on Single Hall output depending on load and spindle. Overvoltage on the motor can result in shorter pulses.</td><td>Output voltage min. $V_{IN}$ - 2V<br>Max. current output: 12mA<br>Max. 680nF<br>N.B. For more precise measurements, please contact LINAK A/S.<br>Low frequency with a high load.<br>Higher frequency with no load.</td></tr>
<tr><td colspan="2">Diagram of Single Hall:<br> 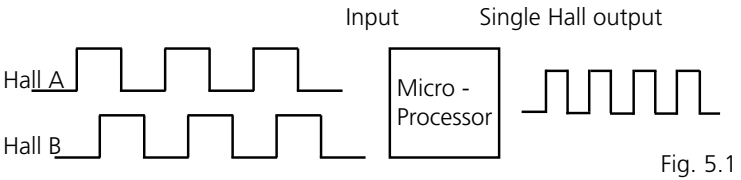

Fig. 5.1</td></tr>
<tr><td>White</td><td colspan="2">Not to be connected</td></tr>
</table>

## Actuator with endstop signals and relative positioning - Single Hall

## Connection diagram:

Fig. 6 : 36xxxxx2Kxxxxxx
36xxxxxxxK00xx-xxxxxxxxxxxxxxx

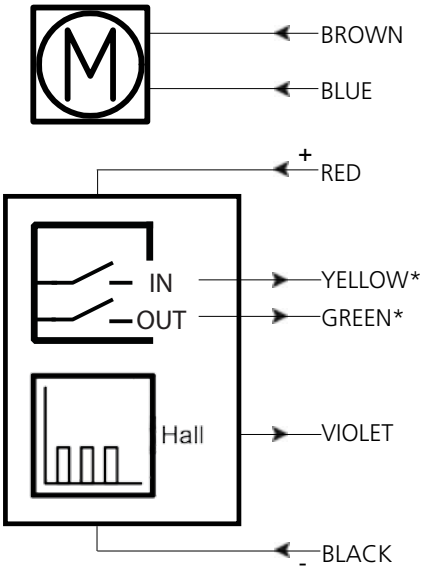


*YELLOW/GREEN:
Endstop signals out are NOT potential free!

If you wish to use the endstop signals, you will have to keep power on the brown, blue, red and black wires, otherwise the signal will be lost.

## Actuator with endstop signals and relative positioning - Single Hall I/O specifications:

<table>
<tr><th>Input/Output</th><th>Specification</th><th>Comments</th></tr>
<tr><td>Description</td><td>The actuator can be equipped with Single Hall that gives a relative positioning feedback signal when the actuator moves.<br>See connection diagram, fig. 6, page 22</td><td> 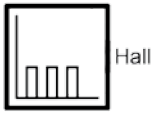
</td></tr>
<tr><td>Brown</td><td>12, 24 or 36VDC (+/-)<br>12V ± 20%<br>24V ± 10%<br>36V ± 10%</td><td>To extend actuator:<br>Connect Brown to positive<br>To retract actuator:<br>Connect Brown to negative</td></tr>
<tr><td>Blue</td><td>Under normal conditions:<br>12V, max. 26A depending on load<br>24V, max. 13A depending on load<br>36V, max. 10A depending on load</td><td>To extend actuator:<br>Connect Blue to negative<br>To retract actuator:<br>Connect Blue to positive</td></tr>
<tr><td>Red</td><td>Signal power supply (+)<br>12-24VDC</td><td rowspan="2">Current consumption:<br>Max. 40mA, also when the actuator is not running</td></tr>
<tr><td>Black</td><td>Signal power supply GND (-)</td></tr>
<tr><td>Green</td><td>Endstop signal out</td><td rowspan="2">Output voltage min. $V_{IN}$ - 2V<br>Source current max. 100mA<br>NOT potential free</td></tr>
<tr><td>Yellow</td><td>Endstop signal in</td></tr>
<tr><td rowspan="2">Violet</td><td>Single Hall output (PNP)<br>Movement per Single Hall pulse:<br>LA362C: Actuator = 0.1 mm per count<br>LA363C: Actuator = 0.2 mm per count<br>LA363B: Actuator = 0.3 mm per count<br>LA363A: Actuator = 0.4 mm per count<br>LA365A: Actuator = 0.7 mm per count<br>Frequency:<br>Frequency is 30-125 Hz on Single Hall output depending on load and spindle. Overvoltage on the motor can result in shorter pulses.</td><td>Output voltage min. $V_{IN}$ - 2V<br>Max. current output: 12mA<br>Max. 680nF<br>N.B. For more precise measurements, please contact LINAK A/S.<br>Low frequency with a high load.<br>Higher frequency with no load.</td></tr>
<tr><td colspan="2">Diagram of Single Hall:<br> 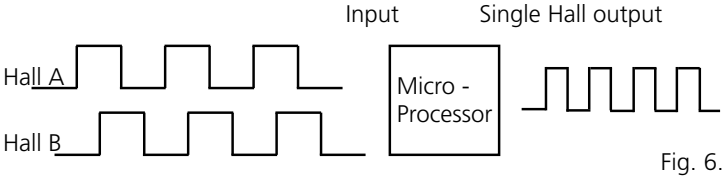

Fig. 6.1</td></tr>
<tr><td>White</td><td colspan="2">Not to be connected</td></tr>
</table>

## Actuator with absolute positioning - Analogue feedback

## Connection diagram:

Fig. 7 : 36xxxxx1B/1Cxxxxxx
36xxxxxxxB00xx-xxxxxxxxxxxxxxx
36xxxxxxxC00xx-xxxxxxxxxxxxxxx

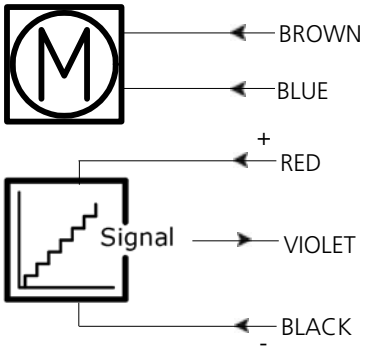

## Actuator with absolute positioning - Analogue feedback
## I/O specifications:

| Input/Output | Specification | Comments |
|---|---|---|
| Description | The actuator can be equipped with electronic circuit that gives an analogue feedback signal when the actuator moves.<br>See connection diagram, fig. 7, page 24 |  |
| Brown | 12, 24 or 36VDC (+/-)<br>12V ± 20%<br>24V ± 10%<br>36V ± 10% | To extend actuator:<br>Connect Brown to positive<br>To retract actuator:<br>Connect Brown to negative |
| Blue | Under normal conditions:<br>12V, max. 26A depending on load<br>24V, max. 13A depending on load<br>36V, max. 10A depending on load | To extend actuator:<br>Connect Blue to negative<br>To retract actuator:<br>Connect Blue to positive |
| Red | Signal power supply (+)<br>12-24VDC | Current consumption:<br>Max. 60mA, also when the actuator is not running |
| Black | Signal power supply GND (-) | |
| Green | Not to be connected | |
| Yellow | Not to be connected | |
| Violet | Analogue feedback<br>0-10V (Option B)<br>0.5-4.5V (Option C) | Tolerances +/- 0.2V<br>Max. current output: 1mA<br>Ripple max. 200mV<br>Transaction delay 100ms<br>Linear feedback 0.5%<br>It is recommendable to have the actuator to activate its limit switches on a regular basis, to ensure more precise positioning |
| White | Not to be connected | |

## Actuator with endstop signals and absolute positioning - Analogue feedback

## Connection diagram:

Fig. 8 : 36xxxxx2B/2Cxxxxxx
36xxxxxxxB00xx-xxxxxxxxxxxxxxx
36xxxxxxxC00xx-xxxxxxxxxxxxxxx

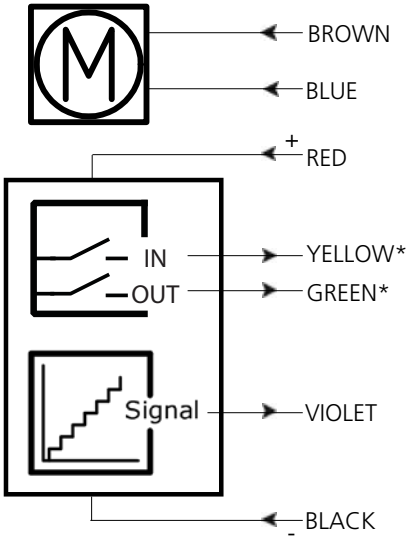


*YELLOW/GREEN:
Endstop signals out are NOT potential free!

If you wish to use the endstop signals, you will have to keep power on the brown, blue, red and black wires, otherwise the signal will be lost.

## Actuator with endstop signals and absolute positioning - Analogue feedback

## I/O specifications:

| Input/Output | Specification | Comments |
|---|---|---|
| Description | The actuator can be equipped with electronic circuit that gives an analogue feedback signal when the actuator moves.<br>See connection diagram, fig. 8, page 26 |  |
| Brown | 12, 24 or 36VDC (+/-)<br>12V ± 20%<br>24V ± 10%<br>36V ± 10% | To extend actuator:<br>Connect Brown to positive<br>To retract actuator:<br>Connect Brown to negative |
| Blue | Under normal conditions:<br>12V, max. 26A depending on load<br>24V, max. 13A depending on load<br>36V, max. 10A depending on load | To extend actuator:<br>Connect Blue to negative<br>To retract actuator:<br>Connect Blue to positive |
| Red | Signal power supply (+)<br>12-24VDC | Current consumption:<br>Max. 60mA, also when the actuator is not running |
| Black | Signal power supply GND (-) | |
| Green | Endstop signal out | Output voltage min. $V_{IN}$ - 2V<br>Source current max. 100mA<br>NOT potential free |
| Yellow | Endstop signal in | |
| Violet | Analogue feedback<br>0-10V (Option B)<br>0.5-4.5V (Option C) | Tolerances +/- 0.2V<br>Max. current output: 1mA<br>Ripple max. 200mV<br>Transaction delay 20ms<br>Linear feedback 0.5%<br>It is recommendable to have the actuator to activate its limit switches on a regular basis, to ensure more precise positioning |
| White | Not to be connected | |

## Actuator with absolute positioning - Mechanical potentiometer feedback

### Connection diagram:

Fig. 9 : 36xxxxx0P/1Pxxxxxx
36xxxxxxxP00xx-xxxxxxxxxxxxxxx

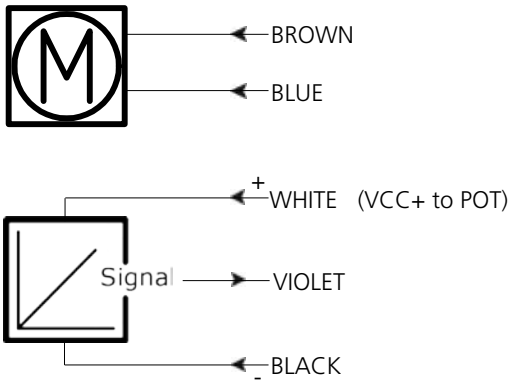

## Actuator with absolute positioning - Mechanical potentiometer feedback I/O specifications:

| Input/Output | Specification | Comments |
|---|---|---|
| Description | The actuator can be equipped with a mechanical potentiometer, 10 kohm.<br>See connection diagram, fig. 9, page 28 |  <br>Bourns 0-10 kohm, 5%, 10-Turn<br>Type: 3540 Wirewound |
| Brown | 12, 24 or 36VDC (+/-)<br>12V ± 20%<br>24V ± 10%<br>36V ± 10% | To extend actuator:<br>Connect Brown to positive<br>To retract actuator:<br>Connect Brown to negative |
| Blue | Under normal conditions:<br>12V, max. 26A depending on load<br>24V, max. 13A depending on load<br>36V, max. 10A depending on load | To extend actuator:<br>Connect Blue to negative<br>To retract actuator:<br>Connect Blue to positive |
| Red | Not to be connected | |
| Black | Signal power supply GND (-) | |
| Green | Not to be connected | |
| Yellow | Not to be connected | |
| Violet | Mechanical potentiometer output<br>Output range with 8mm spindle pitch:<br>0 kohm = 0mm stroke<br>10 kohm = 333mm stroke<br>Output range with 12mm spindle pitch:<br>0 kohm = 0mm stroke<br>10 kohm = 500mm stroke<br>Output range with 20mm spindle pitch:<br>0 kohm = 0mm stroke<br>10 kohm = 833mm stroke | +10V or other value<br>Output protection:<br>1 kohm protection resistor<br>Linearity: ± 0.25% |
| White | VCC+ to POT<br>10VDC or other values | |

Please note that Potentiometer is not possible on variants with fast gear (Spindle pitch 20mm, H Gear).

## Actuator with endstop signals and absolute positioning - Mechanical potentiometer feedback

## Connection diagram:

Fig. 10 : 36xxxxx2Pxxxxxx
36xxxxxxxP00xx-xxxxxxxxxxxxxxx

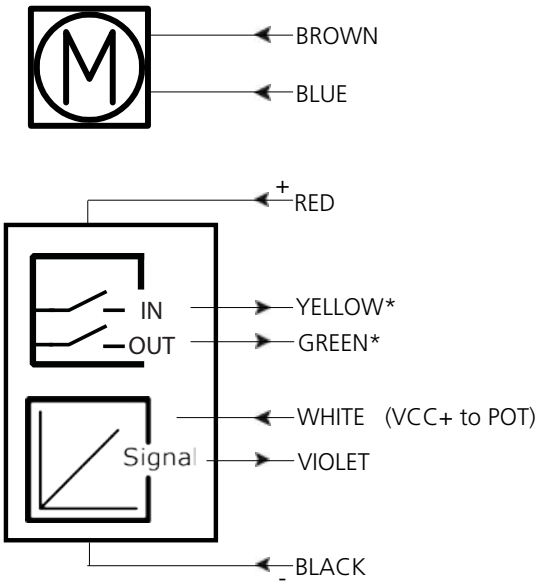


*YELLOW/GREEN:
Endstop signals out are NOT potential free!

If you wish to use the endstop signals, you will have to keep power on the brown, blue, red and black wires, otherwise the signal will be lost.

## Actuator with endstop signals and absolute positioning - Mechanical potentiometer feedback

## I/O specifications:

| Input/Output | Specification | Comments |
|---|---|---|
| Description | The actuator can be equipped with a mechanical potentiometer, 10 kohm.<br>See connection diagram, fig. 10, page 30 |  <br>Bourns 0-10 kohm, 5%, 10-Turn<br>Type: 3540 Wirewound |
| Brown | 12, 24 or 36VDC (+/-)<br>12V ± 20%<br>24V ± 10%<br>36V ± 10% | To extend actuator:<br>Connect Brown to positive<br>To retract actuator:<br>Connect Brown to negative |
| Blue | Under normal conditions:<br>12V, max. 26A depending on load<br>24V, max. 13A depending on load<br>36V, max. 10A depending on load | To extend actuator:<br>Connect Blue to negative<br>To retract actuator:<br>Connect Blue to positive |
| Red | Signal power supply (+)<br>12-24VDC | For endstop signals |
| Black | Signal power supply GND (-) | |
| Green | Endstop signal out | Output voltage min. $V_{IN}$ - 2V<br>Source current max. 100mA<br>NOT potential free |
| Yellow | Endstop signal in | |
| Violet | Mechanical potentiometer output<br>Output range with 8mm spindle pitch:<br>0 kohm = 0mm stroke<br>10 kohm = 333mm stroke<br>Output range with 12mm spindle pitch:<br>0 kohm = 0mm stroke<br>10 kohm = 500mm stroke<br>Output range with 20mm spindle pitch:<br>0 kohm = 0mm stroke<br>10 kohm = 833mm stroke | +10V or other value<br>Output protection:<br>1 kohm protection resistor<br>Linearity: ± 0.25% |
| White | VCC+ to POT<br>10VDC or other values | |

Please note that Potentiometer is not possible on variants with fast gear (Spindle pitch 20mm, H Gear).

## Actuator with absolute positioning - PWM

## Connection diagram:

Fig. 11 : 36xxxxx15/16xxxxxx
36xxxxxxxF00xx-xxxxxxxxxxxxxxx

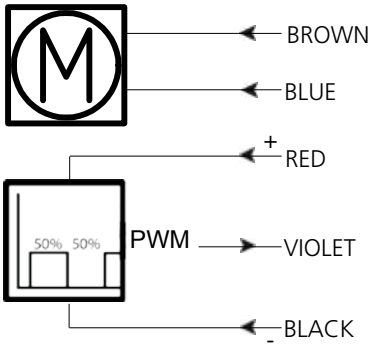

## Actuator with absolute positioning - PWM
## I/O specifications:

| Input/Output | Specification | Comments |
|---|---|---|
| Description | The actuator can be equipped with electronic circuit that gives an analogue feedback signal when the actuator moves.<br>See connection diagram, fig. 11, page 32 |  |
| Brown | 12, 24 or 36VDC (+/-)<br>12V ± 20%<br>24V ± 10%<br>36V ± 10% | To extend actuator:<br>Connect Brown to positive<br>To retract actuator:<br>Connect Brown to negative |
| Blue | Under normal conditions:<br>12V, max. 26A depending on load<br>24V, max. 13A depending on load<br>36V, max. 10A depending on load | To extend actuator:<br>Connect Blue to negative<br>To retract actuator:<br>Connect Blue to positive |
| Red | Signal power supply (+)<br>12-24VDC | Current consumption:<br>Max. 60mA, also when the actuator is not running |
| Black | Signal power supply GND (-) | |
| Green | Not to be connected | |
| Yellow | Not to be connected | |
| Violet | Digital output feedback (PNP)<br>10-90% (Option 5)<br>20-80% (Option 6) | Output voltage min. $V_{IN}$ - 2V<br>Tolerances +/- 2%<br>Max. current output: 12mA<br>Frequency: 75Hz<br>It is recommendable to have the actuator to activate its limit switches on a regular basis, to ensure more precise positioning |
| White | Not to be connected | |

## Actuator with endstop signals and absolute positioning - PWM

## Connection diagram:

Fig. 12 : 36xxxxx25/26xxxxxx
36xxxxxxxF00xx-xxxxxxxxxxxxxxx

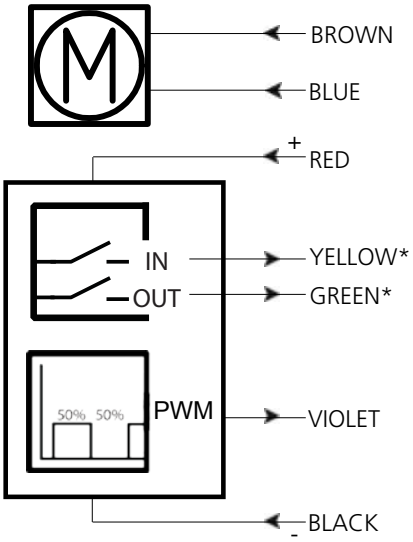


*YELLOW/GREEN:
Endstop signals out are NOT potential free!

If you wish to use the endstop signals, you will have to keep power on the brown, blue, red and black wires, otherwise the signal will be lost.

## Actuator with endstop signals and absolute positioning - PWM
## I/O specifications:

| Input/Output | Specification | Comments |
|---|---|---|
| Description | The actuator can be equipped with electronic circuit that gives an analogue feedback signal when the actuator moves.<br>See connection diagram, fig. 12, page 34 | 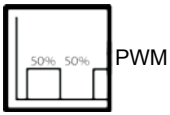 |
| Brown | 12, 24 or 36VDC (+/-)<br>12V ± 20%<br>24V ± 10%<br>36V ± 10% | To extend actuator:<br>Connect Brown to positive<br>To retract actuator:<br>Connect Brown to negative |
| Blue | Under normal conditions:<br>12V, max. 26A depending on load<br>24V, max. 13A depending on load<br>36V, max. 10A depending on load | To extend actuator:<br>Connect Blue to negative<br>To retract actuator:<br>Connect Blue to positive |
| Red | Signal power supply (+)<br>12-24VDC | Current consumption:<br>Max. 60mA, also when the actuator is not running |
| Black | Signal power supply GND (-) | |
| Green | Endstop signal out | Output voltage min. $V_{IN}$ - 2V<br>Source current max. 100mA<br>NOT potential free |
| Yellow | Endstop signal in | |
| Violet | Digital output feedback (PNP)<br>10-90% (Option 5)<br>20-80% (Option 6) | Output voltage min. $V_{IN}$ - 2V Tolerances +/- 2%<br>Max. current output: 12mA<br>Frequency: 75Hz<br>It is recommendable to have the actuator to activate its limit switches on a regular basis, to ensure more precise positioning |
| White | Not to be connected | |

## Actuator with IC Basic

## Connection diagram:

Fig. 13 : 36xxxxx7xxxxxxx
36xxxxxxxx03xx-xxxxxxxxxxxxxxx

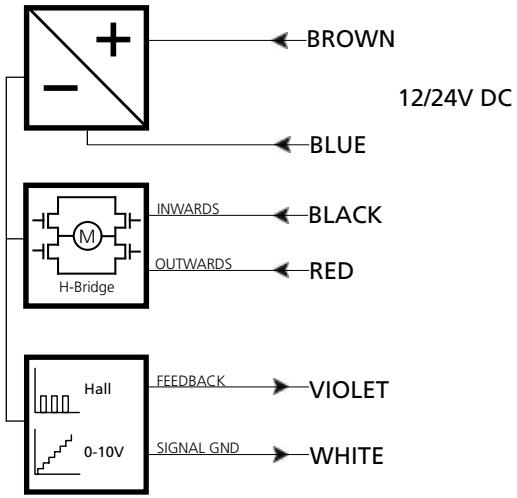


Please be aware that if the power supply is not properly connected, you might damage the actuator!

## Actuator with IC Basic
## I/O specifications:

| Input/Output | Specification | Comments |
|---|---|---|
| Description | Easy to use interface with integrated power electronics (H-bridge).<br>The actuator can also be equipped with electronic circuit that gives an absolute or relative feedback signal.<br>The version with "IC option" cannot be operated with PWM (power supply).<br>See connection diagram, fig. 13, page 36 | 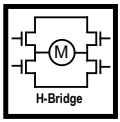 |
| Brown | 12-24VDC + (VCC)<br>Connect Brown to positive<br>12V ± 20%<br>24V ± 10%<br>12V, current limit 30A<br>24V, current limit 20A | Note: Do not change the power supply polarity on the brown and blue wires!<br>Power supply GND (-) is electrically connected to the housing<br>If the temperature drops below 0°C, all current limits will automatically increase to 30A |
| Blue | 12-24VDC - (GND)<br>Connect Blue to negative<br>12V ± 20%<br>24V ± 10%<br>12V, current limit 30A<br>24V, current limit 20A | |
| Red | Extends the actuator | On/off voltages:<br>> 67% of $V_{IN}$ = ON<br>< 33% of $V_{IN}$ = OFF<br>Input current: 10mA |
| Black | Retracts the actuator | |
| Green | Not to be connected | |
| Yellow | Not to be connected | |

## Actuator with IC Basic
## I/O specifications:

| Input/Output | Specification | Comments |
|---|---|---|
| Violet | Analogue feedback<br>0-10V (Option 7.2) | Standby power consumption:<br>12V, 60mA<br>24V, 45 mA<br>Ripple max. 200mV<br>Transaction delay 20ms<br>Linear feedback 0.5%<br>Max. current output: 1mA<br>It is recommendable to have the actuator to activate its limit switches on a regular basis, to ensure more precise positioning |
| | Single Hall output (PNP) (Option 7.1) | Output voltage min. $V_{IN}$ - 2V<br>Max. current output: 12mA<br>For more information see fig. 5.1, page 21 |
| White | Signal GND | For correct wiring of power GND and Signal GND see page 42 |

## Actuator with IC Advanced - with BusLink

## Connection diagram:

Fig. 14 : 36xxxxx8xxxxxxx
36xxxxxxxx03xx-xxxxxxxxxxxxxxx

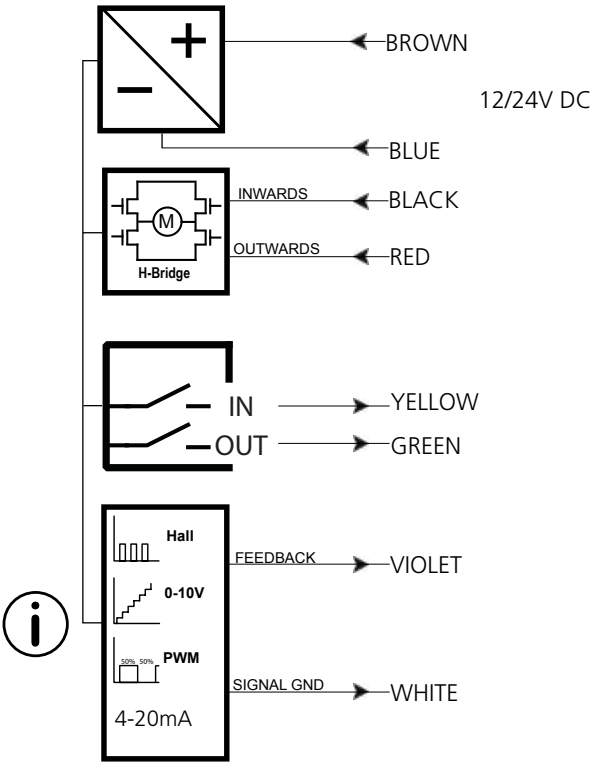


Please be aware that if the power supply is not properly connected, you might damage the actuator!

**BusLink is available for IC Advanced and can be used for:**
Diagnostics, manual run and configuration

Download BusLink software here: **http://www.linak.com/techline/?id3=2363**

For more information and easy set-up of BusLink, please follow this link to view the Quick Guide for BusLink: **http://www.linak.com/techline/?id3=2356**

## Actuator with IC Advanced - with BusLink
## I/O specifications:

| Input/Output | Specification | Comments |
|---|---|---|
| Description | Easy to use interface with integrated power electronics (H-bridge).<br>The actuator can also be equipped with electronic circuit that gives an absolute or relative feedback signal. IC Advanced provides a wide range of possibilities for customisation.<br>The version with "IC option" cannot be operated with PWM (power supply).<br>See connection diagram, fig. 14, page 39 | 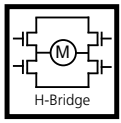 |
| Brown | 12-24VDC + (VCC)<br>Connect Brown to positive<br>12V ± 20%<br>24V ± 10%<br>12V, current limit 30A<br>24V, current limit 20A | Note: Do not change the power supply polarity on the brown and blue wires!<br>Power supply GND (-) is electrically connected to the housing<br>Current limit levels can be adjusted through BusLink<br>If the temperature drops below 0°C, all current limits will automatically increase to 30A |
| Blue | 12-24VDC - (GND)<br>Connect Blue to negative<br>12V ± 20%<br>24V ± 10%<br>12V, current limit 30A<br>24V, current limit 20A | |
| Red | Extends the actuator | On/off voltages:<br>> 67% of $V_{IN}$ = ON<br>< 33% of $V_{IN}$ = OFF<br>Input current: 10mA |
| Black | Retracts the actuator | |
| Green | Endstop signal out | Output voltage min. $V_{IN}$ - 2V<br>Source current max. 100mA<br>Endstop signals are NOT potential free. Endstop signals can be configured with BusLink software according to any position needed.<br>Before configuring virtual endstop, an absolute feedback type must be chosen. Only use one virtual endstop - keep one end open for initialisation. (See I/O specifications for endstop on page 15) |
| Yellow | Endstop signal in | |

## Actuator with IC Advanced - with BusLink
## I/O specifications:

| Input/Output | Specification | Comments |
|---|---|---|
| Violet | Analogue feedback (0-10V): Configure any high/low combination between 0-10V | Ripple max. 200mV<br>Transaction delay 20ms<br>Linear feedback 0.5%<br>Max. current output. 1mA |
| | Single Hall output (PNP) | Output voltage min. $V_{IN}$ - 2V<br>Max. current output: 12mA<br>Please be aware that when choosing single hall, feedback position readout and virtual endstops are not available in BusLink.<br>For more information, see fig. 6.1, page 23 |
| | Digital output feedback PWM: Configure any high/low combination between 0-100% | Output voltage min. $V_{IN}$ - 2V<br>Frequency: 75Hz ± 10Hz as standard, but this can be customised.<br>Duty cycle: Any low/high combination between 0 and 100 percent.<br>Open drain source current max. 12mA |
| | Analogue feedback (4-20mA): Configure any high/low combination between 4-20mA | Tolerances ± 0.2mA<br>Transaction delay 20ms<br>Linear feedback 0.5%<br>Output: Source<br>Serial resistance:<br>12V max. 300 ohm<br>24V max. 900 ohm |
| | All absolute value feedbacks (0-10V, PWM and 4-20mA) | Standby power consumption:<br>12V, 60mA<br>24V, 45mA<br>It is recommendable to have the actuator to activate its limit switches on a regular basis, to ensure more precise positioning |
| White | Signal GND | For correct wiring of power GND and Signal GND see page 42 |

Please note that the BusLink cables must be purchased separately from the actuator!

Item number for BusLink cables: 0367999

## Correct wiring of Power GND and Signal GND for IC Basic and IC Advanced

When using the feedback output, it is important to use the right connection setup. Attention should be paid to the two ground connections. Power GND in the Power connector and Signal GND in the Control connector. When using either 0-10V, Hall or PWM feedback, the Signal GND must be used. For optimal accuracy, the Signal GND is connected to the Power GND as close as possible to the feedback input equipment.

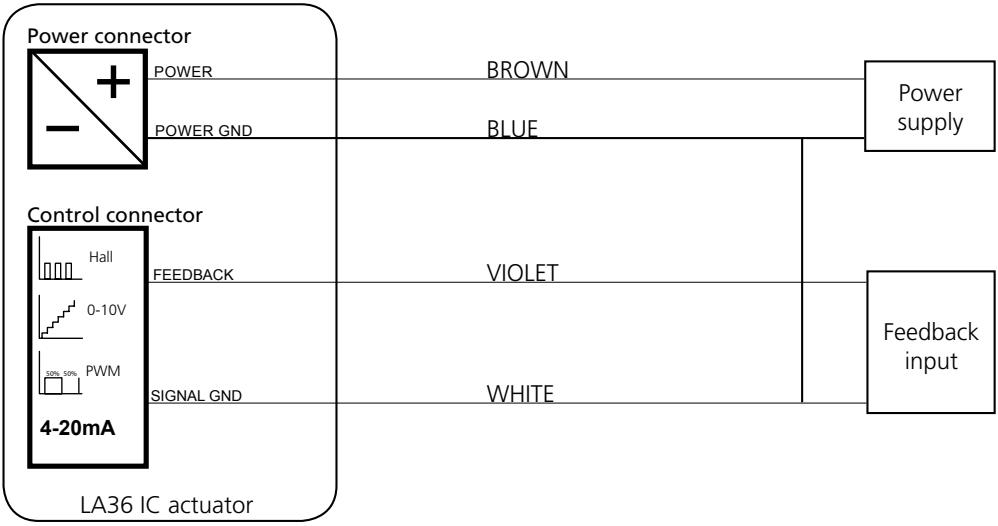


Please note that this section only applies for the following feedback options: 0-10V, Hall and PWM.

## Actuator with Parallel

## Connection diagram:

Fig. 15 : 36xxxxx9xxxxxxx
36xxxxxxxx03xx-xxxxxxxxxxxxxxx

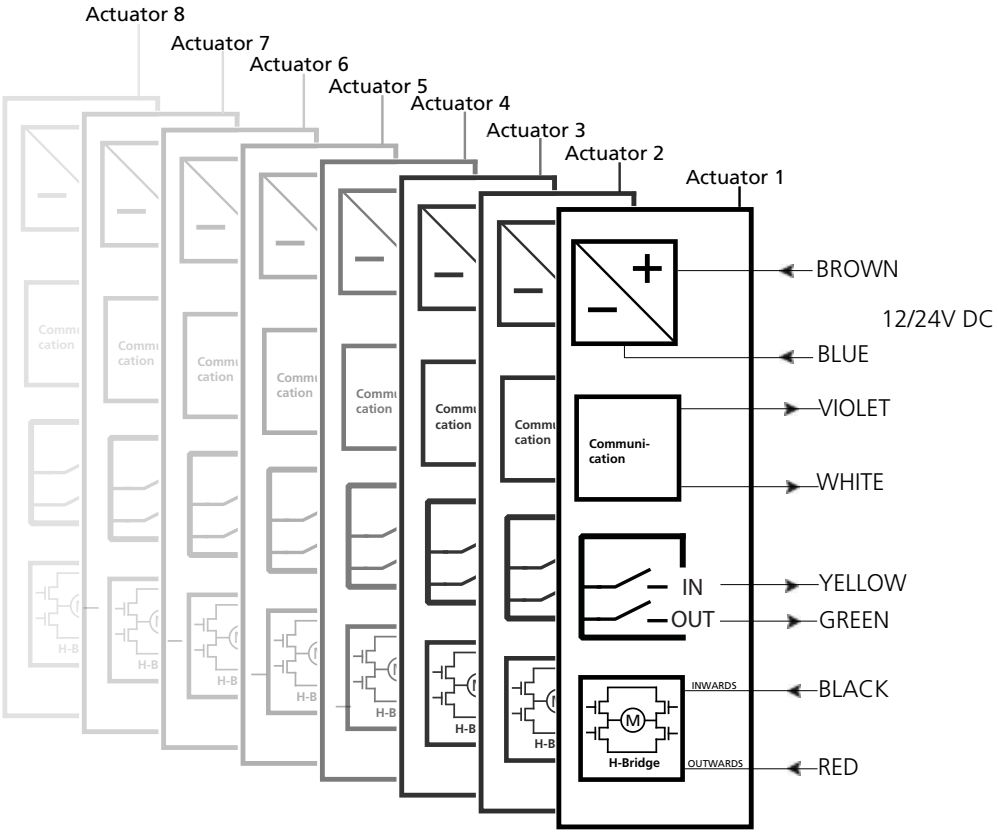


- Please be aware that if the power supply is not properly connected, you might damage the actuator!
- The green and yellow wires from parallel connected actuators must NOT be interconnected. (See I/O specifications for endstop on page 15).

## Actuator with Parallel I/O specifications:

| Input/Output | Specification | Comments |
|---|---|---|
| Description | Parallel drive of up to 8 actuators. A master actuator with an integrated H-bridge controller controls up to 7 slaves.<br>The version with "IC option" cannot be operated with PWM (power supply).<br>See connection diagram, fig. 15, page 43 | 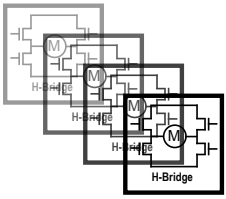 |
| Brown | 12-24VDC + (VCC)<br>Connect Brown to positive<br>12V ± 20%<br>24V ± 10%<br>12V, current limit 30A<br>24V, current limit 20A | Note: Do not change the power supply polarity on the brown and blue wires!<br>The parallel actuators can run on one OR separate power supplies<br>Power supply GND (-) is electrically connected to the housing<br>Current limit levels can be adjusted through BusLink (only one actuator at a time for parallel)<br>If the temperature drops below 0°C, all current limits will automatically increase to 30A |
| Blue | 12-24VDC - (GND)<br>Connect Blue to negative<br>12V ± 20%<br>24V ± 10%<br>12V, current limit 30A<br>24V, current limit 20A | |
| Red | Extends the actuator | On/off voltages:<br>> 67% of $V_{IN}$ = ON<br>< 33% of $V_{IN}$ = OFF<br>Input current: 10mA<br>It does not matter where the in/out signals are applied. You can either choose to connect the signal cable to one actuator OR you can choose to connect the signal cable to each actuator on the line. Either way this will ensure parallel drive |
| Black | Retracts the actuator | |

## Actuator with Parallel I/O specifications:

| Input/Output | Specification | Comments |
|---|---|---|
| Green | Endstop signal out | Output voltage min. $V_{IN}$ - 2V<br>Source current max. 100mA<br>NOT potential free |
| Yellow | Endstop signal in | |
| Violet | Parallel communication:<br>Violet cords must be connected together | Standby power consumption:<br>12V, 60mA<br>24V, 45mA<br>No feedback available during parallel drive |
| White | Signal GND:<br>White cords must be connected together | For correct wiring of power GND and Signal GND see page 42 |

## The parallel system

The parallel drive function will support a number of actuators working jointly.

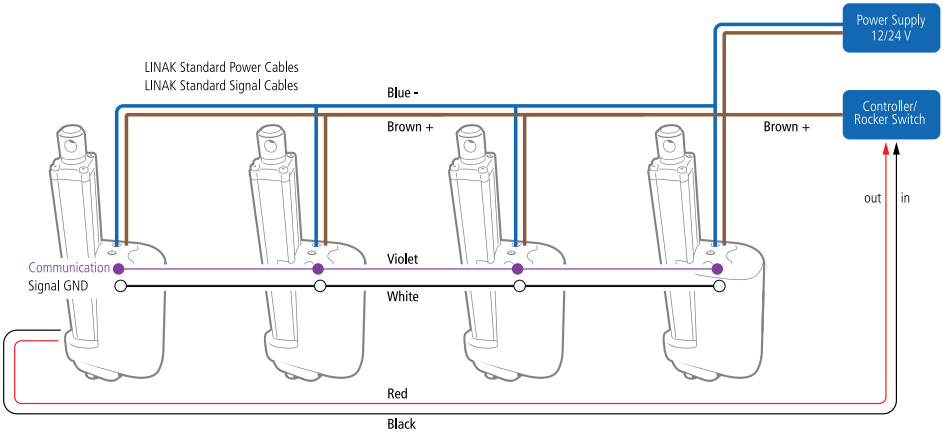


It is both possible to run parallel with a single power supply, or to run each actuator with separate power supplies.

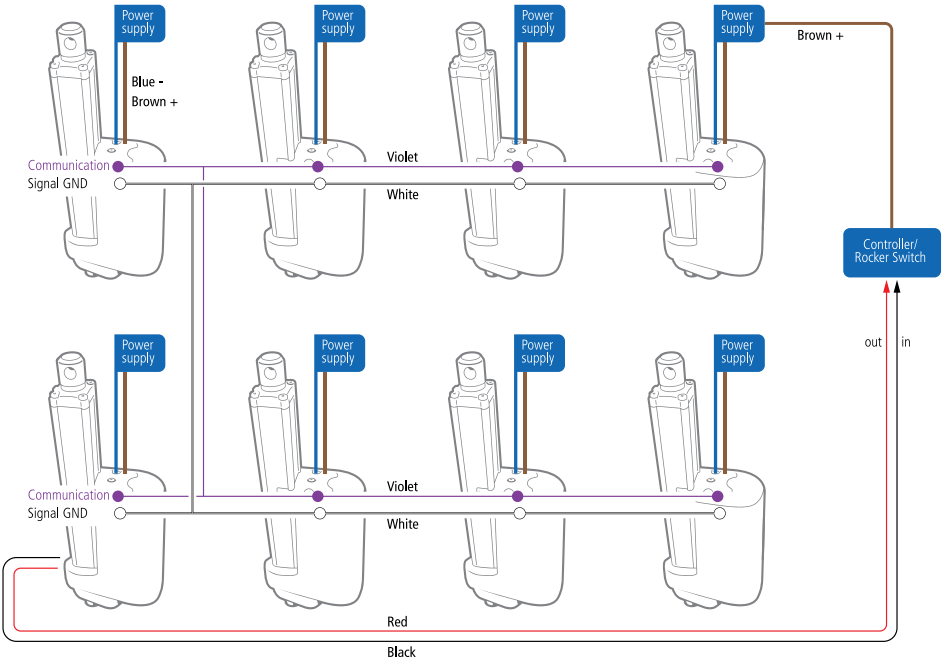


Only standard power and signal cables are available for parallel.

## The parallel system

- It does not matter where the IN/OUT signal is applied. The signals of all actuators can be connected together
- When all actuators are connected, a Master will automatically be chosen. E.g. with 5 actuators in one system there will be 1 Master and 4 Slaves. The Master can control up to 7 slaves
- If an overload occurs, the running of the actuators will be stopped and blocked in that direction until an activation in the opposite direction has been made, or the system has been re-powered
- Before entering BusLink mode, all actuators must be disconnected. It is only possible to configure one actuator at a time through BusLink
- When changing the actuator configuration, it is important that all actuators in the system have the same configuration before the system starts running. Otherwise, the actuators will not run
- Actuators will be pre-programmed from our production as 2, 3, 4, 5.. etc. parallel systems. Through BusLink it will be possible to add or remove actuators to/from the system
- In case one of the actuators are broken, the system will not move; not even after re-powering. The broken actuator needs to be replaced, before the system can run again. The system will only run, when it is complete

**BusLink is available for Parallel**

- BusLink can be used for configuration and diagnostics
- Service counter is available with Parallel

Download BusLink software here: **http://www.linak.com/techline/?id3=2363**

For more information and easy set-up of BusLink, please follow this link to view the Quick Guide for BusLink: **http://www.linak.com/techline/?id3=2356**



Please note that the BusLink cables must be purchased separately from the actuator!
Item number for BusLink cables: 0367999

## System Monitoring for Parallel

If one of the actuators have one of the following error conditions, the actuator will immediately STOP:

- H-Bridge fault
- Out of the temperature range (High duty cycle protection)
- Overcurrent (Current cut-off if one or all actuators go in mechanical block)
- SMPS fault
- EOS fault switch
- Hall sensor failure
- Position lost
- Overvoltage (43V DC)

## Alignment of the parallel actuator system

If the actuators are not in  parallel when starting up, the next movement will run in the following manner:

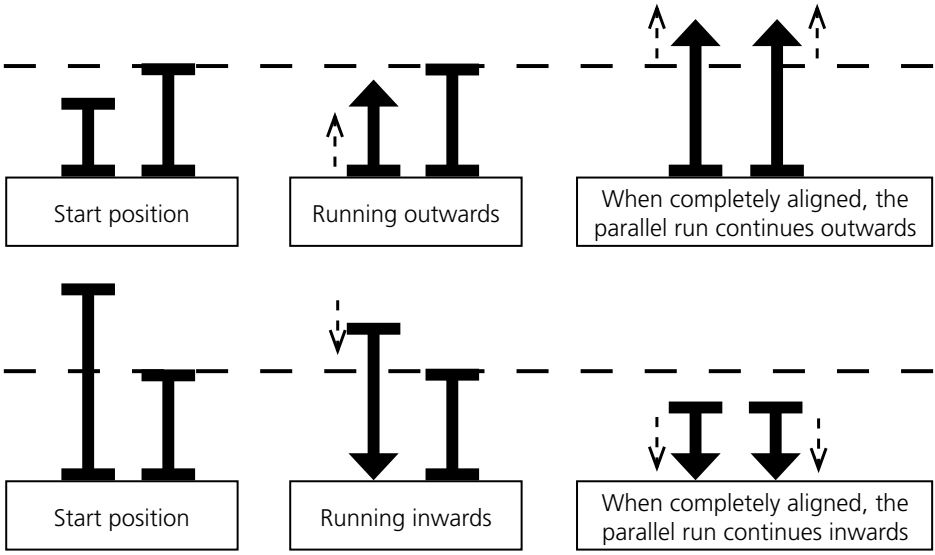

## Parallel manual service mode

With the parallel manual service mode it is possible to drive one or more parallel actuators separately, using the red and black wire from each actuator.

Please follow this procedure to manually extend/retract the parallel actuator(s):

| | Procedure | Min. | Max. |
|---|---|---|---|
| **First step** | Disconnect the Purple and White wires between all actuators | - | - |
| **Hold** | Put power on the Red and Black wires for 10-30 seconds | 10 sec. | 30 sec. |
| **Difference** | The Red and Black wires must all be connected to the power supply within 0.5 seconds | 0 sec. | 0.5 sec. |
| **Release** | Disconnect all wires and wait 0.5-2 seconds before the next step | 0.5 sec. | 2 sec. |
| **Extend/Retract** | Now choose either to extend or retract the actuator:<br>To extend the actuator: Connect only the Red wire(s) to the power supply<br>To retract the actuator: Connect only the Black wire(s) to the power supply | - | - |
| **Interval** | Switch between running in/out as much as needed, without exceeding the 2.0 seconds interval between disconnecting/connecting the Red and Black wires | - | 2 sec. |
| **End** | To exit the parallel manual mode, diconnect the Red and Black wires for more than 2.0 seconds | 2 sec. | - |
| **Back to parallel mode** | Before running in standard parallel mode, reconnect all Purple and White wires | - | - |

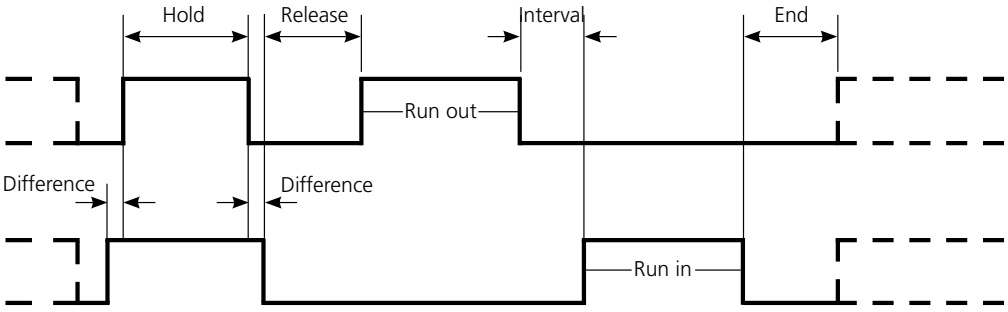

# Chapter 3

## Troubleshooting

| Symptom | Possible cause | Action |
|---|---|---|
| No motor sound or movement of piston rod | The actuator is not properly connected to the power supply<br>Customer fuse burned<br>Cable damaged | • Check the connection to the power supply or the external control unit (if any)<br>To extend actuator:<br>Connect Brown to positive and Blue to negative<br>To retract actuator:<br>Connect Brown to negative and Blue to positive<br>• Change cable |
| | **IC:**<br>Wrongly connected:<br>+ Brown, - Blue<br>Signal required for moving outwards: + VCC -> RED Wire<br>Signal required for moving inwards: + VCC -> Black Wire | • Check wire connection (Red/ Black) on control unit<br>• Please contact LINAK |
| Excessive electricity Consumption | Misalignment or overload in application | • Align or reduce load<br>• Try to run the actuator without load<br>• Please contact LINAK |
| Motor runs but spindle does not move | Gearing system or spindle damaged | • Please contact LINAK |
| Actuator cannot lift full load | Clutch is worn<br>Motor is damaged<br>Insufficient power supply<br>**IC:** Current cut off (overload in application) | • Align or reduce load<br>• Check power supply<br>**For IC advanced and Parallel only:** Connect actuator to BusLink and check the current parameters (inwards/outwards)<br>• Please contact LINAK |

## Troubleshooting

| Symptom | Possible cause | Action |
|---|---|---|
| No signal from Feedback | Wrongly Connected:<br>Violet: Signal out<br>White: Signal GND<br>Yellow: Endstop In<br>Green: Endstop Out | • Check wiring |
| | Cable damaged<br>Bad connection<br>Potentiometer damaged<br>Hall sensor or magnet damaged | • Change cable |
| | **For IC Advanced only:** Check Feedback option - connect to BusLink | **For IC Advanced only:** Connect actuator to BusLink and check current parameters.<br>Initialise the actuator in both directions<br>• Please contact LINAK |
| Motor runs too slowly or does not run with full force | Load is higher than specified<br>Voltage drop in cable (Use of long cables can negatively affect the performance of the actuator) | • Reduce load |
| Motor runs in smaller steps | Insufficient power supply | • Check power supply |
| | **IC:** Current Cut-off | **IC:** Connect actuator to BusLink and check current parameters (reason for last stop).<br>For more info, please see page 53 |
| Actuator(s) cannot hold the chosen load | Load is higher than specified | • Reduce load |

## Troubleshooting for Parallel

| Symptom | Possible cause | Action |
|---|---|---|
| No actuators in movement | Power supply | • Check power supply source and power connections:<br>Brown +<br>Blue -<br>**Please be aware that if the power supply is not properly connected, you might damage the actuator** |
| | Signal connections | • Check parallel communications:<br>Violet = Communication<br>Violet cords must be connected together<br>White = Signal GND<br>White cords must be connected together |
| | Signal required for moving outwards: + VCC (Red wire)<br>Signal required for moving inwards: + VCC (Black wire) | • Check wire connection (Red/ Black) on control unit |
| | • Put power on all actuators at the same time, after everything is connected. Then wait 10 seconds before signals for moving In/Out are activated | |
| Actuator(s) cannot lift full load | Load is higher than specified | • Reduce load<br>• Check for sufficient power supply current<br>• Connect actuator via BusLink one at the time and check monitoring for each actuator (reason for last stop) |
| Short movements before stops | Actuator NOT connected properly<br>Violet = Parallel communication<br>White = Signal GND | • Check wire connection (Violet/ White)<br>• If OK - Connect actuators via BusLink one at the time and check monitoring for each actuator (reason for last stop).<br>For more info, please see page 53 |

## Troubleshooting for Parallel

| Symptom | Possible cause | Action |
|---|---|---|
| Signal cable damaged or removed under operation | All actuators stop at the same position | • When seeing a communication error, the system goes into 'position lost'<br>• The signal and power cables MUST be connected to all actuators again<br>• Afterwards, the Parallel system needs re-powering<br>• If one actuator is missing, the system will not work, not even after re-powering |
| BusLink monitoring: Reason for last stop | H-bridge fault<br>SMPS fault | • Please contact your local supplier for further instructions |
| | Overcurrent | • The Parallel system cannot continue in the same direction<br>• Reactivation is needed in the opposite direction |
| | EOS OUT error<br>EOS IN error | • The Parallel system stops at the same time. When seeing an EOS error, the actuator goes into 'position lost', and the system will need initialisation (to initialise, move the actuators into fully retracted position) |
| | Hall error | • The system stops at the same position. When seeing hall error, the actuator goes into 'position lost', and the system will need initialisation (to initialise, move the actuators into fully retracted position) |
| | Out of range temperature for ambient location<br>Out of range temperature at FET location<br>The above can be due to high environment temperature or high duty cycle | • The error causes the actuators to stop. After elimination of the error (cooling down) and reactivation of the movement, the actuators will move normally<br>• This may not be used for stop of the system |

## Troubleshooting for Parallel

| Symptom | Possible cause | Action |
|---|---|---|
| BusLink monitoring: Reason for last stop | Overvoltage | • When seeing overvoltage, the system stops at the same time. The system needs re-powering and In/Out signals must be removed before next movement |
| | Undervoltage | • When seeing undervoltage, the system stops at the same time. The system needs re-powering and In/Out signals must be removed before next movement |

For more information and easy set-up of BusLink, please follow this link to view the Quick Guide for BusLink: **http://www.linak.com/techline/?id3=2356**

Be aware of Modbus actuator - please see the Modbus installation guide: **http://www.linak.com/techline/?id3=2363**

# Chapter 4

## Specifications

| | |
|---|---|
| Motor: | Permanent magnet motor 12, 24, or 36V * |
| Cable: | Motor: 2 x 14 AWG PVC cable<br>Control: 6 x 20 AWG PVC cable ** |
| Gear ratio: | 6 different gear ratios available in steel<br>(500 N, 1,700/2,600 N, 4,500 N, and 6,800/10,000 N) |
| Slip clutch: | Mechanical overload protection through an integrated slip clutch |
| Brake: | Integrated brake ensures a high self-locking ability. The brake is deactivated when the actuator is powered to obtain a high efficiency |
| Hand crank: | As a standard feature the actuator can be operated manually |
| Housing: | The housing is made of casted aluminium, coated for outdoor use and in harsh conditions |
| Spindle part: | Outer tube: Extruded aluminium anodised<br>Inner tube: Stainless steel AISI304/SS2333<br>Acme spindle: Trapezoidal spindle with high efficiency |
| Temperature range: | - 30° C to +65° C<br>- 22° F to +150° F<br>Full performance +5° C to +40° C |
| End play: | 2 mm maximum |
| Weather protection: | Rated IP66 for outdoor use. Furthermore, the actuator can be washed down with a high-pressure cleaner (IP69K) |

**Usage:**

- The duty cycle at max. load is 20% on time. This means if the actuator runs continuously for 20 seconds it must remain off for 80 seconds before operating again.
  NB. At 10,000 N only 5%
- Storage temperature: -55° C to +105° C
- **Safety device regarding functional failure:**

  Safety nut
  The LA36 has a built-in safety nut in push as an option. Actuators with safety nut in push can only function when used in push applications. The safety nut comes into operation should the main nut fail. Afterwards it is only possible to drive the actuator into the innermost position. Thereafter, the actuator will not function any more and must be sent for service

  Mechanical endstop
  LA36 is equipped with mechanical endstop

* Modbus actuators only 24V - please see the Modbus installation guide:
**http://www.linak.com/techline/?id3=2363**

** Special control cabels for the Modbus actuator - please see the Modbus installation guide:
**http://www.linak.com/techline/?id3=2363**

## Actuator dimensions

## TECHLINE® LA36:

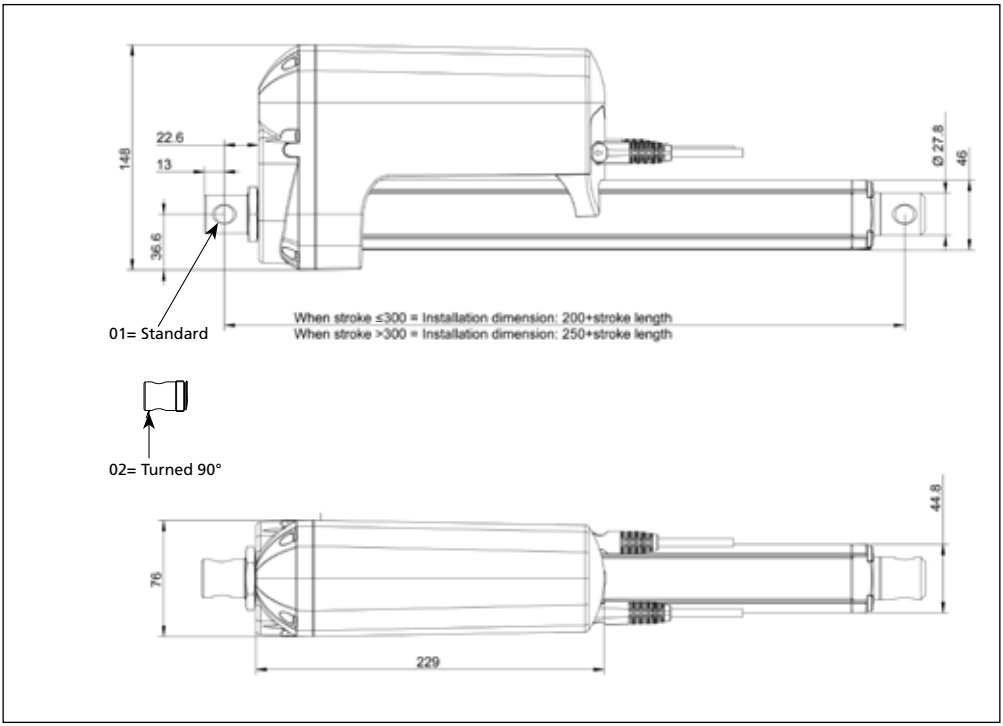

## Built-in dimensions

| Piston rod | "0" /from the surface | | "1" / to the centre of the hole | | "2A" / to the centre of the hole | | "3" / from the surface | |
|---|---|---|---|---|---|---|---|---|
| Back fixture | Stroke <=300 Stroke > 300 | | Stroke <=300 Stroke > 300 | | Stroke <=300 Stroke > 300 | | Stroke <=300 Stroke > 300 | |
| "0" / from the surface | 189 | 239 | 194 | 244 | 194 | 244 | 181 | 231 |
| "1" and "2" / to the centre of the hole | 195 | 245 | 200 | 250 | 200 | 250 | 187 | 237 |
| "3" and "4" / to the centre of the hole | 195 | 245 | 200 | 250 | 200 | 250 | 187 | 237 |
| "5" / from the surface | 180 | 230 | 185 | 235 | 185 | 235 | 173 | 223 |
| "6" / from the surface | 180 | 230 | 185 | 235 | 185 | 235 | 173 | 223 |
| "7" and "8" / to the centre of the hole | 195 | 245 | 200 | 250 | 200 | 250 | 187 | 237 |
| "A" and "B" / to the centre of the hole | 195 | 245 | 200 | 250 | 200 | 250 | 187 | 237 |
| "C" and "D" / to the centre of the hole | 195 | 245 | 200 | 250 | 200 | 250 | 187 | 237 |

| Piston rod | "4" /from the surface | | "5" / to the centre of the hole | | "C" / to the centre of the hole | | "D" / from the surface | |
|---|---|---|---|---|---|---|---|---|
| Back fixture | Stroke <=300 Stroke > 300 | | Stroke <=300 Stroke > 300 | | Stroke <=300 Stroke > 300 | | Stroke <=300 Stroke > 300 | |
| "0" / from the surface | 181 | 231 | 194 | 244 | 209 | 259 | 209 | 259 |
| "1" and "2" / to the centre of the hole | 187 | 237 | 200 | 250 | 215 | 265 | 215 | 265 |
| "3" and "4" / to the centre of the hole | 187 | 237 | 200 | 250 | 215 | 265 | 215 | 265 |
| "5" / from the surface | 172 | 222 | 185 | 235 | 200 | 250 | 200 | 250 |
| "6" / from the surface | 172* | 222* | 185 | 235 | 200 | 250 | 200 | 250 |
| "7" and "8" / to the centre of the hole | 187 | 237 | 200 | 250 | 215 | 265 | 215 | 265 |
| "A" and "B" / to the centre of the hole | 187 | 237 | 200 | 250 | 215 | 265 | 215 | 265 |
| "C" and "D" / to the centre of the hole | 187 | 237 | 200 | 250 | 215 | 265 | 215 | 265 |

* These built-in dimensions are measured according to the illustration below.

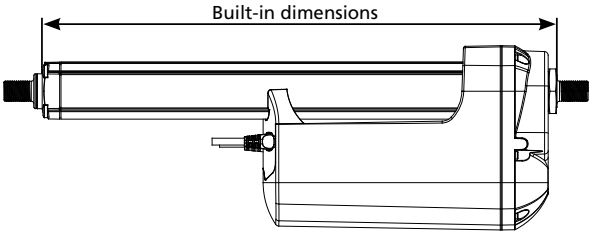

## Manual Hand Crank

The manual hand crank can be used in the case of power failure.




**The cover over the Allen key socket must be unscrewed before the Allen key can be inserted and the hand crank operated.**

**Hand Crank Torque:** 6 - 8 Nm
**Hand Crank rpm:** Max. 65

**Piston rod movement per turn, app.:**

| | 8 mm | 12 mm | 20 mm |
|---|---|---|---|
| Gear A | - | 11 mm | 18 mm |
| Gear B | - | 6 mm | 10 mm |
| Gear C | 3 mm | 4 mm | 7 mm |
| Gear F | - | - | 27 mm |

- The power supply has to be disconnected during manual operation
- If the actuator is operated as a Hand crank, it must only be operated by hand, otherwise there is a potential risk of overloading and hereby damaging the actuator.

## Speed and current curves - 12V motor

The values below are typical values and made with a stable power supply and an ambient temperature of 20°C.

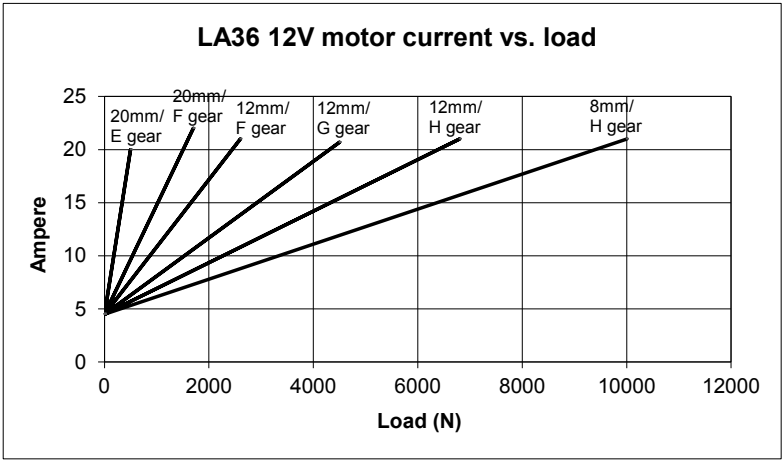


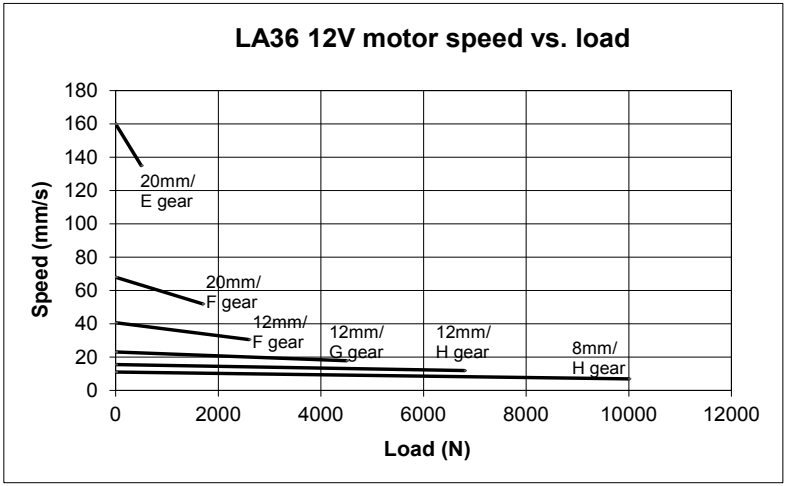


All measurements above describe the spindle pitch (e.g. 20mm) and the gear type (e.g. E gear) of the actuator.

Speed and current are based on a nominal power supply of 12, 24, 36VDC.

## Speed and current curves - 24V motor

The values below are typical values and made with a stable power supply and an ambient temperature of 20˚C.

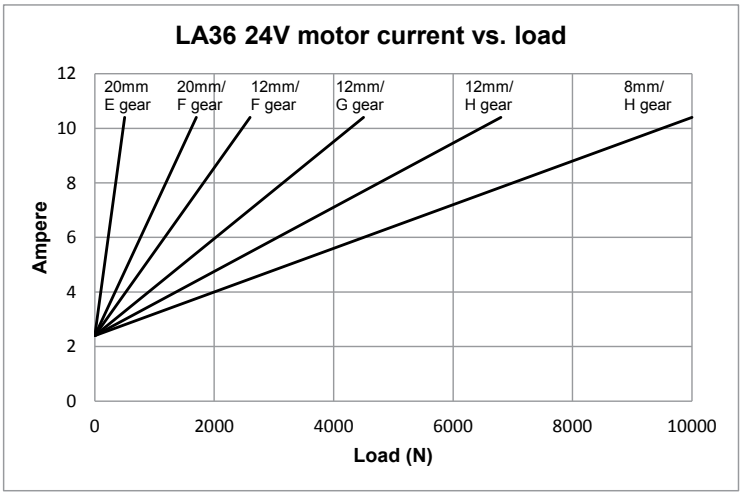


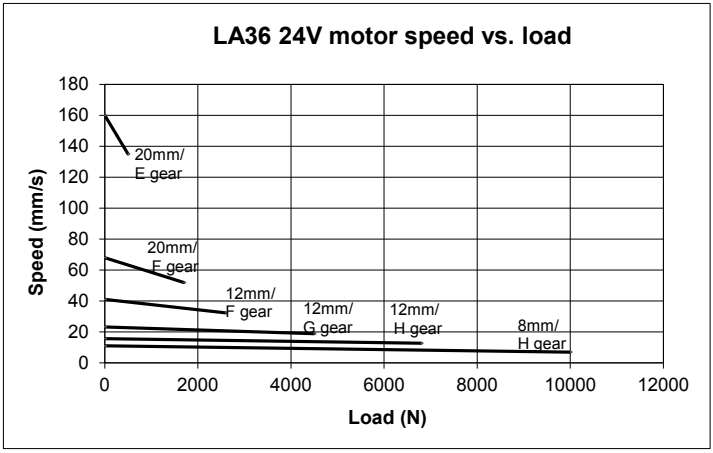


All measurements above describe the spindle pitch (e.g. 20mm) and the gear type (e.g. E gear) of the actuator.

Speed and current are based on a nominal power supply of 12, 24, 36VDC.

## Speed and current curves - 36V motor

The values below are typical values and made with a stable power supply and an ambient temperature of 20˚C.

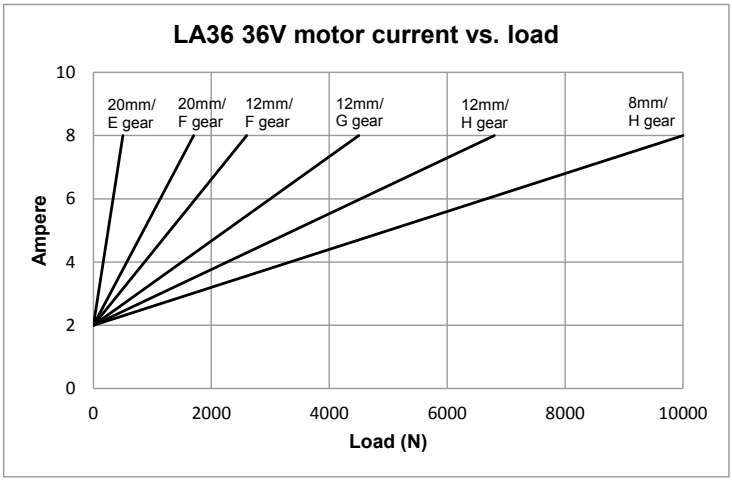


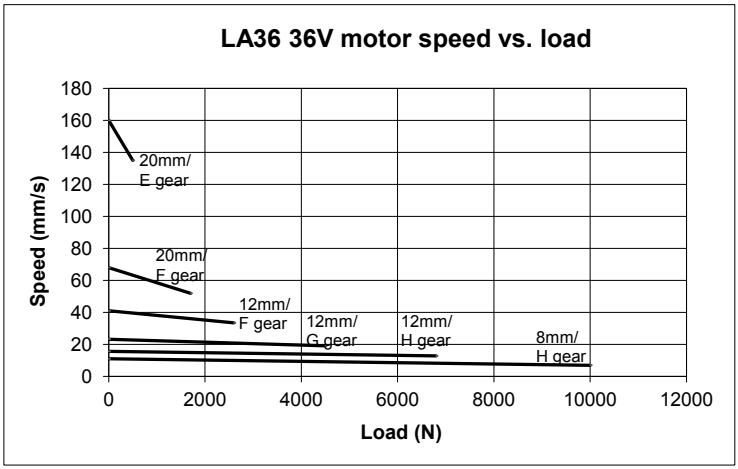


All measurements above describe the spindle pitch (e.g. 20mm) and the gear type (e.g. E gear) of the actuator.

Speed and current are based on a nominal power supply of 12, 24, 36VDC.

## Label for LA36




1. **Type: 36120250A001BA-646G304500X0000**
   Describes the basic functionality of the product
2. **Item no.: J06292**
   Sales and ordering code
3. **Prod. Date: YYYY.MM.DD**
   Production date describes when the product has been produced. This date is the reference for warranty claims
4. **Max Load: Push 4500N / Pull 4500N IP66**
   Describes the maximum load that the product can be exposed to in compression and tension. This line also contains a reference to the product's IP protection degree
5. **Power Rate: 24VDC / Max. 13 Amp**
   Input voltage for the product and maximum current consumption
6. **Duty Cycle: 20%, Max. 4 min. / 16 min.**
   The duty cycle defines the maximum period during operation without interruption. After operation, a pause must be observed. It is important that the operator follows the instructions of the duty cycle; otherwise, a possible overload may result in reduced product life/errors
7. **W/O #1234567-0001**
   The LINAK work order followed by a unique sequential identification number

## Key to symbols

The following symbols are used on the LA36 label:

| Symbol | Norms | Approvals |
|---|---|---|
|  | WEEE Directive 2002/96/EC | Wheelie bin |
|  | Compliance to all relevant EC directives | CE |
|  | C-Tick 2002: The Australian EMC | C-Tick |
|  | China Pollution control mark (also indicates recyclability) | China RoHS legislation |
|  | ISO 7000- 0434A: Caution | |
|  | Operating instructions | |

# LA36
## Ordering example Econ

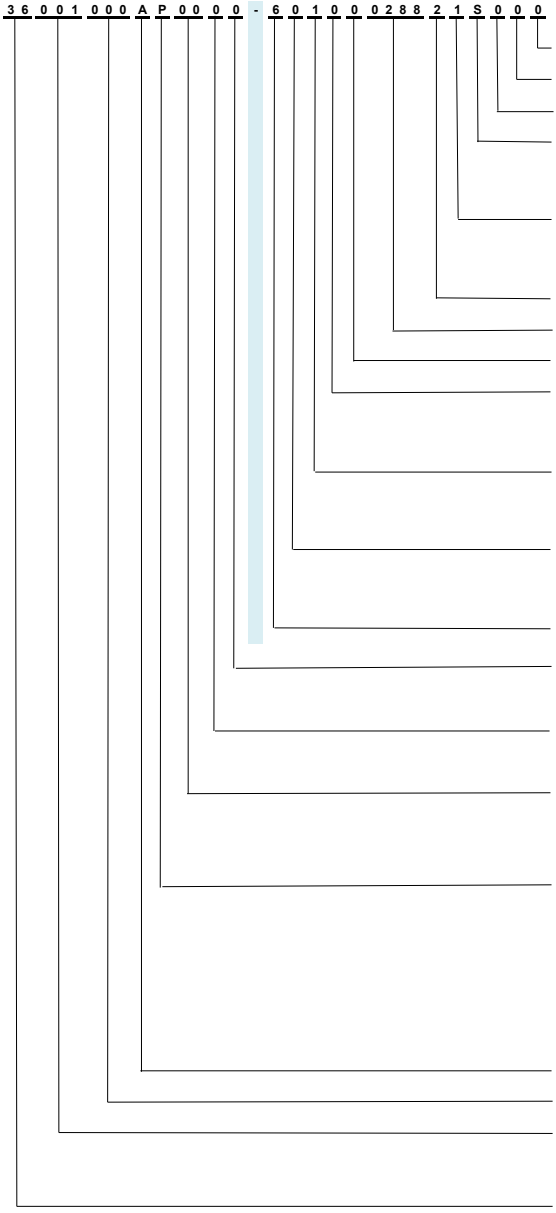


* IC INTEGRATED CONTROLLER

| IC options: | IC | LINbus | Modbus | Parallel |
|---|---|---|---|---|
| LA36 actuator: | √ | √ | √ | √ |

# LA36
## Ordering example

36 0 0 0 0 + 0 0 0 0 0 0 0 0

**CABLE:**
0 = No cable
1 = 1.5 m power cable (0367046-1500)
2 = 5 m power cable (0367046-5000)
3 = 0.2 m power cable with AMP connector (0367006)
4 = 1.5 m power and 1,5 signal (0367046-1500+0367049-1500)
5 = 5 m power and 5 m signal (0367046-5000+0367049-5000)
6 = 1.5 m Y-cable, power and signal in one (0367020)
7 = 5 m power Cable + Data cable M12x1 (Bus)

**IP-DEGREE:**
2 = Standard (IP66)
8 = IP66 ATEX / IECEx approved
9 = Harsh environment housing + IP66/IP69K (Special article number only)

**MOTOR TYPE:**
A = 12 V DC with clutch
B = 24 V DC with clutch
C = 36 V DC with clutch
1 = 12 V DC with dummy clutch (as standard only with IC)
2 = 24 V DC with dummy clutch (as standard only with IC)

**STROKE LENGTH:**
XXX = mm Acme spindle: 100, 150....999 mm

**FEEDBACK:**

Standard and IC:
0 = Standard (No feedback)
5 = PWM 10-90%
6 = PWM 20-80%

Only standard:
B = Analogue feedback 0 - 10V
C = Analogue feedback 0.5 - 4.5V
H = Dual Hall
P = Potentiometer
K = Single hall

Only IC:
D = Bus
1 = Single Hall
2 = Analogue feedback 0-10V
3 = Analogue feedback 0.5-4.5V
4 = Analogue feedback 4-20 mA

**END STOP:**
0 = With out limt switches
1 = With limt switches
2 = With limt switches and end-stop signals
7 = IC Basic
8 = IC Advanced
9 = Parallel
A = Modbus (Special article number only)
B = LINBUS

**SAFETY NUT**
+ = Standard
S = With safety nut - only in push

**PISTON ROD EYE:**

| | |
|---|---|
| 0 = M20 X 1 female adapter | 0361016 |
| 1 = ø 12.9 mm hole, for 1/2" pin | 0361018-B |
| 2 = ø 12.2 mm hole, for 12 mm pin | 0361109-B |
| 3 = M12 X 1.75 male adapter | 0361224 |
| 4 = M16 X 1.5 male adapter | 0361135 |
| 5 = ø 12.2 hole with slot (Like LA34) | 0361138 |
| A = ø 12.2 hole with slot AISI 304 | 0361260 |
| B = ø 12.9 hole with slot AISI 304 | 0361275 |
| C = ø 12 H7 Ball Eye AISI 304 | 0361350 |
| D = ø 16 H7 Ball Eye AISI 304 | 0361351 |

**BACK FIXTURE:**

| | |
|---|---|
| 0 = M20 X 1 female adapter | 0361128 |
| 1 = ø 12.9 mm hole, for 1/2" pin | 0361129 |
| 2 = ø 12.9 mm hole turned 90°, for 1/2" pin | 0361129 |
| 3 = ø 12.2 mm hole, for 12 mm pin | 0361119 |
| 4 = ø 12.2 mm hole turned 90°, for 12 mm pin | 0361119 |
| 5 = M12 X 1.75 male adapter | 0361126 |
| 6 = M16 X 1.5 male adapter | 0361247 |
| 7 = ø 12.3 hole with slot (Like LA34) | 0361140 |
| 8 = ø 12.3 hole with slot ( LA34) turned 90° | 0361140 |
| A = ø 12.2 hole with slot AISI 304 | 0361261 |
| B = ø 12.2 hole with slot AISI 304 turned 90° | 0361261 |
| C = ø 12.9 hole with slot AISI 304 | 0361276 |
| D = ø 12.9 hole with slot AISI 304 turned 90° | 0361276 |

**GEARBOX:**

| | 2.5 mm pitch | 8 mm pitch | 12 mm pitch | 20 mm pitch |
|---|---|---|---|---|
| A = Gear ratio 1 : 18 | N.A. | N.A. | 2.600 N | 1.700 N |
| B = Gear ratio 1 : 31 | N.A. | N.A. | 4.500 N | N.A. |
| C = Gear ratio 1 : 46 | 10.000 N | 10.000 N | 6.800 N | N.A. |
| * F = Gear ratio 1 : 7 | N.A. | N.A. | N.A. | 500N |

*(Special article number only)

**SPINDLE TYPE:**
1 = 1-threaded acme spindle (2.5 mm pitch)
2 = 2-threaded acme spindle (8 mm pitch)
3 = 3-threaded acme spindle (12 mm pitch)
5 = 5-threaded acme spindle (20 mm pitch)
A = 2 + adjustable reed limit switches (on outer tube)
C = 3 + adjustable reed limit switches (on outer tube)
E = 5 + adjustable reed limit switches (on outer tube)

**ACTUATOR TYPE:**
36 = LA36

When ordering standard stroke length with endstop 1, 2, 3 or 4 the stroke length will be up to 4 mm shorter.

# Chapter 5

## Maintenance

- The actuator must be cleaned at regular intervals to remove dust and dirt and inspected for mechanical damages or wear.
- Inspect attachment points, wires, piston rod, cabinet, and plug, as well as check that the actuator functions correctly.
- To ensure that the pregreased inner tube remains lubricated, the actuator must only be washed down when the piston rod is fully retracted.
- The actuator is a closed unit and therefore requires no internal maintenance.
- In order to maintain a proper performance of the spherical eyes and to increase the resistance against environmental wear, we strongly recommend that the spherical eyes (ball bearings) mounted on actuators from LINAK are greased with anticorrosive grease or similar.

## Repair

Only an authorised LINAK® service centre should repair LINAK actuator systems. Systems to be repaired under warranty must be sent to an authorised LINAK service centre.
In order to avoid the risk of malfunction, all actuator repairs must only be carried out by an authorised LINAK Service shop or repairer, as special tools and parts must be used.
If a system is opened by unauthorised personel there is a risk that it may malfunction at a later date.

## Main groups of disposal

LINAK's products may be disposed of, possibly by dividing them into different waste groups for recycling or combustion.

| Product | Metal scrap | Cable scrap | Electronic scrap | Plastic recycling or combustion |
|---|---|---|---|---|
| LA36 | X | X | X | X |

We recommend that our product is disassembled as much as possible at the disposal and that you try to recycle it.

## Warranty

There is an 18 months' warranty on TECHLINE products against manufacturing faults calculated from the production date of the individual products (see label). LINAK's warranty is only valid in so far as the equipment has been used and maintained correctly and has not been tampered with. Furthermore, the actuator must not be exposed to violent treatment. In the event of this, the warranty will be ineffective/ invalid. For further details, please see standard terms of sale and delivery for LINAK A/S.

**Note:**
Only an authorised LINAK® service centre should repair LINAK actuator systems. Systems to be repaired under warranty must be sent to an authorised LINAK service centre.
In order to avoid the risk of malfunction, all actuator repairs must only be carried out by an authorised LINAK Service shop or repairer, as special tools and parts must be used.
If a system is opened by unauthorised personel there is a risk that it may malfunction at a later date.

The actuator is not to be opened by unauthorised personnel. In case the actuator is opened, the warranty will be invalid.

# DECLARATION OF CONFORMITY

LINAK A/S
Smedevænget 8

DK - 6430 Nordborg

hereby declares that
LINAK Actuator 36xxxxx0xxxxxx, 36xxxxx1xxxxxx, 36xxxxx2xxxxxx, 36xxxxx5xxxxxx

complies with the EMC Directive: 2014/30/EU according to following standards:
EN 55016-2-1:2009, EN 55016-2-3:2010+A1+AC, EN 55022:2011+AC Class B, EN 55025:2008
EN 61000-4-2:2009, ISO 10605:2008, EN 61000-4-3:2006+A1, ISO 11452-2:2004, EN 61000-4-5:2006,
ISO 7637-2:2004,

complies with RoHS2 Directive 2011/65/EU according to the standard:
EN 50581:2012

Additional information:
The system does also comply with the standard:
EN 55025:2008 Vehicles, boats and internal combustion engines - Radio disturbance characteristics - Limits and methods of measurement for the protection of on-board receivers: Radiated disturbance

Nordborg, 2014-06-23

**LINAK A/S**
John Kling, B.Sc.E.E.
Certification and Regulatory Affairs
Authorized to compile the relevant technical documentation

Original Declaration

# DECLARATION OF CONFORMITY

LINAK A/S
Smedevænget 8

DK - 6430 Nordborg

hereby declares that

Actuator 36xxxxxADxxxBxx (LA36 BUS)

complies with the EMC Directive: 2014/30/EU according to following standards:
EN 61000-6-1:2007, EN 61000-6-2:2005, EN 61000-6-3:2007, EN 61000-6-4:2007

complies with RoHS2 Directive 2011/65/EU according to the standard:
EN 50581:2012

Additional information:
The system does also comply with the standard:
DS/EN ISO 14982:1998 Agricultural and forestry machines - Electromagnetic compatibility - Test methods and acceptance criteria
DS/EN 13309:2001 Construction machinery - Electromagnetic compatibility of machines with internal power supply
ISO 13766:2006 Earth-moving machinery - Electromagnetic compatibility
and EMC requirements of:
DS/EN 60204-1:2006 Safety of machinery - Electrical equipment of machines - Part 1: General requirements
DS/EN 60204-32:2008 Safety of machinery - Electrical equipment of machines - Part 32: Requirements for hoisting machines

Nordborg, 2014-06-23



**LINAK A/S**
John Kling, B.Sc.E.E.
Certification and Regulatory Affairs
Authorized to compile the relevant technical documentation

Original Declaration

# DECLARATION OF CONFORMITY

LINAK A/S

Smedevænget 8

DK - 6430 Nordborg

Hereby declares that

| | |
|---|---|
| Actuator | LA36IC (36xxxxx7xxxxxxx, 36xxxxx8xxxxxxx, 36xxxxx9xxxxxxx, 36xxxxxBxxxxxxx)<br>LA36IC (36xxxxxxxx03xxxxxxxxxxxxxxxxx) |

complies with the EMC Directive 2014/30/EU according to following harmonized standards:

EN 61000-4-2:2009, EN 61000-4-3:2006+A1+A2, EN 61000-4-4:2012, EN 61000-4-5:2014, EN 61000-4-6:2014, EN 61000-4-8:2010, EN 55016-2-3:2010+A1, EN 55016-2-1:2014, EN 55025:2008

complies with RoHS2 Directive 2011/65/EU according to the standard:
EN 50581:2012

Additional information:

The device does comply with the standards:
EN 61000-6-1:2007, Electromagnetic compatibility (EMC) - Part 6-1: Generic standards - Immunity for residential, commercial and light-industrial environments
EN 61000-6-3:2007, Electromagnetic compatibility (EMC) - Part 6-3: Generic standards - Emission standard for residential, commercial and light-industrial environments
EN 61000-6-2:2005, Electromagnetic compatibility (EMC) - Part 6-2: Generic standards - Immunity for industrial environments
EN 61000-6-4:2007, Electromagnetic compatibility (EMC) - Part 6-4: Generic standards - Emission standard for industrial environments

The device does also comply with the standards:
ISO 10605:2008, Road vehicles -- Test methods for electrical disturbances from electrostatic discharge
ISO 11452-4:2005, Road vehicles -- Component test methods for electrical disturbances from narrowband radiated electromagnetic energy -- Part 4: Harness excitation methods
ISO 11452-2:2004, Road vehicles -- Component test methods for electrical disturbances from narrowband radiated electromagnetic energy -- Part 2: Absorber-lined shielded enclosure
ISO 7637-2:2004, Road vehicles -- Electrical disturbances from conduction and coupling -- Part 2: Electrical transient conduction along supply lines only

Nordborg, 2014-11-06



**LINAK A/S**
John Kling, B.Sc.E.E.
Certification and Regulatory Affairs
Authorized to compile the relevant technical documentation

Original declaration

## DECLARATION OF INCORPORATION OF PARTLY COMPLETED MACHINERY

**LINAK A/S**
Smedevænget 8
DK - 6430 Nordborg

Herewith declares that LINAK TECHLINE ® products
as characterized by the following models and types:

Linear Actuators LA12, LA14, LA22, LA23, LA25, LA30, LA35, LA36, LA37

comply with the following parts of the Machinery Directive 2006/42/EC, ANNEX I, *Essential health and safety requirements relating to the design and construction of machinery*:

1.5.1 Electricity supply

The relevant technical documentation is compiled in accordance with part B of Annex VII and that this documentation or part hereof will be transmitted by post or electronically to a reasoned request by the national authorities.

**This partly completed machinery must not be put into service until the final machinery into which it is to be incorporated has been declared in conformity with the provisions of the Machinery Directive 2006/42/EC where appropriate.**

Nordborg, 2014-10-20



**LINAK A/S**
John Kling, B.Sc.E.E.
Certification and Regulatory Affairs
Authorized to compile the relevant technical documentation

Original Declaration

## FACTORIES

**CHINA**
LINAK (Shenzhen) Actuator Systems, Ltd.
Phone: +86 755 8610 6656
Fax: +86 755 8610 6990
E-mail: sales@linak.cn
*www.linak.cn*

**DENMARK**
LINAK A/S - Group Headquarters, Guderup
Phone: +45 73 15 15 15
Fax: +45 74 45 80 48
Fax: +45 73 15 16 13 (Sales)
E-mail: info@linak.com
*www.linak.com*

**SLOVAKIA**
LINAK Slovakia s.r.o.
Phone: +421 51 75 63 414
Fax: +421 51 75 63 410
E-mail: jp@linak.sk
*www.linak.com*

**USA**
LINAK U.S. Inc.
North and South American Headquarters
Phone: +1 502 253 5595
Fax: +1 502 253 5596
E-mail: info@linak-us.com
*www.linak-us.com*

## SUBSIDIARIES

**AUSTRALIA**
LINAK Australia Pty. Ltd
Phone: +61 3 8796 9777
Fax: +61 3 8796 9778
E-mail: sales@linak.com.au
*www.linak.com.au*

**AUSTRIA**
LINAK Repräsentanz Österreich (Wien)
Phone: +43 (1) 890 7446
Fax: +43 (1) 890 744615
E-mail: info@linak.de
*www.linak.at*

**BELGIUM & LUXEMBOURG**
LINAK Actuator-Systems NV/SA
Phone: +32 (0)9 230 01 09
Fax: +32 (0)9 230 88 80
E-mail: beinfo@linak.be
*www.linak.be*

**BRAZIL**
LINAK Do Brasil Comércio De Atuadores Ltda.
Phone: +55 (11) 2832 – 7070
Fax: +55 (11) 2832 – 7060
E-mail: info@linak.com.br
*www.linak.com.br*

**CANADA**
LINAK Canada Inc.
Phone: +1 502 253 5595
Fax: +1 416-255-7720
E-mail: info@linak.ca
*www.linak-us.com*

**CZECH REPUBLIC**
LINAK C&S S.R.O.
Phone: +420581741814
Fax: +420581702452
E-mail: ponizil@linak.cz
*www.linak.cz*

**DENMARK**
LINAK Danmark A/S
Phone: +45 86 80 36 11
Fax: +45 86 82 90 51
E-mail: linak@linak-silkeborg.dk
*www.linak.dk*

**FINLAND**
LINAK OY
Phone: +358 10 841 8700
Fax: +358 10 841 8729
E-mail: linak@linak.fi
*www.linak.fi*

**FRANCE**
LINAK France E.U.R.L
Phone: +33 (0) 2 41 36 34 34
Fax: +33 (0) 2 41 36 35 00
E-mail: linak@linak.fr
*www.linak.fr*

**GERMANY**
LINAK GmbH
Phone: +49 6043 9655 0
Fax: +49 6043 9655 60
E-mail: info@linak.de
*www.linak.de*

**INDIA**
LINAK A/S India Liaison Office
Phone: +91 120 4393335
Fax: +91 120 4273708
E-mail: info@linak.in
*www.linak.in*

**IRELAND**
LINAK UK Limited - Ireland
Phone: +44 (0)121 544 2211
Fax: +44 (0)121 544 2552
+44 (0)796 855 1606 (UK Mobile)
+35 387 634 6554 (Republic Of Ireland Mobile)
E-mail: sales@linak.co.uk
*www.linak.co.uk*

**ITALY**
LINAK Italia S.r.l.
Phone: +39 02 48 46 33 66
Fax: +39 02 48 46 82 52
E-mail: info@linak.it
*www.linak.it*

**JAPAN**
LINAK K.K.
Phone: 81-45-533-0802
Fax: 81-45-533-0803
E-mail: linak@linak.jp
*www.linak.jp*

**MALAYSIA**
LINAK Actuators Sdn. Bhd.
Phone: +60 4 210 6500
Fax: +60 4 226 8901
E-mail: info@linak-asia.com
*www.linak.my*

**NETHERLANDS**
LINAK Actuator-Systems B.V.
Phone: +31 76 5 42 44 40
Fax: +31 76 5 42 61 10
E-mail: info@linak.nl
*www.linak.nl*

**NEW ZEALAND**
LINAK New Zealand Ltd.
Phone: +64 9580 2071
Fax: +64 9580 2072
E-mail: nzsales@linak.com.au
*www.linak.co.nz*

**NORWAY**
LINAK Norge AS
Phone: +47 32 82 90 90
Fax: +47 32 82 90 98
E-mail: info@linak.no
*www.linak.no*

**POLAND**
LINAK Polska
Phone: +48 (22) 500 28 74
Fax: +48 (22) 500 28 75
E-mail: dkreh@linak.dk
*www.linak.pl*

**REPUBLIC OF KOREA**
LINAK Korea Ltd.
Phone: +82-(0)2-6231-1515
Fax: +82-(0)2-6231-1516
E-mail: scully@linak.kr
*www.linak.kr*

**RUSSIAN FEDERATION**
000 LINAK
Phone: +7 495 280 14 26
Fax: +7 495 687 14 26
E-mail: info@linak.ru
*www.linak.ru*

**SPAIN**
LINAK Actuadores, S.L.u
Phone: +34 93 588 27 77
Fax: +34 93 588 27 85
E-mail: esma@linak.es
*www.linak.es*

**SWEDEN**
LINAK Scandinavia AB
Phone: +46 8 732 20 00
Fax: +46 8 732 20 50
E-mail: info@linak.se
*www.linak.se*

**SWITZERLAND**
LINAK AG
Phone: +41 43 388 31 88
Fax: +41 43 388 31 87
E-mail: info@linak.ch
*www.linak.ch*

**TAIWAN**
LINAK A/S Taiwan Representative Office
Phone: +886 2 27290068
Fax: +886 2 27290096
Mobile: +886 989292100
E-mail: michael.chen@linak.com.tw
*www.linak.com.tw*

**TURKEY**
LINAK Ith. İhr. San. ve Tic. A.Ş.
Phone: + 90 312 4726338
Fax: + 90 312 4726635
E-mail: info@linak.com.tr
*www.linak.com.tr*

**UNITED KINGDOM**
LINAK UK Limited
Phone: +44 (0)121 544 2211
Fax: +44 (0)121 544 2552
E-mail: sales@linak.co.uk
*www.linak.co.uk*

## DISTRIBUTORS

**ARGENTINA**
Novotec Argentina SRL
Phone: 011-4303-8989/8900
Fax: 011-4032-0184
E-mail: info@novotecargentina.com
*www.novotecargentina.com*

**AUSTRALIA**
Ballarat Industrial Supplies
*www.ballind.com.au*

BL Shipways & Co
*www.blshipway.com.au*

Gas Strut Marine and Industrial
*www.gasstrutmarine.com.au*

Prime Motion & Control
*www.primehyd.com.au*

West Vic Industrial Supplies
*www.westvicindustrial.com.au*

**COLOMBIA**
MEM Ltda
Phone: +[57] (1) 334-7666
Fax: +[57] (1) 282-1684
E-mail: servicioalcliente@memltda.com.co
*www.memltda.com.co*

**INDIA**
Mechatronics Control Equipments India Pvt Ltd
Phone: +91-44-28558484/85,
E-mail: bala@mechatronicscontrol.com
*www.mechatronicscontrol.com*

**INDONESIA**
Pt. Himalaya Everest Jaya
Phone: +6 221 544 8956/8965,
Fax: +6 221 619 4658/1925
E-mail: hejplastic-div@centrin.net.id
*www.hej.co.id*

**IRAN**
Bod Inc.
Phone: +98 2188998635-6
Fax: +98 2188954481
E-mail: info@bod.ir
*www.bod.ir*

**RUSSIAN FEDERATION**
000 FAM
Phone: +7 812 3319333
Fax: +7 812 3271454
E-mail: purchase@fam-drive.ru
*www.fam-drive.ru*

**SINGAPORE**
Servo Dynamics Pte. Ltd.
Phone: +65 6844 0288
Fax: +65 6844 0070
E-mail: servodynamics@servo.com.sg
*www.servo.com.sg*

**SOUTH AFRICA**
Industrial Specialised Applications CC
Phone: +27 11 312 2292 or
+27 11 2077600 (Switch Board)
Fax: +27 11 315 6999
E-mail: gartht@isagroup.co.za
*www.isaza.co.za*

**UNITED ARAB EMIRATES**
Mechatronics
Phone: +971 4 267 4311
Fax: +971 4 267 4312
E-mail: mechtron@emirates.net.ae
*www.mechatronics.ae*

For contact details on other countries
please visit *www.linak.com* or contact:

**LINAK INTERNATIONAL**
Phone: +45 73 15 15 15
Fax: +45 74 45 90 10
Fax: +45 73 15 16 13 (Sales)
E-mail: info@linak.com
*www.linak.com*

**Terms of use**
The user is responsible for determining the suitability of LINAK products for specific application. LINAK takes great care in providing accurate and up-to-date information on its products.
However, due to continuous development in order to improve its products, LINAK products are subject to frequent modifications and changes without prior notice. Therefore, LINAK cannot guarantee the correct and actual status of said information on its products.
While LINAK uses its best efforts to fulfil orders, LINAK cannot, for the same reasons as mentioned above, guarantee the availability of any particular product. Therefore, LINAK reserves the right to discontinue the sale of any product displayed on its website or listed in its catalogues or other written material drawn up by LINAK.
All sales are subject to the Standard Terms of Sale and Delivery for LINAK. For a copy hereof, please contact LINAK.

LINAK®

WE IMPROVE YOUR LIFE

Copyright© LINAK · 2016.01 · MA-M9-02-139-X · LINAK A/S reserves the right to make technical alterations

SEW EURODRIVE

# Assembly and Operating Instructions



## Gear Unit Series R..7, F..7, K..7, K..9, S..7, SPIROPLAN® W

Edition 04/2018

25803530/EN



# Table of contents


**1 General information ..... 5**
1.1 About this documentation ..... 5
1.2 Structure of the safety notes ..... 5
1.3 Rights to claim under limited warranty ..... 6
1.4 Exclusion of liability ..... 7
1.5 Product names and trademarks ..... 7
1.6 Copyright notice ..... 7

**2 Safety notes ..... 8**
2.1 Preliminary information ..... 8
2.2 Duties of the user ..... 8
2.3 Target group ..... 8
2.4 Designated use ..... 9
2.5 Transportation/storage ..... 9
2.6 Installation/assembly ..... 10
2.7 Startup/operation ..... 10
2.8 Inspection/maintenance ..... 10

**3 Gear unit structure ..... 11**
3.1 Basic structure of helical gear units R..07 – R..167 ..... 11
3.2 Basic structure of parallel-shaft helical gear units F..27 – F..157 ..... 12
3.3 Basic structure of helical-bevel gear units K..19/K..29 ..... 13
3.4 Basic structure of helical-bevel gear units K..39/K..49 ..... 15
3.5 Basic structure of helical-bevel gear units K..37 – K..187 ..... 16
3.6 Basic structure of helical-worm gear units S..37 – S..97 ..... 17
3.7 Basic structure of SPIROPLAN® gear units W..10 – W..30 ..... 18
3.8 Basic structure of SPIROPLAN® gear units W..37 – W..47 ..... 19
3.9 Nameplate/type designation ..... 20
3.10 Designs and options – R, F, K, S, W gear units ..... 23

**4 Mechanical installation ..... 26**
4.1 Prerequisites for installation ..... 26
4.2 Installing the gear unit ..... 28
4.3 Gear unit with solid shaft ..... 37
4.4 Torque arms for shaft-mounted gear units ..... 39
4.5 Mounting shaft-mounted gear units with splined hollow shaft ..... 44
4.6 Shaft-mounted gear unit with keyway ..... 45
4.7 Shaft-mounted gear unit with shrink disk ..... 50
4.8 Shaft-mounted gear units with TorqLOC® ..... 53
4.9 Mounting the cover ..... 66
4.10 Coupling of AM adapters ..... 68
4.11 AQ. adapter coupling ..... 73
4.12 EWH adapters ..... 76
4.13 AD Input shaft assembly ..... 79
4.14 Direct mounting of a motor on a gear unit ..... 83
4.15 Accessory equipment ..... 86


25803530/EN – 04/2018

**5 Startup ..... 99**
5.1 Inverter-operated gearmotors ..... 99
5.2 Checking the oil level ..... 99
5.3 Pseudo-leakage at shaft seals ..... 100
5.4 Helical-worm gear units and SPIROPLAN® W gear units ..... 101
5.5 Helical/parallel-shaft helical/helical-bevel gear units ..... 102
5.6 Gear units with backstop ..... 103
5.7 Components made of elastomers with fluorocarbon rubber ..... 104

**6 Inspection/maintenance ..... 106**
6.1 Wearing parts ..... 108
6.2 Inspection/maintenance intervals ..... 110
6.3 Lubricant change intervals ..... 111
6.4 Maintenance of AL/AM/AQ./EWH adapter ..... 111
6.5 AD input shaft assembly maintenance ..... 112
6.6 Inspection/maintenance for the gear unit ..... 113

**7 Mounting positions ..... 129**
7.1 Designation of the mounting positions ..... 129
7.2 Churning losses and thermal rating ..... 130
7.3 Change of mounting position ..... 130
7.4 Universal mounting position M0 ..... 131
7.5 Mounting position MX ..... 131
7.6 Mounting position sheets ..... 132

**8 Technical data ..... 167**
8.1 Extended storage ..... 167
8.2 Lubricants ..... 169

**9 Malfunctions and remedies ..... 188**
9.1 Gear units ..... 189
9.2 Adapters AM/AQ./AL/EWH ..... 190
9.3 AD input shaft assembly ..... 190
9.4 Service ..... 191
9.5 Waste disposal ..... 191

**10 Address list ..... 192**

**Index ..... 203**

25803530/EN – 04/2018

# 1 General information

## 1.1 About this documentation

**The current version of the documentation is the original.**

This documentation is an integral part of the product. The documentation is written for all employees who assemble, install, start up, and service this product.

Make sure this documentation is accessible and legible. Ensure that persons responsible for the machinery and its operation as well as persons who work on the product independently have read through the documentation carefully and understood it. If you are unclear about any of the information in this documentation or require further information, contact SEW-EURODRIVE.

## 1.2 Structure of the safety notes

### 1.2.1 Meaning of signal words

The following table shows the grading and meaning of the signal words for safety notes.

| Signal word | Meaning | Consequences if disregarded |
|---|---|---|
| ⚠ **DANGER** | Imminent hazard | Severe or fatal injuries |
| ⚠ **WARNING** | Possible dangerous situation | Severe or fatal injuries |
| ⚠ **CAUTION** | Possible dangerous situation | Minor injuries |
| **NOTICE** | Possible damage to property | Damage to the product or its environment |
| **INFORMATION** | Useful information or tip: Simplifies handling of the product. | |

### 1.2.2 Structure of section-related safety notes

Section-related safety notes do not apply to a specific action but to several actions pertaining to one subject. The hazard symbols used either indicate a general hazard or a specific hazard.

This is the formal structure of a safety note for a specific section:



**SIGNAL WORD**

Type and source of hazard.

Possible consequence(s) if disregarded.

- Measure(s) to prevent the hazard.

25803530/EN – 04/2018

**Meaning of the hazard symbols**

The hazard symbols in the safety notes have the following meaning:

| Hazard symbol | Meaning |
|---|---|
|  | General hazard |
|  | Warning of dangerous electrical voltage |
|  | Warning of hot surfaces |
|  | Warning of risk of crushing |
|  | Warning of suspended load |
|  | Warning of automatic restart |

### 1.2.3 Structure of embedded safety notes

Embedded safety notes are directly integrated into the instructions just before the description of the dangerous action.

This is the formal structure of an embedded safety note:

⚠ **SIGNAL WORD** Type and source of hazard. Possible consequence(s) if disregarded. Measure(s) to prevent the hazard.

## 1.3 Rights to claim under limited warranty

Read the information in this documentation. This is essential for fault-free operation and fulfillment of any rights to claim under limited warranty. Read the documentation before you start working with the product.

25803530/EN – 04/2018

## 1.4 Exclusion of liability

Read the information in this documentation, otherwise safe operation is impossible. You must comply with the information contained in this documentation to achieve the specified product characteristics and performance features. SEW-EURODRIVE assumes no liability for injury to persons or damage to equipment or property resulting from non-observance of these operating instructions. In such cases, SEW-EURODRIVE assumes no liability for defects.

## 1.5 Product names and trademarks

The brands and product names in this documentation are trademarks or registered trademarks of their respective titleholders.

## 1.6 Copyright notice

© 2018 SEW-EURODRIVE. All rights reserved. Unauthorized reproduction, modification, distribution or any other use of the whole or any part of this documentation is strictly prohibited.

25803530/EN – 04/2018

# 2 Safety notes

## 2.1 Preliminary information

The following general safety notes have the purpose to avoid injury and damage to property. They primarily apply to the use of products described in this documentation. If you use additional components also observe the relevant warning and safety notes.

## 2.2 Duties of the user

As the user, you must ensure that the basic safety notes are observed and complied with. Make sure that persons responsible for the machinery and its operation as well as persons who work on the device independently have read through the documentation carefully and understood it.

As the user, you must ensure that all of the work listed in the following is carried out only by qualified specialists:

- Setup and installation
- Installation and connection
- Startup
- Maintenance and repairs
- Shutdown
- Disassembly

Ensure that the persons who work on the product pay attention to the following regulations, conditions, documentation, and information:

- National and regional safety and accident prevention regulations
- Warning and safety signs on the product
- All other relevant project planning documents, installation and startup instructions, and wiring diagrams
- Do not assemble, install or operate damaged products
- All system-specific specifications and conditions

Ensure that systems in which the product is installed are equipped with additional monitoring and protection devices. Observe the applicable safety regulations and legislation governing technical work equipment and accident prevention regulations.

## 2.3 Target group

Specialist for mechanical work

Any mechanical work may only be performed by adequately qualified specialists. Specialists in the context of this documentation are persons familiar with the design, mechanical installation, troubleshooting, and maintenance of the product who possess the following qualifications:

- Qualification in the mechanical area in accordance with the national regulations
- Familiarity with this documentation

25803530/EN – 04/2018

Specialist for electrotechnical work

Any electrotechnical work may only be performed by electrically skilled persons with a suitable education. Electrically skilled persons in the context of this documentation are persons familiar with electrical installation, startup, troubleshooting, and maintenance of the product who possess the following qualifications:

- Qualification in the electrotechnical area in accordance with the national regulations
- Familiarity with this documentation

Additional qualification

In addition to that, these persons must be familiar with the valid safety regulations and laws, as well as with the requirements of the standards, directives, and laws specified in this documentation. The persons must have the express authorization of the company to operate, program, parameterize, label, and ground units, systems, and circuits in accordance with the standards of safety technology.

Instructed persons

All work in the areas of transportation, storage, operation and waste disposal must be carried out by persons who are trained appropriately. The purpose of the instruction is that the persons are capable of performing the required tasks and work steps in a safe and correct manner.

## 2.4 Designated use

The product is intended for use in industrial and commercial systems.

In case of installation in electrical systems or machines, startup of the product is prohibited until it is determined that the machine meets the requirements stipulated in the local laws and directives. For Europe, Machinery Directive 2006/42/EC as well as the EMC Directive 2014/30/EU apply.

Using these products in potentially explosive atmospheres is prohibited, unless specifically designated otherwise.

## 2.5 Transportation/storage

Inspect the shipment for damage as soon as you receive the delivery. Inform the shipping company immediately about any damage. If the product is damaged, it must not be assembled, installed or started up.

Observe the storage information on climatic conditions as given in chapter "Storage conditions" (→ 🗎 167).

The permissible storage temperature is -30 °C to +50 °C.

If the product is not immediately installed, it must be stored in a dry and dust-free location. The product can be stored for up to 9 months without requiring any special measures before startup. Do not store the product outdoors.

The installed lifting eyebolts are in accordance with DIN 580. Observe the loads and regulations specified there. The tension force vector of the slings must not exceed a 45° angle in accordance with DIN 580.

The lifting eyes are designed to carry only the weight of the product. Do not mount any additional loads. If the product has several lifting eyes or lifting eyebolts, then you should use all lifting eyes and lifting eyebolts for attaching transport ropes. Tighten the screwed-in lifting eyes.

The gear units K..167 and K..187 have no lifting eyes and are supplied without lifting eyebolts. Use alternative, suitable slings.

25803530/EN – 04/2018

Use suitable, sufficiently rated handling equipment, that can be used for further transport.

## 2.6 Installation/assembly

Ensure that the product is installed and cooled according to the regulations in the documentation.

Protect the product from strong mechanical strain. The product and its mounting parts must never protrude into the path of persons or vehicles. Ensure that components are not deformed, particularly during transportation and handling. Electric components must not be mechanically damaged or destroyed.

The following applications are prohibited unless the device is explicitly designed for such use:

- Operation in applications with impermissibly high mechanical vibration and shock loads in excess of the regulations stipulated in EN 61800-5-1
- Use in environments with harmful oils, acids, gases, vapors, dust, radiation, etc.

Observe the danger due to static overdetermination. Gear units with foot (e.g. KA19/29B, KA127/157B or FA127/157B) must not be fastened via the torque arm and the foot plate at the same time. Gearmotors must also not be fastened to the foot plate of the gear unit (e.g. KA19/29B, KA127/157B or FA127/157B, R gear unit with foot-mounted motor) and the foot plate of the motor at the same time.

## 2.7 Startup/operation

Check the oil level before startup as described in chapter "Inspection/maintenance" (→ 🗎 106).

Check that the direction of rotation is correct in the **decoupled** state. Listen out for unusual grinding noises as the shaft rotates.

Secure the keys for the test run without output elements.

Do not deactivate monitoring and protection devices even for a test run.

Switch off the gearmotor if in doubt whenever changes occur in relation to normal operation (e.g. increased temperatures, unusual noises, vibrations). Determine the cause. It may be necessary to contact SEW-EURODRIVE.

## 2.8 Inspection/maintenance

Observe the information in chapter "Inspection/maintenance" (→ 🗎 106).

25803530/EN – 04/2018

# 3 Gear unit structure

## INFORMATION

The following figures are block diagrams. Their purpose is only to make it easier to assign components to the spare parts lists. Discrepancies may occur depending on the gear unit size and version.

## 3.1 Basic structure of helical gear units R..07 – R..167

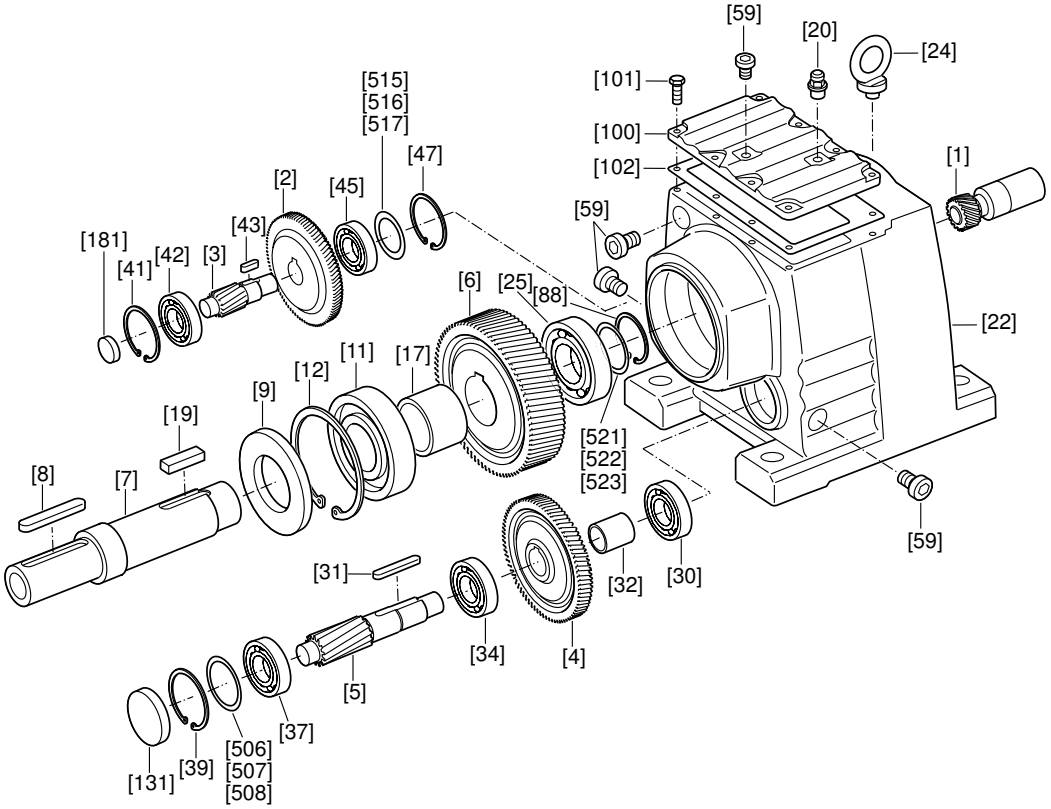


*18014398528676235*

[1] Pinion
[2] Gear
[3] Pinion shaft
[4] Gear
[5] Pinion shaft
[6] Gear
[7] Output shaft
[8] Key
[9] Oil seal
[11] Rolling bearing
[12] Retaining ring
[17] Spacer tube
[19] Key
[20] Breather valve
[22] Gear unit housing
[24] Eyebolt
[25] Rolling bearing
[30] Rolling bearing
[31] Key
[32] Spacer tube
[34] Rolling bearing
[37] Rolling bearing
[39] Retaining ring
[41] Retaining ring
[42] Rolling bearing
[43] Key
[45] Rolling bearing
[47] Retaining ring
[59] Screw plug
[88] Retaining ring
[100] Inspection cover
[101] Hex head screw
[102] Gasket
[131] Closing cap
[181] Closing cap
[506] Shim
[507] Shim
[508] Shim
[515] Shim
[516] Shim
[517] Shim
[521] Shim
[522] Shim
[523] Shim

25803530/EN – 04/2018

## 3.2 Basic structure of parallel-shaft helical gear units F..27 – F..157

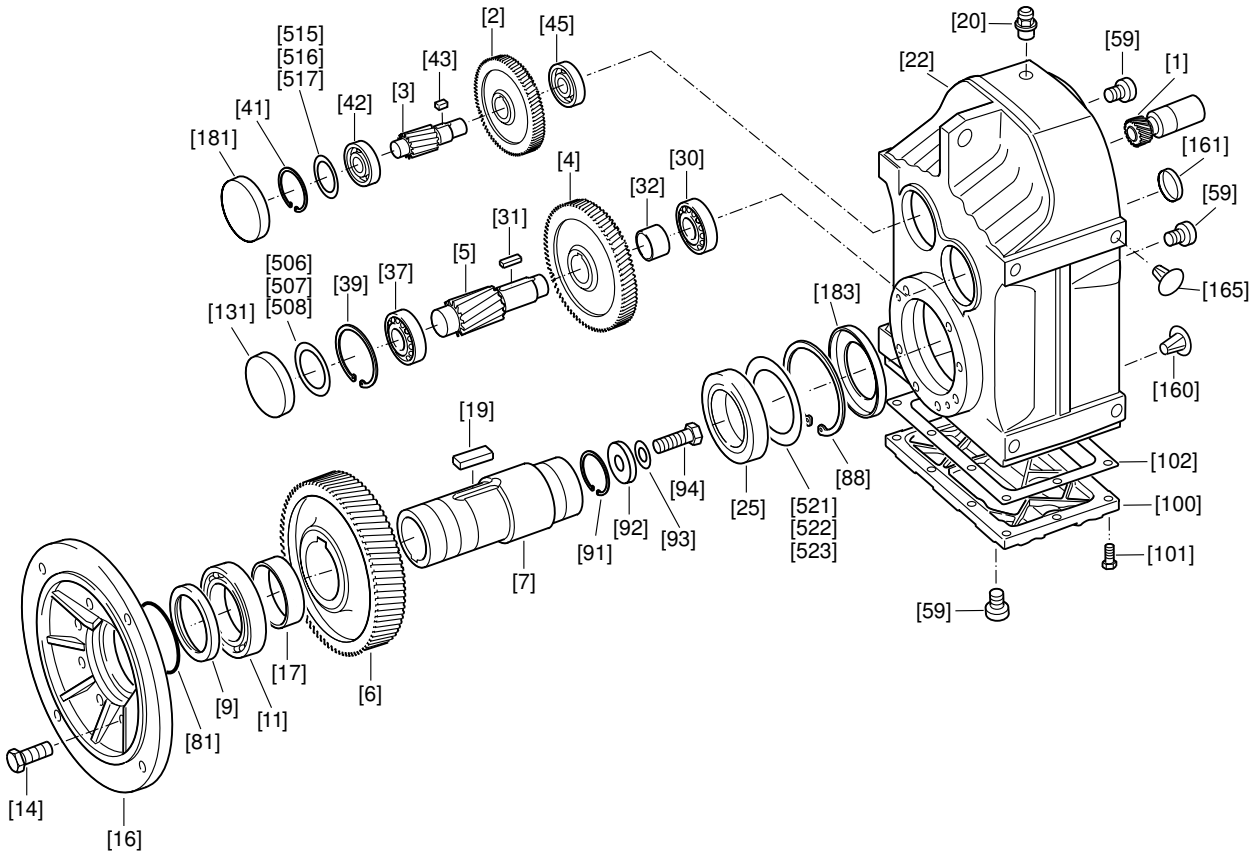


*9007199274039051*

[1] Pinion
[2] Gear
[3] Pinion shaft
[4] Gear
[5] Pinion shaft
[6] Gear
[7] Hollow shaft
[9] Oil seal
[11] Rolling bearing
[14] Hex head screw
[16] Output flange
[17] Spacer tube
[19] Key
[20] Breather valve
[22] Gear unit housing
[25] Rolling bearing
[30] Rolling bearing
[31] Key
[32] Spacer tube
[37] Rolling bearing
[39] Retaining ring
[41] Retaining ring
[42] Rolling bearing
[43] Key
[45] Rolling bearing
[59] Screw plug
[81] Shield ring
[88] Retaining ring
[91] Retaining ring
[92] Washer
[93] Lock washer
[94] Hex head screw
[100] Inspection cover
[101] Hex head screw
[102] Gasket
[131] Closing cap
[160] Closing plug
[161] Closing cap
[165] Closing plug
[181] Closing cap
[183] Oil seal
[506] Shim
[507] Shim
[508] Shim
[515] Shim
[516] Shim
[517] Shim
[521] Shim
[522] Shim
[523] Shim

25803530/EN – 04/2018

## 3.3 Basic structure of helical-bevel gear units K..19/K..29

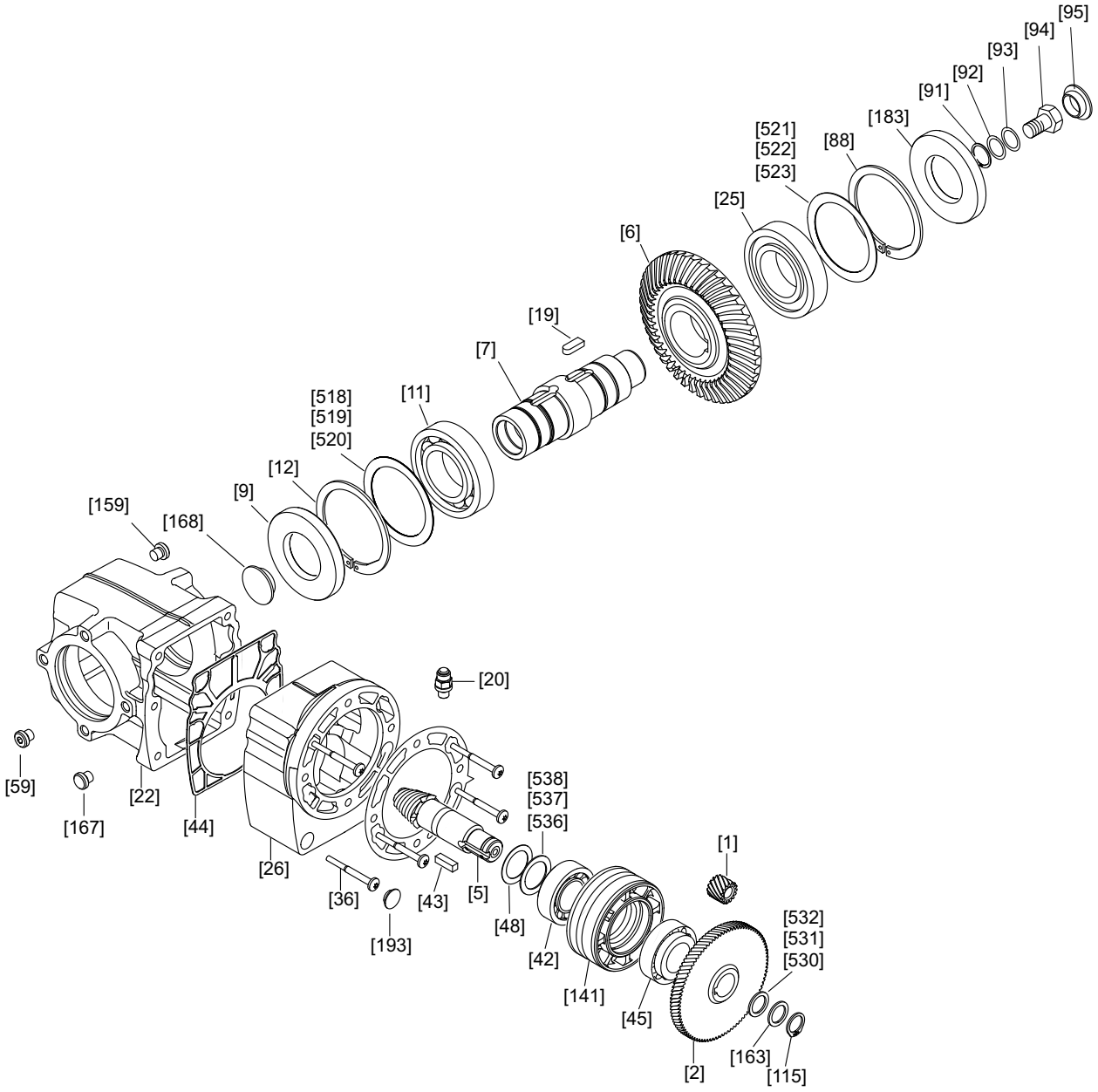


*9007206676351499*

25803530/EN – 04/2018

[1] Pinion
[2] Gear
[5] Pinion shaft
[6] Gear
[7] Hollow shaft
[9] Oil seal
[11] Rolling bearing
[12] Retaining ring
[19] Key
[20] Breather valve
[22] Gear unit housing
[25] Deep groove ball bearing
[26] Housing of 1st stage
[36] Stud
[42] Tapered roller bearing
[43] Key
[44] Seal
[45] Tapered roller bearing
[50] Bevel gear set
[59] Screw plug
[88] Retaining ring
[91] Retaining ring
[92] Washer
[93] Lock washer
[94] Hex head screw
[95] Protection cap
[115] Retaining ring
[141] Bushing
[159] Closing plug
[163] Supporting ring
[167] Closing plug
[168] Protection cap
[183] Oil seal
[193] Closing plug
[518] Shim
[519] Shim
[520] Shim
[521] Shim
[522] Shim
[523] Shim
[530] Shim
[531] Shim
[532] Shim
[536] Shim
[537] Shim
[538] Shim

25803530/EN – 04/2018

## 3.4 Basic structure of helical-bevel gear units K..39/K..49

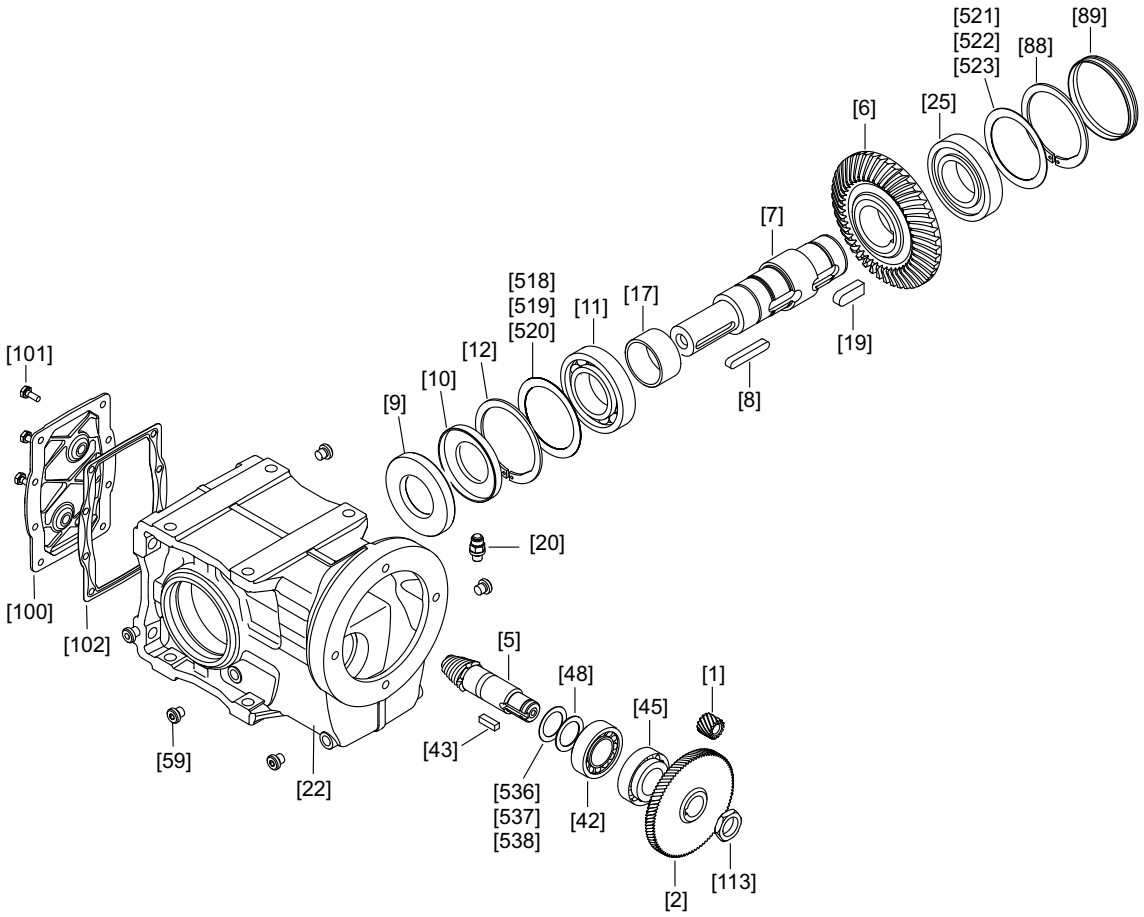


*14457456395*

| | | | | | | | |
|---|---|---|---|---|---|---|---|
| [1] | Pinion | [12] | Retaining ring | [48] | Supporting ring | [518] | Shim |
| [2] | Gear | [17] | Spacer tube | [50] | Bevel gear set | [519] | Shim |
| [5] | Pinion shaft | [19] | Key | [59] | Screw plug | [520] | Shim |
| [6] | Gear | [20] | Breather valve | [88] | Retaining ring | [521] | Shim |
| [7] | Hollow shaft | [22] | Gear unit housing | [89] | Closing cap | [522] | Shim |
| [8] | Key | [25] | Deep groove ball bearing | [100] | Inspection cover | [523] | Shim |
| [9] | Oil seal | [42] | Tapered roller bearing | [101] | Hex head screw | [536] | Shim |
| [10] | Oil seal | [43] | Key | [102] | Gasket | [537] | Shim |
| [11] | Deep groove ball bearing | [45] | Tapered roller bearing | [113] | Slotted nut | [538] | Shim |

25803530/EN – 04/2018

## 3.5 Basic structure of helical-bevel gear units K..37 – K..187

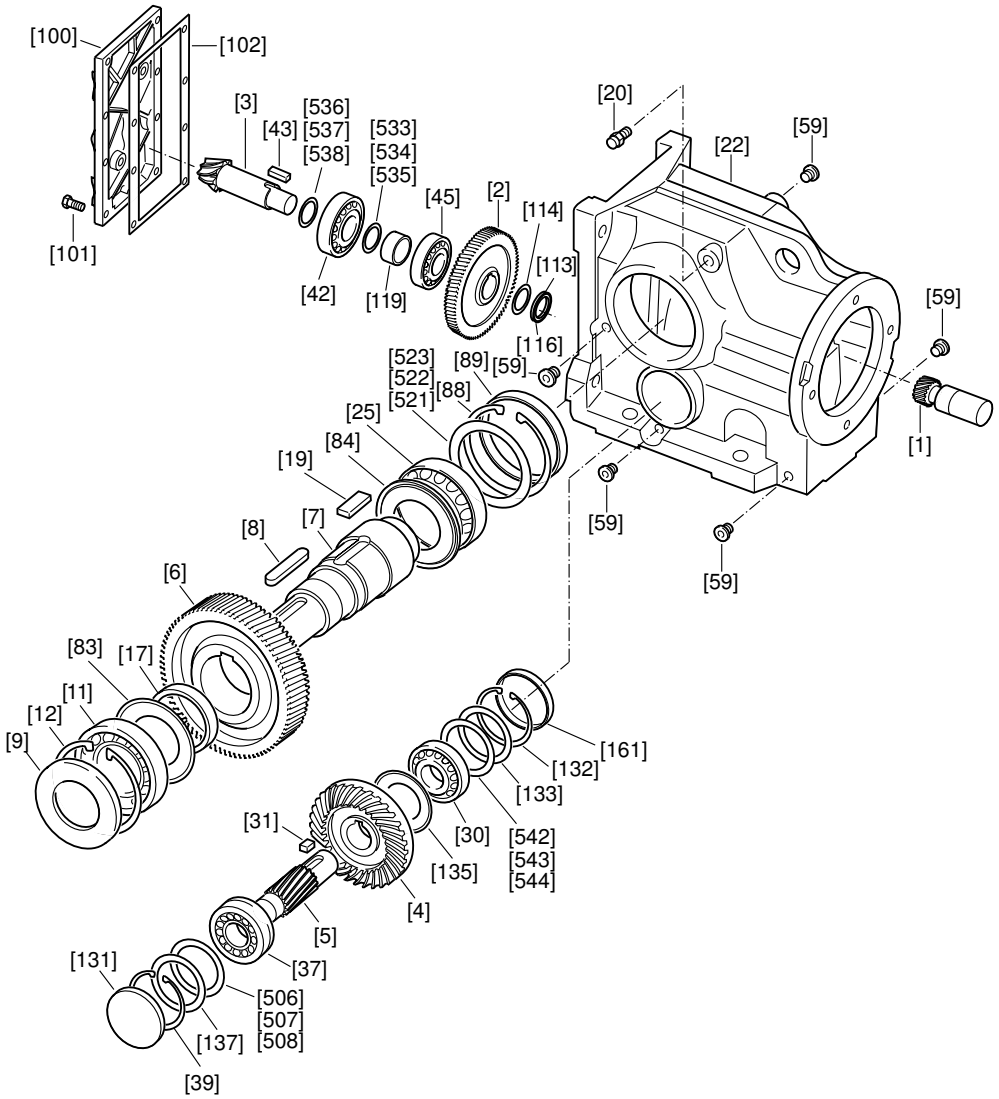


*9007199274042123*

[1] Pinion
[2] Gear
[3] Pinion shaft
[4] Gear
[5] Pinion shaft
[6] Gear
[7] Output shaft
[8] Key
[9] Oil seal
[11] Rolling bearing
[12] Retaining ring
[17] Spacer tube
[19] Key
[20] Breather valve
[22] Gear unit housing
[25] Rolling bearing
[30] Rolling bearing
[31] Key
[37] Rolling bearing
[39] Retaining ring
[42] Rolling bearing
[43] Key
[45] Rolling bearing
[59] Screw plug
[83] Shield ring
[84] Shield ring
[88] Retaining ring
[89] Closing cap
[100] Inspection cover
[101] Hex head screw
[102] Gasket
[113] Slotted nut
[114] Multi-tang washer
[116] Thread lock
[119] Spacer tube
[131] Closing cap
[132] Retaining ring
[133] Supporting ring
[135] Shield ring
[137] Supporting ring
[161] Closing cap
[506] Shim
[507] Shim
[508] Shim
[521] Shim
[522] Shim
[523] Shim
[533] Shim
[534] Shim
[535] Shim
[536] Shim
[537] Shim
[538] Shim
[542] Shim
[543] Shim
[544] Shim

25803530/EN – 04/2018

## 3.6 Basic structure of helical-worm gear units S..37 – S..97

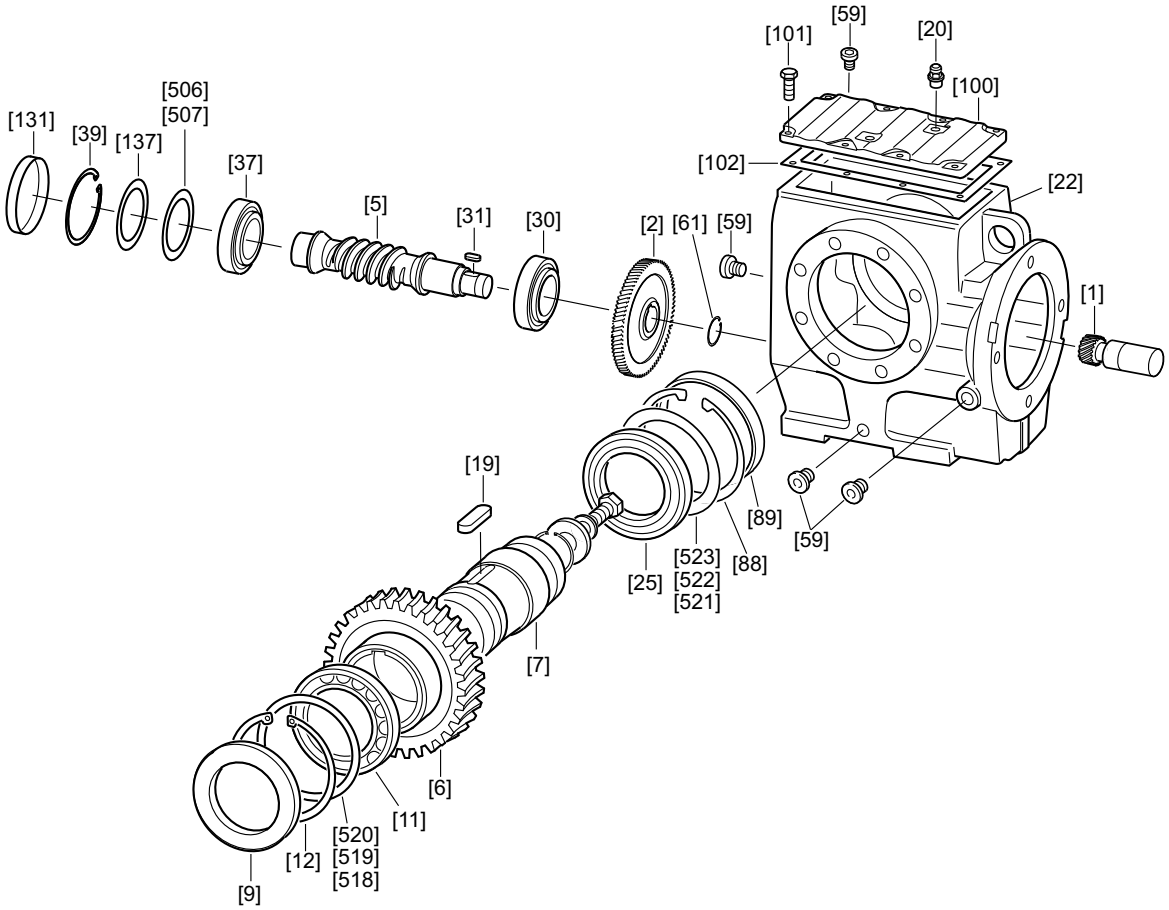


*18014398528786187*

| | | | | | | | |
|---|---|---|---|---|---|---|---|
| [1] | Pinion | [20] | Breather valve | [88] | Retaining ring | [518] | Shim |
| [2] | Gear | [22] | Gear unit housing | [89] | Closing cap | [519] | Shim |
| [5] | Worm | [25] | Rolling bearing | [100] | Gear unit cover | [520] | Shim |
| [6] | Worm gear | [30] | Rolling bearing | [101] | Hex head screw | [521] | Shim |
| [7] | Output shaft | [31] | Key | [102] | Seal | [522] | Shim |
| [9] | Oil seal | [37] | Rolling bearing | [131] | Closing cap | [523] | Shim |
| [11] | Rolling bearing | [39] | Retaining ring | [137] | Supporting ring | | |
| [12] | Retaining ring | [59] | Screw plug | [506] | Shim | | |
| [19] | Key | [61] | Retaining ring | [507] | Shim | | |

25803530/EN – 04/2018

## 3.7 Basic structure of SPIROPLAN® gear units W..10 – W..30

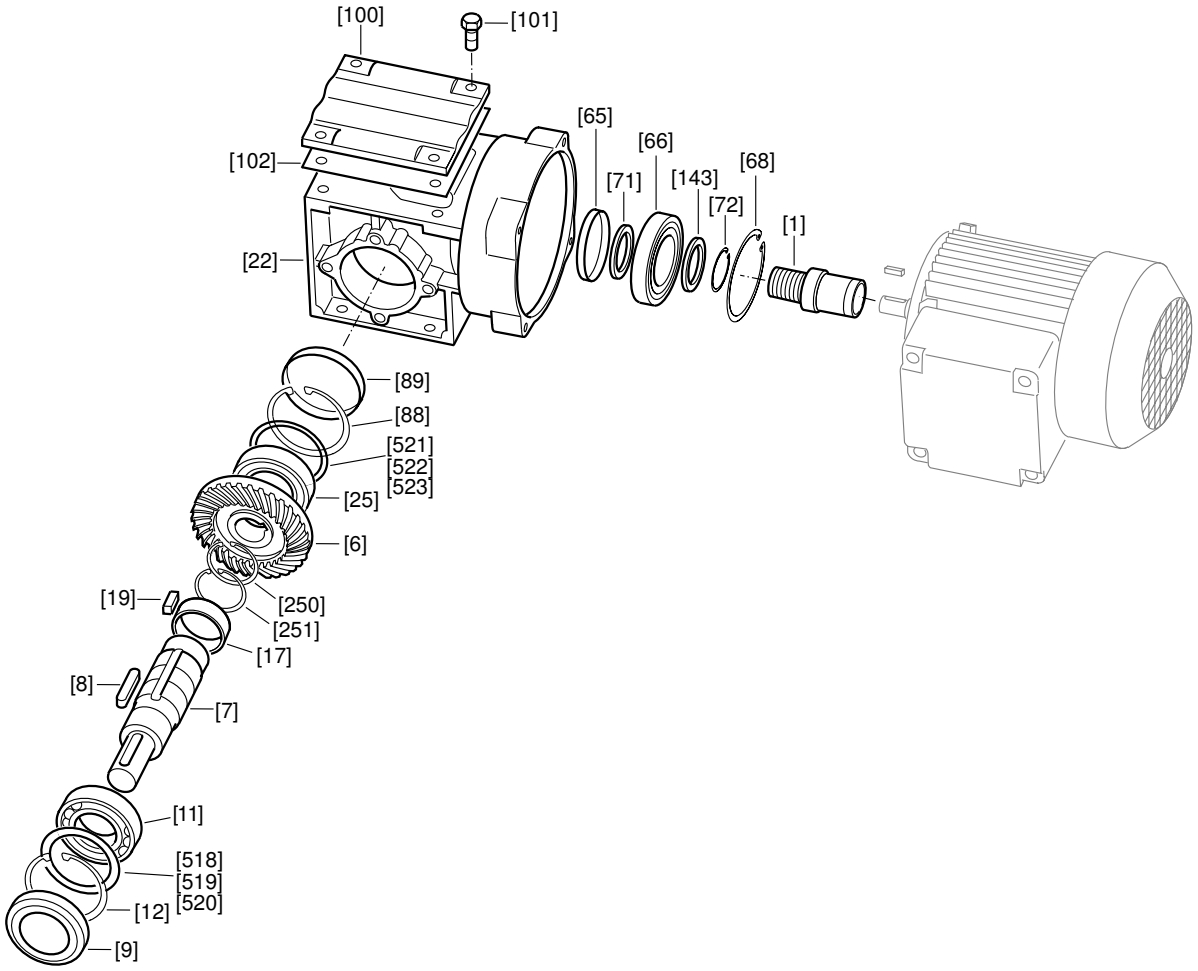


*9007199274048267*

[1] Pinion
[6] Gear
[7] Output shaft
[8] Key
[9] Oil seal
[11] Rolling bearing
[12] Retaining ring
[17] Spacer tube
[19] Key
[22] Gear unit housing
[25] Rolling bearing
[65] Oil seal
[66] Rolling bearing
[68] Retaining ring
[71] Supporting ring
[72] Retaining ring
[88] Retaining ring
[89] Closing cap
[100] Inspection cover
[101] Hex head screw
[102] Gasket
[143] Supporting ring
[250] Retaining ring
[251] Retaining ring
[518] Shim
[519] Shim
[520] Shim
[521] Shim
[522] Shim
[523] Shim

25803530/EN – 04/2018

## 3.8 Basic structure of SPIROPLAN® gear units W..37 – W..47

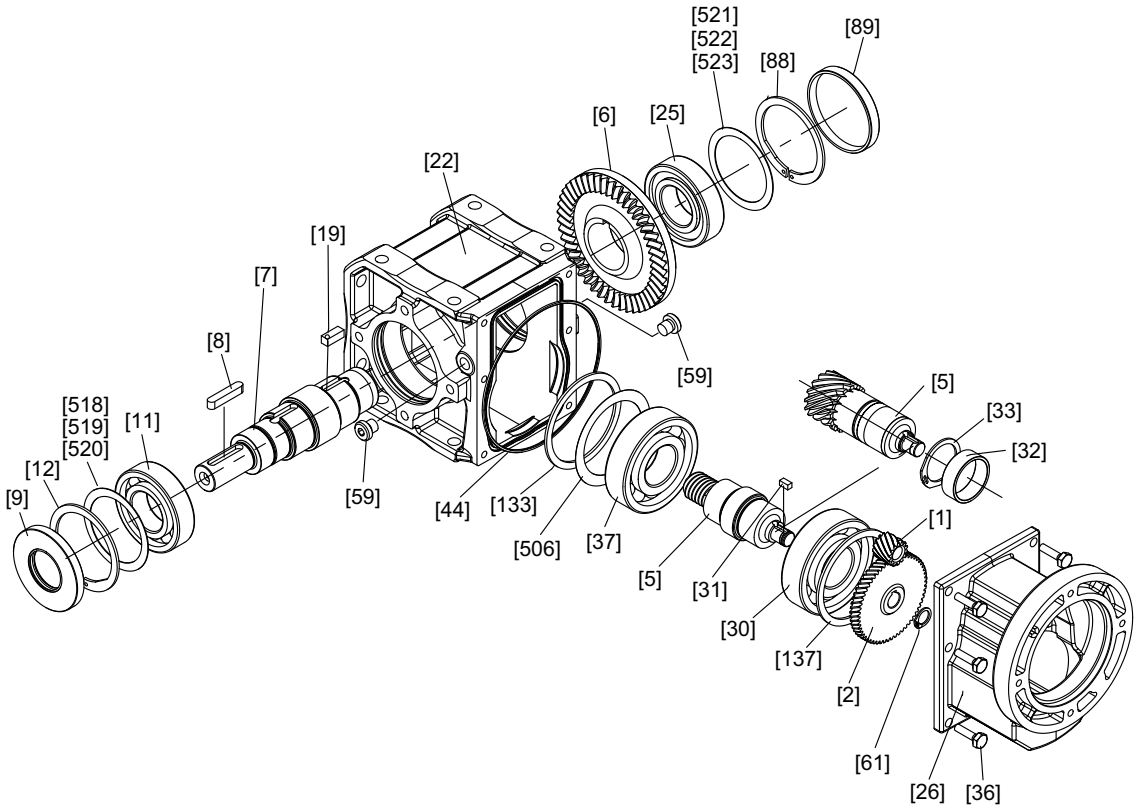


18014399115354379

| | | | | | | | |
|---|---|---|---|---|---|---|---|
| [1] | Pinion | [22] | Gear unit housing | [59] | Screw plug | [521] | Shim |
| [2] | Gear | [25] | Deep groove ball bearing | [61] | Retaining ring | [522] | Shim |
| [5] | Pinion shaft | [26] | Housing stage 1 | [88] | Retaining ring | [523] | Shim |
| [6] | Gear | [30] | Deep groove ball bearing | [89] | Closing cap | | |
| [7] | Output shaft | [31] | Key | [133] | Shim | | |
| [8] | Key | [32] | Spacer tube | [137] | Shim | | |
| [9] | Oil seal | [33] | Retaining ring | [506] | Shim | | |
| [11] | Deep groove ball bearing | [36] | Hex head screw | [518] | Shim | | |
| [12] | Retaining ring | [37] | Deep groove ball bearing | [519] | Shim | | |
| [19] | Key | [44] | O-ring | [520] | Shim | | |

25803530/EN – 04/2018

## 3.9 Nameplate/type designation

### 3.9.1 Gear unit nameplate

The following figure shows an example of a nameplate for a helical-bevel gear unit with input adapter:

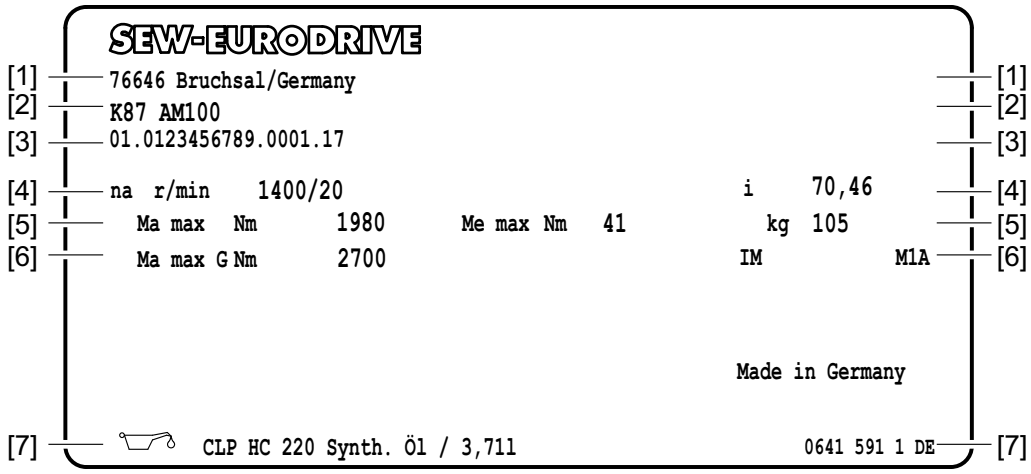


*20682047115*

[1] • Address
[2] • Type designation of the gear unit
[3] • Production number
[4] • Input rated speed/rotational speed at the output shaft of the gear unit in $min^{-1}$
• Gear unit ratio
[5] • Minimum permissible output torque of the gear unit/adapter combination in Nm
• Maximum permissible driving torque in Nm
• Mass in kg
[6] • Maximum permissible output torque of the open gear unit without additional component in Nm
• Mounting position
[7] • Oil type and oil fill volume
• Nameplate number

**Explanation of the production number:**

| 01. | 0123456789. | 0001. | 17 |
|---|---|---|---|
| Sales organization | Order number | Item number | Year of manu-facture |

### 3.9.2 Type designation of the gear unit

A helical-bevel gear unit with AQA adapter, for example, has the following type designation:

| Example: K37/R AQA 80 /1 | | |
|---|---|---|
| Gear unit type | **K** | Helical-bevel gear units |
| Gear unit size | **37** | 19 – 49; 37 – 187 |
| Option | **/R** | e.g. option /R for servo drives: Reduced rotational clearance |

25803530/EN – 04/2018

| Example: K37/R AQA 80 /1 | | |
|---|---|---|
| Adapter | **AQA** | e.g. adapter for servo drives:<br>AQA: Adapter with keyway<br>AQH: Adapter with clamping ring hub |
| Adapter size | **80** | |
| Variants | **/1** | |

### 3.9.3 DRN.. gearmotor nameplate

The following figure shows an example nameplate of a DRN.. gearmotor.

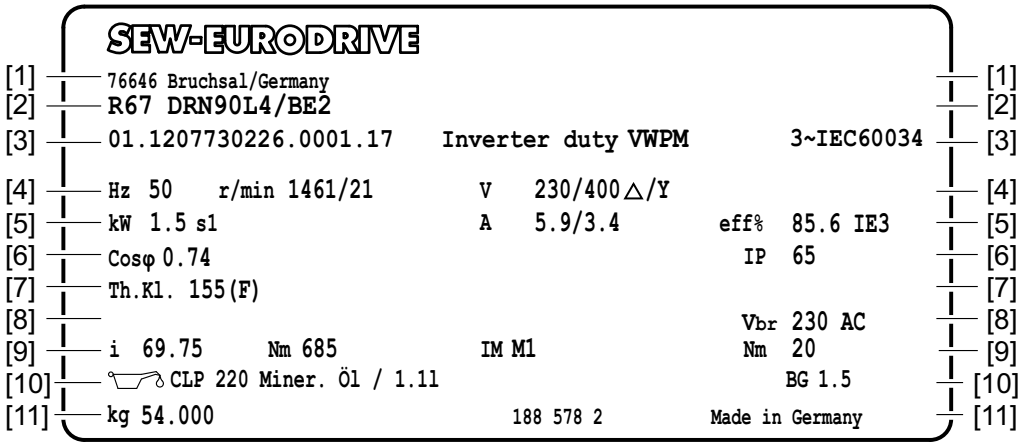


*20683265035*

[1] • Address
[2] • Type designation gearmotor
[3] • Production number
• Suitability for inverter operation
• Number of phases and underlying rated and power standard
[4] • Rated frequency /Hz
• Rated speed of the motor/rotational speed of the gear unit output shaft /$min^{-1}$
• Nominal voltage /V
[5] • Rated power /kW and operating mode
• Rated current /A
• Efficiency /%
• Energy efficiency class
[6] • Power factor
• Degree of protection according to IEC 60034-5
[7] • Thermal class
[8] • Brake voltage /V
[9] • Gear unit ratio
• Output torque /Nm
• Mounting position
• Nominal braking torque /Nm
[10] • Oil type and oil fill volume /l
• Brake control
[11] • Mass /kg
• Nameplate
• Country of production

### 3.9.4 Type designation of a DRN.. gearmotor

The type designation of the gearmotor starts from the component on the output end.

For instance, a multi-stage helical-bevel gearmotor with temperature sensor in the motor winding has the following type designation:

| **Example: K107R77DRN100LS4 /TF** | | |
|---|---|---|
| Gear unit type | K | 1. Gear unit |
| Gear unit size | 107 | |
| Gear unit series | R | 2. Gear unit |
| Gear unit size | 77 | |
| Motor series | DRN.. | Motor |
| Motor size | 100 | |
| Length | LS | |
| Number of poles | 4 | |
| Motor option temperature sensor | /TF | Option |

Example: DRN.. gearmotor

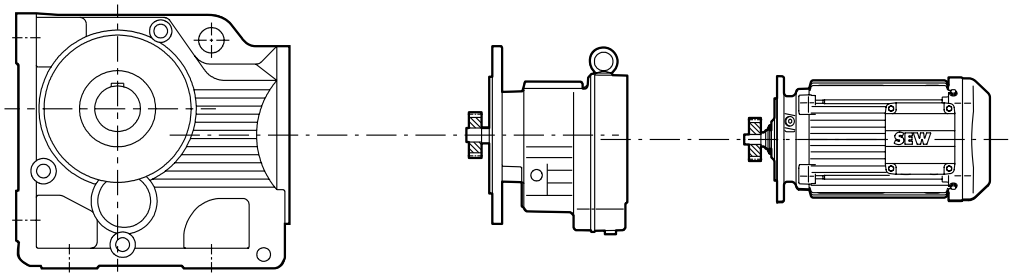


K107 R77 DRN100LS4/TF

*20684745867*

## 3.10 Designs and options – R, F, K, S, W gear units

Below an overview of type designations for R, F, K, S, and W gear units and their options.

### 3.10.1 Helical gear units

| Designation | Description |
|---|---|
| RX.. | Single-stage foot-mounted design, output shaft with key |
| RXF.. | Single-stage B5 flange-mounted design, output shaft with key |
| R.. | Foot-mounted design, output shaft with key |
| R..F | Foot- and B5 flange-mounted design, output shaft with key |
| RF.. | B5 flange-mounted design, output shaft with key |
| RZ.. | B14 flange-mounted design, output shaft with key |
| RM.. | B5 flange-mounted design with extended bearing hub, output shaft with key |

### 3.10.2 Parallel-shaft helical gear units

| Designation | Description |
|---|---|
| F.. | Foot-mounted design, output shaft with key |
| FA..B | Foot-mounted design, hollow shaft with keyway |
| FH..B | Foot-mounted design, hollow shaft with shrink disk |
| FV..B | Foot-mounted design, splined hollow shaft to DIN 5480 |
| FF.. | B5 flange-mounted design, output shaft with key |
| FAF.. | B5 flange-mounted design, hollow shaft with keyway |
| FHF.. | B5 flange-mounted design, hollow shaft with shrink disk |
| FVF.. | B5 flange-mounted design, splined hollow shaft to DIN 5480 |
| FA.. | Hollow shaft with keyway |
| FH.. | Hollow shaft with shrink disk |
| FT.. | Hollow shaft with TorqLOC® hollow shaft mounting system |
| FV.. | Splined hollow shaft to DIN 5480 |
| FZ.. | B14 flange-mounted design, output shaft with key |
| FAZ.. | B14 flange-mounted design, hollow shaft with keyway |
| FHZ.. | B14 flange-mounted design, hollow shaft with shrink disk |
| FVZ.. | B14 flange-mounted design, splined hollow shaft to DIN 5480 |
| FM.. | B5 flange-mounted design with extended bearing hub, output shaft with key |
| FAM.. | B5 flange-mounted design with extended bearing hub, hollow shaft with keyway |

25803530/EN – 04/2018

### 3.10.3 Helical-bevel gear units

| Designation | |
|---|---|
| K.. | Foot-mounted design, output shaft with key |
| KA..B | Foot-mounted design, hollow shaft with keyway |
| KAF..B | B5 flange-mounted design, foot-mounted design, hollow shaft with keyway |
| KF..B | B5 flange-mounted design, foot-mounted design, output shaft with key |
| KH..B | Foot-mounted design, hollow shaft with shrink disk |
| KHF..B | B5 flange-mounted design, foot-mounted design, hollow shaft with shrink disk |
| KV..B | Foot-mounted design, splined hollow shaft to DIN 5480 |
| KF.. | B5 flange-mounted design, output shaft with key |
| KAF.. | B5 flange-mounted design, hollow shaft with keyway |
| KHF.. | B5 flange-mounted design, hollow shaft with shrink disk |
| KVF.. | B5 flange-mounted design, splined hollow shaft to DIN 5480 |
| KA.. | Hollow shaft with keyway |
| KH.. | Hollow shaft with shrink disk |
| KT.. | Hollow shaft with TorqLOC® hollow shaft mounting system |
| KV.. | Splined hollow shaft to DIN 5480 |
| KZ.. | B14 flange-mounted design, output shaft with key |
| KAZ.. | B14 flange-mounted design, hollow shaft with keyway |
| KHZ.. | B14 flange-mounted design, hollow shaft with shrink disk |
| KVZ.. | B14 flange-mounted design, splined hollow shaft to DIN 5480 |
| KM.. | B5 flange-mounted design with extended bearing hub, output shaft with key |
| KAM.. | B5 flange-mounted design with extended bearing hub, hollow shaft with keyway |

### 3.10.4 Helical-worm gear units

| Designation | Description |
|---|---|
| S.. | Foot-mounted design, output shaft with key |
| SF.. | B5 flange-mounted design, output shaft with key |
| SAF.. | B5 flange-mounted design and hollow shaft with keyway |
| SHF.. | B5 flange-mounted design and hollow shaft with shrink disk |
| SA.. | Hollow shaft with keyway |
| SH.. | Hollow shaft with shrink disk |
| ST.. | Hollow shaft with TorqLOC® hollow shaft mounting system |
| SAZ.. | B14 flange-mounted design and hollow shaft with keyway |

25803530/EN – 04/2018

| Designation | Description |
|---|---|
| SHZ.. | B14 flange-mounted design and hollow shaft with shrink disk |

### 3.10.5 SPIROPLAN® gear units

| Designation | Description |
|---|---|
| W.. | Foot-mounted design, output shaft with key |
| WF.. | B5 flange-mounted design, output shaft with key |
| WAF.. | B5 flange-mounted design and hollow shaft with keyway |
| WA.. | Hollow shaft with keyway |
| WA..B | Foot-mounted design and hollow shaft with keyway |
| WH..B | Foot-mounted design and hollow shaft with shrink disk |
| WHF.. | B5 flange-mounted design and hollow shaft with shrink disk |
| WH.. | Hollow shaft with shrink disk |
| WT.. | Hollow shaft with TorqLOC® hollow shaft mounting system |

### 3.10.6 Options

R, F and K gear units:

| Designation | Description |
|---|---|
| /R | Reduced backlash |

K, S and W gear units:

| Designation | Description |
|---|---|
| /T | With torque arm |

F gear units:

| Designation | Description |
|---|---|
| /G | With rubber buffer |

### 3.10.7 Condition monitoring

| Designation | Description |
|---|---|
| /DUO | Diagnostic Unit Oil = Oil aging sensor |
| /DUV40A | Diagnostic Unit Vibration = Vibration sensor |

25803530/EN – 04/2018

# 4 Mechanical installation

## 4.1 Prerequisites for installation

**NOTICE**

Damage to the gear unit/gearmotor due to improper installation

Damage to property

- Observe the following notes.

Make sure that the following requirements are met before you start installing the unit:

- The drive has not been damaged during transportation or storage.
- The entries on the nameplate of the gearmotor match the voltage supply system.
- In case of abrasive ambient conditions, the output side oil seals must be protected against wear.
- Output shafts and flange surfaces must be completely free from anti-corrosion agent and any kind of pollution. Use a commercially available solvent to clean the flange surfaces. Note that solvent damages the oil seal. Do not let the solvent come into contact with the sealing lips of the oil seals!
- **For standard drives:**
  - Check if the gear unit/gearmotor is designed for the ambient temperature. For the application limits refer to the technical documentation, the nameplate or the lubricant table (see chapter "Lubricant table" (→ 🗎 170)).
  - Make sure the environment contains no hazardous substances (oils, acids, gases, vapors, dusts,...) or radiation.
- **For special designs:**
  - Check if the gear unit/gearmotor is designed for the ambient temperature. You find the application limits on the nameplate.
- **For worm/SPIROPLAN® gearmotors:**
  - Note that no large external mass moments of inertia must be present, which could exert a retrodriving load on the gear unit.
  - Note the self-locking at η' (retrodriving) < 0.5.

    Calculation of η': η' = 2- 1/η
- **Servomotor mounting:**
  - The drive may only be mounted if it is ensured that after the mounting the drive will be sufficiently ventilated. Ventilation prevents heat build-up.

25803530/EN – 04/2018

### 4.1.1 Required tools/resources

The following tools and resources are required for the mechanical installation:

- Wrench
- Torque wrench for:
  - Gear unit mounting
  - Shrink disks
  - Motor adapter AQH or EWH
  - Input shaft assembly with centering shoulder
- Mounting device
- Compensation elements (shims and spacing rings)
- Fasteners for input and output elements
- Lubricant (e.g. NOCO® fluid)
- Threadlocker compound for input cover with centering shoulder (e.g. Loctite® 243)

## INFORMATION

Standard parts are not included in the delivery.

### 4.1.2 Installation tolerances

| Shaft end | Flanges |
|---|---|
| Diameter tolerance according to DIN 748<br>• ISO k6 for solid shafts with Ø ≤ 50 mm<br>• ISO m6 for solid shafts with Ø > 50 mm<br>• ISO H7 for hollow shafts<br>• Centering bore in accordance with DIN 332, shape DR | Centering shoulder tolerance to DIN 42948<br>• ISO j6 with b1 ≤ 230 mm<br>• ISO h6 with b1 > 230 mm |

25803530/EN – 04/2018

## 4.2 Installing the gear unit



**⚠ CAUTION**

Risk of injury due to improper installation/disassembly

Severe personal injury and damage to property

- Work on the gear unit only when the machine is not in use.
- Secure the drive unit against unintentional power-up.
- Prevent heavy component parts (e.g. shrink disks) against falling during installation/disassembly.



**⚠ CAUTION**

Risk of injury due to protruding gear unit parts

Severe injuries

- Keep a sufficient safety distance to the gear unit/gearmotor.



**⚠ CAUTION**

Danger due to static overdetermination if gear units with foot (e.g. KA19/29B, KA127/157B or FA127/157B) are mounted both via the torque arm and via the foot plate.

Risk of injuries and damage to property

- Especially with the KA.9B/T variant, it is not permitted to use the foot plates and the torque arm at the same time.
- Attach the KA.9B/T design only via the torque arm.
- Attach the K.9 or KA.9B design only via the foot plate.
- If you want to use foot plates and torque arms for mounting, contact SEW-EURODRIVE.



**⚠ CAUTION**

Danger due to static overdetermination in the case of gearmotors when the gear unit is attached to the foot plate (e.g. KA19/29B, KA127/157B or FA127/157B, R gear unit with foot-mounted motor) and the motor is attached to the foot plate as well.

Risk of injuries and damage to property

- Attach only the gear unit or only the motor to the foot plate.

**NOTICE**

Damage to gear unit/gearmotor due to cold air currents. Condensed water in the gear unit can cause damage.

Damage to property

- Protect the gear unit from direct cold air currents.



**INFORMATION**

When installing the gear unit, make sure that the oil level and drain plugs as well as the breather valves are easily accessible!

25803530/EN – 04/2018

Mounting position

The gear unit or gearmotor is only allowed to be installed in the specified mounting position. Observe the information on the nameplate. SPIROPLAN® gear units of sizes W10 – W30 are mounting position-independent.

Oil level

Check the mounting position-dependent oil level; see chapter "Inspection/maintenance work on the gear unit" (→ 🗎 113). The gear units are filled with the required oil quantity at the factory. There may be slight deviations at the oil level plug as a result of the mounting position, which are permitted within the manufacturing tolerances.

**Adjust the lubricant fill quantities and the position of the breather valve accordingly in the event of a change of mounting position.** Observe chapter Lubricant fill quantities and chapter "Mounting positions" (→ 🗎 129).

Contact SEW-EURODRIVE in case of the following mounting position changes:

- Mounting position change to M4: Depending on the operating mode of the drive, an oil expansion tank can be necessary (see chapter "Oil expansion tank" (→ 🗎 93)).
- Changing the mounting position of K gear units to M5 or M6 or within these mounting positions
- Changing the mounting position of size S47 – S97 S gear units to mounting positions M2 and M3
- Changing the mounting positions of R gear units to mounting position M2.

Submounting

The support structure must have the following characteristics:

- Level
- Vibration damping
- Torsionally rigid

The following table shows the maximally permitted flatness defect for foot- and flange-mounting (guide values based on DIN ISO 1101):

| Gear unit size | Flatness defect |
|---|---|
| ≤ 67 | max. 0.4 mm |
| 77 – 107 | max. 0.5 mm |
| 127 – 147 | max. 0.7 mm |
| 157 – 187 | max. 0.8 mm |

Do not twist housing legs and mounting flanges against each other. Observe the permitted overhung and axial loads! Observe the "Project Planning" section in the gear unit/gearmotor catalog for calculating the permitted overhung and axial loads.

25803530/EN – 04/2018

Strength class of the screws

Always mount gearmotors using screws of strength class 8.8. The gearmotors in flange-mounted design and in foot-/flange-mounted design listed in the following table are an exception. Always use screws of strength class 10.9 for these gearmotors. Use suitable washers.

| Gear unit | Flange Ø in mm | Strength class of the screws |
|---|---|---|
| RF37/R37F | 120 | 10.9 |
| RF47/R47F | 140 | |
| RF57/R57F | 160 | |
| FF/FAF77<br>KF/KAF77 | 250 | |
| FM/FAM67, FM/FAM77<br>KM/KAM67, KM/KAM77 | 300 | |
| FM/FAM87<br>KM/KAM87 | 350 | |
| FM/FAM97<br>KM/KAM97 | 400 | |
| RF147<br>FM/FAM107<br>KM/KAM107 | 450 | |
| RF167<br>FM/FAM127<br>KM/KAM127 | 550 | |
| FM/FAM157<br>KM/KAM157 | 660 | |
| RZ37 – RZ87 | 60ZR – 130ZR | |

Corrosion protection for screw connections

Use plastic inserts (2 – 3 mm thick) if there is a risk of electrochemical corrosion between the gear unit and the driven machine. The material used must have an electrical leakage resistance < $10^9$ Ω. Electrochemical corrosion can occur between various metals, for example, cast iron and stainless steel. Also install the bolts with plastic washers! Additionally ground the housing. Use grounding screws on the motor.

25803530/EN – 04/2018

### 4.2.1 Tightening torques for retaining screws

Mount the gearmotors with the following tightening torques:

| Screw/nut | Tightening torque ± 10%<br>Strength class 8.8<br>Nm |
|---|---|
| M6 | 11 |
| M8 | 27 |
| M10 | 54 |
| M12 | 93 |
| M16 | 230 |
| M20 | 464 |
| M24 | 798 |
| M30 | 1597 |
| M36 | 2778 |
| M42 | 3995 |
| M48 | 6022 |
| M56 | 9650 |

Mount the specified gearmotors in flange-mounted design with the following increased tightening torques:

| Flange Ø mm | Gear unit | Screw/nut | Tightening torque ± 10%<br>Strength class 10.9<br>Nm |
|---|---|---|---|
| 120 | RF37 | M6 | 17 |
| 140 | RF37/RF47 | M8 | 40 |
| 160 | RF57 | M8 | 40 |
| 300 | FM/FAM67,<br>FM/FAM77<br>KM/KAM67,<br>KM/KAM77 | M12 | 137 |
| 350 | FM/FAM87<br>KM/KAM87 | M16 | 338 |
| 400 | FM/FAM97<br>KM/KAM97 | M16 | 338 |
| 450 | FM/FAM107<br>KM/KAM107 | M16 | 338 |
| 450 | RF147 | M20 | 661 |
| 550 | FM/FAM127<br>KM/KAM127 | M16 | 338 |
| 550 | RF167 | M20 | 661 |

25803530/EN – 04/2018

| Flange Ø mm | Gear unit | Screw/nut | Tightening torque ± 10% Strength class 10.9 Nm |
|---|---|---|---|
| 660 | FM/FAM157<br>KM/KAM157 | M20 | 661 |
| 60ZR | RZ37 | M8 | 40 |
| 70ZR | RZ47 | M8 | 40 |
| 80ZR | RZ57 | M10 | 79 |
| 95ZR | RZ67 | M10 | 79 |
| 110ZR | RZ77 | M10 | 79 |
| 130ZR | RZ87 | M12 | 137 |
| 250 | FF77/KF77/ FAF77/ KAF77 | M12 | 137 |

### 4.2.2 Tightening torques for oil level plugs, oil drain plugs, screw plugs, breather valves and oil sight glasses

Observe the tightening torques in the following table when screwing in:

| Thread | Tightening torque Nm |
|---|---|
| M10 × 1 | 8 |
| M12 × 1.5 | 14 |
| M22 × 1.5 | 45 |
| M33 × 2 | 100 |
| M42 × 2 | 160 |

25803530/EN – 04/2018

### 4.2.3 Gear unit mounting

## INFORMATION

If you use the gear unit in flange-mounted design or foot/flange-mounted design in connection with VARIBLOC® variable-speed gear units, use screws of 10.9 quality and suitable washers for flange mounting on the customer side.

To improve the friction contact between flange and mounting surface, SEW-EURODRIVE recommends anaerobic gaskets or an anaerobic glue.

## INFORMATION

With the gear units KAZ/KZ/FAZ/FZ 107-157, remove the 4 transport protection screws from the B14 flange. The 2 recessed screws **must** remain in the B14 flange.

**Foot-mounted gear unit**

The following table shows the thread sizes of the foot-mounted gear units depending on the gear unit type and size:

| Screw | Gear unit type | | | | | |
|---|---|---|---|---|---|---|
| | R/R..F | RX | F/FH..B/ FA..B | K/KH..B/KV..B/ KA..B | S | W |
| M6 | 07 | – | – | 19 | – | 10/20 |
| M8 | 17/27/37 | – | 27/37 | 29 | 37 | 30/37/47 |
| M10 | – | 57 | 47 | 37/39/47/49 | 47/57 | – |
| M12 | 47/57/67 | 67 | 57/67 | 57/67 | 67 | – |
| M16 | 77/87 | 77/87 | 77/87 | 77 | 77 | – |
| M20 | 97 | 97/107 | 97 | 87 | 87 | – |
| M24 | 107 | – | 107 | 97 | 97 | – |
| M30 | 127/137 | – | 127 | 107/167 | – | – |
| M36 | 147/167 | – | 157 | 127/157/187 | – | – |

**Gear unit with B14 flange-mounted design and/or hollow shaft**

The following table shows the thread sizes of the gear units with B14 flange and/or hollow shaft depending on the gear unit type and size:

| Screw | Gear unit type | | | | |
|---|---|---|---|---|---|
| | RZ | FZ/FAZ/FHZ/ FVZ | KZ/KAZ/KHZ/ KVZ | SA/SAZ/SHZ | WA |
| M6 | 07/17/27 | – | – | 37 | 10/20/30[1)] |
| M8 | 37/47 | 27/37/47 | 37/47 | 47/57 | 37 |
| M10 | 57/67 | – | – | – | 47 |
| M12 | 77/87 | 57/67/77 | 57/67/77 | 67/77 | – |
| M16 | – | 87/97 | 87/97 | 87/97 | – |
| M20 | – | 107/127 | 107/127 | – | – |

25803530/EN – 04/2018

| Screw | Gear unit type | | | | |
|---|---|---|---|---|---|
| | RZ | FZ/FAZ/FHZ/ FVZ | KZ/KAZ/KHZ/ KVZ | SA/SAZ/SHZ | WA |
| M24 | – | 157 | 157 | – | – |

1) For the W30 design mounted directly on a CMP.. motor or mounted via an EWH.. adapter, the thread size is M8.

**Gear unit with B5 flange-mounted design**

The following table shows the thread sizes of the gear units with B5 flange depending on the gear unit type, size and flange diameter:

| Ø flange mm | Screw | Gear unit type | | | | | |
|---|---|---|---|---|---|---|---|
| | | RF/R..F/RM | FF/FAF/ FHF/FVF | FM/FAM KM/KAM | KF/KAF/ KHF/KVF | SF/SAF/ SHF | WF/WAF/ WHF |
| 80 | M6 | – | – | – | – | – | 10 |
| 110 | M8 | – | – | – | – | – | 20 |
| 120 | M6 | 07/17/27 | – | – | – | 37 | 10/20/30/37 |
| 120 | M8 | – | – | – | 19 | – | – |
| 140 | M8 | 07/17/27/37/47 | – | – | – | – | – |
| 160 | M8 | 07/17/27/37/47 | 27/37 | – | 19/37 | 37/47 | 30/37/47 |
| 160 | M10 | – | – | – | 29/39 | – | – |
| 200 | M10 | 37/47/57/67 | 47 | – | 29/47 | 57/67 | – |
| 200 | M12 | – | – | – | 49 | – | – |
| 250 | M12 | 57/67/77/87 | 57/67 | – | 57/67 | 77 | – |
| 300 | M12 | 67/77/87 | 77 | 67/77 | 77 | – | – |
| 350 | M16 | 77/87/97/107 | 87 | 87 | 87 | 87 | – |
| 400 | M16 | – | – | 97 | – | – | – |
| 450 | M16 | 97/107/127/137/ 147 | 97/107 | 107 | 97/107 | 97 | – |
| 550 | M16 | 107/127/137/ 147/167 | 127 | 127 | 127 | – | – |
| 660 | M20 | 147/167 | 157 | 157 | 157 | – | – |

### 4.2.4 Installation in damp locations or outdoors

## NOTICE

Paint can block the breather valve and damage the sealing lips of the oil seals.

Damage to property.

- Thoroughly cover the breather valve and sealing lip of the oil seals with strips prior to painting/re-painting.
- Remove the strips after painting.

25803530/EN – 04/2018

Drives are supplied in corrosion-resistant designs with an according surface protection coating for use in damp areas or outdoors.

- Repair any damage to the paint work (e.g. on the breather valve or the lifting eyes).
- When mounting the motors onto AM, AQ adapters and to AR, AT start-up couplings and slip clutches, seal the flange areas with a suitable sealant (e.g. Loctite® 574).
- In case of setup outdoors, the drives must not be exposed to direct sunlight. Install appropriate protection devices e.g. a cover or a canopy. The protection device must not cause heat build-up.
- The system operator must ensure that no foreign objects (e.g. falling objects or coverings) affect the operation of the gear unit.

### 4.2.5 Gear unit venting

## NOTICE

Dirt and dust in the environment affect the function of the breather valve.

Potential damage to property.

- Check the breather valve function regularly and replace it if necessary.
- In case of high dirt and dust load use a breather filter instead of a breather valve.

The following table lists gear units that do not require venting:

| Gear unit | Mounting position |
|---|---|
| R..07 | M1/M2/M3/M5/M6 |
| R..17/R..27/F..27 | M1/M3/M5/M6 |
| W..10/W..20/W..30 | M1 – M6 |
| W..37/W..47 | M1/M2/M3/M5/M6 |
| K..19/K..29 | M1/M2/M3/M5/M6 |

All other gear units are delivered with a breather valve suitable to the mounting position and activated.

**Exceptions:**

- The following gear units are delivered with a screw plug on the provided breather hole:
  - Gear unit with pivoted mounting position (dynamic)
  - Gear unit for mounting in an inclined position (stationary)
  - Mounting position MX

  A breather valve is supplied in a separate plastic bag attached to the gear unit. Before startup, replace the highest screw plug with the breather valve provided. Observe for this the tightening torques in chapter "Tightening torques for oil level plugs, oil drain plugs, screw plugs, breather valves and oil sight glasses" (→ 🗎 32).
- For **gear head units** and **gear units with pivoted mounting position** with venting on the input end, a breather valve is supplied in a plastic bag.
- **Enclosed gear units** are delivered without a breather valve.

- Gear units with gear unit venting on fixed piping, with expansion tank, and with ventilation filter are delivered without a breather valve.
- In some countries, the breather valve is installed, but not activated due to possible pressure fluctuations during transport. In such cases the transport protection must be removed. This activates the breather valve (see chapter "Activating the breather valve" (→ 🗎 36)).

**Activating the breather valve**

1. Before startup, check whether the transport protection on the breather valve has been removed and the valve is therefore activated. The following figure shows a breather valve with transport protection:

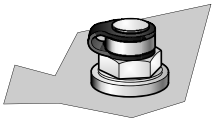

2. Remove the transport protection.

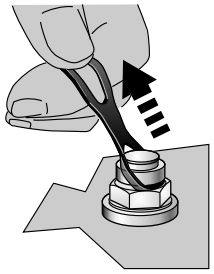

⇨ The following figure shows an activated breather valve:

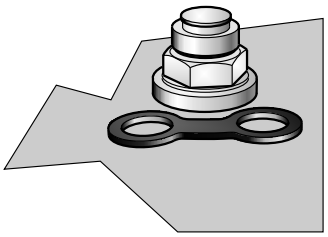

### 4.2.6 Painting the gear unit

## NOTICE

Paint can block the breather valve and damage the sealing lips of the oil seals.

Damage to property.

- Thoroughly cover the breather valve and sealing lip of the oil seals with strips prior to painting/re-painting.
- Remove the strips after painting.

25803530/EN – 04/2018

## 4.3 Gear unit with solid shaft

### 4.3.1 Assembling input and output elements

**NOTICE**

Damage to bearing, housing or shafts due to incorrect mounting

Possible damage to property.

- Only use a mounting device for installing input and output elements (see chapter "Using the mounting device" (→ 🗎 37)). Use the threaded centering bore at the shaft end.
- Never force belt pulleys, couplings, pinions, etc. onto the shaft end by hitting them with a hammer.
- During the installation of belt pulleys, make sure the belt is tensioned correctly in accordance with the manufacturer's instructions.
- Make sure the transmission elements are balanced after fitting and do not give rise to any impermissible radial or axial forces. For the approved values, refer to the catalog "Gearmotors" or "Explosion-Proof Drives".

**INFORMATION**

Mounting is easier if you first apply lubricant to the output element or heat it up briefly to 80 – 100 °C.

**Using a mounting device**

The following figure shows a mounting device for installing couplings or hubs on gear unit or motor shaft ends. Should you be able to tighten the screw without any problems, you may not need the thrust bearing on the mounting device.

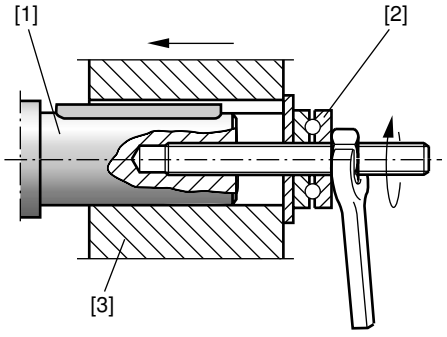


211368587

[1] Gear shaft end
[2] Thrust bearing
[3] Coupling hub

### Avoiding excessive overhung loads

To avoid high overhung loads, mount gears and sprockets according to figure **B**.

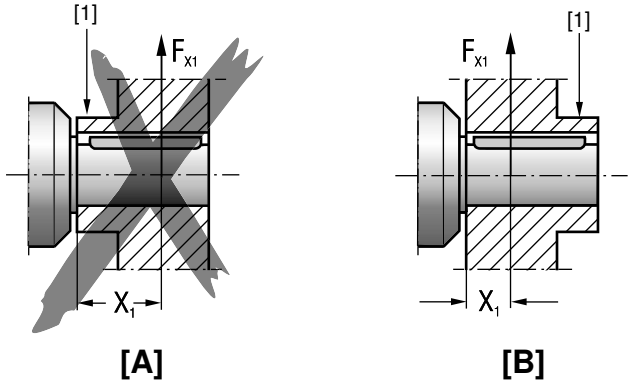


211364235

[1] Hub
[A] Incorrect assembly
$F_{X1}$ Overhung load at point X1
[B] Correct assembly

### 4.3.2 Mounting of couplings

**⚠ CAUTION**

Risk of injury due to moving drive elements, such as belt pulleys or couplings, during operation.

Risk of jamming and crushing.

- Equip the input and output elements with a touch guard.

Adjust the following misalignments according to the coupling manufacturer's specifications when mounting couplings:

a) Maximum and minimum clearance

b) Axial misalignment

c) Angular misalignment

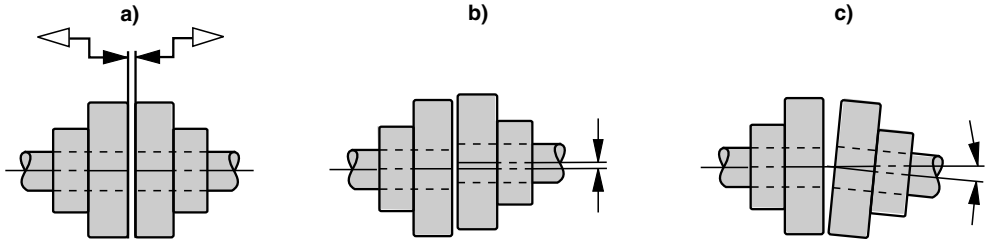


211395595

25803530/EN – 04/2018

## 4.4 Torque arms for shaft-mounted gear units

### NOTICE

Damage to gear unit due to improper installation

Damage to the gear unit

- Do not place torque arms under strain during installation.
- Always use bolts of quality 8.8 to fasten torque arms.

The following figure shows the mounted torque arm without tension:

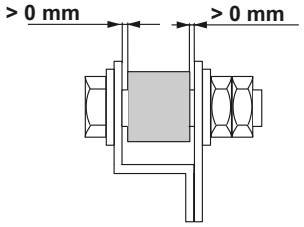


### 4.4.1 Mounting torque arms for parallel-shaft helical gear units

The following figure shows the torque support for parallel-shaft helical gear units in loose state.

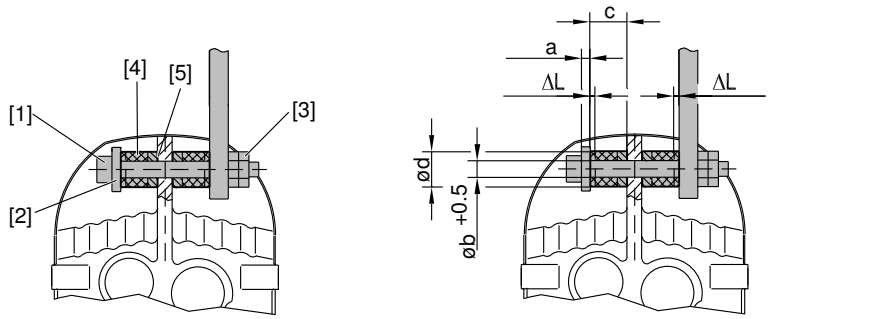


*36028797230330379*

[1] Screw
[2] Washer
[3] Nuts
[4] Rubber buffer
[5] Metal side of the rubber buffer

a Washer width
b Rubber buffer inner diameter
c Rubber buffer length in loose state
d Rubber buffer diameter
ΔL Preload per rubber buffer in tightened state

Proceed as follows:

1. Make sure that the metal sides of the rubber buffers lay against the gear unit.
2. Use screws [1] and washers [2] according to the following table.
3. Secure the screw connection with a nut [3].
4. Tighten the screw [1] until the preload "Δ L" of the rubber buffers is reached according to the table:

| Gear unit | Washer | Rubber buffer | | | |
|---|---|---|---|---|---|
| | a | d | b | c | Δ L |
| | mm | mm | mm | mm | mm |
| F..27 /G | 5 | 40 | 12.5 | 20 | 1 |
| F..37 /G | 5 | 40 | 12.5 | 20 | 1 |
| F..47 /G | 5 | 40 | 12.5 | 20 | 1.5 |
| F..57 /G | 5 | 40 | 12.5 | 20 | 1.5 |
| F..67 /G | 5 | 40 | 12.5 | 20 | 1.5 |
| F..77 /G | 10 | 60 | 21.0 | 30 | 1.5 |
| F..87 /G | 10 | 60 | 21.0 | 30 | 1.5 |
| F..97 /G | 12 | 80 | 25.0 | 40 | 2 |
| F..107 /G | 12 | 80 | 25.0 | 40 | 2 |
| F..127 /G | 15 | 100 | 32.0 | 60 | 3 |
| F..157 /G | 15 | 120 | 32.0 | 60 | 3 |

### 4.4.2 Mounting torque arms for helical-bevel gear unit K..19 – K..49

The following figure shows the torque support for the helical-bevel gear units K..19 – K..49:

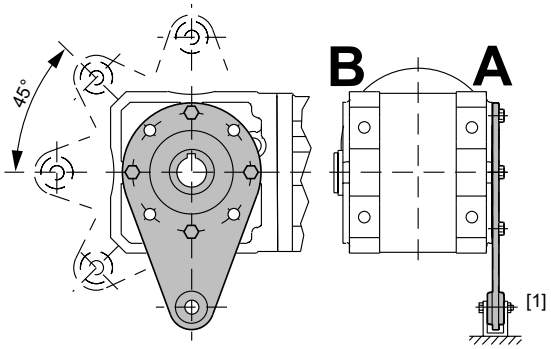


[1] Bushing

A Connection side
B Connection side

Observe the following points during assembly:

- Apply bearings to both sides of the bushing [1].
- Mount connection side B so that it mirrors side A.
- Use screws and tightening torques according to the following table:

| Gear unit | Screws | Tightening torque ± 10% |
|---|---|---|
| | | Nm |
| K..19 /T | 4 × M8 × 20 – 8.8 | 27 |
| K..29 /T | 4 × M8 × 22 – 8.8 | 27 |
| K..39 /T | 4 × M10 × 30 – 8.8 | 54 |
| K..49 /T | 4 × M12 × 35 – 8.8 | 93 |

25803530/EN – 04/2018

### 4.4.3 Mounting torque arms for helical-bevel gear unit K..37 – K..157

The following figure shows the torque support for the helical-bevel gear units K..37 – K..157.

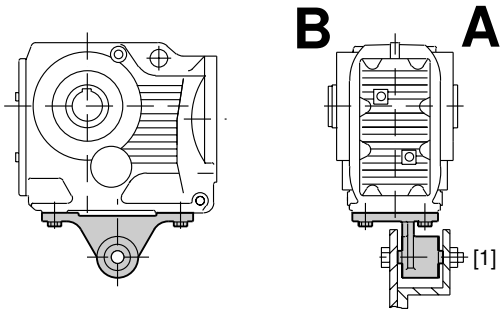


*27021597975585035*

[1] Bushing

A Connection side
B Connection side

Proceed as follows:

1. Apply bearings to both sides of the bushing [1].
2. Mount connection side B so that it mirrors side A.
3. Use screws and tightening torques according to the following table:

| Gear unit | Screws | Tightening torque ± 10%<br>Nm |
|---|---|---|
| K..37 /T | 4 × M10 × 25 – 8.8 | 54 |
| K..47 /T | 4 × M10 × 30 – 8.8 | 54 |
| K..57 /T | 4 × M12 × 35 – 8.8 | 93 |
| K..67 /T | 4 × M12 × 35 – 8.8 | 93 |
| K..77 /T | 4 × M16 × 40 – 8.8 | 230 |
| K..87 /T | 4 × M16 × 40 – 8.8 | 230 |
| K..97 /T | 4 × M20 × 50 – 8.8 | 464 |
| K..107 /T | 4 × M24 × 60 – 8.8 | 796 |
| K..127 /T | 4 × M36 × 130 – 8.8 | 2778 |
| K..157 /T | 4 × M36 × 130 – 8.8 | 2778 |

25803530/EN – 04/2018

### 4.4.4 Mounting torque arms for helical-worm gear units

The following figure shows the toque support for helical-worm gear units.

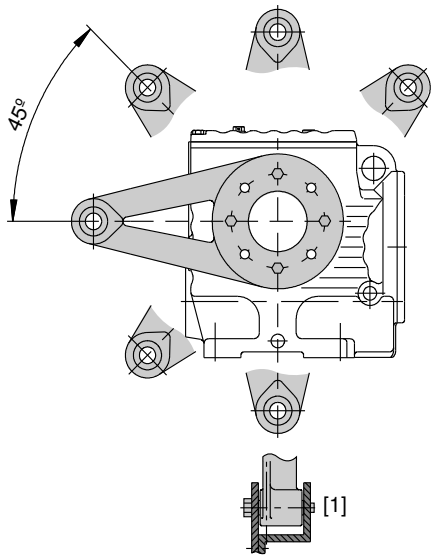


*18014398720973707*

[1] Bushing

Proceed as follows:

1. Apply bearings to both sides of the bushing [1].
2. Use screws and tightening torques according to the following table:

| Gear unit | Screws | Tightening torque ± 10%<br>Nm |
|---|---|---|
| S..37 /T | 4 × M6 × 16 – 8.8 | 11 |
| S..47 /T | 4 × M8 × 25 – 8.8 | 27 |
| S..57 /T | 6 × M8 × 25 – 8.8 | 27 |
| S..67 /T | 4 × M12 × 35 – 8.8 | 93 |
| S..77 /T | 4 × M12 × 35 – 8.8 | 93 |
| S..87 /T | 4 × M16 × 45 – 8.8 | 230 |
| S..97 /T | 4 × M16 × 50 – 8.8 | 230 |

25803530/EN – 04/2018

### 4.4.5 Mounting torque arms for SPIROPLAN® W gear units

The following figure shows the toque support for SPIROPLAN® W gear units.

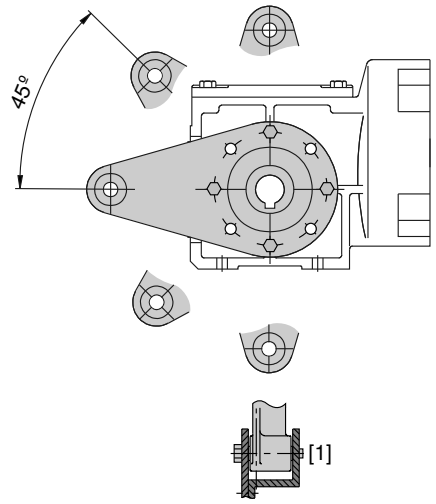


*18014398720971531*

[1] Bushing

Proceed as follows:

1. Apply bearings to both sides of the bushing [1].
2. Use screws and tightening torques according to the following table:

| Gear unit | Screws | Tightening torque ± 10%<br>Nm |
|---|---|---|
| W..10 /T | 4 × M6 × 16 – 8.8 | 11 |
| W..20 /T | 4 × M6 × 16 – 8.8 | 11 |
| W..30 /T | 4 × M6 × 16 – 8.8 | 11 |
| W..37 /T | 4 × M8 × 20 – 8.8 | 27 |
| W..47 /T | 4 x M10 × 20 – 8.8 | 54 |

25803530/EN – 04/2018

## 4.5 Mounting shaft-mounted gear units with splined hollow shaft

### INFORMATION

Concerning the configuration of the customer shaft, please also refer to the design notes in the "Gearmotors" catalog.

Proceed as follows:

1. Apply NOCO® fluid. Spread carefully.

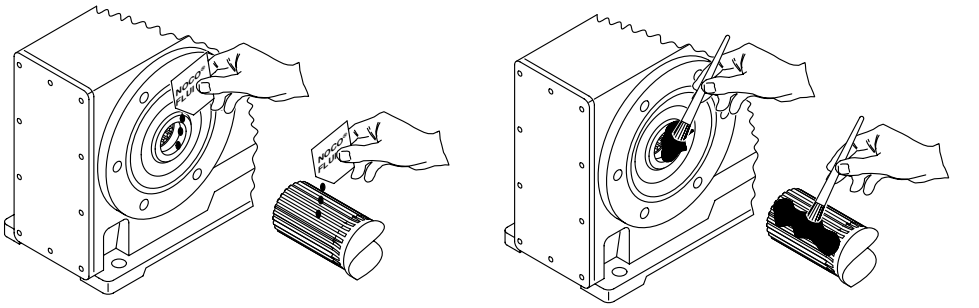

*20685469067*

2. Install the shaft and secure it axially. For easier mounting, use a mounting device.

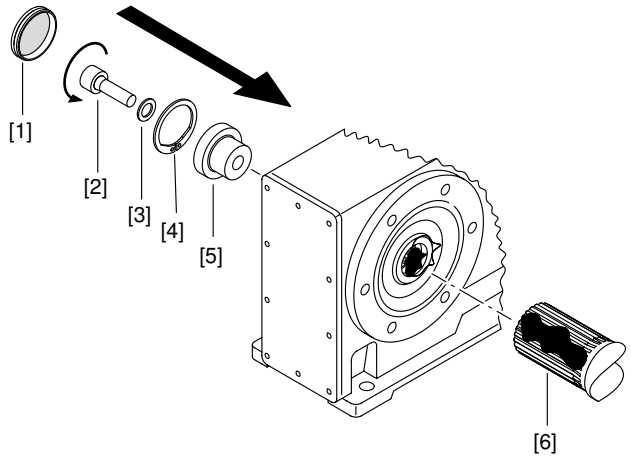


*20685473931*

[1] Closing plug
[2] Cap screw
[3] Supporting ring
[4] Retaining ring
[5] Washer

25803530/EN – 04/2018

## 4.6 Shaft-mounted gear unit with keyway

### INFORMATION

Concerning the design of the customer shaft, please also refer to the design notes in the "Gearmotors" catalog.

### 4.6.1 Mounting shaft-mounted gear units with keyway

Proceed as follows:

1. Apply NOCO® fluid. Spread carefully.

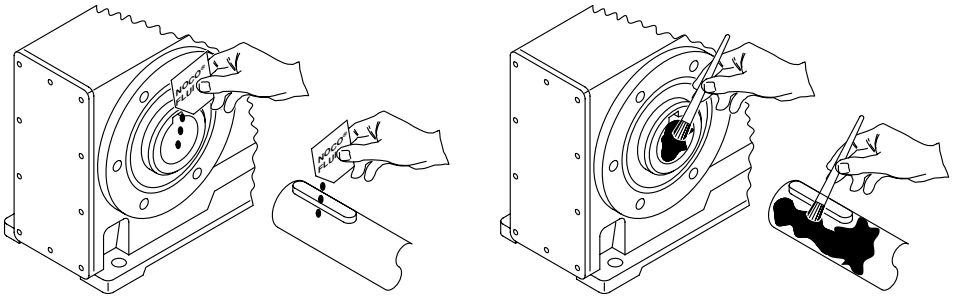

*9007199466257163*

2. Install the shaft and secure it axially. For easier mounting, use a mounting device. Proceed according to one of the **3 mounting types**, depending on the scope of delivery.

**A) Mounting a customer shaft (standard scope of delivery):**

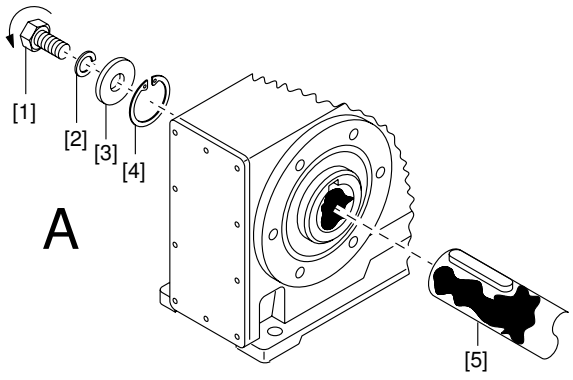


*9007199466259339*

[1] Short retaining screw (standard scope of delivery)
[2] Lock washer
[3] Washer
[4] Retaining ring
[5] Customer shaft

**B) Mounting customer shaft with contact shoulder using the SEW-EURODRIVE assembly/disassembly kit:**

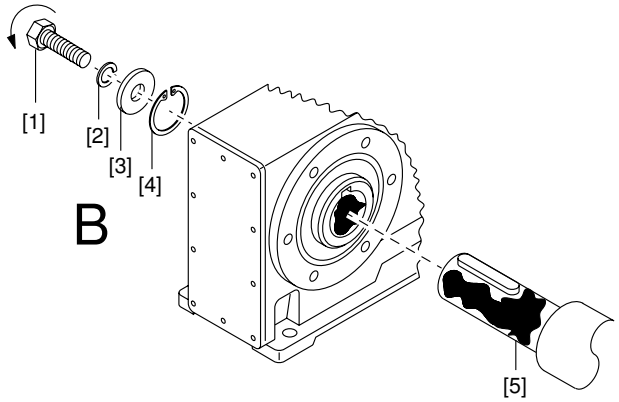


*9007199466261515*

[1] Retaining screw
[2] Lock washer
[3] Washer
[4] Retaining ring
[5] Customer shaft with contact shoulder

**C) Mounting customer shaft without contact shoulder using the SEW-EURODRIVE assembly/disassembly kit:**

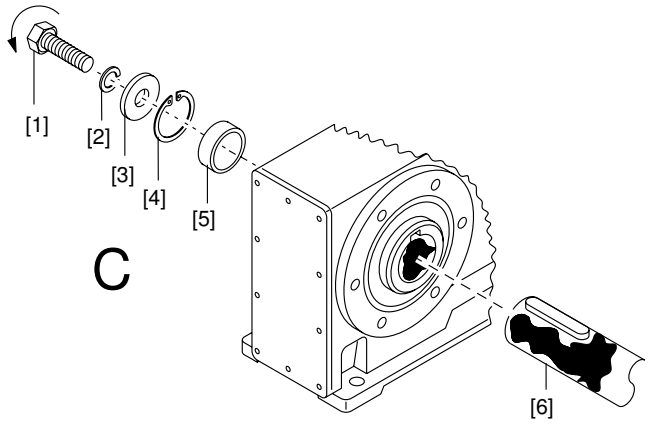


*9007199466263691*

[1] Retaining screw
[2] Lock washer
[3] Washer
[4] Retaining ring
[5] Spacer tube
[6] Customer shaft without contact shoulder

3. Tighten the retaining screw to the appropriate torque. Observe the tightening torques specified in the following table.

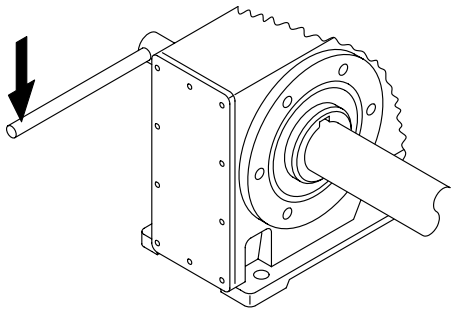

*9007199466265867*

| Screw | Tightening torque<br>Nm |
|---|---|
| M5 | 5 |
| M6 | 8 |
| M10/12 | 20 |
| M16 | 40 |
| M20 | 80 |
| M24 | 200 |

## INFORMATION

To avoid contact corrosion, SEW-EURODRIVE recommends that the customer shaft should be lathed down between the 2 contact surfaces.

### 4.6.2 Removing the shaft-mounted gear unit

This description is only applicable if the gear unit was assembled using the SEW-EURODRIVE assembly/disassembly kit (see step 2 of "Mounting the shaft-mounted gear unit" (→ 🗎 45)).

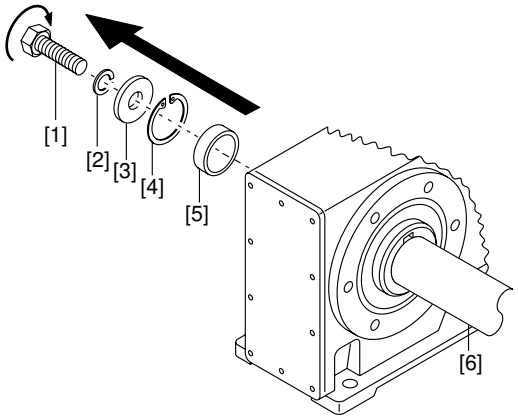


*9007199466268043*

[1] Retaining screw
[2] Lock washer
[3] Washer
[4] Retaining ring
[5] Spacer tube
[6] Customer shaft

Proceed as follows:

1. Loosen the retaining screw [1].
2. Remove parts [2] to [4] and, if applicable, the spacer tube [5].
3. Insert the forcing washer [8] and the fixed nut [7] from the SEW-EURODRIVE assembly/disassembly kit between the customer shaft [6] and the retaining ring [4] (see "SEW-EURODRIVE assembly/disassembly kit" (→ 🗎 49)).

25803530/EN – 04/2018

4. Re-install the retaining ring [4].
5. Re-install the retaining screw [1]. Press the gear unit off the shaft by tightening the screw.

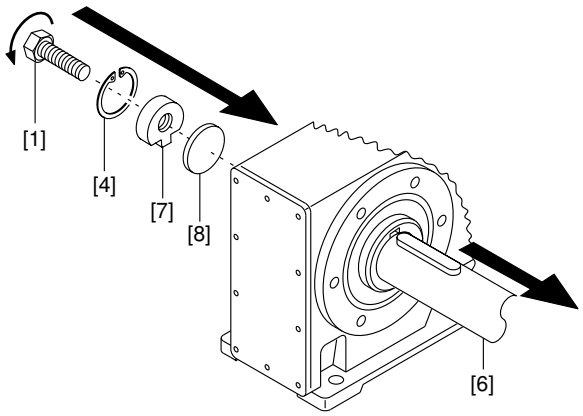


*9007199466270219*

[1] Retaining screw
[4] Retaining ring
[6] Customer shaft
[7] Fixed nut
[8] Forcing washer

25803530/EN – 04/2018

### 4.6.3 Assembly/disassembly kit by SEW-EURODRIVE

Applies only if the installation/removal kit was previously used for installation.

1. Loosen the retaining screw [5].
2. Remove the retaining ring [4] and, if used, the spacer tube.
3. Insert the forcing washer [2] and the fixed nut [3] between the customer shaft [1] and retaining ring [4] as shown in the following figure.
4. Re-insert the retaining ring [4].
5. Re-install the retaining screw [5]. Now you can force the gear unit off the shaft.

The following figure shows the SEW-EURODRIVE assembly/disassembly kit.

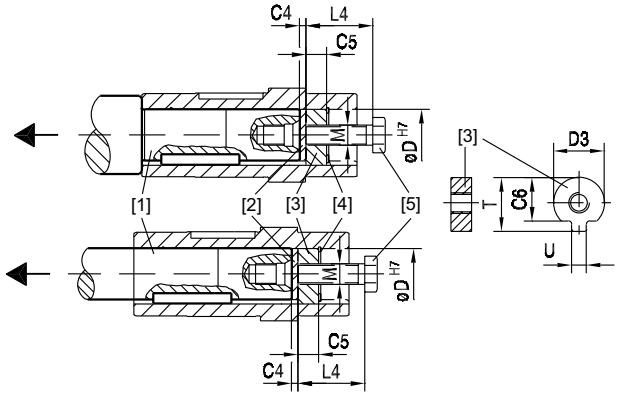


*27021606946895115*

[1] Customer shaft
[2] Forcing washer
[3] Fixed nut for disassembly
[4] Retaining ring
[5] Retaining screw

Dimensions and part numbers of the assembly/disassembly kit:

| Type | $D^{H7}$ mm | M[1)] | C4 mm | C5 mm | C6 mm | $U^{-0.5}$ mm | $T^{-0.5}$ mm | $D3^{-0.5}$ mm | L4 mm | Part number of the assembly/disassembly kit |
|---|---|---|---|---|---|---|---|---|---|---|
| WA..10 | 16 | M5 | 5 | 5 | 12 | 4.5 | 18 | 15.7 | 50 | 6437125 |
| WA..20 | 18 | M6 | 5 | 6 | 13.5 | 5.5 | 20.5 | 17.7 | 25 | 643682X |
| WA..20, WA..30, SA..37, WA..37, KA..19 | 20 | M6 | 5 | 6 | 15.5 | 5.5 | 22.5 | 19.7 | 25 | 6436838 |
| FA..27, SA..47, WA..47, KA..29 | 25 | M10 | 5 | 10 | 20 | 7.5 | 28 | 24.7 | 35 | 6436846 |
| FA..37, KA..29, KA..37, KA..39, SA..47, SA..57, WA..47, | 30 | M10 | 5 | 10 | 25 | 7.5 | 33 | 29.7 | 35 | 6436854 |
| FA..47, KA..39, KA..47, KA..49, SA..57 | 35 | M12 | 5 | 12 | 29 | 9.5 | 38 | 34.7 | 45 | 6436862 |
| FA..57, KA..57, FA..67, KA..49, KA..67, SA..67 | 40 | M16 | 5 | 12 | 34 | 11.5 | 41.9 | 39.7 | 50 | 6436870 |
| SA..67 | 45 | M16 | 5 | 12 | 38.5 | 13.5 | 48.5 | 44.7 | 50 | 6436889 |
| FA..77, KA..77, SA..77 | 50 | M16 | 5 | 12 | 43.5 | 13.5 | 53.5 | 49.7 | 50 | 6436897 |
| FA..87, KA..87, SA..77, SA..87 | 60 | M20 | 5 | 16 | 56 | 17.5 | 64 | 59.7 | 60 | 6436900 |
| FA..97, KA..97, SA..87, SA..97 | 70 | M20 | 5 | 16 | 65.5 | 19.5 | 74.5 | 69.7 | 60 | 6436919 |
| FA..107, KA..107, SA..97 | 90 | M24 | 5 | 20 | 80 | 24.5 | 95 | 89.7 | 70 | 6436927 |

1) Retaining screw

## 4.7 Shaft-mounted gear unit with shrink disk

### 4.7.1 Mounting the shaft-mounted gear unit

**NOTICE**

Deformation of the hollow shaft due to tightening the locking screws without first installing the shaft.

Damage to the hollow shaft.

- Never tighten the screws without the shaft installed.

Proceed as follows:

1. Slightly loosen the locking screws. Do not remove the locking screws completely.

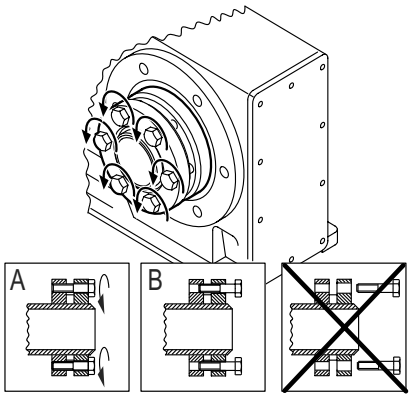


*9007199466274571*

2. Carefully **degrease** the hollow shaft bore and the input shaft using a commercial solvent.

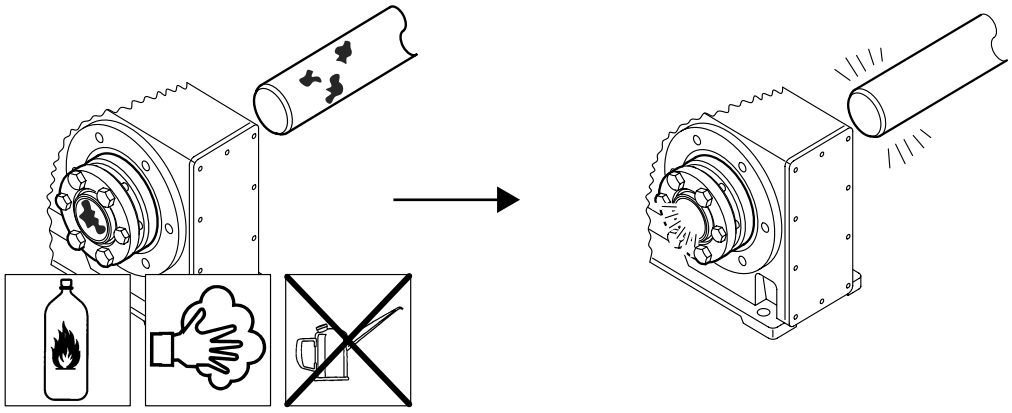

*9007199466276747*

3. Only apply NOCO® fluid to the input shaft around the bushing.

**NOTICE**

The hollow shaft mounting system is without function if NOCO® fluid is applied directly to the bushing. When the input shaft is installed, NOCO® fluid can get into the clamping area of the shrink disk.

Possible damage to property

- Never apply NOCO® fluid directly to the bushing. The clamping area of the shrink disk must be absolutely free of grease.

25803530/EN – 04/2018

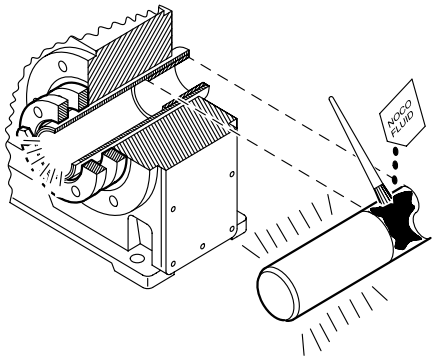


*9007199466281099*

4. Install the input shaft. Proceed as follows to do so:

- Make sure that the outer rings of the shrink disk are plane-parallel.
- In the case of a gear unit with shaft shoulder, mount the shrink disk at the shaft shoulder up to the stop.
- In the case of a gear unit without shaft shoulder, mount the shrink disk at a distance of 1 mm to 2 mm from the gear unit housing.
- Tighten the locking screws with the specified tightening torque according to the following table. Tighten the screws in several turns. Tighten screws one after the other, not in diametrically opposite sequence.

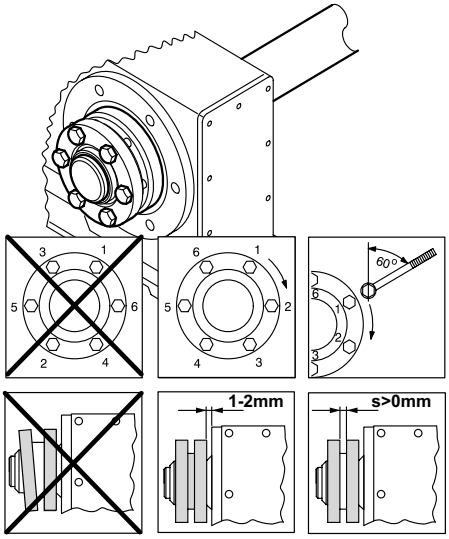


*211542283*

## INFORMATION

The exact values for the tightening torques are shown on the shrink disk.

## INFORMATION

Standard shrink disks and stainless steel shrink disks have the same tightening torques.

| Gear unit type | | | | Locking screw ISO 4014/ISO 4017/ ISO 4762 | Tightening torque ± 4% Nm |
|---|---|---|---|---|---|
| KH.. | FH.. | SH.. | WH.. | | |
| 19/29 | 27 | 37 | 37 | M5 | 5 |

| Gear unit type | | | | Locking screw ISO 4014/ISO 4017/ ISO 4762 | Tightening torque ± 4% Nm |
|---|---|---|---|---|---|
| KH.. | FH.. | SH.. | WH.. | | |
| 37/39/47/49/57/67/77 | 37/47/57/67/77 | 47/57/67/77 | 47 | M6 | 12 |
| 87/97 | 87/97 | 87/97 | – | M8 | 30 |
| 107 | 107 | – | – | M10 | 59 |
| 127/157 | 127/157 | – | – | M12 | 100 |
| 167 | – | – | – | M16 | 250 |
| 187 | – | – | – | M20 | 470 |

5. After installation, make sure the remaining gap "s" between the outer rings of the shrink disk is > 0 mm.
6. To prevent corrosion, grease the outside of the hollow shaft around the shrink disk.

### 4.7.2 Removing the shaft-mounted gear unit

Proceed as follows:

1. To prevent the outer rings from jamming, loosen the locking screws for a quarter turn, one after the other.
2. Steadily loosen the locking screws one after the other, but do not remove the locking screws completely.
3. If rust has formed on the shaft in front of the hub, remove the rust.
4. Remove the shaft or pull the hub off the shaft.
5. Remove the shrink disk from the hub.

## INFORMATION

There is no need to dismantle removed shrink disks before they are reinstalled.

### 4.7.3 Cleaning and lubricating shaft-mounted gear units

Proceed as follows:

1. If the shrink disk is dirty, clean and lubricate the shrink disk.
2. Lubricate the tapered surfaces. Use one of the following solid lubricants:

| Lubricant (Mo S2) | Sold as |
|---|---|
| Molykote 321 (lube coat) | Spray |
| Molykote spray (powder spray) | Spray |
| Molykote G Rapid | Spray or paste |
| Aemasol MO 19P | Spray or paste |
| Aemasol DIO-sétral 57 N (lube coat) | Spray |

3. Grease the locking screws with a multipurpose grease such as Molykote BR 2.

25803530/EN – 04/2018

## 4.8 Shaft-mounted gear units with TorqLOC®

### NOTICE

With a fixed flange or foot mounting, stress can build up in the drive train because of the possible tolerance adjustment of the TorqLOC® shaft.

Damage to property

- A flange or foot mounting is only allowed for TorqLOC® mounting if it is ensured that no static overdetermination can occur. Tolerance adjustment of the shaft must be possible.

### INFORMATION

In case of flange mounting, installing the clamping ring may not be possible depending on the size.

### 4.8.1 Mounting a customer shaft without contact shoulder

Proceed as follows:

1. Clean the customer shaft and the inside of the hollow shaft. Ensure that all traces of grease or oil are removed.
2. Install the stop ring and the bushing on the customer shaft.

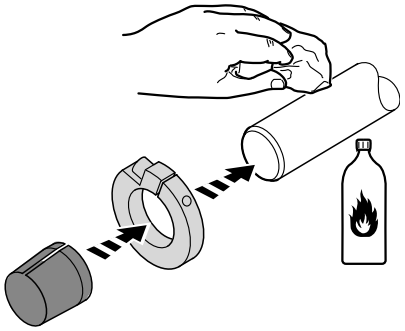

*211941003*

3. Attach the torque arm to the drive unit. Note the information in chapter "Torque arm for shaft-mounted gear units" (→ 🗎 39).

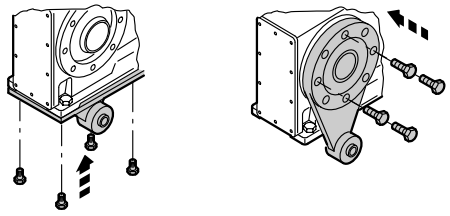

**K..7** **S../W../K..9**

*20622111627*

25803530/EN – 04/2018

4. Apply NOCO® fluid directly to the bushing. Spread carefully.

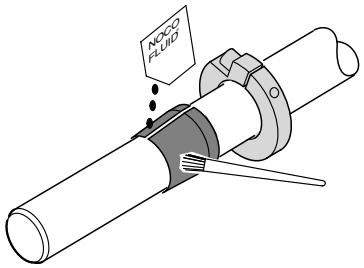


*211938827*

5. Push the gear unit onto the customer shaft.

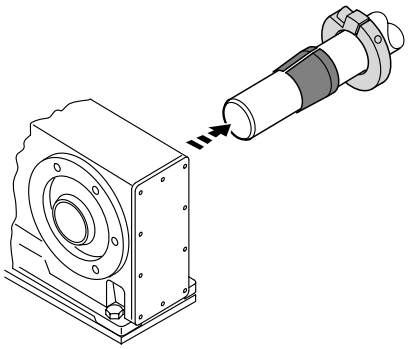

*9007199466677643*

6. Preassemble the torque arm. Do not firmly tighten the screws.

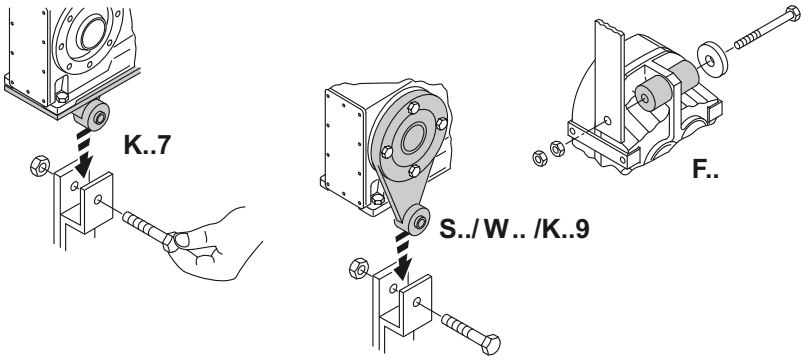


*36028797230907147*

7. Push the bushing into the gear unit up to the stop.

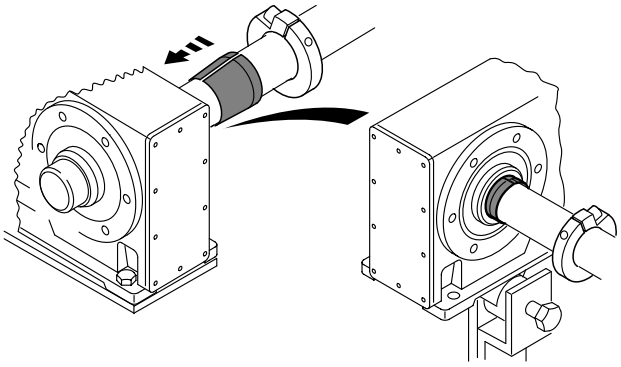

*9007199466686347*

25803530/EN – 04/2018

8. Secure the bushing with the stop ring. Attach the stop ring to the bushing with the respective tightening torque. Refer to the following table for the suitable tightening torque.

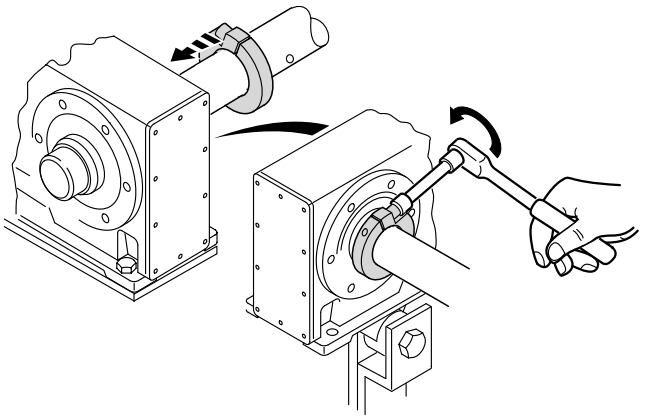

*9007199466741899*

| Gear unit type | | | | Tightening torque Nm | |
|---|---|---|---|---|---|
| FT.. | KT.. | ST.. | WT.. | Standard | Stainless steel |
| – | – | 37 | 37 | 10 | 10 |
| 37 | 37 | 47 | 47 | 10 | 10 |
| 47 | 39/47 | 57 | – | 10 | 10 |
| 57/67 | 49/57/67 | 67 | – | 25 | 25 |
| 77 | 77 | 77 | – | 25 | 25 |
| 87 | 87 | 87 | – | 25 | 25 |
| 97 | 97 | 97 | – | 25 | 25 |
| 107 | 107 | – | – | 38 | 38 |
| 127 | 127 | – | – | 65 | 65 |
| 157 | 157 | – | – | 150 | 150 |

9. Make sure that all screws are loosened and slide the shrink disk onto the hollow shaft.

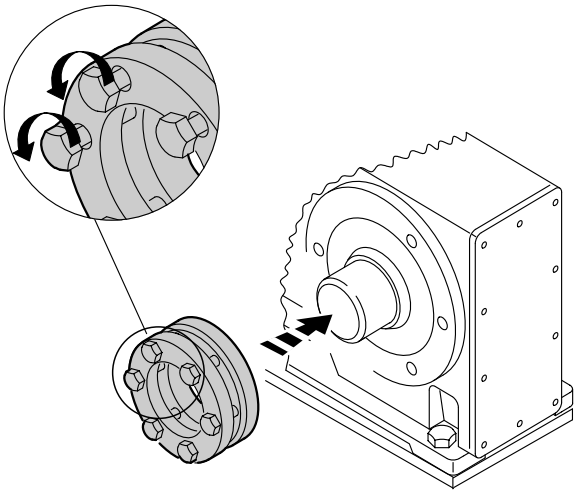

*9007199466744075*

10. Slide the counter bushing onto the customer shaft and into the hollow shaft.

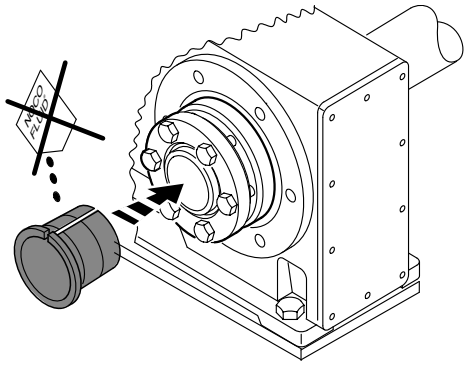

*9007199466746251*

11. In the case of a gear unit **with shaft shoulder**, mount the shrink disk at the shaft shoulder up to the stop. In the case of a gear unit **without shaft shoulder**, mount the shrink disk at a distance of 1 mm to 2 mm from the gear unit housing.
12. Tap lightly on the flange of the counter bushing to ensure that the bushing is fitted securely in the hollow shaft.

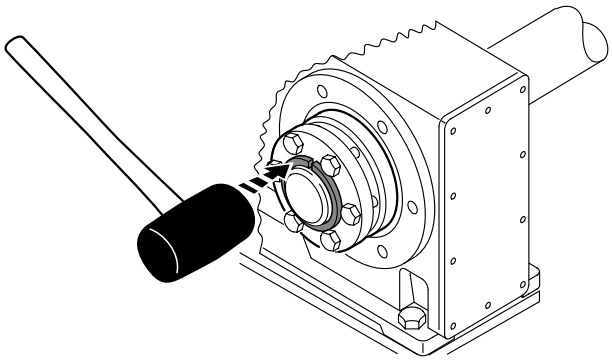

*9007199466748427*

13. Make sure that the customer shaft is seated in the counter bushing.

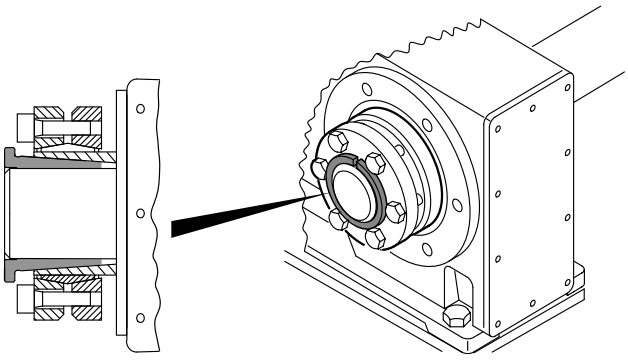

*9007199466750603*

25803530/EN – 04/2018

14. Manually tighten the screws of the shrink disk. Make sure that the outer rings of the shrink disk are plane-parallel.

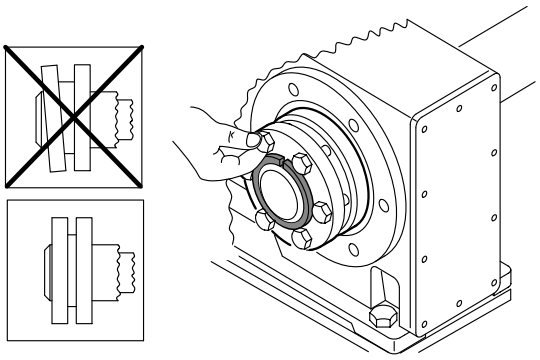

*9007199466752779*

15. Tighten the locking screws with the specified tightening torque according to the following table. Tighten the screws by working round several times from one bolt to the next (not in diametrically opposite sequence).

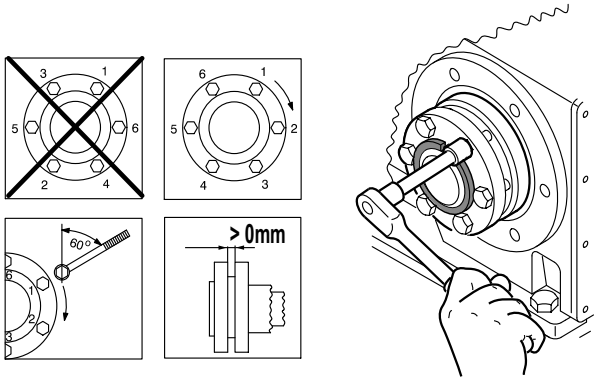


*18014398721495947*

## INFORMATION

The exact values for the tightening torques are shown on the shrink disk.

## INFORMATION

Standard shrink disks and stainless steel shrink disks have the same tightening torques.

| Gear unit type | | | | Locking screw | Tightening torque ± 4% |
|---|---|---|---|---|---|
| FT.. | KT.. | ST.. | WT.. | ISO 4762 | Nm |
| – | – | 37 | 37 | M5 | 4 |
| 37 | 37 | 47 | 47 | M6 | 12 |
| 47/57/67 | 39/47/49/57/67 | 57/67 | - | M6 | 12 |
| 77/87/97 | 77/87/97 | 77/87/97 | – | M8 | 30 |
| 107 | 107 | – | – | M10 | 59 |
| 127/157 | 127/157 | – | – | M12 | 100 |

16. After installation, make sure the remaining gap "s" between the outer rings of the shrink disk is > 0 mm.

17. Make sure that the remaining gap between counter bushing and hollow shaft end, as well as between hollow shaft end and the stop ring is > 0 mm.

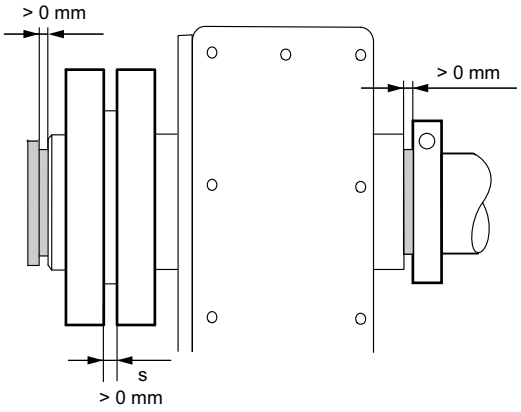


*27021600112884107*

18. Tighten the torque arm. Note the information in chapter "Torque arm for shaft-mounted gear units" (→ 🗎 39).

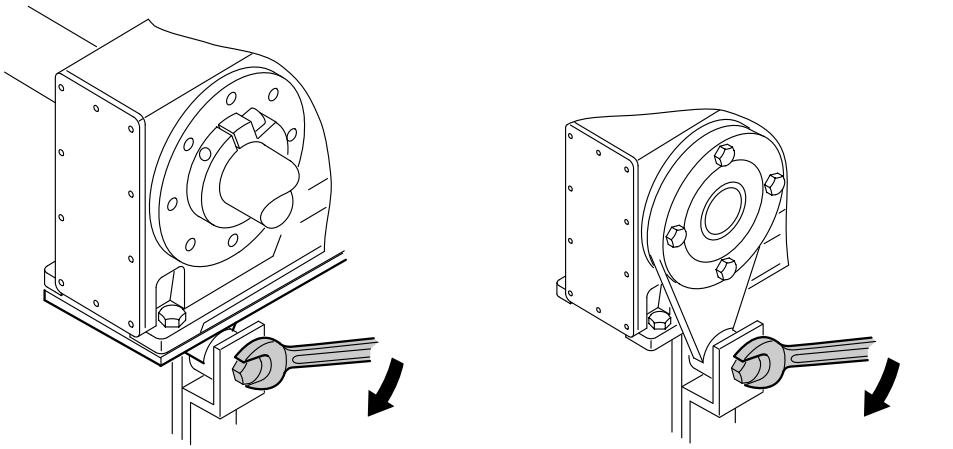

*20623147019*

25803530/EN – 04/2018

### 4.8.2 Mounting a customer shaft with contact shoulder

1. Clean the customer shaft and the inside of the hollow shaft. Ensure that all traces of grease or oil are removed.

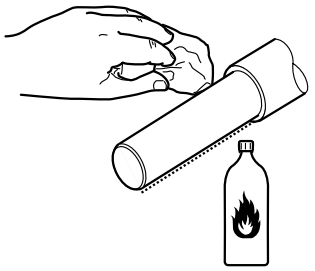

*9007214342258187*

2. Attach the torque arm to the drive unit. Note the information in chapter "Torque arm for shaft-mounted gear units" (→ 🗎 39).

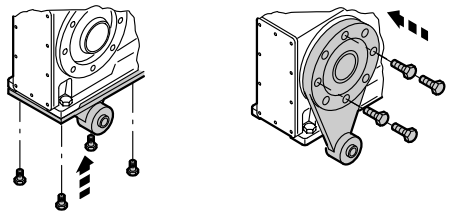

**K..7** **S../W../K..9**

*20622111627*

3. Slide the bushing onto the customer shaft.

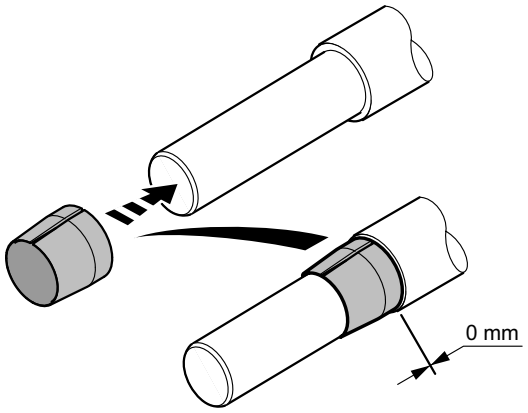


*2349377035*

4. Apply NOCO® fluid directly to the bushing. Spread carefully.

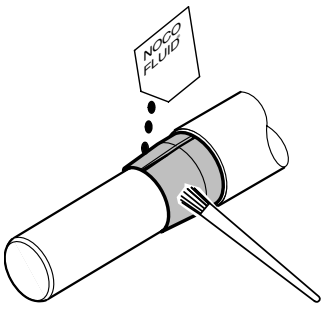


*2349367435*

5. Push the gear unit onto the customer shaft.

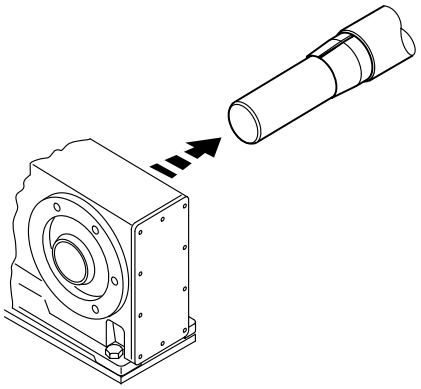

*5129650443*

6. Ensure that all screws are loosened. Slide the shrink disk onto the hollow shaft.

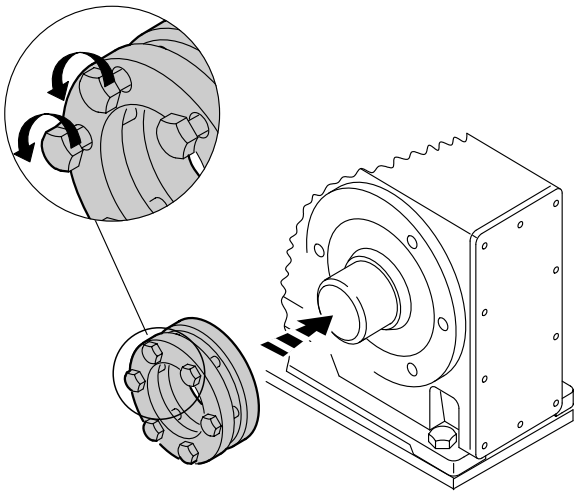

*9007199466744075*

7. Slide the counter bushing onto the customer shaft and into the hollow shaft.

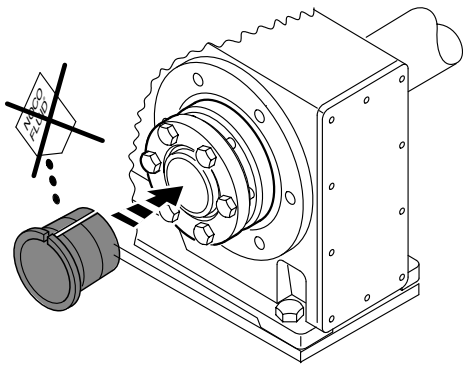

*9007199466746251*

8. In the case of a gear unit **with shaft shoulder**, mount the shrink disk at the shaft shoulder up to the stop. In the case of a gear unit **without shaft shoulder**, mount the shrink disk at a distance of 1 mm to 2 mm from the gear unit housing.

25803530/EN – 04/2018

9. Tap lightly on the flange of the counter bushing to ensure that the bushing is fitted securely in the hollow shaft.

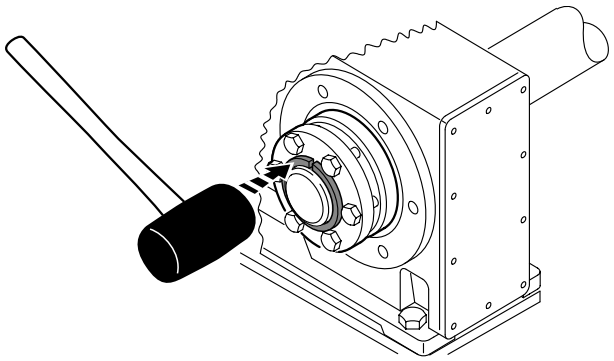

*9007199466748427*

10. Make sure that the customer shaft is seated in the counter bushing.

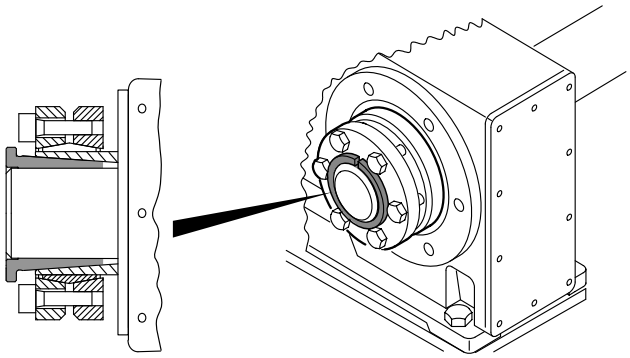

*9007199466750603*

11. Manually tighten the screws of the shrink disk. Make sure that the outer rings of the shrink disk are plane-parallel.

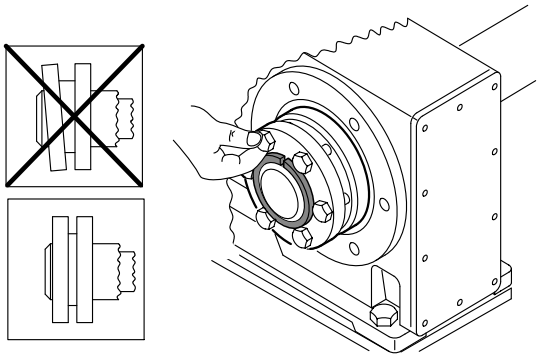

*9007199466752779*

25803530/EN – 04/2018

12. Tighten the locking screws with the specified tightening torque according to the following table. Tighten the screws by working round several times from one bolt to the next (not in diametrically opposite sequence).

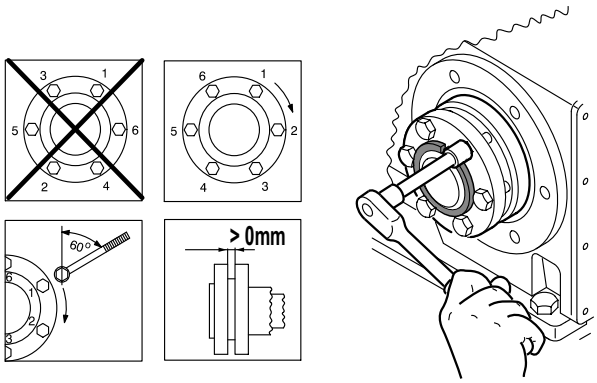


*18014398721495947*

## INFORMATION

The exact values for the tightening torques are shown on the shrink disk.

## INFORMATION

Standard shrink disks and stainless steel shrink disks have the same tightening torques.

| Gear unit type | | | | Locking screw | Tightening torque ± 4% |
|---|---|---|---|---|---|
| FT.. | KT.. | ST.. | WT.. | ISO 4762 | Nm |
| – | – | 37 | 37 | M5 | 4 |
| 37 | 37 | 47 | 47 | M6 | 12 |
| 47/57/67 | 39/47/49/57/67 | 57/67 | - | M6 | 12 |
| 77/87/97 | 77/87/97 | 77/87/97 | – | M8 | 30 |
| 107 | 107 | – | – | M10 | 59 |
| 127/157 | 127/157 | – | – | M12 | 100 |

13. After installation, make sure the remaining gap "s" between the outer rings of the shrink disk is > 0 mm.

25803530/EN – 04/2018

14. Make sure that the remaining gap between counter bushing and hollow shaft end, as well as between the hollow shaft end and customer shaft shoulder is > 0 mm.

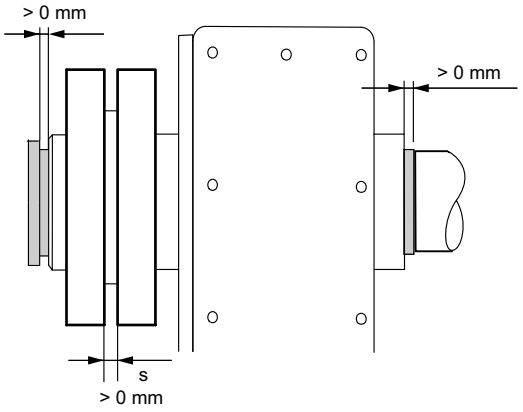


*22017650059*

15. Mount the torque arm and firmly tighten it. Note the information in chapter "Torque arm for shaft-mounted gear units" (→ 🗎 39).

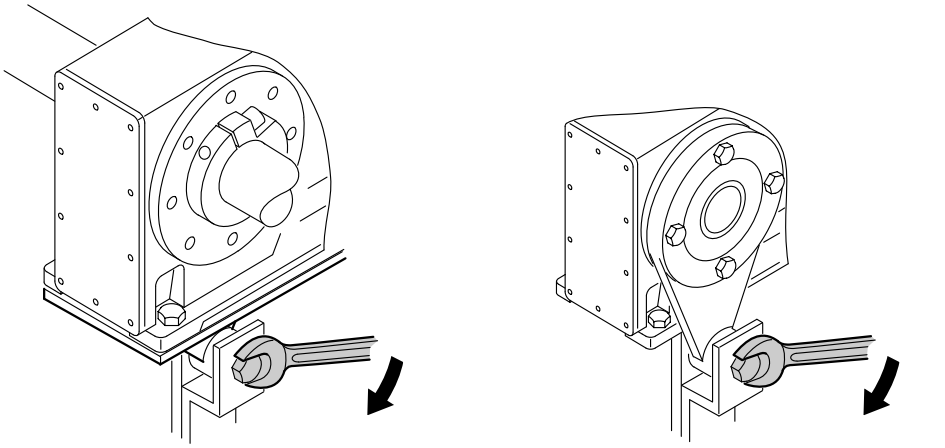

*20623147019*

25803530/EN – 04/2018

### 4.8.3 Removing the shaft-mounted gear unit



**⚠ CAUTION**

Risk of burns caused by hot surfaces

Severe injuries

- Let the units cool down before working on them.

Proceed as follows:

1. To prevent the outer rings from jamming, loosen the locking screws for a quarter turn, one after the other.

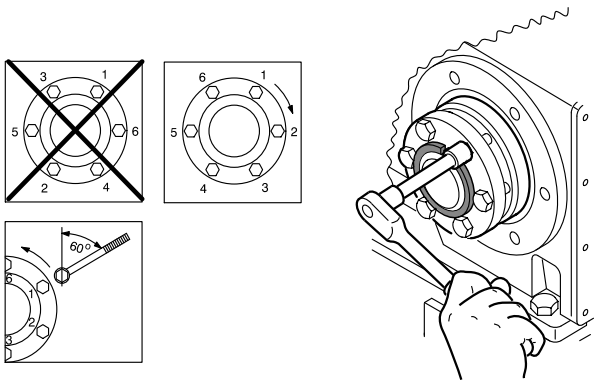


*2903644171*

2. Unscrew the locking screws evenly one after the other. Do not remove the locking screws completely.
3. Remove the conical steel bushing. If required, use the outer rings as pullers. Proceed as follows to do so:
   - Remove all the locking screws.
   - Screw the respective number of screws in the tapped holes of the shrink disk.
   - Support the inner ring against the gear unit housing.
   - Pull off the conical steel bushing by tightening the screws.
4. Remove the gear unit from the shaft.

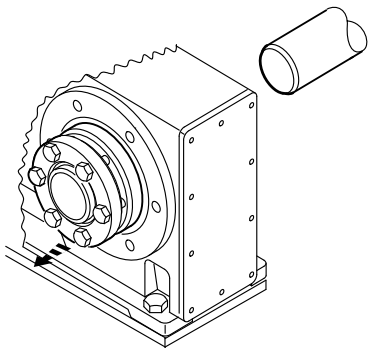

*9007202158521227*

5. Remove the shrink disk from the hub.

## INFORMATION



There is no need to dismantle removed shrink disks before they are reinstalled.

25803530/EN – 04/2018

### 4.8.4 Cleaning and lubricating shaft-mounted gear units

- If the shrink disk is dirty, clean and lubricate the shrink disk.
- Lubricate the tapered surfaces with one of the following solid lubricants:

| Lubricant (Mo S2) | Sold as |
|---|---|
| Molykote 321 (lube coat) | Spray |
| Molykote spray (powder spray) | Spray |
| Molykote G Rapid | Spray or paste |
| Aemasol MO 19P | Spray or paste |
| Aemasol DIO-sétral 57 N (lube coat) | Spray |

- Grease the locking screws with a multipurpose grease such as Molykote BR 2.

25803530/EN – 04/2018

## 4.9 Mounting the cover



**⚠ CAUTION**

Injury due to assembly work during operation.

Injury

- Before you begin working on the unit, disconnect the motor from the power supply. Safeguard the drive against unintentional restart.

### 4.9.1 Mounting the rotating cover

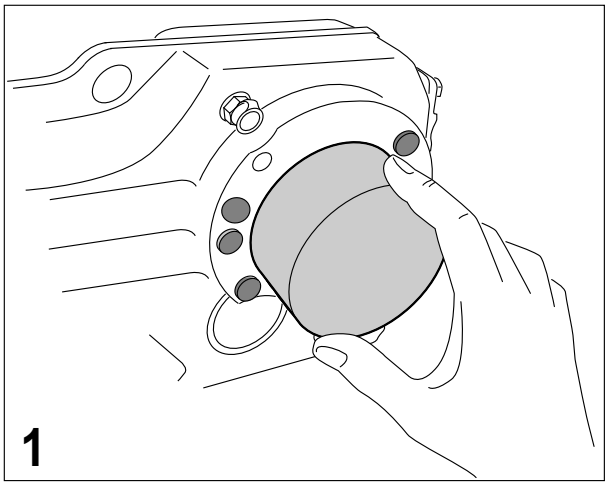


*662284299*

1. Slide the rotating cover onto the shrink disk until it snaps in.

### 4.9.2 Mounting the fixed cover

Proceed as follows:

1. Remove the plastic plug on the gear unit housing (see figure 1).

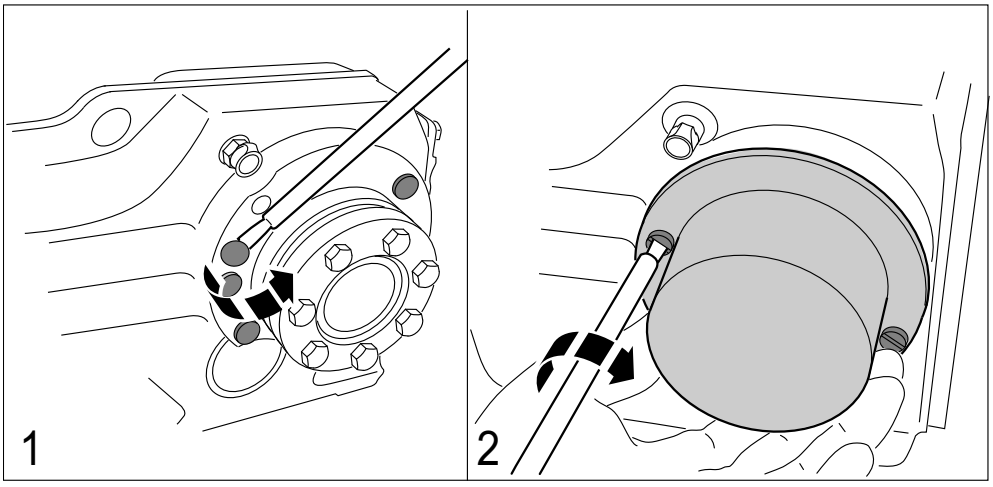


*9007199273238539*

2. Use the delivered screws to mount the cover to the gear unit housing (see figure 2).

25803530/EN – 04/2018

### 4.9.3 Operation without cover

In certain application cases, e.g. with a through-shaft, a cover cannot be installed. The cover is not necessary if the system or unit manufacturer provides corresponding components to guarantee for compliance with the required degree of protection. If this results in additional maintenance, the manufacturer has to describe this in the operating instructions for the system or component.

25803530/EN – 04/2018

## 4.10 Coupling of AM adapters

### 4.10.1 Mounting the IEC adapter AM63 – 280/NEMA adapter AM56 – 365

**NOTICE**

Damage to the adapter due to ingress of moisture or dirt (e.g. dust) when a motor/drive is attached to the adapter.

Damage to the adapter

- Seal the adapter with an anaerobic fluid seal.
- When the motor/drive to be attached has openings or bores that provide access to the inside of the adapter, seal these against dust or liquid.

**INFORMATION**

To avoid contact corrosion, SEW-EURODRIVE recommends to apply NOCO® fluid to the motor shaft before mounting the coupling half.

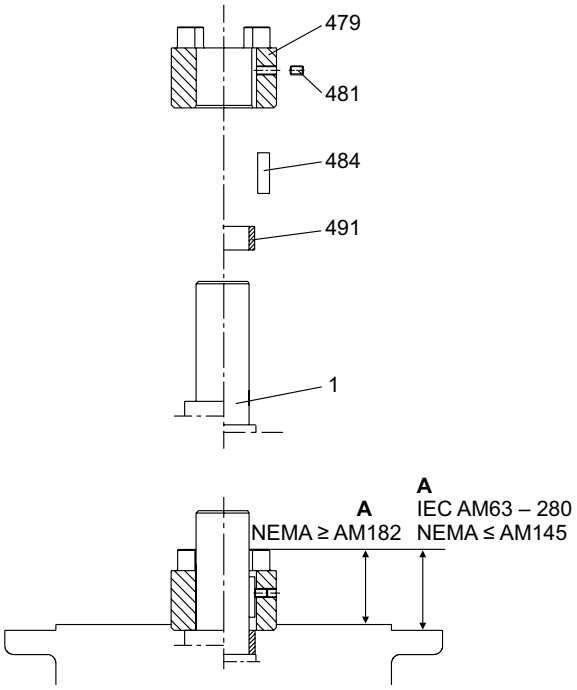


*20577139211*

[1] Motor shaft
[479] Coupling half
[481] Set screw
[484] Key
[491] Spacer tube

Proceed as follows:

1. Clean the motor shaft and flange surfaces of the motor and the adapter.
2. Remove the key from the motor shaft. Replace the key from the motor shaft with the supplied key [484] (not AM63 and AM250).
3. Heat the coupling half [479] to approx. 80 °C – 100 °C and push the coupling half onto the motor shaft. Position as follows:

- IEC adapter AM63 – 225 until stop at motor shaft shoulder.

25803530/EN – 04/2018

- IEC adapter AM250 – 280 to distance "A". The values for the distance "A" are listed in the following table.
- NEMA adapter with spacer tube [491] to distance "A". The values for the distance "A" are listed in the following table.

4. Secure the key and coupling half using the set screw [481] on the motor shaft. Refer to the following table for the required tightening torque "$T_A$".
5. Check the position of the coupling half. The values for the distance "A" are listed in the following table.
6. Seal the contact surfaces between the adapter and motor using a suitable sealing compound.
7. Mount the motor on the adapter. Ensure that the coupling claws of the adapter shaft are engaged in the plastic cam ring.

| **AM..IEC** | 63/71 | 80/90 | 100/112 | 132 | 160/180 | 200 | 225 | 250/280 |
|---|---|---|---|---|---|---|---|---|
| **A /mm** | 24.5 | 31.5 | 41.5 | 54 | 76 | 78.5 | 93.5 | 139 |
| **$T_A$ /Nm** | 1.5 | 1.5 | 4.8 | 4.8 | 10 | 17 | 17 | 17 |
| **Thread** | M4 | M4 | M6 | M6 | M8 | M10 | M10 | M10 |
| **AM..NEMA** | 56 | 143/145 | 182/184 | 213/215 | 254/256 | 284/286 | 324/326 | 364/365 |
| **A /mm** | 46 | 43 | 55 | 63.5 | 78.5 | 85.5 | 107 | 107 |
| **$T_A$ /Nm** | 1.5 | 1.5 | 4.8 | 4.8 | 10 | 17 | 17 | 17 |
| **Thread** | M4 | M4 | M6 | M6 | M8 | M10 | M10 | M10 |

**Permitted loads**

## NOTICE

Overloading of the gear unit due to excessive weight or excessive power rating of an attached motor.

Gear unit failure

- Note that the load data specified in the following table are not to be exceeded.
- Make sure that the approved power rating (torque and speed) on the adapter is observed according to the nameplate.

## NOTICE

Danger due to static overdetermination when motors are additionally attached via a foot plate.

Damage to property

- A motor attached at the foot relieves the interface on the adapter, but you have to make sure that the attached foot-mounted motor is attached to the customer's construction stress-free.

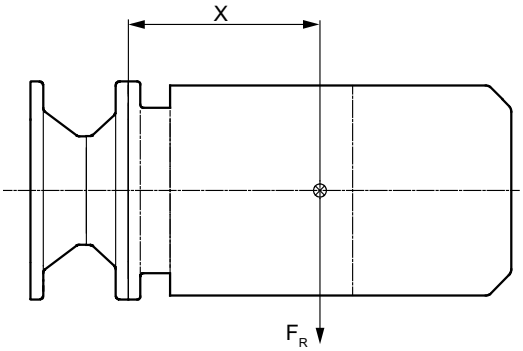


*9007199273254411*

⊗ Motor's center of gravity
X Distance from adapter flange – motor center
$F_R$ Overhung load

*Permitted loads for gear unit series R..7, F..7, K..7, K..9, and S..7:*

| Adapter type | | x[1] | $F_R$[1] N | |
|---|---|---|---|---|
| IEC | NEMA | mm | IEC adapter | NEMA adapter |
| AM63/71 | AM56 | 77 | 530 | 410 |
| AM80/90 | AM143/145 | 113 | 420 | 380 |
| AM100/112 | AM182/184 | 144 | 2000 | 1760 |
| AM132[2] | AM213/2152[2] | 186 | 1600 | 1250 |
| AM132.. | AM213/215 | | 4700 | 3690 |
| AM160/180 | AM254/286 | 251 | 4600 | 4340 |
| AM200/225 | AM324-AM365 | 297 | 5600 | 5250 |
| AM250/280 | - | 390 | 11200 | – |

1) If the center of gravity distance x increases, the maximum permitted weight $F_{R\_max}$ of the attached motor must be reduced linearly. If this center of gravity distance x is reduced, it is not permitted to increase the maximum permitted weight $F_{R\_max}$.

2) Diameter of the adapter output flange: 160 mm

*Permitted loads for gear unit series SPIROPLAN® W37 – W47*

| Adapter type | | x[1] | $F_R$[1] N | |
|---|---|---|---|---|
| IEC | NEMA | mm | IEC adapter | NEMA adapter |
| AM63/71 | AM56 | 115 | 140 | 120 |
| AM80/90 | AM143/145 | 151 | 270 | 255 |

1) If the center of gravity distance x increases, the maximum permitted weight $F_{R\_max}$ of the attached motor must be reduced linearly. If this center of gravity distance x is reduced, it is not permitted to increase the maximum permitted weight $F_{R\_max}$.

25803530/EN – 04/2018

*Permissible power ratings and mass moments of inertia*

The following table shows the permitted power ratings and mass moments of inertia:

| Adapter type | | $P_m$ [1] | $J_{Adapter}$ |
|---|---|---|---|
| IEC | NEMA | kW | kg × m² |
| AM63 | – | 0.25 | $0.44 \times 10^{-4}$ |
| AM71 | AM56 | 0.37 | $0.44 \times 10^{-4}$ |
| AM80 | AM143 | 0.75 | $1.9 \times 10^{-4}$ |
| AM90 | AM145 | 1.5 | $1.9 \times 10^{-4}$ |
| AM100 | AM182 | 3 | $5.2 \times 10^{-4}$ |
| AM112 | AM184 | 4 | $5.2 \times 10^{-4}$ |
| AM132S/M | AM213/215 | 7.5 | $19 \times 10^{-4}$ |
| AM132ML | – | 9.2 | $19 \times 10^{-4}$ |
| AM160 | AM254/256 | 15 | $91 \times 10^{-4}$ |
| AM180 | AM284/286 | 22 | $90 \times 10^{-4}$ |
| AM200 | AM324/326 | 30 | $174 \times 10^{-4}$ |
| AM225 | AM364/365 | 45 | $174 \times 10^{-4}$ |
| AM250 | – | 55 | $173 \times 10^{-4}$ |
| AM280 | – | 90 | $685 \times 10^{-4}$ |

1) Maximum rated power of the attached standard electric motor at 1400 1/min

### 4.10.2 AM adapter with AM../RS backstop

Check the direction of rotation of the drive prior to mounting or startup. In case of a wrong direction of rotation, contact SEW-EURODRIVE.

The backstop is maintenance-free in operation. Backstops have a minimum lift-off speed depending on the size (see following table).

## NOTICE

If the speed is below the minimum lift-off speed of the drive, the backstop is subject to wear and heats up.

Possible damage to property.

- In nominal operation the lift-off speed of the drive must not drop below the specified minimum.
- During startup or braking, the lift-off speed of the drive may drop below the minimum levels.

| Type | Maximum locking torque of the backstop<br>Nm | Minimum lift-off speed<br>$min^{-1}$ |
|---|---|---|
| AM80/90/RS<br>AM143/145/RS | 65 | 820 |

25803530/EN – 04/2018

| Type | Maximum locking torque of the backstop<br>Nm | Minimum lift-off speed<br>$min^{-1}$ |
|---|---|---|
| AM100/112/RS<br>AM182/184/RS | 425 | 620 |
| AM132/RS<br>AM213/215/RS | 850 | 530 |
| AM160/180/RS<br>AM254/286/RS | 1450 | 480 |
| AM200/225/RS<br>AM324-365/RS | 1950 | 450 |
| AM250/280/RS | 1950 | 450 |

### 4.10.3 Mounting of third-party motors at AM and AR/AL adapters

If a third-party motor is mounted, the customer must ensure that the permitted weight and the power at the adapter are adhered to according to the operating instructions. For information on the permitted loads, refer to chapter "Permitted loads" (→ 🗎 69).

| Type | X[1)]<br>mm | $F_R$[1)]<br>N |
|---|---|---|
| AR/AL71 | 77 | 375 |
| AR/AL80/90 | 113 | 320 |
| AR/AL100/112 | 144 | 1560 |
| AR/AL132[2)] | 186 | 1230 |
| AR/AL132 | 186 | 3630 |
| AR/AL160/180 | 251 | 3540 |

[1)] If the center of gravity distance x increases, the maximum permitted weight $F_{R\_max}$ of the attached motor must be reduced linearly. If the center of gravity distance x decreases, the maximum permitted weight $F_{R\_max}$ must not be increased.

[2)] Diameter of the adapter output flange: 160 mm

### 4.10.4 AM adapter with foot-mounted motor

A foot-mounted motor reduces the loads at the adapter interface. The foot-mounted motor at the adapter must be installed without tensions at the customer construction.

25803530/EN – 04/2018

## 4.11 AQ. adapter coupling

### 4.11.1 Mount adapter AQA80 – 190 (with keyway)/Adapter AQH80 – 190 (without keyway)

## NOTICE

Damage to the adapter due to ingress of moisture or dirt (e.g. dust) when a motor/drive is attached to the adapter.

Damage to the adapter

- Seal the adapter with an anaerobic fluid seal.
- When the motor/drive to be attached has openings or bores that provide access to the inside of the adapter, seal these against dust or liquid.

## INFORMATION

**For AQA:** To avoid contact corrosion, SEW-EURODRIVE recommends applying NOCO® fluid to the motor shaft before mounting the coupling half.

**For AQH**: Using NOCO® fluid is not approved.

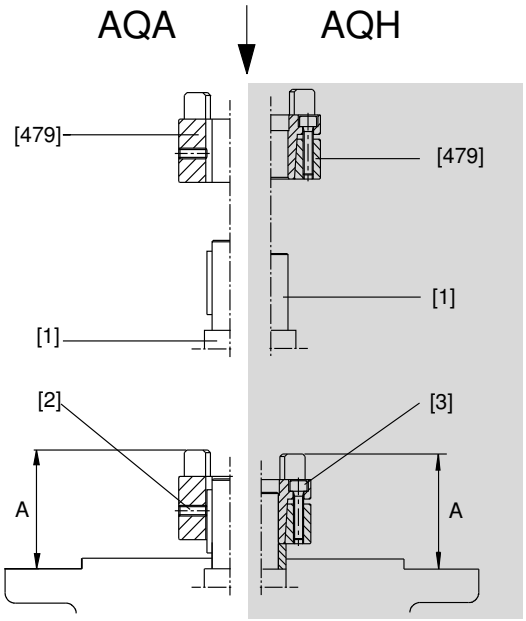


*9007199466855947*

[1] Motor shaft
[2] Lock washer
[3] Washer
[479] Coupling half

Proceed as follows:

1. Clean the motor shaft and flange surfaces of the motor and the adapter.
2. **AQH design:** Loosen the screws of the coupling half [479] and loosen the conical connection.
3. **AQA/AQH design:** Heat the coupling half to approx. 80 °C – 100 °C and push the coupling half onto the motor shaft up to distance "A". The values for the distance "A" are listed in the table in chapter "Setting standards and tightening torques" (→ 🗎 74).

4. **AQH design:** Tighten the screws evenly in diametrically opposite sequence, working round several times. The values for the tightening torque "$T_A$" are listed in the table in chapter "Setting standards and tightening torques" (→ 🗎 74).
5. **AQA design:** Secure the coupling half using the set screw (see figure).
6. Check the position of the coupling half. The values for the distance "A" are listed in the table in chapter "Setting standards and tightening torques" (→ 🗎 74).
7. Mount the motor onto the adapter, making sure that the claws of the two coupling halves engage in each other.
   ⇨ The force that must be applied when joining the two coupling halves is dissipated after final assembly, so there is no risk of any axial load being applied to adjacent bearings.

### 4.11.2 Setting standards and tightening torques

| Type | Coupling Ø | Distance A | Screws | | Tightening torque $T_A$ Nm | |
|---|---|---|---|---|---|---|
| | mm | mm | AQA | AQH | AQA | AQH |
| **AQA /AQH 80 /1 /2 /3** | 19 | 44.5 | M5 | 6 × M4 | 2 | 4 |
| **AQA /AQH 100 /1 /2** | | 39 | | | | |
| **AQA /AQH 100 /3 /4** | | 53 | | | | |
| **AQA /AQH 115 /1 /2** | | 62 | | | | |
| **AQA /AQH 115 /3** | 24 | 62 | M5 | 4 × M5 | 2 | 9 |
| **AQA /AQH 140 /1 /2** | | 62 | | | | |
| **AQA /AQH 140 /3 /4** | 28 | 74.5 | M8 | 8 × M5 | 10 | 9 |
| **AQA /AQH 160 /1** | | 74.5 | | | | |
| **AQA /AQH 190 /1 /2** | | 76.5 | | | | |
| **AQA /AQH 190 /3** | 38 | 100 | M8 | 8 × M6 | 10 | 14 |

### 4.11.3 Permitted loads

## NOTICE

Overloading of the gear unit due to excessive weight or excessive power rating of an attached motor.

Gear unit failure

- Note that the load data specified in the following table are not to be exceeded.
- Make sure that the approved power rating (torque and speed) on the adapter is observed according to the nameplate.

25803530/EN – 04/2018

## NOTICE

Danger due to static overdetermination when motors are additionally attached via a foot plate.

Damage to property

- A motor attached at the foot relieves the interface on the adapter, but you have to make sure that the attached foot-mounted motor is attached to the customer's construction stress-free.

The following figure shows the permitted force application points for the permitted maximum weights:

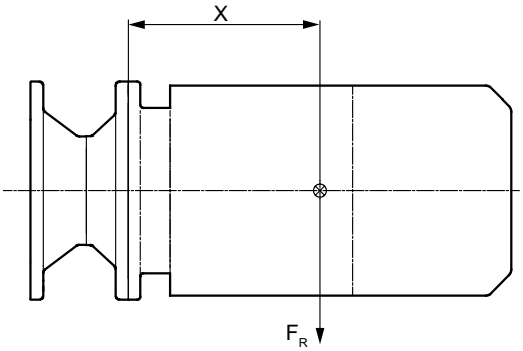


*9007199273254411*

⊗ Motor's center of gravity
X Adapter flange – motor center distance
$F_R$ Overhung load

| Type | x[1)] mm | $F_R$[1)] N |
|---|---|---|
| AQ80 | 77 | 370 |
| AQ100/1/2 | 113 | 350 |
| AQ100/3/4 | 113 | 315 |
| AQ115 | 113 | 300 |
| AQ140/1/2 | 144 | 1550 |
| AQ140/3 | 144 | 1450 |
| AQ160 | 144 | 1450 |
| AQ190/1/2[2)] | 186 | 1250 |
| AQ190/3[2)] | 186 | 1150 |
| AQ190/1/2 | 186 | 3750 |
| AQ190/3 | 186 | 3400 |

1) Maximum load values for connection screws of strength class 8.8. If the center of gravity distance x increases, the maximum permitted weight $F_{R\_max}$ of the attached motor must be reduced linearly. If the center of gravity distance x decreases, the maximum permitted weight $F_{R\_max}$ must not be increased.

2) Diameter of the adapter output flange: 160 mm

## 4.12 EWH adapters

### 4.12.1 Adapter EWH01 – 03

**NOTICE**

Damage to the adapter due to ingress of moisture or dirt (e.g. dust) when a motor/drive is attached to the adapter.

Damage to the adapter

- Seal the adapter with an anaerobic fluid seal.
- When the motor/drive to be attached has openings or bores that provide access to the inside of the adapter, seal these against dust or liquid.

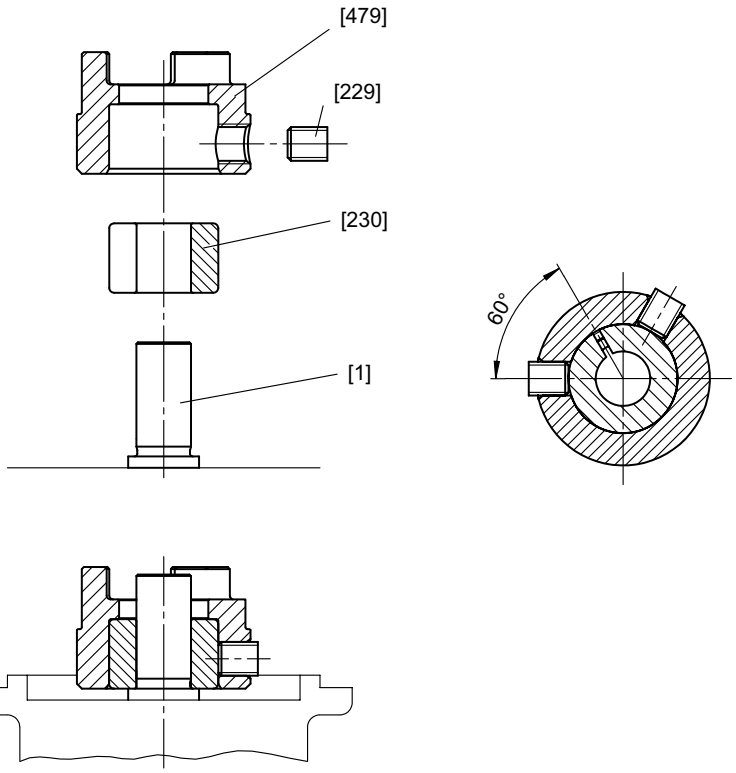


*4557485195*

| | | | |
|---|---|---|---|
| [1] | Motor shaft | [230] | Motor shaft sleeve |
| [229] | Clamping screws | [479] | Coupling half |

1. Clean and de-grease the hollow shaft hole of the coupling half [479], the motor shaft sleeve [230], and the motor shaft [1].
2. Insert the motor shaft sleeve [230] into the coupling half [479] so that the slot of the motor shaft sleeve [230] is at a 60° angle to the two clamping screws [229].
3. Push the coupling half [479] until it reaches the shoulder of the motor shaft.
4. Tighten the clamping screws [229] one after the other with a suitable torque wrench, first to 25% of the tightening torque specified in the following table.
5. Tighten the two clamping screws [229] to the full specified tightening torque.

25803530/EN – 04/2018

| Adapter type | Motor shaft diameter<br>mm | Number of clamping screws | Tightening torque of the clamping screw<br>Nm | Wrench size<br>mm |
|---|---|---|---|---|
| EWH01 | 9 | 2 | 6 | 3 |
| EWH01 | 11 | 2 | 10 | 4 |
| EWH02 | 11; 14; 16 | 2 | 10 | 4 |
| EWH03 | 11; 14; 16 | 2 | 10 | 4 |

### 4.12.2 Permitted loads

## NOTICE

Overloading of the gear unit due to excessive weight or excessive power rating of an attached motor.

Gear unit failure

- Note that the load data specified in the following table are not to be exceeded.
- Make sure that the approved power rating (torque and speed) on the adapter is observed according to the nameplate.

## NOTICE

Danger due to static overdetermination when motors are additionally attached via a foot plate.

Damage to property

- A motor attached at the foot relieves the interface on the adapter, but you have to make sure that the attached foot-mounted motor is attached to the customer's construction stress-free.

The following figure shows the permitted force application points for the permitted maximum weights:

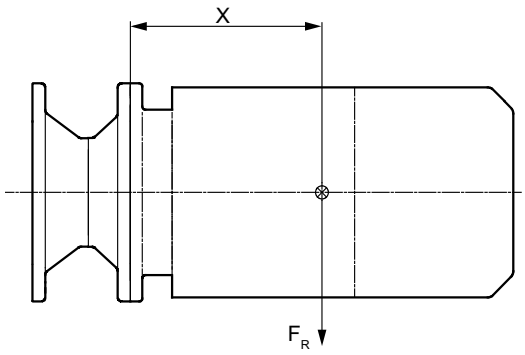


*9007199273254411*

⊗ Motor's center of gravity
X Distance from adapter flange to the middle of the motor
$F_R$ Overhung load

| Type | $x^{1)}$<br>mm | $F_R{}^{1)}$<br>N |
|---|---|---|
| **EWH01** | 113 | 40 |

| Type | x[1)] mm | $F_R$[1)] N |
|---|---|---|
| **EWH02** | 120 | 56 |
| **EWH03** | 120 | 56 |

1) Maximum load values for connection screws of strength class 8.8. If the center of gravity distance x increases, the maximum permitted weight $F_{R\_max}$ of the attached motor must be reduced linearly. If the center of gravity distance x decreases, the maximum permitted weight $F_{R\_max}$ must not be increased.

25803530/EN – 04/2018

## 4.13 AD Input shaft assembly

Observe chapter "Mounting the drive components and output elements" (→ 🗎 37) when installing drive components.

### 4.13.1 Mounting the cover with motor platform AD../P

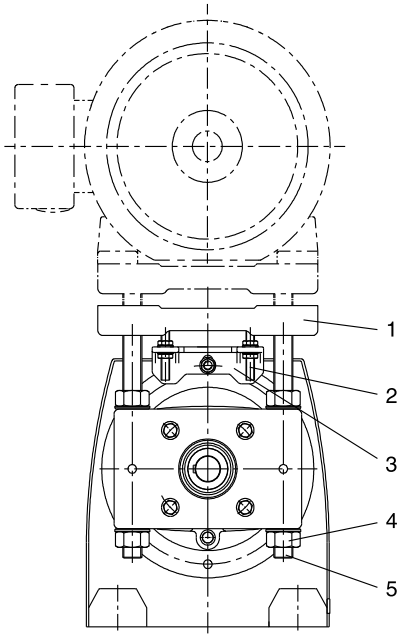


212119307

[1] Motor platform
[2] Stud bolt (only AD6/P / AD7/P)
[3] Support (only AD6/P / AD7/P)
[4] Nut
[5] Threaded column

To mount the motor and to adjust the motor platform proceed as follows:

1. Set the motor platform [1] to the required mounting position by evenly tightening the adjusting nuts [4].
2. If necessary, remove the lifting eyebolt/lifting eye of the helical gear unit to reach the lowest adjustment position. Touch up any damage to the paint work.
3. Align the motor on the motor platform [1] so that the shaft ends are in line. Attach the motor.
4. Mount the drive component onto the input side shaft end and the motor shaft.
5. Align drive component, shaft end and motor shaft. If necessary correct the motor position again.
6. Put on the traction elements (V-belt, chain, etc.) and apply a preload by evenly adjusting the motor platform [1]. Do not stress the motor platform and the columns against each other when doing this.
7. To fasten the threaded columns [5] tighten the nuts [4] that are not used for adjustment.

25803530/EN – 04/2018

### 4.13.2 Special aspects of AD6/P and AD7/P

Proceed as follows:

1. Unscrew the nuts on the threaded bolts [2] before adjustment to allow the threaded bolts [2] to move axially in the support [3] without restriction.
2. Only tighten the nuts when the final adjustment position is reached.

## INFORMATION

Do not adjust the motor platform [1] via the support [3].

### 4.13.3 AD../ZR input shaft assembly with centering shoulder

Mounting applications on the input shaft assembly with centering shoulder

1. Prepare screws of a suitable length for attaching the application. The following figure shows the screw length l = t + a. **Round off the result to the next smaller standard length**.

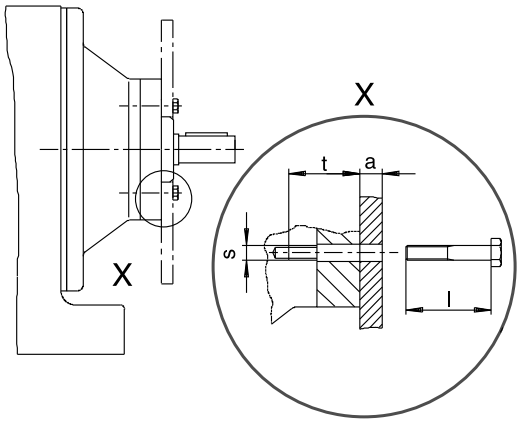


18014398721603467

a Strength of the additional element
t Screw-in depth (see table)
s Retaining thread (see table)

2. Remove the retaining screw from the centering shoulder
3. Clean the contact surface and the centering shoulder.
4. Clean the threads of the new bolts and apply a thread locking compound (e.g. Loctite® 243) to the first few threads.
5. Place the application on the centering shoulder. Tighten the retaining screws with the specified tightening torque "$T_A$" (see following table).

| Type | Screw-in depth t<br>mm | Retaining thread | Tightening torque $T_A$ for connection screws of strength class 8.8<br>Nm |
|---|---|---|---|
| **AD2/ZR** | 25.5 | M8 | 27 |
| **AD3/ZR** | 31.5 | M10 | 54 |
| **AD4/ZR** | 36 | M12 | 93 |
| **AD5/ZR** | 44 | M12 | 93 |
| **AD6/ZR** | 48.5 | M16 | 230 |

25803530/EN – 04/2018

| Type | Screw-in depth t<br>mm | Retaining thread | Tightening torque $T_A$ for connection screws of strength class 8.8<br>Nm |
|---|---|---|---|
| **AD7/ZR** | 49 | M20 | 464 |
| **AD8/ZR** | 42 | M12 | 93 |

**Permitted loads**

The following figure shows the permitted force application points for the permitted maximum weights:

## NOTICE

Overloading of the gear unit due to excessive weight or excessive power rating of an attached motor.

Gear unit failure

- Note that the load data specified in the following table are not to be exceeded.
- Make sure that the approved power rating (torque and speed) on the adapter is observed according to the nameplate.

## NOTICE

Danger due to static overdetermination when motors are additionally attached via a foot plate.

Damage to property

- A motor attached at the foot relieves the interface on the adapter, but you have to make sure that the attached foot-mounted motor is attached to the customer's construction stress-free.

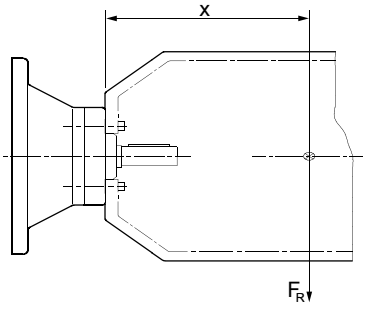


⊗ Motor's center of gravity
X Distance from adapter flange – motor center
$F_R$ Overhung load

| Type | x[1)]<br>mm | $F_R$[1)]<br>N |
|---|---|---|
| **AD2/ZR** | 193 | 330 |
| **AD3/ZR** | 274 | 1400 |
| **AD4/ZR**[2)] | 361 | 1120 |
| **AD4/ZR** | | 3300 |

| Type | x[1)] mm | $F_R$[1)] N |
|---|---|---|
| **AD5/ZR** | 487 | 3200 |
| **AD6/ZR** | 567 | 3900 |
| **AD7/ZR** | 663 | 10000 |
| **AD8/ZR** | 516 | 4300 |

1) Maximum load values for connection screws of strength class 8.8. If the center of gravity distance x increases, the maximum permitted weight $F_{R\_max}$ of the attached motor must be reduced linearly. If the center of gravity distance x decreases, the maximum permitted weight $F_{R\_max}$ must not be increased.

2) Diameter of the adapter output flange: 160 mm

### 4.13.4 Cover with backstop AD../RS

Check the direction of rotation of the drive prior to mounting or startup. In case of a wrong direction of rotation, contact SEW-EURODRIVE.

The backstop is maintenance-free in operation. Backstops have a minimum lift-off speed depending on the size (see following table).

## NOTICE

If the speed is below the minimum lift-off speed of the drive, the backstop is subject to wear and heats up.

Possible damage to property.

- In nominal operation the lift-off speed of the drive must not drop below the specified minimum.
- During startup or braking, the lift-off speed of the drive may drop below the minimum levels.

| Type | Maximum locking torque of the backstop Nm | Minimum lift-off speed $min^{-1}$ |
|---|---|---|
| **AD2/RS** | 65 | 820 |
| **AD3/RS** | 425 | 620 |
| **AD4/RS** | 850 | 530 |
| **AD5/RS** | 1450 | 480 |
| **AD6/RS** | 1950 | 450 |
| **AD7/RS** | 1950 | 450 |
| **AD8/RS** | 1950 | 450 |

25803530/EN – 04/2018

## 4.14 Direct mounting of a motor on a gear unit

### INFORMATION

Secure all pinions on the motor or input shaft with Loctite® 649 even if a retaining ring is additionally present.

If the pinion is already fastened to the shaft, start cleaning the sealing surface (step 6).

Joining the pinion to the motor or input shaft

1. Clean and degrease the shaft and the bore of the pinion.
2. Apply Loctite® 649 to the shaft after the securing hole over the entire area of the circumference.

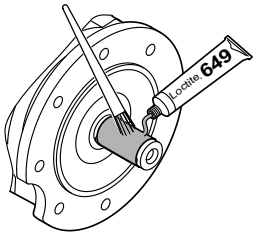


*22763067787*

3. Warm the pinion up to **at least** 100 °C to a **maximum of** 130 °C.
4. Push the pinion onto the shaft.
5. Secure the pinion on the shaft with the retaining ring.

Cleaning the sealing surfaces

6. Remove oils, grease, irregularities of the surface, rust and old Loctite® residue from the flange surfaces.

Sealing threads that lead into the housing interior

To prevent oil from escaping after installation, flange threads that lead into the housing interior must be sealed!

7. Clean and degrease thread through bores that lead into the housing interior and their studs.
8. Apply Loctite® 574 or Loctite® 5188 (selection according to the table at the end of the chapter) in a continuous ring on the upper threads of the flange thread and the stud.

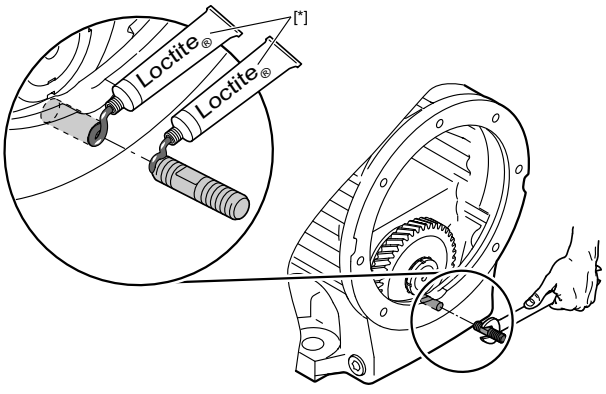


*22795758347*

[*] Loctite® according to the table at the end of the chapter

Screwing in the studs

9. Screw the studs into the thread up to the shoulder.

25803530/EN – 04/2018

10. Remove any excess Loctite® (see following diagram) from the sealing surface 60 minutes after screwing in at the latest.

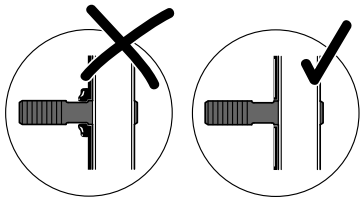

22347379211

Sealing the flange surface

## INFORMATION

Always apply the sealant over a large area in narrow places and on the gear units R97, R107, R127, F97 or F107.

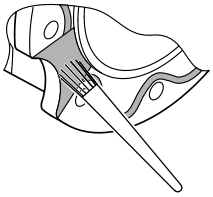

11. Only distribute Loctite® 574 or Loctite® 5188 (selection according to the table at the end of the chapter) to one of the sealing surfaces. Apply the sealant in beads or over a large area without gaps. Use a suitable application tool that does not contaminate the sealing surface, for example, a non-shedding brush or a short-hair lamb's wool roller.

Joining flange surfaces

12. Join the flange surfaces together. Next, **immediately** tighten the nuts with the specified torque (see the table at the end). If you tighten the nuts too late, the sealing film can tear.
13. The sealant must harden for 30 minutes and must not come into contact with the gear oil.

**Tightening torques**

| Screw/nut | Tightening torque<br>Nm |
|---|---|
| M6 | 11.3 |
| M8 | 27.3 |
| M10 | 54 |
| M12 | 93 |
| M16 | 230 |

**Selection and use of Loctite®**

| Sealant | Use | Suitability | Batch size | Part number |
|---|---|---|---|---|
| Loctite® 649 | Locking agent for pinions | All gear units | 50 ml | 09120998 |

25803530/EN – 04/2018

| Sealant | Use | Suitability | Batch size | Part number |
|---|---|---|---|---|
| Loctite® 574 | Surface sealing agent | All gear units except for R97 – R127, F97, F107 | 7 ml | 09102558 |
| Loctite® 5188 | | R97 – R127, F97, F107 | 50 ml | 03207013 |

25803530/EN – 04/2018

## 4.15 Accessory equipment

### 4.15.1 AR.. and AT.. centrifugal and friction couplings

**AR.. friction coupling**

Drives with a slip clutch consist of a standard gear unit and motor/variable speed gearmotor with an adapter installed between them. This adapter accommodates the slip clutch. In gearmotors with a double gear unit, the slip clutch may be located between the first and second gear units. On delivery, the slip torque is set individually according to the drive selection.

The following figure shows a drive with slip clutch and W speed monitor:

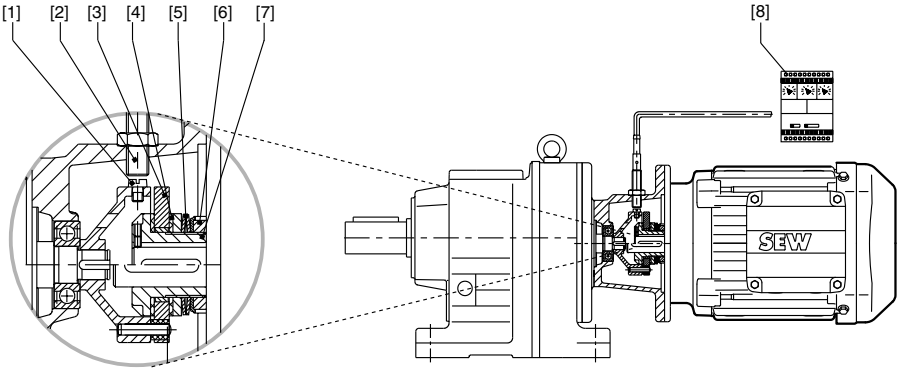


*1901048587*

[1] Trip cam
[2] Incremental encoder
[3] Driving disk
[4] Friction lining
[5] Cup spring
[6] Slotted nut
[7] Friction hub
[8] Speed monitor

**W speed monitor:**

The speed monitor is used with constant-speed gearmotors and is connected to the incremental encoder in the adapter.

**WS slip monitor:**

The slip monitor is used with the following components:

- Speed-controlled motors with speed sensor
- VARIBLOC® variable-speed gear units

## INFORMATION

For further information about the AR.. coupling, refer to the "Start-up coupling and slip clutch AR.. and AT.." operating instructions.

**AT.. hydraulic centrifugal coupling**

Hydraulic centrifugal couplings are fluid couplings based on the Föttinger principle. They consist of 2 hinged hemispheres with blades separated by a tight gap.

The applied torque is transmitted by the inertial force of the streaming fluid. This fluid circulates within a closed circuit, between the pump wheel (primary side) [12] on the driving shaft (motor shaft) and the turbine wheel (secondary side) [9] on the driven shaft (gear unit input shaft).

25803530/EN – 04/2018

The following figure shows the structure of a drive with hydraulic centrifugal coupling:

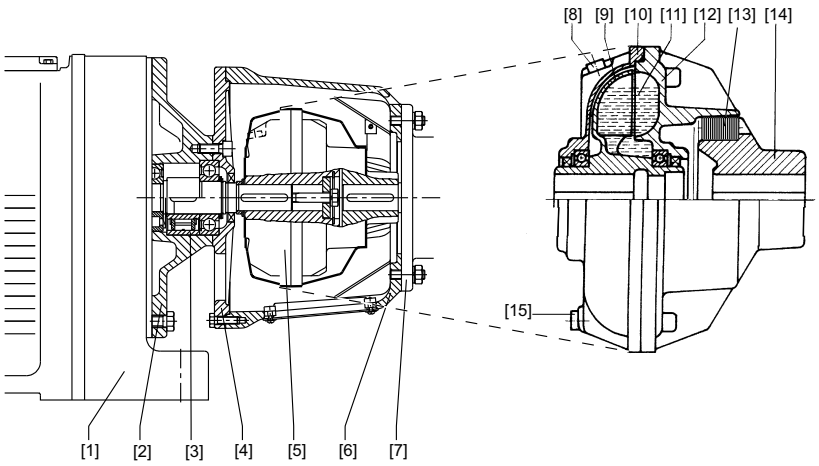


*9007201155884683*

| | | | | | |
|---|---|---|---|---|---|
| [1] | Gear unit | [6] | Extended housing complete | [11] | Operating fluid (hydraulic oil) |
| [2] | Basic flange complete | [7] | Motor | [12] | Pump wheel |
| [3] | Backstop (optional) | [8] | Filler plug | [13] | Elastic components |
| [4] | Intermediate flange | [9] | Turbine wheel | [14] | Flexible connection coupling |

## INFORMATION

For detailed information about the AT.. coupling, refer to the "Start-up coupling and slip clutch AR.. and AT.." operating instructions.

### 4.15.2 Diagnostic units /DUV and /DUO

**Diagnostic unit DUO**

DUO10A comprises a diagnostic unit and a temperature sensor. The temperature sensor (PT100 or PT1000 resistance sensor) is positioned in the gear unit oil to record the oil's temperature. The diagnostic units uses the oil temperature values to calculate the remaining service life of the oil.

The diagnostic unit continuously records the gear unit temperature and calculates the remaining service life for the selected oil type immediately. For this purpose, the diagnostic unit must be supplied with a 24 V voltage supply. Times when the diagnostic unit is switched off are not included in the forecast.

The following figure shows the DUO10A diagnostic unit:

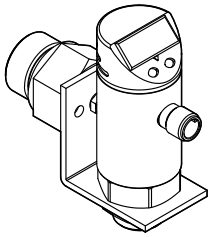

## INFORMATION

For further information on the evaluation unit, refer to the manual "DUV30A Diagnostic Unit".

**Vibration SmartCheck /DUV40A**

Vibration SmartCheck vibration monitoring is used to detect damage of gear units and gearmotors early (e.g. bearing damage or imbalances). For this purpose, permanent frequency-selective monitoring of the gearmotor is used. Apart from the vibration analysis, additional measured values of up to 3 signal encoders can be detected, recorded and analyzed. The additional signals can be used as reference values for signal analysis e.g. to trigger time or event-based measuring tasks. After the analysis and depending on user-defined alarm limits, the system can switch outputs and display the state using LEDs.

Vibration SmartCheck is configured using the FAG SmartWeb software. If you use several Vibration SmartCheck systems, you can control them via the FAG software SmartUtility Light centrally from one PC.

The full version of the SmartUtility software allows you to open sensors directly via the FAG SmartWeb software, to analyze measurement data in the SmartUtility Viewer and to download configurations or uploading configurations on other devices.

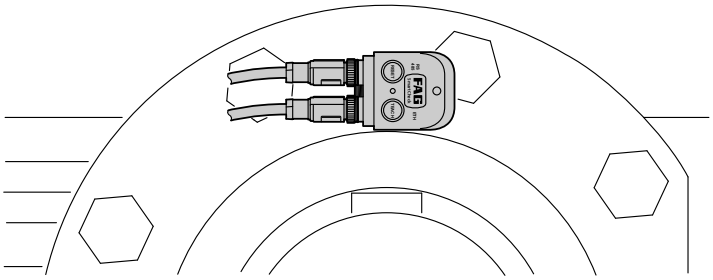

## INFORMATION

Further information about the evaluation unit and accessories can be found in the "Vibration SmartCheck" supplement (installation instructions).

25803530/EN – 04/2018

### 4.15.3 Gear unit heater for gear unit series R..7, F..7, and K..7

An oil heating can be required in order to allow for a smooth startup in the event of a cold start at low ambient temperatures. An oil heating is available with an external or an integrated thermostat depending on the gear unit design.

The heater is screwed into the gear unit housing and is controlled via a thermostat. The limit temperature of the thermostat below which the oil must be heated, is set depending on the respective lubricant.

The following figure shows a gear unit with heater and external thermostat:

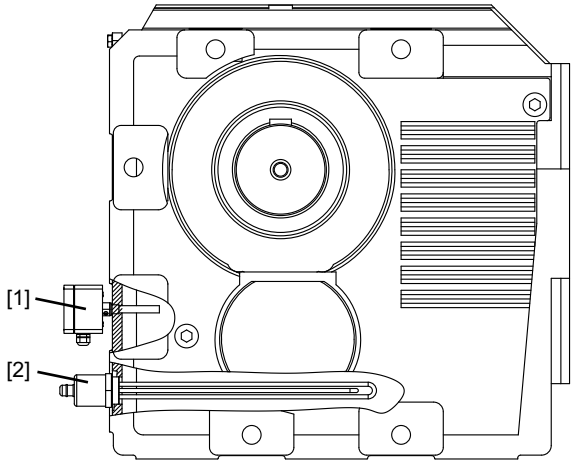


*2060553483*

[1] Thermostat [2] Heater

## INFORMATION

For further information regarding gear unit heaters, refer to the addendum "Gear unit heaters for gear unit series R..7, F..7 and K..7" to the operating instructions "Gear unit series R..7, F..7, K..7, K..9, S..7, SPIROPLAN® W".

25803530/EN – 04/2018

### 4.15.4 Flange coupling

Flange couplings [1] are rigid couplings for connecting 2 shafts [2].

Flange couplings are suitable for operation in both directions of rotation, but cannot compensate any shaft misalignments.

Torque between shaft and coupling is transmitted via a cylindrical interference fit. The two coupling halves are mounted together at the flanges. The couplings are equipped with several disassembly bores [3] for removing the interference fit hydraulically.

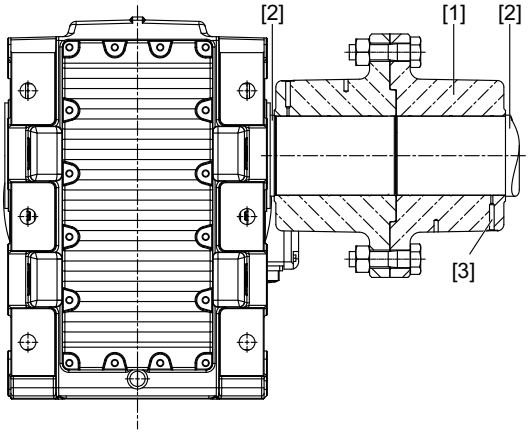


*27021601961007627*

[1] Rigid flange coupling
[2] Customer and gear shaft
[3] Disassembly bores

## INFORMATION

For detailed information about the rigid flange coupling, refer to the "Gear Unit Series R..7, F..7, K..7, S..7, and SPIROPLAN® W – Rigid flange coupling" addendum to the operating instructions.

### 4.15.5 Regreasing the labyrinth seal

Labyrinth seals are used to protect the oil seal in case of very high dust load or other abrasive substances.

**Output shaft**

The following figure shows an example of a regreasable radial labyrinth seal (taconite).

- Single oil seal with radial labyrinth seal
- Used in **very dusty** environments with abrasive particles

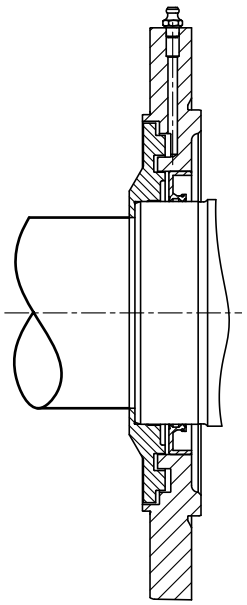

*9007204406135947*

## INFORMATION

The gear shaft must rotate during relubrication.

**Position of greasing points**

Regreasable sealing systems are usually equipped with taper greasing nipples according to DIN 71412 A. Relubrication must be carried out at regular intervals. The greasing points are located near the output shaft, see following figure:

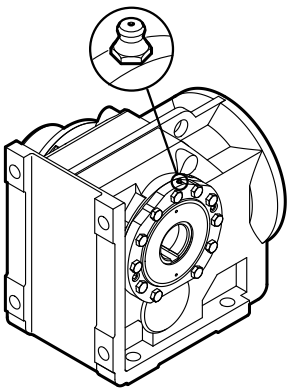

*4986644747*

#### Refilling grease

Regreasable sealing systems can be refilled with lubricating grease. Use moderate pressure to force grease into each lubrication point until new grease leaks out of the sealing gap.

Used grease, including contaminants and sand, is in this way pressed out of the sealing gap.

## INFORMATION

Immediately remove the old grease that leaked out.

#### Inspection and maintenance intervals

Observe the following inspection and maintenance intervals for the regreasing of labyrinth seals:

| Time interval | What to do? |
|---|---|
| Every 3000 operating hours, at least every 6 months | Fill regreasable sealing systems with grease. |

#### Technical data

*Sealing and rolling bearing grease*

The table shows the lubricants recommended by SEW-EURODRIVE:

| Area of operation | Ambient temperature | Manufacturer | Type |
|---|---|---|---|
| Standard | -40 °C to +80 °C | Fuchs | Renolit CX-TOM 15[1)] |
| | -40 °C to +80 °C | Klüber | Petamo GHY 133 N |
| [2)] | -40 °C to +40 °C | Bremer & Leguil | Cassida Grease GTS 2 |
| [3)] | -20 °C to +40 °C | Fuchs | Plantogel 2S |

1) Bearing grease based on semi-synthetic base oil
2) Lubricant for the food processing industry
3) Easily biodegradable lubricant for environmentally sensitive areas

## INFORMATION

The following grease quantities are required:

- **For fast-running bearings (gear unit input side):** Fill the cavities between the rolling elements one-third full with grease.
- **For slow-running bearings (gear unit output side):** Fill the cavities between the rolling elements two-thirds full with grease.

## INFORMATION

If a customer wants to use a grease that is not listed in the above table, the customer has to make sure that it is suitable for the intended application.

25803530/EN – 04/2018

### 4.15.6 Oil drain valve

The gear unit is equipped with an oil drain plug as standard. An oil drain valve can optionally be installed, that enables attaching a drain pipe for changing the gear unit oil.

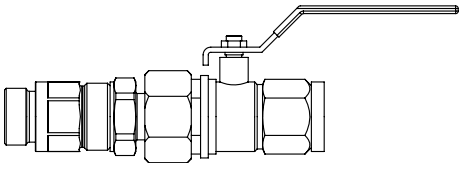

*4984750475*

### 4.15.7 Oil expansion tank

The oil expansion tank allows the lubricant or air space of the gear unit to expand. This means no lubricant can escape the breather valve at high operating temperatures.

SEW-EURODRIVE recommends to use oil expansion tanks for gear units and gearmotors in M4 mounting position and for input speeds > 2000 $min^{-1}$.

The following figure shows the oil expansion tank of a gearmotor.

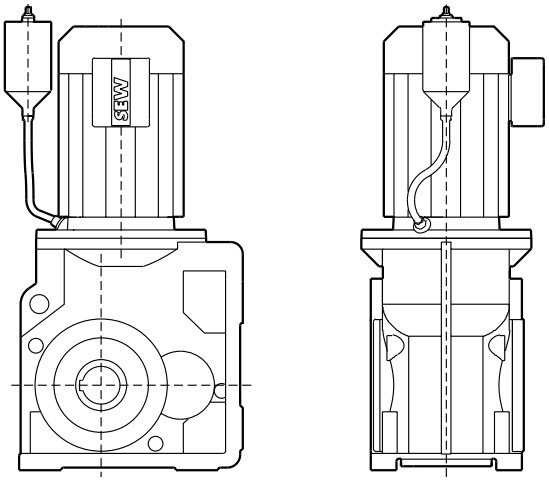


*4979181323*

The oil expansion tank is delivered as assembly kit for mounting onto the gearmotor. In case of limited space or of gear units without motor, the oil expansion tank can also be mounted to nearby machine parts.

## INFORMATION

Transverse acceleration is not permitted for gear units with expansion tank with fixed piping for third party motors and servomotors.

For further information, contact your SEW-EURODRIVE sales representative.

### 4.15.8 Oil-air cooler for splash lubrication /OAC

If the thermal rating of the naturally cooled gear unit is not sufficient, an oil-air cooling system can be used.

The cooling system is delivered without electrical wiring and piping as a complete unit on a base frame for separate installation.

The standard scope of delivery of the cooling system includes:

- Pump with directly mounted asynchronous motor
- Oil-air heat exchanger
- Temperature switch with 2 switching points

SEW-EURODRIVE uses oil-air cooling systems for standard gear units in sizes OAC 005 and OAC 010.

The following figure shows an example of a standard parallel-shaft helical gear unit next to an oil-air cooler.

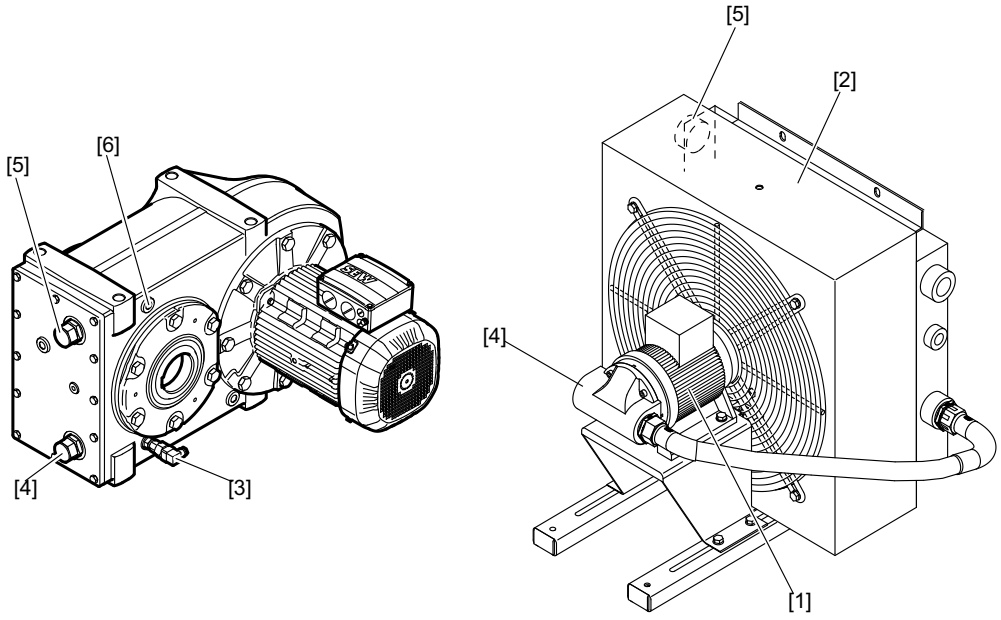


*9007208235792395*

| | | | |
|---|---|---|---|
| [1] | Motor for pump and fan | [4] | Suction pipe connections |
| [2] | Oil-air heat exchanger | [5] | Pressure pipe connections |
| [3] | Temperature switch with 2 switching points | [6] | Option: Oil expansion tank connection |

## INFORMATION

For more information on the cooling system, refer to the addendum to the operating instructions "Gear unit series R..7, F..7, K..7, K..9, S..7 and SPIROPLAN® W: Oil-air cooler for splash lubrication /OAC".

25803530/EN – 04/2018

### 4.15.9 Agitator design

**Relubrication of the agitator design**

A relubrication of the output shaft bearing is offered as an option for the agitator drives FM.., FAM.., KM.. and KAM...

*Position of greasing points*

## INFORMATION

The gear shaft must turn during the relubrication procedure.

Regreasable sealing systems are usually equipped with taper greasing nipples according to DIN 71412 A. The following figure shows the position of the greasing points:

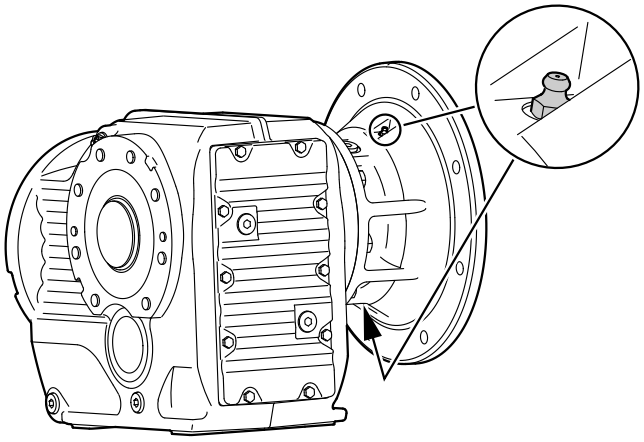

*23563258507*

*Maintenance interval and grease quantities*

Relubricate the agitator design after 5000 operating hours. The number of relubrication procedures is limited to 5x. Observe the information on the required grease quantities in the following table:

| Size | Grease quantity for relubrication<br>g |
|---|---|
| 67 | 7 |
| 77 | 15 |
| 87 | 15 |
| 97 | 23 |
| 107 | 50 |
| 127 | 48 |
| 157 | 66 |

The table shows the lubricants recommended by SEW-EURODRIVE:

| Area of operation | Ambient temperature | Manufac-turer | Type |
|---|---|---|---|
| Standard | -40 °C to +80 °C | Fuchs | Renolit CX-TOM 15[1)] |
| | -40 °C to +80 °C | Klüber | Petamo GHY 133 N |
|  2) | -40 °C to +40 °C | Bremer & Leguil | Cassida Grease GTS 2 |
|  3) | -20 °C to +40 °C | Fuchs | Plantogel 2S |

1) Bearing grease based on semi-synthetic base oil
2) Lubricant for the food processing industry
3) Easily biodegradable lubricant for environmentally sensitive areas

## INFORMATION

If a customer wants to use a grease that is not listed in the above table, the customer has to make sure that it is suitable for the intended application.

**Leak sensor (Drywell design) with the agitator design**

A Drywell design with level sensor is offered as an option for the agitator drives FM.., FAM.., KM.. and KAM...

One of the two following sensors is used, depending on the gear unit size:

*Level sensor for sizes 67 – 97*

**Electrical connection**

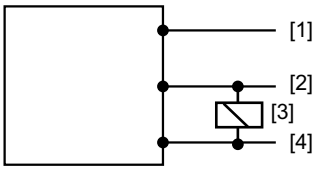


*23527583115*

[1] DC 12 V – 32 V
[2] Output
[3] Load
[4] 0 V

**Pin assignment**

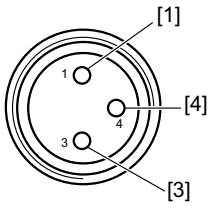


*23527590411*

[1] DC 12 V – 32 V
[4] Output
[3] Load

25803530/EN – 04/2018

**Dimensions**

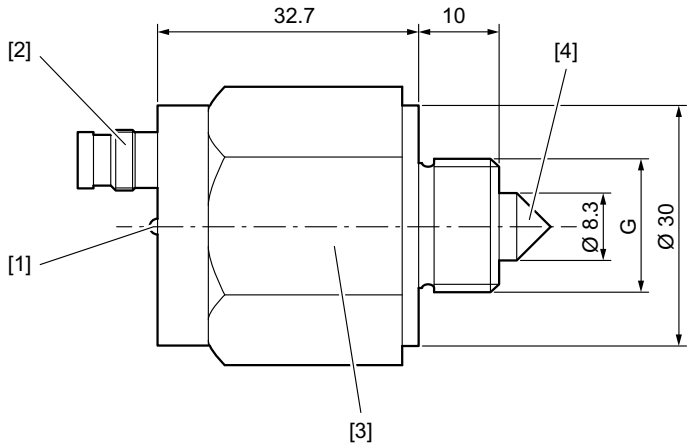


*23563256075*

[1] LED function indicator
[2] M8×1 circular connector; 3-pin (alternatively cable termination)
[3] Wrench size: 30
[4] Glass prism

**Technical data**

| | |
|---|---|
| Measuring accuracy | ± 0.5 mm |
| Minimum distance of the glass tip to an opposite surface | ≥ 10 mm |
| Mounting position | Any |
| Optical display of the switching status | 1 LED |
| Process connection | Male thread G3/8", G 1/2" or M12x1 |

For more information, please contact SEW-EURODRIVE.

*Level sensor for sizes 107 – 157*

**Electrical connection**

M12 plug-in connection:

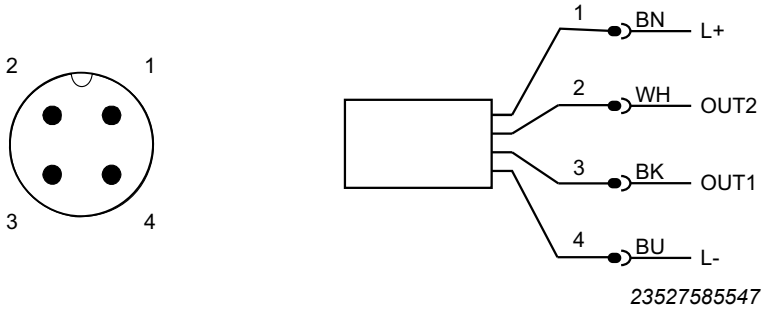


*23527585547*

OUT1: Switching output/IO link/teach
OUT2: Switching output

25803530/EN – 04/2018

**Dimensions**

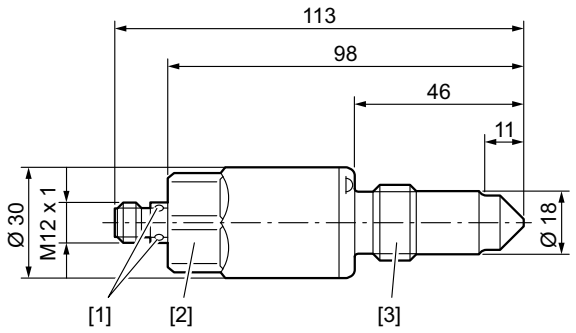


*23563253643*

[1] LED
[2] Tightening torque 20 – 25 Nm
[3] G 1/2

Tightening torque 20 – 25 Nm

**Technical data**

- Plug-in connection
- Process connection G 1/2 A
- Gold-plated contacts
- 2 switching outputs

25803530/EN – 04/2018

# 5 Startup



**⚠ CAUTION**

Damage to the gear unit due to improper startup.

Possible damage to property.

- Observe the following information.

- Check the correct oil level before startup; see chapter "Inspection/maintenance work on the gear unit" (→ 🗎 113).
- The oil level plugs and oil drain plugs, as well as the breather plugs and breather valves must be freely accessible.
- Observe the maximum and rms values of project planning during startup of gear units with servomotor. The buyer is obliged to make the data available to the end user.
- The most important technical data is provided on the nameplate. Additional data relevant for operation is available in drawings and the order confirmation.
- After gear unit setup, ensure that all retaining screws are tight.
- Make sure that the alignment has not changed after tightening the mounting elements.
- Prior to startup, ensure that rotating shafts as well as couplings are equipped with suitable protective covers.
- If the gear unit has an oil sight glass to monitor the oil level, the oil sight glass must be protected against damage.
- It is essential that there is no open fire or risk of sparks when working on the gear unit.
- Protect the gear unit from falling objects.
- Remove transport protection prior to startup.
- Strictly observe the safety notes in the individual chapters.

## 5.1 Inverter-operated gearmotors

For gear units with servomotor, the maximum and r.m.s. values of project planning must be observed during startup. The buyer is obliged to make the data available to the user.

## 5.2 Checking the oil level

Before startup, make sure that the oil level corresponds to the mounting position. Observe the chapter "Checking the oil level and changing the oil" (→ 🗎 113).

If the gear unit is equipped with an oil sight glass, you can also determine the oil level at the oil sight glass.

25803530/EN – 04/2018

## NOTICE

Damage to the gear unit due to oil leaking from the damaged oil sight glass.

Possible damage to the unit

- Attach a protective device to prevent the oil sight glass from being damaged by mechanical impacts.

1. Observe the information in chapter General information.
2. Check the oil level at the oil sight glass according to the following figure:

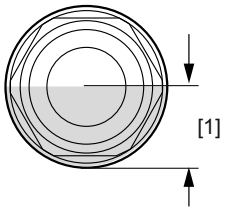


4158756363

[1] The oil level must be within this range.

3. Proceed as follows if the oil level is too low:
   - Open the respective oil fill plug, see chapter "Inspection/maintenance for the gear unit" (→ 🗎 113).
   - Fill in new oil of the same type via the oil fill plug up to the mark.
   - Screw in the oil fill plug.

Before startup, make sure that the oil level corresponds to the mounting position. Observe the chapter "Checking the oil level and changing the oil" (→ 🗎 113).

## 5.3 Pseudo-leakage at shaft seals

Due to their operating principle, seals between moving surfaces at shaft passages cannot be completely tight, as a lubricant film must form during operation. The lubricant film between shaft and sealing lip keeps the built-up of heat and wear on the sealing system to a minimum and ensures the intended service life. The optimum sealing properties are only achieved after the run-in phase.

25803530/EN – 04/2018

## 5.4 Helical-worm gear units and SPIROPLAN® W gear units

### 5.4.1 Run-in period

SPIROPLAN® and helical-worm gear units require a run-in period of at least 48 h before reaching their maximum efficiency. A separate run-in period applies for each direction of rotation if the gear unit is operated in both directions of rotation. The table shows the average power reduction during the run-in period.

**Helical-worm gear units**

| | Worm | |
|---|---|---|
| | **i range** | **η reduction** |
| **1-start** | Approx. 50 – 280 | Approx. 12% |
| **2-start** | Approx. 20 – 75 | Approx. 6% |
| **3-start** | Approx. 20 – 90 | Approx. 3% |
| **4-start** | – | – |
| **5-start** | Approx. 6 – 25 | Approx. 3% |
| **6-start** | Approx. 7 – 25 | Approx. 2% |

**SPIROPLAN® gear units**

| W10/W20/W30 | | W37/W47 | |
|---|---|---|---|
| **i range** | **η reduction** | **i range** | **η reduction** |
| Approx. 35 – 75 | Approx. 15% | | |
| Approx. 20 – 35 | Approx. 10% | | |
| Approx. 10 – 20 | Approx. 8% | Approx. 30 – 70 | Approx. 8% |
| Approx. 8 | Approx. 5% | Approx. 10 – 30 | Approx. 5% |
| Approx. 6 | Approx. 3% | Approx. 3 – 10 | Approx. 3% |

### 5.4.2 Helical-worm gear unit with projecting worm shaft

**⚠ CAUTION**



Risk of injury due to rotating parts

Injury

- Before you operate the helical-worm gear unit using the inserted handwheel or the hand crank, de-energize the drive.
- If the handwheel or the hand crank remains attached to the shaft during operation, take appropriate measures to prevent injuries.

25803530/EN – 04/2018

The following figure shows a helical-worm gearmotor with projecting worm shaft:

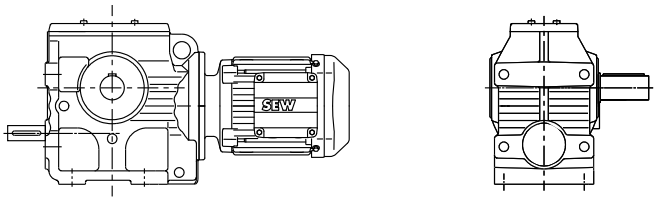


*15050784011*

## 5.5 Helical/parallel-shaft helical/helical-bevel gear units

If the gear units were installed according to chapter "Mechanical installation" (→ 🗎 26), no special startup notes must be observed for helical, parallel-shaft helical and helical-bevel gear units.

25803530/EN – 04/2018

## 5.6 Gear units with backstop

### NOTICE

Operating the motor in the blocking direction could destroy the backstop.

Possible damage to property

- Do not start up the motor in the blocking direction. Before motor startup, make sure the current supply of the motor for the direction of rotation is connected accordingly.
- For control purposes, operation in blocking direction with half the output torque is permitted once.

The purpose of a backstop is to prevent unwanted directions of rotation. During operation, the backstop permits rotation only in the specified direction.

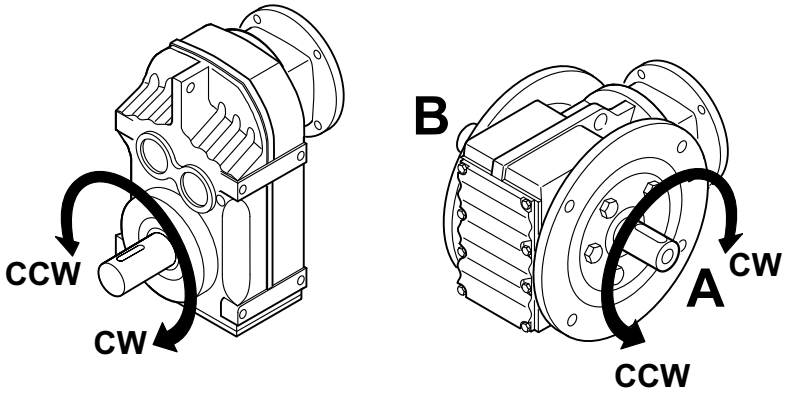


*659173899*

The permitted direction of rotation is indicated by a direction arrow on the housing:

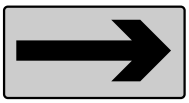

*15985405835*

A replacement label is enclosed for the customer.

In right-angle gear units, you also have to indicate whether the direction of rotation is given looking onto the A or B-side.

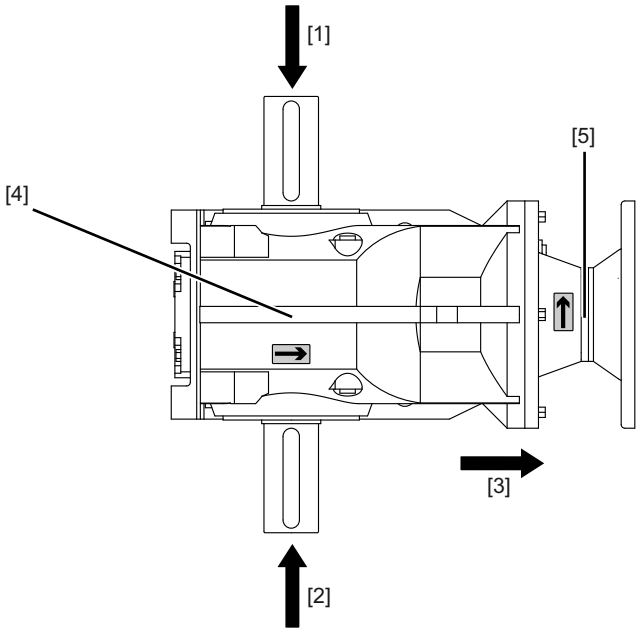


*16117549579*

[1] Viewing direction Direction of rotation Output B
[2] Viewing direction Direction of rotation Output A and A+B
[3] Viewing direction Direction of rotation Input end
[4] Gear unit
[5] Adapter/cover with RS option

## 5.7 Components made of elastomers with fluorocarbon rubber



**⚠ CAUTION**

Health risk due to dangerous gases, vapors, and residue created by heating fluorocarbon rubber to > 200 °C.

Damage to health.

- Make sure that components made of fluorocarbon rubber are not exposed to temperatures > 200 °C. Remove the components, if necessary.
- Avoid inhaling fluorocarbon rubber gases and vapors as well as skin and eye contact.
- Avoid contact with the cooled-down fluorocarbon rubber, as dangerous residue has formed while it was heated.

Under normal operating conditions and at temperatures up to 200 °C, fluorocarbon rubber is very stable and safe. However, when heated to more than 300 °C, e.g. by fire or the flame of a cutting torch, fluorocarbon rubber forms harmful gases and vapors as well as residue.

The following components of R..7, F..7, K..7, K..9, S..7, and SPIROPLAN® W gear units can contain elastomers made of fluorocarbon rubber:

- Oil seals

25803530/EN – 04/2018

- Breather valve
- Screw plugs

The user is responsible for safe handling during the service life including eco-friendly disposal.

SEW-EURODRIVE is not responsible for damage caused by improper handling.

25803530/EN – 04/2018

# 6 Inspection/maintenance



**⚠ WARNING**

Risk of injury if the drive starts up unintentionally.

Severe or fatal injuries

- Disconnect the drive from the power supply before you start working on the unit.
- Prevent the drive from starting up unintentionally for example, by locking the key switch or removing the fuses from the current supply.



**⚠ WARNING**

Risk of injury if preloaded shaft connections are loosened.

Severe or fatal injuries

- Before releasing any shaft connections, make sure there is no active torsional torque present that could lead to tension within the system.



**⚠ WARNING**

Risk of burns due to hot gear unit and hot gear unit lubricant

Severe injuries

- Let the gear unit cool down before you start working on it.
- Carefully remove the oil level plug and the oil drain plug.

**NOTICE**

Loss of lubricant qualities due to filling of wrong lubricant

Damage to the gear unit

- Do not mix synthetic lubricants and mineral lubricants.
- Do not mix different synthetic lubricants.
- As standard lubricant use mineral oil.

**NOTICE**

Damage to oil seal caused by cleaning the gear unit with a high pressure device.

Gear unit damage.

- Do not clean the gear unit with a high-pressure cleaning device.

**NOTICE**

Damage to gear unit due to ingress of foreign objects during maintenance and inspection work

Gear unit failure

- Prevent foreign particles from entering into the gear unit during maintenance and inspection work.

25803530/EN – 04/2018

## INFORMATION

Maintain the inspection and maintenance intervals. This is necessary to ensure operational safety.

## INFORMATION

Perform a safety check and functional check following maintenance and repair work.

25803530/EN – 04/2018

## 6.1 Wearing parts

**Gearing**

If you observe the SEW-EURODRIVE design criteria and the inspection and maintenance intervals, then the gearing components of the gear units will be wear-free after the run-in period. The worm gearing is an exception for design reasons. Depending on the operating conditions, material on the tooth flanks of the worm gear is removed to different extents. The main influencing factors are:

- Rotational speed
- Load
- Operating temperature
- Lubricant (type, viscosity, additives, pollution)
- Switching frequency

For information on the worm gearing service life under certain operating conditions, contact SEW-EURODRIVE.

**Rolling bearing**

Rolling bearings in the gear unit, adapter and input shaft assembly have a limited service life, even under ideal operating conditions. This nominal bearing service life is a solely statistical value. The actual service life of an individual bearing may deviate greatly from this value. The main influencing factors are:

- Rotational speed
- Equivalent bearing load
- Operating temperature
- Lubricant (type, viscosity, additives, pollution)
- Lubricant supply of the bearing
- Misalignment under operating load

Therefore the rolling bearings must be inspected regularly. Observe the corresponding inspection and maintenance intervals in the chapters "Inspection/maintenance intervals" (→ 🗎 110), "Lubricant change intervals" (→ 🗎 111), "Maintenance of AL/AM/AQ./EWH adapter" (→ 🗎 111) and "AD input shaft assembly maintenance" (→ 🗎 112).

For information on the nominal bearing service life under certain operating conditions, contact SEW-EURODRIVE.

**Lubricants**

Lubricants are subject to aging. Their service life is limited depending on the load conditions.

The service life significantly depends on the oil operating temperature. The dependency of lubricant change intervals and operating temperature is depicted in the figure in chapter "Lubricant change intervals" (→ 🗎 111).

**Oil seals**

Oil seals are contact seals that seal unit housings at emerging elements, such as shafts, from the environment. Oils seals are wear parts with a service life that is influenced by the following factors, among others:

- Shaft speed and circumferential velocity at the sealing lip
- Ambient conditions (temperature, dust, humidity, pressure, chemicals, radiation)
- Lubricant (type, viscosity, additives, pollution)
- Surface quality of the sealing
- Lubricant supply of the sealing
- Oil seal material

25803530/EN – 04/2018

Due to the various influencing factors it is not possible to predict the service life. Therefore the oil seals must be inspected regularly. Observe the corresponding inspection and maintenance intervals in the chapters "Inspection/maintenance intervals" (→ 🗎 110), "Lubricant change intervals" (→ 🗎 111), "Maintenance of AL/AM/AQ./EWH adapter" (→ 🗎 111) and "AD input shaft assembly maintenance" (→ 🗎 112).

Cam ring/ coupling ring

The couplings used in the AM, AL, AQ. and EWH adapters are designed to be positive, puncture-proof and low-maintenance claw couplings. They have an impact and vibration-absorbing cam ring (AM, EWH) or coupling ring (AQ., AL). The service life is determined by the following factors, among others:

- Ambient conditions (temperature, chemicals, radiation)
- Operational conditions (switching frequency, impact characteristics)

Adhere to the corresponding inspection and maintenance intervals in chapter "Maintenance of AL/AM/AQ./EWH adapter" (→ 🗎 111).

**Rubber buffer**

The rubber buffer is required for shaft-mounted gear units of the F and W gear unit types for torque support. Rubber buffers are wear parts with a service life that is influenced by the following factors:

- Load
- Ambient conditions
  - Temperature
  - Humidity
  - Aggressive chemicals, e.g. ozone
- Switching frequency
- Impact characteristics

**Flexible bushing**

A so-called flexible bushing is required for the torque arm of the S and K gear unit types. Flexible bushings are wear parts with a service life that is influenced by the following factors:

- Load
- Ambient conditions
  - Temperature
  - Humidity
  - Aggressive chemicals, e.g. ozone
- Switching frequency
- Impact characteristics

25803530/EN – 04/2018

## 6.2 Inspection/maintenance intervals

The following table lists the obligatory intervals and the corresponding measures:

| Time interval | What to do? |
|---|---|
| • Every 3000 hours of operation, at least every 6 months | • Check oil and oil level<br>• Check running noise for possible bearing damage<br>• Visual inspection of the seals for leakage<br>• Check that all screw plugs, any oil sight glass, the breather valve and the gear unit cover screws are tight.<br>• For gear units with a torque arm: Check and replace the rubber buffers, if necessary |
| • Depending on the operating conditions (see illustration in chapter "Lubricant change intervals" (→ 🖹 111)), every 3 years at the latest<br>• according to oil temperature | • Change mineral oil<br>• Replace bearing grease (recommendation)<br>• Replace oil seal (do not install it in the same track) |
| • Depending on the operating conditions (see illustration in chapter "Lubricant change intervals" (→ 🖹 111)), every 5 years at the latest<br>• according to oil temperature | • Change synthetic oil<br>• Replace bearing grease (recommendation)<br>• Replace oil seal (do not install it in the same track) |
| • Varying (depending on external factors) | • Touch up or renew the surfaces / anti-corrosion coating |

**Exceptions**

The following gear units are lubricated for life. A scheduled oil change is not necessary:

- Helical gear units R07, R17, R27
- Parallel-shaft helical gear unit F27
- SPIROPLAN® gear units

25803530/EN – 04/2018

## 6.3 Lubricant change intervals

The following image depicts the change intervals for standard gear units under normal ambient conditions. In case of special designs under severe/aggressive ambient conditions, change the lubricant more frequently.

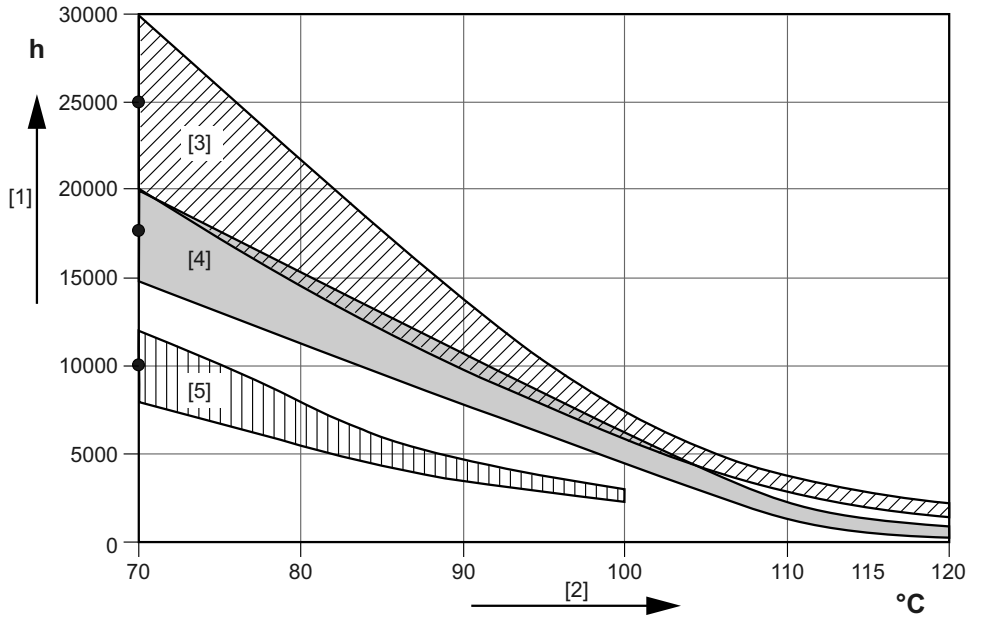


18014398528211595

[1] Operating hours
[2] Sustained oil bath temperature
• Average value per oil type at 70 °C
[3] CLP PG/CLP PG NSF H1
[4] CLP HC/ CLP HC NSF H1
[5] CLP (CC)/E

## 6.4 Maintenance of AL/AM/AQ./EWH adapter

The following table lists the obligatory intervals and the corresponding measures:

| Time interval | What to do? |
|---|---|
| • Every 3000 hours of operation, at least every 6 months | • Check the running noises to detect possible bearing damage.<br>• Visually check the adapter for leakage. |
| • After 10 000 operating hours | • Check the rotational clearance.<br>• Visually check the cam ring (AM, EWH) or coupling ring (AQ., AL). |
| • After 10 000 operating hours with NBR/FKM oil seals<br>• After 20 000 operating hours with Premium Sine Seal (PSS) adapter oil seals: | • Change the bearing grease.<br>• Change the oil seal. With standard NBR or FKM oil seals, the new oil seal must not be fitted on the previous track. This is allowed with Premium Sine Seal (PSS) adapter oil seals. |

## 6.5 AD input shaft assembly maintenance

The following table lists the obligatory intervals and the corresponding measures:

| Time interval | What to do? |
|---|---|
| • Every 3000 hours of operation, at least every 6 months | • Check the running noises to detect possible bearing damage.<br>• Visually check the adapter for leakage. |
| • After 10000 operating hours | • Change the bearing grease.<br>• Change the oil seal. Do not mount it in the same track. |

25803530/EN – 04/2018

## 6.6 Inspection/maintenance for the gear unit

### 6.6.1 Checking the oil level and changing the oil

The procedure when checking the oil level and changing the oil depends on gear unit type, size and mounting position. Determine the code letter (A, B, C, D or E) in the following table in regard of gear unit type and size. Use the code letter to find the reference for the procedure for the corresponding gear unit in the 2nd table.

| Gear unit type | Size | Code letter for chapter "Checking the oil level and changing the oil" | | | | | |
|---|---|---|---|---|---|---|---|
| | | M1 | M2 | M3 | M4 | M5 | M6 |
| R | R..07 – 27 | B | | | | | |
| | R..37 / R..67 | A | | | | | |
| | R..47 / R..57 | A | | | | B | A |
| | R..77 – 167 | A | | | | | |
| | RX..57 – 107 | A | | | | | |
| F | F..27 | B | | | | | |
| | F..37 – 157 | A | | | | | |
| K | K..19 / K..29 | C | | | | | |
| | K..39 / K49 | A | | | | | |
| | K..37 – 187 | A | | | | | |
| S | S..37 | C | | | | | |
| | S..47 – 97 | A | | | | | |
| W | W..10 – 30 | B | | | | | |
| | W..37 – 47 | D | | | E | D | |

| Code letter | Chapter "Checking the oil level and changing the oil" | Reference |
|---|---|---|
| **A:** | • Helical gear units...<br>• Parallel-shaft helical gear units...<br>• Helical-bevel gear units...K..39 / K..49, K..37 – 187<br>• Helical-worm gear units... S..47 – 97<br>**With oil level plug** | (→ 🗎 114) |
| **B:** | • Helical gear units...<br>• Parallel-shaft helical gear units...<br>• SPIROPLAN® gear units...<br>**Without oil level plug, with cover plate** | (→ 🗎 117) |
| **C:** | • S..37 helical-worm gear unit<br>• Helical-bevel gear units K..19 / K..29<br>**Without oil level plug, without cover plate** | (→ 🗎 121) |
| **D:** | • SPIROPLAN® W..37 / W..47<br>**In mounting positions M1, M2, M3, M5, M6 with oil level plug** | (→ 🗎 124) |

25803530/EN – 04/2018

| Code letter | Chapter "Checking the oil level and changing the oil" | Reference |
|---|---|---|
| **E:** | • SPIROPLAN® W..37 / W..47...<br>**In mounting position M4 without oil level plug and cover plate** | (→ 🗎 126) |

Refer to chapter "Mounting positions" (→ 🗎 129) for notes on the mounting positions.

You cannot check the oil level of gear units in pivoted mounting position. The gear units are delivered with the correct oil level. Observe the designations and fill quantities on the nameplate if you have to change the oil.

### 6.6.2 A: Helical, parallel-shaft helical, helical-bevel and helical-worm gear units with oil level plug

**Checking the oil level at the oil level plug**

Proceed as follows to check the oil level of the gear unit:

1. Observe the notes in chapter Information on gear unit inspection/maintenance.
2. Determine the position of the oil level plug and the breather valve using the mounting position sheets. See chapter "Mounting positions" (→ 🗎 129).
3. Place a container underneath the oil level plug.
4. Slowly remove the oil level plug. Small amounts of oil may leak out as the permitted maximum oil level is higher than the lower edge of the oil level bore.
5. Check the oil level according to the following figure and the corresponding table.

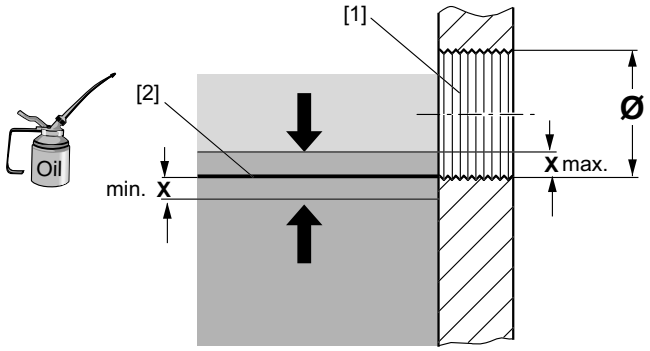


634361867

[1] Oil level bore
[2] Ideal oil level
X min/max oil level

| Ø oil level bore | Approved fluctuation "x" of the oil level mm |
|---|---|
| M10 × 1 | 1.5 |
| M12 × 1.5 | 2 |
| M22 × 1.5 | 3 |
| M33 × 2 | 4 |
| M42 × 2 | 5 |

6. Proceed as follows if the oil level is too low:
   - Fill in fresh oil of the same type (contact SEW-EURODRIVE if necessary) via the breather bore, up to the lower edge of the oil level bore.

25803530/EN – 04/2018

- Re-insert the breather valve. Observe for this the tightening torques in chapter "Tightening torques for oil level plugs, oil drain plugs, screw plugs, breather valves and oil sight glasses" (→ 🗎 32).

7. Screw in the oil level plug again. Observe for this the tightening torques in chapter "Tightening torques for oil level plugs, oil drain plugs, screw plugs, breather valves and oil sight glasses" (→ 🗎 32).

#### Checking the oil via the oil drain plug

Proceed as follows to check the gear unit oil:

1. Observe the notes in chapter Information on gear unit inspection/maintenance.
2. Determine the position of the oil drain plug using the mounting position sheets. See chapter "Mounting positions" (→ 🗎 129).
3. Remove a little oil from the oil drain plug.
4. Check the oil consistency:
   - Viscosity
   - If you can see that the oil is heavily contaminated, SEW-EURODRIVE recommends to change the oil even if this is outside the service intervals specified in "Inspection and maintenance intervals" (→ 🗎 110).
5. Check the oil level. See chapter "Checking the oil level via the oil level plug" (→ 🗎 114).

#### Changing the oil via the oil drain plug and the breather valve



**⚠ WARNING**

Risk of burns due to hot gear unit and hot gear unit oil.

Serious injuries.

- Let the gear unit cool down before you start working on it. Due to the better flowability, the gear unit oil should still be warm so that the gear unit can be drained best.

1. Observe the notes in chapter Information on gear unit inspection/maintenance.
2. Determine the position of the oil drain plug, the oil level plug and the breather valve using the mounting position sheets. See chapter "Mounting positions" (→ 🗎 129).
3. Place a container underneath the oil drain plug.
4. Remove the oil level plug, the breather valve and the oil drain plug.
5. Drain all the oil.
6. Re-insert the oil drain plug. Observe for this the tightening torques in chapter "Tightening torques for oil level plugs, oil drain plugs, screw plugs, breather valves and oil sight glasses" (→ 🗎 32).
7. Fill in fresh oil of the same type (contact SEW-EURODRIVE if necessary) via the breather bore. Do not mix different synthetic lubricants!
   - Observe the oil fill quantities according to the specifications on the nameplate or according to the mounting position. See chapter Lubricant fill quantities.
   - Check the oil level at the oil level plug.

25803530/EN – 04/2018

8. Re-insert the oil level plug and the breather valve. Observe for this the tightening torques in chapter "Tightening torques for oil level plugs, oil drain plugs, screw plugs, breather valves and oil sight glasses" (→ 🗎 32).

25803530/EN – 04/2018

### 6.6.3 B: Helical, parallel shaft helical, SPIROPLAN® gear units without oil level plug with cover plate

**Checking the oil level via the cover plate**

For gear units without oil level bore, the oil level is checked via the cover plate opening. Proceed as follows:

1. Observe the notes in chapter Information on gear unit inspection/maintenance.
2. To position the cover plate on the top, place the gear unit in the following mounting position:
   - R07 – R57 in M1 mounting position
   - F27 in M3 mounting position
   - W10 – W30 in M1 mounting position
3. Loosen the screws [1] of the cover plate [2] and remove the cover plate [2] and the corresponding gasket [3] (see following figure).

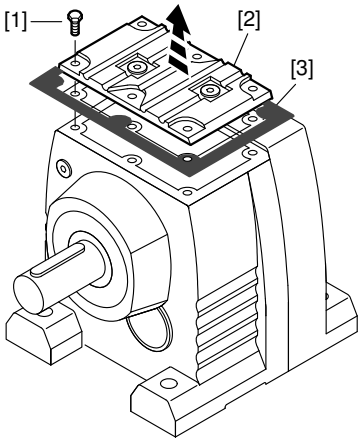


*9007199273384203*

4. Determine the vertical distance "x" between oil level and sealing surface of the gear unit housing (see following figure).

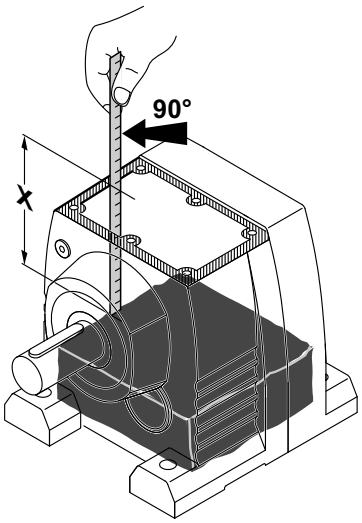


*9007199273387275*

5. Compare the determined value "x" to the max. distance between oil level and sealing surface of the gear unit housing specified in the following table. Adjust the fill level if required.

| Gear unit type | | Max. distance x in mm between oil level and sealing surface of the gear unit housing for mounting position | | | | | |
|---|---|---|---|---|---|---|---|
| | | M1 | M2 | M3 | M4 | M5 | M6 |
| R07 | 2 stages | 52 ± 1 | 27 ± 1 | 27 ± 1 | 27 ± 1 | 27 ± 1 | 27 ± 1 |
| | 3 stages | 49 ± 1 | 21 ± 1 | 21 ± 1 | 21 ± 1 | 21 ± 1 | 21 ± 1 |
| R17 | 2 stages | 63 ± 1 | 18 ± 1 | 46 ± 1 | 18 ± 1 | 46 ± 1 | 46 ± 1 |
| | 3 stages | 58 ± 1 | 11 ± 2 | 40 ± 2 | 11 ± 2 | 40 ± 2 | 40 ± 2 |
| R27 | 2 stages | 74 ± 1 | 22 ± 1 | 45 ± 1 | 22 ± 1 | 45 ± 1 | 45 ± 1 |
| | 3 stages | 76 ± 1 | 19 ± 1 | 42 ± 1 | 19 ± 1 | 42 ± 1 | 42 ± 1 |
| R47 | 2 stages | – | – | – | – | 39 ± 1 | – |
| | 3 stages | – | – | – | – | 32 ± 1 | – |
| R57 | 2 stages | – | – | – | – | 32 ± 1 | – |
| | 3 stages | – | – | – | – | 28 ± 1 | – |
| F27 | 2 stages | 78 ± 1 | 31 ± 1 | 72 ± 1 | 56 ± 1 | 78 ± 1 | 78 ± 1 |
| | 3 stages | 71 ± 1 | 24 ± 1 | 70 ± 1 | 45 ± 1 | 71 ± 1 | 71 ± 1 |
| | | Irrespective of mounting position | | | | | |
| W10 | | 12 ± 1 | | | | | |
| W20 | | 19 ± 1 | | | | | |
| W30 | | 31 ± 1 | | | | | |

6. Close the gear unit after the oil level check:
   - Re-attach the seal of the cover plate. Make sure that the sealing surfaces are clean and dry.
   - Screw on the cover plate. Tighten the cover plate screw connections working from the inside to the outside. Tighten the cover plate screw connections in the sequence depicted in the following figure. Tighten the cover plate screw connections with the specified tightening torque according to the following table. Repeat the tightening procedure until the screws are properly tightened. To avoid damaging the cover plate, use only impulse wrenches or torque wrenches. Do not use impact screwdrivers.

25803530/EN – 04/2018

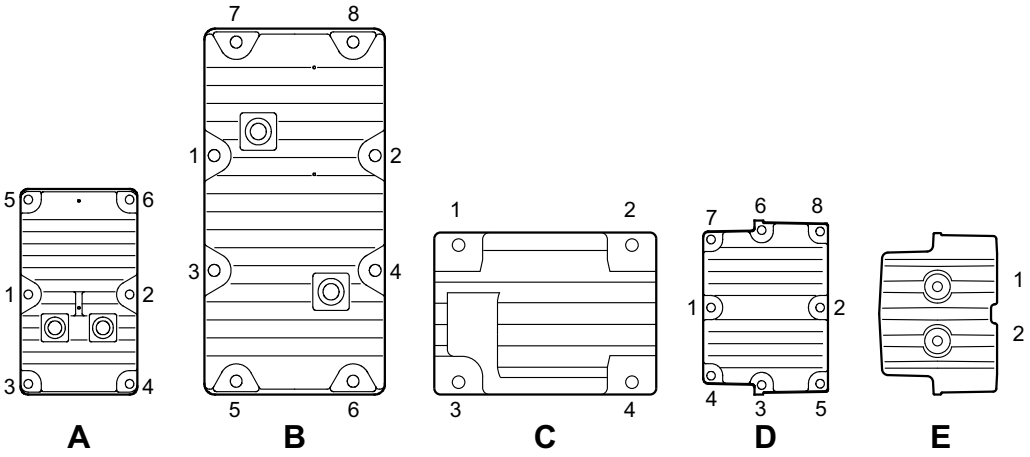


*27021597782872715*

| Gear unit type | Image | Retaining thread | Tightening torque $T_N$ Nm | Minimum tightening torque $T_{min}$ Nm |
|---|---|---|---|---|
| R/RF07/17 | E | M6 | 11 | 7 |
| R/RF27 | D | | | |
| R/RF47/57 | A | | | |
| F27 | B | | | |
| W10 | C | M5 | 6 | 4 |
| W20 | C | M6 | 11 | 7 |
| W30 | A | | | |

**Checking the oil via cover plate**

Proceed as follows to check the gear unit oil:

1. Observe the notes in chapter Information on gear unit inspection/maintenance.
2. Open the cover plate of the gear unit according to chapter "Checking the oil level via the cover plate" (→ 🗎 117).
3. Take an oil sample via the cover plate opening.
4. Check the oil consistency.
   - Viscosity
   - If you can see that the oil is heavily contaminated, SEW-EURODRIVE recommends to change the oil even if this is outside the service intervals specified in "Inspection and maintenance intervals" (→ 🗎 113).
5. Check the oil level. See chapter "Checking the oil level via the cover plate" (→ 🗎 117).
6. Screw on the cover plate. Observe the order and the tightening torques according to chapter "Checking the oil level via the cover plate" (→ 🗎 117).

### Changing the oil via the cover plate



**⚠ WARNING**

Risk of burns due to hot gear unit and hot gear unit oil.

Serious injuries.

- Let the gear unit cool down before you start working on it. Due to the better flowability, the gear unit oil should still be warm so that the gear unit can be drained best.

1. Observe the notes in chapter Information on gear unit inspection/maintenance.
2. Open the cover plate of the gear unit according to chapter "Checking the oil level via the cover plate".
3. Completely drain the oil into a container via the cover plate opening.
4. Fill in fresh oil of the same type (contact SEW-EURODRIVE if necessary) via the cover plate. Do not mix different synthetic lubricants.
   - Fill in the oil as specified on the nameplate or the order confirmation.
5. Check the oil level.
6. Screw on the cover plate. Observe the order and the tightening torques according to chapter "Checking the oil level via the cover plate" (→ 🗎 117).

25803530/EN – 04/2018

### 6.6.4 C: Helical-worm gear units S..37 and helical-bevel gear units K..19/K..29 without oil level plug and cover plate

**Checking the oil level via screw plug**

The gear units S..37, K..19, and K..29 are not equipped with an oil level plug or a cover plate. This is why the oil level is checked via the control bore.

1. Observe the notes in chapter Information on gear unit inspection/maintenance.
2. Place the gear unit in the mounting position stated in the following table. Thus the control bore always points upwards.

| Gear unit | Mounting position |
|---|---|
| S..37 | M5/M6 |
| K19/29 | M6 |

3. Remove the screw plug [1] as shown in the following figure.

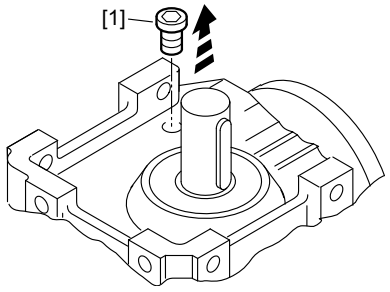


*18655371*

4. Insert the dipstick vertically via the control bore all the way to the bottom of the gear unit housing. Vertically pull the dipstick out of the control bore, as shown in the following figure.

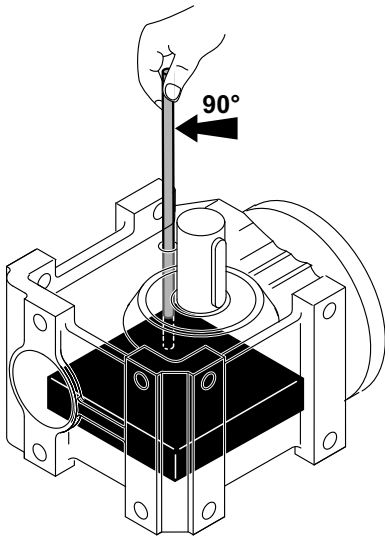


*18658699*

25803530/EN – 04/2018

5. Determine the size of the section "x" of the dipstick covered with lubricant using a slide-gauge as depicted in the following figure.

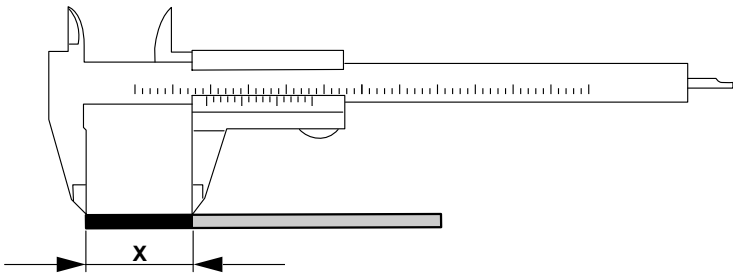


18661771

6. Compare the determined value "x" to the min. value depending on the mounting position specified in the following table. Correct the fill level if required.

| Gear unit type | Oil level = wetted section "x" in mm of the dipstick<br>Mounting position | | | | | |
|---|---|---|---|---|---|---|
| | M1 | M2 | M3 | M4 | M5 | M6 |
| K..19 | 33 ± 1 | 33 ± 1 | 33 ± 1 | 35 ± 1 | 33 ± 1 | 33 ± 1 |
| K..29 | 50 ± 1 | 50 ± 1 | 50 ± 1 | 63 ± 1 | 50 ± 1 | 50 ± 1 |
| S..37 | 10 ± 1 | 24 ± 1 | 34 ± 1 | 37 ± 1 | 24 ± 1 | 24 ± 1 |

7. Re-insert and tighten the screw plug. Observe for this the tightening torques in chapter "Tightening torques for oil level plugs, oil drain plugs, screw plugs, breather valves and oil sight glasses" (→ 🗎 32).

**Checking the oil via the screw plug**

1. Observe the notes in chapter Information on gear unit inspection/maintenance.
2. Open the screw plug of the gear unit according to chapter "Checking the oil level via screw plug" (→ 🗎 121).
3. Take an oil sample via the screw plug bore.
4. Check the oil consistency.
   - Viscosity
   - If you can see that the oil is heavily contaminated, SEW-EURODRIVE recommends to change the oil even if this is outside the service intervals specified in "Inspection and maintenance intervals" (→ 🗎 110).
5. Check the oil level. See chapter "Checking the oil level via screw plug" (→ 🗎 121).
6. Re-insert and tighten the screw plug. Observe for this the tightening torques in chapter "Tightening torques for oil level plugs, oil drain plugs, screw plugs, breather valves and oil sight glasses" (→ 🗎 32).

25803530/EN – 04/2018

### Changing the oil via the screw plug



**⚠ WARNING**

Risk of burns due to hot gear unit and hot gear unit oil.

Serious injuries.

- Let the gear unit cool down before you start working on it. Due to the better flowability, the gear unit oil should still be warm so that the gear unit can be drained best.

1. Observe the notes in chapter Information on gear unit inspection/maintenance.
2. Open the cover plate of the gear unit according to chapter "Checking the oil level via the screw plug".
3. Completely drain the oil via the screw plug bore.
4. Fill in fresh oil of the same type (contact SEW-EURODRIVE if necessary) via the control bore. You must not mix different synthetic lubricants.
   - Observe the oil quantity specified on the nameplate or according to the mounting position. Observe chapter Lubricant fill quantities.
5. Check the oil level.
6. Re-insert and tighten the screw plug. Observe for this the tightening torques in chapter "Tightening torques for oil level plugs, oil drain plugs, screw plugs, breather valves and oil sight glasses" (→ 🗎 32).

25803530/EN – 04/2018

### 6.6.5 D: SPIROPLAN® W..37/W..47 in mounting position M1, M2, M3, M5, M6 with oil level plug

**Checking the oil level at the oil level plug**

Proceed as follows to check the oil level of the gear unit:

1. Observe the notes in chapter Information on gear unit inspection/maintenance.
2. Set up the gear unit in M1 mounting position.
3. Slowly remove the oil level plug (see following figure). Small amounts of oil may leak out.

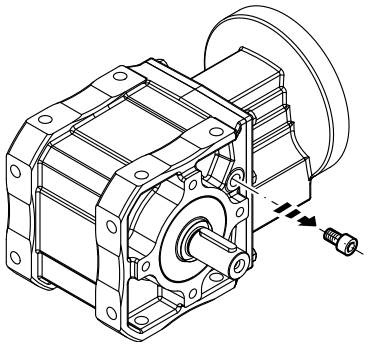

*787235211*

4. Check the oil level according to the following figure.

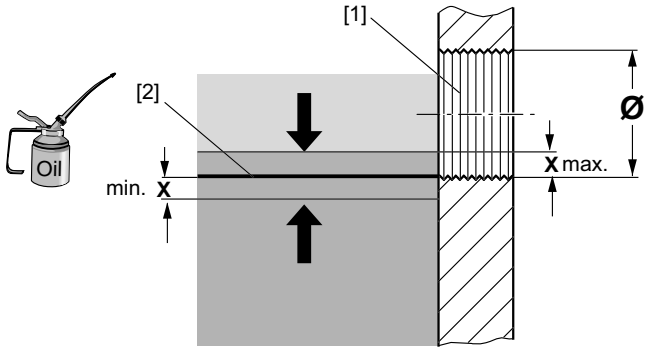


*634361867*

[1] Oil level bore [2] Ideal oil level

| Ø oil level bore | Fluctuation "x" for minimum and maximum fill level in mm |
|---|---|
| **M10 × 1** | 1.5 |

5. In case the oil level is too low, fill in fresh oil of the same type (contact SEW-EURODRIVE if necessary) via the oil level bore, up to the lower edge of the oil level bore.
6. Screw in the oil level plug again. Observe for this the tightening torques in chapter "Tightening torques for oil level plugs, oil drain plugs, screw plugs, breather valves and oil sight glasses" (→ 🗎 32).

**Checking the oil level at the oil level plug**

Proceed as follows to check the oil of the gear unit:

1. Observe the notes in chapter Information on gear unit inspection/maintenance.

25803530/EN – 04/2018

2. Remove some oil at the oil level plug.
3. Check the oil consistency.
   - Viscosity
   - If you can see that the oil is heavily contaminated, SEW-EURODRIVE recommends to change the oil even if this is outside the service intervals specified in "Inspection and maintenance intervals" (→ 🗎 110).
4. Check the oil level. See previous chapter.

**Changing the oil at the oil level plug**



**⚠ WARNING**

Risk of burns due to hot gear unit and hot gear unit oil.

Serious injuries.

- Let the gear unit cool down before you start working on it. Due to the better flowability, the gear unit oil should still be warm so that the gear unit can be drained best.

1. Observe the notes in chapter Information on gear unit inspection/maintenance.
2. Set up the gear unit in M5 or M6 mounting position. See chapter "Mounting positions" (→ 🗎 129).
3. Place a container underneath the oil level plug.
4. Remove the oil level plugs on the A- and B-side of the gear unit.
5. Drain all the oil.
6. Re-insert the lower oil level plug. Observe for this the tightening torques in chapter "Tightening torques for oil level plugs, oil drain plugs, screw plugs, breather valves and oil sight glasses" (→ 🗎 32).
7. Fill in new oil of the same type (contact SEW-EURODRIVE if necessary) via the upper oil level plug. You must not mix different synthetic lubricants.
   - Observe the oil fill quantities according to the specifications on the nameplate or according to the mounting position. See chapter Lubricant fill quantities.
   - Check the oil level according to chapter "Checking the oil level via oil level plug"
8. Re-insert the upper oil level plug. Observe for this the tightening torques in chapter "Tightening torques for oil level plugs, oil drain plugs, screw plugs, breather valves and oil sight glasses" (→ 🗎 32).

25803530/EN – 04/2018

### 6.6.6 E: SPIROPLAN® W..37 / W..47 in mounting position M4 without oil level plug and cover plate

**Checking the oil level via screw plug**

The W37 / W47 gear units are not equipped with an oil level plug or a cover plate. This is why the oil level is checked via the control bore.

1. Observe the notes in chapter Information on gear unit inspection/maintenance.
2. Set up the gear unit in M5 or M6 mounting position. See chapter "Mounting positions" (→ 🗎 129).
3. Remove the screw plug.
4. Insert the dipstick vertically via the control bore all the way to the bottom of the gear unit housing. Mark the point on the dipstick where it exits the gear unit. Pull out the dipstick vertically (see following figure).

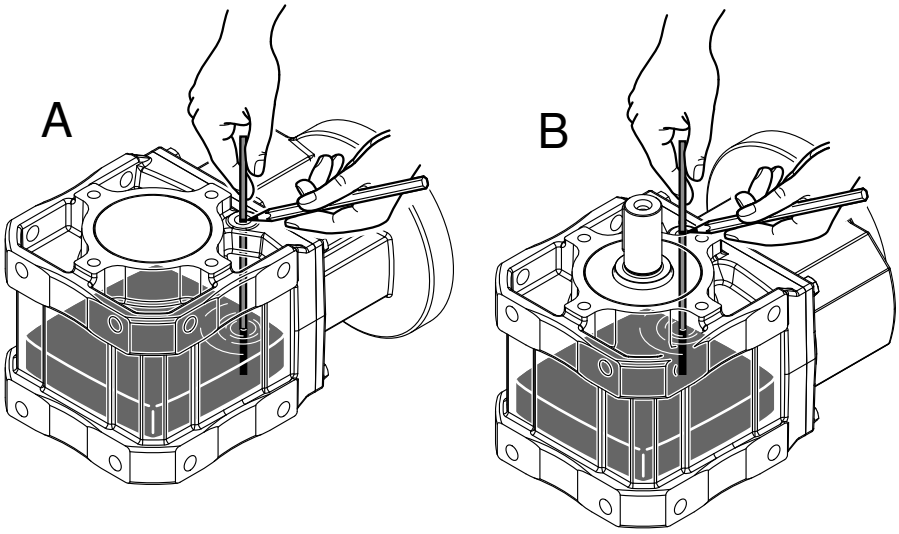


*784447371*

5. Determine the section "x" between the wetted part and the marking using a caliper (see following figure).

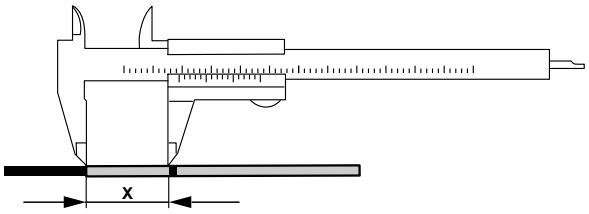


*9007200039761803*

6. Compare the determined value "x" to the min. value depending on the mounting position specified in the following table. Correct the fill level if required.

| Gear unit type | Oil level = section "x" in mm of the dipstick<br>Mounting position during check | |
|---|---|---|
| | M5<br>Lying on the A-side | M6<br>Lying on the B-side |
| W37 in M4 mounting position | 37 ± 1 | 29 ± 1 |
| W47 in M4 mounting position | 41 ± 1 | 30 ± 1 |

25803530/EN – 04/2018

7. Re-insert and tighten the screw plug. Observe for this the tightening torques in chapter "Tightening torques for oil level plugs, oil drain plugs, screw plugs, breather valves and oil sight glasses" (→ 🗎 32).

#### Checking the oil via the screw plug

Proceed as follows to check the oil of the gear unit:

1. Observe the notes in chapter Information on gear unit inspection/maintenance.
2. Remove a little oil at the oil screw plug.
3. Check the oil consistency:
   - Viscosity
   - If you can see that the oil is heavily contaminated, SEW-EURODRIVE recommends to change the oil even if this is outside the service intervals specified in "Inspection and maintenance intervals" (→ 🗎 110).
4. Check the oil level. See previous chapter.

#### Changing the oil via the screw plug



**⚠ WARNING**

Risk of burns due to hot gear unit and hot gear unit oil.

Serious injuries.

- Let the gear unit cool down before you start working on it. Due to the better flowability, the gear unit oil should still be warm so that the gear unit can be drained best.

1. Observe the notes in chapter Information on gear unit inspection/maintenance.
2. Set up the gear unit in M5 or M6 mounting position. See chapter "Mounting positions" (→ 🗎 129).
3. Place a container underneath the screw plug.
4. Remove the screw plugs on the A- and B-side of the gear unit.
5. Drain all the oil.
6. Re-insert the lower screw plug. Observe for this the tightening torques in chapter "Tightening torques for oil level plugs, oil drain plugs, screw plugs, breather valves and oil sight glasses" (→ 🗎 32).
7. Fill in fresh oil of the same type (contact SEW-EURODRIVE if necessary) via the upper screw plug. You must not mix different synthetic lubricants.
   - For the required oil quantity, refer to the nameplate or chapter Lubricant fill quantities.
   - Check the oil level according to chapter "Checking the oil level via oil level plug".
8. Re-insert the upper screw plug. Observe for this the tightening torques in chapter "Tightening torques for oil level plugs, oil drain plugs, screw plugs, breather valves and oil sight glasses" (→ 🗎 32).

25803530/EN – 04/2018

### 6.6.7 Replacing the oil seal

**NOTICE**

Damage to oil seal when mounted below 0 °C.

Damage to oil seal.

- Store oil seals at ambient temperatures over 0 °C.
- If necessary, heat the oil seal before mounting it.

Proceed as follows:

1. Ensure that there is a sufficient grease reservoir between the dust lip and sealing lip, depending on the gear unit design.
2. If you use double oil seals, the space has to be filled with grease for one third.

### 6.6.8 Painting the gear unit

**NOTICE**

Paint can block the breather valve and damage the sealing lips of the oil seals.

Damage to property

- Thoroughly cover the breather valve and sealing lip of the oil seals with strips prior to painting/re-painting.
- Remove the strips after painting.

25803530/EN – 04/2018

# 7 Mounting positions

## 7.1 Designation of the mounting positions

The following illustration shows the SEW-EURODRIVE mounting positions M1 – M6:

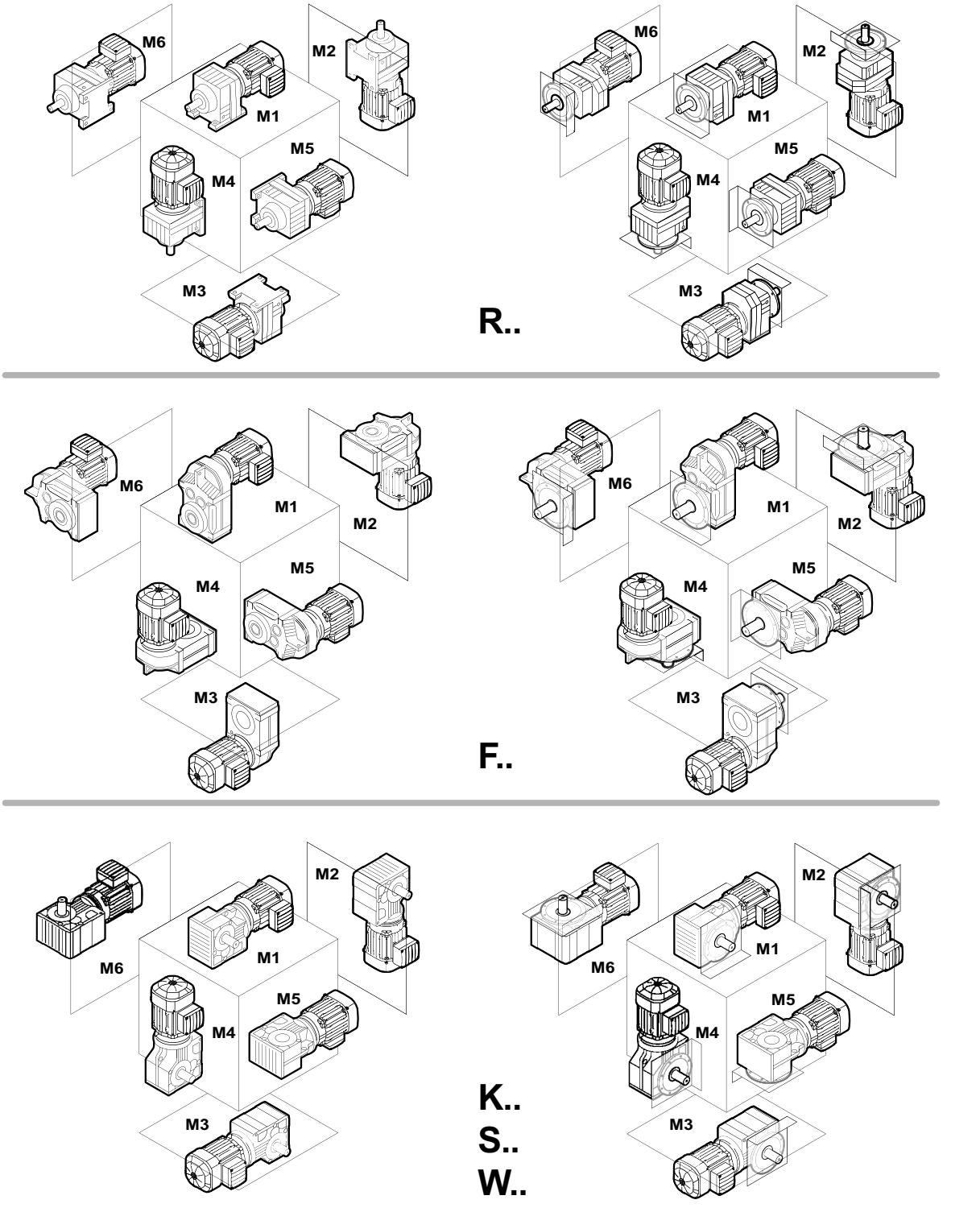


25803530/EN – 04/2018

## 7.2 Churning losses and thermal rating

* (→ 🗎 X)

Churning losses may occur with the following conditions. They must be considered during thermal check:

- A mounting position where the first gear unit stage is fully immersed in the lubricant. The respective mounting positions of the gear units are indicated with a * in chapter "Mounting position sheets" (→ 🗎 132).
- A high mean input speed and thus a high circumferential velocity of the gear wheels of the input gear stage.

If one or both requirements are met, determine the requirements of the application and the corresponding operating conditions (see chapter "Data for calculating the thermal rating" (→ 🗎 130)) and contact SEW-EURODRIVE. SEW-EURODRIVE can calculate the thermal rating based on the actual operating conditions. The thermal rating of the gear unit can be increased by appropriate measure e.g. by using a synthetic lubricant with higher thermal endurance properties.

### INFORMATION

To reduce churning losses to a minimum, use gear units preferably in M1 mounting position.

### 7.2.1 Data for calculating the thermal rating

The following information is required for calculating the thermal rating:

**Gear unit type and design:**

- Gear unit ratio i
- Mean input speed $\overline{n}_e$ or mean output speed $\overline{n}_a$ in $min^{-1}$
- Effective motor torque $M_{eff}$ in Nm
- Input motor power $P_e$ in kW
- Mounting position M1 – M6 or pivoting angle

**Installation site:**

- Ambient temperature $T_{amb}$ in °C
- In small, closed rooms or in large rooms (halls) or outdoors

**Installation on site:**

- Space-critical or well ventilated
- Steel or concrete base

## 7.3 Change of mounting position

Make sure to read the following information when you operate the gearmotor in a mounting position other than the one indicated in the order:

- Adjust the lubricant fill quantity to the changed mounting position.
- Adjust the position of the breather valve.
- When changing the mounting position to M4: Contact SEW-EURODRIVE. Depending on the drive's operating mode, an oil expansion tank might be necessary (see chapter "Oil expansion tank" (→ 🗎 93)).
- For helical-bevel gearmotors: Contact SEW-EURODRIVE if you want to change to mounting position M5 or M6, independent of the initial mounting position.

25803530/EN – 04/2018

- For helical-worm gearmotors: Contact SEW-EURODRIVE when changing to mounting position M2 or M3.
- For helical gearmotors: Contact SEW-EURODRIVE when changing to mounting position M2.
- If you change the mounting position to a mounting position that requires more oil, SEW-EURODRIVE recommends to perform a thermal check/project planning again.

## 7.4 Universal mounting position M0

SPIROPLAN® W10 – W30 gear units can be ordered with M0 universal mounting position. These small SPIROPLAN® gear units are entirely enclosed due to their small size and have no breather valve. You can use them in any mounting position M1 – M6 without having to adjust the gear unit.

All W10 – W30 gear units of one size have the same oil fill quantity.

## 7.5 Mounting position MX

Mounting position MX is available for all gear units of the sizes R..7, F..7, K..7, K..9, S..7 and SPIROPLAN® W..7.

In contrast to the M0 mounting position, gear units in MX mounting position must be adjusted according to the mounting position prior to startup.

For mounting position MX, the gear units are delivered with the maximally possible amount of oil and sealed with oil screw plugs. A breather valve is included with each drive. The oil fill volume must be adapted according to the mounting position of the gear unit (see chapter Lubricant fill quantities). Customers will also have to mount the enclosed breather valve at the proper location depending on the mounting position, see chapter Mounting position sheets. For screwing in the breather valve, observe the corresponding tightening torque in chapter "Tightening torques for oil level plugs, oil drain plugs, screw plugs, breather valves and oil sight glasses" (→ 🗎 32).

Check for the correct oil level before startup, as described in chapter Checking the oil level and changing the oil.

### 7.5.1 Compound gear units in MX mounting position

In MX mounting position, both gear units (primary and subsequent gear unit) are in the same mounting position.

25803530/EN – 04/2018

## 7.6 Mounting position sheets

### 7.6.1 Key to the mounting position sheets

## INFORMATION

The positions of the breather valve, oil level plug, and oil drain plug specified in the mounting position sheets are binding and comply with the assembly specifications.

The motors are only depicted symbolically on the mounting position sheets.

## INFORMATION

**For gear units with solid shaft:** The displayed shaft is always on the A-side.

**For shaft-mounted gear units:** The shaft with dashed lines represents the customer shaft. The output side ( = shaft position) is always shown on the A-side.

## INFORMATION

SPRIOPLAN® gearmotors are not dependent on the mounting position, except for W..37 and W..47 gearmotors in mounting position M4. However, mounting positions M1 to M6 are also shown for SPIROPLAN® gearmotors to assist you in working with this documentation.

## INFORMATION

SPIROPLAN® gearmotors W..10 to W..30 cannot be equipped with breather valves, oil level plugs or oil drain plugs.

SPIROPLAN® gearmotors W..37 and W..47 are equipped with breather valves in mounting position M4 and with oil drain plugs in mounting position M2.

## INFORMATION

Some gear units can be supplied in mounting position M0. In this case, the gear unit is delivered in a universal mounting position and can be adjusted to various mounting positions by the customer. It may be necessary to contact SEW-EURODRIVE.

**Symbols used**

The following table shows the icons used in the mounting position sheets.

| Icon | Meaning |
|---|---|
|  | Breather valve |
| 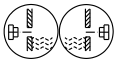 | Oil level plug [1] |
|  | Oil drain plug |

1) Does not apply to the 1st gear unit (large gear unit) of compound gear units. See chapter "Position of the oil level plug of compound gear units".

25803530/EN – 04/2018

### 7.6.2 Position of the oil level plug of compound gear units

To ensure sufficient lubrication of the first gear unit (larger gear unit) in case of compound gear units, the following gear units have a higher oil level in the specified mounting positions:

- Helical gear unit type R..R in mounting position M1 and M2
- Helical-worm gear unit type S..R in mounting position M3

The oil level plugs are located at the following positions, deviating from the specifications on the mounting position sheets:

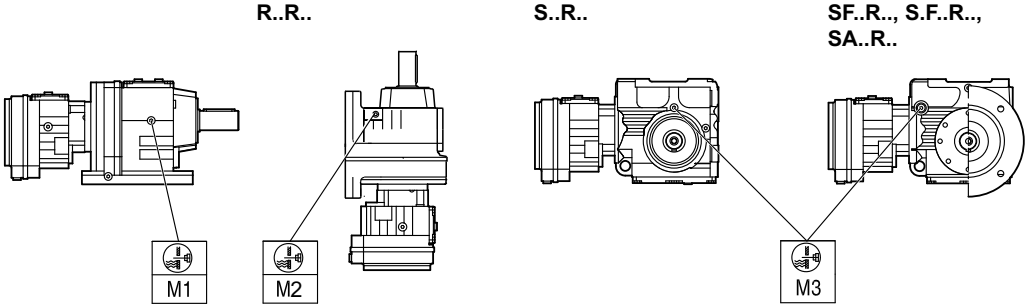


*15987248395*

| Icon | Meaning |
|---|---|
|  | Oil level plug |

### 7.6.3 Mounting positions of helical gearmotors

**RX57-RX107**

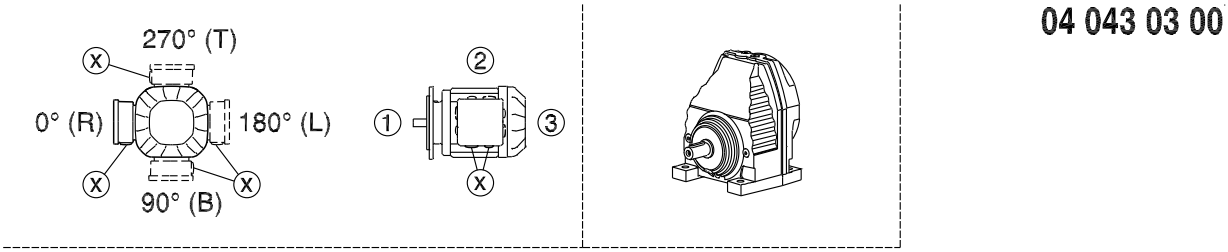


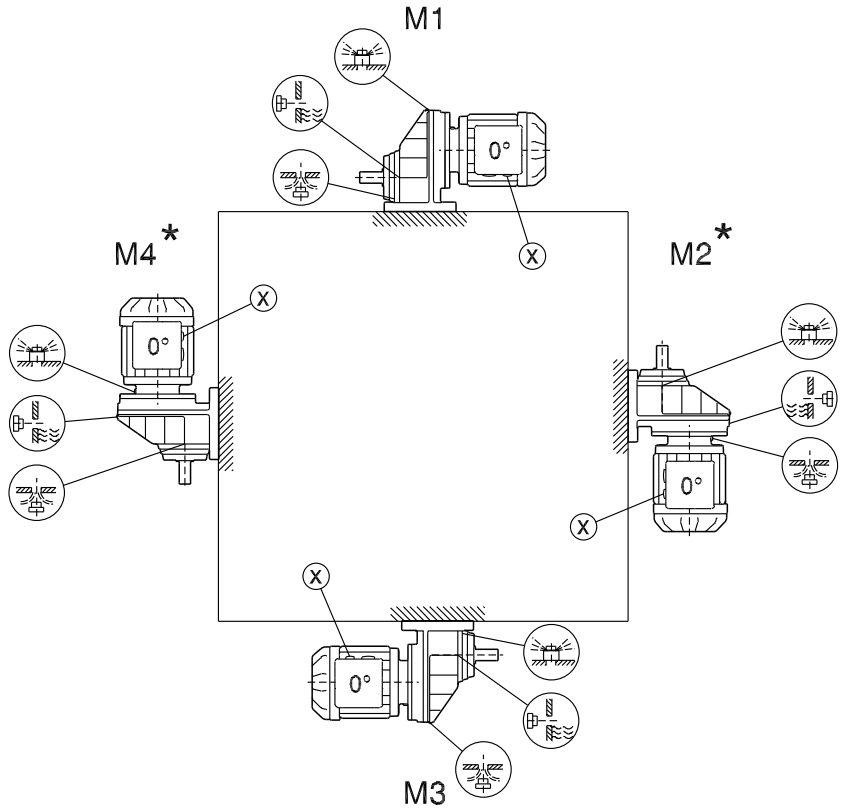


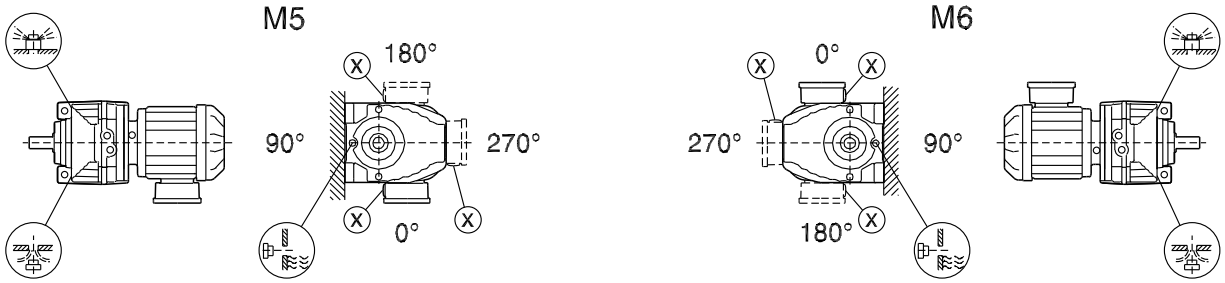


* (→ 🗎 130)

25803530/EN – 04/2018

**RXF57-RXF107**

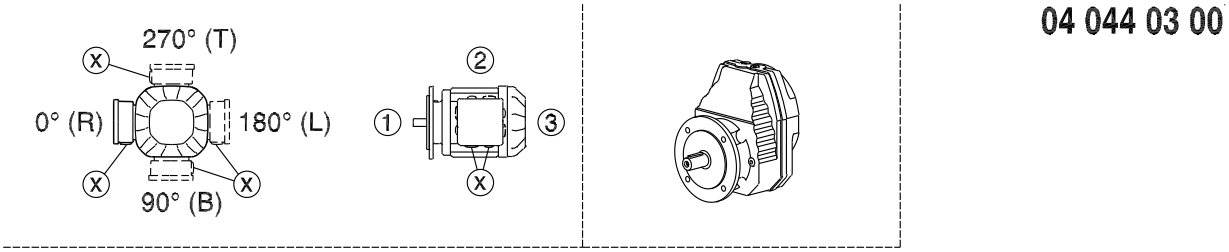


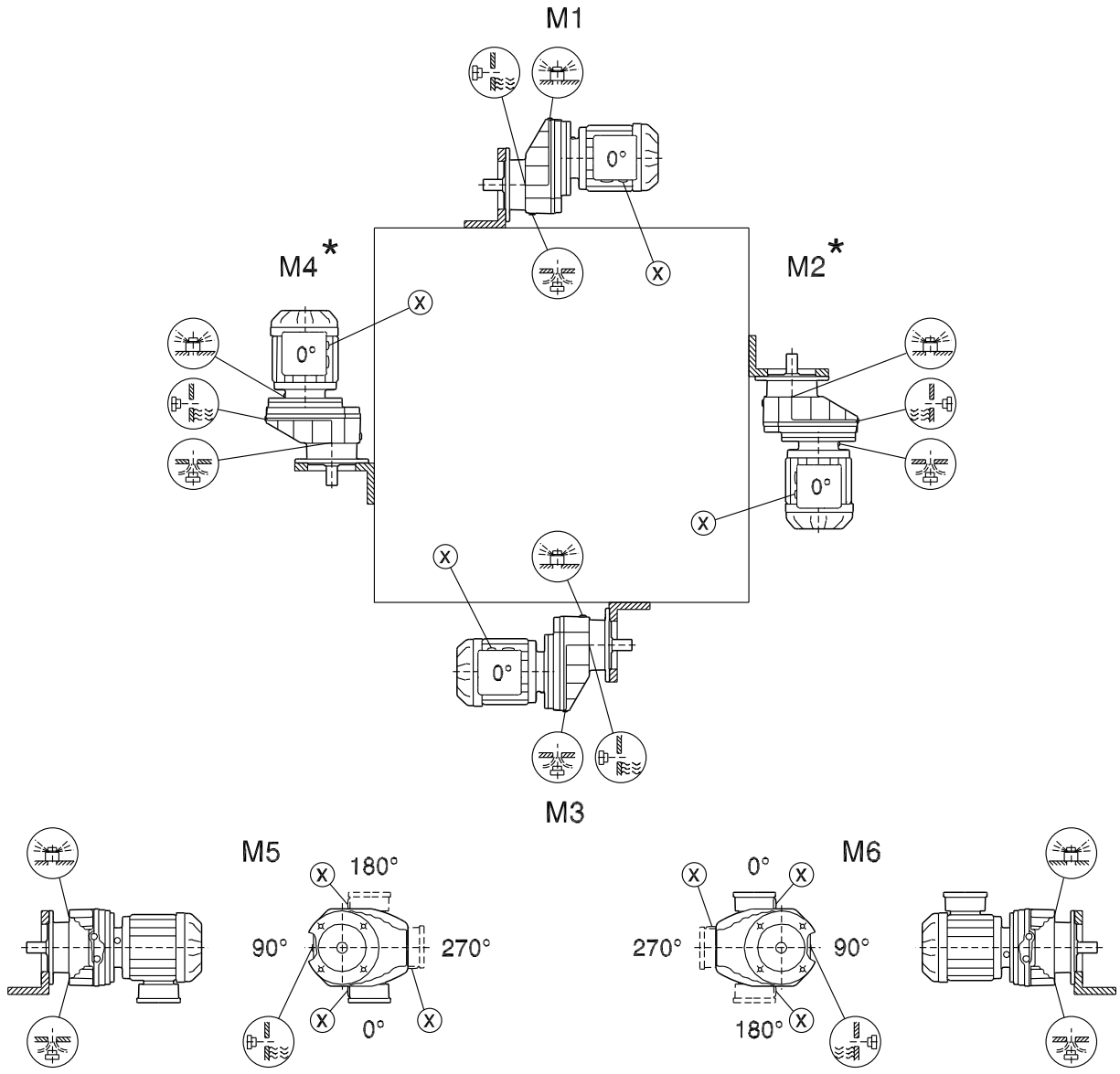


* (→ 130)

**R07-R167**

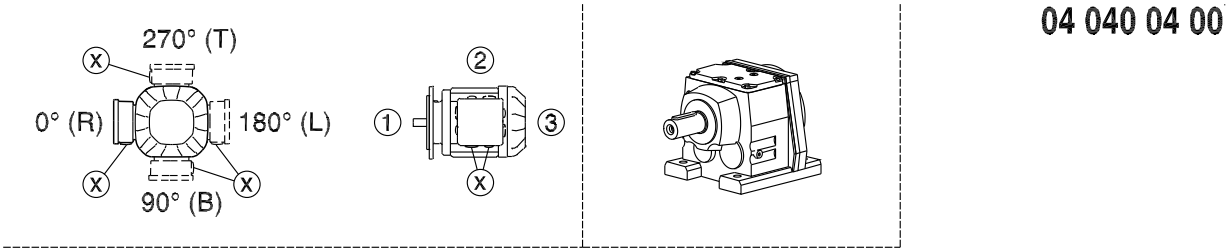


04 040 04 00

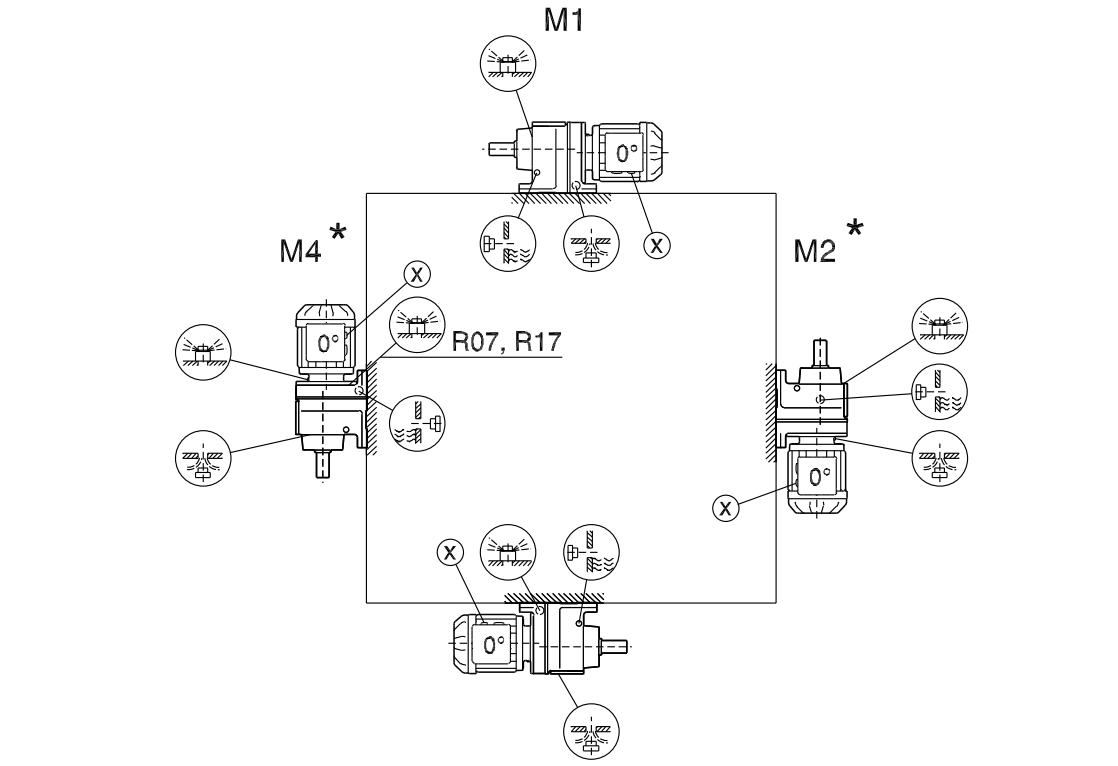


| | | |
|---|---|---|
| R07 | ⊗ | M1, M2, M3, M5, M6 |
| R17, R27 | ⊗ | M1, M3, M5, M6 |
| R07, R17, R27 | ⊗ ⊗ | |
| R47, R57 | ⊗ | M5 |

* (→ 🗎 130)

25803530/EN – 04/2018

**RF07-RF167, RZ07-RZ87**

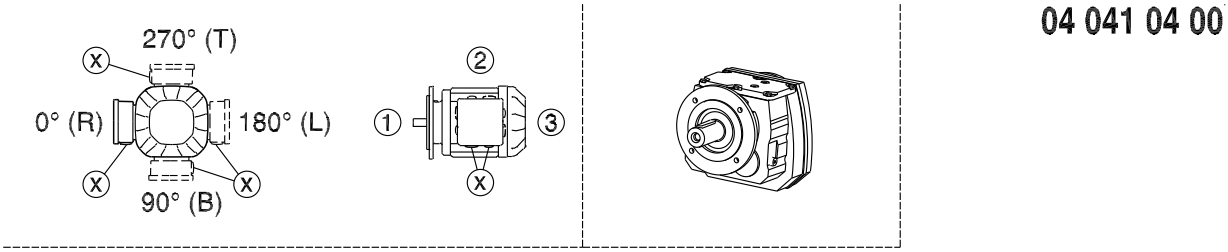


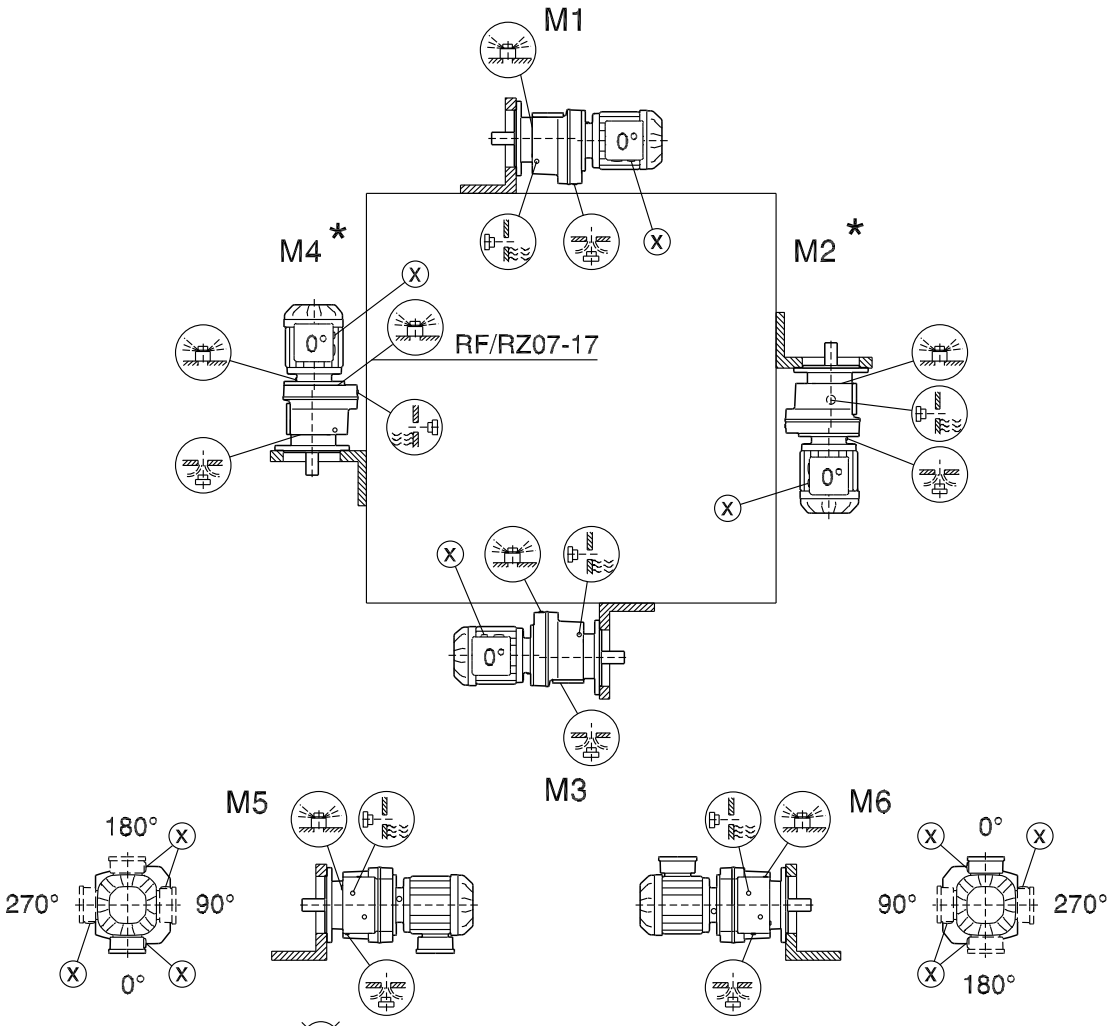


| | | |
|---|---|---|
| RF/RZ07 | | M1, M2, M3, M5, M6 |
| RF/RZ17, 27 | | M1, M3, M5, M6 |
| RF/RZ07, 17, 27 | | |
| RF/RZ47, 57 | | M5 |

* (→ 🗎 130)

**R07F-R87F**

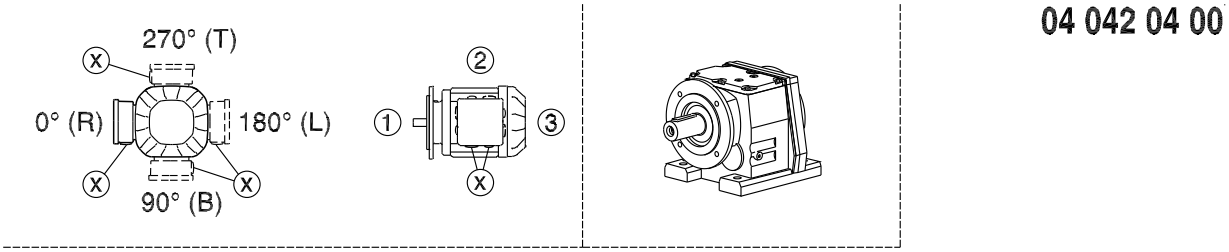


04 042 04 00

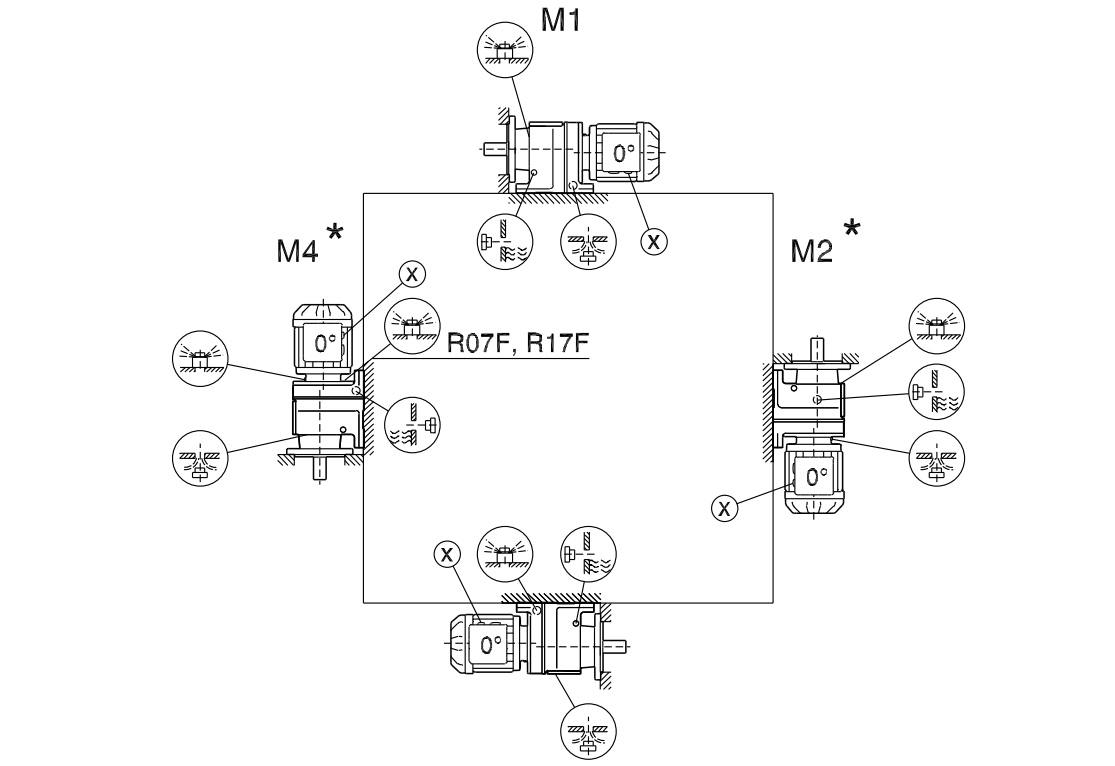


| | |
|---|---|
| R07F | M1, M2, M3, M5, M6 |
| R17F, R27F | M1, M3, M5, M6 |
| R07F, R17F, R27F | |
| R47F, R57F | M5 |

* (→ 🗎 130)

25803530/EN – 04/2018

### 7.6.4 Mounting positions of parallel-shaft helical gearmotors

**F/FA..B/FH27B-157B, FV27B-107B**

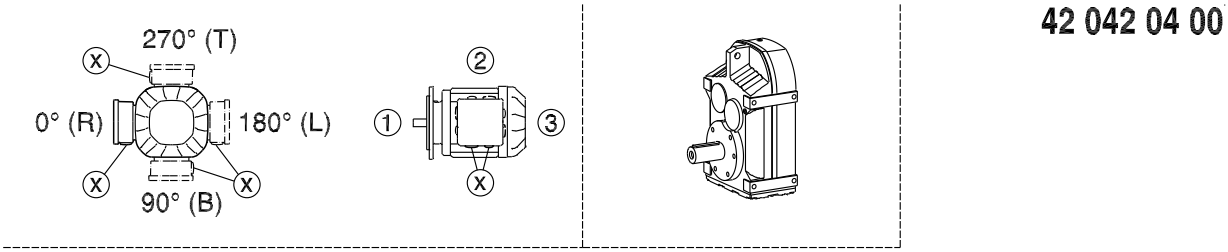


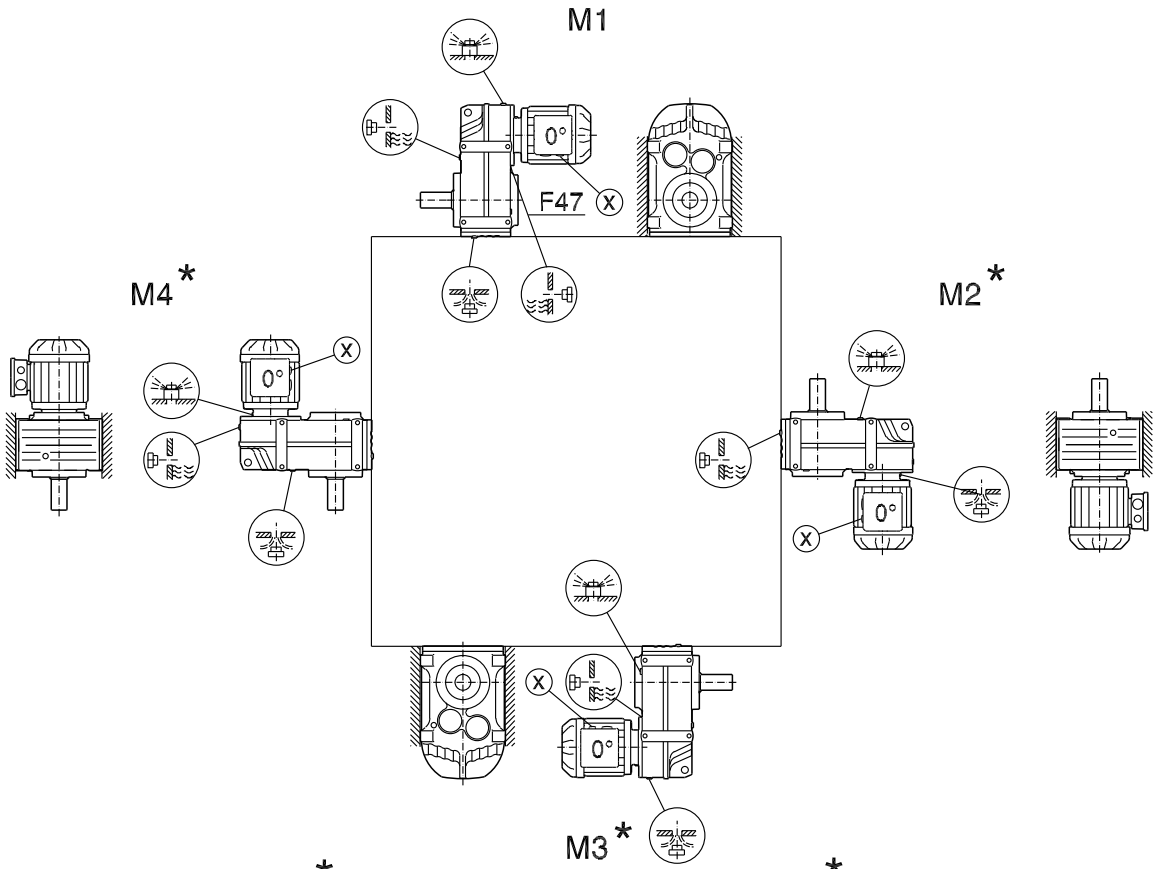


| | | |
|---|---|---|
| F..27 | | M1, M3, M5, M6 |
| F..27 | | M1 - M6 |
| F..27 | | M1, M3, M5, M6 |

* (→ 🗎 130)

25803530/EN – 04/2018

**FF/FAF/FHF/FZ/FAZ/FHZ27-157, FVF/FVZ27-107, FM/FAM67-157**

42 043 04 00

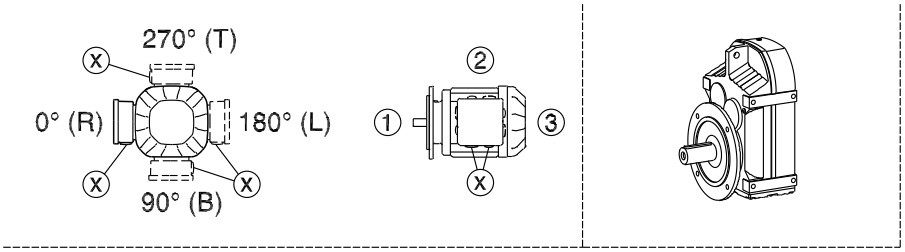


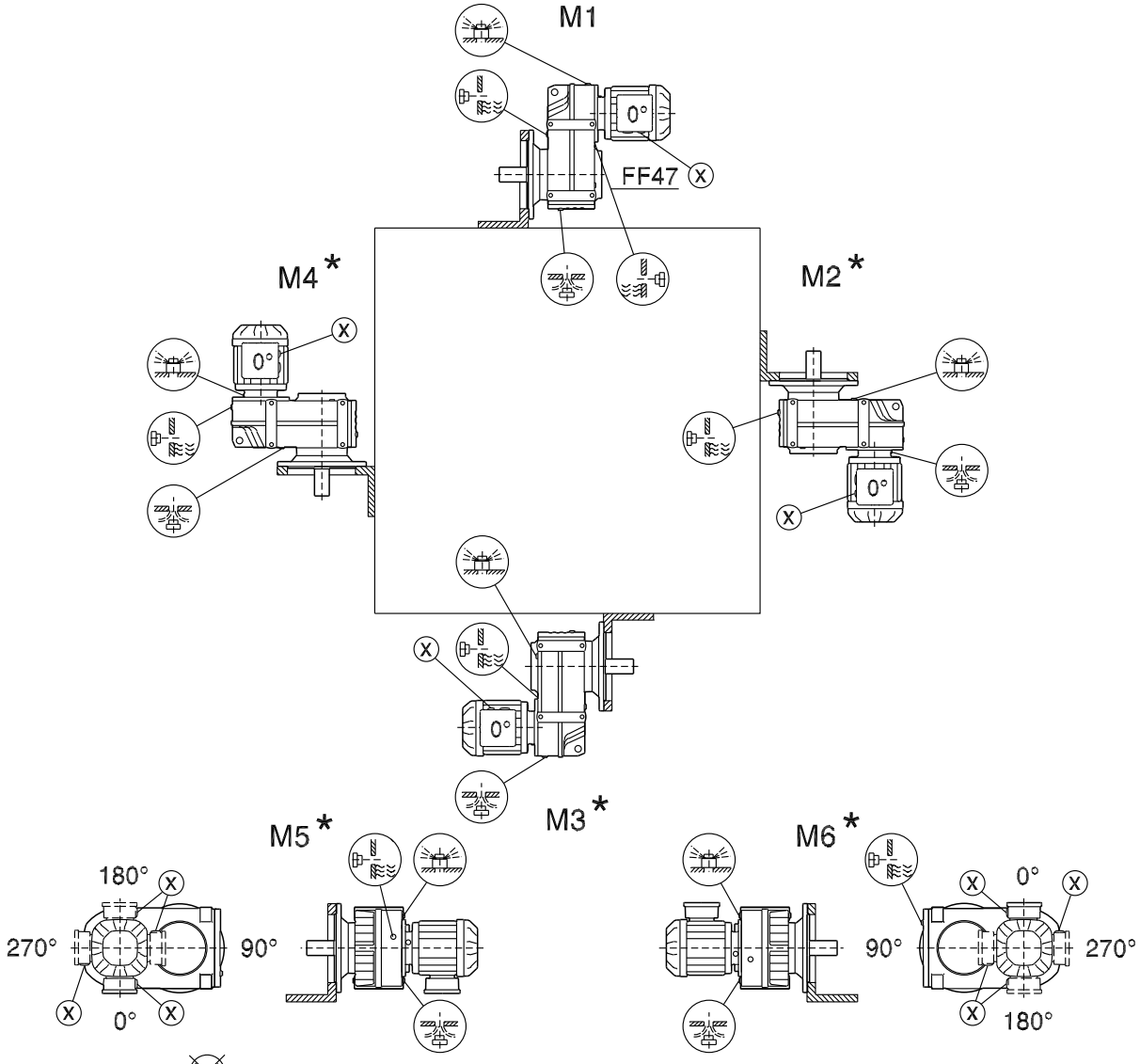


| | | |
|---|---|---|
| F..27 | | M1, M3, M5, M6 |
| F..27 | | M1 - M6 |
| F..27 | | M1, M3, M5, M6 |

* (→ 130)

25803530/EN – 04/2018

**FA/FH27-157, FV27-107, FT37-97**

42 044 04 00

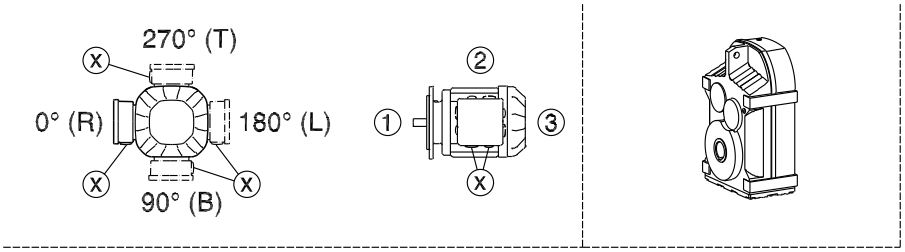


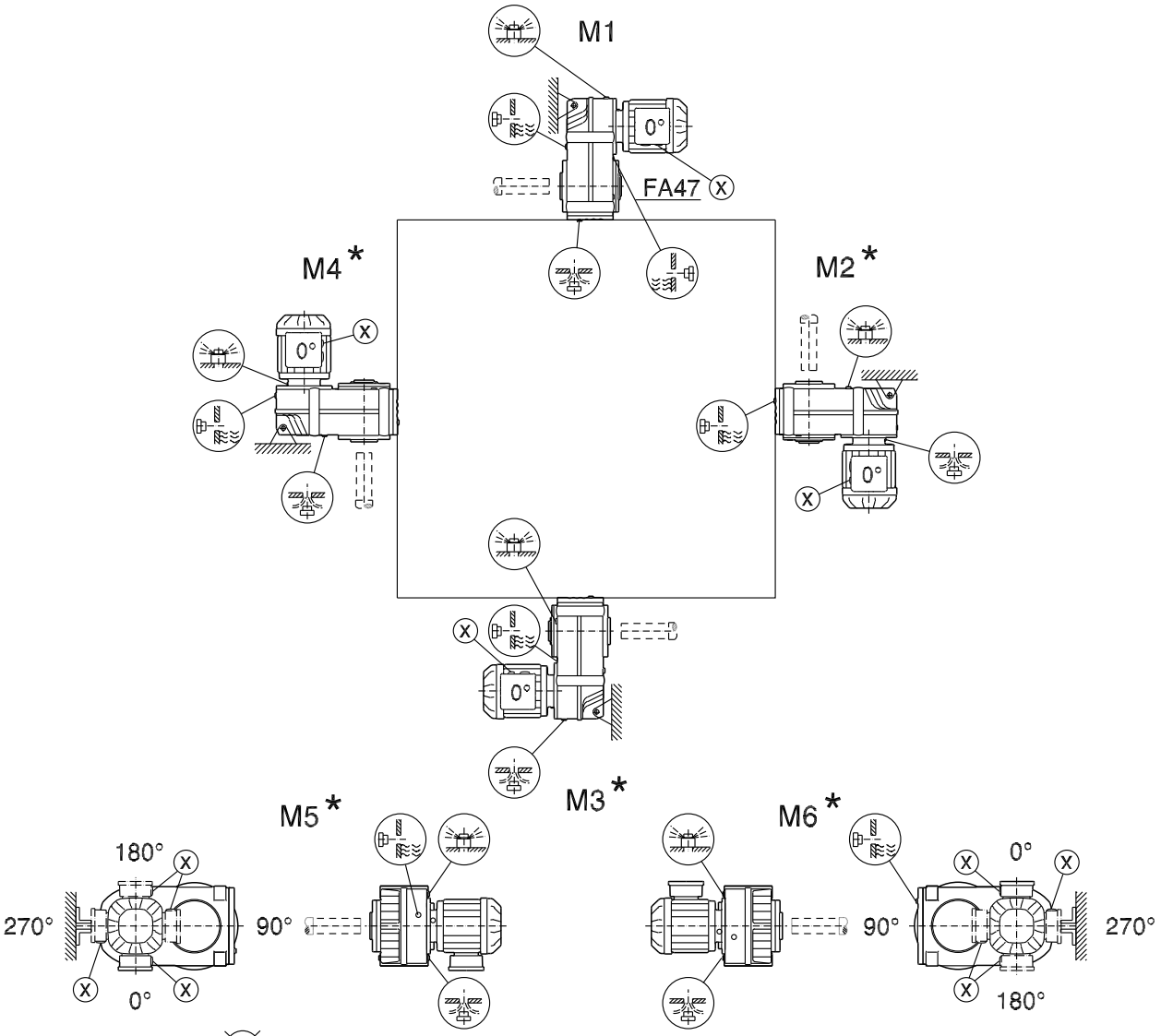


| | | |
|---|---|---|
| F..27 | | M1, M3, M5, M6 |
| F..27 | | M1 - M6 |
| F..27 | | M1, M3, M5, M6 |

* (→ 🗎 130)

25803530/EN – 04/2018

### 7.6.5 Mounting positions of helical-bevel gearmotors

**K/KA..B/KH19B-29B**

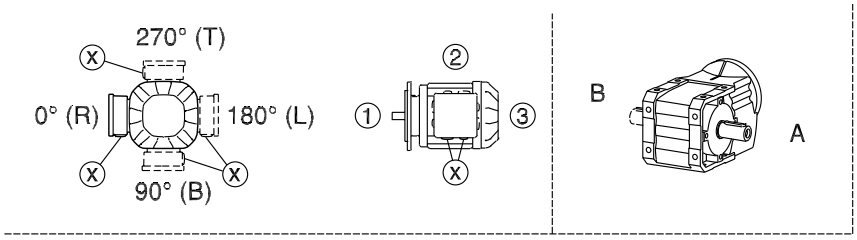


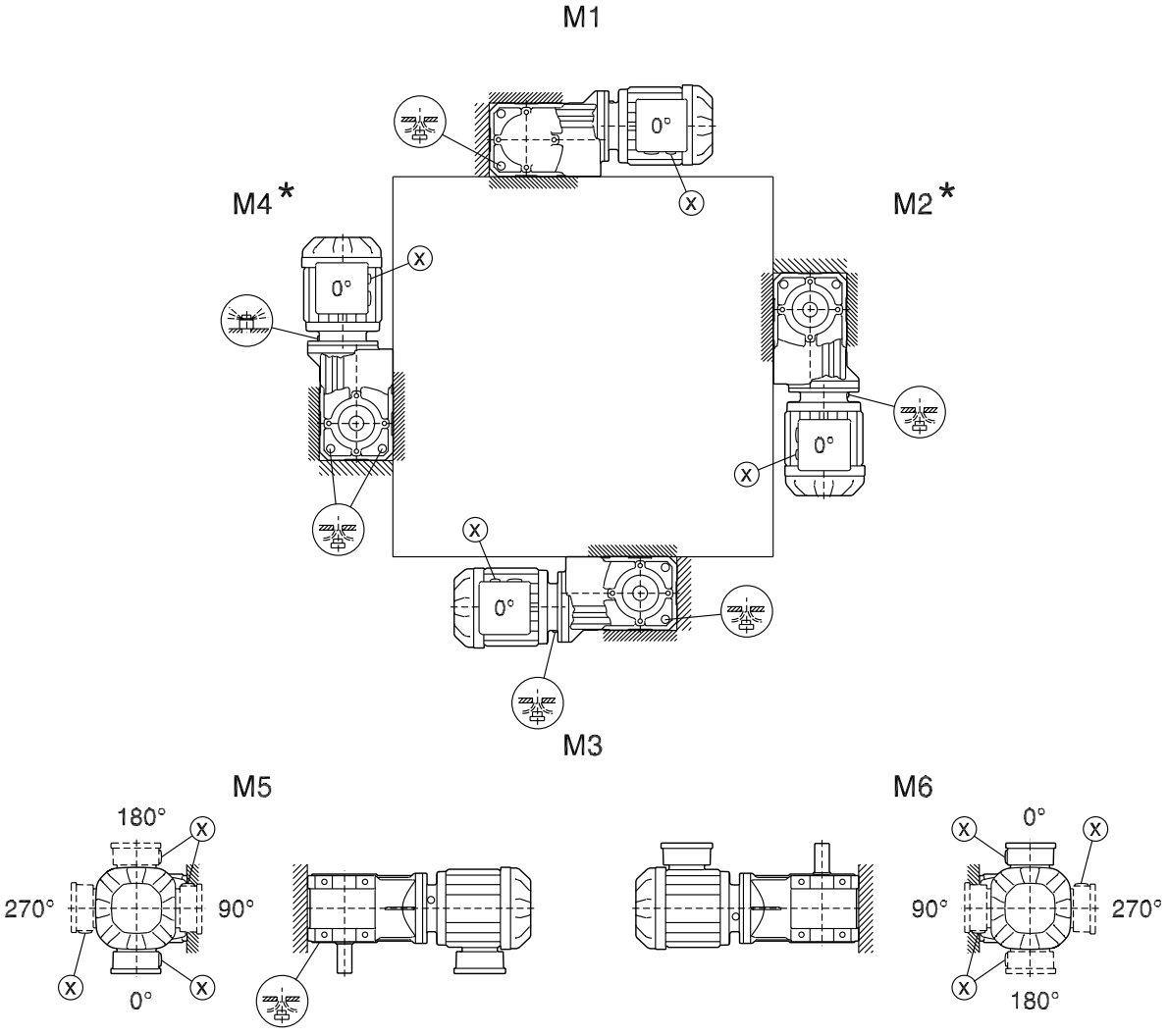


* (→ 130)

25803530/EN – 04/2018

**KF..B/KAF..B/KHF19B-29B**

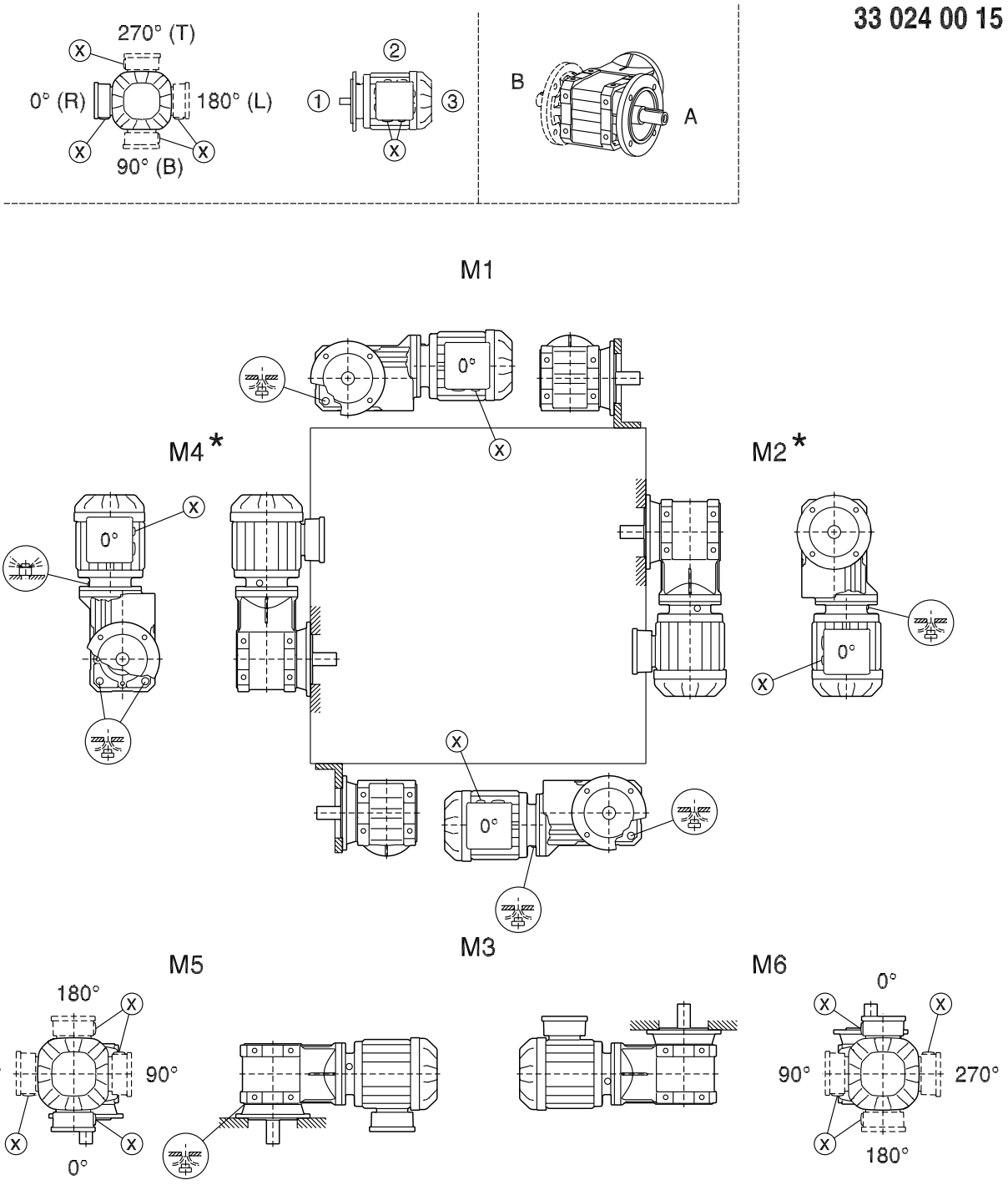


* (→ 🗎 130)

**KA..B/KH19B-29B**

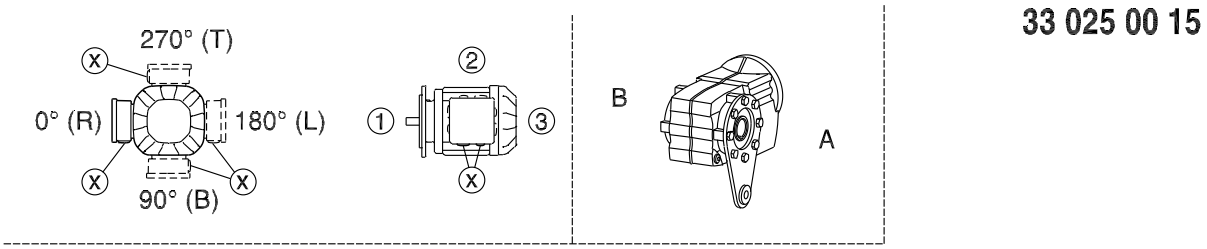


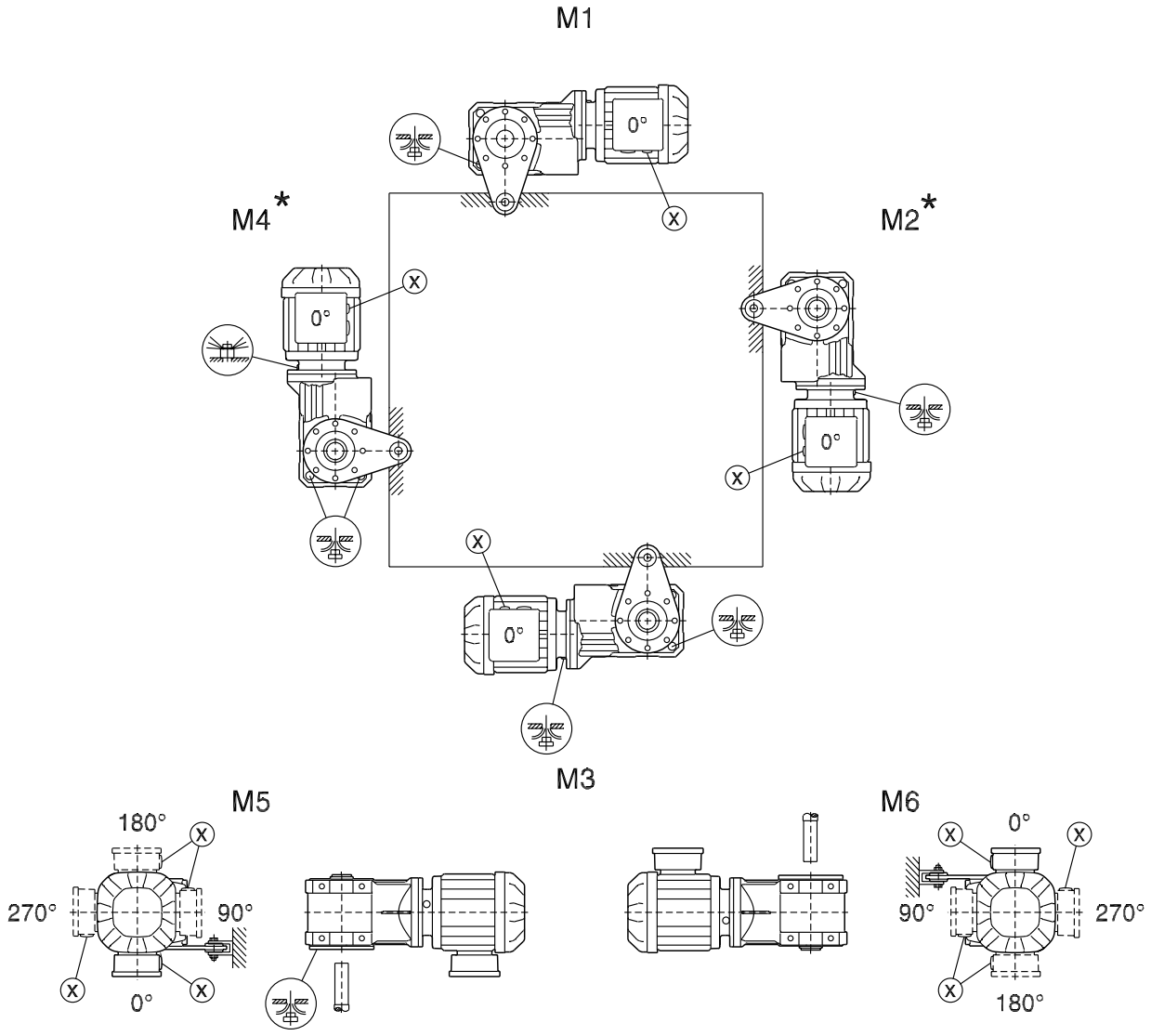


* (→ 130)

25803530/EN – 04/2018

**KF/KAF/KHF19-29**

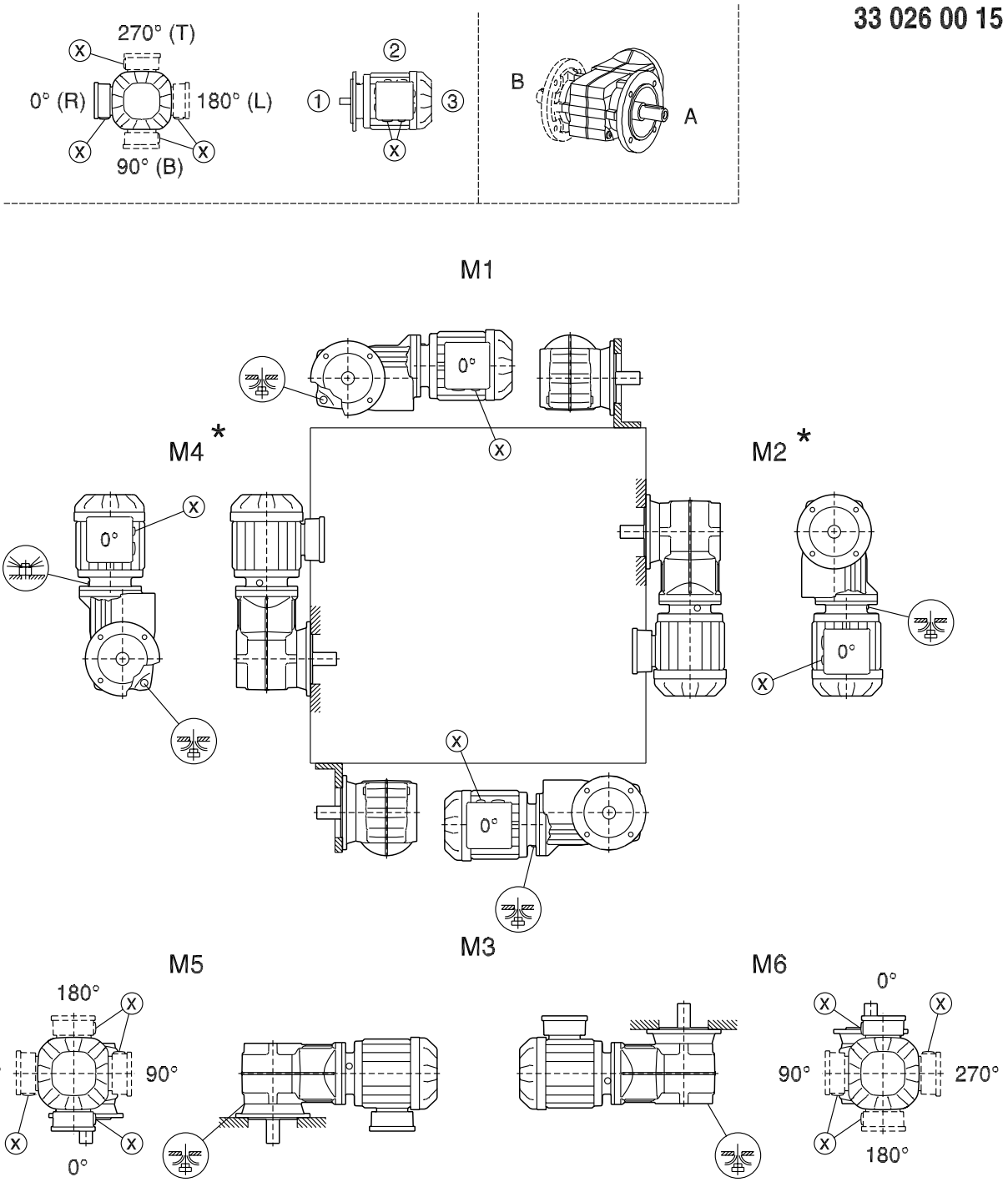


* (→ 130)

**KA/KH19-29**

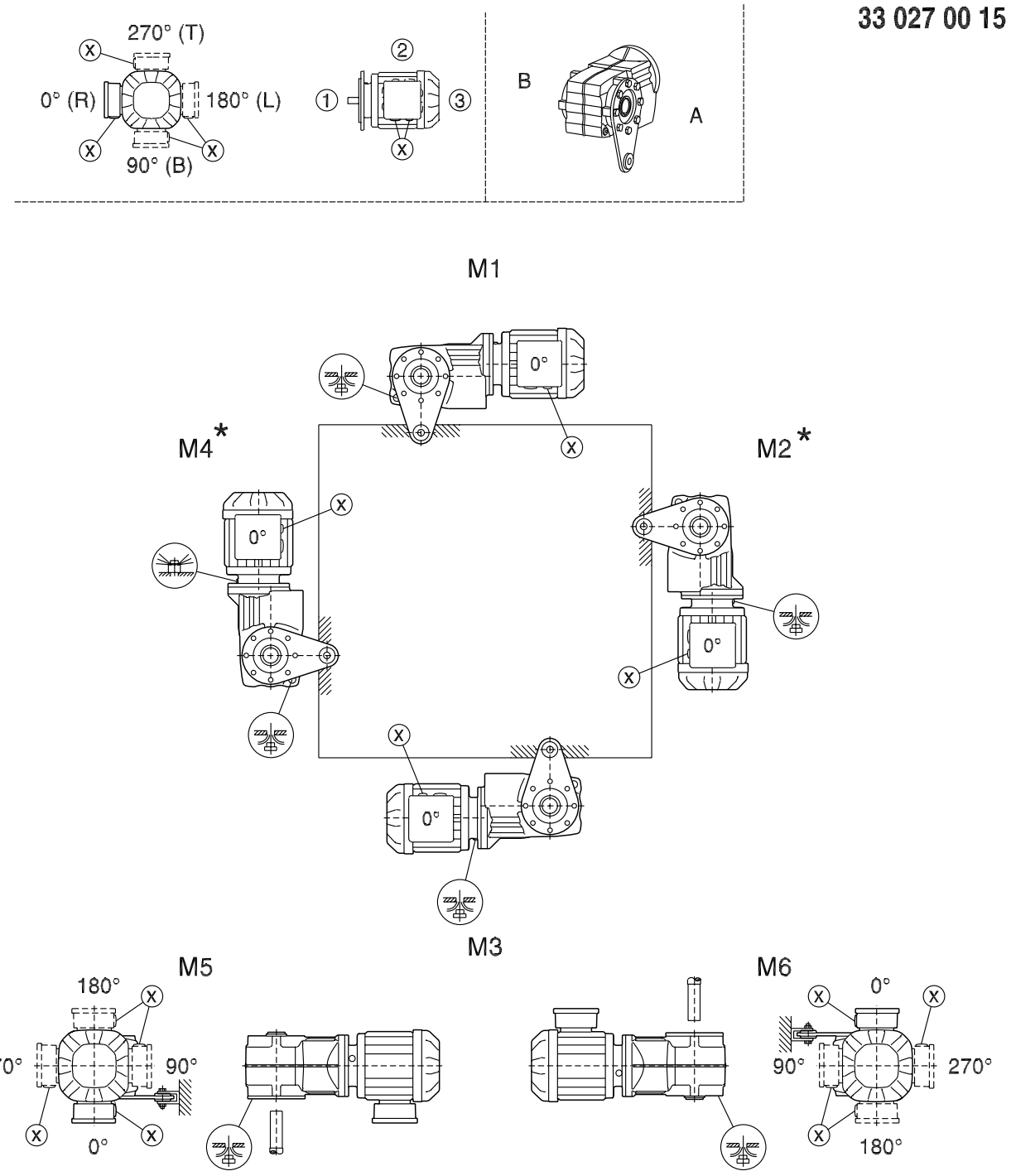


* (→ 130)

25803530/EN – 04/2018

**K/KA..B39-49**

33 092 02 14

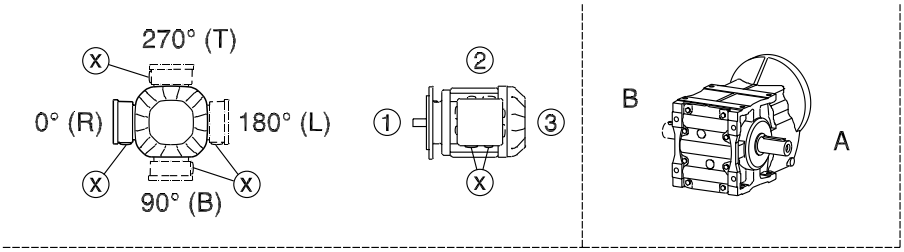


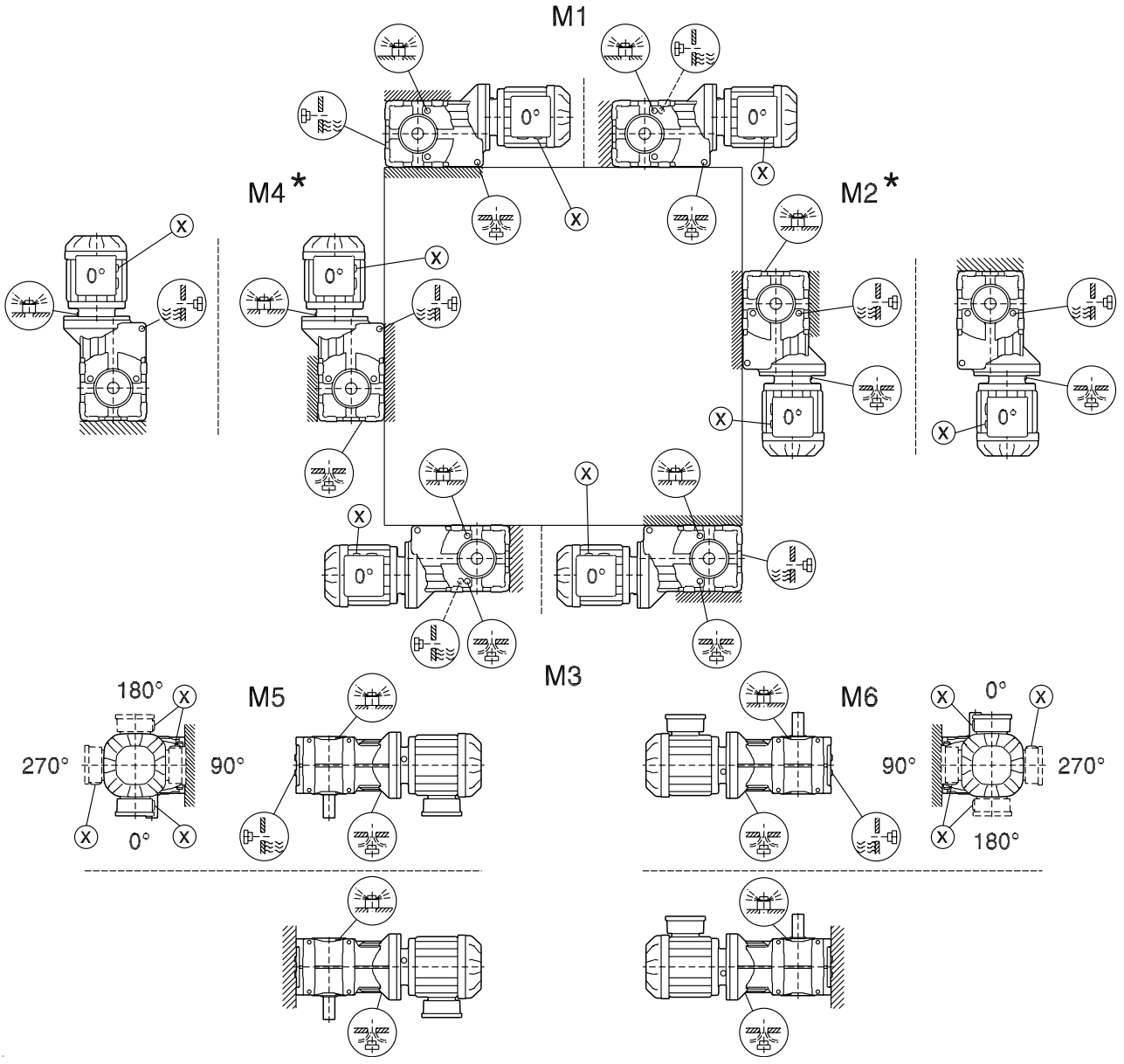


* (→ 130)

**KF/KAF/KHF39-49**

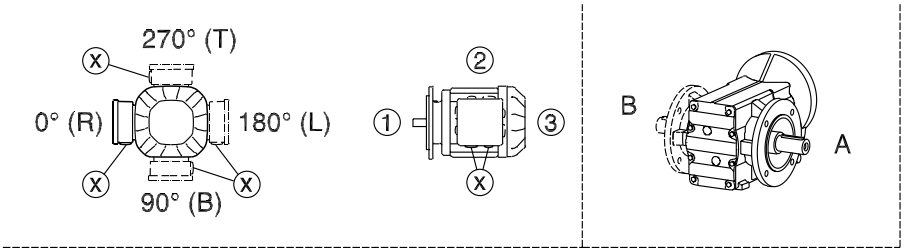


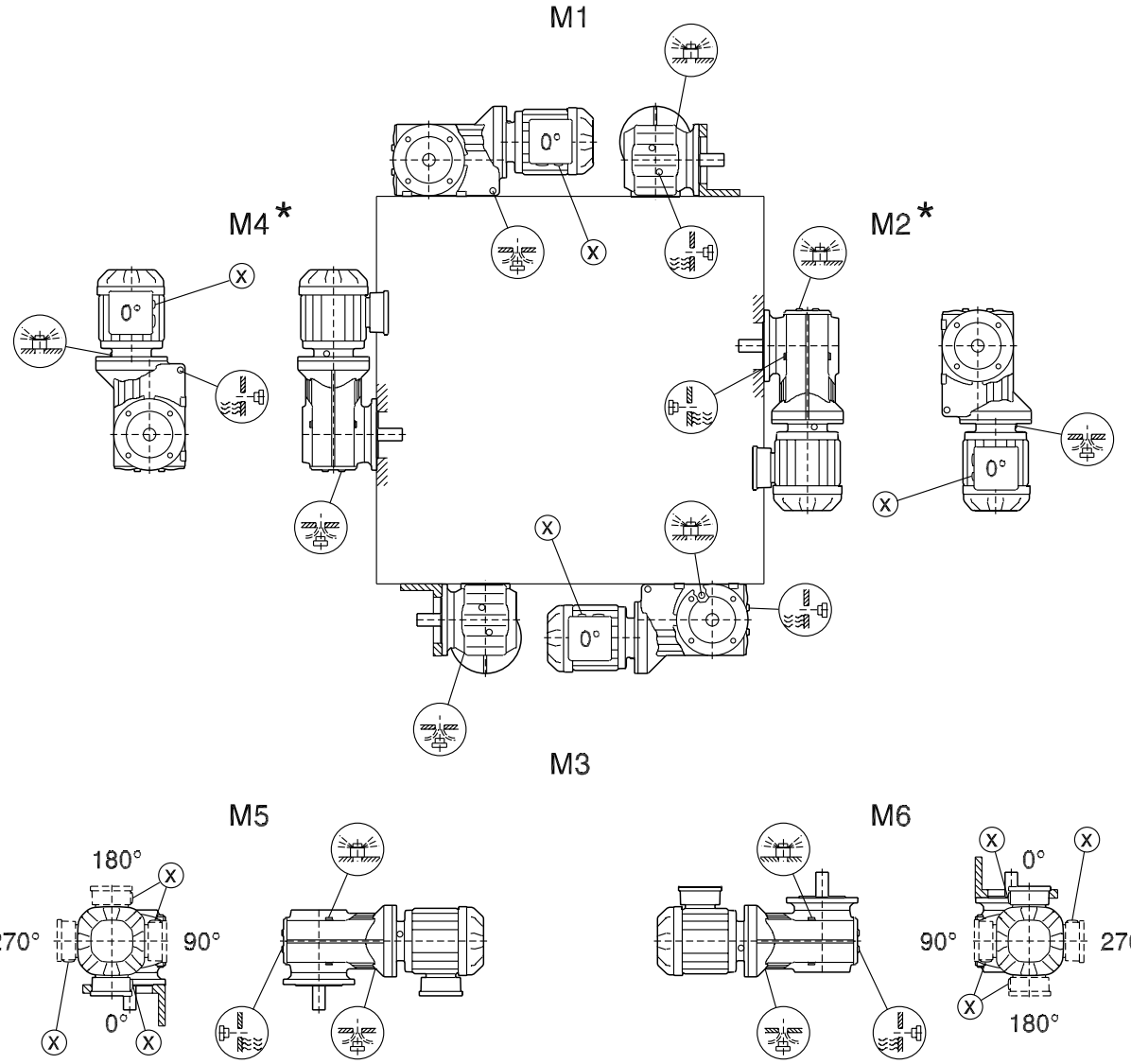


* (→ 130)

25803530/EN – 04/2018

**KA/KH/KT39-49**

33 094 01 14

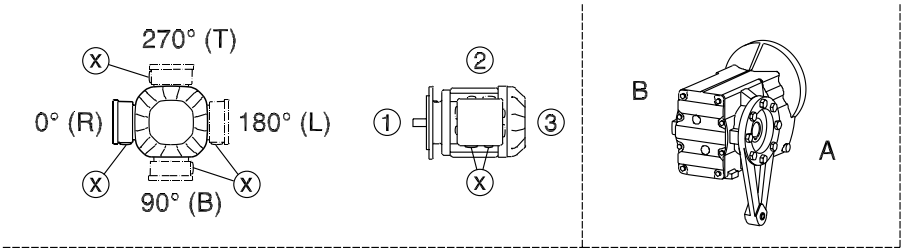


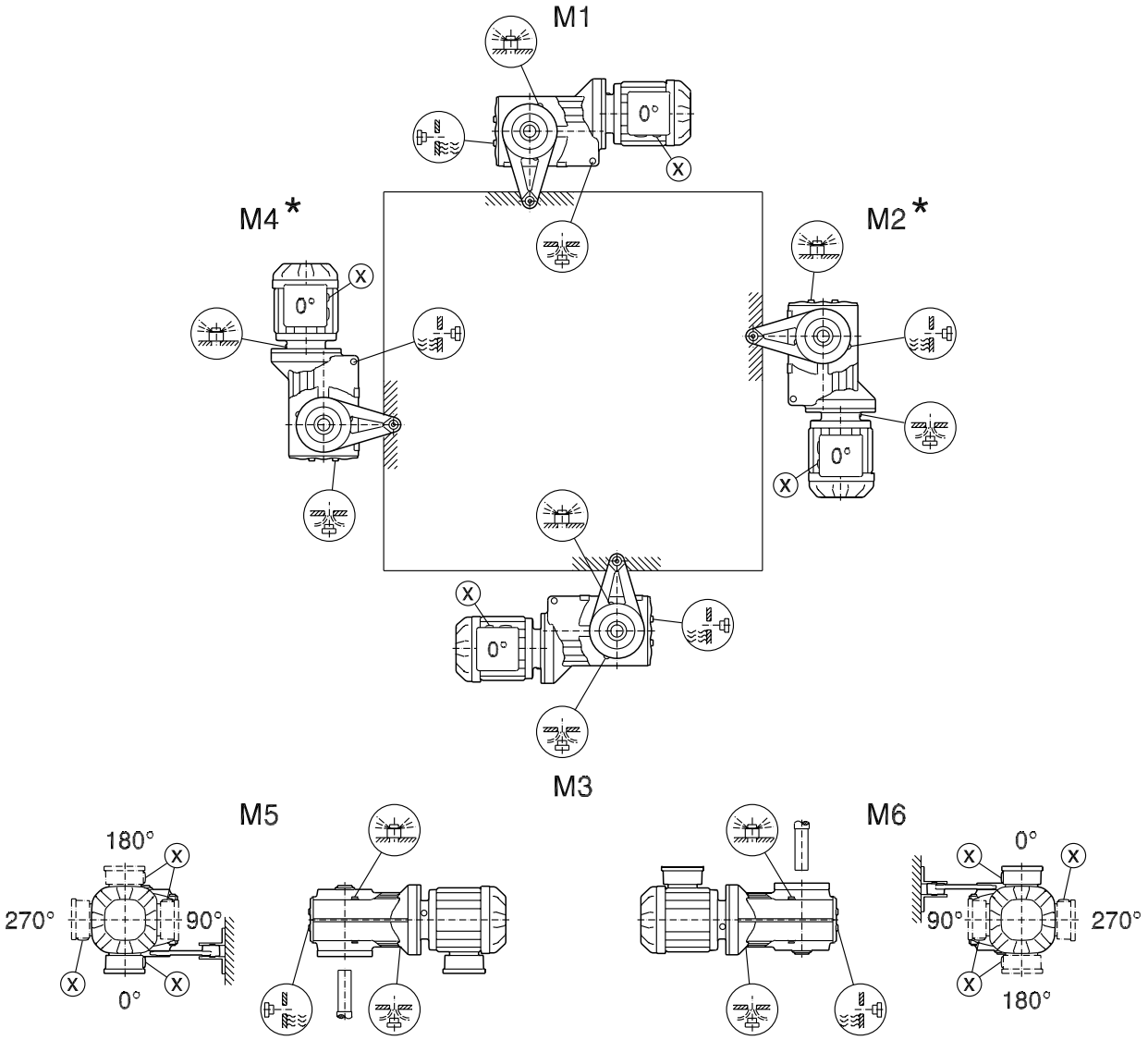


* (→ 🗎 130)

25803530/EN – 04/2018

**K/KA..B/KH47B-157B, KV47B-107B**

34 025 05 00

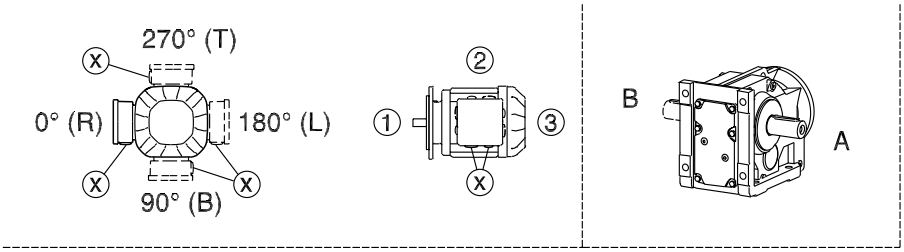


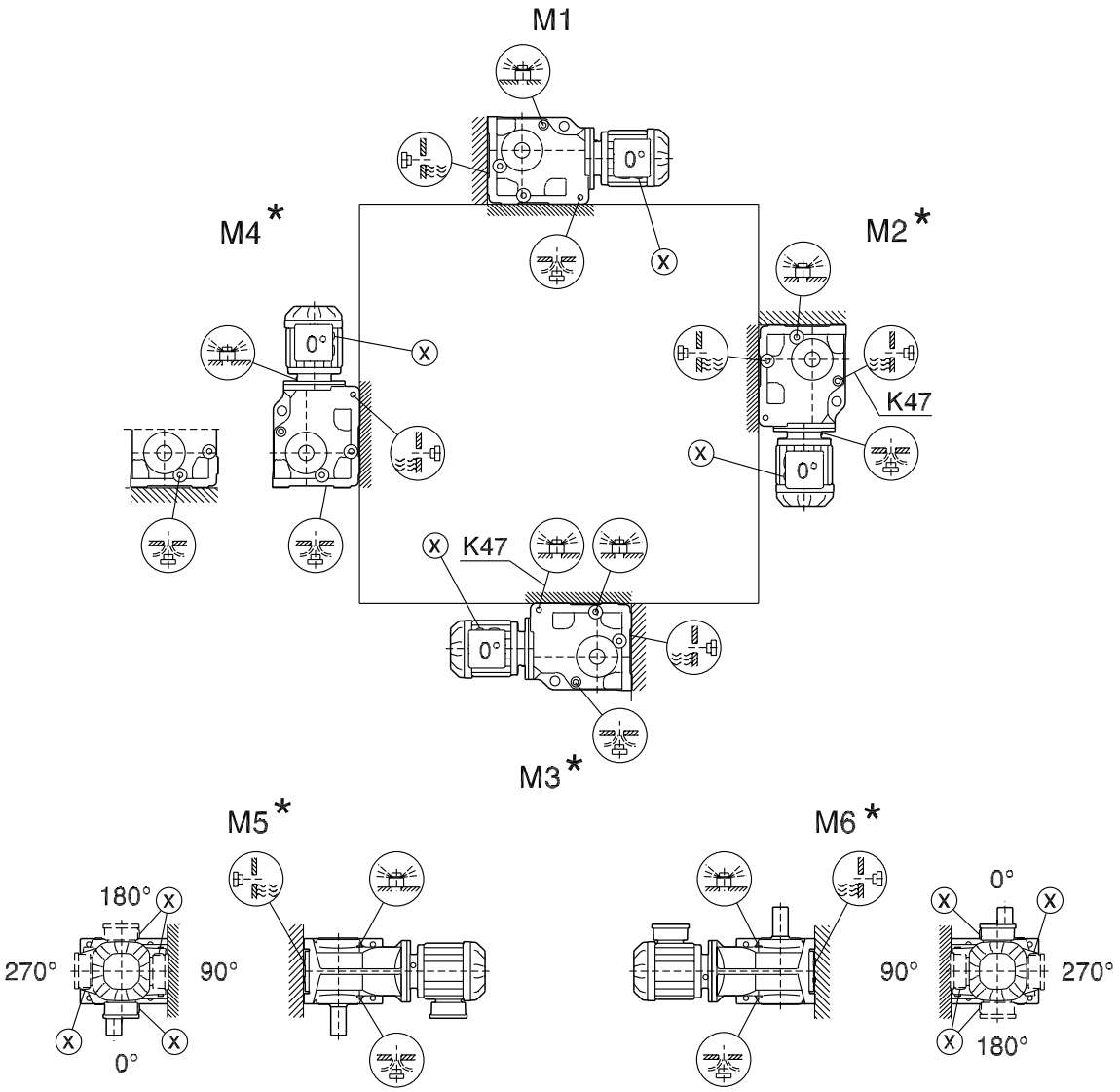


* (→ 🗎 130)

25803530/EN – 04/2018

**K167-187, KH167B-187B**

34 026 05 00

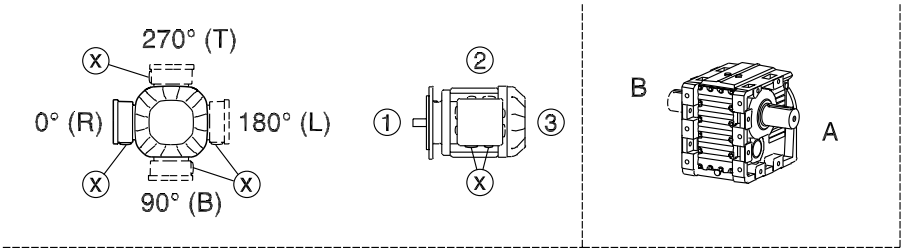


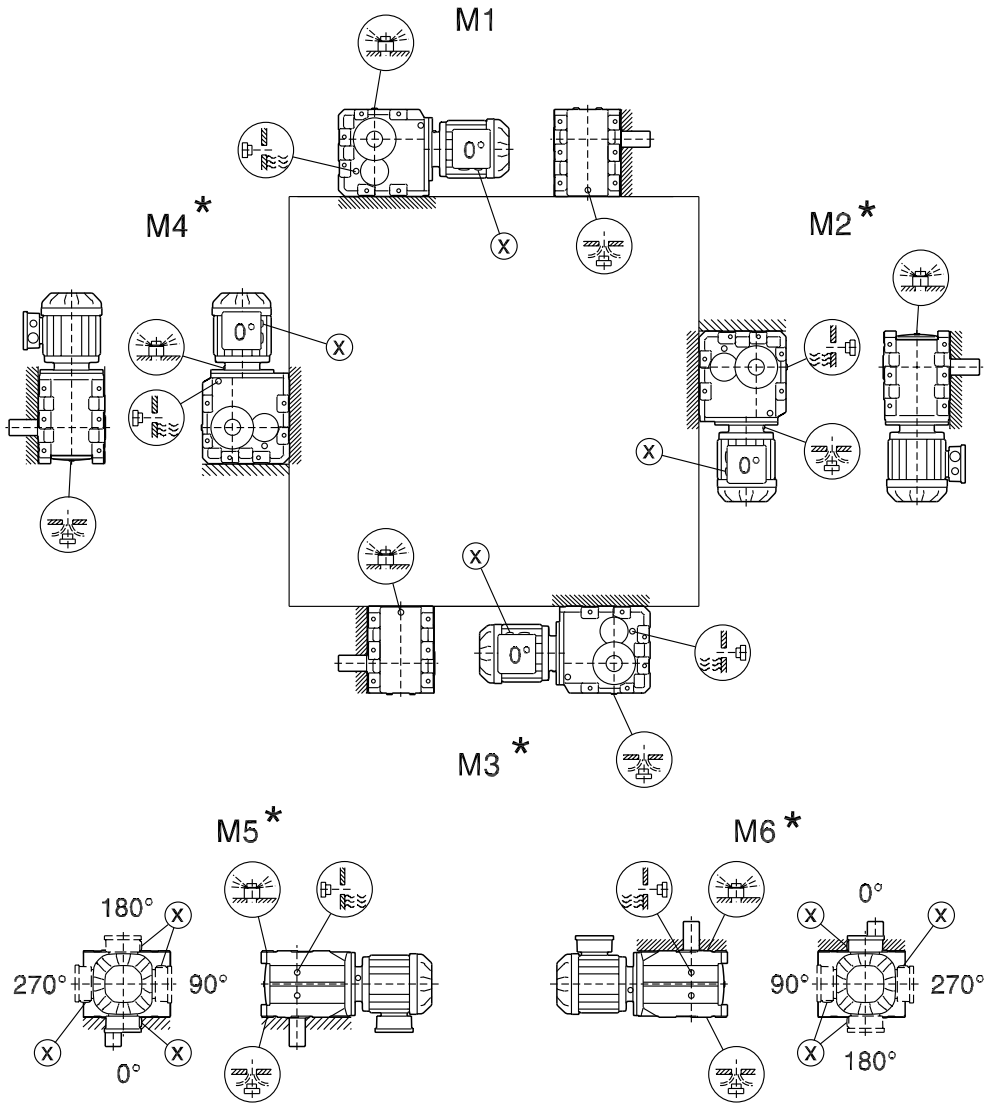


* (→ 130)

25803530/EN – 04/2018

**KF/KAF/KHF/KZ/KAZ/KHZ37–157, KVF/KVZ37–107, KM/KAM67–157**

34 027 04 00

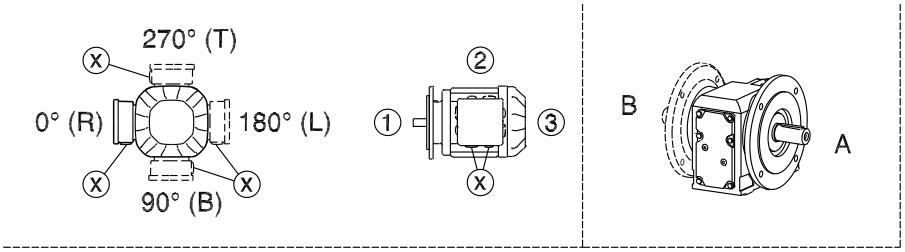


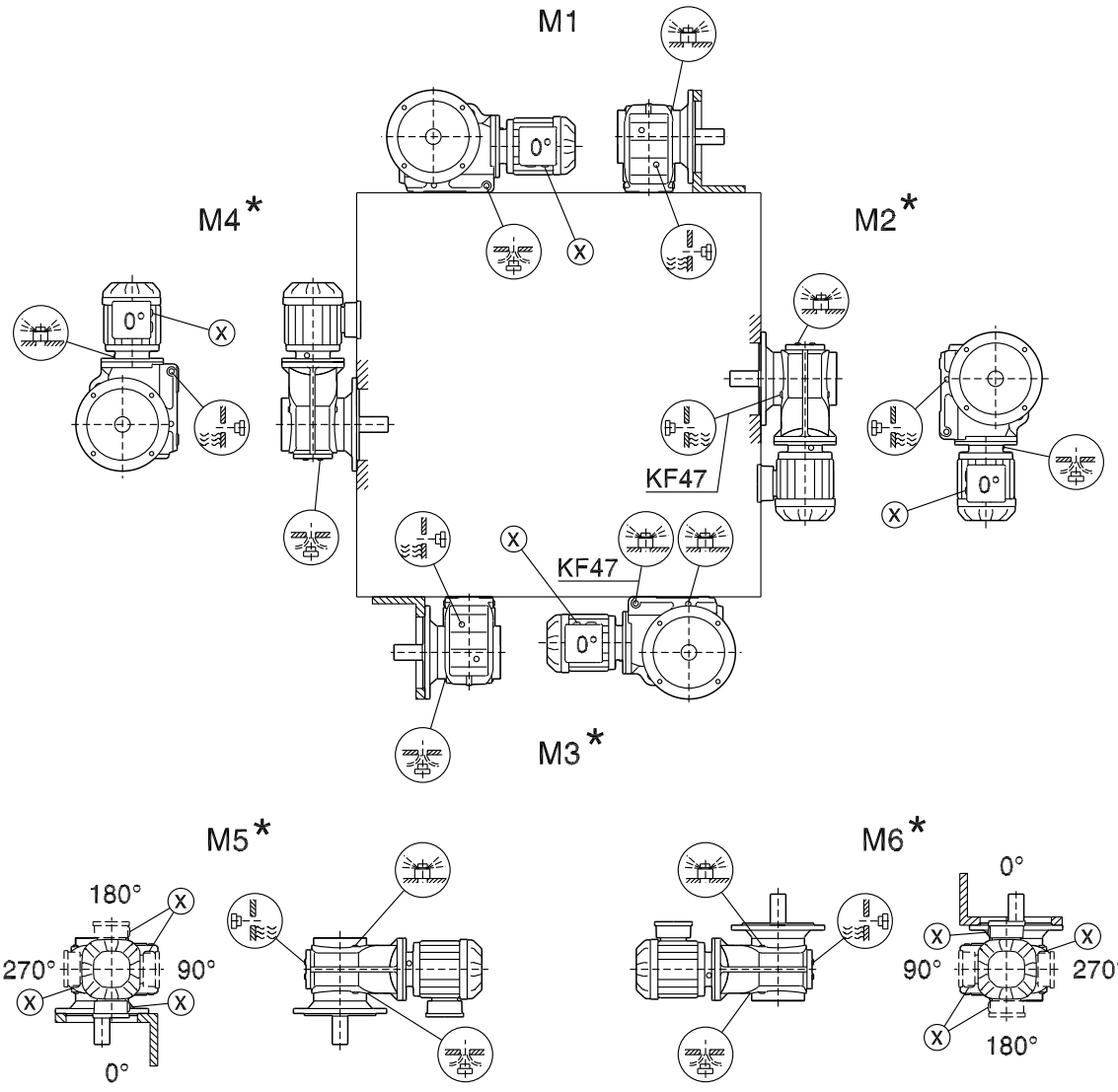


* (→ 130)

25803530/EN – 04/2018

**KA/KH37-157, KV37-107, KT37-97**

39 025 05 00

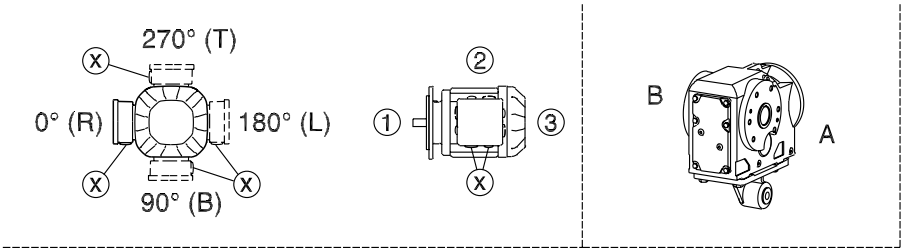


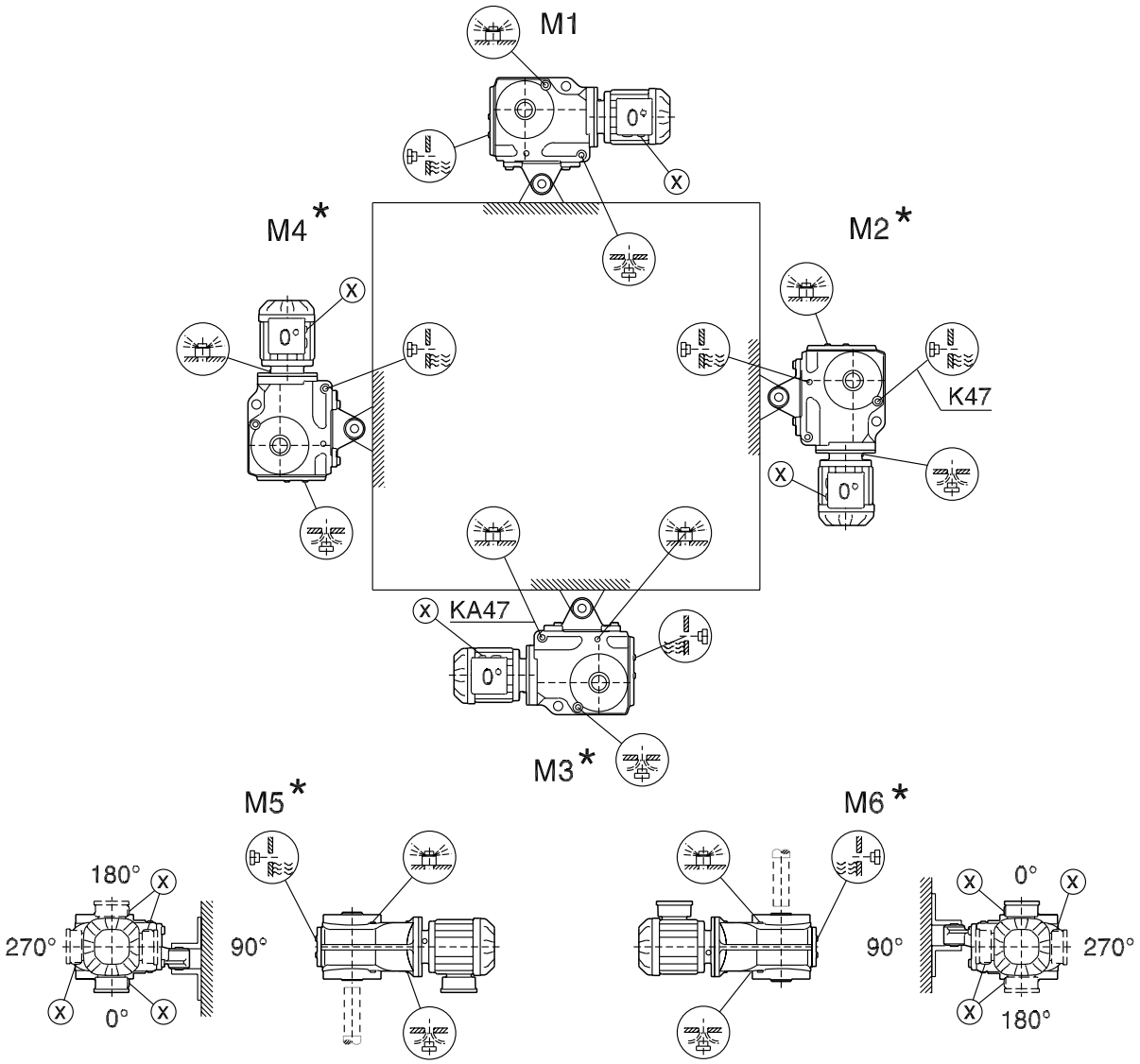


* (→ 130)

25803530/EN – 04/2018

**KH167-187**

39 026 05 00

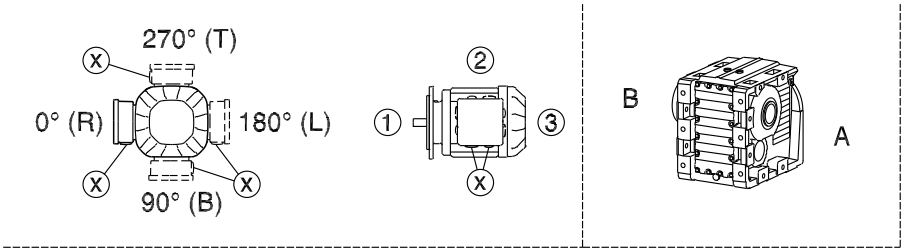


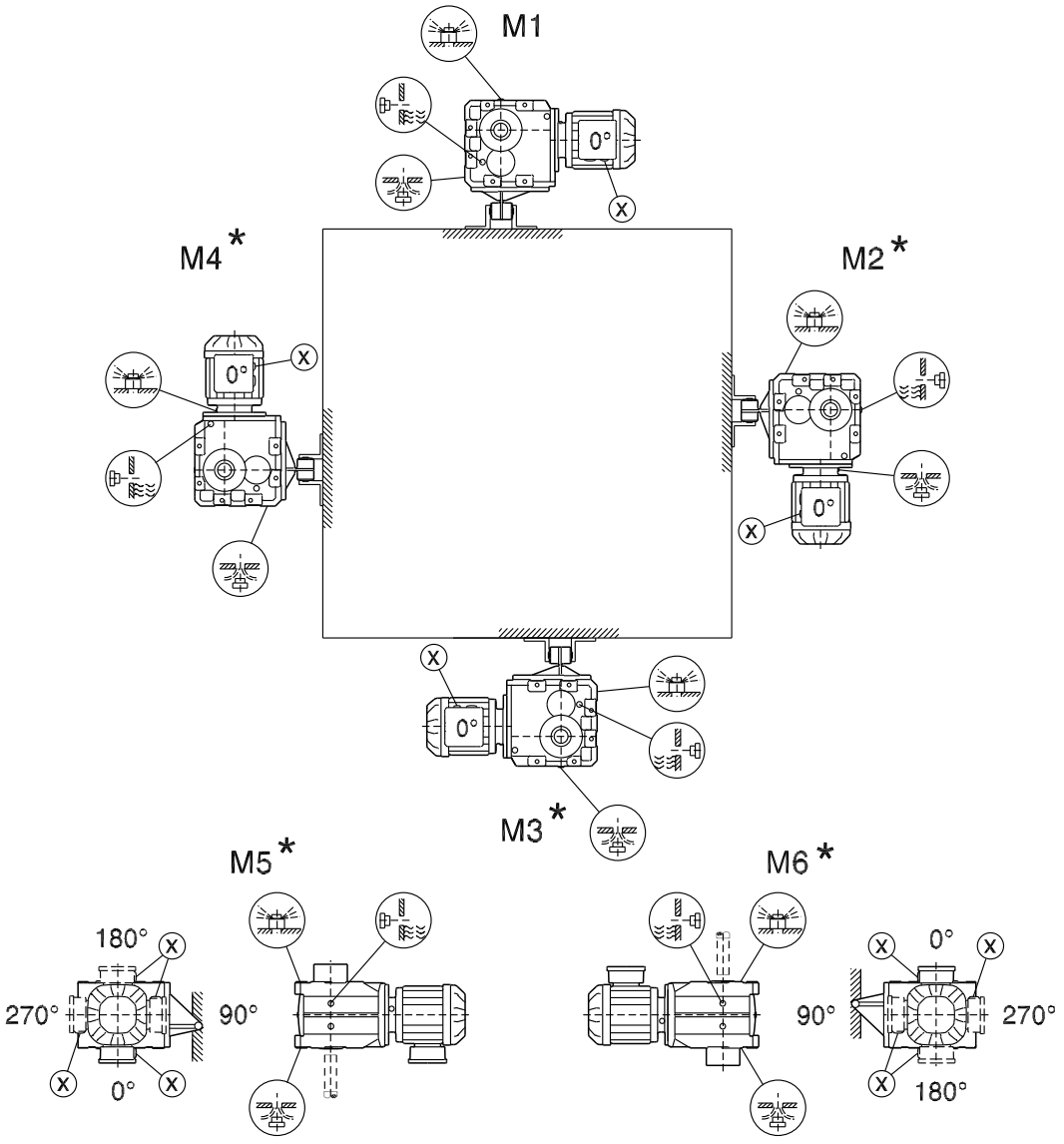


* (→ 🗎 130)

25803530/EN – 04/2018

### 7.6.6 Mounting positions of helical-worm gearmotors

**S37**

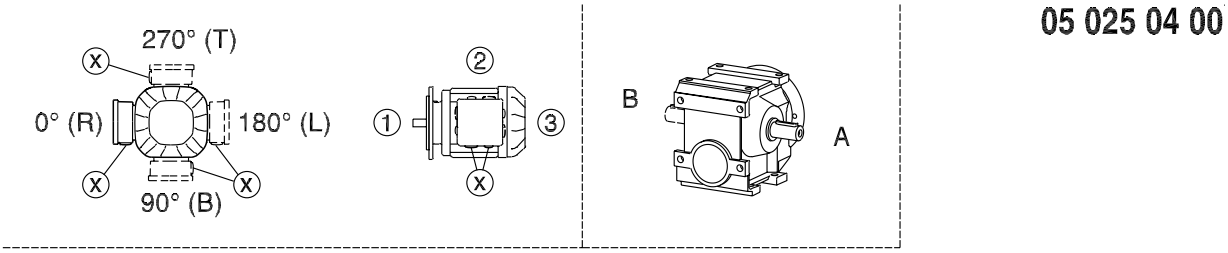


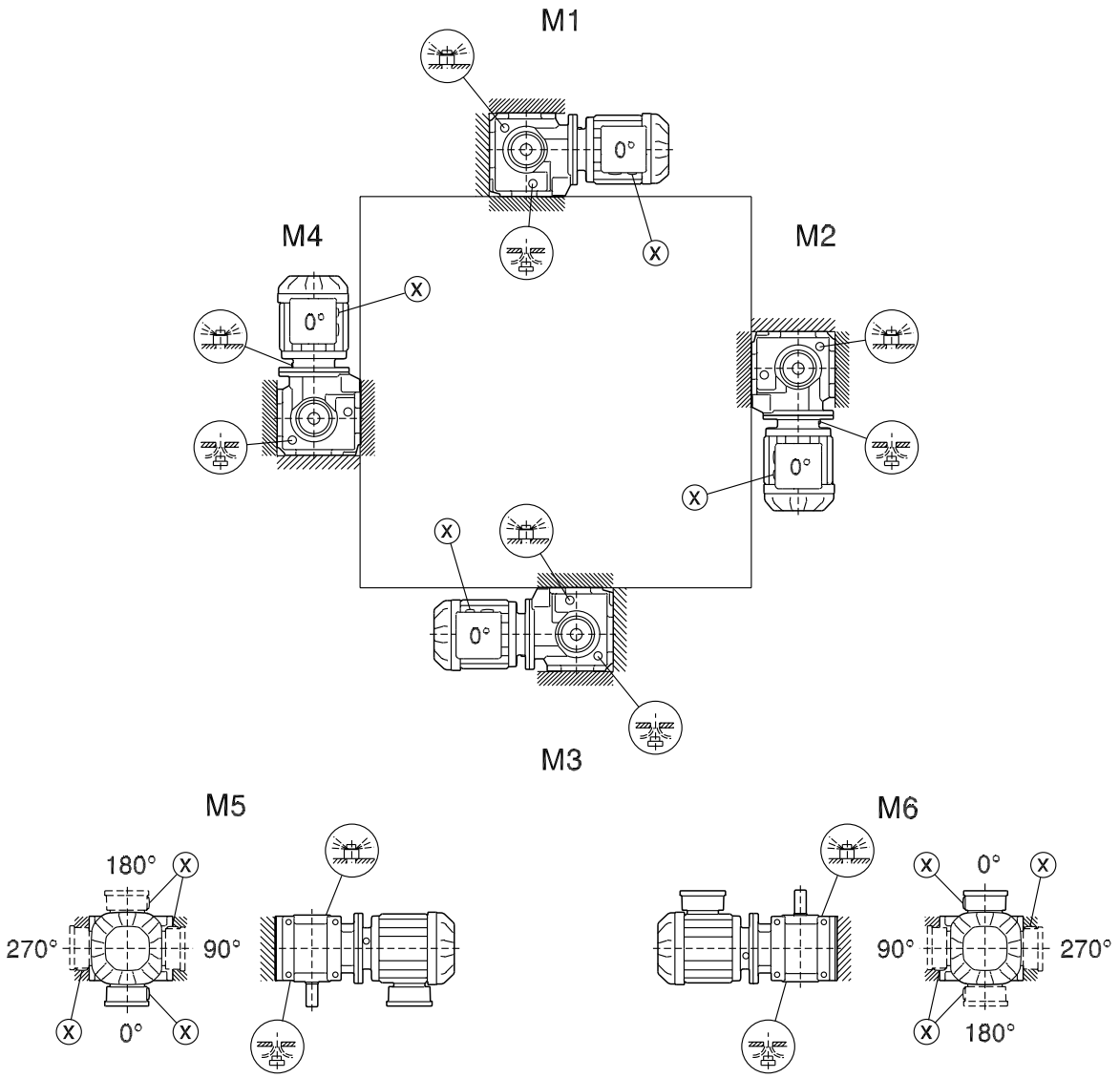


25803530/EN – 04/2018

**S47-S97**

05 026 04 00

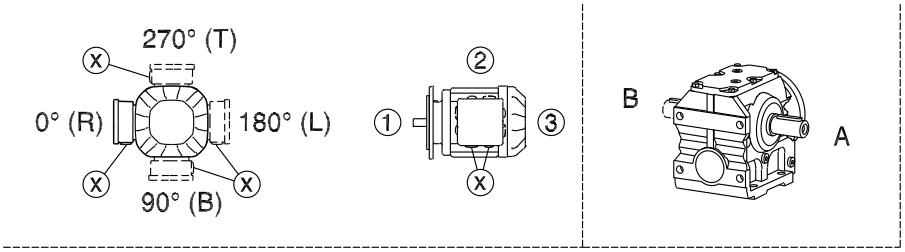


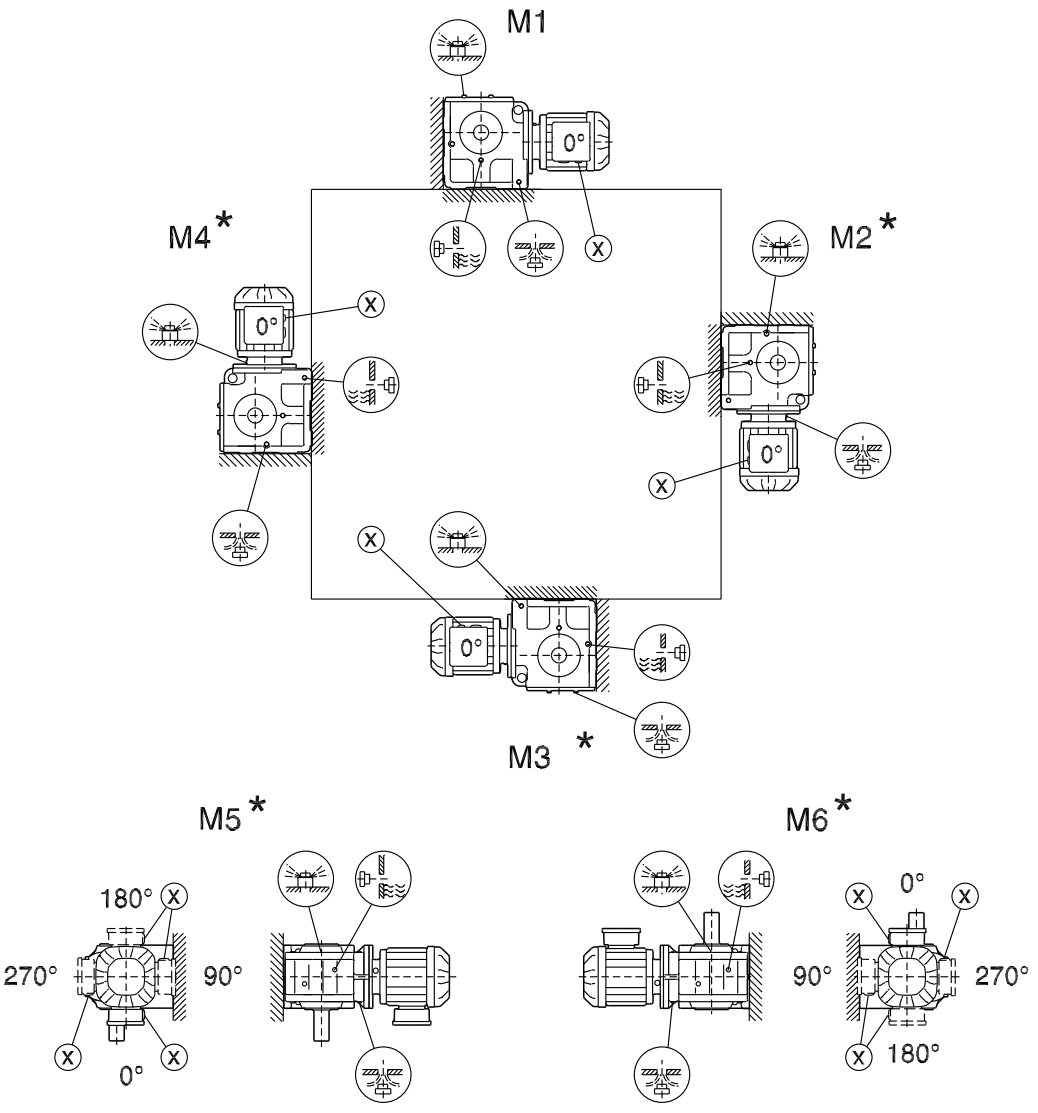


* (→ 130)

**SF/SAF/SHF37**

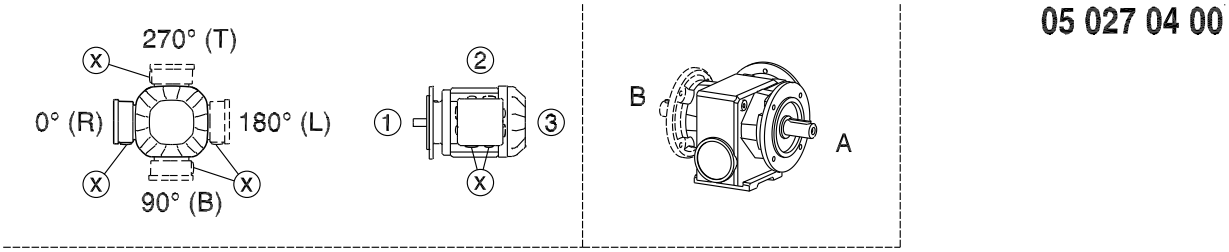


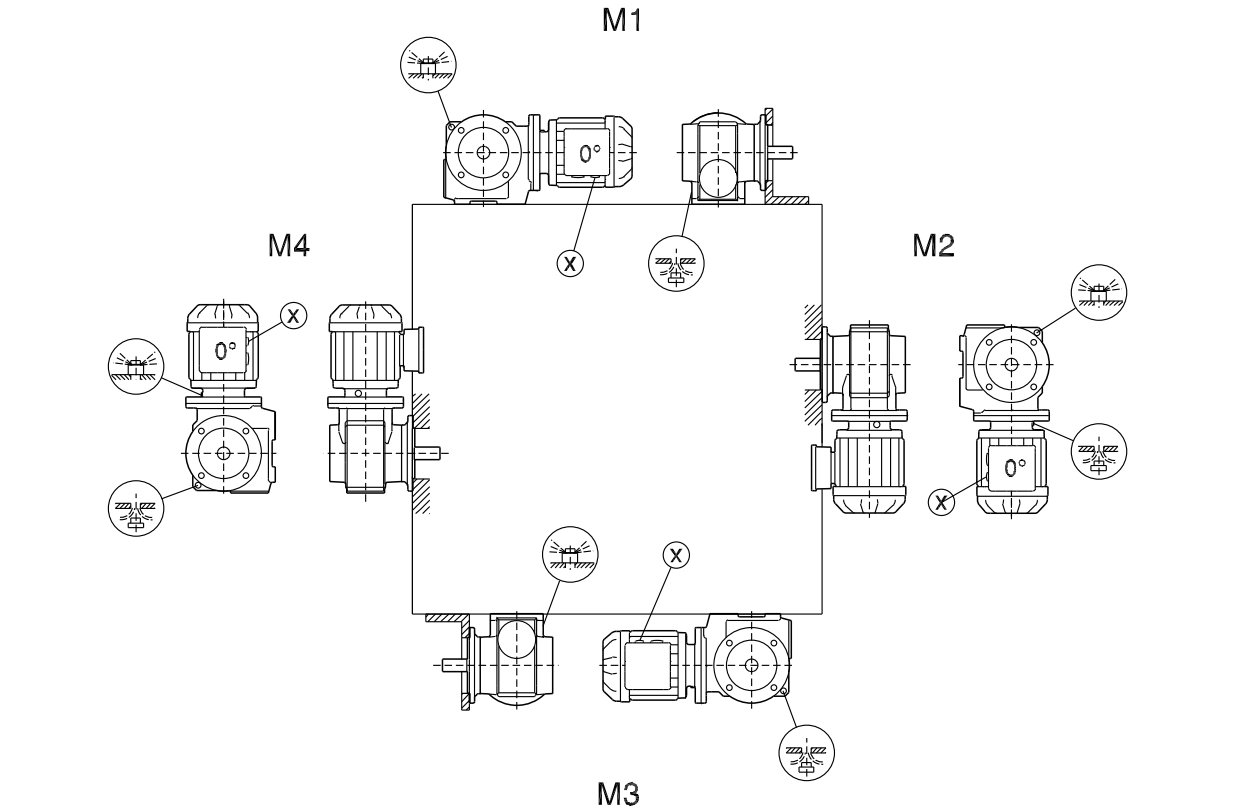


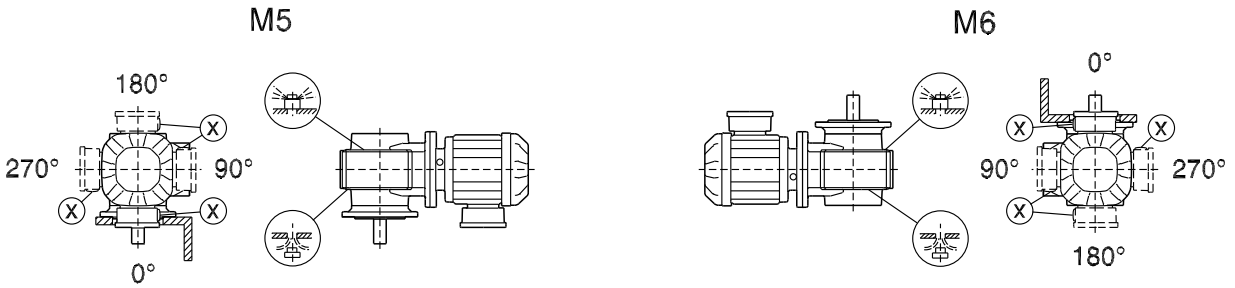


25803530/EN – 04/2018

**SF/SAF/SHF/SAZ/SHZ47-97**

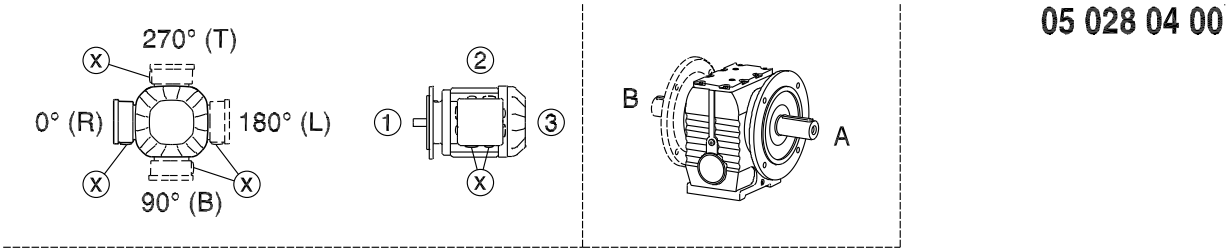


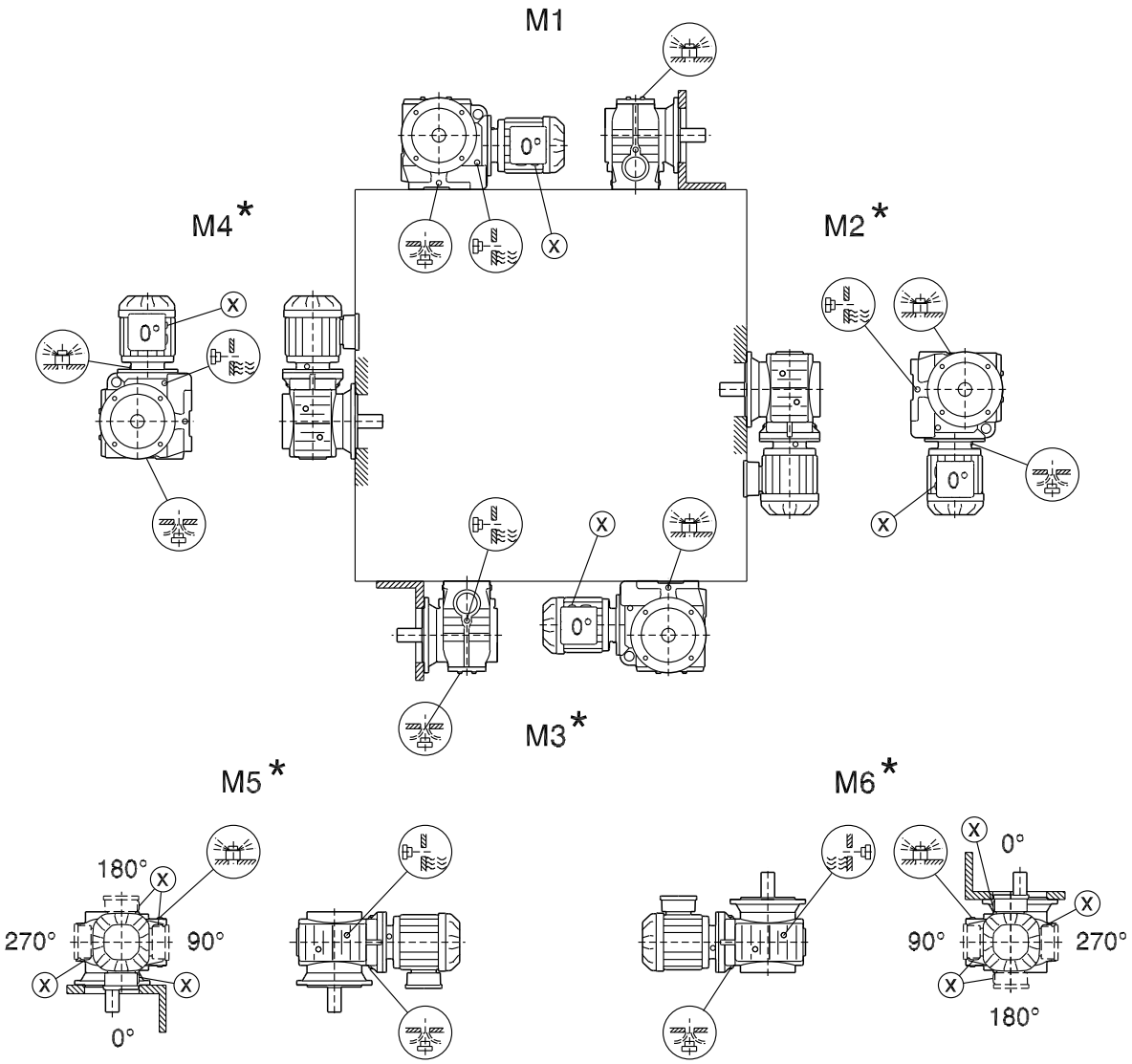


* (→ 130)

25803530/EN – 04/2018

**SA/SH/ST37**

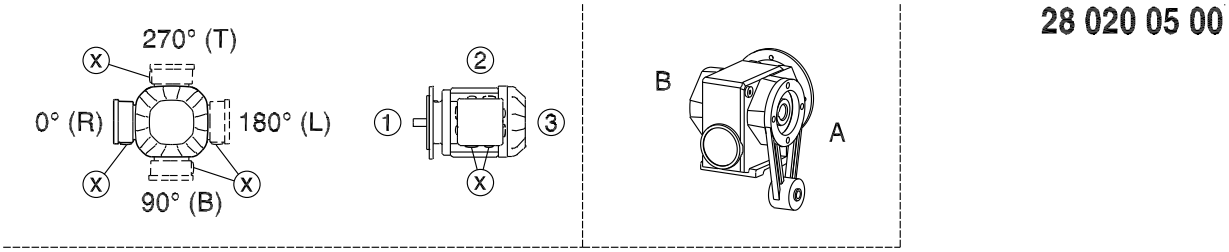
28 020 05 00
270° (T)
0° (R)
180° (L)
90° (B)
X
1
2
3
B
A

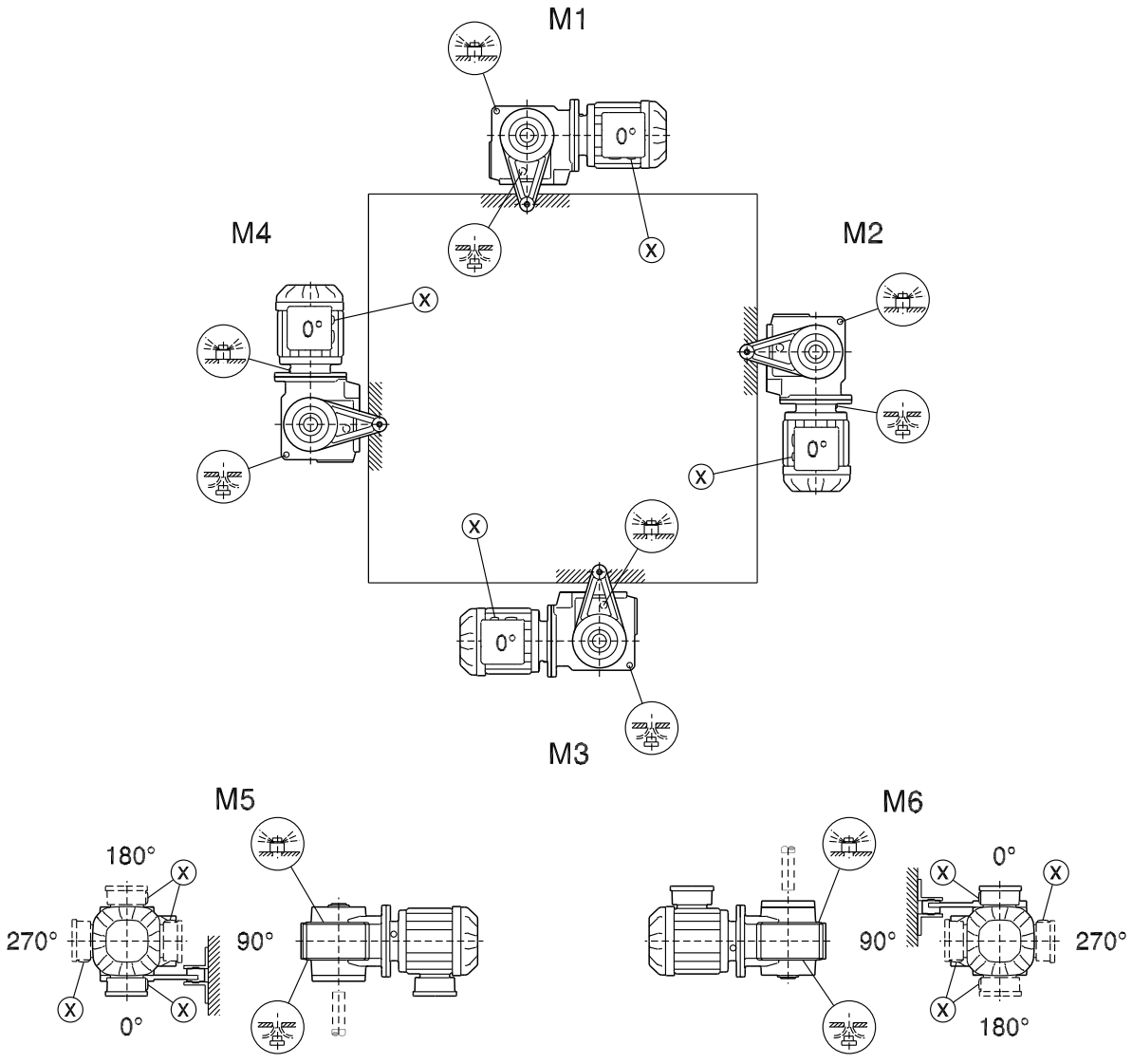
M1
M4
M2
M3
M5
M6
0°
X
180°
270°
90°

**SA/SH/ST47-97**

28 021 04 00

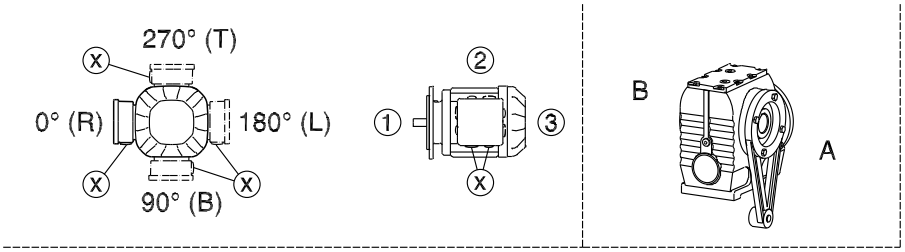


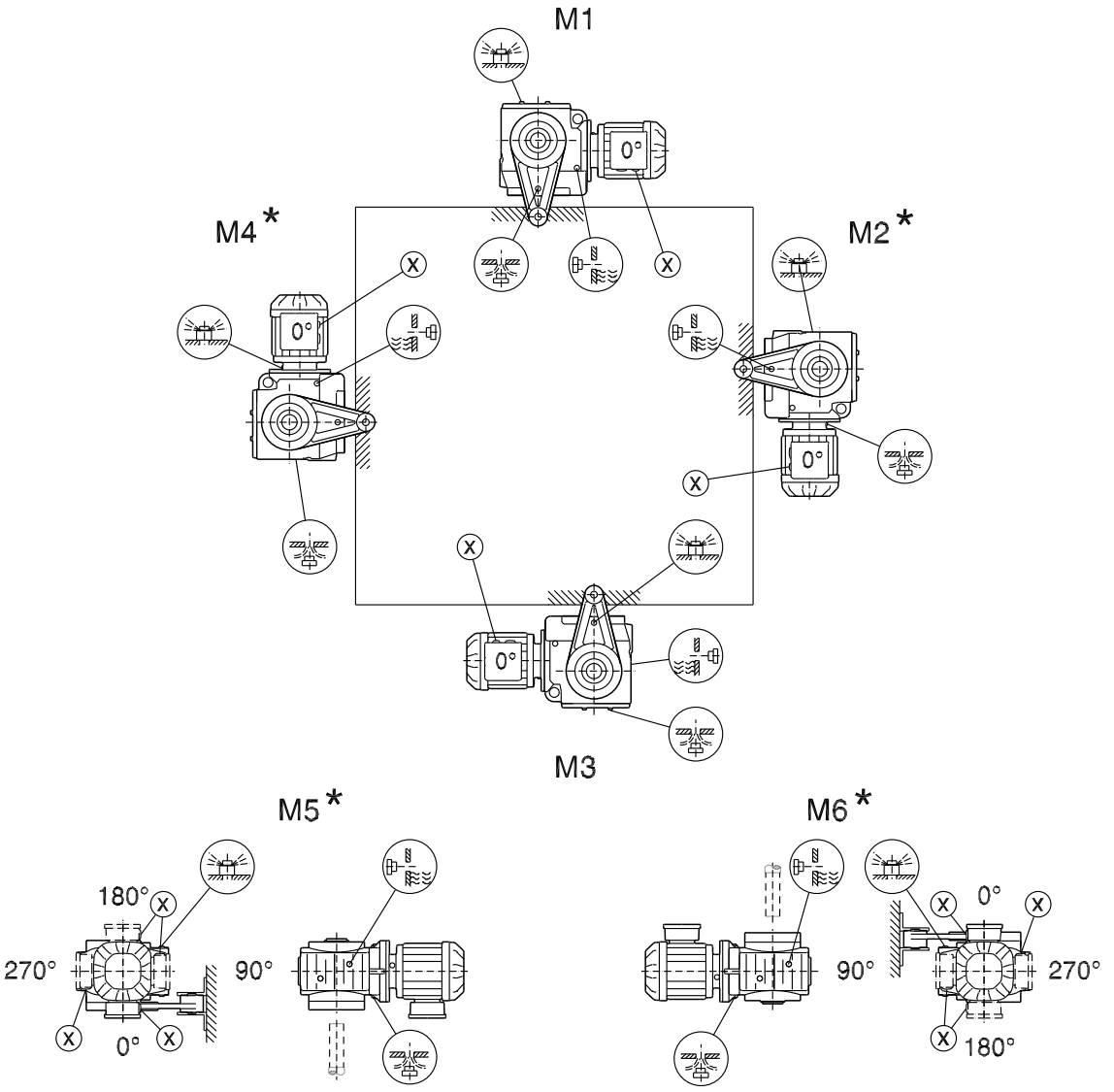


* (→ 🗎 130)

25803530/EN – 04/2018

### 7.6.7 Mounting positions of SPIROPLAN® gearmotors

**W10-30**

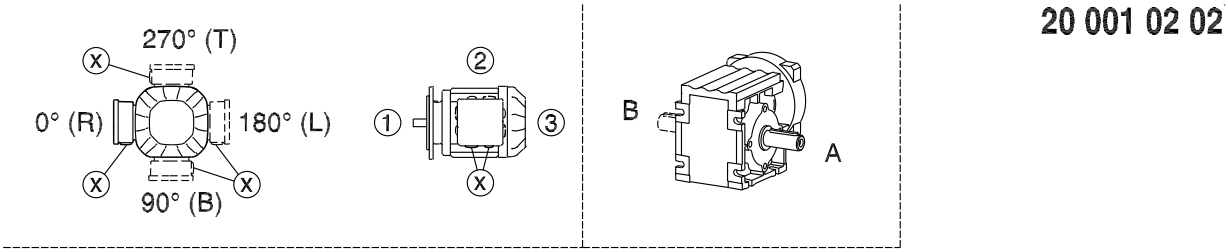


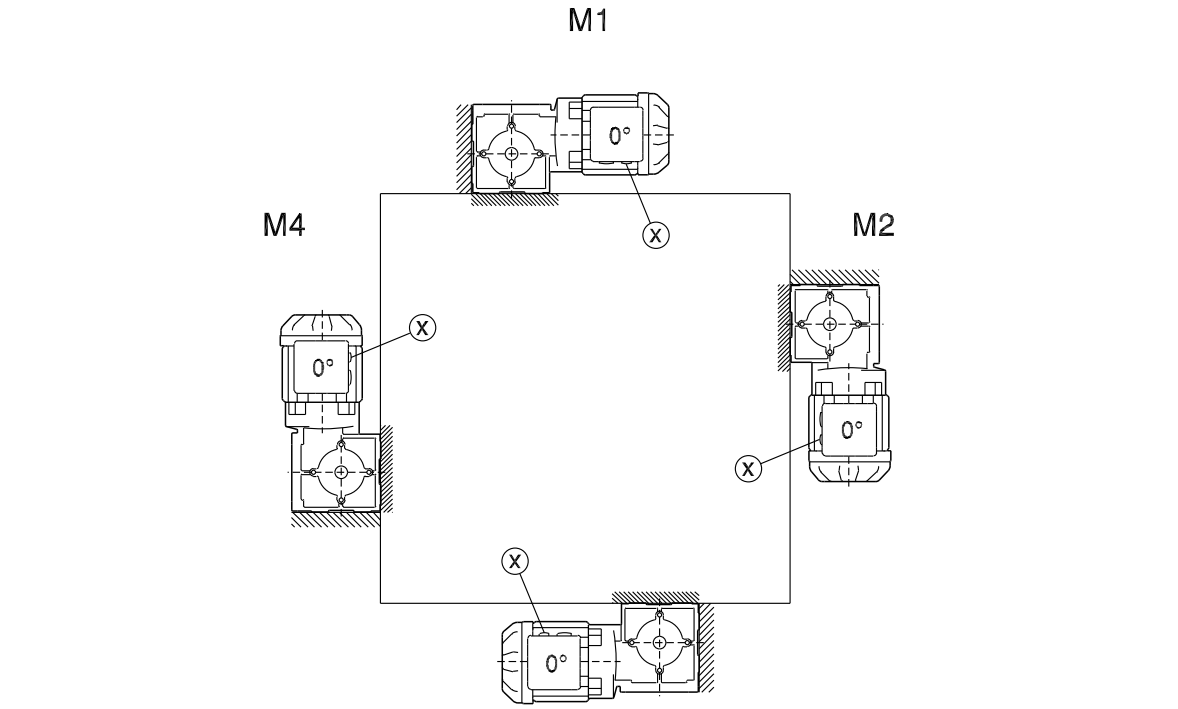


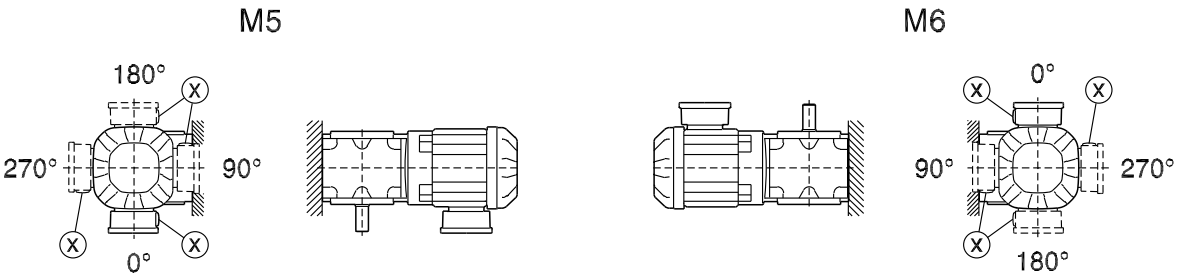

**WF10-30**

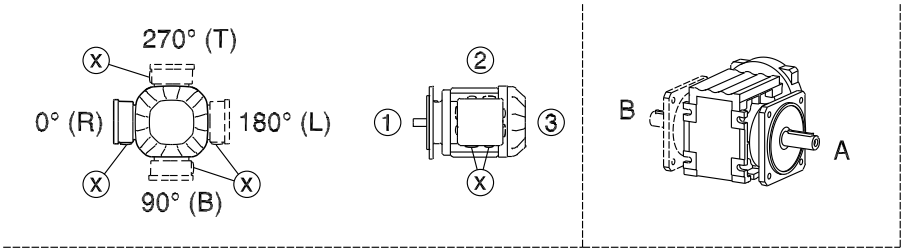


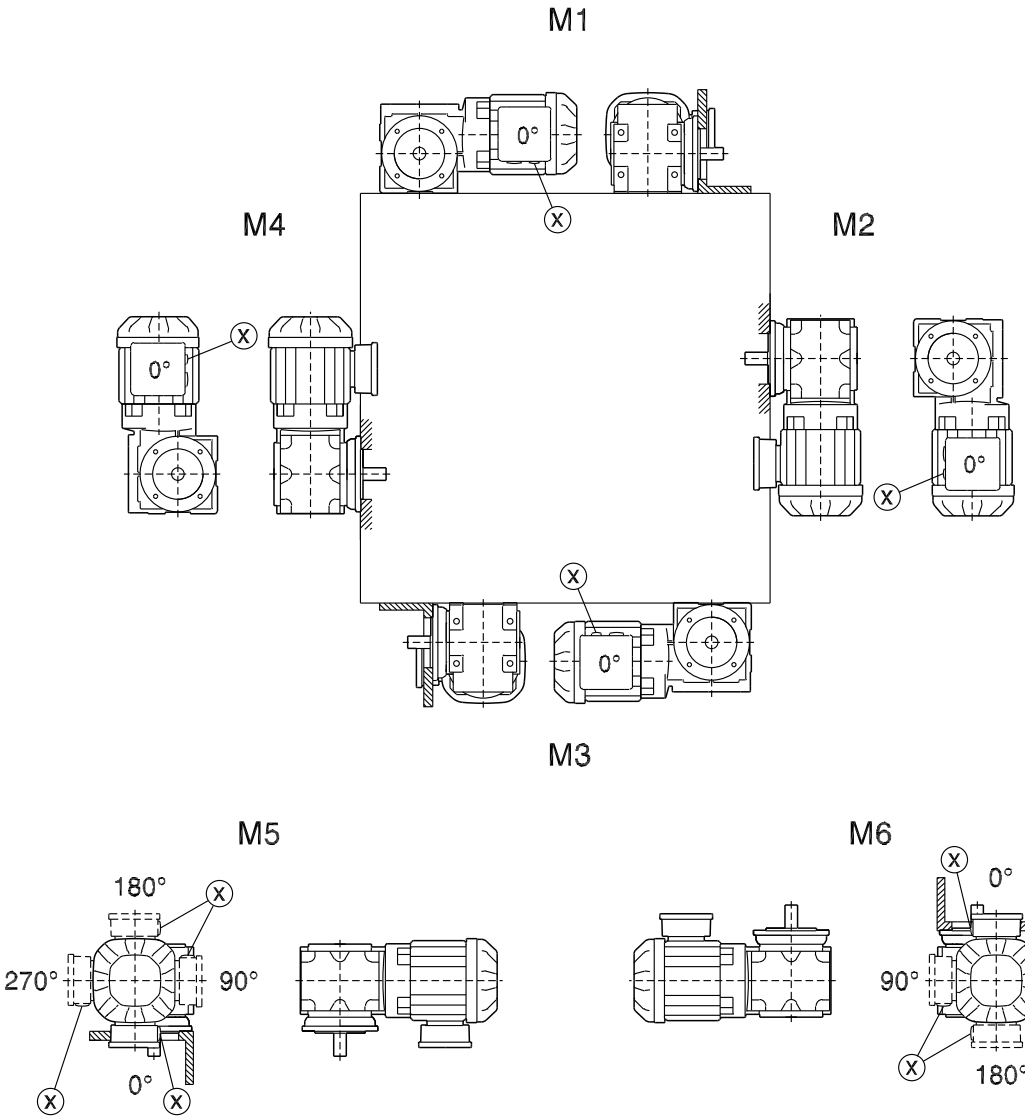


25803530/EN – 04/2018

**WA10-30**

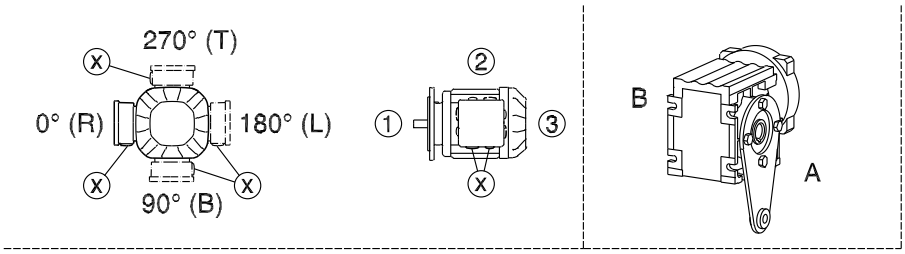


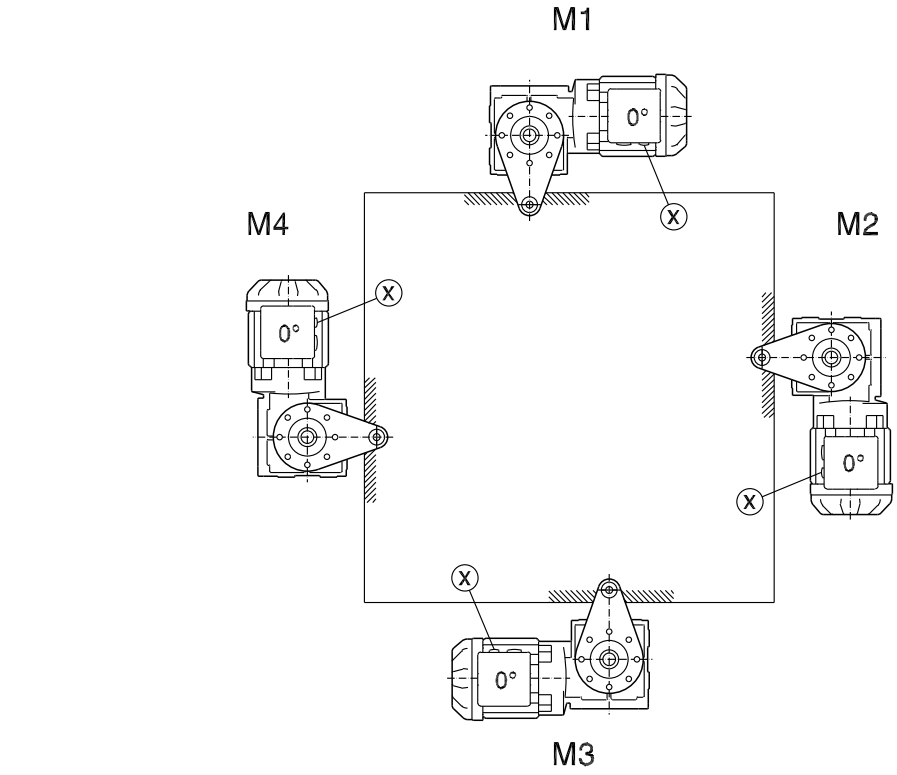


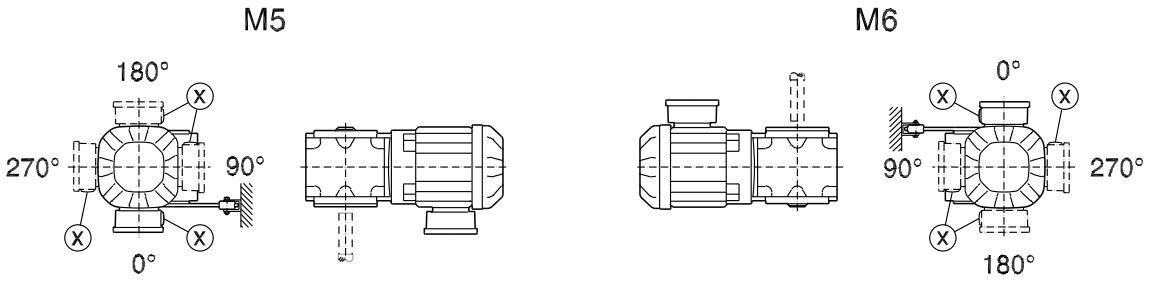


25803530/EN – 04/2018

**W/WA..B/WH37B-47B**

20 012 02 07

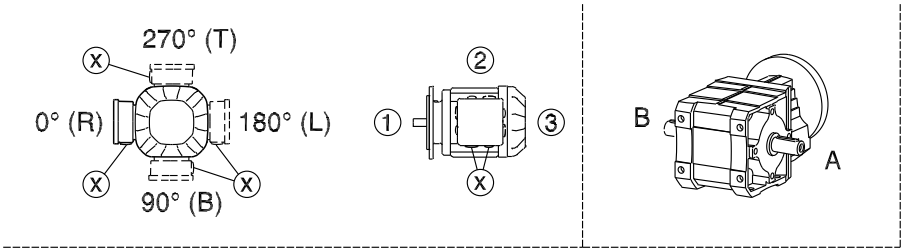


M1

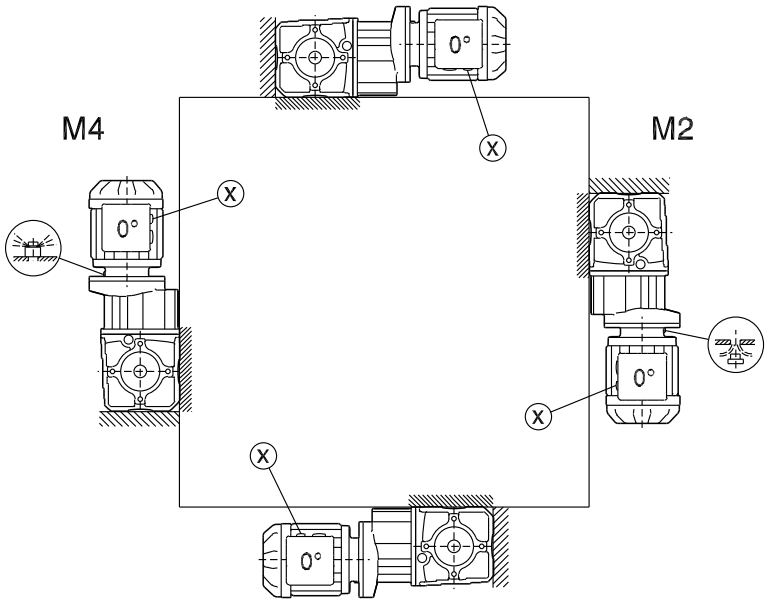


M4

M2

M3

M5

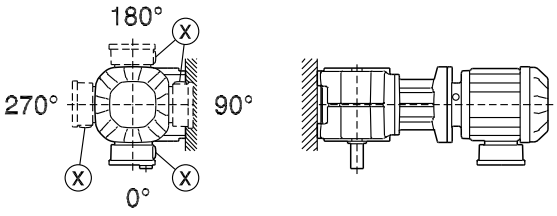


M6

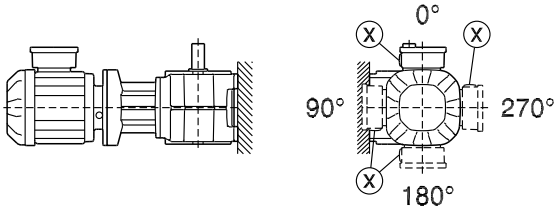


25803530/EN – 04/2018

**WF/WAF/WHF37-47**

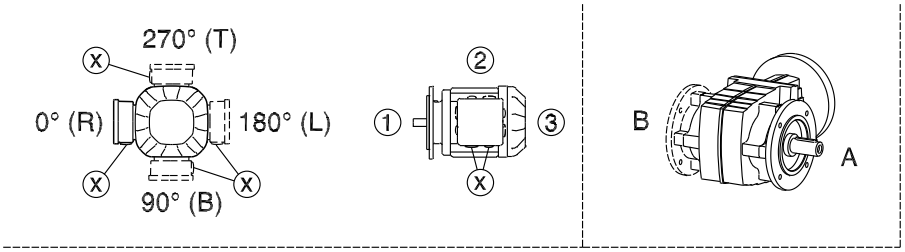


M1

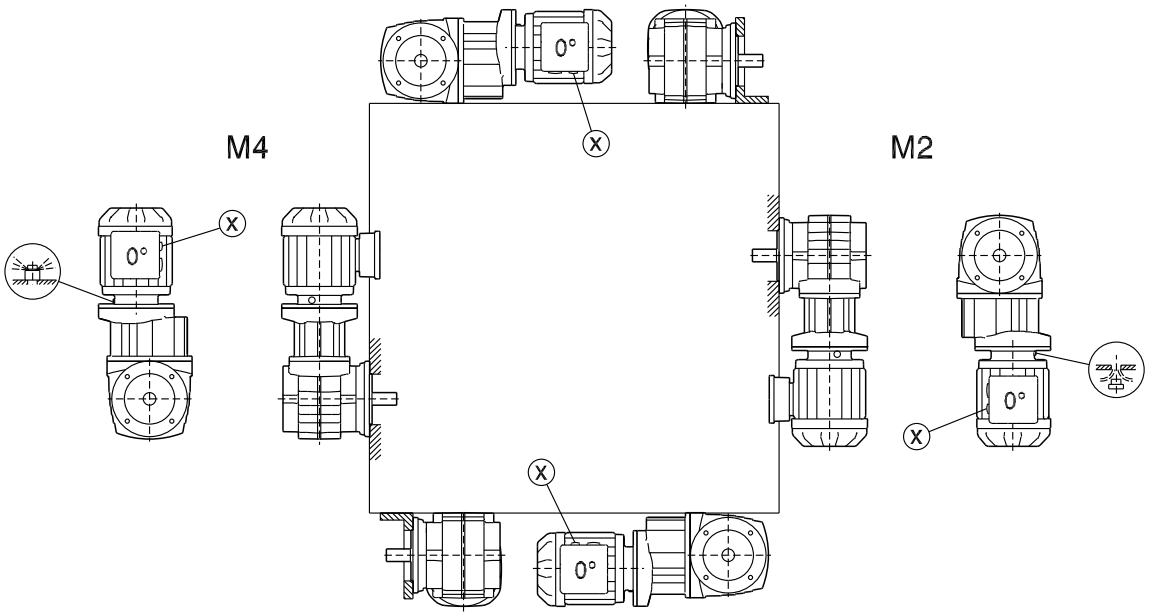


M4

M2

M3

M5

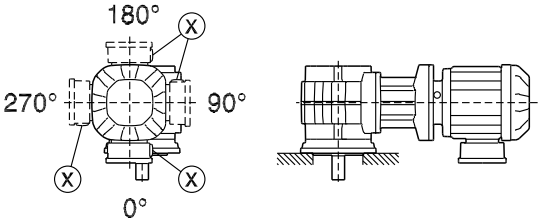


M6

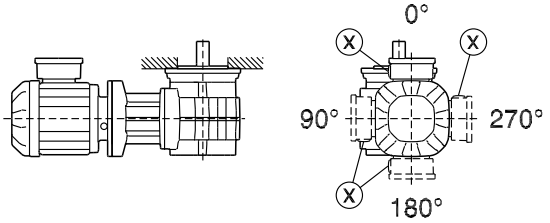


25803530/EN – 04/2018

**WA/WH/WT37-47**

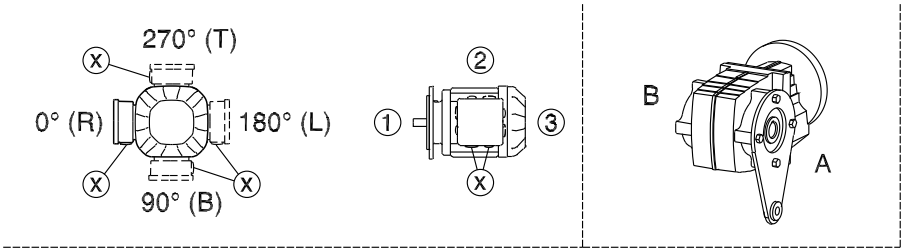


M1

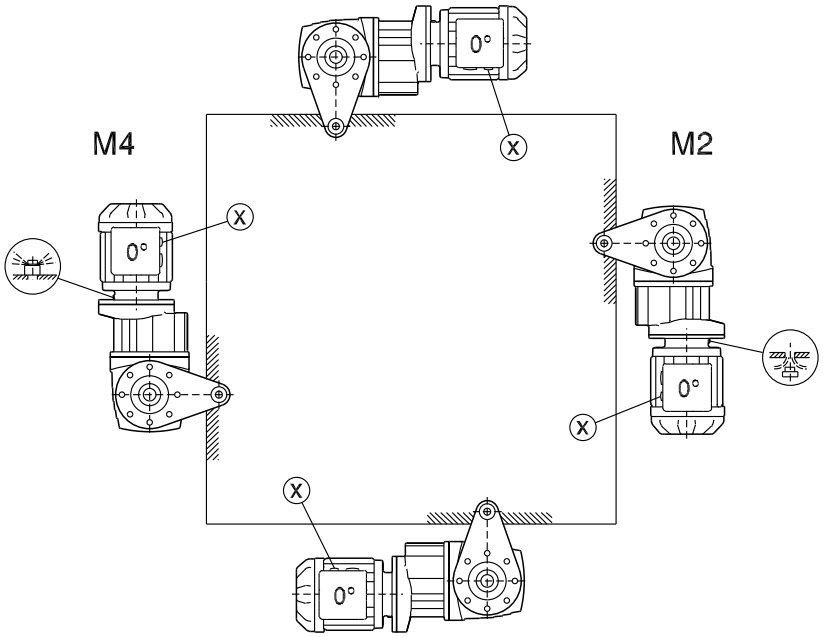


M5

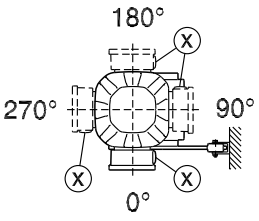


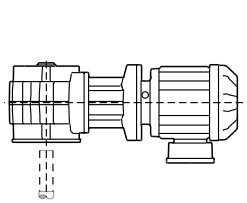

M6

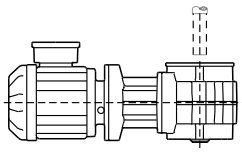

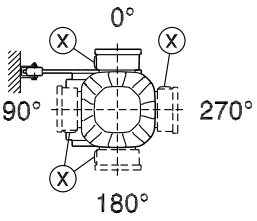


25803530/EN – 04/2018

# 8 Technical data

## 8.1 Extended storage

### INFORMATION

For storage periods longer than 9 months, SEW-EURODRIVE recommends the "extended storage" gear unit type. Gear units in this design are designated with a corresponding label.

### INFORMATION

The gear units must remain tightly sealed until taken into operation to prevent the VCI anti-corrosion agent from evaporating.

For gear units of the "extended storage" design, the following measures are taken:

- A VCI anti-corrosion agent (**v**olatile **c**orrosion **i**nhibitors) is added to the lubricant.

  Please note that this VCI anti-corrosion agent is only effective in a temperature range of -25 °C to +50 °C.
- The flange contact surfaces and shaft ends are also treated with an anti-corrosion agent.

Observe the storage conditions specified in the following table for extended storage.

### 8.1.1 Storage conditions

| Climate zone | Packaging[1)] | Storage[2)] | Storage duration |
|---|---|---|---|
| Temperate (Europe, USA, Canada, China and Russia, excluding tropical zones) | Packed in containers, with desiccant and moisture indicator sealed in the plastic wrap. | Under roof, protected against rain and snow, no shock loads. | Up to 3 years with regular checks on the packaging and moisture indicator (relative atmospheric humidity < 50%). |
| | Open | Under roof and enclosed at constant temperature and atmospheric humidity (5 °C < $\vartheta$ < 50 °C, < 50% relative humidity).<br>No sudden temperature fluctuations. Controlled ventilation with filter (free from dust and dirt). No aggressive vapors, no shocks. | 2 years or more with regular inspections. Check for cleanness and mechanical damage during the inspection. Check corrosion protection. |

25803530/EN – 04/2018

| Climate zone | Packaging[1)] | Storage[2)] | Storage duration |
|---|---|---|---|
| Tropical (Asia, Africa, Central and South America, Australia, New Zealand excluding temperate zones) | Packed in containers, with desiccant and moisture indicator sealed in the plastic wrap.<br>Protected against insect damage and mildew by chemical treatment. | Under roof, protected against rain and shocks. | Up to 3 years with regular checks on the packaging and moisture indicator (relative atmospheric humidity < 50%). |
| | Open | Under roof and enclosed at constant temperature and atmospheric humidity (5 °C < ϑ < 50 °C, relative humidity < 50%).<br>No sudden temperature fluctuations. Controlled ventilation with filter (free from dust and dirt). No aggressive vapors, no shocks. Protected against insect damage. | 2 years or more with regular inspections. Check for cleanness and mechanical damage during the inspection. Check corrosion protection. |

1) The packaging must be carried out by an experienced company using the packaging materials that have been explicitly specified for the particular application.

2) SEW-EURODRIVE recommends to store the gear units according to the mounting position.

25803530/EN – 04/2018

## 8.2 Lubricants

Unless a special arrangement is made, SEW-EURODRIVE supplies the drives with a lubricant fill adapted for the specific gear unit and mounting position. The mounting position (M1 – M6, see chapter "Mounting positions" (→ 🗎 129)) must be specified in the order. You must adapt the lubricant fill in case of any subsequent changes made to the mounting position (see chapter Lubricant fill quantities).

### 8.2.1 Bearing greases

The gear unit rolling bearings are given a factory-fill with the greases listed below. SEW-EURODRIVE recommends re-greasing the rolling bearings with a grease filling at the same time as changing the oil.

The table shows the lubricants recommended by SEW-EURODRIVE:

| Area of operation | Ambient temperature | Manufacturer | Type |
|---|---|---|---|
| Standard | -40 °C to +80 °C | Fuchs | Renolit CX-TOM 15[1)] |
| | -40 °C to +80 °C | Klüber | Petamo GHY 133 N |
|  2) | -40 °C to +40 °C | Bremer & Leguil | Cassida Grease GTS 2 |
|  3) | -20 °C to +40 °C | Fuchs | Plantogel 2S |

1) Bearing grease based on semi-synthetic base oil
2) Lubricant for the food processing industry
3) Easily biodegradable lubricant for environmentally sensitive areas

## INFORMATION

The following grease quantities are required:

- **For fast-running bearings (gear unit input side):** Fill the cavities between the rolling elements one-third full with grease.
- **For slow-running bearings (gear unit output side):** Fill the cavities between the rolling elements two-thirds full with grease.

### 8.2.2 Lubricant table

## NOTICE

Selecting improper lubricants may damage the gear unit.

Possible damage to property.

- Observe the following information.

- The oil viscosity and type (mineral/synthetic) that are to be used are determined by SEW-EURODRIVE specifically for each order. This information is noted in the order confirmation and on the gear unit's nameplate.

  If you use other lubricants for the gear units and/or use the lubricants at temperatures outside the recommended temperature range, SEW-EURODRIVE does not assume liability.

  The lubricant recommendation in the lubricant table in no way represents a guarantee regarding the quality of the lubricant delivered by each respective supplier. Each lubricant manufacturer is responsible for the quality of their product.
- Do not mix synthetic lubricants.
- Do not mix synthetic and mineral lubricants.
- Oils of the same viscosity class from different manufacturers do not have the same characteristics. In particular, the minimally and maximally permitted oil bath temperatures are manufacturer-specific. These temperatures are specified in the lubricant tables.
- The values specified in the lubricant tables apply as of the time of printing of this document. The data of the lubricants are subject to dynamic change on the part of the lubricant manufacturers. For up-to-date information about the lubricants, visit:

  **www.sew-eurodrive.de/lubricants**

**Information on table structure**

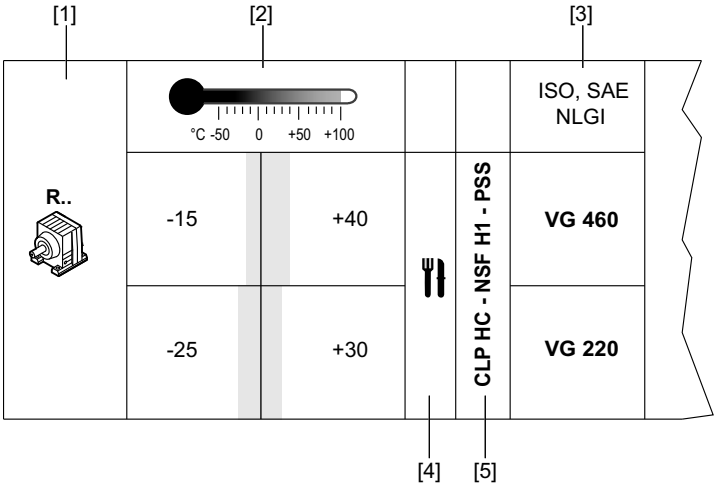


*18014416412986635*

[1] Gear unit type
[2] Ambient temperature range
[3] Viscosity class
[4] Note on special approvals
[5] Lubricant type

25803530/EN – 04/2018

The specified ambient temperatures are guide values for the preselection of a suitable lubricant. The exact upper and lower temperature limits for project planning are specified in the table with the respective trade name.

### Information on the various lubricants

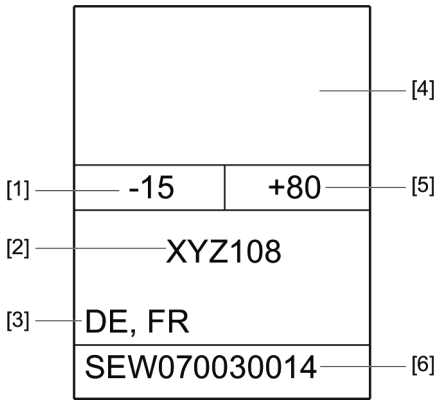


*9007217272258699*

[1] Lowest oil sump temperature in °C, **going below this value during operation is not permitted**
[2] Trade name
[3] Factory filling for the listed countries
BR: Brazil
CN: China
DE: Germany
FR: France
US: United States of America
[4] Manufacturer
[5] Highest oil sump temperature in °C. The service life will be considerably reduced when exceeded. Observe the lubricant change intervals according to chapter "Lubricant change intervals" (→ 🗎 111).
[6] Approvals regarding compatibility of the lubricant with approved oil seals

### Lubricant compatibility with oil seal

| Approval | Explanation |
|---|---|
| SEW07004_ _13: | A lubricant especially recommended with regard to compatibility with the approved oil seals. The lubricant exceeds the state-of-the-art requirements regarding elastomer compatibility. |

**Approved application temperature range of the oil seals**

| Oil seal<br>Material class | Permitted<br>Oil sump temperature |
|---|---|
| NBR | -45 °C to +80 °C |
| FKM | -25 °C to +115 °C |
| FKM-PSS | -25 °C to +115 °C |

25803530/EN – 04/2018

**Limitations of use** of oil seals with the specific lubricant are described in the following table:

| Material class | | | Manufacturer | | Material | |
|---|---|---|---|---|---|---|
| S | 1 | NBR | 1 | Freudenberg | | 72 NBR 902 |
| | | | 2 | Trelleborg | | 4NV11 |
| | 2 | FKM | 1 | Freudenberg | 1 | 75 FKM 585 |
| | | | | | 2 | 75 FKM 170055 |
| | | | 2 | Trelleborg | 1 | VCBVR |

**Examples:**

**S11**: Only the elastomer 72NBR902 of the Freudenberg company meets the requirements of the approval in conjunction with the specific lubricant.

**S2**: Only the elastomer FKM meets the requirements of the approval in conjunction with the specific lubricant.

**Key**

The following table shows the abbreviations and icons used in the lubricant table and explains what they mean:

| Abbreviation/ icon | Meaning |
|---|---|
| | Synthetic lubricant (marked gray) |
| | Mineral lubricants |
| CLP | Mineral oil |
| CLP PG | Polyglycol (PG) |
| CLP HC | Synthetic hydrocarbons – polyalphaolefin (PAO) |
| E | Ester-based oil |
|  | Lubricant for the food processing industry – NSF-H1-compliant |
|  | Easily biodegradable oil for environmentally sensitive areas |
|  | Lubricant suitable for ATEX environment. |
| 1) | Helical-worm gear units with CLP-PG: Contact SEW-EURODRIVE |
| 2) | Special lubricant for SPIROPLAN® gear units only |
| 3) | SEW $f_B \geq 1.2$ required |
| 4) | Observe the critical starting behavior at low temperatures |
| Oil seal | Oil seal |
| PSS | Oil seal type PSS (Premium Sine Sealing). The addendum "PSS" at the lubricant type signals compatibility with the sealing system. |

25803530/EN – 04/2018

### Lubricant table for R.., F.., and K..7 gear units

The lubricant table is valid at the day this document is published. Refer to **www.sew-eurodrive.de/lubricants** for the latest tables.

Observe the thermal limit of the oil seal material, see chapter "Lubricant compatibility with oil seal" (→ 🗎 171).

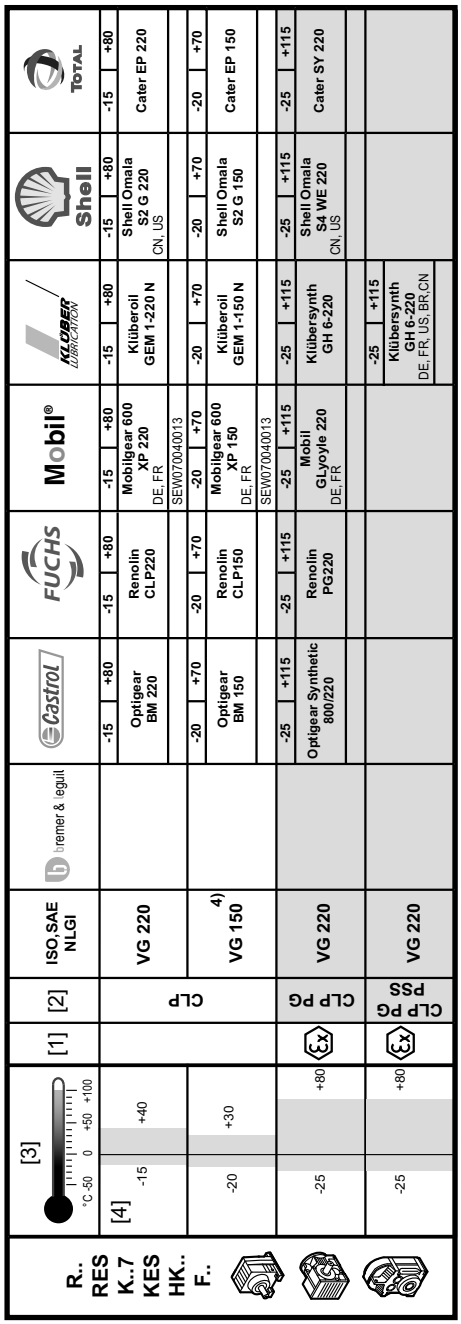


*18014416885322635*

[1] Note on special approvals
[2] Oil type
[3] Ambient temperature range
[4] Standard

The lubricant table is valid at the day this document is published. Refer to **www.sew-eurodrive.de/lubricants** for the latest tables.

Observe the thermal limit of the oil seal material, see chapter "Lubricant compatibility with oil seal" (→ 🗎 171).

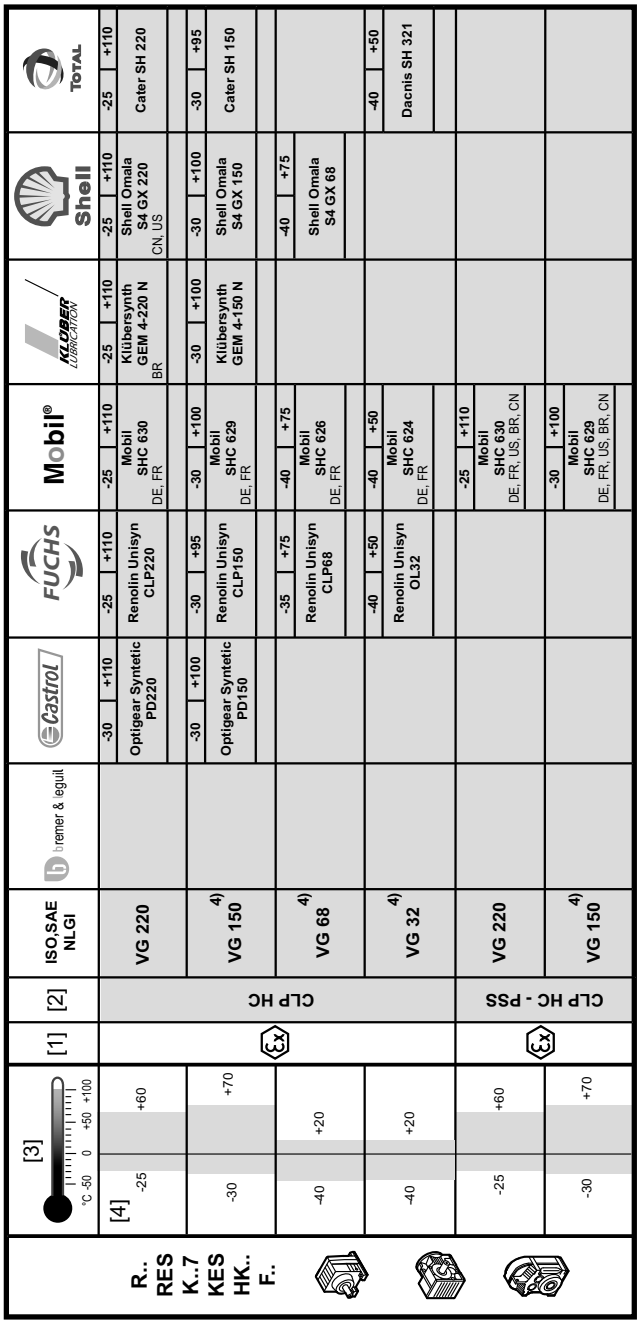


*18014416885325323*

[1] Note on special approvals
[2] Oil type
[3] Ambient temperature range
[4] Standard

25803530/EN – 04/2018

The lubricant table is valid at the day this document is published. Refer to **www.sew-eurodrive.de/lubricants** for the latest tables.

Observe the thermal limit of the oil seal material, see chapter "Lubricant compatibility with oil seal" (→ 🖹 171).

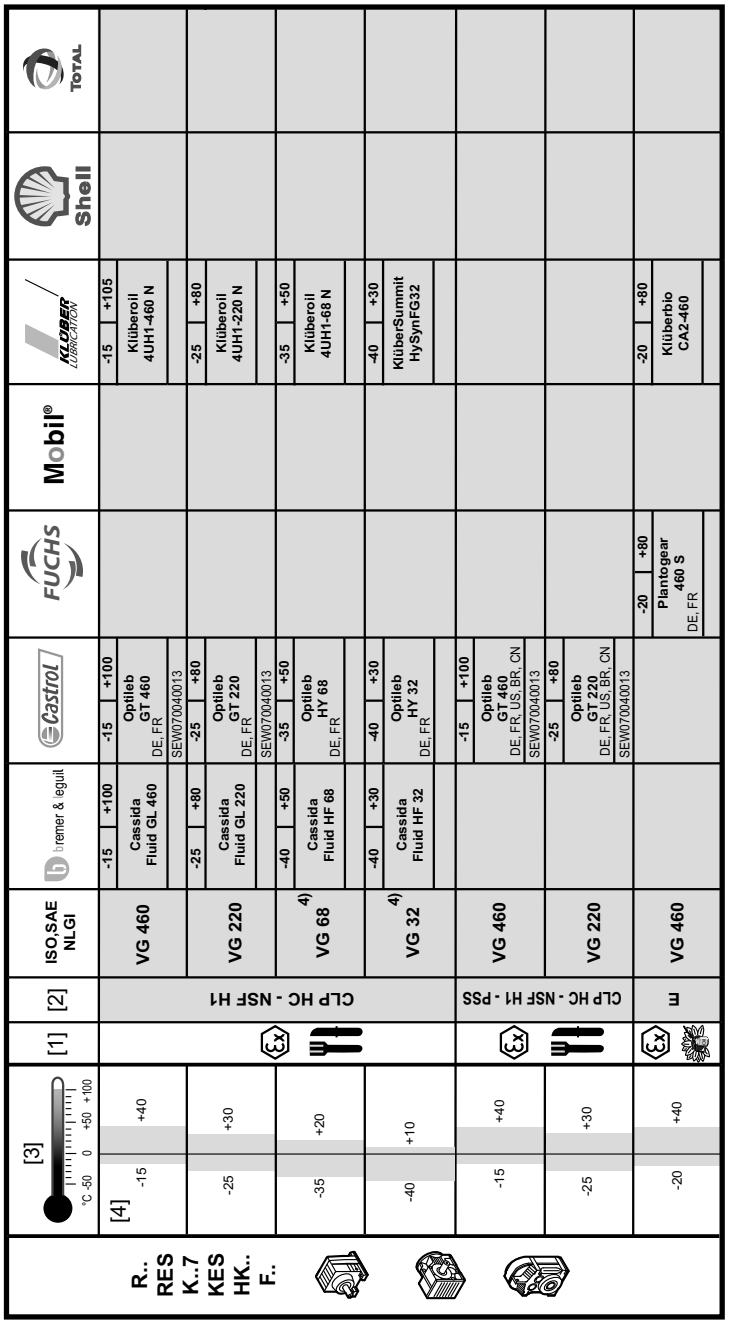


*22849825931*

[1] Note on special approvals
[2] Oil type
[3] Ambient temperature range
[4] Standard

### Lubricant table for K..9 gear units

The lubricant table is valid at the day this document is published. Refer to **www.sew-eurodrive.de/lubricants** for the latest tables.

Observe the thermal limit of the oil seal material, see chapter "Lubricant compatibility with oil seal" (→ 🖹 171).

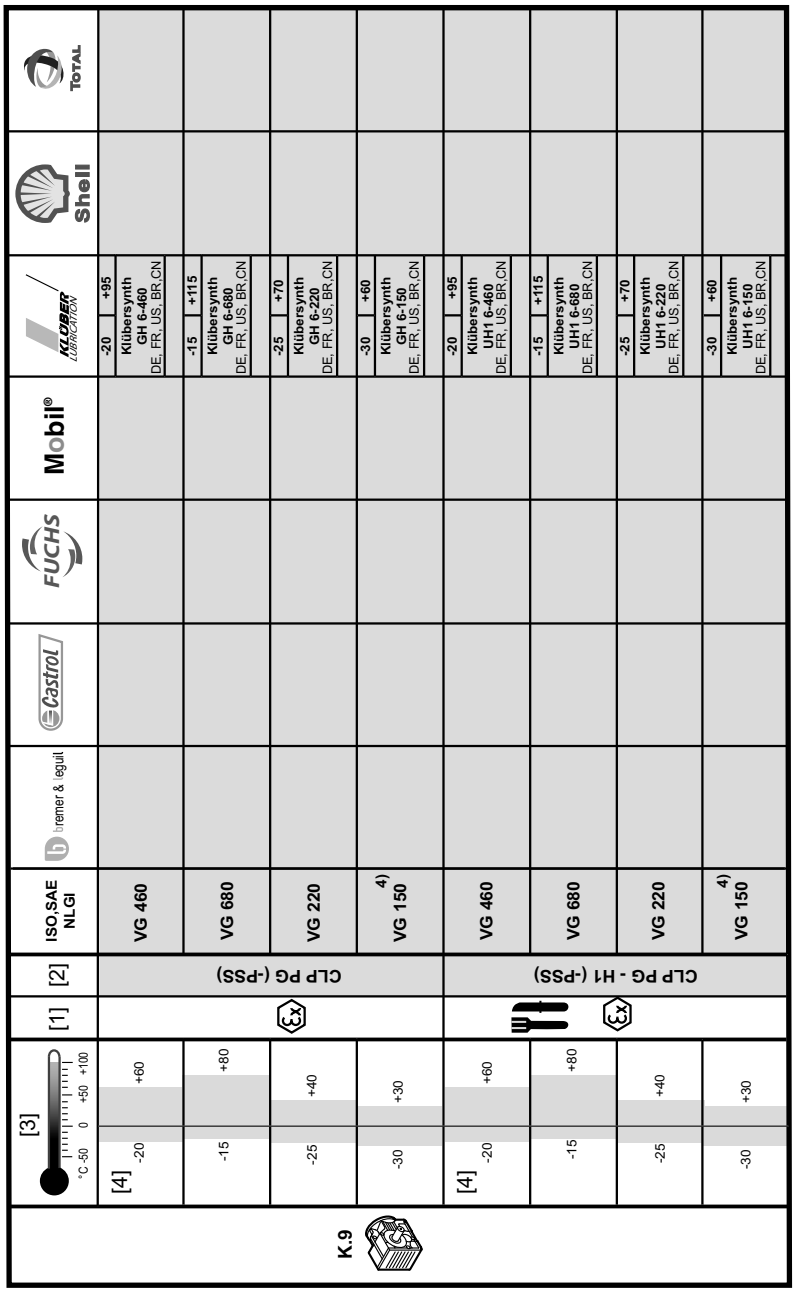


*18014416450433419*

[1] Note on special approvals
[2] Oil type
[3] Ambient temperature range
[4] Standard

25803530/EN – 04/2018

### Lubricant table for S.. gear units

The lubricant table is valid at the day this document is published. Refer to **www.sew-eurodrive.de/lubricants** for the latest tables.

Observe the thermal limit of the oil seal material, see chapter "Lubricant compatibility with oil seal" (→ 🖹 171).

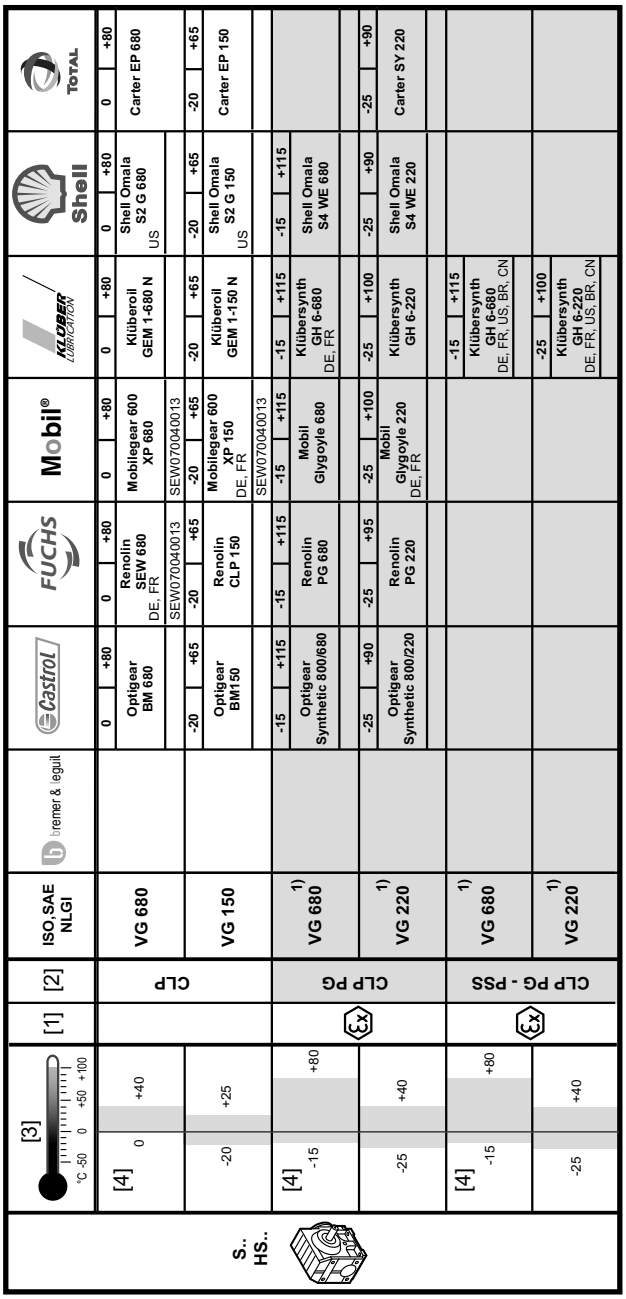


*22849829131*

[1] Note on special approvals
[2] Oil type
[3] Ambient temperature range
[4] Standard

The lubricant table is valid at the day this document is published. Refer to **www.sew-eurodrive.de/lubricants** for the latest tables.

Observe the thermal limit of the oil seal material, see chapter "Lubricant compatibility with oil seal" (→ 171).

| S.. HS.. | [3] °C -50 0 +50 +100 | [1] | [2] | ISO,SAE NLGI | bremer & leguil | Castrol | FUCHS | Mobil® | KLÜBER LUBRICATION | Shell | TOTAL |
|---|---|---|---|---|---|---|---|---|---|---|---|
| | [4] -15 +60 | | CLP HC | VG 460 | | -20 +110 Optigear Synthetic PD 460 | -15 +100 Renolin Unisyn CLP 460 | -20 +105 Mobil SHC 634 DE, FR | -15 +105 Klübersynth GEM 4-460 N | -15 +105 Shell Omala S4 GX 460 | -15 +105 Carter SH 460 |
| | -30 +40 | | | 4) VG 150 | | -30 +75 Optigear Synthetic PD 150 | -30 +70 Renolin Unisyn CLP 150 | -30 +75 Mobil SHC 629 DE, FR | -30 +70 Klübersynth GEM 4-150 N | -30 +75 Shell Omala S4 GX 150 | -30 +70 Carter SH 150 |
| | -40 +30 | | | 4) VG 68 | | | -35 +50 Renolin Unisyn CLP 68 | -40 +55 Mobil SHC 626 DE, FR | | -40 +50 Shell Omala S4 GX 68 | |
| | -40 +10 | | | 4) VG 32 | | | -40 +30 Renolin Unisyn OL 32 | -40 +30 Mobil SHC 624 DE, FR | | | -40 +30 Dacnis SH 32 |
| | [4] -15 +60 | | CLP HC - PSS | VG 460 | | | | -20 +105 Mobil SHC 634 DE, FR, US, BR, CN | | | |
| | -30 +40 | | | 4) VG 150 | | | | -30 +75 Mobil SHC 629 DE, FR, US, BR, CN | | | |

22849831563

[1] Note on special approvals
[2] Oil type
[3] Ambient temperature range
[4] Standard

25803530/EN – 04/2018

The lubricant table is valid at the day this document is published. Refer to **www.sew-eurodrive.de/lubricants** for the latest tables.

Observe the thermal limit of the oil seal material, see chapter "Lubricant compatibility with oil seal" (→ 171).

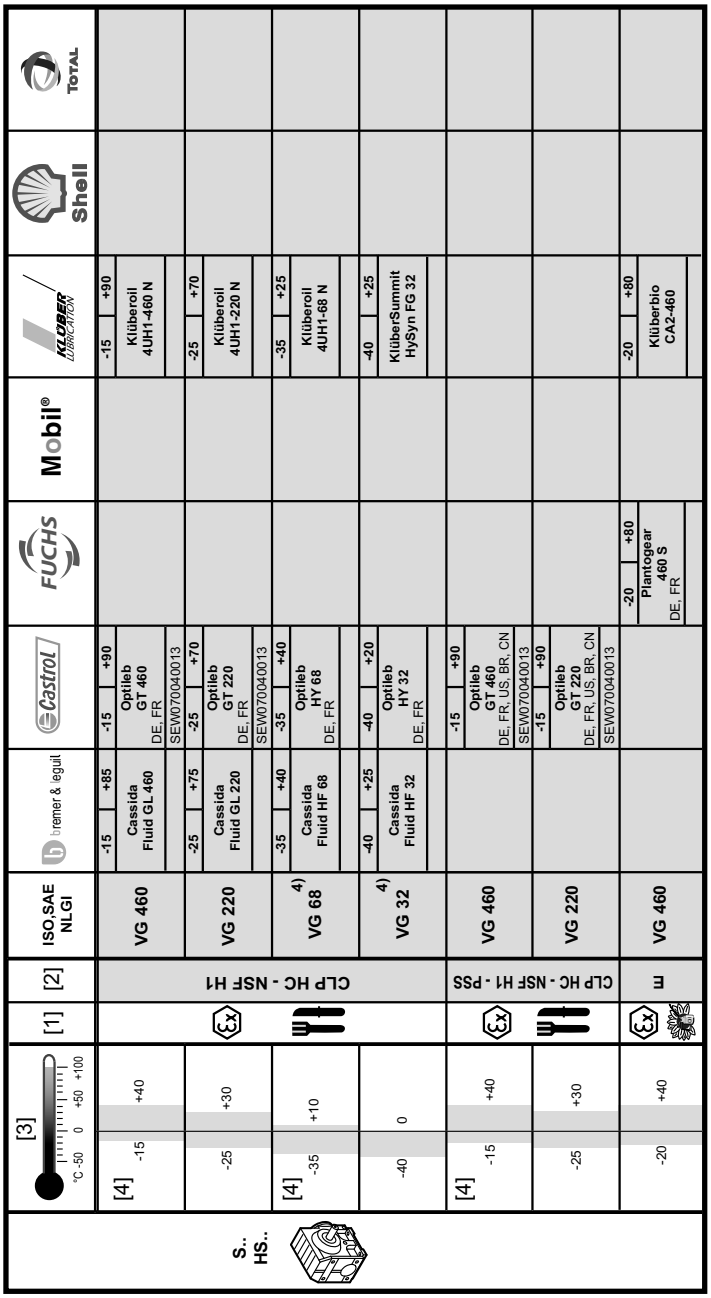


*22849833995*

[1] Note on special approvals
[2] Oil type
[3] Ambient temperature range
[4] Standard

### Lubricant table for W.. gear units

The lubricant table is valid at the day this document is published. Refer to **www.sew-eurodrive.de/lubricants** for the latest tables.

Observe the thermal limit of the oil seal material, see chapter "Lubricant compatibility with oil seal" (→ 🗎 171).

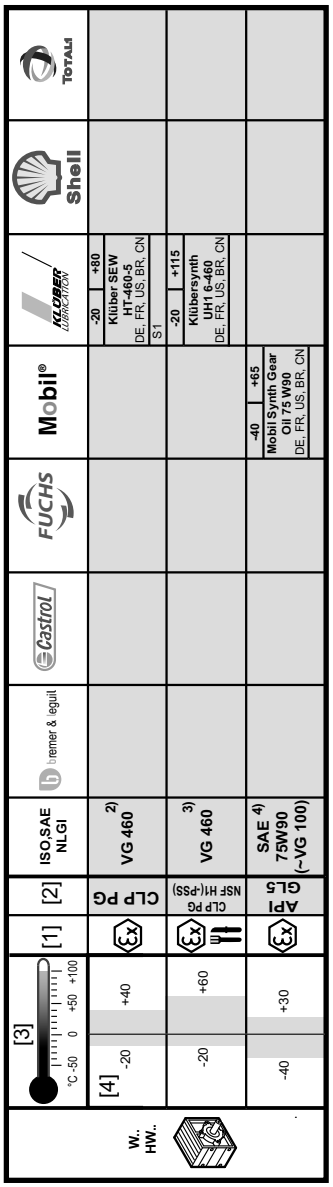


*9007217630712971*

[1] Note on special approvals
[2] Oil type
[3] Ambient temperature range
[4] Standard

25803530/EN – 04/2018

### 8.2.3 Lubricant fill quantities

## INFORMATION

The specified fill quantities are **guide values**. The exact values vary depending on the number of gear stages and gear ratio. Check the oil level plug for the exact oil quantity.

## INFORMATION

Unless a special arrangement is made, SEW-EURODRIVE supplies the drives with a lubricant fill adapted for the specific mounting position. The mounting position (see chapter "Designation of the mounting positions" (→ 🗎 129)) must therefore be specified in the drive order.

When the mounting position is changed, the lubricant fill quantity must be adapted accordingly (see the following chapters). Consequently, a mounting position may only be **changed** after consultation with SEW-EURODRIVE, **otherwise your rights to claim under limited warranty no longer apply.**

The following tables show guide values for lubricant fill quantities in relation to the mounting position M1 – M6.

25803530/EN – 04/2018

### Helical (R) gear units

R.., R..F

| Gear units | Fill quantity in liters | | | | | |
|---|---|---|---|---|---|---|
| | M1[1)] | M2 | M3 | M4 | M5 | M6 |
| R07 | 0.12 | 0.20 | | | | |
| R17 | 0.25 | 0.55 | 0.35 | 0.55 | 0.35 | 0.40 |
| R27 | 0.25/0.40 | 0.70 | 0.50 | 0.70 | 0.50 | |
| R37 | 0.30/0.95 | 0.85 | 0.95 | 1.05 | 0.75 | 0.95 |
| R47 | 0.70/1.50 | 1.60 | 1.50 | 1.65 | 1.50 | |
| R57 | 0.80/1.70 | 1.90 | 1.70 | 2.10 | 1.70 | |
| R67 | 1.10/2.30 | 2.40 | 2.80 | 2.90 | 1.80 | 2.00 |
| R77 | 1.20/3.00 | 3.30 | 3.60 | 3.80 | 2.50 | 3.40 |
| R87 | 2.30/6.0 | 6.4 | 7.2 | | 6.3 | 6.5 |
| R97 | 4.60/9.8 | 11.7 | | 13.4 | 11.3 | 11.7 |
| R107 | 6.0/13.7 | 16.3 | 16.9 | 19.2 | 13.2 | 15.9 |
| R127 | 6.4/17 | 18.3 | 18.2 | 22.0 | 16.8 | 17.9 |
| R137 | 10.0/25.0 | 28.0 | 29.5 | 31.5 | 25.0 | |
| R147 | 15.4/40.0 | 46.5 | 48.0 | 52.0 | 39.5 | 41.0 |
| R167 | 27.0/70.0 | 82.0 | 78.0 | 88.0 | 66.0 | 69.0 |

1) The larger gear unit of compound gear units must be filled with the larger oil volume.

RF.., RZ..

| Gear units | Fill quantity in liters | | | | | |
|---|---|---|---|---|---|---|
| | M1[1)] | M2 | M3 | M4 | M5 | M6 |
| RF07 | 0.12 | 0.20 | | | | |
| RF17 | 0.25 | 0.55 | 0.35 | 0.55 | 0.35 | 0.40 |
| RF27 | 0.25/0.40 | 0.70 | 0.50 | 0.70 | 0.50 | |
| RF37 | 0.35/0.95 | 0.90 | 0.95 | 1.05 | 0.75 | 0.95 |
| RF47 | 0.65/1.50 | 1.60 | 1.50 | 1.65 | 1.50 | |
| RF57 | 0.80/1.70 | 1.80 | 1.70 | 2.00 | 1.70 | |
| RF67 | 1.20/2.50 | 2.50 | 2.70 | 2.80 | 1.90 | 2.10 |
| RF77 | 1.20/2.60 | 3.10 | 3.30 | 3.60 | 2.40 | 3.00 |
| RF87 | 2.40/6.0 | 6.4 | 7.1 | 7.2 | 6.3 | 6.4 |
| RF97 | 5.1/10.2 | 11.9 | 11.2 | 14.0 | 11.2 | 11.8 |
| RF107 | 6.3/14.9 | 15.9 | 17.0 | 19.2 | 13.1 | 15.9 |
| RF127 | 6.6/16.0 | 18.3 | 18.2 | 21.4 | 15.9 | 17.0 |
| RF137 | 9.5/25.0 | 27.0 | 29.0 | 32.5 | 25.0 | |
| RF147 | 16.4/42.0 | 47.0 | 48.0 | 52.0 | 42.0 | 42.0 |
| RF167 | 26.0/70.0 | 82.0 | 78.0 | 88.0 | 65.0 | 71.0 |

1) The larger gear unit of compound gear units must be filled with the larger oil volume.

RX..

| Gear unit | Fill quantity in liters | | | | | |
|---|---|---|---|---|---|---|
| | M1 | M2 | M3 | M4 | M5 | M6 |
| RX57 | 0.60 | 0.80 | 1.30 | | 0.90 | |
| RX67 | 0.80 | | 1.70 | 1.90 | 1.10 | |
| RX77 | 1.10 | 1.50 | 2.60 | 2.70 | 1.60 | |
| RX87 | 1.70 | 2.50 | 4.80 | | 2.90 | |
| RX97 | 2.10 | 3.40 | 7.4 | 7.0 | 4.80 | |
| RX107 | 3.90 | 5.6 | 11.6 | 11.9 | 7.7 | |

RXF..

| Gear unit | Fill quantity in liters | | | | | |
|---|---|---|---|---|---|---|
| | M1 | M2 | M3 | M4 | M5 | M6 |
| RXF57 | 0.50 | 0.80 | 1.10 | | 0.70 | |

25803530/EN – 04/2018

| Gear unit | Fill quantity in liters | | | | | |
|---|---|---|---|---|---|---|
| | M1 | M2 | M3 | M4 | M5 | M6 |
| RXF67 | 0.70 | 0.80 | 1.50 | 1.40 | 1.00 | |
| RXF77 | 0.90 | 1.30 | 2.40 | 2.00 | 1.60 | |
| RXF87 | 1.60 | 1.95 | 4.90 | 3.95 | 2.90 | |
| RXF97 | 2.10 | 3.70 | 7.1 | 6.3 | 4.80 | |
| RXF107 | 3.10 | 5.7 | 11.2 | 9.3 | 7.2 | |

### Parallel shaft helical (F) gear units

F.., FA..B, FH..B, FV..B

| Gear unit | Fill quantity in liters | | | | | |
|---|---|---|---|---|---|---|
| | M1 | M2 | M3 | M4 | M5 | M6 |
| F..27 | 0.60 | 0.80 | 0.65 | 0.70 | 0.60 | 0.60 |
| F..37 | 0.95 | 1.25 | 0.70 | 1.25 | 1.00 | 1.10 |
| F..47 | 1.50 | 1.80 | 1.10 | 1.90 | 1.50 | 1.70 |
| F..57 | 2.60 | 3.50 | 2.10 | 3.50 | 2.80 | 2.90 |
| F..67 | 2.70 | 3.80 | 1.90 | 3.80 | 2.90 | 3.20 |
| F..77 | 5.90 | 7.30 | 4.30 | 8.00 | 6.00 | 6.30 |
| F..87 | 10.8 | 13.0 | 7.70 | 13.8 | 10.8 | 11.0 |
| F..97 | 18.5 | 22.5 | 12.6 | 25.2 | 18.5 | 20.0 |
| F..107 | 24.5 | 32.0 | 19.5 | 37.5 | 27.0 | 27.0 |
| F..127 | 39.5 | 51.7 | 31.5 | 60.1 | 45.6 | 44.2 |
| F..157 | 69.0 | 104.0 | 63.0 | 105.0 | 86.0 | 78.0 |

FF..

| Gear unit | Fill quantity in liters | | | | | |
|---|---|---|---|---|---|---|
| | M1 | M2 | M3 | M4 | M5 | M6 |
| FF27 | 0.60 | 0.80 | 0.65 | 0.70 | 0.60 | 0.60 |
| FF37 | 1.00 | 1.25 | 0.70 | 1.30 | 1.00 | 1.10 |
| FF47 | 1.60 | 1.85 | 1.10 | 1.90 | 1.50 | 1.70 |
| FF57 | 2.30 | 3.10 | 1.70 | 3.10 | 2.30 | 2.40 |
| FF67 | 2.70 | 3.80 | 1.90 | 3.80 | 2.90 | 3.20 |
| FF77 | 5.90 | 7.30 | 4.30 | 8.10 | 6.00 | 6.30 |
| FF87 | 10.8 | 13.2 | 7.80 | 14.1 | 11.0 | 11.2 |
| FF97 | 19.0 | 22.5 | 12.6 | 25.6 | 18.9 | 20.5 |
| FF107 | 25.5 | 32.0 | 19.5 | 38.5 | 27.5 | 28.0 |
| FF127 | 40.6 | 51.6 | 31.5 | 61.2 | 46.3 | 44.9 |
| FF157 | 72.0 | 105.0 | 64.0 | 106.0 | 87.0 | 79.0 |

FA.., FH.., FV.., FAF.., FAZ.., FHF.., FZ.., FHZ.., FVF.., FVZ.., FT.., FM.., FAM..

| Gear unit | Fill quantity in liters | | | | | |
|---|---|---|---|---|---|---|
| | M1 | M2 | M3 | M4 | M5 | M6 |
| F..27 | 0.60 | 0.80 | 0.65 | 0.70 | 0.60 | 0.60 |
| F..37 | 0.95 | 1.25 | 0.70 | 1.25 | 1.00 | 1.10 |
| F..47 | 1.50 | 1.80 | 1.10 | 1.90 | 1.50 | 1.70 |
| F..57 | 2.70 | 3.50 | 2.10 | 3.40 | 2.90 | 3.00 |
| F..67 | 2.70 | 3.80 | 1.90 | 3.80 | 2.90 | 3.20 |
| F..77 | 5.90 | 7.30 | 4.30 | 8.00 | 6.00 | 6.30 |
| F..87 | 10.8 | 13.0 | 7.70 | 13.8 | 10.8 | 11.0 |
| F..97 | 18.5 | 22.5 | 12.6 | 25.2 | 18.5 | 20.0 |
| F..107 | 24.5 | 32.0 | 19.5 | 37.5 | 27.0 | 27.0 |
| F..127 | 38.3 | 50.9 | 31.5 | 59.7 | 44.7 | 43.3 |
| F..157 | 68.0 | 103.0 | 62.0 | 104.0 | 85.0 | 77.0 |

25803530/EN – 04/2018

### Helical-bevel (K) gear units

## INFORMATION

All K..19 and K..29 gear units have a universal mounting position, which means that K..19 and K..29 gear units of the same design are filled with the same oil quantity independent of the mounting position. An exception to this is the M4 mounting position.

K.., KA..B, KH..B, KV..B

| Gear unit | Fill quantity in liters | | | | | |
|---|---|---|---|---|---|---|
| | M1 | M2 | M3 | M4 | M5 | M6 |
| K..19 | 0.40 | | | 0.45 | 0.40 | |
| K..29 | 0.70 | | | 0.85 | 0.70 | |
| K..39 | 0.90 | 1.70 | 1.55 | 1.9 | 1.55 | 1.30 |
| K..49 | 1.70 | 3.40 | 2.80 | 4.20 | 3.15 | 2.80 |
| K..37 | 0.50 | 1.00 | | 1.25 | 0.95 | |
| K..47 | 0.80 | 1.30 | 1.50 | 2.00 | 1.60 | |
| K..57 | 1.10 | 2.20 | | 2.80 | 2.30 | 2.10 |
| K..67 | 1.10 | 2.40 | 2.60 | 3.45 | 2.60 | |
| K..77 | 2.20 | 4.10 | 4.40 | 5.80 | 4.20 | 4.40 |
| K..87 | 3.70 | 8.0 | 8.70 | 10.90 | 8.0 | |
| K..97 | 7.0 | 14.0 | 15.70 | 20.0 | 15.70 | 15.50 |
| K..107 | 10.0 | 21.0 | 25.50 | 33.50 | 24.0 | |
| K..127 | 21.0 | 41.50 | 44.0 | 54.0 | 40.0 | 41.0 |
| K..157 | 31.0 | 65.0 | 68.0 | 90.0 | 62.0 | 63.0 |
| K..167 | 33.0 | 97.0 | 109.0 | 127.0 | 89.0 | 86.0 |
| K..187 | 53.0 | 156.0 | 174.0 | 207.0 | 150.0 | 147.0 |

KF..

| Gear unit | Fill quantity in liters | | | | | |
|---|---|---|---|---|---|---|
| | M1 | M2 | M3 | M4 | M5 | M6 |
| KF19 | 0.40 | | | 0.45 | 0.40 | |
| KF29 | 0.70 | | | 0.85 | 0.70 | |
| KF39 | 0.90 | 1.70 | 1.55 | 1.9 | 1.55 | 1.30 |
| KF49 | 1.70 | 3.40 | 2.80 | 4.20 | 3.15 | 2.80 |
| KF37 | 0.50 | 1.10 | | 1.50 | 1.00 | |
| KF47 | 0.80 | 1.30 | 1.70 | 2.20 | 1.60 | |
| KF57 | 1.20 | 2.20 | 2.40 | 3.15 | 2.50 | 2.30 |
| KF67 | 1.10 | 2.40 | 2.80 | 3.70 | 2.70 | |
| KF77 | 2.10 | 4.10 | 4.40 | 5.90 | 4.50 | |
| KF87 | 3.70 | 8.20 | 9.0 | 11.90 | 8.40 | |
| KF97 | 7.0 | 14.70 | 17.30 | 21.50 | 15.70 | 16.50 |
| KF107 | 10.0 | 21.80 | 25.80 | 35.10 | 25.20 | |
| KF127 | 21.0 | 41.50 | 46.0 | 55.0 | 41.0 | |
| KF157 | 31.0 | 66.0 | 69.0 | 92.0 | 62.0 | 63.0 |

KA.., KH.., KV.., KAF.., KHF.., KVF.., KZ.., KAZ.., KHZ.., KVZ.., KT.., KM.., KAM..

| Gear unit | Fill quantity in liters | | | | | |
|---|---|---|---|---|---|---|
| | M1 | M2 | M3 | M4 | M5 | M6 |
| K..19 | 0.40 | | | 0.45 | 0.40 | |
| K..29 | 0.70 | | | 0.85 | 0.70 | |
| K..39 | 0.90 | 1.70 | 1.55 | 1.9 | 1.55 | 1.30 |
| K..49 | 1.70 | 3.40 | 2.80 | 4.20 | 3.15 | 2.80 |
| K..37 | 0.50 | 1.00 | | 1.40 | 1.00 | |
| K..47 | 0.80 | 1.30 | 1.60 | 2.15 | 1.60 | |
| K..57 | 1.20 | 2.20 | 2.40 | 3.15 | 2.70 | 2.40 |

25803530/EN – 04/2018

| Gear unit | Fill quantity in liters | | | | | |
|---|---|---|---|---|---|---|
| | M1 | M2 | M3 | M4 | M5 | M6 |
| K..67 | 1.10 | 2.40 | 2.70 | 3.70 | 2.60 | |
| K..77 | 2.10 | 4.10 | 4.60 | 5.90 | 4.40 | |
| K..87 | 3.70 | 8.20 | 8.80 | 11.10 | 8.0 | |
| K..97 | 7.0 | 14.70 | 15.70 | 20.0 | 15.70 | |
| K..107 | 10.0 | 20.50 | 24.0 | 32.40 | 24.0 | |
| K..127 | 21.0 | 41.50 | 43.0 | 52.0 | 40.0 | |
| K..157 | 31.0 | 65.0 | 68.0 | 90.0 | 62.0 | 63.0 |
| K..167 | 33.0 | 97.0 | 109.0 | 127.0 | 89.0 | 86.0 |
| K..187 | 53.0 | 156.0 | 174.0 | 207.0 | 150.0 | 147.0 |

### Helical-worm (S) gear units

S..

| Gear unit | Fill quantity in liters | | | | | |
|---|---|---|---|---|---|---|
| | M1 | M2 | M3[1)] | M4 | M5 | M6 |
| S37 | 0.25 | 0.40 | 0.50 | 0.55 | 0.40 | |
| S47 | 0.35 | 0.80 | 0.70/0.90 | 1.00 | 0.80 | |
| S57 | 0.50 | 1.20 | 1.00/1.20 | 1.45 | 1.30 | |
| S67 | 1.00 | 2.00 | 2.20/3.10 | 3.10 | 2.60 | 2.60 |
| S77 | 1.90 | 4.20 | 3.70/5.4 | 5.9 | 4.40 | |
| S87 | 3.30 | 8.1 | 6.9/10.4 | 11.3 | 8.4 | |
| S97 | 6.8 | 15.0 | 13.4/18.0 | 21.8 | 17.0 | |

1) The larger gear unit of multi-stage gear units must be filled with the larger oil quantity.

25803530/EN – 04/2018

SF..

| Gear unit | Fill quantity in liters | | | | | |
|---|---|---|---|---|---|---|
| | M1 | M2 | M3[1)] | M4 | M5 | M6 |
| SF37 | 0.25 | 0.40 | 0.50 | 0.55 | 0.40 | |
| SF47 | 0.40 | 0.90 | 0.90/1.05 | 1.05 | 1.00 | |
| SF57 | 0.50 | 1.20 | 1.00/1.50 | 1.55 | 1.40 | |
| SF67 | 1.00 | 2.20 | 2.30/3.00 | 3.20 | 2.70 | |
| SF77 | 1.90 | 4.10 | 3.90/5.8 | 6.5 | 4.90 | |
| SF87 | 3.80 | 8.0 | 7.1/10.1 | 12.0 | 9.1 | |
| SF97 | 7.4 | 15.0 | 13.8/18.8 | 22.6 | 18.0 | |

1) The larger gear unit of multi-stage gear units must be filled with the larger oil quantity.

SA.., SH.., SAF.., SHZ.., SAZ.., SHF.., ST..

| Gear unit | Fill quantity in liters | | | | | |
|---|---|---|---|---|---|---|
| | M1 | M2 | M3[1)] | M4 | M5 | M6 |
| S..37 | 0.25 | 0.40 | 0.50 | | 0.40 | |
| S..47 | 0.40 | 0.80 | 0.70/0.90 | 1.00 | 0.80 | |
| S..57 | 0.50 | 1.10 | 1.00/1.50 | 1.50 | 1.20 | |
| S..67 | 1.00 | 2.00 | 1.80/2.60 | 2.90 | 2.50 | |
| S..77 | 1.80 | 3.90 | 3.60/5.0 | 5.8 | 4.50 | |
| S..87 | 3.80 | 7.4 | 6.0/8.7 | 10.8 | 8.0 | |
| S..97 | 7.0 | 14.0 | 11.4/16.0 | 20.5 | 15.7 | |

1) The larger gear unit of multi-stage gear units must be filled with the larger oil quantity.

### SPIROPLAN® (W) gear units

## INFORMATION

SPIROPLAN® gear units W..10 to W..30 have a universal mounting position, which means that gear units of the same design are filled with the same oil quantity independent of the mounting position.

The oil fill quantity of SPIROPLAN® gear units W..37 and W..47 in mounting position M4 is different from that of the other mounting positions.

W.., WA..B, WH..B

| Gear unit | Fill quantity in liters | | | | | |
|---|---|---|---|---|---|---|
| | M1 | M2 | M3 | M4 | M5 | M6 |
| W..10 | 0.16 | | | | | |
| W..20 | 0.24 | | | | | |
| W..30 | 0.40 | | | | | |
| W..37 | 0.50 | | | 0.70 | 0.50 | |
| W..47 | 0.90 | | | 1.40 | 0.90 | |

WF..

| Gear unit | Fill quantity in liters | | | | | |
|---|---|---|---|---|---|---|
| | M1 | M2 | M3 | M4 | M5 | M6 |
| WF10 | 0.16 | | | | | |
| WF20 | 0.24 | | | | | |
| WF30 | 0.40 | | | | | |
| WF37 | 0.50 | | | 0.70 | 0.50 | |
| WF47 | 0.90 | | | 1.55 | 0.90 | |

25803530/EN – 04/2018

WA.., WAF..,WH.., WT.., WHF..

| Gear unit | Fill quantity in liters | | | | | |
|---|---|---|---|---|---|---|
| | M1 | M2 | M3 | M4 | M5 | M6 |
| W..10 | 0.16 | | | | | |
| W..20 | 0.24 | | | | | |
| W..30 | 0.40 | | | | | |
| W..37 | 0.50 | | | 0.70 | 0.50 | |
| W..47 | 0.80 | | | 1.40 | 0.80 | |

25803530/EN – 04/2018

# 9 Malfunctions and remedies



**⚠ WARNING**

Risk of death or injury if the drive starts up unintentionally.

Severe or fatal injuries.

- De-energize the motor before you start working on the unit.
- Secure the motor against unintended power-up.



**⚠ CAUTION**

Risk of burns due to hot gear unit and hot gear unit oil.

Serious injuries.

- Let the gear unit cool down before you start working on it.
- Carefully remove the oil level plug and the oil drain plug.

**NOTICE**

Damage to gear unit/gearmotor due to improper operation.

Damage to the gear unit/gearmotor.

- Repair works at SEW-EURODRIVE gear units may only be performed by qualified personnel. In the context of this documentation, qualified personnel are persons who are familiar with the "Technical regulations on operating safety" (TRBS).
- Drive and motor may only be disconnected by qualified personnel.
- Contact SEW-EURODRIVE.

25803530/EN – 04/2018

## 9.1 Gear units

| Fault | Possible cause | Measure |
|---|---|---|
| Unusual, regular running noise | • Meshing/grinding noise: Bearing damage | • Check oil consistency, change bearings |
| | • Knocking noise: Irregularity in the gearing | • Consult SEW-EURODRIVE |
| | • Deformation of the housing upon tightening | • Check the gear unit mounting for possible deformation and correct if necessary |
| | • Noise generated by insufficient stiffness of the gear unit foundation | • Reinforce the gear unit foundation |
| Unusual, irregular running noises | • Foreign objects in the oil | • Check the oil consistency<br>• Stop the drive, contact SEW-EURODRIVE |
| Oil leaking from inspection cover | • Seal of the inspection cover leaking | • Tighten the screws of the inspection cover and observe the gear unit. Contact SEW-EURODRIVE if oil is still leaking. |
| | • Seal defective | • Contact SEW-EURODRIVE. |
| Small amounts of oil leak from the oil seal during run-in phase. | • Function-related pseudo-leakage | • There is no fault. Remove with soft, lint-free cloth and keep monitoring it. |
| Film of moisture around the dust lip of the oil seal | • Function-related pseudo-leakage | • There is no fault. Remove with soft, lint-free cloth and keep monitoring it. |
| Oil leaking from the oil seal. | • Oil seal leaking/defective | • Check sealing system. It may be necessary to contact SEW-EURODRIVE. |
| Oil leaking from motor (e.g. terminal box or fan) | • Too much oil | • Check oil level, correct if necessary |
| | • Gear unit not ventilated | • Vent gear unit |
| | • Oil seal leaking/defective | • Check sealing system. It may be necessary to contact SEW-EURODRIVE. |
| Oil leaking from flange | • Flange gasket leaking/defective | • Check sealing system. It may be necessary to contact SEW-EURODRIVE. |
| | • Too much oil | • Check oil level, correct if necessary |
| | • Gear unit not ventilated | • Vent gear unit |
| Oil leaking from breather valve. | • Too much oil. | • Check oil quantity, correct if necessary |
| | • Function-related oil mist | • There is no fault. |
| | • Drive not installed in proper mounting position. | • Install breather valve correctly and adjust the oil level. |
| | • Frequent cold starts (oil foaming) and/or high oil level. | • Install oil expansion tank. |
| Output shaft does not turn although the motor is running or the input shaft is rotated. | • Shaft-hub connection in the gear unit interrupted. | • Send in the gear unit/gearmotor for repair |

## 9.2 Adapters AM/AQ./AL/EWH

| Fault | Possible cause | Measure |
|---|---|---|
| Unusual, regular running noise | • Meshing/grinding noise: Bearing damage | • Contact SEW-EURODRIVE. |
| Oil leaking. | • Seal defective | • Contact SEW-EURODRIVE. |
| Output shaft does not turn although the motor is running or the input shaft is rotated. | • Shaft-hub connection in the gear unit interrupted. | • Send in the gear unit/gearmotor for repair. |
| Change in running noise and/or vibrations | • Spider wear, short-term torque transmission through metal contact | • Change the spider. |
| | • Screws to secure hub axially are loose | • Tighten the screws |
| Premature wear of spider | • Contact with aggressive fluids/ oils; ozone influence; excessive ambient temperatures, etc. that can change the physical properties of the spider. | • Contact SEW-EURODRIVE. |
| | • Impermissibly high ambient/contact temperature for the spider; maximum permitted temperature: -20 °C to +80 °C. | • Contact SEW-EURODRIVE. |
| | • Overload | • Contact SEW-EURODRIVE. |

## 9.3 AD input shaft assembly

| Fault | Possible cause | Measure |
|---|---|---|
| Unusual, regular running noise. | • Meshing/grinding noise: Bearing damage. | • Contact SEW-EURODRIVE. |
| Oil is leaking. | • Seal defective. | • Contact SEW-EURODRIVE. |
| Output shaft does not turn although the input shaft is rotated. | • Shaft-hub connection in gear unit or cover interrupted. | • Send the gear unit to SEW-EURODRIVE for repair. |

25803530/EN – 04/2018

## 9.4 Service

If you require customer service, include the following information:

- Nameplate data (complete)
- Nature and extent of the problem
- Time the failure occurred and any accompanying circumstances
- Presumed cause
- A digital picture of the failure, if possible

## 9.5 Waste disposal

Dispose gear units in accordance with the material structure and the regulations in force:

- As steel scrap
  - Housing parts
  - Gears
  - Shafts
  - Rolling bearing
- Parts of the worm gears are made of non-ferrous metals. Dispose of the worm gears appropriately.
- Collect used oil and dispose of it according to the regulations in force.

25803530/EN – 04/2018

# 10 Address list

| | | | |
|---|---|---|---|
| **Algeria** | | | |
| Sales | Algiers | REDUCOM Sarl<br>16, rue des Frères Zaghnoune<br>Bellevue<br>16200 El Harrach Alger | Tel. +213 21 8214-91<br>Fax +213 21 8222-84<br>http://www.reducom-dz.com<br>info@reducom-dz.com |
| **Argentina** | | | |
| Assembly<br>Sales | Buenos Aires | SEW EURODRIVE ARGENTINA S.A.<br>Ruta Panamericana Km 37.5, Lote 35<br>(B1619IEA) Centro Industrial Garín<br>Prov. de Buenos Aires | Tel. +54 3327 4572-84<br>Fax +54 3327 4572-21<br>http://www.sew-eurodrive.com.ar<br>sewar@sew-eurodrive.com.ar |
| **Australia** | | | |
| Assembly<br>Sales<br>Service | Melbourne | SEW-EURODRIVE PTY. LTD.<br>27 Beverage Drive<br>Tullamarine, Victoria 3043 | Tel. +61 3 9933-1000<br>Fax +61 3 9933-1003<br>http://www.sew-eurodrive.com.au<br>enquires@sew-eurodrive.com.au |
| | Sydney | SEW-EURODRIVE PTY. LTD.<br>9, Sleigh Place, Wetherill Park<br>New South Wales, 2164 | Tel. +61 2 9725-9900<br>Fax +61 2 9725-9905<br>enquires@sew-eurodrive.com.au |
| **Austria** | | | |
| Assembly<br>Sales<br>Service | Vienna | SEW-EURODRIVE Ges.m.b.H.<br>Richard-Strauss-Straße 24<br>1230 Wien | Tel. +43 1 617 55 00-0<br>Fax +43 1 617 55 00-30<br>http://www.sew-eurodrive.at<br>sew@sew-eurodrive.at |
| **Bangladesh** | | | |
| Sales | Bangladesh | SEW-EURODRIVE INDIA PRIVATE LIMITED<br>345 DIT Road<br>East Rampura<br>Dhaka-1219, Bangladesh | Tel. +88 01729 097309<br>salesdhaka@seweurodrivebangladesh.com |
| **Belarus** | | | |
| Sales | Minsk | Foreign unitary production enterprise SEW-EURODRIVE<br>RybalkoStr. 26<br>220033 Minsk | Tel. +375 17 298 47 56 / 298 47 58<br>Fax +375 17 298 47 54<br>http://www.sew.by<br>sales@sew.by |
| **Belgium** | | | |
| Assembly<br>Sales<br>Service | Brussels | SEW-EURODRIVE n.v./s.a.<br>Researchpark Haasrode 1060<br>Evenementenlaan 7<br>3001 Leuven | Tel. +32 16 386-311<br>Fax +32 16 386-336<br>http://www.sew-eurodrive.be<br>info@sew-eurodrive.be |
| Service Competence Center | Industrial Gears | SEW-EURODRIVE n.v./s.a.<br>Rue de Parc Industriel, 31<br>6900 Marche-en-Famenne | Tel. +32 84 219-878<br>Fax +32 84 219-879<br>http://www.sew-eurodrive.be<br>service-IG@sew-eurodrive.be |
| **Brazil** | | | |
| Production<br>Sales<br>Service | São Paulo | SEW-EURODRIVE Brasil Ltda.<br>Estrada Municipal José Rubim, 205 – Rodovia Santos Dumont Km 49<br>Indaiatuba – 13347-510 – SP | Tel. +55 19 3835-8000<br>sew@sew.com.br |
| Assembly<br>Sales<br>Service | Rio Claro | SEW-EURODRIVE Brasil Ltda.<br>Rodovia Washington Luiz, Km 172<br>Condomínio Industrial Conpark<br>Caixa Postal: 327<br>13501-600 – Rio Claro / SP | Tel. +55 19 3522-3100<br>Fax +55 19 3524-6653<br>montadora.rc@sew.com.br |
| | Joinville | SEW-EURODRIVE Brasil Ltda.<br>Rua Dona Francisca, 12.346 – Pirabeiraba<br>89239-270 – Joinville / SC | Tel. +55 47 3027-6886<br>Fax +55 47 3027-6888<br>filial.sc@sew.com.br |
| **Bulgaria** | | | |
| Sales | Sofia | BEVER-DRIVE GmbH<br>Bogdanovetz Str.1<br>1606 Sofia | Tel. +359 2 9151160<br>Fax +359 2 9151166<br>bever@bever.bg |

25803530/EN – 04/2018

| | | | |
|---|---|---|---|
| **Cameroon** | | | |
| Sales | Douala | SEW-EURODRIVE S.A.R.L.<br>Ancienne Route Bonabéri<br>P.O. Box<br>B.P 8674<br>Douala-Cameroun | Tel. +237 233 39 02 10<br>Fax +237 233 39 02 10<br>sew@sew-eurodrive-cm |
| **Canada** | | | |
| Assembly<br>Sales<br>Service | Toronto | SEW-EURODRIVE CO. OF CANADA LTD.<br>210 Walker Drive<br>Bramalea, ON L6T 3W1 | Tel. +1 905 791-1553<br>Fax +1 905 791-2999<br>http://www.sew-eurodrive.ca<br>l.watson@sew-eurodrive.ca |
| | Vancouver | SEW-EURODRIVE CO. OF CANADA LTD.<br>Tilbury Industrial Park<br>7188 Honeyman Street<br>Delta, BC V4G 1G1 | Tel. +1 604 946-5535<br>Fax +1 604 946-2513<br>b.wake@sew-eurodrive.ca |
| | Montreal | SEW-EURODRIVE CO. OF CANADA LTD.<br>2555 Rue Leger<br>Lasalle, PQ H8N 2V9 | Tel. +1 514 367-1124<br>Fax +1 514 367-3677<br>a.peluso@sew-eurodrive.ca |
| **Chile** | | | |
| Assembly<br>Sales<br>Service | Santiago de Chile | SEW-EURODRIVE CHILE LTDA<br>Las Encinas 1295<br>Parque Industrial Valle Grande<br>LAMPA<br>Santiago de Chile<br>P.O. Box<br>Casilla 23 Correo Quilicura - Santiago - Chile | Tel. +56 2 2757 7000<br>Fax +56 2 2757 7001<br>http://www.sew-eurodrive.cl<br>ventas@sew-eurodrive.cl |
| **China** | | | |
| Production<br>Assembly<br>Sales<br>Service | Tianjin | SEW-EURODRIVE (Tianjin) Co., Ltd.<br>No. 78, 13th Avenue, TEDA<br>Tianjin 300457 | Tel. +86 22 25322612<br>Fax +86 22 25323273<br>http://www.sew-eurodrive.cn<br>info@sew-eurodrive.cn |
| Assembly<br>Sales<br>Service | Suzhou | SEW-EURODRIVE (Suzhou) Co., Ltd.<br>333, Suhong Middle Road<br>Suzhou Industrial Park<br>Jiangsu Province, 215021 | Tel. +86 512 62581781<br>Fax +86 512 62581783<br>suzhou@sew-eurodrive.cn |
| | Guangzhou | SEW-EURODRIVE (Guangzhou) Co., Ltd.<br>No. 9, JunDa Road<br>East Section of GETDD<br>Guangzhou 510530 | Tel. +86 20 82267890<br>Fax +86 20 82267922<br>guangzhou@sew-eurodrive.cn |
| | Shenyang | SEW-EURODRIVE (Shenyang) Co., Ltd.<br>10A-2, 6th Road<br>Shenyang Economic Technological Development Area<br>Shenyang, 110141 | Tel. +86 24 25382538<br>Fax +86 24 25382580<br>shenyang@sew-eurodrive.cn |
| | Taiyuan | SEW-EURODRIVE (Taiyuan) Co,. Ltd.<br>No.3, HuaZhang Street,<br>TaiYuan Economic & Technical Development Zone<br>ShanXi, 030032 | Tel. +86-351-7117520<br>Fax +86-351-7117522<br>taiyuan@sew-eurodrive.cn |
| | Wuhan | SEW-EURODRIVE (Wuhan) Co., Ltd.<br>10A-2, 6th Road<br>No. 59, the 4th Quanli Road, WEDA<br>430056 Wuhan | Tel. +86 27 84478388<br>Fax +86 27 84478389<br>wuhan@sew-eurodrive.cn |
| | Xi'An | SEW-EURODRIVE (Xi'An) Co., Ltd.<br>No. 12 Jinye 2nd Road<br>Xi'An High-Technology Industrial Development Zone<br>Xi'An 710065 | Tel. +86 29 68686262<br>Fax +86 29 68686311<br>xian@sew-eurodrive.cn |
| Sales<br>Service | Hong Kong | SEW-EURODRIVE LTD.<br>Unit No. 801-806, 8th Floor<br>Hong Leong Industrial Complex<br>No. 4, Wang Kwong Road<br>Kowloon, Hong Kong | Tel. +852 36902200<br>Fax +852 36902211<br>contact@sew-eurodrive.hk |

25803530/EN – 04/2018

| | | | |
|---|---|---|---|
| **Colombia** | | | |
| Assembly<br>Sales<br>Service | Bogota | SEW-EURODRIVE COLOMBIA LTDA.<br>Calle 17 No. 132-18<br>Interior 2 Bodega 6, Manzana B<br>Santafé de Bogotá | Tel. +57 1 54750-50<br>Fax +57 1 54750-44<br>http://www.sew-eurodrive.com.co<br>sew@sew-eurodrive.com.co |
| **Croatia** | | | |
| Sales<br>Service | Zagreb | KOMPEKS d. o. o.<br>Zeleni dol 10<br>10 000 Zagreb | Tel. +385 1 4613-158<br>Fax +385 1 4613-158<br>kompeks@inet.hr |
| **Czech Republic** | | | |
| Assembly<br>Sales<br>Service | Hostivice | SEW-EURODRIVE CZ s.r.o.<br>Floriánova 2459<br>253 01 Hostivice | Tel. +420 255 709 601<br>Fax +420 235 350 613<br>http://www.sew-eurodrive.cz<br>sew@sew-eurodrive.cz |
| | Drive Service Hotline / 24 Hour Service | +420 800 739 739 (800 SEW SEW) | Service<br>Tel. +420 255 709 632<br>Fax +420 235 358 218<br>servis@sew-eurodrive.cz |
| **Denmark** | | | |
| Assembly<br>Sales<br>Service | Copenhagen | SEW-EURODRIVEA/S<br>Geminivej 28-30<br>2670 Greve | Tel. +45 43 95 8500<br>Fax +45 43 9585-09<br>http://www.sew-eurodrive.dk<br>sew@sew-eurodrive.dk |
| **Egypt** | | | |
| Sales<br>Service | Cairo | Copam Egypt<br>for Engineering & Agencies<br>Building 10, Block 13005, First Industrial Zone,<br>Obour City Cairo | Tel. +202 44812673 / 79 (7 lines)<br>Fax +202 44812685<br>http://www.copam-egypt.com<br>copam@copam-egypt.com |
| **Estonia** | | | |
| Sales | Tallin | ALAS-KUUL AS<br>Reti tee 4<br>75301 Peetri küla, Rae vald, Harjumaa | Tel. +372 6593230<br>Fax +372 6593231<br>http://www.alas-kuul.ee<br>veiko.soots@alas-kuul.ee |
| **Finland** | | | |
| Assembly<br>Sales<br>Service | Hollola | SEW-EURODRIVE OY<br>Vesimäentie 4<br>15860 Hollola | Tel. +358 201 589-300<br>Fax +358 3 780-6211<br>http://www.sew-eurodrive.fi<br>sew@sew.fi |
| Service | Hollola | SEW-EURODRIVE OY<br>Keskikankaantie 21<br>15860 Hollola | Tel. +358 201 589-300<br>Fax +358 3 780-6211<br>http://www.sew-eurodrive.fi<br>sew@sew.fi |
| Production<br>Assembly | Karkkila | SEW Industrial Gears Oy<br>Santasalonkatu 6, PL 8<br>03620 Karkkila, 03601 Karkkila | Tel. +358 201 589-300<br>Fax +358 201 589-310<br>http://www.sew-eurodrive.fi<br>sew@sew.fi |
| **France** | | | |
| Production<br>Sales<br>Service | Hagenau | SEW-USOCOME<br>48-54 route de Soufflenheim<br>B. P. 20185<br>67506 Haguenau Cedex | Tel. +33 3 88 73 67 00<br>Fax +33 3 88 73 66 00<br>http://www.usocome.com<br>sew@usocome.com |
| Production | Forbach | SEW-USOCOME<br>Zone industrielle<br>Technopôle Forbach Sud<br>B. P. 30269<br>57604 Forbach Cedex | Tel. +33 3 87 29 38 00 |
| | Brumath | SEW-USOCOME<br>1 Rue de Bruxelles<br>67670 Mommenheim Cedex | Tel. +33 3 88 37 48 00 |
| Assembly<br>Sales<br>Service | Bordeaux | SEW-USOCOME<br>Parc d'activités de Magellan<br>62 avenue de Magellan – B. P. 182<br>33607 Pessac Cedex | Tel. +33 5 57 26 39 00<br>Fax +33 5 57 26 39 09 |

25803530/EN – 04/2018

| | | | |
|---|---|---|---|
| **France** | | | |
| | Lyon | SEW-USOCOME<br>75 rue Antoine Condorcet<br>38090 Vaulx-Milieu | Tel. +33 4 74 99 60 00<br>Fax +33 4 74 99 60 15 |
| | Nantes | SEW-USOCOME<br>Parc d'activités de la forêt<br>4 rue des Fontenelles<br>44140 Le Bignon | Tel. +33 2 40 78 42 00<br>Fax +33 2 40 78 42 20 |
| | Paris | SEW-USOCOME<br>Zone industrielle<br>2 rue Denis Papin<br>77390 Verneuil l'Étang | Tel. +33 1 64 42 40 80<br>Fax +33 1 64 42 40 88 |
| **Gabon** | | | |
| Sales | Libreville | SEW-EURODRIVE SARL<br>183, Rue 5.033.C, Lalala à droite<br>P.O. Box 15682<br>Libreville | Tel. +241 03 28 81 55<br>+241 06 54 81 33<br>http://www.sew-eurodrive.cm<br>sew@sew-eurodrive.cm |
| **Germany** | | | |
| Headquarters<br>Production<br>Sales | Bruchsal | SEW-EURODRIVE GmbH & Co KG<br>Ernst-Blickle-Straße 42<br>76646 Bruchsal | Tel. +49 7251 75-0<br>Fax +49 7251 75-1970<br>http://www.sew-eurodrive.de<br>sew@sew-eurodrive.de |
| Production / Industrial Gears | Bruchsal | SEW-EURODRIVE GmbH & Co KG<br>Christian-Pähr-Str. 10<br>76646 Bruchsal | Tel. +49 7251 75-0<br>Fax +49 7251 75-2970 |
| Production | Graben | SEW-EURODRIVE GmbH & Co KG<br>Ernst-Blickle-Straße 1<br>76676 Graben-Neudorf | Tel. +49 7251 75-0<br>Fax +49 7251-2970 |
| | Östringen | SEW-EURODRIVE GmbH & Co KG, Werk Östringen<br>Franz-Gurk-Straße 2<br>76684 Östringen | Tel. +49 7253 9254-0<br>Fax +49 7253 9254-90<br>oestringen@sew-eurodrive.de |
| Service Competence Center | Mechanics / Mechatronics | SEW-EURODRIVE GmbH & Co KG<br>Ernst-Blickle-Straße 1<br>76676 Graben-Neudorf | Tel. +49 7251 75-1710<br>Fax +49 7251 75-1711<br>scc-mechanik@sew-eurodrive.de |
| | Electronics | SEW-EURODRIVE GmbH & Co KG<br>Ernst-Blickle-Straße 42<br>76646 Bruchsal | Tel. +49 7251 75-1780<br>Fax +49 7251 75-1769<br>scc-elektronik@sew-eurodrive.de |
| Drive Technology Center | North | SEW-EURODRIVE GmbH & Co KG<br>Alte Ricklinger Straße 40-42<br>30823 Garbsen (Hannover) | Tel. +49 5137 8798-30<br>Fax +49 5137 8798-55<br>dtc-nord@sew-eurodrive.de |
| | East | SEW-EURODRIVE GmbH & Co KG<br>Dänkritzer Weg 1<br>08393 Meerane (Zwickau) | Tel. +49 3764 7606-0<br>Fax +49 3764 7606-30<br>dtc-ost@sew-eurodrive.de |
| | South | SEW-EURODRIVE GmbH & Co KG<br>Domagkstraße 5<br>85551 Kirchheim (München) | Tel. +49 89 909552-10<br>Fax +49 89 909552-50<br>dtc-sued@sew-eurodrive.de |
| | West | SEW-EURODRIVE GmbH & Co KG<br>Siemensstraße 1<br>40764 Langenfeld (Düsseldorf) | Tel. +49 2173 8507-30<br>Fax +49 2173 8507-55<br>dtc-west@sew-eurodrive.de |
| Drive Center | Berlin | SEW-EURODRIVE GmbH & Co KG<br>Alexander-Meißner-Straße 44<br>12526 Berlin | Tel. +49 306331131-30<br>Fax +49 306331131-36<br>dc-berlin@sew-eurodrive.de |
| | Ludwigshafen | SEW-EURODRIVE GmbH & Co KG<br>c/o BASF SE<br>Gebäude W130 Raum 101<br>67056 Ludwigshafen | Tel. +49 7251 75 3759<br>Fax +49 7251 75 503759<br>dc-ludwigshafen@sew-eurodrive.de |
| | Saarland | SEW-EURODRIVE GmbH & Co KG<br>Gottlieb-Daimler-Straße 4<br>66773 Schwalbach Saar – Hülzweiler | Tel. +49 6831 48946 10<br>Fax +49 6831 48946 13<br>dc-saarland@sew-eurodrive.de |
| | Ulm | SEW-EURODRIVE GmbH & Co KG<br>Dieselstraße 18<br>89160 Dornstadt | Tel. +49 7348 9885-0<br>Fax +49 7348 9885-90<br>dc-ulm@sew-eurodrive.de |

25803530/EN – 04/2018

| | | | |
|---|---|---|---|
| **Germany** | | | |
| | Würzburg | SEW-EURODRIVE GmbH & Co KG<br>Nürnbergerstraße 118<br>97076 Würzburg-Lengfeld | Tel. +49 931 27886-60<br>Fax +49 931 27886-66<br>dc-wuerzburg@sew-eurodrive.de |
| Drive Service Hotline / 24 Hour Service | | | 0 800 SEWHELP<br>0 800 7394357 |
| **Great Britain** | | | |
| Assembly<br>Sales<br>Service | Normanton | SEW-EURODRIVE Ltd.<br>DeVilliers Way<br>Trident Park<br>Normanton<br>West Yorkshire<br>WF6 1GX | Tel. +44 1924 893-855<br>Fax +44 1924 893-702<br>http://www.sew-eurodrive.co.uk<br>info@sew-eurodrive.co.uk |
| | Drive Service Hotline / 24 Hour Service | | Tel. 01924 896911 |
| **Greece** | | | |
| Sales | Athens | Christ. Boznos & Son S.A.<br>12, K. Mavromichali Street<br>P.O. Box 80136<br>18545 Piraeus | Tel. +30 2 1042 251-34<br>Fax +30 2 1042 251-59<br>http://www.boznos.gr<br>info@boznos.gr |
| **Hungary** | | | |
| Sales<br>Service | Budapest | SEW-EURODRIVE Kft.<br>Csillaghegyí út 13.<br>1037 Budapest | Tel. +36 1 437 06-58<br>Fax +36 1 437 06-50<br>http://www.sew-eurodrive.hu<br>office@sew-eurodrive.hu |
| **Iceland** | | | |
| Sales | Reykjavik | Varma & Vélaverk ehf.<br>Knarrarvogi 4<br>104 Reykjavík | Tel. +354 585 1070<br>Fax +354 585)1071<br>http://www.varmaverk.is<br>vov@vov.is |
| **India** | | | |
| Registered Office<br>Assembly<br>Sales<br>Service | Vadodara | SEW-EURODRIVE India Private Limited<br>Plot No. 4, GIDC<br>POR Ramangamdi • Vadodara - 391 243<br>Gujarat | Tel. +91 265 3045200<br>Fax +91 265 3045300<br>http://www.seweurodriveindia.com<br>salesvadodara@seweurodriveindia.com |
| Assembly<br>Sales<br>Service | Chennai | SEW-EURODRIVE India Private Limited<br>Plot No. K3/1, Sipcot Industrial Park Phase II<br>Mambakkam Village<br>Sriperumbudur - 602105<br>Kancheepuram Dist, Tamil Nadu | Tel. +91 44 37188888<br>Fax +91 44 37188811<br>saleschennai@seweurodriveindia.com |
| | Pune | SEW-EURODRIVE India Private Limited<br>Plant: Plot No. D236/1,<br>Chakan Industrial Area Phase- II,<br>Warale, Tal- Khed,<br>Pune-410501, Maharashtra | Tel. +91 21 35 628700<br>Fax +91 21 35 628715<br>salespune@seweurodriveindia.com |
| **Indonesia** | | | |
| Sales | Medan | PT. Serumpun Indah Lestari<br>Jl.Pulau Solor no. 8, Kawasan Industri Medan II<br>Medan 20252 | Tel. +62 61 687 1221<br>Fax +62 61 6871429 / +62 61 6871458 / +62 61 30008041<br>sil@serumpunindah.com<br>serumpunindah@yahoo.com<br>http://www.serumpunindah.com |
| | Jakarta | PT. Cahaya Sukses Abadi<br>Komplek Rukan Puri Mutiara Blok A no 99,<br>Sunter<br>Jakarta 14350 | Tel. +62 21 65310599<br>Fax +62 21 65310600<br>csajkt@cbn.net.id |
| | Jakarta | PT. Agrindo Putra Lestari<br>JL.Pantai Indah Selatan, Komplek Sentra Industri Terpadu, Pantai indah Kapuk Tahap III, Blok E No. 27<br>Jakarta 14470 | Tel. +62 21 2921-8899<br>Fax +62 21 2921-8988<br>aplindo@indosat.net.id<br>http://www.aplindo.com |

25803530/EN – 04/2018

| | | | |
|---|---|---|---|
| **Indonesia** | | | |
| | Surabaya | PT. TRIAGRI JAYA ABADI<br>Jl. Sukosemolo No. 63, Galaxi Bumi Permai<br>G6 No. 11<br>Surabaya 60111 | Tel. +62 31 5990128<br>Fax +62 31 5962666<br>sales@triagri.co.id<br>http://www.triagri.co.id |
| | Surabaya | CV. Multi Mas<br>Jl. Raden Saleh 43A Kav. 18<br>Surabaya 60174 | Tel. +62 31 5458589<br>Fax +62 31 5317220<br>sianhwa@sby.centrin.net.id<br>http://www.cvmultimas.com |
| **Ireland** | | | |
| Sales<br>Service | Dublin | Alperton Engineering Ltd.<br>48 Moyle Road<br>Dublin Industrial Estate<br>Glasnevin, Dublin 11 | Tel. +353 1 830-6277<br>Fax +353 1 830-6458<br>http://www.alperton.ie<br>info@alperton.ie |
| **Israel** | | | |
| Sales | Tel Aviv | Liraz Handasa Ltd.<br>Ahofer Str 34B / 228<br>58858 Holon | Tel. +972 3 5599511<br>Fax +972 3 5599512<br>http://www.liraz-handasa.co.il<br>office@liraz-handasa.co.il |
| **Italy** | | | |
| Assembly<br>Sales<br>Service | Milan | SEW-EURODRIVE di R. Blickle & Co.s.a.s.<br>Via Bernini,14<br>20020 Solaro (Milano) | Tel. +39 02 96 980229<br>Fax +39 02 96 980 999<br>http://www.sew-eurodrive.it<br>milano@sew-eurodrive.it |
| **Ivory Coast** | | | |
| Sales | Abidjan | SEW-EURODRIVE SARL<br>Ivory Coast<br>Rue des Pêcheurs, Zone 3<br>26 BP 916 Abidjan 26 | Tel. +225 21 21 81 05<br>Fax +225 21 25 30 47<br>info@sew-eurodrive.ci<br>http://www.sew-eurodrive.ci |
| **Japan** | | | |
| Assembly<br>Sales<br>Service | Iwata | SEW-EURODRIVE JAPAN CO., LTD<br>250-1, Shimoman-no,<br>Iwata<br>Shizuoka 438-0818 | Tel. +81 538 373811<br>Fax +81 538 373814<br>http://www.sew-eurodrive.co.jp<br>sewjapan@sew-eurodrive.co.jp<br>hamamatsu@sew-eurodrive.co.jp |
| **Kazakhstan** | | | |
| Sales | Almaty | SEW-EURODRIVE LLP<br>291-291A, Tole bi street<br>050031, Almaty | Tel. +7 (727) 350 5156<br>Fax +7 (727) 350 5156<br>http://www.sew-eurodrive.kz<br>sew@sew-eurodrive.kz |
| | Tashkent | SEW-EURODRIVE LLP<br>Representative office in Uzbekistan<br>96A, Sharaf Rashidov street,<br>Tashkent, 100084 | Tel. +998 71 2359411<br>Fax +998 71 2359412<br>http://www.sew-eurodrive.uz<br>sew@sew-eurodrive.uz |
| | Ulaanbaatar | IM Trading LLC<br>Narny zam street 62<br>Sukhbaatar district,<br>Ulaanbaatar 14230 | Tel. +976-77109997<br>Fax +976-77109997<br>imt@imt.mn |
| **Kenya** | | | |
| Sales | Nairobi | SEW-EURODRIVE Pty Ltd<br>Transnational Plaza, 5th Floor<br>Mama Ngina Street<br>P.O. Box 8998-00100<br>Nairobi | Tel. +254 791 398840<br>http://www.sew-eurodrive.co.tz<br>info@sew.co.tz |
| **Latvia** | | | |
| Sales | Riga | SIA Alas-Kuul<br>Katlakalna 11C<br>1073 Riga | Tel. +371 6 7139253<br>Fax +371 6 7139386<br>http://www.alas-kuul.lv<br>info@alas-kuul.com |

25803530/EN – 04/2018

| | | | |
|---|---|---|---|
| **Lebanon** | | | |
| Sales (Lebanon) | Beirut | Gabriel Acar & Fils sarl<br>B. P. 80484<br>Bourj Hammoud, Beirut | Tel. +961 1 510 532<br>Fax +961 1 494 971<br>ssacar@inco.com.lb |
| Sales (Jordan, Kuwait , Saudi Arabia, Syria) | Beirut | Middle East Drives S.A.L. (offshore)<br>Sin El Fil.<br>B. P. 55-378<br>Beirut | Tel. +961 1 494 786<br>Fax +961 1 494 971<br>http://www.medrives.com<br>info@medrives.com |
| **Lithuania** | | | |
| Sales | Alytus | UAB Irseva<br>Statybininku 106C<br>63431 Alytus | Tel. +370 315 79204<br>Fax +370 315 56175<br>http://www.irseva.lt<br>irmantas@irseva.lt |
| **Luxembourg** | | | |
| representation: Belgium | | | |
| **Macedonia** | | | |
| Sales | Skopje | Boznos DOOEL<br>Dime Anicin 2A/7A<br>1000 Skopje | Tel. +389 23256553<br>Fax +389 23256554<br>http://www.boznos.mk |
| **Malaysia** | | | |
| Assembly<br>Sales<br>Service | Johor | SEW-EURODRIVE SDN BHD<br>No. 95, Jalan Seroja 39, Taman Johor Jaya<br>81000 Johor Bahru, Johor<br>West Malaysia | Tel. +60 7 3549409<br>Fax +60 7 3541404<br>sales@sew-eurodrive.com.my |
| **Mexiko** | | | |
| Assembly<br>Sales<br>Service | Quéretaro | SEW-EURODRIVE MEXICO S.A. de C.V.<br>SEM-981118-M93<br>Tequisquiapan No. 102<br>Parque Industrial Quéretaro<br>C.P. 76220<br>Querétaro, México | Tel. +52 442 1030-300<br>Fax +52 442 1030-301<br>http://www.sew-eurodrive.com.mx<br>scmexico@seweurodrive.com.mx |
| Sales<br>Service | Puebla | SEW-EURODRIVE MEXICO S.A. de C.V.<br>Calzada Zavaleta No. 3922 Piso 2 Local 6<br>Col. Santa Cruz Buenavista<br>C.P. 72154<br>Puebla, México | Tel. +52 (222) 221 248<br>http://www.sew-eurodrive.com.mx<br>scmexico@seweurodrive.com.mx |
| **Mongolia** | | | |
| Technical Office | Ulaanbaatar | IM Trading LLC<br>Narny zam street 62<br>Union building, Suite A-403-1<br>Sukhbaatar district,<br>Ulaanbaatar 14230 | Tel. +976-77109997<br>Tel. +976-99070395<br>Fax +976-77109997<br>http://imt.mn/<br>imt@imt.mn |
| **Morocco** | | | |
| Sales<br>Service | Bouskoura | SEW-EURODRIVE Morocco<br>Parc Industriel CFCIM, Lot 55 and 59<br>Bouskoura | Tel. +212 522 88 85 00<br>Fax +212 522 88 84 50<br>http://www.sew-eurodrive.ma<br>sew@sew-eurodrive.ma |
| **Namibia** | | | |
| Sales | Swakopmund | DB Mining & Industrial Services<br>Einstein Street<br>Strauss Industrial Park<br>Unit1<br>Swakopmund | Tel. +264 64 462 738<br>Fax +264 64 462 734<br>anton@dbminingnam.com |
| **Netherlands** | | | |
| Assembly<br>Sales<br>Service | Rotterdam | SEW-EURODRIVE B.V.<br>Industrieweg 175<br>3044 AS Rotterdam<br>Postbus 10085<br>3004 AB Rotterdam | Tel. +31 10 4463-700<br>Fax +31 10 4155-552<br>Service: 0800-SEWHELP<br>http://www.sew-eurodrive.nl<br>info@sew-eurodrive.nl |

25803530/EN – 04/2018

| | | | |
|---|---|---|---|
| **New Zealand** | | | |
| Assembly<br>Sales<br>Service | Auckland | SEW-EURODRIVE NEW ZEALAND LTD.<br>P.O. Box 58-428<br>82 Greenmount drive<br>East Tamaki Auckland | Tel. +64 9 2745627<br>Fax +64 9 2740165<br>http://www.sew-eurodrive.co.nz<br>sales@sew-eurodrive.co.nz |
| | Christchurch | SEW-EURODRIVE NEW ZEALAND LTD.<br>30 Lodestar Avenue, Wigram<br>Christchurch | Tel. +64 3 384-6251<br>Fax +64 3 384-6455<br>sales@sew-eurodrive.co.nz |
| **Nigeria** | | | |
| Sales | Lagos | Greenpeg Nig. Ltd<br>Plot 296A, Adeyemo Akapo Str. Omole GRA<br>Ikeja Lagos-Nigeria | Tel. +234-701-821-9200-1<br>http://www.greenpegltd.com<br>bolaji.adekunle@greenpegltd.com |
| **Norway** | | | |
| Assembly<br>Sales<br>Service | Moss | SEW-EURODRIVE A/S<br>Solgaard skog 71<br>1599 Moss | Tel. +47 69 24 10 20<br>Fax +47 69 24 10 40<br>http://www.sew-eurodrive.no<br>sew@sew-eurodrive.no |
| **Pakistan** | | | |
| Sales | Karachi | Industrial Power Drives<br>Al-Fatah Chamber A/3, 1st Floor Central Commercial Area,<br>Sultan Ahmed Shah Road, Block 7/8,<br>Karachi | Tel. +92 21 452 9369<br>Fax +92-21-454 7365<br>seweurodrive@cyber.net.pk |
| **Paraguay** | | | |
| Sales | Fernando de la Mora | SEW-EURODRIVE PARAGUAY S.R.L<br>De la Victoria 112, Esquina nueva Asunción<br>Departamento Central<br>Fernando de la Mora, Barrio Bernardino | Tel. +595 991 519695<br>Fax +595 21 3285539<br>sewpy@sew-eurodrive.com.py |
| **Peru** | | | |
| Assembly<br>Sales<br>Service | Lima | SEW EURODRIVE DEL PERU S.A.C.<br>Los Calderos, 120-124<br>Urbanizacion Industrial Vulcano, ATE, Lima | Tel. +51 1 3495280<br>Fax +51 1 3493002<br>http://www.sew-eurodrive.com.pe<br>sewperu@sew-eurodrive.com.pe |
| **Philippines** | | | |
| Sales | Makati | P.T. Cerna Corporation<br>4137 Ponte St., Brgy. Sta. Cruz<br>Makati City 1205 | Tel. +63 2 519 6214<br>Fax +63 2 890 2802<br>mech_drive_sys@ptcerna.com<br>http://www.ptcerna.com |
| **Poland** | | | |
| Assembly<br>Sales<br>Service | Łódź | SEW-EURODRIVE Polska Sp.z.o.o.<br>ul. Techniczna 5<br>92-518 Łódź | Tel. +48 42 293 00 00<br>Fax +48 42 293 00 49<br>http://www.sew-eurodrive.pl<br>sew@sew-eurodrive.pl |
| | Service | Tel. +48 42 293 0030<br>Fax +48 42 293 0043 | 24 Hour Service<br>Tel. +48 602 739 739 (+48 602 SEW SEW)<br>serwis@sew-eurodrive.pl |
| **Portugal** | | | |
| Assembly<br>Sales<br>Service | Coimbra | SEW-EURODRIVE, LDA.<br>Av. da Fonte Nova, n.º 86<br>3050-379 Mealhada | Tel. +351 231 20 9670<br>Fax +351 231 20 3685<br>http://www.sew-eurodrive.pt<br>infosew@sew-eurodrive.pt |
| **Romania** | | | |
| Sales<br>Service | Bucharest | Sialco Trading SRL<br>str. Brazilia nr. 36<br>011783 Bucuresti | Tel. +40 21 230-1328<br>Fax +40 21 230-7170<br>sialco@sialco.ro |
| **Russia** | | | |
| Assembly<br>Sales<br>Service | St. Petersburg | ЗАО «СЕВ-ЕВРОДРАЙФ»<br>а. я. 36<br>195220 Санкт-Петербург | Tel. +7 812 3332522 / +7 812 5357142<br>Fax +7 812 3332523<br>http://www.sew-eurodrive.ru<br>sew@sew-eurodrive.ru |

25803530/EN – 04/2018

| | | | |
|---|---|---|---|
| **Sambia** | | | |
| representation: South Africa | | | |
| **Senegal** | | | |
| Sales | Dakar | SENEMECA<br>Mécanique Générale<br>Km 8, Route de Rufisque<br>B.P. 3251, Dakar | Tel. +221 338 494 770<br>Fax +221 338 494 771<br>http://www.senemeca.com<br>senemeca@senemeca.sn |
| **Serbia** | | | |
| Sales | Belgrade | DIPAR d.o.o.<br>Ustanicka 128a<br>PC Košum, IV floor<br>11000 Beograd | Tel. +381 11 347 3244 / +381 11 288 0393<br>Fax +381 11 347 1337<br>office@dipar.rs |
| **Singapore** | | | |
| Assembly<br>Sales<br>Service | Singapore | SEW-EURODRIVE PTE. LTD.<br>No 9, Tuas Drive 2<br>Jurong Industrial Estate<br>Singapore 638644 | Tel. +65 68621701<br>Fax +65 68612827<br>http://www.sew-eurodrive.com.sg<br>sewsingapore@sew-eurodrive.com |
| **Slovakia** | | | |
| Sales | Bratislava | SEW-Eurodrive SK s.r.o.<br>Rybničná 40<br>831 06 Bratislava | Tel.+421 2 33595 202, 217, 201<br>Fax +421 2 33595 200<br>http://www.sew-eurodrive.sk<br>sew@sew-eurodrive.sk |
| | Košice | SEW-Eurodrive SK s.r.o.<br>Slovenská ulica 26<br>040 01 Košice | Tel. +421 55 671 2245<br>Fax +421 55 671 2254<br>Mobile +421 907 671 976<br>sew@sew-eurodrive.sk |
| **Slovenia** | | | |
| Sales<br>Service | Celje | Pakman - Pogonska Tehnika d.o.o.<br>UI. XIV. divizije 14<br>3000 Celje | Tel. +386 3 490 83-20<br>Fax +386 3 490 83-21<br>pakman@siol.net |
| **South Africa** | | | |
| Assembly<br>Sales<br>Service | Johannesburg | SEW-EURODRIVE (PROPRIETARY) LIMITED<br>Eurodrive House<br>Cnr. Adcock Ingram and Aerodrome Roads<br>Aeroton Ext. 2<br>Johannesburg 2013<br>P.O.Box 90004<br>Bertsham 2013 | Tel. +27 11 248-7000<br>Fax +27 11 248-7289<br>http://www.sew.co.za<br>info@sew.co.za |
| | Cape Town | SEW-EURODRIVE (PROPRIETARY) LIMITED<br>Rainbow Park<br>Cnr. Racecourse & Omuramba Road<br>Montague Gardens<br>Cape Town<br>P.O.Box 36556<br>Chempet 7442 | Tel. +27 21 552-9820<br>Fax +27 21 552-9830<br>Telex 576 062<br>bgriffiths@sew.co.za |
| | Durban | SEW-EURODRIVE (PROPRIETARY) LIMITED<br>48 Prospecton Road<br>Isipingo<br>Durban<br>P.O. Box 10433, Ashwood 3605 | Tel. +27 31 902 3815<br>Fax +27 31 902 3826<br>cdejager@sew.co.za |
| | Nelspruit | SEW-EURODRIVE (PROPRIETARY) LIMITED<br>7 Christie Crescent<br>Vintonia<br>P.O.Box 1942<br>Nelspruit 1200 | Tel. +27 13 752-8007<br>Fax +27 13 752-8008<br>robermeyer@sew.co.za |
| **South Korea** | | | |
| Assembly<br>Sales<br>Service | Ansan | SEW-EURODRIVE KOREA CO., LTD.<br>7, Dangjaengi-ro,<br>Danwon-gu,<br>Ansan-si, Gyeonggi-do, Zip 425-839 | Tel. +82 31 492-8051<br>Fax +82 31 492-8056<br>http://www.sew-eurodrive.kr<br>master.korea@sew-eurodrive.com |

25803530/EN – 04/2018

| | | | |
|---|---|---|---|
| **South Korea** | | | |
| | Busan | SEW-EURODRIVE KOREA CO., LTD.<br>28, Noksansandan 262-ro 50beon-gil,<br>Gangseo-gu,<br>Busan, Zip 618-820 | Tel. +82 51 832-0204<br>Fax +82 51 832-0230 |
| **Spain** | | | |
| Assembly<br>Sales<br>Service | Bilbao | SEW-EURODRIVE ESPAÑA, S.L.<br>Parque Tecnológico, Edificio, 302<br>48170 Zamudio (Vizcaya) | Tel. +34 94 43184-70<br>http://www.sew-eurodrive.es<br>sew.spain@sew-eurodrive.es |
| **Sri Lanka** | | | |
| Sales | Colombo | SM International (Pte) Ltd<br>254, Galle Raod<br>Colombo 4, Sri Lanka | Tel. +94 1 2584887<br>Fax +94 1 2582981 |
| **Swaziland** | | | |
| Sales | Manzini | C G Trading Co. (Pty) Ltd<br>PO Box 2960<br>Manzini M200 | Tel. +268 2 518 6343<br>Fax +268 2 518 5033<br>engineering@cgtrading.co.sz |
| **Sweden** | | | |
| Assembly<br>Sales<br>Service | Jönköping | SEW-EURODRIVE AB<br>Gnejsvägen 6-8<br>553 03 Jönköping<br>Box 3100 S-550 03 Jönköping | Tel. +46 36 34 42 00<br>Fax +46 36 34 42 80<br>http://www.sew-eurodrive.se<br>jonkoping@sew.se |
| **Switzerland** | | | |
| Assembly<br>Sales<br>Service | Basel | Alfred Imhof A.G.<br>Jurastrasse 10<br>4142 Münchenstein bei Basel | Tel. +41 61 417 1717<br>Fax +41 61 417 1700<br>http://www.imhof-sew.ch<br>info@imhof-sew.ch |
| **Taiwan** | | | |
| Sales | Taipei | Ting Shou Trading Co., Ltd.<br>6F-3, No. 267, Sec. 2<br>Tung Huw S. Road<br>Taipei | Tel. +886 2 27383535<br>Fax +886 2 27368268<br>Telex 27 245<br>sewtwn@ms63.hinet.net<br>http://www.tingshou.com.tw |
| | Nan Tou | Ting Shou Trading Co., Ltd.<br>No. 55 Kung Yeh N. Road<br>Industrial District<br>Nan Tou 540 | Tel. +886 49 255353<br>Fax +886 49 257878<br>sewtwn@ms63.hinet.net<br>http://www.tingshou.com.tw |
| **Tanzania** | | | |
| Sales | Daressalam | SEW-EURODRIVE PTY LIMITED TANZANIA<br>Plot 52, Regent Estate<br>PO Box 106274<br>Dar Es Salaam | Tel. +255 0 22 277 5780<br>Fax +255 0 22 277 5788<br>http://www.sew-eurodrive.co.tz<br>info@sew.co.tz |
| **Thailand** | | | |
| Assembly<br>Sales<br>Service | Chonburi | SEW-EURODRIVE (Thailand) Ltd.<br>700/456, Moo.7, Donhuaroh<br>Muang<br>Chonburi 20000 | Tel. +66 38 454281<br>Fax +66 38 454288<br>sewthailand@sew-eurodrive.com |
| **Tunisia** | | | |
| Sales | Tunis | T. M.S. Technic Marketing Service<br>Zone Industrielle Mghira 2<br>Lot No. 39<br>2082 Fouchana | Tel. +216 79 40 88 77<br>Fax +216 79 40 88 66<br>http://www.tms.com.tn<br>tms@tms.com.tn |
| **Turkey** | | | |
| Assembly<br>Sales<br>Service | Kocaeli-Gebze | SEW-EURODRİVE Hareket<br>Sistemleri San. Ve TIC. Ltd. Sti<br>Gebze Organize Sanayi Böl. 400 Sok No. 401<br>41480 Gebze Kocaeli | Tel. +90 262 9991000 04<br>Fax +90 262 9991009<br>http://www.sew-eurodrive.com.tr<br>sew@sew-eurodrive.com.tr |

25803530/EN – 04/2018

| | | | |
|---|---|---|---|
| **United Arab Emirates** | | | |
| Sales<br>Service | Dubai | SEW-EURODRIVE FZE<br>PO Box 263835<br>Office No. S3A1SR03<br>Jebel Ali Free Zone – South,<br>Dubai, United Arab Emirates | Tel. +971 (0)4 8806461<br>Fax +971 (0)4 8806464<br>http://www.sew-eurodrive.ae<br>info@sew-eurodrive.ae |
| **Ukraine** | | | |
| Assembly<br>Sales<br>Service | Dnipropetrovsk | ООО «СЕВ-Евродрайв»<br>ул. Рабочая, 23-В, офис 409<br>49008 Днепр | Tel. +380 56 370 3211<br>Fax +380 56 372 2078<br>http://www.sew-eurodrive.ua<br>sew@sew-eurodrive.ua |
| **Uruguay** | | | |
| Assembly<br>Sales | Montevideo | SEW-EURODRIVE Uruguay, S. A.<br>Jose Serrato 3569 Esqina Corumbe<br>CP 12000 Montevideo | Tel. +598 2 21181-89<br>Fax +598 2 21181-90<br>sewuy@sew-eurodrive.com.uy |
| **USA** | | | |
| Production<br>Assembly<br>Sales<br>Service | Southeast Region | SEW-EURODRIVE INC.<br>1295 Old Spartanburg Highway<br>P.O. Box 518<br>Lyman, S.C. 29365 | Tel. +1 864 439-7537<br>Fax Sales +1 864 439-7830<br>Fax Production +1 864 439-9948<br>Fax Assembly +1 864 439-0566<br>Fax Confidential/HR +1 864 949-5557<br>http://www.seweurodrive.com<br>cslyman@seweurodrive.com |
| Assembly<br>Sales<br>Service | Northeast Region | SEW-EURODRIVE INC.<br>Pureland Ind. Complex<br>2107 High Hill Road, P.O. Box 481<br>Bridgeport, New Jersey 08014 | Tel. +1 856 467-2277<br>Fax +1 856 845-3179<br>csbridgeport@seweurodrive.com |
| | Midwest Region | SEW-EURODRIVE INC.<br>2001 West Main Street<br>Troy, Ohio 45373 | Tel. +1 937 335-0036<br>Fax +1 937 332-0038<br>cstroy@seweurodrive.com |
| | Southwest Region | SEW-EURODRIVE INC.<br>3950 Platinum Way<br>Dallas, Texas 75237 | Tel. +1 214 330-4824<br>Fax +1 214 330-4724<br>csdallas@seweurodrive.com |
| | Western Region | SEW-EURODRIVE INC.<br>30599 San Antonio St.<br>Hayward, CA 94544 | Tel. +1 510 487-3560<br>Fax +1 510 487-6433<br>cshayward@seweurodrive.com |
| | Wellford | SEW-EURODRIVE INC.<br>148/150 Finch Rd.<br>Wellford, S.C. 29385 | Tel. +1 864 439-7537<br>Fax +1 864 661 1167<br>IGOrders@seweurodrive.com |
| | Additional addresses for service provided on request! | | |
| **Vietnam** | | | |
| Sales | Ho Chi Minh City | Nam Trung Co., Ltd<br>Huế - South Vietnam / Construction Materials<br>250 Binh Duong Avenue, Thu Dau Mot Town,<br>Binh Duong Province<br>HCM office: 91 Tran Minh Quyen Street<br>District 10, Ho Chi Minh City | Tel. +84 8 8301026<br>Fax +84 8 8392223<br>khanh-nguyen@namtrung.com.vn<br>http://www.namtrung.com.vn |
| | Hanoi | MICO LTD<br>Quảng Trị - North Vietnam / All sectors except Construction Materials<br>8th Floor, Ocean Park Building, 01 Dao Duy Anh St, Ha Noi, Viet Nam | Tel. +84 4 39386666<br>Fax +84 4 3938 6888<br>nam_ph@micogroup.com.vn<br>http://www.micogroup.com.vn |

25803530/EN – 04/2018

# Index


## A

AD input shaft assembly ... 79
AD, input shaft assembly ... 79
Adapter EWH ... 76
Adjustment in mounting position ... 29
Agitator
  Maintenance intervals ... 95
  Relubrication ... 95
Agitator drive
  Strength class of the screws ... 30
AM adapter ... 68
  Foot-mounted motor ... 72
  Mounting of third-party motors ... 72
  Permitted load ... 72
AM IEC adapter ... 68
AM NEMA adapter ... 68
Ambient conditions ... 104
AQ adapter ... 73
AQ adapter coupling ... 73
AQ. adapter
  Permitted loads ... 74
  Setting standards and tightening torques ... 74
AR.. slip clutch ... 86
Assembly
  Safety notes ... 10
AT.. start-up coupling ... 86

## B

Backstop ... 103
Bearing greases ... 169
Breather valve ... 29
  Compound gear unit ... 133

## C

Change in mounting position ... 29
Changing oil ... 113
Changing the mounting position ... 130, 169
Checking the oil level ... 99, 113
  At the breather plug. ... 126
  At the oil level plug. ... 114, 124, 125, 127
  Via the breather plug ... 121
  Via the cover plate ... 117
Churning losses ... 130
Compound gear unit
  Breather valve ... 133
  Oil drain plug ... 133
  Oil level plug ... 133
  Screw plug bore ... 133
Condition monitoring ... 25, 88
Copyright notice ... 7
Coupling of AM adapter ... 68
Coupling, rigid flange coupling ... 90
Cover AD ... 79
Customer service ... 191

## D

Designated use ... 9
Diagnostic unit
  DUO ... 87
  Vibration SmartCheck ... 88
Direct mounting ... 83
DUO, diagnostic unit ... 87

## E

Efficiency ... 101, 130
Elastomers ... 104
Embedded safety notes ... 6
EWH adapter ... 76
Exclusion of liability ... 7
Extended storage ... 167

## F

Failure
  Running noise ... 189, 190
Features ... 86
Flatness defect ... 29
Fluid couplings ... 86
Fluorocarbon rubber ... 104
For mounting to gear units ... 83
Föttinger principle ... 86

## G

Gaskets ... 100
Gear unit heating ... 89
Gear unit mounting ... 33
  Strength class ... 30
Gear unit painting ... 36
Gear unit structure ... 11


25803530/EN – 04/18

Helical gear units ..... 11
Helical-bevel gear units K..7 ..... 16
Helical-bevel gear units K..9 ..... 13, 15
Helical-worm gear units ..... 17
Parallel-shaft helical gear units ..... 12
SPIROPLAN® gear units W..10 – W..30 ..... 18
SPIROPLAN® gear units W..37 – W..47 ..... 19
Gear unit venting ..... 35
Gear unit with solid shaft ..... 37
Grease filling ..... 169

## H

Hazard symbols
Meaning ..... 6
Heater ..... 89
Helical gear units ..... 11
Type designation ..... 23
Helical gearmotors
Mounting positions ..... 134
Helical-bevel gear units ..... 13, 15
Type designation ..... 24
Helical-bevel gear units K..7 ..... 16
Helical-bevel gearmotors
Mounting positions ..... 142
Helical-worm gear units ..... 17
Type designation ..... 24
Helical-worm gearmotors
Mounting positions ..... 155

## I

Input and output elements
High overhung loads ..... 38
Mounting ..... 37
Using a mounting device ..... 37
Inspection ..... 106
Inspection intervals
Gear unit ..... 110
Inspection work
AD Input shaft assembly ..... 112
AL/AM/AQ./EWH adapter ..... 111
Changing oil ..... 113
Checking the oil level ..... 113
Gear unit ..... 113
Oil check ..... 113
Installation
Couplings ..... 38
Input and output elements ..... 37
Mechanical ..... 26
Installation tolerances ..... 27
Installing the gear unit ..... 28

## L

Labyrinth seal ..... 91
Leakage ..... 100
Lubricant
Compatibility with oil seals ..... 171
Determining change intervals ..... 111
Lubricant table ..... 170
Lubricant change intervals ..... 111
Lubricant fill quantities ..... 181
Lubricant table
Notes ..... 170
Lubricants ..... 169

## M

Maintenance ..... 106
Agitator ..... 95
Maintenance intervals
Gear unit ..... 110
Maintenance tasks
AL/AM/AQ./EWH adapter ..... 111
Changing oil ..... 113
Checking the oil level ..... 113
Oil check ..... 113
Maintenance works
AD Input shaft assembly ..... 112
Gear unit ..... 113
Malfunctions ..... 188
AD Input shaft assembly ..... 190
Adapters AM/AQ. /AL/EWH ..... 190
Gear unit ..... 189
Mechanical installation ..... 26
Motor mounting ..... 83
Mounting position
Mounting position M0 ..... 131
Mounting position MX ..... 131
Mounting position sheets ..... 129
Mounting position sheets, key ..... 132
Mounting positions ..... 129
Designation ..... 129
Helical gearmotors ..... 134
Helical-bevel gearmotors ..... 142


25803530/EN – 04/18

Helical-worm gearmotors ..... 155
Parallel-shaft helical gearmotors ..... 139
SPIROPLAN® gearmotors ..... 161
Mounting shaft-mounted gear units with keyway 45
Mounting shaft-mounted gear units with splined hollow shaft ..... 44

## N

Nameplate ..... 20
Notes
Designation in the documentation ..... 5
Meaning of the hazard symbols ..... 6

## O

Oil check ..... 113
Oil drain plug
Compound gear unit ..... 133
Oil drain valve ..... 93
Oil expansion tank ..... 93
Oil level plug
Compound gear unit ..... 133
Oil quantity ..... 181
Oil seal
Lubricant compatibility ..... 171
Oil seals ..... 26
Oil sight glass ..... 99
Optional equipment ..... 86
Options ..... 86
Type designation ..... 25

## P

Painting gear units ..... 128
Painting the gear unit ..... 36
Parallel-shaft helical gear units ..... 12
Type designation ..... 23
Parallel-shaft helical gearmotors
Mounting positions ..... 139
Performance data ..... 20
Product names ..... 7
Pseudo-leakage ..... 100

## R

Relubrication ..... 91
Repair ..... 188, 191
Resources ..... 27
Rights to claim under limited warranty ..... 6
Rigid flange coupling ..... 90
Run-in period ..... 101

## S

Safety notes
Assembly ..... 10
Designated use ..... 9
Designation in the documentation ..... 5
Meaning of the hazard symbols ..... 6
Preliminary information ..... 8
Setup ..... 10
Storage ..... 9
Structure of embedded ..... 6
Structure of the section-related ..... 5
Transportation ..... 9
Screw plug bore
Compound gear unit ..... 133
Section-related safety notes ..... 5
Service ..... 191
Shaft-mounted gear unit ..... 39
TorqLOC® ..... 53
Shaft-mounted gear units
Keyway ..... 45
Shrink disk ..... 50
Splined hollow shaft ..... 45
Signal words in safety notes ..... 5
Solid shaft ..... 37
SPIROPLAN® gear unit
Mounting position M0 ..... 131
SPIROPLAN® gear units
Type designation ..... 25
SPIROPLAN® gear units W..10 – W..30 ..... 18
SPIROPLAN® gear units W..37 – W..47 ..... 19
SPIROPLAN® gearmotors
Mounting positions ..... 161
Startup ..... 99
Start-up coupling, AT ..... 86
Storage ..... 9
Strength class
Gear unit mounting ..... 30
Structure
Helical gear units ..... 11
Helical-bevel gear units K..7 ..... 16
Helical-bevel gear units K..9 ..... 13, 15
Helical-worm gear units ..... 17
Parallel-shaft helical gear units ..... 12
SPIROPLAN® gear units W..10 – W..30 ..... 18

25803530/EN – 04/18

SPIROPLAN® gear units W..37 – W..47 ..... 19

## T

Target group ..... 8
Technical data ..... 167
Thermal rating ..... 130
Tightening torques ..... 31
Tools ..... 27
TorqLOC® ..... 53
Torque arms ..... 39
Torque arms for shaft-mounted gear units ..... 39
Helical-worm gear units ..... 42
K..37 – K..157 helical-bevel gear units ..... 41
Parallel-shaft helical gear units ..... 39
SPIROPLAN® W gear units ..... 43
Trademarks ..... 7
Transportation ..... 9
Type designation ..... 20, 22
Helical gear units ..... 23
Helical-bevel gear units ..... 24
Helical-worm gear units ..... 24
Options ..... 25
Parallel-shaft helical gear units ..... 23
SPIROPLAN® gear units ..... 25

## U

Universal mounting position M0 ..... 131
Using a mounting device ..... 37

## V

Ventilation ..... 35
Venting ..... 35
Vibration SmartCheck ..... 88

## W

Waste disposal ..... 191

25803530/EN – 04/18

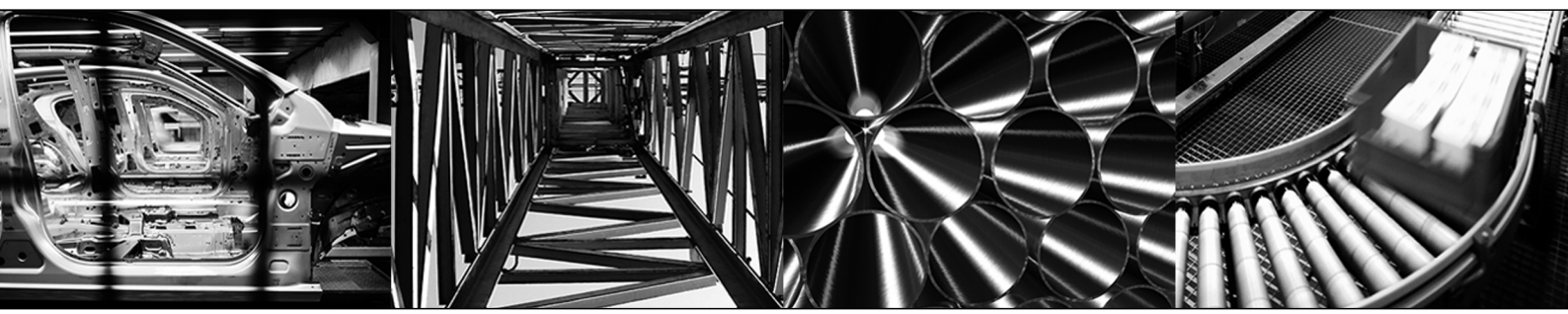



**SEW-EURODRIVE**
**Driving the world**

SEW-EURODRIVE GmbH & Co KG
Ernst-Blickle-Str. 42
76646 BRUCHSAL
GERMANY
Tel. +49 7251 75-0
Fax +49 7251 75-1970
sew@sew-eurodrive.com
➞ **www.sew-eurodrive.com**

SEW EURODRIVE

# Operating Instructions




## AC Motors

DR..71 – 315, DRN63 – 315, DR2..56 – 80

Edition 06/2019

25957074/EN



# Contents

**1 General information ..... 6**
1.1 About this documentation ..... 6
1.2 Structure of the safety notes ..... 6
1.3 Rights to claim under limited warranty ..... 8
1.4 Product names and trademarks ..... 8
1.5 Copyright notice ..... 8
1.6 Other applicable documentation ..... 8

**2 Safety notes ..... 9**
2.1 Preliminary information ..... 9
2.2 Duties of the user ..... 9
2.3 Target group ..... 10
2.4 Designated use ..... 10
2.5 Transportation/storage ..... 11
2.6 Installation/assembly ..... 12
2.7 Electric work ..... 13
2.8 Startup/operation ..... 14

**3 Motor structure ..... 15**
3.1 Basic structure ..... 15
3.2 Basic design of DR2..56 motors ..... 16
3.3 Basic design of DRN63, DR2..63 motors ..... 17
3.4 Basic design of DR..71 – 132, DRN71 – 132S, DR2..71 – 80 motors ..... 18
3.5 Basic structure DR..160 – 180, DRN132M – 180 motors ..... 19
3.6 Basic structure DR..200 – 225, DRN200 – 225 motors ..... 20
3.7 Basic structure DR..250 – 280, DRN250 – 280 motors ..... 21
3.8 Basic structure DR..315, DRN315 motors ..... 22
3.9 Nameplate ..... 23
3.10 Type designation ..... 26
3.11 Designs and options ..... 27
3.12 Functional safety ..... 31

**4 Mechanical installation ..... 32**
4.1 Before you start ..... 32
4.2 Preliminary work after longer periods of storage ..... 33
4.3 Motor installation notes ..... 37
4.4 Installation tolerances ..... 39
4.5 Assembling the input elements ..... 39
4.6 Encoder mounting adapter ..... 40
4.7 Terminal box ..... 44
4.8 Retrofitting (option /F.A) or modifying (option /F.B) motor feet ..... 48
4.9 Direct mounting of a motor on a gear unit ..... 53
4.10 Options ..... 56

**5 Electrical installation ..... 62**
5.1 General information ..... 62
5.2 Wiring diagrams and terminal assignment diagrams ..... 63

25957074/EN – 06/2019

5.3 Wiring notes ... 63
5.4 Special aspects for operation with a frequency inverter ... 64
5.5 Exterior grounding at the terminal box, LF grounding ... 66
5.6 Improving the grounding (EMC), HF grounding ... 67
5.7 Special aspects in switching operation ... 71
5.8 Special aspects of torque motors and low-speed motors ... 71
5.9 Special aspects of DRK.. single-phase motors ... 72
5.10 Notes regarding the connection of the motor ... 74
5.11 Connecting the motor via terminal block ... 75
5.12 Connecting the motor plug connector ... 84
5.13 Connecting the motor via terminal strip ... 90
5.14 Connecting the brake ... 94
5.15 Options ... 103

**6 Startup ... 118**
6.1 Before startup ... 119
6.2 Motors with reinforced bearing ... 119
6.3 Motors with backstop /RS ... 120

**7 Inspection/maintenance ... 121**
7.1 Inspection and maintenance intervals ... 123
7.2 Bearing lubrication ... 125
7.3 Reinforced bearings ... 126
7.4 Motor and brake maintenance – preliminary work ... 127
7.5 Inspection/maintenance work for DR..71 – 315, DRN63 – 315, DR2..56 – 80 motors ... 173
7.6 Inspection/maintenance work for DR..71 – 315, DRN63 – 315, DR2..56 – 80 brakemotors ... 175
7.7 Inspection/maintenance work diagnostic unit /DUB ... 205
7.8 Inspection/maintenance work diagnostic unit /DUE ... 209
7.9 Altering the blocking direction on motors with a backstop ... 219

**8 Technical data ... 222**
8.1 Braking torques ... 222
8.2 Braking work, working air gap, and brake lining carrier thickness ... 225
8.3 Operating currents ... 226
8.4 Resistors ... 230
8.5 Brake control ... 234
8.6 Permitted rolling bearings ... 242
8.7 Lubricant tables ... 244
8.8 Encoders ... 246
8.9 Diagnostic unit /DUE ... 260
8.10 Characteristic safety values ... 261
8.11 S1 duty cycle DRK.. single-phase motor ... 262

**9 Malfunctions ... 263**
9.1 General information ... 263
9.2 Motor malfunctions ... 264
9.3 Brake malfunctions ... 266

25957074/EN – 06/2019



SEW EURODRIVE

9.4 Malfunctions when operated with a frequency inverter ..... 267
9.5 Disposal ..... 268
9.6 Customer service ..... 268

**10 Appendix ..... 269**
10.1 Wiring diagrams ..... 269
10.2 Auxiliary terminals ..... 285

**11 Address list ..... 286**

**Index ..... 297**

25957074/EN – 06/2019

# 1 General information

## 1.1 About this documentation

**The current version of the documentation is the original.**

This documentation is an integral part of the product. The documentation is intended for all employees who perform work on the product.

Make sure this documentation is accessible and legible. Ensure that persons responsible for the systems and their operation as well as persons who work on the product independently have read through the documentation carefully and understood it. If you are unclear about any of the information in this documentation, or if you require further information, contact SEW-EURODRIVE.

## 1.2 Structure of the safety notes

### 1.2.1 Meaning of signal words

The following table shows the grading and meaning of the signal words for safety notes.

| Signal word | Meaning | Consequences if disregarded |
|---|---|---|
| ⚠ **DANGER** | Imminent hazard | Severe or fatal injuries |
| ⚠ **WARNING** | Possible dangerous situation | Severe or fatal injuries |
| ⚠ **CAUTION** | Possible dangerous situation | Minor injuries |
| **NOTICE** | Possible damage to property | Damage to the product or its environment |
| **INFORMATION** | Useful information or tip: Simplifies handling of the product. | |

### 1.2.2 Structure of section-related safety notes

Section-related safety notes do not apply to a specific action but to several actions pertaining to one subject. The hazard symbols used either indicate a general hazard or a specific hazard.

This is the formal structure of a safety note for a specific section:



**SIGNAL WORD**

Type and source of hazard.

Possible consequence(s) if disregarded.

- Measure(s) to prevent the hazard.

25957074/EN – 06/2019

**Meaning of the hazard symbols**

The hazard symbols in the safety notes have the following meaning:

| Hazard symbol | Meaning |
|---|---|
|  | General hazard |
|  | Warning of dangerous electrical voltage |
|  | Warning of hot surfaces |
|  | Warning of automatic restart |

### 1.2.3 Structure of embedded safety notes

Embedded safety notes are directly integrated into the instructions just before the description of the dangerous action.

This is the formal structure of an embedded safety note:

⚠ **SIGNAL WORD** Type and source of hazard. Possible consequence(s) if disregarded. Measure(s) to prevent the hazard.

25957074/EN – 06/2019

## 1.3 Rights to claim under limited warranty

Read the information in this documentation. This is essential for fault-free operation and fulfillment of any rights to claim under limited warranty. Read the documentation before you start working with the product.

## 1.4 Product names and trademarks

The brands and product names in this documentation are trademarks or registered trademarks of their respective titleholders.

## 1.5 Copyright notice

© 2019 SEW-EURODRIVE. All rights reserved. Unauthorized reproduction, modification, distribution or any other use of the whole or any part of this documentation is strictly prohibited.

## 1.6 Other applicable documentation

Observe the corresponding documentation for all further components.

### 1.6.1 DR..71 – 315, DRN63 – 315, DR2..56 – 80 AC motors

The following publications and documents have to be observed as well:

- Wiring diagrams provided with the motor
- "Gear Unit Series R..7, F..7, K..7, K..9, S..7, SPIROPLAN® W" operating instructions for gearmotors
- Catalogs for AC motors
- Catalogs for gearmotors
- Addendum to the operating instructions "Safety Encoders and Safety Brakes, AC Motors DR.., DRN.., DR2.., EDR.., EDRN.. – Functional Safety"
- "Project Planning for BE.. Brakes" manual – DR.., DRN.., DR2.., EDR.., EDRN.. AC Motors – Standard Brake/Safety Brake"
- If required, "MOVIMOT® MM..D Functional Safety" manual

25957074/EN – 06/2019

# 2 Safety notes

## 2.1 Preliminary information

The following general safety notes serve the purpose of preventing injury to persons and damage to property. They primarily apply to the use of products described in this documentation. If you use additional components, also observe the relevant warning and safety notes.

## 2.2 Duties of the user

As the user, you must ensure that the basic safety notes are observed and complied with. Make sure that persons responsible for the machinery and its operation as well as persons who work on the device independently have read through the documentation carefully and understood it.

As the user, you must ensure that all of the work listed in the following is carried out only by qualified specialists:

- Setup and installation
- Installation and connection
- Startup
- Maintenance and repairs
- Shutdown
- Disassembly

Ensure that the persons who work on the product pay attention to the following regulations, conditions, documentation, and information:

- National and regional safety and accident prevention regulations
- Warning and safety signs on the product
- All other relevant project planning documents, installation and startup instructions, and wiring diagrams
- Do not assemble, install or operate damaged products
- All system-specific specifications and conditions

Ensure that systems in which the product is installed are equipped with additional monitoring and protection devices. Observe the applicable safety regulations and legislation governing technical work equipment and accident prevention regulations.

25957074/EN – 06/2019

## 2.3 Target group

Specialist for mechanical work

Any mechanical work may only be performed by adequately qualified specialists. Specialists in the context of this documentation are persons familiar with the design, mechanical installation, troubleshooting, and maintenance of the product who possess the following qualifications:

- Qualification in the mechanical area in accordance with the national regulations
- Familiarity with this documentation

Specialist for electrotechnical work

Any electrotechnical work may only be performed by electrically skilled persons with a suitable education. Electrically skilled persons in the context of this documentation are persons familiar with electrical installation, startup, troubleshooting, and maintenance of the product who possess the following qualifications:

- Qualification in the electrotechnical area in accordance with the national regulations
- Familiarity with this documentation

Additional qualification

In addition to that, these persons must be familiar with the valid safety regulations and laws, as well as with the requirements of the standards, directives, and laws specified in this documentation.

The persons must have the express authorization of the company to operate, program, parameterize, label, and ground devices, systems, and circuits in accordance with the standards of safety technology.

Instructed persons

All work in the areas of transportation, storage, operation and waste disposal must be carried out by persons who are trained appropriately. The purpose of the instruction is that the persons are capable of performing the required tasks and work steps in a safe and correct manner.

## 2.4 Designated use

The product is intended for use in industrial and commercial systems.

In the case of installation in electrical systems or machines, it is prohibited to start the proper operation of the product until it is determined that the machine meets the requirements stipulated in the local laws and directives.

The standards given in the declaration of conformity apply to the product.

25957074/EN – 06/2019

## 2.5 Transportation/storage

Inspect the shipment for damage as soon as you receive the delivery. Inform the shipping company immediately about any damage. If the product is damaged, it must not be assembled, installed or started up.

The lifting eyebolts are designed to carry only the weight of the motor without gear unit. Tighten installed lifting eyebolts. Mounted gear units have separate suspension attachments, which must be used according to the gear unit operating instructions when lifting the gearmotor. Do not mount any additional loads.

The installed lifting eyebolts are in accordance with DIN 580. Observe the loads and regulations specified there. The tension force vector of the slings must not exceed a 45° angle in accordance with DIN 580.

If necessary, use suitable, sufficiently dimensioned handling equipment.

Observe the following notes when transporting the device:

- Always use all attachment points if available. The attachment points are designed to carry only the mass of the product. Severe or fatal injuries. Do not apply any additional loads.
- Ensure that the product is not subject to mechanical impact.

If the product is not immediately installed, it must be stored in a dry and dust-free location. The product can be stored for up to 9 months without requiring any special measures before startup. Do not store the product outdoors.

Do not transport or store the product on the fan guard.

25957074/EN – 06/2019

## 2.6 Installation/assembly

Note the following points during installation:

- Make sure that the supports are even, the foot and flange mounting is correct and if there is direct coupling, align with precision.
- Avoid resonance between the rotational frequency and the double supply system frequency.
- Release brake (for motors with mounted brake).
- Turn the rotor by hand and listen for unusual grinding noise.
- Check the direction of rotation in decoupled state.
- Only install or remove belt pulleys and couplings using suitable devices (heat up). Cover the belt pulleys and couplings with a touch guard. Avoid unacceptable belt tension.
- Establish any necessary pipe connections.
- Mounting positions with the shaft end pointing upward must be equipped with a cover to prevent foreign objects from falling into the fan. Ensure that ventilation openings are not obstructed and that used air cannot be drawn in again straight away. The same applies to air from adjacent units.

See also the information in chapter "Mechanical installation" (→ 🗎 32).

### 2.6.1 Restrictions of use

The following applications are prohibited unless the device is explicitly designed for such use:

- Use in potentially explosive atmospheres
- Use in areas exposed to harmful oils, acids, gases, vapors, dust, and radiation

25957074/EN – 06/2019

## 2.7 Electric work

### 2.7.1 Carrying out electric work safely

Observe the following information to carry out electric work safely during installation and maintenance:

- Electric work may only be carried out by electrically skilled persons.
- Always adhere to the 5 safety rules for working on electrical components:
  - Disconnect
  - Secure the drive against restart
  - Check that no voltage is applied
  - Ground and short-circuit it
  - Cover or safeguard neighboring live parts
- When the device is switched on, dangerous voltages are present at all power connections as well as at any connected cables and terminals. This also applies even when the product is inhibited and the motor is at standstill.

### 2.7.2 Electrical connection

Exceeding the stated tolerances in EN 60034-1 (VDE 0530, Part 1) – voltage ± 5%, frequency ± 2%, curve shape, symmetry – increases the heating and influences electromagnetic compatibility. Adhere to the standard EN 50110. Observe other applicable national regulations, such as DIN VDE 0105 for Germany.

Observe the wiring information and differing data on the nameplate as well as the provided wiring diagram.

The connection must be a permanently secure electrical connection (no protruding wire ends). Use the corresponding cable end equipment. Establish a safe PE connection. When the motor is connected, the distances to non-insulated and live parts must not be shorter than the minimum values according to IEC 60664 and national regulations. With low voltage, the distances should be no shorter than the following values, in compliance with IEC 60664:

| Nominal voltage $V_N$ | Distance |
|---|---|
| ≤ 500 V | 3 mm |
| ≤ 690 V | 5.5 mm |

The terminal box must be free from foreign objects, dirt and humidity. Unused cable entry openings and the connection box itself must be sealed so that they are dust- and water-proof.

Secure the key(s) for the test run without output elements.

When operating low-voltage machines with brakes, check that the brake is functioning properly before startup.

Observe the notes in chapter "Electrical installation".

25957074/EN – 06/2019

## 2.8 Startup/operation

Risk of burns: The surface temperature of the product can exceed 60 °C during operation. Do not touch the product during operation. Let the product cool down before touching it.

Do not deactivate monitoring and protection devices of the machine or system even for a test run.

Depending on the degree of protection, products may have live, uninsulated, and sometimes moving or rotating parts, as well as hot surfaces during operation.

Make sure that any existing transport protection is removed.

In the event of deviations from normal operation, switch the product off. Possible deviations are increased temperatures, noise, or vibration, for example. Determine the cause. Contact SEW-EURODRIVE if necessary.

Ensure that the terminal box is closed and screwed down before applying the supply voltage.

Additional preventive measures may be required for applications with increased hazard potential. Be sure to check the effectiveness of the protection devices after every modification.

Mechanical blocking or internal protective functions of the product can cause a motor standstill. Removing the cause of this problem can result in the drive re-starting. Disconnect the product from the power supply before you start with troubleshooting.

Overheating of motors with backstop /RS

With low motor speeds, the centrifugal forces are so low that the backstop sprags brush against the inner and outer ring. This causes overheating of the friction surfaces.

- Do not permanently operate motors with backstop /RS below lift-off speed.

25957074/EN – 06/2019

# 3 Motor structure

## 3.1 Basic structure

The following figures are schematic representations. Motor size and design may cause deviations.

25957074/EN – 06/2019

## 3.2 Basic design of DR2..56 motors

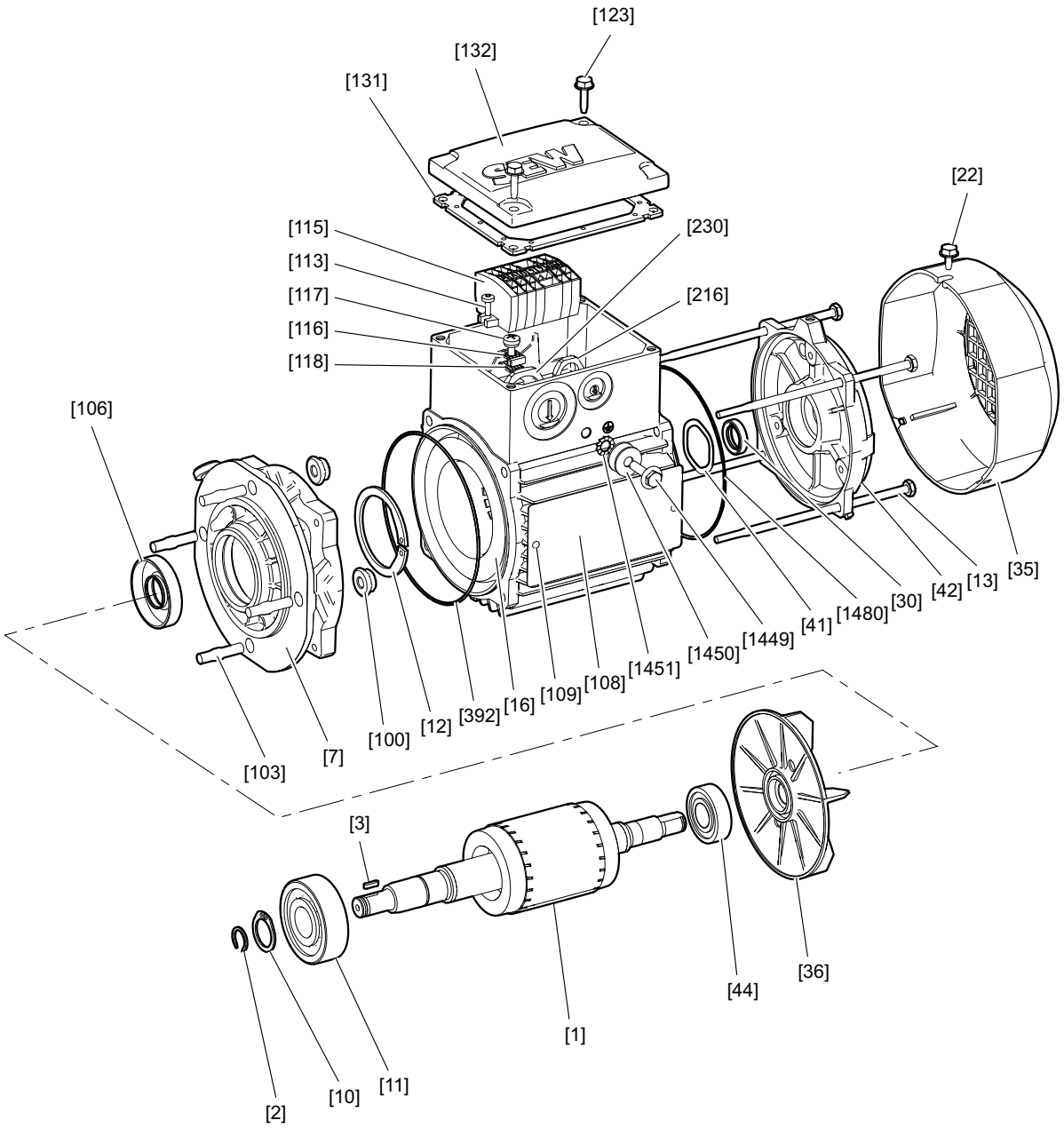


*26857323531*

| | | | | | | | |
|---|---|---|---|---|---|---|---|
| [1] | Rotor | [22] | Hex head screw | [106] | Oil seal | [131] | Gasket for cover |
| [2] | Retaining ring | [30] | Oil seal | [108] | Nameplate | [132] | Terminal box cover |
| [3] | Key | [35] | Fan guard | [109] | Grooved pin | [216] | Hex nut |
| [7] | Flanged endshield | [36] | Fan | [113] | Cylinder head screw | [230] | Hex nut |
| [10] | Retaining ring | [41] | Equalizing ring | [115] | Terminal board | [392] | O-ring |
| [11] | Deep groove ball bearing | [42] | Rear endshield | [116] | Terminal clip | [1449] | Hex head screw |
| [12] | Retaining ring | [44] | Deep groove ball bearing | [117] | Flat head screw | [1450] | Washer |
| [13] | Cap screw | [100] | Hex nut | [118] | Washer | [1451] | Serrated lock washer |
| [16] | Stator | [103] | Stud | [123] | Hex head screw | [1480] | O-ring |

25957074/EN – 06/2019

## 3.3 Basic design of DRN63, DR2..63 motors

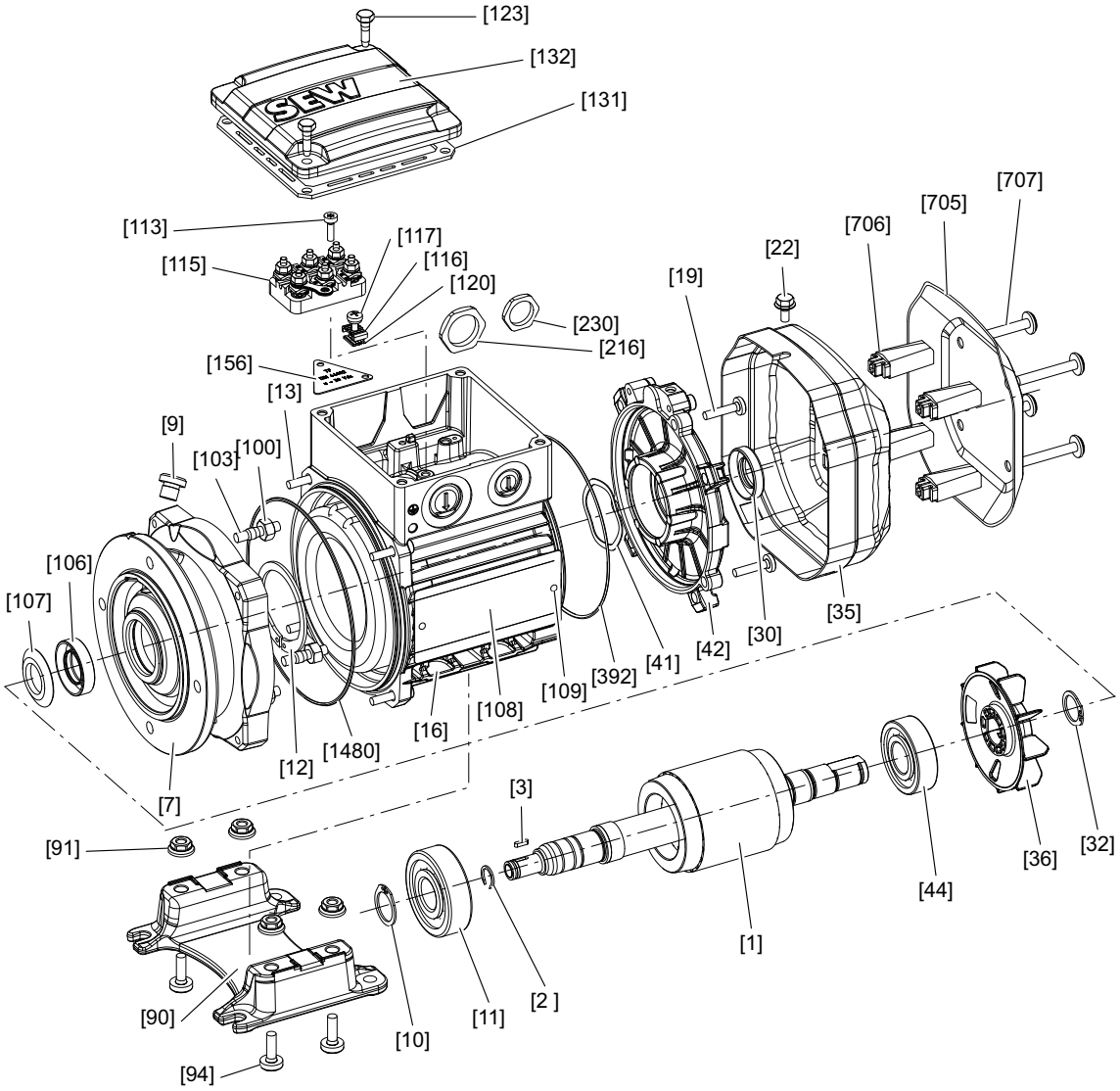


*22297409803*

| | | | | | | | |
|---|---|---|---|---|---|---|---|
| [1] | Rotor | [22] | Hex head screw | [100] | Hex nut | [123] | Hex head screw |
| [2] | Retaining ring | [30] | Oil seal | [103] | Stud | [131] | Gasket for cover |
| [3] | Key | [32] | Retaining ring | [106] | Oil seal | [132] | Terminal box cover |
| [7] | Flanged endshield | [35] | Fan guard | [107] | Oil flinger | [156] | Information sign |
| [9] | Screw plug | [36] | Fan | [108] | Nameplate | [216] | Hex nut |
| [10] | Retaining ring | [41] | Equalizing ring | [109] | Grooved pin | [230] | Hex nut |
| [11] | Deep groove ball bearing | [42] | B-side endshield | [113] | Cylinder head screw | [392] | O-ring |
| [12] | Retaining ring | [44] | Deep groove ball bearing | [115] | Terminal board | [705] | Canopy |
| [13] | Cap screw | [90] | Bed plate | [116] | Terminal clip | [706] | Spacer |
| [16] | Stator | [91] | Hex nut | [117] | Flat head screw | [707] | Hex head screw |
| [19] | Pan head screw | [94] | Flat head screw | [120] | Support plate | [1480] | O-ring |

25957074/EN – 06/2019

## 3.4 Basic design of DR..71 – 132, DRN71 – 132S, DR2..71 – 80 motors

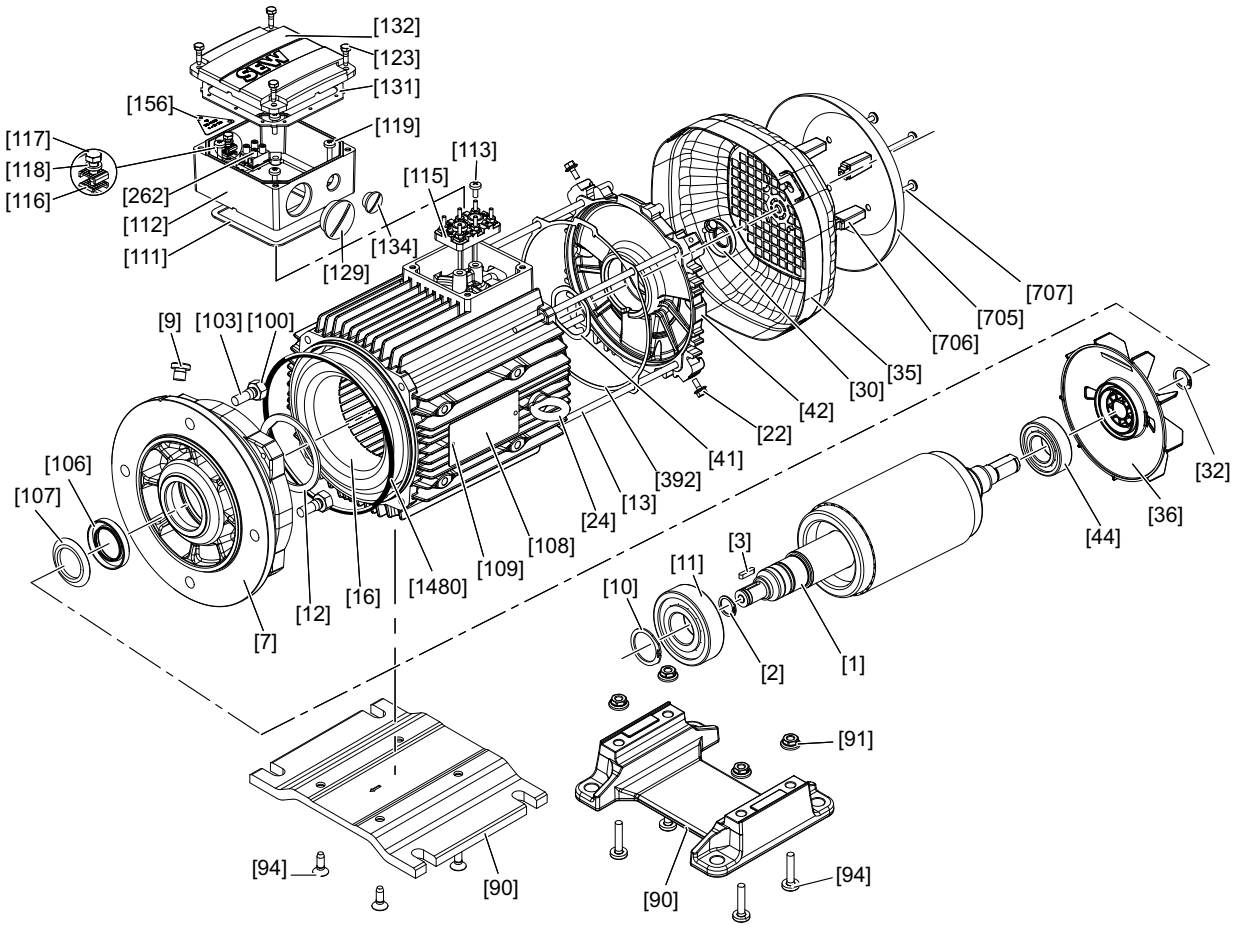


*18014411878699915*

| | | | | | | | |
|---|---|---|---|---|---|---|---|
| [1] | Rotor | [32] | Retaining ring | [107] | Oil flinger | [123] | Hex head screw |
| [2] | Retaining ring | [35] | Fan guard | [108] | Nameplate | [129] | Screw plug with O-ring |
| [3] | Key | [36] | Fan | [109] | Grooved pin | [131] | Gasket for cover |
| [7] | Flanged endshield | [41] | Equalizing ring | [111] | Gasket for lower part | [132] | Terminal box cover |
| [9] | Screw plug | [42] | B-side endshield | [112] | Terminal box lower part | [134] | Screw plug with O-ring |
| [10] | Retaining ring | [44] | Deep groove ball bearing | [113] | Pan head screw | [156] | Information sign |
| [11] | Deep groove ball bearing | [90] | Bed plate | [115] | Terminal board | [262] | Terminal clip |
| [12] | Retaining ring | [91] | Hex nut | [116] | Terminal clip | [392] | Gasket |
| [13] | Cap screw | [94] | Screw | | | [705] | Canopy |
| [16] | Stator | [100] | Hex nut | [117] | Hex head screw | [706] | Spacer |
| [22] | Hex head screw | [103] | Stud | [118] | Lock washer | [707] | Pan head screw |
| [24] | Lifting eyebolt | [106] | Oil seal | [119] | Pan head screw | [1480] | O-ring |
| [30] | Oil seal | | | | | | |

25957074/EN – 06/2019

## 3.5 Basic structure DR..160 – 180, DRN132M – 180 motors

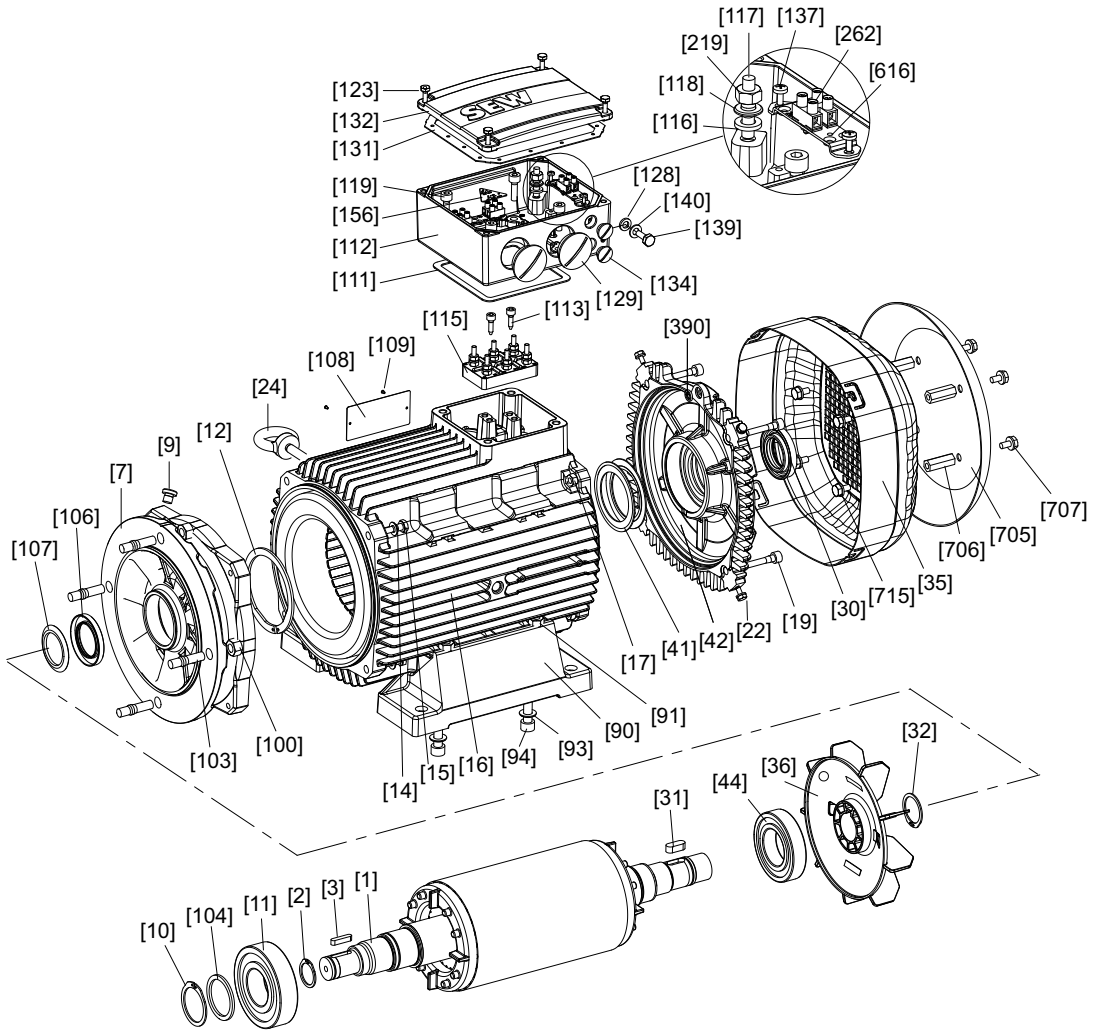


*18014399036804619*

| | | | | | | | |
|---|---|---|---|---|---|---|---|
| [1] | Rotor | [31] | Key | [108] | Nameplate | [132] | Terminal box cover |
| [2] | Retaining ring | [32] | Retaining ring | [109] | Grooved pin | [134] | Screw plug with O-ring |
| [3] | Key | [35] | Fan guard | [111] | Gasket for lower part | [137] | Screw |
| [7] | Flange | [36] | Fan | [112] | Terminal box lower part | [139] | Hex head screw |
| [9] | Screw plug | [41] | Cup spring | [113] | Screw | [140] | Washer |
| [10] | Retaining ring | [42] | Rear endshield | [115] | Terminal board | [156] | Information label |
| [11] | Deep groove ball bearing | [44] | Deep groove ball bearing | [116] | Serrated lock washer | [219] | Hex nut |
| [12] | Retaining ring | [90] | Foot | [117] | Stud | [262] | Connection terminal |
| [14] | Washer | [91] | Hex nut | [118] | Washer | [390] | O-ring |
| [15] | Hex head screw | [93] | Washer | [119] | Cap screw | [616] | Retaining plate |
| [16] | Stator | [94] | Cap screw | [123] | Hex head screw | [705] | Canopy |
| [17] | Hex nut | [100] | Hex nut | [128] | Serrated lock washer | [706] | Spacer |
| [19] | Cap screw | [103] | Stud | [129] | Screw plug with O-ring | [707] | Hex head screw |
| [22] | Hex head screw | [104] | Supporting ring | [131] | Gasket for cover | [715] | Hex head screw |
| [24] | Eyebolt | [106] | Oil seal | | | | |
| [30] | Sealing ring | [107] | Oil flinger | | | | |

25957074/EN – 06/2019

## 3.6 Basic structure DR..200 – 225, DRN200 – 225 motors

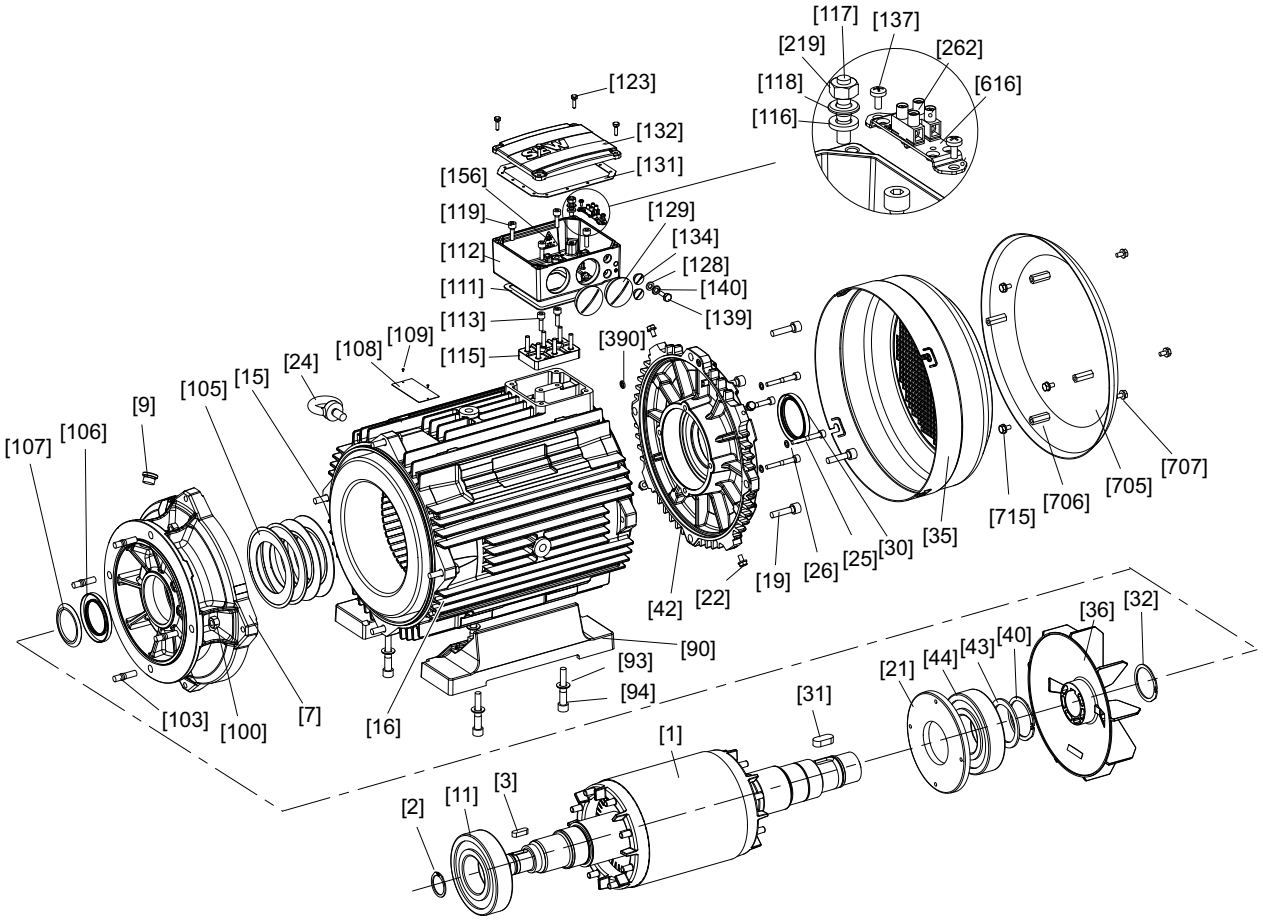


*9007200332597387*

| | | | | | | | |
|---|---|---|---|---|---|---|---|
| [1] | Rotor | [31] | Key | [107] | Oil flinger | [132] | Terminal box cover |
| [2] | Retaining ring | [32] | Retaining ring | [108] | Nameplate | [134] | Screw plug |
| [3] | Key | [35] | Fan guard | [109] | Grooved pin | [137] | Screw |
| [7] | Flange | [36] | Fan | [111] | Gasket for lower part | [139] | Hex head screw |
| [9] | Screw plug | [40] | Retaining ring | [112] | Terminal box lower part | [140] | Washer |
| [11] | Deep groove ball bearing | [42] | Rear endshield | [113] | Cap screw | [156] | Information label |
| [15] | Hex head screw | [43] | Supporting ring | [115] | Terminal board | [219] | Hex nut |
| [16] | Stator | [44] | Deep groove ball bearing | [116] | Serrated lock washer | [262] | Connection terminal |
| [19] | Cap screw | [90] | Foot | [117] | Stud | [390] | O-ring |
| [21] | Oil seal flange | [93] | Washer | [118] | Washer | [616] | Retaining plate |
| [22] | Hex head screw | [94] | Cap screw | [119] | Cap screw | [705] | Canopy |
| [24] | Eyebolt | [100] | Hex nut | [123] | Hex head screw | [706] | Spacer bolt |
| [25] | Cap screw | [103] | Stud | [128] | Serrated lock washer | [707] | Hex head screw |
| [26] | Shield ring | [105] | Cup spring | [129] | Screw plug | [715] | Hex head screw |
| [30] | Oil seal | [106] | Oil seal | [131] | Gasket for cover | | |

25957074/EN – 06/2019

## 3.7 Basic structure DR..250 – 280, DRN250 – 280 motors

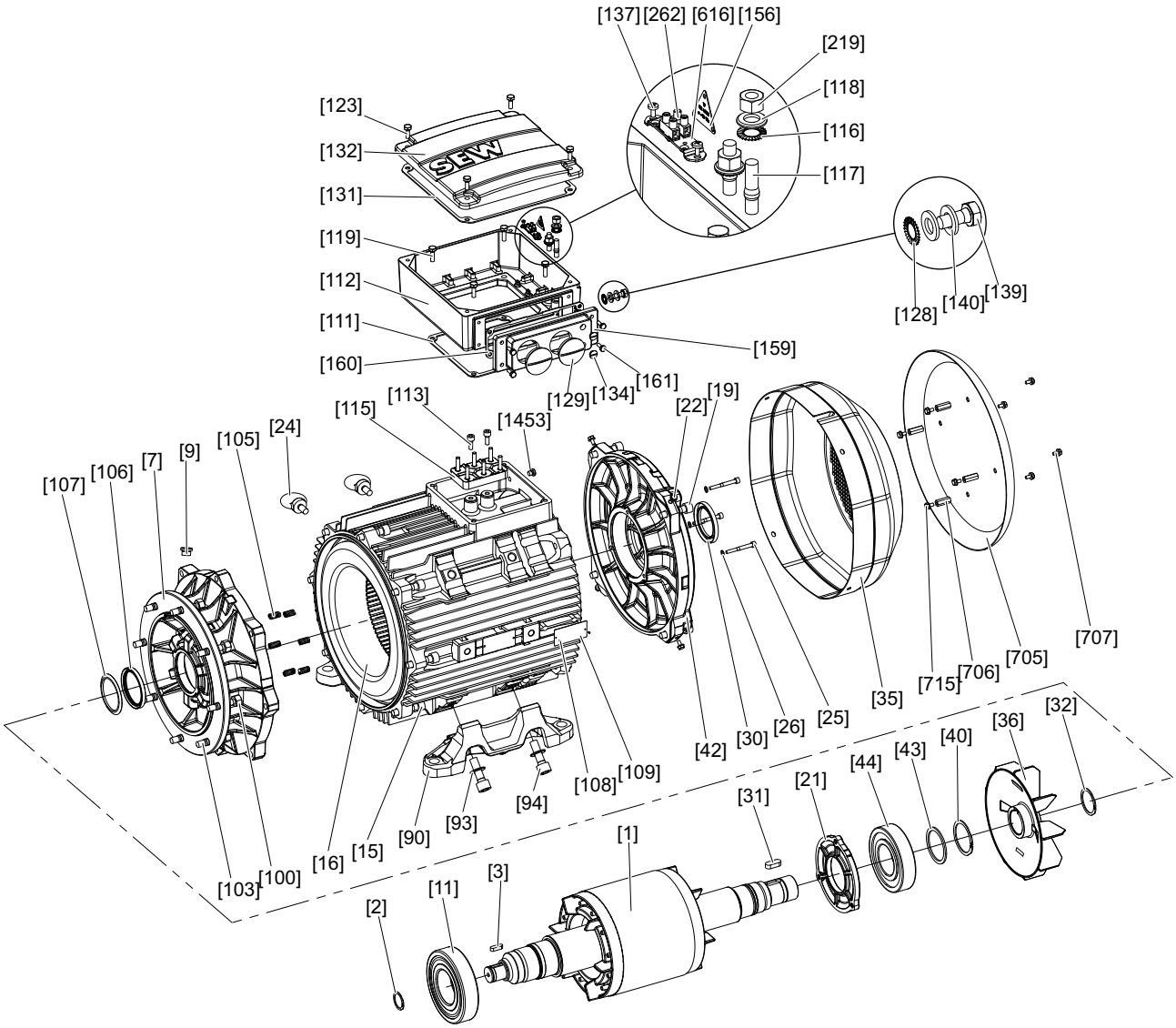


*9007206690410123*

| | | | | | | | |
|---|---|---|---|---|---|---|---|
| [1] | Rotor | [32] | Retaining ring | [108] | Nameplate | [134] | Screw plug |
| [2] | Retaining ring | [35] | Fan guard | [109] | Grooved pin | [137] | Screw |
| [3] | Key | [36] | Fan | [111] | Gasket for lower part | [139] | Hex head screw |
| [7] | Flange | [40] | Retaining ring | [112] | Terminal box lower part | [140] | Washer |
| [9] | Screw plug | [42] | B-side endshield | [113] | Cap screw | [156] | Information sign |
| [11] | Deep groove ball bearing | [43] | Supporting ring | [115] | Terminal board | [159] | Connection piece |
| [15] | Cap screw | [44] | Deep groove ball bearing | [116] | Serrated lock washer | [160] | Connection piece seal |
| [16] | Stator | [90] | Foot | [117] | Stud | [161] | Hex head screw |
| [19] | Cap screw | [93] | Washer | [118] | Washer | [219] | Hex nut |
| [21] | Oil seal flange | [94] | Cap screw | [119] | Hex head screw | [262] | Connection terminal |
| [22] | Hex head screw | [100] | Hex nut | [123] | Hex head screw | [616] | Retaining plate |
| [24] | Lifting eyebolt | [103] | Stud | [128] | Serrated lock washer | [705] | Canopy |
| [25] | Cap screw | [105] | Compression spring | [129] | Screw plug | [706] | Spacer bolt |
| [26] | Shield ring | [106] | Oil seal | [131] | Gasket for cover | [707] | Hex head screw |
| [30] | Oil seal | [107] | Oil flinger | [132] | Terminal box cover | [715] | Hex head screw |
| [31] | Key | | | | | [1453] | Screw plug |

## 3.8 Basic structure DR..315, DRN315 motors

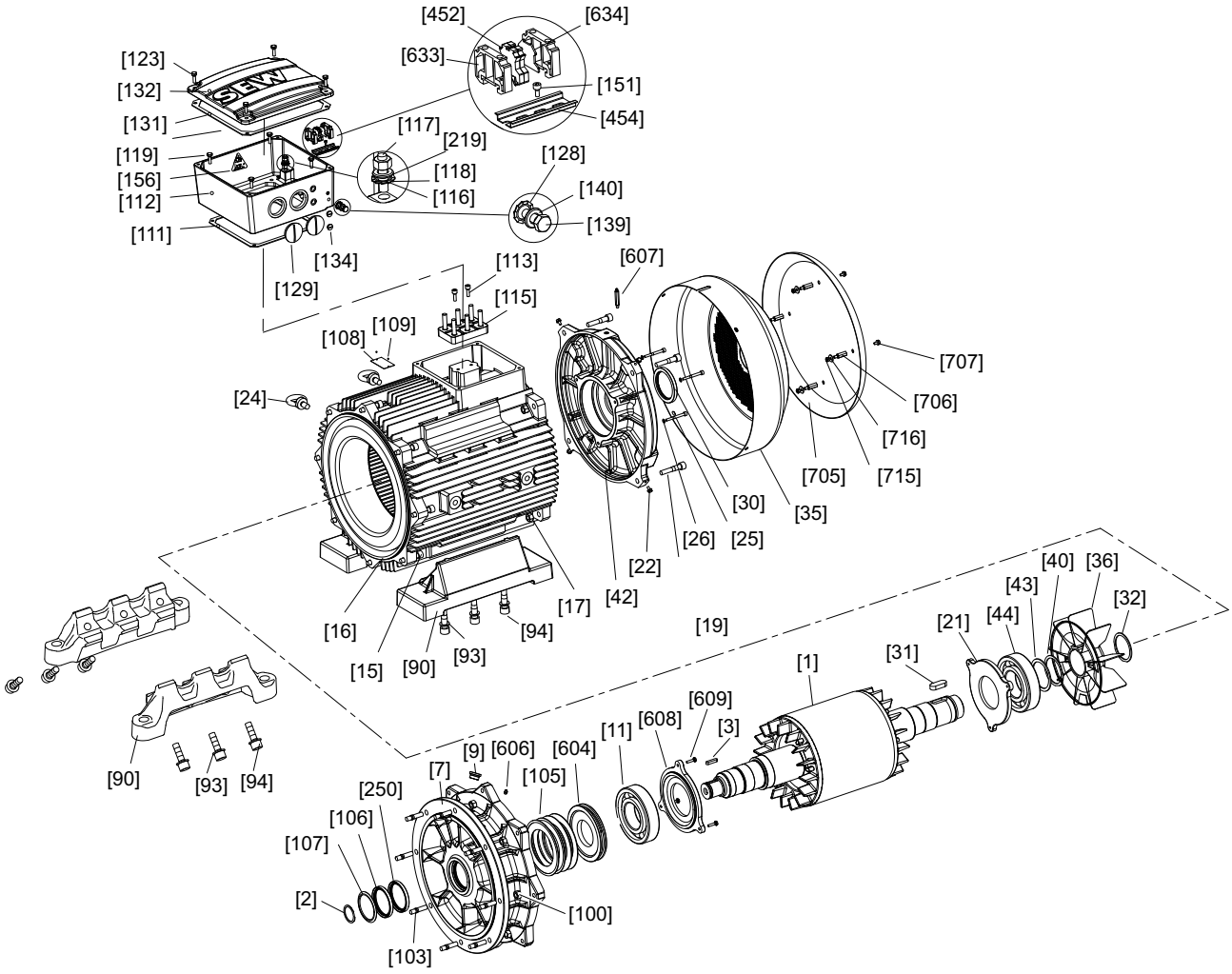


*45035996625703563*

| | | | | | | | |
|---|---|---|---|---|---|---|---|
| [1] | Rotor | [32] | Retaining ring | [111] | Gasket for lower part | [156] | Information sign |
| [2] | Retaining ring | [35] | Fan guard | [112] | Terminal box lower part | [219] | Hex nut |
| [3] | Key | [36] | Fan | [113] | Cap screw | [250] | Oil seal |
| [7] | Flange | [40] | Retaining ring | [115] | Terminal board | [452] | Terminal strip |
| [9] | Screw plug | [42] | B-side endshield | [116] | Serrated lock washer | [454] | Mounting rail |
| [11] | Rolling bearing | [43] | Supporting ring | [117] | Stud | [604] | Lubrication ring |
| [15] | Cap screw | [44] | Rolling bearing | [118] | Washer | [606] | Grease nipple |
| [16] | Stator | [90] | Foot | [119] | Hex head screw | [607] | Grease nipple |
| [17] | Hex nut | [93] | Washer | [123] | Hex head screw | [608] | Oil seal flange |
| [19] | Cap screw | [94] | Cap screw | [128] | Serrated lock washer | [609] | Hex head screw |
| [21] | Oil seal flange | [100] | Hex nut | [129] | Screw plug | [633] | End bracket |
| [22] | Hex head screw | [103] | Stud | [131] | Gasket for cover | [634] | End plate |
| [24] | Eyebolt | [105] | Cup spring | [132] | Terminal box cover | [705] | Canopy |
| [25] | Cap screw | [106] | Oil seal | [134] | Screw plug | [706] | Spacer bolt |
| [26] | Shield ring | [107] | Oil flinger | [139] | Hex head screw | [707] | Hex head screw |
| [30] | Oil seal | [108] | Nameplate | [140] | Washer | [715] | Hex nut |
| [31] | Key | [109] | Grooved pin | [151] | Cap screw | [716] | Washer |

25957074/EN – 06/2019

## 3.9 Nameplate

### 3.9.1 DRN.. motor nameplate

The following figure shows an example of a nameplate:

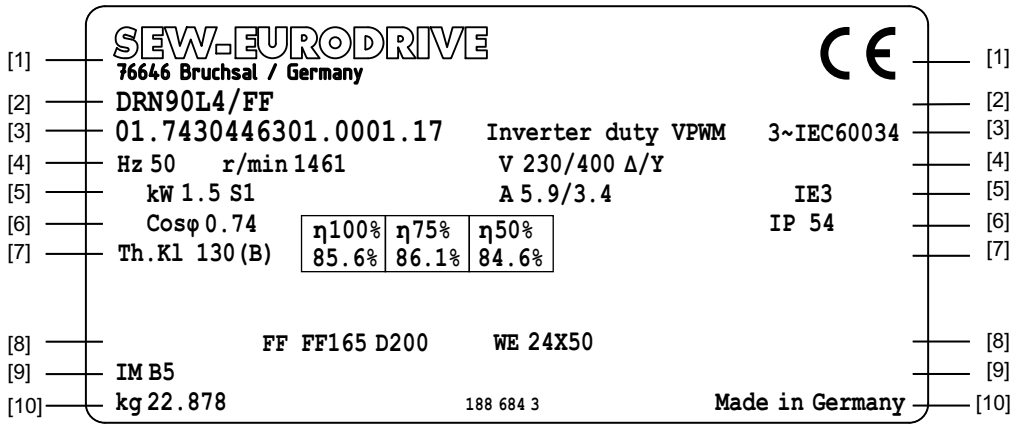


*9007220942512011*

| Line | Information |
|---|---|
| [1] | • Manufacturer, address<br>• CE label |
| [2] | • Type designation |
| [3] | • Serial number<br>• Suitability for inverter operation<br>• Number of phases and underlying rating and performance standard |
| [4] | • Rated frequency<br>• Rated speed<br>• Nominal voltage |
| [5] | • Rated power and operating mode<br>• Rated current<br>• IE class |
| [6] | • Power factor<br>• Degree of protection according to IEC 60034-5 |
| [7] | • Thermal class<br>• Rated efficiency for motors included in the validity of the IEC 60034-30-1 standard |
| [8] | • Flange<br>• Shaft end |
| [9] | • Mounting position |
| [10] | • Weight<br>• Part number nameplate<br>• Country of manufacture |

### 3.9.2 DRN.. global motor nameplate

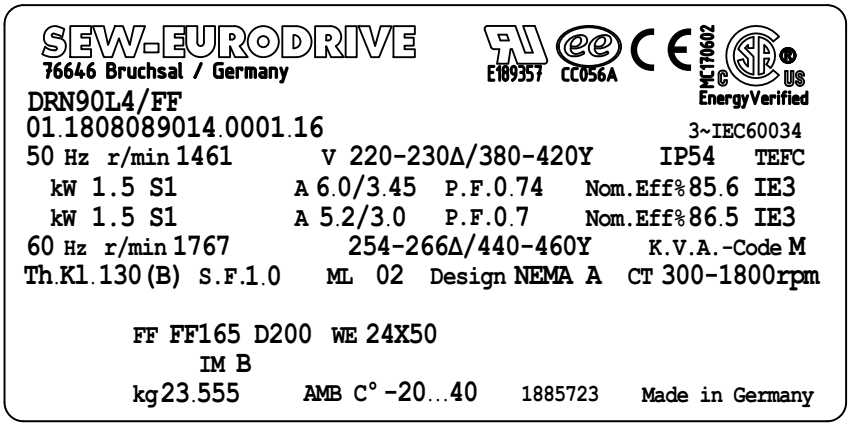


*9007216697981707*

### 3.9.3 Markings

The following table lists all the markings that can be provided on a nameplate or attached to the motor, and an explanation of what they mean.

| | |
|---|---|
| CE | CE mark to state compliance with European guidelines, such as the Low Voltage Directive. |
| UR | UR logo to confirm that UL (Underwriters Laboratory) is informed about the registered components; register number by UL: E189357 |
| CC056A | DoE mark to confirm compliance with US-American efficiency limit values for AC motors. |
| c UL US LISTED | UL logo to confirm that a component is UL (Underwriters Laboratory) tested, also valid for CSA in conjunction with the register number |
| MC170602 c SA US Energy Verified | CSAe mark to confirm compliance with the Canadian efficiency limit values for AC motors |
| CCC | CCC logo to confirm the adherence to the Chinese regulation for small appliances |
| VIK | VIK mark to confirm the compliance with the directive of the German Association of Energy and Power Industry (V.I.K.) |
| FS 02 | FS logo with 2-digit number for identification of installed functional safety motor options |
| EAC | EAC mark (EurAsian Conformity)<br>Confirms compliance with the technical regulations of the economic and customs union of Russia, Belarus, Kazakhstan, Armenia. |

25957074/EN – 06/2019

| | |
|---|---|
| UA.TR. 013 | UA.TR mark to confirm compliance with the technical regulations of the country Ukraine. |
| IE2 EU REGULATION 640/2009 USE WITH VARIABLE SPEED DRIVE ONLY! 1364 171 9 | Motors with this mark may only be operated with frequency inverter (VSD = Variable Speed Drive) according to regulation 640/2009. |
| | BIS mark<br>Confirmation of compliance with the Indian standard IS 12615. |
|  | CEL mark showing energy efficiency in the Chinese grade classification. |
|  | KEL mark confirming the requirements of REELS (Regulation of Energy Efficiency and Labeling Standard). |
| RENDIMENTO E FATOR DE POTÊNCIA APROVADOS PELO INMETRO<br>PROCEL<br>NBR - 17094-1<br>INMETRO<br>Registro INMETRO no: 005431/2015 | ENCE mark (Brazil)<br>Confirmation of compliance with the Brazilian efficiency limit values for AC motors. |

### 3.9.4 Serial number

The following table lists the structure of a serial number:

| **Example: 01. 12212343 01. 0001. 18** | |
|---|---|
| 01. | Sales organization |
| 12212343 | Order number (8 digits) |
| 01. | Order item (2 digits) |
| 0001 | Quantity (4 digits) |
| 18 | End digits of the year of manufacture (2 digits) |

## 3.10 Type designation

The following table shows the structure of a motor type designation:

| **DRN132M4/BE11/HR/FI/TF** | |
|---|---|
| **DR** | Product family |
| **N** | Code for product line identification |
| **132**M | Size |
| **4** | Number of poles |
| /**BE11** | Brake |
| **/HR** | Manual brake release |
| **/FI** | Output option |
| **/TF** | Thermal motor protection |

### 3.10.1 Designation of the motors

| **Designation** | |
|---|---|
| DRS.. | Standard motor, Standard Efficiency IE1 |
| DR2S.. | Standard motor, Standard Efficiency IE1 (2nd generation) |
| DRE.. | Energy-efficient motor, High Efficiency IE2 |
| DRP.. | Energy-efficient motor, Premium Efficiency IE3 |
| DRN.. | Energy-efficient motor, Premium Efficiency IE3 |
| DRU.. | Energy-efficient motor, Super Premium Efficiency IE4 |
| DRL.. | Asynchronous servomotor |
| DR2L.. | Asynchronous servomotor (2nd generation) |
| DRK.. | Single-phase operation with running capacitor |
| DRM.. | Torque motor: AC motor for operation at speed n = 0 |
| DR2M.. | Torque motor: AC motor for operation at speed n = 0 (2nd generation) |
| DR..J | Line start permanent magnet motor |
| 56 – 315 | Nominal sizes:<br>56, 63, 71, 80, 90, 100, 112, 132, 160, 180, 200, 225, 250, 280, 315 |
| K, S, M, L,<br>MC, LC,<br>ME, MS, MK, H, LS, LM | Lengths |
| R, Q<br>P, I<br>B | Power designation (identification of motors with the same size but with different power) |
| 2, 4, 6, 8, 8/2, 8/4, 4/2, 12 | Number of poles |

25957074/EN – 06/2019

## 3.11 Designs and options

### 3.11.1 Output variants

| Designation | Description |
|---|---|
| /FI | IEC foot-mounted motor |
| /F.A /F.B | Universal foot-mounted motor |
| /FG | 7series integral motor, as stand-alone motor |
| /FF | IEC flange-mounted motor with bore |
| /FT | IEC flange-mounted motor with threads |
| /FL | General flange-mounted motor (other than IEC) |
| /FM | 7-series integral motor with IEC feet |
| /FE | IEC flange-mounted motor with bore and IEC feet |
| /FY | IEC flange-mounted motor with threads and IEC feet |
| /FK | General flange-mounted motor (deviating from IEC) with feet |
| /FC | C-face flange-mounted motor, dimensions in inch |

### 3.11.2 Mechanical attachments

| Designation | Description |
|---|---|
| /BE..[1)] | Spring-loaded brake with specification of size |
| /HR | Manual brake release of the brake, re-engaging |
| /HF | Manual brake release, lockable |
| /RS | Backstop |
| /MSW | MOVISWITCH® |
| /MM03 – MM40 | MOVIMOT® |
| /MO | MOVIMOT® option(s) |
| /MI | Motor identification module for MOVIMOT® |

1) Also available in design for functional safety

### 3.11.3 Temperature sensor / temperature detection

| Designation | Description |
|---|---|
| /TF | Temperature sensor (PTC thermistor or PTC resistor) |
| /TH | Thermostat (bimetallic switch) |
| /KY | 1 KTY84 – 130 sensor |
| /PT | 1 or 3 PT100 sensor(s) |
| /PK | PT1000 temperature sensor |

25957074/EN – 06/2019

### 3.11.4 Encoder

| Designation | Description |
|---|---|
| /ES7S[1], /EG7S[1], /EH7S | Add-on speed sensor with sin/cos interface |
| /EV7S | Add-on speed sensor ES7S with sin/cos interface, spread shaft via mounting adapter for third-party encoders |
| /ES7R, /EG7R, /EH7R | Add-on speed sensor with TTL(RS422) interface, U = 9 – 26 V |
| /EV7R | Add-on speed sensor ES7S with TTL(RS422) interface, spread shaft via mounting adapter for third-party encoders |
| /ES7C, /EG7C, /EH7C | Add-on speed sensor with HTL interface |
| /EI7C[1], /EI76, /EI72, /EI71 | Built-in incremental encoder with HTL interface and 24/6/2/1 period(s) |
| /EI8C, /EI8R | Built-in incremental encoder with HTL interface and 1024 periods |
| /AS7W[1], /AG7W[1] | Add-on absolute encoder, RS485 interface (multi-turn) and sin/cos interface |
| /AV7W | Add-on absolute encoder AS7W with RS485 interface (multi-turn), spread shaft via mounting adapter for third-party encoders |
| /AS7Y[1], /AG7Y[1], /AH7Y[1] | Add-on absolute encoder, SSI interface (multi-turn) and sin/cos interface |
| /AV7Y | Add-on absolute encoder AS7Y with SSI interface (multi-turn), spread shaft via mounting adapter for third-party encoders |
| /ES7A, /EG7A | Mounting adapter for speed sensors with solid shaft |
| /EV2T, /EV2R, /EV2S, /EV2C | Add-on incremental encoder with solid shaft |
| /EH7T | Add-on speed sensor with TTL(RS422) interface |
| /EK8S, /EK8R, /EK8C | Incremental encoder |
| /AK8Y, /AK8W, /AK8H | Multi-turn absolute encoder |
| /EV8S, /EV8R, /EV8C | Incremental encoder |
| /AV8Y, /AV8W, /AV8H | Multi-turn absolute encoder |
| /XV.A | Mounting adapter for third-party speed sensors |
| /XV.. | Mounted third-party speed sensors |
| /XH.A | Mounting adapter for third-party hollow-shaft encoders |

1) Also available in design for functional safety

25957074/EN – 06/2019

### 3.11.5 Connection alternatives

| Designation | Description |
|---|---|
| /IS | Integrated plug connector |
| /ISU | Integrated plug connector – Design with only the lower part of the plug connector |
| /ASE. | HAN 10ES plug connector on terminal box with single-locking latch (cage clamp contacts on the motor side) |
| /ASB. | HAN 10ES plug connector on terminal box with double-locking latch (cage clamp contacts on the motor side) |
| /ACE. | HAN 10E plug connector on terminal box with single-locking latch (crimp contacts on the motor side) |
| /ACB. | HAN 10E plug connector on terminal box with double-locking latch (crimp contacts on the motor side) |
| /AME. /ABE. /ADE. /AKE. | HAN Modular 10B plug connector on terminal box with single-locking latch (crimp contacts on the motor side) |
| /AMB. /ABB. /ADB. /AKB. | HAN Modular 10B plug connector on terminal box with double-locking latch (crimp contacts on the motor side) |
| /KCC | 6 or 10-pole terminal strip with cage clamp contacts |
| /KC1 | C1-profile-compliant connection of the electrified monorail drive (VDI guideline 3643), for more compact connection areas. |
| /IV | Other industrial plug connectors according to customer specifications |

### 3.11.6 Ventilation

| Designation | Description |
|---|---|
| /V | Forced cooling fan |
| /Z | Additional inertia (flywheel fan) |
| /AL | Metal fan |
| /U | Non-ventilated (without fan) |
| /OL | Non-ventilated (closed B-side) |
| /C | Canopy for the fan guard |
| /LF | Air filter |
| /LN | Low-noise fan guard |

### 3.11.7 Bearing

| Designation | Description |
|---|---|
| /NS | Relubrication device |
| /ERF | Reinforced bearings on A-side with rolling bearing |
| /NIB | Insulated bearing B-side |

25957074/EN – 06/2019

### 3.11.8 Condition monitoring

| Designation | Description |
|---|---|
| /DUB | Mount-on microswitch for monitoring function and wear of the brake (Diagnostic Unit Brake) |
| /DUE | Eddy-current sensor for function and wear monitoring of the brake (Diagnostic Unit Eddy Current) |

### 3.11.9 Other additional features

| Designation | Description |
|---|---|
| /DH | Condensation drain hole |
| /RI | Reinforced winding insulation |
| /RI2 | Reinforced winding insulation with increased resistance against partial discharge |
| /2W | 2nd shaft end on the motor/brakemotor |

25957074/EN – 06/2019

## 3.12 Functional safety

Motors from SEW-EURODRIVE are optionally available with functionally safe motor options. These are designed for implementing safety functions.

SEW-EURODRIVE labels a functionally safe motor option at the drive with an FS logo and a 2-digit number on the motor nameplate. The number is a code that indicates which components in the drive are safety-related. This allows to uniquely identify an available functionally safe motor option via the motor nameplate.

| FS logo | Available functionally safe motor option | | |
|---|---|---|---|
| | Decentralized inverters | Safety brake | Safety encoder |
| FS 01 | X | | |
| FS 02 | | X | |
| FS 04 | | | X |
| FS 07 | X | | X |
| FS 11 | | X | X |

If the FS logo, e.g. with the code "FS-11" is present on the motor nameplate, the combination of safety encoder and safety brake is available for the motor. If an FS logo is available, adhere to the information specified in the corresponding documentation.

If the drive bears the FS logo on the nameplate, adhere to the information in the following document:

- Addendum to the operating instructions "Safety Encoders and Safety Brakes, AC Motors DR.., DRN.., DR2.., EDR.., EDRN.. – Functional Safety"

To determine the safety level for systems and machines yourself, refer to the characteristic safety values in chapter "Characteristic safety values".

25957074/EN – 06/2019

# 4 Mechanical installation

## 4.1 Before you start

### INFORMATION

Observe the safety notes in chapter 2 of this documentation for the mechanical installation.

### INFORMATION

The mounting position for installation must correspond with the specifications on the nameplate.

Install the drive only if the following conditions are met:

- The specifications on the nameplate of the drive correspond to the supply system or the output voltage of the inverter.
- The drive is undamaged (no damage caused by transportation or storage).
- All transport protection has been removed.
- You are certain that the following requirements have been met:
  - Ambient temperature according to the nameplate.

    Note that the temperature range of the gear unit may also be restricted (see "Gear unit" operating instructions).

    Any differing specifications on the nameplate must be observed.
  - No oils, acids, gases, vapors, dusts, radiations, etc.
  - Max. installation altitude 1000 m above sea level.

    Observe the section "Designated use" in chapter 2.
  - Note the restrictions for encoders.
  - Special design: Drive configured in accordance with ambient conditions.

The aforementioned information refers to standard orders. The conditions might be different when you order drives other than the standard. Refer to the order confirmation for deviating conditions.

Functional safety

If the drive has the FS logo on the nameplate, observe the information on mechanical installation in the corresponding addendum to the operating instructions.

25957074/EN – 06/2019

## 4.2 Preliminary work after longer periods of storage

Depending on the duration and ambient conditions during storage, corrosion, aging of lubricants, embrittlement of sealing elements, and moisture absorption in the insulation can occur.

Perform the described measures on any drives that have been stored for longer than 9 months.

**Corrosion**

- Check for damage to the motor and/or components (coating, shafts, connection and fastening parts).
- Correct the corrosion damage.

**Embrittlement of seals**

- Visually inspect seals and look for fissures, hardening, and embrittlement.
- Replace any damaged seals.

**Reduced grease service life**

If the drives are stored for longer than a year, the service life of the bearing grease is reduced due to aging and de-oiling of the lubricant.

- Check the condition and usability of the rolling bearings.
- Replace any damaged rolling bearings.

**Reduced grease quantity**

- If motors are stored for longer than 5 years, regrease them according to the specifications on the motor nameplate using a relubrication device.

**Moisture absorption**

- Check to see that the wiring space of the motor is dry and clean.
- Remove moisture and dirt.
- If the motor has absorbed moisture, measure the insulation resistance (see chapter "Measuring the insulation resistance" (→ 🗎 34)) and dry the motor (see chapter "Drying the motor" (→ 🗎 35)).

### 4.2.1 Checking the brake

If motors with brake have been stored or non-operational for longer than 9 months, check their function before taking them into operation.

25957074/EN – 06/2019

### 4.2.2 Measuring the insulation resistance

The insulation resistance (see following figure) varies greatly depending on the temperature.

If the measured resistance is within the range of the limit characteristic curve (depending on the ambient temperature), the insulation resistance is sufficient. If the value is below the limit characteristic curve, dry the motor.

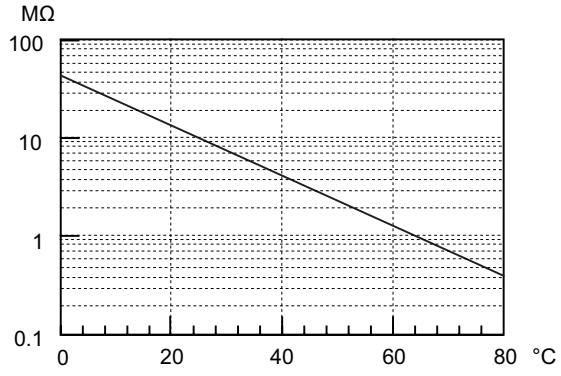


*18014398682805003*

25957074/EN – 06/2019

### 4.2.3 Drying the motor

Use either warm air or an isolation transformer to dry the motor.

## INFORMATION

The motors of size 56 and DR..J motors must be dried only by warm air.

## ⚠ WARNING

Risk of crushing due to torque at the motor shaft.

Severe or fatal injuries.

- Only use warm air for drying DR..J motors.

**Drying the motor with warm air**

1. Dry the motor with warm air.
2. End the drying process when the minimum insulation resistance is exceeded.

**Dry the motor with an isolation transformer**

1. Connect the windings in series.
2. Auxiliary AC voltage supply max. 10% of the nominal voltage with max. 20% of the rated current

*Connect the windings in series: R13 wiring diagram*

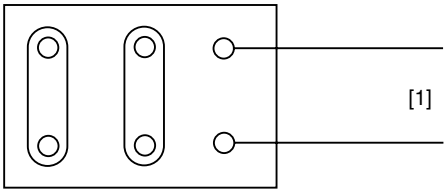


*2336250251*

[1] Transformer

*Connect the windings in series: wiring diagram R72*

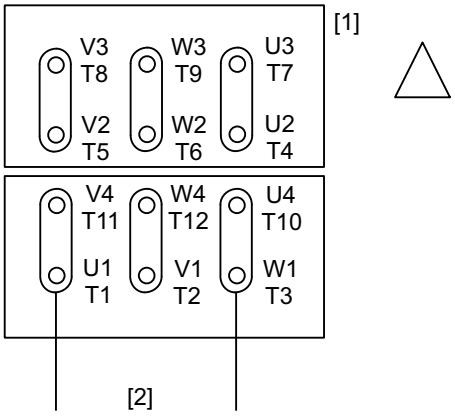


*2343045259*

[1] Motor terminal boards [2] Transformer

25957074/EN – 06/2019

*Connect the windings in series: Wiring diagram R76*

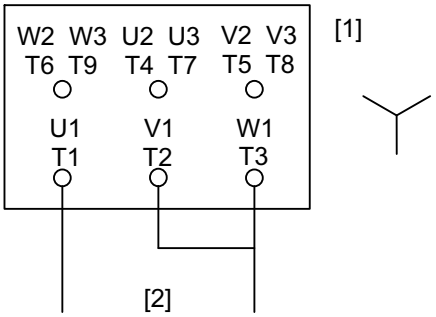


*2343047179*

[1] Motor terminal boards [2] Transformer

*Connect the windings in series: Wiring diagram C13*

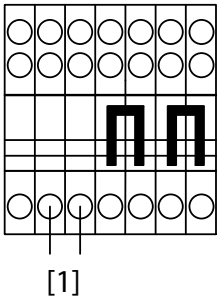


*3955447819*

[1] Transformer

*Connect the windings in series: Wiring diagram A13*

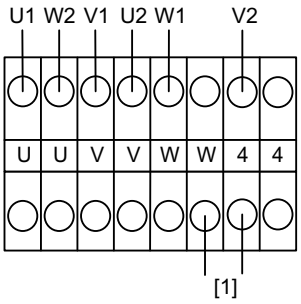


*27511350155*

[1] Transformer

25957074/EN – 06/2019

## 4.3 Motor installation notes



**⚠ CAUTION**

Sharp edges due to open keyway.

Risk of cutting injuries.

- Insert the key into the keyway.
- Pull a protective tubing over the shaft.

**NOTICE**

Improper assembly may damage the drive and corresponding components.

The drive system might be damaged.

- Observe the following information.

- Remove any anti-corrosion agent and dirt from motor shaft ends and flange surfaces. Use a commercially available solvent. Do not allow the solvent to come in contact with the bearings or sealing rings.
- Only install the gearmotor in the specified mounting position on a level, vibration-free and torsionally rigid support structure.
- The mounting position for installation must correspond with the specifications on the nameplate.
- Make sure that there is sufficient clearance around the motor to provide an adequate cooling air supply, and that the motor does not draw in warm exhaust air from other units.
- Align the motor and the driven machine carefully in order to prevent the output shaft from being exposed to unacceptable strain. Observe the permitted overhung and axial forces.
- Do not jolt or hammer the shaft end.
- Use an appropriate cover, e.g. option /C "Canopy", to prevent objects or fluids entering motors in vertical mounting positions (M4/V1).
- Balance components for subsequent mounting on the shaft with a half key (motor shafts are balanced with a half key).
- Existing condensation drain holes are sealed with closing plugs. If contaminated, the condensation drain holes must be checked for proper functioning on a regular basis and cleaned if required.

25957074/EN – 06/2019

### 4.3.1 Mounting the motor with aluminum feet

To mount motors with a foot made of aluminum, you have to use washers with an outer diameter that is at least twice the screw diameter (e.g. DIN EN ISO 7090).

Use bolts of strength class 8.8 up to max. 10.9.

Tightening torque according to VDI 2230-1.

| Motors | Maximum permitted screw lengths |
|---|---|
| DRN63 – DRN71 | M6 × 20 |
| DR2..63 – DR2..71MS | M6 × 20 |
| DRN80 – 90 | M8 × 20 |
| DR2..71M – DR2..80 | M10 × 25 |
| DRN100 – 132S | M10 × 25 |

DRN/DR2..63 motors

With DRN/DR2..63 motors, the aluminum foot is slotted in the front due to the limited space.

Position the screws beforehand or fasten the foot with stud bolts.

### 4.3.2 Installation in damp locations or outdoors

- Use suitable cable glands for the incoming cable (use reducing adapters if necessary) according to the installation instructions.
- If possible, arrange the terminal box in such a way that the cable entries are pointing downwards.
- Seal the cable entry properly.
- Clean the sealing surfaces of the terminal box and the terminal box cover carefully before re-assembly; replace embrittled gaskets.
- If required, touch up the corrosion protection (especially at the eyebolts).
- Check the degree of protection.
- Protect the shaft against corrosion using a suitable anti-corrosion agent.

25957074/EN – 06/2019

## 4.4 Installation tolerances

| Shaft end | Flanges |
|---|---|
| Diameter tolerance according to EN 50347<br>• ISO j6 with Ø ≤ 28 mm<br>• ISO k6 with Ø ≥ 38 mm up to ≤ 48 mm<br>• ISO m6 at Ø ≥ 55 mm<br>• Centering bore according to DIN 332, shape DR | Centering shoulder tolerance according to EN 50347<br>• ISO j6 with Ø ≤ 250 mm<br>• ISO h6 with Ø ≥ 300 mm |

## 4.5 Assembling the input elements

Drive components that are installed on the motor shaft end, e.g. pinions, must be warmed up prior to assembly in order to prevent damage, e.g. to the encoder of stand-alone motors.



**⚠ WARNING**

Unsecured key skidding out of the keyway.

Severe or fatal injuries due to flying parts.

- Only operate the motor with attached customer output element (e.g. gear unit), or with a suitably secured key.

25957074/EN – 06/2019

## 4.6 Encoder mounting adapter

If a drive was ordered with encoder mounting adapter, SEW-EURODRIVE will deliver the drive with enclosed coupling. Do not connect the coupling for operation without the encoder.

### 4.6.1 Mounting the XV../EV.. encoder mounting adapter to DR..71 – 225, DRN80 – 225 motors

If you have ordered the XV.. or EV.. encoder mounting adapter, the adapter [A] and the coupling [B – E] are enclosed with the motor and are to be assembled by the customer.

The following figure shows how to assemble the coupling and the adapter:

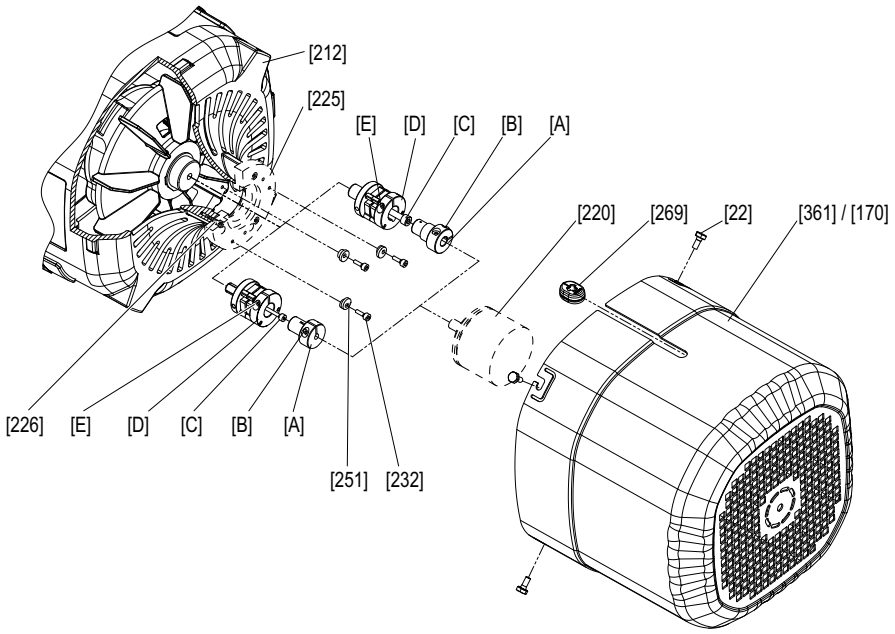


*9007202887904779*

[22] Screw
[170] Forced cooling fan guard
[212] Fan guard with encoder mount
[220] Encoder
[225] Intermediate flange (XV1A)
[232] Screws (XV1A, XV2A)
[251] Conical spring washers (XV1A, XV2A)
[361] Safety cover
[269] Cable grommet
[A] Adapters
[B] Retaining screw
[C] Central retaining screw
[D] Coupling (spread- or solid shaft coupling)
[E] Retaining screw
[226] Screw

25957074/EN – 06/2019

**Mounting the XV../EV.. encoder mounting adapter to DR..71 – 225, DRN80 – 225 motors**

1. Remove the safety cover [361], or the forced cooling fan if required.
2. **For XV2A, XV3A, and XV4A:** Remove the intermediate flange [225].
3. Screw the coupling [D] to the bore at the shaft end using screw [C].
4. Plug the adapter [A] onto the pin of the encoder [220].
5. Tighten the central retaining screw [B].
6. **For XV2A, XV3A, XV4A:** Mount the intermediate flange [225] using the screws [226].
7. Plug the encoder [220] with adapter [A] onto the coupling [D].
8. Tighten the retaining screw [E].
9. **For XV1A, XV2A:** Re-install the retaining screws [232] with conical spring washers.
10. **For XV3A, XV4A:** Installed by the customer via bores in the encoder plate.

| Motor | Screw | Tightening torque |
|---|---|---|
| DR..71 – 132<br>DRN80 – 132S | [C] | 3 Nm |
| DR..160 – 225<br>DRN132M – 225: | [C] | 8 Nm |
| All | [226] | 3 Nm |
| All | [B] | 3 Nm |
| All | [E] | 3 Nm |
| All | [232] | 3 Nm |

25957074/EN – 06/2019

### 4.6.2 Mounting the XV../EV.. encoder mounting adapter to DR..250 – 280, DRN250 – 280 motors

If you have ordered the XV../EV.. encoder mounting adapter, the coupling [233] is enclosed with the motor and must be installed by the customer.

The following figure shows an example of how the coupling is installed:

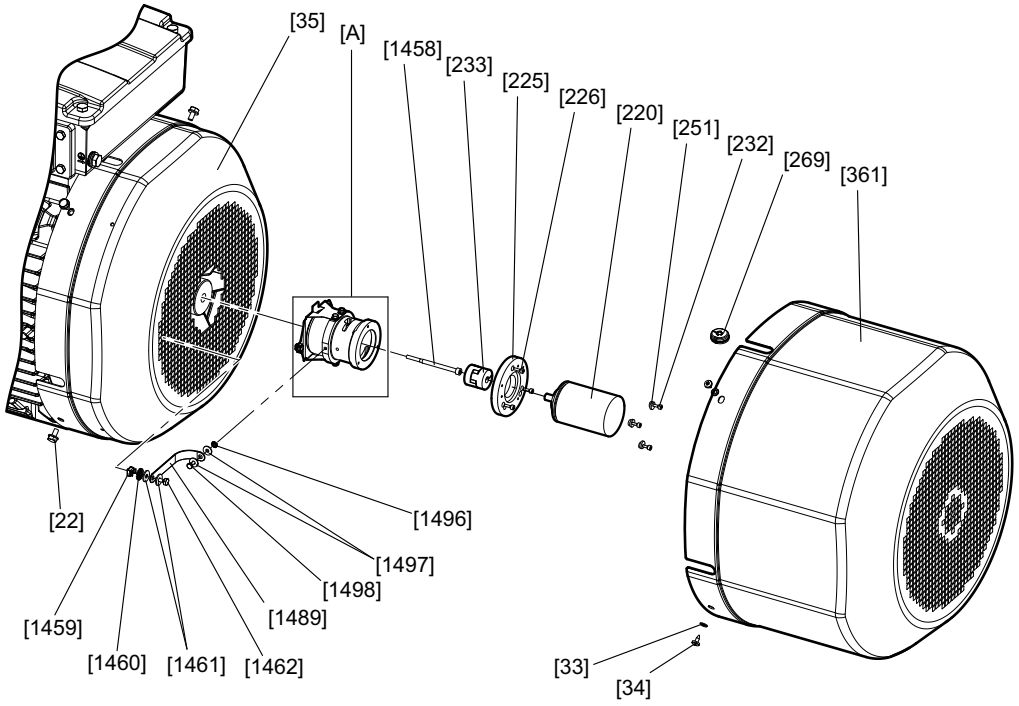


*18014406225445899*

| | | | |
|---|---|---|---|
| [22] | Screw | [361] | Safety cover (normal/long) |
| [33] | Washer | [1458] | Screw |
| [34] | Screw | [1459] | Cage nut |
| [35] | Fan guard | [1460] | Serrated lock washer |
| [220] | Encoder | [1461] | Washer |
| [225] | Intermediate flange (optional) | [1462] | Screw |
| [226] | Screw | [1489] | Ground strap |
| [232] | Screws (.V1A, .V2A) | [1496] | Serrated lock washer |
| [233] | Coupling | [1497] | Washer |
| [251] | Conical spring washers (.V1A, .V2A) | [1498] | Screw |
| [269] | Cable grommet | [A] | Encoder mounting adapter |

25957074/EN – 06/2019

**Mounting encoders to XV../EV.. encoder mounting adapters at DR..250 – 280, DRN250 – 280 motors**

1. Remove the safety cover [361], or the forced cooling fan if required.
2. Place the coupling [233] onto the pin of the encoder mounting adapter [A].
3. Tighten the screw of the coupling [233] via the slots in the encoder mounting adapter.
4. **For XV2A, XV3A, XV4A:** Mount the intermediate flange [225] to the encoder mounting adapter [A] using screw [226].
5. **For XV1A, XV2A:** Insert the screws [232] with eccentric disk spring washers [251] in the encoder mounting adapter [A].
6. Fasten the encoder [220] to the encoder mounting adapter [A] or the intermediate flange [225].
7. Plug the encoder [220] into the coupling [233].
8. To secure the eccentric disks [251], insert the screws [232].
9. **For XV1A, XV2A:** Tighten the screws [232] while turning the eccentric disks [251] in clockwise direction into the groove of the encoder [220].
10. Tighten the screw of the coupling [233].
11. Insert the encoder cable into the cable grommet [269].
12. Insert the cable grommet [269] into the recess of the safety cover [361] or the forced cooling fan.
13. Mount the safety cover [361] onto the forced cooling fan.

| Motor | Screw | Tightening torque |
|---|---|---|
| DR..250 – 280<br>DRN250 – 280 | Screw of the coupling [233] | 3 Nm |
| DR..250 – 280<br>DRN250 – 280 | [226] | 3 Nm |
| DR..250 – 280<br>DRN250 – 280 | [232] | 3 Nm |

### 4.6.3 XH.A encoder mounting adapter

The XH1A, XH7A and XH8A encoder mounting adapters for hollow shaft encoders are premounted on delivery.

To mount the encoder, proceed as described in chapter "Motor and brake maintenance – preliminary work" (→ 🗎 127).

25957074/EN – 06/2019

## 4.7 Terminal box

### 4.7.1 Turning the terminal box

The following figure shows the structure of the terminal box variant with terminal board:

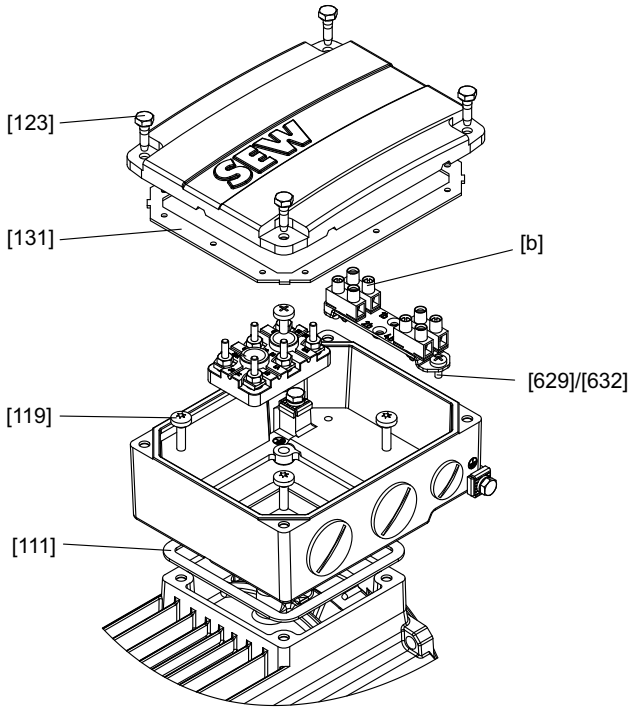


*9007206616947979*

[111] Gasket
[119] Terminal box lower part hex head screws (4 x)
[123] Terminal box cover hex head screws (4 x)
[131] Gasket
[b] Terminal
[629]/ [632] Screws

Proceed as follows to turn the terminal box:

1. Loosen the screws [123] of the terminal box cover. Remove the terminal box cover.
2. Remove the screws [629]/[632].
3. Remove the terminal [b].
4. Remove the retaining screws [119] of the terminal box.
5. Clean the sealing surfaces at the stator shoulder, terminal box lower part and terminal box cover.
6. Check the gaskets [111] and [131] for damages.
7. Replace any damaged seals.
8. ⚠ **DANGER!** Electric shock due to damaged cables. Severe or fatal injuries. When installing the terminal box lower part or the terminal board, make sure the cables are not crushed or twisted. Do not use sharp or pointed objects to align the cables.
   Turn the terminal box to the required position.
9. Make sure that the gasket is positioned correctly [111].

25957074/EN – 06/2019

10. Attach the terminal box lower part.
11. Apply the corresponding tightening torque to tighten the screws [119] of the terminal box lower part.
12. Refer to chapter "Appendix" (→ 🗎 269) for the arrangement of the auxiliary terminals.
13. Secure terminal [b] with screws [629]/[632].
14. Make sure that the gasket is positioned correctly [131].
15. Attach the terminal box cover to the terminal box lower part.
16. Apply the corresponding tightening torque to tighten the screw [123] of the terminal box cover.
17. To make sure that the cables have not been damaged, perform an insulation test after reassembly, see chapter "Preliminary work after longer periods of storage" (→ 🗎 33).

**Tightening torques of the terminal box lower part**

| Motor | Screw | Tightening torque |
|---|---|---|
| | | Nm |
| DR..71 – 132<br>DRN71 – 132S<br>DR2..71– 80 | [119] | 5 |
| DR..160 – 225<br>DRN132M – 225 | [119] | 27.3 |
| DR..250 – 315<br>DRN250 – 315 | [119] | 54 |

**Tightening torques of the terminal box cover**

| Motor | Screw | Tightening torque |
|---|---|---|
| | | Nm |
| DR2..56 | [123] | 3 |
| DR..71 – 132<br>DRN63 – 132S<br>DR2..63– 80 | [123] | 4 |
| Aluminum<br>DR..160 – 225<br>DRN132M – 225 | [123] | 11.3 |
| Gray cast iron<br>DR..160 – 225<br>DRN132M – 225 | [123] | 27.3 |
| DR..250 – 315<br>DRN250 – 315 | [123] | 54 |

25957074/EN – 06/2019

### 4.7.2 Terminal box with NPT thread

In terminal boxes with NPT thread, cable glands cannot always be screwed in all the way (up to the O-ring).

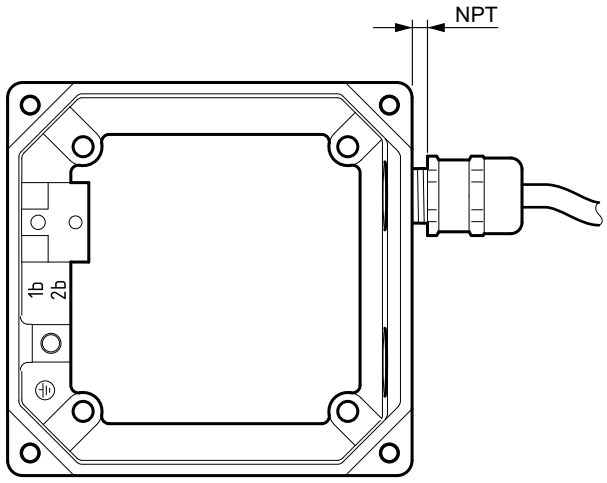


*14949925387*

For applications in wet areas, SEW-EURODRIVE recommends using metric screw fittings.

25957074/EN – 06/2019

### 4.7.3 Breaking open knock-outs

In order to be able to insert cables into the terminal box, the prepared knock-outs must be broken open.

✓ Required tools: Screwdriver or chisel.

1. **NOTICE!** Damage to the terminal box or fragments inside the motor. Possible physical damage. Exercise caution when breaking open the knock-outs.
   Break open the knock-out [K] by using a chisel or screwdriver.
2. Check the opening for residual burr. If any residual burr is present, remove it by using a suitable tool.

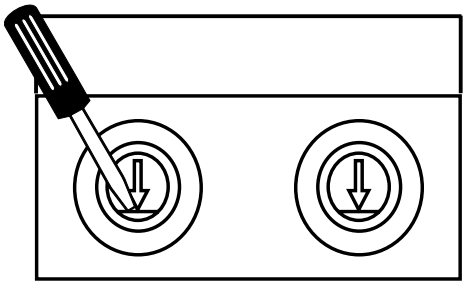

*9007200052610443*

25957074/EN – 06/2019

## 4.8 Retrofitting (option /F.A) or modifying (option /F.B) motor feet

### 4.8.1 DRN71 – 132S, DR2..71 – 80 motors

The following figure shows a motor with option /F.A (retrofit foot).

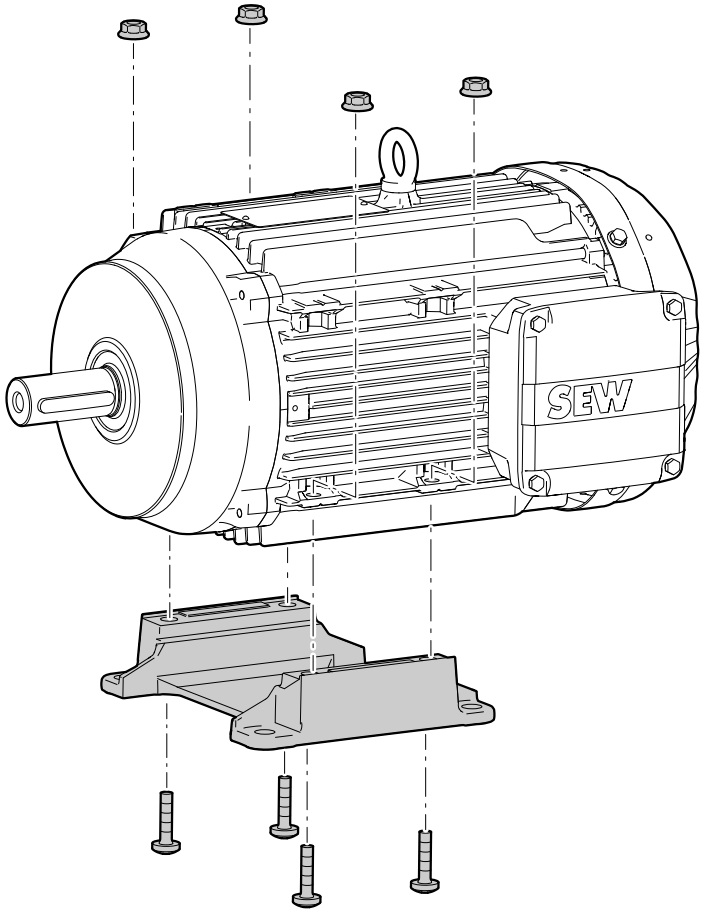


*22845053579*

✓ The contact surfaces at the foot [90] and stator [16] are painted.

1. Observe the following figure when selecting the contact surfaces. The figure illustrates the possible terminal box positions with reference to the retrofittable motor feet.

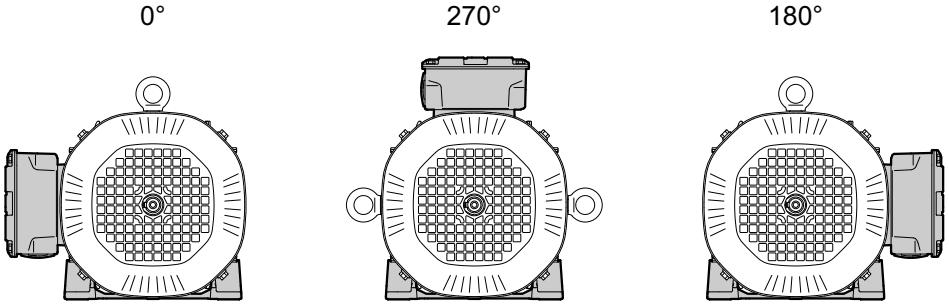


*22845056011*

2. Remove the paint from the stator [16] contact surface where the foot is to be screwed on.
3. Apply a thin layer of corrosion protection to the contact surfaces after the paint has been removed.
4. Remove the paint from the contact surfaces of the foot [90].

25957074/EN – 06/2019

5. Apply a thin layer of corrosion protection to the contact surfaces after the paint has been removed.
6. Attach the foot [90] to the motor using the screws [94] and washers [91]. Tighten the screws in diametrically opposite sequence. The screws are micro-encapsulated. This is why you have to screw in and tighten the screws quickly.
7. If necessary, you can apply paint or corrosion protection at the joint after attaching the foot [90].

**Changing the motor foot position**

For converting the motor foot to another position, observe the following points:

- After removing the screws [94], check for damage to the thread or other similar damage.
- When changing the position of the motor foot, apply corrosion protection to unpainted surfaces.

**Tightening torques**

| Motor | Screw | Tightening torque |
|---|---|---|
| DRN71 – 90, DR2..71 – 80 | M6 | 11.3 Nm |
| DRN100 – 132S | M8 | 27.3 Nm |

25957074/EN – 06/2019

### 4.8.2 DR..250 – 315, DRN..225 – 315 motors

The following figure shows a motor with option /F.A (retrofit feet).

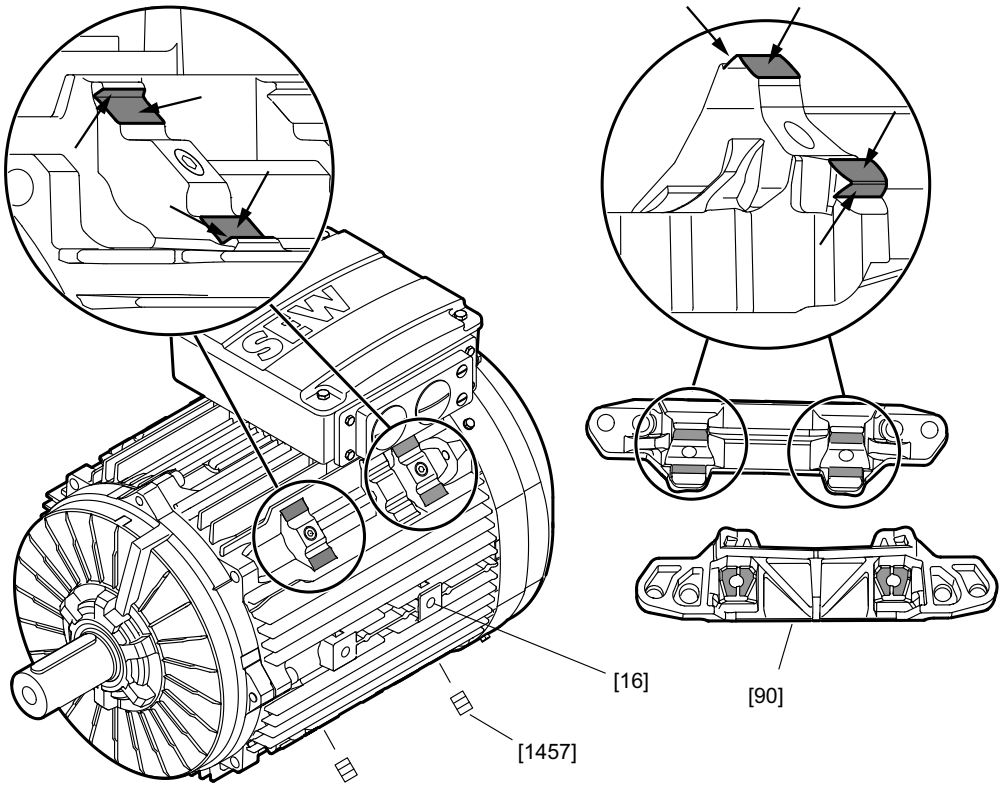


*18014406536422539*

| | | | |
|---|---|---|---|
| [16] | Stator | [1457] | Set screw |
| [90] | Foot | | Remove the paint from the marked surfaces. |

✓ The tapped holes of the foot mounting surfaces are closed with set screws [1457]. The contact surfaces at the feet [90] and stator [16] are painted.

1. Observe the following figure when selecting the contact surfaces. The figure illustrates the possible terminal box positions with reference to the retrofittable motor feet.

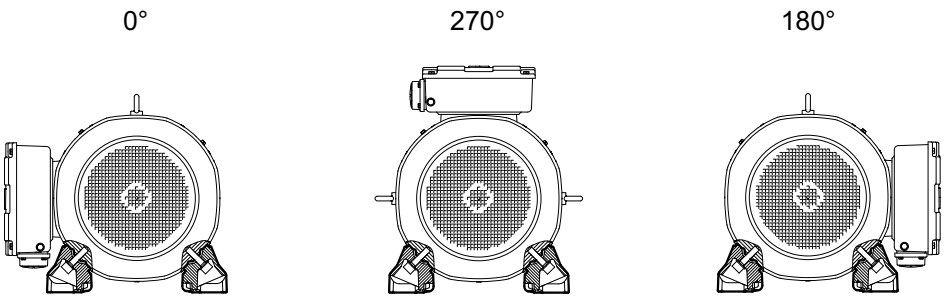


*9007211165643403*

2. Remove the set screws [1457] from those threads into which you will screw the foot screws [94].
   - ⇨ Sizes 250 – 280: 8 set screws
   - ⇨ Size 315: 12 set screws

25957074/EN – 06/2019

3. Remove the paint from the contact surfaces of the stator [16] where the feet are to be screwed on.
   ⇨ Sizes 250 – 280: 8 surfaces
   ⇨ Size 315: 12 surfaces
4. Apply a thin layer of corrosion protection to the contact surfaces after the paint has been removed.
5. Remove the paint from the contact surfaces of the feet [90].
6. Apply a thin layer of corrosion protection to the contact surfaces after the paint has been removed.
7. Attach the feet [90] to the motor using the screws [94] and washers [93]. The screws are micro-encapsulated. This is why you have to screw in and tighten the screws quickly.
8. Apply paint or corrosion protection at the parting line after attaching the feet [90].

**Changing motor feet positions**

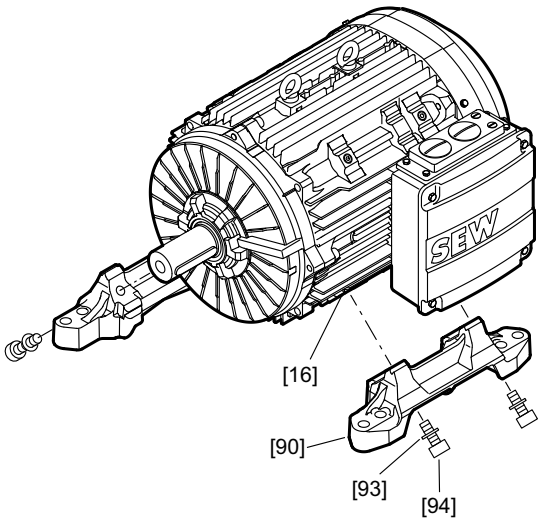


*9007206996709387*

[16] Stator
[90] Foot
[93] Washer
[94] Screw

For converting the motor feet to another position, observe the following points:

- After removing the screws [94], check for damage to the thread or other similar damage.
- Remove the old micro-encapsulation.
- Clean the threads of the screws [94].
- Apply a high-strength thread locker to the screw threads [94] before inserting the screws again.
- The set screws removed from the new mounting position can be reused for the bores of the old mounting position. After inserting the set screw [1457] into the open tapped holes in the stator [16], paint or corrosion protection can be applied on the bare joining surfaces of the stator.
- When the position of the motor feet is changed, apply corrosion protection to the unpainted surfaces.

25957074/EN – 06/2019

### Tightening torques

| Motor | Screw | Tightening torque |
|---|---|---|
| DRN225 | M16 | 230 Nm |
| DR..250/DRN250 | M20 | 464 Nm |
| DR..280/DRN280 | M20 | 464 Nm |
| DR..315/DRN315 | M20 | 464 Nm |

25957074/EN – 06/2019

## 4.9 Direct mounting of a motor on a gear unit

### INFORMATION

Secure all pinions on the motor or input shaft with Loctite® 649 even if a retaining ring is additionally present.

If the pinion is already fastened to the shaft, start cleaning the sealing surface (step 6).

Joining the pinion to the motor or input shaft

1. Clean and degrease the shaft and the bore of the pinion.
2. Apply Loctite® 649 to the shaft after the securing hole over the entire area of the circumference.

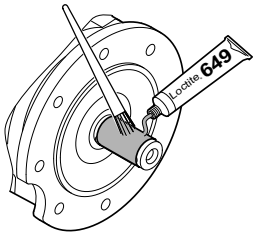


*22763067787*

3. Warm the pinion up to **at least** 100 °C to a **maximum of** 130 °C.
4. Push the pinion onto the shaft.
5. Secure the pinion on the shaft with the retaining ring.

Cleaning the sealing surfaces

6. Remove oils, grease, irregularities of the surface, rust and old Loctite® residue from the flange surfaces.

Sealing threads that lead into the housing interior

To prevent oil from escaping after installation, flange threads that lead into the housing interior must be sealed!

7. Clean and degrease thread through bores that lead into the housing interior and their studs.
8. Apply Loctite® 574 or Loctite® 5188 (selection according to the table at the end of the chapter) in a continuous ring on the upper threads of the flange thread and the stud.

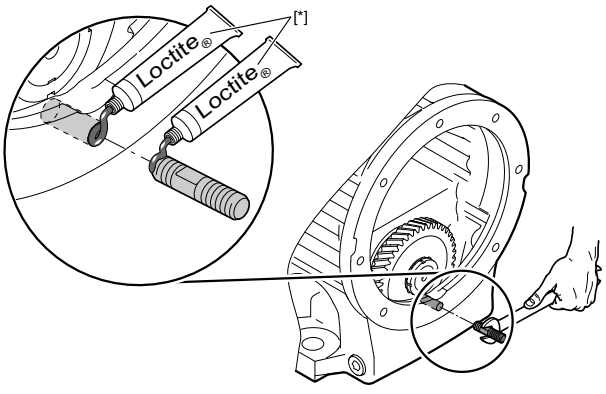


*22795758347*

[*] Loctite® according to the table at the end of the chapter

Screwing in the studs

9. Screw the studs into the thread up to the shoulder.

10. Remove any excess Loctite® (see following diagram) from the sealing surface 60 minutes after screwing in at the latest.

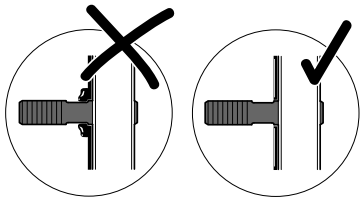

*22347379211*

Sealing the flange surface

## INFORMATION

Always apply the sealant over a large area in narrow places and on the gear units R97, R107, R127, F97 or F107.

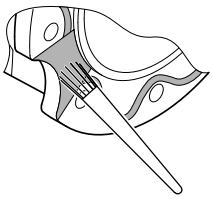

11. Only distribute Loctite® 574 or Loctite® 5188 (selection according to the table at the end of the chapter) to one of the sealing surfaces. Apply the sealant in beads or over a large area without gaps. Use a suitable application tool that does not contaminate the sealing surface, for example, a non-shedding brush or a short-hair lamb's wool roller.

Joining flange surfaces

12. Join the flange surfaces together. Next, **immediately** tighten the nuts with the specified torque (see the table at the end). If you tighten the nuts too late, the sealing film can tear.
13. The sealant must harden for 30 minutes and must not come into contact with the gear oil.

25957074/EN – 06/2019

### 4.9.1 Tightening torques

| Screw/nut | Tightening torque<br>Nm |
|---|---|
| M6 | 11.3 |
| M8 | 27.3 |
| M10 | 54 |
| M12 | 93 |
| M16 | 230 |

### 4.9.2 Selection and use of Loctite®

| Sealant | Use | Suitability | Batch size | Part number |
|---|---|---|---|---|
| Loctite® 649 | Locking agent for pinions | All gear units | 50 ml | 09120998 |
| Loctite® 574 | Surface sealing agent | All gear units except for R97 – R127, F97, F107 | 7 ml | 09102558 |
| Loctite® 5188 | | R97 – R127, F97, F107 | 50 ml | 03207013 |

25957074/EN – 06/2019

## 4.10 Options

### 4.10.1 /HR, /HF Manual brake release

The option manual brake release /HR, /HF is preinstalled and set at the factory for some brake sizes. If your drive was not delivered with manual brake release and you wish to retrofit it, observe the instructions in chapter "Retrofitting the /HR, /HF manual brake release" (→ 🗎 203).

**Activating and loosening the /HF manual brake release**



**⚠ WARNING**

No brake function due to activated manual brake release.

Severe or fatal injuries.

- Before startup, make sure that the hand lever has been removed or secured against unintentional activation to prevent unintentional brake release during operation.

You can use the option /HF (lockable manual brake release) to continuously mechanically release the BE.. brake with a set screw and a releasing lever.

On delivery, the set screw is inserted far enough to not fall out and to not affect the brake performance. The set screw is self-locking. This prevents it from unintended turning in or from falling out.

In case of BE03 brakes, the set screw is stored in the grommets between the stator fins.

*Activating the /HF manual brake release with BE03 brake*

Proceed as follows:

1. Screw in the set screw until there is no more clearance at the releasing lever.
2. To release the brake manually, screw in the set screw by 1/2 – 1 turn.

*Activating the /HF manual brake release with BE05 – BE122 brake*

Proceed as follows:

1. Screw in the set screw until there is no more clearance at the releasing lever.
2. To release the brake manually, screw in the set screw by 1/4 – 1/2 turn.

*Loosening the /HF manual brake release with BE03 brake*

Proceed as follows:

1. Remove the set screw completely from the thread.
2. Fasten the set screw between the stator fins with both grommets.

*Loosening the /HF manual brake release with BE05 – BE122 brake*

Proceed as follows:

1. Loosen the set screw at least until the floating clearance of the manual brake release has completely returned, see chapter "Retrofitting the /HR, /HF manual brake release".

25957074/EN – 06/2019

**Activating and loosening the /HR manual brake release**



## ⚠ WARNING

No brake function due to activated manual brake release.

Severe or fatal injuries.

- Before startup, make sure that the hand lever has been removed or secured against unintentional activation to prevent unintentional brake release during operation.

You can use the option /HF manual brake release to mechanically release the BE.. brake for a short time via a combination of releasing lever and hand lever. It is designed with a spring mechanism, so that it reengages automatically.

During assembly, the mechanics inside the fan guard is preset at the factory. A hand lever is included in the delivery that is attached to the stator housing.

*Activating the /HR manual brake release*

Proceed as follows:

1. Remove the hand lever from the stator housing.
2. Screw the thread of the hand lever completely into the thread of the releasing lever.
3. To release the brake, pull the hand lever in the direction away from the terminal box. The correct direction of use is indicated by an arrow symbol on the fan guard or on the closing part on the fan guard opening.

*Loosening the /HR manual brake release*



## INFORMATION

The releasing procedure can be performed with usual force application, do not apply too much force to the lever to avoid damage to the drive.

Proceed as follows:

1. Let go of the lever in the actuated state. The lever automatically reengages to the initial position and the brake is applied.
2. Screw out the hand lever and keep it safe. With motors of sizes 63 – 280, you can attach the hand lever to the stator housing with the provided grommets or clamps.

25957074/EN – 06/2019

### 4.10.2 Air filter /LF

The air filter is a filter fleece that is installed in front of the fan grille. It can be easily removed and installed for cleaning purposes.

The attached air filter prevents dust and other particles that are drawn in by the air flow from being distributed. It also prevents that the ducts between the cooling fins become clogged with dust.

In very dusty environments, the air filter protects the cooling fins from dirt or from becoming clogged.

The air filter must be cleaned or replaced depending on the amount of dust in the environment. No maintenance intervals can be specified due to the individuality of each drive and the environment where it is installed.

| Technical data | Air filter |
|---|---|
| Approvals | All certifications |
| Ambient temperature | -40 °C to +100 °C |
| Filter material | Viledon PSB290SG4 |

25957074/EN – 06/2019

### 4.10.3 Mounting adapter for measuring nipple

Depending on the respective order specifications, SEW-EURODRIVE delivers the drives as follows:

- With bore
- With bore and included measuring nipples for vibration measurement.

The following figure shows a motor with bores and inserted measuring nipples [1]:

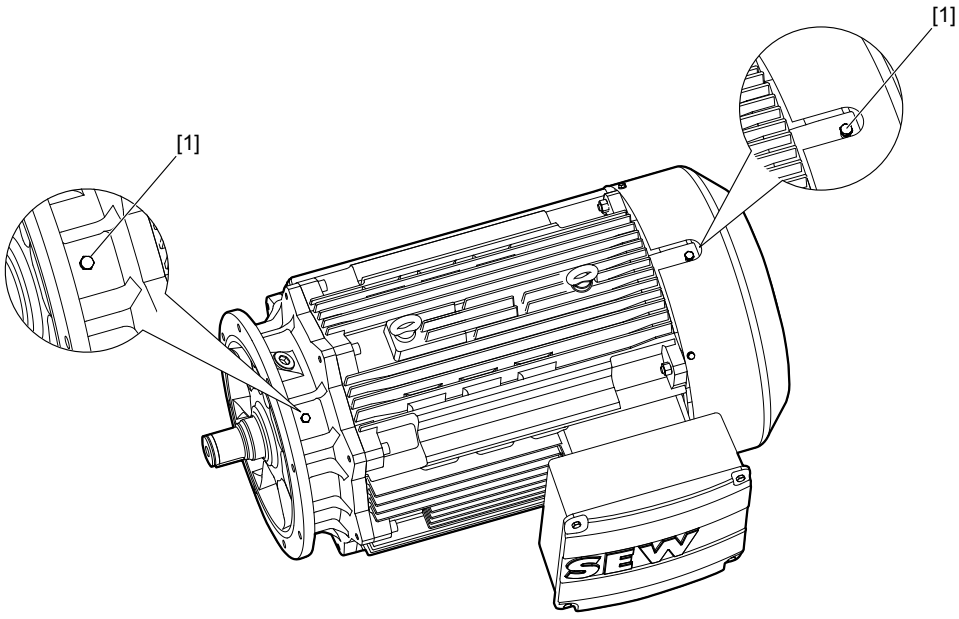


*9007201960947467*

[1] Bore with inserted measuring nipples

Proceed as follows to connect the customer measuring device:

1. Remove the protective plugs from the bores.
2. Insert the measuring nipple in the bores of the motor and screw in the measuring nipple with a tightening torque of 15 Nm.
3. Plug the mounting adapter of the measuring unit into the measuring nipple.

### 4.10.4 Second shaft end with optional cover

SEW-EURODRIVE delivers motors with the 2nd shaft end option /2W with the key inserted and secured by transport protection.

**⚠ WARNING**

Unsecured key skidding out of the keyway.

Severe or fatal injuries due to flying parts.

- Only operate the motor with a suitably secured key.

**⚠ WARNING**

Rotating shaft end or attachments.

Severe or fatal injuries.

- Only start the motor with installed protective cover at the second shaft end.

The protection cover must meet the impact resistance requirements of EN 60079-0 (VDE 0170-1):2014-06, chapter 26.4.2.

As an option, SEW-EURODRIVE can also provide the safety cover [361] for the 2nd motor shaft end already installed at the DR..71 – 280 and DRN63 – 280 motors. This is not included in the delivery as standard.

The following figure shows the dimensions of the optional cover.

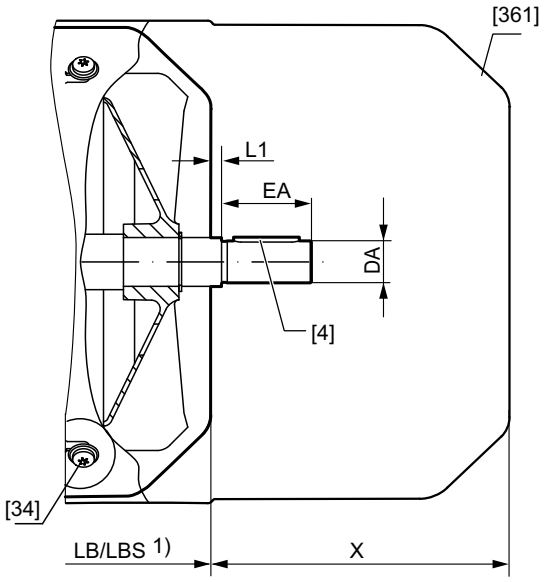


*18014402029073931*

[4] Keyway
[34] Tapping screw
[361] Safety cover
LB/LBS Length of the motor/brakemotor
1) Refer to the "AC Motors" catalog for dimensions

25957074/EN – 06/2019

**Dimensions**

| Motors | | | DA | EA | L1 | X |
|---|---|---|---|---|---|---|
| DR.. | DRN.. | DR2.. | mm | mm | mm | mm |
| – | DRN63 | DR2..63 | 11 | 23 | 2 | 78 |
| – | DRN63 /BE | DR2..63 /BE | | | | |
| DR..71 | DRN71 | DR2..71 | 11 | 23 | 2 | 91.5 |
| DR..71 /BE | DRN71 /BE | DR2..71 /BE | | | | 88 |
| DR..80 | DRN80 | DR2..80 | 14 | 30 | 2 | 95.5 |
| DR..80 /BE | DRN80 /BE | DR2..80 /BE | | | | 94.5 |
| DR..90 | DRN90 | – | 14 | 30 | 2 | 88.5 |
| DR..90 /BE | DRN90 /BE | – | | | | 81 |
| DR..100 | DRN100 | – | 14 | 30 | 2 | 87.5 |
| DR..100 /BE | DRN100 /BE | – | | | | 81 |
| DR..112 – 132 | DRN112 – 132S | – | 19 | 40 | 3.5 | 125 |
| DR..112 – 132 /BE | DRN112 – 132S /BE | – | | | | 120.5 |
| DR..160 | DRN132M/L | – | 28 | 60 | 4 | 193 |
| DR..160 /BE | DRN132M/L /BE | – | | | | 187 |
| DR..180 | DRN160 – 180 | – | 38 | 80 | 4 | 233 |
| DR..180 /BE | DRN160 – 180 /BE | – | | | | 236 |
| DR..200 – 225 | DRN200 – 225 | – | 48 | 110 | 5 | 230 |
| DR..200 – 225 /BE | DRN200 – 225 /BE | – | | | | 246 |
| DR..250 – 280 | DRN250 – 280 | – | 55 | 110 | 3 | 243.5 |
| DR..250 – 280 /BE | DRN250 – 280 /BE | – | | | | |

25957074/EN – 06/2019

# 5 Electrical installation

## 5.1 General information



**⚠ WARNING**

Electric shock due to incorrect installation.

Severe or fatal injuries.

- Use switch contacts in utilization category AC-3 according to EN 60947-4-1 for switching the motor.
- Use switch contacts to switch the brake. Depending on brake type and type design, the switch contacts meet the specifications in the following utilization categories:
  - Switch contacts for the supply voltage for operation with AC voltage: AC-3 according to EN 60947-4-1, or AC-15 according to EN 60947-5-1.
  - Switch contact for the supply voltage for operation with DC voltage: Preferably AC-3 or DC-3 according to EN 60947-4-1. As an alternative, contacts in utilization category DC-13 according to EN 60947-5-1 are also permitted.
  - Switch contacts for optional cut-off in the DC circuit: AC-3 according to EN 60947-4-1.
- When motors are powered by inverters, you must adhere to the wiring instructions in the frequency inverter operating instructions.

25957074/EN – 06/2019

## 5.2 Wiring diagrams and terminal assignment diagrams

Connect the motor as shown in the wiring connection diagrams provided with the motor. You can obtain the valid wiring diagrams free of charge from SEW-EURODRIVE.

### INFORMATION

Do not connect or start up the motor if the wiring diagram is missing.

## 5.3 Wiring notes

During installation observe the safety notes in chapter 2 and 5.

### 5.3.1 Protecting the brake control system against interference

Brake cables must always be routed separately from other unshielded power cables with phased currents to prevent interference with brake control. In particular, power cables with phased currents include:

- Output cables from frequency inverters and servo inverters, soft start units and brake units
- Supply cables for braking resistors and similar options

For line-operated motors and when using AC and DC circuit cut-off, the connection between the brake rectifier and the external switch contact must be in a different power cable that is separate from the motor power supply.

### 5.3.2 Protecting the motor protection devices against interference

Adhere to the following points to protect motor protection devices by SEW-EURODRIVE against interference:

- You may route separately shielded supply cables together with switched-mode power cables in one cable.
- Do not route unshielded supply cables together with switched-mode power lines in one cable.

25957074/EN – 06/2019

## 5.4 Special aspects for operation with a frequency inverter

When motors are powered from inverters, you must observe the wiring instructions issued by the inverter manufacturer. You must also observe the operating instructions for the frequency inverter.

### 5.4.1 Motors with SEW-EURODRIVE frequency inverter

Operation of the motor on SEW-EURODRIVE frequency inverters has been tested. The required dielectric strength values of the motors were confirmed and the startup routines adjusted to the motor data. You can operate the motor with any frequency inverter from SEW-EURODRIVE. To do this, start up the motor as described in the operating instructions for the frequency inverter.

### 5.4.2 Motor with non-SEW inverter

Operating SEW-EURODRIVE motors on third-party frequency inverters is permitted if the pulse voltages at the motor terminals indicated in the following figure are not exceeded.

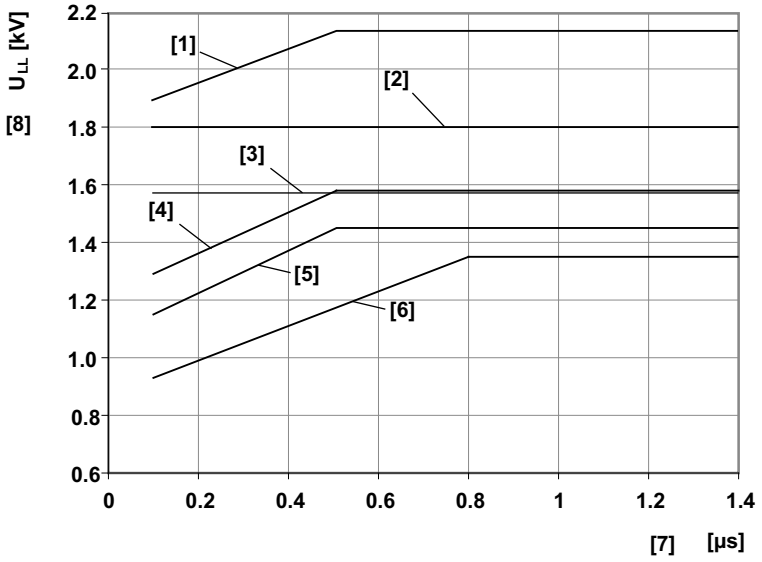


*9007203235332235*

[1] Permitted pulse voltage for DR.., DRN.. motors with reinforced insulation and increased resistance against partial discharge (/RI2)
[2] Permitted pulse voltage for DR.., DRN.. motors with reinforced insulation (/RI)
[3] Permitted pulse voltage according to NEMA MG1 part 31, $V_N \leq 500$ V
[4] Permitted pulse voltage according IEC 60034-25, limit value curve A for nominal voltage $V_N \leq 500$ V, star connection
[5] Permitted pulse voltage according IEC 60034-25, limit value curve A for nominal voltage $V_N \leq 500$ V, delta connection
[6] Permitted pulse voltage according to IEC 60034-17
[7] Voltage rise time
[8] Permitted pulse voltage

The insulation class depends on the voltage.

- ≤ 500 V = standard insulation
- ≤ 600 V = /RI
- > 600 V – 690 V = /RI2

25957074/EN – 06/2019

## INFORMATION

Compliance with the following limit values must be checked and considered:

- The supply voltage level at the third-party inverter
- The threshold of the brake chopper voltage
- The operating mode of the motor (motor mode/generator mode)

→ If the permitted pulse voltage is exceeded, you must install limiting measures, such as filters, chokes or special motor cables. Consult the manufacturer of the frequency inverter.

25957074/EN – 06/2019

## 5.5 Exterior grounding at the terminal box, LF grounding

In addition to the interior PE connection, a LF grounding cable can be attached to the outside of the terminal box. It is not installed as standard.

LF grounding can be ordered as completely pre-installed at the factory. For this, an aluminum or gray cast iron terminal box designed for brake connections is required for DR..71 – 132, DRN71 – 132S, DR2..71 – 80 motors. For DR..160 – 225, DRN132M – 225 motors, this option can be combined with all terminal box types.

The option can be combined with "HF grounding" (→ 🗎 67).

**DR..71 – 132, DRN71 – 132S, DR2..71 – 80 motors**

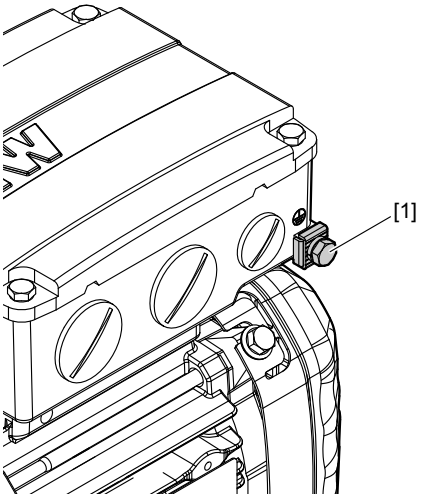


*9007207279069579*

[1] LF grounding at the terminal box

**DR..160 – 225, DRN132M – 225 motors**

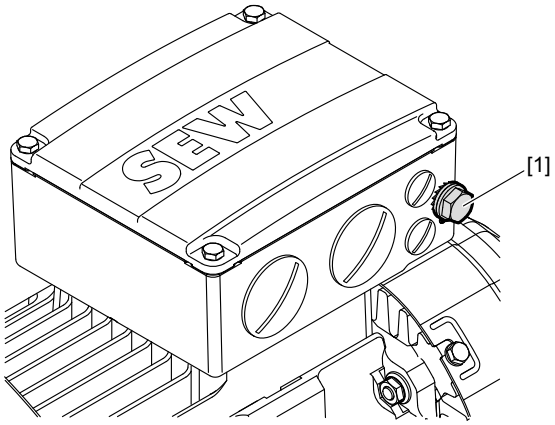


*8026938379*

[1] LF grounding at the terminal box

25957074/EN – 06/2019

## 5.6 Improving the grounding (EMC), HF grounding

For improved, low-impedance grounding at high frequencies, we recommend using the following connections with corrosion protected connection elements:

HF grounding is not installed as standard.

The HF grounding option can be combined with LF grounding at the terminal box.

If you require LF grounding in addition to HF grounding, you can connect the conductor to the same point.

The HF grounding option can be ordered as follows:

- Completely pre-assembled at the factory
- As "grounding terminal" kit for customer installation; part numbers listed in the following table.

| Motors | Part number of "Grounding terminal" kit |
|---|---|
| DRN63, DR2..56 – 63 | 21014817 |
| DR..71 – 100M,<br>DRN71 – 100LS,<br>DR2..71 – 80 | 21015988 |
| DR..100L – 132, DRN100L – 132S | 13633945 |
| DR..160 – 225, DRN132M – 225<br>with aluminum terminal box | |

## INFORMATION

If 2 or more ground straps are used, you have to attach them with a longer screw. The specified tightening torques refer to a strap thickness of t ≤ 3 mm.

### 5.6.1 DRN63, DR2..56 – 63 motors with HF(+LF) grounding

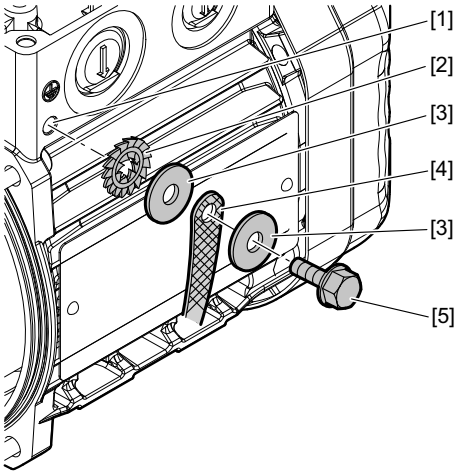


*22297406859*

[1] Use of the pre-cast bore at the stator housing
[2] Serrated lock washer
[3] Disk ISO 7093
[4] Ground strap (not included in the delivery)
[5] Self-tapping screw DIN 7500 M5 × 16, tightening torque 5 Nm

25957074/EN – 06/2019

### 5.6.2 DR..71 – 80, DRN71 – 80, DR2..71 – 80 motors with HF(+LF) grounding

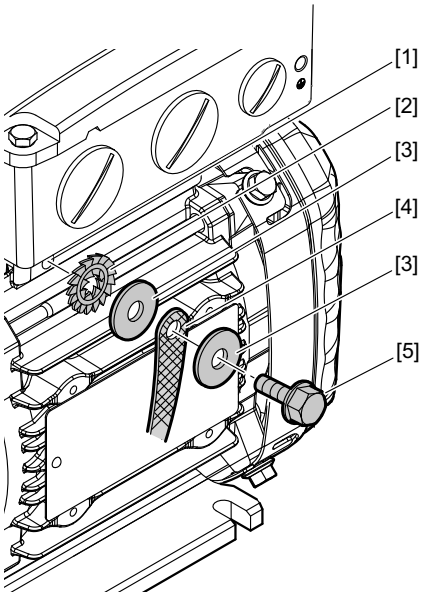


*8026768011*

[1] Use of the pre-cast bore at the stator housing
[2] Serrated lock washer
[3] Disk ISO 7093
[4] Ground strap (not included in the delivery)
[5] Self-tapping screw DIN 7500 M6 × 16, tightening torque 10 Nm

### 5.6.3 DR..90, DRN90 motors with HF(+LF) grounding

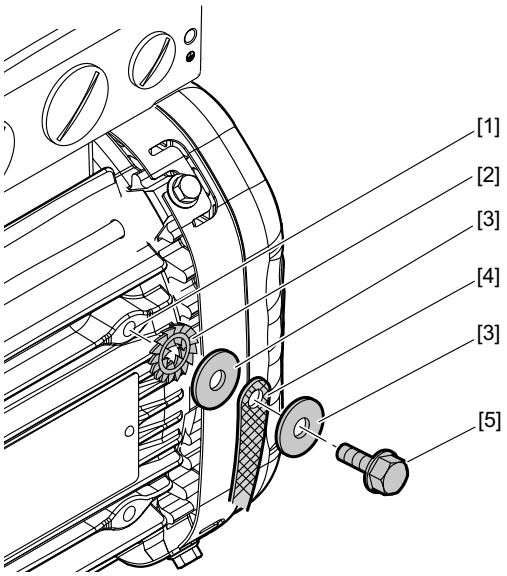


*8026773131*

[1] Use of the pre-cast bore at the stator housing
[2] Serrated lock washer
[3] Disk ISO 7093
[4] Ground strap (not included in the delivery)
[5] Self-tapping screw DIN 7500 M6 × 16, tightening torque 10 Nm

25957074/EN – 06/2019

### 5.6.4 DR..100M, DRN100LS motors with HF(+LF) grounding

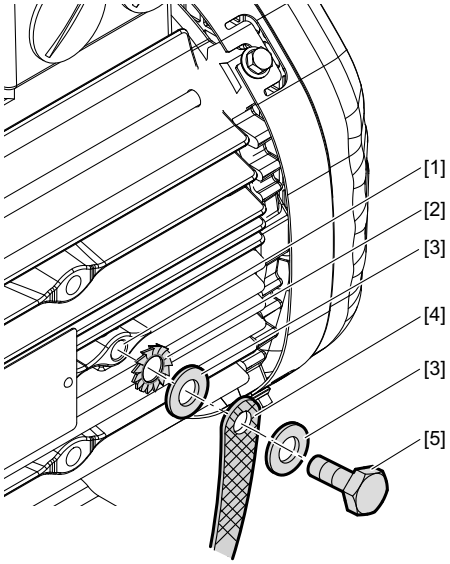


*18014402064551947*

[1] Use of the pre-cast bore at the stator housing
[2] Serrated lock washer
[3] Disk ISO 7093
[4] Ground strap (not included in the delivery)
[5] Self-tapping screw DIN 7500 M6 × 16, tightening torque 10 Nm

### 5.6.5 DR..100L – 132, DRN100LM – 132S motors with HF(+LF) grounding

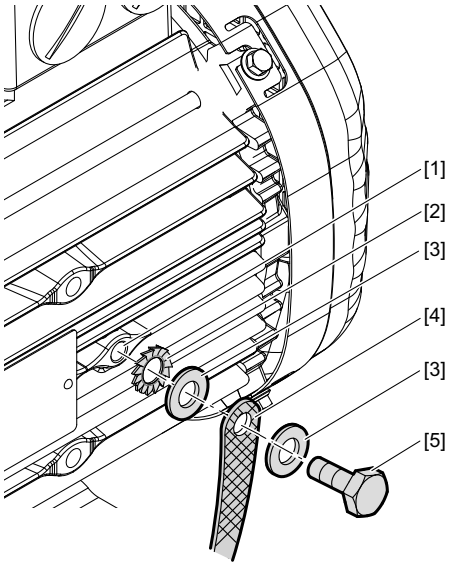


*18014402064551947*

[1] Use of tapped hole for lifting eyes
[2] Serrated lock washer DIN 6798
[3] Washer ISO 7089/ISO 7090
[4] Ground strap (not included in the delivery)
[5] Hex head screw ISO 4017 M8 × 18, tightening torque 10 Nm

25957074/EN – 06/2019

### 5.6.6 DR..160 – 315, DRN132M – 315 motors with HF(+LF) grounding

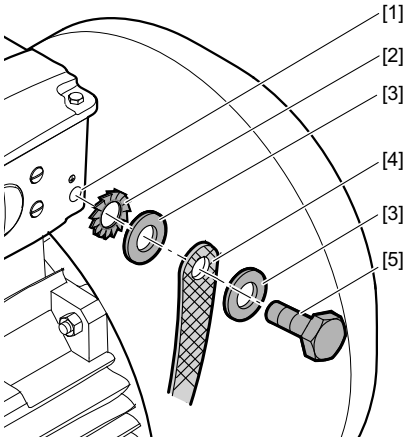


*9007202821668107*

[1] Use of the tapped holes at the terminal box
[2] Serrated lock washer DIN 6798
[3] Washer ISO 7089/ISO 7090
[4] Ground strap (not included in the delivery)
[5]
- Hex head screw ISO 4017 M8 × 18 (with aluminum terminal boxes of DR..160 – 225, DRN132M – 225 motors), tightening torque 10 Nm
- Hex head screw ISO 4017 M10 × 25 (with gray cast iron terminal boxes of DR..160 – 225, DRN132M – 225 motors), tightening torque 10 Nm
- Hex head screw ISO 4017 M12 x 30 (terminal boxes of DR../DRN250 – 315 motors), tightening torque 15.5 Nm

25957074/EN – 06/2019

## 5.7 Special aspects in switching operation

When the motors are used in switching operation, possible interference of the switchgear must be excluded by ensuring suitable wiring. According to EN 60204 (electrical equipment of machines), motor windings must have interference suppression to protect the numerical or programmable logic controllers. As it is primarily switching operations that cause interference, SEW-EURODRIVE recommends installing protective circuit in the switching devices.

If the drive has been delivered with a suppressor circuitry in the motor, you must observe the provided wiring diagram.

## 5.8 Special aspects of torque motors and low-speed motors

Due to the design of DRM.., DR2M.. torque motors and low-speed motors, very high induction voltages may be generated when they are switched off. Consequently, SEW-EURODRIVE recommends using the varistor circuit shown below for protection. The size of the varistors depends, amongst other factors, on the starting frequency.

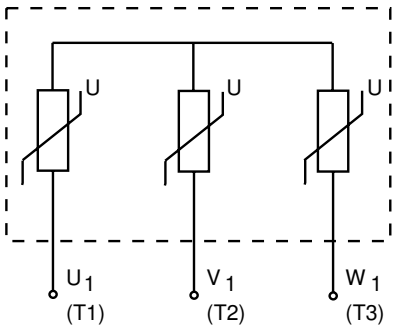


*2454566155*

## 5.9 Special aspects of DRK.. single-phase motors

### Scope of delivery and motor design

DRK.. single-phase motors are delivered with installed running capacitor in the terminal box. Starting relay, centrifugal switch or start-up capacitor are not supplied.

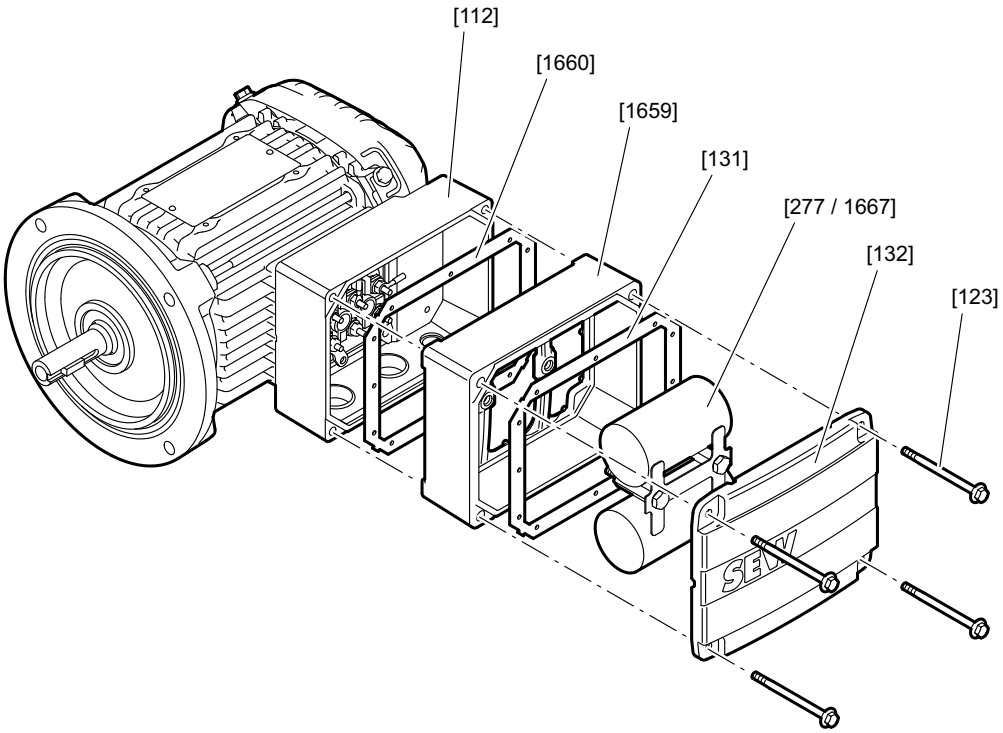


*9007211192388619*

| | | | |
|---|---|---|---|
| [112] | Terminal box | [277]/[1667] | Capacitor |
| [1660] | Seal | [132] | Terminal box cover |
| [1659] | Adapter piece | [123] | Screw |
| [131] | Seal | | |

25957074/EN – 06/2019

### 5.9.1 Connecting DRK.. single-phase motors



**⚠ WARNING**

Electric shock due to charged capacitor.

Severe or fatal injuries.

- After disconnection from the power supply, wait 5 seconds before opening the terminal box.

DRK.. single-phase motors are delivered with 1 or 2 installed and connected running capacitors. The data specified in chapter "Technical data" (→ 🗎 262) apply.

## INFORMATION



If a running capacitor installed by SEW-EURODRIVE must be replaced, only use capacitors with the same technical data.

## INFORMATION



Start-up against the complete rated torque is not possible with only the running capacitors.

Parts which are not supplied must be ordered from specialist retailers and must be connected according to the corresponding instructions and "wiring diagrams" (→ 🗎 284).

Proceed as follows during connection:

- Remove terminal box cover [132]
- Remove adapter piece [1659] with the running capacitors [277]/[1667]
- Perform the connection according to supplied wiring diagrams.

25957074/EN – 06/2019

## 5.10 Notes regarding the connection of the motor

### INFORMATION

It is essential to comply with the valid wiring diagram. Do not connect or start up the motor if this wiring diagram is missing. You can obtain the valid wiring diagrams free of charge from SEW-EURODRIVE.

### ⚠ WARNING



Danger due to contaminated terminal box.

Severe or fatal injuries.

- Seal the terminal box and unused cable entries against dust and humidity.
- Remove present foreign objects, dirt and humidity from the terminal box.

Observe the following points when connecting the motor:

- Check cable cross section
- Arrange terminal links correctly
- Screw on the connections and the PE conductor correctly
- Make sure that the connection cables are not cramped to avoid damage to the cable insulation.
- Observe air gaps, see chapter "Electrical connection" (→ 🗎 13)
- In the terminal box: Check winding connections and tighten them if necessary
- Perform the connection in accordance with the enclosed wiring diagram
- Avoid protruding wire ends
- Connect the motor according to the prescribed direction of rotation

25957074/EN – 06/2019

## 5.11 Connecting the motor via terminal block

### 5.11.1 According to wiring diagram R13

**Arrangement of terminal links with ⅄ connection**

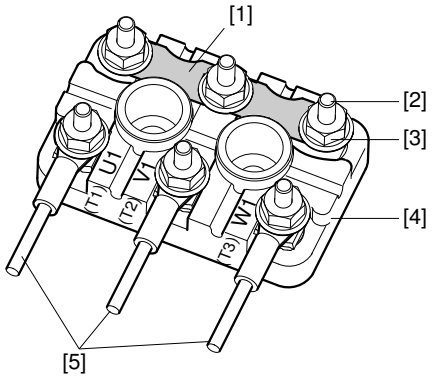


*27021598003155723*

**Arrangement of terminal links with △ connection**

DR..71 – 280, DRN63 – 280, DR2..63 – 80 motors
(single-sided supply):

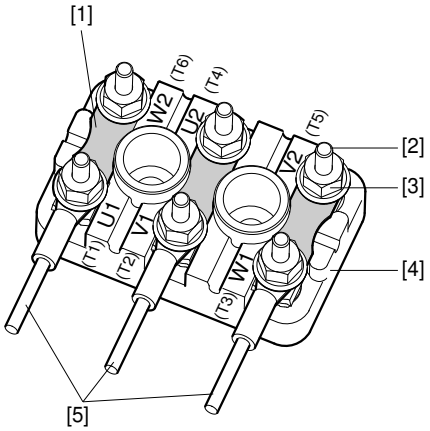


*9007199493672075*

DR../DRN250 – 315 motors
(double-sided supply):

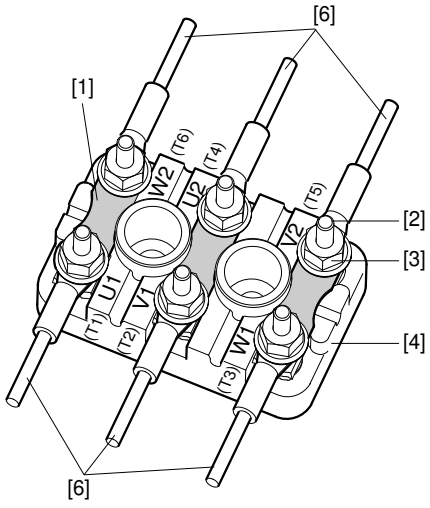


*9007199734852747*

[1] Terminal link
[2] Terminal studs
[3] Flange nut
[4] Terminal board
[5] Customer connection
[6] Customer connection with divided connection cable

## INFORMATION

For DR../DRN250 – 315 motors, SEW-EURODRIVE recommends a double-sided supply for load currents higher than

- M12: 250 A
- M16: 315 A

### 5.11.2 According to wiring diagram R76

**Arrangement of terminal links with ⅄ connection**

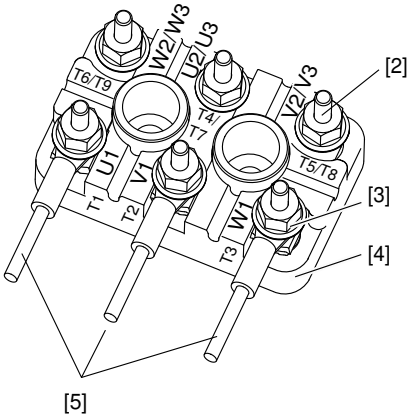


*2319075083*

**Arrangement of terminal links with ⅄⅄ connection**

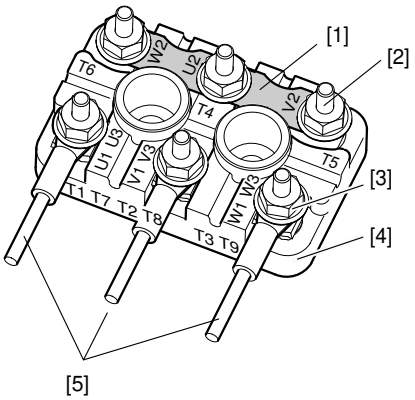


*9007201591100811*

[1] Terminal link
[2] Terminal studs
[3] Flange nut
[4] Terminal board
[5] Customer connection

## INFORMATION

Three winding lead ends must be rewired to change from high to low voltage:

The lines designated U3 (T7), V3 (T8) and W3 (T9) must be reconnected.

- U3 (T7) from U2 (T4) to U1 (T1)
- V3 (T8) from V2 (T5 ) to V1 (T2)
- W3 (T9) from W2 (T6) to W1 (T3)

→ Changing from low to high voltage is carried out in reverse order. In both cases, the customer connection is made to U1 (T1), V1 (T2) and W1 (T3). You can change the direction of rotation by interchanging 2 supply cables.

25957074/EN – 06/2019

### 5.11.3 According to wiring diagram R72

**Arrangement of terminal links with △ connection**

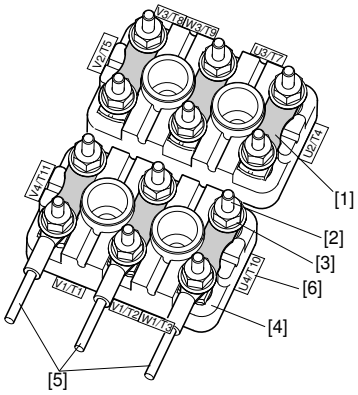


*18014400828555147*

**Arrangement of terminal links with △△ connection**

DR..71 – 280, DRN63 – 280, DR2..63 – 80 motors
(single-sided supply):

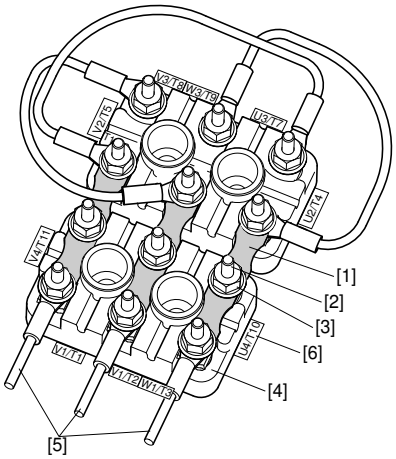


*18014400845874315*

DR../DRN250 – 315 motors
(double-sided supply):

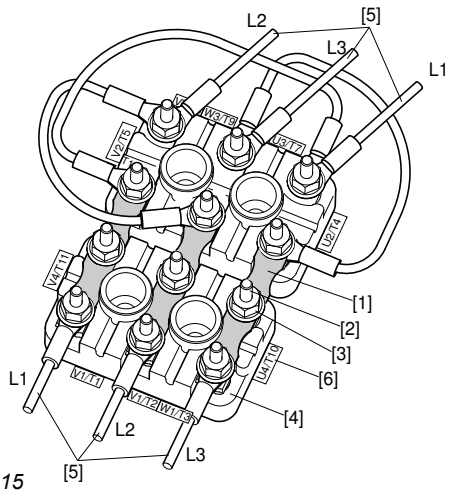


*9007208157343883*

[1] Terminal link
[2] Terminal studs
[3] Flange nut
[4] Terminal board
[5] Customer connection
[6] Wiring designation plate
L1 Conductor 1
L2 Conductor 2
L3 Conductor 3

## INFORMATION

For DR../DRN250 – 315 motors, SEW-EURODRIVE recommends a double-sided supply for load currents higher than

- M10: 160 A

### 5.11.4 Connection variants via terminal block

The motors are supplied and connected differently depending on the electrical design. Arrange the terminal links as shown in the wiring diagram and screw them on firmly. Observe the tightening torques specified in the following tables.

| DRN63, DR2..63 motors | | | | | | | |
|---|---|---|---|---|---|---|---|
| **Terminal stud** | **Tightening torque hex nut** | **Connection** | **Design** | **Connection type** | **Scope of delivery** | **PE connection screw** | **PE design** |
| **Ø** | | **Cross section** | | | | **Ø** | |
| **M4** | **1.6 Nm** | **≤ 1.5 mm²** | **1a** | **Conductor end sleeve** | **Preassembled terminal links** | M4 | 6 |
| | | **≤ 2.5 mm²** | **1a** | **Solid wire** | **Preassembled terminal links** | | |
| | | **≤ 6 mm²** | **1b** | **Ring cable lug** | **Preassembled terminal links** | | |
| | | ≤ 6 mm² | 2 | Ring cable lug | Connection accessories enclosed | | |
| **DR..71 – 100, DRN71 – 100, DR2..71 – 80 motors** | | | | | | | |
| **Terminal stud** | **Tightening torque hex nut** | **Connection** | **Design** | **Connection type** | **Scope of delivery** | **PE connection screw** | **PE design** |
| **Ø** | | **Cross section** | | | | **Ø** | |
| **M4** | **1.6 Nm** | **≤ 1.5 mm²** | **1a** | **Conductor end sleeve** | **Preassembled terminal links** | M5 | 4 |
| | | **≤ 2.5 mm²** | **1a** | **Solid wire** | **Preassembled terminal links** | | |
| | | **≤ 6 mm²** | **1b** | **Ring cable lug** | **Preassembled terminal links** | | |
| | | ≤ 6 mm² | 2 | Ring cable lug | Connection accessories enclosed | | |
| M5 | 2.0 Nm | ≤ 2.5 mm² | 1a | Solid wire Conductor end sleeve | Preassembled terminal links | | |
| | | ≤ 16 mm² | 1b | Ring cable lug | Preassembled terminal links | | |
| | | ≤ 16 mm² | 2 | Ring cable lug | Connection accessories enclosed | | |
| M6 | 3.0 Nm | ≤ 35 mm² | 3 | Ring cable lug | Connection accessories enclosed | | |
| **DR..112 – 132, DRN112 – 132M motors** | | | | | | | |
| **Terminal stud** | **Tightening torque hex nut** | **Connection by customer** | **Design** | **Connection type** | **Scope of delivery** | **PE connection screw** | **PE design** |
| **Ø** | | **Cross section** | | | | **Ø** | |
| **M5** | **2.0 Nm** | **≤ 2.5 mm²** | **1a** | **Solid wire Conductor end sleeve** | **Preassembled terminal links** | M5 | 4 |
| | | **≤ 16 mm²** | **1b** | **Ring cable lug** | **Preassembled terminal links** | | |
| | | ≤ 16 mm² | 2 | Ring cable lug | Connection accessories enclosed | | |
| M6 | 3.0 Nm | ≤ 35 mm² | 3 | Ring cable lug | Connection accessories enclosed | | |
| **DR..160, DRN132L motors** | | | | | | | |
| **Terminal stud** | **Tightening torque hex nut** | **Connection by customer** | **Design** | **Connection type** | **Scope of delivery** | **PE connection screw** | **PE design** |
| **Ø** | | **Cross section** | | | | **Ø** | |
| **M6** | **3.0 Nm** | **≤ 35 mm²** | **3** | **Ring cable lug** | **Connection accessories enclosed** | M8 | 5 |
| M8 | 6.0 Nm | ≤ 70 mm² | 3 | Ring cable lug | Connection accessories enclosed | M10 | 5 |

25957074/EN – 06/2019

| DR..180 – 225, DRN160 – 225 motors | | | | | | | |
|---|---|---|---|---|---|---|---|
| **Terminal stud Ø** | **Tightening torque hex nut** | **Connection by customer Cross section** | **Design** | **Connection type** | **Scope of delivery** | **PE terminal stud Ø** | **PE design** |
| **M8** | **6.0 Nm** | **≤ 70 mm²** | **3** | **Ring cable lug** | **Connection accessories enclosed** | M8 | 5 |
| M10 | 10 Nm | ≤ 95 mm² | 3 | Ring cable lug | Connection accessories enclosed | M10 | 5 |
| M12 | 15.5 Nm | ≤ 95 mm² | 3 | Ring cable lug | Connection accessories enclosed | M10 | 5 |
| **DR../DRN250 – 280 motors** | | | | | | | |
| **Terminal stud Ø** | **Tightening torque hex nut** | **Connection by customer Cross section** | **Design** | **Connection type** | **Scope of delivery** | **PE terminal stud Ø** | **PE design** |
| **M10** | **10 Nm** | **≤ 95 mm²** | **3** | **Ring cable lug** | **Connection accessories enclosed** | M12 | 5 |
| **M12** | **15.5 Nm** | **≤ 95 mm²** | **3** | **Ring cable lug** | **Connection accessories enclosed** | M12 | 5 |
| **DR../DRN315 motors** | | | | | | | |
| **Terminal stud Ø** | **Tightening torque hex nut** | **Connection by customer Cross section** | **Design** | **Connection type** | **Scope of delivery** | **PE terminal stud Ø** | **PE design** |
| **M12** | **15.5 Nm** | **≤ 95 mm²** | **3** | **Ring cable lug** | **Premounted connection pieces** | M12 | 5 |
| **M16** | **30 Nm** | **≤ 120 mm²** | | | | | |

The designs in bold print apply to S1 operation for the standard voltages and standard frequencies according to the data in the catalog. Other designs may have different connections, for example, different terminal stud diameters and/or a different scope of delivery.

25957074/EN – 06/2019

**Variant 1a**

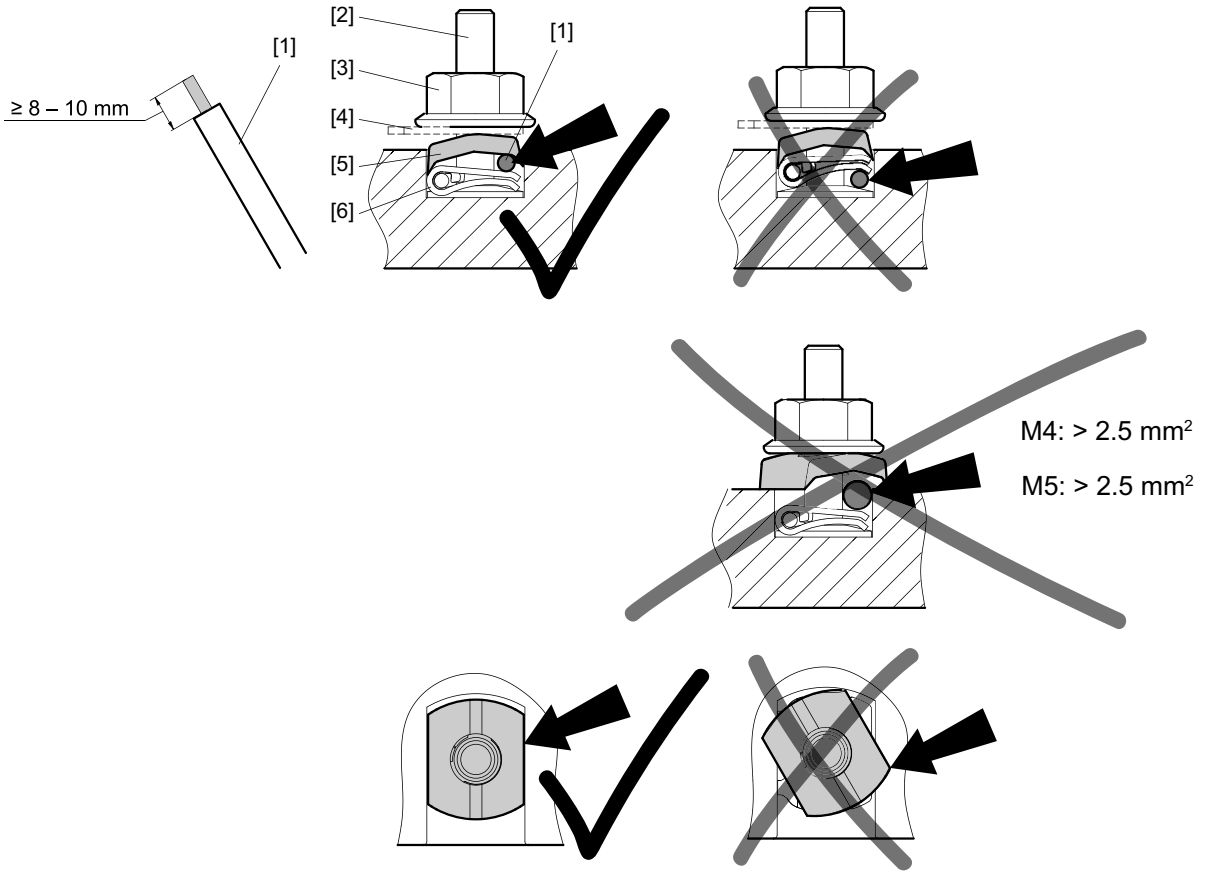


*36028797107830923*

[1] External connection
[2] Terminal stud
[3] Flange nut
[4] Terminal link
[5] Terminal washer
[6] Winding connection with Stocko terminal

25957074/EN – 06/2019

**Variant 1b:**

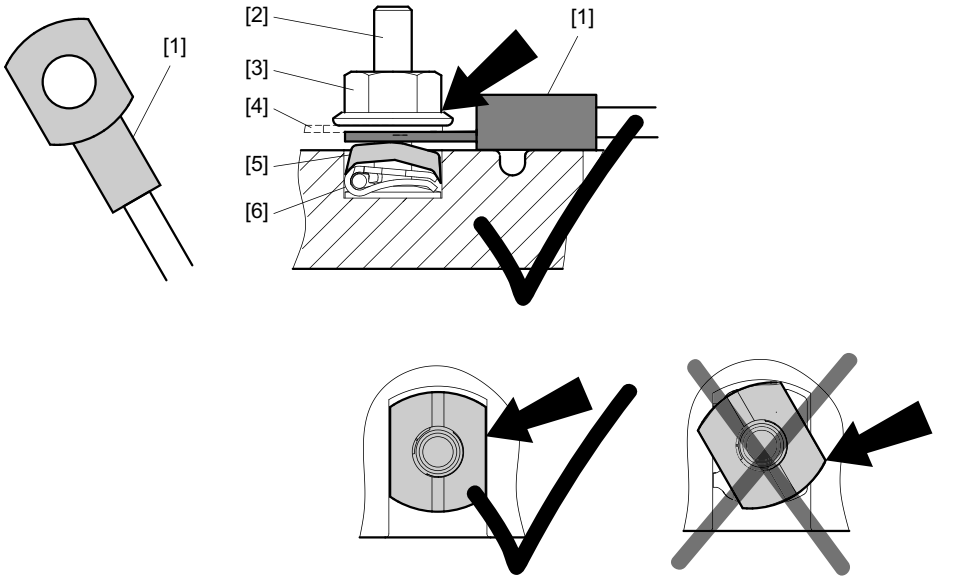


*18014398598346763*

[1] External connection with ring cable lug, according to DIN 46237 or DIN 46234, for example
[2] Terminal stud
[3] Flange nut
[4] Terminal link
[5] Terminal washer
[6] Winding connection with Stocko terminal

**Variant 2**

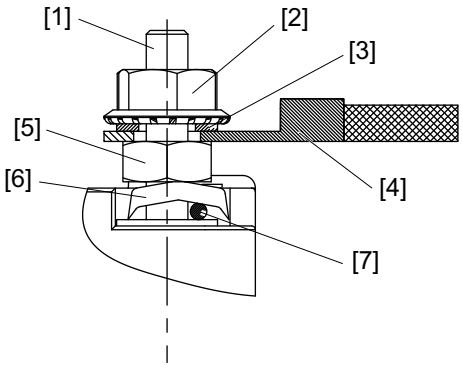


*9007199440180363*

[1] Terminal board
[2] Flange nut
[3] Terminal link
[4] External connection with ring cable lug, according to DIN 46237 or DIN 46234, for example
[5] Bottom nut
[6] Terminal washer
[7] Winding connection

**Variant 3**

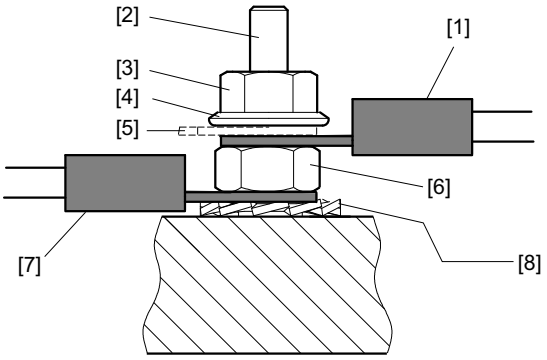


*9007199454382091*

[1] External connection with ring cable lug, according to DIN 46237 or DIN 46234, for example
[2] Terminal stud
[3] Upper nut
[4] Washer
[5] Terminal link
[6] Bottom nut
[7] Winding connection with ring cable lug
[8] Serrated lock washer

**Variant 4**

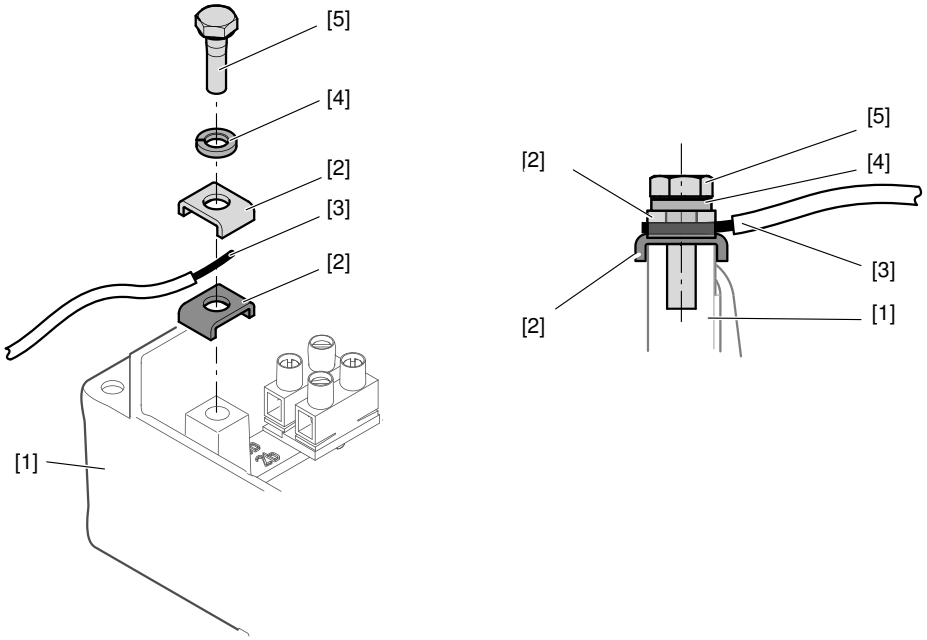


*18014399649088651*

[1] Terminal box
[2] Terminal clip
[3] PE conductor
[4] Lock washer
[5] Hex head screw

25957074/EN – 06/2019

**Variant 5**

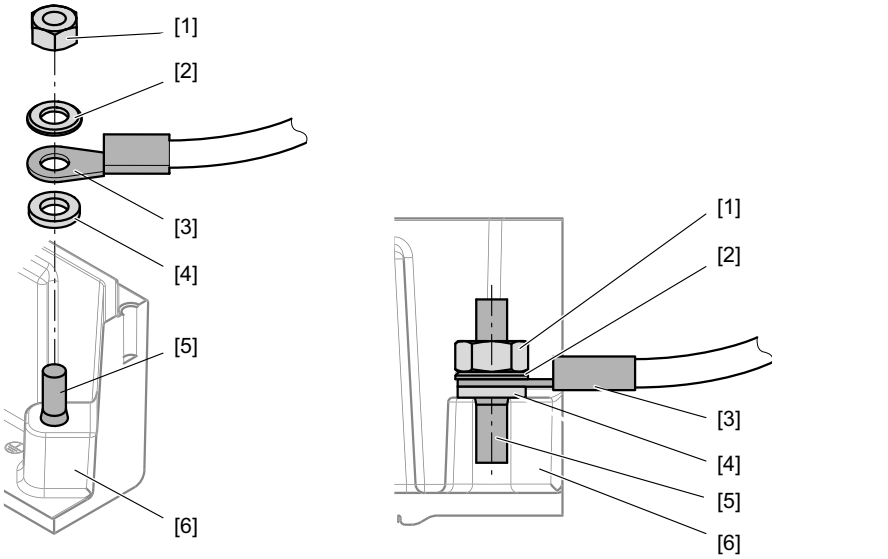


[1] Hex nut
[2] Washer
[3] PE conductor on cable lug
[4] Serrated lock washer
[5] Stud
[6] Terminal box

**Variant 6**

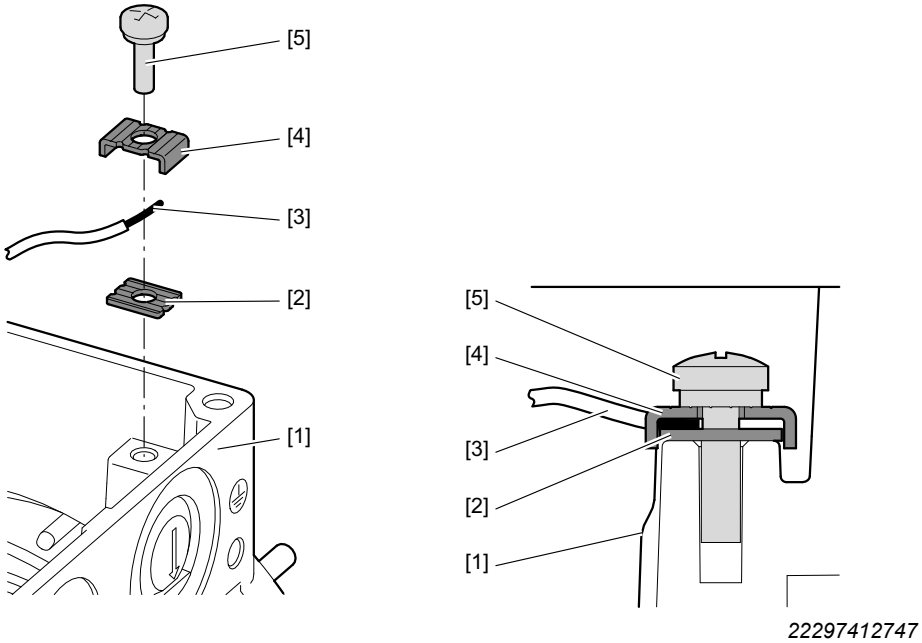


[1] Terminal box
[2] Support plate
[3] PE conductor
[4] Terminal clip
[5] Flat head screw

25957074/EN – 06/2019

## 5.12 Connecting the motor plug connector

### 5.12.1 IS/ISU plug connector

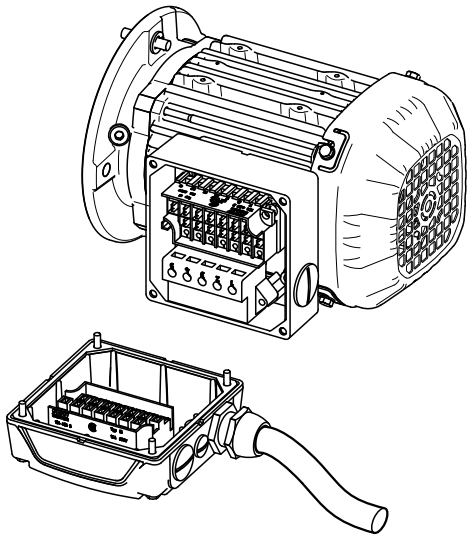

*1009070219*

The lower part of the /IS, /ISU plug connector option is completely prewired at the factory, including the additional features such as brake control.

The upper connector section of the /IS option is included in the scope of delivery. It must be connected according to the wiring diagram.

The /ISU option is delivered without the upper connector section.

The /IS, /ISU plug connector option has CSA approval up to 600 V. Note for application according to CSA regulations: Tighten the M3 clamping screws with a tightening torque of 0.5 Nm.

#### Cable cross section

Make sure that the type of cable complies with the applicable regulations. The rated currents are specified on the nameplate. The cable cross sections that can be used are listed in the following table.

| Without variable terminal link | With variable terminal link | Link cable | Double assignment (Motor and brake/SR) |
|---|---|---|---|
| 0.25 – 4.0 $mm^2$ | 0.25 – 2.5 $mm^2$ | Max. 1.5 $mm^2$ | max. 1 × 2.5 and 1 × 1.5 $mm^2$ |

25957074/EN – 06/2019

**Wiring the upper section of the plug connector**

- Loosen the housing cover screws:
  - Remove the housing cover
- Loosen the screws from the upper section of the plug connection:
  - Remove upper connector section from the cover
- Strip the insulation off the connection cable:
  - Strip off about 9 mm of insulation
- Pass the cable through the cable gland

*Wiring up as shown in wiring diagram R83*

- Connect the lines as shown in the wiring diagram:
  - Tighten the clamping screws with a tightening torque of 0.5 Nm.
- Install the plug connector (see chapter "Installing the connector" (→ 🗎 87))

*Wiring up as shown in wiring diagram R81*

**For ⅄/△ startup:**

- Connect with 6 lines:
  - Tighten the clamping screws carefully.
  - Motor contactors in the control cabinet
- Install the plug connector (see chapter "Installing the connector" (→ 🗎 87))

**For ⅄ or △ operation:**

- Connect as shown in the wiring diagram
- Install the variable terminal link as shown in the following figures according to the desired motor operation (⅄ or △)
- Install the plug connector (see chapter "Installing the connector" (→ 🗎 87))

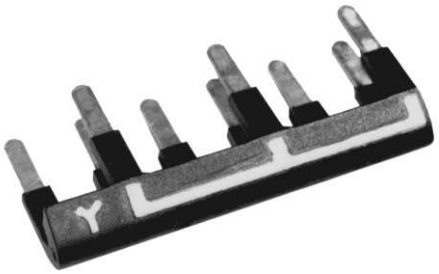

*9007200053347851*

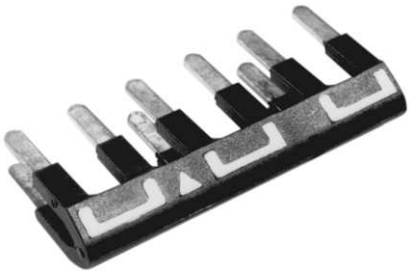

*9007200053349515*

*Brake control system BSR – preparing the variable terminal link*

**For ⅄operation:**

On the ⅄ side of the variable terminal link as shown in the following figure: Remove only the bare metal pin of the marked prong horizontally – install a touch guard!

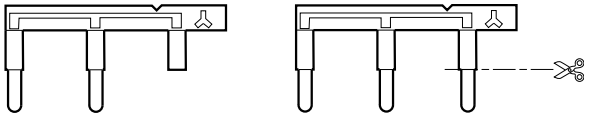

*9007200053520139*

**For △operation:**

On the △ side of the variable terminal link as shown in the following figure: Completely remove two prongs horizontally.

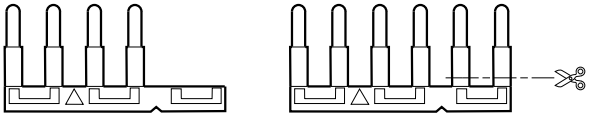

*9007200053518475*

*Wiring according to the R81 wiring diagram for ⅄ or △ operation with double terminal assignment*

- At terminal for double assignment:
  - Connect the link cable
- When operation is as required:
  - Insert the link cable in the variable terminal link
- Installing the variable terminal link
- At terminal for double assignment:
  - Connect the motor lead above the variable terminal link
- Connect the other lines as shown in the wiring diagram
- Install the plug connector (see chapter "Installing the connector" (→ 🗎 87))

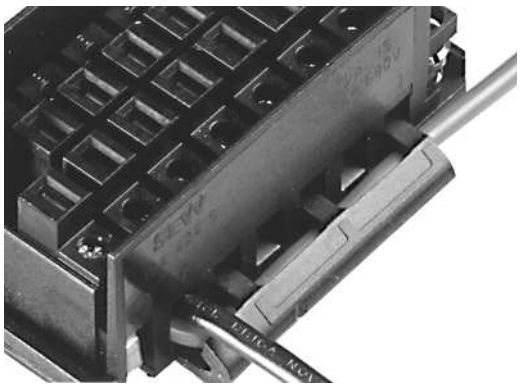

*9007200053521803*

25957074/EN – 06/2019

### Installing the plug connector

The housing cover of the IS plug connector can be screwed onto the lower housing part depending on the required position of the cable lead. You have to install the upper part in the housing cover according to the position of the lower part:

1. Define the required mounting position.
2. Install the upper section of the plug connector into the housing cover in accordance with the mounting position.
3. Close the plug connector.
4. Tighten the cable gland.
5. Check all screws of tightening and contact connections for tight fit.



**⚠ WARNING**

No grounding due to incorrect installation.

Severe or fatal injuries.

- Tighten the retaining screws of the IS plug connector properly with 2 Nm as these screws also act as protective earth contacts.



IS female connector

*9007200053719819*

*Mounting position of the upper section of the plug connector in the housing cover*

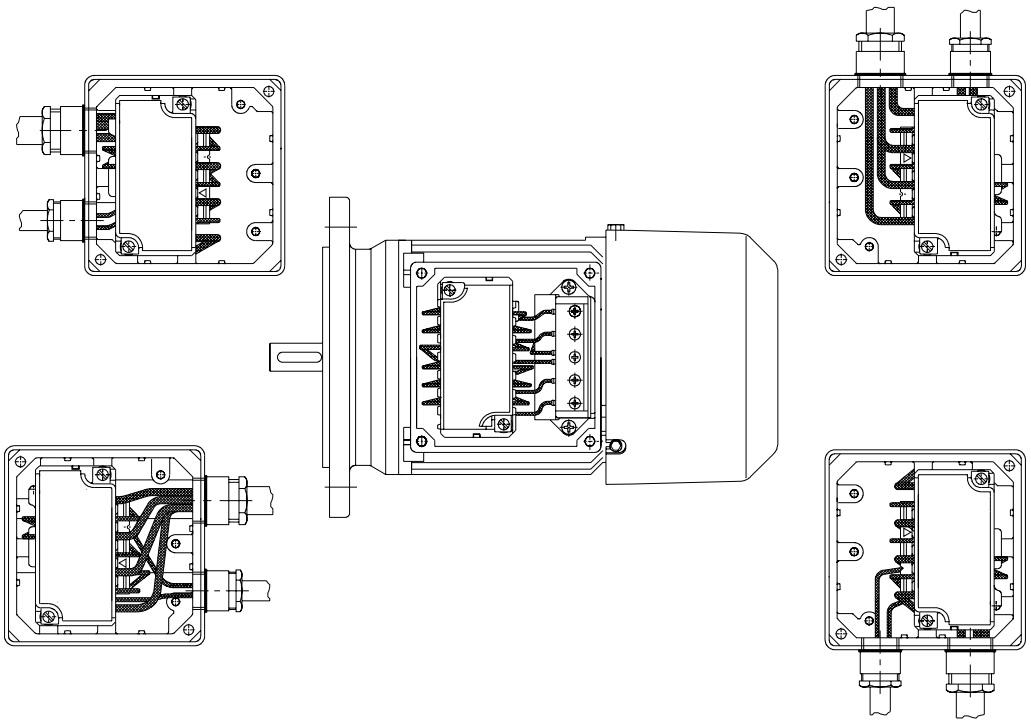

*9007200053526155*

25957074/EN – 06/2019

### 5.12.2 AB.., AD.., AM.., AK.., AC.., AS.. plug connectors

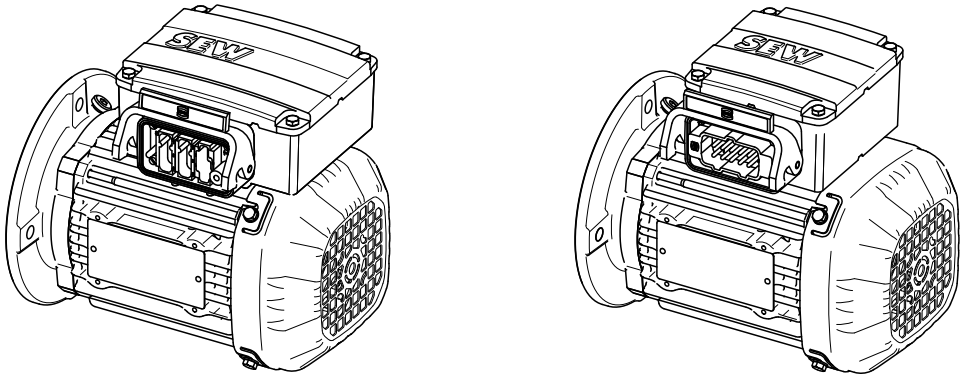

1009065611

The installed AB.., AD.., AM.., AK.., AC.. and AS.. connector systems are based on the connector systems made by Harting.

- AB.., AD.., AM.., AK.. Han Modular®
- AC.., AS.. Han 10E / 10ES

The connectors are located at the side of the terminal box. They are locked either using two clamps or one clamp on the terminal box.

The internal motor wiring is performed at the factory according to the order information. The mating connector must be prefabricated by the user.

The mating connector (grommet housing) with socket contacts is not included in the delivery.

## INFORMATION

The degree of protection is only guaranteed if the mating connector is plugged in and locked.

## 5.13 Connecting the motor via terminal strip

### 5.13.1 According to wiring diagram R10

1. Connect the motor according to the enclosed wiring diagram.
2. Check the maximum cable cross section.
   - ⇨ 2.5 mm² rigid
   - ⇨ 2.5 mm² flexible
   - ⇨ 1.5 mm² flexible with conductor end sleeve
3. The stripping length must be 8 – 9 mm.
4. Connect the protective earth as described in chapter "Variant 6" (→ 🗎 83).

**Arrangement of the terminal leads for 人 connection**

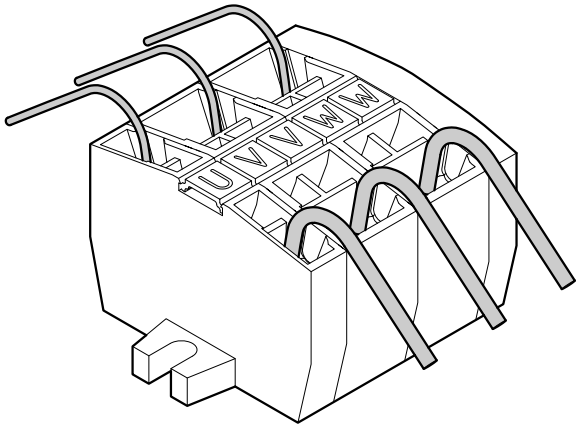


*27830157963*

25957074/EN – 06/2019

### 5.13.2 According to wiring diagram R12

1. Connect the motor according to the enclosed wiring diagram.
2. Check the maximum cable cross section.
   - ⇨ 2.5 mm² rigid
   - ⇨ 2.5 mm² flexible
   - ⇨ 1.5 mm² flexible with conductor end sleeve
3. The stripping length must be 8 – 9 mm.
4. Connect the protective earth as described in chapter "Variant 6" (→ 🗎 83).

**Arrangement of the terminal leads for ⅄ connection**

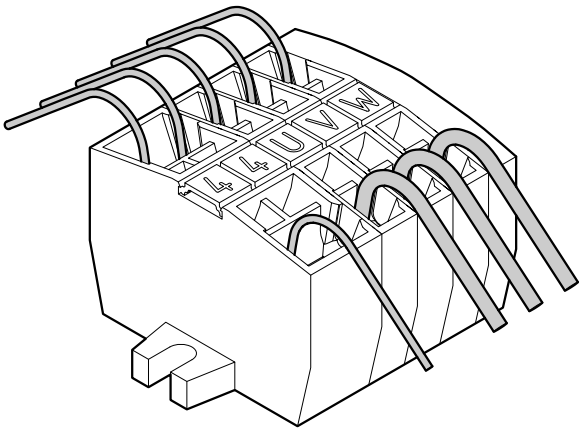


*27830161547*

**Arrangement of the terminal leads for △ connection**

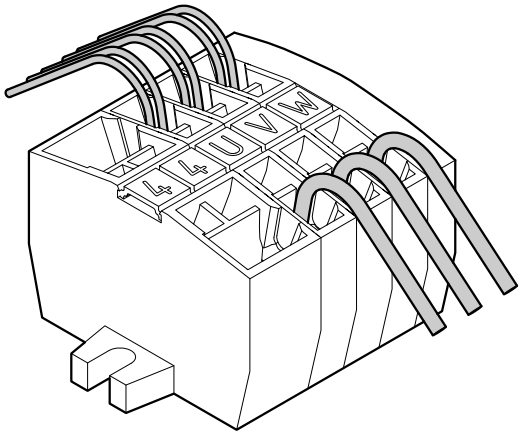


*27830154379*

25957074/EN – 06/2019

### 5.13.3 According to wiring diagram C13 with terminal strip /KCC

1. Connect the motor according to the enclosed wiring diagram.
2. Check the maximum cable cross section.
   - ⇨ 4 mm² rigid
   - ⇨ 4 mm² flexible
   - ⇨ 2.5 mm² flexible with conductor end sleeve
3. Check the winding connections in the terminal box and tighten them, if necessary.
4. The stripping length must be 10 – 12 mm.

**Arrangement of terminal links with ⅄ connection**

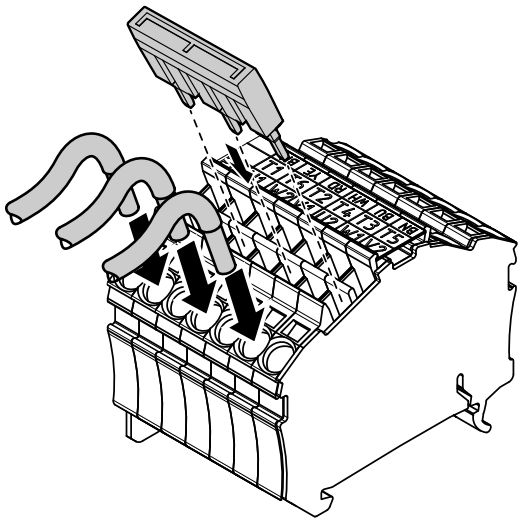

*18014399506064139*

**Arrangement of terminal links with △ connection**

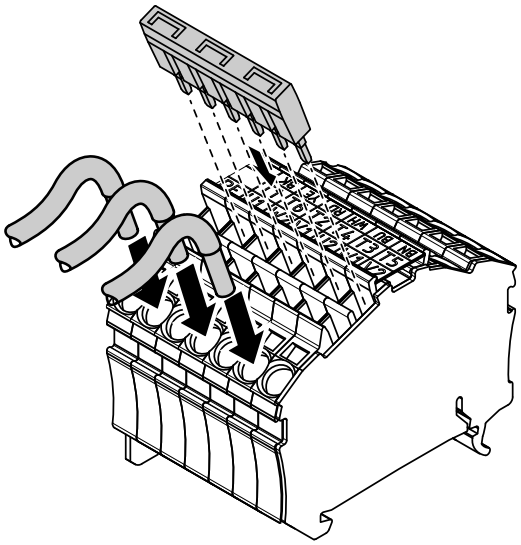

*18014399506066059*

25957074/EN – 06/2019

### 5.13.4 According to wiring diagram C12 with KC1 terminal strip

1. Connect the motor according to the enclosed wiring diagram.
2. Check the maximum cable cross section.
   - ⇨ 2.5 mm² rigid
   - ⇨ 2.5 mm² flexible
   - ⇨ 1.5 mm² flexible with conductor end sleeve
3. The stripping length must be 8 – 9 mm.

**Arrangement of the terminal leads for ⅄ connection**

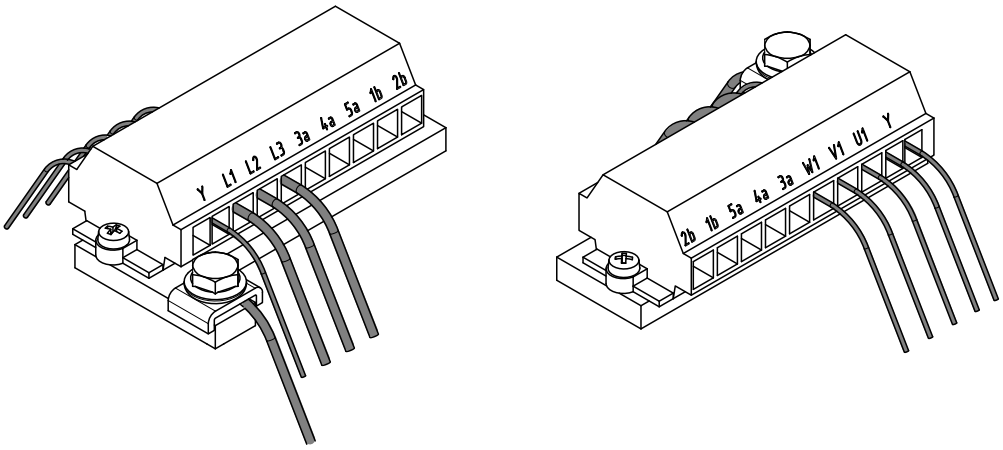


*18014399512138379*

**Arrangement of the terminal leads for △ connection**

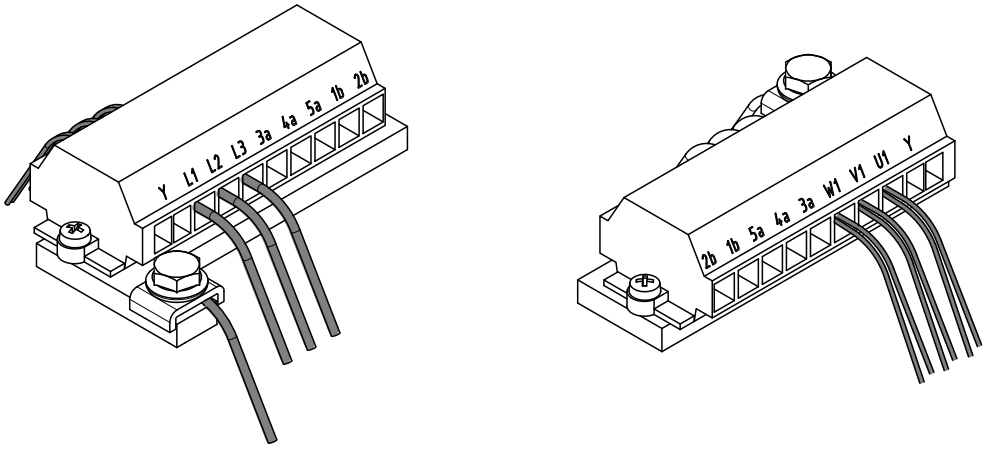


*18014399512140299*

25957074/EN – 06/2019

## 5.14 Connecting the brake

The BE.. brakes are powered by energized DC voltage and are released electrically. The brake is applied mechanically when the voltage supply is disconnected.

### ⚠ WARNING



Delayed brake application or unintentional brake release due to incorrect control or connection.

Severe or fatal injuries, e.g. due to falling hoist.

- Comply with the applicable regulations issued by the relevant employer's liability insurance association regarding phase failure protection and the associated circuit/circuit modification.
- Connect the brake according to the enclosed wiring diagram.
- In case of emergency off, always disconnect all poles of the brake control from the supply voltage.
- Only use suitable contactors with sufficient contact rating (utilization category according to EN 60947-4-1/EN 60947-5-1, see chapter "Brake voltage supply" (→ 🗎 96)).
- For contactor selection, observe the inductive load to switch, and the high current load while switching the brake.

### 5.14.1 Connecting the brake control

The brake is powered by a brake control system with protection circuit. The brake control is either installed in the motor's terminal box or in the control cabinet. If the motor is prepared for the brake control in the control cabinet, the brake supply cables are connected to a terminal strip in the motor terminal box.

Screw terminals are usually used as terminals on the terminal strip or on the brake control. Terminals with cage clamp technology can also be used.

The connectable cable cross sections are restricted to 2.5 $mm^2$. If you use larger cable cross sections due to application reasons, additional intermediate terminals must be used.

The brake is internally connected to the motor PE. An additional connection for the brake is not necessary.

### ⚠ WARNING



Delayed brake application or unintentional brake release due to incorrect control or connection.

Severe or fatal injuries, e.g. due to falling hoist.

- Observe the specifications of this documentation for connecting the brake.
- If you are uncertain about brake control, voltage supply type and design, or overvoltage and short circuit protection, contact the plant manufacturer or SEW-EURODRIVE.

25957074/EN – 06/2019

### 5.14.2 Permitted brake controls

## INFORMATION

The following specifications refer to motors designed for operation at ambient temperatures of -20 °C to +40 °C, and with thermal class 130 (B) or 155 (F). Deviations may occur depending in the installed motor options.

In individual cases, always also observe the additional specifications in the order confirmation and on the motor nameplate.

The brake is designed for operation with AC voltage or DC voltage, depending on the design. A brake control by SEW-EURODRIVE is used that is either installed in the motor terminal box or in the control cabinet.

BE02 – 2 brakes can also be operated without brake control by SEW-EURODRIVE with DC voltage. Observe the information on the motor nameplate. In this case, a suitable overvoltage protection must be installed at the terminal strips in the terminal box using varistors. The varistors are not included in the scope of delivery of the motor. Observe the project planning notes from SEW-EURODRIVE.

The following brake control types are not permitted:

- Operation with AC voltage without brake control by SEW-EURODRIVE with BE02 – 122 brakes.
- Operation with DC voltage without brake control by SEW-EURODRIVE with BE5 – BE122 brakes.
- Operation with third-party brake control systems.

For an overview of available brake controls by SEW-EURODRIVE and of the technical data, refer to chapter "Brake control" (→ 🗎 234).

## ⚠ WARNING

Severe or fatal injuries

Great and unexpected elongation of the stopping distance.

- Operate each brake with a separate brake control.
- Observe the notes on dimensioning in the catalog, or contact SEW-EURODRIVE.

### 5.14.3 Optional separation of DC and AC circuits

In case of brakes operated with AC voltage, make sure the disconnection type designated by the manufacturer is applied correctly during the brake connection. The following types are distinguished:

- Cut-off in the AC circuit with normal application time
- Cut-off in AC circuit and DC circuit with shortened application time

The correct switch-off type must be ensured by a respective wiring. Certain brake controls by SEW-EURODRIVE realize the same AC and DC cut-off via integrated switching relays (e.g. BMP1.5), or via mounted relays (e.g. BSR or BUR).

The switch-off type is specified on the included wiring diagrams by a pictogram.

25957074/EN – 06/2019



**⚠ WARNING**

Delayed brake application or unintentional ongoing brake release due to incorrect switch-off.

Severe or fatal injuries, e.g. due to falling hoist or extended coasting.

- During project planning, consider the required cut-off type and the effects on the expected stopping distance in particular.
- Only use the faster cut-off in the DC and AC circuit for hoists and hoist-like applications.
- When you are not sure if the application is a hoist-like application, contact SEW-EURODRIVE.
- Make sure that the configured cut-off type (AC or AC-DC) is implemented correctly during startup, regardless of the type of application.

### 5.14.4 Brake voltage supply

The brake voltage supply must match the values specified on the nameplate of the motor. The brake must be supplied via the designated brake control.

The specifications on the nameplate have a tolerance of +/-5% of the stated nominal value, or of the mean value of the stated connection range. Observe order-specific deviations.

Make sure the voltage supply is sufficiently stable by using cable cross sections and voltage sources that are dimensioned accordingly. Make sure the supply voltage does not drop below 90% of the nominal value during starting. This could be caused by an increased inrush current, see chapter "Operating currents" (→ 🗎 226).

In case of single-speed drives (not pole-changing) operated directly at the supply system (meaning without frequency inverter or soft start devices), the brake supply voltage can also be taken from the terminal board of the motor. Adhere to the following restrictions:

- The nominal brake voltage must either match the phase-to-neutral voltage, or the phase-to-phase voltage of the motor (observe nameplate and motor switching type).
- In case of hoists or hoist-like applications, the BSR.. brake control must be used for cut-off in the DC and AC circuits.
- For combinations with BMP3.1 brake control (BE60 – 122) a voltage supply via the terminal board is not permitted.

**INFORMATION**



In variable-speed motors and motors operated with soft start devices, the brake voltage must not be picked up at the motor terminal board because the voltage there is not constant.

25957074/EN – 06/2019

### 5.14.5 Switching equipment

The high current utilization during switching the brake (inductive load) requires suitable contactors/switch contacts, to obtain the correct function of the brake.

Depending on brake type and type design, the switch contacts must meet the specifications in the following utilization categories:

- Switch contacts for the supply voltage at AC voltage operation: AC-3 according to EN 60947-4-1, or AC-15 according to EN 60947-5-1.
- Switch contact for the supply voltage at DC voltage operation: Preferably AC-3 or DC-3 according to EN 60947-4-1. As an alternative, contacts in utilization category DC-13 according to EN 60947-5-1 are also permitted.
- Switch contacts for optional separation on DC side: AC-3 according to EN 60947-4-1.

Observe the specifications on the provided wiring diagram.

Using a semi-conductor relay is not permitted.

### 5.14.6 Brake controls with functional control input

In addition to the voltage supply, the optional brake controls of the BMK.., BMKB.. and BMV.. series offer a control input for a DC 24 V signal with which the brakes can be switched via a PLC.

It is a purely functional input that is not "functionally safe" with respect to safety technology.

Due to their operating principle, fault states can occur in these devices that lead to unintentional ongoing brake release, even if the control voltage has been switched off.

**⚠ WARNING**



Unintentional ongoing brake release due to unrecognized malfunction of the brake control.

Severe or fatal injuries, e.g. due to falling hoist or extended coasting.

- Always disconnect all poles of the supply and control voltage for hoists and hoist-like applications.
- Ensure that a malfunction of the control input can be detected through additional, suitable diagnostic measures e.g. by monitoring the braking current to meet increased safety and reliability requirements.
- Use the BST.. brake control for functional safety applications.
- If you have any questions regarding the handling of the control input, contact SEW-EURODRIVE.

25957074/EN – 06/2019

### 5.14.7 Damage protection against overvoltage and short circuit

To obtain protection against overvoltage damages (e.g. due to short circuit), a sufficiently dimensioned fusing must be used at the supply cables.

Observe the notes on dimensioning in the catalog, or contact SEW-EURODRIVE.

### 5.14.8 Connecting diagnostic unit /DUB

Connect the diagnostic unit as shown in the wiring connection diagrams provided with the motor. The maximum permitted connection voltage is AC 250 V with a maximum current of 6 A. With low voltage, the maximum voltage is AC 24 V or DC 24 V with max. 0.1 A. A subsequent change to low voltage is not permitted.

| Function monitoring | Wear monitoring | Function and wear monitoring |
|---|---|---|
| 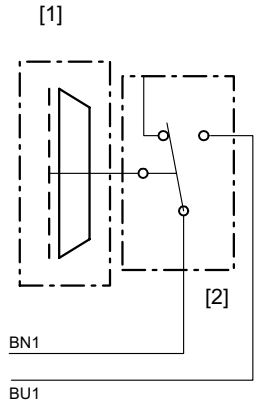 | 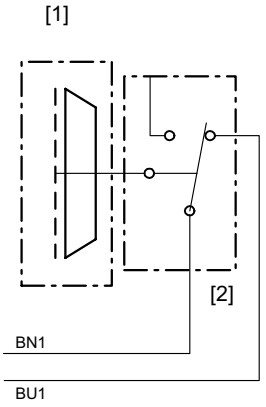 | 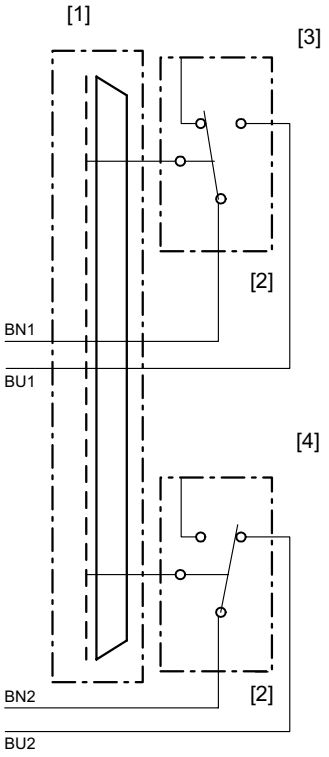 |

| | | | | | |
|---|---|---|---|---|---|
| [1] | Brake | [1] | Brake | [1] | Brake |
| [2] | Microswitch MP321-1MS | [2] | Microswitch MP321-1MS | [2] | Microswitch MP321-1MS |
| | | | | [3] | Function monitoring |
| | | | | [4] | Wear monitoring |

25957074/EN – 06/2019

### 5.14.9 Connecting the diagnostic unit /DUE option for function and wear monitoring

The /DUE diagnostic unit (Diagnostic Unit Eddy Current) is a contactless measuring system for function and wear monitoring of the brake and the continuous measurement of the current working air gap.

The measuring system consists of:

- Sensor, integrated in the magnet body of the brake
- Evaluation unit in the motor terminal box that is supplied via a DC 24 V voltage.

If the diagnostic unit /DUE was ordered, the function and wear monitoring is preinstalled and calibrated at the factory. The customer must connect the diagnostic unit, see wiring diagram. The switching point of the wear monitoring is preset to the maximum permitted value. According to the table in chapter "Evaluation unit" (→ 🗎 210), a reduced value can also be set.

For the status of the evaluation unit, refer to chapter "Retrofitting the /DUE diagnostic unit for function and wear monitoring" (→ 🗎 209).

Information on retrofitting the /DUE diagnostic unit can be found in chapter "Retrofitting the /DUE diagnostic unit for function and wear monitoring" (→ 🗎 209).

#### Connecting the evaluation unit

The maximum permitted cable cross section at terminals "k" of the evaluation unit is 1.5 $mm^2$ with conductor end sleeve without plastic collar, 0.75 $mm^2$ with plastic collar. The recommended cable cross section at terminals "k" is 0.5 $mm^2$ with conductor end sleeve with plastic collar.

## INFORMATION

Use shielded cables to wire the evaluation unit. Connect the shield to the GND potential, or use the shield plate at the user's signal evaluation.

SEW-EURODRIVE recommends routing the power cable of the drive and the cable of the diagnostic unit separately.

- Unless they are shielded, sensor cables must always be routed separately from other power cables with phased currents.
- Provide the appropriate equipotential bonding between drive and control cabinet.

Important characteristics of the cable to be used are:

- Total shielding (outer shield) of the cable
- 100 m maximum length for fixed installation
- 50 m maximum length for cable carrier installation

The required number of cores depends on the type of function/signals that are to be transferred to the higher-level controller and then processed.

At the factory, the diagnostic unit /DUE is pre-installed, calibrated and set to the wear limit permitted for the brake. The diagnostic unit has to be calibrated again after service or maintenance work such as sensor replacement or replacement of the evaluation electronics. The calibration can be take place directly at the evaluation electronics (at the terminal box) or alternatively via the higher-level controller. In the second case, the required signals for calibration have to be routed to the higher-level controller.

25957074/EN – 06/2019

The reference ground GND and the reference ground analog output AGND have the same potential. In case this potential is not treated separately in the application, AGND is not necessary.

| Number of required cores | Function | Abbreviation |
|---|---|---|
| 3 | Voltage supply | DC 24 V |
| | Reference ground | GND |
| | Digital output function | FCT |
| 3 | Voltage supply | DC 24 V |
| | Reference ground | GND |
| | Digital output wear | WEAR |
| 4 | Voltage supply | DC 24 V |
| | Reference ground | GND |
| | Digital output function | FCT |
| | Digital output wear | WEAR |
| 4 | Voltage supply | DC 24 V |
| | Reference ground | GND |
| | Analog output current air gap | OUT |
| | Reference ground analog output | AGND |
| 6 | Voltage supply | DC 24 V |
| | Reference ground | GND |
| | Digital output function | FCT |
| | Digital output wear | WEAR |
| | Analog output current air gap | OUT |
| | Reference ground analog output | AGND |
| 8 | Voltage supply | DC 24 V |
| | Reference ground | GND |
| | Digital output function | FCT |
| | Digital output wear | WEAR |
| | Analog output current air gap | OUT |
| | Reference ground analog output | AGND |
| | Calibration zero value | ZERO |
| | Calibration of infinite value | INF |

## INFORMATION

If the calibration inputs ZERO and/or INF are routed to the outside to a PLC or a controller, they have to be continuously connected to AGND in normal operation to avoid EMC interferences in the calibration cables.

25957074/EN – 06/2019

## INFORMATION

Signal outputs of the evaluation unit /DUE that are switched may not be used as voltage supply for other evaluation units /DUE or comparable systems. Each evaluation unit /DUE has to be supplied with voltage separately.

### Designation of the components

The system comprises a sensor and single-channel evaluation unit. The function monitoring of the brake is realized via a digital signal (NO contact). A digital output (NC contact) signals if the wear limit was reached. Further, a current output allows for continuous monitoring of the brake wear.

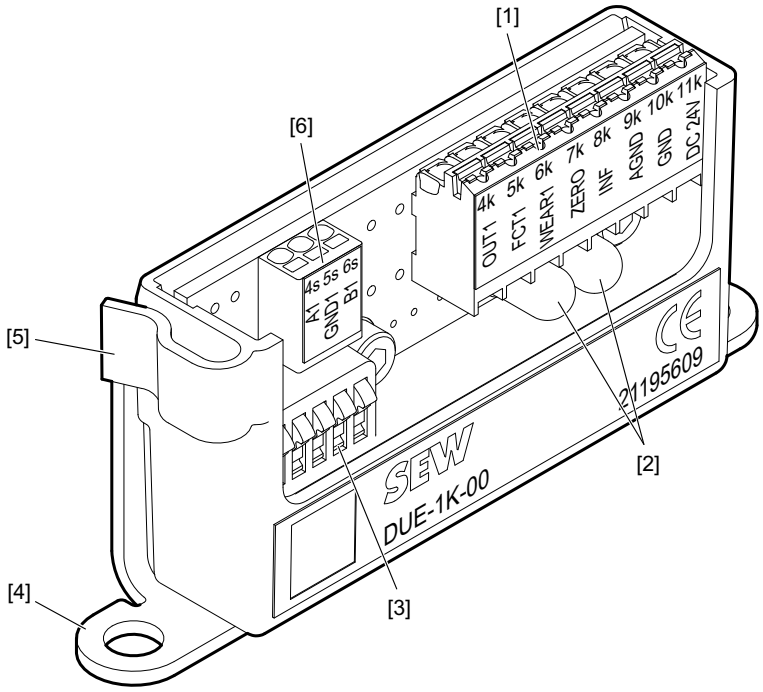


*14950549515*

[1] Terminals 4k – 11k
[2] LEDs for function and wear, brake
[3] DIP switches S1 – S5
[4] Fastening of terminal box (PE)
[5] Line clip
[6] Terminals 4s – 6s

The connection designation of the terminals are as follows:

| Terminal | Designation | Description | Color coding |
|---|---|---|---|
| 4s | A1 | Sensor 1 connection 1 | Brown (BN) |
| 5s | GND1 | Sensor 1 shield | Black (BK) |
| 6s | B1 | Sensor 1 connection 2 | White (WH) |

| Terminal | Designation | Description |
|---|---|---|
| 4k | OUT1 | Analog output working air gap brake |
| 5k | FCT1 | Digital output function brake |
| 6k | WEAR1 | Digital output wear brake |

| Terminal | Designation | Description |
|---|---|---|
| 7k | ZERO | Input calibration zero value |
| 8k | INF | Input calibration infinite value |
| 9k | AGND | Signal ground AGND |
| 10k | GND | Ground potential GND |
| 11k | DC 24 V | DC 24 V supply |

The LEDs have the follow meaning:

| LEDs | Designation | Description |
|---|---|---|
| Green [2] | FCT1 | The brake is open. Electromagnet is active. Pressure plate is in contact with magnet body. |
| Red [2] | WEAR1 | The current working air gap of the brake reached or exceeded the preset maximum working air gap. |

25957074/EN – 06/2019

## 5.15 Options

Connect the options as shown in the wiring connection diagrams provided with the motor. You can obtain the valid wiring diagrams free of charge from SEW-EURODRIVE.

### INFORMATION

Do not connect any options if the wiring diagram is missing.

#### 5.15.1 Temperature sensor /TF

### NOTICE

Impermissible heating of the motor due to defective /TF temperature sensor.

Damage to property.

- Do not connect any voltages > 30 V to the /TF temperature sensor.
- Observe the provided wiring diagram for the connection of the temperature sensor /TF.

The PTC thermistors comply with DIN 44082.

Resistance measurement check (measuring instrument with V ≤ 2.5 V or I < 1 mA):

- Standard measured values: 20 – 500 Ω, hot resistance > 4000 Ω

When using the temperature sensor for thermal monitoring, the evaluation function must be activated to maintain reliable isolation of the temperature sensor circuit. The thermal protection function must become active in case of overtemperature.

If there is a 2nd terminal box for the /TF temperature sensor, this is where you must connect the temperature sensor.

Observe the provided wiring diagram for connecting the temperature sensor /TF. If the wiring diagram is not enclosed, you can obtain it from SEW-EURODRIVE free of charge.

25957074/EN – 06/2019

The figure below shows the characteristic curve of /TF with reference to the nominal response temperature (referred to as $T_{NF}$).

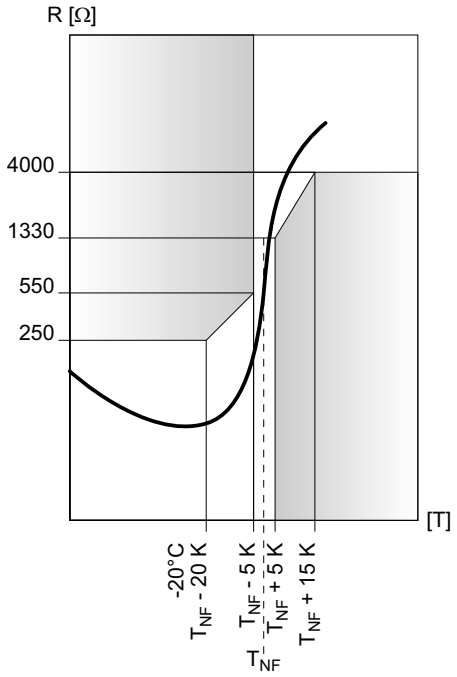


*5470153483*

### 5.15.2 /TH winding thermostats

The thermostats are connected in series as standard and open when the permitted winding temperature is exceeded. They can be connected in the drive monitoring loop.

| | AC V | DC V | |
|---|---|---|---|
| Voltage U in V | 250 | 60 | 24 |
| Current (cos ϕ = 1.0) in A | 2.5 | 1.0 | 1.6 |
| Current (cos ϕ = 0.6) in A | 1.6 | | |
| Contact resistance max. 1 Ω at DC 5 V/1 mA | | | |

25957074/EN – 06/2019

### 5.15.3 Temperature detection /KY (KTY84 – 130)

## NOTICE

Excessive self-heating of the temperature sensor can damage the insulation of the temperature detection as well as the motor winding.

The drive system might be damaged.

- Use currents > 3 mA in the KTY circuit.
- Observe the correct connection of the KTY to ensure correct evaluation of the temperature detection.
- Observe the polarity during connection.

The characteristic curve in the following figure shows the resistance curve subject to the motor temperature with a measuring current of 2 mA and correct pole connection:

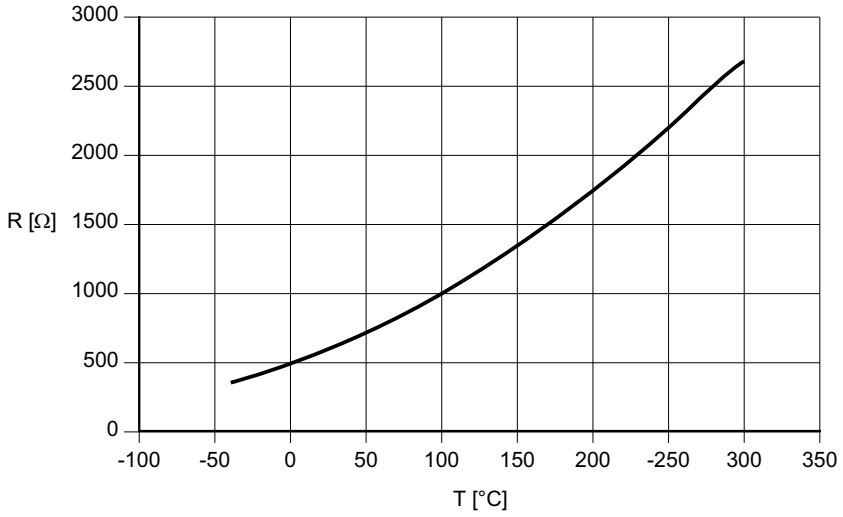


*1140975115*

| Technical data | KTY84 – 130 |
|---|---|
| Connection | Red (+)<br>Blue (−) |
| Total resistance at 20 – 25 °C | 540 Ω < R < 640 Ω |
| Test current | < 3 mA |

### 5.15.4 Temperature sensor /PT (PT100)

## NOTICE

Excessive self-heating of the temperature detection can damage the insulation of the temperature detection as well as the motor winding.

The drive system might be damaged.

- Avoid currents > 3 mA in the circuit of the PT100.
- Observe the correct connection of the PT100 to ensure correct evaluation of the temperature detection.

The characteristic curve in the following figure shows the resistance curve subject to the motor temperature.

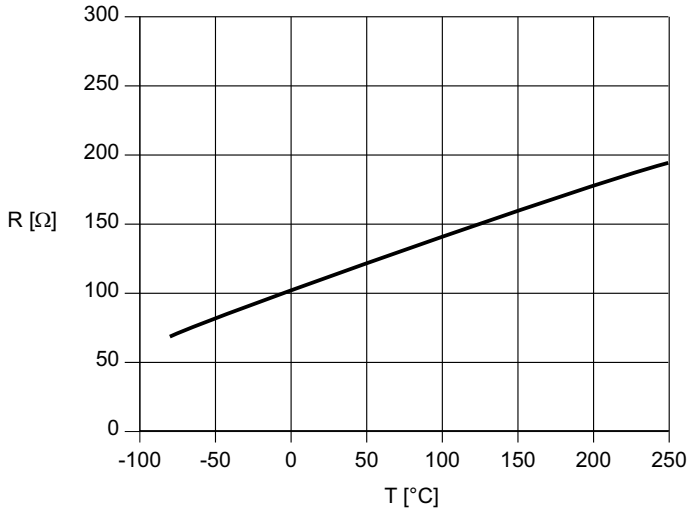


*1145838347*

| Technical data | PT100 |
|---|---|
| Connection | Red/white |
| Resistance at 20 – 25 °C per PT100 | 107.8 Ω < R < 109.7 Ω |
| Test current | < 3 mA |

25957074/EN – 06/2019

### 5.15.5 Temperature detection /PK (PT1000)

## NOTICE

Excessive self-heating of the temperature sensor can damage the insulation of the temperature detection as well as the motor winding.

The drive system might be damaged.

- Avoid currents > 3 mA in the circuit of the PT1000.
- Observe the correct connection of the PT1000 to ensure correct evaluation of the temperature detection.

The characteristic curve in the following figure shows the resistance curve subject to the motor temperature.

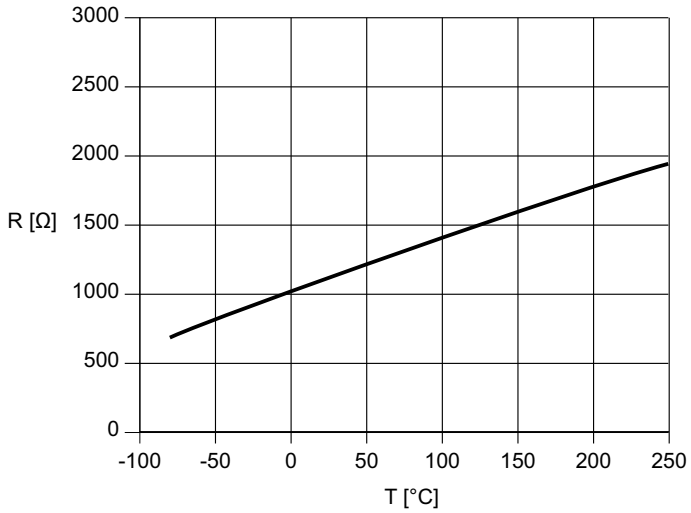


*17535480203*

| Technical data | PT1000 |
|---|---|
| Connection | Black/red |
| Resistance at 20 – 25 °C per PT1000 | 1077 Ω < R < 1098 Ω |
| Test current | < 3 mA |

### 5.15.6 Forced cooling fan /V

- Connection in separate terminal box
- Max. connection cross section 3 × 1.5 mm² (3 × AWG 15)
- Cable gland M16 × 1.5

| Motors | Operating mode/connection | Frequency Hz | Voltage V |
|---|---|---|---|
| DR..71 – 132, DRN71 – 132, DR2..71 – 80 | 1 ~ AC[1] (△) | 50 | 100 – 127 |
| DR..71 – 132, DRN71 – 132, DR2..71 – 80 | 3 ~ AC ⅄ | 50 | 175 – 220 |
| DR..71 – 132, DRN71 – 132, DR2..71 – 80 | 3 ~ AC △ | 50 | 100 – 127 |
| DR..71 – 180, DRN71 – 180, DR2..71 – 80 | 1 ~ AC[1] (△) | 50 | 230 – 277 |
| DR..71 – 315, DRN71 – 315, DR2..71 – 80 | 3 ~ AC ⅄ | 50 | 346 – 500 |
| DR..71 – 315, DRN71 – 315, DR2..71 – 80 | 3 ~ AC △ | 50 | 200 – 290 |

1) Steinmetz circuit

| Motors | Operating mode/connection | Frequency Hz | Voltage V |
|---|---|---|---|
| DR..71 – 132, DRN71 – 132, DR2..71 – 80 | 1 ~ AC[1] (△) | 60 | 100 – 135 |
| DR..71 – 132, DRN71 – 132, DR2..71 – 80 | 3 ~ AC ⅄ | 60 | 175 – 230 |
| DR..71 – 132, DRN71 – 132, DR2..71 – 80 | 3 ~ AC △ | 60 | 100 – 135 |
| DR..71 – 180, DRN71 – 180, DR2..71 – 80 | 1 ~ AC[1] (△) | 60 | 230 – 277 |
| DR..71 – 315, DRN71 – 315, DR2..71 – 80 | 3 ~ AC ⅄ | 60 | 380 – 575 |
| DR..71 – 315, DRN71 – 315, DR2..71 – 80 | 3 ~ AC △ | 60 | 220 – 330 |

1) Steinmetz circuit

25957074/EN – 06/2019

| Motors | Operating mode/connection | Voltage<br>V |
|---|---|---|
| DR..71 – 132,<br>DRN80 – 132,<br>DR2..71 – 80 | DC 24 V | 24 |

## INFORMATION

For information on how to connect the /V forced cooling fan, refer to chapter "Forced cooling fan /V" (→ 🗎 282).

25957074/EN – 06/2019

### 5.15.7 UWU52A switched-mode power supply

The forced cooling fan design V for DC 24 V furthermore includes the UWU52A switched-mode power supply, if you have ordered it. It can be ordered using the part number from SEW-EURODRIVE, even after the order has been placed.

The following figure depicts the UWU52A switched-mode power supply:

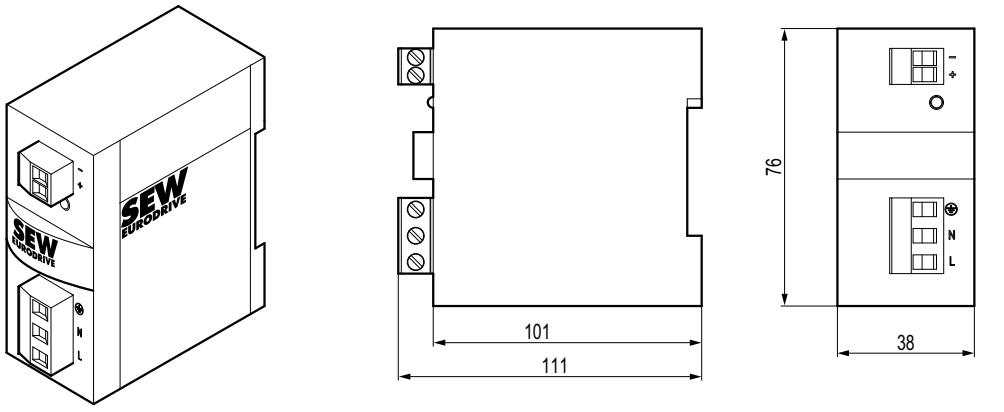


*576533259*

| | |
|---|---|
| Input | AC 110 – 240 V<br>1.04 – 0.61 A<br>50/60 Hz |
| | DC 110 – 300 V<br>0.65 – 0.23 A |
| Output | DC 24 V<br>2.5 A (40 °C) |
| | DC 24 V<br>2.0 A (55 °C) |
| Connection | Screw terminals 1.5 – 2.5 $mm^2$, separable |
| Degree of protection | IP20<br>Mounting on EN 60715 TH35 mounting rail in the control cabinet |
| Part number | 01881817 |

25957074/EN – 06/2019

### 5.15.8 Overview of add-on encoders

Refer to the wiring diagrams for information on how to connect add-on encoders:

| Encoder | Motors | Encoder type | Mounting type | Supply DC V | Signal | Wiring diagram |
|---|---|---|---|---|---|---|
| ES7S | DR..71 – 132<br>DRN80 – 132S | Incremental | Shaft-centered | 7 – 30 | 1 $V_{PP}$ sin/cos | 68180xx08 |
| ES7R | DR..71 – 132<br>DRN80 – 132S | Incremental | Shaft-centered | 7 – 30 | TTL (RS422) | 68179xx08 |
| ES7C | DR..71 – 132<br>DRN80 – 132S | Incremental | Shaft-centered | 4.5 – 30 | HTL/TTL (RS422) | 68179xx08 |
| AS7W | DR..71 – 132<br>DRN80 – 132S | Absolute value | Shaft-centered | 7 – 30 | 1 $V_{pp}$ sin/cos+ RS485 | 68181xx08 |
| AS7Y | DR..71 – 132<br>DRN80 – 132S | Absolute value | Shaft-centered | 7 – 30 | 1 $V_{pp}$ sin/cos + SSI | 68182xx08 |
| EG7S | DR..160 – 280<br>DRN132M – 280 | Incremental | Shaft-centered | 7 – 30 | 1 $V_{PP}$ sin/cos | 68180xx08 |
| EG7R | DR..160 – 280<br>DRN132M – 280 | Incremental | Shaft-centered | 7 – 30 | TTL (RS422) | 68179xx08 |
| EG7C | DR..160 – 280<br>DRN132M – 280 | Incremental | Shaft-centered | 4.5 – 30 | HTL/TTL (RS422) | 68179 xx08 |
| AG7W | DR..160 – 280<br>DRN132M – 280 | Absolute value | Shaft-centered | 7 – 30 | 1 $V_{pp}$ sin/cos+ RS485 | 68181xx08 |
| AG7Y | DR..160 – 280,<br>DRN132M – 280 | Absolute value | Shaft-centered | 7 – 30 | 1 $V_{pp}$ sin/cos + SSI | 68182xx08 |
| EH7S | DR../DRN315 | Incremental | Shaft-centered | 10 – 30 | 1 $V_{PP}$ sin/cos | 08511xx08 |
| EH7C | DR../DRN315 | Incremental | Shaft-centered | 10 – 30 | HTL | 08511xx08 |
| EH7R | DR../DRN315 | Incremental | Shaft-centered | 10 – 30 | TTL (RS422) | 08511xx08 |
| EH7T | DR../DRN315 | Incremental | Shaft-centered | 5 | TTL (RS422) | 08511xx08 |
| AH7Y | DR../DRN315 | Absolute value | Shaft-centered | 9 – 30 | TTL (RS422) +SSI | 08259xx07 |
| EV7S | DR..71 – 280<br>DRN80 – 280 | Incremental | Flange centered | 7 – 30 | 1 $V_{PP}$ sin/cos | 68180xx08 |
| EV7R | DR..71 – 280<br>DRN80 – 280 | Incremental | Flange centered | 7 – 30 | TTL (RS422) | 68179xx08 |
| EV7C | DR..71 – 280<br>DRN80 – 280 | Incremental | Flange centered | 4.5 – 30 | HTL/TTL (RS422) | 68179xx08 |
| AV7W | DR..71 – 280<br>DRN80 – 280 | Absolute value | Flange centered | 7 – 30 | 1 $V_{pp}$ sin/cos+ RS485 | 68181xx08 |
| AV7Y | DR..71 – 280<br>DRN80 – 280 | Absolute value | Flange centered | 7 – 30 | 1 $V_{pp}$ sin/cos + SSI | 68182xx08 |
| EK8S | DRN71 – 315<br>DR2..71 – 80 | Incremental | Shaft-centered | 7 – 30 | 1 $V_{PP}$ sin/cos | 63278995 |
| EK8C | DRN71 – 315<br>DR2..71 – 80 | Incremental | Shaft-centered | 4.5 – 30 | HTL/TTL (RS-422) | 63279010 |

25957074/EN – 06/2019

| En-coder | Motors | Encoder type | Mounting type | Supply DC V | Signal | Wiring dia-gram |
|---|---|---|---|---|---|---|
| EK8R | DRN71 – 315<br>DR2..71 – 80 | Incremental | Shaft-centered | 7 – 30 | TTL (RS-422) | 63279029 |
| AK8W | DRN71 – 315<br>DR2..71 – 80 | Absolute value | Shaft-centered | 7 – 30 | 1 $V_{PP}$ sin/cos + RS485 | 63279037 |
| AK8Y | DRN71 – 315<br>DR2..71 – 80 | Absolute value | Shaft-centered | 7 – 30 | 1 $V_{PP}$ sin/cos + SSI | 63279045 |
| AK8H | DRN71 – 315<br>DR2..71 – 80 | Absolute value | Shaft-centered | 7 – 12 | sin/cos + RS485 HIPERFACE® | 63279053 |
| EV8S | DRN71 – 280<br>DR2..71 – 80 | Incremental | Flange centered | 7 – 30 | 1 $V_{PP}$ sin/cos | 63278995 |
| EV8C | DRN71 – 280<br>DR2..71 – 80 | Incremental | Flange centered | 4.5 – 30 | HTL / TTL (RS-422) | 63279010 |
| EV8R | DRN71 – 280<br>DR2..71 – 80 | Incremental | Flange centered | 7 – 30 | TTL (RS-422) | 63279029 |
| AV8W | DRN71 – 280<br>DR2..71 – 80 | Absolute value | Flange centered | 7 – 30 | 1 $V_{PP}$ sin/cos + RS485 | 63279037 |
| AV8Y | DRN71 – 280<br>DR2..71 – 80 | Absolute value | Flange centered | 7 – 30 | 1 $V_{PP}$ sin/cos + SSI | 63279045 |
| AV8H | DRN71 – 280<br>DR2..71 – 80 | Absolute value | Flange centered | 7 – 12 | sin/cos + RS485 HIPERFACE® | 63279053 |

## INFORMATION

- Maximum oscillation load for encoders ≤ 10 g ≈ 100 m/s² (10 Hz to 2 kHz)
- Shock resistance = 100 g ≈ 1000 m/s² for DR..71 – 132, DRN80 – 132S motors
- Shock resistance = 200 g ≈ 2000 m/s² for DR..160 – 315, DRN132M – 315 motors

25957074/EN – 06/2019

### 5.15.9 Overview of optical status messages for built-in encoders

## INFORMATION

Refer to the wiring diagram for information on how to connect the built-in encoder.

- Observe the information in chapter "Wiring diagrams" (→ 🗎 269) for connection via terminal strip.
- Refer to the enclosed wiring diagram when connecting the EI7. built-in encoder via the M12 connector.
- Refer to the enclosed wiring diagram when connecting the EI8. built-in encoder via the M23 connector.

| Encoder | Motors | Supply in DC V | Signals |
|---|---|---|---|
| EI71 | DR..71 – 132<br>DRN71 – 132S<br>DR2..71 – 80<br>DRN63 (only EI7C) | 9 – 30 | HTL 1 period/revolution |
| EI72 | | 9 – 30 | HTL 2 periods/revolution |
| EI76 | | 9 – 30 | HTL 6 periods/revolution |
| EI7C | | 9 – 30 | HTL 24 periods/revolution |
| EI8R | DRN71 – 132S<br>DR2..71 – 80 | 7 – 30 | TTL (RS-422) 1024 periods/revolution |
| EI8C | DRN71 – 132S<br>DR2..71 – 80 | 7 – 30 | HTL 1024 periods/revolution |

25957074/EN – 06/2019

### EI7. B – visual feedback

The EI7. encoders use 2 bi-colored LEDs (red + green each) for visual feedback on the operating state.

#### LED H1 (at cable output of the encoder) – status and errors

The green LED indicates the status or the configuration of the encoder. It flashes. The flashing frequency indicates the set number of periods.

| LED H1 green | |
|---|---|
| **Frequency** | **Status/configuration** |
| LED off | Encoder without voltage or faulty |
| 0.6 Hz | EI71 (1 period per revolution) |
| 1.2 Hz | EI71 (2 periods per revolution) |
| 3 Hz | EI76 (6 periods per revolution) |
| 15 Hz | EI7C (24 periods per revolution) |
| LED lit continuously | Encoder defective |

The red LED is lit when the encoder detects an error.

| LED H1 red | |
|---|---|
| **Flash code** | **Meaning** |
| 10 s with 1 Hz and 2 s continuous | No valid number of periods can be set |
| other | Output driver signals a fault (e.g. short circuit or overtemperature) |

**The H2 LED gives visual feedback on the signal track status.**

| LED color | Track A | Track B | Track A | Track B |
|---|---|---|---|---|
| Orange (green and red) | 0 | 0 | 1 | 1 |
| Red | 0 | 1 | 1 | 0 |
| Green | 1 | 0 | 0 | 1 |
| Off | 1 | 1 | 0 | 0 |

### EI8. – visual feedback

The EI8. built-in encoders report their operating state visually via a duo LED.

| LED light pattern | Meaning |
|---|---|
| Off | Encoder not supplied or defective |
| Permanent green light | Encoder operational, no errors |
| Red/orange, permanent or flashing light | Encoder reports self-diagnostic information or an error.<br>The content depends on the color pattern and frequency. |

25957074/EN – 06/2019

| Diagnostics<br>LED color orange/red | Meaning and measures |
|---|---|
| Red | Encoder diagnostics has detected an error.<br>Permanently lit: Error regarding the internal encoder sensors (incremental sensors)<br>Flashes 5 Hz: Error regarding the internal encoder sensors (index sensors):<br>• Check the encoder and pole ring for damage or magnetizable contamination and replace or clean if necessary.<br>• Check the fan to ensure it is seated correctly and check the distance between the pole ring and encoder. If necessary, readjust and resecure the fan and pole ring (see chapter "Removing and mounting built-in encoder EI8." (→ 🗎 167)).<br>Flashes 1 Hz: Error regarding the encoder module electrical interface:<br>• Short circuit/overcurrent of the signal tracks: Eliminate the short circuit or limit the output current of the encoder module.<br>• Interference on the signal tracks: Eliminate the external interference. Observe the information regarding connection technology. |
| Orange | Encoder diagnostics signals a warning (function of the encoder is given, maintenance may be required)<br>Permanently lit: Warning regarding the internal encoder sensors (incremental sensors).<br>• Implement any necessary measures (see "Diagnostics red") as maintenance measures.<br>Flashes 1 Hz: Warning regarding the internal memory (encoder signal correction).<br>• The encoder signal correction is reinitialized every time the encoder is started. |

If none of the measures are successful, please contact the SEW-EURODRIVE Service department in the event of an error. In this case, decommission the built-in encoder.

25957074/EN – 06/2019

### 5.15.10 Installation notes for encoders

When connecting the encoder to the inverter, observe the provided wiring diagrams and the information in these operating instructions as well as the operating instructions/wiring diagrams of the inverter and the operating instructions/wiring diagrams provided with the third-party encoder.

Proceed as described in chapter "Motor and brake maintenance – preliminary work" (→ 🗎 127) to mount the encoders. Observe the following information:

- Maximum line length (inverter to encoder):
  - 100 m with a capacitance per unit length core – shield ≤ 110 nF/km
  - 100 m with a capacitance per unit length core – core ≤ 85 nF/km
- Core cross-section: 0.20 – 0.5 $mm^2$; recommendation ≥ 0.25 $mm^2$
- Use shielded cable with twisted pair cores and apply shield over large area on both ends:
  - In the cable gland of the encoder connection cover or in the encoder connector
  - To the inverter on the electronics shield clamp and to the housing of the D-sub connector
- Install the encoder cables separately from the power cables, maintaining a distance of at least 200 mm.
- Compare the operating voltage with the permitted operating voltage range on the encoder nameplate. Deviations in the operating voltage may overheat and damage the encoder.
- SEW-EURODRIVE recommends the use of stabilized voltage sources and separate supply systems for encoder or other sensor components and active components such as switches and light barriers.
- Supplies with voltage transients and interferences higher than the supply voltage $U_B$ are not permitted.
- Observe the clamping area of 5 to 10 mm of the cable gland of the connection cover. If you use cables with a different cross section, you have to replace the provided cable gland with another suitable EMC-compliant cable gland.
- The cable glands for the cable entry must meet the following conditions:
  - Cramping area is suitable for the used cable(s)
  - The IP degree of protection of the encoder connection is at least as high as the IP degree of protection of the actual encoder
  - The operating temperature range matches the designated ambient temperature range.
- Check the flawless state and the proper seat of the connection cover gasket.
- Tighten the screws of the connection cover with a tightening torque of 2.25 Nm.

25957074/EN – 06/2019

**Minimum requirements for encoder cables**

Make sure that self-assembled cables fulfill the following requirements:

- Cross section of voltage supply cable:
  - At least 0.25 $mm^2$ for cable lengths up to 50 m.
  - At least 0.5 $mm^2$ for cable lengths up to 100 m.
- Cross section of the signal wire:
  - At least 0.25 $mm^2$.
- Capacitance per unit length:
  - Maximum 70 pF/m – core/core.
  - Maximum 120 pF/m – core/shield.
- The cable must be shielded.
- Differential signals must be routed via twisted wires e.g. Data+ and Data-.

### 5.15.11 Anti-condensation heating

To protect a shutdown motor from freezing up (rotor blockage) or condensation inside the motor, it can be equipped with an optional anti-condensation heating. The anti-condensation heating consists of strip heaters that are integrated in the winding overhang and supplied with voltage when the motor is switched off. The motor is heated by the current flowing through the strip heaters.

The strip heaters are controlled according to the following principle:

- Motor switched off → anti-condensation heating activated
- Motor switched on → anti-condensation heating deactivated

Observe the permitted voltage according to the nameplate and the enclosed terminal assignment diagram.

25957074/EN – 06/2019

# 6 Startup

## INFORMATION

- It is essential to comply with the safety notes in chapter 2 during installation.
- In case of problems, refer to chapter "Malfunctions" (→ 🗎 263).

If components with functional safety are installed in the motor, observe the following safety note:

## ⚠ WARNING



Disabling functional safety devices.

Severe or fatal injuries.

- Only qualified personnel is allowed to carry out work on functional safety components.
- Any work on functional safety components must be carried out by strictly observing the specifications in the operating instructions at hand and the respective addendum to the operating instructions. Otherwise, the warranty will become void.

## ⚠ WARNING



Electric shock due to incorrect installation.

Severe or fatal injuries.

- Use switch contacts in utilization category AC-3 according to EN 60947-4-1 for switching the motor.
- When motors are powered by inverters, you must adhere to the wiring instructions in the frequency inverter operating instructions.

## ⚠ CAUTION



The surfaces on the drive can be very hot during operation.

Risk of burns.

- Let the motor cool down sufficiently before you start working on it.

## NOTICE

The maximum limit torque ($M_{pk}$) and the maximum current ($I_{max}$) may not be exceeded, not even for acceleration.

The drive system might be damaged.

- Limit the maximum current at the inverter.

## INFORMATION

Limit the maximum speed at the inverter. For information on the procedure, refer to the documentation of the inverter.

25957074/EN – 06/2019



SEW EURODRIVE

## INFORMATION

When using DR..250 – 280, DRN250 – 280 motors with BE brake and encoder, observe the following information:

- Only operate the brake as holding brake.
- The brake may only be applied when the speed is ≤ 20 $min^{-1}$. For higher speeds, please contact SEW-EURODRIVE.
- Emergency stops from higher motor speeds are permitted.

## 6.1 Before startup

Prior to startup make sure that:

- The drive is undamaged and not blocked.
- Any transport locks have been removed.
- The measures stipulated in chapter "Preliminary work after longer periods of storage" (→ 🗎 33) are performed after storage periods longer than 9 months.
- All connections have been made correctly.
- The direction of rotation of the motor/gearmotor is correct.
  - Motor rotating clockwise: U, V, W (T1, T2, T3) to L1, L2, L3
- All protective covers are installed correctly.
- All motor protection equipment is active and set for the rated motor current.
- There are no other sources of danger.
- Loose elements like keys are appropriately secured.
- The brake is not manually released.
  - The set screw of /HF option is loosened correctly.
  - The hand lever of the /HR option has been removed and correctly attached to the stator using the designated clamps.

## 6.2 Motors with reinforced bearing

## NOTICE

Damage to bearings due to impermissible heating of bearing and motor.

Bearing damage.

- Do not operate cylindrical roller bearings without overhung load.

25957074/EN – 06/2019

## 6.3 Motors with backstop /RS

An /RS backstop is used to block/prevent a direction of rotation of the motor. The direction of rotation is indicated by an arrow on the fan guard of the motor or on the device housing.

Observe the direction of rotation of the end shaft and the number of stages when you mount the motor to the gear unit. Do not start up the motor in blocking direction (note the correct phase angle when connecting the motor). For inspection purposes, you can operate the backstop once with half the motor voltage in blocking direction.

If a conversion is required to change the blocking direction, follow the instructions in chapter "Altering the blocking direction on motors with a backstop" (→ 🗎 219).

25957074/EN – 06/2019

# 7 Inspection/maintenance



**⚠ WARNING**

Risk of injury if the drive starts up unintentionally.

Severe or fatal injuries.

- Before you start working on the unit, disconnect the motor and all connected options from the power supply.
- Secure the motor against unintended power-up.



**⚠ CAUTION**

Inhaling, swallowing brake abrasion when releasing the brake.

Irritation of the respiratory tract and respiratory organs.

- ✓ Wear a respirator of class FFP2 during the maintenance of brakemotors.
- Avoid swirling of the brake abrasion.
- Remove the brake abrasion with suitable extraction systems or damp cloths that bind dust.
- Make sure that there is adequate ventilation in the work environment.



**⚠ CAUTION**

The surfaces on the drive can be very hot during operation.

Risk of burns.

- Let the motor cool down sufficiently before you start working on it.

**NOTICE**

Damage to the oil seals if the temperature is too low during installation.

Possible damage to the oil seals.

- Before assembly, make sure that ambient temperature and the temperature of the oil seal are not below 0 °C.



**INFORMATION**

Apply grease with a grease depot to the lip of the oil seal before assembly. For further information on lubricants, refer to chapter "Order information for lubricants, anti-corrosion agents and sealants" (→ 🗎 245).



**INFORMATION**

Friction disks at brakemotors may only be replaced by the SEW-EURODRIVE service.

Repairs

Only SEW-EURODRIVE repair workshops or plants that provide the necessary expertise may repair or modify the motor/brakemotor.

Before you take the motor back into operation, check to see if the regulations have been adhered to. Confirm the compliance with a corresponding identification on the motor or by issuing a test report.

25957074/EN – 06/2019

Always perform safety and functional checks following all maintenance and repair work (thermal protection).

25957074/EN – 06/2019

## 7.1 Inspection and maintenance intervals

The following table lists the inspection and maintenance intervals:

| Device/part of device | Time interval | What to do? |
|---|---|---|
| Brake BE02 | • **If used as a working brake:**<br>At least every 3000 operating hours[1)]<br>• **If used as a holding brake:**<br>Every 0.5 to 4 years, depending on the operating conditions[1)] | Inspect the brake<br>• Measure the brake lining carrier thickness<br>• Inspect the switch contacts and replace them, if necessary (e.g. in case of burnout) |
| Brake BE03 | • **If used as a working brake:**<br>At least every 3000 operating hours[1)]<br>• **If used as a holding brake:**<br>Every 0.5 to 4 years, depending on the operating conditions[1)] | Inspect the brake<br>• Measure the working air gap<br>• Inspect the switch contacts and replace them, if necessary (e.g. in case of burnout) |
| Brakes BE05 – BE122 | • **If used as a working brake:**<br>At least every 3000 operating hours[1)]<br>• **If used as a holding brake:**<br>Every 0.5 to 4 years, depending on the operating conditions[1)] | Inspect the brake:<br>• Measure the brake disk thickness<br>• Brake disk, lining<br>• Measure and set the working air gap<br>• Pressure plate<br>• Driver/gearing<br>• Pressure rings<br>• Suck off any abrasion<br>• Inspect the switch contacts and replace them, if necessary (e.g. in case of burnout) |
| Motor | • **Every 10000 operating hours**[2)3)] | Motor inspection:<br>• Check rolling bearing and change if necessary<br>• Replace the oil seal<br>• Clean the cooling air ducts |
| Drive | • Differing[3)] | • Touch up or renew the surface/anti-corrosion coating<br>• Check and clean the air filter.<br>• If applicable, clean condensation drain hole at the bottom of the fan guard<br>• Clean clogged bores |
| Connection cables | • Regularly | Inspect cables<br>• Check for damages and replace the connection cable if necessary. |

1) Wear times are subject to many factors and can be quite short. The system manufacturer must calculate the required inspection/maintenance intervals individually in accordance with the project planning documents.

2) For the DR../DRN225 – 315 motors with relubrication device, note the shortened relubrication periods in chapter "Bearing lubrication".

3) The interval depends on outer influences and can be very short, e.g. in the event of high dust concentration in the environment.

If you open the motor during inspection/maintenance, you have to clean it before you close it.

25957074/EN – 06/2019

## 7.2 Bearing lubrication

### 7.2.1 Bearing lubrication for DR..71 – 280, DRN63 – 280, DR2..56 – 80 motors

In standard design, the bearings are lubricated for life.

### 7.2.2 Bearing lubrication for DR..250 – 315, DRN225 – 315 motors with relubrication device /NS

Motors of nominal sizes 225, 250, 280, and 315 can be equipped with a relubrication device. The following figure shows the positions of the lubrication devices.

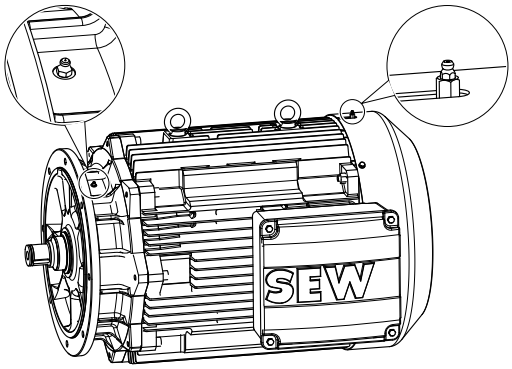


*9007199630094091*

Under normal operating conditions and at an ambient temperature between -20 °C to +40 °C, SEW-EURODRIVE uses Mobil Polyrex EM (K2P-20 DIN 51825), a polyurea-based mineral high-performance, high-temperature grease for initial lubrication.

For motors in the low temperature range up to -40 °C, SEW-EURODRIVE uses SKF GXN or LGHP2, which are also a polyurea-based mineral greases.

**Relubrication**

The grease can be purchased from SEW-EURODRIVE in 400 g cartridges. For the relevant order information, refer to chapter "Order information for lubricants, anti-corrosion agents and sealants" (→ 🗎 245).

## INFORMATION

Only mix lubricants of the same thickness type, the same base oil and the same consistency (NLGI class).

Grease the motor bearings in accordance with the information on the lubricant plate. The used grease collects inside the motor and should be removed every 6 to 8 relubrication cycles during an inspection. Each time you relubricate the bearings, ensure that the bearing is two-thirds full.

Start up the motors slowly after lubrication so that the grease is distributed evenly.

The relubrication channels leading the grease from the grease nipples to the bearings must always be filled with grease. This is usually ensured be adhering to the relubrication intervals. During maintenance work, the grease may remain in the channels and does not need to be removed.

25957074/EN – 06/2019

**Re-lubrication period**

For the relubrication intervals of the bearings, adhere to the requirements stated in the table:

- Ambient temperature: -20 °C to +40 °C
- Rated speed that corresponds to that of a 4-pole AC motor
- Normal load

In case of higher ambient temperatures, higher speeds, or larger loads, the relubrication intervals are shorter. Use 1.5 times of the stated quantity for the initial filling.

The relubrication channels leading the grease from the grease nipples to the bearings must always be filled with grease. This is usually ensured be adhering to the relubrication intervals. During maintenance work, the grease may remain in the channels and does not need to be removed.

| Motors with option | Horizontal mounting position | | Vertical mounting position | |
|---|---|---|---|---|
| | Duration | Quantity | Duration | Quantity |
| **DR../DRN225 – 315 /NS** | 5000 h | 50 g | 3000 h | 70 g |
| **DR../DRN225 – 315 /ERF /NS** | 3000 h | 50 g | 2000 h | 70 g |

## 7.3 Reinforced bearings

### NOTICE

Damage to bearings due to impermissible heating of bearing and motor.

Bearing damage.

- Do not operate cylindrical roller bearings without overhung load.

In the /ERF (reinforced bearing) option, cylindrical rolling bearings are installed on the A-side. The reinforced bearings must have overhung load applied to them and must never be operated without overhung load.

The reinforced bearings are only offered with the /NS (relubrication) option so as to facilitate optimal lubrication of the bearing.

Observe the notes on bearing lubrication in chapter "Bearing lubrication for DR..250 – 315, DRN225 – 315 motors with relubrication device /NS" (→ 🗎 125).

25957074/EN – 06/2019

## 7.4 Motor and brake maintenance – preliminary work



**⚠ WARNING**

Risk of injury if the drive starts up unintentionally.

Severe or fatal injuries.

- Before you start working on the unit, disconnect the motor and all connected options from the power supply.
- Secure the motor against unintended power-up.

### 7.4.1 Removing/installing the fan guard for DRN63 – 71, DR2..63 – 71 motors

The fan guard for DRN63 – 71, DR2..63 – 71 motors is attached using clips.

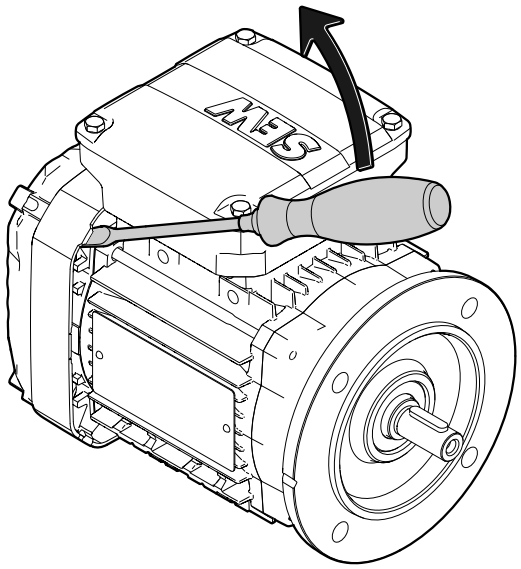

*9007222099799435*

#### Removing the fan guard

Proceed as follows to remove the fan guard:

1. Using a suitable tool, lever out at least 2 adjacent detents.
   - ⇨ **With EI.. encoder option**: Lever out the detent pair opposite of the terminal box.
2. Pull the detents over the latching cams of the endshield.
   - ⇨ In case of DRN63, DR2..63, loosening all 4 fan guard connections may be required to remove the fan guard, depending on the option.

To request for a replacement in case the fan guard is damaged, contact SEW-EURODRIVE.

#### Reassembly

- ✓ The rectangular marking on the fan guard [2] must point in direction of the terminal box [1].

1. Evenly push the detents of the fan guard onto the latching cams until they snap in.

25957074/EN – 06/2019

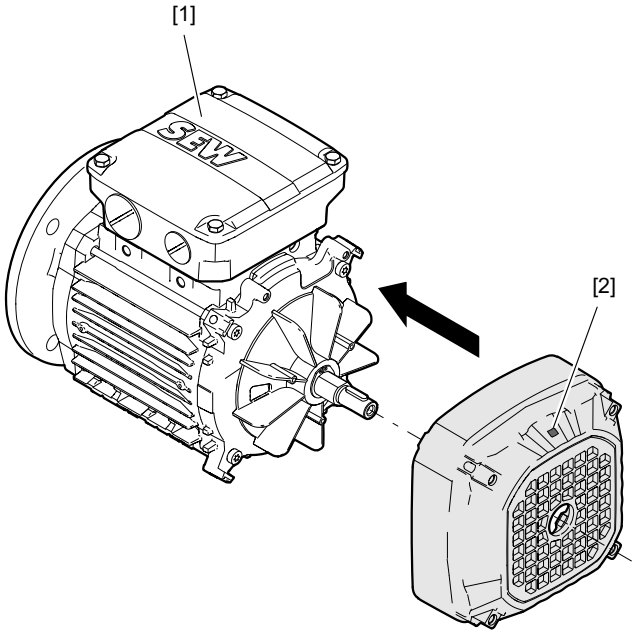


27830526347

### 7.4.2 Removing/installing the plastic fan for DR..71, DRN63 – 71, DR2..56 – 71 motors

The plastic fan [2] for DR..71, DRN63 – 71, DR2..56 – 71 motors is attached using clips.

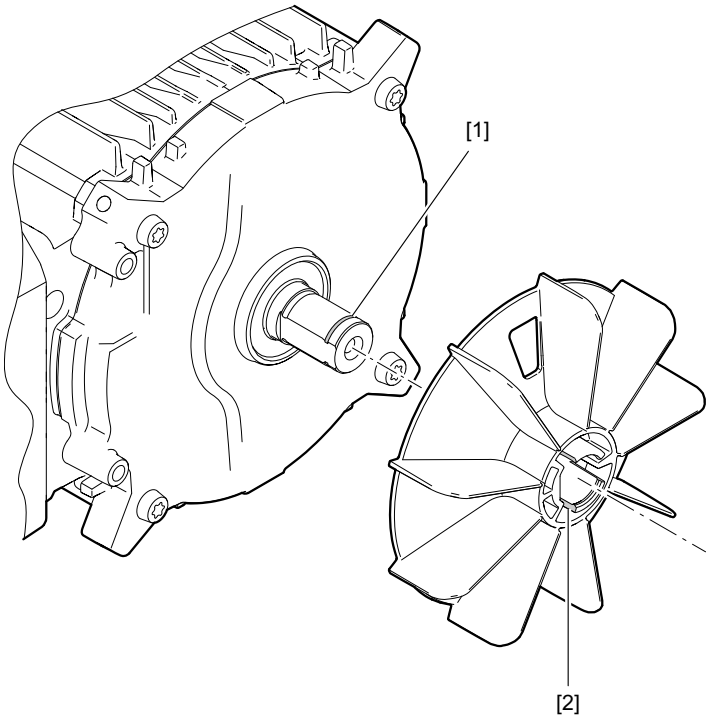


23761871115

**Removing the fan**

Proceed as follows to remove the plastic fan:

✓ Required tools: 1 puller.

25957074/EN – 06/2019

1. Pull off the fan [2] from the shaft [1] using the puller.
   ⇨ The detent is pulled out of the latching groove.
2. Check that the detent of the fan is not damaged.

To request a replacement in case the fan is damaged, please contact SEW-EURODRIVE.

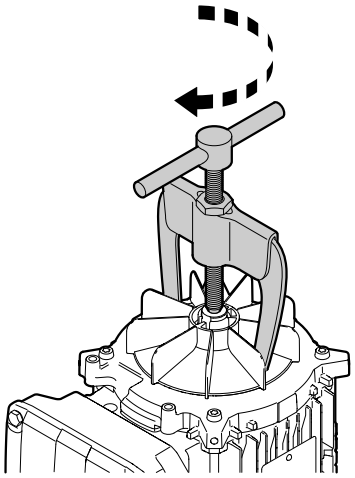

*23761866251*

**Reassembly**

✓ Required tools: 1 hammer, 1 hammer insertion tool.

1. Position the fan centrally on the shaft using the precentering.
2. Mount the fan to the shaft using the plain hammer insertion tool and the hammer. The hammer insertion tool must not be placed on the detent but must have a larger diameter.
   ⇨ When the detent snaps into the latching groove, a click can be clearly heard.
3. Check if the detent is snapped into the latching groove.

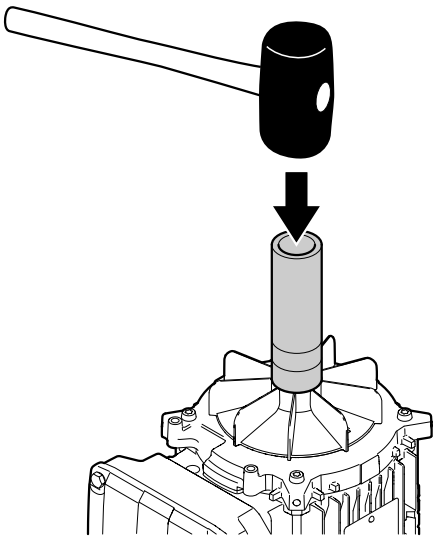

*23761868683*

25957074/EN – 06/2019

### 7.4.3 Removing rotary encoders from DR..71 – 132, DRN80 – 132S motors

The following figure illustrates the disassembly procedure using the ES7. rotary encoder as an example:

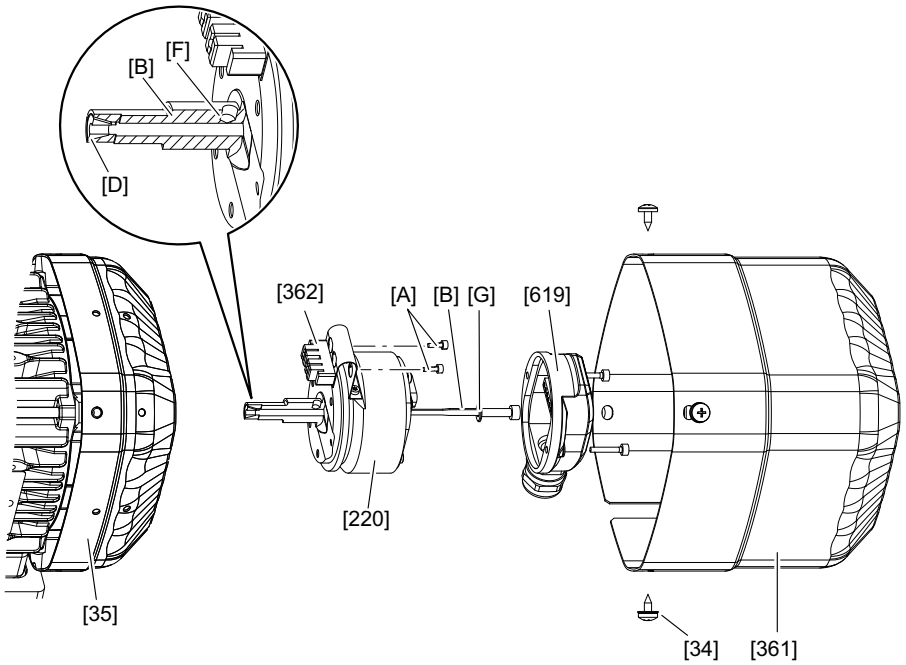


*9007201837842187*

[34] Tapping screw
[35] Fan guard
[220] Encoder
[361] Safety cover
[362] Expansion anchor
[619] Connection cover
[A] Retaining screws for the torque bracket
[B] Central retaining screw
[D] Cone
[F] Bore
[G] Tooth lock washer

**Disassembling ES7./AS7.encoders**

1. Remove the safety cover [361], or the forced cooling fan if required.
2. Loosen the screws of the connection cover [619] and remove it. Do not disconnect the encoder cable.
3. Make sure the cone [D] doesn't fall out while the central retaining screw [B] is loosened. Loosen the central retaining screw [B] by 2 – 3 turns. Loosen the cone [D] by tapping lightly onto the screw head.
4. To loosen the expansion anchor [362], remove the retaining screw of the torque bracket [A]. Carefully pull the encoder [220] from the rotor bore.

**Reassembly**

1. Apply a contact corrosion prevention compound, e.g. NOCO® fluid to the encoder pin.
2. Place the expansion anchor [362] at the torque bracket of the encoder.
3. Push the encoder into the bore in the shaft end to the stop.
4. Tighten the central retaining screw [B] with the inserted tooth lock washer [G].
   ⇨ Tightening torque 2.75 Nm.
5. Press the expansion anchor [362] into the fan guard [35] and check if it is seated correctly.
6. Screw the retaining screws of the torque bracket [A] into the expansion anchor [362] until the stop. Tighten the retaining screws of the torque bracket [A].
   ⇨ Tightening torque 2.25 Nm.
7. Screw on the connection cover [619].
   ⇨ Tightening torque 2.25 Nm.
8. Mount the safety cover [361] onto the forced cooling fan.

25957074/EN – 06/2019

### 7.4.4 Removing rotary encoders from DR..160 – 280, DRN132M – 280 motors

The following figure illustrates the disassembly procedure using the EG7. rotary encoder as an example:

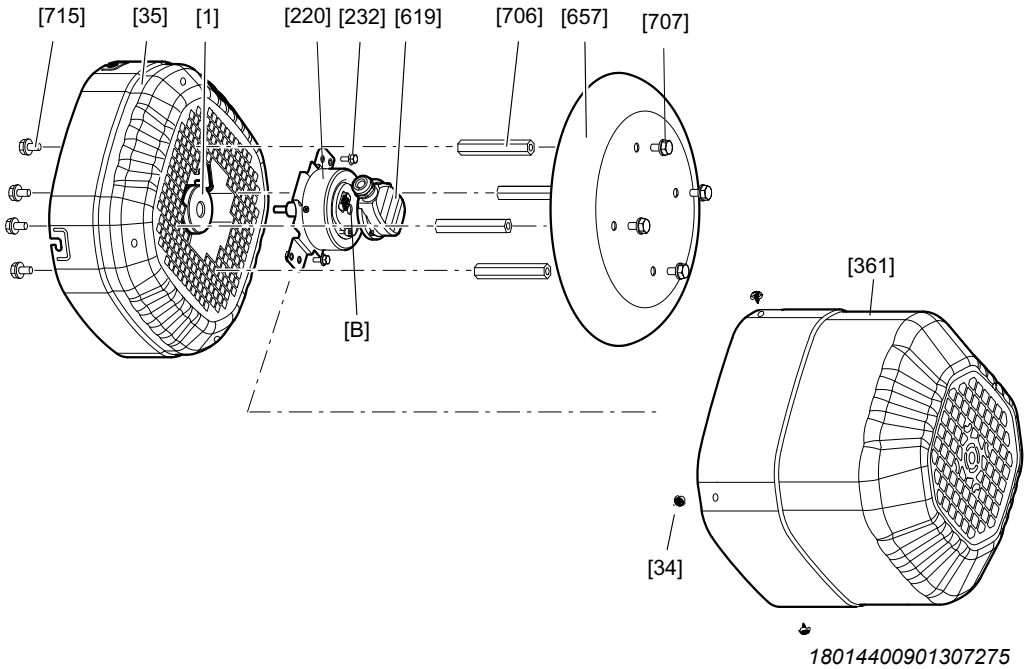


*18014400901307275*

| | | | |
|---|---|---|---|
| [1] | Rotor | [B] | Central retaining screw |
| [34] | Tapping screw | [619] | Connection cover |
| [35] | Fan guard | [657] | Canopy |
| [220] | Encoder | [706] | Spacer bolt |
| [232] | Screws | [707] [715] | Screws |
| [361] | Safety cover | [A] | Screws |

**Removing EG7., AG7. encoders**

1. Proceed as follows, depending on the design:
   - ⇨ **With canopy:** Remove the screws [707] to disassemble the canopy [657]. If required, counter using a hexagon wrench SW13 on the spacer bolt [706].
   - ⇨ **Without canopy:** Remove the screws [34] to disassemble the safety cover [361].
2. Remove the forced cooling fan if required.
3. Loosen the screws of the connection cover [619] and remove it. Do not disconnect the encoder cable.
4. Remove the retaining screws of the torque bracket [232].
5. Loosen the central retaining screw [B] by 2 – 3 turns to pull off the encoder [220].

**Reassembly**

1. Apply a contact corrosion prevention compound, e.g. NOCO® fluid to the encoder pin.
2. Push the encoder into the bore in the shaft end to the stop.
3. Tighten the central retaining screw [B] with the inserted tooth lock washer [G].
   ⇨ Tightening torque 8 Nm.
4. Tighten the retaining screws of the torque bracket [232].
   ⇨ Tightening torque 6 Nm.
5. Screw on the connection cover [619].
   ⇨ Tightening torque 2.25 Nm.
6. Mount the safety cover [361] onto the forced cooling fan.
7. Mount the canopy [657] if necessary.

25957074/EN – 06/2019

### 7.4.5 Removing the rotary encoder from DR..160 – 225, DRN132M – 315 motors with /V forced cooling fan option

The following figure illustrates the disassembly procedure using the EG7. rotary encoder as an example:

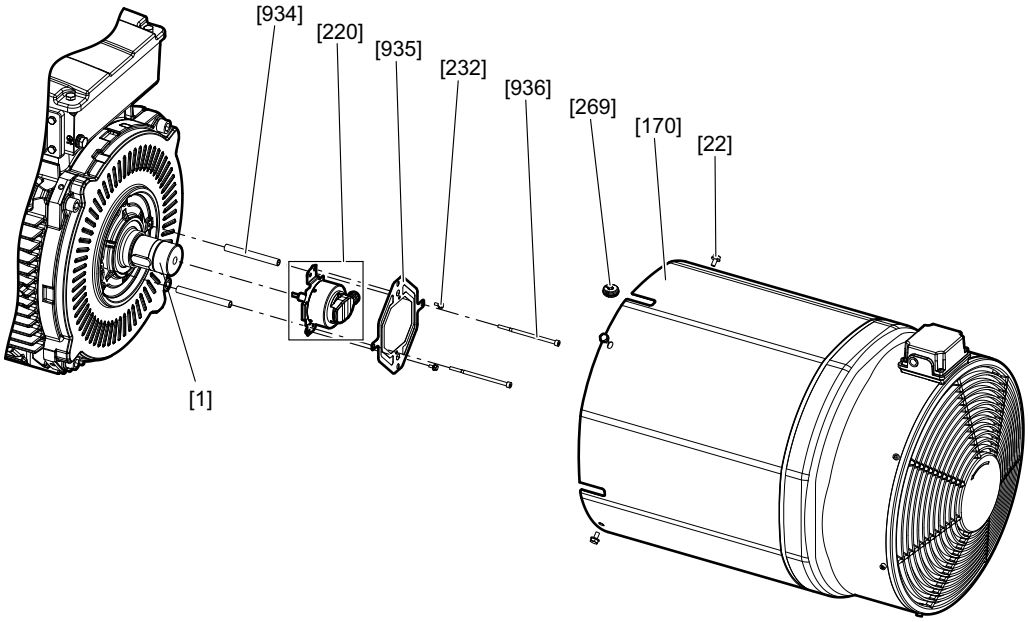


*9007206970702987*

| | | | |
|---|---|---|---|
| [22] | Screw | [935] | Torque bracket |
| [170] | Forced cooling fan guard | [936] | Screw |
| [232] | Screws | [934] | Spacer bushing |
| [269] | Cable grommet | [220] | Encoder |

**Removing EG7., AG7. encoders**

1. Remove the screws [22] to disassemble the forced cooling fan [170].
2. Remove the cable grommet [269] with the encoder cable from the forced cooling fan [170].
3. Remove the screws [232] and [936] to disassemble the torque bracket [935].
4. Loosen the screws of the connection cover [619] and remove it. Do not disconnect the encoder cable.
5. Loosen the central retaining screw [B] by 2 – 3 turns to pull off the encoder [220].

**Reassembly**

1. Apply a contact corrosion prevention compound, e.g. NOCO® fluid to the encoder pin.
2. Push the encoder into the bore in the shaft end to the stop.
3. Tighten the central retaining screw [B] with the inserted tooth lock washer [G].
   ⇨ Tightening torque 8 Nm.
4. Place the torque bracket [935] onto the spacer bushing [934] and tighten the screws [936].
   ⇨ Tightening torque 11 Nm.
5. Tighten the retaining screws of the torque bracket [232].
   ⇨ Tightening torque 6 Nm.
6. Insert the cable grommet [269] into the forced cooling fan [170].
7. Mount the forced cooling fan [170] and tighten the screws [22].
   ⇨ Tightening torque 28 Nm.

25957074/EN – 06/2019

### 7.4.6 Removing rotary encoders from DR..315, DRN315 motors

The following figure illustrates the disassembly procedure using the EH7. and AH7. rotary encoders as an example:

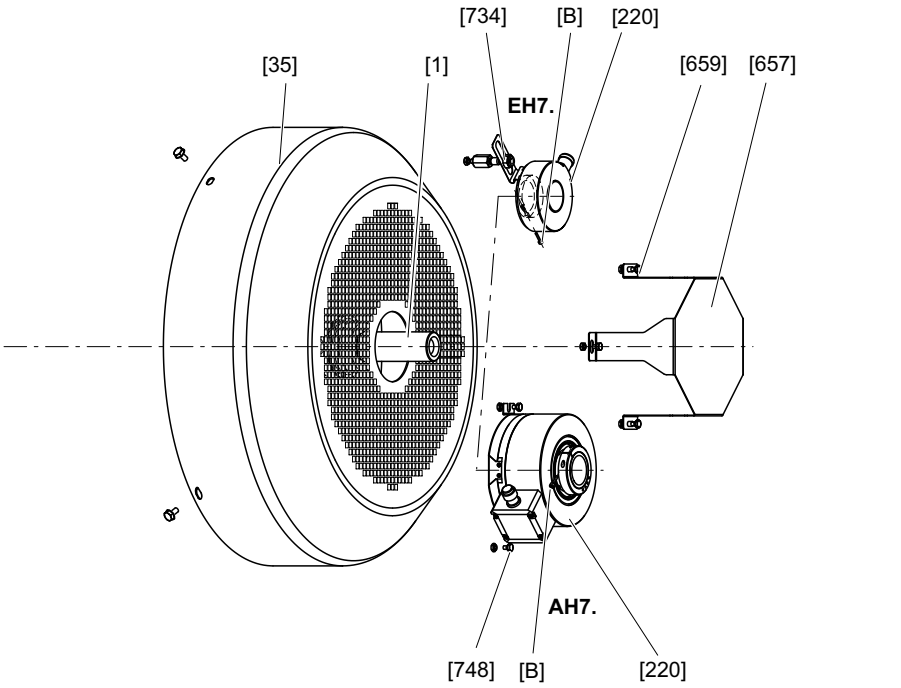


*18014398917111435*

| | | | |
|---|---|---|---|
| [35] | Fan guard | [659] | Screw |
| [220] | Encoder | [734] | Nut |
| [B] | Central retaining screw | [748] | Screw |
| [657] | Cover plate | | |

**Removing EH7., AH7. encoders**

1. Remove the screws [659] to disassemble the cover plate [657].
2. Depending on the design, remove the encoder [220] from the fan guard [35] as follows:
   - ⇨ **EH7.:** Remove the nut [734].
   - ⇨ **AH7.:** Remove screw [748].
3. Loosen the central retaining screw [B] by 2 – 3 turns to pull off the encoder [220].

25957074/EN – 06/2019

**Reassembly**

1. Push the encoder into the bore in the shaft end to the stop.
2. Tighten the central retaining screw [B].
   - ⇨ **EH7.:** Tightening torque 3 Nm.
   - ⇨ **AH7.:** Tightening torque 2 Nm.
3. Proceed as follows, depending on encoder:
   - ⇨ **EH7.:** Install the nut [734].
   - ⇨ **AH7.:** Insert and tighten screw [748].
4. Mount the cover plate [657] using the screws [659].

25957074/EN – 06/2019

### 7.4.7 Mounting/removing rotary encoders with XV../EV../AV.. encoder mounting adapter for DR..71 – 225, DRN71 – 225, DR2..71 – 80 motors

The following figure illustrates the disassembly procedure using a third-party encoder as an example:

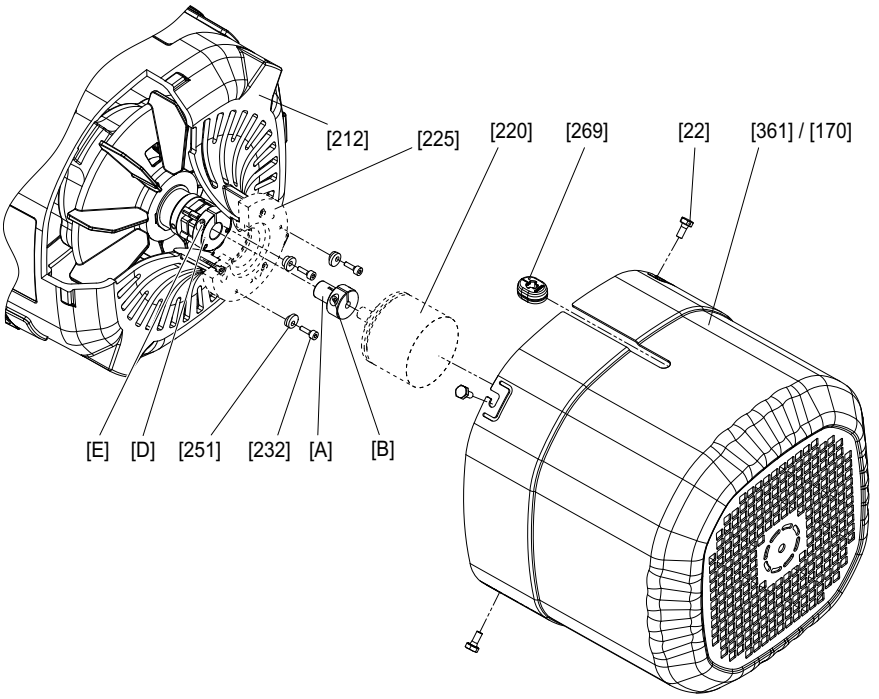


*9007202887906699*

| | | | |
|---|---|---|---|
| [22] | Screw | [361] | Safety cover (normal/long) |
| [170] | Forced cooling fan guard | [269] | Cable grommet |
| [212] | Fan guard with encoder mount | [A] | Adapter |
| [220] | Encoder | [B] | Clamping screw |
| [225] | Intermediate flange (not with XV1A) | [D] | Coupling (spread- or solid shaft coupling) |
| [232] | Retaining screws (enclosed with XV1A and XV2A) | [E] | Clamping screw |
| [251] | Conical spring washers (enclosed with XV1A and XV2A) | | |

#### Removing the XV.., EV.., AV.. encoders

1. Remove the safety cover [361], or the forced cooling fan if required.
2. Loosen the retaining screws [232] and turn the conical spring washers [251] outwards.
3. Loosen the clamping screw [E] of the coupling.
4. Remove adapter [A] and encoder [220].

#### Reassembly

1. Proceed as described in chapter "Encoder mounting adapter" (→ 🗎 40) to mount the encoder.

25957074/EN – 06/2019

### 7.4.8 Mounting/removing rotary encoders with XV../EV../AV.. encoder mounting adapter for DR..250 – 280, DRN250 – 280 motors

The following figure illustrates the disassembly procedure using a third-party encoder as an example:

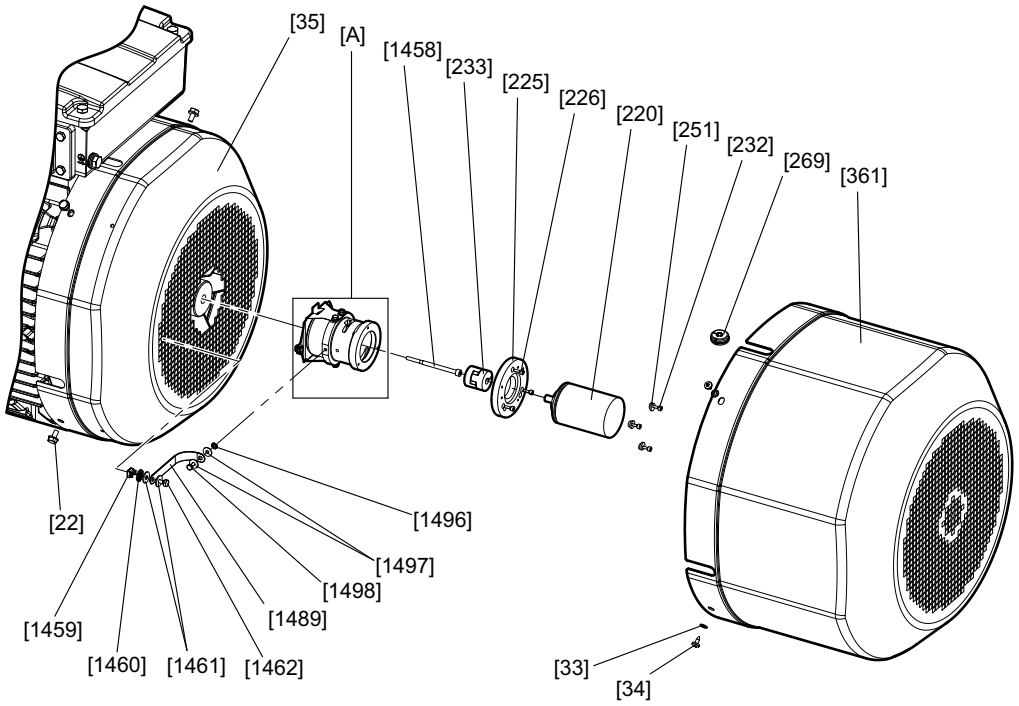


*18014406225445899*

| | | | |
|---|---|---|---|
| [22] | Screw | [361] | Safety cover (normal/long) |
| [33] | Washer | [1458] | Screw |
| [34] | Screw | [1459] | Cage nut |
| [35] | Fan guard | [1460] | Serrated lock washer |
| [220] | Encoder | [1461] | Washer |
| [225] | Intermediate flange (optional) | [1462] | Screw |
| [226] | Screw | [1489] | Ground strap |
| [232] | Screws (enclosed with .V1A and .V2A) | [1496] | Serrated lock washer |
| [233] | Coupling | [1497] | Washer |
| [251] | Conical spring washers (enclosed with .V1A and .V2A) | [1498] | Screw |
| [269] | Cable grommet | [A] | Encoder mounting adapter |

#### Removing the encoder mounting adapter

1. Remove the screws [34] to disassemble the safety cover [361].
2. Remove the encoder [220], see chapter "Removing EV.., AV.. encoders" (→ 🗎 141).
3. In order to remove the ground strap [1489] from the encoder mounting adapter [A], loosen the serrated lock washer [1496], washer [1497], and screw [1498].
4. Remove the screws [22] to disassemble the fan guard [35].
5. Loosen the screw [1458] to remove the encoder mounting adapter [A].
   - ⇨ **If the encoder mounting adapter cannot easily be removed:** Screw an M6 set screw (length 20 – 35 mm) hand tight in the rotor bore. Screw an M8 set screw (length > 10 mm) into the same bore and push the encoder mounting adapter [A] off the rotor [1]. Remove the M6 set screw from the rotor bore.

25957074/EN – 06/2019

**Removing EV.., AV.. encoders**

1. Remove the screws [34] to disassemble the safety cover [361].
2. Pull out the cable grommet [269] together with the encoder cable from the safety cover [361].
3. Loosen the retaining screws [232] and turn the conical spring washers [251] outwards.
4. Loosen the screw at the coupling clamping hub [233] at the encoder end, the screw can be accessed through the slots of the encoder mounting adapter [A].
5. Remove the encoder [220] from the encoder mounting adapter [A] or the intermediate flange [225].

**Reassembly**

1. Proceed as described in chapter "Encoder mounting adapter" (→ 🗎 40) to mount the encoder.

## INFORMATION

When re-installing the fan guard [35], make sure that the torque is supported:

The damping elements [1486] on both sides of the encoder mounting adapter [A] must engage with the ventilation grid (see figure below). The torque plate [935] must protrude from the grid to the left and to the right of the damping element.

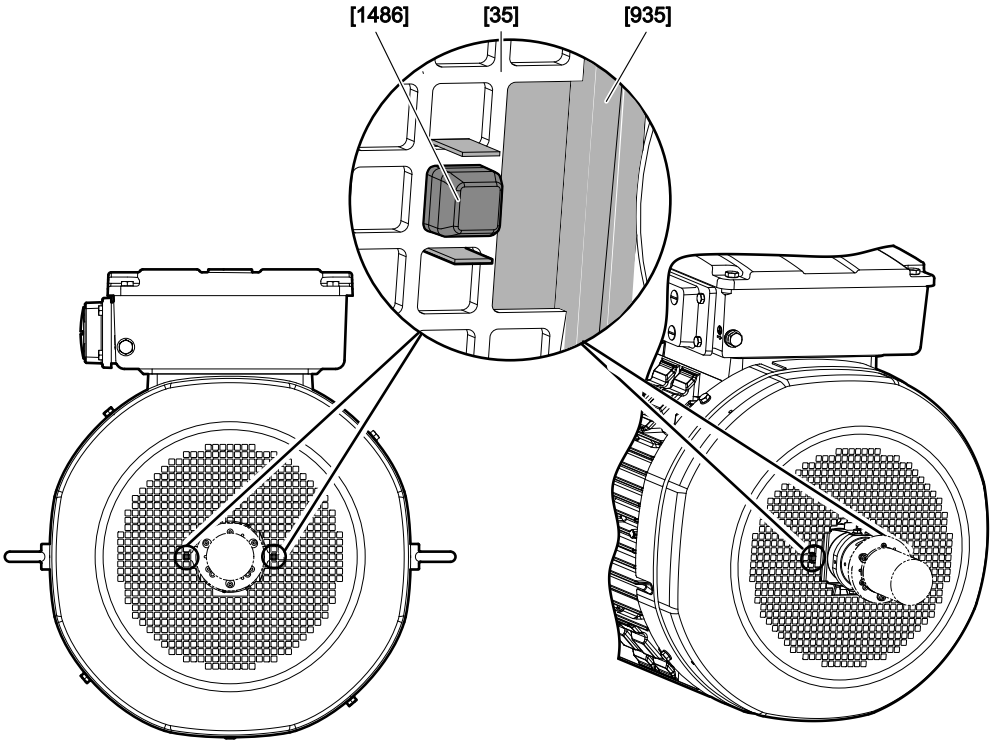


*9007207498780299*

### 7.4.9 Mounting/removing the rotary encoder with EV../AV../XV.. encoder mounting adapter for DR..250 – 280, DRN250 – 280 motors with /V forced cooling fan option

The following figure illustrates the disassembly procedure using a third-party encoder as an example:

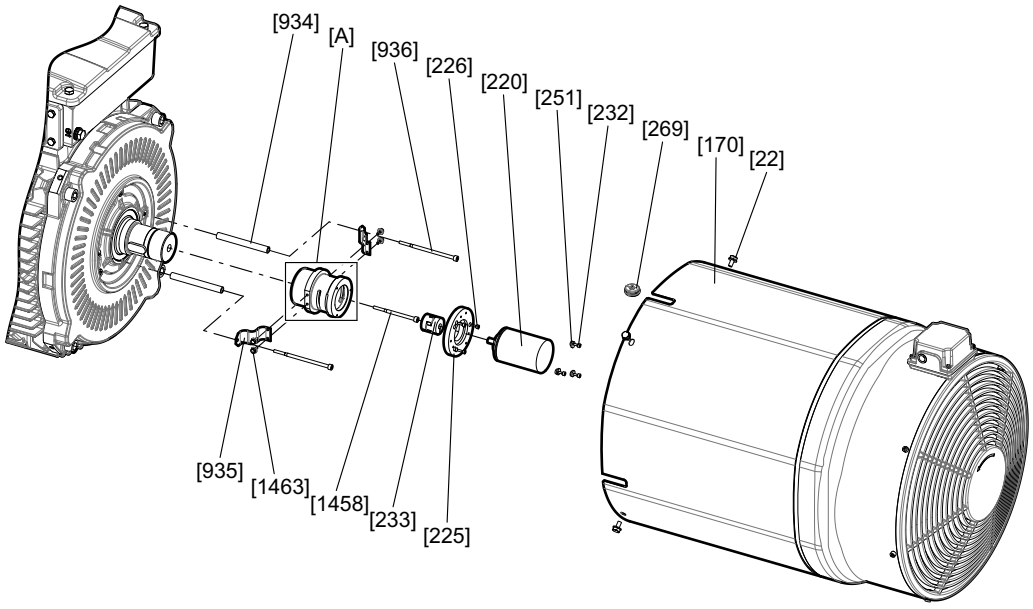


*7715965835*

| | | | |
|---|---|---|---|
| [22] | Screw | [269] | Cable grommet |
| [170] | Forced cooling fan guard | [934] | Spacer bushing |
| [220] | Encoder | [935] | Torque bracket |
| [225] | Intermediate flange (optional) | [936] | Screw |
| [226] | Screw | [1458] | Screw |
| [232] | Screws (enclosed with .V1A and .V2A) | [1463] | Screw |
| [233] | Coupling | [A] | Encoder mounting adapter |
| [251] | Conical spring washers (enclosed with .V1A and .V2A) | | |

**Removing the encoder mounting adapter**

1. Remove the screws [22] to disassemble the forced cooling fan [170].
2. Remove the cable grommet [269] with the encoder cable from the forced cooling fan [170].
3. Loosen the retaining screws [232] and turn the conical spring washers [251] outwards.
4. Loosen the screw at the coupling clamping hub [233] at the encoder end, the screw can be accessed through the slots of the encoder mounting adapter [A].
5. Remove the encoder [220] from the encoder mounting adapter [A] or the intermediate flange [225].
6. Loosen the screws [1458] and [936] to remove the encoder mounting adapter [A]. The torque brackets [935] and screws [1463] can remain at the encoder mounting adapter [A].
   - ⇨ **If the encoder mounting adapter cannot easily be removed:** Screw an M6 set screw (length 20 – 35 mm) hand tight in the rotor bore. Screw an M8 set screw (length > 10 mm) into the same bore and push the encoder mounting adapter [A] off the rotor [1]. Remove the M6 set screw from the rotor bore.

25957074/EN – 06/2019

**Removing EV.., AV.., and XV. encoders**

1. Remove the screws [22] to disassemble the forced cooling fan [170].
2. Remove the cable grommet [269] with the encoder cable from the forced cooling fan [170].
3. Loosen the retaining screws [232] and turn the conical spring washers [251] outwards.
4. Loosen the screw at the coupling clamping hub [233] at the encoder end, the screw can be accessed through the slots of the encoder mounting adapter [A].
5. Remove the encoder [220] from the encoder mounting adapter [A] or the intermediate flange [225].

**Reassembly**

1. Proceed as described in chapter "Encoder mounting adapter" (→ 🗎 40) to mount the encoder.

25957074/EN – 06/2019

### 7.4.10 Mounting/removing hollow shaft encoders with XH.A encoder mounting adapter for DR..71 – 225, DRN71 – 225, DR2..71 – 80 motors

The following figure illustrates the disassembly procedure using a third-party encoder as an example:

Encoder mounting with XH1A encoder mounting adapter

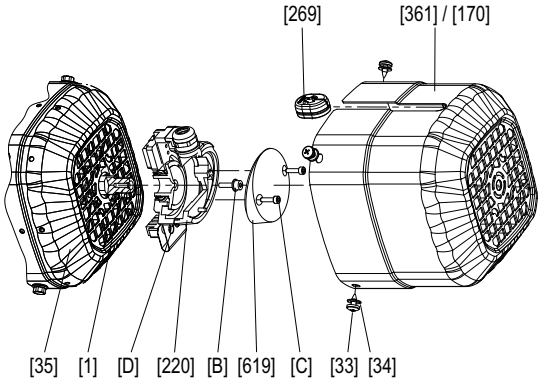


Encoder mounting with XH7A and XH8A encoder mounting adapter

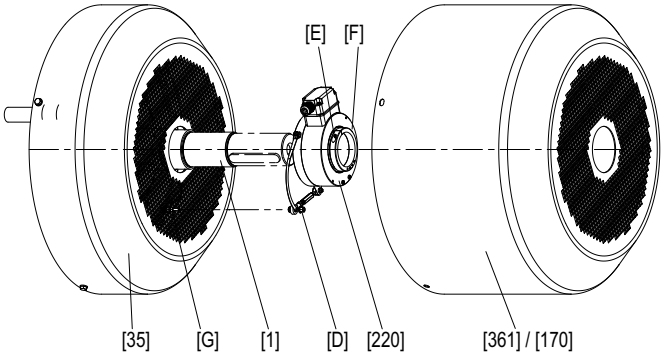


*9007202887902859*

| | |
|---|---|
| [1] | Rotor |
| [33] | Tapping screw |
| [34] | Washer |
| [35] | Fan guard |
| [170] | Forced cooling fan guard |
| [220] | Encoder |
| [269] | Cable grommet |
| [361] | Safety cover |
| [B] | Central retaining screw |
| [619] | Connection cover |
| [C] | Screw connection cover |
| [D] | Torque bracket screws |
| [E] | Screw |
| [F] | Clamping ring |
| [G] | Nut of the torque bracket |

**Removing hollow shaft encoders form XH1A encoder mounting adapter**

1. Remove the safety cover [361], or the forced cooling fan if required.
2. Loosen the screws of the connection cover [619] and remove it. Do not disconnect the encoder cable.
3. Screw out the central retaining screw [B].
4. Remove the torque bracket screws [D].
5. Pull the torque bracket off.
6. Remove the encoder [220] from the shaft end.

25957074/EN – 06/2019

**Removing hollow shaft encoders from XH7A and XH8A encoder mounting adapter**

1. Remove the safety cover [361], or the forced cooling fan if required.
2. Loosen the screw [E] from clamping ring [F].
3. Remove the torque bracket screws [D].
4. Remove the encoder [220] from the shaft end.

**Reassembly of hollow shaft encoders to XH1A encoder mounting adapter**

1. Push the encoder [220] on the shaft end.
2. Screw in the screw [D] to mount the torque bracket.
3. Tighten the central retaining screw [B].
   ⇨ Tightening torque 2.9 Nm
4. Screw on the connection cover [619].
   ⇨ Tightening torque 3 Nm.
5. Mount the safety cover [361] onto the forced cooling fan.

**Reassembly of hollow shaft encoders to XH7A and XH8A encoder mounting adapter**

1. Push the encoder [220] on the shaft end.
2. Screw in the screw [D] to mount the torque bracket.
3. Remove the screw [E] from clamping ring [F].
   ⇨ Tightening torque 5 Nm.
4. Mount the safety cover [361] onto the forced cooling fan.

25957074/EN – 06/2019

### 7.4.11 Encoder mounting adapter EK8A

The encoder mounting adapter EK8A...

Content of the accessory bag [1634]

- Screws [232] for fastening the torque arm of the encoder [220]
- from size DRN180: Insulation coupling [1891]

#### Mounting the encoder mounting adapter EK8A

1. Unscrew the screws [22].
2. Remove the fan guard [35] from the motor.
3. Remove the protection cap [1143] from the recess of the fan guard [35].
   ⇨ Dispose of the protection cap [1143].
4. Remove the closing plug [950] from the rotor [1].
   ⇨ Dispose of the closing plug [950].

Then proceed with the installation process as described in chapter "Mounting cone shaft encoders EK8./AK8.".

25957074/EN – 06/2019

### 7.4.12 Removing and mounting cone shaft encoders of motors DRN71 – 132S, DR2..17 – 80

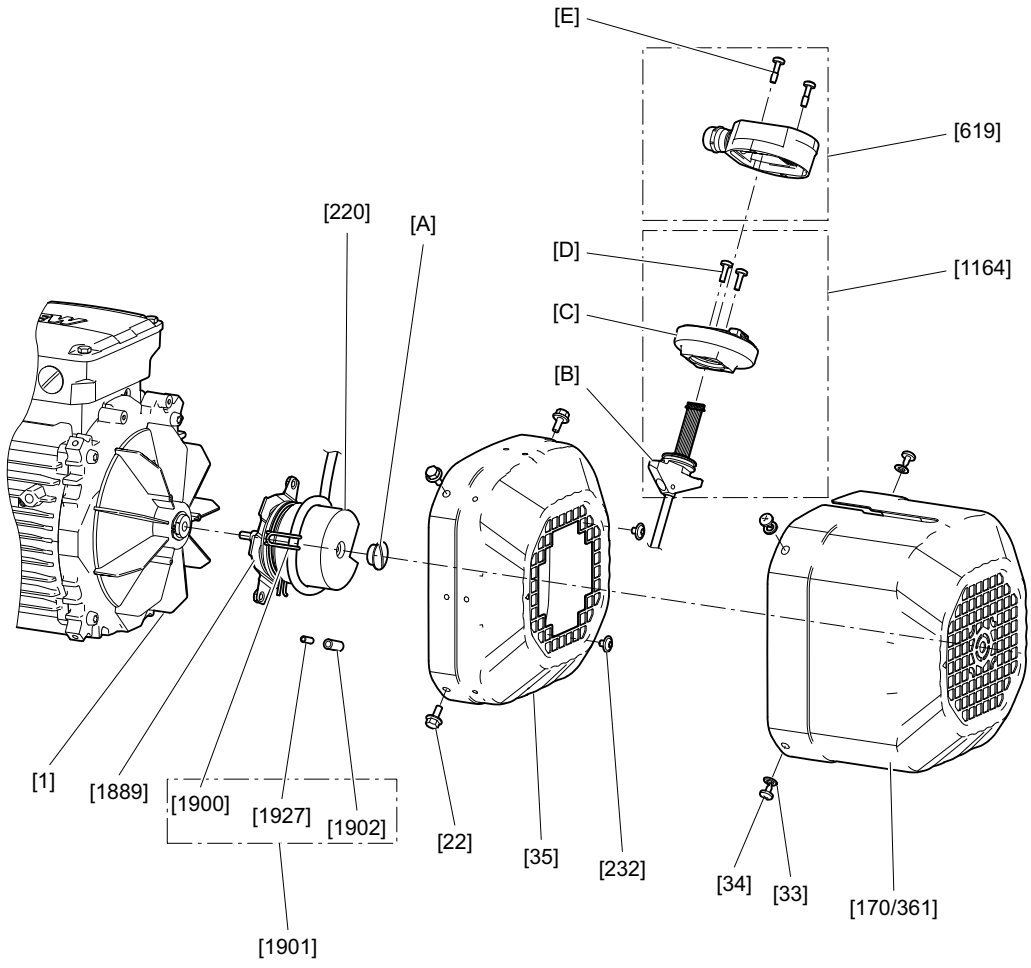


*28519543819*

| | | | |
|---|---|---|---|
| [1] | Rotor | [1889] | Torque arm |
| [22] | Screw (hexagonal) | [1900] | Cable retainer |
| [33] | Washer | [1901] | Accessory bag |
| [34] | Screw (cross recess) | [1902] | Threaded sleeve |
| [35] | Fan guard | [1927] | Set screw |
| [170] | Forced cooling fan | [A] | Screw plug |
| [220] | Encoder | [B] | T-slot nut |
| [232] | Screw (hexalobular) | [C] | Lower part |
| [361] | Safety cover | [D] | Screw |
| [619] | Connection cover | [E] | Screw |
| [1164] | Connection adapter | | |

**Removing encoder EK8./AK8.**

1. Unscrew the screws [E].
2. Remove the connection cover [619] from the connection adapter [1164].
3. Loosen the screws [D] in the lower part [C].
   ⇨ Only unscrew the screws [D] to such an extent that the connection adapter [1164] can be moved in the recess of the safety cover [361].
4. Unscrew the screws [34].
5. Remove the safety cover [361] from the motor. When doing this, slide the connection adapter [1164] out of the recess.

6. Unscrew the screws [232].
7. Unscrew the screws [22].
8. Remove the fan guard [35] over the encoder [220]. Guide the connection adapter [1164] with the signal cable through the cutout of the fan guard [35].
9. Unscrew the central screw plug [A] of the encoder [220].
10. Loosen the central retaining screw of the encoder [220].
    ⇨ If the central retaining screw of the encoder [220] cannot be loosened, counter-tighten the spanner flat SW10 of the encoder shaft.
11. Loosen the cone connection.
    ⇨ Encoder EK8., AK8W, AK8Y: To loosen the cone connection, continue turning the central retaining screw of the encoder [220] counterclockwise.
    ⇨ Encoder AK8H: Continue turning the central retaining screw of the encoder [220] counterclockwise. To loosen the cones, screw an M6 screw (≥ 70 mm long) into the bore.
12. Remove the encoder [220] from the rotor [1].

**Mounting encoder EK8./AK8.**

1. Clean the cone of the encoder [220] and the rotor [1].
2. Remove the central screw plug [A].
3. Insert the encoder [220] into the conical bore of the rotor [1].
4. To secure the encoder [220] in place, tighten the central retaining screw.
    ⇨ Counter-tighten the spanner flat SW 30 of the insulation coupling.
    ⇨ Tightening torque 3.3 Nm.
5. To seal the encoder [220], screw in the central screw plug [A].
    ⇨ Tightening torque 1.8 Nm.
6. Mount the fan guard [35] over the encoder [220]. When doing this, guide the connection adapter [1164] with the signal line through the central grille cutout of the fan guard [35].
7. Use the screws [22] to secure the fan guard [35] to the rear endshield or brake endshield [42] of the motor.
    ⇨ For metal hoods: Tightening torque 3.3 Nm.
    ⇨ For plastic hoods: Tightening torque 2 Nm.
8. Screw the screws [232] through the grille of the fan guard [35] and into the nuts of the torque arm [1889].
    ⇨ If you need to turn the encoder [220] in order for the screws to reach the nuts of the torque arm, turn the encoder [220] clockwise.
    ⇨ Make sure the signal cable is of a sufficient length so that the connection adapter [1164] can be inserted into the recess of the safety cover [361].
    ⇨ Tightening torque 3.3 Nm.
9. Push the connection adapter [1164] up to the end of the recess facing away from the motor.

25957074/EN – 06/2019

10. Place the safety cover [361] onto the fan guard [35].
    ⇨ The arrow that is cast in the lower part [C] of the connection adapter [1164] indicates the direction of the subsequent cable outlet for the connection cover [619].
    ⇨ If you wish to change the direction of the cable outlet: Unscrew the screws [D]. Twist the lower part [C] against the T-slot nut [B]. Screw in the screws [D]. When doing so, only tighten the screws [D] lightly.
11. Secure the safety cover [361] in place by using the screws [34].
    ⇨ Tightening torque 2 Nm.
12. Turn the connection adapter [1164] clockwise up to the stop.
13. Secure the connection adapter [1164] in place by tightening the screws [D].
    ⇨ Tightening torque 2 Nm.
14. Place the connection cover [619] onto the connection adapter [1164].
15. Screw the screws [E] through the bore in the connection cover [619] and into the bore in the connection adapter [1164].
    ⇨ Tightening torque 2.5 Nm

**Removing encoder EK8./AK8. with optional forced cooling fan**

1. Unscrew the screws [E].
2. Remove the connection cover [619] from the connection adapter [1164].
3. Loosen the screws [D] in the lower part [C].
    ⇨ Only unscrew the screws [D] to such an extent that the connection adapter [1164] can be moved in the recess of the forced cooling fan [170].
4. Loosen the screws [22].
5. Unscrew the screws [34].
6. Remove the forced cooling fan [170] from the motor. When doing this, slide the connection adapter [1164] out of the recess.
7. Unscrew the screws [232].
8. Remove the signal cable from the slot of the cable retainer [1900].
9. Unscrew the screws [22].
10. Remove the fan guard [35] over the encoder [220]. Guide the connection adapter [1164] with the signal cable through the cutout of the fan guard [35].
11. Unscrew the central screw plug [A] of the encoder [220].
12. Loosen the central retaining screw of the encoder [220].
    ⇨ If the central retaining screw of the encoder [220] cannot be loosened, counter-tighten the spanner flat SW10 of the encoder shaft.
13. Loosen the cone connection.
    ⇨ Encoder EK8., AK8W, AK8Y: To loosen the cone connection, continue turning the central retaining screw of the encoder [220] counterclockwise.
    ⇨ Encoder AK8H: Continue turning the central retaining screw of the encoder [220] counterclockwise. To loosen the cones, screw an M6 screw (≥ 70 mm long) into the bore.
14. Remove the encoder [220] from the rotor [1].

25957074/EN – 06/2019

**Mounting encoder EK8./AK8. with optional forced cooling fan**

1. Clean the cone of the encoder [220] and the rotor [1].
2. Remove the central screw plug [A].
3. Insert the encoder [220] into the conical bore of the rotor [1].
4. To secure the encoder [220] in place, tighten the central retaining screw.
   - ⇨ Counter-tighten the spanner flat SW10 of the encoder shaft.
   - ⇨ Tightening torque 3.3 Nm.
5. To seal the encoder [220], screw in the central screw plug [A].
   - ⇨ Tightening torque 1.8 Nm.
6. Mount the fan guard [35] over the encoder [220]. When doing this, guide the connection adapter [1164] with the signal line through the central grille cutout of the fan guard [35].
7. Attach the screws [22] of the fan guard [35] to the rear endshield or brake endshield [42] of the motor.
8. Screw the screws [232] through the grille of the fan guard [35] and into the nuts of the torque arm [1889].
   - ⇨ If you need to turn the encoder [220] in order for the screws to reach the nuts of the torque arm, turn the encoder [220] clockwise.
   - ⇨ Make sure the signal cable is of a sufficient length so that the connection adapter [1164] can be inserted into the recess of the forced cooling fan [170].
   - ⇨ Tightening torque 3.3 Nm.
9. ⚠ **CAUTION!**
   Improper installation can cause damage to the equipment. Risk of damage to the signal cable. Insert the signal cable into the slot of the cable retainer [1900] in such a way that the signal cable does not come into contact with the rotating forced cooling fan.
10. To turn the cable retainer [1900], loosen the set screw [1927].
11. To secure the cable retainer [1900] in place, tighten the set screw [1927].
    - ⇨ Tightening torque 1.8 Nm.
12. Place the forced cooling fan [170] onto the fan guard [35].
13. Insert the connection adapter [1164] into the recess of the forced cooling fan [170]. The standard alignment of the recess points towards the terminal box.
    - ⇨ The arrow that is cast in the lower part [C] of the connection adapter [1164] indicates the direction of the subsequent cable outlet for the connection cover [619].
    - ⇨ If you wish to change the direction of the cable outlet: Unscrew the screws [D]. Twist the lower part [C] against the T-slot nut [B]. Screw in the screws [D]. When doing so, only tighten the screws [D] lightly.
14. Use the screws [22] to secure the fan guard [35] to the rear endshield or brake endshield [42] of the motor.
    - ⇨ For metal hoods: Tightening torque 3.3 Nm.
    - ⇨ For plastic hoods: Tightening torque 2 Nm.
15. Secure the forced cooling fan with the screws [34].
    - ⇨ Tightening torque 2 Nm.

25957074/EN – 06/2019

16. Push the connection adapter [1164] up to the end of the recess facing away from the motor.
17. Turn the connection adapter [1164] clockwise up to the stop.
18. Secure the connection adapter [1164] in place by tightening the screws [D].
    ⇨ Tightening torque 2 Nm.
19. Place the connection cover [619] onto the connection adapter [1164].
20. Screw the screws [E] through the bore in the connection cover [619] and into the bore in the connection adapter [1164].
    ⇨ Tightening torque 2.5 Nm

25957074/EN – 06/2019

### 7.4.13 Removing and mounting cone shaft encoders of motors DRN132M – 315

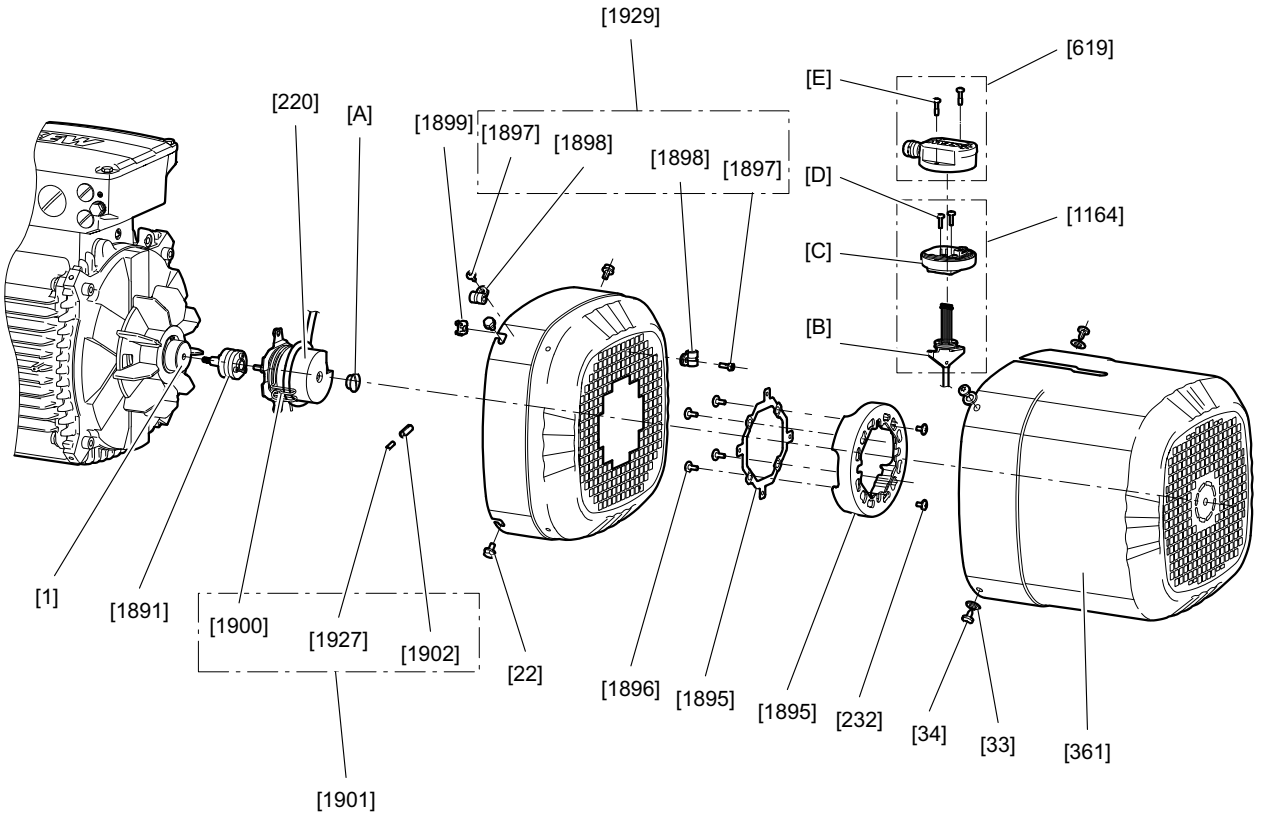


*28534173707*

| | | | |
|---|---|---|---|
| [1] | Rotor | [1898] | Clamp |
| [22] | Screw (hexagonal) | [1899] | Cage nut |
| [33] | Washer | [1900] | Cable retainer |
| [34] | Screw (cross recess) | [1901] | Accessory bag |
| [220] | Encoder | [1902] | Threaded sleeve |
| [232] | Screw (hexalobular) | [1927] | Set screw |
| [361] | Safety cover | [1929] | Accessory bag |
| [619] | Connection cover | [A] | Screw plug |
| [1164] | Connection adapter | [B] | T-slot nut |
| [1891] | Insulation coupling | [C] | Lower part |
| [1895] | Support ring/spacer ring | [D] | Screw |
| [1896] | Screw (hexalobular) | [E] | Screw |
| [1897] | Screw (hexagon socket) | | |

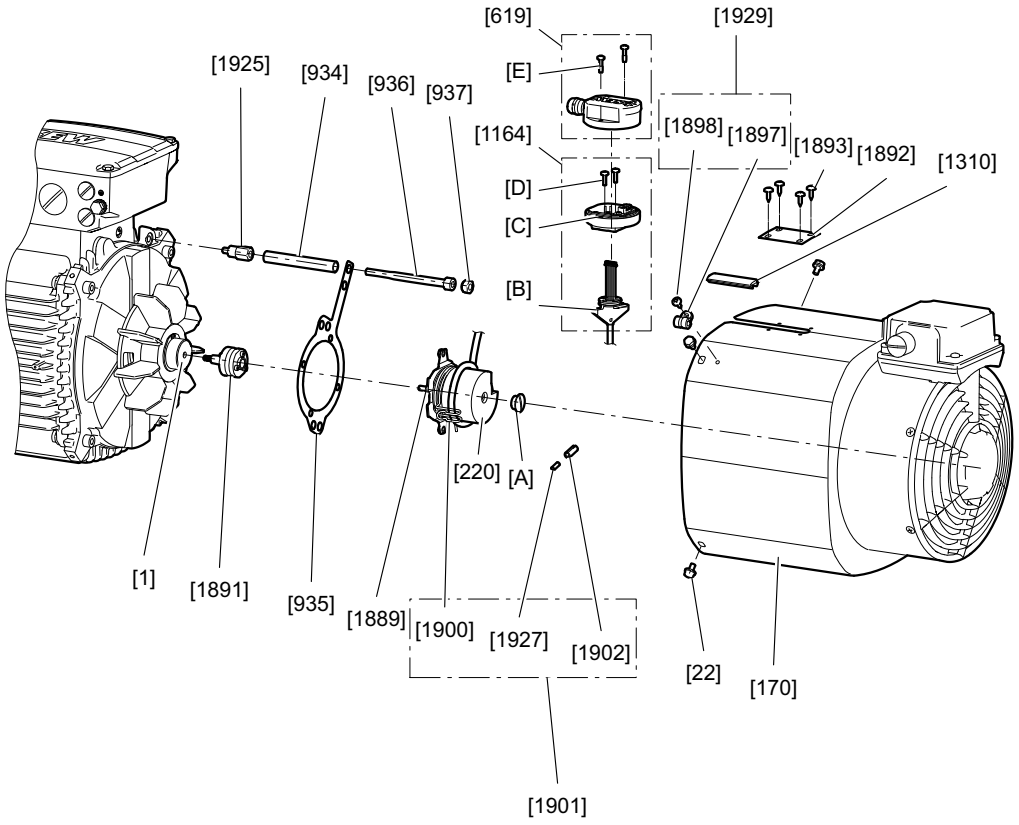


9007227798834699

| | | | |
|---|---|---|---|
| [1] | Rotor | [1892] | Support plate |
| [22] | Screw (hexagonal) | [1893] | Screw (cross recess) |
| [33] | Washer | [1897] | Screw (hexagon socket) |
| [34] | Screw (cross recess) | [1900] | Cable retainer |
| [220] | Encoder | [1901] | Accessory bag |
| [232] | Screw (hexalobular) | [1902] | Threaded sleeve |
| [361] | Safety cover | [1925] | Spacer bolt |
| [619] | Connection cover | [1927] | Set screw |
| [934] | Spacer bushing | [1929] | Accessory bag |
| [935] | Torque arm | [A] | Screw plug |
| [936] | Cap screw | [B] | T-slot nut |
| [937] | Hex nut | [C] | Lower part |
| [1310] | Sealing strip | [D] | Screw |
| [1889] | Torque arm | [E] | Screw |

**Removing encoder EK8./AK8.**

1. Unscrew the screws [E].
2. Remove the connection cover [619] from the connection adapter [1164].
3. Loosen the screws [D] in the lower part [C].
   ⇨ Only unscrew the screws [D] to such an extent that the connection adapter [1164] can be moved in the recess of the safety cover [361].
4. Unscrew the screws [34].
5. Remove the safety cover [361] from the motor. When doing this, slide the connection adapter [1164] out of the recess.
6. Unscrew the screws [232].
7. Unscrew the screws [22].

8. Remove the fan guard [35] over the encoder [220]. Guide the connection adapter [1164] with the signal cable through the cutout of the fan guard [35].
9. Unscrew the central screw plug [A] of the encoder [220].
10. Loosen the central retaining screw of the encoder [220].
    ⇨ If the central retaining screw of the encoder [220] cannot be loosened, counter-tighten the spanner flat SW10 of the encoder shaft.
11. Loosen the cone connection.
    ⇨ Encoder EK8., AK8W, AK8Y: To loosen the cone connection, continue turning the central retaining screw of the encoder [220] counterclockwise.
    ⇨ Encoder AK8H: Continue turning the central retaining screw of the encoder [220] counterclockwise. To loosen the cones, screw an M6 screw (≥ 70 mm long) into the bore.
12. Remove the encoder [220] from the rotor [1].
13. For optional insulation coupling: Remove the encoder [220] from the insulation coupling [1891].

**Mounting encoder EK8./AK8.**

1. Clean the cone of the encoder [220] and the rotor [1].
2. For optional insulation coupling: Clean the cones of the insulation coupling [1891].
3. Remove the central screw plug [A].
4. For optional insulation coupling: The insulation coupling [1891] must be mounted before the encoder is mounted. Insert the insulation coupling [1891] into the conical bore of the rotor [1]. To secure the insulation coupling in place, tighten the central retaining screw.
    ⇨ Counter-tighten the spanner flat SW 30 of the insulation coupling.
    ⇨ Tightening torque 3.3 Nm.
5. Insert the encoder [220] into the conical bore of the rotor [1].
6. For optional insulation coupling: Insert the encoder [220] into the conical opening of the insulation coupling [1891].
7. To secure the encoder [220] in place, tighten the central retaining screw.
    ⇨ Counter-tighten the spanner flat SW10 of the encoder shaft.
    ⇨ Tightening torque 3.3 Nm.
8. To seal the encoder [220], screw in the central screw plug [A].
    ⇨ Tightening torque 1.8 Nm.
9. Mount the fan guard [35] over the encoder [220]. When doing this, guide the connection adapter [1164] with the signal line through the central grille cutout of the fan guard [35].
10. Use the screws [22] to secure the fan guard [35] to the rear endshield or brake endshield [42] of the motor.
    ⇨ DRN132M – L: Tightening torque 11.3 Nm.
    ⇨ DRN160 – 280: Tightening torque 27.3 Nm.
    ⇨ DRN315: Secure the screws [22] in place with medium-strength thread locker. Tightening torque 5 Nm.

25957074/EN – 06/2019

11. Screw the screws [232] through the support ring/spacer ring [1895] and the grille of the fan guard [35] and into the nuts of the torque arm [1889].
    - ⇨ Make sure the signal cable is of a sufficient length so that the connection adapter [1164] can be inserted into the recess of the safety cover [361].
    - ⇨ Tightening torque 3.3 Nm.
12. Place the safety cover [361] onto the fan guard [35].
    - ⇨ The standard alignment of the recess points towards the terminal box.
    - ⇨ The arrow that is cast in the lower part [C] of the connection adapter [1164] indicates the direction of the subsequent cable outlet for the connection cover [619].
    - ⇨ If you wish to change the direction of the cable outlet: Unscrew the screws [D]. Twist the lower part [C] against the T-slot nut [B]. Screw in the screws [D]. When doing so, only tighten the screws [D] lightly.
13. Secure the safety cover [361] in place by using the screws [34].
    - ⇨ Tightening torque 4.5 Nm
14. Push the connection adapter [1164] up to the end of the recess facing away from the motor.
15. Turn the connection adapter [1164] clockwise up to the stop.
16. Secure the connection adapter [1164] in place by tightening the screws [D].
    - ⇨ Tightening torque 2 Nm.
17. Place the connection cover [619] onto the connection adapter [1164].
18. Screw the screws [E] through the bore in the connection cover [619] and into the bore in the connection adapter [1164].
    - ⇨ Tightening torque 2.5 Nm

**Removing encoder EK8./AK8. with optional forced cooling fan**

1. For motors EDRN250 – 315: If the screws [1893] are present, unscrew the screws. Remove the support plate [1892]. Slide the sealing strip [1310]**/[1965]** out of the recess.
2. Unscrew the screws [E].
3. Remove the connection cover [619] from the connection adapter [1164].
4. Loosen the screws [D] in the lower part [C].
    - ⇨ Only unscrew the screws [D] to such an extent that the connection adapter [1164] can be moved in the recess of the forced cooling fan [170].
5. Unscrew the screws [22].
6. Remove the forced cooling fan [170] from the motor. When doing this, slide the connection adapter [1164] out of the recess.
7. Unscrew the screws [232].
8. Remove the signal cable from the slot of the cable retainer [1900].
9. To remove the torque arm [935], loosen the screw [936]/hex nut [937]. Guide the connection adapter [1164] with the signal cable through the cutout of the torque arm [935].
10. Loosen the central retaining screw of the encoder [220].
    - ⇨ If the central retaining screw of the encoder [220] cannot be loosened, counter-tighten the spanner flat SW10 of the encoder shaft.

25957074/EN – 06/2019

11. Loosen the cone connection.
    - ⇨ Encoder EK8., AK8W, AK8Y: To loosen the cone connection, continue turning the central retaining screw of the encoder [220] counterclockwise.
    - ⇨ Encoder AK8H: Continue turning the central retaining screw of the encoder [220] counterclockwise. To loosen the cones, screw an M6 screw (≥ 70 mm long) into the bore.
12. Remove the encoder [220] from the rotor [1].
13. For optional insulation coupling: Remove the encoder [220] from the insulation coupling [1891].

**Mounting encoder EK8./AK8. with optional forced cooling fan**

1. Clean the cone of the encoder [220] and the rotor [1].
2. For optional insulation coupling: Clean the cones of the insulation coupling [1891].
3. Remove the central screw plug [A].
4. For optional insulation coupling: The insulation coupling [1891] must be mounted before the encoder is mounted. Insert the insulation coupling [1891] into the conical bore of the rotor [1]. To secure the insulation coupling in place, tighten the central retaining screw.
    - ⇨ Counter-tighten the spanner flat SW10 of the encoder shaft.
    - ⇨ Tightening torque 3.3 Nm.
5. Insert the encoder [220] into the conical bore of the rotor [1].
6. For optional insulation coupling: Insert the encoder [220] into the conical opening of the insulation coupling [1891].
7. To secure the encoder [220] in place, tighten the central retaining screw.
    - ⇨ Counter-tighten the spanner flat SW10 of the encoder shaft.
    - ⇨ Tightening torque 3.3 Nm.
8. To seal the encoder [220], screw in the central screw plug [A].
    - ⇨ Tightening torque 1.8 Nm.
9. Guide the torque arm [935] over the connection adapter [1164] and the encoder [220].
10. For optional insulation coupling: Mount the spacer bolt [1625].
    - ⇨ M6 screw: Tightening torque 11.3 Nm.
    - ⇨ M8 screw: Tightening torque 27.3 Nm.
11. When mounting the torque arm [935], make sure it is aligned centrally to the encoder [220]. Screw in the screw [936]/hex nut [937] with the spacer bushings [934].
    - ⇨ M6 screw: Tightening torque 11.3 Nm.
    - ⇨ M8 screw: Tightening torque 27.3 Nm.
12. ⚠ **CAUTION!**
    Improper installation can cause damage to the equipment. Risk of damage to the signal cable. Insert the signal cable into the slot of the cable retainer [1900] in such a way that the signal cable does not come into contact with the rotating forced cooling fan.
13. To turn the cable retainer [1900], loosen the set screw [1927].

25957074/EN – 06/2019

14. To secure the cable retainer [1900] in place, tighten the set screw [1927].
    ⇨ Tightening torque 1.8 Nm.
15. To secure the torque arm [1889] of the encoder in place, screw the screws [232] into the bores of the torque arm [935].
    ⇨ Make sure the signal cable is of a sufficient length so that the connection adapter [1164] can be inserted into the recess of the forced cooling fan [170].
16. Place the forced cooling fan [170] onto the rear endshield or brake endshield [42].
17. Insert the connection adapter [1164] into the recess of the forced cooling fan [170]. The standard alignment of the recess points towards the terminal box.
    ⇨ The arrow that is cast in the lower part [C] of the connection adapter [1164] indicates the direction of the subsequent cable outlet for the connection cover [619].
    ⇨ If you wish to change the direction of the cable outlet: Unscrew the screws [D]. Twist the lower part [C] against the T-slot nut [B]. Screw in the screws [D]. When doing so, only tighten the screws [D] lightly.
18. Use the screws [22] to secure the forced cooling fan [170] to the rear endshield or brake endshield [42] of the motor.
    ⇨ DRN132M – L: Tightening torque 11.3 Nm.
    ⇨ DRN160 – 280: Tightening torque 27.3 Nm.
    ⇨ DRN315: Secure the screws [22] in place with medium-strength thread locker. Tightening torque 5 Nm.
19. Push the connection adapter [1164] up to the end of the recess facing away from the motor.
20. For motors EDRN250 – 315: To secure the support plate [1892] in place, screw in the screws [1893]. Slide the sealing strip [1310]/[1965] into the recess.
21. Secure the connection adapter [1164] in place by tightening the screws [D].
    ⇨ Tightening torque 2 Nm.
22. Place the connection cover [619] onto the connection adapter [1164].
23. Screw the screws [E] through the bore in the connection cover [619] and into the bore in the connection adapter [1164].
    ⇨ Tightening torque 2.5 Nm

25957074/EN – 06/2019

### 7.4.14 Removing and mounting encoder EV8./AV8. with coupling from motors DRN71 – 225

**Removing encoder EV8./AV8. with coupling**

1. Unscrew the screws [E].
2. Remove the connection cover [619] from the connection adapter [1164].
3. Loosen the screws [D] in the lower part [C].
   ⇨ Only unscrew the screws [D] to such an extent that the connection adapter [1164] can be moved in the recess of the safety cover [361].
4. Unscrew the screws [22].
5. Remove the safety cover [361] from the motor. When doing this, slide the connection adapter [1164] out of the recess.
6. Unscrew the screws [232].
7. Remove the eccentric disks [251] from the circumferential groove of the encoder [220].
8. Unscrew the central screw plug [A] of the encoder [220].
9. Loosen the central retaining screw of the encoder [220].
   ⇨ If the central retaining screw of the encoder [220] cannot be loosened, exert counter-pressure at the Ø 4.1 mm bore of the rear coupling half.
10. Remove the encoder [220] from the coupling [233].

**Mounting encoder EV8./AV8. with coupling**

1. Remove the central screw plug [A].
2. If the closing plate [646] is present: Unscrew the screws [232] and remove the closing plate [646].
3. Clean the cone of the rotor [1], the encoder [220] and the coupling [233].
4. Insert the coupling [233] into the conical bore of the rotor.
5. To secure the coupling [233] in place, screw in the central retaining screw [F].
   ⇨ Tightening torque 4 Nm
   ⇨ Exert counter-pressure at the Ø 4.1 mm bore of the rear coupling half.
6. To remove the torque arm [1889] from the encoder, unscrew the screws [1888].
7. Remove the central screw plug [A].
   ⇨ For size DRN132M/L: Place the spacer ring [225] between the encoder [220] and the fan guard with encoder mount [212].
8. Insert the encoder [220] into the coupling half with conical bore [233].
9. To secure the encoder [220] in place, tighten the central retaining screw.
   ⇨ Tightening torque 3.3 Nm.
   ⇨ Exert counter-pressure at the Ø 4.1 mm bore of the rear coupling half.
10. To seal the encoder [220], screw in the central screw plug [A].
    ⇨ Tightening torque 1.8 Nm.
11. To secure the eccentric disks [251], insert the screws [232].
12. Tighten the screws [232] while turning the eccentric disks [251] in clockwise direction into the groove of the encoder [220].
    ⇨ Tightening torque 2.25 Nm.

25957074/EN – 06/2019

⇨ Make sure the signal cable is of a sufficient length so that the connection adapter [1164] can be inserted into the recess of the safety cover [361].

13. Insert the connection adapter [1164] into the recess of the safety cover [361]. The standard alignment of the recess points towards the terminal box.
14. Place the safety cover [361] onto the fan guard [35].
    ⇨ The arrow that is cast in the lower part [C] of the connection adapter [1164] indicates the direction of the subsequent cable outlet for the connection cover [619].
    ⇨ If you wish to change the direction of the cable outlet: Unscrew the screws [D]. Twist the lower part [C] against the T-slot nut [B]. Screw in the screws [D]. When doing so, only tighten the screws [D] lightly.
15. Secure the safety cover [361] in place by using the screws [22].
    ⇨ DRN71 – 132S: Tightening torque 3.3 Nm
    ⇨ DRN132M – L: Tightening torque 11.3 Nm
    ⇨ DRN160 – 225: Tightening torque 27.3 Nm
16. Push the connection adapter [1164] up to the end of the recess facing away from the motor.
17. Turn the connection adapter [1164] clockwise up to the stop.
18. Secure the connection adapter [1164] in place by tightening the screws [D].
    ⇨ Tightening torque 2 Nm.
19. Place the connection cover [619] onto the connection adapter [1164].
20. Screw the screws [E] through the bore in the connection cover [619] and into the bore in the connection adapter [1164].
    ⇨ Tightening torque 2.5 Nm

**Removing encoder EV8./AV8. with coupling and optional forced cooling fan**

1. Unscrew the screws [E].
2. Remove the connection cover [619] from the connection adapter [1164].
3. Loosen the screws [D] in the lower part [C].
   ⇨ Only unscrew the screws [D] to such an extent that the connection adapter [1164] can be moved in the recess of the safety cover [361].
4. Loosen the screws [22].
5. Unscrew the screws [34].
6. Remove the forced cooling fan [170] from the motor. When doing this, slide the connection adapter [1164] out of the recess.
7. Remove the signal cable from the slot of the cable retainer [1900].
8. Unscrew the screws [232].
9. Remove the eccentric disks [251] from the circumferential groove of the encoder [220].
10. Unscrew the central screw plug [A] of the encoder [220].
11. Loosen the central retaining screw of the encoder [220].
    ⇨ If the central retaining screw of the encoder [220] cannot be loosened, exert counter-pressure at the Ø 4.1 mm bore of the rear coupling half.
12. Remove the encoder [220] from the coupling [233].

25957074/EN – 06/2019

**Mounting encoder EV8./AV8. with coupling and optional forced cooling fan**

1. Remove the central screw plug [A].
2. If the closing plate [646] is present: Unscrew the screws [232] and remove the closing plate [646].
3. Clean the cone of the rotor [1], the encoder [220] and the coupling [233].
4. Insert the coupling [233] into the conical bore of the rotor.
5. To secure the coupling [233] in place, screw in the central retaining screw [F].
   - ⇨ Tightening torque 3.3 Nm.
   - ⇨ Exert counter-pressure at the Ø 4.1 mm bore of the rear coupling half.
6. To remove the torque arm [1889] from the encoder, unscrew the screws [1888].
7. Remove the central screw plug [A].
   - ⇨ For size DRN132M/L: Place the spacer ring [225] between the encoder [220] and the fan guard with encoder mount [212].
8. Insert the encoder [220] into the coupling half with conical bore [233].
9. To secure the encoder [220] in place, tighten the central retaining screw.
   - ⇨ Tightening torque 3.3 Nm.
   - ⇨ Exert counter-pressure at the Ø 4.1 mm bore of the rear coupling half.
10. To seal the encoder [220], screw in the central screw plug [A].
    - ⇨ Tightening torque 1.8 Nm.
11. To secure the eccentric disks [251], insert the screws [232].
12. Tighten the screws [232] while turning the eccentric disks [251] in clockwise direction into the groove of the encoder [220].
    - ⇨ Tightening torque 2.25 Nm.
    - ⇨ Make sure the signal cable is of a sufficient length so that the connection adapter [1164] can be inserted into the recess of the forced cooling fan [170].
13. ⚠ **CAUTION!**
    Improper installation can cause damage to the equipment. Risk of damage to the signal cable. Insert the signal cable into the slot of the cable retainer [1900] in such a way that the signal cable does not come into contact with the rotating forced cooling fan.
14. To turn the cable retainer [1900], loosen the set screw [1927].
15. To secure the cable retainer [1900] in place, tighten the set screw [1927].
    - ⇨ Tightening torque 1.8 Nm.
16. Place the forced cooling fan [170] onto the fan guard with encoder mount [212].
17. Insert the connection adapter [1164] into the recess of the forced cooling fan [170]. The standard alignment of the recess points towards the terminal box.
    - ⇨ The arrow that is cast in the lower part [C] of the connection adapter [1164] indicates the direction of the subsequent cable outlet for the connection cover [619].
    - ⇨ If you wish to change the direction of the cable outlet: Unscrew the screws [D]. Twist the lower part [C] against the T-slot nut [B]. Screw in the screws [D]. When doing so, only tighten the screws [D] lightly.

25957074/EN – 06/2019

18. Use the screws [22] to secure the forced cooling fan [170] to the fan guard with encoder mount [212] of the motor.
    - ⇨ DRN71 – 132S: Tightening torque 3.3 Nm
    - ⇨ DRN132M – L: Tightening torque 11.3 Nm
    - ⇨ DRN160 – 225: Tightening torque 27.3 Nm
19. Push the connection adapter [1164] up to the end of the recess facing away from the motor.
20. Turn the connection adapter [1164] clockwise up to the stop.
21. Secure the connection adapter [1164] in place by tightening the screws [D].
    - ⇨ Tightening torque 2 Nm.
22. Place the connection cover [619] onto the connection adapter [1164].
23. Screw the screws [E] through the bore in the connection cover [619] and into the bore in the connection adapter [1164].
    - ⇨ Tightening torque 2.5 Nm

25957074/EN – 06/2019

### 7.4.15 Removing and mounting encoder EV8./AV8. with coupling from motors DRN250 – 280

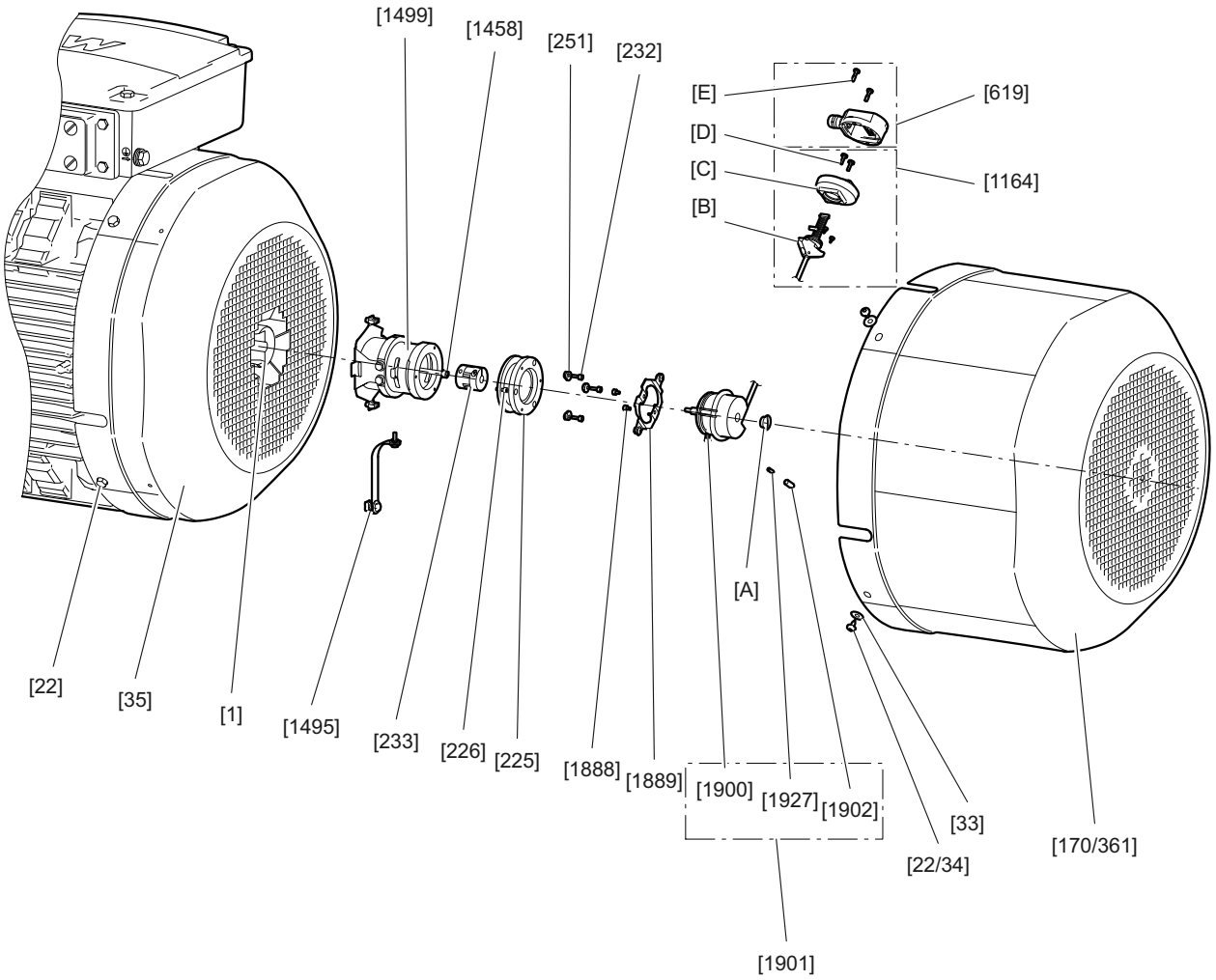


28588932107

| | | | |
|---|---|---|---|
| [1] | Rotor | [1499] | Encoder mounting adapter |
| [22] | Screw (hexagonal) | [1495] | Ground strap SET |
| [33] | Washer | [1888] | |
| [34] | Screw (cross recess) | [1898] | Clamp |
| [35] | Fan guard | [1899] | Cage nut |
| [170] | Forced cooling fan | [1900] | Cable retainer |
| [225] | Intermediate flange | [1901] | Accessory bag |
| [226] | Cap screw | [1902] | Threaded sleeve |
| [232] | Screw (hexalobular) | [1927] | Set screw |
| [233] | Coupling | [A] | Screw plug |
| [251] | Conical spring washer | [B] | T-slot nut |
| [361] | Safety cover | [C] | Lower part |
| [619] | Connection cover | [D] | Screw |
| [1164] | Connection adapter | [E] | Screw |
| [1458] | Cap screw | | |

**Removing encoder EV8./AV8. with coupling**

1. Unscrew the screws [E].
2. Remove the connection cover [619] from the connection adapter [1164].

25957074/EN – 06/2019

3. Loosen the screws [D] in the lower part [C].
   ⇨ Only unscrew the screws [D] to such an extent that the connection adapter [1164] can be moved in the recess of the safety cover [361].
4. Unscrew the screws [34].
5. Remove the safety cover [361] from the motor. When doing this, slide the connection adapter [1164] out of the recess.
6. Unscrew the screws [232].
7. Remove the eccentric disks [251] from the circumferential groove of the encoder [220].
8. Remove the encoder [220] from the intermediate flange [225].
9. Unscrew the central screw plug [A] of the encoder [220].
10. Loosen the central retaining screw of the encoder [220].
11. Remove the encoder with the mounted rear coupling half [233] from the mounting adapter [1499].
    ⇨ If the central retaining screw of the encoder [220] cannot be loosened, counter-tighten the spanner flat SW10 of the encoder shaft.
12. Remove the encoder [220] from the coupling [233].

**Mounting encoder EV8./AV8. with coupling**

1. Clean the cone of the rotor [1], the encoder mounting adapter [1499] and the coupling [233].
2. Insert the encoder mounting adapter [1499] into the conical bore of the rotor [1].
3. To secure the encoder mounting adapter [1499] in place, screw in the central retaining screw [1458].
   ⇨ Tightening torque 3.3 Nm.
4. Use the screws [22] to secure the fan guard [35] to the rear endshield or brake endshield [42] of the motor.
   ⇨ While doing so, the plastic dampers [1486] of the torque arm for the encoder mounting adapter [1499] must engage into the grille of the fan guard [35].
   ⇨ Tightening torque 27.3 Nm.
5. To secure the ground strap [1495] to the encoder mounting adapter [1499], screw in the screw [1498].
   ⇨ Tightening torque 6.5 Nm
6. To secure the ground strap [1495] to the fan guard [35], screw the screw [1462] into the cage nut [1459].
   ⇨ Tightening torque 11.3 Nm.
7. Place the coupling half with cylindrical internal bore [233] onto the inner pin of the encoder mounting adapter [1499].
8. To secure the coupling half with cylindrical internal bore [233] in place, screw the screw into the conical spring washer of the coupling [233].
   ⇨ Tightening torque 3.3 Nm.
9. To secure the intermediate flange [225] to the encoder mounting adapter [1499], screw in the screw [226].
   ⇨ Tightening torque 3.3 Nm.

25957074/EN – 06/2019

10. To remove the torque arm [1889] from the encoder, unscrew the screws [1888].
11. Remove the central screw plug [A].
12. Insert the encoder [220] into the coupling half with conical bore [233].
13. To secure the encoder [220] in place, tighten the central retaining screw.
    - ⇨ Tightening torque 3.3 Nm.
    - ⇨ Counter-tighten the spanner flat SW10 of the encoder shaft.
14. To seal the encoder [220], screw in the central screw plug [A].
    - ⇨ Tightening torque 1.8 Nm.
15. Insert the encoder [220] with mounted coupling half into the centering of the intermediate flange [225]. The two coupling halves must interlock via the plastic coupling star.
16. To secure the eccentric disks [251], insert the screws [232].
17. Tighten the screws [232] while turning the eccentric disks [251] in clockwise direction into the groove of the encoder [220].
    - ⇨ Tightening torque 2.25 Nm.
    - ⇨ Make sure the signal cable is of a sufficient length so that the connection adapter [1164] can be inserted into the recess of the safety cover [361].
18. Insert the connection adapter [1164] into the recess of the safety cover [361]. The standard alignment of the recess points towards the terminal box.
19. Place the safety cover [361] onto the fan guard [35].
    - ⇨ The arrow that is cast in the lower part [C] of the connection adapter [1164] indicates the direction of the subsequent cable outlet for the connection cover [619].
    - ⇨ If you wish to change the direction of the cable outlet: Unscrew the screws [D]. Twist the lower part [C] against the T-slot nut [B]. Screw in the screws [D]. When doing so, only tighten the screws [D] lightly.
20. Secure the safety cover [361] in place by using the screws [34].
    - ⇨ Tightening torque 4.5 Nm
21. Push the connection adapter [1164] up to the end of the recess facing away from the motor.
22. Turn the connection adapter [1164] clockwise up to the stop.
23. Secure the connection adapter [1164] in place by tightening the screws [D].
    - ⇨ Tightening torque 2 Nm.
24. Place the connection cover [619] onto the connection adapter [1164].
25. Screw the screws [E] through the bore in the connection cover [619] and into the bore in the connection adapter [1164].
    - ⇨ Tightening torque 2.5 Nm

**Removing encoder EV8./AV8. with coupling and optional forced cooling fan**

1. Unscrew the screws [E].
2. Remove the connection cover [619] from the connection adapter [1164].
3. Loosen the screws [D] in the lower part [C].
   - ⇨ Only unscrew the screws [D] to such an extent that the connection adapter [1164] can be moved in the recess of the forced cooling fan [170].

25957074/EN – 06/2019

4. Unscrew the screws [22].
5. Remove the forced cooling fan [170] from the motor. When doing this, slide the connection adapter [1164] out of the recess.
6. If necessary, loosen the set screw [1927].
7. Remove the signal cable from the slot of the cable retainer [1900].
8. Unscrew the screws [232].
9. Remove the eccentric disks [251] from the circumferential groove of the encoder [220].
10. Remove the encoder [220] from the intermediate flange [225].
11. Unscrew the central screw plug [A] of the encoder [220].
12. Loosen the central retaining screw of the encoder [220].
13. Remove the encoder with the mounted rear coupling half [233] from the mounting adapter [1499].
    ⇨ If the central retaining screw of the encoder [220] cannot be loosened, counter-tighten the spanner flat SW10 of the encoder shaft.
14. Remove the encoder [220] from the coupling [233].

**Mounting encoder EV8./AV8. with coupling and optional forced cooling fan**

1. Clean the cone of the rotor [1], the encoder mounting adapter [1499] and the coupling [233].
2. Insert the encoder mounting adapter [1499] into the conical bore of the rotor [1].
3. To secure the encoder mounting adapter [1499] in place, screw in the central retaining screw [1458].
    ⇨ Tightening torque 3.3 Nm.
4. Use the screws [1485] to secure the torque arm [935] to the mounting adapter [1499].
    ⇨ Tightening torque 6 Nm.
5. Use the sleeves [934], screws [936] and washers [1666] to secure the torque arm [935] to the rear endshield or brake endshield [42].
    ⇨ Tightening torque 11.3 Nm.
6. Use the screws [22] to secure the fan guard [35] to the rear endshield or brake endshield [42] of the motor.
    ⇨ While doing so, the plastic dampers [1486] of the torque arm for the encoder mounting adapter [1499] must engage into the grille of the fan guard [35].
    ⇨ Tightening torque 27.3 Nm.
7. Place the coupling half with cylindrical internal bore [233] onto the inner pin of the encoder mounting adapter [1499].
8. To secure the coupling half with cylindrical internal bore [233] in place, screw the screw into the conical spring washer of the coupling [233].
    ⇨ Tightening torque 3.3 Nm.
9. To secure the intermediate flange [225] to the encoder mounting adapter [1499], screw in the screw [226].
    ⇨ Tightening torque 3.3 Nm.
10. To remove the torque arm [1889] from the encoder, unscrew the screws [1888].

25957074/EN – 06/2019

11. Remove the central screw plug [A].
12. Insert the encoder [220] into the coupling half with conical bore [233].
13. To secure the encoder [220] in place, tighten the central retaining screw.
    ⇨ Tightening torque 3.3 Nm.
    ⇨ Counter-tighten the spanner flat SW10 of the encoder shaft.
14. To seal the encoder [220], screw in the central screw plug [A].
    ⇨ Tightening torque 1.8 Nm.
15. Insert the encoder [220] with mounted coupling half into the centering of the intermediate flange [225]. The two coupling halves must interlock via the plastic coupling star.
16. To secure the eccentric disks [251], insert the screws [232].
17. Tighten the screws [232] while turning the eccentric disks [251] in clockwise direction into the groove of the encoder [220].
    ⇨ Tightening torque 2.25 Nm.
    ⇨ Make sure the signal cable is of a sufficient length so that the connection adapter [1164] can be inserted into the recess of the safety cover [361].
18. ⚠ **CAUTION!**
    Improper installation can cause damage to the equipment. Risk of damage to the signal cable. Insert the signal cable into the slot of the cable retainer [1900] in such a way that the signal cable does not come into contact with the rotating forced cooling fan.
19. To turn the cable retainer [1900], loosen the set screw [1927].
20. To secure the cable retainer [1900] in place, tighten the set screw [1927].
    ⇨ Tightening torque 1.8 Nm.
21. Insert the connection adapter [1164] into the recess of the forced cooling fan [170]. The standard alignment of the recess points towards the terminal box.
    ⇨ The arrow that is cast in the lower part [C] of the connection adapter [1164] indicates the direction of the subsequent cable outlet for the connection cover [619].
    ⇨ If you wish to change the direction of the cable outlet: Unscrew the screws [D]. Twist the lower part [C] against the T-slot nut [B]. Screw in the screws [D]. When doing so, only tighten the screws [D] lightly.
22. Use the screws [22] to secure the forced cooling fan [170] to the rear endshield or brake endshield [42] of the motor.
    ⇨ Tightening torque 27.3 Nm.
23. Push the connection adapter [1164] up to the end of the recess facing away from the motor.
24. For motors EDRN250 – 315: To secure the support plate [1892] in place, screw in the screws [1893]. Slide the sealing strip [1310]/[1965] into the recess.
25. Secure the connection adapter [1164] in place by tightening the screws [D].
    ⇨ Tightening torque 2 Nm.
26. Place the connection cover [619] onto the connection adapter [1164].
27. Screw the screws [E] through the bore in the connection cover [619] and into the bore in the connection adapter [1164].
    ⇨ Tightening torque 2.5 Nm

25957074/EN – 06/2019

### 7.4.16 Removing and mounting built-in encoder EI8.

A centering ring is required when mounting the built-in encoder EI8. You can order the centering ring via the following part number:

| Motor | Built-in encoder | Part number |
|---|---|---|
| DRN71 – 132S<br>DR2..71 – 80 | Centering ring EI8. | 22659129 |

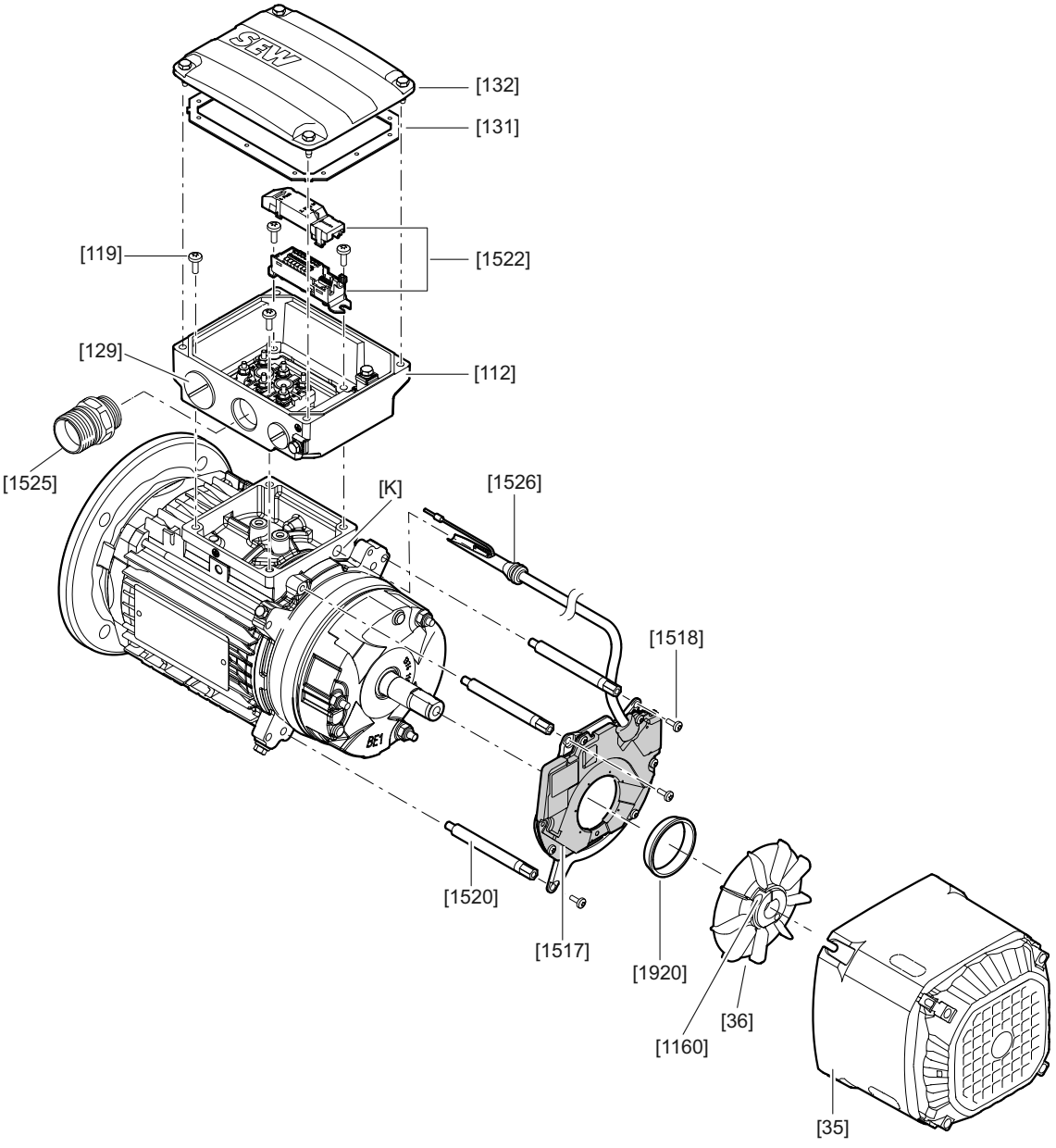


*9007227690175499*

| | | | | | |
|---|---|---|---|---|---|
| [35] | Fan guard | [132] | Terminal box cover | [1525] | M23 plug connector |
| [36] | Fan, complete | [1160] | Cap screw | [1526] | Grommet |
| [112] | Terminal box lower part | [1517] | Encoder module | [1920] | Centering ring (aid) |
| [119] | Screw | [1518] | Flat head screw | [K] | Knock-out |
| [129] | Screw plug | [1520] | Spacer | | |
| [131] | Gasket for cover | [1522] | Connection unit | | |

**Removing EI8. with connection unit**

✓ Required resources: Screwdriver

1. Remove the forced cooling fan if required.
2. Remove the screws [22] to disassemble the fan guard [35].
3. Loosen the radial clamping screw [1160]:
   - ⇨ DRN71 – 100: M3 with cylinder head
   - ⇨ DRN112/132S: M4 with cylinder head
4. Remove the fan [36] with bushing and pole ring from the shaft end.
5. Remove the 3 x M4 pan head screws [1518] of the encoder module [1517].
6. If present, remove the hexagonal spacers [1520] (SW8).
7. Unscrew the screws [123] to remove the terminal box cover [132].
8. Remove the cover of the connection unit [1522] by pressing the cover on both sides behind the cable entry.
9. Disconnect the 10-pin board connector.
10. Pull the jack of the encoder cable from the connector.
11. Unscrew the grounding element of the encoder cable.
12. **NOTICE!** Possible defect of the encoder module. Physical damage can occur. Do not pull directly on the encoder module.
    To remove the encoder module [1517] from the motor, pull the encoder cable out of the grommet [1526] and the opening of the knock-out [K].

**Mounting EI8. with connection unit**

- ✓ Required resources: Feeler gauge, screwdriver, centering ring [1920]

1. Unscrew the screws [123] to remove the terminal box cover [132].
2. **NOTICE!** Damage to the terminal box or fragments inside the motor. Possible physical damage. Exercise caution when breaking open the knock-outs.
   Break open the knock-out [K] by using a chisel or screwdriver.
3. **NOTICE!** Damage to the connector. Possible physical damage. Do not subject the connector to excessive tension.
   Pull the grommet [1526] with encoder cable through the knock-out [K].
   - ⇨ The grommet must engage into the opening of the knock-out [K].
4. If necessary, screw the hexagonal spacers [1520] into the brake endshield.
   - ⇨ Tightening torque 5 Nm.
5. Place the centering ring [1920] onto the pole ring.
6. Push the encoder module [1517] onto the shaft end.
7. Push the fan [36] with bushing and pole ring onto the shaft end.
8. Center the encoder module [1517] with the centering ring [1920] radially to the shaft.
9. Use 3 pan head screws [1518] to secure the encoder module [1517] to the brake endshield or, if applicable, to the hexagonal spacers [1520].
   - ⇨ Tightening torque 2.5 Nm
10. Remove the fan [36] with bushing and pole ring from the shaft end and remove the centering ring [1920].
11. Push the fan [36] with bushing and pole ring onto the shaft end.

25957074/EN – 06/2019

12. To set the distance of 1 mm between the encoder module [1517] and the pole ring, insert a feeler gauge into the designated notch [A].

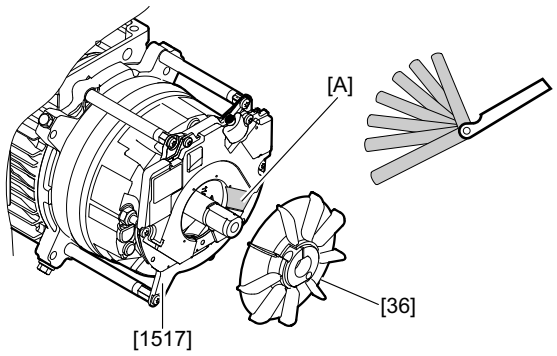


*28744408843*

13. Tighten the clamping screw [1160].
    - ⇨ DRN71 – 100, DR2..71 – 80: Tightening torque 1.2 Nm
    - ⇨ DRN112 – 132S: Tightening torque 3.3 Nm
14. Route the encoder cable in the terminal box in such a way that it is not crushed or improperly subjected to stress.
15. Remove the cover of the connection unit [1522] by pressing the cover on both sides behind the cable entry.
16. Apply the shielding of the encoder cable onto the Stocko terminal.
17. Place the connection unit [1522] in the terminal box.
18. To secure the connection unit [1522] in place, screw the Stocko terminal [1] and the shield plate tightly in the terminal box.
    - ⇨ Tightening torque 5 Nm.

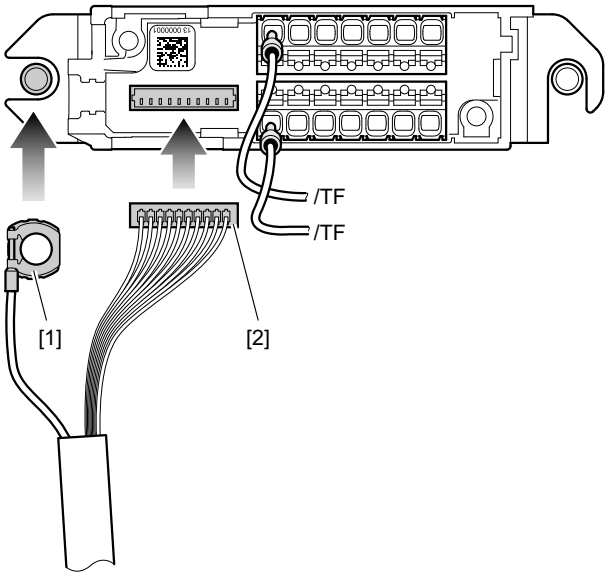


*28759192843*

19. Insert the jack of the encoder cable [2] into the connector on the board and insert the encoder cable into the hollow of the connection unit [1522], which serves as strain relief. If applicable, connect the temperature sensor /TF.
20. Connect the customer's evaluation unit for the encoder to the connection unit [1522] with a shield plate.
21. Connect the supply voltage to the encoder module [1517].

22. Attach the cover of the connection unit [1522].
23. Check the visual feedback of the status LED for the encoder module [1517].
    - ⇨ LED lights up green: The encoder module [1517] has been installed correctly and you can continue with the assembly process.
    - ⇨ LED lights up red: Switch off the supply voltage. Set the distance of 1 mm between the encoder module [1517] and the pole ring again. Switch the supply voltage back on. If the status LED still lights up red, please contact the SEW-EURODRIVE Service department.
24. Mount the terminal box cover [132] using the screws [123] (4xM5 SW8).
    - ⇨ Tightening torque 4 Nm
25. Mount the fan guard [35] with the screws [22].
    - ⇨ Tightening torque 2 Nm.
26. Mount the forced cooling fan if applicable.

**Removing EI8. with M23 plug connector**

- ✓ Required resources: Screwdriver

1. Remove the forced cooling fan if required.
2. Remove the screws [22] to disassemble the fan guard [35].
3. Loosen the radial clamping screw [1160]:
   - ⇨ DRN71 – 100: M3 with cylinder head
   - ⇨ DRN112/132S: M4 with cylinder head
4. Remove the fan [36] with bushing and pole ring from the shaft end.
5. Remove the 3 x M4 pan head screws [1518] of the encoder module [1517].
6. If present, remove the hexagonal spacers [1520] (SW8).
7. Unscrew the screws [123] to remove the terminal box cover [132].
8. Remove the protective cover of the M23 plug connector [1525] on the inside of the terminal box.
9. Pull the jack of the encoder cable from the connector.
10. Remove the grounding element of the encoder.
11. **NOTICE!** Possible defect of the encoder module. Physical damage can occur. Do not pull directly on the encoder module.
    To remove the encoder module [1517] from the motor, pull the encoder cable out of the grommet [1526] and the opening of the knock-out [K].

**Mounting EI8. with M23 plug connector**

- ✓ Required resources: Feeler gauge, screwdriver, centering ring [1920]

1. Unscrew the screws [123] to remove the terminal box cover [132].
2. **NOTICE!** Damage to the terminal box or fragments inside the motor. Possible physical damage. Exercise caution when breaking open the knock-outs.
   Break open the knock-out [K] by using a chisel or screwdriver.
3. **NOTICE!** Damage to the connector. Possible physical damage. Do not subject the connector to excessive tension.
   Pull the grommet [1526] with encoder cable through the knock-out [K].
   - ⇨ The grommet must engage into the opening of the knock-out [K].

25957074/EN – 06/2019

4. If necessary, screw the hexagonal spacers [1520] into the brake endshield.
   ⇨ Tightening torque 5 Nm.
5. Place the centering ring [1920] onto the pole ring.
6. Push the encoder module [1517] onto the shaft end.
7. Push the fan [36] with bushing and pole ring onto the shaft end.
8. Center the encoder module [1517] with the centering ring [1920] radially to the shaft.
9. Use 3 pan head screws [1518] to secure the encoder module [1517] to the brake endshield or, if applicable, to the hexagonal spacers [1520].
   ⇨ Tightening torque 2.5 Nm
10. Remove the fan [36] with bushing and pole ring from the shaft end and remove the centering ring [1920].
11. Push the fan [36] with bushing and pole ring onto the shaft end.
12. To set the distance of 1 mm between the encoder module [1517] and the pole ring, insert a feeler gauge into the designated notch [A].

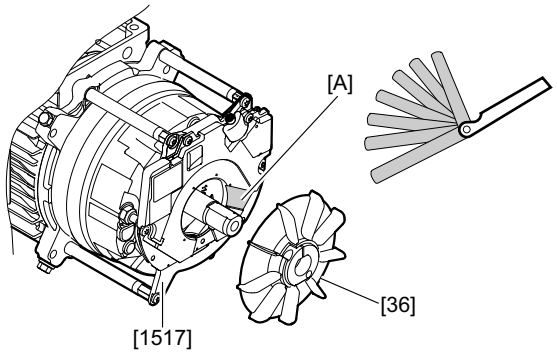


*28744408843*

13. Tighten the clamping screw [1160].
    ⇨ DRN71 – 100, DR2..71 – 80: Tightening torque 1.2 Nm
    ⇨ DRN112 – 132S: Tightening torque 3.3 Nm
14. Route the encoder cable in the terminal box in such a way that it is not crushed or improperly subjected to stress.
15. Remove the protective cover of the M23 plug connector [1525] on the inside of the terminal box.
16. Insert the jack of the encoder cable into the connector on the board.
17. Connect the shielding of the encoder cable [2] and, if applicable, the temperature sensor /TF to the screw terminal.

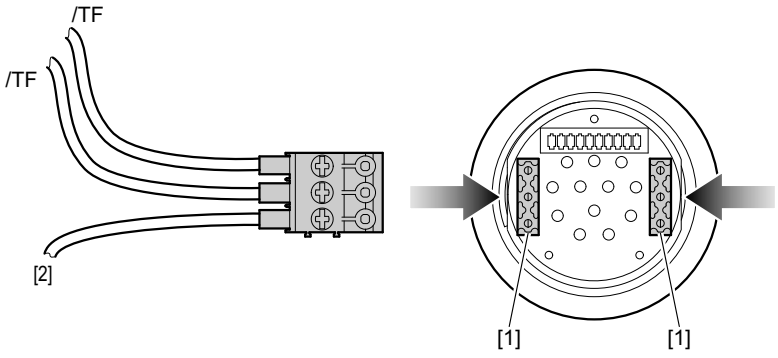


*28759196427*

18. Insert the screw terminal (with the connection side facing outwards) into one of the two plug connectors [1] on the printed circuit board.
19. Attach the protective cover of the M23 plug connector [1525] to the inside of the terminal box.
20. Connect the evaluation unit for the encoder via the M23 plug connector [1525].
21. Connect the supply voltage to the encoder module [1517].
22. Check the visual feedback of the status LED for the encoder module [1517].
    - ⇨ LED lights up green: The encoder module [1517] has been installed correctly and you can continue with the assembly process.
    - ⇨ LED lights up red: Switch off the supply voltage. Set the distance of 1 mm between the encoder module [1517] and the pole ring again. Switch the supply voltage back on. If the status LED still lights up red, please contact the SEW-EURODRIVE Service department.
23. Mount the terminal box cover [132] using the screws [123] (4xM5 SW8).
    - ⇨ Tightening torque 4 Nm
24. Mount the fan guard [35] with the screws [22].
    - ⇨ Tightening torque 2 Nm.
25. Mount the forced cooling fan if applicable.

25957074/EN – 06/2019

## 7.5 Inspection/maintenance work for DR..71 – 315, DRN63 – 315, DR2..56 – 80 motors

For the position numbers used in the following descriptions, refer to chapter "Motor structure" (→ 🗎 15).

### 7.5.1 Working steps for inspecting DR..71 – 315, DRN63 – 315, DR2..56 – 80 motors

1. Before starting to perform any work on the motor, disconnect the motor and all mounted options from the power supply before and secure the motor against unintentional power-up.
2. With gearmotors: Remove the motor from the gear unit.

   Remove pinion and oil flinger [107].
3. Remove the forced cooling fan and rotary encoder, if installed (see chapter "Preliminary work for motor and brake maintenance" (→ 🗎 127)).
4. Remove fan guard [35] and fan [36].
5. Remove stator:
   - **DRN63, DR2..63 motors**: Removing the cap screw [19].
   - **DR..71 – 132, DRN71 – 132S, DR2..56, 71 – 80 motors:** Remove cap screws [13] from flanged endshield [7] and rear endshield [42]. Remove stator [16] from flanged endshield [7].
   - **DR..160 – 180, DRN132M – 180 motors:** Loosen cap screw [19] and remove rear endshield [42]. Loosen hex head screw [15] and remove stator from flanged endshield.
   - **DR..200 – 225, DRN200 – 225 motors**
     - Loosen hex head screw [15] and remove flanged endshield [7] from stator.
     - Loosen cap screws [19] and remove the complete rotor [1] together with the rear endshield [42].
     - Loosen cap screws [25] and remove the complete rotor [1] from the rear endshield [42].
   - **DR..250 – 280, DRN250 – 280 motors** without option /ERF or /NS
     - Loosen cap screws [15] and remove the flange [7].
     - Loosen cap screws [19] and remove the rear endshield [42] together with the rotor [1].
     - Loosen cap screws [25] and remove the rear endshield [42] from the rotor [1].
   - **DR..250 – 280, DRN250 – 280 motors with** option /ERF or /NS, or **DR../ DRN315**
     - Loosen cap screws [19] and [25] and remove the rear endshield [42].
     - Loosen cap screws [15] and remove the flange [7] together with the rotor [1].

       Apply tension or pressure mainly via the rotor [1], carry the flange [7] evenly.
     - Loosen hex head screws [609] and remove the flange [7] from the rotor [1].
     - Before disassembly, preferably protect the oil seal seat from damage using adhesive tape or a protective sleeve.
6. Visual inspection: Is there any moisture or gear unit oil inside the stator?
   - If not, proceed with step 9.
   - If there is moisture, proceed with step 7.

25957074/EN – 06/2019

- If there is gear oil, have the motor repaired by a specialist workshop

7. If there is moisture inside the stator:
   - With gearmotors: Remove the motor from the gear unit.
   - With motors without a gear unit: Remove the A-flange.
   - Remove the rotor [1].
8. Clean the winding, dry it and check it electrically, see chapter "Drying the motor" (→ 🗎 35).
9. Replace the rolling bearing [11], [44] with permitted rolling bearing types, see chapter "Permitted rolling bearings" (→ 🗎 242).

   Apply tension or pressure to the inner ring of the bearings.
10. **DR..250 – 280, DRN225 – 280 motors with** option /ERF or /NS, or for **DR../ DRN315**
    - Fill the rolling bearing with grease until it is two-thirds full, see chapter "Bearing lubrication" (→ 🗎 125)
    - Notice: Place the oil seal flange [608] and [21] onto the rotor shaft before installing the bearings.
    - Mount the motor vertically starting on the A-side.
    - Place the springs [105] and lubrication ring [604] into the bearing bore of the flange [7].
    - Hang the rotor [1] onto the B-side thread, and guide it into the flange [7].
    - Fasten the oil seal flange [608] to the flange [7] using the hex head screws [609].
11. Reseal the shaft:
    - A-side: Replace the oil seal [106].
    - B-side: Replace the oil seal [30].

      Coat the sealing lip with grease (Klüber Petamo GHY 133).
12. Reseal the stator seat:
    - Seal the sealing surface with duroplastic sealing compound (operating temperature -40 °C to +180 °C), such as "SEW L Spezial".
    - **DR..71 – 132, DRN71 – 132S, DR2..71 – 80 motors**: Replace the seal [392].
    - **DR..71 – 132, DRN63 – 132S, DR2..56 – 80 motors**: Replace the O-ring [1480] if it is deformed or damaged. As an alternative, use e.g. "SEW L Spezial" instead of the O-ring.
    - **DRN63, DR2..56 – 63 motors**: Replace the O-ring [392] if it is deformed or damaged. As an alternative, use a duroplastic sealing compound, e.g. "SEW L Spezial" instead of the O-ring.
13. Install the motor and options.

25957074/EN – 06/2019

## 7.6 Inspection/maintenance work for DR..71 – 315, DRN63 – 315, DR2..56 – 80 brakemotors

### 7.6.1 Basic structure of DR2..56 brakemotors

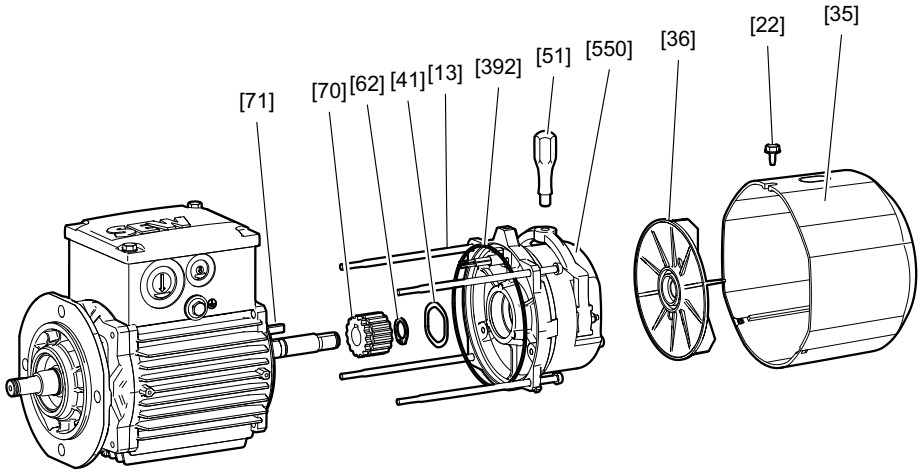


*26860872715*

| | | | | | |
|---|---|---|---|---|---|
| [13] | Cap screw | [41] | Equalizing ring | [71] | Key |
| [22] | Hex head screw | [51] | Hand lever (/HR) | [392] | Gasket |
| [35] | Fan guard | [62] | Retaining ring | [550] | Pre-assembled brake |
| [36] | Fan wheel | [70] | Driver | | |

25957074/EN – 06/2019

### 7.6.2 General structure of DR..71 – 80, DRN63 – 80, DR2..63 – 80 brakemotors

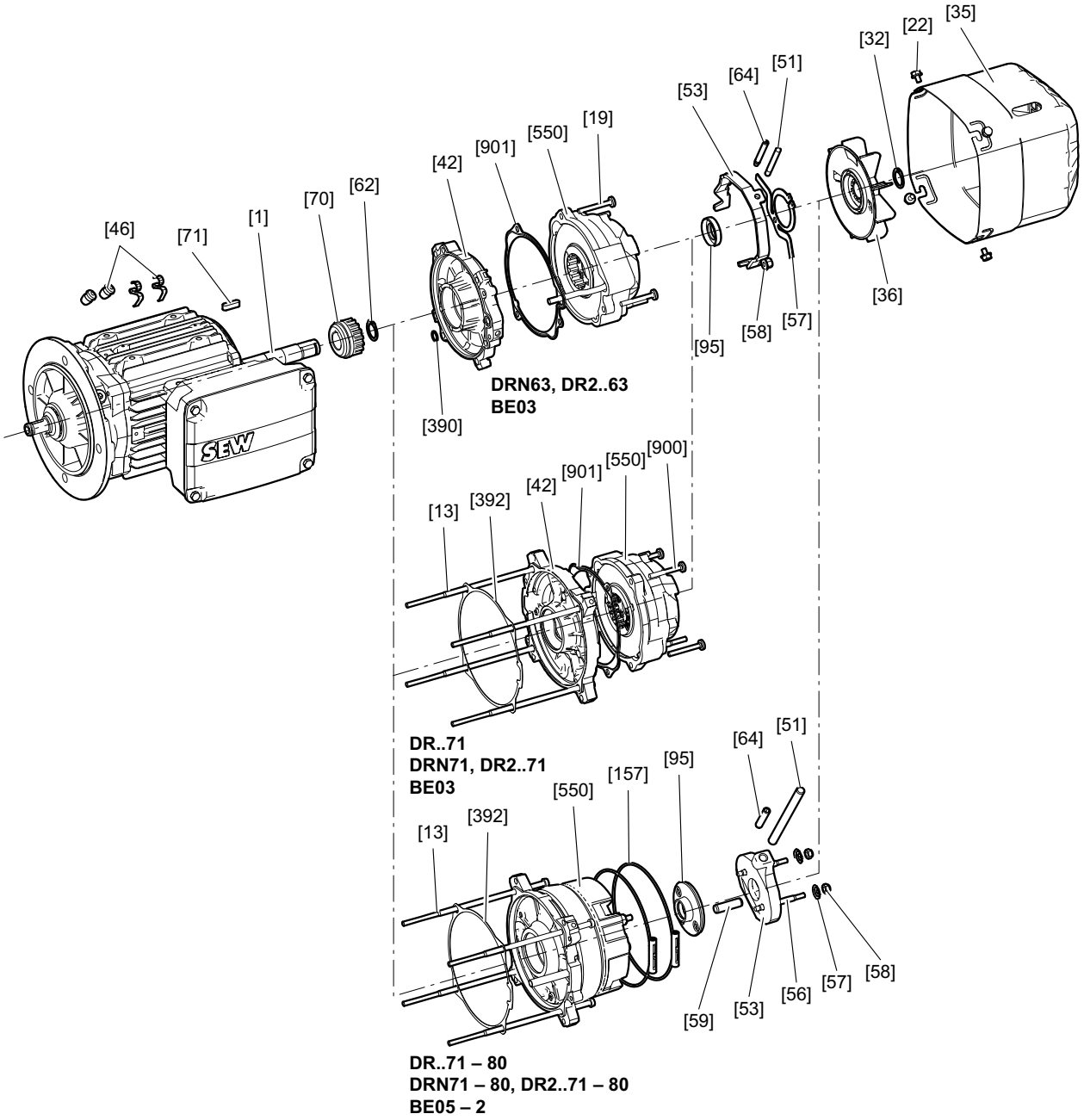


*36028797193164939*

| | | | | | |
|---|---|---|---|---|---|
| [1] | Motor | [51] | Hand lever (/HR) | [70] | Driver |
| [13] | Cap screw | [53] | Releasing lever | [71] | Key |
| [19] | Screw | [56] | Stud | [95] | Sealing ring |
| [22] | Hex head screw | [57] | Conical spring | [157] | Clamping strap (optional) |
| [32] | Retaining ring | [58] | Hex nut | [392] | Gasket |
| [35] | Fan guard | [59] | Parallel pin | [550] | Pre-assembled brake |
| [36] | Fan wheel | [62] | Retaining ring | [900] | Screw |
| [42] | Brake endshield | [64] | Set screw (/HF) | [901] | Flat gasket |
| [46] | Clip | | | | |

### 7.6.3 Basic structure of DR..90 – 132, DRN90 – 132S brakemotors

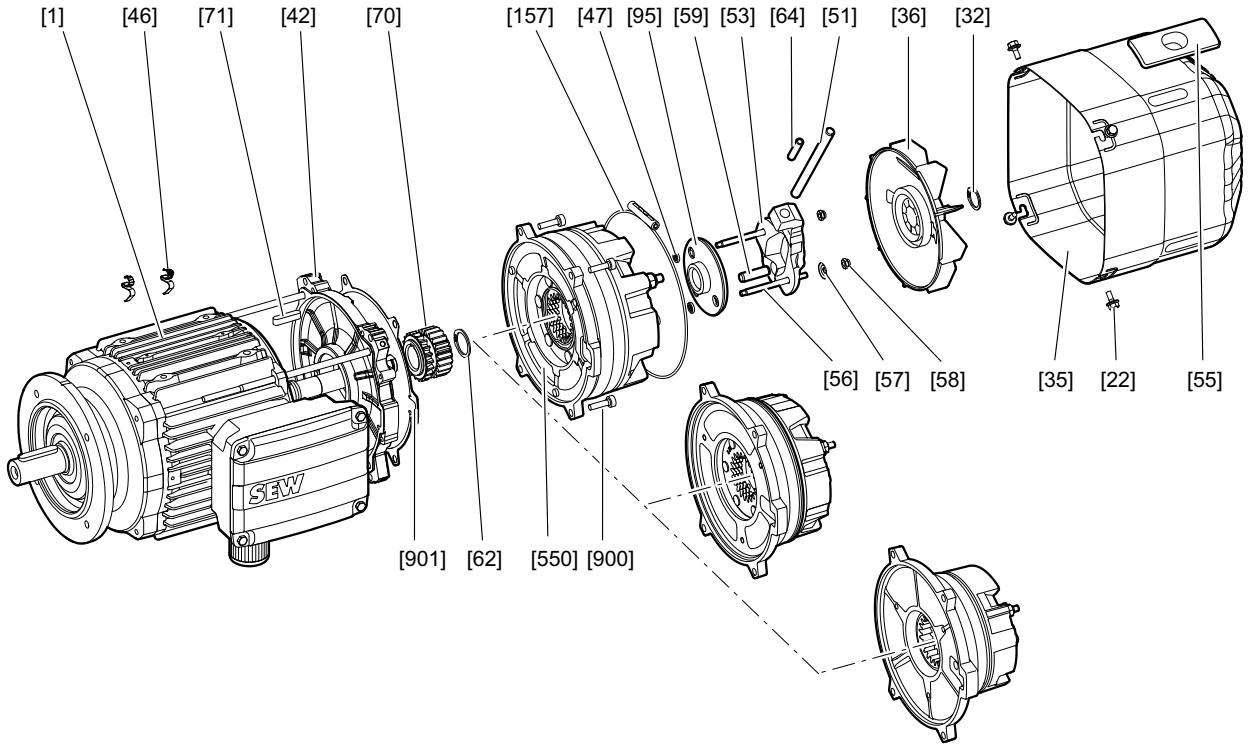


*18014398689463947*

| | | | | | |
|---|---|---|---|---|---|
| [1] | Motor | [56] | Stud | [71] | Key |
| [22] | Hex head screw | [57] | Conical spring | [95] | Sealing ring |
| [32] | Retaining ring | [58] | Hex nut | [157] | Clamping strap (optional) |
| [35] | Fan guard | [59] | Parallel pin | [550] | Pre-assembled brake |
| [36] | Fan wheel | [62] | Retaining ring | [900] | Screw |
| [42] | Brake endshield | [64] | Set screw (/HF) | [901] | Gasket |
| [46] | Bracket | [70] | Driver | | |
| [47] | O-ring | | | | |
| [51] | Hand lever (/HR) | | | | |
| [53] | Releasing lever | | | | |
| [55] | Closing piece fan guard (DR..112 – 132, DRN112 – 132S) | | | | |

### 7.6.4 Basic structure of DR..160 – 315, DRN132M – 315 brakemotors

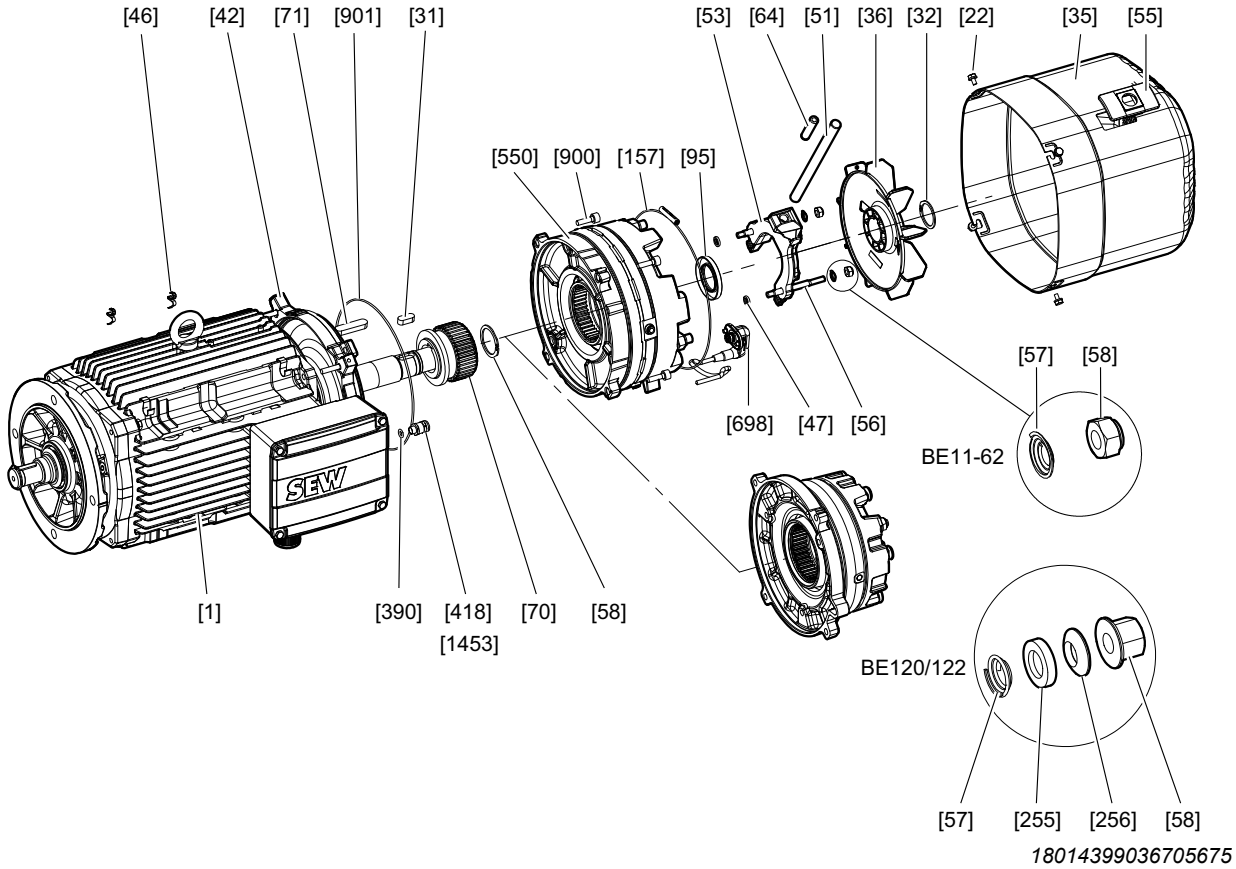


| | | | | | |
|---|---|---|---|---|---|
| [1] | Motor with brake endshield | [53] | Releasing lever | [95] | Sealing ring |
| [22] | Hex head screw | [55] | Closing piece | [157] | Clamping strap (optional) |
| [31] | Key | [56] | Stud | [255] | Conical seat |
| [32] | Retaining ring | [57] | Conical spring | [256] | Spherical washer |
| [35] | Fan guard | [58] | Hex nut | [390] | O-ring (DR..160 – 225, DRN132M – 225) |
| [36] | Fan | [58] | Adjusting nut | [418] | Cable gland |
| [42] | Brake endshield | [62] | Retaining ring | [550] | Pre-assembled brake |
| [46] | Bracket | [64] | Set screw (/HF) | [698] | Connector complete (BE20-BE122) |
| [47] | O-ring | [70] | Driver | [900] | Screw |
| [51] | Hand lever | [71] | Key | [901] | O-ring/seal (DR..160 – 225, DRN132M – 225) |
| | | | | [1453] | Grommet (for DRN180 instead of [418]) |
| | | | | [1607] | O-ring (DR..250 –280/DRN250 – 280) |

25957074/EN – 06/2019

### 7.6.5 Working steps for inspecting DR..71 – 315, DRN63 – 315, DR2..63 – 80 brakemotors

1. Before starting to perform any work on the motor, disconnect the motor and all mounted options from the power supply before and secure the motor against unintentional power-up.
2. With gearmotors: Remove the motor from the gear unit. Remove pinion and oil flinger [107].
3. Remove forced cooling fan and rotary encoder, if installed. See chapter "Motor and brake maintenance – preliminary work" (→ 🗎 127).
4. Remove the fan guard with encoder mount or fan guard [35] and the fan wheel [36].
5. If applicable, disassemble the sensors of the /DUE option, see chapter "Removing the /DUE diagnostic unit" (→ 🗎 209).
6. **DR..90 – 315, DRN63– 315, DR2..56 – 80 motors**: Remove the brake cpl. [550] (if applicable) with mounted /HR, /HF option manual brake release.
   - **BE02 – 11**: Remove terminal box cover, loosen brake cable and microswitch supply cable of the /DUB option from the terminals.
   - **BE20 – 122**: Loosen locking screws of the brake plug connector [698] and remove plug connector.
   - Loosen screws [13]/[19]/[900], press brake [550] off the endshield [42], and carefully lift off the brake.
7. Remove stator:
   - **DR..71 – 132, DRN63 – 132S, DR2..63 – 80 motors:** Remove cap screws [13] from flanged endshield [7] and rear endshield [42]. Remove stator [16] from flanged endshield [7].
   - **DR..160 – 180, DRN132M – 180 motors:** Loosen cap screw [19] and remove rear endshield [42]. Loosen hex head screw [15] and remove stator from flanged endshield.
   - **DR..200 – 225, DRN200 – 225 motors**
     – Loosen hex head screw [15] and remove flanged endshield [7] from stator.
     – Loosen cap screws [19] and remove the complete rotor [1] together with the rear endshield [42].
     – Loosen cap screws [25] and remove the complete rotor [1] from the rear endshield [42].
   - **DR..250 – 280, DRN250 – 280 motors** without option /ERF or /NS
     – Loosen cap screws [15] and remove the flange [7].
     Apply tension or pressure to the rotor [1], carry the flange [7] evenly.
     – Loosen cap screws [19] and remove the rear endshield [42] together with the rotor [1].
     – Loosen cap screws [25] and remove the rear endshield [42] from the rotor [1].
   - **DR..250 – 280, DRN250 – 280 motors** with option /ERF or /NS, or **DR../ DRN315 motors**
     – Loosen cap screws [19] and [25] and remove the rear endshield [42].
     – Loosen cap screws [15] and remove the flange [7] together with the rotor [1].
     – Loosen hex head screws [609] and remove the flange [7] from the rotor [1].

25957074/EN – 06/2019

– Before disassembly, preferably protect the oil seal seat from damage using adhesive tape or a protective sleeve.

8. Pull the stator back by approx. 3 to 4 cm.
9. Visual inspection: Is there any moisture or gear unit oil inside the stator?
   - If not, proceed with step 11.
   - If there is moisture, proceed with step 10.
   - If there is gear oil, have the motor repaired by a specialist workshop.
10. If there is moisture inside the stator:
    - With gearmotors: Remove the motor from the gear unit
    - With motors without a gear unit: Remove the A-flange
    - Remove the rotor [1]
    - Clean the winding, dry it and check it electrically, see chapter "Drying the motor" (→ 🗎 35).
11. Remove the driver from the shaft.
12. Replace the rolling bearing [11], [44] with permitted rolling bearing types, see chapter "Permitted rolling bearings" (→ 🗎 242).

    Apply tension or pressure to the inner ring of the bearings.
13. Install key [71] and driver [70]:
    - Preheat the driver to allow for easier installation (joining temperature +85 °C to +115 °C).
    - **DR..71, DRN63 – 71, DR2..63 – 71 motors**: Clean the driver seat at the rotor [1] before installation. Glue in the driver using Loctite 649. Join the retaining ring [62] flush to the driver. Protect the sealing surface for the oil seal against scratches.
    - **DR..80 – 315, DRN80 – 315, DR2..56, 80 motors**: Clean the driver at the rotor [1] and coat with anti-corrosion agent NOCO® fluid before fitting. Next, mount the retaining ring [62].
14. Seal the stator again and install it:
    - **DR..71 – 132, DRN63 – 132S, DR2..56 – 80 motors**: Replace the seal [392].
    - **DRN63, DR2..63, DRN132M – 225 and DR..160-225 motors:** Replace O-ring [390].
    - **DR..160 – 315, DRN132M – 315 motors**: Seal the sealing surfaces with duroplastic sealing compound (operating temperature -40 °C to +180 °C), such as "SEW-L-Spezial".
15. **DR..250 – 280, DRN225 – 280 motors with** option /ERF or /NS, or with **DR../ DRN315 motors**
    - Fill the rolling bearing with grease until it is two-thirds full, see chapter "Bearing lubrication" (→ 🗎 125).
    - Notice: Place the oil seal flange [608], [21] onto the rotor shaft before installing the bearings.
    - Mount the motor vertically starting on the A-side.
    - Place the springs [105] and lubrication ring [604] into the bearing bore of the flange [7].
    - Hang the rotor [1] onto the B-side thread, and guide it into the flange [7].

25957074/EN – 06/2019

- Fasten the oil seal flange [608] to the flange [7] using the hex head screws [609].
- Screw in the stator [16] and flange [7] with screws [15].

  Notice: Protect the winding overhang from damage.
- Before mounting the rear endshield, screw in the M8 set screw (approximately 200 mm) into the oil seal flange [21].
- Before mounting the rear endshield [42], insert the set screw in through a bore for the screw [25]. Screw rear endshield to stator [16] using cap screws [19] and hex nuts [17]. Lift the oil seal flange [21] with the set screw, and fasten using 2 screws [25]. Remove the set screw and screw in the remaining screws [25].

16. Reseal the shaft:
    - Replace the oil seal [106] on the A-side.
    - **DR..315, DRN315 motors with /FG option:** Replace the oil seal [250] on the A-side.
    - **DR..250 – 315, DRN250 – 315, DRN225 motors with /NS option:** Replace the oil seal [30] on B-side
    - Apply suitable grease to the sealing lip, see chapter "Order information for lubricants, anti-corrosion agents and sealants" (→ 🖹 245).
17. Seal the friction disk of the brake [550] again at the brake endshield [42]:
    - **DRN63 – 71, DR2..63– 71 motors with BE03 brake:** Replace flat gasket [901].
    - **DR..90 – 132, DRN90 – 132S motors:** Replace gasket [901]
    - **DR..160 – 280, DRN132M – 280 motors**: Replace O-ring [901] or [1607].
    - **DR..315, DRN315 motors**: Seal the sealing surface with duroplastic sealing compound (operating temperature -40 °C to +180 °C), such as "SEW L Spezial".
18. Reinstall the brake [550]: Insert the brake cable into the terminal box when installing the brake. Install the brake. Observe the alignment of the brake. (Cams at the endshield, manual brake release position).
    - **BE03 brake**: The self-tapping screws must be distributed and tightened around the brake evenly to prevent the mounted brake from being tilted.
    - **DRN63, DR2..63/BE03 motors**: Tighten screw [19] M5x35 (self-tapping) with a tightening torque of 5 Nm. The screws can be reused.
    - **DRN71, DR2..71/BE03 motors**: Tighten screw [900] M5x20 (self-tapping) with a tightening torque of 5 Nm. New screws must be used each time the brake is mounted again.
    - **DR..71 – 80, DRN71 – 80, DR2..56, 71– 80 motors**: Install cap screws [13]. Tightening torque: 5 Nm
    - **DR..90 – 315, DRN90 – 315 motors**: Install cap screws [900].

| Motors | DR..90 – 100, DRN90 – 100 | DR..112 – 160, DRN112 – 132 | DR..180, DRN160 – 180 | DR..200 – 225, DRN200 – 225 | DR..250 – 315, DRN250 – 315 |
|---|---|---|---|---|---|
| Tightening torque | 10.3 Nm | 25.5 Nm | 50 Nm | 87.3 Nm | 230 Nm |

19. Connect the brake connection cable.
    - **BE02 – 11**: Reconnect the brake cable according to the wiring diagram.

- **BE20 – 122**: Plug in the brake plug connector [698] again. Tighten the retaining screws again (tightening torque: 3 Nm)

20. **DR..71 – 315, DRN63 – 315, DR2..63 – 80 motors:** Apply suitable grease to the sealing ring [95], see chapter "Order information for lubricants, anti-corrosion agents and sealants" (→ 🗎 245).
21. If applicable: Install sensors of the /DUE option and recalibrate the zero value. See chapter "Retrofitting the /DUE diagnostic unit for function and wear monitoring" (→ 🗎 209).
22. Install the fan wheel [36] and the fan guard [35]. Install available optional equipment.
23. With gearmotors: Replace oil flinger [107] and install the pinion.

25957074/EN – 06/2019

### 7.6.6 Basic structure of BE02 brakes

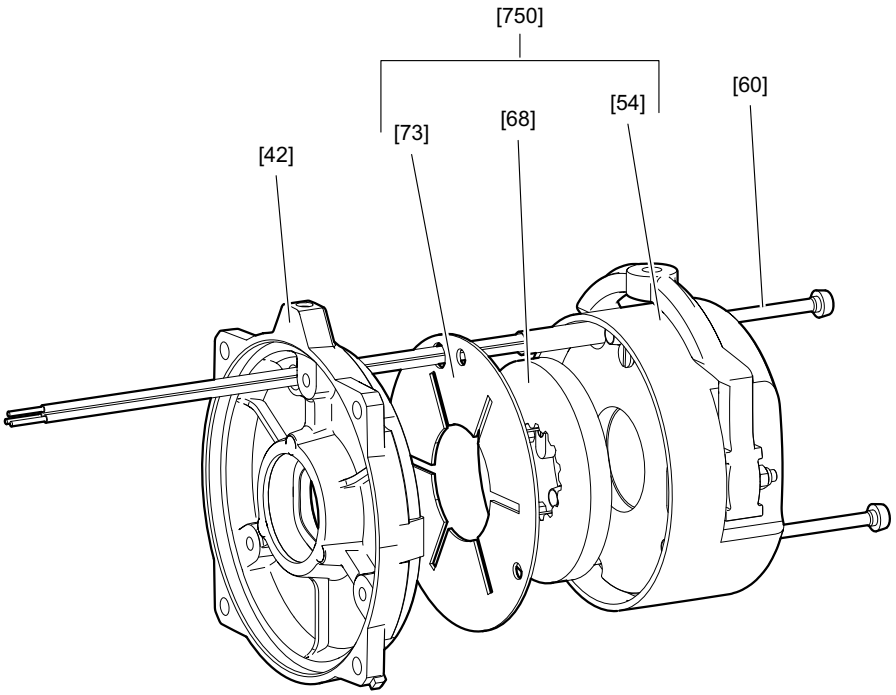


*26860869131*

| | | | |
|---|---|---|---|
| [42] | Brake endshield | [68] | Brake lining |
| [54] | Magnet body, complete | [73] | Friction plate |
| [60] | Cap screw | [750] | Pre-assembled brake |

25957074/EN – 06/2019

### 7.6.7 Basic structure of BE03 brakes

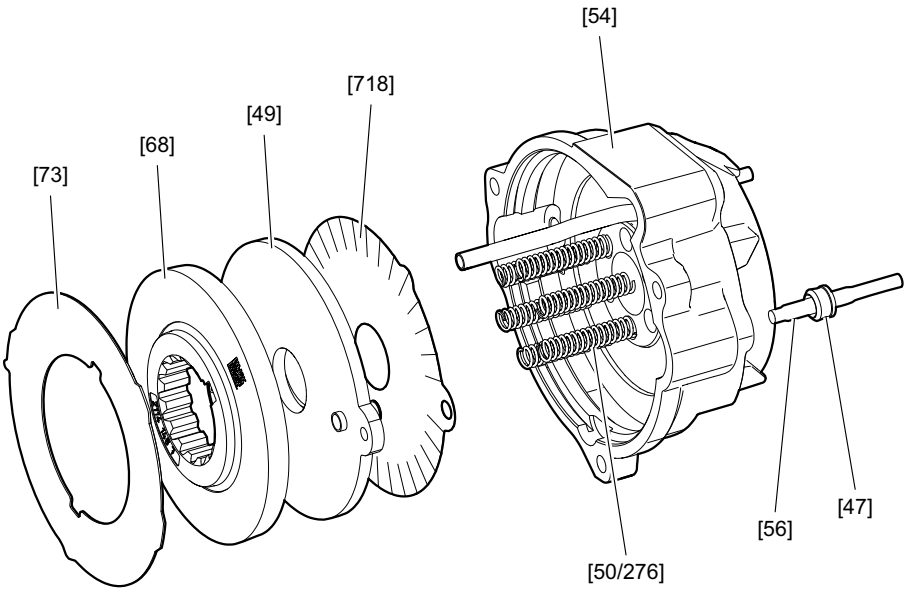


*22473863947*

| | | | | | |
|---|---|---|---|---|---|
| [47] | Sealing element | [54] | Magnet body, complete | [73] | Friction plate |
| [49] | Pressure plate | [56] | Stud | [276] | Brake spring |
| [50] | Brake spring | [68] | Brake disk (complete) | [718] | Damping plate |

25957074/EN – 06/2019

### 7.6.8 Basic structure of BE05 – 2 brakes

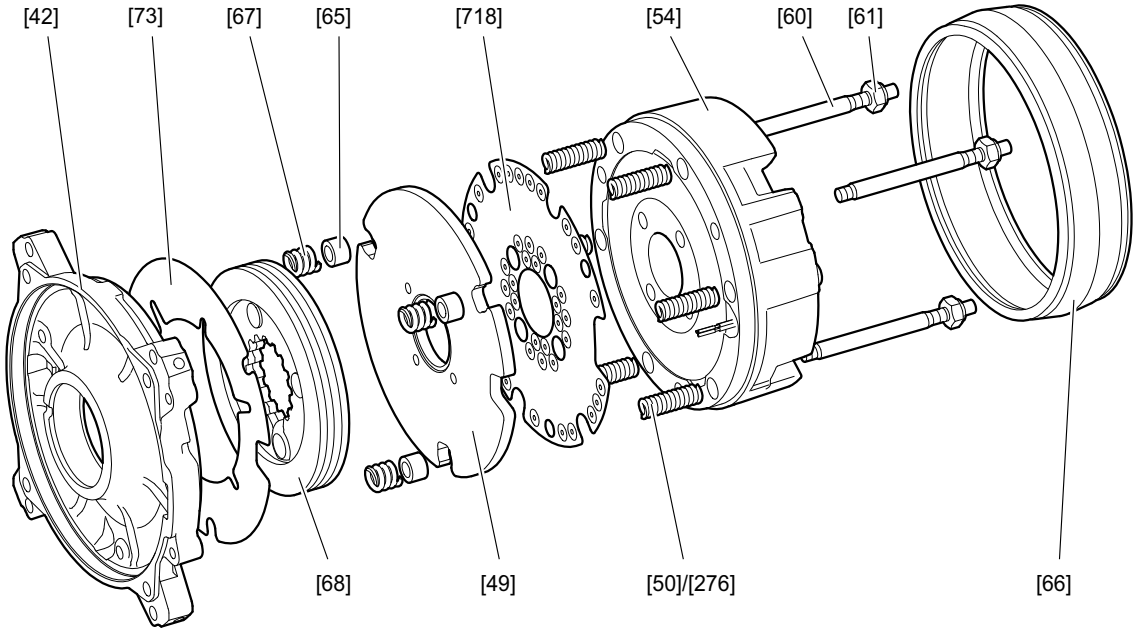


*27021598292600715*

| | | | | | |
|---|---|---|---|---|---|
| [42] | Brake endshield | [61] | Hex nut | [73] | Niro sheet metal |
| [49] | Pressure plate | [65] | Pressure ring | [276] | Brake spring (blue) |
| [50] | Brake spring (normal) | [66] | Sealing strip | [718] | Damping plate |
| [54] | Magnet body, complete | [67] | Counter spring | | |
| [60] | Stud | [68] | Brake lining carrier | | |

### 7.6.9 Basic structure of BE05 – 20 brakes

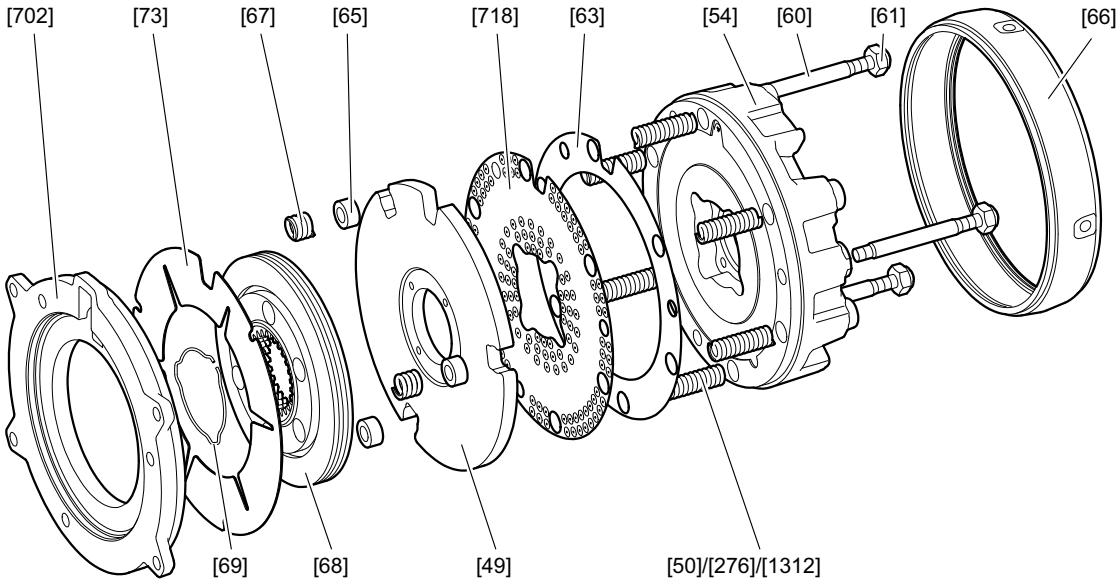


*36028797193166603*

| | | | | | |
|---|---|---|---|---|---|
| [49] | Pressure plate | [65] | Pressure ring | [276] | Brake spring (blue) |
| [50] | Brake spring (normal) | [66] | Sealing strip | [702] | Friction disk |
| [54] | Magnet body, complete | [67] | Counter spring | [718] | Damping plate (BE05 – 11) |
| [60] | Stud | [68] | Brake lining carrier | [1312] | Brake spring (white) |
| [61] | Hex nut | [69] | Circular spring/clasp (BE5 – 20) | | |
| [63] | Pole sheet | [73] | Niro sheet metal | | |

25957074/EN – 06/2019

### 7.6.10 Basic structure of BE30, 60, 120 brakes

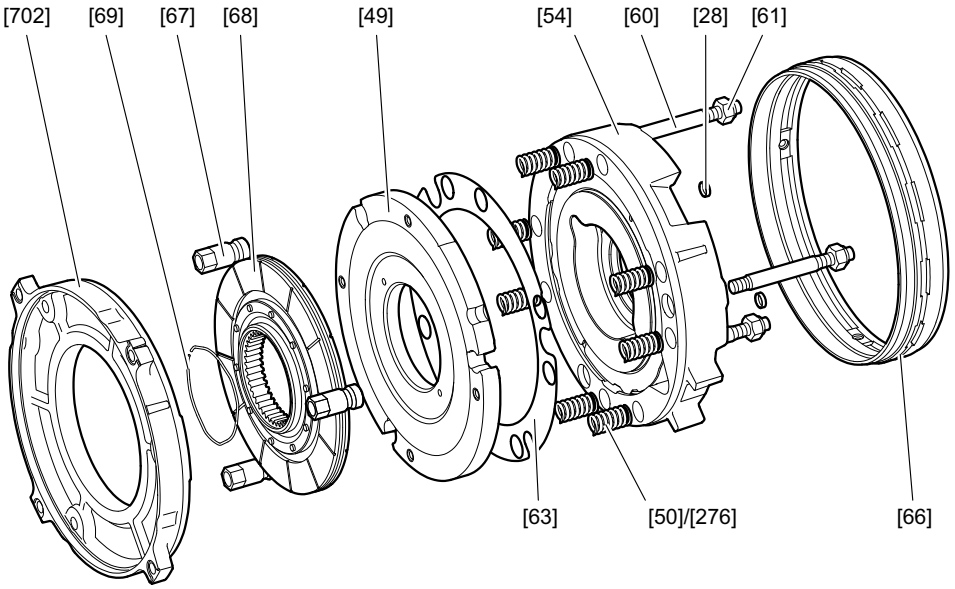


*18234907019*

| | | | | | |
|---|---|---|---|---|---|
| [28] | Closing cap | [61] | Hex nut | [69] | Circular spring |
| [49] | Pressure plate | [63] | Pole sheet | [276] | Brake spring (blue) |
| [50] | Brake spring (normal) | [66] | Sealing strip | [702] | Friction disk |
| [54] | Magnet body, complete | [67] | Setting sleeve | | |
| [60] | Stud | [68] | Complete brake disk | | |

25957074/EN – 06/2019

### 7.6.11 Basic structure of BE32, 62, 122 brakes

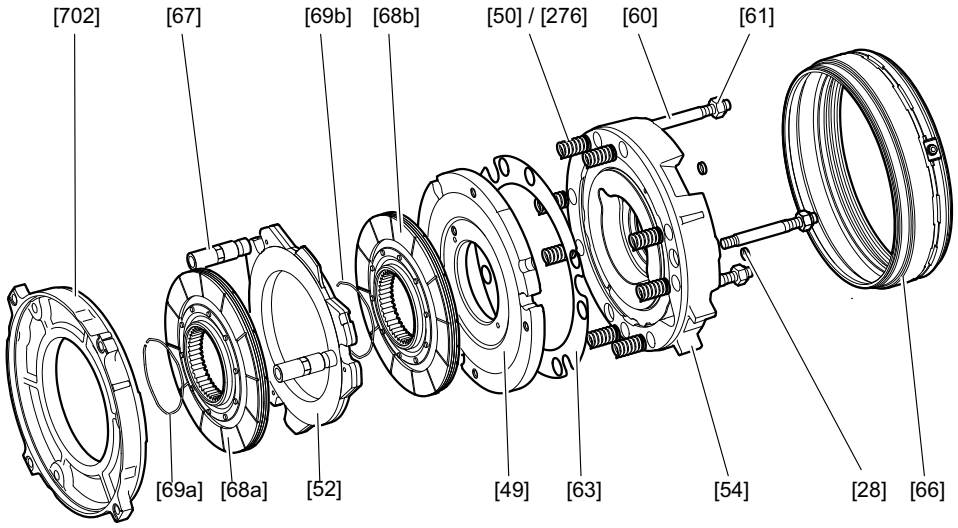


*18234909451*

| | | | | | |
|---|---|---|---|---|---|
| [28] | Closing cap | [61] | Hex nut | [69a] | Circular spring |
| [49] | Pressure plate | [63] | Pole sheet | [69b] | Circular spring |
| [50] | Brake spring (normal) | [66] | Sealing strip | [276] | Brake spring (blue) |
| [52] | Brake plate complete | [67] | Setting sleeve | [702] | Friction disk |
| [54] | Magnet body, complete | [68a] | Complete brake disk | | |
| [60] | Stud | [68b] | Complete brake disk | | |

25957074/EN – 06/2019

### 7.6.12 Measuring the wear of the BE02 brake

The working air gap of BE02 brakes cannot be adjusted. Check the brake lining carrier thickness during maintenance.

Replacing individual parts of the brake is not permitted.

✓ The motor and all connected options are disconnected from the power supply.

✓ The motor is protected against unintended restart.

1. Loosen the screws [60].
2. Remove the complete magnet body [54] with pressure plate and, if applicable, installed manual brake release from the brake endshield [42].
3. Make sure the brake springs [50]/[276] and friction plates [73] do not fall out.
4. Remove the brake lining carrier [68] and measure its thickness "d".

⇨ Replace the brake if the lining thickness is below the minimum permitted value. For the values, refer to chapter "Braking work, working air gap, and brake lining carrier thickness" (→ 🗎 225).

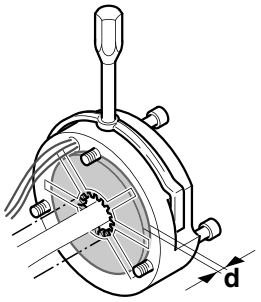


*26854192139*

### 7.6.13 Measuring the wear of BE03 brakes

The working air gap of BE03 brakes cannot be adjusted. Check the stroke of the pressure plate during maintenance.

Replacing individual parts of the brake is not permitted.

✓ The motor and all connected options are disconnected from the power supply.

✓ The motor is protected against unintended restart.

1. Measure the dimension "X" at the stroke of the studs when the brake is released or applied using a depth gauge or slide gauge.

   ⇨ The difference between both values is the working air gap.

⇨ The maximum permitted working air gap is 0.65 mm. Replace the brake in case this value is exceeded.

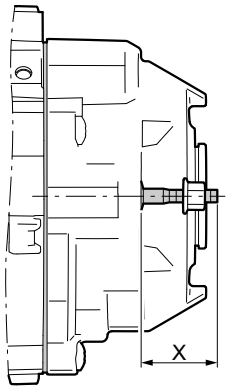


*23652168459*

### 7.6.14 Setting the working air gap of BE05 – BE122 brakes

1. Before starting to perform any work on the motor, disconnect the motor and all mounted options from the power supply before and secure the motor against unintentional power-up.
2. Remove the following:
   - Forced cooling fan and rotary encoder, if installed, see chapter "Motor and brake maintenance – preliminary work" (→ 🗎 127).
   - Fan guard with encoder mount or fan guard [35]
3. Push the sealing strip [66] aside,
   - Loosen the clamping strap [157] to do this, if necessary
   - Vacuum any abrasion
4. Measure the brake lining carrier [68]:
   - For the minimum thickness of the brake lining carrier, see chapter "Technical data" (→ 🗎 222).
   - If necessary, replace the brake lining carrier according to chapter "Replacing the brake lining carrier of BE05 – BE122 brakes" (→ 🗎 193).
5. **BE30 – 122:** Loosen the setting sleeve [67] by turning it towards the rear end-shield.
6. Measure the working air gap A (see the following figure)

   (use a feeler gauge and measure at three points offset by 120°):
   - **BE05 – 11**: between pressure plate [49] and damping plate [718]
   - **BE20 – 122**: between pressure plate [49] and magnet body [54]

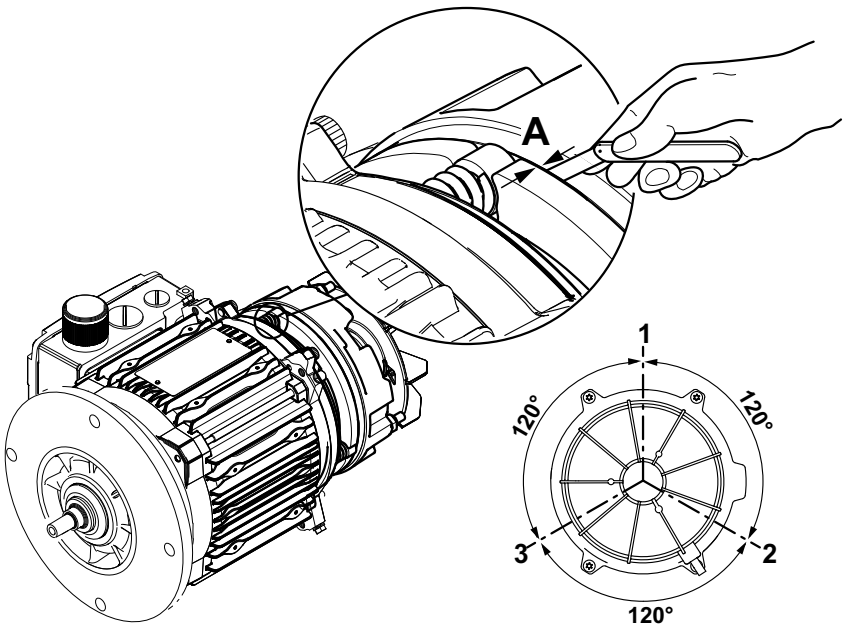


*27021597944201611*

   - **BE05 – 20:** Tighten the hex nuts [61] until the working air gap is set correctly, see chapter "Braking work, working air gap, and brake lining carrier thickness" (→ 🗎 225).

- **BE30 – 122:** Tighten the hex nuts [61] until the working air gap is initially 0.05 – 0.1 mm larger than the desired setting value (for default values, see chapter "Braking work, working air gap, and brake lining carrier thickness" (→ 🗎 225)). For example, with a desired air gap of 0.4 mm, the preset value must be 0.45 – 0.5 mm.

7. **BE30 – 122:** Evenly apply the setting sleeves [67] to the friction disk [900] by screwing them out of the magnet body.

   Tighten the hex nut [61] with the following tightening torque. Lastly, check the settings of the working air gap and adjust it if necessary.

| Brake | Tightening torque |
|---|---|
| BE30 – BE32 | 93 Nm |
| BE60 – BE62 | 40 Nm |
| BE120 – BE122 | 230 Nm |

8. If you are mounting the **BE32, BE62, BE122** to a motor with vertical motor axis, set the 3 springs of the brake plate [52] to the following dimension:

| Brake | Dimension X in mm |
|---|---|
| BE32 | 7.3 |
| BE62 | 10.0 |
| BE122 | 10.0 |

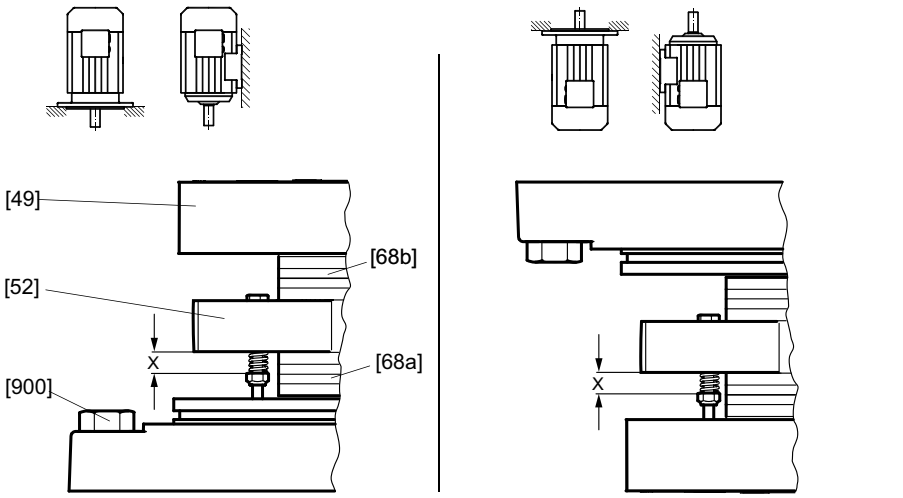


*27021598220181131*

9. Refit the sealing strip [66] and reinstall the dismantled parts.

25957074/EN – 06/2019

### 7.6.15 Replacing the brake lining carrier of BE05 – BE122 brakes

In addition to the brake elements listed in column "BE brake", see chapter "Inspection and maintenance intervals" (→ 🗎 123), check the hex nuts [61] for wear when you replace the brake lining carrier. You must always replace the hex nuts [61] when you replace the brake lining carrier.

## INFORMATION

- With DR..71 – 80, DRN71 – 80 motors with BE05 – 2 brake, the brake cannot be removed from the motor because the BE brake is directly installed on the brake endshield of the motor.

1. Disconnect the motor and all mounted options from the power supply before starting to work, and secure the motor against unintentional power-up.
2. Remove the following:
   - Forced cooling fan and rotary encoder, if installed, see chapter "Motor and brake maintenance – preliminary work" (→ 🗎 127).
   - Fan guard with encoder mount or fan guard [35], retaining ring [32]/[62] and fan [36]
3. Remove the brake cable
   - **BE05 – 11:** Loosen the terminal box cover and unfasten the brake cable from the rectifier.
   - **BE20 – 122:** Loosen locking screws of the brake plug connector [698] and remove plug connector.
4. Remove the rubber sealing collar [66]
5. Remove manual brake release if necessary.
   - Adjusting nuts [58], conical springs [57], studs [56], releasing lever [53], conical seat [255], spherical washer [256]
6. Loosen the hex nuts [61], carefully pull off the magnet body [54] (brake cable!) and take out the brake springs [50]/[276]/[1312].
7. **BE05 – 11:** Remove the damping plate [718], pressure plate [49] and brake lining carrier [68]

   **BE20, BE30, BE60, BE120:** Remove the pressure plate [49], pole sheet [63] and brake lining carrier [68]

   **BE32, BE62, BE122:** Remove the pressure plate [49], brake lining carrier [68a] and [68b], and the brake plate [52].
8. Clean the brake components.
9. Install new brake lining carrier(s).
10. Brake parts are installed as described in chapter "Working steps for inspecting DR..71 – 315, DRN63 – 315, DR2..63 – 80 brakemotors" (→ 🗎 179).
    - Except for the fan and the fan guard, because the working air gap has to be set first, see chapter "Setting the working air gap of BE05 – BE122 brakes" (→ 🗎 191).
11. In case of manual brake release: Use the adjusting nuts to adjust the floating clearance "s" between the conical springs (pressed flat) and the adjusting nuts (see chapter "Retrofitting the /HR, /HF manual brake release" (→ 🗎 203).



**⚠ WARNING**

No braking due to incorrectly set floating clearance "s".

Severe or fatal injuries.

- Make sure the floating clearance "s" is correctly set, so that the pressure plate can move up as the brake lining wears.

12. Put the sealing strip [66] in place and re-install the dismantled parts.



**INFORMATION**

After replacing the brake disk, the maximum braking torque is reached only after several cycles.

#### 7.6.16 Changing the braking torque of BE05 – BE122 brakes

You can alter the braking torque in stages. This can be done in various ways:

- By changing the type and number of brake springs
- By changing the complete magnet (only possible for BE05 and BE1)
- By changing the brake (from motor size 90)
- By changing to a double disk brake (only possible for BE30, BE60, BE120)

For possible braking torque steps, refer to chapter "Technical data" (→ 🗎 222).

25957074/EN – 06/2019

### 7.6.17 Changing the brake spring of BE05 – BE122 brakes

1. Disconnect the motor and all mounted options from the power supply before starting to work, and secure the motor against unintentional power-up.
2. Remove the following:
   - Forced cooling fan and rotary encoder, if installed, see chapter "Motor and brake maintenance – preliminary work" (→ 🗎 127).
   - Fan guard with encoder mount or fan guard [35], retaining ring [32]/[62] and fan [36]
3. Remove the brake cable.
   - **BE05 – 11:** Remove the terminal box cover. Remove the brake cable from the rectifier.
   - **BE20 – 122:** Loosen the locking screws of the brake plug connector [698]. Remove the plug connector.
4. Remove the sealing strip [66] and (if necessary) the manual brake release:
   - Setting nuts [58], conical springs [57], studs [56], releasing lever [53], conical seat [255], spherical washer [256]
5. Unfasten the hex nuts [61] and pull off the magnet body [54]
   - By approx. 50 mm (watch the brake cable!)
6. Replace or add brake springs [50/276/1312]
   - Arrange brake springs symmetrically
7. Brake parts are installed as described in chapter "Working steps for inspecting DR..71 – 315, DRN63 – 315, DR2..63 – 80 brakemotors" (→ 🗎 179).
   - Except for the fan and the fan guard, because the working air gap has to be set first, see chapter "Setting the working air gap of BE05 – BE122 brakes" (→ 🗎 191).
8. In case of manual brake release: Use the adjusting nuts to adjust the floating clearance "s" between the conical springs (pressed flat) and the adjusting nuts (see chapter "Retrofitting the /HR, /HF manual brake release" (→ 🗎 203).

**⚠ WARNING**



No braking due to incorrectly set floating clearance "s".

Severe or fatal injuries.

- Make sure the floating clearance "s" is correctly set, so that the pressure plate can move up as the brake lining wears.

9. Put the sealing strip [66] in place and re-install the dismantled parts.

**INFORMATION**



Replace the setting sleeves [58] if the removal procedure is repeated.

### 7.6.18 Changing the magnet body of BE05 – BE122 brakes

1. Disconnect the motor and all mounted options from the power supply before starting to work, and secure the motor against unintentional power-up.
2. Remove the following:
   - Forced cooling fan and rotary encoder, if installed, see chapter "Motor and brake maintenance – preliminary work" (→ 🗎 127).
   - Fan guard with encoder mount or fan guard [35], retaining ring [32]/[62] and fan [36]
3. Remove the rubber sealing collar [66] and the manual brake release:
   - Setting nuts [58], conical coil springs [57], studs [56], releasing lever [53], parallel pin [59].
4. Remove the brake cable
   - **BE05 – 11:** Loosen the terminal box cover and unfasten the brake cable from the rectifier.
   - **BE20 – 122:** Loosen locking screws of the brake plug connector [698] and remove plug connector.
5. Loosen hex nuts [61], remove complete magnet body [54], remove brake springs [50]/[276]/[1312].
6. Install new magnet body with brake springs. For the possible braking torque steps, refer to chapter "Technical data" (→ 🗎 222).
7. Brake parts are installed as described in chapter "Working steps for inspecting DR..71 – 315, DRN63 – 315, DR2..63 – 80 brakemotors" (→ 🗎 179).
   - Except for the fan and the fan guard, because the working air gap has to be set first, see chapter "Setting the working air gap of BE05 – BE122 brakes" (→ 🗎 191).
8. In case of manual brake release: Use the adjusting nuts to adjust the floating clearance "s" between the conical springs (pressed flat) and the adjusting nuts (see chapter "Retrofitting the /HR, /HF manual brake release" (→ 🗎 203).

**⚠ WARNING**



No braking due to incorrectly set floating clearance "s".

Severe or fatal injuries.

- Make sure the floating clearance "s" is correctly set, so that the pressure plate can move up as the brake lining wears.

9. Put the sealing strip [66] in place and re-install the dismantled parts.
10. Replace the brake control in the event of an interturn short circuit or a short circuit to frame.

## INFORMATION



Replace the setting sleeves [58] if the removal procedure is repeated.

25957074/EN – 06/2019

### 7.6.19 Replacing BE02 brakes with DR2..56 motors

✓ The motor and all connected options are disconnected from the power supply.

✓ The motor is protected against unintended restart.

1. Disassemble the following parts:
   - ⇨ Forced cooling fan and rotary encoder, if installed, see chapter "Motor and brake maintenance – preliminary work" (→ 🗎 127).
   - ⇨ Fan guard with encoder mount [212] or fan guard [35], retaining ring [32]/[62] and fan [36]
2. Remove the terminal box cover and loosen the brake cable from the brake control/ terminals. Attach trailing wire to brake cables, if necessary.
3. Remove the screws and brake (with brake endshield if necessary) from the stator.
   - ⇨ DR2..56: Screws [13]
4. Replace gasket [392]. Observe the alignment of the gasket.
5. If necessary, replace driver [70], key [71], and retaining ring [62], see chapter "Working steps for inspecting DR..71 – 315, DRN63 – 315, DR2..63 – 80 brakemotors" (→ 🗎 179).
6. Insert the brake cable of the new brake into the terminal box.
7. Position the new brake. Make sure the cable outlet and brake lining carrier gearing are correctly aligned.
8. Refasten the brake using the screws.
   - ⇨ Cap screws [13]
   - ⇨ Tightening torque 3.3 Nm.
   - ⇨ Tolerance ±10%.
9. Install the disassembled parts of the motor.

25957074/EN – 06/2019

### 7.6.20 Replacing BE03 brakes for DRN63 – 71 and DR2..63 – 71 motors

✓ The motor and all connected options are disconnected from the power supply.

✓ The motor is protected against unintended restart.

1. Disassemble the following parts:
   - ⇨ Forced cooling fan and rotary encoder, if installed, see chapter "Motor and brake maintenance – preliminary work" (→ 🗎 127).
   - ⇨ Fan guard with encoder mount [212] or fan guard [35], retaining ring [32]/[62] and fan [36]
2. Remove the terminal box cover and loosen the brake cable from the brake control/ terminals. Attach trailing wire to brake cables, if necessary.
3. Remove the screws and brake (with brake endshield if necessary) from the stator.
   - ⇨ DRN63, DR2..63 motors: Screws [19]
   - ⇨ DRN71, DR2..71 motors: Screws [900]
4. Replace the gasket [901]. Observe the alignment of the gasket, if necessary.
5. If necessary, replace driver [70], key [71], and retaining ring [62], see chapter "Working steps for inspecting DR..71 – 315, DRN63 – 315, DR2..63 – 80 brakemotors" (→ 🗎 179).
6. Insert the brake cable of the new brake into the terminal box.
7. Position the new brake. Make sure the cable outlet and brake lining carrier gearing are correctly aligned.
8. Fasten the brake using screws [19] or [900]. Distribute the screws around the brake and tighten them one after the other.
   - ⇨ DRN63, DR2..63 motors: The screws [19] can be reused. Tightening torque 5 Nm, tolerance ±10%
   - ⇨ DRN71, DR2..71 motors: Use new screws [900]. Tightening torque 5 Nm, tolerance ±10%
9. Seal the shaft.
10. Replace the sealing ring [95].
11. Apply grease to the sealing lip, see chapter "Order information for lubricants, anti-corrosion agents and sealants" (→ 🗎 245).
12. ⚠ **DANGER!** No braking due to incorrectly set floating clearance "s". Severe or fatal injuries. Make sure the floating clearance "s" is set correctly so that the pressure plate can move up as the brake lining wears.
    Manual brake release option: Set the floating clearance "s" using the adjusting nuts, see chapter "Retrofitting the /HR, /HF manual brake release" (→ 🗎 203).
13. Install the disassembled parts of the motor.

25957074/EN – 06/2019

### 7.6.21 Replacing BE05 – 2 brakes for DR..71 – 80, DRN80, DR2..80 motors

✓ The motor and all connected options are disconnected from the power supply.

✓ The motor is protected against unintended restart.

1. Disassemble the following parts:
   - ⇨ Forced cooling fan and rotary encoder, if installed, see chapter "Motor and brake maintenance – preliminary work" (→ 🗎 127).
   - ⇨ Fan guard with encoder mount [212] or fan guard [35], retaining ring [32]/[62] and fan [36]
2. Remove the terminal box cover and loosen the brake cable from the brake control/ terminals. Attach trailing wire to brake cables, if necessary.
3. Remove the screws and brake (with brake endshield if necessary) from the stator.
   - ⇨ DR..71 – 80, DRN80, DR2..80: Screws [13]
4. Replace gasket [392]. Observe the alignment of the gasket.
5. If necessary, replace driver [70], key [71], and retaining ring [62], see chapter "Working steps for inspecting DR..71 – 315, DRN63 – 315, DR2..63 – 80 brakemotors" (→ 🗎 179).
6. Insert the brake cable of the new brake into the terminal box.
7. Position the new brake. Make sure the cable outlet and brake lining carrier gearing are correctly aligned.
8. Refasten the brake using the screws.
   - ⇨ Cap screws [13]
   - ⇨ Tightening torque 5 Nm.
   - ⇨ Tolerance ±10%.
9. Seal the shaft.
10. Replace the sealing ring [95].
11. Apply grease to the sealing lip, see chapter "Order information for lubricants, anti-corrosion agents and sealants" (→ 🗎 245).
12. For designs with corrosion protection /KS and/or IP56/66, the clamping straps of the disassembled brake have to be mounted to the new brake [550]. Seal studs with SEW-L-Spezial, see chapter "Order information for lubricants, anti-corrosion agents and sealants" (→ 🗎 245).
13. ⚠ **DANGER!** No braking due to incorrectly set floating clearance "s". Severe or fatal injuries. Make sure the floating clearance "s" is set correctly so that the pressure plate can move up as the brake lining wears.
    Manual brake release option: Set the floating clearance "s" using the adjusting nuts, see chapter "Retrofitting the /HR, /HF manual brake release" (→ 🗎 203).
14. Diagnostic unit option /DUE: Insert the sensor [1151] into the magnet body [54] of the new brake using the screw fitting. Fasten the cable with the terminal [1152/1153] at the magnet body in a way that the sensor cable cannot touch the fan wheel [36]. Then calibrate the zero value, see chapter "Zero value calibration" (→ 🗎 217).
15. Install the disassembled parts of the motor.

25957074/EN – 06/2019

### 7.6.22 Replacing BE05 – 62 brakes for DR..90 – 225, DRN90 – 225 motors

✓ The motor and all connected options are disconnected from the power supply.

✓ The motor is protected against unintended restart.

1. Disassemble the following parts:
   - ⇨ Forced cooling fan and rotary encoder, if installed, see chapter "Motor and brake maintenance – preliminary work" (→ 🗎 127).
   - ⇨ Fan guard with encoder mount [212] or fan guard [35], retaining ring [32]/[62] and fan [36]
2. Loosen the brake cable.
   - ⇨ BE05 – 11: Remove the terminal box cover and loosen the brake cable from the brake control/terminals.
   - ⇨ BE20 – 62: Loosen locking screws of the brake plug connector [698] and remove plug connector.
3. Remove the screws and brake (with brake endshield if necessary) from the stator.
4. Replace the gasket [901]. Observe the alignment of the gasket, if necessary.
5. If necessary, replace driver [70], key [71], and retaining ring [62], see chapter "Working steps for inspecting DR..71 – 315, DRN63 – 315, DR2..63 – 80 brakemotors" (→ 🗎 179).
6. BE05 – 11: Insert the brake cable of the new brake into the terminal box.
7. Position the new brake. Make sure the cable outlet and brake lining carrier gearing are correctly aligned.
   - ⇨ BE20 – 62 with manual brake release option: It is important that the manual brake release is positioned properly.
8. Refasten the brake using the screws.
   - ⇨ Cap screws [900]
   - ⇨ Tightening torque for DR..90 – 100, DRN90 – 100: 10.3 Nm
   - ⇨ Tightening torque for DR..112 – 160, DRN112 – 132: 25.5 Nm
   - ⇨ Tightening torque for DR..180, DRN160 – 180: 50 Nm
   - ⇨ Tightening torque for DR..200 – 225, DRN200 – 225: 87.3 Nm
   - ⇨ Tolerance ±10%.
9. Seal the shaft.
10. Replace the sealing ring [95].
11. Apply grease to the sealing lip, see chapter "Order information for lubricants, anti-corrosion agents and sealants" (→ 🗎 245).
12. BE20 – 62: Insert the plug connector [698] into the brake and fasten using screws.
    - ⇨ Tightening torque 3 Nm.
13. For designs with corrosion protection /KS and/or IP56/66, the clamping straps of the disassembled brake have to be mounted to the new brake [550]. Seal studs with SEW-L-Spezial, see chapter "Order information for lubricants, anti-corrosion agents and sealants" (→ 🗎 245).
14. ⚠ **DANGER!** No braking due to incorrectly set floating clearance "s". Severe or fatal injuries. Make sure the floating clearance "s" is set correctly so that the pressure plate can move up as the brake lining wears.
    Manual brake release option: Set the floating clearance "s" using the adjusting nuts, see chapter "Retrofitting the /HR, /HF manual brake release" (→ 🗎 203).

25957074/EN – 06/2019

15. Diagnostic unit option /DUE: Insert the sensor [1151] into the magnet body [54] of the new brake using the screw fitting. Fasten the cable with the terminal [1152/1153] at the magnet body in a way that the sensor cable cannot touch the fan wheel [36]. Then calibrate the zero value, see chapter "Zero value calibration" (→ 🗎 217).
16. Install the disassembled parts of the motor.

25957074/EN – 06/2019

### 7.6.23 Replacing BE60 – 122 brakes for DR..250 – 315, DRN250 – 315 motors

✓ The motor and all connected options are disconnected from the power supply.

✓ The motor is protected against unintended restart.

1. Disassemble the following parts:
   - ⇨ Forced cooling fan and rotary encoder, if installed, see chapter "Motor and brake maintenance – preliminary work" (→ 🗎 127).
   - ⇨ Fan guard with encoder mount [212] or fan guard [35], retaining ring [32]/[62] and fan [36]
2. Unscrew the locking screws of the brake plug connector [698] and remove the plug connector.
3. Remove the screws and brake (with brake endshield if necessary) from the stator.
   - ⇨ DR..250 – 280, DRN250 – 280 motors: Replace the O-ring [1607].
4. If necessary, replace driver [70], key [71], and retaining ring [62], see chapter "Working steps for inspecting DR..71 – 315, DRN63 – 315, DR2..63 – 80 brakemotors" (→ 🗎 179).
5. Seal the shaft.
6. Replace the sealing ring [95].
7. Apply grease to the sealing lip, see chapter "Order information for lubricants, anti-corrosion agents and sealants" (→ 🗎 245).
8. Position the new brake. Make sure the cable outlet and brake lining carrier gearing are correctly aligned.
   - ⇨ Manual brake release option: It is important that the manual brake release is positioned properly.
9. Refasten the brake using the screws.
   - ⇨ Cap screws [900]
   - ⇨ Tolerance ±10%.
10. For designs with corrosion protection /KS and/or IP56/66, the clamping straps of the disassembled brake have to be mounted to the new brake [550]. Seal studs with SEW-L-Spezial, see chapter "Order information for lubricants, anti-corrosion agents and sealants" (→ 🗎 245).
11. Insert plug connector [698] in the brake and fasten using screws.
    - ⇨ Tightening torque 3 Nm.
12. ⚠ **DANGER!** No braking due to incorrectly set floating clearance "s". Severe or fatal injuries. Make sure the floating clearance "s" is set correctly so that the pressure plate can move up as the brake lining wears.
    Manual brake release option: Set the floating clearance "s" using the adjusting nuts, see chapter "Retrofitting the /HR, /HF manual brake release" (→ 🗎 203).
13. Diagnostic unit option /DUE: Insert the sensor [1151] into the magnet body [54] of the new brake using the screw fitting. Fasten the cable with the terminal [1152/1153] at the magnet body in a way that the sensor cable cannot touch the fan wheel [36]. Then calibrate the zero value, see chapter "Zero value calibration" (→ 🗎 217).
14. Install the disassembled parts of the motor.

25957074/EN – 06/2019

### 7.6.24 Retrofitting the /HR, /HF manual brake release

## INFORMATION

With BE02 brakes, the manual brake release can only be retrofitted if the brake is completely replaced.

✓ The motor and all connected options are disconnected from the power supply.

✓ The motor is protected against unintended restart.

1. Disassemble the following parts:
   - ⇨ Forced cooling fan and rotary encoder, if installed, see chapter "Motor and brake maintenance – preliminary work" (→ 🗎 127).
   - ⇨ Fan guard with encoder mount [212] or fan guard [35], retaining ring [32]/[62] and fan [36]
2. Mount the manual brake release.
   - ⇨ BE03: Position the releasing lever [53] and the spring plate [53] correctly. Mount the flange nut [58]. Attach the hand lever [51]/set screw [64] to the stator using the grommets.
   - ⇨ BE05 – BE11: Remove the old sealing ring [95]. Screw in the studs [56] and glue them. Insert the sealing rings for the manual brake release [95]. Hammer in the parallel pin [59]. Install the releasing lever [53], the conical springs [57] and the adjusting nuts [58].
   - ⇨ BE20 – BE62: Insert O-rings [47] into the magnet body. Screw in the studs [56] and glue them. Install the releasing lever [53], the conical springs [57] and the adjusting nuts [58].
   - ⇨ BE120 – BE122: Insert O-rings [47] in the magnet body. Screw in the studs [56] and glue them.
3. ⚠ **DANGER!** No braking due to incorrectly set floating clearance "s". Severe or fatal injuries. Make sure the floating clearance "s" is set correctly so that the pressure plate can move up as the brake lining wears.
   Set the floating clearance "s" using the adjusting nuts or flange nuts.
   - ⇨ BE03: Between releasing lever and flange nut (see following illustration).
   - ⇨ BE05 – 122: Between conical springs (pressed flat) and adjusting nuts (see following illustration).

| BE03 | BE05 – 122 |
|---|---|
| 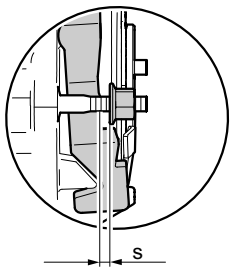 | 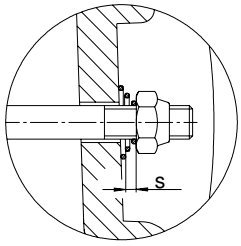 |

| Brake | Floating clearance s<br>mm |
|---|---|
| BE03 | 2.2 |
| BE05, BE1, BE2 | 1.5 |

| Brake | Floating clearance s<br>mm |
|---|---|
| BE5 | 1.7 |
| BE11, BE20, BE30, BE32, BE60, BE62, BE120, BE122 | 2 |

4. Install the disassembled parts of the motor.

25957074/EN – 06/2019

## 7.7 Inspection/maintenance work diagnostic unit /DUB

### 7.7.1 Basic structure of diagnostic unit /DUB on DR..90 – 315 motors with BE..

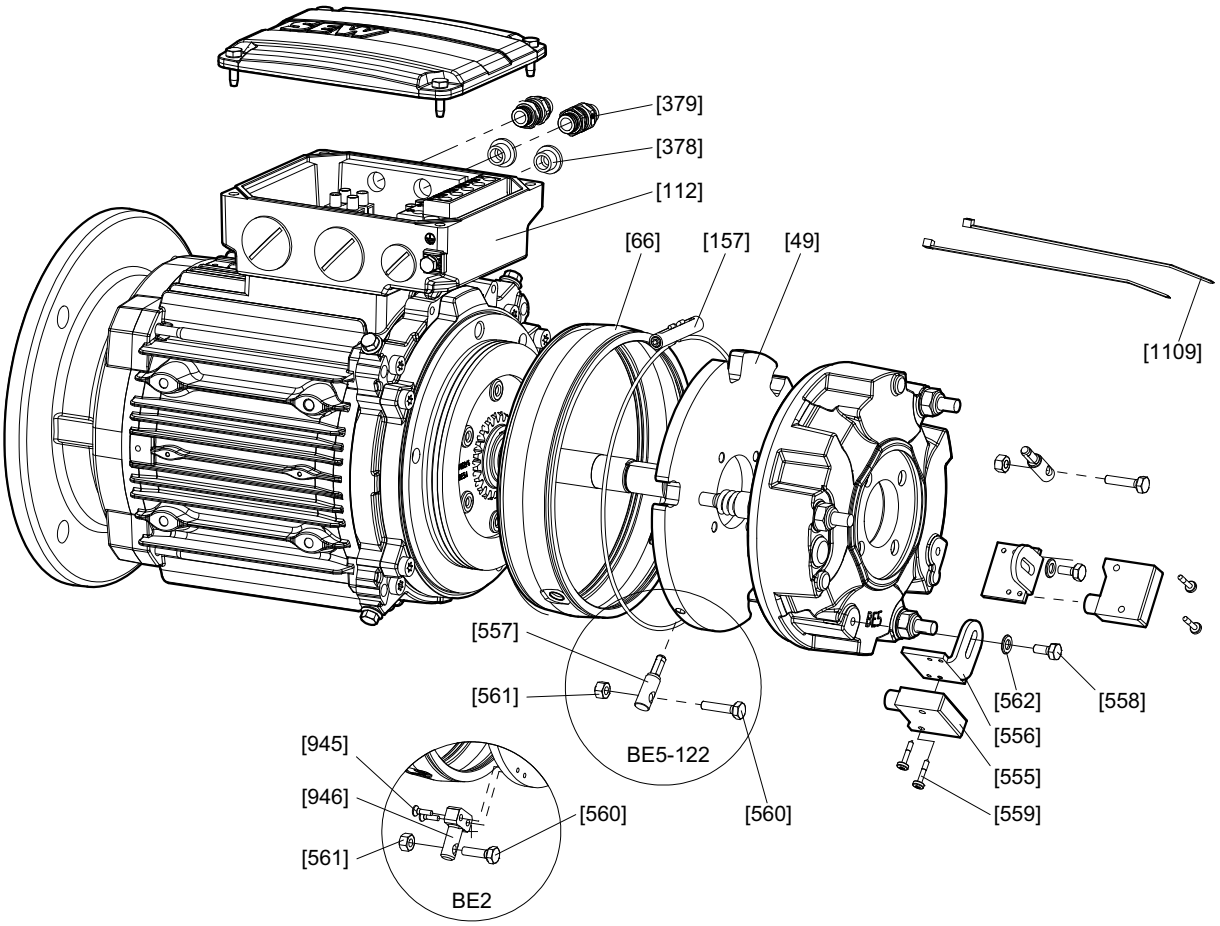


*18014399594797835*

| | | | | | |
|---|---|---|---|---|---|
| [49] | Pressure plate for DUB | [555] | Microswitch | [561] | Hex nut |
| [66] | Sealing strip for DUB | [556] | Angle bracket | [562] | Shim |
| [112] | Terminal box lower part | [557] | Bolt (BE5 and larger) | [945] | Hex head screw (BE2) |
| [157] | Clamping strap (BE2 – 11) | [558] | Hex head screw | [946] | Mounting plate (BE2) |
| [378] | Screw plug | [559] | Pan head screw | [1109] | Cable ties |
| [379] | Screw fitting | [560] | Hex head screw | | |

25957074/EN – 06/2019

### 7.7.2 Inspection/maintenance work diagnostic unit /DUB



**⚠ WARNING**

Risk of injury if the drive starts up unintentionally.

Severe or fatal injuries.

- Before you start working on the unit, disconnect the motor and all connected options from the power supply.
- Secure the motor against unintended power-up.



**INFORMATION**

Brakes equipped with the /DUB option have at least one microswitch. These can be used for function monitoring or setting a wear monitoring. If 2 microswitches are mounted to one brake, both monitoring statuses can be realized. In this case, first set the switch for wear monitoring, then the switch for function monitoring.



**INFORMATION**

The specifications provided in the tables on setting the wear monitoring refer to the maximum permitted working air gap for brakemotors without safety options at brake and encoder, see chapter "Braking work, working air gap, and brake lining carrier thickness" (→ 🗎 225). Deviating values apply to brakemotors with the specified safety options. Observe the information in the addendum to the operating instructions "Safety Encoders and Safety Brakes – AC Motors DR.., DRN.., DR2.., EDR.., EDRN.. – Functional Safety".

25957074/EN – 06/2019

### 7.7.3 Inspection/maintenance work at the /DUB diagnostic unit with microswitch for function monitoring

1. Check the working air gap according to chapter "Setting the working air gap of BE05 – BE122 brakes" (→ 🗎 191) and adjust it if necessary.
2. Screw the hex head screw [560] against the actuator of the microswitch [555] until it trips (brown, blue contacts closed).

   While screwing, install hex nut [561] to eliminate the longitudinal play from the thread.
3. Turn the hex head screw [560] back until the microswitch [555] switches back (contacts brown-blue open). Depending on the brake size, screw out the hex head screw [560] by the specified angle to set the switching hysteresis.

| Brake | Angle |
|---|---|
| BE2, BE5, BE11, BE20, BE30, BE60 | 60° |
| BE32, BE62 | 90° |
| BE120, BE122 | 105° |

- After reaching the respective end position, tighten the hex nut [561] against the bolts [557]/[945] while holding the hex head screw [560] to keep it in the correct position.
- Switch the brake on and off several times. Check whether the microswitch opens and closes reliably in any motor shaft position. Therefore, change the position of the motor shaft manually several times. In case of incorrect switching, the setting procedure may require to be repeated.
- Check if the cables are routed firmly and if they require additional fastening in form of cable ties [1109]. Make sure the cables are routed in a sufficient distance to the fan wheel of the motor.
- Install the previously removed motor parts again.

25957074/EN – 06/2019

### 7.7.4 Inspection/maintenance of the diagnostic unit /DUB with microswitch for wear monitoring

1. Check the working air gap according to chapter "Setting the working air gap of BE05 – BE122 brakes" (→ 🗎 191) and adjust it if necessary.
2. Screw the hex head screw [560] against the actuator of the microswitch [555] until it trips (brown, blue contacts closed).

   While screwing, install hex nut [561] to eliminate the longitudinal play from the thread.
3. Screw the hex head screw [560] further in from the actuated switching point, so that the microswitch [555] remains activated (contact brown-blue closed). Depending on the brake size, screw the hex head screw [560] further in by the specified angle to set the wear point:

| Brake | Standard brake without safety encoder | With safety brake or safety encoder |
|---|---|---|
| BE2 | 135° | 135° |
| BE5 | 270° | 180° |
| BE11, BE20, BE30, BE32, BE60, BE62 | 360° | |
| BE120 | 270° | 135° |
| BE122 | 180° | 90° |

- After reaching the respective end position, tighten the hex nut [561] against the bolts [557]/[945] while holding the hex head screw [560] to keep it in the correct position.
- Check if the cables are routed firmly and if they require additional fastening in form of cable ties [1109]. Make sure the cables are routed in a sufficient distance to the fan wheel of the motor.
- Install the previously removed motor parts again.

25957074/EN – 06/2019

## 7.8 Inspection/maintenance work diagnostic unit /DUE

### 7.8.1 Basic structure of diagnostic unit /DUE

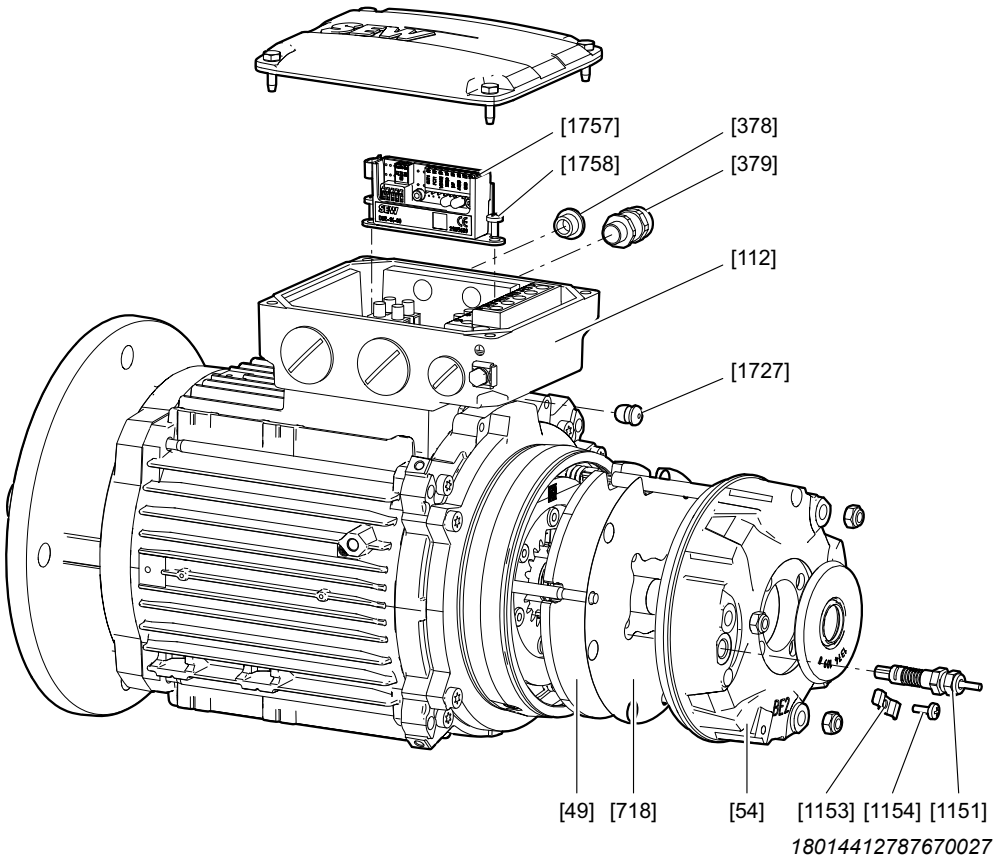


*18014412787670027*

| | | | |
|---|---|---|---|
| [49] | Pressure plate for /DUE (BE20 and higher) | [1151] | Distance sensor |
| [54] | Magnet body complete for /DUE | [1153] | Spring (BE20 – 122) |
| [112] | Terminal box lower part | [1154] | Mushroom head screw (BE20 – 122) |
| [378] | Screw plug (DRN200 – 315) | [1757] | Evaluation unit |
| [379] | Screw fitting (DRN200 – 315) | [1758] | Screw |
| [718] | Dampening plate (BE1 – 11) | [1727] | Grommet (DRN80 – 180) |

### 7.8.2 Removing the /DUE diagnostic unit

1. Remove forced cooling fan and rotary encoder, if installed, see chapter "Motor and brake maintenance – preliminary work" (→ 🗎 127).
2. Remove the fan guard [35] / fan guard with encoder mount [212], or the forced cooling fan [170] by loosening the retaining screws [22].
3. If applicable: Remove the retaining ring [32] and the fan wheel [36] using a suitable tool.
4. Loosen the screw [1154] for the cable fixture clamp [1153].
5. Loosen the union nut of the sensor screw fitting. The sensor cable is free.
6. Loosen the sensor [1151] on the mounting flange. Remove the sensor.

### 7.8.3 Retrofitting the /DUE diagnostic unit for function and wear monitoring

Designation

For the component designation of the evaluation unit, refer to chapter "Designation of the components" (→ 🗎 101).

Conditions

The /DUE diagnostic unit can only be retrofitted for motor sizes 80 – 315 with brakes BE1 – 122 under the following conditions:

- Exchange of the existing brake without /DUE preparation for a new brake with /DUE preparation.
- Conversion of the terminal box to create room for the evaluation unit of the /DUE diagnostic unit.
- Retrofitting of the evaluation and sensor unit, see chapter "Evaluation unit" (→ 🗎 210).

Whether and to what extent the first two measures in the list are to be carried out depends greatly on the respective motor design. To identify the components that need to be replaced, please contact SEW-EURODRIVE.

**Evaluation unit**

The evaluation unit has a 5-pin DIP switch that is labeled with the numbers 1 to 5. Use it to set the measuring range and the maximum permitted wear limit (maximum working air gap).

If the brake is used in combination with a safety encoder, or if the brake is designed as safety brake, the setting values for the wear limit are reduced. For the new values, refer to the addendum to the operating instructions for safety brakes and safety encoders.

To activate the DIP switch ≙1, push the switch upwards. To deactivate the DIP switch ≙ 0, push the switch downwards.

The following table shows the DIP switch settings of the evaluation unit for the maximum working air gap.

| S1 | S2 | S3 | S4 | S5 | Wear limit | BE1 – 2 brake | BE5 brake |
|---|---|---|---|---|---|---|---|
| **Sensor Ø 6 mm** | | | | | | | |
| **0** | **0** | **0** | **0** | **0** | 1.2 mm | | |
| **0** | **0** | **0** | **0** | **1** | 1.1 mm | | |
| **0** | **0** | **0** | **1** | **0** | 1.0 mm | | |
| **0** | **0** | **0** | **1** | **1** | 0.9 mm | | X |
| **0** | **0** | **1** | **0** | **0** | 0.8 mm | | |
| **0** | **0** | **1** | **0** | **1** | 0.7 mm | | |
| **0** | **0** | **1** | **1** | **0** | 0.6 mm | X | |
| **0** | **0** | **1** | **1** | **1** | 0.5 mm | | |
| **S1** | **S2** | **S3** | **S4** | **S5** | **Wear limit** | **BE11 – 122 brake** | |
| **Sensor Ø 8 mm** | | | | | | | |
| **1** | **0** | **0** | **0** | **0** | 1.2 mm | X | |
| **1** | **0** | **0** | **0** | **1** | 1.1 mm | | |
| **1** | **0** | **0** | **1** | **0** | 1.0 mm | | |
| **1** | **0** | **0** | **1** | **1** | 0.9 mm | | |
| **1** | **0** | **1** | **0** | **0** | 0.8 mm | | |
| **1** | **0** | **1** | **0** | **1** | 0.7 mm | | |
| **1** | **0** | **1** | **1** | **0** | 0.6 mm | | |
| **1** | **0** | **1** | **1** | **1** | 0.5 mm | | |

X Factory setting
Setting possible in addition

25957074/EN – 06/2019

*Setting and mounting the evaluation unit*

✓ The motor and all connected options are disconnected from the power supply.

✓ The motor is protected against unintended restart.

1. Set the wear limit using the DIP switches.
2. Screw the evaluation unit into the terminal box after consultation with SEW-EURODRIVE.
3. Connect the sensor, see chapter "Connecting the sensor" (→ 🗎 213).
4. Calibrate the infinite value, see chapter "Calibrating the infinite value" (→ 🗎 215).
5. Install the sensor in the brake, see chapter "Installing the sensor" (→ 🗎 216).
6. Route the cable, see chapter "Cable routing" (→ 🗎 217).
7. Calibrate the zero value, see chapter "Zero value calibration" (→ 🗎 217).
8. To check the function, measure the voltage via terminal 5k to 10k. Switch the brake and check if 24 V are applied.
9. To check if the working air gap is within the permitted range, measure the current between terminals 4k and 10k. Compare the value to the range in the diagram in chapter "Output signals for function and wear monitoring" (→ 🗎 214).

**Connecting electronics**

The function and wear monitoring is connected according to the following wiring diagram. The maximum permitted cable cross section at terminals "k" is 1.5 mm² with conductor end sleeve without plastic collar, 0.75 mm² with plastic collar. The recommended cable cross section at terminal "k" is 0.5 mm² with conductor end sleeve with plastic collar.

## INFORMATION

Use shielded cables to wire the evaluation unit. Connect the shield to the GND potential, or use the shield plate at the user's signal evaluation.

- Unless they are shielded, sensor cables must always be routed separately from other power cables with phased currents.
- Provide for a suitable equipotential bonding between drive and control cabinet.

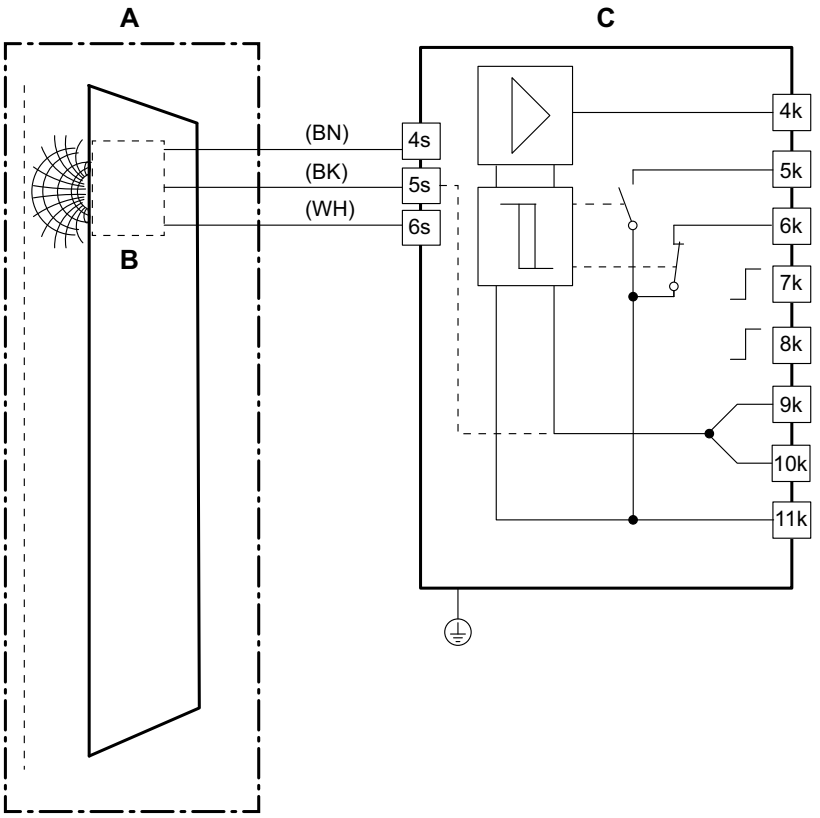


*18014412038672651*

| | | | |
|---|---|---|---|
| [A] | Brake | [4k] | Analog output wear 1 (air gap) |
| [B] | Eddy current sensor | [5k] | Digital output function 1 (NO contact) |
| [C] | Evaluation unit | [6k] | Digital output wear 1 (NC contact) |
| | | [7k] | Input calibration zero value |
| [4s] | Connection sensor A1 (brown cable) | [8k] | Input calibration infinite value |
| [5s] | Connection sensor GND 1 (black cable) | [9k] | Signal ground AGND |
| [6s] | Connection sensor B1 (white cable) | [10k] | Ground potential GND |
| | | [11k] | DC 24 V supply |

The evaluation unit is supplied with DC 24 V via the terminals GND [10k] and DC 24 V [11k].

Brake monitoring provides digital signals for:

- Function FCT1 [5k] and wear WEAR1 [6k] of the brake.

The working air gap can be monitored continuously via the analog signal (4 – 20 mA) regarding the signal ground [9k]:

- Terminal OUT1 [4k]

Use terminals ZERO [7k] and INF [8k] for calibration.

## INFORMATION

If values deviate from the factory setting, the wear point setting must be adjusted. See chapter "Evaluation unit" (→ 🗎 210).

25957074/EN – 06/2019

*Connecting the sensor*

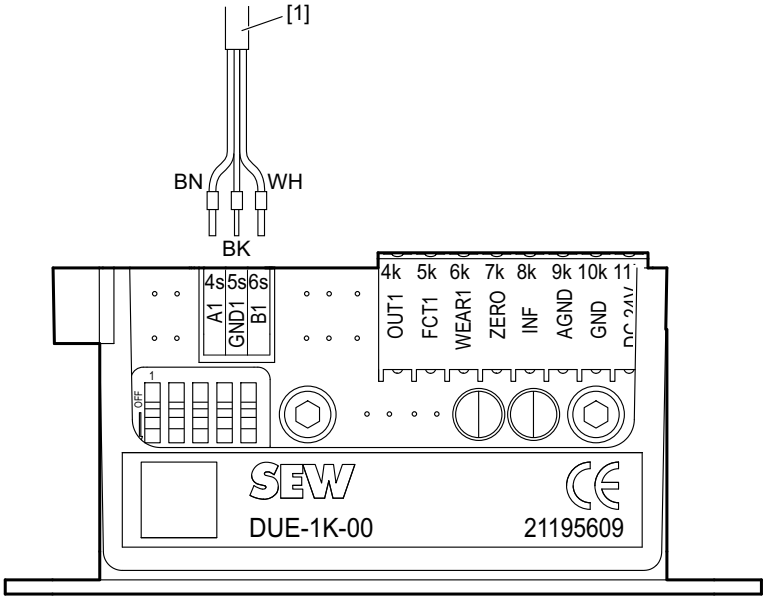


*9007214229800843*

[1] Brake sensor

The connection cross section of the sensor is 0.14 mm². The litz wires of the sensor cables must be equipped with conductor end sleeves. The cable shield must be isolated against other potentials using a heat shrink tubing. The litz wires can be pushed into the terminals without using tools. Put the sensor cables in the provided line clip, see figure in chapter "Calibrating the infinite value" (→ 🗎 215). To remove the sensor cables, use an electronic screwdriver to disengage the clips.

*Output signals for function and wear monitoring*

The diagnostic unit /DUE provides an analog signal (4 – 20 mA, DIN IEC 60381-1) for the current working air gap of the brake.

**D6**

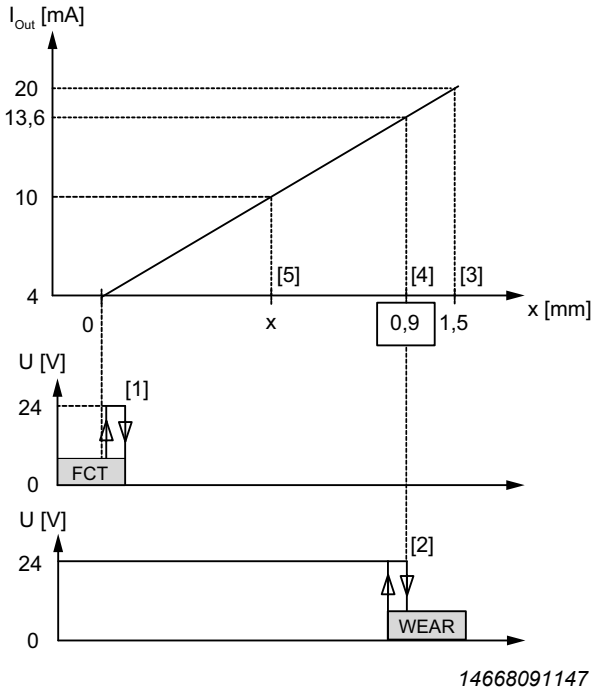


14668091147

**D8**

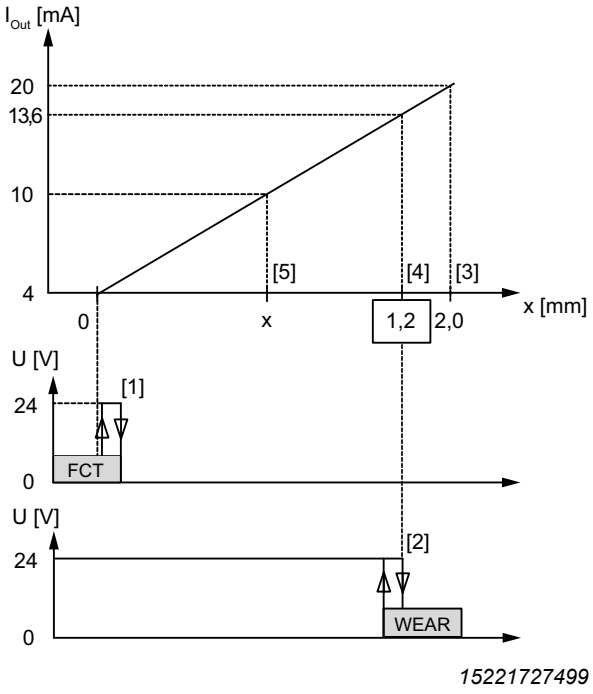


15221727499

[1] FCT: Digital output function (DC 24 V, DIN EN 61131-2)
[2] WEAR: Digital output wear (DC 24 V, DIN EN 61131-2)
[3] Measuring range of the sensor
[4] Max. working air gap of the brake (exemplary)
[5] Currently measured working air gap (exemplary)

25957074/EN – 06/2019

### Calibrating the infinite value

Before you can install the sensor in the brake, the electronics must be calibrated to the actual cable length. During calibration of the infinite value, electronics is adjusted to the sensor cable length. Electronics is reset and previous settings are overwritten.

The sensor must be removed from the brake for the following steps.

Procedure to calibrate the infinite value for the sensor:

1. Make sure that no metallic objects are within a 10 cm radius from the sensor head. The mounting springs may be in contact with the back of the sensor head during calibration.
2. Connect the supply voltage to INF (8k) and AGND (9k) for approx. 5 s. You can use GND (10k) as reference potential instead of AGND (9k). The evaluation unit is supplied via the calibration input during calibration.

The analog output OUT1 signals 0 mA during the calibration procedure.

The infinite value was successfully calibrated when OUT1 (4k) displays 20 mA. The red LED briefly flashes once per second as visual signal.

The corresponding wiring diagram for the calibration process.

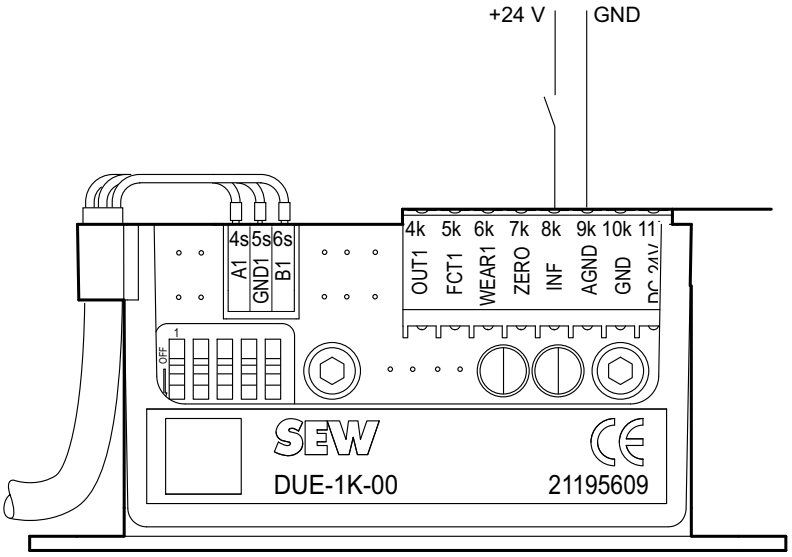


*14975067787*

During calibration, the digital outputs WEAR1 (6k), FCT1 (5k) send a 0 signal which may lead to error messages (wear limit reached).

### Installing the sensor

After calibration, the eddy current sensor can be installed in the magnet body of the brake. When installing the sensor, make sure that the sensor head can be inserted in the stepped bore without pressure being applied.

First install the lower part of the cable gland. Then mount the upper part of the cable gland.

## INFORMATION

To ensure that the sensor is correctly inserted in the stepped bore, twist the sensor carefully with the cable before screwing in the cable gland. Protect the sensor cable against damage.

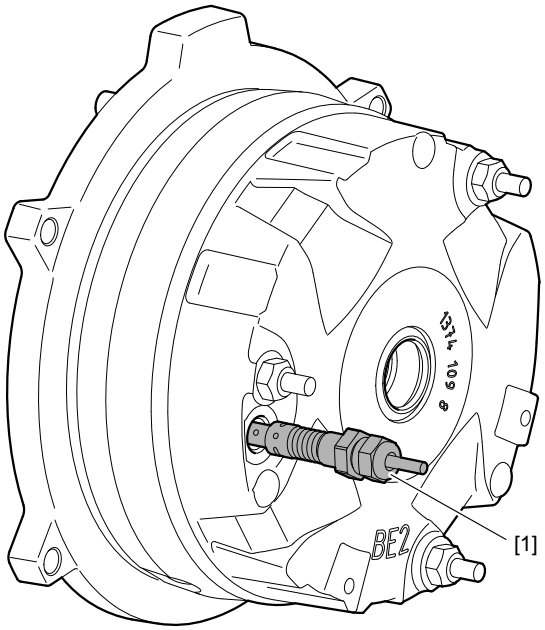


*15126940043*

[1] Brake sensor

25957074/EN – 06/2019

### Cable routing

Prevent the cable from colliding with the fan cable. If necessary, attach the cable to the included clamping strap [157] on the brake using cable ties.

### Zero value calibration

During calibration of the zero value, the current working air gap with released (open) brake is written to the evaluation unit. The electronics are reset and previous settings are overwritten. You can save the zero value again at any time without changing the infinite value.

Procedure for calibrating the zero value:

1. Open the brake.
2. Apply the supply voltage to ZERO (7k) and AGND (9k) for approx. 3 seconds. Electronics is in calibration mode. You can use GND (10k) as reference potential instead of AGND (9k). The evaluation unit is supplied via the calibration input during calibration.

The evaluation unit saves the smallest working air gap of the brake. Each write process is indicated by a brief flashing of the red LED.

The activated calibration mode is indicated by the following LED state:

| LED | State |
|---|---|
| Green [6] | Off |
| Red [6] | Flashing (2 Hz) |

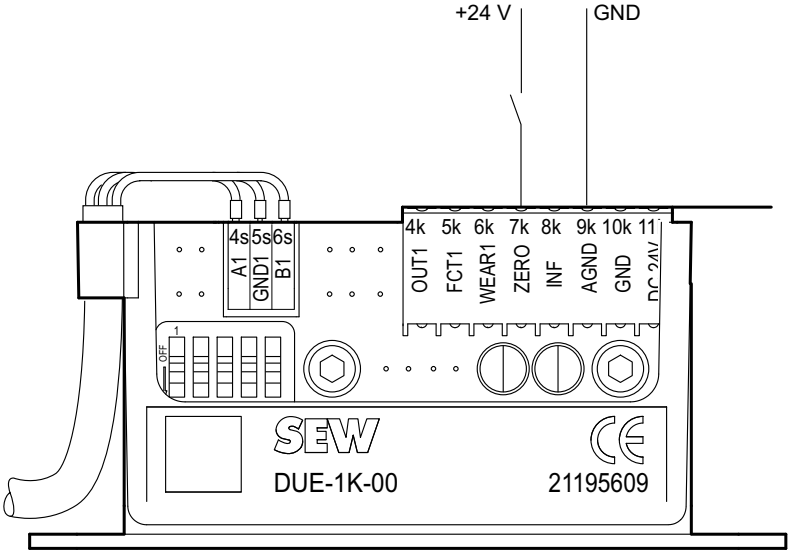


*14977696651*

During calibration, the digital outputs WEAR1 (6k), FCT1 (5k) send a 0 signal which may lead to error messages (wear limit reached).

The analog output OUT1 (4k) signals 0 mA during the calibration procedure. After successful calibration, the value is saved. The output has 4 mA with released brake. If a smaller value is available within 3 seconds, the last value is deleted and the new value is saved. The 4 mA at the output remain unchanged.

### Status messages of the evaluation unit

| Brake | Sensor | Calibration | | LEDs and outputs | | | | | State |
|---|---|---|---|---|---|---|---|---|---|
| | | ZERO | INF | Green | Red | FCT | WEAR | OUT | |
| Open | Installed | – | – | To | Off | HI | HI | 3.6 – 5.6 mA | Brake open, no wear |
| Go to | Installed | – | – | Off | Off | LO | HI | 6 – 20 mA | Brake closed, no wear |
| Go to | Installed | – | – | Off | To | LO | LO | 6 – 20 mA | Brake closed, set wear limit of brake reached |
| – | – | – | – | Off | To | LO | LO | >20 mA | Measuring range exceeded or sensor not connected correctly |
| – | Not installed | – | HI | Off | Blinking 1 Hz | LO | LO | 0 mA | Infinite value calibration active |
| – | Not installed | – | HI | Off | Flashing 1 Hz | LO | LO | 20 mA | Infinite calibration successful |
| – | – | – | – | Blinking 1 Hz | Blinking 1 Hz | Clock 1 Hz | Clock 1 Hz | 0 mA | Not completely calibrated:<br>• ZERO calibration missing<br>• Delivery state (both calibrations missing) |
| Open | Installed | HI | – | Off | Blinking 2 Hz | LO | LO | 0 mA | Zero value calibration active |
| Open | Installed | HI | – | Off | Blinking 2 Hz | LO | LO | 4 mA | First zero value calibration successful |
| Open | Installed | HI | – | Off | Flickering | LO | LO | 4 mA | Smaller zero value detected and saved |

25957074/EN – 06/2019

## 7.9 Altering the blocking direction on motors with a backstop

### 7.9.1 Basic structure of DR..71 – 80, DRN71 – 80, DR2..71 – 80 motors with backstop

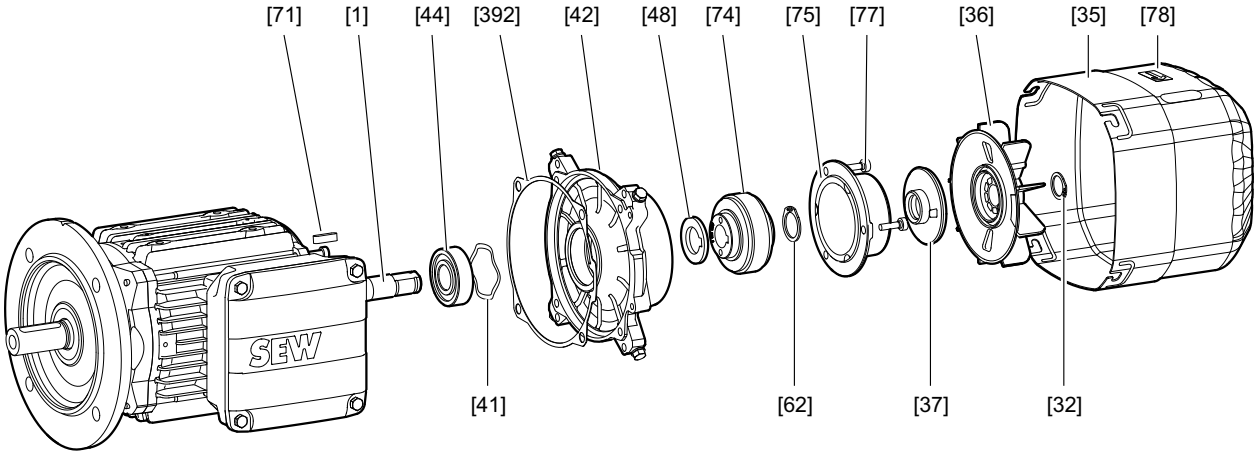


*18014399652340235*

| | | | |
|---|---|---|---|
| [1] | Motor with brakemotor | [48] | Spacing ring (only DR../DRN/DR2..80) |
| [32] | Retaining ring | [62] | Retaining ring (only DR../DRN/ DR2..80) |
| [35] | Fan guard | [71] | Key |
| [36] | Fan wheel | [74] | Backstop |
| [37] | Sealing ring | [75] | Sealing flange |
| [41] | Equalizing ring | [77] | Cap screw |
| [42] | Backstop endshield, complete | [78] | Direction of rotation information sign |
| [44] | Deep groove ball bearing | [392] | Gasket |

25957074/EN – 06/2019

### 7.9.2 Basic structure of DR..90 – 315, DRN63, 90 – 315, DR2..63 motors with backstop

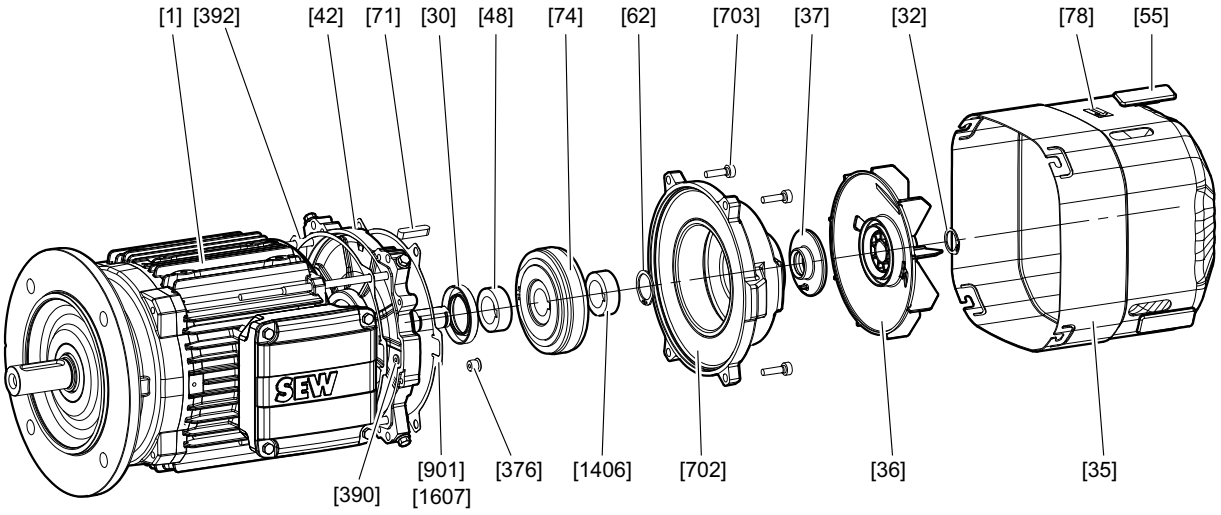


*18014399652338315*

| | | | |
|---|---|---|---|
| [1] | Motor | [74] | Backstop |
| [30] | Sealing ring (DR../DRN250-315) | [78] | Information sign for direction of rotation |
| [32] | Retaining ring | | |
| [35] | Fan guard | [702] | Backstop housing |
| [36] | Fan wheel | [703] | Cap screw |
| [37] | Sealing ring | [376] | Screw plug (DR..160 – 315, DRN132M – 315) |
| [42] | Brake endshield | [392] | O-ring (with DRN63, DR..63)<br>Seal (DR..90 – 132, DRN90 – 132S) |
| [48] | Spacing ring | [901] | Seal (DR..90 – 225, DRN90 – 225) |
| [55] | Closing piece (from DR../ DRN112) | [1406] | Spacing ring (DR..250 – 315, DRN250 – 315) |
| [62] | Retaining ring (from DR../DRN90) | [1607] | O-ring (DR..250 – 280, DRN250 – 280) |
| [71] | Key | | |

25957074/EN – 06/2019

### 7.9.3 Changing the blocking direction

Proceed as follows to change the blocking direction:

✓ The motor and all connected options are disconnected from the power supply.

✓ The motor is protected against unintended restart.

1. Disassemble the following parts:
   - ⇨ Forced cooling fan and rotary encoder, if installed, see chapter "Motor and brake maintenance – preliminary work" (→ 🗎 127).
   - ⇨ Fan guard with encoder mount [212] or fan guard [35], retaining ring [32]/[62] and fan [36]
   - ⇨ **DR..71 – 80, DRN71 – 80, DR2..71 – 80 motors:** Sealing flange [75].
   - ⇨ **DR..90 – 315, DRN63, 90 – 315, DR2..63 motors:** Backstop housing, complete [702].
2. Remove the retaining ring [62] and, if necessary, the spacing ring [1406].
3. Dismount the backstop [74] using a puller.
4. To alter the blocking direction, turn around the backstop [74].
5. Check the old grease. If necessary, replace the grease as specified below.
   - ⇨ **DRN63 – 71, DR2..63 – 71 motors**: Glue in the backstop [74] with Loctite 648/649.
   - ⇨ **DR..71 – 315, DRN80 – 315, DR2..80 motors:** Press on the backstop [74].
6. Mount the retaining ring [62].
7. Mount the following parts:
   - ⇨ **DR..71 –80, DRN71 – 80, DR2..71 – 80 motors:** Apply SEW-L-Spezial sealant to the sealing flange [75]. Mount the sealing flange [75].
   - ⇨ **DR..90 – 315, DRN63, 90 – 315, DR2..63 motors:** Replace the gasket [901], O-ring [1607], and if necessary sealing ring [37]. Mount the complete backstop housing [702].
8. Install the disassembled parts of the motor.
9. Replace the label [78] indicating the direction of rotation.

#### Lubricating the backstop

The backstop is greased at the factory with the corrosion protection low-viscosity grease LBZ 1. If you want to use another grease, make sure it complies with NLGI class 00/000 with a base oil viscosity of 42 $mm^2/s$ at 40 °C on a lithium saponified and mineral oil base. The application temperature range is from -50 °C to +90 °C. See the following table for the amount of grease required:

| **DR.. motors** | **71** | **80** | **90/100** | **112/132** | **160** | **180** | **200/225** | **250/280** | **315** |
|---|---|---|---|---|---|---|---|---|---|
| **DRN.. motors** | **63/71** | **80** | **90/100** | **112/132S** | **132M/L** | **160/180** | **200/225** | **250/280** | **315** |
| **DR2.. motors** | **63/71** | **80** | **–** | **–** | **–** | **–** | **–** | **–** | **–** |
| Amount of grease in g | 9 | 11 | 15 | 20 | 30 | 45 | 80 | 80 | 120 |

The tolerance regarding the grease level is ± 30%.

# 8 Technical data

## 8.1 Braking torques

The following table shows the possible braking torque combinations for various sizes of the BE05 – 122 brake. For BE02 and BE03 brakes, the braking torques of each brake are preset at the factory and cannot be adjusted.

### ⚠ WARNING



Insufficient or excessive braking torque due to impermissible spring pack.

Severe or fatal injuries.

- Maintenance work may only be performed by a trained specialist.
- In case of a conversion, make sure the selected spring set generates nominal braking torques that are permitted for your drive combination and are suitable for the application.
- Observe the project planning note in the manual "Project Planning for BE.. Brakes – DR.., DRN.., DR2.., EDR.., EDRN.. AC Motors – Standard Brake/Safety Brake", or contact SEW-EURODRIVE.

| Brake | Part number Damping plate [718] Pole sheet [63] | Braking torque settings | | | | | |
|---|---|---|---|---|---|---|---|
| | | Braking torque | Type and number of brake springs | | | Purchase order numbers for brake springs | |
| | | Nm | Normal [50] | Blue [276] | White [1312] | Normal | Blue/white |
| **BE05** | 13740563 | 5.0 | 3 | – | – | 0135017X | 13741373 |
| | | 3.5 | – | 6 | – | | |
| | | 2.5 | – | 4 | – | | |
| | | 1.8 | – | 3 | – | | |
| **BE1** | 13740563<br>13749862[1)] | 10 | 6 | – | – | 0135017X | 13741373 |
| | | 7.0 | 4 | 2 | – | | |
| | | 5.0 | 3 | – | – | | |
| **BE2** | 13740199<br>13749870[1)] | 20 | 6 | – | – | 13740245 | 13740520 |
| | | 14 | 2 | 4 | – | | |
| | | 10 | 2 | 2 | – | | |
| | | 7.0 | – | 4 | – | | |
| | | 5.0 | – | 3 | – | | |
| **BE5** | 13740695<br>13749889[1)] | 55 | 6 | – | – | 13740709 | 13740717 |
| | | 40 | 2 | 4 | – | | |
| | | 28 | 2 | 2 | – | | |
| | | 20 | – | – | 6 | | 13747738 |
| | | 14 | – | – | 4 | | |
| **BE11** | 13741713<br>13749854[1)] | 110 | 6 | – | – | 13741837 | 13741845 |
| | | 80 | 2 | 4 | – | | |
| | | 55 | 2 | 2 | – | | |
| | | 40 | – | 4 | – | | |
| | 13741713 + 13746995<br>13749854[1)] + 13746995 | 28 | – | 3 | – | | |
| | 13741713 + 13746995<br>13749854[1)] + 13746995 | 20 | – | – | 4 | | 13747789 |

25957074/EN – 06/2019

| Brake | Part number Damping plate [718] Pole sheet [63] | Braking torque settings | | | | | |
|---|---|---|---|---|---|---|---|
| | | Braking torque | Type and number of brake springs | | | Purchase order numbers for brake springs | |
| | | Nm | Normal [50] | Blue [276] | White [1312] | Normal | Blue/white |
| **BE20** | – | 200 | 6 | – | – | 13743228 | 13742485 |
| | – | 150 | 4 | 2 | – | | |
| | – | 110 | 3 | 3 | – | | |
| | – | 80 | 3 | – | – | | |
| | 13749307 | 55 | – | 4 | – | | |
| | 13746758 | 40 | – | 3 | – | | |
| **BE30** | – | 300 | 8 | – | – | 01874551 | 13744356 |
| | – | 200 | 4 | 4 | – | | |
| | – | 150 | 4 | – | – | | |
| | – | 100 | – | 8 | – | | |
| | 13749455 | 75 | – | 6 | – | | |
| **BE32** | – | 600 | 8 | – | – | 01874551 | 13744356 |
| | – | 500 | 6 | 2 | – | | |
| | – | 400 | 4 | 4 | – | | |
| | – | 300 | 4 | – | – | | |
| | – | 200 | – | 8 | – | | |
| | 13749455 | 150 | – | 6 | – | | |
| | 13749455 | 100 | – | 4 | – | | |
| **BE60** | – | 600 | 8 | – | – | 01868381 | 13745204 |
| | – | 500 | 6 | 2 | – | | |
| | – | 400 | 4 | 4 | – | | |
| | – | 300 | 4 | – | – | | |
| | – | 200 | – | 8 | – | | |
| **BE62** | – | 1200 | 8 | – | – | 01868381 | 13745204 |
| | – | 1000 | 6 | 2 | – | | |
| | – | 800 | 4 | 4 | – | | |
| | – | 600 | 4 | – | – | | |
| | – | 400 | – | 8 | – | | |
| **BE120** | – | 1000 | 8 | – | – | 13608770 | 13608312 |
| | – | 800 | 6 | 2 | – | | |
| | – | 600 | 4 | 4 | – | | |
| | – | 400 | 4 | – | – | | |
| **BE122** | – | 2000 | 8 | – | – | 13608770 | 13608312 |
| | – | 1600 | 6 | 2 | – | | |
| | – | 1200 | 4 | 4 | – | | |
| | – | 800 | 4 | – | – | | |

1) For option /DUE

25957074/EN – 06/2019

### 8.1.1 Brake spring layout

The following table shows the brake spring layout:

| **BE05 – 11:** | | | | | |
|---|---|---|---|---|---|
| 6 springs | 3 + 3 springs | 4 + 2 springs | 2 + 2 springs | 4 springs | 3 springs |
| 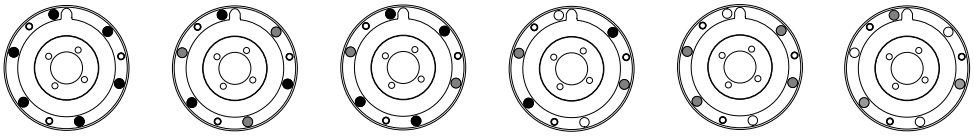 | | | | | |
| **BE20:** | | | | | |
| 6 springs | 4 + 2 springs | 3 + 3 springs | 4 springs | 3 springs | |
| 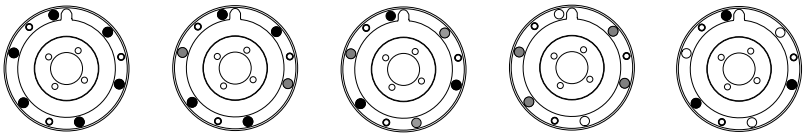 | | | | | |
| **BE30 – 122:** | | | | | |
| 8 springs | 4 + 4 springs | 6 + 2 springs | 6 springs | 4 springs | |
| 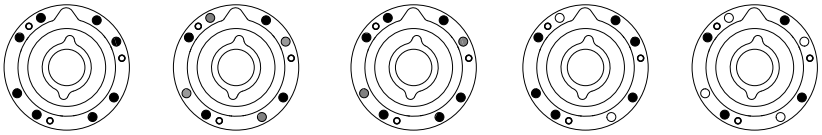 | | | | | |

25957074/EN – 06/2019

## 8.2 Braking work, working air gap, and brake lining carrier thickness

If the brake is used in combination with a safety encoder, or if the brake is designed as safety brake, the maximum values for the working air gap and for the braking work until maintenance are reduced. For the new values, refer to the addendum to the operating instructions for safety brakes and safety encoders.

| Brake | Braking work until maintenance[1] | Working air gap | | Brake lining carrier |
|---|---|---|---|---|
| | | min.[2] | maximum | minimum |
| | $10^6$ J | mm | mm | mm |
| **BE02** | 15 | –[3] | –[3] | min. 5.4 for 0.8 Nm<br>min. 5.6 for 1.2 Nm |
| **BE03** | 200 | 0.25 | 0.65 | –[3] |
| **BE05** | 120 | 0.25 | 0.6 | 11.0 |
| **BE1** | 120 | 0.25 | 0.6 | 11.0 |
| **BE2** | 180 | 0.25 | 0.6 | 11.0 |
| **BE5** | 390 | 0.25 | 0.9 | 11.0 |
| **BE11** | 640 | 0.3 | 1.2 | 12.5 |
| **BE20** | 1000 | 0.3 | 1.2 | 12.5 |
| **BE30** | 1500 | 0.3 | 1.2 | 12.5 |
| **BE32** | 1500 | 0.4 | 1.2 | 12.5 |
| **BE60** | 2500 | 0.3 | 1.2 | 14.0 |
| **BE62** | 2500 | 0.4 | 1.2 | 14.0 |
| **BE120** | 390 | 0.6 | 1.2 | 14.0 |
| **BE122** | 390 | 0.8 | 1.2 | 14.0 |

1) The specified values are nominal values that were determined during rating operation. The actual braking work that can be reached before maintenance may vary depending on the actual load during operation.
2) When checking the working air gap, note: After a test run, parallelism tolerances on the brake lining carrier may give rise to deviations of ±0.15 mm.
3) The brake lining carrier cannot be replaced. When the minimum brake lining carrier thickness/maximum working air gap is reached, the brake must be replaced.

### INFORMATION

In case of drives with BE32, BE62, or BE122 brake in pivoted mounting position, the specified value may be reduced by up to 50%, depending on the pivoting angle.

25957074/EN – 06/2019

## 8.3 Operating currents

### 8.3.1 General information on determining operating currents

The tables in this chapter list the operating currents of BE.. brakes at different voltages.

The acceleration current $I_B$ (= inrush current) flows only for a short time (approx. 160 ms for BE02 – BE62, 400 ms for BE60 – BE122 with BMP3.1 brake control) when the brake is released. No increased inrush current occurs when using BG.., BS24 or BMS.. brake control and direct DC voltage supply without control unit (only possible with brake size BE02 – BE2).

The values for the holding currents $I_H$ are rms values. Only use current measurement units that are designed to measure rms values.



## INFORMATION

The following operating currents and power consumption values are nominal values. They refer to a coil temperature of +20 °C.

Operating currents and power consumption usually decrease during normal operation due to heating of the brake coil.

Note that the actual operating currents can be higher by up to 25% depending on the ambient temperature and with coil temperatures below +20 °C.

### 8.3.2 Legend

The following tables list the operating currents of the brakes at different voltages.

The following values are specified:

| | |
|---|---|
| $P_B$ | Nominal value of the electric power consumption in the brake coil in watt. |
| $U_N$ | Nominal voltage (rated voltage range) of the brake in V (AC or DC). |
| $I_H$ | Nominal holding current in A (AC). rms value of the braking current in the supply cable to the SEW-EURODRIVE brake control. |
| $I_{DC}$ | Nominal holding current in A (DC) in the brake cable with direct DC voltage supply<br>or<br>Nominal holding current in A (DC) in the brake cable with DC 24 V supply via BS24, BSG, or BMV. |
| $I_B$ | Acceleration current in ampere (AC or DC) when operated with SEW brake control for high-speed excitation. |
| $I_B/I_H$ | Inrush current ratio ESV. |
| $I_B/I_{DC}$ | Inrush current ratio ESV for DC 24 V supply with BSG or BMV. |

25957074/EN – 06/2019

### 8.3.3 BE02, BE03, BE05, BE1, BE2 brakes

| | BE02 | BE03 | BE05, BE1 | BE2 |
|---|---|---|---|---|
| Nominal power brake coil in W | 25 | 25 | 30 | 41 |
| Inrush current ratio ESV | 4 | 4 | 4 | 4 |

| Nominal voltage (rated voltage range) $V_N$ | | BE02 | | BE03 | | BE05, BE1 | | BE2 | |
|---|---|---|---|---|---|---|---|---|---|
| | | $I_H$ | $I_{DC}$ | $I_H$ | $I_{DC}$ | $I_H$ | $I_{DC}$ | $I_H$ | $I_{DC}$ |
| AC V | DC V | AC A | DC A | AC A | DC A | AC A | DC A | AC A | DC A |
| 24 (23 – 26) | 10 | – | – | 2.18 | 2.83 | 2.25 | 2.90 | 2.95 | 3.80 |
| 60 (57 – 63) | 24 | – | 0.72 | 0.8 | 1.08 | 0.90 | 1.17 | 1.18 | 1.53 |
| 120 (111 – 123) | 48 | – | – | 0.41 | 0.54 | 0.45 | 0.59 | 0.59 | 0.77 |
| 184 (174 – 193) | 80 | – | – | 0.27 | 0.35 | 0.29 | 0.37 | 0.38 | 0.49 |
| 208 (194 – 217) | 90 | – | – | 0.24 | 0.31 | 0.26 | 0.33 | 0.34 | 0.43 |
| 230 (218 – 243) | 96 | 0.14 | 0.18 | 0.22 | 0.28 | 0.23 | 0.30 | 0.30 | 0.39 |
| 254 (244 – 273) | 110 | – | – | 0.20 | 0.26 | 0.20 | 0.27 | 0.27 | 0.35 |
| 290 (274 – 306) | 125 | – | – | 0.18 | 0.23 | 0.18 | 0.24 | 0.24 | 0.31 |
| 330 (307 – 343) | 140 | – | – | 0.16 | 0.20 | 0.16 | 0.21 | 0.21 | 0.28 |
| 360 (344 – 379) | 160 | – | – | 0.13 | 0.18 | 0.14 | 0.19 | 0.19 | 0.25 |
| 400 (380 – 431) | 180 | 0.08 | 0.10 | 0.11 | 0.15 | 0.13 | 0.17 | 0.17 | 0.22 |
| 460 (432 – 484) | 200 | 0.07 | 0.09 | 0.10 | 0.13 | 0.11 | 0.15 | 0.15 | 0.19 |
| 500 (485 – 542) | 220 | – | – | 0.09 | 0.12 | 0.10 | 0.13 | 0.14 | 0.18 |
| 575 (543 – 600) | 250 | – | – | 0.08 | 0.11 | 0.09 | 0.12 | 0.12 | 0.16 |

25957074/EN – 06/2019

### 8.3.4 Brakes BE5, BE11, BE20, BE30, BE32, BE60, BE62

| | BE5 | BE11 | BE20 | BE30, BE32 | BE60, BE62 |
|---|---|---|---|---|---|
| Nominal power brake coil in W | 50 | 70 | 95 | 120 | 195 |
| Inrush current ratio ESV | 5.9 | 6.6 | 7.5 | 8.5 | 9.2 |

| Nominal voltage (rated voltage range) $V_N$ | | BE5 | BE11 | BE20 | BE30, BE32 | BE60, BE62 |
|---|---|---|---|---|---|---|
| | | $I_H$ | $I_H$ | $I_H$ | $I_H$ | $I_H$ |
| AC V | DC V | AC A | AC A | AC A | AC A | AC A |
| 60 (57 – 63) | 24 | 1.28 | 2.05 | 2.55 | – | – |
| 120 (111 – 123) | – | 0.64 | 1.04 | 1.28 | 1.66 | – |
| 184 (174 – 193) | – | 0.41 | 0.66 | 0.81 | 1.05 | – |
| 208 (194 – 217) | – | 0.37 | 0.59 | 0.72 | 0.94 | 1.50 |
| 230 (218 – 243) | – | 0.33 | 0.52 | 0.65 | 0.84 | 1.35 |
| 254 (244 – 273) | – | 0.29 | 0.47 | 0.58 | 0.75 | 1.20 |
| 290 (274 – 306) | – | 0.26 | 0.42 | 0.51 | 0.67 | 1.12 |
| 330 (307 – 343) | – | 0.23 | 0.37 | 0.46 | 0.59 | 0.97 |
| 360 (344 – 379) | – | 0.21 | 0.33 | 0.41 | 0.53 | 0.86 |
| 400 (380 – 431) | – | 0.18 | 0.30 | 0.37 | 0.47 | 0.77 |
| 460 (432 – 484) | – | 0.16 | 0.27 | 0.33 | 0.42 | 0.68 |
| 500 (485 – 542) | – | 0.15 | 0.24 | 0.29 | 0.38 | 0.60 |
| 575 (543 – 600) | – | 0.13 | 0.22 | 0.26 | 0.34 | 0.54 |

25957074/EN – 06/2019

### 8.3.5 Brake BE120, BE122

| | BE120, BE122 |
|---|---|
| Nominal power brake coil in W | 220 |
| Inrush current ratio ESV | 6 |

| Nominal voltage (rated voltage range) $V_N$ | BE120, BE122 |
|---|---|
| | $I_H$ |
| AC V | AC A |
| 230 (218 – 243) | 1.45 |
| 254 (244 – 273) | 1.30 |
| 290 (274 – 306) | 1.16 |
| 360 (344 – 379) | 0.92 |
| 400 (380 – 431) | 0.82 |
| 460 (432 – 484) | 0.73 |
| 500 (485 – 542) | 0.65 |
| 575 (543 – 600) | 0.58 |

25957074/EN – 06/2019

## 8.4 Resistors

The depicted values apply to the standard temperature range of -20 to +40 °C. Deviating resistances may occur in other temperature ranges, especially in case of drives with permitted temperature above +60 °C, or in case of non-ventilated drives, due to modified winding configurations. The values are available from SEW-EURODRIVE on request.

### 8.4.1 Resistance measurement BE02, BE03, BE05, BE1, BE2, BE5, BE30, BE32, BE60, BE62

**Cut-off in the AC circuit**

The following illustration shows how to measure resistance with cut-off in the AC circuit.

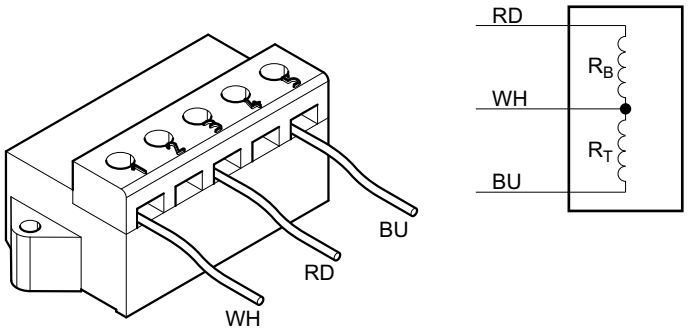


*9007199497350795*

**Cut-off in the DC and AC circuits**

The following illustration shows how to measure resistance with cut-off in the DC and AC circuits.

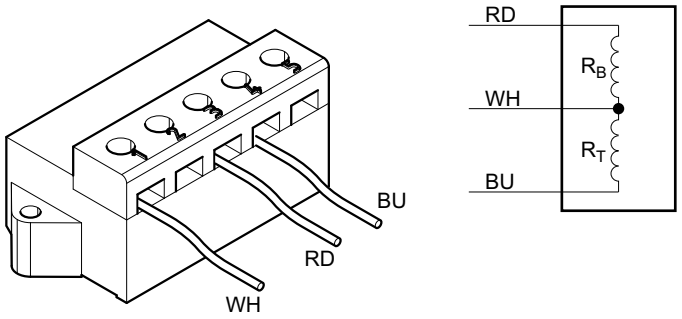


*18014398752093451*

| | | | |
|---|---|---|---|
| BS | Accelerator coil | RD | Red |
| TS | Coil section | WH | White |
| $R_B$ | Accelerator coil resistance at 20 °C in Ω | BU | Blue |
| $R_T$ | Coil section resistance at 20 °C in Ω | | |
| $U_N$ | Nominal voltage (rated voltage range) | | |

## INFORMATION

When measuring the resistance of the coil section ($R_{Sec}$) or the acceleration coil ($R_{Acc}$), remove the white conductor from the brake rectifier; if it remains connected, the internal resistance of the brake rectifier will cause erroneous results.

25957074/EN – 06/2019

### 8.4.2 Brakes BE02, BE03, BE05, BE1, BE2

| | BE02 | BE03 | BE05, BE1 | BE2 |
|---|---|---|---|---|
| Nominal power brake coil in W | 25 | 25 | 32 | 43 |
| Inrush current ratio ESV | 4 | 4 | 4 | 4 |

| Nominal voltage (rated voltage range) $V_N$ | | BE02 | | BE03 | | BE05, BE1 | | BE2 | |
|---|---|---|---|---|---|---|---|---|---|
| AC V | DC V | $R_B$ | $R_T$ | $R_B$ | $R_T$ | $R_B$ | $R_T$ | $R_B$ | $R_T$ |
| 60 (57 – 63) | 24 | 8.5 | 24 | 6 | 20 | 4.85 | 14.8 | 3.60 | 11.0 |
| 120 (111 – 123) | 48 | – | – | 25 | 78 | 19.4 | 59.0 | 14.4 | 44.0 |
| 184 (174 – 193) | 80 | – | – | 62 | 191 | 48.5 | 148 | 36.0 | 110 |
| 208 (194 – 217) | 90 | – | – | 78 | 241 | 61.0 | 187 | 45.5 | 139 |
| 230 (218 – 243) | 96 | 121 | 345 | 96 | 296 | 77.0 | 235 | 58.0 | 174 |
| 254 (244 – 273) | 110 | – | – | 119 | 367 | 97.0 | 296 | 72.0 | 220 |
| 290 (274 – 306) | 125 | – | – | 150 | 462 | 122 | 372 | 91 | 275 |
| 330 (307 – 343) | 140 | – | – | 191 | 589 | 154 | 469 | 115 | 350 |
| 360 (344 – 379) | 160 | – | – | 247 | 762 | 194 | 590 | 144 | 440 |
| 400 (380 – 431) | 180 | 375 | 1070 | 326 | 1004 | 244 | 743 | 182 | 550 |
| 460 (432 – 484) | 200 | 580 | 1650 | 412 | 1270 | 308 | 935 | 230 | 690 |
| 500 (485 – 542) | 220 | – | – | 512 | 1580 | 387 | 1178 | 290 | 870 |
| 575 (543 – 600) | 250 | – | – | 645 | 1989 | 488 | 1483 | 365 | 1100 |

25957074/EN – 06/2019

### 8.4.3 Brakes BE5, BE11, BE20, BE30, BE32, BE60, BE62

| | BE5 | BE11 | BE20 | BE30, BE32 | BE60, BE62 |
|---|---|---|---|---|---|
| Nominal power brake coil in W | 49 | 77 | 95 | 120 | 195 |
| Inrush current ratio ESV | 5.9 | 6.6 | 7.5 | 8.5 | 9.2 |

| **Nominal voltage (rated voltage range) $V_N$** | **BE5** | | **BE11** | | **BE20** | | **BE30, BE32** | | **BE60, BE62** | |
|---|---|---|---|---|---|---|---|---|---|---|
| **AC V** | **$R_B$** | **$R_T$** | **$R_B$** | **$R_T$** | **$R_B$** | **$R_T$** | **$R_B$** | **$R_T$** | **$R_B$** | **$R_T$** |
| 60 (57 – 63) | 2.20 | 10.5 | 1.22 | 7.0 | 0.9 | 5.7 | – | – | – | – |
| 120 (111 – 123) | 8.70 | 42.0 | 4.90 | 28.0 | 3.4 | 22.8 | 2.3 | 17.2 | – | – |
| 184 (174 – 193) | 22.0 | 105 | 12.3 | 70 | 8.5 | 57.2 | 5.8 | 43.2 | – | – |
| 208 (194 – 217) | 27.5 | 132 | 15.5 | 88 | 10.7 | 72.0 | 7.3 | 54.4 | 4.0 | 32.6 |
| 230 (218 – 243) | 34.5 | 166 | 19.5 | 111 | 13.5 | 90.6 | 9.2 | 68.5 | 5.0 | 41.0 |
| 254 (244 – 273) | 43.5 | 210 | 24.5 | 139 | 17.0 | 114.1 | 11.6 | 86.2 | 6.3 | 51.6 |
| 290 (274 – 306) | 55.0 | 265 | 31.0 | 175 | 21.4 | 143.6 | 14.6 | 108.6 | 7.9 | 65.0 |
| 330 (307 – 343) | 69.0 | 330 | 39.0 | 220 | 26.9 | 180.8 | 18.4 | 136.7 | 10.0 | 81.8 |
| 360 (344 – 379) | 87.0 | 420 | 49 | 280 | 33.2 | 223 | 23.1 | 172.1 | 12.6 | 103 |
| 400 (380 – 431) | 110 | 530 | 62 | 350 | 42.7 | 287 | 29.1 | 216.6 | 15.8 | 130 |
| 460 (432 – 484) | 138 | 660 | 78 | 440 | 53.2 | 357 | 35.1 | 261.8 | 19.9 | 163 |
| 500 (485 – 542) | 174 | 830 | 98 | 550 | 67.7 | 454 | 45.2 | 336.4 | 25.1 | 205 |
| 575 (543 – 600) | 220 | 1050 | 123 | 700 | 83.5 | 559 | 56.3 | 419.2 | 31.6 | 259 |

25957074/EN – 06/2019

### 8.4.4 Resistance measurement BE120, BE122

The following illustration shows how to measure resistance with BMP 3.1.

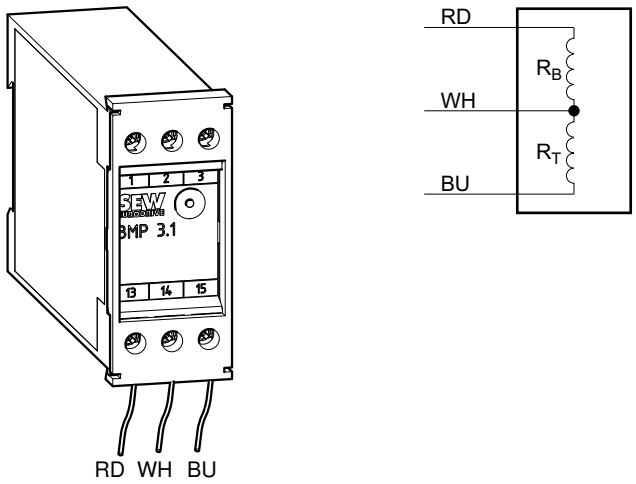


| | | | |
|---|---|---|---|
| BS | Accelerator coil | RD | Red |
| TS | Coil section | WH | White |
| $R_B$ | Accelerator coil resistance at 20 °C in Ω | BU | Blue |
| $R_T$ | Coil section resistance at 20 °C in Ω | | |
| $V_N$ | Nominal voltage (rated voltage range) | | |

## INFORMATION

When measuring the resistance of the coil section ($R_{Sec}$) or the acceleration coil ($R_{Acc}$), remove the white conductor from the brake rectifier; if it remains connected, the internal resistance of the brake rectifier will cause erroneous results.

### 8.4.5 Brake BE120, BE122

| | BE120, BE122 |
|---|---|
| Nominal power brake coil in W | 220 |
| Inrush current ratio ESV | 6 |

| Nominal voltage (rated voltage range) $V_N$ | BE120, BE122 | |
|---|---|---|
| **AC V** | **$R_B$** | **$R_T$** |
| 230 (218 – 243) | 7.6 | 37.9 |
| 254 (244 – 273) | 9.6 | 47.7 |
| 290 (274 – 306) | 12.1 | 60.1 |
| 360 (344 – 379) | 19.2 | 95.2 |
| 400 (380 – 431) | 24.2 | 119.9 |
| 460 (432 – 484) | 30.4 | 150.9 |
| 500 (485 – 542) | 38.3 | 189.9 |
| 575 (543 – 600) | 48.2 | 239.1 |

25957074/EN – 06/2019

## 8.5 Brake control

The depicted combinations apply to drives in insulation class B or F, and to the standard temperature range of -20 °C to +40 °C.

For the brake control assigned to your drive, refer to the specifications on the motor nameplate.

### INFORMATION

The depicted combinations may be limited depending in the present drive configuration (e.g. insulation class H, deviating temperature ranges, etc.). In case of a conversion, check if brake control is permitted for your drive combination. Contact SEW-EURODRIVE if necessary.

### 8.5.1 Permitted combinations

The table below shows the standard and optional combinations of brakes and brake rectifiers.

| | | BE02 | BE03 with DRN63 | BE03 | BE05 | BE1 | BE2 |
|---|---|---|---|---|---|---|---|
| BG.. | BG 1.2 | X | X | – | – | – | – |
| | BG 1.4 | – | – | X[3] | X[3] | X[3] | X[3] |
| | Size 1.5 | – | – | X[1] | X[1] | X[1] | X[1] |
| | BG 2.4 | X | X | – | – | – | – |
| | BG 3 | – | – | X[2] | X[2] | X[2] | X[2] |
| BGE.. | BGE 1.4 | – | – | o | o | o | o |
| | BGE 1.5 | – | – | • | • | • | • |
| | BGE 3 | – | – | • | • | • | • |
| BS.. | BS 24 | – | – | X | X | X | X |
| BMS.. | BMS 1.4 | o | o | o | o | o | o |
| | BMS 1.5 | • | • | • | • | • | • |
| | BMS 3 | • | • | • | • | • | • |
| BME.. | BME 1.4 | o | o | o | o | o | o |
| | BME 1.5 | • | • | • | • | • | • |
| | BME 3 | • | • | • | • | • | • |
| BMH.. | BMH 1.4 | o | o | o | o | o | o |
| | BMH 1.5 | • | • | • | • | • | • |
| | BMH 3 | • | • | • | • | • | • |
| BMK.. | BMK 1.4 | o | o | o | o | o | o |
| | BMK 1.5 | • | • | • | • | • | • |
| | BMK 3 | • | • | • | • | • | • |
| BMKB.. | BMKB 1.5 | • | • | • | • | • | • |
| BMP.. | BMP 1.4 | o | o | o | o | o | o |
| | BMP 1.5 | • | • | • | • | • | • |
| | BMP 3 | • | • | • | • | • | • |
| | BMP 3.1 | – | – | – | – | – | – |
| BMV.. | BMV 5 | • | • | • | • | • | • |
| BSG.. | BSG | – | – | • | • | • | • |

25957074/EN – 06/2019

| | | BE02 | BE03 with DRN63 | BE03 | BE05 | BE1 | BE2 |
|---|---|---|---|---|---|---|---|
| BSR.. | BG 1.2 + SR10 | • | • | – | – | – | – |
| | BG 2.4 + SR10 | • | • | – | – | – | – |
| | BGE1.5 + SR10 | – | – | • | • | • | – |
| | BGE 1.4 + SR 15 | – | – | o | o | o | o |
| | BGE 3 + SR 11 | – | – | • | • | • | • |
| | BGE 3 + SR 15 | – | – | • | • | • | • |
| | BGE3 + SR10 | – | – | • | • | • | – |
| | BGE 1.5 + SR 11 | – | – | • | • | • | • |
| | BGE 1.5 + SR 15 | – | – | • | • | • | • |
| BUR.. | BG 1.2 + UR10 | • | • | – | – | – | – |
| | BG 2.4 + UR10 | • | • | – | – | – | – |
| | BGE 3 + UR 11 | – | – | • | • | • | • |
| | BGE 1.5 + UR 15 | – | – | • | • | • | • |
| BST.. | BST 0.6S | • | • | • | • | • | • |
| | BST 0.7S | • | • | • | • | • | • |
| | BST 1.2S | • | • | • | • | • | • |
| | | **BE5** | **BE11** | **BE20** | **BE30, BE32** | **BE60, BE62** | **BE120, BE122** |
| BG.. | BG 1.2 | – | – | – | – | – | – |
| | BG 1.4 | – | – | – | – | – | – |
| | Size 1.5 | – | – | – | – | – | – |
| | BG 2.4 | – | – | – | – | – | – |
| | BG 3 | – | – | – | – | – | – |
| BGE.. | BGE 1.4 | X[3] | X[3] | X[3] | X[3] | X[3] | – |
| | BGE 1.5 | X[1] | X[1] | X[1] | X[1] | X | – |
| | BGE 3 | X[2] | X[2] | X[2] | X[2] | X | – |
| BS.. | BS 24 | – | – | – | – | – | – |
| BMS.. | BMS 1.4 | – | – | – | – | – | – |
| | BMS 1.5 | – | – | – | – | – | – |
| | BMS 3 | – | – | – | – | – | – |
| BME.. | BME 1.4 | o | o | o | o | o | – |
| | BME 1.5 | • | • | • | • | X | – |
| | BME 3 | • | • | • | • | X | – |
| BMH.. | BMH 1.4 | o | o | o | o | – | – |
| | BMH 1.5 | • | • | • | • | – | – |
| | BMH 3 | • | • | • | • | – | – |
| BMK.. | BMK 1.4 | o | o | o | o | – | – |
| | BMK 1.5 | • | • | • | • | – | – |
| | BMK 3 | • | • | • | • | – | – |
| BMKB.. | BMKB 1.5 | • | • | • | • | – | – |
| BMP.. | BMP 1.4 | o | o | o | o | – | – |
| | BMP 1.5 | • | • | • | • | – | – |
| | BMP 3 | • | • | • | • | – | – |
| | BMP 3.1 | – | – | – | – | • | X |
| BMV.. | BMV 5 | • | • | • | – | – | – |
| BSG.. | BSG | X | X | X | – | – | – |

| | | BE5 | BE11 | BE20 | BE30, BE32 | BE60, BE62 | BE120, BE122 |
|---|---|---|---|---|---|---|---|
| BSR.. | BG 1.2 + SR10 | – | – | – | – | – | – |
| | BG 2.4 + SR10 | – | – | – | – | – | – |
| | BGE1.5 + SR10 | – | – | – | – | – | – |
| | BGE 1.4 + SR 15 | o | o | o | o | – | – |
| | BGE 3 + SR 11 | • | • | – | – | – | – |
| | BGE 3 + SR 15 | • | • | • | • | – | – |
| | BGE3 + SR10 | – | – | – | – | – | – |
| | BGE 1.5 + SR 11 | • | • | – | – | – | – |
| | BGE 1.5 + SR 15 | • | • | • | • | – | – |
| BUR.. | BG 1.2 + UR10 | – | – | – | – | – | – |
| | BG 2.4 + UR10 | – | – | – | – | – | – |
| | BGE 3 + UR 11 | • | – | – | – | – | – |
| | BGE 1.5 + UR 15 | • | • | • | • | – | – |
| BST.. | BST 0.6S | • | • | • | • | – | – |
| | BST 0.7S | • | • | • | • | – | – |
| | BST 1.2S | • | • | • | • | – | – |

X Standard version

$X^1$ Standard design with nominal brake voltage of 150 – 500 $V_{AC}$

$X^2$ Standard design with nominal brake voltage of 24/42 – 150 $V_{AC}$

$X^3$ Standard design with nominal brake voltage of 575 $V_{AC}$

• Can be selected

o Optional with AC 575 V nominal brake voltage

– Not permitted

25957074/EN – 06/2019

### 8.5.2 Motor terminal box

The following table shows the technical data of the brake controls for installation in the terminal box. The different housings have different colors (= color code) to make them easier to distinguish.

**BG..**

Half-wave rectifier without electronic switching.

| Type | Nominal voltage | Nominal output current $I_L$ | Part number | Color code |
|---|---|---|---|---|
| BG1.4 | AC 230 – 575 V | DC 1.0 A | 08278814 | Jet black |
| BG1.2 | AC 90 – 500 V | DC 1.2 A | 08269920 | Jet black |
| BG1.5 | AC 150 – 500 V | DC 1.5 A | 08253846 | Jet black |
| BG2.4 | AC 24 – 90 V | DC 2.4 A | 08270198 | Mahogany brown |
| BG3 | AC 24 – 500 V | DC 2.8 A | 08253862 | Mahogany brown |

**BGE..**

Half-wave rectifier with electronic switching.

| Type | Nominal voltage | Nominal output current $I_L$ | Part number | Color code |
|---|---|---|---|---|
| BGE1.4 | AC 230 – 575 V | DC 1.0 A | 08278822 | Vermilion |
| BGE1.5 | AC 150 – 500 V | DC 1.5 A | 08253854 | Vermilion |
| BGE3 | AC 42 – 150 V | DC 2.8 A | 08253870 | Light blue |

**BSR..**

Half-wave rectifier + current relay for switch-off in the DC circuit.

| Type | Nominal voltage | Nominal output current $I_L$ | Part number | Color code |
|---|---|---|---|---|
| BGE1.5 + SR10 | AC 150 – 500 V | DC 1.0 A | 08253854<br>0826760X | Jet black<br>Gray |
| BGE1.5 + SR11 | AC 150 – 500 V | DC 1.0 A | 08253854<br>08267618 | Jet black<br>Gray |
| BGE1.5 + SR15 | AC 150 – 500 V | DC 1.0 A | 08253854<br>08267626 | Jet black<br>Gray |
| BG1.2 + SR10 | AC 90 – 500 V | DC 1.0 A | 08269920<br>0826760X | Jet black<br>Gray |
| BG1.2 + SR11 | AC 90 – 500 V | DC 1.0 A | 08269920<br>08267618 | Jet black<br>Gray |

25957074/EN – 06/2019

| Type | Nominal voltage | Nominal output current $I_L$ | Part number | Color code |
|---|---|---|---|---|
| BG2.4 + SR10 | AC 42 – 90 V | DC 1.0 A | 08270198<br>0826760X | Mahogany brown<br>Gray |
| BGE3 + SR11 | AC 42 – 150 V | DC 1.0 A | 20253870<br>08267618 | Mahogany brown<br>Gray |
| BGE3 + SR15 | AC 42 – 150 V | DC 1.0 A | 08253870<br>08267626 | Mahogany brown<br>Gray |

**BUR..**

Half-wave rectifier with voltage relay for switch-off in the DC circuit.

| Type | Nominal voltage | Nominal output current $I_L$ | Part number | Color code |
|---|---|---|---|---|
| BG1.2 + UR15 | AC 150 – 500 V | DC 1.0 A | 08269920<br>0826760X | Jet black<br>Gray |
| BGE1.5 + UR15 | AC 150 – 500 V | DC 1.0 A | 08253854<br>08267596 | Vermilion<br>Gray |
| BG2.4 + UR11 | AC 42 – 150 V | DC 1.0 A | 08270198<br>08267588 | Mahogany brown<br>Gray |
| BGE3 + UR11 | AC 42 – 150 V | DC 1.0 A | 08253870<br>08267588 | Light blue<br>Gray |

**BS24**

Varistor overvoltage protection.

| Type | Nominal voltage | Nominal output current $I_L$ | Part number | Color code |
|---|---|---|---|---|
| BS24 | DC 24 V | DC 5.0 A | 08267634 | Water blue |

**BSG..**

Electronic switching.

| Type | Nominal voltage | Nominal output current $I_L$ | Part number | Color code |
|---|---|---|---|---|
| BSG | DC 24 V | DC 5.0 A | 08254591 | Pure white |

25957074/EN – 06/2019

**BMP..**

Half-wave rectifier with electronic switching and integrated voltage relay for cut-off in the DC circuit.

| Type | Nominal voltage | Nominal output current $I_L$ | Part number | Color code |
|---|---|---|---|---|
| BMP3.1[1)] | AC 230 – 575 V | DC 2.8 A | 08295077 | – |

1) Only sizes 250 – 315

25957074/EN – 06/2019

### 8.5.3 Control cabinet

The following tables list the technical data of brake control systems for installation in the control cabinet. The different housings have different colors (= color code) to make them easier to distinguish.

**BMS..**

Half-wave rectifier without electronic switching.

| Type | Nominal voltage | Nominal output current $I_L$ | Part number | Color code |
|---|---|---|---|---|
| BMS1.4 | AC 230 – 575 V | DC 1.0 A | 08298300 | Tar black |
| BMS1.5 | AC 150 – 500 V | DC 1.5 A | 08258023 | Tar black |
| BMS3 | AC 42 – 150 V | DC 3.0 A | 08258031 | Mahogany brown |

**BME..**

Half-wave rectifier with electronic switching.

| Type | Nominal voltage | Nominal output current $I_L$ | Part number | Color code |
|---|---|---|---|---|
| BME1.4 | AC 230 – 575 V | DC 1.0 A | 08298319 | Vermilion |
| BME1.5 | AC 150 – 500 V | DC 1.5 A | 08257221 | Vermilion |
| BME3 | AC 42 – 150 V | DC 3.0 A | 0825723X | Light blue |

**BMH..**

Half-wave rectifier with electronic switching and heating function

| Type | Nominal voltage | Nominal output current $I_L$ | Part number | Color code |
|---|---|---|---|---|
| BMH1.4 | AC 230 – 575 V | DC 1.0 A | 08298343 | Signal green |
| BMH1.5 | AC 150 – 500 V | DC 1.5 A | 0825818X | Signal green |
| BMH3 | AC 42 – 150 V | DC 3.0 A | 08258198 | Zinc yellow |

**BMP..**

Half-wave rectifier with electronic switching and integrated voltage relay for cut-off in the DC circuit.

| Type | Nominal voltage | Nominal output current $I_L$ | Part number | Color code |
|---|---|---|---|---|
| BMP1.4 | AC 230 – 575 V | DC 1.0 A | 08298327 | Light gray |
| BMP1.5 | AC 150 – 500 V | DC 1.5 A | 08256853 | Light gray |
| BMP3 | AC 42 – 150 V | DC 3.0 A | 08265666 | Light green |

25957074/EN – 06/2019

| Type | Nominal voltage | Nominal output current $I_L$ | Part number | Color code |
|---|---|---|---|---|
| BMP3.1 | AC 230 – 575 V | DC 2.8 A | 08295077 | – |

**BMK..**

Half-wave rectifier with electronic switching, DC 24 V control input, and cut-off in the DC circuit.

| Type | Nominal voltage | Nominal output current $I_L$ | Part number | Color code |
|---|---|---|---|---|
| BMK1.4 | AC 230 – 575 V | DC 1.0 A | 08298335 | Water blue |
| BMK1.5 | AC 150 – 500 V | DC 1.5 A | 08264635 | Water blue |
| BMK3 | AC 42 – 150 V | DC 3.0 A | 08265674 | Light pink |

**BMKB..**

Half-wave rectifier with electronic switching, DC 24 V control input, rapid cut-off and LED status display.

| Type | Nominal voltage | Nominal output current $I_L$ | Part number | Color code |
|---|---|---|---|---|
| BMKB1.5 | AC 150 – 500 V | DC 1.5 A | 08281602 | Water blue |

**BMV..**

Brake control unit with electronic switching, DC 24 V control input and fast cut-off.

| Type | Nominal voltage | Nominal output current $I_L$ | Part number | Color code |
|---|---|---|---|---|
| BMV5 | DC 24 V | DC 5.0 A | 13000063 | Pure white |

**BST..**

Safe brake control with electronic switching, DC 24 V control input and safe DC 24 V control input. Supply via the DC link of the inverter.

| Type | Nominal voltage | Nominal output current $I_L$ | Part number | Color code |
|---|---|---|---|---|
| BST0.6S | AC 460 V | DC 0.6 A | 08299714 | – |
| BST0.7S | AC 400 V | DC 0.7 A | 13000772 | – |
| BST1.2S | AC 230 V | DC 1.2 A | 13001337 | – |

25957074/EN – 06/2019

## 8.6 Permitted rolling bearings

### 8.6.1 Rolling bearing for DR..71 – 280 motors

| Motors | A-side bearing | | B-side bearing | |
|---|---|---|---|---|
| | AC motor | Gearmotor | AC motor | Brakemotor |
| **DR..71** | 6204-2Z-C3 | 6303-2Z-C3 | 6203-2Z-C3 | 6203-2RS-C3 |
| **DR..80** | 6205-2Z-C3 | 6304-2Z-C3 | 6304-2Z-C3 | 6304-2RS-C3 |
| **DR..90 – 100** | 6306-2Z-C3 | | 6205-2Z-C3 | 6205-2RS-C3 |
| **DR..112 – 132** | 6308-2Z-C3 | | 6207-2Z-C3 | 6207-2RS-C3 |
| **DR..160** | 6309-2Z-C3 | | 6209-2Z-C3 | 6209-2RS-C3 |
| **DR..180** | 6312-2Z-C3 | | 6213-2Z-C3 | 6213-2RS-C3 |
| **DR..200 – 225** | 6314-2Z-C3 | | 6314-2Z-C3 | 6314-2RS-C3 |
| **DR..250 – 280** | 6317-2Z-C4 | | 6315-2Z-C3 | 6315-2RS-C3 |

### 8.6.2 Rolling bearings for DRN63 – 280, DR2..56 – 80 motors

| Motors | A-side bearing | | B-side bearing | |
|---|---|---|---|---|
| | AC motor | Gearmotor | AC motor | Brakemotor |
| **DR2..56** | – | 6302-2Z-C3 | 6002-2Z-C3 | 6002-2RS-C3 |
| **DRN63**<br>**DR2..63** | 6202-2Z-C3 | 6303-2Z-C3 | 6203-2Z-C3 | 6203-2Z-C3 |
| **DRN71**<br>**DR2..71** | 6204-2Z-C3 | | 6203-2Z-C3 | |
| **DRN80**<br>**DR2..80** | 6205-2Z-C3 | 6304-2Z-C3 | 6304-2Z-C3 | 6304-2RS-C3 |
| **DRN90** | 6305-2Z-C3 | | 6205-2Z-C3 | 6205-2RS-C3 |
| **DRN100** | 6306-2Z-C3 | | 6205-2Z-C3 | 6205-2RS-C3 |
| **DRN112** | 6308-2Z-C3 | | 6207-2Z-C3 | 6207-2RS-C3 |
| **DRN132S** | 6308-2Z-C3 | 6308-2Z-C3 | 6207-2Z-C3 | 6207-2RS-C3 |
| **DRN132M/L** | 6308-2Z-C3 | 6309-2Z-C3 | 6209-2Z-C3 | 6209-2RS-C3 |
| **DRN160** | 6310-2Z-C3 | 6312-2Z-C3 | 6212-2Z-C3 | 6212-2RS-C3 |
| **DRN180** | 6311-2Z-C3 | 6312-2Z-C3 | 6212-2Z-C3 | 6212-2RS-C3 |
| **DRN200** | 6312-2Z-C3 | 6314-2Z-C3 | 6314-2Z-C3 | 6314-2RS-C3 |
| **DRN225** | 6314-2Z-C3 | | 6314-2Z-C3 | 6314-2RS-C3 |
| **DRN250 – 280** | 6317-2Z-C4 | | 6315-2Z-C3 | |

25957074/EN – 06/2019

### 8.6.3 Rolling bearing for DR..315, DRN315 motors

| Motors | A-side bearing | | B-side bearing | |
|---|---|---|---|---|
| | AC motor | Gearmotor | AC motor | Gearmotor |
| **DR..315K, DRN315S** | 6319-C3 | 6319-C3 | 6319-C3 | 6319-C3 |
| **DR..315S, DRN315M** | | | | |
| **DR..315M, DRN315L** | 6319-C3 | 6322-C3 | 6319-C3 | 6322-C3 |
| **DR..315L, DRN315H** | | | | |

### 8.6.4 Rolling bearing for DR..250 – 315, DRN250 – 315 motors, with reinforced bearings /ERF

| Motors | A-side bearing | B-side bearing | |
|---|---|---|---|
| | | AC motor | Gearmotor |
| **DR..250 – 280, DRN250 – 280** | NU317E-C3 | 6315-C3 | |
| **DR..315K, DRN315S** | NU319E | 6319-C3 | 6319-C3 |
| **DR..315S, DRN315M** | | | |
| **DR..315M, DRN315L** | | | 6322-C3 |
| **DR..315L, DRN315H** | | | |

### 8.6.5 Rolling bearing for DR..200 – 315, DRN200 – 315 motors, with current-insulated rolling bearings /NIB

| Motors | B-side bearing | |
|---|---|---|
| | AC motor | Gearmotor |
| **DR..200 – 225, DRN200 – 225** | 6314-C3-EI | 6314-C3-EI |
| **DR..250 – 280, DRN250 – 280** | 6315-Z-C3-EI | 6315-Z-C3-EI |
| **DR..315K, DRN315S** | 6319-C3-EI | 6319-C3-EI |
| **DR..315S, DRN315M** | | |
| **DR..315M, DRN315L** | | 6322-C3-EI |
| **DR..315L, DRN315H** | | |

25957074/EN – 06/2019

## 8.7 Lubricant tables

### 8.7.1 Lubricant table for rolling bearings

**INFORMATION**

Use of wrong bearing grease can damage the bearings.

**Motors with sealed bearings**

The bearings are 2Z or 2RS closed bearings and cannot be relubricated. They are used for DR..71 – 280, DRN63 – 280, DR256 – 80 motors.

| | Ambient temperature | Manufacturer | Type | DIN designation |
|---|---|---|---|---|
| Motor rolling bearings | -20 °C to +80 °C | Mobil | Polyrex EM[1)] | K2P-20 |
| | +20 °C to +100 °C | Klüber | Barrierta L55/2[2)] | KX2U |
| | -40 °C to +60 °C | Kyodo Yushi | Multemp SRL[2)] | KE2N-40 |
| | -20 °C to +60 °C | SKF | LHT23[2)] | KE2N-40 |

1) Mineral lubricant (= mineral-based bearing grease)

2) Synthetic lubricant (= synthetic-based bearing grease)

**Motors with open bearings**

Motors in the sizes DR..315 and DRN315 always have open bearings. If DR..250 – 280 and DRN225 – 280 motors have the relubrication option /NS, these sizes also have open bearings.

| | Ambient temperature | Manufacturer | Type | DIN designation |
|---|---|---|---|---|
| Rolling bearing | -20 °C to +80 °C | Mobil | Polyrex EM[1)] | K2P-20 |
| | -40 °C to +60 °C | SKF | LGHP 2[1)] | K2N-40 |

1) Mineral lubricant (= mineral-based bearing grease)

25957074/EN – 06/2019

### 8.7.2 Order information for lubricants, anti-corrosion agents and sealants

Lubricants, anti-corrosion agents, and sealants may be obtained directly from SEW-EURODRIVE using the following order numbers.

| Usage | Manufacturer | Type | Quantity | Order number |
|---|---|---|---|---|
| **Lubricant for rolling bearings** | Mobil | Polyrex EM | 400 g | 09101470 |
| | SKF | LGHP2 | 400 g | 09101276 |
| **Lubricant for sealing rings** | | | | |
| Material: NBR/FKM | Klüber | Petamo GHY 133N | 10 g | 04963458 |
| | FUCHS LUBRITECH | Gleitmo 100 S | 1 kg | 03258092 |
| Material: EPDM/EPP | Klüber | Klübersynth BLR 46-122 | 10 g | 03252663 |
| **Corrosion protection and lubricant** | SEW-EURODRIVE | NOCO® fluid | 5.5 g | 09107819 |
| **Sealant** | Marston Domsel | SEW-L-Spezial | 80 g | 09112286 |

25957074/EN – 06/2019

## 8.8 Encoders

### 8.8.1 Incremental encoder E.7S – sin/cos

| Encoder | | ES7S | EV7S | EG7S | EH7S |
|---|---|---|---|---|---|
| Supply voltage | $U_B$ | DC 7 V – 30 V | | | |
| Max. current consumption | $I_{in}$ | 140 $mA_{RMS}$ | | | |
| Max. pulse frequency | $f_{max}$ | 150 kHz | | | 180 kHz |
| Incremental tracks, periods per revolution | A, B | 1024 (10 bits) | | | |
| | C | 1 | | | |
| Position resolution, increments per revolution | A, B | | | | |
| Output amplitude per track | $U_{high}$ | 1 $V_{PP}$ | | | |
| | $U_{low}$ | | | | |
| Signal output | | sin/cos | | | |
| Output current per track | $I_{out}$ | 10 $mA_{RMS}$ | | | |
| Pulse duty factor according to IEC 60469-1, n = constant | | – | | | |
| Phase offset A: B n = constant | | 90° ± 3° | | | 90° ± 10° |
| Accuracy[1)] | | 0.0194° | – | 0.0194° | – |
| Vibration resistance according to EN 60088-2-6 | | ≤ 100 $m/s^2$ | | | |
| Shock resistance according to EN 60088-2-27 | | ≤ 1000 $m/s^2$ | | ≤ 2000 $m/s^2$ | |
| Maximum speed | $n_{max}$ | 6000 $min^{-1}$ | | | |
| Duration until fault message (disabled outputs)[2)] | | 25 ms | – | 25 ms | – |
| Activation time of rotary encoder internal diagnostics after switching on | | – | | | |
| Degree of protection in accordance with EN 60529 | | IP66 | | | IP65 |
| Connection | | Terminal box on incremental encoder | | | 12-pin plug connector |
| Ambient temperature | °C | -30 to +60 | -30 to +80 | -30 to +60 | -40 to +60 |

1) Due to the stiffness of the torque arm, you have to take into account an automatically resetting ±0.6° twist (depending of the direction of rotation) of the encoder housing compared to the encoder shaft.

2) Sin/cos encoders have a self-diagnostics function. If an error is detected, the sensor reports it by deactivating the output signals to the encoder evaluation unit.

25957074/EN – 06/2019

### 8.8.2 Incremental encoder E.7R – TTL (RS422), 9 V ≤ $U_B$ ≤ 30 V

| Encoder | | ES7R | EV7R | EG7R | EH7R |
|---|---|---|---|---|---|
| Supply voltage | $U_B$ | DC 7 V – 30 V | | | DC 10 V – 30 V |
| Max. current consumption | $I_{in}$ | 160 $mA_{RMS}$ | | | 140 $mA_{RMS}$ |
| Max. pulse frequency | $f_{max}$ | 120 kHz | | | 300 kHz |
| Incremental tracks, periods per revolution | A, B | 1024 (10 bits) | | | |
| | C | 1 | | | |
| Position resolution, increments per revolution | A, B | 4096 (12 bits) | | | |
| Output amplitude per track | $U_{high}$ | ≥ DC 2.5 V | | | |
| | $U_{low}$ | ≤ DC 0.5 V | | | |
| Signal output | | TTL (RS422) | | | |
| Output current per track | $I_{out}$ | 25 $mA_{RMS}$ | | | 20 $mA_{RMS}$ |
| Pulse duty factor according to IEC 60469-1, n = constant | | 50% ± 10% | | | |
| Phase offset A: B n = constant | | 90° ± 20° | | | |
| Vibration resistance according to EN 60088-2-6 | | ≤ 100 $m/s^2$ | | | |
| Shock resistance according to EN 60088-2-27 | | ≤ 1000 $m/s^2$ | | ≤ 2000 $m/s^2$ | |
| Maximum speed | $n_{max}$ | 6000 $min^{-1}$ | | | 6000 $min^{-1}$<br>2500 $min^{-1}$ at 60 °C |
| Degree of protection in accordance with EN 60529 | | IP66 | | | IP65 |
| Connection | | Terminal box on incremental encoder | | | 12-pin plug connector |
| Ambient temperature | °C | -30 to +60 | -30 to +60 | | -40 to +60 |

### 8.8.3 Incremental encoder E.7C – HTL

| Encoder | | ES7C | EV7C | EG7C | EH7C |
|---|---|---|---|---|---|
| Supply voltage | $U_B$ | DC 4.75 V – 30 V | | | DC 10 V – 30 V |
| Max. current consumption | $I_{in}$ | 240 $mA_{RMS}$ | | | 225 $mA_{RMS}$ |
| Max. pulse frequency | $f_{max}$ | 120 kHz | | | 300 kHz |
| Incremental tracks, periods per revolution | A, B | 1024 (10 bits) | | | |
| | C | 1 | | | |
| Position resolution, increments per revolution | A, B | 4096 (12 bits) | | | |
| Output amplitude per track | $U_{high}$ | $V_B$ -2.5 V | | $V_B$ -2.5 V | $V_B$ -2 V |
| | $U_{low}$ | ≤ DC 1.1 V | | | ≤ DC 2.5 V |
| Signal output | | HTL/TTL (RS422) | | HTL/TTL (RS422) | HTL |
| Output current per track | $I_{out}$ | 60 $mA_{RMS}$ | | | 30 $mA_{RMS}$ |
| Pulse duty factor according to IEC 60469-1, n = constant | | 50% ± 10% | | | 50% ± 20% |
| Phase offset A: B n = constant | | 90° ± 20° | | | |
| Vibration resistance according to EN 60088-2-6 | | ≤ 100 $m/s^2$ | | | |
| Shock resistance according to EN 60088-2-27 | | ≤ 1000 $m/s^2$ | | ≤ 2000 $m/s^2$ | |
| Maximum speed | $n_{max}$ | 6000 $min^{-1}$ | | | 6000 $min^{-1}$<br>2500 $min^{-1}$ at 60 °C |
| Degree of protection in accordance with EN 60529 | | IP66 | | | IP65 |
| Connection | | Terminal box on incremental encoder | | | 12-pin plug connector |
| Ambient temperature | °C | -30 to +60 | | -30 to +60 | -40 to +60 |

25957074/EN – 06/2019

### 8.8.4 Incremental encoder E.7T – TTL (RS422) at $U_B$ = 5 V

| Encoder | | EH7T |
|---|---|---|
| Supply voltage | $U_B$ | DC 5 V |
| Max. current consumption | $I_{in}$ | 140 mA |
| Max. pulse frequency $f_{max}$ | kHz | 300 |
| Incremental tracks, periods per revolution | A, B | 1024 (10 bits) |
| | C | 1 |
| Position resolution, increments per revolution | A, B | 4096 (12 bits) |
| Output amplitude | $U_{high}$ | ≥ DC 2.5 V |
| | $U_{low}$ | ≤ DC 0.5 V |
| Signal output | | TTL (RS422) |
| Output current per track | $I_{out}$ | 20 mA |
| Pulse duty factor according to IEC 60469-1, n = constant | | 50% ± 20% |
| Phase offset A: B<br>n = constant | | 90° ± 20° |
| Vibration resistance according to EN 60088-2-6 at 10 Hz – 2 kHz | | ≤ 100 $m/s^2$ |
| Shock resistance according to EN 60088-2-27 | | ≤ 2000 $m/s^2$ |
| Maximum speed | $n_{max}$ | 6000 $min^{-1}$<br>2500 $min^{-1}$ at 60 °C |
| Degree of protection according to EN 60529 | | IP65 |
| Connection | | 12-pin plug connector |
| Ambient temperature | °C | -40 to +60 |

25957074/EN – 06/2019

### 8.8.5 Incremental encoder E.8.

| Encoder | | EK8S<br>EV8S<br>1) | EK8R<br>EV8R<br>2) | EK8C<br>EV8C |
|---|---|---|---|---|
| Supply voltage | $U_B$ | DC 7 V – 30 V | | DC 4.75 V – 30 V |
| Supply voltage for functional safety applications | $U_{B\_FS}$ | DC 7 V – 30 V | – | |
| Maximum current consumption, free of load | $I_{in}$ | 100 mA (at $U_B$ = 7 V) | | |
| Max. pulse frequency | $f_{pulse\_max}$ | 150 kHz | 120 kHz | |
| Direction of rotation | | A before B when looking at the motor output shaft in clockwise rotation | | |
| Incremental tracks, periods per revolution | A, B | 1024 (10 bits) | | |
| | C | 1 | | |
| Position resolution, increments per revolution | A, B | 4096 (12 bits) | | |
| Voltage output signal differential (peak-to-peak) (A' = A - $\overline{A}$; B' = B - $\overline{B}$) | $U_{t\_diff}$ | 1 V ± 10% | – | |
| Voltage output signal non-differential (peak-to-peak) | $U_t$ | 0.5 V ± 10% | $U_{Low}$ ≤ 0.5 V<br>$U_{High}$ ≥ 2.5 V | $U_B$ ≤ 6 V:<br>$U_{Low}$ ≤ 0.5 V<br>$U_{High}$ ≥ 2.5 V<br>$U_B$ > 6 V:<br>$U_{Low}$ ≤ 3 V<br>$U_{High}$ ≥ $U_B$ - 2.5 V |
| Signal level output, offset nominal against 0 V (A, B, C, $\overline{A}$, $\overline{B}$, $\overline{C}$)V | $U_{t\_o}$ | 2.5 V ± 0.3 V | – | |
| Signal output | | sin/cos | TTL (RS422) | HTL |
| Load resistance/load current differential | $R_L/I_L$ | 120 Ω ± 10% | | $U_B$ 6 V:<br>120 Ω ± 10%<br>UB > 6 V:<br>1 – 3 kΩ |
| Resistance between tracks and reference ground | $R_{gnd}$ | ≥ 1 kΩ | – | |
| Load capacitance, output | $C_o$ | ≤ 20 nF | – | – |
| Voltage output signal, differential (C' = C - $\overline{C}$) (peak-to-peak) | $U_{t\_diff}$<br>e | 0.3 – 1.4 V | – | – |
| C track offset | g | 192 mV ± 5 mV | – | – |
| Voltage output signal, non-differential (C,$\overline{C}$) (peak-to-peak) | $U_{t\_C}$ | – | $U_{Low}$ ≤ 0.5 V<br>$U_{High}$ ≥ 2.5 V | $U_B$ ≤ 6 V:<br>$U_{Low}$ ≤ 0.5 V<br>$U_{High}$ ≥ 2.5 V<br>$U_B$ > 6 V:<br>$U_{Low}$ ≤ 3 V<br>$U_{High}$ ≥ $U_B$ - 2.5 V |
| Phase angle track C', n = constant | k, l | k = 180° ± 90°<br>l = 180° ± 90° | – | – |
| Signal width track C | $W_C$ | see figure | 90° electrical | |
| Signal logic track C | | see figure | C = log 1, when A = B = log 1 | |
| Pulse duty factor according to IEC 60469-1, n = constant | | – | 50 % ± 10% | |
| Phase offset A: B; $\overline{A}$ : $\overline{B}$ n = constant | d | 90° ± 2° | 90° ± 20° | |
| Accuracy of the incremental section[3)] | | 0.0194° (70 ") | 0.033° (120 ") | |
| Vibration resistance according to EN 60068-2-6 | | ≤ 10 g (f > 18.5 Hz) | | |
| Shock resistance according to EN 60068-2-27 | | ≤ 100 g (t = 6 ms, 18 pulses) | | |
| Maximum speed | $n_{max}$ | 6000 $min^{-1}$ | | |
| Maximum line length | | 100 m | 300 m | 100 m |

25957074/EN – 06/2019

| Encoder | | EK8S<br>EV8S<br>1) | EK8R<br>EV8R<br>2) | EK8C<br>EV8C |
|---|---|---|---|---|
| Duration until fault message (disabled outputs)[4] | | ≤ 25 ms | – | |
| Activation time of rotary encoder internal diagnostics after switching on | | ≤ 200 ms | – | |
| Degree of protection in accordance with EN 60529 | | IP66 | | |
| Installation altitude | h | ≤ 4000 m above sea level | | |
| Corrosion protection, surface protection | | KS, OS1 – OS4, OSG | | |
| Connection | | Integrated encoder plug connector on the fan guard (can be pre-assembled and plugged in the field) | | |
| Ambient temperature of motor | $T_{amb}$ | -30 to +60 °C | | |
| Electronic nameplate | | RS485 (serial, asynchronous); 1920 bytes | – | – |

1) see figure "Sin/cos signals and phase relationship"
2) see figure "HTL/TTL signals and phase relationship"
3) Due to the stiffness of the torque arm, you have to take into account an automatically resetting ±0.6° twist (depending of the direction of rotation) of the encoder housing compared to the encoder shaft.
4) Sin/cos encoders have a self-diagnostics function. If an error is detected, the sensor reports it by deactivating the output signals to the encoder evaluation unit.

### Sin/cos signals and phase relationship

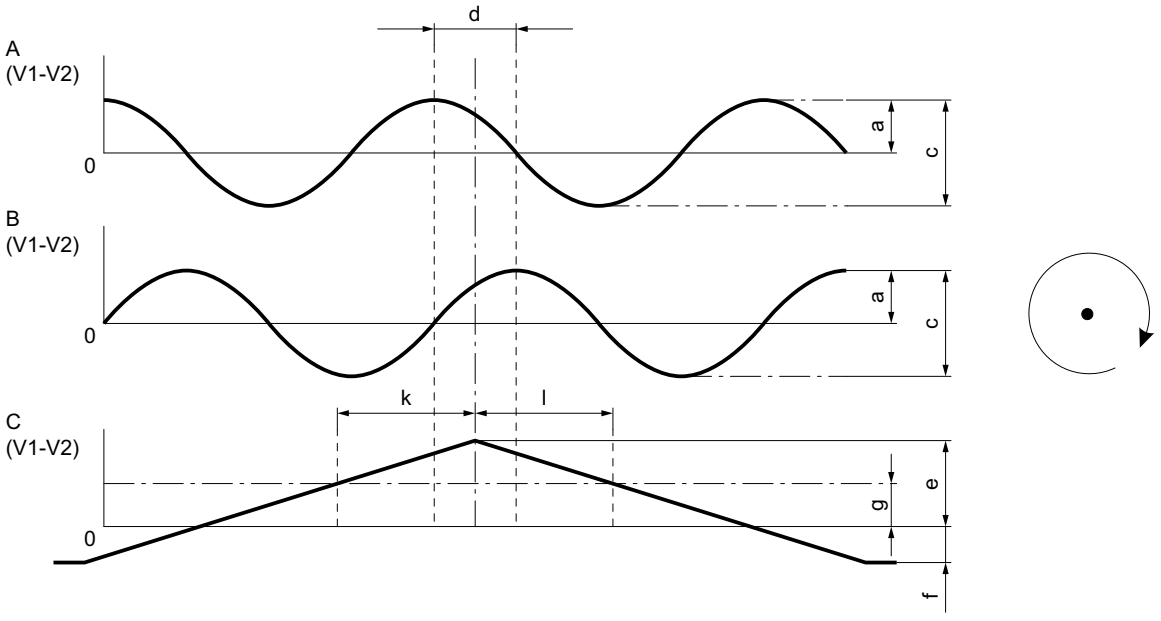


*28352869387*

**HTL/TTL signals and phase relationship**

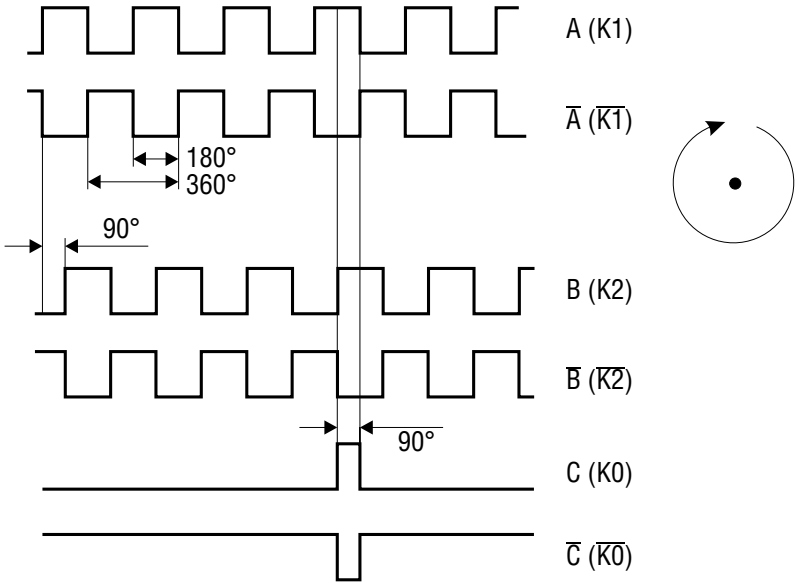


*1369276939*

25957074/EN – 06/2019

### 8.8.6 Incremental encoder EI.7

| Encoder | | EI71<br>EI72<br>EI76<br>EI7C | EI8R | EI8C |
|---|---|---|---|---|
| Supply voltage | $U_B$ | DC 9 V – 30 V | DC 7 V – 30 V | |
| Supply voltage for FS applications | $U_{B\_FS}$ | DC 19.2 V – 30 V | – | |
| Max. current consumption, free of load | $I_{in}$ | 120 mA | 100 mA | |
| Max. pulse frequency | $f_{pulse\_max}$ | 1.44 kHz | 102.4 kHz | |
| Direction of rotation | | A before B when looking at the motor output shaft in clockwise rotation | | |
| Incremental tracks, periods per revolution | A, B | 1, 2, 6, 24<br>(size 63: 24 only)<br>(EI7C FS: 24 only) | 1024 (10 bits) | |
| | C | – | 1 | |
| Position resolution, increments per revolution | A, B | 4, 8, 24, 96<br>(size 63: 96 only)<br>(EI7C FS: 96 only) | 4096 (12 bits) | |
| Voltage output signal differential (peak-to-peak)<br>(A' = A - $\overline{A}$; B' = B - $\overline{B}$) | $U_{t\_diff}$ | – | – | |
| Voltage output signal non-differential (peak-to-peak) | $U_t$ | $U_{Low} \le 3$ V<br>$U_{High} \ge U_B - 3.5$ V | $U_{Low} \le 0.5$ V<br>$U_{High} \ge 2.5$ V | $U_{Low} \le 3$ V<br>$U_{High} \ge U_B - 3.5$ V |
| Signal level output, offset nominal against 0 V (A, B, C, $\overline{A}$, $\overline{B}$, $\overline{C}$)V | $U_{t\_o}$ | – | – | |
| Signal output | | HTL | TTL (RS422) | HTL |
| Load resistance/load current differential | $R_L/I_L$ | 60 mA | 25 mA | 60 mA |
| Resistance between tracks and reference ground | $R_{gnd}$ | – | – | – |
| Load capacitance, output | $C_o$ | – | – | – |
| Voltage output signal, differential (C' = C - $\overline{C}$) (peak-to-peak) | $U_{t\_diff}$ e[1)] | – | – | – |
| C track offset | g[1)] | – | – | – |
| Voltage output signal, non-differential (C,$\overline{C}$) (peak-to-peak) | $U_{t\_C}$ | – | $U_{Low} \le 0.5$ V<br>$U_{High} \ge 2.5$ V | $U_{Low} \le 3$ V<br>$U_{High} \ge U_B - 2.5$ V |
| Phase angle track C', n = constant | k, l[1)] | – | – | – |
| Signal width track C | $W_C$[1)] | – | 90° electrical | |
| Signal logic track C | | – | C = log 1 when A = B = log 1 | |
| Pulse duty factor according to IEC 60469-1, n = constant | | 50 % ± 20% | 50 % ± 10% | |
| Phase offset A: B; $\overline{A}$ : $\overline{B}$ n = constant | d[1)] | 90° ± 20° | 90° ± 20° | |
| Accuracy of the incremental section | | 3.75° (225 ") | 0.2° (720 ") | |
| Vibration resistance according to EN 60068-2-6 | | ≤ 10 g (f > 18.5 Hz) | | |
| Shock resistance according to EN 60068-2-27 | | ≤ 100 g (t = 6 ms, 18 pulses) | | |
| Maximum permissible external magnetic field (outer contour of motor) | | 25 mT/20 kA/m | | |
| Maximum speed | $n_{max}$ | 3600 $min^{-1}$ | 6000 $min^{-1}$ | |
| Maximum line length | | 100 m | | |
| Duration until error message (disabled outputs) | | – | – | |

| Encoder | | EI71<br>EI72<br>EI76<br>EI7C | EI8R | EI8C |
|---|---|---|---|---|
| Activation time of rotary encoder internal diagnostics after switching on | | – | – | |
| Degree of protection in accordance with EN 60529 | | IP66 | | |
| Installation altitude | h | ≤ 4000 m above sea level | | |
| Corrosion protection, surface protection | | KS, OS1 – OS4, OSG | | |
| Connection | | Size 63:<br>M12 (8-pin)<br>Size 71 – 132S:<br>M12 (8- or 4-pin)<br>or<br>connection unit (can be pre-assembled in the field) in a terminal box | M23 or connection unit (can be pre-assembled in the field) in a terminal box | |
| Ambient temperature of motor | $T_{amb}$ | -30 to +60 °C | | |
| Electronic nameplate | | – | – | – |
| Other technical data | | On request | | |

1) relating to measurements in figure "Sin/cos signals and phase relationship"

25957074/EN – 06/2019

### 8.8.7 Multi-turn absolute encoder A.7Y – SSI (multi-turn) + sin/cos or TTL (RS422)

| Encoder | | AS7Y | AV7Y | AG7Y | AH7Y |
|---|---|---|---|---|---|
| Supply voltage | $U_B$ | DC 7 V – 30 V | | | DC 9 V – 30 V |
| Max. current consumption | $I_{in}$ | 140 mA | | | 150 mA |
| Max. pulse frequency | $f_{limit}$ | 200 kHz | | | 120 kHz |
| Incremental tracks, periods per revolution | A, B | 2048 (11 bits) | | | |
| | C | – | | | – |
| Output amplitude per track | $U_{high}$ | 1 $V_{PP}$ | | | ≥ DC 2.5 $V_{PP}$ |
| | $U_{low}$ | | | | ≤ DC 0.5 $V_{PP}$ |
| Signal output | | sin/cos | | | TTL (RS422) |
| Output current per track | $I_{out}$ | 10 mA | | | 20 mA |
| Pulse duty factor according to IEC 60469-1, n = constant | | – | | | 50 ± 20% |
| Phase offset A: B n = constant | | 90° ± 3° | | | 90° ± 20° |
| Accuracy of the incremental section[1)] | | 0.0194° | | | – |
| Accuracy of the absolute section | | ±1 LSB (Least Significant Bit) | | | – |
| Scanning code | | Gray code | | | |
| Position resolution, increments per revolution | A, B | 8192 (13 bits) | | | |
| Position resolution of the absolute section, increments per revolution | | 4096 (12 bits) | | | |
| Multi-turn resolution | | 4096 revolutions (12 bits) | | | |
| Data transmission | | Synchronous, serial (SSI) | | | |
| Serial data output | | Driver to EIA RS422 | | | Driver to EIA RS485 |
| Serial pulse input | | Recommended receiver to EIA RS422 | | | Optocoupler, recommended driver to EIA RS485 |
| Clock frequency | | Permitted range: 100 – 2000 kHz (max. 100 m cable length with 300 kHz) | | | |
| Clock-pulse space period | | 12 – 30 µs | | | |
| Vibration resistance according to EN 60088-2-6 | | ≤ 100 $m/s^2$ | | | |
| Shock resistance according to EN 60088-2-27 | | ≤ 1000 $m/s^2$ | | | ≤ 2000 $m/s^2$ |
| Maximum speed | $n_{max}$ | 6000 $min^{-1}$ | | 6000 $min^{-1}$ at $T_U$ to 40 °C<br>4500 $min^{-1}$ at $T_U$ > 40 °C | 3500 $min^{-1}$ |
| Duration until fault message (disabled outputs)[2)] | | 25 ms + 3/4 revolution | | | – |
| Activation time of rotary encoder internal diagnostics after switching on | | – | | | |
| Degree of protection in accordance with EN 60529 | | IP66 | | | IP56 |
| Connection | | Terminal strip in pluggable connection cover | | | Terminal strip on encoder |
| Ambient temperature | °C | -30 to +60 | | | -20 to +40 |

1) Due to the stiffness of the torque arm, you have to take into account an automatically resetting ±0.6° twist (depending of the direction of rotation) of the encoder housing compared to the encoder shaft.

2) Absolute encoders AS7Y, AV7Y, and AG7Y have a self-diagnostics function. If an error is detected, the sensor reports it by deactivating the output signals to the encoder evaluation unit.

### 8.8.8 Multi-turn absolute encoder A.7W – RS485 (multi-turn) + sin/cos

| Encoder | | AS7W | AV7W | AG7W |
|---|---|---|---|---|
| Supply voltage | $U_B$ | DC 7 V – 30 V | | |
| Max. current consumption | $I_{in}$ | 150 mA | | |
| Max. pulse frequency | $f_{max}$ | 200 kHz | | |
| Incremental tracks, periods per revolution | A, B | 2048 (11 bits) | | |
| | C | – | | |
| Output amplitude per track | $U_{high}$ / $U_{low}$ | 1 $V_{PP}$ | | |
| Signal output | | sin/cos | | |
| Output current per track | $I_{out}$ | 10 mA | | |
| Pulse duty factor according to IEC 60469-1, n = constant | | – | | |
| Phase offset A: B<br>n = constant | | 90° ± 3° | | |
| Accuracy of the incremental section[1)] | | 0.0194° | | |
| Accuracy of the absolute section | | ±1 LSB (Least Significant Bit) | | |
| Scanning code | | Binary code | | |
| Position resolution, increments per revolution | A, B | 8192 (13 bits) | | |
| Multi-turn resolution | | 65536 revolutions (16 bits) | | |
| Data transmission | | RS485 | | |
| Serial data output | | Driver to EIA RS485 | | |
| Serial pulse input | | Recommended driver to EIA RS485 | | |
| Clock frequency | | 9600 baud | | |
| Clock-pulse space period | | – | | |
| Vibration resistance according to EN 60088-2-6 | | ≤ 100 m/s² | | |
| Shock resistance according to EN 60088-2-27 | | ≤ 1000 m/s² | | ≤ 2000 m/s² |
| Maximum speed | $n_{max}$ | 6000 min$^{-1}$ | 6000 min$^{-1}$ at $T_U$ to 40 °C<br>4500 min$^{-1}$ at $T_U$ > 40 °C | 6000 min$^{-1}$ |
| Duration until fault message (disabled outputs)[2)] | | 25 ms + 3/4 revolution | | |
| Activation time of rotary encoder internal diagnostics after switching on | | – | | |
| Degree of protection in accordance with EN 60529 | | IP66 | | |
| Connection | | Terminal strip in pluggable connection cover | | |
| Ambient temperature | °C | -30 to +60 | | |

1) Due to the stiffness of the torque arm, you have to take into account an automatically resetting ±0.6° twist (depending of the direction of rotation) of the encoder housing compared to the encoder shaft.

2) Absolute encoders AS7W, AV7W, and AG7W have a self-diagnostics function. If an error is detected, the sensor reports it by deactivating the output signals to the encoder evaluation unit.

25957074/EN – 06/2019

### 8.8.9 Multi-turn absolute encoder A.8.

| Encoder | | AK8Y<br>AV8Y<br>1) | AK8W<br>AV8W<br>1) | AK8H<br>AV8H<br>1)2) |
|---|---|---|---|---|
| Supply voltage | $U_B$ | DC 7 V – 30 V | | DC 7 V – 12 V |
| Supply voltage for FS applications | $U_{B\_FS}$ | DC 7 V – 30 V | | – |
| Max. current consumption, free of load | $I_{in}$ | 100 mA (at $U_B$ = 7 V) | | 80 mA |
| Max. pulse frequency | $f_{pulse\_max}$ | 200 kHz | | |
| Direction of rotation | | A before B when looking at the motor output shaft in clockwise rotation | | |
| Incremental tracks, periods per revolution | A, B | 2048 (11 bits) | | 1024 (10 bits) |
| | C | – | | |
| Position resolution, increments per revolution | A, B | 4096 (12 bits)<br>(SSI, RS422) | 65536 (16 bits)<br>(RS485) | 32768 (15 bits)<br>HIPERFACE® |
| Voltage output signal differential (peak-to-peak)<br>(A' = A - $\overline{A}$; B' = B - $\overline{B}$ | $U_{t\_diff}$ | 1 V ± 10% | | HIPERFACE® |
| Voltage output signal non-differential (peak-to-peak) | $U_t$ | 0.5 V ± 10% | | |
| Signal level output, offset nominal against 0 V<br>(A, B, C, $\overline{A}$, $\overline{B}$, $\overline{C}$)V | $U_{t\_o}$ | 2.5 V ± 0.3 V | | |
| Signal output | | sin/cos + SSI, RS422 | sin/cos + RS485 | |
| Load resistance/load current differential | $R_L/I_L$ | 120 Ω ± 10% | | |
| Resistance between track and reference ground | $R_{gnd}$ | ≥ 1 kΩ | | |
| Load capacitance, output | | ≤ 20 nF | | |
| Voltage output signal, differential (C' = C - $\overline{C}$) (peak-to-peak)<br>e | $U_{t\_diff}$ | – | – | |
| C track offset | g | – | – | |
| Voltage output signal, non-differential (C,$\overline{C}$) (peak-to-peak) | $U_{t\_C}$ | – | – | |
| Phase angle track C',<br>n = constant | k, l | – | – | |
| Signal width track C | $W_C$ | – | – | – |
| Signal logic track C | | – | – | – |
| Pulse duty factor according to IEC 60469-1, n = constant | | – | | – |
| Phase offset A: B; $\overline{A}$ : $\overline{B}$<br>n = constant | | 90° ± 2° | | HIPERFACE® |
| Accuracy of the incremental section[3)] | | 0.0194° (70 ") | | ± 0.0144° (± 52 ") |
| Accuracy of the absolute section | | ±1 LSB (Least Significant Bit) | | |
| Scanning code/counting direction | | Gray code, ascending with the direction of rotation specified above | Binary code, ascending with the direction of rotation specified above | – |
| Multi-turn resolution | | 4096 revolutions (12 bits) | 65536 revolutions (16 bits) | 4096 revolutions (12 bits) |
| Communication, interface | | SSI (synchronous, serial) | RS485 (asynchronous, serial) | HIPERFACE® |
| Communication, modules | | Driver to EIA RS422 | Driver to EIA RS485 | |
| Clock frequency/bandwidth | | 100 – 800 kHz (100 m cable length with maximum 300 kHz) | 9600 baud | HIPERFACE® |
| Clock-pulse space period | | 12 – 30 µs | – | |
| Vibration resistance according to EN 60068-2-6 | | ≤ 10 g (f > 18.5 Hz) | | |

| Encoder | | AK8Y<br>AV8Y<br>1) | AK8W<br>AV8W<br>1) | AK8H<br>AV8H<br>1)2) |
|---|---|---|---|---|
| Shock resistance according to EN 60068-2-27 | | ≤ 100 g (t = 6 ms, 18 pulses) | | |
| Maximum speed | $n_{max}$ | 6000 $min^{-1}$ | | |
| Maximum line length | | 100 m | | |
| Duration until fault message (disabled outputs)[4] | | ≤ 25 ms + 3/4 revolution | | HIPERFACE® |
| Activation time of rotary encoder internal diagnostics after switching on | | 200 ms | | HIPERFACE® |
| Degree of protection in accordance with EN 60529 | | IP66 | | |
| Installation altitude | h | ≤ 4000 m above sea level | | ≤ 2000 m above sea level |
| Corrosion protection, surface protection | | KS, OS1 – OS4, OSG | | |
| Connection | | Integrated encoder plug connector on the fan guard (can be pre-assembled and plugged in the field) | | |
| Ambient temperature of motor | $T_{amb}$ | -30 to +60 °C | | |
| Electronic nameplate | | – | RS485 (serial, asynchronous); 1920 bytes | HIPERFACE®; 1792 bytes |
| Other technical data | | On request | | |

1) see figure "Sin/cos signals and phase relationship"
2) Please observe the specification for the HIPERFACE® interface, Sick AG
3) Due to the stiffness of the torque arm, you have to take into account an automatically resetting ±0.6° twist (depending of the direction of rotation) of the encoder housing compared to the encoder shaft.
4) Absolute encoders A.8. and AG7Y have a self-diagnostics function. If an error is detected, the sensor reports it by deactivating the output signals to the encoder evaluation unit.

### Sin/cos signals and phase relationship

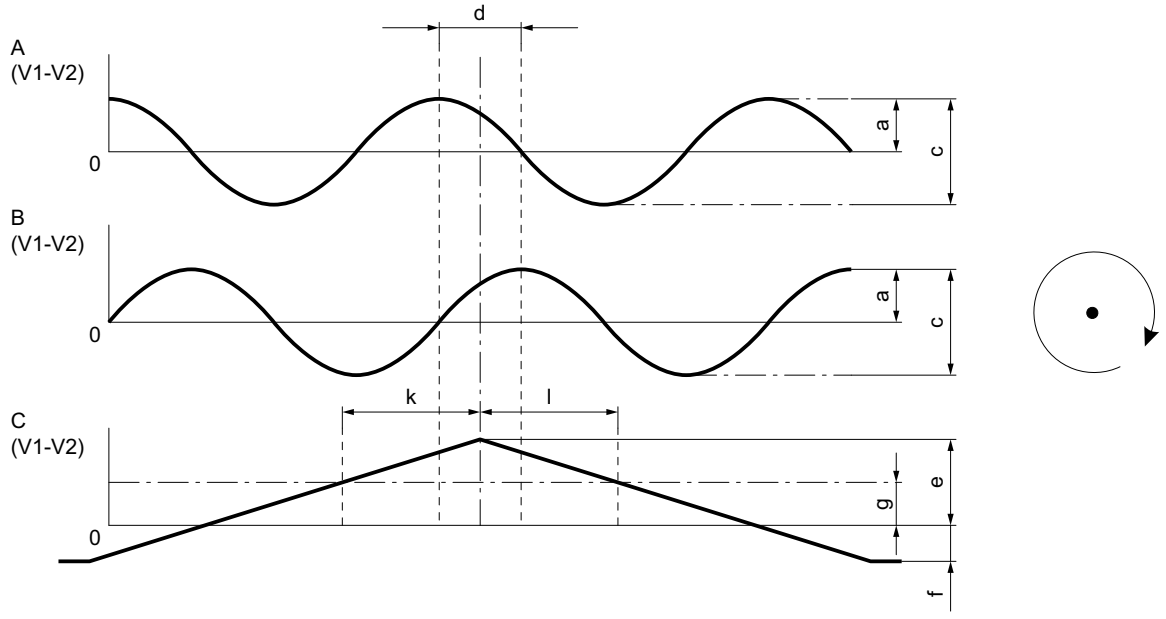


*28352869387*

### HTL/TTL signals and phase relationship

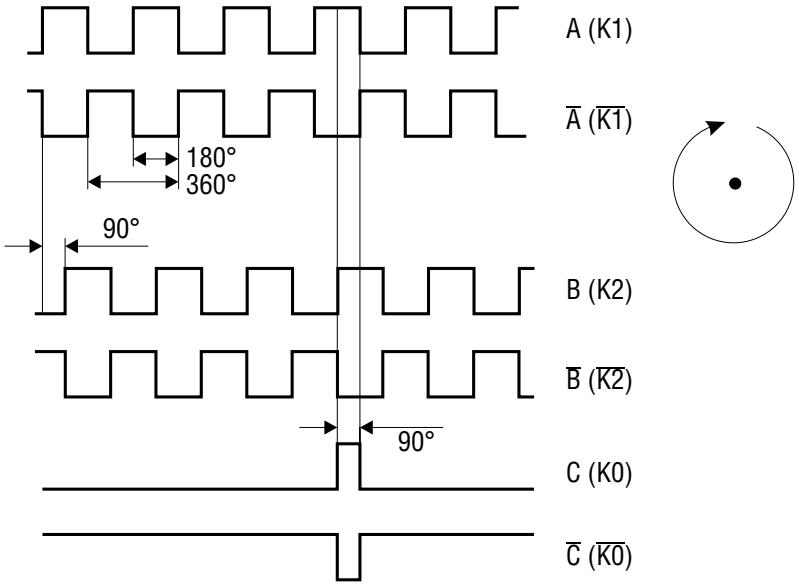


*1369276939*

## 8.9 Diagnostic unit /DUE

| Sensors | | Ø 6 mm | Ø 8 mm |
|---|---|---|---|
| | | DUE-d6-00 | DUE-d8-00 |
| Measuring range (MB) | mm | 1.5 | 2.0 |
| Protection class | | IP66 | IP66 |
| Operating temperature (sensor and cable) | | -50 to +150 °C | -50 to +150 °C |

| Evaluation unit | | | DUE-1K-00 |
|---|---|---|---|
| Part number | | | 21195609 |
| Signal outputs (1 channel) | | | OUT1: 4 – 20 mA<br>FCT1: DC 24 V (150 mA)<br>WEAR1: DC 24 V (150 mA) |
| Current consumption | Max. | mA | 320 |
| | Min. | mA | 40 |
| Supply voltage | | | DC 24 V (±15%) |
| Electromagnetic compatibility | | | DIN EN 61800-3 |
| Operating temperature (evaluation unit) | | | -40 to +105 °C |
| Humidity | | | ≤ 90% rF |
| Protection class | | | IP20 (in the closed terminal box up to IP66) |

25957074/EN – 06/2019

## 8.10 Characteristic safety values

### 8.10.1 Characteristic safety values for BE.. brakes

The values specified in the following table apply to BE.. brakes in standard applications.

| | Characteristic safety values according to EN ISO 13849-1 | |
|---|---|---|
| **Classification** | Category B | |
| **System structure** | 1-channel (Cat. B) | |
| **$MTTF_D$ value** | Calculation via $B_{10D}$ value | |
| **$B_{10D}$ value** | BE02 | $1.5 \times 10^6$ |
| | BE03 | $20 \times 10^6$ |
| | BE05 | $16 \times 10^6$ |
| | BE1 | $12 \times 10^6$ |
| | BE2 | $8 \times 10^6$ |
| | BE5 | $6 \times 10^6$ |
| | BE11 | $3 \times 10^6$ |
| | BE20 | $2 \times 10^6$ |
| | BE30 | $1.5 \times 10^6$ |
| | BE32 | $1.5 \times 10^6$ |
| | BE60 | $1 \times 10^6$ |
| | BE62 | $1 \times 10^6$ |
| | BE120 | $0.25 \times 10^6$ |
| | BE122 | $0.25 \times 10^6$ |

SEW-EURODRIVE offers BE.. brakes also as safety brakes up to size BE32. For more information, consult the addendum to the operating instructions "Safety Encoders and Safety Brakes – AC Motors DR.., DRN.., DR2.., EDR.., EDRN.. – Functional Safety".

25957074/EN – 06/2019

## 8.11 S1 duty cycle DRK.. single-phase motor

The following section describes the data for DRK.. single-phase motor in S1 continuous duty.

The specified starting torques result from the connection of a running capacitor or a running capacitor with start-up capacitor connected in parallel, respectively.

| S1 operation at 1500/1800 $min^{-1}$ 230 V) | | | | | | | | | |
|---|---|---|---|---|---|---|---|---|---|
| | | | | | | | $M_A/M_N$ with $C_B$ | $C_A$ for $M_A/M_N$ | |
| Motors | | $P_N$ | $n_N$ | $I_N$ | cos φ | $C_B$ | | 100% | 150% |
| | Hz | kW | $min^{-1}$ | A | | µF | % | µF | µF |
| DRK71S4 | 50 | 0.18 | 1450 | 1.53 | 0.81 | 20 | 50 | 14 | 25 |
| | 60 | | 1755 | 1.38 | 0.87 | 18 | 45 | 14 | 25 |
| DRK71M4 | 50 | 0.25 | 1455 | 2.05 | 0.80 | 25 | 45 | 16 | 35 |
| | 60 | | 1760 | 1.80 | 0.89 | 25 | 50 | 14 | 30 |
| DRK80S4 | 50 | 0.37 | 1420 | 2.40 | 0.98 | 18 | 50 | 12 | 25 |
| | 60 | | 1730 | 2.45 | 0.94 | 15 | 45 | 12 | 20 |
| DRK80M4 | 50 | 0.55 | 1430 | 3.45 | 0.97 | 25 | 50 | 12 | 30 |
| | 60 | | 1740 | 3.45 | 0.94 | 20 | 50 | 12 | 25 |
| DRK90M4 | 50 | 0.75 | 1430 | 4.75 | 0.93 | 15+15 | 50 | 20 | 40 |
| | 60 | | 1740 | 4.80 | 0.90 | 25 | 50 | 18 | 35 |
| DRK90L4 | 50 | 1.1 | 1415 | 6.6 | 0.97 | 20+25 | 50 | 30 | 70 |
| | 60 | | 1725 | 6.8 | 0.93 | 15+20 | 55 | 30 | 50 |

$C_B$ Running capacitor

$C_A$ Start-up capacitor

25957074/EN – 06/2019

# 9 Malfunctions

## 9.1 General information



**⚠ WARNING**

Risk of injury if the drive starts up unintentionally.

Severe or fatal injuries.

- Before you start working on the unit, disconnect the motor and all connected options from the power supply.
- Secure the motor against unintended power-up.



**⚠ CAUTION**

The surfaces on the drive can be very hot during operation.

Risk of burns.

- Let the motor cool down sufficiently before you start working on it.

**NOTICE**

Improper troubleshooting measures may damage the drive.

The drive system might be damaged.

- Use only genuine spare parts in accordance with the valid parts list.

25957074/EN – 06/2019

## 9.2 Motor malfunctions

| Fault | Possible cause | Measure |
|---|---|---|
| Motor does not start up | Supply cable interrupted | Check the connections and (intermediate) terminal points, correct if necessary |
| | Brake does not release | See chapter "Brake malfunctions" |
| | Supply cable fuse has blown | Replace fuse |
| | Motor protection (switch) has triggered | Check that the motor protection (switch) is set correctly; current specification is on the nameplate |
| | Motor protection does not trip | Check motor protection control |
| | Error in control or in the control process | Observe the switching sequence; correct if necessary |
| Motor only starts with difficulty or does not start at all | Motor power designed for delta connection but connected in star | Correct the connection from star to delta;<br>Observe wiring diagram |
| | Motor power designed for star-star connection but only connected in star | Correct the connection from star to star-star;<br>Observe wiring diagram |
| | Voltage or frequency differs considerably from the setpoint, at least when switching on the motor | Provide better power supply system; reduce the power supply load;<br>Check cross section of supply cable, replace with cable of larger cross section if necessary |
| Motor does not start in star connection, only in delta connection | Star connection does not provide sufficient torque | If the delta inrush current is not too high (observe the regulations of the power supplier), start up directly in delta;<br>Check the project planning and use a larger motor or special design if necessary. Contact SEW-EURODRIVE. |
| | Contact fault on star/delta switch | Check the switch, replace if necessary;<br>Check the connections |
| Incorrect direction of rotation | Motor connected incorrectly | Swap 2 phases of the motor supply cable |
| Motor hums and has high current consumption | Brake does not release | See chapter "Brake malfunctions" |
| | Winding defective | Send motor to specialist workshop for repair |
| | Rotor rubbing | Send motor to specialist workshop for repair |
| Fuses blow or motor protection trips immediately | Short circuit in the motor supply cable | Eliminate short circuit |
| | Supply cables connected incorrectly | Correct the connection;<br>Observe wiring diagram |
| | Short circuit in the motor | Send motor to specialist workshop for repair |
| | Ground fault on motor | Send motor to specialist workshop for repair |

25957074/EN – 06/2019

| Fault | Possible cause | Measure |
|---|---|---|
| Severe speed loss under load | Motor overload | Measure power, check project planning and use larger motor or reduce load if necessary |
| | Voltage drops | Check cross section of supply cable, replace with cable of larger cross section if necessary |
| Motor heats up excessively (measure temperature) | Overload | Measure power, check project planning and use larger motor or reduce load if necessary |
| | Insufficient cooling | Provide a cooling air supply or clear cooling air passages, retrofit forced cooling fan if necessary. Check the air filter, clean or replace if necessary |
| | Ambient temperature too high | Observe the permitted temperature range, reduce the load if necessary |
| | Motor in delta connection instead of star connection as intended | Correct the wiring, observe the wiring diagram |
| | Loose contact in supply cable (one phase missing) | Tighten loose contact, check connections, observe wiring diagram |
| | Fuse defective | Look for and rectify cause; replace fuse |
| | Line voltage deviates from the rated motor voltage by more than 5% (range A) / 10% (range B) | Adjust motor to line voltage |
| | Operating mode (S1 to S10, DIN 57530) exceeded, e.g. caused by excessive switching frequency | Adjust the operating mode of the motor to the required operating conditions; consult a professional to determine the proper drive, if necessary |
| Loud noises | Ball bearing compressed, dirty or damaged | Realign motor and the driven machine, inspect rolling bearing and replace if necessary. |
| | Vibration of rotating parts | Look for the cause, possibly an imbalance; correct the cause, observe method for balancing |
| | Foreign bodies in cooling air ducts | Clean cooling air ducts |
| | For DR.. motors with rotor designation "J": Load too high | Reduce the load |

25957074/EN – 06/2019

## 9.3 Brake malfunctions

| Fault | Possible cause | Measure |
|---|---|---|
| Brake does not release | Incorrect voltage on brake control unit | Apply the correct voltage; brake voltage specified on the nameplate. |
| | Brake control unit failed | Renew brake control, check resistors and isolation of the brake coils.<br>Check switchgear, replace if necessary. |
| | Maximum permitted working air gap exceeded because brake lining worn down. | Measure and set working air gap.<br>If the brake disk is too thin, replace the brake disk. |
| | Voltage drop along supply cable > 10% | Provide correct connection voltage: brake voltage specifications on the nameplate. Check the cross section of the brake supply cable, increase cross section if necessary. |
| | Inadequate cooling, brake overheating | Provide for cooling air supply or clear cooling air passages, check air filter, clean or replace if necessary. Replace type BG brake rectifier with type BGE. |
| | Brake coil has interturn short circuit or a short circuit to frame | Check resistors and isolation of the brake coils;<br>Replace complete brake and brake control (specialist workshop);<br>Check switchgear, replace if necessary. |
| | Rectifier defective | Replace rectifier and brake coil; it may be more economical to replace the complete brake. |
| Brake does not brake | Working air gap not correct | Measure and set working air gap.<br>If the brake disk is too thin, replace the brake disk. |
| | Brake lining worn | Replace entire brake lining carrier. |
| | Incorrect braking torque | Check the dimensioning and, if necessary, change braking torque by type and number of brake springs, or by selecting a different brake. |
| Brake does not brake | Working air gap so large that setting nuts for the manual release come into contact | Set the working air gap. |
| | Manual brake release device not set correctly | Set the setting nuts for the manual release correctly. |
| | Brake locked by manual brake release HF | Loosen the set screw, remove if needed. |
| Brake is applied with time lag | Brake is switched only on AC voltage side | Switch both the DC and AC circuits (e.g. by retrofitting a SR current relay to BSR or a UR voltage relay to BUR);<br>Observe wiring diagram. |

25957074/EN – 06/2019

| Fault | Possible cause | Measure |
|---|---|---|
| Noises in vicinity of brake | Gearing wear on the brake disk or the driver caused by jerky start-up | Check the project planning, replace the brake disk if necessary.<br>Have a specialist workshop replace the carrier. |
| | Alternating torques due to incorrectly set inverter | Check correct setting of inverter according to its operating instructions, correct if necessary. |

## 9.4 Malfunctions when operated with a frequency inverter

The symptoms described in chapter "Motor malfunctions" (→ 🗎 264) can also occur when the motor is operated with a frequency inverter. Refer to the frequency inverter operating instructions for the meaning of the problems that occur and to find information about rectifying the problems.

25957074/EN – 06/2019

## 9.5 Disposal

Dispose of the motors in accordance with the material structure and the regulations in force:

- Iron
- Aluminum
- Copper
- Plastics
- Electronic parts
- Oil and grease (not mixed with solvents)

## 9.6 Customer service

**Have the following information available if you require customer service assistance:**

- Nameplate data (complete)
- Nature and extent of the problem
- Time the failure occurred and any accompanying circumstances
- Assumed cause
- Ambient conditions e.g.:
  - Ambient temperature
  - Humidity
  - Installation altitude
  - Dirt
  - etc.

25957074/EN – 06/2019

# 10 Appendix

## 10.1 Wiring diagrams

### INFORMATION

The motor should be connected as shown in the connection wiring diagram or the terminal assignment diagram, which are supplied with the motor. The following section only shows a selection of the common types of connections. You can obtain the relevant wiring diagrams free of charge from SEW-EURODRIVE.

#### 10.1.1 Delta and star connection in wiring diagram R13 (68001 xx 06)

For all motors with one speed, direct on-line, or ⅄/△ start-up.

**Delta connection**

The following illustration shows the △ connection for lower voltage.

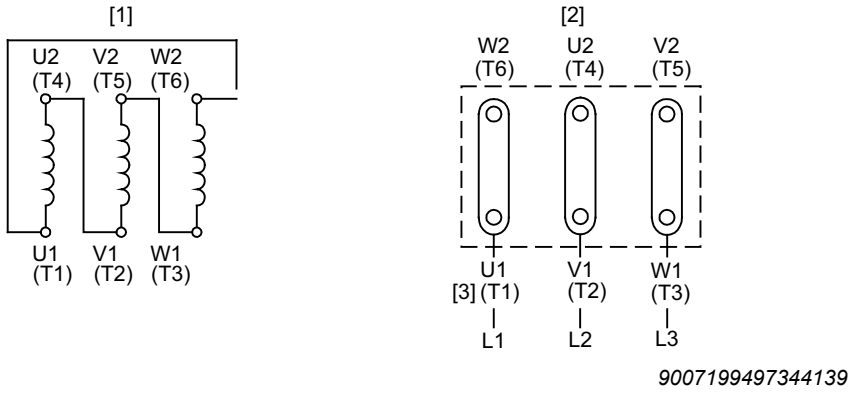


*9007199497344139*

[1] Motor winding
[2] Motor terminal board
[3] Supply cables

**Star connection**

The following illustration shows the ⅄ connection for high voltage.

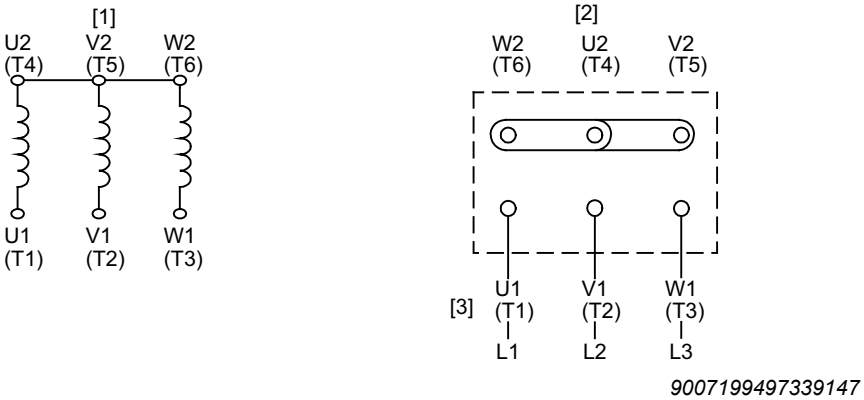


*9007199497339147*

[1] Motor winding
[2] Motor terminal board
[3] Supply cables

25957074/EN – 06/2019

Proceed as follows to reverse the direction of rotation:

1. Swap the supply cables L1 – L2.

25957074/EN – 06/2019

### 10.1.2 Delta connection with wiring diagram R72 (68192 xx 09)

For all motors with one speed and direct power-on.

**Delta connection, Double-delta connection**

The following figure shows the △ connection for high voltages and the △△ connection for lower voltages.

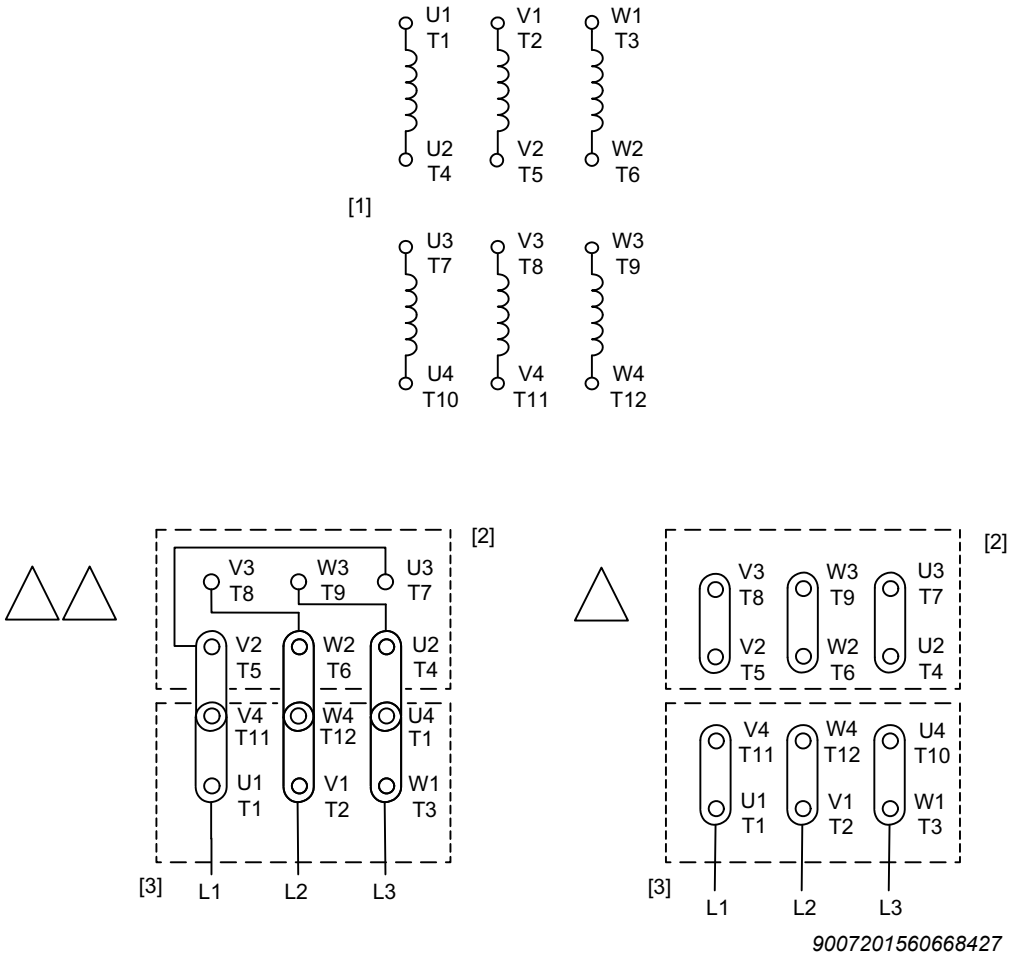


[1] Motor winding
[2] Motor terminal board
[3] Supply cables

Proceed as follows to reverse the direction of rotation:

1. Swap the supply cables L1 – L2.

### 10.1.3 Star connection with wiring diagram R76 (68043 xx 06)

For all motors with one speed and direct power-on.

**Star connection, double-star connection**

The following figure shows the ⅄ connection for high voltages and the ⅄ ⅄ connection for lower voltages.

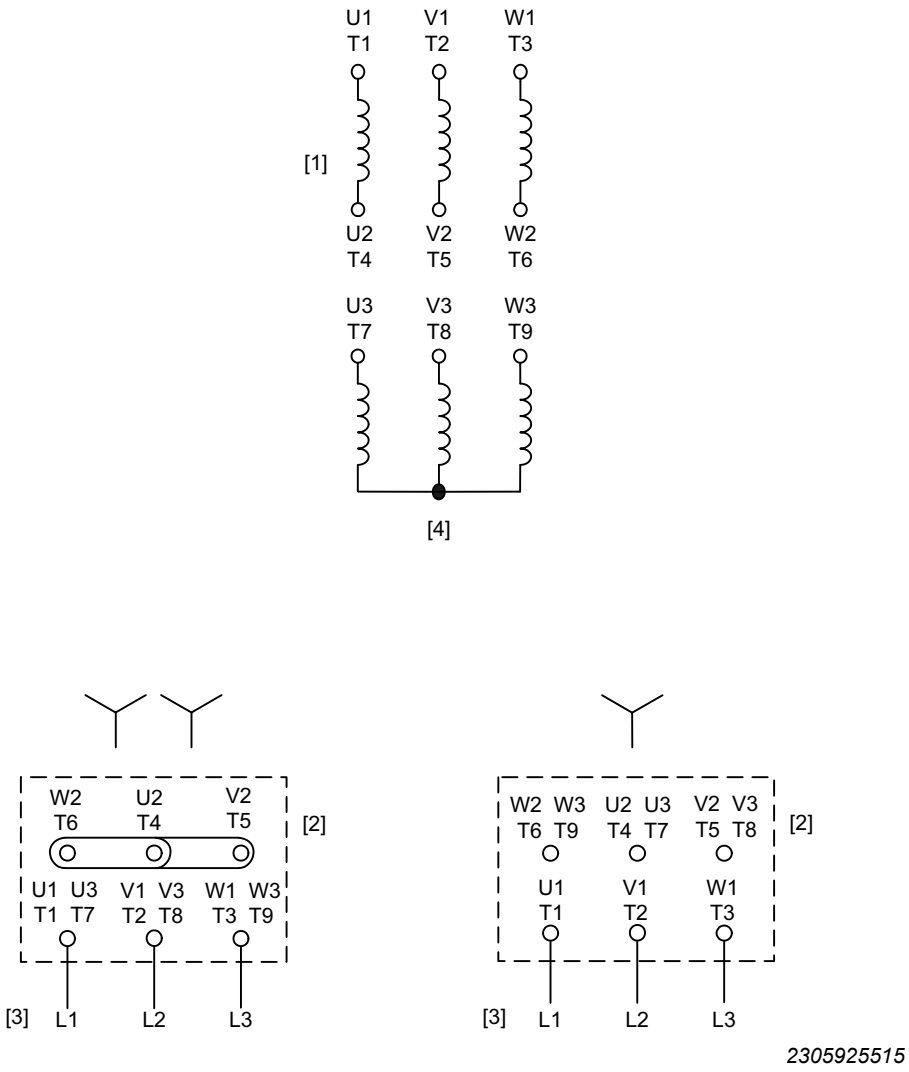


*2305925515*

[1] Motor winding
[2] Motor terminal board
[3] Supply cables
[4] Star point connected in motor

Proceed as follows to reverse the direction of rotation:

1. Swap the supply cables L1 – L2.

25957074/EN – 06/2019

### 10.1.4 Motor protection with /TF or /TH for DR..71 – 280, DRN63 – 280, DR2..63 – 80 motors

## INFORMATION

The following shows an example terminal assignment. The actual terminal assignment is included in the motor delivery as wiring diagram.

**/TF, /TH**

The following figures show examples for connection of motor protection with /TF PTC thermistor sensors or /TH bimetallic thermostats.

Either a two-pole connection terminal or a five-pole terminal strip is available for connecting to the trip switch.

**Example: /TF, /TH to 2-pin terminal strip**

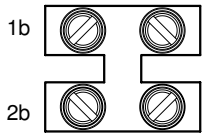


*9007199728684427*

| 1b | 2b |
|---|---|
| TF/TH | TF/TH |

**Example: 2 × /TF, /TH to 5-pin terminal strip**

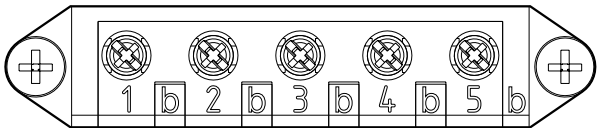


*18014398983427083*

| 1b | 2b | 3b | 4b | 5b |
|---|---|---|---|---|
| 1.TF/TH | 1.TF/TH | 2.TF/TH | 2.TF/TH | – |

**2 × /TF, /TH with anti-condensation heating**

The following illustration shows the connection of the motor protection with 2 /TF PTC thermistor sensors or /TH bimetallic thermostats and Hx anti-condensation heating.

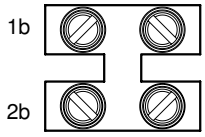


*9007199728684427*

| 1b | 2b |
|---|---|
| Hx | Hx |

25957074/EN – 06/2019

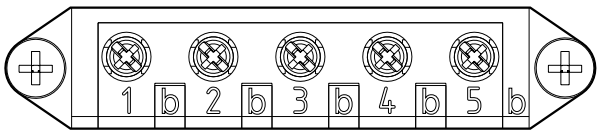


*18014398983427083*

| 1b | 2b | 3b | 4b | 5b |
|---|---|---|---|---|
| 1.TF/TH | 1.TF/TH | 2.TF/TH | 2.TF/TH | – |

### 10.1.5 Motor protection with /TF or /TH for DR..315, DRN315 motors

## INFORMATION

The following shows an example terminal assignment. The actual terminal assignment is included in the motor delivery as wiring diagram.

**/TF, /TH**

The following figures show examples for connection of motor protection with /TF PTC thermistor sensors or /TH bimetallic thermostats.

Depending on the version, an "x-pin" terminal strip is available for connection to the trip switch.

**Example: /TF, /TH to terminal strip**

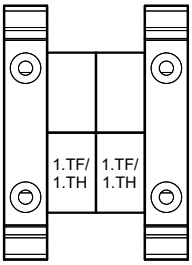


*473405707*

**Example: 2x /TF, /TH to terminal strip**

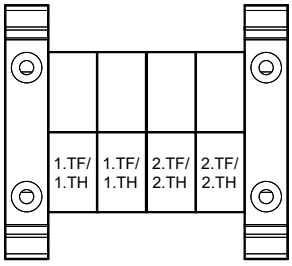


*473410187*

25957074/EN – 06/2019

### 10.1.6 EI7.B built-in encoder

**Connection via terminal strip**

The encoder is equipped with a 10-pole terminal strip for connection:

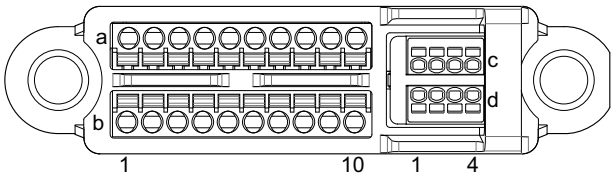


*9007207579353739*

## INFORMATION

The ranges 1a – 10a, 1c – 4c and 1d – 4d have been pre-configured by SEW-EURODRIVE. The must not be changed.

Range 1b – 10b is intended for customer adjustments.

**Basic connection**:

Connections 1a – 10a, 1c – 4c and 1d – 4d lead to the encoder or to the motor.

Connections 1b – 10b lead to the cable gland.

| | 1 | 2 | 3 | 4 | 5 | 6 | 7 | 8 | 9 | 10 | 1 | 2 | 3 | 4 | |
|---|---|---|---|---|---|---|---|---|---|---|---|---|---|---|---|
| a | TF1[1] | TF1[1] | TF2[1] Opt. | TF2[1] Opt. | +UB[1] (GY) | GND[1] (PK) | A[1] (BN) | $\overline{A}$[1] (WH) | $\overline{B}$[1] (YE) | B[1] (GN) | see below | | | | c |
| b | TF1 | TF1 | TF2 Opt. | TF2 Opt. | +UB | GND | A | $\overline{A}$ | B | $\overline{B}$ | see below | | | | d |

1) Pre-configured by SEW-EURODRIVE. Do not alter the setting!

| Pin assignment EI7**C** B | | | | |
|---|---|---|---|---|
| 1 | 2 | 3 | 4 | |
| GND_ Config (BU)[1] | n. c.[1] | n. c.[1] | n. c.[1] | c |
| EI7C[1] (RD) | n. c.[1] | n. c.[1] | n. c.[1] | d |

| Pin assignment EI7**6** B | | | | |
|---|---|---|---|---|
| 1 | 2 | 3 | 4 | |
| GND_ Config (BU)[1] | n. c.[1] | n. c.[1] | n. c.[1] | c |
| n. c.[1] | EI76[1] (RD) | n. c.[1] | n. c.[1] | d |

1) Pre-configured by SEW-EURODRIVE. Do not alter the setting!

| Pin assignment EI7**2** B | | | | |
|---|---|---|---|---|
| 1 | 2 | 3 | 4 | |
| GND_ Config (BU)[1] | n. c.[1] | n. c.[1] | n. c.[1] | c |
| n. c.[1] | n. c.[1] | EI72[1] (RD) | n. c.[1] | d |

| Pin assignment EI7**1** B | | | | |
|---|---|---|---|---|
| 1 | 2 | 3 | 4 | |
| GND_ Config (BU)[1] | n. c.[1] | n. c.[1] | n. c.[1] | c |
| n. c.[1] | n. c.[1] | n. c.[1] | EI71[1] (RD) | d |

1) Pre-configured by SEW-EURODRIVE. Do not alter the setting!

25957074/EN – 06/2019

### Connection via M12 plug connector

A 8-pin or a 4-pin M12 plug connector is available for the connection.

| 4-pin M12 plug connector AVSE | | 8-pin M12 plug connector AVRE | |
|---|---|---|---|
| • A coded<br>• Male<br>  | Pin 1: $+U_B$<br>Pin 2: B<br>Pin 3: GND<br>Pin 4: A | • A coded<br>• Male<br> 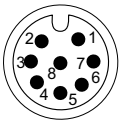 | Pin 1: $+U_B$<br>Pin 2: GND<br>Pin 3: A<br>Pin 4: $\overline{A}$<br>Pin 5: B<br>Pin 6: $\overline{B}$<br>Pin 7: TF1<br>Pin 8: TF1 |

25957074/EN – 06/2019

### 10.1.7 BGE..; BS..; BSG..; BUR.. brake control

**BG../BGE..**

Wiring diagram B100

The following illustration shows the wiring for BG.. and BGE.. brake rectifiers for the AC-side shut-off as well as the DC and AC-side shutoff.

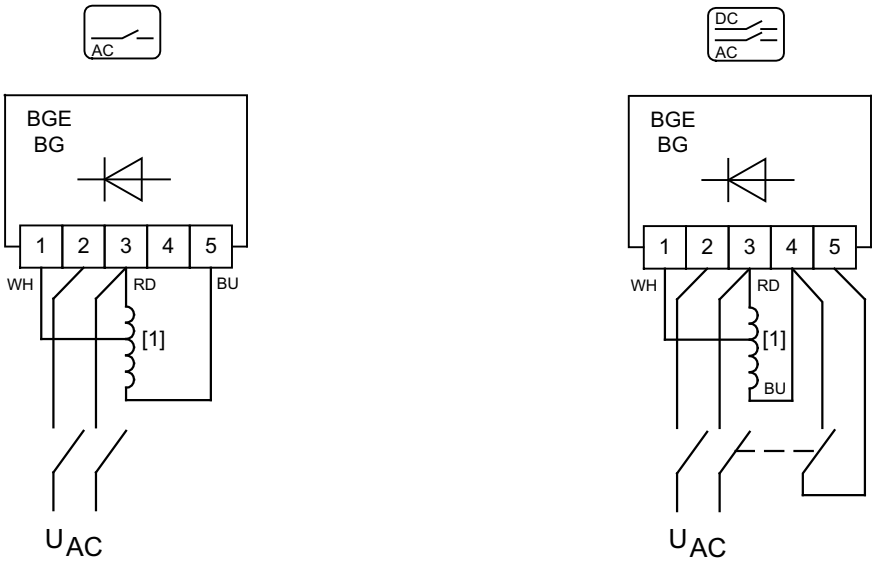


*242604811*

[1] Brake coil

**BS24/BSG..**

Wiring diagram B100

The following illustration shows the DC 24 V connection of the BS24 brake protection or BSG.. control unit.

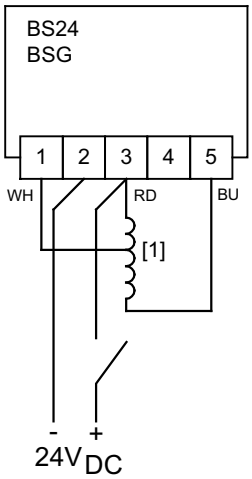


*9007199497347467*

[1] Brake coil

**BUR**

## NOTICE

Malfunction caused by incorrect brake connection for frequency inverter operation.

The drive system might be damaged.

- Do not connect the brake to the terminal board of the motor.

Wiring diagram B100

The following figure shows the wiring for BUR.. brake control

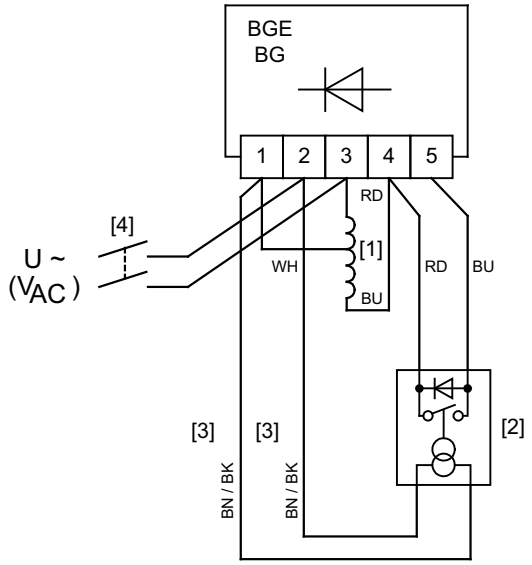


242608139

[1] Brake coil
[2] UR11/UR15 voltage relay

BN = UR 11 (42 – 150 V)
BK = UR 15 (150 – 500 V)

25957074/EN – 06/2019

### 10.1.8 BSR.. brake control

**Brake voltage = phase-to-neutral voltage**

BSR.. brake control for single speed drives in line operation (basic wiring diagram R13)

Wiring diagram R13A/R13B

The white interconnecting wires are the ends of a converter loop and, depending on the motor connection, must be connected to the motor terminal block instead of the △ or ⅄ bridge.

The following figure shows the factory wiring for BSR.. brake control.

For example

Motor: AC 230 V/AC 400 V

Brake: AC 230 V

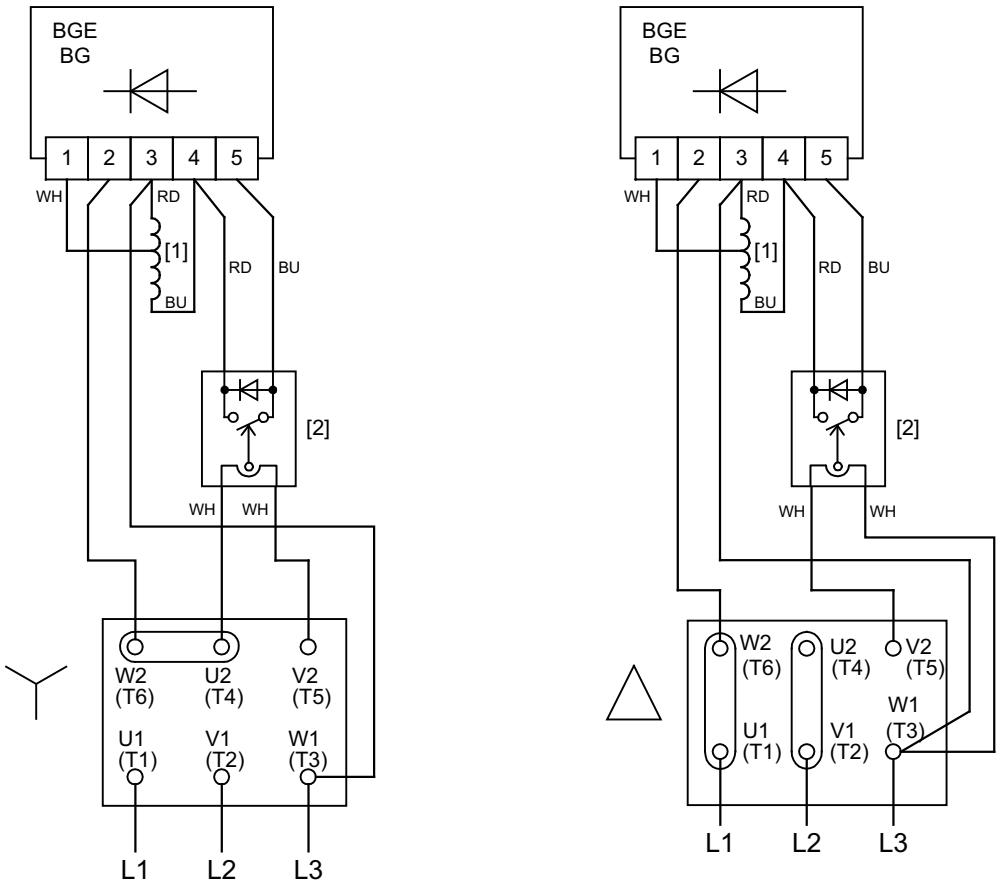


*18014398752081803*

[1] Brake coil
[2] SR10/11/15/19 current relay

### Brake voltage = Line voltage

Wiring diagram R13C

The white interconnecting wires are the ends of a converter loop and, depending on the motor connection, must be connected to the motor terminal block instead of one of the ⅄ bridges before startup.

The following figure shows the factory wiring for BSR.. brake control:

Example

Motor: AC 400 V

Brake: AC 400 V

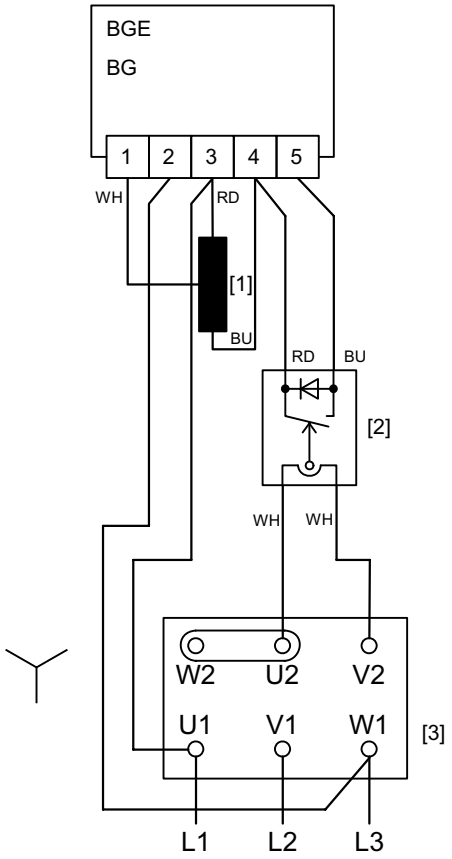


*17564599179*

[1] Brake coil
[2] SR10/11/15/19 current relay
[3] Terminal board

### Further wiring diagrams for BSR.. brake control

Wiring diagrams for BSR.. brake control in combination with the following drives are available from SEW-EURODRIVE upon request.

- Multi-voltage motors according to basic wiring diagram R76 or R72
- Single speed drive with cage clamp terminal /KCC (basic wiring diagram A13 or C13)

25957074/EN – 06/2019

### 10.1.9 BMP3.1 brake control in the terminal box

## INFORMATION

Separate supply cables are required for the voltage supply.

**BMP3.1**

The following illustration shows the wiring for the BMP3.1 brake rectifier for cut-off in the AC circuit and cut-off in the DC and AC circuit.

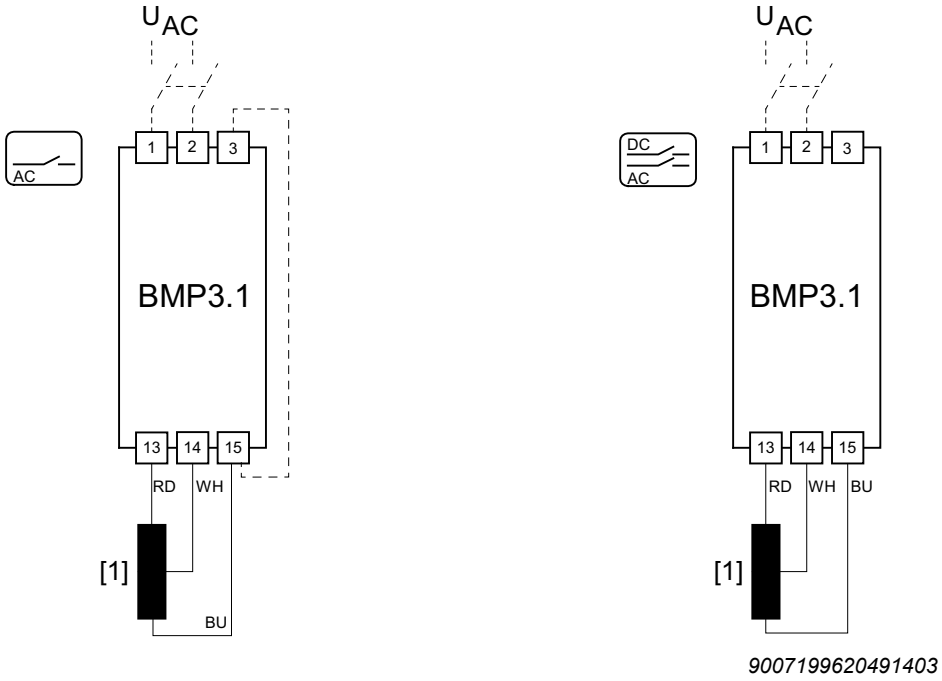


*9007199620491403*

[1] Brake coil

### 10.1.10 Forced cooling fan /V

#### Delta Steinmetz

The following figure shows the wiring of the V forced cooling fan for delta-Steinmetz connection for 1-phase operation.

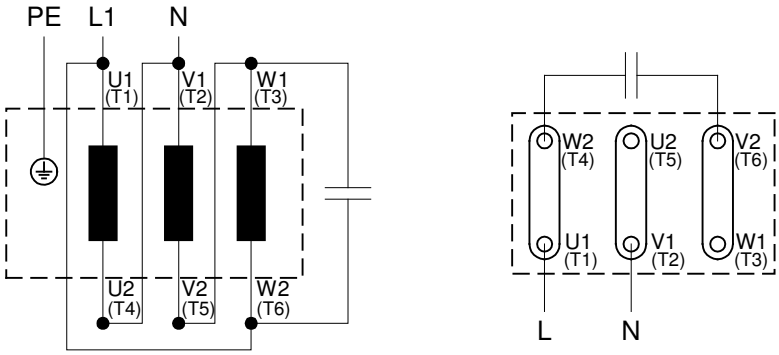


*9007199778089483*

#### Star connection

The following figure shows the wiring of the /V forced cooling fan for star connection.

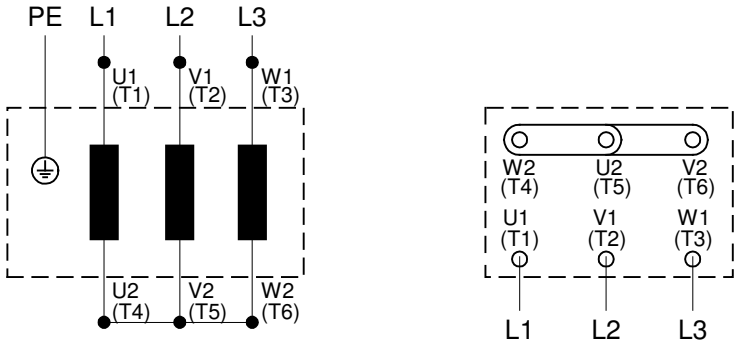


*9007199778091147*

#### Delta connection

The following figure shows the wiring of the /V forced cooling fan for delta connection.

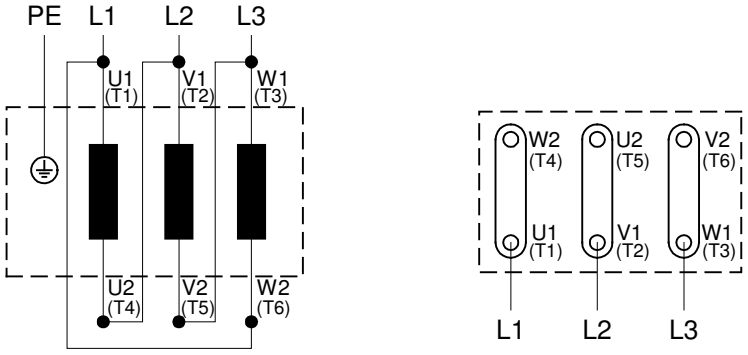


*18014399032833803*

25957074/EN – 06/2019

### DC 24 V connection

The following figure shows the wiring of the /V forced cooling fan for DC 24 V.

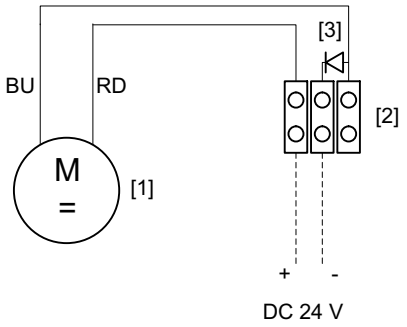


*9007201648125067*

[1] Forced cooling fan
[2] Terminal strip
[3] Polarity reversal protection diode

## NOTICE

Damage to the forced cooling fan due to incorrect connection.

The drive system might be damaged.

- Observe the polarity when connecting the forced cooling fan.

25957074/EN – 06/2019

### 10.1.11 DRK... single-phase motor

**ER10 wiring diagram**

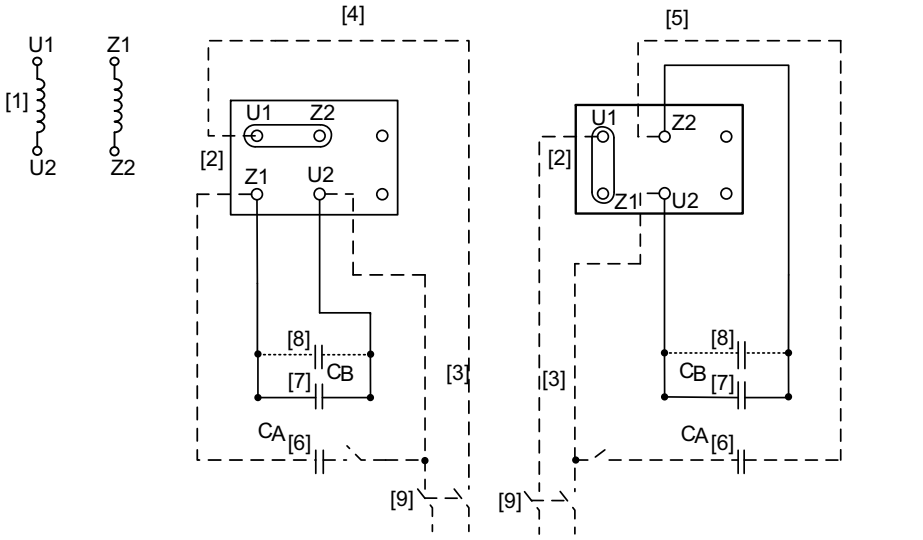


11919510027

| | | | |
|---|---|---|---|
| [1] | Motor winding | [6] | Starting capacitor, switchable |
| [2] | Motor terminal | [7] | Running capacitor |
| [3] | Incoming cables | [8] | Further running capacitors (if available) |
| [4] | Counterclockwise rotation | | |
| [5] | CW rotation, connected at factory | [9] | All-pole power switch |

**ER11 wiring diagram**

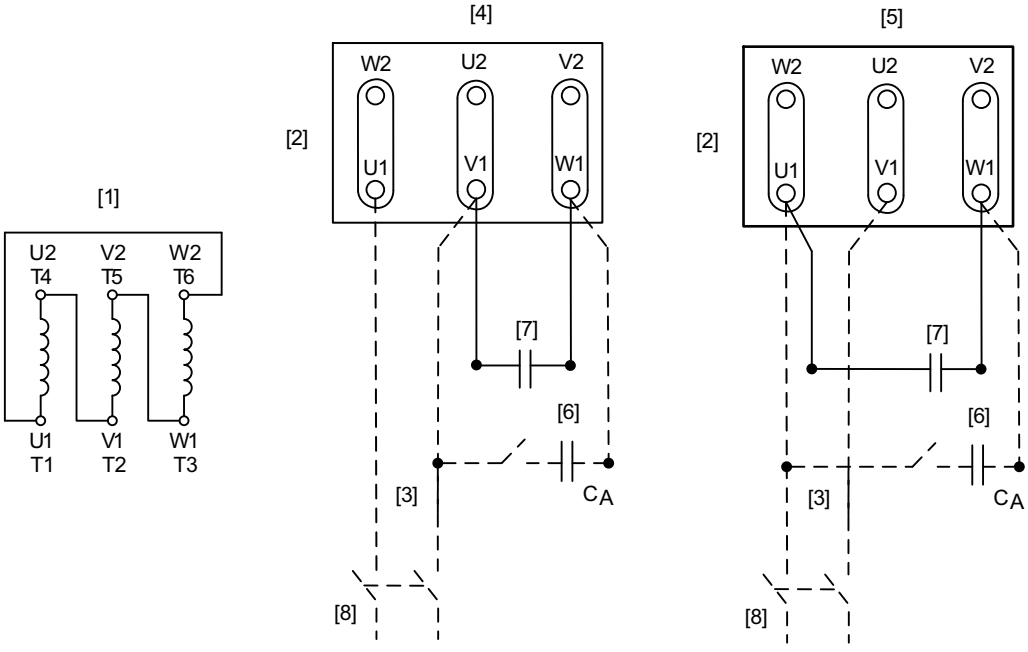


11919511947

| | | | |
|---|---|---|---|
| [1] | Motor winding | [5] | CW rotation, connected at factory |
| [2] | Motor terminal board | [6] | Starting capacitor, switchable |
| [3] | Incoming cables | [7] | Running capacitor |
| [4] | Counterclockwise rotation | [8] | All-pole power switch |

25957074/EN – 06/2019

## 10.2 Auxiliary terminals

The following figure shows the arrangement of the auxiliary terminals for the different terminal box positions.

Terminal box position 2 and X, here X[1)]

Terminal box position 1 and 3, here 3

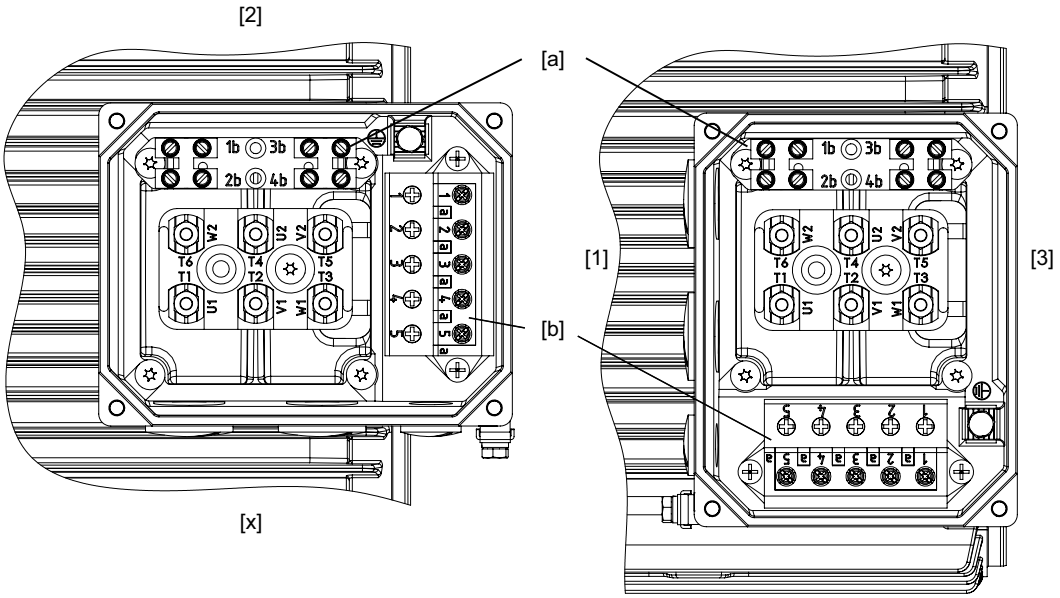


*9007202826949515*

1) If auxiliary terminal 2 is not provided, you can install auxiliary terminal 1 in the same position.

| | | | |
|---|---|---|---|
| [1] | Terminal box position 1 | [X] | Terminal box position X |
| [2] | Terminal box position 2 | [a] | Auxiliary terminal 1 |
| [3] | Terminal box position 3 | [b] | Auxiliary terminal 2 |

Regardless of the terminal box position, auxiliary terminal 1 must always be mounted parallel to the terminal board.

The terminal structure can vary depending on the terminal box design.

# 11 Address list

| | | | |
|---|---|---|---|
| **Argentina** | | | |
| Assembly<br>Sales | Buenos Aires | SEW EURODRIVE ARGENTINA S.A.<br>Ruta Panamericana Km 37.5, Lote 35<br>(B1619IEA) Centro Industrial Garín<br>Prov. de Buenos Aires | Tel. +54 3327 4572-84<br>Fax +54 3327 4572-21<br>http://www.sew-eurodrive.com.ar<br>sewar@sew-eurodrive.com.ar |
| **Australia** | | | |
| Assembly<br>Sales<br>Service | Melbourne | SEW-EURODRIVE PTY. LTD.<br>27 Beverage Drive<br>Tullamarine, Victoria 3043 | Tel. +61 3 9933-1000<br>Fax +61 3 9933-1003<br>http://www.sew-eurodrive.com.au<br>enquires@sew-eurodrive.com.au |
| | Sydney | SEW-EURODRIVE PTY. LTD.<br>9, Sleigh Place, Wetherill Park<br>New South Wales, 2164 | Tel. +61 2 9725-9900<br>Fax +61 2 9725-9905<br>enquires@sew-eurodrive.com.au |
| **Austria** | | | |
| Assembly<br>Sales<br>Service | Vienna | SEW-EURODRIVE Ges.m.b.H.<br>Richard-Strauss-Straße 24<br>1230 Wien | Tel. +43 1 617 55 00-0<br>Fax +43 1 617 55 00-30<br>http://www.sew-eurodrive.at<br>sew@sew-eurodrive.at |
| **Bangladesh** | | | |
| Sales | Bangladesh | SEW-EURODRIVE INDIA PRIVATE LIMITED<br>345 DIT Road<br>East Rampura<br>Dhaka-1219, Bangladesh | Tel. +88 01729 097309<br>salesdhaka@seweurodrivebangladesh.com |
| **Belarus** | | | |
| Sales | Minsk | Foreign unitary production enterprise SEW-EURODRIVE<br>RybalkoStr. 26<br>220033 Minsk | Tel. +375 17 298 47 56 / 298 47 58<br>Fax +375 17 298 47 54<br>http://www.sew.by<br>sales@sew.by |
| **Belgium** | | | |
| Assembly<br>Sales<br>Service | Brussels | SEW-EURODRIVE n.v./s.a.<br>Researchpark Haasrode 1060<br>Evenementenlaan 7<br>3001 Leuven | Tel. +32 16 386-311<br>Fax +32 16 386-336<br>http://www.sew-eurodrive.be<br>info@sew-eurodrive.be |
| Service Competence Center | Industrial Gears | SEW-EURODRIVE n.v./s.a.<br>Rue du Parc Industriel, 31<br>6900 Marche-en-Famenne | Tel. +32 84 219-878<br>Fax +32 84 219-879<br>http://www.sew-eurodrive.be<br>service-IG@sew-eurodrive.be |
| **Brazil** | | | |
| Production<br>Sales<br>Service | São Paulo | SEW-EURODRIVE Brasil Ltda.<br>Estrada Municipal José Rubim, 205 – Rodovia Santos Dumont Km 49<br>Indaiatuba – 13347-510 – SP | Tel. +55 19 3835-8000<br>sew@sew.com.br |
| Assembly<br>Sales<br>Service | Rio Claro | SEW-EURODRIVE Brasil Ltda.<br>Rodovia Washington Luiz, Km 172<br>Condomínio Industrial Conpark<br>Caixa Postal: 327<br>13501-600 – Rio Claro / SP | Tel. +55 19 3522-3100<br>Fax +55 19 3524-6653<br>montadora.rc@sew.com.br |
| | Joinville | SEW-EURODRIVE Brasil Ltda. Jvl / Ind<br>Rua Dona Francisca, 12.346 – Pirabeiraba<br>89239-270 – Joinville / SC | Tel. +55 47 3027-6886<br>Fax +55 47 3027-6888<br>filial.sc@sew.com.br |
| **Bulgaria** | | | |
| Sales | Sofia | BEVER-DRIVE GmbH<br>Bogdanovetz Str.1<br>1606 Sofia | Tel. +359 2 9151160<br>Fax +359 2 9151166<br>bever@bever.bg |

25957074/EN – 06/2019

| | | | |
|---|---|---|---|
| **Cameroon** | | | |
| Sales | Douala | SEW-EURODRIVE S.A.R.L.<br>Ancienne Route Bonabéri<br>P.O. Box<br>B.P 8674<br>Douala-Cameroun | Tel. +237 233 39 02 10<br>Fax +237 233 39 02 10<br>sew@sew-eurodrive-cm |
| **Canada** | | | |
| Assembly<br>Sales<br>Service | Toronto | SEW-EURODRIVE CO. OF CANADA LTD.<br>210 Walker Drive<br>Bramalea, ON L6T 3W1 | Tel. +1 905 791-1553<br>Fax +1 905 791-2999<br>http://www.sew-eurodrive.ca<br>l.watson@sew-eurodrive.ca |
| | Vancouver | SEW-EURODRIVE CO. OF CANADA LTD.<br>Tilbury Industrial Park<br>7188 Honeyman Street<br>Delta, BC V4G 1G1 | Tel. +1 604 946-5535<br>Fax +1 604 946-2513<br>b.wake@sew-eurodrive.ca |
| | Montreal | SEW-EURODRIVE CO. OF CANADA LTD.<br>2001 Ch. de l'Aviation<br>Dorval<br>Quebec H9P 2X6 | Tel. +1 514 367-1124<br>Fax +1 514 367-3677<br>n.paradis@sew-eurodrive.ca |
| **Chile** | | | |
| Assembly<br>Sales<br>Service | Santiago de Chile | SEW-EURODRIVE CHILE LTDA<br>Las Encinas 1295<br>Parque Industrial Valle Grande<br>LAMPA<br>Santiago de Chile<br>P.O. Box<br>Casilla 23 Correo Quilicura - Santiago - Chile | Tel. +56 2 2757 7000<br>Fax +56 2 2757 7001<br>http://www.sew-eurodrive.cl<br>ventas@sew-eurodrive.cl |
| **China** | | | |
| Production<br>Assembly<br>Sales<br>Service | Tianjin | SEW-EURODRIVE (Tianjin) Co., Ltd.<br>No. 78, 13th Avenue, TEDA<br>Tianjin 300457 | Tel. +86 22 25322612<br>Fax +86 22 25323273<br>http://www.sew-eurodrive.cn<br>info@sew-eurodrive.cn |
| Assembly<br>Sales<br>Service | Suzhou | SEW-EURODRIVE (Suzhou) Co., Ltd.<br>333, Suhong Middle Road<br>Suzhou Industrial Park<br>Jiangsu Province, 215021 | Tel. +86 512 62581781<br>Fax +86 512 62581783<br>suzhou@sew-eurodrive.cn |
| | Guangzhou | SEW-EURODRIVE (Guangzhou) Co., Ltd.<br>No. 9, JunDa Road<br>East Section of GETDD<br>Guangzhou 510530 | Tel. +86 20 82267890<br>Fax +86 20 82267922<br>guangzhou@sew-eurodrive.cn |
| | Shenyang | SEW-EURODRIVE (Shenyang) Co., Ltd.<br>10A-2, 6th Road<br>Shenyang Economic Technological Development Area<br>Shenyang, 110141 | Tel. +86 24 25382538<br>Fax +86 24 25382580<br>shenyang@sew-eurodrive.cn |
| | Taiyuan | SEW-EURODRIVE (Taiyuan) Co,. Ltd.<br>No.3, HuaZhang Street,<br>TaiYuan Economic & Technical Development Zone<br>ShanXi, 030032 | Tel. +86-351-7117520<br>Fax +86-351-7117522<br>taiyuan@sew-eurodrive.cn |
| | Wuhan | SEW-EURODRIVE (Wuhan) Co., Ltd.<br>10A-2, 6th Road<br>No. 59, the 4th Quanli Road, WEDA<br>430056 Wuhan | Tel. +86 27 84478388<br>Fax +86 27 84478389<br>wuhan@sew-eurodrive.cn |
| | Xi'An | SEW-EURODRIVE (Xi'An) Co., Ltd.<br>No. 12 Jinye 2nd Road<br>Xi'An High-Technology Industrial Development Zone<br>Xi'An 710065 | Tel. +86 29 68686262<br>Fax +86 29 68686311<br>xian@sew-eurodrive.cn |
| Sales<br>Service | Hong Kong | SEW-EURODRIVE LTD.<br>Unit No. 801-806, 8th Floor<br>Hong Leong Industrial Complex<br>No. 4, Wang Kwong Road<br>Kowloon, Hong Kong | Tel. +852 36902200<br>Fax +852 36902211<br>contact@sew-eurodrive.hk |

25957074/EN – 06/2019

| | | | |
|---|---|---|---|
| **Colombia** | | | |
| Assembly<br>Sales<br>Service | Bogota | SEW-EURODRIVE COLOMBIA LTDA.<br>Calle 17 No. 132-18<br>Interior 2 Bodega 6, Manzana B<br>Santafé de Bogotá | Tel. +57 1 54750-50<br>Fax +57 1 54750-44<br>http://www.sew-eurodrive.com.co<br>sew@sew-eurodrive.com.co |
| **Croatia** | | | |
| Sales<br>Service | Zagreb | KOMPEKS d. o. o.<br>Zeleni dol 10<br>10 000 Zagreb | Tel. +385 1 4613-158<br>Fax +385 1 4613-158<br>kompeks@inet.hr |
| **Czech Republic** | | | |
| Assembly<br>Sales<br>Service | Hostivice | SEW-EURODRIVE CZ s.r.o.<br>Floriánova 2459<br>253 01 Hostivice | Tel. +420 255 709 601<br>Fax +420 235 350 613<br>http://www.sew-eurodrive.cz<br>sew@sew-eurodrive.cz |
| | Drive Service Hotline / 24 Hour Service | +420 800 739 739 (800 SEW SEW) | Service<br>Tel. +420 255 709 632<br>Fax +420 235 358 218<br>servis@sew-eurodrive.cz |
| **Denmark** | | | |
| Assembly<br>Sales<br>Service | Copenhagen | SEW-EURODRIVEA/S<br>Geminivej 28-30<br>2670 Greve | Tel. +45 43 95 8500<br>Fax +45 43 9585-09<br>http://www.sew-eurodrive.dk<br>sew@sew-eurodrive.dk |
| **Egypt** | | | |
| Sales<br>Service | Cairo | Copam Egypt<br>for Engineering & Agencies<br>Building 10, Block 13005, First Industrial Zone,<br>Obour City Cairo | Tel. +202 44812673 / 79 (7 lines)<br>Fax +202 44812685<br>http://www.copam-egypt.com<br>copam@copam-egypt.com |
| **Estonia** | | | |
| Sales | Tallin | ALAS-KUUL AS<br>Reti tee 4<br>75301 Peetri küla, Rae vald, Harjumaa | Tel. +372 6593230<br>Fax +372 6593231<br>http://www.alas-kuul.ee<br>veiko.soots@alas-kuul.ee |
| **Finland** | | | |
| Assembly<br>Sales<br>Service | Hollola | SEW-EURODRIVE OY<br>Vesimäentie 4<br>15860 Hollola | Tel. +358 201 589-300<br>Fax +358 3 780-6211<br>http://www.sew-eurodrive.fi<br>sew@sew.fi |
| Service | Hollola | SEW-EURODRIVE OY<br>Keskikankaantie 21<br>15860 Hollola | Tel. +358 201 589-300<br>Fax +358 3 780-6211<br>http://www.sew-eurodrive.fi<br>sew@sew.fi |
| | Tornio | SEW-EURODRIVE Oy<br>Lossirannankatu 5<br>95420 Tornio | Tel. +358 201 589 300<br>Fax +358 3 780 6211<br>http://www.sew-eurodrive.fi<br>sew@sew.fi |
| Production<br>Assembly | Karkkila | SEW Industrial Gears Oy<br>Santasalonkatu 6, PL 8<br>03620 Karkkila, 03601 Karkkila | Tel. +358 201 589-300<br>Fax +358 201 589-310<br>http://www.sew-eurodrive.fi<br>sew@sew.fi |
| **France** | | | |
| Production<br>Sales<br>Service | Hagenau | SEW-USOCOME<br>48-54 route de Soufflenheim<br>B. P. 20185<br>67506 Haguenau Cedex | Tel. +33 3 88 73 67 00<br>Fax +33 3 88 73 66 00<br>http://www.usocome.com<br>sew@usocome.com |
| Production | Forbach | SEW-USOCOME<br>Zone industrielle<br>Technopôle Forbach Sud<br>B. P. 30269<br>57604 Forbach Cedex | Tel. +33 3 87 29 38 00 |
| | Brumath | SEW-USOCOME<br>1 Rue de Bruxelles<br>67670 Mommenheim Cedex | Tel. +33 3 88 37 48 00 |

25957074/EN – 06/2019

| | | | |
|---|---|---|---|
| **France** | | | |
| Assembly<br>Sales<br>Service | Bordeaux | SEW-USOCOME<br>Parc d'activités de Magellan<br>62 avenue de Magellan – B. P. 182<br>33607 Pessac Cedex | Tel. +33 5 57 26 39 00<br>Fax +33 5 57 26 39 09 |
| | Lyon | SEW-USOCOME<br>75 rue Antoine Condorcet<br>38090 Vaulx-Milieu | Tel. +33 4 74 99 60 00<br>Fax +33 4 74 99 60 15 |
| | Nantes | SEW-USOCOME<br>Parc d'activités de la forêt<br>4 rue des Fontenelles<br>44140 Le Bignon | Tel. +33 2 40 78 42 00<br>Fax +33 2 40 78 42 20 |
| | Paris | SEW-USOCOME<br>Zone industrielle<br>2 rue Denis Papin<br>77390 Verneuil l'Étang | Tel. +33 1 64 42 40 80<br>Fax +33 1 64 42 40 88 |
| **Gabon** | | | |
| Sales | Libreville | SEW-EURODRIVE SARL<br>183, Rue 5.033.C, Lalala à droite<br>P.O. Box 15682<br>Libreville | Tel. +241 03 28 81 55<br>+241 06 54 81 33<br>http://www.sew-eurodrive.cm<br>sew@sew-eurodrive.cm |
| **Germany** | | | |
| Headquarters<br>Production<br>Sales | Bruchsal | SEW-EURODRIVE GmbH & Co KG<br>Ernst-Blickle-Straße 42<br>76646 Bruchsal | Tel. +49 7251 75-0<br>Fax +49 7251 75-1970<br>http://www.sew-eurodrive.de<br>sew@sew-eurodrive.de |
| Production / Industrial Gears | Bruchsal | SEW-EURODRIVE GmbH & Co KG<br>Christian-Pähr-Str. 10<br>76646 Bruchsal | Tel. +49 7251 75-0<br>Fax +49 7251 75-2970 |
| Production | Graben | SEW-EURODRIVE GmbH & Co KG<br>Ernst-Blickle-Straße 1<br>76676 Graben-Neudorf | Tel. +49 7251 75-0<br>Fax +49 7251-2970 |
| | Östringen | SEW-EURODRIVE GmbH & Co KG, Werk Östringen<br>Franz-Gurk-Straße 2<br>76684 Östringen | Tel. +49 7253 9254-0<br>Fax +49 7253 9254-90<br>oestringen@sew-eurodrive.de |
| Service Competence Center | Mechanics / Mechatronics | SEW-EURODRIVE GmbH & Co KG<br>Ernst-Blickle-Straße 1<br>76676 Graben-Neudorf | Tel. +49 7251 75-1710<br>Fax +49 7251 75-1711<br>scc-mechanik@sew-eurodrive.de |
| | Electronics | SEW-EURODRIVE GmbH & Co KG<br>Ernst-Blickle-Straße 42<br>76646 Bruchsal | Tel. +49 7251 75-1780<br>Fax +49 7251 75-1769<br>scc-elektronik@sew-eurodrive.de |
| Drive Technology Center | North | SEW-EURODRIVE GmbH & Co KG<br>Alte Ricklinger Straße 40-42<br>30823 Garbsen (Hannover) | Tel. +49 5137 8798-30<br>Fax +49 5137 8798-55<br>dtc-nord@sew-eurodrive.de |
| | East | SEW-EURODRIVE GmbH & Co KG<br>Dänkritzer Weg 1<br>08393 Meerane (Zwickau) | Tel. +49 3764 7606-0<br>Fax +49 3764 7606-30<br>dtc-ost@sew-eurodrive.de |
| | South | SEW-EURODRIVE GmbH & Co KG<br>Domagkstraße 5<br>85551 Kirchheim (München) | Tel. +49 89 909552-10<br>Fax +49 89 909552-50<br>dtc-sued@sew-eurodrive.de |
| | West | SEW-EURODRIVE GmbH & Co KG<br>Siemensstraße 1<br>40764 Langenfeld (Düsseldorf) | Tel. +49 2173 8507-30<br>Fax +49 2173 8507-55<br>dtc-west@sew-eurodrive.de |
| Drive Center | Berlin | SEW-EURODRIVE GmbH & Co KG<br>Alexander-Meißner-Straße 44<br>12526 Berlin | Tel. +49 306331131-30<br>Fax +49 306331131-36<br>dc-berlin@sew-eurodrive.de |
| | Hamburg | SEW-EURODRIVE GmbH & Co KG<br>Hasselbinnen 11<br>22869 Schenefeld | Tel. +49 40 298109-60<br>Fax +49 40 298109-70<br>tb-hamburg@sew-eurodrive.de |
| | Ludwigshafen | SEW-EURODRIVE GmbH & Co KG<br>c/o BASF SE<br>Gebäude W130 Raum 101<br>67056 Ludwigshafen | Tel. +49 7251 75 3759<br>Fax +49 7251 75 503759<br>dc-ludwigshafen@sew-eurodrive.de |

25957074/EN – 06/2019

| | | | |
|---|---|---|---|
| **Germany** | | | |
| | Saarland | SEW-EURODRIVE GmbH & Co KG<br>Gottlieb-Daimler-Straße 4<br>66773 Schwalbach Saar – Hülzweiler | Tel. +49 6831 48946 10<br>Fax +49 6831 48946 13<br>dc-saarland@sew-eurodrive.de |
| | Ulm | SEW-EURODRIVE GmbH & Co KG<br>Dieselstraße 18<br>89160 Dornstadt | Tel. +49 7348 9885-0<br>Fax +49 7348 9885-90<br>dc-ulm@sew-eurodrive.de |
| | Würzburg | SEW-EURODRIVE GmbH & Co KG<br>Nürnbergerstraße 118<br>97076 Würzburg-Lengfeld | Tel. +49 931 27886-60<br>Fax +49 931 27886-66<br>dc-wuerzburg@sew-eurodrive.de |
| Drive Service Hotline / 24 Hour Service | | | 0 800 SEWHELP<br>0 800 7394357 |
| **Great Britain** | | | |
| Assembly<br>Sales<br>Service | Normanton | SEW-EURODRIVE Ltd.<br>DeVilliers Way<br>Trident Park<br>Normanton<br>West Yorkshire<br>WF6 1GX | Tel. +44 1924 893-855<br>Fax +44 1924 893-702<br>http://www.sew-eurodrive.co.uk<br>info@sew-eurodrive.co.uk |
| | Drive Service Hotline / 24 Hour Service | | Tel. 01924 896911 |
| **Greece** | | | |
| Sales | Athens | Christ. Boznos & Son S.A.<br>12, K. Mavromichali Street<br>P.O. Box 80136<br>18545 Piraeus | Tel. +30 2 1042 251-34<br>Fax +30 2 1042 251-59<br>http://www.boznos.gr<br>info@boznos.gr |
| **Hungary** | | | |
| Sales<br>Service | Budapest | SEW-EURODRIVE Kft.<br>Csillaghegyí út 13.<br>1037 Budapest | Tel. +36 1 437 06-58<br>Fax +36 1 437 06-50<br>http://www.sew-eurodrive.hu<br>office@sew-eurodrive.hu |
| **Iceland** | | | |
| Sales | Reykjavik | Varma & Vélaverk ehf.<br>Knarrarvogi 4<br>104 Reykjavík | Tel. +354 585 1070<br>Fax +354 585)1071<br>http://www.varmaverk.is<br>vov@vov.is |
| **India** | | | |
| Registered Office<br>Assembly<br>Sales<br>Service | Vadodara | SEW-EURODRIVE India Private Limited<br>Plot No. 4, GIDC<br>POR Ramangamdi • Vadodara - 391 243<br>Gujarat | Tel. +91 265 3045200<br>Fax +91 265 3045300<br>http://www.seweurodriveindia.com<br>salesvadodara@seweurodriveindia.com |
| Assembly<br>Sales<br>Service | Chennai | SEW-EURODRIVE India Private Limited<br>Plot No. K3/1, Sipcot Industrial Park Phase II<br>Mambakkam Village<br>Sriperumbudur - 602105<br>Kancheepuram Dist, Tamil Nadu | Tel. +91 44 37188888<br>Fax +91 44 37188811<br>saleschennai@seweurodriveindia.com |
| | Pune | SEW-EURODRIVE India Private Limited<br>Plant: Plot No. D236/1,<br>Chakan Industrial Area Phase- II,<br>Warale, Tal- Khed,<br>Pune-410501, Maharashtra | Tel. +91 21 35 628700<br>Fax +91 21 35 628715<br>salespune@seweurodriveindia.com |
| Sales<br>Service | Gurgaon | SEW-EURODRIVE India Private Limited<br>Drive Center Gurugram<br>Plot no 395, Phase-IV, UdyogVihar<br>Gurugram , 122016 Haryana | Tel. +91 99588 78855<br>salesgurgaon@seweurodriveindia.com |
| **Indonesia** | | | |
| Sales | Medan | PT. Serumpun Indah Lestari<br>Jl.Pulau Solor no. 8, Kawasan Industri Medan II<br>Medan 20252 | Tel. +62 61 687 1221<br>Fax +62 61 6871429 / +62 61 6871458 / +62 61 30008041<br>sil@serumpunindah.com<br>serumpunindah@yahoo.com<br>http://www.serumpunindah.com |

25957074/EN – 06/2019

| | | | |
|---|---|---|---|
| **Indonesia** | | | |
| | Jakarta | PT. Cahaya Sukses Abadi<br>Komplek Rukan Puri Mutiara Blok A no 99,<br>Sunter<br>Jakarta 14350 | Tel. +62 21 65310599<br>Fax +62 21 65310600<br>csajkt@cbn.net.id |
| | Jakarta | PT. Agrindo Putra Lestari<br>JL.Pantai Indah Selatan, Komplek Sentra Industri Terpadu, Pantai indah Kapuk Tahap III, Blok E No. 27<br>Jakarta 14470 | Tel. +62 21 2921-8899<br>Fax +62 21 2921-8988<br>aplindo@indosat.net.id<br>http://www.aplindo.com |
| | Surabaya | PT. TRIAGRI JAYA ABADI<br>Jl. Sukosemolo No. 63, Galaxi Bumi Permai G6 No. 11<br>Surabaya 60111 | Tel. +62 31 5990128<br>Fax +62 31 5962666<br>sales@triagri.co.id<br>http://www.triagri.co.id |
| | Surabaya | CV. Multi Mas<br>Jl. Raden Saleh 43A Kav. 18<br>Surabaya 60174 | Tel. +62 31 5458589<br>Fax +62 31 5317220<br>sianhwa@sby.centrin.net.id<br>http://www.cvmultimas.com |
| **Ireland** | | | |
| Sales<br>Service | Dublin | Alperton Engineering Ltd.<br>48 Moyle Road<br>Dublin Industrial Estate<br>Glasnevin, Dublin 11 | Tel. +353 1 830-6277<br>Fax +353 1 830-6458<br>http://www.alperton.ie<br>info@alperton.ie |
| **Israel** | | | |
| Sales | Tel Aviv | Liraz Handasa Ltd.<br>Ahofer Str 34B / 228<br>58858 Holon | Tel. +972 3 5599511<br>Fax +972 3 5599512<br>http://www.liraz-handasa.co.il<br>office@liraz-handasa.co.il |
| **Italy** | | | |
| Assembly<br>Sales<br>Service | Milan | SEW-EURODRIVE di R. Blickle & Co.s.a.s.<br>Via Bernini,14<br>20020 Solaro (Milano) | Tel. +39 02 96 980229<br>Fax +39 02 96 980 999<br>http://www.sew-eurodrive.it<br>milano@sew-eurodrive.it |
| **Ivory Coast** | | | |
| Sales | Abidjan | SEW-EURODRIVE SARL<br>Ivory Coast<br>Rue des Pêcheurs, Zone 3<br>26 BP 916 Abidjan 26 | Tel. +225 21 21 81 05<br>Fax +225 21 25 30 47<br>info@sew-eurodrive.ci<br>http://www.sew-eurodrive.ci |
| **Japan** | | | |
| Assembly<br>Sales<br>Service | Iwata | SEW-EURODRIVE JAPAN CO., LTD<br>250-1, Shimoman-no,<br>Iwata<br>Shizuoka 438-0818 | Tel. +81 538 373811<br>Fax +81 538 373814<br>http://www.sew-eurodrive.co.jp<br>sewjapan@sew-eurodrive.co.jp<br>hamamatsu@sew-eurodrive.co.jp |
| **Kazakhstan** | | | |
| Sales<br>Service | Almaty | SEW-EURODRIVE LLP<br>291-291A, Tole bi street<br>050031, Almaty | Tel. +7 (727) 350 5156<br>Fax +7 (727) 350 5156<br>http://www.sew-eurodrive.kz<br>sew@sew-eurodrive.kz |
| | Tashkent | SEW-EURODRIVE LLP<br>Representative office in Uzbekistan<br>96A, Sharaf Rashidov street,<br>Tashkent, 100084 | Tel. +998 71 2359411<br>Fax +998 71 2359412<br>http://www.sew-eurodrive.uz<br>sew@sew-eurodrive.uz |
| | Ulaanbaatar | IM Trading LLC<br>Olympic street 28B/3<br>Sukhbaatar district,<br>Ulaanbaatar 14230 | Tel. +976-77109997<br>Fax +976-77109997<br>imt@imt.mn |
| **Latvia** | | | |
| Sales | Riga | SIA Alas-Kuul<br>Katlakalna 11C<br>1073 Riga | Tel. +371 6 7139253<br>Fax +371 6 7139386<br>http://www.alas-kuul.lv<br>info@alas-kuul.com |

25957074/EN – 06/2019

| | | | |
|---|---|---|---|
| **Lebanon** | | | |
| Sales (Lebanon) | Beirut | Gabriel Acar & Fils sarl<br>B. P. 80484<br>Bourj Hammoud, Beirut | Tel. +961 1 510 532<br>Fax +961 1 494 971<br>ssacar@inco.com.lb |
| Sales (Jordan, Kuwait , Saudi Arabia, Syria) | Beirut | Middle East Drives S.A.L. (offshore)<br>Sin El Fil.<br>B. P. 55-378<br>Beirut | Tel. +961 1 494 786<br>Fax +961 1 494 971<br>http://www.medrives.com<br>info@medrives.com |
| **Lithuania** | | | |
| Sales | Alytus | UAB Irseva<br>Statybininku 106C<br>63431 Alytus | Tel. +370 315 79204<br>Fax +370 315 56175<br>http://www.irseva.lt<br>irmantas@irseva.lt |
| **Luxembourg** | | | |
| Representation: Belgium | | | |
| **Macedonia** | | | |
| Sales | Skopje | Boznos DOOEL<br>Dime Anicin 2A/7A<br>1000 Skopje | Tel. +389 23256553<br>Fax +389 23256554<br>http://www.boznos.mk |
| **Malaysia** | | | |
| Assembly<br>Sales<br>Service | Johor | SEW-EURODRIVE SDN BHD<br>No. 95, Jalan Seroja 39, Taman Johor Jaya<br>81000 Johor Bahru, Johor<br>West Malaysia | Tel. +60 7 3549409<br>Fax +60 7 3541404<br>sales@sew-eurodrive.com.my |
| **Mexico** | | | |
| Assembly<br>Sales<br>Service | Quéretaro | SEW-EURODRIVE MEXICO S.A. de C.V.<br>SEM-981118-M93<br>Tequisquiapan No. 102<br>Parque Industrial Quéretaro<br>C.P. 76220<br>Querétaro, México | Tel. +52 442 1030-300<br>Fax +52 442 1030-301<br>http://www.sew-eurodrive.com.mx<br>scmexico@seweurodrive.com.mx |
| Sales<br>Service | Puebla | SEW-EURODRIVE MEXICO S.A. de C.V.<br>Calzada Zavaleta No. 3922 Piso 2 Local 6<br>Col. Santa Cruz Buenavista<br>C.P. 72154<br>Puebla, México | Tel. +52 (222) 221 248<br>http://www.sew-eurodrive.com.mx<br>scmexico@seweurodrive.com.mx |
| **Mongolia** | | | |
| Technical Office | Ulaanbaatar | IM Trading LLC<br>Olympic street 28B/3<br>Sukhbaatar district,<br>Ulaanbaatar 14230 | Tel. +976-77109997<br>Tel. +976-99070395<br>Fax +976-77109997<br>http://imt.mn/<br>imt@imt.mn |
| **Morocco** | | | |
| Sales<br>Service | Bouskoura | SEW-EURODRIVE Morocco<br>Parc Industriel CFCIM, Lot 55 and 59<br>Bouskoura | Tel. +212 522 88 85 00<br>Fax +212 522 88 84 50<br>http://www.sew-eurodrive.ma<br>sew@sew-eurodrive.ma |
| **Namibia** | | | |
| Sales | Swakopmund | DB MINING & INDUSTRIAL SUPPLIES CC<br>Einstein Street<br>Strauss Industrial Park<br>Unit1<br>Swakopmund | Tel. +264 64 462 738<br>Fax +264 64 462 734<br>anton@dbminingnam.com |
| **Netherlands** | | | |
| Assembly<br>Sales<br>Service | Rotterdam | SEW-EURODRIVE B.V.<br>Industrieweg 175<br>3044 AS Rotterdam<br>Postbus 10085<br>3004 AB Rotterdam | Tel. +31 10 4463-700<br>Fax +31 10 4155-552<br>Service: 0800-SEWHELP<br>http://www.sew-eurodrive.nl<br>info@sew-eurodrive.nl |

25957074/EN – 06/2019

| | | | |
|---|---|---|---|
| **New Zealand** | | | |
| Assembly<br>Sales<br>Service | Auckland | SEW-EURODRIVE NEW ZEALAND LTD.<br>P.O. Box 58-428<br>82 Greenmount drive<br>East Tamaki Auckland | Tel. +64 9 2745627<br>Fax +64 9 2740165<br>http://www.sew-eurodrive.co.nz<br>sales@sew-eurodrive.co.nz |
| | Christchurch | SEW-EURODRIVE NEW ZEALAND LTD.<br>30 Lodestar Avenue, Wigram<br>Christchurch | Tel. +64 3 384-6251<br>Fax +64 3 384-6455<br>sales@sew-eurodrive.co.nz |
| **Nigeria** | | | |
| Sales | Lagos | Greenpeg Nig. Ltd<br>Plot 296A, Adeyemo Akapo Str. Omole GRA<br>Ikeja Lagos-Nigeria | Tel. +234-701-821-9200-1<br>http://www.greenpegltd.com<br>bolaji.adekunle@greenpegltd.com |
| **Norway** | | | |
| Assembly<br>Sales<br>Service | Moss | SEW-EURODRIVE A/S<br>Solgaard skog 71<br>1599 Moss | Tel. +47 69 24 10 20<br>Fax +47 69 24 10 40<br>http://www.sew-eurodrive.no<br>sew@sew-eurodrive.no |
| **Pakistan** | | | |
| Sales | Karachi | Industrial Power Drives<br>Al-Fatah Chamber A/3, 1st Floor Central Commercial Area,<br>Sultan Ahmed Shah Road, Block 7/8,<br>Karachi | Tel. +92 21 452 9369<br>Fax +92-21-454 7365<br>seweurodrive@cyber.net.pk |
| **Paraguay** | | | |
| Sales | Fernando de la Mora | SEW-EURODRIVE PARAGUAY S.R.L<br>De la Victoria 112, Esquina nueva Asunción<br>Departamento Central<br>Fernando de la Mora, Barrio Bernardino | Tel. +595 991 519695<br>Fax +595 21 3285539<br>sewpy@sew-eurodrive.com.py |
| **Peru** | | | |
| Assembly<br>Sales<br>Service | Lima | SEW EURODRIVE DEL PERU S.A.C.<br>Los Calderos, 120-124<br>Urbanizacion Industrial Vulcano, ATE, Lima | Tel. +51 1 3495280<br>Fax +51 1 3493002<br>http://www.sew-eurodrive.com.pe<br>sewperu@sew-eurodrive.com.pe |
| **Philippines** | | | |
| Sales | Makati | P.T. Cerna Corporation<br>4137 Ponte St., Brgy. Sta. Cruz<br>Makati City 1205 | Tel. +63 2 519 6214<br>Fax +63 2 890 2802<br>mech_drive_sys@ptcerna.com<br>http://www.ptcerna.com |
| **Poland** | | | |
| Assembly<br>Sales<br>Service | Łódź | SEW-EURODRIVE Polska Sp.z.o.o.<br>ul. Techniczna 5<br>92-518 Łódź | Tel. +48 42 293 00 00<br>Fax +48 42 293 00 49<br>http://www.sew-eurodrive.pl<br>sew@sew-eurodrive.pl |
| | Service | Tel. +48 42 293 0030<br>Fax +48 42 293 0043 | 24 Hour Service<br>Tel. +48 602 739 739 (+48 602 SEW SEW)<br>serwis@sew-eurodrive.pl |
| **Portugal** | | | |
| Assembly<br>Sales<br>Service | Coimbra | SEW-EURODRIVE, LDA.<br>Av. da Fonte Nova, n.º 86<br>3050-379 Mealhada | Tel. +351 231 20 9670<br>Fax +351 231 20 3685<br>http://www.sew-eurodrive.pt<br>infosew@sew-eurodrive.pt |
| **Romania** | | | |
| Sales<br>Service | Bucharest | Sialco Trading SRL<br>str. Brazilia nr. 36<br>011783 Bucuresti | Tel. +40 21 230-1328<br>Fax +40 21 230-7170<br>sialco@sialco.ro |
| **Russia** | | | |
| Assembly<br>Sales<br>Service | St. Petersburg | ЗАО «СЕВ-ЕВРОДРАЙФ»<br>а. я. 36<br>195220 Санкт-Петербург | Tel. +7 812 3332522 / +7 812 5357142<br>Fax +7 812 3332523<br>http://www.sew-eurodrive.ru<br>sew@sew-eurodrive.ru |

25957074/EN – 06/2019

| | | | |
|---|---|---|---|
| **Senegal** | | | |
| Sales | Dakar | SENEMECA<br>Mécanique Générale<br>Km 8, Route de Rufisque<br>B.P. 3251, Dakar | Tel. +221 338 494 770<br>Fax +221 338 494 771<br>http://www.senemeca.com<br>senemeca@senemeca.sn |
| **Serbia** | | | |
| Sales | Belgrade | DIPAR d.o.o.<br>Ustanicka 128a<br>PC Košum, IV floor<br>11000 Beograd | Tel. +381 11 347 3244 / +381 11 288 0393<br>Fax +381 11 347 1337<br>office@dipar.rs |
| **Singapore** | | | |
| Assembly<br>Sales<br>Service | Singapore | SEW-EURODRIVE PTE. LTD.<br>No 9, Tuas Drive 2<br>Jurong Industrial Estate<br>Singapore 638644 | Tel. +65 68621701<br>Fax +65 68612827<br>http://www.sew-eurodrive.com.sg<br>sewsingapore@sew-eurodrive.com |
| **Slovakia** | | | |
| Sales | Bratislava | SEW-Eurodrive SK s.r.o.<br>Rybničná 40<br>831 06 Bratislava | Tel.+421 2 33595 202, 217, 201<br>Fax +421 2 33595 200<br>http://www.sew-eurodrive.sk<br>sew@sew-eurodrive.sk |
| | Košice | SEW-Eurodrive SK s.r.o.<br>Slovenská ulica 26<br>040 01 Košice | Tel. +421 55 671 2245<br>Fax +421 55 671 2254<br>Mobile +421 907 671 976<br>sew@sew-eurodrive.sk |
| **Slovenia** | | | |
| Sales<br>Service | Celje | Pakman - Pogonska Tehnika d.o.o.<br>UI. XIV. divizije 14<br>3000 Celje | Tel. +386 3 490 83-20<br>Fax +386 3 490 83-21<br>pakman@siol.net |
| **South Africa** | | | |
| Assembly<br>Sales<br>Service | Johannesburg | SEW-EURODRIVE (PROPRIETARY) LIMITED<br>Eurodrive House<br>Cnr. Adcock Ingram and Aerodrome Roads<br>Aeroton Ext. 2<br>Johannesburg 2013<br>P.O.Box 90004<br>Bertsham 2013 | Tel. +27 11 248-7000<br>Fax +27 11 248-7289<br>http://www.sew.co.za<br>info@sew.co.za |
| | Cape Town | SEW-EURODRIVE (PROPRIETARY) LIMITED<br>Rainbow Park<br>Cnr. Racecourse & Omuramba Road<br>Montague Gardens<br>Cape Town<br>P.O.Box 36556<br>Chempet 7442 | Tel. +27 21 552-9820<br>Fax +27 21 552-9830<br>Telex 576 062<br>bgriffiths@sew.co.za |
| | Durban | SEW-EURODRIVE (PROPRIETARY) LIMITED<br>48 Prospecton Road<br>Isipingo<br>Durban<br>P.O. Box 10433, Ashwood 3605 | Tel. +27 31 902 3815<br>Fax +27 31 902 3826<br>cdejager@sew.co.za |
| | Nelspruit | SEW-EURODRIVE (PROPRIETARY) LIMITED<br>7 Christie Crescent<br>Vintonia<br>P.O.Box 1942<br>Nelspruit 1200 | Tel. +27 13 752-8007<br>Fax +27 13 752-8008<br>robermeyer@sew.co.za |
| **South Korea** | | | |
| Assembly<br>Sales<br>Service | Ansan | SEW-EURODRIVE KOREA CO., LTD.<br>7, Dangjaengi-ro,<br>Danwon-gu,<br>Ansan-si, Gyeonggi-do, Zip 425-839 | Tel. +82 31 492-8051<br>Fax +82 31 492-8056<br>http://www.sew-eurodrive.kr<br>master.korea@sew-eurodrive.com |
| | Busan | SEW-EURODRIVE KOREA CO., LTD.<br>28, Noksansandan 262-ro 50beon-gil,<br>Gangseo-gu,<br>Busan, Zip 618-820 | Tel. +82 51 832-0204<br>Fax +82 51 832-0230 |

25957074/EN – 06/2019

| | | | |
|---|---|---|---|
| **Spain** | | | |
| Assembly<br>Sales<br>Service | Bilbao | SEW-EURODRIVE ESPAÑA, S.L.<br>Parque Tecnológico, Edificio, 302<br>48170 Zamudio (Vizcaya) | Tel. +34 94 43184-70<br>http://www.sew-eurodrive.es<br>sew.spain@sew-eurodrive.es |
| **Sri Lanka** | | | |
| Sales | Colombo | SM International (Pte) Ltd<br>254, Galle Raod<br>Colombo 4, Sri Lanka | Tel. +94 1 2584887<br>Fax +94 1 2582981 |
| **Swaziland** | | | |
| Sales | Manzini | C G Trading Co. (Pty) Ltd<br>Simunye street<br>Matsapha, Manzini | Tel. +268 7602 0790<br>Fax +268 2 518 5033<br>charles@cgtrading.co.sz<br>www.cgtradingswaziland.com |
| **Sweden** | | | |
| Assembly<br>Sales<br>Service | Jönköping | SEW-EURODRIVE AB<br>Gnejsvägen 6-8<br>553 03 Jönköping<br>Box 3100 S-550 03 Jönköping | Tel. +46 36 34 42 00<br>Fax +46 36 34 42 80<br>http://www.sew-eurodrive.se<br>jonkoping@sew.se |
| **Switzerland** | | | |
| Assembly<br>Sales<br>Service | Basel | Alfred Imhof A.G.<br>Jurastrasse 10<br>4142 Münchenstein bei Basel | Tel. +41 61 417 1717<br>Fax +41 61 417 1700<br>http://www.imhof-sew.ch<br>info@imhof-sew.ch |
| **Taiwan** | | | |
| Sales | Taipei | Ting Shou Trading Co., Ltd.<br>6F-3, No. 267, Sec. 2<br>Tung Huw S. Road<br>Taipei | Tel. +886 2 27383535<br>Fax +886 2 27368268<br>Telex 27 245<br>sewtwn@ms63.hinet.net<br>http://www.tingshou.com.tw |
| | Nan Tou | Ting Shou Trading Co., Ltd.<br>No. 55 Kung Yeh N. Road<br>Industrial District<br>Nan Tou 540 | Tel. +886 49 255353<br>Fax +886 49 257878<br>sewtwn@ms63.hinet.net<br>http://www.tingshou.com.tw |
| **Tanzania** | | | |
| Sales | Daressalam | SEW-EURODRIVE PTY LIMITED TANZANIA<br>Plot 52, Regent Estate<br>PO Box 106274<br>Dar Es Salaam | Tel. +255 0 22 277 5780<br>Fax +255 0 22 277 5788<br>http://www.sew-eurodrive.co.tz<br>info@sew.co.tz |
| **Thailand** | | | |
| Assembly<br>Sales<br>Service | Chonburi | SEW-EURODRIVE (Thailand) Ltd.<br>700/456, Moo.7, Donhuaroh<br>Muang<br>Chonburi 20000 | Tel. +66 38 454281<br>Fax +66 38 454288<br>sewthailand@sew-eurodrive.com |
| **Tunisia** | | | |
| Sales | Tunis | T. M.S. Technic Marketing Service<br>Zone Industrielle Mghira 2<br>Lot No. 39<br>2082 Fouchana | Tel. +216 79 40 88 77<br>Fax +216 79 40 88 66<br>http://www.tms.com.tn<br>tms@tms.com.tn |
| **Turkey** | | | |
| Assembly<br>Sales<br>Service | Kocaeli-Gebze | SEW-EURODRİVE Hareket<br>Sistemleri San. Ve TIC. Ltd. Sti<br>Gebze Organize Sanayi Böl. 400 Sok No. 401<br>41480 Gebze Kocaeli | Tel. +90 262 9991000 04<br>Fax +90 262 9991009<br>http://www.sew-eurodrive.com.tr<br>sew@sew-eurodrive.com.tr |
| **Ukraine** | | | |
| Assembly<br>Sales<br>Service | Dnipropetrovsk | SEW-EURODRIVE, LLC<br>Robochya str., bld. 23-B, office 409<br>49008 Dnipro | Tel. +380 56 370 3211<br>Fax +380 56 372 2078<br>http://www.sew-eurodrive.ua<br>sew@sew-eurodrive.ua |

25957074/EN – 06/2019

| | | | |
|---|---|---|---|
| **United Arab Emirates** | | | |
| Drive Technology Center | Dubai | SEW-EURODRIVE FZE<br>PO Box 263835<br>Jebel Ali Free Zone – South,<br>P.O. Box<br>Dubai, United Arab Emirates | Tel. +971 (0)4 8806461<br>Fax +971 (0)4 8806464<br>info@sew-eurodrive.ae |
| **Uruguay** | | | |
| Assembly<br>Sales | Montevideo | SEW-EURODRIVE Uruguay, S. A.<br>Jose Serrato 3569 Esqina Corumbe<br>CP 12000 Montevideo | Tel. +598 2 21181-89<br>Fax +598 2 21181-90<br>sewuy@sew-eurodrive.com.uy |
| **USA** | | | |
| Production<br>Assembly<br>Sales<br>Service | Southeast Region | SEW-EURODRIVE INC.<br>1295 Old Spartanburg Highway<br>P.O. Box 518<br>Lyman, S.C. 29365 | Tel. +1 864 439-7537<br>Fax Sales +1 864 439-7830<br>Fax Production +1 864 439-9948<br>Fax Assembly +1 864 439-0566<br>Fax Confidential/HR +1 864 949-5557<br>http://www.seweurodrive.com<br>cslyman@seweurodrive.com |
| Assembly<br>Sales<br>Service | Northeast Region | SEW-EURODRIVE INC.<br>Pureland Ind. Complex<br>2107 High Hill Road, P.O. Box 481<br>Bridgeport, New Jersey 08014 | Tel. +1 856 467-2277<br>Fax +1 856 845-3179<br>csbridgeport@seweurodrive.com |
| | Midwest Region | SEW-EURODRIVE INC.<br>2001 West Main Street<br>Troy, Ohio 45373 | Tel. +1 937 335-0036<br>Fax +1 937 332-0038<br>cstroy@seweurodrive.com |
| | Southwest Region | SEW-EURODRIVE INC.<br>3950 Platinum Way<br>Dallas, Texas 75237 | Tel. +1 214 330-4824<br>Fax +1 214 330-4724<br>csdallas@seweurodrive.com |
| | Western Region | SEW-EURODRIVE INC.<br>30599 San Antonio St.<br>Hayward, CA 94544 | Tel. +1 510 487-3560<br>Fax +1 510 487-6433<br>cshayward@seweurodrive.com |
| | Wellford | SEW-EURODRIVE INC.<br>148/150 Finch Rd.<br>Wellford, S.C. 29385 | Tel. +1 864 439-7537<br>Fax +1 864 661 1167<br>IGOrders@seweurodrive.com |
| | Additional addresses for service provided on request! | | |
| **Vietnam** | | | |
| Sales | Ho Chi Minh City | SEW-EURODRIVE PTE. LTD. RO at Hochiminh City<br>Floor 8, KV I, Loyal building, 151-151 Bis Vo Thi Sau street, ward 6, District 3, Ho Chi Minh City, Vietnam | Tel. +84 937 299 700<br><br>huytam.phan@sew-eurodrive.com |
| | Hanoi | MICO LTD<br>Quảng Trị - North Vietnam / All sectors except Construction Materials<br>8th Floor, Ocean Park Building, 01 Dao Duy Anh St, Ha Noi, Viet Nam | Tel. +84 4 39386666<br>Fax +84 4 3938 6888<br>nam_ph@micogroup.com.vn<br>http://www.micogroup.com.vn |
| **Zambia** | | | |
| Representation: South Africa | | | |

25957074/EN – 06/2019

# Index

## Icons

/DUB (Diagnostic Unit Brake) ..... 206
/V forced cooling fan ..... 108

## Numerical

2nd shaft end ..... 60

## A

AB.., AD.., AM.., AK.., AC.., AS plug connectors 89
Add-on encoder ..... 111
AG7. ..... 111
AH7. ..... 111
Air filter /LF ..... 58
Anti-condensation heating
  /Hx ..... 117
Appendix ..... 269
AS7. ..... 111
Auxiliary terminals, arrangement ..... 285

## B

Backstop ..... 219
BE05 – 2 ..... 185
Bearing
  Reinforced ..... 126
Bearing lubrication ..... 125
Brake
  BE05 – 2 ..... 185
  BE05 – 20 ..... 186
  BE120 ..... 187
  BE122 ..... 188
  BE30 ..... 187
  BE32 ..... 188
  BE60 ..... 187
  BE62 ..... 188
  Braking torques ..... 225
  Braking work ..... 225
  Operating currents BE.. brake ..... 226
  Working air gap ..... 225
Brake connection ..... 94
Brake control ..... 63, 234
  BG.. ..... 277
  BGE.. ..... 277
  BMP3.1 ..... 281
  BSG.. ..... 277
  BSR ..... 279
  BUR.. ..... 277
  Connection ..... 94
  Control cabinet ..... 240
  Motor terminal box ..... 237
  Motor wiring compartment ..... 237
Brake exchange
  DR.71 – 80, DRN80, DR2..80 ..... 197, 199
Brake malfunctions ..... 266
Brake rectifier combinations ..... 234
Brakemotor structure
  DR..160 – 315, DRN132M – 315 ..... 178
  DR..71 – 80, DRN63 – 80, DR2..63 – 80 ..... 176
  DR..90 – 132, DRN90 – 132S ..... 177
  DR2..56 ..... 175
Braking torques ..... 225
Braking work ..... 225
Built-in encoder ..... 113, 275

## C

Cable gland
  NPT ..... 46
Changing the blocking direction ..... 219
Changing the brake lining carrier
  BE05 – 122 ..... 193
Changing the brake spring
  BE05 – 122 ..... 195
Changing the braking torque
  BE05 – 122 ..... 194
Changing the magnet body
  BE05 – 122 ..... 196
Characteristic safety values ..... 261
Characteristic values ..... 261
Condensation drain holes ..... 37
Connecting diagnostic unit /DUB ..... 98
Connecting diagnostic unit /DUE ..... 211
Connecting the motor ..... 74
  AB.., AD.., AM.., AK.., AC.., AS plug connectors ..... 89
  IS plug connector ..... 84
  Terminal box ..... 75, 76, 77
  via plug connector ..... 84
  via terminal board ..... 75
  via terminal strip ..... 90

25957074/EN – 06/19

Connection
Variants ... 29
Cooling air supply ... 37
Copyright notice ... 8
Customer service ... 268

D

Delta connection
R13 ... 269
R72 ... 271
Design
DR..315, DRN315 ... 22
Motor ... 22
Designated use ... 10
Diagnostic unit /DUE ... 210
Direct mounting ... 53
Disassembly
Diagnostic unit /DUE ... 209
Drive components, installation ... 39
DRK.. ... 72
DRK.. single-phase motor
S1 operation ... 262
DRK... single-phase motor
Wiring diagram ... 284
Drying
Motor ... 35
DUB (Diagnostic Unit Brake) ... 98

E

EG7. ... 111
EH7. ... 111
EI7 ... 275
Electrical connection ... 13
Electrical installation ... 62
Minimum requirements for encoder cables .. 117
Embedded safety notes ... 7
EMC ... 67
Encoder ... 28, 111
AG7. ... 111
AH7. ... 111
AS7 ... 111
EG7. ... 111
EH7. ... 111
EI7. ... 113
EI8. ... 113
ES7 ... 111
Mounting adapter ... 40
Technical data ... 246
Encoder cable ... 117
Encoder cable requirements ... 117
Encoder connection ... 116
Encoder mounting adapter ... 42
Equipment, accessory ... 103
ES7 ... 111
EV. ... 40

F

Failure ... 263
Faults ... 263
For mounting to gear units ... 53
Forced cooling fan
Wiring diagram ... 282
Forced cooling fan /V ... 108
Frequency inverter operation ... 64

G

Grounding ... 67
at the terminal box ... 66
NF ... 66

H

Hazard symbols
Meaning ... 7
Hollow shaft rotary encoder ... 43
HR/HF manual brake release, retrofitting .... 56, 203
Hx ... 117

I

Improving the grounding ... 67
Inspecting the brakemotor
DR.63 – 315, DRN80 – 315 ... 179
Inspecting the motor
DR..71 – 315, DRN80 – 315 ... 173
Inspection ... 121
/DUB ... 206
Inspection intervals ... 123
Installation
In damp locations or outdoors ... 38
Measuring nipple ... 59
Tolerances ... 39
XH.A encoder mounting adapter ... 43

25957074/EN – 06/19



SEW EURODRIVE

Installation notes
Encoder ... 116
Installation tolerances ... 39
Installation, conditions ... 32
Insulation resistance ... 34
Insulation, reinforced ... 64
Intervals for inspection and maintenance ... 123
IS plug connector ... 84
Isolation transformer ... 35
ISU plug connector ... 84

## K

KTY84-130 temperature sensor ... 105

## L

LF
Air filter ... 58
Low-speed motors ... 71
Lubricant table ... 244
Lubrication ... 125

## M

Maintenance ... 121
Maintenance intervals ... 123
Malfunctions when operating with a frequency inverter ... 267
Mark, nameplate ... 24
Measuring nipple mounting adapter ... 59
Mechanical installation ... 32
Minimum requirements for encoder cables ... 117
Motor
Connect via terminal board ... 75
Connecting the terminal strip ... 90
Connecting via plug connector ... 84
Connection ... 74
Drying ... 35
Setup ... 37
Motor design
DR..315, DRN315 ... 22
Motor designation ... 26
Motor feet
Retrofitting/modifying motor feet ... 48
Motor malfunctions ... 264
Motor mounting ... 53
Motor protection ... 273, 274
TF ... 273, 274
TH ... 273, 274
Motor protection device ... 63
Motor structure
DR..160 – 180, DRN132M – 180 ... 19
DR..200 – 225, DRN200 – 225 ... 20
DR..250 – 280, DRN250 – 280 ... 21
DR..71 – 132, DRN71 – 132S, DR2..71 – 80 . 18
Mounting ... 37
Mounting adapter ... 40, 42
Encoder ... 40
Measuring nipple ... 59
XH.A ... 144
XV ... 140, 142
XV.A ... 139
Mounting XH.A ... 43

## N

Nameplate ... 23
Mark ... 24
Notes
Designation in the documentation ... 6
Meaning of the hazard symbols ... 7

## O

Operation
Safety notes ... 14
Operation with frequency inverter ... 64
Optical status messages ... 113
Options ... 27
Electrical ... 103
Mechanical ... 56

## P

Plug connector ... 84
AB.., AD.., AM.., AK.., AC.., AS ... 89
IS ... 84
ISU ... 84
Port dimensions
Encoder ... 116
Preliminary work for motor and brake maintenance ... 127
Product names ... 8
PT100 ... 106
PT100 temperature detection ... 106
PT1000 ... 107
PT1000 temperature detection ... 107

25957074/EN – 06/19

Pulse voltages ..... 64

## R

Reinforced bearings ..... 119, 126
Relubrication ..... 125
Relubrication device ..... 125
Relubrication intervals ..... 126
Removing rotary encoder ..... 131, 133, 135, 137
EG7. and AG7. ..... 133, 135
EH7. and AH7. ..... 137
ES7. and AS7. ..... 131
Removing the absolute encoder ..... 139, 140, 142
Removing the encoder
..... 131, 133, 135, 137, 139, 140, 142, 144
EG7. and AG7. ..... 133, 135
EH7. and AH7. ..... 137
ES7. and AS7. ..... 131
EV.., AV.., and XV.. ..... 139, 140, 142
EV.., AV.., and XV.A ..... 139
Removing the hollow shaft encoder ..... 144
Removing the incremental encoder ... 139, 140, 142
EV.., AV.., and XV.. ..... 140, 142
EV.., AV.., and XV.A ..... 139
Removing the special encoder ..... 139, 140, 142
Resistance ..... 230
Resistance measurement of the brake ..... 230, 233
Retrofitting the HR/HF manual brake release
..... 56, 203
Rights to claim under limited warranty ..... 8
Rolling bearing ..... 242
RS ..... 219

## S

Safety cover ..... 60
Safety notes
Designated use ..... 10
Designation in the documentation ..... 6
Electrical connection ..... 13
Meaning of the hazard symbols ..... 7
Preliminary information ..... 9
Setup ..... 12
Storage ..... 11
Structure of embedded ..... 7
Structure of section-related ..... 6
Second shaft end ..... 60
Section-related safety notes ..... 6
Serial number ..... 25
Setting the working air gap
BE05 – 122 ..... 191
Setup ..... 12, 37
Signal words in safety notes ..... 6
Single-phase motor ..... 72
Special design ..... 32
Special features
Low-speed motors ..... 71
Switching operation ..... 71
Torque motors ..... 71
Star connection
R13 ..... 269
R76 ..... 272
Startup ..... 118
Safety notes ..... 14
Status message evaluation unit ..... 218
Storage
Reinforced ..... 119
Storage, extended ..... 34
Strip heater ..... 117
Structure
Brakemotor ..... 175, 176, 177, 178
DR..160 – 315, DRN132M – 315 with BE .... 178
DR..160 – 180, DRN132M – 180 ..... 19
DR..200 – 225, DRN200 – 225 ..... 20
DR..250 – 280, DRN250 – 280 ..... 21
DR..71 – 132, DRN71 – 132S, DR2..71 – 80 . 18
DR..71 – 80, DRN63 – 80, DR2..63 – 80 with BE
..... 176
DR..90 – 132, DRN90 – 132S with BE ..... 177
DR2..56 with BE ..... 175
DUB ..... 205
Motor ..... 18, 19, 20, 21
Motors ..... 15
Switch contacts ..... 118
Switching operation ..... 71

## T

Target group ..... 10
Technical data ..... 222
Technical data BE.. brake
Operating currents BE.. brake ..... 226
Terminal arrangement ..... 285
Terminal board ..... 75

25957074/EN – 06/19



SEW EURODRIVE

Terminal box
Rotate ... 44
Terminal box positions ... 285
Terminal strip ... 90
TF ... 103, 273, 274
TF temperature sensor ... 103
TH ... 104, 273, 274
TH winding thermostats ... 104
Torque motors ... 71
Trademarks ... 8
Transportation ... 11
Type designation ... 26
Bearing ... 29
Connection variants ... 29
Encoder ... 28
Mechanical attachments ... 27
Other additional features ... 30
Output variants ... 27
Temperature sensor ... 27
Ventilation ... 29
Type designation DR..
Condition monitoring ... 30
Types
Overview ... 27

## U

UWU51A switched-mode power supply ... 110

## W

Waste disposal ... 268
Wear ... 123
Wiring diagram
BMP3.1 ... 281
Wiring diagrams ... 269
BG.. ... 277
BGE.. ... 277
BS24 ... 277
BSG.. ... 277
BSR ... 279
R13 delta connection ... 269, 271
R76 star connection ... 272
Star connection R13 ... 269
TF ... 273, 274
TH ... 273, 274
Working air gap ... 225

## X

XV.. ... 40

25957074/EN – 06/19



**SEW-EURODRIVE**
**Driving the world**

SEW-EURODRIVE GmbH & Co KG
Ernst-Blickle-Str. 42
76646 BRUCHSAL
GERMANY
Tel. +49 7251 75-0
Fax +49 7251 75-1970
sew@sew-eurodrive.com
➞ **www.sew-eurodrive.com**

HYDROTECH



**Hydrotech AB**
**A Veolia Solutions & Technologies Company**
Mejselgatan 6
235 32 Vellinge
Sweden

Telephone: +46 (0)40 - 42 95 30
Fax: +46 (0)40 - 42 95 31
E-mail: mailbox@hydrotech.se
Web: www.hydrotech.se
Copyright © All rights reserved

VEOLIA

LEFT BLANK

# *WAM*

## *MBF SERIES, MICRO BATCH FEEDER*

LEFT BLANK

WAM®

WAMGROUP

2

MAINTENANCE

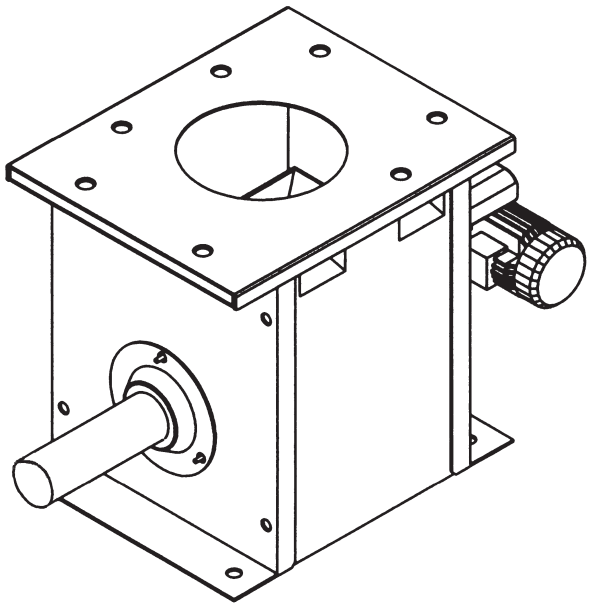

# MBF

- ***MICRO-BATCH FEEDERS***
  INSTALLATION, OPERATION AND MAINTENANCE
- ***MIKRODOSIERER***
  EINBAU-, BETRIEBS- UND WARTUNGSANLEITUNG
- ***MICRODOSEURS***
  INSTALLATION, UTILISATION ET ENTRETIEN
- ***MICRODOSATORI***
  INSTALLAZIONE, USO E MANUTENZIONE

All rights reserved © WAMGROUP S.p.A.


| CATALOGUE No. **VAL.062.--.M.4L** | | | |
|---|---|---|---|
| ISSUE<br>**A14** | CIRCULATION<br>**100** | LATEST UPDATE<br>**09.16** | |

WAM®

All the products described in this catalogue are manufactured according to **WAMGROUP S.p.A. Quality System procedures**. The Company's Quality System, certified in July 1994 according to International Standards **UNI EN ISO 9002** and extended to the latest release of **UNI EN ISO 9001**, ensures that the entire production process, starting from the processing of the order to the technical service after delivery, is carried out in a controlled manner that guarantees the quality standard of the product.

*Alle in diesem Katalog beschriebenen Produkte werden gemäß dem **Qualitätssystem der WAMGROUP S.p.A.** hergestellt. Das im Juli 1994 gemäß der internationalen Norm **UNI EN ISO 9002** und auf die neueste Version der **UNI EN ISO 9001** erweiterte, zertifizierte Qualitätssystem der Firma gewährleistet, dass der gesamte Produktionsprozess von der Auftragsbearbeitung bis zum technischen Kundendienst nach Lieferung in kontrollierter Art und Weise erfolgt, so dass der Qualitätsstandard des Produkts gewährleistet ist.*

Tous les produits décrits dans ce catalogue sont fabriqués selon les procédures du **Système de Qualité de WAMGROUP S.p.A.**, certifié en Juillet 1994 selon les normes internationales **UNI EN ISO 9002** et étendu à la dernière version de la norme **UNI EN ISO 9001**. Cela garantit que le processus de production, à partir de la gestion de la commande au service technique après-vente, est effectué de manière contrôlée garantissant la norme de qualité du produit.

*Tutti i prodotti descritti nel catalogo sono stati realizzati secondo le **procedure del Sistema Qualità di WAMGROUP S.p.A.** Il Sistema Qualità aziendale, certificato dal luglio 1994 in conformità alle normative internazionali **UNI EN ISO 9002** e successivamente esteso all' ultima versione delle normative **UNI EN ISO 9001**, garantisce che l'intero processo produttivo, dalla formulazione dell'ordine fino all'assistenza tecnica dopo la consegna, si svolga secondo modalità controllate che garantiscono lo standard qualitativo del prodotto.*

**This publication cancels and replaces any previous edition and revision.**
**We reserve the right to implement modifications without notice.**
**This catalogue cannot be reproduced, even partially, without prior written consent by the Manufacturer.**

***Diese Veröffentlichung storniert und ersetzt alle früheren Ausgaben und überarbeiteten Fassungen.***
***Wir behalten uns das Recht vor, Änderungen ohne vorherige Information durchzuführen.***
***Dieser Katalog darf selbst auszugsweise nicht ohne das schriftliche Einverständnis der Herstellers vervielfältigt werden.***

**Cette publication annule et remplace toute édition et révision antérieure.**
**Nous nous réservons le droit de mettre en place des modifications sans préavis.**
**Aucune reproduction, partielle ou intégrale du catalogue, ne pourra être faite sans l'accord préalable et écrit du Fabricant.**

***Questa pubblicazione annulla e sostituisce le edizioni e revisioni precedenti.***
***Ci riserviamo la facoltà di apportare modifiche senza preavviso.***
***Il presente catalogo non può essere riprodotto, nemmeno parzialmente, senza previo consenso scritto del Costruttore.***

2 **MAINTENANCE CATALOGUE** **WARTUNGSKATALOG**

OPERATION AND MAINTENANCE.....BETRIEBS- UND WARTUNGSANLEITUNG.....**M. 4 → .24**

2 **CATALOGUE D'ENTRETIEN** **CATALOGO DI MANUTENZIONE**

UTILISATION ET ENTRETIEN.....USO E MANUTENZIONE.....**M. 4 → .24**

| ADDRESS OF LOCAL DEALER OR LOCAL SERVICE POINT | ANSCHRIFT DES HÄNDLERS ODER DES KUNDENDIENSTES | ADRESSE DU REVENDEUR OU DU SERVICE APRES-VENTE LOCAL | INDIRIZZO RIVENDITORE O PUNTO DI ASSISTENZA LOCALE |
|---|---|---|---|

| EQUIPMENT IDENTIFICATION | IDENTIFIKATION | PLAQUE D'IDENTIFICATION | INTERPRETAZIONE DELLA TARGHETTA |
|---|---|---|---|
| Refer to order code in acknowledgement of order, in invoice and on packaging to identify equipment. | Zur korrekten Identifikation auf den Bestellcode in der Auftragsbestätigung, in der Rechnung und auf der Verpackung Bezug nehmen. | Pour identifier correctement l'équipement, vous devez vous référer au code qui se trouve sur la confirmation de commande, sur la facture et sur la plaque qui se trouve sur l'emballage. | Per una corretta identificazione della macchina, bisogna fare riferimento al codice che si trova sulla conferma d'ordine, sulla fattura e sulla targhetta posta sull'imballo. |
| **CONTRA-INDICATIONS**<br>If the user observes normal precaution (typical of this type of machine) together with the indications of this manual, work is safe.<br>NOTE FOR FOOD GRADE MICRO-FEEDERS<br>Clean micro-batch feeder with water from time to time. Cleaning frequency depends on type of product and plant.<br>In cleaning certain feeder parts such as the body, the metering screw, the outlet pipe and the protections, special care must be taken.<br>Before using any other than water for cleaning, contact a WAM® sales office.<br>If material is acid or temperature is extremely high or low also contact a WAM® sales office. | **KONTRA-INDIKATIONEN**<br>Sofern der Betreiber die für Geräte dieser Art typischen Vorsichtsmaßnahmen zusammen mit den in dieser Dokumentation enthaltenen Vorschriften beachtet, ist die Betriebssicherheit gewährleistet.<br>BETRIFFT MIKRODOSIERER FÜR NAHRUNGSMITTEL<br>Dosierer regelmäßig mit Wasser abwaschen (Häufigkeit abhängig von Produkt und Anlagentyp). Besonders bei der Reinigung von Gehäuse, Dosierwerkzeug, Ablaufrohr und Schutzvorrichtungen mit Vorsicht vorgehen.<br>Bevor Reinigungsmittel egal welcher Art verwendet werden, bei einem WAM®-Verkaufsbüro Informationen in bezug auf die Verträglichkeit einholen. Ist das Produkt säurehaltig oder dessen Temperatur entweder sehr hoch oder sehr niedrig, ebenfalls mit einem WAM®-Verkaufsbüro Kontakt aufnehmen. | **CONTRE-INDICATIONS**<br>Si l'utilisateur observe les précautions normales pour ce type de machine et les instructions contenues dans ce catalogue l'utilisation est sûre.<br>NOTE POUR MICRODOSEURS ALIMENTAIRES<br>Nettoyer le microdoseur périodiquement avec de l'eau (fréquence dépend du type de matériau et du type d'installation).<br>Utilisez du soin particulier pour le corps, l'outil de dosage, la sortie verticale et les protections. Avant d'utiliser des autres produits au lieu de l'eau contactez un bureau de vente WAM®. Le même vaut si le matériau est acide ou sa température est trop élevée ou trop basse. | **CONTROINDICAZIONE**<br>Se l'utilizzatore osserva le precauzioni normali tipiche per questo tipo di macchina insieme alle indicazioni date in questo catalogo l'utilizzo è sicuro.<br>NOTE PER MICRODOSATORI PER USO ALIMENTARE<br>Lavare il microdosatore periodicamente con acqua. La frequenza dipende dal tipo di materiale e della natura dell'impianto. Certe parti come il corpo, l'utensile di dosaggio, lo scarico verticale e le protezioni vanno puliti con particolare cura. Prima di utilizzare altri prodotti per la pulizia contattare il ns. Ufficio Vendite. Anche se il materiale da dosare fosse acido o avesse una temperatura troppo alta o troppo bassa, contattare il ns. Ufficio Vendite. |
| The equipment must not be put into service before the machine or plant it has been fitted to has been declared in conformity with the regulations of the directive 14/06/1982 (89/392/ECC). | Das Gerät darf nicht in Betrieb genommen werden, bevor die Anlage oder Maschine, in die er eingebaut wurde mit den Vorschriften der Bestimmungen vom 14.06.1982 (89/392/ECC) als konform erklärt wurden. | Il est interdit de mettre en fonction la machine avant que l'installation dans laquelle elle doit etre installée soit déclarée conforme aux dispositions de la directive 14/06/1982 (89/392/ECC). | E' inoltre vietato mettere in funzione la macchina prima che la macchina/impianto nel quale devono essere installate sia dichiarato conforme alle disposizioni della direttiva 14/06/1982 (89/392/EEC). |
| For dangerous materials, i.e. those that must not get in contact with the human body or be inhaled, for flammable, explosive and bacteriologically dangerous materials the plant manufacturer or fitter must provide for the required safety devices and measures. | Für Gefahrenprodukte, bzw. solche, die nicht mit dem menschlichen Körper in Kontakt geraten oder eingeatmet werden dürfen, für leicht entzündbare, explosive sowie bakteriologisch gefährliche Medien muß der Anlagenbauer bzw. –errichter die für die Sicherheit erforderlichen Vorrichtungen vorsehen und Maßnahmen treffen. | Pour des produits dangereux, nuisibles au contact et/ou à l'inhalation, inflammables, explosifs et dangereux du point de vue bactériologique et/ou viral, le constructeur de l'installation ou l'installateur devront prévoir des dispositifs appropriés au besoin. | Per prodotti pericolosi, nocivi al contatto e/o all'inalzione, infiammabili, esplosivi e pericolosi dal punto di vista batteriologico e/o virale, l'impiantista e/o l'installatore, dovranno prevedere idonei dispositivi all'uopo. |
| It is the plant designer's / plant fitter's responsibility to design and install all necessary protection in order to avoid that breaking and/or yielding of the equipment or of parts of it might damage people and/or parts of the plant (e.g. adequate protection against falling down of the motor etc.). | Es liegt in der Verantwortung des Anlagenplaners bzw. –aufstellers, alle notwendigen Schutzvorrichtungen vorzusehen, welche es verhindern, dass durch einen Geräte- oder Teiledefekt Personen- und/oder Sachschäden verursacht werden (z.B. geeigneter Schutz gegen das Herunterfallen des Motors etc.). | Dans ce cadre il est la responsabilité du constructeur de l'installation ou de l'installateur de projeter et d'installer tout équipement de protection nécessaire afin d'éviter que des ruptures et/ou des tassements de la machine et/ou des parties d'elle puissent causer de dégâts à des personnes et/ou des choses (par ex.: des protections appropriées contre la chute du moteur etc.). | In quest'ambito è cura dell'impiantista/installatore predisporre ed installare tutti gli accorgimenti/protezioni al fine di evitare danni a cose o persone in caso di rotture e conseguente caduta di pezzi della macchina (ad es: rottura del motore). |

**RECEIPT OF GOODS / PACKAGING DATA**

On arrival, prior to unloading, check if nature and quantity of the goods comply with the contents of the delivery note, the invoice and the acknowledgement of order.

If any parts are damaged through transport immediately state your claims in writing on the consignment note (waybill). The driver is obliged to accept this and to leave you a copy. Send off your claims without hesitation to us if you received goods free destination or to your shipping agent. Failure to state your claims on arrival of the goods may later invalidate your claim.
Avoid any kind of damage to goods during unloading and handling.
Always handle goods with care.

**N. B.:** The weights given below do not include any additional packaging such as pallets or similar.

**KOLLIMASSE UND GEWICHTE**

Bei Wareneingang vor dem Ab-Laden prüfen, ob Ware in Be-schaffenheit und Menge mit den Angaben auf Lieferschein, Rechnung und Auftragsbestätigung übereinstimmt. Eventuelle Schäden sofort schriftlich im Frachtbrief reklamieren, da spätere Ansprüche nicht mehr geltend gemacht werden können. Der Fahrer ist dazu verpflichtet, die Reklamation entgegen zu nehmen und dem Empfänger eine
Kopie dieser zu überlassen. Bei Lieferung frei Haus Reklamation an den Lieferanten schicken, in allen anderen Fällen an den Spediteur. Beim Abladen Ware nicht beschädigen. Berücksichtigen, daß es sich um mechanische Teile handelt, die mit Vorsicht zu behandeln sind.

**N.B.:** Gewichte beinhalten keine zusätzlichen Verpackungen wie Paletten o.ä.

**EMBALLAGES - POIDS**

Au moment où Vous recevez la marchandise, vérifiez bien que le modèle et la quantité correspondent aux données indiquées sur le bulletin de livraison, sur la facture et sur la confirmation de commande.
Si vous constatez des dommages, vous devez immédiatement le faire savoir en l'écrivant dans l'emplacement prévu à cet effet sur la lettre de voiture. Le chauffeur a l'obligation d'accepter votre réclamation et de vous en laisser une copie. Si la fourniture a été livrée franco destination, envoyez-nous votre réclamation, sinon, envoyez-la directement au transporteur. Si vous ne réclamez les dommages immédiatement après avoir reçu la marchandise, votre réclamation risque de ne pas être acceptée. Veillez à ne pas endommager la marchandise durant le déchargement et la manutention. Faites toujours extrèmement attention quand vous la deplacez.

**N.B.:** Les données ci-dessous ne comprennent pas le poids d'un éventuel emballage supplémentaire (palette ou autre).

**TRASPORTO E RICEVIMENTO**

Al ricevimento della merce controllare se la tipologia e la quantità corrispondono con i dati di bolla di consegna, fattura e conferma d'ordine.
Eventuali danni devono essere fatti presenti immediatamente per iscritto nell'apposito spazio della lettera di vettura. L'autista è obbligato ad accettare un tale reclamo e lasciarne una copia a Voi.
Se la fornitura è franco destino, inviate il Vs. reclamo a noi, altrimenti direttamente allo spedizioniere.
Se non richiederete i danni immediatatamente all'arrivo della merce, la vostra richiesta potrebbe non essere accolta.
Evitate ogni tipo di danneggiamento durante lo scarico e le movimentazioni.
Movimentate sempre la merce con cura.

**N.B.:** I dati riportati non comprendono il peso di un eventuale imballo cumulativo (pallet o altro).

| | **WEIGHTS - *GEWICHTE* - POIDS - *PESI* (kg)** | | | |
|---|---|---|---|---|
| **Type** | Without speed variator<br>*Ohne Regelgetriebe*<br>Sans variateur<br>*Senza motorizzazione* | With speed variator<br>*Mit Regelgetriebe*<br>Avec variateur<br>*Con motovariatore* | Max. weight of accessories<br>*Maximalgewicht Zubehör*<br>Poids max. accessoires<br>*Peso max. accessori* | Packing<br>*Verpackung*<br>Emballage<br>*Imballo* |
| **MBF 042** | 20 | 26 | 25 | 20 |
| **MBF 073** | 60 | 80 | 50 | 30 |
| **MBF 114** | 65 | 85 | 50 | 30 |

Total weight is given by weight of micro-batch feeder (with or without speed variator) plus accessories and packaging.

Gesamtgewicht = Gewicht des Mikrodosierers (mit oder ohne Regelgetriebemotor) + Zubehör + Verpackung.

Le poids total est donné du poids du microdoseur (avec ou sans motovariateur) plus les accessoires éventuels et l'emballage.

Il peso complessivo è dato dal peso del microdosatore (con o senza motovariatore) più gli eventuali accessori e l'imballo.

**RECEIPT OF GOODS / PACKAGING DATA**

**KOLLIMASSE UND GEWICHTE**

**EMBALLAGES - POIDS**

**IMBALLI E PESI**

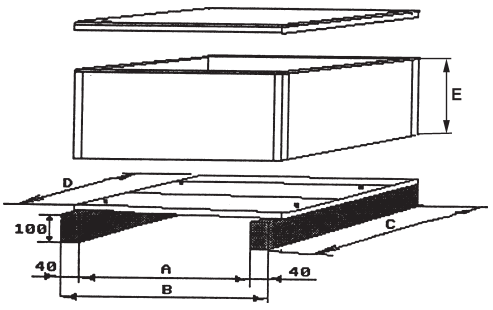


| **Suitable for - *Passend zu***<br>**Pour type - *Idoneo***<br>**MBF** | **A** | **B** | **C** | **D** | **E** | **kg*** |
|---|---|---|---|---|---|---|
| **42** | 570 | 650 | 450 | 440 | 350 | 50 |
| **73** | 820 | 900 | 600 | 500 | 600 | 125 |
| **114** | 820 | 900 | 600 | 590 | 600 | 140 |

(*) Weight with standard MBF
*Gewicht mit Standard MBF*
Poids avec MBF std.
*Peso con MBF std.*

**INSTALLATION**
The micro-batch feeder is ready for operation. Prior to delivery, it has been tested at the factory.

**PREPARATION**
Remove equipment from packaging.

**ASSEMBLY**
The MBF units are despatched with the following parts not assembled:
- motors
- metering screws
- blending tools
- accessories

Procedure:
• unpack
• check supply is complete and in compilance with the order
• assemble metering screw

**EINBAU**
Der Dosierer ist bereits betriebsbereit und wurde vor der Auslieferung im Werk einem vollständigen Funktionstest unterzogen.

**VORBEREITUNG**
Gerät auspacken und zusammenbauen.

**MONTAGE**
Folgende Teile werden unmontiert geliefert:
- E-Motoren
- Dosierwerkzeuge
- Homogenisierwerkzeuge
- Zubehör

Vorgehensweise:
• Gerät auspacken
• Sicherstellen, daß Lieferung vollständing ist
• Dosierwerkzeug montieren

**INSTALLATION**
Le doseur ne nécessite d'aucun contrôle particulier, puisqu'il est fourni déjà complet et testé dans l'usine.

**PREPARATION**
Enlevez le doseur de l'emballage et commencez l'assemblage.

**ASSEMBLAGE**
Les microdoseurs sont fournis avec les éléments suivants non assemblés:
- moteurs
- outil de dosage
- homogénéisateur
- accessoires

Opérations à effectuer:
• enlever le microdoseur de l'emballage
• vérifier et contrôler la correspondance de tous les composants commandés
• monter l'outil de dosage

**INSTALLAZIONE**
I dosatori non richiedono particolari accorgimenti, in quanto la macchina viene fornita già completa e collaudata prima della consegna

**PREPARAZIONE**
Togliere il dosatore dall'imballo e provvedere all'imballaggio

**ASSEMBLAGGIO**
I dosatori vengono consegnati con le seguenti parti non montate:
- motore
- utensile dosaggio
- accessori

Operazioni da effettuarsi per un corretto assembiaggio:
• togliere il dosatore dall'imballo
• verificare presenza e corrispondenza di tutti i componenti ordinati.
• montaggio utensile dosaggio

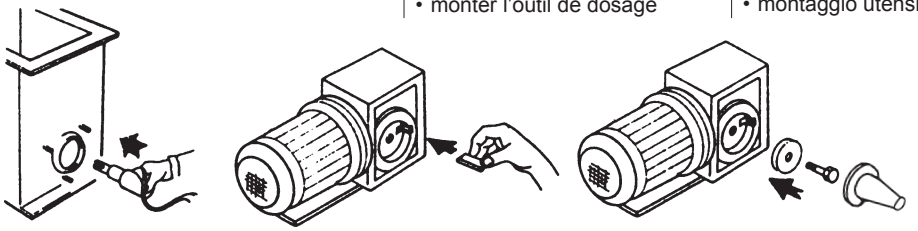

**• ASSEMBLE FEEDER PIPE** | **• DOSIERROHR MONTIEREN** | **• MONTER LA SORTIE** | **• MONTAGGIO SCARICO**

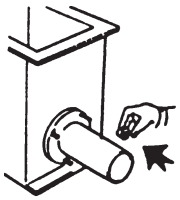

**• ASSEMBLE BLENDING TOOL** | **• HOMOGENISIERWERKZEUG MONTIEREN** | **• MONTER L'HOMOGÉNÉISATEUR** | **• MONTAGGIO UTENSILE DI OMOGENEIZZAZIONE**

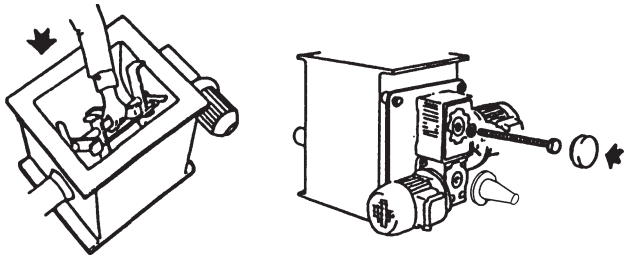

**• ASSEMBLE MOTORS (SPEED VARIATORS )** | **• E-MOTOREN UND, SOFERN VORHANDEN, REGELANTRIEB MONTIEREN** | **• MONTER LES MOTEURS (ÉVENTUELS VARIATEURS)** | **• MONTAGGIO MOTORI (EVENTUALI VARIATORI)**

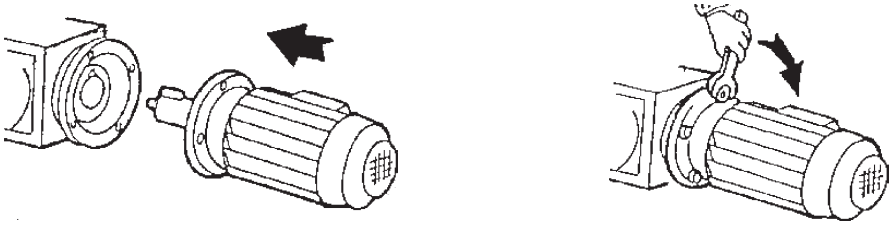

**ASSEMBLE ACCESSORIES**
- Fix micro-batch feeder to the ground or to a support structure using bolts.
- Check metering screw has been assembled correctly.
- Connect the electrical components to the central control panel or fit it in situ.
- Check sense of rotation of metering screw is ANTI-CLOCKWISE seen from be-hind the drive unit and the blending tool clockwise.
- Once carried out the above-mentioned steps, the micro-batch feeder is ready for the final check.

**ZUBEHÖR MONTIEREN.**
- Den Dosierer am Boden oder an der Rahmenkonstruktion mittels Schrauben befestigen.
- Prüfen, ob Dosierwerkzeug ordnungsgemäß montiert ist.
- Die elektrischen Komponenten an die zentrale Steuerungseinheit anschließen oder vor Ort einpassen.
- Sicherstellen, daß sich von hinter dem Antrieb stehend geshen das Dosierwerkzeug GEGEN DEN UHRZEIGERSINN dreht und dass das Homogenisierwerkzeug im Uhrzeigersinn drehen.
- Nach erfolgter Durchführung der vorgenannten Arbeiten ist der Dosierer bereit für eine letzte Kontrolle.

**MONTER LES ACCESSOIRES**
- Fixez le doseur à la structure de soutien au moyen de boulons à travers les trous prévus à ce propos.
- Contrôlez l'assemblage de l'outil de dosage.
- Connecter les composants électriques au panneau de commande central ou situé sur place.
- Contrôlez que vu de derrière la motorisation l'outil de dosage tourne AU SENS INVERSE DES AIGUILLES D'UNE MONTRE et l'outil de mélange dans le sens horaire.
- Exécutées les opérations indiquées ci-dessus, le microdoseur est prêt pour le contrôle final.

**MONTAGGIO ACCESSORI**
- Fissare il dosatore alla struttura di sostegno mediante viti da applicarsi nelle apposite sedi.
- Controllare il montaggio dell'utensile omogeneizzatore e dell'utensile dosaggio.
- Collegare le parti elettriche al quadro di comando centrale o posizionato in loco.
- Controllare che, rispetto ad un osservatore posto al lato del carico della macchina (retro), l'utensile di dosaggio ruoti in senso ANTIORARIO e l'utensile di omogenizzazione in senso orario.
- Eseguite le suddette operazioni, il dosatore è pronto per il collaudo finale.

**ELECTRICAL CONNECTION**
Connection between the feeder motor and mains supply, as well as all work on the open terminal box must be carried out by qualified personnel only.
PRIOR TO ANY KIND OF MAINTENANCE OR REPAIR WORK, DISCONNECT FEEDER MOTOR FROM THE MAINS!
Prior to connection ensure voltage supply and motor plate data match.
The protection of the junction box of the electric motor is IP 55.
Check the earthing connections of the machine.
The installer shall connect the machine to the earthing of the plant by means of a copper braid (not included in the standard supply) fitted to the fixing bolt; check the effectiveness of the earthing between the machine and the components of the plant connected to it. Always follow the safety standards.

**ELEKTRISCHER ANSCHLUSS**
Der Anschluß des Dosierermo-tors an das Netz sowie Arbeiten am Klemmenkasten des Dosierermotors im allgemeinen dürfen nur vom Elektriker ausgeführt werden.
VOR WARTUNGS- UND REPARATURARBEITEN IMMER DIE HAUPTSTROMZUFUHR UNTERBRECHEN!
Vor dem elektrischen Anschluß sicherstellen, daß die Netzspannung mit den Typenschildangaben des Dosierermotors übereinstimmen.
Die Schutzart des Elektromotor-Klemmenkastens ist IP 55.
Die Erdung der Maschine überprüfen.
Der Installateur sollte die Maschine unter Verwendung eines Kupfergeflechts (nicht im Standard-Lieferumfang enthalten), das an einem Schraubbolzen befestigt ist, an die Erdung der Anlage anschließen.
Die Funktion der Erdung zwischen Maschine und den anderen Anlagenkomponenten überprüfen, mit denen die Maschine verbunden ist. Dabei immer die Sicherheitsrichtlinien einhalten.
In jedem Fall die Allgemeinen Arbeitssicherheitsbestimmungen befolgen.

**BRANCHEMENTS**
La connexion entre le moteur et le réseau et, en tout cas, tout travail sur la boîte à bornes du moteur doit être effectué par du personnel spécialisé.
AVANT DE CHAQUE INTERVENTION DETACHER L'ALIMENTATION DE COURRANT!
Avant le branchement s'assurer que le voltage du réseau coïncide avec celui indiqué sur la plaquete du moteur.
La protection de la boîte a bornes du moteur électrique est IP 55.
Vérifier les connexions de mise à la terre de la machine.
L'installateur doit brancher la machine à la mise à la terre de l'installation au moyen d'une tresse en cuivre (non comprise dans la fourniture standard) inserée dans le boulon de fixation; avant de démarrer la machine, vérifier l'efficacité de la mise à la terre entre la machine et les composants de l'installation branchés sur celle-ci.
Faire toujours attention aux normes de sécurité.

**COLLEGAMENTI**
Il collegamento tra i motori del microdosatore e la rete elettrica e in ogni caso qualsiasi lavoro sulla scatola morsettiera dei motori, devono essere eseguiti da personale specializzato.
PRIMA DI QUALSIASI OPERAZIONE STACCARE L'ALIMENTAZIONE DI CORRENTE!
Prima del collegamento assicurasi che il voltaggio di rete coincida con quello indicato sulla targhetta del motore.
La protezione della morsettiera motore elettrico è IP55.
Verificare l'equipotenzialità della macchina.
L'installatore dovrà collegare la macchina al circuito di terra dell'impianto utilizzando una treccia di rame, non in dotazione, inserita nel bullone di fissaggio e verificarne l'effettiva equipotenzialità tra macchina e i componenti dell'impianto a contatto con le sue parti prima di avviare la macchina.
Fare sempre attenzione alle eventuali norme di sicurezza.

**SAFETY NOTICE**
Never introduce hands into a running micro-batch feeder.
Never open the inspection hatch when the feeder is running.
It is however necessary fitting upstream the machine a fix safety grid or a hopper high enough to prevent damages to limbs according to the Machine Directive in force. The same approach is necessary for the outlet: it is required using a vertical outlet or similar systems meant to prevent foreign bodies from entering the machine and cause damage to it, to persons or to their limbs. Always ensure the Machine Directive in force is being followed.

**SICHERHEITS-HINWEIS**
Niemals mit den Händen in den laufenden Mikrodosierer greifen.
Niemals die Inspektionsklappe öffnen, wenn der Dosierer in Betrieb ist.
Es ist notwendig, vor der Maschine ein Sicherheitsgitter oder ein Behälter mit adäquater Höhe zu installieren, um entsprechend der geltenden Maschinenrichtlinie Verletzungen an Gliedmaßen vorzubeugen.
Gleiches gilt auch für die Absicherung des Auslaufs: Es ist notwendig einen vertikalen Auslauf oder ähnliches zu verwenden, um zu verhindern, dass Fremdkörper in die Maschine gelangen können, die die Maschine schädigen oder das Personal verletzen könnten.
Stellen Sie zu jeder Zeit sicher, dass die momentan geltende Maschinenrichtlinie stets eingehalten wird.

**PRECAUTIONS GENERALES**
Jamais mettre les mains à l'intérieur du microdoseur pendant qu'il est en fonction.
Jamais ouvrir la trappe de visite quand le doseur est en fonction.
Il est toutefois nécessaire de monter au-dessus de la machine une grille de sécurité fixe ou une trémie suffisamment haute pour prévenir les dommages aux membres inférieurs, selon la directive européenne en vigueur. La même approche est nécessaire pour la bouche de sortie: il faut utiliser une sortie verticale ou des systèmes similaires destinés à empêcher les corps étrangers d'entrer dans la machine et causer des dommages à celle-ci ou blesser les personnes. Assurez-vous que la directive européenne en vigueur est respectée.

**PRECAUZIONE GENERALI**
Mai mettere le mani all'interno del microdosatore mentre è in funzione. Mai aprire lo sportello di ispezione quando il dosatore è in funzione.
In ogni caso é necessario che sopra la macchina venga montata una griglia di sicurezza fissa o una tramoggia che sia di altezza sufficiente ad impedire che gli arti di una persona vengano danneggiati nel rispetto della Direttiva Macchine Vigente
Lo stesso discorso vale per lo scarico: é necessario usare lo scarico verticale o un sistema equivalente che protegga da eventuali intrusioni che possano pregiudicare il funzionamento della macchina o danneggiare persone o loro arti.
Verificare idoneità dei sistemi in accordo alla Direttiva Macchine in vigore.

**START-UP**
Check whether foreign substances or water have entered the micro-batch feeder. In such a case clean thoroughly.
Avoid any friction between the metering screw and the body.
Check sense of rotation of metering screw is ANTICLOCKWISE seen from behind the drive unit.
Check oil level in gear reducer is correct.
Check to ensure, with batch feeder in stainless steel, that the inspection hatch is closed.
First start-up must be carried out with empty micro-batch feeder. If feeder operates correctly add material and proceed with regular operation.

**INBETRIEBNAHME**
Prüfen, ob Fremdkörper oder Wasser ins Innere des Dosierers gedrungen sind. Ist dem so, gründlich säubern.
Jede übermäßige Reibung zwischen Dosierwerkzeug und Gehäuse vermeiden.
Sicherstellen, daß sich das Dosierwerkzeug gegen den Uhrzeigersinn dreht (aus der Sicht hinter dem Antrieb). Bei falscher Drehrichtung Kabeldrähte umklemmen.
Ölstand im Getriebe prüfen.
Sicherstellen, dass beim Dosierer aus Edelstahl die Inspektionsklappe verschlossen ist.
Probelauf mit leerem Dosierer durchführen. Material zugeben und regulären Betrieb aufnehmen.

**MISE EN MARCHE**
Vérifiez qu'aucune substance externe ou de l'eau ne soient entrées dans le microdoseur. S'il y en a, nettoyez.
Evitez absolument toute friction entre l'outil de dosage et le corps.
Contrôlez le sens de rotation de l'outil de dosage (sens inverse de celui des aiguilles d'une montre); si erronné, invertir le branchement des fils dans la boîte à bornes du moteur.
S'assurer que le niveau d'huile dans le réducteur soit correct. S'assurer, dans le doseur en inox, que la trappe de visite est fermée.
La première épreuve de mise en marche doit être faite à microdoseur vide. Si tout fonctionne régulière-ment, alimenter le doseur avec du matériau et procéder normalement.

**AVVIAMENTO**
Verificare se sostanze esterne o acqua sono entrate nel microdosatore. Se così fosse, pulire.
Evitate assolutamente ogni frizione tra spirale e dosatrice e dell'omogeneizzatore contro la parte esterna.
Controllare il senso di rotazione dell'utensile di dosaggio (antiorario visto dal carico); se errato, invertire i poli del motore.
Assicurarsi che l'olio del riduttore sia al livello giusto. Accertarsi, nel dosatore in AISI, che sia chiuso lo sportello d'ispezione.
La prima prova di avviamento deve essere fatta a microdosatore vuoto; se tutto funziona regolarmente, alimentare con il materiale e procedere normalmente.

**OPERATION**

I Depending on the type of plant, operation of the micro-feeder is controlled by a central control panel or by a local starter.
It is essential having knowledge regarding the weight of the product laid on the top of the micro-batch feeder as the former cannot exceed the max. resistance of the inner casing and also it must not generate abnormal flexion of the blending tool.
The maximum weight in case of the 042 and 73/144 machine sizes is 120 respectively 240 kg.
As it can be difficult measure the actual weight that rests on it due to the unpredictable behavior of the various material, we consider that the volume of our standard hoppers will not generate problems for material having their specific weight up to 1.3 t/m3. Otherwise, please contact our Sales Department.
In case the weight laid on the micro-batch feeder exceeds the indicated limits there has to be provided a safety system upstream the machine.

**N.B.:** Life of the micro-batch feeder increases considerably if it is emptied at the end of each working day. This becomes even more important with materials which, through longer storage, tend to harden or pack.

**ASSEMBLY / DISMANTLING**
**FASTENING**

The bottom part of the micro-batch feeder must be firmly fastened to the ground or to a support structure using nuts and bolts.
If on top of the standard hopper another loading system is installed the connection must be flexible in order to avoid vibrations.
In any case, vibrations must be avoided.
The micro-batch feeders cannot be used as a external support for the machines downstream it (eg. there cannot be hanged screw conveyors, belt conveyors and so on).

**IMPORTANT: to prevent accidents it is necessary that the hopper for manual loading is equipped with fixed (bolted) protection grille.**
Standard manual loading hoppers are always supplied complete with a protection grille.
Accident prevention laws require that this grille is correctly assembled and that the user does not remove it. If the user provides a different loading system or different types of mobile protection the protection must be able to stop the feeder instantaneously if protection is removed or opened.

This device is also meant to prevent machine start-up if the protection is not closed.

**BETRIEB**

Je nach Anlagentyp wird der Mikrodosierer über eine zentrale Steuerung oder einen Vor-Ort-Schaltkasten in Betrieb genommen.
Es ist unbedingt erforderlich das spezifische Gewicht des Produktes zu kennen, das auf dem Mikrodosierer aufliegt, da das Gewicht die max. Belastbarkeit des inneren Gehäuse nicht überschreiten darf. Des Weiteren könnte durch ein zu hohes Produktgewicht das Mischwerkzeug überbeansprucht bzw. verbogen werden.
Das Maximalgewicht bei den Maschinengrößen 042 und 73/144 ist 120 bzw. 240 kg.
Da das Verhalten verschiedener Materialien oft unvorhersehbar ist, kann es schwierig sein, das momentane Gewicht des auf der Maschine lastenden Materials zu messen. Ausgehend vom Volumen unseres Standardbehälters können wir jedoch einschätzen, das bei Materialien mit einem spezifischen Gewicht bis 1,3 t/m$^3$ keine Probleme entstehen. Andernfalls bitte unsere Vertriebsabteilung kontaktieren.
Für den Fall, dass das aufliegende Produkt das maximale Gewicht überschreitet, sind vor der Maschine entsprechende Schutzvorrichtungen zu installieren.

**N.B.:** Die Lebensdauer des Mikrodosierers erhöht sich merklich, wenn er täglich nach Feierabend geleert wird. Besonders wichtig ist dies bei der Dosierung von Medien, die nach längerer Lagerung zum Aushärten oder Anbacken neigen.

**MONTAGE / DEMONTAGE**
**BEFESTIGUNG**

Der Mikrodosierer muß an seiner Unterseite bündig am Boden oder auf einem Rahmen mittels Schrauben befestigt werden.
Falls über dem Trichter ein weiteres Befüllsystem vorgesehen ist, muß zwischen diesem und dem Trichter des Dosierers eine flexible Verbindung vorgesehen werden, um zu verhindern, daß sich Vibrationen übertragen.
Vibrationen sind im allgemeinen zu vermeiden.
Die Mikrodosierer können nicht als äußere Halterung nachgelagerter Maschinen eingesetzt werden (z.B. können keine Schnecken- oder Gurtförderer etc. angebaut werden).

**WICHTIG: zur Unfallverhütung muß der Trichter zur manuellen Aufgabe mit einem fest installierten (verschraubten) Schutzgitter versehen werden.**
Die manuellen Aufgabetrichter werden immer mit Schutzgitter geliefert. Im Interesse der Unfallverhütung ist es wichtig, dass das Schutzgitter ordnungsgemäß montiert ist und nicht entfernt wird. Falls der Betreiber ein anderes Befüllsystem oder bewegliche Schutzvorrichtungen vorsieht, so müssen diese Schutzvorrichtungen so ausgeführt sein, daß das Gerät augenblicklich abschaltet, sobald die Schutzvorrichtung entfernt oder geöffnet wird.

Diese Vorrichtung darf es außerdem nicht gestatten, dass die Maschine eingeschaltet werden kann, wenn das Schutzgitter sich nicht in der geschlossenen Position befindet.

**FONCTIONNEMENT**

Selon le type d'installation, le fonctionnement du microdoseur est contrôle ou par un pupitre de commande ou par starter sur place.
Il faut connaître le poids du produit qui se trouve sur le corps du microdoseur, puisqu'il ne doit pas dépasser la résistance maximale du boîtier interne et aussi il ne doit pas générer une flexion anormale de l'outil d'homogénéisation.
Le poids maximum pour les tailles 042 et 73/144 est de 120 et respectivement de 240 kg.
Comme il est difficile de mesurer le poids réel en raison du comportement imprévisible des différents matériaux, nous estimons que le volume de nos trémies standards ne génèrent pas de problèmes pour les matières avec poids spécifique jusqu'à 1,3 t/m$^3$. Dans le cas contraire, veuillez contacter notre département des ventes.
Dans le cas où le poids visé sur le microdoseur excède les limites indiquées, il faut prévoir un système de sécurité sur la machine.

**N.B.:** La durée du microdoseur augmente sensiblement si on le vide à la fin de la journée.
Ceci est particulièrement important quand le matériau dosé tend à durcir ou à se compacter s'il reste ferme pour une certaine période de temos.

**MONTAGE / DEMONTAGE**
**FIXAGE**

Le microdoseur doit être bien fixé dans la partie inférieure à une structure de support au moyen de boulons dans les trous prévus à ce propos.
Si au-dessus de la trémie est prévu un autre système de chargement, la connexion doit être flexible afin d'éviter des vibrations.
En tout cas il faut éviter toute vibration.
Les microdoseurs ne peuvent pas être utilisés comme support externe pour les machines en aval (par exemple vous ne pouvez pas pendre des convoyeurs à vis, convoyeurs à bande et ainsi de suite).

**IMPORTANT: pour respecter les dispositions en vigueur en ce qui concerne la prévention d'accidents, il est nécessaire que la trémie de chargement manuel soit toujours munie d'une protection fixe (boulonnée).**
Les trémies à chargement manuel sont toujours fournies dotées de grille de protection. Il est d'une importance fondamentale, dans le respect des normes de sécurité contre les accidents du travail, que cette protection soit assemblée correctement et ne soit pas enlevée. Au cas où le client utilise un autre système de chargement ou prévoit des protections de type mobile, il est obligatoire de doter l'appareillage d'un dispositif qui provoque son arrêt immédiat quand la protection est enlevée ou ouverte.

En outre ce dispositif ne doit pas permettre le démarrage de la machine quand la protection n'est pas dans la position correcte de fermeture.

**FUNZIONAMENTO**

In base al tipo di impianto, il funzionamento del microdosatore è controllato o da un quadro centrale di comando o da un comando in loco.
E molto importante conoscere il peso del prodotto che grava sul corpo del microdosatore: esso non deve mai superare la massima resistenza della cassa interna e non deve portare a flessioni anomale dell'utensile di omogenizzazione.
Considerare rispettivamente 120kg e 240kg come peso massimo per le taglie 042 e 73/114.
Poichè è molto difficile quantificare il peso che realmente viene a gravare a causa della imprevedibilità del comportamento dei vari prodotti, riteniamo che i volumi delle nostre tramogge standard con prodotti di peso specifico fino a 1,3 t/m$^3$ non abbiano problemi, in caso contrario consultare il ns. Uff. Tecnico Comm.le.
Qualora il peso sopra il microdosatore sia superiore ai limiti riportati sopra, è necessario prevedere un sistema di protezione nella tramoggia posto sopra il microdosatore.

**N.B.:** Si aumenta notevolmente la durata del microdosatore svuotandolo al termine di ogni giorno lavorativo.
Questo è particolarmente importante quando il materiale trasportato tende ad indurirsi o a compattarsi se rimane fermo per un certo periodo di tempo.

**MONTAGGIO / SMONTAGGIO**
**FISSAGGIO**

Il microdosatore deve essere fissato saldamente nella parte inferiore a una struttura di sostegno mediante viti da applicarsi nelle apposite sedi.
Se sopra una tramoggia viene posto un altro sistema di carico questa connessione deve essere flessibile per evitare la propagazione di vibrazioni.
In ogni caso l'importante è che siano evitate vibrazioni.
I microdosatori non possono essere impiegate da sostegno esterno per macchine sottostanti (per es. non si possono appendere coclee, nastri trasportatori, canalette, etc.).

**IMPORTANTE: per rispettare le vígenti disposizioni in materia di prevenzione, è necessario che l'eventuale tramoggia di carico manuale sia sempre munita di protezione fissa (imbullonata).**
Le tramogge a caricamento manuale sono fornite sempre complete di griglia di protezione, è di fondamentale importanza, per il rispetto delle norme antinfortunistiche, che tale protezione sia correttamente assemblata, e non venga rimossa. Qualora il cliente usi un altro sistema di carico o preveda protezioni. di tipo mobile, è obbligatorio dotare l'apparecchiatura di un dispositivo che ne provochi l'arresto immediato all'atto della rimozione o apertura della protezione.

Tale dispositivo, inoltre, non deve consentire l'avviamento della macchina se la protezione non è nella posizione di chiusura.

Particular attention must be paid to the feeder outlet. Either a vertical outlet must be fitted (see catalogue chapter on "accessories") or the area around the outlet must be made inaccessible to the operator because the metering screw runs freely.

Am Auslauf des Dosierers besteht besondere Verletzungsgefahr. Entweder muß ein vertikales Ablaufrohr verwendet werden (siehe Katalog "Zubehör") oder der gesamte Bereich muß dem Bedienungspersonal wegen der sich frei drehenden Dosierspirale unzugänglich gemacht werden.

Il faut faire attention particulière à la sortie du microdoseur: ou il faut utiliser la sortie verticale (v. catalogue "accessoires"), ou cette partie doit être inaccessible au personnel parceque dans ce point la spire peut tourner librement.

Particolare attenzione deve poi essere posta al lato uscita del microdosatore: o si deve usare lo scarico verticale (vedi catalogo accessori) oppure questa parte del microdosatore deve essere inaccessibile al personale, in quanto in quel punto la spirale può ruotare a ciclo libero.

**DISMANTLING**

**ATTENTION:**
**PRIOR TO DISASSEMBLING ANY PART OF THE MICRO-BATCH FEEDER, ENSURE FEEDER MOTOR IS DISCONNECTED FROM MAINS SUPPLY.**

**MAINTENANCE**
**Failure to follow the following instructions may cause problems and invalidate the warranty on the supplied equipment.**
Once every day, when operation finishes, empty the micro-batch feeder.
Once every week check outlet is free from material residues. If not clean thoroughly to avoid any kind of obstruction to material flow.
With the batch feeder in 304 stainless steel open the inspec-tion hatch.
Obviously lubrication and maintenance intervals depend on the use and on the type of metered material.

In case of feeders with MBTT type shaft seals grease once a month.
If the machine uses MBTX, MBTN or MBTT type seals, check these on a monthly basis to make sure they are intact.
For more heavy-duty applications, such as with particularly abrasive material and/or high tool rotation speed, increase the maintenance frequency.

**SUBSTITUTION OF WEAR PARTS**
Follow the following instructions (see appendix).

**DEMONTAGE**

**ACHTUNG:**
**VOR DEM AUSBAU IRGENDWELCHE TEILE AUS DEM DOSIERER SICHERSTELLEN, DASS DIE HAUPTSTROMZUFUHR ZUM MOTOR DES DOSIERERS UNTERBROCHEN IST.**

**WARTUNG**
**Das Nichtbefolgen der nachfolgenden Vorschriften kann zu Störungen führen und die Gewährleistung auf das gelieferte Gerät außer kraft setzen.**
Jeden Tag nach Feierabend den Mikrodosierer leer fahren.
Einmal die Woche prüfen, ob Auslauf frei von Materialrück-ständen ist und ggfls. gründlich säubern, um einen freien Produktfluß zu gewährleisten.
Beim Dosierer aus Edelstahl 1.4301 die Inspektionsklappe öffnen.
Es ist klar, daß die Schmier- und Wartungsintervalle sowohl von der Betriebsart, als auch vom Dosiergut abhängen.

Bei Dosierern mit Wellenabdichtungen vom Typ MBTT ein mal monatlich abschmieren.
Falls die Maschine Dichtungen vom Typ MBTX, MBTN oder MBTT vorsieht, sind diesen Dichtungen einmal im Monat auf Unversehrtheit zu prüfen.
Bei Anwendungen unter schwierigen Verhältnissen, wie beispielsweise mit besonders abrasiv wirkendem Material und/oder hoher Drehgeschwindigkeit des Werkzeugs sind die Wartungsintervalle zu verkürzen.

**AUSTAUSCH DER VERSCHLEISSTEILE**
Nachfolgende Anleitungen befolgen (siehe Anhang).

**DEMONTAGE**

**ATTENTION:**
**AVANT DE DEMONTER DES PIECES DU MICRODOSEUR S'ASSURER QUE L'ALIMENTATION DE COURANT AU MOTEUR ELECTRIQUE SOIT DETACHE !**

**ENTRETIEN**
**Le ne pas respecter rigoureusement les instructions suivantes peut causer des problèmes et peut invalider la garantie sur les machines fournies.**
Tous les jours, à la fin du travail, vider le microdoseur.
Toutes les semaines vérifier si la sortie est libre de résidus de matériau; sinon, la nettoyer soigneusement afin d'éviter toute obstruction au passage du matériau.
Dans le doseur en inox 304 ouvrir la trappe de visite.
Il est évident que les intervalles de lubrification et de remplacement des pièces dépend et de l'utilisation et du type de matériau dosé.

Au cas où la machine est prévue d'étanchéités de type MBTT graisser une fois par mois.
Au cas où la machine prévoit des étanchéités type MBTX, MBTN ou MBTT contrôler chaque mois l'intégrité du joint d'étanchéité.
En cas d'applications particulièrement contraignantes, par exemple des matériaux abrasifs et/ou une vitesse élevée de rotation de l'outil, réduire les intervalles de maintenance.

**SUBSTITUTION DES PIECES D'USURE**
Suivez les instructions suivantes (Voir annexe).

**SMONTAGGIO**

**ATTENZIONE:**
**PRIMA DI SMONTARE QUALSIASI PEZZO DEL MICRODOSATORE, ASSICURARSI CHE L'ALIMENTAZIONE DI CORRENTE AL MOTORE ELETTRICO SIA STACCATA !**

**MANUTENZIONE**
**Il non attenersi strettamente alle seguenti istruzioni può causare problemi ed invalidare la garanzia sulle macchine fornite.**
Ogni giorno, alla fine del lavoro vuotare il microdosatore.
Ogni settimana, verificare se lo scarico è libero da residui di materiale: se non lo è pulire accuratamente per evitare ogni ostruzione al passaggio di materiale.
Nel dosatore in AISI 304 aprire lo sportello d'ispezione.
E' chiaro che il tempo di lubrificazione e di sostituzione dei pezzi dipende sia dall'uso del dosatore che dal tipo di prodotto trasportato.

Nel caso in cui la macchina preveda tenute tipo MBTT procedere mensilmente all'ingrassaggio.
Nel caso la macchina prevede tenute tipo MBTX, MBTN o MBTT procedere mensilmente al controllo dell'integrità della tenuta stessa.
In caso di applicazioni più gravose, per esempio materiale particolarmente abrasivo e/o elevata velocità di rotazione dell'utensile, accorciare gli intervalli di manutenzione.

**SOSTITUZIONE DEI PEZZI DI USURA**
Seguire le seguenti istruzioni (Vedi allegati).

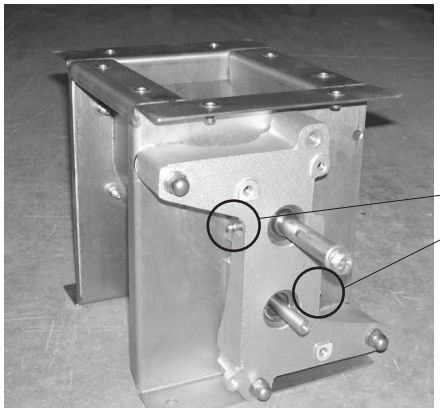

**Greasing points**
***Schmierstellen***
**Points de graissage**
***Punti di ingrassaggio***

## METERING SCREW REPLACEMENT OF SINT® MBF - *AUSTAUSCH DES DOSIERWERKZEUGS VON SINT® MBF*
## REMPLACEMENT OUTIL DE DOSAGE DE MBF DANS SINT® - *SOSTITUZIONE UTENSILE DOSAGGIO DELL' MBF IN SINT®*

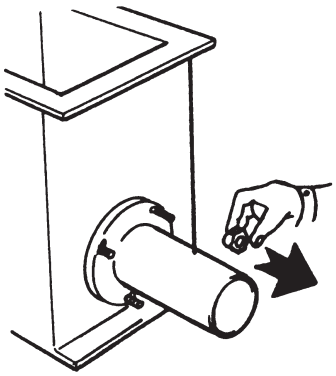

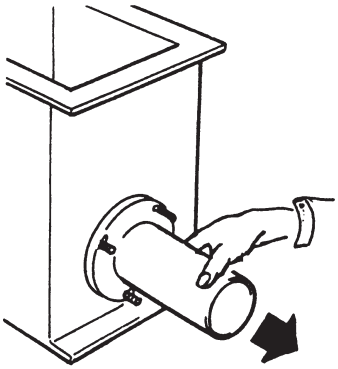

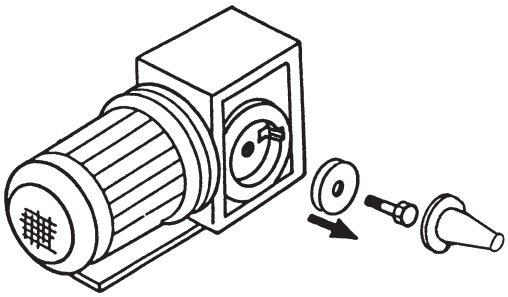

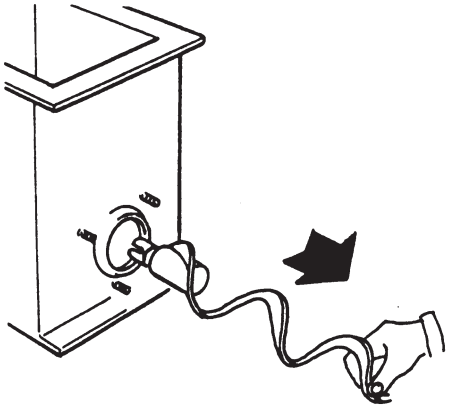

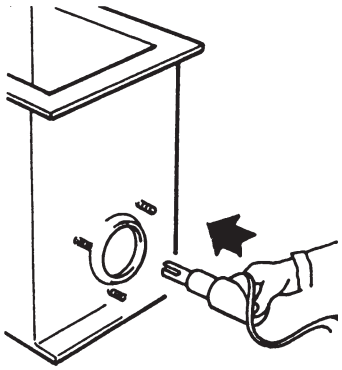

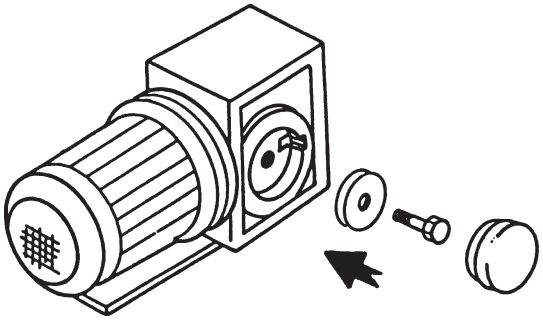

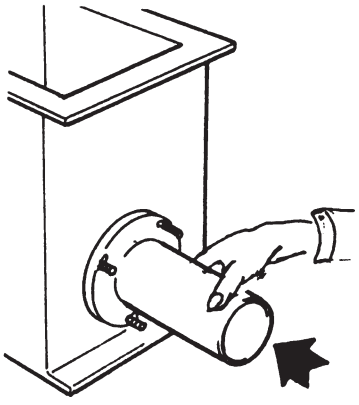

| N.B.: DISCONNECT MOTOR FROM MAINS SUPPLY | N.B.: HAUPTSTROMZUFUHR ZU DEN MOTOREN UNTERBRECHEN | N.B.: DEBRANCHER LES CONNEXIONS ELECTRIQUES! | N.B.: DISINSERIRE I COLLEGAMENTI ELETTRICI! |
|---|---|---|---|
| 1 - Unscrew nuts | 1 - Muttern lösen | 1 - Dévisser les écrous | 1 - Svitare i dadi |
| 2 - Take off feeder pipe | 2 - Dosierrohr entfernen | 2 - Emporter tube de dosage | 2 - Asportare proboscide |
| 3 - Remove protection cover | 3 - Abdeckungschutz entfernen | 3 - Enlever le couvercle de protection | 3 - Togliere coperchio di protezione |
| 4 - Unscrew metering screw | 4 - Dosierwerkz. herausdrehen | 4 - Dévisser (sens droit) | 4 - Svitare filetto sinistro |
| 5 - Remove metering screw | 5 - Dosierwerkz. herausziehen | 5 - Enlever outil de dosage | 5 - Estrarre utensile |
| 6 - Insert new metering screw | 6 - Neues Dosierw. einsetzen | 6 - Monter nouvel outil | 6 - Inserire nuovo utensile |
| 7 - Screw on new metering screw | 7 - Neues Dosierw. eindrehen | 7 - Visser (sens gauche) | 7 - Avvitare filetto sinistro |
| 8 - Fix protection cover | 8 - Abdeckungschutz befestigen | 8 - Fixer le couvercle de protection | 8 - Montare coperchio di protezione |
| 9 - Reassemble feeder pipe | 9 - Dosierrohr montieren | 9 - Rimontare la proboscide | 9 - Rimontare proboscide |

## METERING SCREW REPLACEMENT OF AISI MBF - *AUSTAUSCH DES DOSIERWERKZEUGS VON EDELSTAHL MBF*
## REMPLACEMENT OUTIL DE DOSAGE DE MBF DANS AISI - *SOSTITUZIONE UTENSILE DOSAGGIO DELL' MBF IN AISI*

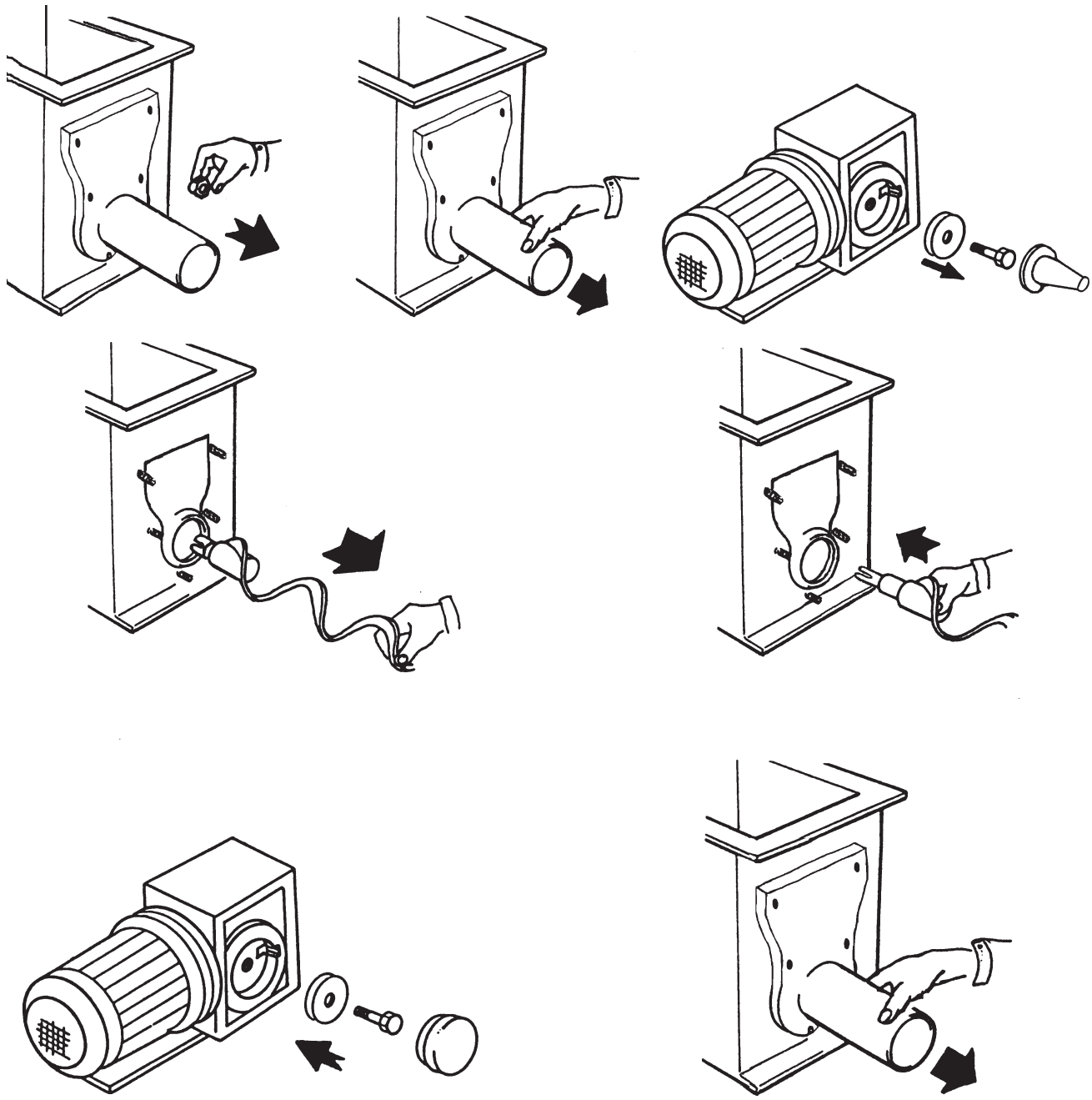

**N.B.: DISCONNECT MOTOR FROM MAINS SUPPLY**

1 - Unscrew safety nut
2 - Slacken threaded knobs
3 - Take off inspection hatch
4 - Remove protection cover
5 - Unscrew feeder screw
6 - Remove feeder screw
7 - Insert new feeder screw
8 - Screw on new feeder screw
9 - Fix protection cover
10- Reassemble threaded knobs
11- Fit inspection hatch
12- Tighten safety nut

**N.B.: HAUPTSTROMZUFUHR ZU DEN MOTOREN UNTERBRECHEN**

1 - Sicherungsmutter lösen
2 - Drehverschlüsse lösen
3 - Inspektionsklappe entfernen
4 - Schutzabdeckung entfernen
5 - Dosierwerkz. herausdrehen
6 - Dosierwerkz. herausziehen
7 - Neues Dosierw. einsetzen
8 - Neues Dosierw. eindrehen
9 - Schutzabdeckung befestigen
10- Drehverschlüsse eindrehen
11- Inspektionsklappe montieren
12- Sicherungsmutter anziehen

**N.B.: DEBRANCHER LES CONNEXIONS ELECTRIQUES!**

1 - Dévisser les écrous
2 - Dévisser les boulons
3 - Enlever la trappe de visite
4 - Enlever le couvercle de protection
5 - Dévisser (sens droit)
6 - Enlever outil de dosage
7 - Monter nouvel outil
8 - Visser (sens gauche)
9 - Fixer le couvercle de protection
10-Visser les boulons
11- Remonter la trappe de visite
12- Visser l'écrou de sécurité

**N.B.: DISINSERIRE I COLLEGAMENTI ELETTRICI!**

1 - Svitare il dado di sicurezza
2 - Svitare i pomelli
3 - Asportare il portello d'ispezione
4 - Togliere coperchio di protezione
5 - Svitare filetto sinistro
6 - Estrarre utensile
7 - Inserire nuovo utensile
8 - Avvitare filetto sinistro
9 - Montare coperchio di protezione
10 - Avvitare i pomelli
11 - Rimontare il portello d'ispezione
12 - Avvitare il dado di sicurezza

## BLENDING TOOL REPLACEMENT - *AUSTAUSCH HOMOGENISIERWERKZEUG*
## REMPLACEMENT HOMOGENEISATEUR - *SOSTITUZIONE UTENSILE OMOGENEIZZATORE*

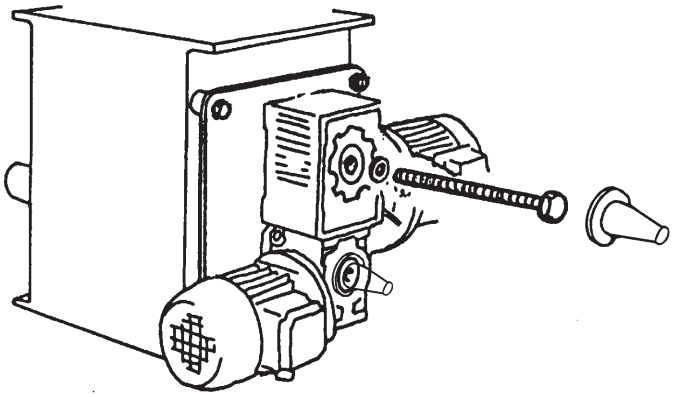

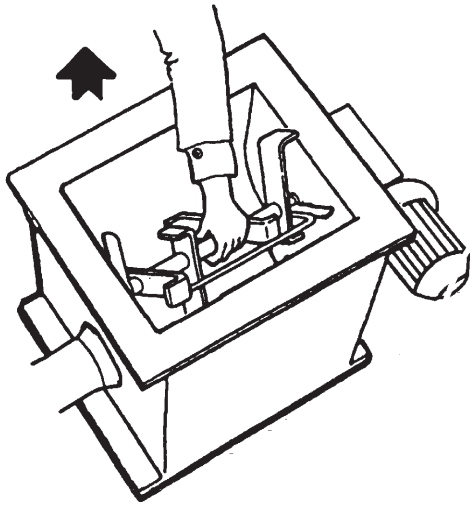

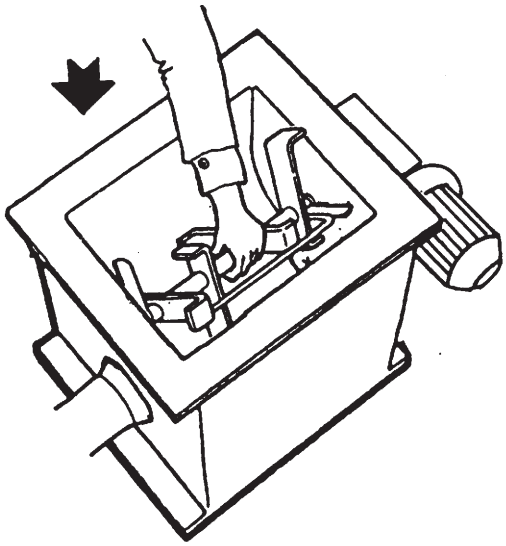

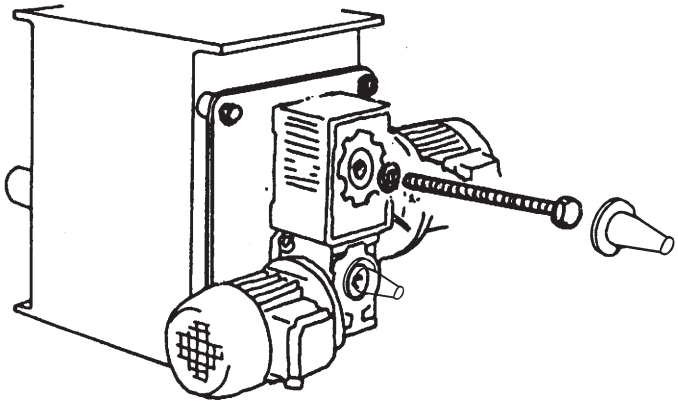

| **N.B.: DISCONNECT MOTORS FROM MAINS SUPPLY** | **N.B.: HAUPTSTROMZUFUHR ZU DEN MOTOREN UNTERBRECHEN!** | **N.B.: DEBRANCHER LES CONNEXIONS ELECTRIQUES!** | **N.B.: DISINSERIRE I COLLEGAMENTI ELETTRICI!** |
|---|---|---|---|
| 1 - Remove protection cover | 1 - Abdeckungschutz entfernen | 1 - Enlever couvercle de protection | 1 - Togliere coperchio di protezione |
| 2 - Unscrew gear rducer bolt | 2 - Getriebeschraube lösen | 2 - Dévisser boulon postérieur | 2 - Agire sulla vite posteriore |
| 3 - Remove bolt | 3 - Schraube entfernen | 3 - Enlever boulon | 3 - Estrarre vite posteriore |
| 4 - Remove blending tool | 4 - Homogenisierwerkzeug von oben herausnehmen | 4 - Enlever homogénéisateur | 4 - Estrarre omogeneizzatore |
| 5 - Insert new blending tool | 5 - Neues Werkzeug einführen | 5 - Introduire homogénéisateur | 5 - Introdurre omogeneizzatore |
| 6 - Insert gear reducer bolt | 6 - Getrebeschraube einführen | 6 - Insérer boulon postérieur | 6 - Inserire vite posteriore |
| 7 - Fasten gear reducer bolt | 7 - Getriebeschraube anziehen | 7 - Visser boulon postérieur | 7 - Agire sulla vite posteriore |
| 8 - Fix protection cover | 8 - Abdeckungschutz befestigen | 8 - Fixer couvercle de protection | 8 - Fissare coperchio di protezione |

## SHAFT SEALS REPLACEMENT - *AUSTAUSCH WELLENABDICHTUNGEN*
## REMPLACEMENT ETANCHEITES - *SOSTITUZIONE TENUTE*

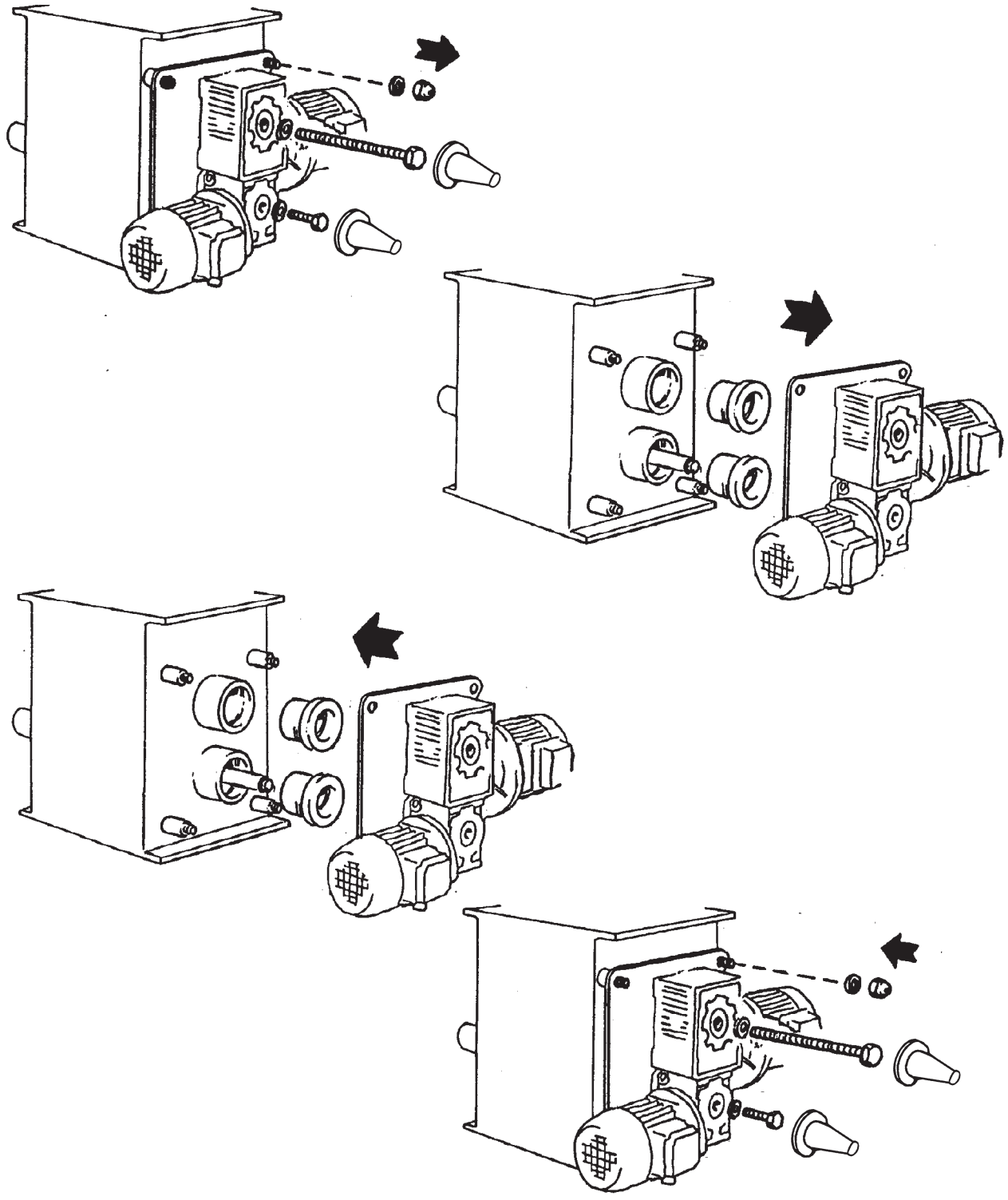

| | | | |
|---|---|---|---|
| N.B: DISCONNECT MOTORS FROM MAINS SUPPLY | N.B: HAUPTSTROMZUFUHR ZU DEN MOTOREN UNTER-BRECHEN ! | N.B: DEBRANCHER LES CONNEXIONS ELECTRIQUES ! | N.B: DISINSERIRE I COLLEGA-MENTI ELETTRICI ! |

## SHAFT SEALS REPLACEMENT AISI MBF - *AUSTAUSCH WELLENABDICHTUNGEN*
## REMPLACEMENT ETANCHEITES MBF EN INOX - *SOSTITUZIONE TENUTE MICRODOSATORE IN AISI 304*

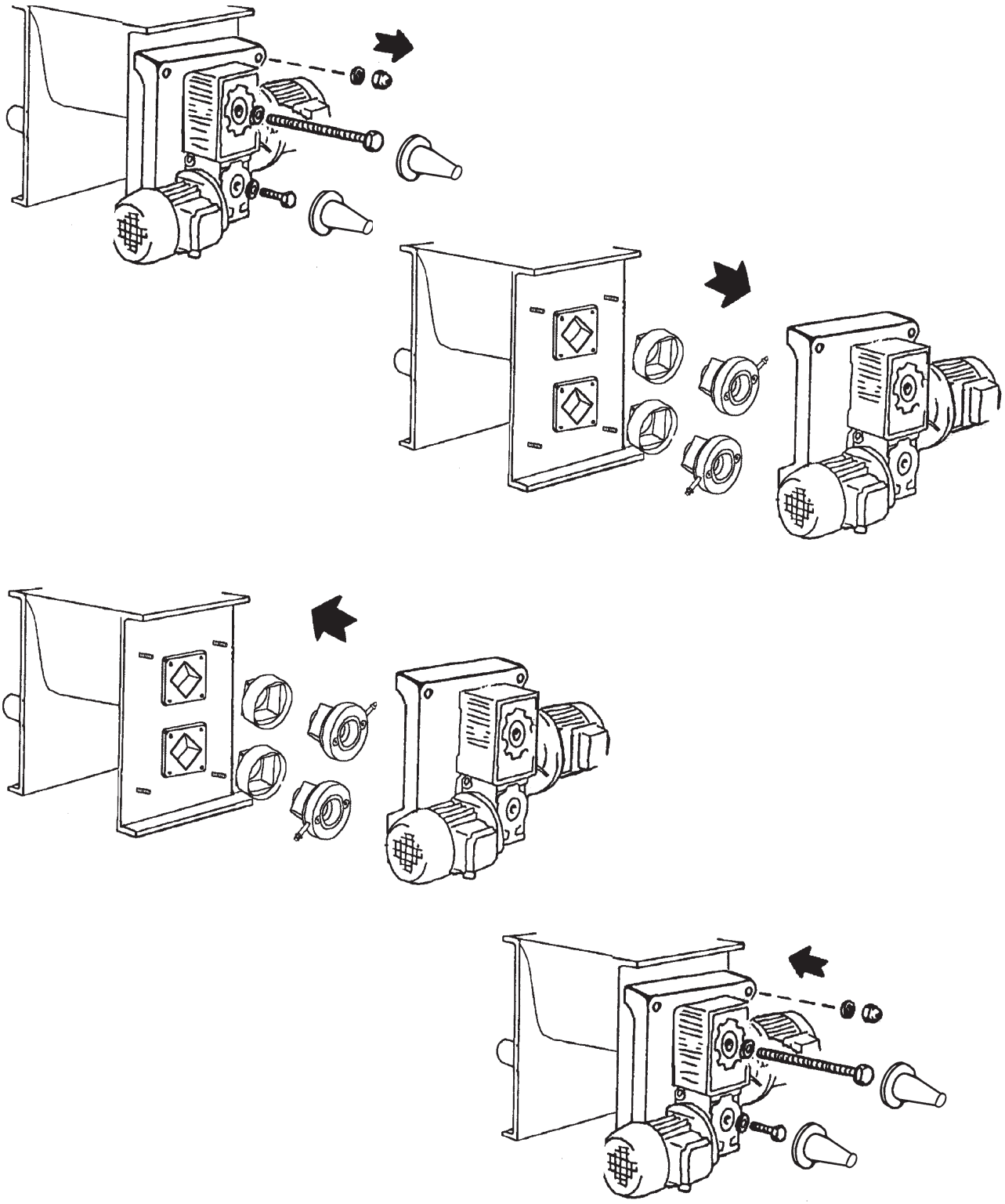

| | | | |
|---|---|---|---|
| N.B: DISCONNECT MOTORS FROM MAINS SUPPLY | N.B: HAUPTSTROMZUFUHR ZU DEN MOTOREN UNTERBRECHEN ! | N.B: DEBRANCHER LES CONNEXIONS ELECTRIQUES ! | N.B: DISINSERIRE I COLLEGAMENTI ELETTRICI ! |

## LUBRICATION

**Micro-batch feeder MBW 042**

The installed gear reducer is filled with long life grease and does, therefore, not require any maintenance.

**Micro-batch feeders MBF 073-114**

VARVEL REDUCERS
are sealed for life and, therefore, need no extra lubrification.

SPEED VARIATOR
(MOTOVARIO)
Oil splash lubricated. For this reason it is particularly important to perform the following checks before starting them up:
- ensure that oil plugs are in right place and tight;
- ensure unit is topped up with oil to the, correct level. Oil must come up to about midpoint of the oil level plug according to mounting position.
  Units are supplied without breather plugs.
  Use only reccomended oils (see lable).

## SCHMIERUNG

**Mikrodosierer MBF 042**

Das installierte Getriebe ist wartungsfrei dank einer Lebensdauer-Fettschmierung.

**Mikrodosierer MBF 073-114**

VARVEL-GETRIEBE
Erfordern keinerlei Wartung dank einer Lebensdauer-Fettschmierung.

REGELGETRIEBE
(MOTOVARIO)
Da spritzgeschmiert, vor Inbetriebnahme unbedingt folgende Kontrollen vornehmen:
- Lage der Ölschrauben muß der jeweiligen Bauform entsprechen;
- Den ordnungsgemäßen Füllstand überprüfen; Am Schauglas muß ca. halber Füllstand anstehen. Regelgetriebe werden ohne Entlüftungsschrauben geliefert. Zum Nachfüllen die in der Tabelle genannten Ölsorten verwenden.

## LUBRIFICATION

**Microdoseur MBF 042**

Le réducteur monté sur ce type de doseur est muni d'une graisse spéciale à vie.

**Microdoseurs MBF 073-114**

REDUCTEURS VARVEL
Aucune intervention nécessaire (lubrification à vie).

La lubrification du VARIATEUR (MOTOVARIO) se faisant par barbotage, on ne saurait trop recommander avant la mise en marche:
- de s'assurer de la position correcte des bouchons;
- de s'assurer du bon niveau du lubrifiant: l'huile doit être visible approximativement à mi-indicateur du niveau. Ils sont fournis sans bouchons de soupirail. Pour les appoints éventuels, utiliser uniquement les lubrifiants préconisés (voir tableau).

## LUBRIFICAZIONE

**Microdosatore MBF 042**

Il riduttore montato con questo tipo di macchina è dotato di uno speciale grasso che ne mantiene la lubrificazione a vita.

**Microdosatori MBF 073-114**

RIDUTTORI VARVEL
Non necessitano di alcun intervento essendo lubrificati a vita.

La lubrificazione del VARIATORE (MOTOVARIO) avviene per sbattimento, quindi è molto importante, prima della messa in opera, eseguire le seguenti verifiche:
- assicurarsi che la posizione dei tappi olio sia corretta;
- verificare che il livello dell'olio sia corretto: olio visibile a circa metà della spia di livello. Sono forniti senza tappo di sfiato. Per gli eventuali rabbocchi attenersi ai tipi di olio raccommandati nella tabella.

| **Oil Quantity - *Ölfüllung***<br>**Quantité d'huile - *Quantità d'olio*** | |
|---|---|
| **TKF** | **l** |
| 002 | 0.12 |
| 005 | 0.15 |

| **Reccomended oils - *Empfohlene Ölsorten***<br>**Type de lubrificants préconisés - *Tipi di olio raccomandati*** | | | |
|---|---|---|---|
| **AGIP** | A.T.F. DEXRON | **FINA** | A.T.F. DEXRON |
| **BP** | BP AUTRAN DX | **IP** | IP DEXRON |
| **CHEVRON** | A.T.F. DEXRON | **MOBIL** | A.T.F. 220 |
| **ELF** | MATIC G2 | **SHELL** | A.T.F. DEXRON |
| **ESSO** | A.T.F. DEXRON | | |

N.B.: The trade marks of lubrificants are in alphabetic order which does not refer to the quality of the products.
*N.B.: Die Reihenfolge der Marken ist alphabetisch und sagt nichts über die Qualität der Produkte aus.*
N.B.: Les marques de lubrificants sont par ordre alphabétique sans aucune référence en ce qui concerne la qualité du produit.
*N.B.: Le marche di lubrificanti sono in ordine alfabetico senza alcun riferimento alla qualità del prodotto.*

**AUTOMATIC LUBRICATOR** | **AUTOMATISCHE SCHMIERVORRICHTUNG** | **GRAISSEUR AUTOMATIQUE** | **LUBRIFICATORE AUTOMATICO**

# CARTRIDGE GREASE NIPPLE LIT - *SCHMIERPATRONENSATZ*
# KIT GRAISSEUR CARTOUCHE - *KIT INGRASSATORE CARTUCCIA*

| M | D | X | I | 125 |
|---|---|---|---|---|

Capacity - *Kapazität* - Capacité - *Capacità*

Grease nipple - *Schmiernippel* - Graisseur - *Ingrassatore*

Micro-batch feeders accessories - *Mikrodosierer zubehör*
Accessoires microdoseurs - *Accessori microdosatore*

| TECHNICAL SPECIFICATIONS | |
|---|---|
| **Capacity** | 125 ml |
| **Operating period** | Adjustable at 1-12 months |
| **Operating temperature** | -20°C a + 55°C° |
| **Max. operating pressure** | 5 bar** |
| **Activation mechanism** | Hydrogen gas release battery (H2) |
| **Threading** | G 1/4 |
| **Recommended storage temperature** | +20°C |
| **Storage period** | 2 years*** |
| **Weight** | Approx. 190g (including grease) |
| **Appellative** | LAGD 125/WA (filled with SKF LGWA 2 grease) LAGD 125/"lubricant" |

| TECHNISCHE DATEN | |
|---|---|
| **Kapazität** | 125 ml |
| **Betriebsdauer** | Von 1 bis 12 Monate einstellbar |
| **Betriebstemperatur** | -20°C bis + 55°C° |
| **Max. Betriebsdruck** | 5 bar** |
| **Einschaltmechanismus** | Wasserstoff freisetzende Batterie (H2) |
| **Gewinde** | G 1/4 |
| **Empfohlene Lagerhaltungstemperatur** | +20°C |
| **Lagerzeit** | 2 Jahre *** |
| **Gewicht** | circa 190 g (Fett inbegriffen) |
| **Bezeichnung** | LAGD 125/WA (mit Fett SKF LGWA 2 gefüllt) LAGD 125/"Schmierstoff" |

| CARACTÉRISTIQUES TECHNIQUES | |
|---|---|
| **Capacité** | 125 ml |
| **Période de fonctionnement** | Réglable de 1 à 12 mois |
| **Température de fonctionnement** | -20°C a + 55°C° |
| **Pression max. de fonctionnement** | 5 bar** |
| **Mécanisme d'activation** | Batterie à dégagement de gaz hydrogène (H2) |
| **Filetage** | G 1/4 |
| **Température conseillée pour le stockage** | +20°C |
| **Période de stockage** | 2 ans*** |
| **Poids** | Env. 190jj (graisse incluse) |
| **Désignation** | LAGD 125/WA (avec le plein de graisse SKF LGWA 2 grease) LAGD 125/"lubrifiant" |

| DATI TECNICI | |
|---|---|
| **Capacità** | 125 ml |
| **Periodo di funzionamento** | Regolabile da 1 a 12 mesi |
| **Temperatura di funzionamento** | -20°C a + 55°C° |
| **Pressione max. di funzionamento** | 5 bar** |
| **Meccanismo di attivazione** | Batteria a sviluppo di gas idrogeno ($H_2$) |
| **Filettatura** | G 1/4 |
| **Temperatura consigliata per lo stoccaggio** | +20°C |
| **Periodo di stoccaggio** | 2 anni*** |
| **Peso** | Circa 190g (grasso incluso) |
| **Appellativo** | LAGD 125/WA (riempito con grasso SKF LGWA 2) LAGD 125/"lubrificante" |

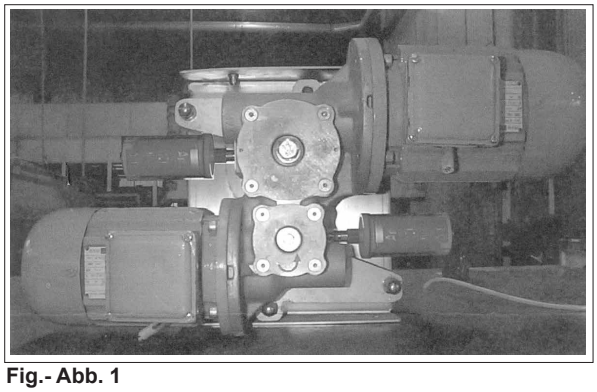

**Fig.- Abb. 1**
SKF assembly on Batch feeder - *Montage SKF auf Dosierer*
Montage SKF sur doseur - *Montaggio SKF su dosatore*

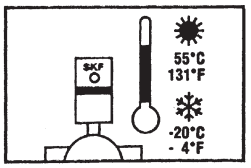


Operatin temperature - *Betriebstemperatur*
Température de fonctionnement - - *Temperatura di funzionamento*

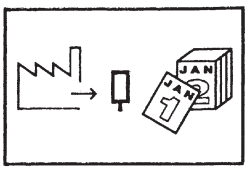


Production date - *Produktionsdatum*
Date de production - *Data di produzione*



**Code MDXI125 grease nipple kit with 125 ml cartridge for greased MBTT seals**

For assembly on new plants:

1. Make sure the grease used in System 24 is of the right type.
2. Make sure the grease supplied can be used with the one already present.
3. Check to ensure that the environmental temperature remains constant between -20ºC and + 55ºC.
4. Check to make sure the grease reaches the components to be lubricated.
5. Protect the unit from heat and temperature variations.

**Note:**
- The lubricator can be temporarily made inactive by setting the selector on 0.
- The unit can be mounted anywhere; it is airtight and can therefore also be installed immersed inside water.
- The oil lubricators are provided with a connector fitted with a check valve. Cut the tip before installation. Do not remove the connector.

**Installation**
1- Mark the installation date on the unit with an indelible ink marker pen.
2- Open the lubricant intake by cutting the tip or removing the cap (Fig. 3).
3- To activate the lubricator, turn the selector using a 3mm Allen wrench (Fig. 4).
4- Clean the area around the lubrication point.
5- Fit the new unit with the connector ready and tighten manually (Fig.6 - Fig.1).

**Bestell-Nr.MDXI125 Schmierpatronensatz 125 ml für mit MBTT geschmierte Dichtungen**

Für die Montage auf neuen Anlagen:
1. Sicherstellen, dass das im System 24 benutzte Fett der richtigen Sorte entspricht.
2. Sicherstellen, dass das Fett, das man benutzt, zusammen mit dem vorher vorhandenen benutzt werden kann.
3. Sicherstellen, ob die Umgebungstemperatur konstant zwischen -20°C und +55°C liegt.
4. Sicherstellen, dass das Fett die zu schmierenden Bestandteile erreicht.
5. Die Einheit vor Hitze und Temperatursprüngen schützen.

**Anm.:**
- Die Schmiervorrichtung kann vorübergehend abgestellt werden, wenn man den Schalthebel auf die Stellung 0 bringt.
- Das Gerät ist wasserdicht und kann daher überall installiert werden, auch in Wasser eingetaucht.
- Die Schmiervorrichtungen mit Öl werden mit einem Anschluss geliefert, der mit einem Rückschlagventil versehen ist. Vor der Installation das Ende absägen. Den Stutzen nicht entfernen.

**Installation**
1- Das Installationsdatum mit einem unauslöschlichen Filzstift auf der Einheit vermerken (Abb. 2).
2- Die Schmierstoffabgabe öffnen, indem man die Versiegelung durchschneidet oder den Stopfen abnimmt (Abb. 3).
3- Zum Aktivieren der Schmiervorrichtung den Wahlschalter um 3 mm drehen, und zwar mit einem Steckschlüssel (Abb. 4).
4- Den Bereich rings um die Schmierstelle reinigen.
5- Die neue Einheit mit dem vorhandenen Anschluss montieren und von Hand anziehen (Abb. 6 - Abb. 1)

**Code MDXI125 kit graisseur à cartouche 125 ml pour étanchéités MBTT graissées**

Pour le montage sur installations neuves:
1. S'assurer que la graisse utilisée dans le System 24 est du type approprié.
2. S'assurer que la graisse administrée peut être utilisée ensemble à celle existante.
3. Contrôle que la température ambiante se maintient constante entre -20°C et +55°C.
4. Vérifier que la graisse atteint les composants à lubrifier.
5. Protéger l'unité contre la chaleur et les écarts de température.

**Remarques:**
- Le graisseur peut temporairement être rendu inactif en tournant le sélecteur sur la position 0.
- L'unité peut être montée de partout, elle est étanche et peut donc être aussi installée immergée dans l'eau.
- Les graisseur à huile sont fournis avec un raccord doté de clapet antiretour. Avant de les monter couper l'extrémité. Ne pas enlever le raccord.

**Mise en place**
1- Marquer la date de mise en place sur l'unité avec un marqueur à encre indélébile (fig. 2).
2- Ouvrir la prise du lubrifiant en coupant le sceau ou en enlevant le bouchon (Fig. 3).
3- Pour activer le graisseur tourner le sélecteur de 3 mm en utilisant une clé d'Allen (Fig. 4).
4- Nettoyer toute la partie autour du point de lubrification.
5- Monter la nouvelle unité avec le raccord prévu et serrer à la main (Fig.6 - Fig.1).

**Codice MDXI125 kit ingrassatore a cartuccia 125 ml per tenute MBTT ingrassate**

Per il montaggio su impianti nuovi:

1- Assicurarsi che il grasso usato nel System 24 sia del tipo adatto.
2- Assicurarsi che il grasso somministrato possa essere usato insieme a quello preesistente.
3- Controllare se la temperatura ambientale si mantiene costante tra -20°C e +55°C.
4- Verificare che il grasso raggiunga i componenti da lubrificare.
5- Proteggere l'unità dal calore e dagli sbalzi di temperatura

**Note:**
- il lubrificatore può essere temporaneamente inattivato settando il selettore sulla posizione 0.
- L'unità può essere montata ovunque, è a tenuta stagna e può quindi essere installata anche sommersa in acqua.
- I lubrificatori ad olio sono forniti con un raccordo dotato di valvola di non ritorno. Prima di installarli tagliare l'estremità. Non rimuovere il raccordo.

**Installazione**
1- Marcare la data di installazione sull'unità con un pennarello ad inchiostro indelebile (fig.2).
2- Aprire la presa del lubrificante tagliando il sigillo o estraendo il tappo. (fig.3)
3- Per attivare il lubrificatore girare il selettore di 3 mm usando una chiave a brugola (fig. 4).
4- Pulire l'area intorno al punto di lubrificazione.
5- Montare la nuova unità con il raccordo predisposto e stringerla a mano (Fig.6 - Fig.1)

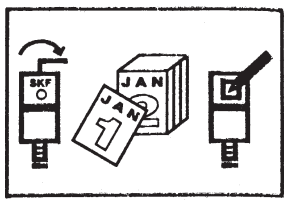

**Fig.- Abb. 2**

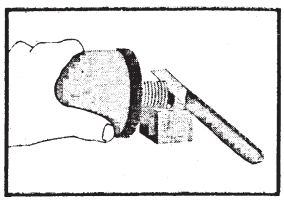
**Fig.- Abb. 3**

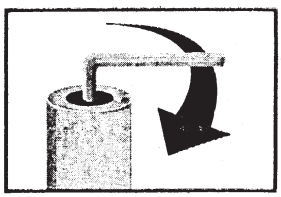
**Fig.- Abb. 4**

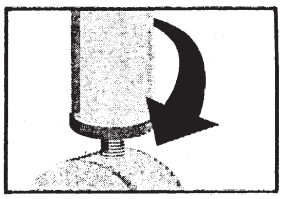
**Fig.- Abb. 5**

**Selection on the basis of experience**
If the previous results acquired on the basis of experience have been satisfactory, retain the same criteria.

**Selection on the basis of lubrication using manual grease nipple**
Set the lubricator emptying period in such a way as to guarantee the same quantity of lubricant as that supplied using a manual grease nipple.
For example:
- Bearing "X" receives 10 grease pump cycles by means of the grease injector (SKF 1077600) per month.
- The quantity of grease per pump cycle is 2.0 cm3.

**LAGD 125**
- The quantity of grease inside the LAGD 125 lubricator is 125 cm³.
- Therefore 125 cm³/2.0 cm³ = 62 pump cycles.
- 62/10 (pump cycles per month) equivalent to 6.2 months.

Position the selector on 6 months using the 3mm Allen wrench.

**Activation period**
A period of activation is necessary before the lubricator can start supplying grease. This period is variable, depending on the selected emptying time and the temperature. At normal room temperatures, the grease delivery will start within a week. Two weeks are required for temperatures of -20ºC. Therefore, check the bearing to make sure it has enough grease to last this period.

**Influence on selection of duration**
The emptying time can be influenced by the resistance offered by the lubrication channels and the room temperature. If the temperature is less than -10ºC, the emptying time will be approximately double that indicated on the lubricator.
On the other hand, if the room temperature is over 40ºC, the time will be halved.

**Wahl aufgrund der Erfahrung**
Wenn die vorher erhaltenen Resultate aufgrund der Erfahrung zufriedenstellend waren, die gleichen Kriterien beibehalten.

**Wahl aufgrund der Neuschmierung mit Schmieren von Hand**
Den Zeitraum für die Entleerung des Schmierstoffvorrats so einstellen, dass die gleiche Menge der vorher von Hand verabreichten Schmierstoffmenge gewährleistet wird. z.B.:
- Das Lager „X" erhält 10 Einspritzungen Fett pro Monat mittels des Schmiernippels (SKF 1077600).
- Die Fettmenge jeder einzelnen Einspritzung beträgt 2,0 cm³.

**LAGD 125**
- Die Fettmenge, die sich innerhalb der Schmiervorrichtung LAGD befindet, beträgt 125 cm³.
- Also 125 cm³/2,0 cm³=62 Einspritzungen.
- 62/10 (Einspritzungen pro Monat) entspricht 6,2 Monaten.

Den Wahlschalter daher auf 6 Montage stellen, wozu man die Inbusschraube von 3 mm benutzt.

**Aktivierungszeit**
Bevor die Schmiervorrichtung in der Lage ist, Fett abzugeben, braucht sie eine Aktivierungszeit. Diese Zeit hängt von der gewählten Entleerungszeit und der Temperatur ab. Bei normaler Umgebungstemperatur beginnt die Fettabgabe innerhalb einer Woche. Bei -20°C sind zwei Wochen erforderlich. Sicherstellen, dass das Lager ausreichend mit Schmierstoff versehen ist, um diese Zeit zu überstehen.

**Einfluss auf der Wahl der Dauer**
Die Entleerungszeit kann durch den Widerstand beeinflusst werden, den die Schmierkanäle bieten, wie auch die durch Umgebungstemperatur. Bei Temperaturen unter -10°C beträgt die Entleerungszeit circa das doppelte im Bezug zu der Abgabe auf der Schmiervorrichtung. Bei Umgebungstemperaturen über 40°C wird die Zeit dagegen halbiert.

**Sélection en fonction de l'expérience**
Si les résultats acquis en fonction de l'expérience sont satisfaisants, maintenir les mêmes critères.

**Sélection en fonction de la lubrification effectuée par graisseur manuel**
Régler la période de vidage du graisseur de manière à garantir la même quantité de lubrifiant fourni précédemment avec un graisseur manuel.
Par exemple:
- Le roulement "X" reçoit 10 coups de pompe à travers l'injecteur de graisse (SKF 1077600) par mois.
- La quantité de graisse pour chaque coup de pompe est de 2,0 cm3.

**LAGD 125**
- La quantité de graisse à l'intérieur du graisseur LAGD 125 est de 125 cm³.
- Donc 125 cm³/2,0 cm³ = 62 coups de pompe.
- 62/10 (coups de pompe par mois) équivaut à 6,2 mois.

Placer le sélecteur sur 6 mois à l'aide de la clé d'Allen de 3 mm.

**Période d'activation**
Une période d'activation est nécessaire avant que le lubrificateur ne soit en mesure de fournir la graisse. Cette période est variable selon la période de vidage choisie et de la température. A une température ambiante normale, la graisse sera débitée au bout d'une semaine. Deux semaines sont nécessaires à la température de -20ºC. Vérifier donc que le roulement a suffisamment de lubrifiant pour couvrir cette période.

**Influence sur la sélection de la durée**
Le temps de vidage peut être influencé par la résistance offerte par les canaux de lubrification et par la température ambiante. Si la température ambiante est inférieure à -10ºC, le temps de vidage sera approximativement le double par rapport à ce qui est indiqué sur le graisseur.
Au contraire avec une température ambiante de plus de 40ºC, le temps sera diminué de moitié.

**Selezione in base all'esperienza**
Se i precedenti risultati acquisiti in base all'esperienza sono soddisfacenti, mantenere gli stessi criteri.

**Selezione in base alla rilubrificazione effettuata tramite ingrassatore manuale**
Settare il periodo di svuotamento del lubrificatore in modo da garantire lo stesso quantitativo di lubrificante precedentemente fornito con un ingrassatore manuale.
es.:
- il cuscinetto"X" riceve 10 pompate tramite l'iniettore di grasso (SKF 1077600) al mese.
- Il quantitativo di grasso per ogni pompata è di 2.0 cm³.

**LAGD 125**
- Il quantitativo di grasso all'interno del lubrificatore LAGD 125 è di 125 cm³.
- Dunque 125 cm³/2.0 cm³=62 pompate.
- 62/10 (pompate per mese) equivale a 6.2 mesi.

Posizionare allora il selettore su 6 mesi con l'ausilio della brugola da 3 mm.

**Periodo di attivazione**
Prima che il lubrificatore sia in grado di fornire il grasso è necessario un periodo di attivazione. Questo tempo è variabile a seconda del periodo di svuotamento prescelto e della temperatura. A temperatura ambiente normale comincerà ad erogare il grasso entro una settimana. A -20°C necessiteranno due settimane. Verificare quindi che il cuscinetto abbia lubrificante a sufficienza per coprire questo periodo.

**Influenza sulla selezione della durata**
Il tempo di svuotamento può essere influenzato dalla resistenza offerta dai canali di lubrificazione e dalla temperatura ambiente. Se la temperatura è inferiore a -10°C il tempo di svuotamento sarà approssimativamente il doppio rispetto a quanto indicato sul lubrificatore.
Al contrario con temperatura ambiente di oltre 40°C il tempo sarà dimezzato.

**NOISE**
Operation noise depends on different factors. The most important ones are material properties and the application. The noise values in the following table were measured in one metre distance in the worst possible position.

**BETRIEBSGERÄUSCHE**
Betriebsgeräusche sind von verschiedenen Faktoren abhängig. Davon sind die wichtigsten die Produkteigenschaften und die Anwendung.
Die Geräuschwerte in der nachstehenden Tabelle wurden in einem Meter Entfernung in der ungünstigsten Position gemessen.

**BRUIT**
Le niveau de bruit des appareils dépend de différents facteurs. Les plus importants sont les caractéristiques du matériau dosé et l'application.
La valeur de bruit dans le tableau ci-dessous est mesurée à la distance de 1 m, dans la position plus défavoravble.

**RUMORE**
Il livello di rumorosità delle macchine dipende da diversi fattori tra cui principalmente la natura del materiale dosato e applicazione. Il valore di rumorosità riportato nella tabella sottostante, è misurato alla distanza di 1 m, nella posizione più sfavorevole.

| Type | dB(A) |
|---|---|
| **MBF 042** | 56 |
| **MBF 073** | 60 |
| **MBF 114** | 62 |

**DISAMNTLING AND DISPOSAL**
Storage of equipement for longer periods:
- clean the equipment thoroughly.
- store the equipment in a container.

Scrapping:
- recycle plastic materials (e.g. seals, coatings etc.) and dispose according to regulations.
- Dispose of metal parts at the scrap yard.

**DEMONTAGE UND VERSCHROTTUNG**
Lagerung des Geräts über längere Zeiträume:
- Gerät gründlich säubern.
- Gerät in einem Behälter lagern.

Verschrottung:
- Kunststoffteile (z.B. Dichtungen, Beschichtungen etc.) gemäß den Vorschriften recyclen.
- Metallteile beim Schrotthändler abgeben.

**DEMONTAGE ET DEMOLITION**
Mise en entrepôt de la machine pendant une longue période:
- nettoyez soigneusement la machine;
- protégez-la en la mettant dans un conteneur.

Démolition:
- récupérez les pièces en matière plastique (par ex. revêtements, joints, etc.) et remettez les aux centres de récolte spécialisés;
- remettez les autres pièces en acier aux centres de récupération des métaux.

**SMANTELLAMENTO E DEMOLIZIONE**
Immagazinaggio della macchina per periodo prolungato:
- pulire accuratamente la macchina.
- immagazinare la macchina dentro un contenitore.

Rottamazione:
- riciclare i pezzi in plastica (per es. guarnizioni, rivestimenti etc.) a norma di legge.
- Consegnare i pezzi in metallo ai centri di raccolta.

**FAULT FINDING**
Minor problems can be resolved without consulting a specialist. Here are a few examples of possibles causes and solutions.

**BETRIEBSSTÖRUNGEN UND ABHILFE**
Kleinere Störungen können ohne die Einschaltung eines Fachmanns behoben werden. Im folgenden einige Beispiele möglicher Ursachen und Abhilfen.

**PROBLEMES EVENTUELS**
Vous pouvez résoudre vous-même les petits problèmes sans devoir consulter un spécialiste. De suite on donne quelques exemples des cuses éventuelles et des solutions possibles.

**POSSIBILI INCONVENIENTI**
I problemi minori possono essere risolti senza consultare uno specialista. Diamo qui di seguito un elenco degli incovenienti più comuni con le eventuali cause e possibili rimedi.

| FAULT | POSSIBLE REASON | ACTION |
|---|---|---|
| **Screw or agitator is damaged** | Foreign body inside feeder | Remove foreign body and replace damaged components |
| **Screw or agitator stops** | Hygroscopic material inside feeder has absorbed humidity | Unload feeder completely when shutting down for longer periods |
| **Rotating components unscrewed, no material handled** | Motor incorrectly wired | Rewire (metering screw must turn anticlockwise viewed from behind drive unit) |
| **Sticking of hygroscopic products**<br>**Agglomeration of viscous materials**<br>**Contamination of the product** | Long shutdown period | Unload feeder completely when shutting down for longer periods |

| STÖRUNG | MÖGLICHE URSACHE | ABHILFE |
|---|---|---|
| **Beschädigung des Dosier- oder Homogenisierwerkzeugs** | Eindringen von Fremdkörpern | Fremdkörper entfernen und beschädigte Teile austauschen. |
| **Blockierung von Dosier- oder Homogenisierwerkzeug** | Verkleben von hygroskopischen Produkten bei längerer Verweilzeit.<br>Viskose oder zum Anbacken neigende Medien mit hierfür ungeeigneten Werkzeugen. | Bei längeren Stilistandzeiten Gerät leeren. Geeignetes Dosierwerkzeug mit Innenrohr verwenden. |
| **Dosierwerkzeug hat sich gelöst, keine Dosierung** | E-Motor falsch angeschlossen. | E-Motor umklemmen; stellt man sich hinter den Antrieb, muß sich das Dosierwerkzeug gegen den Uhrzeigersinn, das Homogenisierwerkzeug im Uhrzeigersinn drehen. |
| **Kompression hygroskopischer Medien**<br>**Verklumpen viskoser Medien**<br>**Produktkontamination** | Längere Stillstandzeiten. | Bei längeren Stillstandzeiten das Gerät leeren. |

| PROBLEME | CAUSE POSSIBLE | SOLUTION |
|---|---|---|
| **Défaut sur hélices ou rotors** | Pénétration de corps étrangers dans la machine. | Retirer le corps étranger, remplacer les éléments endommagés. |
| **Blocage de l'hélice ou du rotor** | Empâtement de produits hygroscopiques demeurant dans la machine en milieux humides.<br>Produits visqueux ou compressés traités au moyen de doseurs non adaptés. | Toujours vider la machine en cas de longues périodes de non utilisation.<br>Utiliser des doseurs adaptés avec tube interne. |
| **Dévissage organes roulants, Absence de flux** | Connexion erronée des moteurs électriques. | Inversion de phases des moteurs: un observateur au chargement voit l'instrument de dosage tourner dans le sens trigonométrique, pendant que l'instrument d'homogénéisation tourne dans le sens horaire. |
| **Compression de produits hygroscopiques**<br>**Colmatage de produits visqueux**<br>**Contamination de oroduits périssables** | Périodes d'inactivité. | Vider la machine en prévision de longues périodes d'inactivité. |

| PROBLEMA | POSSIBILE MOTIVO | SOLUZIONE |
|---|---|---|
| **Attorcigliamento eliche e rotori** | Penetrazioni di corpi estranei entro la macchina. | Rimuovere il corpo estraneo; sostituire gli elementi danneggiati. |
| **Blocco eliche** | Appesantimento dei materiali igroscopici che permangono entro la macchina in ambienti umidi.<br>Prodotti viscosi e impaccanti. | Svuotare sempre la macchina in caso di lunghi periodi di non utilizzo.<br>Utilizzare utensili idonei. |
| **Svitamento organi rotanti, assenza di flusso.** | Erroneo collegamento delle fasi dei motori elettrici. | Inversioni fasi dei motori: un osservatore al carico vede l'utensile di dosaggio ruotare in senso antiorario. |
| **Impaccamento prodotti igroscopici.**<br>**Solidificazione prodotti viscosi.**<br>**Contaminazione prodotti deperibili** | Periodi di inattività. | Svuotare la macchina in previsione di lunghi periodi di inattività. |

| | **List of hazards**<br>***Gefährdungsliste***<br>**Liste des risques**<br>***Lista dei rischi*** | **Safety Measures**<br>***Sicherheitsmaßnahmen***<br>**Consignes de sécurité**<br>***Misure di sicurezza*** | **Norm Reference**<br>***Bezugsnormen***<br>**Normes de référence**<br>***Norme di Riferimento*** | **Operating Instruction Ref.**<br>***Bez. Betriebsanleitung***<br>**Réf. instructions de fonctionnement**<br>***Rif. istruzioni operative*** | **Residual Risk**<br>***Restrisiken***<br>**Risque résiduel**<br>***Rischio residuo*** |
|---|---|---|---|---|---|
| **1.** | **Mechanical Hazards - *Mechanische Gefährdungenen* - Risques mécaniques - *Rischi meccanici*** | | | | |
| 1.1 | Crushing - *Quetschen*<br>Ecrasement - *Schiacciamento* | Protection (grid, robust flexible sock...) to keep the valve out of reach of the personnel.<br>If the protection is movable a limit switch has to be fitted to stop the valve if the protection is removed.<br><br>*Schutzvorrichtungen (Gitter, robuste Verbindungsmanschetten etc.) um zu verhindern, daß das Bedienungspersonal mit beweglichen Klappenteilen in Kontakt kommt. Bei beweglichen Schutzvorrichtungen ist ein Endschalter vorzusehen, der die Klappe abschaltet, sobald die Schutzvorrichtung entfernt wird.*<br><br>Protection (grille, manchon flexible robuste etc.) pour éviter que le personnel entre en contact avec les pièces mobiles de la vanne. Si la protection est mobile, un dispositif de fin de course doit être installé qui arrête la vanne au moment où la protection est enlevée.<br><br>*Protezione (griglia, robusto calzone flessibile ecc...) onde evitare che il personale entri in contatto con le parti mobili della valvola. Con protezioni mobili occorre installare un dispositivo fine corsa che arresti la valvola al momento in cui la protezione viene rimossa.* | EN 292 - 1<br>EN 294<br>EN 349 | 02515 M.6<br>02515 M.7 | NO - *NEIN*<br>NON - *NO* |
| 1.2 | Shearing - *Scheren*<br>Troncature - *Troncamento* | | | | |
| 1.3 | Cutting - *Schneiden*<br>Coupe - *Taglio* | | | | |
| 1.4 | Entanglement<br>*Erfassen - Aufwickeln*<br>Entortillement *Attorcigliamento* | | | | |
| 1.5 | Drawing-in - Trapping<br>*Einziehen - Fangen*<br>Entraînement - Encastrement<br>*Trascinamento - Intrappolamento* | | | | |
| 1.6 | Impact - *Stoß*<br>Impact - *Impatto* | Not applicable - *Nicht anwendbar*<br>Non applicable - *Non applicabile* | | | |
| 1.7 | Stabbing - puncture<br>*Stich*<br>Perforation - perçage<br>*Perforazione - foratura* | | | | |
| 1.8 | Friction - abrasion<br>*Reibung - Abrieb*<br>Frottement - abrasion<br>*Frizione - abrasione* | | | | |
| 1.9 | High pressure fluid injection<br>*Flüssigkeiten unter Druck*<br>Injection de fluide à haute pression<br>*Iniezione fluido ad alta pressione* | | | | |
| 1.10 | Ejection of parts<br>*Ausstoßung von Teilen*<br>Ejection des pièces<br>*Espulsione di pezzi* | | | | |
| 1.11 | Loss of stability<br>*Stabilitätsverlust*<br>Perte de stabilité<br>*Perdita di stabilità* | Fix correctly the machine to the ground or to a strong structure<br><br>*Die maschine am Boden oder an einer soliden Struktur richtig verankern*<br><br>Ancrer correctement la machine au sol ou à une structure solide<br><br>*Ancorare correttamente la macchina al suolo o a una struttura solida* | EN 292-1 | 02515 M.6<br>02515 M.7 | NO- *NEIN*<br>NON - *NO* |
| 1.12 | Slip Trip and fall<br>*Rutschen oder Fallen*<br>Glissement et chute<br>*Scivolamento e caduta* | Not applicable - *Nicht anwendbar*<br>Non applicable - *Non applicabile* | | | |

| | List of hazards<br>*Gefährdungsliste*<br>Liste des risques<br>*Lista dei rischi* | Safety Measures<br>*Sicherheitsmaßnahmen*<br>Consignes de sécurité<br>*Misure di sicurezza* | Norm Reference<br>*Bezugsnormen*<br>Normes de référence<br>*Norme di Riferimento* | Operating Instruction Ref.<br>*Bez. Betriebsanleitung*<br>Réf. instructions de fonctionnement<br>*Rif. istruzioni operative* | Residual Risk<br>*Restrisiken*<br>Risque résiduel<br>*Rischio residuo* |
|---|---|---|---|---|---|
| **2.** | **Electrical Hazard - *Elektrische Gefährdungen* - Risques électriques - *Rischi elettrici*** | | | | |
| 2.1 | Electrical contact<br>*Elektrischer Kontakt*<br>Contact électrique<br>*Contatto elettrico* | Minimum protection of terminal box is IP 55 and suitable thermal fuse for the electrical motors has to be fitted.<br>Only qualified personnel has to work on electrical connections.<br><br>*Die kleinste Schutzart der Abzweigdose beträgt IP 55 und für die Elektromotoren sind geeignete thermosicherungen zu installieren.*<br>*Die elektrischen Arbeiten dürfen ausschließlich durch qualifiziertes Personal ausgeführt werden.*<br><br>La protection minimum du boîtier de dérivation est IP 55 et il faut prévoir des fusibles thermiques appopriés pour les moteurs électriques.<br>Les opérations concernant les raccordements électriques doivent être réalisés exclusivement par du personnel qualifié.<br><br>*La protezione minima della scatola di derivazione è IP 55 ed è necessario installare adeguati fusibili termici per i motori elettrici.*<br>*Le operazioni riguardanti i collegamenti elettrici devono essere eseguite esclusivamente da personale qualificato.* | EN 292-1 | 02515 M.8<br>02515 M.9 | NO - *NEIN*<br>NON - *NO* |
| 2.2 | Electrostatic phenomena<br>*Elektrostatische Erscheinungen*<br>Phénomènes électrostatiques<br>*Fenomeni elettrostatici* | Not applicable - *Nicht anwendbar*<br>Non applicable - *Non applicabile* | | | |
| 2.3 | Thermal radiation<br>*Wärmestrahlung*<br>Radiation thermique<br>*Radiazione termica* | | | | |
| 2.4 | External influence on equipment<br>*Äußere Einwirkungen auf die Geräte*<br>Influence extérieure sur les appareillages<br>*Influenza esterna sulle apparecchiature* | | | | |
| **3.** | **Thermal Hazards - *Thermische Gefährdungen* - Risques thermiques - *Rischi termici*** | | | | |
| 3.1 | Burns and scalds<br>*Verbrennungen und Branwunden*<br>Brûlures et lésions<br>*Bruciature e ustioni* | Not applicable - *Nicht anwendbar*<br>Non applicable - *Non applicabile* | | | |
| 3.2 | Health -damaging effects by hot/cold environment<br><br>*Gesundheitsschädliche Auswirkungen infolge warmer/kalter Umgebungen*<br><br>Effets nocifs pour la santé dus aux environnement chauds/froids<br><br>*Effetti dannosi per la salute dovuti ad ambienti caldi/freddi* | | | | |

| | List of hazards<br>*Gefährdungsliste*<br>Liste des risques<br>*Lista dei rischi* | Safety Measures<br>*Sicherheitsmaßnahmen*<br>Consignes de sécurité<br>*Misure di sicurezza* | Norm Reference<br>*Bezugsnormen*<br>Normes de référence<br>*Norme di Riferimento* | Operating Instruction Ref.<br>*Bez. Betriebsanleitung*<br>Réf. instructions de fonctionnement<br>*Rif. istruzioni operative* | Residual Risk<br>*Restrisiken*<br>Risque résiduel<br>*Rischio residuo* |
|---|---|---|---|---|---|
| **4.** | **Hazard generated by noise - *Gefährdungen durch Lärm* - Risque dérivant de la pollution acoustique - *Rischio da inquinamento acustico*** | | | | |
| 4.1 | Hearing losses<br>*Gehörverlust*<br>Pertes de l'ouïe<br>*Perdite dell'udito* | Not applicable - *Nicht anwendbar*<br>Non applicable - *Non applicabile* | | | |
| 4.2 | Interference with speech<br>*Verständigungsschwierigkeiten*<br>Difficulté de communication<br>*Difficoltà di comunicazione* | | | | |
| **5.** | **Hazard generated by vibration - *Gefährdungen durch Schwingungen* - Risque dû aux vibrations - *Rischio dovuto alle vibrazioni*** | | | | |
| | | Fix correctly the machine to a strong structure<br>*Die maschine am Boden oder an einer soliden Struktur richtig verankern*<br>Ancrer correctement la machine au sol ou à une structure solide<br>*Ancorare correttamente la macchina al suolo o a una struttura solida* | EN 292-1 | 02515 M.6<br>02515 M.7 | NO - *NEIN*<br>NON - *NO* |
| **6.** | **Radiation Hazards - *Gefährdungen durch Strahlung* - Risques de radiation - *Rischi di radiazione*** | | | | |
| | | Not applicable - *Nicht anwendbar*<br>Non applicable - *Non applicabile* | | | |
| **7.** | **Hazards generated by materials processed - *Gefährdungen duch die behandelten Materialien***<br>**Risques dus aux matériaux traités - *Rischi dovuti ai materiali trattati*** | | | | |
| 7.1 | Contact or inhalation<br>*Berühren oder Einatmen*<br>Contact ou inhalation<br>*Contatto o inalazione* | For such a kind of materials the plant manufacturer and/or the installator has to fit suitable special device<br>*Für diese Art Material ist der Anlagenhersteller oder der Installateurangehalten, passende Spezialeinrichtungen bereitzustellen.*<br>Pour ce type de matériaux le constructeur de l'installation ou le personnel responsable est tenu de prévoir des dispositifs spéciaux.<br>*Per questo tipo di materiali il costruttore dell'impianto o l'addetto all'installazione è tenuto a predisporre opportuni dispositivi speciali* | EN 292-1 | 02515 T.6<br>02515 M.4 | NO - *NEIN*<br>NON - *NO* |
| 7.2 | Fire and explosion<br>*Brand oder Explosion*<br>Incendie et explosion<br>*Incendio ed esplosione* | | | | |
| 7.3 | Biological (viral/bacterial)<br>*Biologisch (durch Viren/Bakterien)*<br>Biologique (viral/bactérien)<br>*Biologico (virale/batterico)* | | | | |
| **8.** | **H.generated by neglecting ergonomic principles - *Gefährdungen durch die Nichtbeachtung der ergonomischen Richtlinien***<br>**Risques dus à l'inobservation des principes ergonomiques - *Rischi dovuti all'inosservanza dei principi ergonomici*** | | | | |
| | | Not applicable - *Nicht anwendbar*<br>Non applicable - *Non applicabile* | | | |
| **9.** | **Hazards combination - *Kombination der Gefährdungen* - Combinaison de risques - *Combinazione di rischi*** | | | | |
| | | Not applicable - *Nicht anwendbar*<br>Non applicable - *Non applicabile* | | | |
| **10.** | **H. generated by failure of energy supply - *Gefährdungen durch eine Störung der Energieversorgung***<br>**Risques produits par une panne du secteur d'alimentation - *Rischi generati da un guasto nella rete di alimentazione*** | | | | |
| 10.1 | Failure of energy supply<br>*Störung im Versorgungsnetz*<br>Panne dans le secteur d'alimentation<br>*Guasto nella rete di alimentazione* | Not applicable - *Nicht anwendbar*<br>Non applicable - *Non applicabile* | | | |
| 10.2 | Unexpected ejection of parts<br>*Unerwartetes Ausstoßen von Teilen*<br>Ejection inattendue de pièces<br>*Espulsione inaspettata di pezzi* | | | | |
| 10.3 | Failure of control system<br>*Störung des Steuersystems*<br>Avarie du système de contrôle<br>*Avaria del sistema di controllo* | | | | |
| 10.4 | Errors of fitting - *Passungsfehler*<br>Erreurs d'accouplement - *Errori di accoppiamento* | | | | |
| **11.** | **H. generated by missing of safety related measures - *Gefährdungen durch die Nichtbeachtung der entsprechenden Sicherheitsnaßnahmen***<br>**Risques dus à l'absence de mesures concernant la sécurité - *Rischi dovuti alla mancanza di misure legate alla sicurezza*** | | | | |
| | | Not applicable - *Nicht anwendbar*<br>Non applicable - *Non applicabile* | | | |

**CHECK LIST IN CASE OF TROUBLE**

GENERAL QUESTIONS
a) Does metering screw start without problems even after longer down periods?
b) Does it seem that atmospheric conditions contribute to malfunctioning?
c) Feeder must work in perfectly horizontal position.
d) Outlet must be free.

HOPPER CHECK
a) Hopper capacity must be less than 100 litres.
b) Is hopper equipped with bridge breaking deflector?
c) Is hopper equipped with fluidization, vibrator or knocker?

ELECTRIC MOTOR CHECK
a) Are voltage drops possible due to contemperary starting of different machines?
b) Is the plant equipped with a power generator ?
c) Check if motor receives power.
d) Check motor is correctly connected and wires are fixed properly to terminals.
e) Check power cut-out in main controls is correctly set and compare to motor plate data.
f) Check correct sense of rotation of electric motor.

MICRO-BATCH FEEDER CHECK
a) Does material stick to metering screw?
b) Are there any lumps of material hindering material transport?
c) Is the tecnopolymer body damaged?
d) Ensure shaft seals do not loose material.
e) During transport metering screw must not touch feeder pipe.

MATERIAL CHECK
a) Material description?
b) Bulk density? (kg/dm$^3$)
c) Particle size? (µm/mm)
d) Humidity? (%)
e) Flowability? (make material slide down a metal plate by varying the angle from low to steep)
f) Compressible material? (can you make a “snowball”?)
g) Abrasive material? (does it hurt when rubbing it between fingers?)

**CHECKLISTE BEI BETRIEBSSTÖRUNGEN**

ALLGEMEINE FRAGEN
a) Läuft Dosierwerkzeug auch nach längeren Betriebsunterbrechungen problemlos an?
b) Scheint Fehlfunktion durch Witterung begünstigt ?
c) Gerät muß sich in exakt horizontaler Lage befinden.
d) Auslauf muß frei sein.

KONTROLLE DES TRICHTERS
a) Trichterinhalt muß weniger als 100 l betragen.
b) Ist Trichter mit Entlastungsvorrichtung ausgestattet?
c) Ist Trichter mit Luftauflockerung, Rüttler oder Klopfer ausgestattet?

KONTROLLE E-MOTOR
a) Sind aufgrund gleichzeitigen Einschaltens mehrerer Geräte Spannungsschwankungen möglich?
b) Ist Anlage mit einem Stromgenerator ausgerüstet?
c) Prüfen, ob am Motor Strom anliegt.
d) Prüfen, ob Motor korrekt angeschlossen ist und ob Klemmenmuttern fest angezogen sind.
e) Prüfen, ob Überstromschalter des Motors in der Hauptsteuerung richtig eingestellt ist und mit Typenschilddaten vergleichen.
f) Motordrehrichtung prüfen.

KONTROLLE DES MIKRO-DOSIERERS
a) Haftet Dosiergut am Dosierwerkzeug?
b) Behindern Produktklumpen die Dosierung?
c) Ist der polymerverkleidung beschädigt?
d) Sicherstellen, daß durch die Wellenabdichtungen kein Produkt austritt.
e) Während der Dosierung darf das Dosierwerkzeug das Förderrohr nicht berühren.

PRÜFUNG DES DOSIERGUTS
a) Materialbezeichnung?
b) Schüttgewicht? (kg/dm$^3$)
c) Körnung? (µm/mm)
d) Feuchte? (%)
e) Fließfähigkeit ? (Materialprobe auf einem geneigten Blech zum Fließen bringen)
f) Komprimierbarkeit? (Kann ein “Schneeball” geformt wer-den?)
g) Abrasivität? (Schmerzt es, wenn man Material zwischen den Fingern reibt?)

**CHECK-LIST EN CAS DE VIS EN PANNE**

DEMANDES GENERALES
a) L’outil de dosage démarre sans problèmes même après des longues périodes d’inactivité?
b) Il semble que les conditions atmosphériques contribuisent au malfonctionnement?
c) Il faut que le doseur travaille de manière parfaitement horizontale.
d) Il faut que la bouche de sortie soit libre.

CONTROLE DE LA TREMIE
a) La trémie doit être plus petite que 100 litres.
b) La trémie est équipée d’un déflecteur casse-voûte?
c) La trémie est équipée d’un système de fluidification, d’un vibrateur ou d’un percuteur?

CONTROLE MOTEUR ELECTRIQUE
a) Est-ce qu’il y a la possibilité de variations de courant d’alimentation à cause d’un démarrage de divers appareils au même temps?
b) L’installation est équipée d’un générateur de courant?
c) Contrôler si le moteur reçoit du courant!
d) Contrôler si le moteur est connecté correctement et si les fils sont fixés bien aux bornes.
e) Contrôler le réglage thermique du moteur dans le pupitre général et le confronter avec les données sur la plaque du moteur.
f) Verificare il giusto senso di rotazione del motore elettrico!

CONTROLE DU MICRODOSEUR
a) Le matériau a adhéré à l’outil de dosage?
b) Est-ce qu’il y a des blocs de matériau qui obstruisent le dosage?
c) Est-ce que le corps en polymèr technique est ruiné?
d) S’assurer que les joints d’étanchéité ne perdent pas de matériau.
e) Durant le transport l’outil de dosage ne doit pas toucher le tube de décharge.

3) CONTROLE DU MATERIAU
a) Désignation du matériau
b) Densité? (kg/dm$^3$)
c) Granulométrie? (µm/mm)
d) Humidité? (%)
e) Fluidité? (faites couler le matériau sur une tôle en augmentant l’inclinaison de la même)
f) Compressibilité? (est-il possible de faire une “boule de neige”?)
g) Abrasivité? (est ce qu’il fait mal quand on frotte le matériau dans les doigts?)

**CHECK-LIST IN CASO DI GUASTO**

DOMANDE GENERALI
a) L’utensile di dosaggio parte senza problemi anche dopo lunghi periodi di sosta ?
b) Pare che le condizioni atmosferiche contribuiscano al malfunzionamento?
c) La macchina deve lavorare in modo perfettamente orizzontale.
d) La bocca di scarico deve essere libera.

CONTROLLO DELLA TRAMOGGIA
a) La tramoggia deve essere inferiore a 100 litri.
b) La tramoggia è equipaggiata con un deflettore rompiponte?
c) La tramoggia è equipaggiata con un impianto di fluidificazione, di un vibratore o martellatore ?

CONTROLLO MOTORE ELETTRICO
a) Sono possibili sbalzi di corrente di alimentazione a causa dell’avviamento contemporaneo di diverse macchine ?
b) L’impianto è equipaggiato con un generatore di corrente ?
c) Controllare se il motore riceve corrente!
d) Controllare se il motore è collegato correttamente e se i fili sono fissati bene ai morsetti!
e) Controllare la regolazione della termica del motore nel quadro generale e confrontarla con i dati sulla targhetta del motore!
f) Verificare il giusto senso di rotazione del motore elettrico!

CONTROLLO DEL MICRODOSATORE
a) Il materiale si è attaccato all’elica di dosaggio?
b) Ci sono dei blocchi di materiale che ostruiscono il trasporto?
c) Il corpo in tecnopolimero si è rovinato?
d) Accertarsi che le tenute non perdano materiale.
e) Durante il trasporto l’elica non deve toccare il tubo di scarico.

CONTROLLO DEL PRODOTTO
a) denominazione del prodotto ?
b) densità ? (kg/dm$^3$)
c) granulometria ? (µm/mm)
d) umidità? (%)
e) scorrevolezza ? (fare scorrere il materiale su una lamiera aumentando lentamente l’inclinazione!)
f ) comprimibilità ‘ ( è possibile fare una “palla di neve”?)
g) abrasività ? (fa male quando si sfrega il prodotto tra le dita ?)

*N.B. Rights reserved to modify technical specifications*
*N.B. Angaben ohne Gewähr. Änderungen können ohne Vorankündigung vorgenommen werden.*
*N.B. Toutes données portées dans le présent catalogue n'engagent pas le fabricant. Elles peuvent être modifiéès à tout moment.*
*N.B. Tutti i dati riportati nel presente catalogo non sono impegnativi e possono subire variazioni in qualsiasi momento.*



WAMGROUP S.p.A.
Via Cavour, 338
I - 41030 Ponte Motta
Cavezzo (MO) - ITALY

☎ +39 / 0535 / 618111
**fax** +39 / 0535 / 618226
**e-mail** info@wamgroup.it
**internet** www.wamgroup.com
**videoconference** + 39 / 0535 / 49032

LEFT BLANK

WAM®

WAMGROUP

3

SPARE PARTS

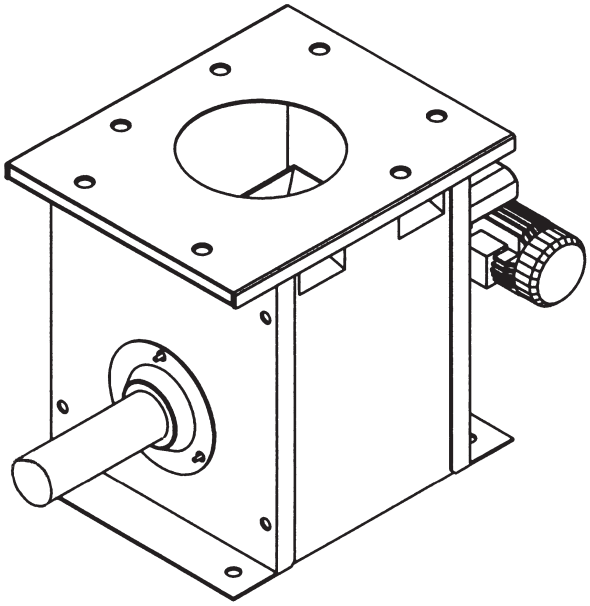

# MBF

- ***MICRO-BATCH FEEDERS***
  SPARE PARTS CATALOGUE
- ***MIKRODOSIERER***
  ERSATZTEILKATALOG
- ***MICRODOSEURS***
  PIECES DE RECHANGE
- ***MICRODOSATORI***
  PEZZI DI RICAMBIO

All rights reserved © WAMGROUP S.p.A.

**Manual No. VAL.MBF.--.R.A14.0420.4L Issue: A14**
**Latest Update: April 2020**

**ORIGINAL INSTRUCTIONS IN ENGLISH**

WAM®

All the products described in this catalogue are manufactured according to **WAMGROUP S.p.A. Quality System procedures**. The Company's Quality System, certified in July 1994 according to International Standards **UNI EN ISO 9002** and extended to the latest release of **UNI EN ISO 9001**, ensures that the entire production process, starting from the processing of the order to the technical service after delivery, is carried out in a controlled manner that guarantees the quality standard of the product.

*Alle in diesem Katalog beschriebenen Produkte werden gemäß dem **Qualitätssystem der WAMGROUP S.p.A.** hergestellt. Das im Juli 1994 gemäß der internationalen Norm **UNI EN ISO 9002** und auf die neueste Version der **UNI EN ISO 9001** erweiterte, zertifizierte Qualitätssystem der Firma gewährleistet, dass der gesamte Produktionsprozess von der Auftragsbearbeitung bis zum technischen Kundendienst nach Lieferung in kontrollierter Art und Weise erfolgt, so dass der Qualitätsstandard des Produkts gewährleistet ist.*

Tous les produits décrits dans ce catalogue sont fabriqués selon les procédures du **Système de Qualité de WAMGROUP S.p.A.**, certifié en Juillet 1994 selon les normes internationales **UNI EN ISO 9002** et étendu à la dernière version de la norme **UNI EN ISO 9001**. Cela garantit que le processus de production, à partir de la gestion de la commande au service technique après-vente, est effectué de manière contrôlée garantissant la norme de qualité du produit.

*Tutti i prodotti descritti nel catalogo sono stati realizzati secondo le **procedure del Sistema Qualità di WAMGROUP S.p.A.** Il Sistema Qualità aziendale, certificato dal luglio 1994 in conformità alle normative internazionali **UNI EN ISO 9002** e successivamente esteso all' ultima versione delle normative **UNI EN ISO 9001**, garantisce che l'intero processo produttivo, dalla formulazione dell'ordine fino all'assistenza tecnica dopo la consegna, si svolga secondo modalità controllate che garantiscono lo standard qualitativo del prodotto.*

**This publication cancels and replaces any previous edition and revision.**
**We reserve the right to implement modifications without notice.**
**This catalogue cannot be reproduced, even partially, without prior written consent by the Manufacturer.**

***Diese Veröffentlichung storniert und ersetzt alle früheren Ausgaben und überarbeiteten Fassungen.***
***Wir behalten uns das Recht vor, Änderungen ohne vorherige Information durchzuführen.***
***Dieser Katalog darf selbst auszugsweise nicht ohne das schriftliche Einverständnis der Herstellers vervielfältigt werden.***

**Cette publication annule et remplace toute édition et révision antérieure.**
**Nous nous réservons le droit de mettre en place des modifications sans préavis.**
**Aucune reproduction, partielle ou intégrale du catalogue, ne pourra être faite sans l'accord préalable et écrit du Fabricant.**

***Questa pubblicazione annulla e sostituisce le edizioni e revisioni precedenti.***
***Ci riserviamo la facoltà di apportare modifiche senza preavviso.***
***Il presente catalogo non può essere riprodotto, nemmeno parzialmente, senza previo consenso scritto del Costruttore.***

## 1 TECHNICAL CATALOGUE — TECHNISCHER KATALOG


| | | |
|---|---|---|
| DESCRIPTION AND TECHNICAL CHARACTERISTICS | BESCHREIBUNG UND TECHNISCE MERKMALE | **T. 6 → .23** |
| ORDER CODES | BESTELLCODES | **24 → .27** |
| ACCESSORIES | ZUBEHÖR | **28 → .41** |
| OPERATION AND MAINTENANCE | BETRIEBS- UND WARTUNGSANLEITUNG | **42** |
| INQUIRY AND ORDER FORM | ANFRAGE- UND BESTELLBLATT | **43** |


## 1 CATALOGUE TECNIQUE — CATALOGO TECNICO


| | | |
|---|---|---|
| DESCRIPTION ET CARACTERISTIQUES TECHNIQUES | DESCRIZIONE E CARATTERISTICHE TECNICHE | **T. 6 → .23** |
| CODES DE COMMANDE | CODICI DI ORDINAZIONE | **24 → .27** |
| ACCESSOIRES | ACCESSORI | **28 → .41** |
| UTILISATION ET ENTRETIEN | USO E MANUTENZIONE | **42** |
| QUESTIONNAIRE | MODULO DI RICHIESTA | **43** |


## 2 MAINTENANCE CATALOGUE — WARTUNGSKATALOG


| | | |
|---|---|---|
| OPERATION AND MAINTENANCE | BETRIEBS- UND WARTUNGSANLEITUNG | **M. 4 → .24** |


## 2 CATALOGUE D'ENTRETIEN — CATALOGO DI MANUTENZIONE


| | | |
|---|---|---|
| UTILISATION ET ENTRETIEN | USO E MANUTENZIONE | **M. 4 → .24** |


## 3 SPARE PARTS CATALOGUE — ERSAITZTEILKATALOG


| | | |
|---|---|---|
| SPARE PARTS | ERSATZTEIL | **R. 4 → .12** |


## 3 CATALOGUE PIECES DE RECHANGE — CATALOGO RICAMBI


| | | |
|---|---|---|
| PIECES DE RECHANGE | PEZZI DI RICAMBIO | **R. 4 → .12** |

**ORDERING OF SPARE PARTS**
To identify the spare parts refer to the following tables.
To order spare part either indicate the part code or the microdoseur, the item number and part description, as well as the required quantity.
Kits and sets are only supplied entirely.
For any further information plase.

**ERSATZTEILBESTELLUNGEN**
Zur Identifikation der Ersatzteile auf nachfolgende Tabelle Bezug nehmen.
Zur Ersatzteilbestellung ist es ausreichend, die Produktionsnummer des Mikrodosierers, die Position des Teils in der Ersatzteilliste und die gewünschte stückzahl.

**COMMANDE DE PIECES DE RECHANGE**
Pour identifier les pièces de rechange voyez le tableau suivant.
Pour commander des pièces de rechange il est suffisant d'indiquer le numéro matriculaire du microdoseur, la position de la pièce et la quantité désidérée.
Les groupes composants du microdoseur normalement sont vendus intégralement.
Les pièces sont aussi disponibles séparément. En tel cas s'adresser à notre Bureau de Service de Pièces de Rechange.

**ORDINAZIONE DEI PEZZI DI RICAMBIO**
Per l'identificazione dei pezzi di ricambio vedi tabelle riportate qui a seguito.
Per l'ordinazione dei pezzi di ricambio è sufficiente indicare il numero di matricola del microdosatore, la posizione del pezzo e la quantità voluta.
I gruppi componenti del microdosatore sono normalmente venduti integralmente.
Sono comunque disponibili separatamente i particolari :in tale caso rivolgersi al ns. Uff. Ricambi.

**A) Steel fabricated parts and bearing assemblies.**
Please indicate serial No. of the MBW, wich you read on side wall, and copy page No. and item No. (or letter) as well as the description of the part from the catalogue.

**A) Stahlbauteile und Lagereinheiten.**
Folgende Angaben sind hierfür erforderlich: die Produktions- Nr. der MBF; die Seitenzahl und die entsprechende Positionsnummer, bzw. der Positionsbuchstabe und die Teilebezeichnung; die Mengenangabe, wobei auf die in der Preisliste angegebene, jeweilige Mindest-Abnahmemenge zu achten ist.

**A) Pièces de charpente et paliers**
Quand passez une commande de pìeces de rechange, nous vous prions de comuniquer le N. de fabrication du MBF, le N. de la page, de la position et la désignation de la pièce, la quantitè désirée et tenant compte de la quantité minimum dans la liste de prix.

**A) Pezzi di carpenteria e di supporteria**
All'ordine sono da comunicare il N° matricolare del MBF, il N° di pagina, il N° o la lettera di posizione e la descrizione del pezzo nonchè la quantità richiesta tenendo conto delle quantità minime riportate nel listino.

**B) Gear Reduction Units and Eletric Motors**
Instead of the serial No. of the MBW indicate the serial No. of the gear reduction unit or of the electric motor and add the information requested under item A.
Parts not included in the price list cannot be supplied. These are:
1) Norm parts if not included in the kids
2) Item numbers in brackets ( )i. e. single parts of the kits.

Indicate the quantity of parts required (see minimum supply in the price list).

**B) Getriebeeinheiten und Elektro Motoren**
Anstelle der Produktions- Nr. der MBF ist die Produktions-Nr. des Getribes bzw. des E- Motors anzugeben.
Ansonsten sind die unter Punkt A bereits genannten Angaben hinzuzufügen. In der Preisliste nicht aufgeüfhrte Positionen sind nicht lieferbar. Im einzelnen sind dies:
1) Normteile, sofern die Montagesätze diese nicht beinhalten
2) in Klammern gesetzte Positionen ( ), bzw. Einzelteile zu den Montagesätzen.

**B) Reducteurs et moteurs électriques**
Au lieu du N. de fabrication du MBF il faut indiquer celui du reducteur ou du moteur. Ensuite ajoutez l'information demande sous la lettre A. Les pièces qui ne sont pas comprises dans la liste de prix ne peuvent pas être fournies. En particulier ce sont:
1) Les pièces commerciales à normes européenes si pas comprises dans les kits
2) Les positions entre parenthsès ( ), c' est à dire les composants des kits.

Avant le passage d'une commande vérifier les quantités minimum dans la liste de prix.

**B) Testate motrici e motori elettrici**
Al posto del N° matricolare del MBF, indicare quello della testata motrice o del motore elettrico. Quindi aggiungere le altre informazioni richieste sotto la lettera A.
I pezzi non compresi nel listino prezzi non possono essere forniti.
In particolare sono:
1) pezzi a norme se non compresi nei kits
2) numeri di posizione tra parentesi ( ), cioè singoli componenti dei kits.

Prima di passare un ordine verificare la quantità minima indicata nel listino prezzi.
Sono valide le ns Condizioni Generali di vendita.

| | |
|---|---|
| SPARE PARTS | SERIES |
| *ERSATZTEIL* | SERIE |
| PIECES DE RECHANGE | SERIE |
| *RICAMBI* | SERIE |

## MBF 042 in SINT®

MBF made of AISI
Mikrodosierer aus Edelstahl
Microdoseurs construit dans AISI
Microdosatore in AISI

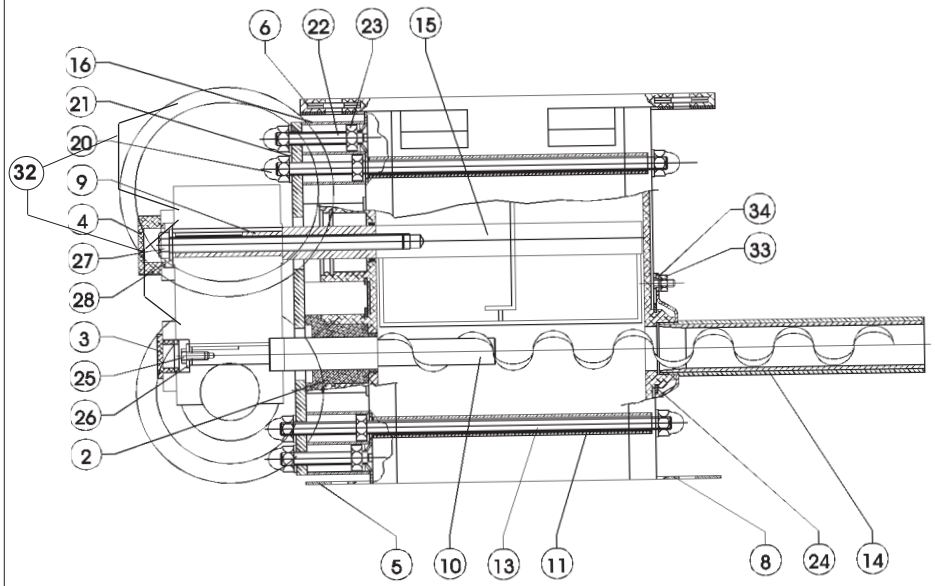


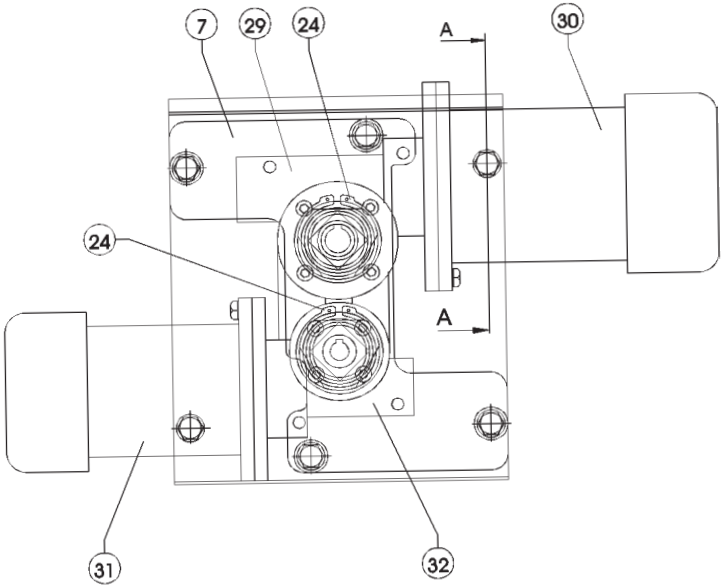


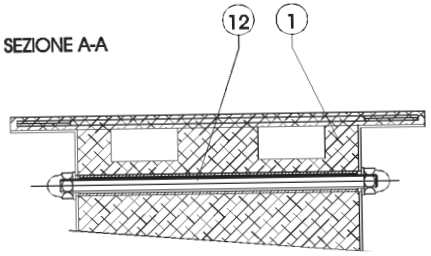


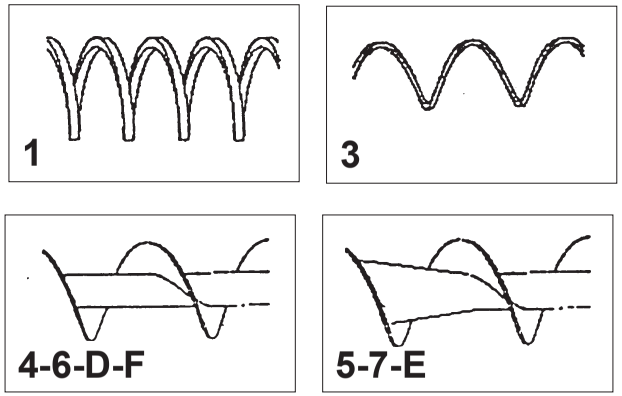

| | |
|---|---|
| SPARE PARTS | SERIES |
| *ERSATZTEILE* | SERIE |
| PIECES DE RECHANGE | SERIE |
| *RICAMBI* | SERIE |

**MBF 042**

| | Type | Code |
|---|---|---|
| *1 | 1 | UTD212 |
| | 3 | UTD232 |
| | 4 | UTD242 |
| | 5 | UTD254 (SINT®ER) |
| | | UTD255 (SINT®AL) |
| | 7 | UTD274 (SINT®ER) |
| | | UTD275 (SINT®AL) |
| | D | UTD2D2 |
| | G | UTD2G4 (SINT®ER) |
| | | UTD2G5 (SINT®AL) |

| | Type | Code |
|---|---|---|
| *2 | Normal *Normale* | 20640832/A |
| | Extended *Verlängert* Rallongé *Prolungato* | 20640842/A |

| | Type | Code |
|---|---|---|
| *3 | 1 | UTO12 |
| | 2 | UTO22 |

| | Type | Code |
|---|---|---|
| *4 | Cast - *Guß* Fonte - *Di fusione* | 20674161/A |
| | Welded *Geschweißt* Soudée *Saldata* | 20673351/A |

| | Type | Code |
|---|---|---|
| *5 | TPU Yellow - *Gelb* Jaune - *Giallo* | 2099828HA |

| | Type | Code |
|---|---|---|
| *6 | SINT®ER | 20689271A |
| | SINT®AL | 20689272A |

| Pos | Q. | Norms | Description | Benennung | Désignation | Descrizione | Code |
|---|---|---|---|---|---|---|---|
| 1 | 1 | | Body | Gehäuse | Corps | Corpo dosatore | *6 |
| 2 | 2 | | Seal TPU | Dichtung TPU | Etanchéité TPU | Tenuta TPU | *5 |
| 3 | 1 | | Shaft cover metering reduce | Wellenschutzdeckel Dos. | Protection arbre dos. | Capuccio x rid. D1 lato dosatore | 2099826-A |
| 4 | 1 | | Shaft cover blender reducer | Wellenschutzdeckel Hom. | Protection arbre hom. | Capuccio x rid. D1 lato omogeneiz. | 2099827-A |
| 5 | 1 | | End plate drive end | Endschild Antriebesseite | Plaque côté mot. | Facciata lato motorizzazione | 206F3E22/A |
| 7 | 1 | | Drive mount | Antriebskonsole | Support motorisation | Piastra supporto motorizzazione | * 4 |
| 8 | 1 | | End plate outlet end | Endschild Auslaufseite | Plaque coté sortie | Facciata lato scarico | 206F3E32/A |
| 9 | 1 | | Agitator shaft | Wellenzapfen | Arbre comm. rotor omogénéisateur | Albero comando utensile omog. | 20945101/A |
| 10 | 1 | | Metering screw | Dosierwerkzeug | Vis de dosaqe | Utensile dosatore | *1 |
| 11 | 4 | | Spacer | Distanzring | Entretoise | Distanziale | 20989581/A |
| 12 | 2 | DIN 975 | Threaded bar M10x238 | Gewindestange M 10x238 | Barre filetée M 10x238 | Barra fil. M10x238 | 20689571/A |
| 13 | 2 | DIN 975 | Threaded bar M10x293 | Gewindestange M 10x293 | Barre filetée Ml 10x293 | Barra fil. M10x293 | 20689581/A |
| 14 | 1 | | Tubular housing outlet side | Auslaufrohr | Tube décharge | Tubo di scarico | *2 |
| 15 | 1 | | Blending tool | Homogenisierwerkzeug | Homogénéisateur | Utensile omogeneizzatore | *3 |
| 16 | 4 | | Spacer | Distanzring | Entretoise | Distanziale | 20986851/A |
| 17 | 3 | DIN 934 | Nut M6 | Sechskantmutter M6 | Ecrou M6 | Dado M6 | |
| 18 | 3 | DIN 433 | Washer Ø 6 | Unterlegscheibe Ø 6 | Rondelle Ø 6 | Rondella Ø 6 | |
| 19 | 1 | DIN 913 | Screw M 10x70 | Schraube M10x70 | Vis M10x70 | Vite TE M 10x70 | |
| 20 | 16 | DIN 15187 | Cap nut M10 | Hutmutter M 10 | Ecrou borgne M10 | Dado cieco M 10 | |
| 21 | 30 | DIN 433 | Washer Ø 10 | Unterlegscheibe Ø 10 | Rondelle Ø 10 | Rondella Ø 10 | |
| 21 | 1 | DIN 7991 | Screw TSEI M10x70 | Schraube TSEI M10x70 | Vis TSEI M10x70 | Vite TSEI M10x70 | |
| 23 | 12 | DIN 934 | Nut M10 | Sechskantmutter M 10 | Ecrou M10 | Dado M10 | |
| 24 | 1 | DIN 471 | Shaft Ø60 retaining ring | Wellensicherungsring Ø 60 | Criclip pour arbre Ø 60 | Seeger x albero Ø 60 | |
| 25 | 1 | DIN 91311 | Hexagonal bolt M6x20 | Sechskantschraube M6x20 | Vis TE M6x20 | Vite TE M6x20 | |
| 26 | 1 | DIN 433 | Washer Ø 6 | Unterlegscheibe Ø 6 | Rondelle Ø 6 | Rondella Ø 6 | |
| 27 | 1 | DIN 9311 | Hexagonal bolt M12x190 | Sechskantschraube M12x190 | Vis TE M12x190 | Vite TE M12x190 | |
| 28 | 1 | DIN 433 | Washer Ø 12 | Unterlegscheibe Ø12 | Rondelle Ø 12 | Rondella Ø 12 | |
| 29 | 1 | | Gear box type “D1” | Getriebe Type “D1” | Réducteur type “D1” | Riduttore “D1” | |
| 30 | 1 | | E-Motor “63” | E-Motor “63” | Moteur “63” | Motore “63” | |
| 31 | 1 | | E-Motor “63” | E-Motor “63” | Moteur “63“ | Motore “63” | |
| 32 | 2 | | Protection cover | Abdeckungschutz | Couvercle de protection | Coperchio di protezione | |

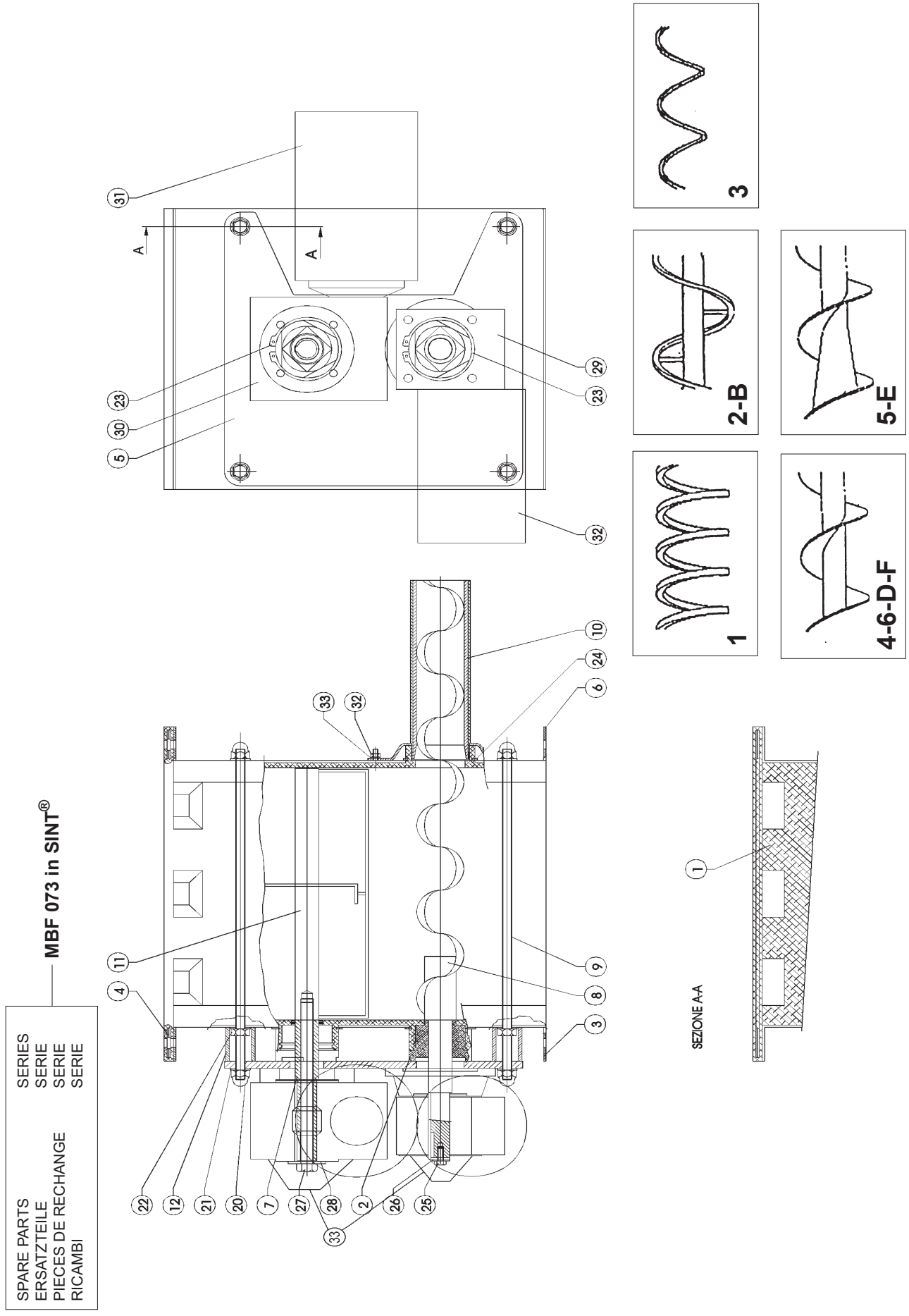
MBF 073 in SINT®
SPARE PARTS SERIES
ERSATZTEILE SERIE
PIECES DE RECHANGE SERIE
RICAMBI SERIE
A
A
SEZIONE A-A
1
2-B
3
4-6-D-F
5-E

SPARE PARTS SERIES
*ERSATZTEILE* SERIE
PIECES DE RECHANGE SERIE
*RICAMBI* SERIE

**MBF 073**

| *1 | Type | Code |
|---|---|---|
| | Cast - *Guß*<br>Fonte - *Di fusione* | **20674171/A** |
| | Welded<br>*Geschweißt*<br>Soudée<br>*Saldata* | **20674141/A** |

| *2 | Type | Code |
|---|---|---|
| | 1 | **UTD312** |
| | 2 | **UTD322** |
| | 3 | **UTD332** |
| | 4 | **UTD342** |
| | 5 | **UTD354 (SINT®ER)**<br>**UTD355 (SINT®AL)** |
| | B | **UTD3B2** |
| | D | **UTD3D2** |
| | E | **UTD3E4 (SINT®ER)**<br>**UTD3E5 (SINT®AL)** |

| *3 | Type | Code |
|---|---|---|
| | Normal<br>*Normale* | **2064085½/A** |
| | Extended<br>*Verlängert*<br>Rallongé<br>*Prolungato* | **2064086½/A** |

| *4 | Type | Code |
|---|---|---|
| | 1 | **UTO13** |
| | 2 | **UTO23** |

| *5 | Type | Code |
|---|---|---|
| | **TPU**<br>Yellow - *Gelb*<br>Jaune - *Giallo* | **2099843HA** |

| *6 | Type | Code |
|---|---|---|
| | SINT®ER | **20689281A** |
| | SINT®AL | **20689282A** |

| Pos | Q. | Norms | Description | Benennung | Désignation | Descrizione | Code |
|---|---|---|---|---|---|---|---|
| **1** | 1 | | Body | Gehäuse | Corps | Corpo dosatore | ***6** |
| **2** | 2 | | Seal TPU | Dichtung TPU | Etanchéité TPU | Tenuta TPU | ***5** |
| **3** | 1 | | End plate drive end | Endschild Antriebesseite | Plaque côté mot. | Facciata lato motorizzazione | **206F3E42/A** |
| **5** | 1 | | Drive mount | Antriebskonsole | Support motorisation | Piastra supporto motorizzazione | ***1** |
| **6** | 1 | | End plate outlet end | Endschild Auslaufseite | Plaque coté sortie | Facciata lato scarico | **206F3E52/A** |
| **7** | 1 | | Agitator shaft | Wellenzapfen | Arbre com. rotor homogénéisateur | Albero comando utensile omog. | **20947371/A** |
| **8** | 1 | | Metering screw | Dosierwerkzeug | Vis de dosage | Utensile-dosatore | ***2** |
| **9** | 4 | DIN 975 | Threaded bar M12x459 | Gewindestange M12x459 | Barre filetée M12x459 | Barra fil. M12x459 | **20689591/A** |
| **10** | 1 | | Tubular housinq outlet side | Auslaufrohr | Tube décharqe | Tubo di scarico | ***3** |
| **11** | 1 | | Blending tool | Homogenisierwerkzeug | Homogénéisateur | Utensile omogeneizzatore | ***4** |
| **12** | 4 | | Spacer | Distanzring | Entretoise | Distanziale | **20987771/A** |
| **18** | 3 | DIN 433 | Washer Ø 6 | Unterlegscheibe Ø 6 | Rondelle Ø 6 | Rondella Ø6 | |
| **19** | 3 | DIN 934 | Nul M6 | Sechskantmutter M6 | Ecrou M6 | Dado M6 | |
| **20** | 8 | DIN 1587 | Cap nul M12 | Hut mutter M12 | Ecrou borqne M12 | Dado cieco M12 | |
| **21** | 12 | DIN 433 | Washer Ø 12 | Unterlegscheibe Ø 12 | Rondelle Ø 12 | Rondella Ø12 | |
| **22** | 4 | DIN 934 | Nut M12 | Sechskantmutter M12 | Ecrou M12 | Dado M12 | |
| **23** | 2 | DIN 471 | Shaft Ø 80 retaining ring | Wellensicherungsring Ø 80 | Cnclip pour arbre Ø 80 | Seeger x albero Ø80 | |
| **24** | 1 | DIN 471 | Shaft Ø 88 retaining ring | Wellensicherungsring Ø 88 | Criclip pour arbre Ø 88 | Seeger x albero Ø88 | |
| **25** | 1 | DIN 931 | Hexaqonal bolt M8x35 | Sechskantschraube M8x35 | Vis TE M8x35 | Vite TE M8x35 | |
| **26** | 1 | DIN 433 | Washer Ø 8 | Unterlegscheibe Ø 8 | Rondelle Ø 8 | Rondella Ø8 | |
| **27** | 1 | DIN 931 | Hexagonal bolt M16x240 | Sechskantschraube M16x240 | Vis TE Ml 6x240 | Vite TE M16x240 | |
| **28** | 1 | | Washer ØI6 | Unterlegscheibe Ø 16 | Rondelle Ø 16 | Rondella Ø16 | |
| **29** | 1 | | Gearbox | Getriebe | Réducteur | Riduttore | |
| **30** | 1 | | Gearbox | Getriebe | Réducteur | Riduttore | |
| **31** | 1 | | E-Motor “71” | E-Motor “71” | Moteur “71” | Motore”71” | |
| **32** | 1 | | E-Motor “80” | E-Motor “80” | Moteur “80” | Motore “80” | |
| **33** | 2 | | Cover | Abdeckungschutz | Couvercle de protection | Coperchio di protezione | |

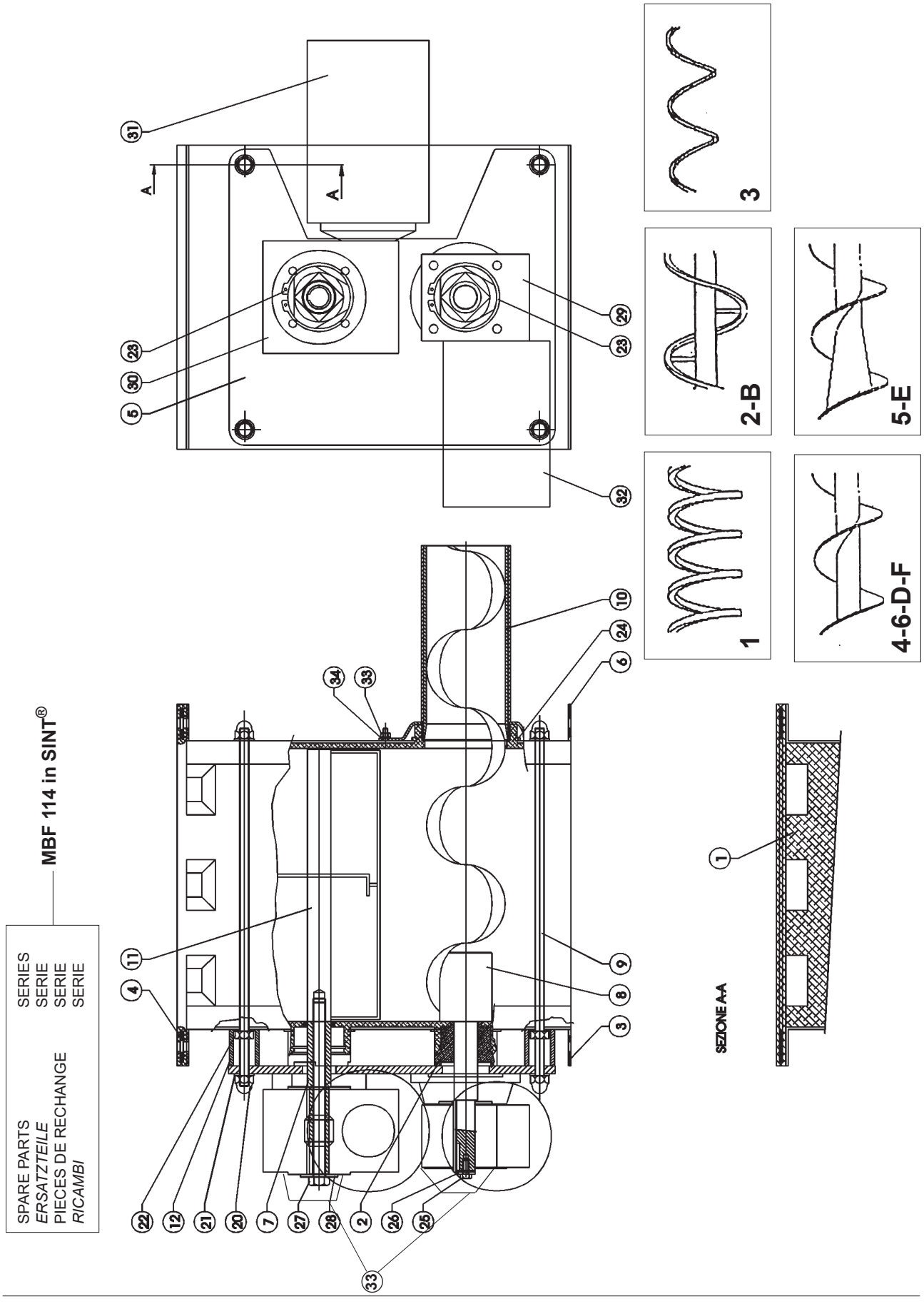
MBF 114 in SINT®
SPARE PARTS SERIES
ERSATZTEILE SERIE
PIECES DE RECHANGE SERIE
RICAMBI SERIE
SEZIONE A-A
1
2-B
3
4-6-D-F
5-E

| | |
|---|---|
| SPARE PARTS | SERIES |
| *ERSATZTEILE* | SERIE |
| PIECES DE RECHANGE | SERIE |
| *RICAMBI* | SERIE |

**MBF 114**

| *1 | Type | Code |
|---|---|---|
| | Cast - *Guß* Fonte - *Di fusione* | **20674181/A** |
| | Welded *Geschweißt* Soudée *Saldata* | **20674151/A** |

| *2 | Type | Code |
|---|---|---|
| | 1 | **UTD412** |
| | 2 | **UTD422** |
| | 3 | **UTD432** |
| | 4 | **UTD442** |
| | 5 | **UTD454 (SINT®ER)** |
| | | **UTD455 (SINT®AL)** |
| | B | **UTD4B2** |
| | D | **UTD4D2** |
| | E | **UTD4E4 (SINT®ER)** |
| | | **UTD4E5 (SINT®AL)** |

| *3 | Type | Code |
|---|---|---|
| | Normal *Normale* | **2064087½/A** |
| | Extended *Verlängert* Rallongé *Prolungato* | **2064088½/A** |

| *4 | Type | Code |
|---|---|---|
| | 1 | **UTO13** |
| | 2 | **UTO23** |

| *5 | Type | Code |
|---|---|---|
| | **TPU** Yellow - *Gelb* Jaune - *Giallo* | **2099843HA** |

| *6 | Type | Code |
|---|---|---|
| | SINT®ER | **20689291A** |
| | SINT®AL | **20689292A** |

| Pos. | Q. | Norms | Description | Benennung | Désignation | Descrizione | Code |
|---|---|---|---|---|---|---|---|
| **1** | 1 | | Body | Gehäuse | Corps | Corpo dosatore | ***6** |
| **2** | 2 | | Seal TPU | Dichtung TPU | Etanchéité TPU | Tenuta TPU | ***5** |
| **3** | 1 | | End plate drive end | Endschild Antriebesseite | Plaque coté mot. | Facciata lato motorizzazione | **206F3E72/A** |
| **5** | 1 | | Drive mount | Antriebskonsole | Support motorisation | Piastra supporto motorizzazione | ***1** |
| **6** | 1 | | End plate outlet end | Endschild Auslaufseite | Plaque côté sorbe | Facciata lato scarico | **206F3E52/A** |
| **7** | 1 | | Agitator shaft | Wellenzapfen | Arbre com. rotor homogénéisateur | Albero comando utensile omog. | **20947371/A** |
| **8** | 1 | | Metering screw | Dosierwerkzeug | Vis de dosage | Utensile dosatore | ***2** |
| **9** | 4 | DIN 975 | Threaded bar M12x459 | Gewindestange M12x459 | Barre filetée M12x459 | Barra fil. M 12x459 | **20689591/A** |
| **10** | 1 | | Tubular housing outlet side | Auslaufrohr | Tube décharge | Tubo di scarico | ***3** |
| **11** | 1 | | Blending tool | Homogenisierwerkzeug | Homogénéisateur | Utensile omogeneizzatore | ***4** |
| **12** | 4 | | Spacer | Distanzring | Entretoise | Distanziale | **20987771/A** |
| **18** | 3 | DIN 433 | Washer Ø6 | Unterlegscheibe Ø6 | Rondelle Ø6 | Rondella Ø6 | |
| **19** | 3 | DIN 934 | Nut M6 | Sechskantmutter M6 | Ecrou M6 | Dado M6 | |
| **20** | 8 | DIN 1587 | Cap nut M12 | Hut mutter M12 | Ecrou borqne M12 | Dado cieco M12 | |
| **21** | 12 | DIN 433 | Washer Ø12 | Unterlegscheibe Ø12 | Rondelle Ø12 | Rondella Ø12 | |
| **22** | 4 | DIN 934 | Nut M12 | Sechskantmutter M 12 | Ecrou M12 | Dado M12 | |
| **23** | 2 | DIN 471 | Shaft Ø80 retaining ring | Wellensicherungsring Ø80 | Criclip pour arbre Ø80 | Seeger x albero Ø80 | |
| **24** | 1 | DIN 471 | Shaft Ø130 retaining ring | Wellensicherungsring Ø130 | Criclip pour arbre Ø130 | Seeger x albero Ø130 | |
| **25** | 1 | DIN 931 | Hexaqonal bolt M8x35 | Sechskantschraube M8x35 | Vis TE M8x35 | Vite TE M8x35 | |
| **26** | 1 | DIN 433 | Washer Ø8 | Unterlegscheibe Ø8 | Rondelle Ø8 | Rondella Ø8 | |
| **27** | 1 | DIN 931 | Hexagonal bolt M16x240 | Sechskantschraube M16x240 | Vis TE Ml 6x240 | Vite TE M16x240 | |
| **28** | 1 | | Washer Ø16 | Unterlegscheibe Ø16 | Rondelle Ø16 | Rondella Ø16 | |
| **29** | 1 | | Gearbox | Getriebe | Réducteur | Riduttore | |
| **30** | 1 | | Gearbox | Getriebe | Réducteur | Riduttore | |
| **31** | 1 | | E-Motor “71” | E-Motor “71” | Moteur “71” | Motore “71” | |
| **32** | 1 | | E-Motor “80” | E-Motor “80” | Moteur “80” | Motore “80” | |
| **33** | 2 | | Cover | Abdeckungschutz | Couvercle de protection | Coperchio di protezione | |

| | |
|---|---|
| SPARE PARTS | SERIES |
| *ERSATZTEILE* | SERIE |
| PIECES DE RECHANGE | SERIE |
| *RICAMBI* | SERIE |

**MBF 042 AISI**

**MBF 073 AISI**

**MBF 114 AISI**

For electric motors see Sint® version
Fur elektromotoren sieke Sint® version
Pour les moteurs electriques voir version in Sint®
Per le motorizzazioni vedi la versione in Sint®

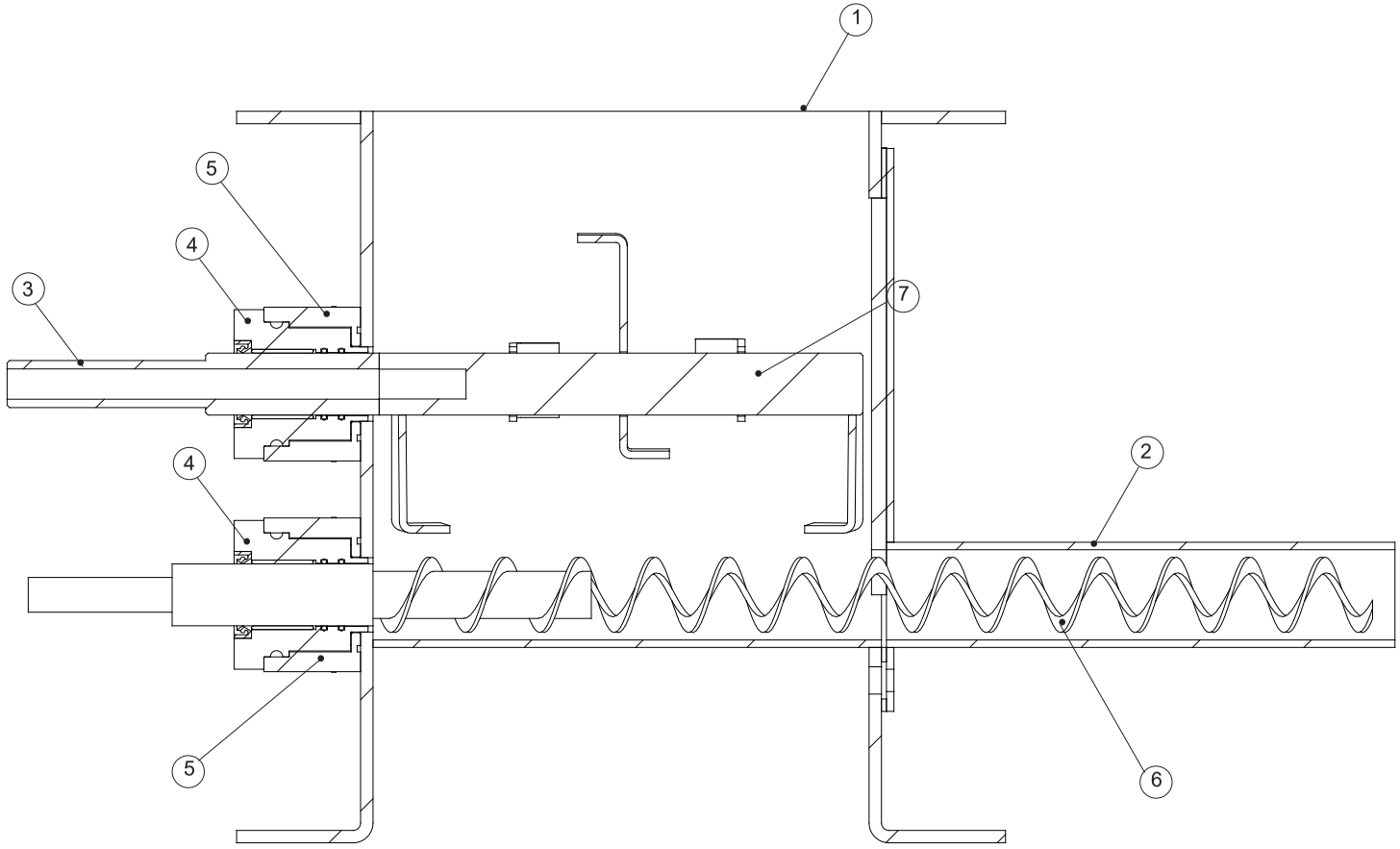


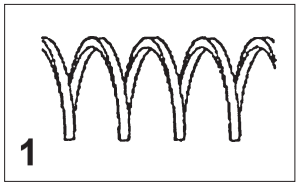


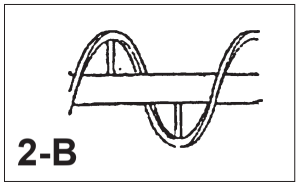


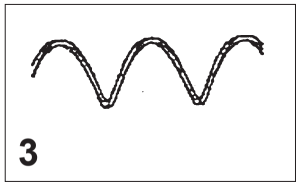


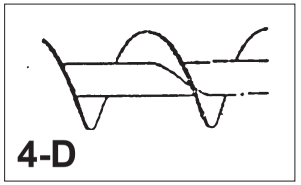

| | |
|---|---|
| SPARE PARTS | SERIES |
| *ERSATZTEILE* | SERIE |
| PIECES DE RECHANGE | SERIE |
| *RICAMBI* | SERIE |

**MBF 042 AISI**

**MBF 073 AISI**

**MBF 114 AISI**

For electric motors see Sint® version
Fur elektromotoren sieke Sint® version
Pour les moteurs electriques voir version in Sint®
Per le motorizzazioni vedi la versione in Sint®

| | Type | Code |
|---|---|---|
| *2a | 1 | UTD212000 |
| | 2 | UTD222000 |
| | 3 | UTD232000 |
| | 4 | UTD242000 |
| | B | UTD2B2000 |
| | D | UTD2D2000 |

| | Type | Code |
|---|---|---|
| *2b | 1 | UTD312000 |
| | 2 | UTD322000 |
| | 3 | UTD332000 |
| | 4 | UTD342000 |
| | B | UTD3B2000 |
| | D | UTD3D2000 |

| | Type | Code |
|---|---|---|
| *2c | 1 | UTD412000 |
| | 2 | UTD422000 |
| | 3 | UTD432000 |
| | 4 | UTD442000 |
| | B | UTD4B2000 |
| | D | UTD4D2000 |

| Item Pos. | Q. | Norms | Description | Benennung | Désignation | Descrizione | Code | | |
|---|---|---|---|---|---|---|---|---|---|
| | | | | | | | MBF-042 | MBF-073 | MBF-114 |
| 1 | 1 | | Body | Gehäuse | Corps | Corpo dosatore | 2068A79_A | 2068A81_A | 2068A83_A |
| 2 | 1 | | STD Inspection hatch | STD Inspektionstür | Trappe de visite STD | Portello di Ispesione STD | MBPI2 | MBPI3 | MBPI4 |
| 2a | 1 | | Inspection hatch with extended tube | Inspektionstür mit langlichrohr | Trappe de visite avec tube prolonge | Portello di ispezione con tubo prolungato | MBPIP2 | MBPIP3 | MBPIP4 |
| 3 | 1 | | Agitator shaft | Wellenzapfen | Arbre comm. rotor omogénéisateur | Albero comando utensile omogeneizzatore | 20945101A | 20947371A | 20947371A |
| 4 | 1 | | Seal | Dichtung | Entachéité | Tenuta | MBTT2 | MBTT3 | MBTT4 |
| 5 | 2 | | Seal mount | Montierung fur dichtung | Support pour entachéité | Supporto per tenuta | - | - | - |
| 6 | 2 | | Metering screw | Dosierwerkzeug | Vis de dosage | Utensile dosatore | 2a* | 2b* | 2c* |
| 7 | 1 | | Blending tool | Homogenisierwerkzeug | Homogénéisateur | Utensile omogenizzatore | UTO12<br>UTO22 | UTO13<br>UTO23 | UTO14<br>UTO24 |

*N.B. Rights reserved to modify technical specifications*
*N.B. Angaben ohne Gewähr. Änderungen können ohne Vorankündigung vorgenommen werden.*
*N.B. Toutes données portées dans le présent catalogue n'engagent pas le fabricant. Elles peuvent être modifiéès à tout moment.*
*N.B. Tutti i dati riportati nel presente catalogo non sono impegnativi e possono subire variazioni in qualsiasi momento.*



WAMGROUP S.p.A.
Via Cavour, 338
I - 41030 Ponte Motta
Cavezzo (MO) - ITALY

☎ +39 / 0535 / 618111
**fax** +39 / 0535 / 618226
**e-mail** info@wamgroup.it
**internet** www.wamgroup.com
**videoconference** + 39 / 0535 / 49032

LEFT BLANK

# *WAM*

## *SBB SERIES, CONE FOR BIG BAG UNLOADING STATION*

LEFT BLANK

EXTRAC®

WAMGROUP

2

MAINTENANCE

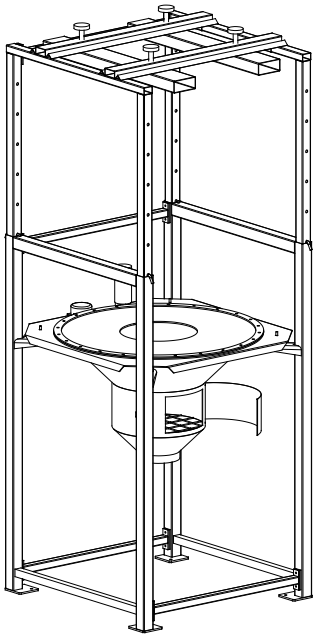

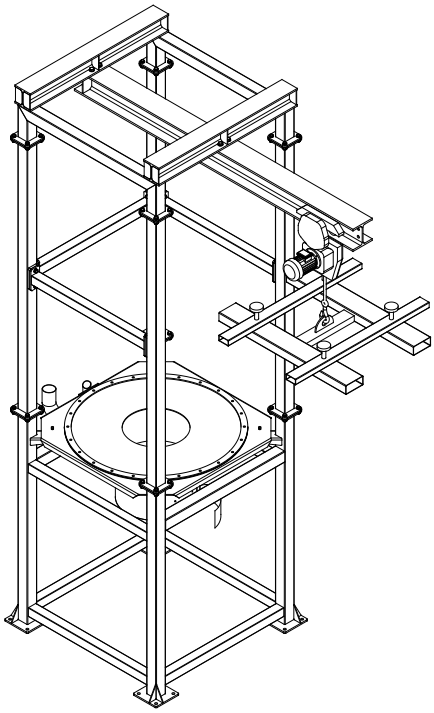

# SBB

- **FLEXIBLE INTERMEDIATE BULK CONTAINER UNLOADER**
  INSTALLATION, OPERATION AND MAINTENANCE
- ***BIG-BAG - ENTLEERSTATION***
  *EINBAU-, BETRIEBS- UND WARTUNGSANLEITUNG*
- **VIDE-SACS DE GRANDES DIMENSIONS**
  INSTALLATION, UTILISATION ET ENTRETIEN
- ***SVUOTA BIG BAG***
  *INSTALLAZIONE, USO E MANUTENZIONE*


| Manual No. EXT.SBB.--.M.A10.0820.4L Issue: A10<br>Latest update: August 2020 |
| --- |
| ORIGINAL INSTRUCTIONS IN ENGLISH |


All rights reserved © WAMGROUP S.p.A.

WAM®

All the products described in this catalogue are manufactured according to **WAMGROUP S.p.A. Quality System procedures**. The Company's Quality System, certified in July 1994 according to International Standards **UNI EN ISO 9002** and extended to the latest release of **UNI EN ISO 9001**, ensures that the entire production process, starting from the processing of the order to the technical service after delivery, is carried out in a controlled manner that guarantees the quality standard of the product.

*Alle in diesem Katalog beschriebenen Produkte werden gemäß dem **Qualitätssystem der WAMGROUP S.p.A.** hergestellt. Das im Juli 1994 gemäß der internationalen Norm **UNI EN ISO 9002** und auf die neueste Version der **UNI EN ISO 9001** erweiterte, zertifizierte Qualitätssystem der Firma gewährleistet, dass der gesamte Produktionsprozess von der Auftragsbearbeitung bis zum technischen Kundendienst nach Lieferung in kontrollierter Art und Weise erfolgt, so dass der Qualitätsstandard des Produkts gewährleistet ist.*

Tous les produits décrits dans ce catalogue sont fabriqués selon les procédures du **Système de Qualité de WAMGROUP S.p.A.**, certifié en Juillet 1994 selon les normes internationales **UNI EN ISO 9002** et étendu à la dernière version de la norme **UNI EN ISO 9001**. Cela garantit que le processus de production, à partir de la gestion de la commande au service technique après-vente, est effectué de manière contrôlée garantissant la norme de qualité du produit.

*Tutti i prodotti descritti nel catalogo sono stati realizzati secondo le **procedure del Sistema Qualità di WAMGROUP S.p.A.** Il Sistema Qualità aziendale, certificato dal luglio 1994 in conformità alle normative internazionali **UNI EN ISO 9002** e successivamente esteso all' ultima versione delle normative **UNI EN ISO 9001**, garantisce che l'intero processo produttivo, dalla formulazione dell'ordine fino all'assistenza tecnica dopo la consegna, si svolga secondo modalità controllate che garantiscono lo standard qualitativo del prodotto.*

**This publication cancels and replaces any previous edition and revision.**
**We reserve the right to implement modifications without notice.**
**This catalogue cannot be reproduced, even partially, without prior written consent by the Manufacturer.**

***Diese Veröffentlichung storniert und ersetzt alle früheren Ausgaben und überarbeiteten Fassungen.***
***Wir behalten uns das Recht vor, Änderungen ohne vorherige Information durchzuführen.***
***Dieser Katalog darf selbst auszugsweise nicht ohne das schriftliche Einverständnis der Herstellers vervielfältigt werden.***

**Cette publication annule et remplace toute édition et révision antérieure.**
**Nous nous réservons le droit de mettre en place des modifications sans préavis.**
**Aucune reproduction, partielle ou intégrale du catalogue, ne pourra être faite sans l'accord préalable et écrit du Fabricant.**

***Questa pubblicazione annulla e sostituisce le edizioni e revisioni precedenti.***
***Ci riserviamo la facoltà di apportare modifiche senza preavviso.***
***Il presente catalogo non può essere riprodotto, nemmeno parzialmente, senza previo consenso scritto del Costruttore.***

## 2 MAINTENANCE CATALOGUE — WARTUNGS KATALOG


| | |
|---|---|
| MANUFACTURING DATA | KONSTRUKTIONSDATEN **M.01** |
| GENERAL STANDARDS | ALLGEMEINES **.02** |
| OPERATING CONDITIONS | EINSATZEINSCHRÄNKUNGEN **.03** |
| INDICATIONS FOR USE | ANGABEN ZUM GEBRAUCH **.04** |
| WARNINGS | HINWEISE **.05** |
| DESCRIPTION AND USE | BESCHREIBUNG UND FUNKTION **.06 →.08** |
| WARRANTY CONDITIONS | GARANTIEBEDINGUNGEN **.09** |
| TRANSPORT AND STORAGE | TRANSPORT UND EINLAGERUNG **.10** |
| PAKING AND WEIGHTS | VERPACKUNGEN UND GEWICHTE **.11** |
| STORING THE MACHINE | LAGERHALTUNG **.12** |
| PACKING - UNPACKING | VERPACKUNG - AUSPACKEN **.13** |
| HANDLING | HANDLING **.14** |
| INSTALLATION - ANCHORING | INSTALLATION - BEFESTIGUNG **.15** |
| INSTALLATION - ASSEMBLY OF MODEL S | INSTALLATION - ZUSAMMENBAU MODELL S **.16** |
| INSTALLATION - ASSEMBLY OF MODEL M | INSTALLATION - ZUSAMMENBAU MODELL M **.17→.20** |
| ELECTRICAL CONNECTIONS | ELEKTRISCHE ANSCHLÜSSE **.21** |
| ELECTRIC -PNEUMATIC ACTUATORS CONNECTION | ELEKTRISCHER UND PNEUM. ANSCHLÜSS DER AUSTRAG **.22→.30** |
| START-UP | INBETRIEBNAHME **.31** |
| START-UP - OPERATION | INBETRIEBNAHME - BETRIEB **.32→.33** |
| START-UP - ADJUSTING THE ELECTRIC VIBRATOR | INBETRIEBNAHME - EINSTELLUNG DES UNWUCHTMOTORS **.34** |
| START-UP - PNEUMATIC ACTUATORS | INBETRIEBNAHME - PNEUMATISCHE AUSTRAGHILFEN **.35→.37** |
| MAINTENANCE - WARNING | WARTUNG - HINWEISE **.38→.40** |
| CLEANING | REINIGUNG **.41** |
| OPERATION NOISE | BETRIEBSGERAUSCHE **.42** |
| RESIDUAL RISKS | RESTRISIKEN **.43** |
| SCRAPPING THE MACHINE - RETURNING THE MACHINE | VERSCHROTTEN DER MASCHINE - MASCHINENRÜCKG **.44** |
| FAULT FINDING | BETRIEBSSTÖRUNGEN UND ABHILFE **.45** |


## 2 CATALOGUE D'ENTRETIEN — CATALOGO DI MANUTENZIONE


| | |
|---|---|
| DONNÉES COSTRUCTIVES | DATI COSTRUZIONE **M.01** |
| CONSIGNES GENERALES | NORME GENERALI **.02** |
| LIMITES D'EMPLOI | LIMITI DI IMPIEGO **.03** |
| MODE D'EMPLOI | INDICAZIONE PER L'USO **.04** |
| RECOMMANDATIONS | AVVERTENZE **.05** |
| DESCRIPTION ET DOMAINE D'UTILISATION | DESCRIZIONE E FUNZIONE D'USO **.06 →.08** |
| CONDITIONS DE GARANTIE | CONDIZIONI DI GARANZIA **.09** |
| TRANSPORT ET EMMAGASINAGE | TRASPORTO E IMMAGAZZINAGGIO **.10** |
| EMBALLAGES ET POIDS | IMBALLI E PESI **.11** |
| EMMAGASINAGE | IMMAGAZZINAGGIO **.12** |
| EMBALLAGE DEBALLAGE | IMBALLO-RIMOZIONE **.13** |
| MANUTENTION | MOVIMENTAZIONE **.14** |
| INSTALLATION - NORMES DE FIXATION | INSTALLAZIONE- NORME DI FISSAGGIO **.15** |
| INSTALLATION - ASSEMBLAGE MODELE S | INSTALLAZIONE - ASSEMBLAGGIO MODELLI "C" ed "S" **.16→.20** |
| INSTALLATION - ASSEMBLAGE MODELE M | INSTALLAZIONE- ASSEMBLAGGIO MODELLO M **.21→.24** |
| RACCORDEMENTS ÉLECTRIQUES | COLLEGAMENTI ELETTRICI **.25** |
| RACCORDEMENT ÉLECTRIQUE-PNEUMATIQUE DES ACTION | COLLEGAMENTO ELETTRO-PNEUMATICO ATTIVATORI **.26→.34** |
| MISE EN SERVICE DE LA MACHINE | MESSA IN SERVIZIO DELLA MACCHINA **.35** |
| MISE EN SERVICE - FONCTIONNEMENT | MESSA IN SERVIZIO - FUNZIONAMENTO **.36→.37** |
| MISE EN SERVICE - REGLAGE DU MOTOVIBRATEUR | MESSA IN SERVIZIO - REGOLAZIONE MOTOVIBRATORE **.38** |
| MISE EN SERVICE - ACTIONNEURS PNEUMATIQUES | MESSA IN SERVIZIO - ATTIVATORI PNEUMATICI **.39→.41** |
| ENTRETIEN - RECOMMANDATIONS | MANUTENZIONE - AVVERTENZE **.42→.44** |
| NETTOYAGE | PULIZIA **.45** |
| BRUYANCE | RUMOROSITA' **.46** |
| RISQUES RESIDUELS | RISCHI RESIDUI **.47** |
| DEMANTELEMENT DE LA MACHINE- RESTITUTION MACHINE | ROTTAMAZIONE MACCHINA - RESO MACCHINA **.48** |
| RECHERCHE DES PANNES | RICERCA GUASTI **.49** |

**ADDRESS OF LOCAL DEALER OR SERVICE POINT**

**ANSCHRIFT DES LOKALEN HÄNDLERS ODER KUNDENDIENSTES**

**ADRESSE DU REVENDEUR OU DU SERVICE APRES-VENTE LOCAL**

**INDIRIZZO RIVENDITORE O PUNTO DI ASSISTENZA LOCALE**

**MACHINE IDENTIFICATION**

Refer to order code in acknowledgment of order, in invoice and on packaging to identify equipment or on the label applied on the package or on the plate affixed directly on the machine..

**IDENTIFIKATION DER MASCHINE**

Zur korrekten Identifikation des Geräts auf den Code Bezug nehmen, der sich in der Auftragsbestätigung, der Rechnung und dem Aufkleber auf der Verpackung oder dem Schild auf der Maschine befindet.

**IDENTIFICATION DE LA MACHINE**

Pour identifier correctement la machine, vous devez vous référer au code qui se trouve sur la confirmation de commande, sur la facture ou sur l'étiquette apposée sur l'emballage et sur la plaque appliquée directement sur la machine.

**IDENTIFICAZIONE DELLA MACCHINA**

Per una corretta identificazione della macchina, bisogna fare riferimento al codice che si trova sulla conferma d'ordine, sulla fattura o sulla etichetta posta sull'imballo e sulla targhetta direttamente applicata sulla macchina.

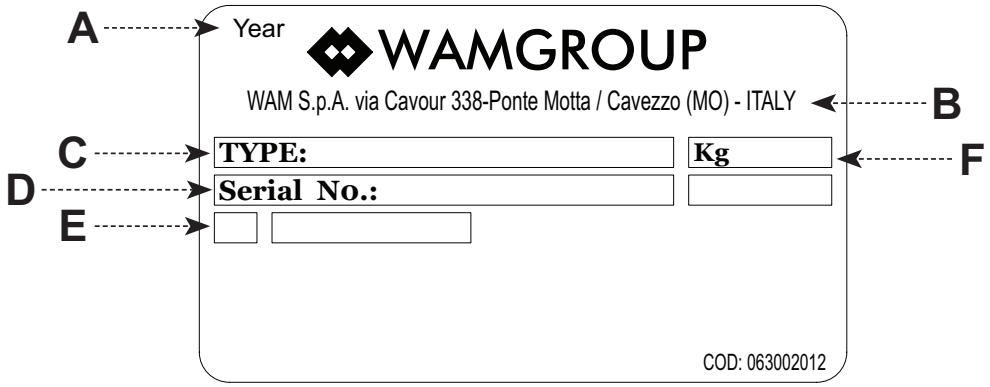


Identification plate of machine
The plate is affixed on machine.
A) Year of manufacture
B) Manufacturer's identification
C) Type of machine
D) Serial No.
E) Progressive number of section
F) Weight of the machine

Schnecken-Typenschild
Auf jedem Schneckenteil befindet sich ein identisches Typenschild.
A) Baujahr
B) Herstelleridentifikation
C) Schneckentyp
D) Serien-Nr.
E) Schneckenteil Nr.
F) Gewicht Schnecke

Plaque vis
Sur chaque tronçon de equipement il y a une plaque identique.
A) Année
B) Identification du constructeur
C) Type de equipement
D) N° de série
E) Tronçon de equipement N°
F) Poids de l'equipement

Targa identificazione della macchina
La targa è applicata sulla macchina o se e composta in più sezioni su ogni sezione.
A) Anno di fabbricazione
B) Identificazione del costruttore
C) Tipo di macchina
D) Numero di serie
E) Numero progressivo della sezione
F) Peso della macchina

**SCOPE AND IMPORTANCE OF THE MANUAL**

This manual, prepared by the manufacturer, forms an integral part of the FIBC UNLOADER; it must therefore accompany of the FIBC UNLOADER right up to its final scrapping, and must be available ready at hand for consultation by the operators concerned and those in charge of operations at the work site. If the machine changes hands, this manual must be handed over to the new owner, as part of the SBB supply. Before carrying out any operation on or using the SBB, the personnel concerned must have read this manual carefully and completely. If the manual is lost, or in such a condition as to make it illegible, download a new copy from the internet site www.wamgroup.com, and check the date of the last revision. This manual provides warnings and indications concerning the safety regulations for preventing accidents at the work site. However, the operators MUST scrupulously follow the safety regulations meant for them by the existing legislation.
Modifications to the safety regulations made over time must be integrated and implemented.

**ZWECK UND BEDEUTUNG DES HANDBUCHS**

Dieses vom Hersteller erstellte Handbuch ist integrierender Teil der BIG-BAG Entleerstation.. Daher muss es der BIG-BAG Entleerstation unbedingt folgen, bis dieser zerlegt bzw. verschrottet wird. Es muss zudem einfach zu finden sein, wenn die betroffenen Bediener oder die Baustellenleitung in ihm nachschlagen wollen. Bei einem Besitzerwechsel des SBB muss das Handbuch dem neuen Besitzer als normale Bestückung des SBB ausgehändigt werden. Bevor irgendwelche Arbeiten an oder mit dem Austragboden SBB ausgeführt werden, müssen die betreffenden Personen dieses Handbuch unbedingt mit großer Aufmerksamkeit durchgelesen haben. Falls das Handbuch verloren geht oder unleserlich geworden ist, kann eine neue Kopie von den Internetseiten unter www.wamgroup.com heruntergeladen werden, nachdem man das Datum der letzten Aktualisierung des Handbuchs geprüft hat. Dieses Handbuch liefert Hinweise und Angaben zu den Sicherheits- und Unfallverhütungsbestimmungen am Arbeits-platz. Die Sicherheitsbestimmungen, die laut den geltenden Normen vom Bedienungspersonal zu beachten sind, müssen zu jedem Zeitpunkt beachtet wer-den.
Etwaige Änderungen der Sicherheitsbestimmungen, die im Laufe der Zeit vorgenommen werden, sind immer zu erfassen und umzusetzen.

**BUT ET IMPORTANCE DU MANUEL**

Le présent Manuel, rédigé par le constructeur, fait partie intégrante de la fourniture du vide BIG-BAG. Il doit absolument suivre le vide BIG-BAGS jusqu'à son démantèlement et être à portée de la main pour une consultation rapide de la part des opérateurs concernés et par la direction des travaux du chantier. En cas de changement de propriété de la machine, le manuel doit être remis au nouveau propriétaire, comme équipement du SBB.
Avant d'effectuer une quelconque opération avec ou sur le SBB, le personnel concerné doit absolument et obligatoirement avoir lu très attentivement le présent manuel. Si le manuel est égaré, abîmé de manière à ne plus être lisible, une copie doit être téléchargée à partir du site internet www.wamgroup.com en vérifiant la date de la dernière mise à jour. Le présent manuel fournit les recommandations et les indications concernant les consignes de sécurité pour la prévention contre les accidents du travail. Dans tous les cas les consignes de sécurité conformément aux normes en vigueur doivent être observée avec la plus grande attention par les différents opérateurs.
Les modifications éventuelle des consignes de sécurité devront être adoptées et mises en oeuvre.

**SCOPO ED IMPORTANZA DEL MANUALE**

Il presente manuale, redatto dal costruttore, è parte integrante del corredo dello svuota BIG-BAG; come tale deve assolutamente seguire lo svuota BIG-BAG fino al suo smantellamento ed essere facilmente reperibile per una rapida consultazione da parte degli operatori interessati e della direzione lavori del cantiere. In caso di cambio di proprietà della macchina, il manuale deve essere consegnato alla nuova proprietà, quale corredo dello stesso SBB. Prima di eseguire qualsiasi operazione con, o sul SBB, il personale interessato deve assolutamente ed obbligatoriamente aver letto con la massima attenzione il presente manuale. Qualora il manuale venga smarrito, sgualcito e tale da non essere leggibile, si deve scaricare una nuova copia dal sito internet www.wamgroup.com e verificarne la data dell'ultimo aggiornamento. Il presente manuale fornisce avvertenze ed indicazioni relative alle norme di sicurezza per la prevenzione degli infortuni sul lavoro. Vanno comunque, ed in ogni caso, osservate con il massimo scrupolo da parte dei vari operatori le norme di sicurezza poste a loro carico dalle vigenti normative.
Eventuali modifiche delle norme di sicurezza che nel tempo dovessero aver luogo, dovranno essere recepite ed attuate.

The basic features of the machine being unchanged, the manufacturer reserves the right to make modifications to components, parts and accessories, which he considers as suitable for improving the product or for structural or commercial requirements, at any moment, without any obligation to updating this manual immediately.

Auch wenn die wesentlichen Eigenschaften der beschriebenen Geräte unverändert bleiben, behält der Hersteller sich das Recht vor, Änderungen an Organen, Einzelteilen und dem Zubehör vorzunehmen, die er von Fall zu Fall als angemessen betrachtet, um das Produkt zu verbessern, oder wenn die Konstruktion oder der Vertrieb dies verlangen, ohne dazu gezwungen zu sein, diese Veröffentlichung immer sofort auf den neuesten Stand zu bringen.

Sans préjudice des caractéristiques principales des machines décrites, le constructeur se réserve le droit d'apporter les modifications aux organes, pièces et accessoires qu'il retient avantageuses pour l'amélioration du produit ou pour des exigences de fabrication ou commerciale, à tout moment et sans l'obligation de mettre à jour immédiatement cette publication.

Ferme restando le caratteristiche essenziali delle macchine descritte, il costruttore si riserva il diritto di apportare modifiche di organi, dettagli ed accessori, che riterrà convenienti per il miglioramento del prodotto o per esigenze di carattere costruttivo o commerciale, in qualunque momento e senza impegnarsi di aggiornare tempestivamente questa pubblicazione.

The FIBC Dischargers (SBB) are designed and constructed for carrying out their function in compliance with the following limits of use:

**Maximum operating temperature:**
+40°C in continuous mode

**Minimum operating temperature:**
-20°C

**Height of FIBC:**
- Min. 600mm
- Max. 1800mm (model S) and 2000mm (model M)

- Any
(for models T and C)

**USE**
- The FIBC unloader is NOT designed for operating in potentially explosive atmospheres or with materials that could be hazardous by contact and/or inhalation, or else dangerous from a bacteriological or viral viewpoint.

**If the machine has to cater for similar requirements, please contact the manufacturer.**

Die Big-Bag-Entleerstationen (SBB) wurden entwickelt und werden hergestellt, um ihre Funktion unter Berücksihtigung folgender Einsatzeinschrämkungen zu erfüllen:

**Max. Betriebstemperatur:**
+40°C bei Dauerbetrieb

**Niedrigste Betriebstemperatur:**
-20°C

**Höhe der Big-Bags:**
- Min. 600 mm
- Max. 1800 mm (Modell S) und 2000 mm (Modell M)

- Jede beliebige
(für Modelle T und C)

**GEBRAUCHSANGABEN**
- Diese Big-Bag-Entleerstationen sind NICHT zum Einsatz in explosionsgefährdeten Bereichen oder zum Betrieb mit Schütt-gütern bestimmt, die bei Berüh-rung und/oder Einatmen schäd-lich sind oder die unter bakte-riologischen oder virologischen Gesichtspunkten gefährlich sind.

**Wenn die Maschinen unter solchen Bedingungen zum Einsatz kommen sollen, ist es vorgeschrieben, Kontakt mit dem Hersteller aufzunehmen.**

Les vide BIG BAG (SBB) ont été conçus et projetés pour assurer leur fonction d'utilisation dans le respect des limites d'emploi suivantes :

**Température maximum de travail :**
+40°C en continu

**Température minimum de travail :**
-20°C

**Hauteur des BIG-BAG:**
- Min. 600 mm
- Max. 1800mm (modèle S) et 2000mm (modèle M)

- Quelconque
(pour modèles T et C)

**MODES D'EMPLOI**
- Le vide BIG-BAG N'A PAS été conçu pour travailler dans des atmosphères explosibles, ni avec des matières nocives au contact ou à l'inhalation, ou encore dangereuses du point de vue bactériologique et viral :

**Quand la machine doit être utilisée dans ces conditions, il faut contacter le fabricant.**

Gli svuota BIG-BAG (SBB) sono stati studiati e progettati per assolvere alla loro funzione d'uso nel rispetto dei seguenti limiti di impiego:

**Temperatura massima di lavoro:**
+40°C in continuo

**Temperatura minima di lavoro:**
-20°C

**Altezza dei BIG-BAG:**
- Min. 600 mm
- Max. 1800mm (modello S) e 2000mm (modello M)

- Qualsiasi
(per modelli T e C)

**INDICAZIONI PER L'USO**
- Lo svuota BIG-BAG NON è statoprogettato per operare in atmosfere potenzialmente esplosive o con materiali nocivi al contatto e/o inalazione, oppure pericolosi dal punto di vista batteriologico e virale.

**Quando la macchina deve assolvere a queste esigenze è d'obbligo contattare il Costruttore.**

The FIBC UNLOADERS ARE NOT designed for operating in potentially explosive atmospheres or with materials that are harmful on contact and/or when inhaled, or hazardous from a bacteriological or viral point of view.
The manufacturer must be informed if the machine is required to satisfy these requirements.
The FIBC UNLOADER must be installed with sufficient clearance around it to allow for normal assembly/disassembly, cleaning and maintenance operations.
It is also forbidden to start up the machine before the plant in which it is installed has been declared as conforming to the provisions of Machine Directive 23/07/1998 (2006/42/CE). In this regard, the installer must make provision for installing suitable personal and public protection devices to avoid damage to objects and harm to persons in the event of breakage.
Before carrying out any operation, make sure the machine is in safety condition.

Die BIG-BAG Entleerstation sind NICHT zum Einsatz in explosionsgefährdeter Umgebung oder mit bei Berührung und/oder beim Einatmen schädlichen oder unter dem bakteriologischen oder virologischen Gesichtspunkt gefährlichen Substanzen ausgelegt.
Wenn die Maschine unter solchen Bedingungen arbeiten muss, ist es unbedingt erforderlich, den Hersteller davon zu unterrichten.
Die BIG-BAG Entleerstation ist so zu installieren dass ringsum ausreichend freier Platz bleibt, um die normalen Ein- und Ausbauarbeiten, die Reinigung und die Wartung auszuführen.
Es ist außerdem verboten, die Maschine in Betrieb zu nehmen, bevor die Anlage, in die sie installiert werden, den Bestimmungen der Maschinen-Richtlinie vom 123.07.1998 (2006/42/EG) konform erklärt worden ist. In diesem Rahmen ist es Pflicht des Anlagenbauers/Installateurs, die persönlichen bzw. der Allgemeinheit dienenden Schutzausrüstungen vorzubereiten und zu installieren, um zu vermeiden dass im Bruchfall Personen- oder Sachschäden entstehen.
Bevor man irgendeinen Eingriff an der Maschine ausführt, ist zu überprüfen, dass diese in einen sicheren Zustand versetzt worden ist.

Les vide BIG-BAG N'ONT pas été conçus pour travailler dans les atmosphères potentiellement explosibles, avec des matériaux nocifs au contact et/ou à l'inhalation ou encore dangereux du point de vue bactériologique et viral.
Quand la machine doit satisfaire ces exigences il est obligatoire d'en informer le constructeur.
Le vide BIG-BAG devra être installé avec un espace circonstant suffisant pour effectuer les opérations ordinaires de montage/démontage, nettoyage et entretien.
Il est interdit, en outre, de mettre en service la machine avant que l'installation dans laquelle il sera monté n'ait été déclarée conformes aux dispositions de la Directive Machines du 23/07/1998 (2006/42/CE).
Dans ce cadre, le technicien installateur devra monter les équipements de protection individuels et collectifs, afin d'éviter les dommages aux choses ou aux personnes en cas de ruptures.
Avant d'effectuer une quelconque intervention sur la machine s'assurer que celle-ci a été placée en condition de sécurité.

Gli svuota BIG-BAG NON sono stati progettati per operare in atmosfere potenzialmente esplosive o con materiali nocivi al contatto e/o all'inalazione oppure pericolosi dal punto di vista batteriologico e virale.
Quando la macchina deve assolvere a queste esigenze è d'obbligo informare il costruttore.
Lo svuota BIG-BAG dovrà essere installato con uno spazio circostante sufficiente per effettuare le normali operazioni di montaggio/smontaggio, pulitura e manutenzione.
È vietato, inoltre, mettere in funzione la macchina prima che l'impianto nel quale venga installato sia stato dichiarato conforme alle disposizioni della Direttiva Macchine 23/07/1998 (2006/42/CE). In quest'ambito è cura dell'impiantista/installatore predisporre ed installare gli idonei dispositivi di protezione individuali e collettivi al fine di evitare danni a cose o persone in caso di rotture.
Prima di effettuare un qualsiasi intervento sulla macchina assicurasi che questa sia messa in sicurezza.

In this manual, from here onwards **"setting the machine in safety conditions"** will indicate the following operations:
- Make sure the machine is disconnected from all electric power supply sources.
- Make sure the machine is completely stopped
- Provide sufficient lighting around the machine operating area (the operators may be provided with electric lamps if necessary).
- Wait for the powder mass inside to settle down completely, and then stop the machine.

In diesem Handbuch verstehen wir unter dem Begriff **„das Gerät in einen sicheren Zustand versetzen"** folgendes:
- Sicherstellen, dass das Geräte von allen elektrischen Versorgungsquellen getrennt ist.
- Sicherstellen, dass die Maschine ganz still steht.
- Dafür sorgen, dass der Bereich rings um das Gerät in angemessener Weise beleuchtet ist (eventuell indem man das Personal mit elektrischen Lampen ausstattet).
- Sicherstellen, dass die Staubmasse innerhalb sich ganz abgelagert hat und sich daher nicht mehr bewegt.

Dans le présent manuel la consigne **"mettre la machine en sécurité"** indique les opérations suivantes :
- S'assurer que la machine est débranchée de toutes les alimentations électriques.
- S'assurer que la machine est complètement arrêtée.
- Eclairer correctement la zone qui entoure la machine (en dotant éventuellement les opérateur de lampes électriques).
- Attendre que la masse de poussière contenue se soit entièrement déposée et donc arrêtée.

In seguito, nel presente manuale, indicheremo con la dicitura **"mettere in sicurezza la macchina"** le seguenti operazioni:
- Accertarsi che la macchina sia scollegata da tutte le alimentazioni elettriche.
- Accertarsi che la macchina sia completamente ferma.
- Provvedere ad illuminare correttamente la zona circostante alla macchina (eventualmente dotando gli operatori di lampade elettriche).
- Attendere che la massa di polvere contenuta all'interno sia completamente depositata e quindi ferma.

Before carrying out any operation on the machine (maintenance or cleaning), the operators must use suitable personal protection equipment:
- antistatic safety footwear (certified)
- antistatic protective clothing (certified)
- helmet
- antistatic, cut-proof gloves
- safety masks

In addition to these, use the safety devices specified in the safety chart of the product handled.

Für jede am Gerät durch-zuführende Arbeit wie Wartung und Reinigung muss das Personal mit den entsprechenden persönlichen Schutzausrüstungen (PSA) ausgestattet sein:
- Antistatische Sicherheitsschuhe (zertifiziert)
- Antistatische Schutzkleidung (zertifiziert)
- Schutzhelme
- Antistatische Schnittschutz-Handschuhe
- Atemschutzmasken.

Außerdem sind die Schutz-maßnahmen, die auf dem Sicherheitsdatenblatt des behandelten Produkts stehen, betroffen.

Pour toute opération à effectuer sur la machine (entretien et nettoyage), les opérateurs devront être munis des équipements de protection individuelle (EPI) :
- Chaussures de sécurité antistatiques (certifiées)
- Vêtements de protection antistatiques (certifiés)
- Casque
- Gants anticoupure antistatiques
- Maques de protection respiratoire

En outre les équipements de protection prévus par la fiche de sécurité du produit traité.

Per qualsiasi operazione da effettuarsi sulla macchina (manutenzioni e pulizia), gli operatori dovranno essere muniti degli appositi dispositivi di protezione individuale (DPI):
- Scarpe antinfortunistiche antistatiche (certificate)
- Indumenti protettivi antistatici (certificati)
- Casco
- Guanti antitaglio antistatici
- Mascherine protettive

Inoltre quei dispositivi di protezione previsti dalla scheda di sicurezza del prodotto trattato.

**WARNINGS**

The manufacturer shall be relieved of all responsibility concerning the safety of persons and objects and operations if the truck loading and unloading operations, transport, positioning at the worksite, use, repairs, maintenance are not carried out in conformity with the instructions in this manual.

Similarly the manufacturer shall not be responsible iif the FIBC is used:

- improperly;
- by unauthorized and/or unskilled personnel;
- with modifications to the original configuration;
- with spare parts that are not original;
- in a manner non conforming to existing standards and legisla tion;
- non conforming to the recom mendations in this manual or on the warning and hazard notices on the machine.

The user is obliged to carefully check that the work area is clear of obstacles, persons, and machines with potential risk, before carrying out any operation.

Lifting, transport, installation at the worksite, set-up, checking stability and operations, routine and extraordinary maintenance, etc. must be carried out by qualified authorized personnel according to the instructions in this manual and in compliance with the existing safety regulations.

When positioning the FIBC at the work site must be earthed.

- It is forbidden to carry out maintenance, repairs or modifications with the machine in operation.
- For every operation, it is compulsory to disconnect all the electric power supplies to the machine.
- It is forbidden to remove the guards and safeties present on the machine.
- Before startup, make sure all the guards are installed correctly.

**HINWEISE**

Der Hersteller betrachtet sich jeglicher Haftung hinsichtlich der Sicherheit von Personen, Sachen und Betrieb enthoben, falls das Auf- und Abladen vom Lkw, Transport, Aufstellung auf der Baustelle, Gebrauch, Reparaturen, Wartung etc. nicht gemäß der in diesem Handbuch beschriebenen Hinweise ausgeführt werden.

Gleichermaßen betrachtet der Hersteller sich in keinerlei Weise verantwortlich, falls die BIG-BAG Entleerstation wie folgt benutzt wird:

- bestimmungswidrig;
- durch Personal, das nicht befugt und/oder ausreichend angewiesen ist;
- mit Änderungen im Bezug zur ursprünglichen Konfiguration;
- mit Einbau von Ersatzteilen, die keine Originale sind;
- nicht entsprechend der augenblicklich geltenden Normen und Gesetze;
- nicht entsprechend der Empfehlungen dieses Hand buchs oder der Hinweis- und Warnschilder, die auf der Ma schine angebracht sind.

Der Anwender ist dazu verpflichtet, vor der Ausführung irgendeines Vorgangs sehr aufmerksam zu prüfen, dass der Arbeitsbereich frei von Hindernissen, Personen und Maschinen ist, die eine mögliche Gefahrenquelle darstellen.

Heben, Transport, Installation auf der Baustelle, Inbetriebnahme, Standsicherheits- und Funktion stests, regelmäßige und außeror dentliche Wartung etc. müssen durch qualifiziertes und befugtes Personal vorgenommen werden, das gemäß der Anweisungen, die in diesem Handbuch stehen, und unter Beachtung der geltenden Sicherheitsbestim mungen vorzugehen hat.

Bei der Aufstellung vor Ort muss die Big-Bag-Entleerstation geerdet werden.

- Es ist verboten, die laufende Maschine zu warten, zu reparieren oder zu ändern.
- Vor jedem Eingriff ist es unbedingt erforderlich, alle elektrischen Verbindungen der Maschine abzuklemmen.
- Es ist verboten, die Schutz- und Sicherheitseinrichtungen, die auf der Maschine vorhanden sind, zu entfernen.
- Vor der Inbetriebnahme sicherstellen, dass alle Schutzvorrichtungen korrekt installiert sind.

**RECOMMANDATIONS**

Le constructeur se considère dégagé de toute responsabilité concernant la sécurité des personnes, des choses et du fonctionnement si les opérations de chargement et de déchargement du camion, transport, positionnement sur chantier, utilisation, réparations, entretiens, etc. n'ont pas été effectuées conformément aux recommandations décrites dans cette notice d'instructions.

De même le constructeur ne pourra être considéré respon sable si le vide BIG-BAG est utilisé:

- de manière impropre;
- par du personnel non autorisé et/ ou pas suffisamment formé;
- avec des modifications par rapport à la configuration originale ;
- avec introduction de pièces détachées non d'origine ;
- de manière non conforme à la réglementation et à la législation en vigueur ;
- de manière non conforme aux recommandations fournies dans la présente notice ou par les plaques signalétiques apposées sur la machine.

L'utilisateur a l'obligation de vérifier avec la plus grande attention, avant d'effectuer une quelconque opération, que la zone de travail est dégagée de tout obstacle, personnes, machines pouvant représenter une source potentielle de danger.

Les opérations de soulèvement, le transport, le montage sur chantier, la mise en service, les vérifications de stabilité et de fonctionnement, les entretiens ordinaires et extraordinaires, etc. doivent être effectuées par du personnel qualifié et autorisé, lequel doit intervenir suivant les indications indiquées dans la présente notice d'instructions et dans le respect des normes de sécurité en vigueur.

Au moment du positionnement sur chantier le vide BIG BAG doit être relié électriquement à la terre.

- Il est interdit d'effectuer des opérations d'entretien, des réparations ou des modifications quand la machine est en marche.
- Avant toute opération il est obligatoire de débrancher toutes les alimentations électriques de la machine.
- Il est interdit d'enlever les protections et les sécurités présentes sur la machine.
- Avant la mise en marche s'assurer que toutes les protections sont montées correctement.

**AVVERTENZE**

Il costruttore si riterrà sollevato da qualsiasi responsabilità inerente la sicurezza delle persone, delle cose e di funzionamento qualora le operazioni di carico e scarico da autocarro, trasporto, posizionamento in cantiere, utilizzo, riparazioni, manutenzioni, ecc. non siano eseguite conformemente alle avvertenze descritte nel presente manuale.

Analogamente il costruttore non si riterrà in alcun modo responsabile qualora lo svuota BIG-BAG venga utilizzato:

- impropriamente;
- da personale non autorizzato e/o non sufficientemente addestrato;
- con modifiche rispetto alla configurazione originale;
- con inserimento di parti di ricambio non originali;
- non conformemente alla normativa e legislazione attualmente vigente;
- non conformemente a quanto raccomandato nel presente manuale o sulle targhette di avvertenza e pericolo applicata sulla macchina.

Per l'utente è fatto obbligo di verificare con la massima attenzione, prima di eseguire qualsiasi operazione, che la zona di lavoro sia libera da ostacoli, persone, macchine potenziali fonti di pericolo.

Le operazioni di sollevamento, trasporto, installazione in cantiere, la messa in funzione, le verifiche di stabilità e funzionamento, le manutenzioni ordinarie e straordinarie,ecc., devono essere svolte da personale qualificato ed autorizzato, il quale deve operare secondo le indicazioni riportate nel presente manuale e nel rispetto delle vigenti norme di sicurezza.

All'atto del posizionamento in cantiere lo svuota BIG-BAG deve essere collegato elettricamente a terra.

- É vietato manutenzionare, eseguire riparazioni o modifiche con la macchina in funzione.
- Prima di ogni operazione è obbligatorio scollegare tutte le alimentazioni elettriche della macchina.
- É vietato rimuovere le protezioni e le sicurezze presenti sulla macchina.
- Prima dell' avviamento assicurarsi che tutte le protezioni siano correttamente installate.

The FIBC in this catalogue (code SBB) are devices suitable for discharging bags of different shapes and sizes.
They are manufactured from shot-blasted, painted steel; on request, they may be supplied in 304 stainless steel, entirely or only the parts in contact with the product to prevent its contamination.
The numerous models and sizes of SBB available, together with the complete range of accessories make this equipment suitable for use in virtually all applications and industrial sectors and with different types of FIBCs: in fact, the hopper, which can also be supplied alone, is specially designed for optimising the flow of materials.

**MACHINE CODE**
- SBB

**MACHINE TYPE**
- FLEXIBLE INTERMEDIATE BULK CONTAINER UNLOADER

**USE**
- Emptying FIBCs of various sizes containing product in powder or granular form.

**ADVANTAGES**
- Equipment which can be assembled according to requirements.
- The model with hoist does not require the use of a forklift truck.
- The removable frame makes it possible to empty FIBCs 600 to 1800 mm in height.
- The operator is protected from falling FIBCs by the four posts of the frame.
- The FIBC valve can be accessed through the hatch.
- The pneumatic activators optimises emptying of FIBCs.

Die in diesem Katalog beschriebenen Big-Bag-Entleerstationen (Code SBB) sind Vorrichtungen, die zum Entleeren Big-Bags unterschiedlicher Form und Abmessungen geeignet sind.
Sie bestehen aus sandgestrahltem und lackiertem Stahl. Auf Anfrage sind sie auch entweder komplett oder, zur Verhinderung der Produktverunreinigung, nur in den produktberührenden Teilen aus Edelstahl 1.4301 lieferbar.
Die zahlreichen Modellvarianten der SBB in Bezug auf Abmessungen und das komplette Zubehörsortiment machen diese Geräte für praktisch jeden Einsatz in allen Industriezweigen und für unterschiedliche Big-Bag-Typen einsetzbar: Die Trichter, die auch separat lieferbar sind, sind so konstruiert, dass die Fließfähigkeit des Schüttguts optimiert wird.

**MASCHINENCODE**
- SBB

**MASCHINENTYPE**
- BIG-BAG ENTLEERSTATION

**BENUTZUNG**
- Entleeren von Big-Bags unterschiedlicher Größe mit staub- und granulatförmigen Produkten.

**VORTEILE**
- Leicht und schnell aufstellbares Gerät.
- Die Version mit Flaschenzug kann ohne Einsatz von Gabelstaplern verwendet wird.
- Der herausziehbare Rahmen ermöglicht das Entleeren von Big-Bags mit Höhen von 600 bis 1800 mm.
- Der Bediener ist gegen den eventuellen Absturz des Big-Bags durch die vier Ständer des Gestells geschützt.
- Die Klappe ermöglicht den Zugriff zum Ventil des Big-Bags.
- Die pneumatische Austraghilfe optimiert die Entleerung des Big-Bags.

Les vide BIG-BAG (code SBB) représentés dans ce catalogue sont des dispositifs qui servent à décharger des sacs de différentes formes et dimensions.
Ils sont réalisés en acier au carbone sablé et peint. Sur demande, ils peuvent être réalisés en acier inox 304, soit entièrement, soit uniquement les parties au contact du produit pour éviter de le contaminer.
Les nombreuses variantes de SBB en termes de modèle et dimensions disponibles, associées à une ample gamme d'accessoires, rendent ces machines utilisables pour n'importe quelle application pratiquement dans tous les secteurs industriels et avec différents types de BIG-BAG : en effet la trémie, qui peut être fournie même séparément, a été conçue spécialement pour optimiser la fluidité des produits.

**CODE MACHINE**
- SBB

**TYPE DE MACHINE**
- VIDE-SACS GRANDES DIMENSIONS

**UTILISATION**
- Vidage de GRANDS SACS de différentes dimensions avec des produits en poudre ou granulaires.

**AVANTAGES**
- Machine composée suivant les exigences.
- La version avec palan n'exige pas l'utilisation du chariot élévateur.
- Le châssis démontable permet de vide des sacs d'une hauteur de 600 à 1800 mm.
- Les opérateurs sont protégés contre la chute des sacs par quatre montants du châssis.
- Une trappe permet l' accès à la vanne du BIG BAG.
- Les activateurs pneumatiques optimisent le vidage du BIG BAG.

Gli svuota BIG-BAG (codice SBB) rappresentati in questo catalogo sono dispositivi idonei a scaricare sacchi di svariate tipologie per forme e dimensioni.
Sono realizzati in acciaio al carbonio sabbiato e verniciato; su richiesta comunque possono essere realizzati in AISI 304, sia interamente che solo nelle parti a contatto col prodotto per evitare contaminazioni dello stesso.
Le numerose varianti di SBB in termini di modello e dimensioni disponibili, unite ad una completa gamma di accessori, rendono queste macchine utilizzabili per qualsiasi applicazione in tutti i settori industriali e con diverse tipologie di BIG-BAG: infatti la tramoggia, che può essere fornita anche da sola, è stata accuratamente studiata per ottimizzare la scorrevolezza dei materiali.

**CODICE MACCHINA**
- SBB

**TIPO MACCHINA**
- SVUOTA BIG-BAG

**FUNZIONE D'USO**
- Svuotamento di BIG-BAG di varie dimensioni con prodotti in polvere o granulari.

**VANTAGGI**
- Macchina componibile a seconda delle esigenze.
- La versione con paranco non richiede l' utilizzo del carrello elevatore.
- Il telaio sfilabile permette di svuotare big bag con altezze da 600 a 1800 mm.
- Gli operatori sono protetti dall' eventuale caduta dei big bag dai quattro montanti del telaio.
- Attraverso il portello si accede alla valvola del BIG BAG.
- Gli attivatori pneumatici ottimizzano lo svuotamento del BIG BAG.

**MODELS AVAILABLE**

**MODEL T:**
**UNLOADING HOPPER**
**- SBB._.125.T**
**- SBB._.150.T**
Supplied separately, in two sizes, it is carefully designed to optimize the flowability of materials.
It comprises:
- seals made of material suitable for the type of use.
- adjustable weight motovi-brator.
- vent pipe with filter bag.
- finger mesh.
- inspection hatch with seal.
- damper supports.

**MODEL C:**
**HOPPER WITH FEET**
**- SBB._.125.C**
**- SBB._.150.C**
Thanks to its structure, there is plenty of space for using different systems for loading the FIBCs.
It comprises:
- a unloading hopper.
- supporting frame made of tubular elements having suitable size and thickness to ensure sturdiness and solidity.
- cross with pegs for hooking FIBC harness, lifting hooks and tubular elements for lift truck forks

**MODEL S:**
**HOPPER WITH REMOVABLE FRAME**
**- SBB._.125.S**
**- SBB._.150.S**
Athough it is identical as regards design and use, the difference lies in the size of the FIBCs which can be accepted.
These comprise:
- a unloading hopper.
- supporting tubular frame having size and thickness suitable to guarantee sturdiness and solidity.
- removable frame which makes it possible to adapt the Unloader for use with FIBCs of different heights.
- cross with pegs for hooking FIBC harness, lifting hooks and tubular elements for lift truck forks

**LIEFERBARE MODELLE**

**MODELL T:**
**AUSLAUFTRICHTER**
**- SBB._.125.T**
**- SBB._.150.T**
Wird separat geliefert; in zwei Größen erhältlich; ausgelegt, um optimalen Materialfluß zu gewährleisten.
Besteht aus:
- Dichtung aus dem Einsatz angepaßten Material.
- Vibrationsmotor mit einstellbaren Unwuchtmassen.
- Entlüftungsstutzen mit Filtersack.
- Schutzgitter.
- Inspektionsklappe mit Dichtung.
- Schwingungsdämpfende Träger.

**MODELL C:**
**TRICHTER AUF STANDBEINEN**
**- SBB._.125.C**
**- SBB._.150.C**
Läßt dank der besonderen Konstruktion viel Platz für Big-Bag-Handlingsyteme.
Besteht aus:
- Auslauftrichter.
- Traggestell aus Rohren mit solchen Abmessungen und Wandstärken, dass eine robuste und solide Bauweise gewährleistet wird.
- Kreuzteil mit Stiften zum Einhaken der Big-Bag-Gurte, Hubhaken und Rohre für die Gabeln des Staplers.

**MODELL S:**
**TRICHTER MIT HERAUSZIEHBAREM GESTELL**
**- SBB._.125.S**
**- SBB._.150.S**
Im Aufbau und im Einsatz identisch, jedoch geeignet für größere Big-Bags.
Besteht aus:
- Auslauftrichter.
- Rohrtragegestell in robu-ster Bauweise.
- Herausziehbarer Rahmen zur Anpassung des Geräts an verschiedene Big-Bag-Größen.
- Kreuzteil mit Stiften zum Einhaken der Big-Bag-Gurte, Hubhaken und Rohre für die Gabeln des Staplers.

**MODELES DISPONIBLES**

**MODELE T:**
**TREMIE DE DÉCHARGEMENT**
**- SBB._.125.T**
**- SBB._.150.T**
Fournie même seule, en deux dimensions, elle a été étudiée spécialement pour optimiser l' écoulement des produits.
Elle est composée de:
- joint en matière appropriée au secteur d' utilisation.
- motovibrateur à masses réglables.
- tube d' évent à manchon filtrant.
- grille de sécurité.
- trappe de visite avec joint.
- supports absorbe vibrations.

**MODELE C :**
**TREMIE AVEC PIEDS**
**- SBB._.125.C**
**- SBB._.150.C**
Grâce à sa conformation il laisse un espace ample à l'utilisateur des systèmes les plus variés de chargement du BIG BAG.
Composé de:
- trémie de dechargement.
- châssis de soutien réalisé en tubulaire aux dimensions et épaisseurs garantissant la robustesse et la solidité de la structure.
- croisillon à picots d' accrochage des bretelles BIG BAG, crochet de soulèvement et tubulaires pour fourches de chariot élévateur.

**MODELE S :**
**TREMIE AVEC CHASSIS AMOVIBLE**
**- SBB._.125.S**
**- SBB._.150.S**
Bien qu' étant identiques par composition et utilisation ils se différencient par les dimensions des SACS «BIG BAG» qu'ils peuvent accepter.
Ils sont composés de:
- trémie de dechargement.
- châssis réalisé en tubulaire aux dimensions et épaisseurs garantissant robustesse et solidité.
- châssis démontable pour permettre d' adapter la machine aux différentes hauteurs des BIG BAG.
- croisillon à picots d' accrochage des bretelles BIG BAG, crochet de soulèvement et tubulaires pour fourches de chariot élévateur.

**MODELLI DISPONIBILI**

**MODELLO T:**
**TRAMOGGIA DI SCARICO**
**- SBB._.125.T**
**- SBB._.150.T**
Fornita anche da sola, in due dimensioni, è stata accuratamente studiata per ottimizzare la scorrevolezza dei materiali.
E' composta da:
- guarnizione di tenuta in materiale idoneo al settore di impiego.
- motovibratore a masse regolabili.
- tubo sfiato aria con manica filtrante.
- griglia di sicurezza.
- portello di ispezione con relativa guarnizione.
- supporti antivibranti.

**MODELLO C:**
**TRAMOGGIA CON PIEDI**
**- SBB._.125.C**
**- SBB._.150.C**
Grazie alla sua conformazione lascia ampio spazio all' utilizzo dei più svariati sistemi di carico del BIG BAG.
Composto da:
- tramoggia di scarico.
- telaio di sostegno realizzato in tubolari di dimensioni e spessori tali da garantire robustezza e solidità.
- crociera con pioli di aggancio bretelle BIG BAG, gancio di sollevamento e tubolari per forche carrello elevatore.

**MODELLO S:**
**TRAMOGGIA CON TELAIO SFILABILE**
**- SBB._.125.S**
**- SBB._.150.S**
Pur essendo identici per composizione e funzione d' uso si differenziano per le dimensioni dei BIG BAG che possono accettare.
Sono composti da:
- tramoggia di scarico.
- telaio di sostegno realizzato in tubolari di dimensioni e spessori tali da garantire robustezza e solidità.
- telaio sfilabile per consentire di adattare la macchina alle diverse altezze dei BIG BAG.
- crociera con pioli di aggancio bretelle BIG BAG, gancio di sollevamento e tubolari per forche carrello elevatore.

**MODEL M:**
**FRAME WITH MONORAIL**
**- SBB._.125.M**

The special feature of this equipment lies in the fact that it does not require the use of a fork lift truck for external loading of FIBCs, as it is designed for use with its own hoist (not supplied) which makes it possible to operate independently during the various phases.
The equipment comprises:
- a unloading hopper.
- a supporting frame made of suitably sized tubular elements thick enough to guarantee the required sturdiness and solidity.
- a monorail for the hoist (hoist excluded)..
- cross with pegs for hooking the FIBC harness, lifting hooks and tubular elements for using a lift truck if necessary for handling FIBCs.

**MODELL M:**
**GESTELL MIT EINSCHIENEN-BAHN**
**- SBB._.125.M**

Die Besonderheit dieses Geräts besteht darin, daß es zum Aufladen des Big-Bags keinen Gabelstapler benötigt, weil das Gerät für die Installation einer eigenen Seilwinde ausgelegt ist (gehört nicht zum Lieferumfang), was in den verschiedenen Arbeitsphasen ein Höchstmaß an Autonomie bedeutet.
Besteht aus:
- Auslauf trichter.
- Rohrtragegestell in robuster Bauweise.
- Monoschiene für Seilwinde (Flaschenzug ausgenommen).
- Kreuzteil mit Stiften zum Einhaken der Big-Bag-Gurte, Haken zum Heben und Rohre für die eventuelle Benutzung eines Gabelstaplers zum Handling der Big-Bags.

**MODELE M :**
**CHASSIS AVEC MONORAIL**
**- SBB._.125.M**

Sa particularité est celle de ne pas exiger l' utilisation d'un chariot élévateur pour le chargement du BIG BAG extérieur car il est prévu pour être équipé d' un treuil (non de fourniture) qui permet une meilleure autonomie dans les différentes phases de travail.
Composé de:
- trémie de dechargement.
- châssis réalisé en tubulaire aux dimensions et épaisseurs garantissant robustesse et solidité.
- monorail pour palan (palan exclu).
- croisillon à picots d'accrochage des bretelles BIG BAG, crochet de soulèvement et tubulaires pour l'utilisation éventuelle d'un chariot élévateur pendant les phases de manutention des BIG BAG.

**MODELLO M:**
**TELAIO CON MONOROTAIA**
**- SBB._.125.M**

La sua particolarità è quella di non richiedere l' uso di un carrello elevatore per il carico BIG BAG esterno in quanto è predisposto per l' installazione di un proprio verricello (non di fornitura) che permette la più completa autonomia nelle varie fasi di lavoro.
Composto da:
- tramoggia si scarico.
- telaio di sostegno realizzato in tubolari di dimensioni e spessori tali da garantire robustezza e solidità.
- monorotaia per paranco (paranco escluso).
- crociera con pioli di aggancio bretelle BIG BAG, gancio di sollevamento e tubolari per l' eventuale utilizzo di un carrello elevatore durante le fasi di movimentazioni dei BIG BAG.

**ACCESSORIES**

- Hopper seal made of food- grade material.

- Pneumatic activators
  Materials featuring poor flowability do not flow out of the FIBC easily. It is therefore necessary to use pneumatic activators. These devices act directly at the bottom of the FIBC, causing lifting and lowering of the opposite corners to stimulate the flow of material compacted at the bottom.
  The gradual movement of the activators makes the FIBC assume a "V" shape, to eliminate the deadlock points.
For more information, see Technical Catalogue - Maintenance KSC.

- Cutting device
  It is used for cutting FIBCs without valves which cannot be recycled after emptying.
- Hose connector kit available in black or white food- grade rubber.
- Round or square flange for hopper.
- Raised feet for lifting the entire structure.
- Mechanical limit stop for signalling door open status.
- Manual gate valve at outlet.

**ZUBEHÖR**

- Trichterdichtung aus nahrungsmitteltauglichem Material.

- Pneumatische Austraghilfe
  Materialien, die nur schwach rieselfähig sind und nur schwer aus dem Big-Bag ausgetragen werden können, verlangen den Einsatz pneumatischer Austraghilfen. Diese wirken direkt auf den unteren Teil des Big-Bags und bewegen die gegenüberliegenden Sackkanten auf- und abwärts, damit das im unteren Bereich verdichtete Material abläuft.
  Das ständige Ausfahren der Austraghilfe dient dazu, daß der Big-Bag eine V-förmige Gestalt annimmt, wodurch Toträume beseitigt werden.
Weitere Informationen siehe Technischer Katalog - Einbau und Wartungsanleitung KSC.

- Schneidevorrichtung
  Hat die Funktion, Einwegsäcke ohne Ventil aufzuschneiden.
- Montagesatz für flexible Verbindung, erhältlich in schwarzem oder weißem, nahrungsmittelechtem Kautschuk.
- Rund- oder Vierkantflansche für Trichter.
- Füße zum Höherstellen der kompletten Vorrichtung.
- Mechanischer Endschalter für Meldungen Klappe offen.
- Handschieber am Auslauf.

**ACCESSOIRES**

- Joint trémie en matière indiquée pour le secteur alimentaire

- Activateurs pneumatiques.
  Les matières peu fluides ne sortent pas facilement des sacs. Il est donc nécessaire d'appliquer des activateurs pneumatiques. Ils agissent directement sur le fond des «big bag» en déterminant un rehaussement ou un abaissement des angles opposés de manière à stimuler la sortie du produit compacte sur le fond.
  Le mouvement progressif des activateurs fait prendre une forme en «V» au big bag de manière à éliminer les points morts.
Pour plus d'informations voir Catolgue Techinique - Utilisation et Entertien KSC.

- Système de coupe.
  Sa fonction est de couper les gros sacs sans valve, qui ne sont pas récupérés après vidange.
- Kit de liaison flexible disponible en caoutchouc noir ou blanc pour secteur alimentaire.
- Brides rondes ou carrées pour la trémie.
- Pieds de rehausse pour le soulèvement de toute la structure.
- Fin de course mécanique pour signaler l'ouverture du portillon.
- Vanne manuelle de décharge-ment.

**ACCESSORI**

- Guarnizione tramoggia in materiale idoneo al settore alimentare

- Attivatori pneumatici.
  I materiali poco scorrevoli non escono facilmente dai big bag pertanto si rende necessario applicare degli attivatori pneumatici. Questi agiscono direttamente sul fondo dei big bag determinando un innalzamento e un abbassamento degli spigoli opposti in modo da stimolare la fuoriuscita del materiale compattato sul fondo.
  La progressiva escursione degli attivatori fa si che il big bag assume la forma a "V" in modo da eliminare i punti morti.
Per ulteriori informazioni consultare il relativo Catalogo Tecnico - Uso e Manutenzione KSC.

- Sistema di taglio.
  Ha la funzione di tagliare BIG BAG senza valvola, monouso.
- Kit collegamento flessibile disponibile in gomma nera o bianca per settore alimentare.
- Flange tonde o quadre per tramoggia.
- Piedi di rialzo per il sollevamento di tutta la struttura.
- Fine corsa meccanico per segnalazioni apertura portello.
- Serranda manuale allo scarico.

The Manufacturer provides a 12-month warranty on their products. This period starts from the date of the consignment note.
The warranty is not applicable for breakage and/or defects caused by incorrect installation or use, or incorrect maintenance, or modifications not authorized by the Manufacturer.
The warranty does not extend to parts that wear out following normal use and electrical components.
To be more precise, the warrantee lapses if the FIBC:
- has been tampered with or modified,
- has not been used correctly,
- has been used without respecting the limits indicated in this manual and/or has been subjected to excessive mecha nical stress,
- has not been subjected to the necessary maintenance or these operations have been carried out partly and/or incorrectly,
- has been damaged due to carelessness during transport, installation and use,
- has been fitted with spare parts that are not original.

On receiving the product, the user must check these for defects deriving from transport and/or incomplete supply.
Defects, damage or incom pleteness of the supply must be immediately communicated to the Manufacturer in writing and countersigned by the haulage transporter.

Der Hersteller gewährt auf ihre Erzeugnisse eine Garantie von 12 Monaten. Die Garantiezeit beginnt mit dem Datum des Lieferscheins.
Die Garantie ist nicht anwendbar, wenn es sich um Schäden und/oder Defekte handelt, die auf falschem Einbau oder Gebrauch, nicht korrekter Wartung oder Änderungen beruhen, die ohne die Genehmigung des Her-stellers ausgeführt wurden.
Die Garantie deckt keine Teile ab, die infolge des normalen Gebrauchs verschleißen, und auch keine elektrischen Teile.
Vielmehr erlischt die Garantie in jenen Fällen, in denen die Big-Bag-Entleerstation:
- manipuliert oder geändert wurde,
- nicht korrekt verwendet wurde,
- nicht unter der Beachtung der in diesem Handbuch genannten Grenzwerte benutzt wurde und/oder zu starken mechanischen Belastungen ausgesetzt wurde,
- bei Transport, Installation und Gebrauch Schäden wegen Fahrlässigkeit erlitten hat,
- mit Ersatzteilen bestückt wurde, die keine Originalteile sind.

Beim Empfang der Ware hat der Empfänger sicherzustellen, dass die Ware keine durch den Transport verursachten Schäden oder Defekte aufweist, und/oder dass der Lieferumfang vollstän-dig ist.
Etwaige Defekte, Schäden oder Fehlmengen sind mittels schriftlicher und vom Frachtführer gegengezeichneter Mitteilung sofort dem Hersteller zu melden.

Le constructeur reconnaît une période de 12 mois de garantie sur les produits de sa fabrication. La période prend effet à compter de la date indiquée sur le bon de livraison.
La garantie ne s'applique pas à la suite de ruptures et/ou de défauts provoqués par un montage et une utilisation impropre, des entretiens qui ne sont réalisés correctement ou des modifications apportées sans autorisation du constru cteur.
La garantie s'étend aux pièces qui s'usent à la suite d'une utilisation normale et aux parties électriques.
Plus précisément, la garantie est sans effet dans les cas où le vide BIG-BAG :
- a été manipulé ou modifié,
- a été utilisé de manière incor recte,
- a été utilisé sans respecter les limites indiquées dans la présen te notice et/ou qu'il a été soumis à des contraintes mécaniques excessives
- il n'a pas été soumis aux entretiens nécessaires ou que ces opérations ont été effectuées partiellement, de manière incom plète ou incorrecte
- a subit des dommages par négligence pendant le transport, la mise en place et l'utilisation,
- a été réparé avec des pièces qui ne sont pas d'origine.

Dès réception de la marchan dise, le destinataire doit vérifier que celle-ci n'a pas de défauts ou subit de dégâts dus au tran sport et que la fourniture n'est pas incomplète.
Tout défaut, dommage ou four niture incomplète doit immédia tement être signalée au constru cteur par communication écrite et contresignée par le tran sporteur.

Il costruttore riconosce un periodo di 12 mesi di garanzia sui prodotti di propria costruzione. Il periodo decorre dalla data della bolla di consegna.
La garanzia non è applicabile a seguito di rotture e/o difetti causati da errata installazione o utilizzo, oppure da manutenzioni non corrette o modifiche apportate senza autorizzazione del costruttore.
La garanzia non si estende alle parti che si logorano in seguito al normale uso e alle parti elettriche.
A miglior precisazione la garanzia decade nei casi in cui lo svuota BIG-BAG:
- sia stato manomesso o modificato,
- sia stato utilizzato non correttamente,
- sia stato utilizzato non rispettando i limiti indicati nel presente manuale e/o sia stato sottoposto ad eccessive sollecitazioni meccaniche,
- non sia stato sottoposto alle necessarie manutenzioni o queste siano state eseguite solo in parte e/o non correttamente,
- abbia subito danni per incuria durante il trasporto, l'installazione e l'utilizzo,
- siano state inserite parti di ricambio non originali.

Al ricevimento del prodotto, il destinatario deve verificare che lo stesso non presenti difetti o danni derivanti dal trasporto e/o incompletezza della fornitura.
Eventuali difetti, danni o incompletezza vanno immediatamente segnalati al costruttore mediante comunicazione scritta e controfirmata dal vettore.

**CHECKING BEFORE SHIPMENT**

The machine has been subjected to operating tests at our factory in order to guarantee correct installation. The special checks carried out by the manufacturer are as follows:

- Checking the power voltage of the electric motor vibrator, which must correspond to the value specified at the time of purchase.;
- Checking the serial number;
- Checking to ensure that all rating plates are present;
- Checking to ensure that all bolts and screws are locked properly;
- Checking the dimensions;
- Checking painting;
- Check correct working of the pneumatic actuators without load for about 15 minutes;
- Checking packaging.

**KONTROLLEN VON DEM VERSAND**

Die Maschine ist im Herstellerwerk einer gründlichen Funktionsprobe unterzogen worden, damit die korrekte Inbetriebnahme garantiert werden kann. Insbesondere wurden die folgenden Kontrollen ausgeführt:

- Kontrolle der Betriebsspannung des elektrischen Unwuchtmotors, die den Werten entsprechen muss, die bei der Bestellung angegeben wurden.
- Kontrolle der Serien-Nummer.
- Kontrolle auf das Vorhandensein aller Schilder.
- Kontrolle aller Schrauben auf festen Sitz.
- Größenkontrolle.
- Lackkontrolle.
- Kontrolle der pneumatischen Austraghilfen im leeren Zustand auf korrekte Funktion auf die Dauer von circa 15 Minuten
- Kontrolle der Verpackung.

**CONTROLES AVANT L'EXPEDITION**

La machine a subi dans nos établissement un essai de réception réel de fonctionnement, pour garantir une mise en service correcte. Les contrôles effectués par le constructeur sont notamment les suivants:

- Contrôle de la tension de fonctionnement du motovibrateur électrique, qui doit correspondre à la valeur demandée au moment de la commande;
- Contrôle du numéro de matricule;
- Contrôle de la présence de toutes les plaques;
- Contrôle du serrage de toute la visserie;
- Contrôle dimensionnel;
- Contrôle de la peinture;
- Contrôle du fonctionnement correct des actionneurs pneumatiques à vide pendant environ 15 minutes;
- Contrôle de l'emballage.

**CONTROLLI PRIMA DELLA SPEDIZIONE**

La macchina ha subito, presso i nostri stabilimenti, un reale collaudo funzionale, così da garantire la corretta messa in esercizio. In particolare i controlli compiuti dal costruttore sono i seguenti:

- Controllo della tensione di funzionamento del motovibratore elettrico, che deve corrispondere al valore richiesto al momento dell' acquisto;
- Controllo del numero di matricola;
- Controllo presenza di tutte le targhette;
- Controllo serraggio di tutta la viteria;
- Controllo dimensionale;
- Controllo verniciatura;
- Controllo corretto funzionamento degli attivatori pneumatici a vuoto per 15 minuti circa;
- Controllo imballaggio.

**TRANSPORT**

When the filter is delivered, make sure that the type and quantity of the materials consigned comply with the information on the order confirmation. Immediately inform the haulage contractor in writing if damage is discovered, using the relative space on the consignment form.
The driver is obliged to accept the complaint and to issue you with a copy. If the filter has been supplied carriage forward, either sent your complaint to us or straight to the haulage contractor. Damages will only be reimbursed if you have notified the matter on receipt of the goods.
Avoid any kind of damage due to the unloading and handling operations; so lift loose parts, if any of the FIBC using the eyebolts provided. DO NOT PUSH OR PULL the components! Always bear in mind you are dealing with mechanical equipment which must be treated with care.

**TRANSPORT**

Bei Erhalt der Ware sicherstellen, ob Typ und Menge mit den Daten auf der Bestellung übereinstimmen.
Etwaige Transportschäden sind sofort auf dem Schriftwege zu melden, und zwar durch Eintragen auf dem Lieferschein.
Der Fahrer ist verpflichtet, diese Reklamation anzunehmen und Ihnen eine Kopie davon auszuhändigen. Wenn die Lieferung frei Haus erfolgt, senden Sie Ihre Reklamation an uns, andernfalls direkt an den Frachtführer. Die Entschädigung erfolgt nur, wenn der Schaden gleich bei Empfang der Ware gemeldet wird.
Beim Abladen und beim Handling jede Art der Beschädigung vermei-den. Zum Anheben der eventuell zerlegten Teile der Big-Bag-Ent-leerstation die vorhandenen Kran-ösen verwenden. Komponenten weder SCHIEBEN NOCH SCHLEI-FEN! Immer berücksichtigen, dass es sich um mechanische Elemente handelt, die mit Vorsicht zu behandeln sind.

**TRANSPORT**

Au moment où vous recevez la machine, vérifiez si la typologie et la quantité correspondent bien aux données qui se trouvent sur la confirmation de la commande.
Si vous constatez des dommages, vous devez immédiatement le déclarer en l'écrivant dans l'emplacement réservé à cet effet sur la lettre de voiture.
Le chauffeur est obligé d'accepter votre réclamation et de vous en laisser une copie. Si la fourniture a été livrée franco destination, envoyez-nous votre réclamation, sinon envoyez-la directement au transporteur.
Vous ne pourrez être remboursé des dommages et intérêts que si vous avez déclaré le dommage au moment où vous avez reçu la machine. Evitez tout type de dégât pendant le déchargement et les déplacements ; pour cela soulever les pièces éventuellement séparées du vide BIG-BAG en utilisant les crochets prévus à cet effet. VOUS NE DEVEZ NI PAS POUSSER, NI TRAINER les composants ! Rappelez-vous qu'il s'agit de matériel mécanique qui doit être déplacé avec le plus grand soin.

**TRASPORTO**

Al ricevimento della merce controllare se la tipologia e la quantità corrispondono con i dati della conferma d'ordine. Eventuali danni devono essere fatti presenti immediatamente per iscritto nell'apposito spazio della lettera di vettura.
L'autista è obbligato ad accettare un tale reclamo e lasciarne una copia a Voi. Se la fornitura è franco destino, inviate il vs. reclamo e noi, altrimenti direttamente allo spedizioniere. Il risarcimento avviene soltanto se avete fatto presente il danno all'atto del ricevimento.
Evitate ogni tipo di danneggiamento durante lo scarico e le movimentazioni; a tale scopo sollevare eventuali pezzi sfusi dello svuota BIG-BAG impiegando i golfari previsti. NON SPINGERE NÈ TRASCINARE i componenti! Tenete conto che si tratta di materiale meccanico che deve essere movimentato con cura.

**MACHINE STORAGE OVER EXTENDED PERIODS**

Avoid a humid or salty environ-ment. If this is not possible protect the filter using insulating foil.
Prior to installation of the filter, check to ensure that all the electrical and pneumatic components are intact.
To store the machine correctly for a period of inactivity, clean all the parts thoroughly and grease the elastic parts. Store the equipment on a wooden platform, in a place that is protected from inclement weather conditions.

**LANGFRISTIGE EINLAGERUNG DER MASCHINE**

Eine feuchte und salzige Umge-bung sollte vermieden werden. Ist dies nicht möglich, das Gerät durch wärmedämmende Folie schützen.
Vor dem Einbau des Geräts prüfen, ob die elektrischen und pneumatischen Komponenten intakt sind.
Eine korrekt Einlagerung der Maschine bei längerem Nichtgebrauch erfordert eine grundliche Reinigung aller Teile und das Einfetten der elastischen Komponenten; die Ausrüstung auf Holzbalken legen und witterungsgeschützt aufbewahren.

**EMMAGASINAGE DE LA MACHINE POUR UNE LONGUE PÉRIODE.**

Eviter possiblement des am-biants humides et salmâtres. Si cela n'est pas possible, protéger le produit avec des pellicules protectives thermoisolantes.
Avant d'installer la machine contrôler l'intégrité de l'instal-lation électrique et pneumatique.
Pour stocker correctement la machine pour une longue période d'inactivité, il est conseillé de nettoyer parfaitement toutes les pièces et de graisser les parties élastiques. Stocker sur une palette en bois à l'abri des intempéries.

**IMMAGAZZINAGGIO DELLA MACCHINA PER PERIODO PROLUNGATO.**

Evitare possibilmente ambienti umidi e salmastri.
Qualora ciò non sia possibile, proteggere il prodotto con pellicole protettive termoisolanti.
Prima di installare la macchina controllare l'integrità dell'impianto elettrico e pneumatico.
Per immagazzinare correttamente la macchina per un periodo di inattività, bisogna pulire accuratamente tutte le parti e ingrassare le parti metalliche.
Sistemare l'attrezzatura su pedane in legno e locarla al riparo dalle intemperie.

The FIBC is basically supplied on a pallet of suitable dimensions, protected with a heat-shrink polythene cover.

In ihrer Standardversion wird die Big-Bag-Entleerstation auf einer Palette entsprechender Größe stehend ausgeliefert und ist durch eine Schrumpffolie aus Poly-äthylen geschützt.

Le vide BIG-BAG est livré en standard sur une palette de dimensions appropriées et enveloppée dans un film en polyéthylène thermo-rétractable.

Di base lo svuota BIG-BAG viene fornito su un pallet di dimensioni opportune e protetto da un involucro di polietilene termoretraibile. A richiesta può essere fornito all'interno di gabbia di protezione in legno.

**BASE PACKAGING - BASIS-VERPACKUNG**
**EMBALLAGE DE BASE - IMBALLO BASE**

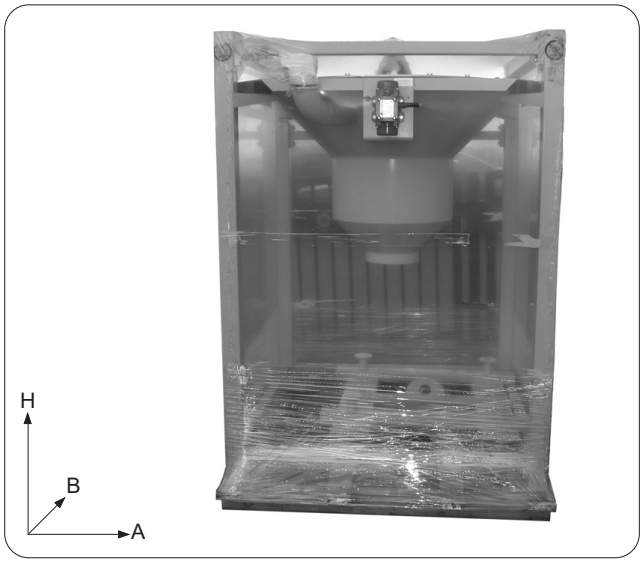


**WOODEN CRATE PACKAGING (MODELS T, C, S)**
**HOLZKISTENVERPACKUNG (MODELLE T, C, S)**
**EMBALLAGE DE CRATE EN BOIS (MODÈLES T, C, S)**
**IMBALLO GABBIA IN LEGNO (MODELLI T, C,S)**

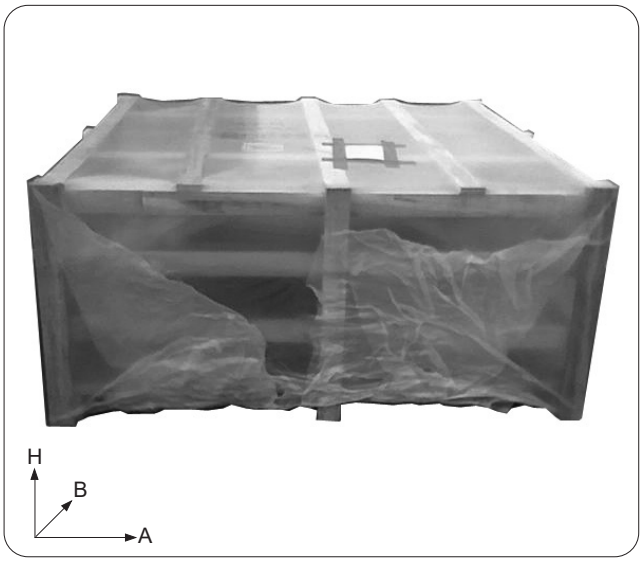


| **Packing code** ***Code Verpackung*** **Code emballage** ***Codice imballo*** | **TYPE** | **A** | **B** | **H** | **Equipment weight** ***Gerätegewicht*** **Poidsmachine** ***Peso macchina*** **kg** | **Packing weight** ***Verpackungsgewicht*** **Poids et emballage** ***Peso imballo*** **kg** | **Total weight** **Gesamtgewicht** **Poids total** **Peso totale** **kg** |
|---|---|---|---|---|---|---|---|
| **IME.SBB.125.T.P00** | SBB.x.125.T | 1600 | 1500 | 1000 | 125 | 53 | 178 |
| **IME.SBB.150.T.P00** | SBB.x.150.T | 1900 | 1750 | 1100 | 214 | 70 | 284 |
| **IME.SBB.125.C.P00** | SBB.x.125.C | 1600 | 1500 | 2050 | 321 | 60 | 381 |
| **IME.SBB.150.C.P00** | SBB.x.150.C | 2000 | 2000 | 2200 | 498 | 82 | 580 |
| **IME.SBB.125.S.P00** | SBB.x.125.S | 1600 | 1600 | 2450 | 400 | 84 | 484 |
| **IME.SBB.150.S.P00** | SBB.x.150.S | 2050 | 2100 | 2200 | 703 | 101 | 804 |
| **IME.SBB.125.M.P00** | SBB.x.125.M | 1900 | 1750 | 2650 | 750 | 25 | 775 |
| **IME.SBB.125.T.G00** | SBB.x.125.T | 1600 | 1500 | 1000 | 125 | 89 | 214 |
| **IME.SBB.150.T.G00** | SBB.x.150.T | 1900 | 1800 | 1350 | 214 | 111 | 325 |
| **IME.SBB.125.C.G00** | SBB.x.125.C | 1600 | 1500 | 2050 | 321 | 98 | 419 |
| **IME.SBB.150.C.G00** | SBB.x.150.C | 2000 | 2000 | 2200 | 498 | 124 | 622 |
| **IME.SBB.125.S.G00** | SBB.x.125.S | 1600 | 1600 | 2500 | 400 | 124 | 524 |
| **IME.SBB.150.S.G00** | SBB.x.150.S | 2100 | 2000 | 2620 | 703 | 146 | 849 |
| **IME.SBB.125.M.G00** | SBB.x.125.M | - | - | - | - | - | - |

**1 - STORAGE PRIOR TO INSTALLATION**
- Avoid damp, salty environments, if possible.
- Place the equipment on wooden platforms and store them protected from unfavourable weather conditions.

**2 - PROLONGED MACHINE SHUTDOWNS AFTER ASSEMBLY**
- Before starting up the machine, set it in safety status.
- Prior to commissioning the machine check the vibrator motor and all other machine components are intact and functioning.
- Allow the pneumatic actuators to run load-free for **at least 10 minutes** without any material inside to ensure that all components work correctly.
- Check to ensure correct working of the electric vibrator, running it **only for a few seconds** with the hopper empty.

**N.B.:** prolonged use of the vibrator with the machine devoid of product can damage the machine.

**3 - POSSIBLE REUSE AFTER PERIODS OF INACTIVITY**
- During machine halts, avoid damp, salty environments
- Place the equipment on wooden platforms and store them protected from unfavourable weather conditions.
- Set the machine in safety status before starting it up.
- Before starting up the machine, check the condition of the electric vibrator and all parts for which long shutdowns may affect working.
- Clean the machine thoroughly before starting it.

**1) EINLAGERUNG VOR DEM EINBAU**
- Feuchte und salzhaltige Luft für die Einlagerung vermeiden.
- Die Einrichtung auf Holzpaletten setzen und vor Witterung schützen.

**2) LÄNGERE BETRIEBSUNTERBRECHUNGEN NACH DEM EINBAU**
- Vor der Inbetriebnahme ist das Gerät in einen sicheren Zustand zu versetzen.
- Vor der Inbetriebnahme des Gerätes den elektrischen Unwuchtmotor und alle anderen Geräteteile auf Unversehrtheit prüfen sowie auf deren Funktionstüchtigkeit die nach einem längeren Geräte-stillstand in Frage gestellt sein könnte.
- Vor dem Einschalten des Gerätes eine Reinigung durchführen.
- Die pneumatischen Austraghilfen wenigstens **10 Minuten** lang ohne Materialfüllung bei leerem Gerät laufen lassen, um den korrekten Betrieb aller Komponenten zu sicherzustellen.
- Den Unwuchtmotor auf korrekten Betrieb prüfen, indem man ihn **nur ein paar Sekunden** bei leerem Trichter laufen lässt.

**N.B.:** Eine längerer Betrieb des Unwuchtmotors bei leerem Gerät könnte dieses beschä-digen.

**3) MÖGLICHE WIEDERVERWENDUNG NACH EINEM LÄNGEREN STILLSTAND**
- Während des Stillstands des Gerätes Räume mit feuchter und salzhaltiger Luft vermeiden.
- Das Gerät auf Holzpaletten setzen und vor Witterung schützen.
- Vor der Inbetriebnahme ist das Gerät in einen sicheren Zustand zu versetzen.
- Vor der Inbetriebnahme des Gerätes den elektrischen Unwuchtmotor und alle Teile auf Unversehrtheit prüfen, deren Funktionstüchtigkeit durch die längere Betriebs-unterbrechung in Frage gestellt sein könnte.
- Vor dem Einschalten des Gerätes eine Reinigung durchführen.

**1-EMMAGASINAGE AVANT LA MISE EN PLACE**
- Si possible éviter les locaux humides et les saumâtres
- Placer l'équipement sur des palettes en bois et les ranger à l'abri des intempéries.

**2-ARRÊT MACHINE PROLONGÉ APRÈS LE MONTAGE**
- Avant la mise en service, mettre la machine en sécurité.
- Avant la mise en service de la machine, contrôler l'intégrité du motovibrateur électrique et de toutes les parties pour lesquelles un arrêt prolongé pourrait compromettre le fonctionnement.
- Effectuer un cycle complet de nettoyage avant de mettre la machine en marche.
- Laisser fonctionner à vide les actionneurs pneumatiques pendant **10 minutes** sans matière à l'intérieur pour vérifier le fonctionnement correct de chaque composant.
- Vérifier le bon fonctionnement du moto-vibrateur en le faisant fonctionner **seulement quelques secondes** avec la trémie vide.

**N.B.**: l'utilisation prolongée du vibrateur avec la machine sans produit pourrait provoquer des dommages à la machine.

**3-RÉ-UTILISATION APRES UNE PÉRIODE D'INACTIVITÉ**
- Pendant la période d'inactivté de la machine éviter les locaux humides et saumâtres
- Placer l'équipement sur des palettes en bois et les ranger à l'abri des intempéries.
- Prima della messa in servizio
- Avant la mise en service, mettre la machine en sécurité.
- Avant la mise en service de la machine, contrôler l'intégrité du motovibrateur électrique et de toutes les parties pour lesquelles un arrêt prolongé pourrait compromettre le fonctionnement.
- Effectuer un cycle complet de nettoyage avant de mettre la machine en marche.

**1-IMMAGAZZINAGGIO PRIMA DELL'INSTALLAZIONE**
- Evitare possibilmente ambienti umidi e salmastri
- Sistemare l'attrezzatura su pedane di legno e locarle al riparo dalle intemperie.

**2-FERMO MACCHINA PROLUNGATO DOPO IL MONTAGGIO**
- Prima della messa in servizio mettere in sicurezza la macchina.
- Prima della messa in servizio della macchina controllare l'integrità del motovibratore elettrico e di tutte le parti per le quali un prolungato arresto potrebbe compromettere la funzionalità.
- Eseguire un ciclo di pulizia completa prima di attivare la macchina.
- Lasciare funzionare a vuoto gli attuatori pneumatici per **almeno 10 minuti** senza materiale all'interno per verificare il corretto funzionamento di ogni componente.
- Verificare il corretto funzionamento del motovibratore facendolo funzionare **solo per pochi secondi** con tramoggia vuota.

**N.B.:** un utilizzo prolungato del vibratore con macchina scarica di prodotto potrebbe arrecare danni alla macchina.

**3-POSSIBILE REIMPIEGO DOPO PERIODO DI INATTIVITÀ**
- Durante il fermo macchina evitare ambienti umidi e salmastri
- Sistemare l'attrezzatura su pedane di legno e locarle al riparo dalle intemperie.
- Prima della messa in servizio mettere in sicurezza la macchina.
- Prima della messa in servizio della macchina controllare l'integrità del motovibratore elettrico e di tutte le parti per le quali un prolungato arresto potrebbe compromettere la funzionalità.
- Eseguire un ciclo di pulizia completa prima di attivare la macchina.

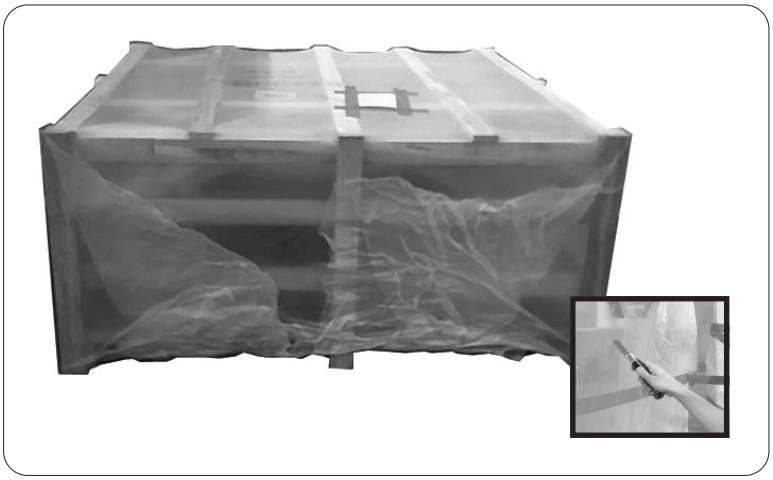

To remove the packing, use a cutter or a pair of scissors to cut the heat-shrink nylon covering.
Take special care to avoid damaging parts of the machine and/or scratch the paint with the blade.
Si consiglia di utilizzare un martello per smontare l'imballo a gabbia a protezione della macchina.
The FIBCs require certain operations for completing assembly before starting operation, in particular:

- **MODEL T** must be fixed to a solid structure (constructed by the plant designer).

- **MODELS C, S, M**
  The machines are already partially assembled; the frame is to be assembled and the hopper is to be installed (see below).

- All the machines must be fixed to the ground or to a solid structure before use.
- Make the electrical connections of the electric vibrator to all the machines.
- For all the assembly operations listed above, proceed as described below.

NOTE:
It is the installer's responsibility to dispose off the packaging in a suitable manner, in compliance with existing legislation.

Zum Entfernen der Verpackung reicht es aus, einen Cutter oder eine Schere zu benutzen, mit der man die Nylon-Schrumpffolie aufschneidet.
Besonders darauf achten, dass das Messer keine Teile der Maschine beschädigt und/oder den Lack aufkratzt.
Si consiglia di utilizzare un martello per smontare l'imballo a gabbia a protezione della macchina.
Die BIG-BAG Entleerstationen verlangen noch, dass der Zusammenbau beendet wird, bevor man sie in Betrieb nehmen kann, insbesondere:

- **MODELL T**: Dieses muss an einer festen Struktur befestigt werden (Anfertigung durch den Anlagenbauer).

- **MODELLE C, S, M**
  Die Maschinen sind bereits teilweise montiert; das Gestell ist zu montieren und der Trichter ist zu installieren (siehe unten).

- Alle Maschinen müssen vor dem Gebrauch am Boden oder einer soliden Struktur verankert werden.
- Auf allen Maschinen ist der elektrische Anschluss des Unwuchtmotors vorzunehmen.
- Für die oben genannten Montagevorgänge ist so vorzuge

N.B.:
Der Anlagenaufsteller ist dafür verantwortlich, das Verpackungsmaterial auf angemessene Art und in Übereinstimmung mit den einschlägigen, geltenden Gesetzen zu entsorgen.

Pour le déballage il suffit d'utiliser un cutter ou des ciseaux et de couper le film en nylon thermorétractable.
Prêter une attention particulière à ne pas endommager des parties de la machine et/ou rayer le vernis avec la lame.
Si consiglia di utilizzare un martello per smontare l'imballo a gabbia a protezione della macchina.
Les vide BIG-BAG nécessitent quelques opérations pour terminer l'assemblage avant la mise en marche, à savoir:

- le **MODELE T** devra être fixé à une structure solide (réalisée par l'installateur).

- **MODÈLES C, S, M**
  Les machines sont déjà partiellement assemblées ; le cadre doit être assemblé et la trémie doit être installée (voir ci-dessous).

- Toutes les machines seront ancrées par terre ou fixées à une structure solide avant l'utilisation.
- Sur toutes les machines il faudra réaliser le raccordement électrique du motovibrateur.
- Pour toutes les opérations de montage décrites ci-dessus, suivre les instructions des pages suivantes.

N.B.:
L'installateur doit, à ses frais, éliminer les emballages de manière adéquate et conformément aux lois en vigueur en la matière.

Per la rimozione dell'imballo è sufficiente utilizzare un cutter o un paio di forbici per tagliare l'involucro in naylon termoretraibile.
Prestare particolare attenzione a non danneggiare con la lama parti della macchina e/o scalfire la vernice.
Si consiglia di utilizzare un martello per smontare l'imballo a gabbia a protezione della macchina.
Gli svuota BIG-BAG necessitano di alcune operazioni per concluderne l'assemblaggio prima della messa in funzione, in particolare:

- **MODELLO T** dovrà essere fissato ad una struttura solida (fabbricazione a cura dell'impiantista).

- **MODELLI C, S, M**
  Le macchine sono già parzialmente assemblate; dovrà essere assemblato il telaio ed installata la tramoggia. (vedi oltre)

- Tutte le macchine dovranno essere ancorate a terra o ad una struttura solida prima dell'utilizzo.
- Su tutte le macchine andrà effettuato il collegamento elettrico del motovibratore.
- Per tutte le operazioni di montaggio sopraelencate, procedere come descritto in seguito.

N.B.:
è a cura dell'installatore smaltire gli imballi in modo adeguato e secondo le leggi vigenti in materia.

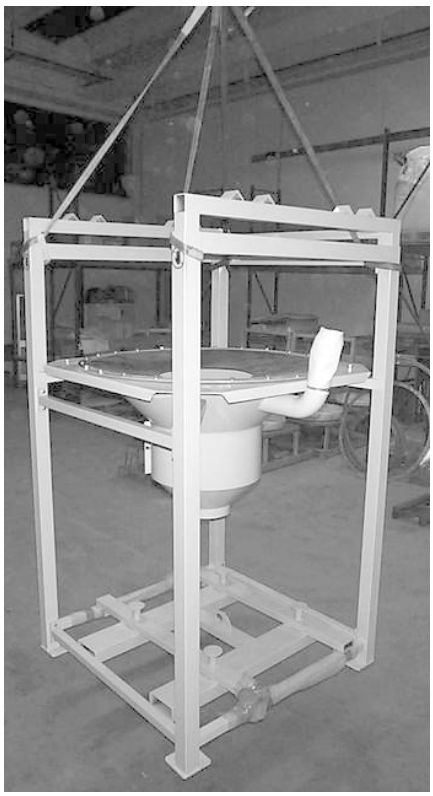



Use lifting equipment that is suitable for the weight, dimensions and movements required.

Hook the equipment to the lifting device by means of flexible straps and use hooks with safety fasteners.

Do not use clamps, rings, open hooks or other systems which do not guarantee the same safety as shackles or hooks with safety fasteners.

If the straps are in close contact with the equipment it is advisable to place protective elements between the two to avoid damage.

**CAUTION !**
**1- Use lifting equipment which acts from above.**
**2- Keep the equipment at a minimum distance above the ground.**
**3- Do not stand near or walk under suspended loads.**

Zum Heben Vorrichtungen verwenden, die dem Gewicht der zu hebenden Last, deren Abmessungen und dem Transport entsprechen.

Die Befestigung an den Lastaufnahmestellen mittels elastischer Gurte vornehmen und Haken mit Sicherheitsverschluß verwenden.

Es ist verboten, Klammern, Ringe, offene Haken oder andere Systeme zu verwenden, die nicht den Sicher-heitsnormen entsprechen.

Sollten die Anschlaggurte die Maschine berühren, Schutzelemente dazwischen schieben, um die Ausrüstung nicht zu beschädigen.

**ACHTUNG !**
**1- Nur Hebezeug verwenden, das von oben her angreift.**
**2- Die Ausrüstung nur so wenig wie gerade erforderlich heben.**
**3- Nicht unter der hängenden Last gehen oder stehen.**

Utiliser des systèmes de levage appropriés aux poids, dimensions et déplacements prévus.

Effectuer l'accrochage aux prises de levage à l'aide de sangles élastiques et utiliser des crochets avec fermeture de sécurité.

L'utilisation de mors, anneaux, crochets ouverts ou tout système ne garantissant pas la même sécurité que les manilles ou les crochets à fermeture de sécurité est interdite.

En cas de contact entre les sangles et les pièces de l'équipement, il est conseillé d'intercaler des protections pour ne pas endommager ce dernier.

**ATTENTION !**
**1- Utiliser des appareils de levage agissant par le haut.**
**2- Tenir la machine à une distance minimum du sol.**
**3- Ne pas stationner sous les charges suspendues.**

Utilizzare sistemi di sollevamento idonei alle masse, alle dimensioni e agli spostamenti previsti.

Eseguire l' aggancio alle prese di sollevamento mediante fasce elastiche e utilizzare ganci con chiusure di sicurezza.

E' vietato l' utilizzo di morsetti, anelli, ganci aperti o qualsiasi sistema che non garantisca la stessa sicurezza dei grilli o dei ganci con chiusura di sicurezza.

Nel caso si verificassero contatti tra le fasce e parti della macchina, è consigliabile frapporre degli elementi di protezione per evitare danni a quest' ultima.

**ATTENZIONE !**
**1- Utilizzare apparecchi di sollevamento che agiscono dall' alto.**
**2- Tenere la macchina alla minima distanza da terra.**
**3- Non sostare o passare sotto i carichi sospesi.**

While defining the installation of the equipment, take into account the space required for maintenance and access, for loading the FIBCs, especially as regards height, as it is variable.
This space depends on the lifting and handling equipment available at the work site.
The place in which the equipment is located must have the necessary connections (electricity, air, etc.) for operating the equipment.
It is the Customer's responsibility to equip the assembly area in accordance with the existing regulations and safety requirements: aeration, earthing, etc.

Bei der Festlegung des Standortes der Ausrüstung auch den für die Wartung und den Zugriff erforderlichen Platz berücksichtigen, der für die Aufgabe des Big-Bags dient, vor allem deshalb, weil die Höhe variabel ist.
Dieser Platz hängt vom Förder- und Hebezeug ab, das auf der Baustelle vorhanden ist.
Der Standort muß mit den erforderlichen Anschlüssen (Strom, Luft etc.) versehen sein, damit die Ausrüstung in Betrieb genommen werden kann.
Für die Einrichtung des Montageraums und die Beachtung der geltenden Normen und die Sicherheitserfordernisse (Belüftung, Erdung etc. ist der Anwender verantwortlich.

Lors de la détermination de l'emplacement de l'équipe-ment tenir compte des espaces d'entretien et d'accès, pour le chargement du sac, surtout en hauteur car celle-ci est variable.
Cet espace dépend des moyens de levage et de manutention disponibles au chantier.
Le local devra être doté des raccordements nécessaires (énergie électrique, air, etc.) pour le fonctionnement de l'équipement.
Le client a la responsabilité d'équiper le lieu de montage dans le respect des normes en vigueur sur la sécurité: aération, mise à la terre, etc.

Nel definire la dislocazione della macchina tenere conto degli spazi di manutenzione e di accesso, per il carico del saccone, soprattutto in altezza in quanto questa è variabile.
Suddetto spazio dipende dai mezzi di sollevamento e movimentazione disponibili in cantiere.
Il locale dovrà essere dotato degli allacciamenti necessari (energia elettrica, aria, ecc...) per il funzionamento della macchina.
E' responsabilità del cliente attrezzare il luogo di montaggio rispettando le normative vigenti e i requisiti di sicurezza: aereazione, messa a terra, ecc...

Assembly instructions:
- Lift and position the equipment (according to the procedure indicated on the previous page) near the supply lines.
- Countermark the position of the four anchor holes on the ground corresponding to the frame supporting plate.
- Move the frame, make the bores as shown in the Table and reposition the equipment.
- Check that the equipment is longitudinally and transversely perfectly level.
- Fit the plugs into the bores and tighten them.

Montageanweisungen:
- Das Gerät auf der Höhe der Versorgungsleitung aufstellen (Vorgehensweise siehe vorangegangene Seite).
- Die Befestigungsbohrungen, die sich auf der Platte der Stellfläche des Rahmens befinden, am Boden markieren.
- Das Gestell seitlich ablegen, Bohrungen lt. Tabelle vorsehen und das Gerät wieder aufstellen.
- Sicherstellen, daß das komplette Gerät in der Waage steht, sowohl in der Längs- als auch in der Querrichtung.
- Die Dübel in die Bohrungen einführen und anziehen.

Instructions de montage:
- Soulever et mettre en place (suivant les procédures indiquées dans la page précédente) au niveau de la ligne d'alimentation.
- Faire sur le sol les marques des trous de fixation situés sur les plaques d'ancrage du bâti.
- Déplacer le bâti, exécuter les trous comme indiqué dans le tableau et positionner de nouveau l'équipement.
- Contrôler que l'équipement est parfaitement horizontal dans le sens longitudinal et transversal.
- Insérer les bouchons dans les trous et visser.

Istruzioni per il montaggio:
- Sollevarlo e posizionarlo (secondo le procedure indicate nella pagina precedente) in corrispondenza della linea di alimentazione.
- Contromarcare sul pavimento i fori di fissaggio situati sulle piastre d' appoggio del telaio.
- Spostare il telaio, eseguire i fori come indicato nella tabella e riposizionare la macchina.
- Controllare che la macchina sia perfettamente orizzontale in senso longitudinale e trasversale.
- Inserire i tappi nei fori e avvitare.

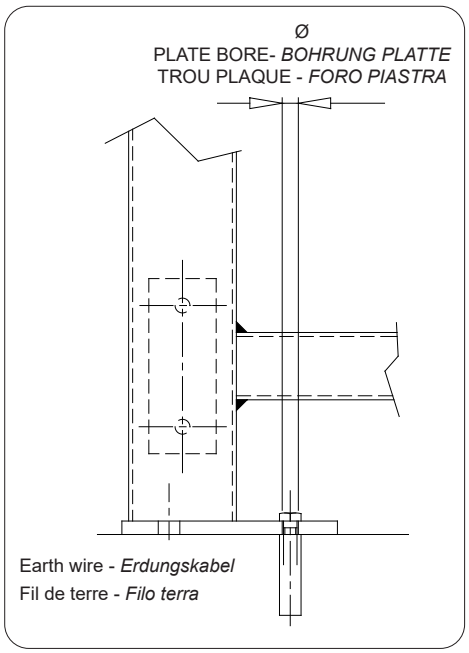


| CODE | Ø PLATE HOLE *LOCH PLATTE* TROU PLAQUE *FORO PIASTRA* mm | NBR OF HOLES *LOCHZAHL* NBRE DE TROUS *N° FORI* | MAX. PULL FOR FIXING *MAX. ZUG PRO SCHRAUBE* TRACTION MAXI POUR ANCRAGE *TIRO MAX. PER ZANCA* |
|---|---|---|---|
| **SBB125C** | 16.5 | 12 | / |
| **SBB125S** | 16.5 | 12 | / |
| **SBB150C** | 22 | 16 | / |
| **SBB150S** | 22 | 16 | / |
| **SBB125M** | 22 | 8 | 1250 daN |



Verify the presence and integrity of all constituent parts of the machine which is supplied already partially assembled.

Das Vorhandensein und die Unversehrtheit aller Bestandteile der Maschine, die bereits teilweise montiert geliefert werden, überprüfen.

Vérifiez la présence et l’intégrité de toutes les pièces constitutives de la machine fournie déjà partiellement assemblée.

Verificare la presenza e l’integrità di tutte le parti costituenti la macchina che viene fornita già parzialmente assemblata.



Remove the components of the machine from the packing by using an appropriate lifting system and position them in the proximity of the assembling area, taking care not to damage them.

Die Komponenten der Maschine mit einem geeigneten Hubsystem aus der Verpackung nehmen und in der Nähe des Montagebereichs positionieren, wobei darauf zu achten ist, dass sie nicht beschädigt werden.

Retirez les composants de la machine de l’emballage en utilisant un système de levage approprié et placez-les à proximité de la zone de montage en veillant à ne pas les endommager.

Mediante apposito sistema di sollevamento, rimuovere i componenti della macchina dall’imballo e posizionarli in prossimità della zona di assemblaggio avendo cura di non danneggiarli.



In particular, use the supplied eyebolts for lifting the hopper.

Die mitgelieferten Ringschrauben sind insbesondere zum Anheben des Trichters zu verwenden.

Utilisez en particulier les boulons à œil fournis pour soulever la trémie.

In particolare, per il sollevamento della tramoggia utilizzare i golfari forniti in dotazione.

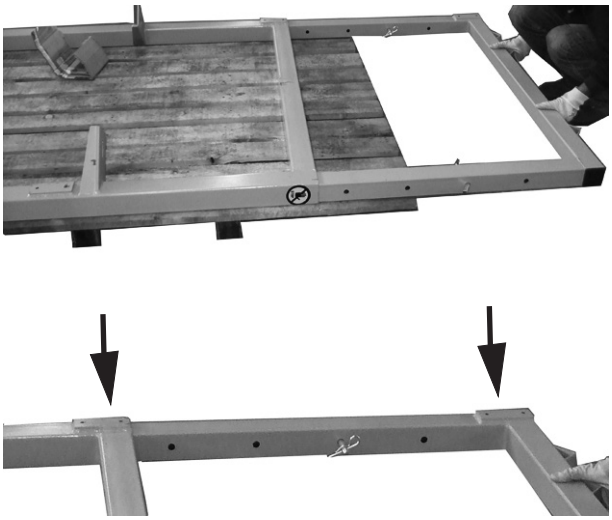

(ONLY MODEL S)
Start assembling the frame by inserting each of the two removable parts within the respective fixed part of the frame; Pay attention to the direction of insertion: the flanges used to join the cross beams on the removable and fixed part must be on the same side as shown in the figure.

(NUR MODELL S)
Mit der Montage des Gestells beginnen, indem jedes der beiden abnehmbaren Teile in den jeweiligen festen Teil des Gestells eingesetzt wird; dabei ist die Einbaurichtung zu beachten: Die Flansche, mit denen die Querträger am abnehmbaren und festen Teil verbunden sind, müssen auf der gleichen Seite wie in der Abbildung dargestellt sein.

(UNIQUEMENT MODÈLE S)
Commencez à assembler le cadre en insérant chacune des deux parties amovibles dans la partie fixe respective du cadre ; Faites attention au sens d’insertion : les brides utilisées pour joindre les traverses de la partie amovible et fixe doivent être du même côté que celui indiqué sur la figure.

(SOLO MODELLO S)
Iniziare l’assemblaggio del telaio infilando ciascuna delle due parti sfilabili all’interno della rispettiva parte fissa del telaio; Prestare attenzione al verso di inserimento: le flange per la giunzione delle traverse sulla parte sfilabile e della parte fissa devono risultare dalla stessa parte come in figura.

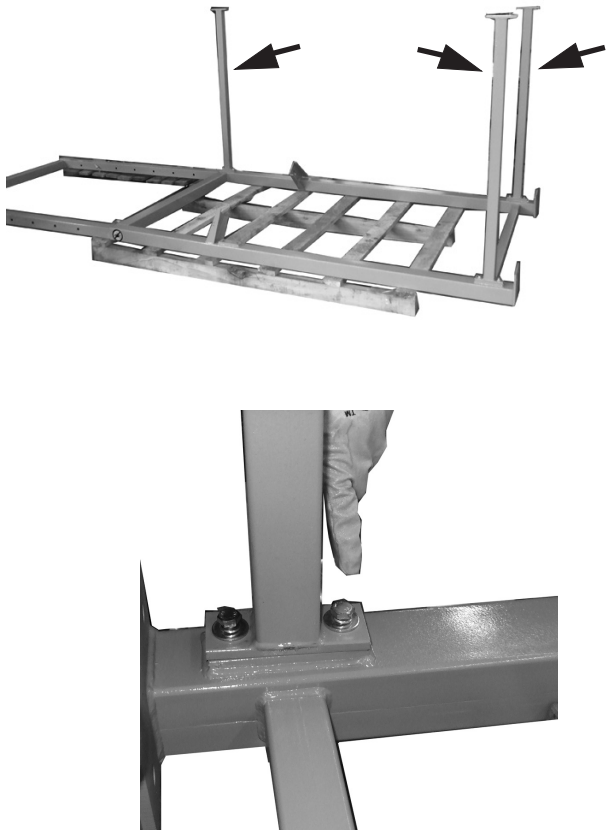

Proceed by connecting the first 3 cross beams to the fixed part of the frame. For the moment, do not tighten the screws until they cannot be tightened further but leave a clearance of approximately 4-5 mm.

Anschließend werden die ersten 3 Querträger mit dem festen Teil des Gestells verbunden. Vorläufig die Schrauben nicht festziehen, bis sie nicht mehr festgezogen werden können, sondern einen Abstand von ca. 4-5 mm freilassen.

Continuez en connectant les 3 premières traverses à la partie fixe du cadre. Pour le moment, ne serrez pas les vis jusqu’à ce qu’elles ne puissent plus être serrées, mais laissez un jeu d’environ 4-5 mm.

Procedere collegando le prime 3 traverse alla parte fissa del telaio. Per il momento non serrare fino a battuta le viti ma lasciare un gioco di circa 4-5 mm.





Lift the frame upright as shown and push the other side.

Das Gestell wie abgebildet aufrecht anheben und die andere Seite schieben.

Soulevez le cadre verticalement comme indiqué et poussez l’autre côté.

Sollevare il telaio in posizione verticale come indicato ed avvicinare l’altra fiancata.



Connect the two sides via the cross beams, without entirely tightening the screws.

Die beiden Seiten über die Querträger verbinden, ohne die Schrauben vollständig anzuziehen.

Reliez les deux côtés par les traverses sans serrer entièrement les vis.

Collegare le due fiancate mediante le traverse senza portare del tutto a battuta le viti.

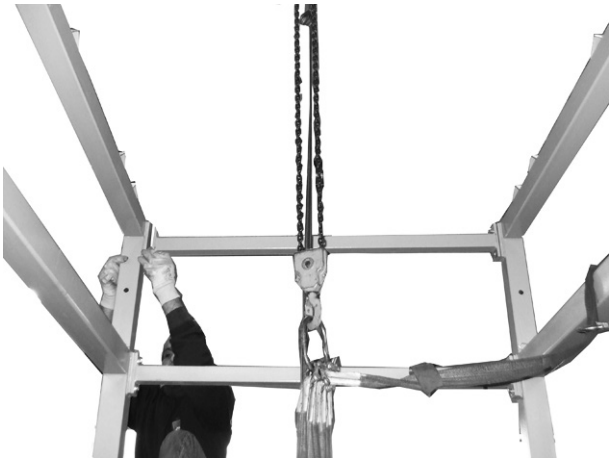

At this point, mount the connecting cross beam of the two removable parts, without fully tightening the screws (for the moment).

An diesem Punkt die Verbindungsquerträger der beiden abnehmbaren Teile montieren, ohne die Schrauben (vorerst) vollständig anzuziehen.

À ce stade, montez la traverse de connexion des deux pièces amovibles sans serrer complètement les vis (pour le moment).

A questo punto, montare la traversa di collegamento delle due parti sfilabili, per il momento senza portare a battuta le viti.



Lift the hopper by means of the eyebolts and place it on the appropriate shelf.

Den Trichter mit den Ringschrauben anheben und auf die entsprechende Ablage stellen.

Soulevez la trémie à l’aide des boulons à œil et placez-la sur l’étagère appropriée.

Sollevare la tramoggia mediante i golfari ed posizionarla sulle apposite mensole.



Secure the hopper via the screws provided, without tightening them all the way.

Den Trichter mit den mitgelieferten Schrauben sichern, ohne sie ganz festzuziehen.

Fixez la trémie à l’aide des vis fournies, sans les serrer complètement.

Fissare la tramoggia mediante le viti in dotazione, senza serrare a battuta.

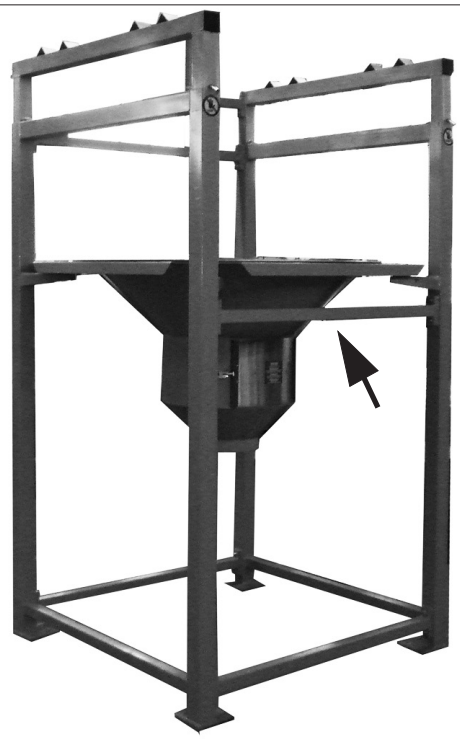

Mount the front cross beam.

Den vorderen Querträger montieren.

Montez la traverse avant.

Montare la traversa anteriore.

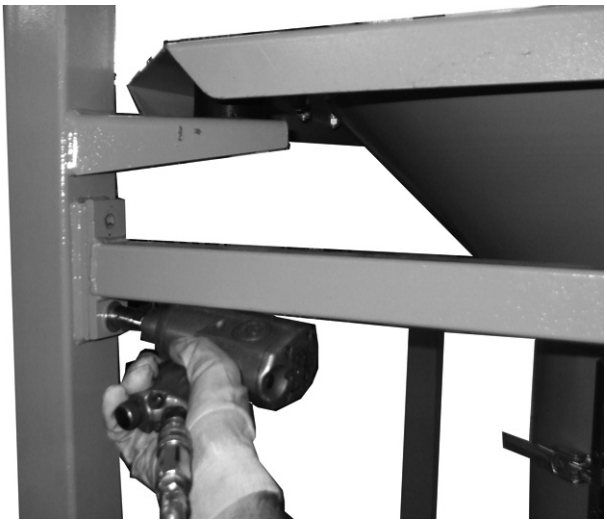

Proceed by fully tightening all screws, starting with those of the frame and, subsequently, with those of the hopper.

Alle Schrauben, beginnend mit denen des Gestells und anschließend mit denen des Trichters, vollständig festziehen.

Procédez en serrant complètement toutes les vis, en commençant par celles du châssis et, ensuite, par celles de la trémie.

Procedere al serraggio competo di tutte le viti, partendo da quelle del telaio e successivamente della tramoggia.





Lift the machine as shown in the figure, position it in the final arrangement and secure it to the ground.

Die Maschine wie in der Abbildung gezeigt anheben, in der endgültigen Position positionieren und am Boden absichern.

Soulevez la machine comme indiqué sur la figure, positionnez-la dans l’agencement final et fixez-la au sol.

Sollevare la macchina come indicato in figura posizionarla nella sistemazione definitiva e fissarla a terra.

Then proceed with the wiring of the electric vibrator (see section on page …)

Dann mit der Verdrahtung des Elektrovibrators fortfahren (siehe Abschnitt auf Seite ...)

Ensuite, procédez au câblage du vibrateur électrique (voir section à la page…)

Procedere quindi al cablaggio del vibratore elettrico (Vedi sezione dedicata pag…)



1) The MODEL M BIG-BAG unloader is supplied partially dismantled to optimize transport. About two hours are required to complete assembly at the site; after unpacking and placing all the objects on the floor, proceed as follows:

*1) Die BIG-BAG Entleerstation MODELL M wird teilweise zerlegt ausgeliefert, um den Transport zu optimieren. Um den Zusammenbau vor Ort zu vervollständigen, sind circa 2 Arbeitsstunden anzuschlagen. Nach dem Erntfernen der Verpackung und dem Anlegen aller Teile am Boden wie folgt vorgehen:*

1) Le vide BIG-BAG MODELE M est fourni partiellement démonté pour optimiser le transport. Il faut environ 2 heures de travail pour réaliser l'assemblage sur place; après avoir enlevé le film d'emballage, procéder de la manière suivante :

*1) Lo svuota BIG-BAG MODELLO M viene fornito parzialmente smontato per ottimizzarne il trasporto. Sono necessarie all'incirca 2 ore di lavoro per ultimarne l'assemblaggio in loco; una volta rimosso l'involucro dell'imballo e depositati tutti gli oggetti a terra, procedere come segue:*



2) Slacken the screws connecting the hoist frame 1 to hopper frame 2.

*2) Die Schrauben losdrehen, die den Flaschenzugrahmen 1 mit dem Trichtergestell 2 verbinden.*

2) Dévisser les vis qui relient le châssis palan 1 et le châssis de la trémie 2.

*2) Svitare le viti che collegano il telaio paranco **1** dal telaio tramoggia **2**.*



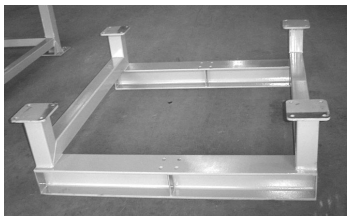

3) Using a suitable lifting system, lift the hoist frame and put it aside upside down

*3) Das Flaschenzuggestell mit einem geeigneten Gerät heben und separat auf dem Kopf abstellen.*

3) Soulever le châssis palan à l'aide d'un système de levage approprié et le mettre de côté, renversé.

*3) Sollevare mediante apposito sistema di sollevamento il telaio paranco e deporlo in disparte rovesciato*



4) Lift the hopper frame and place it in the final position, fixing the feet to the ground

*4) Das Trichtergestell heben und in der endgültigen Position abstellen, um dann die Füße am Boden zu befestigen.*

4) Soulever le châssis de la trémie et le mettre dans sa position définitive, en fixant les pieds par terre

*4) Sollevare il telaio della tramoggia e disporlo in posizione definitiva fissandone i piedi a terra*



5) Place a rear strut 4 on the ground as shown in the Figure and connect a cross beam 5 to it by means of screws, taking care to avoid tightening the screws excessively

*5) Einen hinteren Mast 4 auf den Boden legen, wie im Bild zu sehen ist, und eine Querstrebe 5 anschrauben, wobei zu beachten ist, dass die Schrauben nicht zu fest angezogen werden.*

5) Placer un pylône 4 arrière par terre, comme montré sur la figure et visser une traverse 5 sans serrer excessivement les vis

*5) Disporre un pilone **4** posteriore al suolo come mostrato in figura e avvitare una traversa **5** avendo cura di non serrare eccessivamente le viti*



6) Place the frame down and connect the second rear strut taking care to orient it as shown in the Figure.

*6) Die Struktur hinlegen und den zweiten hinteren Mast befestigen, wobei darauf zu achten ist, dass er wie im Bild gezeigt ausgerichtet wird.*

6) Allonger la structure et relier le deuxième pylône arrière en le dirigeant comme indiqué par la figure.

*6) Sdraiare la struttura e collegare il secondo pilone posteriore avendo cura di orientarlo come in figura.*



7) Connect a second beam 6 as shown in the Figure, taking care to avoid tightening the screws excessively

*7) Eine zweite Querstrebe 6 anschließen, wie in der Abbildung zu sehen ist, wobei darauf zu achten ist, dass die Schrauben nicht zu straff angezogen werden.*

7) Relier une deuxième traverse 6, comme l'indique la figure, en faisant attention à ne pas trop serrer les vis

*7) Collegare una seconda traversa **6** come mostrato in figura avendo cura di non serrare eccessivamente le viti*



8) Connect the last cross beam as shown in the Figure, taking care to avoid tightening the screws excessively.

*8) Die vormontierte Struktur mit einem Kran oder einen ähnlichen System heben und den zweiten hinteren Mast befestigen, wobei darauf zu achten ist, dass die Schrauben nicht zu straff angezogen werden. Nun muss die Struktur ein stabiles Gleichgewicht aufweisen.*

8) Relier la dernière traverse comme l'indique la figure, sans serrer excessivement les vis.

*8) Collegare l'ultima traversa come mostrato in figura, avendo cura di non serrare eccessivamente le viti.*



8) Using a crane or similar system, lift the pre-assembly and fix the third strut taking care to avoid tightening the screws excessively. The structure will now be stable

*8) Die vormontierte Struktur mit einem Kran oder einem ähnlichen System heben und den dritten Mast befestigen, wobei ebenfalls zu beachten ist, dass man die Schrauben nicht zu fest anzieht. Nun muss die Struktur ein stabiles Gleichgewicht haben.*

8) A l'aide d'une grue ou d'un système similaire soulever la structure pré-assemblée et fixer le troisième pylône sans serrer excessivement les vis. Après quoi la structure sera en équilibre stable

*8) Sollevare mediante gru o sistema simile il pre-assemblato e fissare il terzo pilone avendo cura di non serrare eccessivamente le viti. A questo punto la struttura sarà in equilibrio stabile*



10)Complete the chassis fixing the last of the struts as shown in the Figure; again take care to avoid tightening the screws excessively

*10)Das Gestell fertig montieren, indem man den letzten der Maste befestigt, wie in der Abbildung zu sehen ist. Erneut darauf achten, die Schrauben nicht zu fest anzuziehen.*

10)Compléter le châssis en fixant le dernier pylône comme l'indique la figure ; même dans ce cas il ne faut pas trop serrer les vis

*10)Completare lo chassis fissando l'ultimo dei piloni come mostrato in figura; ancora una volta non serrare eccessivamente le viti*



11) Lift the chassis carefully using a crane or a forklift truck and place it on top of the hoist frame as shown in the Figure

*11)* Das Gestell sorgfältig mit einem Kran oder Gabelstapler geben und über dem Flaschenzuggestell abstellen, wie im Bild zu sehen ist.

11) A l'aide d'une grue ou d'un chariot élévateur soulever le châssis et l'appuyer sur le châssis pour palan comme le montre la figure.

*11) Sollevare con cura mediante una gru o carrello elevatore lo chassis ed appoggiarlo sopra al telaio per paranco come mostrato in figura*



12) Fix the hoist frame to the chassis by means of the 16 M16 bolts and tighten these

*12) Das Flaschenzuggestell mit 16 Schraubbolzen M16 am Gestell befestigen und diese Schrauben gut anziehen.*

12) Fixer le châssis du palan sur le châssis au moyen des 16 boulons M16 en veillant à bien les serrer

*12) Fissare il telaio paranco allo chassis mediante i 16 bulloni M16 e serrare bene questi ultimi*



13) Fix the beam 3 for the hoist on hoist frame using the 8 M20 bolts and tighten the assembly firmly

*13) Den Balken 3 für den Flaschenzug mit den 8 Schraubbolzen M20 am Flaschenzugrahmen befestigen und alles gut anziehen.*

13) Fixer la poutre 3 pour le palan sur le châssis du palan au moyen des 8 boulons M20 et bien serrer le tout

*13) Fissare la trave **3** per il paranco sul telaio paranco mediante gli 8 bulloni M20 e serrare bene il tutto*



14) Using a suitable crane or forklift truck lift the entire block A and position it on top of the hopper frame B taking care to align the holes of the connecting flanges

*14) Den ganzen Block A mit Kran oder Gabelstapler heben und über dem Trichtergestell B anordnen, wobei darauf zu achten ist, dass die Löcher der Verbindungsflansche übereinander zu liegen kommen.*

14) A l'aide d'une grue ou d'un chariot élévateur soulever tout l'ensemble **A** et le poser au-dessus du châssis trémie **B** en veillant à faire coïncider les orifices des brides d'accouplement

*14) Mediante gru o carrello elevatore adeguato sollevare l'intero blocco **A** e posizionarlo sopra il telaio tramoggia **B** avendo cura di far combaciare i fori delle flangie di collegamento*



15) Insert the connecting bolts and tighten them

*15) Die Verbindungsschrauben einstecken und gut anziehen.*

15) Introduire les boulons d'accouplement et les serrer

*15) Inserire i bulloni di collegamento e serrarli bene*



16) Now tighten all the bolts of the chassis and carry out a final check on all the bolts to make sure they are tightened perfectly

*16) Nun alle Schraubbolzen des Gestells gut anziehen und die anschließende Kontrolle ausführen, um sicherzugehen, dass alle Schraubteile fest angezogen sind.*

16) Après quoi bien serrer tous les boulons du châssis et effectuer un contrôle final du serrage correct de tous les boulons

*16) Provvedere ora a serrare bene tutti i bulloni dello chassis ed eseguire un controllo finale sul corretto serraggio di tutta la bulloneria*

| | | | |
|---|---|---|---|
| **Important:**<br>use a torque wrench to ensure the following tightening torques:<br>M16 screws: 225 Nm<br>M18 screws: 439 Nm | **Wichtig:**<br>Einen Drehmomentschlüssel benutzen, um die folgenden Anzugsdrehmomente zu erhalten:<br>Schrauben M16: 225 Nm<br>Schrauben M18: 439 Nm | **Important :**<br>utiliser une clé dynamométrique afin de garantir les couples de serrage suivant :<br>Vis M16 : 225 Nm<br>Vis M18 : 439 Nm | **Importante:**<br>utilizzare una chiave dinanometrica al fine di garantire le seguenti coppie di serraggio:<br>Viti M16: 225 Nm<br>Viti M18: 439 Nm |

| GENERAL WARNINGS | ALLGEMEINE WARNHINWEISE | CONSIGNES GENERALES | AVVERTENZE GENERALI |
|---|---|---|---|
| 1.1 All the connections to the supplies must be carried out according to existing safety regulations. | 1.1 Alle Anschlüsse an das Stromnetz müssen gemäß der geltenden Sicherheitsbestimmungen ausgeführt werden. | 1.1 Tous les raccordements au secteur électrique doivent être réalisés conformément aux normes de sécurité en vigueur. | 1.1 Tutti i collegamenti alla rete di alimentazione devono essere eseguiti secondo le norme di sicurezza vigenti. |
| 1.2 Before start-up, check the efficiency of the earth connection. | 1.2 Vor der Inbetriebnahme ist der Erdungsanschluß auf Funktionstüchtigkeit zu prüfen. | 1.2 Avant la mise en route vérifier la mise à la terre et son efficacité. | 1.2 Prima dell' avviamento assicurarsi del perfetto collegamento a terra verificandone l' efficienza. |
| 1.3 Check the supply voltage and cycles to ensure these correspond with the values on the motor rating plate. | 1.3 Sicherstellen, daß Spannung und Frequenz den Werten auf dem Typenschild des Motors entsprechen. | 1.3 Contrôler que la tension et la fréquence d'alimentation correspondent aux valeurs de plaque du moteur. | 1.3 Controllare che tensione e frequenza di alimentazione siano corrispondenti ai valori di targa del motore. |
| 1.4 Provide protection against overload; ensure the calibrated values of the thermal or magnetothermal current do not exceed those on the rating plate. | 1.4 Einen Überlastschutz vorsehen, dabei auch prüfen, ob die Einstellwerte der Thermorelais oder Motorschutzschalter nicht über dem Wert des Typenschilds liegen. | 1.4 Prévoir des protections contre les surcharges, en vérifiant que les valeurs du courant de réglage de l'interrupteur ne dépasse pas ceux de plaque. | 1.4 Prevedere delle protezioni di sovraccarico, verificando che i valori della corrente di taratura del termico o magnetotermico non superino più del 10% quelli di targa. |
| 1.5 The electrical connection must be carried out according to the following sequence:<br>- disconnect the mains supply.<br>- Pass the power cable through the cable gland into the junction box.<br>- make the connections using the accessories provided.<br>- tighten the cable glands completely.<br>- fit the junction box cover taking care to avoid damaging the seal. | 1.5 Der Stromanschluß ist in folgender Reihenfolge vorzunehmen:<br>- Die allgemeine Stromversorgung ausschalten.<br>- Die Speisekabel durch die Kabeldurchführung in das Innere des Anschlußkastens stecken.<br>- Die Anschlüsse mit den vorgesehenen Zubehörteilen vornehmen.<br>- Die Kabeldurchführungen fest anziehen.<br>- Den Kastendeckel montieren und dabei beachten, daß die Dichtung nicht beschädigt wird. | 1.5 Le raccordement électrique doit être effectué dans la séquence ci-dessous:<br>- débrancher l'alimentation électrique générale.<br>- Passer les câbles d'alimentation à travers les serre-câbles, à l'intérieur du boîtier de connexion.<br>- Exécuter les raccordements en utilisant les accessoires prévus à cet effet.<br>- Serrer à fond les serre-câbles.<br>- Monter le couvercle du boîtier en faisant attention à ne pas endommager le joint. | 1.5 Il collegamento elettrico dovrà essere eseguito in sequenza:<br>- disinserire l' alimentazione elettrica generale.<br>- inserire i cavi di alimentazione attraverso i pressacavi, all' interno della scatola di collegamento.<br>- eseguire i collegamenti utilizzando gli appositi accessori.<br>- serrare a fondo i pressacavi.<br>- montare il coperchio della scatola facendo attenzione a non danneggiare la guarnizione. |
| **CAUTION !**<br>**The cross section of the power cable and safety cable must be defined by the buyer. The user must provide a differential automatic circuit-breaker upline of the main switch.** | **ACHTUNG !**<br>**Für die Stromkabel- und Sicherungskabelquer-schnitte ist der Betreiber verantwortlich. Der Betreiber muß stromauf vom Hauptschalter der Anlage einen Fehlerstrom-Schutzschalter vorsehen.** | **ATTENTION !**<br>**Le dimensionnement des câbles d' alimentation et du câble de protection est sous la responsabilité de l'acheteur. L' utilisateur doit appliquer en amont de l'interrupteur général de l'installation, un interrupteur automatique différentiel.** | **ATTENZIONE !**<br>**Il dimensionamento dei cavi di alimentazione e del cavo di protezione è responsabilità dell' acquirente. L' utilizzatore deve applicare a monte dell' interruttore generale dell' impianto, un interruttore automatico differenziale.** |
| **PRECAUTION**<br>**Connecting the machine to the mains supply must be done in accordance with the existing regulations of the country where the machine is being used.** | **VORSICHTMASSNAHME**<br>**Der Anschluß der Ausrüstung an das Netz muß unter Beachtung der Normen ausgeführt werden, die im Land des Anwenders gelten.** | **PRECAUTION**<br>**Le raccordement de la machine au secteur doit être effectué dans le respect de la réglementation en vigueur dans le pays de l'utilisateur.** | **PRECAUZIONE**<br>**Nel collegare la macchina alla rete, rispettare la regolamentazione in vigore nel paese dell' utilizzatore.** |

**PNEUMATIC ACTUATORS KIT - *BAUSATZ PNEUMATISCHE AUSTRAGHILFEN***
**KIT ACTIONNEURS PNEUMATIQUES - *KIT ATTIVATORI PNEUMATICI***

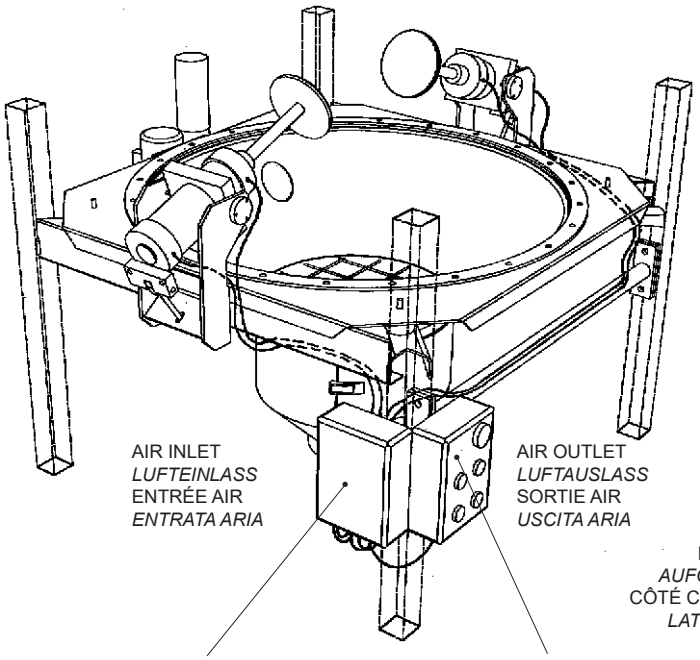


**CYLINDER INFEED PIPING PATH**
***VERLAUF DER ZYLINDERVERSORGUNGSLEITUNGEN***
**PARCOURS TUBES ALIMENTATION CYLINDRES**
***PERCORSO TUBI ALIMENTAZIONE CILINDRI***

**ELECTRICAL DATA - *ELEKTRISCHE DATEN***
**CARACTÉRISTIQUES ÉLECTRIQUES - *DATI ELETTRICI***

**Mains Voltage - *Betriebsspannung***
**Tension d'alimentation - *Tensione di alimentazione***

| | |
|---|---|
| Line: Three-phase 400V + Earth<br>*Leitung: dreiphasig 400V + Erde*<br>Ligne: Troisphase 400V + Terre<br>*Linea: Trifase 400V + Terra* | |
| Auxiliaries:<br>*Steuerspannung:*<br>Auxiliaires:<br>*Ausiliari:* | 110VAC<br>*110V WS*<br>110VCA<br>*110vca* |

**Mains frequency - *Betriebsfrequenz***
**Fréquence d'alimentation - *Frequenza di alimentazione***

| | |
|---|---|
| Cycles:<br>*Frequenz:*<br>Fréquence:<br>*Frequenza:* | **50/60 Hz** |

**Consumption - Verbrauch - Consommation - *Consumi***

| | |
|---|---|
| Max. Ampere:<br>*Max. Stromaufnahme:*<br>Ampère maxi:<br>*Amper max:* | **2 A** |

**PNEUMATIC DATA - *PNEUMATISCHE DATEN***
**CARACTÉRISTIQUES PNEUMATIQUES - *DATI PNEUMATICI***

| | |
|---|---|
| Inlet pressure:<br>*Eingangsdruck:*<br>Pression d'entrée:<br>*Pressione d'ingresso:* | **6 bar** |
| Operating pressure:<br>*Betriebsdruck:*<br>Pression de service:<br>*Pressione d'esercizio:* | **6 bar max** |
| Air consumption per cycle:<br>*Luftverbrauch pro zyklus:*<br>Consomm. d'air par cycle:<br>*Consumo d'aria per ciclo:*<br>*(AVANTI / INDIETRO)* | **66,72 Nl/cycle** |

## ELECTRIC CONTROL PANEL - *ELEKTROSCHALTKASTEN* - ARMOIRE ÉLECTRIQUE - *QUADRO ELETTRICO*

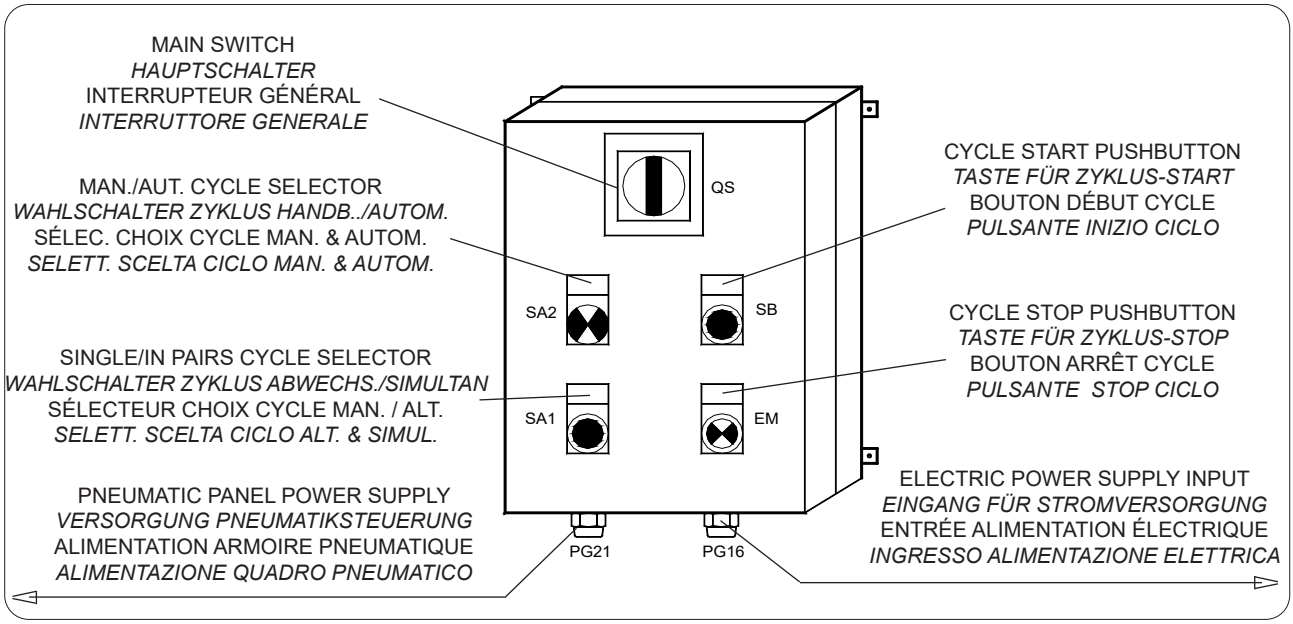


| ITEM *POS.* | DESCRIPTION - *BENENNUNG* - DÉSIGNATION - *DENOMINAZIONE* | COLOUR - *FARBE* COULEUR - *COLORE* |
|---|---|---|
| **QS** | MAIN SWITCH - *HAUPTSCHALTER*<br>INTERRUPTEUR GÉNÉRAL - *INTERRUTTORE GENERALE* | RED – YELLOW<br>*ROT –GELB*<br>ROUGE –JAUNE<br>*ROSSO - GIALLO* |
| **SB** | CYCLE START PUSHBUTTON - *TASTE FÜR ZYKLUS-START*<br>BOUTON DÉBUT CYCLE - *PULSANTE INIZIO CICLO* | BLACK - *SCHWARZ*<br>NOIR - *NERO* |
| **EM** | CYCLE STOP PUSHBUTTON - *TASTE FÜR ZYKLUS-STOP*<br>BOUTON ARRÊT CYCLE - *PULSANTE STOP CICLO* | RED - *ROT*<br>ROUGE - *ROSSO* |
| **SA1** | SINGLE/IN PAIRS CYCLE SELECTOR - *WAHLSCHALTER ZYKLUS ABWECHSELND - SIMULTAN*<br>SÉLECTEUR CHOIX CYCLE ALT. - SIMULT. - *SELETTORE SCELTA CICLO ALTERNATIVO -SIMULTANEO* | BLACK - *SCHWARZ*<br>NOIR - *NERO* |
| **SA2** | MAN./AUT. CYCLE SELECTOR - *WAHLSCHALTER ZYKLUS MANUELL - AUTOMATISCH*<br>SÉLECTEUR CHOIX CYCLE MAN. - AUT. - *SELETTORE SCELTA CICLO MANUALE - AUTOMATICO* | BLACK - *SCHWARZ*<br>NOIR - *NERO* |

The control board comprises a box with front door on which the controls and operation indicators are fitted.

**Description of controls and indicators:**
SB/EM = PUSHBUTTONS:
controls with single operating mode
SA = SELECTORS:
double-function switches
QS = SWITCHES:
controls with two possible positions.

Die elektrische Steuerung ist mit einer Tür ausgestattet, auf der sich die Bedienelemente und Kontrollanzeigen befinden.

**Beschreibung der Bedienelemente und Kontrollanzeigen:**
SB/EM = DRUCKKNÖPFE:
Bedienelemente mit nur einer Betriebsart.
SA = WAHLSCHALTER:
Bedienelemente mit zwei Betriebsarten.
QS = SCHALTER:
Bedienelemente mit zwei möglichen Positionen.

L`armoire électrique de commande est constituée d'un boîtier à porte frontale sur lequel sont montés les commandes et témoins de fonctionnement.

**Description commandes et indicateurs:**
SB / EM = BOUTONS: commandes avec un seul mode de fonctionnemnt.
SA= SÉLECTEURS: commutateurs à deux fonctions.
QS=INTERRUPTEURS commandes à deux positions possibles.

Il quadro elettrico di comando è costituito da una cassetta con portello frontale sul quale sono montati dei comandi ed indicatori di funzionamento.

**Descrizione comandi ed indicatori:**
SB / EM =PULSANTI:
sono comandi con un'unica modalità di funzionamento
SA=SELETTORI:
sono commutatori a due funzioni.
QS=INTERRUTTORI:
sono comandi con due posizioni possibili.

## PNEUMATIC PANEL - *PNEUMATIKSTEUERUNG* - ARMOIRE PNEUMATIQUE - *QUADRO PNEUMATICO*

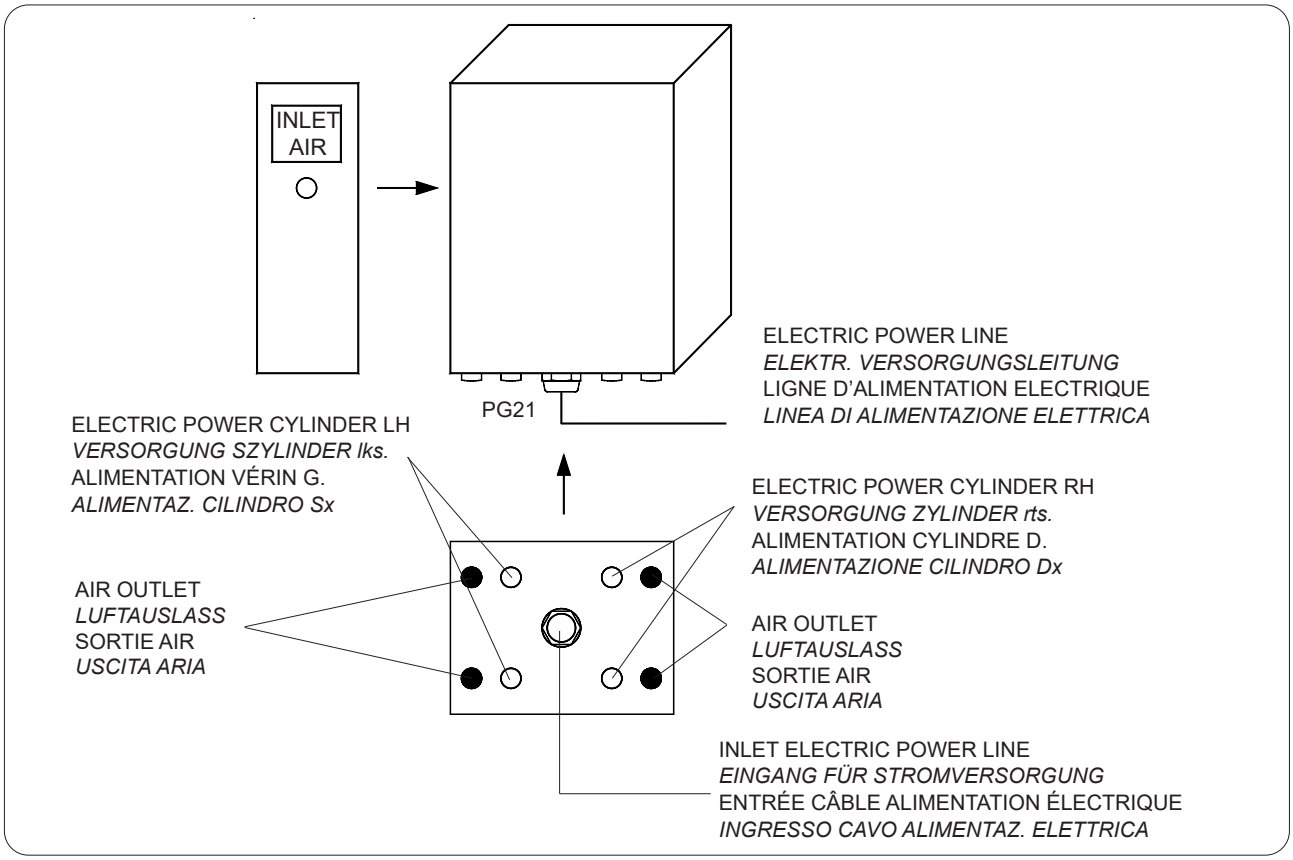


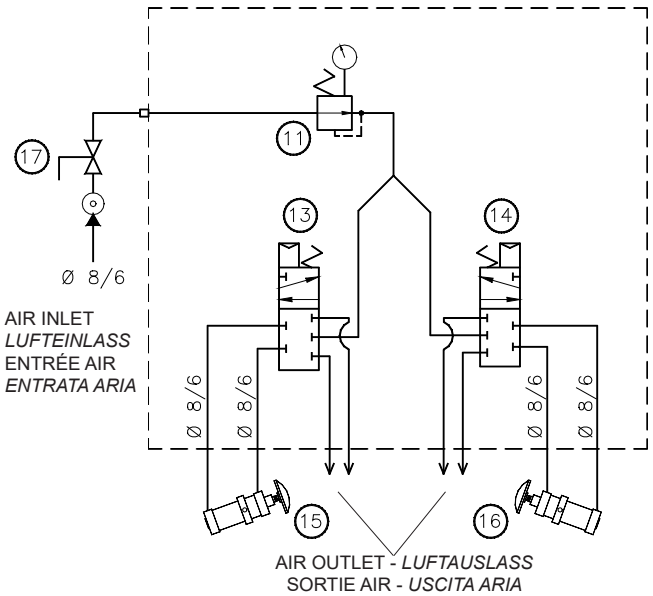


| ITEM *POS.* | DESCRIPTION - *BENENNUNG* - DÉSIGNATION - *ENOMINAZIONE* |
|---|---|
| 13/14 | 5 WAY SOLENOID VALVE - *5 WEGE-MAGNETVENTIL*<br>ÉLECTROVALVE À 5 VOIES - *ELETTROVALVOLA 5 VIE* |
| 11 | PRESSURE REDUCER - *DRUCKMINDERER*<br>RÉDUCTEUR DE PRESSION - *RIDUTTORE DI PRESSIONE* |
| 15-16 | PNEUMATIC ACTIVATORS - *PNEUMATISCHE AUSTRAGHILFEN*<br>ACTIVATEURS PNEUMATIQUES - *ATTIVATORI PNEUMATICI* |
| 17 | 1/2" MANUAL BALL VALVE ( NON STANDARD ) - *1/2" KUGELHAHN MANUELL ( KEIN STANDARD )*<br>VANNE SPHÉRIQUE MANUELLE 1/2" ( NON STANDARD ) - *VALVOLA A SFERA MANUALE 1/2" ( NON STANDARD )* |

## TERMINAL BOARD ELECTRIC CONTROL PANEL - PNEUMATIC CONTROL PANEL
## *KLEMMENLEISTE ELEKTROSTEUERUNG - PNEUMATIKSTEUERUNG*
## BORNIER ARMOIRE ÉLECTRIQUE - ARMOIRE PNEUMATIQUE
## *MORSETTIERA QUADRO ELETTRICO - QUADRO PNEUMATICO*

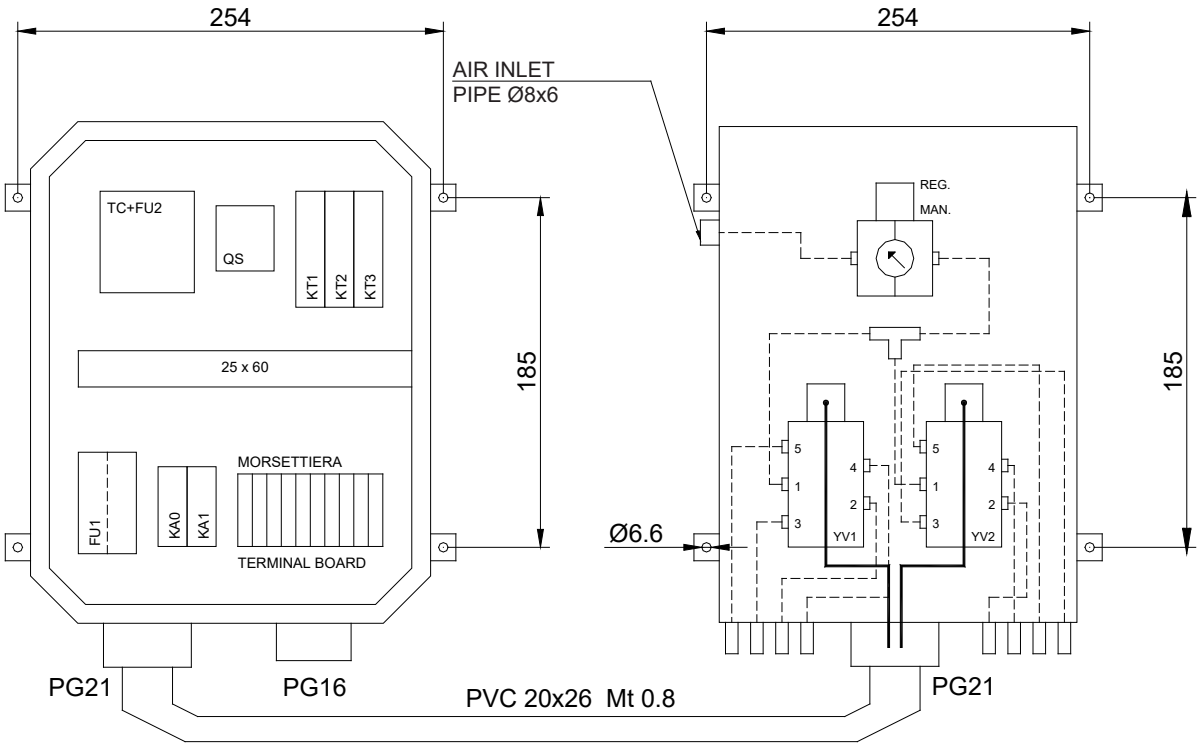


TERMINAL BOARD
*KLEMMENLEISTE*
PLAQUE À BORNES
*MORSETTIERA*

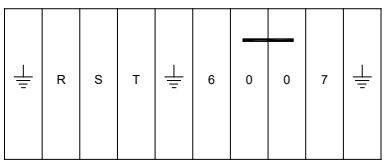

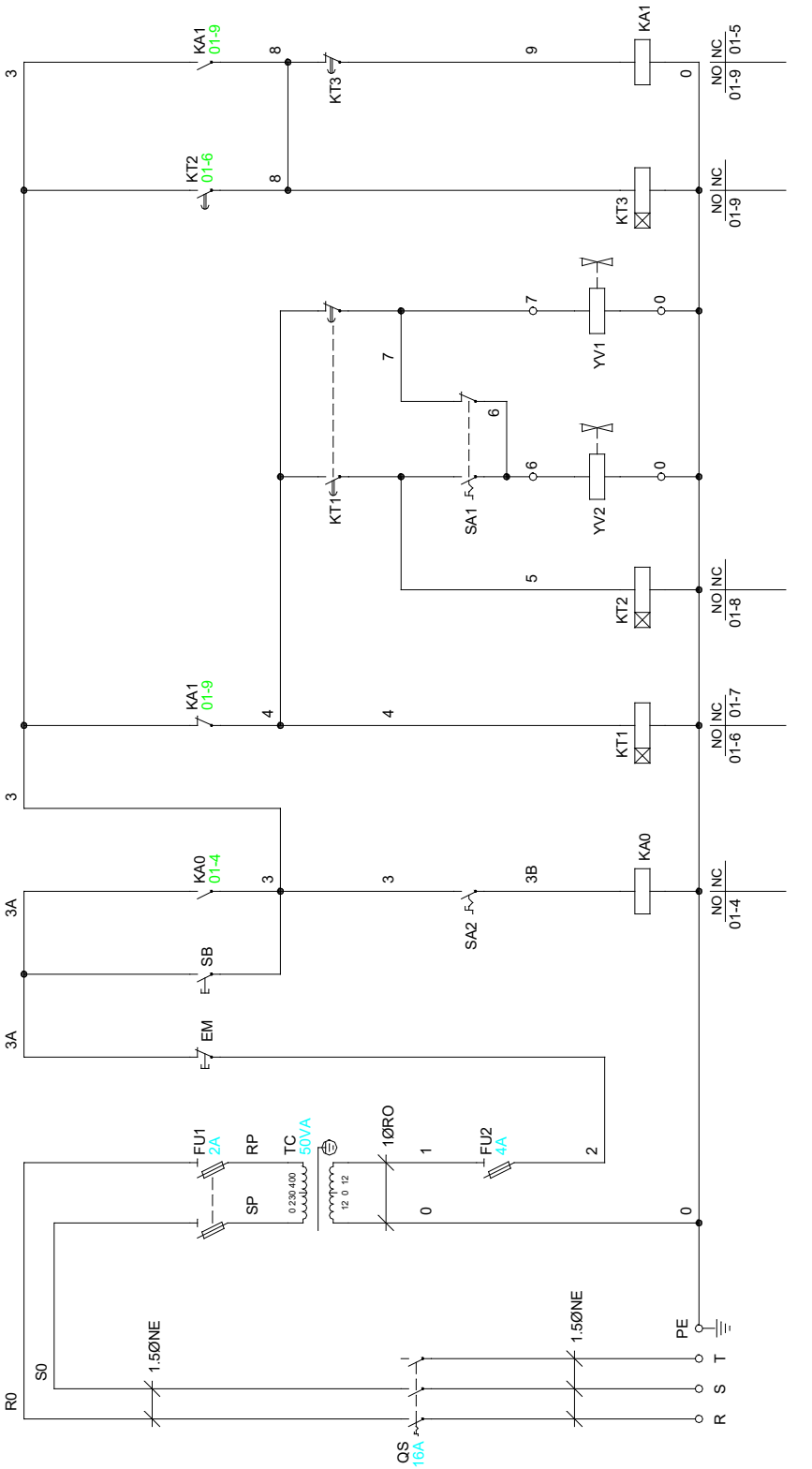


**NOTE:** The magneto-thermal differential cutout switch for this electric panel must be provided by the final Customer.

***HINWEIS:*** *Der Fehlerstrom-Schutzschalter für diesen Schaltkasten ist eine Leistung, für die der Endanwender zu sorgen hat (gehört nicht zum Lieferumfang).*

**REMARQUE:** L'interrupteur de protection magnétothermique différentielle de cette armoire électrique est à la charge du Client utilisateur final.

***NOTE:*** *La protezione magnetotermica differenziale di questo quadro elettrico é a carico del Cliente utilizzatore finale.*

| WIRING DIAGRAM CODE<br>*KURZBEZEICHNUNG STROMLAUFPLAN*<br>ENTRÉE CÂBLE ALIMENTATION ELECT.<br>*SIGLA SCHEMA ELETTRICO* | Q.ty<br>*Menge*<br>Q.té<br>*Q.tà* | DESCRIPTION<br>*BENENNUNG*<br>DÉSIGNATION<br>*DENOMINAZIONE* | TYPE<br>*TYP*<br>TYPE<br>*TIPO* | BRAND<br>*FABRIKAT*<br>MARQUE<br>*MARCA* |
|---|---|---|---|---|
| | 2 | Box 300x220x120 mm<br>*Kunststoffgehäuse 300 x 320 x 120 mm*<br>Boîtier plastique 300x220x120 mm<br>*Scatola plastica 300x220x120 mm* | GW44209 | GEWISS |
| | 2 | Internal panel<br>*Bodenplatte*<br>Plaque de fond<br>*Piastra di fondo* | GW44617 | GEWISS |
| | 8 | Fixing support<br>*Befestigungsbügel*<br>Étrier de fixation<br>*Staffa di fissaggio* | GW44621 | GEWISS |
| | | | | |
| QS | 1 | Main switch 3X16A<br>*Schalter 3 x 16 A*<br>Interrupteur 3x16 A<br>*Interruttore 3X16A* | LA216-1753 | BRETER |
| QS | 1 | Yellow/red dial<br>*Gelbrote Anzeige*<br>Cache jaune/rouge<br>*Mostrina giallo/rossa* | LFS2-N.6.1753 | BRETER |
| QS | 1 | Main switch extension<br>*Verlängerung Kunststoffwelle*<br>Rallonge arbre plastique<br>*Prolunga albero plastica* | LA2-G2853 | BRETER |
| TC | 1 | Transformer 50VA<br>*Transformator 50 VA*<br>Transformateur 50 VA<br>*Trasformatore 50VA* | 50WP/G+F | ITALTRAFO |
| | | | | |
| FU1 | 1 | BiPole fuse holder<br>*Zweipoliger Sicherungshalter*<br>Porte fusible bipolaire<br>*Portafusibile bipolare* | 24212 | ELETTRO ITALIA |
| FU1 | 2 | Fuse GL 10x38 2A<br>*Sicherung GL 10x38 2A*<br>Fusible GL 10x38 2A<br>*Fusibile GL 10x38 2A* | CH10-2A | |
| FU2 | 1 | Glass Fuse 4A<br>*Glassicherung 4A*<br>Fusible de verre 4A<br>*Fusibile di vetro 4A* | 4A5X20 | |
| | | | | |
| KA0 KA1 | 2 | Base for 2-contact relay<br>*Sockel für Relais 2SC*<br>Socle pour rélais 2SC<br>*Zoccolo per relè 2SC.* | 95.45 | FINDER |
| KA0 KA1 | 2 | *2-contact relay 24VAC*<br>*Relais mit 2 Kontakten 24V WS*<br>*Rélais 2 contacts 24VCA*<br>*Relè 2 contatti 24VAC* | 40.52.8.024 | FINDER |
| KT1 KT2 KT3 | 3 | Multiscale Timer 24 240VAC/DC<br>*Mehrbereichszeitschalter 24V WS/GS*<br>Temporisateur 24 240VCA<br>*Timer multiscala 24 240VAC/DC* | H3DE-S1 | OMRON |
| SA1 SA2 | 2 | Selector 0-1<br>*Stabiler Wahlschalter 0-1*<br>Sélecteur stable 0-1<br>*Selettore stabile 0-1* | P2T-S120 | OMRON |

| WIRING DIAGRAM CODE<br>*KURZBEZEICHNUNG STROMLAUFPLAN*<br>ENTRÉE CÂBLE ALIMENTIMENTATION ELECT.<br>*SIGLA SCHEMA ELETTRICO* | Q.ty<br>*Menge*<br>Q.té<br>*Q.tà* | DESCRIPTION<br>*BENENNUNG*<br>DÉSIGNATION<br>*DENOMINAZIONE* | TYPE<br>*TYP*<br>TYPE<br>*TIPO* | MAKE<br>*FABRIKAT*<br>MARQUE<br>*MARCA* |
|---|---|---|---|---|
| SB | 1 | Black button<br>*Schwarze Taste*<br>Bouton noir<br>*Pulsante nero* | P2T-B102 | LOVATO |
| EM | 1 | Red button<br>*Rote Taste*<br>Bouton rouge<br>*Pulsante rosso* | P2T-B2104 | LOVATO |
| | 3 | Contact 1NA<br>*Kontakt 1NA*<br>Contact 1NA<br>*Contatto 1NA* | M2T-C10 | LOVATO |
| | 2 | Contact 1NA<br>*Kontakt 1S*<br>Contact 1NA<br>*Contatto 1NA* | M2T-C01 | LOVATO |
| HL0 SB2 | 1 | Lamp BA9S 30V<br>*Lampe BA9S 30V*<br>Lampe BA9S 30V<br>*Lampadina BA9S 30V* | BA9S 30V | |
| SA1 SA2 SB EM | 4 | Plate holder<br>*Schildhalter*<br>Porte plaquette<br>*Porta targhetta* | PTAR22 | MODERNO<br>TECNICA |
| SA1 SA2 SB EM | 4 | Glass<br>*Glas*<br>Verre<br>*Vetrino* | T1527V | MODERNO<br>TECNICA |
| | | | | |
| | 7 | Spring terminal ZDU 2.5<br>*Klemme mit Feder ZDU 2.5*<br>Bornier à ressort ZDU 2.5<br>*Morsetto a molla ZDU 2.5* | 160851 | WEIDMULLER |
| | 3 | Spring ground term. ZPE 2.5<br>*Erdungsklemme mit Feder ZPE 2.5*<br>Borner de terre à ressort ZPE 2.5<br>*Morsetto terra a molla ZPE 2.5* | 160864 | WEIDMULLER |
| | 1 | Terminal plate ZDU 2.5<br>*Klemmenleiste ZDU 2.5*<br>Plaque à cosse ZDU 2.5<br>*Piastra terminale ZDU2.5* | 160874 | WEIDMULLER |
| | 2 | Terminal lock ZEW35<br>*Klemmensperre ZWE35*<br>Serre borne ZWE35<br>*Ferma morsetto ZEW35* | 954000 | WEIDMULLER |
| | | | | |
| | 1 | Cable-press PG16<br>*Kabelverschraubung PG16*<br>Serre fil PG16<br>*Pressacavo PG16* | POP-PG16 | RTA |
| | 2 | Alfa nylon union PG21<br>*Alfa-Nylonanschluss PG21*<br>Raccord alfa Nylon PG21<br>*Raccordo alfa nylon PG21* | 81028 | RTA |
| | 1 | Metal ring PG16<br>*Metallringmutter PG16*<br>Bague en métal PG16<br>*Ghiera metallo PG16* | 86625 | RTA |

| WIRING DIAGRAM CODE<br>*KURZBEZEICHNUNG STROMLAUFPLAN*<br>ENTRÉE CÂBLE ALIMENTATION ELECT.<br>*SIGLA SCHEMA ELETTRICO* | Q.ty<br>*Menge*<br>Q.té<br>*Q.tà* | DESCRIPTION<br>*BENENNUNG*<br>DÉSIGNATION<br>*DENOMINAZIONE* | TYPE<br>*TYP*<br>TYPE<br>*TIPO* | MAKE<br>*FABRIKAT*<br>MARQUE<br>*MARCA* |
|---|---|---|---|---|
| | 2 | Metal ring PG21<br>*Metallringmutter PG21*<br>Bague en métal PG21<br>*Ghiera metallo PG21* | 86626 | RTA |
| | 1 mt | Grey PVC sheath 20x26mm<br>*Graue PVC-Hülle 20x26 mm*<br>Gaine PVC 20x26 mm grise<br>*Guaina PVC 20x26mm grigia* | PVC20GR | RTA |
| | 4 mt | Flame-retardant cable 3x1<br>*Graues flammwidriges Kabel 3x1*<br>Câble antifeu 3x1 gris<br>*Cavo antifiamma 3x1 grigio* | 3x1GR | |
| MAN | 1 | Manometer 0.4 bar 1/8"<br>*Manometer 0,4 bar 1/8"*<br>Manomètre 0,4 bar 1/8"<br>*Manometro 0.4 bar 1/8"* | 0.4 bar 1/8 | WIKA |
| REG | 1 | Pressure regulator<br>*Druckregler*<br>Régulateur de pression<br>*Regolatore di pressione* | MRBIT 1/4-0.4 | METAL WORK |
| REG | 1 | Pressure regulator support<br>*Bügel für Druckregler*<br>Étrier pour régulateur de pression<br>*Staffa per regolatore di pressione* | SF 1/4 | METAL WORK |
| YV1 YV2 | 2 | Solenoid valve SOV 35 SOS OO<br>*Magnetventil SOV 35 SOS OO*<br>Électrovanne SOV 35 SOS OO<br>*Elettrovalvola SOV 35 SOS OO* | SOV35SOSOO | METAL WORK |
| YV1 YV2 | 2 | Coil for solenoid valve<br>*Spule für Magnetventil*<br>Bobine pour électrovanne<br>*Bobina per elettrovalvola* | 22D8-2450 | METAL WORK |
| YV1 YV2 | 2 | Connector for coil<br>*Steckverbinder für Spule*<br>Connecteur pour bobine<br>*Connettore per bobina* | 22STD | METAL WORK |
| | 5 | Union pipe Ø8<br>*Wanddurchführung Rohr Ø8*<br>Raccord passe paroi tube Ø8<br>*Raccordo passaparete tubo Ø8* | RL108 | METAL WORK |
| | 4 | Leak SFE 1/4"<br>*Entlüftung SFE 1/4"*<br>Évent SFE 1/4"<br>*Sfiato SFE 1/4"* | SFE-1/4 | METAL WORK |
| | 4 | Female union 1/4" pipe Ø8<br>*Anschluß 1/4" Rohr Ø8*<br>Raccord femelle 1/4" tube Ø8<br>*Raccordo femmina 1/4" tubo Ø8* | RL2-8-1/4 | METAL WORK |
| | 12 | Union 90x8 1/4" pipe Ø8<br>*Anschluß 90x8 1/4" Rohr Ø8*<br>Raccord 90x8 1/4" tube Ø8<br>*Raccordo 90x8 1/4" tubo Ø8* | RL34-8-1/4 | METAL WORK |
| | 1 | T-Union pipe Ø8<br>*T-Stück Rohr Ø8*<br>Raccord en Té tube Ø8<br>*Raccordo a T tubo Ø8* | RL228 | METAL WORK |
| | 3 mt | Light blue Elastolan pipe 8x6<br>*Hellblauer Elastolan-Schlauch 8x6*<br>Tube Elastolan 8x6 bleu ciel<br>*Tubo Elastolan 8x6 azzurro* | ELASTOLAN<br>8x6AZ | METAL WORK |

**PNEUMATIC POWER**

The compressed air coupling on the equipment is achieved by means of a hose connector pipe having internal diameter 8x6mm.

**COMPRESSED AIR PRESSURE**

- Minimum 5 bar
- Maximum 6 bar

It is advisable to connect a manual cut-off device on the air infeed line (ball valve or similar) to facilitate subsequent maintenance operations.

**DRUCKLUFTVERSORGUNG**

Die Einleitung der Druckluft auf die Vorrichtung erfolgt mit einem Gummistutzen mit Innendurchmesser 8x6 mm.

**DRUCK DER DRUCKLUFT**

- Minimum 5 bar
- Maximum 6 bar

Auf die Zufuhrleitung der Druckluft sollte ein von Hand zu betätigendes Absperrorgan (Kugelventil oder ähnliches) installiert werden, das die anschließenden Wartungsarbeiten vereinfacht.

**ALIMENTATION PNEUMATIQUE**

Le branchement de l'air comprimé sur les filtres est réalisé par un tube de diamètre 8x6 mm.

**PRESSION AIR COMPRIMÉ**

- Minimum 5 bar
- Maximum 6 bar

Il est conseillé d 'insérer sur la circuit d' alimentation de l'air un dispositif de coupure manuelle (robinet à boisseau ou similaire) pour faciliter les opérations d' entretien.

**ALIMENTAZIONE PNEUMATICA**

L' innesto dell' aria compressa sulla macchina è realizzato da un tubo portagomma di diametro 8x6 mm.

**PRESSIONE ARIA COMPRESSA**

- Minimo 5 bar
- Massimo 6 bar

É consigliabile inserire sulla linea di alimentazione della aria un organo di intercettazione manuale (valvola a sfera o simile) che faciliterà le successive operazioni di manutenzione.




The compressed air must be:

**1- Clean**
Free of impurities which may damage the solenoid valve.

**Warning:** Before connecting the compressed air to the equipment, empty the piping.

**2 - Dehumidified**
However, it is advisable to use a condensate trap.

**3 - Oil-free**
The presence of oily substances in the air may cause precocious, irreversible clogging.

Die Druckluft muß sein:

**1- Sauber**
Sie darf keinen Schmutz enthalten, der das Magnetventil des Filters beschädigen könnte.

**Achtung:** Vor dem Anschluß der Druckluft an die Vorrichtung die Leitungen entleeren.

**2 - Trocken**
Es sollte aber besser ein Kondensatabscheider benutzt werden.

**3 - Ölfrei**
Das Vorhandensein von Ölteilchen in der Druckluft würde unweigerlich zum vorzeitigen Verstopfen führen.

L' air comprimé doit être :

**1- Propre**
Sans impuretés pouvant endommager l'électrovanne du filtre

**Attention:** avant de brancher l'air comprimé au filtre vider les tuyauteries

**2 - Déshumidifié**
Il faut prévoir l'utilisation d'un séparateur d'eau de condensation.

**3 - Déshuilé**
La présence de substances huileuses dans l'air constitue une cause de colmatage précoce et irréversible.

L' aria compressa deve essere:

**1- Pulita**
Esente da impurità che potrebbe danneggiare l' elettrovalvola

**Attenzione:** prima di collegare l' aria compressa alla macchina vuotare le tubazioni

**2 - Deumidificata**
E' opportuno comunque prevedere l' utilizzo di un separatore di condensa.

**3 - Disoleata**
La presenza di sostanze oleose nell' aria costituirebbe una causa d' intasamento precoce ed irreversibile.

## PRELIMINARY OPERATIONS PRIOR TO START-UP

Before starting up the plant, it is essential to carry out a series of checks to prevent problems or risks.

Ascertain that all the equipment components are positioned and fixed correctly.

Carefully check all the connections, the rubber hoses and fixtures.

If pneumatic activators are provided, special attention must be paid to the compressed air connections.

### WARNINGS

1) - It is recommended not to operate the motor vibrator when the machine is empty (not even in the test phase) in order to avoid the overheating of said device, as well as to avoid the subsequent possible and irreversible damaging thereof.
2) - In order to ensure the proper operation of the machine, it is advisable to operate the motor vibrator for periods not longer than 10-15 seconds per minute in order to avoid the compaction of the product within the hopper; Please remember that it takes about 40-45 seconds for the masses to completely stop.
3 - For proper functioning of the FIBC unloader, the equipment downline must be capable of removing all the product extracted from the FIBC.
4 - The connection between the outlet spout of the FIBC Unloader and any other equipment positioned downline must be made using a flexible connector to prevent vibrations of the hopper from being transmitted to the equipment.
5 - It is advisable to provide a butterfly valve or slide valve at the hopper outlet in order to prevent outflow of product when the motovibrator stops operating.

## VORBEREITUNG DER INBETRIEBNAHME

Vor der Inbetriebnahme des Systems müssen eine Reihe von Kontrollen vorgenommen werden, um etwaige Probleme oder Risiken zu vermeiden.

Sicherstellen, daß alle Bestandteile der Vorrichtung korrekt aufgestellt und befestigt sind.

Alle Anschlüsse, Gummischläuche und entsprechenden Befestigungen sorgfältig prüfen.

Falls pneumatische Aus-traghilfen vorgesehen sind, ist besonders auf die pneumatischen Anschlüsse zu achten.

### VORSICHT

1) - Es wird empfohlen, den Motorvibrator nicht zu betreiben, wenn die Maschine leer ist (auch nicht in der Testphase), um eine Überhitzung der Vorrichtung zu vermeiden und eine nachfolgende mögliche und irreversible Beschädigung derselben zu vermeiden.
2) - Um den ordnungsgemäßen Betrieb der Maschine zu gewährleisten, ist es ratsam, den Motorvibrator nicht länger als 10-15 Sekunden pro Minute zu betreiben, um die Verdichtung des Produkts im Trichter zu vermeiden; Es ist zu beachten, dass es etwa 40-45 Sekunden dauert, bis die Massen vollständig gestoppt sind.
3 - Für den korrekten Betrieb der Big-Bag-Entleerstation müssen die Geräte stromab unbedingt in der Lage sein, das aus dem Big-Bag entleerte Produkt aufzunehmen.
4 - Der Anschluß zwischen dem Auslauf der Big-Bag-Entleerungsstation und dem stromab eingebauten Gerät ist mittels einer flexiblen Verbindung vorzunehmen, damit die Vibrationen des Trichters nicht auf das Gerät übertragen werden.
5- Am Trichterauslauf sollte ein Flachschieber oder eine Drehklappe vorgesehen werden, damit kein Produkt mehr ausströmt, wenn der Vibrationsmotor einge-schaltet wird.

## OPERATIONS PRELIMINAIRES A LA MISE EN MARCHE

Avant d'effectuer la mise en marche de l'installation il est important de faire une série de contrôles pour prévenir les problèmes et les risques.

S' assurer que tous les composants de l'équipement sont bien positionnés et fixés correctement.

Vérifier soigneusement tous les raccordements, les tubes en caoutchouc et leurs fixations.

Si l'équipement est équipé d'activateurs pneumatiques, faire tout particulièrement attention aux raccordements pneumatiques.

### RECOMMANDATIONS

1) - Il est recommandé de ne pas utiliser le vibrateur moteur lorsque la machine est vide (même pendant la phase de test) afin d'éviter la surchauffe dudit dispositif et d'éviter tout endommagement ultérieur éventuel et irréversible de celui-ci.
2) - Afin de garantir le bon fonctionnement de la machine, il est conseillé de faire fonctionner le vibrateur moteur pendant des périodes ne dépassant pas 10-15 secondes par minute afin d'éviter le compactage du produit dans la trémie; S'il vous plaît rappelez-vous qu'il faut environ 40-45 secondes pour que les masses s'arrêtent complètement.
3 - Pour un bon fonctionnement du vide-sac il est indispensable que les machines en aval soient en mesure d'évacuer le produit extrait des sacs.
4 - La liaison à la bouche de sortie du vide-sacs et de toute machine placée en aval doit être réalisée à travers un raccord flexible de manière à éviter que les vibrations de la trémie soient transmises à l'équipement.
5 - Il est conseillé de prévoir en sortie de la trémie une vanne papillon ou une vanne à guillotine pour éviter la sortie de produit lors de l'arrêt du fonctionnement du moto-vibrateur.

## OPERAZIONI PRELIMINARI ALL' AVVIAMENTO

Prima di effettuare l' avviamento dell' impianto è importante che vengano eseguiti una serie di controlli al fine di prevenire problemi o rischi.

Accertarsi che tutti i componenti della macchina siano collocati in modo opportuno e correttamente fissati.

Verificare accuratamente tutti gli allacciamenti, i tubi gomma ed i relativi fissaggi.

Nel caso siano previsti gli attivatori pneumatici porre particolare attenzione ai collegamenti pneumatici.

### AVVERTENZE

1) - Si raccomanda di non far funzionare mai il motovibratore a macchina vuota (anche in fase di collaudo) onde evitare il rischio di surriscaldamento dello stesso e conseguente possibile danneggiamento irreversibile dello stesso.
2) - Per un corretto funzionamento della macchina si consiglia di far funzionare il motovibratore per intervalli di tempo non superiori a 10-15 secondi ogni minuto onde evitare il compattamento del prodotto nella tramoggia; Si ricorda che le masse impiegano circa 40-45 secondi ad arrestarsi completamente.
3 - Per un buon funzionamento dello svuota big bag è indispensabile che le macchine a valle siano in grado di evacuare il prodotto estratto dal big bag.
4 - Il collegamento tra la bocca di scarico dello svuota big bag e qualunque macchina posizionata a valle dovrà essere effettuata mediante un raccordo flessibile in modo da evitare che le vibrazioni della tramoggia vengano trasmesse alla macchina stessa.
5 - Si consiglia di prevedere allo scarico della tramoggia una valvola a farfalla o una serranda a ghigliottina in modo da evitare fuoriuscita di prodotto all' arresto del funzionamento del motovibratore.



1) Lift the fixing cross of the FIBC above the FIBC by means of a forklift truck or a hoist, and fix the slings to the hooks as shown in the Figure.

*1) Das Kreuzstück zur Befestigung des Big-Bag per Gabelstapler oder Flaschenzug über denselben heben und die Gurte zum Einhaken wie in der Abbildung gezeigt befestigen.*

1) Soulever le croisillon de fixation du BIG-BAG au-dessus du BIG-BAG au moyen d'un chariot élévateur ou d'un palan; fixer ensuite les sangles dans les crochets, comme l'indique la figure.

*1) Sollevare la apposita crociera di fissaggio del BIG-BAG al di sopra del BIG-BAG stesso mediante carrello elevatore o paranco, e fissare le bretelle agli agganci come mostrato in figura.*



2) Lift the cross on which the FIBC is hooked by means of a forklift truck or hoist and insert it in the supporting frame.

*2) Mit dem Gabelstapler oder dem Flaschenzug das Kreuzstück heben, in den der Big-Bag eingehängt ist, und ihn in die Tragstruktur einführen.*

2) A l'aide d'un chariot élévateur ou d'un palan soulever le croisillon sur lequel est accroché le BIG-BAG et l'introduire dans la structure de soutien.

2) *Sollevare col muletto o paranco la crociera sul quale è agganciato il BIG-BAG e introdurlo nella struttura di sostegno.*



3) While inserting the frame, take care to fit the tailpieces of the cross in the seats provided (MODEL S).

*3) Beim Einführen darauf achten, dass sich die Vorsprünge des Kreuzstücks innerhalb der vorgesehenen Winkeleisen befinden (MODELL S).*

3) En phase d'introduction, veiller à encastrer les extrémités du croisillon dans leurs sièges (MODELE S).

3) *In fase di introduzione avere cura di incastrare le appendici della crociera nelle apposite sedi (MODELLO S).*



4) In the working position the FIBC must only rest on the seal and not exert its weight on it. If this is not the case, modify the position of the removable frame to obtain proper stretching of the FIBC. In the version with hoist it is sufficient to modify the length of the chain. For other versions, it shall be the responsibility of the plant technician or the user to use structures or forklift trucks of suitable height to ensure this condition.

4) *Es ist wichtig, daß der Big-Bag in der Arbeitsstellung auf der Dichtung nur leicht aufliegt und nicht mit seinem Gewicht auf sie drückt. Andernfalls ist die Einstellung des ausziehbaren Gestells so weit zu verändern bis die richtige Streckung des Big-Bag erreicht ist. In der Version mit Seilwinde muß lediglich die Kettenlänge angepaßt werden. Für die anderen Versionen muss der Anlagenbauer bzw. der Betreiber dafür sorgen, dass Strukturen oder Gabelstapler geeigneter Höhe verwendet werden, die diesen Zustand gewährleisten.*

4) Il est très important que le Big-Bag en position de travail soit seulement appuyé sur le joint et qu'il ne repose pas de tout son poids sur celui-ci. Dans le cas contraire modifier la position du châssis démontable jusqu'à obtenir une juste tension du Big-Bag. Dans la version à palan il suffit de modifier la longueur de la chaîne. Pour les autres versions, l'installateur ou l'utilisateur devront se servir de structures ou de chariots élévateurs d'une hauteur appropriée pour garantir cette condition.

4) *É molto importante che il BIG-BAG, in posizione di lavoro, sia solo appoggiato sulla guarnizione e che non gravi col proprio peso sulla stessa. In caso contrario modificare la posizione del telaio sfilabile fino ad ottenere un giusto tensionamento del Big-Bag. Nella versione con paranco sarà sufficente modificare la lunghezza della catena. Per le altre versioni sarà cura dell'impiantista o dell'utilizzatore provvedere ad utilizzare strutture o carrelli elevatori di altezza adeguata a garantire questa condizione.*



5) Open the hatch.

5) *Inspektionsklappe öffnen.*

5) Ouvrir la trappe en actionnant le crochet prévu à cet effet.

5) *Aprire il portello agendo sull' apposito gancio.*



6) Extract the FIBC outlet spout and untie the cord to allow the product to start flowing out.

6) *Die Auslaßöffnung des Big-Bag herausziehen und die Verschlußleine öffnen, damit das Produkts langsam herausströmen kann.*

6) Extraire la bouche de sortie du Big-Bag et délacer le cordon de fermeture de manière à faire tomber la première partie de produit.

6) *Estrarre la bocca di scarico del Big-Bag e slacciarne il cordone di chiusura in modo da fare defluire lentamente la prima parte di prodotto.*



7) Close the hatch and start up the motovibrator to begin emptying the FIBC.

7) *Die Klappe wieder verschließen und den Vibrationsmotor starten, um mit der eigentlichen Entleerung zu beginnen.*

7) Fermer la trappe en agissant sur le crochet prévu à cet effet et commencer le vidage en mettant en marche le motovibrateur.

7) *Chiudere il portello agendo sull' apposito gancio ed iniziare lo svuotamento avviando il motovibratore.*

Operation of the motovibra-tor will be cyclic or continuous according to the flow required. At the end of the emptying process, it is advisable to continue to operate the motovibrator for another one or two minutes in order to remove any product remaining in the folds of the FIBC. Do not start up the motovibrator without the FIBC or without product.

**To unload the FIBC empty the hopper completely, then proceed with the operations indicated in reverse order.**

Der Vibrationsmotor arbeitet je nach dem geforderten Durchsatz zyklisch oder im Dauerbetrieb. Am Ende der Entleerphase sollte der Vibrationsmotor noch 1 oder 2 Minuten weiterlaufen, um die Restmenge auszutragen, die in den Sackfalten verblieben ist. Den Vibrationsmotor nicht einschalten, wenn kein Sack oder kein Produkt vorhanden ist.

**Zur Entfernung des Big-Bag den Trichter ganz entleeren, um die beschriebenen Vorgänge dann in umgekehrter Reihenfolge vorzunehmen.**

Le fonctionnement du moto-vibrateur sera cyclique ou continu suivant le débit requis. Il est conseillé, à la fin du vidage, de faire fonctionner le motovibrateur encore 1 à 2 minutes pour extraire le produit qui est resté dans les plis du sac. Ne pas mettre le moto-vibrateur en marche en l'absence de Big Bags ou sans produit.

**Pour décharger le Big-Bag vider complètement la trémie puis procéder dans l'ordre inverse aux opérations indiquées.**

Il funzionamento del motovibratore sarà ciclico o in continuo a seconda della portata richiesta. Si consiglia, al termine dello svuotamento, di far funzionare ancora il motovibratore per 1 o 2 minuti al fine di estrarre l' eventuale prodotto rimasto nelle pieghe del big bag. Non avviare il motovibratore in assenza di Big Bag o senza prodotto.

**Per scaricare il BIG-BAG svuotare completamente la tramoggia poi procedere in senso contrario alle operazioni indicate.**

If, during operation, there is a problem with downflow of the product, the motovibrator can be adjusted, by increasing or decreasing its intensity of vibration.

**PROCEDURES FOR ADJUSTING MOTOVIBRATOR**

The motovibrator installed is of the variable weights type; it is therefore necessary to change the degree of intensity of vibrations according to the method described in the (enclosed) USE AND MAINTENANCE manual supplied by the Manufacturer.

The value of regulation of the motovibrator fitted on the FIBC, is closely linked to the conditions of use.

The adjustment must be made before start-up.

The parameters to be taken into consideration are:

- Type of product;
- Humidity;
- Temperature;
- FIBC storage time;
- Flow rate;
- FIBC dimensions.

The adjustment defined by the Manufacturer during the acceptance test phase is 70%.

If it is necessary to change this value, it is advisable to proceed gradually.

If the results are not satisfactory, before proceeding with another adjustment, empty the product from the hopper in order to avoid residue from previous tests.

**THE OPERATION MUST BE CARRIED OUT EXCLUSIVELY BY QUALIFIED PERSONNEL, WITH THE POWER SUPPLY DISCONNECTED.**

- Remove the side covers after unscrewing the screws.
- Slacken the Allen nut (photo 1) and move the mobile mass (photo 2) to the required position, and tighten all the way after fitting the respective washers.
- Retighten the Allen nut all the way (Photo 3).

The weights must be adjusted perfectly equal and in the same direction on both sides.

Maximum intensity is obtained with the adjustable masses perfectly aligned with the fixed masses.

**Refit the covers, after replacing the OR sealing ring without damaging it.**

**For more information, refer to the vibrator motor manual available on the site www.wamgroup.com.**

Wenn während des Betriebs der Entleerungsstation feststellt wird, daß das Produkt unregelmäßig ausgetragen wird, kann eine Einstellung des Vibrationsmotors vorgenommen werden, indem man die Stärke der Vibrationen erhöht oder verringert.

**VORGEHENSWEISE ZUR EINSTELLUNG DES VIBRATIONSMOTORS**

Der eingebaute Vibrationsmotor hat einstellbare Un-wuchtmassen. Man kann daher die Stärke der Vibrationen nach Bedarf einstellen. Dazu die Beschreibungen der BETRIEBS- UND WARTUNGSANLEITUNG (in der Anlage) beachten, die der Hersteller des Motors liefert.

Der Wert, auf den der Vibrationsmotor eingestellt ist, der in der Big-Bag- Entleerungsstation installiert ist, ist abhängig von den Einsatzbe-dingungen.

Die Einstellung ist vor der Inbetriebnahme vorzunehmen.

Die zu berücksichtigenden Parameter sind:

- Produkttyp;
- Feuchtegehalt;
- Temperatur;
- Lagerzeit des BIG-BAG;
- Durchsatzmenge;
- BIG-BAG-Abmessungen.

Vom Hersteller ist der Motor bei der Abnahmeprüfung auf einen Wert von 70% eingestellt.

Falls dieser Wert geändert werden muß, immer stufenweise vorgehen.

Wenn das Resultat nicht zufriedenstellend ausfällt, vor weiteren Einstellungen das Produkt aus dem Trichter entfernen, um bei weiteren Versuchen keine Restmengen zu haben.

**DER VORGANG DARF NUR DURCH QUALIFIZIERTES PERSONAL UND BEI AUSGESCHALTETER VERSORGUNG AUSGEFÜHRT WERDEN.**

- Die Seitendeckel abnehmen, nachdem man die Schrauben losgedreht hat.
- Die Innensechskantmutter (Bild 1) lockern, das bewegliche Gewicht (Bild 2) in die gewünschte Position bringen und fest anziehen, nachdem man immer die entsprechenden Unterlegscheiben dazwischengelegt hat.
- Die Mutter fest anziehen (Bild 3)

Die Gewichte müssen perfekt gleichmäßig und auf beiden Seiten in der gleichen Richtung eingestellt werden.

Die max. Stärke erhält man, wenn die einstellbaren Gewichte perfekt zu den festen Gewichten ausgerichtet sind.

**Die Deckel wieder montieren. Vorsichtig den O-Ring dazwischen legen, ohne diesen zu beschädigen.**

**Für weitere Informationen ist Bezug auf das Handbuch des Unwuchtmotors auf der Webseite www.wamgroup.com zu nehmen.**

Si pendant le fonctionnement des irrégularités se vérifient dans la descente du produit, on peut effectuer le réglage du motovibrateur, en augmentant ou en diminuant son intensité de vibration.

**PROCEDURES DE REGLAGE DU MOTOVIBRATEUR**

Le motovibrateur installé est à masses variables, donc, s'il s'avère nécessaire de changer le degré d'intensité des vibrations suivre les modalités prévues sur la notice UTILISATION ET ENTRETIEN (ci-joint) fournie par le constructeur.

La valeur de réglage du motovibrateur, monté sur le Big Bag est étroitement lié aux conditions d'utilisation.

Le réglage devra être effectué avant le démarrage.

Les paramètres à prendre en compte sont:

- Type de produit;
- Humidité;
- Température;
- Temps de stockage du BIG-BAG;
- Débit;
- Dimensions du BIG-BAG.

Le réglage prévu par le constructeur en phase de réception, est de 70%.

S'il s'avère nécessaire de modifier cette valeur il est conseillé de procéder graduellement.

Si le résultat n'est pas satisfaisant, avant de faire un nouveau réglage, vider la trémie du produit pour ne pas avoir les résidus des essais précédents.

**L'OPÉRATION DOIT ÊTRE EXÉCUTÉE UNIQUEMENT PAR DU PERSONNEL QUALIFIÉ ET AVEC L'ALIMENTATION DÉBRANCHÉE.**

- Déposer les couvercles latéraux en dévissant les vis.
- Desserrer le boulon d'Allen (photo 1), déplacer la masse mobile (photo 2) dans la position désirée.
- Resserrer à fond l'écrou à six pans creux (Photo 3)

Les poids doivent être réglés de manière parfaitement identique et dans le même sens de deux côtés.

L'intensité maximale s'obtient avec les poids réglables parfaitement alignés aux poids fixes.

**Remonter le couvercles en montant, sans l'endommager, le joint d'étanchéité OR.**

**Pour tout complément d'informations faire référence au Manuel du motovibrateur repérable sur le site www.wamgroup.com.**

Se durante il funzionamento si riscontrano delle irregolarità nella discesa del prodotto si può effettuare la regolazione del motovibratore, aumentando o riducendo la sua intensità di vibrazione.

**PROCEDURE PER LA REGOLAZIONE DEL MOTOVIBRATORE**

Il motovibratore installato è a masse variabili, pertanto, nel caso si renda necessario variare il grado di intensità delle vibrazioni seguire le modalità previste sul libretto USO E MANUTENZIONE (in allegato) fornito dal Costruttore.

Il valore di regolazione del motovibratore, montato sul big bag, è strettamente legato alle condizioni di utilizzo.

La regolazione dovrà essere effettuata prima dell' avviamento.

I parametri da considerare sono:

- Tipo di prodotto;
- Umidità;
- Temperatura;
- Tempo di stoccaggio del BIG-BAG;
- Portata;
- Dimensioni del BIG-BAG.

La regolazione prevista dal Costruttore in fase di collaudo, è del 70%.

Nel caso si renda necessario modificare tale valore è consigliabile procedere gradualmente.

Se il risultato non è soddisfacente, prima di procedere a una nuova regolazione, svuotare la tramoggia dal prodotto per non avere residui di prove precedenti.

**L'OPERAZIONE DEVE ESSERE ESEGUITA ESCLUSIVAMENTE DA PERSONALE QUALIFICATO E CON ALIMENTAZIONE DISINSERITA.**

- Togliere i coperchi laterali svitando le viti.
- Allentare il dado a brugola (foto 1), spostare la massa mobile (foto 2) nella posizione desiderata.
- Riserrare a fondo il dado a brugola (Foto 3)

Le masse devono essere regolate in modo perfettamente uguale e nello stesso senso in entrambi i lati.

La massima intensità si ottiene con le masse regolabili perfettamente allineate alle masse fisse.

**Rimontare i coperchi, interponendo, senza danneggiarla, la guarnizione OR di tenuta.**

**Per ulteriori informazioni riferirsi al manuale del motovibratore reperibile sul sito www.wamgroup.com**

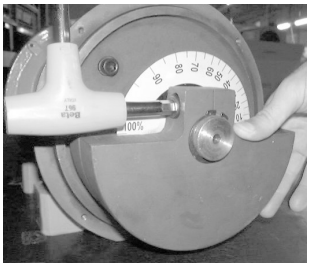

Photo 1 - *Bild 1*
Photo 1 - *Foto 1*

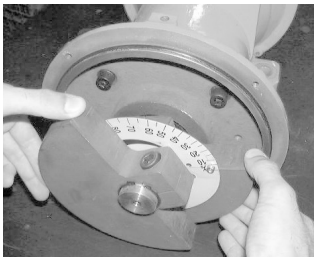

Photo 2 - *Bild 2*
Photo 2 - *Foto 2*

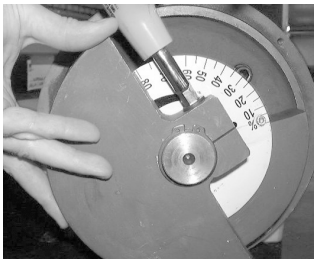

Photo 3 - *Bild 3*
Photo 3 - *Foto 3*

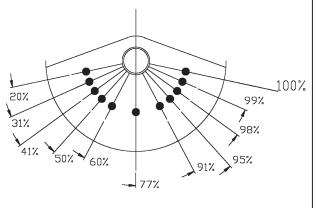


Weights - *Unwuchtmassen*
Masses - Masse

Before starting up the plant, it is necessary to carry out a series of checks in order to prevent problems or risks.
Make sure that all the equipment components are positioned and fitted properly.
Carefully check all the electric and pneumatic connections.

Vor Inbetriebnahme des Systems muß eine Reihe von Prüfungen vorgenommen werden, um Probleme oder Risiken zu vermeiden.
Sicherstellen, daß alle Bestandteile der Vorrichtung korrekt aufgestellt und befestigt wurden.
Alle elektrischen und pneumatischen Anschlüsse sorgfältig prüfen.

Avant de mettre en marche l'installation il est important d'effectuer une série de contrôles afin de prévenir les problèmes ou les risques.
S'assurer que tous les composants de la machine sont placés de la bonne manière et fixés correctement.
Vérifier soigneusement tous les raccordements électriques et pneumatiques.

Prima di effettuare l' avviamento dell' impianto è importante che vengano eseguiti una serie di controlli al fine di prevenire problemi o rischi.
Accertarsi che tutti i componenti della macchina siano collocati in modo opportuno e correttamente fissati.
Verificare accuratamente tutti gli allacciamenti elettrici e pneumatici.

**OPERATION**

The work cycle can be:
- automatic
- manual.

The cylinders may operate:
- in pairs (the two pneumatic hammers move in parallel towards the FIBC).
- In single mode (the two pneumatic hammers move alternately).

**FUNKTIONSWEISE**

Der Betriebszyklus kann wie folgt ablaufen:
- automatisch
- von Hand.

Der Betrieb der Zylinder erfolgt:
- gleichzeitig (die beiden Betätigungsstangen fahren parallel zum BIG-BAG vorwärts)
- abwechselnd (die beiden Betätigungsstangen fahren abwechselnd vorwärts).

**FONCTIONNEMENT**

Le cycle de fonctionnement peut être:
- automatique
- manuel

En outre il est prévu que les cylindres fonctionnement de manière:
- simultanée (les deux percuteurs avancent parallèles vers le BIG-BAF).
- alternée (les deux percuteurs avancent alternativement).

**FUNZIONAMENTO**

Il ciclo di funzionamento può essere:
- automatico
- manuale.

Inoltre è previsto un funzionamento dei cilindri:
- simultaneo (i due percussori avanzano in parallelo verso il BIG-BAG).
- alternato (i due percussori avanzano alternativamente)

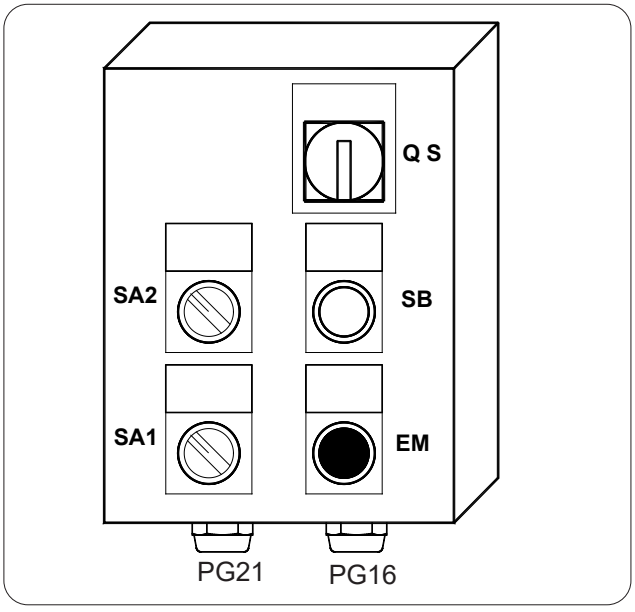


**A - AUTOMATIC - SINGLE operation**

- Turn on the main switch QS to power the panels (electric and pneumatic).
- Open the compressed air on/off valve (to be provided by the Customer) to supply the electric panel.
- Turn selector SA2 to the "AUTOMATIC" position.
- Turn selector SA1 to the "SINGLE" position.
- Set the operating times on timers KT1-KT2-KT3.

**A - Betrieb AUTOMATISCH - ABWECHSELND**

- Den Hauptschalter QS drehen, um die Schalttafeln (elektrisch und pneumatisch) spannungsführend zu machen.
- Das Sperrventil der Druckluft (Installation auf Veranlassung des Kunden) zum Speisen der elektrischen Schalttafel öffnen.
- Den Wahlschalter SA2 auf die Stellung „AUTOMATIK" drehen.
- Den Wahlschalter SA1 auf die Stellung „SINGLE" drehen.
- Auf den Zeitschaltern KT1-KT2-KT3 die Betriebszeiten einstellen.

**A - Fonctionnement AUTOMATIQUE - ALTERNÉ**

- Tourner l'interrupteur général QS pour mettre les armoires sous tension (électrique et pneumatique).
- Ouvrir la vanne d'arrêt de l'air comprimé (installation à la charge du Client) pour alimenter l'armoire électrique.
- Tourner le sélecteur SA2 sur la position «AUTOMATIQUE».
- Tourner le sélecteur SA1 sur la position «SINGLE».
- Programmer les temps de fonctionnement sur les temporisateurs KT1-KT2-KT3

**A - Funzionamento AUTOMATICO - ALTERNATO**

- Ruotare interruttore generale QS per dare tensione ai quadri (elettrico e pneumatico).
- Aprire la valvola di intercettazione aria compressa (installazione a carico del Cliente) per alimentare il quadro elettrico.
- Ruotare il selettore SA2 in posizione "AUTOMATICO".
- Ruotare il selettore SA1 in posizione "SINGLE".
- Impostare i tempi di funzionamento sui timer KT1-KT2-KT3.

- Press the cycle start pushbutton SB (the automatic cycle relay KA0 is energized - solenoid valve YV1 is energized and it pushes activator 1 regulated by timer KT1 forward.
- At the end of the time set on timer KT1, solenoid valve YV2 is energized which pushes activator 2 regulated by timer KT2 forward and at the same time activator 1 is drawn back.
- At the end of the time set on timer KT2, activator 2 is drawn back and at the same time energizes relay KA1 which holds the two activators in pause in the retracted position.
  The pause time is regulated by timer KT3 which, at the end of the set time, allows the next cycle to be started up.
- When the FIBC is completely empty, select push-button EM to stop the working of the system.

- Die Starte Zyklus-Start SB drücken (das Relais Zyklus Automatik KA0 zieht an - das Magnetventil YV1 wird erregt, das den Trieb 1, der vom Timer KT1 aktiviert wird, vorwärts schiebt.
- Nach Ablauf der auf Zeitschalter KT1 eingestellten Zeit erregt sich das Magnetventil YV2, das den Trieb 2, der vom Timer KT2 aktiviert wird, vorwärts schiebt, wobei der Trieb 1 sich gleichzeitig rückwärts bewegt.
- Nach Ablauf der auf Zeitschalter KT2 eingestellten Zeit bewegt sich der Trieb 2 rückwärts und gleichzeitig zieht das Relais KA1 an, das die beiden Triebe in der zurückgefahrenen Position in der Pause hält.
  Die Pausenzeit wird vom Zeitschalter KT3 geregelt, der nach Ablauf der Zeit die Wiederaufnahme des anschließenden Zyklus gestattet.
- Nach dem Entleeren des Big-Bag die Taste EM wählen, um den Betrieb des Systems zu stoppen.

- Appuyer sur le bouton de marche cycle SB (excitation du relais de cycle automatique KA0 - excitation de l'électrovanne YV1 qui pousse vers l'avant l'activateur 1 réglé par le temporisateur KT1).
- Quand le temps programmé sur le temporisateur KT1 est terminé, l'électrovanne YV2 s'excite et pousse vers l'avant l'activateur 2 réglé par le temporisateur KT2 et simultanément l'activateur 1 recule.
- Quand le temps programmé sur le temporisateur KT2 est terminé, l'activateur 2 recule et simultanément s'excite le relais KA1 qui tient en pause les deux activateurs dans la position rentrée.
  Le temps d'arrêt est réglé par le temporisateur KT3 qui à la fin du temps permet la reprise du cycle successif.
- Quand le vidage du Big-Bag est terminé, appuyer sur le bouton EM pour arrêter le fonctionnement du système.

- Premere il pulsante di marcia ciclo SB (si eccita il relè di ciclo automatico KA0 - si eccita l'elettrovalvola YV1 che spinge in avanti l'attivatore 1 regolato dal timer KT1.
- Scaduto il tempo impostato sul timer KT1 si eccita l'elettrovalvola YV2 che spinge in avanti l'attivatore 2 regolato dal timer KT2 e contemporaneamente retrocede l'attivatore 1.
- Scaduto il tempo del timer KT2 l'attivatore 2 retrocede e contemporaneamente si eccita il relè KA1 che tiene in pausa i due attivatori in posizione retratta.
  Il tempo di sosta è regolato dal timer KT3 che a fine tempo consente la ripresa del ciclo successivo).
- Completato lo svuotamento del Big - Bag selezionare il pulsante EM per arrestare il funzionamento del sistema.

**B - AUTOMATIC - IN PAIRS operation**

- Turn on the main switch QS to power the panels (electric and pneumatic).
- Open the compressed air on/off valve (to be provided by the Customer) to supply the electric panel.
- Turn selector SA2 to the "AUTOMATIC" position.
- Turn selector SA1 to the "IN PAIRS" position.
- Set the operating times on timers KT1-KT2-KT3.
- Press the cycle start pushbutton SB (the automatic cycle relay KA0 is energized - solenoid valves YV1 and YV2 are energized and simultaneously push the two pneumatic hammers for the time set on timer KT1.
- At the end of the time set on timer KT1, both pneumatic hammers are retracted and remain in pause for the time set on timer KT3.
- When the FIBC is completely empty, select push-button EM to stop the operation of the system.

**B - Betrieb AUTOMATISCH - SIMULTAN**

- Den Hauptschalter QS drehen, um die (elektrische und pneumatische) Schalttafel spannungsführend zu machen.
- Das Sperrventil der Druckluft öffnen (Installation durch den Kunden), um die elektrische Schalttafel zu speisen.
- Den Wahlschalter SA2 auf die Stellung „AUTOMATIK" drehen.
- Den Wahlschalter SA1 auf die Stellung „IN PAIRS" drehen.
- Die Betriebszeiten auf den Zeitschaltern KT1-KT3 einstellen.
- Die Taste Zyklus Start SB drücken (das Relais Zyklus Automatik KA0 zieht an - die Magnetventile YV1 und YV2 erregen sich, welche die beiden Betätigungsstangen für die auf Zeitschalter KT1 eingestellte Zeit gleichzeitig nach vorn schieben.
- Nach Ablauf der auf dem Zeitschalter KT1 eingestellten Zeit fahren beide Betätigungsstangen zurück und bleiben die auf Zeitschalter KT3 eingestellte Zeit in der Pause).
- Nach Ablauf der Entleerung des Big-Bag die Taste EM wählen, um den Betrieb des Systems anzuhalten.

**B - Fonctionnement AUTOMATIQUE - SIMULTANÉ**

- Tourner l'interrupteur général QS pour mettre les armoires sous tension (électrique et pneumatique).
- Ouvrir la vanne d'arrêt de l'air comprimé (installation à la charge du Client) pour alimenter l'armoire électrique.
- Tourner le sélecteur SA2 sur la position «AUTOMATIQUE».
- Tourner le sélecteur SA1 sur la position «IN PAIRS».
- Programmer les temps de fonctionnement sur les temporisateurs KT1-KT2-KT3.
- Appuyer sur le bouton de marche cycle SB (excitation du relais de cycle automatique KA0 - excitation des électrovannes YV1 et YV2 qui poussent vers l'avant simultanément les deux percuteurs pour la durée programmée sur le temporisateur KT1).
- Quand le temps programmé sur le temporisateur KT1 est terminé, les deux percuteurs reculent et restent en pause pendant le temps programmé sur le temporisateur KT3.
- Quand le vidage du Big-Bag est terminé, appuyer sur le bouton EM pour arrêter le fonctionnement du système.

**B - Funzionamento AUTOMATICO - SIMULTANEO**

- Ruotare interruttore generale QS per dare tensione ai quadri (elettrico e pneumatico).
- Aprire la valvola di intercettazione aria compressa (installazione a carico del Cliente) per alimentare il quadro elettrico.
- Ruotare il selettore SA2 in posizione "AUTOMATICO".
- Ruotare il selettore SA1 in posizione "IN PAIRS".
- Impostare i tempi di funzionamento sui timer KT1-KT3.
- Premere il pulsante di marcia ciclo SB (si eccita il relè di ciclo automatico KA0 - si eccitano le elettrovalvola YV1 e YV2 che spingeranno in avanti contemporaneamente i due percussori per il tempo impostato sul timer KT1.
- Scaduto il tempo impostato sul timer KT1 retrocedono ambedue i percussori restando in pausa per il tempo impostato sul timer KT3).
- Completato lo svuotamento del Big - Bag selezionare il pulsante EM per arrestare il funzionamento del sistema.

**C - MANUAL - IN PAIRS operation**

- Turn on the main switch QS to power the panels (electric and pneumatic).
- Open the compressed air on/off valve (to be provided by the Customer) to supply the electric panel.
- Turn selector SA2 to the “MANUAL” position.
- Turn selector SA1 to the “IN PAIRS” position.
- Press the cycle start pushbutton SB. The system works as long as the start pushbutton is kept pressed.

**C - Betrieb VON HAND - SIMULTAN**

- Den Hauptschalter QS drehen, um den (elektrischen und pneumatischen) Schaltkasten spannungsführend zu machen.
- Das Sperrventil der Druckluft öffnen (Installation durch den Kunden), um die elektrische Schalttafel zu speisen.
- Den Wahlschalter SA2 auf die Stellung „VON HAND“ drehen.
- Den Wahlschalter SA1 auf die Stellung „SIMULTAN“ drehen.
- Die Start-Taste SB drücken. Das System funktioniert, solange man die Start-Taste gedrückt hält.

**C - Fonctionnement MANUEL - SIMULTANÉ**

- Tourner l’interrupteur général QS pour mettre les armoires sous tension (électrique et pneumatique).
- Ouvrir la vanne d’arrêt de l’air comprimé (installation à la charge du Client) pour alimenter l’armoire électrique.
- Tourner le sélecteur SA2 sur la position «MANUEL».
- Tourner le sélecteur SA1 sur la position «SIMULTANÉ».
- Appuyer sur le bouton de marche SB. Le système fonctionne tant que le bouton de marche est maintenu enfoncé.

**C - Funzionamento MANUALE - SIMULTANEO**

- Ruotare interruttore generale QS per dare tensione ai quadri (elettrico e pneumatico).
- Aprire la valvola di intercettazione aria compressa (installazione a carico del Cliente) per alimentare il quadro elettrico.
- Ruotare il selettore SA2 in posizione “MANUALE”.
- Ruotare il selettore SA1 in posizione “SIMULTANEO”.
- Premere il pulsante di marcia SB. Il sistema funziona finché si tiene premuto il pulsante di marcia.

**D - MANUAL - SINGLE operation**

- Turn on the main switch QS to power the panels (electric and pneumatic).
- Open the compressed air on/off valve (to be provided by the Customer) to supply the electric panel.
- Turn selector SA2 to the “MANUAL” position.
- Turn selector SA1 to the “SINGLE” position.
- Press the start pushbutton SB. The system works as long as the start pushbutton is kept pressed.

**D - Betrieb VON HAND - ABWECHSELND**

- Den Hauptschalter QS drehen, um den (elektrischen und pneumatischen) Schaltkasten spannungsführend zu machen.
- Das Sperrventil der Druckluft öffnen (Installation durch den Kunden), um die elektrische Schalttafel zu speisen.
- Den Wahlschalter SA2 auf die Stellung „VON HAND“ drehen.
- Den Wahlschalter SA1 auf die Stellung „ABWECHSELND“ drehen.
- Die Start-Taste SB drücken. Das System funktioniert, solange man die Start-Taste gedrückt hält.

**D - Fonctionnement MANUEL - ALTERNÉ**

- Tourner l’interrupteur général QS pour mettre les armoires sous tension (électrique et pneumatique).
- Ouvrir la vanne d’arrêt de l’air comprimé (installation à la charge du Client) pour alimenter l’armoire électrique.
- Tourner le sélecteur SA2 sur la position «MANUEL».
- Tourner le sélecteur SA1 sur la position «ALTERNÉ».
- Appuyer sur le bouton de marche SB. Le système fonctionne tant que le bouton de marche est maintenu enfoncé.

**D - Funzionamento MANUALE - ALTERNATO**

- Ruotare interruttore generale QS per dare tensione ai quadri (elettrico e pneumatico).
- Aprire la valvola di intercettazione aria compressa (installazione a carico del Cliente) per alimentare il quadro elettrico.
- Ruotare il selettore SA2 in posizione “MANUALE”.
- Ruotare il selettore SA1 in posizione “ALTERNATO”.
- Premere il pulsante di marcia SB. Il sistema funziona finché si tiene premuto il pulsante di marcia.

**CHECKS MADE AT THE FACTORY**

The equipment has been subjected to actual operating tests load-free for about 15 minutes at the factory, so as to guarantee correct start-up.

**VOM HERSTELLER DURCHGEFÜHRTE KONTROLLEN**

Die Vorrichtung wurde im Herstellerwerk einer abschließenden Funktionskontrolle unterzogen der leeren Vorrichtung auf die Dauer von ca. 15 Minuten., um eine korrekte Inbetriebnahme zu garantieren.

**CONTRÔLES EFFECTUÉS DANS NOS ETABLISSEMENTS**

Cette machine a été soumise, dans l’ établissement du constructeur un fonctionnement à vide pendant environ 15 minutes, à un essai fonctionnel de réception afin de garantir une mise en service correcte.

**CONTROLLI EFFETTUATI NEI NOSTRI STABILIMENTI**

La macchina ha subito, presso gli stabilimenti del costruttore, un reale collaudo funzionale a vuoto per circa 15 minuti così da garantire la corretta messa in esercizio.

**MAINTENANCE**

Before carrying out any operation, make sure the machine is in safety condition

In this manual, from here onwards "setting the machine in safety conditions" will indicate the following operations:

- Make sure the machine is disconnected from all electric power supply sources.
- Make sure the machine is completely stopped.
- Wait for the internal and external machine temperatures to reach values not dangerous to the touch.
- Provide sufficient lighting around the machine operating area (the operators may be provided with electric lamps with protection degree IP65, if necessary).
- Make sure the machine is disconnected from the compressed air supply.
- Wait for the powder mass inside the silo to settle down completely.

Before carrying out any operation on the machine (maintenance or cleaning), the operators must use suitable personal protection equipment:

- antistatic safety footwear (certified)
- antistatic protective clothing (certified)
- helmet
- antistatic, cut-proof gloves
- safety masks

In addition to these, use the safety devices specified in the safety chart of the product handled.

**Machine operations must be carried out with the machine in safety conditions disconnected from all energy sources and in the absence of airborne dust; follow the machine stop procedure for maintenance.**

All maintenance operations, whether ordinary or extraordinary, must be carried out by adopting the suitable personal protection equipment required and by following the instructions in this manual strictly.

To reach the parts at the top of the machine, use a work platform, which must be chosen in such a way as to prevent risk of slipping, tripping or falling of operators.

**WARTUNG**

Vor Eingriffen jeder Art am Gerät überprüfen, ob dieses in einen sicheren Zustand versetzt wurde.

In diesem Handbuch verstehen wir unter dem Begriff „das Gerät in einen sicheren Zustand bringen" die folgenden Maßnahmen:

- Sicherstellen, dass die Maschine von allen elektrischen Versorgungsquellen getrennt ist.
- Sicherstellen, dass alle beweglichen Geräteteile still stehen.
- Sicherstellen, dass die Innen- und Außentemperatur des Gerä-tes einen Wert erreicht hat, der bei Berührung ungefährlich ist.
- Dafür sorgen, dass der Bereich rings um das Gerät gut be-leuchtet ist (eventuell indem man das Personal mit elektrischen Lampen mit Schutzart IP65 ausstattet).
- Sicherstellen, dass das Gerät vom Versorgungsnetz für Druckluft abgetrennt ist.
- Abwarten, bis der Staub, der sich innerhalb des Gerätes befindet, sich vollkommen abgesetzt hat.

Für jede Arbeit, die am Gerät auszuführen ist, (Wartung und Reinigung) muss das Personal mit den entsprechenden persönlichen Schutzausrüstungen (PSA) ausgestattet sein:

- Antistatische Sicherheitsschuhe (zertifiziert)
- Antistatische Schutzkleidung (zertifiziert)
- Schutzhelme
- Antistatische Schnittschutz-handschuhe
- Atemschutzmasken.

Außerdem auch die Schutzvorrichtungen, die auf dem Sicherheitsdatenblatt zu filternden Produkts stehen.

**Die Wartungsarbeiten müssen bei in den sicheren Zustand gebrachter Maschine ausgeführt werden, wenn diese von allen Energiequellen getrennt ist, und in Abwesenheit von durch die Luft verteiltem Staub: Die ganze Prozedur zum Anhalten der Maschine durchführen, bevor man mit der Wartung beginnt.**

Alle Wartungsarbeiten, sowohl regelmäßige als auch außerordentliche, müssen unter Anwendung aller erforderlichen persönlichen Schutzeinrichtu ngen und unter Beachtung aller Angaben dieses Handbuchs ausgeführt werden.

Wenn Teile der Maschine erreicht werden müssen, die sich in größerer Höhe befinden, benutzen Sie eine Arbeitsbühne, die so zu wählen ist, dass Ausrutsch-, Stolper- und Abstürzgefahren für das Personal vermieden werden.

**ENTRETIEN**

Avant d'effectuer une quelconque intervention sur la machine s'assurer que celle-ci a été placée en condition de sécurité.

Dans le présent manuel la consigne "mettre la machine en sécurité" indique les opérations suivantes :

- S'assurer que la machine est débranchée de toutes les alimentations électriques;
- S'assurer que la machine est complètement arrêtée;
- Attendre que la température intérieure et extérieure de la machine a atteint une valeur qui n'est pas dangereuse au toucher;
- Eclairer correctement la zone qui entoure la machine (en dotant éventuellement les opérateur de lampes électriques avec degré de protection IP65);
- S'assurer que la machine est débranchée du réseau de distribution de l'air comprimé;
- Attendre que la poussière contenue à l'intérieur de la machine se soit entièrement déposée.

Pour toute opération à effectuer sur la machine (entretien et nettoyage), les opérateurs devront être munis des équipements de protection individuelle (EPI) :

- Chaussures de sécurité antistatiques (certifiées)
- Vêtements de protection antistatiques (certifiés)
- Casque
- Gants anticoupure antistatiques
- Maques de protection respiratoire

En outre les équipements de protection prévus par la fiche de sécurité du produit filtré.

**Les opérations d'entretien doivent être effectuées avec la machine en condition de sécurité, débranché de toute source d'énergie et en absence de poussières dispersée dans l'air : effectuer toute la procédure d'arrêt de la machine avant de commencer l'entretien.**

Toutes les opérations d'entretien, aussi bien ordinaire qu'extraordinaire, doivent être exécutées en adoptant tous les dispositifs de protection individuelle requis et en suivant attentivement les indications de cette notice.

Si l'on doit atteindre des parties de la machine, utiliser une plate-forme aérienne de travail qui devra être choisie de manière à éviter les dangers de glissement, heurt ou chute des opérateurs.

**MANUTENZIONE**

Prima di effettuare un qualsiasi intervento sulla macchina assicurarsi che questa sia messa in sicurezza.

In seguito nel presente manuale indicheremo con la dicitura "mettere in sicurezza la macchina" le seguenti operazioni:

- accertarsi che la macchina sia scollegata da tutte le alimentazioni elettriche;
- accertarsi che la macchina sia completamente ferma;
- attendere che la temperatura interna ed esterna della macchina abbia raggiunto un valore non pericoloso al tatto;
- provvedere ad illuminare correttamente la zona circostante alla macchina (eventualmente dotando gli operatori di lampade elettriche con grado di protezione IP65);
- accertarsi che la macchina sia scollegata dalla rete di distribuzione d'aria compressa;
- attendere che la polvere contenuta all'interno della macchina sia completamente depositata.

Per qualsiasi operazione da effettuarsi sulla macchina (manutenzioni e pulizia), gli operatori dovranno essere muniti degli appositi dispositivi di protezione individuale (DPI):

- scarpe antinfortunistiche antistatiche (certificate)
- indumenti protettivi antistatici (certificati)
- casco
- guanti antitaglio antistatici
- mascherine protettive

Inoltre occorre utilizzare tutti i dispositivi di protezione previsti dalla scheda di sicurezza del prodotto filtrato.

**Le operazioni di manutenzione devono essere effettuate a macchina in sicurezza, scollegata da ogni fonte di energia e in assenza di polvere aerodispersa: seguire tutta la procedura di arresto della macchina prima di iniziare la manutenzione.**

Tutte le operazioni di manutenzione, sia ordinaria che straordinaria, devono essere eseguite adottando tutti i dispositivi di protezione personale richiesti e seguendo attentamente le indicazioni di questo manuale.

Laddove si debbano raggiungere parti della macchina in quota, utilizzare una piattaforma aerea di lavoro che dovrà essere scelta in modo da evitare pericoli di scivolamento, inciampo o caduta per gli operatori.

The machine can be used with a very large range of products; this involves different degrees of wear on some components.

The recommended maintenance schedules are therefore subject to modifications.

It is always preferable to program maintenance operations periodically instead of having to act in emergency conditions so as to eliminate potential stops during periods of peak production.

**Failure to follow the instruc-tions given below can lead to risks for the operators and lead to invalidation of the warranty on the equipment supplied.**

**CAUTION**
**All maintenance, lubrication and cleaning operations must be performed with the machine in safety conditions.**

For hazardous materials, suitable PPD (personal protection devices) must be used in accordance with the safety chart of the powder handled.

Maintenance must be done only by qualified technicians.
Lift and handle all heavy parts using suitable lifting equipment.
Make sure that the parts or components are supported by suitable harnesses or hooks.
Ensure that there is no one standing in the area where the load is being lifted.

Remember that careful periodic maintenance and correct use are essential requirements for guaranteeing high machine performance.
To ensure that the machine functions constantly and normally and to prevent the guarantee's replacement clauses being invalidated, we recommend that you always use original spare parts.

Maintenance of the vibrator motor must be carried out in accordance with the instructions given in the relevant manual.

Das Gerät kann für unter-schiedliche Medien eingesetzt werden, was einen unterschiedlich schnellen Verschleiß einiger Komponenten zur Folge haben kann.

Die empfohlenen Wartungsabstände können daher Änderungen unterliegen.

Es ist immer besser, regelmäßige Wartungseingriffe zu planen, statt erst im Notfall eingreifen zu müssen, weil dann die Gefahr etwaiger Ausfallzeiten nicht besteht, wenn max. Produktionsauslastung vorgesehen ist.

**Die Nichtbeachtung der folgenden Anweisungen kann zur Gefährdung des Personals und zum Ungültigwerden der Garantie auf die gelieferten Maschinen führen.**

**ACHTUNG**
**Vor der Ausführung von Wartung, Schmierung oder Reinigungsarbeiten ist die Maschine in den sicheren Zustand zu bringen.**

Für gefährliches Schüttgut sind die persönlichen Schutzausrüstungen zu benutzen, die auf den Sicherheitsdatenblättern des behandelten Schüttguts beschrie-ben sind.

Die Wartungsarbeiten sind von spezialisierten Technikern auszuführen.
Alle schweren Einzelteile mit einer angemessenen Hubeinrichtung heben und transportieren.
Sicherstellen, daß Gruppen oder Einzelteile von passenden Anschlagelementen und Haken gehalten werden.
Sicherstellen, daß sich in der Nähe der zu hebenden Maschine keine Personen aufhalten.
Eine genaue und regelmäßige Wartung wie auch eine korrekte Benutzung sind in der Regel die Voraussetzungen für eine hohe Leistung der Maschine.
Um einen konstanten und ordnungsgemäßen Betrieb zu garantieren und zu vermeiden, die Voraussetzungen für die Garantiegewähr zu verlieren, sollte man immer nur Originalersatzteile verwenden.

Die Wartung des Unwuchtmotors ist gemäß der Angaben im Handbuch desselben vorzunehmen.

Il est rappelé que la machine peut travailler avec une très vaste gamme de produits et ceci comporte une rapidité différente dans l'usure de certains composants.

Le calendrier des intervention d'entretien est donc susceptible de variations.

Il convient de programmer régulièrement les interventions au lieu d'intervenir en conditions d'émergence, afin d'éliminer les arrêts potentiels pendant les périodes de production maximale.

**L' inobservation des consignes suivantes peut provoquer des risques pour les opérateurs et invalider la garantie des machines fournies.**

**ATTENTION**
**Toute intervention d'entretien, lubrification et nettoyage doit être exécutée la machine en condition de sécurité.**

Pour les matières dangereuses il faut utiliser les EPI appropriés conformément à la fiche de sécurité de la poudre traitée.

Les opérations d' entretien doivent être effectuées par des techniciens spécialisés.
Soulever et manipuler les pièces lourdes avec un moyen de levage approprié.
S' assurer que les groupes ou les pièces sont soutenues par des élingues et des crochets appropriés.
S' assurer qu' il n' y a personne à proximité de la charge à soulever.
Il est rappelé qu' un entretien régulier et précis ainsi qu'une utilisation correcte sont les conditions indispensables pour garantir un rendement élevé de la machine.
Pour assurer un fonctionnement constant, régulier et ne pas risquer de ne plus bénéficier du remplacement sous garantie, il est recommandé d'utiliser uniquement des pièces détachées d'origine.

L'entretien du motovibrateur doit être réalisé en suivant les indications contenues dans le manuel. tuellement branché à la RSM).

Si ricorda che la macchina può lavorare con una vastissima gamma di prodotti, e ciò comporta una diversa rapidità nell' usura di alcuni componenti.

I tempi di intervento di manutenzione consigliati sono quindi suscettibili di modifiche.

E' sempre preferibile programmare periodicamente gli interventi anziché dover intervenire in condizioni di emergenza così da eliminare potenziali arresti durante i periodi di massima produzione.

**Il non attenersi strettamente alle seguenti istruzioni può causare rischi sugli operatori ed invalidare la garanzia sulle macchine fornite.**

**ATTENZIONE**
**Ogni intervento di manutenzione, lubrificazione e pulizia deve essere eseguito a macchina in sicurezza.**

Per materiali pericolosi si devono usare i DPI idonei in accordo con la scheda di sicurezza della polvere trattata.

Le operazioni di manutenzione devono essere effettuate da tecnici specializzati.
Sollevare e maneggiare tutti i particolari pesanti con un mezzo di sollevamento adatto.
Assicurarsi che i gruppi od i particolari siano sostenuti da imbragature e ganci appropriati.
Accertarsi che non ci siano persone in prossimità del carico da sollevare.
Si ricorda che una precisa e periodica manutenzione ed un uso corretto sono la premessa indispensabile per garantire un elevato rendimento della macchina.
Per assicurare il suo costante e regolare funzionamento ed evitare che vengano a mancare i presupposti per la sostituzione in garanzia, si raccomanda di utilizzare sempre ricambi originali.

La manutenzione del motovibratore deve essere eseguita secondo le indicazioni contenute nel manuale dello stesso.

| PERIODIC CHECKS | REGELMÄSSIGE KONTROLLEN | CONTRÔLES PÉRIODIQUES | CONTROLLI PERIODICI |
|---|---|---|---|
| **Before every work shift**<br>Check the safety devices to ensure they are present and intact. | **Vor jeder Schicht**<br>Sicherstellen, daß die Schutzvorrichtungen vorhanden und unversehrt sind. | **Avant chaque poste de travail**<br>Vérifier la présence et l'intégrité des protections. | **Prima di ogni turno di lavoro**<br>Verificare la presenza e l'integrità delle protezioni. |
| **After every work shift**<br>Make sure that the passage of the material is free of residue; if this is not the case, clean carefully. | **Nach jeder Schicht**<br>Sicherstellen, daß der Produktdurchlaufbereich keine Produktreste aufweist; an-dernfalls ist dieser Bereich sorgfältig zu reinigen. | **Après chaque poste de travail**<br>Vérifier que la zone de passage du produit est libre de tous résidus; dans le cas contraire nettoyer soigneusement | **Dopo ogni turno di lavoro**<br>Verificare che la zona di passaggio del materiale sia libera da residui dello stesso ; se non lo è pulire accuratamente |
| **Every 100 hours of operation (every 2 weeks)**<br>Check the condition of the FIBC support seal. | **Alle 100 Betriebsstunden (alle 2 Wochen)**<br>Den Zustand der Dichtungen prüfen, auf denen der Sack aufliegt. | **Toutes les 100 heures de travail (tous les 15 jours)**<br>Contrôler l'état du joint d'appui du Big Bag. | **Ogni 100 ore di lavoro (ogni 15 giorni)**<br>Controllare lo stato di efficienza della guarnizione di appoggio Big Bag. |
| **Every 200 hours of operation (monthly)**<br>**1** - Check the appearance of the structure, paying particular attention to the state of:<br>- welds in general;<br>- motovibrator fixing plate;<br>- damper support plates. | **Alle 200 Betriebsstunden (monatlich)**<br>**1** - Das Aussehen der Struktur prüfen, wobei besonders auf folgendes zu achten ist:<br>- Schweißstellen im allgemeinen;<br>- Befestigungsplatte des Vibrationsmotors;<br>- Trageplatten der Schwingungsdämpfer. | **Toutes les 200 heures de travail (tous les mois)**<br>**1** - Vérifier l' aspect de la structure du fond en faisant attention à:<br>- points de soudures;<br>- plaque de fixation du motovibrateur;<br>- plaques de soutien des dispositifs anti-vibration. | **Ogni 200 ore di lavoro (ogni mese)**<br>**1** - Verificare l' aspetto della struttura prestando attenzione a:<br>- saldature in genere;<br>- piastra di fissaggio del motovibratore;<br>- piastre di sostegno degli antivibranti. |
| **2** - Check that all bolts are correctly tightened, in par-ticular the motovibrator fixing bolts. | **2** - Kontrolle der Schrauben auf festen Sitz, insbesondere der Schrauben zur Befestigung des Vibrations-motors. | **2**- Contrôler si les boulons ont été serrés correctement en faisant particulièrement attention à ceux qui fixent le motovibrateur. | **2** - Controllare il corretto serraggio dei bulloni prestando particolare attenzione a quelli di fissaggio del motovibratore. |
| **3** - Check the seal for cracks or splits. | **3** - Sicherstellen, daß die Dichtungen keine Risse oder Bruchstellen aufweisen. | **3** - Contrôler que les joint ne présent aucune fissure ou lacération. | **3** - Controllare che non ci siano screpolature o fessurazioni nella guarnizione. |
| **4** - Check the dampers for signs of collapse (load deformation must not exceed 10% of nominal height). | **4**- Sicherstellen, daß die Schwingungsdämpfer nicht verformt sind (die Verformung unter Lasteinwirkung darf nicht mehr als 10% über der Nennhöhe liegen). | **4**- Contrôler que les dispositifs anti-vibration ne sont pas défoncés (la déformation ne doit pas dépasser 10% de la hauteur nominale). | **4** - Controllare che gli antivibranti non presentino segni di sfondamento (la deformazione sotto carico non deve superare il 10% dell' altezza nominale). |
| **5** - Check that the motovi-brator is as clean as pos-sible. | **5** - Sicherstellen, daß der Vibrationsmotor so sauber wie möglich ist. | **5**- Contrôler que le moto-vibrateur est toujours très propre. | **5** - Controllare che il motovibratore sia il più pulito possibile. |
| **6** - Check the seals of the compressed air connections. | **6** - Die pneumatischen Anschlüsse auf dichten Sitz prüfen. | **6**- Contrôler la tenue des raccordements pneumatiques. | **6** - Controllare la tenuta dei collegamenti pneumatici. |
| **7** - Check to make sure the pneumatic cylinders of the pneumatic actuators kit (if present) are in perfect working order. | **7**- Die Funktionstüchtigkeit der pneumatischen Zylinder des Bausatzes pneumatische Austraghilfen prüfen (falls vorhanden). | **7**- Contrôler l'efficacité des cylindres pneumatiques du kit des actionneurs pneumatiques (si prévu) | **7**- Controllare l' efficienza dei cilindri pneumatici del kit attivatori pneumatici (se presente) |

The detergents to be used for cleaning the various equipment must have a flash point indicated in the respective safety chart, higher than the temperature reached in normal operating conditions and reasonably expected; therefore, there should be no risk of fire.

Die für die Reinigung der verschiedenen Geräte zu benutzenden Reinigungsmittel müssen einen Flammpunkt aufweisen (siehe entsprechendes Sicherheitsdatenblatt), der über der Temperatur liegt, die unter normalen und vorhersehbaren Einsatzbedingungen erreicht wird. Daher können sie keine Brandgefahr darstellen.

Les détergents à utiliser pour le nettoyage des différents appareillages doivent présenter un point d'inflammabilité, reporté sur les fiches de sécurité correspondantes, supérieur à la température pouvant être atteinte dans les conditions d'utilisation normales et raisonnablement prévisibles; par conséquent ils ne doivent pas déterminer un risque d'incendie.

I detergenti da impiegare per la pulizia delle varie apparecchiature devono presentare un punto di infiammabilità, riportato nelle rispettive schede di sicurezza, superiore alla temperatura raggiungibile nelle condizioni di utilizzo normali e ragionevolmente prevedibili; pertanto non possono determinare pericoli di incendio.

Before starting cleaning operations, set the machine in safety conditions.

Bevor man mit der Reinigung beginnt, ist das Gerät in den sicheren Zustand zu versetzen.

Avant de commencer les opérations de nettoyage, mettre la machine en condition de sécurité.

Prima di iniziare le operazioni di pulizia mettere in sicurezza la macchina.

When removing dust that may be present on the machine, take care to avoid spreading it in the surrounding area.

Beim Entfernen des Staubs, der eventuell im Gerät vorhanden ist, ist darauf zu achten, dass dieser nicht aufgewirbelt wird.

Lors du nettoyage de la poussière présente dans la machine, faire attention à ne pas la disperser dans le milieu ambiant.

Nella rimozione della polvere eventualmente presente nella macchina aver cura di non disperdere la polvere stessa nell'ambiente circostante.

The user must provide for the choice of suitable products for cleaning, depending on the type of plant and the product handled.

Der Benutzer muss Produkte auswählen, die für den jeweiligen Typ der Anlage und das behan-delte Schüttgut geeignet sind.

L'utilisateur devra choisir des produits appropriés pour le nettoyage en fonction de la typologie d'installation et de la matière transportée.

L'utilizzatore dovrà provvedere alla scelta dei prodotti idonei alle fasi di pulizia in base alla tipologia di impianto ed al prodotto trasportato.

the FIBC UNLOADERS meant for use with food products, provision must be made for cleaning at intervals depending on the type or product and plant.

Für die BIG-BAG Entleerstationen, die für Nahrungsmittel eingesetzt werden soll, ist die Häufigkeit der Reinigung abhängig von der Beschaffenheit des behandelten Produkts und vom Anlagentyp.

Pour les vide BIG-BAG destinés à être utilisés avec des produits alimentaires, il faut prévoir une phase de nettoyage à une fréquence qui dépend de la nature du produit et de l'installation.

Per gli svuota BIG-BAG destinati ad essere utilizzati con prodotti alimentari occorre prevedere una fase di pulizia con frequenza che dipende dalla natura del prodotto e dell'impianto.

In case of harmful products, the cleaning wastes must be conveyed to a tank and disposed off according to relevant regulations.

Bei schädlichen oder giftigen Produkten muss das Spülwasser in geeigneten Wannen aufgefangen und in Übereinstimmung mit den einschlägigen geltenden Bestimmungen entsorgt werden.

Dans le cas de produits nocifs, toxiques, les effluents de la phase de nettoyage doivent être convoyés dans une cuve appropriée et éliminés conformément à la norme en vigueur en la matière.

Nel caso di prodotti nocivi, tossici, i reflui della fase di pulizia dovranno essere convogliati in idonea vasca e smaltiti in accordo alle normative vigenti in materia.

## OPERATION NOISE

The noise level values, expressed in dB(A) are obtained from readings made in an open field, at maximum performance, on 4 cardinal points at a distance of 1.5 metres from the equipment.

**The values obtained are:**

**max. 75 dB(A)**

The user may obtain values different from those indicated depending on the environment in which the equipment is installed.
It is therefore advisable to avoid installing the equipment near corners, walls and boxed metal structures.

The noise values refer to the machine complete with accessories, if any.

## BETRIEBSGERÄUSCHE

Die Werte des Lärmpegels, ausgedrückt in dB(A), resultieren aus Freifeldmessungen bei maximaler Leistungsstufe, in den 4 Himmelsrichtungen, in 1,5 Meter Abstand von der Vorrichtung.

**Meßwerte:**

**max. 75 dB(A)**

Der Betreiber kann je nach der-Positionierung der Vorrichtung im Raum auf andere Werte treffen.
Daher die Vorrichtung nicht in Ecken, nahe an Wänden oder Metallstrukturen aufstellen.

Der Wert des Lärmpegels bezieht sich auf die Maschine mit eventuellen angebauten Zubehörteilen.

## NIVEAU SONORE

Les valeurs du niveau sonore, exprimées en dB(A) sont obtenues à travers des lectures en champ libre, au rendement maximum, sur les 4 points cardinaux à 1,5 mètres de la machine.

**Valeurs mesurées:**

**max. 75 dB(A)**

L' utilisateur pourrait relever des valeurs différentes de celles indiquées en fonction de l' emplacement de la machine.
Il est préférable d' éviter de placer la machine à proximité des angles, murs, structures métalliques en caisson.

La valeur de bruit se réfère à la machine complète avec tout accessoire éventuel.

## RUMOROSITÀ

I valori di rumorosità, espressi in dB (A) sono ottenuti attraverso letture eseguite in campo libero, al massimo rendimento, sui 4 punti cardinali a 1,5 metri dalla macchina.

I **valori rilevati sono:**

**dB(A) max. 75**

L' utilizzatore potrebbe rilevare valori diversi da quelli indicati in funzione della collocazione ambientale.
Pertanto è preferibile evitare di collocare la macchina in prossimità di angoli, pareti, strutture metalliche cassonate.

Il valore di rumorosità si riferisce alla macchina completa di eventuali accessori.

During operations and/or maintenance, the operators ARE NOT exposed to any residual risks.

**In any case, it shall be the installer's responsibility to provide further indications and/or warning notices which may be necessary depending on the machine installation site and the material handled.**

When servicing, inspecting or cleaning, the operator, after setting the machine to safety conditions, must use some of the individual protection devices indicated on the additional special plates to be affixed to the various machine sections.

Given below are examples of some warning notices which may be necessary, depending on the type of powder handled.




Während des Betriebs und der Wartung ist das Personal KEINEN Restgefahren ausgesetzt.

**Es ist daher auf jeden Fall Aufgabe des Monteurs, weitere Angaben und /oder Schilder anzubringen, die in bezug auf den Einbauort und das behandelte Schüttgut erforderlich werden könnten.**

Während der Wartungsarbeiten, der Inspektion und Reinigung und, nachdem man die Maschine in den sicheren Zustand gebracht hat, ist es auf jeden Fall erforderlich, dass das Bedienungspersonal einige persönliche Schutzausrüstungen benutzt, so wie durch Warnschilder, die in den einzelnen Bereichen des Geräts hinzuzufügen sind.

Untenstehend folgen Beispiele einiger Schilder, die je nach Art der verarbeiteten Pulver erforderlich sein könnten.




Pendant le travail et/ou l'entretien, les opérateurs ne sont PAS exposés à certains risques résiduels.

**Dans tous le cas, l'installateur devra se charger d'apposer les indications ou les panneaux de signalisation qui peuvent s'avérer nécessaires en fonction du lieu d'installation de la machine et de la matière traitée.**

Pendant les activités de maintenance, inspection et nettoyage et après avoir mis la machine en sécurité il est obligatoire que l'opérateur utilise des équipements de protection individuelle comme indiqué sur les plaques signalétiques à ajouter dans les différentes sections de la machine.

Voir ci-après, à titre d'exemple, quelques plaques qui pourraient se rendre nécessaires en fonction du type de poudre traitée.




Durante la lavorazione e/o la manutenzione, gli operatori NON sono esposti ad alcuni rischi residui.

**In ogni caso sarà cura dell'installatore apporre ulteriori indicazioni e/o cartellonistiche che si potrebbero rendere necessarie in funzione del luogo di installazione della macchina e del materiale trattato.**

Durante le attività di manutenzione, ispezione, pulizia, dopo aver messo in sicurezza la macchina, è obbligatorio che l'operatore utilizzi alcuni dispositivi di protezione individuale come indicato da apposite targhe monitorie da aggiungere nelle singole sezioni della macchina.

Di seguito si riportano a titolo esemplificativo alcune targhe che potrebbero rendersi necessarie in funzione del tipo di polvere.



Before carrying out any operation, set the machine in safety status and use suitable personal protection devices.

Vor Arbeiten jeglicher Aret an dem Gerät muss dieses in einen sicheren Zustand versetzt werden und geeignete PSA angelegt werden.

Avant toute intervention mettre la machine en condition de sécurité et utiliser les EPI appropriés.

Prima di qualsiasi intervento mettere in sicurezza la macchina e far uso degli idonei DPI.

**SCRAPPING**

For scrapping the machine at the end of its life, make sure the plastic parts (seals and components) are collected separately and sent to special centres for disposal.

The other parts meant for recycling must be sent to iron scrap yards.

When dismantling the machine make sure the lifting procedures indicated in the HANDLING section (page M.14) are followed.

For disposal of materials contained in the machine, refer to the existing legislation concerning disposal and the product safety chart.

**VERSCHROTTUNG**

Bei Verschrottung des Gerätes sind die Teile aus Kunststoff (Dichtungen und Komponenten) auszubauen und vorschriftsmäßig zu entsorgen.

Die restlichen Teile sind beim Scrotthändler abzugeben.

Während des Zerlegens des Gerätes die Anleitungen zum Anheben beachten, die im Teil HANDLING DES GERÄTES auf Seite M.14 nachzulesen sind.

Für die Entsorgung des im Gerät vorhandenen Produkts ist Bezug auf die geltenden Bestimmungen zur Materialentsorgung und die Sicherheitsdatenblätter der Produkte zu nehmen.

**DEMANTELEMENT**

En cas de démantèlement de la machine, démonter les parties en matières plastique (joints et composants) et les mettre à la décharge dans les déchetteries spécialisées.

Les parties restantes sont destinées à la récupération des matériaux ferreux.

Pendant les phases de démantèlement de la machine respecter les procédures de levage comme indiqué dans la section MANUTENTION (page M.14)

Pour l'élimination de la matière contenue dans la machine, se conformer aux normes en vigueur en matière d'élimination et à la fiche de sécurité du produit.

**ROTTAMAZIONE**

In caso di rottamazione a fine vita della macchina, aver cura di smontare le parti in materiale plastico (guarnizioni e componenti) e destinarle agli appositi centri di raccolta.

Le restanti parti sono da destinare al recupero dei materiali ferrosi.

Durante le fasi di smantellamento della macchina osservare le procedure di sollevamento come indicato nella sezione MOVIMENTAZIONE (pag. M.14)

Per lo smaltimento del materiale contenuto nella macchina, fare riferimento all norme vigenti in materia di smaltimento ed alla scheda di sicurezza del prodotto.

**RETURNING THE MACHINE**

To return the machine, fasten to a pallet and cover it with.heat-shrink nylon to protect it from knocks during transport

In any event, make sure the machine does not contain any material residue.

**MASCHINENRÜCKGABE**

Bei der etwaigen Rückgabe des Geräts ist dieses auf einer Palette zu befestigen und mit Schrumpffolie zu schützen. Auf jeden Fall versuchen, es so weit wie möglich vor etwaigen Stößen beim Transport zu schützen.

Sicherstellen, daß sich keine Materialrückstände im Gerät befinden.

**RESTITUTION MACHINE**

En cas de restitution de la machine, la fixer sur une palette et la protéger au moyen de Nylon thermorétractable, en essayant de la protéger au mieux contre les chocs éventuels du transport.

Vérifier dans tous les cas qu'il n'y a pas de résidus de matériel dans la machine.

**RESO MACCHINA**

In caso di reso della macchina fissarla su di un pallet e proteggerla con del nylon termoretraibile , cercando di proteggerla al meglio da eventuali urti derivanti dal trasporto.

In ogni caso assicurarsi che la macchina non abbia residui di materiale.

Minor problems may often be solved without calling a technician.
The most common faults with relevant solutions are given in the Table below.

Kleinere Probleme können oft ohne die Einschaltung eines Fachmanns behoben werden. Hier folgt eine Aufstellung der häufigsten Probleme und deren Abhilfe.

Les problèmes mineurs peuvent être résolus sans consulter un spécialiste. Vous trouverez ci-dessous une liste des inconvénients les plus communs avec les solutions éventuelles.

I problemi minori possono essere risolti senza consultare uno specialista.
Diamo di seguito un elenco degli inconvenienti più comuni con le eventuali soluzioni.

| N. | Problem | Cause | Solution |
|---|---|---|---|
| 1 | Vibrator does not work. | Connection not made. | Check fuses. |
| | | Incorrect voltage. | Correct voltage. |
| | | Vibrator. | Replace faulty parts. |
| 2 | Product does not flow down. | Insufficient vibration. | Adjust vibrator size value. |
| | | Outlet is obstructed. | Check extraction system below outlet. |
| | | Valve closed.. | Open. |
| | | Vibrator burnt out. | Check; replace the vibrator if necessary. |
| 3 | Product under the hopper.. | Hatchway seal damaged.t. | Locate cause, then replace if necessary. |
| | | Welded joints are cracked. | Repair welds immediately. |
| 4 | Hopper vibrates irregularly.s. | Damper(s) damaged. | Locate, then replace. |

| N. | Problem | Ursache | Abhilfe |
|---|---|---|---|
| 1 | Vibrationsmotor funktioniert nicht. | Kein Anschluß.. | Sicherungen prüfen.. |
| | | Falsche Spannung. | Spannung anpassen. |
| | | Vibrationsmotor defekt. | Defektes Teil ersetzen. |
| 2 | Produkt wird nicht gefördert. | Schlechte Vibration. | Unwuchtmassen im Motor ersetzen. |
| | | Verstopfung des Auslaufs. | Austragesystem stromab vom Trichter prüfen. |
| | | Klappe oder Schieber geschlossen. | Klappe oder Schieber öffnen. |
| | | Vibrationsmotor durchgebrannt. | Ursache suchen und Vibrationsmotor ersetzen. |
| 3 | Unter Trichter tritt Produkt aus. | Dichtung der Klappe beschädigt. | Ursache suchen und dann ersetzen. |
| | | Risse in der Schweißnaht. | Sofort reparieren. |
| 4 | Unregelmäßige Vibrationen des Trichters. | Bruch der Schwingungsdämpfer. | Ursache suchen und ersetzen. |

| N. | Problème | Cause | Remède |
|---|---|---|---|
| 1 | Le motovibrateur ne fonctionne pas | Absence de courant.. | Contrôler les fusibles. |
| | | Tension erronée. | Adapter la tension. |
| | | Motovibrateur défectueux.. | Changer le composant défectueux. |
| 2 | Le produit ne descend pas. | Vibration faible. | Régler les masses du motovibrateur. |
| | | Obstruction de la bouche de sortie. | Contrôler le système d'extraction en aval du fond. |
| | | Vanne fermée. | Ouvrir la vanne. . |
| | | Motovibrateur brûlé. | Rechercher la cause puis remplacer le motovibrateur.e. |
| 3 | Présence de produit sous la trémie | Joint de trappe endommagé. | Rechercher la cause puis le remplacer. |
| | | Présence de criques dans les soudurese | Réparer immédiatement. |
| 4 | Vibration décomposée de la trémie. | Rupture d'un anti-vibrant.. | Rechercher la cause et le remplacer. |

| N. | Problema | Causa | Soluzione |
|---|---|---|---|
| 1 | Il motovibratore non funziona. | Manca il collegamento. | Controllare fusibili. |
| | | Tensione errata. | Adeguare la tensione. |
| | | Motovibratore difettoso. | Sostituire il componente difettoso. |
| 2 | Il prodotto non scende. | Vibrazione scarsa. | Regolare masse motovibratore. |
| | | Ostruzione della bocca di scarico. | Controllare sistema di estrazione a valle del fondo |
| | | Valvola o serranda chiusa. | Aprire la valvola o serranda. |
| | | Motovibratore bruciato. | Indagare il motivo poi sostituire il motovibratore. |
| 3 | Presenza prodotto sotto la tramoggia. | Guarnizione boccaporto danneggiata. | Scoprire il motivo e poi sostituirla. |
| | | Presenza di cricche nelle saldature | Riparare immediatamente. |
| 4 | Vibrazione scomposta della tramoggia. | Rottura di un antivibrante/i. | Scoprire il motivo e sostituirlo/i. |

*N.B. Rights reserved to modify technical specifications*
*N.B. Angaben ohne Gewähr. Änderungen können ohne Vorankündigung vorgenommen werden.*
*N.B. Toutes données portées dans le présent catalogue n'engagent pas le fabricant. Elles peuvent être modifiéès à tout moment.*
*N.B. Tutti i dati riportati nel presente catalogo non sono impegnativi e possono subire variazioni in qualsiasi momento.*

EXTRAC®

**WAMGROUP S.p.A**. - EXTRAC
Division
Via Cavour, 338
I - 41030 Ponte Motta
Cavezzo (MO) - ITALY

☎ + 39 / 0535 / 618111
**fax** + 39 / 0535 / 618226
**e-mail** info@wamgroup.it
**internet** www.wamgroup.com
**videoconferenze** + 39 / 0535 / 49032

LEFT BLANK

EXTRAC®

WAMGROUP

3

SPARE PARTS

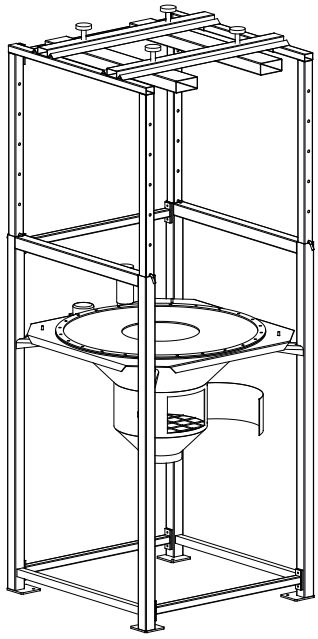

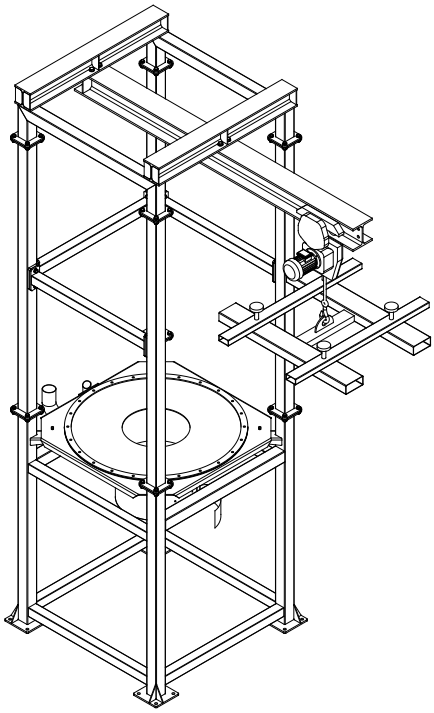

# SBB

- **FLEXIBLE INTERMEDIATE BULK CONTAINER UNLOADER**
  SPARE PARTS CATALOGUE
- ***BIG-BAG - ENTLEERSTATION***
  *ERSATZTEILKATALOG*
- **VIDE-SACS DE GRANDES DIMENSIONS**
  PIECES DE RECHANGE
- ***SVUOTA BIG BAG***
  *PEZZI DI RICAMBIO*

All rights reserved © WAMGROUP S.p.A.


| CATALOGUE No. **EXT.096.--.R.4L** | | | |
|---|---|---|---|
| ISSUE<br>**A3** | CIRCULATION<br>**100** | LATEST UPDATE<br>**04.15** | |

All the products described in this catalogue are manufactured according to **WAMGROUP S.p.A. Quality System procedures**. The Company's Quality System, certified in July 1994 according to International Standards **UNI EN ISO 9002** and extended to the latest release of **UNI EN ISO 9001**, ensures that the entire production process, starting from the processing of the order to the technical service after delivery, is carried out in a controlled manner that guarantees the quality standard of the product.

*Alle in diesem Katalog beschriebenen Produkte werden gemäß dem **Qualitätssystem der WAMGROUP S.p.A.** hergestellt. Das im Juli 1994 gemäß der internationalen Norm **UNI EN ISO 9002** und auf die neueste Version der **UNI EN ISO 9001** erweiterte, zertifizierte Qualitätssystem der Firma gewährleistet, dass der gesamte Produktionsprozess von der Auftragsbearbeitung bis zum technischen Kundendienst nach Lieferung in kontrollierter Art und Weise erfolgt, so dass der Qualitätsstandard des Produkts gewährleistet ist.*

Tous les produits décrits dans ce catalogue sont fabriqués selon les procédures du **Système de Qualité de WAMGROUP S.p.A.**, certifié en Juillet 1994 selon les normes internationales **UNI EN ISO 9002** et étendu à la dernière version de la norme **UNI EN ISO 9001**. Cela garantit que le processus de production, à partir de la gestion de la commande au service technique après-vente, est effectué de manière contrôlée garantissant la norme de qualité du produit.

*Tutti i prodotti descritti nel catalogo sono stati realizzati secondo le **procedure del Sistema Qualità di WAMGROUP S.p.A.** Il Sistema Qualità aziendale, certificato dal luglio 1994 in conformità alle normative internazionali **UNI EN ISO 9002** e successivamente esteso all' ultima versione delle normative **UNI EN ISO 9001**, garantisce che l'intero processo produttivo, dalla formulazione dell'ordine fino all'assistenza tecnica dopo la consegna, si svolga secondo modalità controllate che garantiscono lo standard qualitativo del prodotto.*

**This publication cancels and replaces any previous edition and revision.**
**We reserve the right to implement modifications without notice.**
**This catalogue cannot be reproduced, even partially, without prior written consent by the Manufacturer.**

***Diese Veröffentlichung storniert und ersetzt alle früheren Ausgaben und überarbeiteten Fassungen.***
***Wir behalten uns das Recht vor, Änderungen ohne vorherige Information durchzuführen.***
***Dieser Katalog darf selbst auszugsweise nicht ohne das schriftliche Einverständnis der Herstellers vervielfältigt werden.***

**Cette publication annule et remplace toute édition et révision antérieure.**
**Nous nous réservons le droit de mettre en place des modifications sans préavis.**
**Aucune reproduction, partielle ou intégrale du catalogue, ne pourra être faite sans l'accord préalable et écrit du Fabricant.**

***Questa pubblicazione annulla e sostituisce le edizioni e revisioni precedenti.***
***Ci riserviamo la facoltà di apportare modifiche senza preavviso.***
***Il presente catalogo non può essere riprodotto, nemmeno parzialmente, senza previo consenso scritto del Costruttore.***

3 **SPARE PARTS CATALOGUE** **ERSATZTEILKATALOG**

SPARE PARTS CATALOGUE.....ERSATZTEILKATALOG..... **R.01**

3 **PIECES DE RECHANGE** **PEZZI DI RICAMBIO**

PIECES DE RECHANGE.....PEZZI DI RICAMBIO.....**R.01**

## ALL MODELS - *ALLE MODELLE* - TOUS LES MODÈLES - *TUTTI I MODELLI*

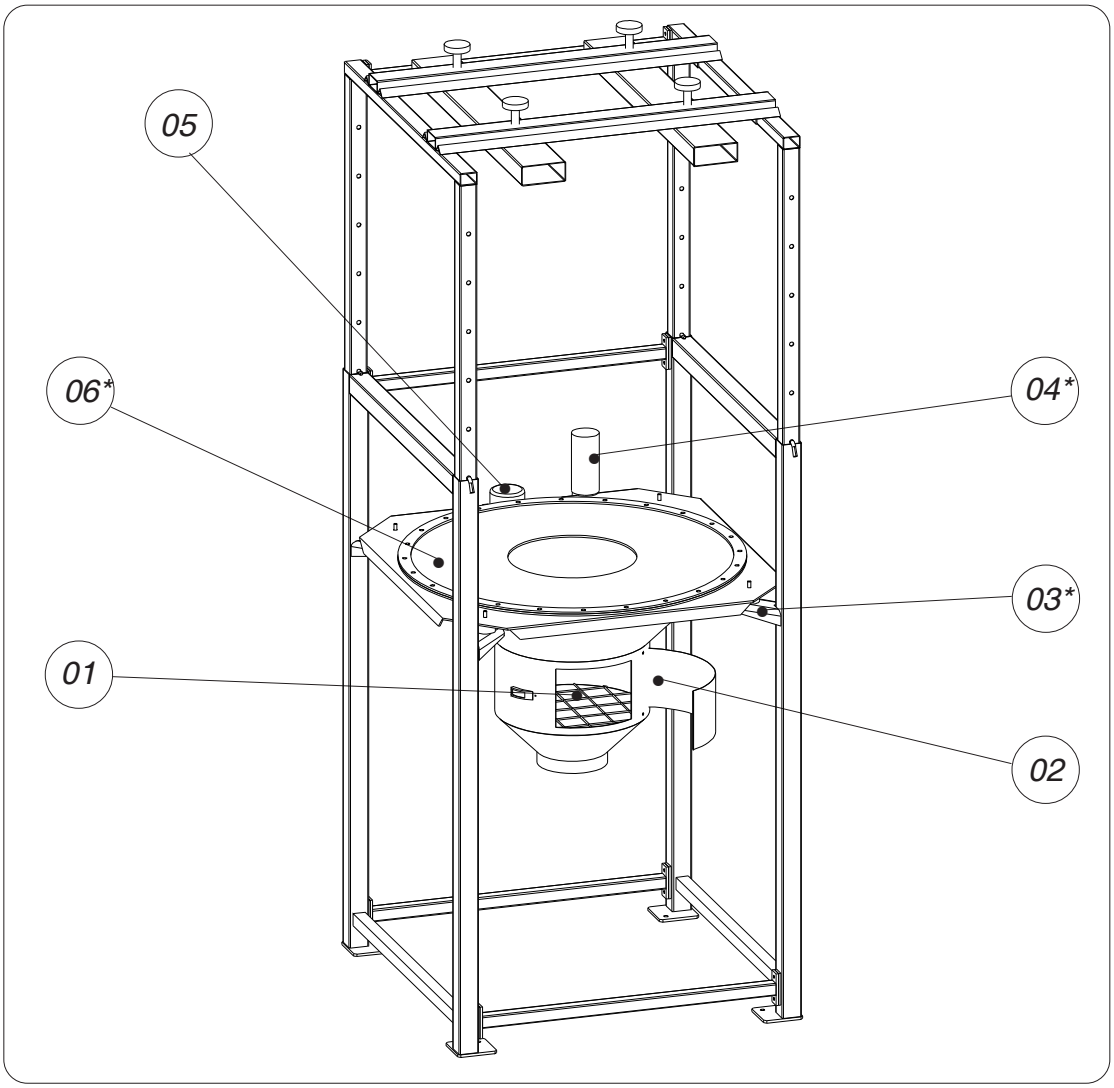


| ITEM POS. | QT.Y MENGE | DESCRIPTION | BENENNUNG | DÉSIGNATION | DENOMINAZIONE | Type SBB | Code |
|---|---|---|---|---|---|---|---|
| 01 | 1 | SAFETY GRILLE | SICHERHEITSGITTER | GRILLE DE SÉCURITÉ | GRIGLIA DI SICUREZZA | All - *Alle* - Tous - *Tutte* | **206F4BQ2A** |
| 02 | 1 | HATCH SEAL | KLAPPENDICHTUNG | JOINT DE TRAPPE | GUARNIZIONE PORTELLO | All - *Alle* - Tous - *Tutte* | **20994512A** |
| 03* | 4 | DAMPER | SCHWINGUNGSDÄMPFER | SILENT-BLOC | ANTIVIBRANTE | All - *Alle* - Tous - *Tutte* | **2099574TA** |
| 04* | 1 | FILTER BAG | FILTERSACK | MANCHON FILTRANT | MANICA FILTRANTE | All - *Alle* - Tous - *Tutte* | **2099580ZA** |
| 05 | 1 | STD MOTOVIBRATOR | VIBRATIONSMOTOR STD | MOTOVIBRATEUR STD | MOTOVIBRATORE STD | SBB125 | **VBOL101311** |
| | | | | | | SBB150 | **VBOL201311** |
| 06* | 1 | STD SEAL Black | DICHTUNG STD Schwarze | JOINT STD Noir | GUARNIZIONE Nera STD | SBB125 | **361002300** |
| | | | | | | SBB150 | **361002301** |
| | | SEAL white | DICHTUNG Weiße | JOINT Blanc | GUARNIZIONE Bianca | SBB125 | **19ZAQN6TA** |
| | | | | | | SBB150 | **19ZAQN8TA** |

* = RECOMMENDED SPARE PARTS
* = *EMPFOHLENE ERSATZTEILE*
* = PIÈCES DÉTACHÉES CONSEILLÉES
* = *RICAMBI CONSIGLIATI*

## CUTTING SYSTEM - *SCHNEIDEVORRICHTUNG* - SYSTÈME DE COUPE - *SISTEMA DI TAGLIO*

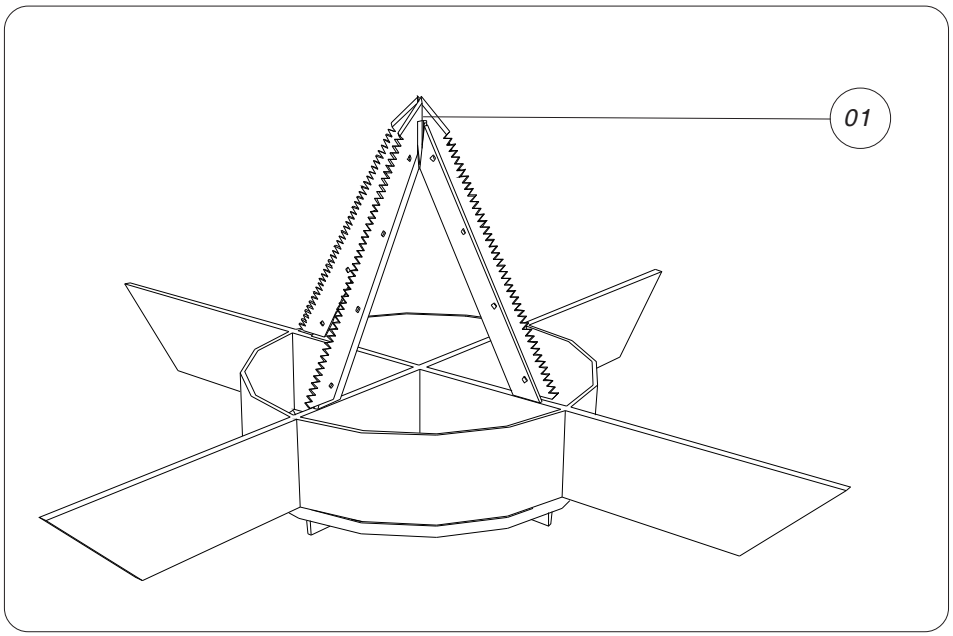


| ITEM POS. | QTY MENGE | DESCRIPTION | BENENNUNG | DÉSIGNATION | DENOMINAZIONE | Cod. |
|---|---|---|---|---|---|---|
| 01 | 4 | CUTTING BLADES | SCHNITTMESSER | LAMES DE COUPE | LAME DI TAGLIO | 206FWGU2A |

| PROCEDURE FOR PARTS REPLACEMENT | AUSTAUSCH VON ERSATZ-TEILEN | PROCÉDURES POUR LE REMPLACEMENT DES PIÈCES DETACHEES | PROCEDURA PER LA SOSTITUZIONE DELLE PARTI DI RI-CAMBIO |
|---|---|---|---|
| **ITEM 6**<br>**REPLACING SEAL**<br>- Disconnect power supply to the panel and terminal board.<br>- Unscrew the screws blocking the seal to the underlying hopper.<br>- Remove the seal and replace it.<br>- Restore the power supply connections. | **POS. 6**<br>**AUSTAUSCH DER DICHTUNG**<br>- Den elektrischen Anschluß am Schaltkasten und der Klemmenleiste abtrennen.<br>- Die Schrauben lösen, welche die Dichtung am unteren Trichter befestigen.<br>- Die Dichtung entfernen und ersetzen.<br>- Die elektrischen Anschlüsse wieder herstellen. | **POS. 6**<br>**REMPLACEMENT DU JOINT**<br>- Débrancher le raccordement électrique au tableau et au bornier.<br>- Dévisser les vis de serrage qui bloquent le joint à la trémie inférieure.<br>- Enlever et changer le joint.<br>- Rétablir les raccordements électriques. | **POS. 6**<br>**SOSTITUZIONE GUARNIZIONE**<br>- Disconnettere l' allacciamento elettrico al quadro e alla morsettiera.<br>- Svitare le viti di serraggio che bloccano la guarnizione alla tramoggia inferiore.<br>- Rimuovere e sostituire la guarnizione.<br>- Ripristinare i collegamenti elettrici. |
| **ITEM 3**<br>**REPLACING DAMPERS**<br>- Disconnect power supply to the motor and panel.<br>- Harness the hopper and support it using suitable lifting equipment that will keep it balanced.<br>- Unscrew the four fixing screws which fix the dampers to the supporting frame.<br>- Remove the dampers and replace them.<br>- Repeat the operations in reverse order.<br>- Restore the electrical connections. | **POS. 3**<br>**ERSETZEN DER SCHWINGUNGSDÄMPFER**<br>- Den elektrischen Anschluß am Motor und am Schaltkasten unterbrechen.<br>- Den Trichter anschlagen und mit einem geeigneten Hebezeug im Gleichgewicht halten.<br>- Die vier Schrauben lösen, mit denen die Schwingungsdämpfer an den Gestellträgern befestigt sind.<br>- Die Schwingungsdämpfer entfernen und ersetzen.<br>- Zusammenbau in umgekehrter Reihenfolge vornehmen.<br>- Die elektrischen Anschlüsse wieder herstellen. | **POS. 3**<br>**REMPLACEMENT DES SILENTBLOCS**<br>- Débrancher le raccordement électrique au moteur et au tableau.<br>- Elinguer la trémie et la soutenir avec un moyen de levage approprié pour la maintenir en équilibre.<br>- Dévisser les quatre vis de serrage qui bloquent les silentblocs aux supports du châssis.<br>- Enlever et changer les silentblocs.<br>- Exécuter les opérations dans l'ordre inverse.<br>- Rétablir les raccordements électriques. | **POS. 3**<br>**SOSTITUZIONE ANTIVIBRANTI**<br>- Disconnettere l' allacciamento elettrico al motore e al quadro.<br>- Imbragare la tramoggia e sostenerla con mezzo di sollevamento idoneo in modo da tenerla in equilibrio.<br>- Svitare le quattro viti di serraggio che bloccano gli antivibranti ai sostegni del telaio.<br>- Rimuovere e sostituire gli antivibranti.<br>- Eseguire le operazioni in senso inverso.<br>- Ripristinare i collegamenti elettrici. |
| **ITEM 4**<br>**REPLACING FILTER BAG**<br>- Slacken the locking clamp<br>- Remove the filter bag and replace it.<br>- Refit the clamp. | **POS. 4**<br>**AUSTAUSCH DES FILTERSCHLAUCHS**<br>- Die Befestigungsschelle lösen.<br>- Den Filterschlauch entfernen und ersetzen.<br>- Die Befestigungsschelle wieder anschrauben. | **POS. 4**<br>**REMPLACEMENT DU MANCHON FILTRANT**<br>- Dévisser le collier de blocage.<br>- Enlever et remplacer le manchon filtrant.<br>- Revisser le collier. | **POS. 4**<br>**SOSTITUZIONE MANICA FILTRANTE**<br>- Svitare la fascetta di bloccag-gio.<br>- Rimuovere e sostituire la manica filtrante.<br>- Riavvitare la fascetta. |
| **ITEM 5**<br>**REPLACING VIBRATOR**<br>- Disconnect power supply to the terminal board and panel<br>- Remove the fixing bolts.<br>- Remove the vibrator safety cable.<br>- Install the new vibrator.<br>- Refit the safety cable.<br>- Restore the electrical connections. | **POS. 5**<br>**AUSTAUSCH DES SCHWINGUNGSDÄMPFERS**<br>- Den elektrischen Anschluß an der Klemmenleiste und dem Schaltkasten unterbrechen.<br>- Die Befestigungsschrauben entfernen.<br>- Das Sicherheitskabel des Schwingungsdämpfers entfernen.<br>- Den neuen Schwingungsdämpfer einbauen.<br>- Das Sicherheitskabel wieder befestigen.<br>- Elektrische Anschlüsse vornehmen. | **POS. 5**<br>**REMPLACEMENT DU VIBRATEUR**<br>- Débrancher le raccordement électrique du bornier et du tableau.<br>- Enlever les boulons de fixation.<br>- Enlever le câble de sécurité du vibrateur.<br>- Installer le nouveau vibrateur.<br>- Remettre le câble de sécurité.<br>- Rétablir les raccordements électriques. | **POS. 5**<br>**SOSTITUZIONE VIBRATORE**<br>- Disconnettere l' allacciamento elettrico alla morsettiera e al quadro<br>- Togliere i bulloni di fissaggio.<br>- Togliere il cavo di sicurezza del vibratore.<br>- Installare il nuovo vibratore.<br>- Reinserire il cavo di sicurezza.<br>- Ripristinare i collegamenti elettrici. |

*N.B. Rights reserved to modify technical specifications*
*N.B. Angaben ohne Gewähr. Änderungen können ohne Vorankündigung vorgenommen werden.*
*N.B. Toutes données portées dans le présent catalogue n'engagent pas le fabricant. Elles peuvent être modifiéès à tout moment.*
*N.B. Tutti i dati riportati nel presente catalogo non sono impegnativi e possono subire variazioni in qualsiasi momento.*

EXTRAC®

**WAMGROUP S.p.A**. - EXTRAC
Division
Via Cavour, 338
I - 41030 Ponte Motta
Cavezzo (MO) - ITALY

☎ + 39 / 0535 / 618111
**fax** + 39 / 0535 / 618226
**e-mail** info@wamgroup.it
**internet** www.wamgroup.com
**videoconferenze** + 39 / 0535 / 49032

LEFT BLANK

# *WAM*

## *VL SERIES, SLIDE GATE VALVE*

LEFT BLANK

WAM®

WAMGROUP

2

MAINTENANCE

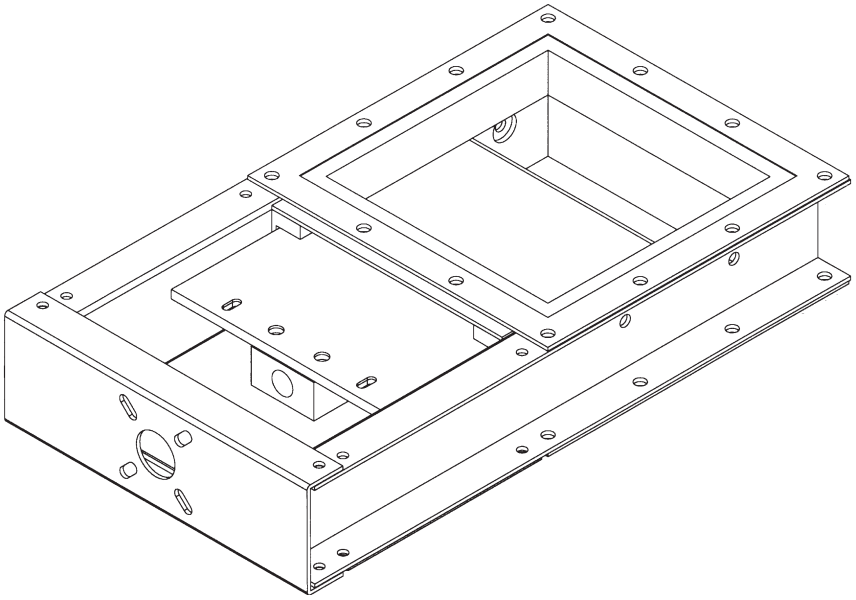

# VL

- **SLIDE VALVES**
  INSTALLATION, OPERATION AND MAINTENANCE
- ***FLACHSCHIEBER***
  EINBAU-, BETRIEBS - UND WARTUNGSANLEITUNG
- **VANNES GUILLOTTINE**
  INSTALLATION, UTILISATION ET ENTRETIEN
- ***VALVOLE A GHIGLIOTTINA***
  INSTALLAZIONE, USO E MANUTENZIONE

*All rights reserved © WAMGROUP S.p.A.*

**Manual No. VAL.VL.--.M.A11.0318.4L Issue: A11**
**Latest Update: March 2018**

**ORIGINAL INSTRUCTIONS IN ENGLISH**

| ADDRESS OF LOCAL DEALER OR SERVICE POINT | ANSCHRIFT DES LOKALEN HÄNDLERS ODER KUNDEN-DIENSTES | ADRESSE DU REVENDEUR OU DU SERVICE APRES-ENTE LOCAL | INDIRIZZO RIVENDITORE O PUNTO DI ASSISTENZA LOCALE |
|---|---|---|---|

**IDENTIFICATION**
Refer to order code in acknowledgement of order, in invoice and on packaging to identify equipment.

**CONTRA - INDICATIONS**
None if all safety instructions are followed.

REMARKS REGARDING VALVES FOR FOODSTUFF:
Wash valve regularly with water.
Clean valve disc and seal with particular care.
Check first with supplier before using any cleaning product.
Check first with supplier when handling acid containing products or particularly hot or cold materials.
VL-type Slide Valves must only be closed with bulk material column in motion.
Valves are dust-tight.

The valve must not be put into service before the machine or plant it has been fitted to has been declared in conformity with the regulations of the Machinery Directive 2006/42/EC.
It is the plant designer's / plant fitter's responsibility to design and install all necessary protection in order to avoid that breaking and/or yielding of the quipment or of parts of it might damage people and/or parts of the plant (e.g. adequate protection against falling down of the motor etc.).
For dangerous materials, i.e. those that must not get in contact with the human body or be inhaled, for flammable, explosive and bacteriologically dangerous materials the plant manufacturer or fitter must provide for the required safety devices and measures.

**IDENTIFIKATION**
Zur korrekten Identifikation auf den Bestellcode in der Auftragsbestätigung, in der Rechnung und auf der Verpackung Bezug nehmen.

**KONTRAINDIKATIONEN**
Keine, sofern alle allgemeinen Sicherheitsvorschriften befolgt werden.

BEMERKUNGEN ZU SCHIEBERN FÜR NAHRUNGSMITTEL:
In regelmäßigen Abständen mit Wasser abwaschen.
Schieberblech und Dichtung sind besonders sorgfältig zu reinigen.
Reinigungsmittel nur in Absprache mit dem Hersteller verwenden.
Bei säurehaltigen sowie bei besonders heißen oder kalten Medien vor dem Einsatz Rücksprache mit dem Hersteller halten.
Flachschieber vom Typ VL dürfen nur bei in Bewegung befindlicher Materialsäule geschlossen werden.
Schieber sind staubdicht.
Der Schieber darf nicht in Betrieb genommen werden, bevor die Anlage oder Maschine, in die er eingebaut wurde mit den Vorschriften der Maschinenrichtlinie 2006/42/EG als konform erklärt wurden.
Es liegt in der Verantwortung des Anlagenplaners bzw. –aufstellers, alle notwendigen Schutzvorrichtungen vorzusehen, welche es verhindern, dass durch einen Geräte- oder Teiledefekt Personen- und/oder Sachschäden verursacht werden (z.B. geeigneter Schutz gegen das Herunterfallen des Motors etc.).
Für Gefahrenprodukte, bzw. solche, die nicht mit dem menschlichen Körper in Kontakt geraten oder eingeatmet werden dürfen, für leicht entzündbare, explosive sowie bakteriologisch gefährliche Medien muß der Anlagenbauer bzw. –errichter die für die Sicherheit erforderlichen Vorrichtungen vorsehen und Maßnahmen treffen.

**PLAQUE D'IDENTIFICATION**
Pour identifier correctement la machine, vous devez vous référer au code qui se trouve sur la confirmation de commande, sur la facture et sur la plaque qui se trouve sur l'emballage.

**CONTRE - INDICATIONS POUR L'UTILISATION DE LA VANNE**
Il n'existe aucune contreindication pour l'utilisation de la vanne si vous prenez les précautions normales pour les machines de ce genre.

INSTRUCTIONS POUR LES VANNES DESTINEES AUX PRODUITS ALIMENTAIRES:
Nettoyez régulièrement les vannes avec de l'eau.
Nettoyez tout particulièrement le disque de la vanne et le joint.
Avant d'employer d'autres produits pour le nettoyage, consultez votre fournisseur. Si le produit qui entre en contact avec la vanne est acide ou bien si sa température est trop élevée ou trop basse, adressez-vous directement à notre service aprés-vente.
Les vannes à guillotine de type VL doivent être fermées seulement avec la colonne de matériau en mouvement.
Nos vannes sont étanches à la poussière.
Il est interdit de mettre en fonction la vanne avant que l'installation dans laquelle elle doit etre installée soit déclarée conforme aux dispositions de la Directive Machines 2006/42/CE.
Dans ce cadre il est la responsabilité du constructeur de l'installation ou de l'installateur de projeter et d'installer tout équipement de protection nécessaire afin d'éviter que des ruptures et/ou des tassements de la machine et/ou des parties d'elle puissent causer de dégâts à des personnes et/ou des choses (par ex.: des protections appropriées contre la chute du moteur etc.).
Pour des produits dangereux, nuisibles au contact et/ou à l'inhalation, inflammables, explosifs et dangereux du point de vue bactériologique et/ou viral, le constructeur de l'installation ou l'installateur devront prévoir des dispositifs appropriés au besoin.

**INTERPRETAZIONE DELLA TARGHETTA**
Per una corretta identificazione della macchina, bisogna fare riferimento al codice che si trova sulla conferma d'ordine, sulla fattura e sulla targhetta posta sull'imballo.

**CONTROINDICAZIONI ALL'USO**
Non vi é nessuna controindicazione all'uso, se vengono osservate le normali precauzioni per macchine di questo tipo.

NOTE PER VALVOLE PER PRODOTTI ALIMENTARI:
Pulire periodicamente le valvole con acqua.
Pulire lama e rivestimento con particolare cura.
Prima di usare altri prodotti di pulizia consultare il fornitore.
Nel caso in cui il prodotto a contatto con la valvola sia acido o a temperatura troppo elevata o troppo bassa, rivolgersi direttamente al ns. Uff. Tecnico Comm.le.
Le valvole a ghigliottina tipo VL devono essere chiuse soltanto con colonna di prodotto in movimento.
Ricordiamo che le nostre valvole sono a tenuta polvere.
E' vietato mettere le valvole in funzione prima che la macchina/impianto nel quale devono essere installate sia dichiarato conforme alle disposizioni della Direttiva Macchine 2006/42/CE.
In quest'ambito è cura dell'impiantista / installatore predisporre ed installare tutti gli accorgimenti / protezioni al fine di evitare danni a cose o persone in caso di rotture e conseguente caduta di pezzi della macchina (ad es: rottura del motore).
Per prodotti pericolosi, nocivi al contatto e/o all'inalazione, infiammabili, esplosivi e pericolosi dal punto di vista batteriologico e/o virale, l'impiantista e/o l'installatore, dovranno prevedere idonei dispositivi all'uopo.

**TRANSPORT AND RECEIPT OF GOODS**

On arrival, prior to unloading, check goods are in compliance with delivery note, invoice and acknowledgement of order.
If any parts are damaged through transport immediately state your claims in writing in the consignment note (waybill). The driver is obliged to accept the claim and to leave you a copy. Send off your claim without hesitation to the supplier if you received the goods free destination. In all other cases send claim to shipping agent. If you fail to state your claims on arrival of the goods it may not be accepted.
Avoid any kind of damage to goods during unloading and handling.
Always handle goods with care.

**TRANSPORT UND WARENEMPFANG**

Bei Wareneingang vor dem Abladen prüfen, ob die Ware in Beschaffenheit und Menge mit den Angaben auf Lieferschein, Rechnung und Auftragsbestätigung übereinstimmt.
Eventuelle Schäden sofort schriftlich im Frachtbrief reklamieren, da spätere Ansprüche nicht mehr geltend gemacht werden können. Der Fahrer ist dazu verpflichtet, die Reklamation entgegenzunehmen und dem Empfänger eine Kopie dieser zu überlassen. Bei Lieferung frei Haus Reklamation an den Lieferanten schicken, in allen anderen Fällen an den Spediteur.
Beim Abladen Ware nicht beschädigen.
Berücksichtigen, daß es sich um mechanische Teile handelt, die mit Vorsicht zu behandeln sind.

**TRANSPORT ET RECEPTION**

Au moment où vous recevez la marchandise, vérifiez bien que le modèle et la quantité correspondent aux données indiquées sur le bulletin de livraison, sur la facture et sur la confirmation de commande.
Si vous constatez des dommages, vous devez immédiatement le faire savoir en l'écrivant dans l'emplacement prévu à cet effet sur la lettre de voiture. Le chauffeur a l'obligation d'accepter votre réclamation et de vous en laisser une copie. Si la fourniture a été livrée franco destination, envoyez-nous votre réclamation, sinon, envoyez-la directement au transporteur.
Si vous ne réclamez pas les dommages et intérêts immédiatement après avoir reçu la marchandise, votre réclamation risque de ne pas être acceptée.Veillez à ne pas endommager la marchandise durant le déchargement et la manutention.
Faites toujours extrêmement attention quand vous la déplacez.

**TRASPORTO - RICEVIMENTO**

Al ricevimento della merce controllare se la tipologia e la quantità corrispondono con i dati di bolla di consegna, fattura e conferma d'ordine.
Eventuali danni devono essere fatti presenti immediatamente per iscritto nell'apposito spazio della lettera di vettura. L'autista è obbligato ad accettare un tale reclamo e lasciarne una copia a Voi. Se la fornitura è franco destino, inviate il Vs. reclamo a noi, altrimenti direttamente allo spedizioniere.
Se non richiederete i danni immediatamente all'arrivo della merce, la vostra richiesta potrebbe non essere accolta.
Evitate ogni tipo di danneggiamento durante lo scarico e le movimentazioni.
Movimentate sempre la merce con cura.

**PACKAGING DATA**

**N.B.**: The above weights do not include any additional packaging such as pallets or similar.

**KOLLIMASSE UND GEWICHTE**

**N.B.**: Die o.a. Gewichte beinhalten keine zusätzlichen Verpakkungen wie Paletten o.ä.

**EMBALLAGES ET POIDS**

**N.B**.: Les données ci-dessous ne comprennent pas le poids d'un éventuel emballage supplémentaire (palette ou autre).

**IMBALLI - PESI**

**N.B.**: I dati sopra riportati non comprendono il peso di un eventuale imballo cumulativo (pallet o altro).

| **Valve - *Weiche* Vanne - *Valvola*** | **Weight - *Gewicht* - Poids - *Peso* (kg)** | | | | | |
|---|---|---|---|---|---|---|
| | **Nominal width - *Nennweite* - Taille nominale - *Grandezza nominale*** | | | | | |
| | **150** | **200** | **250** | **300** | **350** | **400** |
| **VL** | 18 | 23 | 28 | 36 | 50 | 60 |
| **VLR** | / | / | / | 45 | / | / |
| **VLS** | 20 | 24 | 30 | 39 | / | / |
| Single packing included - *Einzelverpackung inbegriffen* - Emballage simple compris - *Imballo singolo compreso* | | | | | | |

**PACKAGING DIMENSIONS** **VERPACKUNGSMASSE** **EMBALLAGE ENCOMBREMENTS** **IMBALLO - DIMENSIONI**

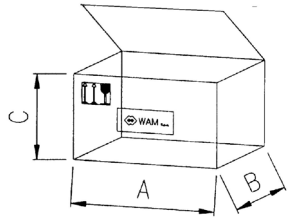


| **Valve - *Weiche* Vanne - *Valvola*** | **Nominal width - *Nennweite* - Taille nominale - *Grandezza nominale*** | | | | | | | | | | | | | | | | | |
|---|---|---|---|---|---|---|---|---|---|---|---|---|---|---|---|---|---|---|
| | **150** | | | **200** | | | **250** | | | **300** | | | **350** | | | **400** | | |
| | **A** | **B** | **C** | **A** | **B** | **C** | **A** | **B** | **C** | **A** | **B** | **C** | **A** | **B** | **C** | **A** | **B** | **C** |
| **VL** | 470 | 288 | 128 | 570 | 338 | 128 | 660 | 388 | 128 | 780 | 458 | 128 | 915 | 508 | 128 | 1000 | 545 | 165 |
| **VLR** | / | / | / | / | / | / | / | / | / | 600 | 128 | 780 | / | / | / | / | / | / |
| **VLS** | 470 | 288 | 128 | 570 | 338 | 128 | 660 | 388 | 128 | 780 | 458 | 128 | / | / | / | / | / | / |

**INSTALLATION**
The valves have been pre-assembled and tested at the factory.

**PREPARATION**
Remove packaging.
Mount actuator (hand wheel, manual chain actuator, electropneumatic, gear motor or others). WAM® supplies some of the above-mentioned actuators which have to be bolted on by the customer.

**ELECTRICAL AND PNEUMATIC CONNECTIONS**
Electrical and pneumatic connections must be carried out by qualified personnel ONLY.

**DISCONNECT MAINS SUPPLY!**
Check voltage corresponds with motor plate data.
Follow general safety instructions.

**SAFETY NOTICE**
Never introduce hands in the area between valve body and disc when valve is working.
Provide for a saftey grille or a hopper above the machine in order to avoid harm to extremities.
To avoid harm also at the outlet side, provide a vertical outlet spout or an equivalent system.

**START - UP**
Especially with materials which tend to harden or become sticky through longer periods of storage ensure no material is deposited on the shaft passages. In such a case clean the area thoroughly.
Start valve operation without material. If valve works correctly add material and proceed with regular operation.

**EINBAU**
Die Schieber sind werksseitig komplett vormontiert und getestet.

**VORBEREITUNG**
Verpackung entfernen.
Antrieb (Handrad, manuell über Kette, elektropneumatisch, elektromotorisch, o.a.) montieren. WAM® liefert einige der vorgenannten Antriebe, deren Anbau mittels Schraubverbindungen erfolgt.

**ELEKTRISCHER UND PNEUMATISCHER ANSCHLUSS**
Elektrische und pneumatische Anschlüsse dürfen NUR von Fachpersonal vorgenommen werden.

**STROMZUFUHR ABSCHALTEN !**
Kontrollieren, ob Netzspannung mit den Typenschildangaben übereinstimmt. Allgemeine Sicherheitsvorschriften beachten.

**SICHERHEITSHINWEIS**
Niemals im Betriebszustand mit den Händen in den Bereich zwischen Klappenkörper und -Teller greifen!
Über dem Gerät ein fest montiertes Schutzgitter oder einen Trichter vorsehen, der so hoch ist, daß die Verletzung von Körperextremitäten ausgeschlossen ist.
Ebenfalls zur Ausschließung der Verletzungsgefahr am Auslauf einen vertikalen Aufsteckstutzen oder ein gleichwertiges System vorsehen.

**INBETRIEBNAHME**
Besonders bei Medien, die durch längere Lagerung zum Aushärten neigen oder klebrig werden, sicherstellen, daß sich zwischen Gehäuse und Schieberblech kein Material abgelagert hat. Ist dies doch der Fall, den Bereich gründlich säubern.
Schieber zunächst ohne Materialzugabe in Betrieb nehmen. Wenn Schieber problemfrei funktioniert, Material zugeben und normalen Betrieb aufnehmen.

**INSTALLATION**
Nous fournissons nos vannes déjà complètes et testées.

**PREPARATION**
Enlevez la vanne de son emballage.
Montez sur la vanne l'actionneur prévu (manuel à volant, manuel à distance avec poulie à chaîne, pneumatique, électrique, etc.).
La société WAM® construit quelques-unes des actionneurs énumérés ci-dessus et les fournit séparément: ils doivent donc être boulonnées par le client.

**BRANCHEMENTS ELECTRIQUES ET PNEUMATIQUES**
Les branchements électriques et pneumatiques doivent être exécutés UNIQUEMENT par du personnel spécialisé.

**AVANT D'EFFECTUER N'IMPORTE QUELLE OPERATION, DEBRANCHEZ LA MACHINE DU COURANT ELECTRIQUE!**
Avant de brancher votre machine, assurez-vous que le voltage du réseau correspond bien à celui indiqué sur la plaque du moteur.
Respectez toujours les consignes générales de sécurité.

**PRECAUTIONS GENERALES**
Ne mettez jamais vos mains entre la partie en mouvement et le corps de la vanne quand celle-ci est en marche!
Monter au-dessus de la machine une grille de sécurité fixe ou une trémie d'une hauteur suffisante pour empêcher des dommages les membres d'une personne.
Pour la même raison il est nécessaire d'utiliser à la décharge un raccordement vertical ou un système équivalent.

**MISE EN MARCHE**
Vérifiez qu'il ne reste pas de substances étrangères entre la partie mobile et le corps de la vanne, surtout s'il s'agit de substances dures ou collantes; s'il y en a, nettoyez soigneusement.
Quand vous mettez la machine en marche pour la première fois, vous devez le faire sans produit; si tout marche régulièrement, mettez du produit et procédez normalement.

**INSTALLAZIONE:**
Le valvole vengono fornite già complete e collaudate prima della consegna.

**PREPARAZIONE**
Togliere le valvole dall'imballo
Montare sulla valvola il comando previsto (volantino, manuale a distanza con puleggia a catena, pneumatico, elettrico, ecc.).
La ditta WAM® costruisce e fornisce separatamente alcuni dei tipi sopraelencati: vanno imbullonati dal cliente.

**COLLEGAMENTI ELETTRICI E PNEUMATICI**
I collegamenti elettrici e pneumatici devono essere eseguiti SOLTANTO da personale specializzato.

**PRIMA DI QUALSIASI OPERAZIONE STACCARE L'ALIMENTAZIONE DI CORRENTE!**
Prima del collegamento assicurarsi che il voltaggio di rete coincida con quello indicato sulla targhetta del motore.
Seguire sempre le norme generali di sicurezza.

**PRECAUZIONI GENERALI**
Mai mettere le mani tra la parte in movimento e il corpo valvola mentre la valvola è in funzione!
In ogni caso é necessario che sopra la macchina venga montata una griglia di sicurezza fissa o una tramoggia che sia di altezza sufficiente ad impedire che gli arti di una persona vengano danneggiati.
Lo stesso discorso vale per lo scarico: é necessario usare lo scarico verticale o un sistema equivalente.

**AVVIAMENTO**
Verificare che sostanze estranee non si siano fermate tra lama e corpo valvola, soprattutto se sono dure o collanti; se così fosse pulire accuratamente.
La prima prova di avviamento deve essere fatta senza prodotto; se tutto funziona regolarmente, alimentare con il materiale e procedere normalmente.

**OPERATION**

Depending on the type of plant, the valve can be operated either manually, electropneumatically or by a gear motor. In the two latter versions the valve is controlled by a remote control panel or by a local starter.
The weight of the material column must not exceed the resistance of the mobile valve parts. Materials with bulk density < 1.3 t/m³ normally do not create any problem. When dealing with materials with higher bulk density check with customer service.

**N.B.**: Regular cleaning increases the life of the valve. This applies in particular to applications where materials are handled which either tend to harden or become sticky when stored for a longer period.

**BETRIEB**

Je nach Anlagentyp wird der Schieber entweder von Hand, elektropneumatisch oder elektromotorisch betrieben. In den letzten beiden Versionen wird der Schieber entweder über eine zentrale Steuerung oder über einen Vor-Ort-Schaltkasten in Betrieb genommen.
Das Gewicht der Materialsäule darf nicht größer sein als der Widerstand der beweglichen Schieberteile. Medien mit einem Schüttgewicht <1.3 t/m³ stellen in der Regel kein Problem dar. Bei Medien mit höherem Schüttgewicht Rücksprache mit dem Kundendienst halten.

**N.B.**: Regelmäßiges Säubern erhöht die Lebensdauer des Schiebers. Dies gilt insbesondere für Medien, die bei längerer Lagerung aushärten oder klebrig werden

**FONCTIONNEMENT**

Suivant le type d'installation, la vanne peut fonctionner manuellement, pneumatiquement ou électriquement; dans les deux derniers cas, l'actionneur peut se trouver sur un tableau central ou sur place.
Il est très important de savoir le poids du produit qui pèse sur la partie mobile de la vanne; il ne doit jamais dépasser la résistance maximum de cette dernière.
Pour les silos et les trémies de série avec des produits dont le poids spécifique est inférieur à 1.3 t/m³, il n'y a pas de problèmes; dans les autres cas, consultez notre bureau de vente

**N.B**.: Pour augmenter de beaucoup la durée de la vanne, nettoyez-la régulièrement. Ce nettoyage est particulièrement important si le produit traité a la tendance à se durcir ou à se tasser quand il reste quelque temps immobile.

**FUNZIONAMENTO**

In base al tipo di impianto, il funzionamento di una valvola è manuale, pneumatico o elettrico: in questi due ultimi casi il comando può essere o in un quadro centrale o in loco.
E' molto importante conoscere il peso del prodotto che grava sulla parte mobile della valvola: esso non deve mai superare la sua massima resistenza.
Con sili e tramogge standard con prodotti di peso specifico inferiore a 1.3 non vi sono problemi; in caso contrario consultare il ns. Uff. Tecnico Commerciale.

**N.B.**: Si aumenta notevolmente la durata della valvola pulendola periodicamente. Questo è particolarmente importante quando il prodotto trattato tende ad indurirsi o a compattarsi se rimane fermo per un certo periodo di tempo.

**ASSEMBLY - DISMANTLING**

**MONTAGE - DEMONTAGE**

**MONTAGE - DEMONTAGE**

**MONTAGGIO - SMONTAGGIO**

**ASSEMBLY**

Put the valve in position and bolt it on carefully using nuts and bolts.
Securely bolt the valve into position, as established.
(Make sure that the valve works perfectly in axis.)
Check valve is properly mounted, with the upper part in the correct position.
Connect the pneumatic parts to the air supply and the electrical parts to the power mains.
Ensure the valve is mounted the right way round.
Carry out pneumatic und electrical connections in the correct manner.
**IMPORTANT: For accident prevention it is <u>essential</u> to keep the valve <u>out of reach</u> of personnel during operation. With this aim in mind the customer has to provide suitable safety devices such as grilles, as well as protective inlet and outlet joints (either robust flexible socks or rigid pipe unions).**
When using movable safety devices provide protection limit switches which stop the valve instantaneously if the protection is opened or removed. Restarting of the valve operation must only be possible when the protection is effective again.

**MONTAGE**

Klappe in Einbaulage bringen und mittels Schrauben und Muttern gründlich befestigen.
Sicherstellen, dass der Schieber perfekt in Achse arbeitet.
Sicherstellen, daß der Schieber richtig herum eingebaut ist.
Pneumatische und elektrische Anschlüsse vorschriftsmäßig vornehmen.
**WICHTIG:Zur Unfallverhütung <u>unbedingt darauf achten</u>, daß das Betriebspersonal den Schieber im Betriebszustand <u>nicht mit den Händen erreichen kann</u>. Zu diesem Zweck müssen kundenseitig geeignete Schutzvorrichtungen wie z.B. Gitter sowie zu- und abflußseitig geschützte Verbindungen (z.B. robuste, flexible Schlauch-oder starre Rohrverbindungen) vorgesehen werden.**
Bei Verwendung von beweglichen
Schutzvorrichtungen sind Schutz-Endschalter vorzusehen, die beim Öffnen oder Entfernen der Schutzvorrichtung des Schiebers augenblicklich außer Betrieb setzen und die neuerliche Inbetriebnahme erst dann ermöglichen, wenn die Schutzvorrichtung wieder wirksam ist.

**MONTAGE**

Assujettissez la vanne à l'endroit prévu en la boulonnant solidement.
Fixez la vanne à l'endroit prévu en la boulonnant solidement.
(Assurez-vous que la vanne fonctionne parfaitement en axe).
Vérifiez si elle est montée correctement avec sa partie supérieure dans la bonne position.
Branchez les parties pneumatiques à la ligne d'air et les parties électriques au réseau électrique.
**IMPORTANT: Pour respecter les dispositions en vigueur en matière de prévention des accidents, <u>il faut absolument empêcher</u> qu'une main d'homme puisse atteindre l'intérieur de la vanne pendant que celle-ci est en marche.**
**Pour ce faire, la personne qui installe la machine doit prévoir des obstacles tels que des grilles, des filets de protection, etc. et/ou des entretoises, aussi bien pour la partie supérieure que pour la partie inférieure (manchons, etc.) qui en empêchent l'accès.**
Si ces "protections" sont mobiles, vous devez équiper l'appareil d'un dispositif qui provoque immédiatement l'arrêt de la vanne quand cette protection est retirée ou ouverte. En outre, ce même dispositif ne doit pas permettre que la machine démarre si la protection n'est pas placée dans la bonne position.

**MONTAGGIO**

Fissare la valvola, dove è previsto, imbullonandola saldamente.
(Accertarsi che la valvola lavori perfettamente in asse).
Controllare che sia montata correttamente con la parte superiore nella giusta posizione.
Collegare le parti pneumatiche alla linea aria e le parti elettriche alla rete.
**IMPORTANTE: Per rispettare le vigenti disposizioni in materia di prevenzione <u>è assolutamente da evitare</u> la possibilità che l'interno della valvola in funzione sia raggiungibile da mano d'uomo. Per ottenere ciò, l'installatore deve prevedere ostacoli (griglie, reti di protezione, ecc.) e/o distanziali sia per la parte superiore che per la parte inferiore (calzoni, ecc.) che non permettano l'accesso.**
Se queste "protezioni" sono mobili, è obbligatorio dotare l'apparecchiatura di un dispositivo che provochi l'immediato arresto della valvola all'atto della rimozione o apertura della protezione. Tale dispositivo inoltre non deve consentire l'avviamento della macchina se la protezione non è collocata nella posizione corretta.

**DISMANTLING**
Prior to dismantling ensure mains supply is disconnected.

**MAINTENANCE**
**Failure to follow the maintenance instructions could cause problems and might invalidate the warranty.**
Once a week, check material flows freely and no material deposits spoil the function of the valve. If necessary clean contact parts thoroughly.

**PRIOR TO EVERY MAINTENANCE JOB, DISCONNECT VALVE FROM MAINS SUPPLY!**

The bearings must be cleaned on a routine basis to prevent incrustations from forming which might impede the bearings from rotating and, therefore, the blade from becoming worn.
Routinely empty the rear casing of the valve to prevent the accumulation of powder and allow for the ducts and the limit sswitch to function properly.

**REPLACEMENT OF WEAR PARTS**
No replacement required.

**DEMONTAGE**
Vor Demontage des Schiebers oder von Schieberteilen sicherstellen, daß die Stromzufuhr unterbrochen ist.

**WARTUNG**
**Das Nichtbefolgen der Wartungsvorschriften kann zu Störungen führen und die Gewährleistung außer kraft setzen.**
Einmal wöchentlich sicherstellen, daß das Material frei fließen kann und keine Ablagerungen die Schieberfunktion beeinträchtigen. Ggfls. den produktberührenden Bereich gründlich säubern.

**VOR JEDER WARTUNGS-ARBEIT HAUPTSTROMZUFUHR UNTERBRECHEN!**

Die Lager regelmäßig säubern, um Verkrustungen zu vermeiden, die ihre Drehfähigkeit behindern mit daraus resultierendem Verschleiß des Schieberbleches. Das hintere Gehäuseteil des Flachschiebers regelmäßig säubern, um die Ansammlung von Material zu vermeiden und das gute Funktionieren des Zu- und Auslaufes sowie der Endschalter zu gewährleisten.

**AUSTAUSCH VON VERSCHLEISSTEILEN**
Es ist kein Austausch von Verschleißteilen erforderlich.

**DEMONTAGE**
Avant de démonter une pièce quelconque de la vanne, assurez-vous que cette dernière est bien débranchée du réseau électrique.

**ENTRETIEN**
**Si vous ne respectez pas exactement les consignes suivantes vous pouvez avoir de graves problèmes et invalider la garantie des machines fournies.**
Toutes les semaines, vérifiez s'il n'y a pas de résidus dans la zone de passage du produit. S'il y en a, nettoyez soigneusement afin d'éviter tout engorgement.

**AVANT D'ENTREPRENDRE N'IMPORTE QUELLE OPERATION, DEBRANCHEZ LA VANNE DU RESEAU ELECTRIQUE!**

Nettoyez périodiquement les roulements afin d'éviter toute incrustation qui en empêche la rotation et provoque l'usure de la lame.
Nettoyez périodiquement le boîtier arrière de la vanne de manière à éviter toute accumulation de poudre encrassante en vue d'assurer le bon fonctionnement des conduits et du fin de course.

**REMPLACEMENT DES PIECES USEES**
Les pièces usées ne seront pas remplacées.

**SMONTAGGIO**
Prima di smontare qualsiasi pezzo della valvola, assicurarsi che l'alimentazione di corrente sia staccata.

**MANUTENZIONE**
**Il non attenersi strettamente alle seguenti istruzioni può causare problemi ed invalidare la garanzia sulle macchine fornite.**
Ogni settimana, verificare che la zona di passaggio del materiale sia libera da residui dello stesso: se non lo è, pulire accuratamente per evitare ogni ostruzione.

**PRIMA DI QUALSIASI OPERAZIONE STACCARE L'ALIMENTAZIONE DI CORRENTE!**

Pulire periodicamente i cuscinetti, onde evitare incrostazioni che ne impediscono la rotazione con conseguente usura della lama.
Vuotare periodicamnete la carcassa posteriore della valvola in modo da evitare ristagno di polvere per permettere il buon funzionamento dei condotti e del fine corsa.

**SOSTITUZIONE DEI PEZZI DI USURA**
Non è prevista nessuna sostituzione di pezzi soggetti ad usura.

**LUBRICATION**
No lubrication required.
**N.B**.:only for CRG and AR-type gear motor actuators regular lubrication once every 300 cycles (openings-closings) approximately is recommended.

**NOISE**
Noise level depends on handled material and on actuator type.
**DISMANTLING AND DISPOSAL**
Storage of equipment for longer periods
Clean the equipment thoroughly.
Store the equipment in a container.
Scrapping
Recycle plastic materials (e.g. seals, coatings etc.) and dispose according to regulations.
Dispose of metal parts at the scrap yard.
**FAULT FINDING**
Minor problems can be resolved without consulting a specialist.

**SCHMIERUNG**
Keine Schmierung erforderlich.
**N.B.:** Nur für elektromechanische Antriebe vom Typ CRG und AR ist ein Nachschmieren ca. alle 300 Zyklen (Öffnungen und Schliessungen) empfehlenswert.

**BETRIEBSGERÄUSCHE**
Die Intensität der Betriebsgeräusche hängt vom behandelten Schüttgut sowie vom Typ des Schieberantriebs ab.
**DEMONTAGE UND VERSCHROTTUNG**
Lagerung des Geräts über längere Zeiträume
Gerät gründlich säubern.
Gerät in einem Behälter lagern.
Verschrottung
Kunststoffteile (z.B. Dichtungen, Beschichtungen etc.) gemäß den Vorschriften recyclen.
Metallteile beim Schrotthändler abgeben.
**BETRIEBSSTÖRUNGEN UND ABHILFE**
Kleinere Störungen können ohne die Einschaltung eines Fachmanns behoben werden.

**LUBRIFICATION**
Il n'est prévu aucune lubrification.
**N.B.:** Seulement pour les actionneurs électromécaniques CRG et AR on conseille le cycle de lubrification ordinaire au bloc en bronze toutes les 300 cycles (environ) d'ouverture / fermeture.

**BRUYANCE**
Le niveau de bruyance des vannes dépend de la nature du produit dosé et de l'actionneur accouplé.
**DEMONTAGE ET DEMOLITION**
Mise en entrepôt de la machine pendant une longue période:
nettoyez soigneusement la machine;
protégez-la en la mettant dans un conteneur.
Démontage et mise à la ferraille à la fin de la vie de la machine:
récupérez les pièces en matière plastique (par ex. revêtements, joints, etc.) et remettez-les aux centres de récolte spécialisés;
remettez les autres pièces en métal aux centres de récupération des métaux.
**PROBLEMES EVENTUELS**
Vous pouvez résoudre vous-même les petits problèmes sans devoir consulter un spécialiste.

**LUBRIFICAZIONE**
Nessuna operazione di lubrificazione è prevista.
**N.B**.: unicamente per il comando elettromeccanico CRG si consiglia ciclo di lubrificazione ordinaria al blocchetto in bronzo ogni 300 cicli circa apertura/chiusura.

**RUMORE**
Il livello di rumorosità delle valvole dipende dalla natura del materiale dosato e dall'attuatore accoppiato.
**SMANTELLAMENTO E DEMOLIZIONE**
Immagazinaggio della macchina per periodo prolungato
Pulire accuratamente la macchina.
Immagazinare la macchina dentro un contenitore.
Rottamazione
Riciclare i pezzi in plastica (per es. guarnizioni, rivestimenti etc.) a norma di legge.
Consegnare i pezzi in metallo ai centri di raccolta.
**POSSIBILI INCONVENIENTI**
I problemi minori possono essere risolti senza consultare uno specialista.

| Item | PROBLEM | Item | REASON | Item | SOLUTION |
|---|---|---|---|---|---|
| 1 | Valve does not open or stays always open | 1.1 | Material has formed a block | 1.1 | Dismantle, clean and reassemble |
| | | 1.2 | Material weight too high | 1.2 | Provide weight relief above valve |
| | | 1.3 | Insufficient air pressure | 1.3 | Check compressed air mains |
| | | 1.4 | Drive unit too weak | 1.4 | Check mains supply and gear motor |
| 2 | Valve leaks | 2.1 | Valve stays always completely or partly open | 2.1 | See solution item 1.1 |
| 3 | Valve opens and closes with difficulty | 3.1 | See item 1.1 - 1.2 1.3 - 1.4 | 3.1 | Ensure valve works in axis |
| 4 | Excessive presence of dust | 4.1 | Fluidization nozzles too close to valve | 4.1.1 | Substitute nozzles with vibrator o knocker or move nozzles from present position |
| | | | | 4.1.2 | Provide breather hole in rotary valve |
| | | 4.2 | Material column always too high | 4.2 | Provide weight relief above valve |
| | | 4.3 | St. steel 304 blade, thickness 9.4 ± 0.1 mm | 4.3 | Mount polyurethane blade with thickness 10 ± 0.1 mm for greater interference |
| 5 | Infiltration of powder or water in the rear part of the valve | 5.1 | Guard incorrectly positioned | 5.1 | Mount guard tightly onto valve frame |

| Pos. | STÖRUNG | Pos. | URSACHE | Pos. | LÖSUNG |
|---|---|---|---|---|---|
| 1 | Schieber offnet nicht oder bleibt offen. | 1.1 | Materialverklumpung | 1.1 | Ausbauen, säubern und wieder einbauen |
| | | 1.2 | Zu hohes Material-gewicht | 1.2 | Entlastungskegel vorsehen |
| | | 1.3 | Luftdruck unzureichend | 1.3 | Druckluftleitung überprüfen |
| | | 1.4 | Getriebemotor zu schwach | 1.4 | Stromzufuhr und Getriebemotor überprüfen |
| 2 | Schieber leckt | 2.1 | Schieber bleibt ständig gänzlich oder nur zum Teil geöffnet | 2.1 | Siehe 1.1 |
| 3 | Schieber beim Öffnen und Schliessen schwergangig | 3.1 | Siehe Punkt 1.1 - 1.2 1.3 - 1.4 | 3.1 | Prüfen, ob Schieberblech exakt axial arbeitet |
| 4 | Zu große Staubentwicklung | 4.1 | Luftauflockerungsdüsen zu nahe am Schieber | 4.1.1 | Düsen durch Rüttler oder Klopfer ersetzen, oder Düsen versetzen |
| | | | | 4.1.2 | In Zellenradschleuse Entlüftung vorsehen |
| | | 4.2 | Ständig sehr hohe Materialsäule | 4.2 | Entlastungskegel vorsehen |
| | | 4.3 | Schieberblech aus Edelstahl 1.4301, Stärke 9.4 ± 0.1 mm | 4.3 | Schieberblech aus Polyurethan, Stärke 10 mm ± 0.1 im Interesse einer besseren Passung vorsehen |
| 5 | Eindringen von Material oder Wasser in den hinteren Teil des Shiebers | 5.1 | Schutzblech nicht korrekt positioniert | 5.1 | Schutzblech dicht an den Schieberrahmen montieren |

| Pos. | PROBLEME | Pos. | CAUSE | Pos. | SOLUTION |
|---|---|---|---|---|---|
| 1 | Vanne n'ouvre pas ou reste toujours ouverte. | 1.1 | Produit à l'intérieur a formé un bloc | 1.1 | Démonter, nettoyer et remonter |
| | | 1.2 | Poids élevé du produit | 1.2 | Prévoir un toit de protection |
| | | 1.3 | Pression d'air insuffisante | 1.3 | Controler la ligne pneumatique |
| | | 1.4 | Motoréducteur insuffisant | 1.4 | Controler ligne électrique et motoréducteur |
| 2 | Vanne perd | 2.1 | Vanne reste toujours ouverte (complètement ou partiellement) | 2.1 | Voir solution au point 1.1 |
| 3 | Vanne s'ouvre et se ferme avec peine | 3.1 | Voir au point 1.1 - 1.2 1.3 - 1.4 | 3.1 | Vérifier si la vanne travaille parfaitement en axe |
| 4 | Présence excessive de poussière | 4.1 | Buses de fluidification trop près de la vanne | 4.1.1 | Substituer buses avec vibrateur ou percuteur, ou eventuellement les déplacer |
| | | | | 4.1.2 | Créer dans la vanne alvéolaire un évent |
| | | 4.2 | Colonne de matériau élevée toujours présente | 4.2 | Prévoir toit de protection |
| | | 4.3 | Guillotine AISI304 épaisseur 9.4 ± 0.1 mm | 4.3 | Monter guillotine en polyuréthane d'épaiss. 10 mm ± 0.1, afin d'obtenir interférence plus grande |
| 5 | Entrée de produit ou d'eau dans la partie arrière de la vanne | 5.1 | Tôle de protection ne pas positionnée correctement | 5.1 | Monter la tôle de protection adhérente au châssis |

| Pos. | PROBLEMA | Pos. | CAUSA | Pos. | SOLUZIONE |
|---|---|---|---|---|---|
| 1 | La valvola non si apre o rimane sempre aperta. | 1.1 | Il prodotto all'interno ha fatto blocco | 1.1 | Smontare, pulire e rimontare |
| | | 1.2 | Elevato peso del prodotto | 1. 2 | Prevedere un corpo di protezione |
| | | 1.3 | La pressione aria è insufficiente | 1.3 | Controllare la linea pneumatico |
| | | 1.4 | Il motoriduttore è insufficiente | 1.4 | Controllare linea elettri ca e motoriduttore |
| 2 | La valvola perde | 2.1 | La valvola rimane sempre aperta completamente o parzialmente | 2.1 | Vedi soluzione al punto 1.1 |
| 3 | La valvola apre e chiude con fatica | 3.1 | Vedi al punto 1.1 - 1.2 1.3 - 1.4 | 3.1 | Verificare che la valvola lavori perfettamente in asse |
| 4 | Eccessiva presenza di polvere | 4.1 | Gli ugelli di fluidificazione sono eccessivamente vicini alla valvola | 4.1.1 | Sostituire gli ugelli con vibratore o percussore, eventualmente spostarli da tale posizione |
| | | | | 4.1.2 | Creare nella rotovalvola un foro di sfiato |
| | | 4.2 | Elevata colonna di materiale sempre presente | 4.2 | Posizionare coppo di protezione |
| | | 4.3 | Lama in AISI304 spessore 9.4 ± 0.1 mm | 4.3 | Montare lama in poliuretano di spessore 10 mm ± 0.1, per una maggiore interferenza |
| 5 | Entrata di polvere o acqua nella parte posteriore della valvola | 5.1 | Lamiera di protezione non posizionata correttamente | 5.1 | Montare lamiera di protezione aderente alla lamiera piegata |

N.B.: VL-type Slide Valves are dust proof but NOT pressure proof.

N.B.: Schieber vom Typ VL sind staubdicht, d.h. NICHT druckdicht.

N. B.: les vannes guillotine du type VL sont étanches aux poudres mais PAS à la pression

N. B.: le valvole a ghigliottina WAM® tipo VL sono a perfetta tenuta polvere/granuli NON a tenuta pressione

| | List of hazards<br>*Gefährdungsliste*<br>Liste des risques<br>*Lista dei rischi* | Safety Measures<br>*Sicherheitsmaßnahmen*<br>Consignes de sécurité<br>*Misure di sicurezza* | Norm Reference<br>*Bezugsnormen*<br>Normes de référence<br>*Norme di Riferimento* | Operating Instruction Ref.<br>*Bez. Betriebsanleitung*<br>Réf. instructions de fonctionnement<br>*Rif. istruzioni operative* | Residual Risk<br>*Restrisiken*<br>Risque résiduel<br>*Rischio residuo* |
|---|---|---|---|---|---|
| **1.** | **Mechanical Hazards - *Mechanische Gefährdungenen* - Risques mécaniques - *Rischi meccanici*** | | | | |
| 1.1 | Crushing - *Quetschen*<br>Ecrasement - *Schiacciamento* | Protection (grid, robust flexible sock...) to keep the valve out of reach of the personnel.<br>If the protection is movable a limit switch has to be fitted to stop the valve if the protection is removed.<br><br>*Schutzvorrichtungen (Gitter, robuste Verbindungsmanschetten etc.) um zu verhindern, daß das Bedienungspersonal mit beweglichen Klappenteilen in Kontakt kommt. Bei beweglichen Schutzvorrichtungen ist ein Endschalter vorzusehen, der die Klappe abschaltet, sobald die Schutzvorrichtung entfernt wird.*<br><br>Protection (grille, manchon flexible robuste etc.) pour éviter que le personnel entre en contact avec les pièces mobiles de la vanne. Si la protection est mobile, un dispositif de fin de course doit être installé qui arrête la vanne au moment où la protection est enlevée.<br><br>*Protezione (griglia, robusto calzone flessibile ecc...) onde evitare che il personale entri in contatto con le parti mobili della valvola. Con protezioni mobili occorre installare un dispositivo fine corsa che arresti la valvola al momento in cui la protezione viene rimossa.* | EN 292 - 1<br>EN 294<br>EN 349 | 03021.25 M.04 | NO - *NEIN*<br>NON - *NO* |
| 1.2 | Shearing - *Scheren*<br>Troncature - *Troncamento* | | | | |
| 1.3 | Cutting - *Schneiden*<br>Coupe - *Taglio* | | | | |
| 1.4 | Entanglement<br>*Erfassen - Aufwickeln*<br>Entortillement *Attorcigliamento* | | | | |
| 1.5 | Drawing-in - Trapping<br>*Einziehen - Fangen*<br>Entraînement - Encastrement<br>*Trascinamento - Intrappolamento* | | | | |
| 1.6 | Impact - *Stoß*<br>Impact - *Impatto* | Not applicable - *Nicht anwendbar*<br>Non applicable - *Non applicabile* | | | |
| 1.7 | Stabbing - puncture<br>*Stich*<br>Perforation - perçage<br>*Perforazione - foratura* | | | | |
| 1.8 | Friction - abrasion<br>*Reibung - Abrieb*<br>Frottement - abrasion<br>*Frizione - abrasione* | | | | |
| 1.9 | High pressure fluid injection<br>*Flüssigkeiten unter Druck*<br>Injection de fluide à haute pression<br>*Iniezione fluido ad alta pressione* | | | | |
| 1.10 | Ejection of parts<br>*Ausstoßung von Teilen*<br>Ejection des pièces<br>*Espulsione di pezzi* | | | | |
| 1.11 | Loss of stability<br>*Stabilitätsverlust*<br>Perte de stabilité<br>*Perdita di stabilità* | Fix correctly the machine to the ground or to a strong structure<br><br>*Die maschine am Boden oder an einer soliden Struktur richtig verankern*<br><br>Ancrer correctement la machine au sol ou à une structure solide<br><br>*Ancorare correttamente la macchina al suolo o a una struttura solida* | EN 292-1 | 03021.25 M.04 | NO- *NEIN*<br>NON - *NO* |
| 1.12 | Slip Trip and fall<br>*Rutschen oder Fallen*<br>Glissement et chute<br>*Scivolamento e caduta* | Not applicable - *Nicht anwendbar*<br>Non applicable - *Non applicabile* | | | |

| | List of hazards<br>*Gefährdungsliste*<br>Liste des risques<br>*Lista dei rischi* | Safety Measures<br>*Sicherheitsmaßnahmen*<br>Consignes de sécurité<br>*Misure di sicurezza* | Norm Reference<br>*Bezugsnormen*<br>Normes de référence<br>*Norme di Riferimento* | Operating Instruction Ref.<br>*Bez. Betriebsanleitung*<br>Réf. instructions de fonctionnement<br>*Rif. istruzioni operative* | Residual Risk<br>*Restrisiken*<br>Risque résiduel<br>*Rischio residuo* |
|---|---|---|---|---|---|
| **2.** | **Electrical Hazard - *Elektrische Gefährdungen* - Risques électriques - *Rischi elettrici*** | | | | |
| 2.1 | Electrical contact<br>*Elektrischer Kontakt*<br>Contact électrique<br>*Contatto elettrico* | Minimum protection of terminal box is IP 55 and suitable thermal fuse for the electrical motors has to be fitted.<br>Only qualified personnel has to work on electrical connections.<br><br>*Die kleinste Schutzart der Abzweigdose beträgt IP 55 und für die Elektromotoren sind geeignete thermosicherungen zu installieren.*<br>*Die elektrischen Arbeiten dürfen ausschließlich durch qualifiziertes Personal ausgeführt werden.*<br><br>La protection minimum du boîtier de dérivation est IP 55 et il faut prévoir des fusibles thermiques appopriés pour les moteurs électriques.<br>Les opérations concernant les raccordements électriques doivent être réalisés exclusivement par du personnel qualifié.<br><br>*La protezione minima della scatola di derivazione è IP 55 ed è necessario installare adeguati fusibili termici per i motori elettrici.*<br>*Le operazioni riguardanti i collegamenti elettrici devono essere eseguite esclusivamente da personale qualificato.* | EN 292-1 | 03021.25 M.03<br>03021.25 M.04 | NO - *NEIN*<br>NON - *NO* |
| 2.2 | Electrostatic phenomena<br>*Elektrostatische Erscheinungen*<br>Phénomènes électrostatiques<br>*Fenomeni elettrostatici* | Not applicable - *Nicht anwendbar*<br>Non applicable - *Non applicabile* | | | |
| 2.3 | Thermal radiation<br>*Wärmestrahlung*<br>Radiation thermique<br>*Radiazione termica* | | | | |
| 2.4 | External influence on equipment<br>*Äußere Einwirkungen auf die Geräte*<br>Influence extérieure sur les appareillages<br>*Influenza esterna sulle apparecchiature* | | | | |
| **3.** | **Thermal Hazards - *Thermische Gefährdungen* - Risques thermiques - *Rischi termici*** | | | | |
| 3.1 | Burns and scalds<br>*Verbrennungen und Branwunden*<br>Brûlures et lésions<br>*Bruciature e ustioni* | Not applicable - *Nicht anwendbar*<br>Non applicable - *Non applicabile* | | | |
| 3.2 | Health -damaging effects by hot/cold environment<br><br>*Gesundheitsschädliche Auswirkungen infolge warmer/kalter Umgebungen*<br><br>Effets nocifs pour la santé dus aux environnement chauds/froids<br><br>*Effetti dannosi per la salute dovuti ad ambienti caldi/freddi* | | | | |

| | List of hazards<br>*Gefährdungsliste*<br>Liste des risques<br>*Lista dei rischi* | Safety Measures<br>*Sicherheitsmaßnahmen*<br>Consignes de sécurité<br>*Misure di sicurezza* | Norm Reference<br>*Bezugsnormen*<br>Normes de référence<br>*Norme di Riferimento* | Operating Instruction Ref.<br>*Bez. Betriebsanleitung*<br>Réf. instructions de fonctionnement<br>*Rif. istruzioni operative* | Residual Risk<br>*Restrisiken*<br>Risque résiduel<br>*Rischio residuo* |
|---|---|---|---|---|---|
| **4.** | **Hazard generated by noise - *Gefährdungen durch Lärm* - Risque dérivant de la pollution acoustique - *Rischio da inquinamento acustico*** | | | | |
| 4.1 | Hearing losses<br>*Gehörverlust*<br>Pertes de l'ouïe<br>*Perdite dell'udito* | Not applicable - *Nicht anwendbar*<br>Non applicable - *Non applicabile* | | | |
| 4.2 | Interference with speech<br>*Verständigungsschwierigkeiten*<br>Difficulté de communication<br>*Difficoltà di comunicazione* | | | | |
| **5.** | **Hazard generated by vibration - *Gefährdungen durch Schwingungen* - Risque dû aux vibrations - *Rischio dovuto alle vibrazioni*** | | | | |
| | | Fix correctly the machine to a strong structure<br>*Die maschine am Boden oder an einer soliden Struktur richtig verankern*<br>Ancrer correctement la machine au sol ou à une structure solide<br>*Ancorare correttamente la macchina al suolo o a una struttura solida* | EN 292-1 | 03021.25 M.06 | NO - *NEIN*<br>NON - *NO* |
| **6.** | **Radiation Hazards - *Gefährdungen durch Strahlung* - Risques de radiation - *Rischi di radiazione*** | | | | |
| | | Not applicable - *Nicht anwendbar*<br>Non applicable - *Non applicabile* | | | |
| **7.** | **Hazards generated by materials processed - *Gefährdungen duch die behandelten Materialien***<br>**Risques dus aux matériaux traités - *Rischi dovuti ai materiali trattati*** | | | | |
| 7.1 | Contact or inhalation<br>*Berühren oder Einatmen*<br>Contact ou inhalation<br>*Contatto o inalazione* | For such a kind of materials the plant manufacturer and/or the installator has to fit suitable special device<br>*Für diese Art Material ist der Anlagenhersteller oder der Installateurangehalten, passende Spezialeinrichtungen bereitzustellen.*<br>Pour ce type de matériaux le constructeur de l'installation ou le personnel responsable est tenu de prévoir des dispositifs spéciaux.<br>*Per questo tipo di materiali il costruttore dell'impianto o l'addetto all'installazione è tenuto a predisporre opportuni dispositivi speciali* | EN 292-1 | 03021.25 T.01<br>03021.25 M.01 | NO - *NEIN*<br>NON - *NO* |
| 7.2 | Fire and explosion<br>*Brand oder Explosion*<br>Incendie et explosion<br>*Incendio ed esplosione* | | | | |
| 7.3 | Biological (viral/bacterial)<br>*Biologisch (durch Viren/Bakterien)*<br>Biologique (viral/bactérien)<br>*Biologico (virale/batterico)* | | | | |
| **8.** | **H.generated by neglecting ergonomic principles - *Gefährdungen durch die Nichtbeachtung der ergonomischen Richtlinien***<br>**Risques dus à l'inobservation des principes ergonomiques - *Rischi dovuti all'inosservanza dei principi ergonomici*** | | | | |
| | | Not applicable - *Nicht anwendbar*<br>Non applicable - *Non applicabile* | | | |
| **9.** | **Hazards combination - *Kombination der Gefährdungen* - Combinaison de risques - *Combinazione di rischi*** | | | | |
| | | Not applicable - *Nicht anwendbar*<br>Non applicable - *Non applicabile* | | | |
| **10.** | **H. generated by failure of energy supply - *Gefährdungen durch eine Störung der Energieversorgung***<br>**Risques produits par une panne du secteur d'alimentation - *Rischi generati da un guasto nella rete di alimentazione*** | | | | |
| 10.1 | Failure of energy supply<br>*Störung im Versorgungsnetz*<br>Panne dans le secteur d'alimentation<br>*Guasto nella rete di alimentazione* | Not applicable - *Nicht anwendbar*<br>Non applicable - *Non applicabile* | | | |
| 10.2 | Unexpected ejection of parts<br>*Unerwartetes Ausstoßen von Teilen*<br>Ejection inattendue de pièces<br>*Espulsione inaspettata di pezzi* | | | | |
| 10.3 | Failure of control system<br>*Störung des Steuersystems*<br>Avarie du système de contrôle<br>*Avaria del sistema di controllo* | | | | |
| 10.4 | Errors of fitting - *Passungsfehler*<br>Erreurs d'accouplement - *Errori di accoppiamento* | | | | |
| **11.** | **H. generated by missing of safety related measures - *Gefährdungen durch die Nichtbeachtung der entsprechenden Sicherheitsnaßnahmen***<br>**Risques dus à l'absence de mesures concernant la sécurité - *Rischi dovuti alla mancanza di misure legate alla sicurezza*** | | | | |
| | | Not applicable - *Nicht anwendbar*<br>Non applicable - *Non applicabile* | | | |

**Environmental temperature**
-5°C / +40°C
**Maximum temperature of dusts:**
+60°C continuous, +80°C for short time intervals (maximum of 1 minute).
These temperature limits are linked to the features of the gaskets and plastic coatings, with their efficiency affected by extremely high temperatures, leading to loss of material and contributing to the formation of potentially explosive hazardous mixtures.

**Noise level**
The machine without material has a maximum noise level of 55 dB(A). The noise values are connected to the type of material batched and the type of actuator. The user is advised to take noise measurements directly on the application to check the values.

- The VL slide valves must be closed only by the moving product column.
- The VL valves are not suitable for applications with liquids or with pressure values different from that of the atmosphere.

**THE VL SLIDE VALVES ARE NOT FLAME-PROOF AND MUST NOT BE USED AS SAFETY DEVICE FOR SHUTTING OFF A FLAME SOURCE.**

Features of the dusts:

**Umgebungstemperatur**
-5°C / +40°C
**Max. Staubtemperatur:**
+60°C ständig, +80°C für kurze Zeitintervalle (max. 1 Minute).
Diese Grenztemperaturen sind von den Eigenschaften der Dichtungen und der Auskleidung aus Kunst-stoff abhängig, deren Wirksamkeit durch zu hohe Temperaturen in Frage gestellt werden kann. Dabei käme es zum Austritt von Material und zum etwaigen Entstehen explosionsgefährdeter Staubmi-schungen.

**Lärmpegel**
Das Gerät ohne Materialfüllung hat einen Lärmpegel von max. 55 dB(A). Die Lärmwerte hängen vom Me-dium und der Ausführung des Antriebs ab. Unter diesem Aspekt sollte der Anwender die Lärm-messungen direkt am Anwen-dungsort ausführen, um diese Werte festzustellen.

- Die Flachschieber Typ VL dürfen nur geschlossen werden, wenn die Produktsäule sich in Bewegung befindet.
- Die Schieber Typ VL eignen sich nicht für Anwendungen mit Flüssigkeiten oder mit Druckwerten, die vom normalen Luftdruck abweichen.

**DIE FLACHSCHIEBER VL SIND NICHT FLAMMENSICHER UND DÜRFEN NICHT ALS SICHERHEITSVORRICHTUNG ZUM UNTERBRECHEN EINER FLAMMENFRONT BENUTZT WERDEN.**

Eigenschaften der Stäube:

**Température ambiante**
-5°C +40°C
**Température maximum des poudres :**
+60°C en continu, +80°C pour intervalles de temps brefs (1 minute maximum).
Ces limites de température sont liées aux caractéristiques des joints et des revêtements en matière plastique, dont l'efficacité peut être compromise par des températures trop élevées, donnant lieu à des pertes de matière et contribuent à former des mélanges explosibles dangereux.

**Niveau sonore**
Le niveau sonore maxi de la machine sans matière est de 55 dB(A). Les valeurs de bruit sont associées au type de matière dosée et au type d'actionneur. A ce propos, il est recommandé à l'utilisateur de faire des relevés de bruit directement sur l'application afin de vérifier les valeurs.

- Les vannes à guillotine type VL doivent être fermées seulement avec la colonne de produit en mouvement.
- Les vannes type VL ne sont pas indiquées pour les applications avec des liquides ou avec des valeurs de pression différente de celle atmosphérique.

**LES VANNES A GUILLOTINE VL NE SONT PAS A TENUE DE LA FLAMME ET NE DOIVENT PAS ETRE UTILISÉES COMME DISPOSITIF DE SÉCURITÉ POUR INTERROMPRE LE FRONT DE FLAMME.**

Caractéristiques des poussières :

**Temperatura ambiente**
-5°C / +40°C
**Temperatura massima delle polveri:**
+60°C in continuo, +80°C per brevi intervalli di tempo (massimo 1 minuto).
Tali limiti di temperatura sono legati alle caratteristiche delle guarnizioni e dei rivestimenti in materiale plastico, la cui efficienza può essere compromessa da temperature troppo elevate, dando origine a perdite di materiale e contribuendo a formare pericolose miscele potenzialmente esplosive.

**Livello di rumorosità**
La macchina senza materiale ha un livello di rumorosità max. pari a 55 dB(A).
I valori di rumore sono legati al tipo di materiale dosato ed al tipo di attuatore. A tal proposito, si raccomanda all'utilizzatore di fare dei rilievi di rumore direttamente all'applicazione al fine di verificare i valori.

- Le valvole a ghigliottina tipo VL devono essere chiuse soltanto con colonna di prodotto in movimento.
- Le valvole tipo VL non sono idonee per applicazioni con liquidi o con valori di pressione diversi da quella atmosferica.

**LE VALVOLE A GHIGLIOTTINA VL NON SONO A TENUTA FIAMMA E NON DEVONO ESSERE UTILIZZATE COME DISPOSITIVO DI SICUREZZA PER INTERROMPERE IL FRONTE DI FIAMMA.**

Caratteristiche delle polveri:

The Manufacturer provides a **12**-month warranty on their products. This period starts from the date of the consignment note.

Der Hersteller gewährt auf ihre Erzeugnisse eine Garantie von **12** Monaten. Die Garantiezeit beginnt mit dem Datum des Lieferscheins.

Le constructeur reconnaît une période de **12** mois de garantie sur les produits de sa fabrication. La période prend effet à compter de la date indiquée sur le bon de livraison.

Il costruttore riconosce un periodo di **12** mesi di garanzia sui prodotti di propria costruzione. Il periodo decorre dalla data della bolla di consegna.

The warranty is not applicable for breakage and/or defects caused by incorrect installation or use, or incorrect maintenance, or modifications not authorized by the Manufacturer.

Die Garantie ist nicht anwendbar, wenn es sich um Schäden und/ oder Defekte handelt, die auf falschem Einbau oder Gebrauch, nicht korrekter Wartung oder Änderungen beruhen, die ohne die Genehmigung des Herstellers ausgeführt wurden.

La garantie ne s'applique pas à la suite de ruptures et/ou de défauts provoqués par un montage et une utilisation impropre, des entretiens qui ne sont réalisés correctement ou des modifications apportées sans autorisation du constru cteur.

La garanzia non è applicabile a seguito di rotture e/o difetti causati da errata installazione o utilizzo, oppure da manutenzioni non corrette o modifiche apportate senza autorizzazione del costruttore.

The warranty does not extend to parts that wear out following normal use and electrical components.

Die Garantie deckt keine Teile ab, die infolge des normalen Gebrauchs verschleißen, und auch keine elektrischen Teile.

La garantie s'étend aux pièces qui s'usent à la suite d'une utilisation normale et aux parties électriques.

La garanzia non si estende alle parti che si logorano in seguito al normale uso e alle parti elettriche.

**The warranty elapses if the vanne:**
- has been tampered with or modified,
- has not been used correctly,
- has been used without respecting the limits indicated in this manual and/or has been subjected to excessive mecha nical stress,
- has not been subjected to the necessary maintenance or these operations have been carried out partly and/or or by unskilled personnel incorrectly,
- has been damaged due to carelessness during transport, installation and use,
- has been fitted with spare parts that are not original.

**Genauer gesagt, verfällt die Garantie, wenn die Klappe:**
- manipuliert oder geändert wurde,
- nicht korrekt benutzt worden ist,
- bei ihrem Gebrauch nicht die in diesem Handbuch stehenden Einsatzbeschränkungen beachtet wurden und/oder sie zu starken mechanischen Belastungen ausgesetzt wurde,
- nicht der erforderlichen Wartung unterzogen wurde oder wenn die Wartung nur teilweise und/ oder nicht korrekt oder durch nicht korrekt angeleitetes Personal ausgeführt wurde.
- beschädigt wurde, weil Transport, Einbau oder Gebrauch ohne die erforderliche Sorgfalt vorgenommen wurden,
- wenn keine Original-Ersatzteile verwendet worden sind.

**Plus précisément la garantie est sans effet si la vanne:**
- a été manipulée ou modifiée,
- a été utilisée de manière incorrecte,
- a été utilisée sans respecter les limites indiquées dans la présente notice et/ou qu'elle a été soumise à des contraintes mécaniques excessives
- elle n'a pas été soumise aux entretiens nécessaires ou que ces opérations ont été effectuées partiellement, de manière incomplète ou incorrecte, ou par du personnel pas instruit correctement
- a subit des dommages par négligence pendant le transport, la mise en place et l'utilisation,
- a été réparée avec des pièces qui ne sont pas d'origine.

**A miglior precisazione la garanzia decade nei casi in cui la valvola:**
- sia stata manomessa o modificata,
- sia stata utilizzata non correttamente,
- sia stata utilizzata non rispettando i limiti indicati nel presente manuale e/o sia stata sottoposta ad eccessive sollecitazioni meccaniche,
- non sia stato sottoposta alle necessarie manutenzioni o queste siano state eseguite solo in parte e/o non correttamente, o da personale non correttamente istruito
- abbia subito danni per incuria durante il trasporto, l'installazione e l'utilizzo,
- siano state inserite parti di ricambio non originali.

On receiving the product, the user must check these for defects deriving from transport and/or incomplete supply.

Beim Empfang der Ware hat der Empfänger sicherzustellen, dass die Ware keine durch den Transport verursachten Schäden oder Defekte aufweist, und/oder dass der Lieferumfang vollständig ist.

Dès réception de la marchan dise, le destinataire doit vérifier que celle-ci n'a pas de défauts ou subit de dégâts dus au tran sport et que la fourniture n'est pas incomplète.

Al ricevimento del prodotto, il destinatario deve verificare che lo stesso non presenti difetti o danni derivanti dal trasporto e/o incompletezza della fornitura.

Defects, damage or incom pleteness of the supply must be immediately communicated to the Manufacturer in writing and countersigned by the haulage transporter.

Etwaige Defekte, Schäden oder Fehlmengen sind mittels schriftlicher und vom Frachtführer gegengezeichneter Mitteilung sofort dem Hersteller zu melden.

Tout défaut, dommage ou four niture incomplète doit immédia tement être signalée au constru cteur par communication écrite et contresignée par le tran sporteur.

Eventuali difetti, danni o incompletezza vanno immediatamente segnalati al costruttore mediante comunicazione scritta e controfirmata dal vettore.

**STORAGE**
**BEFORE INSTALLATION**
- Avoid damp, salty environments, if possible.
- Place the slide valve on wooden platforms, protected from unfavourable weather conditions.
- The valves must not be stored in the open or in areas in the presence of vapours or substances (however weakly corrosive) not compatible with the materials used for constructing the slide valve.
- Avoid storage temperatures below -20° C.

**LONG MACHINE SHUTDOWNS AFTER ASSEMBLY**
- Set the slide valve in safety condition before starting up the plant.
- Before starting operation with the slide valve, check all parts for which prolonged disuse may have affected the functionality.

**POSSIBLE REUSE AFTER SHUTDOWNS**
- Avoid damp, salty environments during machine shutdowns.

Place the slide valve on wooden pallets, protected from unfavourable weather conditions.
- The valve must not be stored in the open or in the presence of vapours or substances (however weakly corrosive) not compatible with the materials used for construction of the slide valve.
- Before start up set the slide valve in safety condition.
- Before starting operation with the slide valve, check all parts for which prolonged disuse may have affected the functionality.
- Before starting operation with the slide valve, carry out a complete cleaning cycle according to the indications in the safety sheet of the product to be handled.
- If the slide valve operates in conditions and with materials different from the previous application, check the compatibility of this use with the indications in the INDICATION FOR USE section.

**EINLAGERUNG VOR DEM EINBAU**
- Feuchte Räume mit salzhaltiger Luft möglichst vermeiden.
- Den Flachschieber auf einen Holzuntersatz legen und ihn vor der Witterung geschützt ufstellen..
- Die Lagerung im Freien oder in Bereichen, wo Dämpfe oder auch nur schwach korrosiv wirkende Substanzen vorhanden sind, die nicht mit den Konstruktionsmaterialien des Flachschiebers verträglich sind ist verboten. - Eine Lagerhaltung bei Temperaturen unter -20° C ist zu vermeiden.

**LÄNGERER STILLSTAND DES GERÄTS NACH DEM EINBAU**
- Vor der Inbetriebnahme ist der Flachschieber in einen sicheren Zustand zu bringen.
- Vor der Inbetriebnahme des Flachschiebers sind alle Teile, deren Funktionstüchtigkeit durch einen längeren Stillstand in Frage gestellt werden könnte, auf Unversehrtheit zu prüfen.

**MÖGLICHER WIEDERGEBRAUCH NACH EINEM STILLSTAND**
- Während des Stillstands des Geräts feuchte Räume mit salzhaltiger Luft vermeiden.
- Den Flachschieber auf einen Holzuntersatz legen und witterungsgeschützt lagern.
- Die Lagerung im Freien oder in Bereichen, wo Dämpfe oder auch nur schwach korrosiv wirkende Substanzen vorhanden sind, die nicht mit den Konstruktionsmaterialien des Flachschiebers verträglich sind ist verboten.
- Vor der Inbetriebnahme ist der Flachschieber in einen sicheren Zustand zu bringen.
- Vor der Inbetriebnahme des Flachschiebers sind die Teile, deren Funktionstüchtigkeit durch einen längeren Stillstand in Frage gestellt ist, auf Unversehrtheit prüfen.
- Vor der Aufnahme des Betriebs des Flachschiebers eine kom-plette Reinigung durchführen, wobei zu beachten ist, was auf dem Sicherheitsdatenblatt des Staubes steht.
- Wenn der Flachschieber unter Bedingungen und mit Medien betrieben wird, die von der letzten Anwendung abweichen, die Kompatibilität mit dem vergleichen, was im Abschnitt GEBRAUCHSANWEISUNG steht.

**STOCKAGE**
**AVANT L'INSTALLATION**
- Eviter le plus possible les environnements humides et saumâtres.
- Placer la vanne à guillotine sur une plate-forme en bois et à l'abri des intempéries.
- Il est interdit de la stocker en plein air ou dans des zones où sont présentes des vapeurs ou des substances (même faiblement corrosives) non compatibles avec les matériaux de construction de la vanne à guillotine. - Eviter l'entreposage à des températures inférieures à -20°C.

**ARRET PROLONGÉ DE LA MACHINE APRES LE MONTAGE**
- Avant la mise en service mettre la vanne à guillotine en conditions de sécurité.
- Avant la mise en service de la vanne à guillotine, contrôler l'intégrité de toutes les parties dont un arrêt prolongé pourrait compromettre le fonctionnement.

**RÉEMPLOI POSSIBLE APRES UNE PÉRIODE D'INACTIVITÉ**
- Pendant l'inactivité de la machine éviter les environnements humides et saumâtres.

Placer la vanne à guillotine sur une plate-forme en bois et l'entreposer à l'abri des intempéries .
- Il est interdit de l'entreposer en plein air ou dans des zones où sont présentes des vapeurs ou des substances (même faiblement corrosives) non compatibles avec les matériaux de construction de la vanne à guillotine.
- Avant la mise en service mettre la vanne à guillotine en conditions de sécurité.
- Avant la mise en service de la vanne à guillotine, contrôler l'intégrité de toutes les parties dont un arrêt prolongé pourrait compromettre le fonctionnement.
- Avant la mise en service de la vanne à guillotine effectuer un cycle complet de nettoyage en respectant les indications figurant sur la fiche de sécurité de la poudre à traiter.
- Si la vanne à guillotine travaille dans des conditions et avec des matières différentes de l'application précédente, vérifier la compatibilité de cette utilisation suivant ce qui est indiqué dans la section MODE D'EMPLOI.

**IMMAGAZZINAGGIO**
**PRIMA DELL'INSTALLAZIONE**
- Evitare possibilmente ambienti umidi e salmastri.
- Sistemare la valvola a ghigliottina, su pedane di legno e locarla al riparo dalle intemperie.
- E' vietata la conservazione all'aperto o in zone dove siano presenti vapori o sostanze (anche debolmente corrosive) non compatibili con i materiali di costruzione della valvola a ghigliottina.
- Le condizioni di immagazzinamento al di sotto di -20° C devono essere evitate.

**FERMO MACCHINA PROLUNGATO DOPO IL MONTAGGIO**
- Prima della messa in servizio mettere in sicurezza la valvola a ghigliottina.
- Prima della messa in servizio della valvola a ghigliottina, controllare l'integrità di tutte le parti per le quali un prolungato inutilizzo potrebbe compromettere la funzionalità.

**POSSIBILE REIMPIEGO DOPO PERIODO DI INATTIVITA'**
- Durante il fermo macchina evitare ambienti umidi e salmastri. Sistemare la valvola a ghigliottina, su pedane di legno e locarla al riparo dalle intemperie.
- E' vietato conservare la valvola all'aperto o in zone e dove siano presenti vapori o sostanze non compatibili con i materiali di costruzione della valvola a ghigliottina (sostanze anche debolmente corrosive).
- Prima della messa in servizio mettere in sicurezza la valvola a ghigliottina.
- Prima della messa in servizio del valvola a ghigliottina, controllare l'integrità delle parti per le quali un fermo macchina prolungato potrebbe compromettere la funzionalità.
- Prima della messa in servizio della valvola a ghigliottina, eseguire un ciclo completo di pulizia rispettando quanto riportato sulla scheda di sicurezza della polvere da trattare.
- Se la valvola a ghigliottina opera in condizioni e con materiali diversi dall'applicazione precedente, verificare la compatibilità di tale utilizzo secondo quanto riportato nella sezione INDICAZIONE PER L'USO.

**ATTENTION!**

**1)** Valves must **NOT operate in absence of material**!

**2)** Do **NOT wet** the valve with water or grease!

**3)** Do not insert **any type of gasket** between the silo flange and the upper flange of the side valve! (Fig.1).

**N.B.: VL- type Slide Valves are dust proof but NOT pressure proof.**

**4)**It is advisable to use the valve as an external support for machines below (for example, it is not possible to hang screw feeders, conveyor belts, offlets, etc.).
Fix the valve using bolts or stud bolts that are long enough for a "sandwich" grip with the upper and lower flanges. Lock the outside bolts. The internal bolts are used exclusively as safety for the valve if the conveyor device below were to get detached (Fig. 2).
**5)** Tighten not too firmly fixing bolts between the flange of the slide valve and the hopper flange!
**6)** Ensure parallel tolerance of the connecting hopper flange is within 2 mm!
**7)** Ensure the valve is **perfectly parallel** after installation!
**8)** Avoid connection of square valve with round silo flange or round valve with square silo flange!
**9)** Ensure there is no pressurized air present in the valve inlet zone.
**10)**Strictly follow assembly instruction for actuators!
**11)** With lumpy, granular and fibrous products, it is advisable to use a steel blade.
**12)** With raised product columns it is advisable to insert a safety cup in the silo, above the valve

**NOTE REGARDING ASSEMBLY OF NON WAM® ACTUATORS!**

When valve is closed distance "S" must be minimum 5 mm (see fig.3).

**ACHTUNG!**

**1)** Schieber **dürfen NICHT ohne Schüttgutpräsenz** betrieben werden!

**2)** **Kein Wasser oder Fett** über die Schieber geben!

**3)** Zwischen Silo- und Flachschieber-Flansch **keine Dichtung, egal welcher Art,** vorsehen! (Abb.1)

**N.B.: Schieber vom Typ VL sind staubdicht, d.h. NICHT druckdicht.**

**4)**Die Benutzung als externer Träger für darunter stehende Maschinen ist möglich (man kann beispielsweise keine Schnecken, Förderbänder, Rinnen etc. aufhängen).
Den Schieber mit Schraubbolzen oder Stiftschrauben ausreichender Länge befestigen, um die Sandwich-Einspannung desselben mit dem oberen und unteren Flansch zu erzielen. Die äußeren Schraubbolzen anziehen. Die inneren Schraubbolzen dienen nur als Sicherheitselement des Schiebers, falls die darunter befindliche Fördervorrichtung abgetrennt wird (Abb. 2).
**5)**Verbindungsschrauben zwischen Flachschieber- und Trichterflansch nicht zu fest anziehen!
**6)** Sicherstellen, daß die Ebenenabweichung des Trichterflansches nicht mehr als 2 mm beträgt!
**7)** Sicherstellen, daß sich der Schieber nach dem Einbau **in horizontaler Lage** befindet .
**8)** Kombination von quadratischem Schieber mit rundem Siloauslauf bzw, von rundem Schieber mit quadratischem Siloauslauf vermeiden!
**9)** Sicherstellen, dass keine Druckluft im Schiebereinlaufbereich ansteht.
**10)**Die Montageanleitung für die Antriebe strikt befolgen!
**11)** Für klumpige, körnige oder faserhaltige Produkte empfiehlt sich Blätter aus Stahl.
**12)** Bei hohen Produktsäulen empfiehlt es sich, eine Schutzhaube in den Silo einzusetzen, und zwar über dem Ventil.

**BEMERKUNG BEZÜGLICH FREMDANTRIEBEN**

Bei geschlossenem Schieber muß das Maß "S" mindestens 5 mm betragen (Abb.3).

**ATTENTION!**

**1)** Les vannes doivent travailler en présence du matériau et **JAMAIS à vide!**

**2)** **NE PAS mouiller** le corps avec de l'eau ou de la graisse!

**3)** N'inserér **aucun type de garniture** entre la bride du silo et la bride de la vanne à guillotine!
(Fig.1)

**N.B.: Les vannes guillotine du type VL sont étanches aux poudres mais PAS à la pression.**

**4)** On conseille l'utilisation comme soutien extérieur pour les machines placées dessous (par ex. on ne peut pas y suspendre des vis sans fin, tapis transporteurs, canalisations, etc.).
Fixer la vanne avec des boulons ou des goujons suffisamment longs pour la prise en "sandwich" de celle-ci avec la bride supérieure et inférieure. Serrer les boulons extérieurs. Les boulons intérieurs servent exclusivement comme sécurité de la vanne au cas où le dispositif de transport placé dessous soit décroché (fig.2).
**5)**Serrer avec modération les boulons de fixation de la vanne à la trémie!
**6)** S'assurer que la tolérance de planéité de la bride de la trémie de liaison soit entre les 2 mm!
**7)** S'assurer que à montage terminé, la vanne soit en position **parfaitement horizontale**!
**8)** Eviter l'accouplement entre vanne carrée et bride de silo ronde ou entre vanne ronde bride de silo carrée!
**9)** S'assurer qu'il n y ait pas de presénce d'air comprimé dans la zone de chargement de la vanne.
**10)**Se tenir rigoureusement aux instruction quant au montage des commandes!
**11)** Avec des produits grumeleux, granulaires ou fibreux il est conseillé d'utilisé lames en acier.
**12)** En présence de colonnes élevées de produit il est conseillé de placer un carter de protection dans le silo, au-dessus de la vanne.

**NOTE EN CE QUI CONCERNE L'INSTALLATION DES COMMANDES NON WAM®**

Avec la vanne fermée la distance "S" doit être de 5 mm au minimum (Fig.3).

**ATTENZIONE!**

**1)** Le valvole devono lavorare con polvere, **NON a vuoto!**

**2)** **Non bagnare** il corpo con acqua o grasso!

**3)** **Non** inserire **guarnizioni di alcun tipo** tra flangia silo e flangia valvola! (Fig.1)

**N.B.: Le valvole a ghigliottina WAM® tipo VL sono a perfetta tenuta polvere/granuli NON a tenuta pressione.**

**4)**Si consiglia l'impiego come sostegno esterno per macchine sottostanti (per es. non si possono appendere coclee, nastri trasportatori, canalette, etc.).
Fissare la valvola con bulloni o prigionieri sufficientemente lunghi per la presa a "sandwich" della stessa con la flangia superiore ed inferiore. Serrare i bulloni esterni. I bulloni interni servono esclusivamente come sicurezza della valvola qualora il dispositivo di trasporto sottostante venga staccato (fig.2).
**5)** Serrare con moderazione le viti di fissaggio della valvola al silo!
**6)** Accertarsi che la tolleranza di planarità della flangia di collegamento della tramoggia sia entro i 2 mm!
**7)** Accertarsi che, a montaggio ultimato, la valvola sia **perfettamente planare!**
**8)** Evitare accoppiamento valvola quadra con silo a bocca tonda e viceversa!
**9)** Accertarsi che non vi sia aria in pressione in vicinanza della bocca valvola.
**10)**Attenersi rigorosamente alle istruzioni inerenti al montaggio dei comandi!
**11)** Con prodotti grumosi, granulari o fibrosi si consiglia l'uso di lame in metallo.
**12)** Con elevate colonne di prodotto si consiglia di inserire un coppo di protezione nel silo sopra la valvola.

**NOTA PER INSTALLAZIONE DI COMANDI NON WAM®**

A valvola chiusa la distanza "S" deve essere almeno di 5 mm (Fig.3).

**Fig./Abb. 1**

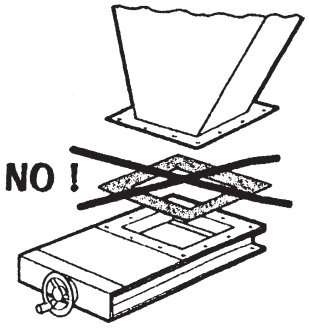


**Fig./Abb. 2**



**Fig./Abb. 3**

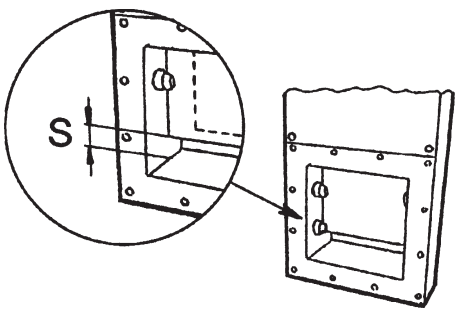

**SUPPLY:**
A) 1 hand wheel cpl. with spindle
B) 1 nut screw
• Bolts, nuts, washers
• Cardboard box

**LIEFERUMFANG:**
A) 1 Handrad mit Spindel
B) 1 Schloßmutter
• Schrauben, Muttern, Unterlegscheiben
• Kartonverpackung

**FOURNITURE:**
A) 1 volant à main avec vis mère
B) 1 support à écrou
• Boulonnerie
• Emballage

**LA FORNITURA COMPRENDE:**
A) 1 volantino con madrevite
B) 1 chiocciola
• Bulloneria
• Imballo

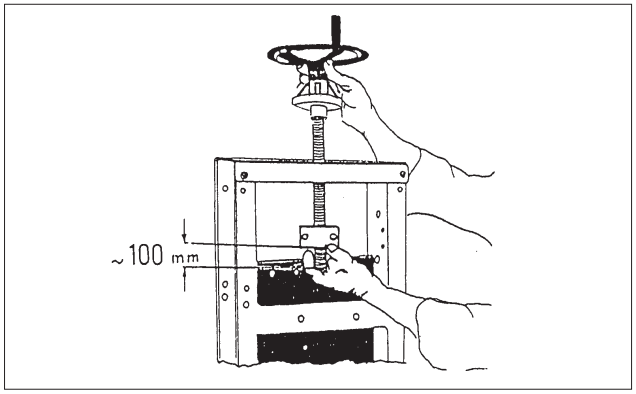


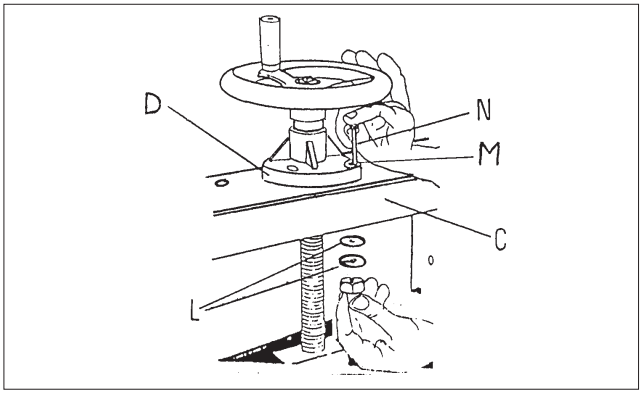


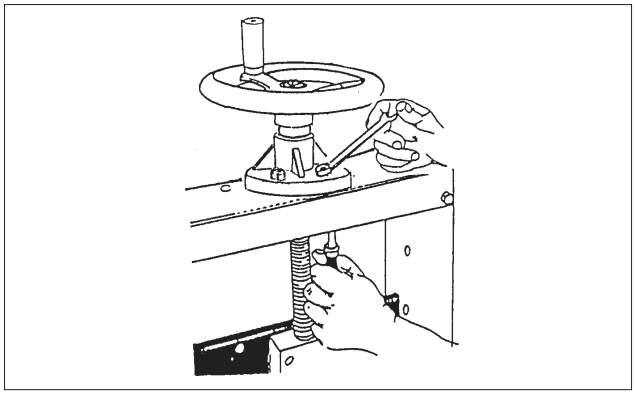

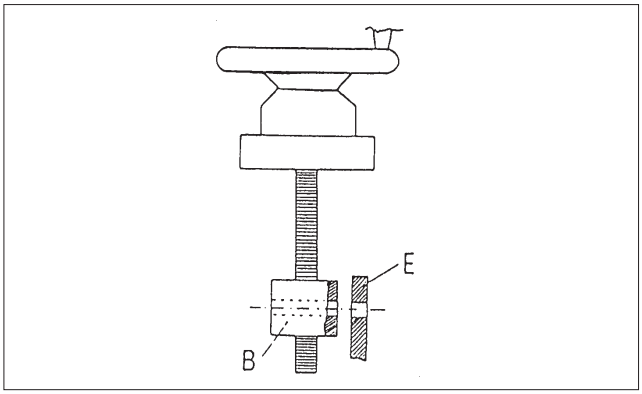


**N.B.: DURING ASSEMBLY THE BLADE MUST REST ON ALL BEARINGS. ONLY AFTER THIS CHECK PUT VALVE ON END FOR ACTUATOR ASSEMBLY.**

1) Insert spindle (A) into central bore on upper crosspiece of valve body. Screw nut screw (B) onto spindle (A) by approx. 100 mm.
2) Insert larger washers (L) on the inside of the valve frame (C) from below and smaller washers (M) on hand wheel support (D). Insert bolts and nuts (N).
3) Tighten bolts and nuts.
4) Turn hand wheel until holes on nut screw (B) and on blade (E) correspond.

**N.B.: ZUR MONTAGE MUSS DAS SCHIEBERBLECH AUF ALLEN ROLLENLAGERN AUFLIEGEN. ERST NACH EROLGTER ÜBERPRÜFUNG, DASS DEM SO IST, SCHIEBER ZWECKS MONTAGE DES HANDRADES HOCHKANT STELLEN.**

1) Spindel (A) durch mittige Bohrung am oberen Rahmen-Quertrager stecken. Schloßmutter (B) ca. 100 mm weit auf Spindel schrauben.
2) Große Unterlegscheiben (L) von unten innen auf den Schieberrahmen (C) legen, kleinere Unterlegscheiben (M) auf die Handradhalterung (D) legen und mit Schrauben (N) und Muttern befestigen.
3) Schrauben und Muttern festziehen.
4) Handrad so weit drehen bis sich Bohrungen des Schieberblechs (E) mit denen der Schloßmutter (B) exakt überlagern.

**N.B.: AVANT LE MONTAGE LA LAME DOIT SE POSITIONNER SUR TOUS LES ROULEMENTS. ENSUITE METTRE LA VANNE EN POSITION VERTICALE POUR LE MONTAGE DE L'ACTIONNEUR.**

1) Insérer la vis mère (A) dans le perçage appropié. Visser le support à écrou (B) à une hauter environ 100 mm.
2) Positionner les rondelles grandes (L) sur la plaque à l'interieur du corps de la vanne (C), les plus petites rondelles (M) sur le bloc (D). Insérer les boulons (N) et les écrous.
3) Visser avec les clefs appropriés.
4) Déplacer le volant jusqu'à l'interface du support à écrou (B) et la lame (E).

**NB. : ALL'ATTO DEL MONTAGGIO, LA LAMA DEVE TROVARSI APPOGGIATA SU TUTTI I CUSCINETTI. IN SEGUITO METTERE LA VALVOLA IN POSIZIONE VERTICALE PER IL MONTAGGIO DELL'ATTUATORE.**

1) Inserire la madrevite (A) nell'apposito foro del corpo valvola. Avvitare la chiocciola (B) per 100 mm.
2) Posizionare le rondelle più grandi (L) sulla carpenteria al l'interno del corpo valvola (C), le piu' piccole (M ) sul distanziale (D). Inserire bulloni (N) e dadi.
3) Fissare con chiavi apposite.
4) Ruotare il volantino fino alla sovrapposizione dei fori sulla chiocciola (B) e quelli sulla lama (E).

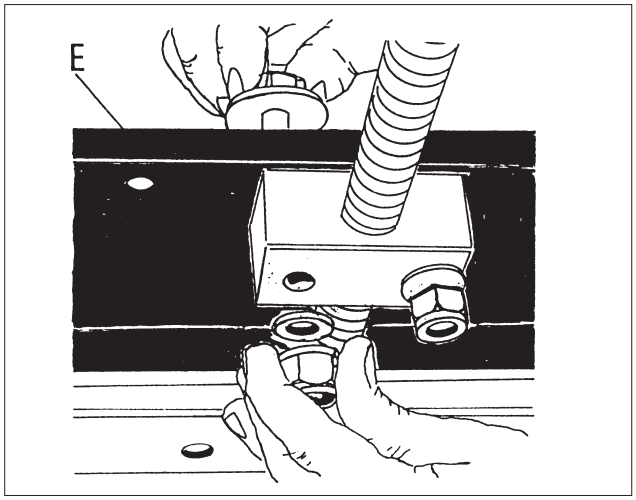


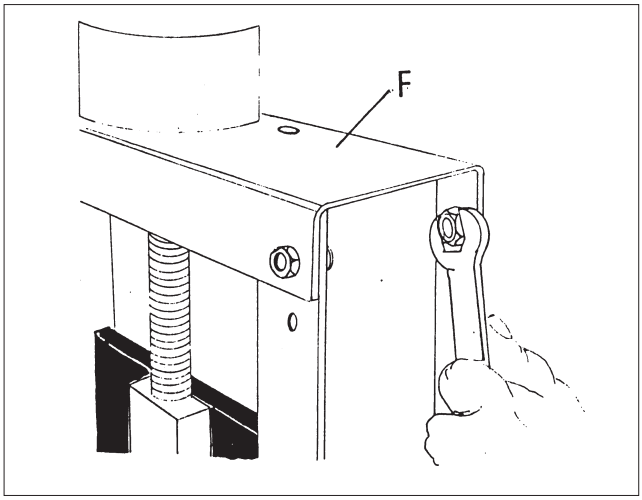


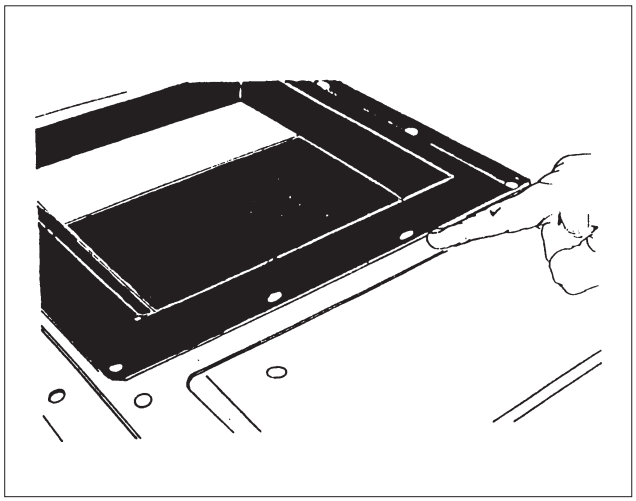

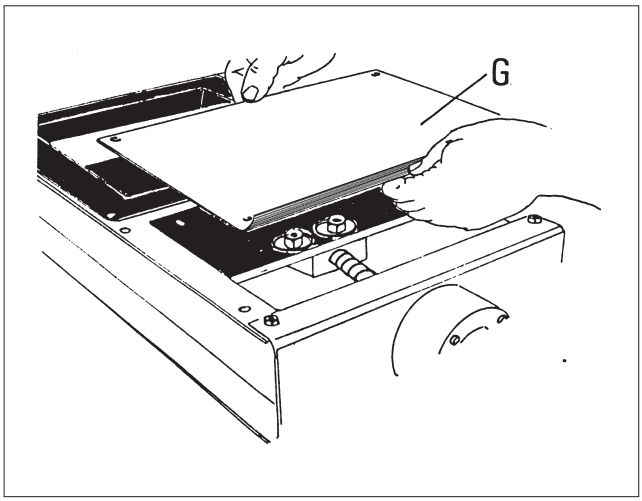


5) Insert M12 bolts and larger washers on upper side of blade (E). Position smaller washers and self-locking nuts. Do not tighten completely.

6) Tighten 4 connecting nuts between cross bar (F) and body. Check operation of valve is correct by turning hand wheel.

7) For valve installation use bolts which are short enough not to interfere with blade.

8) When assembly is completed mount the top and bottom guard (G) ensuring they perfectly adhere to the frame. Check the positioning of the self-adhesive gasket.

5) Große Unterlegscheiben auf Bohrungen auf Oberseite des Schieberbleches (E) legen und M12-Schrauben einführen. Kleine Unterlegscheiben und selbstsichernde Muttern anbringen, aber nicht zu stark anziehen.

6) Die vier Verbindungsschrauben des Rahmen-Querträgers (F) anziehen. Jetzt prüfen, ob Handrad leicht gängig ist, bzw. ob sich Schieberblech problemfrei öffnen und schließen läßt.

7) Beim Einbau des Schiebers darauf achten, daß nicht zu lange Flanschverbindungsschrauben verwendet werden, bzw. daß diese nicht am Schieberblech schleifen.

8) Oberes und unteres Schutzblech (G) so montieren, daß die Bleche dicht am Eahmen anliegen.
Positionierung der selbst klebenden Dichtung prüfen.

5) Positionner les boulons M12 avec les grandes rondelles sur la partie supérieure de la lame (E). Monter les rondelles plus petites et les écrous autobloquants: ne pas serrer complètement.

6) Serrer les 4 boulons qui mantiennent la plaque (F) sur le corps de la vanne.Verifier le fonctionnement de la vanne en utilisant son actionneur.

7) Pendant l'installation utiliser sur la partie supérieure des boulons qui ne seront pas en contact avec la lame.

8) Quand le montage est effectué monter les tôles de protection (G) en s'assurant qu'elles sont parfaitement adhérentes au châssis.
Verifier le positionnement de la garniture adhesive.

5) Posizionare i bulloni M12 e le rondelle grandi sulla parte superiore della lama (E). Montare le rondelle piu' piccole e i dadi autobloccanti: non serrare completamente.

6) Serrare i 4 bulloni che collegano il traverso (F) al corpo valvola. Verificare la funzionalità della valvola agendo sull'attuatore.

7) All'installazione, utilizzare nella parte superiore bulloni di lunghezza tale da non interferire con lo scorrimento della lama.

8) Ad installazione effettuata montare le lamiere di protezione (G), accertandosi che siano perfettamente aderenti alla lamiera piegata.
Verificare il corretto posizionamento della mousse.

**SUPPLY:**
C) 1 bush
H) 1 electrovalve support bracket
B) Bolts, nuts, spring washers and flat washers
• Cardboard box

**LIEFERUMFANG:**
C) 1 Lagerbuchse
H) 1 Magnetventilhalterung
B) Schrauben, Muttern, Sprengringe, Unterlegscheiben
• Kartonverpackung

**FOURNITURE:**
C) 1 embout
H) 1 support électrovanne
B) Boulonnerie
• Emballage

**FORNITURA:**
C) 1 boccola
H) 1 staffa per elettrovalvola
B) Bulloneria
• Imballo

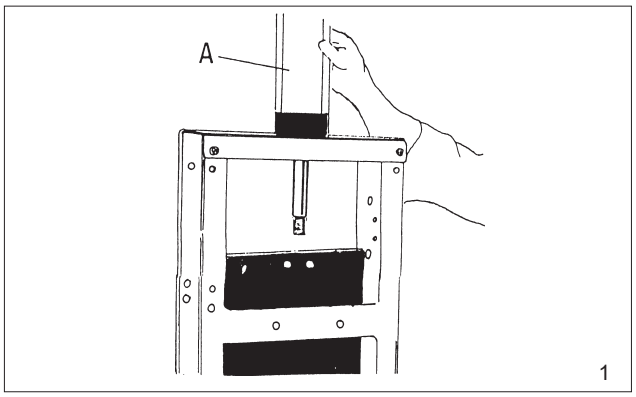

1

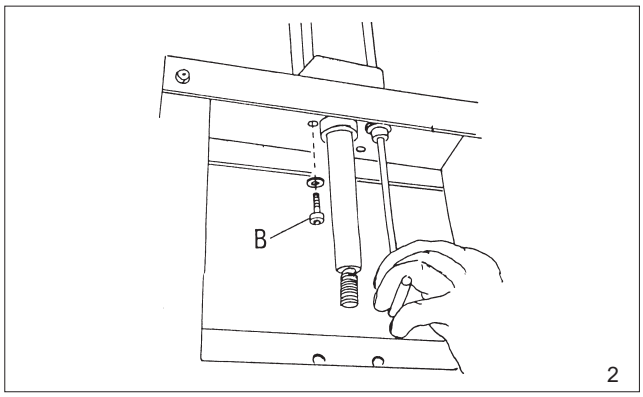

2

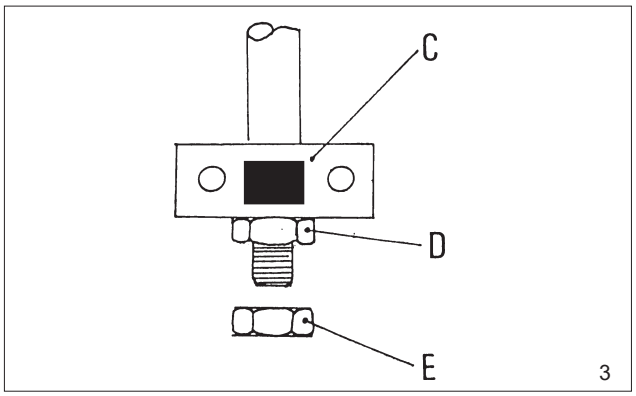

3

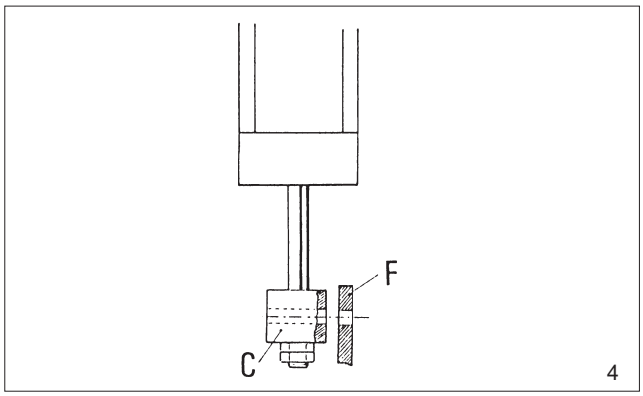

4

**NOTE.: DURING ASSEMBLY THE BLADE MUST REST ON ALL BEARINGS. ONLY AFTER HAVING CHECKED THIS UP-END VALVE FOR ACTUATOR ASSEMBLY.**

1) Insert pneumatic cylinder (A) into central bore on upper crosspiece of valve body.

2) Fix cylinder by inserting 4 bolts M8x25, spring washers, flat washers and nuts (B) from below and tighten crossways.

3) Fit bush onto rod so the sticker on the bush remains visible. Fix bush by screwing on nut (D) and self-locking nut (E).Tighten bolts and nuts.

4) Slide down rod until bores on bush (C) and on blade (F) correspond.

**N.B.: ZUR MONTAGE MUSS DAS SCHIEBERBLECH AUF ALLEN ROLLENLAGERN AUFLIEGEN. ERST NACH ERFOLGTER ÜBERPRÜFUNG, DASS DEM SO IST, SCHIEBER ZWECKS MONTAGE DER ANTRIEBSEINHEIT HOCHKANT STELLEN.**

1) Pneumatikzylinder (A) durch mittige Bohrung des oberen Rahmen-Quertragers stekken.

2) Mittels 4 Schrauben M8x25 und Sprengringen, Unterlegscheiben und Muttern (B) Zylinder befestigen. Schrauben über Kreuz festziehen.

3) Lagerbuchse (C) auf Zylinderstange schieben, dann Mutter (D) und selbstsichernde Mutter (E) anbringen und festziehen.

4) Zylinderstange so weit vor- oder zurückschieben bis sich Bohrungen von Lagerbuchse (C) und Schieberblech (F) überlagern.

**NOTE.: PENDANT LES OPERATIONS DE MONTAGE LA GUILLOTINE DOIT APPUYER SUR TOUS LES ROULEMENTS. ENSUITE METTRE LA VANNE EN POSITION VERTICALE POUR LE MONTAGE DE L'ACTIONNEUR.**

1) Insérer cylindre pneumatique (A) dans le logement central.

2) Fixer le avec les boulons M8x25, les rondelles et les écrous (B) et serrer les en croix.

3) Monter sur l'arbre du cylindre l'embout (C), ensuite l'écrou (D) et le contre-écrou (E). Serrer en adhérence.

4) Agir sur l'arbre du cylindre jusq' à la superposition des trous de l'embout (C) de la guillottine (F).

**NB. : ALL'ATTO DEL MONTAGGIO, LA LAMA DEVE TROVARSI APPOGGIATA SU TUTTI I CUSCINETTI. SOLTANTO ORA METTERE LA VALVOLA IN POSIZIONE VERTICALE PER IL MONTAGGIO DELL'ATTUATORE.**

1) Inserire il pistone pneumatico (A) nell'apposito foro del telaio.

2) Fissare mediante appositi bulloni M8x25, rondelle e dadi (B). Serrare con tecnica a croce.

3) Montare sullo stelo la boccola (C), quindi dado (D) e controdado (E). Serrare in aderenza.

4) Agire sullo stelo fino alla sovrapposizione dei fori sulla boccola (C) e quelli sulla lama (F).

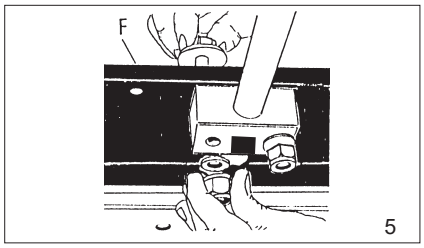

5

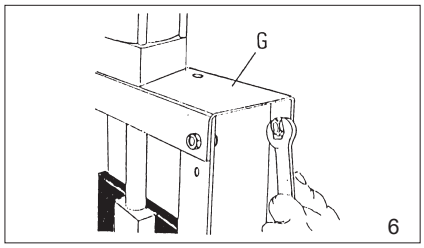

6

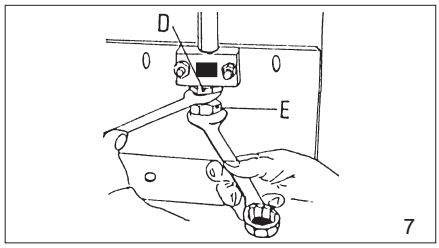

7

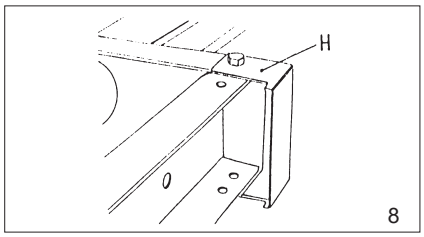

8

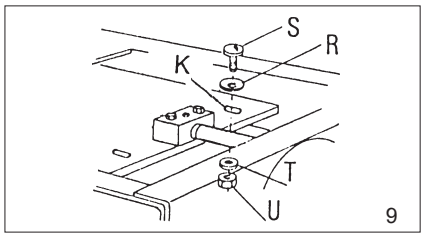

9

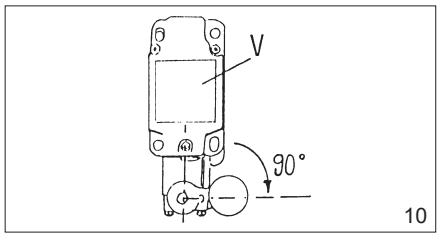

10

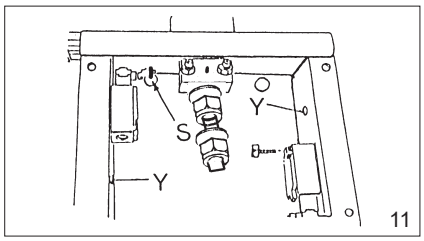

11

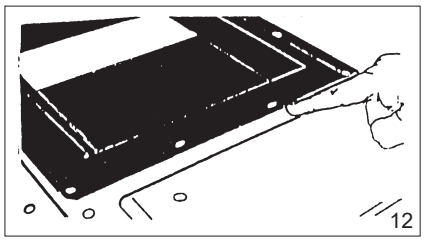
12

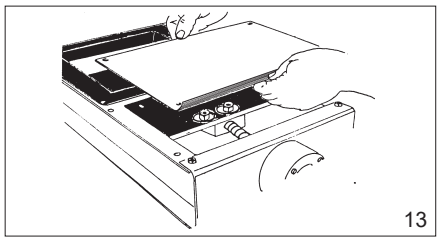
13

5) Place M12 bolts and the large washers on top side of blade (F). Insert small washers and self-locking nuts without tightening completely.
6) Tighten 4 bolts that fix upper crosspiece (G) to valve frame.
7) Loosen by a quarter turn bush fixing nuts (D) and (E). Tighten bottom nut (E) to top one (D).
8) If required, now, mount electrovalve for pneumatic actuator onto separately supplied support bracket (H) using 2 crosspiece connecting bolts.
9) Position washers Ø 12 (R) on bottom side of blade. Insert round head bolt M8x25 (S) and fix from top side using washers Ø 8 (T) and nuts (U).
10) Put arms of limit switches (V) at right angle so that after being fitted rollers face blade slots.
11) Fix limit switches to the inside of the side using nuts and bolts. Open valve position = head of the bolt (S) must rest on limit switch roller. Holes (Y) are cable passages. Check switch operation before starting regular operation.
12) For valve installation use bolts which are short enough not to interfere with blade.
13) When assembly is completed mount the top and bottom guard ensuring they perfectly adhere to the frame, and check the positioning of the self-adhesive gasket.

5) M12er Schrauben mit großen Unterlegscheiben von oben in Schieberblech (F) stecken. Mit kleinen Unterlegscheiben und selbstsichernden Muttern befestigen, jedoch nicht zu fest anziehen.
6) 4 Befestigungsschrauben des antriebsseitigen Winkelrahmenbleches (G) festziehen.
7) Muttern (D) und (E) um eine Vierteldrehung lockern. Untere Kontermutter (E) gegen obere Mutter (D) festziehen.
8) Sofern erforderlich, Magnetventil zur Zylinderbetätigung auf der lose mitgelieferten Halterung (H) befestigen und die Einheit gem. Abb. unter Verwendung der zwei Verbindungsschrauben am Rahmen (G) montieren.
9) Schieber flach legen, sodaß die Schieberunterseite nach oben zeigt. Zwei Zylinderkopfschrauben M8x25 (S) und Unterlegscheiben Ø12 (R) mittig in die Langlöcher im Schieberblech stecken. Auf der Gegenseite Muttern (U) mit Unterlegscheiben Ø 8 (T) anbringen und festziehen.
10) Schwenkhebel der Endschalter (V) in rechtwinklige Position bringen. Endschalterhebelrolln müssen Langlochern im Schieberblech gegenüberstehen.
11) Endschalter an den Längsstreben des Schieberrahmens mittels Schrauben und Mutterm befestigen. POSITION SCHIEBER AUF = Schraubenkopf (S) wirkt auf die Schwenkhebelrolle des dem Antrieb näher liegenden Endschalters. Die Bohrungen (Y) in den längsseitigen Winkelrahmenblechen des Schiebergehäuses dienen als Kabeldurchgänge zu den Endschaltern. Vor dem Einbau Schieber- und Endschalterfunktion prüfen.
12) Beim Einbau des Schiebers darauf achten, daß nicht zu lange Flanschverbindungsschrauben verwendet werden, bzw. daß diese nicht am Schieberblech schleifen.
13) Oberes und unteres Schutzblech so montieren, daß die Bleche dicht am Eahmen anliegen und Positionierung der selbst klebenden Dichtung prüfen.

5) Positioner les boulons M12 et les rondelles plus grandes sur la partie supérieure de la guillottine (F). Monter les petites rondelles et les écrous autobloquants; ne pas les serrer complètement.
6) Serrer les 4 boulons positionnées entre la traverse (G) et le corps de la vanne.
7) Dessérer de 1/4 de tour les écrous (D) et (E): serrer l'écrou Inférieur (E) sur l'écrou supérieur.
8) Si nècessaire monter l'electrovanne de commande pour le cylindre, fixer le support (H) avec les deux vis de connexion de la traverse (G).
9) Placer les rondelles Ø 8 (R) dans la partie inférieure de la guillottine en correspondence avec le trou. Insérer la vis a tête ronde M8x25 (S) sur la partie supérieure avec les rondelles Ø8 (T) et les écrous (U).
10) Tourner les bras des fins de courses (V) jusqu'à ce qu' ils soient perpendiculaires à l'axe d'eux-mêmes: le galet doit être positionné sur la guilliottine sur la cotè du trou.
11) Fixer les fin de courses sur le longerons sur la côtè écrous. Position de vanne ouverte: la tête de la vis (S) doit être positionné sur le galet du fin de course. Les trous (Y) sont pour sortir le cäblage. Vèrifier le fonctionnement et le correcte branchement des fins de course.
12) Pendant le montage de la partie supérieure utiliser des boulons avec une longeur qui n'interfèrent pas avec la guillottine.
13) Après l'installation monter les tôles de protection en s'assurant qu'elles sont parfaitement adhérentes au châssis et verifier le positionnement de la garniture adhesive.

5) Posizionare i bulloni M12 e le rondelle grandi sulla parte superiore della lama (F). Montare le rondelle più piccole e dadi autobloccanti: non serrare completamente.
6) Serrare i 4 bulloni che collegano il traverso (G) al corpo valvola.
7) Allentare di 1/4 di giro i dadi (D) ed (E); serrare il dado inferiore su quello superiore.
8) Se necessario montare l'elettrovalvola di comando per il cilindro, fissare la staffa (H) sfruttando i 2 bulloni di collegamento del traverso (G).
9) Disporre le rondelle Ø12 (R) nella parte inferiore della lama. Infilare la vite a testa tonda M5x25 (S) nell'asola (K) che consente anche una eventuale registrazione della corsa della lama; nella parte superiore, utilizzare rondelle Ø 8 (T) e dadi (U).
10) Portare i braccetti dei finecorsa (V) perpendicolari all'asse degli stessi: la rotella deve disporsi sulla lama dalla parte dell'asola.
11) Fissare i finecorsa sui longheroni del corpo valvola con viti e dadi. Posizione di valvola aperta: testa della vite (S) sulla rotella del finecorsa. Fori (Y) per uscita cablaggi. Verificare funzionalità e consensi fine corsa a banco.
12) All'installazione, utilizzare nella parte superiore bulloni di lunghezza tale da non interferire con lo scorrimento della lama.
13) Ad installazione effettuata montare le lamiere di protezione accertandosi che siano perfettamente aderenti alla lamiera piegata e verificare il corretto posizionamento della mousse.

**SUPPLY:**
C) 1 gear motor actuator
D) 1 nut screw
V) 2 electrovalves
• Bolts, nuts and washers
• Cardboard box

**LIEFERUMFANG:**
C) 1 Getriebemotor mit Spindel
D) 1 Schloßmutter
V) 2 Magnetventlle
• Schrauben, Muttern, Unterlegscheiben
• Kartonverpackung

**COMPLETE AVEC:**
C) 1 actionneur avec motoréducteur
D) 1 support à écrou
V) 2 électrovannes
• Vis et rondelles
• Emballage

**LA FORNITURA COMPRENDE:**
C) 1 attuatore con motoriduttore
D) 1 chiocciola
V) 2 elettrovalvole
• Bulloneria
• Imballo

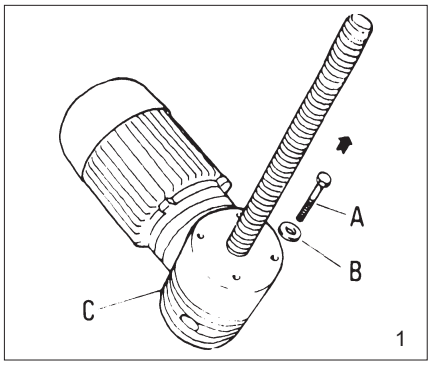

1

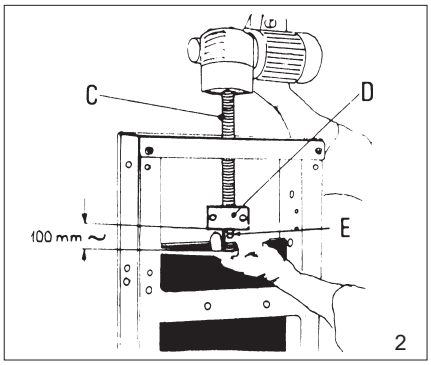

2

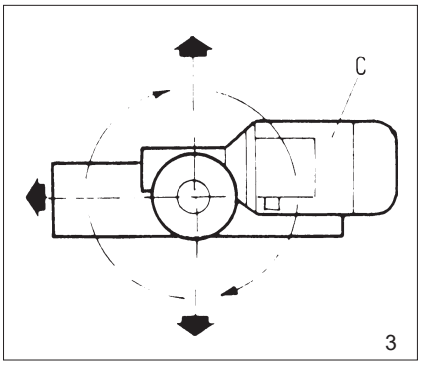

3

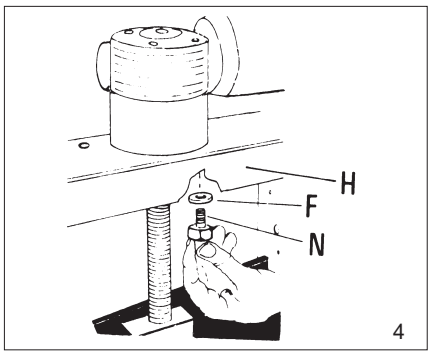

4

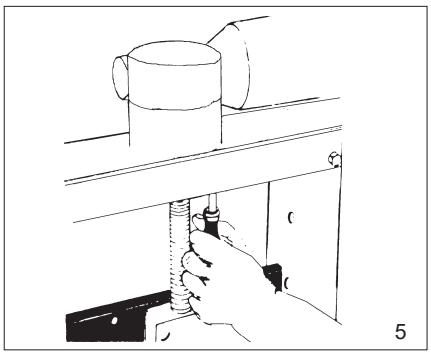
5

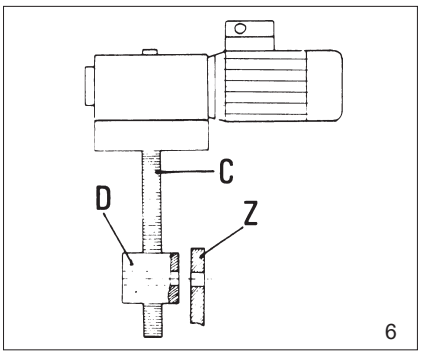

6

**NOTE: DURING THE INSTALLATION THE BLADE HAS TO BE SUPPORTED ON ALL THE BEARINGS. ONLY AFTER HAVING CHECKED THIS UP-END VALVE FOR ACTUATOR ASSEMBLY.**

1) Remove the 4 bolts (A) and washers (B) from the actuator.
2) Introduce the actuator spindle (C) into the central bore on the upper crosspiece of the valve body. Screw nut screw (D) onto spindle by approx. 100 mm with grease nipple (E) pointing outside.
3) Choose position of actuator (C).
4) Introduce 4 washers (F) and bolts (N) from below through upper crosspiece (H) into threaded bores of the actuator.
5) Tighten bolts.
6) Turn spindle (C) by hand until bores on nut screw (D) and those on blade (Z) correspond.

**N.B.: FÜR DIE MONTAGE MUSS DAS SCHIEBERBLECH AUF ALLEN LAGERROLLEN AUFLIEGEN. ERST NACH ERFOLGTER PRÜFUNG, DASS DEM SO IST, SCHIEBER ZWECKS MONTAGE DES ANTRIEBS HOCHKANT STELLEN.**

1) Die 4 Schrauben (A) samt Unterlegscheiben (B) vom Antrieb entfernen.
2) Antriebsspindel Spindel (C) durch mittige Bohrung im Rahmen-Quertrager stecken. Schloßmutter (D) ca. 100 mm weit so auf Spindel schrauben, daß Schmiernippel (E) nach außen zeigt.
3) Antriebsposition wählen.
4) Die 4 mit Scheiben (F) unterlegten Schrauben (N) von unten durch den Querträger (H) in die Gewindebohrungen des Antriebs einführen.
5) Schrauben fest anziehen.
6) Spindel (C) so lange von Hand drehen bis sich die Bohrungen der Schloßmutter (D) die des Schieberblechs (Z) überlagern.

**NOTE: PENDANT LE MONTAGE DE LA VANNE, LA GUILLOTTINE DOIT APPUYER SUR TOUS LES ROULEMENTS. ENSUITE METTRE LA VANNE EN POSITION VERTICALE POUR LE MONTAGE DE L'ACTIONNEUR.**

1) Enlever les 4 boulons (A) et les rondelles (B) de l'actionneur.
2) Insérer la vis mère (C) de l'actionneur dans le logement de la vanne. Serrer le support à écrou (D) à environ 100 mm avec le graisseur (E) vers l'extérieur.
3) Orienter l'actionneur.
4) Positionner les 4 rondelles (F) et insérer les boulons (N) du bas à travers le corps (H) dans les trous filetés de l'actionneur.
5) Serrer les boulons.
6) Tourner manuellement la vis mère (C) de l'actionneur jusq'à obtenir la superposition des trous du support à écrou (D) et ceux de la guillottine (Z).

**NB. : ALL'ATTO DEL MONTAGGIO LA LAMA DEVE TROVARSI APPOGGIATA SU TUTTI I CUSCINETTI. SOLTANTO ORA METTERE LA VALVOLA IN POSIZIONE VERTICALE PER IL MONTAGGIO DELL'ATTUATORE.**

1) Svitare i 4 bulloni (A) e rondelle (B) dall'attuatore.
2) Inserire la madrevite (C) dell'attuatore nell'apposito foro del corpo valvola. Avvitare la chiocciola (D) per ~100 mm, con l'ingrassatore (E) verso l'esterno.
3) Scegliere la posizione dell' attuatore.
4) Posizionare le 4 rondelle (F) e inserire i bulloni (N) dal basso attraverso il corpo (H) nei fori filettati dell'attuatore.
5) Serrare i bulloni.
6) Ruotare manualmente la madrevite (C) dell'attuatore fino alla sovrapposizione dei fori della chiocciola (D) e quelli sulla lama (Z).

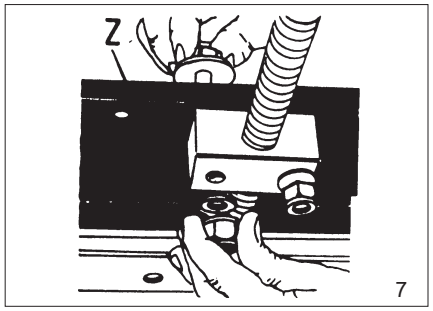

7

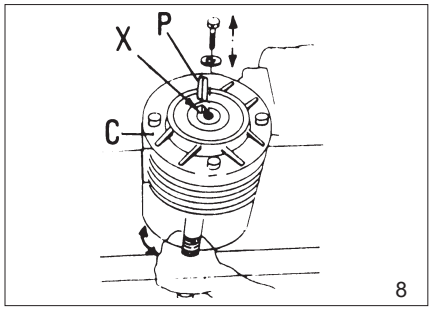

8

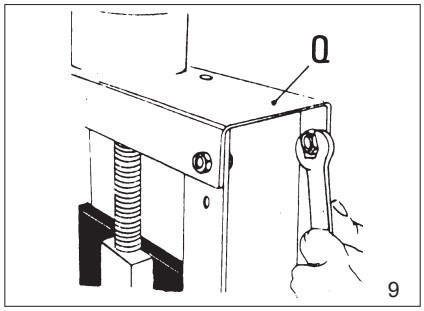

9

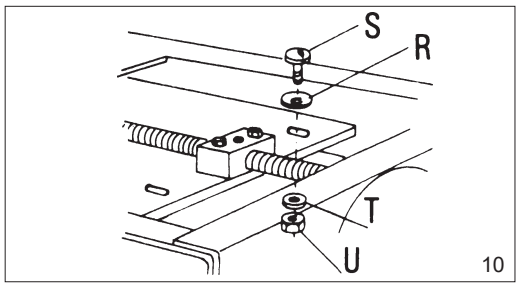

10

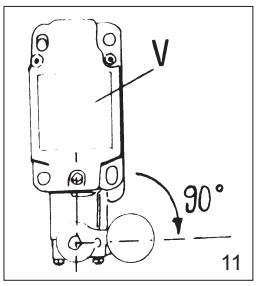

11

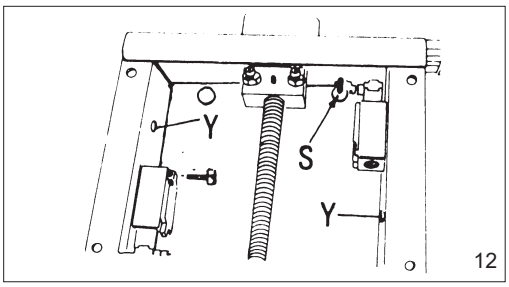

12

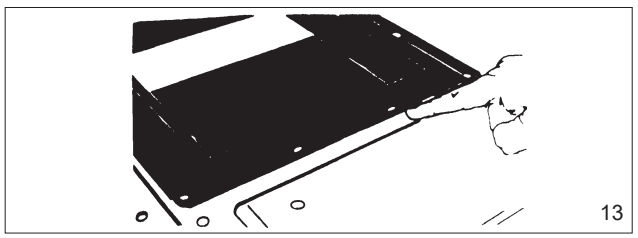
13

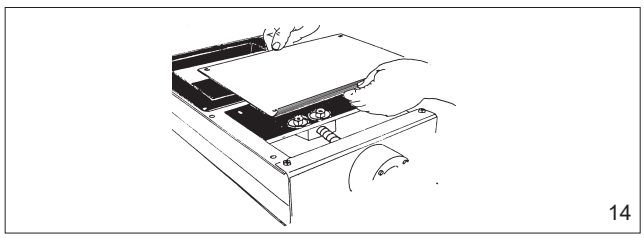
14

7) Introduce into the blade (Z) from above the two M12 bolts along with the large washers. Insert small washers and screw on self-locking nuts from below without tightening them up.
8) Remove central bolt and washer from top side of the actuator. Turn spindle by hand until key slots in the reducer housing (X) are aligned. Insert parallel key (P) and reinsert central bolt and washer. Tighten the bolt.
9) Tighten the 4 bolts that fix upper cross-piece (Q) to valve frame.
10) Position washers D.12 (R) on the rear side in the centre of the slots. Insert round head screws M8x25 (S). Insert washers D.8 (T) and nuts (U) from op-posite side.
11) Put arms of limit switches (V) at right angle so that after being fitted rollers face blade slots.
12) Fix limit switches to the inside of the side using nuts and bolts. **Open valve position** = head of the bolt (S) must rest on limit switch roller. Holes (Y) are cable passages. Check switch opera-tion before starting regular operation.
13) For valve installation use bolts which are short enough not to interfere with blade.
14) Carry out greasing (see operation and maintenance manual, item "**I** 2").
15) Mount the top and bottom guard ensur-ing they perfectly adhere to the frame. Check the positioning of the self-adhesive gasket.

7) Von oben die mit den großen Scheiben unterlegten M12er Schrauben durch das Schieberblech (Z) stecken. Kleine Unterlegscheiben und selbstsichernde Muttern mit zunächst lockerem Sitz von unten anbringen.
8) Mittige Schraube und Unterlegscheibe oben im Antrieb entfernen. Spindel so weit von Hand drehen bis die Paß-federnuten (X) im Getriebegehäuse exakt gegenüberstehen. Paßfeder (P) elnführen und mittige Schraube samt Unterlegscheibe wieder eindrehen und festziehen.
9) Die 4 Verbindungsschrauben zwischen Winkelrahmenblech (Q) und Rahmen festziehen.
10) Schieber flach legen, so daß die Schieberunterseite nach oben zeigt. 2 Zylinderkopfschrauben M8x25 (S) und Unterlegscheiben D.12 (R) mittig in die Langlöcher im Schieberblech plazieren. Auf Gegenseite Muttern (U) mit Unterlegscheiben D.8 (T) anbringen und festziehen.
11) Schwenkhebel der Endschalter (V) in rechtwinklige Position bringen. End-schalterhebelrolln müssen langlöchern Schieberblech gegenüberstehen.
12) Endschalter an den Längsstreben des Schieberrahmens mittels Schrauben und Mutterm befestigen. **Position Schieber auf** = Schraubenkopf (S) wirkt auf die Schwenkhebelrolle des dem Antrieb näher liegenden Endschalters. Die Bohrungen (Y) in den längssetigen Winkelrahmenblechen des Schieber-gehäuses dienen als Kabeldurchgänge zu den Endschaltern. Vor dem Einbau Schieber- und Endschalterfunktion prüfen.
13) Beim Einbau des Schiebers darauf achten, daß nicht zu lange Flanschver-bindungsschrauben verwendet werden, bzw. daß diese nicht am Schieberblech schleifen.
14) Nachschmieren (siehe Betriebs- und Wartungsanleitung, Pos. "**I** 2").
15) Oberes und unteres Schutzblech so montieren, daß die Bleche dicht am Eahmen anliegen.
Positionierung der selbst klebenden Dichtung prüfen.

7) Insérer les boulons M12 et les rondelles les plus grosses à travers la partie supérieure de la guillottine (Z). Monter les rondelles plus petites et le écrous autobloquants dans la partie inférieure; ne pas les serrer completement.
8) Enlever les boulons et les rondelles de l'actionneur. Tourner la vis mère de l'actionneur juaqu'à joindre les logements (X) de la clavette. Insérer la clavette (P) et remonter les rondelles et les boulons; les serrer.
9) Serrer les 4 boulons positionnés entre la traverse (Q) et le corps de la vanne.
10) Placer les rondelles D.12 (R) dans la partie inférieure de la guillottine en correspondance avec le trou. Insérer la vis a tête ronde M8x25 (S) sur la partie supérieure avec les rondelles D. 8 (T) et les écrous (U).
11) Tourner les bras des fins de courses (V) jusqu'à ce qu' ils soient perpendiculaires à l'axe d'eux-mêmes: le galet doit être positionné sur la guillottine sur la côté du trou.
12) Fixer les fin de courses sur le longerons sur la côté écrous. **Position de vanne ouverte** = la tête de la vis (S) doit être positionné sur le galet du fin de course. Les trous (Y) sont pour sortir le câblage. Vérifier le fonctionnement et le correcte branchement des fins de course.
13) Pendant le montage de la partie supé-rieure utiliser des boulons avec une longeur qui n'interfèrent pas avec la guillottine.
14) Pourvoir au graissage du bloc (voir manuel d'utilisation et d'entretien, pos. "**I** 2").
15) Monter les tôles de protection en s'assurant qu'elles sont parfaitement adhérentes au châssis.
Verifier le positionnement de la garniture adhesive.

7) Posizionare le viti M12 e rondelle grandi sulla parte superiore della lama (Z). Montare le rondelle più piccole e dadi autobloccanti nella parte inferiore: non serrare con forza.
8) Togliere vite e rondella dal comando (C). Ruotare la madrevite e far coincidere le sedi (X) di linguetta. Inserire linguetta (P) e rimontare rondella e vite. Serrare.
9) Serrare le 4 viti che collegano il traverso (Q) al corpo valvola.
10) Disporre le rondelle Ø12 (R) nella parte inferiore della lama, contralmente all'a-sola. Infilare la vite a testa tonda M8x25 (S); nella parte superiore utilizzare rondelle Ø8 (T) e dadi (U).
11) Portare i braccetti dei finecorsa (V) perpendicolari all'asse degli stessi: la rotella deve disporsi sulla lama dalla parte dell'asola.
12) Fissare i finecorsa sui longheroni del corpo valvola con viti e dadi. **Posizione di valvola aperta** = testa della vite (S) sulla rotella del fine corsa. Fori (Y) per uscita cablaggi. Verificare funzionalità e consensi fine corsa a banco.
13) Installare valvola: attenzione a non interferire con le viti allo scorrimento della lama.
14) Provvedere all'ingrassaggio del bloc-chetto (vedi cat.USO E MANUTENZIO-NE **"I** 2").
15) Montare le lamiere di protezione accertandosi che siano perfettamente aderenti alla lamiera piegata.
Verificare il corretto posizionamento della mousse.

**CHECK LIST IN CASE OF TROUBLE**

1) General questions

Fault description

a) Does valve open and close after longer periods without problems?
b) Do atmospheric conditions influence operation in a negative way?
c) If valve is fitted to feeder outlet check centre line of valve shaft is parallel with centre line of feeder, as would be fitted in normal circumstances. Check valve opens completely.
Make sure feeder outlet valve is open when feeder starts and only closes when feeder has stopped.
If necessary disconnect valve actuator in open position.

Silo check

a) Is silo equipped with a deflecting or bridge breaking cone.
b) Is silo equipped with cone fluidization system. If so how does it operate? Automatically at intervals while feeder is running. Manually on emergency in case of bridging.
c) Is silo cone equipped with vibrator or knocker.

Checking of gear motor actuators

a) Is a drop in voltage possible through the contemporary starting of different machines?
b) Is the plant equipped with a generator?
c) Check mains supply arrives at motor.
d) Check electric motor is correctly connected and ensure wires are tightly fastened.
e) Check adjustment of thermal cutout in the control panel and compare with data on motor plate.
f) Check sense of motor rotation is correct.

Checking of pneumatic actuators

Check compress air supply is 6 bar.

**CHECKLISTE BEI BETRIEBSSTORUNGEN**

1) Allgemeine Fragen

Beschreibung der Fehlfunktion

a) Offnen bzw. Schließen nach längeren Stillstandzeiten problemlos?
b) Spielen beim Auftreten der Storungen Witterungseinflüsse eine Rolle?
c) Wenn Auslaufklappe vorhanden, prüfen ob Klappenachse mit Schneckenachse fluchtet (so wäre es richtig) und ob Klappe ganz offnet.
Ist gewährleistet, daß die Auslaufklappe geoffnet ist, wenn die Schnecke anläuft und erst dann schließt, wenn die Schnecke bereits abgeschaltet ist?
Eventuell bei weiteren Tests Klappenantrieb bei vollkommen geoffneter Klappe abklemmen.

Kontrolle des Silos

a) Ist Silo mit einem Brechkegel ausgestattet?
b) Ist Silo mit einer Luftauflockerung oder einer andersartigen Austraghilfe ausgerüstet? Wenn ja, erfolgt nur eine Notbelüftung von Hand, oder wird die Belüftung bei der Dosierung automatisch zugeschaltet? Wenn automatisch, arbeitet dann die Belüftung im Intervallbetrieb, d.h. stoßweise?
c) Ist Silokonus mit einem Rüttler oder Klopfer ausgestattet. Wenn ja, Funktion beschreiben.

Kontrollen bei elektrischen Antrieben

a) Ist es moglich, daß Spannungsschwankungen infolge eines gleichzeitigen Einschaltens mehrerer Maschinen auftreten?
b) Ist die Anlage mit einem Generator ausgestattet?
c) Prüfen, ob am Motor Spannung anliegt.
d) Prüfen, ob Motor korrekt angeschlossen ist und ob Klemmenmuttern fest angezogen sind.
e) Einstellung der Motorabsicherung in der Steuerung prüfen und mit Typenschildangaben auf dem E-Motor vergleichen.
f) Motor-Drehrichtung prüfen.

Kontrollen bei pneumatischen Antrieben

Druckluftanschluß prüfen (6 bar).

**CHECK-LIST EN CAS DE PANNE**

1) Demandes générales

Desription de la panne

a) Est ce que la vanne s'ouvre et se ferme sans problèmes méme après des longues périodes d'arrét?
b) Est ce que les conditions atmosphériques ont un róle ìmportant?
c) S'il y a une vanne montée sur la bouche de sortie de la vis, contrólez si l'axe de la vis et l'axe de l'arbre de la vanne sont parallèles (ainsi il est correct) et si la vanne s'ouvre complètement.
Est il sùr que la vanne est ouverte au moment où la vis démarre? Il faut qu'elle soit fermée seulement au moment où la vis est arrétée.
Eventuellement détachez le vérin à vanne ouverte!

Contróles du silo

a) Est ce que le silo est équipé d'un déflecteur casse-voúte?
b) Est ce que le silo est équipé d'un système de fluidification? Entre-t-il en fonctìon automatiquement pendant le dosage ou s'agit-il d'un dispositif manuel d'alerte pour casser des voútes?
c) Est ce que le silo est équipé d'un vibrateur ou d'un marteau pneumatique. Comment est ce qu'il fonctionne?

Controles avec actionneur électromécanique

a) Est qu'il y a la possibilité d'écarts de courant à cause du démarrage de plusieurs machines au méme temps?
b) Est ce que la centrale est équipée d'un générateur de courant?
c) Contrólez si le moteur reçoit courant.
d) Controlez si le moteur a été connecté correctement et si les fils ont été fixé bien aux bornes.
e) Contrólez la régulation thermique du moteur dans le coffret de commande et comparez-la aux données sur la plaque du moteur.
f) Vérifiez que le sens de rotation du moteur électrique soit correct.

Controles avec actionneur électropneumatique

Vérifier connexion avec ligne (6 bar).

**CHECK-LIST IN CASO DI GUASTO**

1) Domande generali

Descrizionedel guasto

a) La valvola apre e chiude senza problemi anche dopo lunghi periodi di sosta?
b) Pare che le condizioni atmosferiche contribuiscano al malfunzionamento?
c) Qualora vi sia una valvola allo scarico della coclea controllare se l'asse della coclea e l'asse dell'albero della valvola sono paralleli (così sarebbe corretto) e se la valvola si apre completamente!
E' sicuro che la valvola è aperta nel momento in cui la coclea è già stata fermata?
Eventualmente staccare il comando della valvola aperta!

Controlli parte silo

a) Il silo è equipaggiato con un deflettore rompiponte?
b) Il silo è equipaggiato con un impianto di fluidificazione? Entra in funzione automaticamente durante il lavoro della valvola oppure si tratta di un dispositivo manuale di emergenza per eventuali ponti?
c) Il silo è equipaggiato con un vibratore o un martellatore? Come funziona?

Controlli con attuatore elettromeccanico

a) Sono possibili sbalzi di corrente di alimentazione a causa dell'avviamento contemporaneo di diverse macchine?
b) L'impianto è equipaggiato con un generatore di corrente?
c) Controllare se il motore riceve corrente!
d) Controllare se il motore è collegato correttamente e se i fili sono fissati bene i morsetti!
e) Controllare la regolazione della termica del motore nel quadro generale e confrontarla con i dati sulla targhetta del motore!
f) Verificare il giusto senso di rotazione del motore elettrico!

Controlli con attuatore elettropneumatico

Verificare collegamento con la linea (6 bar).

2) Valve check

Check valve connection to upper counterflange is even and dust-tight.

3) Material

a) Material description?
b) Bulk density? (kg/dm$^3$)
c) Particle size? (µm/mm)
d) Humidity? (%)
e) Flowability? (make material slide down a metal plate by varying the angle from low to steep)
f) Compressible material? (can you make a “snowball”?)
g) Abrasive material? (does it hurt when rubbing it between fingers?).

2) Prüfung der Klappe

Prüfen, ob die KLappe plan auf dem oben anschließenden Gegenflansch anliegt.

3) Prüfung des Fördermediums

a) Materialbezeichnung?
b) Schüttgewicht? (kg/dm$^3$)
c) Körnung? (µm/mm)
d) Feuchte? (%)
e) Fließfähigkeit?(Materialprobe auf einem geneigten Blech zum Fließen bringen)
f) Komprimierbarkeit? (Kann ein “Schneeball” geformt werden?)
g) Abrasivität? (Schmerzt es, wenn man Material zwischen den Fingern reibt?).

2) Contrôle de la vanne

Vérifier que la vanne soit solidaire à la bride supérieure parfaitement plane.

3) Contrôle du Matériau

a) Désignation du matériau
b) Densité? (kg/dm$^3$)
c) Granulométrie? (µm/mm)
d) Humidité? (%)
e) Fluidité? (faites couler le matériau sur une tôle en augmentant l’inclinaison de la-même)
f) Compressibilité? (est-il possible de faire une “boule de neige”?)
g) Abrasivité? (est ce qu’il fait mal quand on frotte le matériau dans les doigts?).

2) Controllo della Valvola

Verificare che la valvola sia solidale a una flangia superiore che sia perfettamente planare.

3) Controllo del Prodotto

a) Denominazione del prodotto?
b) Densità? (kg/dm$^3$)
c) Granulometria? (µm/mm)
e) Scorrevolezza? (fare scorrere il materiale su una lamiera aumentando lentamente l’inclinazione)
f) Comprimibilità? (è possibile fare una “palla di neve”?)
g) Abrasività? (fa male quando si sfrega il prodotto tra le dita?).

WAM®

WAMGROUP

3

SPARE PARTS

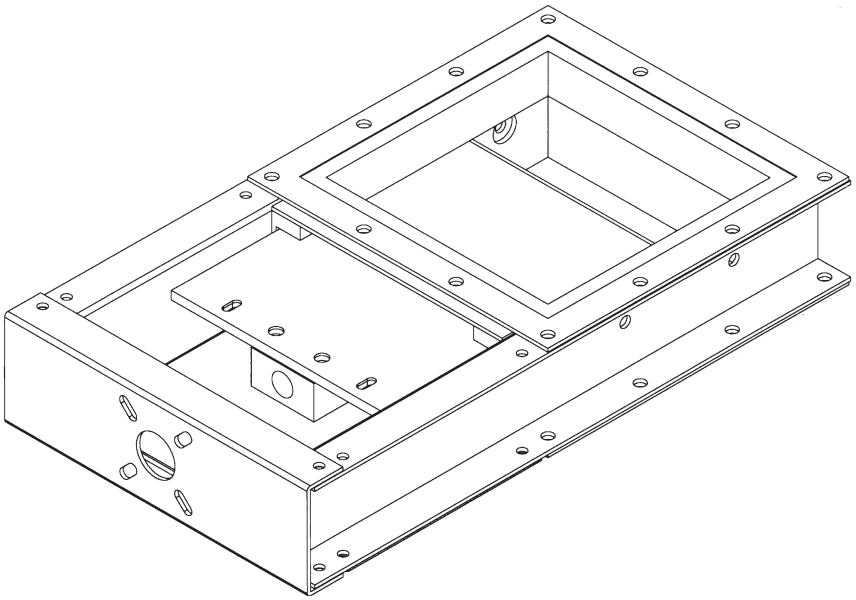

# VL

- **SLIDE VALVES**
  SPARE PARTS CATALOGUE
- ***FLACHSCHIEBER***
  ERSATZTEILKATALOG
- **VANNES GUILLOTTINE**
  PIECES DE RECHANGE
- ***VALVOLE A GHIGLIOTTINA***
  PEZZI DI RICAMBIO

All rights reserved © WAMGROUP S.p.A.

**Manual No. VAL.VL.--.R.A12.0519.4L Issue: A12**
**Latest Update: May 2019**

**ORIGINAL INSTRUCTIONS IN ENGLISH**

WAM®

All the products described in this catalogue are manufactured according to **WAMGROUP S.p.A. Quality System procedures**. The Company's Quality System, certified in July 1994 according to International Standards **UNI EN ISO 9002** and extended to the latest release of **UNI EN ISO 9001**, ensures that the entire production process, starting from the processing of the order to the technical service after delivery, is carried out in a controlled manner that guarantees the quality standard of the product.

*Alle in diesem Katalog beschriebenen Produkte werden gemäß dem **Qualitätssystem der WAMGROUP S.p.A.** hergestellt. Das im Juli 1994 gemäß der internationalen Norm **UNI EN ISO 9002** und auf die neueste Version der **UNI EN ISO 9001** erweiterte, zertifizierte Qualitätssystem der Firma gewährleistet, dass der gesamte Produktionsprozess von der Auftragsbearbeitung bis zum technischen Kundendienst nach Lieferung in kontrollierter Art und Weise erfolgt, so dass der Qualitätsstandard des Produkts gewährleistet ist.*

Tous les produits décrits dans ce catalogue sont fabriqués selon les procédures du **Système de Qualité de WAMGROUP S.p.A.**, certifié en Juillet 1994 selon les normes internationales **UNI EN ISO 9002** et étendu à la dernière version de la norme **UNI EN ISO 9001**. Cela garantit que le processus de production, à partir de la gestion de la commande au service technique après-vente, est effectué de manière contrôlée garantissant la norme de qualité du produit.

*Tutti i prodotti descritti nel catalogo sono stati realizzati secondo le **procedure del Sistema Qualità di WAMGROUP S.p.A.** Il Sistema Qualità aziendale, certificato dal luglio 1994 in conformità alle normative internazionali **UNI EN ISO 9002** e successivamente esteso all' ultima versione delle normative **UNI EN ISO 9001**, garantisce che l'intero processo produttivo, dalla formulazione dell'ordine fino all'assistenza tecnica dopo la consegna, si svolga secondo modalità controllate che garantiscono lo standard qualitativo del prodotto.*

**This publication cancels and replaces any previous edition and revision.**
**We reserve the right to implement modifications without notice.**
**This catalogue cannot be reproduced, even partially, without prior written consent by the Manufacturer.**

***Diese Veröffentlichung storniert und ersetzt alle früheren Ausgaben und überarbeiteten Fassungen.***
***Wir behalten uns das Recht vor, Änderungen ohne vorherige Information durchzuführen.***
***Dieser Katalog darf selbst auszugsweise nicht ohne das schriftliche Einverständnis der Herstellers vervielfältigt werden.***

**Cette publication annule et remplace toute édition et révision antérieure.**
**Nous nous réservons le droit de mettre en place des modifications sans préavis.**
**Aucune reproduction, partielle ou intégrale du catalogue, ne pourra être faite sans l'accord préalable et écrit du Fabricant.**

***Questa pubblicazione annulla e sostituisce le edizioni e revisioni precedenti.***
***Ci riserviamo la facoltà di apportare modifiche senza preavviso.***
***Il presente catalogo non può essere riprodotto, nemmeno parzialmente, senza previo consenso scritto del Costruttore.***

3 **SPARE PARTS CATALOGUE** — **ERSATZTEILKATALOG**

SPARE PARTS ..... ERSATZTEIL ..... **R.01 > .18**

3 **CATALOGUE PIECES DE RECHANGE** — **CATALOGO RICAMBI**

PIECES DE RECHANGE ..... PEZZI DI RICAMBIO ..... **R.01 > .18**

| | | | | | |
|---|---|---|---|---|---|
| **L** | Vulcanized SINT®MC blade<br>*SINT®MC-Blech vulkanisiert*<br>Lame vulcanisée SINT®MC<br>*Lama vulcanizzata SINT®MC* | **M** | Steel blade<br>*Stahl-Blech*<br>Lame en fer<br>*Lama ferro* | **T** | St. st. 304 blade<br>*1.4301-Blech*<br>Lame AISI 304<br>*Lama AISI 304* |

**VLQ** | | | | | | | **1**

Size / *Größe*
Taille / *Dimensioni*

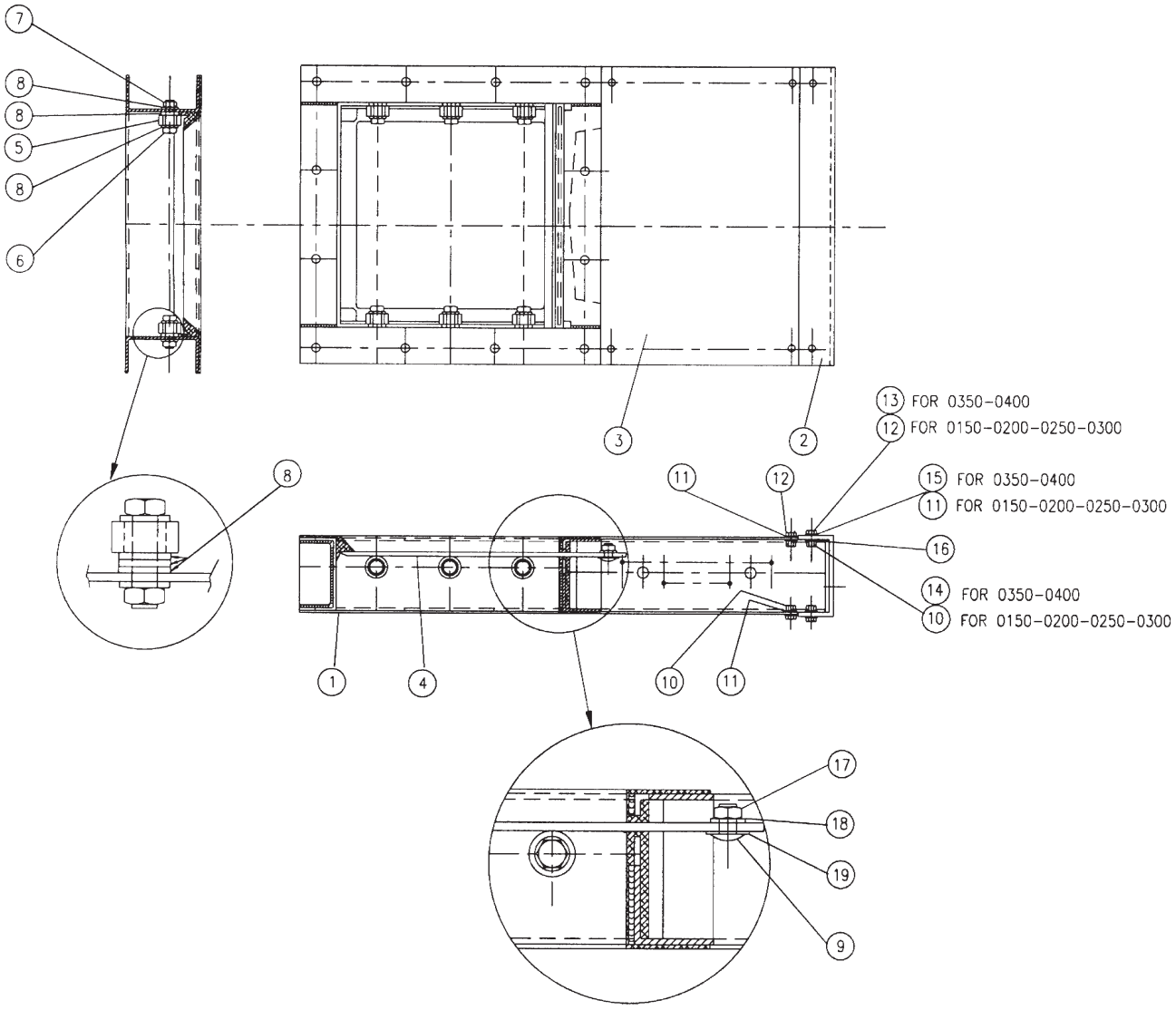

WAM®

VL
- SPARE PARTS
- ERSATZTEILE
- PIECES DE RECHANGE
- RICAMBI

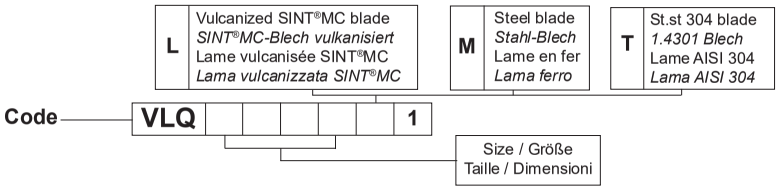




| Item<br>Pos.<br>Pos.<br>Pos. | Quant.<br>Menge<br>Quant.<br>Quant. | Norms<br>Normen<br>Normes<br>Norme | Description | Benennung | Dèsignation | Denominazione | 0150<br><br>Code<br>Codice | 0200<br><br>Code<br>Codice | 0250<br><br>Code<br>Codice | 0300<br><br>Code<br>Codice |
|---|---|---|---|---|---|---|---|---|---|---|
| **1** | 1 | | Body | Gehäuse | Corps vanne | Corpo valvola | **20933911A** | **20933921A** | **20933931A** | **20933941A** |
| **2** | 1 | | Plate | Kantblech | Tôle pliée | Lamiera piegata | **20688711A** | **20688721A** | **20688731A** | **20688741A** |
| **3** | 2 | | Guard | Schutzblech | Tôle de protection | Lamiera di protez. | **20691561A** | **20691571A** | **20691581A** | **20691591A** |
| **4L** | 1 | | Vulc. blade SINT®MC L | Schieberblech SINT®MC L | Lame vulc. SINT®MC L | Lama vulcaniz. in SINT®MC tipo L | **20654211B** | **20654221B** | **20654231B** | **20654241B** |
| **4M** | 1 | | Carbon steel blade M | Schieberblech Stahl M | Lame en fer M | Lama in ferro tipo M | **20654351A** | **20654361A** | **20654371A** | **20654381A** |
| **4T** | 1 | | St. steel 304 blade T | Schieberblech 1.4301 T | Lame AISI 304 type T | Lama in AISI 304 tipo T | **20654352A** | **20654362A** | **20654372A** | **20654382A** |
| **5** | * | 12x32x10 DIN 625 | Bearing | Wälzlager | Roulement | Cuscinetto | - | - | - | - |
| **6** | * | M12 x 40 DIN 934 | Hexagonal bolt | Sechskantschraube | Vis à tête à six pans | Vite T.E. | - | - | - | - |
| **7** | * | M12 DIN 934 | Hexagonal nut | Sechskantmutter | Écrou à tète à six pans | Dado esagonale | - | - | - | - |
| **8** | ** | Ø12 DIN 125A | Flat washer | Unterlegscheibe | Rondelle | Rondella | - | - | - | - |
| **9** | 2 | M8 x 20 DIN 603 | Round-headed bolt | Zylinderkopfschraube | Boulon à tête ronde | Bullone testa tonda | - | - | - | - |
| **10** | 14 | M8 DIN 934 | Hexagonal nut | Sechskantmutter | Écrou à tète à six pans | Dado esagonale | - | - | - | - |
| **11** | 22 | Ø8 DIN 125A | Flat washer | Unterlegscheibe | Rondelle | Rondella | - | - | - | - |
| **12** | 12 | M8 x 20 DIN 933 | Hexagonal bolt | Sechskantschraube | Vis à tête à six pans | Vita T.E. | - | - | - | - |
| **16** | 4 | Ø8 DIN 127B | Spring washer | Federring | Rondelle à ressort | Rosetta elastica | - | - | - | - |

| Item<br>Pos.<br>Pos.<br>Pos. | Quant.<br>Menge<br>Quant.<br>Quant. | Norms<br>Normen<br>Normes<br>Norme | Description | Benennung | Dèsignation | Denominazione | 0350<br><br>Code<br>Codice | 0400<br><br>Code<br>Codice | | |
|---|---|---|---|---|---|---|---|---|---|---|
| **1** | 1 | | Body | Gehäuse | Corps | Corpo valvola | **20933951A** | **20933961A** | | |
| **2** | 1 | | Plate | Kantblech | Tôle pliée | Lamiera piegata | **20690461A** | **20690471A** | | |
| **3** | 2 | | Guard | Schutzblech | Tôle de protection | Lamiera di protez. | **20691601A** | **20691611A** | | |
| **4L** | 1 | | Vulc. blade SINT®MC L | Schieberblech SINT®MC L | Lame vulc. SINT®MC L | Lama vulcaniz. in SINT®MC tipo L | **20654251B** | **20654261B** | | |
| **4M** | | | Carbon steel blade M | Schieberblech Stahl M | Lame en fer M | Lama in ferro tipo M | **20654391A** | **20654401A** | | |
| **4T** | | | St. steel 304 blade T | Schieberblech 1.4301 T | Lame AISI 304 type T | Lama in AISI 304 tipo T | **20654392A** | **20654402A** | | |
| **5** | 6 | 12x37x12 DIN 625 | Bearing | Wälzlager | Roulement | Cuscinetto | - | - | | |
| **6** | 6 | M12 x 40 DIN 933 | Hexagonal bolt | Sechskantschraube | Vis à tête à six pans | Vite T.E. | - | - | | |
| **7** | 6 | M12 DIN 934 | Hexagonal nut | Sechskantmutter | Écrou à tète à six pans | Dado esagonale | - | - | | |
| **8** | 32 | Ø 12 DIN 125A | Flat washer | Unterlegscheibe | Rondelle | Rondella | - | - | | |
| **9** | 2 | M8 x 20 DIN 603 | Round-headed bolt | Zylinderkopfschraube | Boulon à tête ronde | Bullone testa tonda | - | - | | |
| **10** | 10 | M8 DIN 934 | Hexagonal nut | Sechskantmutter | Écrou à tète à six pans | Dado esagonale | - | - | | |
| **11** | 18 | Ø 8 DIN 125A | Flat washer | Unterlegscheibe | Rondelle | Rondella | - | - | | |
| **12** | 8 | M8 x 20 DIN 933 | Hexagonal bolt | Sechskantschraube | Vis à tête à six pans | Vita T.E. | - | - | | |
| **13** | 4 | M10 x 25 DIN 933 | Hexagonal bolt | Sechskantschraube | Vis à tête à six pans | Vita T.E. | - | - | | |
| **14** | 4 | M10 DIN 934 | Hexagonal nut | Sechskantmutter | Écrou à tète à six pans | Dado esagonale | - | - | | |
| **15** | 4 | Ø 10 DIN 125A | Flat washer | Unterlegscheibe | Rondelle | Rondella | - | - | | |
| **16** | 4 | Ø 8 DIN 127b | Spring washer | Federring | Rondelle à ressort | Rosetta elastica | - | - | | |

* (4 off / St. / Pces. / Pezzi: VLQ0150 - 0200 - 0250) - (6 off / St. / Pces. / Pezzi: VLQ0300)
* (22 off / St. / Pces. / Pezzi: VLQ0150 - 0200 - 0250) - (32 off / St. / Pces. / Pezzi: VLQ0300)

| | | | |
|---|---|---|---|
| **N** | Vulcanized SINT®AL blade<br>*SINT®AL-Blech vulkanisiert*<br>Lame vulcanisée SINT®AL<br>*Lama vulcanizzata SINT®AL* | **P** | St. st. 304 blade<br>*1.4301-Blech*<br>Lame AISI 304<br>*Lama AISI 304* |

**VLQ** [ ][ ][ ][ ][ ][ ]

Size / *Größe*
Taille / *Dimensioni*

| | |
|---|---|
| **2** | Standard bearings<br>*Standard-Lager*<br>Roulem. standard<br>*Cuscinetti standard* |
| **3** | St. steel bearings<br>*Edelstahl-Lager*<br>Roulements inox<br>*Cuscinetti inox* |

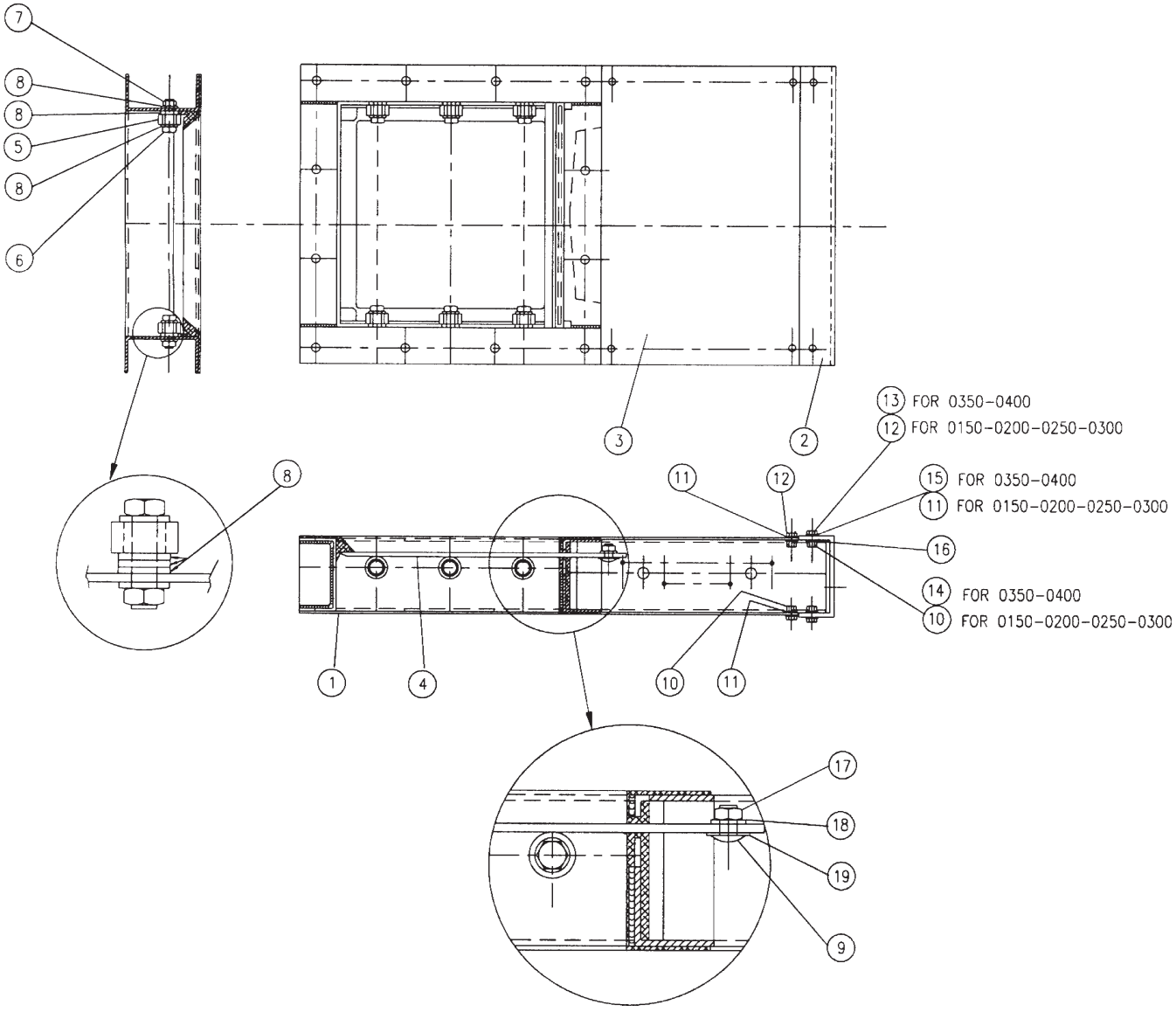

WAM®

**VL**

- **SPARE PARTS**
- **ERSATZTEILE**
- **PIECES DE RECHANGE**
- **RICAMBI**

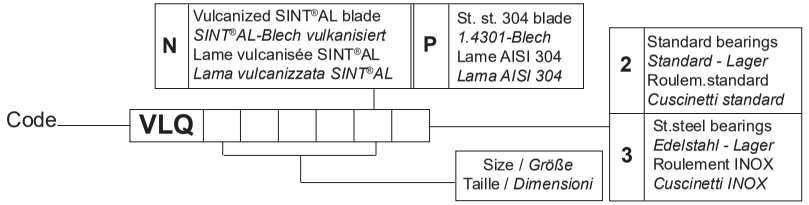


**05.19**

**3**

VAL.VL.--.R.A12.0519.4L **04**

| Item<br>Pos.<br>Pos.<br>Pos. | Quant.<br>Menge<br>Quant.<br>Quant. | Norms<br>Normen<br>Normes<br>Norme | Description | Benennung | Dèsignation | Denominazione | 0150<br><br>Code<br>Codice | 0200<br><br>Code<br>Codice | 0250<br><br>Code<br>Codice | 0300<br><br>Code<br>Codice |
|---|---|---|---|---|---|---|---|---|---|---|
| **1** | 1 | | Body | Gehäuse | Corps | Corpo valvola | **20933912A** | **20933922A** | **20933932A** | **20933942A** |
| **2** | 1 | | Plate | Kantblech | Tôle pliée | Lamiara piegata | **20688712A** | **20688722A** | **20688732A** | **20688742A** |
| **3** | 2 | | Protection plate | Schutzblech | Tôle de protection | Lamiera di protez. | **20691562A** | **20691572A** | **20691582A** | **20691592A** |
| **4N** | 1 | | Vulcanized blade SINT®AL N | Schieberblech SINT®AL N | Tôle vulc. SINT®AL type N | Lama vulcaniz. in SINT®AL tipo N | **20654212B** | **20654222B** | **20654232B** | **20654242B** |
| **4P** | 1 | | St. steel 304 blade P | Schieberblech 1.40301 P | Lame AISI 304 type P | Lama in AISI 304 tipo P | **20654352A** | **20654362A** | **20654372A** | **20654382A** |
| **5** | * | 12x32x10 DIN 625 | Bearing STD type 2 | Lager STD type 2 | Roulement STD type 2 | Cuscinetto STD tipo 2 | - | - | - | - |
| **5** | * | 12x32x10 DIN 625 | Bearing AISI 304 type 3 | Lager AISI 304 type 3 | Roulement AISI 304 type 3 | Cuscinetto AISI 304 tipo 3 | - | - | - | - |
| **6** | * | M12 x 40 DIN 934 | Hexag. headed screw | Sechskantschraube | Vis à tête à six pans | Vite T.E. | **-(DIN A2)** | **-(DIN A2)** | **-(DIN A2)** | **-(DIN A2)** |
| **7** | * | M12 DIN 934 | Hexagonal nut | Sechskantmutter | Écrou à tète à six pans | Dado esagonale | **-(DIN A2)** | **-(DIN A2)** | **-(DIN A2)** | **-(DIN A2)** |
| **8** | * | Ø12 DIN 125A | Washer | Unterlegscheibe | Rondelle | Rondella | **-(DIN A2)** | **-(DIN A2)** | **-(DIN A2)** | **-(DIN A2)** |
| **9** | 2 | M8 x 20 DIN 603 | Round-headed bolt | Zylinderkopfschraube | Boulon à tête ronde | Bullone testa tonda | - | - | - | - |
| **10** | 10 | M8 DIN 934 | Hexagonal nut | Sechskantmutter | Écrou à tète à six pans | Dado esagonale | **-(DIN A2)** | **-(DIN A2)** | **-(DIN A2)** | **-(DIN A2)** |
| **11** | 20 | Ø8 DIN 125A | Washer | Unterlegscheibe | Rondelle | Rondella | **-(DIN A2)** | **-(DIN A2)** | **-(DIN A2)** | **-(DIN A2)** |
| **12** | 12 | M8 x 20 DIN 933 | Hexag. head screw | Sechskantschraube | Vis à tête à six pans | Vita T.E. | **-(DIN A2)** | **-(DIN A2)** | **-(DIN A2)** | **-(DIN A2)** |
| **16** | 4 | Ø8 DIN 127B | Spring washer | Federring | Rondelle à ressort | Rosetta elastica | - | - | - | - |
| **17** | 2 | Ø8 DIN 934 | Hexagon nut | Sechskantmutter | Écrou à tète à six pans | Dado esagonale | - | - | - | - |
| **18** | 2 | Ø8 DIN 125A | Washer | Unterlegscheibe | Rondelle | Rondella | - | - | - | - |
| **19** | 2 | Ø12 DIN 125A | Washer | Unterlegscheibe | Rondelle | Rondella | - | - | - | - |

| Item<br>Pos.<br>Pos.<br>Pos. | Quant.<br>Menge<br>Quant.<br>Quant. | Norms<br>Normen<br>Normes<br>Norme | Description | Benennung | Dèsignation | Denominazione | 0350<br><br>Code<br>Codice | 0400<br><br>Code<br>Codice | | |
|---|---|---|---|---|---|---|---|---|---|---|
| **1** | 1 | | Body | Gehäuse | Corps | Corpo valvola | **20933952A** | **20933962A** | | |
| **2** | 1 | | Plate | Kantblech | Tôle pliée | Lamiara piegata | **20688752A** | **20688762A** | | |
| **3** | 2 | | Protection plate | Schutzblech | Tôle de protection | Lamiera di protez. | **20691602A** | **20691612A** | | |
| **4N** | 1 | | Vulcanized blade SINT®AL L | Schieberblech SINT®AL L | Tôle vulc. SINT®AL L | Lama vulcaniz. in SINT®AL tipo L | **20654252B** | **20654262B** | | |
| **4P** | 1 | | Carbon steel blade M | Schieberblech Sthal M | Lame en fer M | Lama in ferro tipo M | **20654392A** | **20654402A** | | |
| **5** | 6 | | St. steel 304 blade T | Schieberblech 1.40301T | Lame AISI 304 type T | Lama in AISI 304 tipo T | - | - | | |
| **5** | 6 | 12x37x12 DIN 625 | Bearing | Lager | Roulement | Cuscinetto | - | - | | |
| **6** | 6 | M12 x 40 DIN 933 | Hexag. headed screw | Sechskantschraube | Vis à tête à six pans | Vite T.E. | **-(DIN A2)** | **-(DIN A2)** | | |
| **7** | 6 | M12 DIN 934 | Hexagonal nut | Sechskantmutter | Écrou à tète à six pans | Dado esagonale | **-(DIN A2)** | **-(DIN A2)** | | |
| **8** | 30 | Ø 12 DIN 125A | Washer | Unterlegscheibe | Rondelle | Rondella | **-(DIN A2)** | **-(DIN A2)** | | |
| **9** | 2 | M8 x 20 DIN 603 | Round-headed bolt | Zylinderkopfschraube | Boulon à tête ronde | Bullone testa tonda | - | - | | |
| **10** | 8 | M8 DIN 934 | Hexagonal nut | Sechskantmutter | Écrou à tète à six pans | Dado esagonale | **-(DIN A2)** | **-(DIN A2)** | | |
| **11** | 16 | Ø8 DIN 125A | Washer | Unterlegscheibe | Rondelle | Rondella | **-(DIN A2)** | **-(DIN A2)** | | |
| **12** | 8 | M8 x 20 DIN 933 | Hexag. head screw | Sechskantschraube | Vis à tête à six pans | Vita T.E. | **-(DIN A2)** | **-(DIN A2)** | | |
| **13** | 4 | M10 x 25 DIN 933 | Hexag. head screw | Sechskantschraube | Vis à tête à six pans | Vita T.E. | **-(DIN A2)** | **-(DIN A2)** | | |
| **14** | 4 | M10 DIN 934 | Hexagonal nut | Sechskantmutter | Écrou à tète à six pans | Dado esagonale | **-(DIN A2)** | **-(DIN A2)** | | |
| **15** | 4 | Ø10 DIN 125A | Washer | Unterlegscheibe | Rondelle | Rondella | **-(DIN A2)** | **-(DIN A2)** | | |
| **16** | 4 | Ø8 DIN 127b | Spring washer | Federring | Rondelle à ressort | Rosetta elastica | **-(DIN A2)** | **-(DIN A2)** | | |
| **17** | 2 | Ø8 DIN 934 | Hexagon nut | Sechskantmutter | Écrou à tète à six pans | Dado esagonale | - | - | | |
| **18** | 2 | Ø8 DIN 125A | Washer | Unterlegscheibe | Rondelle | Rondella | - | - | | |
| **19** | 2 | Ø12 DIN 125A | Washer | Unterlegscheibe | Rondelle | Rondella | - | - | | |

* (4 off / St. / Pces. / Pezzi: VLQ0150 - 0200 - 0250) - (6 off / St. / Pces. / Pezzi: VLQ0300)

* (22 off / St. / Pces. / Pezzi: VLQ0150 - 0200 - 0250) - (32 off / St. / Pces. / Pezzi: VLQ0300)

| | | | | | |
|---|---|---|---|---|---|
| **L** | Vulcanized SINT®MC blade<br>*Vulkanis. SINT®MC Blech*<br>Lame vulcanisée SINT®MC<br>*Lama vulcanizzata SINT®MC* | **M** | Steel blade<br>*Stahl-Blech*<br>Lame en fer<br>*Lama ferro* | **T** | St.st. 304 blade<br>*1.4301 Blech*<br>Lame AISI 304<br>*Lama AISI 304* |

**VLC** | | | | | | **1**

Size / *Größe*
Taille / *Dimensioni*

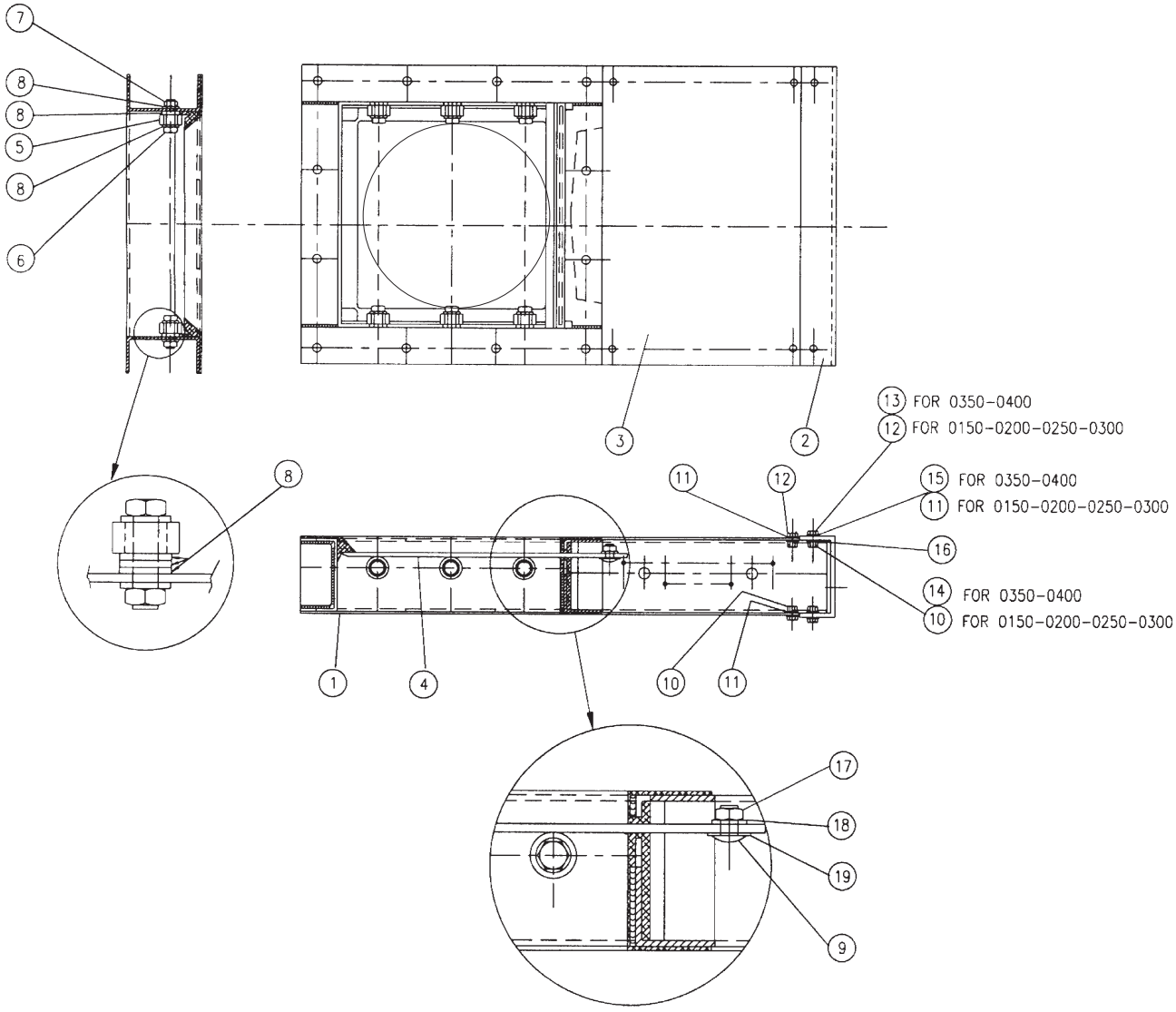

WAM®

VL
- SPARE PARTS
- ERSATZTEILE
- PIECES DE RECHANGE
- RICAMBI

| | Vulcanized SINT®MC blade<br>*SINT®MC-Blech vulkanisiert*<br>Lame vulcanisée SINT®MC<br>*Lama vulcanizzata SINT®MC* | | Steel blade<br>*Stahl-Blech*<br>Lame en fer<br>*Lama ferro* | | St. st. 304 blade<br>*1.4301 Blech*<br>Lame AISI 304<br>*Lama AISI 304* |
|---|---|---|---|---|---|
| | L | M | | T | |

Code / Codice: VLC [ ][ ][ ][ ][ ][ ] 1

Size / *Größe*
Taille / *Dimensioni*

VAL.VL.--.R.A12.0519.4L **6**

| Item<br>Pos.<br>Pos.<br>Pos. | Quant.<br>Menge<br>Quant.<br>Quant. | Norms<br>Normen<br>Normes<br>Norme | Description | Benennung | Dèsignation | Denominazione | 0150<br><br>Code<br>Codice | 0200<br><br>Code<br>Codice | 0250<br><br>Code<br>Codice | 0300<br><br>Code<br>Codice |
|---|---|---|---|---|---|---|---|---|---|---|
| **1** | 1 | | Body | Gehäuse | Corps | Corpo valvola | **20933971A** | **20933981A** | **20933991A** | **20934001A** |
| **2** | 1 | | Plate | Kantblech | Tôle plièe | Lamiera piegata | **20688711A** | **20688721A** | **20688731A** | **20688741A** |
| **3** | 2 | | Protection plate | Schutzblech | Tôle de protection | Lamiera di protez. | **20691561A** | **20691571A** | **20691581A** | **20691591A** |
| **4L** | 1 | | Vulc. blade SINT®MC L | Schieberblech SINT®MC L | Lame vulc. SINT®MC type L | Lama vulcaniz. in SINT®MC tipo L | **20654211B** | **20654221B** | **20654231B** | **20654241B** |
| **4M** | 1 | | Carbon steel blade M | Schieberblech Stahl M | Lame en fer M | Lama in ferro tipo M | **20654351A** | **20654361A** | **20654371A** | **20654381A** |
| **4T** | 1 | | St. steel 304 blade T | Schieberblech 1.4301 T | Lame AISI 304 type T | Lama in AISI 304 tipo T | **20654352A** | **20654362A** | **20654372A** | **20654382A** |
| **5** | * | 12x32x10 DIN 625 | Bearing | Lager | Roulement | Cuscinetto | - | - | - | - |
| **6** | * | M12 x 40 DIN 934 | Hexag. headed screw | Sechskantschraube | Vis à tête à six pans | Vite T.E. | - | - | - | - |
| **7** | * | M12 DIN 934 | Hexagonalnut | Sechskantmutter | Écrou à tète à six pans | Dado esagonale | - | - | - | - |
| **8** | ** | Ø12 DIN 125A | Washer | Unterlegscheibe | Rondelle | Rondella | - | - | - | - |
| **9** | 2 | M8 x 20 DIN 603 | Round-headed bolt | Zylinderkopfschraube | Boulon à tête ronde | Bullone testa tonda | - | - | - | - |
| **10** | 14 | M8 DIN 934 | Hexagonal nut | Sechskantmutter | Écrou à tète à six pans | Dado esagonale | - | - | - | - |
| **11** | 22 | Ø8 DIN 125A | Washer | Unterlegscheibe | Rondelle | Rondella | - | - | - | - |
| **12** | 12 | M8 x 20 DIN 933 | Hexag. head screw | Sechskantschraube | Vis à tête à six pans | Vita T.E. | - | - | - | - |
| **16** | 4 | Ø8 DIN 127B | Spring washer | Federring | Rondelle à ressort | Rosetta elastica | - | - | - | - |

| Item<br>Pos.<br>Pos.<br>Pos. | Quant.<br>Menge<br>Quant.<br>Quant. | Norms<br>Normen<br>Normes<br>Norme | Description | Benennung | Dèsignation | Denominazione | 0350<br><br>Code<br>Codice | 0400<br><br>Code<br>Codice | | |
|---|---|---|---|---|---|---|---|---|---|---|
| **1** | 1 | | Body | Gehäuse | Corps | Corpo valvola | **20934011A** | **20934021A** | | |
| **2** | 1 | | Plate | Kantblech | Tôle plièe | Lamiera piegata | **20690461A** | **20690471A** | | |
| **3** | 2 | | Protection plate | Schutzblech | Tôle de protection | Lamiera di protez. | **20691601A** | **20691611A** | | |
| **4L** | 1 | | Vulc. blade SINT®MC L | Schieberblech SINT®MC L | Lame vulc. SINT®MC type L | Lama vulcaniz. in SINT®MC tipo L | **20654251B** | **20654261B** | | |
| **4M** | | | Carbon steel blade M | Schieberblech Stahl M | Lame en fer M | Lama in ferro tipo M | **20654391A** | **20654401A** | | |
| **4T** | | | St. steel 304 blade T | Schieberblech 1.4301 T | Lame AISI 304 type T | Lama in AISI 304 tipo T | **20654392A** | **20654402A** | | |
| **5** | 6 | 12x37x12 DIN 625 | Bearing | Lager | Roulement | Cuscinetto | - | - | | |
| **6** | 6 | M12 x 40 DIN 933 | Hexag. headed screw | Sechskantschraube | Vis à tête à six pans | Vite T.E. | - | - | | |
| **7** | 6 | M12 DIN 934 | Hexagonal nut | Sechskantmutter | Écrou à tète à six pans | Dado esagonale | - | - | | |
| **8** | 32 | Ø12 DIN 125A | Washer | Unterlegscheibe | Rondelle | Rondella | - | - | | |
| **9** | 2 | M8 x 20 DIN 603 | Round-headed bolt | Zylinderkopfschraube | Boulon à tête ronde | Bullone testa tonda | - | - | | |
| **10** | 10 | M8 DIN 934 | Hexagonal nut | Sechskantmutter | Écrou à tète à six pans | Dado esagonale | - | - | | |
| **11** | 18 | Ø8 DIN 125A | Washer | Unterlegscheibe | Rondelle | Rondella | - | - | | |
| **12** | 8 | M8 x 20 DIN 933 | Hexag. head screw | Sechskantschraube | Vis à tête à six pans | Vita T.E. | - | - | | |
| **13** | 4 | M10 x25 DIN 933 | Hexag. head screw | Sechskantschraube | Vis à tête à six pans | Vita T.E. | - | - | | |
| **14** | 4 | M10 DIN 934 | Hexagonal nut | Sechskantmutter | Écrou à tète à six pans | Dado esagonale | - | - | | |
| **15** | 4 | Ø10 DIN 125A | Washer | Unterlegscheibe | Rondelle | Rondella | - | - | | |
| **16** | 4 | Ø8 DIN 127b | Spring washer | Federring | Rondelle à ressort | Rosetta elastica | - | - | | |

* (4 off / St. / Pces. / Pezzi: VLQ0150 - 0200 - 0250) - (6 off / St. / Pces. / Pezzi: VLQ0300)
* (22 off / St. / Pces. / Pezzi: VLQ0150 - 0200 - 0250) - (32 off / St. / Pces. / Pezzi: VLQ0300)

| | | | |
|---|---|---|---|
| **N** | Vulcanized SINT®AL blade<br>*Vulkanisiertes SINT®AL Blech*<br>Lame vulcanisée SINT®AL<br>*Lama vulcanizzata SINT®AL* | **P** | St.st. 304 blade<br>*1.4301 Blech*<br>Lame AISI 304<br>*Lama AISI 304* |

**VLC** [ ][ ][ ][ ][ ][ ][ ]

Size / *Größe*
Taille / *Dimensioni*

| | |
|---|---|
| **2** | Standard bearings<br>*Standardlager*<br>Roulements *Cuscinetti std.* |
| **3** | St.st. bearings<br>*Edelstahllager*<br>Roulements inox<br>*Cuscinetti inox* |

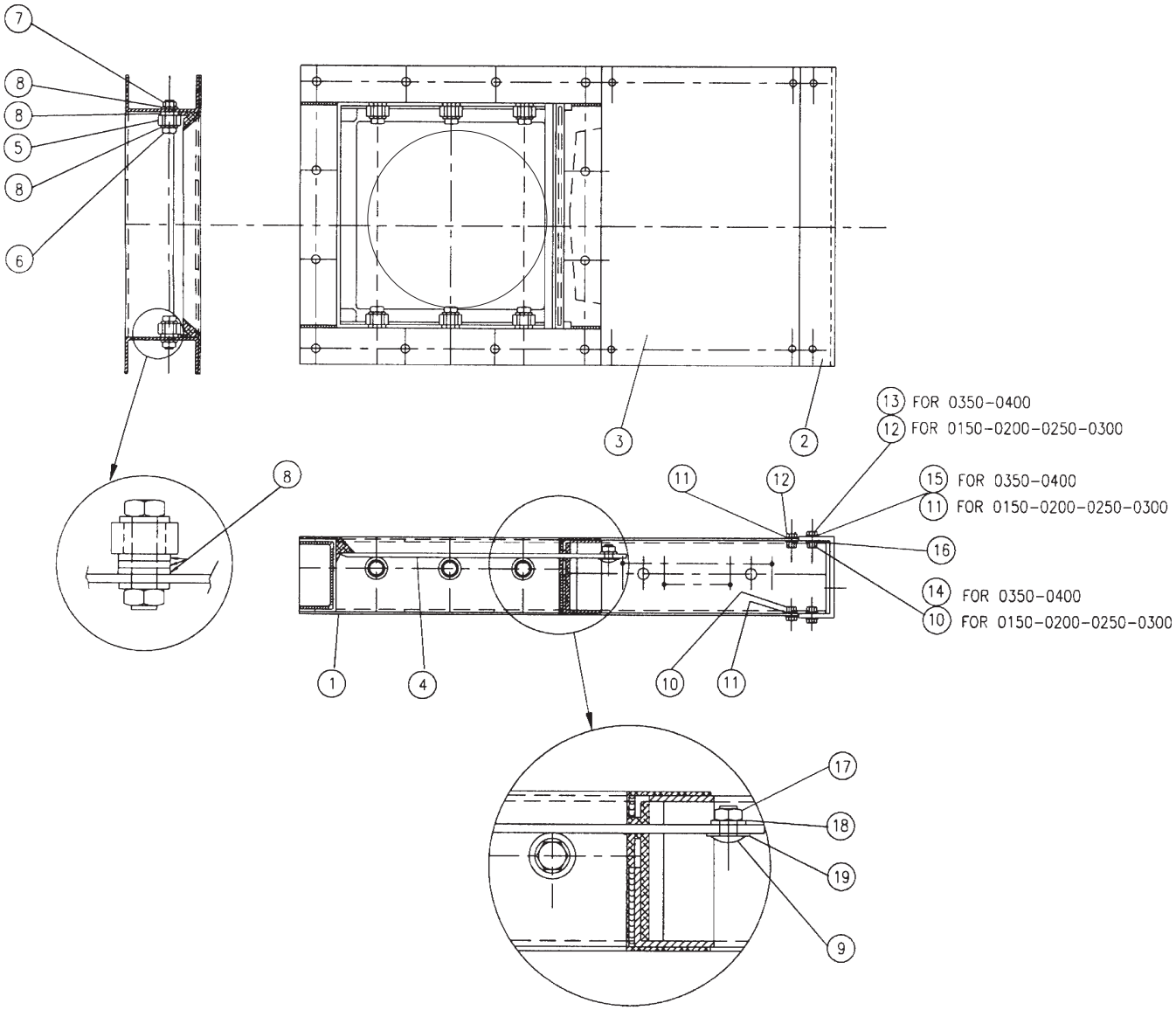

WAM®

**VL**

- **SPARE PARTS**
- **ERSATZTEILE**
- **PIECES DE RECHANGE**
- **RICAMBI**

Code **VLC** □□□□□□□

| | | | |
|---|---|---|---|
| **N** | Vulkanized SINT®AL blade<br>*SINT®AL - Blach vulkanisiert*<br>Lame vulcanisée SINT®AL<br>*Lama vulcanizzata SINT®AL* | **P** | St. st. 304 blade<br>*1.4301 - Blech*<br>Lame AISI 304<br>*Lama AISI 304* |
| **2** | Standard bearings<br>*Standard - Lager*<br>Roulem. standard<br>*Cuscinetti standard* | | |
| **3** | St. steel bearings<br>*Edelstahl - Lager*<br>Roulement INOX<br>*Cuscinetti INOX* | | |

Size / *Größe*
Taille / *Dimensioni*



| Item<br>Pos.<br>Pos.<br>Pos. | Quant.<br>Menge<br>Quant.<br>Quant. | Norms<br>Normen<br>Normes<br>Norme | Description | Benennung | Dèsignation | Denominazione | 0150<br>Code<br>Codice | 0200<br>Code<br>Codice | 0250<br>Code<br>Codice | 0300<br>Code<br>Codice |
|---|---|---|---|---|---|---|---|---|---|---|
| **1** | 1 | | Body | Gehäuse | Corps | Corpo valvola | **20933971A** | **20933981A** | **20933991A** | **20934001A** |
| **2** | 1 | | Plate | Kantblech | Tôle plièe | Lamiera piegata | **20688712A** | **20688722A** | **20688732A** | **20688742A** |
| **3** | 2 | | Protection plate | Schutzblech | Tôle de protection | Lamiera di protez. | **20691562A** | **20691572A** | **20691582A** | **20691592A** |
| **4N** | 1 | | Vulcanized blade SINT®AL N | Schieberblech SINT®AL N | Lame vulc. SINT®AL type N | Lama vulcaniz. in SINT®AL tipo N | **20654212B** | **20654222B** | **20654232B** | **20654242B** |
| **4P** | 1 | | St. steel 304 blade P | Schieberblech 1.4301 P | Lame AISI type P | Lama in AISI 304 tipo P | **20654352A** | **20654362A** | **20654372A** | **20654382A** |
| **5** | * | 12x32x10 DIN 625 | Bearing STD type 2 | Lager STD type 2 | Roulement STD type 2 | Cuscinetto STD tipo 2 | - | - | - | - |
| **5** | * | 12x32x10 DIN 625 | Bearing AISI 304 type 3 | Lager AISI 304 type 3 | Roulement AISI 304 type 3 | Cuscinetto AISI 304 tipo 3 | - | - | - | - |
| **6** | * | M12 x 40 DIN 934 | Hexag. headed screw | Sechskantschraube | Vis à tête à six pans | Vite T.E. | **-(DIN A2)** | **-(DIN A2)** | **-(DIN A2)** | **-(DIN A2)** |
| **7** | * | M12 DIN 934 | Hexagonal nut | Sechskantmutter | Écrou à tète à six pans | Dado esagonale | **-(DIN A2)** | **-(DIN A2)** | **-(DIN A2)** | **-(DIN A2)** |
| **8** | * | Ø12 DIN 125A | Washer | Unterlegscheibe | Rondelle | Rondella | **-(DIN A2)** | **-(DIN A2)** | **-(DIN A2)** | **-(DIN A2)** |
| **9** | 2 | M8 x 20 DIN 603 | Round-headed bolt | Zylinderkopfschraube | Boulon à tête ronde | Bullone testa tonda | - | - | - | - |
| **10** | 10 | M8 DIN 934 | Hexagonal nut | Sechskantmutter | Écrou à tète à six pans | Dado esagonale | **-(DIN A2)** | **-(DIN A2)** | **-(DIN A2)** | **-(DIN A2)** |
| **11** | 20 | Ø8 DIN 125A | Washer | Unterlegscheibe | Rondelle | Rondella | **-(DIN A2)** | **-(DIN A2)** | **-(DIN A2)** | **-(DIN A2)** |
| **12** | 12 | M8 x 20 DIN 933 | Hexag. head screw | Sechskantschraube | Vis à tête à six pans | Vita T.E. | **-(DIN A2)** | **-(DIN A2)** | **-(DIN A2)** | **-(DIN A2)** |
| **16** | 4 | Ø8 DIN 127B | Spring washer | Federring | Rondelle à ressort | Rosetta elastica | - | - | - | - |
| **17** | 2 | Ø8 DIN 934 | Hexagon nut | Sechskantmutter | Écrou à tète à six pans | Dado esagonale | - | - | - | - |
| **18** | 2 | Ø8 DIN 125A | Washer | Unterlegscheibe | Rondelle | Rondella | - | - | - | - |
| **19** | 2 | Ø12 DIN 125A | Washer | Unterlegscheibe | Rondelle | Rondella | - | - | - | - |

| Item<br>Pos.<br>Pos.<br>Pos. | Quant.<br>Menge<br>Quant.<br>Quant. | Norms<br>Normen<br>Normes<br>Norme | Description | Benennung | Dèsignation | Denominazione | 0350<br>Code<br>Codice | 0400<br>Code<br>Codice | | |
|---|---|---|---|---|---|---|---|---|---|---|
| **1** | 1 | | Body | Gehäuse | Corps | Corpo valvola | **20934011A** | **20934021A** | | |
| **2** | 1 | | Plate | Kantblech | Tôle plièe | Lamiera piegata | **20688752A** | **20688762A** | | |
| **3** | 2 | | Protection plate | Schutzblech | Tôle de protection | Lamiera di protez. | **20691602A** | **20691612A** | | |
| **4N** | 1 | | Vulc.blade SINT®AL N | Schieberblech SINT®AL N | Lame vulc. SINT®AL type N | Lama vulcaniz. in SINT®AL tipo N | **20654252B** | **20654262B** | | |
| **4P** | 1 | | Carbon steel blade M | Schieberblech Sthal M | Lame en fer M | Lama in ferro tipo M | **20654392A** | **20654402A** | | |
| **5** | 6 | | St. steel 304 blade P | Schieberblech 1.4301 P | Lame AISI 304 type P | Lama in AISI 304 tipo P | - | - | | |
| **5** | 6 | 12x37x12 DIN 625 | Bearing | Lager | Roulement | Cuscinetto | - | - | | |
| **6** | 6 | M12 x 40 DIN 933 | Hexag. headed screw | Sechskantschraube | Vis à tête à six pans | Vite T.E. | **-(DIN A2)** | **-(DIN A2)** | | |
| **7** | 6 | M12 DIN 934 | Hexagonal nut | Sechskantmutter | Écrou à tète à six pans | Dado esagonale | **-(DIN A2)** | **-(DIN A2)** | | |
| **8** | 30 | Ø12 DIN 125A | Washer | Unterlegscheibe | Rondelle | Rondella | **-(DIN A2)** | **-(DIN A2)** | | |
| **9** | 2 | M8 x 20 DIN 603 | Round-headed bolt | Zylinderkopfschraube | Boulon à tête ronde | Bullone testa tonda | - | - | | |
| **10** | 8 | M8 DIN 934 | Hexagonal nut | Sechskantmutter | Écrou à tète à six pans | Dado esagonale | **-(DIN A2)** | **-(DIN A2)** | | |
| **11** | 16 | Ø8 DIN 125A | Washer | Unterlegscheibe | Rondelle | Rondella | **-(DIN A2)** | **-(DIN A2)** | | |
| **12** | 8 | M8 x 20 DIN 933 | Hexag. head screw | Sechskantschraube | Vis à tête à six pans | Vita T.E. | **-(DIN A2)** | **-(DIN A2)** | | |
| **13** | 4 | M10 x 25 DIN 933 | Hexag. head screw | Sechskantschraube | Vis à tête à six pans | Vita T.E. | **-(DIN A2)** | **-(DIN A2)** | | |
| **14** | 4 | M10 DIN 934 | Hexagonal nut | Sechskantmutter | Écrou à tète à six pans | Dado esagonale | **-(DIN A2)** | **-(DIN A2)** | | |
| **15** | 4 | Ø10 DIN 125A | Washer | Unterlegscheibe | Rondelle | Rondella | **-(DIN A2)** | **-(DIN A2)** | | |
| **16** | 4 | Ø8 DIN 127b | Spring washer | Federring | Rondelle à ressort | Rosetta elastica | **-(DIN A2)** | **-(DIN A2)** | | |
| **17** | 2 | Ø8 DIN 934 | Hexagon nut | Sechskantmutter | Écrou à tète à six pans | Dado esagonale | - | - | | |
| **18** | 2 | Ø8 DIN 125A | Washer | Unterlegscheibe | Rondelle | Rondella | - | - | | |
| **19** | 2 | Ø12 DIN 125A | Washer | Unterlegscheibe | Rondelle | Rondella | - | - | | |

* (4 off / St. / Pces. / Pezzi: VLQ0150 - 0200 - 0250) - (6 off / St. / Pces. / Pezzi: VLQ0300)

* (22 off / St. / Pces. / Pezzi: VLQ0150 - 0200 - 0250) - (32 off / St. / Pces. / Pezzi: VLQ0300)

| | | |

WAM®

VL
- SPARE PARTS
- ERSATZTEILE
- PIECES DE RECHANGE
- RICAMBI

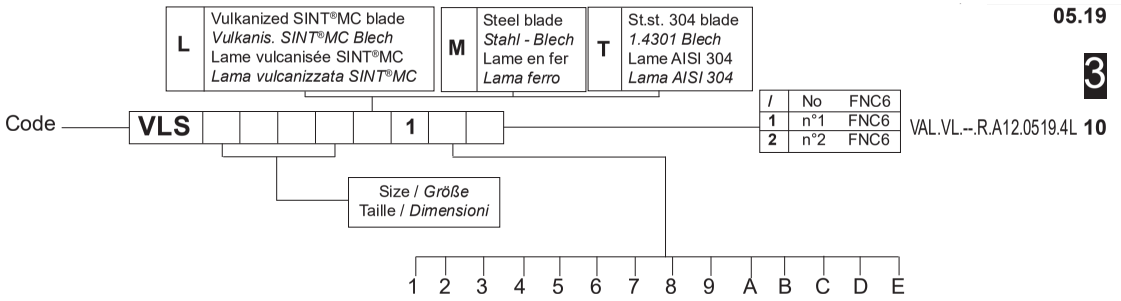


| Item<br>Pos.<br>Pos.<br>Pos. | Quant.<br>Menge<br>Quant.<br>Quant. | Standars<br>Normen<br>Normes<br>Norme | Description | Benennung | Dèsignation | Denominazione | 0150<br>Code | 0200<br>Code | 0250<br>Code | 0300<br>Code |
|---|---|---|---|---|---|---|---|---|---|---|
| 1 | 1 | | Body | Gehäuse | Corps | Corpo valvola | **20934521A** | **20934531A** | **20934541A** | **20934551A** |
| 2 | 1 | | Thrust connection | Axialverbindung | Connexion axiale | Collegamento di spinta | **206F3R41A** | **206F3R51A** | **206F3R61A** | **206F3R71A** |
| 3 | 2 | | Protection plate | Schutzblech | Tôle de protection | Lamiera di protezione | **20693981A** | **20693871A** | **20693881A** | **20693891A** |
| 4 L | 1 | | Vulcanized blade SINT®MC L | Sthal-Schieberblech ®MCTyp M | Lame vulc.SINT®MC type L | Lama vulcanizzata SINT®MC tipoL | **20654211B** | **20654221B** | **20654231B** | **20654241B** |
| 4 M | 1 | | Carbon steel blade M | Schieberblech Stahl M | Guillotine en acier au carbone type M | Lama in ferro tipo M | **20654351A** | **20654361A** | **20654371A** | **20654381A** |
| 4 T | 1 | | St. steel 304 blade T | Schieberblech 1.4301 T | Guillotine en acier inox 304 type T | Lama in AISI 304 tipo T | **20654352A** | **20654362A** | **20654372A** | **20654382A** |
| 5 | 1 | | Electrovalve fitting bracket | Magnetventilhalterung | Bride électrovanne | Staffa att. elettrovalvola | **20671571A** | **20671571A** | **20671571A** | **20671571A** |
| 6 | 1 | | Kit blade guiding slide | Schieberblech-Führungsschlitten | Kit glissière guillotine | Kit slitta guidalama | **13008830A** | **13008830A** | **13008830A** | **13008830A** |
| 7 | 1 | | Pneumatic cylinder | Pneumatik Zylinder | Vérin | Gruppo cilindro | **10744510A** | **10744520A** | **10744530A** | **10744540A** |
| 8 | 1 | | Bearing kit (6201/2RS 12x32x10) | Lager Satz (6201/2RS 12x32x10) | Kit roulement (6201/2RS 12x32x10) | Kit cuscinetto (6201/2RS 12x32x10) | **13007491A** | **13007491A** | **13007491A** | **13007491A** |
| 9 | 2 | | FNC6 | FNC6 | FNC6 | FNC6 | | | | |
| | 8 | | Hexag. headed screw | Sechskantschraube | Vis à tête à six pans | Vite T.E. | | | | |
| | 2 | | Hexag. headed | Sechskantschraube | Vis à tête à six pans | Vite T.S. | | | | |
| | 8 | | Hexagonal nut M 8 | Sechskantmutter M8 | Vis à tête à six pans M 8 | Dado esag. M8 | | **- (DIN A2) -** | **- (DIN A2) -** | **- (DIN A2) -** |
| | 2 | | Hexagonal nut M 10 | Sechskantmutter M10 | Vis à tête à six pans M 10 | Dado esag. M10 | | - | - | - |
| | 16 | | Washer Ø 8 | Unterlegscheibe abgeschägt Ø 8 | Rondelle biseautée Ø 8 | Rondella biseliata Ø 8 | | - | - | - |
| | 2 | | Washer Ø 10 | Unterlegscheibe abgeschägt Ø 10 | Rondelle biseautée Ø 10 | Rondella biseliata Ø 10 | | - | - | - |
| | 2 | | Spring washer | Sprengring | Rondelle à ressort | Rosetta elastica | | - | - | - |

*N.B. Rights reserved to modify technical specifications*
*N.B. Angaben ohne Gewähr. Änderungen können ohne Vorankündigung vorgenommen werden.*
*N.B. Toutes données portées dans le présent catalogue n'engagent pas le fabricant. Elles peuvent être modifiéès à tout moment.*
*N.B. Tutti i dati riportati nel presente catalogo non sono impegnativi e possono subire variazioni in qualsiasi momento.*

WAMGROUP S.p.A.
Via Cavour, 338
I - 41030 Ponte Motta
Cavezzo (MO) - ITALY

☎ +39 / 0535 / 618111
**fax** +39 / 0535 / 618226
**e-mail** info@wamgroup.it
**internet** www.wamgroup.com
**videoconferenze** + 39 / 0535 / 49032

# *WATTS*

## *SERIES R119, AIR PRESSURE REGULATOR VALVE*

LEFT BLANK

**Pneumatic Division**
Richland, Michigan 49083
269-629-5000

**Installation & Service Instructions**
**IS-R119**

**R119, 1/4", 3/8", 1/2", 3/4", 1", 1-1/4", 1-1/2" Series Regulators**

**ISSUED: October, 2010**
**Supersedes: November, 2006**

**Doc. #ISR119, EN #100901, Rev. 5**

## ⚠WARNING

**To avoid unpredictable system behavior that can cause personal injury and property damage:**

- **Disconnect electrical supply (when necessary) before installation, servicing, or conversion.**
- **Disconnect air supply and depressurize all air lines connected to this product before installation, servicing, or conversion.**
- **Operate within the manufacturer's specified pressure, temperature, and other conditions listed in these instructions.**
- **Medium must be moisture-free if ambient temperature is below freezing.**
- **Service according to procedures listed in these instructions.**
- **Installation, service, and conversion of these products must be performed by knowledgeable personnel who understand how pneumatic products are to be applied.**
- **After installation, servicing, or conversion, air and electrical supplies (when necessary) should be connected and the product tested for proper function and leakage. If audible leakage is present, or the product does not operate properly, do not put into use.**
- **Warnings and specifications on the product should not be covered by paint, etc. If masking is not possible, contact your local representative for replacement labels.**

## ⚠WARNING

**Product rupture can cause serious injury.**
**Do not connect regulator to bottled gas.**
**Do not exceed maximum primary pressure rating.**

## Safety Guide

For more complete information on recommended application guidelines, see the Safety Guide section of Pneumatic Division catalogs or you can download the **Pneumatic Division Safety Guide** at: www.parker.com/safety

## Introduction

Follow these instructions when installing, operating, or servicing the product.

## Application Limits

These products are intended for use in general purpose compressed media systems only.

### Operating Pressure:

| | kPa | PSIG | bar |
|---|---|---|---|
| **Maximum Inlet Pressure** | 2068 | 300 | 21.0 |

**Ambient Temperature Range:** 40°F to 125°F (4°C to 52°C)

## Symbols

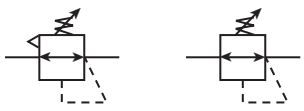

**Relieving Regulator Adjustable** **Non-Relieving Regulator Adjustable**

## Installation

1. The regulator should be installed with reasonable accessibility for service whenever possible - repair service kits are available. Keep pipe and tubing lengths to a minimum with inside clean and free of dirt and chips. Pipe joint compound should be used sparingly and applied only to the male pipe - never into the female port. Do not use PTFE tape to seal pipe joints - pieces have a tendency to break off and lodge inside unit, possibly causing malfunction.
2. Install regulator so that media flow is in the direction of arrow. Installation must be upstream (high pressure) side and as close to the devices it is to service (valve, cylinder, tool, etc.). Mounting may be in any position.
3. Gauge ports are located on both sides of the regulator body for your convenience. It is necessary to install a gauge or pipe plugs into each port during installation.
4. For protection against rust, pipe scale, and other foreign matter, install a filter on the upstream (high pressure) side as close to the regulator as possible.

## Operation

1. Before turning on the media source turn the T-handle counterclockwise until compression is released from the Control Spring. Then turn on media source and adjust regulator to desired secondary pressure by turning T-handle clockwise. This permits pressure to build up slowly, preventing any unexpected operation of the valve, cylinders, tools, etc., attached to the line. Adjustment to desired secondary pressure can be made only with primary pressure applied to the regulator.
2. To decrease regulator pressure setting, always reset from a pressure lower than the final setting desired. For example, lowering the secondary pressure from 550 to 410 kPa (80 to 60 PSIG) is best accomplished by dropping the secondary pressure to 350 kPa (50 PSIG), then adjusting upward to 410 kPa (60 PSIG). Tighten the Locking Nut on the T-handle to lock the pressure setting.

### Reduced Pressure Spring Ranges

"A" Range = 1 – 25 PSI (1/4", 3/8", 1/2" Only)
"B" Range = 2 – 60 PSI (1/4", 3/8", 1/2" Only)
"C" Range = 2 – 125 PSI (ALL)
"D" Range = 5 – 250 PSI (ALL)

## Service

⚠ **Caution: Disconnect or shut off air supply and exhaust the primary and secondary pressures before servicing unit. Turning the T-handle counterclockwise does not vent downstream pressure on non-relieving regulators. Downstream pressure must be vented before servicing regulator.**

## ⚠WARNING

**FAILURE OR IMPROPER SELECTION OR IMPROPER USE OF THE PRODUCTS AND/OR SYSTEMS DESCRIBED HEREIN OR RELATED ITEMS CAN CAUSE DEATH, PERSONAL INJURY AND PROPERTY DAMAGE.**

This document and other information from The Company, its subsidiaries and authorized distributors provide product and/or system options for further investigation by users having technical expertise. It is important that you analyze all aspects of your application, including consequences of any failure and review the information concerning the product or systems in the current product catalog. Due to the variety of operating conditions and applications for these products or systems, the user, through its own analysis and testing, is solely responsible for making the final selection of the products and systems and assuring that all performance, safety and warning requirements of the application are met.

The products described herein, including without limitation, product features, specifications, designs, availability and pricing, are subject to change by The Company and its subsidiaries at any time without notice.

**EXTRA COPIES OF THESE INSTRUCTIONS ARE AVAILABLE FOR INCLUSION IN EQUIPMENT / MAINTENANCE MANUALS THAT UTILIZE THESE PRODUCTS. CONTACT YOUR LOCAL REPRESENTATIVE.**

⚠ **Caution: Grease packets are supplied with kits for lubrication of seals. Use only mineral based grease or oils. Do not use synthetic oils such as esters. Do not use silicones.**

**Note: After servicing unit, turn on air supply and adjust regulator to the desired downstream pressure. Check unit for leaks. If leakage occurs, do not operate - conduct repairs and retest.**

## A. Servicing the Bonnet and Diaphragm Assembly

1. Turn the T-handle counterclockwise until the compression is released from the Pressure Control Spring.
2. Remove Bonnet Mounting Screws, Bonnet Assembly, Pressure Control Spring and Spring Button. Remove Diaphragm Assembly. Next, disassemble, clean, and carefully inspect parts for wear and / or damage. Wipe parts, clean with soapy water or denatured alcohol. If using compressed air to blow dry, be sure to wear appropriate eye protection. If replacement is necessary, use parts from service kits.
3. Install Diaphragm Assembly, Pressure Control Spring, Spring Button as shown below. Then, install Bonnet Assembly to Body with Mounting Screws and tighten in an alternating or star pattern to the following torque specifications:

   1/4", 3/8", 1/2" 2.3 to 4.5 Nm (20 to 40 in. lb.)

   3/4", 1-1/4", 1-1/2" 6.8 to 7.9 Nm (60 to 70 in. lb.)

## B. Servicing the Poppet Assembly

1. Exhaust system media pressure as previously described. Then remove Bottom Plug by unscrewing it from Body. Next, remove Bottom Plug, O-ring, Bottom Spring and Inner Valve Assembly.
2. Next, disassemble, clean, and carefully inspect parts for wear and / or damage. If replacement is necessary, use parts from service kits.
3. Lubricate O-ring and sliding surfaces using grease supplied with service kit.
4. Install parts as shown.

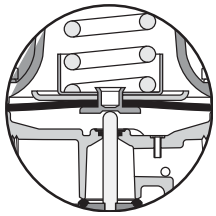

**R119 Regulator – Non-Relieving**

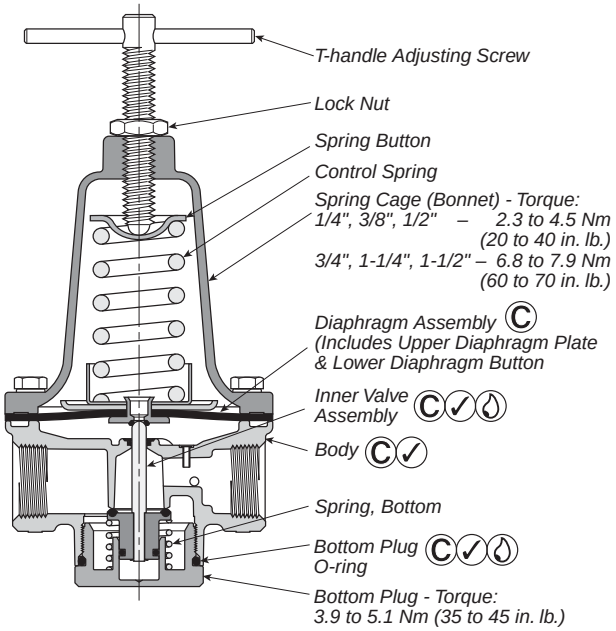


**R119 Regulator – Relieving**

Ⓛ Lightly grease with provided lubricant.

✓ Inspect for nicks, scratches, and surface imperfections. If present, reduced service life is probable and future replacement should be planned.

Ⓒ Clean with lint-free cloth.

5. Lubricate Bottom Plug O-ring and install it in o-ring groove on Bottom Plug. Be sure Inner Valve Stem fits into center area of Diaphragm Assembly before installing Bottom Plug. Then screw Bottom Plug into Body until it bottoms out in body. Tighten to 3.5 to 5.1 Nm (35 to 45 in. lb.).
6. Turn on media source and adjust to desired secondary pressure as described in the Operation section. Check regulator for leakage. If leakage occurs, DO NOT OPERATE — conduct repairs again.

If you have questions concerning how to service this unit, contact your local authorized dealer or your customer service representative.

## Service Kits Available

| Description | Kit Number | Regulator Size |
|---|---|---|
| Bottom Plug Only | 118Y2 | 1/4", 3/8" |
| | 118A2 | 1/2" |
| | 119B2-2 | 3/4" thru 1-1/2" |
| Bottom Plug O-ring Only | 118Y102 | 1/4", 3/8" |
| | 118A101 | 1/2" |
| | 118B101 | 3/4" thru 1-1/2" |
| Mounting Bracket Kit | SA15Y57 | 1/4", 3/8" |
| | 18A57 | 1/2" |
| | 18B57 | 3/4" thru 1-1/2" |
| Panel Mount Conversion Kit | 4202 | 1/4", 3/8" |
| | 4204 | 1/2" |
| Knob & Hardware Only | PK16Y | 1/4", 3/8", 1/2" |
| Regulator Repair Kit* (Relieving) | RK119Y | 1/4", 3/8" |
| | RK119A | 1/2" |
| | RK119A250 | 1/2" ("D" Range) |
| | RK119B | 3/4", 1" |
| | RK119D | 1-1/4", 1-1/2" |
| Regulator Repair Kit* (Non-Relieving) | RK118Y | 1/4", 3/8" |
| | RK118A | 1/2" |
| | RK118A250 | 1/2" ("D" Range) |
| | RK118B | 3/4", 1" |
| | RK118D | 1-1/4", 1-1/2" |
| Spring Cage Kit | RKC119Y | 1/4", 3/8" |
| T-handle Kits | TK119A | 1/2" |
| | TK119B | 3/4" thru 1-1/2" |
| Check Valve Assembly for Reverse Flow Option | SAN263Y116-2 | 1/4", 3/8", 1/2", 3/4" thru 1-1/2" |

## Accessories

| | | |
|---|---|---|
| Gauges | 0 to 60 PSI (0 to 4 bar) | K4520N14060 |
| | 0 to 160 PSI (0 to 11 bar) | K4520N14160 |
| | 0 to 300 PSI (0 to 20 bar) | K4520N14300 |

Kits 4202 & 4204 include Bonnet. For Knob & Hardware only, order Kit Number PK16Y

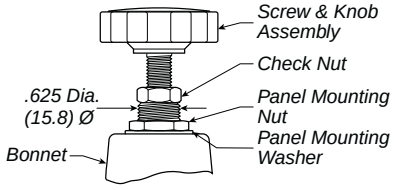


**R119 Regulator with Panel Mount Conversion Kit**

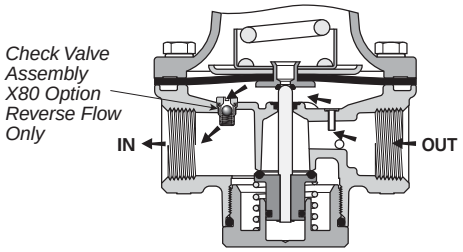


**R119 Regulator with X80 Option Reverse Flow Feature**

# *WEG*

## *SERIES W22 PREMIUM EFFICIENCY, AC MOTOR*

LEFT BLANK

# Installation, operation and maintenance manual of electric motors



# English 57



# INSTALLATION, OPERATION AND MAINTENANCE MANUAL OF ELECTRIC MOTORS

This manual provides information about WEG induction motors fitted with squirrel cage, permanent magnet or hybrid rotors, low, medium and high voltage, in frame sizes IEC 56 to 630 and NEMA 42 to 9606/10.
The motor lines indicated below have additional information that can be checked in their respective manuals:

- Smoke Extraction Motors;
- Electromagnetic Brake Motors;
- Hazardous Area Motors.

These motors meet the following standards, if applicable:

- NBR 17094-1: Máquinas Elétricas Girantes - Motores de Indução - Parte 1: trifásicos.
- NBR 17094-2: Máquinas Elétricas Girantes - Motores de Indução - Parte 2: monofásicos.
- IEC 60034-1: Rotating Electrical Machines - Part 1: Rating and Performance.
- NEMA MG 1: Motors and Generators.
- CSA C 22.2 N°100: Motors and Generators.
- UL 1004-1: Rotating Electrical Machines - General Requirements.

If you have any questions regarding this manual please contact your local WEG branch, contact details can be found at www.weg.net.

# TABLE OF CONTENTS


*1. TERMINOLOGY* 61

*2. INITIAL RECOMMENDATIONS* 62

*2.1. WARNING SYMBOL* ..... 62
*2.2. RECEIVING INSPECTION* ..... 62
*2.3. NAMEPLATES* ..... 63

*3. SAFETY INSTRUCTIONS* 66

*4. HANDLING AND TRANSPORT* 67

*4.1. LIFTING* ..... 67
*4.1.1. Horizontal motors with one eyebolt* ..... 67
*4.1.2. Horizontal motor with two eyebolts* ..... 68
*4.1.3. Vertical motors* ..... 69
*4.1.3.1. Procedures to place W22 motors in the vertical position* ..... 69
*4.1.3.2. Procedures to place HGF motors in the vertical position* ..... 70
*4.2 Procedures to place W22 vertical mount motors in horizontal position* ..... 72

*5. STORAGE* 73

*5.1. EXPOSED MACHINED SURFACES* ..... 73
*5.2. STORAGE* ..... 73
*5.3 BEARINGS* ..... 74
*5.3.1 Grease lubricated bearings* ..... 74
*5.3.2 Oil lubricated bearings* ..... 74
*5.3.3 Oil Mist lubricated bearings* ..... 75
*5.3.4 Sleeve bearing* ..... 75
*5.4. INSULATION RESISTANCE* ..... 75
*5.4.1. Insulation resistance measurement* ..... 75

*6. INSTALLATION* 78

*6.1. FOUNDATIONS* ..... 79
*6.2. MOTOR MOUNTING* ..... 80
*6.2.1. Foot mounted motors* ..... 80
*6.2.2. Flange mounted motors* ..... 80
*6.2.3. Pad mounted motors* ..... 81
*6.3. BALANCING* ..... 81
*6.4. COUPLINGS* ..... 81
*6.4.1. Direct coupling* ..... 83
*6.4.2. Gearbox coupling* ..... 83
*6.4.3. Pulley and belt coupling* ..... 83
*6.4.4. Coupling of sleeve bearing motors* ..... 83
*6.5. LEVELING* ..... 84

*6.6. ALIGNMENT ..... 84*
*6.7. CONNECTION OF OIL LUBRICATED OR OIL MIST LUBRICATED MOTORS ..... 85*
*6.8. CONNECTION OF THE COOLING WATER SYSTEM ..... 85*
*6.9. ELECTRICAL CONNECTION ..... 85*
*6.10. CONNECTION OF THE THERMAL PROTECTION DEVICES ..... 88*
*6.11. RESISTANCE TEMPERATURE DETECTORS (PT-100) ..... 89*
*6.12. CONNECTION OF THE SPACE HEATERS ..... 91*
*6.13. STARTING METHODS ..... 92*
*6.14. MOTORS DRIVEN BY FREQUENCY INVERTER ..... 93*
*6.14.1. Use of dV/dt filter ..... 93*
*6.14.1.1. Motor with enameled round wire ..... 93*
*6.14.1.2. Motor with prewound coils ..... 93*
*6.14.2. Bearing insulation ..... 94*
*6.14.3. Switching frequency ..... 94*
*6.14.4. Mechanical speed limitation ..... 94*

*7. COMMISSIONING 95*

*7.1. INITIAL START-UP ..... 95*
*7.2. OPERATING CONDITIONS ..... 97*
*7.2.1.Limits of vibration ..... 98*

*8. MAINTENANCE 99*

*8.1. GENERAL INSPECTION ..... 99*
*8.2. LUBRICATION ..... 99*
*8.2.1. Grease lubricated rolling bearings ..... 100*
*8.2.1.1. Motor without grease fitting ..... 103*
*8.2.1.2. Motor with grease fitting ..... 103*
*8.2.1.3. Compatibility of the Mobil Polyrex EM grease with other greases ..... 104*
*8.2.2. Oil lubricated bearings ..... 104*
*8.2.3. Oil mist lubricated bearings ..... 105*
*8.2.4. Sleeve bearings ..... 105*
*8.3. MOTOR ASSEMBLY AND DISASSEMBLY ..... 106*
*8.3.1. Terminal box ..... 107*
*8.4. DRYING THE STATOR WINDING INSULATION ..... 107*
*8.5. SPARE PARTS ..... 108*

*9. ENVIRONMENTAL INFORMATION 109*

*9.1. PACKAGING ..... 109*
*9.2. PRODUCT ..... 109*

*10. TROUBLESHOOTING CHART X SOLUTIONS 110*

# 1. TERMINOLOGY

***Balancing:*** the procedure by which the mass distribution of a rotor is checked and, if necessary, adjusted to ensure that the residual unbalance or the vibration of the journals and/or forces on the bearings at a frequency corresponding to service speed are within specified limits in International Standards.
[ISO 1925:2001, definition 4.1]

***Balance quality grade:*** indicates the peak velocity amplitude of vibration, given in mm/s, of a rotor running free-in-space and it is the product of a specific unbalance and the angular velocity of the rotor at maximum operating speed.

***Grounded Part:*** metallic part connected to the grounding system.

***Live Part:*** conductor or conductive part intended to be energized in normal operation, including a neutral conductor.

***Authorized personnel:*** employee who has formal approval of the company.

***Qualified personnel:*** employee who meets the following conditions simultaneously:
- Receives training under the guidance and responsibility of a qualified and authorized professional;
- Works under the responsibility of a qualified and approved professional.

***Note****: The qualification is only valid for the company that trained the employee in the conditions set out by the authorized and qualified professional responsible for training.*

# 2. INITIAL RECOMMENDATIONS

Electric motors have energized circuits, exposed rotating parts and hot surfaces that may cause serious injury to people during normal operation. Therefore, it is recommended that transportation, storage, installation, operation and maintenance services are always performed by qualified personnel.
Also the applicable procedures and relevant standards of the country where the machine will be installed must be considered.
Noncompliance with the recommended procedures in this manual and other references on the WEG website may cause severe personal injuries and/or substantial property damage and may void the product warranty.

For practical reasons, it is not possible to include in this Manual detailed information that covers all construction variables nor covering all possible assembly, operation or maintenance alternatives.
This Manual contains only the required information that allows qualified and trained personnel to carry out their services. The product images are shown for illustrative purpose only.

For *Smoke Extraction Motors*, please refer to the additional instruction manual 50026367 available on the website www.weg.net.

For brake motors, please refer to the information contained in WEG 50021973 brake motor manual available on the website www.weg.net.

For information about permissible radial and axial shaft loads, please check the product technical catalogue.

The user is responsible for the correct definition of the installation environment and application characteristics.

During the warranty period, all repair, overhaul and reclamation services must be carried out by WEG authorized Service Centers to maintain validity of the warranty.

## 2.1. WARNING SYMBOL

Warning about safety and warranty.

## 2.2. RECEIVING INSPECTION

All motors are tested during the manufacturing process.
The motor must be checked when received for any damage that may have occurred during the transportation. All damages must be reported in writing to the transportation company, to the insurance company and to WEG. Failure to comply with such procedures will void the product warranty.
You must inspect the product:
- Check if nameplate data complies with the purchase order;
- Remove the shaft locking device (if any) and rotate the shaft by hand to ensure that it rotates freely;
- Check that the motor has not been exposed to excessive dust and moisture during the transportation.

Do not remove the protective grease from the shaft, or the plugs from the cable entries. These protections must remain in place until the installation has been completed.

## 2.3. NAMEPLATES

The nameplate contains information that describes the construction characteristics and the performance of the motor. Figure 2.1 and Figure 2.2 show nameplate layout examples.

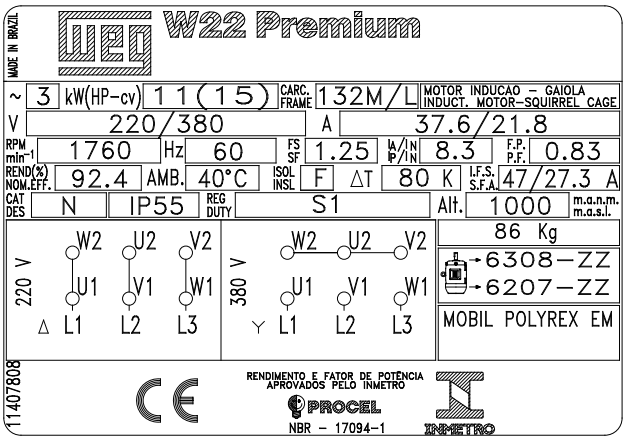


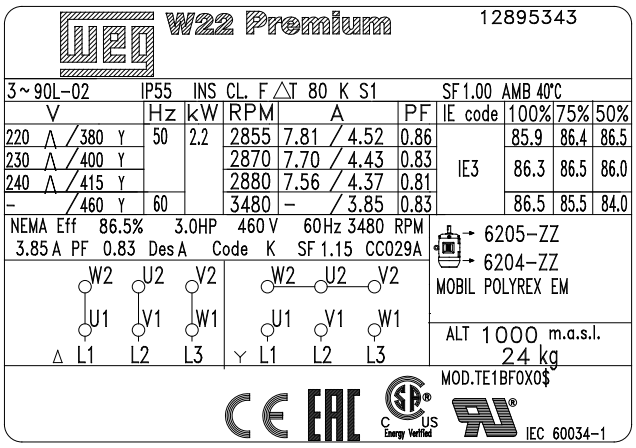


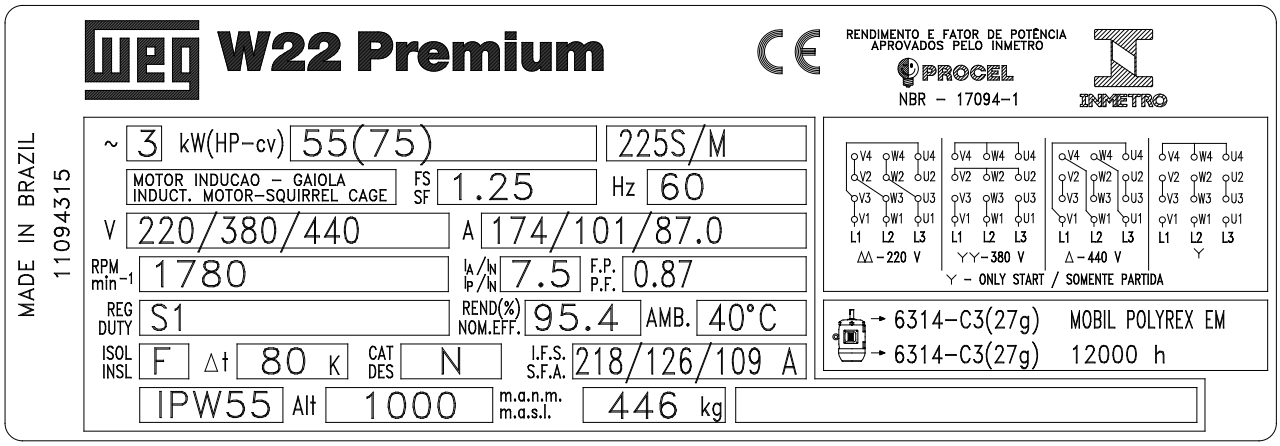


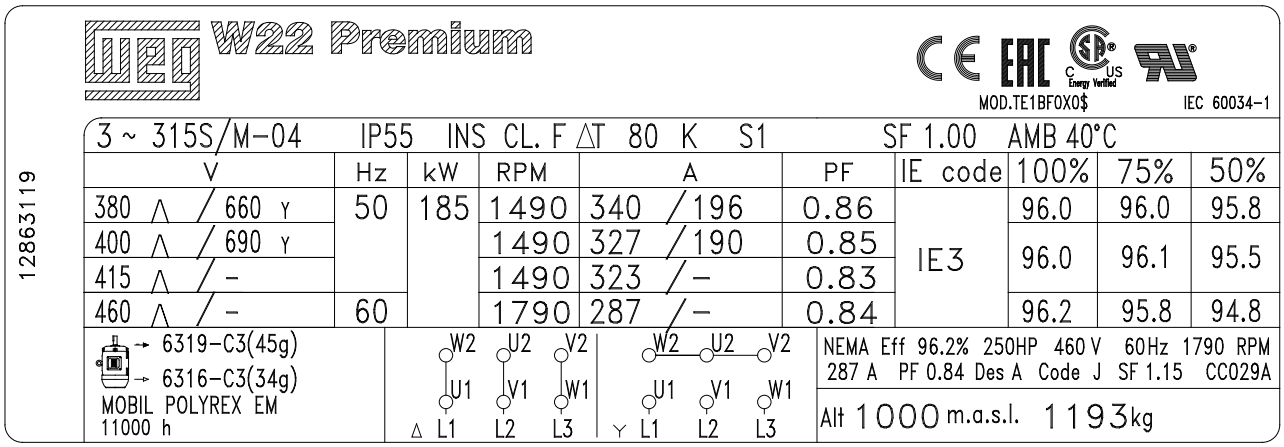

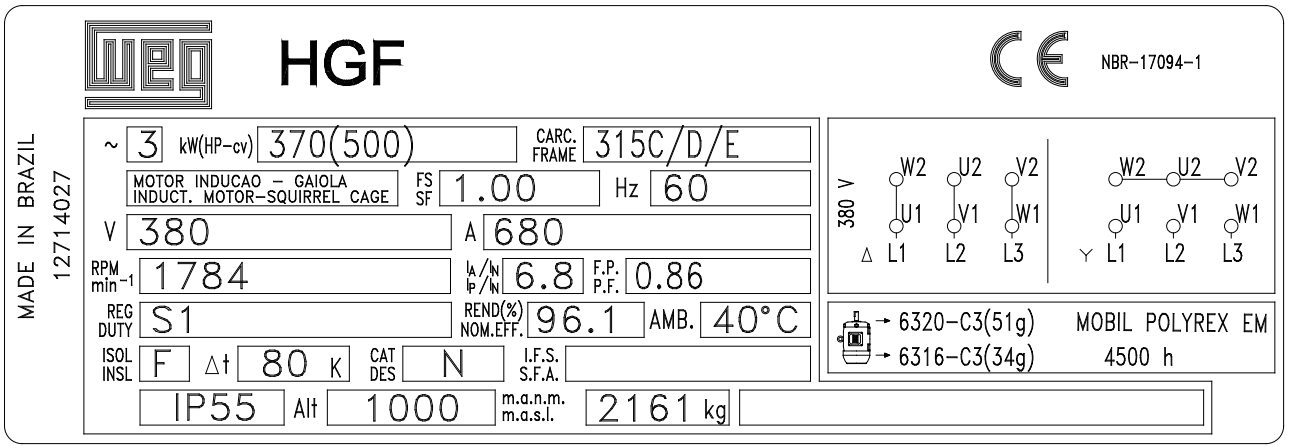


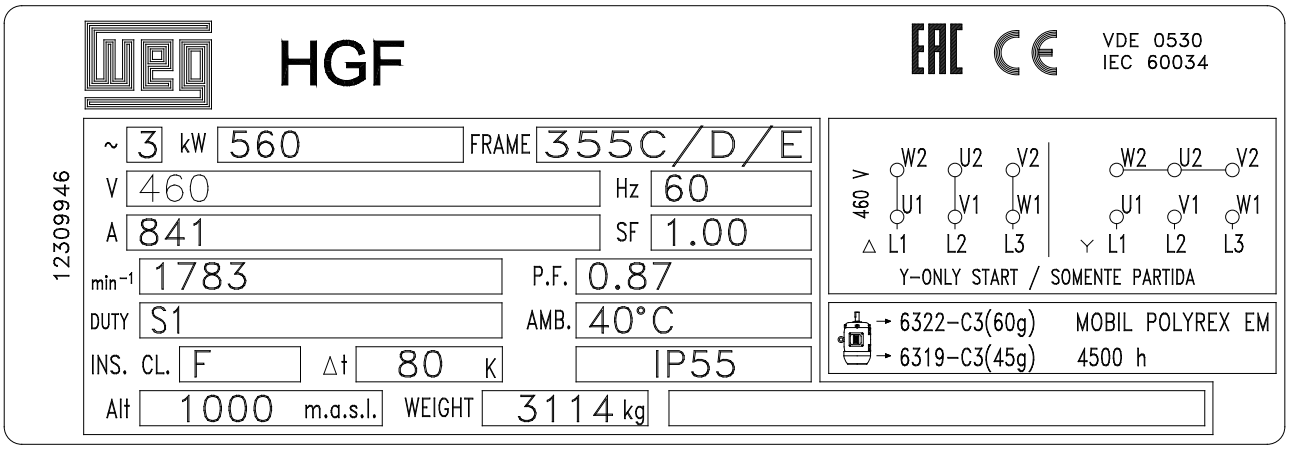


***Figure 2.1*** *- IEC motor nameplate*

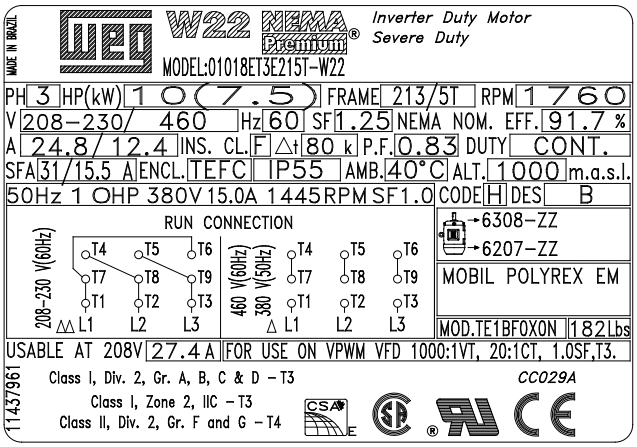

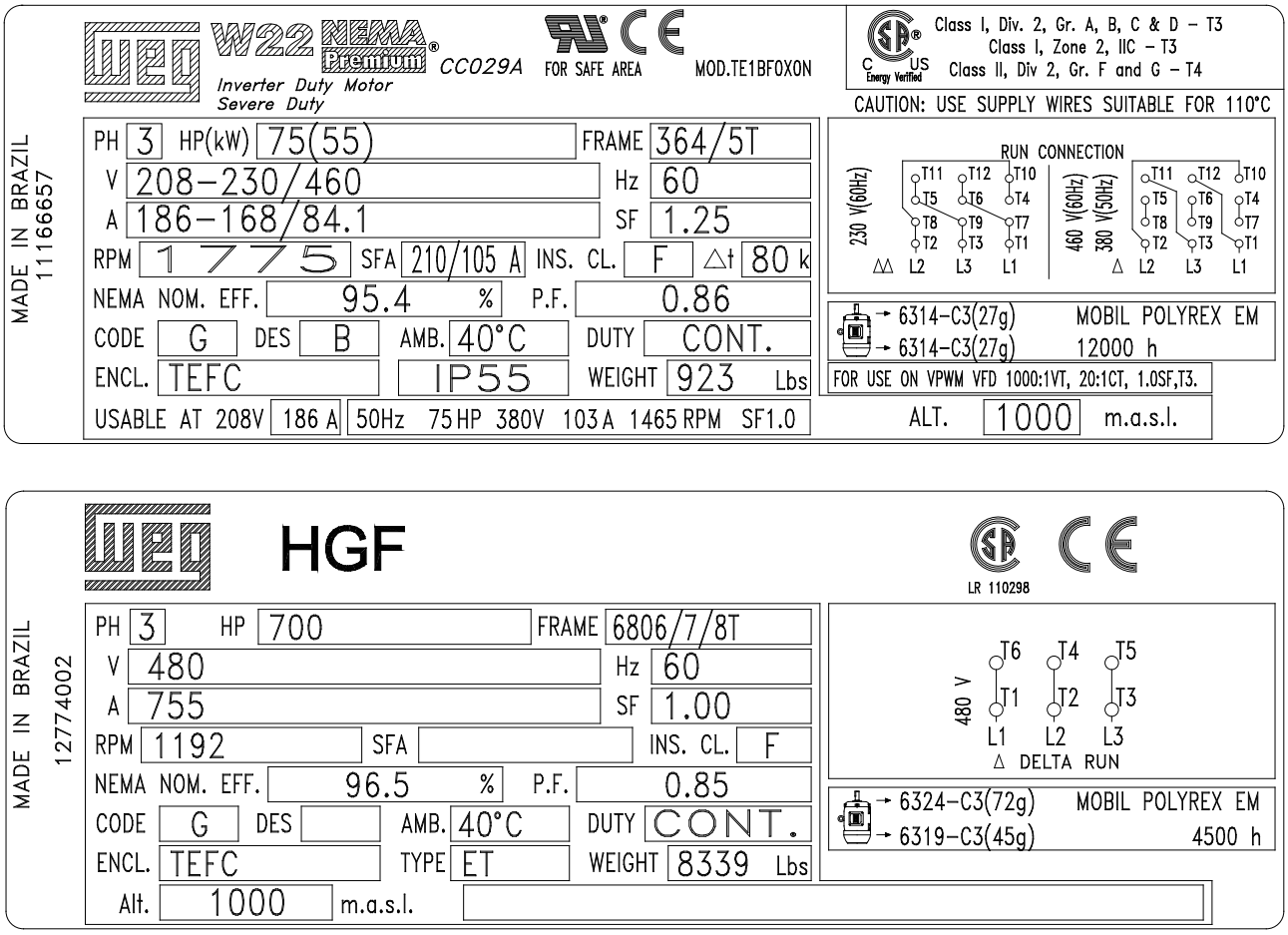


***Figure 2.2*** - *NEMA motor nameplate*

# 3. SAFETY INSTRUCTIONS



The motor must be disconnected from the power supply and be completely stopped before conducting any installation or maintenance procedures. Additional measures should be taken to avoid accidental motor starting.



Professionals working with electrical installations, either in the assembly, operation or maintenance, should use proper tools and be instructed on the application of standards and safety requirements, including the use of Personal Protective Equipment (PPE) that must be carefully observed in order to reduce risk of personal injury during these services.



Electric motors have energized circuits, exposed rotating parts and hot surfaces that may cause serious injury to people during normal operation. It is recommended that transportation, storage, installation, operation and maintenance services are always performed by qualified personnel.

Always follow the safety, installation, maintenance and inspection instructions in accordance with the applicable standards in each country.

# 4. HANDLING AND TRANSPORT

Individually packaged motors should never be lifted by the shaft or by the packaging. They must be lifted only by means of the eyebolts, when supplied. Use always suitable lifting devices to lift the motor. Eyebolts on the frame are designed for lifting the machine weight only as indicated on the motor nameplate. Motors supplied on pallets must be lifted by the pallet base with lifting devices fully supporting the motor weight.

The package should never be dropped. Handle it carefully to avoid bearing damage.

Eyebolts provided on the frame are designed for lifting the machine only. Do not use these eyebolts for lifting the motor with coupled equipment such as bases, pulleys, pumps, reducers, etc..

Never use damaged, bent or cracked eyebolts. Always check the eyebolt condition before lifting the motor.

Eyebolts mounted on components, such as on end shields, forced ventilation kits, etc. must be used for lifting these components only. Do not use them for lifting the complete machine set.

Handle the motor carefully without sudden impacts to avoid bearing damage and prevent excessive mechanical stresses on the eyebolts resulting in its rupture.

To move or transport motors with cylindrical roller bearings or angular contact ball bearings, use always the shaft locking device provided with the motor.
All HGF motors, regardless of bearing type, must be transported with shaft locking device fitted.
Vertical mounted motors with oil-lubricated bearings must be transported in the vertical position. If necessary to move or transport the motor in the horizontal position, install the shaft locking device on both sides (drive end and non-drive end) of the motor.

## 4.1. LIFTING

Before lifting the motor ensure that all eyebolts are tightened properly and the eyebolt shoulders are in contact with the base to be lifted, as shown in Figure 4.1. Figure 4.2 shows an incorrect tightening of the eyebolt.
Ensure that lifting machine has the required lifting capacity for the weight indicated on the motor nameplate.

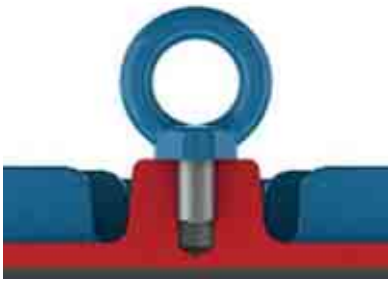

***Figure 4.1*** *- Correct tightening of the eyebolt*

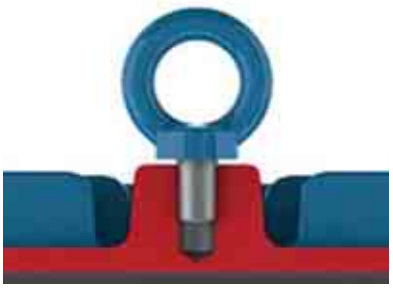

***Figure 4.2*** *- Incorrect tightening of the eyebolt*

The center-of-gravity may change depending on motor design and accessories. During the lifting procedures the maximum allowed angle of inclination should never be exceeded as specified below.

### 4.1.1. Horizontal motors with one eyebolt

For horizontal motors fitted with only one eyebolt, the maximum allowed angle-of-inclination during the lifting process should not exceed 30° in relation to the vertical axis, as shown in Figure 4.3.

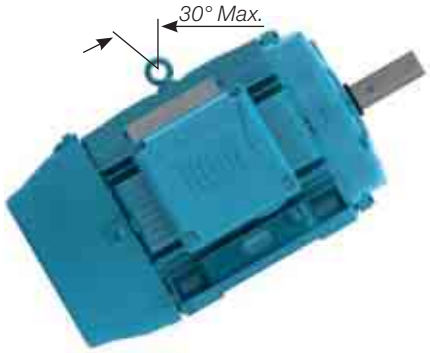


***Figure 4.3*** *- Maximum allowed angle-of-inclination for motor with one eyebolt*

### 4.1.2. Horizontal motor with two eyebolts

When motors are fitted with two or more eyebolts, all supplied eyebolts must be used simultaneously for the lifting procedure.

There are two possible eyebolt arrangements (vertical and inclined), as shown below:

- For motors with vertical lifting eyebolts, as shown in Figure 4.4, the maximum allowed lifting angle should not exceed 45° in relation to the vertical axis. We recommend to use a spreader beam for maintaining the lifting elements (chain or rope) in vertical position and thus preventing damage to the motor surface;




***Figure 4.4*** *- Maximum resulting angle for motors with two or more lifting eyebolts*

- For HGF, W40 and W50 motors, as shown in Figure 4.5, the maximum resulting angle should not exceed 30° in relation to the vertical axis;

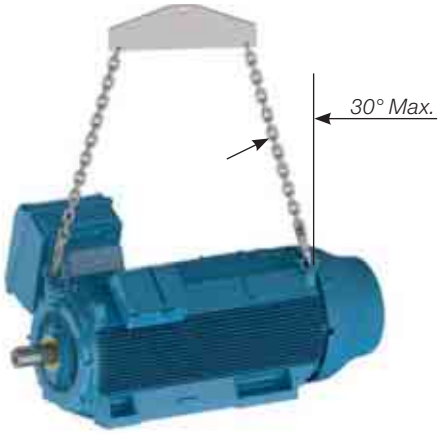


***Figure 4.5*** *- Maximum resulting angle for horizontal HGF, W40 and W50 motors*

- For motors fitted with inclined eyebolts, as shown in Figure 4.6, the use of a spreader beam is required for maintaining the lifting elements (chain or rope) in vertical position and thus preventing damage to the motor surface.



***Figure 4.6*** *- Use of a spreader beam for lifting*

### 4.1.3. Vertical motors

For vertical mounted motors, as shown in Figure 4.7, the use of a spreader beam is required for maintaining the lifting element (chain or rope) in vertical position and thus preventing damage to the motor surface.



***Figure 4.7*** *- Lifting of vertical mounted motors*

Always use the eyebolts mounted on the top side of the motor, diametrically opposite, considering the mounting position. See Figure 4.8.



***Figure 4.8*** *- Lifting of HGF and W50 motors.*

#### 4.1.3.1. Procedures to place W22 motors in the vertical position

For safety reasons during the transport, vertical mounted Motors are usually packed and supplied in horizontal position.
To place W22 motors fitted with eyebolts (see Figure 4.6), to the vertical position, proceed as follows:

1. Ensure that the eyebolts are tightened properly, as shown in Figure 4.1;
2. Remove the motor from the packaging, using the top mounted eyebolts, as shown in Figure 4.9;



***Figure 4.9*** *- Removing the motor from the packaging*

3. Install a second pair of eyebolts, as shown in Figure 4.10;



***Figure 4.10*** *- Installation of the second pair of eyebolts*

4. Reduce the load on the first pair of eyebolts to start the motor rotation, as shown in Figure 4.11. This procedure must be carried out slowly and carefully.



***Figure 4.11*** *- End result: motor placed in vertical position*

These procedures will help you to move motors designed for vertical mounting. These procedures are also used to place the motor from the horizontal position into the vertical position and vertical to horizontal.

### 4.1.3.2. Procedures to place HGF and W50 motors in the vertical position

HGF motors are fitted with eight lifting points: four at drive end and four at non-drive end. W50 motors are fitted with nine lifting points: four at drive end, one in the central part and four at non-drive end. The motors are usually transported in horizontal position, however for the installation they must be placed in the vertical position.
To place an these motors in the vertical position, proceed as follows:

1. Lift the motor by using the four lateral eyebolts and two hoists, see Figure 4.12;



***Figure 4.12*** *- Lifting of HGF and W50 motors with two hoists*

2. Lower the hoist fixed to motor drive end while lifting the hoist fixed to motor non-drive end until the motor reaches its equilibrium, see Figure 4.13;



***Figure 4.13*** *- Placing HGF and W50 motors in vertical position*

3. Remove the hoist hooks from the drive end eyebolts and rotate the motor 180° to fix the removed hooks into the two eyebolts at the motor non-drive end, see Figure 4.14;



***Figure 4.14*** *- Lifting HGF and W50 motors by the eyebolts at the non-drive end*

4. Fix the removed hoist hooks in the other two eyebolts at the non-drive end and lift the motor until the vertical position is reached, see Figure 4.15.



***Figure 4.15*** *- HGF and W50 motors in the vertical position*

These procedures will help you to move motors designed for vertical mounting. These procedures are also used to place the motor from the horizontal position into the vertical position and vertical to horizontal.

## 4.2 Procedures to place W22 vertical mount motors in horizontal position

To place W22 vertical mount motor in horizontal position, proceed as follows:

1. Ensure that all eyebolts are tightened properly, as shown in Figure 4.1;

2. Install the first pair of eyebolts and lift the motor as shown in Figure 4.16;



***Figure 4.16 -*** *Install the first pair of eyebolts*

3. Install the second pair of eyebolts, as shown in Figure 4.17;



***Figure 4.17 -*** *Install the second pair of eyebolts*

4. Reduce the load on the first pair of eyebolts for rotating the motor, as shown in Figure 4.18. This procedure must be carried out slowly and carefully;



***Figure 4.18 -*** *Motor is being rotated to horizontal position*

5. Remove the first pair of eyebolts, as shown in Figure 4.19.



***Figure 4.19 -*** *Final result: motor placed in horizontal position*

# 5. STORAGE

If the motor is not installed immediately, it must be stored in a dry and clean environment, with relative humidity not exceeding 60%, with an ambient temperature between 5 ºC and 40 ºC, without sudden temperature changes, free of dust, vibrations, gases or corrosive agents. The motor must be stored in horizontal position, unless specifically designed for vertical operation, without placing objects on it. Do not remove the protection grease from shaft end to prevent rust.

If the motor are fitted with space heaters, they must always be turned on during the storage period or when the installed motor is out of operation. Space heaters will prevent water condensation inside the motor and keep the winding insulation resistance within acceptable levels. Store the motor in such position that the condensed water can be easily drained. If fitted, remove pulleys or couplings from the shaft end (more information are given on item 6).

The space heaters should never be energized when the motor is in operation.

## 5.1. EXPOSED MACHINED SURFACES

All exposed machined surfaces (like shaft end and flange) are factory-protected with temporary rust inhibitor. A protective film must be reapplied periodically (at least every six months), or when it has been removed and/or damaged.

## 5.2. STORAGE

The stacking height of the motor packaging during the storage period should not exceed 5 m, always considering the criteria indicated in Table 5.1:

***Table 5.1*** *- Max. recommended stacking height*

| Packaging type | Frame sizes | Maximum stacking quantity |
|---|---|---|
| **Cardboard box** | IEC 63 to 132<br>NEMA 143 to 215 | Indicated on the top side of the cardboard box |
| **Wood crate** | IEC 63 to 315<br>NEMA 48 to 504/5 | 06 |
| | IEC 355<br>NEMA 586/7 and 588/9 | 03 |
| | W40 / W50 / HGF IEC 315 to 630<br>W40 / W50 / HGF NEMA 5000 to 9600 | Indicated on the packaging |

***Notes:***
*1) Never stack larger packaging onto smaller packaging;*
*2) Align the packaging correctly (see Figure 5.1 and Figure 5.2);*



***Figure 5.1*** *- Correct stacking*

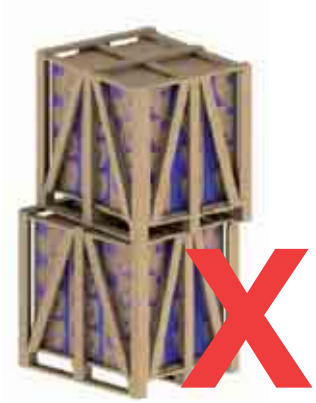

***Figure 5.2*** *- Incorrect stacking*

ENGLISH

*3) The feet of the crates above should always be supported by suitable wood battens (Figure 5.3) and never stand on the steel tape or without support (Figure 5.4);*



*Figure 5.3 - Correct stacking*

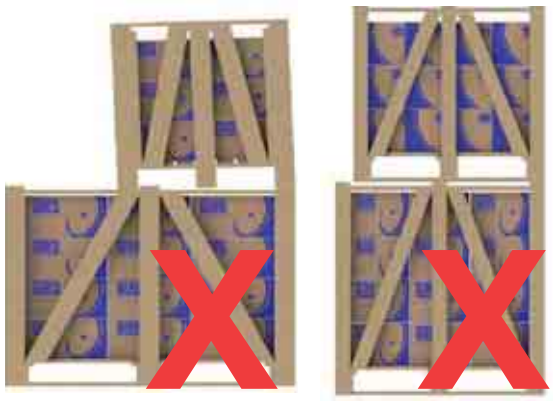

*Figure 5.4 - Incorrect stacking*

*4) When stacking smaller crates onto longer crates, always ensure that suitable wooden supports are provided to withstand the weight (see Figure 5.5). This condition usually occurs with motor packaging above IEC 225S/M (NEMA 364/5T) frame sizes.*



***Figure 5.5** - Use of additional battens for stacking*



## 5.3 BEARINGS

### 5.3.1 Grease lubricated bearings

We recommend rotating the motor shaft at least once a month (by hand, at least five revolutions, stopping the shaft at a different position from the original one). If the motor is fitted with shaft locking device, remove it before rotating the shaft and install it again before performing any handling procedure. Vertical motors may be stored in the vertical or in horizontal position. If motors with open bearings are stored longer than six months, the bearings must be relubricated according to item 8.2 before commissioning of the motor.
If the motor is stored for longer than 2 years, the bearings must be replaced or removed, washed, inspected and relubricated according to item 8.2.

### 5.3.2 Oil lubricated bearings

The motor must be stored in its original operating position and with oil in the bearings. Correct oil level must be ensured. It should be in the center of the sight glass.
During the storage period, remove the shaft locking device and rotate the shaft by hand every month, at least five revolutions, thus achieving an even oil distribution inside the bearing and maintaining the bearing in good operating conditions. Reinstall the shaft locking device every time the motor has to be moved.
If the motor is stored for a period equal or longer than the oil change interval, the oil must be replaced according to Item 8.2, before starting the operation. If the motor is stored for a period of over two years, the bearings must be replaced or removed, washed according to manufacturer instructions, checked and relubricated according to Item 8.2. The oil of vertical mounted motors is removed to prevent oils leaks during the transport. After receiving  the motor the bearings must be lubricated.

### 5.3.3 Oil Mist lubricated bearings

The motor must be stored in horizontal position. Lubricate the bearings with ISO VG 68 mineral oil in the amount indicated in the Table 5.2 (this is also valid for bearings with equivalent dimensions). After filling with oil, rotate the shaft by hand, at least five revolutions)
During the storage period, remove the shaft locking device (if any) and rotate the shaft by hand every week, at least five revolutions, stopping it at a different position from the original one. Reinstall the shaft locking device every time the motor has to be moved. If the motor is stored for a period of over two years, the bearings must be replaced or removed, washed according to manufacturer instructions, checked and relubricated according to item 8.2.

***Table 5.2 -*** *Amount of oil per bearing*

| Bearing size | Amount of oil (ml) | Bearing size | Amount of oil (ml) |
|---|---|---|---|
| 6201 | 15 | 6309 | 65 |
| 6202 | 15 | 6311 | 90 |
| 6203 | 15 | 6312 | 105 |
| 6204 | 25 | 6314 | 150 |
| 6205 | 25 | 6315 | 200 |
| 6206 | 35 | 6316 | 250 |
| 6207 | 35 | 6317 | 300 |
| 6208 | 40 | 6319 | 350 |
| 6209 | 40 | 6320 | 400 |
| 6211 | 45 | 6322 | 550 |
| 6212 | 50 | 6324 | 600 |
| 6307 | 45 | 6326 | 650 |
| 6308 | 55 | 6328 | 700 |

The oil must always be removed when the motor has to be handled. If the oil mist system is not operating after installation, fill the bearings with oil to prevent bearing rusting. During the storage period, rotate the shaft by hand, at least five revolutions, stopping it at a different position from the original one. Before starting the motor, all bearing protection oil must be drained from the bearing and the oil mist system must be switched ON.

### 5.3.4 Sleeve bearing

The motor must be stored in its original operating position and with oil in the bearings. Correct oil level must be ensured. It should be in the middle of the sight glass. During the storage period, remove the shaft locking device and rotate the shaft by hand every month, at least five revolutions, and at 30 rpm, thus achieving an even oil distribution inside the bearing and maintaining the bearing in good operating conditions. Reinstall the shaft locking device every time the motor has to be moved.
If the motor is stored for a period equal or longer than the oil change interval, the oil must be replaced, according to Item 8.2, before starting the operation.

If the motor is stored for a period longer than the oil change interval, or if it is not possible to rotate the motor shaft by hand, the oil must be drained and a corrosion protection and dehumidifiers must be applied.

## 5.4. INSULATION RESISTANCE

We recommend measuring the winding insulation resistance at regular intervals to follow-up and evaluate its electrical operating conditions. If any reduction in the insulation resistance values are recorded, the storage conditions should be evaluated and corrected, where necessary.

### 5.4.1. Insulation resistance measurement

We recommend measuring the winding insulation resistance at regular intervals to follow-up and evaluate its electrical operating conditions. If any reduction in the insulation resistance values are recorded, the storage conditions should be evaluated and corrected, where necessary.



The insulation resistance must be measured in a safe environment.

The insulation resistance must be measured with a megohmmeter. The machine must be in cold state and disconnected from the power supply.

To prevent the risk of an electrical shock, ground the terminals before and after each measurement. Ground the capacitor (if any) to ensure that it is fully discharged before the measurement is taken.

It is recommended to insulate and test each phase separately. This procedure allows the comparison of the insulation resistance between each phase. During the test of one phase, the other phases must be grounded. The test of all phases simultaneously evaluates the insulation resistance to ground only but does not evaluate the insulation resistance between the phases.
The power supply cables, switches, capacitors and other external devices connected to the motor may considerably influence the insulation resistance measurement. Thus all external devices must be disconnected and grounded during the insulation resistance measurement.
Measure the insulation resistance one minute after the voltage has been applied to the winding. The applied voltage should be as shown in Table 5.3.

***Table 5.3*** *- Voltage for the insulation resistance*

| Winding rated voltage (V) | Testing voltage for measuring the insulation resistance (V) |
|---|---|
| < 1000 | 500 |
| 1000 - 2500 | 500 - 1000 |
| 2501 - 5000 | 1000 - 2500 |
| 5001 - 12000 | 2500 - 5000 |
| > 12000 | 5000 - 10000 |

The reading of the insulation resistance must be corrected to 40 °C as shown in the Table 5.4.

***Table 5.4*** *- Correction factor for the insulation resistance corrected to 40 °C*

| Measuring temperature of the insulation resistance (°C) | Correction factor of the insulation resistance corrected to 40 °C | Measuring temperature of the insulation resistance (°C) | Correction factor of the insulation resistance corrected to 40 °C |
|---|---|---|---|
| 10 | 0.125 | 30 | 0.500 |
| 11 | 0.134 | 31 | 0.536 |
| 12 | 0.144 | 32 | 0.574 |
| 13 | 0.154 | 33 | 0.616 |
| 14 | 0.165 | 34 | 0.660 |
| 15 | 0.177 | 35 | 0.707 |
| 16 | 0.189 | 36 | 0.758 |
| 17 | 0.203 | 37 | 0.812 |
| 18 | 0.218 | 38 | 0.871 |
| 19 | 0.233 | 39 | 0.933 |
| 20 | 0.250 | 40 | 1.000 |
| 21 | 0.268 | 41 | 1.072 |
| 22 | 0.287 | 42 | 1.149 |
| 23 | 0.308 | 43 | 1.231 |
| 24 | 0.330 | 44 | 1.320 |
| 25 | 0.354 | 45 | 1.414 |
| 26 | 0.379 | 46 | 1.516 |
| 27 | 0.406 | 47 | 1.625 |
| 28 | 0.435 | 48 | 1.741 |
| 29 | 0.467 | 49 | 1.866 |
| 30 | 0.500 | 50 | 2.000 |

The motor insulation condition must be evaluated by comparing the measured value with the values indicated in Table 5.5 (corrected to 40 °C):

***Table 5.5*** *- Evaluation of the insulation system*

| Limit value for rated voltage up to 1.1 kV (MΩ) | Limit value for rated voltage above 1.1 kV (MΩ) | Situation |
|---|---|---|
| Up to 5 | Up to 100 | Dangerous. The motor can not be operated in this condition |
| 5 to 100 | 100 to 500 | Regular |
| 100 to 500 | Higher than 500 | Good |
| Higher than 500 | Higher than 1000 | Excellent |

The values indicated in the table should be considered only as reference values. It is advisable to log all measured values to provide a quick and easy overview on the machine insulation resistance.
If the insulation resistance is low, moisture may be present in the stator windings. In this case the motor should be removed and transported to a WEG authorized Service Center for proper evaluation and repair (This service is not covered by the warranty). To improve the insulation resistance through the drying process, see section 8.4.

# 6. INSTALLATION

The insulation resistance must be measured in a safe environment.

Check some aspects before proceeding with the installation:

1. Insulation resistance: must be within the acceptable limits. See item 5.4.
2. Bearings:
   If the motor is installed without running immediately, proceed as described in item 5.3.
3. Operating conditions of the start capacitors: If single-phase motors are stored for a period of over two years, it is recommended to change the start capacitors before motor starting since they lose their operating characteristics.
4. Terminal box:
   a. the inside of the terminal box must be clean and dry;
   b. the contacts must be correctly connected and corrosion free. See 6.9 and 6.10;
   c. the cable entries must be correctly sealed and the terminal box cover properly mounted in order to ensure the degree of protection indicated on the motor nameplate.
5. Cooling: the cooling fins, air inlet and outlet openings must be clean and unobstructed. The distance between the air inlet openings and the wall should not be shorter than ¼ (one quarter) of the diameter of the air inlet. Ensure sufficient space to perform the cleaning services. See item 7.
6. Coupling: remove the shaft locking device (where fitted) and the corrosion protection grease from the shaft end and flange just before installing the motor. See item 6.4.
7. Drain hole: the motor must always be positioned so the drain hole is at the lowest position (If there is any indication arrow on the drain, the drain must be so installed that the arrow points downwards).
   Motors supplied with rubber drain plugs leave the factory in the closed position and must be opened periodically to allow the exit of condensed water. For environments with high water condensation levels and motor with degree of protection IP55, the drain plugs can be mounted in open position (see Figure 6.1).
   For motors with degree of protection IP56, IP65 or IP66, the drain plugs must remain at closed position (see Figure 6.1), being opened only during the motor maintenance procedures.
   The drain system of motors with Oil Mist lubrication system must be connected to a specific collection system (see Figure 6.12).



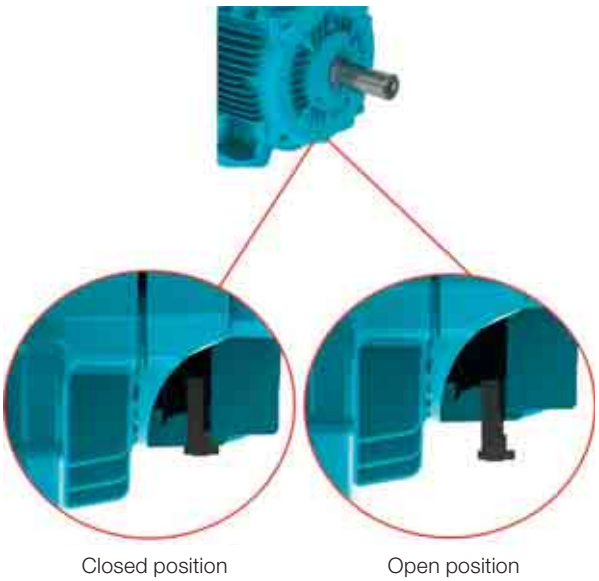


***Figure 6.1*** *- Detail of the rubber drain plug mounted in closed and open position*

8.Additional recommendations:
a. Check the direction of motor rotation, starting the motor at no-load before coupling it to the load;
b. Vertical mounted motors with shaft end down must be fitted with drip cover to protect them from liquids or solids that may drop onto the motors;
c. Vertical mounted motors with shaft end up should be fitted with water slinger ring to prevent water ingress inside the motor.

Remove or fix the shaft key before starting the motor.

Changes on the motor construction (features), such as installation of extended grease fittings or modification of the lubrication system, installation of accessories at alternative locations, etc., can be carried out only after prior written consent from WEG.

## 6.1. FOUNDATIONS

The foundation is the structure, structural element, natural or prepared base, designed to withstand the stresses produced by the installed equipment, ensuring safe and stable performance during operation. The foundation design should consider the adjacent structures to avoid the influences of other installed equipment and no vibration is transferred through the structure

The foundation must be flat and its selection and design must consider the following characteristics:

a) The features of the machine to be installed on the foundation, the driven loads, application, maximum allowed deformations and vibration levels (for instance, motors with reduced vibration levels, foot flatness, flange concentricity, axial and radial loads, etc. lower than the values specified for standard motors).

b) Adjacent buildings, conservation status, maximum applied load estimation, type of foundation and fixation and vibrations transmitted by theses constructions.

If the motor is supplied with leveling/alignment bolts, this must be considered in the base design.

Please consider for the foundation dimensioning all stresses that are generated during the operation of the driven load.
The user is responsible for the foundation designing and construction.

The foundation stresses can be calculated by using the following equations (see Figure 6.2):

$$F_1 = 0,5 * g * m - (4 * T_b / A)$$
$$F_2 = 0,5 * g * m + (4 * T_b / A)$$

Where:

$F_1$ and $F_2$ = lateral stresses (N);
g = gravitational acceleration (9,8 m/s$^2$);
m = motor weight (kg);
$T_b$ = breakdown torque (Nm);
A = distance between centerlines of mounting holes in feet or base of the machine (end view) (m).

The motors may be mounted on:

- Concrete bases: are most used for large-size motors (see Figure 6.2);
- Metallic bases: are generally used for small-size motors (see Figure 6.3).

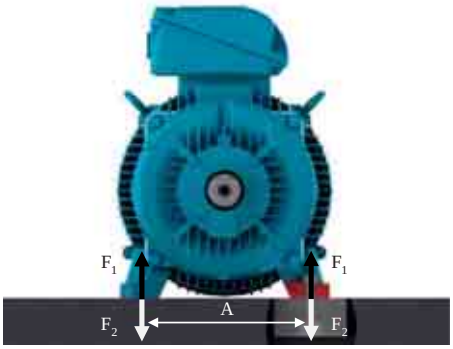


***Figure 6.2*** *- Motor installed on concrete base*



***Figure 6.3*** *- Motor installed on metallic base*

The metallic and concrete bases may be fitted with sliding system. These types of foundations are generally used where the power transmission is achieved by belts and pulleys. This power transmission system is easier to assemble/disassemble and allows the belt tension adjustment. Other important aspect of this foundation type is the location of the base locking screws that must be diagonally opposite. The rail nearest the drive pulley is placed in such a way that the positioning bolt is between the motor and the driven machine. The other rail must be placed with the bolt on the opposite side (diagonally opposite), as shown in Figure 6.4 .

To facilitate assembly, the bases may have the following features:

- Shoulders and/or recesses;
- Anchor bolts with loose plates;
- Bolts cast in the concrete;
- Leveling screws;
- Positioning screws;
- Steel & cast iron blocks, plates with flat surfaces.

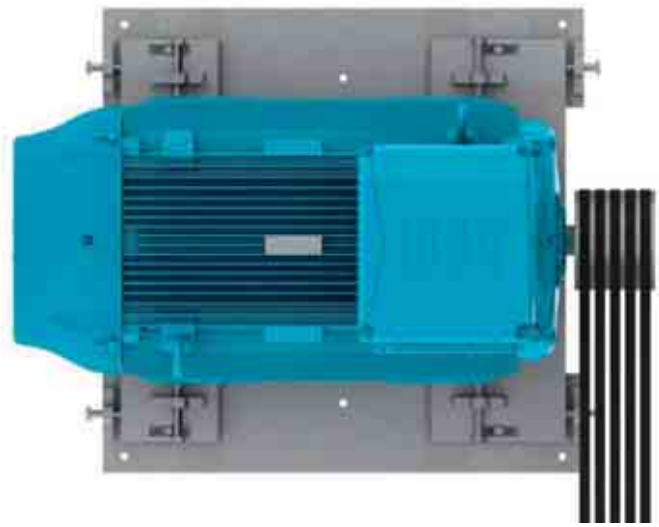

***Figure 6.4*** *- Motor installed on sliding base*

After completing the installation, it is recommended that all exposed machined surfaces are coated with suitable rust inhibitor.

## 6.2. MOTOR MOUNTING

Footless motors supplied with transportation devices, according to Figure 6.5, must have their devices removed before starting the motor installation.

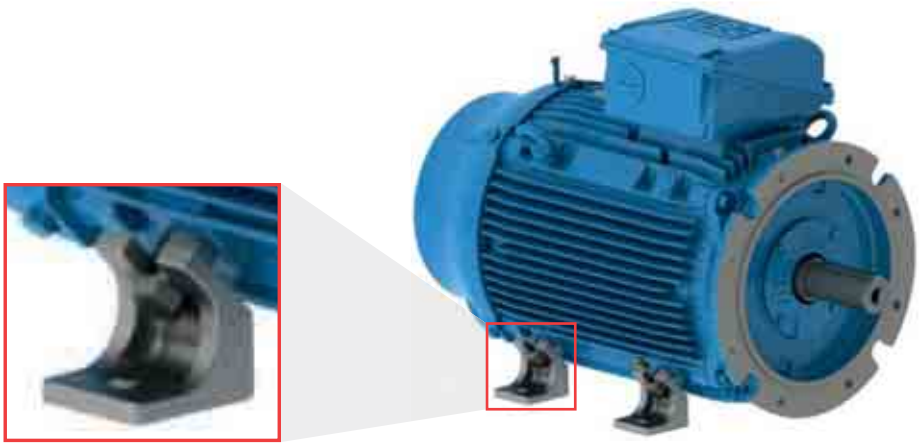

***Figure 6.5*** *- Detail of the transportation devices for footless motors*

### 6.2.1. Foot mounted motors

The drawings of the mounting hole dimensions for NEMA or IEC motors can be checked in the respective technical catalogue.
The motor must be correctly aligned and leveled with the driven machine. Incorrect alignment and leveling may result in bearing damage, generate excessive vibration and even shaft distortion/breakage.
For more details, see section 6.3 and 6.6. The thread engagement length of the mounting bolt should be at least 1.5 times the bolt diameter. This thread engagement length should be evaluated in more severe applications and increased accordingly.
Figure 6.6 shows the mounting system of a foot mounted motor indicating the minimum required thread engagement length.

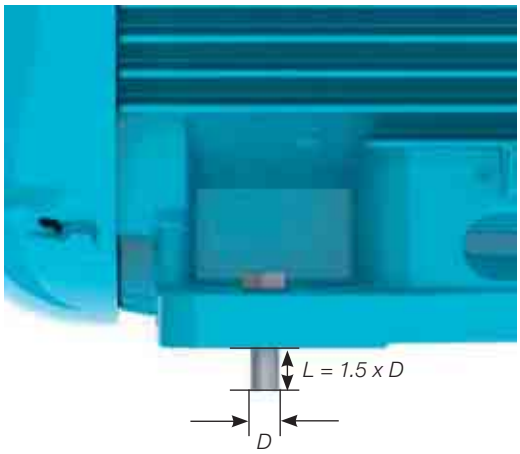


***Figure 6.6*** *- Mounting system of a foot mounted motor*

### 6.2.2. Flange mounted motors

The drawings of the flange mounting dimensions, IEC and NEMA flanges, can be checked in the technical catalogue.
The coupling of the driven equipment to the motor flange must be properly dimensioned to ensure the required concentricity of the assembly.
Depending on the flange type, the mounting can be performed from the motor to the driven equipment flange (flange FF (IEC) or D (NEMA)) or from the driven equipment flange to the motor (flange C (DIN or NEMA)).
For the mounting process from the driven equipment flange to the motor, you must consider the bolt length, flange thickness and the thread depth of the motor flange.

If the motor flange has tapped through-holes, the length of the mounting bolts must not exceed the tapped through-hole length of the motor flange, thus preventing damage to the winding head.

For flange mounting the thread engagement length of the mounting bolt should be at least 1.5 times the bolt diameter. In severe applications, longer thread engagement length may be required.
In severe applications or if large motors are flange mounted, a foot or pad mounting may be required in addition to the flange mounting (Figure 6.7). The motor must never be supported on its cooling fins.



***Figure 6.7*** *- Mounting method of flange mounted motors with frame base support*

***Note****:*
*When liquid (for example oil) is likely to come into contact with the shaft seal, please contact your local WEG representative.*

### 6.2.3. Pad mounted motors

Typically, this method of mounting is used in axial fans. The motor is fixed by tapped holes in the frame. The dimensions of these tapped holes can be checked in the respective product catalogue. The selection of the motor mounting rods/bolts must consider the dimensions of the fan case, the installation base and the thread depth in the motor frame.
The mounting rods and the fan case wall must be sufficiently stiff to prevent the transmission of excessive vibration to the machine set (motor & fan). Figure 6.8 shows the pad mounting system.

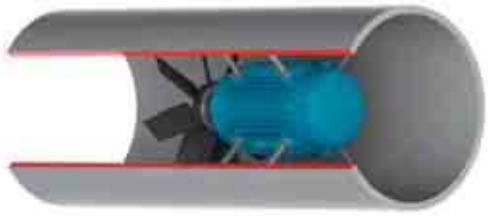

***Figure 6.8*** *- Mounting of the motor inside the cooling duct*

## 6.3. BALANCING

Unbalanced machines generate vibration which can result in damage to the motor. WEG motors are dynamically balanced with “half key” and without load (uncoupled). Special balancing quality level must be stated in the Purchase Order.

The transmission elements, such as pulleys, couplings, etc., must balanced with “half key” before they are mounted on the motor shaft.

The balance quality grade meets the applicable standards for each product line.

The maximum balancing deviation must be recorded in the installation report.

## 6.4. COUPLINGS

Couplings are used to transmit the torque from the motor shaft to the shaft of the driven machine. The following aspects must be considered when couplings are installed:

- Use proper tools for coupling assembly & disassembly to avoid damages to the motor and bearings;
- Whenever possible, use flexible couplings, since they can absorb eventual residual misalignments during the machine operation;
- The maximum loads and speed limits informed in the coupling and motor manufacturer catalogues cannot be exceeded;
- Level and align the motor as specified in sections 6.5 and 6.6, respectively.

Remove or fix the shaft key firmly when the motor is operated without coupling in order to prevent accidents.

### 6.4.1. Direct coupling

Direct coupling is characterized when the Motor shaft is directly coupled to the shaft of the driven machine without transmission elements. Whenever possible, use direct coupling due to lower cost, less space required for installation and more safety against accidents.

Do not use roller bearings for direct coupling, unless sufficient radial load is expected.

### 6.4.2. Gearbox coupling

Gearbox coupling is typically used where speed reduction is required.
Make sure that shafts are perfectly aligned and strictly parallel (in case of straight spur gears) and in the right meshing angle (in case of bevel and helical gears).

### 6.4.3. Pulley and belt coupling

Pulleys and belts are used when speed increase or reduction between motor shaft and driven load is required.

Excessive belt tension will damage the bearings and cause unexpected accidents such as breakage of the motor shaft.

### 6.4.4. Coupling of sleeve bearing motors

Motors designed with sleeve bearings must be operated with direct coupling to the driven machine or a gearbox. Pulley and belts can not be applied for sleeve bearing motors.

Motors designed with sleeve bearings have 3 (three) marks on the shaft end. The center mark is the indication of the magnetic center and the 2 (two) outside marks indicate the allowed limits of the rotor axial movement, as shown in Figure 6.9.
The motor must be so coupled that during operation the arrow on the frame is placed over the central mark indicating the rotor magnetic center. During start-up, or even during operation, the rotor may freely move between the two outside marks when the driven machine exerts an axial load on the motor shaft. However, under no circumstance, the motor can operate continuously with axial forces on the bearing.




***Figure 6.9*** *- Axial clearance of motor designed with sleeve bearing*

For coupling evaluation consider the maximum axial bearing clearance as shown in Table 6.1.
The axial clearance of the driven machine and coupling influence the maximum bearing clearance.

***Table 6.1*** *- Clearance used for sleeve bearings*

| Bearing size | Total axial clearance (mm) |
|---|---|
| 9* | 3 + 3 = 6 |
| 11* | 4 + 4 = 8 |
| 14* | 5 + 5 =10 |
| 18 | 7,5 + 7,5 = 15 |

** For Motors in accordance with API 541, the total axial clearance is 12.7 mm*

The sleeve bearings used by WEG were not designed to support axial load continuously.
Under no circumstance must the motor be operated continuously at its axial clearance limits.

## 6.5. LEVELING

The motor must be leveled to correct any deviations in flatness arising from the manufacturing process and the material structure rearrangement. The leveling can be carried out by a leveling screw fixed on the motor foot or on the flange or by means of thin compensation shims. After the leveling process, the leveling height between the motor mounting base and the motor cannot exceed 0.1 mm.
If a metallic base is used to level the height of the motor shaft end and the shaft end of the driven machine, level only the metallic base relating to the concrete base.

Record the maximum leveling deviations in the installation report.

## 6.6. ALIGNMENT

The correct alignment between the motor and the driven machine is one of the most important variables that extends the useful service life of the motor. Incorrect coupling alignment generates high loads and vibrations reducing the useful life of the bearings and even resulting in shaft breakages. Figure 6.10 illustrates the misalignment between the motor and the driven machine.

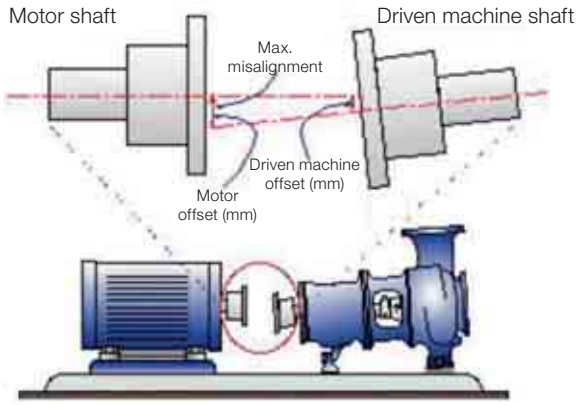


***Figure 6.10*** *- Typical misalignment condition*

Alignment procedures must be carried out using suitable tools and devices, such as dial gauge, laser alignment instruments, etc.. The motor shaft must be aligned axially and radially with the driven machine shaft.

The maximum allowed eccentricity for a complete shaft turn should not exceed 0.03 mm, when alignment is made with dial gauges, as shown in Figure 6.11. Ensure a gap between couplings to compensate the thermal expansion between the shafts as specified by the coupling manufacturer.

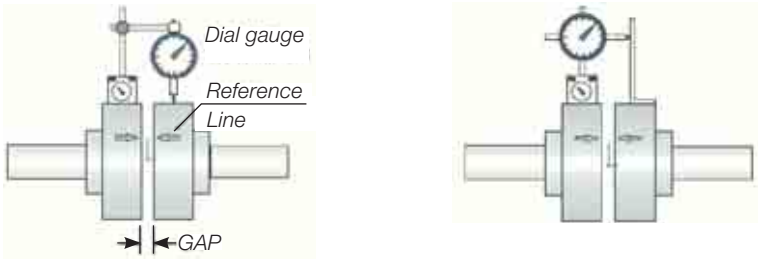


*Parallel alignment* *Angular alignment*

***Figure 6.11*** *- Alignment with dial gauge*

If alignment is made by a laser instrument, please consider the instructions and recommendations provided by the laser instrument manufacturer.
The alignment should be checked at ambient temperature with machine at operating temperature.

The coupling alignment must be checked periodically.

Pulley and belt couplings must be so aligned that the driver pulley center lies in the same plane of the driven pulley center and the motor shaft and the shaft of the driven machine are perfectly parallel.
After completing the alignment procedures, ensure that mounting devices do not change the motor and machine alignment and leveling resulting into machine damage during operation.

It is recommended to record the maximum alignment deviation in the Installation Report.

## 6.7. CONNECTION OF OIL LUBRICATED OR OIL MIST LUBRICATED MOTORS

When oil lubricated or oil mist lubricated motors are installed, connect the existing lubricant tubes (oil inlet and oil outlet tubes and motor drain tube), as shown in Figure 6.12. The lubrication system must ensure continuous oil flow through the bearings as specified by the manufacturer of the installed lubrication system.

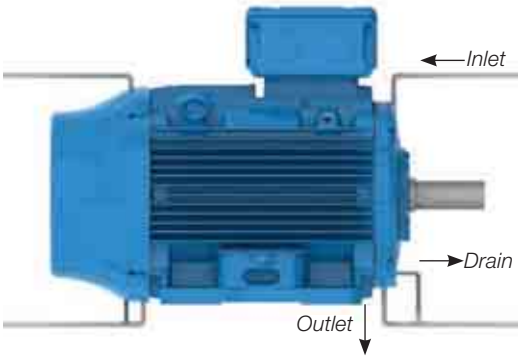


***Figure 6.12*** *- Oil supply and drain system of oil lubricated or oil mist lubricated motors*

## 6.8. CONNECTION OF THE COOLING WATER SYSTEM

When water cooled motors are installed, connect the water inlet and outlet tubes to ensure proper motor cooling. According to item 7.2, ensure correct cooling water flow rate and water temperature in the motor cooling system.

## 6.9. ELECTRICAL CONNECTION

Consider the rated motor current, service factor, starting current, environmental and installation conditions, maximum voltage drop, etc. to select appropriate power supply cables and switching and protection devices. All motors must be installed with overload protection systems. Three-phase motors should be fitted with phase fault protection systems.

Before connecting the motor, check if the power supply voltage and the frequency comply with the motor nameplate data. All wiring must be made according to the connection diagram on the motor nameplate. Please consider the connection diagrams in the Table 6.2 as reference value.
To prevent accidents, check if motor has been solidly grounded in accordance with the applicable standards.

***Table 6.2*** *- Typical connection diagram for three-phase motors.*

| Configuration | Quantity of leads | Type of connection | Connection diagram |
|---|---|---|---|
| Single speed | 3 | - | 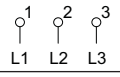  |
| | 6 | Δ - Y | 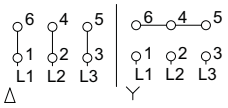  |
| | 9 | YY - Y | 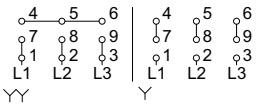  |
| | | ΔΔ - Δ | 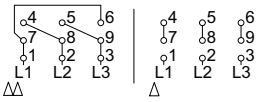  |
| | 12 | ΔΔ - YY - Δ - Y | 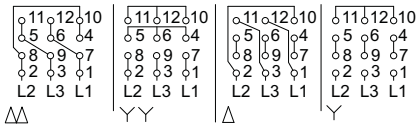  |
| | | Δ - PWS Part-winding start | 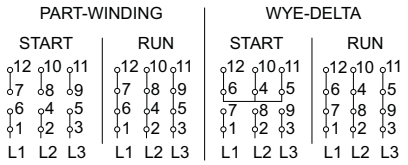  |
| Double speed Dahlander | 6 | YY - Y Variable Torque | 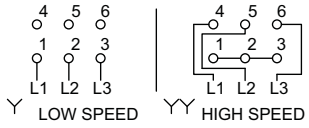  |
| | | Δ - YY Constant Torque | 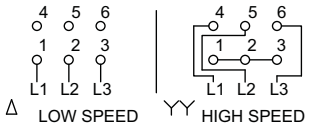  |
| | | YY - Δ Constant Output | 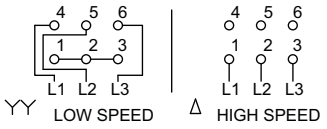  |
| | 9 | Δ - Y - YY | 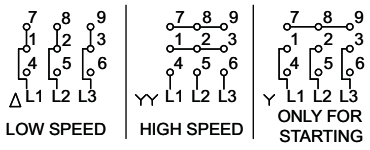  |
| Double speed Double winding | 6 | - |   |

| Equivalent table for lead identification | | | | | | | | | | | | | |
|---|---|---|---|---|---|---|---|---|---|---|---|---|---|
| **Lead identification on the wiring diagram** | | **1** | **2** | **3** | **4** | **5** | **6** | **7** | **8** | **9** | **10** | **11** | **12** |
| Single speed | NEMA MG 1 Part 2 | T1 | T2 | T3 | T4 | T5 | T6 | T7 | T8 | T9 | T10 | T11 | T12 |
| | IEC 60034-8 | U1 | V1 | W1 | U2 | V2 | W2 | U3 | V3 | W3 | U4 | V4 | W4 |
| | JIS (JEC 2137) - up to 6 terminals | U | V | W | X | Y | Z | | | | | | |
| | JIS (JEC 2137) - above 6 terminals | U1 | V1 | W1 | U2 | V2 | W2 | U5 | V5 | W5 | U6 | V6 | W6 |
| Double speed (Dahlander / Double winding) | NEMA MG 1 Part 2[1)] | 1U | 1V | 1W | 2U | 2V | 2W | 3U | 3V | 3W | 4U | 4V | 4W |
| | IEC 60034-8 | 1U | 1V | 1W | 2U | 2V | 2W | 3U | 3V | 3W | 4U | 4V | 4W |
| | JIS (JEC 2137) | 1U | 1V | 1W | 2U | 2V | 2W | 3U | 3V | 3W | 4U | 4V | 4W |

*1) NEMA MG 1 Part 2 defines T1 to T12 for two or more winding, however WEG adopts 1U to 4W.*

If motors are supplied without terminal blocks, insulate the cable terminals with suitable insulation material that meets the power supply voltage and the insulation class indicated on the motor nameplate.

Ensure correct tightening torque for the power cable and grounding connections as specified in Table 8.11

The clearance distance (see Figure 6.13) between non-insulated live parts with each other and between grounded parts must be as indicated in Table 6.3.

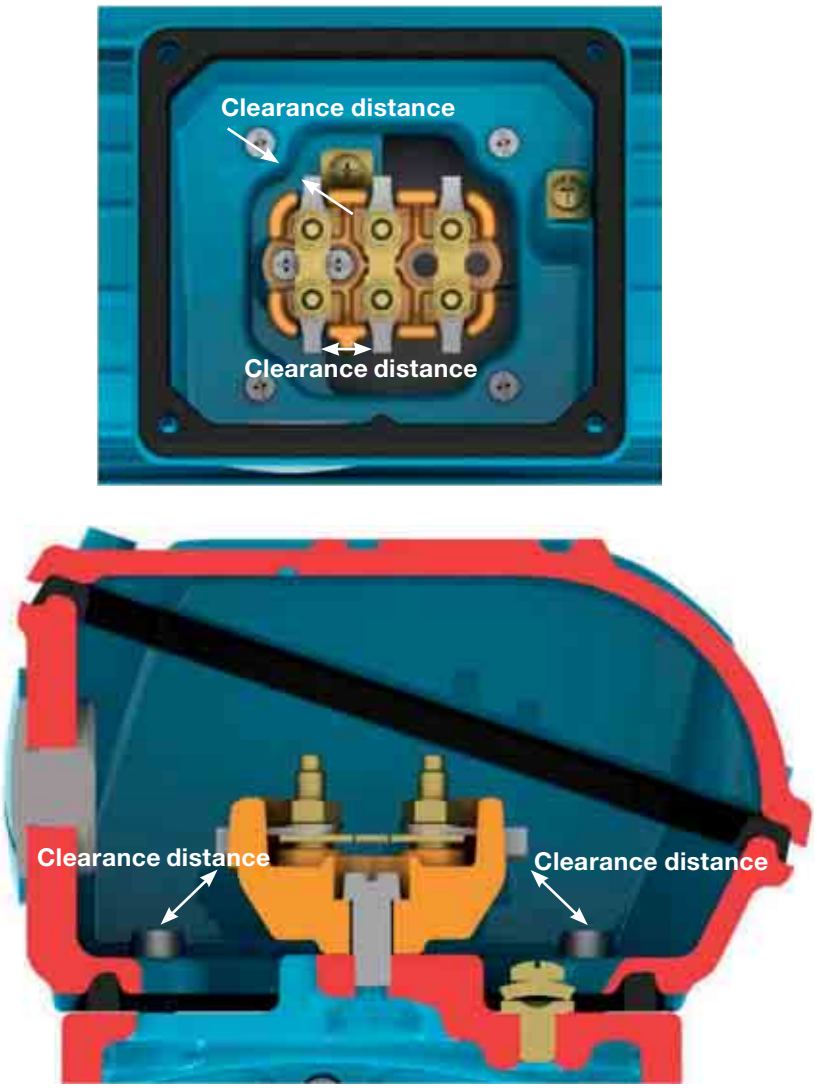


***Figure 6.13*** *- Clearance distance representation*

***Table 6.3*** *- Minimum clearance distance (mm) x supply voltage*

| Voltage | Minimum clearance distance (mm) |
|---|---|
| U ≤ 440 V | 4 |
| 440 < U ≤ 690 V | 5.5 |
| 690 < U ≤ 1000 V | 8 |
| 1000 < U ≤ 6900 V | 45 |
| 6900 < U ≤ 11000 V | 70 |
| 11000 < U ≤ 16500 V | 105 |

Even when the motor is off, dangerous voltages may be present inside the terminal box used for the space heater supply or winding energization when the winding is used as heating element.
Motor capacitors will hold a charge even after the power has been cut off. Do not touch the capacitors and/or motor terminals, before discharging the capacitors completely.

After the motor connection has been completed, ensure that no tool or foreign body has been left inside the terminal box.

Unused cable inlet holes in the terminal box must be properly closed to ensure the degree of protection indicated on the motor nameplate.
The cable inlets used for power supply and control must be fitted with components (for example, cable-glands and conduits) that meet the applicable standards and regulations in each country.

If the motor is fitted with accessories, such as brakes and forced cooling systems, these devices must be connected to the power supply according to the information provided on their nameplates and with special care as indicated above.

All protection devices, including overcurrent protection, must be set according to the rated machine conditions. These protection devices must protect the machine against short circuit, phase fault or locked rotor condition. The motor protection devices must be set according to the applicable standards.

Check the direction of rotation of the motor shaft. If there is no limitation for the use of unidirectional fans, the shaft rotation direction can be changed by reversing any two of the phase connections. For single-phase motor, check the connection diagram indicated on the motor nameplate.

## 6.10. CONNECTION OF THE THERMAL PROTECTION DEVICES

If the motor is supplied with temperature monitoring devices, such as, thermostat, thermistors, automatic thermal protectors, Pt-100 (RTD), etc., they must be connected to the corresponding control devices as specified on the accessory nameplates. The non-compliance with this procedure may void the product warranty and cause serious material damages.

Do not apply test voltage above 2.5 V on thermistors and current above 1 mA on RTDs (Pt-100) according to IEC 60751 standard.

Figure 6.14 and Figure 6.15 show the connection diagram of the bimetal thermal protector (thermostats) and thermistors, respectively.

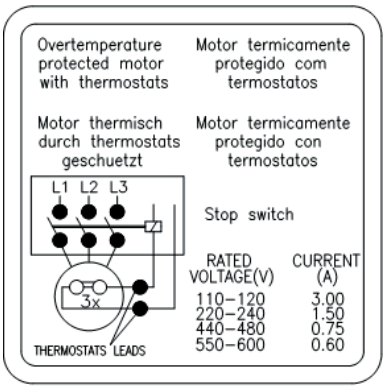


***Figure 6.14*** *- Connection of the bimetal thermal protectors (thermostats)*

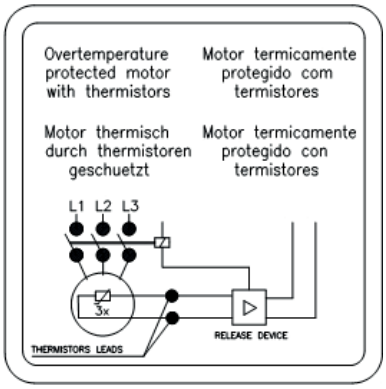


***Figure 6.15*** *- Thermistor connection*

The alarm temperature limits and thermal protection shutdowns can be defined according to the application; however these temperature limits can not exceed the values in Table 6.4.

***Table 6.4*** *- Maximum activation temperature of the thermal protections*

| Component | Insulation class | Maximum temperature of the protection setting (°C) | |
|---|---|---|---|
| | | Alarm | Tripping |
| Winding | B | - | 130 |
| | F | 130 | 155 |
| | H | 155 | 180 |
| Bearing | All | 110 | 120 |

***Notes****:*
*1) The number and type of the installed protection devices are stated on the accessory nameplate of the motor.*
*2) If the motor is supplied with calibrated resistance, (for example, Pt-100), the motor protection system must be set according to the operating temperatures indicated in Table 6.4.*

## 6.11. RESISTANCE TEMPERATURE DETECTORS (PT-100)

The thermocouples Pt-100 are made of materials, whose resistance depends on the temperature variation, intrinsic property of some materials (usually platinum, nickel or copper), calibrated resistance. Its operation is based on the principle that the electric resistance of a metallic conductor varies linearly with the temperature, thus allowing a continuous monitoring of the motor warm-up through the controller display ensuring a high level of precision and answer stability. These devices are widely used for measuring temperatures in various industry sectors.
In general these devices are used in installations where precise temperature control is required, for example, in installation for irregular or intermittent duty.
The same detector may be used for alarm and tripping purposes.

Table 6.5 and Figure 6.16 show the equivalence between the Pt-100 resistance and the temperature.

***Table 6.5*** *- Equivalence between the Pt-100 resistance and the temperature*

| °C | Ω | °C | Ω | °C | Ω | °C | Ω | °C | Ω |
|---|---|---|---|---|---|---|---|---|---|
| -29 | 88.617 | 17 | 106.627 | 63 | 124.390 | 109 | 141.908 | 155 | 159.180 |
| -28 | 89.011 | 18 | 107.016 | 64 | 124.774 | 110 | 142.286 | 156 | 159.553 |
| -27 | 89.405 | 19 | 107.404 | 65 | 125.157 | 111 | 142.664 | 157 | 159.926 |
| -26 | 89.799 | 20 | 107.793 | 66 | 125.540 | 112 | 143.042 | 158 | 160.298 |
| -25 | 90.193 | 21 | 108.181 | 67 | 125.923 | 113 | 143.420 | 159 | 160.671 |
| -24 | 90.587 | 22 | 108.570 | 68 | 126.306 | 114 | 143.797 | 160 | 161.043 |
| -23 | 90.980 | 23 | 108.958 | 69 | 126.689 | 115 | 144.175 | 161 | 161.415 |
| -22 | 91.374 | 24 | 109.346 | 70 | 127.072 | 116 | 144.552 | 162 | 161.787 |
| -21 | 91.767 | 25 | 109.734 | 71 | 127.454 | 117 | 144.930 | 163 | 162.159 |
| -20 | 92.160 | 26 | 110.122 | 72 | 127.837 | 118 | 145.307 | 164 | 162.531 |
| -19 | 92.553 | 27 | 110.509 | 73 | 128.219 | 119 | 145.684 | 165 | 162.903 |
| -18 | 92.946 | 28 | 110.897 | 74 | 128.602 | 120 | 146.061 | 166 | 163.274 |
| -17 | 93.339 | 29 | 111.284 | 75 | 128.984 | 121 | 146.438 | 167 | 163.646 |
| -16 | 93.732 | 30 | 111.672 | 76 | 129.366 | 122 | 146.814 | 168 | 164.017 |
| -15 | 94.125 | 31 | 112.059 | 77 | 129.748 | 123 | 147.191 | 169 | 164.388 |
| -14 | 94.517 | 32 | 112.446 | 78 | 130.130 | 124 | 147.567 | 170 | 164.760 |
| -13 | 94.910 | 33 | 112.833 | 79 | 130.511 | 125 | 147.944 | 171 | 165.131 |
| -12 | 95.302 | 34 | 113.220 | 80 | 130.893 | 126 | 148.320 | 172 | 165.501 |
| -11 | 95.694 | 35 | 113.607 | 81 | 131.274 | 127 | 148.696 | 173 | 165.872 |
| -10 | 96.086 | 36 | 113.994 | 82 | 131.656 | 128 | 149.072 | 174 | 166.243 |
| -9 | 96.478 | 37 | 114.380 | 83 | 132.037 | 129 | 149.448 | 175 | 166.613 |
| -8 | 96.870 | 38 | 114.767 | 84 | 132.418 | 130 | 149.824 | 176 | 166.984 |
| -7 | 97.262 | 39 | 115.153 | 85 | 132.799 | 131 | 150.199 | 177 | 167.354 |
| -6 | 97.653 | 40 | 115.539 | 86 | 133.180 | 132 | 150.575 | 178 | 167.724 |
| -5 | 98.045 | 41 | 115.925 | 87 | 133.561 | 133 | 150.950 | 179 | 168.095 |
| -4 | 98.436 | 42 | 116.311 | 88 | 133.941 | 134 | 151.326 | 180 | 168.465 |
| -3 | 98.827 | 43 | 116.697 | 89 | 134.322 | 135 | 151.701 | 181 | 168.834 |
| -2 | 99.218 | 44 | 117.083 | 90 | 134.702 | 136 | 152.076 | 182 | 169.204 |
| -1 | 99.609 | 45 | 117.469 | 91 | 135.083 | 137 | 152.451 | 183 | 169.574 |
| 0 | 100.000 | 46 | 117.854 | 92 | 135.463 | 138 | 152.826 | 184 | 169.943 |
| 1 | 100.391 | 47 | 118.240 | 93 | 135.843 | 139 | 153.200 | 185 | 170.313 |
| 2 | 100.781 | 48 | 118.625 | 94 | 136.223 | 140 | 153.575 | 186 | 170.682 |
| 3 | 101.172 | 49 | 119.010 | 95 | 136.603 | 141 | 153.950 | 187 | 171.051 |
| 4 | 101.562 | 50 | 119.395 | 96 | 136.982 | 142 | 154.324 | 188 | 171.420 |
| 5 | 101.953 | 51 | 119.780 | 97 | 137.362 | 143 | 154.698 | 189 | 171.789 |
| 6 | 102.343 | 52 | 120.165 | 98 | 137.741 | 144 | 155.072 | 190 | 172.158 |
| 7 | 102.733 | 53 | 120.550 | 99 | 138.121 | 145 | 155.446 | 191 | 172.527 |
| 8 | 103.123 | 54 | 120.934 | 100 | 138.500 | 146 | 155.820 | 192 | 172.895 |
| 9 | 103.513 | 55 | 121.319 | 101 | 138.879 | 147 | 156.194 | 193 | 173.264 |
| 10 | 103.902 | 56 | 121.703 | 102 | 139.258 | 148 | 156.568 | 194 | 173.632 |
| 11 | 104.292 | 57 | 122.087 | 103 | 139.637 | 149 | 156.941 | 195 | 174.000 |
| 12 | 104.681 | 58 | 122.471 | 104 | 140.016 | 150 | 157.315 | 196 | 174.368 |
| 13 | 105.071 | 59 | 122.855 | 105 | 140.395 | 151 | 157.688 | 197 | 174.736 |
| 14 | 105.460 | 60 | 123.239 | 106 | 140.773 | 152 | 158.061 | 198 | 175.104 |
| 15 | 105.849 | 61 | 123.623 | 107 | 141.152 | 153 | 158.435 | 199 | 175.472 |
| 16 | 106.238 | 62 | 124.007 | 108 | 141.530 | 154 | 158.808 | 200 | 175.840 |

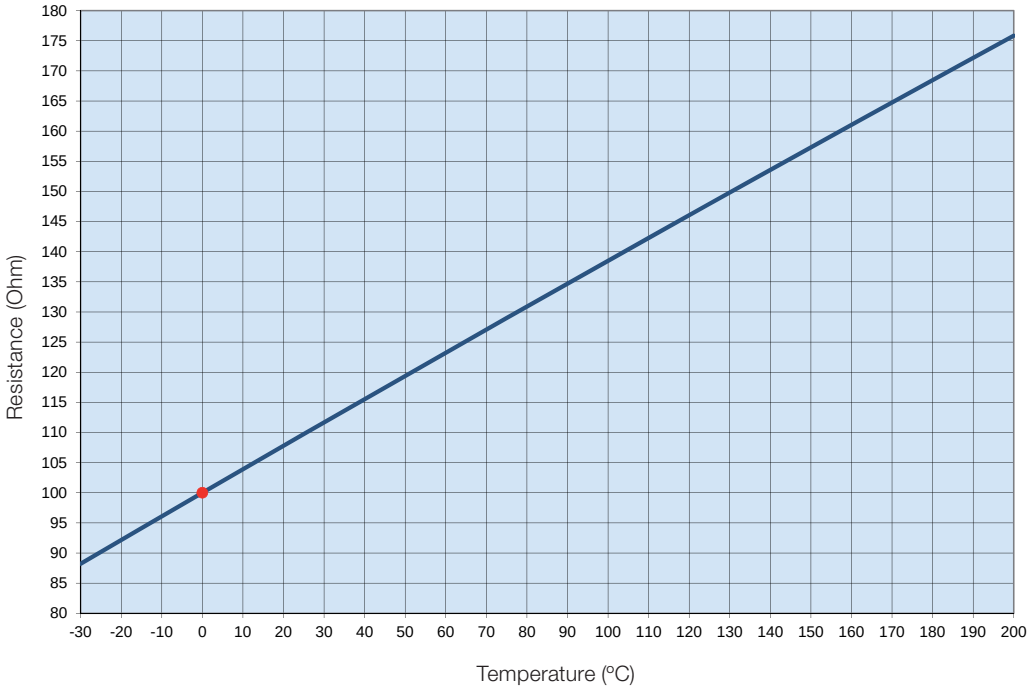


***Figure 6.16*** *- Ohmic resistance of the Pt-100 x temperature*

## 6.12. CONNECTION OF THE SPACE HEATERS

Before switching ON the space heaters, check if the space heaters connection have been made according to the connection diagram shown on the space heater nameplate. For motors supplied with dual voltage space heaters (110-127/220-240 V), see Figure 6.17.

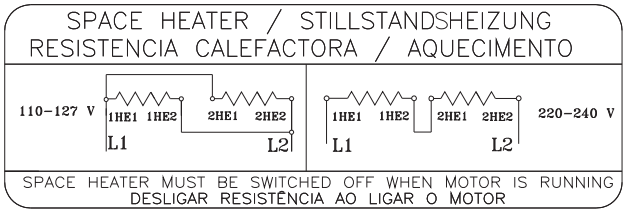


***Figure 6.17*** *- Dual voltage space heater connection*

The space heaters should never be energized when the motor is in operation.

ENGLISH

Resistência (Ohm)

Temperatura (°C)

## 6.13. STARTING METHODS

Whenever possible, the motor starting must be Direct On Line (DOL) at rated voltage. This is the most simple and feasible starting method. However, it must only be applied when the starting current does not affect the power supply. Please consider the local electric utility regulations when installing a motor.
High inrush current may result in:
a) high voltage drop in the power supply line creating unacceptable line disturbance on the distribution system;
b) requiring oversized protection system (cables and contactor) increasing the installation costs.

If DOL starting is not allowed due to the reasons mentioned above, an indirect starting method compatible with the load and motor voltage to reduce the starting current may be used.
If reduced voltage starters are used for starting, the motor starting torque will also be reduced.

Table 6.6 shows the possible indirect starting methods that can be used depending on the number of the motor leads.

***Table 6.6*** *- Starting method x number of motor leads*

| Number of leads | Possible starting methods |
|---|---|
| 3 leads | Autotransformer<br>Soft-starter |
| 6 leads | Star-Delta<br>Autotransformer<br>Soft-starter |
| 9 leads | Series/Parallel<br>Part winding<br>Autotransformer<br>Soft-starter |
| 12 leads | Star-Delta<br>Series/Parallel<br>Part winding<br>Autotransformer<br>Soft-starter |

Table 6.7 shows examples of possible indirect starting methods to be used according to the voltage indicated on the motor nameplate and the power supply voltage.

***Table 6.7*** *- Starting methods x voltage*

| Nameplate voltage | Operating voltage | Star-delta | Autotransformer starting | Starting by series/ parallel switch | Part-winding starting | Starting by Soft-starter |
|---|---|---|---|---|---|---|
| 220/380 V | 220 V<br>380 V | YES<br>NO | YES<br>YES | NO<br>NO | NO<br>NO | YES<br>YES |
| 220/440 V | 220 V<br>440 V | NO<br>NO | YES<br>YES | YES<br>NO | YES<br>NO | YES<br>YES |
| 230/460 V | 230 V<br>460 V | NO<br>NO | YES<br>YES | YES<br>NO | YES<br>NO | YES<br>YES |
| 380/660 V | 380 V | YES | YES | NO | NO | YES |
| 220/380/440 V | 220 V<br>380 V<br>440 V | YES<br>NO<br>YES | YES<br>YES<br>YES | YES<br>YES<br>NO | YES<br>YES<br>NO | YES<br>YES<br>YES |

The WQuattro line motors must be started direct on-line (DOL) or driven by a frequency inverter in scalar mode.

## 6.14. MOTORS DRIVEN BY FREQUENCY INVERTER

The operation with frequency inverter must be stated in the Purchase Order since this drive type may require some changes of the motor design.

Wmagnet Motors must only be driven by WEG frequency inverter.

The frequency inverter used to drive motors up to 690 V must be fitted with Pulse With Modulation (PWM) with vector control.

When a motor is driven by a frequency inverter at lower frequencies than the rated frequency, you must reduce the motor torque to prevent motor overheating. The torque reduction (derating torque) can be found in the item 6.4 of the "Technical Guidelines for Induction Motors driven by PWM Frequency inverters" available on the site www.weg.net.

If the motor is operated above the rated frequency, please note:
- That the motor must be operated at constant output;
- That the motor can supply max. 95% of its rated output;
- Do not exceed the maximum speed and please consider:
  - max. operating frequency stated on the additional nameplate;
  - mechanical speed limitation of the motor.

Information on the selection of the power cables between the frequency inverter and the motor can be found in the item 6.4 of the "Technical Guidelines for Induction Motors driven by PWM Frequency inverters" available at www.weg.net.

### 6.14.1. Use of dV/dt filter

#### 6.14.1.1. Motor with enameled round wire

Motors designed for rated voltages up to 690 V, when driven by frequency inverter, do not require the use of dV/dT filters, provided that following criteria are considered.

| Criteria for the selection of motors with round enameled wire when driven by frequency inverter [1] | | | | |
|---|---|---|---|---|
| **Motor rated votage [2]** | **Peak voltage at the motor terminals (max)** | **dV/dt inverter output (max)** | **Inverter Rise Time [3] (min.)** | **MTBP [3] Time between pulses (min)** |
| Vnom ≤ 460 V | ≤ 1600 V | ≤ 5200 V/µs | ≥ 0,1 µs | ≥ 6 µs |
| 460 < Vnom ≤ 575 V | ≤ 1800 V | ≤ 6500 V/µs | | |
| 575 < Vnom ≤ 690 V [4] | ≤ 1600 V | ≤ 5200 V/µs | | |
| 575 < Vnom ≤ 690 V [5] | ≤ 2200 V | ≤ 7800 V/µs | | |

***Notes:***
*1. For the application of motors with round enameled wires designed for 690 < Vnom ≤ 1100 V, please contact WEG.*
*2. For the application of dual voltage motors, example 380/660 V, consider the lower voltage (380 V).*
*3. Information supplied by the inverter manufacturer.*
*4. When not stated in the Purchase Order that the motor will be driven by frequency inverter.*
*5. When stated in the Purchase Order that the motor will be driven by frequency inverter.*

#### 6.14.1.2. Motor with prewound coils

Motors with prewound coils (medium and high voltage motors regardless of frame sizes, and low voltage motors from IEC 500 / NEMA 800 frame on), designed for the use with frequency inverters, do not require the use of filters, provided they comply with the criteria in Table 6.8.

***Table 6.8*** *- Criteria to be considered when using motor with prewound coils to be drive by frequency inverters*

| **Motor rated voltage** | **Type of modulation** | **Turn to turn insulation (phase-phase)** | | **Phase-ground insulation** | |
|---|---|---|---|---|---|
| | | **Peak voltage at the motor terminals** | **dV/dt at the motor terminals** | **Peak voltage at the motor terminals** | **dV/dt at the motor terminals** |
| 690 < Vnom ≤ 4160 V | Sinusoidal | ≤ 5900 V | ≤ 500 V/µs | ≤ 3400 V | ≤ 500 V/µs |
| | PWM | ≤ 9300 V | ≤ 2700 V/µs | ≤ 5400 V | ≤ 2700 V/µs |
| 4160 < Vnom ≤ 6600 V | Sinusoidal | ≤ 9300 V | ≤ 500 V/µs | ≤ 5400 V | ≤ 500 V/µs |
| | PWM | ≤ 14000 V | ≤ 1500 V/µs | ≤ 8000 V | ≤ 1500 V/µs |

### 6.14.2. Bearing insulation

Only the motors in IEC frame size 400 (NEMA 680) and larger are supplied, as standard, with insulated bearing. If motor must be driven by frequency inverter, insulate the bearing according to Table 6.9.

***Table 6.9*** *- Recommendation on the bearing insulation for inverter driven motors*

| Frame size | Recommendation |
|---|---|
| IEC 315 and 355<br>NEMA 445/7 to L5810/11 | ■ Insulated bearing/end shield<br>■ Grounding between shaft and frame by grounding brush |
| IEC 400 and larger<br>NEMA 680 and larger | ■ Insulated NDE bearing<br>■ Grounding between shaft and frame by grounding brush |



When motors are supplied with shaft grounding system, monitor the grounding brush constantly during its operation and, when it reaches the end of its useful life, it must be replaced by another brush with the same specification.

### 6.14.3. Switching frequency

The minimum inverter switching frequency must not be lower than 2.5 kHz and should not exceed 5 kHz.



The non-compliance with the criteria and recommendations indicated in this manual may void the product warranty.

### 6.14.4. Mechanical speed limitation

Table 6.10 shows the maximum speeds allowed for motors driven by frequency inverter.

***Table 6.10*** *- Maximum motor speed (in rpm)*

| Frame size | | DE-bearing | Maximum speed for standard motors |
|---|---|---|---|
| IEC | NEMA | | |
| 63-90 | 143/5 | 6201<br>6202<br>6203<br>6204<br>6205 | 10400 |
| 100 | - | 6206 | 8800 |
| 112 | 182/4 | 6207 | 7600 |
| | | 6307 | 6800 |
| 132 | 213/5 | 6308 | 6000 |
| 160 | 254/6 | 6309 | 5300 |
| 180 | 284/6 | 6311 | 4400 |
| 200 | 324/6 | 6312 | 4200 |
| 225-630 | 364/5-9610 | 6314 | 3600 |
| | | 6315 | 3600 |
| | | 6316 | 3200 |
| | | 6319 | 3000 |
| | | 6218 | 3600 |
| | | 6220 | 3600 |
| | | 6320 | 2200 |
| | | 6322 | 1900 |
| | | 6324 | 1800 |
| | | 6328 | 1800 |
| | | 6330 | 1800 |
| | | 6224 | 1800 |
| | | 6228 | 1800 |

***Note:***
*To select the maximum allowed motor speed, consider the motor torque derating curve.*

For more information on the application of frequency inverters, contact WEG or check the “Technical Guidelines for Induction Motors driven by PWM Frequency inverters” available at www.weg.net.

# 7. COMMISSIONING

## 7.1. INITIAL START-UP

After finishing the installation procedures and before starting the motor for the first time or after a long period without operation, the following items must be checked:

- If the nameplate data (voltage, current, connection diagram, degree of protection, cooling system, service factor, etc.) meet the application requirements;
- If the machine set (motor + driven machine) has been mounted and aligned correctly;
- If the motor driving system ensures that the motor speed does not exceed the max. allowed speed indicated in Table 6.10;
- Measure the winding insulation resistance, making sure it complies with the specified values in item 5.4;
- Check the motor rotation direction;
- Inspect the motor terminal box for damage and ensure that it is clean and dry and all contacts are rust-free, the seals are in perfect operating conditions and all unused threaded holes are properly closed thus ensuring the degree of protection indicated on the motor nameplate;
- Check if the motor wiring connections, including grounding and auxiliary equipment connection, have been carried out properly and are in accordance with the recommendations in item 6.9;
- Check the operating conditions of the installed auxiliary devices (brake, encoder, thermal protection device, forced cooling system, etc.);
- Check bearing operating conditions. If the motors are stored and/or installed for more than two years without running, it is recommended to change the bearings, or to remove, wash, inspect and relubricate them before the motor is started. If the motor is stored and/or installed according to the recommendations described in item 5.3, lubricate the bearings as described in item 8.2. For the bearing condition evaluation, it is recommended to use of the vibration analysis techniques: Envelope Analysis or Demodulation Analysis.
- For roller bearing motors with oil lubrication, ensure:
  - The oil level should be in the center of the sight glass (see Figure 8.1 and 8.2);
  - That if the motor is stored for a period equal or longer than the oil change interval, the oil must be changed before starting the motor.
- When motors are fitted with sleeve bearings, ensure:
  - Correct oil level for the sleeve bearing. The oil level should be in the center of the sight glass (see Figure 8.3);
  - That the motor is not started or operated with axial or radial loads;
  - That if the motor is stored for a period equal or longer than the oil change interval, the oil must be changed before starting the motor.
- Inspect the capacitor operating condition, if any. If motors are installed for more than two years, but were never commissioned, it is recommended to change the start capacitors since they lose their operating characteristics;
- Ensure that the air inlet and outlet opening are not blocked. The minimum clearance to the nearest wall (L) should be at least ¼ of the fan cover diameter (D), see Figure 7.1. The intake air temperature must be at ambient temperature.




***Figure 7.1**- Minimum clearance to the wall*

Please consider the minimum distances shown in the Table 7.1 as reference value;

***Table 7.1*** *- Minimum distance between the fan cover and wall*

| Frame size | | Distance between the fan cover and the wall (L) | |
|---|---|---|---|
| **IEC** | **NEMA** | **mm** | **inches** |
| 63 | - | 25 | 0.96 |
| 71 | - | 26 | 1.02 |
| 80 | - | 30 | 1.18 |
| 90 | 143/5 | 33 | 1.30 |
| 100 | - | 36 | 1.43 |
| 112 | 182/4 | 41 | 1.61 |
| 132 | 213/5 | 50 | 1.98 |
| 160 | 254/6 | 65 | 2.56 |
| 180 | 284/6 | 68 | 2.66 |
| 200 | 324/6 | 78 | 3.08 |
| 225<br>250 | 364/5<br>404/5 | 85 | 3.35 |
| 280 | 444/5<br>445/7<br>447/9 | 108 | 4.23 |
| 315 | L447/9<br>504/5<br>5006/7/8<br>5009/10/11 | 122 | 4.80 |
| 355 | 586/7<br>588/9<br>5807/8/9<br>5810/11/12 | 136 | 5.35 |
| 400 | 6806/7/8<br>6809/10/11 | 147 | 5.79 |
| 450 | 7006/10 | 159 | 6.26 |
| 500 | 8006/10 | 171 | 6.73 |
| 560 | 8806/10 | 185 | 7.28 |
| 630 | 9606/10 | 200 | 7.87 |

- Ensure correct water flow rate and water temperature when water cooled motors are used. See item 7.2;
- Ensure that all rotating parts, such as pulleys, couplings, external fans, shaft, etc. are protected against accidental contact.

Other tests and inspections not included in the manual may be required, depending on the specific installation, application and/or motor characteristics.

After all previous inspections have been carried out, proceed as follows to start the motor:

- Start the motor on no-load (if possible) and check the motor direction of rotation. Check for the presence of any abnormal noise, vibration or other abnormal operating conditions;
- Ensure the motor starts smoothly. If any abnormal operating condition is noticed, switch off the motor, check the assembly system and connections before the motor is started again;
- If excessive vibrations are noticed, check if the motor mounting bolts are well tightened or if the vibrations are not generated and transmitted from adjacent installed equipment. Check the motor vibration periodically and ensure that the vibration limits are as specified in item 7.2.1;
- Start the motor at rated load during a short time and compare the operating current with the rated current indicated on the nameplate;
- Continue to measure the following motor variables until thermal equilibrium is reached: current, voltage, bearing and motor frame temperature, vibration and noise levels;
- Record the measured current and voltage values on the Installation Report for future comparisons.

As induction motors have high inrush currents during start-up, the acceleration of high inertia load requires an extended starting time to reach full speed resulting in fast motor temperature rise. Successive starts within short intervals will result in winding temperature increases and can lead to physical insulation damage reducing the useful life of the insulation system. If the duty cycle S1 / CONT. is specified on the motor nameplate, this means that the motor has been designed for:

- Two successive starts: first start from cold condition, i. e., the motor windings are at room temperature and the second start immediately after the motor stops;
- One start from hot condition, i. e., the motor windings are at rated temperature.

The Troubleshooting Chart in section 10 provides a basic list of unusual cases that may occur during motor operation with the respective corrective actions.

## 7.2. OPERATING CONDITIONS

Unless otherwise stated in the Purchase Order, electric motors are designed and built to be operated at altitudes up to 1000 meters above sea level and in a temperature range from -20 °C to +40 °C. Any deviation from the normal condition of motor operation must be stated on the motor nameplate. Some components must be changed if the ambient temperature is different from the specified one. Please contact WEG to check the required special features.

For operating temperatures and altitudes differing from those above, the factors indicated in Table 7.2 must be applied to the nominal motor power rating in order to determine the derated available output (Pmax = Pnom x correction factor).

***Table 7.2 -*** *Correction factors for altitude and ambient temperature*

| T (°C) | Altitude (m) | | | | | | | | |
|---|---|---|---|---|---|---|---|---|---|
| | 1000 | 1500 | 2000 | 2500 | 3000 | 3500 | 4000 | 4500 | 5000 |
| 10 | | | | | | | 0.97 | 0.92 | 0.88 |
| 15 | | | | | | 0.98 | 0.94 | 0.90 | 0.86 |
| 20 | | | | | 1.00 | 0.95 | 0.91 | 0.87 | 0.83 |
| 25 | | | | 1.00 | 0.95 | 0.93 | 0.89 | 0.85 | 0.81 |
| 30 | | | 1.00 | 0.96 | 0.92 | 0.90 | 0.86 | 0.82 | 0.78 |
| 35 | | 1.00 | 0.95 | 0.93 | 0.90 | 0.88 | 0.84 | 0.80 | 0.75 |
| 40 | 1.00 | 0.97 | 0.94 | 0.90 | 0.86 | 0.82 | 0.80 | 0.76 | 0.71 |
| 45 | 0.95 | 0.92 | 0.90 | 0.88 | 0.85 | 0.81 | 0.78 | 0.74 | 0.69 |
| 50 | 0.92 | 0.90 | 0.87 | 0.85 | 0.82 | 0.80 | 0.77 | 0.72 | 0.67 |
| 55 | 0.88 | 0.85 | 0.83 | 0.81 | 0.78 | 0.76 | 0.73 | 0.70 | 0.65 |
| 60 | 0.83 | 0.82 | 0.80 | 0.77 | 0.75 | 0.73 | 0.70 | 0.67 | 0.62 |
| 65 | 0.79 | 0.76 | 0.74 | 0.72 | 0.70 | 0.68 | 0.66 | 0.62 | 0.58 |
| 70 | 0.74 | 0.71 | 0.69 | 0.67 | 0.66 | 0.64 | 0.62 | 0.58 | 0.53 |
| 75 | 0.70 | 0.68 | 0.66 | 0.64 | 0.62 | 0.60 | 0.58 | 0.53 | 0.49 |
| 80 | 0.65 | 0.64 | 0.62 | 0.60 | 0.58 | 0.56 | 0.55 | 0.48 | 0.44 |

Motors installed inside enclosures (cubicles) must be ensured an air renewal rate in the order of one cubic meter per second for each 100 kW installed power or fraction of installed power. Totally Enclosed Air Over motors - TEAO (fan and exhaust / smoke extraction) are supplied without cooling fan and the manufacturer of the driven machine is responsible for sufficient motor cooling. If no minimum required air speed between motor fins is indicated on the motor nameplate, ensure the air speed indicated in the table 7.3 is provided. The values shown in Table 7.3 are valid for 60 Hz motors. To obtain the minimum air speed for 50 Hz motors, multiply the values in the table by 0.83.

***Table 7.3*** *- Minimum required air speed between motor fins (metres/second)*

| Frame | | Poles | | | |
|---|---|---|---|---|---|
| IEC | NEMA | 2 | 4 | 6 | 8 |
| 63 to 90 | 143/5 | 13 | 7 | 5 | 4 |
| 100 to 132 | 182/4 to 213/5 | 18 | 12 | 8 | 6 |
| 160 to 200 | 254/6 to 324/6 | 20 | 15 | 10 | 7 |
| 225 to 280 | 364/5 to 444/5 | 22 | 20 | 15 | 12 |
| 315 to 450 | 445/7 to 7008/9 | 25 | 25 | 20 | 15 |

The voltage and frequency variations may affect the performance characteristics and the electromagnetic compatibility of the motor. The power supply variations should not exceed the values specified in the applicable standards. Examples:

- ABNT NBR 17094 - Parts 1 and 2. The motor has been designed to supply the rated torque for a combined variation in voltage and frequency:
  - Zone A: ±5% of the rated voltage and ±2% of the rated frequency;
  - Zone B: ±10% of the rated voltage and +3% -5% of the rated frequency.

When operated continuously in Zone A or B, the motor may show performance variations and the operating temperature may increase considerably. These performance variations will be higher in Zone B. Thus it is not recommended to operate the motor in Zone B during extended periods.

- IEC 60034-1. The motor has been designed to supply the rated torque for combined variation in voltage and frequency:
  - Zone A: ±5% of the rated voltage and ±2% of the rated frequency;
  - Zone B: ±10% of the rated voltage and +3% -5% of the rated frequency.

When operated continuously in Zone A or B, the motor may show performance variations and the operating temperature may increase considerably. These performance variations will be higher in Zone B. Thus it is not recommended to operate the motor in Zone B during extended periods. For multivoltage motors (example 380-415/660 V), a ±5% voltage variation from the rated voltage is allowed.

- NEMA MG 1 Part 12. The motor has been designed to be operated in one of the following variations:
  - ±10% of the rated voltage, with rated frequency;
  - ±5% of the rated frequency, with rated voltage;
  - A combined variation in voltage and frequency of ±10%, provided the frequency variation does not exceed ±5%.

If the motor is cooled by ambient air, clean the air inlet and outlet openings and cooling fins at regular intervals to ensure a free airflow over the frame surface. The hot air should never be returned to the motor. The cooling air must be at room temperature limited to the temperature range indicated on the motor nameplate (if no room temperature is specified, please consider a temperature range between -20 °C and +40 °C).

Table 7.4 shows the minimum required water flow for water cooled motors considering the different frame sizes and the maximum allowed temperature rise of the cooling water after circulating through the motor. The inlet water temperature should not exceed 40 °C.

***Table 7.4** - Minimum required water flow and the maximum allowed temperature rise of the cooling water after circulating through the motor*

| Frame size | | Flow rate (litres/minute) | Maximum allowed water temperature rise (°C) |
|---|---|---|---|
| IEC | NEMA | | |
| 180 | 284/6 | 12 | 5 |
| 200 | 324/6 | 12 | 5 |
| 225 | 364/5 | 12 | 5 |
| 250 | 404/5 | 12 | 5 |
| 280 | 444/5<br>445/7<br>447/9 | 15 | 6 |
| 315 | 504/5 | 16 | 6 |
| 355 | 586/7<br>588/9 | 25 | 6 |

Motors fitted with oil mist lubrication systems can be operated continuously for a maximum of one hour after the failure of the oil pumping system.

Considering the sun's heat increases the operating temperature, externally mounted motors should always be protected from direct sunlight exposure.

Each and every deviation from the normal operating condition (tripping of the thermal protection, noise and vibration level increase, temperature and current rise) should be investigated and corrected by WEG Authorized Service Centers.

Motors fitted with cylindrical roller bearings require a minimum radial load to ensure a normal operation. For information regarding the radial preload, please contact WEG.

### 7.2.1.Limits of vibration

The vibration severity is the maximum vibration value measured at all positions and in all directions as recommended in the standard IEC 60034-14. Table 7.5 specifies the limits of the maximum vibrations magnitudes according to standard IEC 60034-14 for shaft heights IEC 56 to 400, for vibrations grades A and B. The vibration severity limits in Table 7.5 are given as RMS values (Root Mean Square values or effective values) of the vibration speed in mm/s measured in free suspension condition.

***Table 7.5** - Recommended limits for the vibration severity according to standard IEC 60034-14*

| Shaft height [mm] | 56 ≤ H ≤ 132 | 132 ≤ H ≤ 280 | H > 280 |
|---|---|---|---|
| Vibration grade | Vibration severity on elastic base [mm/s RMS] | | |
| A | 1.6 | 2.2 | 2.8 |
| B | 0.7 | 1.1 | 1.8 |

***Notes**:*

*1 - The values in Table 7.5 are valid for measurements carried out with decoupled machines (without load) operated at rated voltage and frequency.*

*2 - The values in Table 7.5 are valid regardless of the direction of rotation of the machine.*

*3 - The values in Table 7.5 are not applicable to single-phase motors, three-phase motors powered by a single-phase system or to machines mounted in situ or coupled with inertia flywheels or to loads.*

According to NEMA MG 1, the allowed vibration limit for standard motors is 0.15 in/s (peak vibration in in/s).

***Note**:*

*For the load operation condition, the use of the standard ISO 10816-3 is recommended for evaluating the motor vibration limits. In the load condition the motor vibration will be influenced by several factors, such as, type of the coupled load, condition of the motor fixation, alignment condition under load, structure or base vibration due to other equipments, etc..*

# 8. MAINTENANCE

The purpose of the maintenance is to extend the useful life of the equipment. The non-compliance with one of these previous items can cause unexpected machine failures.

If motors with cylindrical roller or angular contact bearings are to be transported during the maintenance procedures, the shaft locking device must always be fitted. All HGF motors, regardless of the bearing type, must always be transported with the shaft locking device fitted.

All repairs, disassembly and assembly related services must be carried out only by qualified and well-trained personnel by using proper tools and techniques. Make sure that the machine has stopped and it is disconnected from the power supply, including the accessory devices (space heater, brake, etc.), before any servicing is undertaken.
The company does not assume any responsibility or liability for repair services or maintenance operations executed by non-authorized Service Centers or by non qualified service personnel. The company shall have no obligation or liability whatsoever to the buyer for any indirect, special, consequential or incidental loss or damage caused or arising from the company's proven negligence

## 8.1. GENERAL INSPECTION

The inspection intervals depend on the motor type, application and installation conditions. Proceed as follows during inspection:

- Visually inspect the motor and coupling. Check if abnormal noises, vibrations, excessive heating, wear signs, misalignment or damaged parts are noticed. Replace the damaged parts as required;
- Measure the insulation resistance according to the item 5.4;
- Clean the motor enclosure. Remove oil spills and dust accumulation from the motor frame surface to ensure a better heat transfer to the surrounding ambient;
- Check cooling fan condition and clean the air inlet & outlet openings to ensure a free air flow over the motor;
- Investigate the actual condition of the seals and replace them, if required;
- Drain the condensed water from inside the motor. After draining, reinstall the drain plugs to ensure the degree of protection as indicated on the motor nameplate. The motor must always be positioned so the drain hole is at the lowest position (see item 6);
- Check the connections of the power supply cables, ensuring the correct clearance distance between live and grounded parts, as specified in Table 6.3;
- Check if the tightening torque of the bolted connections and mounting bolts meets the tightening torque specified in Table 8.11;
- Check the status of the cable passages, the cable gland seals and the seals inside the terminal box and replace them, if required;
- Check the bearing operating conditions. Check for the presence of any abnormal noise, vibration or other abnormal operating conditions, like motor temperature rise. Check the oil level, the lube oil condition and compare the workings hours with the informed life time;
- Record and file all changes performed on the motor.



Do not reuse damaged or worn parts. Damaged or worn parts must be replaced by parts supplied by the manufacturer and must be installed as if they were the original parts.

## 8.2. LUBRICATION

Proper lubrication plays a vital role in the motor performance. Only use the grease or oil types, amounts and lubrication intervals recommended for the bearings. This information is available on the motor nameplate and the lubrication procedures must be carried out according to the type of lubricant (oil or grease).
When the motor is fitted with thermal protection devices for bearing temperature control, consider the operating temperature limits shown in Table 6.4.
The maximum operating temperature of motors used in special applications may differ from those shown in Table 6.4. The grease and oil disposal should be made in compliance with applicable laws in each country.



Please contact WEG when motors are to be installed in special environments or used for special applications.

### 8.2.1. Grease lubricated rolling bearings

Excess grease causes bearing overheating, resulting in bearing failure.

The lubrication intervals specified in Table 8.1, Table 8.2, Table 8.3, Table 8.4, Table 8.5, Table 8.6, Table 8.7 and Table 8.8 consider an absolute temperature on the bearing of 70 °C (up to frame size IEC 200 / NEMA 324/6) and 85 °C (for frame size IEC 225 / NEMA 364/5 and above), the motor running at rated speed, a motor mounted in horizontal position and greased with Mobil Polyrex EM grease. Any variation of the parameters listed above must be evaluated.

***Table 8.1*** *- Lubrication intervals for ball bearings*

| Frame | | Poles | Bearing designation | Amount of grease (g) | Lubrication intervals (hours) | | | | | |
|---|---|---|---|---|---|---|---|---|---|---|
| | | | | | ODP (Open Drip Proof) | | W21 TEFC (Totally Enclosed Fan Cooled) | | W22 TEFC (Totally Enclosed Fan Cooled) | |
| IEC | NEMA | | | | 50 Hz | 60 Hz | 50 Hz | 60 Hz | 50 Hz | 60 Hz |
| 90 | 143/5 | 2 | 6205 | 4 | - | - | 20000 | 20000 | 25000 | 25000 |
| | | 4 | | | | | | | | |
| | | 6 | | | | | | | | |
| | | 8 | | | | | | | | |
| 100 | - | 2 | 6206 | 5 | - | - | 20000 | 20000 | 25000 | 25000 |
| | | 4 | | | | | | | | |
| | | 6 | | | | | | | | |
| | | 8 | | | | | | | | |
| 112 | 182/4 | 2 | 6207/ 6307 | 9 | - | - | 20000 | 20000 | 25000 | 25000 |
| | | 4 | | | | | | | | |
| | | 6 | | | | | | | | |
| | | 8 | | | | | | | | |
| 132 | 213/5 | 2 | 6308 | 11 | - | - | 20000 | 18400 | 25000 | 23200 |
| | | 4 | | | | | 20000 | 20000 | 25000 | 25000 |
| | | 6 | | | | | | | | |
| | | 8 | | | | | | | | |
| 160 | 254/6 | 2 | 6309 | 13 | 20000 | 20000 | 18100 | 15700 | 22000 | 20000 |
| | | 4 | | | | | 20000 | 20000 | 25000 | 25000 |
| | | 6 | | | | | | | | |
| | | 8 | | | | | | | | |
| 180 | 284/6 | 2 | 6311 | 18 | 20000 | 20000 | 13700 | 11500 | 17000 | 14000 |
| | | 4 | | | | | 20000 | 20000 | 25000 | 25000 |
| | | 6 | | | | | | | | |
| | | 8 | | | | | | | | |
| 200 | 324/6 | 2 | 6312 | 21 | 20000 | 20000 | 11900 | 9800 | 15000 | 12000 |
| | | 4 | | | | | 20000 | 20000 | 25000 | 25000 |
| | | 6 | | | | | | | | |
| | | 8 | | | | | | | | |
| 225 250 280 315 355 | 364/5 404/5 444/5 445/7 447/9 L447/9 504/5 5008 5010/11 586/7 588/9 | 2 | 6314 | 27 | 18000 | 14400 | 4500 | 3600 | 5000 | 4000 |
| | | 4 | | | 20000 | 20000 | 11600 | 9700 | 14000 | 12000 |
| | | 6 | | | | | 16400 | 14200 | 20000 | 17000 |
| | | 8 | | | | | 19700 | 17300 | 24000 | 20000 |
| | | 2 | 6316 | 34 | 14000 | *Upon request | 3500 | *Upon request | 4000 | *Upon request |
| | | 4 | | | 20000 | 20000 | 10400 | 8500 | 13000 | 10000 |
| | | 6 | | | | | 14900 | 12800 | 18000 | 16000 |
| | | 8 | | | | | 18700 | 15900 | 20000 | 20000 |
| | | 2 | 6319 | 45 | *Upon request | | | | | |
| | | 4 | | | 20000 | 20000 | 9000 | 7000 | 11000 | 8000 |
| | | 6 | | | | | 13000 | 11000 | 16000 | 13000 |
| | | 8 | | | | | 17400 | 14000 | 20000 | 17000 |
| | | 4 | 6322 | 60 | 20000 | 20000 | 7200 | 5100 | 9000 | 6000 |
| | | 6 | | | | | 10800 | 9200 | 13000 | 11000 |
| | | 8 | | | | | 15100 | 11800 | 19000 | 14000 |

*Table 8.2* - *Lubrication intervals for cylindrical roller bearings*

| Frame | | Poles | Bearing designation | Amount of grease (g) | LUBRICATION INTERVALS (hours) | | | | | |
|---|---|---|---|---|---|---|---|---|---|---|
| | | | | | ODP (Open Drip Proof) | | W21 TEFC (Totally Enclosed Fan Cooled) | | W22 TEFC (Totally Enclosed Fan Cooled) | |
| IEC | NEMA | | | | 50 Hz | 60 Hz | 50 Hz | 60 Hz | 50 Hz | 60 Hz |
| 160 | 254/6 | 2 | NU309 | 13 | 20000 | 19600 | 13300 | 9800 | 16000 | 12000 |
| | | 4 | | | | 20000 | 20000 | 20000 | 25000 | 25000 |
| | | 6 | | | | | | | | |
| | | 8 | | | | | | | | |
| 180 | 284/6 | 2 | NU311 | 18 | 18400 | 12800 | 9200 | 6400 | 11000 | 8000 |
| | | 4 | | | 20000 | 20000 | 20000 | 19100 | 25000 | 25000 |
| | | 6 | | | | | | 20000 | | |
| | | 8 | | | | | | | | |
| 200 | 324/6 | 2 | NU312 | 21 | 15200 | 10200 | 7600 | 5100 | 9000 | 6000 |
| | | 4 | | | 20000 | 20000 | 20000 | 17200 | 25000 | 21000 |
| | | 6 | | | | | | 20000 | | 25000 |
| | | 8 | | | | | | | | |
| 225<br>250<br>280<br>315<br>355 | 364/5<br>404/5<br>444/5<br>445/7<br>447/9<br>L447/9<br>504/5<br>5008<br>5010/11<br>586/7<br>588/9 | 4 | NU314 | 27 | 17800 | 14200 | 8900 | 7100 | 11000 | 9000 |
| | | 6 | | | 20000 | 20000 | 13100 | 11000 | 16000 | 13000 |
| | | 8 | | | | | 16900 | 15100 | 20000 | 19000 |
| | | 4 | NU316 | 34 | 15200 | 12000 | 7600 | 6000 | 9000 | 7000 |
| | | 6 | | | 20000 | 19000 | 11600 | 9500 | 14000 | 12000 |
| | | 8 | | | | 20000 | 15500 | 13800 | 19000 | 17000 |
| | | 4 | NU319 | 45 | 12000 | 9400 | 6000 | 4700 | 7000 | 5000 |
| | | 6 | | | 19600 | 15200 | 9800 | 7600 | 12000 | 9000 |
| | | 8 | | | 20000 | 20000 | 13700 | 12200 | 17000 | 15000 |
| | | 4 | NU322 | 60 | 8800 | 6600 | 4400 | 3300 | 5000 | 4000 |
| | | 6 | | | 15600 | 11800 | 7800 | 5900 | 9000 | 7000 |
| | | 8 | | | 20000 | 20000 | 11500 | 10700 | 14000 | 13000 |

*Table 8.3* - *Lubrication intervals for ball bearings - HGF line*

| Frame | | Poles | Bearing designation | Amount of grease (g) | Lubrication intervals (hours) | |
|---|---|---|---|---|---|---|
| IEC | NEMA | | | | 50 Hz | 60 Hz |
| 315L/A/B and 315C/D/E | 5006/7/8T and 5009/10/11T | 2 | 6314 | 27 | 3100 | 2100 |
| | | 4 - 8 | 6320 | 50 | 4500 | 4500 |
| | | | 6316 | 34 | 4500 | 4500 |
| 355L/A/B and 355C/D/E | 5807/8/9T and 5810/11/12T | 2 | 6314 | 27 | 3100 | 2100 |
| | | 4 - 8 | 6322 | 60 | 4500 | 4500 |
| | | | 6319 | 45 | 4500 | 4500 |
| 400L/A/B and 400 C/D/E | 6806/7/8T and 6809/10/11T | 2 | 6315 | 30 | 2700 | 1800 |
| | | 4 - 8 | 6324 | 72 | 4500 | 4500 |
| | | | 6319 | 45 | 4500 | 4500 |
| 450 | 7006/10 | 2 | 6220 | 31 | 2500 | 1400 |
| | | 4 | 6328 | 93 | 4500 | 3300 |
| | | | 6322 | 60 | 4500 | 4500 |
| | | 6 - 8 | 6328 | 93 | 4500 | 4500 |
| | | | 6322 | 60 | 4500 | 4500 |
| 500 | 8006/10 | 4 | 6330 | 104 | 4200 | 2800 |
| | | | 6324 | 72 | 4500 | 4500 |
| | | 6 - 8 | 6330 | 104 | 4500 | 4500 |
| | | | 6324 | 72 | 4500 | 4500 |
| 500 | 8006/10 | 4 | 6330 | 104 | 4200 | 2800 |
| | | | 6324 | 72 | 4500 | 4500 |
| | | 6 - 8 | 6330 | 104 | 4500 | 4500 |
| | | | 6324 | 72 | 4500 | 4500 |
| 560 | 8806/10 | 4 - 8 | *Upon request | | | |
| 630 | 9606/10 | 4 - 8 | | | | |

ENGLISH

*Table 8.4* - *Lubrication intervals for cylindrical roller bearings - HGF line*

| Frame | | Poles | Bearing designation | Amount of grease (g) | Lubrication intervals (hours) | |
|---|---|---|---|---|---|---|
| IEC | NEMA | | | | 50 Hz | 60 Hz |
| 315L/A/B and 315C/D/E | 5006/7/8 and 5009/10/11 | 4 | NU320 | 50 | 4300 | 2900 |
| | | 6 - 8 | | | 4500 | 4500 |
| 355L/A/B and 355C/D/E | 5807/8/9 and 5810/11/12 | 4 | NU322 | 60 | 3500 | 2200 |
| | | 6 - 8 | | | 4500 | 4500 |
| 400L/A/B and 400C/D/E | 6806/7/8 and 6809/10/11 | 4 | NU324 | 72 | 2900 | 1800 |
| | | 6 - 8 | | | 4500 | 4500 |
| 450 | 7006/10 | 4 | NU328 | 93 | 2000 | 1400 |
| | | 6 | | | 4500 | 3200 |
| | | 8 | | | 4500 | 4500 |
| 500 | 8006/10 | 4 | NU330 | 104 | 1700 | 1000 |
| | | 6 | | | 4100 | 2900 |
| | | 8 | | | 4500 | 4500 |
| 560 | 8806/10 | 4 | NU228 + 6228 | 75 | 2600 | 1600 |
| | | 6 - 8 | | 106 | 4500 | 4500 |
| 630 | 9606/10 | 4 | NU232 + 6232 | 92 | 1800 | 1000 |
| | | 6 | | 120 | 4300 | 3100 |
| | | 8 | | 140 | 4500 | 4500 |

*Tabela 8.5* - *Lubrication intervals for ball bearings - W50 line*

| | Frame | | Poles | D.E. Bearing | Amount of grease (g) | 50 Hz (h) | 60 Hz (h) | N.D.E. Bearing | Amount of grease (g) | 50 Hz (h) | 60 Hz (h) |
|---|---|---|---|---|---|---|---|---|---|---|---|
| | IEC | NEMA | | | | | | | | | |
| Horizontal mounting Ball bearings | 315 H/G | 5009/10 | 2 | 6314 | 27 | 4500 | 3500 | 6314 | 27 | 4500 | 3500 |
| | | | 4 - 8 | 6320 | 50 | | 4500 | 6316 | 34 | | 4500 |
| | 355 J/H | 5809/10 | 2 | 6314 | 27 | | 3500 | 6314 | 27 | | 3500 |
| | | | 4 - 8 | 6322 | 60 | | 4500 | 6319 | 45 | | 4500 |
| | 400 L/K and 400 J/H | 6806/07 and 6808/09 | 2 | 6218 | 24 | 3800 | 2500 | 6218 | 24 | 3800 | 1800 |
| | | | 4 - 8 | 6324 | 72 | 4500 | 4500 | 6319 | 45 | 4500 | 4500 |
| | 450 L/K and 450 J/H | 7006/07 and 7008/09 | 2 | 6220 | 31 | 3000 | 2000 | 6220 | 31 | 3000 | 2000 |
| | | | 4 | 6328 | 93 | 4500 | 3300 | 6322 | 60 | 4500 | 4500 |
| | | | 6 - 8 | | | | 4500 | | | | |
| Vertical mounting Ball bearings | 315 H/G | 5009/10 | 2 | 7314 | 27 | 2500 | 1700 | 6314 | 27 | 2500 | 1700 |
| | | | 4 | 6320 | 50 | 4200 | 3200 | 6316 | 34 | 4500 | 4500 |
| | | | 6 - 8 | | | 4500 | 4500 | | | | |
| | 355 J/H | 5809/10 | 2 | 7314 | 27 | 2500 | 1700 | 6314 | 27 | 2500 | 1700 |
| | | | 4 | 6322 | 60 | 3600 | 2700 | 6319 | 45 | 4500 | 3600 |
| | | | 6 - 8 | | | 4500 | 4500 | | | | 4500 |
| | 400 L/K and 400 J/H | 6806/07 and 6808/09 | 2 | 7218 | 24 | 2000 | 1300 | 6218 | 24 | 2000 | 1300 |
| | | | 4 | 7324 | 72 | 3200 | 2300 | 6319 | 45 | 4500 | 3600 |
| | | | 6 | | | 4500 | 4300 | | | | 4500 |
| | | | 8 | | | | 4500 | | | | |
| | 450 L/K and 450 J/H | 7006/07 and 7008/09 | 2 | 7220 | 31 | 1500 | 1000 | 6220 | 31 | 1500 | 1000 |
| | | | 4 | 7328 | 93 | 2400 | 1700 | 6322 | 60 | 3500 | 2700 |
| | | | 6 | | | 4100 | 3500 | | | 4500 | 4500 |
| | | | 8 | | | 4500 | 4500 | | | | |

*Tabela 8.6* - *Lubrication intervals for cylindrical roller bearings - W50 line*

| | Frame | | Poles | D.E. Bearing | Amount of grease (g) | 50 Hz (h) | 60 Hz (h) | N.D.E. Bearing | Amount of grease (g) | 50 Hz (h) | 60 Hz (h) |
|---|---|---|---|---|---|---|---|---|---|---|---|
| | IEC | NEMA | | | | | | | | | |
| Horizontal mounting Roller bearings | 315 H/G | 5009/10 | 4 | NU320 | 50 | 4300 | 2900 | 6316 | 34 | 4500 | 4500 |
| | | | 6 -8 | | | 4500 | 4500 | | | | |
| | 355 J/H | 5809/10 | 4 | NU322 | 60 | 3500 | 2200 | 6319 | 45 | | |
| | | | 6 - 8 | | | 4500 | 4500 | | | | |
| | 400 L/K and 400 J/H | 6806/07 and 6808/09 | 4 | NU324 | 72 | 2900 | 1800 | | | | |
| | | | 6 - 8 | | | 4500 | 4500 | | | | |
| | 450 L/K and 450 J/H | 7006/07 and 7008/09 | 4 | NU328 | 93 | 2000 | 1400 | 6322 | 60 | | |
| | | | 6 | | | 4500 | 3200 | | | | |
| | | | 8 | | | | 4500 | | | | |

***Tabela 8.7*** *- Lubrication intervals for ball bearings - W40 line*

| | Frame | | Poles | D.E. Bearing | Amount of grease (g) | 50 Hz (h) | 60 Hz (h) | N.D.E. Bearing | Amount of grease (g) | 50 Hz (h) | 60 Hz (h) |
|---|---|---|---|---|---|---|---|---|---|---|---|
| | IEC | NEMA | | | | | | | | | |
| Horizontal mounting Ball bearings | 355 J/H | L5010/11 | 2 | 6218 | 24 | 4500 | 4500 | 6218 | 24 | 4500 | 4500 |
| | | | 4 – 8 | 6224 | 43 | 4500 | 4500 | 6218 | 24 | 4500 | 4500 |
| | 400 J/H | L5810/11 | 2 | 6220 | 31 | 4500 | 3800 | 6220 | 31 | 4500 | 3800 |
| | | | 4 – 8 | 6228 | 52 | 4500 | 4500 | 6220 | 31 | 4500 | 4500 |
| | 450 K/J | L6808/09 | 2 | 6220 | 31 | 4500 | 3800 | 6220 | 31 | 4500 | 3800 |
| | | | 4 – 8 | 6228 | 52 | 4500 | 4500 | 6220 | 31 | 4500 | 4500 |

***Tabela 8.8*** *- Lubrication intervals for cylindrical roller bearings - W40 line*

| | Frame | | Poles | D.E. Bearing | Amount of grease (g) | 50 Hz (h) | 60 Hz (h) | N.D.E. Bearing | Amount of grease (g) | 50 Hz (h) | 60 Hz (h) |
|---|---|---|---|---|---|---|---|---|---|---|---|
| | IEC | NEMA | | | | | | | | | |
| Horizontal mounting Roller bearings | 355 J/H | L5010/11 | 4 – 8 | NU224 | 43 | 4500 | 4500 | NU218 | 24 | 4500 | 4500 |
| | 400 J/H | L5810/11 | 4 – 8 | NU228 | 52 | 4500 | 3300 | NU220 | 31 | 4500 | 4500 |
| | 450 K/J | L6808/09 | 4 – 8 | NU228 | 52 | 4500 | 3300 | NU220 | 31 | 4500 | 4500 |

For each increment of 15 °C above the bearing temperature, the relubrication intervals given in the Table must be halved. The relubrication interval of motors designed by the manufacturer for mounting in horizontal position, but installed in vertical position (with WEG authorization), must be halved.
For special applications, such as: high and low temperatures, aggressive environments, driven by frequency inverter (VFD - frequency inverter), etc., please contact WEG about the required amount of grease and the relubrication intervals.

### 8.2.1.1. Motor without grease fitting

Motors without grease fittings must be lubricated in accordance with the existing Maintenance Plan. Motor disassembly must be carried out as specified in Item 8.3. If motors are fitted with shielded bearings (for example, ZZ, DDU, 2RS, VV), these bearings must be replaced at the end of the grease service life.

### 8.2.1.2. Motor with grease fitting

To lubricate the bearings with the motor stopped, proceed as follows:
- Before lubricating, clean the grease nipple and immediate vicinity thoroughly;
- Lift grease inlet protection;
- Remove the grease outlet plug;
- Pump in approximately half of the total grease indicated on the motor nameplate and run the motor for about 1 (one) minute at rated speed;
- Switch-off the motor and pump in the remaining grease;
- Lower again the grease inlet protection and reinstall the grease outlet protection.

To grease the motor while running, proceed as follows:
- Before lubricating, clean the grease nipple and immediate vicinity thoroughly;
- Pump the total grease indicated on the motor nameplate;
- Lower again the grease inlet protection.



For lubrication, use only manual grease gun.

If Motors are provided with a spring device for grease removal, the grease excess must be removed by pulling the rod and cleaning the spring until the spring does not remove more grease.

### 8.2.1.3. Compatibility of the Mobil Polyrex EM grease with other greases

The Mobil Polyrex EM grease has a polyurea thickener and a mineral oil thus being compatible with greases that contain:

- Lithium based thickener, lithium-based complex thickener, polyurea thickener and refined mineral oil;
- The used grease must have in its formulation corrosion and oxidation inhibitors.

In general terms, greases with the same type of soap are compatible to each other. However, depending on the proportion of the mixture there may be incompatibility. In such a case, it is not recommended to mix different types of greases without contacting the supplier or WEG beforehand.

### 8.2.2. Oil lubricated bearings

To change the oil of oil lubricated motor proceed as follows:

- Switch-off the motor;
- Remove threaded oil drain plug;
- Open the valve and drain the oil;
- Close the drain valve again;
- Reinstall the threaded oil drain plug;
- Fill-up with the type and amount of oil as specified on the nameplate;
- Check oil level. The oil level is OK when the lubricant can be viewed approximately in the center of the sight glass;
- Reinstall oil inlet plug;
- Check for oil leaks and ensure that all not used threaded plugs are closed with plugs.



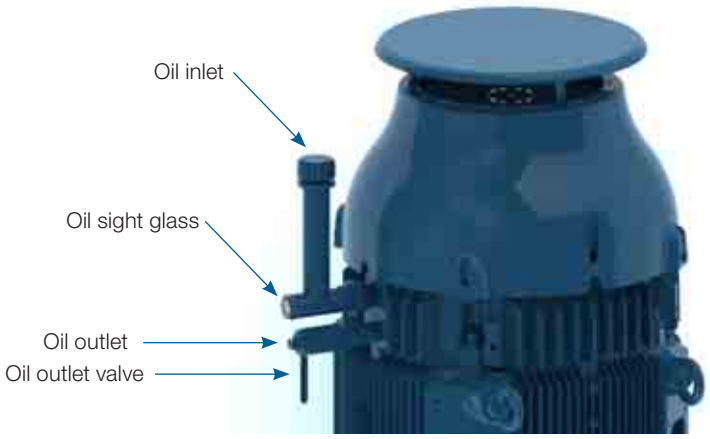


***Figure 8.1*** *- Oil lubricated bearing - vertical mounting*

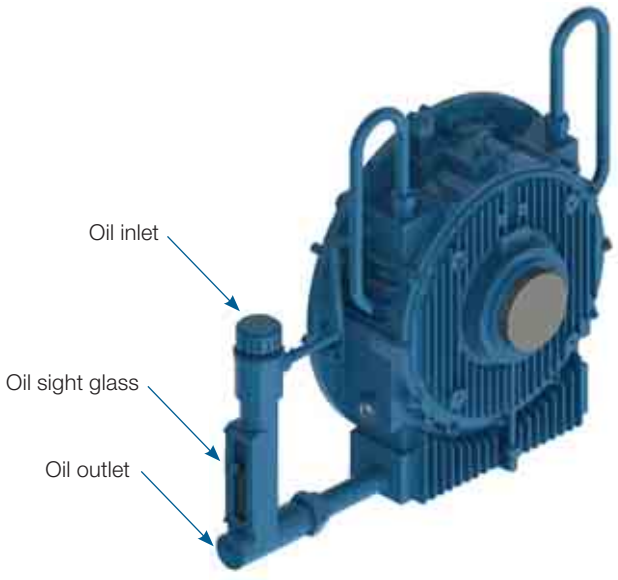


***Figure 8.2*** *- Oil lubricated bearing - horizontal mounting*

The bearing lubricating oil must be replaced as specified on the nameplate or whenever changes in the oil properties are noticed. The oil viscosity and pH must be checked periodically. The oil level must be checked every day and must be kept in the center of the sight glass.
Please contact WEG, when oils with different viscosities should be used.

***Note**:*
*The HGF vertical mounted motors with high axial thrust are supplied with grease lubricated DE-bearings and with oil lubricated NDE-bearings. The DE-bearings must be lubricated according to recommendations in item 8.2.1. Table 8.9 specifies the oil type and the amount of oil required for this motor lubrication.*

***Table 8.9** - Oil properties for HGF vertical mounted motors with high axial thrust*

| Mounting - high axial thrust | Frame | | Poles | Bearing designation | Oil (liters) | Interval (h) | Lubricant | Lubricant specification |
|---|---|---|---|---|---|---|---|---|
| | IEC | NEMA | | | | | | |
| | 315L/A/B e 315C/D/E | 5006/7/8T e 5009/10/11T | 4 - 8 | 29320 | 20 | 8000 | FUCHS Renolin DTA 40 / Mobil SHC 629 | ISO VG150 mineral oil with antifoam and antioxidant additives |
| | 355L/A/B e 355C/D/E | 5807/8/9T e 5810/11/12T | 4 - 8 | 29320 | 26 | | | |
| | 400L/A/B e 400C/D/E | 6806/7/8T e 6809/10/11T | 4 - 8 | 29320 | 37 | | | |
| | 450 | 7006/10 | 4 - 8 | 29320 | 45 | | | |

### 8.2.3. Oil mist lubricated bearings

Check the service conditions of the seals and if replacement is required use only original components. Clean the seal components before assembly (bearing caps, end shields, etc.).
Apply joint sealant between the bearing caps and end shields. The joint sealant must be compatible with the used lubricating oil. Connect the oil lubricant tubes (oil inlet and oil outlet tubes and motor drain tube), as shown in Figure 6.12.

### 8.2.4. Sleeve bearings

The lubricating oil of sleeve bearings must be changed at the intervals specified in Table 8.10. To replace the oil, proceed as follows:

- NDE-bearing: remove the protection plate from the fan cover;
- Drain the oil through the drain hole located at the bottom of the bearing (see Figure 8.3);
- Close the oil drain hole;
- Remove the oil inlet plug;
- Fill the sleeve bearing with the specified oil and with the amount of oil specified in;
- Check the oil level and ensure it is kept close to the center of the sight glass;
- Install the oil inlet plug;
- Check for oil leaks.

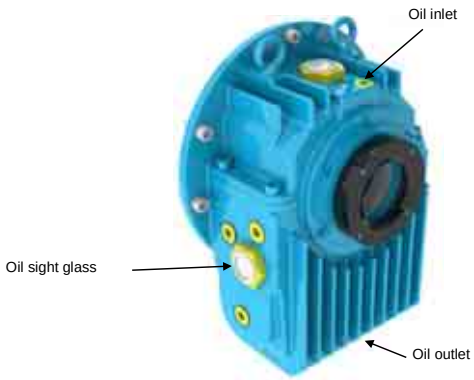


***Figure 8.3** - Sleeve bearing*

*Table 8.10* - *Oil properties for sleeve bearings*

| Frame | | Poles | Bearing designation | Oil (liters) | Interval (h) | Lubricant | Lubricant specification |
|---|---|---|---|---|---|---|---|
| IEC | NEMA | | | | | | |
| 315 | 5000 | 2 | 9-80 | 2.8 | 8000 | FUCHS Renolin DTA 10 | ISO VG32 mineral oil with antifoam and antioxidant additives |
| 355 | 5800 | | | | | | |
| 400 | 6800 | | | | | | |
| 450 | 7000 | | | | | | |
| 315 | 5000 | 4 - 8 | 9-90 | 2.8 | 8000 | FUCHS Renolin DTA 15 | ISO VG46 mineral oil with antifoam and antioxidant additives |
| 355 | 5800 | | 9-100 | | | | |
| 400 | 6800 | | 11-110 | 4.7 | | | |
| 450 | 7000 | | 11-125 | | | | |
| 500 | 8000 | | | | | | |

The lubricating oil must be replaced as specified on the nameplate or whenever changes on the oil properties are noticed. The oil viscosity and pH must be checked periodically. The oil level must be checked every day and kept in the center of the sight glass.
Please contact WEG, when oils with different viscosities are to be used.

## 8.3. MOTOR ASSEMBLY AND DISASSEMBLY

All repair services on motors should be always performed by qualified personnel and in accordance with the applicable laws and regulations in each country. Always use proper tools and devices for motor disassembly and assembly.

Disassembly and assembly services can be carried out only after the motor has been disconnected from the power supply and is completely stopped.

Dangerous voltages may be present at the motor terminals inside the terminal box since capacitors can retain electrical charge for long periods of time even when they are not connected directly to a power source or when space heaters are connected to the motor or when the motor windings are used as space heaters. Dangerous voltages may be present at the motor terminals when they are driven by frequency inverter even when they are completely stopped.

Record the installation conditions such as terminal connection diagram, alignment / leveling conditions before starting the disassembly procedures. These records should be considered for later assembly.

Disassemble the motor carefully without causing scratches on machined surfaces or damaging the threads.

Assemble the motor on a flat surface ensuring a good support base. Footless motors must be fixed/locked on the base to prevent accidents.

Handle the motor carefully to not damage the insulated components such as windings, insulated rolling bearings, power cables etc..

Seal elements, such as joint seals and bearing seals should always be replaced when wear or damage is noticed.

Motors with degree of protection higher than IP55 are supplied with joint and screw seal Loctite 5923 (Henkel) Clean the components and apply a new coat of Loctite 5923 on the surfaces before assembly.

### 8.3.1. Terminal box

Proceed as follows to remove the terminal box cover and to disconnect/connect the power supply cables and the cables of the accessory devices:

- Ensure that during the screw removal the terminal box cover does not damage the components installed inside the terminal box;
- If the terminal box cover is fitted with lifting eyebolt, lift the terminal box cover always by its lift eyebolt;
- If motors are supplied with terminal blocks, ensure the correct tightening torque on the motor terminals as specified in Table 8.11;
- Ensure that the cables do not contact sharp edges;
- Ensure that the original IP degree of protection is not changed and is maintained as indicate on the motor nameplate. The power supply cables and the control cables must always be fitted with components (cable glands, conduits) that meet the applicable standards and regulations of each country;
- Ensure that the pressure relief device is in perfect operating condition, if provided. The seals in the terminal box must be in perfect condition for reuse and must be reinstalled correctly to ensure the specified degree of protection;
- Ensure the correct tightening torque for the securing bolts of the terminal box cover as specified in Table 8.11.

***Table 8.11*** *- Tightening torque for the securing bolts [Nm]*

| Screw type and seal | M4 | M5 | M6 | M8 | M10 | M12 | M16 | M20 |
|---|---|---|---|---|---|---|---|---|
| Hex bolt/hex socket bolt (without seal) | - | 4 to 7 | 7 to 12 | 16 to 30 | 30 to 50 | 55 to 85 | 120 to 180 | 230 to 360 |
| Combined slotted screw (without seal) | - | 3 to 5 | 5 to 10 | 10 to 18 | - | - | - | - |
| Hex bolt/hex socket bolt (with seal with metallic stop/cord) | - | - | - | 13 to 20 | 25 to 37 | 40 to 55 | 50 to 65 | - |
| Combined slotted screw (with flat seal 'and/or mettallic stop/cord) | - | 3 to 5 | 4 to 8 | 8 to 15 | - | - | - | - |
| Hex bolt/hex socket bolt (with flat seal) | - | - | - | 8 to 15 | 18 to 30 | 25 to 40 | 35 to 50 | - |
| Terminal blocks | 1 to 1,5 | 1,5 to 4 | 3 to 6,5 | 6 to 9 | 10 to 18 | 15,5 to 30 | 30 to 50 | - |
| Grounding terminals | - | 3 to 5 | 5 to 10 | 10 to 18 | 30 to 50 | 55 to 85 | 120 to 180 | - |

## 8.4. DRYING THE STATOR WINDING INSULATION

Dismantle the motor completely. Remove the end shields, the rotor with the shaft, the fan cover, the fan and the terminal box before the wound stator with the frame is transferred to the oven for the drying process. Place the wound stator in the oven heated to max. 120 °C for two hours. For larger motors a longer drying time may be required. After the drying process has been concluded, allow the stator to cool to room temperature. Measure the insulation resistance again as described in item 5.4. Repeat the stator drying process if the required insulation resistance does not meet the values specified in Table 5.3. If the insulation resistance does not improve despite several drying processes, evaluate the causes of the insulation resistance drop carefully and an eventual replacement of the motor winding may be required. If in doubt contact WEG.



To prevent electrical shock, discharge the motor terminals immediately before, and after each measurement. If the motor is equipped with capacitors, these must be discharged before beginning any repair.

## 8.5. SPARE PARTS

When ordering spare parts, always provide complete motor designation, indicating the motor type, the code number and the serial number, which are stated on the motor nameplate.

Spare parts must always be purchased from WEG authorized Service Centers. The use of non-original spare parts can cause motor failure, performance drop and void the product warranty.

The spare parts must be stored in a clean, dry and properly ventilated room, with relative air humidity not exceeding 60%, with ambient temperature between 5 °C and 40 °C, free of dust, vibrations, gases, corrosive smokes and at constant temperature. The spare parts must be stored in their normal mounting position without placing other components onto them.

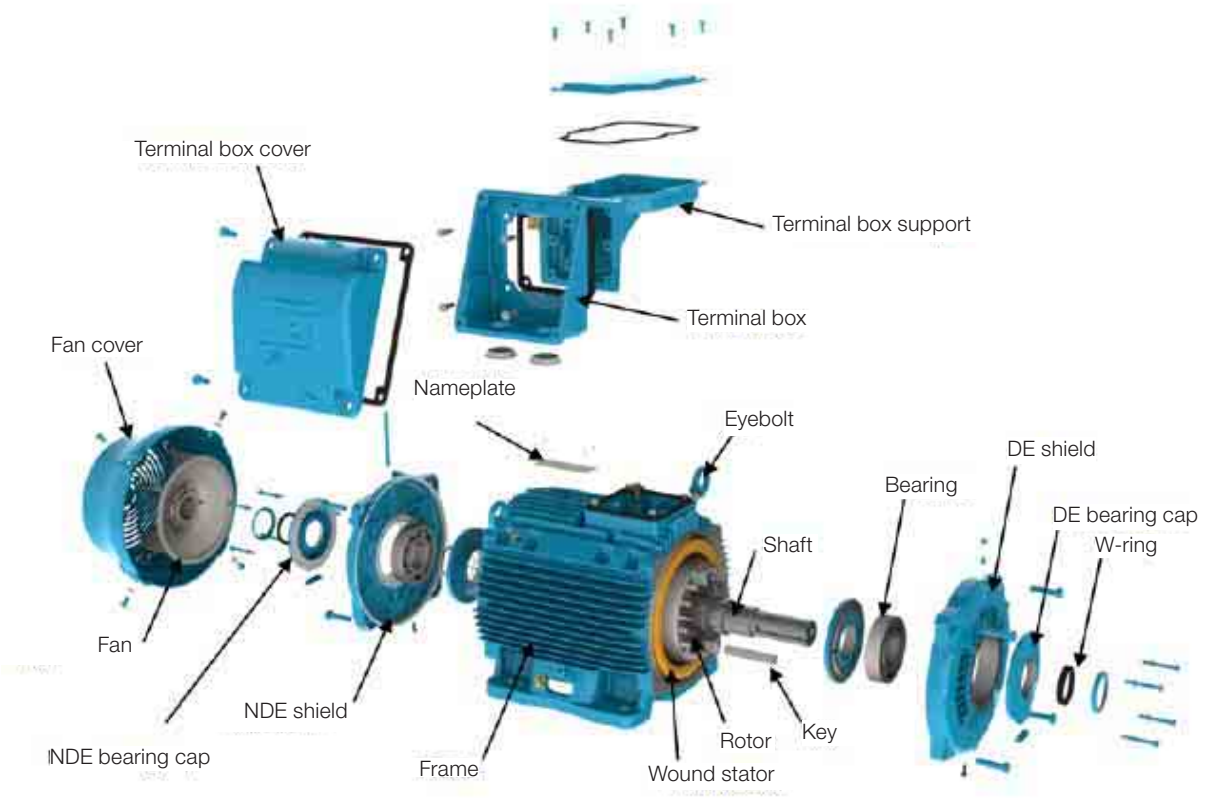


***Figure 8.4*** *- Exploded view of the components of a W22 motor*

# 9. ENVIRONMENTAL INFORMATION

## 9.1. PACKAGING

WEG electric motors are supplied in cardboard, plastic or wooden packaging. These materials can be recycled and must be disposed according to the applicable laws and regulations in each country. All wood used in the packaging of WEG motors come from the company reforestation program and is not submitted to any chemical conservation treatment.

## 9.2. PRODUCT

Electric motors consist mainly of ferrous metals (steel plates and cast iron), non ferrous metals (copper and aluminum) and plastic materials.

In general, electric motors have relatively long service live. However when they must be discarded, WEG recommends to dismantle the motor, sort the different materials and send them for recycling.

No-recyclable materials should be disposed of at industrial landfills according to the applicable environmental laws and regulations in each country, or co-processed in cement kilns or incinerated.

The recycling service providers, the disposal in industrial landfills, the waste co-processing or the incineration process must be properly authorized by the state environment agency to carry out these activities.

# 10. TROUBLESHOOTING CHART X SOLUTIONS

This troubleshooting chart provides a basic list of problems that may occur during motor operation, possible causes and recommended corrective actions. In case of doubts, please contact WEG Service Center.

| Problem | Possible cause | Corrective action |
|---|---|---|
| Motor does not start, neither coupled nor decoupled | Power cables are interrupted | Check the control panel and the motor power supply cables |
| | Blown fuses | Replace blown fuses |
| | Wrong motor connection | Correct the motor connection according to connection diagram |
| | Locked rotor | Check motor shaft to ensure that it rotates freely |
| The motor starts at no-load, but fails when load is applied. It starts very slowly and does not reach the rated speed | Load toque is too high during start-up | Do not start the motor on load |
| | Too high voltage drop in the power cables | Check the installation dimensioning (transformer, cable cross section, relays, circuit breakers, etc.) |
| Abnormal/excessive noise | Defective transmission component or defective driven machine | Check the transmission force, the coupling and the alignment |
| | Misaligned / unleveled base | Align / level the motor with the driven machine |
| | Unbalanced components or unbalanced driven machine | Balance the machine set again |
| | Different balancing methods used for motor and coupling balancing (halve key, full key) | Balance the motor again |
| | Wrong motor direction of rotation | Reverse the direction of rotation |
| | Loose bolts | Retighten the bolts |
| | Foundation resonance | Check the foundation design |
| | Damaged bearings | Replace the bearings |
| Motor overheating | Insufficient cooling | Clean air inlet and outlet and cooling fins |
| | | Check the minimum required distance between the fan cover and nearest walls. See item 7 |
| | | Check air temperature at inlet |
| | Overload | Measure motor current, evaluate motor application and if required, reduce the load |
| | Number of starts per hour is too high or the load inertia moment is too high | Reduce the number of starts per hour |
| | Power supply voltage too high | Check the motor power supply voltage. Power supply voltage must not exceed the tolerance specified in item 7.2 |
| | Power supply voltage too low | Check the motor power supply voltage and the voltage drop. Power supply voltage must not exceed the tolerance specified in item 7.2 |
| | Interrupted power supply | Check the connection of the power cables |
| | Voltage unbalance at the motor terminals | Check for blown fuses, wrong commands, voltage unbalance in the power line, phase fault or interrupted power cables |
| | Direction of rotation is not compatible with the unidirectional fan | Check if the direction of rotation matches the rotation arrow indicated on end shield |
| Bearing overheating | Excessive grease/oil | Clean the bearing and lubricate it according to the provided recommendations |
| | Grease/oil aging | |
| | The used grease/oil does not matches the specified one | |
| | Lack of grease/oil | Lubricate the bearing according to the provided recommendations |
| | Excessive axial or radial forces due to the belt tension | Reduce the belt tension |
| | | Reduce the load applied to the motor |

**ARGENTINA**
WEG EQUIPAMIENTOS ELECTRICOS S.A.
Sgo. Pampiglione 4849
Parque Industrial San Francisco, 2400 - San Francisco
Phone: +54 (3564) 421484
**www.weg.net/ar**

**AUSTRALIA**
WEG AUSTRALIA PTY. LTD.
14 Lakeview Drive, Scoresby 3179, Victoria
Phone: +03 9765 4600
**www.weg.net/au**

**AUSTRIA**
WATT DRIVE ANTRIEBSTECHNIK GMBH*
Wöllersdorfer Straße 68
2753, Markt Piesting
Phone: + 43 2633 4040
**www.wattdrive.com**

LENZE ANTRIEBSTECHNIK GES.M.B.H*
Ipf - Landesstrasse 1
A-4481 Asten
Phone: +43 (0) 7224 / 210-0
**www.lenze.at**

**BELGIUM**
WEG BENELUX S.A.*
Rue de l'Industrie 30 D, 1400 Nivelles
Phone: +32 67 888420
**www.weg.net/be**

**BRAZIL**
WEG EQUIPAMENTOS ELÉTRICOS S.A.
Av. Pref. Waldemar Grubba, 3000, CEP 89256-900
Jaraguá do Sul - SC
Phone: +55 47 3276-4000
**www.weg.net/br**

**CHILE**
WEG CHILE S.A.
Los Canteros 8600,
La Reina - Santiago
Phone: +56 2 2784 8900
**www.weg.net/cl**

**CHINA**
WEG (NANTONG) ELECTRIC MOTOR MANUFACTURING CO. LTD.
No. 128# - Xinkai South Road, Nantong Economic & Technical Development Zone, Nantong, Jiangsu Province
Phone: +86 513 8598 9333
**www.weg.net/cn**

**COLOMBIA**
WEG COLOMBIA LTDA
Calle 46A N82 - 54
Portería II - Bodega 6 y 7
San Cayetano II - Bogotá
Phone: +57 1 416 0166
**www.weg.net/co**

**DENMARK**
WEG SCANDINAVIA DENMARK*
Sales Office of WEG Scandinavia AB
Verkstadgatan 9 - 434 22
Kumgsbacka, Sweden
Phone: +46 300 73400
**www.weg.net/se**

**FRANCE**
WEG FRANCE SAS *
ZI de Chenes - Le Loup13 / 38297
Saint Quentin Fallavier, Rue du Morellon - BP 738 / Rhône Alpes, 38 > Isère
Phone: + 33 47499 1135
**www.weg.net/fr**

**GREECE**
MANGRINOX*
14, Grevenon ST.
GR 11855 - Athens, Greece
Phone: + 30 210 3423201-3

**GERMANY**
WEG GERMANY GmbH*
Industriegebiet Türnich 3
Geigerstraße 7
50169 Kerpen-Türnich
Phone: + 49 2237 92910
**www.weg.net/de**

**GHANA**
ZEST ELECTRIC MOTORS (PTY) LTD.
15, Third Close Street Airport Residential Area, Accra
Phone: +233 3027 66490
**www.zestghana.com.gh**

**HUNGARY**
AGISYS AGITATORS & TRANSMISSIONS LTD.*
Tó str. 2. Torokbalint, H-2045
Phone: + 36 (23) 501 150
**www.agisys.hu**

**INDIA**
WEG ELECTRIC (INDIA) PVT. LTD.
#38, Ground Floor, 1st Main Road, Lower Palace, Orchards, Bangalore, 560 003
Phone: +91 804128 2007
**www.weg.net/in**

**ITALY**
WEG ITALIA S.R.L.*
Via Viganò de Vizzi, 93/95
20092 Cinisello Balsamo, Milano
Phone: + 39 2 6129 3535
**www.weg.net/it**

FERRARI S.R.L.*
Via Cremona 25 26015
Soresina (CR), Cremona
Phone: + 39 (374) 340-404
**www.ferrarisrl.it**

STIAVELLI IRIO S.P.A.*
Via Pantano - Blocco 16 - Capalle
50010 , Campi Bisenzio (FI)
Phone: + 39 (55) 898.448
**www.stiavelli.com**

**JAPAN**
WEG ELECTRIC MOTORS JAPAN CO., LTD.
Yokohama Sky Building 20F, 2-19-12 Takashima, Nishi-ku, Yokohama City, Kanagawa, Japan 220-0011
Phone: + 81 45 5503030
**www.weg.net/jp**

**MEXICO**
WEG MEXICO, S.A. DE C.V.
Carretera Jorobas-Tula
Km. 3.5, Manzana 5, Lote 1
Fraccionamiento Parque Industrial - Huehuetoca,
Estado de México - C.P. 54680
Phone: +52 55 53214275
**www.weg.net/mx**

**NETHERLANDS**
WEG NETHERLANDS *
Sales Office of WEG Benelux S.A.
Hanzepoort 23C, 7575 DB Oldenzaal
Phone: +31 541 571090
**www.weg.net/nl**

**PORTUGAL**
WEG EURO - INDÚSTRIA ELÉCTRICA, S.A.*
Rua Eng. Frederico Ulrich, Sector V, 4470-605 Maia, Apartado 6074, 4471-908 Maia, Porto
Phone: +351 229 477 705
**www.weg.net/pt**

**RUSSIA**
WEG ELECTRIC CIS LTD*
Russia, 194292, St. Petersburg, Prospekt Kultury 44, Office 419
Phone: +7 812 3632172
**www.weg.net/ru**

**SOUTH AFRICA**
ZEST ELECTRIC MOTORS (PTY) LTD.
47 Galaxy Avenue, Linbro Business Park - Gauteng Private Bag X10011
Sandton, 2146, Johannesburg
Phone: +27 11 7236000
**www.zest.co.za**

**SPAIN**
WEG IBERIA INDUSTRIAL S.L.*
C/ Tierra de Barros, 5-7
28823 Coslada, Madrid
Phone: +34 91 6553008
**www.weg.net/es**

**SINGAPORE**
WEG SINGAPORE PTE LTD
159, Kampong Ampat, #06-02A KA PLACE. 368328
Phone: +65 68581081
**www.weg.net/sg**

**SWEDEN**
WEG SCANDINAVIA AB*
Box 27, 435 21 Mölnlycke
Visit: Designvägen 5, 435 33
Mölnlycke, Göteborg
Phone: +46 31 888000
**www.weg.net/se**

**SWITZERLAND**
BIBUS AG*
Allmendstrasse 26
8320 – Fehraltorf
Phone: + 41 44 877 58 11
**www.bibus-holding.ch**

**UNITED ARAB EMIRATES**
The Galleries, Block No. 3, 8th Floor, Office No. 801 - Downtown Jebel Ali
262508, Dubai
Phone: +971 (4) 8130800
**www.weg.net/ae**

**UNITED KINGDOM**
WEG (UK) Limited*
Broad Ground Road - Lakeside
Redditch, Worcestershire B98 8YP
Phone: + 44 1527 513800
**www.weg.net/uk**

ERIKS *
Amber Way, B62 8WG
Halesowen, West Midlands
Phone: + 44 (0)121 508 6000

BRAMMER GROUP *
PLC43-45 Broad St, Teddington
TW11 8QZ
Phone: + 44 20 8614 1040

**USA**
WEG ELECTRIC CORP.
6655 Sugarloaf Parkway,
Duluth, GA 30097
Phone: +1 678 2492000
**www.weg.net/us**

**VENEZUELA**
WEG INDUSTRIAS VENEZUELA C.A.
Centro corporativo La Viña Plaza, Cruce de la Avenida Carabobo con la calle Uzlar de la Urbanización La Viña / Jurisdicción de la Parroquia San José - Valencia
Oficinas 06-16 y 6-17, de la planta tipo 2, Nivel 5, Carabobo
Phone: (58) 241 8210582
**www.weg.net/ve**

*** European Union Importers**

Cod: 50033244 | Rev: 19 | Date (m/y): 04/2016
The values shown are subject to change without prior notice.

**Chemical Skid**

PCP
Pompes & équipements

# MAKE DOWN SODIUM HYDROXIDE UNIT
# WAM/PCP/SH

AGNICO EAGLE

**Vendor Document Status**

| | |
|---|---|
| 1 ☐ | Proceed to next submission and status. |
| 2 ☐ | Proceed with exceptions as noted to next submission and status. |
| 3 ☐ | Do not proceed.<br>Revise as noted and resubmit next submission and status. |
| 4 ☑ | Complete, no further submission required. |

By: Sébastien Perron, Instrumentation Date: 2021-04-08

Review and authorization to fabricate are only for general conformance with the design concept of the Project as expressed in the Contract Documents. Sole responsibility for the accuracy and completeness of this document, including but not limited to dimensions and quantities, remains with the Supplier/Contractor. Agnico Eagle does not warrant the accuracy or completeness of any of the information contained herein, nor does Agnico Eagle authorize or approve any construction means, methods, techniques, sequences or any safety precautions or procedures.

Agnico Eagle No. 6526-S265-605B-135_MAKEDOWN SODIUM HYDROXIDE UNIT WAMPCPST _DOC_R1 R: MAKEDOWN SODIUM HYDROXIDE

**DOCUMENT FOR INFORMATION**

**Workshop drawing :**

- ☐ Approuved as is
- ☐ Approuved with correction(s)
- ☐ Rejected

**Approuved by**

Name : _____

Title : _____

Compagnie : _____

Signature : _____

# CAUSTIC HOPPER
# 65HOP68005

**Workshop drawing :**

- □ Approuved as is
- □ Approuved with correction(s)
- □ Rejected

**Approuved by**

Name : _____

Title : _____

Compagnie : _____

Signature : _____

*3076 A, Bernard-Pilon, St-Mathieu de Beloeil, Qc, J3G 4S5  Tél.: (450) 922-4224 /  Fax: (450) 922-4223*

| ITEM NO. | QTY. EACH | PART NUMBER | MAT'L | DESCRIPTION |
|---|---|---|---|---|
| 1 | 1 | 30014715-A | 316SS | 9" DIA X 15'-0" LONG 30 DEG. INCLINED SCREW FEEDER WITH A 3 HP @ 34 RPM DRIVE UNIT |
| 2 | 1 | 30014715-B | NOTED | SBB CONE AND FRAME ASSEMBLY, TYPE SBB/3.1.125.M.A., LESS HOIST, 316L HOPPER, MS FRAME |
| 3 | 1 | X.JN.273.236 | | WAM X.JN.273.236 FLEXIBLE CONNECTION, BLACK NEOPRENE |
| 4 | 1 | ILT | | WAM #ILT.C.2 ROTARY LEVEL INDICATOR, 1 1/2" NPT THREAD, 110/220VAC, 50/60HZ |
| 5 | 1 | V1FS250.ZB | | WAM #V1FS250.ZB SINGLE FLANGE BUTTYERFLY VALVE, 10" DIA, CAST ALUMINUM BODY, 304SS DISC, WITH WAM #AE070A1D ELECTROMECHANICAL ROTARY ACTUATOR AE70 22X19, 575V, 60 HZ, 0.75 KW; WAM #MIC23 POSITION LIMIT SWITCH |

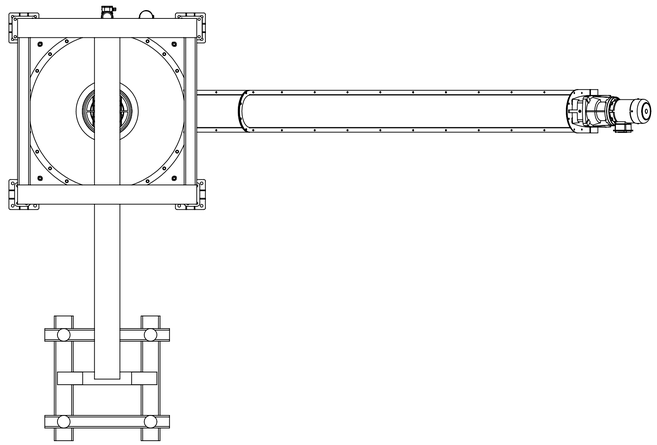

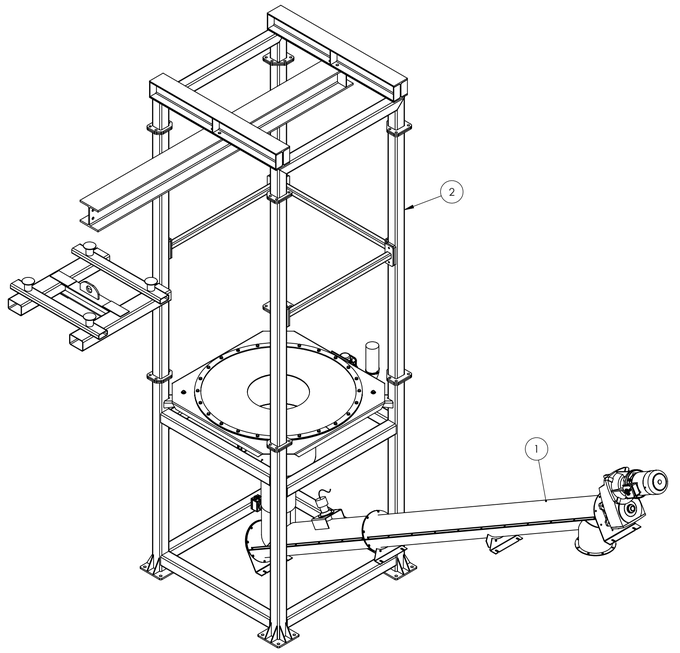


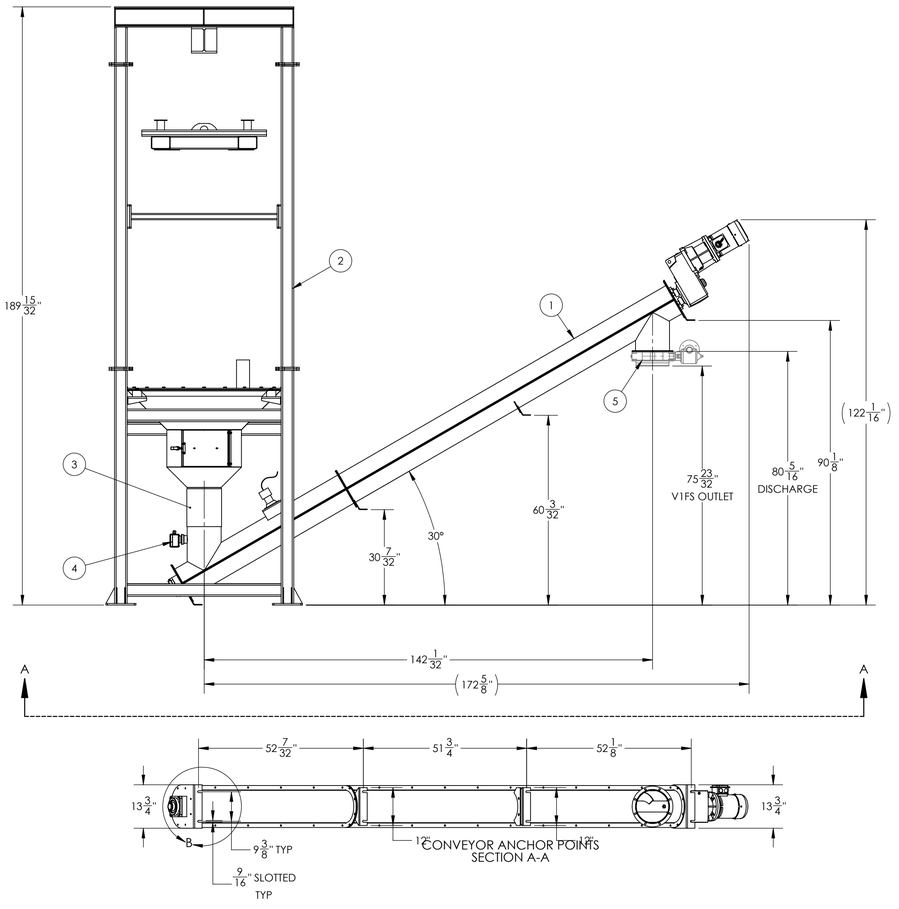


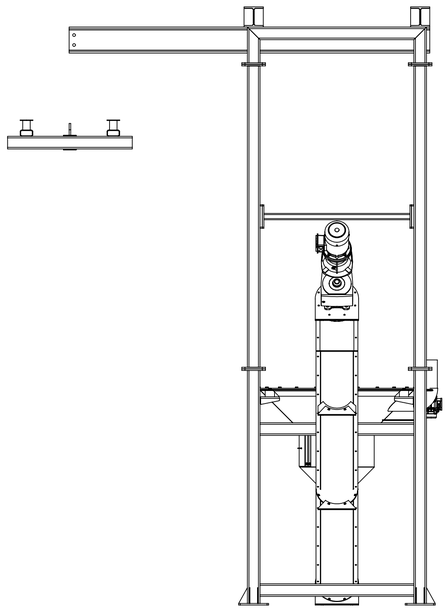




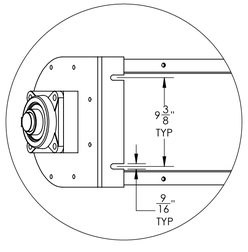


DETAIL B
SCALE 1 : 8

CERTIFIED DRAWING

DATE: 3/26/2021

| REVISIONS | | | |
|---|---|---|---|
| REV. | BY | DESCRIPTION | DATE |
| 1 | JAH | REVISIONS TO FEEDER | 3/26/2021 |

UNLESS OTHERWISE SPECIFIED:
ALL DIMENSIONS ARE IN INCHES

ALL ITEMS MANUFACTURED PER CEMA 300 TOLERANCES WHEN APPLICABLE

FOR ALL REMAINING ITEMS, GENERAL TOLERANCES ARE AS FOLLOWS:
FRACTIONS = ±1/16
X.XX = ±0.01
X.XXX = ±0.005
ANGLES = ±2°

CUSTOMER:
POMPES & EQUIPMENT
3076 A. RUE BERNARD-PILON
ST-MATHIEU-DE-BELOEIL, QC J3G 4S5

SHIP TO:
POMPES & EQUIPMENT (PCP)
3076 A. RUE BERNARD-PILON
ST-MATHIEU-DE-BELOEIL, QC J3G 4S5

QUOTE:
Y010821A-SYS-B

CUSTOMER PO:
C14-204979R2

CONFIDENTIALITY NOTE: THIS DRAWING AND ALL DESIGNS, DETAILS, INVENTIONS AND/OR DEVELOPMENTS COVERED ARE CONFIDENTIAL AND THE EXCLUSIVE PROPERTY OF WAM INC. WHICH RESERVES ALL PATENT AND OTHER RIGHTS. IT IS NOT TO BE PRINTED, PHOTOGRAPHED, COPIED, LOANED OR USED WITHOUT PERMISSION. IT MUST BE RETURNED ON REQUEST AND USED SUBJECT TO THE ABOVE CONDITIONS AND ONLY ON WORK AUTHORIZED BY WAM INC.

WAM® USA INC.
1300 TRIAD BLVD., FORT WORTH, TX 76131
PH. #817-232-2678, FAX #817-232-2676

DESCRIPTION
SBB BULK BAG UNLOADER AND SCREW CONVEYOR GA

SHEET 1 OF 1

SIZE D

| DRAWN | CHKD. | DATE | SCALE | DRAWING NO. | REV |
|---|---|---|---|---|---|
| JAH | | 3/17/21 | 1:24 | 30014715-GA | 1 |

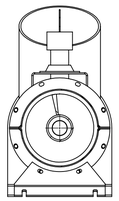

SECTION A-A

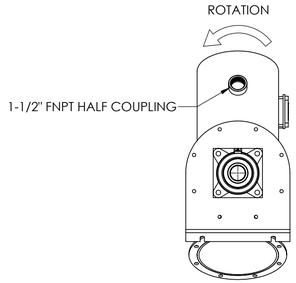


INLET END

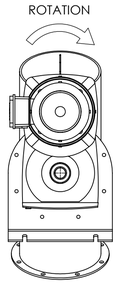


DISCHARGE / DRIVE END

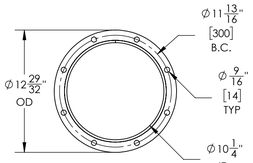


DISCHARGE FLANGE
SCALE 1 : 8

SPECIFICATIONS:
QTY: TWO (2), 9" DIA X 15'-0" LONG 30 DEG. INCLINED SCREW FEEDER WITH A 3 HP @ 34 RPM DRIVE UNIT TO CONVEY 221 CFH, OF A FLOOD FED CAUSTIC SODA AND SODIUM THIOSULPHATE @ 60 TO 75 LB/FT$^3$, SHOP ASSEMBLED AND CONSISTING OF:

NOTES:
- ALL 316SS CONSTRUCTION UNLESS NOTED
- INTERIOR (PRODUCT CONTACT) FINISH EXCL. SCREW: CEMA II WELDS, SURFACE FINISH AS-IS
- SCREW FINISH: CEMA II STD. SKIP WELDING, SURFACES AS-IS
- EXTERIOR FINISH: CEMA II WELDS, SURFACES TO BE SSPC-SP6 COMMERCIAL BLAST CLEAN
- ALL FABRICATED GUARDS TO BE PAINTED SAFETY YELLOW
- ALL PURCHASED ITEMS TO HAVE MANUFACTURERS STD. FINISH
- 18-8 SS ASSEMBLY BOLTS
- 1/8" THK CLOSED CELL NEOPRENE COVER GASKETS
- SILICONE CAULK TROUGH FLANGE GASKETS
- CEMA SAFETY LABELS
- SERIAL NUMBER(S): 30014715-01 THRU 02

| ITEM NO. | QTY. EACH | MAT'L | DESCRIPTION |
|---|---|---|---|
| 1 | 2 | 316SS | 9TO10-F, SPLIT TUBULAR TROUGH HALF, 9" DIA X .135 THK X 60" LONG |
| 2 | 2 | 316SS | 9TO10-F, SPLIT TUBULAR TROUGH HALF, 9" DIA X .135 THK X 120" LONG |
| 3 | 8 | 316SS | 9FO-F-GA, END FLANGE, SPLIT TUBULAR TROUGH, 9" DIA X .250 THK |
| 4 | 1 | 316SS | INCLINED ROUND DISCHARGE, FLANGE TO MATE WITH V1FS250 BUTTERFLY VALVE |
| 5 | 2 | 316SS | 9EF4-O-BB, TROUGH END, TUBULAR, WITH FOOT, 9" SIZE X .250 THK., 2" SHAFT, DRILLED FOR BALL BEARING |
| 6 | 1 | 316SS | 9S412, SECTIONAL SCREW, 9" DIA X 178" LG, 3/16" THK, RH VARIABLE PITCH WITH 9" BARE PIPE, MOUNTED ON A 3" SCH. 40 PIPE, BUSHED AND DRILLED ON BOTH ENDS FOR 2", 2 BOLT SHAFT, FLIGHTING: FIRST 12" TO BE 6" PITCH, REMAINDER FULL PITCH |
| 7 | 1 | 316SS | 4ES-B, END SHAFT, 2" DIA X 10 3/8" LG FOR BALL BEARING AND SEAL, CEMA 2 BOLT DRILLED |
| 8 | 4 | 316SS | 4CB, COUPLING BOLT WITH LOCK NUT, 5/8 - 11 UNC X 3 5/8" LG WITH A 2 7/8" LG SHANK, FOR 2 1/2" (2.875 OD) PIPE |
| 9 | 1 | | SE.4CP, WAM-SHIELD SEAL, 2" SHAFT, NON SPLIT |
| 10 | 1 | | 4BF-B, BALL BEARING, FLANGED, 2 SHAFT |
| 11 | 1 | 316SS | INCLINED ROUND INLET STUB WITH PORT FOR ILT LEVEL INDICATOR |
| 12 | 2 | 316SS | 9FF, FLANGE FEET, 9" SIZE, .188 THK., INCLINED |
| 13 | 1 | 316SS | 9SL10, SADDLE MOUNT, FOR 9" SIZE X .135 THK TROUGH, .250 THK |
| 14 | 1 | | NORD SK4282SCP/VL-180TC SCREW CONVEYOR DRIVE, 52.2:1 RATIO, 180TC NEMA ADAPTER, M1 MOUNTING POSITION, 2" CEMA DRIVE SHAFT |
| 15 | 1 | | NORD 100LP/4, 3 HP PREM. EFF., 1770 RPM, TEFC, NEMA 182TC C FACE MTR, 3/60/332-575V |
| 16 | 1 | | SITRANS WM100 ZERO-SPEED ALARM SWITCH |
| 17 | 1 | 316SS | SENSOR MOUNTING BRACKET, FITTED TO TROUGH, .188 THK SHEET / PLATE |

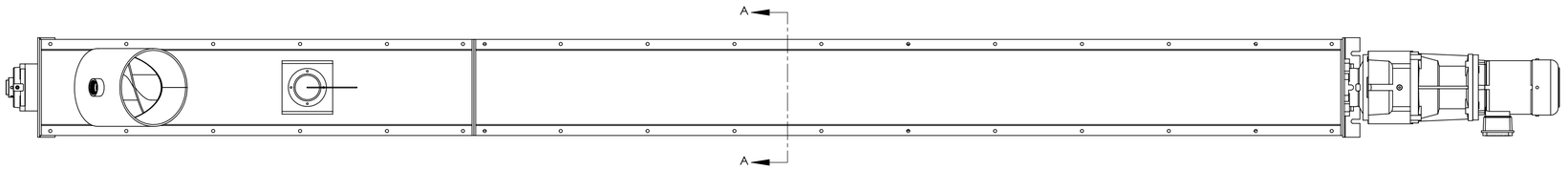


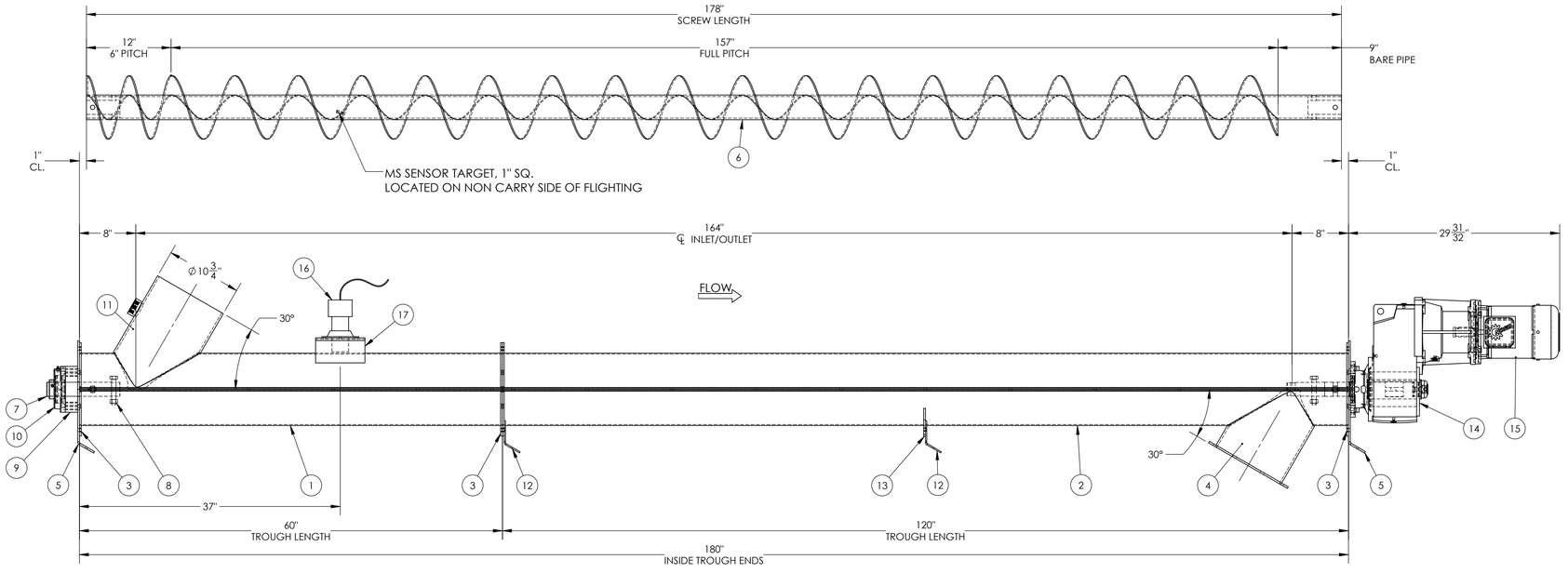


CERTIFIED DRAWING

DATE: 3/26/2021

| REVISIONS | | | |
|---|---|---|---|
| REV. | BY | DESCRIPTION | DATE |
| 1 | JAH | ADDED SPEED SWITH AND BRACKET, CHANGED MOTOR VOLTAGE | 3/26/2021 |

UNLESS OTHERWISE SPECIFIED:
ALL DIMENSIONS ARE IN INCHES

ALL ITEMS MANUFACUTRED PER CEMA 300 TOLERANCES WHEN APPLICABLE

FOR ALL REMAINING ITEMS, GENERAL TOLERANCES ARE AS FOLLOWS:
FRACTIONS = ±1/16
X.XX = ±0.01
X.XXX = ±0.005
ANGLES = ±2°

CUSTOMER:
POMPES & EQUIPMENT (PCP)
3076 A, RUE BERNARD-PILON
ST-MATHIEU-DE-BELOEIL, QC J3G 4S5

SHIP TO:
POMPES & EQUIPMENT (PCP)
3076 A, RUE BERNARD-PILON
ST-MATHIEU-DE-BELOEIL, QC J3G 4S5

QUOTE:
Y010821A-SYS-B

CUSTOMER PO:
C14-204979R2

CONFIDENTIALITY NOTE: THIS DRAWING AND ALL DESIGNS, DETAILS, INVENTIONS AND/OR DEVELOPMENTS COVERED ARE CONFIDENTIAL AND THE EXCLUSIVE PROPERTY OF WAM INC., WHICH RESERVES ALL PATENT AND OTHER RIGHTS. IT IS NOT TO BE PRINTED, PHOTOGRAPHED, COPIED, LOANED OR USED WITHOUT PERMISSION. IT MUST BE RETURNED ON REQUEST AND USED SUBJECT TO THE ABOVE CONDITIONS AND ONLY ON WORK AUTHORIZED BY WAM INC.

WAM® USA INC.
1300 TRIAD BLVD., FORT WORTH, TX 76131
PH. #817-232-2678, FAX #817-232-2676

DESCRIPTION:
9" DIA X 15'-0" LONG 30 DEG. INCLINED SCREW FEEDER WITH A 3 HP @ 34 RPM DRIVE UNIT

SHEET 1 OF 1
SIZE D
REV 1

| DRAWN | CHKD. | DATE | SCALE | DRAWING NO. |
|---|---|---|---|---|
| JAH | | 3/12/21 | 1:10 | 30014715 |

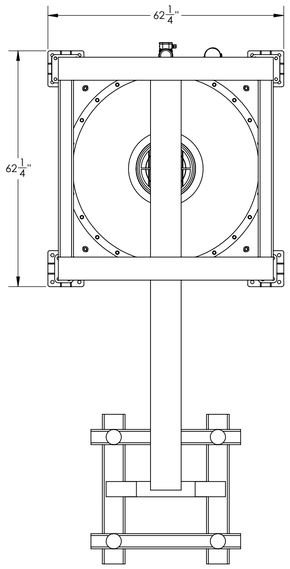


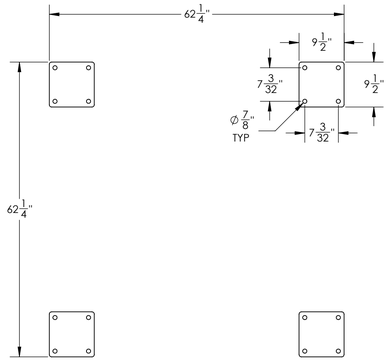


SECTION A-A
SCALE 1 : 16

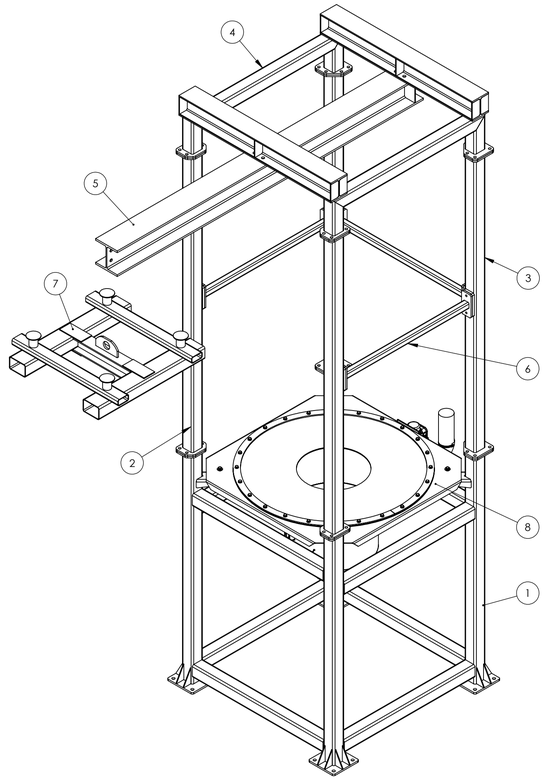


SPECIFICATIONS:

- QTY: TWO (2) SBB BULK BAG UNLOADERS
- FRAME TO BE ALL MS (UNLESS NOTED)
- FRAME FINISH: CEMA II WELDS, SURFACES TO BE SSPC-SP6 COMMERCIAL BLAST CLEAN, FOLLOWED BY ONE (1) RED OXIDE PRIMER COAT AND ONE (1) TOP COAT RAL 7001
- HOPPER TO BE 316L
- HOPPER FINISH: INTERNAL TREATMENT = SILKING 240, EXTERNAL GLASS BEAD BLASTING
- ZINC PLATED ASSEMBLY BOLTS
- UNIT TO BE ASSEMBLED TO VERIFY FIT, THEN DISASSEMBLED AND PALLETIZED FOR SHIPMENT
- SERAIL NUMBER(S): 30014715-B-01 THRU 02

| ITEM NO. | QTY. EACH | MAT'L | DESCRIPTION |
|---|---|---|---|
| 1 | 1 | MS | SBB CONE SUPPORT FRAME |
| 2 | 2 | MS | FRAME FRONT LEG |
| 3 | 2 | MS | FRAME REAR LEG |
| 4 | 1 | MS | FRAME TOP AND HOIST SUPPORT |
| 5 | 1 | MS | HOIST I-BEAM ASSEMBLY, W8 X 40 |
| 6 | 3 | MS | FRAME CROSS BRACE |
| 7 | 1 | MS | LIFTING FRAME |
| 8 | 1 | 316SS | WAMGROUP SBB CONE, CONSISTING OF 1250MM HOPPER, STD LEVEL DISCHARGING HOPPER POSITION, 273MM OUTLET DIAMETER, BLACK RUBBER SEAL, WITH 0.18 KW, 575V, 60 HZ VIBRATOR AND CUTTING SYSTEM |

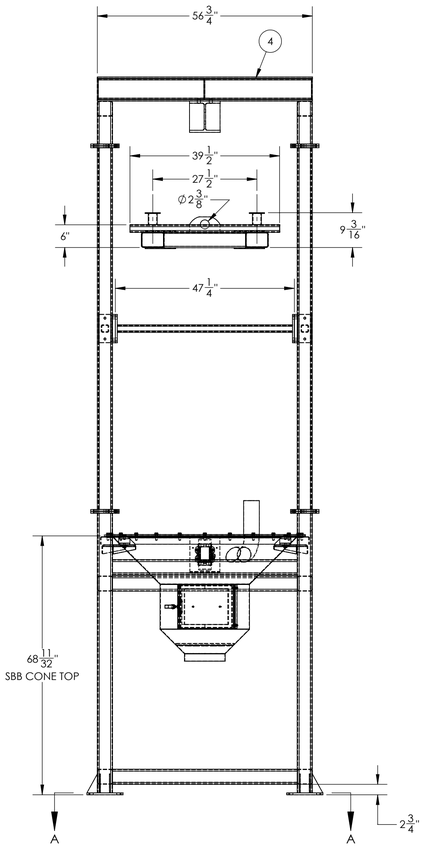


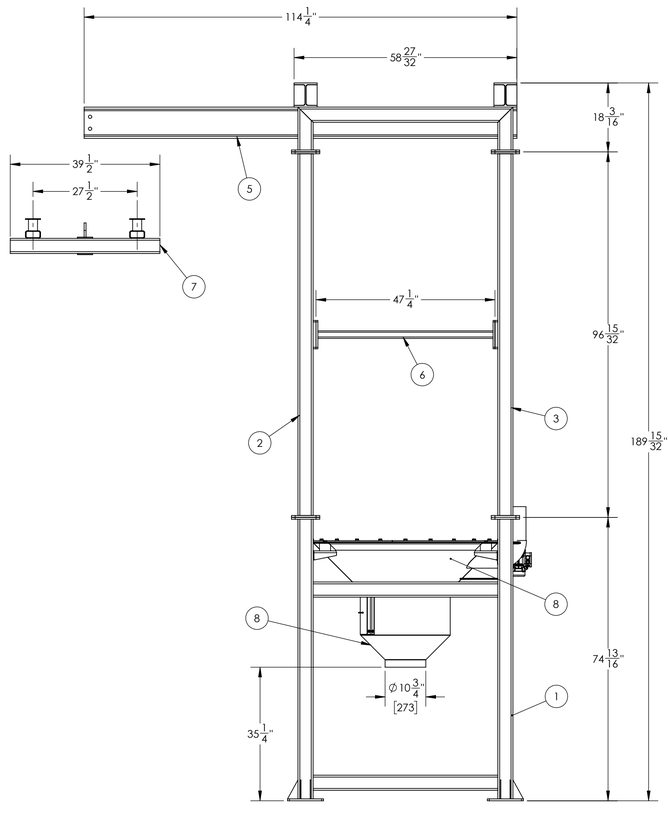


APPROVAL DRAWING

CUSTOMER NOTE: NO FABRICATION WILL TAKE PLACE BY WAM USA INC. WITHOUT A SIGNED AND APPROVED COPY FROM THE CUSTOMER. ANY CHANGES / MARKUPS WILL REQUIRE A REVISION AND RESUBMITTAL FOR FINAL APPROVAL. SHIP DATE CANNOT BE PROVIDED BEFORE FINAL APPROVAL.

_____ APPROVED AS DRAWN
_____ NOT APPROVED, RESUBMITTAL REQD.

SIGNED BY: _____

DATE: _____

| REVISIONS | | | |
|---|---|---|---|
| REV. | BY | DESCRIPTION | DATE |

UNLESS OTHERWISE SPECIFIED:
ALL DIMENSIONS ARE IN INCHES

ALL ITEMS MANUFACTURED PER CEMA 300 TOLERANCES WHEN APPLICABLE

FOR ALL REMAINING ITEMS, GENERAL TOLERANCES ARE AS FOLLOWS:
FRACTIONS = ±1/16
X.XX = ±0.01
X.XXX = ±0.005
ANGLES = ±2°

CUSTOMER:
POMPES & EQUIPMENT (PCP)
3076 A, RUE BERNARD-PILON
ST-MATHIEU-DE-BELOEIL, QC J3G 4S5

SHIP TO:
PCP INC
3076 A BERNARD-PILON
ST-MATHIEU-DE-BELOEIL, QC J3G 4S5
CANADA

QUOTE:
Y010821A-SYS-B

CUSTOMER PO:
C14-204979R2

WAM® USA INC.
1300 TRIAD BLVD., FORT WORTH, TX 76131
PH. #817-232-2678, FAX #817-232-2676

DESCRIPTION
SBB CONE AND FRAME ASSEMBLY, TYPE SBB/3.1.125.M.A., LESS HOIST, 316L HOPPER, MS FRAME

SHEET 1 OF 4

SIZE D

| DRAWN | CHKD. | DATE | SCALE | DRAWING NO. | REV |
|---|---|---|---|---|---|
| JAH | | 3/16/21 | 1:20 | 30014715-B | ~ |

CONFIDENTIALITY NOTE: THIS DRAWING AND ALL DESIGNS, DETAILS, INVENTIONS AND/OR DEVELOPMENTS COVERED ARE CONFIDENTIAL AND THE EXCLUSIVE PROPERTY OF WAM INC. WHICH RESERVES ALL PATENT AND OTHER RIGHTS. IT IS NOT TO BE PRINTED, PHOTOGRAPHED, COPIED, LOANED OR USED WITHOUT PERMISSION. IT MUST BE RETURNED ON REQUEST AND USED SUBJECT TO THE ABOVE CONDITIONS AND ONLY ON WORK AUTHORIZED BY WAM INC.

# RESERVOIR 4300L

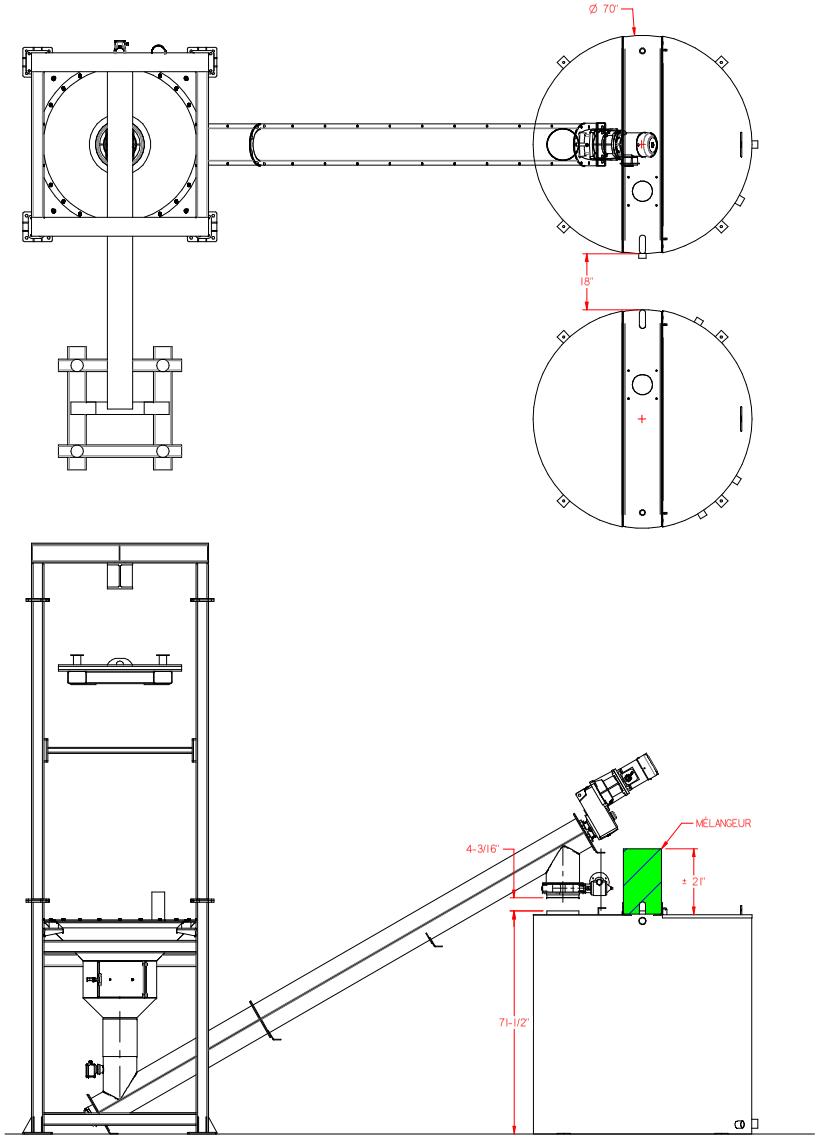


# RESERVOIR 5075L

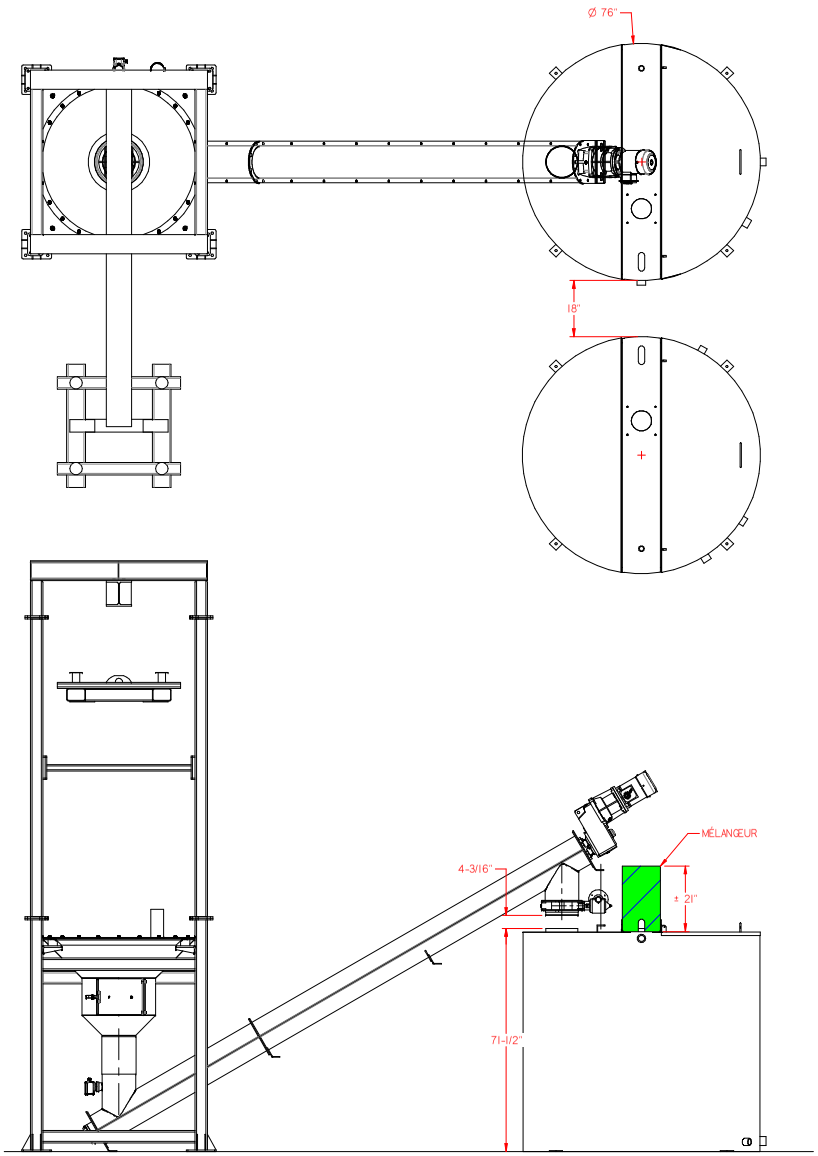


Ce document est la propriété de Lacal Technologie Inc. Il ne doit pas être dévoilé, utilisé ou reproduit en tout ou en partie sans l'autorisation écrite de Lacal Technologie Inc.

| Tolérancement (Sauf indications contraires) | |
|---|---|
| Coupe | ±1/16" |
| Pliage | ±0.5° |
| Usinage | ±0.005" |
| Montage | ±1/8" |

LACAL

| | |
|---|---|
| Projet | 21716-00 PCP |
| Titre | RESERVOIR 4300 L ET 5075L |
| Dessiné par | DM |
| Date | 18-03-2021 |
| Vérifié par | |
| No dessin | 21716.00.APPROBATION |
| Page | 5/5 |

# CAUSTIC HOIST
# 65HST68001

**Workshop drawing :**

- □ Approuved as is
- □ Approuved with correction(s)
- □ Rejected

**Approuved by**

Name : _____

Title : _____

Compagnie : _____

Signature : _____

VULCAN HOIST 1.5T 575/3/60 16 'LIFTING

1.5T SELF-LOCKING HOOK OPTION

32 FEET ZINC TREATED CHAIN

ZINC TREATMENT HOOK 1 FALL

PUSH BUTTON NEMA 4

SYNTHETIC OIL

30 'BASKET FOR RING CHAIN WITH ANGLE IRON

16 'LIFT, 12' CONTROL WIRE, 15 'FEED WIRE

SPEED: 26 PPM CAPACITY: 1.5 MT

# ELECTRIC HOIST

VULCAN
HOIST - PALAN

## VULCAN'S ELECTRIC HOIST:

- TWO YEARS WARRANTY
- Build to **ASME B30.16**
- Certified to **CSA C22.2 NO. 14 & NO. 33**
- Conforms **UL 508A & 1004-1**
- Design factor **5:1**

MADE IN CANADA CUSTOM-MADE

**VULCAN IS THE ONLY CANADIAN MANUFACTURER** of electric chain hoists, trolleys and winches.

Intertek




### Rugged Worm Gear Drive

- Worm gear drive: robust, reliable and the only one to offer controlled lowering of the load
- Speeds: 2ft/min to 52ft/min
- High quality ball bearing
- Industrial alloy gears running in oil bath

### Calibrated load chain

- High performance welded link chain: GR80, tempered and case-hardened alloy steel
- Black finish or zinc plated *(optional)*

### Safety brake

- Electromechanical brake reteins load even if power is lost
- Brake holds 200% of hoist working load limit

### Electric motor

- Voltages: 115/230-1Ph-50/60Hz, 230/460/575-3Ph-50/60Hz
- Instantly reversible electronic starter (single phase motors)
- Insulation: Class B (standard motors), Class F (high performance motors)
- Options: 2 speeds 3Ph motor, thermal relay, acidity/humidity treatment, TENV or TEFC

### Limit switches

- Adjustable upper/lower limit switches
- Chain guide with integrated limit switch *(optional)*

### Hooks

- Forged hooks with safety latches
- Bearing-mounted lower hooks
- Options: low headroom (lug), self-locking hook, zinc plating/epoxy paint (lower hooks)

### Control

- Standard voltage: 24VAC
- Options: 115VAC, NEMA 4 pendant, ergonomic pendant, emergency stop, radio-control, simultaneous hoist operation, Festoon power system

### Other options

- Hour/cycle counter
- Electromechanical overload protection
- Vinyl or metal chain container
- Raincoat cover
- Synthetic oil
- Inverted hoist (theater hoist)

3435, boul. Crémazie Est, Montréal (Québec) H1Z 2J2 / Tel.: 514 728.4527 / Fax: 514 374.4231 / vulcanhoist.com / info@vulcanhoist.com

# ELECTRIC HOIST

VULCAN
HOIST - PALAN

| 1 SPEED MODELS | | 1 Phase | | | 3 Phases | | | | |
|---|---|---|---|---|---|---|---|---|---|
| CAPACITY | Speed | 115 V. | 230 V. | HP | 230 V | 460 V | HP | 575 V | HP |
| 1/4T 1 FALL | 08 | L05A08 | | | | | | | |
| | 10 | | L05F10 | 3/4 | | | | | |
| | 14 | L05A14 | | 3/4 | | | | | |
| | 16 | | L05F16 | 3/4 | L05H16 | L05T16 | 1 | L05V16 | 1 |
| | 20 | L05A20 | L05F20 | 1 1/2 | L05H20 | L05H20 | 2 | L05V20 | 2 |
| | 26 | L05A26 | L05F26 | 1 1/2 | | | | | |
| | 28 | | | | L05H28 | L05T28 | 2 | L05V28 | 2 |
| | 33 | L05A33 | L05F33 | 1 1/2 | L05H33 | L05T33 | 2 | L05V33 | 2 |
| | 40 | L05A40 | L05F40 | 1 1/2 | L05H40 | L05T40 | 2 | L05V40 | 2 |
| | 52 | L05A52 | L05F52 | 1 1/2 | L05H52 | L05T52 | 2 | L05V52 | 2 |
| 1/2T 1 FALL | 08 | L1A08 | | 3/4 | | | | | |
| | 10 | | L1F10 | 3/4 | L1H10 | L1T10 | 1 | L1V10 | 1 |
| | 14 | L1A14 | | 3/4 | | | | | |
| | 16 | | L1F16 | 3/4 | L1H16 | L1T16 | 1 | L1V16 | 1 |
| | 20 | L1A20 | L1F20 | 1 1/2 | L1H20 | L1T20 | 2 | L1V20 | 2 |
| | 26 | L1A26 | L1F26 | 1 1/2 | | | | | |
| | 28 | | | | L1H28 | L1T28 | 2 | L1V28 | 2 |
| | 33 | L1A33 | L1F33 | 1 1/2 | L1H33 | L1T33 | 2 | L1V33 | 2 |
| | 40 | | L1F40 | 2 | L1H40 | L1T40 | 2 | L1V40 | 2 |
| | 52 | | | | L1H52 | L1T52 | 2 | L1V52 | 2 |
| 1T 1 FALL | 07 | L2A07 | L2F07 | 3/4 | | | | | |
| | 10 | | | | L2H10 | L2T10 | 1 | | 1 |
| | 14 | | L2F14 | 1 1/2 | L2H14 | L2T14 | 2 | L2V14 | 1 |
| | 20 | | L2F20 | 2 | L2H20 | | 2 | L2V20 | 2 |
| | 26 | | | 2 | | | | | |
| | 27 | | | | | | 2 | L2V27 | 2 |
| | 33 | | | | L2H33 | L2T33 | 4 1/2 | L2V33 | 3 |
| | 40 | | | | L2H40 | L2T40 | 4 1/2 | L2V40 | 3 |
| | 52 | | | | L2H52 | L2T52 | 4 1/2 | L2V52 | 3 |
| 1 1/2T 1 FALL | 07 | | L3F07 | 1 1/2 | | | | | |
| | 13 | | L3F13 | 2 | | | 2 | L3V13 | 2 |
| | 20 | | | | L3H20 | L3T20 | 4 1/2 | L3V20 | 3 |
| | 26 | | | | L3H26 | L3T26 | 4 1/2 | L3V26 | 4 1/2 |
| | 33 | | | | L3H33 | L3T33 | 4 1/2 | L3V33 | 4 1/2 |
| 2T 2 FALLS | 04 | L4A04 | L4F04 | 3/4 | | | | | |
| | 06 | | | | L4H06 | L4T06 | 2 | L4V06 | 2 |
| | 10 | | L4F10 | 2 | L4H10 | | 2 | L4V10 | 2 |
| | 13 | | L4F13 | 2 | | | | | |
| | 15 | | | | L4H15 | | 2 | L4V15 | 2 |
| | 20 | | | | L4H20 | L4T20 | 4 1/2 | L4V20 | 3 |
| | 26 | | | | L4H26 | L4T26 | 4 1/2 | L4V26 | 3 |

3435, boul. Crémazie Est, Montréal (Québec) H1Z 2J2 / Tel.: 514 728.4527 / Fax: 514 374.4231 / vulcanhoist.com / info@vulcanhoist.com

# ELECTRIC HOIST

VULCAN
HOIST - PALAN

| 1 SPEED MODELS | | 1 Phase | | | 3 Phases | | | | |
|---|---|---|---|---|---|---|---|---|---|
| CAPACITY | Speed | 115 V. | 230 V. | HP | 230 V | 460 V | HP | 575 V | HP |
| 3T 2 FALLS | 04 | | L6F04 | 1 1/2 | | | | | |
| | 05 | | | | L6H05 | L6T05 | 2 | L6V05 | 1 1/2 |
| | 07 | | L6F07 | 2 | | | | | |
| | 09 | | | | L6H09 | L6T09 | 4 1/2 | L6V09 | 3 |
| | 15 | | | | L6H16 | L6T16 | 4 1/2 | L6V16 | 3 |
| | 20 | | | | L6h20 | L6T20 | 4 1/2 | L6V20 | 4 1/2 |
| 5T 3 FALLS | 02 | L10A02 | L10F02 | 1 1/2 | | | | | |
| | 05 | | L10F04 | 2 | L10H05 | L10T05 | 4 1/2 | L10V05 | 3 |
| | 10 | | | | L10H10 | L10T10 | 4 1/2 | L10V10 | 4 1/2 |
| | 13 | | | | L10H13 | L10T13 | 4 1/2 | L10V13 | 4 1/2 |
| 10T 6 FALLS | 07 | | | | L20H07 | L20T07 | 9 | L20V07 | 9 |

| 2 SPEEDS MODELS | Speed | | 3 Phases | | | |
|---|---|---|---|---|---|---|
| CAPACITY | High | Low | 230 V | 460 V | 575 V | HP |
| 1/4T 1 FALL | 13 | 4,3 | L05H13X2 | L05T13X2 | L05V13X2 | 2 |
| | 20 | 6,7 | L05H20X2 | L05T20X2 | L05V20X2 | 2 |
| | 26 | 8,7 | L05H26X2 | L05T26X2 | L05V26X2 | 2 |
| | 33 | 11,0 | L05H33X2 | L05T33X2 | L05V33X2 | 2 |
| | 40 | 13,3 | L05H40X2 | L05T40X2 | L05V40X2 | 2 |
| | 52 | 17,3 | L05H52X2 | L05T52X2 | L05V52X2 | 2 |
| 1/2T 1 FALL | 07 | 2,3 | L1H07X2 | L1T07X2 | L1V07X2 | 2 |
| | 13 | 4,3 | L1H13X2 | L1T13X2 | L1V13X2 | 2 |
| | 20 | 6,7 | L1H20X2 | L1T20X2 | L1V20X2 | 2 |
| | 26 | 8,7 | L1H26X2 | L1T26X2 | L1V26X2 | 2 |
| | 33 | 11,0 | L1H33X2 | L1T33X2 | L1V33X2 | 2 |
| | 40 | 13,3 | L1H40X2 | L1T40X2 | L1V40X2 | 3 |
| | 52 | 17,3 | L1H52X2 | L1T52X2 | L1V52X2 | 3 |
| 1T 1 FALL | 07 | 2,3 | L2H07X2 | L2T07X2 | L2V07X2 | 2 |
| | 13 | 4,3 | L2H13X2 | L2T13X2 | L2V13X2 | 3 |
| | 20 | 6,7 | L2H20X2 | L2T20X2 | L2V20X2 | 3 |
| | 26 | 8,7 | L2H26X2 | L2T26X2 | L2V26X2 | 3 |
| 1 1/2T 1 FALL | 13 | 4,3 | L3H13X2 | L3T13X2 | L3V13X2 | 3 |
| | 20 | 6,7 | L3H20X2 | L3T20X2 | L3V20X2 | 3 |
| 2T 2 FALLS | 10 | 3,3 | L4H10X2 | L4T10X2 | L4V10X2 | 3 |
| | 13 | 4,3 | L4H13X2 | L4T13X2 | L4V13X2 | 3 |
| 3T 2 FALLS | 07 | 2,3 | L6H07X2 | L6T07X2 | L6V07X2 | 3 |

3435, boul. Crémazie Est, Montréal (Québec) H1Z 2J2 / Tel.: 514 728.4527 / Fax: 514 374.4231 / vulcanhoist.com / info@vulcanhoist.com

# ELECTRIC HOIST

VULCAN
HOIST - PALAN

## Standard hoist dimensions

| Capacity | Model | Falls | Weight (lbs) | A (in.) | B (in.) | C (in.) |
|---|---|---|---|---|---|---|
| 1/4T | L05 | 1 | 100 | 10 5/8 | 13 3/4 | 1 |
| 1/2T | L1 | 1 | 100 | 10 5/8 | 13 3/4 | 1 |
| 1T | L2 | 1 | 100 | 10 5/8 | 13 3/4 | 1 |
| 1 1/2T | L3 | 1 | 105 | 10 5/8 | 13 3/4 | 1 1/8 |
| 2T | L4 | 2 | 120 | 10 5/8 | 13 3/4 | 1 3/8 |
| 3T | L6 | 2 | 130 | 10 5/8 | 13 3/4 | 1 3/8 |
| 5T | L10 | 3 | 165 | 11 1/4 | 14 3/8 | 1 3/8 |

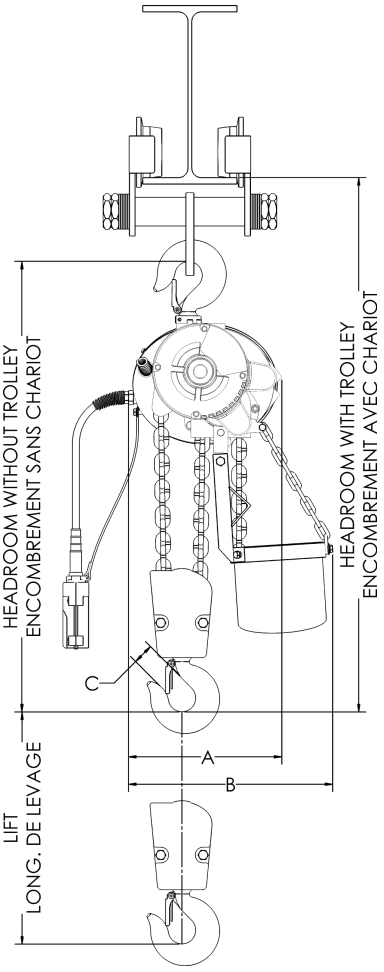


## Headroom clearances

| Capacity | Model | Hook mount* | | | Low headroom lug* | |
|---|---|---|---|---|---|---|
| | | Hoist only | w/ Electric Trolley | w/ Nova Trolley | w/ Electric Trolley | w/ Nova Trolley |
| 1/4T | L05 | 18 7/8 | 23 1/8 | 23 3/8 | 20 1/8 | 19 5/8 |
| 1/2T | L1 | 18 7/8 | 23 1/8 | 23 3/8 | 20 1/8 | 19 5/8 |
| 1T | L2 | 18 7/8 | 23 1/8 | 24 | 20 1/8 | 20 |
| 1 1/2T | L3 | 21 1/2 | 26 | 27 1/4 | 22 3/8 | 23 1/8 |
| 2T | L4 | 25 1/4 | 29 3/4 | 31 1/4 | 25 3/8 | 26 1/8 |
| 3T | L6 | 25 1/4 | 31 | 31 1/4 | 26 1/8 | 26 3/4 |
| 5T | L10 | 30 1/2 | 36 3/4 | 39 1/8 | 31 3/4 | 33 1/4 |

** Excluding chain guide. Chain guide adds 5 inches to headroom and is installed by default on hoists with linear chain speed ≥ 33 fpm, otherwise optional.*

## Motor options

| Motor | M (in.)** |
|---|---|
| 3/4 HP , 1 phase | 10 1/8 |
| 1 1/2 HP , 1 phase | 11 1/8 |
| 2 HP , 1 phase | 11 1/4 |
| 1 HP , 3 phases | 9 1/2 |
| 2 HP , 3 phases | 11 |
| 3 HP , 3 phases | 11 |
| 4 1/2 HP , 3 phases | 11 7/8 |
| 2 HP dual speed , 3 phases | 11 7/8 |
| 3 HP dual speed , 3 phases | 11 7/8 |

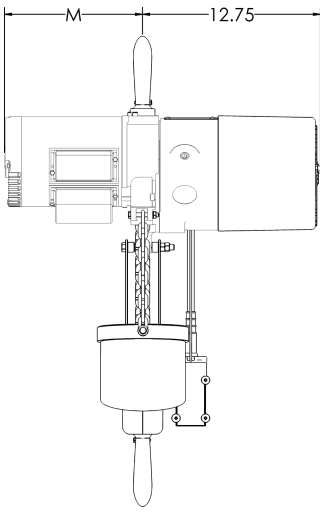


*** Motors with a fan will be approximately 1 ¼ inch longer*

3435, boul. Crémazie Est, Montréal (Québec) H1Z 2J2 / Tel.: 514 728.4527 / Fax: 514 374.4231 / vulcanhoist.com / info@vulcanhoist.com

2T VULCAN TROLLEY 24 PPM 575/3/60 BEAM-H

EMERGENCY STOP BUTTON WITH CONTACTOR

NEMA 4 CONTROL BOX

ENGINE TREATMENT (ACIDITY / HUMIDITY)

SYNTHETIC OIL

*3076 A, Bernard-Pilon, St-Mathieu de Beloeil, Qc, J3G 4S5  Tél.: (450) 922-4224 /  Fax: (450) 922-4223*

# ELECTRIC TROLLEY

VULCAN
HOIST - PALAN

## VULCAN'S ELECTRIC TROLLEY,
## a sturdy, durable equipment with leading edge safety features*:

Intertek

FABRIQUÉ AU CANADA
FAIT SUR MESURE

**VULCAN IS THE ONLY CANADIAN MANUFACTURER of electric chain hoists, trolleys and winches.**

### COMPATIBLE WITH ALL BEAMS
Whether the beam has an H profile, an I profile or a non-standard shape, Vulcan's electric trolley can adapt to it.

### LIMIT SWITCH
For a precise movement of the trolley on the beam.

### NEMA 4 OR NEMA 12 CASE
For an improved protection against humidity and/or dust.

### REVOLVING LIGHT
High-intensity revolving light for visible travels.

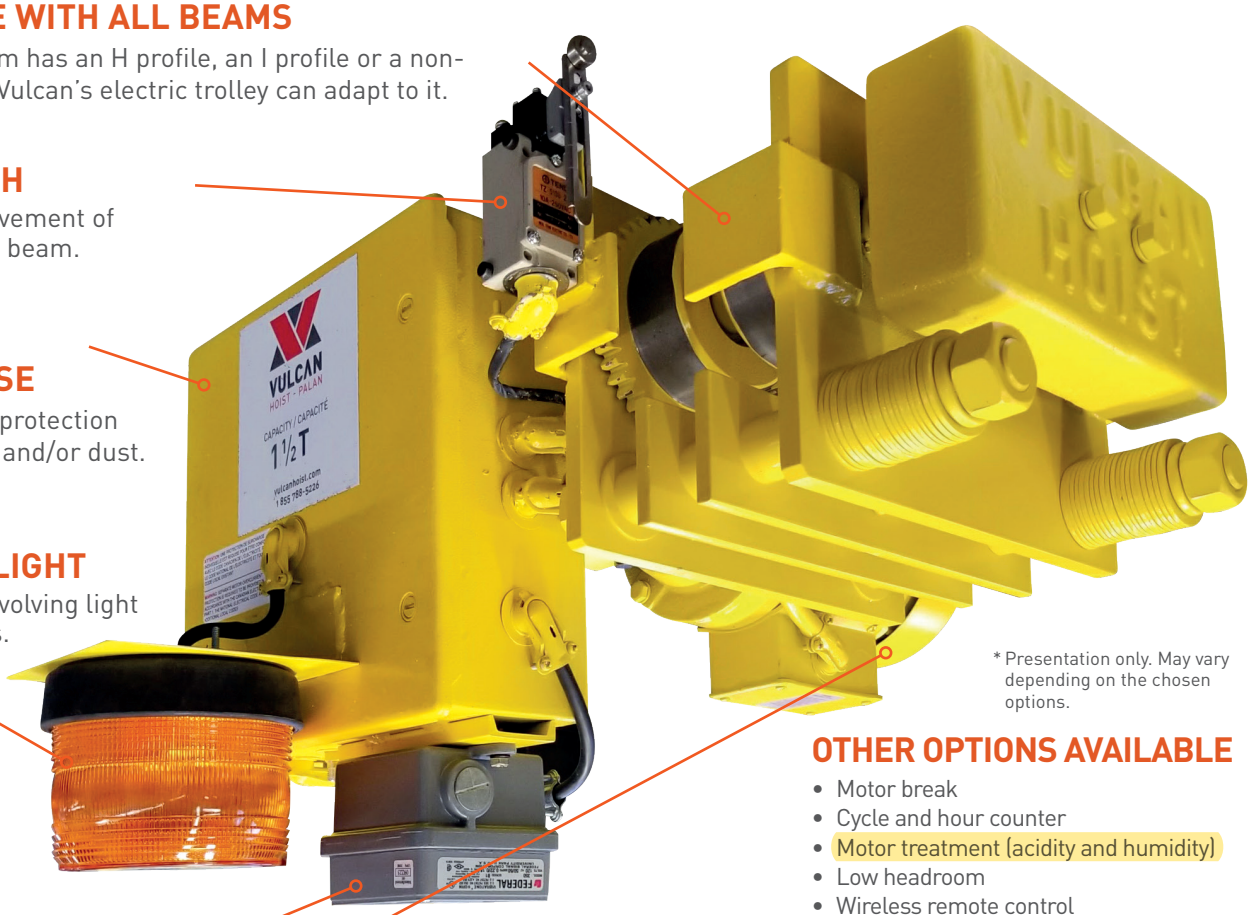


* Presentation only. May vary depending on the chosen options.

### HORN
Device produces a sound signal.

### MOTOR TREATMENTS
To use trolley in acidic, damp and/or dusty conditions.

### BASE FEATURES
- Emergency stop
- Thermal overload relay
- Controls & pendants
- TEFC motor
- Insulation Class F

### OTHER OPTIONS AVAILABLE
- Motor break
- Cycle and hour counter
- Motor treatment (acidity and humidity)
- Low headroom
- Wireless remote control
- Simultaneous control of multiple trolleys
- Synthetic oil
- Revolving light
- Buzzer / horn
- Festoon power system
- Travel limit switch
- Epoxy paint and custom colors
- NEMA 4 push button control pendant
- NEMA 4 & NEMA 12 control enclosure

PLEASE CONTACT US FOR MORE INFORMATIONS

3435, boul. Crémazie Est, Montréal (Québec) H1Z 2J2 / Tel.: 514 728.4527 / Fax: 514 374.4231 / vulcanhoist.com / info@vulcanhoist.com

# ELECTRIC TROLLEY

VULCAN HOIST - PALAN

## VULCAN'S ELECTRIC TROLLEY:

- Two-year warranty
- Sturdy design
- Machined-steel wheels and gears
- Built-in bumper and drop stop
- Single or double-speed motor
- Multiple travel speeds available
- ANSI/ASME B30.11 & CSA

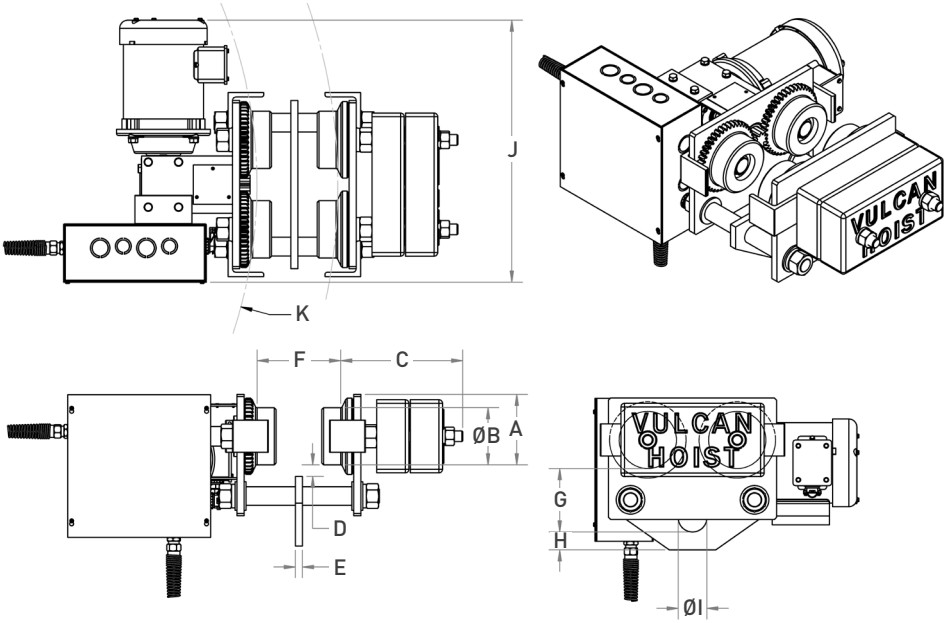


Like Vulcan's electric chain hoists, electric trolleys have a sturdy, durable design. Their wheels and gears are made of machined, case-hardened steel that provide a maximum resistance to wear. Bumpers and drop stops are built into the design to provide better safety and a protection against contacts.

The trolley design, with 2 support bolts (3 for the 10T model) provides an increased sturdiness under all load conditions.

Mainly designed to be used with Vulcan hoists, these trolleys can also be combined with hoists from other manufacturers on a wide array of H or I beam dimensions. Vulcan's electrical hoists are available with several travel speed options, as well as with a single speed or double-speed motor.

Lastly, depending on the chosen hoist-trolley combination and options, we carry a complete line of available controls, including wireless remote controls.

| MODEL | Capacity | A | B | C | D | E | F (Beam Flange)** | | G | H | I | J* | K (min. curve radius) | Counter-weight* | Weight (lb)* | Available speeds (fpm) (single-speed motor) | Available speeds (fpm) (double-speed motor) |
|---|---|---|---|---|---|---|---|---|---|---|---|---|---|---|---|---|---|
| | lb | | | | | | Min. | Max. | | | | | | | | | |
| ET1T | 2,000 | 4.0 | 2.8 | 7.8 | 0.75 | 0.38 | 2.50 | 5.50 | 4.3 | 1.00 | 2.0 | 18.5 | 28 | 2 | 156 | 9, 12, 18, 24, 36, 48, 72 | 18/6, 24/8, 36/12, 72/24 |
| ET2T | 4,000 | 4.9 | 4.0 | 8.5 | 0.81 | 0.50 | 4.00 | 6.50 | 4.4 | 1.25 | 2.0 | 18.5 | 33 | 1 | 170 | 9, 12, 18, 24, 36, 48, 72 | 18/6, 24/8, 36/12, 72/24 |
| ET3T | 6,000 | 5.8 | 4.5 | 5.8 | 0.81 | 0.63 | 4.00 | 6.50 | 5.8 | 1.25 | 2.0 | 18.8 | 35 | 1 | 207 | 9, 12, 18, 24, 36, 48 | 18/6, 24/8, 36/12 |
| ET5T | 10,000 | 6.3 | 5.3 | 6.0 | 0.69 | 0.63 | 4.00 | 7.00 | 6.2 | 1.25 | 2.0 | 19.8 | 50 | 1 | 267 | 9, 12, 18, 24, 36, 48 | 18/6, 24/8, 36/12 |
| ET10T | 20,000 | 7.4 | 6.0 | 4.2 | 1.63 | 0.75 | 4.00 | 6.25 | 9.3 | 1.81 | 2.5 | 21.5 | 61 | 0 | 390 | 18, 24, 36, 48 | 18/6, 24/8, 36/12 |

All measurements displayed in inches.

* Can vary depending on chosen options
** For larger beam flanges, please contact us

3435, boul. Crémazie Est, Montréal (Québec) H1Z 2J2 / Tel.: 514 728.4527 / Fax: 514 374.4231 / vulcanhoist.com / info@vulcanhoist.com

# SELF-LOCKING HOOK

VULCAN
HOIST - PALAN

## VULCAN'S SELF-LOCKING HOOK:

- Sturdy and safe build - requires minimal maintenance
- 1/4T to 5T capacity
- Complies with ANSI B30.10 and B30.16 standards
- 5:1 Safety Factor

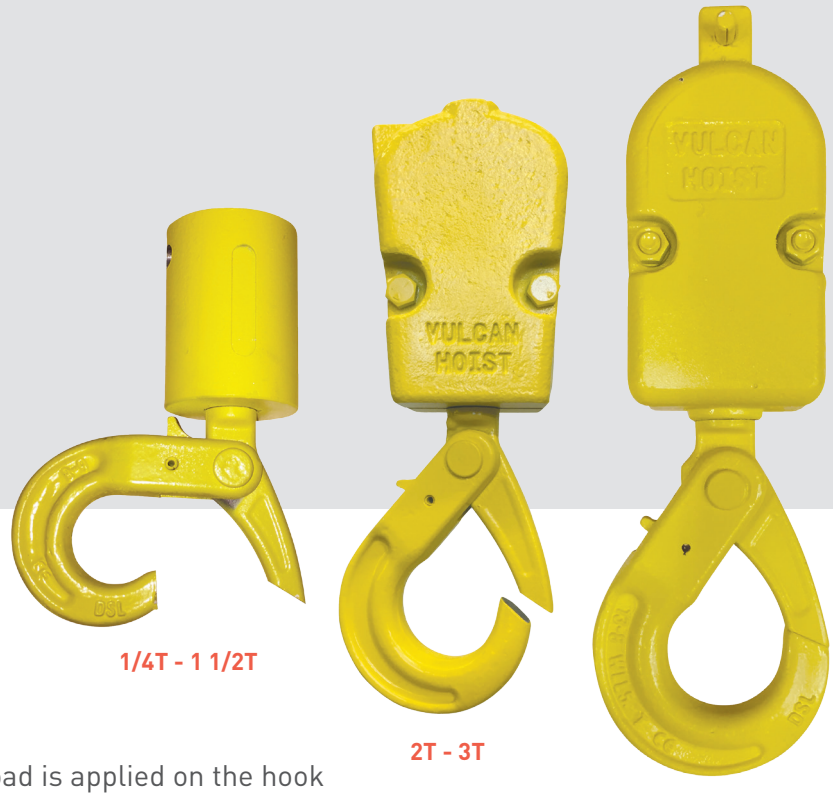


1/4T - 1 1/2T

2T - 3T

5T

### Sturdy

- Hook made of grade-80 forged steel alloy
- Safety yellow finish

### Safe

- Latch automatically closes and locks once load is applied on the hook
- Load fitting is secured inside the hook when hook is closed
- Once close, latch fits the hook profile perfectly

### Minimal maintenance

- No spring latch to replace
- Save time and money

### Easy to handle

- Simplified hook opening with ergonomic release

3435, boul. Crémazie Est, Montréal (Québec) H1Z 2J2 / Tel.: 514 728.4527 / Fax: 514 374.4231 / vulcanhoist.com / info@vulcanhoist.com

# SELF-LOCKING HOOK

VULCAN
HOIST - PALAN

## Vulcan hook for lifting mold installation

| MODEL | Capacity | Net weight | Dimensions | | | | | | | | |
|---|---|---|---|---|---|---|---|---|---|---|---|
| | | | A | B | C | D | D1 | E | I | J | K |
| | Tons (MT) | lb | in | | | | | | | | |
| HOPHL-301A | 0.25 | 0.75 | 3.66 | 0.81 | 2.75 | 1.09 | 1.30 | 0.91 | 1.31 | 0.88 | 0.47 |
| HOPHL-301B | 0.5 | 0.75 | 3.66 | 0.81 | 2.75 | 1.09 | 1.30 | 0.91 | 1.31 | 0.88 | 0.47 |
| HOPHL-301 | 1 | 0.75 | 3.66 | 0.81 | 2.75 | 1.09 | 1.30 | 0.91 | 1.31 | 0.88 | 0.47 |
| HOPHL-301C | 1.5 | 2.5 | 5.38 | 1.17 | 4.25 | 1.72 | 2.25 | 1.25 | 2.13 | 1.38 | 0.78 |
| HOPHL-302 | 2 | 2.5 | 5.38 | 1.17 | 4.25 | 1.72 | 2.25 | 1.25 | 2.13 | 1.38 | 0.78 |
| HOPHL-303 | 3 | 2.5 | 5.38 | 1.17 | 4.25 | 1.72 | 2.25 | 1.25 | 2.13 | 1.38 | 0.78 |
| HOPHL-305 | 5 | 6 | 6.50 | 1.56 | 5.31 | 2.00 | 2.50 | 1.50 | 2.50 | 1.72 | 0.84 |

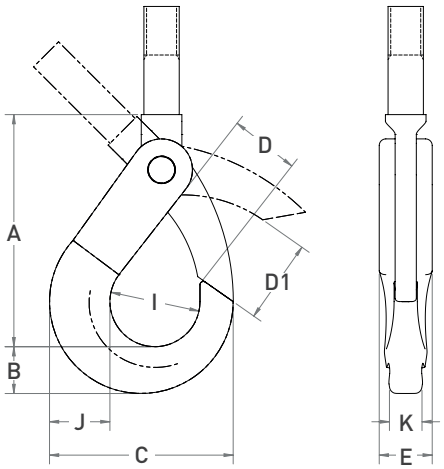


## Self-locking hook is also available already mounted in the Vulcan lifting mold

- 360-degree swivelling hook
- Steel ball bearing
- Shear-resisting steel alloy connecting pin for the chain

**1 FALL**
**1/4T - 1T**

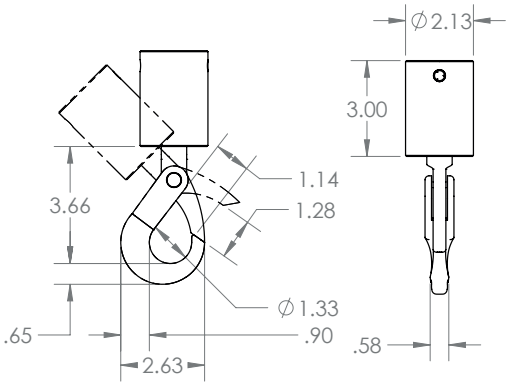


**2 FALLS**
**2T - 3T**

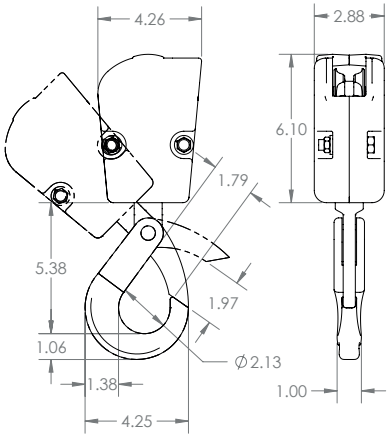


**1 FALL**
**1 1/2T**

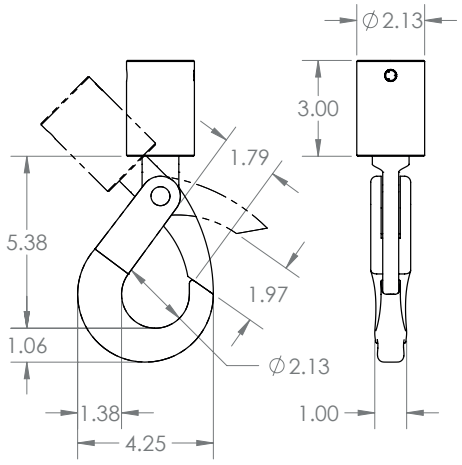


**3 FALLS**
**5T**

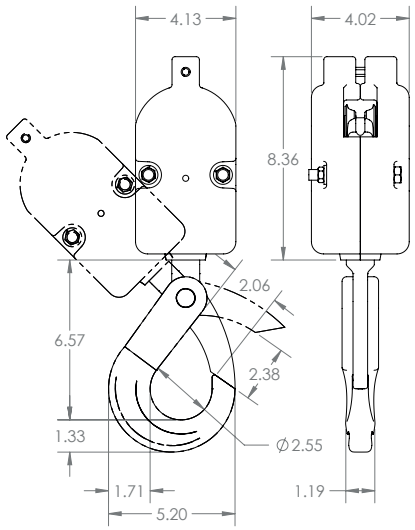


3435, boul. Crémazie Est, Montréal (Québec) H1Z 2J2 / Tel.: 514 728.4527 / Fax: 514 374.4231 / vulcanhoist.com / info@vulcanhoist.com

OLI

# VIBRATEURS INDUSTRIELS

## VIBRATEURS ÉLECTRIQUES POUR APPLICATIONS INDUSTRIELLES

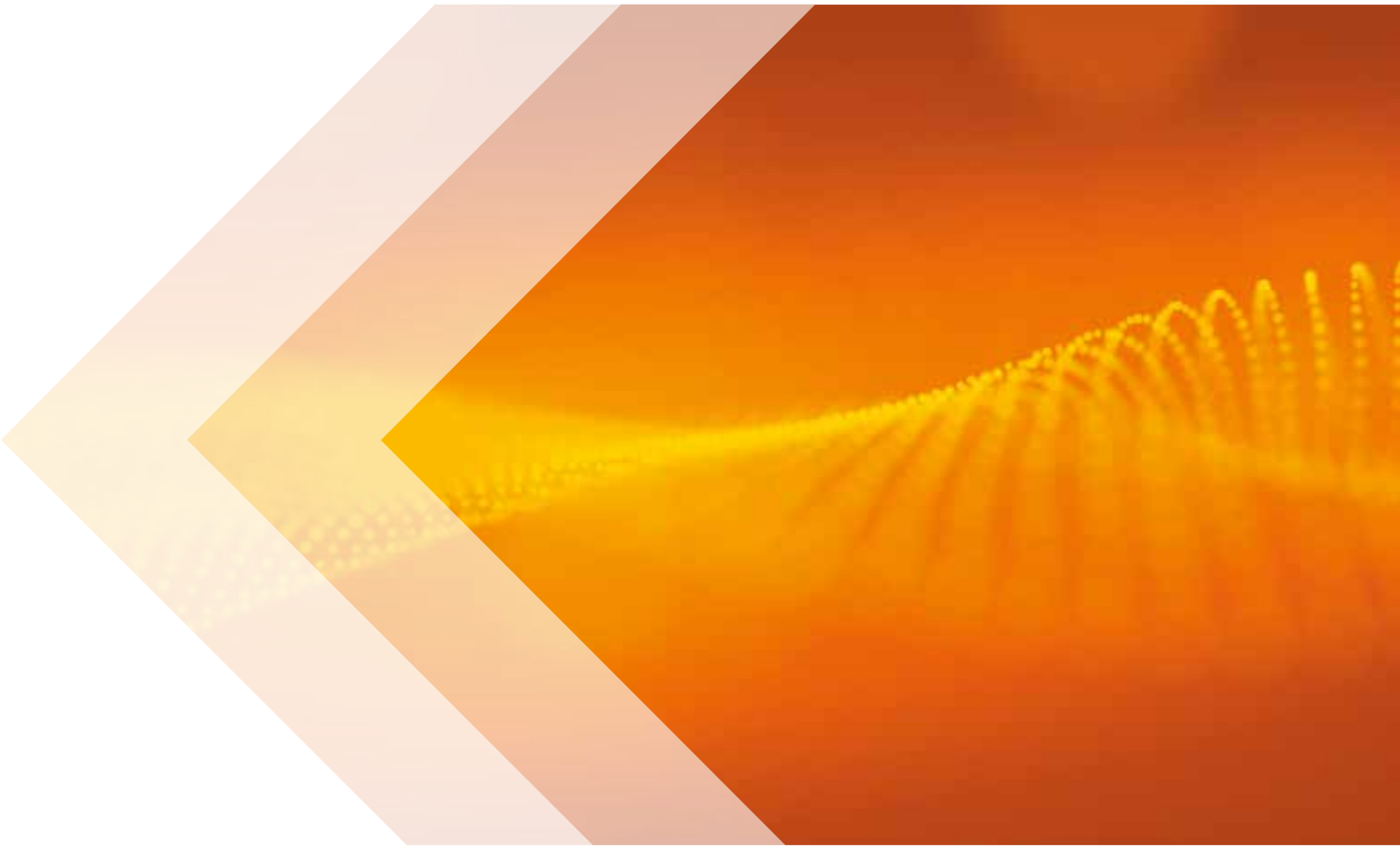

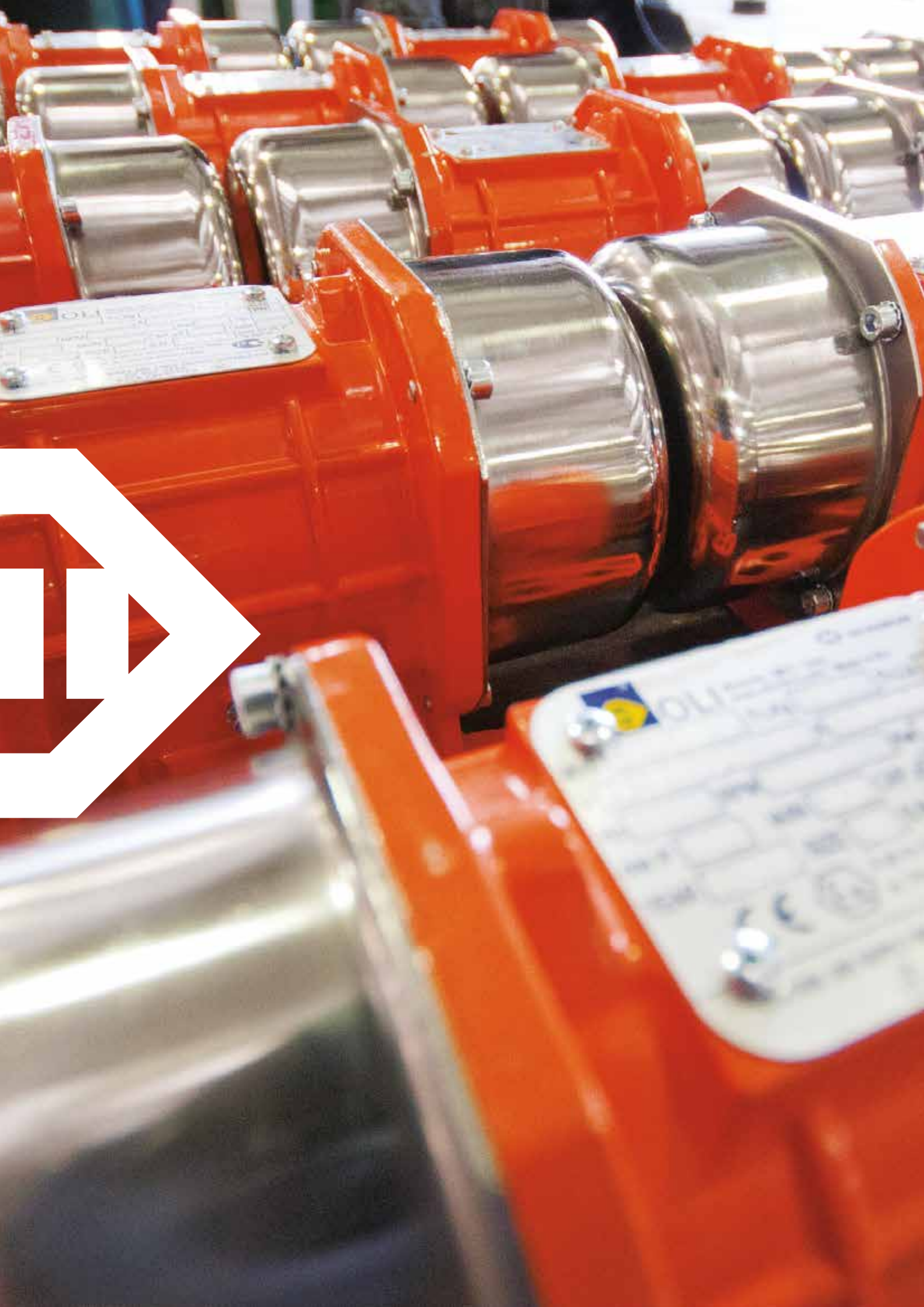



## Intro


Profil société 4
Caractéristiques techniques 6
Specifications standard 7
La gamme des vibrateurs OLI 8
Certifications 9
Comment choisir un motovibrateur? 10
Tensions nominales standard 11
Options 11


## MVE Gamme Standard


2 pôles 12
4 pôles 14
6 pôles 16
8 pôles 18
2 pôles monophasés 20
MICRO 22
MVE DC courant continu 24


## MVE-Exe Sécurité Accrue


2 pôles 26
4 pôles 28
6 pôles 30
8 pôles 32


## MVE-Exd Antidéflagrant


2 and 4 pôles 34
6 and 8 pôles 36


## MVE-Milling Minoterie


6, 8, 10, 12 pôles 38


## MVE-SV Spécial Crible


4 pôles 40


## MVE-SS Tout Inox


2, 4, 6, 8 pôles 42


## Installation


Montage 44
Comment modifier l'intensité des vibrations 46


## Dessins Techniques


Plan 2D pagina extra



# Leader mondial dans la technologie de vibration

OLI est **le leader global dans la fabrication des vibrateurs pneumatiques et électriques**. Un niveau élevé de service à la clientèle est garanti à travers 20 filiales de commerce OLI 70+ entrepots et nos 4 usines de fabrication dans le monde entier.

## LES 3 DIVISIONS OLI

### FOURNISSENT DES SOLUTIONS OPTIMALES POUR TOUTES LES EXIGENCES DES CLIENTS

| VIBRATEUR INDUSTRIELS | MATÉRIELS D'AIDE À L ÉCOULEMENT | CONSOLIDATION DU BÉTON |
|---|---|---|
|  |  |  |
| Vibarteurs électriques pour équipements vibrant. | Gamme complète de vibrateurs électriques et pneumatiques pour faciliter l'écoulement de produits. | Aiguilles vibrantes et convertisseur de fréquence pour une compaction efficace du béton. |



Initialement spécialisé dans les vibrateurs à immersion pour la compaction du béton, OLI est maintenant le leader mondial sur l'ensemble des technologies de la vibration, avec une **gamme complète de vibrateurs électriques et pneumatiques internes et externes.**

En fournissant des solutions et des **produits compétitifs de haute qualité pour les applications les plus rigoureuses**, OLI allie **performance** et **fiabilité** pour un marché en constante évolution. Promoteur de l'innovation, OLI s'efforce continuellement d'être en avance sur ses concurrents.

En tant que leader mondial dans les technologies de la vibration industrielle, l'une des principales préoccupations de la stratégie de OLI est la **livraison rapide à tout moment et partout dans le monde.**
Le service à la clientèle est d'une importance cruciale: il garantit le **traitement rapide des commandes** et les clients du monde entier peuvent avoir accès à des produits et des services de haute qualité.

Une equipe d'ingenieurs specialisees
dans la conception de solutions efficaces, fiables
et sures soutenues par un **management certifié**
**au niveau mondial permettent un partage de l'ensemble de nos expériences partout dans le monde.**

OLI fournit à ses clients des équipements de pointe  et le plan d'action pour la prochaine génération de produits est déjà en cours.



# CARACTÉRISTIQUES TECHNIQUES

## QUALITÉ



Matériaux de classe mondiale
Isolation classe F
Étanchéité durable
Roulements de qualité Premium
Conception robuste conçue FEM
Isolation sous vide
Analyse FMEA
Contrôle qualité 3D

## RENDEMENT

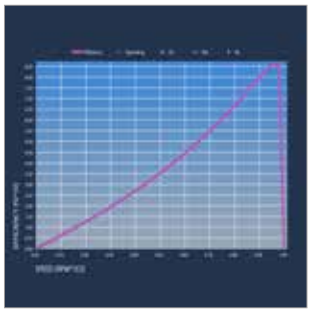

Rapport puissance/poids optimisé
Service continu S1
Conception électrique optimisée

## FIABILITÉ



Thermistance 130 °C
Dispositif de séparation de la graisse
Tropicalisation standard
Protection IP66
Isolation classe F

## FLEXIBILITÉ



Réglage facile de la masse
Différentes tensions et fréquences disponibles
Accès facile à la boîte de jonction
Anneaux de levage multiples



# Spécifications standards

| | GAMME | | | | | |
|---|---|---|---|---|---|---|
| Spécification | Standard | Sécurité accrue | Antidéflagrant | Minoterie | Spécial Crible | Tout Inox |
| **Alimentation électrique:** | Triphasé de 12V à 690V, 50Hz or 60Hz; Monophasé 110V 60Hz et 220V 50Hz. Les moteurs triphasés sont conçus pour les applications avec convertisseur. | Triphasés de 230 V à 500 V. 50 Hz à 60 Hz. Tous les moteurs sont conçus pour une application de type convertisseur de 20 Hz à la fréquence nominale. | Triphasés de 220 V à 575 V. 50 Hz à 60 Hz. Tous les moteurs sont conçus pour une application de type convertisseur de 20 Hz à la fréquence nominale. | | Triphasés de 220 V à 575 V. 50 Hz à 60 Hz. Tous les moteurs sont conçus pour une application de type convertisseur de 20 Hz à la fréquence nominale. | |
| **Temporisation** | Service continu (S1). | | | | | |
| **Structure de protection** | Protection mécanique IP66 selon CEI 60529. | | | | | |
| **Paliers** | Roulements à billes de la taille MICRO à 50. Roulements à rouleaux de la taille 60 à 110. | Roulements à billes de la taille 10 à 50. Roulements à rouleaux de la taille 60 à 90. | Roulements à rouleaux. | | | Roulements à billes de la taille 10 à 50 * Roulement à rouleaux pour taille 60. |
| **Couleur revêtement** | Revêtement en poudre polyester. Couleur standard RAL 2009. Peinture spéciale anticorrosion disponible sur demande sur la gamme Standard uniquement. | | | | | AISI 316 CORPS Sans revêtement |
| **Fixation** | Compatibilité avec les fixations des marques les plus connus, à la demande | | | | | / |
| **Installation et environnement de fonctionnement** | Pour utilisation à l'abri et en plein air | | | | | |
| | Température environnementale: -20 °C à +40 °C. Jusqu'à +55 ° C disponible sur demande. | Température environnementale: -20 °C à +40 °C. | Température environnementale: -20 °C à +40 °C. Jusqu'à +60 ° C disponible sur demande. | Température environnementale: -20 °C à +40 °C. | Température environnementale: -20 °C à +40 °C. | Température environnementale: -20 °C à +40 °C. |
| **Normes respectées** | Conformité avec la Directive européenne, Basse tension 2014/35/UE Directive Machines 2006/42/EC, ATEX 2014/34/UE | | | | | |
| **Couvercles masses** | Aluminium, pour vibrateurs de taille 10 à taille 50 et taille 100, 105, 110. Acier doux, de la taille 60 à la taille 91. Acier inoxydable AISI 304, pour motovibrateurs à courant continu. | Aluminium, pour vibrateurs de la taille 10 à la taille 50. Acier doux, de la taille 60 à la taille 91. | Acier inoxydable AISI 304 . | Acier. | Aluminium. | Acier inoxydable AISI 304 . |
| **Enroulements** | moteur asynchrone 2, 4, 6 et 8 pôles triphasés de taille 10 à 110; 2 pôles monophasé de taille 10 à 30. | moteur asynchrone 2, 4, 6 et 8 pôles triphasés. | | 6, 8 et 10 pôles moteur asynchrone triphasé. | 4 pôles. | moteur asynchrone 2, 4, 6 et 8 pôles triphasés. |
| | Matériaux d'isolement classe F (155 °C). Enroulements imprégnés sous vide; Thermistance 130 °C standard de taille 60. | | Interrupteur thermique 130 °C standard à partir de la taille 60. | Matériaux d'isolement classe F (155 °C). Enroulements imprégnés sous vide; Thermistance 130 °C standard de taille 60. | Interrupteur thermique 130 °C. | Matériaux d'isolement classe F (155 °C). Enroulements imprégnés sous vide. |
| **Brides** | Boîtier en fonte jusqu'à la taille 80 (y compris), fonte sphéroïdale à partir de la taille 100. | | | | Fonte sphéroïdale. | AISI 316 |
| **Cadre** | En aluminium jusqu'à la taille 50, fonte à partir de la taille 60. | | | | Aluminium. | AISI 316 |
| **Arbre** | Alliage d'acier hautement résistant au stress. | | | | | |
| **Masses excentriques** | Complètement réglable. | | | | | |

* Sauf pour MVE 710/15N-50A0 et MVE 510/1N-50A0

# La gamme des vibrateurs OLI

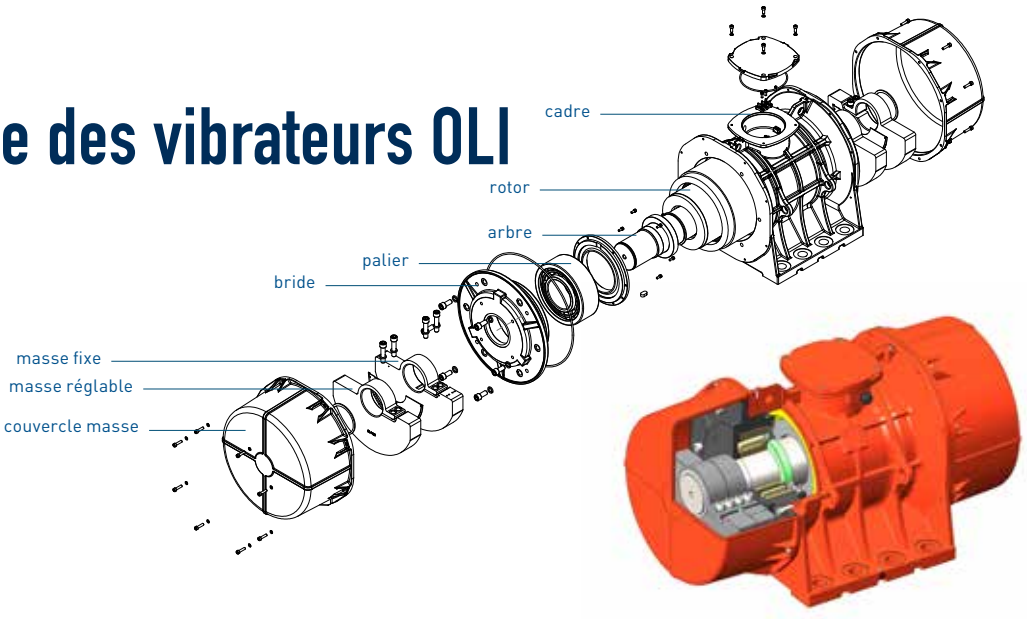


Fournissant une force centrifuge allant jusqu'a 26 000 kg et plusieurs tension d'alimentation possible, la gamme des moto-vibrateurs électriques OLI couvre plusieurs domaines d'application dans tous les pays et dans tous les secteurs industriels: des aliments aux minéraux, de la fonderie au recyclage et bien plus encore.
Les moto vibrateurs électriques OLI sont conçus et fabriqués en utilisant les dernières technologies et des matériaux et des composants haut de gamme.
Les corps des moteurs, les brides et les arbres de support sont conçus et fabriqués FMEA en alliage d'aluminium de première qualité, fonte et alliage d'acier pour résister aux applications lourdes et garantir un fonctionnement sans danger dans toutes les conditions.

Les enroulements imprégnés sous vide et les matériaux d'isolement classe F améliorent la fiabilité et la longévité.
Les roulements de qualité supérieure et le système de répartition de la graisse assurent une performance et une fiabilité sur le long terme.

Les masses excentriques réglables permettent un réglage facile de la force centrifuge fournie par le moteur.
Plusieurs certifications pour l'utilisation dans des environnements dangereux sont disponibles dans la gamme OLI afin de correspondre à la spécification plus exigeante dans le monde entier.

## ZONES ATEX

- RISQUE TRÈS OCCASIONEL
- RISQUE OCCASIONEL
- RISQUE CONSTANT

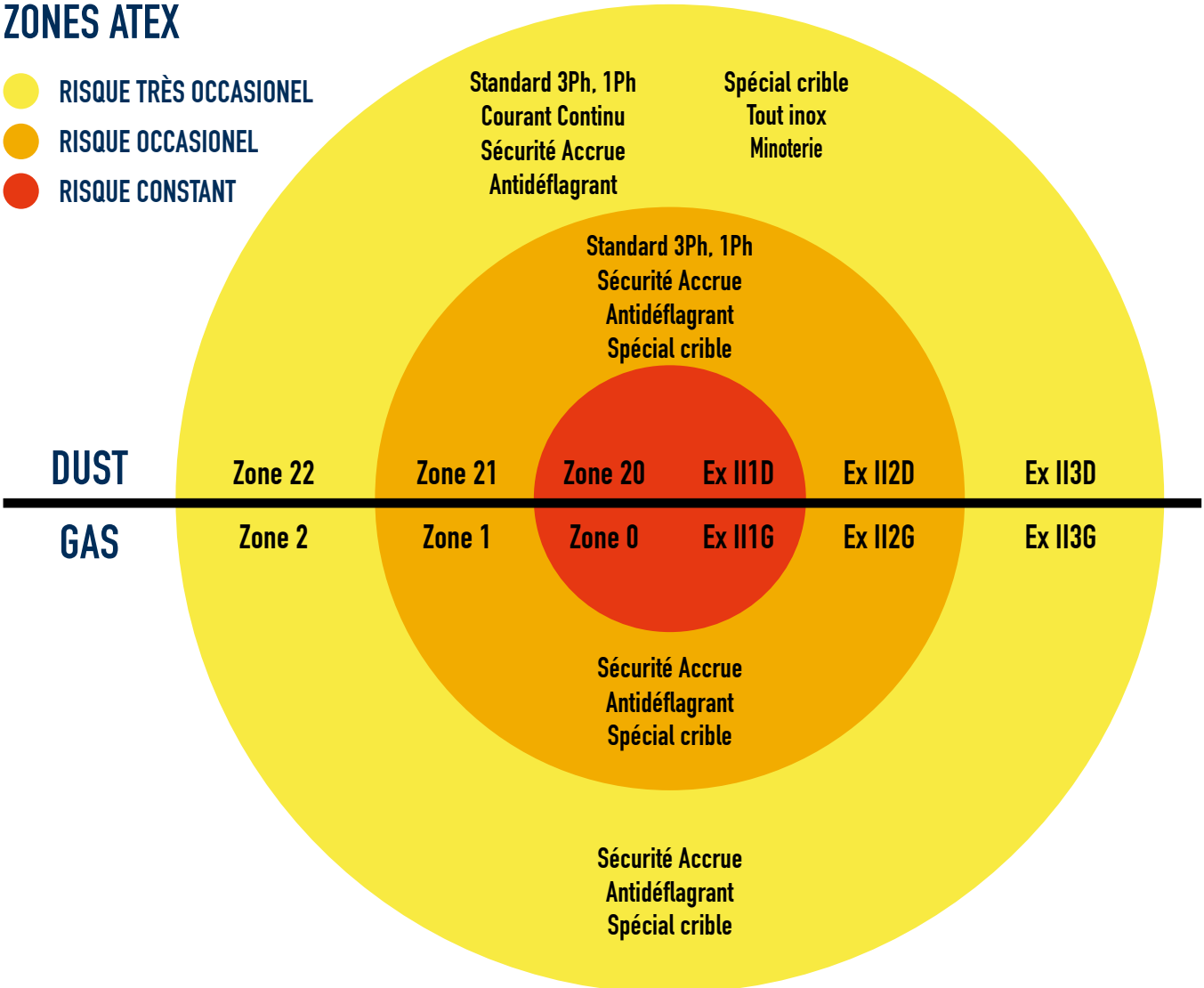

# Certifications

## Standard

Confirmité avec la directive Européene - Basse tension 2014/35/UE;Directive machine 2006/42/EC; ATEX 2014/34/UE - UL 1836. UL 1004-1 - SAC22.2 NO 25. 100. 145

| CATÉGORIE | CERTIFICATIONS | DIRECTIVE | GAZ | POUSSIÈRE |
|---|---|---|---|---|
| **ATEX zone 21**<br>Class II Div.2<br>Température nominale<br>-20/+40 °C * | | EN 60079-0, EN 60079-31 | n/a | II2D Ex tb IIIC Tx Db IP66 |
| | | IEC 60079-0, IEC 60079-31 | n/a | Ex tb IIIC Tx Db IP66 |
| | | UL 1004-1, UL 60079-0, UL 60079-31<br>CSA 22.2 100, CSA 22.2 60079-0,<br>CSA 22.2 60079-31 | n/a | Class II Div.2 Groups F, G T4 |

*Température ambiante de 55°C disponible à la demande

**Gamme MVE DC:** II3D Ex tc IIIC T100 IP66

Tx = T100°C jusqu'à la taille 30 inclus
Tx = T135°C à partir de la taille 40 et suppérieur"

## Traitement du grain, acier inoxydable et vibrateur à tamis

Confirmité avec la directive Européene - Basse tension 2014/35/UE; Directive machine 2006/42/EC; ATEX 2014/34/UE

| CATÉGORIE | CERTIFICATIONS | DIRECTIVE | GAZ | POUSSIÈRE |
|---|---|---|---|---|
| **ATEX zone 22**<br>Température nominale<br>-20/+40 °C | | EN 60079-0, EN 60079-31 | n/a | II3D Ex tc IIIC T100 IP66 |
| | | UL 1446, CSA C22.2 NO 0-10 | n/a | n/a |

## Sécurité Accrue

Confirmité avec la directive Européene - Basse tension 2014/35/UE; Directive machine 2006/42/EC; ATEX 2014/34/UE - UL 1836. UL 1004-1 - SAC22.2 NO 25. 100. 145

| CATÉGORIE | CERTIFICATIONS | DIRECTIVE | GAZ | POUSSIÈRE |
|---|---|---|---|---|
| **ATEX zone 1-21**<br>Class II Div.2 (dust)<br>Class I Div.2 (gas)<br>Température nominale<br>-20/+40 °C | | EN 60079-0, EN 60079-7 | II 2G Ex eb IIC T3 Gb | II2D Ex tb IIIC Tx Db IP66 |
| | | IEC 60079-0, IEC 60079-7 | Ex eb IIC T3 Gb | Ex tb IIIC Tx Db IP66 |
| | | UL 1004-1, UL 60079-0, UL 60079-7<br>CSA 22.2 100, CSA 22.2 60079-0,<br>CSA 22.2 60079-7 | Class I Div.2<br>Group A, B, C, D T3 | Class II Div.2 Groups F, G T4 |

Tx = T100°C jusqu'à la taille 30 inclus
Tx = T135°C à partir de la taille 40 et suppérieur"

## Antidéflagrant et vibrateur tamis

Confirmité avec la directive Européene - Basse tension 2014/35/UE; Directive machine 2006/42/EC; ATEX 2014/34/UE- UL 1836. UL 1004-1. UL 674 - CSAC22.2 NO 25. 100. 145

| CATÉGORIE | CERTIFICATIONS | DIRECTIVE | GAZ | POUSSIÈRE |
|---|---|---|---|---|
| **ATEX zone 1-21**<br>Class I Div.1<br>Class II Div.1 **<br>Température<br>nominale<br>-20/+60 °C | | EN 60079-0, EN 60079-31, EN 60079-1 | ATEX II 2G Ex db IIB T4 Gb | ATEX II 2D Ex tb IIIC T135°C Db |
| | | IEC 60079-0, IEC 60079-31,<br>IEC 60079-1 | IECEx Ex db IIB T4 Gb | IECEX Ex tb IIIC T135°C Db |
| | c UL us LISTED E488916 CLASS I DIV.1 GROUP C,D T4 | UL 1004-1,<br>UL 1004-3,UL1203;UL674,<br>CSA C22.2 No.145,<br>CSA C22.2 No.30-M1986. | CLASS I Div.1<br>Group C, D T4 IP66 | CLASS II Div.1 GROUP E,F,G** |

* Le vibrateur à tamis est également disponible avec les mêmes certifications que la gamme standard, non antidéflagrante, mentionnée dans le premier tableau de cette page.
** Bientôt disponible.

# Comment choisir un motovibrateur

## 1.

Choisissez tr/min et l'amplitude "e" (max. 0) adapté à votre application :

Vibration circulaire

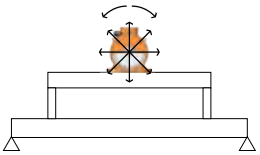

Vibration linéaire

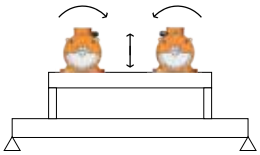

| Procédés d'application | Vibration | | Tours par minute | | | | | |
|---|---|---|---|---|---|---|---|---|
| | | | 50Hz | 750 | 1000 | 1500 | 3000 | 6000 |
| | Circulaire | Linéaire | 60Hz | 900 | 1200 | 1800 | 3600 | - |
| Transport | | ✓ | | | ✓ | ✓ | | |
| Séparation / Dégrillage / Dimensionnement | | ✓ | | ✓ | ✓ | ✓ | | |
| Positionnement / Dosage | | ✓ | | ✓ | ✓ | ✓ | | |
| Nettoyage filtre | ✓ | | | | | | ✓ | |
| Déchargement silo/ trémie | ✓ | | | | | | ✓ | |
| Lits fluidisés | | ✓ | | ✓ | ✓ | | | |
| Fonds vibrants | ✓ | | | | | ✓ | ✓ | |
| Compactage | | ✓ | | | | | ✓ | ✓ |
| Consolidation du béton | ✓ | | | | | | ✓ | ✓ |

| rpm | e (mm) | |
|---|---|---|
| | Min. | Max. |
| 3.600 | 0,3 | 0,6 |
| 3.000 | 0,3 | 0,8 |
| 1.800 | 1,2 | 2,2 |
| 1.500 | 1,4 | 2,6 |
| 1.200 | 2,5 | 4,0 |
| 1.000 | 3,0 | 5,2 |
| 9.00 | 3,5 | 5,5 |
| 750 | 3,5 | 6,0 |

## 2.

Choisissez un vibrateur MVE des tableaux des pages suivantes et utiliser son Wm dans cette formule:

$$e = 5 \times \frac{n \times Wm}{n \times M_{mot} + M_{vm}}$$

e = amplitude de vibration 0-pic (mm)

n = nombre de moteurs de vibration

Wm = moment dynamique (kgcm)

$M_{mot}$ = poids moteur (kg)

$M_{vm}$ = poids de la machine vibrante (sans matériel et moteurs)

## 3.

Vérifiez la valeur obtenue “e”:

- Si elle est similaire à celle nécessaire (étape 1) ➡ le modèle MVE est le bon.
- Si elle n’est pas similaire à celle nécessaire (étape 1) ➡ répétez le processus (étape 2) avec un modèle différent de MVE.

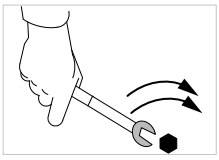

Pour obtenir des informations sur l’installation, voir annexe.

# Tensions nominales standard

Plusieurs tensions sont disponibles pour correspondre aux spécifications électriques locales
dans le monde entier à 50 Hz et 60 Hz.

Tous les vibrateurs OLI peuvent fonctionner avec une double tension en changeant simplement les connexions à l'intérieur de la boîte à bornes de **Star** à **Delta** ou vice-versa.

**En règle générale, les MVE avec une puissance nominale > 4,3kW ont une connexion de boîte à bornes Delta standard** , à la seule exception du MVE 5000/3E-75A1. **Les MVE plus petits ont une connexion de boîte à bornes Star standard.** Se référer aux tableaux de spécifications du produit pour voir le réglage d'usine de chaque modèle.
*Pour plus de détails sur les connexions « Star » et « Delta », voir page 45.*

| | Voltzahlen | Hz |
|---|---|---|
| | 200-230/345-400 V | 50/60 |
| | 220-240/380-415 V | 50 |
| | 380-415 V (Delta) * | 50 |
| | 230/460 V * | 60 |
| | 460 V (Delta) | 60 |
| | 330/575 V | 60 |
| | 575 V (Delta) * | 60 |
| | 460 V (Delta) | 60 |
| | 290-300/500-525 V | 50 |
| | 500-525 V (Delta) | 50 |
| | 207-253/414-480 V | 60 |
| | 220-240/380-415 V | 50 |
| | 220-277/380-480 V | 60 |
| | 380/415 V (Delta) | 50 |
| | 460 V (Delta) | 60 |

*** Tolérance de tension ± 10%**

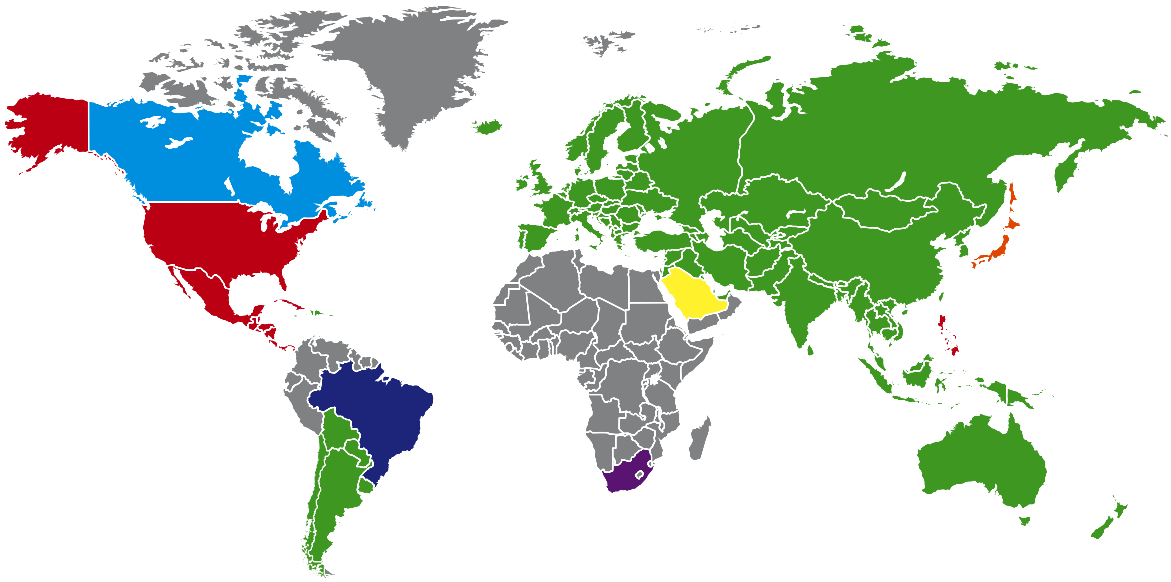

# Options



**ACIER-IT**
Spécialement développé pour les applications alimentaires avec un revêtement spécial contenant de l'acier inoxydable AiSi 316L.



**ARBRES ALLONGÉS**
Conçus pour l'utilisation de plusieurs vibrateurs.
Disponibles sur demande.



**COUVERCLES EN ACIER INOXYDABLE**
Disponibles avec une finition propre.
Couvercles de masse en acier inoxydable AiSi 304 (sur demande) pour les applications les plus exigeantes. Disponibles jusqu'à la taille 91.



**CHAUFFAGE**
À utiliser dans un environnement très froid.



**COUVERCLES FENDUS**
Développés pour les applications peu encombrantes. Disponibles à partir de la taille 60 et au-delà.



**EMPREINTE**
Empreinte du concurrent disponible sur demande.

**IMPORTANT:**
La tension nominale peut varier en fonction du niveau de certification admis lorsque certaines options sont choisies.

# MVE GAMME STANDARD

## 2 PÔLES – 3000/3600 rpm

Class II Div.2: Temp. Class **T4**
ExII 2D Temp. Class: ● 100 °C ● 135 °C

* Raccordements des bornes : **Y** Haute tension ; **Δ** Basse tension

| Wm (kgcm) | | Modèle | | Force centrifuge (kg) | | Poids (kg) | | SPÉCIFICATIONS ÉLECTRIQUES | | | | | | | | |
|---|---|---|---|---|---|---|---|---|---|---|---|---|---|---|---|---|
| | | | | | | | | Puissance d'entrée (kW) | | Courant nominal | | * Raccordements des bornes | Ia/In | | Presse-étoupe | |
| 50Hz | 60Hz | 50Hz | 60Hz | 50Hz | 60Hz | 50Hz | 60Hz | 50Hz | 60Hz | 50Hz (400V) | 60Hz (460V) | | 50Hz | 60Hz | Metrico | |
| 1,3 | 1,0 | MVE 60/3E-10A0 | MVE 60/36E-10A0 | 66 | 71 | 4 | | 0,09 | 0,09 | 0,25 | 0,23 | Y | 3,2 | 3,2 | M16 | ● |
| 2,0 | 1,3 | MVE 100/3E-10A0 | MVE 100/36E-10A0 | 98 | 95 | 5 | | 0,09 | 0,09 | 0,25 | 0,23 | Y | 3,2 | 3,2 | M16 | ● |
| 3,7 | 2,6 | MVE 200/3E-20A0 | MVE 200/36E-20A0 | 187 | 189 | 7 | | 0,15 | 0,18 | 0,35 | 0,30 | Y | 3,5 | 3,5 | M20 | ● |
| 3,7 | 2,6 | MVE 200/3E-23A0 | MVE 200/36E-23A0 | 187 | 189 | 7 | | 0,15 | 0,18 | 0,35 | 0,30 | Y | 3,5 | 3,5 | M20 | ● |
| 6,4 | 4,5 | MVE 300/3E-30A0 | MVE 300/36E-30A0 | 321 | 323 | 10 | | 0,25 | 0,28 | 0,52 | 0,45 | Y | 3,8 | 3,7 | M20 | ● |
| 8,0 | 5,7 | MVE 400/3E-30A0 | MVE 400/36E-30A0 | 407 | 411 | 10 | | 0,27 | 0,33 | 0,58 | 0,60 | Y | 3,7 | 3,7 | M20 | ● |
| 10,3 | 7,4 | MVE 500/3E-40A0 | MVE 500/36E-40A0 | 530 | 534 | 16 | | 0,50 | 0,58 | 0,96 | 0,97 | Y | 4,2 | 4,4 | M20 | ● |
| 14,9 | 10,6 | MVE 700/3E-40A0 | MVE 700/36E-40A0 | 758 | 765 | 17 | | 0,59 | 0,61 | 1,25 | 1,24 | Y | 4,5 | 5,2 | M20 | ● |
| 15,7 | 11,1 | MVE 800/3E-50A0 | MVE 800/36E-50A0 | 794 | 800 | 20 | | 0,70 | 0,84 | 1,45 | 1,50 | Y | 4,0 | 4,0 | M20 | ● |
| 20,3 | 14,0 | MVE 1200/3E-50A0 | MVE 1200/36E-50A0 | 1.005 | 1.013 | 21 | | 0,95 | 1,15 | 1,85 | 1,95 | Y | 4,6 | 4,7 | M20 | ● |
| 26,6 | 18,6 | MVE 1300/3E-50A0 | MVE 1300/36E-50A0 | 1.355 | 1.365 | 22 | | 1,30 | 1,38 | 2,44 | 2,25 | Y | 5,4 | 5,2 | M20 | ● |
| 26,6 | 18,6 | MVE 1300/3E-51A0 | MVE 1300/36E-51A0 | 1.355 | 1.365 | 22 | | 1,30 | 1,38 | 2,44 | 2,25 | Y | 5,4 | 5,2 | M20 | ● |
| 31,3 | 22,2 | MVE 1600/3E-60A0 | MVE 1600/36E-60A0 | 1.601 | 1.608 | 51 | 50 | 1,54 | 1,60 | 2,94 | 2,61 | Y | 6,1 | 6,4 | M25 | ● |
| 36,8 | 27,6 | MVE 2000/3E-60A0 | MVE 2000/36E-60A0 | 2.027 | 1.997 | 52 | 50 | 2,10 | 2,10 | 3,75 | 3,42 | Y | 6,7 | 6,6 | M25 | ● |
| 46,0 | 31,9 | MVE 2300/3E-60A0 | MVE 2300/36E-60A0 | 2.302 | 2.306 | 53 | 51 | 2,40 | 2,45 | 4,44 | 3,45 | Y | 6,2 | 6,5 | M25 | ● |
| 68,1 | 43,9 | MVE 3200/3E-75A1 | MVE 3200/36E-75A1 | 3.252 | 3.176 | 103 | 101 | 2,76 | 2,90 | 5,30 | 4,61 | Y | 8,5 | 8,4 | M32 | ● |
| 79,4 | 56,0 | MVE 4000/3E-75A1 | MVE 4000/36E-75A1 | 4.033 | 4.052 | 107 | 104 | 2,90 | 2,90 | 5,30 | 4,61 | Y | 8,7 | 9,9 | M32 | ● |
| 103,2 | 69,8 | MVE 5000/3E-75A1 | MVE 5000/36E-75A1 | 5.009 | 5.048 | 111 | 106 | 4,00 | 4,00 | 7,22 | 6,28 | Y | 8,7 | 10,0 | M32 | ● |
| 129,6 | 90,5 | MVE 6500/3E-85A0 | MVE 6500/36E-85A0 | 6.510 | 6.552 | 228 | 230 | 5,23 | 5,50 | 9,43 | 8,20 | Δ | 8,7 | 9,0 | M32 | ● |
| 179,6 | 129,6 | MVE 9000/3E-85A0 | MVE 9000/36E-85A0 | 9.025 | 9.375 | 240 | 235 | 9,50 | 9,30 | 17,80 | 14,40 | Δ | 8,6 | 8,8 | M32 | ● |
| 129,6 | 90,5 | MVE 6500/3E-86A0 | MVE 6500/36E-86A0 | 6.510 | 6.552 | 228 | 230 | 5,50 | 6,30 | 9,50 | 9,50 | Δ | 8,2 | 7,7 | M32 | ● |
| 179,6 | 129,6 | MVE 9000/3E-86A0 | MVE 9000/36E-86A0 | 9.025 | 9.375 | 240 | 235 | 6,60 | 7,70 | 11,50 | 11,50 | Δ | 8,2 | 8,2 | M32 | ● |

*Taille 10A0*



*Taille 60A0*



*Taille 105A0*



JUSQU'À LA TAILLE 60 (NON COMPRIS)
60Hz masses = 50Hz masses ajustées à 70%

SUPÉRIEUR À LA TAILLE 60 (Y COMPRIS)
Masses spécifiques pour 60Hz

Pour convertir les kg en Newton: N = 9.81 · kg

- II2D Ex tb IIIC Tx Db IP66
- Équipement et système de protection destinés pour l'utilisation en atmosphères explosibles (Zone 21) - Directive 2014/34/UE
- Conformité avec les Exigences Essentielles de Santé et de Sécurité
- IEC 60034-1, IEC EN 60079-0, IEC EN 60079-31

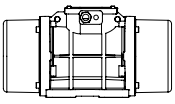

Dessins techniques sur la dernière page



| Modèle | | Dessein | Taille | SPÉCIFICATIONS DIMENSIONNELLES (mm) | | | | | | | | | | | | | | |
|---|---|---|---|---|---|---|---|---|---|---|---|---|---|---|---|---|---|---|
| | | | | C | | M | | A | B | Ø G | Trous | D | E | F | H | I | L | N |
| 50Hz | 60Hz | | | 50Hz | 60Hz | 50Hz | 60Hz | | | | N° | | | | | | | |
| MVE 60/3E-10A0 | MVE 60/36E-10A0 | A1 | 10A0 | 213 | | 45 | | Empreinte multiple | | | 4 | 130 | 135 | 11 | 50 | 96 | 107 | 85 |
| | | | | | | | | 62-74 | 106 | 9 | | | | | | | | |
| | | | | | | | | 33 | 83-102 | 7 | | | | | | | | |
| MVE 100/3E-10A0 | MVE 100/36E-10A0 | A1 | 10A0 | 213 | | 45 | | Empreinte multiple | | | 4 | 130 | 135 | 11 | 50 | 96 | 107 | 85 |
| | | | | | | | | 62-74 | 106 | 9 | | | | | | | | |
| | | | | | | | | 33 | 83-102 | 7 | | | | | | | | |
| MVE 200/3E-20A0 | MVE 200/36E-20A0 | B1 | 20A0 | 233 | | 54 | | 62-74 | 106 | 9 | 4 | 130 | 154 | 15 | 65 | 125 | 120 | 112 |
| MVE 200/3E-23A0 | MVE 200/36E-23A0 | G | 23A0 | 222 | | 55 | | Empreinte multiple | | | 4 | 164 | 140 | 25 | 82 | 116 | 159 | 110 |
| | | | | | | | | 62-74 | 106 | 9 | | | | | | | | |
| | | | | | | | | 65 | 140 | 13 | | | | | | | | |
| | | | | | | | | 115 | 135 | 11 | | | | | | | | |
| | | | | | | | | 135 | 115 | 11 | | | | | | | | |
| MVE 300/3E-30A0 | MVE 300/36E-30A0 | C1 | 30A0 | 254 | | 42 | | Empreinte multiple | | | 4 | 150 | 173 | 15 | 79 | 150 | 166 | 134 |
| | | | | | | | | 80 | 110 | 11 | | | | | | | | |
| | | | | | | | | 90 | 125 | 13 | | | | | | | | |
| | | | | | | | | 124 | 110 | 11 | | | | | | | | |
| | | | | | | | | 135 | 115 | 11 | | | | | | | | |
| MVE 400/3E-30A0 | MVE 400/36E-30A0 | C1 | 30A0 | 274 | | 52 | | Empreinte multiple | | | 4 | 150 | 173 | 15 | 79 | 150 | 166 | 134 |
| | | | | | | | | 80 | 110 | 11 | | | | | | | | |
| | | | | | | | | 90 | 125 | 13 | | | | | | | | |
| | | | | | | | | 124 | 110 | 11 | | | | | | | | |
| | | | | | | | | 135 | 115 | 11 | | | | | | | | |
| MVE 500/3E-40A0 | MVE 500/36E-40A0 | D1 | 40A0 | 330 | | 78 | | 105 | 140 | 13 | 4 | 170 | 196 | 20 | 92 | 169 | 166 | 158 |
| MVE 700/3E-40A0 | MVE 700/36E-40A0 | D1 | 40A0 | 330 | | 78 | | 105 | 140 | 13 | 4 | 170 | 196 | 20 | 92 | 169 | 166 | 158 |
| MVE 800/3E-50A0 | MVE 800/36E-50A0 | D1 | 50A0 | 321 | | 62 | | 120 | 170 | 17 | 4 | 208 | 210 | 22 | 96 | 185 | 192 | 170 |
| MVE 1200/3E-50A0 | MVE 1200/36E-50A0 | D1 | 50A0 | 321 | | 62 | | 120 | 170 | 17 | 4 | 208 | 210 | 22 | 96 | 185 | 192 | 170 |
| MVE 1300/3E-50A0 | MVE 1300/36E-50A0 | D1 | 50A0 | 321 | | 62 | | 120 | 170 | 17 | 4 | 208 | 210 | 22 | 96 | 185 | 192 | 170 |
| MVE 1300/3E-51A0 | MVE 1300/36E-51A0 | D1 | 51A0 | 326 | | 63 | | 120 | 170 | 17 | 4 | 208 | 220 | 25 | 105 | 203 | 192 | 187 |
| MVE 1600/3E-60A0 | MVE 1600/36E-60A0 | D1 | 60A0 | 402 | | 90 | | 140 | 190 | 17 | 4 | 230 | 260 | 26 | 124 | 240 | 218 | 222 |
| MVE 2000/3E-60A0 | MVE 2000/36E-60A0 | D1 | 60A0 | 402 | | 90 | | 140 | 190 | 17 | 4 | 230 | 260 | 26 | 124 | 240 | 218 | 222 |
| MVE 2300/3E-60A0 | MVE 2300/36E-60A0 | D1 | 60A0 | 402 | | 90 | | 140 | 190 | 17 | 4 | 230 | 260 | 26 | 124 | 240 | 218 | 222 |
| MVE 3200/3E-75A1 | MVE 3200/36E-75A1 | D1 | 75A1 | 516 | | 117 | | 155 | 255 | 25 | 4 | 304 | 314 | 30 | 147 | 285 | 277 | 265 |
| MVE 4000/3E-75A1 | MVE 4000/36E-75A1 | D1 | 75A1 | 516 | | 117 | | 155 | 255 | 25 | 4 | 304 | 314 | 30 | 147 | 285 | 277 | 265 |
| MVE 5000/3E-75A1 | MVE 5000/36E-75A1 | D1 | 75A1 | 564 | 516 | 141 | 117 | 155 | 255 | 25 | 4 | 304 | 314 | 30 | 147 | 285 | 277 | 265 |
| MVE 6500/3E-85A0 | MVE 6500/36E-85A0 | D1 | 85A0 | 624 | | 130 | | 200 | 320 | 28 | 4 | 385 | 402 | 40 | 203 | 394 | 360 | 378 |
| MVE 9000/3E-85A0 | MVE 9000/36E-85A0 | D1 | 85A0 | 624 | | 130 | | 200 | 320 | 28 | 4 | 385 | 402 | 40 | 203 | 394 | 360 | 378 |
| MVE 6500/3E-86A0 | MVE 6500/36E-86A0 | D1 | 86A0 | 624 | | 130 | | 200 | 320 | 28 | 4 | 385 | 402 | 40 | 203 | 394 | 360 | 378 |
| MVE 9000/3E-86A0 | MVE 9000/36E-86A0 | D1 | 86A0 | 624 | | 130 | | 200 | 320 | 28 | 4 | 385 | 402 | 40 | 203 | 394 | 360 | 378 |

## Note:

REMARQUE: Dimensions avec précision grossière conformément à UNI 22768/1

Ces informations sont fournies sans garantie, représentation, incitation ou licence d'aucune sorte. Les informations sont précises selon la connaissance de OLI ou sont obtenues de sources considérées comme exactes. OLI n'assume donc aucune responsabilité légale.
La dernière version du catalogue mis à jour est disponible en ligne.

Intertek

» Class II Div.2 Group F, G T4
» Conforme à UL 1004-1,UL 1004-3, UL60079-31, UL60079-0, CSA 60079-0, CSA 60079- 31, CSA 22.2 N°100, CSA 22.2 N°77

# MVE GAMME STANDARD

## 4 PÔLES – 1500/1800 rpm

Class II Div.2: Temp. Class **T4**
ExII 2D Temp. Class: ● 100 °C ● 135 °C

* Raccordements des bornes : **Y** Haute tension ; **Δ** Basse tension

| Wm (Kgcm) | | Modèle | | Force centrifuge (kg) | | Poids (kg) | | SPÉCIFICATIONS ÉLECTRIQUES | | | | | | | | |
|---|---|---|---|---|---|---|---|---|---|---|---|---|---|---|---|---|
| | | | | | | | | Puissance d'entrée (kW) | | Courant nominal | | * Raccordements des bornes | Ia/In | | Presse-étoupe | |
| 50Hz | 60Hz | 50 Hz | 60 Hz | 50Hz | 60Hz | 50Hz | 60Hz | 50Hz | 60Hz | 50Hz (400V) | 60Hz (460V) | | 50Hz | 60Hz | Metrico | |
| 2.0 | 2.0 | MVE 40/15E-10A0 | MVE 40/18E-10A0 | 25 | 36 | 5 | | 0,05 | 0,04 | 0,31 | 0,31 | Y | 2,2 | 2,2 | M16 | ● |
| 6.0 | 4.2 | MVE 90/15E-20A0 | MVE 90/18E-20A0 | 75 | 76 | 7 | | 0,07 | 0,08 | 0,31 | 0,25 | Y | 2,2 | 2,2 | M20 | ● |
| 6.0 | 4.2 | MVE 90/15E-23A0 | MVE 90/18E-23A0 | 75 | 76 | 7 | | 0,07 | 0,08 | 0,31 | 0,25 | Y | 2,2 | 2,2 | M20 | ● |
| 7.7 | 5,4 | MVE 100/15E-20A0 | MVE 100/18E-20A0 | 97 | 98 | 7 | | 0.07 | 0.08 | 0.31 | 0.25 | Y | 2.2 | 2.2 | M20 | ● |
| 15.4 | 10.8 | MVE 200/15E-30A0 | MVE 200/18E-30A0 | 194 | 196 | 12 | | 0,12 | 0,15 | 0,49 | 0,50 | Y | 2,2 | 2,2 | M20 | ● |
| 33.4 | 23.4 | MVE 400/15E-40A0 | MVE 400/18E-40A0 | 420 | 423 | 20 | | 0,27 | 0,32 | 0,84 | 0,86 | Y | 2,7 | 2,7 | M20 | ● |
| 40.1 | 28.1 | MVE 500/15E-40A0 | MVE 500/18E-40A0 | 504 | 508 | 21 | | 0,35 | 0,40 | 1,06 | 1,09 | Y | 3,0 | 2,9 | M20 | ● |
| 26.6 | 18.6 | MVE 300/15E-50A0 | MVE 300/18E-50A0 | 334 | 336 | 22 | | 0,62 | 0,73 | 1,32 | 1,20 | Y | 3,2 | 3,4 | M20 | ● |
| 26.6 | 18.6 | MVE 300/15E-51A0 | MVE 300/18E-51A0 | 334 | 336 | 22 | | 0,62 | 0,73 | 1,32 | 1,20 | Y | 3,2 | 3,4 | M20 | ● |
| 56.8 | 39.4 | MVE 700/15E-50A0 | MVE 700/18E-50A0 | 714 | 712 | 27 | | 0,62 | 0,73 | 1,32 | 1,20 | Y | 3,2 | 3,4 | M20 | ● |
| 56.8 | 39.4 | MVE 710/15E-50A0 | MVE 710/18E-50A0 | 714 | 712 | 27 | | 0,62 | 0,73 | 1,32 | 1,20 | Y | 3,2 | 3,4 | M20 | ● |
| 75.6 | 52.9 | MVE 950/15E-50A0 | MVE 950/18E-50A0 | 950 | 957 | 33 | | 0,64 | 0,77 | 1,40 | 1,35 | Y | 4,2 | 4,2 | M20 | ● |
| 87.7 | 61.4 | MVE 1100/15E-51A0 | MVE 1100/18E-51A0 | 1.102 | 1.110 | 35 | 28,5 | 0,64 | 0,77 | 1,40 | 1,35 | Y | 4,0 | 4,0 | M20 | ● |
| 108.6 | 76.7 | MVE 1400/15E-60A0 | MVE 1400/18E-60A0 | 1.364 | 1.388 | 63,5 | 60,5 | 0,70 | 0,84 | 1,78 | 1,78 | Y | 4,2 | 4,2 | M25 | ● |
| 137.3 | 92.0 | MVE 1700/15E-60A0 | MVE 1700/18E-60A0 | 1.725 | 1.664 | 67,5 | 64 | 1,13 | 1,30 | 2,16 | 2,09 | Y | 4,9 | 4,7 | M25 | ● |
| 187.7 | 137.4 | MVE 2400/15E-60A0 | MVE 2400/18E-60A0 | 2.358 | 2.485 | 68 | 65 | 1,57 | 1,88 | 3,20 | 3,20 | Y | 5,1 | 5,1 | M25 | ● |
| 203.5 | 135.6 | MVE 2500/15E-70A0 | MVE 2500/18E-70A0 | 2.557 | 2.454 | 86,5 | 74 | 1,76 | 2,00 | 3,08 | 3,00 | Y | 6,2 | 6,3 | M25 | ● |
| 248.7 | 169.8 | MVE 3000/15E-70A0 | MVE 3000/18E-70A0 | 3.124 | 3.071 | 94,5 | 87 | 1,90 | 2,30 | 3,68 | 3,30 | Y | 6,7 | 6,8 | M25 | ● |
| 306.7 | 204.7 | MVE 3800/15E-75A0 | MVE 3800/18E-75A0 | 3.853 | 3.704 | 125 | 113 | 2,20 | 2,60 | 4,15 | 4,15 | Y | 7,0 | 7,0 | M32 | ● |
| 343.2 | 240.9 | MVE 4300/15E-75A0 | MVE 4300/18E-75A0 | 4.312 | 4.359 | 136 | 120 | 2,50 | 3,00 | 4,50 | 4,60 | Y | 7,2 | 7,4 | M32 | ● |
| 437.4 | 303.7 | MVE 5500/15E-80A0 | MVE 5500/18E-80A0 | 5.495 | 5.495 | 181 | 169 | 2,88 | 3,45 | 6,50 | 5,50 | Y | 7,3 | 7,2 | M32 | ● |
| 576.8 | 397.3 | MVE 7200/15E-85A0 | MVE 7200/18E-85A0 | 7.246 | 7.188 | 237 | 231 | 4,00 | 4,80 | 8,50 | 8,70 | Δ | 7,0 | 7,1 | M32 | ● |
| 718.0 | 498.8 | MVE 9000/15E-85A0 | MVE 9000/18E-85A0 | 9.020 | 9.023 | 252 | 241 | 7,35 | 8,50 | 13,40 | 12,00 | Δ | 7,2 | 7,2 | M32 | ● |
| 579.9 | 406.0 | MVE 7200/15E-86A0 | MVE 7200/18E-86A0 | 7.286 | 7.345 | 237 | 231 | 6,00 | 6,50 | 11,00 | 10,80 | Δ | 4,7 | 4,5 | M32 | ● |
| 724.8 | 507.0 | MVE 9000/15E-86A0 | MVE 9000/18E-86A0 | 9.106 | 9.172 | 252 | 241 | 6,00 | 6,50 | 11,00 | 10,80 | Δ | 4,7 | 4,5 | M32 | ● |
| 800.1 | 588.3 | MVE 10000/15E-90A0 | MVE 10000/18E-90A0 | 10.052 | 10.643 | 300 | 286 | 5,40 | 7,00 | 13,00 | 13,00 | Δ | 6,7 | 6,6 | M32 | ● |
| 835.7 | 581.3 | MVE 10000/15E-91A0 | MVE 10000/18E-91A0 | 10.499 | 10.517 | 300 | 286 | 7,00 | 8,20 | 13,10 | 13,10 | Δ | 7,2 | 7,7 | M32 | ● |
| 939 | 655 | MVE 11500/15E-100A0 | MVE 11500/18E-100A0 | 11.779 | 11.853 | 445 | 422 | 9,00 | 10,00 | 15,50 | 15,50 | Δ | 7,0 | 7,0 | M32 | ● |
| 1.142 | 838 | MVE 14500/15E-100A0 | MVE 14500/18E-100A0 | 14.352 | 15.153 | 460 | 442 | 11,00 | 13,00 | 18,50 | 18,50 | Δ | 8,0 | 8,0 | M32 | ● |

JUSQU'À LA TAILLE 60 (NON COMPRIS)
60Hz masses = 50Hz masses ajustées à 70%

Ausgenommen Type MVE 1100/15 - 1100/18

SUPÉRIEUR À LA TAILLE 60 (Y COMPRIS)
Masses spécifiques pour 60Hz

Pour convertir les kg en Newton: N = 9.81 · kg

- II2D Ex tb IIIC Tx Db IP66
- Équipement et système de protection destinés pour l'utilisation en atmosphères explosibles (Zone 21) - Directive 2014/34/UE
- Conformité avec les Exigences Essentielles de Santé et de Sécurité
- IEC 60034-1, IEC EN 60079-0, IEC EN 60079-31

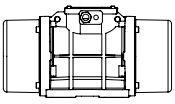

Dessins techniques sur la dernière page



| Modèle | | Dessein | Taille | SPÉCIFICATIONS DIMENSIONNELLES (mm) | | | | | | | | | | | | | | |
|---|---|---|---|---|---|---|---|---|---|---|---|---|---|---|---|---|---|---|
| | | | | C | | M | | A | B | Ø G | Trous | D | E | F | H | I | L | N |
| 50 Hz | 60 Hz | | | 50Hz | 60Hz | 50Hz | 60Hz | | | | N° | | | | | | | |
| MVE 40/15E-10A0 | MVE 40/18E-10A0 | A | 10A0 | 213 | | 45 | | Empreinte multiple<br>62-74<br>33 | 106<br>83-102 | 9<br>7 | 4 | 130 | 135 | 11 | 50 | 96 | 107 | 85 |
| MVE 90/15E-20A0 | MVE 90/18E-20A0 | B | 20A0 | 233 | | 54 | | 62-74 | 106 | 9 | 4 | 130 | 154 | 15 | 65 | 125 | 120 | 112 |
| MVE 90/15E-23A0 | MVE 90/18E-23A0 | G | 23A0 | 222 | | 55 | | Empreinte multiple<br>62-74<br>65<br>115<br>135 | 106<br>140<br>135<br>115 | 9<br>13<br>11<br>11 | 4 | 164 | 140 | 25 | 82 | 116 | 159 | 110 |
| MVE 100/15E-20A0 | MVE 100/18E-20A0 | B | 20A0 | 233 | | 54 | | 62-74 | 106 | 9 | 4 | 130 | 154 | 15 | 65 | 125 | 120 | 112 |
| MVE 200/15E-30A0 | MVE 200/18E-30A0 | C | 30A0 | 274 | | 52 | | Empreinte multiple<br>80<br>90<br>124<br>135 | 110<br>125<br>110<br>115 | 11<br>13<br>11<br>11 | 4 | 150 | 173 | 15 | 79 | 150 | 166 | 134 |
| MVE 400/15E-40A0 | MVE 400/18E-40A0 | D1 | 40A0 | 330 | | 78 | | 105 | 140 | 13 | 4 | 170 | 196 | 20 | 92 | 174 | 166 | 160 |
| MVE 500/15E-40A0 | MVE 500/18E-40A0 | D1 | 40A0 | 330 | | 78 | | 105 | 140 | 13 | 4 | 170 | 196 | 20 | 92 | 174 | 166 | 160 |
| MVE 300/15E-50A0 | MVE 300/18E-50A0 | D1 | 50A0 | 321 | | 62 | | 120 | 170 | 17 | 4 | 208 | 210 | 22 | 96 | 185 | 192 | 170 |
| MVE 300/15E-51A0 | MVE 300/18E-51A0 | D1 | 51A0 | 326 | | 63 | | 120 | 170 | 17 | 4 | 208 | 220 | 25 | 105 | 202 | 192 | 187 |
| MVE 700/15E-50A0 | MVE 700/18E-50A0 | D1 | 50A0 | 391 | | 97 | | 120 | 170 | 17 | 4 | 208 | 210 | 22 | 96 | 185 | 192 | 170 |
| MVE 710/15E-50A0 | MVE 710/18E-50A0 | D1 | 50A0 | 391 | | 97 | | 120 | 170 | 17 | 4 | 208 | 210 | 22 | 96 | 185 | 192 | 170 |
| MVE 950/15E-50A0 | MVE 950/18E-50A0 | D1 | 50A0 | 455 | | 129 | | 120 | 170 | 17 | 4 | 208 | 210 | 22 | 96 | 185 | 192 | 170 |
| MVE 1100/15E-51A0 | MVE 1100/18E-51A0 | D1 | 51A0 | 414 | | 106 | | 120 | 170 | 17 | 4 | 208 | 220 | 25 | 105 | 202 | 192 | 187 |
| MVE 1400/15E-60A0 | MVE 1400/18E-60A0 | D1 | 60A0 | 446 | | 112 | | 140 | 190 | 17 | 4 | 230 | 260 | 26 | 124 | 240 | 218 | 222 |
| MVE 1700/15E-60A0 | MVE 1700/18E-60A0 | D1 | 60A0 | 446 | | 112 | | 140 | 190 | 17 | 4 | 230 | 260 | 26 | 124 | 240 | 218 | 222 |
| MVE 2400/15E-60A0 | MVE 2400/18E-60A0 | D1 | 60A0 | 490 | 446 | 134 | 112 | 140 | 190 | 17 | 4 | 230 | 260 | 26 | 124 | 240 | 218 | 222 |
| MVE 2500/15E-70A0 | MVE 2500/18E-70A0 | D1 | 70A0 | 501 | | 123 | | 155 | 225 | 22 | 4 | 275 | 290 | 30 | 140 | 256 | 250 | 236 |
| MVE 3000/15E-70A0 | MVE 3000/18E-70A0 | D1 | 70A0 | 535 | 501 | 140 | 123 | 155 | 225 | 22 | 4 | 275 | 290 | 30 | 140 | 256 | 250 | 236 |
| MVE 3800/15E-75A0 | MVE 3800/18E-75A0 | D1 | 75A0 | 564 | 536 | 151 | 117 | 155 | 255 | 23.5 | 4 | 304 | 314 | 30 | 147 | 285 | 277 | 265 |
| MVE 4300/15E-75A0 | MVE 4300/18E-75A0 | D1 | 75A0 | 584 | 564 | 151 | 141 | 155 | 255 | 23.5 | 4 | 304 | 314 | 30 | 147 | 285 | 277 | 265 |
| MVE 5500/15E-80A0 | MVE 5500/18E-80A0 | D1 | 80A0 | 603 | | 143 | | 180 | 280 | 26 | 4 | 332 | 360 | 37 | 167 | 345 | 304 | 310 |
| MVE 7200/15E-85A0 | MVE 7200/18E-85A0 | D1 | 85A0 | 624 | | 130 | | 200 | 320 | 28 | 4 | 385 | 402 | 40 | 203 | 394 | 360 | 378 |
| MVE 9000/15E-85A0 | MVE 9000/18E-85A0 | D1 | 85A0 | 624 | | 130 | | 200 | 320 | 28 | 4 | 385 | 402 | 40 | 203 | 394 | 360 | 378 |
| MVE 7200/15E-86A0 | MVE 7200/18E-86A0 | D1 | 86A0 | 624 | | 130 | | 200 | 320 | 28 | 4 | 385 | 402 | 40 | 203 | 394 | 360 | 378 |
| MVE 9000/15E-86A0 | MVE 9000/18E-86A0 | D1 | 86A0 | 624 | | 130 | | 200 | 320 | 28 | 4 | 385 | 402 | 40 | 203 | 394 | 360 | 378 |
| MVE 10000/15E-90A0 | MVE 10000/18E-90A0 | E1 | 90A0 | 728 | | 170 | | 125 | 380 | 39 | 6 | 452 | 415 | 40 | 205 | 394 | 380 | 378 |
| MVE 10000/15E-91A0 | MVE 10000/18E-91A0 | E1 | 91A0 | 728 | | 170 | | 125 | 380 | 39 | 6 | 452 | 415 | 40 | 205 | 394 | 380 | 378 |
| MVE 11500/15E-100A0 | MVE 11500/18E-100A0 | E | 100 | 890 | | 210 | | 140 | 440 | 45 | 6 | 530 | 484 | 37 | 232 | 446 | 470 | 424 |
| MVE 14500/15E-100A0 | MVE 14500/18E-100A0 | E | 100 | 890 | | 210 | | 140 | 440 | 45 | 6 | 530 | 484 | 37 | 232 | 446 | 470 | 424 |

REMARQUE: Dimensions avec précision grossière conformément à UNI 22768/1

Ces informations sont fournies sans garantie, représentation, incitation ou licence d'aucune sorte. Les informations sont précises selon la connaissance de OLI ou sont obtenues de sources considérées comme exactes. OLI n'assume donc aucune responsabilité légale.
La dernière version du catalogue mis à jour est disponible en ligne.

» Class II Div.2 Group F, G T4
» Conforme à UL 1004-1,UL 1004-3, UL60079-31, UL60079-0, CSA 60079-0, CSA 60079- 31, CSA 22.2 N°100, CSA 22.2 N°77

# MVE GAMME STANDARD

## 6 PÔLES – 1000/1200 rpm

Class II Div.2: Temp. Class **T4**
ExII 2D Temp. Class: 100 °C 135 °C

* Raccordements des bornes : **Y** Haute tension ; **Δ** Basse tension

| Wm (Kgcm) | | Modèle | | Force centrifuge (kg) | | Poids (kg) | | SPÉCIFICATIONS ÉLECTRIQUES | | | | | | | | |
|---|---|---|---|---|---|---|---|---|---|---|---|---|---|---|---|---|
| | | | | | | | | Puissance d'entrée (kW) | | Courant nominal | | * | Ia/In | | Presse-étoupe | |
| 50Hz | 60Hz | 50Hz | 60Hz | 50Hz | 60Hz | 50Hz | 60Hz | 50Hz | 60Hz | 50Hz (400V) | 60Hz (460V) | Raccordements des bornes | 50Hz | 60Hz | Metrico | |
| 9,5 | 6,6 | MVE 50/1E-30A0 | MVE 50/12E-30A0 | 53 | 53 | 10 | | 0,12 | 0,14 | 0,30 | 0,40 | Y | 2,2 | 2,2 | M20 | ● |
| 18,8 | 13,2 | MVE 100/1E-30A0 | MVE 100/12E-30A0 | 105 | 106 | 11 | | 0,12 | 0,14 | 0,30 | 0,40 | Y | 2,2 | 2,2 | M20 | ● |
| 33,5 | 23,4 | MVE 200/1E-40A0 | MVE 200/12E-40A0 | 187 | 188 | 19 | | 0,15 | 0,18 | 0,65 | 0,63 | Y | 2,2 | 2,2 | M20 | ● |
| 56,9 | 39,9 | MVE 300/1E-50A0 | MVE 300/12E-50A0 | 318 | 320 | 26 | | 0,25 | 0,30 | 0,67 | 0,64 | Y | 2,7 | 2,7 | M20 | ● |
| 91,9 | 64,3 | MVE 500/1E-50A0 | MVE 500/12E-50A0 | 513 | 517 | 34 | | 0,55 | 0,40 | 1,22 | 1,15 | Y | 3,0 | 2,9 | M20 | ● |
| 91,9 | 91,9 | MVE 510/1E-51A0 | MVE 510/12E-51A0 | 513 | 739 | 34 | | 0,55 | 0,40 | 1,20 | 1,15 | Y | 3,0 | 2,9 | M20 | ● |
| 137,4 | 108,6 | MVE 800/1E-60A0 | MVE 800/12E-60A0 | 767 | 873 | 60 | 58 | 0,75 | 0,80 | 1,42 | 1,32 | Y | 3,4 | 3,3 | M25 | ● |
| 187,7 | 137,3 | MVE 1100/1E-60A0 | MVE 1100/12E-60A0 | 1.048 | 1.104 | 78 | 72 | 0,75 | 0,80 | 1,42 | 1,32 | Y | 3,4 | 3,3 | M25 | ● |
| 284,8 | 196,5 | MVE 1500/1E-60A0 | MVE 1500/12E-60A0 | 1.590 | 1.580 | 84 | 73 | 0,90 | 1,08 | 1,80 | 2,00 | Y | 3,5 | 3,5 | M25 | ● |
| 299,6 | 203,5 | MVE 1600/1E-70A0 | MVE 1600/12E-70A0 | 1.673 | 1.636 | 90 | 79 | 0,90 | 1,08 | 2,40 | 2,30 | Y | 3,9 | 3,8 | M25 | ● |
| 373,1 | 248,7 | MVE 2100/1E-70A0 | MVE 2100/12E-70A0 | 2.083 | 2.000 | 105 | 91 | 1,50 | 1,80 | 3,00 | 3,20 | Y | 4,5 | 4,6 | M25 | ● |
| 401,0 | 275,2 | MVE 2200/1E-70A0 | MVE 2200/12E-70A0 | 2.239 | 2.213 | 107 | 93 | 1,50 | 1,80 | 3,00 | 3,20 | Y | 4,5 | 4,6 | M25 | ● |
| 467,4 | 306,7 | MVE 2600/1E-75A0 | MVE 2600/12E-75A0 | 2.610 | 2.466 | 146.5 | 126.5 | 1,96 | 2,10 | 4,10 | 4,00 | Y | 5,0 | 5,0 | M32 | ● |
| 540,3 | 379,7 | MVE 3000/1E-75A0 | MVE 3000/12E-75A0 | 3.017 | 3.053 | 155 | 138 | 2,20 | 2,40 | 4,50 | 4,30 | Y | 5,2 | 5,2 | M32 | ● |
| 702,5 | 465,6 | MVE 3700/1E-75A0 | MVE 3700/12E-75A0 | 3.797 | 3.744 | 159 | 142 | 2,20 | 2,40 | 4,50 | 4,30 | Y | 5,2 | 5,2 | M32 | ● |
| 680,4 | 437,4 | MVE 3800/1E-80A0 | MVE 3800/12E-80A0 | 3.799 | 3.517 | 216 | 195 | 2,50 | 3,00 | 5,50 | 5,30 | Y | 6,1 | 6,2 | M32 | ● |
| 838,3 | 584,2 | MVE 4700/1E-80A0 | MVE 4700/12E-80A0 | 4.681 | 4.697 | 220 | 201 | 3,20 | 3,90 | 6,50 | 6,95 | Y | 5,7 | 5,9 | M32 | ● |
| 929,9 | 654,6 | MVE 5200/1E-85A0 | MVE 5200/12E-85A0 | 5.192 | 5.263 | 264 | 248 | 3,80 | 4,00 | 6,92 | 6,36 | Y | 5,7 | 5,7 | M32 | ● |
| 1.165,2 | 824,0 | MVE 6500/1E-85A0 | MVE 6500/12E-85A0 | 6.506 | 6.625 | 288 | 265 | 4,30 | 5,00 | 7,76 | 7,81 | Y | 6,4 | 6,2 | M32 | ● |
| 1.436,0 | 929,8 | MVE 8000/1E-85A0 | MVE 8000/12E-85A0 | 8.018 | 7.476 | 309 | 274 | 5,50 | 6,60 | 12,60 | 11,60 | Δ | 6,2 | 6,4 | M32 | ● |
| 1.600,4 | 1.165,2 | MVE 9000/1E-85A0 | MVE 9000/12E-85A0 | 8.936 | 9.369 | 322 | 291 | 6,20 | 7,45 | 13,20 | 12,60 | Δ | 6,5 | 6,4 | M32 | ● |
| 1.434,0 | 929,8 | MVE 8000/1E-86A0 | MVE 8000/12E-86A0 | 8.007 | 7.476 | 309 | 274 | 4,60 | 5,50 | 9,00 | 10,00 | Δ | 6,0 | 6,2 | M32 | ● |
| 1.598,0 | 1.165,2 | MVE 9000/1E-86A0 | MVE 9000/12E-86A0 | 8.923 | 9.369 | 322 | 291 | 4,60 | 5,50 | 9,00 | 10,00 | Δ | 6,0 | 6,2 | M32 | ● |
| 1.788,4 | 1.240,0 | MVE 10000/1E-90A0 | MVE 10000/12E-90A0 | 9.986 | 9.970 | 374 | 348 | 6,10 | 6,40 | 14,00 | 12,70 | Δ | 6,6 | 6,6 | M32 | ● |
| 2.329,8 | 1.647,4 | MVE 13000/1E-90A0 | MVE 13000/12E-90A0 | 13.009 | 13.246 | 411 | 364 | 7,50 | 8,30 | 16,40 | 16,00 | Δ | 6,4 | 6,5 | M32 | ● |
| 1.802,9 | 1.240,0 | MVE 10000/1E-91A0 | MVE 10000/12E-91A0 | 10.067 | 9.970 | 373 | 348 | 6,40 | 7,70 | 13,00 | 14,50 | Δ | 6,0 | 6,0 | M32 | ● |
| 2.056,9 | 1.433,0 | MVE 11400/1E-91A0 | MVE 11400/12E-91A0 | 11.485 | 11.522 | 404 | 361 | 6,40 | 7,70 | 13,00 | 14,50 | Δ | 6,0 | 6,0 | M32 | ● |
| 2.311,0 | 1.647,4 | MVE 13000/1E-91A0 | MVE 13000/12E-91A0 | 12.904 | 13.246 | 411 | 364 | 8,00 | 8,90 | 17,20 | 18,10 | Δ | 5,6 | 6,3 | M32 | ● |
| 2.253 | 1.550 | MVE 12000/1E-100A0 | MVE 12000/12E-100A0 | 12.580 | 12.466 | 522 | 476 | 8,00 | 9,50 | 15,00 | 15,00 | Δ | 5,0 | 5,5 | M32 | ● |
| 2.634 | 1.856 | MVE 15000/1E-105A0 | MVE 15000/12E-105A0 | 14.706 | 14.923 | 672 | 630 | 10,10 | 12,00 | 18,00 | 18,00 | Δ | 5,8 | 5,8 | M32 | ● |
| 3.220 | 2.147 | MVE 17500/1E-105A0 | MVE 17500/12E-105A0 | 17.980 | 17.264 | 744 | 684 | 11,90 | 14,20 | 21,00 | 21,00 | Δ | 5,6 | 5,9 | M32 | ● |
| 3.632 | 2.525 | MVE 19500/1E-105A0 | MVE 19500/12E-105A0 | 20.285 | 20.299 | 768 | 728 | 12,00 | 14,50 | 24,00 | 24,00 | Δ | 5,4 | 5,6 | M32 | ● |
| 4.067 | 2.622 | MVE 22000/1E-110A0 | MVE 22000/12E-110A0 | 22.711 | 21.079 | 916 | 868 | 13,90 | 17,00 | 28,00 | 28,00 | Δ | 4,8 | 5,3 | M32 | ● |
| 4.572 | 3.163 | MVE 25000/1E-110A0 | MVE 25000/12E-110A0 | 25.532 | 25.432 | 994 | 937 | 13,90 | 17,00 | 28,00 | 28,00 | Δ | 4,8 | 5,3 | M32 | ● |

JUSQU'À LA TAILLE 60 (NON COMPRIS)
60Hz masses = 50Hz masses ajustées à 70%

SUPÉRIEUR À LA TAILLE 60 (Y COMPRIS)
Masses spécifiques pour 60Hz

Pour convertir les kg en Newton: N = 9.81 · kg

- II2D Ex tb IIIC Tx Db IP66
- Équipement et système de protection destinés pour l'utilisation en atmosphères explosibles (Zone 21) - Directive 2014/34/UE
- Conformité avec les Exigences Essentielles de Santé et de Sécurité
- IEC 60034-1, IEC EN 60079-0, IEC EN 60079-31

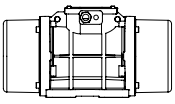

Dessins techniques sur la dernière page



| Modèle | | Dessein | Taille | SPÉCIFICATIONS DIMENSIONNELLES (mm) | | | | | | | | | | | | | | | |
|---|---|---|---|---|---|---|---|---|---|---|---|---|---|---|---|---|---|---|---|
| | | | | C | | M | | A | B | ØG | Trous | D | E | F | H | I | L | N |
| 50Hz | 60Hz | | | 50Hz | 60Hz | 50Hz | 60Hz | | | | N° | | | | | | | |
| MVE 50/1E-30A0 | MVE 50/12E-30A0 | C | 30A0 | 274 | | 52 | | Empreinte multiple<br>80 / 90 / 124 / 135 | 110 / 125 / 110 / 115 | 11 / 13 / 11 / 11 | 4 | 150 | 173 | 15 | 79 | 150 | 166 | 134 |
| MVE 100/1E-30A0 | MVE 100/12E-30A0 | C | 30A0 | 304 | | 67 | | Empreinte multiple<br>80 / 90 / 124 / 135 | 110 / 125 / 110 / 115 | 11 / 13 / 11 / 11 | 4 | 150 | 173 | 15 | 79 | 150 | 166 | 134 |
| MVE 200/1E-40A0 | MVE 200/12E-40A0 | D1 | 40A0 | 330 | | 78 | | 105 | 140 | 13 | 4 | 170 | 196 | 20 | 92 | 174 | 166 | 160 |
| MVE 300/1E-50A0 | MVE 300/12E-50A0 | D1 | 50A0 | 391 | | 97 | | 120 | 170 | 17 | 4 | 208 | 210 | 22 | 96 | 185 | 192 | 170 |
| MVE 500/1E-50A0 | MVE 500/12E-50A0 | D1 | 50A0 | 455 | | 129 | | 120 | 170 | 17 | 4 | 208 | 210 | 22 | 96 | 185 | 192 | 170 |
| MVE 510/1E-51A0 | MVE 510/12E-51A0 | D1 | 51A0 | 455 | | 129 | | 120 | 170 | 17 | 4 | 208 | 210 | 22 | 96 | 185 | 192 | 170 |
| MVE 800/1E-60A0 | MVE 800/12E-60A0 | D1 | 60A0 | 446 | | 112 | | 140 | 190 | 17 | 4 | 230 | 260 | 26 | 124 | 240 | 218 | 222 |
| MVE 1100/1E-60A0 | MVE 1100/12E-60A0 | D1 | 60A0 | 490 | 446 | 134 | 112 | 140 | 190 | 17 | 4 | 230 | 260 | 26 | 124 | 240 | 218 | 222 |
| MVE 1500/1E-60A0 | MVE 1500/12E-60A0 | D1 | 60A0 | 566 | 490.0 | 172 | 134 | 140 | 190 | 17 | 4 | 230 | 260 | 26 | 124 | 240 | 218 | 222 |
| MVE 1600/1E-70A0 | MVE 1600/12E-70A0 | D1 | 70A0 | 563 | 501 | 154 | 123 | 155 | 225 | 22 | 4 | 275 | 290 | 30 | 140 | 256 | 250 | 236 |
| MVE 2100/1E-70A0 | MVE 2100/12E-70A0 | D1 | 70A0 | 623 | 563 | 184 | 154 | 155 | 225 | 22 | 4 | 275 | 290 | 30 | 140 | 256 | 250 | 236 |
| MVE 2200/1E-70A0 | MVE 2200/12E-70A0 | D1 | 70A0 | 623 | | 184 | | 155 | 225 | 22 | 4 | 275 | 290 | 30 | 140 | 256 | 250 | 236 |
| MVE 2600/1E-75A0 | MVE 2600/12E-75A0 | D1 | 75A0 | 692 | 584 | 205 | 151 | 155 | 255 | 23.5 | 4 | 304 | 314 | 30 | 147 | 285 | 277 | 265 |
| MVE 3000/1E-75A0 | MVE 3000/12E-75A0 | D1 | 75A0 | 692 | | 205 | | 155 | 255 | 23.5 | 4 | 304 | 314 | 30 | 147 | 285 | 277 | 265 |
| MVE 3700/1E-75A0 | MVE 3700/12E-75A0 | D1 | 75A0 | 734 | 692 | 226 | 205 | 155 | 255 | 23.5 | 4 | 304 | 314 | 30 | 147 | 285 | 277 | 265 |
| MVE 3800/1E-80A0 | MVE 3800/12E-80A0 | D1 | 80A0 | 683 | 603 | 183 | 143 | 180 | 280 | 26 | 4 | 332 | 354 | 32 | 170 | 330 | 312 | 311 |
| MVE 4700/1E-80A0 | MVE 4700/12E-80A0 | D1 | 80A0 | 733 | 683 | 208 | 183 | 180 | 280 | 26 | 4 | 332 | 354 | 32 | 170 | 330 | 312 | 311 |
| MVE 5200/1E-85A0 | MVE 5200/12E-85A0 | D1 | 85A0 | 704 | 624 | 170.0 | 130.0 | 200 | 320 | 28 | 4 | 385 | 402 | 40 | 203 | 394 | 360 | 378 |
| MVE 6500/1E-85A0 | MVE 6500/12E-85A0 | D1 | 85A0 | 704 | | 170 | | 200 | 320 | 28 | 4 | 385 | 402 | 40 | 203 | 394 | 360 | 378 |
| MVE 8000/1E-85A0 | MVE 8000/12E-85A0 | D1 | 85A0 | 774 | 704 | 205 | 170 | 200 | 320 | 28 | 4 | 385 | 402 | 40 | 203 | 394 | 360 | 378 |
| MVE 9000/1E-85A0 | MVE 9000/12E-85A0 | D1 | 85A0 | 774 | 704 | 205 | 170 | 200 | 320 | 28 | 4 | 385 | 402 | 40 | 203 | 394 | 360 | 378 |
| MVE 8000/1E-86A0 | MVE 8000/12E-86A0 | D1 | 86A0 | 774 | | 205 | | 200 | 320 | 28 | 4 | 385 | 402 | 40 | 203 | 394 | 360 | 378 |
| MVE 9000/1E-86A0 | MVE 9000/12E-86A0 | D1 | 86A0 | 774 | | 205 | | 200 | 320 | 28 | 4 | 385 | 402 | 40 | 203 | 394 | 360 | 378 |
| MVE 10000/1E-90A0 | MVE 10000/12E-90A0 | E1 | 90A0 | 908 | 798 | 260 | 205 | 125 | 380 | 39 | 6 | 452 | 415 | 40 | 205 | 394 | 380 | 378 |
| MVE 13000/1E-90A0 | MVE 13000/12E-90A0 | E1 | 90A0 | 948 | 798 | 280 | 205 | 125 | 380 | 39 | 6 | 452 | 415 | 40 | 205 | 394 | 380 | 378 |
| MVE 10000/1E-91A0 | MVE 10000/12E-91A0 | E1 | 91A0 | 908 | | 260 | | 125 | 380 | 39 | 6 | 452 | 415 | 40 | 205 | 394 | 380 | 378 |
| MVE 11400/1E-91A0 | MVE 11400/12E-91A0 | E1 | 91A0 | 908 | | 260 | | 125 | 380 | 39 | 6 | 452 | 415 | 40 | 205 | 394 | 380 | 378 |
| MVE 13000/1E-91A0 | MVE 13000/12E-91A0 | E1 | 91A0 | 948 | | 280 | | 125 | 380 | 39 | 6 | 452 | 415 | 40 | 205 | 394 | 380 | 378 |
| MVE 12000/1E-100A0 | MVE 12000/12E-100A0 | E | 100 | 1,020 | | 275 | | 140 | 440 | 45 | 6 | 530 | 484 | 37 | 232 | 446 | 470 | 424 |
| MVE 15000/1E-105A0 | MVE 15000/12E-105A0 | H | 105 | 980 | | 210 | | 140 | 480 | 45 | 8 | 570 | 542 | 48 | 268 | 510 | 560 | 490 |
| MVE 17500/1E-105A0 | MVE 17500/12E-105A0 | H | 105 | 1,060 | | 250 | | 140 | 480 | 45 | 8 | 570 | 542 | 48 | 268 | 510 | 560 | 490 |
| MVE 19500/1E-105A0 | MVE 19500/12E-105A0 | H | 105 | 1,060 | | 250 | | 140 | 480 | 45 | 8 | 570 | 542 | 48 | 268 | 510 | 560 | 490 |
| MVE 22000/1E-110A0 | MVE 22000/12E-110A0 | H | 110 | 1,130 | | 285 | | 140 | 520 | 45 | 8 | 610 | 594 | 42 | 297 | 560 | 560 | 530 |
| MVE 25000/1E-110A0 | MVE 25000/12E-110A0 | H | 110 | 1,130 | | 285 | | 140 | 520 | 45 | 8 | 610 | 594 | 42 | 297 | 560 | 560 | 530 |

REMARQUE: Dimensions avec précision grossière conformément à UNI 22768/1

Ces informations sont fournies sans garantie, représentation, incitation ou licence d'aucune sorte. Les informations sont précises selon la connaissance de OLI ou sont obtenues de sources considérées comme exactes. OLI n'assume donc aucune responsabilité légale.
La dernière version du catalogue mis à jour est disponible en ligne.

» Class II Div.2 Group F, G T4
» Conforme à UL 1004-1,UL 1004-3, UL60079-31, UL60079-0, CSA 60079-0, CSA 60079- 31, CSA 22.2 N°100, CSA 22.2 N°77

# MVE GAMME STANDARD

## 8 PÔLES – 750/900 rpm

Class II Div.2: Temp. Class **T4**
ExII 2D Temp. Class: ● 100 °C ● 135 °C

* Raccordements des bornes : **Y** Haute tension ; **Δ** Basse tension

| Wm (Kgcm) | | Modèle | | Force centrifuge (kg) | | Poids (kg) | | SPÉCIFICATIONS ÉLECTRIQUES | | | | | | | | |
|---|---|---|---|---|---|---|---|---|---|---|---|---|---|---|---|---|
| | | | | | | | | Puissance d'entrée (kW) | | Courant nominal | | * Raccordements des bornes | Ia/In | | Presse-étoupe | |
| 50Hz | 60Hz | 50Hz | 60Hz | 50Hz | 60Hz | 50Hz | 60Hz | 50Hz | 60Hz | 50Hz (400V) | 60Hz (460V) | | 50Hz | 60Hz | Metrico | |
| 33,4 | | MVE 150/075E-40A0 | MVE 150/090E-40A0 | 105 | 151 | 21 | | 0,23 | 0,25 | 1,14 | 1,14 | Y | 1,7 | 1,7 | M20 | ● |
| 56,9 | | MVE 250/075E-50A0 | MVE 250/090E-50A0 | 179 | 257 | 29 | | 0,25 | 0,30 | 0,90 | 0,89 | Y | 1,9 | 1,9 | M20 | ● |
| 84,0 | | MVE 400/075E-51A0 | MVE 400/090E-51A0 | 264 | 380 | 34 | | 0,25 | 0,30 | 0,90 | 0,89 | Y | 2,1 | 2,1 | M20 | ● |
| 137,3 | | MVE 650/075E-60A0 | MVE 650/090E-60A0 | 431 | 621 | 63 | | 0,37 | 0,45 | 1,20 | 1,20 | Y | 2,4 | 2,4 | M25 | ● |
| 187,7 | | MVE 900/075E-60A0 | MVE 900/090E-60A0 | 589 | 849 | 70 | | 0,55 | 0,54 | 1,23 | 1,29 | Y | 2,7 | 2,7 | M25 | ● |
| 299,6 | | MVE 1300/075E-70A0 | MVE 1300/090E-70A0 | 941 | 1.355 | 90 | | 0,75 | 0,90 | 2,20 | 2,20 | Y | 3,2 | 3,2 | M25 | ● |
| 467,4 | | MVE 2100/075E-75A0 | MVE 2100/090E-75A0 | 1.468 | 2.114 | 150 | | 1,00 | 1,20 | 2,81 | 2,89 | Y | 4,4 | 4,3 | M32 | ● |
| 680,3 | | MVE 3100/075E-80A0 | MVE 3100/090E-80A0 | 2.137 | 3.077 | 201 | | 2,00 | 2,30 | 4,50 | 4,40 | Y | 4,2 | 4,2 | M32 | ● |
| 838,4 | | MVE 3800/075E-80A0 | MVE 3800/090E-80A0 | 2.633 | 3.792 | 219 | | 2,50 | 3,00 | 6,00 | 6,00 | Y | 4,1 | 4,2 | M32 | ● |
| 929,7 | | MVE 4200/075E-85A0 | MVE 4200/090E-85A0 | 2.920 | 4.205 | 268 | | 2,90 | 3,40 | 6,50 | 6,50 | Y | 4,0 | 3,9 | M32 | ● |
| 1.165,2 | | MVE 5300/075E-85A0 | MVE 5300/090E-85A0 | 3.660 | 5.270 | 289 | | 3,70 | 4,30 | 8,00 | 8,20 | Y | 4,0 | 4,4 | M32 | ● |
| 1.435,9 | | MVE 6500/075E-85A0 | MVE 6500/090E-85A0 | 4.510 | 6.494 | 308 | | 3,80 | 4,20 | 8,78 | 8,30 | Y | 3,8 | 4,2 | M32 | ● |
| 2.200,4 | | MVE 10000/075E-90A0 | MVE 10000/090E-90A0 | 6.911 | 9.952 | 422 | | 6,80 | 7,50 | 13,50 | 12,50 | Δ | 3,7 | 4,4 | M32 | ● |
| 2.311,0 | | MVE 10000/075E-91A0 | MVE 10000/090E-91A0 | 7.258 | 10.452 | 422 | | 6,00 | 7,00 | 14,40 | 14,00 | Δ | 4,7 | 4,7 | M32 | ● |
| 2.835 | 2.553 | MVE 12000/075E-100A0 | MVE 12000/090E-100A0 | 8.904 | 11.546 | 571 | 553 | 7,50 | 8,00 | 13,50 | 13,50 | Δ | 3,8 | 4,0 | M32 | ● |
| 3.713 | 3.220 | MVE 14000/075E-105A0 | MVE 14000/090E-105A0 | 11.661 | 14.563 | 751 | 725 | 9,00 | 10,60 | 19,00 | 19,00 | Δ | 4,5 | 5,0 | M32 | ● |
| 4.401 | 3.920 | MVE 17000/075E-105A0 | MVE 17000/090E-105A0 | 13.822 | 17.729 | 812 | 792 | 9,10 | 11,00 | 20,00 | 20,00 | Δ | 5,3 | 5,8 | M32 | ● |
| 5.857 | 4.999 | MVE 22000/075E-110A0 | MVE 22000/090E-110A0 | 18.395 | 22.610 | 982 | 937 | 13,80 | 16,50 | 28,00 | 28,00 | Δ | 5,6 | 5,2 | M32 | ● |
| - | 5.857 | NA | MVE 26000/090E-110A0 | - | 26.489 | - | 982 | - | 16,50 | - | 28,00 | Δ | - | 5,2 | M32 | ● |

*Taille 40A0*



*Taille 50A0*



*Taille 60A0*



AB GRÖSSE 90 (EINSCHLIESSLICH)
60Hz Masse= 50Hz Massen auf 100% angepasst

BIS ZUR GRÖSSE 90 (NICHT EINGESCHLOSSEN)
Spezifische Massen für 60Hz

Pour convertir les kg en Newton: N = 9.81 · kg

- II2D Ex tb IIIC Tx Db IP66
- Équipement et système de protection destinés pour l'utilisation en atmosphères explosibles (Zone 21) - Directive 2014/34/UE
- Conformité avec les Exigences Essentielles de Santé et de Sécurité
- IEC 60034-1, IEC EN 60079-0, IEC EN 60079-31

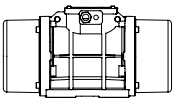

Dessins techniques sur la dernière page

| Modèle | | Dessein | Taille | SPÉCIFICATIONS DIMENSIONNELLES (mm) | | | | | | | | | | | | |
|---|---|---|---|---|---|---|---|---|---|---|---|---|---|---|---|---|
| | | | | C | M | A | B | Ø G | Trous | D | E | F | H | I | L | N |
| 50Hz | 60Hz | | | 50Hz-60Hz | 50Hz-60Hz | | | | N° | | | | | | | |
| MVE 150/075E-40A0 | MVE 150/090E-40A0 | D1 | 40A0 | 330 | 78 | 105 | 140 | 13 | 4 | 170 | 196 | 20 | 92 | 174 | 166 | 160 |
| MVE 250/075E-50A0 | MVE 250/090E-50A0 | D1 | 50A0 | 391 | 97 | 120 | 170 | 17 | 4 | 208 | 210 | 22 | 96 | 185 | 192 | 170 |
| MVE 400/075E-51A0 | MVE 400/090E-51A0 | D1 | 51A0 | 455 | 129 | 120 | 170 | 17 | 4 | 208 | 210 | 22 | 96 | 185 | 192 | 170 |
| MVE 650/075E-60A0 | MVE 650/090E-60A0 | D1 | 60A0 | 446 | 112 | 140 | 190 | 17 | 4 | 230 | 260 | 26 | 124 | 240 | 218 | 222 |
| MVE 900/075E-60A0 | MVE 900/090E-60A0 | D1 | 60A0 | 490 | 134 | 140 | 190 | 17 | 4 | 230 | 260 | 26 | 124 | 240 | 218 | 222 |
| MVE 1300/075E-70A0 | MVE 1300/090E-70A0 | D1 | 70A0 | 563 | 154 | 155 | 225 | 22 | 4 | 275 | 290 | 30 | 140 | 256 | 250 | 236 |
| MVE 2100/075E-75A0 | MVE 2100/090E-75A0 | D1 | 75A0 | 692 | 205 | 155 | 255 | 23.5 | 4 | 304 | 314 | 30 | 147 | 285 | 277 | 265 |
| MVE 3100/075E-80A0 | MVE 3100/090E-80A0 | D1 | 80A0 | 683 | 183 | 180 | 280 | 26 | 4 | 332 | 354 | 32 | 170 | 330 | 312 | 311 |
| MVE 3800/075E-80A0 | MVE 3800/090E-80A0 | D1 | 80A0 | 733 | 208 | 180 | 280 | 26 | 4 | 332 | 354 | 32 | 170 | 330 | 312 | 311 |
| MVE 4200/075E-85A0 | MVE 4200/090E-85A0 | D1 | 85A0 | 704 | 170 | 200 | 320 | 28 | 4 | 385 | 402 | 40 | 203 | 394 | 360 | 378 |
| MVE 5300/075E-85A0 | MVE 5300/090E-85A0 | D1 | 85A0 | 704 | 170 | 200 | 320 | 28 | 4 | 385 | 402 | 40 | 203 | 394 | 360 | 378 |
| MVE 6500/075E-85A0 | MVE 6500/090E-85A0 | D1 | 85A0 | 774 | 205 | 200 | 320 | 28 | 4 | 385 | 402 | 40 | 203 | 394 | 360 | 378 |
| MVE 10000/075E-90A0 | MVE 10000/090E-90A0 | E1 | 90A0 | 948 | 280 | 125 | 380 | 39 | 6 | 452 | 415 | 40 | 205 | 394 | 380 | 378 |
| MVE 10000/075E-91A0 | MVE 10000/090E-91A0 | E1 | 91A0 | 948 | 280 | 125 | 380 | 39 | 6 | 452 | 415 | 40 | 205 | 394 | 380 | 378 |
| MVE 12000/075E-100A0 | MVE 12000/090E-100A0 | E | 100 | 1,020 | 275 | 140 | 440 | 45 | 6 | 530 | 484 | 37 | 232 | 446 | 470 | 424 |
| MVE 14000/075E-105A0 | MVE 14000/090E-105A0 | H | 105 | 1,060 | 250 | 140 | 480 | 45 | 8 | 570 | 542 | 48 | 268 | 510 | 560 | 490 |
| MVE 17000/075E-105A0 | MVE 17000/090E-105A0 | H | 105 | 1,120 | 280 | 140 | 480 | 45 | 8 | 570 | 542 | 48 | 268 | 510 | 560 | 490 |
| MVE 22000/075E-110A0 | MVE 22000/090E-110A0 | H | 110 | 1,130 | 285 | 140 | 520 | 45 | 8 | 610 | 594 | 42 | 297 | 560 | 560 | 530 |
| NA | MVE 26000/090E-110A0 | H | 110 | 1,130 | 285 | 140 | 520 | 45 | 8 | 610 | 594 | 42 | 297 | 560 | 560 | 530 |

## Note:

REMARQUE: Dimensions avec précision grossière conformément à UNI 22768/1

Ces informations sont fournies sans garantie, représentation, incitation ou licence d'aucune sorte. Les informations sont précises selon la connaissance de OLI ou sont obtenues de sources considérées comme exactes. OLI n'assume donc aucune responsabilité légale.
La dernière version du catalogue mis à jour est disponible en ligne.

» Class II Div.2 Group F, G T4
» Conforme à UL 1004-1,UL 1004-3, UL60079-31, UL60079-0, CSA 60079-0, CSA 60079- 31, CSA 22.2 N°100, CSA 22.2 N°77

# MVE GAMME STANDARD

## 2 PÔLES MONOPHASÉ – 3000/3600 rpm

Class II Div.2: Temp. Class **T4**
ExII 2D Temp. Class: ● 100 °C ● 135 °C

* Terminal Connections: **Y** High Voltage; **Δ** Low Voltage

| Wm (Kgcm) | | Modèle | | Force centrifuge (kg) | | Poids (kg) | | SPÉCIFICATIONS ÉLECTRIQUES | | | | | | | |
|---|---|---|---|---|---|---|---|---|---|---|---|---|---|---|---|
| | | | | | | | | Puissance d'entrée (kW) | | Courant nominal A Max | | Presse-étoupe | Condensateur * | | |
| 50Hz | 60Hz | 50Hz | 60Hz | 50Hz | 60Hz | 50Hz | 60Hz | 50Hz | 60Hz | 50Hz (230V ) | 60Hz (115V) | Metrico | 50Hz (230V) | 60Hz (115V) | |
| 1,3 | 1,0 | MVE 60/3E-10A0-M | MVE 60/36E-10A0-M | 66 | 71 | 4 | | 0,08 | 0,09 | 0,43 | 1,03 | M16 | 3,0 | 6,3 | ● |
| 2,0 | 1,3 | MVE 100/3E-10A0-M | MVE 100/36E-10A0-M | 98 | 95 | 5 | | 0,10 | 0,11 | 0,54 | 1,30 | M16 | 4,0 | 8,0 | ● |
| 3,7 | 2,6 | MVE 200/3E-20A0-M | MVE 200/36E-20A0-M | 187 | 189 | 7 | | 0,18 | 0,21 | 1,14 | 2,62 | M20 | 8,0 | 16,0 | ● |
| 3,7 | 2,6 | MVE 200/3E-23A0-M | MVE 200/36E-23A0-M | 187 | 189 | 7 | | 0,18 | 0,21 | 1,14 | 2,62 | M20 | 8,0 | 16,0 | ● |
| 6,4 | 4,5 | MVE 300/3E-30A0-M | MVE 300/36E-30A0-M | 321 | 323 | 10 | | 0,27 | 0,28 | 1,58 | 3,43 | M20 | 12,5 | 25,0 | ● |

** REMARQUE: Condensateur non fourni avec vibrateur (à commander séparément)*

*Taille 10A0*



*Taille 20A0*



*Taille 30A0*



Pour convertir les kg en Newton: N = 9.81 · kg

- II2D Ex tb IIIC Tx Db IP66
- Équipement et système de protection destinés pour l'utilisation en atmosphères explosibles (Zone 21) - Directive 2014/34/UE
- Conformité avec les Exigences Essentielles de Santé et de Sécurité
- IEC 60034-1, IEC EN 60079-0, IEC EN 60079-31

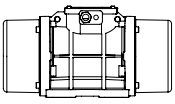

Dessins techniques sur la dernière page



| Modèle | | Dessein | Taille | SPÉCIFICATIONS DIMENSIONNELLES (mm) | | | | | | | | | | | | | | |
|---|---|---|---|---|---|---|---|---|---|---|---|---|---|---|---|---|---|---|
| | | | | C | | M | | A | B | Ø G | Trous | D | E | F | H | I | L | N |
| 50Hz | 60Hz | | | 50Hz | 60Hz | 50Hz | 60Hz | | | | N° | | | | | | | |
| MVE 60/3E-10A0-M | MVE 60/36E-10A0-M | A1 | 10A0 | 213 | | 45 | | Empreinte multiple<br>62-74<br>33 | 106<br>83-102 | 9<br>7 | 4 | 130 | 135 | 11 | 50 | 96 | 107 | 85 |
| MVE 100/3E-10A0-M | MVE 100/36E-10A0-M | A1 | 10A0 | 213 | | 45 | | Empreinte multiple<br>62-74<br>33 | 106<br>83-102 | 9<br>7 | 4 | 130 | 135 | 11 | 50 | 96 | 107 | 85 |
| MVE 200/3E-20A0-M | MVE 200/36E-20A0-M | B1 | 20A0 | 233 | | 54 | | 62-74 | 106 | 9 | 4 | 130 | 154 | 15 | 65 | 125 | 120 | 112 |
| MVE 200/3E-23A0-M | MVE 200/36E-23A0-M | G | 23A0 | 222 | | 55 | | Empreinte multiple<br>62-74<br>65<br>115<br>135 | 106<br>140<br>135<br>115 | 9<br>13<br>11<br>11 | 4 | 164 | 140 | 25 | 82 | 116 | 159 | 110 |
| MVE 300/3E-30A0-M | MVE 300/36E-30A0-M | C1 | 30A0 | 254 | | 42 | | Empreinte multiple<br>80<br>90<br>124<br>135 | 110<br>125<br>110<br>115 | 11<br>13<br>11<br>11 | 4 | 154 | 173 | 15 | 79 | 150 | 166 | 134 |

## Note:

REMARQUE: Dimensions avec précision grossière conformément à UNI 22768/1

Ces informations sont fournies sans garantie, représentation, incitation ou licence d'aucune sorte. Les informations sont précises selon la connaissance de OLI ou sont obtenues de sources considérées comme exactes. OLI n'assume donc aucune responsabilité légale.
La dernière version du catalogue mis à jour est disponible en ligne.

# MVE GAMME STANDARD

## MVE-MICRO - 3000/3600 rpm

Class II Div.2: Temp. Class **T4**
II 3D Temp. Class: ● 100 °C ● 135 °C

* Terminal Connections: **Y** High Voltage; **Δ** Low Voltage

## TRIPHASÉ

| Wm (kgcm) | | Modèle | | Force centrifuge (kg) | | Poids (kg) | | SPÉCIFICATIONS ÉLECTRIQUES | | | | | | |
|---|---|---|---|---|---|---|---|---|---|---|---|---|---|---|
| | | | | | | | | Puissance d'entrée (kW) | | Courant nominal A Max | | | * Raccordements des bornes | Presse-étoupe |
| 50Hz | 60Hz | 50Hz | 60Hz | 50Hz | 60Hz | 50Hz | 60Hz | 50Hz | 60Hz | 50Hz (230V) | 50Hz (400V) | 60Hz (460V) | | Metrico |
| 0,4 | 0,4 | MVE 21/3E-MICRO | MVE 21/36E-MICRO | 20 | 29 | 2 | | 0,04 | 0,04 | 0,21 | 0,12 | 0,12 | Y | M16 ● |
| 0,9 | 0,9 | MVE 41/3E-MICRO | MVE41/36E-MICRO | 45 | 65 | 2 | | 0,06 | 0,06 | 0,30 | 0,18 | 0,18 | Y | M16 ● |

## MONOPHASÉ

| Wm (kgcm) | | Modèle | | Force centrifuge (kg) | | Poids (kg) | | SPÉCIFICATIONS ÉLECTRIQUES | | | | |
|---|---|---|---|---|---|---|---|---|---|---|---|---|
| | | | | | | | | Puissance d'entrée (kW) | | Courant nominal A Max | | Presse-étoupe * |
| 50Hz | 60Hz | 50Hz | 60Hz | 50Hz | 60Hz | 50Hz | 60Hz | 50Hz | 60Hz | 50Hz (230V) | 60Hz (115V) | Metrico |
| 0,1 | 0,1 | MVE 3/3E-MICRO-M | MVE 3/36E-MICRO-M | 4 | 6 | 1,6 | | 0,03 | 0,04 | 0,30 | 0,80 | M16 ● |
| 0,1 | 0,1 | MVE 6/3E-MICRO-M | MVE 6/36E-MICRO-M | 6 | 9 | 1,6 | | 0,03 | 0,04 | 0,30 | 0,80 | M16 ● |
| 0,4 | 0,4 | MVE 21/3E-MICRO-M | MVE 21/36E-MICRO-M | 20 | 29 | 2 | | 0,04 | 0,07 | 0,20 | 0,80 | M16 ● |
| 0,9 | 0,9 | MVE 41/3E-MICRO-M | MVE 41/36E-MICRO-M | 45 | 65 | 2,4 | | 0,05 | 0,07 | 0,25 | 0,80 | M16 ● |

*MICRO*



*REMARQUE: Condensateur intégré dans le câble*

Pour convertir les kg en Newton: N = 9.81 · kg

- II2D Ex tb IIIC Tx Db IP66
- Équipement et système de protection destinés pour l'utilisation en atmosphères explosibles (Zone 21) - Directive 2014/34/UE
- Conformité avec les Exigences Essentielles de Santé et de Sécurité
- IEC 60034-1, IEC EN 60079-0, IEC EN 60079-31

**F**

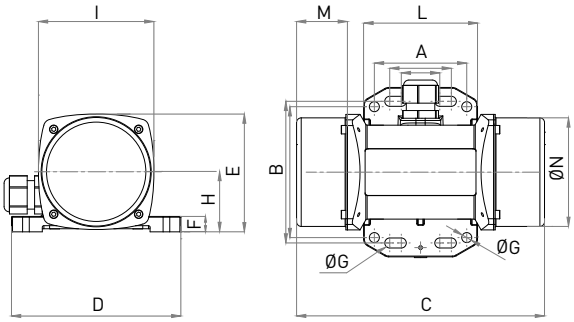


**I**

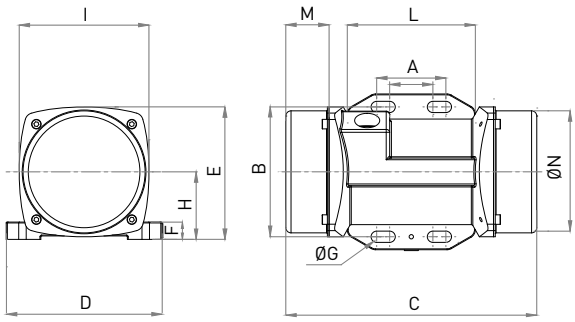


| Modèle | | Dessein | SPÉCIFICATIONS DIMENSIONNELLES (mm) | | | | | | | | | | | | | |
|---|---|---|---|---|---|---|---|---|---|---|---|---|---|---|---|---|
| | | | C | M | A | B | Ø G | Trous | D | E | F | H | I | L | N |
| 50Hz | 60Hz | | 50Hz | 50Hz | | | | N° | | | | | | | |
| MVE 21/3E-MICRO | MVE21/36E-MICRO | F | 145 | 25 | Empreinte multiple: 25-40 / 92 / 6.5; 60 / 85 / 6.5 | | | 4 | 110 | 76 | 10 | 39 | 75 | 74 | 70 |
| MVE 41/3E-MICRO | MVE 41/36E-MICRO | F | 161 | 33 | Empreinte multiple: 25-40 / 92 / 6.5; 60 / 85 / 6.5 | | | 4 | 110 | 76 | 10 | 39 | 75 | 74 | 70 |

| Modèle | | Dessein | SPÉCIFICATIONS DIMENSIONNELLES (mm) | | | | | | | | | | | | | |
|---|---|---|---|---|---|---|---|---|---|---|---|---|---|---|---|---|
| | | | C | M | A | B | Ø G | Trous | D | E | F | H | I | L | N |
| 50Hz | 60Hz | | 50Hz | 50Hz | | | | N° | | | | | | | |
| MVE 3/3E-MICRO-M | MVE 3/36E-MICRO-M | F | 145 | 25 | Empreinte multiple: 25-40 / 92 / 6.5; 60 / 85 / 6.5 | | | 4 | 110 | 76 | 10 | 39 | 75 | 74 | 70 |
| MVE 6/3E-MICRO-M | MVE 6/36E-MICRO-M | I | 145 | 25 | Empreinte multiple: 25-40 / 75 / 6.5; - / - / - | | | 4 | 90 | 76 | 10 | 39 | 75 | 74 | 70 |
| MVE 21/3E-MICRO-M | MVE 21/36E-MICRO-M | F | 145 | 25 | Empreinte multiple: 25-40 / 92 / 6.5; 60 / 85 / 6.5 | | | 4 | 110 | 76 | 10 | 39 | 75 | 74 | 70 |
| MVE 41/3E-MICRO-M | MVE 41/36E-MICRO-M | F | 161 | 25 | Empreinte multiple: 25-40 / 92 / 6.5; 60 / 85 / 6.5 | | | 4 | 110 | 76 | 10 | 39 | 75 | 74 | 70 |

## Note:

REMARQUE: Dimensions avec précision grossière conformément à UNI 22768/1

Ces informations sont fournies sans garantie, représentation, incitation ou licence d'aucune sorte. Les informations sont précises selon la connaissance de OLI ou sont obtenues de sources considérées comme exactes. OLI n'assume donc aucune responsabilité légale.
La dernière version du catalogue mis à jour est disponible en ligne.

» Class II Div.2 Group F, G T4
» Conforme à UL 1004-1,UL 1004-3, UL60079-31, UL60079-0, CSA 60079-0, CSA 60079- 31, CSA 22.2 N°100, CSA 22.2 N°77

# MVE GAMME STANDARD

## MVE-DC COURANT CONTINU – 3000 rpm

* Rac

II 3D Temp. Class: ○ 100 °C

| Wm (kgcm) | Modèle | rpm | Force centrifuge (kg) | Poids (kg) | SPÉCIFICATIONS ÉLECTRIQUES | | | |
|---|---|---|---|---|---|---|---|---|
| | | | | | Puissance d'entrée (kW) | Courant nominal A Max | Presse-étoupe | |
| 1,0 | MVE 50/3N-10A0-12V | 3,000 | 50 | 4,4 | 0,08 | 6,60 | M16 | ○ |
| 1,0 | MVE 50/3N-10A0-24V | 3,000 | 50 | 4,4 | 0,08 | 3,30 | M16 | ○ |
| 1,1 | MVE 120/3N-23A0-12V | 3,000 | 117 | 7,2 | 0,12 | 9,50 | M20 | ○ |
| 1,1 | MVE 120/3N-23A0-24V | 3,000 | 117 | 7,2 | 0,12 | 4,80 | M20 | ○ |
| 4,2 | MVE 200/3N-23A0-12V | 3,000 | 200 | 7,2 | 0,16 | 13,30 | M20 | ○ |
| 4,2 | MVE 200/3N-23A0-24V | 3,000 | 200 | 7,2 | 0,16 | 6,70 | M20 | ○ |
| 10,4 | MVE 500/3N-40A0-24V | 3,000 | 530 | 15,8 | 0,26 | 11,00 | M20 | ○ |
| 22,4 | MVE 1500/3N-50A0-24V | 3,000 | 1.616 | 23 | 0,52 | 21,50 | M20 | ○ |

*Taille 23A0*



*Taille 40A0*



*Taille 50A0*



Pour convertir les kg en Newton: N = 9.81 · kg

- II3D Ex tc IIIC T100 IP66
- Équipement et système de protection destinés pour l'utilisation en atmosphères explosibles (Zone 22) - Directive 2014/34/UE
- Conformité avec les Exigences Essentielles de Santé et de Sécurité
- EN 60079-0, EN 60079-31

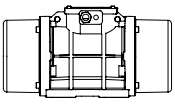

Dessins techniques sur la dernière page



| Modèle | Dessein | Taille | SPÉCIFICATIONS DIMENSIONNELLES (mm) | | | | | | | | | | | | |
|---|---|---|---|---|---|---|---|---|---|---|---|---|---|---|---|
| | | | C | M | A | B | Ø G | Trous N° | D | E | F | H | I | L | N |
| MVE 50/3N-10A0-12V | A | 10A0 | 211 | 45 | Empreinte multiple | | | 4 | 130 | 136 | 12 | 48 | 94 | 121 | 85 |
| | | | | | 62-74 | 106 | 9 | | | | | | | | |
| MVE 50/3N-10A0-24V | A | 10A0 | 211 | 45 | 33 | 83-102 | 7 | 4 | 130 | 136 | 12 | 48 | 94 | 121 | 85 |
| MVE 120/3N-23A0-12V | G | 23A0 | 218 | 53 | Empreinte multiple | | | 4 | 164 | 140 | 25 | 82 | 116 | 159 | 110 |
| | | | | | 62-74 | 106 | 9 | | | | | | | | |
| MVE 120/3N-23A0-24V | G | 23A0 | 218 | 53 | 65 | 140 | 13 | 4 | 164 | 140 | 25 | 82 | 116 | 159 | 110 |
| MVE 200/3N-23A0-12V | G | 23A0 | 218 | 53 | 115 | 135 | 11 | 4 | 164 | 140 | 25 | 82 | 116 | 159 | 110 |
| MVE 200/3N-23A0-24V | G | 23A0 | 218 | 53 | 135 | 115 | 11 | 4 | 164 | 140 | 25 | 82 | 116 | 159 | 110 |
| MVE 500/3N-40A0-24V | D1 | 40A0 | 330 | 78 | 105 | 140 | 13 | 4 | 170 | 195 | 15 | 92 | 174 | 166 | 160 |
| MVE 1500/3N-50A0-24V | D1 | 50A0 | 324 | 63 | 120 | 170 | 18 | 4 | 208 | 210 | 18 | 96 | 185 | 192 | 165 |

## Note:

REMARQUE: Dimensions avec précision grossière conformément à UNI 22768/1

Ces informations sont fournies sans garantie, représentation, incitation ou licence d'aucune sorte. Les informations sont précises selon la connaissance de OLI ou sont obtenues de sources considérées comme exactes. OLI n'assume donc aucune responsabilité légale.
La dernière version du catalogue mis à jour est disponible en ligne.

# MVE-Exe SÉCURITÉ ACCRUE

## 2 PÔLES – 3000/3600 rpm

Ex II 2G: Temp. Class **T3** - ExII 2D Temp. Class: ● 100 °C ● 135 °C
Class II Div.2: Temp. Class **T4**
EX e, tE: **5**

* Terminal Connections: **Y** High Voltage; **Δ** Low Voltage

| Wm (kgcm) | | Modèle | | Force centrifuge (kg) | | Poids (kg) | | SPÉCIFICATIONS ÉLECTRIQUES | | | | | | | | |
|---|---|---|---|---|---|---|---|---|---|---|---|---|---|---|---|---|
| | | | | | | | | Puissance d'entrée (kW) | | Courant nominal | | * Raccordements des bornes | Ia/In | | Presse-étoupe | |
| 50Hz | 60Hz | 50Hz | 60Hz | 50Hz | 60Hz | 50Hz | 60Hz | 50 Hz | 60 Hz | 50Hz (400V) | 60Hz (460V) | | 50Hz | 60Hz | Metrico | |
| 3,7 | 2,6 | MVE 200/3X-20A0 | MVE 200/36X-20A0 | 187 | 189 | 7 | | 0,15 | 0,18 | 0,35 | 0,30 | Y | 3,0 | 3,5 | M20 | ● |
| 3,7 | 2,6 | MVE 200/3X-23A0 | MVE 200/36X-23A0 | 187 | 189 | 7 | | 0,15 | 0,18 | 0,35 | 0,30 | Y | 3,5 | 3,5 | M20 | ● |
| 6,4 | 4,5 | MVE 300/3X-30A0 | MVE 300/36X-30A0 | 321 | 323 | 10 | | 0,25 | 0,28 | 0,52 | 0,45 | Y | 3,8 | 3,7 | M20 | ● |
| 8,0 | 5,7 | MVE 400/3X-30A0 | MVE 400/36X-30A0 | 407 | 411 | 10 | | 0,27 | 0,33 | 0,58 | 0,60 | Y | 3,7 | 3,7 | M20 | ● |
| 10,3 | 7,4 | MVE 500/3X-40A0 | MVE 500/36X-40A0 | 530 | 534 | 16 | | 0,50 | 0,58 | 0,96 | 0,97 | Y | 4,2 | 4,4 | M20 | ● |
| 14,9 | 10,6 | MVE 700/3X-40A0 | MVE 700/36X-40A0 | 758 | 765 | 17 | | 0,59 | 0,61 | 1,25 | 1,24 | Y | 4,5 | 5,2 | M20 | ● |
| 15,7 | 11,1 | MVE 800/3X-50A0 | MVE 800/36X-50A0 | 794 | 800 | 20 | | 0,70 | 0,84 | 1,45 | 1,50 | Y | 4,0 | 4,0 | M20 | ● |
| 20,3 | 14,0 | MVE 1200/3X-50A0 | MVE 1200/36X-50A0 | 1.005 | 1.013 | 21 | | 0,95 | 1,15 | 1,85 | 1,95 | Y | 4,6 | 4,7 | M20 | ● |
| 26,6 | 18,6 | MVE 1300/3X-50A0 | MVE 1300/36X-50A0 | 1.355 | 1.365 | 22 | | 1,30 | 1,38 | 2,44 | 2,25 | Y | 5,4 | 5,2 | M20 | ● |
| 26,6 | 18,6 | MVE 1300/3X-51A0 | MVE 1300/36X-51A0 | 1.355 | 1.365 | 22 | | 1,30 | 1,38 | 2,44 | 2,25 | Y | 5,4 | 5,2 | M20 | ● |
| 31,3 | 22,2 | MVE 1600/3X-60A0 | MVE 1600/36X-60A0 | 1.601 | 1.608 | 51 | 50 | 1,54 | 1,60 | 2,94 | 2,61 | Y | 6,1 | 6,4 | M25 | ● |
| 36,8 | 27,6 | MVE 2000/3X-60A0 | MVE 2000/36X-60A0 | 2.027 | 1.997 | 52 | 50 | 2,10 | 2,10 | 3,75 | 3,42 | Y | 6,7 | 6,6 | M25 | ● |
| 46,0 | 31,9 | MVE 2300/3X-60A0 | MVE 2300/36X-60A0 | 2.302 | 2.306 | 53 | 51 | 2,40 | 2,45 | 4,44 | 3,45 | Y | 6,2 | 6,5 | M25 | ● |
| 68,1 | 43,9 | MVE 3200/3X-75A1 | MVE 3200/36X-75A1 | 3.252 | 3.176 | 103 | 101 | 2,76 | 2,90 | 5,30 | 4,61 | Y | 8,5 | 8,4 | M32 | ● |
| 79,4 | 56,0 | MVE 4000/3X-75A1 | MVE 4000/36X-75A1 | 4.033 | 4.052 | 107 | 104 | 2,90 | 2,90 | 5,30 | 4,61 | Y | 8,7 | 9,9 | M32 | ● |

*Taille 40A0*



*Taille 50A0*



*Taille 60A0*



JUSQU'À LA TAILLE 60 (NON COMPRIS)
60Hz masses = 50Hz masses ajustées à 70%

SUPÉRIEUR À LA TAILLE 60 (Y COMPRIS)
Masses spécifiques pour 60Hz

Pour convertir les kg en Newton: N = 9.81 · kg

- II 2D Ex tb IIIC Tx Db IP66
- II 2G Ex eb IIC T3 Gb
- Équipement et système de protection destinés pour l'utilisation en atmosphères explosibles (Zone 21) - Directive 2014/34/UE
- Conformité avec les Exigences Essentielles de Santé et de Sécurité
- IEC 60034-1, IEC EN 60079-0, IEC EN 60079-31, IEC EN 60079-7

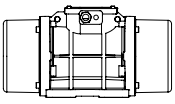

Dessins techniques sur la dernière page

| Modèle | | Dessein | Taille | SPÉCIFICATIONS DIMENSIONNELLES (mm) | | | | | | | | | | | | | | |
|---|---|---|---|---|---|---|---|---|---|---|---|---|---|---|---|---|---|---|
| | | | | C | | M | | A | B | Ø G | Trous | D | E | F | H | I | L | N |
| 50Hz | 60Hz | | | 50Hz | 60Hz | 50Hz | 60Hz | | | | N° | | | | | | | |
| MVE 200/3X-20A0 | MVE 200/36X-20A0 | B1 | 20A0 | 233 | | 54 | | 62-74 | 106 | 9 | 4 | 130 | 154 | 15 | 65 | 125 | 120 | 112 |
| MVE 200/3X-23A0 | MVE 200/36X-23A0 | G | 23A0 | 222 | | 55 | | Empreinte multiple<br>62-74<br>65<br>115<br>135 | 106<br>140<br>135<br>115 | 9<br>13<br>11<br>11 | 4 | 164 | 140 | 25 | 82 | 116 | 159 | 110 |
| MVE 300/3X-30A0 | MVE 300/36X-30A0 | C1 | 30A0 | 254 | | 42 | | Empreinte multiple<br>80<br>90<br>124<br>135 | 110<br>125<br>110<br>115 | 11<br>13<br>11<br>11 | 4 | 150 | 173 | 15 | 79 | 150 | 166 | 134 |
| MVE 400/3X-30A0 | MVE 400/36X-30A0 | C1 | 30A0 | 274 | | 52 | | Empreinte multiple<br>80<br>90<br>124<br>135 | 110<br>125<br>110<br>115 | 11<br>13<br>11<br>11 | 4 | 150 | 173 | 15 | 79 | 150 | 166 | 134 |
| MVE 500/3X-40A0 | MVE 500/36X-40A0 | D1 | 40A0 | 330 | | 78 | | 105 | 140 | 13 | 4 | 170 | 196 | 20 | 92 | 169 | 166 | 158 |
| MVE 700/3X-40A0 | MVE 700/36X-40A0 | D1 | 40A0 | 330 | | 78 | | 105 | 140 | 13 | 4 | 170 | 196 | 20 | 92 | 169 | 166 | 158 |
| MVE 800/3X-50A0 | MVE 800/36X-50A0 | D1 | 50A0 | 321 | | 62 | | 120 | 170 | 17 | 4 | 208 | 210 | 22 | 96 | 185 | 192 | 170 |
| MVE 1200/3X-50A0 | MVE 1200/36X-50A0 | D1 | 50A0 | 321 | | 62 | | 120 | 170 | 17 | 4 | 208 | 210 | 22 | 96 | 185 | 192 | 170 |
| MVE 1300/3X-50A0 | MVE 1300/36X-50A0 | D1 | 50A0 | 321 | | 62 | | 120 | 170 | 17 | 4 | 208 | 210 | 22 | 96 | 185 | 192 | 170 |
| MVE 1300/3X-51A0 | MVE 1300/36X-51A0 | D1 | 51A0 | 326 | | 63 | | 120 | 170 | 17 | 4 | 208 | 220 | 25 | 105 | 203 | 192 | 187 |
| MVE 1600/3X-60A0 | MVE 1600/36X-60A0 | D1 | 60A0 | 402 | | 90 | | 140 | 190 | 17 | 4 | 230 | 260 | 26 | 124 | 240 | 218 | 222 |
| MVE 2000/3X-60A0 | MVE 2000/36X-60A0 | D1 | 60A0 | 402 | | 90 | | 140 | 190 | 17 | 4 | 230 | 260 | 26 | 124 | 240 | 218 | 222 |
| MVE 2300/3X-60A0 | MVE 2300/36X-60A0 | D1 | 60A0 | 402 | | 90 | | 140 | 190 | 17 | 4 | 230 | 260 | 26 | 124 | 240 | 218 | 222 |
| MVE 3200/3X-75A1 | MVE 3200/36X-75A1 | D1 | 75A1 | 516 | | 117 | | 155 | 255 | 25 | 4 | 304 | 314 | 30 | 147 | 285 | 277 | 265 |
| MVE 4000/3X-75A1 | MVE 4000/36X-75A1 | D1 | 75A1 | 516 | | 117 | | 155 | 255 | 25 | 4 | 304 | 314 | 30 | 147 | 285 | 277 | 265 |

## Note:

REMARQUE: Dimensions avec précision grossière conformément à UNI 22768/1

Ces informations sont fournies sans garantie, représentation, incitation ou licence d'aucune sorte. Les informations sont précises selon la connaissance de OLI ou sont obtenues de sources considérées comme exactes. OLI n'assume donc aucune responsabilité légale.
La dernière version du catalogue mis à jour est disponible en ligne.

- Class I, Div.2 Group A, B, C, D T3
- Class II Div.2 Group F, G T4
- Conforme à UL 1004-1,UL 1004-3, UL60079-31, UL60079-0, CSA 60079-0, CSA 60079-31, CSA 22.2 N°100, CSA 22.2 N°77, CSA 22.2 N°60079-7

# MVE-Exe SÉCURITÉ ACCRUE

## 4 PÔLES – 1500/1800 rpm

Ex II 2G: Temp. Class **T3** - ExII 2D Temp. Class: ● 100 °C ● 135 °C
Class II Div.2: Temp. Class **T4**
EX e, tE: **5**

* Raccordements des bornes : **Y** Haute tension ; **Δ** Basse tension

| Wm (kgcm) | | Modèle | | Force centrifuge (kg) | | Poids (kg) | | SPÉCIFICATIONS ÉLECTRIQUES | | | | | | | | |
|---|---|---|---|---|---|---|---|---|---|---|---|---|---|---|---|---|
| | | | | | | | | Puissance d'entrée (kW) | | Courant nominal | | * Raccordements des bornes | Ia / In | | Presse-étoupe | |
| 50Hz | 60Hz | 50Hz | 60Hz | 50Hz | 60Hz | 50Hz | 60Hz | 50Hz | 60Hz | 50Hz (400V) | 60Hz (460V) | | 50Hz | 60Hz | Metrico | |
| 15,4 | 10,8 | MVE 200/15X-30A0 | MVE 200/18X-30A0 | 194 | 196 | 12 | | 0,12 | 0,15 | 0,49 | 0,50 | Y | 2,2 | 2,2 | M20 | ● |
| 33,4 | 23,4 | MVE 400/15X-40A0 | MVE 400/18X-40A0 | 420 | 423 | 20 | | 0,27 | 0,32 | 0,84 | 0,86 | Y | 2,7 | 2,7 | M20 | ● |
| 40,1 | 28,1 | MVE 500/15X-40A0 | MVE 500/18X-40A0 | 504 | 508 | 21 | | 0,35 | 0,40 | 1,06 | 1,09 | Y | 3,0 | 2,9 | M20 | ● |
| 26,6 | 18,6 | MVE 300/15X-50A0 | MVE 300/18X-50A0 | 334 | 336 | 22 | | 0,62 | 0,73 | 1,32 | 1,20 | Y | 3,2 | 3,4 | M20 | ● |
| 26,6 | 18,6 | MVE 300/15X-51A0 | MVE 300/18X-51A0 | 334 | 336 | 22 | | 0,62 | 0,73 | 1,32 | 1,20 | Y | 3,2 | 3,4 | M20 | ● |
| 56,8 | 39,4 | MVE 700/15X-50A0 | MVE 700/18X-50A0 | 714 | 712 | 27 | | 0,62 | 0,73 | 1,32 | 1,20 | Y | 3,2 | 3,4 | M20 | ● |
| 56,8 | 39,4 | MVE 710/15X-50A0 | MVE 710/18X-50A0 | 714 | 712 | 27 | | 0,62 | 0,73 | 1,32 | 1,20 | Y | 3,2 | 3,4 | M20 | ● |
| 75,6 | 52,9 | MVE 950/15X-50A0 | MVE 950/18X-50A0 | 950 | 957 | 33 | | 0,64 | 0,77 | 1,40 | 1,35 | Y | 4,2 | 4,2 | M20 | ● |
| 87,7 | 61,4 | MVE 1100/15X-51A0 | MVE 1100/18X-51A0 | 1.102 | 1.110 | 35 | 28,5 | 0,64 | 0,77 | 1,40 | 1,35 | Y | 4,0 | 4,0 | M20 | ● |
| 108,6 | 76,7 | MVE 1400/15X-60A0 | MVE 1400/18X-60A0 | 1.364 | 1.388 | 63 | 60 | 0,70 | 0,84 | 1,78 | 1,78 | Y | 4,2 | 4,2 | M25 | ● |
| 137,3 | 92,0 | MVE 1700/15X-60A0 | MVE 1700/18X-60A0 | 1.725 | 1.664 | 62 | 59 | 1,13 | 1,30 | 2,16 | 2,09 | Y | 4,9 | 4,7 | M25 | ● |
| 187,7 | 137,4 | MVE 2400/15X-60A0 | MVE 2400/18X-60A0 | 2.358 | 2.485 | 68 | 62 | 1,57 | 1,88 | 3,20 | 3,20 | Y | 5,1 | 5,1 | M25 | ● |
| 203,5 | 135,6 | MVE 2500/15X-70A0 | MVE 2500/18X-70A0 | 2.557 | 2.454 | 80 | 74 | 1,76 | 2,00 | 3,08 | 3,00 | Y | 6,2 | 6,3 | M25 | ● |
| 248,7 | 169,8 | MVE 3000/15X-70A0 | MVE 3000/18X-70A0 | 3.124 | 3.071 | 94 | 87 | 1,90 | 2,30 | 3,68 | 3,30 | Y | 6,7 | 6,8 | M25 | ● |
| 306,7 | 204,7 | MVE 3800/15X-75A0 | MVE 3800/18X-75A0 | 3.853 | 3.704 | 146 | | 2,20 | 2,60 | 4,15 | 4,15 | Y | 7,0 | 7,0 | M32 | ● |
| 343,2 | 240,9 | MVE 4300/15X-75A0 | MVE 4300/18X-75A0 | 4.312 | 4.359 | 136 | 125 | 2,50 | 3,00 | 4,50 | 4,60 | Y | 7,2 | 7,4 | M32 | ● |
| 437,4 | 303,7 | MVE 5500/15X-80A0 | MVE 5500/18X-80A0 | 5.495 | 5.495 | 181 | 169 | 2,88 | 3,45 | 6,50 | 5,50 | Y | 7,3 | 7,2 | M32 | ● |
| 576,8 | 397,3 | MVE 7200/15X-85A0 | MVE 7200/18X-85A0 | 7.246 | 7.188 | 237 | 231 | 4,00 | 4,80 | 8,50 | 8,70 | Δ | 7,0 | 7,1 | M32 | ● |
| 718,0 | 498,8 | MVE 9000/15X-85A0 | MVE 9000/18X-85A0 | 9.020 | 9.023 | 252 | 241 | 7,35 | 8,50 | 13,40 | 12,00 | Δ | 7,2 | 7,2 | M32 | ● |
| 579,9 | 406,0 | MVE 7200/15X-86A0 | MVE 7200/18X-86A0 | 7.286 | 7.345 | 237 | 231 | 6,00 | 6,50 | 11,00 | 10,80 | Δ | 4,7 | 4,5 | M32 | ● |
| 724,8 | 507,0 | MVE 9000/15X-86A0 | MVE 9000/18X-86A0 | 9.106 | 9.172 | 252 | 241 | 6,00 | 6,50 | 11,00 | 10,80 | Δ | Δ | 4,5 | M32 | ● |
| 800,1 | 588,3 | MVE 10000/15X-90A0 | MVE 10000/18X-90A0 | 10.052 | 10.643 | 300 | 286 | 5,40 | 7,00 | 13,00 | 13,00 | Δ | 6,7 | 6,6 | M32 | ● |
| 835,7 | 581,3 | MVE 10000/15X-91A0 | MVE 10000/18X-91A0 | 10.499 | 10.517 | 300 | 286 | 7,00 | 8,20 | 13,10 | 13,10 | Δ | 7,2 | 7,7 | M32 | ● |

*Taille 70A0*



*Taille 75A0*



*Taille 80A0*



JUSQU'À LA TAILLE 60 (NON COMPRIS)
60Hz masses = 50Hz masses ajustées à 70%

Ausgenommen Type MVE 1100/15E - 1100/18E

SUPÉRIEUR À LA TAILLE 60 (Y COMPRIS)
Masses spécifiques pour 60Hz

Pour convertir les kg en Newton: N = 9.81 · kg

- II 2D Ex tb IIIC Tx Db IP66
- II 2G Ex eb IIC T3 Gb
- Équipement et système de protection destinés pour l'utilisation en atmosphères explosibles (Zone 21) - Directive 2014/34/UE
- Conformité avec les Exigences Essentielles de Santé et de Sécurité
- IEC 60034-1, IEC EN 60079-0, IEC EN 60079-31, IEC EN 60079-7

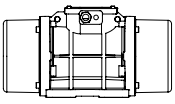

Dessins techniques sur la dernière page



| Modèle | | Dessein | Taille | SPÉCIFICATIONS DIMENSIONNELLES (mm) | | | | | | | | | | | | | | |
|---|---|---|---|---|---|---|---|---|---|---|---|---|---|---|---|---|---|---|
| | | | | C | | M | | A | B | Ø G | Trous | D | E | F | H | I | L | N |
| 50Hz | 60Hz | | | 50Hz | 60Hz | 50Hz | 60Hz | | | | N° | | | | | | | |
| MVE 200/15X-30A0 | MVE 200/18X-30A0 | C | 30A0 | 274 | | 52 | | Empreinte multiple<br>80<br>90<br>124<br>135 | 110<br>125<br>110<br>115 | 11<br>13<br>11<br>11 | 4 | 150 | 173 | 15 | 79 | 150 | 166 | 134 |
| MVE 400/15X-40A0 | MVE 400/18X-40A0 | D1 | 40A0 | 330 | | 78 | | 105 | 140 | 13 | 4 | 170 | 196 | 20 | 92 | 174 | 166 | 160 |
| MVE 500/15X-40A0 | MVE 500/18X-40A0 | D1 | 40A0 | 330 | | 78 | | 105 | 140 | 13 | 4 | 170 | 196 | 20 | 92 | 174 | 166 | 160 |
| MVE 300/15X-50A0 | MVE 300/18X-50A0 | D1 | 50A0 | 321 | | 62 | | 120 | 170 | 17 | 4 | 208 | 210 | 22 | 96 | 185 | 192 | 170 |
| MVE 300/15X-51A0 | MVE 300/18X-51A0 | D1 | 51A0 | 321 | | 62 | | 120 | 170 | 17 | 4 | 208 | 220 | 25 | 105 | 202 | 192 | 187 |
| MVE 700/15X-50A0 | MVE 700/18X-50A0 | D1 | 50A0 | 391 | | 97 | | 120 | 170 | 17 | 4 | 208 | 210 | 22 | 96 | 185 | 192 | 170 |
| MVE 710/15X-50A0 | MVE 710/18X-50A0 | D1 | 50A0 | 391 | | 97 | | 120 | 170 | 17 | 4 | 208 | 210 | 22 | 96 | 185 | 192 | 170 |
| MVE 950/15X-50A0 | MVE 950/18X-50A0 | D1 | 50A0 | 455 | | 129 | | 120 | 170 | 17 | 4 | 208 | 210 | 22 | 96 | 185 | 192 | 170 |
| MVE 1100/15X-51A0 | MVE 1100/18X-51A0 | D1 | 51A0 | 414 | | 106 | | 120 | 170 | 17 | 4 | 208 | 220 | 25 | 105 | 202 | 192 | 187 |
| MVE 1400/15X-60A0 | MVE 1400/18X-60A0 | D1 | 60A0 | 446 | | 112 | | 140 | 190 | 17 | 4 | 230 | 260 | 26 | 124 | 240 | 218 | 222 |
| MVE 1700/15X-60A0 | MVE 1700/18X-60A0 | D1 | 60A0 | 446 | | 112 | | 140 | 190 | 17 | 4 | 230 | 260 | 26 | 124 | 240 | 218 | 222 |
| MVE 2400/15X-60A0 | MVE 2400/18X-60A0 | D1 | 60A0 | 490 | 446 | 134 | 112 | 140 | 190 | 17 | 4 | 230 | 260 | 26 | 124 | 240 | 218 | 222 |
| MVE 2500/15X-70A0 | MVE 2500/18X-70A0 | D1 | 70A0 | 501 | | 123 | | 155 | 225 | 22 | 4 | 275 | 290 | 30 | 140 | 256 | 250 | 236 |
| MVE 3000/15X-70A0 | MVE 3000/18X-70A0 | D1 | 70A0 | 535 | 501 | 140 | 123 | 155 | 225 | 22 | 4 | 275 | 290 | 30 | 140 | 256 | 250 | 236 |
| MVE 3800/15X-75A0 | MVE 3800/18X-75A0 | D1 | 75A0 | 564 | 536 | 151 | 117 | 155 | 255 | 23.5 | 4 | 304 | 314 | 30 | 147 | 285 | 277 | 265 |
| MVE 4300/15X-75A0 | MVE 4300/18X-75A0 | D1 | 75A0 | 584 | 564 | 151 | 141 | 155 | 255 | 23.5 | 4 | 304 | 314 | 30 | 147 | 285 | 277 | 265 |
| MVE 5500/15X-80A0 | MVE 5500/18X-80A0 | E1 | 80A0 | 603 | | 143 | | 180 | 280 | 26 | 4 | 332 | 360 | 37 | 167 | 345 | 304 | 310 |
| MVE 7200/15X-85A0 | MVE 7200/18X-85A0 | D1 | 85A0 | 624 | | 130 | | 200 | 320 | 28 | 4 | 385 | 402 | 40 | 203 | 394 | 360 | 378 |
| MVE 9000/15X-85A0 | MVE 9000/18X-85A0 | D1 | 85A0 | 624 | | 130 | | 200 | 320 | 28 | 4 | 385 | 402 | 40 | 203 | 394 | 360 | 378 |
| MVE 7200/15X-86A0 | MVE 7200/18X-86A0 | D1 | 86A0 | 624 | | 130 | | 200 | 320 | 28 | 4 | 385 | 402 | 40 | 203 | 394 | 360 | 378 |
| MVE 9000/15X-86A0 | MVE 9000/18X-86A0 | D1 | 86A0 | 624 | | 130 | | 200 | 320 | 28 | 4 | 385 | 402 | 40 | 203 | 394 | 360 | 378 |
| MVE 10000/15X-90A0 | MVE 10000/18X-90A0 | E1 | 90A0 | 728 | | 170 | | 125 | 380 | 39 | 6 | 452 | 415 | 40 | 205 | 394 | 380 | 378 |
| MVE 10000/15X-91A0 | MVE 10000/18X-91A0 | E1 | 91A0 | 728 | | 170 | | 125 | 380 | 39 | 6 | 452 | 415 | 40 | 205 | 394 | 380 | 378 |

## Note:

REMARQUE: Dimensions avec précision grossière conformément à UNI 22768/1

Ces informations sont fournies sans garantie, représentation, incitation ou licence d'aucune sorte. Les informations sont précises selon la connaissance de OLI ou sont obtenues de sources considérées comme exactes. OLI n'assume donc aucune responsabilité légale.
La dernière version du catalogue mis à jour est disponible en ligne.

- Class I, Div.2 Group A, B, C, D T3
- Class II Div.2 Group F, G T4
- Conforme à UL 1004-1,UL 1004-3, UL60079-31, UL60079-0, CSA 60079-0, CSA 60079-31, CSA 22.2 N°100, CSA 22.2 N°77, CSA 22.2 N°60079-7

# MVE-Exe SÉCURITÉ ACCRUE

## 6 PÔLES – 1000/1200 rpm

Ex II 2G: Temp. Class **T3** - ExII 2D Temp. Class: ● 100 °C ● 135 °C
Class II Div.2: Temp. Class **T4**
EX e, tE: **5**

* Raccordements des bornes : **Y** Haute tension ; **Δ** Basse tension

| Wm (kgcm) | | Modèle | | Force centrifuge (kg) | | Poids (kg) | | SPÉCIFICATIONS ÉLECTRIQUES | | | | | | | | |
|---|---|---|---|---|---|---|---|---|---|---|---|---|---|---|---|---|
| | | | | | | | | Puissance d'entrée (kW) | | Courant nominal | | * Raccordements des bornes | Ia / In | | Presse-étoupe | |
| 50Hz | 60Hz | 50Hz | 60Hz | 50Hz | 60Hz | 50Hz | 60Hz | 50Hz | 60Hz | 50Hz (400V) | 60Hz (460V) | | 50Hz | 60Hz | Metrico | |
| 9,5 | 6,6 | MVE 50/1X-30A0 | MVE 50/12X-30A0 | 53 | 53 | 10 | | 0,12 | 0,14 | 0,30 | 0,40 | Y | 2,2 | 2,2 | M20 | ● |
| 18,8 | 13,2 | MVE 100/1X-30A0 | MVE 100/12X-30A0 | 105 | 106 | 11 | | 0,12 | 0,14 | 0,30 | 0,40 | Y | 2,2 | 2,2 | M20 | ● |
| 33,5 | 23,4 | MVE 200/1X-40A0 | MVE 200/12X-40A0 | 187 | 188 | 19 | | 0,15 | 0,18 | 0,65 | 0,63 | Y | 2,2 | 2,2 | M20 | ● |
| 56,9 | 39,9 | MVE 300/1X-50A0 | MVE 300/12X-50A0 | 318 | 320 | 26 | | 0,25 | 0,30 | 0,67 | 0,64 | Y | 2,7 | 2,7 | M20 | ● |
| 91,9 | 64,3 | MVE 500/1X-50A0 | MVE 500/12X-50A0 | 513 | 517 | 34 | | 0,55 | 0,40 | 1,22 | 1,15 | Y | 3,0 | 2,9 | M20 | ● |
| 91,9 | 91,9 | MVE 510/1X-51A0 | MVE 510/12X-51A0 | 513 | 739 | 34 | | 0,55 | 0,40 | 1,20 | 1,15 | Y | 3,0 | 2,9 | M20 | ● |
| 137,4 | 108,6 | MVE 800/1X-60A0 | MVE 800/12X-60A0 | 767 | 873 | 60 | 58 | 0,75 | 0,80 | 1,42 | 1,32 | Y | 3,4 | 3,3 | M25 | ● |
| 187,7 | 137,3 | MVE 1100/1X-60A0 | MVE 1100/12X-60A0 | 1.048 | 1.104 | 78 | 72 | 0,75 | 0,80 | 1,42 | 1,32 | Y | 3,4 | 3,3 | M25 | ● |
| 284,8 | 196,5 | MVE 1500/1X-60A0 | MVE 1500/12X-60A0 | 1.590 | 1.580 | 84 | 73 | 0,90 | 1,08 | 1,80 | 2,00 | Y | 3,5 | 3,5 | M25 | ● |
| 299,6 | 203,5 | MVE 1600/1X-70A0 | MVE 1600/12X-70A0 | 1.673 | 1.636 | 90 | 79 | 0,90 | 1,08 | 2,40 | 2,30 | Y | 3,9 | 3,8 | M25 | ● |
| 373,1 | 248,7 | MVE 2100/1X-70A0 | MVE 2100/12X-70A0 | 2.083 | 2.000 | 105 | 91 | 1,50 | 1,80 | 3,00 | 3,20 | Y | 4,5 | 4,6 | M25 | ● |
| 401,0 | 275,2 | MVE 2200/1X-70A0 | MVE 2200/12X-70A0 | 2.239 | 2.213 | 107 | 93 | 1,50 | 1,80 | 3,00 | 3,20 | Y | 4,5 | 4,6 | M25 | ● |
| 467,4 | 306,7 | MVE 2600/1X-75A0 | MVE 2600/12X-75A0 | 2.610 | 2.466 | 146,5 | 126,5 | 1,96 | 2,10 | 4,10 | 4,00 | Y | 5,0 | 5,0 | M32 | ● |
| 540,3 | 379,7 | MVE 3000/1X-75A0 | MVE 3000/12X-75A0 | 3.017 | 3.053 | 155 | 138 | 2,20 | 2,40 | 4,50 | 4,30 | Y | 5,2 | 5,2 | M32 | ● |
| 702,5 | 465,6 | MVE 3700/1X-75A0 | MVE 3700/12X-75A0 | 3.797 | 3.744 | 159 | 142 | 2,20 | 2,40 | 4,50 | 4,30 | Y | 5,2 | 5,2 | M32 | ● |
| 680,4 | 437,4 | MVE 3800/1X-80A0 | MVE 3800/12X-80A0 | 3.799 | 3.517 | 216 | 195 | 2,50 | 3,00 | 5,50 | 5,30 | Y | 6,1 | 6,2 | M32 | ● |
| 838,3 | 584,2 | MVE 4700/1X-80A0 | MVE 4700/12X-80A0 | 4.681 | 4.697 | 220 | 201 | 3,20 | 3,90 | 6,50 | 6,95 | Y | 5,7 | 5,9 | M32 | ● |
| 929,9 | 654,6 | MVE 5200/1X-85A0 | MVE 5200/12X-85A0 | 5.192 | 5.263 | 264 | 248 | 3,80 | 4,00 | 6,92 | 6,36 | Y | 5,7 | 5,7 | M32 | ● |
| 1.165,2 | 824,0 | MVE 6500/1X-85A0 | MVE 6500/12X-85A0 | 6.506 | 6.625 | 288 | 265 | 4,30 | 5,00 | 7,76 | 7,81 | Y | 6,4 | 6,2 | M32 | ● |
| 1.436,0 | 929,8 | MVE 8000/1X-85A0 | MVE 8000/12X-85A0 | 8.018 | 7.476 | 309 | 274 | 5,50 | 6,60 | 12,60 | 11,60 | Δ | 6,2 | 6,4 | M32 | ● |
| 1.600,4 | 1.165,2 | MVE 9000/1X-85A0 | MVE 9000/12X-85A0 | 8.936 | 9.369 | 322 | 291 | 6,20 | 7,45 | 13,20 | 12,60 | Δ | 6,5 | 6,4 | M32 | ● |
| 1.434,0 | 929,8 | MVE 8000/1X-86A0 | MVE 8000/12X-86A0 | 8.007 | 7.476 | 309 | 274 | 4,60 | 5,50 | 9,00 | 10,00 | Δ | 6,0 | 6,2 | M32 | ● |
| 1.598,0 | 1.165,2 | MVE 9000/1X-86A0 | MVE 9000/12X-86A0 | 8.923 | 9.369 | 322 | 291 | 4,60 | 5,50 | 9,00 | 10,00 | Δ | 6,0 | 6,2 | M32 | ● |
| 1.788,4 | 1.240,0 | MVE 10000/1X-90A0 | MVE 10000/12X-90A0 | 9.986 | 9.970 | 374 | 348 | 6,10 | 6,40 | 14,00 | 12,70 | Δ | 6,6 | 6,6 | M32 | ● |
| 2.329,8 | 1.647,4 | MVE 13000/1X-90A0 | MVE 13000/12X-90A0 | 13.009 | 13.246 | 411 | 364 | 7,50 | 8,30 | 16,40 | 16,00 | Δ | 6,4 | 6,5 | M32 | ● |
| 1.802,9 | 1.240,0 | MVE 10000/1X-91A0 | MVE 10000/12X-91A0 | 10.067 | 9.970 | 373 | 348 | 6,40 | 7,70 | 13,00 | 14,50 | Δ | 6,0 | 6,0 | M32 | ● |
| 2.056,9 | 1.433,0 | MVE 11400/1X-91A0 | MVE 11400/12X-91A0 | 11.485 | 11.522 | 404 | 361 | 6,40 | 7,70 | 13,00 | 7,50 | Δ | 6,0 | 6,0 | M32 | ● |

JUSQU'À LA TAILLE 60 (NON COMPRIS)
60Hz masses = 50Hz masses ajustées à 70%

SUPÉRIEUR À LA TAILLE 60 (Y COMPRIS)
Masses spécifiques pour 60Hz

Pour convertir les kg en Newton: N = 9.81 · kg

- II 2D Ex tb IIIC Tx Db IP66
- II 2G Ex eb IIC T3 Gb
- Équipement et système de protection destinés pour l'utilisation en atmosphères explosibles (Zone 21) - Directive 2014/34/UE
- Conformité avec les Exigences Essentielles de Santé et de Sécurité
- IEC 60034-1, IEC EN 60079-0, IEC EN 60079-31, IEC EN 60079-7

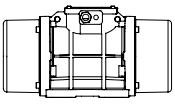

Dessins techniques sur la dernière page



| Modèle | | Dessein | Taille | SPÉCIFICATIONS DIMENSIONNELLES (mm) | | | | | | | | | | | | | | | |
|---|---|---|---|---|---|---|---|---|---|---|---|---|---|---|---|---|---|---|---|
| | | | | C | | M | | A | B | Ø G | Trous | D | E | F | H | I | L | N |
| 50Hz | 60Hz | | | 50Hz | 60Hz | 50Hz | 60Hz | | | | N° | | | | | | | |
| MVE 50/1X-30A0 | MVE 50/12X-30A0 | C | 30A0 | 274 | | 52 | | Empreinte multiple<br>80 110 11<br>90 125 13<br>124 110 11<br>135 115 11 | | | 4 | 150 | 173 | 15 | 79 | 150 | 166 | 134 |
| MVE 100/1X-30A0 | MVE 100/12X-30A0 | C | 30A0 | 304 | | 67 | | Empreinte multiple<br>80 110 11<br>90 125 13<br>124 110 11<br>135 115 11 | | | 4 | 150 | 173 | 15 | 79 | 150 | 166 | 134 |
| MVE 200/1X-40A0 | MVE 200/12X-40A0 | D1 | 40A0 | 330 | | 78 | | 105 | 140 | 13 | 4 | 170 | 196 | 20 | 92 | 174 | 166 | 160 |
| MVE 300/1X-50A0 | MVE 300/12X-50A0 | D1 | 50A0 | 391 | | 97 | | 120 | 170 | 17 | 4 | 208 | 210 | 22 | 96 | 185 | 192 | 170 |
| MVE 500/1X-50A0 | MVE 500/12X-50A0 | D1 | 50A0 | 455 | | 129 | | 120 | 170 | 17 | 4 | 208 | 210 | 22 | 96 | 185 | 192 | 170 |
| MVE 510/1X-51A0 | MVE 510/12X-51A0 | D1 | 51A0 | 455 | | 129 | | 120 | 170 | 17 | 4 | 208 | 210 | 22 | 96 | 185 | 192 | 170 |
| MVE 800/1X-60A0 | MVE 800/12X-60A0 | D1 | 60A0 | 446 | | 112 | | 140 | 190 | 17 | 4 | 230 | 260 | 26 | 124 | 240 | 218 | 222 |
| MVE 1100/1X-60A0 | MVE 1100/12X-60A0 | D1 | 60A0 | 490 | 446 | 134 | 112 | 140 | 190 | 17 | 4 | 230 | 260 | 26 | 124 | 240 | 218 | 222 |
| MVE 1500/1X-60A0 | MVE 1500/12X-60A0 | D1 | 60A0 | 566 | 490 | 172 | 134 | 140 | 190 | 17 | 4 | 230 | 260 | 26 | 124 | 240 | 218 | 222 |
| MVE 1600/1X-70A0 | MVE 1600/12X-70A0 | D1 | 70A0 | 563 | 501 | 154 | 123 | 155 | 225 | 22 | 4 | 275 | 290 | 30 | 140 | 256 | 250 | 236 |
| MVE 2100/1X-70A0 | MVE 2100/12X-70A0 | D1 | 70A0 | 623 | 563 | 184 | 154 | 155 | 225 | 22 | 4 | 275 | 290 | 30 | 140 | 256 | 250 | 236 |
| MVE 2200/1X-70A0 | MVE 2200/12X-70A0 | D1 | 70A0 | 623 | | 184 | | 155 | 225 | 22 | 4 | 275 | 290 | 30 | 140 | 256 | 250 | 236 |
| MVE 2600/1X-75A0 | MVE 2600/12X-75A0 | D1 | 75A0 | 692 | 584 | 205 | 151 | 155 | 255 | 23.5 | 4 | 304 | 314 | 30 | 147 | 285 | 277 | 265 |
| MVE 3000/1X-75A0 | MVE 3000/12X-75A0 | D1 | 75A0 | 692 | | 205 | | 155 | 255 | 23.5 | 4 | 304 | 314 | 30 | 147 | 285 | 277 | 265 |
| MVE 3700/1X-75A0 | MVE 3700/12X-75A0 | D1 | 75A0 | 734 | 692 | 226 | 205 | 155 | 255 | 23.5 | 4 | 304 | 314 | 30 | 147 | 285 | 277 | 265 |
| MVE 3800/1X-80A0 | MVE 3800/12X-80A0 | D1 | 80A0 | 683 | 603 | 183 | 143 | 180 | 280 | 26 | 4 | 332 | 354 | 32 | 170 | 330 | 312 | 311 |
| MVE 4700/1X-80A0 | MVE 4700/12X-80A0 | D1 | 80A0 | 733 | 683 | 208 | 183 | 180 | 280 | 26 | 4 | 332 | 354 | 32 | 170 | 330 | 312 | 311 |
| MVE 5200/1X-85A0 | MVE 5200/12X-85A0 | D1 | 85A0 | 704 | 624 | 170 | 130 | 200 | 320 | 28 | 4 | 385 | 402 | 40 | 20 | 394 | 360 | 378 |
| MVE 6500/1X-85A0 | MVE 6500/12X-85A0 | D1 | 85A0 | 704 | | 170 | | 200 | 320 | 28 | 4 | 385 | 402 | 40 | 20 | 394 | 360 | 378 |
| MVE 8000/1X-85A0 | MVE 8000/12X-85A0 | D1 | 85A0 | 774 | 704 | 205 | 170 | 200 | 320 | 28 | 4 | 385 | 402 | 40 | 203 | 394 | 360 | 378 |
| MVE 9000/1X-85A0 | MVE 9000/12X-85A0 | D1 | 85A0 | 774 | 704 | 205 | 170 | 200 | 320 | 28 | 4 | 385 | 402 | 40 | 203 | 394 | 360 | 378 |
| MVE 8000/1X-86A0 | MVE 8000/12X-86A0 | D1 | 86A0 | 774 | | 205 | | 200 | 320 | 28 | 4 | 385 | 402 | 40 | 203 | 394 | 360 | 378 |
| MVE 9000/1X-86A0 | MVE 9000/12X-86A0 | D1 | 86A0 | 774 | | 205 | | 200 | 320 | 28 | 4 | 385 | 402 | 40 | 203 | 394 | 360 | 378 |
| MVE 10000/1X-90A0 | MVE 10000/12X-90A0 | E1 | 90A0 | 908 | 798 | 260 | 205 | 125 | 380 | 39 | 6 | 452 | 415 | 40 | 205 | 394 | 380 | 378 |
| MVE 13000/1X-90A0 | MVE 13000/12X-90A0 | E1 | 90A0 | 948 | 798 | 280 | 205 | 125 | 380 | 39 | 6 | 452 | 415 | 40 | 205 | 394 | 380 | 378 |
| MVE 10000/1X-91A0 | MVE 10000/12X-91A0 | E1 | 91A0 | 908 | | 260 | | 125 | 380 | 39 | 6 | 452 | 415 | 40 | 205 | 394 | 380 | 378 |
| MVE 11400/1X-91A0 | MVE 11400/12X-91A0 | E1 | 91A0 | 908 | | 260 | | 125 | 380 | 39 | 6 | 452 | 415 | 40 | 205 | 394 | 380 | 378 |

REMARQUE: Dimensions avec précision grossière conformément à UNI 22768/1

Ces informations sont fournies sans garantie, représentation, incitation ou licence d'aucune sorte. Les informations sont précises selon la connaissance de OLI ou sont obtenues de sources considérées comme exactes. OLI n'assume donc aucune responsabilité légale.
La dernière version du catalogue mis à jour est disponible en ligne.

- Class I, Div.2 Group A, B, C, D T3
- Class II Div.2 Group F, G T4
- Conforme à UL 1004-1,UL 1004-3, UL60079-31, UL60079-0, CSA 60079-0, CSA 60079-31, CSA 22.2 N°100, CSA 22.2 N°77, CSA 22.2 N°60079-7

# MVE-Exe SÉCURITÉ ACCRUE

## 8 PÔLES – 750/900 rpm

Ex II 2G: Temp. Class **T3** - ExII 2D Temp. Class: ● 100 °C ● 135 °C
Class II Div.2: Temp. Class **T4**
EX e, tE: **5**

* Raccordements des bornes : **Y** Haute tension ; **Δ** Basse tension

| Wm (kgcm) | | Modèle | | Force centrifuge (kg) | | Poids (kg) | | SPÉCIFICATIONS ÉLECTRIQUES | | | | | | | | |
|---|---|---|---|---|---|---|---|---|---|---|---|---|---|---|---|---|
| | | | | | | | | Puissance d'entrée (kW) | | Courant nominal | | * Raccordements des bornes | Ia / In | | Presse-étoupe | |
| 50Hz | 60Hz | 50Hz | 60Hz | 50Hz | 60Hz | 50Hz | 60Hz | 50Hz | 60Hz | 50Hz (400V) | 60Hz (460V) | | 50Hz | 60Hz | Metrico | |
| 33,4 | | MVE 150/075X-40A0 | MVE 150/090X-40A0 | 105 | 151 | 21 | | 0,23 | 0,25 | 1,14 | 1,14 | Y | 1,7 | 1,7 | M20 | ● |
| 56,9 | | MVE 250/075X-50A0 | MVE 250/090X-50A0 | 179 | 257 | 29 | | 0,25 | 0,30 | 0,90 | 0,89 | Y | 1,9 | 1,9 | M20 | ● |
| 84,0 | | MVE 400/075X-51A0 | MVE 400/090X-51A0 | 264 | 380 | 34 | | 0,25 | 0,30 | 0,90 | 0,89 | Y | 2,1 | 2,1 | M20 | ● |
| 137,3 | | MVE 650/075X-60A0 | MVE 650/090X-60A0 | 431 | 621 | 63 | | 0,37 | 0,45 | 1,20 | 1,20 | Y | 2,4 | 2,4 | M25 | ● |
| 187,7 | | MVE 900/075X-60A0 | MVE 900/090X-60A0 | 589 | 849 | 70 | | 0,55 | 0,54 | 1,23 | 1,29 | Y | 2,7 | 2,7 | M25 | ● |
| 299,6 | | MVE 1300/075X-70A0 | MVE 1300/090X-70A0 | 941 | 1.355 | 90 | | 0,75 | 0,90 | 2,20 | 2,20 | Y | 3,2 | 3,2 | M25 | ● |
| 467,4 | | MVE 2100/075X-75A0 | MVE 2100/090X-75A0 | 1.468 | 2.114 | 150 | | 1,00 | 1,20 | 2,81 | 2,89 | Y | 4,4 | 4,3 | M32 | ● |
| 680,3 | | MVE 3100/075X-80A0 | MVE 3100/090X-80A0 | 2.137 | 3.077 | 201 | | 2,00 | 2,30 | 4,50 | 4,40 | Y | 4,2 | 4,2 | M32 | ● |
| 838,4 | | MVE 3800/075X-80A0 | MVE 3800/090X-80A0 | 2.633 | 3.792 | 219 | | 2,50 | 3,00 | 6,00 | 6,00 | Y | 4,1 | 4,2 | M32 | ● |
| 929,7 | | MVE 4200/075X-85A0 | MVE 4200/090X-85A0 | 2.920 | 4.205 | 268 | | 2,90 | 3,40 | 6,50 | 6,50 | Y | 4,0 | 3,9 | M32 | ● |
| 1.165,2 | | MVE 5300/075X-85A0 | MVE 5300/090X-85A0 | 3.660 | 5.270 | 289 | | 3,70 | 4,30 | 8,00 | 8,20 | Y | 4,0 | 4,4 | M32 | ● |
| 1.435,9 | | MVE 6500/075X-85A0 | MVE 6500/090X-85A0 | 4.510 | 6.494 | 308 | | 3,80 | 4,20 | 8,78 | 8,30 | Y | 3,8 | 4,2 | M32 | ● |
| 2.200,4 | | MVE 10000/075X-90A0 | MVE 10000/090X-90A0 | 6.911 | 9.952 | 422 | | 6,80 | 7,50 | 13,50 | 12,50 | Δ | 3,7 | 4,4 | M32 | ● |
| 2.311,0 | | MVE 10000/075X-91A0 | MVE 10000/090X-91A0 | 7.258 | 10.452 | 422 | | 6,00 | 7,00 | 14,40 | 14,00 | Δ | 4,7 | 4,7 | M32 | ● |

*Taille 80A0*



*Taille 86A0*



*Taille 91A0*



60Hz masses = 50Hz masses adjusted at 100%

Pour convertir les kg en Newton: N = 9.81 · kg

- II 2D Ex tb IIIC Tx Db IP66
- II 2G Ex eb IIC T3 Gb
- Équipement et système de protection destinés pour l'utilisation en atmosphères explosibles (Zone 21) - Directive 2014/34/UE
- Conformité avec les Exigences Essentielles de Santé et de Sécurité
- IEC 60034-1, IEC EN 60079-0, IEC EN 60079-31, IEC EN 60079-7

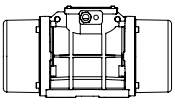

Dessins techniques sur la dernière page

| Modèle | | Dessein | Taille | SPÉCIFICATIONS DIMENSIONNELLES (mm) | | | | | | | | | | | | |
|---|---|---|---|---|---|---|---|---|---|---|---|---|---|---|---|---|
| | | | | C | M | A | B | Ø G | Trous | D | E | F | H | I | L | N |
| 50Hz | 60Hz | | | 50Hz-60Hz | 50Hz-60Hz | | | | N° | | | | | | | |
| MVE 150/075X-40A0 | MVE 150/090X-40A0 | D1 | 40A0 | 330 | 78 | 105 | 140 | 13 | 4 | 170 | 196 | 20 | 92 | 174 | 166 | 160 |
| MVE 250/075X-50A0 | MVE 250/090X-50A0 | D1 | 50A0 | 391 | 97 | 120 | 170 | 17 | 4 | 208 | 210 | 22 | 96 | 185 | 192 | 170 |
| MVE 400/075X-51A0 | MVE 400/090X-51A0 | D1 | 51A0 | 455 | 129 | 120 | 170 | 17 | 4 | 208 | 210 | 22 | 96 | 185 | 192 | 170 |
| MVE 650/075X-60A0 | MVE 650/090X-60A0 | D1 | 60A0 | 446 | 112 | 140 | 190 | 17 | 4 | 230 | 260 | 26 | 124 | 240 | 218 | 222 |
| MVE 900/075X-60A0 | MVE 900/090X-60A0 | D1 | 60A0 | 490 | 134 | 140 | 190 | 17 | 4 | 230 | 260 | 26 | 124 | 240 | 218 | 222 |
| MVE 1300/075X-70A0 | MVE 1300/090X-70A0 | D1 | 70A0 | 563 | 154 | 155 | 225 | 22 | 4 | 275 | 290 | 30 | 140 | 256 | 250 | 236 |
| MVE 2100/075X-75A0 | MVE 2100/090X-75A0 | D1 | 75A0 | 692 | 205 | 155 | 255 | 23.5 | 4 | 304 | 314 | 30 | 147 | 285 | 277 | 265 |
| MVE 3100/075X-80A0 | MVE 3100/090X-80A0 | D1 | 80A0 | 683 | 183 | 180 | 280 | 26 | 4 | 332 | 354 | 32 | 170 | 330 | 312 | 311 |
| MVE 3800/075X-80A0 | MVE 3800/090X-80A0 | D1 | 80A0 | 733 | 208 | 180 | 280 | 26 | 4 | 332 | 354 | 32 | 170 | 330 | 312 | 311 |
| MVE 4200/075X-85A0 | MVE 4200/090X-85A0 | D1 | 85A0 | 704 | 170 | 200 | 320 | 28 | 4 | 385 | 402 | 40 | 203 | 394 | 360 | 378 |
| MVE 5300/075X-85A0 | MVE 5300/090X-85A0 | D1 | 85A0 | 704 | 170 | 200 | 320 | 28 | 4 | 385 | 402 | 40 | 203 | 394 | 360 | 378 |
| MVE 6500/075X-85A0 | MVE 6500/090X-85A0 | D1 | 85A0 | 774 | 205 | 200 | 320 | 28 | 4 | 385 | 402 | 40 | 203 | 394 | 360 | 378 |
| MVE 10000/075X-90A0 | MVE 10000/090X-90A0 | E1 | 90A0 | 948 | 280 | 125 | 380 | 39 | 6 | 452 | 415 | 40 | 205 | 394 | 380 | 378 |
| MVE 10000/075X-91A0 | MVE 10000/090X-91A0 | E1 | 91A0 | 948 | 280 | 125 | 380 | 39 | 6 | 452 | 415 | 40 | 205 | 394 | 380 | 378 |

## Note:

REMARQUE: Dimensions avec précision grossière conformément à UNI 22768/1

Ces informations sont fournies sans garantie, représentation, incitation ou licence d'aucune sorte. Les informations sont précises selon la connaissance de OLI ou sont obtenues de sources considérées comme exactes. OLI n'assume donc aucune responsabilité légale.
La dernière version du catalogue mis à jour est disponible en ligne.

- Class I, Div.2 Group A, B, C, D T3
- Class II Div.2 Group F, G T4
- Conforme à UL 1004-1,UL 1004-3, UL60079-31, UL60079-0, CSA 60079-0, CSA 60079-31, CSA 22.2 N°100, CSA 22.2 N°77, CSA 22.2 N°60079-7

# MVE-Exd ANTIDÉFLAGRANT

Ex II 2G: Temp. Class **T4**
Class1 Div.1: Temp. Class **T4**
Ex II 2D Temp. Class: ● **135 °C**

* Raccordements des bornes : **Y** Haute tension ; **Δ** Basse tension

## 2 PÔLES - 3000/3600 rpm

| Wm (kgcm) | | Modèle | | Force centrifuge (kg) | | Poids (kg) | | SPÉCIFICATIONS ÉLECTRIQUES | | | | | | | | |
|---|---|---|---|---|---|---|---|---|---|---|---|---|---|---|---|---|
| | | | | | | | | Puissance d'entrée (kW) | | Courant nominal | | * Raccordements des bornes | Ia / In | | Presse-étoupe | |
| 50Hz | 60Hz | 50Hz | 60Hz | 50Hz | 60Hz | 50Hz | 60Hz | 50Hz | 60Hz | 50Hz (400V) | 60Hz (460V) | | 50Hz | 60Hz | Metrico | |
| 15,7 | 11,1 | MVE 800/3D-50A0 | MVE 800/36D-50A0 | 794 | 800 | 40 | | 0,75 | 0,90 | 1,45 | 1,50 | Y | 3,8 | 3,8 | 3/4" NPT 110 °C | ● |
| 26,6 | 18,6 | MVE 1300/3D-50A0 | MVE 1300/36D-50A0 | 1.355 | 1.365 | 41 | | 1,10 | 1,10 | 2,00 | 2,75 | Y | 5,2 | 5,0 | 3/4" NPT 110 °C | ● |
| 31,3 | 22,2 | MVE 1600/3D-60A0 | MVE 1600/36D-60A0 | 1.601 | 1.608 | 63 | 62 | 1,57 | 1,60 | 2,94 | 2,61 | Y | 5,9 | 6,2 | 3/4" NPT 110 °C | ● |
| 36,8 | 27,6 | MVE 2000/3D-60A0 | MVE 2000/36D-60A0 | 2.027 | 1.997 | 64 | 63 | 1,25 | 1,40 | 3,20 | 2,80 | Y | 6,5 | 6,4 | 3/4" NPT 110 °C | ● |
| 46,0 | 31,9 | MVE 2300/3D-60A1 | MVE 2300/36D-60A1 | 2.302 | 2.306 | 65 | 63 | 1,25 | 1,40 | 3,20 | 2,80 | Y | 6,0 | 6,3 | 3/4" NPT 110 °C | ● |
| 68,1 | 43,9 | MVE 3200/3D-75A0 | MVE 3200/36D-75A0 | 3.252 | 3.176 | 105 | 103 | 3,00 | 3,00 | 5,20 | 4,60 | Y | 8,3 | 8,2 | 3/4" NPT 110 °C | ● |
| 79,4 | 56,0 | MVE 4000/3D-75A0 | MVE 4000/36D-75A0 | 4.033 | 4.052 | 108 | 104 | 3,00 | 3,00 | 5,20 | 4,60 | Y | 8,5 | 9,7 | 3/4" NPT 110 °C | ● |

## 4 PÔLES - 1500/1800 rpm

| Wm (kgcm) | | Modèle | | Force centrifuge (kg) | | Poids (kg) | | SPÉCIFICATIONS ÉLECTRIQUES | | | | | | | | |
|---|---|---|---|---|---|---|---|---|---|---|---|---|---|---|---|---|
| | | | | | | | | Puissance d'entrée (kW) | | Courant nominal | | * Raccordements des bornes | Ia/In | | Presse-étoupe | |
| 50Hz | 60Hz | 50Hz | 60Hz | 50Hz | 60Hz | 50Hz | 60Hz | 50Hz | 60Hz | 50Hz (400V) | 60Hz (460V) | | 50Hz | 60Hz | Metrico | |
| 56,8 | 39,4 | MVE 700/15D-50A0 | MVE 700/18D-50A0 | 714 | 712 | 45 | | 0,55 | 0,66 | 1,00 | 1,00 | Y | 3,0 | 3,2 | 3/4" NPT 110 °C | ● |
| 88,7 | 56,8 | MVE 1100/15D-50A0 | MVE 1100/18D-50A0 | 1.114 | 1.028 | 52 | 45 | 0,60 | 0,68 | 1,27 | 1,50 | Y | 3,8 | 3,8 | 3/4" NPT 110 °C | ● |
| 108,6 | 76,7 | MVE 1400/15D-60A0 | MVE 1400/18D-60A0 | 1.364 | 1.388 | 73 | 70 | 0,75 | 1,00 | 1,67 | 1,80 | Y | 4,0 | 4,0 | 3/4" NPT 110 °C | ● |
| 137,3 | 92,0 | MVE 1700/15D-60A1 | MVE 1700/18D-60A1 | 1.725 | 1.664 | 76 | 61 | 1,00 | 1,20 | 1,95 | 2,00 | Y | 4,7 | 4,5 | 3/4" NPT 110 °C | ● |
| 187,7 | 137,4 | MVE 2400/15D-60A1 | MVE 2400/18D-60A1 | 2.358 | 2.485 | 78 | 72 | 1,25 | 1,40 | 2,80 | 2,70 | Y | 4,9 | 4,9 | 3/4" NPT 110 °C | ● |
| 203,5 | 135,6 | MVE 2500/15D-70A0 | MVE 2500/18D-70A0 | 2.557 | 2.454 | 99 | 93 | 1,50 | 1,60 | 2,70 | 2,60 | Y | 6,0 | 6,1 | 3/4" NPT110 °C | ● |
| 248,7 | 169,8 | MVE 3000/15D-70A0 | MVE 3000/18D-70A0 | 3.124 | 3.071 | 105 | 97 | 1,65 | 1,90 | 2,80 | 2,70 | Y | 6,5 | 6,6 | 3/4" NPT 110 °C | ● |
| 306,7 | 204,7 | MVE 3800/15D-75A0 | MVE 3800/18D-75A0 | 3.853 | 3.704 | 136 | 125 | 2,30 | 2,25 | 4,10 | 3,96 | Y | 6,8 | 6,8 | 3/4" NPT 110 °C | ● |
| 343,2 | 240,9 | MVE 4300/15D-75A0 | MVE 4300/18D-75A0 | 4.312 | 4.359 | 140 | 130 | 2,40 | 2,60 | 4,30 | 4,10 | Y | 7,0 | 7,2 | 3/4" NPT 110 °C | ● |
| 437,4 | 303,7 | MVE 5500/15D-80A0 | MVE 5500/18D-80A0 | 5.495 | 5.495 | 193 | 183 | 3,10 | 3,10 | 5,70 | 5,30 | Y | 7,1 | 7,0 | 3/4" NPT 110 °C | ● |

*Taille 50A0*



JUSQU'À LA TAILLE 50 (Y COMPRIS)
60Hz masses = 50Hz masses ajustées à 70%

Ausgenommen Type MVE 1100/15D - 1100/18D

SUPÉRIEUR À LA TAILLE 50 (NON COMPRIS)
Masses spécifiques pour 60Hz

Pour convertir les kg en Newton: N = 9.81 · kg

- II 2G Ex db IIB T4 Gb,
- II 2D Ex tb IIIC T135°C Db
- Ex db IIB T4 Gb
- Ex tb IIIC T135°C Db
- Température ambiante de -20 °C à + 60 °C

- Conformité avec les Exigences Essentielles de Santé et de Sécurité
- IEC EN 60079-0, IEC EN 60079-31, IEC EN 60079-1

X

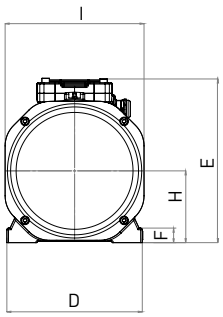


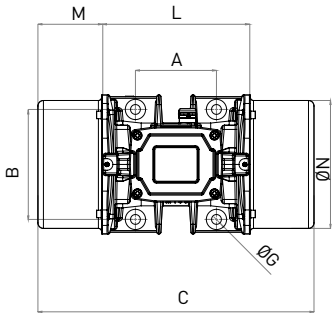


Y

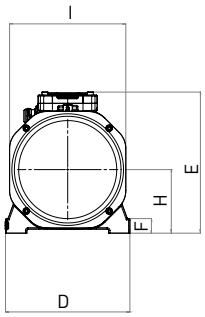


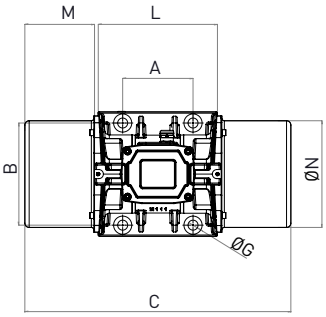


| Modèle | | Dessein | Taille | SPÉCIFICATIONS DIMENSIONNELLES (mm) | | | | | | | | | | | | | | |
|---|---|---|---|---|---|---|---|---|---|---|---|---|---|---|---|---|---|---|
| | | | | C | | M | | A | B | Ø G | Trous | D | E | F | H | I | L | N |
| 50Hz | 60Hz | | | 50Hz | 60Hz | 50Hz | 60Hz | | | | N° | | | | | | | |
| MVE 800/3D-50A0 | MVE 800/36D-50A0 | X | 50A0 | 332 | | 63 | | 120 | 170 | 17 | 4 | 209 | 251 | 27 | 103 | 185 | 205 | 165 |
| MVE 1300/3D-50A0 | MVE 1300/36D-50A0 | X | 50A0 | 332 | | 63 | | 120 | 170 | 17 | 4 | 209 | 251 | 27 | 103 | 185 | 205 | 165 |
| MVE 1600/3D-60A0 | MVE 1600/36D-60A0 | X | 60A0 | 477 | | 111 | | 140 | 190 | 17 | 4 | 234 | 283 | 25 | 124 | 240 | 254 | 221 |
| MVE 2000/3D-60A0 | MVE 2000/36D-60A0 | X | 60A0 | 477 | | 111 | | 140 | 190 | 17 | 4 | 234 | 283 | 25 | 124 | 240 | 254 | 221 |
| MVE 2300/3D-60A1 | MVE 2300/36D-60A1 | X | 60A1 | 477 | | 111 | | 140 | 190 | 22 | 4 | 234 | 283 | 25 | 124 | 240 | 254 | 221 |
| MVE 3200/3D-75A0 | MVE 3200/36D-75A0 | Y | 75A0 | 540 | | 118 | | 155 | 255 | 23.5 | 4 | 302 | 330 | 30 | 150 | 280 | 304 | 265 |
| MVE 4000/3D-75A0 | MVE 4000/36D-75A0 | Y | 75A0 | 554 | | 125 | | 155 | 255 | 23.5 | 4 | 302 | 330 | 30 | 150 | 280 | 304 | 265 |

| Modèle | | Dessein | Taille | SPÉCIFICATIONS DIMENSIONNELLES (mm) | | | | | | | | | | | | | | |
|---|---|---|---|---|---|---|---|---|---|---|---|---|---|---|---|---|---|---|
| | | | | C | | M | | A | B | Ø G | Trous | D | E | F | H | I | L | N |
| 50Hz | 60Hz | | | 50Hz | 60Hz | 50Hz | 60Hz | | | | N° | | | | | | | |
| MVE 700/15D-50A0 | MVE 700/18D-50A0 | X | 50A0 | 396 | | 95 | | 120 | 170 | 17 | 4 | 209 | 251 | 27 | 103 | 185 | 205 | 165 |
| MVE 1100/15D-50A0 | MVE 1100/18D-50A0 | X | 50A0 | 466 | 396 | 130 | 95 | 120 | 170 | 17 | 4 | 209 | 251 | 27 | 103 | 185 | 205 | 165 |
| MVE 1400/15D-60A0 | MVE 1400/18D-60A0 | X | 60A0 | 477 | | 111 | | 140 | 190 | 17 | 4 | 234 | 283 | 25 | 124 | 240 | 254 | 221 |
| MVE 1700/15D-60A1 | MVE 1700/18D-60A1 | X | 60A1 | 477 | | 111 | | 140 | 190 | 22 | 4 | 234 | 283 | 25 | 124 | 240 | 254 | 221 |
| MVE 2400/15D-60A1 | MVE 2400/18D-60A1 | X | 60A1 | 521 | | 133 | | 140 | 190 | 22 | 4 | 234 | 283 | 25 | 124 | 240 | 254 | 221 |
| MVE 2500/15D-70A0 | MVE 2500/18D-70A0 | Y | 70A0 | 525 | | 123 | | 155 | 225 | 22 | 4 | 274 | 311 | 32 | 140 | 256 | 279 | 235 |
| MVE 3000/15D-70A0 | MVE 3000/18D-70A0 | Y | 70A0 | 586 | | 153 | | 155 | 225 | 22 | 4 | 274 | 311 | 32 | 140 | 256 | 279 | 235 |
| MVE 3800/15D-75A0 | MVE 3800/18D-75A0 | Y | 75A0 | 596 | | 146 | | 155 | 255 | 23.5 | 4 | 302 | 330 | 30 | 150 | 280 | 304 | 265 |
| MVE 4300/15D-75A0 | MVE 4300/18D-75A0 | Y | 75A0 | 616 | | 156 | | 155 | 255 | 23.5 | 4 | 302 | 330 | 30 | 150 | 280 | 304 | 265 |
| MVE 5500/15D-80A0 | MVE 5500/18D-80A0 | Y | 80A0 | 612 | | 127 | | 180 | 280 | 26 | 4 | 330 | 379 | 33 | 176 | 330 | 358 | 310 |

## Note:

REMARQUE: Dimensions avec précision grossière conformément à UNI 22768/1

Ces informations sont fournies sans garantie, représentation, incitation ou licence d'aucune sorte. Les informations sont précises selon la connaissance de OLI ou sont obtenues de sources considérées comme exactes. OLI n'assume donc aucune responsabilité légale.
La dernière version du catalogue mis à jour est disponible en ligne.

c UL us LISTED CLASS I DIV.1 GROUP C,D T4
E488916

» Class I, Div.1 Group C, D T4 IP66
» Conforme à UL 1004-1,UL 1004-3,UL1203;UL674,CSA C22.2 No.145, CSA C22.2 No.30-M1986.

# MVE-Exd ANTIDÉFLAGRANT

Ex II 2G: Temp. Class **T4**
Class1 Div.1: Temp. Class **T4**
Ex II 2D Temp. Class: ● **135 °C**

* Raccordements des bornes : **Y** Haute tension ; **Δ** Basse tension

## 6 PÔLES – 1000/1200 rpm

| Wm (kgcm) | | Modèle | | Force centrifuge (kg) | | Poids (kg) | | SPÉCIFICATIONS ÉLECTRIQUES | | | | | | | | |
|---|---|---|---|---|---|---|---|---|---|---|---|---|---|---|---|---|
| | | | | | | | | Puissance d'entrée (kW) | | Courant nominal | | * Raccordements des bornes | Ia/In | | Presse-étoupe | |
| 50Hz | 60Hz | 50Hz | 60Hz | 50Hz | 60Hz | 50Hz | 60Hz | 50Hz | 60Hz | 50Hz (400V) | 60Hz (460V) | | 50Hz | 60Hz | Metrico | |
| 91,9 | | MVE 500/1D-50A0 | MVE 500/12D-50A0 | 513 | 739 | 54 | | 0,30 | 0,32 | 1,10 | 1,05 | Y | 2,8 | 2,7 | 3/4" NPT 110 °C | ● |
| 137,4 | 108,6 | MVE 800/1D-60A0 | MVE 800/12D-60A0 | 767 | 873 | 73 | 71 | 0,57 | 0,68 | 1,14 | 1,21 | Y | 3,2 | 3,1 | 3/4" NPT 110 °C | ● |
| 187,7 | 137,3 | MVE 1100/1D-60A1 | MVE 1100/12D-60A1 | 1.048 | 1.104 | 80 | 74 | 0,56 | 0,58 | 1,40 | 1,30 | Y | 3,2 | 3,1 | 3/4" NPT 110 °C | ● |
| 284,8 | 196,5 | MVE 1500/1D-60A0 | MVE 1500/12D-60A0 | 1.590 | 1.580 | 94 | 83 | 0,80 | 0,90 | 1,60 | 1,70 | Y | 3,3 | 3,3 | 3/4" NPT 110 °C | ● |
| 299,6 | 203,5 | MVE 1600/1D-70A0 | MVE 1600/12D-70A0 | 1.673 | 1.636 | 109 | 99 | 1,00 | 1,13 | 2,50 | 2,72 | Y | 3,7 | 3,6 | 3/4" NPT110 °C | ● |
| 373,1 | 248,7 | MVE 2100/1D-70A0 | MVE 2100/12D-70A0 | 2.083 | 2.000 | 121 | 107 | 1,20 | 1,35 | 2,80 | 3,00 | Y | 4,3 | 4,4 | 3/4" NPT 110 °C | ● |
| 467,4 | 306,7 | MVE 2600/1D-75A0 | MVE 2600/12D-75A0 | 2.610 | 2.466 | 153 | 136 | 1,50 | 1,60 | 3,50 | 3,30 | Y | 4,8 | 4,8 | 3/4" NPT 110 °C | ● |
| 540,3 | 379,7 | MVE 3000/1D-75A0 | MVE 3000/12D-75A0 | 3.017 | 3.053 | 161 | 135 | 1,75 | 1,90 | 4,30 | 4,00 | Y | 5,0 | 5,0 | 3/4" NPT 110 °C | ● |
| 680,4 | 437,4 | MVE 3800/1D-80A0 | MVE 3800/12D-80A0 | 3.799 | 3.517 | 215 | 196 | 2,10 | 2,30 | 5,00 | 4,80 | Y | 5,9 | 6,0 | 3/4" NPT110 °C | ● |
| 838,3 | 584,2 | MVE 4700/1D-80A0 | MVE 4700/12D-80A0 | 4.681 | 4.697 | 231 | 212 | 2,50 | 2,80 | 6,20 | 6,00 | Y | 5,5 | 5,7 | 3/4" NPT 110 °C | ● |

## 8 PÔLES – 750/900 rpm

| Wm (kgcm) | | Modèle | | Force centrifuge (kg) | | Poids (kg) | SPÉCIFICATIONS ÉLECTRIQUES | | | | | | | | |
|---|---|---|---|---|---|---|---|---|---|---|---|---|---|---|---|
| | | | | | | | Puissance d'entrée (kW) | | Courant nominal | | * Raccordements des bornes | Ia/In | | Presse-étoupe | |
| 50Hz | 60Hz | 50Hz | 60Hz | 50Hz | 60Hz | 50Hz-60Hz | 50Hz | 60Hz | 50Hz (400V) | 60Hz (460V) | | 50Hz | 60Hz | Metrico | |
| 56,9 | | MVE 250/075D-50A0 | MVE 250/090D-50A0 | 179 | 257 | 47 | 0,35 | 0,38 | 1,15 | 1,15 | Y | 1,7 | 1,7 | 3/4" NPT 110 °C | ● |
| 84,0 | | MVE 400/075D-50A0 | MVE 400/090D-50A0 | 264 | 380 | 54 | 0,35 | 0,38 | 1,15 | 1,15 | Y | 1,9 | 1,9 | 3/4" NPT 110 °C | ● |
| 137,3 | | MVE 650/075D-60A0 | MVE 650/090D-60A0 | 431 | 621 | 73 | 0,43 | 0,50 | 1,12 | 1,10 | Y | 2,2 | 2,2 | 3/4" NPT 110 °C | ● |
| 187,7 | | MVE 900/075D-60A0 | MVE 900/090D-60A0 | 589 | 849 | 82 | 0,55 | 0,60 | 1,40 | 1,20 | Y | 2,5 | 2,5 | 3/4" NPT 110 °C | ● |
| 299,6 | | MVE 1300/075D-70A0 | MVE 1300/090D-70A0 | 941 | 1.355 | 109 | 0,80 | 0,80 | 2,20 | 2,10 | Y | 3,0 | 3,0 | 3/4" NPT 110 °C | ● |
| 467,4 | | MVE 2100/075D-75A0 | MVE 2100/090D-75A0 | 1.468 | 2.114 | 153 | 1,25 | 1,30 | 3,20 | 2,80 | Y | 4,2 | 4,1 | 3/4" NPT 110 °C | ● |
| 680,3 | | MVE 3100/075D-80A0 | MVE 3100/090D-80A0 | 2.137 | 3.077 | 214 | 1,50 | 1,80 | 3,80 | 3,80 | Y | 4,0 | 4,0 | 3/4" NPT 110 °C | ● |
| 838,4 | | MVE 3800/075D-80A0 | MVE 3800/090D-80A0 | 2.633 | 3.792 | 230 | 2,50 | 3,20 | 5,50 | 5,70 | Y | 3,9 | 4,0 | 3/4" NPT 110 °C | ● |

*Taille 60A0*



Pour convertir les kg en Newton: N = 9.81 · kg

- II 2G Ex db IIB T4 Gb,
- II 2D Ex tb IIIC T135°C Db
- Ex db IIB T4 Gb
- Ex tb IIIC T135°C Db
- Température ambiante de -20 °C à + 60 °C
- Conformité avec les Exigences Essentielles de Santé et de Sécurité
- IEC EN 60079-0, IEC EN 60079-31, IEC EN 60079-1

X

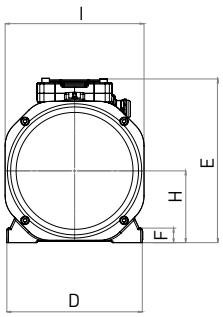


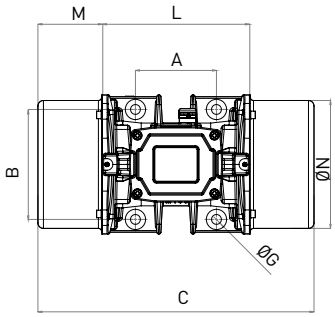


Y

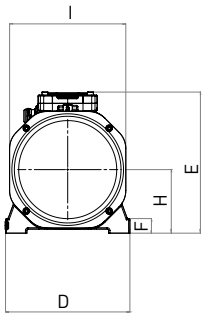


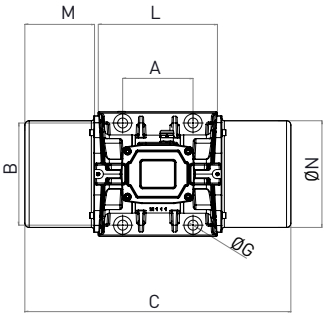


| Modèle | | Dessein | Taille | SPÉCIFICATIONS DIMENSIONNELLES (mm) | | | | | | | | | | | | | | |
|---|---|---|---|---|---|---|---|---|---|---|---|---|---|---|---|---|---|---|
| | | | | C | | M | | A | B | Ø G | Trous | D | E | F | H | I | L | N |
| 50Hz | 60Hz | | | 50Hz | 60Hz | 50Hz | 60Hz | | | | N° | | | | | | | |
| MVE 500/1D-50A0 | MVE 500/12D-50A0 | X | 50A0 | 466 | | 130 | | 120 | 170 | 17 | 4 | 209 | 251 | 27 | 103 | 185 | 205 | 165 |
| MVE 800/1D-60A0 | MVE 800/12D-60A0 | X | 60A0 | 477 | | 111 | | 140 | 190 | 17 | 4 | 234 | 283 | 25 | 124 | 240 | 254 | 221 |
| MVE 1100/1D-60A1 | MVE 1100/12D-60A1 | X | 60A1 | 521 | | 133 | | 140 | 190 | 22 | 4 | 234 | 283 | 25 | 124 | 240 | 254 | 221 |
| MVE 1500/1D-60A0 | MVE 1500/12D-60A0 | X | 60A0 | 597 | | 171 | | 140 | 190 | 17 | 4 | 234 | 283 | 25 | 124 | 240 | 254 | 221 |
| MVE 1600/1D-70A0 | MVE 1600/12D-70A0 | Y | 70A0 | 586 | | 153 | | 155 | 225 | 22 | 4 | 274 | 311 | 32 | 140 | 256 | 279 | 235 |
| MVE 2100/1D-70A0 | MVE 2100/12D-70A0 | Y | 70A0 | 646 | | 183 | | 155 | 225 | 22 | 4 | 274 | 311 | 32 | 140 | 256 | 279 | 235 |
| MVE 2600/1D-75A0 | MVE 2600/12D-75A0 | Y | 75A0 | 724 | | 210 | | 155 | 255 | 23.5 | 4 | 302 | 330 | 30 | 150 | 280 | 304 | 264 |
| MVE 3000/1D-75A0 | MVE 3000/12D-75A0 | Y | 75A0 | 724 | | 210 | | 155 | 255 | 23.5 | 4 | 302 | 330 | 30 | 150 | 280 | 304 | 264 |
| MVE 3800/1D-80A0 | MVE 3800/12D-80A0 | Y | 80A0 | 692 | | 167 | | 180 | 280 | 26 | 4 | 330 | 379 | 33 | 176 | 330 | 358 | 310 |
| MVE 4700/1D-80A0 | MVE 4700/12D-80A0 | Y | 80A0 | 744 | | 193 | | 180 | 280 | 26 | 4 | 330 | 379 | 33 | 176 | 330 | 358 | 310 |

| Modèle | | Dessein | Taille | SPÉCIFICATIONS DIMENSIONNELLES (mm) | | | | | | | | | | | | | |
|---|---|---|---|---|---|---|---|---|---|---|---|---|---|---|---|---|---|
| | | | | C | M | A | B | Ø G | Trous | D | E | F | H | I | L | N | |
| 50Hz | 60Hz | | | 50Hz-60Hz | 50Hz-60Hz | | | | N° | | | | | | | | |
| MVE 250/075D-50A0 | MVE 250/090D-50A0 | X | 50A0 | 396 | 95 | 120 | 170 | 17 | 4 | 209 | 251 | 27 | 103 | 185 | 205 | 165 | |
| MVE 400/075D-50A0 | MVE 400/090D-50A0 | X | 50A0 | 466 | 130 | 120 | 170 | 17 | 4 | 209 | 251 | 27 | 103 | 185 | 205 | 165 | |
| MVE 650/075D-60A0 | MVE 650/090D-60A0 | X | 60A0 | 477 | 111 | 140 | 190 | 17 | 4 | 234 | 283 | 25 | 124 | 240 | 254 | 221 | |
| MVE 900/075D-60A0 | MVE 900/090D-60A0 | X | 60A0 | 521 | 133 | 140 | 190 | 17 | 4 | 234 | 283 | 25 | 124 | 240 | 254 | 221 | |
| MVE 1300/075D-70A0 | MVE 1300/090D-70A0 | Y | 70A0 | 586 | 153 | 155 | 225 | 22 | 4 | 274 | 311 | 32 | 140 | 256 | 279 | 235 | |
| MVE 2100/075D-75A0 | MVE 2100/090D-75A0 | Y | 75A0 | 724 | 210 | 155 | 255 | 23.5 | 4 | 302 | 330 | 30 | 150 | 280 | 304 | 264 | |
| MVE 3100/075D-80A0 | MVE 3100/090D-80A0 | Y | 80A0 | 692 | 167 | 180 | 280 | 26 | 4 | 330 | 379 | 33 | 176 | 330 | 358 | 310 | |
| MVE 3800/075D-80A0 | MVE 3800/090D-80A0 | Y | 80A0 | 744 | 193 | 180 | 280 | 26 | 4 | 330 | 379 | 33 | 176 | 330 | 358 | 310 | |

## Note:

REMARQUE: Dimensions avec précision grossière conformément à UNI 22768/1

Ces informations sont fournies sans garantie, représentation, incitation ou licence d'aucune sorte. Les informations sont précises selon la connaissance de OLI ou sont obtenues de sources considérées comme exactes. OLI n'assume donc aucune responsabilité légale.
La dernière version du catalogue mis à jour est disponible en ligne.

c UL us LISTED CLASS I DIV.1 GROUP C,D T4
E488916

» Class I, Div.1 Group C, D T4 IP66
» Conforme à UL 1004-1,UL 1004-3,UL1203;UL674,CSA C22.2 No.145, CSA C22.2 No.30-M1986.

# MVE-Milling TRAITEMENT DU GRAIN

Ex II 3D Temp. Class: ● 100 °C ● 135 °C

* Raccordements des bornes : **Y** Haute tension ; **Δ** Basse tension

## 6 PÔLES – 1000/1200 rpm – Épierreuse/Table densimétrique

| Wm (kgcm) | | Modèle | | Force centrifuge (kg) | | Poids (kg) | | SPÉCIFICATIONS ÉLECTRIQUES | | | | | | | | |
|---|---|---|---|---|---|---|---|---|---|---|---|---|---|---|---|---|
| | | | | | | | | Puissance d'entrée (kW) | | Courant nominal | | * Raccordements des bornes | Ia / In | | Presse-étoupe | |
| 50Hz | 60Hz | 50Hz | 60Hz | 50Hz | 60Hz | 50Hz | 60Hz | 50Hz | 60Hz | 50Hz (400V) | 60Hz (460V) | | 50Hz | 60Hz | Metrico | |
| 111 | 87.7 | MVE 610/1N-51A0 | MVE 610/12N-51A0 | 622 | 705 | 40 | 37 | 0,35 | 0,40 | 1,22 | 1,15 | Y | 3,0 | 3,0 | M20 | ● |
| 138 | - | MVE 750/1N-58A0 | NA | 771 | - | 39,5 | | 0,75 | | 1,42 | - | Y | 3,4 | - | M25 | ● |

## 8 PÔLES – 750 rpm – Sasseur

| Wm (kgcm) | | Modèle | | Force centrifuge (kg) | | Poids (kg) | | SPÉCIFICATIONS ÉLECTRIQUES | | | | | | | | |
|---|---|---|---|---|---|---|---|---|---|---|---|---|---|---|---|---|
| | | | | | | | | Puissance d'entrée (kW) | | Courant nominal | | * Raccordements des bornes | Ia / In | | Presse-étoupe | |
| 50Hz | 60Hz | 50Hz | 60Hz | 50Hz | 60Hz | 50Hz | 60Hz | 50Hz | 60Hz | 50Hz (400V) | 60Hz (460V) | | 50Hz | 60Hz | Metrico | |
| 383 | - | MVE 1200/075N-60A | NA | 1203 | - | 94 | - | 0,65 | - | 1,30 | - | Y | 2,5 | - | M25 | ● |
| 471 | - | MVE 1400/075N-60A | NA | 1480 | - | 104 | - | 0,65 | - | 1,50 | - | Y | 2,5 | - | M25 | ● |

## 10 PÔLES – 600/720 rpm – Sasseur

| Wm (kgcm) | | Modèle | | Force centrifuge (kg) | | Poids (kg) | | SPÉCIFICATIONS ÉLECTRIQUES | | | | | | | | |
|---|---|---|---|---|---|---|---|---|---|---|---|---|---|---|---|---|
| | | | | | | | | Puissance d'entrée (kW) | | Courant nominal | | * Raccordements des bornes | Ia / In | | Presse-étoupe | |
| 50Hz | 60Hz | 50Hz | 60Hz | 50Hz | 60Hz | 50Hz | 60Hz | 50Hz | 60Hz | 50Hz (400V) | 60Hz (460V) | | 50Hz | 60Hz | Metrico | |
| 247 | 247 | MVE 505/060N-51A0 | MVE 505/072N-51A0 | 497 | 715 | 54 | | 0,35 | 0,35 | 1,22 | 0,98 | Y | 2,8 | 2,8 | M20 | ● |
| 274 | 274 | MVE 550/060N-51A0 | MVE 550/072N-51A0 | 551 | 793 | 57 | | 0,35 | 0,35 | 1,22 | 0,98 | Y | 2,8 | 2,8 | M20 | ● |
| 329 | 329 | MVE 780/060N-61A0 | MVE 780/072N-61A0 | 661 | 952 | 73 | | 0,40 | 0,40 | 1,20 | 1,00 | Y | 2,5 | 2,5 | M20 | ● |
| 383 | 383 | MVE 1200/060N-60A | MVE 1200/072N-60A0 | 770 | 1110 | 94 | | 0,78 | 0,78 | 1,40 | 1,30 | Y | 2,5 | 2,5 | M25 | ● |
| 471 | 471 | MVE 1400/060N-60A | MVE 1400/072N-60A0 | 947 | 1364 | 104 | | 0,78 | 0,78 | 1,40 | 1,30 | Y | 2,5 | 2,5 | M25 | ● |

## 12 PÔLES – 600 rpm – Sasseur

| Wm (kgcm) | | Modèle | | Force centrifuge (kg) | | Poids (kg) | | SPÉCIFICATIONS ÉLECTRIQUES | | | | | | | | |
|---|---|---|---|---|---|---|---|---|---|---|---|---|---|---|---|---|
| | | | | | | | | Puissance d'entrée (kW) | | Courant nominal | | * Raccordements des bornes | Ia / In | | Presse-étoupe | |
| 50Hz | 60Hz | 50Hz | 60Hz | 50Hz | 60Hz | 50Hz | 60Hz | 50Hz | 60Hz | 50Hz (400V) | 60Hz (460V) | | 50Hz | 60Hz | Metrico | |
| - | 247 | NA | MVE 505/059N-51A0 | - | 497 | 54 | | - | 0,35 | - | 0,98 | Y | - | 2,8 | M20 | ● |
| - | 274 | NA | MVE 550/059N-51A0 | - | 551 | 57 | | - | 0,35 | - | 0,98 | Y | - | 2,8 | M20 | ● |
| - | 329 | NA | MVE 780/059N-61A0 | - | 952 | 73 | | - | 0,40 | - | 1 | Y | - | 2,3 | M20 | ● |

*MVE-MILLING*



60Hz masses = 50Hz masses ajustées à 100%

Pour convertir les kg en Newton: N = 9.81 · kg

- II3D Ex tc IIIC Tx IP66
- Équipement et système de protection destinés pour l'utilisation en atmosphères explosibles (Zone 22) - Directive 2014/34/UE
- Conformité avec les Exigences Essentielles de Santé et de Sécurité
- EN 60079-0, EN 60079-31

L

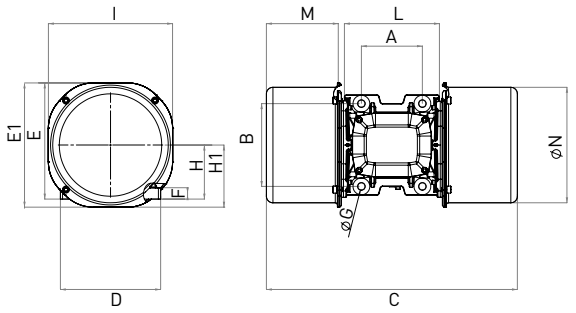


M

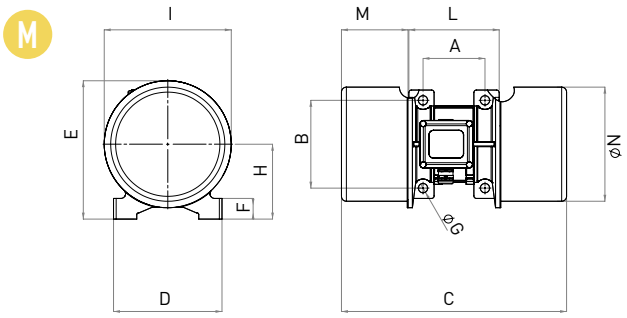


| Modèle | | Dessein | Taille | SPÉCIFICATIONS DIMENSIONNELLES (mm) | | | | | | | | | | | | | | | | |
|---|---|---|---|---|---|---|---|---|---|---|---|---|---|---|---|---|---|---|---|---|
| | | | | C | | M | | A | B | Ø G | Trous | D | E | F | H | I | L | N | | |
| 50Hz | 60Hz | | | 50Hz | 60Hz | 50Hz | 60Hz | | | | N° | | | | | | | | | |
| MVE 610/1N-51A0 | MVE 610/12N-51A0 | M | 51A0 | 434 | | 117 | | 120 | 170 | 17 | 4 | 208 | 223 | 25 | 105 | 203 | 192 | 184 | | |
| MVE 750/1N-58A0 | NA | M | 58A0 | 436 | | 129 | | 120 | 170 | 17 | 4 | 210 | 268 | 40 | 145 | 246 | 175 | 221 | | |

| Modèle | | Dessein | Taille | SPÉCIFICATIONS DIMENSIONNELLES (mm) | | | | | | | | | | | | | | | | | |
|---|---|---|---|---|---|---|---|---|---|---|---|---|---|---|---|---|---|---|---|---|---|
| | | | | C | | M | | A | B | Ø G | Trous | D | E | E1 | F | H | H1 | I | L | N | |
| 50Hz | 60Hz | | | 50Hz | 60Hz | 50Hz | 60Hz | | | | N° | | | | | | | | | | |
| MVE 1200/075N-60A | NA | L | 60A0 | 576 | | 165 | | 140 | 190 | 17 | 4 | 230 | 266 | 285 | 26 | 124 | 143 | 285 | 218 | 265 | |
| MVE 1400/075N-60A | NA | L | 60A0 | 576 | | 165 | | 140 | 190 | 17 | 4 | 230 | 266 | 285 | 26 | 124 | 143 | 285 | 218 | 265 | |

| Modèle | | Dessein | Taille | SPÉCIFICATIONS DIMENSIONNELLES (mm) | | | | | | | | | | | | | | | | | |
|---|---|---|---|---|---|---|---|---|---|---|---|---|---|---|---|---|---|---|---|---|---|
| | | | | C | | M | | A | B | Ø G | Trous | D | E | E1 | F | H | H1 | I | L | N | |
| 50Hz | 60Hz | | | 50Hz | 60Hz | 50Hz | 60Hz | | | | N° | | | | | | | | | | |
| MVE 505/060N-51A0 | MVE 505/072N-51A0 | L | 51A0 | 492 | | 134 | | 120 | 170 | 17 | 4 | 208 | 225 | 240 | 22 | 105 | 120 | 240 | 192 | 222 | |
| MVE 550/060N-51A0 | MVE 550/072N-51A0 | L | 51A0 | 492 | | 134 | | 120 | 170 | 17 | 4 | 208 | 225 | 240 | 22 | 105 | 120 | 240 | 192 | 222 | |
| MVE 780/060N-61A0 | MVE 780/072N-61A0 | L | 61A0 | 576 | | 165 | | 140 | 190 | 17 | 4 | 230 | 266 | 285 | 26 | 124 | 143 | 285 | 218 | 265 | |
| MVE 1200/060N-60A | MVE 1200/072N-60A0 | L | 60A0 | 576 | | 165 | | 140 | 190 | 17 | 4 | 230 | 266 | 285 | 26 | 124 | 143 | 285 | 218 | 265 | |
| MVE 1400/060N-60A | MVE 1400/072N-60A0 | L | 60A0 | 576 | | 165 | | 140 | 190 | 17 | 4 | 230 | 266 | 285 | 26 | 124 | 143 | 285 | 218 | 265 | |

| Modèle | | Dessein | Taille | SPÉCIFICATIONS DIMENSIONNELLES (mm) | | | | | | | | | | | | | | | | | |
|---|---|---|---|---|---|---|---|---|---|---|---|---|---|---|---|---|---|---|---|---|---|
| | | | | C | | M | | A | B | Ø G | Trous | D | E | E1 | F | H | H1 | I | L | N | |
| 50Hz | 60Hz | | | 50Hz | 60Hz | 50Hz | 60Hz | | | | N° | | | | | | | | | | |
| NA | MVE 505/059N-51A0 | L | 51A0 | 492 | | 134 | | 120 | 170 | 17 | 4 | 208 | 225 | 240 | 22 | 105 | 120 | 240 | 192 | 222 | |
| NA | MVE 550/059N-51A0 | L | 51A0 | 492 | | 134 | | 120 | 170 | 17 | 4 | 208 | 225 | 240 | 22 | 105 | 120 | 240 | 192 | 222 | |
| NA | MVE 780/059N-61A0 | L | 61A0 | 576 | | 165 | | 140 | 190 | 17 | 4 | 230 | 266 | 285 | 26 | 124 | 143 | 285 | 218 | 265 | |

## Note:

REMARQUE: Dimensions avec précision grossière conformément à UNI 22768/1

Ces informations sont fournies sans garantie, représentation, incitation ou licence d'aucune sorte. Les informations sont précises selon la connaissance de OLI ou sont obtenues de sources considérées comme exactes. OLI n'assume donc aucune responsabilité légale.
La dernière version du catalogue mis à jour est disponible en ligne.

» Déclaration de conformité "type B" selon: 2014/35/UE - 2006/42/EC - EN 60034-1
» Conforme à UL1446 et CSA 22.2 No 0-10

# MVE-SV SPÉCIAL CRIBLE

Ex II 2G: Temp. Class **T4**
Class1 Div.1: Temp. Class **T4**
Ex II 2D Temp. Class: ● **135 °C**

* Raccordements des bornes : **Y** Haute tension ; **Δ** Basse tension

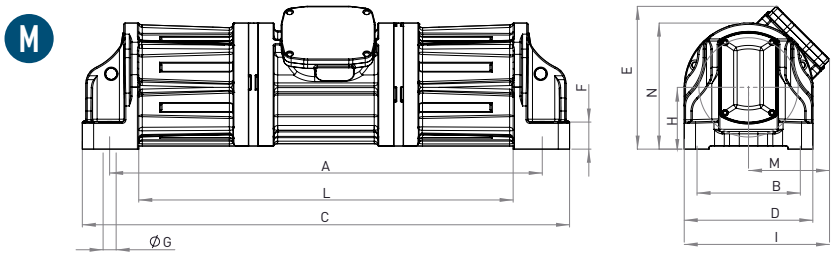


## 4 PÔLES ANTIDÉFLAGRANT – 1500/1800 rpm

| Wm (kgcm) | | Modèle | | Force centrifuge (kg) | | Poids (kg) | | SPÉCIFICATIONS ÉLECTRIQUES | | | | | | | | |
|---|---|---|---|---|---|---|---|---|---|---|---|---|---|---|---|---|
| | | | | | | | | Puissance d'entrée (kW) | | Courant nominal | | * Raccordements des bornes | Ia / In (Ampere) | | Presse-étoupe | |
| 50Hz | 60Hz | 50Hz | 60Hz | 50Hz | 60Hz | 50Hz | 60Hz | 50Hz | 60Hz | 50Hz (400V) | 60Hz (460V) | | 50Hz | 60Hz | Metrico | |
| 279 | 193 | MVE 3500/15D-SV-75A0 | MVE 3500/18D-SV-75A0 | 3.500 | 3.502 | 180 | 170 | 2,2 | 2,6 | 4,3 | 4,3 | Y | 6,5 | 6,5 | 3/4" NPT 110°C | ● |
| 279 | 193 | MVE 3500/15D-SV-75D0 | MVE 3500/18D-SV-75D0 | 3.500 | 3.502 | 180 | 170 | 2,2 | 2,6 | 4,3 | 4,3 | Y | 6,5 | 6,5 | 3/4" NPT 110°C | ● |
| 417 | 292 | MVE 5300/15D-SV-80A0 | MVE 5300/18D-SV-80A0 | 5.240 | 5.283 | 211 | 200 | 2,6 | 3,0 | 5,5 | 5,2 | Y | 7,1 | 7,0 | 3/4" NPT 110°C | ● |
| 620 | 434 | MVE 8000/15D-SV-85A0 | MVE 8000/18D-SV-85A0 | 7.790 | 7.851 | 280 | 260 | 3,2 | 3,8 | 6,3 | 6,3 | Y | 7,1 | 7,0 | 3/4" NPT 110°C | ● |

## 4 PÔLES GAMME STANDARD – 1500/1800 rpm

Le MVE-SV est également disponible dans la gamme « standard », avec la certification Ex II 3D : Ex II 3D Temp. Classe : ● 135 °C
Les spécifications électriques et dimensionnelles sont les mêmes que pour la gamme « antidéflagrante ».

*REMARQUE : Le nom du modèle dans la gamme standard est différent : la lettre « D » change en « N ».*

- II3D Ex tc IIIC Tx IP66
- Équipement et système de protection destinés pour l'utilisation en atmosphères explosibles (Zone 22) - Directive 2014/34/UE
- Conformité avec les Exigences Essentielles de Santé et de Sécurité
- EN 60079-0, EN 60079-31

- Déclaration de conformité "type B" selon: 2014/35/UE - 2006/42/EC - EN 60034-1
- Conforme à UL1446 et CSA 22.2 No 0-10

*SV Taille 75A0*



*SV Taille 85A0*



*REMARQUE : Force centrifuge réglable.*

Pour convertir les kg en Newton: N = 9.81 · kg

- II 2G Ex db IIB T4 Gb,
- II 2D Ex tb IIIC T135°C Db
- Ex db IIB T4 Gb
- Ex tb IIIC T135°C Db
- Température ambiante de -20 °C à + 60 °C

- Conformité avec les Exigences Essentielles de Santé et de Sécurité
- IEC EN 60079-0, IEC EN 60079-31, IEC EN 60079-1

**N**

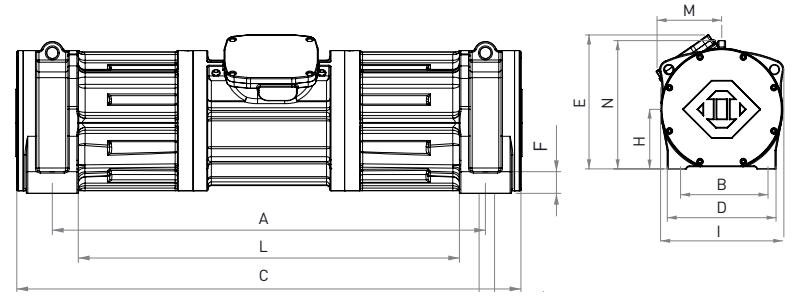


**O**

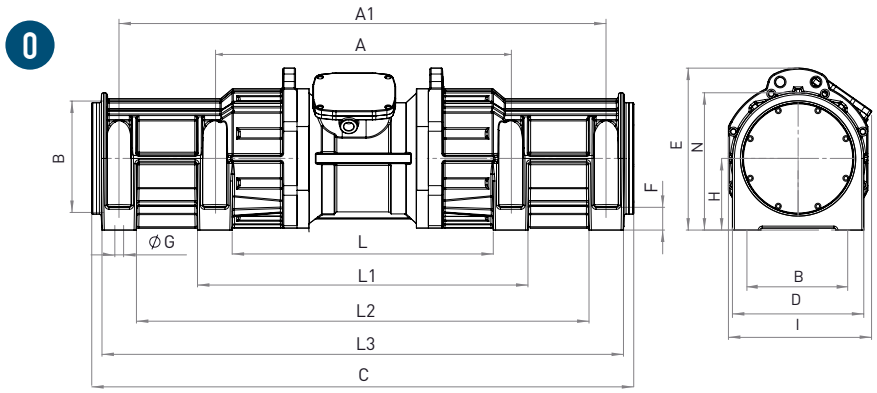


| Modèle | | Dessein | Taille | SPÉCIFICATIONS DIMENSIONNELLES (mm) | | | | | | | | | | | | | | | | |
|---|---|---|---|---|---|---|---|---|---|---|---|---|---|---|---|---|---|---|---|---|
| 50Hz | 60Hz | | | C | M | A | A1 | B | Ø G | Trous N° | D | E | F | H | I | L | L1 | L2 | L3 | N |
| MVE 3500/15D-SV-75A0 | MVE 3500/18D-SV-75A0 | M | 75A0 | 1.080 | 179 | 959 | - | 229 | 29 | 4 | 285 | 316 | 60 | 137 | 322 | 830 | - | - | - | 279 |
| MVE 3500/15D-SV-75D0 | MVE 3500/18D-SV-75D0 | M | 75D0 | 1.080 | 179 | 959 | - | 241 | 20 | 4 | 285 | 316 | 60 | 137 | 322 | 830 | - | - | - | 279 |
| MVE 5300/15D-SV-80A0 | MVE 5300/18D-SV-80A0 | N | 80A0 | 1.116 | 170 | 959 | - | 229 | 29 | 4 | 285 | 351 | 48 | 156 | 333 | 844 | - | - | - | 316 |
| MVE 8000/15D-SV-85A0 | MVE 8000/18D-SV-85A0 | O | 85A0 | 1.425 | / | 800 | 1.280 | 280 | 22 | 8 | 330 | 407 | 57 | 180 | 360 | 714 | 886 | 1.193 | 1.366 | 345 |

## Note:

REMARQUE: Dimensions avec précision grossière conformément à UNI 22768/1

Ces informations sont fournies sans garantie, représentation, incitation ou licence d'aucune sorte. Les informations sont précises selon la connaissance de OLI ou sont obtenues de sources considérées comme exactes. OLI n'assume donc aucune responsabilité légale.
La dernière version du catalogue mis à jour est disponible en ligne.

c UL us LISTED CLASS I DIV.1 GROUP C,D T4
E488916

» Class I, Div.1 Group C, D T4 IP66
» Conforme à UL 1004-1,UL 1004-3,UL1203;UL674,CSA C22.2 No.145, CSA C22.2 No.30-M1986.

# MVE-SS TOUT INOX

Ex II 3D Temp. Class: ● 100 °C ● 135 °C

* Raccordements des bornes : **Y** Haute tension ; **Δ** Basse tension

## 2 PÔLES – 1000/1200 rpm

| Wm (kgcm) | | Modèle | | Force centrifuge (kg) | | Poids (kg) | | SPÉCIFICATIONS ÉLECTRIQUES | | | | | | | | |
|---|---|---|---|---|---|---|---|---|---|---|---|---|---|---|---|---|
| | | | | | | | | Puissance d'entrée (kW) | | Courant nominal | | * Raccordements des bornes | Ia / In | | Presse-étoupe | |
| 50Hz | 60Hz | 50Hz | 60Hz | 50Hz | 60Hz | 50Hz | 60Hz | 50Hz | 60Hz | 50Hz (400V) | 60Hz (460V) | | 50Hz | 60Hz | Metrico | |
| 6,4 | 4,5 | MVE 300/3N-SS-30A0 | MVE 300/36N-SS-30A0 | 321 | 323 | 16 | | 0,25 | 0,28 | 0,52 | 0,45 | Y | 3,8 | 3,7 | M20 | ● |
| 14,9 | 10,6 | MVE 700/3N-SS-40A0 | MVE 700/36N-SS-40A0 | 758 | 765 | 25 | | 0,59 | 0,61 | 1,25 | 1,24 | Y | 4,5 | 5,2 | M20 | ● |
| 15,7 | 11,1 | MVE 800/3N-SS-50A0 | MVE 800/36N-SS-50A0 | 794 | 800 | 32 | 31 | 0,70 | 0,84 | 1,45 | 1,50 | Y | 4,0 | 4,0 | M20 | ● |

## 4 PÔLES – 1500/1800 rpm

| Wm (kgcm) | | Modèle | | Force centrifuge (kg) | | Poids (kg) | | SPÉCIFICATIONS ÉLECTRIQUES | | | | | | | | |
|---|---|---|---|---|---|---|---|---|---|---|---|---|---|---|---|---|
| | | | | | | | | Puissance d'entrée (kW) | | Courant nominal | | * Raccordements des bornes | Ia / In | | Presse-étoupe | |
| 50Hz | 60Hz | 50Hz | 60Hz | 50Hz | 60Hz | 50Hz | 60Hz | 50Hz | 60Hz | 50Hz (400V) | 60Hz (460V) | | 50Hz | 60Hz | Metrico | |
| 15,4 | 10,8 | MVE 200/15N-SS-30A0 | MVE 200/18N-SS-30A0 | 194 | 196 | 18,5 | | 0,12 | 0,15 | 0,49 | 0,50 | Y | 2,2 | 2,2 | M20 | ● |
| 40,1 | 28,1 | MVE 500/15N-SS-40A0 | MVE 500/18N-SS-40A0 | 504 | 508 | 30 | | 0,35 | 0,40 | 1,06 | 1,09 | Y | 3,0 | 2,9 | M20 | ● |
| 56,8 | 39,4 | MVE 710/15N-SS-50A0 | MVE 710/18N-SS-50A0 | 714 | 712 | 27 | | 0,62 | 0,73 | 1,32 | 1,20 | Y | 3,2 | 3,4 | M20 | ● |
| 88,7 | 62,0 | MVE 1100/15N-SS-50A0 | MVE 1100/18N-SS-50A0 | 1.114 | 1.122 | 47 | | 0,64 | 0,77 | 1,40 | 1,35 | Y | 4,0 | 4,0 | M20 | ● |
| 108,6 | 76,7 | MVE 1400/15N-SS-60A0 | MVE 1400/18N-SS-60A0 | 1.364 | 1.388 | 65 | | 0,70 | 0,84 | 1,78 | 1,78 | Y | 4,2 | 4,2 | M25 | ● |
| 187,7 | 137,4 | MVE 2400/15N-SS-60A0 | MVE 2400/18N-SS-60A0 | 2.358 | 2.485 | 70 | | 1,57 | 1,88 | 3,20 | 3,20 | Y | 5,1 | 5,1 | M25 | ● |

## 6 PÔLES – 1000/1200 rpm

| Wm (kgcm) | | Modèle | | Force centrifuge (kg) | | Poids (kg) | | SPÉCIFICATIONS ÉLECTRIQUES | | | | | | | | |
|---|---|---|---|---|---|---|---|---|---|---|---|---|---|---|---|---|
| | | | | | | | | Puissance d'entrée (kW) | | Courant nominal | | * Raccordements des bornes | Ia / In | | Presse-étoupe | |
| 50Hz | 60Hz | 50Hz | 60Hz | 50Hz | 60Hz | 50Hz | 60Hz | 50Hz | 60Hz | 50Hz (400V) | 60Hz (460V) | | 50Hz | 60Hz | Metrico | |
| 33,5 | 23,4 | MVE 200/1N-SS-40A0 | MVE 200/12N-SS-40A0 | 187 | 188 | 28 | | 0,15 | 0,18 | 0,65 | 0,62 | Y | 2,2 | 2,2 | M20 | ● |
| 91,9 | 91,9 | MVE 510/1N-SS-50A0 | MVE 510/12N-SS-50A0 | 513 | 739 | 46 | | 0,55 | 0,40 | 0,67 | 1,15 | Y | 3,0 | 2,9 | M20 | ● |
| 137,4 | 108,6 | MVE 800/1N-SS-60A0 | MVE 800/12N-SS-60A0 | 767 | 873 | 60 | 58 | 0,75 | 0,80 | 1,42 | 1,32 | Y | 3,4 | 3,3 | M25 | ● |
| 284,8 | 196,5 | MVE 1500/1N-SS-60A0 | MVE 1500/12N-SS-60A0 | 1.590 | 1.580 | 84 | 73 | 0,90 | 1,08 | 1,80 | 2,00 | Y | 3,5 | 3,5 | M25 | ● |

## 8 PÔLES – 750/900 rpm

| Wm (kgcm) | | Modèle | | Force centrifuge (kg) | | Poids (kg) | | SPÉCIFICATIONS ÉLECTRIQUES | | | | | | | | |
|---|---|---|---|---|---|---|---|---|---|---|---|---|---|---|---|---|
| | | | | | | | | Puissance d'entrée (kW) | | Courant nominal | | * Raccordements des bornes | Ia / In | | Presse-étoupe | |
| 50Hz | 60Hz | 50Hz | 60Hz | 50Hz | 60Hz | 50Hz | 60Hz | 50Hz | 60Hz | 50Hz (400V) | 60Hz (460V) | | 50Hz | 60Hz | Metrico | |
| 33,4 | | MVE 150/075N-SS-40A0 | MVE 150/090N-SS-40A0 | 105 | 151 | 30 | | 0,23 | 0,25 | 1,14 | 1,14 | Y | 1,7 | 1,7 | M20 | ● |
| 84,0 | | MVE 400/075N-SS-50A0 | MVE 400/090N-SS-50A0 | 264 | 380 | 46 | | 0,25 | 0,30 | 0,90 | 0,89 | Y | 2,1 | 2,1 | M20 | ● |
| 137,3 | | MVE 650/075N-SS-60A0 | MVE 650/090N-SS-60A0 | 431 | 621 | 63 | | 0,37 | 0,45 | 1,20 | 1,20 | Y | 2,4 | 2,4 | M25 | ● |
| 187,7 | | MVE 900/075N-SS-60A0 | MVE 900/090N-SS-60A0 | 589 | 849 | 70 | | 0,55 | 0,54 | 1,23 | 1,29 | Y | 2,7 | 2,7 | M25 | ● |

*Taille 30A0*



*Taille 50A0*



2, 4, 6 POLES
60Hz masses = 50Hz masses ajustées à 70%

8 POLES
60Hz masses = 50Hz masses ajustées à 100%

Pour convertir les kg en Newton: N = 9.81 · kg

- II3D Ex tc IIIC Tx IP66
- Équipement et système de protection destinés pour l'utilisation en atmosphères explosibles (Zone 22) - Directive 2014/34/UE
- Conformité avec les Exigences Essentielles de Santé et de Sécurité
- EN 60079-0, EN 60079-31

P

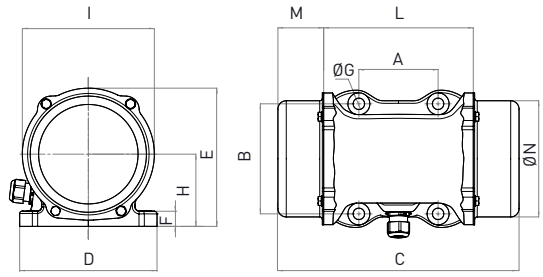


Q

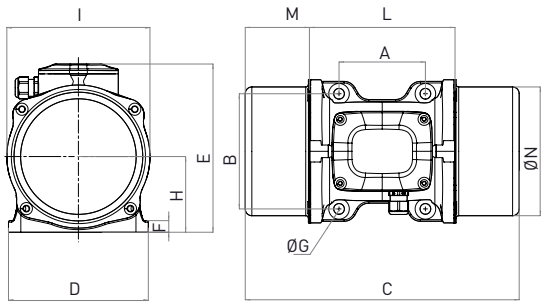


| Modèle | | Dessein | Taille | SPÉCIFICATIONS DIMENSIONNELLES (mm) | | | | | | | | | | | | | | |
|---|---|---|---|---|---|---|---|---|---|---|---|---|---|---|---|---|---|---|
| | | | | C | | M | | A | B | Ø G | Trous | D | E | F | H | I | L | N |
| 50Hz | 60Hz | | | 50Hz | 60Hz | 50Hz | 60Hz | | | | N° | | | | | | | |
| MVE 300/3N-SS-30A0 | MVE 300/36N-SS-30A0 | P | 30A0 | 298 | | 64 | | 90 | 125 | 13 | 4 | 156 | 157 | 17 | 82 | 150 | 164 | 134 |
| MVE 700/3N-SS-40A0 | MVE 700/36N-SS-40A0 | Q | 40A0 | 333 | | 78 | | 105 | 140 | 13 | 4 | 170 | 204 | 14 | 92 | 174 | 174 | 156 |
| MVE 800/3N-SS-50A0 | MVE 800/36N-SS-50A0 | Q | 50A0 | 324 | | 63,5 | | 120 | 170 | 17 | 4 | 208 | 223 | 18 | 96 | 185 | 197 | 165 |

| Modèle | | Dessein | Taille | SPÉCIFICATIONS DIMENSIONNELLES (mm) | | | | | | | | | | | | | | |
|---|---|---|---|---|---|---|---|---|---|---|---|---|---|---|---|---|---|---|
| | | | | C | | M | | A | B | Ø G | Trous | D | E | F | H | I | L | N |
| 50Hz | 60Hz | | | 50Hz | 60Hz | 50Hz | 60Hz | | | | N° | | | | | | | |
| MVE 200/15N-SS-30A0 | MVE 200/18N-SS-30A0 | P | 30A0 | 298 | | 64 | | 90 | 125 | 13 | 4 | 156 | 157 | 17 | 82 | 150 | 164 | 134 |
| MVE 500/15N-SS-40A0 | MVE 500/18N-SS-40A0 | Q | 40A0 | 333 | | 78 | | 105 | 140 | 13 | 4 | 170 | 204 | 14 | 92 | 174 | 174 | 156 |
| MVE 710/15N-SS-50A0 | MVE 710/18N-SS-50A0 | Q | 50A0 | 388 | | 95 | | 120 | 170 | 17 | 4 | 208 | 223 | 18 | 96 | 185 | 197 | 165 |
| MVE 1100/15N-SS-50A0 | MVE 1100/18N-SS-50A0 | Q | 50A0 | 458 | | 129 | | 120 | 170 | 17 | 4 | 208 | 223 | 18 | 96 | 185 | 192 | 170 |
| MVE 1400/15N-SS-60A0 | MVE 1400/18N-SS-60A0 | Q | 60A0 | 445 | | 111 | | 140 | 190 | 17 | 4 | 230 | 250 | 26 | 124 | 240 | 218 | 221 |
| MVE 2400/15N-SS-60A0 | MVE 2400/18N-SS-60A0 | Q | 60A0 | 489 | | 133 | | 140 | 190 | 17 | 4 | 230 | 250 | 26 | 124 | 240 | 218 | 221 |

| Modèle | | Dessein | Taille | SPÉCIFICATIONS DIMENSIONNELLES (mm) | | | | | | | | | | | | | | |
|---|---|---|---|---|---|---|---|---|---|---|---|---|---|---|---|---|---|---|
| | | | | C | | M | | A | B | Ø G | Trous | D | E | F | H | I | L | N |
| 50Hz | 60Hz | | | 50Hz | 60Hz | 50Hz | 60Hz | | | | N° | | | | | | | |
| MVE 200/1N-SS-40A0 | MVE 200/12N-SS-40A0 | Q | 40A0 | 330 | | 78 | | 105 | 140 | 13 | 4 | 170 | 204 | 14 | 92 | 174 | 174 | 156 |
| MVE 510/1N-SS-50A0 | MVE 510/12N-SS-50A0 | Q | 50A0 | 458 | | 129 | | 120 | 170 | 17 | 4 | 208 | 223 | 18 | 96 | 185 | 192 | 170 |
| MVE 800/1N-SS-60A0 | MVE 800/12N-SS-60A0 | Q | 60A0 | 445 | | 111 | | 140 | 190 | 17 | 4 | 230 | 250 | 26 | 124 | 240 | 218 | 221 |
| MVE 1500/1N-SS-60A0 | MVE 1500/12N-SS-60A0 | Q | 60A0 | 565 | 489 | 171 | 133 | 140 | 190 | 17 | 4 | 230 | 250 | 26 | 124 | 240 | 218 | 221 |

| Modèle | | Dessein | Taille | SPÉCIFICATIONS DIMENSIONNELLES (mm) | | | | | | | | | | | | | | |
|---|---|---|---|---|---|---|---|---|---|---|---|---|---|---|---|---|---|---|
| | | | | C | | M | | A | B | Ø G | Trous | D | E | F | H | I | L | N |
| 50Hz | 60Hz | | | 50Hz | 60Hz | 50Hz | 60Hz | | | | N° | | | | | | | |
| MVE 150/075N-SS-40A0 | MVE 150/090N-SS-40A0 | Q | 40A0 | 330 | | 78 | | 105 | 140 | 13 | 4 | 170 | 204 | 14 | 92 | 174 | 174 | 156 |
| MVE 400/075N-SS-50A0 | MVE 400/090N-SS-50A0 | Q | 50A0 | 458 | | 129 | | 120 | 170 | 17 | 4 | 208 | 223 | 18 | 96 | 185 | 192 | 170 |
| MVE 650/075N-SS-60A0 | MVE 650/090N-SS-60A0 | Q | 60A0 | 445 | | 111 | | 140 | 190 | 17 | 4 | 230 | 250 | 26 | 124 | 240 | 218 | 221 |
| MVE 900/075N-SS-60A0 | MVE 900/090N-SS-60A0 | Q | 60A0 | 489 | | 133 | | 140 | 190 | 17 | 4 | 230 | 250 | 26 | 124 | 240 | 218 | 221 |

## Note:

REMARQUE: Dimensions avec précision grossière conformément à UNI 22768/1

Ces informations sont fournies sans garantie, représentation, incitation ou licence d'aucune sorte. Les informations sont précises selon la connaissance de OLI ou sont obtenues de sources considérées comme exactes. OLI n'assume donc aucune responsabilité légale.
La dernière version du catalogue mis à jour est disponible en ligne.

» Déclaration de conformité "type B" selon: 2014/35/UE - 2006/42/EC - EN 60034-1
» Conforme à UL1446 et CSA 22.2 No 0-10



# INSTALLATION

## Montage

La surface de la plaque de base où le vibrateur est monté doit être totalement plate avec une tolérance maximum de 0.25mm (0,01in), afin que les surfaces reposent uniformément l'une contre l'autre pour éviter les tensions internes qui peuvent provoquer la rupture du pied du moteur vibrateur.
Utiliser des boulons 8.8, des écrous type 8.0 et des rondelles plates appartenant à la catégorie A EN ISO 7089 / 7092.
Le graphique suivant affiche les paramètres du couple correct pour les différentes tailles de boulons utilisés sur les moteurs vibrateurs.

### Interface moteur / machine

| Vis | | Rondelle | | Couple de serrage | |
|---|---|---|---|---|---|
| Métrique | Impérial | Métrique UNI 6592 | Impérial Rondelle plate | (Nm) | (ftlb) |
| M6 | 1/4" | 6.4 x 12 | 1/4" | 9 | 6,5 |
| M8 | 5/16" | 8.4 x 16 | 5/16" | 23 | 16,5 |
| M10 | 3/8" | 10.5 x 20 | 3/8" | 45 | 33 |
| M12 | 1/2" | 13 x 24 | 1/2" | 80 | 58 |
| M16 | 5/8" | 17 x 30 | 5/8" | 185 | 137 |
| M20 | 13/16" | 21 x 37 | 13/16" | 373 | 275 |
| M22 | 7/8" | 23 x 39 | 7/8" | 550 | 411 |
| M24 | 15/16" | 25 x 44 | 15/16" | 696 | 513 |
| M27 | 1" | 28 x 50 | 1" | 873 | 645 |
| M36 | 1-3/8" | 37 x 66 | 1-3/8" | 1.864 | 1.370 |
| M42 | 1 5/8" | 37 x 66 | 1 5/8" | 2.850 | 2.102 |

### FIXATION

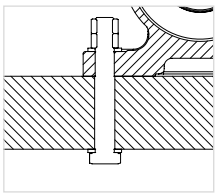

Lisse par
trou de forage
+ vis
+ rondelle plate, écrou et
contre-écrou

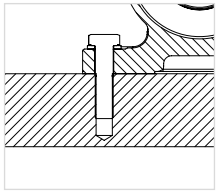

Trou taraudé
+ vis
+ rondelle plate

### TOLÉRANCE DE PLANÉITÉ SURFACE

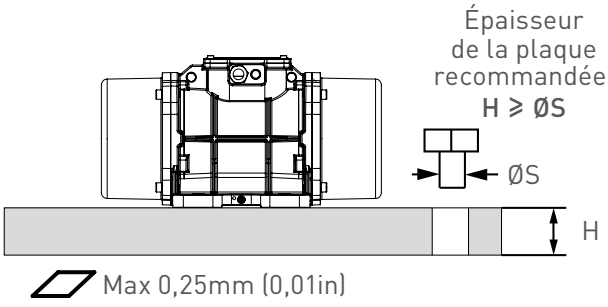




**PLAQUE DE SUPPORT USINÉE ET PAS PEINTE**



# Raccordement électrique

Assurez-vous que l'alimentation en tension et la fréquence correspondent à celles indiquées sur la plaque signalétique du vibrateur électrique.
Si le moteur est alimenté par un entraînement à fréquence variable ne pas démarrer en dessous 20 Hz et au-dessus de la fréquence nominale.
Insérer le câble d'alimentation dans le presse-étoupe. Les câbles doivent être de type œillet, préalablement isolés, avec un alésage pour les bornes de la boîte de jonction afin d'éviter une surchauffe du fil. Utiliser seulement les conducteurs qui ont une section appropriée.

Connecter les câbles aux goupilles (tel que illustré dans le diagramme ci-dessous) et serrer avec le couple spécifié:

**N'oubliez pas de fixer le câble de mise à la terre aux goujons fournis**
**→ connexion obligatoire!**
Avant de fermer la boîte de jonction assurez-vous que le joint du couvercle est fixé afin de maintenir la protection IP spécifiée.
Pour plus de détails sur l'installation du moteur, consulter les manuels du produit.

| Écrous boîtier de dérivation couple de serrage | | |
|---|---|---|
| Vite | Nm | ftlb |
| M4 | 2.5 | 1,84 |
| M5 | 4 | 2,95 |
| M6 | 5 | 3,69 |
| M8 | 6 | 4,43 |
| M10 | 8 | 5,90 |

**RACCORDEMENTS DES BORNES**

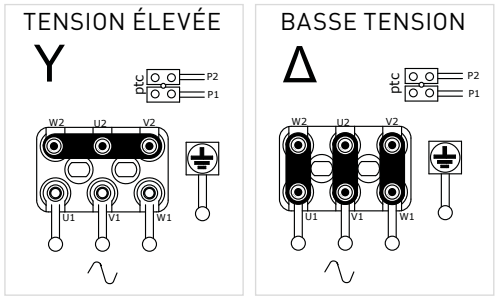


Vérifier l'étiquette de la colonne « Raccordements des bornes » pour connaître le raccordement préréglé en usine de chaque moteur.

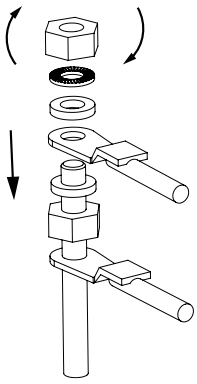

# Protection contre les surcharges

Tous les vibrateurs électriques doivent être connectés à une protection contre les surcharges externes.
En utilisant deux vibrateurs électriques synchronisés, chacun d'eux doit être raccordé à un disjoncteur de surcharge externe et ces dispositifs de protection contre la surcharge doivent être verrouillés pour s'assurer que les deux moteurs s'arrêtent en cas de défaillance.

Utilisez toujours un disjoncteur magnéto-thermique pour la protection du moteur, avec seuil de retard, pour éviter d'arrêter le moteur au démarrage quand le courant absorbé est supérieur à la puissance nominale pendant quelques secondes.
Le seuil de protection contre les surcharges doit être défini à un maximum de 10 % du courant nominal.

# COMMENT MODIFIER L'INTENSITÉ DES VIBRATIONS

## Masses réglables – Type A

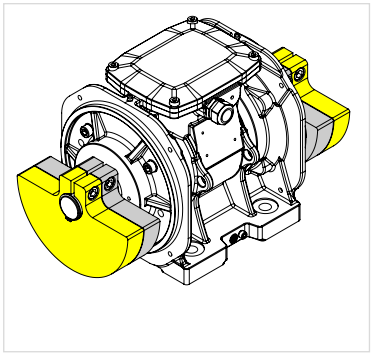

MASSES A 100%

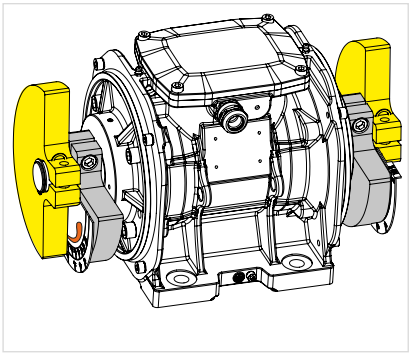

MASSES AJUSTÉS

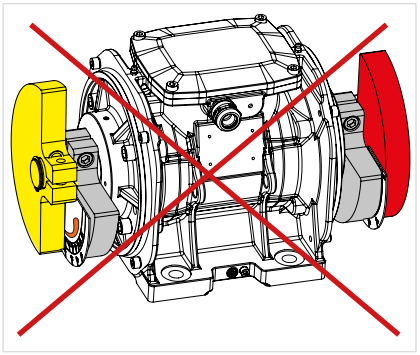

MASSES MAL AJUSTÉS

**2 CONSEILS POUR BIEN AJUSTER LES MASSES:**

Faire tourner la masse selon le dessin sur la plaque: de la pointe plus épaisse vers la pointe fine.

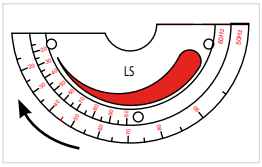


*côté gauche du moteur, pour des tailles jusqu'à 60*

Faire pivoter les masses dans la direction opposée au presse-étoupe.

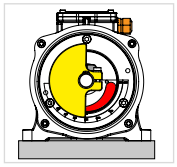

*côté gauche*

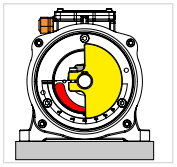

*côté droit*

## Masses réglables– Type B

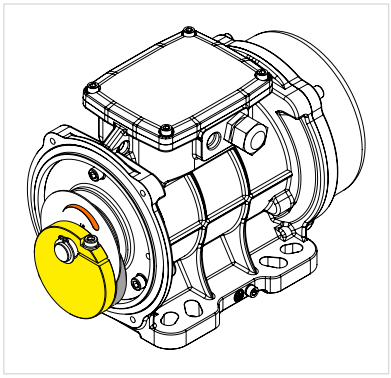

MASSES A 100%

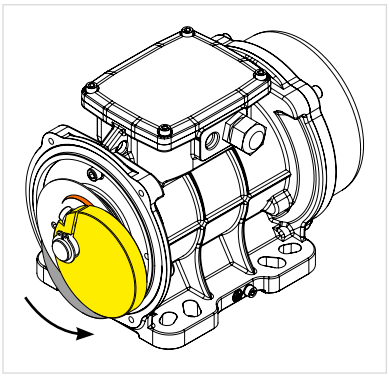

MASSES AJUSTÉS

La fissure dans la masse indique le degré de réglage.



Faire tourner la masse selon le dessin sur la plaque: de la pointe plus épaisse vers la pointe fine.

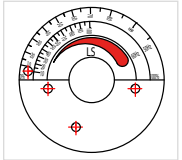



## Masses réglables – Type C (masses de lame)

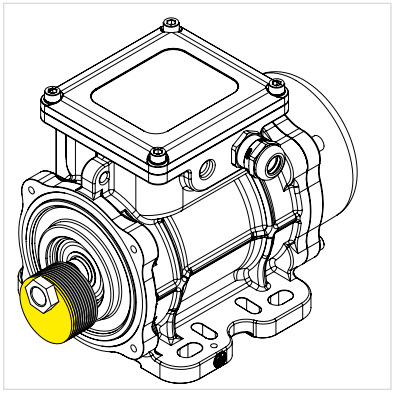

MASSES A 100%

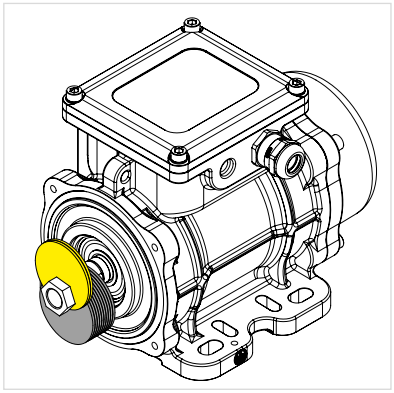

MASSES AJUSTÉS

Pour des informations techniques sur le réglage des masses de la lame consulter le manuel d'utilisation et d'entretien.

### Avertissement:
### NE PAS graisser de moteurs neufs avant l'installation.

Les roulements à rouleaux OLI pour moteurs quittent l'usine remplis avec la bonne quantité de graisse, tandis que ceux avec roulement à billes n'ont pas besoin de graissage.

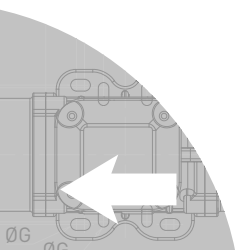

## DESSINS TECHNIQUES

**A**

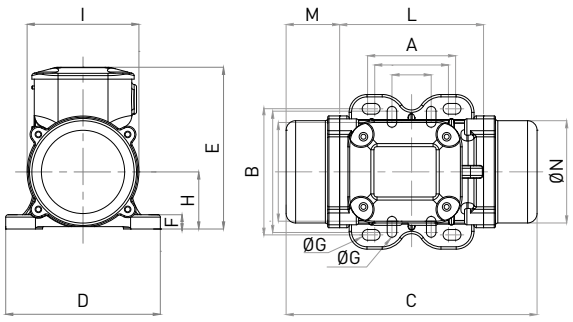


**A1**

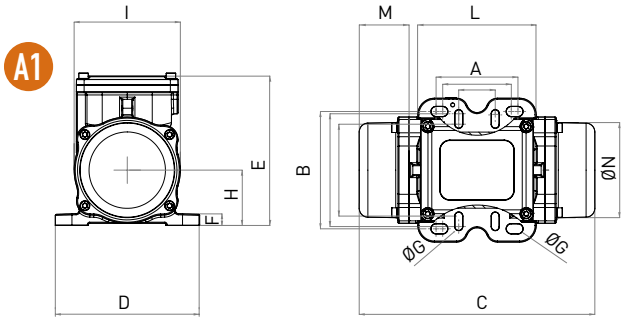


**B**

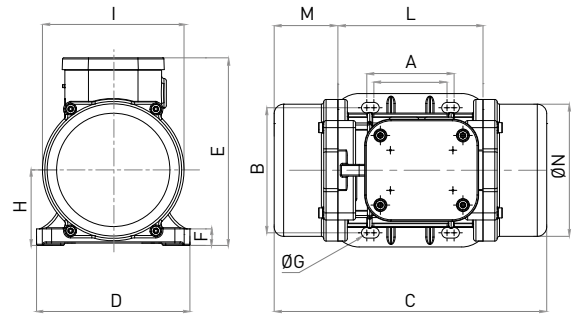


**B1**

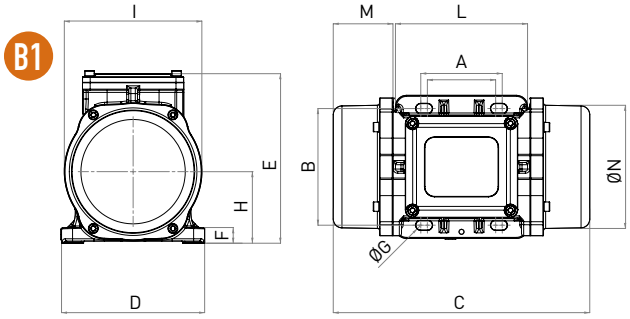


**C**

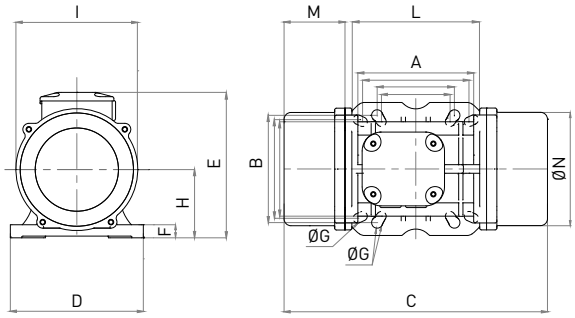


**C1**

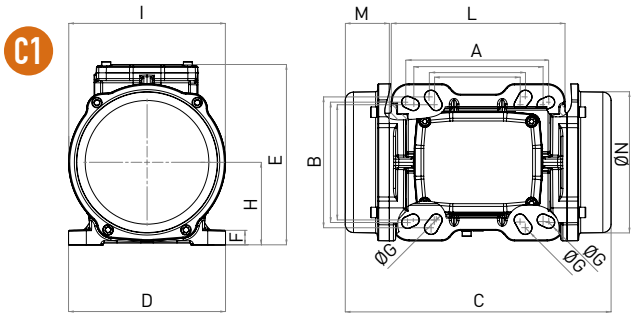


**D1**

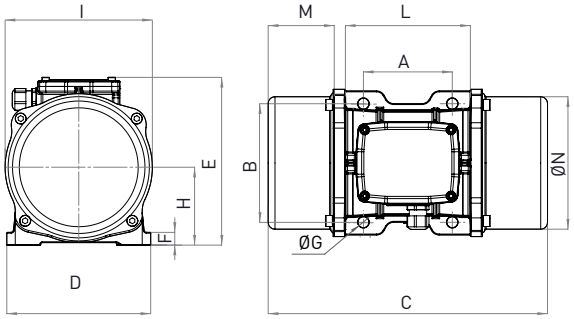


**E1**

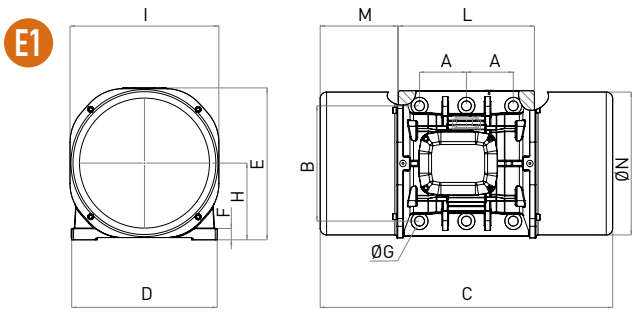


**E**

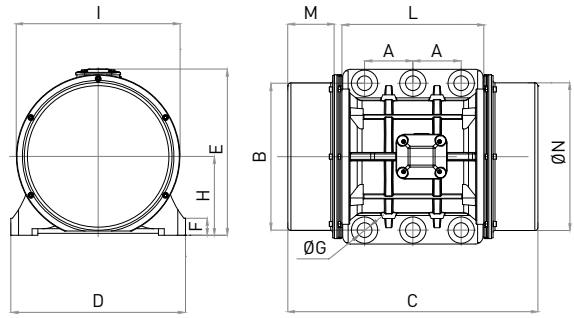


**G**

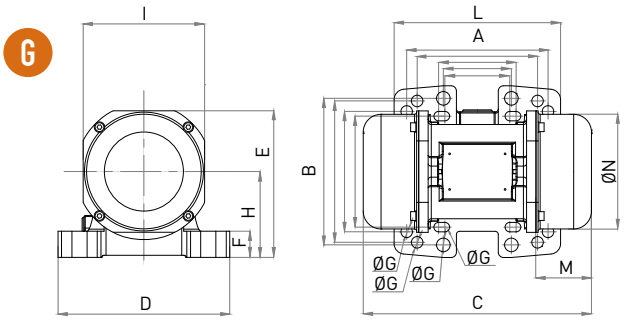


**H**

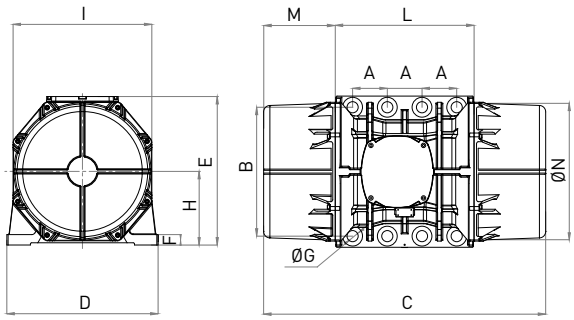

# WHEN YOU NEED IT, WHERE YOU NEED IT.

## THE WORLDWIDE LEADER IN VIBRATION TECHNOLOGY

**www.olivibra.com**




### OLI siège social

VIA CANALAZZO, 35
41036 MEDOLLA (MO) - ITALY

+39 0535 41 06 11

INFO@OLIVIBRA.COM

### OLI France S.a.S.

9 RUE DU GÉNÉRAL MOCQUERY
37550 ST AVERTIN
FRANCE

+33 (0)2 47 71 98 36

CONTACT@OLIVIBRA.FR


### OLI dans le monde entier

OLI Australie
OLI Benelux
OLI Brésil
OLI Chine
OLI Far East
OLI France
OLI Allemagne
OLI Inde
OLI Italie
OLI Malte
OLI Moyen-Orient
OLI Pays nordiques
OLI Russie
OLI Afrique du Sud
OLI Espagne
OLI Thaïlande
OLI Turquie
OLI UK
OLI USA

OLI

TOREX®

**TOREX® S.p.A.**
Via Canaletto, 139/A
41030 S. Prospero (MO) - ITALY

☎ ++39 / 059 / 8080811
**fax** ++39 / 059 / 908204
**e-mail** torex@torex.it
**internet** www.torex.it

WAMGROUP



# ILT

- **LEVEL INDICATOR**
  OPERATING AND MAINTENANCE
- ***FÜLLSTANDANZEIGER***
  BETRIEBS- UND WARTUNGSANLEITUNG
- **INDICATEURS DE NIVEAU**
  UTILISATION ET ENTRETIEN
- ***INDICATORE DI LIVELLO***
  USO E MANUTENZIONE

**Manual No. TOR.ILT.--.C.A7.0917.4L Issue: A7**
**Latest Update: September 2017**

**ORIGINAL INSTRUCTIONS IN ENGLISH**

*All rights reserved © WAMGROUP S.p.A.*

TOREX®

**ILT** - INDEX
- INHALTSVERZEICHNIS
- INDEX
- INDICE

**TOR.ILT.--.C.A7.0917.4L 2**


| | |
|---|---|
| INTRODUCTION, RULES AND GENERAL PROHIBITIONS | 3 - 5 |
| LIMITS OF USE | 6 |
| INTRODUCTION, RULES AND GENERAL PROHIBITIONS | 7 - 9 |
| GENERAL DIAGRAM | 10 |
| ORDER CODES | 11 |
| OTHER VERSIONS OF THE ILT AND ACCESSORIES | 12 - 13 |
| SAFETY NOCITES | 14 |
| CONNECTIONS | 15 - 16 |
| OPTIONS | 17 |
| VERSION FOR HIGH PROCESS TEMPERATURES | 18 |
| COMMISIONING - TESTING | 19 - 20 |
| MAINTENANCE | 21 |
| DEMOLITION | 22 |
| DECLARATION OF CONFORMITY | 23 - 26 |

| | |
|---|---|
| EINFÜHRUNG, ALLGEMEINE VORSCHRIFTEN GERÄTEBESCHREIBUNG | 3 - 5 |
| EINSATZGRENZEN | 6 |
| EINFÜHRUNG, ALLGEMEINE VORSCHRIFTEN GERÄTEBESCHREIBUNG | 7 - 9 |
| ALLGEMEINES SCHEMA | 10 |
| BESTELLCODES | 11 |
| ANDERE ILT-VERSIONEN UND ZUBEHÖR | 12 - 13 |
| SICHERHEITSHINWEISE | 14 |
| ANSCHLÜSSE | 15 - 16 |
| VARIANTEN | 17 |
| VERSION FÜR HOHE PROZESSTEMPERATUREN | 18 |
| ABNAHME UND INBETRIEBNAHME | 19 - 20 |
| WARTUNG | 21 |
| DEMONTAGE | 22 |
| KONFORMITÄTSERKLÄRUNG | 23 - 26 |

| | |
|---|---|
| INTRODUCTION, PRESCRIPTIONS ET CONSIGNES GENERALES | 3 - 5 |
| LIMITES D'UTILISATION | 6 |
| INTRODUCTION, PRESCRIPTIONS ET CONSIGNES GENERALES | 7 - 9 |
| SCHEMA GENERAL | 10 |
| CODES DE SELECTION | 11 |
| AUTRE VERSIONNES ILT ET ACCESSOIRES | 12 - 13 |
| INDICATIONS DE SÉCURITÉ | 14 |
| RACCORDEMENTS | 15 - 16 |
| OPTIONS | 17 |
| VERSION POUR PROCESSUS HAUTE TEMPÉRATURE | 18 |
| MISE EN SERVICE ET ESSAI DE RECEPTION | 19 - 20 |
| ENTRETIEN | 21 |
| DEMANTELEMENT | 22 |
| DÉCLARATION DE CONFORMITÉ | 23 - 26 |

| | |
|---|---|
| INTRODUZIONE, PRESCRIZIONI E DIVIETI GENERALI | 3 - 5 |
| LIMITI DI IMPIEGO | 6 |
| INTRODUZIONE, PRESCRIZIONI E DIVIETI GENERALI | 7 - 9 |
| SCHEMA GENERALE | 10 |
| CODICI DI SCELTA | 11 |
| ALTRE VERSIONI DELL'ILT ED ACCESSORI | 12 - 13 |
| ISTRUZIONI DI SICUREZZA | 14 |
| CONNESSIONI | 15 - 16 |
| OPZIONI | 17 |
| VERSIONE PER TEMPERATURE DI PROCESSO ALTE | 18 |
| MESSA IN SERVIZIO E COLLAUDO | 19 - 20 |
| MANUTENZIONE | 21 |
| DEMOLIZIONE | 22 |
| DICHIARAZIONE DI CONFORMITÀ | 23 - 26 |

This "OPERATING AND MAINTENANCE MANUAL" is an essential and integral part of the machine and must be readily available to operating and servicing personnel.

The owner, operator and maintenance Manager must be familiar with the contents of this Manual.

The description and illustrations used in thus Manual are not binding on Manufacturer.

While the basic characteristics of the machine remain unchanged as described, Manufacturer reserves the right to make any modifications to assemblies, parts and accessories it deems necessary for product improvement on for fabrication or marketing needs and this without prior notice and without being obliged to update this Manual at the time of modifications.

Die "BETRIEBS- UND WARTUNGSANLEITUNG" gehört zur Maschine und muß an einem Ort aufbewahrt werden, der dem Bedienungs- und Wartungspersonal gut zugänglich ist.

Betreiber, Bediener und Wartungspersonal sind verpflichtet, den Inhalt dieses Handbuchs zu kennen.

Unter Beibehaltung der wesentlichen Merkmale der beschriebenen Maschinen behält sich der Hersteller vor, jederzeit an Geräteteilen und/oder am Zubehör Änderungen im Sinne der Produktverbesserung oder aus technisch oder kaufmännisch notwendigen Gründen vorzunehmen.

La présente notice "UTILISATION ET ENTRETIEN" fait partie intégrante de la machine et elle doit être mise à la disposition du personnel préposé à la conduite et à la maintenance de la machine.
L'utilisateur, le conducteur et le technicien de maintenance ont l'obligation de connaître le contenu de cette notice d'instructions.
Les descriptions et les illustrations contenues dans la présente publication sont données sans engagement de la part du constructeur.

Bien que les caractéristiques principales des machines décrites dans les présentes demeurent inchangées, le constructeur se réserve le droit d'apporter, à tout moment et sans obligation, des modifications eventuelles d'organes, pièces et accessoires retenus nécessaires pour l'amélioration du produit ou pour des exigences de fabrication ainsi que commerciales ; et de mettre immédiatement à jour la présente publication.

Il presente libretto " USO E MANUTENZIONE" costituisce parte integrante della macchina e deve essere, facilmente reperibile dal personale addetto alla conduzione ed alla manutenzione.

L'utente, il conduttore e l'addetto alla manutenzione hanno l'obbligo di conoscere il contenuto dei presente libretto.

Le descrizioni e le illustrazioni contenuti nella presente pubblicazione si intendono non impegnative,

Ferme restando le caratteristiche essenziali delle macchine descritte, la ditta costruttrice si riserva il diritto di apportare, le eventuali modifiche di organi, dettagli e, accessori, che riterrà convenienti per il miglioramento del prodotto o per esigenze di carattere costruttivo o commerciale, in qualunque momento e senza impegnarsi ad aggiornare tempestivamente questa pubblicazione.

## GENERAL PROHIBITIONS AND REGULATIONS

- This machine must not be used even partially by unauthorised personnel.
- The shop foreman or Department Manager is responsible for Machine operator training and for checking training level achieved.
- The machine must not be used for purposes other than those is was designed for.
- Read carefully the warning notices attached to the machine.
- Do not remove the warning notices attached to the machine,
- When the machine is running, do not service, repair, regulate the machine or carry out any other operation not strictly required by the work cycle. ,Before any of the above listed operations, always disconnect the machine for all electric power supply sources.
- DO not remove the guards and the safety devices on the machine,
- DO not start to work with protections opened or do not open them during the work,
- Always wear safety gloves when working on the machine.
- At the end of the work shift, disconnect the machine from the electric supply.
- Any repair, service or maintenance work, whether electrical or otherwise, must be in compliance with CEI standards in force.

## ALLGEMEINE VORSCHRIFTEN

- Jegliche auch teilweise Bedienung der Maschine durch hierzu nicht ausdrücklich autorisiertes Personal ist untersagt.
- Der Betriebsleiter ist dafür verantwortlich, daß das zur Bedienung autorisierte Personal in der Bedienung der Maschine geschult wird.
- Die Maschine darf zu keinem anderen Zweck als zu dem in diesem Handbuch beschriebenen verwendet werden.
- Die Gefahren- und Hinweisschilder an der Maschine müssen beachtet werden.
- Es ist verboten, die Gefahren- und Hinweisschilder an der Maschine zu entfernen.
- Wartungs-, Reparatur-, und/oder vom Hersteller autorisierte Änderungsarbeiten dürfen nicht bei laufender Maschine durchgeführt werden. Vor der Durchführung solcher Arbeiten muß zuerst die Stromversorgung zur Maschine unterbrochen werden.
- Es ist verboten, die an der Maschine angebrachten Schutz- und Sicherheitseinrichtungen zu entfernen.
- Schulzeinrichtungen an der Maschine dürfen bei Kontroll-, Wartungs-, Reparatur- und/oder Anderungsarbeiten weder fehlen noch während dieser Arbeiten entfernt werden.
- Zum Ende der Arbeitsschicht die Stromversorgung der Maschine abschalten.
- Für alle elektrischen und nicht elektrischen Wartungsarbeiten die Vorschriften der geltenden Normen beachten.

## PRESCRIPTIONS ET CONSIGNES GENERALES

- L'utilisation, même partielle, de l'équipement de la part du personnel non autorisé est expressément interdit.
- Le chef d'usine et les chefs d'atelier ont l'obligation d'instruire et de contrôler le personnel préposé à l'utilisation de l'équipement.
- L'utilisation de l'équipement pour des usages différents de ceux pour lesquels ils ont été prévus, sont interdits.
- Lire attentivement les plaques signalétiques et de danger apposées sur l'équipement.
- Il est interdit d'enlever de l'équipement les plaques de signalisation et de danger.
- Il est interdit d'effectuer la maintenance, de réparer, de modifier ou de faire tout ce qui n'est pas strictement nécessaire au cycle de travail quand la machine est en marche.
- Il est interdit de démonter les protections et les sécurités présentes sur la machine.
- Il est interdit de commencer le travail avec les protections ouvertes ou de les ouvrir pendant le travail. Le port des gants de protection est obligatoire pour travailler sur la machine.
- A la fin des périodes de travail débrancher toujours la machine des alimentations électriques.
- Toute maintenance électrique et autres doivent être conformes aux normes en vigueur.

## PRESCRIZIONI E DIVIETI GENERALI

- E' vietato l'uso, anche parziale, dell'attrezzatura da parte del personale non espressamente autorizzato. L'istruzione del personale preposto all'uso è da realizzare e verificare a cura dei capo officina e dei capi reparto.
- E' vietato l'uso dell'attrezzatura per modalità diverse da quelle per cui è stata prevista.
- Leggere con attenzione le targhe di avvertenza e pericolo poste sulla macchina.
- E' vietato rimuovere le targhe di avvertenza e pericolo sulla macchina.
- E' vietato manutenzionare, eseguire riparazioni, modifiche e quanto non strettamente necessario al ciclo di lavoro con la macchina in movimento. Prima di tutto è obbligatorio disinnestare tutte le alimentazioni elettriche alla macchina.
- E' vietato rimuovere le protezioni e le sicurezze presenti sulla macchina.
- E' vietato iniziare il lavoro con le protezioni aperte o aprirle durante il lavoro.
- Operare sulla macchina solo con i guanti di protezione.
- Al termine dei periodi di lavoro scollegare sempre la macchina dalle alimentazioni elettriche.
- Qualsiasi manutenzione elettrica e non elettrica deve attenersi alle norme vigenti.

TOREX®

# ILT
- INTRODUCTION, RULES AND GENERAL PROHIBITIONS
- EINFÜHRUNG, ALLGEMEINE VORSCHRIFTEN GERÄTEBESCHREIBUNG
- INTRODUCTION, PRESCRIPTIONS ET CONSIGNES GENERALES
- INTRODUZIONE, PRESCRIZIONI E DIVIETI GENERALI

**TOR.ILT.--.C.A7.0917.4L 5**

**DESCRIPTION**
**Bin Level Indicator for point level limit detection in bulk materials**

**FUNCTION**
The device is used for level monitoring in all types of containers and silos.
It can be used with all powdery and granular bulk materials that do not show a strong propensity to form crusts or deposits.
When the material level reaches the measuring paddle the rotation is blocked.
The resulting reaction torque activates a limit switch output signal that stops the motor.
As soon as the material level sinks below the paddle radius, the switch returns to the OFF position and the motor is switched on.

**IMPROPER USE**
ILT level indicators are not designed to work in dangerous conditions or with dangerous materials. If the machine has to operate in these conditions, the manufacturer must be informed.

Dangerous materials:
- explosives,
- toxic,
- flammable,
- harmful and similar.

**BESCHREIBUNG**
**Füllstandmelder für Behälter zur punktuellen Füllstandbestimmung bei Schüttgütern**

**FUNKTION**
Das Gerät wird verwendet zur Füllstandüberwachung in Behältern und Silos aller Art.
Es ist einsetzbar für alle pulverförmigen Schüttgüter und Granulate, die nicht zu starker Ansatzbildung neigen.
Erreicht der Füllstand des Schüttgutes das Messpaddel, wird dessen Rotationsbewegung unterbrochen. Das entstehende Drehmoment aktiviert ein Ausgangssignal am Begrenzungsschalter, welches den Motor stoppt.
Sinkt der Füllstand unterhalb des Radius des Paddels, der Schalter kehrt in die AUS-Position zurück und der Motor ist eingeschaltet.

**UNZULÄSSIGE VERWENDUNGSZWECKE**
Die Füllstandanzeiger der Modellreihe ILT sind weder für gefährliche Anwendungen noch zum Handling von gefährlichen Medien geeignet. Sollte der Betreiber eine ILT - Füllstandanzeiger für gefährliche Medien bzw. Anwendungen einsetzen wollen, so muß er unbedingt vorher den Hersteller um Erlaubnis fragen.

Als gefährliche Medien gelten:
- explosive,
- giftige,
- feuergefährliche,
- in irgendeiner Weise schädliche.

**DESCRIPTION**
**Indicateur de niveau pour le contrôle du niveau des matériaux en vrac**

**FONCTION**
L'appareil sert à surveiller le niveau de remplissage dans les réservoirs et silos de types les plus divers.
Il peut être utilisé pour tous produits pulvérulents et granulés n'ayant pas tendance à former de dépôts importants.
Lorsque le niveau du matériau atteint la palette de mesure, la rotation est bloquée.
Le couple de réaction résultant active un signal de sortie de l'interrupteur de fin de course, qui arrête le moteur.
Dès que le niveau du matériau descend en dessous du rayon d'action de la palette, l'interrupteur revient à la position OFF (ARRÊT) et le moteur est remis en marche.

**CONTRE-INDICATION**
Les indicateurs de niveau standards de la classe ILT N'ONT pas été projetés pour travailler dans des conditions ou avec des produits dangereux; par conséquent si la, machine ne répond pas à ces exigences, le constructeur doit obligatoirement en être informé

Les produits suivants sont considérés comme dangereux, si ceux-si sont:
- explosifs,
- toxiques,
- inflammables,
- nocifs et/ou similaires.

**DESCRIZIONE:**
**Indicatore di livello a pala rotativa per il controllo di livello di materiale sfuso**

**FUNZIONE D'USO**
Il dispositivo è utilizzato per il monitoraggio del livello all'interno di container e sili di qualsiasi tipo.
Può essere utilizzato in presenza di polveri e granulati con scarsa tendenza alla formazione di incrostazioni o depositi.
Quando il livello del materiale raggiunge la paletta sensore, la rotazione si blocca.
La coppia risultante attiva un finecorsa che invia un segnale per fermare il motore.
Appena il livello del materiale scende al di sotto del raggio di azione della paletta, il finecorsa si disattiva e fa ripartire il motore.

**CONTROINDICAZIONI**
Gli indicatori di livello standard della ILT NON sono stati progettati per operare in condizioni o con materiali pericolosi pertanto quando la macchina deve assolvere a queste esigenze è d'obbligo informare il costruttore.

Si ritengono materiali pericolosi:
- esplosivi,
- tossici,
- infiammabili,
- nocivi e/o simili.

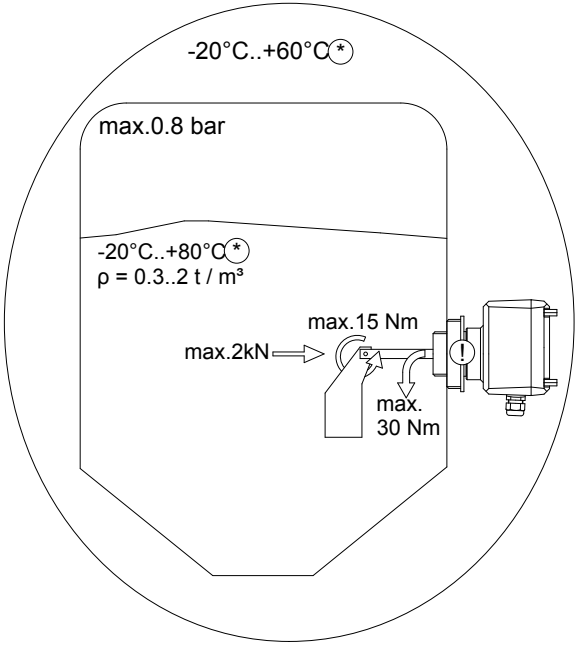


!

Maximum value of impact energy on connecting bush.

*Max. Schlagenenergie auf die Verbindungsbuchse.*

Valeur maximum de l'énergie d'impact sur la bague de connexion.

*Massimo valore dell'energia di impatto sulla boccola di connessione.*

1J

*

Different process and ambient temperatures available as an option.

*Verschiedene Prozess- und Umgebungstemperaturen als Option verfügbar.*

Différentes températures environnementales et de processus disponibles en option.

*Diverse temperatura ambiente e di processo disponibili come opzione.*

**Restrictions**

The bushing is suitable for withstanding sunlight and atmospheric agents. The mechanical features of the material are not guaranteed in case of acidic or basic environments.
These environmental conditions must be checked for each application.
The breaking load of the plastic material gets reduced over a period of time with the following proportions:
- approx. 50% in two years
- approx. 60% in five years

**Einschränkungen**

Die Buchse ist sonnenlicht- und witterungsbeständig. Die mechanischen Werkstoffeigenschaften werden bei saurer und Basischer umgebung nicht gewährleistet.
Die Umgebungsbedingungen müssen für jede Anwendung gesondert geprüft werden.
Die Bruchlast des Kunststoffs verringert sich im Laufe der Zeit im folgenden Verhält-nis:
- ca 50% in zwei Jahren
- ca 60% in fünf Jahren

**Restrictions**

La bague est adaptée pour résister à la lumière solaire et aux agents atmosphériques. Les caractéristiques mécaniques du matériau ne sont pas garanties en milieu acide et basique.
Ces conditions ambiantes doivent être vérifiées pour chaque application.
La charge de rupture de la matière plastique diminue dans le temps dans les proportions suivantes :
- 50% au bout de deux ans
- 60% au bout de cinq ans

**Restrizioni**

La boccola è adatta per resistere alla luce solare ed agenti atmosferici. Non sono garantite le caratteristiche meccaniche del materiale in caso di ambienti acidi e basici.
Tali condizioni ambientali devono essere verificate per ogni applicazione.
Il carico di rottura del materiale plastico si riduce nell'arco del tempo con le seguenti proporzioni:
- circa 50% in due anni
- circa 60% in cinque anni

| MECHANICAL DATA | |
|---|---|
| Enclosure | IP 65 |
| Process connection | Thread G1 1/4", G1 1/2", G2 1/2" |
| Material process-connection | Plastic and aluminium |
| Material vane shaft and measuring | Stainless steel |
| Paddle shaft clutch | Protection of the gearing from impacts on the measuring vane |
| Pickup delay | Approx. 1.3 sec. |
| Sensitivity | Adjustable via reset force of spring in three positions |
| Paddle speed | 1 rpm |

| ELECTRICAL DATA | |
|---|---|
| Supply voltage (!)* | AC: 24V / 48V / 115V / 230V 50/60Hz<br>DC: 12V / 24V (all voltage +/- 10%) |
| Power | 3W |
| Connection terminal | 1 x max. 1.5 mm2 |
| Signal output | Floating microswich max.250V (AC/DC), 2A. |
| Protection class | I |
| Over voltage category | II |

* Power supply voltage must never come directly from the mains but always obtained by a secondary transformation winding.

| MECHANISCHE DATEN | |
|---|---|
| Gehause | IP 65 |
| Prozessanschluss | Gewinde G1 1/4", G1 1/2", G2 1/2" |
| Material des Anschlussgewindes | Kunststoff und Aluminium |
| Material von Welle und Flugel | Rostfreier Stahl |
| Paddelklaue | Schutz der Messwelle vor Stoften auf das Messpaddel |
| Signalverzogerung | c.a 1.3 sec. |
| Empfindlichkeit | Einstellbar durch Ruckholfeder mit drei Stellungen |
| Umdrehungszahl Paddel | 1 Umdrehung/min. |

| ELEKTRISCHE DATEN | |
|---|---|
| Versorgungs-spannung (!)* | AC: 24V / 48V / 115V / 230V 50/60Hz<br>DC: 12V / 24V (alle Spannungen +/- 10%) |
| Leistung | 3W |
| Anschluftklemmen | 1 x max. 1.5 mm2 |
| Ausgangssignal | Potentialfreier mikroschalter max. 250V (AC/DC) 2A |
| Schutzart | I |
| Uberspannung Kategorie | II |

* Die Versorgungsspannung darf nie direkt aus der Netzleitung kommen, sondern muss immer über eine Trafospule geleitet werden.

| CARACTERISTIQUES MECANIQUES | |
|---|---|
| Enveloppe | IP 65 |
| Raccordement processus | Filetage G1 1/4", G1 1/2", G2 1/2" |
| Matiere du filetage de raccord | Plastique et aluminium |
| Matiere de l'arbre et de la palette | Acier inoxydable |
| Embrayage de l'arbre de la palette | Protection de l'engrenage contre les impacts sur la palette de mesure |
| Retard de signal | 1.3 s. environ. |
| Sensibilite | Reglable par le rappel du ressort dans trois positions |
| Vitesse de la palette | 1 tour/min |

| CARACTERISTIQUES ELECTRIQUES | |
|---|---|
| Tension d'alimentation (!) * | AC: 24V / 48V / 115V / 230V 50/60Hz<br>DC: 12V / 24V (toutes les tensions +/- 10%) |
| Energie | 3W |
| Borne | 1 x 1.5 $mm^2$ max. |
| Signal de sortie | Microrupteur flottant max. 250V (AC/DC), 2A |
| Classe de protection | I |
| Categorie de surtension | II |

* La tension d'alimentation ne doit jamais venir directement du réseau, mais toujours obtenue d'un transformateur secondaire.

| DATI MECCANICI | |
|---|---|
| Protezione | IP 65 |
| Connessioni standard | Filettato G1 1/4", G1 1/2", G2 1/2" |
| Materiale del mozzo di collegamento | Plastica e Alluminio |
| Materiale dell' albero e della paletta | Acciaio inossidabile |
| Frizione albero paletta | Protezione degli ingranaggi dagli impatti della paletta sensore |
| Ritardo di segnale | 1.3 sec. circa |
| Sensibilità | Regolabile mediante il tensionamento di una molla su 3 diverse posizioni |
| Velocità paletta | 1 giro/min |

| DATI ELETTRICI | |
|---|---|
| Tensione d'alimentazione (!)* | AC: 24V / 48V / 115V / 230V 50/60Hz<br>DC: 12V / 24V (tutte le tensioni +/- 10%) |
| Assorbimento | 3W |
| Morsetto d'attacco | 1 x 1.5 $mm^2$ max. |
| Segnale di uscita | Microinterruttore flottante max.250V (AC/DC), 2A |
| Classe di protezione | I |
| Categoria di sovratensione | II |

* La tensione di alimentazione non deve provenire direttamente dalla rete, ma dev'essere sempre ottenuta da un avvolgimento secondario.

TOREX®

**ILT**

- GENERAL DIAGRAM
- ALLGEMEINES SCHEMA
- SCHEMA GENERAL
- SCHEMA GENERALE

**TOR.ILT.--.C.A7.0917.4L 10**

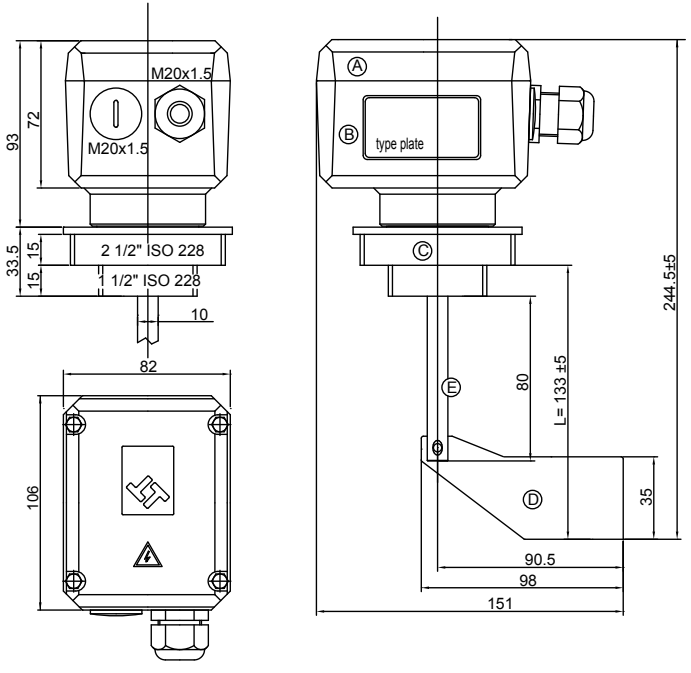


| Item pos. | Description - *Benennung* Designation - *Descrizione* | Quantity - *Stück* Quantitè - *Quantità* |
|---|---|---|
| **A** | Cover - *Deckel* Couvercle - *Coperchio* | 1 |
| **B** | Frame - *Gehäuse* Corps - *Corpo* | 1 |
| **C** | Shaft support *Anschlußgewinde mit Wellenführung* Support arbre *Supporto albero* | 1 |
| **D** | Paddle - *Drehfügel* Palette - *Paletta* | 1 |
| **E** | Shaft - *Welle* Arbre - *Albero* | 1 |

| ILT | A | 0 |
|---|---|---|

| | |
|---|---|
| **0** | 1 + ½“ - 2 + ½“ |
| **2** | 1 + ¼“ NPT cilindrical - *Zylindrisch* - cylindrique - *cilindrico* |

| | |
|---|---|
| **A** | 24/48 VAC - 50/60 Hz |
| **C** | 115/230 VAC - 50/60 Hz |
| **D** | 24 VDC |
| **E** | 12 VDC |
| **R** | 24 VDC - 22..230 VAC with rotation control - *mit Rotationskontrolle* - avec contrôle rotation - *con controllo rotazione* |

Level indicator - *Füllstandsmelder*
Indicateur de niveau - *Indicatore di livello*

| ACCESSORIES - *ZUBEHÖR* - ACCESSOIRES - *ACCESSORI* | |
|---|---|
| Sleeve 1+1/2" - *Manschette 1+1/2"*- Manchon 1+1/2"- *Manicotto 1+1/2"* | 4538020100 |
| Sleeve 2+1/2" - *Manschette 2+1/2"* - Manchon 2+1/2" - *Manicotto 2+1/2"* | 4538020150 |
| Double blade - *Doppelpaddel* - Palette double - *Paletta doppia* | 13N07051A (Pos.3) |
| Green lamp cover M20x1.5 - *Abdeckung der grünen Leuchte M20x1.5* - Couvercle lampe vert M20x1.5 - *Copri lampada verde M20x1.5* | 3848004510 (Pos.5) |
| Red lamp cover M20x1.5 - *Abdeckung der roten Leuchte M20x1.5* - Couvercle lampe rouge M20x1.5 - *Copri lampada verde M20x1.5* | 3848004530 (Pos.5) |
| 24 volt lamp - *Leuchte 24 V* - lampe 24 volt - *Lampada 24 volt* | 3848004050 (Pos.6) |
| 48 volt lamp - *Leuchte 48 V* - lampe 48 volt - *Lampada 48 volt* | 3848004055 (Pos.6) |
| 115 volt lamp - *Leuchte 115 V* - lampe 115 volt - *Lampada 115 volt* | 3848004100 (Pos.6) |
| 230 volt lamp - *Leuchte 230 V* - lampe 230 volt - *Lampada 230 volt* | 3848004150 (Pos.6) |
| 500 mm shaft extension (Carbon steel) - *Wellenzapfen 500 mm (unlegierter Stahl)* - 500 mm Rallonge pour arbre (acier au carbone) - *Prolunga per albero da 500 mm (Acciaio al carbonio)* | 3850001022 (Pos.2) |
| 1000 mm shaft extension (Carbon steel) - *Wellenzapfen 1000 mm (unlegierter Stahl)* - 1000 mm Rallonge pour arbre (acier au carbone) - *Prolunga per albero da 1000 mm (Acciaio al carbonio)* | 3850001038 (Pos.2) |
| 500 mm shaft extension (Stainless steel) - *Wellenzapfen 500 mm (Edelstahl)* - 500 mm Rallonge pour arbre (acier inoxydable) - *Prolunga per albero da 500 mm (Acciaio inossidabile)* | 3850001023 (Pos.2) |
| 1000 mm shaft extension (Stainless steel) - *Wellenzapfen 1000 mm (Edelstahl)* - 1000 mm Rallonge pour arbre (acier inoxydable) - *Prolunga per albero da 1000 mm (Acciaio inossidabile)* | 3850001027 (Pos.2) |
| Pin for shaft extensions - *Stift für Wellenzapfen* - Goupille pour rallonges arbre - *Perno per prolunghe albero* | 3850001039 (Pos.4) |
| Ø4x25 SS 304 DIN 94" - *Ø4x25 1.4301 Edelstahl DIN 94"* - Ø4x25 AISI 304 DIN 94" - *Ø4x25 AISI 304 DIN 94"* | 3024020275 (Pos.1) |

* assembly of the extensions is permitted only vertically and for a maximum of 3 m.
* *Es sind nur Verlängerungen bis zu max. 3 m zulässig, die vertikal zu montieren sind.*
* Le montage des prolonges est permis seulement en vertical et pour un maximum de 3 m.
* *il montaggio delle prolunghe è consentito solo in verticale e per un massimo di 3 m.*

When an extension set is purchased, make sure you include all components shown in the picture at page.13.
*Bei der Anschaffung eines Verlängerung-Bausatzes sicherstellen, dass alle aus der Abbildung von Seite 13 dargestellten Bauteile eingeschlossen sind.*
Lorsque vous achetez une extension, assurez-vous que tous les composants indiqués dans l'image à la page 13 ont été inclus.
*All'acquisto di una prolunga, assicuratevi di aver incluso tutte le componenti indicate nell'immagine alla pagina 13.*

Lamp - *Leuchte*
Lampe - *Lampada*

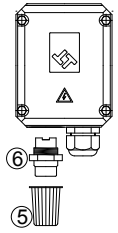


Multiple extension set - *Doppelpaddel mit Federung*
Rallonges en série - *Prolunghe in serie*

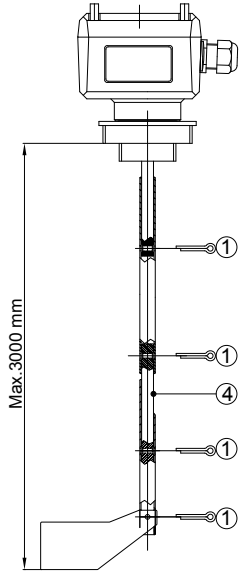


Extension - *Verlängerung*
Rallonge - *Prolunga*

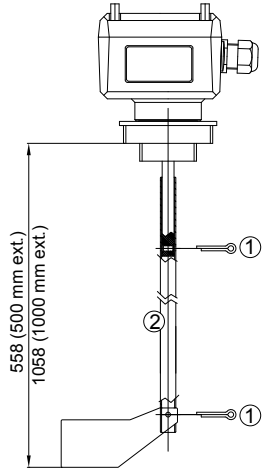


Double spring paddle - *Doppelpaddel mit Federung*
Double palette à ressort - *Pala doppia a molla*

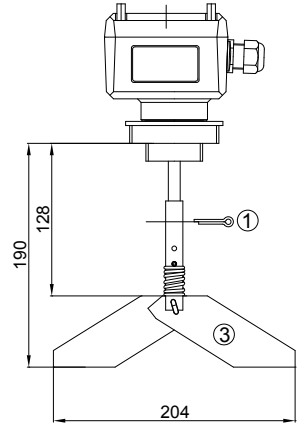

TOREX®

# ILT
- SAFETY NOCITES
- SICHERHEITSHINWEISE
- INDICATIONS DE SÉCURITÉ
- ISTRUZIONI DI SICUREZZA



**WARNING: high voltage!**

- Disconnect from all mains before opening the device.
- Start the device up only when the cover is closed.
- Before opening the lid take care that no dust deposits or whirlings are present.
- Do not allow any dust/water to enter the casing when the lid is open.
- Provide protection for relay contacts and output transistors to protect the device against spikes with inductive loads.
- Make sure that max. 8mm of the pigtails are bared (danger of contact with live parts).
- Make sure that the boots for protecting cable terminations are not longer than 8mm (danger of contact with live parts). Make sure that the screwed cable gland safely seals the cable and that it is tight (danger of water intrusion).
- A voltage-disconnecting switch must be provided near the device.
- In the case of inexpert handling or handling malpractice, the electric safety of the device cannot be guaranteed.
- In the case of a defect, the distribution voltage must automatically be cut off by a RCCB protective switch so as to protect the user of the device from indirect contact with dangerous electric tensions.
- Provide protection for relay contacts to protect the device against spikes, if inductive loads are connected.
- Provide a disconnect switch near the device.
- All field wirings must have insulation suitable for at least 250VAC. The temperature rating must be at least 90°C. (194°F).
- Protect the power of the device by means of a fuse.
- The device body has to be earthed to avoid static charges. This is particularly important in pneumatic conveying applications or with non-metallic containers.

**ACHTUNG: Hochspannung!**

- Vor der Öffnung des Geräts, dieses von allen Stromnetzen trennen.
- Das Gerät in Betrieb nehmen, nur wenn die Abdeckung geschlossen ist.
- Vor der Öffnung des Deckels sicherstellen, dass keine Staubablagerungen oder - aufwirbelungen vorhanden sind.
- Beim geöffneten Deckel darf kein Staub/Wasser innerhalb des Gehäuses gelangen.
- Zum Schutz vor Spannungsspitzen bei induktiven Lasten einen Schutz für Relaiskontakte / Ausgangstransistoren vorsehen.
- Darauf achten, daß die Anschlußlitzen max. 8 mm abisoliert werden (Gefahr der Berührung spannungs- führender Teile).
- Darauf achten, daß die Aderendhülsen der Anschlußkabel max. 8 mm lang sind (Gefahr der Berührung spannungsführender Teile).
- Darauf achten, daß die Kabelverschraubung das Kabel sicher dichtet u. fest angezogen ist (Wassereintritt).
- Es muß in der Nähe des Gerätes ein Schalter als Trennvorrichtung für die Anschlußspannung vorgesehen werden.
- Bei unsachgemäßem Gebrauch des Gerätes ist die elektr. Sicherheit nicht gewährleistet.
- Zum Schutz gegen indirektes Berühren gefährlicher Spannung muß im Fehlerfall ein automatisches Ausschalten (RCCB - Schutzschalter) der Versorgungsspannung gewährleistet sein.
- Für ein geeignetes System zum Schutz der Relaiskontakte sorgen, um die Vorrichtung vor Spannungsspitzen zu schützen, wenn induktive Lasten angelegt werden.
- Einen Trennschalter in der Nähe des Gerätes vorsehen.
- Alle Anschlusskabel müssen für wenigstens 250V AC Betriebsspannung isoliert sein. Die Temperaturbeständigkeit muss mindestens 90°C (194°F) betragen.
- Die Stromversorgung des Gerätes über eine Sicherung absichern.
- Um eine statische Aufladung zu vermeiden, muss das Gerätegehäuse geerdet sein. Dies ist insbesondere wichtig bei pneumatischer Materialförderung und bei nichtmetallischen Gehäusen.

**AVERTISSEMENT: haute tension!**

- Débranchez toutes alimentations électriques avant d'ouvrir le couvercle.
- Démarrer l'équipement seulement quand le couvercle est fermé.
- Avant d'ouvrir le couvercle assurez-vous qu'il n'y a pas de poussière ou des dépôts présents.
- Ne laissez pas la poussière/l'eau entrer dans le boîtier lorsque le couvercle est ouvert.
- Prévoir une protection pour les contacts de relais/les transistors de sortie afin de les protéger contre les pointes de tension en cas de charges inductives.
- Veiller à ce que les torons de raccordement soient dénudés à 8 mm au maximum (danger de contact avec des pièces sous tension).
- Veiller à ce que les cosses d'adhérence des câbles de connexion aient une longueur maximale de 8 mm (danger de contact avec des pièces sous tension).
- Veiller à ce que le presse étoupe ferme le câble hermétiquement et qu'il soit bien serré (arrivée d'eau).
- Prévoir un interrupteur à proximité de l'appareil.
- La garantie ne s'applique pas en cas de utilisation non conforme.
- En cas de défaut, l'alimentation doit être coupée automatiquement: (disjoncteur RCCB) pour protéger l'utilisateur contre toute tension dangereuse.
- Prévoir un dispositif approprié de protection des relais pour protéger l'équipement contre les pics de tension de courte durée, si les charges inductives sont reliées.
- Prévoir un interrupteur près du dispositif.
- Tous les câbles doivent être pourvus d'isolation appropriée d'au moins 250VAC. Le rapport de température doit être au moins 90°C (194°F).
- Protéger l'alimentation du dispositif avec un fusible.
- Le corps du dispositf doit être mis à la terre pour prévenir la formation de charges électrostatiques. Ceci est particulièrement important pour les applications de transport pneumatique ou dans le cas des conteneurs non-métalliques.

**ATTENZIONE: Tensione pericolosa!**

- Scollegare tutte le alimentazioni elettriche al dispositivo prima di aprire il coperchio.
- Avviare il dispositivo solamente con il coperchio del corpo chiuso.
- Prima di aprire il coperchio assicurarsi che non vi siano presenti depositi di polvere.
- Non far entrare la polvere/acqua all'interno della carcassa quando il coperchio viene aperto.
- Fornire una protezione per i contatti dei relè e i transistor d'uscita contro i picchi di tensione con cariche induttive.
- Assicurarsi che la superficie scoperta dei fili connettori non superi gli 8 mm (pericolo di contatto con parti sotto tensione).
- Assicurarsi che le guaine di protezione delle terminazioni dei cavi non superino gli 8 mm di lunghezza (pericolo di contatto con parti sotto tensione).
- Assicurarsi che il pressacavo stringa il cavo in modo sicuro, fissandolo adeguatamente (pericolo di infiltrazione d'acqua).
- Collocare un interruttore di tensione nei pressi del dispositivo.
- Non si garantisce la sicurezza elettrica del dispositivo in caso di impiego improprio o non conforme.
- In caso di guasto, l'alimentazione dovrà essere automaticamente interrotta mediante un interruttore di protezione RCCB al fine di proteggere l'utilizzatore dal contatto indiretto con tensioni elettriche pericolose.
- Predisporre un sistema idoneo di protezione dei contatti relé per proteggere il dispositivo da transitori di breve durata, se sono collegati i carichi induttivi.
- Prevedere un sezionatore vicino al dispositivo.
- Tutti i cavi devono disporre di isolamento idoneo ad almeno 250 VAC. IL rapporto di temperatura deve essere di almeno 90°C. (194°F).
- Proteggere l'alimentazione del dispositivo mediante fusibile.
- Il corpo del dispositivo deve essere collegato a terra per evitare la formazione di cariche elettrostatiche. Questo è particolarmente importante in applicazioni di trasporto pneumatico o con contenitori non metallici.

**ELECTRICAL CONNECTIONS**
The connection has to be carried out on the basis of the voltage indicated on the ID plate and according to the standards in force.
The wiring diagram is indicated on the electronic board (for AC devices) or inside the cover (for DC devices).

**ELEKTRISCHE ANSCHLÜSSE**
Der Anschluss muss aufgrund der auf dem Typenschild angegebenen Spannung und gemäß den geltenden Normen durchgeführt werden.
Das Schaltschema ist auf der elektronischen Karte (mit Wechselstrom betriebene Geräte) oder innerhalb der Abdeckung (mit Gleichstrom betriebene Geräte).

**RACCORDEMENTS ELECTRIQUES**
La connexion doit être effectuée conformément à la tension indiquée sur la plaque signalétique et conformément à la réglementation en vigueur. Le schéma de raccordement est montré sur la carte électronique (dispositifs alimentés en courant alternatif) ou à l'intérieur du couvercle (dispositifs alimentés en courant continu).

**COLLEGAMENTI ELETTRICI**
Il collegamento deve essere eseguito in accordo alla tensione riportata sulla targhetta identificativa ed in accordo alle normative vigenti.
Lo schema di connessione è riportato sulla scheda elettronica (dispositivi alimentati in corrente alternata) o sull'interno del coperchio (dispositivi in corrente continua).

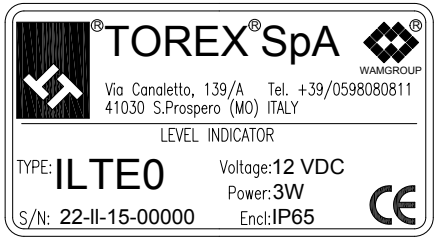


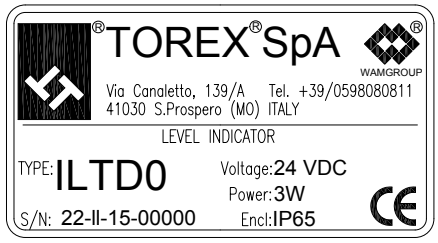


**DC version - *GS-Version* - Version CC - *Versione CC***

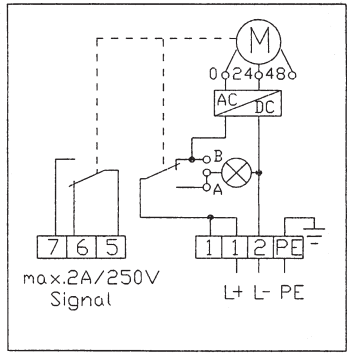

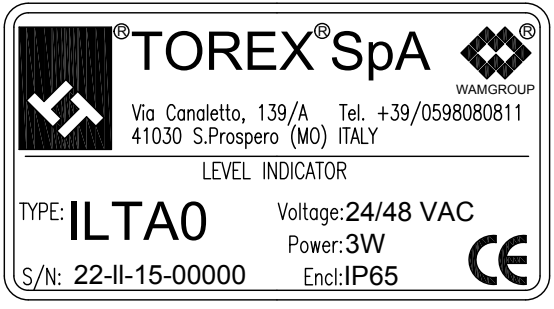


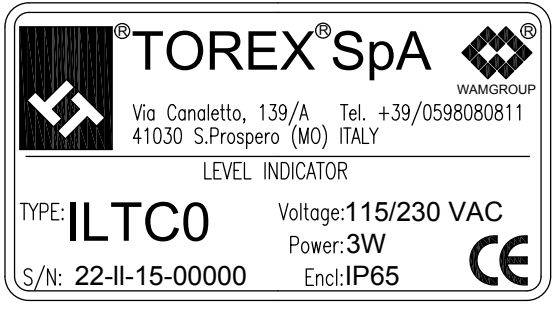


**AC version - *WS-Version* - Version CA - *Versione CA***

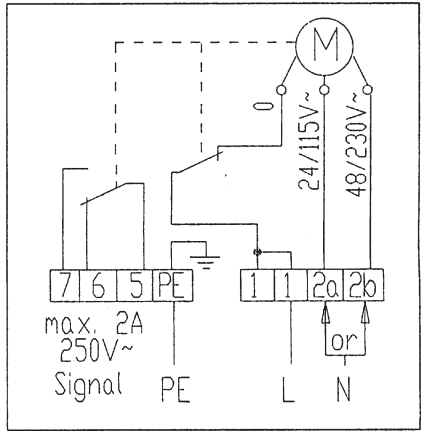

TOREX®

**ILT**
- **OPTIONS**
- **VARIANTEN**
- **OPTIONS**
- **OPZIONI**

# TOR.ILT.--.C.A7.0917.4L 17

Version with rotation control, universal voltage
*Version mit Rotationskontrolle, Universalspannung*
Version avec contrôle rotation, tension universelle
*Versione con controllo rotazione, tensione universale*

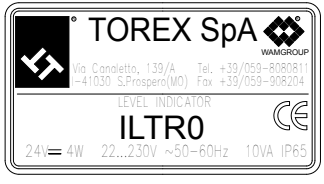


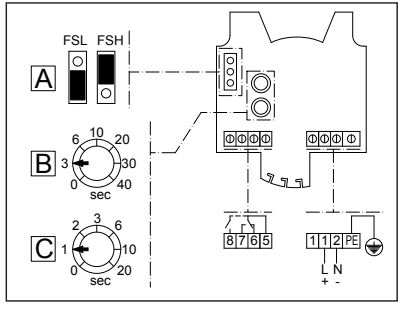


**Checking the rotation**
**Switching mode**
When the unit is switched on and works normally (paddle spinning freely or paddle stopped by material) contact 5-8 is Normally Closed.

In case of:
- missing power supply
- problems on connections
- unit defect

the contact 5-8 will open.

**Rotationsprüfung**
**Einschalt-Modus**
Wenn die Einheit eingeschaltet ist und normal funktioniert (das Paddel dreht sich unbehindert oder ist vom Material gestoppt), ist der Kontakt 5-8 ein Öffner.

Im Fall von:
- fehlender Spannungsversorgung,
- Problemen bei den Anschlüssen,
- Fehler der Einheit,

wird der Kontakt 5-8 öffnen.

**Contrôle de rotation**
**Mode de commutation**
Lorsque l'équipement est mis en marche et fonctionne normalement (avec la palette en rotation libre ou bloquée par le matériau) le contact 5-8 est Normal fermé.

En cas de :
- panne d'électricité
- problèmes de connexion
- appareil défectueux

le contact 5-8 s'ouvre.

**Controllo di rotazione**
**Modalità di commutazione**
Quando l'unità é avviata e funziona normalmente (con la paletta in rotazione libera o bloccata dal materiale) il contatto 5-8 é Normale Chiuso.

In caso di:
- blackout
- problemi di connessione
- unità difettosa

il contatto 5-8 si aprirà.

| | **Function; *Funktion*; Fonction; *Funzione*** | **Range; *Bereich;* Champ; *Campo*** | **Factory setting; *Werkseinstellung;* Réglages usine; *Impostazioni di fabbrica*** |
|---|---|---|---|
| A | Signal type; *Signaltyp;* Type de signal; *Tipo segnale* | FSL - FSH | FSL |
| B | Sensor covered -> free delay; *Verzögerung durch bedeckten Sensor -> frei;* Retard détecteur occupé -> libre; *Ritardo sensore occupato -> libero* | 0-60 s | 3s |
| C | Sensor free -> covered; *Verzögerung durch freien Sensor -> belegt;* Retard détecteur libre -> occupé; *Ritardo sensore libero -> occupato* | 0-20 s | 1s |
| 8-5 | Alarm output; *Alarmausgang;* Sortie alarme; *Uscita allarme* | max.250V - 2A | |
| 5-6-7 | Signal output; *Signalausgang;* Sortie signal; *Uscita segnale* | | |
| 1-2 | Power supply; *Speisung;* Alimentation; *Alimentazione* | 24V DC , max.4W | |
| | | 22..230V AC 50-60 Hz , max.10VA | |

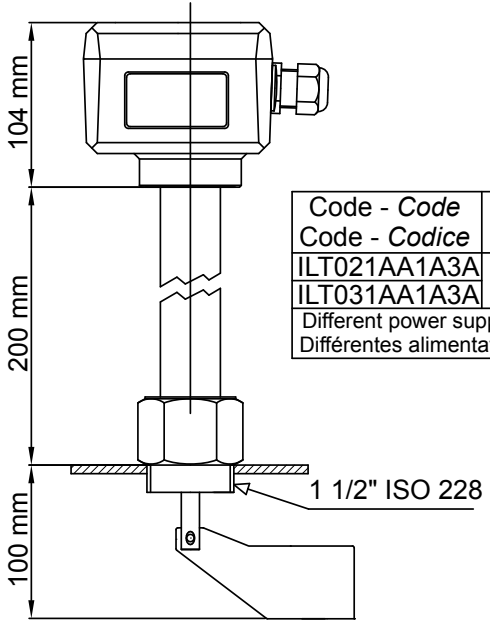


| Code - *Code*<br>Code - *Codice* | Power supply - *Speisung*<br>Alimentation - *Alimentazione* | Process temp. - *Prozesstemp.*<br>Temp. de processus - *Temp.Processo* |
|---|---|---|
| ILT021AA1A3A | 230 V AC 50-60 Hz | 150°C |
| ILT031AA1A3A | | 250°C |
| Different power supply available as an option; *Verschiedene Speisung als Option verfügbar;*<br>Différentes alimentations disponibles en option; *Alimentazioni diverse disponibili su richiesta* | | |

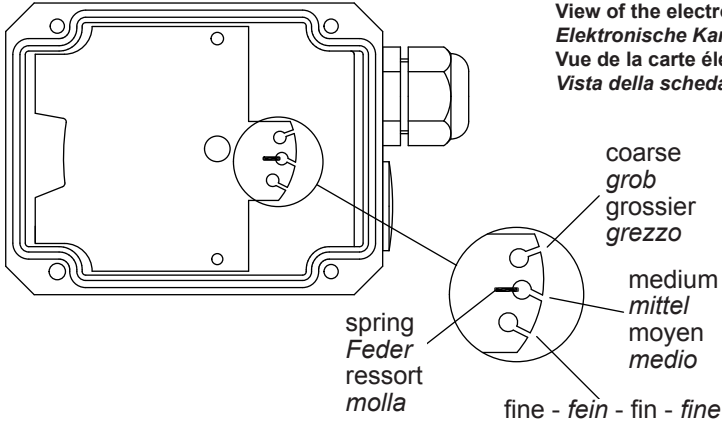


**View of the electronic board**
***Elektronische Karte - Ansicht***
**Vue de la carte électronique**
***Vista della scheda elettronica***

The spring is adjustable in 3 positions. It should be changed only if necessary.
Fine: for light material
Medium: suitable for nearly every material (factory setting)
Coarse: for very sticky material
The sping can be changed via a small plier

Die Feder ist in 3 Positionen einstellbar. Die Position sollte nur geändert werden, wenn dies erforderlich ist
Fein: für leichte Materialien
Mittel: für fast alle Materialien geeignet (Werkseinstellung)
Grob: für sehr klebriges/pappiges Material
Die Feder kann mit einer kleinen Zange gewechselt werden

Le ressort est réglable en 3 positions. Il ne doit être modifié que si cela est nécessaire
Fin : pour matériaux légers
Moyen : adapté pour presque tous les matériaux (réglage d'usine)
Grossier : pour matériaux très collants
Le ressort peut être modifié à l'aide de petites pinces

La molla è regolabile in 3 posizioni. Deve essere cambiata solo se necessario
Fine: per materiali leggeri
Medium: adatto per quasi ogni tipo di materiale (impostazione di fabbrica)
Grezzo: per il materiale molto appiccicoso
La posizione della molla può essere modificata tramite una piccola pinza.

**Switching logic**
***Logischer Umschaltplan***
**Schéma logique de commutation**
***Schema logico di commutazione***

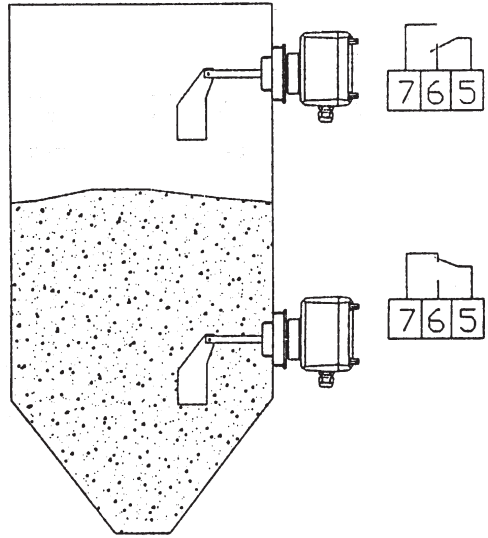

The unit must be mounted with the threaded fitting on the container. It is possible to use a suitable sealing material (teflon tape) to fix and seal the unit: fasten the plastic bush in manually, do not use any tool.
The cable gland must be downwards in order to prevent dust/water from entering the casing.
It is not possible to turn the housing after fastening.
All electrical connections must be made according to the connection diagram: make sure the cable is sealed tightly inside the cable gland.

*Die Einheit muss mit dem Gewindestück auf dem Behälter eingebaut werden. Es ist möglich, eine geeignete Dichtmasse zu verwenden (Band aus Teflon), um die Einheit zu befestigen oder abzudichten: die Buchse aus Kunststoff von Hand festschrauben, kein Werzkeug benutzen.*
*Um das Eintretten von Staub/Wasser innerhalb des Gehäuses zu vermeiden, muss die PG-Verschraubung nach unten zeigen. Es ist nicht möglich, das Gehäuse nach dem Festschrauben zu drehen.*
*Alle elektrischen Anschlüsse müssen gemäß dem Anschlussschema ausgeführt werden: sicherstellen, dass das Kabel innerhalb der PG-Verschraubung abgedichtet ist.*

L'unité doit être installée avec le raccord fileté sur le conteneur. Vous pouvez utiliser un joint d'étanchéité adéquat (téflon) pour la fixation et l'étanchéité de l'unité: serrer la douille en plastique manuellement, n'utilisez pas d'outils. La glande de câble doit être positionnée vers le bas pour empêcher l'entrée d'eau ou de la poussière. ce n'est pas possible de tourner la carcasse après fixation.Toutes les connexions électriques doivent être effectuées selon le schéma de câblage: assurez-vous que le câble est fixé à l'intérieur de la glande de câble.

*L'unità deve essere montata con il raccordo filettato sul contenitore. È possibile utilizzare un sigillante adatto (nastro teflon) per il fissaggio e la tenuta dell'unità: serrare manualmente la boccola di plastica, non utilizzare attrezzi.*
*Il pressacavo deve essere posizionato in basso per impedire l'entrata di acqua/polvere.*
*Non è possibile girare la carcassa dopo il fissaggio.*
*Tutte le connessioni elettriche devono essere eseguite secondo lo schema elettrico: assicurarsi che il cavo sia ben fissato all'interno del pressacavo.*

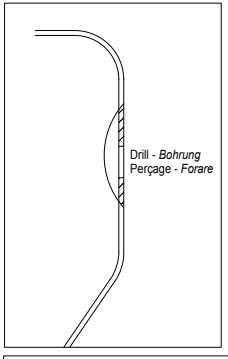


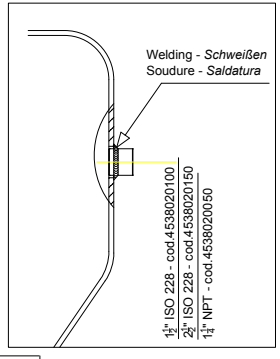


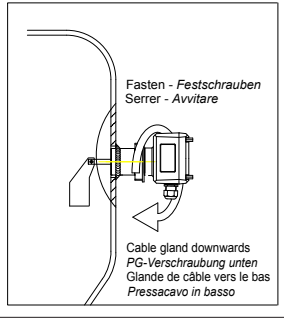

BEFORE CARRYNG OUT ANY TYPE OF WORK ON THE MACHINE STOP IT AND DISCONNECT IT FROM ALL ELECTRIC SUPPLY SOURCES

**N.B.: Failure to observe these instructions can cause problems and make the warranty null and void.**

VOR BEGINN DER WARTUNGSARBEITEN SICHERSTELLEN, DASS DIE MASCHINE UND DER HAUPTSCHALTER AUSGESCHALTET SIND.

**N.B.: Die Nichtbeachtung der oben genannten Vorschriften kann zu Betriebsstörungen und zum Verfall der auf die maschine gewährten Garantie führen.**

AVANT D' EFFECTUER UNE QUELCONQUE OPERATION SUR LA MACHINE, IL FAUT L' ARRETER ET LA DEBRANCHER DE TOUTES LES ALIMENTATIONS ELECTRIQUES.

**N.B.: L' inobservation de ces instructions peut provoquer des problémes et invalider la garantie sur les machines fournies.**

PRIMA DI ESEGUIRE QUALSIASI OPERAZIONE SULLA MACCHINA ARRESTARLA E SCOLLEGARE TUTTE LE ALIMENTAZIONI ELETTRICHE.

**N.B.: Il non attenersi strettamente alle suddette istruzioni può causare dei problemi ed invalidare la garanzia sulle macchine fornite.**

**BUILD REMOVAL - *ANBACKUNGEN ENTFERNEN* - ENLEVER LES INCRUSTATIONS - *RIMOZIONE DELLE INCROSTAZIONI***

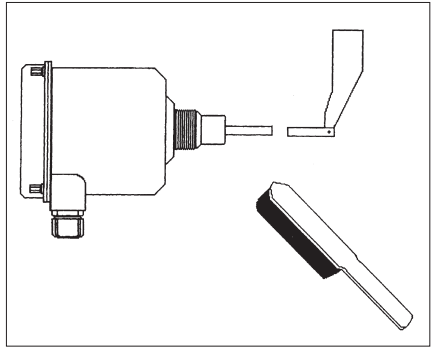

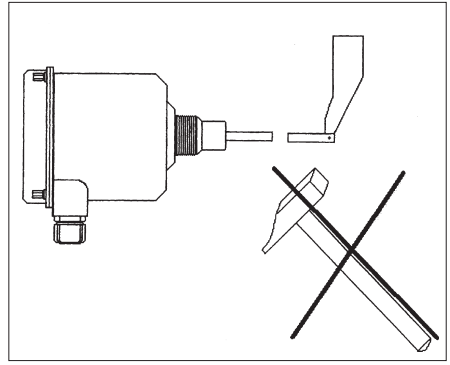

| To scrap: | Verschrottung: | En cas de mise à décharge: | In caso di rottamazione: |
|---|---|---|---|
| When the machine's working life ends, remove the plastic parts (seal rings) and take them to specialised disposal centres. The remaining components can be sent to metal salvage centres. | Nach Ausbau der Maschine, Teile aus Kunststoff (Wellendichtringe) ausbauen und bei der entsprechenden Sammelstelle abgeben. Alle restlichen Teile können als Alteisen verschrottet werden. | A la fin de la vie de la machine; démonter les pièces en matière plastique (anneaux d'étanchéité) et les destiner aux déchetteries spécialisées; les parties restantes sont destinées à la récupération des matériaux ferreux. | A fine vita della macchina, smontare le parti in materiale plastico (anelli di tenuta) e destinarle agli appositi centri di raccolta; le restanti parti sono da destinare al recupero dei materiali ferrosi. |
| When scrapping the machine, bear in mind the different kinds of material used to fabricated it. | Bei der Entsorgung der Maschine muß die unterschiedliche Beschaffenheit der Werkstoffe berücksichtigt werden, | En cas de mise à la décharge il faut tenir compte de la diversification et de la qualité des matériaux. | In caso di demolizione considerare la diversificazione della qualità dei materiali. |

***N.B***. *Rights reserved to modify technical specifications*
***N.B***. *Angaben ohne Gewähr. Änderungen können ohne Vorankündigung vorgenommen werden.*
***N.B***. *Toutes données portées dans le présent catalogue n'engagent pas le fabricant. Elles peuvent être modifiéès à tout moment.*
***N.B***. *Tutti i dati riportati nel presente catalogo non sono impegnativi e possono subire variazioni in qualsiasi momento.*

TOREX®

The manufacturer:

## TOREX S.p.A.

located in
Via Canaletto, 139/A - 41030 S.Prospero Modena - Italy

WAMGROUP

**under its own responsibility declares that:**

the level indicators type ILT

**complies with the requirements imposed by the following directives:**

**Directive 2014/30/EU** of the European Parliament and the Council of 26 February 2014 on the harmonisation of the laws of the Member States relating to electromagnetic compatibility;
Applied standards for evaluation of the unit:
EN 61326-1:2013 (Electrical equipment for measurement, control and laboratory use - EMC requirements - Part 1: General requirements)

**Directive 2014/35/EU** of the European Parliament and the Council of 26 February 2014 on the harmonisation of the laws of the Member States relating to the making available on the market of electrical equipment designed for use within certain voltage limits.
Applied standards for evaluation of the unit:
DIN EN 61010-1:2013 (Safety requirements for electrical equipment for measurement, control and laboratory use - Part.1: General requirements)
EN 60529:1997 (IEC 529) (Degrees of protection provided by enclosures - IP code)

**Directive 2011/65/EU RoHS** of the European Parliament and of the Council of 8 June 2011 on the restriction of the use of certain hazardous substances in electrical and electronic equipment.

The signing company is committed to provide, in response to a reasoned request by national authorities, relevant information on products covered by this declaration, without prejudice to the rights of intellectual property of the manufacturer. The information will be transmitted directly to the national authorities having requested.

Via Canaletto, 139/A - 41030 – S.Prospero Modena - Italy, July 1st 2016

The person authorized to provide the technical documentation:
Nino Ratti

The legal representative:
Nino Ratti

TOREX®

Der Hersteller:

**TOREX S.p.A.**

mit Sitz in

Via Canaletto, 139/A - 41030 S.Prospero Modena - Italien

WAMGROUP

**erklärt unter eigener Verantwortung wie folgt:**

die Füllstandsmelder Typ ILT

**konform ist mit den Anforderungen gemäß den folgenden Richtlinien:**

**Richtlinie 2014/30/EU** des Europäischen Parlaments und des Rates vom 26. Februar 2014 zur Harmonisierung der Rechtsvorschriften der Mitgliedstaaten über die elektromagnetische Verträglichkeit.
Angewendete Normen zur Einstufung des Gerätes:
EN 61326-1:2013 (Elektrische Betriebsmittel für Leittechnik und Laboreinsatz - EMV-Anforderungen - Teil 1: Allgemeine Anforderungen)

**Richtlinie 2014/35/EU** des Europäischen Parlaments und des Rates vom 26. Februar 2014 zur Harmonisierung der Rechtsvorschriften der Mitgliedstaaten über die Bereitstellung elektrischer Betriebsmittel zur Verwendung innerhalb bestimmter Spannungsgrenzen auf dem Markt.
Angewendete Normen zur Einstufung des Gerätes:
DIN EN 61010-1:2013 (Sicherheitsbestimmungen für elektrische Mess-, Steuer-, Regel- und Laborgeräte - Teil 1: Allgemeine Anforderungen)
EN 60529:1997 (IEC 529) (Schutzarten durch Gehäuse - IP kode)

**Richtlinie 2011/65/EU RoHS** des Europäischen Parlaments und des Rates vom 8. Juni 2011 über die Einschränkungen bei der Anwendung bestimmter gefährlicher Substanzen in elektrischen und elektronischen Geräten.

Das ausstellende Unternehmen ist verpflichtet, die technischen Unterlagen für diese Produkte auf begründetes Verlangen den Marktaufsichtsbehörden, unbeschadet der Rechte am geistigen Eigentum des Herstellers, zur Verfügung zu stellen. Die Unterlagen werden direkt an die anfordernde Behörde gesandt.

Via Canaletto, 139/A - 41030 – S.Prospero Modena - Italien, 01/07/2016

Bevollmächtigter für die Zusammenstellung der relevanten Technischen Unterlagen:
Nino Ratti

Für den Hersteller:
Nino Ratti

TOREX®

Le fabricant:

**TOREX S.p.A.**

ayant le siège social à

Via Canaletto, 139/A - 41030 S.Prospero Modena - Italie

WAMGROUP

**déclare sous sa propre responsabilité que**

les indicateurs de niveau type ILT

**est conforme aux exigences imposées par les directives suivantes:**

**Directive 2014/30/UE** du Parlement Européen et du Conseil du 26 février 2014 relative à l'harmonisation des législations des États membres concernant la compatibilité électromagnétique.
Le dispositif a été testé en appliquant les normes suivantes:
EN 61326-1:2013 (Des appareils électriques de mesurage, de régulation et de laboratoire - Exigences de compatibilité électromagnétique - Partie 1: Exigences générales)

**Directive 2014/35/UE** du Parlement Européen et du Conseil du 26 février 2014 relative à l'harmonisation des législations des États membres concernant la mise à disposition sur le marché du matériel électrique destiné à être employé dans certaines limites de tension.
Le dispositif a été testé en appliquant les normes suivantes:
DIN EN 61010-1:2013 (Règles de sécurité pour appareils électriques de mesurage, de régulation et de laboratoire - Partie 1: Exigences générales)
EN 60529:1997 (IEC 529) (Degrés de protection pour boîtiers - IP code)

**Directive 2011/65/UE RoHS** du Parlement Européen et du Conseil du 8 juin 2011 relative à la limitation de l'utilisation de certaines substances dangereuses dans les équipements électriques et électroniques.

La société signataire s'engage à fournir, en réponse à une demande motivée par les autorités nationales, toute information sur les produits couverts par cette déclaration, sans préjudice des droits de propriété intellectuelle du fabricant. Les informations seront transmises directement aux autorités nationales qui les ont demandées.

Via Canaletto, 139/A - 41030 – S.Prospero Modena - Italie, le 1er juillet 2016

La personne autorisée à fournir
la documentation technique:
Nino Ratti

Le représentant légal:
Nino Ratti

TOREX®

Il sottoscritto fabbricante:

**TOREX S.p.A.**

con sede legale in

Via Canaletto, 139/A - 41030 S.Prospero Modena - Italia

WAMGROUP

**dichiara sotto la propria responsabilità che:**

indicatori di livello tipo ILT

**risultano conformi alle esigenze imposte dalle seguenti Direttive:**

**Direttiva 2014/30/UE** del Parlamento Europeo e del Consiglio del 26 febbraio 2014 concernente l'armonizzazione delle legislazioni degli Stati membri relative alla compatibilità elettromagnetica;
Standards applicati per la valutazione dell'unità:
EN 61326-1:2013 (Apparecchi elettrici di misura, controllo e laboratorio - Prescrizioni di compatibilità elettromagnetica - Parte 1: Prescrizioni generali)

**Direttiva 2014/35/UE** del Parlamento Europeo e del Consiglio del 26 febbraio 2014 concernente l'armonizzazione delle legislazioni degli Stati membri relative alla messa a disposizione sul mercato del materiale elettrico destinato a essere adoperato entro taluni limiti di tensione.
Standards applicati per la valutazione dell'unità:
DIN EN 61010-1:2013 (Requisiti di sicurezza degli equipaggiamenti elettrici per la misurazione, il controllo e l'uso in laboratorio - Parte 1: Prescrizioni generali)
EN 60529:1997 (IEC 529) (Gradi di protezione degli involucri - codice IP)

**Direttiva 2011/65/EU RoHS** del Parlamento Europeo e del Consiglio dell'8 giugno 2011, sulla restrizione dell'uso di determinate sostanze pericolose nelle apparecchiature elettriche ed elettroniche.

L'azienda firmataria della presente si impegna a trasmettere, in risposta a una richiesta adeguatamente motivata delle autorità nazionali, informazioni pertinenti sui prodotti oggetto della presente dichiarazione, fatti salvi i diritti di proprietà intellettuale del fabbricante. Le informazioni verranno trasmesse direttamente all'autorità nazionale che le ha richieste.

Via Canaletto, 139/A - 41030 – S.Prospero Modena - Italia, 01/07/2016

La persona autorizzata
a costituire il fascicolo tecnico:
Nino Ratti

Il rappresentante legale:

Nino Ratti



TOREX®

**TOREX® S.p.A.**
Via Canaletto, 139/A
41030 S. Prospero (MO) - ITALY

☎ ++39 / 059 / 8080811
**fax** ++39 / 059 / 908204
**e-mail** torex@torex.it
**internet** www.torex.it

WAMGROUP®

LEVEL MONITORING

# Rotating Level Indicators

## ILT








WAMGROUP®

TOREX®

Rotating Level Indicators ILT

# PRECISE AND RELIABLE LEVEL INDICATORS FOR POWDERY AND GRANULAR MATERIALS

ILT Rotating Level indicators are designed for level monitoring of bins, hoppers or silos by means of the rotating paddle.

When the material level reaches the measuring paddle the rotation is blocked. The motor is freely suspended within the casing.

The resulting reaction torque activates a limit switch output signal that stops the motor.

As soon as the material level sinks below the paddle radius, a spring pulls the motor back into its operating position. The switch returns to the OFF position and the motor is switched on.

The top or side-mounted indicators are commonly used for materials having a minimum bulk density of 0.3 t/m$^3$ (0.01 lbs per cu in).

## Features

### MECHANICAL DATA

- Enclosure: IP 66
- Process connection: Thread G1 1/4", G1 1/2", G2 1/2"
- Material process connection: Plastic and aluminium
- Material shaft and measuring vane: stainless steel
- Friction clutch: Protection of the gearing from impact of the measuring vane
- Pickup delay: Approx. 1.3 sec
- Sensitivity: adjustable via reset force of spring in three positions
- Speed of measuring vane: 1 r.p.m.

### ELECTRICAL DATA

- Mains voltage: 24/48V 50-60Hz or 115V / 230V, 50-60Hz or 24V DC (all voltages +10% / -15%)
- Installed load: 3 VA (3W)
- Signal output: Floating micro-switch
- Signal output: Floating micro-switch ( AC max. 250V, 2 A, 500W - DC max. 300V, 2A, 60W )
- Protection class: I

### OPERATING CONDITIONS

- Container excess pressure: max. 0.8 bar
- Temperature inside vessel: -4F~176F (-4F / 482F with high temperature version)
- Ambient temperature inside the casing: -4F~158F

## Overall Dimensions

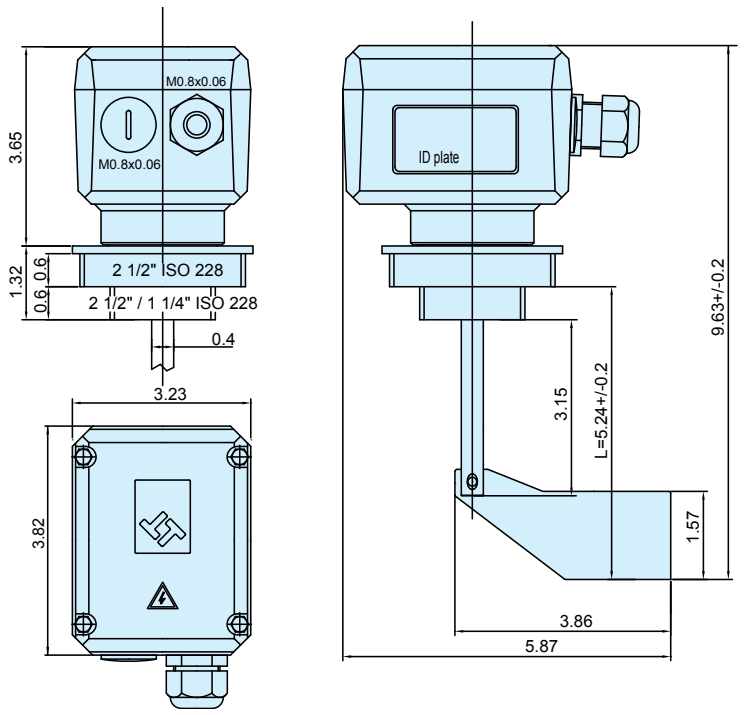


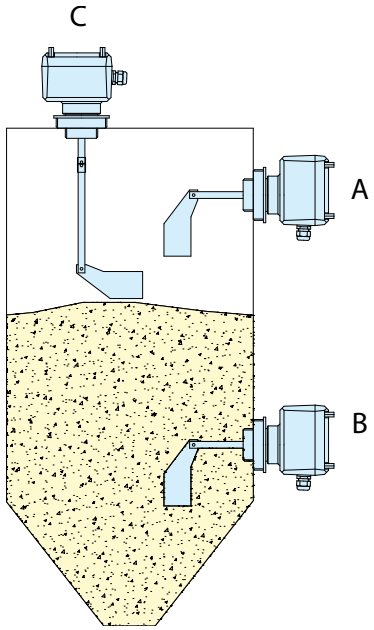


A = Maximum horizontal installation level
B = Minimum installation level
C = Maximum vertical installation level

## Benefits

- ✓ ATEX certified version available for use in hazardous classified areas;
- ✓ High or low process temperature options;
- ✓ Various process connections (flange and thread);
- ✓ Easy installation;
- ✓ Uninfluenced by material properties such as conductivity, dust, dielectricity;
- ✓ Extremely reliable level measuring of bulk solids;
- ✓ Different measuring paddle types, suitable for all densities.




### 1 ROTATING PADDLE

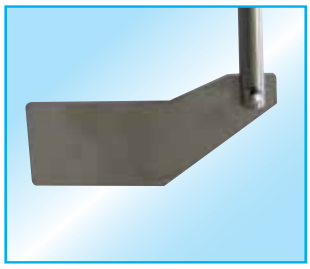

Made from 304 Stainless Steel

### 2 CASING



Die-cast Aluminium
Protection IP66
Electronic Panel Included

### 3 THREADED FITTING

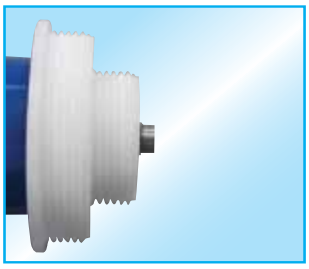

**Standard**
Thread: 1" ½ ISO 228
Thread: 2" ½ ISO 228
Material: Delrin

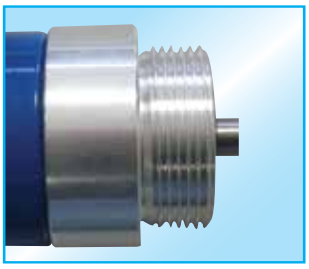

**ATEX Ex II 1/2 D IP66 T 100°C**
Thread: 1" ½ ISO 228
Material: Aluminum

## Accessories

### Threaded bushes

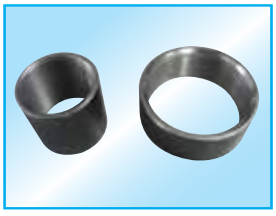

Made from carbon steel, to be welded on to the silo/hopper wall to facilitate installation of the ILT
Thread: 1" ½ ISO 228
Thread: 2" ½ ISO 228

### Double paddle for light materials

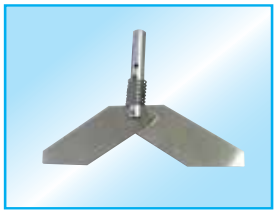

### External light

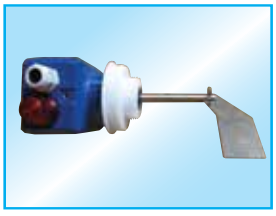

### Rotation control



ILTRO is the code for rotation control multi-voltage version of ILT indicators

### Shaft extension



Shaft extensions are available in zinc-coated carbon steel or 304 stainless steel

- Available 19.69 inch and 39.37 inch pieces
- Modular extension-type
- Maximum extension length allowed: 118.1 inch
- To be used in vertical position only

## Application






ILT Rotating Level Indicators are fitted on the walls of a bin, silo or hopper, depending on the type of detection they are installed for.



WAMGROUP®

WAM® FLITECH® MAP® EXTRAC® SPECO® TOREX® OLI® RONCUZZI® TECNO CM

January 2014 Rights reserved to modify technical specifications.

TOREX®

**WAM Inc.**
Georgia Division
75 Boulderbrook Circle
Lawrenceville, GA 30045
Tel.: (770) 339 - 6767
Fax: (770) 339 - 4727
wamgeorgia@waminc.com
www.extrac-usa.com
www.waminc.com

**WAM Inc.**
Texas Division
1300 Triad Blvd.
Fort Worth, TX 76131
Tel.: (817) 232 - 2678
Fax: (817) 232 - 2676
wamtexas@waminc.com
www.extrac-usa.com
www.waminc.com

UNI EN ISO 9001 Certified Company

www.wamgroup.com

Intelligent Drivesystems

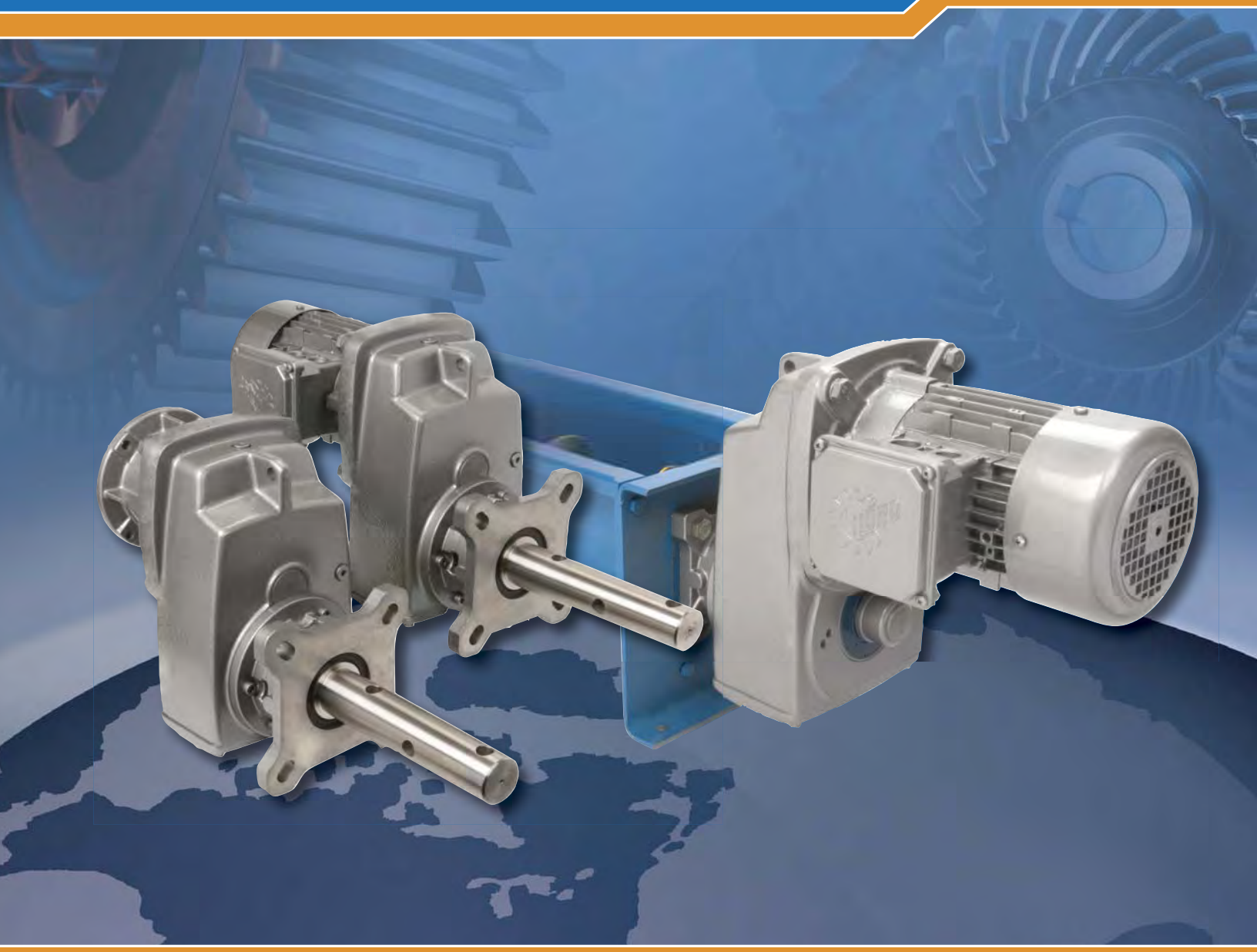

# SCREW CONVEYOR GEARMOTORS & SPEED REDUCERS

## Durable & Premium Efficient Gear Units

G1129

NORD DRIVESYSTEMS

# Screw Conveyor Package
# Innovative Design



## SCP - PRODUCT FEATURES

**OPTIMIZED SEALING SYSTEM**

- Dual Viton lip seals
- Grease impregnated packing seal
- Dual gap seals (excludes particles) – 0.03" gap
- Material evacuation ports
- Shaft material ditch
- Quadrilip™ sealing

**MOUNTING**

- Standard CEMA mounting
- Versatile flange – multiple bolt patterns
- 3-Hole tapered CEMA drive shaft
  - Easy mounting
  - Easy removal (less fretting – due to less material contact)
- Reduced bearing loads – tapered shaft allows for screw pipe misalignment
- Quick external removal feature

**FLANGE**

- Standard CEMA mounting
- High strength class 35 gray cast iron
- Versatile flange – multiple bolt patterns

## HIGH EFFICIENCY

The NORD SCP design is extremely effective due to the direct coupled gearmotor or NEMA C-face input design. Belted input systems have significantly lower total drive performance. You can further increase the overall efficiency by applying the NORD "H" line of energy efficient motors.

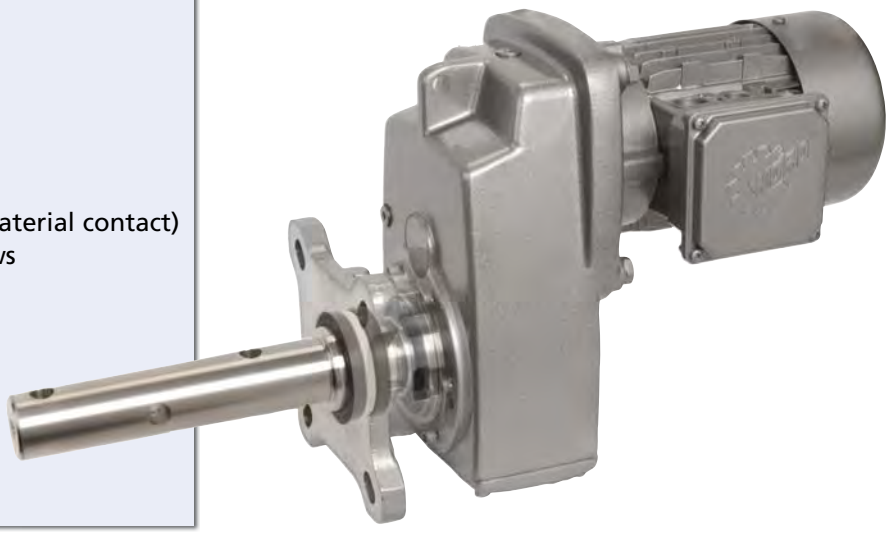

# TABLE OF CONTENTS


**Introduction** ..... 2

**Selections** ..... 29

Gearmotors Ratings Tables ..... 31

Combinations Ratings Tables ..... 65

**Dimensions** ..... 75

SK 1282 SCP ..... 76

SK 2282 SCP ..... 82

SK 3282 SCP ..... 88

SK 4282 SCP ..... 96

SK 5282 SCP ..... 102

SK 6282 SCP ..... 110

Other ..... 114

**Motors** ..... 119

Engineering Info ..... 123

Performance & Ordering Data ..... 142

Options Selections & Ratings ..... 128

**International Contacts** ..... 155

**Terms & Conditions** ..... 167


DRIVESYSTEMS

UNICASE™

www.nord.com





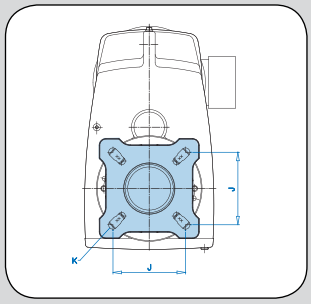





## Company Overview

Since 1965, NORD Gear has grown to global proportions on the strength of product performance, superior customer service, and intelligent solutions to a never ending variety of industrial challenges.

All mechanical and electrical drive components are available from NORD Gear. Our products cover the full range of drive equipment: helical in-line, Clincher™ shaft-mount, helical-bevel, and helical-worm gearboxes, motors and AC drives from 1/6 hp to 250 hp, with torques from 90 lb-in to 900,000 lb-in.

But NORD Gear does far more than manufacture the world's finest drive components. We provide our customers with optimum drive configurations for their specific purposes. NORD provides each and every one of them with truly complete and efficient systems at a price/quality ratio unmatched in today's fast-changing markets.

NORD Gear makes its wide range of products easily available through a global network that provides all customers with prompt delivery and expert support services to consistently exceed customer expectations. We are firmly committed to being totally responsive to the ideas and specifications of every customer, anywhere in the world.

## High-Performance Motors & Brakemotors

NORD motors are designed to run cool for longer service life. Low rotor inertia and high starting torque allow peak performance in the most difficult applications for inverter and vector duty per NEMA MG 1-2006 Section 31.4.4.2 voltage spikes. Our motors are internationally accepted, conforming to North American NEMA MG 1 and international IEC electrical specifications. High performance options include brakes, encoders, and forced cooling fans.



## Short, On-Time Delivery

As a NORD customer, you can rest assured that your order will be delivered on time. Because NORD has both decentralized assembly and manufacturing operations paired with a globally linked network, we have the ability to offer our customers:

- Fast, reliable responses
- Greater product versatility
- Shorter lead times
- Timely shipping
- Rapid delivery

## Quality

Quality is assured at NORD's assembly and manufacturing facilities, based on ISO 9000 standards — from careful inspection of incoming materials to closely monitored machining operations, including gear cutting, turning, hardening & grinding as well as finishing & assembly.

## NORD 911

Trouble? Just call 715-NORD-911 (in Canada, 905-796-3606). Emergency service is available 24 hours a day, 7 days a week. We'll answer your call, ship the parts, or build a unit and have it shipped directly to you to provide what you need, when you need it.



## Manufacturing

NORD continually invests in research, manufacturing and automation technology. This is to ensure the highest possible quality at affordable prices. NORD invests heavily in our North American facilities as well as our factories around the world. Recent examples include expanding our Waunakee factory and adding numerous new large gear unit assembly cells. In our Glinde, Germany gear factory we added a state-of-the-art multi-chamber vacuum carburization system.




## Global Availability

From Shanghai to Charlotte, and everywhere in-between, NORD reaches customers around the world. Deliveries, service, and product support are close at hand, regardless of your location.

## Worldwide Standards

NORD products are designed and manufactured based on the latest North American and global standards.

## Increased North American Presence

NORD covers North America with over 30 district offices and over 500 distributor branches. NORD operates manufacturing and assembly facilities in Waunakee, WI, Charlotte, NC, Corona, CA, Brampton, ON, and Monterrey, Mexico, resulting in an ever-increasing capacity in North America and giving our customers the shortest lead times in the industry.

## Energy Efficiency

Lowering your operating costs is one of our greatest goals! NORD research and development focuses on energy efficiency, with gearboxes, motors, and frequency inverters designed for lower energy consumption. Our fully diverse line of in-line or right-angle units and motors has been developed to suit your needs.

## Modular Design

NORD's modular design philosophy provides you with a competitive edge by allowing you to configure drive systems to exactly fit your applications.

More than 20,000,000 combinations of totally unique gearmotors and speed reducers are possible – assembled in-line or right-angle, mounted by foot or flange, featuring solid or hollow shafts with either metric or inch shaft extensions – to give you complete freedom to specify a drive solution that's perfect for you.

### Benefits

- More output speeds
- More mounting arrangements/Greater flexibility
- Fewer gear stages/Lower cost
- Metric and inch products

NORD engineers stand ready to assist you with your custom applications. Most standard drives can be modified to your purposes, and custom designs can be developed for special applications.

# Key Features



## Standard NORD features

### Modular Design

All NORD products including the SCP units are modular in design and provide extraordinary flexibility.The SCP unit may also be provided with a number of different input components including:

- Integral motor (Gearmotor)
- NEMA C-face motor adapter
- IEC B5 motor adapter
- Solid input shaft
- Custom motor adapter
  (servo, hydraulic motors, and more)

### Large Ratio Per Gear Stage

NORD gear cutting technology allows for the production of gear sets with a higher maximum ratio per stage than many other speed reducer manufacturers. NORD commonly produces gear sets with a maximum ratio of between 9:1 and 10:1 per stage. This allows for double reduction gear units with a maximum ratio between 72:1 and 100:1. Most speed reducer manufacturer's can only produce single-stage reduction of between 5:1 and 6:1. This means a two-stage reducer with a maximum reduction of about 25:1 to 35:1. NORD can often provide a two-stage reducer when most companies must provide three-stage units. The same situation applies to three, four and higher gear stages. This allows NORD to provide superior value and performance in many conditions.

**Benefits**

- Better value
- Higher efficiency
- Quieter operation
- Lower weight
- Longer life

### AUTOVENT™

The AUTOVENT™ prevents bearing damage by blocking entry of foreign material (water, dust, corrosives, etc.) through the breather. A ball and spring check valve opens at approximately 2 psi during operation and closes tightly when the gearbox cools, producing a slightly negative pressure that ensures the valve seals tight. This keeps contaminants out of the oil to maintain proper oil cleanliness reducing contamination, foaming and oxidation. The AUTOVENT™ is perfect for humid conditions, washdown applications, and dusty environments.

**Benefits**

- Cleaner gearbox oil
- Extended lubrication life
- Longer-lasting seals, gears, and bearings

### High-Quality Gearing (Infinite Life Design)

NORD continually invests in state-of-the-art gear production equipment and in gear research. This allows us to produce exceptionally high quality gears.

**Benefits**

- Designed & manufactured up to AGMA CLASS 13
- Infinite design life
- Case-hardened steel
- Exceptional hardness: 58 Rc minimum
- High-speed gears are ground;
  low speed gears are skive hobbed
- 275% momentary overload capacity
- Low noise
- Low maintenance

### Factory Oil Filled

All SCP units are filled at the factory with the proper quantity and type of lubrication. Oil fill before shipping prevents damage from dry start-ups.

**Benefits**

- No need for filling on-site
- Ensures proper oil grade and fill level

### NORD High-Performance Motors & Options

NORD motors are designed to run cool for producing longer service life. Low rotor inertia and high starting torque allow peak performance in the most difficult applications for inverter and vector duty per NEMA MG 1-2006 Section 31.4.4.2 voltage spikes. Our motors are internationally accepted, conforming to North American NEMA MG 1 and international IEC electrical specifications. High performance options include brakes, encoders, and forced cooling fans.



## Screw Conveyor Package Overview

NORD has developed a unique class of high performance right-angle speed reducers. The SCP are available as gearmotors and speed reducers with many mounting options. The SCP units provide high performance right-angle helical-bevel gear units at the cost effectiveness of a single worm system.

**SCP Clincher™ Gear Units** (76 - 113)

| | |
|---|---|
| SK 1282 SCP | SK 1382 SCP |
| SK 2282 SCP | SK 2382 SCP |
| SK 3282 SCP | SK 3382 SCP |
| SK 4282 SCP | SK 4382 SCP |
| SK 5282 SCP | SK 5382 SCP |
| SK 6282 SCP | SK 6382 SCP |

**SCP Bevel Gear Units** (118)

| | |
|---|---|
| SK 9012.1 SCP | SK 9013.1 SCP |
| SK 9022.1 SCP | SK 9023.1 SCP |
| SK 9032.1 SCP | SK 9033.1 SCP |
| SK 9042.1 SCP | SK 9043.1 SCP |
| SK 9052.1 SCP | SK 9053.1 SCP |

Please note that when ordering an SCP unit with a bevel gearbox that the lead times are slightly longer due to the extra manufacturing involved on this specialty product.

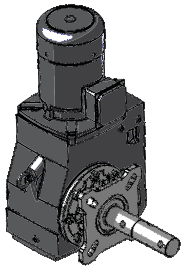

## Customer Benefits

Simplicity - The NORD SCP screw conveyor package eliminates the need for costly separate v-belt drives by directly coupling their motors to the C-face reducer. More space savings is also possible using an integral gearmotor with the SCP package.

- Reduced cost
- Reduced installation time
- No belt maintenance or guarding
- Space savings
- Higher efficiency
- More transferred torque

## UNICASE™ Design

NORD heavy-duty, one-piece housings are precisely machined to meticulous standards. Internal reinforcements further increase strength and rigidity. All bearings and seal seats are contained within the casting, eliminating splits or bolt-on carriers that can weaken the housing and allow oil leakage. Bores and mounting faces are machined in one step, producing extrememly precise tolerances – thus ensuring accurate positioning of gear teeth, bearings and seals, and longer life for all components.

## High-Quality Gearing (Infinite Life Design)

NORD continually invests in state-of-the-art gear production equipment and in gear research. This allows us to produce exceptionally high quality gears.

### Benefits

- Designed and manufactured up to AGMA CLASS 13
- Infinite design life
- Case-hardened steel
- Exceptional hardness: 58 Rc minimum
- High-speed gears are ground; low speed gears are skive hobbed
- 275% momentary overload capacity
- Low noise
- Low maintenance

## QUADRILIP™ Sealing

The QUADRILIP™ system has four components for sealing lubricant inside, and contaminants outside, the speed reducer. The system includes a double lip seal, single lip seal and greasepack barrier (grease lip). Furthermore, the shaft seal area is super-finished.

### Benefits

- Superior protection against leaks
- Long seal life
- Improved protection against contaminants
- Improved speed reducer life
- Reduced maintenance requirements & costs

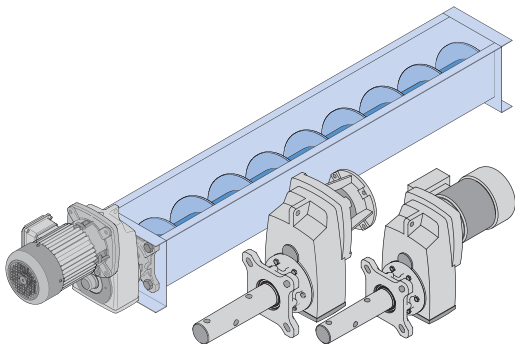

# Key Features



## SCP - Product Features

NORD offers a unique class of high performance screw conveyor drives. The NORD SCP line is based upon the premium efficient CLINCHER™ gear units. The SCP series of screw conveyor drives offers superior durability in the most severe load and service conditions. The SCP system may also be provided as right-angle helical-bevel gear drives.



### Optimized Sealing System

- **❶ Dual Fluropolymer lip seals**
  The SCP mounting flanges contains dual Fluropolymer seals to provide improved sealing. The Fluropolymer seals provide a high degree of chemical and mechanical protection.
- **❷ Dual gap seals (excludes particles) – 0.03" gap**
  The SCP mounting flange and CEMA drive shaft are designed to provide a mechanical sealing device referred to as a gap seal. The flange owns a clearance of 0.03" at two locations on the shaft. This forms a mechanical block to large particles and prevents their entrance into the gear unit.
- **❸ Shaft material ditch**
  Should any material penetrate the fluoropolymer seals, gap seals and greased packing felt seals, the shaft material ditch provides a material gravity break to divert anything that is working its way down the shaft towards the inside of the gearbox.
- **❹ Greased packing felt seal**
  Provides protection for small objects. If materials work their way past the first fluropolymer lip seal and gap seal it will be trapped within the grease felt sealing ring.
- **❺ Material evacuation ports**
  Provides an exit for any foreign material that infiltrates the external sealing system. Also provides a way to clean out the sealing system.
- **❻ QUADRILIP™ sealing**
  Please see page 5 for details

### Mounting

- **Standard CEMA mounting**
  The NORD SCP drives adhere to the CEMA standard mounting dimensions.
- **❼ 3-Hole tapered CEMA drive shaft**
  The NORD SCP CEMA drive shaft is a standard three hole shaft. This allows for mounting to either 2-bolt or 3-bolt connections. The drive shaft is tapered for easier mounting and removal. The taper also reduces shaft loading due to misalignments.
- **Easy mounting**
  The NORD SCP drive is easily mounted into the screw pipe. The taper shaft acts as a guide in assembling the drive shaft into the screw pipe.
- **Easy Removal** -
  There is less fretting due to less material contact.
- **Reduced bearing loads**
  Taper allows for screw pipe misalignment.
- **Quick external removal feature** -
  The SCP drive can be easily removed from the screw pipe in two ways. First is the conventional removal of the complete drive and shaft. Unbolt the mounting flange from the trough and remove the cross bolts from the pipe and shaft. After this is done the drive may be removed. This requires access to inside of the screw pipe which is not always possible.

  The Second way to remove the drive without screw pipe access by unbolting the SCP mounting flange from the drive and removing the drive, leaving the flange and drive shaft attached to the screw pipe.

### Flange

- **Standard CEMA mounting**
  The NORD SCP drives adhere to the CEMA standard mounting dimensions.
- **High strength class 35 gray cast iron**
  The SCP drives and screw conveyor flanges are made form high strength class 35 gray cast iron with a minimum tensile strength of 35,000psi.
- **❽ Versatile flange – multiple bolt patterns**
  The SCP mounting flanges often accommodate more that one CEMA bolt pattern. This allows one drive to be used on different screw sizes simply by switching out the drive shaft.

### High Efficiency

The NORD SCP design is extremely efficient due to the direct coupled gearmotor or NEMA C-face input design. Belted input systems have scientifically lower total drive efficiency. Efficiency may be further increased by using the NORD "H" line of energy efficient motors.

### Options

- Grease purge-able seal (PC) - see page 16
- Stainless steel CEMA drive shaft (SM5) - See page 16

## Screw Conveyor Key Features and Details

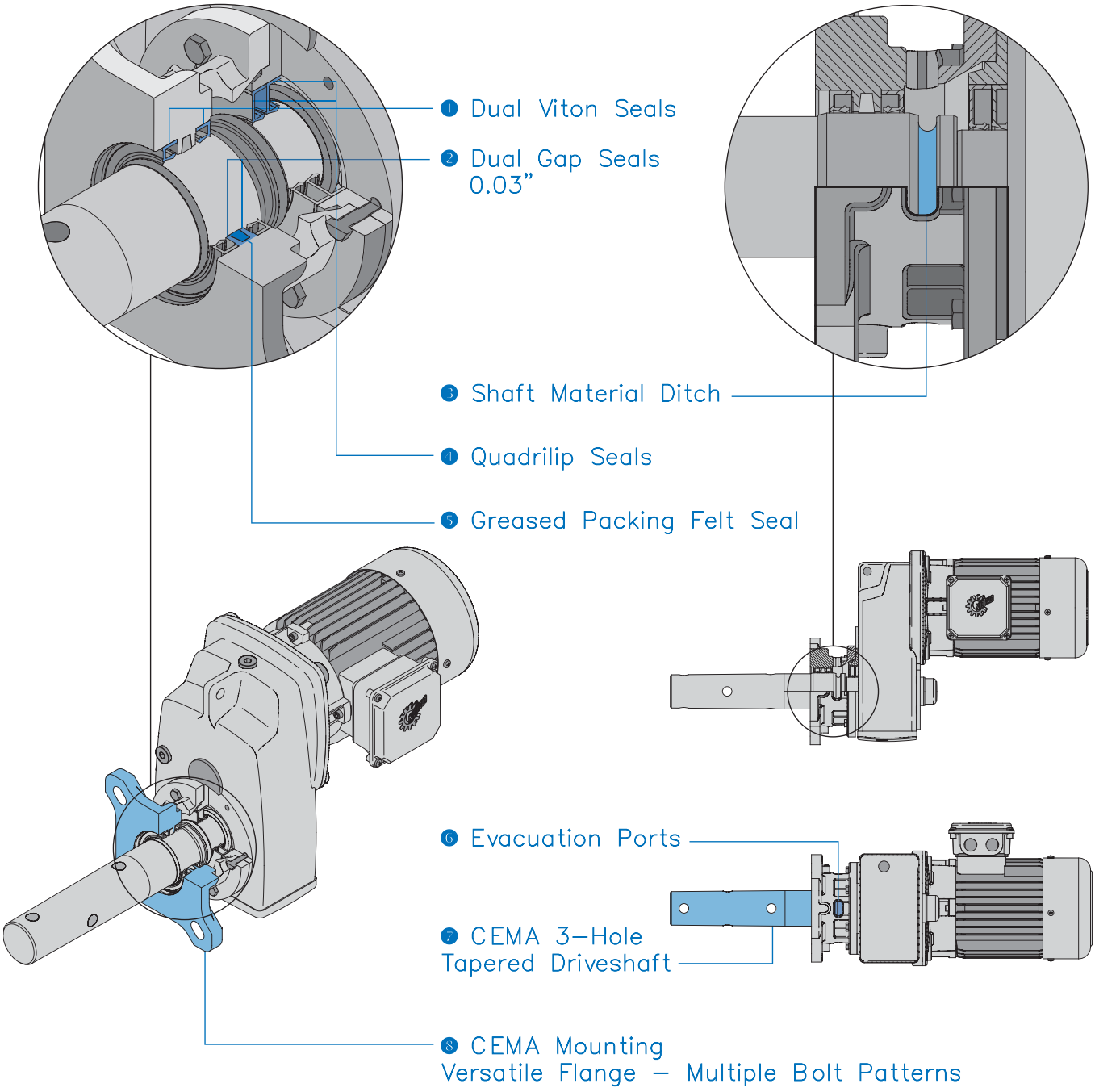

# Capacity , Ratings & Combinations





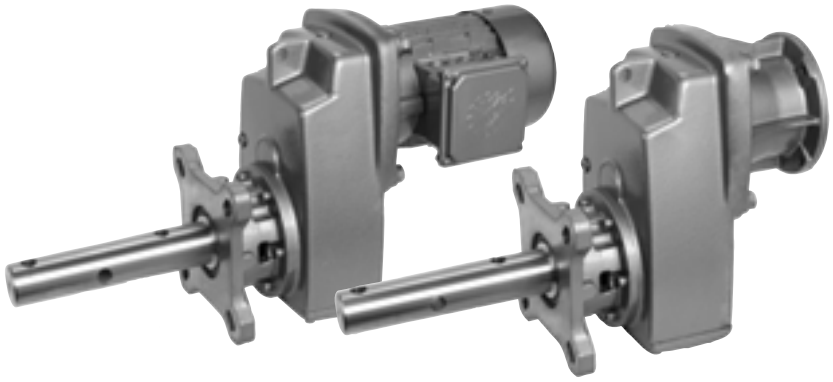

**Capacity & Ratings Overview**

| Model Type | Max Torque [lb-in] | Ratio Range [x:1] | Speed's [rpm] | Max Thrust Load Std Brgs [lb] | Max Thrust Load HD Brgs " VL " [lb] | Gear Stages | Efficiency [%] |
|---|---|---|---|---|---|---|---|
| **SK 1282 SCP** | 2620 | 4.79-109.5 | 365-16 | 1609 | 1609 | 2 | 97 |
| **SK 1382 SCP** | 2425 | 87.94-624.45 | 20-2.8 | 1550 | 1609 | 3 | 95 |
| **SK 2282 SCP** | 4611 | 4.51-127.51 | 388-14 | 2700 | 3375 | 2 | 97 |
| **SK 2382 SCP** | 4894 | 82.22-763.41 | 21-2.3 | 2700 | 3375 | 3 | 95 |
| **SK 3282 SCP** | 8363 | 4.48-112.23 | 391-16 | 3263 | 4500 | 2 | 97 |
| **SK 3382 SCP** | 9195 | 89.60-1022.42 | 20-1.7 | 3263 | 4500 | 3 | 95 |
| **SK 4282 SCP** | 16089 | 4.7-155.4 | 372-11 | 4950 | 6750 | 2 | 97 |
| **SK 4382 SCP** | 18381 | 86.83-1585.08 | 20-1.1 | 4950 | 6750 | 3 | 95 |
| **SK 5282 SCP** | 28630 | 4.32-134.03 | 405-13 | 7200 | 9000 | 2 | 97 |
| **SK 5382 SCP** | 28320 | 82.72-1367.08 | 21-1.3 | 7200 | 9000 | 3 | 95 |
| **SK 6282 SCP** | 40135 | 4.39-80.33 | 399-22 | 13219 | 13500 | 2 | 97 |
| **SK 6382 SCP** | 53100 | 24.42-551.58 | 72-3.2 | 13253 | 13500 | 3 | 95 |

**CEMA Drive Shaft Combinations**

| Model type | 1.5" shaft | 2" shaft | 2-7/16" shaft | 3" shaft | 3-7/16" shaft |
|---|---|---|---|---|---|
| **SK 1282 SCP** | X | X | X | | |
| **SK 1382 SCP** | X | X | X | | |
| **SK 2282 SCP** | X | X | X | | |
| **SK 2382 SCP** | X | X | X | | |
| **SK 3282 SCP** | X | X | X | X | |
| **SK 3382 SCP** | X | X | X | X | |
| **SK 4282 SCP** | | X | X | X | |
| **SK 4382 SCP** | | X | X | X | |
| **SK 5282 SCP** | | X | X | X | X |
| **SK 5382 SCP** | | X | X | X | X |
| **SK 6282 SCP** | | | | X | X |
| **SK 6382 SCP** | | | | X | X |



# SCP
# Ordering Guide

| | Gear Unit | Reducer Options | | Motor/Input | Motor Options |
|---|---|---|---|---|---|
| SK | ❶ | ❷ | ❸ | | ❹ |
| | | | | see page 19 | see page 128 |

❶

| Gear Unit |
|---|
| **1282 SCP** |
| **1382 SCP** |
| **2282 SCP** |
| **2382 SCP** |
| **3282 SCP** |
| **3382 SCP** |
| **4282 SCP** |
| **4382 SCP** |
| **5282 SCP** |
| **5382 SCP** |
| **6282 SCP** |
| **6382 SCP** |
| **Specialty Bevel Product** |

❷

| Reducer Options | |
|---|---|
| **ADP -** Additional Drain Plug | **PC -** Grease Purge Seal |
| **LL -** Long Term Storage | **RV -** Drain Valve |
| **MDP -** Magnetic Drain Plug | **SM5 -** Stainless Steel CEMA Shaft |
| **OA -** Oil Expansion Chamber | **VL -** Heavy Duty Bearings |
| **OSG -** Oil Sight Glass | |

❹

| Motor Options | |
|---|---|
| **F & FC -** Blower Cooling Fan | **OL -** Non Ventilated TENV W/Out Fan |
| **RD -** Drip Cover Canopy | **OLH -** Non Ventilated TENV W/Out Fan & Cover |
| **RDD -** Double Drip Cover Canopy | **WE -** Motor Second Shaft Extension |
| **KD -** Condensation Drain Holes | **Z -** High Inertia Motor Fan |
| **KB -** Condensation Drain Holes Plugged | **IG -** Incremental Encoderr |
| **IP66 -** IP66 Motor Enclosure | **TW -** Thermostat |
| **KKV -** Potted Terminal Box | **TF -** Thermistor |
| **MS -** Quick Power Disconnect, Harting Plug | **SH -** Anti-Condensation Space Heaters |

❸

| Input Shaft | NEMA Adapter | IEC Adapter | Integral Motors | Integral Energy Efficent Motors |
|---|---|---|---|---|
| **W** | **N56C** | **IEC 63** | **63S/4** - 0.16hp | **80LH/4** - 1hp |
| | **N140TC** | **IEC 71** | **63L/4** - 0.25hp | **90SH/4** - 1.5hp |
| | **N180TC** | **IEC 80** | **71S/4** - 0.33hp | **90LH/4** - 2hp |
| | **N210TC** | **IEC 90** | **71L/4** - 0.50hp | **100LH/4** - 3hp |
| | **N250TC** | **IEC 100** | **80S/4** - 0.75hp | **112MH/4** - 5hp |
| | **N280TC** | **IEC 112** | **80L/4** - 1hp | **132SH/4** - 7.5hp |
| | | **IEC 132** | **90S/4** - 1.5hp | **132MH/4** - 10hp |
| | | **IEC160** | **90L/4** - 2hp | **160MH/4** - 15hp |
| | | **IEC180** | **100L/4** - 3hp | **160LH/4** - 20hp |
| | | | **100LA/4** - 5hp | **180MH/4** - 25hp |
| | | | **112M/4** - 5.4hp | **180LH/4** - 30hp |
| | | | **132S/4** - 7.5hp | |
| | | | **132M/4** - 10hp | |
| | | | **160M/4** - 15hp | |
| | | | **160L/4** - 20hp | |
| | | | **180MX/4** - 25hp | |
| | | | **180LX/4** - 30hp | |
| | | | Other Speeds Available | Other Speeds Available |

## Product Specifications

**Ratio**

_____ :1

see pages 31 - 62

OR

**Output Speed**

_____ rpm

see pages 31 - 62

**Mounting Position**

- ❍ M1
- ❍ M2
- ❍ M3
- ❍ M4
- ❍ M5
- ❍ M6
- ❍ Special _____

**CEMA Shaft Diameter**

- ❍ 1-1/2"
- ❍ 2"
- ❍ 2-7/16"
- ❍ 3"
- ❍ 3-7/16"

**Paint**

- ❍ Standard Stainless Steel Paint
- ❍ NSD+ (gray)
- ❍ NSD+W (white)
- ❍ NSD-X3 (gray)
- ❍ NSD-X3W (white)
- ❍ Casting Primed
- ❍ Special _____

**Lubricant**

- ❍ Standard
- ❍ Synthetic
- ❍ Food Grade
- ❍ Other _____

## Gearmotor Only Details

**Voltage & Frequency**

- ❍ 230/460V-60Hz (460V only ≥ 40 hp)
- ❍ 575V-60Hz
- ❍ 208V-60Hz
- ❍ 400V-50Hz
- ❍ Other _____

**Terminal Box Pos.**

- ❍ TB1
- ❍ TB2
- ❍ TB3
- ❍ TB4

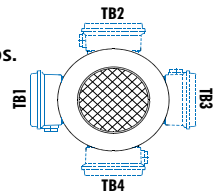


Mtg. Pos. M1 Shown

**Conduit Entry Loc.**

- ❍ CE I *
- ❍ CE II
- ❍ CE III *
- ❍ CE IV

* Brakemotor

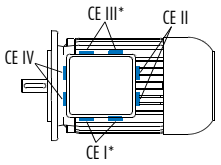


Mtg. Pos. M1 Shown





## Gearbox Selection

A number of factors are considered when selecting a gear unit, including gearbox rating, service factor, speed and speed variation, horsepower, thermal capacity, ratio, physical size, ambient conditions and cost. Below are some guideline steps to help aid in the gear unit selection.

1. Determine the speed and/or gear ratio
2. Determine the required power or torque
3. Determine Service Factor
4. Determine CEMA Shaft Diameter
5. Select the basic gearbox type and input
6. Determine the required mounting position
7. Select options
8. Checks – thrust load, NEMA moto weight, thermal considerations, & other application considerations

### 1. Speed and Gear Ratio

The first step in selecting a gear unit is determining the final output speed or speeds you need. This speed is normally described in revolutions per minute (rpm). This output speed or speeds is determined by the input speed to the gear unit divided by its gear ratio. Their relationship is described by the following formulas.

$$\text{i (gear ratio)} = \frac{\text{Input speed [rpm]}}{\text{Output speed [rpm]}}$$

$$\text{Output speed [rpm]} = \frac{\text{Input speed [rpm]}}{\text{i (gear ratio)}}$$

To specify a gear unit, you can identify either gear ratio needed or the output speed (rpm) if the input speed is known.

### 2. Power and Torque

The second step for selecting a gear unit is the required power or torque needed to power the load. Torque in this catalog is normally expressed in pound-inches [lb-in].

$$\text{Power [hp]} = \frac{\text{Torque [lb-in] x speed [rpm]}}{63025}$$

$$\text{Torque [lb-in]} = \frac{\text{Power [hp] x 63025}}{\text{speed [rpm]}}$$

For a proper selection you must ensure that the motor or other prime mover can produce enough torque or power and that the gear unit has adequate torque or power capacity.

To specify a gear unit you can identify either torque or power.

### 3. Service Factor or Service Class

In addition to power or torque, service factor must also be considered. A service factor is essentially the ratio of extra capacity in a gear unit compared to the power or torque that is needed to run that application. The goal of selecting a gear unit with extra capacity (service factor) is to provide adequate service life in operation.

One reason to apply a larger service factor is if a unit operates more hours per day. If a unit runs 24 hours per day it should normally have a higher service factor than a unit that runs 8 hours per day if you expect the same calendar life.

A second reason for applying a larger service factor is to cope with a more difficult application. Even if it takes the same power and speed to operate a rock crusher as a fan, the rock crusher needs a stronger gearbox (higher service factor) to give the same calendar operating life as the gear unit powering the fan.

The real question is how to determine the proper service factor for a gear unit in an application. Following are four possible methods.

#### Customer or User Specification

Many customers will have their own service factor guidelines or specifications.

#### AGMA Service Factoring

American Gear Manufacturers Association (AGMA) publishes lists of recommended service factors for different applications. These service factor recommendations have been determined from the experience of many gear manufactures and are in AGMA standard 6010.

#### AGMA Service Classes

American Gear Manufactures Association (AGMA) has another method for selecting gear units service factors. AGMA standard 6009 lists many applications by a service class (I, II, III) with class I being the simplest applications and class III being the hardest. These application service classes are associated with a range of service factors by the following table.

| AGMA Service Class | Service Factor |
|---|---|
| I | 1.00 to 1.39 |
| II | 1.40 to 1.99 |
| III | 2.00 and above |

In the gearmotors selection table each unit is also classified by an AGMA service class.



### NORD Mass Acceleration Service Factoring

NORD often uses a calculation based system to properly assign a service factor. This system considers hours of operation per day, the severity of the application and the number of times the equipment is cycled.

### AGMA Class of Service

This table has been developed from the collective experience of gearbox and screw conveyor manufacturers and users of speed reducers in typical applications. Maintaining speed reducer Service Factor (S.F.) provides compensation for non-measurable operating loads and daily length of time in service.

The speed reducer selected should have a service factor greater than or equal to service factor suggested for the particular application. This will result in trouble free operation for a reasonable period of time. Insufficient service factor inevitably ends with premature failure of the speed reducer. Note: Each screw conveyor manufacturer determines the proper "margin of safety" for their type of application and equipment.

| Operating conditions | Service Factor | | |
|---|---|---|---|
| | up to 3 hrs/day | 3-10 hrs/day | 10-24 hrs/day |
| Uniformly loaded or fed | I | I | II |
| Heavy duty | I | II | II |

from AGMA Standard 6009-A00

### 4. CEMA Drive Shaft Size

Available CEMA Shaft Sizes

- 1 - 1/2"
- 2"
- 2 - 7/16"
- 3"
- 3 - 7/16"

### CEMA Drive Shaft Connection Strength

For some selections the torque is limited by the CEMA drive shaft connection. It is important to consider the torque limits following when making a selection.

**Torque limits - CEMA 350-2003 (Table 3-5) excerpts**

| Shaft size [in] | 2-Bolt [lb-in] | 3-Bolt [lb-in] |
|---|---|---|
| 1 - 1/2 | 3,070 | 3,070 |
| 2 | 7,600 | 7,600 |
| 2 - 7/16 | 9,270 | 13,900 |
| 3 | 15,400 | 23,310 |
| 3 - 7/16 | 21,800 | 32,700 |

### 5. Gearbox Input

NORD's modular design allows for a number of different inputs to be added to NORD reducers including:

- Integral motor
- NEMA-C and IEC motor adapter
- Solid input shaft

### 6. Mounting Position

The gearbox mounting position is an important and often overlooked specification. The mounting position determines how much oil the gear reducer requires, in addition to determining the position of the oil drain, oil fill and vent on the gear drive. NORD offers six basic mounting positions. If your application requires a variation from the six basic mounting positions, please contact NORD.

### 7. Options

NORD offers a number of mechanical, protective, paint and lubrication options for gear reducers and motors. Please see page 16 for gear unit options and refer to the motor section for motor options.

### 8. Checks

### Thrust Loads (Axial)

Loads that are directed towards or away from the gearbox along the axis of the shaft are called thrust or axial loads. Output shaft thrust capacity [$F_A$] can be found in the gearmotor rating tables. Thrust load capacities should not exceed the values listed in the tables to ensure long bearing life. Contact NORD for combination loads or a more exact examination of the application.

### NEMA C-face Motor Weight Limits

When mounting a motor to a NORD NEMA C-face motor adapter it is important to consider the motor's weight. Following is a table that includes the maximum motor weight the NEMA adapter can support. If the motor exceeds the listed weight it must be externally supported. When a C-face mounted motor is externally supported care must be taken to ensure that the support system does not impose additional pre-loads on the NEMA motor adapter.

**NEMA Weights**

| Motor FRAME | 56C | 143TC | 145TC | 182TC |
|---|---|---|---|---|
| Max Weight [lb] | 66 | 88 | 110 | 130 |
| **Motor FRAME** | **184TC** | **210TC** | | |
| Max Weight [lb] | 175 | 220 | | |





**⚠ GENERAL WARNINGS & CAUTIONS ⚠**

Applications with risk of personal injury should be reviewed together with NORD. Examples of these are hoist, lifts or other applications where people may be at risk.

### NEMA and IEC Adapters

NEMA/IEC adapter have additional shaft coupling and additional bearing seats compared to integral motors so there are higher no-load losses with NEMA or IEC adapters. We recommend mounting the motor directly, since it offers both technical and cost advantages.

NEMA and IEC adapters used in hoist, lifts and other applications with danger of personal injury should be reviewed together with NORD.

### NEMA C-Face Adapter Capacity

The NEMA adapters are designed to handle the torques produced by the standard NEMA power assignment at 4-pole (1800 rpm) motor speeds. If a larger motor power than the power listed below is used, NORD should be consulted. Also if a NEMA adapter is being used for other than an AC induction motor NORD should be consulted.

| Adapter | Max Power [hp] |
|---|---|
| 56C | 1 |
| 140TC | 2 |
| 180TC | 5 |
| 210TC | 10 |

### External Installation, Tropical Use

Gearboxes installed outside, in damp rooms, or used in the tropics may require special seals and anti-corrosion options. Please contact NORD for application assistance.

### Special conditions

If special environmental or other conditions exist in transit, storage or operation these need to be considered in the unit selection. Special conditions may include (but are not limited to):

- Exposure to aggressive corrosive materials (contaminated air, gasses, acids, bases, salts, etc.)
- Very high relative humidity
- Direct contact between the motor and liquid
- Material build-up on the gear unit or motor (dirt, dust, sand, etc.)
- High atmospheric pressure
- Radiation
- Extreme temperatures, high, low or large temperature changes
- High vibration, acceleration, shocks or impacts
- Other abnormal conditions

### Gear Reducer Ratings

The permissible continuous power limit of gear reducers is limited by both the mechanical rating and the thermal rating. The mechanical rating depends upon the material strength of the gear reducer's gears, bearings, housing, shafts, etc. The mechanical input power limit to the reducer is also a function of the mechanical power rating divided by the relevant reducer service factor.

The thermal rating or thermal limit depends upon the amount of heat generated within the reducer and is influenced by a variety of factors including:

- Churning or splashing losses in the lubricant which depend upon reducer type, ratio, input style, mounting position or oil fill-level, and the circumferential travel velocities of the gear wheels.
- The actual speed and load conditions. These factors determine load-depedent losses in the gear areas and frictional losses in the gear, bearing & seal areas.
- Ambient Conditions:
  - Ambient Temperature.
  - Amount of free air circulation around the drive.
  - Possible near-by heat sources.
  - Heat dissipation or the ability of the reducer to transfer heat through the housing, shafts, and the mating sub-structure or mounting surface.

### Storage Before Installation

The gear units and motors should be stored in a dry area before they are to be installed. Special measures are required for longer storage. Please request long term storage instructions from NORD Gear or see page 17.



## Observing the Reducer's Thermal Limit

### When to Contact NORD

Through computer program analysis NORD can evaluate application conditions and the impact they have on a reducer's thermal capacity.

When applying SCP gear units of case size SK 6282 & larger, consult NORD if any two or more of the following conditions apply:

- Gear ratio, $i_{total} \leq 24:1$
- Input speed, $n_1 > 1800$
- Vertical positioning (mounting position M2 or M4)
- Input configuration: NEMA C-face, IEC, servo adapter or solid-shaft input (Type-W)
- An elevated ambient temperature ≥ 86° F (30 °C)

### Dangers of Reducer Overheating

The following problems may result when the reducer's thermal capacity or maximum oil sump temperatures are exceeded:

- Lubrication oxidation, breakdown & deterioration.
- A decrease in lubrication viscosity & film thickness.
- Loss of critical bearing and gear clearances required for proper lubrication.
- Increased contact pressures and increased operating temperatures in the critical load zones of the gearing and bearings.
- An increased possibility for metal-to-metal contact and premature component wear.
- A significant reduction in the lubricant's ability to prevent scuffing, pitting, and in extreme cases galling or welding.

### Maximum Oil Sump Temperature Limit

To prevent reducer overheating, the reducer's maximum oil sump temperature limit must not be exceeded for prolonged periods of operation (up to 3 hours continuous operation, depending upon reducer size).

| Oil Type | Maximum Oil Temperature Limit | |
|---|---|---|
| | NORD | AGMA 9005-D94 |
| Mineral | 80-85 °C (176-185 °F) | 95 °C (203 °F) |
| Synthetic | 105 °C (220 ° F) | 107 ° C (225 ° F) |

**IMPORTANT NOTE**

***Use caution when specifying gear reducers for high temperature service.*** If there is concern about exceeding the allowable safe operating temperatures, please consult NORD to discuss alternatives.

### Measures to Expand the Application Range

There are a variety of measures that may be taken in order to protect against thermal overload and expand the application range of the gear reducer. Common examples include the following:

- Recommending a change in lubrication viscosity and/or a specific synthetic lubricant type.
- Applying high-temperature seals.
- Increasing air flow around the gear unit.
- Shielding or protecting the reducer from high heat sources.
- Considering an integral motor instead of the bolt-on input assembly covers. In many cases the motor fan will substantially increase air-flow around the gear unit.



## Mounting Positions

The reducer mounting position determines the approximate oil fill level and the appropriate vent location. In some cases the mounting position may dictate possible variation in final reducer assembly. If considering any mounting positions that are not shown as catalog-standard options, it is critical that the customer consult with NORD prior to ordering.



### New Mounting Position System

NORD is in the processes of incorporating a new mounting position systems. Historically the NORD mounting position system was based on international motor standards. NORD is changing in an effort to simplify the system. The new system is based on the six sides of a cube. Below is a cross reference between the old and new mounting position codes.

**Mounting Position Cross Reference Table**

| New | M1 | M2 | M3 | M4 | M5 | M6 |
|---|---|---|---|---|---|---|
| Old | B3, B5 | V3, V6 | B8, B5I | V1, V5 | B5II, B6 | B7, B5III |

## Screw Conveyor Package

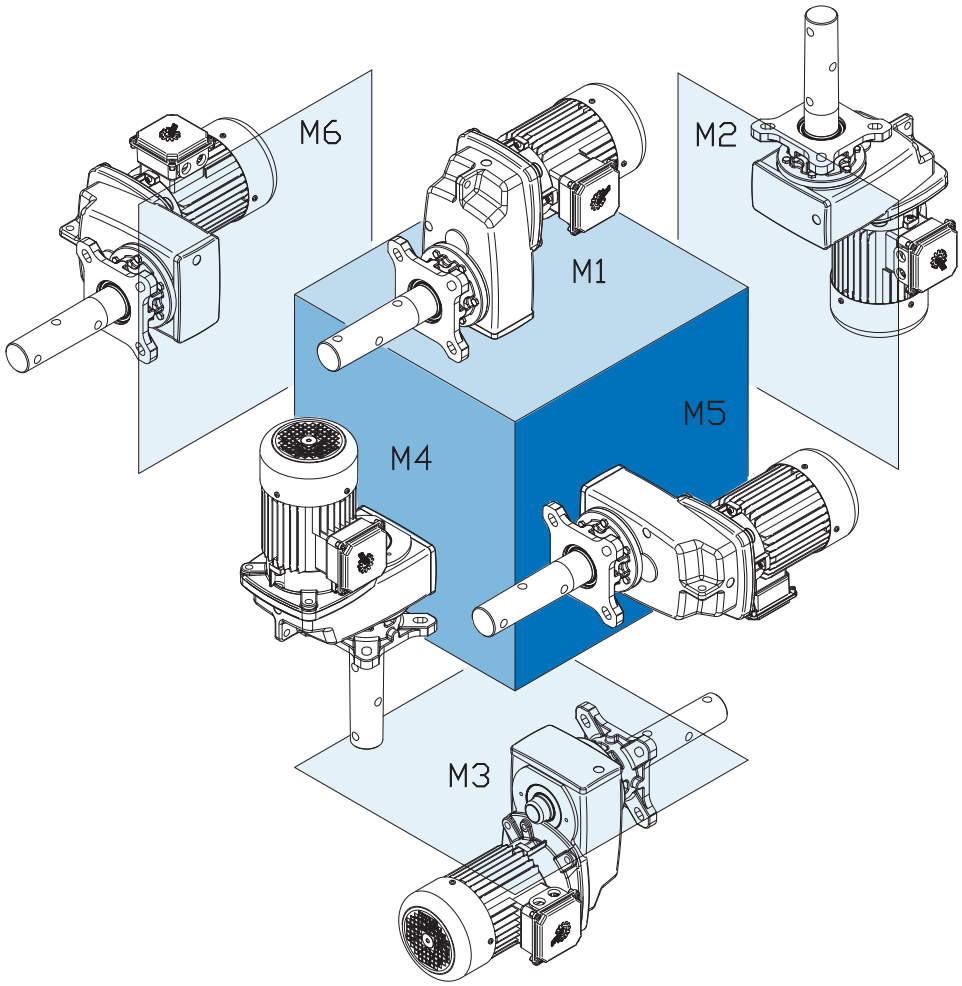



## Screw Conveyor Mounting

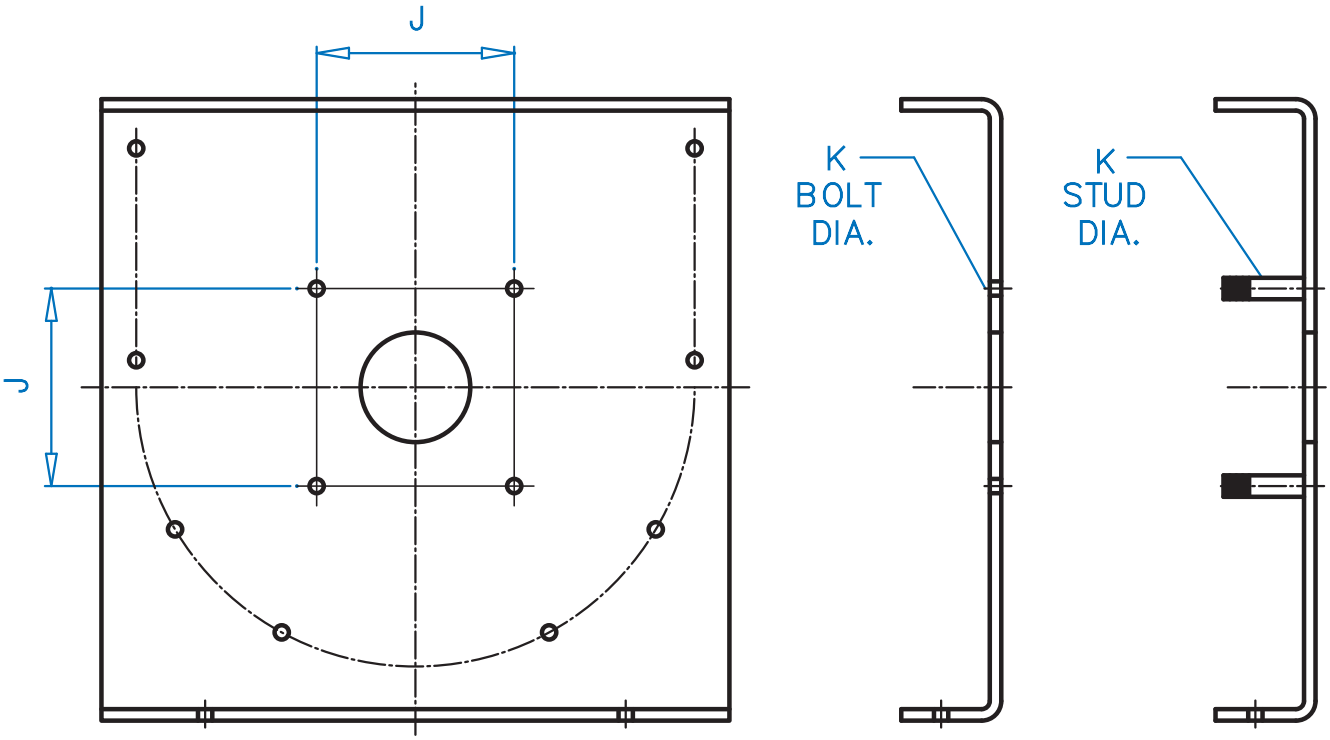




**Screw Conveyor mounting dimensions from CEMA 300-13 excerpts**

| Screw Diameter [in] | CEMA Drive shaft [in] | J Width [in] | K Bolt [in] | K Stud [in] |
|---|---|---|---|---|
| 6 | 1-1/2 | 4 | 1/2 | 7/16 |
| 9 | 1-1/2 | 4 | 1/2 | 7/16 |
| | 2 | 5-1/8 | 5/8 | 9/16 |
| 12 | 2 | 5-1/8 | 5/8 | 9/16 |
| | 2-7/16 | 5-5/8 | 5/8 | 9/16 |
| | 3 | 6 | 3/4 | 3/4 |
| 14 | 2-7/16 | 5-5/8 | 5/8 | 9/16 |
| | 3 | 6 | 3/4 | 3/4 |
| 16 | 3 | 6 | 3/4 | 3/4 |
| 18 | 3 | 6 | 3/4 | 3/4 |
| | 3-7/16 | 6-3/4 | 3/4 | 3/4 |
| 20 | 3 | 6 | 3/4 | 3/4 |
| | 3-7/16 | 6-3/4 | 3/4 | 3/4 |
| 24 | 3-7/16 | 6-3/4 | 3/4 | 3/4 |

# Gear Unit Options





### Screw Conveyor Package Gearbox Options

| Abbreviation | Description | Page |
|---|---|---|
| **ADP** | Additional drain plug | 17 |
| **LL** | Long term storage | 17 |
| **DR** | Autovent | 17 |
| **FV** | Filtered Vent | 17 |
| **MDP** | Magnetic drain plug | 17 |
| **OA** | Oil Expansion Chamber | 16 |
| **OSG** | Oil sight glass | 16 |
| **OV** | Open vent | 17 |
| **PC** | Grease Purge Seal | 16 |
| **SM5** | Stainless steel output shaft | 16 |
| **VL** | Heavy Duty Bearings | 16 |
| **none** | Special Drain Plugs | 17 |
| **none** | Paint coatings | 18 |

## Heavy Duty Output Bearings (VL)

Replacing standard output bearings with heavy-duty versions will increase the external load carrying capacity of the speed reducer. Increased capacity in either or both overhung (radial) or thrust (axial) loading insures that premature bearing failure will not occur due to high stresses in the bearing elements. The increased bearing capacity will also keep the speed reducer as small as possible by not having to select the next larger case size in order to handle the bearing loads. If increased bearing life is desired, larger bearings will reduce the relative stress on the bearings and increase B10 bearing life.

### Standard Bearing

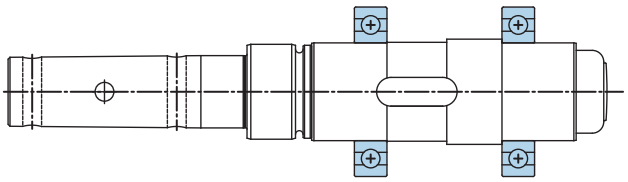

### Heavy Duty Bearings (VL)-option

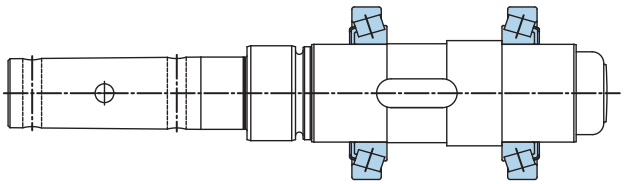

## Grease Purge Seal (PC)

The SCP screw conveyor package has an optional grease purgeable sealing system. The design replaces the greased packed felt packing seal with a grease filled cavity. The system also includes a grease nipple and relief to allow the seal to be flushed with fresh grease.

## Stainless Steel Output Shaft (SM5)

Output shafts made from stainless steel are available and are frequently used in food, pharmaceutical, and washdown applications. In some cases stainless steel solid input shafts may also be provided.

## Oil Expansion Chamber (OA)

Oil expansion chambers are available for most reducers. These chambers allow for expansion of the oil-air mix in the reducer that can occur during operation. This expansion chamber is similar to a car radiator over-flow chamber.

## Oil Sight Glass (OSG)

The oil sight glass provides a visible oil level indication on the reducer. The sight glass replaces the standard steel fill plug and consists of a sealed clear porthole centered in the middle of a brass plug. The sight glass allows for quick oil level and color inspection.



## Autovent™ (DR)

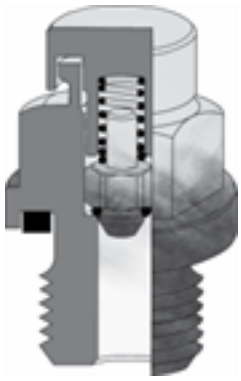

The Autovent™ prevents entry of foreign material, such as water, dust, corrosives, etc… and is perfect for washdown and dusty environments. The Autovent™ is a ball and spring check valve that opens at 2 psi and during operation and closes tightly when the gearbox cools. The Autovent™ is standard on all vented NORD reducers. Some of the benefits are cleaner gearbox oil, extended lubrication life and longer lasting seals, gears, and bearings.

## Open Vent (OV)

An open vent may be optionally supplied on NORD reducers. The open vent allows for air pressure differences between the inner space of the reducer and the atmosphere. This open vent will be closed upon delivery to prevent oil leakage. Before the reducer is put in service the open vent should be activated by removing the sealing plug.

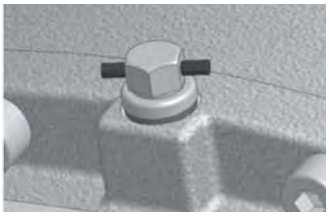

Sealed vent

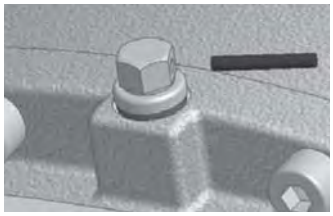

Activated vent

## Filtered Vent (FV)

NORD offers a filtered vent, which allows gases to permeate, but does not allow dust and debris to pass through the vent.

## Magnetic Drain Plug (MDP)

Magnetic drain plugs attract and hold ferrous metal particles that may circulate inside the reducer's lubrication system. These potentially abrasive particles may cause excessive wear in the reducer if they remain circulating. An increase of collected material may be a warning sign of future problems.

## Special Drain Plugs



NORD oil drain valves are offered to make draining the oil from the gearbox clean and easy. The drain hose needs to be supplied by the customer. The hose fittings are offered in either 90° or straight to accommodate the user.



A brass drain valve is threaded into the existing oil drain port of the gearbox. The spring valve is closed using a rubber o-ring. When the hose fitting is threaded into the drain valve, the spring valve is pushed open and allows oil to drain. When the hose fitting is removed, the drain valve closes. A brass, threaded cap is supplied to cover the drain valve when not in use.

## Additional Drain Plug Hole (ADP)

NORD can add an additional drain hole to the reducer housing for a small surcharge if required for special oil plumbing needs.

## Long Term Storage (LL)

Speed reducers are frequently put in storage prior to installation for long periods of time and in some cases exposed to the elements. NORD's long term storage option protects the unit from moisture or corrosion by coating all unpainted surfaces with a dry, transparent, durable waxy film. Once installation is necessary this waxy film can be easily removed with a commercial de-greaser or petroleum solvent. If possible the store room should be vented and dry, with room temperatures between 23°F and 104 °F (-5 °C and 40 °C).





## Paint Coatings

NORD's standard paint coating is a two component, aliphatic polyurethane finish contaning 316 stainless steel material. This gray stainless steel paint has excellent appearance and outstanding physical properties. It is suitable for both indoor and outdoor applications.

Advantages of NORD's stainless steel two component polyurethane:

- Excellent adhesion to cast iron, aluminum, steel, and plastics
- Excellent corrosion resistance
- Excellent chemical resistance
- Excellent gloss and color retention
- Suitable for indoor and outdoor exposure
- Nonporous and excellent abrasion resistance
- USDA compliant

NORD also offers a variety of severe duty paint coatings that provide a high level of protection against water and severe environments both indoors and outdoors. NSD+ (NORD Severe Duty) consists of a primer undercoat and a stainless steel polyurethane topcoat. For the most demanding environments, NORD offers NSD-X3 (NORD Severe Duty triple coated) which consists of a primer undercoat, stainless steel polyurethane coating, and a clear topcoat. Paint coatings are also available in alternate colors as seen in the table below.

| Finish | Color | Coating | Use |
|---|---|---|---|
| Standard (stainless steel paint) | Stainless steel silver (Gray) | 1 x Stainless steel (316) top coat (polyurethane) | Indoor or outdoor moderate environment |
| Alternate color | Black, Blue, Red, Orange | 1 x Color top coat (polyurethane) | Indoor or outdoor protected |
| NSD+ | | | |
| NORD Severe Duty + NSD+ | Stainless steel silver (Gray) | 1 x Primer high solid alkyd system<br>1 x Stainless steel (316) top coat (polyurethane) | Indoor or outdoor moderate environment |
| NORD Severe Duty +W NSD+W | White | 1 x Primer high solid alkyd system<br>1 x White top coat (polyurethane) | Indoor or outdoor moderate environment |
| Alternate color NSD+ | Black, Blue, Red, Orange | 1 x Primer high solid alkyd system<br>1 x Color top coat (polyurethane) | Indoor or outdoor moderate environment |
| NSD X3 | | | |
| NORD Severe Duty Extreme NSD-X3 | Stainless steel silver (Gray) | 1 x Primer high solid alkyd system<br>1 x Stainless steel (316) (polyurethane)<br>1 x Clear top coat (polyurethane) | Indoor or outdoor more severe environment |
| NORD Severe Duty Extreme NSD-X3W | White | 1 x Primer high solid alkyd system<br>1 x White (polyurethane)<br>1 x Clear top coat (polyurethane) | Indoor or outdoor more severe environment |
| Alternate color NSD-X3 | Black, Blue, Red, Orange | 1 x Primer high solid alkyd system<br>1 x Color (polyurethane)<br>1 x Clear top coat (polyurethane) | Indoor or outdoor more severe environment |

Special colors and paints possible please contact NORD with your specific requirements.



## Input

NORD's modular design allows for many different types of inputs to be added to gear reducers. All inputs are bolt on and include machined pilots to ensure simple and accurate assembly. NORD offers the following different input types:

- Integral motor
- NEMA C-face motor adapter
- IEC B5 motor adapter
- Solid input shaft
- Servo motor adapter
- Top mount motor platform
- Custom mounting interface

### Example Nomenclature

**SK3282SCP - W**

- **W** — Solid Input Shaft
- **SK3282SCP** — Gear unit

SCP Gear unit with solid input shaft.

**SK3282SCP -140TC**

- **140TC** — NEMA 140 TC Motor Adaptor
- **SK3282SCP** — Gear unit

SCP Gear unit to recieve standard NEMA C-Face motor adaptor.

**SK3282SCP - IEC80**

- **IEC80** — IEC 80 B5 Motor Adaptor
- **SK3282SCP** — Gear unit

SCP Gear unit to recieve standard metric IEC B5 flange mount motor adaptor.

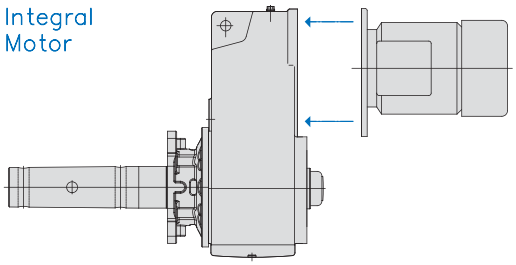


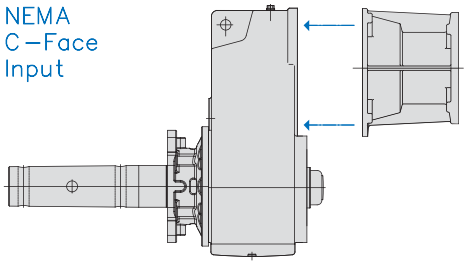


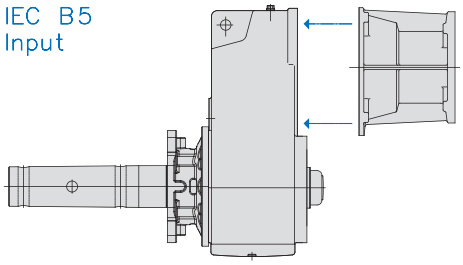


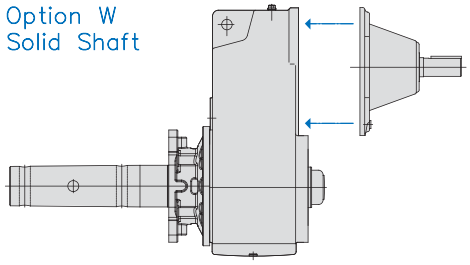


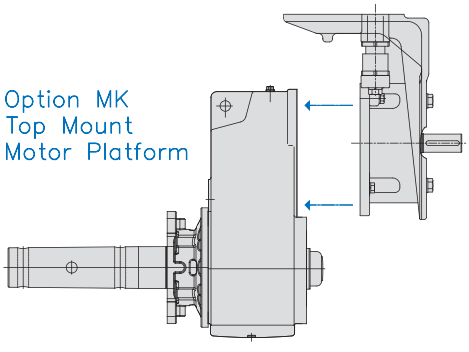





## Integral Motors

NORD provides integral motors that mount directly to the gearbox. Integral motor mounting eliminates the need for costly v-belts or sheaves and directly couples the motor to the reducer. This also results in a dimensionally compact one-piece package.

NORD high performance integral motors are available in many operational voltages, are inverter duty rated, and offer many valuable options including energy efficient motors and power off brakes. For more information on integral motors, see the motor section found on page 119.

## NEMA C-Face Motor Adapter

NEMA C-face motor adapters allow for easy installation and removal of industry standard C-face motors. NEMA C-face motor adapters consist of a coupling and an adapter housing that connects the motor to the gear reducer. Gear units with NEMA C-face adapters are commonly used where applications require specialized motors or the user wants to easily find a replacement motor if failure occurs. NORD also offers high performance NEMA C-face motors and brakemotors, that can be factory installed to the motor adapter.

NORD motor adapters deliver nearly 100% of the torque generated by the motor and can be used from -13°F (-25°C) to 212°F (100°C). Most motor adapters have specially sealed bearings that are lubricated for life.

The maximum input power of a gear unit with a NEMA C-face adapter is generally limited by the power rating of the standard NEMA C-face motor size. The power limit is indicated in the ratings table for a standard 4-pole 1750 rpm motor. In some cases the gearbox limit ($T2_{max}$) will be the limiting capacity. Both the NEMA adapter limit and the gearbox torque limit must be considered. If the speeds required exceed those included in the performance and speed reduction tables please contact NORD.

## IEC Motor Adapter

IEC motor adapters allow for easy installation and removal of industry standard IEC motors according to DIN 42677. The IEC adapter is very similar to the NEMA C-face adapter in construction. The maximum input power is generally limited by the IEC motor size. For ratings and dimensions, please consult NORDS metric catalogs that may be found online at www.nord.com under the document section.

## Solid Input Shaft

Designed to mount couplings, sheaves or sprockets, which transfer torque from the prime mover. The input shaft is made from ANSI 1045 or stronger material and is dimensioned with long keys according to ANSI B17 standards. The maximum gearbox input power rating is indicated in the speed reducer performance tables.

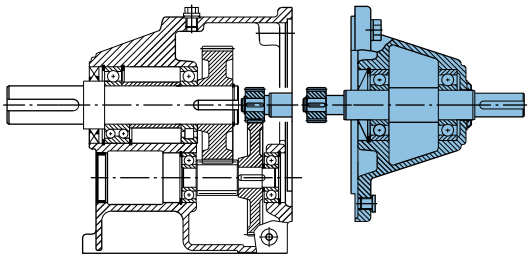

## Servo Motor Adapter

Servo motor adapters are designed to handle the highly dynamic capabilities of servo motors. NORD servo motor adapters have a square mounting flange and are available with either a keyed (SEP) or a key-less (SEK) coupling. They are suitable for speeds up to 3000 rpm and the high torques produced by servo motors. Higher input speeds can be handled for a short duration and the bearings and input shaft are designed to cope with the high torque loads.

## Top Motor Mount Platform

Some applications require the motor to be mounted on top of the reducer with a belt drive connection from the motor to the reducer. MK platforms can be bolted-on to all UNICASE™ gearboxes in any mounting position and offer the following advantages:

- Light, vibration inhibiting aluminum construction
- Corrosion resistant, easily adjustable mechanism for belt tensioning
- Corrosion resistant fasteners
- Available in all mounting positions
- Can be swung 90° to the right or left
- Platform has multiple bolt patterns for various motors

Motor platforms are pre-drilled and tapped to bolt on a standard NEMA footed motor. Each platform has belt tension adjusters. Motor, belts, sheaves and guard are supplied by the customer.



## Custom Mounting Interface

NORD can provide custom input adapters typically consisting of a special adapter plate and special coupling to mount non-standard dimensioned motors or other devices.

When a custom input adapter is required, special attention needs to be given for each application to be sure the customer receives the performance that is necessary. The following information is required:

- Motor Dimensional Drawing
- Motor Weight
- Motor performance specifications, including torque, horsepower and operating speed ranges.

NORD engineers will review the performance requirements and make a unit selection based on given parameters.

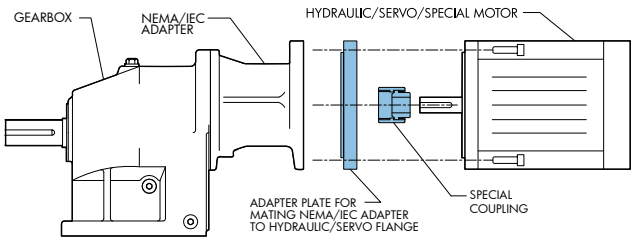


## Vertical Motor Adapter Applications

Gear units with motors frame sizes 250TC (IEC160) and larger, in a vertical up motor mounting position, NORD recommends using an integral gearmotor instead of a NEMA or IEC input adapter. If your application requires this mounting position and a NEMA or IEC input, please consult NORD. In vertical down motor mounted applications it is recommended to shorten the maintenance interval.

## Couplings

Couplings are made with tough abrasion resistant materials, which resist most chemicals and petroleum products. They are electrically isolated (prevent metal to metal contact) and require no lubrication or maintenance. Depending on the size of the C-face input, NORD provides either a gear or jaw type coupling.

## Gear Couplings

Gear couplings are used with 56C to 280TC adapters and provide a compact space saving design. C-face adapter input shafts have a machined male spline that meshes with a molded nylon spline on the coupling. This specially designed molded nylon sleeve that exhibits high torsional stiffness, resulting in minimum fit-up backlash and reduced internal frictional losses. Gear couplings lightweight design yields low inertia and use blind assembly and slip together components to make inspection easy without disassembly.

NORD incorporates two styles of gear couplings, the “J” and “M” styles. The “J” style is one-piece couplings consisting of a nylon sleeve and metal hub that are fused together. The “M” style is a two-piece coupling consisting of a separate nylon sleeve and metal hub.

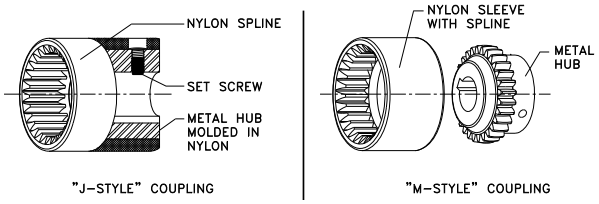


## Jaw Couplings

Jaw couplings are used with 320TC and larger adapters. The cast iron jaw type couplings have a urethane “spider” that provides smooth transmission of the motor torque and has excellent shock and vibration dampening characteristics. A set screw on the coupling prohibits axial movement along the motor shaft.

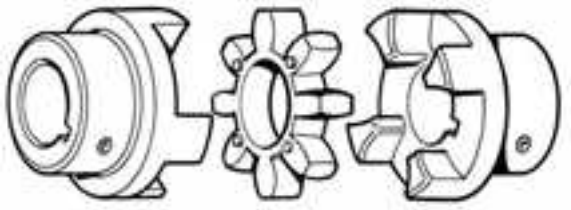





## The Importance of Proper Lubrication

Proper gearbox lubrication is essential in order to reduce friction and component wear, and protect against corrosion and rust. Gear lubricants reduce heat and wear by inserting a load-sharing "protective fluid film" between mating parts and preventing direct metal to metal contact. Properly selected lubricants will operate under various film conditions, improve heat transfer, optimize reducer efficiency, absorb shock loads, reduce noise, inhibit foaming, and separate water readily.

## Design Considerations

Along with many other factors, the gear designer must consider the gear load and speed conditions, and the expected operating oil temperatures. These factors help determine a generally suitable oil category, a desired additive package, preferred base-oil type, and oil viscosity.

It is important that the consumer be aware of these many design factors before making any changes in the critical areas (oil category, base-oil type, viscosity, etc.) One should consult their preferred lubrication supplier or NORD Gear when questions arise.

## Gear Oil Types, Categorized by Base Oil

### *Mineral Oil with an EP Additive (DIN 51517, Type CLP)*

High performance mineral gear oils are carefully engineered and manufactured to improve aging characteristics, minimize friction, offer good wear protection, provide corrosion and oxidation resistance, minimize foam, and separate water. Mineral gear oils are classified as API Group I or II oils, depending upon viscosity.

The standard NORD mineral gear oil has an extreme pressure (EP) additive ISO Viscosity Grade EP220 (AGMA 5 EP) and is generally acceptable for helical gear units. Good quality mineral oil should have the ability to operate at moderate sump temperatures (up to 80-85 °C) without losing viscosity or thickness. A minimum viscosity index (VI) of 93 or higher is suggested. The oil must also have good film strength to handle shock loads, high torque, and start-up conditions. A minimum FZG Scuffing Load Stage 12 is desirable.

**Advantages:**

- Most economical of all the gear oil types.
- Generally offers good compatibility with shaft seals, gaskets, paint finishes, etc.
- Offers good corrosion and oxidation protection.
- Effectively reduces internal friction and wear.

### *When Synthetic Oils Are Used*

Synthetic gear oils are suggested when mineral gear oils have reached their performance limit or when they no longer meet certain application requirements. NORD may recommend synthetic oil for any one of the following conditions:

- Severe duty applications or when gears are exposed to frequent starts and stops, high-load or shock.
- For applications in low or high temperature service.
- To extend oil service interval requirements.
- To eliminate the necessity for seasonal oil changes.
- To extend service life of factory-sealed or maintenance-free gear units.
- To take advantage of performance benefits: shear resistance, low traction coefficient, reduced internal friction, improved lubricity, reduced operating temperatures, improved gear efficiency, etc.

### *Performance Advantages of Synthetic Oil*

Compared to mineral oils, synthetic oils provide a number of performance advantages including:

- Ability to operate at higher temperatures without losing viscosity or thickness, due to a much improved viscosity index.
- Improved low-temperature stability due to a lower pour point
- Increased oil change intervals due to superior oxidative & wear resistance
- Lower tendency to form residues and increased resistance to foaming.
- Other benefits may include: very good shear resistance, low traction coefficient, reduced internal friction, improved lubricity, reduced operating temperatures, improved gear efficiency, extended component life and wear protection.

When application conditions warrant the use of synthetic oil, NORD may suggest a particular type of synthetic oil, depending upon the gear unit type and the application.



***Synthetic Hydrocarbon/Polyalphaolefin (SHC/PAO) Oil (DIN 51517, Type CLP-HC)***

Synthetic Hydrocarbons (SHC) or Polyalphaolefin (PAO) synthetic base oils offer good miscibility with mineral base oils and are very readily available. SHC/PAO oils are classified as API Group IV oils. The can be formulated with or without anti-wear (AW) or extreme pressure (EP) additives. They can also be formulated for acceptance in food-grade applications.

**Advantages:**

- Higher viscosity index and therefore greater high-temperature stability than mineral oil.
- Better low-temperature stability and lower pour point than mineral type gear oils
- High surface tension and lower tendency to foam compared to mineral oil, and water-soluble polyglycol gear oils.
- Compatible (miscible) with mineral oil.
- Better water seperability (demulsibility) than PG oils.

***Polyalkylene Glycol or Polyglycol Synthetic Oil (DIN 51517, Type CLP-PG)***

Polyalkylene glycol or polyglycol (PAG or PG) synthetic gear oils are made readily available through many lubrication suppliers. PG oils are classified as API Group V gear oils. They can also be formulated for acceptance in food-grade applications.

PG gear oils possess extremely low traction coefficients and a viscosity index higher than any of the other synthetics (often greater than 220 VI), resulting in excellent heat resistant, shear stability, and natural anti-wear properties.

Typical PG gear oils are formulated with a 1:1 or higher ratio of ethylene oxide to propylene oxide (50:50 or 60:40 is common); this makes PG gear oils water soluble, providing them with very good corrosion resistance even when water is present in concentrations that are higher then what is normally allowed.

**Advantages:**

- PG oils offer the highest viscosity index of any other synthetic resulting in excellent heat resistant, shear stability, and superior natural anti-wear properties without requiring EP-additives.
- PG gears oils minimize internal friction and often result in improved gear efficiency.
- PG oils have significantly higher film strength than mineral and SHC/PAO oils and out perform these oils at higher operating oil temperatures (approaching 80°C or higher).

***IMPORTANT NOTE***

Polyglycol (PG) oils are not miscible with other oil types and should never be mixed with mineral oil, hydrosynthesized synthetic or PAO synthetic oils.

## Food-Grade Lubricants

Food-grade lubricants should be manufactured in compliance with FDA 212 CFR 178.3570 and should either satisfy the former 1998 USDA Guidelines as an H1 lubricant or currently qualify as a NSF-H1 lubricant. Please consult with lubrication manufacturers for more information or visit www.nsf.org

H1 food grade oil can only contain additives which appear on the FDA "approved list" for food safe compounds. H1 oils are generally absent of common zinc-based AW additives, and sulfur-phosphorus based, EP chemistries, commonly found in many industrial gear oils.

Food manufacturers control risk and liability by following detailed guidelines outlined by the HACCP (Hazard Analysis and Critical Control Point) program, which includes food-grade H1 lubricants.

Food grade H1 lubricants may be formulated as highly refined mineral oils (white oils), SHC/PAO synthetic oils or PG synthetic oils.

The highly refined nature of good-quality food-grade white-oils provides good long-term oxidative stability and in most cases adequate lubrication under high-load (boundary) conditions. So long as food-grade white oils meet the minimum anti-wear requirements of the normally specified non-food grade oil, they are often acceptable.

Both food-grade white oils and PAO's have an inherent "purity" and absence of polar compounds, making them better than the average mineral oil or even PG oil in terms of demulsibility (water seperability).

Compared to food-grade white-oils, food-grade synthetic PAO or PG oils typically provide:

- Better wear and oxidation resistance.
- Improved high-temperature characteristics.
- Better cold-temperature behavior.





## The Importance of Oil Viscosity

Viscosity or the oil's resistance to shear under load, is often considered the single most important property of any gear oil.

NORD Gear Designers have selected the most appropriate ISO viscosity grade of oil, for each type or class of gear reducer. Gear oil viscosity is selected by assuming typical ambient conditions, at rated speed and load conditions.

**Important Considerations:**

- The correct viscosity selection helps provide proper lubrication and assures that a minimum film thickness is maintained between interacting surfaces.
- The degree to which viscosity changes with temperature or the viscosity index, varies from oil to oil, and depends upon the type of lubricant & additive agents used.
- Selecting too low of a viscosity can result in mixed boundary (partial metal-to metal contact) or boundary lubrication (full metal-to-metal contact) conditions, increasing internal friction heat build-up and wear.
- Selecting too high of a viscosity results in increased churning and squeezing losses in the load zone and excessive heat (especially when peripheral gear speeds are high); Ultimately, this causes the oil temperature to rise and the viscosity to go down, decreasing the effectiveness of the lubricant.

## Considering an Oil Viscosity Change

There are three primary reasons to consider a lubrication viscosity change as follows:

1. Low temperature gear oils should be selected so that the pour point is at least 9°F (5°C) lower than the expected minimum ambient temperature. In extreme cases, consider a lower ISO Viscosity rating and test the critical performance of the gear box under cold start-up.

2. High temperature applications may require an increase in the lubricants viscosity to assure proper lubrication conditions in the critical load zones of the gear unit. NORD also recommends switching to synthetic oil if oil sump temperatures exceed 176-185 °F (80-85 °C).

3. In cases of extreme load conditions, gear pairs and antifriction bearings may be more susceptible to scuffing wear. In these operating conditions, it may be beneficial to consider an increased lubrication viscosity and/or lubrication with improved antiwear additive packages.

**IMPORTANT NOTE**

NORD recommends that the user consult with their primary lubrication supplier when considering changes in oil viscosity.

## Maximum Oil Sump Temperature Limit

To prevent reducer overheating, the reducer's maximum oil sump temperature limit must not be exceeded for prolonged periods of operation (up to 3 hours continuous operation, depending upon reducer size).

| Oil Type | Maximum Oil Temperature Limit | |
|---|---|---|
| | NORD | AGMA 9005-D94 |
| Mineral | 80-85 °C (176-185 °F) | 95 °C (203 °F) |
| Synthetic | 105 °C (220 ° F) | 107 ° C (225 ° F) |

**IMPORTANT NOTE**

***Use caution when specifying gear reducers for high temperature service.*** If there is concern about exceeding the allowable safe operating temperatures, please consult NORD to discuss alternatives.



## Ventilation

Most gear reducers are equipped with a vent which helps compensate for air pressure differences between the inner space of the gear unit and the atmosphere.

The spring-pressure vent (Autovent™) is commonly supplied and factory-installed. Normally open vents may also be supplied as an option; normally-open vents are closed upon delivery in order to prevent oil leakage during transport. When normally open vents are supplied, the sealing plugs must be removed prior to commissioning the reducer.

Prior to reducer start-up, it is important to check the maintenance manual to verify that the vent is properly located with respect to mounting position.

## Mounting Position

The reducer mounting position determines the approximate oil fill-level and the appropriate vent location. In some cases mounting position may dictate possible variation in final reducer assembly.

If considering any mounting positions that are not shown as catalog-standard options, it is critical that the customer consult with NORD prior to ordering.

## Oil Fill Quantities

Oil fill quantities shown in the catalog or maintenance instructions are approximate amounts. The actual oil volume varies depending upon the gear ratio. Prior to commissioning the reducer, the oil-fill level should be checked using the reducer's oil-level plug. It may be necessary to drain excess oil or add additional oil.

Unless otherwise specified, NORD supplies most all gear units factory-filled with the standard lubrication type per the specified mounting position.

## Lubrication Replacement

If the gear unit is filled with mineral oil, the lubricant should be replaced at least after every 10,000 operating hours or after every two years. If the gear unit is filled with synthetic oil, the lubricant should be replaced at least after every 20,000 operating hours or after every four years. Often gear reducers are exposed to extreme ambient conditions, hostile environments, wet conditions, or dirty and dusty operating areas. Especially in these situations, it is important to establish a condition-based oil service interval.

## The Importance of Routine Oil Analysis

Routine oil analysis, sound lubrication practices, and good tracking of oil performance trends will help establish proper lubrication maintenance and change-out intervals. To maximize equipment reliability, NORD Gear generally recommends a condition-based lubrication maintenance program. One may take exceptions to this general recommendation on sealed-for-life or maintenance-free gear units or smaller and less costly gear units. In these instances, the replacement cost of the gear unit is often small compared to the costs associated with this type of oil analysis program.

NORD suggests replacing the gear oil if oil analysis indicates any of the following:

- Viscosity has changed by approximately 10% or more.
- Debris particles (silicon, dust, dirt or sand) exceed 25 ppm.
- Iron content exceeds 150-200 ppm.
- Water content is greater than 0.05% (500 ppm).
- The total acid number (TAN) tests indicate a significant level of oxidative break-down of the oil, and a critical reduction in performance; If the TAN number measured changes by more than 5% over the new oil, then an oil change would be recommended.







## Lubrication Types

Proper gearbox lubrication is essential in order to reduce friction, heat, and component wear. Lubricants reduce heat and wear by inserting a protective "fluid boundary" between mating parts and preventing direct metal to metal contact. Lubricants also help prevent corrosion and oxidation, minimize foam, improve heat transfer, optimize reducer efficiency, absorb shock loads and reduce noise.

Mounting position not only determines the proper fill-level but may also have some effect on final reducer assembly. If considering any mounting positions that are not shown as catalog-standard options, it is critical that the customer consult with NORD prior to ordering. Unless otherwise specified, NORD supplies all Screw conveyor gear units factory-filled with the standard mineral lubrication type and the appropriate quantity.

**Standard Oil Lubricants**

| Gear Unit Type | ISO Viscosity | Oil Type | Ambient Temperature Range | Manufacturer Brand/Type | Notes |
|---|---|---|---|---|---|
| Clincher™ SCP | VG220 | MIN-EP | 0 to 40°C (32 to 104°) | Mobilgear 600XP220 | ♦❶ |
| | VG220 | PAO | -35 to 60°C (-31 to 140°F) | Mobil SHC630 | ♦ |
| | VG220 | FG | -5 to 40°C (23 to 104°F) | Fuchs FM220 | ♦ |

**Optional Oil Lubricants**

| Gear Unit Type | ISO Viscosity | Oil Type | Ambient Temperature Range | Manufacturer Brand/Type | Notes |
|---|---|---|---|---|---|
| Clincher™ SCP | VG460 | PAO | -35 to 80°C (-31 to 176°F) | Mobil SHC 634 | - |
| | VG460 | FG-PAO | -35 to 80°C (-31 to 176°F) | Mobil/Cibus SHC460 | - |
| | VG220 | FG-PAO | -35 to 60°C (-31 to 140°F) | Mobil/Cibus SHC220 | - |
| | VG150 | PAO | -35 to 25°C (-31 to 77°F) | Mobil SHC629 | - |

**Standard Bearing Grease Lubricants**

| Grease Type/Thickener | NLGI Grade | Ambient Temperature Range | Manufacturer Brand/Type | Notes |
|---|---|---|---|---|
| Standard (Li-Complex) | NLGI 2 | -30 to 60°C (-22 to 140°F) | Mobil Grease XHP222 | ♦❶ |
| High Temp (Polyurea) | NLGI 2 | -25 to 80°C (-13 to 176°F) | Mobil Polyrex EP 2 | ♦ |
| Food-Grade (AL-Complex) | NLGI 2 | -25 to 40°C (-13 to 104°F) | Mobil Grease FM222 | ♦ |

♦ Stocked Lubricants

❶ Standard product on serviceable gear units

### *IMPORTANT NOTES*

- Food grade lubricants must be in compliance with FDA 212 CFR 178.3570 and qualify as a NSF-H1 lubricant. Please consult with lubrication manufacturer for more information.
- When making a lubrication change, check with the lubrication supplier to assure compatibility and to obtain recommended cleaning or flushing procedures.
- Do not to mix different oils with different additive packages or different base oil formulation types. Polyglycol(PG) oils are not miscible with other oil types and should never be mixed with mineral oil.
- Consult NORD if considering oils of ISO Viscosity VG100 or lower.

**Oil Formulation Codes**

| | |
|---|---|
| MIN-EP | Mineral Oil with EP Additive |
| PAO | Synthetic Polyalphaolefin Oil |
| FG | Food-Grade Oil |
| FG-PAO | Food-Grade, Synthetic Polyalphaolefin Oil |



# SCP Mounting Positions & Oil Fill Quantities



### Screw Conveyor Package lubrication

Unless otherwise noted below, the following NORD Gear reducers are shipped from the factory with a pre-determined oil fill level in accordance to the specified reducer size and mounting position. For additional information, please refer to the "Oil Plug & Vent Locations" documentation for your gear unit.

**STOP** ***HARMFUL SITUATION*** **STOP**

Actual oil volume can vary slightly depending upon the gear case size, mounting and ratio. Prior to commissioning the reducer, check the oil-fill level using the reducer's oil level plug and drain or add additional oil as needed.

For mounting orientations other than shown please consult NORD Gear. Reducer modifications may be required.

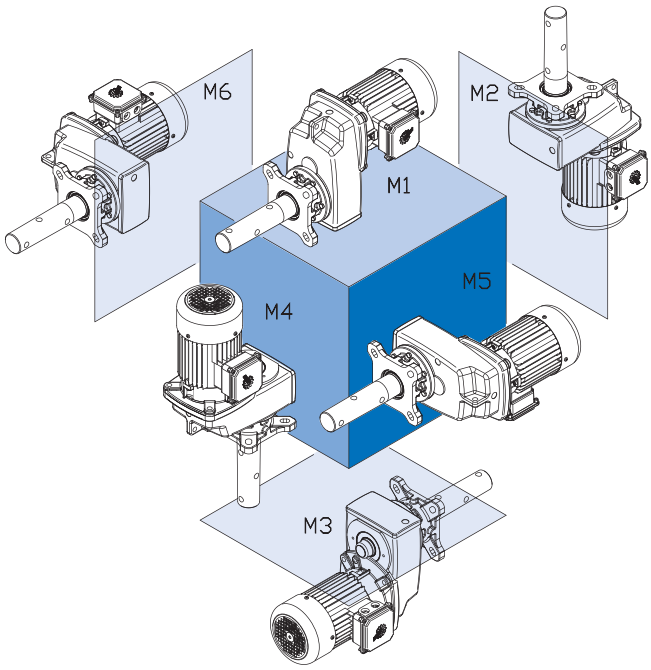


| Unit Type | Mounting Position | | | | | | | | | | | |
|---|---|---|---|---|---|---|---|---|---|---|---|---|
| | M1 | | M2 | | M3 | | M4 | | M5 | | M6 | |
| | Quarts | Liters | Quarts | Liters | Quarts | Liters | Quarts | Liters | Quarts | Liters | Quarts | Liters |
| **SK 1282** | 0.950 | 0.900 | 1.37 | 1.30 | 0.950 | 0.900 | 1.27 | 1.20 | 1.000 | 0.950 | 1.000 | 0.950 |
| **SK 1382** | 1.37 | 1.30 | 2.43 | 2.30 | 1.48 | 1.40 | 2.22 | 2.10 | 2.11 | 2.00 | 2.01 | 1.90 |
| **SK 2282** | 1.74 | 1.65 | 2.54 | 2.40 | 2.01 | 1.90 | 2.11 | 2.00 | 1.90 | 1.80 | 1.90 | 1.80 |
| **SK 2382** | 1.80 | 1.70 | 2.75 | 2.60 | 2.01 | 1.90 | 3.28 | 3.10 | 1.59 | 1.50 | 1.59 | 1.50 |
| **SK 3282** | 3.33 | 3.15 | 4.33 | 4.10 | 3.44 | 3.25 | 4.33 | 4.10 | 3.33 | 3.15 | 3.33 | 3.15 |
| **SK 3382** | 4.33 | 4.10 | 5.18 | 4.90 | 3.49 | 3.30 | 5.92 | 5.60 | 3.49 | 3.30 | 3.49 | 3.30 |
| **SK 4282** | 4.97 | 4.70 | 6.45 | 6.10 | 5.02 | 4.75 | 5.71 | 5.40 | 4.97 | 4.70 | 4.97 | 4.70 |
| **SK 4382** | 6.24 | 5.90 | 7.19 | 6.80 | 5.18 | 4.90 | 8.77 | 8.30 | 5.18 | 4.90 | 5.18 | 4.90 |
| **SK 5282** | 7.93 | 7.50 | 9.30 | 8.80 | 7.93 | 7.50 | 9.30 | 8.80 | 7.61 | 7.20 | 7.61 | 7.20 |
| **SK 5382** | 13.21 | 12.50 | 12.68 | 12.00 | 7.08 | 6.70 | 14.80 | 14.00 | 8.77 | 8.30 | 8.77 | 8.30 |
| **SK 6282** | 17.97 | 17.00 | 14.80 | 14.00 | 12.68 | 12.00 | 18.50 | 17.50 | 10.57 | 10.00 | 14.80 | 14.00 |
| **SK 6382** | 17.44 | 16.50 | 13.74 | 13.00 | 10.15 | 9.60 | 19.03 | 18.00 | 14.80 | 14.00 | 13.21 | 12.50 |

# SCP
# Weights





**Base Weight**

| Input Type | SK 1282 [lb] | SK 2282 [lb] | SK 3282 [lb] | SK 4282 [lb] | SK 5282 [lb] | SK 6282 [lb] |
|---|---|---|---|---|---|---|
| 3rd gear stage "3" | 8 | 8 | 11 | 27 | 35 | |
| 63S/4 | 39 | – | – | – | – | |
| 63L/4 | 40 | – | – | – | – | |
| 71S/4 | 43 | 67 | 100 | – | | |
| 71L/4 | 45 | 69 | 102 | – | – | |
| 80S/4 | 49 | 73 | 106 | – | – | |
| 80L/4 | 51 | 75 | 108 | – | – | |
| 90S/4 | 57 | 82 | 115 | 148 | 227 | |
| 90L/4 | 62 | 86 | 119 | 152 | 232 | |
| 100L/4 | 71 | 95 | 128 | 161 | 240 | |
| 100LA/4 | 77 | 101 | 135 | 168 | 247 | 432 |
| 112M/4 | 97 | 121 | 155 | 188 | 267 | 452 |
| 132S/4 | – | – | 185 | 218 | 298 | 483 |
| 132M/4 | – | – | 209 | 243 | 322 | 507 |
| 160M/4 | – | – | – | 282 | 362 | 547 |
| 160L/4 | – | – | – | 320 | 399 | 584 |
| 180MX/4 | – | – | – | – | 452 | 637 |
| 180LX/4 | – | – | – | – | 452 | 637 |
| 225S/4 | – | – | – | – | – | 867 |
| 225M/4 | – | – | – | – | – | 939 |
| 56C | 51 | 82 | 115 | 154 | 234 | – |
| 140TC | 51 | 82 | 115 | 154 | 234 | – |
| 180TC | 66 | 90 | 124 | 170 | 249 | 448 |
| 210TC | – | – | 143 | 201 | 280 | 476 |
| 250TC | – | – | – | 223 | 302 | 531 |
| 280TC | – | – | – | – | 322 | 531 |
| 320TC | – | – | – | – | – | 562 |
| 360TC | – | – | – | – | – | 562 |
| W | 40 | 77 | 110 | 165 | 245 | 474 |

**SCP Package Additional Weight**

| | 1-1/2" [lbs] | 2" [lbs] | 2-7/16" [lbs] | 3" [lbs] | 3-7/16" [lbs] |
|---|---|---|---|---|---|
| SK 1282 SCP | 15 | 23 | 28 | – | – |
| SK 2282 SCP | 18 | 27 | 31 | – | – |
| SK 3282 SCP | 23 | 35 | 39 | 46 | – |
| SK 4282 SCP | – | 41 | 44 | 51 | – |
| SK 5282 SCP | – | 58 | 60 | 67 | 80 |
| SK 6282 SCP | – | – | – | 76 | 89 |

# SCP Gearmotors & Speed Reducers

## Selection

- 0.16 hp
- 0.25 hp
- 0.5 hp
- 0.75 hp
- 1 hp
- 1.5 hp
- 2 hp
- 3 hp
- 5 hp
- 7.5 hp
- 10 hp
- 15 hp
- 20 hp
- 25 hp
- 30 hp
- 40 hp
- 50 hp

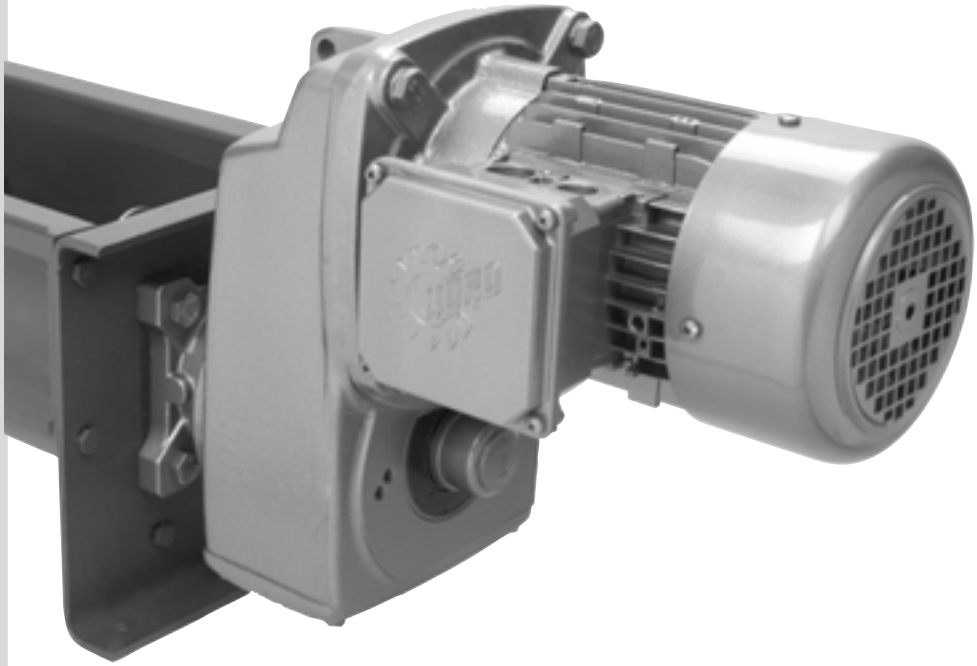

NORD DRIVESYSTEMS

www.nord.com

| Thrust | | Integral Gearmotor | | Reducer |
|---|---|---|---|---|
| Brg [lb] | HD Brg "VL" [lb] | Standard Efficiency Motor | Energy Efficient Motor | C-Face Input |
| 083 | 6750 | SK 4282 SCP - 90L/4 | SK 4282 SCP - 90LH/4 | SK 4282 SCP - 140TC |
| 516 | 6750 | SK 4282 SCP - 90L/4 | SK 4282 SCP - 90LH/4 | SK 4282 SCP - 140TC |
| 056 | 6750 | SK 4282 SCP - 90L/4 | SK 4282 SCP - 90LH/4 | SK 4282 SCP - 140TC |
| 950 | 6750 | SK 4282 SCP - 90L/4 | SK 4282 SCP - 90LH/4 | SK 4282 SCP - 140TC |
| 950 | 6750 | SK 4282 SCP - 90L/4 | SK 4282 SCP - 90LH/4 | SK 4282 SCP - 140TC |
| 950 | 6750 | SK 4282 SCP - 90L/4 | SK 4282 SCP - 90LH/4 | SK 4282 SCP - 140TC |
| 950 | 6750 | SK 4282 SCP - 90L/4 | SK 4282 SCP - 90LH/4 | SK 4282 SCP - 140TC |
| 950 | 6750 | SK 4282 SCP - 90L/4 | SK 4282 SCP - 90LH/4 | SK 4282 SCP - 140TC |
| 950 | 6750 | SK 4282 SCP - 90L/4 | SK 4282 SCP - 90LH/4 | SK 4282 SCP - 140TC |
| 950 | 6750 | SK 4282 SCP - 90L/4 | SK 4282 SCP - 90LH/4 | SK 4282 SCP - 140TC |
| 950 | 6750 | SK 4282 SCP - 90L/4 | SK 4282 SCP - 90LH/4 | SK 4282 SCP - 140TC |
| 50 | 6750 | SK 4282 SCP - 90L/4 | SK 4282 SCP - 90LH/4 | SK 4282 SCP - 140TC |
| | 6750 | SK 4282 SCP - 90L/4 | SK 4282 SCP - 90LH/4 | SK 4282 SCP - |





CLINCHER™



## Explanation of Selection Tables

**OUTPUT SPEED** – Output speed at NORD standard efficiency motor rated speed.

**OUTPUT TORQUE** – Output torque produced by motor.

**SERVICE FACTOR**

**AGMA SERVICE CLASS**

**TOTAL GEAR RATIO**

**NEMA C-FACE INPUT**



| Output Speed | Output Torque | SF | AGMA Class | Gear Ratio | Thrust | | Integral Gearmotor | | Reducer | CEMA DriveShaft | | | | |
|---|---|---|---|---|---|---|---|---|---|---|---|---|---|---|
| $n_2$ | $T_2$ | $f_a$ | | i | Std Brg | H.D. Brg " VL" | Standard Efficiency Motor | Energy Efficient Motor | C-Face Input | 1-1/2" | 2" | 2-7/16" | 3" | 3-7/16" |
| [rpm] | [lb-in] | | | | [lb] | [lb] | | | | | | | | |
| 355 | 29 | 26.1 | III | 4.79 | 1613 | 1609 | SK 1282 SCP - 63S/4 | | SK 1282 SCP - 56C | X | X | X | | |
| 311 | 33 | 25.3 | III | 5.47 | 1676 | 1609 | SK 1282 SCP - 63S/4 | | SK 1282 SCP - 56C | X | X | X | | |
| 264 | 38 | 24.4 | III | 6.43 | 1760 | 1609 | SK 1282 SCP - 63S/4 | | SK 1282 SCP - 56C | X | X | X | | |
| 235 | 43 | 23.5 | III | 7.24 | 1825 | 1609 | SK 1282 SCP - 63S/4 | | SK 1282 SCP - 56C | X | X | X | | |
| 207 | 49 | 26.1 | III | 8.21 | 1895 | 1609 | SK 1282 SCP - 63S/4 | | SK 1282 SCP - 56C | X | X | X | | |

**ENERGY EFFICIENCT MOTOR**

**STANDARD EFFICIENCY MOTOR**

**AXIAL LOAD RATING HEAVY DUTY BEARINGS "VL"**

**AXIAL LOAD RATING STANDARD BEARINGS**

**CEMA DRIVESHAFT AVAILABILITY, X=POSSIBLE COMBINATION**



# 0.16 hp Gearmotors & Speed Reducers

| Output Speed | Output Torque | SF | AGMA Class | Gear Ratio | Thrust | | Integral Gearmotor | | Reducer | CEMA DriveShaft | | | | |
|---|---|---|---|---|---|---|---|---|---|---|---|---|---|---|
| $n_2$ | $T_2$ | $f_a$ | | i | Std Brg | H.D. Brg " VL" | Standard Efficiency Motor | Energy Efficient Motor | C-Face Input | 1-1/2" | 2" | 2-7/16" | 3" | 3-7/16" |
| [rpm] | [lb-in] | | | | [lb] | [lb] | | | | | | | | |
| 355 | 29 | 26.1 | III | 4.79 | 1613 | 1609 | SK 1282 SCP - 63S/4 | | SK 1282 SCP - 56C | X | X | X | | |
| 311 | 33 | 25.3 | III | 5.47 | 1676 | 1609 | SK 1282 SCP - 63S/4 | | SK 1282 SCP - 56C | X | X | X | | |
| 264 | 38 | 24.4 | III | 6.43 | 1760 | 1609 | SK 1282 SCP - 63S/4 | | SK 1282 SCP - 56C | X | X | X | | |
| 235 | 43 | 23.5 | III | 7.24 | 1825 | 1609 | SK 1282 SCP - 63S/4 | | SK 1282 SCP - 56C | X | X | X | | |
| 207 | 49 | 26.1 | III | 8.21 | 1895 | 1609 | SK 1282 SCP - 63S/4 | | SK 1282 SCP - 56C | X | X | X | | |
| 206 | 49 | 22.6 | III | 8.24 | 1897 | 1609 | SK 1282 SCP - 63S/4 | | SK 1282 SCP - 56C | X | X | X | | |
| 185 | 55 | 24.4 | III | 9.18 | 1958 | 1609 | SK 1282 SCP - 63S/4 | | SK 1282 SCP - 56C | X | X | X | | |
| 164 | 62 | 23.5 | III | 10.34 | 2030 | 1609 | SK 1282 SCP - 63S/4 | | SK 1282 SCP - 56C | X | X | X | | |
| 145 | 70 | 22.6 | III | 11.76 | 2108 | 1609 | SK 1282 SCP - 63S/4 | | SK 1282 SCP - 56C | X | X | X | | |
| 120 | 84 | 22.1 | III | 14.11 | 2174 | 1609 | SK 1282 SCP - 63S/4 | | SK 1282 SCP - 56C | X | X | X | | |
| 99 | 103 | 19.3 | III | 17.21 | 2174 | 1609 | SK 1282 SCP - 63S/4 | | SK 1282 SCP - 56C | X | X | X | | |
| 83 | 123 | 16.2 | III | 20.57 | 2174 | 1609 | SK 1282 SCP - 63S/4 | | SK 1282 SCP - 56C | X | X | X | | |
| 67 | 150 | 13.2 | III | 25.22 | 2174 | 1609 | SK 1282 SCP - 63S/4 | | SK 1282 SCP - 56C | X | X | X | | |
| 60 | 169 | 11.8 | III | 28.33 | 2174 | 1609 | SK 1282 SCP - 63S/4 | | SK 1282 SCP - 56C | X | X | X | | |
| 53 | 191 | 10.6 | III | 32.08 | 2174 | 1609 | SK 1282 SCP - 63S/4 | | SK 1282 SCP - 56C | X | X | X | | |
| 37 | 276 | 6.3 | III | 46.19 | 2171 | 1609 | SK 1282 SCP - 63S/4 | | SK 1282 SCP - 56C | X | X | X | | |
| 31 | 330 | 6.3 | III | 55.39 | 2171 | 1609 | SK 1282 SCP - 63S/4 | | SK 1282 SCP - 56C | X | X | X | | |
| 26 | 395 | 6 | III | 66.23 | 2171 | 1609 | SK 1282 SCP - 63S/4 | | SK 1282 SCP - 56C | X | X | X | | |
| 21 | 484 | 5.4 | III | 81.17 | 2169 | 1609 | SK 1282 SCP - 63S/4 | | SK 1282 SCP - 56C | X | X | X | | |
| 18 | 552 | 3.7 | III | 92.48 | 2167 | 1609 | SK 1282 SCP - 63S/4 | | SK 1282 SCP - 56C | X | X | X | | |
| 16 | 653 | 2.8 | III | 109.5 | 2162 | 1609 | SK 1282 SCP - 63S/4 | | SK 1282 SCP - 56C | X | X | X | | |

Output speed and torque ratings are based on the "Standard Efficiency Motor" Power and speed. Performance will vary slightly for other motors.

# 0.25 hp Gearmotors & Speed Reducers



| Output Speed | Output Torque | SF | AGMA Class | Gear Ratio | Thrust | | Integral Gearmotor | | Reducer | CEMA DriveShaft | | | | |
|---|---|---|---|---|---|---|---|---|---|---|---|---|---|---|
| $n_2$ | $T_2$ | $f_a$ | | i | Std Brg | H.D. Brg " VL" | Standard Efficiency Motor | Energy Efficient Motor | C-Face Input | 1-1/2" | 2" | 2-7/16" | 3" | 3-7/16" |
| [rpm] | [lb-in] | | | | [lb] | [lb] | | | | | | | | |
| 351 | 46 | 16.3 | III | 4.79 | 1616 | 1609 | SK 1282 SCP - 63L/4 | | SK 1282 SCP - 56C | X | X | X | | |
| 307 | 52 | 15.8 | III | 5.47 | 1681 | 1609 | SK 1282 SCP - 63L/4 | | SK 1282 SCP - 56C | X | X | X | | |
| 261 | 61 | 15.2 | III | 6.43 | 1764 | 1609 | SK 1282 SCP - 63L/4 | | SK 1282 SCP - 56C | X | X | X | | |
| 232 | 69 | 14.7 | III | 7.24 | 1832 | 1609 | SK 1282 SCP - 63L/4 | | SK 1282 SCP - 56C | X | X | X | | |
| 205 | 78 | 16.3 | III | 8.21 | 1897 | 1609 | SK 1282 SCP - 63L/4 | | SK 1282 SCP - 56C | X | X | X | | |
| 204 | 79 | 14.1 | III | 8.24 | 1899 | 1609 | SK 1282 SCP - 63L/4 | | SK 1282 SCP - 56C | X | X | X | | |
| 183 | 88 | 15.2 | III | 9.18 | 1964 | 1609 | SK 1282 SCP - 63L/4 | | SK 1282 SCP - 56C | X | X | X | | |
| 162 | 99 | 14.7 | III | 10.34 | 2032 | 1609 | SK 1282 SCP - 63L/4 | | SK 1282 SCP - 56C | X | X | X | | |
| 143 | 112 | 14.1 | III | 11.76 | 2108 | 1609 | SK 1282 SCP - 63L/4 | | SK 1282 SCP - 56C | X | X | X | | |
| 119 | 135 | 13.8 | III | 14.11 | 2174 | 1609 | SK 1282 SCP - 63L/4 | | SK 1282 SCP - 56C | X | X | X | | |
| 98 | 165 | 12.1 | III | 17.21 | 2174 | 1609 | SK 1282 SCP - 63L/4 | | SK 1282 SCP - 56C | X | X | X | | |
| 82 | 197 | 10.1 | III | 20.57 | 2174 | 1609 | SK 1282 SCP - 63L/4 | | SK 1282 SCP - 56C | X | X | X | | |
| 67 | 241 | 8.3 | III | 25.22 | 2174 | 1609 | SK 1282 SCP - 63L/4 | | SK 1282 SCP - 56C | X | X | X | | |
| 59 | 271 | 7.4 | III | 28.33 | 2171 | 1609 | SK 1282 SCP - 63L/4 | | SK 1282 SCP - 56C | X | X | X | | |
| 52 | 307 | 6.6 | III | 32.08 | 2171 | 1609 | SK 1282 SCP - 63L/4 | | SK 1282 SCP - 56C | X | X | X | | |
| 36 | 442 | 3.9 | III | 46.19 | 2169 | 1609 | SK 1282 SCP - 63L/4 | | SK 1282 SCP - 56C | X | X | X | | |
| 30 | 529 | 3.9 | III | 55.39 | 2167 | 1609 | SK 1282 SCP - 63L/4 | | SK 1282 SCP - 56C | X | X | X | | |
| 25 | 633 | 3.8 | III | 66.23 | 2165 | 1609 | SK 1282 SCP - 63L/4 | | SK 1282 SCP - 56C | X | X | X | | |
| 21 | 776 | 3.4 | III | 81.17 | 2160 | 1609 | SK 1282 SCP - 63L/4 | | SK 1282 SCP - 56C | X | X | X | | |
| 18 | 884 | 2.3 | III | 92.48 | 2156 | 1609 | SK 1282 SCP - 63L/4 | | SK 1282 SCP - 56C | X | X | X | | |
| 15 | 1047 | 1.8 | II | 109.5 | 2147 | 1609 | SK 1282 SCP - 63L/4 | | SK 1282 SCP - 56C | X | X | X | | |

Output speed and torque ratings are based on the "Standard Efficiency Motor" Power and speed. Performance will vary slightly for other motors.



# 0.33 hp Gearmotors & Speed Reducers

| Output Speed | Output Torque | SF | AGMA Class | Gear Ratio | Thrust | | Integral Gearmotor | | Reducer | CEMA DriveShaft | | | | |
|---|---|---|---|---|---|---|---|---|---|---|---|---|---|---|
| $n_2$ | $T_2$ | $f_a$ | | i | Std Brg | H.D. Brg " VL" | Standard Efficiency Motor | Energy Efficient Motor | C-Face Input | 1-1/2" | 2" | 2-7/16" | 3" | 3-7/16" |
| [rpm] | [lb-in] | | | | [lb] | [lb] | | | | | | | | |
| 357 | 59 | 12.6 | III | 4.79 | 1607 | 1609 | SK 1282 SCP - 71S/4 | | SK 1282 SCP - 56C | X | X | X | | |
| 313 | 68 | 12.2 | III | 5.47 | 1672 | 1609 | SK 1282 SCP - 71S/4 | | SK 1282 SCP - 56C | X | X | X | | |
| 266 | 79 | 11.8 | III | 6.43 | 1751 | 1609 | SK 1282 SCP - 71S/4 | | SK 1282 SCP - 56C | X | X | X | | |
| 236 | 89 | 11.4 | III | 7.24 | 1814 | 1609 | SK 1282 SCP - 71S/4 | | SK 1282 SCP - 56C | X | X | X | | |
| 208 | 101 | 12.6 | III | 8.21 | 1888 | 1609 | SK 1282 SCP - 71S/4 | | SK 1282 SCP - 56C | X | X | X | | |
| 208 | 102 | 10.9 | III | 8.24 | 1888 | 1609 | SK 1282 SCP - 71S/4 | | SK 1282 SCP - 56C | X | X | X | | |
| 186 | 113 | 11.8 | III | 9.18 | 1946 | 1609 | SK 1282 SCP - 71S/4 | | SK 1282 SCP - 56C | X | X | X | | |
| 165 | 128 | 11.4 | III | 10.34 | 2016 | 1609 | SK 1282 SCP - 71S/4 | | SK 1282 SCP - 56C | X | X | X | | |
| 145 | 145 | 10.9 | III | 11.76 | 2095 | 1609 | SK 1282 SCP - 71S/4 | | SK 1282 SCP - 56C | X | X | X | | |
| 121 | 174 | 10.7 | III | 14.11 | 2174 | 1609 | SK 1282 SCP - 71S/4 | | SK 1282 SCP - 56C | X | X | X | | |
| 99 | 213 | 9.3 | III | 17.21 | 2174 | 1609 | SK 1282 SCP - 71S/4 | | SK 1282 SCP - 56C | X | X | X | | |
| 83 | 254 | 7.8 | III | 20.57 | 2174 | 1609 | SK 1282 SCP - 71S/4 | | SK 1282 SCP - 56C | X | X | X | | |
| 68 | 312 | 6.4 | III | 25.22 | 2171 | 1609 | SK 1282 SCP - 71S/4 | | SK 1282 SCP - 56C | X | X | X | | |
| 60 | 350 | 5.7 | III | 28.33 | 2171 | 1609 | SK 1282 SCP - 71S/4 | | SK 1282 SCP - 56C | X | X | X | | |
| 53 | 396 | 5.1 | III | 32.08 | 2171 | 1609 | SK 1282 SCP - 71S/4 | | SK 1282 SCP - 56C | X | X | X | | |
| 37 | 571 | 3 | III | 46.19 | 2167 | 1609 | SK 1282 SCP - 71S/4 | | SK 1282 SCP - 56C | X | X | X | | |
| 31 | 684 | 3 | III | 55.39 | 2162 | 1609 | SK 1282 SCP - 71S/4 | | SK 1282 SCP - 56C | X | X | X | | |
| 26 | 818 | 2.9 | III | 66.23 | 2158 | 1609 | SK 1282 SCP - 71S/4 | | SK 1282 SCP - 56C | X | X | X | | |
| 21 | 1003 | 2.6 | III | 81.17 | 2149 | 1609 | SK 1282 SCP - 71S/4 | | SK 1282 SCP - 56C | X | X | X | | |
| 18 | 1143 | 1.8 | II | 92.48 | 2142 | 1609 | SK 1282 SCP - 71S/4 | | SK 1282 SCP - 56C | X | X | X | | |
| 16 | 1353 | 1.4 | II | 109.5 | 2129 | 1609 | SK 1282 SCP - 71S/4 | | SK 1282 SCP - 56C | X | X | X | | |
| | | | | | | | | | | | | | | |
| 25 | 861 | 4.6 | III | 69.67 | 3155 | 3375 | SK 2282 SCP - 71S/4 | | SK 2282 SCP - 56C | X | X | X | | |
| 21 | 1018 | 4.1 | III | 82.42 | 3152 | 3375 | SK 2282 SCP - 71S/4 | | SK 2282 SCP - 56C | X | X | X | | |
| 17 | 1248 | 3.1 | III | 100.98 | 3146 | 3375 | SK 2282 SCP - 71S/4 | | SK 2282 SCP - 56C | X | X | X | | |
| 16 | 1286 | 2.7 | III | 104.07 | 3143 | 3375 | SK 2282 SCP - 71S/4 | | SK 2282 SCP - 56C | X | X | X | | |
| 13 | 1576 | 2.1 | III | 127.51 | 3132 | 3375 | SK 2282 SCP - 71S/4 | | SK 2282 SCP - 56C | X | X | X | | |
| | | | | | | | | | | | | | | |
| 24 | 872 | 5.7 | III | 70.56 | 5146 | 4500 | SK 3282 SCP - 71S/4 | | SK 3282 SCP - 56C | X | X | X | X | |
| 17 | 1247 | 5.7 | III | 100.88 | 5141 | 4500 | SK 3282 SCP - 71S/4 | | SK 3282 SCP - 56C | X | X | X | X | |
| 15 | 1387 | 4.9 | III | 112.23 | 5139 | 4500 | SK 3282 SCP - 71S/4 | | SK 3282 SCP - 56C | X | X | X | X | |

Output speed and torque ratings are based on the "Standard Efficiency Motor" Power and speed. Performance will vary slightly for other motors.

# 0.50 hp Gearmotors & Speed Reducers



| Output Speed | Output Torque | SF | AGMA Class | Gear Ratio | Thrust | | Integral Gearmotor | | Reducer | CEMA DriveShaft | | | | |
|---|---|---|---|---|---|---|---|---|---|---|---|---|---|---|
| $n_2$ | $T_2$ | $f_a$ | | i | Std Brg | H.D. Brg " VL" | Standard Efficiency Motor | Energy Efficient Motor | C-Face Input | 1-1/2" | 2" | 2-7/16" | 3" | 3-7/16" |
| [rpm] | [lb-in] | | | | [lb] | [lb] | | | | | | | | |
| 359 | 87 | 8.6 | III | 4.79 | 1598 | 1609 | SK 1282 SCP - 71L/4 | | SK 1282 SCP - 56C | X | X | X | | |
| 314 | 99 | 8.3 | III | 5.47 | 1663 | 1609 | SK 1282 SCP - 71L/4 | | SK 1282 SCP - 56C | X | X | X | | |
| 267 | 117 | 8 | III | 6.43 | 1744 | 1609 | SK 1282 SCP - 71L/4 | | SK 1282 SCP - 56C | X | X | X | | |
| 238 | 132 | 7.7 | III | 7.24 | 1805 | 1609 | SK 1282 SCP - 71L/4 | | SK 1282 SCP - 56C | X | X | X | | |
| 210 | 149 | 8.6 | III | 8.21 | 1874 | 1609 | SK 1282 SCP - 71L/4 | | SK 1282 SCP - 56C | X | X | X | | |
| 209 | 150 | 7.4 | III | 8.24 | 1874 | 1609 | SK 1282 SCP - 71L/4 | | SK 1282 SCP - 56C | X | X | X | | |
| 187 | 167 | 8 | III | 9.18 | 1937 | 1609 | SK 1282 SCP - 71L/4 | | SK 1282 SCP - 56C | X | X | X | | |
| 166 | 188 | 7.7 | III | 10.34 | 2005 | 1609 | SK 1282 SCP - 71L/4 | | SK 1282 SCP - 56C | X | X | X | | |
| 146 | 214 | 7.4 | III | 11.76 | 2081 | 1609 | SK 1282 SCP - 71L/4 | | SK 1282 SCP - 56C | X | X | X | | |
| 122 | 257 | 7.2 | III | 14.11 | 2174 | 1609 | SK 1282 SCP - 71L/4 | | SK 1282 SCP - 56C | X | X | X | | |
| 100 | 313 | 6.3 | III | 17.21 | 2171 | 1609 | SK 1282 SCP - 71L/4 | | SK 1282 SCP - 56C | X | X | X | | |
| 84 | 374 | 5.3 | III | 20.57 | 2171 | 1609 | SK 1282 SCP - 71L/4 | | SK 1282 SCP - 56C | X | X | X | | |
| 68 | 459 | 4.3 | III | 25.22 | 2169 | 1609 | SK 1282 SCP - 71L/4 | | SK 1282 SCP - 56C | X | X | X | | |
| 61 | 515 | 3.9 | III | 28.33 | 2167 | 1609 | SK 1282 SCP - 71L/4 | | SK 1282 SCP - 56C | X | X | X | | |
| 54 | 583 | 3.5 | III | 32.08 | 2165 | 1609 | SK 1282 SCP - 71L/4 | | SK 1282 SCP - 56C | X | X | X | | |
| 42 | 747 | 2.6 | III | 41.07 | 2160 | 1609 | SK 1282 SCP - 71L/4 | | SK 1282 SCP - 56C | X | X | X | | |
| 37 | 840 | 2.1 | III | 46.19 | 2156 | 1609 | SK 1282 SCP - 71L/4 | | SK 1282 SCP - 56C | X | X | X | | |
| 35 | 895 | 2.6 | III | 49.25 | 2153 | 1609 | SK 1282 SCP - 71L/4 | | SK 1282 SCP - 56C | X | X | X | | |
| 31 | 1007 | 2.1 | III | 55.39 | 2149 | 1609 | SK 1282 SCP - 71L/4 | | SK 1282 SCP - 56C | X | X | X | | |
| 29 | 1071 | 2.3 | III | 58.89 | 2144 | 1609 | SK 1282 SCP - 71L/4 | | SK 1282 SCP - 56C | X | X | X | | |
| 26 | 1204 | 2 | III | 66.23 | 2138 | 1609 | SK 1282 SCP - 71L/4 | | SK 1282 SCP - 56C | X | X | X | | |
| 24 | 1312 | 2 | III | 72.17 | 2131 | 1609 | SK 1282 SCP - 71L/4 | | SK 1282 SCP - 56C | X | X | X | | |
| 21 | 1476 | 1.8 | II | 81.17 | 2120 | 1609 | SK 1282 SCP - 71L/4 | | SK 1282 SCP - 56C | X | X | X | | |
| 19 | 1681 | 1.2 | I | 92.48 | 2102 | 1609 | SK 1282 SCP - 71L/4 | | SK 1282 SCP - 56C | X | X | X | | |
| 301 | 104 | 8.4 | III | 5.72 | 2203 | 3375 | SK 2282 SCP - 71L/4 | | SK 2282 SCP - 56C | X | X | X | | |
| 267 | 117 | 8.1 | III | 6.43 | 2282 | 3375 | SK 2282 SCP - 71L/4 | | SK 2282 SCP - 56C | X | X | X | | |
| 230 | 136 | 7.8 | III | 7.48 | 2383 | 3375 | SK 2282 SCP - 71L/4 | | SK 2282 SCP - 56C | X | X | X | | |
| 205 | 152 | 7.5 | III | 8.37 | 2464 | 3375 | SK 2282 SCP - 71L/4 | | SK 2282 SCP - 56C | X | X | X | | |
| 190 | 164 | 8.4 | III | 9.03 | 2525 | 3375 | SK 2282 SCP - 71L/4 | | SK 2282 SCP - 56C | X | X | X | | |
| 169 | 185 | 8.1 | III | 10.15 | 2610 | 3375 | SK 2282 SCP - 71L/4 | | SK 2282 SCP - 56C | X | X | X | | |

Output speed and torque ratings are based on the "Standard Efficiency Motor" Power and speed. Performance will vary slightly for other motors.



# 0.50 hp Gearmotors & Speed Reducers

| Output Speed | Output Torque | SF | AGMA Class | Gear Ratio | Thrust | | Integral Gearmotor | | Reducer | CEMA DriveShaft | | | | |
|---|---|---|---|---|---|---|---|---|---|---|---|---|---|---|
| $n_2$ | $T_2$ | $f_a$ | | i | Std Brg | H.D. Brg " VL" | Standard Efficiency Motor | Energy Efficient Motor | C-Face Input | 1-1/2" | 2" | 2-7/16" | 3" | 3-7/16" |
| [rpm] | [lb-in] | | | | [lb] | [lb] | | | | | | | | |
| 146 | 215 | 7.8 | III | 11.81 | 2729 | 3375 | SK 2282 SCP - 71L/4 | | SK 2282 SCP - 56C | X | X | X | | |
| 130 | 241 | 7.5 | III | 13.23 | 2824 | 3375 | SK 2282 SCP - 71L/4 | | SK 2282 SCP - 56C | X | X | X | | |
| 104 | 301 | 7.8 | III | 16.53 | 3015 | 3375 | SK 2282 SCP - 71L/4 | | SK 2282 SCP - 56C | X | X | X | | |
| 93 | 337 | 7.5 | III | 18.51 | 3119 | 3375 | SK 2282 SCP - 71L/4 | | SK 2282 SCP - 56C | X | X | X | | |
| 79 | 398 | 7.5 | III | 21.9 | 3164 | 3375 | SK 2282 SCP - 71L/4 | | SK 2282 SCP - 56C | X | X | X | | |
| 72 | 436 | 7.8 | III | 23.96 | 3164 | 3375 | SK 2282 SCP - 71L/4 | | SK 2282 SCP - 56C | X | X | X | | |
| 69 | 454 | 7.2 | III | 24.97 | 3164 | 3375 | SK 2282 SCP - 71L/4 | | SK 2282 SCP - 56C | X | X | X | | |
| 64 | 488 | 7.5 | III | 26.83 | 3161 | 3375 | SK 2282 SCP - 71L/4 | | SK 2282 SCP - 56C | X | X | X | | |
| 58 | 539 | 6.7 | III | 29.65 | 3161 | 3375 | SK 2282 SCP - 71L/4 | | SK 2282 SCP - 56C | X | X | X | | |
| 46 | 676 | 6 | III | 37.18 | 3159 | 3375 | SK 2282 SCP - 71L/4 | | SK 2282 SCP - 56C | X | X | X | | |
| 25 | 1267 | 3.1 | III | 69.67 | 3143 | 3375 | SK 2282 SCP - 71L/4 | | SK 2282 SCP - 56C | X | X | X | | |
| 21 | 1498 | 2.8 | III | 82.42 | 3134 | 3375 | SK 2282 SCP - 71L/4 | | SK 2282 SCP - 56C | X | X | X | | |
| 17 | 1836 | 2.1 | III | 100.98 | 3121 | 3375 | SK 2282 SCP - 71L/4 | | SK 2282 SCP - 56C | X | X | X | | |
| 17 | 1892 | 1.9 | II | 104.07 | 3119 | 3375 | SK 2282 SCP - 71L/4 | | SK 2282 SCP - 56C | X | X | X | | |
| 13 | 2318 | 1.5 | II | 127.51 | 3094 | 3375 | SK 2282 SCP - 71L/4 | | SK 2282 SCP - 56C | X | X | X | | |
| 207 | 151 | 8.5 | III | 8.31 | 2813 | 4381 | SK 3282 SCP - 71L/4 | | SK 3282 SCP - 56C | X | X | X | X | |
| 122 | 257 | 8.5 | III | 14.11 | 3296 | 4500 | SK 3282 SCP - 71L/4 | | SK 3282 SCP - 56C | X | X | X | X | |
| 103 | 303 | 8.5 | III | 16.67 | 3465 | 4500 | SK 3282 SCP - 71L/4 | | SK 3282 SCP - 56C | X | X | X | X | |
| 85 | 367 | 8.5 | III | 20.18 | 3659 | 4500 | SK 3282 SCP - 71L/4 | | SK 3282 SCP - 56C | X | X | X | X | |
| 80 | 389 | 8 | III | 21.38 | 3724 | 4500 | SK 3282 SCP - 71L/4 | | SK 3282 SCP - 56C | X | X | X | X | |
| 77 | 408 | 8.5 | III | 22.45 | 3778 | 4500 | SK 3282 SCP - 71L/4 | | SK 3282 SCP - 56C | X | X | X | X | |
| 73 | 431 | 7.7 | III | 23.71 | 3839 | 4500 | SK 3282 SCP - 71L/4 | | SK 3282 SCP - 56C | X | X | X | X | |
| 66 | 471 | 8 | III | 25.88 | 3938 | 4500 | SK 3282 SCP - 71L/4 | | SK 3282 SCP - 56C | X | X | X | X | |
| 60 | 522 | 7.7 | III | 28.7 | 4061 | 4500 | SK 3282 SCP - 71L/4 | | SK 3282 SCP - 56C | X | X | X | X | |
| 54 | 581 | 7.7 | III | 31.93 | 4185 | 4500 | SK 3282 SCP - 71L/4 | | SK 3282 SCP - 56C | X | X | X | X | |
| 46 | 687 | 6.9 | III | 37.77 | 4399 | 4500 | SK 3282 SCP - 71L/4 | | SK 3282 SCP - 56C | X | X | X | X | |
| 41 | 764 | 6.9 | III | 42.02 | 4534 | 4500 | SK 3282 SCP - 71L/4 | | SK 3282 SCP - 56C | X | X | X | X | |
| 24 | 1283 | 3.9 | III | 70.56 | 5141 | 4500 | SK 3282 SCP - 71L/4 | | SK 3282 SCP - 56C | X | X | X | X | |
| 17 | 1834 | 3.9 | III | 100.88 | 5132 | 4500 | SK 3282 SCP - 71L/4 | | SK 3282 SCP - 56C | X | X | X | X | |
| 15 | 2040 | 3.3 | III | 112.23 | 5130 | 4500 | SK 3282 SCP - 71L/4 | | SK 3282 SCP - 56C | X | X | X | X | |

Output speed and torque ratings are based on the "Standard Efficiency Motor" Power and speed. Performance will vary slightly for other motors.

# 0.75 hp Gearmotors & Speed Reducers



| Output Speed | Output Torque | SF | AGMA Class | Gear Ratio | Thrust | | Integral Gearmotor | | Reducer | CEMA DriveShaft | | | | |
|---|---|---|---|---|---|---|---|---|---|---|---|---|---|---|
| $n_2$ | $T_2$ | $f_a$ | | i | Std Brg | H.D. Brg " VL" | Standard Efficiency Motor | Energy Efficient Motor | C-Face Input | 1-1/2" | 2" | 2-7/16" | 3" | 3-7/16" |
| [rpm] | [lb-in] | | | | [lb] | [lb] | | | | | | | | |
| 357 | 133 | 5.6 | III | 4.79 | 1595 | 1609 | SK 1282 SCP - 80S/4 | | SK 1282 SCP - 56C | X | X | X | | |
| 313 | 151 | 5.5 | III | 5.47 | 1658 | 1609 | SK 1282 SCP - 80S/4 | | SK 1282 SCP - 56C | X | X | X | | |
| 266 | 178 | 5.3 | III | 6.43 | 1739 | 1609 | SK 1282 SCP - 80S/4 | | SK 1282 SCP - 56C | X | X | X | | |
| 236 | 200 | 5.1 | III | 7.24 | 1798 | 1609 | SK 1282 SCP - 80S/4 | | SK 1282 SCP - 56C | X | X | X | | |
| 208 | 227 | 5.6 | III | 8.21 | 1870 | 1609 | SK 1282 SCP - 80S/4 | | SK 1282 SCP - 56C | X | X | X | | |
| 208 | 228 | 4.9 | III | 8.24 | 1870 | 1609 | SK 1282 SCP - 80S/4 | | SK 1282 SCP - 56C | X | X | X | | |
| 186 | 254 | 5.3 | III | 9.18 | 1928 | 1609 | SK 1282 SCP - 80S/4 | | SK 1282 SCP - 56C | X | X | X | | |
| 165 | 286 | 5.1 | III | 10.34 | 1998 | 1609 | SK 1282 SCP - 80S/4 | | SK 1282 SCP - 56C | X | X | X | | |
| 145 | 325 | 4.9 | III | 11.76 | 2072 | 1609 | SK 1282 SCP - 80S/4 | | SK 1282 SCP - 56C | X | X | X | | |
| 121 | 391 | 4.8 | III | 14.11 | 2171 | 1609 | SK 1282 SCP - 80S/4 | | SK 1282 SCP - 56C | X | X | X | | |
| 99 | 476 | 4.2 | III | 17.21 | 2169 | 1609 | SK 1282 SCP - 80S/4 | | SK 1282 SCP - 56C | X | X | X | | |
| 83 | 569 | 3.5 | III | 20.57 | 2167 | 1609 | SK 1282 SCP - 80S/4 | | SK 1282 SCP - 56C | X | X | X | | |
| 68 | 698 | 2.9 | III | 25.22 | 2162 | 1609 | SK 1282 SCP - 80S/4 | | SK 1282 SCP - 56C | X | X | X | | |
| 60 | 784 | 2.5 | III | 28.33 | 2158 | 1609 | SK 1282 SCP - 80S/4 | | SK 1282 SCP - 56C | X | X | X | | |
| 53 | 888 | 2.3 | III | 32.08 | 2153 | 1609 | SK 1282 SCP - 80S/4 | | SK 1282 SCP - 56C | X | X | X | | |
| 42 | 1137 | 1.7 | II | 41.07 | 2142 | 1609 | SK 1282 SCP - 80S/4 | | SK 1282 SCP - 56C | X | X | X | | |
| 35 | 1363 | 1.7 | II | 49.25 | 2126 | 1609 | SK 1282 SCP - 80S/4 | | SK 1282 SCP - 56C | X | X | X | | |
| 29 | 1630 | 1.5 | II | 58.89 | 2106 | 1609 | SK 1282 SCP - 80S/4 | | SK 1282 SCP - 56C | X | X | X | | |
| 24 | 1998 | 1.3 | I | 72.17 | 2072 | 1609 | SK 1282 SCP - 80S/4 | | SK 1282 SCP - 56C | X | X | X | | |
| 299 | 158 | 5.5 | III | 5.72 | 2198 | 3375 | SK 2282 SCP - 80S/4 | | SK 2282 SCP - 56C | X | X | X | | |
| 266 | 178 | 5.3 | III | 6.43 | 2277 | 3375 | SK 2282 SCP - 80S/4 | | SK 2282 SCP - 56C | X | X | X | | |
| 229 | 207 | 5.1 | III | 7.48 | 2383 | 3375 | SK 2282 SCP - 80S/4 | | SK 2282 SCP - 56C | X | X | X | | |
| 204 | 232 | 4.9 | III | 8.37 | 2459 | 3375 | SK 2282 SCP - 80S/4 | | SK 2282 SCP - 56C | X | X | X | | |
| 189 | 250 | 5.5 | III | 9.03 | 2520 | 3375 | SK 2282 SCP - 80S/4 | | SK 2282 SCP - 56C | X | X | X | | |
| 168 | 281 | 5.3 | III | 10.15 | 2610 | 3375 | SK 2282 SCP - 80S/4 | | SK 2282 SCP - 56C | X | X | X | | |
| 145 | 327 | 5.1 | III | 11.81 | 2725 | 3375 | SK 2282 SCP - 80S/4 | | SK 2282 SCP - 56C | X | X | X | | |
| 129 | 366 | 4.9 | III | 13.23 | 2819 | 3375 | SK 2282 SCP - 80S/4 | | SK 2282 SCP - 56C | X | X | X | | |
| 103 | 458 | 5.1 | III | 16.53 | 3008 | 3375 | SK 2282 SCP - 80S/4 | | SK 2282 SCP - 56C | X | X | X | | |
| 92 | 512 | 4.9 | III | 18.51 | 3107 | 3375 | SK 2282 SCP - 80S/4 | | SK 2282 SCP - 56C | X | X | X | | |
| 78 | 606 | 4.9 | III | 21.9 | 3161 | 3375 | SK 2282 SCP - 80S/4 | | SK 2282 SCP - 56C | X | X | X | | |
| 71 | 663 | 5.1 | III | 23.96 | 3159 | 3375 | SK 2282 SCP - 80S/4 | | SK 2282 SCP - 56C | X | X | X | | |
| 68 | 691 | 4.7 | III | 24.97 | 3159 | 3375 | SK 2282 SCP - 80S/4 | | SK 2282 SCP - 56C | X | X | X | | |

Output speed and torque ratings are based on the "Standard Efficiency Motor" Power and speed. Performance will vary slightly for other motors.



# 0.75 hp Gearmotors & Speed Reducers

| Output Speed | Output Torque | SF | AGMA Class | Gear Ratio | Thrust | | Integral Gearmotor | | Reducer | CEMA DriveShaft | | | | |
|---|---|---|---|---|---|---|---|---|---|---|---|---|---|---|
| $n_2$ | $T_2$ | $f_a$ | | i | Std Brg | H.D. Brg " VL" | Standard Efficiency Motor | Energy Efficient Motor | C-Face Input | 1-1/2" | 2" | 2-7/16" | 3" | 3-7/16" |
| [rpm] | [lb-in] | | | | [lb] | [lb] | | | | | | | | |
| 64 | 743 | 4.9 | III | 26.83 | 3157 | 3375 | SK 2282 SCP - 80S/4 | | SK 2282 SCP - 56C | X | X | X | | |
| 58 | 821 | 4.4 | III | 29.65 | 3157 | 3375 | SK 2282 SCP - 80S/4 | | SK 2282 SCP - 56C | X | X | X | | |
| 46 | 1029 | 4 | III | 37.18 | 3150 | 3375 | SK 2282 SCP - 80S/4 | | SK 2282 SCP - 56C | X | X | X | | |
| 38 | 1249 | 3.2 | III | 45.11 | 3146 | 3375 | SK 2282 SCP - 80S/4 | | SK 2282 SCP - 56C | X | X | X | | |
| 32 | 1494 | 3 | III | 53.96 | 3137 | 3375 | SK 2282 SCP - 80S/4 | | SK 2282 SCP - 56C | X | X | X | | |
| 27 | 1767 | 2.6 | III | 63.83 | 3123 | 3375 | SK 2282 SCP - 80S/4 | | SK 2282 SCP - 56C | X | X | X | | |
| 25 | 1928 | 2 | III | 69.67 | 3116 | 3375 | SK 2282 SCP - 80S/4 | | SK 2282 SCP - 56C | X | X | X | | |
| 21 | 2281 | 1.9 | II | 82.42 | 3096 | 3375 | SK 2282 SCP - 80S/4 | | SK 2282 SCP - 56C | X | X | X | | |
| 17 | 2795 | 1.4 | II | 100.98 | 3060 | 3375 | SK 2282 SCP - 80S/4 | | SK 2282 SCP - 56C | X | X | X | | |
| 16 | 2880 | 1.2 | I | 104.07 | 3053 | 3375 | SK 2282 SCP - 80S/4 | | SK 2282 SCP - 56C | X | X | X | | |
| 13 | 3529 | 1 | I | 127.51 | 2997 | 3375 | SK 2282 SCP - 80S/4 | | SK 2282 SCP - 56C | X | X | X | | |
| 206 | 230 | 5.6 | III | 8.31 | 2813 | 4367 | SK 3282 SCP - 80S/4 | | SK 3282 SCP - 56C | X | X | X | X | |
| 121 | 391 | 5.6 | III | 14.11 | 3285 | 4500 | SK 3282 SCP - 80S/4 | | SK 3282 SCP - 56C | X | X | X | X | |
| 103 | 461 | 5.6 | III | 16.67 | 3454 | 4500 | SK 3282 SCP - 80S/4 | | SK 3282 SCP - 56C | X | X | X | X | |
| 85 | 559 | 5.6 | III | 20.18 | 3652 | 4500 | SK 3282 SCP - 80S/4 | | SK 3282 SCP - 56C | X | X | X | X | |
| 80 | 592 | 5.3 | III | 21.38 | 3710 | 4500 | SK 3282 SCP - 80S/4 | | SK 3282 SCP - 56C | X | X | X | X | |
| 76 | 621 | 5.6 | III | 22.45 | 3764 | 4500 | SK 3282 SCP - 80S/4 | | SK 3282 SCP - 56C | X | X | X | X | |
| 72 | 656 | 5.1 | III | 23.71 | 3825 | 4500 | SK 3282 SCP - 80S/4 | | SK 3282 SCP - 56C | X | X | X | X | |
| 66 | 716 | 5.3 | III | 25.88 | 3924 | 4500 | SK 3282 SCP - 80S/4 | | SK 3282 SCP - 56C | X | X | X | X | |
| 60 | 794 | 5.1 | III | 28.7 | 4039 | 4500 | SK 3282 SCP - 80S/4 | | SK 3282 SCP - 56C | X | X | X | X | |
| 54 | 884 | 5.1 | III | 31.93 | 4172 | 4500 | SK 3282 SCP - 80S/4 | | SK 3282 SCP - 56C | X | X | X | X | |
| 45 | 1045 | 4.6 | III | 37.77 | 4374 | 4500 | SK 3282 SCP - 80S/4 | | SK 3282 SCP - 56C | X | X | X | X | |
| 41 | 1163 | 4.6 | III | 42.02 | 4509 | 4500 | SK 3282 SCP - 80S/4 | | SK 3282 SCP - 56C | X | X | X | X | |
| 36 | 1330 | 3.7 | III | 48.04 | 4676 | 4500 | SK 3282 SCP - 80S/4 | | SK 3282 SCP - 56C | X | X | X | X | |
| 31 | 1544 | 3.7 | III | 55.79 | 4889 | 4500 | SK 3282 SCP - 80S/4 | | SK 3282 SCP - 56C | X | X | X | X | |
| 26 | 1824 | 3.7 | III | 65.89 | 5117 | 4500 | SK 3282 SCP - 80S/4 | | SK 3282 SCP - 56C | X | X | X | X | |
| 24 | 1953 | 2.6 | III | 70.56 | 5130 | 4500 | SK 3282 SCP - 80S/4 | | SK 3282 SCP - 56C | X | X | X | X | |
| 21 | 2208 | 3.4 | III | 79.76 | 5126 | 4500 | SK 3282 SCP - 80S/4 | | SK 3282 SCP - 56C | X | X | X | X | |
| 19 | 2456 | 3.4 | III | 88.74 | 5119 | 4500 | SK 3282 SCP - 80S/4 | | SK 3282 SCP - 56C | X | X | X | X | |
| 17 | 2792 | 2.6 | III | 100.88 | 5112 | 4500 | SK 3282 SCP - 80S/4 | | SK 3282 SCP - 56C | X | X | X | X | |
| 15 | 3106 | 2.2 | III | 112.23 | 5101 | 4500 | SK 3282 SCP - 80S/4 | | SK 3282 SCP - 56C | X | X | X | X | |

Output speed and torque ratings are based on the "Standard Efficiency Motor" Power and speed. Performance will vary slightly for other motors.

# 1 hp Gearmotors & Speed Reducers



| Output Speed | Output Torque | SF | AGMA Class | Gear Ratio | Thrust | | Integral Gearmotor | | Reducer | CEMA DriveShaft | | | | |
|---|---|---|---|---|---|---|---|---|---|---|---|---|---|---|
| $n_2$ | $T_2$ | $f_a$ | | i | Std Brg | H.D. Brg " VL" | Standard Efficiency Motor | Energy Efficient Motor | C-Face Input | 1-1/2" | 2" | 2-7/16" | 3" | 3-7/16" |
| [rpm] | [lb-in] | | | | [lb] | [lb] | | | | | | | | |
| 344 | 184 | 4.1 | III | 4.79 | 1604 | 1609 | SK 1282 SCP - 80L/4 | SK 1282 SCP - 80LH/4 | SK 1282 SCP - 140TC | X | X | X | | |
| 302 | 210 | 3.9 | III | 5.47 | 1670 | 1609 | SK 1282 SCP - 80L/4 | SK 1282 SCP - 80LH/4 | SK 1282 SCP - 140TC | X | X | X | | |
| 257 | 247 | 3.8 | III | 6.43 | 1746 | 1609 | SK 1282 SCP - 80L/4 | SK 1282 SCP - 80LH/4 | SK 1282 SCP - 140TC | X | X | X | | |
| 228 | 278 | 3.7 | III | 7.24 | 1809 | 1609 | SK 1282 SCP - 80L/4 | SK 1282 SCP - 80LH/4 | SK 1282 SCP - 140TC | X | X | X | | |
| 201 | 315 | 4.1 | III | 8.21 | 1879 | 1609 | SK 1282 SCP - 80L/4 | SK 1282 SCP - 80LH/4 | SK 1282 SCP - 140TC | X | X | X | | |
| 200 | 317 | 3.5 | III | 8.24 | 1877 | 1609 | SK 1282 SCP - 80L/4 | SK 1282 SCP - 80LH/4 | SK 1282 SCP - 140TC | X | X | X | | |
| 180 | 353 | 3.8 | III | 9.18 | 1937 | 1609 | SK 1282 SCP - 80L/4 | SK 1282 SCP - 80LH/4 | SK 1282 SCP - 140TC | X | X | X | | |
| 160 | 397 | 3.7 | III | 10.34 | 2003 | 1609 | SK 1282 SCP - 80L/4 | SK 1282 SCP - 80LH/4 | SK 1282 SCP - 140TC | X | X | X | | |
| 140 | 452 | 3.5 | III | 11.76 | 2077 | 1609 | SK 1282 SCP - 80L/4 | SK 1282 SCP - 80LH/4 | SK 1282 SCP - 140TC | X | X | X | | |
| 117 | 542 | 3.4 | III | 14.11 | 2167 | 1609 | SK 1282 SCP - 80L/4 | SK 1282 SCP - 80LH/4 | SK 1282 SCP - 140TC | X | X | X | | |
| 96 | 661 | 3 | III | 17.21 | 2162 | 1609 | SK 1282 SCP - 80L/4 | SK 1282 SCP - 80LH/4 | SK 1282 SCP - 140TC | X | X | X | | |
| 80 | 790 | 2.5 | III | 20.57 | 2158 | 1609 | SK 1282 SCP - 80L/4 | SK 1282 SCP - 80LH/4 | SK 1282 SCP - 140TC | X | X | X | | |
| 65 | 969 | 2.1 | III | 25.22 | 2151 | 1609 | SK 1282 SCP - 80L/4 | SK 1282 SCP - 80LH/4 | SK 1282 SCP - 140TC | X | X | X | | |
| 58 | 1088 | 1.8 | II | 28.33 | 2144 | 1609 | SK 1282 SCP - 80L/4 | SK 1282 SCP - 80LH/4 | SK 1282 SCP - 140TC | X | X | X | | |
| 51 | 1232 | 1.7 | II | 32.08 | 2135 | 1609 | SK 1282 SCP - 80L/4 | SK 1282 SCP - 80LH/4 | SK 1282 SCP - 140TC | X | X | X | | |
| 40 | 1578 | 1.2 | I | 41.07 | 2111 | 1609 | SK 1282 SCP - 80L/4 | SK 1282 SCP - 80LH/4 | SK 1282 SCP - 140TC | X | X | X | | |
| 34 | 1892 | 1.2 | I | 49.25 | 2084 | 1609 | SK 1282 SCP - 80L/4 | SK 1282 SCP - 80LH/4 | SK 1282 SCP - 140TC | X | X | X | | |
| 28 | 2262 | 1.1 | I | 58.89 | 2041 | 1609 | SK 1282 SCP - 80L/4 | SK 1282 SCP - 80LH/4 | SK 1282 SCP - 140TC | X | X | X | | |
| 23 | 2773 | 0.9 | * | 72.17 | 1971 | 1609 | SK 1282 SCP - 80L/4 | SK 1282 SCP - 80LH/4 | SK 1282 SCP - 140TC | X | X | X | | |
| 288 | 220 | 4 | III | 5.72 | 2221 | 3375 | SK 2282 SCP - 80L/4 | SK 2282 SCP - 80LH/4 | SK 2282 SCP - 140TC | X | X | X | | |
| 257 | 247 | 3.8 | III | 6.43 | 2295 | 3375 | SK 2282 SCP - 80L/4 | SK 2282 SCP - 80LH/4 | SK 2282 SCP - 140TC | X | X | X | | |
| 221 | 287 | 3.7 | III | 7.48 | 2396 | 3375 | SK 2282 SCP - 80L/4 | SK 2282 SCP - 80LH/4 | SK 2282 SCP - 140TC | X | X | X | | |
| 197 | 322 | 3.6 | III | 8.37 | 2480 | 3375 | SK 2282 SCP - 80L/4 | SK 2282 SCP - 80LH/4 | SK 2282 SCP - 140TC | X | X | X | | |
| 183 | 347 | 4 | III | 9.03 | 2536 | 3375 | SK 2282 SCP - 80L/4 | SK 2282 SCP - 80LH/4 | SK 2282 SCP - 140TC | X | X | X | | |
| 163 | 390 | 3.8 | III | 10.15 | 2621 | 3375 | SK 2282 SCP - 80L/4 | SK 2282 SCP - 80LH/4 | SK 2282 SCP - 140TC | X | X | X | | |
| 140 | 454 | 3.7 | III | 11.81 | 2745 | 3375 | SK 2282 SCP - 80L/4 | SK 2282 SCP - 80LH/4 | SK 2282 SCP - 140TC | X | X | X | | |
| 125 | 508 | 3.6 | III | 13.23 | 2831 | 3375 | SK 2282 SCP - 80L/4 | SK 2282 SCP - 80LH/4 | SK 2282 SCP - 140TC | X | X | X | | |
| 100 | 635 | 3.7 | III | 16.53 | 3022 | 3375 | SK 2282 SCP - 80L/4 | SK 2282 SCP - 80LH/4 | SK 2282 SCP - 140TC | X | X | X | | |
| 89 | 711 | 3.6 | III | 18.51 | 3128 | 3375 | SK 2282 SCP - 80L/4 | SK 2282 SCP - 80LH/4 | SK 2282 SCP - 140TC | X | X | X | | |
| 75 | 841 | 3.6 | III | 21.9 | 3157 | 3375 | SK 2282 SCP - 80L/4 | SK 2282 SCP - 80LH/4 | SK 2282 SCP - 140TC | X | X | X | | |
| 69 | 920 | 3.7 | III | 23.96 | 3155 | 3375 | SK 2282 SCP - 80L/4 | SK 2282 SCP - 80LH/4 | SK 2282 SCP - 140TC | X | X | X | | |

Output speed and torque ratings are based on the "Standard Efficiency Motor" Power and speed. Performance will vary slightly for other motors.



# 1 hp Gearmotors & Speed Reducers

| Output Speed | Output Torque | SF | AGMA Class | Gear Ratio | Thrust | | Integral Gearmotor | | Reducer | CEMA DriveShaft | | | | |
|---|---|---|---|---|---|---|---|---|---|---|---|---|---|---|
| $n_2$ | $T_2$ | $f_a$ | | i | Std Brg | H.D. Brg " VL" | Standard Efficiency Motor | Energy Efficient Motor | C-Face Input | 1-1/2" | 2" | 2-7/16" | 3" | 3-7/16" |
| [rpm] | [lb-in] | | | | [lb] | [lb] | | | | | | | | |
| 66 | 959 | 3.4 | III | 24.97 | 3152 | 3375 | SK 2282 SCP - 80L/4 | SK 2282 SCP - 80LH/4 | SK 2282 SCP - 140TC | X | X | X | | |
| 61 | 1031 | 3.6 | III | 26.83 | 3150 | 3375 | SK 2282 SCP - 80L/4 | SK 2282 SCP - 80LH/4 | SK 2282 SCP - 140TC | X | X | X | | |
| 56 | 1139 | 3.2 | III | 29.65 | 3148 | 3375 | SK 2282 SCP - 80L/4 | SK 2282 SCP - 80LH/4 | SK 2282 SCP - 140TC | X | X | X | | |
| 44 | 1428 | 2.9 | III | 37.18 | 3139 | 3375 | SK 2282 SCP - 80L/4 | SK 2282 SCP - 80LH/4 | SK 2282 SCP - 140TC | X | X | X | | |
| 37 | 1733 | 2.3 | III | 45.11 | 3125 | 3375 | SK 2282 SCP - 80L/4 | SK 2282 SCP - 80LH/4 | SK 2282 SCP - 140TC | X | X | X | | |
| 31 | 2073 | 2.2 | III | 53.96 | 3107 | 3375 | SK 2282 SCP - 80L/4 | SK 2282 SCP - 80LH/4 | SK 2282 SCP - 140TC | X | X | X | | |
| 26 | 2452 | 1.9 | II | 63.83 | 3085 | 3375 | SK 2282 SCP - 80L/4 | SK 2282 SCP - 80LH/4 | SK 2282 SCP - 140TC | X | X | X | | |
| 24 | 2677 | 1.5 | II | 69.67 | 3069 | 3375 | SK 2282 SCP - 80L/4 | SK 2282 SCP - 80LH/4 | SK 2282 SCP - 140TC | X | X | X | | |
| 20 | 3166 | 1.3 | I | 82.42 | 3031 | 3375 | SK 2282 SCP - 80L/4 | SK 2282 SCP - 80LH/4 | SK 2282 SCP - 140TC | X | X | X | | |
| 16 | 3879 | 1 | I | 100.98 | 2959 | 3375 | SK 2282 SCP - 80L/4 | SK 2282 SCP - 80LH/4 | SK 2282 SCP - 140TC | X | X | X | | |
| | | | | | | | | | | | | | | |
| 199 | 319 | 4 | III | 8.31 | 2831 | 4403 | SK 3282 SCP - 80L/4 | SK 3282 SCP - 80LH/4 | SK 3282 SCP - 140TC | X | X | X | X | |
| 117 | 542 | 4 | III | 14.11 | 3308 | 4500 | SK 3282 SCP - 80L/4 | SK 3282 SCP - 80LH/4 | SK 3282 SCP - 140TC | X | X | X | X | |
| 99 | 640 | 4 | III | 16.67 | 3474 | 4500 | SK 3282 SCP - 80L/4 | SK 3282 SCP - 80LH/4 | SK 3282 SCP - 140TC | X | X | X | X | |
| 82 | 775 | 4 | III | 20.18 | 3670 | 4500 | SK 3282 SCP - 80L/4 | SK 3282 SCP - 80LH/4 | SK 3282 SCP - 140TC | X | X | X | X | |
| 77 | 821 | 3.8 | III | 21.38 | 3735 | 4500 | SK 3282 SCP - 80L/4 | SK 3282 SCP - 80LH/4 | SK 3282 SCP - 140TC | X | X | X | X | |
| 73 | 862 | 4 | III | 22.45 | 3794 | 4500 | SK 3282 SCP - 80L/4 | SK 3282 SCP - 80LH/4 | SK 3282 SCP - 140TC | X | X | X | X | |
| 70 | 911 | 3.7 | III | 23.71 | 3843 | 4500 | SK 3282 SCP - 80L/4 | SK 3282 SCP - 80LH/4 | SK 3282 SCP - 140TC | X | X | X | X | |
| 64 | 994 | 3.8 | III | 25.88 | 3942 | 4500 | SK 3282 SCP - 80L/4 | SK 3282 SCP - 80LH/4 | SK 3282 SCP - 140TC | X | X | X | X | |
| 57 | 1103 | 3.7 | III | 28.7 | 4064 | 4500 | SK 3282 SCP - 80L/4 | SK 3282 SCP - 80LH/4 | SK 3282 SCP - 140TC | X | X | X | X | |
| 52 | 1227 | 3.7 | III | 31.93 | 4187 | 4500 | SK 3282 SCP - 80L/4 | SK 3282 SCP - 80LH/4 | SK 3282 SCP - 140TC | X | X | X | X | |
| 44 | 1451 | 3.3 | III | 37.77 | 4385 | 4500 | SK 3282 SCP - 80L/4 | SK 3282 SCP - 80LH/4 | SK 3282 SCP - 140TC | X | X | X | X | |
| 39 | 1614 | 3.3 | III | 42.02 | 4518 | 4500 | SK 3282 SCP - 80L/4 | SK 3282 SCP - 80LH/4 | SK 3282 SCP - 140TC | X | X | X | X | |
| 34 | 1846 | 2.6 | III | 48.04 | 4685 | 4500 | SK 3282 SCP - 80L/4 | SK 3282 SCP - 80LH/4 | SK 3282 SCP - 140TC | X | X | X | X | |
| 30 | 2143 | 2.7 | III | 55.79 | 4878 | 4500 | SK 3282 SCP - 80L/4 | SK 3282 SCP - 80LH/4 | SK 3282 SCP - 140TC | X | X | X | X | |
| 25 | 2531 | 2.7 | III | 65.89 | 5119 | 4500 | SK 3282 SCP - 80L/4 | SK 3282 SCP - 80LH/4 | SK 3282 SCP - 140TC | X | X | X | X | |
| 23 | 2711 | 1.8 | II | 70.56 | 5114 | 4500 | SK 3282 SCP - 80L/4 | SK 3282 SCP - 80LH/4 | SK 3282 SCP - 140TC | X | X | X | X | |
| 21 | 3064 | 2.5 | III | 79.76 | 5103 | 4500 | SK 3282 SCP - 80L/4 | SK 3282 SCP - 80LH/4 | SK 3282 SCP - 140TC | X | X | X | X | |
| 19 | 3409 | 2.5 | III | 88.74 | 5092 | 4500 | SK 3282 SCP - 80L/4 | SK 3282 SCP - 80LH/4 | SK 3282 SCP - 140TC | X | X | X | X | |
| 16 | 3876 | 1.8 | II | 100.88 | 5076 | 4500 | SK 3282 SCP - 80L/4 | SK 3282 SCP - 80LH/4 | SK 3282 SCP - 140TC | X | X | X | X | |
| 15 | 4312 | 1.6 | II | 112.23 | 5058 | 4500 | SK 3282 SCP - 80L/4 | SK 3282 SCP - 80LH/4 | SK 3282 SCP - 140TC | X | X | X | X | |

Output speed and torque ratings are based on the "Standard Efficiency Motor" Power and speed. Performance will vary slightly for other motors.

# 1.5 hp Gearmotors & Speed Reducers





| Output Speed | Output Torque | SF | AGMA Class | Gear Ratio | Thrust | | Integral Gearmotor | | Reducer | CEMA DriveShaft | | | | |
|---|---|---|---|---|---|---|---|---|---|---|---|---|---|---|
| $n_2$ | $T_2$ | $f_a$ | | i | Std Brg | H.D. Brg " VL" | Standard Efficiency Motor | Energy Efficient Motor | C-Face Input | 1-1/2" | 2" | 2-7/16" | 3" | 3-7/16" |
| [rpm] | [lb-in] | | | | [lb] | [lb] | | | | | | | | |
| 347 | 273 | 4.1 | III | 4.79 | 1591 | 1609 | SK 1282 SCP - 90S/4 | SK 1282 SCP - 90SH/4 | SK 1282 SCP - 140TC | X | X | X | | |
| 303 | 312 | 4.1 | III | 5.47 | 1652 | 1609 | SK 1282 SCP - 90S/4 | SK 1282 SCP - 90SH/4 | SK 1282 SCP - 140TC | X | X | X | | |
| 258 | 367 | 3.9 | III | 6.43 | 1728 | 1609 | SK 1282 SCP - 90S/4 | SK 1282 SCP - 90SH/4 | SK 1282 SCP - 140TC | X | X | X | | |
| 229 | 413 | 3.8 | III | 7.24 | 1791 | 1609 | SK 1282 SCP - 90S/4 | SK 1282 SCP - 90SH/4 | SK 1282 SCP - 140TC | X | X | X | | |
| 202 | 468 | 3 | III | 8.21 | 1856 | 1609 | SK 1282 SCP - 90S/4 | SK 1282 SCP - 90SH/4 | SK 1282 SCP - 140TC | X | X | X | | |
| 201 | 470 | 3.6 | III | 8.24 | 1854 | 1609 | SK 1282 SCP - 90S/4 | SK 1282 SCP - 90SH/4 | SK 1282 SCP - 140TC | X | X | X | | |
| 181 | 523 | 3.2 | III | 9.18 | 1913 | 1609 | SK 1282 SCP - 90S/4 | SK 1282 SCP - 90SH/4 | SK 1282 SCP - 140TC | X | X | X | | |
| 161 | 590 | 2.9 | III | 10.34 | 1976 | 1609 | SK 1282 SCP - 90S/4 | SK 1282 SCP - 90SH/4 | SK 1282 SCP - 140TC | X | X | X | | |
| 141 | 671 | 2.7 | III | 11.76 | 2045 | 1609 | SK 1282 SCP - 90S/4 | SK 1282 SCP - 90SH/4 | SK 1282 SCP - 140TC | X | X | X | | |
| 118 | 805 | 2.3 | III | 14.11 | 2158 | 1609 | SK 1282 SCP - 90S/4 | SK 1282 SCP - 90SH/4 | SK 1282 SCP - 140TC | X | X | X | | |
| 96 | 981 | 2 | III | 17.21 | 2149 | 1609 | SK 1282 SCP - 90S/4 | SK 1282 SCP - 90SH/4 | SK 1282 SCP - 140TC | X | X | X | | |
| 81 | 1173 | 1.7 | II | 20.57 | 2140 | 1609 | SK 1282 SCP - 90S/4 | SK 1282 SCP - 90SH/4 | SK 1282 SCP - 140TC | X | X | X | | |
| 66 | 1438 | 1.4 | II | 25.22 | 2122 | 1609 | SK 1282 SCP - 90S/4 | SK 1282 SCP - 90SH/4 | SK 1282 SCP - 140TC | X | X | X | | |
| 59 | 1615 | 1.2 | I | 28.33 | 2108 | 1609 | SK 1282 SCP - 90S/4 | SK 1282 SCP - 90SH/4 | SK 1282 SCP - 140TC | X | X | X | | |
| 52 | 1829 | 1.1 | I | 32.08 | 2088 | 1609 | SK 1282 SCP - 90S/4 | SK 1282 SCP - 90SH/4 | SK 1282 SCP - 140TC | X | X | X | | |
| 368 | 257 | 4.4 | III | 4.51 | 2054 | 3375 | SK 2282 SCP - 90S/4 | SK 2282 SCP - 90SH/4 | SK 2282 SCP - 140TC | X | X | X | | |
| 290 | 326 | 4.2 | III | 5.72 | 2203 | 3375 | SK 2282 SCP - 90S/4 | SK 2282 SCP - 90SH/4 | SK 2282 SCP - 140TC | X | X | X | | |
| 258 | 367 | 4 | III | 6.43 | 2277 | 3375 | SK 2282 SCP - 90S/4 | SK 2282 SCP - 90SH/4 | SK 2282 SCP - 140TC | X | X | X | | |
| 222 | 427 | 3.8 | III | 7.48 | 2381 | 3375 | SK 2282 SCP - 90S/4 | SK 2282 SCP - 90SH/4 | SK 2282 SCP - 140TC | X | X | X | | |
| 198 | 477 | 3.7 | III | 8.37 | 2455 | 3375 | SK 2282 SCP - 90S/4 | SK 2282 SCP - 90SH/4 | SK 2282 SCP - 140TC | X | X | X | | |
| 184 | 515 | 4.2 | III | 9.03 | 2513 | 3375 | SK 2282 SCP - 90S/4 | SK 2282 SCP - 90SH/4 | SK 2282 SCP - 140TC | X | X | X | | |
| 164 | 579 | 4 | III | 10.15 | 2599 | 3375 | SK 2282 SCP - 90S/4 | SK 2282 SCP - 90SH/4 | SK 2282 SCP - 140TC | X | X | X | | |
| 141 | 673 | 3.8 | III | 11.81 | 2714 | 3375 | SK 2282 SCP - 90S/4 | SK 2282 SCP - 90SH/4 | SK 2282 SCP - 140TC | X | X | X | | |
| 125 | 754 | 3.7 | III | 13.23 | 2804 | 3375 | SK 2282 SCP - 90S/4 | SK 2282 SCP - 90SH/4 | SK 2282 SCP - 140TC | X | X | X | | |
| 100 | 943 | 3.8 | III | 16.53 | 2986 | 3375 | SK 2282 SCP - 90S/4 | SK 2282 SCP - 90SH/4 | SK 2282 SCP - 140TC | X | X | X | | |
| 90 | 1056 | 3.7 | III | 18.51 | 3085 | 3375 | SK 2282 SCP - 90S/4 | SK 2282 SCP - 90SH/4 | SK 2282 SCP - 140TC | X | X | X | | |
| 76 | 1249 | 3.4 | III | 21.9 | 3146 | 3375 | SK 2282 SCP - 90S/4 | SK 2282 SCP - 90SH/4 | SK 2282 SCP - 140TC | X | X | X | | |
| 69 | 1366 | 2.8 | III | 23.96 | 3141 | 3375 | SK 2282 SCP - 90S/4 | SK 2282 SCP - 90SH/4 | SK 2282 SCP - 140TC | X | X | X | | |
| 66 | 1424 | 3 | III | 24.97 | 3139 | 3375 | SK 2282 SCP - 90S/4 | SK 2282 SCP - 90SH/4 | SK 2282 SCP - 140TC | X | X | X | | |
| 62 | 1530 | 2.5 | III | 26.83 | 3134 | 3375 | SK 2282 SCP - 90S/4 | SK 2282 SCP - 90SH/4 | SK 2282 SCP - 140TC | X | X | X | | |
| 56 | 1691 | 2.6 | III | 29.65 | 3128 | 3375 | SK 2282 SCP - 90S/4 | SK 2282 SCP - 90SH/4 | SK 2282 SCP - 140TC | X | X | X | | |
| 53 | 1781 | 2.2 | III | 31.23 | 3123 | 3375 | SK 2282 SCP - 90S/4 | SK 2282 SCP - 90SH/4 | SK 2282 SCP - 140TC | X | X | X | | |
| 45 | 2084 | 2.1 | III | 36.54 | 3107 | 3375 | SK 2282 SCP - 90S/4 | SK 2282 SCP - 90SH/4 | SK 2282 SCP - 140TC | X | X | X | | |
| 45 | 2120 | 1.9 | II | 37.18 | 3105 | 3375 | SK 2282 SCP - 90S/4 | SK 2282 SCP - 90SH/4 | SK 2282 SCP - 140TC | X | X | X | | |
| 38 | 2493 | 2 | III | 43.71 | 3083 | 3375 | SK 2282 SCP - 90S/4 | SK 2282 SCP - 90SH/4 | SK 2282 SCP - 140TC | X | X | X | | |

Output speed and torque ratings are based on the "Standard Efficiency Motor" Power and speed. Performance will vary slightly for other motors.



# 1.5 hp Gearmotors & Speed Reducers

| Output Speed | Output Torque | SF | AGMA Class | Gear Ratio | Thrust | | Integral Gearmotor | | Reducer | CEMA DriveShaft | | | | |
|---|---|---|---|---|---|---|---|---|---|---|---|---|---|---|
| $n_2$ | $T_2$ | $f_a$ | | i | Std Brg | H.D. Brg " VL" | Standard Efficiency Motor | Energy Efficient Motor | C-Face Input | 1-1/2" | 2" | 2-7/16" | 3" | 3-7/16" |
| [rpm] | [lb-in] | | | | [lb] | [lb] | | | | | | | | |
| 37 | 2572 | 1.5 | II | 45.11 | 3076 | 3375 | SK 2282 SCP - 90S/4 | SK 2282 SCP - 90SH/4 | SK 2282 SCP - 140TC | X | X | X | | |
| 32 | 2949 | 1.6 | II | 51.71 | 3049 | 3375 | SK 2282 SCP - 90S/4 | SK 2282 SCP - 90SH/4 | SK 2282 SCP - 140TC | X | X | X | | |
| 31 | 3077 | 1.5 | II | 53.96 | 3038 | 3375 | SK 2282 SCP - 90S/4 | SK 2282 SCP - 90SH/4 | SK 2282 SCP - 140TC | X | X | X | | |
| 26 | 3640 | 1.3 | I | 63.83 | 2986 | 3375 | SK 2282 SCP - 90S/4 | SK 2282 SCP - 90SH/4 | SK 2282 SCP - 140TC | X | X | X | | |
| 24 | 3973 | 1 | I | 69.67 | 2950 | 3375 | SK 2282 SCP - 90S/4 | SK 2282 SCP - 90SH/4 | SK 2282 SCP - 140TC | X | X | X | | |
| 20 | 4700 | 0.9 | * | 82.42 | 2858 | 3375 | SK 2282 SCP - 90S/4 | SK 2282 SCP - 90SH/4 | SK 2282 SCP - 140TC | X | X | X | | |
| 371 | 255 | 4.4 | III | 4.48 | 2351 | 3650 | SK 3282 SCP - 90S/4 | SK 3282 SCP - 90SH/4 | SK 3282 SCP - 140TC | X | X | X | X | |
| 292 | 324 | 4.8 | III | 5.68 | 2518 | 3911 | SK 3282 SCP - 90S/4 | SK 3282 SCP - 90SH/4 | SK 3282 SCP - 140TC | X | X | X | X | |
| 248 | 382 | 4.6 | III | 6.7 | 2642 | 4104 | SK 3282 SCP - 90S/4 | SK 3282 SCP - 90SH/4 | SK 3282 SCP - 140TC | X | X | X | X | |
| 200 | 474 | 4.4 | III | 8.31 | 2813 | 4361 | SK 3282 SCP - 90S/4 | SK 3282 SCP - 90SH/4 | SK 3282 SCP - 140TC | X | X | X | X | |
| 169 | 559 | 4.6 | III | 9.8 | 2952 | 4500 | SK 3282 SCP - 90S/4 | SK 3282 SCP - 90SH/4 | SK 3282 SCP - 140TC | X | X | X | X | |
| 146 | 649 | 4.6 | III | 11.38 | 3080 | 4500 | SK 3282 SCP - 90S/4 | SK 3282 SCP - 90SH/4 | SK 3282 SCP - 140TC | X | X | X | X | |
| 118 | 805 | 4.4 | III | 14.11 | 3278 | 4500 | SK 3282 SCP - 90S/4 | SK 3282 SCP - 90SH/4 | SK 3282 SCP - 140TC | X | X | X | X | |
| 100 | 951 | 4.4 | III | 16.67 | 3440 | 4500 | SK 3282 SCP - 90S/4 | SK 3282 SCP - 90SH/4 | SK 3282 SCP - 140TC | X | X | X | X | |
| 82 | 1151 | 4.4 | III | 20.18 | 3632 | 4500 | SK 3282 SCP - 90S/4 | SK 3282 SCP - 90SH/4 | SK 3282 SCP - 140TC | X | X | X | X | |
| 78 | 1219 | 4 | III | 21.38 | 3690 | 4500 | SK 3282 SCP - 90S/4 | SK 3282 SCP - 90SH/4 | SK 3282 SCP - 140TC | X | X | X | X | |
| 74 | 1280 | 4.4 | III | 22.45 | 3742 | 4500 | SK 3282 SCP - 90S/4 | SK 3282 SCP - 90SH/4 | SK 3282 SCP - 140TC | X | X | X | X | |
| 70 | 1352 | 3.9 | III | 23.71 | 3796 | 4500 | SK 3282 SCP - 90S/4 | SK 3282 SCP - 90SH/4 | SK 3282 SCP - 140TC | X | X | X | X | |
| 64 | 1476 | 4 | III | 25.88 | 3893 | 4500 | SK 3282 SCP - 90S/4 | SK 3282 SCP - 90SH/4 | SK 3282 SCP - 140TC | X | X | X | X | |
| 58 | 1637 | 3.9 | III | 28.7 | 4005 | 4500 | SK 3282 SCP - 90S/4 | SK 3282 SCP - 90SH/4 | SK 3282 SCP - 140TC | X | X | X | X | |
| 52 | 1821 | 3.9 | III | 31.93 | 4127 | 4500 | SK 3282 SCP - 90S/4 | SK 3282 SCP - 90SH/4 | SK 3282 SCP - 140TC | X | X | X | X | |
| 44 | 2154 | 3.4 | III | 37.77 | 4318 | 4500 | SK 3282 SCP - 90S/4 | SK 3282 SCP - 90SH/4 | SK 3282 SCP - 140TC | X | X | X | X | |
| 43 | 2202 | 2.5 | III | 38.62 | 4325 | 4500 | SK 3282 SCP - 90S/4 | SK 3282 SCP - 90SH/4 | SK 3282 SCP - 140TC | X | X | X | X | |
| 40 | 2396 | 3.4 | III | 42.02 | 4448 | 4500 | SK 3282 SCP - 90S/4 | SK 3282 SCP - 90SH/4 | SK 3282 SCP - 140TC | X | X | X | X | |
| 37 | 2558 | 2.6 | III | 44.85 | 4509 | 4500 | SK 3282 SCP - 90S/4 | SK 3282 SCP - 90SH/4 | SK 3282 SCP - 140TC | X | X | X | X | |
| 35 | 2739 | 1.8 | II | 48.04 | 4583 | 4500 | SK 3282 SCP - 90S/4 | SK 3282 SCP - 90SH/4 | SK 3282 SCP - 140TC | X | X | X | X | |
| 31 | 3021 | 2.5 | III | 52.97 | 4712 | 4500 | SK 3282 SCP - 90S/4 | SK 3282 SCP - 90SH/4 | SK 3282 SCP - 140TC | X | X | X | X | |
| 30 | 3181 | 1.8 | II | 55.79 | 4775 | 4500 | SK 3282 SCP - 90S/4 | SK 3282 SCP - 90SH/4 | SK 3282 SCP - 140TC | X | X | X | X | |
| 26 | 3656 | 2.5 | III | 64.12 | 4961 | 4500 | SK 3282 SCP - 90S/4 | SK 3282 SCP - 90SH/4 | SK 3282 SCP - 140TC | X | X | X | X | |
| 25 | 3757 | 1.8 | II | 65.89 | 4984 | 4500 | SK 3282 SCP - 90S/4 | SK 3282 SCP - 90SH/4 | SK 3282 SCP - 140TC | X | X | X | X | |
| 24 | 4024 | 1.2 | I | 70.56 | 5069 | 4500 | SK 3282 SCP - 90S/4 | SK 3282 SCP - 90SH/4 | SK 3282 SCP - 140TC | X | X | X | X | |
| 21 | 4548 | 1.7 | II | 79.76 | 5047 | 4500 | SK 3282 SCP - 90S/4 | SK 3282 SCP - 90SH/4 | SK 3282 SCP - 140TC | X | X | X | X | |
| 19 | 5060 | 1.7 | II | 88.74 | 5022 | 4500 | SK 3282 SCP - 90S/4 | SK 3282 SCP - 90SH/4 | SK 3282 SCP - 140TC | X | X | X | X | |
| 16 | 5753 | 1.2 | I | 100.88 | 4984 | 4500 | SK 3282 SCP - 90S/4 | SK 3282 SCP - 90SH/4 | SK 3282 SCP - 140TC | X | X | X | X | |
| 15 | 6400 | 1.1 | I | 112.23 | 4943 | 4500 | SK 3282 SCP - 90S/4 | SK 3282 SCP - 90SH/4 | SK 3282 SCP - 140TC | X | X | X | X | |

Output speed and torque ratings are based on the "Standard Efficiency Motor" Power and speed. Performance will vary slightly for other motors.

# 1.5 hp Gearmotors & Speed Reducers





| Output Speed | Output Torque | SF | AGMA Class | Gear Ratio | Thrust | | Integral Gearmotor | | Reducer | CEMA DriveShaft | | | | |
|---|---|---|---|---|---|---|---|---|---|---|---|---|---|---|
| $n_2$ | $T_2$ | $f_a$ | | i | Std Brg | H.D. Brg " VL" | Standard Efficiency Motor | Energy Efficient Motor | C-Face Input | 1-1/2" | 2" | 2-7/16" | 3" | 3-7/16" |
| [rpm] | [lb-in] | | | | [lb] | [lb] | | | | | | | | |
| 274 | 346 | 5.4 | III | 6.06 | 3652 | 6203 | SK 4282 SCP - 90S/4 | SK 4282 SCP - 90SH/4 | SK 4282 SCP - 140TC | | X | X | X | |
| 233 | 407 | 4.9 | III | 7.13 | 3832 | 6509 | SK 4282 SCP - 90S/4 | SK 4282 SCP - 90SH/4 | SK 4282 SCP - 140TC | | X | X | X | |
| 199 | 475 | 4.8 | III | 8.33 | 4007 | 6750 | SK 4282 SCP - 90S/4 | SK 4282 SCP - 90SH/4 | SK 4282 SCP - 140TC | | X | X | X | |
| 180 | 526 | 5.4 | III | 9.23 | 4131 | 6750 | SK 4282 SCP - 90S/4 | SK 4282 SCP - 90SH/4 | SK 4282 SCP - 140TC | | X | X | X | |
| 153 | 619 | 4.9 | III | 10.85 | 4340 | 6750 | SK 4282 SCP - 90S/4 | SK 4282 SCP - 90SH/4 | SK 4282 SCP - 140TC | | X | X | X | |
| 131 | 723 | 4.8 | III | 12.68 | 4534 | 6750 | SK 4282 SCP - 90S/4 | SK 4282 SCP - 90SH/4 | SK 4282 SCP - 140TC | | X | X | X | |
| 109 | 867 | 4.8 | III | 15.2 | 4786 | 6750 | SK 4282 SCP - 90S/4 | SK 4282 SCP - 90SH/4 | SK 4282 SCP - 140TC | | X | X | X | |
| 91 | 1037 | 4.8 | III | 18.18 | 5038 | 6750 | SK 4282 SCP - 90S/4 | SK 4282 SCP - 90SH/4 | SK 4282 SCP - 140TC | | X | X | X | |
| 77 | 1223 | 4.8 | III | 21.45 | 5294 | 6750 | SK 4282 SCP - 90S/4 | SK 4282 SCP - 90SH/4 | SK 4282 SCP - 140TC | | X | X | X | |
| 74 | 1277 | 4.6 | III | 22.39 | 5353 | 6750 | SK 4282 SCP - 90S/4 | SK 4282 SCP - 90SH/4 | SK 4282 SCP - 140TC | | X | X | X | |
| 63 | 1497 | 4.8 | III | 26.25 | 5607 | 6750 | SK 4282 SCP - 90S/4 | SK 4282 SCP - 90SH/4 | SK 4282 SCP - 140TC | | X | X | X | |
| 63 | 1507 | 4.6 | III | 26.43 | 5616 | 6750 | SK 4282 SCP - 90S/4 | SK 4282 SCP - 90SH/4 | SK 4282 SCP - 140TC | | X | X | X | |
| 51 | 1844 | 4.6 | III | 32.34 | 5958 | 6750 | SK 4282 SCP - 90S/4 | SK 4282 SCP - 90SH/4 | SK 4282 SCP - 140TC | | X | X | X | |
| 45 | 2099 | 4.1 | III | 36.81 | 6170 | 6750 | SK 4282 SCP - 90S/4 | SK 4282 SCP - 90SH/4 | SK 4282 SCP - 140TC | | X | X | X | |
| 41 | 2323 | 4.2 | III | 40.74 | 6359 | 6750 | SK 4282 SCP - 90S/4 | SK 4282 SCP - 90SH/4 | SK 4282 SCP - 140TC | | X | X | X | |
| 37 | 2569 | 4.1 | III | 45.05 | 6541 | 6750 | SK 4282 SCP - 90S/4 | SK 4282 SCP - 90SH/4 | SK 4282 SCP - 140TC | | X | X | X | |
| 22 | 4374 | 3.2 | III | 76.7 | 6878 | 6750 | SK 4282 SCP - 90S/4 | SK 4282 SCP - 90SH/4 | SK 4282 SCP - 140TC | | X | X | X | |
| 18 | 5162 | 2.7 | III | 90.52 | 6860 | 6750 | SK 4282 SCP - 90S/4 | SK 4282 SCP - 90SH/4 | SK 4282 SCP - 140TC | | X | X | X | |
| 15 | 6317 | 2.2 | III | 110.78 | 6829 | 6750 | SK 4282 SCP - 90S/4 | SK 4282 SCP - 90SH/4 | SK 4282 SCP - 140TC | | X | X | X | |
| 11 | 8862 | 1.3 | I | 155.4 | 6737 | 6750 | SK 4282 SCP - 90S/4 | SK 4282 SCP - 90SH/4 | SK 4282 SCP - 140TC | | X | X | X | |
| 191 | 496 | 5.7 | III | 8.7 | 5639 | 9000 | SK 5282 SCP - 90S/4 | SK 5282 SCP - 90SH/4 | SK 5282 SCP - 140TC | | X | X | X | X |
| 128 | 741 | 5.7 | III | 13 | 6338 | 9000 | SK 5282 SCP - 90S/4 | SK 5282 SCP - 90SH/4 | SK 5282 SCP - 140TC | | X | X | X | X |
| 108 | 877 | 5.7 | III | 15.38 | 6662 | 9000 | SK 5282 SCP - 90S/4 | SK 5282 SCP - 90SH/4 | SK 5282 SCP - 140TC | | X | X | X | X |
| 94 | 1003 | 5.6 | III | 17.59 | 6935 | 9000 | SK 5282 SCP - 90S/4 | SK 5282 SCP - 90SH/4 | SK 5282 SCP - 140TC | | X | X | X | X |
| 88 | 1077 | 5.7 | III | 18.88 | 7081 | 9000 | SK 5282 SCP - 90S/4 | SK 5282 SCP - 90SH/4 | SK 5282 SCP - 140TC | | X | X | X | X |
| 82 | 1161 | 5.6 | III | 20.36 | 7229 | 9000 | SK 5282 SCP - 90S/4 | SK 5282 SCP - 90SH/4 | SK 5282 SCP - 140TC | | X | X | X | X |
| 66 | 1426 | 5.6 | III | 25 | 7682 | 9000 | SK 5282 SCP - 90S/4 | SK 5282 SCP - 90SH/4 | SK 5282 SCP - 140TC | | X | X | X | X |
| 54 | 1739 | 5.5 | III | 30.5 | 8138 | 9000 | SK 5282 SCP - 90S/4 | SK 5282 SCP - 90SH/4 | SK 5282 SCP - 140TC | | X | X | X | X |
| 50 | 1906 | 5.6 | III | 33.43 | 8377 | 9000 | SK 5282 SCP - 90S/4 | SK 5282 SCP - 90SH/4 | SK 5282 SCP - 140TC | | X | X | X | X |
| 41 | 2327 | 5.5 | III | 40.8 | 8856 | 9000 | SK 5282 SCP - 90S/4 | SK 5282 SCP - 90SH/4 | SK 5282 SCP - 140TC | | X | X | X | X |
| 30 | 3168 | 5.3 | III | 55.55 | 9684 | 9000 | SK 5282 SCP - 90S/4 | SK 5282 SCP - 90SH/4 | SK 5282 SCP - 140TC | | X | X | X | X |
| 20 | 4654 | 3.5 | III | 81.61 | 10035 | 9000 | SK 5282 SCP - 90S/4 | SK 5282 SCP - 90SH/4 | SK 5282 SCP - 140TC | | X | X | X | X |
| 17 | 5713 | 3.5 | III | 100.19 | 10022 | 9000 | SK 5282 SCP - 90S/4 | SK 5282 SCP - 90SH/4 | SK 5282 SCP - 140TC | | X | X | X | X |
| 12 | 7643 | 3.1 | III | 134.03 | 9990 | 9000 | SK 5282 SCP - 90S/4 | SK 5282 SCP - 90SH/4 | SK 5282 SCP - 140TC | | X | X | X | X |

Output speed and torque ratings are based on the "Standard Efficiency Motor" Power and speed. Performance will vary slightly for other motors.



# 2 hp Gearmotors & Speed Reducers

| Output Speed | Output Torque | SF | AGMA Class | Gear Ratio | Thrust | | Integral Gearmotor | | Reducer | CEMA DriveShaft | | | | |
|---|---|---|---|---|---|---|---|---|---|---|---|---|---|---|
| $n_2$ | $T_2$ | $f_a$ | | i | Std Brg | H.D. Brg " VL" | Standard Efficiency Motor | Energy Efficient Motor | C-Face Input | 1-1/2" | 2" | 2-7/16" | 3" | 3-7/16" |
| [rpm] | [lb-in] | | | | [lb] | [lb] | | | | | | | | |
| 347 | 363 | 3.1 | III | 4.79 | 1577 | 1609 | SK 1282 SCP - 90L/4 | SK 1282 SCP - 90LH/4 | SK 1282 SCP - 140TC | X | X | X | | |
| 303 | 415 | 3.1 | III | 5.47 | 1636 | 1609 | SK 1282 SCP - 90L/4 | SK 1282 SCP - 90LH/4 | SK 1282 SCP - 140TC | X | X | X | | |
| 258 | 488 | 3 | III | 6.43 | 1712 | 1609 | SK 1282 SCP - 90L/4 | SK 1282 SCP - 90LH/4 | SK 1282 SCP - 140TC | X | X | X | | |
| 229 | 549 | 2.8 | III | 7.24 | 1771 | 1609 | SK 1282 SCP - 90L/4 | SK 1282 SCP - 90LH/4 | SK 1282 SCP - 140TC | X | X | X | | |
| 202 | 623 | 2.3 | III | 8.21 | 1841 | 1609 | SK 1282 SCP - 90L/4 | SK 1282 SCP - 90LH/4 | SK 1282 SCP - 140TC | X | X | X | | |
| 201 | 625 | 2.7 | III | 8.24 | 1829 | 1609 | SK 1282 SCP - 90L/4 | SK 1282 SCP - 90LH/4 | SK 1282 SCP - 140TC | X | X | X | | |
| 181 | 696 | 2.4 | III | 9.18 | 1890 | 1609 | SK 1282 SCP - 90L/4 | SK 1282 SCP - 90LH/4 | SK 1282 SCP - 140TC | X | X | X | | |
| 161 | 784 | 2.2 | III | 10.34 | 1951 | 1609 | SK 1282 SCP - 90L/4 | SK 1282 SCP - 90LH/4 | SK 1282 SCP - 140TC | X | X | X | | |
| 141 | 892 | 2 | III | 11.76 | 2016 | 1609 | SK 1282 SCP - 90L/4 | SK 1282 SCP - 90LH/4 | SK 1282 SCP - 140TC | X | X | X | | |
| 118 | 1070 | 1.7 | II | 14.11 | 2117 | 1609 | SK 1282 SCP - 90L/4 | SK 1282 SCP - 90LH/4 | SK 1282 SCP - 140TC | X | X | X | | |
| 96 | 1306 | 1.5 | II | 17.21 | 2131 | 1609 | SK 1282 SCP - 90L/4 | SK 1282 SCP - 90LH/4 | SK 1282 SCP - 140TC | X | X | X | | |
| 81 | 1560 | 1.3 | I | 20.57 | 2113 | 1609 | SK 1282 SCP - 90L/4 | SK 1282 SCP - 90LH/4 | SK 1282 SCP - 140TC | X | X | X | | |
| 66 | 1913 | 1 | I | 25.22 | 2081 | 1609 | SK 1282 SCP - 90L/4 | SK 1282 SCP - 90LH/4 | SK 1282 SCP - 140TC | X | X | X | | |
| 59 | 2149 | 0.9 | * | 28.33 | 2054 | 1609 | SK 1282 SCP - 90L/4 | SK 1282 SCP - 90LH/4 | SK 1282 SCP - 140TC | X | X | X | | |
| 368 | 342 | 3.3 | III | 4.51 | 2045 | 3375 | SK 2282 SCP - 90L/4 | SK 2282 SCP - 90LH/4 | SK 2282 SCP - 140TC | X | X | X | | |
| 290 | 434 | 3.1 | III | 5.72 | 2194 | 3375 | SK 2282 SCP - 90L/4 | SK 2282 SCP - 90LH/4 | SK 2282 SCP - 140TC | X | X | X | | |
| 258 | 488 | 3 | III | 6.43 | 2266 | 3375 | SK 2282 SCP - 90L/4 | SK 2282 SCP - 90LH/4 | SK 2282 SCP - 140TC | X | X | X | | |
| 222 | 567 | 2.9 | III | 7.48 | 2365 | 3375 | SK 2282 SCP - 90L/4 | SK 2282 SCP - 90LH/4 | SK 2282 SCP - 140TC | X | X | X | | |
| 198 | 635 | 2.8 | III | 8.37 | 2437 | 3375 | SK 2282 SCP - 90L/4 | SK 2282 SCP - 90LH/4 | SK 2282 SCP - 140TC | X | X | X | | |
| 184 | 685 | 3.1 | III | 9.03 | 2504 | 3375 | SK 2282 SCP - 90L/4 | SK 2282 SCP - 90LH/4 | SK 2282 SCP - 140TC | X | X | X | | |
| 164 | 770 | 3 | III | 10.15 | 2579 | 3375 | SK 2282 SCP - 90L/4 | SK 2282 SCP - 90LH/4 | SK 2282 SCP - 140TC | X | X | X | | |
| 141 | 896 | 2.9 | III | 11.81 | 2691 | 3375 | SK 2282 SCP - 90L/4 | SK 2282 SCP - 90LH/4 | SK 2282 SCP - 140TC | X | X | X | | |
| 125 | 1004 | 2.8 | III | 13.23 | 2777 | 3375 | SK 2282 SCP - 90L/4 | SK 2282 SCP - 90LH/4 | SK 2282 SCP - 140TC | X | X | X | | |
| 100 | 1254 | 2.9 | III | 16.53 | 2959 | 3375 | SK 2282 SCP - 90L/4 | SK 2282 SCP - 90LH/4 | SK 2282 SCP - 140TC | X | X | X | | |
| 90 | 1404 | 2.8 | III | 18.51 | 3049 | 3375 | SK 2282 SCP - 90L/4 | SK 2282 SCP - 90LH/4 | SK 2282 SCP - 140TC | X | X | X | | |
| 76 | 1661 | 2.6 | III | 21.9 | 3128 | 3375 | SK 2282 SCP - 90L/4 | SK 2282 SCP - 90LH/4 | SK 2282 SCP - 140TC | X | X | X | | |
| 69 | 1818 | 2.1 | III | 23.96 | 3121 | 3375 | SK 2282 SCP - 90L/4 | SK 2282 SCP - 90LH/4 | SK 2282 SCP - 140TC | X | X | X | | |
| 66 | 1894 | 2.3 | III | 24.97 | 3116 | 3375 | SK 2282 SCP - 90L/4 | SK 2282 SCP - 90LH/4 | SK 2282 SCP - 140TC | X | X | X | | |
| 62 | 2035 | 1.9 | II | 26.83 | 3110 | 3375 | SK 2282 SCP - 90L/4 | SK 2282 SCP - 90LH/4 | SK 2282 SCP - 140TC | X | X | X | | |
| 56 | 2249 | 2 | III | 29.65 | 3098 | 3375 | SK 2282 SCP - 90L/4 | SK 2282 SCP - 90LH/4 | SK 2282 SCP - 140TC | X | X | X | | |
| 53 | 2369 | 1.7 | II | 31.23 | 3089 | 3375 | SK 2282 SCP - 90L/4 | SK 2282 SCP - 90LH/4 | SK 2282 SCP - 140TC | X | X | X | | |
| 45 | 2772 | 1.6 | II | 36.54 | 3062 | 3375 | SK 2282 SCP - 90L/4 | SK 2282 SCP - 90LH/4 | SK 2282 SCP - 140TC | X | X | X | | |
| 45 | 2821 | 1.4 | II | 37.18 | 3058 | 3375 | SK 2282 SCP - 90L/4 | SK 2282 SCP - 90LH/4 | SK 2282 SCP - 140TC | X | X | X | | |
| 38 | 3316 | 1.5 | II | 43.71 | 3017 | 3375 | SK 2282 SCP - 90L/4 | SK 2282 SCP - 90LH/4 | SK 2282 SCP - 140TC | X | X | X | | |
| 37 | 3422 | 1.2 | I | 45.11 | 3006 | 3375 | SK 2282 SCP - 90L/4 | SK 2282 SCP - 90LH/4 | SK 2282 SCP - 140TC | X | X | X | | |
| 32 | 3923 | 1.2 | I | 51.71 | 2954 | 3375 | SK 2282 SCP - 90L/4 | SK 2282 SCP - 90LH/4 | SK 2282 SCP - 140TC | X | X | X | | |
| 31 | 4094 | 1.1 | I | 53.96 | 2936 | 3375 | SK 2282 SCP - 90L/4 | SK 2282 SCP - 90LH/4 | SK 2282 SCP - 140TC | X | X | X | | |
| 26 | 4842 | 1 | I | 63.83 | 2837 | 3375 | SK 2282 SCP - 90L/4 | SK 2282 SCP - 90LH/4 | SK 2282 SCP - 140TC | X | X | X | | |

Output speed and torque ratings are based on the "Standard Efficiency Motor" Power and speed. Performance will vary slightly for other motors.

# 2 hp Gearmotors & Speed Reducers



| Output Speed $n_2$ [rpm] | Output Torque $T_2$ [lb-in] | SF $f_a$ | AGMA Class | Gear Ratio i | Thrust Std Brg [lb] | Thrust H.D. Brg " VL" [lb] | Integral Gearmotor Standard Efficiency Motor | Integral Gearmotor Energy Efficient Motor | Reducer C-Face Input | CEMA DriveShaft 1-1/2" | 2" | 2-7/16" | 3" | 3-7/16" |
|---|---|---|---|---|---|---|---|---|---|---|---|---|---|---|
| 371 | 340 | 3.3 | III | 4.48 | 2340 | 3632 | SK 3282 SCP - 90L/4 | SK 3282 SCP - 90LH/4 | SK 3282 SCP - 140TC | X | X | X | X | |
| 292 | 431 | 3.6 | III | 5.68 | 2507 | 3886 | SK 3282 SCP - 90L/4 | SK 3282 SCP - 90LH/4 | SK 3282 SCP - 140TC | X | X | X | X | |
| 248 | 508 | 3.5 | III | 6.7 | 2633 | 4070 | SK 3282 SCP - 90L/4 | SK 3282 SCP - 90LH/4 | SK 3282 SCP - 140TC | X | X | X | X | |
| 200 | 630 | 3.3 | III | 8.31 | 2799 | 4327 | SK 3282 SCP - 90L/4 | SK 3282 SCP - 90LH/4 | SK 3282 SCP - 140TC | X | X | X | X | |
| 169 | 743 | 3.5 | III | 9.8 | 2936 | 4500 | SK 3282 SCP - 90L/4 | SK 3282 SCP - 90LH/4 | SK 3282 SCP - 140TC | X | X | X | X | |
| 146 | 863 | 3.5 | III | 11.38 | 3065 | 4500 | SK 3282 SCP - 90L/4 | SK 3282 SCP - 90LH/4 | SK 3282 SCP - 140TC | X | X | X | X | |
| 118 | 1070 | 3.3 | III | 14.11 | 3258 | 4500 | SK 3282 SCP - 90L/4 | SK 3282 SCP - 90LH/4 | SK 3282 SCP - 140TC | X | X | X | X | |
| 100 | 1265 | 3.3 | III | 16.67 | 3411 | 4500 | SK 3282 SCP - 90L/4 | SK 3282 SCP - 90LH/4 | SK 3282 SCP - 140TC | X | X | X | X | |
| 82 | 1531 | 3.3 | III | 20.18 | 3605 | 4500 | SK 3282 SCP - 90L/4 | SK 3282 SCP - 90LH/4 | SK 3282 SCP - 140TC | X | X | X | X | |
| 78 | 1622 | 3 | III | 21.38 | 3650 | 4500 | SK 3282 SCP - 90L/4 | SK 3282 SCP - 90LH/4 | SK 3282 SCP - 140TC | X | X | X | X | |
| 74 | 1703 | 3.3 | III | 22.45 | 3715 | 4500 | SK 3282 SCP - 90L/4 | SK 3282 SCP - 90LH/4 | SK 3282 SCP - 140TC | X | X | X | X | |
| 70 | 1799 | 2.9 | III | 23.71 | 3755 | 4500 | SK 3282 SCP - 90L/4 | SK 3282 SCP - 90LH/4 | SK 3282 SCP - 140TC | X | X | X | X | |
| 64 | 1963 | 3 | III | 25.88 | 3850 | 4500 | SK 3282 SCP - 90L/4 | SK 3282 SCP - 90LH/4 | SK 3282 SCP - 140TC | X | X | X | X | |
| 58 | 2177 | 2.9 | III | 28.7 | 3960 | 4500 | SK 3282 SCP - 90L/4 | SK 3282 SCP - 90LH/4 | SK 3282 SCP - 140TC | X | X | X | X | |
| 52 | 2422 | 2.9 | III | 31.93 | 4070 | 4500 | SK 3282 SCP - 90L/4 | SK 3282 SCP - 90LH/4 | SK 3282 SCP - 140TC | X | X | X | X | |
| 44 | 2865 | 2.6 | III | 37.77 | 4255 | 4500 | SK 3282 SCP - 90L/4 | SK 3282 SCP - 90LH/4 | SK 3282 SCP - 140TC | X | X | X | X | |
| 43 | 2930 | 1.9 | II | 38.62 | 4262 | 4500 | SK 3282 SCP - 90L/4 | SK 3282 SCP - 90LH/4 | SK 3282 SCP - 140TC | X | X | X | X | |
| 40 | 3188 | 2.6 | III | 42.02 | 4379 | 4500 | SK 3282 SCP - 90L/4 | SK 3282 SCP - 90LH/4 | SK 3282 SCP - 140TC | X | X | X | X | |
| 37 | 3402 | 1.9 | II | 44.85 | 4428 | 4500 | SK 3282 SCP - 90L/4 | SK 3282 SCP - 90LH/4 | SK 3282 SCP - 140TC | X | X | X | X | |
| 35 | 3644 | 1.3 | I | 48.04 | 4500 | 4500 | SK 3282 SCP - 90L/4 | SK 3282 SCP - 90LH/4 | SK 3282 SCP - 140TC | X | X | X | X | |
| 31 | 4018 | 1.9 | II | 52.97 | 4626 | 4500 | SK 3282 SCP - 90L/4 | SK 3282 SCP - 90LH/4 | SK 3282 SCP - 140TC | X | X | X | X | |
| 30 | 4232 | 1.3 | I | 55.79 | 4671 | 4500 | SK 3282 SCP - 90L/4 | SK 3282 SCP - 90LH/4 | SK 3282 SCP - 140TC | X | X | X | X | |
| 26 | 4864 | 1.8 | II | 64.12 | 4849 | 4500 | SK 3282 SCP - 90L/4 | SK 3282 SCP - 90LH/4 | SK 3282 SCP - 140TC | X | X | X | X | |
| 25 | 4999 | 1.3 | I | 65.89 | 4874 | 4500 | SK 3282 SCP - 90L/4 | SK 3282 SCP - 90LH/4 | SK 3282 SCP - 140TC | X | X | X | X | |
| 21 | 6051 | 1.2 | I | 79.76 | 4966 | 4500 | SK 3282 SCP - 90L/4 | SK 3282 SCP - 90LH/4 | SK 3282 SCP - 140TC | X | X | X | X | |
| 19 | 6732 | 1.2 | I | 88.74 | 4921 | 4500 | SK 3282 SCP - 90L/4 | SK 3282 SCP - 90LH/4 | SK 3282 SCP - 140TC | X | X | X | X | |
| 274 | 460 | 4.1 | III | 6.06 | 3638 | 6194 | SK 4282 SCP - 90L/4 | SK 4282 SCP - 90LH/4 | SK 4282 SCP - 140TC | | X | X | X | |
| 233 | 541 | 3.7 | III | 7.13 | 3818 | 6478 | SK 4282 SCP - 90L/4 | SK 4282 SCP - 90LH/4 | SK 4282 SCP - 140TC | | X | X | X | |
| 199 | 632 | 3.6 | III | 8.33 | 4001 | 6750 | SK 4282 SCP - 90L/4 | SK 4282 SCP - 90LH/4 | SK 4282 SCP - 140TC | | X | X | X | |
| 180 | 700 | 4.1 | III | 9.23 | 4124 | 6750 | SK 4282 SCP - 90L/4 | SK 4282 SCP - 90LH/4 | SK 4282 SCP - 140TC | | X | X | X | |
| 153 | 823 | 3.7 | III | 10.85 | 4320 | 6750 | SK 4282 SCP - 90L/4 | SK 4282 SCP - 90LH/4 | SK 4282 SCP - 140TC | | X | X | X | |

Output speed and torque ratings are based on the "Standard Efficiency Motor" Power and speed. Performance will vary slightly for other motors.



# 2 hp Gearmotors & Speed Reducers

| Output Speed | Output Torque | SF | AGMA Class | Gear Ratio | Thrust | | Integral Gearmotor | | Reducer | CEMA DriveShaft | | | | |
|---|---|---|---|---|---|---|---|---|---|---|---|---|---|---|
| $n_2$ | $T_2$ | $f_a$ | | i | Std Brg | H.D. Brg " VL" | Standard Efficiency Motor | Energy Efficient Motor | C-Face Input | 1-1/2" | 2" | 2-7/16" | 3" | 3-7/16" |
| [rpm] | [lb-in] | | | | [lb] | [lb] | | | | | | | | |
| 131 | 962 | 3.6 | III | 12.68 | 4518 | 6750 | SK 4282 SCP - 90L/4 | SK 4282 SCP - 90LH/4 | SK 4282 SCP - 140TC | | X | X | X | |
| 109 | 1153 | 3.6 | III | 15.2 | 4763 | 6750 | SK 4282 SCP - 90L/4 | SK 4282 SCP - 90LH/4 | SK 4282 SCP - 140TC | | X | X | X | |
| 91 | 1379 | 3.6 | III | 18.18 | 5013 | 6750 | SK 4282 SCP - 90L/4 | SK 4282 SCP - 90LH/4 | SK 4282 SCP - 140TC | | X | X | X | |
| 77 | 1627 | 3.6 | III | 21.45 | 5258 | 6750 | SK 4282 SCP - 90L/4 | SK 4282 SCP - 90LH/4 | SK 4282 SCP - 140TC | | X | X | X | |
| 74 | 1699 | 3.4 | III | 22.39 | 5317 | 6750 | SK 4282 SCP - 90L/4 | SK 4282 SCP - 90LH/4 | SK 4282 SCP - 140TC | | X | X | X | |
| 63 | 1991 | 3.6 | III | 26.25 | 5569 | 6750 | SK 4282 SCP - 90L/4 | SK 4282 SCP - 90LH/4 | SK 4282 SCP - 140TC | | X | X | X | |
| 63 | 2005 | 3.4 | III | 26.43 | 5587 | 6750 | SK 4282 SCP - 90L/4 | SK 4282 SCP - 90LH/4 | SK 4282 SCP - 140TC | | X | X | X | |
| 51 | 2453 | 3.4 | III | 32.34 | 5904 | 6750 | SK 4282 SCP - 90L/4 | SK 4282 SCP - 90LH/4 | SK 4282 SCP - 140TC | | X | X | X | |
| 45 | 2792 | 3.1 | III | 36.81 | 6122 | 6750 | SK 4282 SCP - 90L/4 | SK 4282 SCP - 90LH/4 | SK 4282 SCP - 140TC | | X | X | X | |
| 41 | 3091 | 3.2 | III | 40.74 | 6298 | 6750 | SK 4282 SCP - 90L/4 | SK 4282 SCP - 90LH/4 | SK 4282 SCP - 140TC | | X | X | X | |
| 37 | 3418 | 3.1 | III | 45.05 | 6489 | 6750 | SK 4282 SCP - 90L/4 | SK 4282 SCP - 90LH/4 | SK 4282 SCP - 140TC | | X | X | X | |
| 22 | 5819 | 2.4 | III | 76.7 | 6845 | 6750 | SK 4282 SCP - 90L/4 | SK 4282 SCP - 90LH/4 | SK 4282 SCP - 140TC | | X | X | X | |
| 18 | 6867 | 2.1 | III | 90.52 | 6813 | 6750 | SK 4282 SCP - 90L/4 | SK 4282 SCP - 90LH/4 | SK 4282 SCP - 140TC | | X | X | X | |
| 15 | 8404 | 1.7 | II | 110.78 | 6757 | 6750 | SK 4282 SCP - 90L/4 | SK 4282 SCP - 90LH/4 | SK 4282 SCP - 140TC | | X | X | X | |
| 11 | 11789 | 1 | I | 155.4 | 6590 | 6750 | SK 4282 SCP - 90L/4 | SK 4282 SCP - 90LH/4 | SK 4282 SCP - 140TC | | X | X | X | |
| 191 | 660 | 4.3 | III | 8.7 | 5612 | 9000 | SK 5282 SCP - 90L/4 | SK 5282 SCP - 90LH/4 | SK 5282 SCP - 140TC | | X | X | X | X |
| 128 | 986 | 4.3 | III | 13 | 6318 | 9000 | SK 5282 SCP - 90L/4 | SK 5282 SCP - 90LH/4 | SK 5282 SCP - 140TC | | X | X | X | X |
| 108 | 1167 | 4.3 | III | 15.38 | 6640 | 9000 | SK 5282 SCP - 90L/4 | SK 5282 SCP - 90LH/4 | SK 5282 SCP - 140TC | | X | X | X | X |
| 94 | 1334 | 4.2 | III | 17.59 | 6912 | 9000 | SK 5282 SCP - 90L/4 | SK 5282 SCP - 90LH/4 | SK 5282 SCP - 140TC | | X | X | X | X |
| 88 | 1432 | 4.3 | III | 18.88 | 7056 | 9000 | SK 5282 SCP - 90L/4 | SK 5282 SCP - 90LH/4 | SK 5282 SCP - 140TC | | X | X | X | X |
| 82 | 1545 | 4.2 | III | 20.36 | 7205 | 9000 | SK 5282 SCP - 90L/4 | SK 5282 SCP - 90LH/4 | SK 5282 SCP - 140TC | | X | X | X | X |
| 66 | 1897 | 4.2 | III | 25 | 7657 | 9000 | SK 5282 SCP - 90L/4 | SK 5282 SCP - 90LH/4 | SK 5282 SCP - 140TC | | X | X | X | X |
| 54 | 2314 | 4.1 | III | 30.5 | 8123 | 9000 | SK 5282 SCP - 90L/4 | SK 5282 SCP - 90LH/4 | SK 5282 SCP - 140TC | | X | X | X | X |
| 50 | 2536 | 4.2 | III | 33.43 | 8332 | 9000 | SK 5282 SCP - 90L/4 | SK 5282 SCP - 90LH/4 | SK 5282 SCP - 140TC | | X | X | X | X |
| 41 | 3095 | 4.1 | III | 40.8 | 8811 | 9000 | SK 5282 SCP - 90L/4 | SK 5282 SCP - 90LH/4 | SK 5282 SCP - 140TC | | X | X | X | X |
| 30 | 4214 | 4 | III | 55.55 | 9644 | 9000 | SK 5282 SCP - 90L/4 | SK 5282 SCP - 90LH/4 | SK 5282 SCP - 140TC | | X | X | X | X |
| 20 | 6191 | 2.6 | III | 81.61 | 10015 | 9000 | SK 5282 SCP - 90L/4 | SK 5282 SCP - 90LH/4 | SK 5282 SCP - 140TC | | X | X | X | X |
| 17 | 7601 | 2.6 | III | 100.19 | 9990 | 9000 | SK 5282 SCP - 90L/4 | SK 5282 SCP - 90LH/4 | SK 5282 SCP - 140TC | | X | X | X | X |
| 12 | 10168 | 2.3 | III | 134.03 | 9934 | 9000 | SK 5282 SCP - 90L/4 | SK 5282 SCP - 90LH/4 | SK 5282 SCP - 140TC | | X | X | X | X |

Output speed and torque ratings are based on the "Standard Efficiency Motor" Power and speed. Performance will vary slightly for other motors.

# 3 hp Gearmotors & Speed Reducers



| Output Speed | Output Torque | SF | AGMA Class | Gear Ratio | Thrust | | Integral Gearmotor | | Reducer | CEMA DriveShaft | | | | |
|---|---|---|---|---|---|---|---|---|---|---|---|---|---|---|
| $n_2$ | $T_2$ | $f_a$ | | i | Std Brg | H.D. Brg " VL" | Standard Efficiency Motor | Energy Efficient Motor | C-Face Input | 1-1/2" | 2" | 2-7/16" | 3" | 3-7/16" |
| [rpm] | [lb-in] | | | | [lb] | [lb] | | | | | | | | |
| 356 | 531 | 2.1 | III | 4.79 | 1541 | 1609 | SK 1282 SCP - 100L/4 | SK 1282 SCP - 100LH/4 | SK 1282 SCP - 180TC | X | X | X | | |
| 312 | 607 | 2.5 | III | 5.47 | 1595 | 1609 | SK 1282 SCP - 100L/4 | SK 1282 SCP - 100LH/4 | SK 1282 SCP - 180TC | X | X | X | | |
| 265 | 714 | 2.2 | III | 6.43 | 1667 | 1609 | SK 1282 SCP - 100L/4 | SK 1282 SCP - 100LH/4 | SK 1282 SCP - 180TC | X | X | X | | |
| 235 | 804 | 2.1 | III | 7.24 | 1719 | 1609 | SK 1282 SCP - 100L/4 | SK 1282 SCP - 100LH/4 | SK 1282 SCP - 180TC | X | X | X | | |
| 208 | 912 | 1.6 | II | 8.21 | 1784 | 1609 | SK 1282 SCP - 100L/4 | SK 1282 SCP - 100LH/4 | SK 1282 SCP - 180TC | X | X | X | | |
| 207 | 915 | 1.8 | II | 8.24 | 1775 | 1609 | SK 1282 SCP - 100L/4 | SK 1282 SCP - 100LH/4 | SK 1282 SCP - 180TC | X | X | X | | |
| 186 | 1019 | 1.6 | II | 9.18 | 1832 | 1609 | SK 1282 SCP - 100L/4 | SK 1282 SCP - 100LH/4 | SK 1282 SCP - 180TC | X | X | X | | |
| 165 | 1148 | 1.5 | II | 10.34 | 1886 | 1609 | SK 1282 SCP - 100L/4 | SK 1282 SCP - 100LH/4 | SK 1282 SCP - 180TC | X | X | X | | |
| 145 | 1306 | 1.4 | II | 11.76 | 1944 | 1609 | SK 1282 SCP - 100L/4 | SK 1282 SCP - 100LH/4 | SK 1282 SCP - 180TC | X | X | X | | |
| 121 | 1567 | 1.2 | I | 14.11 | 2039 | 1609 | SK 1282 SCP - 100L/4 | SK 1282 SCP - 100LH/4 | SK 1282 SCP - 180TC | X | X | X | | |
| 99 | 1911 | 1 | I | 17.21 | 2081 | 1609 | SK 1282 SCP - 100L/4 | SK 1282 SCP - 100LH/4 | SK 1282 SCP - 180TC | X | X | X | | |
| 83 | 2284 | 0.9 | * | 20.57 | 2039 | 1609 | SK 1282 SCP - 100L/4 | SK 1282 SCP - 100LH/4 | SK 1282 SCP - 180TC | X | X | X | | |
| 378 | 501 | 3.3 | III | 4.51 | 2012 | 3375 | SK 2282 SCP - 100L/4 | SK 2282 SCP - 100LH/4 | SK 2282 SCP - 180TC | X | X | X | | |
| 298 | 635 | 3 | III | 5.72 | 2151 | 3375 | SK 2282 SCP - 100L/4 | SK 2282 SCP - 100LH/4 | SK 2282 SCP - 180TC | X | X | X | | |
| 265 | 714 | 2.8 | III | 6.43 | 2219 | 3375 | SK 2282 SCP - 100L/4 | SK 2282 SCP - 100LH/4 | SK 2282 SCP - 180TC | X | X | X | | |
| 228 | 831 | 2.6 | III | 7.48 | 2313 | 3375 | SK 2282 SCP - 100L/4 | SK 2282 SCP - 100LH/4 | SK 2282 SCP - 180TC | X | X | X | | |
| 204 | 929 | 2.4 | III | 8.37 | 2385 | 3375 | SK 2282 SCP - 100L/4 | SK 2282 SCP - 100LH/4 | SK 2282 SCP - 180TC | X | X | X | | |
| 189 | 1003 | 3 | III | 9.03 | 2446 | 3375 | SK 2282 SCP - 100L/4 | SK 2282 SCP - 100LH/4 | SK 2282 SCP - 180TC | X | X | X | | |
| 168 | 1127 | 2.8 | III | 10.15 | 2522 | 3375 | SK 2282 SCP - 100L/4 | SK 2282 SCP - 100LH/4 | SK 2282 SCP - 180TC | X | X | X | | |
| 144 | 1311 | 2.6 | III | 11.81 | 2626 | 3375 | SK 2282 SCP - 100L/4 | SK 2282 SCP - 100LH/4 | SK 2282 SCP - 180TC | X | X | X | | |
| 129 | 1469 | 2.4 | III | 13.23 | 2707 | 3375 | SK 2282 SCP - 100L/4 | SK 2282 SCP - 100LH/4 | SK 2282 SCP - 180TC | X | X | X | | |
| 103 | 1835 | 2.3 | III | 16.53 | 2880 | 3375 | SK 2282 SCP - 100L/4 | SK 2282 SCP - 100LH/4 | SK 2282 SCP - 180TC | X | X | X | | |
| 92 | 2055 | 2.1 | III | 18.51 | 2959 | 3375 | SK 2282 SCP - 100L/4 | SK 2282 SCP - 100LH/4 | SK 2282 SCP - 180TC | X | X | X | | |
| 78 | 2432 | 1.7 | II | 21.9 | 3087 | 3375 | SK 2282 SCP - 100L/4 | SK 2282 SCP - 100LH/4 | SK 2282 SCP - 180TC | X | X | X | | |
| 71 | 2660 | 1.4 | II | 23.96 | 3069 | 3375 | SK 2282 SCP - 100L/4 | SK 2282 SCP - 100LH/4 | SK 2282 SCP - 180TC | X | X | X | | |
| 68 | 2773 | 1.6 | II | 24.97 | 3062 | 3375 | SK 2282 SCP - 100L/4 | SK 2282 SCP - 100LH/4 | SK 2282 SCP - 180TC | X | X | X | | |
| 64 | 2979 | 1.3 | I | 26.83 | 3047 | 3375 | SK 2282 SCP - 100L/4 | SK 2282 SCP - 100LH/4 | SK 2282 SCP - 180TC | X | X | X | | |
| 58 | 3292 | 1.3 | I | 29.65 | 3020 | 3375 | SK 2282 SCP - 100L/4 | SK 2282 SCP - 100LH/4 | SK 2282 SCP - 180TC | X | X | X | | |
| 55 | 3468 | 1.1 | I | 31.23 | 3002 | 3375 | SK 2282 SCP - 100L/4 | SK 2282 SCP - 100LH/4 | SK 2282 SCP - 180TC | X | X | X | | |
| 47 | 4057 | 1.1 | I | 36.54 | 2939 | 3375 | SK 2282 SCP - 100L/4 | SK 2282 SCP - 100LH/4 | SK 2282 SCP - 180TC | X | X | X | | |
| 39 | 4853 | 1 | I | 43.71 | 2837 | 3375 | SK 2282 SCP - 100L/4 | SK 2282 SCP - 100LH/4 | SK 2282 SCP - 180TC | X | X | X | | |
| 381 | 497 | 3.7 | III | 4.48 | 2309 | 3569 | SK 3282 SCP - 100L/4 | SK 3282 SCP - 100LH/4 | SK 3282 SCP - 180TC | X | X | X | X | |
| 300 | 631 | 3.6 | III | 5.68 | 2466 | 3818 | SK 3282 SCP - 100L/4 | SK 3282 SCP - 100LH/4 | SK 3282 SCP - 180TC | X | X | X | X | |
| 254 | 744 | 3.4 | III | 6.7 | 2583 | 3992 | SK 3282 SCP - 100L/4 | SK 3282 SCP - 100LH/4 | SK 3282 SCP - 180TC | X | X | X | X | |
| 205 | 923 | 3.1 | III | 8.31 | 2745 | 4230 | SK 3282 SCP - 100L/4 | SK 3282 SCP - 100LH/4 | SK 3282 SCP - 180TC | X | X | X | X | |
| 174 | 1088 | 3.4 | III | 9.8 | 2882 | 4430 | SK 3282 SCP - 100L/4 | SK 3282 SCP - 100LH/4 | SK 3282 SCP - 180TC | X | X | X | X | |
| 150 | 1264 | 3.4 | III | 11.38 | 3004 | 4500 | SK 3282 SCP - 100L/4 | SK 3282 SCP - 100LH/4 | SK 3282 SCP - 180TC | X | X | X | X | |
| 121 | 1567 | 3.1 | III | 14.11 | 3179 | 4500 | SK 3282 SCP - 100L/4 | SK 3282 SCP - 100LH/4 | SK 3282 SCP - 180TC | X | X | X | X | |

Output speed and torque ratings are based on the "Standard Efficiency Motor" Power and speed. Performance will vary slightly for other motors.



# 3 hp Gearmotors & Speed Reducers

| Output Speed | Output Torque | SF | AGMA Class | Gear Ratio | Thrust | | Integral Gearmotor | | Reducer | CEMA DriveShaft | | | | |
|---|---|---|---|---|---|---|---|---|---|---|---|---|---|---|
| $n_2$ | $T_2$ | $f_a$ | | i | Std Brg | H.D. Brg " VL" | Standard Efficiency Motor | Energy Efficient Motor | C-Face Input | 1-1/2" | 2" | 2-7/16" | 3" | 3-7/16" |
| [rpm] | [lb-in] | | | | [lb] | [lb] | | | | | | | | |
| 102 | 1851 | 3.1 | III | 16.67 | 3328 | 4500 | SK 3282 SCP - 100L/4 | SK 3282 SCP - 100LH/4 | SK 3282 SCP - 180TC | X | X | X | X | |
| 84 | 2241 | 3.1 | III | 20.18 | 3503 | 4500 | SK 3282 SCP - 100L/4 | SK 3282 SCP - 100LH/4 | SK 3282 SCP - 180TC | X | X | X | X | |
| 80 | 2374 | 2.7 | III | 21.38 | 3553 | 4500 | SK 3282 SCP - 100L/4 | SK 3282 SCP - 100LH/4 | SK 3282 SCP - 180TC | X | X | X | X | |
| 76 | 2493 | 2.8 | III | 22.45 | 3602 | 4500 | SK 3282 SCP - 100L/4 | SK 3282 SCP - 100LH/4 | SK 3282 SCP - 180TC | X | X | X | X | |
| 72 | 2633 | 2.5 | III | 23.71 | 3647 | 4500 | SK 3282 SCP - 100L/4 | SK 3282 SCP - 100LH/4 | SK 3282 SCP - 180TC | X | X | X | X | |
| 66 | 2874 | 2.6 | III | 25.88 | 3737 | 4500 | SK 3282 SCP - 100L/4 | SK 3282 SCP - 100LH/4 | SK 3282 SCP - 180TC | X | X | X | X | |
| 59 | 3187 | 2.4 | III | 28.7 | 3839 | 4500 | SK 3282 SCP - 100L/4 | SK 3282 SCP - 100LH/4 | SK 3282 SCP - 180TC | X | X | X | X | |
| 53 | 3545 | 2.2 | III | 31.93 | 3935 | 4500 | SK 3282 SCP - 100L/4 | SK 3282 SCP - 100LH/4 | SK 3282 SCP - 180TC | X | X | X | X | |
| 45 | 4194 | 1.8 | II | 37.77 | 4097 | 4500 | SK 3282 SCP - 100L/4 | SK 3282 SCP - 100LH/4 | SK 3282 SCP - 180TC | X | X | X | X | |
| 44 | 4288 | 1.3 | I | 38.62 | 4086 | 4500 | SK 3282 SCP - 100L/4 | SK 3282 SCP - 100LH/4 | SK 3282 SCP - 180TC | X | X | X | X | |
| 41 | 4666 | 1.8 | II | 42.02 | 4205 | 4500 | SK 3282 SCP - 100L/4 | SK 3282 SCP - 100LH/4 | SK 3282 SCP - 180TC | X | X | X | X | |
| 38 | 4980 | 1.3 | I | 44.85 | 4241 | 4500 | SK 3282 SCP - 100L/4 | SK 3282 SCP - 100LH/4 | SK 3282 SCP - 180TC | X | X | X | X | |
| 32 | 5882 | 1.3 | I | 52.97 | 4406 | 4500 | SK 3282 SCP - 100L/4 | SK 3282 SCP - 100LH/4 | SK 3282 SCP - 180TC | X | X | X | X | |
| 27 | 7120 | 1.3 | I | 64.12 | 4604 | 4500 | SK 3282 SCP - 100L/4 | SK 3282 SCP - 100LH/4 | SK 3282 SCP - 180TC | X | X | X | X | |
| 281 | 673 | 4.2 | III | 6.06 | 3593 | 6095 | SK 4282 SCP - 100L/4 | SK 4282 SCP - 100LH/4 | SK 4282 SCP - 180TC | | X | X | X | |
| 239 | 792 | 4 | III | 7.13 | 3764 | 6386 | SK 4282 SCP - 100L/4 | SK 4282 SCP - 100LH/4 | SK 4282 SCP - 180TC | | X | X | X | |
| 205 | 925 | 3.8 | III | 8.33 | 3935 | 6667 | SK 4282 SCP - 100L/4 | SK 4282 SCP - 100LH/4 | SK 4282 SCP - 180TC | | X | X | X | |
| 185 | 1025 | 4.2 | III | 9.23 | 4064 | 6750 | SK 4282 SCP - 100L/4 | SK 4282 SCP - 100LH/4 | SK 4282 SCP - 180TC | | X | X | X | |
| 157 | 1205 | 4 | III | 10.85 | 4250 | 6750 | SK 4282 SCP - 100L/4 | SK 4282 SCP - 100LH/4 | SK 4282 SCP - 180TC | | X | X | X | |
| 134 | 1408 | 3.8 | III | 12.68 | 4444 | 6750 | SK 4282 SCP - 100L/4 | SK 4282 SCP - 100LH/4 | SK 4282 SCP - 180TC | | X | X | X | |
| 112 | 1688 | 3.8 | III | 15.2 | 4685 | 6750 | SK 4282 SCP - 100L/4 | SK 4282 SCP - 100LH/4 | SK 4282 SCP - 180TC | | X | X | X | |
| 94 | 2019 | 3.8 | III | 18.18 | 4921 | 6750 | SK 4282 SCP - 100L/4 | SK 4282 SCP - 100LH/4 | SK 4282 SCP - 180TC | | X | X | X | |
| 79 | 2382 | 3.8 | III | 21.45 | 5162 | 6750 | SK 4282 SCP - 100L/4 | SK 4282 SCP - 100LH/4 | SK 4282 SCP - 180TC | | X | X | X | |
| 76 | 2486 | 3.4 | III | 22.39 | 5218 | 6750 | SK 4282 SCP - 100L/4 | SK 4282 SCP - 100LH/4 | SK 4282 SCP - 180TC | | X | X | X | |
| 65 | 2915 | 3.8 | III | 26.25 | 5472 | 6750 | SK 4282 SCP - 100L/4 | SK 4282 SCP - 100LH/4 | SK 4282 SCP - 180TC | | X | X | X | |
| 65 | 2935 | 3.4 | III | 26.43 | 5472 | 6750 | SK 4282 SCP - 100L/4 | SK 4282 SCP - 100LH/4 | SK 4282 SCP - 180TC | | X | X | X | |
| 53 | 3591 | 3.4 | III | 32.34 | 5778 | 6750 | SK 4282 SCP - 100L/4 | SK 4282 SCP - 100LH/4 | SK 4282 SCP - 180TC | | X | X | X | |
| 47 | 4042 | 3 | III | 36.4 | 5931 | 6750 | SK 4282 SCP - 100L/4 | SK 4282 SCP - 100LH/4 | SK 4282 SCP - 180TC | | X | X | X | |
| 46 | 4087 | 2.9 | III | 36.81 | 5978 | 6750 | SK 4282 SCP - 100L/4 | SK 4282 SCP - 100LH/4 | SK 4282 SCP - 180TC | | X | X | X | |
| 42 | 4524 | 3 | III | 40.74 | 6156 | 6750 | SK 4282 SCP - 100L/4 | SK 4282 SCP - 100LH/4 | SK 4282 SCP - 180TC | | X | X | X | |
| 39 | 4847 | 2.9 | III | 43.65 | 6228 | 6750 | SK 4282 SCP - 100L/4 | SK 4282 SCP - 100LH/4 | SK 4282 SCP - 180TC | | X | X | X | |
| 38 | 5002 | 2.8 | III | 45.05 | 6305 | 6750 | SK 4282 SCP - 100L/4 | SK 4282 SCP - 100LH/4 | SK 4282 SCP - 180TC | | X | X | X | |
| 33 | 5796 | 2.8 | III | 52.2 | 6523 | 6750 | SK 4282 SCP - 100L/4 | SK 4282 SCP - 100LH/4 | SK 4282 SCP - 180TC | | X | X | X | |
| 28 | 6840 | 2.3 | III | 61.6 | 6813 | 6750 | SK 4282 SCP - 100L/4 | SK 4282 SCP - 100LH/4 | SK 4282 SCP - 180TC | | X | X | X | |
| 23 | 8371 | 1.7 | II | 75.39 | 6757 | 6750 | SK 4282 SCP - 100L/4 | SK 4282 SCP - 100LH/4 | SK 4282 SCP - 180TC | | X | X | X | |
| 22 | 8517 | 1.7 | II | 76.7 | 6752 | 6750 | SK 4282 SCP - 100L/4 | SK 4282 SCP - 100LH/4 | SK 4282 SCP - 180TC | | X | X | X | |
| 19 | 10051 | 1.4 | II | 90.52 | 6683 | 6750 | SK 4282 SCP - 100L/4 | SK 4282 SCP - 100LH/4 | SK 4282 SCP - 180TC | | X | X | X | |
| 15 | 12301 | 1.2 | I | 110.78 | 6559 | 6750 | SK 4282 SCP - 100L/4 | SK 4282 SCP - 100LH/4 | SK 4282 SCP - 180TC | | X | X | X | |

Output speed and torque ratings are based on the "Standard Efficiency Motor" Power and speed. Performance will vary slightly for other motors.

# 3 hp Gearmotors & Speed Reducers



| Output Speed | Output Torque | SF | AGMA Class | Gear Ratio | Thrust | | Integral Gearmotor | | Reducer | CEMA DriveShaft | | | | |
|---|---|---|---|---|---|---|---|---|---|---|---|---|---|---|
| $n_2$ | $T_2$ | $f_a$ | | i | Std Brg | H.D. Brg " VL" | Standard Efficiency Motor | Energy Efficient Motor | C-Face Input | 1-1/2" | 2" | 2-7/16" | 3" | 3-7/16" |
| [rpm] | [lb-in] | | | | [lb] | [lb] | | | | | | | | |
| 269 | 703 | 4.7 | III | 6.33 | 5056 | 8498 | SK 5282 SCP - 100L/4 | SK 5282 SCP - 100LH/4 | SK 5282 SCP - 180TC | | X | X | X | X |
| 238 | 796 | 4.8 | III | 7.17 | 5245 | 8831 | SK 5282 SCP - 100L/4 | SK 5282 SCP - 100LH/4 | SK 5282 SCP - 180TC | | X | X | X | X |
| 196 | 966 | 4.4 | III | 8.7 | 5549 | 9000 | SK 5282 SCP - 100L/4 | SK 5282 SCP - 100LH/4 | SK 5282 SCP - 180TC | | X | X | X | X |
| 180 | 1050 | 4.7 | III | 9.46 | 5702 | 9000 | SK 5282 SCP - 100L/4 | SK 5282 SCP - 100LH/4 | SK 5282 SCP - 180TC | | X | X | X | X |
| 159 | 1189 | 4.8 | III | 10.71 | 5897 | 9000 | SK 5282 SCP - 100L/4 | SK 5282 SCP - 100LH/4 | SK 5282 SCP - 180TC | | X | X | X | X |
| 131 | 1443 | 4.4 | III | 13 | 6246 | 9000 | SK 5282 SCP - 100L/4 | SK 5282 SCP - 100LH/4 | SK 5282 SCP - 180TC | | X | X | X | X |
| 111 | 1708 | 4.4 | III | 15.38 | 6566 | 9000 | SK 5282 SCP - 100L/4 | SK 5282 SCP - 100LH/4 | SK 5282 SCP - 180TC | | X | X | X | X |
| 97 | 1953 | 4.2 | III | 17.59 | 6811 | 9000 | SK 5282 SCP - 100L/4 | SK 5282 SCP - 100LH/4 | SK 5282 SCP - 180TC | | X | X | X | X |
| 90 | 2096 | 4.4 | III | 18.88 | 6953 | 9000 | SK 5282 SCP - 100L/4 | SK 5282 SCP - 100LH/4 | SK 5282 SCP - 180TC | | X | X | X | X |
| 84 | 2261 | 4 | III | 20.36 | 7099 | 9000 | SK 5282 SCP - 100L/4 | SK 5282 SCP - 100LH/4 | SK 5282 SCP - 180TC | | X | X | X | X |
| 68 | 2776 | 4 | III | 25 | 7542 | 9000 | SK 5282 SCP - 100L/4 | SK 5282 SCP - 100LH/4 | SK 5282 SCP - 180TC | | X | X | X | X |
| 56 | 3387 | 3.6 | III | 30.5 | 7974 | 9000 | SK 5282 SCP - 100L/4 | SK 5282 SCP - 100LH/4 | SK 5282 SCP - 180TC | | X | X | X | X |
| 51 | 3712 | 4 | III | 33.43 | 8206 | 9000 | SK 5282 SCP - 100L/4 | SK 5282 SCP - 100LH/4 | SK 5282 SCP - 180TC | | X | X | X | X |
| 42 | 4530 | 3.6 | III | 40.8 | 8658 | 9000 | SK 5282 SCP - 100L/4 | SK 5282 SCP - 100LH/4 | SK 5282 SCP - 180TC | | X | X | X | X |
| 36 | 5249 | 4 | III | 47.27 | 8991 | 9000 | SK 5282 SCP - 100L/4 | SK 5282 SCP - 100LH/4 | SK 5282 SCP - 180TC | | X | X | X | X |
| 31 | 6168 | 3.1 | III | 55.55 | 9423 | 9000 | SK 5282 SCP - 100L/4 | SK 5282 SCP - 100LH/4 | SK 5282 SCP - 180TC | | X | X | X | X |
| 31 | 6207 | 3.7 | III | 55.9 | 9421 | 9000 | SK 5282 SCP - 100L/4 | SK 5282 SCP - 100LH/4 | SK 5282 SCP - 180TC | | X | X | X | X |
| 25 | 7621 | 3.4 | III | 68.63 | 9956 | 9000 | SK 5282 SCP - 100L/4 | SK 5282 SCP - 100LH/4 | SK 5282 SCP - 180TC | | X | X | X | X |
| 21 | 9062 | 1.8 | II | 81.61 | 9961 | 9000 | SK 5282 SCP - 100L/4 | SK 5282 SCP - 100LH/4 | SK 5282 SCP - 180TC | | X | X | X | X |
| 19 | 10194 | 2.4 | III | 91.81 | 9934 | 9000 | SK 5282 SCP - 100L/4 | SK 5282 SCP - 100LH/4 | SK 5282 SCP - 180TC | | X | X | X | X |
| 17 | 11125 | 1.8 | II | 100.19 | 9909 | 9000 | SK 5282 SCP - 100L/4 | SK 5282 SCP - 100LH/4 | SK 5282 SCP - 180TC | | X | X | X | X |
| 13 | 14882 | 1.6 | II | 134.03 | 9790 | 9000 | SK 5282 SCP - 100L/4 | SK 5282 SCP - 100LH/4 | SK 5282 SCP - 180TC | | X | X | X | X |
| 253 | 748 | 5.1 | III | 6.74 | 7515 | 10845 | SK 6282 SCP - 100L/4 | SK 6282 SCP - 100LH/4 | SK 6282 SCP - 180TC | | | | X | X |
| 218 | 868 | 4.9 | III | 7.82 | 7835 | 11324 | SK 6282 SCP - 100L/4 | SK 6282 SCP - 100LH/4 | SK 6282 SCP - 180TC | | | | X | X |
| 182 | 1043 | 4.6 | III | 9.39 | 8273 | 11979 | SK 6282 SCP - 100L/4 | SK 6282 SCP - 100LH/4 | SK 6282 SCP - 180TC | | | | X | X |
| 160 | 1181 | 5.1 | III | 10.64 | 8586 | 12409 | SK 6282 SCP - 100L/4 | SK 6282 SCP - 100LH/4 | SK 6282 SCP - 180TC | | | | X | X |
| 138 | 1371 | 4.9 | III | 12.35 | 8964 | 12978 | SK 6282 SCP - 100L/4 | SK 6282 SCP - 100LH/4 | SK 6282 SCP - 180TC | | | | X | X |
| 115 | 1647 | 4.6 | III | 14.83 | 9482 | 13500 | SK 6282 SCP - 100L/4 | SK 6282 SCP - 100LH/4 | SK 6282 SCP - 180TC | | | | X | X |
| 91 | 2076 | 4.6 | III | 18.7 | 10125 | 13500 | SK 6282 SCP - 100L/4 | SK 6282 SCP - 100LH/4 | SK 6282 SCP - 180TC | | | | X | X |
| 74 | 2548 | 4.6 | III | 22.95 | 10760 | 13500 | SK 6282 SCP - 100L/4 | SK 6282 SCP - 100LH/4 | SK 6282 SCP - 180TC | | | | X | X |
| 65 | 2893 | 4.4 | III | 26.05 | 11162 | 13500 | SK 6282 SCP - 100L/4 | SK 6282 SCP - 100LH/4 | SK 6282 SCP - 180TC | | | | X | X |
| 57 | 3320 | 4.2 | III | 29.9 | 11617 | 13500 | SK 6282 SCP - 100L/4 | SK 6282 SCP - 100LH/4 | SK 6282 SCP - 180TC | | | | X | X |
| 26 | 7266 | 4.1 | III | 65.44 | 13219 | 13500 | SK 6282 SCP - 100L/4 | SK 6282 SCP - 100LH/4 | SK 6282 SCP - 180TC | | | | X | X |
| 21 | 8920 | 4.1 | III | 80.33 | 13199 | 13500 | SK 6282 SCP - 100L/4 | SK 6282 SCP - 100LH/4 | SK 6282 SCP - 180TC | | | | X | X |

Output speed and torque ratings are based on the "Standard Efficiency Motor" Power and speed. Performance will vary slightly for other motors.



# 5 hp Gearmotors & Speed Reducers

| Output Speed | Output Torque | SF | AGMA Class | Gear Ratio | Thrust | | Integral Gearmotor | | Reducer | CEMA DriveShaft | | | | |
|---|---|---|---|---|---|---|---|---|---|---|---|---|---|---|
| $n_2$ | $T_2$ | $f_a$ | | i | Std Brg | H.D. Brg " VL" | Standard Efficiency Motor | Energy Efficient Motor | C-Face Input | 1-1/2" | 2" | 2-7/16" | 3" | 3-7/16" |
| [rpm] | [lb-in] | | | | [lb] | [lb] | | | | | | | | |
| 360 | 875 | 1.3 | I | 4.79 | 1487 | 1609 | SK 1282 SCP - 100LA/4 | SK 1282 SCP - 112MH/4 | SK 1282 SCP - 180TC | X | X | X | | |
| 315 | 1000 | 1.5 | II | 5.47 | 1537 | 1609 | SK 1282 SCP - 100LA/4 | SK 1282 SCP - 112MH/4 | SK 1282 SCP - 180TC | X | X | X | | |
| 268 | 1175 | 1.4 | II | 6.43 | 1595 | 1609 | SK 1282 SCP - 100LA/4 | SK 1282 SCP - 112MH/4 | SK 1282 SCP - 180TC | X | X | X | | |
| 238 | 1323 | 1.3 | I | 7.24 | 1638 | 1609 | SK 1282 SCP - 100LA/4 | SK 1282 SCP - 112MH/4 | SK 1282 SCP - 180TC | X | X | X | | |
| 210 | 1500 | 0.9 | * | 8.21 | 1701 | 1609 | SK 1282 SCP - 100LA/4 | SK 1282 SCP - 112MH/4 | SK 1282 SCP - 180TC | X | X | X | | |
| 209 | 1506 | 1.1 | I | 8.24 | 1683 | 1609 | SK 1282 SCP - 100LA/4 | SK 1282 SCP - 112MH/4 | SK 1282 SCP - 180TC | X | X | X | | |
| 188 | 1678 | 1 | I | 9.18 | 1737 | 1609 | SK 1282 SCP - 100LA/4 | SK 1282 SCP - 112MH/4 | SK 1282 SCP - 180TC | X | X | X | | |
| 167 | 1890 | 0.9 | * | 10.34 | 1780 | 1609 | SK 1282 SCP - 100LA/4 | SK 1282 SCP - 112MH/4 | SK 1282 SCP - 180TC | X | X | X | | |
| 382 | 824 | 2 | III | 4.51 | 1969 | 3375 | SK 2282 SCP - 100LA/4 | SK 2282 SCP - 112MH/4 | SK 2282 SCP - 180TC | X | X | X | | |
| 302 | 1045 | 1.8 | II | 5.72 | 2099 | 3375 | SK 2282 SCP - 100LA/4 | SK 2282 SCP - 112MH/4 | SK 2282 SCP - 180TC | X | X | X | | |
| 268 | 1175 | 1.7 | II | 6.43 | 2162 | 3375 | SK 2282 SCP - 100LA/4 | SK 2282 SCP - 112MH/4 | SK 2282 SCP - 180TC | X | X | X | | |
| 231 | 1367 | 1.6 | II | 7.48 | 2246 | 3375 | SK 2282 SCP - 100LA/4 | SK 2282 SCP - 112MH/4 | SK 2282 SCP - 180TC | X | X | X | | |
| 206 | 1530 | 1.5 | II | 8.37 | 2311 | 3375 | SK 2282 SCP - 100LA/4 | SK 2282 SCP - 112MH/4 | SK 2282 SCP - 180TC | X | X | X | | |
| 191 | 1650 | 1.8 | II | 9.03 | 2372 | 3375 | SK 2282 SCP - 100LA/4 | SK 2282 SCP - 112MH/4 | SK 2282 SCP - 180TC | X | X | X | | |
| 170 | 1855 | 1.7 | II | 10.15 | 2437 | 3375 | SK 2282 SCP - 100LA/4 | SK 2282 SCP - 112MH/4 | SK 2282 SCP - 180TC | X | X | X | | |
| 146 | 2158 | 1.6 | II | 11.81 | 2536 | 3375 | SK 2282 SCP - 100LA/4 | SK 2282 SCP - 112MH/4 | SK 2282 SCP - 180TC | X | X | X | | |
| 130 | 2418 | 1.5 | II | 13.23 | 2601 | 3375 | SK 2282 SCP - 100LA/4 | SK 2282 SCP - 112MH/4 | SK 2282 SCP - 180TC | X | X | X | | |
| 104 | 3021 | 1.4 | II | 16.53 | 2750 | 3375 | SK 2282 SCP - 100LA/4 | SK 2282 SCP - 112MH/4 | SK 2282 SCP - 180TC | X | X | X | | |
| 93 | 3383 | 1.3 | I | 18.51 | 2815 | 3375 | SK 2282 SCP - 100LA/4 | SK 2282 SCP - 112MH/4 | SK 2282 SCP - 180TC | X | X | X | | |
| 79 | 4002 | 1.1 | I | 21.9 | 2918 | 3375 | SK 2282 SCP - 100LA/4 | SK 2282 SCP - 112MH/4 | SK 2282 SCP - 180TC | X | X | X | | |
| 72 | 4379 | 0.9 | * | 23.96 | 2900 | 3375 | SK 2282 SCP - 100LA/4 | SK 2282 SCP - 112MH/4 | SK 2282 SCP - 180TC | X | X | X | | |
| 69 | 4563 | 1 | I | 24.97 | 2876 | 3375 | SK 2282 SCP - 100LA/4 | SK 2282 SCP - 112MH/4 | SK 2282 SCP - 180TC | X | X | X | | |
| 385 | 819 | 2.3 | III | 4.48 | 2264 | 3490 | SK 3282 SCP - 100LA/4 | SK 3282 SCP - 112MH/4 | SK 3282 SCP - 180TC | X | X | X | X | |
| 304 | 1038 | 2.2 | III | 5.68 | 2417 | 3715 | SK 3282 SCP - 100LA/4 | SK 3282 SCP - 112MH/4 | SK 3282 SCP - 180TC | X | X | X | X | |
| 257 | 1224 | 2.1 | III | 6.7 | 2527 | 3872 | SK 3282 SCP - 100LA/4 | SK 3282 SCP - 112MH/4 | SK 3282 SCP - 180TC | X | X | X | X | |
| 208 | 1519 | 1.9 | II | 8.31 | 2675 | 4091 | SK 3282 SCP - 100LA/4 | SK 3282 SCP - 112MH/4 | SK 3282 SCP - 180TC | X | X | X | X | |
| 176 | 1791 | 2.1 | III | 9.8 | 2799 | 4277 | SK 3282 SCP - 100LA/4 | SK 3282 SCP - 112MH/4 | SK 3282 SCP - 180TC | X | X | X | X | |
| 152 | 2080 | 2.1 | III | 11.38 | 2912 | 4446 | SK 3282 SCP - 100LA/4 | SK 3282 SCP - 112MH/4 | SK 3282 SCP - 180TC | X | X | X | X | |
| 122 | 2579 | 1.9 | II | 14.11 | 3074 | 4500 | SK 3282 SCP - 100LA/4 | SK 3282 SCP - 112MH/4 | SK 3282 SCP - 180TC | X | X | X | X | |
| 103 | 3047 | 1.9 | II | 16.67 | 3206 | 4500 | SK 3282 SCP - 100LA/4 | SK 3282 SCP - 112MH/4 | SK 3282 SCP - 180TC | X | X | X | X | |
| 85 | 3688 | 1.9 | II | 20.18 | 3359 | 4500 | SK 3282 SCP - 100LA/4 | SK 3282 SCP - 112MH/4 | SK 3282 SCP - 180TC | X | X | X | X | |
| 81 | 3907 | 1.6 | II | 21.38 | 3398 | 4500 | SK 3282 SCP - 100LA/4 | SK 3282 SCP - 112MH/4 | SK 3282 SCP - 180TC | X | X | X | X | |
| 77 | 4103 | 1.7 | II | 22.45 | 3447 | 4500 | SK 3282 SCP - 100LA/4 | SK 3282 SCP - 112MH/4 | SK 3282 SCP - 180TC | X | X | X | X | |
| 73 | 4333 | 1.5 | II | 23.71 | 3474 | 4500 | SK 3282 SCP - 100LA/4 | SK 3282 SCP - 112MH/4 | SK 3282 SCP - 180TC | X | X | X | X | |
| 67 | 4730 | 1.6 | II | 25.88 | 3553 | 4500 | SK 3282 SCP - 100LA/4 | SK 3282 SCP - 112MH/4 | SK 3282 SCP - 180TC | X | X | X | X | |
| 60 | 5245 | 1.5 | II | 28.7 | 3632 | 4500 | SK 3282 SCP - 100LA/4 | SK 3282 SCP - 112MH/4 | SK 3282 SCP - 180TC | X | X | X | X | |
| 54 | 5835 | 1.3 | I | 31.93 | 3713 | 4500 | SK 3282 SCP - 100LA/4 | SK 3282 SCP - 112MH/4 | SK 3282 SCP - 180TC | X | X | X | X | |
| 46 | 6903 | 1.1 | I | 37.77 | 3830 | 4500 | SK 3282 SCP - 100LA/4 | SK 3282 SCP - 112MH/4 | SK 3282 SCP - 180TC | X | X | X | X | |
| 41 | 7679 | 1.1 | I | 42.02 | 3906 | 4500 | SK 3282 SCP - 100LA/4 | SK 3282 SCP - 112MH/4 | SK 3282 SCP - 180TC | X | X | X | X | |

Output speed and torque ratings are based on the "Standard Efficiency Motor" Power and speed. Performance will vary slightly for other motors.

# 5 hp Gearmotors & Speed Reducers



| Output Speed | Output Torque | SF | AGMA Class | Gear Ratio | Thrust | | Integral Gearmotor | | Reducer | CEMA DriveShaft | | | | |
|---|---|---|---|---|---|---|---|---|---|---|---|---|---|---|
| $n_2$ | $T_2$ | $f_a$ | | i | Std Brg | H.D. Brg " VL" | Standard Efficiency Motor | Energy Efficient Motor | C-Face Input | 1-1/2" | 2" | 2-7/16" | 3" | 3-7/16" |
| [rpm] | [lb-in] | | | | [lb] | [lb] | | | | | | | | |
| 285 | 1107 | 2.5 | III | 6.06 | 3542 | 5987 | SK 4282 SCP - 100LA/4 | SK 4282 SCP - 112MH/4 | SK 4282 SCP - 180TC | | X | X | X | |
| 242 | 1303 | 2.4 | III | 7.13 | 3708 | 6264 | SK 4282 SCP - 100LA/4 | SK 4282 SCP - 112MH/4 | SK 4282 SCP - 180TC | | X | X | X | |
| 207 | 1522 | 2.3 | III | 8.33 | 3879 | 6530 | SK 4282 SCP - 100LA/4 | SK 4282 SCP - 112MH/4 | SK 4282 SCP - 180TC | | X | X | X | |
| 187 | 1687 | 2.5 | III | 9.23 | 3998 | 6743 | SK 4282 SCP - 100LA/4 | SK 4282 SCP - 112MH/4 | SK 4282 SCP - 180TC | | X | X | X | |
| 159 | 1983 | 2.4 | III | 10.85 | 4172 | 6750 | SK 4282 SCP - 100LA/4 | SK 4282 SCP - 112MH/4 | SK 4282 SCP - 180TC | | X | X | X | |
| 136 | 2317 | 2.3 | III | 12.68 | 4354 | 6750 | SK 4282 SCP - 100LA/4 | SK 4282 SCP - 112MH/4 | SK 4282 SCP - 180TC | | X | X | X | |
| 113 | 2778 | 2.3 | III | 15.2 | 4581 | 6750 | SK 4282 SCP - 100LA/4 | SK 4282 SCP - 112MH/4 | SK 4282 SCP - 180TC | | X | X | X | |
| 95 | 3322 | 2.3 | III | 18.18 | 4808 | 6750 | SK 4282 SCP - 100LA/4 | SK 4282 SCP - 112MH/4 | SK 4282 SCP - 180TC | | X | X | X | |
| 80 | 3920 | 2.3 | III | 21.45 | 5031 | 6750 | SK 4282 SCP - 100LA/4 | SK 4282 SCP - 112MH/4 | SK 4282 SCP - 180TC | | X | X | X | |
| 77 | 4092 | 2.1 | III | 22.39 | 5076 | 6750 | SK 4282 SCP - 100LA/4 | SK 4282 SCP - 112MH/4 | SK 4282 SCP - 180TC | | X | X | X | |
| 66 | 4797 | 2.3 | III | 26.25 | 5299 | 6750 | SK 4282 SCP - 100LA/4 | SK 4282 SCP - 112MH/4 | SK 4282 SCP - 180TC | | X | X | X | |
| 65 | 4830 | 2.1 | III | 26.43 | 5306 | 6750 | SK 4282 SCP - 100LA/4 | SK 4282 SCP - 112MH/4 | SK 4282 SCP - 180TC | | X | X | X | |
| 53 | 5910 | 2.1 | III | 32.34 | 5589 | 6750 | SK 4282 SCP - 100LA/4 | SK 4282 SCP - 112MH/4 | SK 4282 SCP - 180TC | | X | X | X | |
| 47 | 6652 | 1.8 | II | 36.4 | 5697 | 6750 | SK 4282 SCP - 100LA/4 | SK 4282 SCP - 112MH/4 | SK 4282 SCP - 180TC | | X | X | X | |
| 47 | 6727 | 1.7 | II | 36.81 | 5751 | 6750 | SK 4282 SCP - 100LA/4 | SK 4282 SCP - 112MH/4 | SK 4282 SCP - 180TC | | X | X | X | |
| 42 | 7445 | 1.8 | II | 40.74 | 5900 | 6750 | SK 4282 SCP - 100LA/4 | SK 4282 SCP - 112MH/4 | SK 4282 SCP - 180TC | | X | X | X | |
| 40 | 7977 | 1.8 | II | 43.65 | 5958 | 6750 | SK 4282 SCP - 100LA/4 | SK 4282 SCP - 112MH/4 | SK 4282 SCP - 180TC | | X | X | X | |
| 38 | 8233 | 1.7 | II | 45.05 | 6055 | 6750 | SK 4282 SCP - 100LA/4 | SK 4282 SCP - 112MH/4 | SK 4282 SCP - 180TC | | X | X | X | |
| 33 | 9540 | 1.7 | II | 52.2 | 6210 | 6750 | SK 4282 SCP - 100LA/4 | SK 4282 SCP - 112MH/4 | SK 4282 SCP - 180TC | | X | X | X | |
| 28 | 11258 | 1.4 | II | 61.6 | 6451 | 6750 | SK 4282 SCP - 100LA/4 | SK 4282 SCP - 112MH/4 | SK 4282 SCP - 180TC | | X | X | X | |
| 23 | 13778 | 1 | I | 75.39 | 6464 | 6750 | SK 4282 SCP - 100LA/4 | SK 4282 SCP - 112MH/4 | SK 4282 SCP - 180TC | | X | X | X | |
| 22 | 14017 | 1 | I | 76.7 | 6446 | 6750 | SK 4282 SCP - 100LA/4 | SK 4282 SCP - 112MH/4 | SK 4282 SCP - 180TC | | X | X | X | |
| 19 | 16543 | 0.9 | * | 90.52 | 6251 | 6750 | SK 4282 SCP - 100LA/4 | SK 4282 SCP - 112MH/4 | SK 4282 SCP - 180TC | | X | X | X | |
| 273 | 1157 | 2.9 | III | 6.33 | 5006 | 8417 | SK 5282 SCP - 100LA/4 | SK 5282 SCP - 112MH/4 | SK 5282 SCP - 180TC | | X | X | X | X |
| 241 | 1310 | 2.9 | III | 7.17 | 5186 | 8719 | SK 5282 SCP - 100LA/4 | SK 5282 SCP - 112MH/4 | SK 5282 SCP - 180TC | | X | X | X | X |
| 198 | 1590 | 2.7 | III | 8.7 | 5486 | 9000 | SK 5282 SCP - 100LA/4 | SK 5282 SCP - 112MH/4 | SK 5282 SCP - 180TC | | X | X | X | X |
| 182 | 1729 | 2.9 | III | 9.46 | 5627 | 9000 | SK 5282 SCP - 100LA/4 | SK 5282 SCP - 112MH/4 | SK 5282 SCP - 180TC | | X | X | X | X |
| 161 | 1957 | 2.9 | III | 10.71 | 5830 | 9000 | SK 5282 SCP - 100LA/4 | SK 5282 SCP - 112MH/4 | SK 5282 SCP - 180TC | | X | X | X | X |

Output speed and torque ratings are based on the "Standard Efficiency Motor" Power and speed. Performance will vary slightly for other motors.



# 5 hp Gearmotors & Speed Reducers

| Output Speed | Output Torque | SF | AGMA Class | Gear Ratio | Thrust | | Integral Gearmotor | | Reducer | CEMA DriveShaft | | | | |
|---|---|---|---|---|---|---|---|---|---|---|---|---|---|---|
| $n_2$ | $T_2$ | $f_a$ | | i | Std Brg | H.D. Brg " VL" | Standard Efficiency Motor | Energy Efficient Motor | C-Face Input | 1-1/2" | 2" | 2-7/16" | 3" | 3-7/16" |
| [rpm] | [lb-in] | | | | [lb] | [lb] | | | | | | | | |
| 133 | 2376 | 2.7 | III | 13 | 6154 | 9000 | SK 5282 SCP - 100LA/4 | SK 5282 SCP - 112MH/4 | SK 5282 SCP - 180TC | | X | X | X | X |
| 112 | 2811 | 2.7 | III | 15.38 | 6455 | 9000 | SK 5282 SCP - 100LA/4 | SK 5282 SCP - 112MH/4 | SK 5282 SCP - 180TC | | X | X | X | X |
| 98 | 3215 | 2.5 | III | 17.59 | 6707 | 9000 | SK 5282 SCP - 100LA/4 | SK 5282 SCP - 112MH/4 | SK 5282 SCP - 180TC | | X | X | X | X |
| 91 | 3450 | 2.7 | III | 18.88 | 6847 | 9000 | SK 5282 SCP - 100LA/4 | SK 5282 SCP - 112MH/4 | SK 5282 SCP - 180TC | | X | X | X | X |
| 85 | 3721 | 2.4 | III | 20.36 | 6980 | 9000 | SK 5282 SCP - 100LA/4 | SK 5282 SCP - 112MH/4 | SK 5282 SCP - 180TC | | X | X | X | X |
| 69 | 4569 | 2.4 | III | 25 | 7400 | 9000 | SK 5282 SCP - 100LA/4 | SK 5282 SCP - 112MH/4 | SK 5282 SCP - 180TC | | X | X | X | X |
| 57 | 5574 | 2.2 | III | 30.5 | 7805 | 9000 | SK 5282 SCP - 100LA/4 | SK 5282 SCP - 112MH/4 | SK 5282 SCP - 180TC | | X | X | X | X |
| 52 | 6109 | 2.4 | III | 33.43 | 8015 | 9000 | SK 5282 SCP - 100LA/4 | SK 5282 SCP - 112MH/4 | SK 5282 SCP - 180TC | | X | X | X | X |
| 42 | 7456 | 2.2 | III | 40.8 | 8444 | 9000 | SK 5282 SCP - 100LA/4 | SK 5282 SCP - 112MH/4 | SK 5282 SCP - 180TC | | X | X | X | X |
| 36 | 8639 | 2.5 | III | 47.27 | 8741 | 9000 | SK 5282 SCP - 100LA/4 | SK 5282 SCP - 112MH/4 | SK 5282 SCP - 180TC | | X | X | X | X |
| 31 | 10152 | 1.9 | II | 55.55 | 9140 | 9000 | SK 5282 SCP - 100LA/4 | SK 5282 SCP - 112MH/4 | SK 5282 SCP - 180TC | | X | X | X | X |
| 31 | 10216 | 2.3 | III | 55.9 | 9108 | 9000 | SK 5282 SCP - 100LA/4 | SK 5282 SCP - 112MH/4 | SK 5282 SCP - 180TC | | X | X | X | X |
| 25 | 12542 | 2.1 | III | 68.63 | 9603 | 9000 | SK 5282 SCP - 100LA/4 | SK 5282 SCP - 112MH/4 | SK 5282 SCP - 180TC | | X | X | X | X |
| 21 | 14915 | 1.1 | I | 81.61 | 9788 | 9000 | SK 5282 SCP - 100LA/4 | SK 5282 SCP - 112MH/4 | SK 5282 SCP - 180TC | | X | X | X | X |
| 19 | 16779 | 1.5 | II | 91.81 | 9716 | 9000 | SK 5282 SCP - 100LA/4 | SK 5282 SCP - 112MH/4 | SK 5282 SCP - 180TC | | X | X | X | X |
| 17 | 18310 | 1.1 | I | 100.19 | 9648 | 9000 | SK 5282 SCP - 100LA/4 | SK 5282 SCP - 112MH/4 | SK 5282 SCP - 180TC | | X | X | X | X |
| 13 | 24494 | 1 | I | 134.03 | 9308 | 9000 | SK 5282 SCP - 100LA/4 | SK 5282 SCP - 112MH/4 | SK 5282 SCP - 180TC | | X | X | X | X |
| 256 | 1232 | 3.1 | III | 6.74 | 7432 | 10742 | SK 6282 SCP - 100LA/4 | SK 6282 SCP - 112MH/4 | SK 6282 SCP - 180TC | | | | X | X |
| 221 | 1429 | 3 | III | 7.82 | 7772 | 11216 | SK 6282 SCP - 100LA/4 | SK 6282 SCP - 112MH/4 | SK 6282 SCP - 180TC | | | | X | X |
| 184 | 1716 | 2.8 | III | 9.39 | 8195 | 11846 | SK 6282 SCP - 100LA/4 | SK 6282 SCP - 112MH/4 | SK 6282 SCP - 180TC | | | | X | X |
| 162 | 1945 | 3.1 | III | 10.64 | 8501 | 12290 | SK 6282 SCP - 100LA/4 | SK 6282 SCP - 112MH/4 | SK 6282 SCP - 180TC | | | | X | X |
| 140 | 2257 | 3 | III | 12.35 | 8876 | 12854 | SK 6282 SCP - 100LA/4 | SK 6282 SCP - 112MH/4 | SK 6282 SCP - 180TC | | | | X | X |
| 116 | 2710 | 2.8 | III | 14.83 | 9358 | 13500 | SK 6282 SCP - 100LA/4 | SK 6282 SCP - 112MH/4 | SK 6282 SCP - 180TC | | | | X | X |
| 92 | 3417 | 2.8 | III | 18.7 | 10008 | 13500 | SK 6282 SCP - 100LA/4 | SK 6282 SCP - 112MH/4 | SK 6282 SCP - 180TC | | | | X | X |
| 75 | 4194 | 2.8 | III | 22.95 | 10616 | 13500 | SK 6282 SCP - 100LA/4 | SK 6282 SCP - 112MH/4 | SK 6282 SCP - 180TC | | | | X | X |
| 66 | 4761 | 2.7 | III | 26.05 | 10994 | 13500 | SK 6282 SCP - 100LA/4 | SK 6282 SCP - 112MH/4 | SK 6282 SCP - 180TC | | | | X | X |
| 58 | 5464 | 2.5 | III | 29.9 | 11439 | 13500 | SK 6282 SCP - 100LA/4 | SK 6282 SCP - 112MH/4 | SK 6282 SCP - 180TC | | | | X | X |
| 26 | 11959 | 2.5 | III | 65.44 | 13149 | 13500 | SK 6282 SCP - 100LA/4 | SK 6282 SCP - 112MH/4 | SK 6282 SCP - 180TC | | | | X | X |
| 21 | 14681 | 2.5 | III | 80.33 | 13095 | 13500 | SK 6282 SCP - 100LA/4 | SK 6282 SCP - 112MH/4 | SK 6282 SCP - 180TC | | | | X | X |

Output speed and torque ratings are based on the "Standard Efficiency Motor" Power and speed. Performance will vary slightly for other motors.

# 7.5 hp Gearmotors & Speed Reducers



| Output Speed | Output Torque | SF | AGMA Class | Gear Ratio | Thrust | | Integral Gearmotor | | Reducer | CEMA DriveShaft | | | | |
|---|---|---|---|---|---|---|---|---|---|---|---|---|---|---|
| $n_2$ | $T_2$ | $f_a$ | | i | Std Brg | H.D. Brg " VL" | Standard Efficiency Motor | Energy Efficient Motor | C-Face Input | 1-1/2" | 2" | 2-7/16" | 3" | 3-7/16" |
| [rpm] | [lb-in] | | | | [lb] | [lb] | | | | | | | | |
| 387 | 1221 | 3.3 | III | 4.48 | 2219 | 3402 | SK 3282 SCP - 132S/4 | SK 3282 SCP - 132SH/4 | SK 3282 SCP - 210TC | X | X | X | X | |
| 305 | 1547 | 3.2 | III | 5.68 | 2360 | 3602 | SK 3282 SCP - 132S/4 | SK 3282 SCP - 132SH/4 | SK 3282 SCP - 210TC | X | X | X | X | |
| 259 | 1824 | 2.9 | III | 6.7 | 2459 | 3744 | SK 3282 SCP - 132S/4 | SK 3282 SCP - 132SH/4 | SK 3282 SCP - 210TC | X | X | X | X | |
| 209 | 2263 | 2.6 | III | 8.31 | 2597 | 3935 | SK 3282 SCP - 132S/4 | SK 3282 SCP - 132SH/4 | SK 3282 SCP - 210TC | X | X | X | X | |
| 177 | 2669 | 2.8 | III | 9.8 | 2709 | 4104 | SK 3282 SCP - 132S/4 | SK 3282 SCP - 132SH/4 | SK 3282 SCP - 210TC | X | X | X | X | |
| 152 | 3099 | 2.3 | III | 11.38 | 2810 | 4237 | SK 3282 SCP - 132S/4 | SK 3282 SCP - 132SH/4 | SK 3282 SCP - 210TC | X | X | X | X | |
| 123 | 3842 | 2 | III | 14.11 | 2948 | 4417 | SK 3282 SCP - 132S/4 | SK 3282 SCP - 132SH/4 | SK 3282 SCP - 210TC | X | X | X | X | |
| 104 | 4539 | 1.6 | II | 16.67 | 3060 | 4500 | SK 3282 SCP - 132S/4 | SK 3282 SCP - 132SH/4 | SK 3282 SCP - 210TC | X | X | X | X | |
| 86 | 5495 | 1.3 | I | 20.18 | 3186 | 4500 | SK 3282 SCP - 132S/4 | SK 3282 SCP - 132SH/4 | SK 3282 SCP - 210TC | X | X | X | X | |
| 81 | 5822 | 1.1 | I | 21.38 | 3204 | 4500 | SK 3282 SCP - 132S/4 | SK 3282 SCP - 132SH/4 | SK 3282 SCP - 210TC | X | X | X | X | |
| 77 | 6113 | 1.2 | I | 22.45 | 3254 | 4500 | SK 3282 SCP - 132S/4 | SK 3282 SCP - 132SH/4 | SK 3282 SCP - 210TC | X | X | X | X | |
| 73 | 6456 | 1 | I | 23.71 | 3260 | 4500 | SK 3282 SCP - 132S/4 | SK 3282 SCP - 132SH/4 | SK 3282 SCP - 210TC | X | X | X | X | |
| 67 | 7047 | 1.1 | I | 25.88 | 3335 | 4500 | SK 3282 SCP - 132S/4 | SK 3282 SCP - 132SH/4 | SK 3282 SCP - 210TC | X | X | X | X | |
| 60 | 7815 | 1 | I | 28.7 | 3380 | 4500 | SK 3282 SCP - 132S/4 | SK 3282 SCP - 132SH/4 | SK 3282 SCP - 210TC | X | X | X | X | |
| 54 | 8695 | 0.9 | * | 31.93 | 3445 | 4500 | SK 3282 SCP - 132S/4 | SK 3282 SCP - 132SH/4 | SK 3282 SCP - 210TC | X | X | X | X | |
| 369 | 1280 | 4 | III | 4.7 | 3251 | 5492 | SK 4282 SCP - 132S/4 | SK 4282 SCP - 132SH/4 | SK 4282 SCP - 210TC | | X | X | X | |
| 347 | 1362 | 3.9 | III | 5 | 3310 | 5589 | SK 4282 SCP - 132S/4 | SK 4282 SCP - 132SH/4 | SK 4282 SCP - 210TC | | X | X | X | |
| 320 | 1479 | 3.9 | III | 5.43 | 3384 | 5706 | SK 4282 SCP - 132S/4 | SK 4282 SCP - 132SH/4 | SK 4282 SCP - 210TC | | X | X | X | |
| 286 | 1650 | 3.7 | III | 6.06 | 3488 | 5884 | SK 4282 SCP - 132S/4 | SK 4282 SCP - 132SH/4 | SK 4282 SCP - 210TC | | X | X | X | |
| 243 | 1942 | 3.5 | III | 7.13 | 3647 | 6134 | SK 4282 SCP - 132S/4 | SK 4282 SCP - 132SH/4 | SK 4282 SCP - 210TC | | X | X | X | |
| 208 | 2268 | 3.2 | III | 8.33 | 3800 | 6386 | SK 4282 SCP - 132S/4 | SK 4282 SCP - 132SH/4 | SK 4282 SCP - 210TC | | X | X | X | |
| 188 | 2513 | 3.7 | III | 9.23 | 3917 | 6581 | SK 4282 SCP - 132S/4 | SK 4282 SCP - 132SH/4 | SK 4282 SCP - 210TC | | X | X | X | |
| 160 | 2955 | 3.5 | III | 10.85 | 4086 | 6750 | SK 4282 SCP - 132S/4 | SK 4282 SCP - 132SH/4 | SK 4282 SCP - 210TC | | X | X | X | |
| 137 | 3453 | 3.2 | III | 12.68 | 4255 | 6750 | SK 4282 SCP - 132S/4 | SK 4282 SCP - 132SH/4 | SK 4282 SCP - 210TC | | X | X | X | |
| 114 | 4139 | 3.2 | III | 15.2 | 4464 | 6750 | SK 4282 SCP - 132S/4 | SK 4282 SCP - 132SH/4 | SK 4282 SCP - 210TC | | X | X | X | |
| 95 | 4951 | 3.2 | III | 18.18 | 4673 | 6750 | SK 4282 SCP - 132S/4 | SK 4282 SCP - 132SH/4 | SK 4282 SCP - 210TC | | X | X | X | |
| 81 | 5841 | 2.6 | III | 21.45 | 4871 | 6750 | SK 4282 SCP - 132S/4 | SK 4282 SCP - 132SH/4 | SK 4282 SCP - 210TC | | X | X | X | |
| 77 | 6097 | 2.5 | III | 22.39 | 4905 | 6750 | SK 4282 SCP - 132S/4 | SK 4282 SCP - 132SH/4 | SK 4282 SCP - 210TC | | X | X | X | |
| 66 | 7148 | 2 | III | 26.25 | 5121 | 6750 | SK 4282 SCP - 132S/4 | SK 4282 SCP - 132SH/4 | SK 4282 SCP - 210TC | | X | X | X | |
| 66 | 7197 | 2.2 | III | 26.43 | 5121 | 6750 | SK 4282 SCP - 132S/4 | SK 4282 SCP - 132SH/4 | SK 4282 SCP - 210TC | | X | X | X | |
| 65 | 7276 | 1.9 | II | 26.72 | 5078 | 6750 | SK 4282 SCP - 132S/4 | SK 4282 SCP - 132SH/4 | SK 4282 SCP - 210TC | | X | X | X | |
| 54 | 8725 | 1.8 | II | 32.04 | 5301 | 6750 | SK 4282 SCP - 132S/4 | SK 4282 SCP - 132SH/4 | SK 4282 SCP - 210TC | | X | X | X | |
| 54 | 8806 | 1.6 | II | 32.34 | 5351 | 6750 | SK 4282 SCP - 132S/4 | SK 4282 SCP - 132SH/4 | SK 4282 SCP - 210TC | | X | X | X | |
| 48 | 9912 | 1.2 | I | 36.4 | 5405 | 6750 | SK 4282 SCP - 132S/4 | SK 4282 SCP - 132SH/4 | SK 4282 SCP - 210TC | | X | X | X | |
| 47 | 10024 | 1.2 | I | 36.81 | 5488 | 6750 | SK 4282 SCP - 132S/4 | SK 4282 SCP - 132SH/4 | SK 4282 SCP - 210TC | | X | X | X | |
| 45 | 10432 | 1.7 | II | 38.31 | 5506 | 6750 | SK 4282 SCP - 132S/4 | SK 4282 SCP - 132SH/4 | SK 4282 SCP - 210TC | | X | X | X | |
| 43 | 11094 | 1.2 | I | 40.74 | 5609 | 6750 | SK 4282 SCP - 132S/4 | SK 4282 SCP - 132SH/4 | SK 4282 SCP - 210TC | | X | X | X | |
| 40 | 11886 | 1.2 | I | 43.65 | 5627 | 6750 | SK 4282 SCP - 132S/4 | SK 4282 SCP - 132SH/4 | SK 4282 SCP - 210TC | | X | X | X | |
| 39 | 12267 | 1.1 | I | 45.05 | 5715 | 6750 | SK 4282 SCP - 132S/4 | SK 4282 SCP - 132SH/4 | SK 4282 SCP - 210TC | | X | X | X | |
| 33 | 14214 | 1.1 | I | 52.2 | 5814 | 6750 | SK 4282 SCP - 132S/4 | SK 4282 SCP - 132SH/4 | SK 4282 SCP - 210TC | | X | X | X | |
| 28 | 16774 | 0.9 | * | 61.6 | 5994 | 6750 | SK 4282 SCP - 132S/4 | SK 4282 SCP - 132SH/4 | SK 4282 SCP - 210TC | | X | X | X | |

Output speed and torque ratings are based on the "Standard Efficiency Motor" Power and speed. Performance will vary slightly for other motors.



# 7.5 hp Gearmotors & Speed Reducers

| Output Speed | Output Torque | SF | AGMA Class | Gear Ratio | Thrust | | Integral Gearmotor | | Reducer | CEMA DriveShaft | | | | |
|---|---|---|---|---|---|---|---|---|---|---|---|---|---|---|
| $n_2$ | $T_2$ | $f_a$ | | i | Std Brg | H.D. Brg " VL" | Standard Efficiency Motor | Energy Efficient Motor | C-Face Input | 1-1/2" | 2" | 2-7/16" | 3" | 3-7/16" |
| [rpm] | [lb-in] | | | | [lb] | [lb] | | | | | | | | |
| 274 | 1724 | 4.2 | III | 6.33 | 4959 | 8323 | SK 5282 SCP - 132S/4 | SK 5282 SCP - 132SH/4 | SK 5282 SCP - 210TC | | X | X | X | X |
| 242 | 1952 | 4.1 | III | 7.17 | 5135 | 8622 | SK 5282 SCP - 132S/4 | SK 5282 SCP - 132SH/4 | SK 5282 SCP - 210TC | | X | X | X | X |
| 199 | 2369 | 3.8 | III | 8.7 | 5414 | 9000 | SK 5282 SCP - 132S/4 | SK 5282 SCP - 132SH/4 | SK 5282 SCP - 210TC | | X | X | X | X |
| 183 | 2576 | 4.2 | III | 9.46 | 5553 | 9000 | SK 5282 SCP - 132S/4 | SK 5282 SCP - 132SH/4 | SK 5282 SCP - 210TC | | X | X | X | X |
| 162 | 2916 | 4.1 | III | 10.71 | 5753 | 9000 | SK 5282 SCP - 132S/4 | SK 5282 SCP - 132SH/4 | SK 5282 SCP - 210TC | | X | X | X | X |
| 133 | 3540 | 3.8 | III | 13 | 6062 | 9000 | SK 5282 SCP - 132S/4 | SK 5282 SCP - 132SH/4 | SK 5282 SCP - 210TC | | X | X | X | X |
| 113 | 4188 | 3.8 | III | 15.38 | 6356 | 9000 | SK 5282 SCP - 132S/4 | SK 5282 SCP - 132SH/4 | SK 5282 SCP - 210TC | | X | X | X | X |
| 99 | 4790 | 3.6 | III | 17.59 | 6590 | 9000 | SK 5282 SCP - 132S/4 | SK 5282 SCP - 132SH/4 | SK 5282 SCP - 210TC | | X | X | X | X |
| 92 | 5141 | 3.8 | III | 18.88 | 6728 | 9000 | SK 5282 SCP - 132S/4 | SK 5282 SCP - 132SH/4 | SK 5282 SCP - 210TC | | X | X | X | X |
| 85 | 5544 | 3.4 | III | 20.36 | 6842 | 9000 | SK 5282 SCP - 132S/4 | SK 5282 SCP - 132SH/4 | SK 5282 SCP - 210TC | | X | X | X | X |
| 69 | 6808 | 3.4 | III | 25 | 7236 | 9000 | SK 5282 SCP - 132S/4 | SK 5282 SCP - 132SH/4 | SK 5282 SCP - 210TC | | X | X | X | X |
| 57 | 8305 | 3.1 | III | 30.5 | 7621 | 9000 | SK 5282 SCP - 132S/4 | SK 5282 SCP - 132SH/4 | SK 5282 SCP - 210TC | | X | X | X | X |
| 52 | 9103 | 2.2 | III | 33.43 | 7805 | 9000 | SK 5282 SCP - 132S/4 | SK 5282 SCP - 132SH/4 | SK 5282 SCP - 210TC | | X | X | X | X |
| 49 | 9656 | 2.5 | III | 35.46 | 7884 | 9000 | SK 5282 SCP - 132S/4 | SK 5282 SCP - 132SH/4 | SK 5282 SCP - 210TC | | X | X | X | X |
| 43 | 11110 | 2 | III | 40.8 | 8188 | 9000 | SK 5282 SCP - 132S/4 | SK 5282 SCP - 132SH/4 | SK 5282 SCP - 210TC | | X | X | X | X |
| 41 | 11421 | 2.5 | III | 41.94 | 8208 | 9000 | SK 5282 SCP - 132S/4 | SK 5282 SCP - 132SH/4 | SK 5282 SCP - 210TC | | X | X | X | X |
| 37 | 12872 | 1.7 | II | 47.27 | 8411 | 9000 | SK 5282 SCP - 132S/4 | SK 5282 SCP - 132SH/4 | SK 5282 SCP - 210TC | | X | X | X | X |
| 34 | 14021 | 2 | III | 51.49 | 8638 | 9000 | SK 5282 SCP - 132S/4 | SK 5282 SCP - 132SH/4 | SK 5282 SCP - 210TC | | X | X | X | X |
| 31 | 15127 | 1.3 | I | 55.55 | 8798 | 9000 | SK 5282 SCP - 132S/4 | SK 5282 SCP - 132SH/4 | SK 5282 SCP - 210TC | | X | X | X | X |
| 31 | 15222 | 1.5 | II | 55.9 | 8753 | 9000 | SK 5282 SCP - 132S/4 | SK 5282 SCP - 132SH/4 | SK 5282 SCP - 210TC | | X | X | X | X |
| 25 | 18688 | 1.4 | II | 68.63 | 9191 | 9000 | SK 5282 SCP - 132S/4 | SK 5282 SCP - 132SH/4 | SK 5282 SCP - 210TC | | X | X | X | X |
| 19 | 25001 | 1 | I | 91.81 | 9275 | 9000 | SK 5282 SCP - 132S/4 | SK 5282 SCP - 132SH/4 | SK 5282 SCP - 210TC | | X | X | X | X |
| 257 | 1835 | 4.5 | III | 6.74 | 7382 | 10672 | SK 6282 SCP - 132S/4 | SK 6282 SCP - 132SH/4 | SK 6282 SCP - 210TC | | | | X | X |
| 222 | 2129 | 4.3 | III | 7.82 | 7697 | 11144 | SK 6282 SCP - 132S/4 | SK 6282 SCP - 132SH/4 | SK 6282 SCP - 210TC | | | | X | X |
| 185 | 2557 | 4.1 | III | 9.39 | 8114 | 11732 | SK 6282 SCP - 132S/4 | SK 6282 SCP - 132SH/4 | SK 6282 SCP - 210TC | | | | X | X |
| 163 | 2897 | 4.5 | III | 10.64 | 8431 | 12173 | SK 6282 SCP - 132S/4 | SK 6282 SCP - 132SH/4 | SK 6282 SCP - 210TC | | | | X | X |
| 140 | 3363 | 4.3 | III | 12.35 | 8789 | 12690 | SK 6282 SCP - 132S/4 | SK 6282 SCP - 132SH/4 | SK 6282 SCP - 210TC | | | | X | X |
| 117 | 4038 | 4.1 | III | 14.83 | 9248 | 13381 | SK 6282 SCP - 132S/4 | SK 6282 SCP - 132SH/4 | SK 6282 SCP - 210TC | | | | X | X |
| 93 | 5092 | 4.1 | III | 18.7 | 9873 | 13500 | SK 6282 SCP - 132S/4 | SK 6282 SCP - 132SH/4 | SK 6282 SCP - 210TC | | | | X | X |
| 76 | 6249 | 4.1 | III | 22.95 | 10485 | 13500 | SK 6282 SCP - 132S/4 | SK 6282 SCP - 132SH/4 | SK 6282 SCP - 210TC | | | | X | X |
| 67 | 7094 | 3.9 | III | 26.05 | 10836 | 13500 | SK 6282 SCP - 132S/4 | SK 6282 SCP - 132SH/4 | SK 6282 SCP - 210TC | | | | X | X |
| 58 | 8142 | 3.7 | III | 29.9 | 11252 | 13500 | SK 6282 SCP - 132S/4 | SK 6282 SCP - 132SH/4 | SK 6282 SCP - 210TC | | | | X | X |
| 44 | 10751 | 2.6 | III | 39.48 | 12058 | 13500 | SK 6282 SCP - 132S/4 | SK 6282 SCP - 132SH/4 | SK 6282 SCP - 210TC | | | | X | X |
| 35 | 13547 | 2.6 | III | 49.75 | 12807 | 13500 | SK 6282 SCP - 132S/4 | SK 6282 SCP - 132SH/4 | SK 6282 SCP - 210TC | | | | X | X |
| 28 | 16633 | 2.4 | III | 61.08 | 13048 | 13500 | SK 6282 SCP - 132S/4 | SK 6282 SCP - 132SH/4 | SK 6282 SCP - 210TC | | | | X | X |
| 27 | 17820 | 1.7 | II | 65.44 | 13016 | 13500 | SK 6282 SCP - 132S/4 | SK 6282 SCP - 132SH/4 | SK 6282 SCP - 210TC | | | | X | X |
| 22 | 21874 | 1.7 | II | 80.33 | 12893 | 13500 | SK 6282 SCP - 132S/4 | SK 6282 SCP - 132SH/4 | SK 6282 SCP - 210TC | | | | X | X |

Output speed and torque ratings are based on the "Standard Efficiency Motor" Power and speed. Performance will vary slightly for other motors.

# 10 hp Gearmotors & Speed Reducers



| Output Speed | Output Torque | SF | AGMA Class | Gear Ratio | Thrust | | Integral Gearmotor | | Reducer | CEMA DriveShaft | | | | |
|---|---|---|---|---|---|---|---|---|---|---|---|---|---|---|
| $n_2$ | $T_2$ | $f_a$ | | i | Std Brg | H.D. Brg " VL" | Standard Efficiency Motor | Energy Efficient Motor | C-Face Input | 1-1/2" | 2" | 2-7/16" | 3" | 3-7/16" |
| [rpm] | [lb-in] | | | | [lb] | [lb] | | | | | | | | |
| 387 | 1627 | 2.5 | III | 4.48 | 2178 | 3314 | SK 3282 SCP - 132M/4 | SK 3282 SCP - 132MH/4 | SK 3282 SCP - 210TC | X | X | X | X | |
| 305 | 2064 | 2.4 | III | 5.68 | 2309 | 3494 | SK 3282 SCP - 132M/4 | SK 3282 SCP - 132MH/4 | SK 3282 SCP - 210TC | X | X | X | X | |
| 259 | 2435 | 2.2 | III | 6.7 | 2394 | 3614 | SK 3282 SCP - 132M/4 | SK 3282 SCP - 132MH/4 | SK 3282 SCP - 210TC | X | X | X | X | |
| 209 | 3020 | 2 | III | 8.31 | 2513 | 3769 | SK 3282 SCP - 132M/4 | SK 3282 SCP - 132MH/4 | SK 3282 SCP - 210TC | X | X | X | X | |
| 177 | 3561 | 2.1 | III | 9.8 | 2624 | 3922 | SK 3282 SCP - 132M/4 | SK 3282 SCP - 132MH/4 | SK 3282 SCP - 210TC | X | X | X | X | |
| 152 | 4136 | 1.8 | II | 11.38 | 2709 | 4037 | SK 3282 SCP - 132M/4 | SK 3282 SCP - 132MH/4 | SK 3282 SCP - 210TC | X | X | X | X | |
| 123 | 5128 | 1.5 | II | 14.11 | 2822 | 4169 | SK 3282 SCP - 132M/4 | SK 3282 SCP - 132MH/4 | SK 3282 SCP - 210TC | X | X | X | X | |
| 104 | 6058 | 1.2 | I | 16.67 | 2912 | 4277 | SK 3282 SCP - 132M/4 | SK 3282 SCP - 132MH/4 | SK 3282 SCP - 210TC | X | X | X | X | |
| 86 | 7333 | 1 | I | 20.18 | 3011 | 4388 | SK 3282 SCP - 132M/4 | SK 3282 SCP - 132MH/4 | SK 3282 SCP - 210TC | X | X | X | X | |
| 77 | 8158 | 0.9 | * | 22.45 | 3056 | 4446 | SK 3282 SCP - 132M/4 | SK 3282 SCP - 132MH/4 | SK 3282 SCP - 210TC | X | X | X | X | |
| 369 | 1708 | 3 | III | 4.7 | 3220 | 5423 | SK 4282 SCP - 132M/4 | SK 4282 SCP - 132MH/4 | SK 4282 SCP - 210TC | | X | X | X | |
| 347 | 1817 | 3 | III | 5 | 3272 | 5499 | SK 4282 SCP - 132M/4 | SK 4282 SCP - 132MH/4 | SK 4282 SCP - 210TC | | X | X | X | |
| 320 | 1973 | 2.9 | III | 5.43 | 3344 | 5616 | SK 4282 SCP - 132M/4 | SK 4282 SCP - 132MH/4 | SK 4282 SCP - 210TC | | X | X | X | |
| 286 | 2202 | 2.7 | III | 6.06 | 3440 | 5771 | SK 4282 SCP - 132M/4 | SK 4282 SCP - 132MH/4 | SK 4282 SCP - 210TC | | X | X | X | |
| 243 | 2591 | 2.6 | III | 7.13 | 3584 | 6008 | SK 4282 SCP - 132M/4 | SK 4282 SCP - 132MH/4 | SK 4282 SCP - 210TC | | X | X | X | |
| 208 | 3027 | 2.4 | III | 8.33 | 3728 | 6253 | SK 4282 SCP - 132M/4 | SK 4282 SCP - 132MH/4 | SK 4282 SCP - 210TC | | X | X | X | |
| 188 | 3354 | 2.7 | III | 9.23 | 3854 | 6446 | SK 4282 SCP - 132M/4 | SK 4282 SCP - 132MH/4 | SK 4282 SCP - 210TC | | X | X | X | |
| 160 | 3943 | 2.6 | III | 10.85 | 4005 | 6689 | SK 4282 SCP - 132M/4 | SK 4282 SCP - 132MH/4 | SK 4282 SCP - 210TC | | X | X | X | |
| 137 | 4608 | 2.4 | III | 12.68 | 4160 | 6750 | SK 4282 SCP - 132M/4 | SK 4282 SCP - 132MH/4 | SK 4282 SCP - 210TC | | X | X | X | |
| 114 | 5524 | 2.4 | III | 15.2 | 4352 | 6750 | SK 4282 SCP - 132M/4 | SK 4282 SCP - 132MH/4 | SK 4282 SCP - 210TC | | X | X | X | |
| 95 | 6607 | 2.4 | III | 18.18 | 4545 | 6750 | SK 4282 SCP - 132M/4 | SK 4282 SCP - 132MH/4 | SK 4282 SCP - 210TC | | X | X | X | |
| 81 | 7795 | 1.9 | II | 21.45 | 4718 | 6750 | SK 4282 SCP - 132M/4 | SK 4282 SCP - 132MH/4 | SK 4282 SCP - 210TC | | X | X | X | |
| 77 | 8137 | 1.8 | II | 22.39 | 4748 | 6750 | SK 4282 SCP - 132M/4 | SK 4282 SCP - 132MH/4 | SK 4282 SCP - 210TC | | X | X | X | |
| 66 | 9539 | 1.5 | II | 26.25 | 4930 | 6750 | SK 4282 SCP - 132M/4 | SK 4282 SCP - 132MH/4 | SK 4282 SCP - 210TC | | X | X | X | |
| 66 | 9605 | 1.6 | II | 26.43 | 4919 | 6750 | SK 4282 SCP - 132M/4 | SK 4282 SCP - 132MH/4 | SK 4282 SCP - 210TC | | X | X | X | |
| 65 | 9710 | 1.5 | II | 26.72 | 4869 | 6750 | SK 4282 SCP - 132M/4 | SK 4282 SCP - 132MH/4 | SK 4282 SCP - 210TC | | X | X | X | |
| 54 | 11643 | 1.4 | II | 32.04 | 5072 | 6750 | SK 4282 SCP - 132M/4 | SK 4282 SCP - 132MH/4 | SK 4282 SCP - 210TC | | X | X | X | |
| 54 | 11752 | 1.2 | I | 32.34 | 5126 | 6750 | SK 4282 SCP - 132M/4 | SK 4282 SCP - 132MH/4 | SK 4282 SCP - 210TC | | X | X | X | |
| 47 | 13377 | 0.9 | * | 36.81 | 5218 | 6750 | SK 4282 SCP - 132M/4 | SK 4282 SCP - 132MH/4 | SK 4282 SCP - 210TC | | X | X | X | |
| 45 | 13922 | 1.3 | I | 38.31 | 5213 | 6750 | SK 4282 SCP - 132M/4 | SK 4282 SCP - 132MH/4 | SK 4282 SCP - 210TC | | X | X | X | |
| 43 | 14805 | 0.9 | * | 40.74 | 5321 | 6750 | SK 4282 SCP - 132M/4 | SK 4282 SCP - 132MH/4 | SK 4282 SCP - 210TC | | X | X | X | |
| 39 | 16371 | 0.9 | * | 45.05 | 5387 | 6750 | SK 4282 SCP - 132M/4 | SK 4282 SCP - 132MH/4 | SK 4282 SCP - 210TC | | X | X | X | |

Output speed and torque ratings are based on the "Standard Efficiency Motor" Power and speed. Performance will vary slightly for other motors.



# 10 hp Gearmotors & Speed Reducers

| Output Speed | Output Torque | SF | AGMA Class | Gear Ratio | Thrust | | Integral Gearmotor | | Reducer | CEMA DriveShaft | | | | |
|---|---|---|---|---|---|---|---|---|---|---|---|---|---|---|
| $n_2$ | $T_2$ | $f_a$ | | i | Std Brg | H.D. Brg " VL" | Standard Efficiency Motor | Energy Efficient Motor | C-Face Input | 1-1/2" | 2" | 2-7/16" | 3" | 3-7/16" |
| [rpm] | [lb-in] | | | | [lb] | [lb] | | | | | | | | |
| 274 | 2300 | 3.2 | III | 6.33 | 4910 | 8255 | SK 5282 SCP - 132M/4 | SK 5282 SCP - 132MH/4 | SK 5282 SCP - 210TC | | X | X | X | X |
| 242 | 2606 | 3 | III | 7.17 | 5094 | 8539 | SK 5282 SCP - 132M/4 | SK 5282 SCP - 132MH/4 | SK 5282 SCP - 210TC | | X | X | X | X |
| 199 | 3162 | 2.9 | III | 8.7 | 5360 | 9000 | SK 5282 SCP - 132M/4 | SK 5282 SCP - 132MH/4 | SK 5282 SCP - 210TC | | X | X | X | X |
| 183 | 3438 | 3.2 | III | 9.46 | 5497 | 9000 | SK 5282 SCP - 132M/4 | SK 5282 SCP - 132MH/4 | SK 5282 SCP - 210TC | | X | X | X | X |
| 162 | 3892 | 3 | III | 10.71 | 5693 | 9000 | SK 5282 SCP - 132M/4 | SK 5282 SCP - 132MH/4 | SK 5282 SCP - 210TC | | X | X | X | X |
| 133 | 4724 | 2.9 | III | 13 | 5987 | 9000 | SK 5282 SCP - 132M/4 | SK 5282 SCP - 132MH/4 | SK 5282 SCP - 210TC | | X | X | X | X |
| 113 | 5589 | 2.9 | III | 15.38 | 6264 | 9000 | SK 5282 SCP - 132M/4 | SK 5282 SCP - 132MH/4 | SK 5282 SCP - 210TC | | X | X | X | X |
| 99 | 6392 | 2.7 | III | 17.59 | 6482 | 9000 | SK 5282 SCP - 132M/4 | SK 5282 SCP - 132MH/4 | SK 5282 SCP - 210TC | | X | X | X | X |
| 92 | 6861 | 2.9 | III | 18.88 | 6615 | 9000 | SK 5282 SCP - 132M/4 | SK 5282 SCP - 132MH/4 | SK 5282 SCP - 210TC | | X | X | X | X |
| 85 | 7399 | 2.6 | III | 20.36 | 6725 | 9000 | SK 5282 SCP - 132M/4 | SK 5282 SCP - 132MH/4 | SK 5282 SCP - 210TC | | X | X | X | X |
| 69 | 9085 | 2.6 | III | 25 | 7090 | 9000 | SK 5282 SCP - 132M/4 | SK 5282 SCP - 132MH/4 | SK 5282 SCP - 210TC | | X | X | X | X |
| 57 | 11084 | 2.3 | III | 30.5 | 7439 | 9000 | SK 5282 SCP - 132M/4 | SK 5282 SCP - 132MH/4 | SK 5282 SCP - 210TC | | X | X | X | X |
| 52 | 12148 | 1.7 | II | 33.43 | 7607 | 9000 | SK 5282 SCP - 132M/4 | SK 5282 SCP - 132MH/4 | SK 5282 SCP - 210TC | | X | X | X | X |
| 49 | 12886 | 1.9 | II | 35.46 | 7652 | 9000 | SK 5282 SCP - 132M/4 | SK 5282 SCP - 132MH/4 | SK 5282 SCP - 210TC | | X | X | X | X |
| 43 | 14827 | 1.5 | II | 40.8 | 7949 | 9000 | SK 5282 SCP - 132M/4 | SK 5282 SCP - 132MH/4 | SK 5282 SCP - 210TC | | X | X | X | X |
| 41 | 15241 | 1.9 | II | 41.94 | 7949 | 9000 | SK 5282 SCP - 132M/4 | SK 5282 SCP - 132MH/4 | SK 5282 SCP - 210TC | | X | X | X | X |
| 34 | 18712 | 1.5 | II | 51.49 | 8321 | 9000 | SK 5282 SCP - 132M/4 | SK 5282 SCP - 132MH/4 | SK 5282 SCP - 210TC | | X | X | X | X |
| 31 | 20187 | 0.9 | * | 55.55 | 8474 | 9000 | SK 5282 SCP - 132M/4 | SK 5282 SCP - 132MH/4 | SK 5282 SCP - 210TC | | X | X | X | X |
| | | | | | | | | | | | | | | |
| 257 | 2449 | 3.4 | III | 6.74 | 7335 | 10604 | SK 6282 SCP - 132M/4 | SK 6282 SCP - 132MH/4 | SK 6282 SCP - 210TC | | | | X | X |
| 222 | 2842 | 3.3 | III | 7.82 | 7659 | 11057 | SK 6282 SCP - 132M/4 | SK 6282 SCP - 132MH/4 | SK 6282 SCP - 210TC | | | | X | X |
| 185 | 3412 | 3.1 | III | 9.39 | 8060 | 11619 | SK 6282 SCP - 132M/4 | SK 6282 SCP - 132MH/4 | SK 6282 SCP - 210TC | | | | X | X |
| 163 | 3867 | 3.4 | III | 10.64 | 8361 | 12094 | SK 6282 SCP - 132M/4 | SK 6282 SCP - 132MH/4 | SK 6282 SCP - 210TC | | | | X | X |
| 140 | 4488 | 3.3 | III | 12.35 | 8714 | 12589 | SK 6282 SCP - 132M/4 | SK 6282 SCP - 132MH/4 | SK 6282 SCP - 210TC | | | | X | X |
| 117 | 5389 | 3.1 | III | 14.83 | 9185 | 13253 | SK 6282 SCP - 132M/4 | SK 6282 SCP - 132MH/4 | SK 6282 SCP - 210TC | | | | X | X |
| 93 | 6796 | 3.1 | III | 18.7 | 9767 | 13500 | SK 6282 SCP - 132M/4 | SK 6282 SCP - 132MH/4 | SK 6282 SCP - 210TC | | | | X | X |
| 76 | 8340 | 3.1 | III | 22.95 | 10350 | 13500 | SK 6282 SCP - 132M/4 | SK 6282 SCP - 132MH/4 | SK 6282 SCP - 210TC | | | | X | X |
| 67 | 9467 | 3 | III | 26.05 | 10674 | 13500 | SK 6282 SCP - 132M/4 | SK 6282 SCP - 132MH/4 | SK 6282 SCP - 210TC | | | | X | X |
| 58 | 10866 | 2.8 | III | 29.9 | 11093 | 13500 | SK 6282 SCP - 132M/4 | SK 6282 SCP - 132MH/4 | SK 6282 SCP - 210TC | | | | X | X |
| 44 | 14347 | 2 | III | 39.48 | 11844 | 13500 | SK 6282 SCP - 132M/4 | SK 6282 SCP - 132MH/4 | SK 6282 SCP - 210TC | | | | X | X |
| 35 | 18079 | 2 | III | 49.75 | 12517 | 13500 | SK 6282 SCP - 132M/4 | SK 6282 SCP - 132MH/4 | SK 6282 SCP - 210TC | | | | X | X |
| 28 | 22197 | 1.8 | II | 61.08 | 12881 | 13500 | SK 6282 SCP - 132M/4 | SK 6282 SCP - 132MH/4 | SK 6282 SCP - 210TC | | | | X | X |

Output speed and torque ratings are based on the "Standard Efficiency Motor" Power and speed. Performance will vary slightly for other motors.

# 15 hp Gearmotors & Speed Reducers



| Output Speed | Output Torque | SF | AGMA Class | Gear Ratio | Thrust | | Integral Gearmotor | | Reducer | CEMA DriveShaft | | | | |
|---|---|---|---|---|---|---|---|---|---|---|---|---|---|---|
| $n_2$ | $T_2$ | $f_a$ | | i | Std Brg | H.D. Brg " VL" | Standard Efficiency Motor | Energy Efficient Motor | C-Face Input | 1-1/2" | 2" | 2-7/16" | 3" | 3-7/16" |
| [rpm] | [lb-in] | | | | [lb] | [lb] | | | | | | | | |
| 377 | 2510 | 3.3 | III | 4.7 | 3130 | 5225 | SK 4282 SCP - 160M/4 | SK 4282 SCP - 160MH/4 | SK 4282 SCP - 250TC | | X | X | X | |
| 354 | 2672 | 3.2 | III | 5 | 3173 | 5301 | SK 4282 SCP - 160M/4 | SK 4282 SCP - 160MH/4 | SK 4282 SCP - 250TC | | X | X | X | |
| 326 | 2901 | 3.2 | III | 5.43 | 3238 | 5405 | SK 4282 SCP - 160M/4 | SK 4282 SCP - 160MH/4 | SK 4282 SCP - 250TC | | X | X | X | |
| 292 | 3238 | 3 | III | 6.06 | 3326 | 5544 | SK 4282 SCP - 160M/4 | SK 4282 SCP - 160MH/4 | SK 4282 SCP - 250TC | | X | X | X | |
| 248 | 3810 | 2.8 | III | 7.13 | 3458 | 5744 | SK 4282 SCP - 160M/4 | SK 4282 SCP - 160MH/4 | SK 4282 SCP - 250TC | | X | X | X | |
| 212 | 4451 | 2.5 | III | 8.33 | 3580 | 5940 | SK 4282 SCP - 160M/4 | SK 4282 SCP - 160MH/4 | SK 4282 SCP - 250TC | | X | X | X | |
| 192 | 4932 | 2.9 | III | 9.23 | 3697 | 6125 | SK 4282 SCP - 160M/4 | SK 4282 SCP - 160MH/4 | SK 4282 SCP - 250TC | | X | X | X | |
| 163 | 5797 | 2.6 | III | 10.85 | 3836 | 6314 | SK 4282 SCP - 160M/4 | SK 4282 SCP - 160MH/4 | SK 4282 SCP - 250TC | | X | X | X | |
| 140 | 6775 | 2.3 | III | 12.68 | 3951 | 6509 | SK 4282 SCP - 160M/4 | SK 4282 SCP - 160MH/4 | SK 4282 SCP - 250TC | | X | X | X | |
| 116 | 8122 | 2 | III | 15.2 | 4118 | 6743 | SK 4282 SCP - 160M/4 | SK 4282 SCP - 160MH/4 | SK 4282 SCP - 250TC | | X | X | X | |
| 97 | 9714 | 1.6 | II | 18.18 | 4255 | 6750 | SK 4282 SCP - 160M/4 | SK 4282 SCP - 160MH/4 | SK 4282 SCP - 250TC | | X | X | X | |
| 83 | 11461 | 1.3 | I | 21.45 | 4406 | 6750 | SK 4282 SCP - 160M/4 | SK 4282 SCP - 160MH/4 | SK 4282 SCP - 250TC | | X | X | X | |
| 79 | 11963 | 1.3 | I | 22.39 | 4399 | 6750 | SK 4282 SCP - 160M/4 | SK 4282 SCP - 160MH/4 | SK 4282 SCP - 250TC | | X | X | X | |
| 67 | 14026 | 1 | I | 26.25 | 4545 | 6750 | SK 4282 SCP - 160M/4 | SK 4282 SCP - 160MH/4 | SK 4282 SCP - 250TC | | X | X | X | |
| 67 | 14122 | 1.1 | I | 26.43 | 4525 | 6750 | SK 4282 SCP - 160M/4 | SK 4282 SCP - 160MH/4 | SK 4282 SCP - 250TC | | X | X | X | |
| 410 | 2308 | 4 | III | 4.32 | 4334 | 7286 | SK 5282 SCP - 160M/4 | SK 5282 SCP - 160MH/4 | SK 5282 SCP - 250TC | | X | X | X | X |
| 353 | 2677 | 3.9 | III | 5.01 | 4516 | 7585 | SK 5282 SCP - 160M/4 | SK 5282 SCP - 160MH/4 | SK 5282 SCP - 250TC | | X | X | X | X |
| 335 | 2827 | 3.8 | III | 5.29 | 4581 | 7693 | SK 5282 SCP - 160M/4 | SK 5282 SCP - 160MH/4 | SK 5282 SCP - 250TC | | X | X | X | X |
| 310 | 3051 | 3.7 | III | 5.71 | 4676 | 7844 | SK 5282 SCP - 160M/4 | SK 5282 SCP - 160MH/4 | SK 5282 SCP - 250TC | | X | X | X | X |
| 280 | 3382 | 3.5 | III | 6.33 | 4804 | 8060 | SK 5282 SCP - 160M/4 | SK 5282 SCP - 160MH/4 | SK 5282 SCP - 250TC | | X | X | X | X |
| 247 | 3831 | 3.3 | III | 7.17 | 4968 | 8336 | SK 5282 SCP - 160M/4 | SK 5282 SCP - 160MH/4 | SK 5282 SCP - 250TC | | X | X | X | X |
| 203 | 4649 | 3.1 | III | 8.7 | 5216 | 8762 | SK 5282 SCP - 160M/4 | SK 5282 SCP - 160MH/4 | SK 5282 SCP - 250TC | | X | X | X | X |
| 187 | 5055 | 3.5 | III | 9.46 | 5357 | 8973 | SK 5282 SCP - 160M/4 | SK 5282 SCP - 160MH/4 | SK 5282 SCP - 250TC | | X | X | X | X |
| 165 | 5723 | 3.3 | III | 10.71 | 5528 | 9000 | SK 5282 SCP - 160M/4 | SK 5282 SCP - 160MH/4 | SK 5282 SCP - 250TC | | X | X | X | X |
| 136 | 6946 | 3.1 | III | 13 | 5798 | 9000 | SK 5282 SCP - 160M/4 | SK 5282 SCP - 160MH/4 | SK 5282 SCP - 250TC | | X | X | X | X |
| 115 | 8218 | 2.8 | III | 15.38 | 6050 | 9000 | SK 5282 SCP - 160M/4 | SK 5282 SCP - 160MH/4 | SK 5282 SCP - 250TC | | X | X | X | X |
| 101 | 9399 | 2.6 | III | 17.59 | 6242 | 9000 | SK 5282 SCP - 160M/4 | SK 5282 SCP - 160MH/4 | SK 5282 SCP - 250TC | | X | X | X | X |
| 94 | 10088 | 2.3 | III | 18.88 | 6363 | 9000 | SK 5282 SCP - 160M/4 | SK 5282 SCP - 160MH/4 | SK 5282 SCP - 250TC | | X | X | X | X |
| 87 | 10879 | 2.5 | III | 20.36 | 6442 | 9000 | SK 5282 SCP - 160M/4 | SK 5282 SCP - 160MH/4 | SK 5282 SCP - 250TC | | X | X | X | X |
| 71 | 13358 | 1.9 | II | 25 | 6764 | 9000 | SK 5282 SCP - 160M/4 | SK 5282 SCP - 160MH/4 | SK 5282 SCP - 250TC | | X | X | X | X |
| 58 | 16297 | 1.6 | II | 30.5 | 7040 | 9000 | SK 5282 SCP - 160M/4 | SK 5282 SCP - 160MH/4 | SK 5282 SCP - 250TC | | X | X | X | X |
| 53 | 17862 | 1.1 | I | 33.43 | 7187 | 9000 | SK 5282 SCP - 160M/4 | SK 5282 SCP - 160MH/4 | SK 5282 SCP - 250TC | | X | X | X | X |
| 43 | 21800 | 1 | I | 40.8 | 7434 | 9000 | SK 5282 SCP - 160M/4 | SK 5282 SCP - 160MH/4 | SK 5282 SCP - 250TC | | X | X | X | X |

Output speed and torque ratings are based on the "Standard Efficiency Motor" Power and speed. Performance will vary slightly for other motors.



# 15 hp Gearmotors & Speed Reducers

| Output Speed | Output Torque | SF | AGMA Class | Gear Ratio | Thrust | | Integral Gearmotor | | Reducer | CEMA DriveShaft | | | | |
|---|---|---|---|---|---|---|---|---|---|---|---|---|---|---|
| $n_2$ | $T_2$ | $f_a$ | | i | Std Brg | H.D. Brg " VL" | Standard Efficiency Motor | Energy Efficient Motor | C-Face Input | 1-1/2" | 2" | 2-7/16" | 3" | 3-7/16" |
| [rpm] | [lb-in] | | | | [lb] | [lb] | | | | | | | | |
| 363 | 2607 | 4.1 | III | 4.88 | 6588 | 9509 | SK 6282 SCP - 160M/4 | SK 6282 SCP - 160MH/4 | SK 6282 SCP - 250TC | | | | X | X |
| 322 | 2939 | 4 | III | 5.5 | 6813 | 9835 | SK 6282 SCP - 160M/4 | SK 6282 SCP - 160MH/4 | SK 6282 SCP - 250TC | | | | X | X |
| 306 | 3088 | 3.9 | III | 5.78 | 6923 | 9979 | SK 6282 SCP - 160M/4 | SK 6282 SCP - 160MH/4 | SK 6282 SCP - 250TC | | | | X | X |
| 263 | 3601 | 3.7 | III | 6.74 | 7205 | 10402 | SK 6282 SCP - 160M/4 | SK 6282 SCP - 160MH/4 | SK 6282 SCP - 250TC | | | | X | X |
| 226 | 4178 | 3.6 | III | 7.82 | 7508 | 10827 | SK 6282 SCP - 160M/4 | SK 6282 SCP - 160MH/4 | SK 6282 SCP - 250TC | | | | X | X |
| 188 | 5017 | 3.3 | III | 9.39 | 7889 | 11381 | SK 6282 SCP - 160M/4 | SK 6282 SCP - 160MH/4 | SK 6282 SCP - 250TC | | | | X | X |
| 166 | 5685 | 3.7 | III | 10.64 | 8192 | 11826 | SK 6282 SCP - 160M/4 | SK 6282 SCP - 160MH/4 | SK 6282 SCP - 250TC | | | | X | X |
| 143 | 6599 | 3.6 | III | 12.35 | 8523 | 12290 | SK 6282 SCP - 160M/4 | SK 6282 SCP - 160MH/4 | SK 6282 SCP - 250TC | | | | X | X |
| 119 | 7924 | 3.3 | III | 14.83 | 8933 | 12895 | SK 6282 SCP - 160M/4 | SK 6282 SCP - 160MH/4 | SK 6282 SCP - 250TC | | | | X | X |
| 95 | 9992 | 3.3 | III | 18.7 | 9488 | 13500 | SK 6282 SCP - 160M/4 | SK 6282 SCP - 160MH/4 | SK 6282 SCP - 250TC | | | | X | X |
| 77 | 12263 | 3.3 | III | 22.95 | 10024 | 13500 | SK 6282 SCP - 160M/4 | SK 6282 SCP - 160MH/4 | SK 6282 SCP - 250TC | | | | X | X |
| 68 | 13919 | 2.9 | III | 26.05 | 10325 | 13500 | SK 6282 SCP - 160M/4 | SK 6282 SCP - 160MH/4 | SK 6282 SCP - 250TC | | | | X | X |
| 59 | 15976 | 2.5 | III | 29.9 | 10674 | 13500 | SK 6282 SCP - 160M/4 | SK 6282 SCP - 160MH/4 | SK 6282 SCP - 250TC | | | | X | X |
| 45 | 21095 | 1.3 | I | 39.48 | 11270 | 13500 | SK 6282 SCP - 160M/4 | SK 6282 SCP - 160MH/4 | SK 6282 SCP - 250TC | | | | X | X |
| 36 | 26583 | 1.3 | I | 49.75 | 11867 | 13500 | SK 6282 SCP - 160M/4 | SK 6282 SCP - 160MH/4 | SK 6282 SCP - 250TC | | | | X | X |
| 29 | 32636 | 1.2 | I | 61.08 | 12427 | 13500 | SK 6282 SCP - 160M/4 | SK 6282 SCP - 160MH/4 | SK 6282 SCP - 250TC | | | | X | X |

Output speed and torque ratings are based on the "Standard Efficiency Motor" Power and speed. Performance will vary slightly for other motors.

# 20 hp Gearmotors & Speed Reducers



| Output Speed | Output Torque | SF | AGMA Class | Gear Ratio | Thrust | | Integral Gearmotor | | Reducer | CEMA DriveShaft | | | | |
|---|---|---|---|---|---|---|---|---|---|---|---|---|---|---|
| $n_2$ | $T_2$ | $f_a$ | | i | Std Brg | H.D. Brg " VL" | Standard Efficiency Motor | Energy Efficient Motor | C-Face Input | 1-1/2" | 2" | 2-7/16" | 3" | 3-7/16" |
| [rpm] | [lb-in] | | | | [lb] | [lb] | | | | | | | | |
| 376 | 3357 | 2.5 | III | 4.7 | 3053 | 5076 | SK 4282 SCP - 160L/4 | SK 4282 SCP - 160LH/4 | SK 4282 SCP - 250TC | | X | X | X | |
| 353 | 3570 | 2.4 | III | 5 | 3096 | 5141 | SK 4282 SCP - 160L/4 | SK 4282 SCP - 160LH/4 | SK 4282 SCP - 250TC | | X | X | X | |
| 325 | 3877 | 2.4 | III | 5.43 | 3155 | 5234 | SK 4282 SCP - 160L/4 | SK 4282 SCP - 160LH/4 | SK 4282 SCP - 250TC | | X | X | X | |
| 291 | 4327 | 2.2 | III | 6.06 | 3233 | 5344 | SK 4282 SCP - 160L/4 | SK 4282 SCP - 160LH/4 | SK 4282 SCP - 250TC | | X | X | X | |
| 248 | 5091 | 2.1 | III | 7.13 | 3341 | 5508 | SK 4282 SCP - 160L/4 | SK 4282 SCP - 160LH/4 | SK 4282 SCP - 250TC | | X | X | X | |
| 212 | 5947 | 1.9 | II | 8.33 | 3449 | 5661 | SK 4282 SCP - 160L/4 | SK 4282 SCP - 160LH/4 | SK 4282 SCP - 250TC | | X | X | X | |
| 191 | 6590 | 2.2 | III | 9.23 | 3564 | 5837 | SK 4282 SCP - 160L/4 | SK 4282 SCP - 160LH/4 | SK 4282 SCP - 250TC | | X | X | X | |
| 163 | 7747 | 1.9 | II | 10.85 | 3663 | 5987 | SK 4282 SCP - 160L/4 | SK 4282 SCP - 160LH/4 | SK 4282 SCP - 250TC | | X | X | X | |
| 139 | 9053 | 1.7 | II | 12.68 | 3760 | 6125 | SK 4282 SCP - 160L/4 | SK 4282 SCP - 160LH/4 | SK 4282 SCP - 250TC | | X | X | X | |
| 116 | 10852 | 1.5 | II | 15.2 | 3888 | 6293 | SK 4282 SCP - 160L/4 | SK 4282 SCP - 160LH/4 | SK 4282 SCP - 250TC | | X | X | X | |
| 97 | 12980 | 1.2 | I | 18.18 | 3989 | 6406 | SK 4282 SCP - 160L/4 | SK 4282 SCP - 160LH/4 | SK 4282 SCP - 250TC | | X | X | X | |
| 82 | 15315 | 1 | I | 21.45 | 4086 | 6518 | SK 4282 SCP - 160L/4 | SK 4282 SCP - 160LH/4 | SK 4282 SCP - 250TC | | X | X | X | |
| 79 | 15986 | 0.9 | * | 22.39 | 4070 | 6458 | SK 4282 SCP - 160L/4 | SK 4282 SCP - 160LH/4 | SK 4282 SCP - 250TC | | X | X | X | |
| 409 | 3084 | 3 | III | 4.32 | 4282 | 7193 | SK 5282 SCP - 160L/4 | SK 5282 SCP - 160LH/4 | SK 5282 SCP - 250TC | | X | X | X | X |
| 352 | 3577 | 2.9 | III | 5.01 | 4462 | 7475 | SK 5282 SCP - 160L/4 | SK 5282 SCP - 160LH/4 | SK 5282 SCP - 250TC | | X | X | X | X |
| 334 | 3777 | 2.8 | III | 5.29 | 4511 | 7585 | SK 5282 SCP - 160L/4 | SK 5282 SCP - 160LH/4 | SK 5282 SCP - 250TC | | X | X | X | X |
| 309 | 4077 | 2.8 | III | 5.71 | 4606 | 7745 | SK 5282 SCP - 160L/4 | SK 5282 SCP - 160LH/4 | SK 5282 SCP - 250TC | | X | X | X | X |
| 279 | 4519 | 2.6 | III | 6.33 | 4723 | 7931 | SK 5282 SCP - 160L/4 | SK 5282 SCP - 160LH/4 | SK 5282 SCP - 250TC | | X | X | X | X |
| 246 | 5119 | 2.5 | III | 7.17 | 4883 | 8177 | SK 5282 SCP - 160L/4 | SK 5282 SCP - 160LH/4 | SK 5282 SCP - 250TC | | X | X | X | X |
| 203 | 6212 | 2.3 | III | 8.7 | 5105 | 8566 | SK 5282 SCP - 160L/4 | SK 5282 SCP - 160LH/4 | SK 5282 SCP - 250TC | | X | X | X | X |
| 187 | 6754 | 2.6 | III | 9.46 | 5243 | 8789 | SK 5282 SCP - 160L/4 | SK 5282 SCP - 160LH/4 | SK 5282 SCP - 250TC | | X | X | X | X |
| 165 | 7647 | 2.5 | III | 10.71 | 5398 | 9000 | SK 5282 SCP - 160L/4 | SK 5282 SCP - 160LH/4 | SK 5282 SCP - 250TC | | X | X | X | X |
| 136 | 9282 | 2.3 | III | 13 | 5643 | 9000 | SK 5282 SCP - 160L/4 | SK 5282 SCP - 160LH/4 | SK 5282 SCP - 250TC | | X | X | X | X |
| 115 | 10981 | 2.1 | III | 15.38 | 5868 | 9000 | SK 5282 SCP - 160L/4 | SK 5282 SCP - 160LH/4 | SK 5282 SCP - 250TC | | X | X | X | X |
| 100 | 12559 | 1.9 | II | 17.59 | 6032 | 9000 | SK 5282 SCP - 160L/4 | SK 5282 SCP - 160LH/4 | SK 5282 SCP - 250TC | | X | X | X | X |
| 93 | 13480 | 1.7 | II | 18.88 | 6149 | 9000 | SK 5282 SCP - 160L/4 | SK 5282 SCP - 160LH/4 | SK 5282 SCP - 250TC | | X | X | X | X |
| 87 | 14536 | 1.9 | II | 20.36 | 6206 | 9000 | SK 5282 SCP - 160L/4 | SK 5282 SCP - 160LH/4 | SK 5282 SCP - 250TC | | X | X | X | X |
| 71 | 17849 | 1.4 | II | 25 | 6476 | 9000 | SK 5282 SCP - 160L/4 | SK 5282 SCP - 160LH/4 | SK 5282 SCP - 250TC | | X | X | X | X |
| 58 | 21776 | 1.2 | I | 30.5 | 6687 | 9000 | SK 5282 SCP - 160L/4 | SK 5282 SCP - 160LH/4 | SK 5282 SCP - 250TC | | X | X | X | X |
| 53 | 23868 | 0.9 | * | 33.43 | 6784 | 9000 | SK 5282 SCP - 160L/4 | SK 5282 SCP - 160LH/4 | SK 5282 SCP - 250TC | | X | X | X | X |

Output speed and torque ratings are based on the "Standard Efficiency Motor" Power and speed. Performance will vary slightly for other motors.



# 20 hp Gearmotors & Speed Reducers

| Output Speed | Output Torque | SF | AGMA Class | Gear Ratio | Thrust | | Integral Gearmotor | | Reducer | CEMA DriveShaft | | | | |
|---|---|---|---|---|---|---|---|---|---|---|---|---|---|---|
| $n_2$ | $T_2$ | $f_a$ | | i | Std Brg | H.D. Brg " VL" | Standard Efficiency Motor | Energy Efficient Motor | C-Face Input | 1-1/2" | 2" | 2-7/16" | 3" | 3-7/16" |
| [rpm] | [lb-in] | | | | [lb] | [lb] | | | | | | | | |
| 362 | 3484 | 3.1 | III | 4.88 | 6532 | 9432 | SK 6282 SCP - 160L/4 | SK 6282 SCP - 160LH/4 | SK 6282 SCP - 250TC | | | | X | X |
| 321 | 3927 | 3 | III | 5.5 | 6743 | 9740 | SK 6282 SCP - 160L/4 | SK 6282 SCP - 160LH/4 | SK 6282 SCP - 250TC | | | | X | X |
| 305 | 4127 | 2.9 | III | 5.78 | 6831 | 9866 | SK 6282 SCP - 160L/4 | SK 6282 SCP - 160LH/4 | SK 6282 SCP - 250TC | | | | X | X |
| 262 | 4812 | 2.8 | III | 6.74 | 7130 | 10287 | SK 6282 SCP - 160L/4 | SK 6282 SCP - 160LH/4 | SK 6282 SCP - 250TC | | | | X | X |
| 226 | 5583 | 2.7 | III | 7.82 | 7418 | 10708 | SK 6282 SCP - 160L/4 | SK 6282 SCP - 160LH/4 | SK 6282 SCP - 250TC | | | | X | X |
| 188 | 6704 | 2.5 | III | 9.39 | 7765 | 11198 | SK 6282 SCP - 160L/4 | SK 6282 SCP - 160LH/4 | SK 6282 SCP - 250TC | | | | X | X |
| 166 | 7597 | 2.8 | III | 10.64 | 8064 | 11637 | SK 6282 SCP - 160L/4 | SK 6282 SCP - 160LH/4 | SK 6282 SCP - 250TC | | | | X | X |
| 143 | 8818 | 2.7 | III | 12.35 | 8372 | 12094 | SK 6282 SCP - 160L/4 | SK 6282 SCP - 160LH/4 | SK 6282 SCP - 250TC | | | | X | X |
| 119 | 10588 | 2.5 | III | 14.83 | 8780 | 12629 | SK 6282 SCP - 160L/4 | SK 6282 SCP - 160LH/4 | SK 6282 SCP - 250TC | | | | X | X |
| 94 | 13351 | 2.5 | III | 18.7 | 9297 | 13381 | SK 6282 SCP - 160L/4 | SK 6282 SCP - 160LH/4 | SK 6282 SCP - 250TC | | | | X | X |
| 77 | 16386 | 2.4 | III | 22.95 | 9765 | 13500 | SK 6282 SCP - 160L/4 | SK 6282 SCP - 160LH/4 | SK 6282 SCP - 250TC | | | | X | X |
| 68 | 18599 | 2.2 | III | 26.05 | 10037 | 13500 | SK 6282 SCP - 160L/4 | SK 6282 SCP - 160LH/4 | SK 6282 SCP - 250TC | | | | X | X |
| 59 | 21348 | 1.9 | II | 29.9 | 10330 | 13500 | SK 6282 SCP - 160L/4 | SK 6282 SCP - 160LH/4 | SK 6282 SCP - 250TC | | | | X | X |
| 45 | 28188 | 1 | I | 39.48 | 10787 | 13500 | SK 6282 SCP - 160L/4 | SK 6282 SCP - 160LH/4 | SK 6282 SCP - 250TC | | | | X | X |
| 35 | 35520 | 1 | I | 49.75 | 11268 | 13500 | SK 6282 SCP - 160L/4 | SK 6282 SCP - 160LH/4 | SK 6282 SCP - 250TC | | | | X | X |
| 29 | 43609 | 0.9 | * | 61.08 | 11678 | 13500 | SK 6282 SCP - 160L/4 | SK 6282 SCP - 160LH/4 | SK 6282 SCP - 250TC | | | | X | X |

Output speed and torque ratings are based on the "Standard Efficiency Motor" Power and speed. Performance will vary slightly for other motors.

# 25 hp Gearmotors & Speed Reducers



| Output Speed | Output Torque | SF | AGMA Class | Gear Ratio | Thrust | | Integral Gearmotor | | Reducer | CEMA DriveShaft | | | | |
|---|---|---|---|---|---|---|---|---|---|---|---|---|---|---|
| $n_2$ | $T_2$ | $f_a$ | | i | Std Brg | H.D. Brg " VL" | Standard Efficiency Motor | Energy Efficient Motor | C-Face Input | 1-1/2" | 2" | 2-7/16" | 3" | 3-7/16" |
| [rpm] | [lb-in] | | | | [lb] | [lb] | | | | | | | | |
| 405 | 3890 | 3.5 | III | 4.32 | 4239 | 7101 | SK 5282 SCP - 180MX/4 | SK 5282 SCP - 180MH/4 | SK 5282 SCP - 280TC | | X | X | X | X |
| 349 | 4510 | 3.3 | III | 5.01 | 4394 | 7369 | SK 5282 SCP - 180MX/4 | SK 5282 SCP - 180MH/4 | SK 5282 SCP - 280TC | | X | X | X | X |
| 331 | 4762 | 3.3 | III | 5.29 | 4457 | 7475 | SK 5282 SCP - 180MX/4 | SK 5282 SCP - 180MH/4 | SK 5282 SCP - 280TC | | X | X | X | X |
| 306 | 5140 | 3.1 | III | 5.71 | 4543 | 7607 | SK 5282 SCP - 180MX/4 | SK 5282 SCP - 180MH/4 | SK 5282 SCP - 280TC | | X | X | X | X |
| 276 | 5698 | 3.3 | III | 6.33 | 4649 | 7819 | SK 5282 SCP - 180MX/4 | SK 5282 SCP - 180MH/4 | SK 5282 SCP - 280TC | | X | X | X | X |
| 244 | 6455 | 3 | III | 7.17 | 4788 | 8035 | SK 5282 SCP - 180MX/4 | SK 5282 SCP - 180MH/4 | SK 5282 SCP - 280TC | | X | X | X | X |
| 201 | 7832 | 2.7 | III | 8.7 | 5011 | 8404 | SK 5282 SCP - 180MX/4 | SK 5282 SCP - 180MH/4 | SK 5282 SCP - 280TC | | X | X | X | X |
| 185 | 8516 | 2.4 | III | 9.46 | 5135 | 8593 | SK 5282 SCP - 180MX/4 | SK 5282 SCP - 180MH/4 | SK 5282 SCP - 280TC | | X | X | X | X |
| 163 | 9641 | 2.3 | III | 10.71 | 5272 | 8831 | SK 5282 SCP - 180MX/4 | SK 5282 SCP - 180MH/4 | SK 5282 SCP - 280TC | | X | X | X | X |
| 135 | 11703 | 2 | III | 13 | 5492 | 9000 | SK 5282 SCP - 180MX/4 | SK 5282 SCP - 180MH/4 | SK 5282 SCP - 280TC | | X | X | X | X |
| 114 | 13846 | 1.7 | II | 15.38 | 5688 | 9000 | SK 5282 SCP - 180MX/4 | SK 5282 SCP - 180MH/4 | SK 5282 SCP - 280TC | | X | X | X | X |
| 99 | 15835 | 1.5 | II | 17.59 | 5821 | 9000 | SK 5282 SCP - 180MX/4 | SK 5282 SCP - 180MH/4 | SK 5282 SCP - 280TC | | X | X | X | X |
| 93 | 16996 | 1.4 | II | 18.88 | 5931 | 9000 | SK 5282 SCP - 180MX/4 | SK 5282 SCP - 180MH/4 | SK 5282 SCP - 280TC | | X | X | X | X |
| 86 | 18329 | 1.5 | II | 20.36 | 5963 | 9000 | SK 5282 SCP - 180MX/4 | SK 5282 SCP - 180MH/4 | SK 5282 SCP - 280TC | | X | X | X | X |
| 70 | 22506 | 1.1 | I | 25 | 6185 | 9000 | SK 5282 SCP - 180MX/4 | SK 5282 SCP - 180MH/4 | SK 5282 SCP - 280TC | | X | X | X | X |
| 399 | 3952 | 4.6 | III | 4.39 | 6296 | 9106 | SK 6282 SCP - 180MX/4 | SK 6282 SCP - 180MH/4 | SK 6282 SCP - 280TC | | | | X | X |
| 359 | 4393 | 4.3 | III | 4.88 | 6478 | 9358 | SK 6282 SCP - 180MX/4 | SK 6282 SCP - 180MH/4 | SK 6282 SCP - 280TC | | | | X | X |
| 318 | 4951 | 4.1 | III | 5.5 | 6687 | 9646 | SK 6282 SCP - 180MX/4 | SK 6282 SCP - 180MH/4 | SK 6282 SCP - 280TC | | | | X | X |
| 303 | 5203 | 4 | III | 5.78 | 6773 | 9772 | SK 6282 SCP - 180MX/4 | SK 6282 SCP - 180MH/4 | SK 6282 SCP - 280TC | | | | X | X |
| 292 | 5392 | 3.9 | III | 5.99 | 6849 | 9866 | SK 6282 SCP - 180MX/4 | SK 6282 SCP - 180MH/4 | SK 6282 SCP - 280TC | | | | X | X |
| 260 | 6068 | 4 | III | 6.74 | 7056 | 10172 | SK 6282 SCP - 180MX/4 | SK 6282 SCP - 180MH/4 | SK 6282 SCP - 280TC | | | | X | X |
| 224 | 7040 | 3.4 | III | 7.82 | 7317 | 10553 | SK 6282 SCP - 180MX/4 | SK 6282 SCP - 180MH/4 | SK 6282 SCP - 280TC | | | | X | X |
| 186 | 8453 | 2.9 | III | 9.39 | 7655 | 11039 | SK 6282 SCP - 180MX/4 | SK 6282 SCP - 180MH/4 | SK 6282 SCP - 280TC | | | | X | X |
| 164 | 9578 | 4 | III | 10.64 | 7958 | 11491 | SK 6282 SCP - 180MX/4 | SK 6282 SCP - 180MH/4 | SK 6282 SCP - 280TC | | | | X | X |
| 142 | 11118 | 3.5 | III | 12.35 | 8255 | 11882 | SK 6282 SCP - 180MX/4 | SK 6282 SCP - 180MH/4 | SK 6282 SCP - 280TC | | | | X | X |
| 118 | 13350 | 3 | III | 14.83 | 8593 | 12389 | SK 6282 SCP - 180MX/4 | SK 6282 SCP - 180MH/4 | SK 6282 SCP - 280TC | | | | X | X |
| 94 | 16834 | 2.3 | III | 18.7 | 9079 | 13061 | SK 6282 SCP - 180MX/4 | SK 6282 SCP - 180MH/4 | SK 6282 SCP - 280TC | | | | X | X |
| 76 | 20660 | 1.9 | II | 22.95 | 9536 | 13500 | SK 6282 SCP - 180MX/4 | SK 6282 SCP - 180MH/4 | SK 6282 SCP - 280TC | | | | X | X |
| 67 | 23451 | 1.7 | II | 26.05 | 9758 | 13500 | SK 6282 SCP - 180MX/4 | SK 6282 SCP - 180MH/4 | SK 6282 SCP - 280TC | | | | X | X |
| 59 | 26917 | 1.5 | II | 29.9 | 9999 | 13500 | SK 6282 SCP - 180MX/4 | SK 6282 SCP - 180MH/4 | SK 6282 SCP - 280TC | | | | X | X |

Output speed and torque ratings are based on the "Standard Efficiency Motor" Power and speed. Performance will vary slightly for other motors.



# 30 hp Gearmotors & Speed Reducers

| Output Speed | Output Torque | SF | AGMA Class | Gear Ratio | Thrust | | Integral Gearmotor | | Reducer | CEMA DriveShaft | | | | |
|---|---|---|---|---|---|---|---|---|---|---|---|---|---|---|
| $n_2$ | $T_2$ | $f_a$ | | i | Std Brg | H.D. Brg " VL" | Standard Efficiency Motor | Energy Efficient Motor | C-Face Input | 1-1/2" | 2" | 2-7/16" | 3" | 3-7/16" |
| [rpm] | [lb-in] | | | | [lb] | [lb] | | | | | | | | |
| 406 | 4654 | 2.9 | III | 4.32 | 4174 | 7000 | SK 5282 SCP - 180LX/4 | SK 5282 SCP - 180LH/4 | SK 5282 SCP - 280TC | | X | X | X | X |
| 350 | 5397 | 2.8 | III | 5.01 | 4327 | 7250 | SK 5282 SCP - 180LX/4 | SK 5282 SCP - 180LH/4 | SK 5282 SCP - 280TC | | X | X | X | X |
| 332 | 5699 | 2.7 | III | 5.29 | 4381 | 7355 | SK 5282 SCP - 180LX/4 | SK 5282 SCP - 180LH/4 | SK 5282 SCP - 280TC | | X | X | X | X |
| 307 | 6151 | 2.6 | III | 5.71 | 4464 | 7475 | SK 5282 SCP - 180LX/4 | SK 5282 SCP - 180LH/4 | SK 5282 SCP - 280TC | | X | X | X | X |
| 277 | 6819 | 2.7 | III | 6.33 | 4568 | 7670 | SK 5282 SCP - 180LX/4 | SK 5282 SCP - 180LH/4 | SK 5282 SCP - 280TC | | X | X | X | X |
| 245 | 7724 | 2.5 | III | 7.17 | 4694 | 7855 | SK 5282 SCP - 180LX/4 | SK 5282 SCP - 180LH/4 | SK 5282 SCP - 280TC | | X | X | X | X |
| 202 | 9372 | 2.2 | III | 8.7 | 4892 | 8177 | SK 5282 SCP - 180LX/4 | SK 5282 SCP - 180LH/4 | SK 5282 SCP - 280TC | | X | X | X | X |
| 186 | 10191 | 2 | III | 9.46 | 5009 | 8404 | SK 5282 SCP - 180LX/4 | SK 5282 SCP - 180LH/4 | SK 5282 SCP - 280TC | | X | X | X | X |
| 164 | 11538 | 1.9 | II | 10.71 | 5137 | 8593 | SK 5282 SCP - 180LX/4 | SK 5282 SCP - 180LH/4 | SK 5282 SCP - 280TC | | X | X | X | X |
| 135 | 14005 | 1.7 | II | 13 | 5315 | 8901 | SK 5282 SCP - 180LX/4 | SK 5282 SCP - 180LH/4 | SK 5282 SCP - 280TC | | X | X | X | X |
| 114 | 16569 | 1.4 | II | 15.38 | 5495 | 9000 | SK 5282 SCP - 180LX/4 | SK 5282 SCP - 180LH/4 | SK 5282 SCP - 280TC | | X | X | X | X |
| 100 | 18950 | 1.3 | I | 17.59 | 5603 | 9000 | SK 5282 SCP - 180LX/4 | SK 5282 SCP - 180LH/4 | SK 5282 SCP - 280TC | | X | X | X | X |
| 93 | 20339 | 1.1 | I | 18.88 | 5697 | 9000 | SK 5282 SCP - 180LX/4 | SK 5282 SCP - 180LH/4 | SK 5282 SCP - 280TC | | X | X | X | X |
| 86 | 21934 | 1.3 | I | 20.36 | 5702 | 9000 | SK 5282 SCP - 180LX/4 | SK 5282 SCP - 180LH/4 | SK 5282 SCP - 280TC | | X | X | X | X |
| 70 | 26932 | 1 | I | 25 | 5873 | 9000 | SK 5282 SCP - 180LX/4 | SK 5282 SCP - 180LH/4 | SK 5282 SCP - 280TC | | X | X | X | X |
| 400 | 4729 | 3.8 | III | 4.39 | 6233 | 9005 | SK 6282 SCP - 180LX/4 | SK 6282 SCP - 180LH/4 | SK 6282 SCP - 280TC | | | | X | X |
| 360 | 5257 | 3.6 | III | 4.88 | 6413 | 9252 | SK 6282 SCP - 180LX/4 | SK 6282 SCP - 180LH/4 | SK 6282 SCP - 280TC | | | | X | X |
| 319 | 5925 | 3.4 | III | 5.5 | 6608 | 9540 | SK 6282 SCP - 180LX/4 | SK 6282 SCP - 180LH/4 | SK 6282 SCP - 280TC | | | | X | X |
| 304 | 6227 | 3.3 | III | 5.78 | 6703 | 9646 | SK 6282 SCP - 180LX/4 | SK 6282 SCP - 180LH/4 | SK 6282 SCP - 280TC | | | | X | X |
| 293 | 6453 | 3.3 | III | 5.99 | 6768 | 9740 | SK 6282 SCP - 180LX/4 | SK 6282 SCP - 180LH/4 | SK 6282 SCP - 280TC | | | | X | X |
| 260 | 7261 | 3.3 | III | 6.74 | 6948 | 10026 | SK 6282 SCP - 180LX/4 | SK 6282 SCP - 180LH/4 | SK 6282 SCP - 280TC | | | | X | X |
| 224 | 8424 | 2.8 | III | 7.82 | 7214 | 10402 | SK 6282 SCP - 180LX/4 | SK 6282 SCP - 180LH/4 | SK 6282 SCP - 280TC | | | | X | X |
| 187 | 10116 | 2.4 | III | 9.39 | 7544 | 10845 | SK 6282 SCP - 180LX/4 | SK 6282 SCP - 180LH/4 | SK 6282 SCP - 280TC | | | | X | X |
| 165 | 11462 | 3.3 | III | 10.64 | 7814 | 11270 | SK 6282 SCP - 180LX/4 | SK 6282 SCP - 180LH/4 | SK 6282 SCP - 280TC | | | | X | X |
| 142 | 13305 | 2.9 | III | 12.35 | 8087 | 11657 | SK 6282 SCP - 180LX/4 | SK 6282 SCP - 180LH/4 | SK 6282 SCP - 280TC | | | | X | X |
| 118 | 15976 | 2.5 | III | 14.83 | 8406 | 12114 | SK 6282 SCP - 180LX/4 | SK 6282 SCP - 180LH/4 | SK 6282 SCP - 280TC | | | | X | X |
| 94 | 20145 | 1.9 | II | 18.7 | 8840 | 12731 | SK 6282 SCP - 180LX/4 | SK 6282 SCP - 180LH/4 | SK 6282 SCP - 280TC | | | | X | X |
| 76 | 24724 | 1.6 | II | 22.95 | 9250 | 13295 | SK 6282 SCP - 180LX/4 | SK 6282 SCP - 180LH/4 | SK 6282 SCP - 280TC | | | | X | X |
| 67 | 28064 | 1.4 | II | 26.05 | 9448 | 13500 | SK 6282 SCP - 180LX/4 | SK 6282 SCP - 180LH/4 | SK 6282 SCP - 280TC | | | | X | X |
| 59 | 32211 | 1.2 | I | 29.9 | 9664 | 13500 | SK 6282 SCP - 180LX/4 | SK 6282 SCP - 180LH/4 | SK 6282 SCP - 280TC | | | | X | X |

Output speed and torque ratings are based on the "Standard Efficiency Motor" Power and speed. Performance will vary slightly for other motors.

# 40 hp & 50 hp Gearmotors & Speed Reducers





| Output Speed | Output Torque | SF | AGMA Class | Gear Ratio | Thrust | | Integral Gearmotor | | Reducer | CEMA DriveShaft | | | | |
|---|---|---|---|---|---|---|---|---|---|---|---|---|---|---|
| $n_2$ | $T_2$ | $f_a$ | | i | Std Brg | H.D. Brg " VL" | Standard Efficiency Motor | Energy Efficient Motor | C-Face Input | 1-1/2" | 2" | 2-7/16" | 3" | 3-7/16" |
| [rpm] | [lb-in] | | | | [lb] | [lb] | | | | | | | | |
| 405 | 6217 | 2.9 | III | 4.39 | 6098 | 8791 | SK 6282 SCP - 200L/4 | SK 6282 SCP - 200LH/4 | SK 6282 SCP - 320TC | | | | X | X |
| 365 | 6912 | 2.8 | III | 4.88 | 6253 | 9020 | SK 6282 SCP - 200L/4 | SK 6282 SCP - 200LH/4 | SK 6282 SCP - 320TC | | | | X | X |
| 324 | 7790 | 2.6 | III | 5.5 | 6442 | 9284 | SK 6282 SCP - 200L/4 | SK 6282 SCP - 200LH/4 | SK 6282 SCP - 320TC | | | | X | X |
| 308 | 8187 | 2.5 | III | 5.78 | 6512 | 9389 | SK 6282 SCP - 200L/4 | SK 6282 SCP - 200LH/4 | SK 6282 SCP - 320TC | | | | X | X |
| 297 | 8484 | 2.5 | III | 5.99 | 6572 | 9479 | SK 6282 SCP - 200L/4 | SK 6282 SCP - 200LH/4 | SK 6282 SCP - 320TC | | | | X | X |
| 264 | 9546 | 2.8 | III | 6.74 | 6748 | 9725 | SK 6282 SCP - 200L/4 | SK 6282 SCP - 200LH/4 | SK 6282 SCP - 320TC | | | | X | X |
| 228 | 11076 | 2.1 | III | 7.82 | 6977 | 10076 | SK 6282 SCP - 200L/4 | SK 6282 SCP - 200LH/4 | SK 6282 SCP - 320TC | | | | X | X |
| 190 | 13300 | 1.8 | II | 9.39 | 7252 | 10451 | SK 6282 SCP - 200L/4 | SK 6282 SCP - 200LH/4 | SK 6282 SCP - 320TC | | | | X | X |
| 167 | 15070 | 2.5 | III | 10.64 | 7538 | 10845 | SK 6282 SCP - 200L/4 | SK 6282 SCP - 200LH/4 | SK 6282 SCP - 320TC | | | | X | X |
| 144 | 17492 | 2.2 | III | 12.35 | 7760 | 11162 | SK 6282 SCP - 200L/4 | SK 6282 SCP - 200LH/4 | SK 6282 SCP - 320TC | | | | X | X |
| 120 | 21005 | 1.9 | II | 14.83 | 8026 | 11545 | SK 6282 SCP - 200L/4 | SK 6282 SCP - 200LH/4 | SK 6282 SCP - 320TC | | | | X | X |
| 95 | 26486 | 1.5 | II | 18.7 | 8368 | 12035 | SK 6282 SCP - 200L/4 | SK 6282 SCP - 200LH/4 | SK 6282 SCP - 320TC | | | | X | X |
| 78 | 32506 | 1.2 | I | 22.95 | 8683 | 12490 | SK 6282 SCP - 200L/4 | SK 6282 SCP - 200LH/4 | SK 6282 SCP - 320TC | | | | X | X |
| 402 | 7838 | 2.3 | III | 4.39 | 5994 | 8651 | SK 6282 SCP - 225S/4 | SK 6282 SCP - 225SH/4 | SK 6282 SCP - 320TC | | | | X | X |
| 362 | 8714 | 2.2 | III | 4.88 | 6143 | 8847 | SK 6282 SCP - 225S/4 | SK 6282 SCP - 225SH/4 | SK 6282 SCP - 320TC | | | | X | X |
| 321 | 9821 | 2.1 | III | 5.5 | 6307 | 9106 | SK 6282 SCP - 225S/4 | SK 6282 SCP - 225SH/4 | SK 6282 SCP - 320TC | | | | X | X |
| 305 | 10321 | 2 | III | 5.78 | 6374 | 9194 | SK 6282 SCP - 225S/4 | SK 6282 SCP - 225SH/4 | SK 6282 SCP - 320TC | | | | X | X |
| 295 | 10696 | 2 | III | 5.99 | 6422 | 9252 | SK 6282 SCP - 225S/4 | SK 6282 SCP - 225SH/4 | SK 6282 SCP - 320TC | | | | X | X |
| 262 | 12035 | 2.2 | III | 6.74 | 6599 | 9479 | SK 6282 SCP - 225S/4 | SK 6282 SCP - 225SH/4 | SK 6282 SCP - 320TC | | | | X | X |
| 226 | 13964 | 1.7 | II | 7.82 | 6784 | 9772 | SK 6282 SCP - 225S/4 | SK 6282 SCP - 225SH/4 | SK 6282 SCP - 320TC | | | | X | X |
| 188 | 16767 | 1.5 | II | 9.39 | 7025 | 10091 | SK 6282 SCP - 225S/4 | SK 6282 SCP - 225SH/4 | SK 6282 SCP - 320TC | | | | X | X |
| 166 | 18999 | 2 | III | 10.64 | 7279 | 10487 | SK 6282 SCP - 225S/4 | SK 6282 SCP - 225SH/4 | SK 6282 SCP - 320TC | | | | X | X |
| 143 | 22053 | 1.8 | II | 12.35 | 7459 | 10742 | SK 6282 SCP - 225S/4 | SK 6282 SCP - 225SH/4 | SK 6282 SCP - 320TC | | | | X | X |
| 119 | 26481 | 1.5 | II | 14.83 | 7661 | 11039 | SK 6282 SCP - 225S/4 | SK 6282 SCP - 225SH/4 | SK 6282 SCP - 320TC | | | | X | X |
| 94 | 33391 | 1.2 | I | 18.7 | 7931 | 11399 | SK 6282 SCP - 225S/4 | SK 6282 SCP - 225SH/4 | SK 6282 SCP - 320TC | | | | X | X |
| 77 | 40980 | 1 | I | 22.95 | 8141 | 11732 | SK 6282 SCP - 225S/4 | SK 6282 SCP - 225SH/4 | SK 6282 SCP - 320TC | | | | X | X |

Output speed and torque ratings are based on the "Standard Efficiency Motor" Power and speed. Performance will vary slightly for other motors.

# SCP Ratings & Combinations

## Selection

- SK 1282, 1382 SCP Ratings & Combinations
- SK 2282 & 2382 SCP Ratings & Combinations
- SK 3282 & 3382 SCP Ratings & Combinations
- SK 4282 & 4382 SCP Ratings & Combinations
- SK 5282 & 5382 SCP Ratings & Combinations
- SK 6282 & 6382 SCP Ratings & Combinations



NORD DRIVESYSTEMS

www.nord.com

CLINCHER™

| Thrust | | Integral Gearmotor | | Reducer |
|---|---|---|---|---|
| Brg [lb] | HD Brg "VL" [lb] | Standard Efficiency Motor | Energy Efficient Motor | C-Face Input |
| 083 | 6750 | SK 4282 SCP - 90L/4 | SK 4282 SCP - 90LH/4 | SK 4282 SCP - 140TC |
| 516 | 6750 | SK 4282 SCP - 90L/4 | SK 4282 SCP - 90LH/4 | SK 4282 SCP - 140TC |
| 056 | 6750 | SK 4282 SCP - 90L/4 | SK 4282 SCP - 90LH/4 | SK 4282 SCP - 140TC |
| 950 | 6750 | SK 4282 SCP - 90L/4 | SK 4282 SCP - 90LH/4 | SK 4282 SCP - 140TC |
| 950 | 6750 | SK 4282 SCP - 90L/4 | SK 4282 SCP - 90LH/4 | SK 4282 SCP - 140TC |
| 950 | 6750 | SK 4282 SCP - 90L/4 | SK 4282 SCP - 90LH/4 | SK 4282 SCP - 140TC |
| 950 | 6750 | SK 4282 SCP - 90L/4 | SK 4282 SCP - 90LH/4 | SK 4282 SCP - 140TC |
| 950 | 6750 | SK 4282 SCP - 90L/4 | SK 4282 SCP - 90LH/4 | SK 4282 SCP - 140TC |
| 950 | 6750 | SK 4282 SCP - 90L/4 | SK 4282 SCP - 90LH/4 | SK 4282 SCP - 140TC |
| 950 | 6750 | SK 4282 SCP - 90L/4 | SK 4282 SCP - 90LH/4 | SK 4282 SCP - 140TC |
| 950 | 6750 | SK 4282 SCP - 90L/4 | SK 4282 SCP - 90LH/4 | SK 4282 SCP - 140TC |
| 50 | 6750 | SK 4282 SCP - 90L/4 | SK 4282 SCP - 90LH/4 | SK 4282 SCP - 140TC |
| | 6750 | SK 4282 SCP - 90L/4 | SK 4282 SCP - 90LH/4 | SK 4282 SCP - |





# Screw Conveyor Package Ratings & Combinations



## Explanation of Selection Tables

**GEARBOX TYPE** – Nomenclature for specified gear unit.

**TOTAL GEAR RATIO**

**OUTPUT SPEED** – Based on 1750 rpm input speed

**MAXIMUM TORQUE RATINGS**

**MAX POWER RATING** – Based on 1750 rpm input speed

**NEMA C-FACE INPUT POSSIBLE COMBINATIONS**

**INTEGRAL MOTOR POSSIBLE COMBINATIONS**



| Type | Ratio | Output Speed 1750 rpm input $n_2$ [rpm] | Max Torque $T_{max}$ [lb-in] | Max Power 1750 rpm input $P_{max}$ [hp] | NEMA C-face | | | Integral Motor | | | | | | | | | |
|---|---|---|---|---|---|---|---|---|---|---|---|---|---|---|---|---|---|
| | | | | | 56C 1.0 hp | 140TC 2.0 hp | 180TC 5.0 hp | 63S/4 0.16 hp | 63L/4 0.25 hp | 71S/4 0.33 hp | 71L/4 0.5 hp | 80S/4 0.75 hp | 80L 80LH/4 1.0 hp | 90S 90SH/4 1.5 hp | 90L 90LH/4 2 .0 hp | 100L 100LH/4 3.0 hp | 100LA 112LH/4 5.0 hp |
| SK 1282 SCP | 4.79 | 365 | 1133 | 5.00 | X | X | X | X | X | X | X | X | X | X | X | X | X |
| | 5.47 | 320 | 1522 | 5.00 | X | X | X | X | X | X | X | X | X | X | X | X | X |
| | 6.43 | 272 | 1602 | 5.00 | X | X | X | X | X | X | X | X | X | X | X | X | X |
| | 7.24 | 242 | 1655 | 5.00 | X | X | X | X | X | X | X | X | X | X | X | X | X |

**X =** Available Combination



# SK 1282 SCP & SK 1382 SCP
# Ratings & Combinations

| Type | Ratio | Output Speed 1750 rpm input $n_2$ [rpm] | Max Torque $T_{max}$ [lb-in] | Max ◈ Power 1750 rpm input $P_{max}$ [hp] | NEMA C-face* 56C 1.0 hp | 140TC 2.0 hp | 180TC 5.0 hp | Integral Motor 63S/4 0.16 hp | 63L/4 0.25 hp | 71S/4 0.33 hp | 71L/4 0.5 hp | 80S/4 0.75 hp | 80L/4 80LH/4 1.0 hp | 90S/4 90SH/4 1.5 hp | 90L/4 90LH/4 2 .0 hp | 100L/4 100LH/4 3.0 hp | 100LA/4 112LH/4 5.0 hp |
|---|---|---|---|---|---|---|---|---|---|---|---|---|---|---|---|---|---|
| **SK 1282 SCP** | 4.79 | 365 | 1133 | *5.00* | X | X | X | X | X | X | X | X | X | X | X | X | X |
| | 5.47 | 320 | 1522 | *5.00* | X | X | X | X | X | X | X | X | X | X | X | X | X |
| | 6.43 | 272 | 1602 | *5.00* | X | X | X | X | X | X | X | X | X | X | X | X | X |
| | 7.24 | 242 | 1655 | *5.00* | X | X | X | X | X | X | X | X | X | X | X | X | X |
| | 8.21 | 213 | 1416 | 4.78 | X | X | X | X | X | X | X | X | X | X | X | X | X |
| | 8.24 | 212 | 1690 | 5.00 | X | X | X | X | X | X | X | X | X | X | X | X | X |
| | 9.18 | 191 | 1673 | *5.00* | X | X | X | X | X | X | X | X | X | X | X | X | X |
| | 10.34 | 169 | 1735 | 4.65 | X | X | X | X | X | X | X | X | X | X | X | X | X |
| | 11.76 | 149 | 1805 | 4.27 | X | X | X | X | X | X | X | X | X | X | X | X | X |
| | 14.11 | 124 | 1859 | 3.66 | X | X | X | X | X | X | X | X | X | X | X | X | X |
| | 17.21 | 102 | 1982 | 3.21 | X | X | X | X | X | X | X | X | X | X | X | X | X |
| | 20.57 | 85 | 1991 | 2.68 | X | X | X | X | X | X | X | X | X | X | X | X | X |
| | 25.22 | 69 | 1991 | 2.18 | X | X | X | X | X | X | X | X | X | X | X | X | X |
| | 28.33 | 62 | 1991 | 1.96 | X | X | | X | X | X | X | X | X | X | X | | |
| | 32.08 | 55 | 2036 | 1.78 | X | X | | X | X | X | X | X | X | X | X | | |
| | 41.07 | 43 | 1920 | 1.31 | X | X | | | | | X | X | X | | | | |
| | 46.19 | 38 | 1735 | 1.05 | X | | | X | X | X | X | | | | | | |
| | 49.25 | 36 | 2301 | 1.31 | X | X | | | | | X | X | X | | | | |
| | 55.39 | 32 | 2080 | 1.06 | X | | | X | X | X | X | | | | | | |
| | 58.89 | 30 | 2505 | 1.19 | X | X | | | | | X | X | X | | | | |
| | 66.23 | 26 | 2390 | 0.99 | X | | | X | X | X | X | | | | | | |
| | 72.17 | 24 | 2620 | 1.00 | X | X | | | | | X | X | X | | | | |
| | 81.17 | 22 | 2620 | 0.91 | X | | | X | X | X | X | | | | | | |
| | 92.48 | 19 | 2053 | 0.62 | X | | | X | X | X | X | | | | | | |
| | 109.50 | 16 | 1850 | 0.47 | X | | | X | X | X | | | | | | | |
| **SK 1382 SCP** | 87.94 | 20 | 2425 | 0.77 | X | | | X | X | X | X | | | | | | |
| | 105.11 | 17 | 2390 | 0.63 | X | | | X | X | X | X | | | | | | |
| | 128.82 | 14 | 1991 | 0.43 | X | | | X | X | X | X | | | | | | |
| | 163.93 | 11 | 1991 | 0.34 | X | | | X | X | X | X | | | | | | |
| | 209.87 | 8.3 | 2080 | 0.28 | X | | | X | X | X | X | | | | | | |
| | 251.67 | 7.0 | 2425 | 0.27 | X | | | X | X | X | X | | | | | | |
| | 300.93 | 5.8 | 2390 | 0.22 | X | | | X | X | X | X | | | | | | |
| | 368.79 | 4.8 | 1991 | 0.15 | X | | | X | X | X | X | | | | | | |
| | 414.78 | 4.2 | 1991 | 0.13 | X | | | X | X | X | X | | | | | | |
| | 472.60 | 3.7 | 1991 | 0.12 | X | | | X | X | X | X | | | | | | |
| | 556.83 | 3.1 | 1991 | 0.10 | X | | | X | X | X | | | | | | | |
| | 634.45 | 2.8 | 1965 | 0.09 | X | | | X | X | X | | | | | | | |

◈ The maximum input power limit shown is the largest motor power typically combined with the gear unit. *The Italicized power values shown are not the mechanical limit and often may be increased through discussion with our sales or engineering department.*

* The NEMA C-face power limit must also be considered when selecting a reducer. The C-face Adapter's Maximum Input Power values are displayed under the Available Combinations and based on a 1750 rpm motor.

# SK 2282 SCP & SK 2382 SCP
# Ratings & Combinations





| Type | Ratio | Output Speed 1750 rpm input $n_2$ [rpm] | Max Torque $T_{max}$ [lb-in] | Max ◈ Power 1750 rpm input $P_{max}$ [hp] | NEMA C-face* 56C 1.0 hp | 140TC 2.0 hp | 180TC 5.0 hp | Integral Motor 63S/4 0.16 hp | 63L/4 0.25 hp | 71S/4 0.33 hp | 71L/4 0.5 hp | 80S/4 0.75 hp | 80L/4 80LH/4 1.0 hp | 90S/4 90SH/4 1.5 hp | 90L/4 90LH/4 2 .0 hp | 100L/4 100LH/4 3.0 hp | 100LA/4 112LH/4 5.0 hp |
|---|---|---|---|---|---|---|---|---|---|---|---|---|---|---|---|---|---|
| **SK 2282 SCP** | 4.51 | 388 | 1646 | *5.00* | X | X | X | | | | X | X | X | X | X | X | X |
| | 5.72 | 306 | 1876 | *5.00* | X | X | X | | | | X | X | X | X | X | X | X |
| | 6.43 | 272 | 2000 | *5.00* | X | X | X | | | | X | X | X | X | X | X | X |
| | 7.48 | 234 | 2151 | *5.00* | X | X | X | | | | X | X | X | X | X | X | X |
| | 8.37 | 209 | 2266 | *5.00* | X | X | X | | | | X | X | X | X | X | X | X |
| | 9.03 | 194 | 2965 | *5.00* | X | X | X | | | | X | X | X | X | X | X | X |
| | 10.15 | 172 | 3151 | *5.00* | X | X | X | | | | X | X | X | X | X | X | X |
| | 11.81 | 148 | 3398 | *5.00* | X | X | X | | | | X | X | X | X | X | X | X |
| | 13.23 | 132 | 3584 | *5.00* | X | X | X | | | | X | X | X | X | X | X | X |
| | 16.53 | 106 | 4168 | *5.00* | X | X | X | | | | X | X | X | X | X | X | X |
| | 18.51 | 95 | 4301 | *5.00* | X | X | X | | | | X | X | X | X | X | X | X |
| | 21.90 | 80 | 4248 | *5.00* | X | X | X | | | | X | X | X | X | X | X | X |
| | 23.96 | 73 | 3850 | 4.46 | X | X | X | | | | X | X | X | X | X | X | X |
| | 24.97 | 70 | 4337 | 4.81 | X | X | X | | | | X | X | X | X | X | X | X |
| | 26.83 | 65 | 3885 | 4.01 | X | X | X | | | | X | X | X | X | X | X | X |
| | 29.65 | 59 | 4425 | 4.14 | X | X | X | | | | X | X | X | X | X | X | X |
| | 31.23 | 56 | 3938 | 3.50 | X | X | X | | | | | | | X | X | X | |
| | 36.54 | 48 | 4434 | 3.38 | X | X | X | | | | | | | X | X | X | |
| | 37.18 | 47 | 4071 | 3.03 | X | X | | | | | X | X | X | X | X | | |
| | 43.71 | 40 | 4983 | 3.16 | X | X | X | | | | | | | X | X | X | |
| | 45.11 | 39 | 3983 | 2.46 | X | X | | | | | | X | X | X | X | | |
| | 51.71 | 34 | 4611 | 2.49 | X | X | X | | | | | | | X | X | X | |
| | 53.96 | 32 | 4478 | 2.27 | X | X | | | | | | X | X | X | X | | |
| | 63.83 | 27 | 4611 | 1.97 | X | X | | | | | | X | X | X | X | | |
| | 69.67 | 25 | 3921 | 1.55 | X | X | | | | X | X | X | X | X | | | |
| | 82.42 | 21 | 4221 | 1.41 | X | X | | | | X | X | X | X | X | | | |
| | 100.98 | 17 | 3894 | 1.05 | X | X | | | | X | X | X | X | X | | | |
| | 104.07 | 17 | 3513 | 0.95 | X | X | | | | X | X | X | | | | | |
| | 127.51 | 14 | 3363 | 0.75 | X | X | | | | X | X | X | | | | | |
| **SK 2382 SCP** | 82.22 | 21 | 4965 | 1.50 | X | X | | X | X | X | X | X | X | | | | |
| | 98.35 | 18 | 4983 | 1.42 | X | X | | X | X | X | X | X | X | | | | |
| | 116.35 | 15 | 4611 | 1.10 | X | X | | X | X | X | X | X | X | | | | |
| | 131.86 | 13 | 4611 | 0.95 | X | X | | X | X | X | X | X | X | | | | |
| | 149.96 | 12 | 4611 | 0.88 | X | X | | X | X | X | X | X | X | | | | |
| | 185.11 | 9.5 | 4611 | 0.69 | X | X | | X | X | X | X | X | X | | | | |
| | 236.11 | 7.4 | 4186 | 0.49 | X | | | X | X | X | X | | | | | | |
| | 276.27 | 6.3 | 4894 | 0.49 | X | | | X | X | X | X | | | | | | |
| | 330.45 | 5.3 | 4983 | 0.42 | X | | | X | X | X | X | | | | | | |
| | 390.93 | 4.5 | 4611 | 0.33 | X | | | X | X | X | X | | | | | | |
| | 482.56 | 3.6 | 4611 | 0.26 | X | | | X | X | X | X | | | | | | |
| | 623.10 | 2.8 | 4611 | 0.20 | X | | | X | X | X | X | | | | | | |
| | 763.41 | 2.3 | 3876 | 0.14 | X | | | X | X | X | X | | | | | | |

◈ The maximum input power limit shown is the largest motor power typically combined with the gear unit. *The Italicized power values shown are not the mechanical limit and often may be increased through discussion with our sales or engineering department.*

* The NEMA C-face power limit must also be considered when selecting a reducer. The C-face Adapter's Maximum Input Power values are displayed under the Available Combinations and based on a 1750 rpm motor.



# SK 3282 SCP & SK 3382 SCP
# Ratings & Combinations

| Type | Ratio | Output Speed 1750 rpm input $n_2$ [rpm] | Max Torque $T_{max}$ [lb-in] | Max ◈ Power 1750 rpm input $P_{max}$ [hp] | NEMA C-face* | | | | Integral Motor | | | | | | | | | | | |
|---|---|---|---|---|---|---|---|---|---|---|---|---|---|---|---|---|---|---|---|---|
| | | | | | 56C | 140TC | 180TC | 210TC | 63L/4 | 71S/4 | 71L/4 | 80S/4 | 80L/4 80LH/4 | 90S/4 90SH/4 | 90L/4 90LH/4 | 100L/4 100LH/4 | 100LA/4 112LH/4 | 132S/SH/4 | 132M/MH/4 | |
| | | | | | 1.0 hp | 2.0 hp | 5.0 hp | 10 hp | 0.25 hp | 0.33 hp | 0.5 hp | 0.75 hp | 1.0 hp | 1.5 hp | 2 .0 hp | 3.0 hp | 5.0 hp | 7.5 hp | 10 hp | |
| **SK 3282 SCP** | 4.48 | 391 | 4080 | *10.00* | X | X | X | X | | | | | | X | X | X | X | X | X | |
| | 5.68 | 308 | 4912 | *10.00* | X | X | X | X | | | | | | X | X | X | X | X | X | |
| | 6.70 | 261 | 5372 | *10.00* | X | X | X | X | | | | | | X | X | X | X | X | X | |
| | 8.31 | 211 | 5983 | *10.00* | X | X | X | X | | | | X | X | X | X | X | X | X | X | |
| | 9.80 | 179 | 7425 | *10.00* | X | X | X | X | | | | | | X | X | X | X | X | X | |
| | 11.38 | 154 | 7266 | *10.00* | X | X | X | X | | | | | | X | X | X | X | X | X | |
| | 14.11 | 124 | 7584 | *10.00* | X | X | X | X | | | | X | X | X | X | X | X | X | X | |
| | 16.67 | 105 | 7443 | *10.00* | X | X | X | X | | | | X | X | X | X | X | X | X | X | |
| | 20.18 | 87 | 7275 | *10.00* | X | X | X | X | | | | X | X | X | X | X | X | X | X | |
| | 21.38 | 82 | 6390 | 8.31 | X | X | X | X | | | | X | X | X | X | X | X | X | X | |
| | 22.45 | 78 | 7080 | 8.76 | X | X | X | X | | | | X | X | X | X | X | X | X | X | |
| | 23.71 | 74 | 7124 | 8.36 | X | X | X | X | | | | X | X | X | X | X | X | X | X | |
| | 25.88 | 68 | 7487 | 8.07 | X | X | X | X | | | | X | X | X | X | X | X | X | X | |
| | 28.70 | 61 | 7700 | 7.45 | X | X | X | X | | | | X | X | X | X | X | X | X | X | |
| | 31.93 | 55 | 7761 | 6.77 | X | X | X | X | | | | X | X | X | X | X | X | X | X | |
| | 37.77 | 46 | 7390 | 5.39 | X | X | X | | | | | X | X | X | X | X | | | | |
| | 38.62 | 45 | 5611 | 4.00 | X | X | X | | | | | | | X | X | X | | | | |
| | 42.02 | 42 | 8222 | 5.48 | X | X | X | | | | | X | X | X | X | X | | | | |
| | 44.85 | 39 | 6522 | 4.03 | X | X | X | | | | | | | X | X | X | | | | |
| | 48.04 | 36 | 4885 | 2.79 | X | X | | | | | | X | X | X | X | | | | | |
| | 52.97 | 33 | 7478 | 3.91 | X | X | X | | | | | | | X | X | X | | | | |
| | 55.79 | 31 | 5682 | 2.79 | X | X | | | | | | X | X | X | X | | | | | |
| | 64.12 | 27 | 8983 | 3.85 | X | X | X | | | | | | | X | X | X | | | | |
| | 65.89 | 27 | 6708 | 2.87 | X | X | | | | | | X | X | X | X | | | | | |
| | 70.56 | 25 | 4991 | 1.98 | X | X | | | | X | X | X | X | X | | | | | | |
| | 79.76 | 22 | 7523 | 2.62 | X | X | | | | | | X | X | X | X | | | | | |
| | 88.74 | 20 | 8363 | 2.65 | X | X | | | | | | X | X | X | X | | | | | |
| | 100.88 | 17 | 7142 | 1.93 | X | X | | | | X | X | X | X | X | | | | | | |
| | 112.23 | 16 | 6815 | 1.73 | X | X | | | | X | X | X | X | X | | | | | | |
| **SK 3382 SCP** | 89.60 | 20 | 5496 | 1.50 | X | X | | | X | X | X | X | X | X | X | | | | | |
| | 104.05 | 17 | 6505 | 1.50 | X | X | | | X | X | X | X | X | X | X | | | | | |
| | 126.93 | 14 | 6850 | 1.50 | X | X | | | X | X | X | X | X | X | X | | | | | |
| | 161.46 | 11 | 6974 | 1.22 | X | X | | | X | X | X | X | X | X | X | | | | | |
| | 190.69 | 9.2 | 7664 | 1.12 | X | X | | | X | X | X | X | X | X | X | | | | | |
| | 230.83 | 7.6 | 8850 | 1.07 | X | X | | | X | X | X | X | X | X | X | | | | | |
| | 287.14 | 6.1 | 8301 | 0.80 | X | X | | | X | X | X | X | X | X | X | | | | | |
| | 408.58 | 4.3 | 7045 | 0.48 | X | | | | X | X | X | X | | | | | | | | |
| | 482.56 | 3.6 | 7664 | 0.44 | X | | | | X | X | X | X | | | | | | | | |
| | 584.13 | 3 | 8850 | 0.42 | X | | | | X | X | X | X | | | | | | | | |
| | 726.61 | 2.4 | 8354 | 0.32 | X | | | | X | X | X | X | | | | | | | | |
| | 808.42 | 2.2 | 9195 | 0.32 | X | | | | X | X | X | X | | | | | | | | |
| | 919.00 | 1.9 | 7275 | 0.22 | X | | | | X | X | X | X | | | | | | | | |
| | 1,022.42 | 1.7 | 6965 | 0.19 | X | | | | X | X | X | X | | | | | | | | |

◈ The maximum input power limit shown is the largest motor power typically combined with the gear unit. *The Italicized power values shown are not the mechanical limit and often may be increased through discussion with our sales or engineering department.*

* The NEMA C-face power limit must also be considered when selecting a reducer. The C-face Adapter's Maximum Input Power values are displayed under the Available Combinations and based on a 1750 rpm motor.

# SK 4282 SCP
# Ratings & Combinations



| Type | Ratio | Output Speed 1750 rpm input $n_2$ [rpm] | Max Torque $T_{max}$ [lb-in] | Max ◈ Power 1750 rpm input $P_{max}$ [hp] | NEMA C-face* | | | | | Integral Motor | | | | | | | |
|---|---|---|---|---|---|---|---|---|---|---|---|---|---|---|---|---|---|
| | | | | | 56C 1.0 hp | 140TC 2.0 hp | 180TC 5.0 hp | 210TC 10 hp | 250TC 20 hp | 90S/4 90SH/4 1.5 hp | 90L/4 90LH/4 2 .0 hp | 100L/4 100LH/4 3.0 hp | 100LA/4 112LH/4 5.0 hp | 132S/SH/4 7.5 hp | 132M/MH/4 10 hp | 160M/MH/4 15 hp | 160L/LH/4 20 hp |
| **SK 4282 SCP** | 4.70 | 372 | 9160 | *20.00* | | | X | X | X | | | | | X | X | X | X |
| | 5.00 | 350 | 9160 | *20.00* | | | X | X | X | | | | | X | X | X | X |
| | 5.43 | 322 | 9160 | *20.00* | | | X | X | X | X | X | X | X | X | X | X | X |
| | 6.06 | 289 | 10620 | *20.00* | X | X | X | X | X | X | X | X | X | X | X | X | X |
| | 7.13 | 245 | 10638 | *20.00* | X | X | X | X | X | X | X | X | X | X | X | X | X |
| | 8.33 | 210 | 11257 | *20.00* | X | X | X | X | X | X | X | X | X | X | X | X | X |
| | 9.23 | 190 | 14461 | *20.00* | X | X | X | X | X | X | X | X | X | X | X | X | X |
| | 10.85 | 161 | 15045 | *20.00* | X | X | X | X | X | X | X | X | X | X | X | X | X |
| | 12.68 | 138 | 15488 | *20.00* | X | X | X | X | X | X | X | X | X | X | X | X | X |
| | 15.20 | 115 | 15930 | *20.00* | X | X | X | X | X | X | X | X | X | X | X | X | X |
| | 18.18 | 96 | 15930 | *20.00* | X | X | X | X | X | X | X | X | X | X | X | X | X |
| | 21.45 | 82 | 14921 | 19.41 | X | X | X | X | X | X | X | X | X | X | X | X | X |
| | 22.39 | 78 | 15036 | 18.60 | X | X | X | X | X | X | X | X | X | X | X | X | X |
| | 26.25 | 67 | 14231 | 15.12 | X | X | X | X | X | X | X | X | X | X | X | X | X |
| | 26.43 | 66 | 15815 | 16.55 | X | X | X | X | X | X | X | X | X | X | X | X | X |
| | 26.72 | 65 | 14160 | 14.60 | | | X | X | | | | | | X | X | | |
| | 32.04 | 55 | 15797 | 13.78 | | | X | X | | | | | | X | X | | |
| | 32.34 | 54 | 14337 | 12.28 | X | X | X | X | X | X | X | X | X | X | X | X | X |
| | 36.40 | 48 | 12169 | 9.26 | | | X | X | | | | X | X | X | | | |
| | 36.81 | 48 | 12390 | 9.43 | X | X | X | X | | X | X | X | X | X | X | | |
| | 38.31 | 46 | 17700 | 12.91 | | | X | X | | | | | | X | X | | |
| | 40.74 | 43 | 13771 | 9.39 | X | X | X | X | | X | X | X | X | X | X | | |
| | 43.65 | 40 | 14160 | 8.98 | | | X | X | | | | X | X | X | | | |
| | 45.05 | 39 | 14107 | 8.73 | X | X | X | X | | X | X | X | X | X | X | | |
| | 52.20 | 34 | 16089 | 8.68 | | | X | X | | | | X | X | X | | | |
| | 61.60 | 28 | 15877 | 7.05 | | | X | X | | | | X | X | X | | | |
| | 75.39 | 23 | 14063 | 5.13 | | | X | X | | | | X | X | X | | | |
| | 90.52 | 19 | 14160 | 4.27 | X | X | X | | | X | X | X | X | | | | |
| | 110.78 | 16 | 14160 | 3.59 | X | X | X | | | X | X | X | X | | | | |
| | 155.40 | 11 | 11284 | 1.97 | X | X | | | | X | X | | | | | | |

◈ The maximum input power limit shown is the largest motor power typically combined with the gear unit. *The Italicized power values shown are not the mechanical limit and often may be increased through discussion with our sales or engineering department.*

* The NEMA C-face power limit must also be considered when selecting a reducer. The C-face Adapter's Maximum Input Power values are displayed under the Available Combinations and based on a 1750 rpm motor.



# SK 4382 SCP
# Ratings & Combinations

| Type | Ratio | Output Speed 1750 rpm input $n_2$ [rpm] | Max Torque $T_{max}$ [lb-in] | Max Power 1750 rpm input $P_{max}$ [hp] | NEMA C-face | | | Integral Motor | | | | | | | |
|---|---|---|---|---|---|---|---|---|---|---|---|---|---|---|---|
| | | | | | 56C 1.0 hp | 140TC 2.0 hp | 180TC 5.0 hp | 71S/4 0.33 hp | 71L/4 0.5 hp | 80S/4 0.75 hp | 80L 80LH/4 1.0 hp | 90S 90SH/4 1.5 hp | 90L 90LH/4 2 .0 hp | 100L 100LH/4 3.0 hp | 100LA 112LH/4 5.0 hp |
| **SK 4382 SCP** | 86.83 | 20 | 17523 | 5.00 | X | X | X | | X | X | X | X | X | X | X |
| | 103.82 | 17 | 17700 | 4.77 | X | X | X | | X | X | X | X | X | X | X |
| | 118.38 | 15 | 17700 | 4.21 | X | X | X | | X | X | X | X | X | X | X |
| | 140.60 | 12 | 17700 | 3.37 | X | X | X | | X | X | X | X | X | X | X |
| | 160.20 | 11 | 14664 | 2.56 | X | X | X | | X | X | X | X | X | X | X |
| | 191.57 | 9.1 | 17612 | 2.54 | X | X | X | | X | X | X | X | X | X | X |
| | 211.09 | 8.3 | 14470 | 1.90 | X | X | | | | X | X | X | X | | |
| | 253.12 | 6.9 | 17355 | 1.90 | X | X | | | | X | X | X | X | | |
| | 272.54 | 6.4 | 13912 | 1.41 | X | X | | X | X | X | X | X | | | |
| | 302.65 | 5.8 | 18381 | 1.69 | X | X | | | | X | X | X | X | | |
| | 326.81 | 5.4 | 16727 | 1.43 | X | X | | X | X | X | X | X | | | |
| | 344.84 | 5.1 | 14709 | 1.19 | X | X | | | | X | X | X | X | | |
| | 390.76 | 4.5 | 17700 | 1.26 | X | X | | X | X | X | X | X | | | |
| | 412.38 | 4.2 | 17612 | 1.17 | X | X | | | | X | X | X | X | | |
| | 445.23 | 3.9 | 14744 | 0.91 | X | X | | X | X | X | X | X | | | |
| | 532.44 | 3.3 | 17700 | 0.93 | X | X | | X | X | X | X | X | | | |
| | 605.88 | 2.9 | 13054 | 0.60 | X | X | | | | X | X | X | X | | |
| | 654.27 | 2.7 | 10912 | 0.47 | X | X | | X | X | X | X | X | | | |
| | 782.32 | 2.2 | 13063 | 0.46 | X | X | | X | X | X | X | X | | | |
| | 1,097.48 | 1.6 | 9629 | 0.24 | X | X | | X | X | X | X | X | | | |
| | 1,129.91 | 1.5 | 14160 | 0.34 | X | X | | X | X | X | X | X | | | |
| | 1,585.08 | 1.1 | 12567 | 0.22 | X | X | | X | X | X | X | X | | | |

◈ The maximum input power limit shown is the largest motor power typically combined with the gear unit. *The Italicized power values shown are not the mechanical limit and often may be increased through discussion with our sales or engineering department.*

* The NEMA C-face power limit must also be considered when selecting a reducer. The C-face Adapter's Maximum Input Power values are displayed under the Available Combinations and based on a 1750 rpm motor.

# SK 5282 SCP
# Ratings & Combinations



| Type | Ratio | Output Speed 1750 rpm input $n_2$ [rpm] | Max Torque $T_{max}$ [lb-in] | Max ◈ Power 1750 rpm input $P_{max}$ [hp] | NEMA C-face* | | | | | | Integral Motor | | | | | | | | | |
|---|---|---|---|---|---|---|---|---|---|---|---|---|---|---|---|---|---|---|---|---|
| | | | | | 56C | 140TC | 180TC | 210TC | 250TC | 280TC | 90S/4 90SH/4 | 90S/4 90LH/4 | 90L/4 100LH/4 | 100L/4 112LH/4 | 100LA/4 112LH/4 | 132S/SH/4 | 132M/MH/4 | 160M/MH/4 | 160L/LH/4 | 180MX/MH/4 | 180LX/LH/4 |
| | | | | | 1.0 hp | 2.0 hp | 5.0 hp | 10 hp | 20 hp | 30 hp | 1.5 hp | 2 .0 hp | 3.0 hp | 5.0 hp | 7.5 hp | 10 hp | 15 hp | 20 hp | 25 hp | 30 hp | |
| **SK 5282 SCP** | 4.32 | 405 | 13718 | *30.00* | | | | | X | X | | | | | | | X | X | X | X |
| | 5.01 | 349 | 15045 | *30.00* | | | | | X | X | | | | | | | X | X | X | X |
| | 5.29 | 331 | 15488 | *30.00* | | | | | X | X | | | | | | | X | X | X | X |
| | 5.71 | 306 | 15930 | *30.00* | | | | | X | X | | | | | | | X | X | X | X |
| | 6.33 | 276 | 18709 | *30.00* | | | X | X | X | X | | | X | X | X | X | X | X | X | X |
| | 7.17 | 244 | 19125 | *30.00* | | | X | X | X | X | | | X | X | X | X | X | X | X | X |
| | 8.70 | 201 | 20886 | *30.00* | X | X | X | X | X | X | X | X | X | X | X | X | X | X | X | X |
| | 9.46 | 185 | 20355 | *30.00* | | | X | X | X | X | | | X | X | X | X | X | X | X | X |
| | 10.71 | 163 | 22125 | *30.00* | | | X | X | X | X | | | X | X | X | X | X | X | X | X |
| | 13.00 | 135 | 23267 | *30.00* | X | X | X | X | X | X | X | X | X | X | X | X | X | X | X | X |
| | 15.38 | 114 | 23010 | *30.00* | X | X | X | X | X | X | X | X | X | X | X | X | X | X | X | X |
| | 17.59 | 99 | 24338 | *30.00* | X | X | X | X | X | X | X | X | X | X | X | X | X | X | X | X |
| | 18.88 | 93 | 23010 | *30.00* | X | X | X | X | X | X | X | X | X | X | X | X | X | X | X | X |
| | 20.36 | 86 | 27435 | *30.00* | X | X | X | X | X | X | X | X | X | X | X | X | X | X | X | X |
| | 25.00 | 70 | 25665 | 28.49 | X | X | X | X | X | X | X | X | X | X | X | X | X | X | X | X |
| | 30.50 | 57 | 25665 | 23.20 | X | X | X | X | X | | X | X | X | X | X | X | X | X | | |
| | 33.43 | 52 | 20355 | 16.79 | X | X | X | X | X | X | X | X | X | X | X | X | X | X | X | X |
| | 35.46 | 49 | 23895 | 18.57 | | | X | X | | | | | | | X | X | | | | |
| | 40.80 | 43 | 22125 | 15.09 | X | X | X | X | X | | X | X | X | X | X | X | X | X | | |
| | 41.94 | 42 | 28320 | 18.87 | | | X | X | | | | | | | X | X | | | | |
| | 47.27 | 37 | 21240 | 12.46 | | | X | X | | | | | X | X | X | | | | | |
| | 51.49 | 34 | 28630 | 15.44 | | | X | X | | | | | | | X | X | | | | |
| | 55.55 | 32 | 22125 | 11.23 | X | X | X | X | | | X | X | X | X | X | X | | | | |
| | 55.90 | 31 | 23010 | 11.31 | | | X | X | | | | | X | X | X | | | | | |
| | 68.63 | 25 | 26285 | 10.42 | | | X | X | | | | | X | X | X | | | | | |
| | 81.61 | 21 | 16178 | 5.39 | X | X | X | | | | X | X | X | X | | | | | | |
| | 91.81 | 19 | 24417 | 7.36 | | | X | X | | | | | X | X | X | | | | | |
| | 100.19 | 17 | 19833 | 5.35 | X | X | X | | | | X | X | X | X | | | | | | |
| | 134.03 | 13 | 23488 | 4.84 | X | X | X | | | | X | X | X | X | | | | | | |

◈ The maximum input power limit shown is the largest motor power typically combined with the gear unit. *The Italicized power values shown are not the mechanical limit and often may be increased through discussion with our sales or engineering department.*

* The NEMA C-face power limit must also be considered when selecting a reducer. The C-face Adapter's Maximum Input Power values are displayed under the Available Combinations and based on a 1750 rpm motor.



# SK 5382 SCP
# Ratings & Combinations

| Type | Ratio | Output Speed 1750 rpm input $n_2$ [rpm] | Max Torque $T_{max}$ [lb-in] | Max ◈ Power 1750 rpm input $P_{max}$ [hp] | NEMA C-face* | | | | Integral Motor | | | | | | | | |
|---|---|---|---|---|---|---|---|---|---|---|---|---|---|---|---|---|---|
| | | | | | 56C 1.0 hp | 140TC 2.0 hp | 180TC 5.0 hp | 210TC 10 hp | 71L/4 0.5 hp | 80S/4 0.75 hp | 80L/4 80LH/4 1.0 hp | 90S/4 90SH/4 1.5 hp | 90L/4 90LH/4 2 .0 hp | 100L/4 100LH/4 3.0 hp | 100LA/4 112LH/4 5.0 hp | 132S/SH/4 7.5 hp | 132M/MH/4 10 hp |
| **SK 5382 SCP** | 82.72 | 21 | 24736 | 7.50 | X | X | X | X | X | X | X | X | X | X | X | X | X |
| | 91.71 | 19 | 25665 | 7.50 | X | X | X | X | X | X | X | X | X | X | X | X | X |
| | 117.37 | 15 | 24338 | 5.79 | X | X | X | X | X | X | X | X | X | X | X | X | X |
| | 138.82 | 13 | 28320 | 5.84 | X | X | X | X | X | X | X | X | X | X | X | X | X |
| | 153.92 | 11 | 28320 | 4.94 | X | X | X | X | X | X | X | X | X | X | X | X | X |
| | 171.27 | 10 | 24780 | 3.93 | X | X | X | | X | X | X | X | X | X | X | | |
| | 202.57 | 8.6 | 28320 | 3.86 | X | X | X | | X | X | X | X | X | X | X | | |
| | 248.70 | 7 | 28320 | 3.14 | X | X | X | | X | X | X | X | X | X | X | | |
| | 269.99 | 6.5 | 23895 | 2.46 | X | X | X | | X | X | X | X | X | X | X | | |
| | 331.48 | 5.3 | 28320 | 2.38 | X | X | X | | X | X | X | X | X | X | X | | |
| | 361.69 | 4.8 | 24780 | 1.89 | X | X | | | | X | X | X | X | | | | |
| | 427.79 | 4.1 | 28320 | 1.84 | X | X | | | | X | X | X | X | | | | |
| | 525.20 | 3.3 | 28320 | 1.48 | X | X | | | | X | X | X | X | | | | |
| | 570.18 | 3.1 | 24780 | 1.22 | X | X | | | | X | X | X | X | | | | |
| | 700.03 | 2.5 | 28320 | 1.12 | X | X | | | | X | X | X | X | | | | |
| | 936.45 | 1.9 | 23895 | 0.72 | X | X | | | | X | X | X | X | | | | |
| | 1,367.08 | 1.3 | 23895 | 0.49 | X | X | | | | X | X | X | X | | | | |

◈ The maximum input power limit shown is the largest motor power typically combined with the gear unit. *The Italicized power values shown are not the mechanical limit and often may be increased through discussion with our sales or engineering department.*

* The NEMA C-face power limit must also be considered when selecting a reducer. The C-face Adapter's Maximum Input Power values are displayed under the Available Combinations and based on a 1750 rpm motor.

# SK 6282 SCP
# Ratings & Combinations



| Type | Ratio | Output Speed 1750 rpm input $n_2$ [rpm] | Max Torque $T_{max}$ [lb-in] | Max ◈ Power 1750 rpm input $P_{max}$ [hp] | NEMA C-face* | | | | | | Integral Motor | | | | | | | | | |
|---|---|---|---|---|---|---|---|---|---|---|---|---|---|---|---|---|---|---|---|---|
| | | | | | 180TC 5 hp | 210TC 10 hp | 250TC 20 hp | 280TC 30 hp | 320TC 40 hp | 360TC 50 hp | 100L/4 100LH/4 3.0 hp | 100LA/4 112LH/4 5.0 hp | 132S/SH/4 7.5 hp | 132M/MH/4 10 hp | 160M/MH/4 15 hp | 160L/LH/4 20 hp | 180MX/MH/4 25 hp | 180LX/LH/4 30 hp | 200 l/LH/4 40 hp | 225S/SH/4 225M/MH/4 50 hp |
| **SK 6282 SCP** | 4.39 | 399 | 18001 | *60.00* | | | X | X | X | X | | | | | | | X | X | X | X |
| | 4.88 | 359 | 19081 | *60.00* | X | X | X | X | X | X | | | | X | X | X | X | X | X | X |
| | 5.50 | 318 | 20275 | *60.00* | X | X | X | X | X | X | | | | X | X | X | X | X | X | X |
| | 5.78 | 303 | 20656 | *60.00* | X | X | X | X | X | X | | | | X | X | X | X | X | X | X |
| | 5.99 | 292 | 21169 | *60.00* | | | X | X | X | X | | | | | | | X | X | X | X |
| | 6.74 | 260 | 26462 | *60.00* | X | X | X | X | X | X | X | X | X | X | X | X | X | X | X | X |
| | 7.82 | 224 | 23736 | *60.00* | X | X | X | X | X | X | X | X | X | X | X | X | X | X | X | X |
| | 9.39 | 186 | 24373 | *60.00* | X | X | X | X | X | X | X | X | X | X | X | X | X | X | | |
| | 10.64 | 164 | 38179 | *60.00* | X | X | X | X | X | X | X | X | X | X | X | X | X | X | X | X |
| | 12.35 | 142 | 38843 | *60.00* | X | X | X | X | X | X | X | X | X | X | X | X | X | X | X | X |
| | 14.83 | 118 | 39604 | *60.00* | X | X | X | X | X | X | X | X | X | X | X | X | X | X | | |
| | 18.70 | 94 | 39179 | 58.43 | X | X | X | X | X | X | X | X | X | X | X | X | X | X | | |
| | 22.95 | 76 | 40135 | 48.40 | X | X | X | X | X | X | X | X | X | X | X | X | X | X | | |
| | 26.05 | 67 | 40117 | 42.65 | X | X | X | X | | | X | X | X | X | X | X | X | X | | |
| | 29.90 | 59 | 40152 | 37.59 | X | X | X | X | | | X | X | X | X | X | X | X | X | | |
| | 39.48 | 44 | 28320 | 19.77 | X | X | X | X | | | | | X | X | X | X | | | | |
| | 49.75 | 35 | 35754 | 19.86 | X | X | X | X | | | | | X | X | X | X | | | | |
| | 61.08 | 29 | 40135 | 18.47 | X | X | X | X | | | | | X | X | X | X | | | | |
| | 65.44 | 27 | 29816 | 12.77 | X | X | | | | | X | X | X | | | | | | | |
| | 80.33 | 22 | 36559 | 12.76 | X | X | | | | | X | X | X | | | | | | | |

◈ The maximum input power limit shown is the largest motor power typically combined with the gear unit. *The Italicized power values shown are not the mechanical limit and often may be increased through discussion with our sales or engineering department.*

* The NEMA C-face power limit must also be considered when selecting a reducer. The C-face Adapter's Maximum Input Power values are displayed under the Available Combinations and based on a 1750 rpm motor.

W + NEMA



# SK 6382 SCP
# Ratings & Combinations

| Type | Ratio | Output Speed 1750 rpm input $n_2$ [rpm] | Max Torque $T_{max}$ [lb-in] | Max ◈ Power 1750 rpm input $P_{max}$ [hp] | NEMA C-face* | | | | | | Integral Motor | | | | | | | | | |
|---|---|---|---|---|---|---|---|---|---|---|---|---|---|---|---|---|---|---|---|---|
| | | | | | 56C | 140TC | 180TC | 210TC | 250TC | 280TC | 90S/4 90SH/4 | 90L/4 90LH/4 | 100L/4 100LH/4 | 100LA/4 112LH/4 | 132S/SH/4 | 132M/MH/4 | 160M/MH/4 | 160L/LH/4 | 180MX/MH/4 | 180LX/LH/4 |
| | | | | | 1.0 hp | 2.0 hp | 5.0 hp | 10 hp | 15 hp | 20 hp | 1.5 hp | 2 .0 hp | 3.0 hp | 5.0 hp | 7.5 hp | 10 hp | 15 hp | 20 hp | 25 hp | 30 hp |
| **SK 6382 SCP** | 24.42 | 72 | 41507 | *30.00* | X | X | X | X | X | X | | | X | X | X | X | X | X | X | X |
| | 28.72 | 61 | 40710 | *30.00* | X | X | X | X | X | X | X | X | X | X | X | X | X | X | X | X |
| | 30.91 | 57 | 40268 | *30.00* | X | X | X | X | X | X | | | X | X | X | X | X | X | X | X |
| | 36.34 | 48 | 40268 | *30.00* | X | X | X | X | X | X | X | X | X | X | X | X | X | X | X | X |
| | 42.46 | 41 | 40268 | 26.20 | X | X | X | X | X | X | X | X | X | X | X | X | X | X | X | X |
| | 51.07 | 34 | 44958 | 24.25 | X | X | X | X | X | X | X | X | X | X | X | X | X | X | X | X |
| | 59.66 | 29 | 48675 | 22.40 | X | X | X | X | X | X | X | X | X | X | X | X | X | X | X | X |
| | 73.50 | 24 | 49295 | 18.77 | X | X | X | X | X | | X | X | X | X | X | X | X | X | | |
| | 75.18 | 23 | 53100 | 19.38 | X | X | X | X | X | X | X | X | X | X | X | X | X | X | X | X |
| | 92.63 | 19 | 53100 | 16.01 | X | X | X | X | X | | X | X | X | X | X | X | X | X | | |
| | 114.79 | 15 | 52038 | 12.39 | X | X | X | X | X | | X | X | X | X | X | X | X | X | | |
| | 126.87 | 14 | 40533 | 9.00 | X | X | X | X | | | X | X | X | X | X | X | | | | |
| | 159.88 | 11 | 51065 | 8.91 | X | X | X | X | | | X | X | X | X | X | X | | | | |
| | 171.34 | 10 | 49295 | 7.82 | | | X | X | | | | | X | X | X | X | | | | |
| | 212.33 | 8.2 | 41330 | 5.38 | | | X | X | | | | | X | X | X | X | | | | |
| | 225.79 | 7.8 | 35577 | 4.40 | X | X | X | | | | X | X | X | X | | | | | | |
| | 251.76 | 7.0 | 39648 | 4.40 | X | X | X | | | | X | X | X | X | | | | | | |
| | 267.59 | 6.5 | 52038 | 5.37 | | | X | X | | | | | X | X | X | X | | | | |
| | 317.28 | 5.5 | 49914 | 4.36 | X | X | X | | | | X | X | X | X | | | | | | |
| | 393.19 | 4.5 | 52038 | 3.72 | X | X | X | | | | X | X | X | X | | | | | | |
| | 445.09 | 3.9 | 36905 | 2.28 | X | X | | | | | X | X | | | | | | | | |
| | 551.58 | 3.2 | 45755 | 2.32 | X | X | | | | | X | X | | | | | | | | |

◈ The maximum input power limit shown is the largest motor power typically combined with the gear unit. *The Italicized power values shown are not the mechanical limit and often may be increased through discussion with our sales or engineering department.*

* The NEMA C-face power limit must also be considered when selecting a reducer. The C-face Adapter's Maximum Input Power values are displayed under the Available Combinations and based on a 1750 rpm motor.

# Notes



# Gearmotors & C-Face Reducers

- SK 1282 SCP
- SK 2282 SCP
- SK 3282 SCP
- SK 4282 SCP
- SK 5282 SCP
- SK 6282 SCP
- 3-Stage Gearmotors & Reducers
- NEMA C-Face Motors
- CEMA Drive Shaft Detail
- 3rd Party Shaft Design & Detail

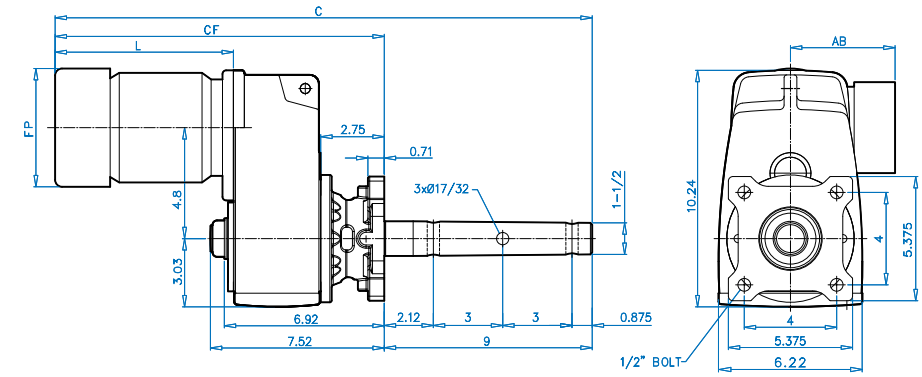


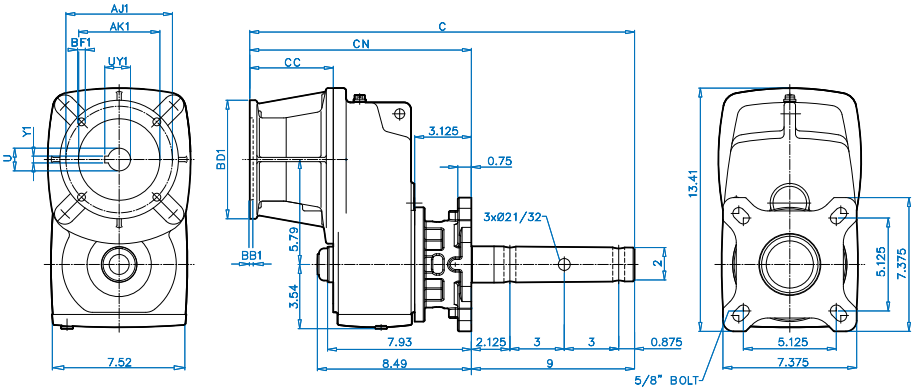


DRIVESYSTEMS

www.nord.com

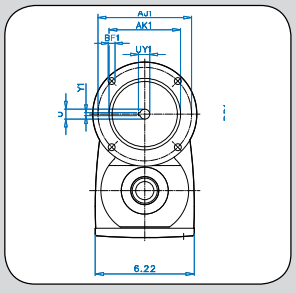


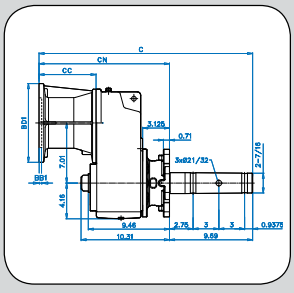


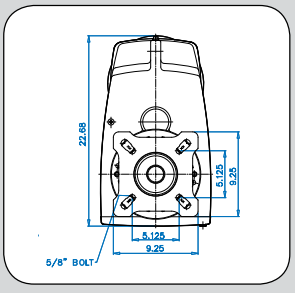


UNICASE™ CLINCHER™

# SK 1282 SCP + Motor
# 1-1/2" CEMA Drive Shaft

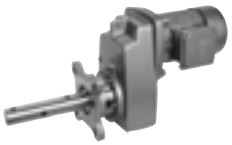

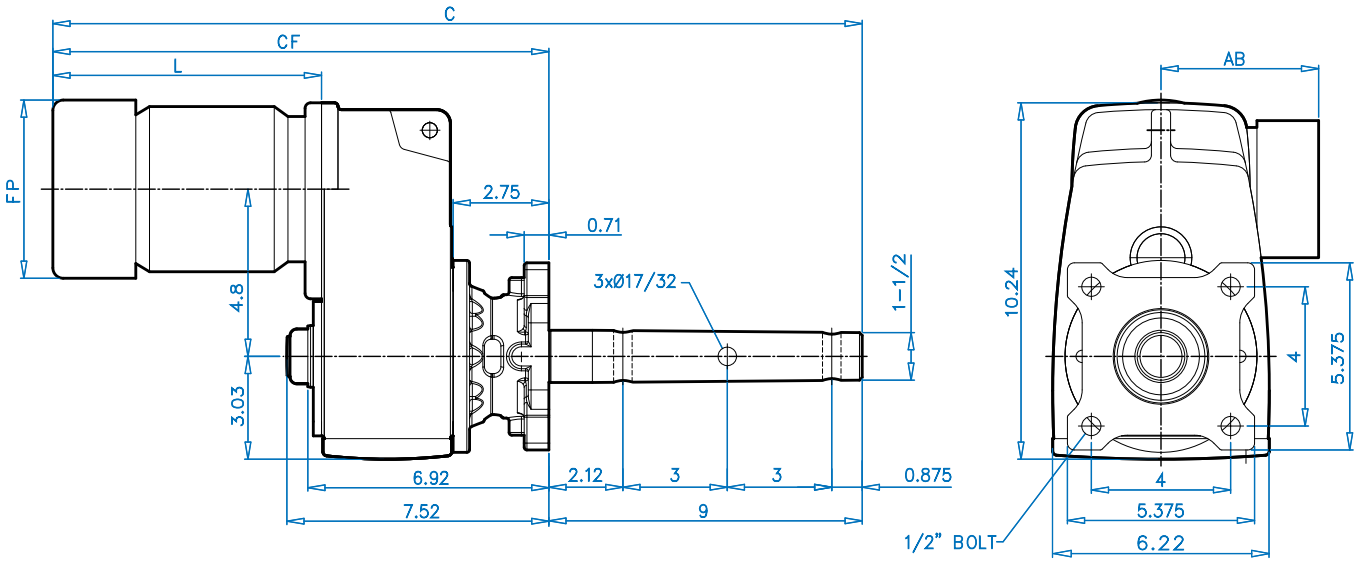


DIMENSIONS

| Motor Type | Overall | | Motor | | |
|---|---|---|---|---|---|
| | C | CF | L | FP | AB |
| 63S/L | 23.38 | 14.38 | 7.73 | 5.08 | 4.51 |
| 71S/L | 24.96 | 15.96 | 9.31 | 5.72 | 4.86 |
| 80S/L/LH | 25.94 | 16.94 | 10.29 | 6.43 | 5.59 |
| 90S/SH/L/LH | 27.52 | 18.28 | 11.87 | 7.19 | 5.79 |
| 100L/LA/LH | 28.74 | 19.74 | 13.09 | 7.90 | 6.65 |
| 112M | 29.61 | 20.61 | 13.96 | 8.87 | 7.05 |
| 112MH | 30.60 | 21.60 | 14.95 | 8.87 | 7.05 |

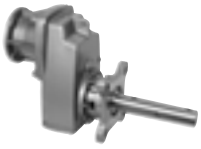

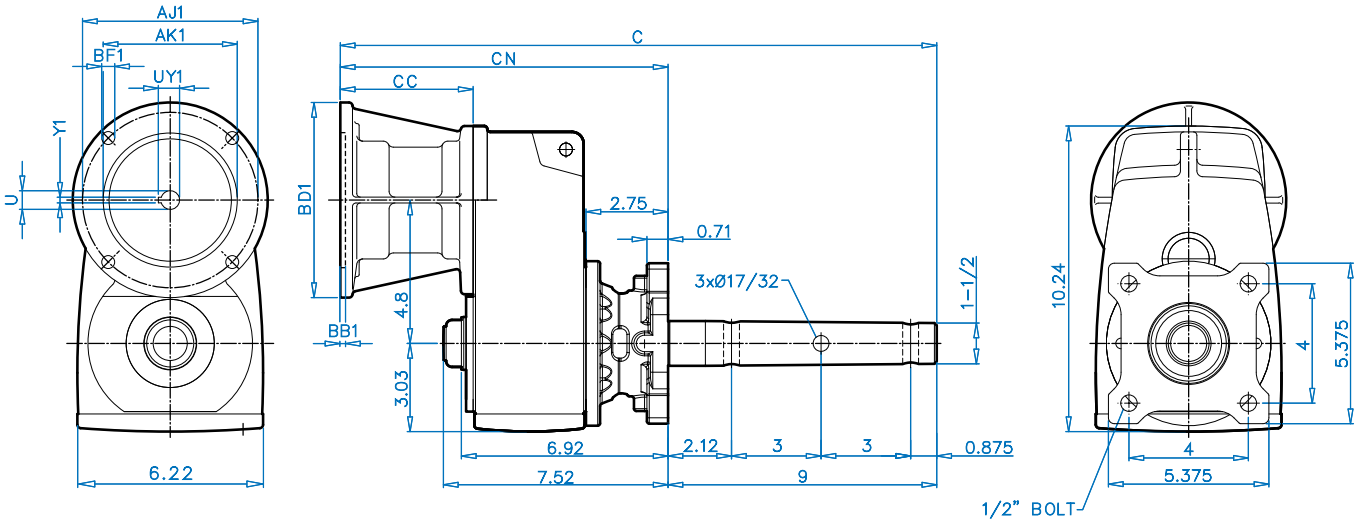




| NEMA | Overall | | NEMA Input | | | | | | Coupling | | |
|---|---|---|---|---|---|---|---|---|---|---|---|
| C-Face Input | C | CN | CC | AJ1 | AK1 | BB1 | BD1 | BF1 | U1 | UY1 | Y1 |
| **56C** | 20.10 | 11.10 | 4.45 | 5.875 | 4.50 | 0.20 | 6.54 | 0.43 | 0.625 | 0.71 | 0.188 |
| **140TC** | 20.10 | 11.10 | 4.45 | 5.875 | 4.50 | 0.20 | 6.54 | 0.43 | 0.875 | 0.96 | 0.188 |
| **180TC** | 21.30 | 12.30 | 5.65 | 7.250 | 8.50 | 0.23 | 9.17 | 0.59 | 1.125 | 1.24 | 0.250 |

# SK 1282 SCP + Motor
# 2” CEMA Drive Shaft

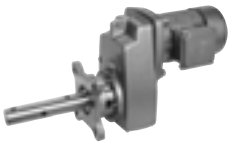



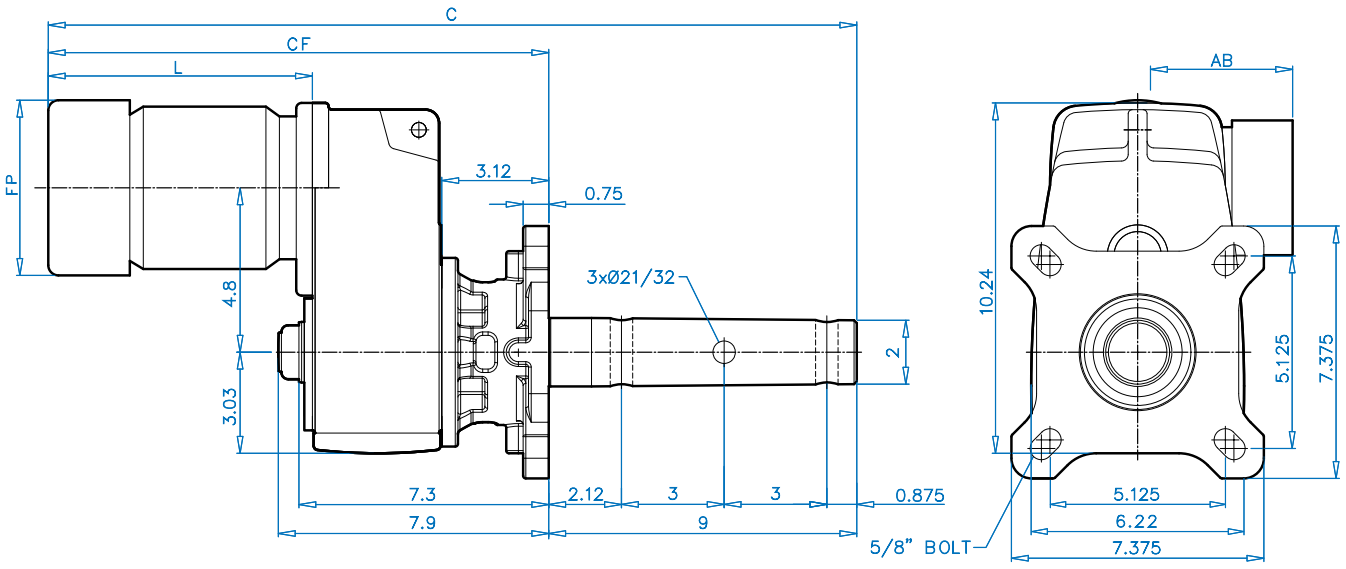


| Motor Type | Overall | | Motor | | |
|---|---|---|---|---|---|
| | C | CF | L | FP | AB |
| 63S/L | 23.76 | 14.76 | 7.73 | 5.08 | 4.51 |
| 71S/L | 25.33 | 16.33 | 9.31 | 5.72 | 4.86 |
| 80S/L/LH | 26.32 | 17.32 | 10.29 | 6.43 | 5.59 |
| 90S/SH/L/LH | 27.89 | 18.65 | 11.87 | 7.19 | 5.79 |
| 100L/LA/LH | 29.11 | 20.11 | 13.09 | 7.90 | 6.65 |
| 112M | 29.98 | 20.98 | 13.96 | 8.87 | 7.05 |
| 112MH | 30.97 | 21.97 | 14.95 | 8.87 | 7.05 |

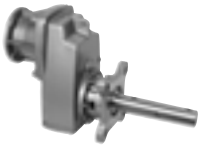

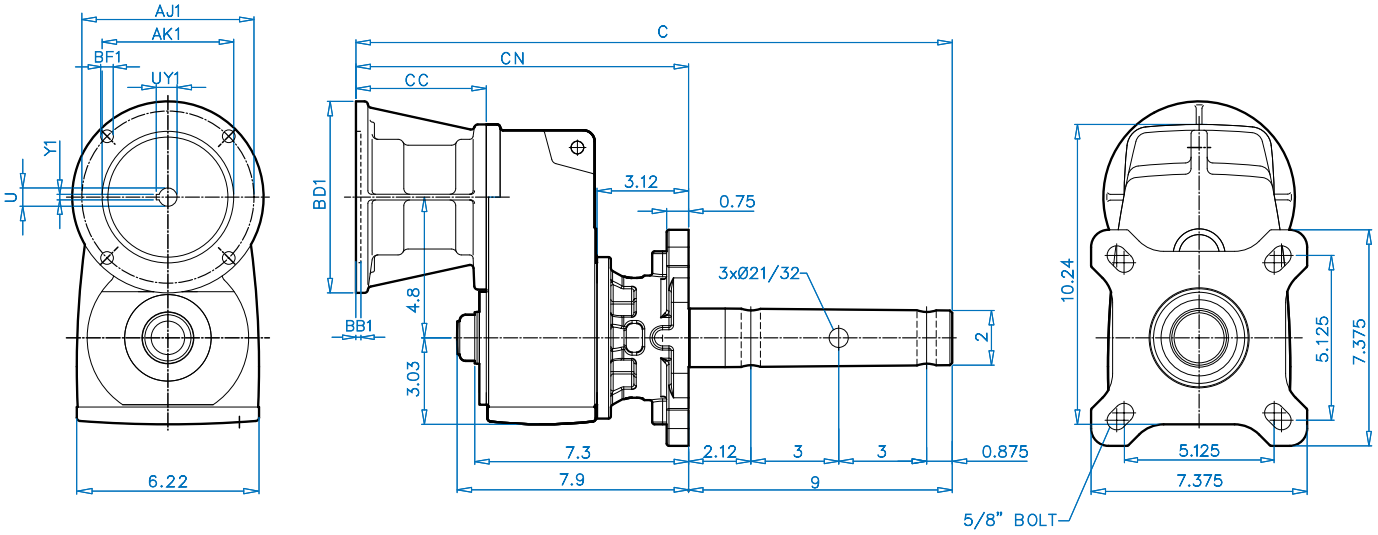


DIMENSIONS

| NEMA | Overall | | NEMA Input | | | | | | Coupling | | |
|---|---|---|---|---|---|---|---|---|---|---|---|
| C-Face Input | C | CN | CC | AJ1 | AK1 | BB1 | BD1 | BF1 | U1 | UY1 | Y1 |
| **56C** | 20.47 | 11.47 | 4.45 | 5.875 | 4.50 | 0.20 | 6.54 | 0.43 | 0.625 | 0.71 | 0.188 |
| **140TC** | 20.47 | 11.47 | 4.45 | 5.875 | 4.50 | 0.20 | 6.54 | 0.43 | 0.875 | 0.96 | 0.188 |
| **180TC** | 21.67 | 12.67 | 5.65 | 7.250 | 8.50 | 0.23 | 9.17 | 0.59 | 1.125 | 1.24 | 0.250 |

# SK 1282 SCP + Motor
# 2-7/16" CEMA Drive Shaft

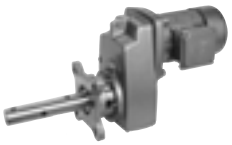

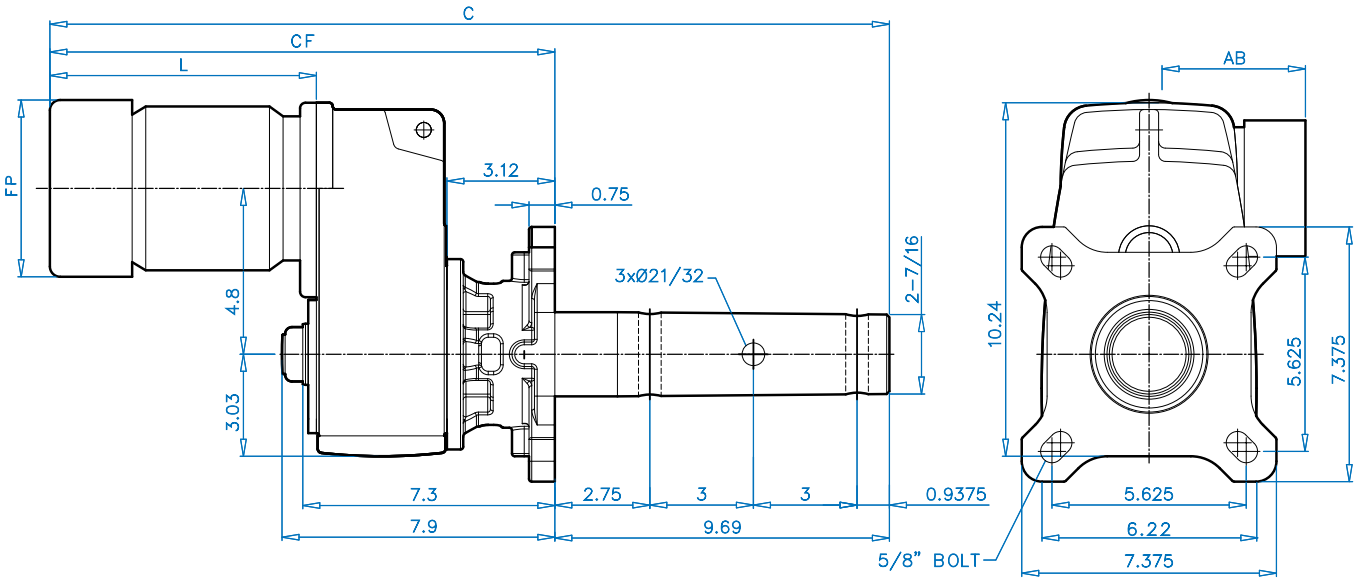


DIMENSIONS

| Motor Type | Overall | | Motor | | |
|---|---|---|---|---|---|
| | C | CF | L | FP | AB |
| 63S/L | 23.76 | 14.76 | 7.73 | 5.08 | 4.51 |
| 71S/L | 25.33 | 16.33 | 9.31 | 5.72 | 4.86 |
| 80S/L/LH | 26.32 | 17.32 | 10.29 | 6.43 | 5.59 |
| 90S/SH/L/LH | 27.89 | 18.65 | 11.87 | 7.19 | 5.79 |
| 100L/LA/LH | 29.11 | 20.11 | 13.09 | 7.90 | 6.65 |
| 112M | 29.98 | 20.98 | 13.96 | 8.87 | 7.05 |
| 112MH | 30.97 | 21.97 | 14.95 | 8.87 | 7.05 |

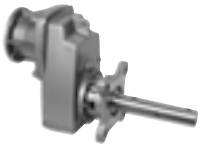

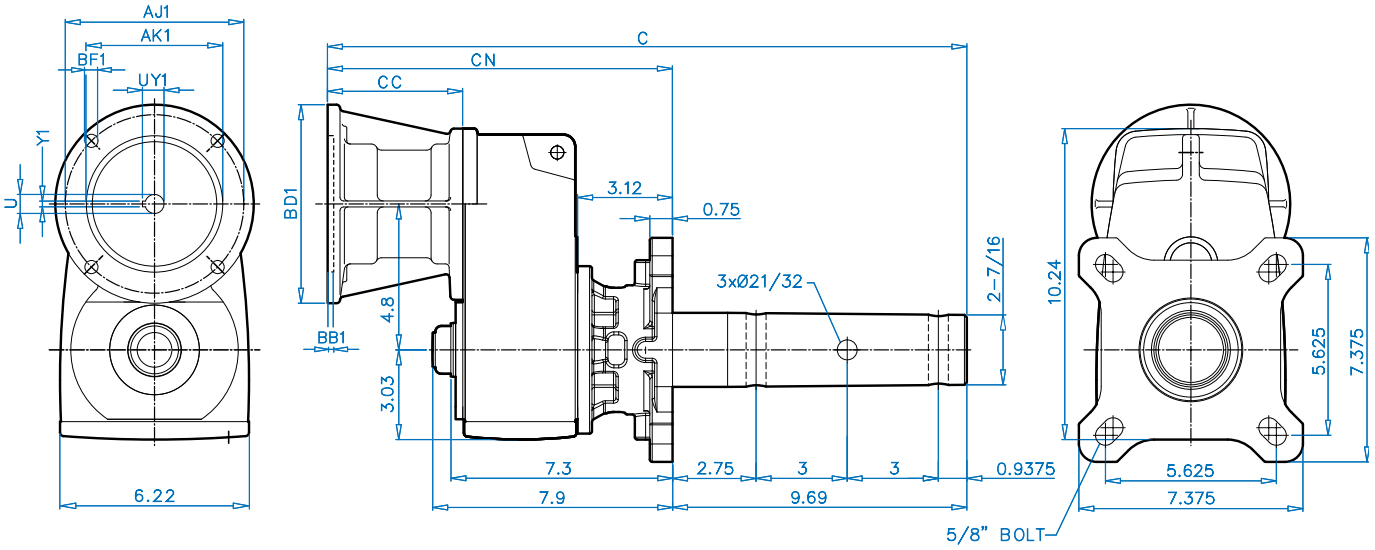


DIMENSIONS

| NEMA C-Face Input | Overall | | NEMA Input | | | | | | Coupling | | |
|---|---|---|---|---|---|---|---|---|---|---|---|
| | C | CN | CC | AJ1 | AK1 | BB1 | BD1 | BF1 | U1 | UY1 | Y1 |
| **56C** | 21.16 | 11.47 | 4.45 | 5.875 | 4.50 | 0.20 | 6.54 | 0.43 | 0.625 | 0.71 | 0.188 |
| **140TC** | 21.16 | 11.47 | 4.45 | 5.875 | 4.50 | 0.20 | 6.54 | 0.43 | 0.875 | 0.96 | 0.188 |
| **180TC** | 22.36 | 12.67 | 5.65 | 7.250 | 8.50 | 0.23 | 9.17 | 0.59 | 1.125 | 1.24 | 0.250 |

# SK 2282 SCP + Motor
# 1-1/2" CEMA Drive Shaft

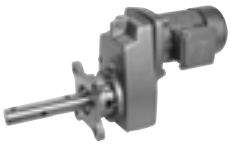

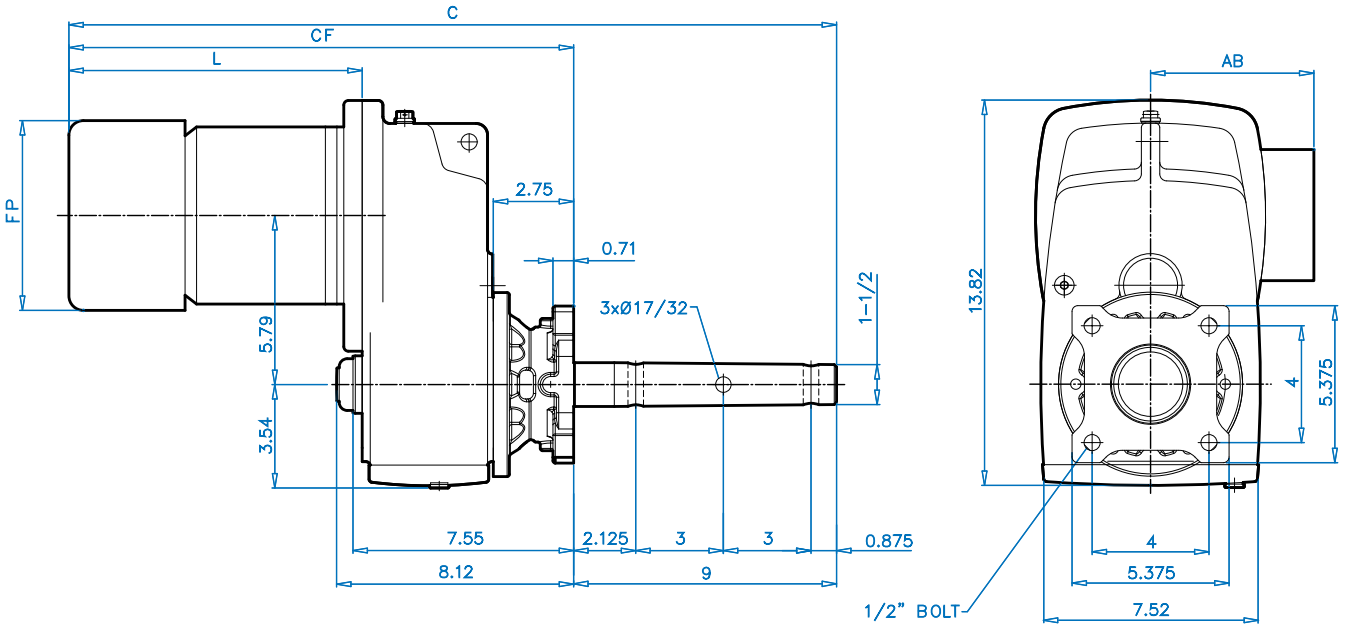


DIMENSIONS

| Motor Type | Overall | | Motor | | |
|---|---|---|---|---|---|
| | C | CF | L | FP | AB |
| **71S/L** | 25.51 | 16.51 | 9.07 | 5.72 | 4.86 |
| **80S/L/LH** | 26.49 | 17.49 | 10.06 | 6.43 | 5.59 |
| **90S/SH/L/LH** | 28.07 | 19.07 | 11.63 | 7.19 | 5.79 |
| **100L/LA/LH** | 29.29 | 20.29 | 12.85 | 7.90 | 6.65 |
| **112M** | 30.16 | 21.16 | 13.72 | 8.87 | 7.05 |
| **112MH** | 31.15 | 22.15 | 14.71 | 8.87 | 7.05 |

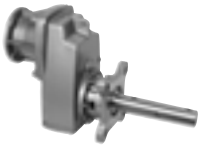

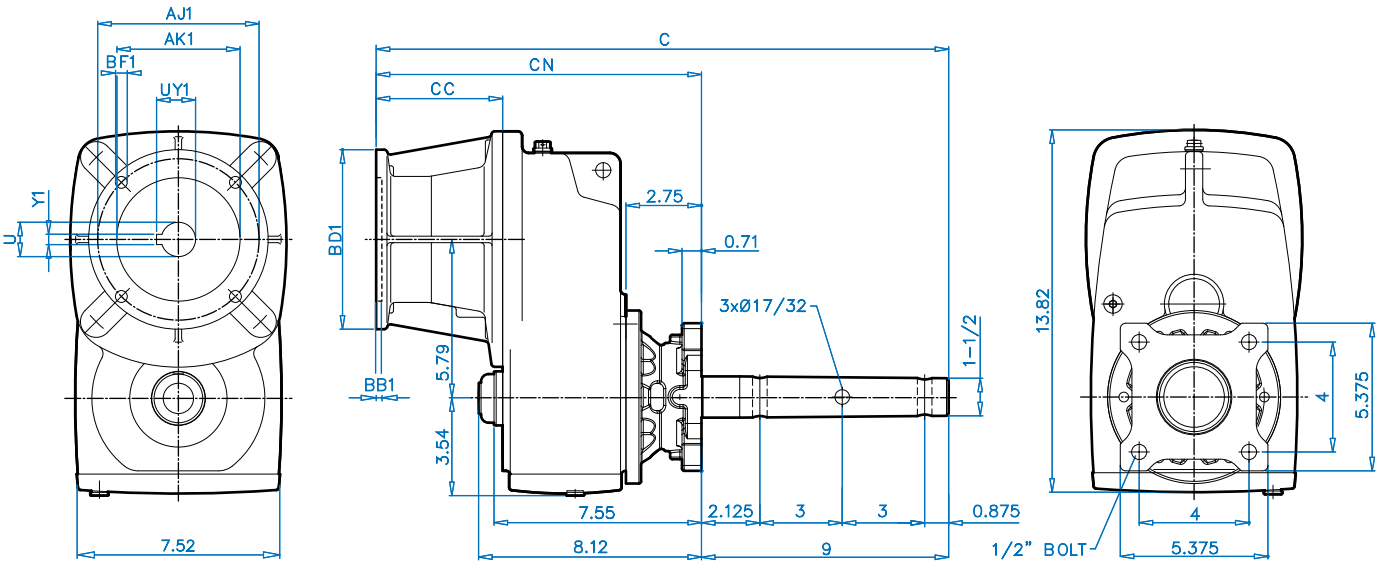




| NEMA | Overall | | NEMA Input | | | | | | Coupling | | |
|---|---|---|---|---|---|---|---|---|---|---|---|
| C-Face Input | C | CN | CC | AJ1 | AK1 | BB1 | BD1 | BF1 | U1 | UY1 | Y1 |
| **56C** | 21.04 | 12.04 | 4.61 | 5.875 | 4.50 | 0.20 | 6.54 | 0.43 | 0.625 | 0.71 | 0.188 |
| **140TC** | 21.04 | 12.04 | 4.61 | 5.875 | 4.50 | 0.20 | 6.54 | 0.43 | 0.875 | 0.96 | 0.188 |
| **180TC** | 23.08 | 14.08 | 6.65 | 7.250 | 8.50 | 0.23 | 9.17 | 0.59 | 1.125 | 1.24 | 0.250 |

# SK 2282 SCP + Motor
# 2” CEMA Drive Shaft

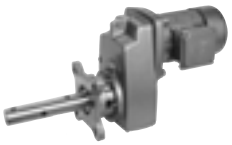



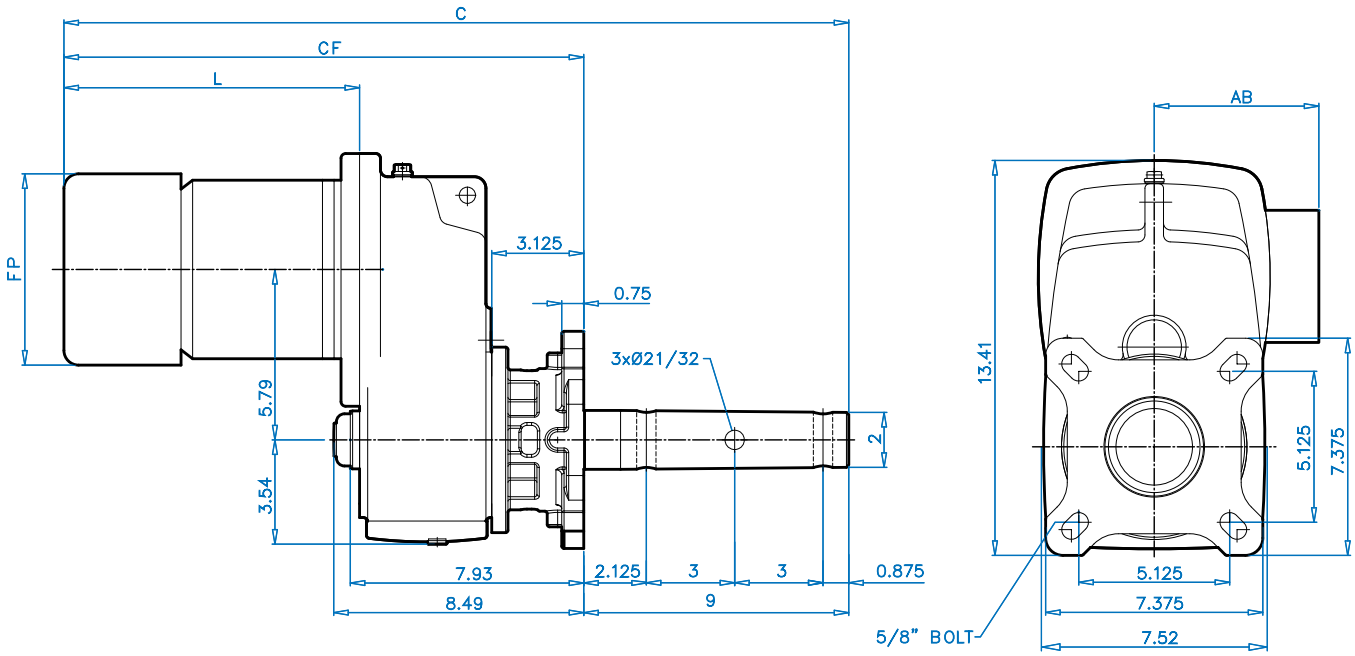


| Motor Type | Overall | | Motor | | |
|---|---|---|---|---|---|
| | C | CF | L | FP | AB |
| **71S/L** | 25.88 | 16.88 | 9.07 | 5.72 | 4.86 |
| **80S/L/LH** | 26.87 | 17.87 | 10.06 | 6.43 | 5.59 |
| **90S/SH/L/LH** | 28.44 | 19.44 | 11.63 | 7.19 | 5.79 |
| **100L/LA/LH** | 29.66 | 20.66 | 12.85 | 7.90 | 6.65 |
| **112M** | 30.53 | 21.53 | 13.72 | 8.87 | 7.05 |
| **112MH** | 31.53 | 22.53 | 14.71 | 8.87 | 7.05 |

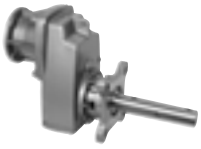

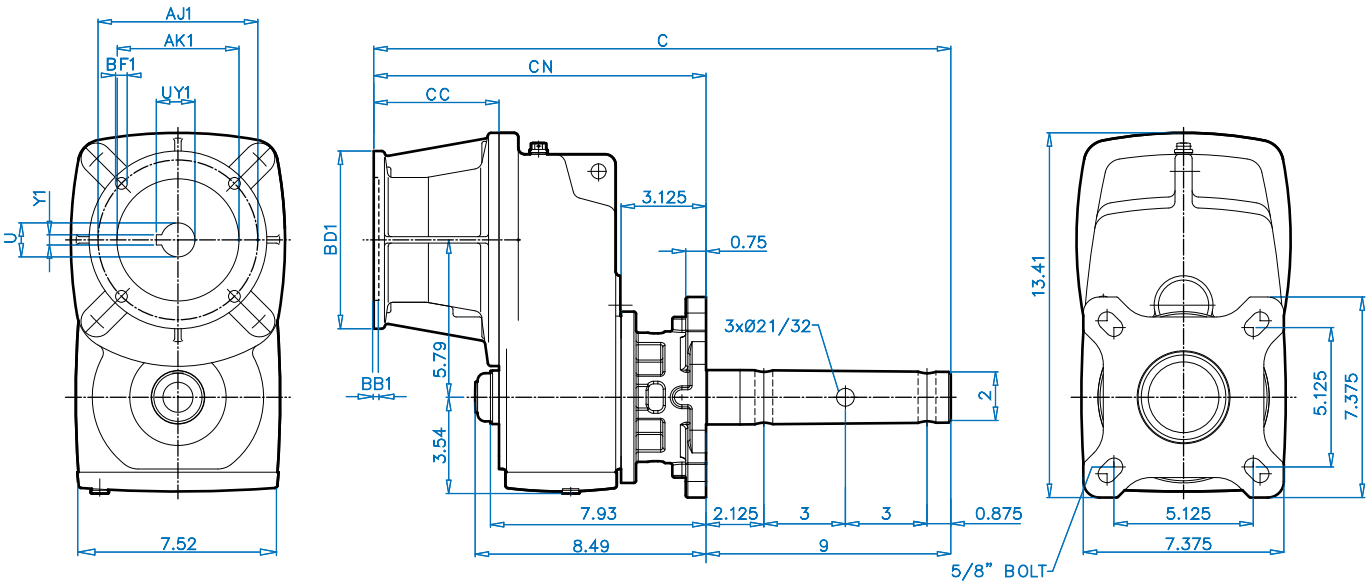




| NEMA | Overall | | NEMA Input | | | | | | Coupling | | |
|---|---|---|---|---|---|---|---|---|---|---|---|
| C-Face Input | C | CN | CC | AJ1 | AK1 | BB1 | BD1 | BF1 | U1 | UY1 | Y1 |
| **56C** | 21.42 | 12.42 | 4.61 | 5.875 | 4.50 | 0.20 | 6.54 | 0.43 | 0.625 | 0.71 | 0.188 |
| **140TC** | 21.42 | 12.42 | 4.61 | 5.875 | 4.50 | 0.20 | 6.54 | 0.43 | 0.875 | 0.96 | 0.188 |
| **180TC** | 23.46 | 14.46 | 6.65 | 7.250 | 8.50 | 0.23 | 9.17 | 0.59 | 1.125 | 1.24 | 0.250 |

# SK 2282 SCP + Motor
# 2-7/16” CEMA Drive Shaft

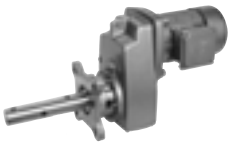

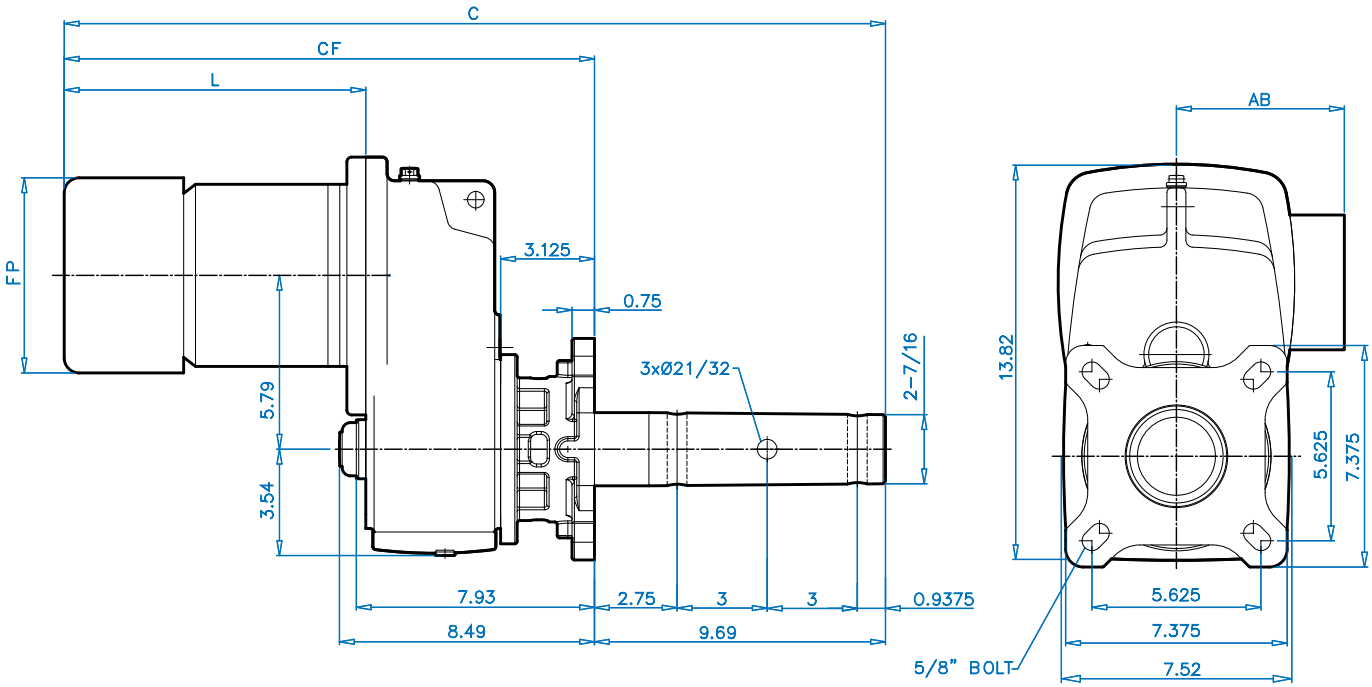


DIMENSIONS

| Motor Type | Overall | | Motor | | |
|---|---|---|---|---|---|
| | C | CF | L | FP | AB |
| **71S/L** | 26.57 | 16.88 | 9.07 | 5.72 | 4.86 |
| **80S/L/LH** | 27.56 | 17.87 | 10.06 | 6.43 | 5.59 |
| **90S/SH/L/LH** | 29.13 | 19.44 | 11.63 | 7.19 | 5.79 |
| **100L/LA/LH** | 30.35 | 20.66 | 12.85 | 7.90 | 6.65 |
| **112M** | 31.22 | 21.53 | 13.72 | 8.87 | 7.05 |
| **112MH** | 32.21 | 22.53 | 14.71 | 8.87 | 7.05 |

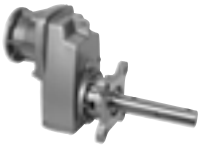

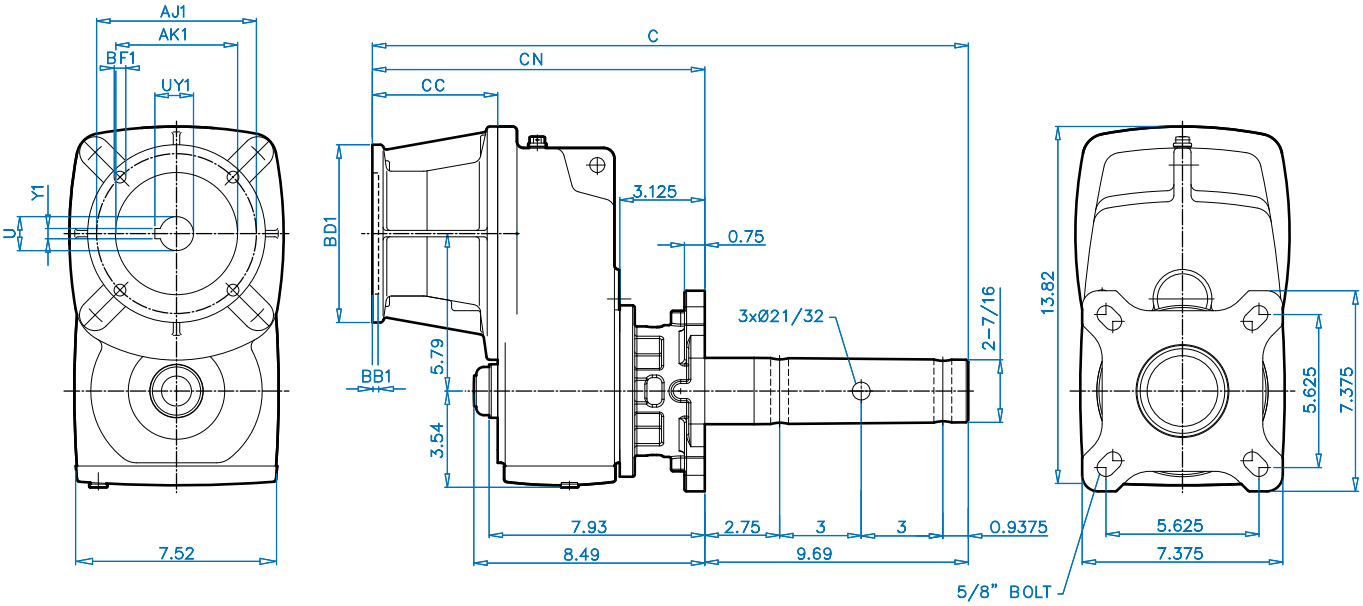


| NEMA | Overall | | NEMA Input | | | | | | Coupling | | |
|---|---|---|---|---|---|---|---|---|---|---|---|
| C-Face Input | C | CN | CC | AJ1 | AK1 | BB1 | BD1 | BF1 | U1 | UY1 | Y1 |
| **56C** | 22.11 | 12.42 | 4.61 | 5.875 | 4.50 | 0.20 | 6.54 | 0.43 | 0.625 | 0.71 | 0.188 |
| **140TC** | 22.11 | 12.42 | 4.61 | 5.875 | 4.50 | 0.20 | 6.54 | 0.43 | 0.875 | 0.96 | 0.188 |
| **180TC** | 24.15 | 14.46 | 6.65 | 7.250 | 8.50 | 0.23 | 9.17 | 0.59 | 1.125 | 1.24 | 0.250 |

# SK 3282 SCP + Motor
# 1-1/2" CEMA Drive Shaft

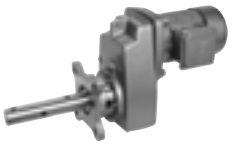

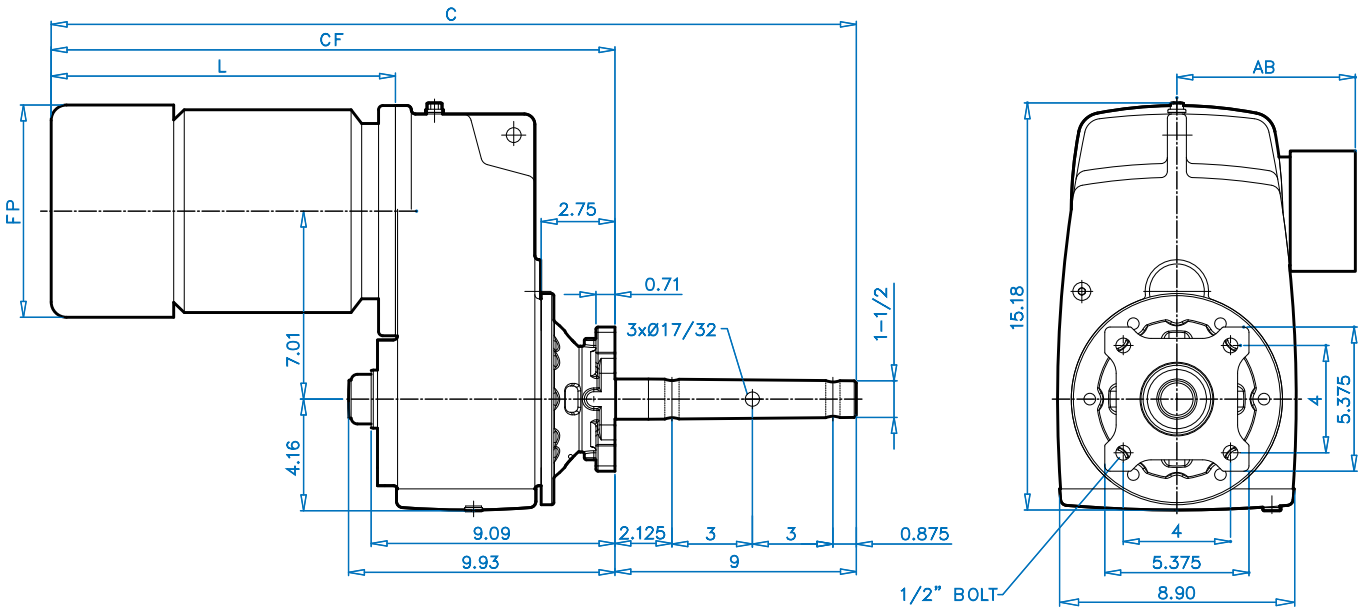


DIMENSIONS

| Motor Type | Overall | | Motor | | |
|---|---|---|---|---|---|
| | C | CF | L | FP | AB |
| **71S/L** | 26.49 | 17.41 | 9.07 | 5.72 | 4.86 |
| **80S/L/LH** | 27.47 | 18.47 | 10.06 | 6.43 | 5.59 |
| **90S/SH/L/LH** | 29.04 | 20.04 | 11.63 | 7.19 | 5.79 |
| **100L/LA/LH** | 30.27 | 21.27 | 12.85 | 7.90 | 6.65 |
| **112M** | 31.14 | 22.14 | 13.72 | 8.87 | 7.05 |
| **112MH** | 32.13 | 23.13 | 14.71 | 8.87 | 7.05 |
| **132S/SH/M/MH** | 34.56 | 25.56 | 17.14 | 10.45 | 8.03 |

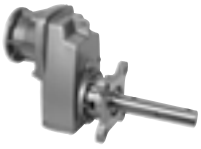

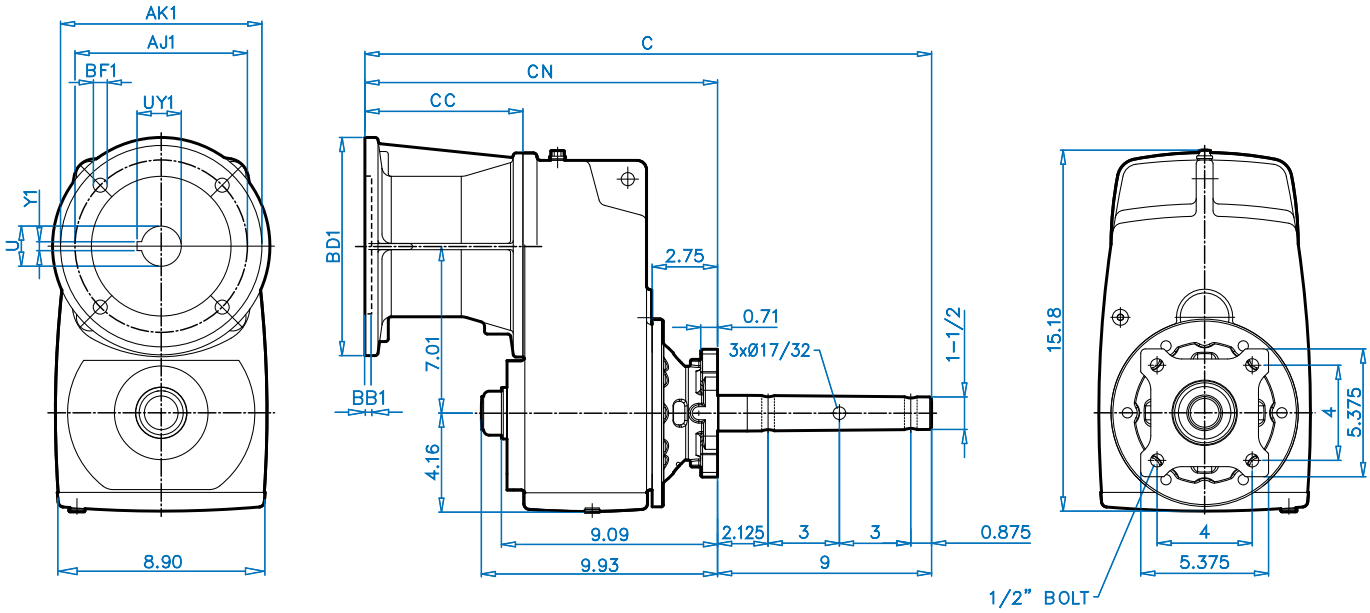




| NEMA | Overall | | NEMA Input | | | | | | Coupling | | |
|---|---|---|---|---|---|---|---|---|---|---|---|
| C-Face Input | C | CN | CC | AJ1 | AK1 | BB1 | BD1 | BF1 | U1 | UY1 | Y1 |
| **56C** | 22.02 | 13.02 | 4.61 | 5.875 | 4.50 | 0.20 | 6.54 | 0.43 | 0.625 | 0.71 | 0.188 |
| **140TC** | 22.02 | 13.02 | 4.61 | 5.875 | 4.50 | 0.20 | 6.54 | 0.43 | 0.875 | 0.96 | 0.188 |
| **180TC** | 24.06 | 15.06 | 6.65 | 7.250 | 8.50 | 0.23 | 9.17 | 0.59 | 1.125 | 1.24 | 0.250 |
| **210TC** | 24.06 | 15.06 | 6.65 | 7.250 | 8.50 | 0.23 | 9.17 | 0.59 | 1.375 | 1.52 | 0.310 |

# SK 3282 SCP + Motor
# 2” CEMA Drive Shaft

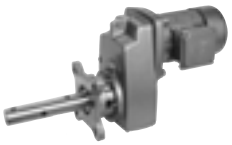

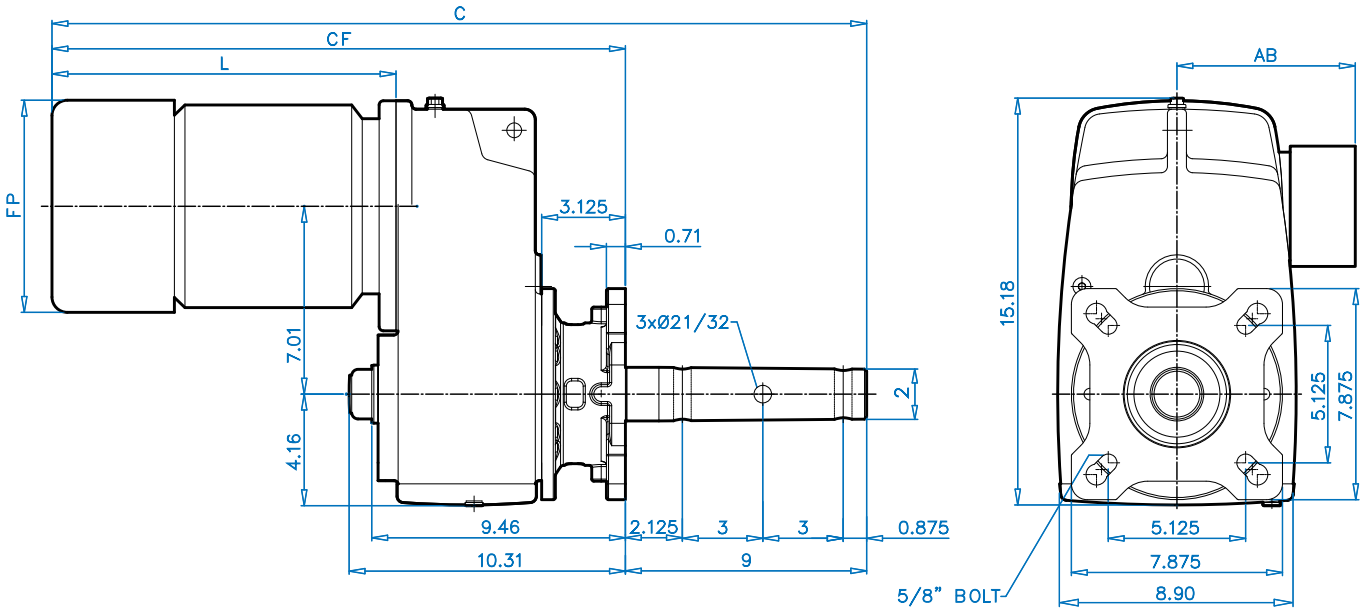


DIMENSIONS

| Motor Type | Overall | | Motor | | |
|---|---|---|---|---|---|
| | C | CF | L | FP | AB |
| **71S/L** | 26.86 | 17.79 | 9.07 | 5.72 | 4.86 |
| **80S/L/LH** | 27.85 | 18.85 | 10.06 | 6.43 | 5.59 |
| **90S/SH/L/LH** | 29.42 | 20.42 | 11.63 | 7.19 | 5.79 |
| **100L/LA/LH** | 30.64 | 21.64 | 12.85 | 7.90 | 6.65 |
| **112M** | 31.51 | 22.51 | 13.72 | 8.87 | 7.05 |
| **112MH** | 32.50 | 23.50 | 14.71 | 8.87 | 7.05 |
| **132S/SH/M/MH** | 34.93 | 25.93 | 17.14 | 10.45 | 8.03 |

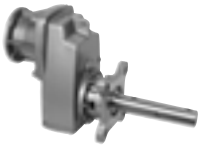

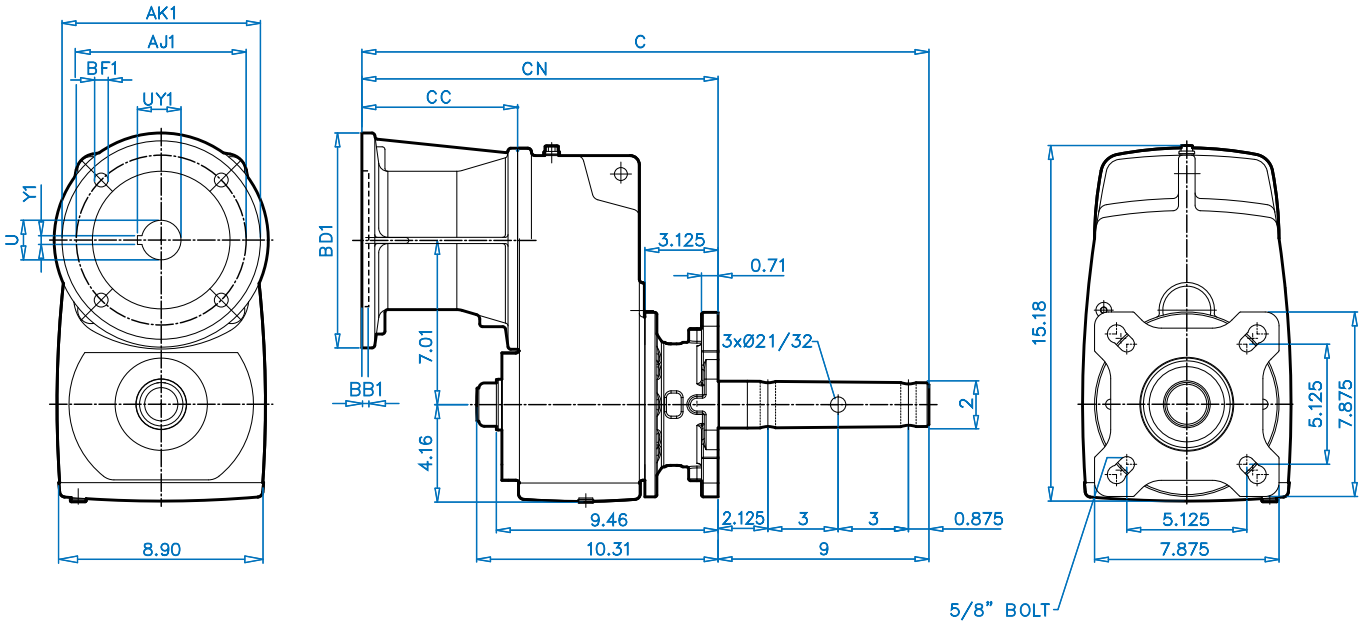


DIMENSIONS

| NEMA | Overall | | NEMA Input | | | | | | Coupling | | |
|---|---|---|---|---|---|---|---|---|---|---|---|
| C-Face Input | C | CN | CC | AJ1 | AK1 | BB1 | BD1 | BF1 | U1 | UY1 | Y1 |
| **56C** | 22.40 | 13.40 | 4.61 | 5.875 | 4.50 | 0.20 | 6.54 | 0.43 | 0.625 | 0.71 | 0.188 |
| **140TC** | 22.40 | 13.40 | 4.61 | 5.875 | 4.50 | 0.20 | 6.54 | 0.43 | 0.875 | 0.96 | 0.188 |
| **180TC** | 24.44 | 15.44 | 6.65 | 7.250 | 8.50 | 0.23 | 9.17 | 0.59 | 1.125 | 1.24 | 0.250 |
| **210TC** | 24.44 | 15.44 | 6.65 | 7.250 | 8.50 | 0.23 | 9.17 | 0.59 | 1.375 | 1.52 | 0.310 |

# SK 3282 SCP + Motor
# 2-7/16" CEMA Drive Shaft

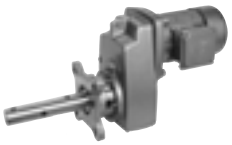

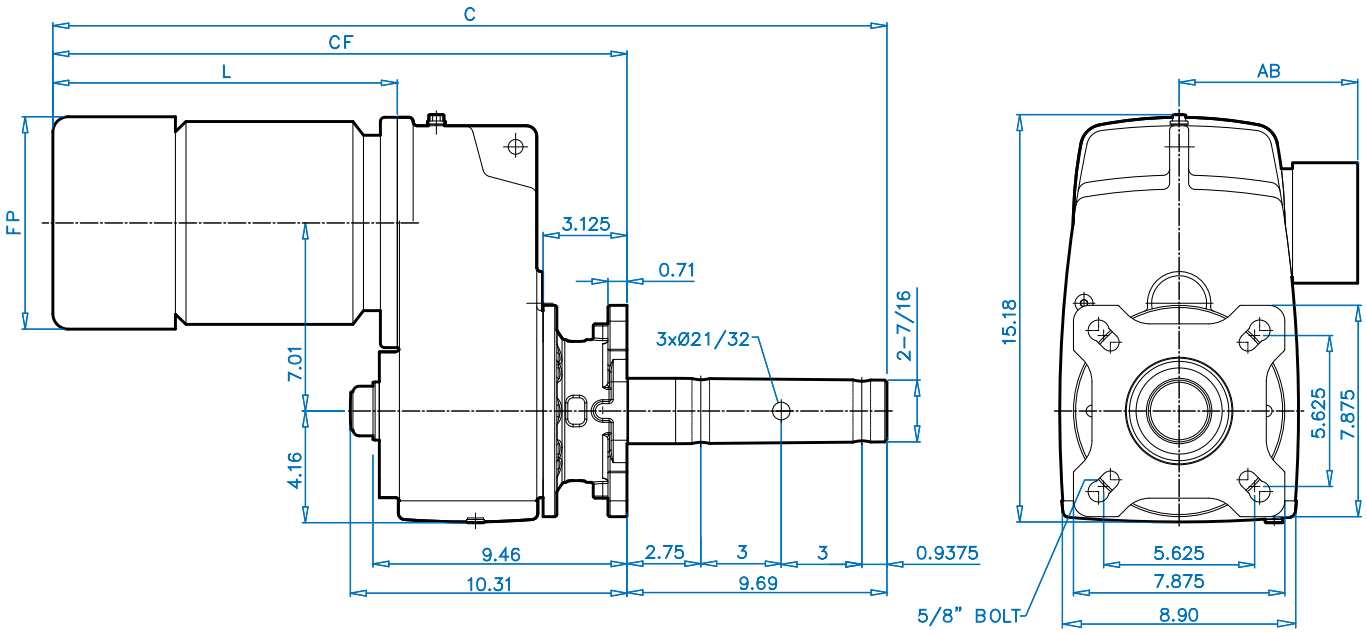


DIMENSIONS

| Motor Type | Overall | | Motor | | |
|---|---|---|---|---|---|
| | C | CF | L | FP | AB |
| **71S/L** | 27.55 | 18.48 | 9.07 | 5.72 | 4.86 |
| **80S/L/LH** | 28.53 | 18.85 | 10.06 | 6.43 | 5.59 |
| **90S/SH/L/LH** | 30.11 | 20.42 | 11.63 | 7.19 | 5.79 |
| **100L/LA/LH** | 31.33 | 21.64 | 12.85 | 7.90 | 6.65 |
| **112M** | 32.20 | 22.51 | 13.72 | 8.87 | 7.05 |
| **112MH** | 33.19 | 23.50 | 14.71 | 8.87 | 7.05 |
| **132S/SH/M/MH** | 35.62 | 25.93 | 17.14 | 10.45 | 8.03 |

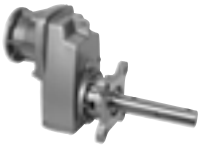

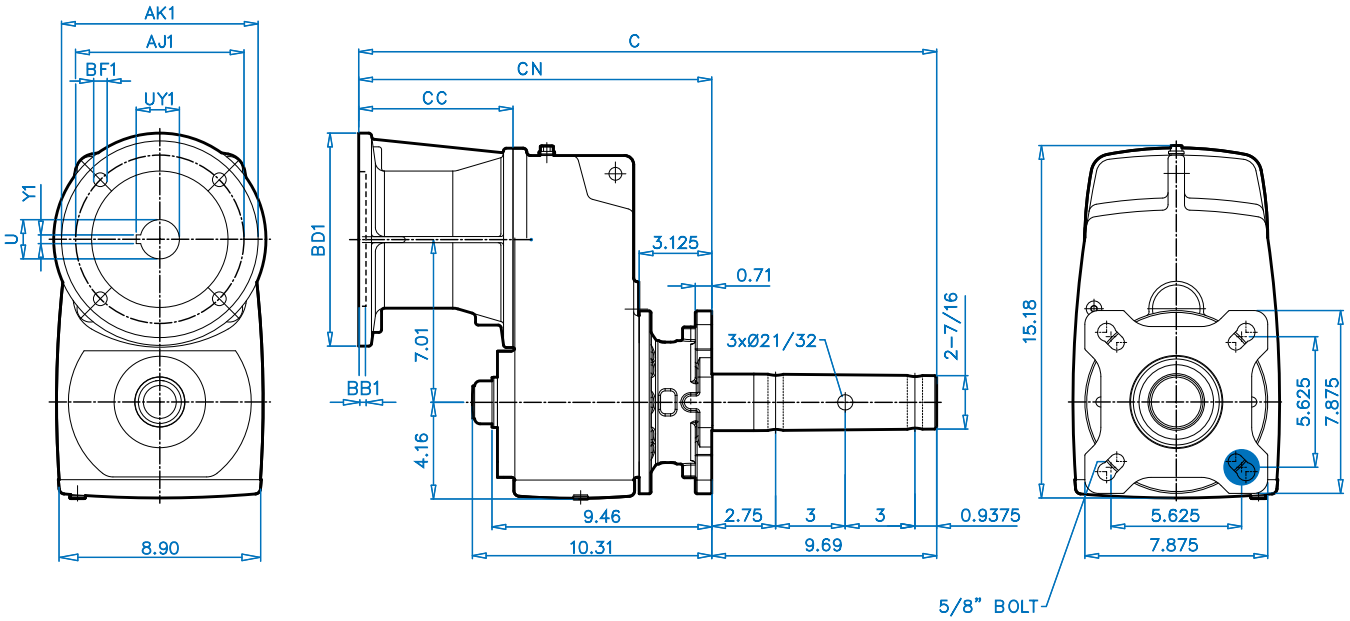


| NEMA | Overall | | NEMA Input | | | | | | Coupling | | |
|---|---|---|---|---|---|---|---|---|---|---|---|
| C-Face Input | C | CN | CC | AJ1 | AK1 | BB1 | BD1 | BF1 | U1 | UY1 | Y1 |
| **56C** | 23.08 | 13.40 | 4.61 | 5.875 | 4.50 | 0.20 | 6.54 | 0.43 | 0.625 | 0.71 | 0.188 |
| **140TC** | 23.08 | 13.40 | 4.61 | 5.875 | 4.50 | 0.20 | 6.54 | 0.43 | 0.875 | 0.96 | 0.188 |
| **180TC** | 25.12 | 15.44 | 6.65 | 7.250 | 8.50 | 0.23 | 9.17 | 0.59 | 1.125 | 1.24 | 0.250 |
| **210TC** | 25.12 | 15.44 | 6.65 | 7.250 | 8.50 | 0.23 | 9.17 | 0.59 | 1.375 | 1.52 | 0.310 |

# SK 3282 SCP + Motor
# 3” CEMA Drive Shaft

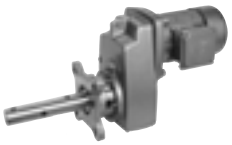

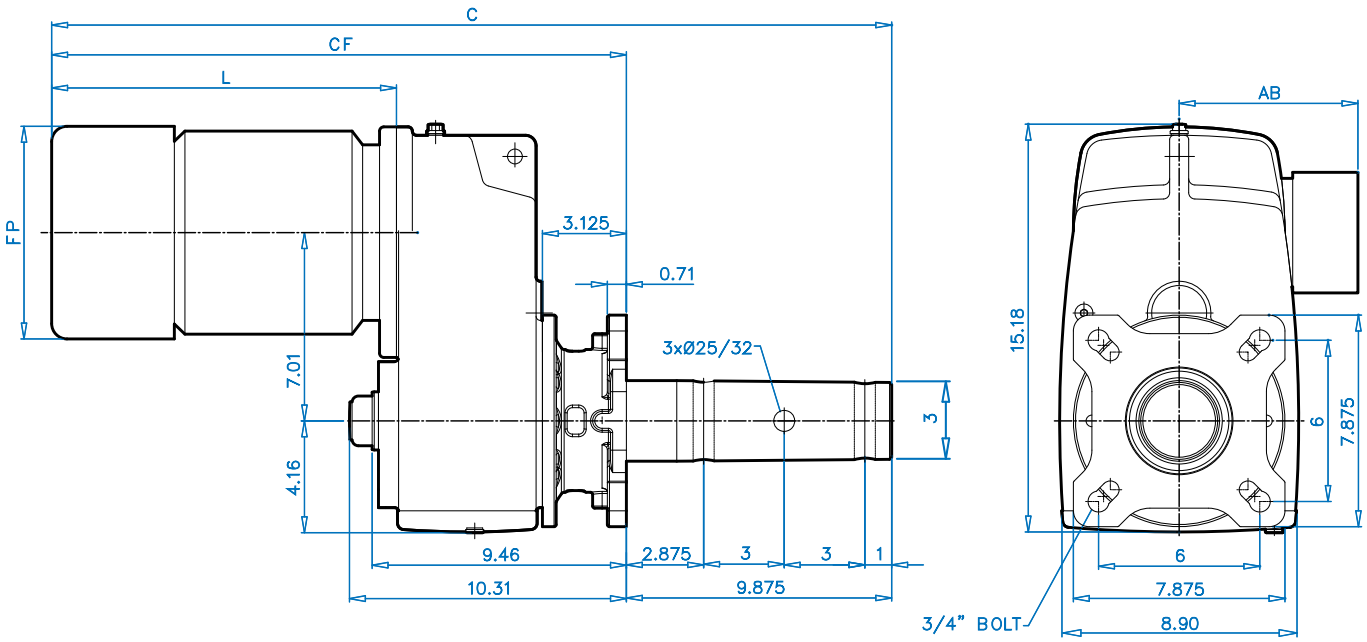


DIMENSIONS

| Motor Type | Overall | | Motor | | |
|---|---|---|---|---|---|
| | C | CF | L | FP | AB |
| **71S/L** | 27.74 | 18.66 | 9.07 | 5.72 | 4.86 |
| **80S/L/LH** | 28.72 | 18.85 | 10.06 | 6.43 | 5.59 |
| **90S/SH/L/LH** | 30.29 | 20.42 | 11.63 | 7.19 | 5.79 |
| **100L/LA/LH** | 31.52 | 21.64 | 12.85 | 7.90 | 6.65 |
| **112M** | 32.39 | 22.51 | 13.72 | 8.87 | 7.05 |
| **112MH** | 33.38 | 23.50 | 14.71 | 8.87 | 7.05 |
| **132S/SH/M/MH** | 35.81 | 25.93 | 17.14 | 10.45 | 8.03 |

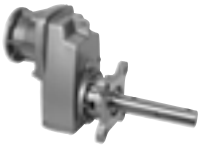

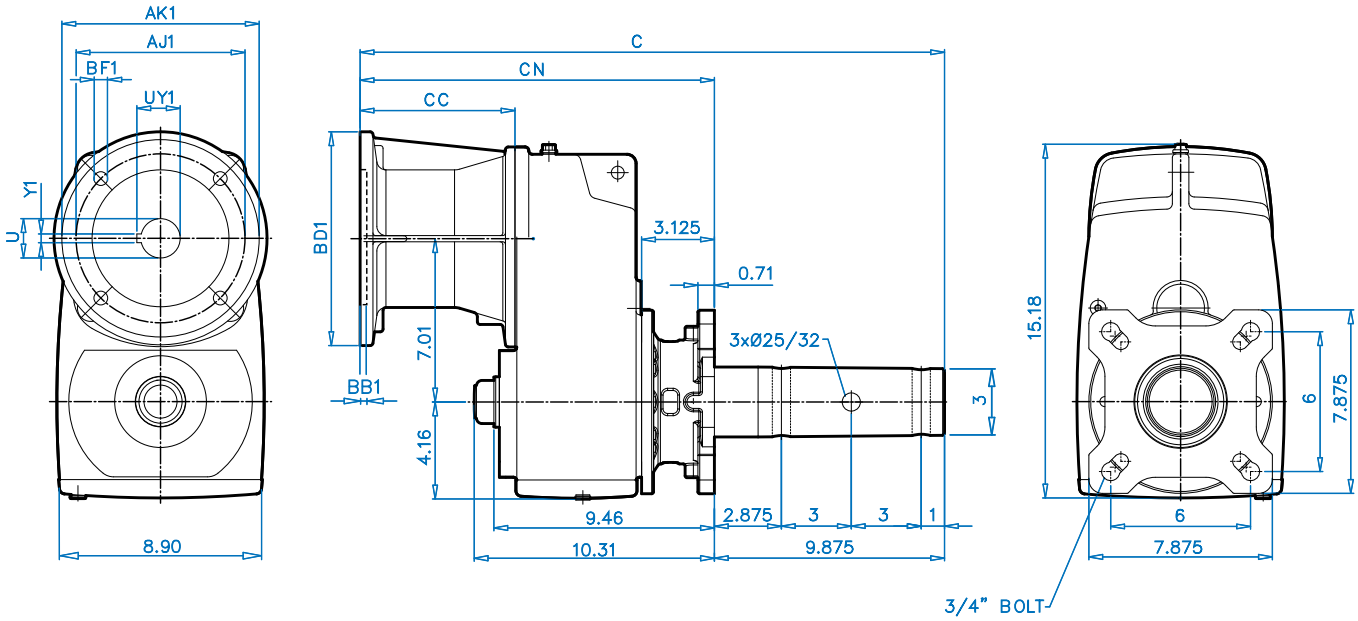




| NEMA | Overall | | NEMA Input | | | | | | Coupling | | |
|---|---|---|---|---|---|---|---|---|---|---|---|
| C-Face Input | C | CN | CC | AJ1 | AK1 | BB1 | BD1 | BF1 | U1 | UY1 | Y1 |
| **56C** | 23.27 | 13.40 | 4.61 | 5.875 | 4.50 | 0.20 | 6.54 | 0.43 | 0.625 | 0.71 | 0.188 |
| **140TC** | 23.27 | 13.40 | 4.61 | 5.875 | 4.50 | 0.20 | 6.54 | 0.43 | 0.875 | 0.96 | 0.188 |
| **180TC** | 25.31 | 15.44 | 6.65 | 7.250 | 8.50 | 0.23 | 9.17 | 0.59 | 1.125 | 1.24 | 0.250 |
| **210TC** | 25.31 | 15.44 | 6.65 | 7.250 | 8.50 | 0.23 | 9.17 | 0.59 | 1.375 | 1.52 | 0.310 |

# SK 4282 SCP + Motor
# 2” CEMA Drive Shaft

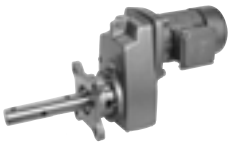

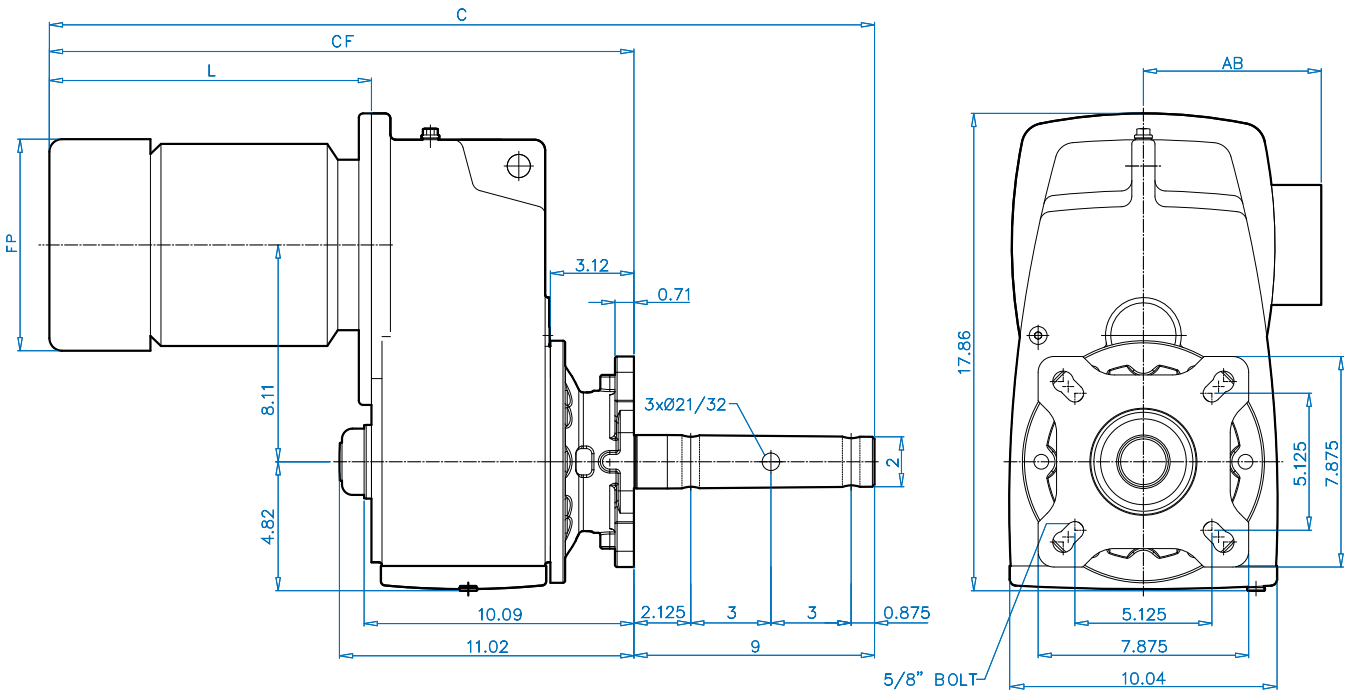


DIMENSIONS

| Motor Type | Overall | | Motor | | |
|---|---|---|---|---|---|
| | C | CF | L | FP | AB |
| 90S/SH/L/LH | 29.94 | 20.94 | 10.84 | 7.19 | 5.79 |
| 100L/LA/LH | 31.16 | 22.16 | 12.06 | 7.90 | 6.65 |
| 112M | 32.03 | 23.03 | 12.93 | 8.87 | 7.05 |
| 112MH | 33.02 | 24.02 | 13.93 | 8.87 | 7.05 |
| 132S/SH/M/MH | 35.45 | 26.45 | 16.35 | 10.45 | 8.03 |
| 160M/L | 38.51 | 29.51 | 19.41 | 12.56 | 9.53 |

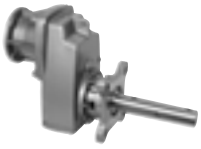

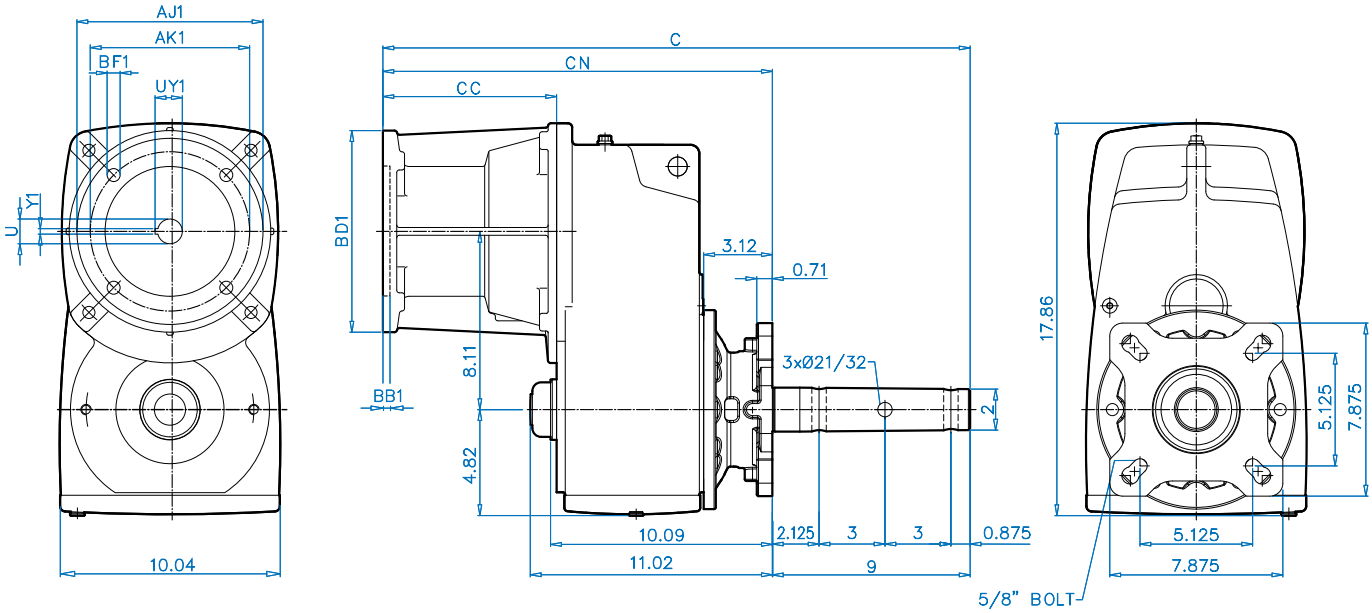




| NEMA | Overall | | NEMA Input | | | | | | Coupling | | |
|---|---|---|---|---|---|---|---|---|---|---|---|
| C-Face Input | C | CN | CC | AJ1 | AK1 | BB1 | BD1 | BF1 | U1 | UY1 | Y1 |
| **56C** | 23.43 | 14.43 | 4.33 | 5.875 | 4.50 | 0.20 | 6.54 | 0.43 | 0.625 | 0.71 | 0.188 |
| **140TC** | 23.43 | 14.43 | 4.33 | 5.875 | 4.50 | 0.20 | 6.54 | 0.43 | 0.875 | 0.96 | 0.188 |
| **180TC** | 27.17 | 18.17 | 8.07 | 7.250 | 8.50 | 0.23 | 9.17 | 0.59 | 1.125 | 1.24 | 0.250 |
| **210TC** | 27.17 | 18.17 | 8.07 | 7.250 | 8.50 | 0.23 | 9.17 | 0.59 | 1.375 | 1.52 | 0.312 |
| **250TC** | 27.01 | 18.01 | 7.91 | 7.250 | 8.50 | 0.23 | 9.17 | 0.59 | 1.625 | 1.80 | 0.375 |

# SK 4282 SCP + Motor
# 2-7/16” CEMA Drive Shaft

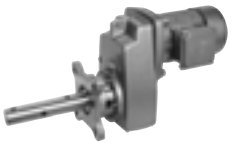



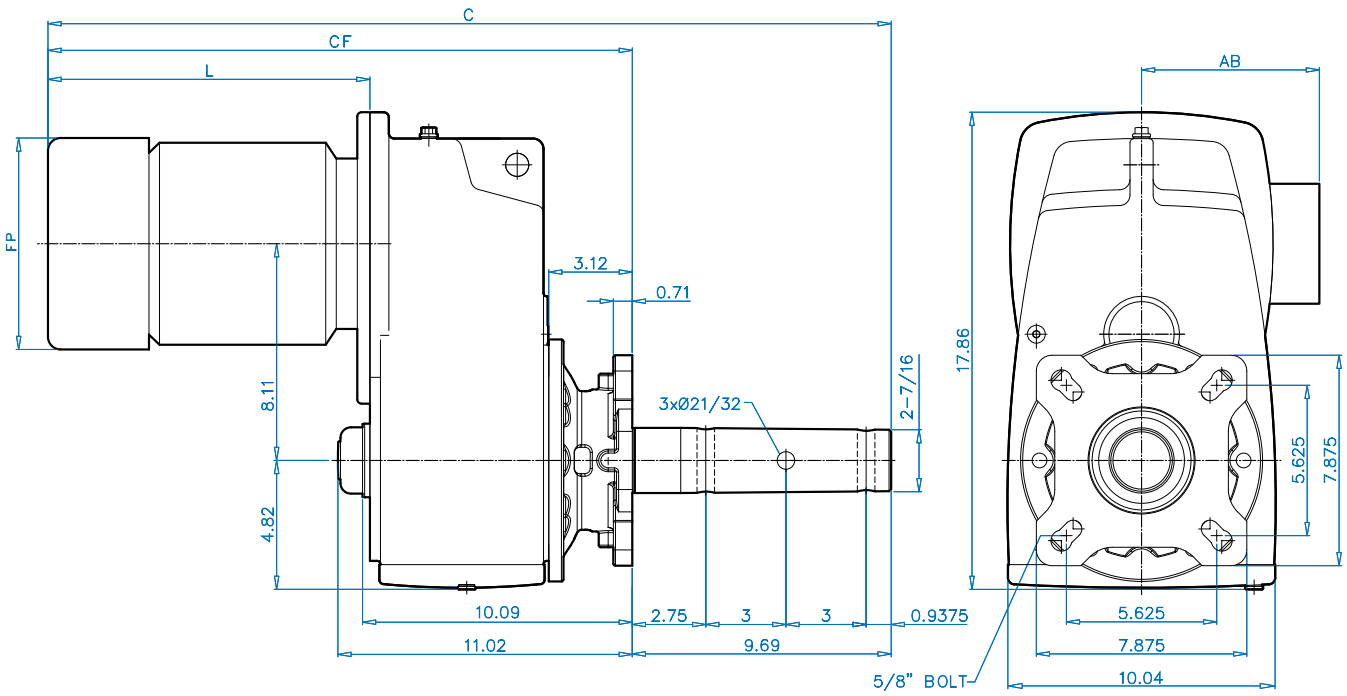


| Motor Type | Overall | | Motor | | |
|---|---|---|---|---|---|
| | C | CF | L | FP | AB |
| 90S/SH/L/LH | 30.63 | 20.94 | 10.84 | 7.19 | 5.79 |
| 100L/LA/LH | 31.85 | 22.16 | 12.06 | 7.90 | 6.65 |
| 112M | 32.72 | 23.03 | 12.93 | 8.87 | 7.05 |
| 112MH | 33.71 | 24.02 | 13.93 | 8.87 | 7.05 |
| 132S/SH/M/MH | 36.14 | 26.45 | 16.35 | 10.45 | 8.03 |
| 160M/L | 39.19 | 29.51 | 19.41 | 12.56 | 9.53 |

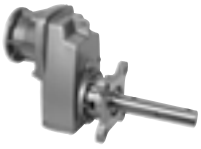

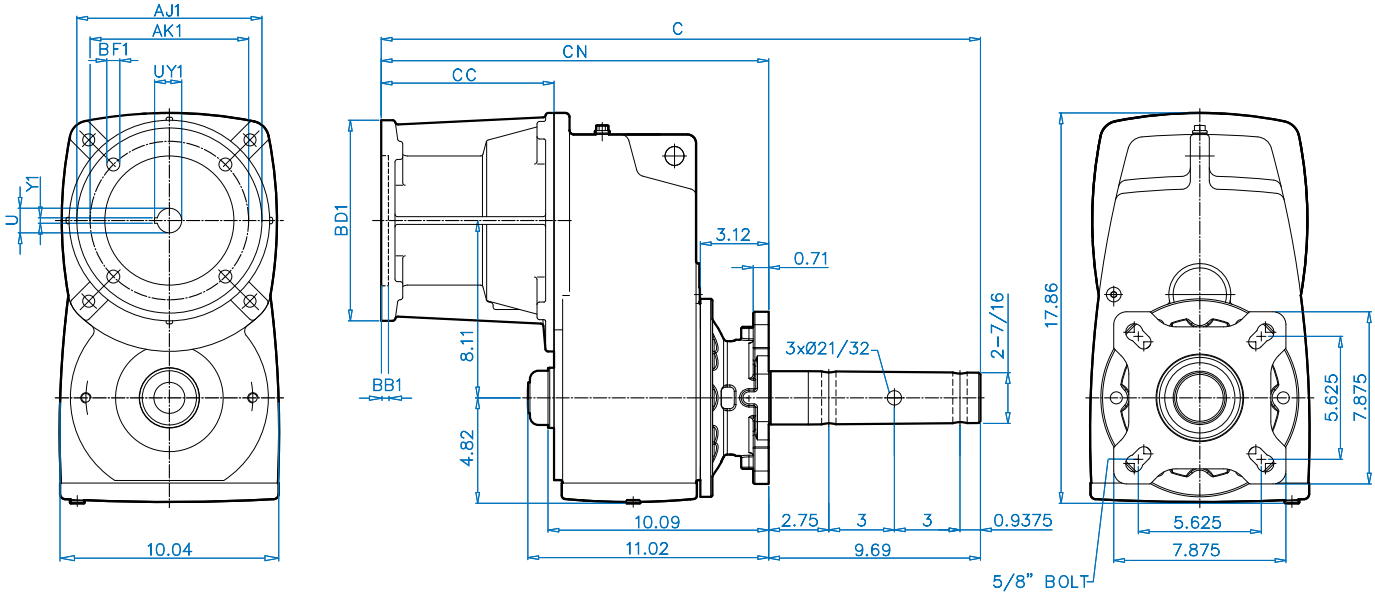


| NEMA | Overall | | NEMA Input | | | | | | Coupling | | |
|---|---|---|---|---|---|---|---|---|---|---|---|
| C-Face Input | C | CN | CC | AJ1 | AK1 | BB1 | BD1 | BF1 | U1 | UY1 | Y1 |
| **56C** | 24.11 | 14.43 | 4.33 | 5.875 | 4.50 | 0.20 | 6.54 | 0.43 | 0.625 | 0.71 | 0.188 |
| **140TC** | 24.11 | 14.43 | 4.33 | 5.875 | 4.50 | 0.20 | 6.54 | 0.43 | 0.875 | 0.96 | 0.188 |
| **180TC** | 27.85 | 18.17 | 8.07 | 7.250 | 8.50 | 0.23 | 9.17 | 0.59 | 1.125 | 1.24 | 0.250 |
| **210TC** | 27.85 | 18.17 | 8.07 | 7.250 | 8.50 | 0.23 | 9.17 | 0.59 | 1.375 | 1.52 | 0.312 |
| **250TC** | 27.70 | 18.01 | 7.91 | 7.250 | 8.50 | 0.23 | 9.17 | 0.59 | 1.625 | 1.80 | 0.375 |

# SK 4282 SCP + Motor
# 3” CEMA Drive Shaft

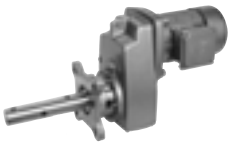



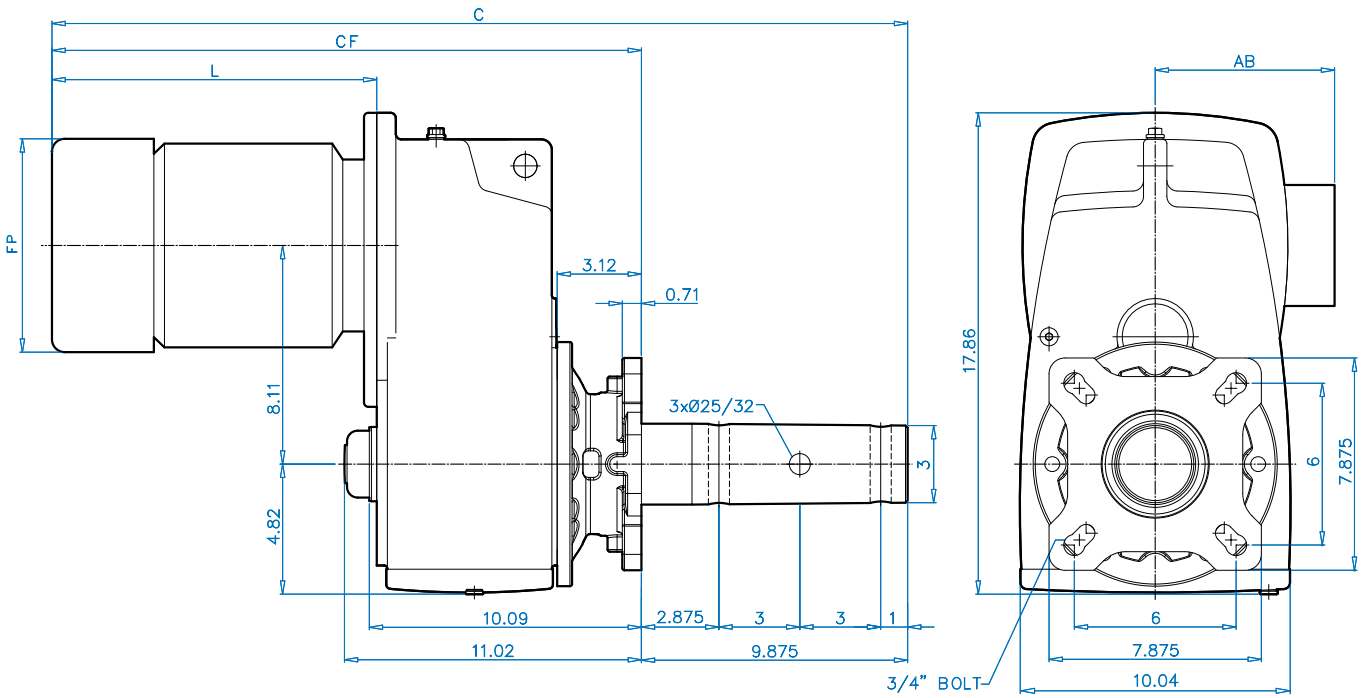


| Motor Type | Overall | | Motor | | |
|---|---|---|---|---|---|
| | C | CF | L | FP | AB |
| 90S/SH/L/LH | 30.81 | 20.94 | 10.84 | 7.19 | 5.79 |
| 100L/LA/LH | 32.03 | 22.16 | 12.06 | 7.90 | 6.65 |
| 112M | 32.90 | 23.03 | 12.93 | 8.87 | 7.05 |
| 112MH | 33.90 | 24.02 | 13.93 | 8.87 | 7.05 |
| 132S/SH/M/MH | 36.33 | 26.45 | 16.35 | 10.45 | 8.03 |
| 160M/L | 39.38 | 29.51 | 19.41 | 12.56 | 9.53 |

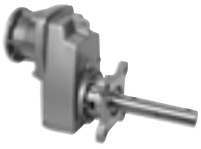

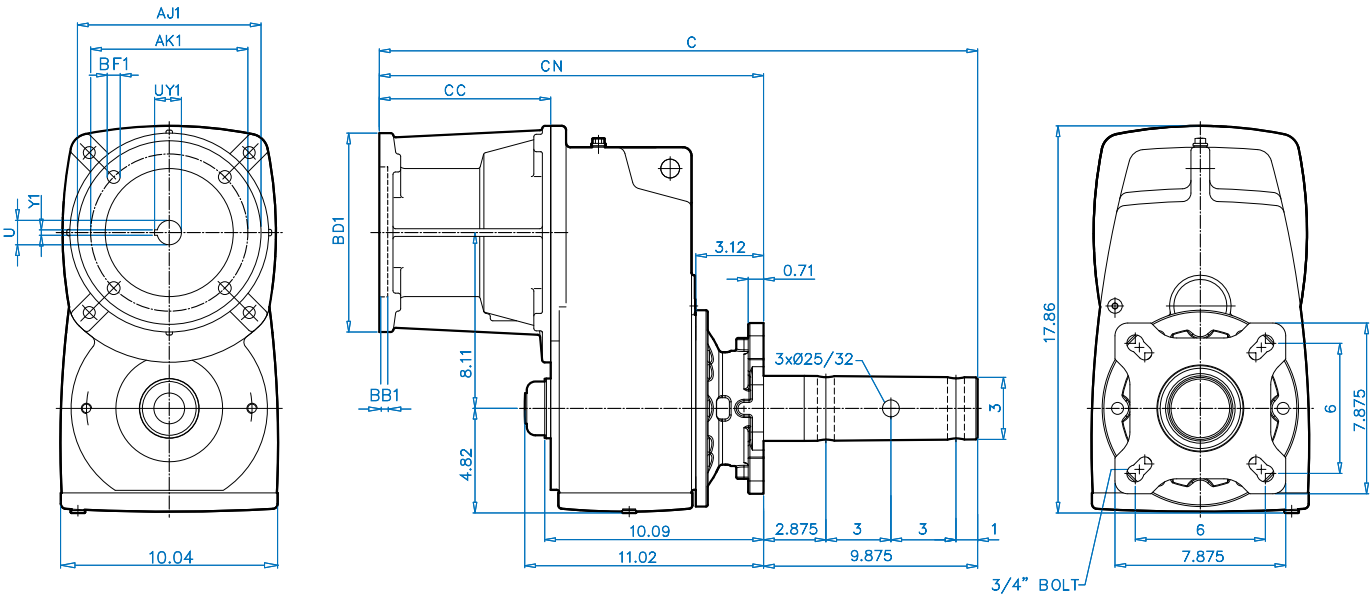


DIMENSIONS

| NEMA C-Face Input | Overall C | Overall CN | NEMA Input CC | AJ1 | AK1 | BB1 | BD1 | BF1 | Coupling U1 | UY1 | Y1 |
|---|---|---|---|---|---|---|---|---|---|---|---|
| **56C** | 24.30 | 14.43 | 4.33 | 5.875 | 4.50 | 0.20 | 6.54 | 0.43 | 0.625 | 0.71 | 0.188 |
| **140TC** | 24.30 | 14.43 | 4.33 | 5.875 | 4.50 | 0.20 | 6.54 | 0.43 | 0.875 | 0.96 | 0.188 |
| **180TC** | 28.04 | 18.17 | 8.07 | 7.250 | 8.50 | 0.23 | 9.17 | 0.59 | 1.125 | 1.24 | 0.250 |
| **210TC** | 28.04 | 18.17 | 8.07 | 7.250 | 8.50 | 0.23 | 9.17 | 0.59 | 1.375 | 1.52 | 0.312 |
| **250TC** | 27.88 | 18.01 | 7.91 | 7.250 | 8.50 | 0.23 | 9.17 | 0.59 | 1.625 | 1.80 | 0.375 |

# SK 5282 SCP + Motor
# 2” CEMA Drive Shaft

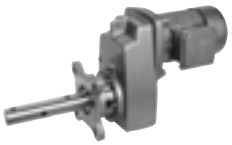

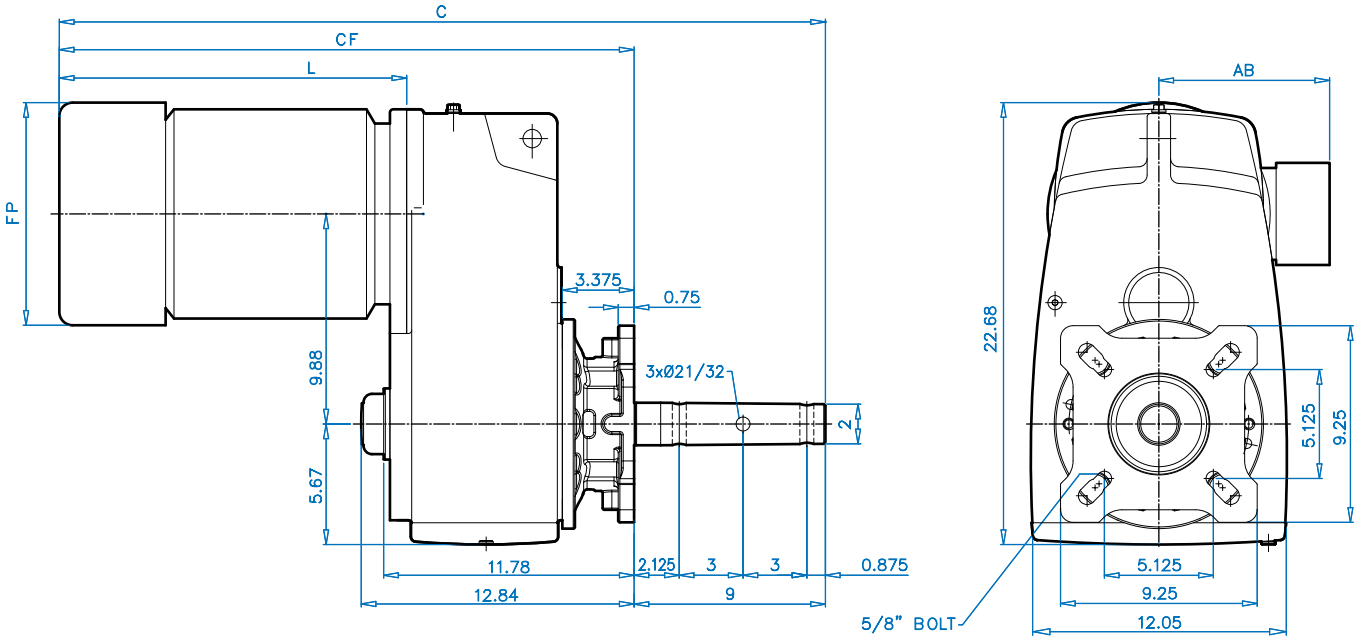


DIMENSIONS

| Motor Type | Overall | | Motor | | |
|---|---|---|---|---|---|
| | C | CF | L | FP | AB |
| 90S/SH/L/LH | 30.84 | 21.84 | 10.84 | 7.19 | 5.79 |
| 100L/LA/LH | 32.06 | 23.06 | 12.06 | 7.90 | 6.65 |
| 112M | 32.93 | 23.93 | 12.93 | 8.87 | 7.05 |
| 112MH | 33.92 | 24.92 | 13.93 | 8.87 | 7.05 |
| 132S/SH/M/MH | 36.35 | 27.35 | 16.35 | 10.45 | 8.03 |
| 160M/L | 39.41 | 30.41 | 19.41 | 12.56 | 9.53 |
| 180MX/LX | 39.41 | 30.41 | 19.41 | 12.56 | 9.53 |

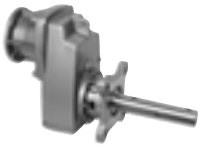

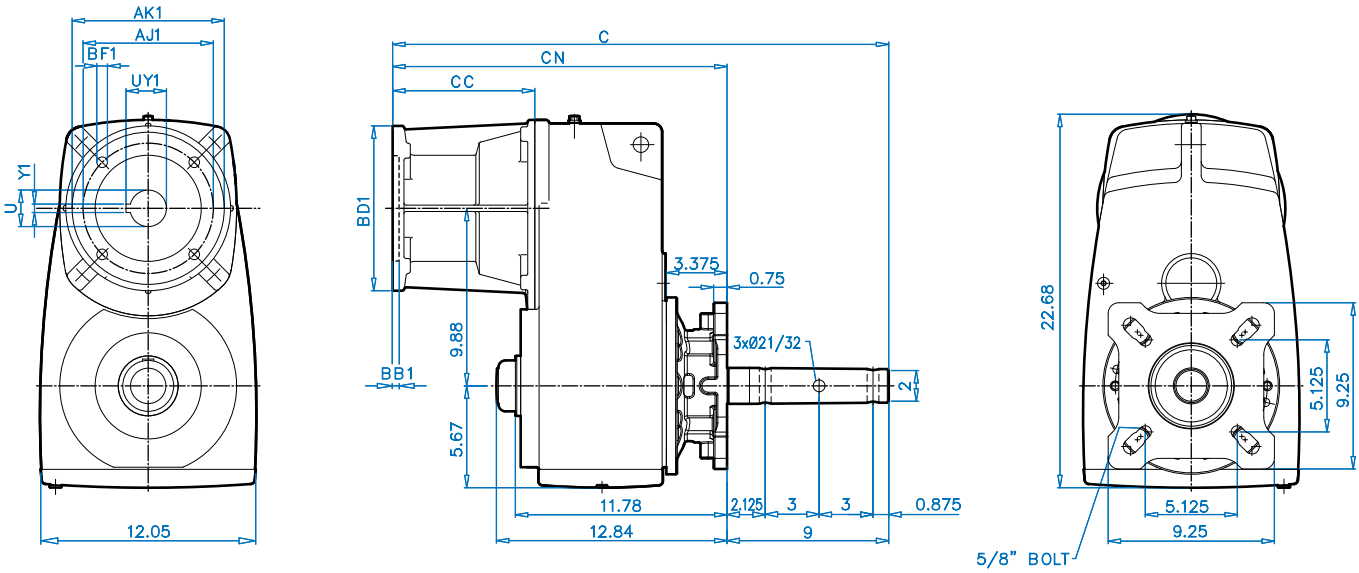




| NEMA | Overall | | NEMA Input | | | | | | Coupling | | |
|---|---|---|---|---|---|---|---|---|---|---|---|
| C-Face Input | C | CN | CC | AJ1 | AK1 | BB1 | BD1 | BF1 | U1 | UY1 | Y1 |
| 56C | 24.33 | 15.33 | 4.33 | 5.875 | 4.50 | 0.20 | 6.54 | 0.43 | 0.625 | 0.71 | 0.188 |
| 140TC | 24.33 | 15.33 | 4.33 | 5.875 | 4.50 | 0.20 | 6.54 | 0.43 | 0.875 | 0.96 | 0.188 |
| 180TC | 28.07 | 19.07 | 8.07 | 7.250 | 8.50 | 0.23 | 9.17 | 0.59 | 1.125 | 1.24 | 0.250 |
| 210TC | 28.07 | 19.07 | 8.07 | 7.250 | 8.50 | 0.23 | 9.17 | 0.59 | 1.375 | 1.52 | 0.312 |
| 250TC | 27.91 | 18.91 | 7.91 | 7.250 | 8.50 | 0.23 | 9.17 | 0.59 | 1.625 | 1.80 | 0.375 |
| 280TC | 28.54 | 19.54 | 8.54 | 9.000 | 10.50 | 0.23 | 13.78 | 0.55 | 1.875 | 2.10 | 0.500 |

# SK 5282 SCP + Motor
# 2-7/16" CEMA Drive Shaft

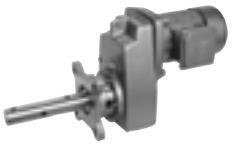



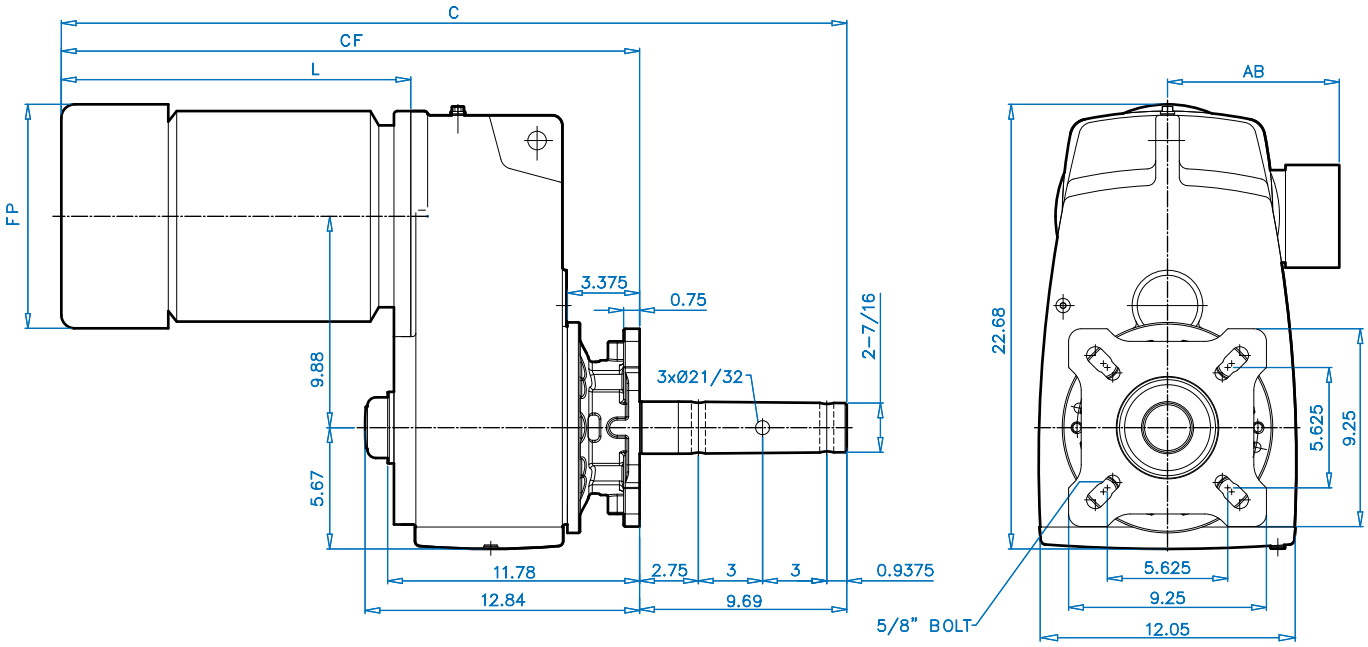


| Motor Type | Overall | | Motor | | |
|---|---|---|---|---|---|
| | C | CF | L | FP | AB |
| **90S/SH/L/LH** | 31.53 | 21.84 | 10.84 | 7.19 | 5.79 |
| **100L/LA/LH** | 32.75 | 23.06 | 12.06 | 7.90 | 6.65 |
| **112M** | 33.62 | 23.93 | 12.93 | 8.87 | 7.05 |
| **112MH** | 34.61 | 24.92 | 13.93 | 8.87 | 7.05 |
| **132S/SH/M/MH** | 37.04 | 27.35 | 16.35 | 10.45 | 8.03 |
| **160M/L** | 40.09 | 30.41 | 19.41 | 12.56 | 9.53 |
| **180MX/LX** | 40.09 | 30.41 | 19.41 | 12.56 | 9.53 |

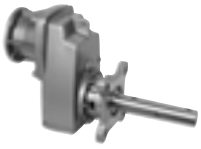

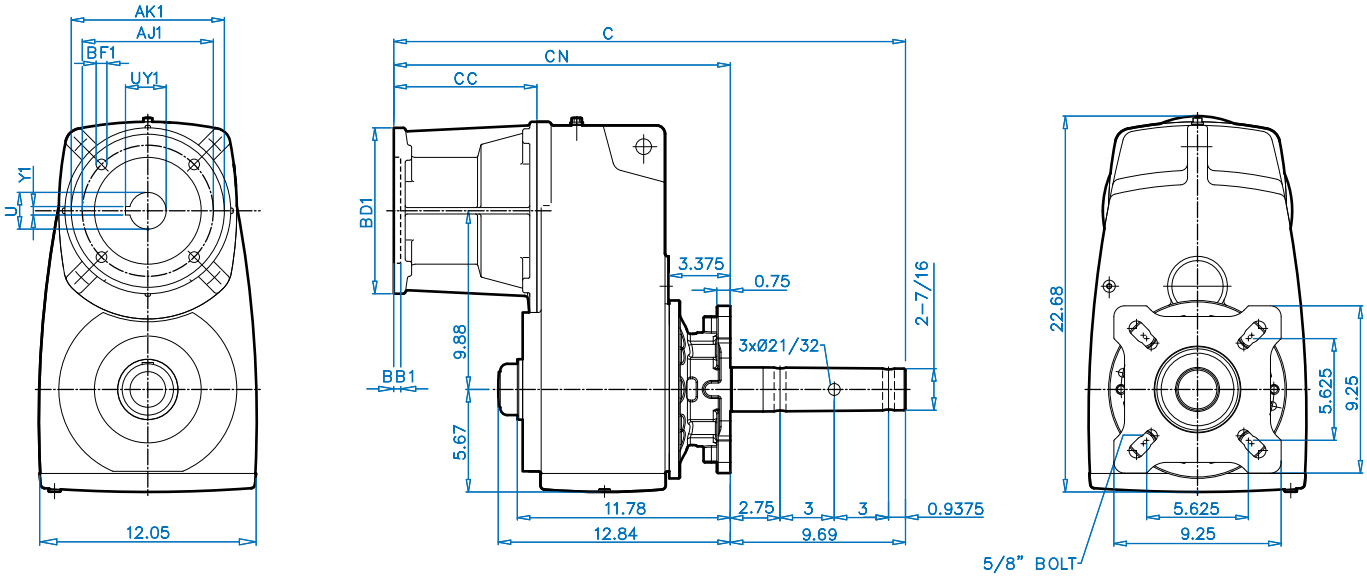


DIMENSIONS

| NEMA | Overall | | NEMA Input | | | | | | Coupling | | |
|---|---|---|---|---|---|---|---|---|---|---|---|
| C-Face Input | C | CN | CC | AJ1 | AK1 | BB1 | BD1 | BF1 | U1 | UY1 | Y1 |
| **56C** | 25.02 | 15.33 | 4.33 | 5.875 | 4.50 | 0.20 | 6.54 | 0.43 | 0.625 | 0.71 | 0.188 |
| **140TC** | 25.02 | 15.33 | 4.33 | 5.875 | 4.50 | 0.20 | 6.54 | 0.43 | 0.875 | 0.96 | 0.188 |
| **180TC** | 28.76 | 19.07 | 8.07 | 7.250 | 8.50 | 0.23 | 9.17 | 0.59 | 1.125 | 1.24 | 0.250 |
| **210TC** | 28.76 | 19.07 | 8.07 | 7.250 | 8.50 | 0.23 | 9.17 | 0.59 | 1.375 | 1.52 | 0.312 |
| **250TC** | 28.60 | 18.91 | 7.91 | 7.250 | 8.50 | 0.23 | 9.17 | 0.59 | 1.625 | 1.80 | 0.375 |
| **280TC** | 29.23 | 19.54 | 8.54 | 9.000 | 10.50 | 0.23 | 13.78 | 0.55 | 1.875 | 2.10 | 0.500 |

# SK 5282 SCP + Motor
# 3” CEMA Drive Shaft

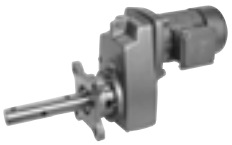

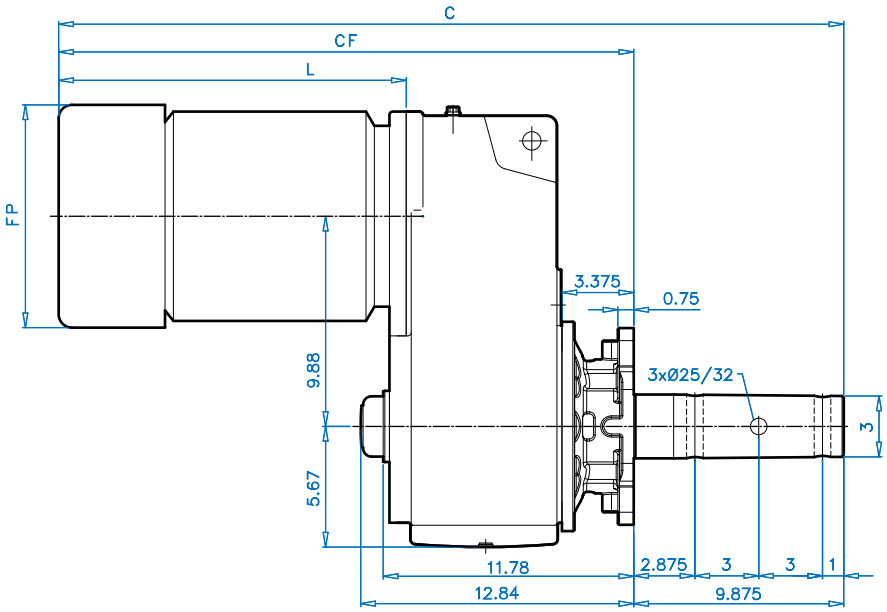


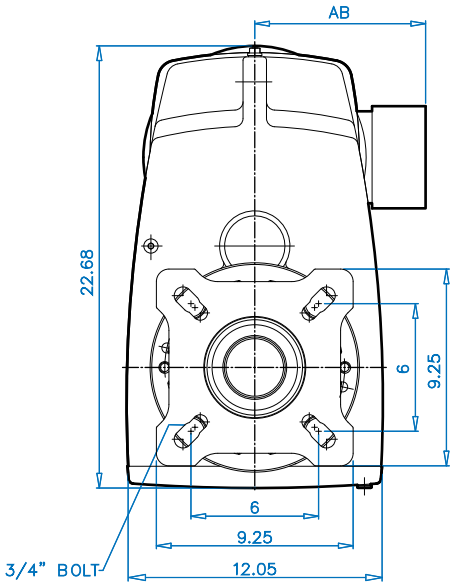


DIMENSIONS

| Motor Type | Overall | | Motor | | |
|---|---|---|---|---|---|
| | C | CF | L | FP | AB |
| 90S/SH/L/LH | 31.71 | 21.84 | 10.84 | 7.19 | 5.79 |
| 100L/LA/LH | 32.94 | 23.06 | 12.06 | 7.90 | 6.65 |
| 112M | 33.81 | 23.93 | 12.93 | 8.87 | 7.05 |
| 112MH | 34.80 | 24.92 | 13.93 | 8.87 | 7.05 |
| 132S/SH/M/MH | 37.23 | 27.35 | 16.35 | 10.45 | 8.03 |
| 160M/L | 40.28 | 30.41 | 19.41 | 12.56 | 9.53 |
| 180MX/LX | 40.28 | 30.41 | 19.41 | 12.56 | 9.53 |

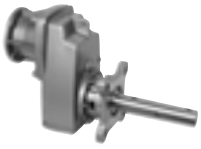

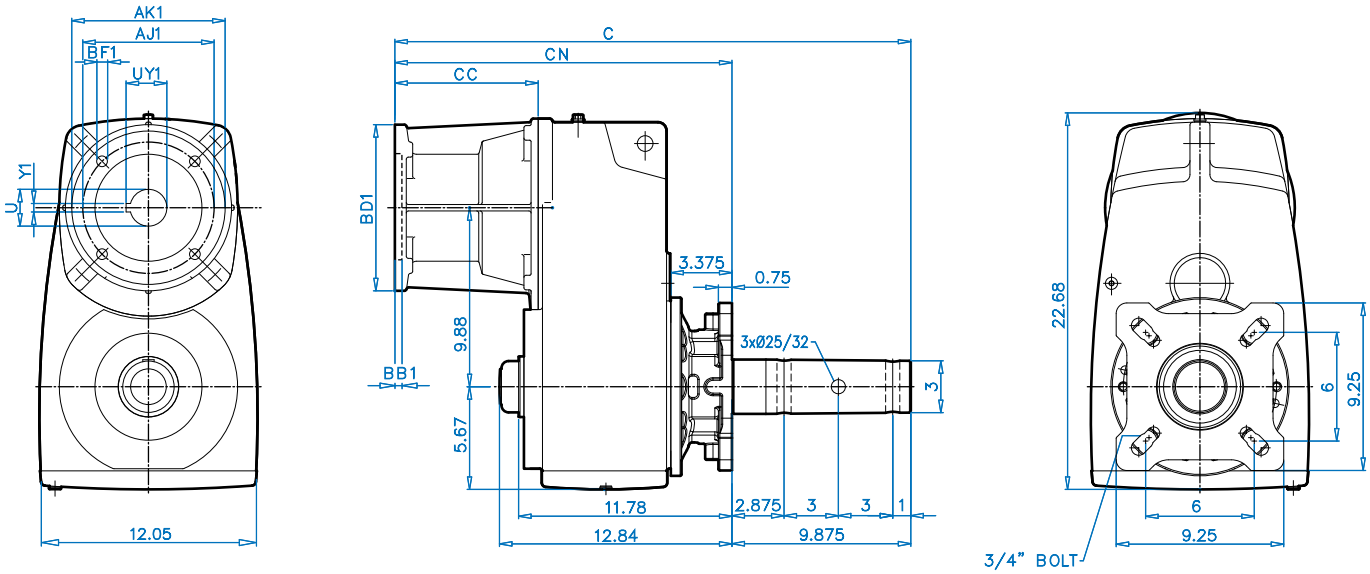




| NEMA | Overall | | NEMA Input | | | | | | Coupling | | |
|---|---|---|---|---|---|---|---|---|---|---|---|
| C-Face Input | C | CN | CC | AJ1 | AK1 | BB1 | BD1 | BF1 | U1 | UY1 | Y1 |
| **56C** | 25.20 | 15.33 | 4.33 | 5.875 | 4.50 | 0.20 | 6.54 | 0.43 | 0.625 | 0.71 | 0.188 |
| **140TC** | 25.20 | 15.33 | 4.33 | 5.875 | 4.50 | 0.20 | 6.54 | 0.43 | 0.875 | 0.96 | 0.188 |
| **180TC** | 28.94 | 19.07 | 8.07 | 7.250 | 8.50 | 0.23 | 9.17 | 0.59 | 1.125 | 1.24 | 0.250 |
| **210TC** | 28.94 | 19.07 | 8.07 | 7.250 | 8.50 | 0.23 | 9.17 | 0.59 | 1.375 | 1.52 | 0.312 |
| **250TC** | 28.79 | 18.91 | 7.91 | 7.250 | 8.50 | 0.23 | 9.17 | 0.59 | 1.625 | 1.80 | 0.375 |
| **280TC** | 29.42 | 19.54 | 8.54 | 9.000 | 10.50 | 0.23 | 13.78 | 0.55 | 1.875 | 2.10 | 0.500 |

# SK 5282 SCP + Motor
# 3-7/16"CEMA Drive Shaft

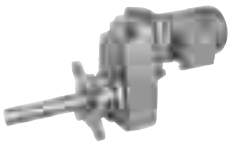



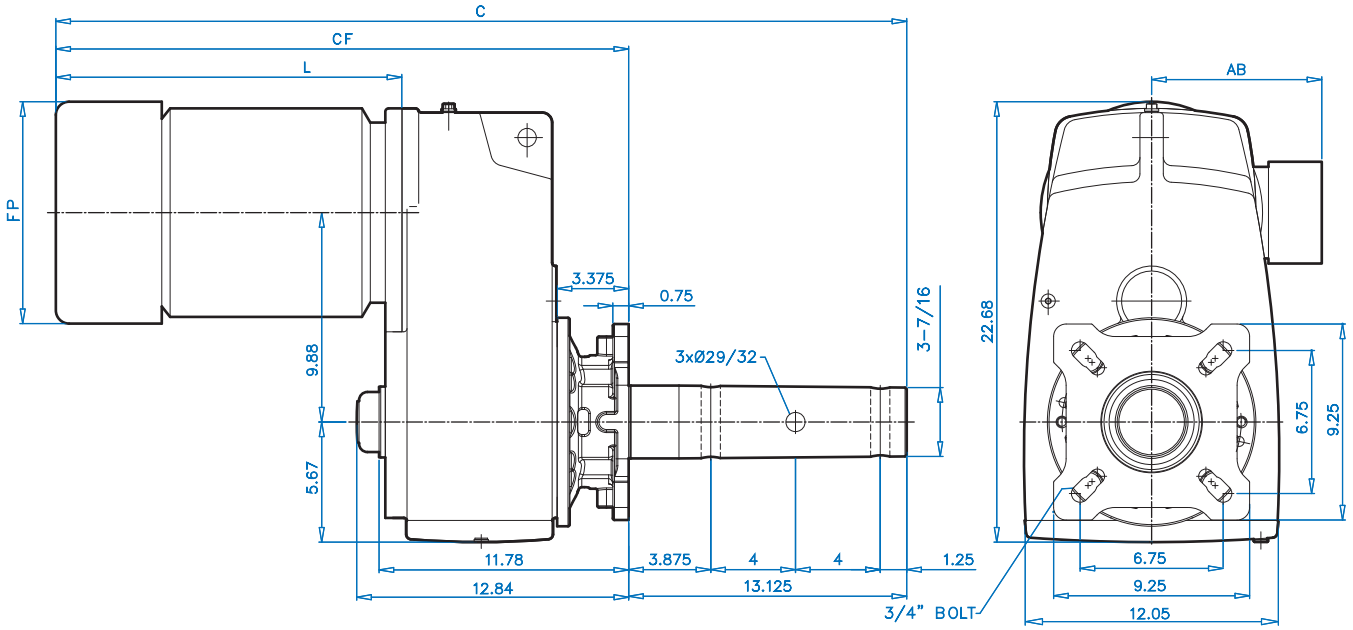


| Motor Type | Overall | | Motor | | |
|---|---|---|---|---|---|
| | C | CF | L | FP | AB |
| 90S/SH/L/LH | 34.96 | 21.84 | 10.84 | 7.19 | 5.79 |
| 100L/LA/LH | 35.87 | 22.75 | 12.06 | 7.90 | 6.65 |
| 112M | 37.06 | 23.93 | 12.93 | 8.87 | 7.05 |
| 112MH | 38.05 | 24.92 | 13.93 | 8.87 | 7.05 |
| 132S/SH/M/MH | 40.48 | 27.35 | 16.35 | 10.45 | 8.03 |
| 160M/L | 43.53 | 30.41 | 19.41 | 12.56 | 9.53 |
| 180MX/LX | 43.53 | 30.41 | 19.41 | 12.56 | 9.53 |

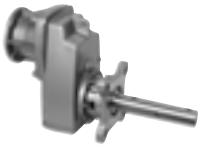

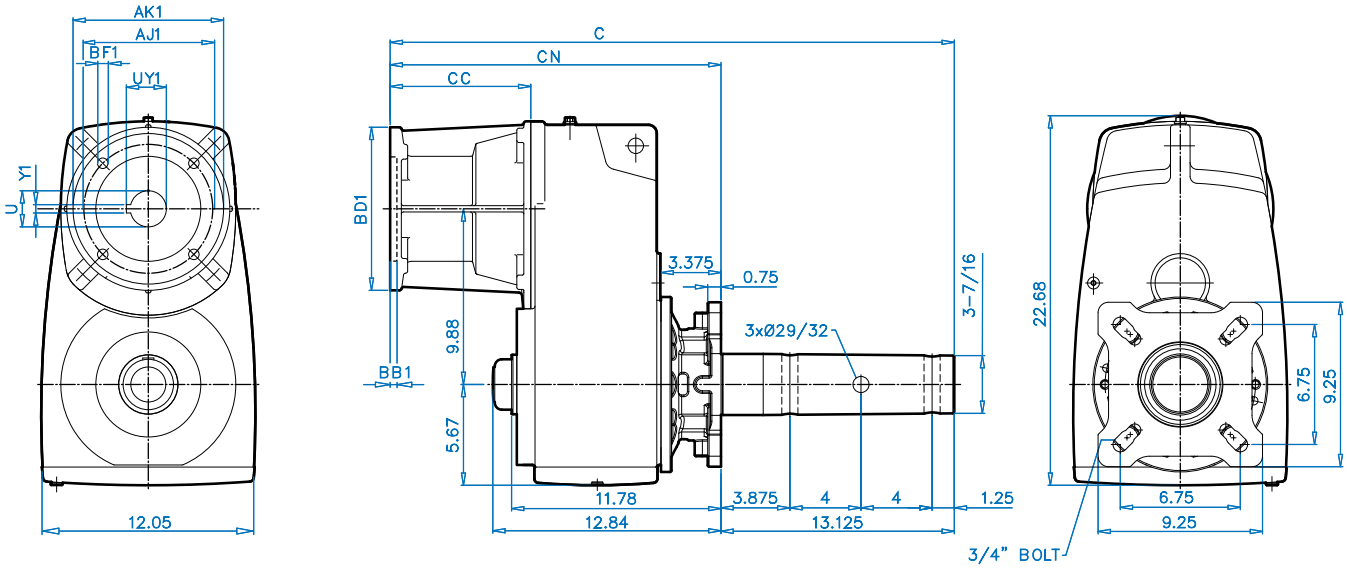


DIMENSIONS

| NEMA | Overall | | | NEMA Input | | | | | Coupling | | |
|---|---|---|---|---|---|---|---|---|---|---|---|
| C-Face Input | C | CN | CC | AJ1 | AK1 | BB1 | BD1 | BF1 | U1 | UY1 | Y1 |
| **56C** | 28.45 | 15.33 | 4.33 | 5.875 | 4.50 | 0.20 | 6.54 | 0.43 | 0.625 | 0.71 | 0.188 |
| **140TC** | 28.45 | 15.33 | 4.33 | 5.875 | 4.50 | 0.20 | 6.54 | 0.43 | 0.875 | 0.96 | 0.188 |
| **180TC** | 32.19 | 19.07 | 8.07 | 7.250 | 8.50 | 0.23 | 9.17 | 0.59 | 1.125 | 1.24 | 0.250 |
| **210TC** | 32.19 | 19.07 | 8.07 | 7.250 | 8.50 | 0.23 | 9.17 | 0.59 | 1.375 | 1.52 | 0.312 |
| **250TC** | 32.04 | 18.91 | 7.91 | 7.250 | 8.50 | 0.23 | 9.17 | 0.59 | 1.625 | 1.80 | 0.375 |
| **280TC** | 32.67 | 19.54 | 8.54 | 9.000 | 10.50 | 0.23 | 13.78 | 0.55 | 1.875 | 2.10 | 0.500 |

# SK 6282 SCP + Motor
# 3” CEMA Drive Shaft

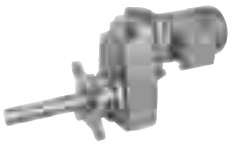

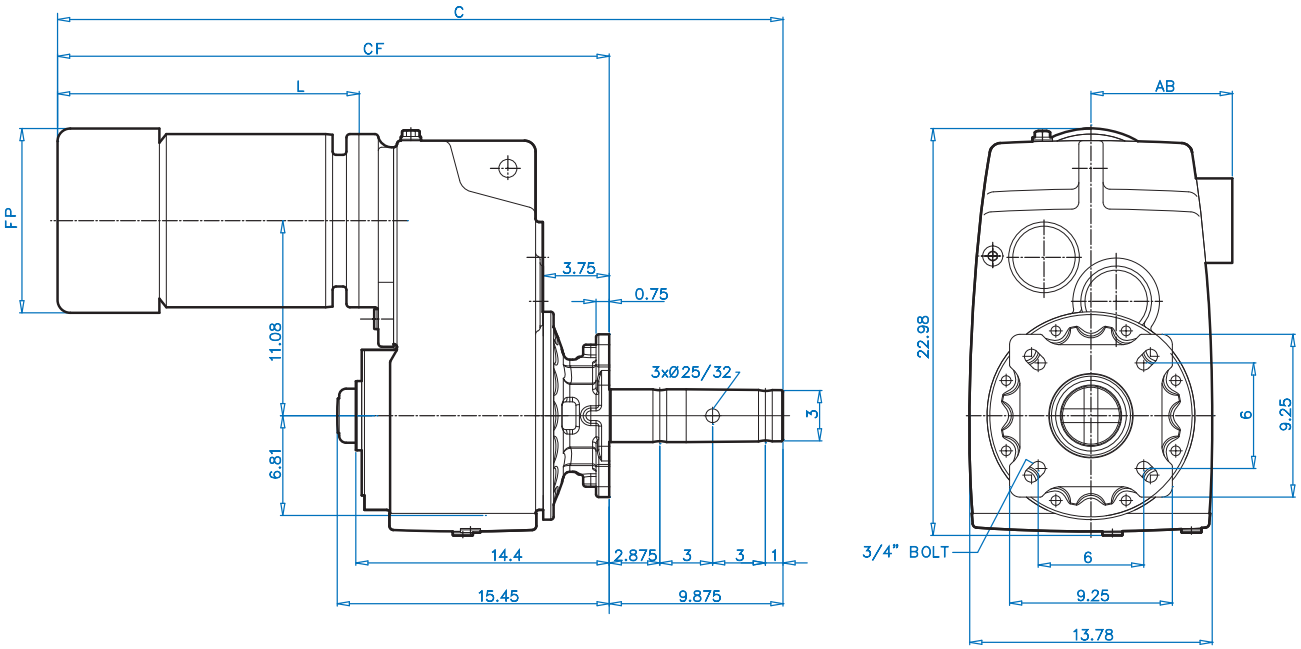


DIMENSIONS

| Motor Type | Overall | | Motor | | |
|---|---|---|---|---|---|
| | C | CF | L | FP | AB |
| 100L/LA/LH | 36.50 | 26.62 | 12.06 | 7.90 | 6.65 |
| 112M | 37.25 | 27.38 | 12.81 | 8.87 | 7.05 |
| 112MH | 38.24 | 28.37 | 13.81 | 8.87 | 7.05 |
| 132S/SH/M/MH | 41.58 | 31.70 | 17.14 | 10.45 | 8.03 |
| 160M/L | 43.84 | 33.97 | 19.41 | 12.56 | 9.53 |
| 180MX/LX | 43.84 | 33.97 | 19.41 | 12.56 | 9.53 |
| 200L | 51.52 | 41.65 | 27.09 | 15.83 | 12.01 |
| 225S/M | 51.52 | 41.65 | 27.09 | 15.83 | 12.01 |

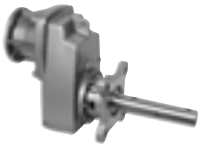

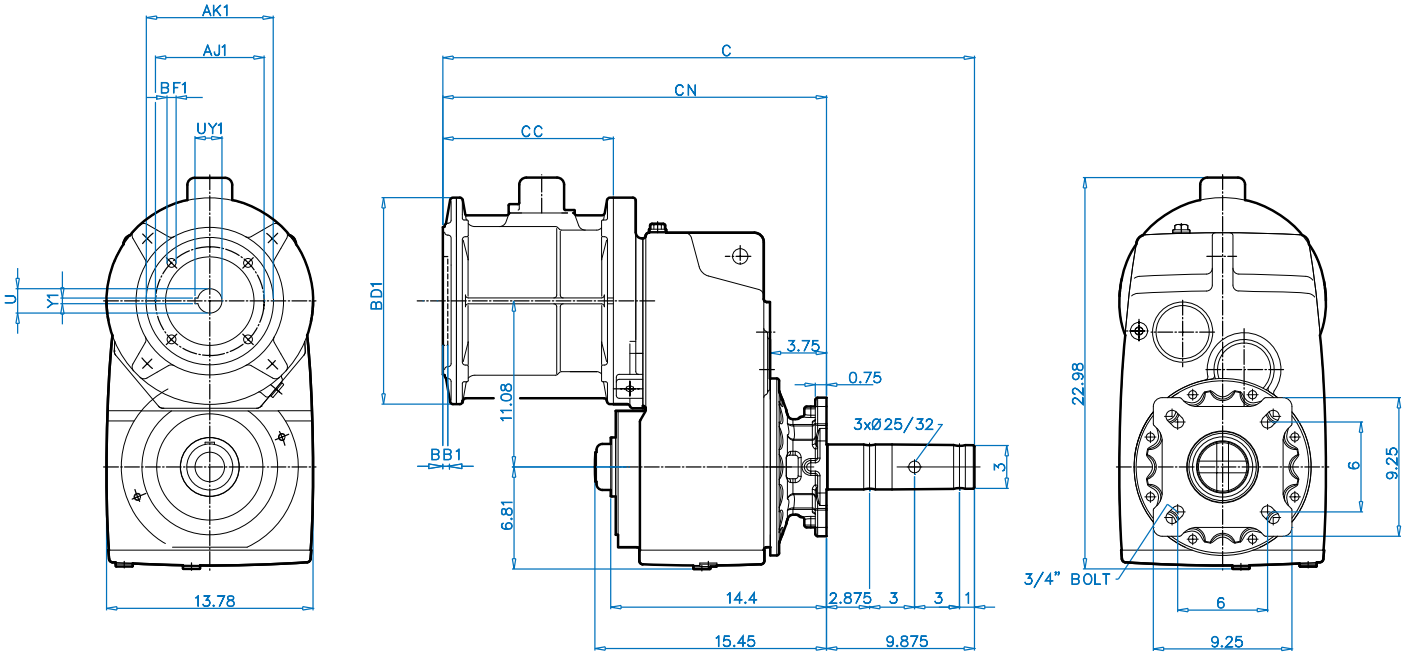


DIMENSIONS

| NEMA | Overall | | NEMA Input | | | | | | Coupling | | |
|---|---|---|---|---|---|---|---|---|---|---|---|
| C-Face Input | C | CN | CC | AJ1 | AK1 | BB1 | BD1 | BF1 | U1 | UY1 | Y1 |
| 180TC | 31.95 | 22.08 | 7.52 | 7.250 | 8.50 | 0.23 | 9.17 | 0.59 | 1.125 | 1.24 | 0.250 |
| 210TC | 31.95 | 22.08 | 7.52 | 7.250 | 8.50 | 0.23 | 9.17 | 0.59 | 1.375 | 1.52 | 0.312 |
| 250TC | 35.81 | 25.94 | 11.38 | 7.250 | 8.50 | 0.23 | 9.17 | 0.59 | 1.625 | 1.80 | 0.375 |
| 280TC | 35.81 | 25.94 | 11.38 | 9.000 | 10.50 | 0.23 | 13.78 | 0.55 | 1.875 | 2.10 | 0.500 |
| 320TC | 34.79 | 24.91 | 10.35 | 11.000 | 12.50 | 0.23 | 15.75 | 0.71 | 2.125 | 2.35 | 0.500 |
| 360 TC | 37.70 | 27.83 | 13.27 | 11.000 | 12.50 | 0.16 | 17.72 | 0.71 | 2.375 | 2.65 | 0.625 |

# SK 6282 SCP + Motor
# 3-7/16" CEMA Drive Shaft

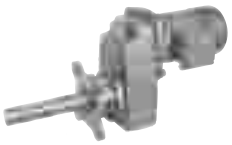



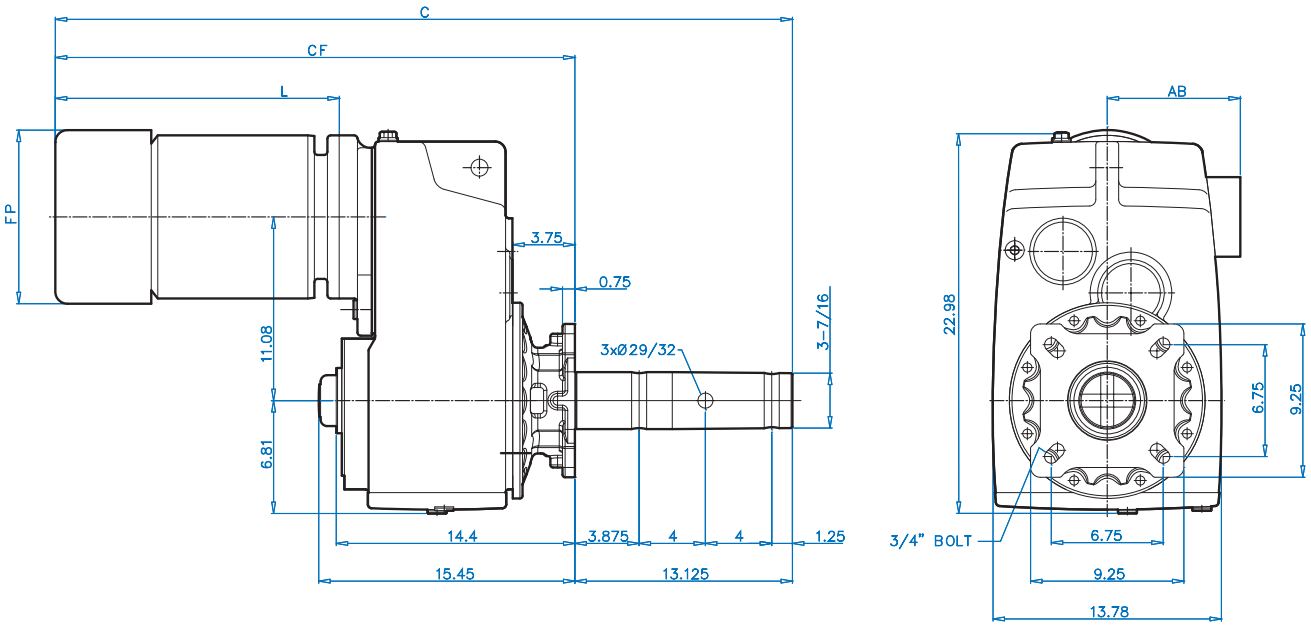


| Motor Type | Overall | | Motor | | |
|---|---|---|---|---|---|
| | C | CF | L | FP | AB |
| **100L/LA/LH** | 39.75 | 26.62 | 12.06 | 7.90 | 6.65 |
| **112M** | 40.50 | 27.38 | 12.81 | 8.87 | 7.05 |
| **112MH** | 41.49 | 28.37 | 13.81 | 8.87 | 7.05 |
| **132S/SH/M/MH** | 49.04 | 31.70 | 17.14 | 10.45 | 8.03 |
| **160M/L** | 47.09 | 33.97 | 19.41 | 12.56 | 9.53 |
| **180MX/LX** | 47.09 | 33.97 | 19.41 | 12.56 | 9.53 |
| **200L** | 54.77 | 41.65 | 27.09 | 15.83 | 12.01 |
| **225S/M** | 54.77 | 41.65 | 27.09 | 15.83 | 12.01 |

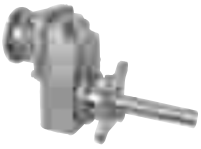

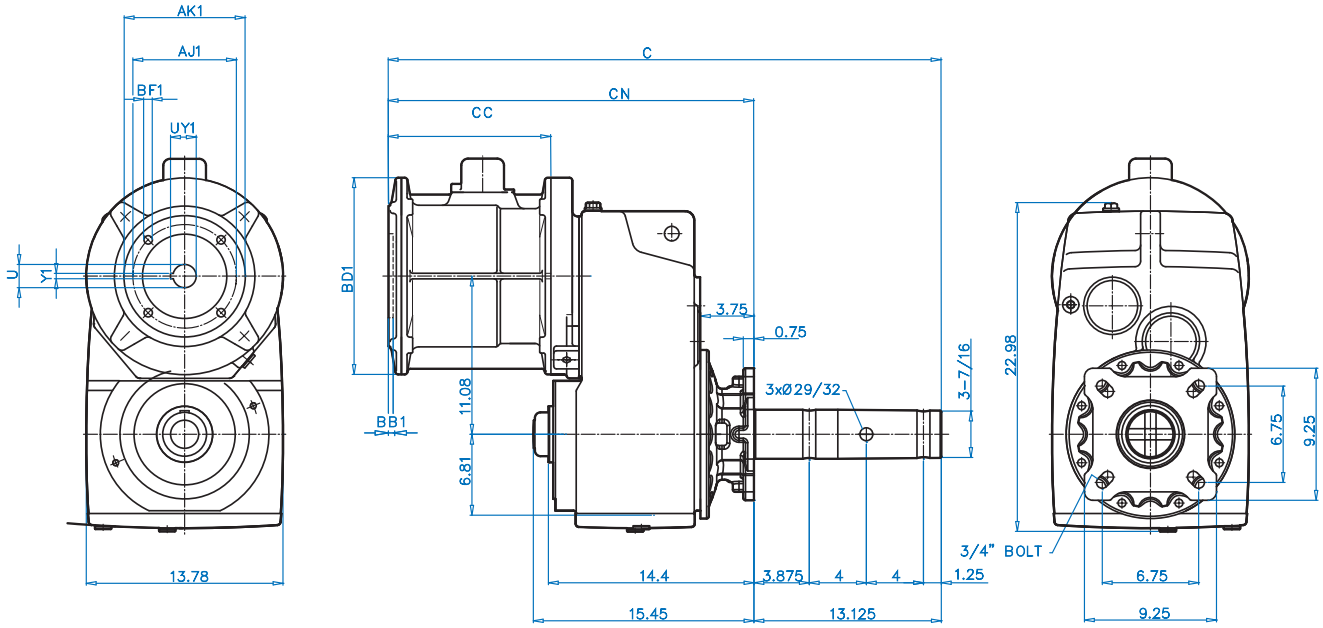


DIMENSIONS

| NEMA | Overall | | NEMA Input | | | | | | Coupling | | |
|---|---|---|---|---|---|---|---|---|---|---|---|
| C-Face Input | C | CN | CC | AJ1 | AK1 | BB1 | BD1 | BF1 | U1 | UY1 | Y1 |
| 180TC | 35.20 | 22.08 | 7.52 | 7.250 | 8.50 | 0.23 | 9.17 | 0.59 | 1.125 | 1.24 | 0.250 |
| 210TC | 35.20 | 22.08 | 7.52 | 7.250 | 8.50 | 0.23 | 9.17 | 0.59 | 1.375 | 1.52 | 0.312 |
| 250TC | 39.06 | 25.94 | 11.38 | 7.250 | 8.50 | 0.23 | 9.17 | 0.59 | 1.625 | 1.80 | 0.375 |
| 280TC | 38.95 | 25.82 | 11.26 | 9.000 | 10.50 | 0.23 | 13.78 | 0.55 | 1.875 | 2.10 | 0.500 |
| 320TC | 38.04 | 24.91 | 10.35 | 11.000 | 12.50 | 0.23 | 15.75 | 0.71 | 2.125 | 2.35 | 0.500 |
| 360 TC | 40.95 | 27.83 | 13.27 | 11.000 | 12.50 | 0.16 | 17.72 | 0.71 | 2.375 | 2.65 | 0.625 |

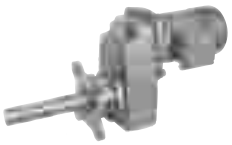

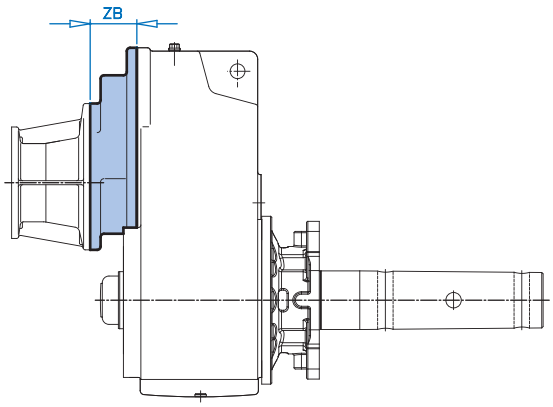


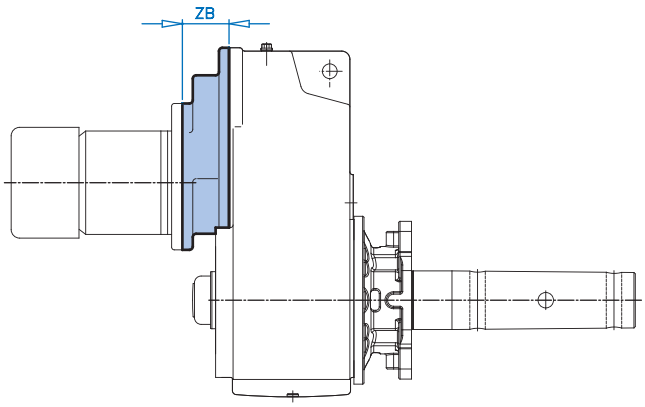




| Model Type | ZB |
|---|---|
| SK 1382 SCP | 2.28 |
| SK 2382 SCP | 2.36 |
| SK 3382 SCP | 2.36 |
| SK 4382 SCP | 2.72 |
| SK 5382 SCP | 2.72 |
| SK 6382 SCP | 0.00 |

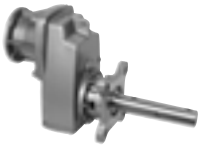

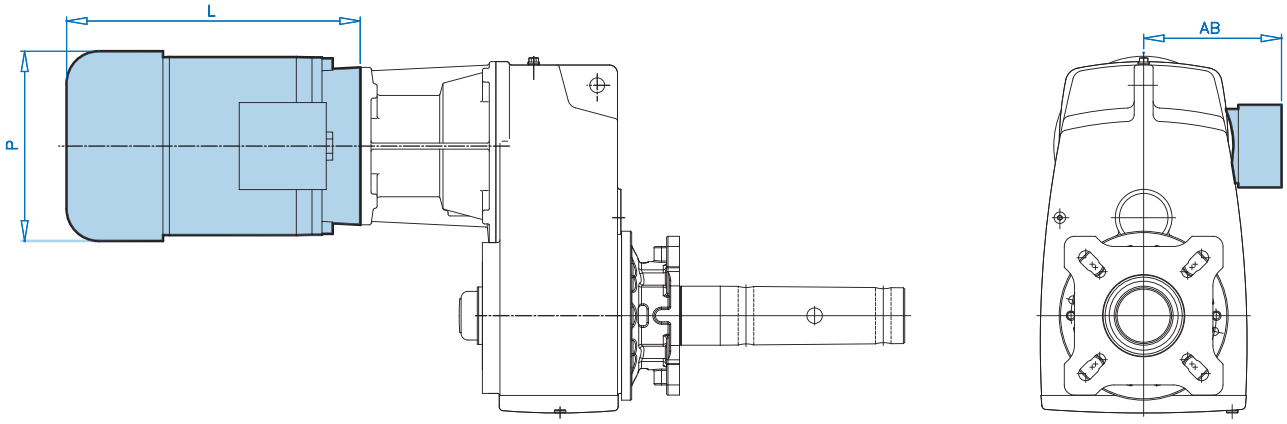




| Motor Type | AB | P | L |
|---|---|---|---|
| 63S-56C | 4.53 | 5.12 | 7.56 |
| 63L-56C | 4.53 | 5.12 | 7.56 |
| 71S-56C | 4.88 | 5.71 | 7.64 |
| 71L-56C | 4.88 | 5.71 | 7.64 |
| 80S-56C | 5.59 | 6.50 | 9.45 |
| 80L-143TC | 5.59 | 6.50 | 9.45 |
| 90S-145TC | 5.79 | 7.20 | 10.04 |
| 90L-145TC | 5.79 | 7.20 | 11.02 |
| 100L-182TC | 6.65 | 7.91 | 12.20 |
| 100L-184TC | 6.65 | 7.91 | 12.20 |
| 112M-184TC | 7.05 | 8.98 | 12.83 |
| 132S-213TC | 8.03 | 10.47 | 14.96 |
| 132M-215TC | 8.03 | 10.47 | 16.46 |

# SK SCP + Motor
# CEMA Drive Shaft

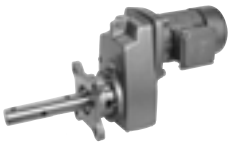



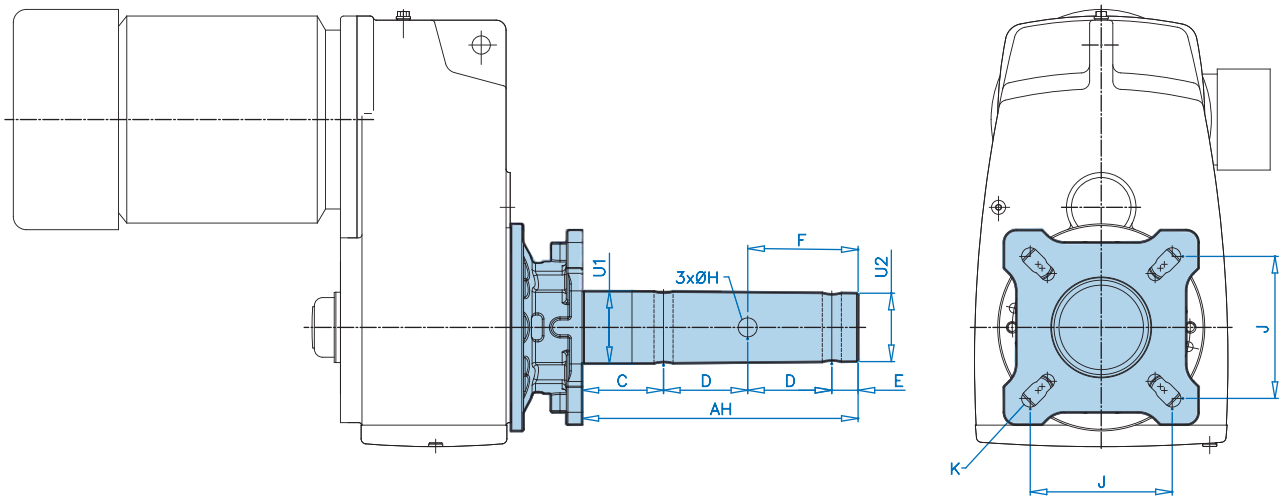


| Shaft Size | Shaft | | | | | | | | Flange | |
|---|---|---|---|---|---|---|---|---|---|---|
| | U1 | U2 | AH | C | D | E | F | H | J | K |
| **1-1/2** | 1.5 | 1.41 | 9.00 | 2.125 | 3.0 | 0.875 | 5 3/8 | 17/32 | 4 | 9/16 |
| **2** | 2.0 | 1.91 | 9.00 | 2.125 | 3.0 | 0.875 | 5 3/8 | 21/32 | 5-1/8 | 11/16 |
| **2-7/16** | 2.4375 | 2.34 | 9.6875 | 2.75 | 3.0 | 0.9375 | 5 7/16 | 21/32 | 5-5/8 | 11/16 |
| **3** | 3.0 | 2.91 | 9.875 | 2.875 | 3.0 | 1.00 | 5 1/2 | 25/32 | 6 | 13/16 |
| **3-7/16** | 3.4375 | 3.31 | 13.125 | 3.875 | 4.0 | 1.25 | 7 1/4 | 29/32 | 6-3/4 | 13/16 |

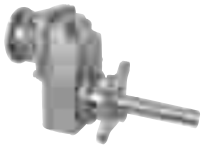

# CLINCHER™ SCP + NEMA CEMA Drive Shaft

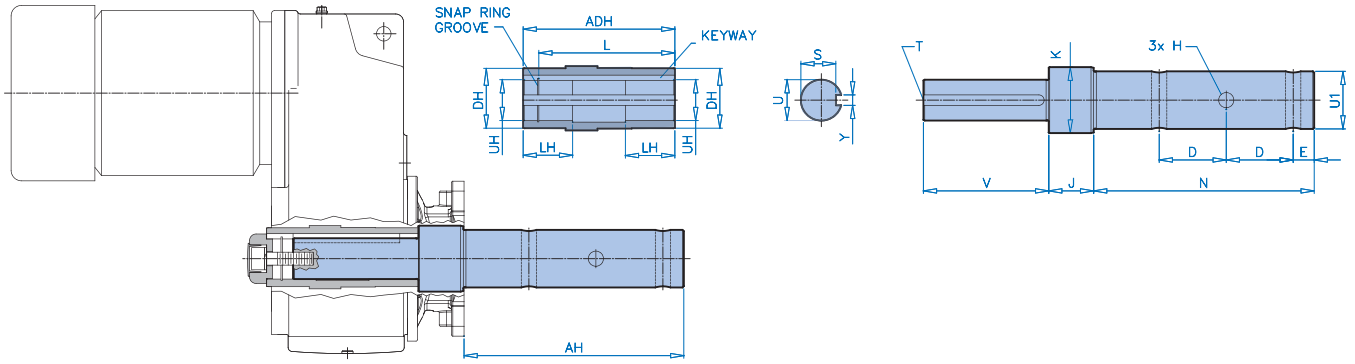




| Gear Unit Size | Hollow Shaft | | | | |
|---|---|---|---|---|---|
| | UH | ADH | L | LH | DH |
| SK 1282 SCP | 1-3/16 + 0.0008 | 4.80 | 3.85 | 1.57 | 1.77 |
| SK 2282 SCP | 1-7/16 + 0.0010 | 5.47 | 4.80 | 1.97 | 1.97 |
| SK 3282 SCP | 1-5/8 + 0.0010 | 6.85 | 6.14 | 2.28 | 2.17 |
| SK 4282 SCP | 2-1/16 + 0.0010 | 7.68 | 6.42 | 2.56 | 2.76 |
| SK 5282 SCP | 2-7/16 + 0.0012 | 9.06 | 7.58 | 2.95 | 3.35 |
| SK 6282 SCP | 2-3/4 + 0.0012 | 11.41 | 9.92 | 3.54 | 3.93 |

| | Shaft | | | | | | | | | | | | | | |
|---|---|---|---|---|---|---|---|---|---|---|---|---|---|---|---|
| | Shaft Size | U1 | AH | D | E | H | N | J | K | U | V | S | Y | T | Key |
| SK 1282 | 1-1/2 | 1-1/2 | 9 | 3 | 7/8 | 17/32 | 9.04 | 2.04 | 2.165 | 1.18752-0.0006 | 3.74 | 1.049 | 0.25 | 7/16-14 x 1 | 1/4 x 1/4 |
| | 2 | 2 | 9 | 3 | 7/8 | 21/32 | 9.04 | 2.41 | 2.559 | 1.18752-0.0006 | 3.74 | 1.049 | 0.25 | 7/16-14 x 1 | 1/4 x 1/4 |
| | 2-7/16 | 2-7/16 | 9-11/16 | 3 | 15/16 | 21/32 | 9.73 | 2.41 | 2.559 | 1.18752-0.0006 | 3.74 | 1.049 | 0.25 | 7/16-14 x 1 | 1/4 x 1/4 |
| SK 2282 | 1-1/2 | 1-1/2 | 9 | 3 | 7/8 | 17/32 | 9.04 | 2.04 | 2.165 | 1.43752-0.0006 | 4.65 | 1.225 | 0.375 | 5/8-11 x 1.5 | 3/8 x 3/8 |
| | 2 | 2 | 9 | 3 | 7/8 | 21/32 | 9.04 | 2.04 | 2.559 | 1.43752-0.0006 | 4.65 | 1.225 | 0.375 | 5/8-11 x 1.5 | 3/8 x 3/8 |
| | 2-7/16 | 2-7/16 | 9-11/16 | 3 | 15/16 | 21/32 | 9.73 | 2.41 | 2.559 | 1.43752-0.0006 | 4.65 | 1.225 | 0.375 | 5/8-11 x 1.5 | 3/8 x 3/8 |
| SK 3282 | 1-1/2 | 1-1/2 | 9 | 3 | 7/8 | 17/32 | 9.04 | 2.20 | 2.165 | 1.625-0.0006 | 5.91 | 1.478 | 0.375 | 5/8-11 x 1.5 | 3/8 x 1/4 |
| | 2 | 2 | 9 | 3 | 7/8 | 21/32 | 9.04 | 2.57 | 3.150 | 1.625-0.0006 | 5.91 | 1.478 | 0.375 | 5/8-11 x 1.5 | 3/8 x 1/4 |
| | 2-7/16 | 2-7/16 | 9-11/16 | 3 | 15/16 | 21/32 | 9.73 | 2.57 | 3.150 | 1.625-0.0006 | 5.91 | 1.478 | 0.375 | 5/8-11 x 1.5 | 3/8 x 1/4 |
| | 3 | 3 | 9-7/8 | 3 | 1 | 25/32 | 9.91 | 2.57 | 3.150 | 1.625-0.0006 | 5.91 | 1.478 | 0.375 | 5/8-11 x 1.5 | 3/8 x 1/4 |
| SK 4282 | 2 | 2 | 9 | 3 | 7/8 | 21/32 | 9.04 | 2.37 | 3.150 | 2.06252-0.0007 | 6.42 | 1.844 | 0.5 | 5/8-11 x 1.5 | 1/2 x 3/8 |
| | 2-7/16 | 2-7/16 | 9-11/16 | 3 | 15/16 | 21/32 | 9.73 | 2.37 | 3.150 | 2.06252-0.0007 | 6.42 | 1.844 | 0.5 | 5/8-11 x 1.5 | 1/2 x 3/8 |
| | 3 | 3 | 9-7/8 | 3 | 1 | 25/32 | 9.91 | 2.37 | 3.150 | 2.06252-0.0007 | 6.42 | 1.844 | 0.5 | 5/8-11 x 1.5 | 1/2 x 3/8 |
| SK 5282 | 2 | 2 | 9 | 3 | 7/8 | 21/32 | 9.04 | 2.68 | 3.937 | 2.43752-0.0007 | 7.48 | 2.084 | 0.625 | 3/4-10 x 2 | 5/8 x 5/8 |
| | 2-7/16 | 2-7/16 | 9-11/16 | 3 | 15/16 | 21/32 | 9.73 | 2.68 | 3.937 | 2.43752-0.0007 | 7.48 | 2.084 | 0.625 | 3/4-10 x 2 | 5/8 x 5/8 |
| | 3 | 3 | 9-7/8 | 3 | 1 | 25/32 | 9.91 | 2.68 | 3.937 | 2.43752-0.0007 | 7.48 | 2.084 | 0.625 | 3/4-10 x 2 | 5/8 x 5/8 |
| | 3-7/16 | 3-7/16 | 13-1/8 | 4 | 1-1/4 | 29/32 | 13.16 | 2.68 | 3.937 | 2.43752-0.0007 | 7.48 | 2.084 | 0.625 | 3/4-10 x 2 | 5/8 x 5/8 |
| SK 6282 | 3 | 3 | 9-7/8 | 3 | 1 | 25/32 | 9.91 | 2.94 | 3.937 | 2.750 - 0.0007 | 10.55 | 2.402 | 0.625 | 3/4-10 x 2 | 5/8 x 5/8 |
| | 3-7/16 | 3-7/16 | 13-1/8 | 4 | 1-1/4 | 29/32 | 13.16 | 2.94 | 3.937 | 2.750 - 0.0007 | 10.55 | 2.402 | 0.625 | 3/4-10 x 2 | 5/8 x 5/8 |

# SK 9012.1 - SK9053.1
# SCP Dimensions

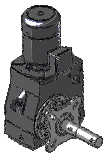

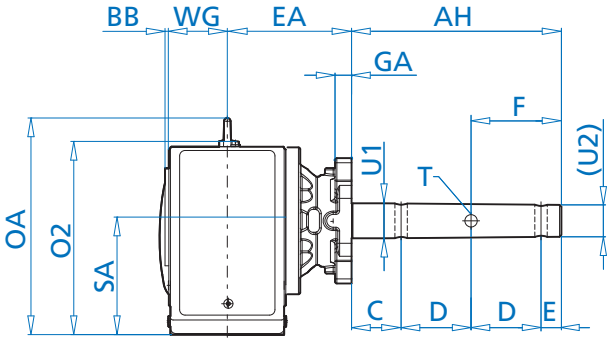


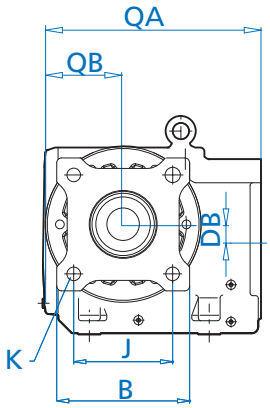


Standard Housing

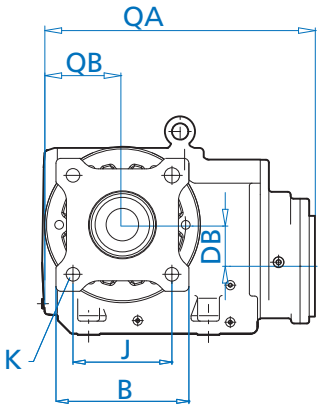


3rd Reduction Housing

## Bevel SCP Dimensions

| Unit | Shaft Dimensions | | | | | | | | Flange Dimensions | | | | Housing Dimensions | | | | | | | | |
|---|---|---|---|---|---|---|---|---|---|---|---|---|---|---|---|---|---|---|---|---|---|
| | U1 | U2 | AH | C | D | E | F | T | B | GA | J | K | BB | DB | EA | OA | O2 | SA | WG | QA | QB |
| SK 9012.1 | 1.500 | 1.41 | 9.00 | 2.125 | 3.00 | 0.875 | 3.875 | 3x17/32 | 5.375 | 0.71 | 4.000 | 0.5625 | 0.12 | 0.39 | 5.55 | 9.09 | 7.76 | 4.41 | 2.80 | 9.90 | 3.32 |
| | 2.000 | 1.91 | 9.00 | 2.125 | 3.00 | 0.875 | 3.875 | 3x21/32 | 7.375 | 0.75 | 5.125 | 0.6875 | 0.12 | 0.39 | 5.925 | 9.09 | 7.76 | 4.41 | 2.80 | 9.90 | 3.32 |
| | 2.4375 | 2.31 | 9.6875 | 2.750 | 3.00 | 0.9375 | 3.9375 | 3x21/32 | 7.375 | 0.75 | 5.625 | 0.6875 | 0.12 | 0.39 | 5.925 | 9.09 | 7.76 | 4.41 | 2.80 | 9.90 | 3.32 |
| SK 9013.1 | 1.500 | 1.41 | 9.00 | 2.125 | 3.00 | 0.875 | 3.875 | 3x17/32 | 5.375 | 0.71 | 4.000 | 0.5625 | 0.12 | 1.57 | 5.55 | 9.09 | 7.76 | 4.41 | 2.80 | 12.18 | 3.32 |
| | 2.000 | 1.91 | 9.00 | 2.125 | 3.00 | 0.875 | 3.875 | 3x21/32 | 7.375 | 0.75 | 5.125 | 0.6875 | 0.12 | 1.57 | 5.925 | 9.09 | 7.76 | 4.41 | 2.80 | 12.18 | 3.32 |
| | 2.4375 | 2.31 | 9.6875 | 2.750 | 3.00 | 0.9375 | 3.9375 | 3x21/32 | 7.375 | 0.75 | 5.625 | 0.6875 | 0.12 | 1.57 | 5.925 | 9.09 | 7.76 | 4.41 | 2.80 | 12.18 | 3.32 |
| SK 9022.1 | 1.500 | 1.41 | 9.00 | 2.125 | 3.00 | 0.875 | 3.875 | 3x17/32 | 5.375 | 0.71 | 4.000 | 0.5625 | 0.16 | 0.55 | 6.14 | 11.00 | 9.65 | 5.63 | 3.39 | 11.47 | 4.03 |
| | 2.000 | 1.91 | 9.00 | 2.125 | 3.00 | 0.875 | 3.875 | 3x21/32 | 7.375 | 0.75 | 5.125 | 0.6875 | 0.16 | 0.55 | 6.515 | 11.00 | 9.65 | 5.63 | 3.39 | 11.47 | 4.03 |
| | 2.4375 | 2.31 | 9.6875 | 2.750 | 3.00 | 0.9375 | 3.9375 | 3x21/32 | 7.375 | 0.75 | 5.625 | 0.6875 | 0.16 | 0.55 | 6.515 | 11.00 | 9.65 | 5.63 | 3.39 | 11.47 | 4.03 |
| SK 9023.1 | 1.500 | 1.41 | 9.00 | 2.125 | 3.00 | 0.875 | 3.875 | 3x17/32 | 5.375 | 0.71 | 4.000 | 0.5625 | 0.16 | 1.73 | 6.14 | 11.00 | 9.65 | 5.63 | 3.39 | 13.75 | 4.03 |
| | 2.000 | 1.91 | 9.00 | 2.125 | 3.00 | 0.875 | 3.875 | 3x21/32 | 7.375 | 0.75 | 5.125 | 0.6875 | 0.16 | 1.73 | 6.515 | 11.00 | 9.65 | 5.63 | 3.39 | 13.75 | 4.03 |
| | 2.4375 | 2.31 | 9.6875 | 2.750 | 3.00 | 0.9375 | 3.9375 | 3x21/32 | 7.375 | 0.75 | 5.625 | 0.6875 | 0.16 | 1.73 | 6.515 | 11.00 | 9.65 | 5.63 | 3.39 | 13.75 | 4.03 |
| SK 9032.1 | 1.500 | 1.41 | 9.00 | 2.125 | 3.00 | 0.875 | 3.875 | 3x17/32 | 5.375 | 0.71 | 4.000 | 0.5625 | 0.20 | 0.94 | 6.69 | 13.15 | 11.75 | 7.24 | 3.94 | 13.11 | 4.96 |
| | 2.000 | 1.91 | 9.00 | 2.125 | 3.00 | 0.875 | 3.875 | 3x21/32 | 7.875 | 0.71 | 5.125 | 0.6875 | 0.20 | 0.94 | 7.065 | 13.15 | 11.75 | 7.24 | 3.94 | 13.11 | 4.96 |
| | 2.4375 | 2.31 | 9.6875 | 2.750 | 3.00 | 0.9375 | 3.9375 | 3x21/32 | 7.875 | 0.71 | 5.625 | 0.6875 | 0.20 | 0.94 | 7.065 | 13.15 | 11.75 | 7.24 | 3.94 | 13.11 | 4.96 |
| | 3.000 | 2.91 | 9.875 | 2.875 | 3.00 | 1.000 | 4.000 | 3x25/32 | 7.875 | 0.71 | 6.000 | 0.8125 | 0.20 | 0.94 | 7.065 | 13.15 | 11.75 | 7.24 | 3.94 | 13.11 | 4.96 |
| SK 9033.1 | 1.500 | 1.41 | 9.00 | 2.125 | 3.00 | 0.875 | 3.875 | 3x17/32 | 5.375 | 0.71 | 4.000 | 0.5625 | 0.20 | 2.91 | 6.69 | 13.15 | 11.75 | 7.24 | 3.94 | 15.49 | 4.96 |
| | 2.000 | 1.91 | 9.00 | 2.125 | 3.00 | 0.875 | 3.875 | 3x21/32 | 7.875 | 0.71 | 5.125 | 0.6875 | 0.20 | 2.91 | 7.065 | 13.15 | 11.75 | 7.24 | 3.94 | 15.49 | 4.96 |
| | 2.4375 | 2.31 | 9.6875 | 2.750 | 3.00 | 0.9375 | 3.9375 | 3x21/32 | 7.875 | 0.71 | 5.625 | 0.6875 | 0.20 | 2.91 | 7.065 | 13.15 | 11.75 | 7.24 | 3.94 | 15.49 | 4.96 |
| | 3.000 | 2.91 | 9.875 | 2.875 | 3.00 | 1.000 | 4.000 | 3x25/32 | 7.875 | 0.71 | 6.000 | 0.8125 | 0.20 | 2.91 | 7.065 | 13.15 | 11.75 | 7.24 | 3.94 | 15.49 | 4.96 |
| SK 9042.1 | 2.000 | 1.91 | 9.00 | 2.125 | 3.00 | 0.875 | 3.875 | 3x21/32 | 9.250 | 0.75 | 5.125 | 0.6875 | 0.20 | 1.42 | 7.905 | 15.71 | 13.97 | 8.54 | 4.53 | 15.81 | 6.06 |
| | 2.4375 | 2.31 | 9.6875 | 2.750 | 3.00 | 0.9375 | 3.9375 | 3x21/32 | 9.250 | 0.75 | 5.625 | 0.6875 | 0.20 | 1.42 | 7.905 | 15.71 | 13.97 | 8.54 | 4.53 | 15.81 | 6.06 |
| | 3.000 | 2.91 | 9.875 | 2.875 | 3.00 | 1.000 | 4.000 | 3x25/32 | 9.250 | 0.75 | 6.000 | 0.8125 | 0.20 | 1.42 | 7.905 | 15.71 | 13.97 | 8.54 | 4.53 | 15.81 | 6.06 |
| | 3.4375 | 3.31 | 13.125 | 3.875 | 4.00 | 1.250 | 5.125 | 3x29/32 | 9.250 | 0.75 | 6.750 | 0.8125 | 0.20 | 1.42 | 7.905 | 15.71 | 13.97 | 8.54 | 4.53 | 15.81 | 6.06 |
| SK 9043.1 | 2.000 | 1.91 | 9.00 | 2.125 | 3.00 | 0.875 | 3.875 | 3x21/32 | 9.250 | 0.75 | 5.125 | 0.6875 | 0.20 | 3.82 | 7.905 | 15.71 | 13.97 | 8.54 | 4.53 | 18.55 | 6.06 |
| | 2.4375 | 2.31 | 9.6875 | 2.750 | 3.00 | 0.9375 | 3.9375 | 3x21/32 | 9.250 | 0.75 | 5.625 | 0.6875 | 0.20 | 3.82 | 7.905 | 15.71 | 13.97 | 8.54 | 4.53 | 18.55 | 6.06 |
| | 3.000 | 2.91 | 9.875 | 2.875 | 3.00 | 1.000 | 4.000 | 3x25/32 | 9.250 | 0.75 | 6.000 | 0.8125 | 0.20 | 3.82 | 7.905 | 15.71 | 13.97 | 8.54 | 4.53 | 18.55 | 6.06 |
| | 3.4375 | 3.31 | 13.125 | 3.875 | 4.00 | 1.250 | 5.125 | 3x29/32 | 9.250 | 0.75 | 6.750 | 0.8125 | 0.20 | 3.82 | 7.905 | 15.71 | 13.97 | 8.54 | 4.53 | 18.55 | 6.06 |
| SK 9052.1 | 3.000 | 2.91 | 9.875 | 2.875 | 3.00 | 1.000 | 4.000 | 3x25/32 | 9.250 | 0.75 | 6.000 | 0.8125 | 0.20 | 1.61 | 9.085 | 18.82 | 16.79 | 10.31 | 5.71 | 19.15 | 7.32 |
| | 3.4375 | 3.31 | 13.125 | 3.875 | 4.00 | 1.250 | 5.125 | 3x29/32 | 9.250 | 0.75 | 6.750 | 0.8125 | 0.20 | 1.61 | 9.085 | 18.82 | 16.79 | 10.31 | 5.71 | 19.15 | 7.32 |
| SK 9053.1 | 3.000 | 2.91 | 9.875 | 2.875 | 3.00 | 1.000 | 4.000 | 3x25/32 | 9.250 | 0.75 | 6.000 | 0.8125 | 0.20 | 4.61 | 9.085 | 18.82 | 16.79 | 10.31 | 5.71 | 21.89 | 7.32 |
| | 3.4375 | 3.31 | 13.125 | 3.875 | 4.00 | 1.250 | 5.125 | 3x29/32 | 9.250 | 0.75 | 6.750 | 0.8125 | 0.20 | 4.61 | 9.085 | 18.82 | 16.79 | 10.31 | 5.71 | 21.89 | 7.32 |

## Motors


- Order Form
- NEMA C-Face Motors
- Engineering Information
- Options
- Environmental Options
- AC Vector Drive Options
- SK 300E Trio AC Vector Drive
- Additional Options
- Ratings Tables
- Dimensions
- Connection Diagrams




NORD DRIVESYSTEMS

www.nord.com

INVERTER DUTY MOTOR



| Motor Type | Power Pn | | Nn Full-load | In Full-Load Current 230V[a] | In Full-Load Current 460V[a] |
|---|---|---|---|---|---|
| | [hp] | [kW] | [rpm] | [A] | [A] |
| 63S/4 | 0.16 | 0.12 | 1700 | 0.88 | 0.44 |
| 63L/4 | 0.25 | 0.18 | 1680 | 1.12 | 0.56 |
| 71S/4 | 0.33 | 0.25 | 1710 | 1.56 | 0.78 |
| 71L/4 | 0.5 | 0.37 | 1720 | 1.90 | 0.95 |
| 80S/4 | 0.75 | 0.55 | 1710 | 2.70 | 1.35 |
| 80L/4 | 1 | 0.75 | 1650 | 3.66 | 1.83 |
| 90S/4 | 1.5 | 1.1 | 1660 | 4.84 | 2.42 |
| 90L/4 | 2 | 1.5 | 1660 | 6.34 | 3.17 |
| 100L/4 | 3 | 2.2 | 1705 | 9.0 | 4.50 |
| 100LA/4 | 5 | 3.7 | 1725 | 15.2 | 7.62 |
| 132S/4 | 7.5 | 5.5 | 1735 | 19.8 | 9.9 |
| 132M/4 | 10 | 7.5 | 1735 | 25.8 | 12.9 |
| 160M/4 | 15 | 11 | 1770 | 38.4 | 19.2 |



# Motor Order Form



| | Frame | Size | Poles | Motor Options | Brake Size | Brake Options |
|---|---|---|---|---|---|---|
| **SK** | | | | | | |

| Frame | Size | Poles |
|---|---|---|
| 63 | S | 4 |
| 71 | SH | 2 |
| 80 | M | 6 |
| 90 | MH | 4-2 |
| 100 | MX | 8-2 |
| 112 | L | 8-4 |
| 132 | LA | 12-2 |
| | LH | Other |
| | LX | |

**Paint**

- ❍ Unpainted Aluminum Alloy
- ❍ Stainless Steel Paint
- ❍ NSD+ (gray)
- ❍ NSD+W (white)
- ❍ NSD-X3 (gray)
- ❍ NSD-X3W (white)
- ❍ Special _____

**Electrical Motor Options**

- ❒ **H** - Energy Efficient Motor
- ❒ **TW** - Thermostat
- ❒ **TF** - Thermistor
- ❒ **SH** - Space Heater (select voltage)
  - ❍ 110 Volt ❍ 230 Volt ❍ 460 Volt
- ❒ **ISO** H - Class H insulation
- ❒ **WU** - High Resistance Rotor
- ❒ **4-2** - 2-Speed, 4/2 Pole, 1800/3600rpm
- ❒ **8-2** - 2-Speed, 8/2 Pole, 900/3600rpm
- ❒ **ECR** - Single Phase Motor

**Environmental Options**

- ❒ **NSD+** - Nord Severe Duty Paint
- ❒ **NSDx3** - Nord Extreme Duty Paint
- ❒ **RD** - Canopy Drip Cover
- ❒ **RDD** - Double Fan Cover
- ❒ **KB** - Condensation Drain Holes (plugged)
- ❒ **KBO** - Condensation Drain Holes (open)
- ❒ **IP66** - IP66 Enclosure Protection
- ❒ **KKV** - Terminal Box Sealed with Resin
- ❒ **AICM** - Additional Insulation
- ❒ **EP** - Epoxy Dipped Windings

**AC Vector Drive Related Options**

- ❒ **F** - Blower Fan (200-575V 1 & 3 Phase)
- ❒ **FC** - Blower Cooling Fan (115V, 1 Phase)
- ❒ **IG__** - Incremental Encoder
- ❒ **IG__P** - Incremental Encoder with Plug
- ❒ **AG** - Absolute Encoder

**Additional Motor Options**

- ❒ **OL** - Totally Enclosed Non-Ventilated (TENV)
- ❒ **OL/H** - (TENV) Without Fan Cover
- ❒ **WE** - Second Shaft Extension (Fan Side)
- ❒ **HR** - Hand Wheel
- ❒ **Z** - High Inertia Cast Iron Fan
- ❒ **RLS** - Motor Backstop (rotation viewing fan)
  - ❍ Clockwise ❍ Counter-Clockwise
- ❒ **EKK** - Small Terminal Box (not UL approved)
- ❒ **MS** - Quick Power Plug Connector

| Brake Size |
|---|
| BRE 5 |
| BRE 10 |
| BRE 20 |
| BRE 40 |
| BRE 60 |
| BRE 100 |
| BRE 150 |

- ❒ **HL** - Hand Release Lever
- ❒ **FHL** - Locking Hand Release Lever
- ❒ **HLH** - Hand Release Lever with Hole
- ❒ **RG** - Corrosion Protected Brake
- ❒ **SR** - Dust and Corrosion Protected Brake
- ❒ **ADJ_____Nm** - Adjust Brake Torque
- ❒ **BIP66** - IP66 Brake Enclosure
- ❒ **MIK** - Micro-switch
- ❒ **BSH** - Brake Heating/Bifilar Coil
- ❒ **NRB1** - Quiet Brake Release
- ❒ **NRB2** - Quiet Brake Motor Operation
- ❒ **FBR** - Brass Foil
- ❒ **DBR** - Double Brake
- ❒ **G...P** - High Performance Rectifier
- ❒ **G...V** - Sealed Rectifier
- ❒ **IR** - Current Sensing Relay

**Rectifier Selection**

**Rectifier Wiring**

- ❍ Across the line (from motor terminal box)
- ❍ Separate power source (frequency AC vector drive, soft starter)

**Brake Supply Voltage**

- ❍ 24 VDC
- ❍ 115 VAC
- ❍ 200 VAC
- ❍ 230 VAC
- ❍ 400 VAC
- ❍ 460 VAC
- ❍ 500 VAC
- ❍ 575 VAC
- ❍ Other _____

**Braking Method**

- ❍ Method 10
- ❍ Method 15
- ❍ Method 20
- ❍ Method 25
- ❍ Method 30
- ❍ Method 35
- ❍ Method 40
- ❍ Method 45
- ❍ Method 50
- ❍ Method 55

**Hand Release Position**

- ❍ HL1
- ❍ HL2
- ❍ HL3
- ❍ HL4

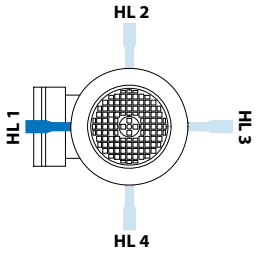


**Mounting**

- ❍ Integral to gearbox
- ❍ NEMA C-Face
- ❍ IEC B5 Mount

**Voltage & Frequency**

- ❍ 230/460V-60Hz
- ❍ 575V-60Hz
- ❍ 208V-60Hz
- ❍ 400V-50Hz
- ❍ 115/230V, 60Hz-1-ph.
- ❍ Other

**Terminal Box Pos.**

- ❍ TB1
- ❍ TB2
- ❍ TB3
- ❍ TB4

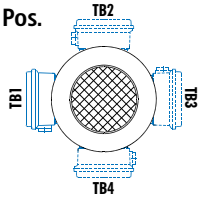


Mtg. Pos. M1 Shown

**Conduit Entry Loc.**

- ❍ CE I *
- ❍ CE II
- ❍ CE III *
- ❍ CE IV

*Brakemotor

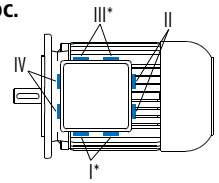


Mtg. Pos. M1 Shown

MOTORS



## Motor Options & Construction

NORD motors are stocked in one of two ways. The first method is to stock a complete motor that is ready to be assembled to a gear reducer or shipped as a stand alone motor. The second method, the motor is assembled from component parts. The Mod next to a motor option designates that the option can be added to a complete motor by simple modification. The Build next to a motor option indicates that the motor will need to be built from component parts in order to incorporate the motor option.

**Motor Options**

| Abbreviation | Description | Mod | Build | Page |
|---|---|---|---|---|
| **AG** | Absolute Encoder | | ✓ | 137 |
| **AICM** | Additional Insulation | | ✓ | 131 |
| **ECR** | Single Phase Motors, 60Hz | | ✓ | 130 |
| **EKK** | Small Terminal Box | ✓ | | 134 |
| **EP** | Epoxy Dipped Windings | | ✓ | 131 |
| **F** | Blower Cooling Fan | ✓ | | 135 |
| **FC** | Blower Cooling Fan | ✓ | | 135 |
| **HR** | Hand Wheel | | ✓ | 132 |
| **IG...P** | Incremental Encoder | | ✓ | 136 |
| **ISO H** | Class H Insulation | | ✓ | 130 |
| **KB** | Plugged Condensation Drain Holes | | ✓ | 131 |
| **KBO** | Open Condensation Drain Holes | | ✓ | 131 |
| **KKV** | Terminal Box Sealed with Resin | ✓ | | 131 |
| **MS** | Quick Power Plug Connector | ✓ | | 134 |
| **OL** | Totally Enclosed Non-Ventilated | ✓ | | 132 |
| **OL/H** | Totally Enclosed Non Ventilated without Fan Cover | | ✓ | 132 |
| **RD** | Canopy Drip Cover | ✓ | | 131 |
| **RDD** | Double Fan Cover | ✓ | | 131 |
| **RLS** | Motor Backstop | | ✓ | 133 |
| **SH** | Space Heater | | ✓ | 130 |
| **TF** | Thermistor | | ✓ | 129 |
| **TW** | Thermostat | | ✓ | 129 |
| **WE** | 2nd Shaft Extension on Fan Side | | ✓ | 132 |
| **WU** | High Resistance Rotor | | ✓ | 130 |
| **Z** | High Inertia Cast Iron Fan | | ✓ | 133 |
| **-** | IP65 Enclosure Protection | ✓ | | 131 |
| **-** | IP66 Enclosure Protection | ✓ | | 131 |
| **-** | Paint Coatings | ✓ | | 18 |

# Stocked NEMA C-Face Motors



## NEMA C-Face Motors

The National Electrical Manufacturers Association (NEMA) provides standardization of electrical equipment, enabling customers to select from a range of safe, effective and compatible products. A NEMA C-face motor has a machined face with a pilot and threaded holes for direct mounting onto a NORD reducer or other industrial equipment. NORD offers NEMA C-face motors stocked as finished goods and will also assemble NEMA C-face motors to your specifications. For ratings, see page 142.

## Stocked NEMA C-Face Motors

Stocked NEMA C-face motors are offered in standard efficiency, energy efficient and in a brakemotor design. They are available in 230/460V-60Hz and 575V-60Hz up to 10 hp. Part numbers for stocked NEMA C-face motors are in the table below.

## Assembled per Order NEMA C-Face Motors

NORD will assemble a NEMA C-face motor to your specifications based upon the available motor options from this catalog.

| Motor Type | Power | Part Number 230/460V-60Hz | Part Number 575V-60Hz | Weight [lb] |
|---|---|---|---|---|
| **High Performance Motors** | | | | |
| 63S/4-56C | 1/6 hp | 31110012 | 31110013 | 7.9 |
| 63L/4-56C | 1/4 hp | 31610012 | 31610013 | 9.3 |
| 71S/4-56C | 1/3 hp | 32110012 | 32110013 | 11.9 |
| 71L/4-56C | 1/2 hp | 32610012 | 32610013 | 13.9 |
| 80S/4-56C | 3/4 hp | 33110012 | 33110013 | 17.6 |
| 80L/4-56C | 1 hp | 33610022 | n/a | 19.8 |
| 80L/4-143TC | 1 hp | 33610012 | n/a | 19.8 |
| 90S/4-145TC | 1.5 hp | 34110012 | n/a | 26.5 |
| 90L/4-145TC | 2 hp | 34610012 | n/a | 30.9 |
| 100L/4-182TC | 3 hp | 35110012 | n/a | 39.7 |
| 100LA/4-184TC | 5 hp | 35610012 | n/a | 46.3 |
| 132S/4-213TC | 7.5 hp | 36410012 | n/a | 97.0 |
| 132M/4-215TC | 10 hp | 36710012 | n/a | 121.3 |
| 160M/4-254TC TW | 15 hp | 37310012 | n/a | 160.9 |
| 160L/4-256TC TW | 20 hp | 37510012 | n/a | 178.6 |
| 180MX/4-284TC TW | 25hp | 37610012 | n/a | 276.3 |
| 180LX/4-286TC TW | 30hp | 37810012 | n/a | 307.2 |
| **Energy Efficient Motors** | | | | |
| 80LH/4-56C | 1 hp | 33610094 | 33610095 | 19.8 |
| 80LH/4-143TC | 1 hp | 33610092 | 33610093 | 19.8 |
| 90SH/4-145TC | 1.5 hp | 34110092 | 34110093 | 26.5 |
| 90LH/4-145TC | 2 hp | 34610092 | 34610093 | 30.9 |
| 100LH/4-182TC | 3 hp | 35610092 | 35610093 | 39.7 |
| 112MH/4-184TC | 5 hp | 36110082 | 36110083 | 83.6 |
| 132SH/4-213TC | 7.5 hp | 36410092 | 36410093 | 97.0 |
| 132MH/4-215TC | 10 hp | 36710092 | 36710093 | 121.3 |
| 160MH/4-254TC TW | 15 hp | 37310092 | 37310093 | 160.9 |
| 160LH/4-256TC TW | 20 hp | 37510092 | 37510093 | 198.4 |



## Standards

All motors are in accordance with existing standards and regulations:

### NEMA MG 1 - Motors and Generators:

- Electrical performance
- Motors for operation on variable AC vector drive

### UL 1004 – Electric Motors

### CSA C22.2 No. 100-04 - Motors and Generators:

### Industrial Products
### IEC 60034 parts 1, 5, 6, 8, 9, 11 and 14.

- Part 1 – General rules
- Part 5 – Types of enclosures
- Part 6 – Types of cooling
- Part 8 – Terminal lead designations and sense of rotation
- Part 9 – Noise limits
- Part 11 – Integrated thermal protection
- Part 14 – Mechanical vibration

### IEC 60038 – Standard voltages

| | |
|---|---|
| CE | NORD motors carry the CE mark in accordance with the Low Voltage Directive and, if installed properly, the Electromagnetic Compatibility Directive (EMC). The CE mark is required for installation in European Union (EU) states. |
| ® | Many NORD motors from frame size 63 to 315 are an Underwriters Laboratories Recognized component per UL standard 1004.<br>Frames 63-132 File number E191510<br>Frames 160+ File number E227215 |
| C SP® US | The Canadian Standards Association CUS mark indicates that CSA has tested and approved NORD motors according to both US and Canadian standards. It is equivalent to the Underwriters Laboratories RU recognition mark (UL standard 1004) and the CSA mark according to CSA Standard C22.2 No. 100-04<br>Frames 63-132 File number LR112560<br>Frame 160+ File number LR13494 |
| ee | NORD Energy Efficient motors up to frame 160 have been evaluated by the United States Department of Energy and recieved a Certificate of Compliance to certify the efficiency ratings. The certificate of compliance is CC 092B. |
| CSA E | NORD energy efficient motors carry the CSA energy efficiency verification mark. This mark ensures that CSA has verified that NORD motors are designed and manufactured to meet energy efficiency requirements number EEV112560. |

## EPAct – US Energy Efficiency

The Energy Policy Act of 1992 (EPAct) covers efficiency levels of general purpose industrial electric motors and became effective October 24, 1997. The basic goal of the law is to promote energy conservation. This law mandated energy efficiency requirements for many devices including some types of industrial electric motors. The efficiency levels are defined in NEMA MG-1 table 12-10. The regulations to implement this law have been developed by the Department of Energy (DOE).

The law covers minimum efficiency levels for general purpose motors including:

- Single-speed, polyphase NEMA T frame (and IEC equivalents)
- 1 to 200 hp (0.75 to 150 kW)
- 1200, 1800 or 3600 rpm
- NEMA design A and B
- Continuous rated
- Foot-mounted
- 230/460V-60Hz

The law excludes the following motor types from minimum efficiency levels:

- Integral gearmotors
- Brake motors

The NORD "H" line of energy efficient motors are designed to meet the efficiency levels defined by EPAct. NORD offers these motors as an option in combination with our high efficiency gear units for superior energy savings.

Efficiency levels for enclosed 4-pole motors per EPAct and NEMA MG 1 - in percent efficiency [%]

### Efficiency for EPACT & NEMA MG1 4-Pole Motors

| hp | 1 | 1.5 | 2 | 3 | 5 | 7.5 | 10 |
|---|---|---|---|---|---|---|---|
| kW | 0.75 | 1.1 | 1.5 | 2.2 | 3.7 | 5.5 | 7.5 |
| Eff% | 82.5 | 84.0 | 84.0 | 87.5 | 87.5 | 89.5 | 89.5 |

| hp | 15 | 20 | 25 | 30 | 40 | 50 | 60 |
|---|---|---|---|---|---|---|---|
| kW | 11 | 15 | 18.5 | 22 | 30 | 37 | 45 |
| Eff% | 91.0 | 91.0 | 92.4 | 92.4 | 93.0 | 93.0 | 93.6 |

| hp | 75 | 100 | 125 | 150 | 200 |
|---|---|---|---|---|---|
| kW | 55 | 75 | 90 | 110 | 150 |
| Eff% | 94.1 | 94.5 | 94.5 | 95.0 | 95.0 |



## Canadian Energy Efficiency

The Energy Efficiency Act and the Energy Efficiency Regulations establish minimum energy performance levels for electric motors from 1 to 200 HP (0.75 to 150 kW) for sale or lease in Canada. The Energy Efficiency Regulations were developed by Natural Resources Canada (NRCan).

Certain National Electrical Manufacturers Association (NEMA) motors have been regulated since Feb. 3,1995. Effective Nov. 27, 1997, the Energy Efficiency Regulations were amended to include International Electrotechnical Commission (IEC) motors. This amendment also increased the minimum energy performance levels that motors must meet. For explosion-proof motors and motors contained within an integral gear assembly, the effective date of the Regulations is Nov. 27, 1999.

The regulations mandate that motors carry an energy efficiency verification mark that is authorized by Standards Council of Canada (SCC) accredited certification organization such as Canadian Standards Association (CSA).

## CEMEP Agreement
## European Efficiency Categories

CEMEP, the association of European Electric Motor Manufacturers, has reached an agreement with the European Commission's General Directorate for Energy so that in the future all 2 and 4-pole low voltage motors from 1 to 100kW will be categorized on the basis of their efficiency. The classification will be displayed on the nameplate and in catalogs. The following categories will be used: EFF1, EFF2 and EFF3.

| | |
|---|---|
| EFF 1 | EFF1-indicates a high efficiency factor. |
| EFF 2 | EFF2-indicates an improved efficiency factor. |
| EFF 3 | EFF3-Indicates a standard efficiency motor. |

NORD supplies both motors of EFF1 and EFF2 categories in its 4-pole motors. The category EFF2 motors are the standard efficiency motors and the EFF1 motors are the "H" line of energy efficient motors.

In the future NORD will mark all of its 50-Hz motor with the CEMEP efficiency symbols.

| kW | 1.1 | 1.5 | 2.2 | 3 | 4 | 5.5 |
|---|---|---|---|---|---|---|
| hp | 1.5 | 2 | 3 | 4 | 5.4 | 7.5 |
| EFF1 [%] | 83.3 | 85.0 | 86.4 | 87.4 | 88.3 | 89.2 |
| EFF2 [%] | 76.2 | 78.5 | 81.0 | 82.6 | 84.2 | 85.7 |
| EFF3 [%] | <76.2 | <78.5 | <81.0 | <82.6 | <84.2 | <85.7 |

| kW | 7.5 | 11 | 15 | 18.5 | 22 | 30 |
|---|---|---|---|---|---|---|
| hp | 10 | 15 | 20 | 25 | 30 | 40 |
| EFF1 [%] | 90.1 | 91.0 | 91.8 | 92.2 | 92.6 | 93.2 |
| EFF2 [%] | 87.0 | 88.4 | 89.4 | 90.0 | 90.5 | 91.4 |
| EFF3 [%] | <87.0 | <88.4 | <89.4 | <90.0 | <90.5 | <91.4 |

| kW | 37 | 45 | 55 | 75 | 90 |
|---|---|---|---|---|---|
| hp | 50 | 60 | 75 | 100 | 120 |
| EFF1 [%] | 93.6 | 93.9 | 94.2 | 94.7 | 95.0 |
| EFF2 [%] | 92.0 | 92.5 | 93.0 | 93.6 | 93.9 |
| EFF3 [%] | <92.0 | <92.5 | <93.0 | <93.6 | <93.9 |

INVERTER DUTY MOTOR

## Inverter/Vector Duty

NORD single–speed motors are Inverter/Vector Duty. The construction of the NORD motors insulating system takes into account the non-sinusoidal wave forms produced by variable frequency drives. NORD uses high grade insulating components and extra first turn protection as well as double coated wire to ensure long service life when connected to AC vector drives. NORD motors can produce full torque at zero speed if properly sized, selected and controlled.



## Voltage and Frequency

NORD motors are available in a wide range of voltages and frequencies for use in North America and around the world. For a more detailed list of choices see page 128.

NORD motors designed for North American voltages (208V, 230V, 460V and 575V) conform to the voltage and frequency tolerances in NEMA MG-1. The voltage tolerance is +/-10%, the frequency tolerance is +/- 5% or a combined voltage and frequency tolerance of +/-10%.

## Low Inertia

The motor inertia in all NORD motors is extremely low which allows for a much more dynamic motor control capability. Low motor inertia is a significant advantage when using NORD motors with AC vector drives or vector controllers. NORD motors can cycle more frequently and require less mechanical energy to start than standard NEMA frame motors. This leaves more energy to start the load.

## High Torque

The NORD motors produce higher starting torque than required by NEMA standards. This is achieved through improved motor winding, rotor design and construction.

## Non-Sparking Fan

The standard NORD motor fan is a non-sparking design. The fan will also provide proper airflow in either direction of rotation.

## Terminal Block

Each NORD motor uses a terminal block, which is a superior method of wire termination when compared to pigtail leads. A terminal block ensures long-term reliability of the power connections.

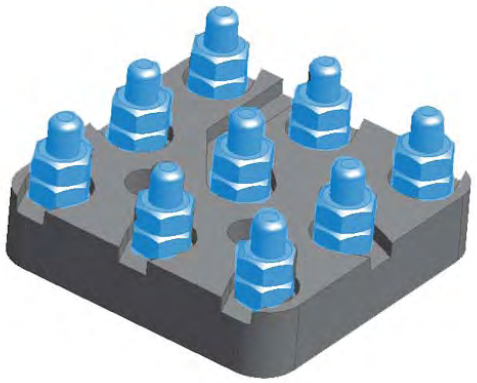

## Tropical Protection (Anti-fungal)

As a standard the NORD motor insulation system is tropically protected. The insulating and construction components are inorganic materials that resist fungal growth.

## Insulation Class

NORD motors are constructed with a thermal class F insulating system. The motors are also designed for a class B temperature rise (80°C). The use of class F insulation with a class B temperature rise provides increased operating life. Motors constructed with class H insulation are also available as an option.

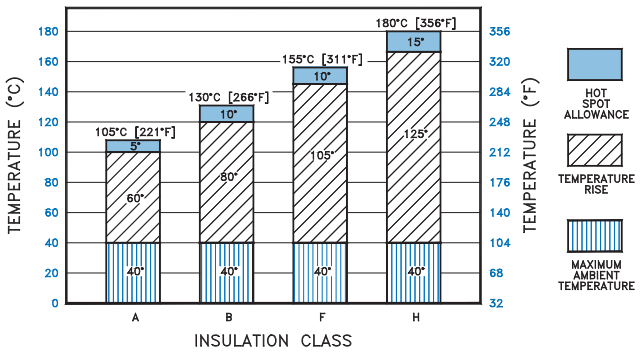


## Insulation System

NORD motor insulation system is designed to provide a superior degree of protection. NORD utilizes the following insulation components:

- Magnet wire – double coated insulation
- Varnish dip impregnation
- Slot liners
- Phase paper
- Phase separators
- Top sticks
- Connecting wire sleeves

Other motor manufacturers eliminate some of these insulating components for cost reduction.

## Inverter/Vector Duty – Voltage Spikes

All NORD motors are constructed with an insulating system designed to withstand the repeated voltage spikes generated by modern AC vector drives. The insulation system withstands the ratings in conformance with NEMA MG 1-2006 Section 31.4.4.2 Voltage Spikes.

$V_{peak} = 3.1 \times V_{rated}$ with a Rise time ≤ 0.1µs.



## Ambient Temperature

NORD motors are designed to operate with a maximum ambient temperature of 40°C (104°F). If the motor's operating environment exceeds 40°C, the motor's nominal power $P_n$ either needs to be de-rated (see table below) or use upgraded insulation.

| Ambient temp [°F] | 113 | 122 | 131 | 140 |
|---|---|---|---|---|
| Ambient temp [°C] | 45 | 50 | 55 | 60 |
| De-rate factor | 0.96 | 0.92 | 0.87 | 0.82 |

**Motor Rated Power = [$P_n$ x De-rate factor]**

## Elevation

NORD motors are designed to operate at an elevation of up to 3300 ft (1000 m) above sea level. At higher elevations the air is thinner resulting in less cooling capacity. If the motor's nominal power $P_n$ installation elevation exceeds 3300 ft (1000 m), the motor either needs to be de-rated (see table below) or requires upgraded insulation.

| Altitude [ft] | 5000 | 6500 | 8200 | 10000 | 11500 | 13000 |
|---|---|---|---|---|---|---|
| Altitude [m] | 1500 | 2000 | 2500 | 3000 | 3500 | 4000 |
| De-rate Factor | 0.97 | 0.94 | 0.90 | 0.86 | 0.83 | 0.80 |

**Motor Rated Power = [$P_n$ x De-rate factor]**

## Service Factor

Motors rated 230/460V-60Hz and 332/575V-60Hz have a service factor of 1.15. Almost all other motors have a service factor of 1.1 or 1.0.

## Duty Classes

The following duty types are defined in IEC 60034-1.

| Duty Type | Explanation Excerpts |
|---|---|
| S1 | Continuous operation at a constant load, the motor reaches thermal equilibrium |
| S2 | Short-time operation at a constant load for a given time followed by a time of rest until the motor is completely cooled down to ambient temperature.<br>Example: S2-10 minutes<br>Recommended values for determination: 10, 30 min. |
| S3 | Intermittent operation sequential, identical run and rest cycles with constant load. Temperature equilibrium is never reached. Starting current has little effect on temperature rise. The cyclic duration factor (cdf) indicates the portion of operation time in relation to a complete duty cycle. The typical duty cycle time is 10 minutes, unless otherwise specified.<br>Example: S3-40%<br>Recommended values for determination: 25, 40, 60% |
| S6 | Continuous operation with intermittent load sequential, identical cycles of running with constant load and running with no load. No rest periods.<br>Example: S6-40%<br>Recommended values for determination: 25, 40, 60% |

## Power Increasing Factor for Short-term & Intermittent Operation

Motor ratings in this catalog are based on continuous duty operation (S1). If a motor is designed for S1 duty, but is to be operated for short-time or intermittent operation it can be subjected to higher loads. The available motor power can be raised above the motor rated power by the "increasing factor" in the table below.

| Duty Type | | | Increasing factor |
|---|---|---|---|
| S2 | Operating time | 10 min | 1.40 |
| | | 30 min | 1.15 |
| S3 | Cyclic duration factor (cdf) | 25% | 1.33 |
| | | 40% | 1.18 |
| | | 60% | 1.08 |
| S6 | Cyclic duration factor (cdf) | 25% | 1.45 |
| | | 40% | 1.35 |
| | | 60% | 1.15 |

**Motor Rated Power = [$P_n$ x Increasing factor]**



## Enclosure

The NORD standard motors are provided with Totally Enclosed Fan-Cooled (TEFC) with an IP55 enclosure rating. Other enclosures are available, including Totally Enclosed Non-Ventilated (TENV), Totally Enclosed Blower-Cooled (TEBC), and IP66.

The motor integral cooling fan provides proper air flow in either direction of rotation. The IEC cooling classification is IC 411 according to IEC 60034-6.

## IP Enclosures per IEC 60034-5 - Simplified

| | 1st digit Foreign body protection | | 2nd digit Water protection |
|---|---|---|---|
| 0 | No protection | 0 | No Protection |
| 1 | Protected against solid objects 50mm (2 in) in diameter and larger | 1 | Protected against dripping water |
| 2 | Protected against solid objects 12 mm (1/2 in) in diameter and larger | 2 | Protected against dripping water up to a 15 degree angle |
| 3 | Protected against solid objects 2.5 mm (0.1 in) in diameter and larger | 3 | Protection against sprayed water |
| 4 | Protected against solid objects 1 mm (0.04 in) in diameter and larger | 4 | Protection against splashed water |
| 5 | Protected against dust | 5 | Protection against water jets |
| 6 | Dust tight | 6 | Protection against high pressure water jets |
| 7 | -- | 7 | Protection against intermittent submersion in water |
| 8 | -- | 8 | Protection against continuous submersion in water |

## Protective Features

All NORD Motors and Speed Reducers are constructed to provide a high degree of protection against wet and severe environments. NORD Motors and Speed Reducers are extremely well sealed against moisture ingress and use corrosion and moisture resistant components. NORD has recently made many enhancements in the motor and gear units standard construction to provide improved environmental protection. Many of the standard protection features of the NORD units are only available at an additional cost from other motor and gear drive suppliers. NORD designs all gearmotors, speed reducers and motors for installation in harsh industrial, commercial and municipal installation environments.

## Standard Construction

- Shaft lip seals on both ends of the motor shafts
- Stator to endbell connections sealed to exclude moisture
- Double coated magnetic wire insulation
- Inverter/vector duty insulation system conforms to NEMA MG1-1998, section 31.4.4.2 voltage spikes
- Moisture resistant varnish dipped windings improved varnish materials
- Inorganic insulating components for tropical protection
- Moisture resistant motor windings
- Conduit box sealed with gaskets
- Corrosion resistant alloy materials
- Threaded cable entry holes

### Motors for Indoor Operation - Option Codes

| | Dry Conditions | Wet or Humid Conditions |
|---|---|---|
| **Ambient Temperature Fluctuation** | – | KB, SH |
| **Paint** | – | NSD+ |
| **Vertical Motor Mount** 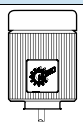 | RD | RDD |

### Motors for Outdoor Operation - Option Codes

| | Sheltered from the Elements | Exposed to the Elements |
|---|---|---|
| **Ambient Temperature Fluctuation** | KB, SH | KB, SH, KKV |
| **Paint** | NSD+ | NSDx3 |
| **Vertical Motor Mount** 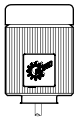 | RD | RDD |

### Option Code Key

| | | |
|---|---|---|
| KB | Condensation Drain Holes - Plugged | Page 131 |
| SH | Space Heater | Page 130 |
| KKV | Terminal Box Sealed with Resin | Page 131 |
| NSD+ | Nord Severe Duty Paint | Page 18 |
| NSDx3 | Nord Severe Extreme Duty X3 Paint | Page 18 |
| RD | Canopy Drip Cover | Page 131 |
| RDD | Double Fan Cover | Page 131 |

# General Options



## Voltage and Frequency

NORD motors are available in a number of voltages and frequencies. The standard voltages are commonly available. Optional voltages can be provided, but may include an increase in price and additional lead time. It also may be possible to provide motors with special voltages and frequency operation points.

### Standard Voltages

| Single speed motors | Two speed motors |
|---|---|
| 230/460V-60Hz (up to 30 hp) | 460V-60Hz |
| 460V-60Hz (40 hp and larger) | 230V-60Hz |
| 575V-60Hz | 575V-60Hz |
| 400V-50Hz | 400V-50Hz |

### Optional Voltages

| Single speed motors | Two speed motors |
|---|---|
| 208V-60Hz<br>(up to 10 hp, not available in energy efficient design) | Other voltages & frequencies available upon request |
| 380V-50Hz | |
| 415V-50Hz | |
| 380V-60Hz | |
| Other voltages & frequencies available upon request | |

## Poles / speeds

NORD offers a variety of single speed and two speed motors in addition to the standard 4 pole motor. NORD single speed motors are inverter/vector duty rated, however, it is not recommended to run a NORD two speed motor with an AC vector drive.

| Number of Poles | Synchronous Speed at 60Hz | Synchronous Speed at 50Hz | Notes: |
|---|---|---|---|
| **Single Speed Motors** | | | |
| **4** | 1800 rpm | 1500 rpm | – |
| **2** | 3600 rpm | 3000 rpm | – |
| **6** | 1200 rpm | 1000 rpm | – |
| **Two Speed Motors** | | | |
| **4-2** | 1800/3600 rpm | 1500/3000 rpm | Single winding |
| **8-2** | 900/3600 rpm | 750/3000 rpm | Two winding |
| **8-4** | 900/1800 rpm | 750/1500 rpm | Single winding |

Other speeds available upon request.

## US Canadian Standard (CUS)

CUS motor construction defines that NORD motors are constructed in accordance to UL 1004 (electric motors) and CSA C22.2 No. 100-04 (motors and generators) guidelines. This option is standard for 208, 230, 460, and 575 Volt operation at 60 Hz.

Motors nameplated with the CUS option will be marked and indicating that the Underwriters Laboratories and CSA have tested and approved NORD motors according to both US and Canadian standards.



## Motor Protection

Selecting the appropriate motor protective system is a key factor in reliable motor operation. There are two common classes of motor protection; current based and motor temperature based. Electrical installation codes require at least two types of protection in the motors circuit, both of which are normally current based. First is short-circuit protection normally accomplished by fuses or circuit breakers. Second is "motor overload protection" this is normally a device called a "motor overload" or a "heater." Current based protection is effective in some conditions. NORD can provide two different types of motor temperature based protection, a PTC thermistor (TF) or a bi-metallic thermostat (TW). Temperature based protection is more effective motor protection in many situations, see the table below.

| ⬆ = Good protection<br>⬌= Limited protection<br>⬇ = No protection | Fuses | Motor Overloads | PTC Thermistor (TF) | Bi-metallic Switch (TW) |
|---|---|---|---|---|
| Over current up to 200% | ⬇ | ⬆ | ⬆ | ⬆ |
| High inertia starting | ⬇ | ⬌ | ⬆ | ⬌ |
| Frequent motor starts | ⬇ | ⬌ | ⬆ | ⬆ |
| Stalling | ⬌ | ⬌ | ⬌ | ⬌ |
| Single phasing | ⬇ | ⬌ | ⬆ | ⬆ |
| Supply voltage deviations | ⬇ | ⬆ | ⬆ | ⬆ |
| Supply frequency deviations | ⬇ | ⬆ | ⬆ | ⬆ |
| Inadequate motor cooling | ⬇ | ⬇ | ⬆ | ⬆ |
| Bearing Damage | ⬇ | ⬇ | ⬆ | ⬆ |

## Thermostat (TW)

Build

Three bimetallic switches are connected in series in the motor windings, one per motor phase. Upon reaching the limit temperature, this device automatically opens circuits. The installer is responsible to wire the thermostat into the motor control circuit. After the temperature has fallen below the trip limit, the thermostat switch re-sets automatically. The auto resetting property must be considered when designing the safety aspects of the control scheme.

| TW Ratings | |
|---|---|
| NC (Normally Closed) | auto resetting |
| Voltage | 6 to 500VAC |
| Current | 1.6 A |
| Resistance | less than 50 mΩ |

## Thermistor (TF)

Build

Three positive temperature coefficient (PTC) thermistors are connected in series in the motor windings, one per motor phase. Thermistors require an external tripping device. Upon reaching the limit temperature, the thermistors change their resistance suddenly. In connection with a tripping device, this property is employed to monitor the motor temperature. The relay built into the tripping device has a make-and-break-contact, which is used in the control wiring. NORD does not provide the external tripping device with the TF thermistor option. You must request a thermistor tripping device separately. Many AC vecotor drives and PLCs include a built in PTC thermistor evaluation input.

| TF Ratings | |
|---|---|
| Transition Temperature | 150 °C +/- 5°C |
| Resistance < Transition | 20 ... 500 . Ω |
| Resistance > Transition | > 4k Ω. |
| Reed Voltage | < 7,5 V |
| Rated Current | < 1 mA |
| Motor Ambient Temp. | 40°C |

# General Options



## Space Heater (SH)

Build

Motors subjected to extreme temperature fluctuations or severe climatic conditions can be damaged by the formation of condensation. NORD can provide motor anti-condensation space heaters inside the motor to heat up the windings when the motor is not operating. This will prevent moisture from condensing inside the motor. The space heaters must not be switched on while the motor is running.

**Space Heater Voltage Must be specified**

| Voltages available |
|---|
| ❍ 115V – 50/60Hz |
| ❍ 230V – 50/60Hz |
| ❍ 460V – 50/60Hz |
| ❍ other voltages available on request |

## Class H Insulation (ISO H)

Build

NORD motors can be manufactured with class H insulation system. Standard NORD motors include double coated magnetic wire windings. When these windings are paired with a class H insulation it provides extra temperature capacity for the motor and will lengthen the motor's life. Class H insulation rated motors are also an advantage in some severe applications:

- Increased ambient temperature installations above 40°C (104°F)
- Increased elevation installations – above 3300 ft (1000 m)
- Applications with a high number of starts per hour.
- Meets class H insulation motor specifications
- Lower operating frequency when used with AC vector drive systems
- For additional information on insulation class see page 125.

## High Resistance Rotor (WU)

Build

Using Silumin rotor material, NORD offers a high resistance rotor to soften the motors operation and allow higher overload torques.

## Single Phase Motors, 60Hz (ECR)

Build

The ECR series of single phase motors is intended for demanding operation at 60Hz with a supply voltage of 115V or 230V. The permissible voltage range is 115/230V +/- 10%. The ECR motors have a 1.15 service factor and are available from 0.16 - 2 hp.



## Paint Coatings

Mod

NORD's standard paint coating is a two component, aliphatic polyurethane finish contaning 316 stainless steel material. This gray stainless steel paint has excellent appearance and outstanding physical properties. It is suitable for both indoor and outdoor applications. For more information and an explanation of all of our paint options please see page 18

## Condensation Drain Holes

NORD motors can be equipped with condensation drain holes. These drain holes are placed in the motor endbells at the lowest possible point. The drain holes are closed at the factory with plastic snap in plugs. They allow for condensation accumulation in the motor to drain after the closing plugs are removed.

The motor drain holes can be provided by NORD either open (KBO) or sealed with a closing plug (KB).

*IMPORTANT NOTE*

The motor must be installed in the mounting orientation specified on the nameplate or the drain holes will not function properly and may result with the motor filling with water.

## Condensation Drain Holes, Plugged (KB)

Build

KB drain holes are plugged for shipment. In order for the holes to effectively drain moisture, the plugs must be removed before using the motor.

## Condensation Drain Holes, Open (KBO)

Build

KBO drain holes are shipped open (not plugged).

## IP65 Enclosure Protection

Mod

NORD motors can be provided with an IP65 enclosure protection. IP65 protection is suitable for wet, low-pressure wash down and extremely dusty environments.

| IP | 1st digit Foreign body protection | IP | 2nd digit Water protection |
|---|---|---|---|
| 6 | Dust tight | 5 | Protection against water jets |

## IP66 Enclosure Protection

Mod

NORD motors can be provided with an IP66 enclosure protection. IP66 protection is suitable for wet, high-pressure wash down and extremely dusty environments, and includes all requirements included in IP65 enclosure protection.

| IP | 1st digit Foreign body protection | IP | 2nd digit Water protection |
|---|---|---|---|
| 6 | Dust tight | 6 | Protection against high pressure water jets |

## Terminal Box Sealed with Resin (KKV)

Mod

Terminal boxes can be sealed with a flexible, electrically safe resin to ensure that contaminants, water, and moisture cannot pass through the terminal box into the stator body. This option is helpful in extremely dusty, wet and humid environments. Another environment where this option is helpful is in installations that have frequent large temperature swings where condensation may form.

## Additional Insulation (AICM)

Build

NORD can provide additional insulation inside the motor to provide additional electrical protection in extremely wet or corrosive environments. An electrically safe insulating material is coated internally in the stator windings and on the rotor body

## Epoxy Dipped Windings (EP)

Build

In extremely wet environments, the motor windings are dipped in epoxy for improved moisture protection. The motor can also be treated with the standard NORD Severe Duty + (NSD+) package for an even higher degree of protection.

## Canopy Drip Cover (RD)

Mod



For wet or dirty installations where the fan end of the motor is mounted up, thus allowing water or debris to fall into the motor's fan guard, NORD offers a canopy drip cover to block this falling water or debris.

## Double Fan Cover (RDD)

Mod



For wet or dirty installations where the fan end of the motor is mounted up, the NORD Double Fan Cover provides protection against falling or wind blown water, snow, dirt or debris from entering the back of the motor.

# Additional Options



## Totally Enclosed Non-Ventilated (OL) Mod

NORD can provide totally enclosed non-ventilated (TENV) motor enclosure. TENV motors provide benefits in certain operating environments; such as extremely dusty or dirty applications, where cooling fans may have material accumulation, which can be detrimental to the motor and the application. The OL series of motors are the standard fan cooled motor construction including the fan cover, but provided without the fan. TENV motors can also be used to reduce cooling fan noise on a standard motor.

A TENV motor's frame size is larger then a totally enclosed fan cooled (TEFC) motor. For intermittent operation, a TENV motor can be operated at a 50% duty cycle at full rated power.

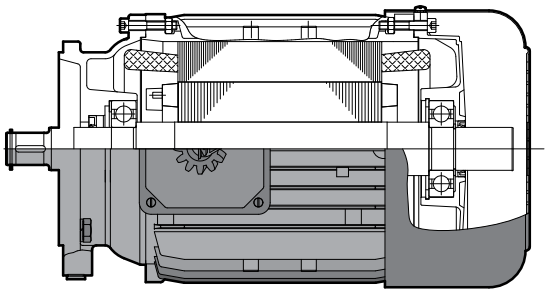

## Totally Enclosed Non-Ventilated, without Fan Cover (OL/H) Build

The OL/H series of TENV motors are more compact in space than the OL series. They do not include the rotor shaft extension through the back bearing end bell or the fan cover.

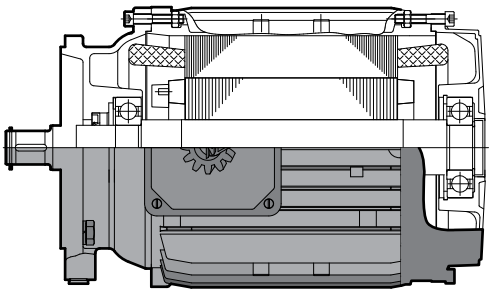

## 2nd Shaft Extension on Fan Side (WE) Build

NORD can provide a second shaft extension on the fan side of the motor that protrudes through the fan cover. This extension can be used as a power take-off or to mount customer supplied devices such as encoders and tachometers.

The shaft extension can be provided on both motors with and without brakes. The shaft extension can not be used on motors with blower fans (F) or (FC). For dimensions see pages 148 - 152.

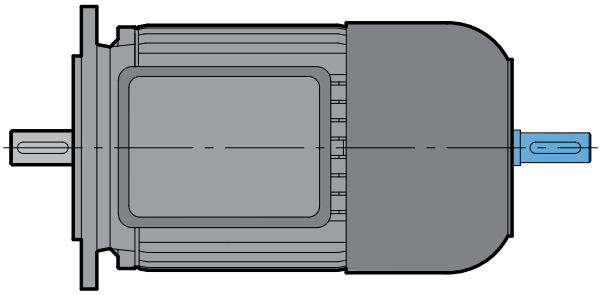

## Hand Wheel (HR) Build

Motors can be supplied with a hand wheel provided on the second shaft extension. The hand wheel can be used for manual operation during power outages, or for machine positioning setup. For dimensions see pages 148 - 152.

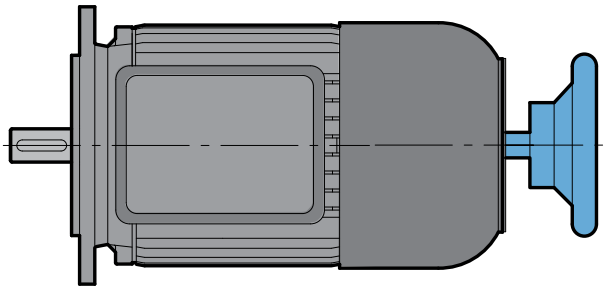

**WARNING**

The customer is required to provide appropriate safety guarding of the rotating hand wheel.

## High Inertia Cast Iron Fan (Z)

Build

An optional cast iron motor cooling fan is available. This fan is used as a mechanical soft start and/or soft stop. This fan adds inertia to the motor. The high inertia fan can also be used for a flywheel effect to store mechanical energy. This can be helpful in smoothing rapid load changes. The cast iron fan replaces the standard plastic motor fan. The motor length is the same as a brakemotor.



| Motor Frame | Fan Inertia $J_z$[lb-ft²] |
|---|---|
| 71 | 0.0475 |
| 80 | 0.1140 |
| 90 | 0.2375 |
| 100 | 0.2684 |
| 112 | 0.5653 |
| 132 | 0.9500 |

## Motor Backstop (RLS)

Build

NORD can provide backstops on many motor frames. A backstop will prevent the motor from rotating in one direction. A common use is to prevent a motor from allowing a load to move backwards when power is removed. A motor brake can also be used for this same purpose. A backstop adds length to the motor. For the motor length extension, see the table below.

**The allowable direction of rotation must be specified in the order.**

| Allowable Shaft Rotation |
|---|
| ❍ Clockwise - Back of Motor |
| ❍ Counter Clockwise - Back of Motor |

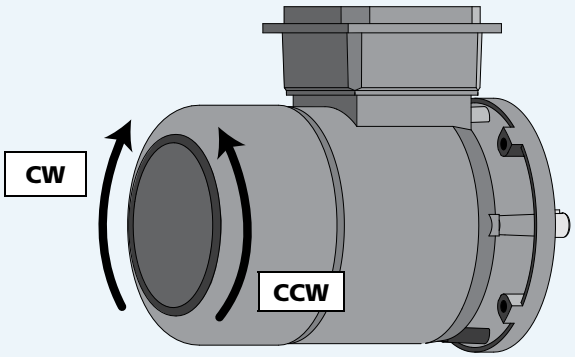


| Motor Size | Backstop Torque [lb-in] | Minimum Speed [rpm] | Motor Extension [in] |
|---|---|---|---|
| 80S/L | 1150 | 860 | 2.52 |
| 90S/L | 1150 | 860 | 2.95 |
| 100L | 1150 | 860 | 3.58 |
| 112M | 3270 | 750 | 3.66 |
| 132S/M | 3270 | 750 | 4.21 |
| 160M/L | 7880 | 670 | 6.57 |
| 180MX/LX | 7880 | 670 | 6.73 |
| 200L | 9120 | 630 | 6.57 |
| 225S/M | 9120 | 630 | 6.57 |
| 250M | 22130 | 400 | 9.84 |
| 280S/M | 51330 | 320 | 11.02 |

# Additional Options



## Quick Power Plug Connector (MS)

Mod

The quick power plug connector (MS) is a simple and fast way to connect and disconnect a motor or brake motor. The MS connector is available on NORD three-phase motors from frame size 63 to 132. The motor connections are made by a modular power plug manfacturer by Harting. After the first installation, the motor can be quickly changed by simply plugging and unplugging the electrical connections. This will ensure the new motor is properly wired. This is a significant advantage to equipment builders who fabricate machinery on site and then ship to another location. The motor with the MS connector can simply be plugged in during final installation.

NORD supplies the male connector half mounted on the motor conduit box. The customer must supply the female connector half mounted on the power wiring. NORD supplies a protective plastic cover on the motor male connector half to protect from dirt and damage prior to installation.





### Advantages:

- Simple motor wiring
- Accurate wiring of motor at final job site
- Fast motor replacement
- Accurate wiring of replacement motor
- Ideal for portable equipment
- Reduces the required personnel for motor replacement
- Faster motor changes reduce down time

## Plug ratings:

| | |
|---|---|
| **Manufacturer** | Harting |
| **Connector** | HAN 10 ES/HAN 10ESS<br>Cage Clamp Connectors |
| **Number of Pins** | 10-Male |
| **Voltage** | 600VAC per UL/CSA |
| **Current** | 16A - Continuous |

## Motor Power Plug Kits:

Includes conduit box, mounting hardware & Male Harting Motor Plug

| P/N | Motor size |
|---|---|
| 11035350 | 63 + 71 |
| 13035350 | 80 + 90 + 100 |
| 16035350 | 112 |
| 16335350 | 132 |

### Power Plug Positions

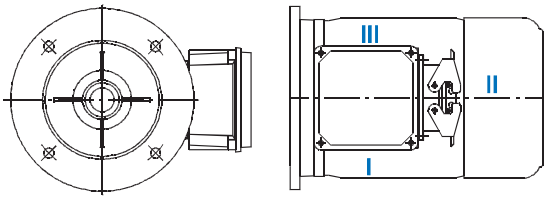


**Power plug position must be specified**

| Power Plug Position | | |
|---|---|---|
| ❍ I | ❍ II | ❍ III |

## Small Terminal Box (EKK)

Mod

The motor terminal box can be provided as a smaller, one-piece terminal design. This option is valid for standard motors 0.16 - 10 hp and is not available for Brakemotors.

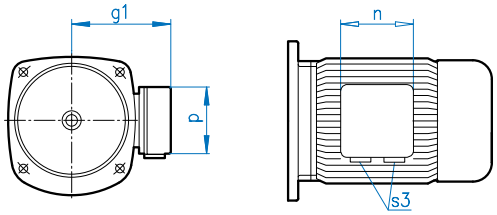


| EKK Dimensions | | | | |
|---|---|---|---|---|
| **Motor Frame** | **g1** | **n** | **p** | **S3** |
| **63** | 3.94 | 2.95 | 2.95 | 2x M16 x 1.5 |
| **71** | 4.29 | 2.95 | 2.95 | 2x M16 x 1.5 |
| **80** | 4.88 | 3.62 | 3.62 | 2x M20 x 1.5 |
| **90** | 5.08 | 3.62 | 3.62 | 2x M20 x 1.5 |
| **100** | 5.51 | 3.62 | 3.62 | 2x M20 x 1.5 |
| **112** | 5.91 | 3.62 | 3.62 | 2x M20 x 1.5 |
| **132** | 6.85 | 4.13 | 4.13 | 2x M25 x 1.5 |

## Blower Cooling Fan (F & FC)

Mod

NORD offers continuous running motor mounted cooling fans that provide motor cooling at low motor speeds. When a motor is operated on an AC vector drive at low frequency, standard rotor fans do not provide adequate airflow for cooling. NORD's separate powered motor cooling fans provide that necessary airflow. These separately powered fans replace the standard motor fan cover and fan.

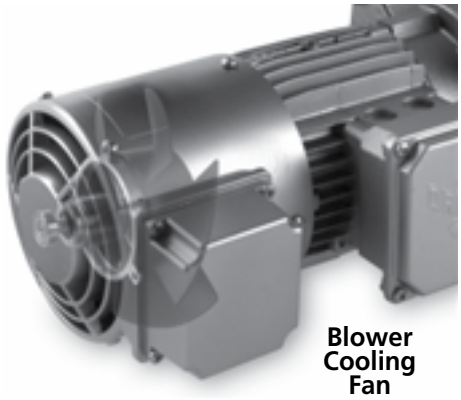

Blower Cooling Fan

### Option F – 3ph & 1ph 220-575V 50/60Hz

| Motor Frame | 60Hz Ratings | | | 50Hz Ratings | | |
|---|---|---|---|---|---|---|
| | Voltage [V] | Current [A] | Power [W] | Voltage [V] | Current [A] | Power [W] |
| Single phase connection - ⊥ (Delta) | | | | | | |
| 63 | 230 – 277 | 0.11 | 38 | 230 – 277 | 0.10 | 27 |
| 71 | 230 – 277 | 0.12 | 41 | 230 – 277 | 0.10 | 28 |
| 80 | 230 – 277 | 0.13 | 44 | 230 – 277 | 0.11 | 29 |
| 90 | 230 – 277 | 0.25 | 88 | 230 – 277 | 0.26 | 72 |
| 100 | 230 – 277 | 0.28 | 88 | 230 – 277 | 0.26 | 70 |
| 112 | 230 – 277 | 0.31 | 107 | 230 – 277 | 0.26 | 73 |
| 132 | 230 – 277 | 0.27 | 89 | 230 – 277 | 0.29 | 82 |
| 160 - 225 | 230 – 277 | 0.41 | 140 | 230 – 277 | 0.45 | 128 |
| Three phase low-voltage connection - ⊥ (Delta) | | | | | | |
| 63 | 220 – 332 | 0.08 | 23 | 220 – 290 | 0.10 | 27 |
| 71 | 220 – 332 | 0.08 | 24 | 220 – 290 | 0.10 | 30 |
| 80 | 220 – 332 | 0.08 | 25 | 220 – 290 | 0.01 | 29 |
| 90 | 220 – 332 | 0.21 | 64 | 220 – 290 | 0.28 | 86 |
| 100 | 220 – 332 | 0.21 | 66 | 220 – 290 | 0.27 | 86 |
| 112 | 220 – 332 | 0.23 | 70 | 220 – 290 | 0.27 | 85 |
| 132 | 220 – 332 | 0.25 | 74 | 220 – 290 | 0.32 | 96 |
| 160 - 225 | 220 – 322 | 0.49 | 165 | 220 – 290 | 0.52 | 155 |
| Three phase high-voltage connection - (Y) | | | | | | |
| 63 | 380 – 575 | 0.04 | 23 | 380 – 500 | 0.05 | 29 |
| 71 | 380 – 575 | 0.04 | 25 | 380 – 500 | 0.05 | 30 |
| 80 | 380 – 575 | 0.04 | 26 | 380 – 500 | 0.05 | 29 |
| 90 | 380 – 575 | 0.12 | 62 | 380 – 500 | 0.16 | 82 |
| 100 | 380 – 575 | 0.12 | 66 | 380 – 500 | 0.16 | 83 |
| 112 | 380 – 575 | 0.13 | 70 | 380 – 500 | 0.16 | 82 |
| 132 | 380 – 575 | 0.14 | 75 | 380 – 500 | 0.18 | 96 |
| 160 - 225 | 380 – 575 | 0.28 | 165 | 380 – 500 | 0.29 | 155 |

### Option FC – 115V 50/60Hz 1ph

| Motor Frame | 60Hz Ratings | | | 50Hz Ratings | | |
|---|---|---|---|---|---|---|
| | Voltage [V] | Current [A] | Power [W] | Voltage [V] | Current [A] | Power [W] |
| Single Phase Connection - ⊥ (Delta) | | | | | | |
| 63 | 100 – 135 | 0.23 | 42 | 100 – 135 | 0.30 | 42 |
| 71 | 100 – 135 | 0.23 | 47 | 100 – 135 | 0.30 | 44 |
| 80 | 100 – 135 | 0.27 | 57 | 100 – 135 | 0.30 | 43 |
| 90 | 100 – 135 | 0.46 | 102 | 100 – 135 | 0.57 | 78 |
| 100 | 100 – 135 | 0.53 | 105 | 100 – 135 | 0.54 | 78 |
| 112 | 100 – 135 | 0.60 | 115 | 100 – 135 | 0.55 | 80 |

# AC Vector Drive
# Related Options



## Incremental Encoder (IG..P)

Build

NORD can provide an incremental encoder mounted on the back of a motor or brake motor. Commonly encoders are used as speed or position feedback devices for use with AC drives, motion controllers or PLC's. Below are standard encoders; however, others can be supplied on request.

**?** **Encoder nomenclature must be specified.**

**Encoder nomenclature**

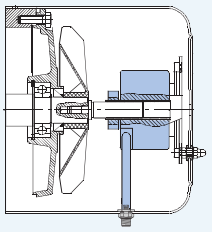

**Standard Motor with Encoder**

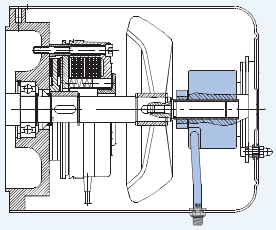

**Encoder with Brake Option**

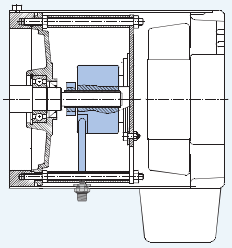

**Encoder with F Type Blower Fan**

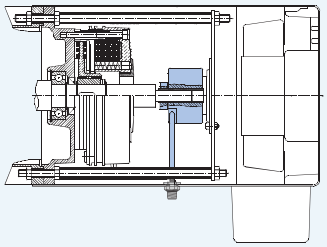

**Brake Option, Blower Fan with Encoder**



**Encoder Type: Quadrature Differential Marker pulse**

**M12 Connector Interface**

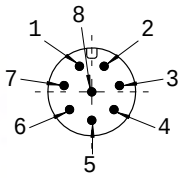


**Wiring Diagram**

| Pin | Conn | Cord |
|---|---|---|
| 1 | 0V | WH |
| 2 | +V | BN |
| 3 | A | GN |
| 4 | A\ | YE |
| 5 | B | GY |
| 6 | B\ | PK |
| 7 | Z | BU |
| 8 | Z\ | RD |
| Nut | Gnd | Open |

| | IG1 P | IG4 P | IG11 P | IG41 P | IG12 P | IG42 P | IG13 P | IG43 P |
|---|---|---|---|---|---|---|---|---|
| **Interface** | TTL/RS422 (26C31) | | TTL/RS422 (26C31) | | HTL/Push-pull (IC-WE) | | Line Driver (7272) | |
| **Logic [VDC]** | 5 | | 5 | | 10-30 | | 5-30 | |
| **Pulse Count [PPR]** | 1024 | 4096 | 1024 | 4096 | 1024 | 4096 | 1024 | 4096 |
| **Power Supply [VDC]** | 4-6 | 4-6 | 10-30 | 10-30 | 10-30 | 10-30 | 5-30 | 5-30 |
| **Part Number** | 19551500 | 19551520 | 19551502 | 19551522 | 19551501 | 19551521 | 19551503 | 19551523 |
| **Max Current Draw [mA]** | 100 | | | | 150 | | | |
| **Max Frequency [kHz]** | 300 | | | | | | | |
| **Ambient Temperature [°F]** | -4 to185 | | | | | | | |
| **Enclosure** | IP66 | | | | | | | |
| **Cable** | M12 8-pin male plug | | | | | | | |

## Pre-fabricated Encoder Cables



NORD can provide Turck pre-fabricated encoder molded cordsets (M12, 8-pin, shielded, twisted pair)

| Length | In-line | | Right-angle | |
|---|---|---|---|---|
| | NORD P/N | Turck P/N | NORD P/N | Turck P/N |
| **2m** | 19551580 | E-RKC 8T-264-2 | 19551584 | E-WKC 8T-264-2 |
| **5m** | 19551581 | E-RKC 8T-264-5 | 19551585 | E-WKC 8T-264-5 |
| **10m** | 19551582 | E-RKC 8T-264-10 | 19551586 | E-WKC 8T-264-10 |
| **15m** | 19551583 | E-RKC 8T-264-15 | 19551587 | E-WKC 8T-264-15 |
| **Field Wireable** | 19551588 | CMB 8181-0 | - | - |
| **Custom** | order from Turck | E-RKC 8T-264 | order from Turck | E-WKC 8T-264 |





## Encoders for NORD AC Drives

NORD AC vector drives with encoder inputs are designed to use TTL/RS422 encoders. There are also advantages in using an encoder with the 10-30VDC power supply system. The NORD AC vector drives can use a wide range of pulse counts, however the 1024PPR version provides good performance with minimal interference issues. A 4096 PPR encoder can also be used and will provide increased precision in some application but has some increased concerns with noise interference.

**Recommended encoder:** IG11P – 1024PPR/TTL/10-30VDC
**Alternate encoder:** IG41P – 4096PPR/TTL/10-30VDC

## Absolute Encoder (AG)

Build

Absolute encoders offer a unique value (voltage, binary count, etc.) for each mechanical position. When an absolute encoder is powered up, the position of the encoder is known. Absolute encoders are available in single or multi-turn versions. The encoder is attached under the fan cover with field bus connection outside the fan cover.

Absolute encoders can be provided to meet a variety of specifications:

- Resolution: up to 17 bits of resolution per turn (131,072 steps) with 4096 turns (12 bits of turns)
- Interfaces: Synchronous serial interface (SSI), SSI with incremental track, ProfiBus, DeviceNet, CANopen, CANlift, and other interfaces

# AC Vector Drive
# SK 300E Trio



## NORDAC SK 300E
## Motor Mounted Frequency AC Vector Drive

For select HP ratings, NORD can provide a fully programmable, high performance AC vector drive mounted on the motor. This motor mounted AC vector drives:

- Eliminates the need to separately mount & wire the AC drive
- Insures AC vector drive/motor compatibility
- Has an IP 55 washdown duty enclosure
- Provides Electronic Motor Overload protection
- Insures smooth constant torque operation down to 2 Hz (check motor thermal limitations)
- Features a unique plug-in construction where the program stays with the motor, minimizing return to service time in the event of AC vector drive replacement



### SK 300E AC Vector Drive Ratings

- 200-240 VAC 3 phase 50/60 Hz input, ½ through 3 HP
- 380-480 VAC 3 phase 50/60 Hz input, 3/4 through 5 HP
- Full range of built-in pre-engineered options available
- For dimensions see page 154

### Selection Steps

1) Choose the SK300E-trio AC vector drive based on motor ratings and input line voltage
2) Select the required Trio Interface (TI)
3) Select the braking resistor if required
4) Select additional customer based I/O if required (SK CU2-STD)
5) Select cover mounted technology unit if required
6) If remote wall mounting is required
7) Select any needed programming tools



### Step 1: AC vector drive Selection

| Basic NORD Motor Description | Power Rating HP/kW | P [in] | 240 VAC Input Inverter Type SK 300E | 480 VAC Input Inverter Type SK 300E |
|---|---|---|---|---|
| 63 S/4 | 0.16 / 0.12 | 5.12 | -370-323-B | -550-340-B |
| 63 L/4 | 0.25 / 0.18 | 5.12 | -370-323-B | -550-340-B |
| 71 S/4 | 0.33 / 0.25 | 5.71 | -370-323-B | -550-340-B |
| 71/L/4 | 0.50 / 0.37 | 5.71 | -370-323-B | -550-340-B |
| 80 S/4 | 0.75 / 0.55 | 6.50 | -550-323-B | -550-340-B |
| 80 L/4 | 1.00/ 0.75 | 6.50 | -750-323-B | -750-340-B |
| 90 S/4 | 1.50/ 1.1 | 7.20 | -111-323-B | -111-340-B |
| 90 L/4 | 2.00/ 1.5 | 7.20 | -151-323-B | -151-340-B |
| 100 L/4 | 3.00/ 2.2 | 7.91 | -221-323-B | -221-340-B |
| 100 L/40 | 5.00/ 3.7 | 7.91 | Not Available | -401-340-B |

### AC Vector Drive Ratings

| Type designation SK 300E | -370-323-B | -550-323-B | -750-323-B | -111-323B | -151-323-B | -221-323-B | -550-340-B | -750-340-B | -111-340-B | -151-340-B | -221-340-B | -301-340-B | -401-340-B |
|---|---|---|---|---|---|---|---|---|---|---|---|---|---|
| Supply Voltage | 3 Phase 200-240 VAC +/- 10%, 47-63 Hz | | | | | | 3 Phase 380-480 VAC, -20%/+10%, 47-63 Hz | | | | | | |
| Motor Rating | 1/2 HP | 3/4 | 1 HP | 1 1/2 HP | 2 HP | 3 HP | 3/4 HP | 1 HP | 1 1/2 HP | 2 HP | 3 HP | 4 HP | 5 HP |
| Rated Output Current Amps [RMS] | 2.2 | 3 | 4 | 5.5 | 7 | 9.5 | 1.6 | 2.2 | 3 | 3.7 | 5.5 | 7 | 9.2 |
| Typical Output Current Amps [RMS] | 3.1 | 4.2 | 5.6 | 7.7 | 9.8 | 13.3 | 2.5 | 3.1 | 4.2 | 5.2 | 7.7 | 9.8 | 12.9 |

## Step 2: Selection of Trio Interface (TI)

Following selection of the appropriate SK 300E AC vector drive rating from the preceding chart, an appropriate Trio Interface (TI) must be specified. The Trio Interface (TI) is an adapter that replaces the motor conduit box and contains a circuit board that the SK 300E plugs into.

A typical TI is shown below



### SK 300E Trio Interface (TI) Types

| | |
|---|---|
| **SK TI 0/1** | For standard 380-480 VAC units |
| **SK TI 0/1 - 230** | For standard 200-240 VAC units |
| **SK TI 0/2** | For 380-480 VAC units using Harting connectors |
| **SK TI 0/2 – 230** | 200-240 VAC units using Harting connectors |

### Harding H10E series connector options for side 1(CE1) of SK TI 0/2 (and -230) Interfaces

| | |
|---|---|
| **LE H10E** | Socket for AC supply input |
| **MA H10E** | Plug for motor output |

### Conduit plate options for side 3(CE3) of SK TI 0/2 (and -230) Interfaces

| | |
|---|---|
| **SK DA4** | Plate with 4 x M16 |
| **SK DA2** | Plate with 2 x M20 and 1 x M16<br>(Provided as standard with SK TI 0/2) |
| **SK DA1** | Plate with 1 x M25 and 2 x M16 |
| **SK DA0** | Plate with no entries |

### Added related components for Trio Interfaces

| | |
|---|---|
| **P/N 018524200** | M20 x ½ adapter<br>(Qty 2 provided as standard on assembled trios) |
| **P/N 011015410** | Adapter to mount Trio Interface on 63 & 71 frame motors |
| **P/N 013097000** | Gasket to mount Trio Interface on 63 & 71 frame motors |

## SK 300E Options & Related Information

## Step 3: Braking Resistors

Braking Resistor Options for SK 300E for mounting on Trio Interface

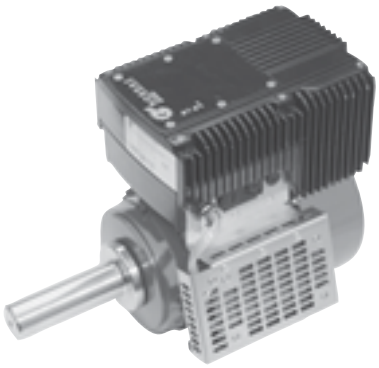

During dynamic braking, energy is delivered from the load through the motor (acting as a generator) to the AC vector drive. The AC vector drive dissipates this energy as heat via the integral brake chopper to the optional external braking resistors.

### For use with SK TI 0/1 adapters

| | |
|---|---|
| **SK BR3-120/100-TI 0/1** | 120 ohm/100 W for all ratings except 5 HP |
| **SK BR3-82/200-TI 0/1** | 82 ohm/200 W for 5 HP only |

### For use with SK TI 0/2 adapters

| | |
|---|---|
| **SK BR3-120/100-TI 0/2** | 120 ohm/100 W for all ratings except 5 HP |
| **SK BR3-82/200-TI 0/2** | 82 ohm/200 W for 5 HP only |



## Step 4: Customer I/O Based Control Interface Option - SK CU2-STD

The standard I/O based control available via the Trio Interface can be expanded via selection of an optional Customer Unit, **SK CU2-STD**, that plugs into the Trio Interface. Interface I/O points are listed on the following chart:




| I/O on standard Trio Interface | Additional I/O on SK CU2-STD Option |
|---|---|
| 1 X programmable digital input | 4 X programmable digital input |
| 5 VDC and 15 VDC power supplies | 2 X single-ended analog inputs |
| RS 485 interface via M-12 connector and terminals | +10 VDC reference supply |
| 1 X programmable relay output | 1 X selectable/programmable analog/digital output |
| | PID control access |

## Step 5: Cover Mounted Technology Unit (TU) Options

A variety of pre-engineered plug in Technology Unit (TU) options can be ordered to replace the standard blank cover of the SK 300E AC vector drive. Only a single TU can be installed on the AC vector drive at a given time. Available units include operator and field bus interfaces:



| Technology Unit (TU) Name | Description |
|---|---|
| **SK TU2-POT** | Analog reference potentiometer box with L/Off/R control switch |
| **SK TU2-CTR** | Digital control/programmer with 4 digit, 7 segment LED display |
| **SK TU2-PBR** | Profibus field bus interface |
| **SK TU2-PBR-24V** | Profibus field bus interface powered by customer 24 VDC supply |
| **SK TU2-PBR-KL** | Profibus field bus interface with clamp on connectors |
| **SK TU2-AS1** | AS (Actuator/Sensor) Interface |
| **SK TU2-CAO** | CANopen field bus interface |
| **SK TU2-DEV** | DeviceNet field bus interface |
| **SK TU2-IBS** | InterBus field bus interface |
| **SK TU2-DECKEL** | Original blank cover for TU slot (in case TU option is removed) |

## Step 6: Wall Mounting Option Kit, SK WMK-DA1

The wall mounting kit enables placing the SK 300E AC vector drive on a nearby wall or the machine instead of directly on the NORD motor or gearmotor. The Trio Interface (TI) is still required and all other options can be used.





## Step 7 : Additional Tools & Related Interface Options

In addition to the cover mounted SK TU2-CTR option, there are several additional options that enable simple programming and control of the SK 300E:

**Handheld Parameter Box (P-Box) with 10 foot cable, SK PAR-2H**

Detachable external add-on unit that can be used to program and display parameters and control the operation of the connected SK 300E. Features multi-line plain text display selectable in six languages. Manages and stores up to five unique AC vector drive programs. Cable plugs into M-12 connector in side of Trio Interface.

**Panel Mount Parameter Box (P-Box), SK PAR-2E**

Panel Mount version of Parameter Box with same functionality as SK PAR-2H. Installs in cut-out in front of customer supplied operator panel. Interface connection is performed by customer with their shielded cable via terminals on SK PAR-2E and SK 300E.



### NORD CON Software – Available free at NORD Website

NORD CON Software is a Windows-based PC program that enables the control and programming of NORDAC AC vector drives. It provides for accessing up to 31 AC vector drives simultaneously via the RS485 interface. It features both off-line and on-line programming and data management modes.

NORD CON allows user to:

- Program AC vector drives and upload/download parameter files
- Control connected AC vector drives for test/troubleshooting
- Monitor connected AC vector drives and examine up to four variables versus time with built-in oscilloscope feature
- Display parameter information in six languages

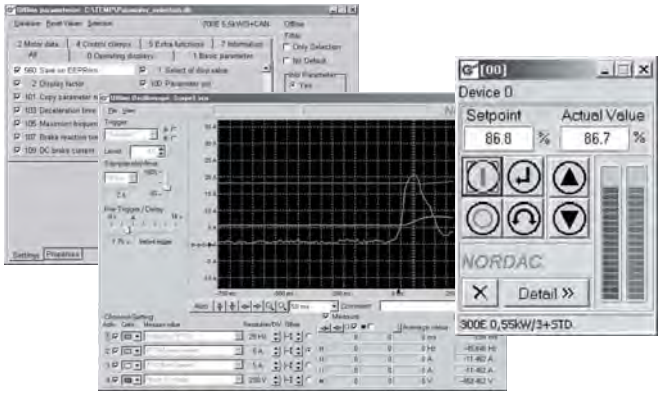


**Optional accessories required to interface user PC to SK 300E via NORD CON are:**

**SK IC1 – RS 485 to RS 232 interface converter**
Enables communication between RS 232 port on computer and RS 485 port on SK 300E

**Cable SK 300E –**
10 foot cable that connects between the 9-Pin D shell connector on the SK IC1 and the M-12 connector on the side of the SK 300E Trio Interface.

### Electromechanical Brake Interface & Coil Voltage Selection

As standard, the SK 300E provides a dedicated high voltage DC power supply and coordination software to directly control an Electromechanical Brake. This is equivalent to using a half wave rectifier, so the brake coil voltage must be specified per the following chart:

| Nominal Inverter AC Input Voltage | Brake Coil Voltage |
|---|---|
| 440 – 480 VAC | 205 VDC |
| 200 – 240 VAC | 105 VDC |
| 380 – 415 VAC | 180 VDC |

The brake gets connected to terminals +Br and –Br on the Trio Interface

### Motor overload protection

Electronic motor overload protection is provided as standard on the SK 300E AC vector drive. If required, more precise protection can be achieved via the use of motor thermostats (TW) or thermistor sensors (TF). These devices can be interfaced to the SK 300E via the programmable digital input to indicate a motor over temperature error.

# Performance Data



## Standard Efficiency

## 230/460V – 60Hz

Inverter duty • TEFC
Synchronous speed 1800rpm @ 60Hz • 4-pole • Three-phase
Voltages: 230/460V – 60Hz • 1.15 Service Factor
Continuous Duty • 40°C Ambient • up to 3300ft Elevation
Class B temperature rise • Class F insulation

| Motor Type | Power Pn | | Nn Full-load | In Full-Load Current 230V | In Full-Load Current 460V | Ia/In | Code Letter | Torque Tn | Ta/Tn | Tk/Tn | pf | Eff. | Jm Inertia |
|---|---|---|---|---|---|---|---|---|---|---|---|---|---|
| | [hp] | [kW] | [rpm] | [A] | [A] | [%] | | [lb-in] | | | | [%] | [lb-ft²] |
| **63S/4** | 0.16 | 0.12 | 1700 | 0.88 | 0.44 | 245 | F | 5.92 | 2.1 | 2.2 | 0.66 | 52 | 0.005 |
| **63L/4** | 0.25 | 0.18 | 1680 | 1.12 | 0.56 | 275 | E | 8.99 | 2.1 | 2.2 | 0.71 | 57 | 0.0067 |
| **71S/4** | 0.33 | 0.25 | 1710 | 1.56 | 0.78 | 310 | G | 12.3 | 2.5 | 2.4 | 0.64 | 63 | 0.017 |
| **71L/4** | 0.5 | 0.37 | 1720 | 1.90 | 0.95 | 355 | F | 18.0 | 2.45 | 2.6 | 0.69 | 71 | 0.0204 |
| **80S/4** | 0.75 | 0.55 | 1710 | 2.70 | 1.35 | 355 | F | 27.0 | 2.2 | 2.2 | 0.71 | 72 | 0.0259 |
| **80L/4** | 1 | 0.75 | 1650 | 3.66 | 1.83 | 390 | G | 38.1 | 2.2 | 2.3 | 0.74 | 70 | 0.0345 |
| **90S/4** | 1.5 | 1.1 | 1660 | 4.84 | 2.42 | 445 | G | 55.6 | 2.7 | 2.6 | 0.78 | 73 | 0.055 |
| **90L/4** | 2 | 1.5 | 1660 | 6.34 | 3.17 | 465 | G | 75.8 | 2.55 | 2.5 | 0.80 | 74 | 0.074 |
| **100L/4** | 3 | 2.2 | 1705 | 9.0 | 4.50 | 490 | G | 108 | 2.3 | 2.6 | 0.81 | 82 | 0.107 |
| **100LA/4** | 5 | 3.7 | 1725 | 15.2 | 7.62 | 510 | G | 180 | 2.7 | 3.1 | 0.75 | 81 | 0.141 |
| **132S/4** | 7.5 | 5.5 | 1735 | 19.8 | 9.9 | 545 | G | 267 | 2.45 | 2.75 | 0.82 | 86 | 0.55 |
| **132M/4** | 10 | 7.5 | 1735 | 25.8 | 12.9 | 645 | H | 363 | 2.9 | 3.2 | 0.84 | 87 | 0.752 |
| **160M/4** | 15 | 11 | 1770 | 38.4 | 19.2 | 665 | H | 522 | 2.45 | 3.0 | 0.82 | 88 | 0.95 |
| **160L/4** | 20 | 15 | 1765 | 49 | 24.5 | 725 | H | 713 | 2.9 | 3.3 | 0.86 | 89.4 | 1.23 |
| **180MX/4** | 25 | 18.5 | 1750 | 60 | 30 | 860 | K | 887 | 2.95 | 3.4 | 0.87 | 89 | 1.35 |
| **180LX/4** | 30 | 22 | 1755 | 71 | 35.5 | 980 | L | 1052 | 3.4 | 3.7 | 0.87 | 89.4 | 1.35 |

**Pn** - Full load power
**Nn** - Full load speed
**In** - Full load current
**Ia** - Locked-rotor current
**Ia/In** - Locked-rotor current ratio (%)
**Tn** - Full-load torque
**Ta** - Locked-rotor torque
**Ta/Tn** - Locked-rotor torque ratio
**Tk** - Break-down torque
**Tk/Tn** - Break-down torque ratio
**pf** - Power factor
**Eff** - Normal efficiency
**Jm** - Motor inertia





## Energy Efficient (EPAct)

# 230/460V – 60Hz / EE

Inverter duty • TEFC
Synchronous speed 1800rpm @ 60Hz • 4-pole • Three-phase
Voltages: 230/460V – 60Hz • 1.15 Service Factor
Continuous Duty • 40°C Ambient • up to 3300ft Elevation
Class B temperature rise • Class F insulation

| Motor Type | Power Pn | | Nn Full-load | In Full-Load Current | | Ia/In | Code Letter | Torque Tn | Ta/Tn | Tk/Tn | pf | Eff. | Jm Inertia |
|---|---|---|---|---|---|---|---|---|---|---|---|---|---|
| | | | | 230V | 460V | | | | | | | | |
| | [hp] | [kW] | [rpm] | [A] | [A] | [%] | | [lb-in] | | | | [%] | [lb-ft²] |
| **80LH/4** | 1 | 0.75 | 1750 | 3.88 | 1.94 | 600 | L | 36.0 | 4.6 | 4.3 | 0.59 | 82.5 | 0.051 |
| **90SH/4** | 1.5 | 1.1 | 1740 | 4.3 | 2.15 | 630 | J | 53.1 | 3.5 | 3.8 | 0.76 | 84.0 | 0.085 |
| **90LH/4** | 2 | 1.5 | 1745 | 6.3 | 3.15 | 670 | K | 72.1 | 4.3 | 4.5 | 0.71 | 84.0 | 0.092 |
| **100LH/4** | 3 | 2.2 | 1765 | 8.6 | 4.3 | 790 | L | 105 | 3.6 | 4.7 | 0.73 | 87.5 | 0.178 |
| **112MH/4** | 5 | 3.7 | 1770 | 14.4 | 7.2 | 810 | L | 176 | 4.0 | 4.8 | 0.76 | 87.5 | 0.304 |
| **132SH/4** | 7.5 | 5.5 | 1780 | 20.9 | 10.5 | 820 | L | 259 | 4.3 | 4.6 | 0.74 | 89.5 | 0.75 |
| **132MH/4** | 10 | 7.5 | 1770 | 27.0 | 13.5 | 735 | J | 356 | 3.2 | 4.0 | 0.78 | 89.5 | 0.84 |
| **160MH/4** | 15 | 11 | 1765 | 35.8 | 17.9 | 810 | J | 527 | 2.6 | 3.2 | 0.85 | 91.0 | 1.23 |
| **160LH/4** | 20 | 15 | 1765 | 49 | 24.5 | 850 | K | 712 | 2.8 | 3.5 | 0.85 | 91.0 | 1.35 |
| **180MH/4** | 25 | 18.5 | 1770 | 61 | 30.5 | 840 | K | 879 | 2.8 | 3.6 | 0.83 | 92.4 | 3.56 |
| **180LH/4** | 30 | 22 | 1770 | 72 | 36 | 880 | K | 1046 | 3.1 | 3.9 | 0.83 | 92.4 | 4.51 |

**Pn** - Full load power
**Nn** - Full load speed
**In** - Full load current
**Ia** - Locked-rotor current
**Ia/In** - Locked-rotor current ratio (%)
**Tn** - Full-load torque
**Ta** - Locked-rotor torque
**Ta/Tn** - Locked-rotor torque ratio
**Tk** - Break-down torque
**Tk/Tn** - Break-down torque ratio
**pf** - Power factor
**Eff** - Normal efficiency
**Jm** - Motor inertia

# Performance Data



## Standard Efficiency

**575V – 60Hz**

Inverter duty • TEFC
Synchronous speed 1800rpm @ 60Hz • 4-pole • Three-phase
Voltages: 332/575V – 60Hz • 1.15 Service Factor
Continuous Duty • 40°C Ambient • up to 3300ft Elevation
Class B temperature rise • Class F insulation

| Motor Type | Power Pn | | Nn Full-load | In Full-Load Current 575V | Ia/In | Code Letter | Torque Tn | Ta/Tn | Tk/Tn | pf | Eff. | Jm Inertia |
|---|---|---|---|---|---|---|---|---|---|---|---|---|
| | [hp] | [kW] | [rpm] | [A] | [%] | | [lb-in] | | | | [%] | [lb-ft²] |
| **63S/4** | 0.16 | 0.12 | 1700 | 0.37 | 245 | F | 5.92 | 2.1 | 2.2 | 0.66 | 52 | 0.005 |
| **63L/4** | 0.25 | 0.18 | 1680 | 0.46 | 275 | E | 8.99 | 2.1 | 2.2 | 0.71 | 57 | 0.0067 |
| **71S/4** | 0.33 | 0.25 | 1710 | 0.66 | 310 | G | 12.3 | 2.5 | 2.4 | 0.64 | 63 | 0.017 |
| **71L/4** | 0.5 | 0.37 | 1720 | 0.8 | 355 | F | 18.0 | 2.45 | 2.6 | 0.69 | 71 | 0.0204 |
| **80S/4** | 0.75 | 0.55 | 1710 | 1.12 | 355 | F | 27.0 | 2.2 | 2.2 | 0.71 | 72 | 0.0259 |
| **80L/4** | 1 | 0.75 | 1650 | 1.46 | 390 | G | 38.1 | 2.2 | 2.3 | 0.74 | 70 | 0.0345 |
| **90S/4** | 1.5 | 1.1 | 1660 | 1.94 | 445 | G | 55.6 | 2.7 | 2.6 | 0.78 | 73 | 0.055 |
| **90L/4** | 2 | 1.5 | 1660 | 2.54 | 465 | G | 75.8 | 2.55 | 2.5 | 0.80 | 74 | 0.074 |
| **100L/4** | 3 | 2.2 | 1705 | 3.6 | 490 | G | 108 | 2.3 | 2.6 | 0.81 | 82 | 0.107 |
| **100LA/4** | 5 | 3.7 | 1725 | 6.1 | 510 | G | 180 | 2.7 | 3.1 | 0.75 | 81 | 0.141 |
| **132S/4** | 7.5 | 5.5 | 1735 | 7.92 | 545 | G | 267 | 2.45 | 2.75 | 0.82 | 86 | 0.55 |
| **132M/4** | 10 | 7.5 | 1735 | 10.3 | 645 | H | 363 | 2.9 | 3.2 | 0.84 | 87 | 0.752 |
| **160M/4** | 15 | 11 | 1770 | 14.7 | 665 | H | 522 | 2.45 | 3.0 | 0.82 | 88 | 0.95 |
| **160L/4** | 20 | 15 | 1765 | 19.5 | 725 | H | 713 | 2.9 | 3.3 | 0.86 | 89.4 | 1.23 |
| **180MX/4** | 25 | 18.5 | 1750 | 24.0 | 860 | K | 887 | 2.95 | 3.4 | 0.87 | 89 | 1.35 |
| **180LX/4** | 30 | 22 | 1755 | 28.4 | 980 | L | 1052 | 3.4 | 3.7 | 0.87 | 89.4 | 1.35 |

**Pn** - **Full load power**
**Nn** - **Full load speed**
**In** - **Full load current**
**Ia** - **Locked-rotor current**
**Ia/In** - **Locked-rotor current ratio (%)**
**Tn** - **Full-load torque**
**Ta** - **Locked-rotor torque**
**Ta/Tn** - **Locked-rotor torque ratio**
**Tk** - **Break-down torque**
**Tk/Tn** - **Break-down torque ratio**
**pf** - **Power factor**
**Eff** - **Normal efficiency**
**Jm** - **Motor inertia**





## Energy Efficient (EPAct)

# 575V – 60Hz / EE

Inverter duty • TEFC
Synchronous speed 1800rpm @ 60Hz • 4-pole • Three-phase
Voltages: 332/575V – 60Hz • 1.15 Service Factor
Continuous Duty • 40°C Ambient • up to 3300ft Elevation
Class B temperature rise • Class F insulation

| Motor Type | Power Pn | | Nn Full-load | In Full-Load Current 575V | Ia/In | Code Letter | Torque Tn | Ta/Tn | Tk/Tn | pf | Eff. | Jm Inertia |
|---|---|---|---|---|---|---|---|---|---|---|---|---|
| | [hp] | [kW] | [rpm] | [A] | [%] | | [lb-in] | | | | [%] | [lb-ft²] |
| **80LH/4** | 1 | 0.75 | 1750 | 1.5 | 600 | L | 36.0 | 4.6 | 4.3 | 0.59 | 82.5 | 0.051 |
| **90SH/4** | 1.5 | 1.1 | 1740 | 1.75 | 630 | J | 53.1 | 3.5 | 3.8 | 0.76 | 84.0 | 0.085 |
| **90LH/4** | 2 | 1.5 | 1745 | 2.45 | 670 | K | 72.1 | 4.3 | 4.5 | 0.71 | 84.0 | 0.092 |
| **100LH/4** | 3 | 2.2 | 1765 | 3.4 | 790 | L | 105 | 3.6 | 4.7 | 0.73 | 87.5 | 0.178 |
| **112MH/4** | 5 | 3.7 | 1770 | 5.6 | 810 | L | 176 | 4.0 | 4.8 | 0.76 | 87.5 | 0.304 |
| **132SH/4** | 7.5 | 5.5 | 1780 | 8.3 | 820 | L | 259 | 4.3 | 4.6 | 0.74 | 89.5 | 0.75 |
| **132MH/4** | 10 | 7.5 | 1770 | 10.8 | 735 | J | 356 | 3.2 | 4.0 | 0.78 | 89.5 | 0.84 |
| **160MH/4** | 15 | 11 | 1765 | 14.3 | 810 | J | 527 | 2.6 | 3.2 | 0.85 | 91.0 | 1.23 |
| **160LH/4** | 20 | 15 | 1765 | 19.6 | 850 | K | 712 | 2.8 | 3.5 | 0.85 | 91.0 | 1.35 |
| **180MH/4** | 25 | 18.5 | 1770 | 24.4 | 840 | K | 879 | 2.8 | 3.6 | 0.83 | 92.4 | 3.56 |
| **180LH/4** | 30 | 22 | 1770 | 28.8 | 880 | K | 1046 | 3.1 | 3.9 | 0.83 | 92.4 | 4.51 |

**Pn** - Full load power
**Nn** - Full load speed
**In** - Full load current
**Ia** - Locked-rotor current
**Ia/In** - Locked-rotor current ratio (%)
**Tn** - Full-load torque
**Ta** - Locked-rotor torque

**Ta/Tn** - Locked-rotor torque ratio
**Tk** - Break-down torque
**Tk/Tn** - Break-down torque ratio
**pf** - Power factor
**Eff** - Normal efficiency
**Jm** - Motor inertia

# Performance Data



## Standard Efficiency

## 200-208V – 60Hz

Inverter duty • Induction motor • TEFC
Synchronous speed 1800rpm @ 60Hz • 4-pole • Three-phase
Voltages: 208V – 60Hz • 1.15 Service Factor
Continuous Duty • 40°C Ambient • up to 3300ft Elevation
Class B temperature rise • Class F insulation

| Motor Type | Power Pn | | Nn Full-load | In 208V | Ia/In | Code Letter | Torque Tn | Ta/Tn | Tk/Tn | pf | Eff. | Jm Inertia |
|---|---|---|---|---|---|---|---|---|---|---|---|---|
| | [hp] | [kW] | [rpm] | [A] | [%] | | [lb-in] | | | | [%] | [lb-ft²] |
| **63S/4** | 0.16 | 0.12 | 1700 | 0.97 | 245 | F | 5.93 | 2.1 | 2.2 | 0.66 | 52 | 0.005 |
| **63L/4** | 0.25 | 0.18 | 1680 | 1.24 | 275 | E | 9.38 | 2.1 | 2.2 | 0.71 | 57 | 0.0067 |
| **71S/4** | 0.33 | 0.25 | 1710 | 1.73 | 310 | G | 12.2 | 2.5 | 2.4 | 0.64 | 63 | 0.015 |
| **71L/4** | 0.5 | 0.37 | 1720 | 2.10 | 355 | F | 18.3 | 2.45 | 2.6 | 0.69 | 71 | 0.0181 |
| **80S/4** | 0.75 | 0.55 | 1710 | 2.99 | 355 | F | 27.6 | 2.2 | 2.2 | 0.71 | 72 | 0.0304 |
| **80L/4** | 1 | 0.75 | 1650 | 4.05 | 390 | G | 38.2 | 2.2 | 2.3 | 0.74 | 70 | 0.0392 |
| **90S/4** | 1.5 | 1.1 | 1660 | 5.35 | 445 | G | 57.0 | 2.7 | 2.6 | 0.78 | 73 | 0.0670 |
| **90L/4** | 2 | 1.5 | 1660 | 7.01 | 465 | G | 75.9 | 2.55 | 2.5 | 0.80 | 74 | 0.0855 |
| **100L/4** | 3 | 2.2 | 1705 | 9.95 | 490 | G | 111 | 2.3 | 2.6 | 0.81 | 82 | 0.107 |
| **100LA/4** | 5 | 3.7 | 1725 | 16.8 | 510 | G | 183 | 2.7 | 3.1 | 0.75 | 81 | 0.162 |
| **132S/4** | 7.5 | 5.5 | 1735 | 21.9 | 545 | G | 272 | 2.45 | 2.75 | 0.82 | 86 | 0.553 |
| **132M/4** | 10 | 7.5 | 1735 | 28.5 | 645 | H | 363 | 2.9 | 3.2 | 0.84 | 87 | 0.753 |

**Pn** - **Full load power**
**Nn** - **Full load speed**
**In** - **Full load current**
**Ia** - **Locked-rotor current**
**Ia/In** - **Locked-rotor current ratio (%)**
**Tn** - **Full-load torque**
**Ta** - **Locked-rotor torque**

**Ta/Tn** - **Locked-rotor torque ratio**
**Tk** - **Break-down torque**
**Tk/Tn** - **Break-down torque ratio**
**pf** - **Power factor**
**Eff** - **Normal efficiency**
**Jm** - **Motor inertia**



Frames 63-132
230 / 460V, 60Hz, 3Ø  200 / 400V, 50Hz, 3Ø
190 / 380V, 60Hz, 3Ø

120094410

WIRING DIAGRAM
3 PHASE MOTOR

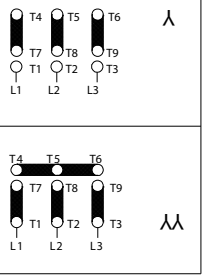


Frames 160 +
230 / 460V, 60Hz, 3Ø  200 / 400V, 50Hz, 3Ø
190 / 380V, 60Hz, 3Ø

120095260

WIRING DIAGRAM
3 PHASE MOTOR

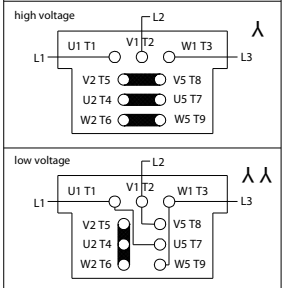


Frames 160 +
230 / 460V, 60Hz, 3Ø  200 / 400V, 50Hz, 3Ø
190 / 380V, 60Hz, 3Ø

120095500 REV 1

WIRING DIAGRAM
3 PHASE MOTOR

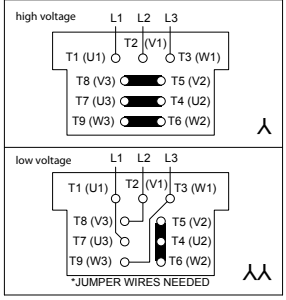


460 / 800V, 60Hz, 3Ø  230 / 400V, 50Hz, 3Ø
208 / 360V, 60Hz, 3Ø  400 / 690V, 50Hz, 3Ø
332 / 575V, 60Hz, 3Ø

120095270

WIRING DIAGRAM
3 PHASE MOTOR

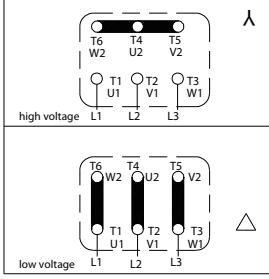


120094440

Normal Brake Reaction Time
(AC - Switching)

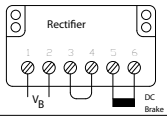


Rapid Brake Reaction Time
(DC - Switching)

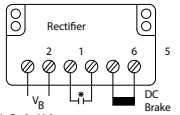


VB Brake Voltage
Terminals 1 & 2
- AC brake power input
Terminals 3 & 4
- DC switching, fast react
Terminals 5 & 6
- Brake coil, DC voltage out
* Customer supplied contact

STANDARD
BRAKE RECTIFIER

120094450

Normal Brake Reaction Time
(AC Switching)

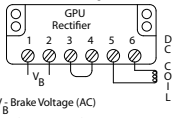


VB Brake Voltage (AC)
Terminals 1 & 2 - AC Brake Power Input
Terminals 3 & 4 - DC Switching, Fast React Terminals
Terminals 5 & 6 - DC Voltage Output to Brake.

Rapid Brake Reaction Time
(DC Switching - Internal)

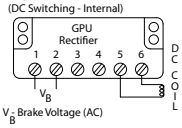


VB Brake Voltage (AC)
Terminals 1 & 2 - AC Brake Power Input
Terminals 3 & 4 - No Jumper Connected
Terminals 5 & 6 - DC Voltage Output to Brake.

GPU BRAKE
RECTIFIER

120094460

Rapid Brake Reaction Time
(DC Switching - External)

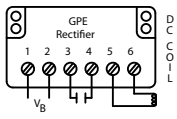


VB Brake Voltage (AC)
Terminals 1 & 2 - AC Brake Power Input
Terminals 3 & 4 - DC Switching, Contactor - IEC AC3
Terminals 5 & 6 -DC Voltage Output to Brake.

GPE BRAKE
RECTIFIER

Use with P/N's 19140230 & 19140240

2 - SPEED MOTORS
SINGLE WINDING (4-2 & 8-4 POLE)

120094400

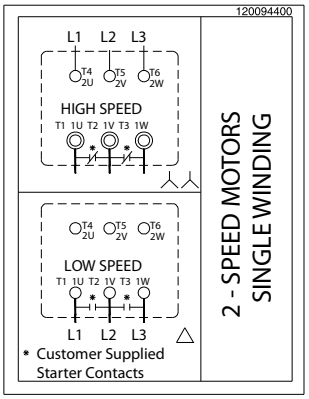


2 - SPEED MOTORS
SINGLE WINDING

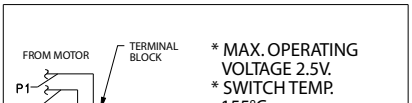


* MAX. OPERATING VOLTAGE 2.5V.
* SWITCH TEMP. 155°C
* RESPONSE TIME < 5 SECONDS

THERMISTOR
"TF" OPTION

120095240

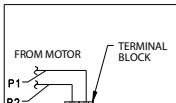


* NC (NORMALLY CLOSED) CONTACTS RATED 1.6A AT 2.50 VAC
* 6-500 VAC WORKING RANGE
* AUTOMATIC RESET AT 30 ± 15°C TEMP. DROP

THERMISTATS
"TW" OPTION

120095230

2 - SPEED MOTORS
DUAL WINDING (8-2 POLE)

120095310

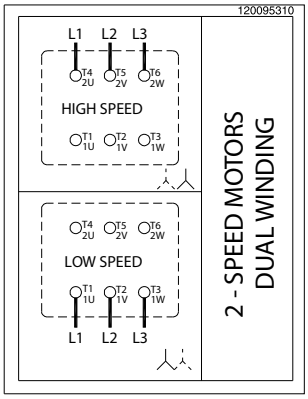


2 - SPEED MOTORS
DUAL WINDING

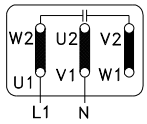


1 PHASE
115V*
50/60 Hz

* CAPACITOR IS SUPPLIED

BLOWER COOLING FAN
"FC" OPTION

120095460

OPTION "F" 1 PH

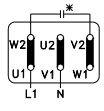


230V
50 / 60 Hz

OPTION "F" 3 PH

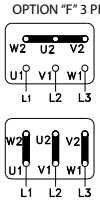


380-575V
50 / 60 Hz

220-332V
50 / 60 Hz

* CAPACITOR IS SUPPLIED

BLOWER COOLING FAN
"F" OPTION

120095250

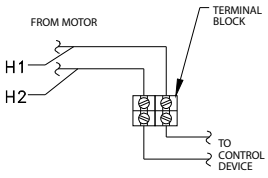


SPACE HEATER
"SH" OPTION

120095220

MOTORS

# Dimensions
# Motor Options



**Standard Motor**

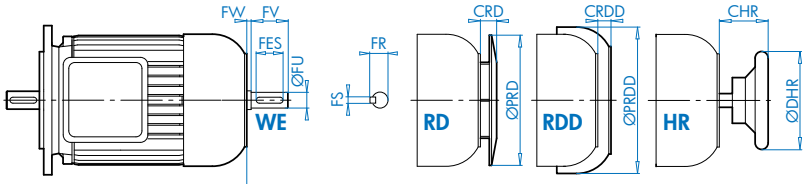


**Option IG**

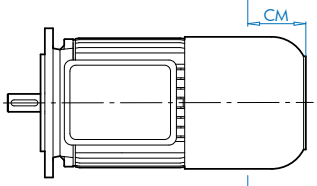


**Option F**

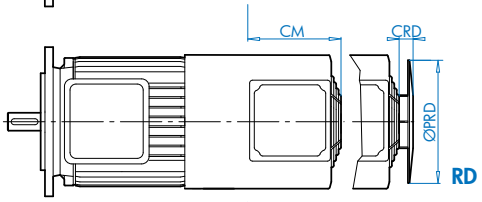


**Option IG F**

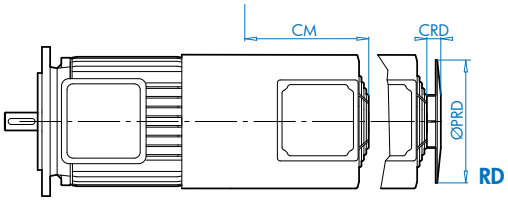


MOTORS

| Motor Type | WE | | | | | | RD | | RDD | | HR | | IG | F | IG F | RD/IG/IGF | |
|---|---|---|---|---|---|---|---|---|---|---|---|---|---|---|---|---|---|
| | FU | FR | FV | FW | FES | FS | PRD | CRD | PRDD | CRDD | DHR | CHR | CM | CM | CM | PRD | CRD |
| | [mm] | | | | | | [in] | | | | | | | | | | |
| **63S/L** | 11 | 12.5 | 23 | 0 | 16 | 4 | 4.84 | 0.47 | 6.02 | 1.06 | 3.94 | 1.54 | 2.20 | 3.46 | 6.22 | 5.24 | 1.46 |
| **71S/L** | 11 | 16.0 | 23 | 1 | 16 | 4 | 5.43 | 0.47 | 6.65 | 0.94 | 3.94 | 1.57 | 2.20 | 3.50 | 5.67 | 5.91 | 1.46 |
| **80S/L** | 14 | 21.5 | 30 | 3 | 20 | 5 | 6.14 | 0.63 | 7.20 | 1.22 | 3.94 | 1.93 | 2.40 | 3.54 | 5.51 | 6.69 | 1.57 |
| **90S/L** | 19 | 27.0 | 40 | 7 | 32 | 6 | 6.93 | 0.63 | 7.91 | 1.22 | 6.30 | 2.64 | 2.83 | 4.09 | 5.87 | 7.40 | 1.18 |
| **100L** | 24 | 31.0 | 50 | 6 | 40 | 8 | 7.64 | 0.63 | 8.86 | 1.10 | 6.30 | 2.95 | 2.71 | 3.74 | 6.10 | 8.27 | 1.10 |
| **112M** | 24 | 31.0 | 50 | 4 | 40 | 8 | 8.58 | 0.63 | 10.43 | 1.50 | 6.30 | 2.91 | 2.67 | 3.90 | 5.87 | 9.80 | 1.30 |
| **132S/M** | 32 | 41.0 | 80 | 18 | 70 | 10 | 10.12 | 0.71 | 12.51 | 1.61 | 7.87 | 4.57 | 2.48 | 4.53 | 6.10 | 11.81 | 0.98 |
| **160M/L** | 38 | 46.0 | 80 | 23 | 90 | 12 | 9.84 | 2.09 | 14.45 | 1.77 | 9.84 | 4.72 | 2.95 | 6.50 | 6.93 | 13.31 | 1.26 |
| **180MX/LX** | * | * | * | * | * | * | 13.39 | 3.15 | 15.87 | 2.76 | * | * | 4.13 | 5.87 | 7.83 | 13.31 | 1.26 |

* **Consult Factory**

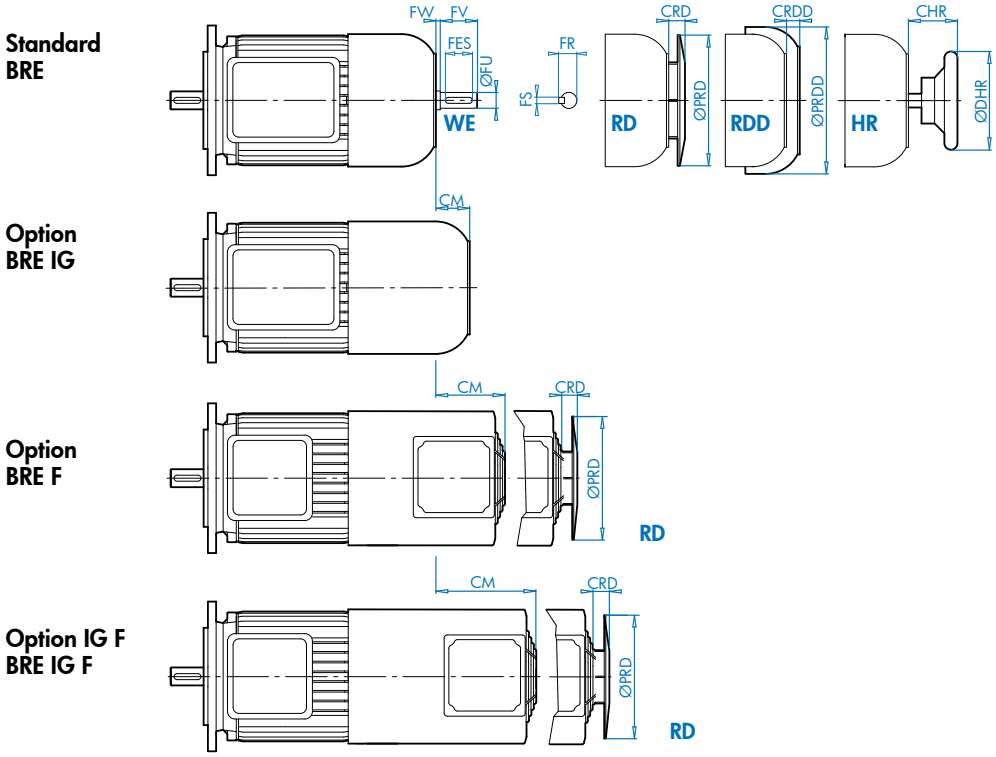


| Motor Type | WE | | | | | | RD | | RDD | | HR | | IG | F | IG F | RD/IG/IGF | |
|---|---|---|---|---|---|---|---|---|---|---|---|---|---|---|---|---|---|
| | FU | FR | FV | FW | FES | FS | PRD | CRD | PRDD | CRDD | DHR | CHR | CM | CM | CM | PRD | CRD |
| | [mm] | | | | | | [in] | | | | | | | | | | |
| **63S/L** | 11 | 12.5 | 23 | 3.5 | 16 | 4 | 4.84 | 0.47 | 6.02 | 1.02 | 0.39 | 1.69 | 2.44 | 3.54 | 4.92 | 5.24 | 1.46 |
| **71S/L** | 11 | 16.0 | 23 | 3.5 | 16 | 4 | 5.43 | 0.47 | 6.65 | 0.94 | 3.94 | 1.69 | 2.91 | 3.70 | 5.47 | 5.91 | 1.46 |
| **80S/L** | 14 | 21.5 | 30 | 4 | 20 | 5 | 6.14 | 0.63 | 7.20 | 1.22 | 3.94 | 1.97 | 2.20 | 3.50 | 5.47 | 6.69 | 1.57 |
| **90S/L** | 14 | 27.0 | 30 | 8 | 32 | 6 | 6.93 | 0.63 | 7.91 | 1.22 | 6.30 | 2.68 | 2.76 | 3.94 | 5.71 | 7.40 | 1.18 |
| **100L** | 24 | 31.0 | 50 | 10 | 40 | 8 | 7.64 | 0.63 | 8.86 | 0.87 | 6.30 | 3.07 | 2.80 | 4.13 | 5.52 | 8.27 | 1.10 |
| **112M** | 24 | 31.0 | 50 | 7 | 40 | 8 | 8.58 | 0.63 | 10.43 | 1.50 | 6.30 | 3.03 | 2.52 | 4.13 | 5.52 | 9.80 | 1.30 |
| **132S/M** | 32 | 41.0 | 80 | 10 | 70 | 10 | 10.12 | 0.71 | 12.60 | 1.61 | 7.87 | 4.25 | 2.56 | 4.92 | 6.10 | 11.81 | 0.98 |
| **160M/L** | 38 | 46.0 | 80 | 19 | 90 | 12 | 12.20 | 0.75 | 14.45 | 1.77 | 9.84 | 4.57 | 1.54 | 5.12 | 6.50 | 13.31 | 1.26 |
| **180MX/LX** | * | * | * | * | * | * | 13.70 | 0.75 | 15.87 | 2.76 | * | * | 1.97 | 5.71 | 8.46 | 13.31 | 1.26 |

*** Consult Factory**

# Dimensions
## Conduit Box & Cable Entry



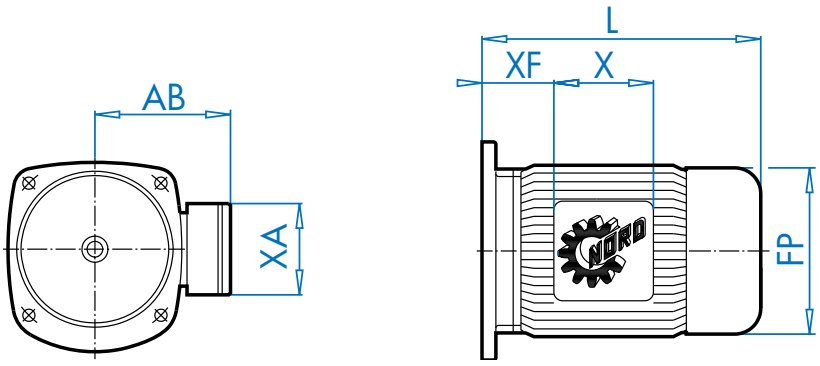


| Type / Flange | Options | Outline dimensions | | | | | | Cable entry | |
|---|---|---|---|---|---|---|---|---|---|
| 63S/L | | FP | AB | XF | X | L | XA | ce | ce-adapter |
| B14 | | 5.12 | 4.53 | 0.47 | 3.94 | 7.56 | 3.94 | 2 × M20×1.5 | 1/2" NPT |
| 160S | | 5.12 | 4.53 | 0.63 | 3.94 | 7.72 | 3.94 | 2 × M20×1.5 | 1/2" NPT |
| B14 | BRE | 5.12 | 4.84 | 0.71 | 5.28 | 9.76 | 3.50 | 2 × M20×1.5 | 1/2" NPT |
| 160S | BRE | 5.12 | 4.84 | 0.87 | 5.28 | 9.92 | 3.50 | 2 × M20×1.5 | 1/2" NPT |
| **71S/L** | | **FP** | **AB** | **XF** | **X** | **L** | **XA** | **ce** | **ce-adapter** |
| B14 | | 5.71 | 4.88 | 0.79 | 3.94 | 8.43 | 3.94 | 2 × M20×1.5 | 1/2" NPT |
| 160S | | 5.71 | 4.88 | 1.65 | 3.94 | 9.29 | 3.94 | 2 × M20×1.5 | 1/2" NPT |
| 250S | | 5.71 | 4.88 | 1.42 | 3.94 | 9.06 | 3.94 | 2 × M20×1.5 | 1/2" NPT |
| B14 | BRE | 5.75 | 5.24 | 1.02 | 5.28 | 10.71 | 3.50 | 2 × M20×1.5 | 1/2" NPT |
| 160S | BRE | 5.75 | 5.24 | 1.89 | 5.28 | 11.57 | 3.50 | 2 × M20×1.5 | 1/2" NPT |
| 250S | BRE | 5.75 | 5.24 | 1.65 | 5.28 | 11.34 | 3.50 | 2 × M20×1.5 | 1/2" NPT |
| **80S/L/LH** | | **FP** | **AB** | **XF** | **X** | **L** | **XA** | **ce** | **ce-adapter** |
| B14 | | 6.50 | 5.59 | 0.87 | 4.49 | 9.29 | 4.49 | 2 × M25×1.5 | 3/4" NPT |
| 160S | | 6.50 | 5.59 | 1.85 | 4.49 | 10.28 | 4.49 | 2 × M25×1.5 | 3/4" NPT |
| 250S | | 6.50 | 5.59 | 1.61 | 4.49 | 10.04 | 4.49 | 2 × M25×1.5 | 3/4" NPT |
| B14 | BRE | 6.50 | 5.59 | 1.02 | 6.02 | 11.81 | 4.25 | 2 × M25×1.5 | 3/4" NPT |
| 160S | BRE | 6.50 | 5.59 | 2.01 | 6.02 | 12.80 | 4.25 | 2 × M25×1.5 | 3/4" NPT |
| 250S | BRE | 6.50 | 5.59 | 1.77 | 6.02 | 12.56 | 4.25 | 2 × M25×1.5 | 3/4" NPT |
| **90S/L/SH/LH** | | **FP** | **AB** | **XF** | **X** | **L** | **XA** | **ce** | **ce-adapter** |
| B14 | | 7.20 | 5.79 | 1.02 | 4.49 | 10.87 | 4.49 | 2 × M25×1.5 | 3/4" NPT |
| 160S | | 7.20 | 5.79 | 2.05 | 4.49 | 11.89 | 4.49 | 2 × M25×1.5 | 3/4" NPT |
| 250S | | 7.20 | 5.79 | 1.81 | 4.49 | 11.65 | 4.49 | 2 × M25×1.5 | 3/4" NPT |
| 300S | | 7.20 | 5.79 | 1.02 | 4.49 | 10.87 | 4.49 | 2 × M25×1.5 | 3/4" NPT |
| B14 | BRE | 7.20 | 5.79 | 1.18 | 6.02 | 13.82 | 4.25 | 2 × M25×1.5 | 3/4" NPT |
| 160S | BRE | 7.20 | 5.79 | 2.20 | 6.02 | 14.84 | 4.25 | 2 × M25×1.5 | 3/4" NPT |
| 250S | BRE | 7.20 | 5.79 | 1.97 | 6.02 | 14.61 | 4.25 | 2 × M25×1.5 | 3/4" NPT |
| 300S | BRE | 7.20 | 5.79 | 1.18 | 6.02 | 13.82 | 4.25 | 2 × M25×1.5 | 3/4" NPT |



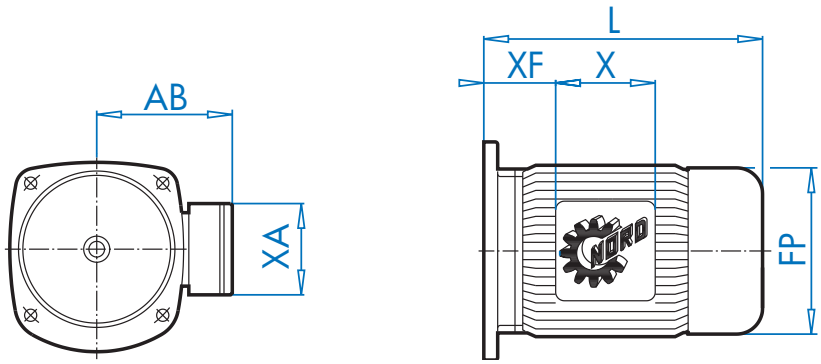


| Type / Flange | Options | Outline dimensions | | | | | | Cable entry | |
|---|---|---|---|---|---|---|---|---|---|
| 100L/L/LA/LH | | FP | AB | XF | X | L | XA | ce | ce-adapter |
| B14 | | 7.91 | 6.65 | 1.26 | 4.49 | 12.05 | 4.49 | 2 × M32×1.5 | 1" NPT |
| 160S | | 7.91 | 6.65 | 2.28 | 4.49 | 13.07 | 4.49 | 2 × M32×1.5 | 1" NPT |
| 250S | | 7.91 | 6.65 | 2.05 | 4.49 | 12.83 | 4.49 | 2 × M32×1.5 | 1" NPT |
| 300S | | 7.91 | 6.65 | 1.26 | 4.49 | 12.05 | 4.49 | 2 × M32×1.5 | 1" NPT |
| Ø 250 | | 7.91 | 6.65 | 1.26 | 4.49 | 12.05 | 4.49 | 2 × M32×1.5 | 1" NPT |
| B14 | BRE | 7.91 | 6.77 | 1.42 | 6.02 | 15.63 | 4.25 | 2 × M25×1.5 | 1" NPT |
| 160S | BRE | 7.91 | 6.77 | 2.44 | 6.02 | 16.65 | 4.25 | 2 × M25×1.5 | 1" NPT |
| 250S | BRE | 7.91 | 6.77 | 2.20 | 6.02 | 16.42 | 4.25 | 2 × M25×1.5 | 1" NPT |
| 300S | BRE | 7.91 | 6.77 | 1.42 | 6.02 | 15.63 | 4.25 | 2 × M25×1.5 | 1" NPT |
| Ø 250 | BRE | 7.91 | 6.77 | 1.42 | 6.02 | 15.63 | 4.25 | 2 × M25×1.5 | 1" NPT |

| 112M/SH/MH | | FP | AB | XF | X | L | XA | ce | ce-adapter |
|---|---|---|---|---|---|---|---|---|---|
| B14 | | 8.98 | 7.05 | 1.77 | 4.49 | 12.83 | 4.49 | 2 × M32×1.5 | 1" NPT |
| 160S | | 8.98 | 7.05 | 2.91 | 4.49 | 13.98 | 4.49 | 2 × M32×1.5 | 1" NPT |
| 250S | | 8.98 | 7.05 | 2.68 | 4.49 | 13.74 | 4.49 | 2 × M32×1.5 | 1" NPT |
| 300S | | 8.98 | 7.05 | 1.89 | 4.49 | 12.95 | 4.49 | 2 × M32×1.5 | 1" NPT |
| Ø 250 | | 8.98 | 7.05 | 1.77 | 4.49 | 12.83 | 4.49 | 2 × M32×1.5 | 1" NPT |
| B14 | BRE | 8.98 | 7.17 | 1.93 | 6.02 | 16.50 | 4.25 | 2 × M25×1.5 | 1" NPT |
| 160S | BRE | 8.98 | 7.17 | 3.07 | 6.02 | 17.64 | 4.25 | 2 × M25×1.5 | 1" NPT |
| 250S | BRE | 8.98 | 7.17 | 2.83 | 6.02 | 17.40 | 4.25 | 2 × M25×1.5 | 1" NPT |
| 300S | BRE | 8.98 | 7.17 | 2.05 | 6.02 | 16.61 | 4.25 | 2 × M25×1.5 | 1" NPT |
| Ø 250 | BRE | 8.98 | 7.17 | 1.93 | 6.02 | 16.50 | 4.25 | 2 × M25×1.5 | 1" NPT |

| 132S/M/SH/MH | | FP | AB | XF | X | L | XA | ce | ce-adapter |
|---|---|---|---|---|---|---|---|---|---|
| B14 | | 10.47 | 8.03 | 2.09 | 4.80 | 16.42 | 4.80 | 2 × M32×1.5 | 1" NPT |
| 250S | | 10.47 | 8.03 | 2.80 | 4.80 | 17.13 | 4.80 | 2 × M32×1.5 | 1" NPT |
| 300S | | 10.47 | 8.03 | 2.01 | 4.80 | 16.34 | 4.80 | 2 × M32×1.5 | 1" NPT |
| Ø 250 | | 10.47 | 8.03 | 2.80 | 4.80 | 17.13 | 4.80 | 2 × M32×1.5 | 1" NPT |
| B14 | BRE | 10.47 | 7.91 | 1.77 | 7.28 | 20.59 | 5.47 | 2 × M25×1.5 | 1" NPT |
| 250S | BRE | 10.47 | 7.91 | 7.28 | 7.28 | 21.34 | 5.47 | 2 × M25×1.5 | 1" NPT |
| 300S | BRE | 10.47 | 7.91 | 1.73 | 7.28 | 20.55 | 5.47 | 2 × M25×1.5 | 1" NPT |
| Ø 250 | BRE | 10.47 | 7.91 | 2.52 | 7.28 | 21.34 | 5.47 | 2 × M25×1.5 | 1" NPT |

# Dimensions
## Conduit Box & Cable Entry



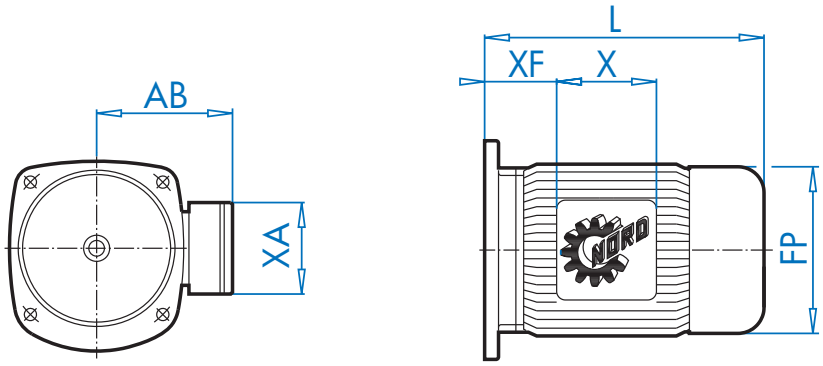


| Type / Flange | Options | Outline dimensions | | | | | | Cable entry | |
|---|---|---|---|---|---|---|---|---|---|
| 160M/L/MH | | FP | AB | XF | X | L | XA | ce | ce-adapter |
| 300S | | 12.60 | 8.90 | 3.07 | 6.50 | 18.82 | 6.50 | 2 × M40×1.5 | 1.0" NPT |
| Ø 300 | | 12.60 | 8.90 | 3.07 | 6.50 | 18.82 | 6.50 | 2 × M40×1.5 | 1.0" NPT |
| Ø 350 | | 12.60 | 8.90 | 3.07 | 6.50 | 18.82 | 6.50 | 2 × M40×1.5 | 1.0" NPT |
| 300S | BRE | 12.60 | 8.90 | 3.07 | 6.50 | 25.39 | 6.50 | 2 × M40×1.5 | 1.0" NPT |
| Ø 300 | BRE | 12.60 | 8.90 | 3.07 | 6.50 | 25.39 | 6.50 | 2 × M40×1.5 | 1.0" NPT |
| Ø 350 | BRE | 12.60 | 8.90 | 3.07 | 6.50 | 25.39 | 6.50 | 2 × M40×1.5 | 1.0" NPT |
| 160LH | | FP | AB | XF | X | L | XA | ce | ce-adapter |
| 300S | | 12.60 | 8.90 | 3.07 | 6.50 | 20.39 | 6.50 | 2 × M40×1.5 | 1.0" NPT |
| Ø 300 | | 12.60 | 8.90 | 3.07 | 6.50 | 20.39 | 6.50 | 2 × M40×1.5 | 1.0" NPT |
| Ø 350 | | 12.60 | 8.90 | 3.07 | 6.50 | 20.39 | 6.50 | 2 × M40×1.5 | 1.0" NPT |
| 300S | BRE | 12.60 | 8.90 | 3.07 | 6.50 | 27.13 | 6.50 | 2 × M40×1.5 | 1.0" NPT |
| Ø 300 | BRE | 12.60 | 8.90 | 3.07 | 6.50 | 27.13 | 6.50 | 2 × M40×1.5 | 1.0" NPT |
| Ø 350 | BRE | 12.60 | 8.90 | 3.07 | 6.50 | 27.13 | 6.50 | 2 × M40×1.5 | 1.0" NPT |
| 180MX/LX | | FP | AB | XF | X | L | XA | ce | ce-adapter |
| 300S | | 12.60 | 8.90 | 3.07 | 6.50 | 20.39 | 6.50 | 2 × M40×1.5 | 1.0" NPT |
| Ø 300 | | 12.60 | 8.90 | 3.07 | 6.50 | 20.39 | 6.50 | 2 × M40×1.5 | 1.0" NPT |
| Ø 350 | | 12.60 | 8.90 | 3.07 | 6.50 | 20.39 | 6.50 | 2 × M40×1.5 | 1.0" NPT |
| 300S | BRE | 12.60 | 8.90 | 3.07 | 6.50 | 27.13 | 6.50 | 2 × M40×1.5 | 1.0" NPT |
| Ø 300 | BRE | 12.60 | 8.90 | 3.07 | 6.50 | 27.13 | 6.50 | 2 × M40×1.5 | 1.0" NPT |
| Ø 350 | BRE | 12.60 | 8.90 | 3.07 | 6.50 | 27.13 | 6.50 | 2 × M40×1.5 | 1.0" NPT |
| 180MH/LH | | FP | AB | XF | X | L | XA | ce | ce-adapter |
| Ø 300 | | 14.09 | 10.20 | 4.45 | 5.20 | 24.49 | 5.98 | 2 × M40×1.5 | 1.0" NPT |
| Ø 350 | | 14.09 | 10.20 | 3.66 | 5.20 | 23.70 | 5.98 | 2 × M40×1.5 | 1.0" NPT |
| Ø 300 | BRE | 14.09 | 10.20 | 3.86 | 6.38 | 28.62 | 6.38 | 2 × M40×1.5 | 1.0" NPT |
| Ø 350 | BRE | 14.09 | 10.20 | 3.07 | 6.38 | 27.83 | 6.38 | 2 × M40×1.5 | 1.0" NPT |

## Motor Dimensions with SK 200E Motor Mounted AC Vector Drive

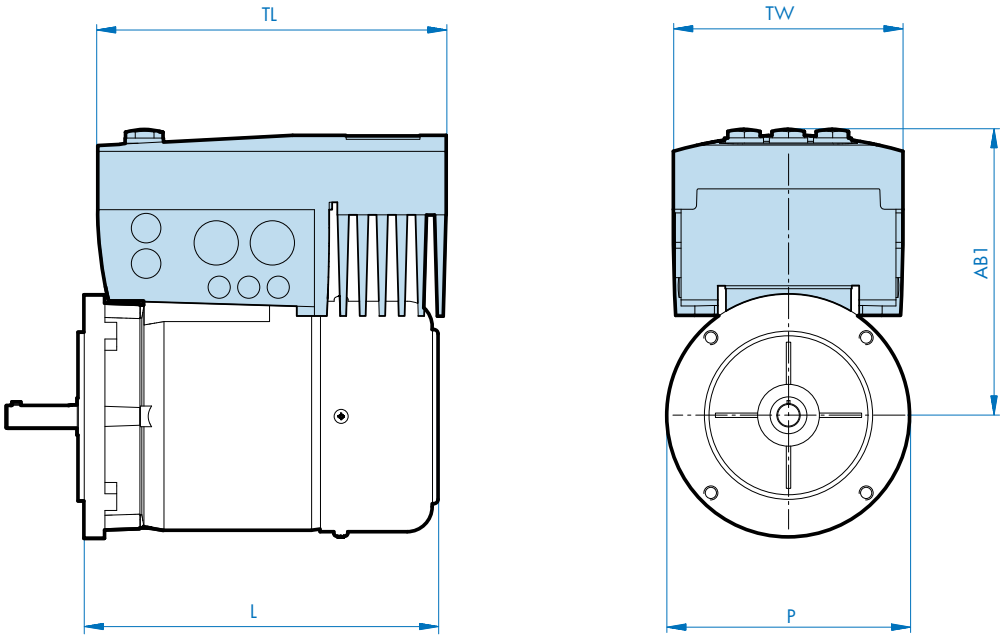


| AC Vector Drive Size | Motor | Width | | Length | | | |
|---|---|---|---|---|---|---|---|
| | | P [in] | TW [in] | L [in] | TL [in] | AB1 [in] | Weight [lbs] |
| Size 1 | 71S/L | 5.71 | 6.14 | 8.43 | 9.29 | 7.91 | 6.61 |
| | 80S/L | 6.50 | | 9.29 | | 7.68 | |
| | 90S/L | 7.20 | | 10.87 | | 7.87 | |
| | 100L/LA | 7.91 | | 12.05 | | 8.23 | |
| Size 2 | 80S/L | 6.50 | 6.93 | 9.29 | 10.47 | 7.95 | 9.04 |
| | 90S/L | 7.20 | | 10.87 | | 8.15 | |
| | 100L/LA | 7.91 | | 12.05 | | 8.58 | |
| | 112M | 8.98 | | 12.83 | | 8.98 | |
| Size 3 | 100L/LA | 7.91 | 8.58 | 12.05 | 12.99 | 9.88 | 15.21 |
| | 112M | 8.98 | | 12.83 | | 10.28 | |
| | 132S/M | 10.47 | | 16.18 | | 10.31 | |
| Size 4 | 132S/M | 10.47 | 12.01 | 16.18 | 18.90 | 12.32 | 37.48 |
| | 160M/L | 12.60 | | 19.37 | | 12.52 | |
| | 180MX/LX | 14.09 | | 24.17 | | 13.19 | |

# Dimensions
# SK 300E Trio AC Vector Drive



## Motor Dimensions with SK 300E Motor Mounted AC Vector Drive

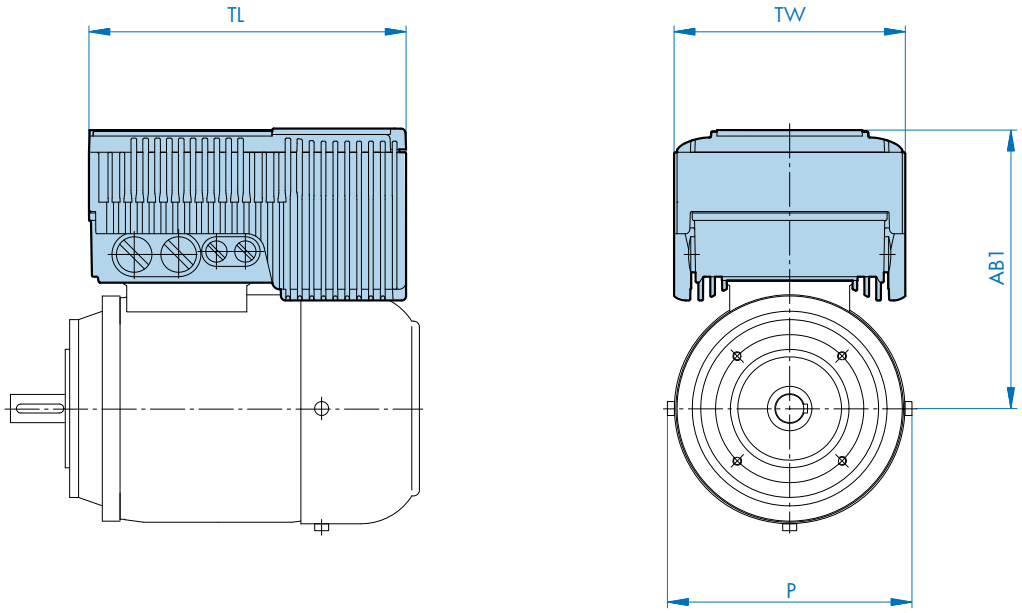


| Basic NORD Motor Description | 240 VAC Input AC Vector Drive | | | 480 VAC Input AC Vector Drive | | |
|---|---|---|---|---|---|---|
| | Type SK 300E | AC Vector Drive Size | AB1 [in] | Type SK 300E | AC Vector Drive Size | AB1 [in] |
| **63S/4** | **-370-323-B** | Size 1 | 7.48 | **-550-340-B** | Size 1 | 7.48 |
| **63L/4** | **-370-323-B** | Size 1 | 7.48 | **-550-340-B** | Size 1 | 7.48 |
| **71S/4** | **-370-323-B** | Size 1 | 7.78 | **-550-340-B** | Size 1 | 7.78 |
| **71L/4** | **-370-323-B** | Size 1 | 7.78 | **-550-340-B** | Size 1 | 7.78 |
| **80S/4** | **-550-323-B** | Size 1 | 7.42 | **-550-340-B** | Size 1 | 7.42 |
| **80L/4** | **-750-323-B** | Size 1 | 7.42 | **-750-340-B** | Size 1 | 7.42 |
| **90S/4** | **-111-323-B** | Size 2 | 8.69 | **-111-340-B** | Size 1 | 7.62 |
| **90L/4** | **-151-323-B** | Size 2 | 8.69 | **-151-340-B** | Size 1 | 7.62 |
| **100L/4** | **-221-323-B** | Size 2 | 9.19 | **-221-340-B** | Size 2 | 9.19 |
| **100LA/4** | **Not Available** | N/A | N/A | **-401-340-B** | Size 2 | 9.19 |

| AC Vector Drive Size | TL [in] | TW [in] | Weight [lbs] |
|---|---|---|---|
| Size 1 | 8.43 | 6.14 | 8.8 |
| Size 2 | 11.14 | 7.72 | 18.5 |

## Contact Information:

- North America
- Global



DRIVESYSTEMS

www.nord.com

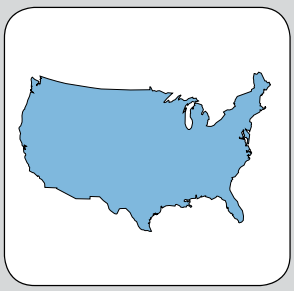





# International
# Contacts - North America

## United States

**NORD Gear Corporation - Midwest Headquarters**
800 Nord Drive, P.O. 367
Waunakee, WI 53597

toll free: 1-888-314-6673
phone: 1-608-849-7300
fax: 1-800-373-6673
eMail: info.us@nord.com

**NORD Gear Corporation - East**
100 Forsyth Hall Drive
Building 100B
Charlotte, NC 28273

toll free: 1-888-314-6673
phone: 1-608-849-0140
fax: 1-888-259-6673
eMail: info.us@nord.com

**NORD Gear Corporation - West**
1137 W. Bradford Circle
Corona, CA 92882

toll free: 1-888-314-6673
phone: 1-608-849-0190
fax: 1-888-408-6673
eMail: info.us@nord.com

**For Sales office or distributors please contact us or see our website at www.nord.com**

## Canada

**NORD Gear Limited**
41 West Drive
Brampton, Ontario L6T 4A1

toll free: 1-800-668-4378
Phone: 1-905-796-3606
fax: 1-905-796-8130
eMail: info.ca@nord.com

**Engrenages NORD Limitée**
1405 Trans-Canada Hwy.
Suite 245
Dorval, Quebec H9P 2V9

toll free: 1-800-668-4378
phone: 1-514-421-1044
fax: 1-514-421-3973
eMail: info.ca@nord.com

**For Sales office or distributors please contact us or see our website at www.nord.com**

## Mexico

**Mexico NORD Drivesystems SA DE CV**
Mexico Regional Office
Av. Ruiz Cortines 831 Ote.
Guadalupe, N.L.
México, C.P. 67110

phone: +52-81-8327-4733
fax: +52-81-8327-4735
eMail: info.mx@nord.com

**For Sales office or distributors please contact us or see our website at www.nord.com**

### Global
**Getriebebau NORD GmbH & Co. KG**
Rudolf-Diesel Str.1
22941 Bargteheide / Hamburg Germany
Phone: +49-4532-401 0 Fax: +49-4532-401 254
Email: info@nord-de.com

### Afghanistan
**Getriebebau NORD GmbH & Co. KG**
Rudolf-Diesel Str.1
22941 Bargteheide / Hamburg Germany
Phone: +49-4532-4010 Fax: +49-4532-401254
Email: info@af.nord.com

### Algeria
**Tunesia S.I.A. Ben Djemaa & CIE**
220 Avenue des Martyrs
TN - 3000 Sfax
Phone: +216-74-408 446 Fax: +216-74-408 065
Email: bendjemaa@planet.tn

### Algeria
**EURL Agence Maghrebine Des Echanges Commerciaux**
35 Avenue 5 Juillet
Borj El Kiffane
Phone: +213-76-288837 Fax: +213-21-201209
Email: bendjemaa@planet.tn

### Angola
**Power Drives a division of Bearing Man Ltd.**
Bearing Man Park, Droste Cresent
Droste Park Ext. 7, Johannesburg 2001
P.O. Box 33431
Jeppestown 2043, South Africa
Phone: +27-11-620 1500 Fax: +27-11-620 1670
Email: powerdrives@bearingman.co.za

### Argentina
**Chilicote S.A.**
Avda. Julio A. Roca 546
1067 Buenos Aires
Phone: +54-11-4343 8469 Fax: +54-11-4331 4278
Email: chilicote@chilicote.com.ar

### Armenia
**Getriebebau NORD GmbH & Co. KG**
Rudolf-Diesel Str.1
22941 Bargteheide / Hamburg Germany
Phone: +49-4532-4010 Fax: +49-4532-401254
Email: info@nord-de.com

### Australia
**CMG Pty Ltd.**
19 Corporate Avenue
Rowville, VIC 3178
PO Box 2340, Rowville, VIC 3178 - Australia
Phone: +61-3-9237 4000 Fax: +61-3-9237 4010
Email: mark.alexander@cmggroup.com.au

### Austria
**Getriebebau NORD GmbH**
Deggendorfstraße 8
A-4030 Linz
Phone: +43-732-31 89 20 Fax: +43-732-31 89 20-85
Email: info@nord-at.com

### Bahrain
**Eight Industries**
P.O. Box 32095
Dubai/U.A.E.
Phone: +971-4-3200 770 Fax: +971-4-3200 771
Email: eight@emirates.net.ae

### Bangladesh
**Getriebebau NORD GmbH & Co. KG**
Rudolf-Diesel Str.1
22941 Bargteheide / Hamburg Germany
Phone: +49-4532-4010 Fax: +49-4532-401254
Email: info@bd.nord.com

### Belarus
**OOO NORD PRIVODY**
P.O. 51
BY-220121 Minsk
Phone: +375-17-205 04 27 Fax: +375-17-205 04 27
Email: info@by.nord.com

### Belgium
**NORD Aandrijvingen België N.V.**
NORD Transmission Belgique S.A.
Boutersemdreef 24
B-2240 Zandhoven
Phone: +32-3-484 59 21 Fax: +32-3-484 59 24
Email: info@nord-be.com

### Bhutan
**Getriebebau NORD GmbH & Co. KG**
Rudolf-Diesel Str.1
22941 Bargteheide / Hamburg Germany
Phone: +49-4532-4010 Fax: +49-4532-401254
Email: info@bt.nord.com

### Bolivia
**Variadores S.A.**
Carrera 50 (Aut. Sur)
No. 2 Sur 271 - A.A. 053811
Medellin, Columbia
Phone: +57-94-2552200 Fax: +57-94-2557450
Email: variadores@variadores.com.co

### Brazil
**NORD Motoredutores do Brasil Ltda**
Rua Dr. Moacyr Antonio de Morais, 700
Parque Santo Agostinho
Guarulhos – São Paulo
CEP 07140-285
Phone: +55-11-6402 8855 Fax: +55-11-6402 8830
Email: info@nord-br.com

# International Contacts

**Bulgaria**
**MELSICON Ltd.**
P.Wolov 47-49
BG-1504 SOFIA
Phone: +359-2-9434150 Fax: +359-2-9434160
Email: melsicon@applet-bg.com

**Burundi**
**Power Drives a division of Bearing Man Ltd.**
Bearing Man Park, Droste Cresent
Droste Park Ext. 7, Johannesburg 2001
P.O. Box 33431 Jeppestown 2043
South Africa
Phone: +27-11-620 1500 Fax: +27-11-620 1670
Email: daver@bearingman.co.za

**Cameroon**
**Getriebebau NORD GmbH & Co. KG**
Rudolf-Diesel Str.1
22941 Bargteheide / Hamburg Germany
Phone: +49-4532-4010 Fax: +49-4532-401254
Email: export2@nord-de.com

**Canada**
**NORD Gear Limited**
41 West Drive
Brampton, Ontario L6T 4A1
Phone: (905) 796-3606 Fax: (905) 796-8130
Email: info.ca@nord.com

**Chile**
**TDC Techno Drive Center S.A.**
Los Leones No. 133-2° Piso
Providencia Santiago de Chile
Chile
Phone: +56-2-234 0084 Fax: +56-2-334 9633
Email: tdc@technodrive.cl

**China**
**NORD (Beijing)**
Power Transmission Co. Ltd.
No. 5, Tangjiacun,
Guangqudonglu, Chaoyangqu
Beijing 100022
Phone: +86-10-67704305 Fax: +86-10-67704330
Email: info@nord-cn.com

**China**
**NORD (Suzhou)**
Power Transmission Co. Ltd.
No.510 Changyang Street
Suzhou Ind. Park
Jiangsu 215021
Phone: +86-512-85180277 Fax: +86-512-85180278
Email: info@nord-cn.com

**Colombia**
**Variadores S.A.**
Carrera 50 (Aut. Sur)
No. 2 Sur 271 - A.A. 053811
Medellin
Phone: +57-4-2552200 Fax: +57-4-2557450
Email: variadores@variadores.com.co

**Costa Rica**
**Variadores S.A.**
Carrera 50 (Aut. Sur)
No. 2 Sur 271 - A.A. 053811
Medellin, Columbia
Phone: +57-94-2552200 Fax: +57-94-2557450
Email: variadores@variadores.com.co

**Croatia**
**NORD-Pogoni d.o.o**
Obrtnicka 9
HR-48260 Krizevci
Phone: +385-48-711 900 Fax: +385-48-270 494
Email: info@nord-hr.com

**Cyprus**
**Getriebebau NORD GmbH & Co. KG**
Rudolf-Diesel Str.1
22941 Bargteheide / Hamburg Germany
Phone: +49-4532-401 441 Fax: +49-4532-401 254
Email: export2@nord-de.com

**Czech Republic**
**NORD-Poháncí technika, s. r. o.**
Palackého 359
500 03 Hradec Králové
Phone: +420 495 580 310 Fax: +420 495 580 312
Email: HZubr@nord-cz.com

**Dem. Rep. Congo**
**Power Drives a division of Bearing Man Ltd.**
Bearing Man Park, Droste Cresent
Droste Park Ext. 7, Johannesburg 2001
P.O. Box 33431 Jeppestown 2043, South Africa
Phone: +27-11-620 1500 Fax: +27-11-620 1670
Email: daver@bearingman.co.za

**Denmark**
**NORD-Gear Danmark A/S**
Kliplev Erhvervspark 28 - Kliplev
DK - 6200 Aabenraa
Phone: +45 73 68 78 00 Fax: +45 73 68 78 10
Email: info@nord-dk.com

**Ecuador**
**Variadores S.A.**
Carrera 50 (Aut. Sur)
No. 2 Sur 271 - A.A. 053811
Medellin, Columbia
Phone: +57-94-2552200 Fax: +57-94-2557450
Email: variadores@variadores.com.co

### Egypt
**IED-International Engineering Development**
4 Abu Gafar El Nahas Street
El Golf, Heliopolis
Cairo
Phone: +20-2-2900475 Fax: +20-2-4185637
Email: ied@thewayout.net

### El Salvador
**Maquinaria E Insumos Industriales, S.A.**
67 Av Sur Edificio #144 Local #3,.
Col Escalon
San Salvador, C.A
Phone: +503-22243059 Fax: +503-22246272
Email: maquinsa@integra.com.sv

### Estonia
**Technobalt Eesti Ltd.**
Läike tee 10
Peetri küla, Rae vald
EE-75301 Harjumaa
Phone: +372-6-684 400 Fax: +372-6-613 165
Email: info@technobalt.ee

### Finland
**NORD Gear Oy**
Aunankorvenkatu 7
FI - 33840 Tampere
Phone: +358-3-254 1800 Fax: +358-3-254 1820
Email: info@nord-fi.com

### France
**NORD Réducteurs**
Bureaux commerciaux
17, Av. Georges Clémenceau
FR-93421 Villepinte Cedex
Phone: +33-1-4963 0189 Fax: +33-1-4963 0811
Email: info@nord-fr.com

### Germany
**Getriebebau NORD GmbH & Co. KG**
Postfach 12 62
Rudolf-Diesel-Strasse 1
D-22941 Bargteheide
Phone: +49-4532-401-0 Fax: +49-4532-401-253
Email: info@nord-de.com

### Ghana
**Getriebebau NORD GmbH & Co. KG**
Rudolf-Diesel Str.1
22941 Bargteheide / Hamburg Germany
Phone: +49-4532-4010 Fax: +49-4532-401254
Email: export2@nord-de.com

### Greece
**Mangrinox S.A.**
14 Grevenon Str.
Votanikos
GR-11855 Athens
Phone: +30-210-3423201-3 Fax: +30-210-3459767, 3459928
Email: magrinox@mail.otenet.gr

### Guatemala
**Maquinaria E Insumos Industriales, S.A.**
19 Avenida 16-56 Zona 10
Empresarial Santa Fe Bodega 4
Guatemala 01010
Phone: +502-23674490 Fax: +502-23674493
Email: maquinsa@inteinet.net.gt

### Guinea
**Getriebebau NORD GmbH & Co. KG**
Rudolf-Diesel Str.1
22941 Bargteheide / Hamburg Germany
Phone: +49-4532-4010 Fax: +49-4532-401254
Email: export2@nord-de.com

### Hungary
**NORD Hajtastechnika Kft.**
Törökkö u. 5-7
HU-1037 Budapest
Phone: +36 1 437 0127 Fax: +36 1 250 5549
Email: info@nord-hu.com

### Iceland
**Varmaverk Ltd.**
Dalshrauni 5
IS-220 Hafnarfiroei
Phone: +354-5651750 Fax: +354-5651951
Email: pall@varmaverk.is

### India
**NORD Drivesystems Pvt. Ltd.**
282/ 2, 283/2, Plot No. 15
Mauje, Village Mann
Tal Mulshi, Adj. Hinjewadi Phase- II
Pune Maharashtra 411 057
Phone: +91-20-39801200 Fax: +91-20-39801216
Email: info@nord-in.com

### Indonesia
**PT. NORD Indonesia**
Jln. Raya Serpong KM7,
Kompleks Rumah Multi Guna Blok D-No. 1
Pakulonan, Serpong 15310 - Tangerang
West Java
Phone: +62-21-5312 2222 Fax: +62-21-5312 2288
Email: info@nord-id.com

# International Contacts

### Iran
**Paralog Engineering Co. Ltd.**
P.O.Box 19395-7366
No. 6, Shangarf Street
Mirdamad Blvd.
Tehran 15489
Phone: +98-21-22905551 / -2 Fax: +98-21-22905550
Email: nord@Paralog.ir

### Ireland
**NORD Gear Limited (UK)**
11 Barton Lane, Abingdon Science Park,
Abingdon,
Oxfordshire OX14 3NB
Phone: +353(0) 87 69 -48 7 11 Fax: +353 (0) 49 85 - 43 7 34
Email: pfinnegan@nord-ie.com

### Israel
**Ringel Bros. Ltd**
Hertzel St. 134
5148 Tel-Aviv
Phone: +972-3-6824027 Fax: +972-3-6822041
Email: mringel@netvision.net.il

### Italy
**NORD-Motoriduttori s.r.l.**
Via Newton 22
IT-40017 San Giovanni in Persiceto (BO)
Phone: +39-051-6870 711 Fax: +39-051-6870 793
Email: info@nord-it.com

### Ivory Coast
**Getriebebau NORD GmbH & Co. KG**
Rudolf-Diesel Str.1
22941 Bargteheide / Hamburg Germany
Phone: +49-4532-4010 Fax: +49-4532-401254
Email: export2@nord-de.com

### Jordan
**Arab Co. For Power Transmissions Technology**
"GearTech Co"
P.O Box 830641
Amman 11183
Phone: +962-6-5692283 Fax: +962-6-5656750
Email: indgroup@wanadoo.jo

### Kazakhstan
**NORD Privody KZ**
Chaykovski str.,
h.131, of.12. KZ - Almaty, 050 000
Phone: +7-3272-61 02 99 Fax: +7-3272-61 02 99
Email: info@kz.nord.com

### Kenya
**Jos. Hansen & Soehne (East Africa) Ltd.**
Baba Dogo Road, Ruaraka
P.O.Box 30196
Nairobi
Phone: +254-2-861 637 Fax: +254-2-861 640
Email: hansenkenya@swiftkenya.com

### Kongo
**Power Drives a division of Bearing Man Ltd.**
Bearing Man Park, Droste Cresent
Droste Park Ext. 7, Johannesburg 2001
P.O. Box 33431 Jeppestown 2043
South Africa
Phone: +27-11-620 1500 Fax: +27-11-620 1670
Email: powerdrives@bearingman.co.za

### Korea
**POWERKING GEAR Co.**
216-8, No-onsa,
Gwangmyung, Gyunggi, 423-080
Phone: +82-2-2615-6044 Fax: +82-2-2060-7044
Email: sales@pkgear.com

### Kuwait
**Eight Industries**
P.O. Box 32095
Dubai/U.A.E.
Phone: +971-4-3200 770 Fax: +971-4-3200 771
Email: eight@emirates.net.ae

### Kyrgyzstand
**Getriebebau NORD GmbH & Co. KG**
Rudolf-Diesel Str.1
22941 Bargteheide / Hamburg Germany
Phone: +49-4532-4010 Fax: +49-4532-401254
Email: info@nord-de.com

### Latvia
**SIA Technobalt**
Skaistkalnes 1
Riga LV - 1004
Phone: +371-7605 046 Fax: +371-7605 062
Email: technobalt@technobalt.lv

### Lebanon
**Hosny Homany**
P.O. Box 102
Ghobery, Beirut
Phone: +961 5 480661/2 Fax: +961 5 480660
Email: hhomany@cyberia.net.lb

### Liberia
**Getriebebau NORD GmbH & Co. KG**
Rudolf-Diesel Str.1
22941 Bargteheide / Hamburg Germany
Phone: +49-4532-4010 Fax: +49-4532-401254
Email: export2@nord-de.com

### Lithuania
**Technobalt Group**
UAB Technobalta
Titnago g.10
LT-02300 Vilnius
Phone: +370-5-260 2503 Fax: +370-5-2653288
Email: lietuva@technobalt.com

### Malaysia
**GTM Sdn Bhd**
No. 19, Jalan Tambur 33/19,
Shah Alam Technology Park, Section 33,
40400, Shah Alam,
Selangor Darul Ehsan
Phone: +60-3-51 24 67 73 Fax: +60-3-51 24 68 10
Email: jenny.multidrive@gmail.com

### Marocco
**Societe Marocaine des Etablissements Moulin**
14 Rue Allal Ben Ahmed AMKIK et 7,
Rue Saint Saens
Belvédère - Casablanca
Phone: +212-22-406777 Fax: +212-22-406782
Email: etsmoulin@wanadoo.net.ma

### Mauritius
**Power Drives a division of Bearing Man Ltd.**
Bearing Man Park, Droste Cresent
Droste Park Ext. 7, Johannesburg 2001
P.O. Box 33431
Jeppestown 2043
South Africa
Phone: +27-11-620 1500 Fax: +27-11-620 1670
Email: powerdrives@bearingman.co.za

### Mexico
**NORD DRIVESYSTEMS SA DE CV**
Av. Lázaro Cárdenas 1007 Pte.
San Pedro Garza Garcia, N.L.
México, C.P. 66266
Phone: +52-81-8220-9165 Fax: +52-81-8220-9044
Email: info.mx@nord.com

### Namibia
**Power Drives a division of Bearing Man Ltd.**
Bearing Man Park, Droste Cresent
Droste Park Ext. 7, Johannesburg 2001
P.O. Box 33431
Jeppestown 2043
South Africa
Phone: +27-11-620 1500 Fax: +27-11-620 1670
Email: powerdrives@bearingman.co.za

### Nepal
**Getriebebau NORD GmbH & Co. KG**
Rudolf-Diesel Str.1
22941 Bargteheide / Hamburg Germany
Phone: +49-4532-4010 Fax: +49-4532-401254
Email: info@np.nord.com

### Netherlands
**NORD Aandrijvingen Nederland B.V.**
Voltstraat 12
NL-2181 HA Hillegom
P.O.Box 136
NL-2180 AC Hillegom
Phone: +31-252 529544 Fax: +31-252 522222
Email: info@nord-nl.com

### New Zealand
**CMG Electric Motors (NZ) Limited**
2 Ross Reid Avenue
East Tamaki, Auckland
Phone: +64-9-273 9162 Fax: +64-9-273 9062
Email: Mark.Alexander@cmggroup.com.au

### Nigeria
**Jos. Hansen & Soehne (Nigeria) Ltd.**
km 16, Ikorodu Road (near Bata)
Ojota
Lagos
Phone: +234-1-4974 304 Fax: +234-1-4976 936
Email: joshansen@linkserve.com

### Norway
**NORD GEAR NORGE A/S**
Solgaard Skog 7,
PB85
N-1501 Moss
Phone: +47-69 20 69 90 Fax: +47-69 20 69 93
Email: MHansen@nord-no.com

### Oman
**Eight Industries**
P.O. Box 32095
Dubai/U.A.E.
Phone: +971-4-3200 770 Fax: +971-4-3200 771
Email: eight@emirates.net.ae

### Pakistan
**OTC**
Flat # 3, 89B/C-II,
Gulberg-III
Lahore 54660
Phone: +92-42-587 2667-9 Fax: +92-42-587 2670
Email: sajjad@otc.com.pk

### Panama
**Variadores S.A.**
Carrera 50 (Aut. Sur)
No. 2 Sur 271 - A.A. 053811
Medellin, Columbia
Phone: +57-94-2552200 Fax: +57-94-2557450
Email: variadores@variadores.com.co

# International Contacts

### Peru
**Delcrosa S.A.**
Av. Argentina 1515
Lima
Phone: +51-1-336 6614 Fax: +51-1-336 8189
Email: viviana@delcrosa.com.pe

### Philippines
**Mheco Mechanical Handling Equipment Company Inc**
Suite 812 Herrera Tower,
Herrera cor. Valero Sts.
Salcedo Village, Makati City
P.O.Box 1004
Makati 1250
Phone: +63-2-844 8901-05 Fax: +63-2-845 1535
Email: mheco@skyinet.net

### Poland
**NORD Napedy sp. z o.o.**
Ul. Grottgera 30
PL-32-020 Wieliczka
S d Rejonowy dla Krakowa Zródmiescia
NIP: 683-17-20-355
Kapital ZakBadowy 770 000, 00 PLN
Phone: +48-0122889900 Fax: +48-0122889911
Email: biuro@nord-pl.com

### Portugal
**NORD Motorreductores**
Apdo de Correos 166,
ES-08200 Sabadell - Spain
Phone: +34-93-723 5322 Fax: +34-93-723 3147
Email: info@nord-es.com

### Qatar
**Eight Industries**
P.O. Box 32095
Dubai/U.A.E.
Phone: +971-4-3200 770 Fax: +971-4-3200 771
Email: eight@emirates.net.ae

### Romania
**S.C.NORD Drivesystems S.R.L.**
Str.Nicolae Iorga,Nr.55/3
RO-550387 SIBIU
Phone: +40/269/232880 Fax: +40/269/232880
Email: UPiringer@ro.nord.com

### Russian Federation
**OOO NORD PRIVODY**
Ul. A. Nevsky 9
RU-191167 St.Petersburg
Phone: +7-812-327 0192 Fax: +7-812-327 0192
Email: info@nord-ru.com

### Rwanda
**Power Drives a division of Bearing Man Ltd.**
Bearing Man Park, Droste Cresent
Droste Park Ext. 7, Johannesburg 2001
P.O. Box 33431 Jeppestown 2043
South Africa
Phone: +27-11-620 1500 Fax: +27-11-620 1670
Email: powerdrives@bearingman.co.za

### Saudi Arabia
**Al-Musairiey Industrial Equipment. Co.**
P.O. Box 40966
Riyadh - 11511
Phone: +966-1-448 3808 Fax: +966-1-446 9244
Email: info@almusairiey.com

### Senegal
**Getriebebau NORD GmbH & Co. KG**
Rudolf-Diesel Str.1
22941 Bargteheide / Hamburg Germany
Phone: +49-4532-4010 Fax: +49-4532-401254
Email: export2@nord-de.com

### Singapore
**NORD GEAR Pte Ltd**
33 Kian Teck Drive
Jurong, Singapore 628850
Phone: +65-6265-9118 Fax: +65-6265-6841
Email: info@nord-sg.com

### Slovakia
**NORD Pohony, s.r.o.**
Juzná Trieda 74
SK - 04001 Kosice
Phone: +421-55-729 9600 Fax: +421-55-729 9599
Email: Info@nord-sk.com

### Slovenia
**Getriebebau NORD GmbH**
Deggendorfstraße 8
A-4030 Linz
Phone: +43-732-31 89 20 Fax: +43-732-31 89 20-85
Email: info@nord-at.com

### South Africa
**Power Drives a division of Bearing Man Ltd.**
6 Tetford Circle,
Millennium Bridge Business Park,
La Lucia Ridge 4320 (Durban)
P.O. Box 25191, Gateway 4321 (Durban)
Phone: +27-11-62 01 61 3 Fax: +27-11-62 01 67 0
Email: powerdrives@bearingman.co.za

### Spain
**NORD Motorreductores S.A.**
Aptdo de Correos 166
ES - 08200 Sabadell
Phone: +34-93-723 5322 Fax: +34-93-723 3147
Email: info@nord-es.com

### Sri Lanka
**Getriebebau NORD GmbH & Co. KG**
Rudolf-Diesel Str.1
22941 Bargteheide / Hamburg Germany
Phone: +49-4532-4010 Fax: +49-4532-401254
Email: info@lk.nord.com

### Sweden
**NORD Drivsystem AB**
Box 2097
Ryttargatan 277
SE-194 02 Upplands Väsby
Phone: +46-8-594 114 00 Fax: +46-8-594 114 14
Email: info@nord-se.com

### Switzerland
**Getriebebau NORD AG**
Bächigenstr.18
CH-9212 Arnegg
Phone: +41-71-38899 11 Fax: +41-71-38899 15
Email: info@nord-ch.com

### Syria
**Elias Brothers Co.**
Al' Kowatly St. 2
P.O. Box 4282
Homs
Phone: +963-31-2771 004 Fax: +963-31-2771 003
Email: eliasbrothersco@mail.sy

### Taiwan
**TACT Trans-Asia Consulting & Trade Co., Ltd.**
1F, No. 157-1, Sec. 1, Beisin Road.,
Sindian City,
Taipei County 231, Taiwan R.O.C.
Phone: + 886-2-29188768 Fax: + 886-2-29185985
Email: TACT@trans-asia.com.tw

### Tanzania
**Jos. Hansen & Soehne (Tanzania) Ltd.**
Holland House, Ohio Street
P.O.Box 9521
Dar es Salaam
Phone: +255-22-211 5746 Fax: +255-22-211 2948
Email: jhs-t@africaonline.co.tz

### Thailand
**Charoen Muang Machinery Co. Ltd.**
164/1 Wisutkasat Rd.
Banpanthom, Pranakorn
Bangkok 10200
Phone: +66-2-281 5331 Fax: +66-2-280 8033-4
Email: info@nord-sg.com

### Tunisia
**Tunesia S.I.A. Ben Djemaa & CIE**
220 Avenue des Martyrs
TN - 3000 Sfax
Phone: +216-74-408 446 Fax: +216-74-408 065
Email: bendjemaa@planet.tn

### Turkey
**NORD-REMAS**
Redüktör Sanayi ve
Ticaret Ltd. Sti.
Tepeören Köyü
34959 - Tuzla - Istanbul
Phone: +90-216-304 13 60 Fax: +90-216-304 13 69
Email: info@nord-tr.com

### Uganda
**Jos. Hansen & Soehne (Uganda) Ltd.**
Workers House Plot 1
Pilkington Road
P.O.Box 2333
Kampala
Phone: +256-41-251 324 Fax: +256-41-251 325
Email: hansenuganda@africaonline.co.ug

### Ukraine
**GETRIEBEBAU NORD GmbH**
Vasilkovskaja, 1
office 306
03040 KIEW
Phone: + 380-44-537 0615 Fax: + 380-44-537 0615
Email: vtsoka@nord-ukr.com

### United Arab Emirates
**Eight Industries**
P.O. Box 32095
Dubai/U.A.E.
Phone: +971-4-3200 770 Fax: +971-4-3200 771
Email: eight@emirates.net.ae

### United Kingdom
**NORD Gear Limited (UK)**
11 Barton Lane, Abingdon Science Park,
Abingdon,
Oxfordshire OX14 3NB
Phone: +44-1235-534404 Fax: +44-1235-534414
Email: info@nord-uk.com

# International Contacts

**United States - Midwest**
**NORD Gear Corporation**
800 Nord Drive, P.O. 367
Waunakee, WI 53597
Phone: 1-888-314-6673 Fax: 1-800-373-6673
Phone: 1-608-849-7300
Email: info.us@nord.com

**United States - West**
**NORD Gear Corporation**
1137 W. Bradford Circle
Corona, CA 92882
Toll free: 1-888-314-6673 Fax: 1-888-408-6673
Phone: 1-608-849-0190
Email: info.us@nord.com

**United States - East**
**NORD Gear Corporation**
100 Forsyth Hall Drive
Building 100B
Charlotte, NC 28273
Toll free: 1-888-314-6673 Fax: 1-888-259-6673
Phone: 1-608-849-0140
Email: info.us@nord.com

**Uzbekistan**
**Getriebebau NORD GmbH & Co. KG**
Rudolf-Diesel Str.1
22941 Bargteheide / Hamburg Germany
Phone: +49-4532-4010 Fax: +49-4532-401254
Email: info@nord-de.com

**Venezuela**
**Getriebebau NORD GmbH & Co. KG**
Rudolf-Diesel Str.1
22941 Bargteheide / Hamburg Germany
Phone: +49-4532-4010 Fax: +49-4532-401254
Email: info@nord-de.com

**Vietnam**
**NORD Gear Pte. Ltd**
Representative office
Unit 401, 4F, An Dinh Building,
18 Nam Quoc Cang Street
Pham Ngu Lao Ward
District 1, Ho Chi Minh City, Vietnam
Phone: +84 8 925 7270 Fax: +84 8 925 7271
Email: info@vn.nord.com

**Zambia**
**PROVIDENT INVESTMENT Ltd**
Mr.Y.M.Mulambya
1st. Floor - Angoni House
Obote Avenenue
Kitwe
Phone: +260-2-22 60 84 Fax: +260-2-22 67 10
Email: provident@zamtel.zm

**Zimbabwe**
**Power Drives a division of Bearing Man Ltd.**
Bearing Man Park, Droste Cresent
P.O. Box 33431 Jeppestown 2043
South Africa
Phone: +27-11-620 1500 Fax: +27-11-620 1670
Email: powerdrives@bearingman.co.za



# SCP
# Ordering Guide

| | Gear Unit | Reducer Options | Motor/Input | Motor Options |
|---|---|---|---|---|
| SK | ❶ | ❷ | ❸ | ❹ |
| | | | see page 19 | see page 128 |

❶

| Gear Unit |
|---|
| 1282 SCP |
| 1382 SCP |
| 2282 SCP |
| 2382 SCP |
| 3282 SCP |
| 3382 SCP |
| 4282 SCP |
| 4382 SCP |
| 5282 SCP |
| 5382 SCP |
| 6282 SCP |
| 6382 SCP |
| Specialty Bevel Product |

❷

| Reducer Options | |
|---|---|
| **ADP -** Additional Drain Plug | **PC -** Grease Purge Seal |
| **LL -** Long Term Storage | **RV -** Drain Valve |
| **MDP -** Magnetic Drain Plug | **SM5 -** Stainless Steel CEMA Shaft |
| **OA -** Oil Expansion Chamber | **VL -** Heavy Duty Bearings |
| **OSG -** Oil Sight Glass | |

❹

| Motor Options | |
|---|---|
| **F & FC -** Blower Cooling Fan | **OL -** Non Ventilated TENV W/Out Fan |
| **RD -** Drip Cover Canopy | **OLH -** Non Ventilated TENV W/Out Fan & Cover |
| **RDD -** Double Drip Cover Canopy | **WE -** Motor Second Shaft Extension |
| **KD -** Condensation Drain Holes | **Z -** High Inertia Motor Fan |
| **KB -** Condensation Drain Holes Plugged | **IG -** Incremental Encoderr |
| **IP66 -** IP66 Motor Enclosure | **TW -** Thermostat |
| **KKV -** Potted Terminal Box | **TF -** Thermistor |
| **MS -** Quick Power Disconnect, Harting Plug | **SH -** Anti-Condensation Space Heaters |

❸

| Input Shaft | NEMA Adapter | IEC Adapter | Integral Motors | Integral Energy Efficent Motors |
|---|---|---|---|---|
| **W** | **N56C** | **IEC 63** | **63S/4** - 0.16hp | **80LH/4** - 1hp |
| | **N140TC** | **IEC 71** | **63L/4** - 0.25hp | **90SH/4** - 1.5hp |
| | **N180TC** | **IEC 80** | **71S/4** - 0.33hp | **90LH/4** - 2hp |
| | **N210TC** | **IEC 90** | **71L/4** - 0.50hp | **100LH/4** - 3hp |
| | **N250TC** | **IEC 100** | **80S/4** - 0.75hp | **112MH/4** - 5hp |
| | **N280TC** | **IEC 112** | **80L/4** - 1hp | **132SH/4** - 7.5hp |
| | | **IEC 132** | **90S/4** - 1.5hp | **132MH/4** - 10hp |
| | | **IEC160** | **90L/4** - 2hp | **160MH/4** - 15hp |
| | | **IEC180** | **100L/4** - 3hp | **160LH/4** - 20hp |
| | | | **100LA/4** - 5hp | **180MH/4** - 25hp |
| | | | **112M/4** - 5.4hp | **180LH/4** - 30hp |
| | | | **132S/4** - 7.5hp | |
| | | | **132M/4** - 10hp | |
| | | | **160M/4** - 15hp | |
| | | | **160L/4** - 20hp | |
| | | | **180MX/4** - 25hp | |
| | | | **180LX/4** - 30hp | |
| | | | Other Speeds Available | Other Speeds Available |

## Product Specifications

**Ratio**

_____ :1

see pages 31 - 62

OR

**Output Speed**

_____ rpm

see pages 31 - 62

**Mounting Position**

- ❍ M1
- ❍ M2
- ❍ M3
- ❍ M4
- ❍ M5
- ❍ M6
- ❍ Special _____

**CEMA Shaft Diameter**

- ❍ 1-1/2″
- ❍ 2″
- ❍ 2-7/16″
- ❍ 3″
- ❍ 3-7/16″

**Paint**

- ❍ Standard Stainless Steel Paint
- ❍ NSD+ (gray)
- ❍ NSD+W (white)
- ❍ NSD-X3 (gray)
- ❍ NSD-X3W (white)
- ❍ Casting Primed
- ❍ Special _____

**Lubricant**

- ❍ Standard
- ❍ Synthetic
- ❍ Food Grade
- ❍ Other _____

CONTACTS

## Gearmotor Only Details

**Voltage & Frequency**

- ❍ 230/460V-60Hz (460V only ≥ 40 hp)
- ❍ 575V-60Hz
- ❍ 208V-60Hz
- ❍ 400V-50Hz
- ❍ Other _____

**Terminal Box Pos.**

- ❍ TB1
- ❍ TB2
- ❍ TB3
- ❍ TB4

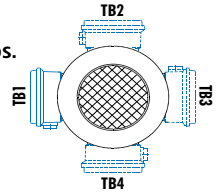


Mtg. Pos. M1 Shown

**Conduit Entry Loc.**

- ❍ CE I *
- ❍ CE II
- ❍ CE III *
- ❍ CE IV

* Brakemotor

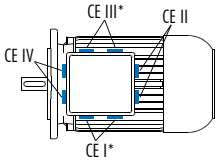


Mtg. Pos. M1 Shown

# Capacity , Ratings & Combinations



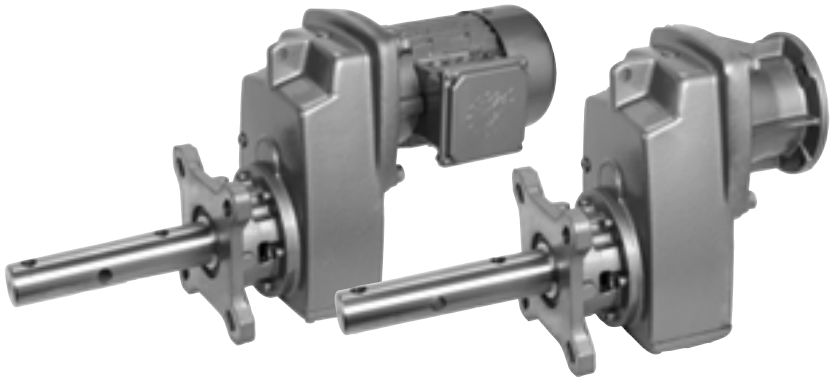

**Capacity & Ratings Overview**

| Model Type | Max Torque [lb-in] | Ratio Range [x:1] | Speed's [rpm] | Max Thrust Load Std Brgs [lb] | Max Thrust Load HD Brgs " VL" [lb] | Gear Stages | Efficiency [%] |
|---|---|---|---|---|---|---|---|
| SK 1282 SCP | 2620 | 4.79-109.5 | 365-16 | 1609 | 1609 | 2 | 97 |
| SK 1382 SCP | 2425 | 87.94-624.45 | 20-2.8 | 1550 | 1609 | 3 | 95 |
| SK 2282 SCP | 4611 | 4.51-127.51 | 388-14 | 2700 | 3375 | 2 | 97 |
| SK 2382 SCP | 4894 | 82.22-763.41 | 21-2.3 | 2700 | 3375 | 3 | 95 |
| SK 3282 SCP | 8363 | 4.48-112.23 | 391-16 | 3263 | 4500 | 2 | 97 |
| SK 3382 SCP | 9195 | 89.60-1022.42 | 20-1.7 | 3263 | 4500 | 3 | 95 |
| SK 4282 SCP | 16089 | 4.7-155.4 | 372-11 | 4950 | 6750 | 2 | 97 |
| SK 4382 SCP | 18381 | 86.83-1585.08 | 20-1.1 | 4950 | 6750 | 3 | 95 |
| SK 5282 SCP | 28630 | 4.32-134.03 | 405-13 | 7200 | 9000 | 2 | 97 |
| SK 5382 SCP | 28320 | 82.72-1367.08 | 21-1.3 | 7200 | 9000 | 3 | 95 |
| SK 6282 SCP | 40135 | 4.39-80.33 | 399-22 | 13219 | 13500 | 2 | 97 |
| SK 6382 SCP | 53100 | 24.42-551.58 | 72-3.2 | 13253 | 13500 | 3 | 95 |

**CEMA Drive Shaft Combinations**

| Model type | 1.5" shaft | 2" shaft | 2-7/16" shaft | 3" shaft | 3-7/16" shaft |
|---|---|---|---|---|---|
| SK 1282 SCP | X | X | X | | |
| SK 1382 SCP | X | X | X | | |
| SK 2282 SCP | X | X | X | | |
| SK 2382 SCP | X | X | X | | |
| SK 3282 SCP | X | X | X | X | |
| SK 3382 SCP | X | X | X | X | |
| SK 4282 SCP | | X | X | X | |
| SK 4382 SCP | | X | X | X | |
| SK 5282 SCP | | X | X | X | X |
| SK 5382 SCP | | X | X | X | X |
| SK 6282 SCP | | | | X | X |
| SK 6382 SCP | | | | X | X |

# NORD GEAR CORPORATION

## Conditions of Sale

**1. CONTRACT**

Any contract between Nord Gear Corporation, hereinafter designated as Seller, and the Buyer is subject to the terms and conditions of sale hereinafter set forth. Any deviation from such terms and conditions must be specifically set forth in writing and consented to by Seller. Accordingly, the Buyer and Seller acknowledge and agree that the terms and conditions set forth below and on the face hereof shall govern Buyer's purchase of the goods described on the face hereof and shall take precedence over and represents the final agreement between Buyer and Seller, notwithstanding any inconsistent, contradictory or other prior or further conditions contained in any oral or written request or purchase order issued by Buyer or any other document furnished by Buyer in connection with its purchase of the Goods, regardless of whether such document or documents are exchanged simultaneously with this Invoice or prior or subsequent thereto. Any additional or different terms or conditions which may appear in any communicaiton, oral or written, from Seller, its officers, employees, agents or representatives, are hereby expressly rejected and shall not be effective or binding upon the Seller, unless specifically hereafter agreed to in writing by Seller and no such additional or different terms or conditions in any document submitted to Seller by Buyer shall become part of the contract between Buyer and Seller, unless such written acceptance by Seller specifically recognizes and assents to their inclusion. Any objection by Buyer to the terms and conditions hereof shall be ineffective unless Seller is advised in writing thereof within two (2) days of the date of this Invoice.

**2. CONFIRMATION**

An order shall be deemed accepted only when duly confirmed by Seller, at Nord Gear Corporation's home office in Waunakee, Wisconsin, and upon such confirmation the order shall become a contract binding upon the parties hereto, their successors and assigns.

**3. PRICES**

Prices shown are list prices and may be subject to applicable discounts. Unless otherwise agreed upon in writing, prices are FOB factory Waunakee, Wisconsin. Prices and discounts are subject to change without notice until order is accepted. Seller's prices do not include cost of any inspection permits required.

**4. LIMITED WARRANTY**

Seller warrants the goods sold hereunder to be free from defects in material and workmanship under normal use and service not arising from misuse, negligence, or accident, including but not limited to the use, installation, and transportation of the goods by the Buyer, its agents, servants, employees, or by carriers. Such obligations under this warranty are limited to remedying any deficiencies in the goods at Waunakee, Wisconsin, or at such place or places in the United States of America as may be designated by Seller. THIS WARRANTY SHALL PERTAIN TO ANY PART OR PARTS OF ANY GOODS TO WHICH BUYER OR ITS ASSIGNS HAS GIVEN WRITTEN NOTICE OF CLAIMED DEFECTS TO SELLER. NORD GEAR CORP. WARRANTS ITS PRODUCTS AGAINST DEFECTS IN MATERIAL AND WORKMANSHIP FOR A PERIOD OF 12 MONTHS FROM DATE OF INSTALLATION OR 18 MONTHS FROM DATE OF SHIPMENT WHICHEVER COMES FIRST ON ALL COMPONENTS. 36 MONTHS FROM DATE OF INVOICE OR 24 MONTHS FROM DATE OF INSTALLATION WHICHEVER COMES FIRST ON GEARS AND HOUSINGS ONLY. PARTS WHICH ARE SUBJECT TO OPERATIONAL WEAR AND TEAR, SUCH AS BELTS & TRACTION DISCS, ARE NOT COVERED BY THE LIMITED WARRANTY. Buyer shall be required to furnish Seller with details of such defects and this warranty shall be effective as to such goods which Seller's examination shall disclose to its satisfaction to have been defective and which at Seller's option shall promptly thereafter be returned to Seller or its nominees. THE LIMITED WARRANTY SET FORTH HEREIN IS IN LIEU OF ALL OTHER WARRANTIES, EXPRESS OR IMPLIED. EXCEPT FOR THE EXPRESS WARRANTIES SET FORTH HEREIN, SELLER HAS MADE AND MAKES NO OTHER WARRANTIES, EXPRESS OR IMPLIED, AS TO THE GOODS SOLD HEREUNDER, INCLUDING, BUT NOT LIMITED TO, THEIR MERCHANTABILITY OR FITNESS FOR ANY PARTICULAR PURPOSE. ANY DESCRIPTION OR MODEL OF THE GOODS IS FOR IDENTIFICATION OR ILLUSTRATIVE PURPOSES ONLY AND SHALL NOT BE DEEMED TO CREATE ANY WARRANTY, EXPRESS OR IMPLIED. SELLER MAKES NO REPRESENTATIONS AS TO THE CAPACITY OR PERFORMANCE OF THE GOODS SOLD HEREUNDER, EXCEPT AS SET FORTH IN THE INVOICE'S SPECIFICATIONS OR OTHER VALID AGREEMENT OR CONDITION AGREED TO BETWEEN THE PARTIES, AND ANY SUCH REPRESENTATIONS ARE EXPRESSLY CONDITIONED UPON THE CORRECTNESS OF THE DATA AND INFORMATION FURNISHED BY THE BUYER AND UPON THE GOODS BEING PROPERLY INSTALLED AND MAINTAINED. THE REMEDIES OF THE BUYER PROVIDED HEREUNDER ARE EXCLUSIVE. In no event shall the Seller be liable to the Buyer or to any other person for any loss or damage, direct or indirect, arising out of or caused by the use or operation of the goods, or for the loss of profits, business, or good will, or for any incidental, special or consequential damages. Seller shall in no event be liable to any person or firm (including any assignee or Buyer) except Buyer and its successors. Unless specifically authorized by Seller in writing, Seller shall not become responsible for any repair work done by Buyer or any other party on any goods sold. Any and all costs of the return to the Seller of such goods and all related costs to remove and re-install such goods, shall be borne by Buyer. Goods sold but not manufactured by the Seller are being warranted as to defects in material and workmanship consistent with the limited warranty policy of the original manufacturer of the goods and if there is not such a limited warranty policy, the warranty shall be limited to the provision of the preceding paragraph of Article 4 herein. Standards for the operating characteristics of the gearboxes and the gearmotors are in conformity with Seller's tests.

**5. SHORTAGE AND NONCONFORMITY**

Any claim of shortage or that the goods do not conform with the specifications of the order or model must be made in writing within ten (10) days after delivery of the goods (as to which such claim is made) to Buyer or its nominees, but in no event shall the claim be later than within the time limit provided by the carrier or insurance company, otherwise such claim shall be deemed waived. Buyer may not return any goods claimed to be in non-conformity without Seller's prior written authorization. Goods returned without permission will not be accepted, including for credit, and will be returned to Buyer, F.O.B. Sellter's plant. Any claim based on the receipt of damaged Goods must be filed with the carrier which delivered the goods. The samples, measurements, dimensions and weights contained in the Seller's catalogs, sales manuals, photographs and drawings constitute only an approximate guide. The Seller reserves the right to make any change which the Seller, in its absolute discretion, considers necessary. While the goods will be delivered principally according to specifications or standards or quantities agreed upon, insignificant deviations or insignificant changes in construction are permissible. The same applies to partial deliveries, In the event that Buyer has a verified claim of shortage or nonconformity of the goods to the specifications of the order or the model, and if such claim has been submitted within the required time limit as set forth above, the Seller shall, at its own expense, make up for the shortage of the goods, or replace or repair the goods, as the case may be, but in no event shall Seller be or become liable to Buyer or to any other person or persons for any loss in damage, direct or indirect, arising out of or caused by such incidents or for the loss of profits, business or good will. The liability of the Seller to Buyer, if any hereunder, for breach of warranty, contract, negligence or otherwise, shall in no event exceed the amount of the purchase price of the goods sold with respect to which any damages are claimed. Shipping dates are estimates unless parties expressly agree on time of the essence.

**6. FORCE MAJEURE**

The obligation of the Seller shall be modified or excused, as the case may be, for reasons of Acts of God, war, governmental law regulations, strikes or lock-outs, fire, breakdown of machinery, whether in its own business enterprise, or if for any other cause beyond Seller's control, the goods cannot be delivered or their delivery becomes delayed in whole or in part. In the above instances time for delivery shall be extended for the period of the delay caused, with the proviso, however, that either party may cancel in writing the undelivered portion of the order or contract if the delay exceeds six (6) months from the delivery date originally confirmed by Seller. In no event shall Seller become liable in the aforesaid instances to Buyer or any third party for consequential damages or business loss.

**7. SHIPMENT AS UNIT**

Each shipment by Seller shall be treated as a separate and distinct unit with respect, but only with respect to forwarding, terms of payment, and the making of claims by the Buyer: provided, however, that if the Buyer defaults in the payment of any obligation to Seller or any installments thereof, under any agreement between Buyer and Seller, or if Buyer refuses to accept any goods when tendered for delivery, the Seller may, on fifteen (15) days written notice to the Buyer, without prejudice to Seller's other lawful remedies, either defer further performance until the defaulted payments are made in full, or make future deliveries for cash in advance only, or treat the entire contract or contracts with Buyer as breached by the Buyer and pursue its remedies for breach.

**8. BUYER'S REFUSAL OF DELIVERY**

If Buyer refuses to accept delivery of any goods tendered for delivery, then Seller, without prejudice to Seller's other lawful remedies, may either store or cause such goods to be stored in a warehouse, for buyer's account and at Buyer's cost, risk and expense, or sell such goods (without notice) to any purchases at public or private sale, and hold the Buyer liable for any difference between (a) the contract price of the goods, and (b) the price at which goods are resold less the costs and expense of such resale including brokerage commissions, or restocking charges.

**9. GOODS IN TRANSIT**

If prior to delivery or while the goods are in transit, Buyer or Seller becomes bankrupt or insolvent, or any petition in bankruptcy or for the reorganization or for a state court receivership is filed against Buyer or Seller, as the case may be, then the other party hereto may forthwith terminate this contract by giving written notice of such termination. Such termination shall not affect any claim for damages available to the Buyer, provided that if Buyer is then indebted to Seller, the amount of any such damage claim shall be abated to the extent that the indebtedness of Buyer to Seller, as actually paid in money, is abated by any order of judgement entered or any plan adopted in any bankruptcy, reorganization, receivership, or similar proceeding. Such termination shall not prejudice the Seller's rights to any amounts then due under the contract. If Buyer becomes bankrupt or insolvent or any petition in bankruptcy or for reorganizing or if a state court receivership is filed against Buyer, then, at its option Seller may take possession of any goods theretofore sold to Buyer, in connection with which the full purchase price has not been paid, analogous to the terms and provisions set forth in Paragraphs 11 and 12 hereinafter.

**10. DELIVERY**

(a) Any indicated dates of delivery are approximate only, but NORD Gear will attempt to meet them whenever possible. (b) NORD Gear will not be liable for any penalty clausess contained in any specifications or order submitted unless agreed to in writing by an authorized officer of NORD Gear Corporation. (c) Unless otherwise agreed, delivery of the goods to any carrier shall constitute delivery to the Buyer, and thereafter the risk of loss or damage to the goods shall be upon the Buyer. (d) If the Buyer does not give delivery instructions to the Seller at least (10) days prior to the delivery date ex factory confirmed by the Seller, the Seller may deliver the goods to a carrier of its own choosing, at Buyer's cost and risk, or, at Seller's option, may store the goods on the pier or any warehouse, at Buyer's cost and risk. Any purchase price in such event becomes due and payable within ten (10) days of such storage.

**11. PAYMENT OF PURCHASE PRICE**

Time of payment is of the essence under the contract. Unless otherwise provided, terms of payment are 30 days net from the date of invoice with a 1% discount if paid within 10 days of date of invoice. Upon default in any of the terms of the contract, or failure to comply with any of the conditions thereof, or upon seizure of the property under execution or other legal process, or if the Buyer becomes bankrupt or insolvent, or any petition for reorganization or for a state court receivership is filed against Buyer, or if the Buyer makes any assignment for the benefit of it's creditors or otherwise sells, encumbers or disposes of the goods, or if for any other reason the Seller should deem itself insecure, the full amount of the purchase price then remaining unpaid shall at once become due and payable at the option of the Seller.

**12. BUYER'S DEFAULT**

Upon the Buyer's default, the Seller may dispose of the merchandise in any manner that it deems fit and, if it desires to resell same, may do so at private or public sale, with or without notice, and with or without the property being at the place of sale, subject, however, to applicable laws. The Seller or its assigns shall have the right to bid at such sale and may become the purchaser of the property. The proceeds of the sale shall first be applied to the expenses incurred in retaking, repairing, storing and selling the goods, reasonable attorney's fees included, and then shall be applied to the payment of the balance due under the contract. Any surplus amount shall be paid to the Buyer. If a deficiency results after the resale, the Buyer agrees to pay such forthwith, together with reasonable attorney's fees, for the recovery of the goods incurred by the Seller. If upon the Buyer's default, the Seller elects not to resell any goods which it may repossess, then the cost of repossession, including reasonable attorney's fees, shall forthwith be due and payable from Buyer to Seller. Buyer agrees to pay all reasonable costs and reasonable attorneys' fees incurred by Seller in enforcing Seller's rights against Buyer, including Seller's right to payment of the purchase price of the goods and Buyer's payment of all other amounts owing to Seller required under this Invoice and Conditions of Sale.

**13. SECURITY INTEREST AND TITLE**

In states and localities which are governed by the Uniform Commercial Code, this contract shall serve as security agreement, reserving in Seller a security interest until full payment of purchase price. The provisions of the Uniform Commercial Code regarding security interest shall have preference and apply if inconsistent with other terms of the conditions of sale. In states and localities where the Uniform Commercial Code does not apply, title to the goods shall remain in the Seller or its assigns until full payment of the purchase price. Buyer agrees to execute forthwith any and all documents in such a way and form as Seller may need for filing or recording the security interest under the Uniform Commercial Code with the proper registers or offices, or for filing or recording the conditional sales contract.

**14. SALES AND USE TAX**

Buyer agrees to bear and pay any sales or use tax in connection with the purchase herein, and to hold the Seller harmless from payment. At the option the Seller, Buyer shall give evidence of payment or of exemption certificate.

**15. INSURANCE**

The Buyer shall keep the goods insured against damage by fire, water or other casualty as required by Seller, with a company acceptable to Seller, with loss payable to Seller for the total purchase price until the Seller is fully paid. Seller, if it so elects, may place said insurance at Buyer's expense; Seller may cancel such insurance at any time and without notice and may receive the return premium, if any.

**16. MODIFICATION BY SELLER**

Any contract may be assigned or transferred by the Seller, or the time for the making of any payment due by Buyer may be extended by Seller without derogation of any of the rights of the Seller or its assigns. Waiver by any party of any default shall not be deemed a waiver of any subsequent default.

**17. RETURNED GOODS**

No goods will be accepted for return unless authorized in writing by Seller. In all cases, transportation and restocking charges will be borne by Buyer.

**18. PACKING**

The Buyer will be charged for export packaging or other special packing desired. Cost for cartage to ship or transfer express will be added to the invoice. No credit will be allowed if no packing is required.

**19. CHANGES/CANCELLATION**

NORD Gear will not accept changes in specifications to a confirmed order unless such changes are requested in writing and confirmed back in writing. In addition, the purchaser must to agree to any additional charges that may arise from the change. Placing orders on hold or cancellation of orders require Seller's written approval, and are subject to cancellation and/or restocking charges.

**20. BUYER'S RESPONSIBILITY AS TO MAINTENANCE**

Buyer shall use and shall require its employees and agents to use all safety devices and guards and shall maintain the same in proper working order. Buyer shall use and require its employees and agents to use safe operation procedures in operating the equipment and shall further obey and have its employees and agents obey safety instructions given by Seller. If Buyer fails to meet the obligations herein, Buyer agrees to defend, indemnify and save Seller harmless from any liability or obligation with regard to any personal injuries or property damages directly or indirectly connected with the operation of the equipment. Buyer further agrees to notify Seller promptly and in any event not later than ten (10) days after notice or knowledge of any accident or malfunction involving Seller's equipment which has caused personal injury or property damages and to cooperate fully with Seller in investigating and determining the causes of such accident and malfunction. In the event that Buyer fails to give such notice to Seller or to cooperate with Seller, Buyer shall be obligated to defend, indemnify and save Seller harmless from any such claims arising from such accident.

**21. MISCELLANEOUS PROVISIONS**

(a) If for any reason a provision of a contract is legally invalid, then in such event the rest of the contract shall remain in full force and affect, except that the parties shall try to replace such invalid provision closest to their original mutual intentions. (b) This Invoice and these Conditions of Sale constitute the entire agreement between the parties regarding the subject matter hereof and supercedes all prior agreements, understandings and statements, whether oral or written, regarding such subject matter. No modification to, change in or departure from, the provisions of this Invoice and Conditions of Sale shall be valid or binding on Seller, unless approved in writing by Seller. No course of dealing or usage of trade shall be applicable unless expressly incorporated into this Invoice and Conditions of Sale. Any amendments to any contract or contracts between the parties shall be valid only upon the written consent of both parties.

**22. NON ASSIGNMENT BY BUYER**

Contract or contracts may not be assigned by the Buyer without prior written consent of the Seller.

**23. APPLICABLE LAW AND VENUE**

All contracts and their interpretation are governed by the applicable, substantive laws of the State of Wisconsin. Any litigation brought by the Buyer regarding this Invoice or goods purchased hereunder may only be brought in the Circuit Court for Dane County, Wisconsin.

# NORD GEAR LIMITED

# Terms and Conditions of Sale

## 1. CONTRACT

Any contract between Nord Gear Limited, hereinafter designated as Seller, and the Buyer is subject to the terms and conditions of sale hereinafter set forth. Any deviation from such terms and conditions must be specifically set forth in writing and consented to by Seller.

## 2. CONFIRMATION

An order shall be deemed accepted only when duly confirmed by Seller, at Nord Gear Limited's home office in Brampton, Ontario, and upon such confirmation the order shall become a contract binding upon the parties hereto, their successors and assigns.

## 3. PRICES

Prices shown are list prices and may be subject to applicable discounts. Unless otherwise agreed upon in writing, prices are FOB factory Braenton, Ontario. Prices and discounts are subject to change without notice until order is accepted. Seller's prices do not include cost of any inspection permits required.

## 4. LIMITED WARRANTY

Seller warrants the goods sold hereunder to be free from defects in material and workmanship under normal use and service not arising from misuse, negligence, or accident, including but not limited to the use, installation, and transportation of the goods by the Buyer, its agents, servants, employees, or by carriers. Such obligations under this warranty are limited to remedying any deficiencies in the goods at Brampton, Ontario, or at such place or places in Canada as may be designated by Seller. This warranty shall pertain to any part or parts of any goods to which Buyer or its assigns has, within one year from date of original factory invoice, given written notice of claimed defects to Seller. Buyer shall be required to furnish Seller with details of such defects and this warranty shall be effective as to such goods which Seller's examination shall disclose to its satisfaction to have been defective and which at Seller's option shall promptly thereafter be returned to Seller or its nominees. EXCEPT FOR THE EXPRESS WARRANTIES SET FORTH ABOVE, SELLER HAS MADE NO WARRANTIES, EXPRESS, IMPLIED OR STATUTORY, AS TO THE GOODS SOLD HEREUNDER, INCLUDING, BUT NOT LIMITED TO THEIR MERCHANTABILITY OR FITNESS FOR ANY PARTICULAR PURPOSE. ANY DESCRIPTION OR MODEL OF THE GOODS IS FOR IDENTIFICATION OR ILLUSTRATIVE PURPOSES ONLY AND SHALL NOT BE DEEMED TO CREATE AN EXPRESS WARRANTY. THE REMEDIES OF THE BUYER SET FORTH IN THIS SECTION ARE EXCLUSIVE. In no event shall the Seller be liable to the Buyer or to any other person for any loss or damage, direct or indirect, arising out of or caused by the use or operation of the goods, or for the loss of profits, business, or good will, or for any incidental, special or consequential damages. Seller shall in no event be liable to any person or firm (including any assignee or Buyer) except Buyer and its successors. Unless specifically authorized by Seller in writing, Seller shall not become responsible for any repair work done by Buyer or any other party on any goods sold. Any costs of the return of such goods to Seller shall be borne by Buyer. Goods sold but not manufactured by the Seller are being warranted as to defects in material and workmanship consistent with the limited warranty policy of the original manufacturer of the goods and if there is not such a limited warranty policy, the warranty shall be limited to the provisions of the preceding paragraph of Article 4 herein. Standards for the operating characteristics of the gearboxes and the gearmotors are in conformity with Seller's test. THIS WARRANTY IS IN LIEU OF ALL OTHER EXPRESS OR IMPLIED WARRANTIES, INCLUDING ANY IMPLIED WARRANTY OF MERCHANTABILITY OR FITNESS FOR ANY PARTICULAR PURPOSE THE SELLER DOES NOT ASSUME, NOR DOES IT AUTHORIZE ANY PERSON TO ASSUME, ON ITS BEHALF, ANY OTHER OBLIGATION OR LIABILITY.

## 5. SHORTAGE AND NONCONFORMITY

Any claim of shortage or that the goods do not conform with the specifications of the order or model must be made in writing within ten (10) days after delivery of the goods (as to which such claim is made) to Buyer or its nominees, but in no event shall the claim be later than within the time limit provided by the carrier or insurance company, otherwise such claim shall be deemed waived. The samples, measurements, dimensions and weights contained in the Seller's catalogs, sales manuals, photographs and drawings constitute only an approximate guide. The Seller reserves the right to make any changes which the Seller, in its absolute discretion, considers necessary. While the goods will be delivered principally according to specifications or standards or quantities agreed upon, insignificant deviations or insignificant changes in construction are permissible. The same applies to partial deliveries. In the event that Buyer has a verified claim of shortage or nonconformity of the goods to the specifications of the order or the model, and if such claim has been submitted within the required time limit as set forth above, the Seller shall, at its own expense, make up for the shortage of the goods, or replace or repair the goods, as the case may be, but in no event shall Seller be or become liable to Buyer or to any other person or persons for any loss in damage, direct or indirect, arising out of or caused by such incidents or for the loss of profits, business or good will. Shipping dates are estimates unless parties expressly agree on time of the essence.

## 6. FORCE MAJEURE

The obligation of the Seller shall be modified or excused, as the case may be, for reasons of Acts of God, war, governmental law regulations, strikes or lock outs, fire, breakdown of machinery, whether in its own business enterprise, or if for any other course beyond Seller's control, the goods cannot be delivered or their delivery becomes delayed in whole or in part. In the above instances time for delivery shall be extended for the period of the delay caused, with the proviso, however, that either party may cancel in writing the undelivered portion of the order or contract if the delay exceeds six (6) months from the delivery date originally confirmed by Seller. In no event shall Seller become liable in the aforesaid instances to Buyer or any third party for consequential damages or business loss.

## 7. SHIPMENT AS UNIT

Each shipment by Seller shall be treated as a separate and distinct unit with respect, but only with respect to forwarding, terms of payment, and the making of claims by the Buyer; provided, however, that if the Buyer defaults in the payment of any obligation to Seller or any installment thereof, under any agreement between Buyer and Seller, or if Buyer refuses to accept any goods when tendered for delivery, the Seller may, on fifteen (15) days' written notice to the Buyer, without prejudice to Seller's other lawful remedies, either defer further performance until the defaulted payments are made in full, or make future deliveries for cash in advance only, or treat the entire contract or contracts with Buyer as breached by the Buyer and pursue its remedies for breach.

## 8. BUYER'S REFUSAL OF DELIVERY

If Buyer refuses to accept delivery of any goods tendered for delivery, then Seller, without prejudice to Seller's other lawful remedies, may either store or cause such goods to be stored in a warehouse, for Buyer's account and at Buyer's cost, risk and expense, or sell such goods (without notice) to any purchaser at public or private sale, and hold Buyer liable for any difference between (a) the contract price of the goods, and (b) the price at which goods are resold less the costs and expense of such resale including brokerage commissions, or restocking charges.

## 9. GOODS IN TRANSIT

If prior to delivery or while the goods are in transit, Buyer or Seller becomes bankrupt or insolvent, or any petition in bankruptcy or for the reorganization or for appointment of a receiver is filed against Buyer or Seller, as the case may be, then the other party hereto may forthwith terminate this contract by giving written notice of such termination. Such termination shall not affect any claim for damages available to the Buyer, provided that if Buyer is then indebted to Seller, the amount of any such damage claim shall be abated to the extent that the indebtedness of Buyer to Seller, as actually paid in money, is abated by any order or judgment entered or any plan adopted in any bankruptcy, reorganization, receivership, or similar proceeding. Such termination shall not prejudice the Seller's rights to any amounts then due under the contract. If Buyer becomes bankrupt or insolvent or any petition in bankruptcy or for reorganization or if a state court receivership is filed against Buyer, then, at its option, Seller may take possession of any goods theretofore sold to Buyer, in connection with which the full purchase price has not been paid, analogous to the terms and provisions set forth in Paragraphs 11 and 12 hereinafter.

## 10. DELIVERY

(a) Unless otherwise agreed, delivery of the goods to any carrier shall constitute delivery to the Buyer, and thereafter the risk of loss or damage to the goods shall be upon the Buyer. (b) If the Buyer does not give delivery instructions to the Seller at least (10) days prior to the delivery date ex factory confirmed by the Seller, the Seller may deliver the goods to a carrier of its own choosing, at Buyer's cost and risk, or, at Seller's option, may store the goods on the pier or on any warehouse, at Buyer's cost and risk. Any purchase price in such event becomes due and payable within ten (10) days of such storage.

## 11. PAYMENT OF PURCHASE PRICE

Time of payment is of the essence under the contract. Upon default in any of the terms of the contract, or failure to comply with any of the conditions thereof, or upon seizure of the property under execution or other legal process, or if the Buyer becomes bankrupt or insolvent, or any petition for reorganization or for appointment of a receiver is filed against Buyer, or if the Buyer makes any assignment for the benefit of its creditors or otherwise sells, encumbers or disposes of the goods, or if for any other reason the Seller should deem itself insecure, the full amount of the purchase price then remaining unpaid shall at once become due and payable at the option of the Seller.

## 12. BUYER'S DEFAULT

Upon the Buyer's default, the Seller may dispose of the merchandise in any manner that it deems fit and, if it desires to resell same, may do so at private or public sale, with or without notice, and with or without the property being at the place of sale, subject, however, to applicable laws. The Seller or its assigns shall have the right to bid at such sale and may become the purchaser of the property. The proceeds of the sale shall first be applied to the expenses incurred in retaking, repairing, storing and selling the goods, reasonable solicitor's fees included, and then shall be applied to the payment of the balance due under the contract. Any surplus amount shall be paid to the Buyer. If a deficiency results after the resale, the Buyer agrees to pay such forthwith, together with reasonable solicitor's fees, for the recovery of the goods incurred by the Seller. If upon the Buyer's default, the Seller elects not to resell any goods which it may repossess, then the cost of repossession, including reasonable solicitor's fees, shall forthwith be due and payable from Buyer to Seller.

## 13. SECURITY INTEREST AND TITLE

In provinces which are governed by a Personal Property Security Act, this contract shall serve as Security Agreement, reserving in Seller a security interest until full payment of purchase price. The provisions of the Personal Property Security Act regarding security interest shall have preference and apply if inconsistent with other terms of the conditions of sale herein. In provinces where a Personal Property Security Act does not apply, title to the goods shall remain in the Seller or its assigns until full payment of the purchase price. Buyer agrees to execute forthwith any and all documents in such a way and form as Seller may need for filing or recording the security interest under a Personal Property Security Act with the proper registers or offices, or for filing or recording the Conditional Sales Contract herein.

## 14. SALES AND USE TAX

The Seller's prices do not include sales, use, excise or other taxes payable to any governmental authority in respect of the sale of Seller's goods. The Buyer shall pay, in addition to the Seller's price the amount of any such taxes or shall reimburse the Seller for the amount thereof that the Seller may be required to pay. At the option of the Seller, Buyer shall give evidence of payment or of exemption certificate.

## 15. INSURANCE

The Buyer shall keep the goods insured against damage by fire, water or other casualty as required by Seller, with a company acceptable to Seller, with loss payable to Seller for the total purchase price until the Seller is fully paid. Seller, if it so elects, may place said insurance at Buyer's expense; Seller may cancel such insurance at any time and without notice and may receive the return premium, if any.

## 16. MODIFICATION BY SELLER

Any contract may be assigned or transferred by the Seller, or the time for the making of any payment due by Buyer may be extended by Seller without derogation of any of the rights of the Seller or its assigns. Waiver by any party of any default shall not be deemed a waiver of any subsequent default.

## 17. RETURNED GOODS

No goods will be accepted for return unless authorized in writing by Seller. In all cases, transportation and restocking charges will be borne by Buyer.

## 18. PACKING

The Seller does not charge for standard packaging for domestic shipment. The Buyer will be charged, however, for export packaging or other special packing desired. Cost for cartage to ship or transfer express will be added to the invoice. No credit will be allowed if no packing is required.

## 19. EXPORT ORDER

Export orders are to be accompanied by a confirmed irrevocable Letter of Credit in Seller's favour, in Canadian currency, with an accredited Canadian bank, subject to Seller's draft, with shipping documents attached.

## 20. CANCELLATION

Placing orders on hold or cancellation of orders require Seller's written approval, and are subject to cancellation and/or restocking charges.

## 21. BUYER'S RESPONSIBILITY AS TO MAINTENANCE

Buyer shall use and shall require its employees and agents to use all safety devices and guards and shall maintain the same in proper working order. Buyer shall use and require its employees and agents to use safe operating procedures in operating the equipment and shall further obey and have its employees and agents obey safety instructions given by Seller. If Buyer fails to meet the obligations herein, Buyer agrees to indemnify and save Seller harmless from any liability or obligation with regard to any personal injuries or property damages directly or indirectly connected with the operation of the equipment. Buyer further agrees to notify Seller promptly and in any event not later than ten (10) days after notice or knowledge of any accident or malfunction involving Seller's equipment which has caused personal injury or property damages and to cooperate fully with Seller in investigating and determining the causes of such accident and malfunction. In the event that Buyer fails to give such notice to Seller or to cooperate with Seller, Buyer shall be obligated to indemnify and save Seller harmless from any such claims arising from such accident.

## 22. MISCELLANEOUS PROVISIONS

(a) If for any reason a provision of a contract is legally invalid, then in such event the rest of the contract shall remain in full force and effect; except that the parties shall try to replace such invalid provision with a provision closest to their original mutual intentions. (b) Any amendments to any contract or contracts require the consent in writing by both parties.

## 23. NON ASSIGNMENT BY BUYER

Contract or contracts may not be assigned by the Buyer without prior written consent of the Seller.

## 24. APPLICABLE LAW

All contracts are governed by the applicable laws of Ontario.

**25.** This instrument sets forth the entire understanding and agreement of the parties hereto in respect of the subject matter hereof, and all prior undertakings between the parties hereto, together with all representations and obligations of such parties in respect of such subject matter, shall be superceded by and merged into this instrument.

**26.** The provisions of this agreement shall bind and ensure to the benefit of the parties hereto and their respective heirs, executors, administrators, successors and (subject to any restrictions or assignment herein above set forth) assigns, as the case may be.

**27.** The parties acknowledge that they have requested this Contract and all notices or other documents relating thereto be drafted in the English language.

Les parties reconnaissent qu'ils ont requis que ce contrat et tous les avis ou autres documents qui s'y rapportent soient rédigés en langue anglaise.

*"Terms and Conditions in French available upon request."*

# Product Overview

## UNICASE™ SPEED REDUCERS



**HELICAL IN-LINE**
- Foot or Flange Mount
- Torque up to 205,000 lb-in
- Gear ratios – 1.82:1 to over 300,000:1



**NORDBLOC®.1 HELICAL IN-LINE**
- Foot or Flange Mount
- Torque up to 26,550 lb-in
- Gear ratios – 1.88:1 to over 370:1



**PARALLEL HELICAL CLINCHER™**
- Shaft, Flange or Foot Mount
- Torque up to 797,000 lb-in
- Gear ratios – 4.26:1 to over 300,000:1

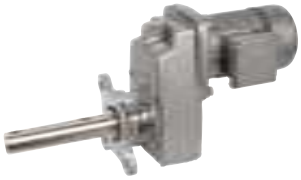

**SCP SCREW CONVEYOR PACKAGE**
- Shaft, or Flange Mount
- Torque up to 53,100 lb-in
- Gear ratios – 4.32:1 to over 1500:1



**RIGHT ANGLE HELICAL-BEVEL 2-STAGE**
- Foot, Flange or Shaft Mount
- Torque up to 5,840 lb-in
- Gear ratios – 4.1:1 to 72:1



**RIGHT ANGLE HELICAL-BEVEL**
- Foot, Flange or Shaft Mount
- Torque up to 283,000 lb-in
- Gear ratios – 8.04:1 to over 300,000:1



**RIGHT ANGLE HELICAL-WORM**
- Foot, Flange or Shaft Mount
- Torque up to 27,585 lb-in
- Gear ratios – 4.40:1 to over 300,000:1

## HIGH PERFORMANCE MOTORS & BRAKEMOTORS



**INVERTER/VECTOR DUTY**
- Standard or Energy Efficient
- Integral, NEMA or Metric IEC
- 1/6 to 250 hp

## UNICASE™ SPEED REDUCERS



**MINICASE™ RIGHT ANGLE WORM**
- Foot, Flange or Shaft Mount
- Torque up to 3,540 lb-in
- Gear ratios – 5:1 to 500:1



**FLEXBLOC™ WORM**
- Modular bolt-on options
- Torque up to 4,683 lb-in
- Gear ratios – 5:1 to 3,000:1



**MAXXDRIVE™ LARGE INDUSTRIAL GEAR UNITS PARALLEL HELICAL**
- Modular bolt-on options
- Torque up to 2,027,000 lb-in
- Gear ratios – 5:1 to 1,600:1



**MAXXDRIVE™ LARGE INDUSTRIAL GEAR UNITS HELICAL-BEVEL**
- Modular bolt-on options
- Torque up to 2,027,000 lb-in
- Gear ratios – 5:1 to 1,600:1

## NORDAC AC VECTOR DRIVES



**SK200E**
- Decentralized, high performance
- 380-480V, 3-phase to 10 hp
- 200-240V, 3-phase to 5 hp
- 200-240V, 1-phase to 1.5 hp
- 100-120V, 1-phase to 1 hp



**SK500/520/530E**
- Compact, high performance
- 380-480V, 3-phase, to 30hp
- 200-240V, 3-phase, to 15hp
- 200-240V, 1-phase, to 3hp
- 110-120V, 1-phase, to 1.5hp



**SK700E**
- Flexible high performance
- 380-460V, 3-phase, to 200hp

NORD DRIVESYSTEMS



DRIVESYSTEMS

**www.nord.com**

## NORD Gear Corporation

National Customer Service Toll-Free: 888.314.6673
info.us@nord.com

## NORD Gear Limited

Toll-Free in Canada: 800.668.4378
info.ca@nord.com

**WEST**
Corona, CA (Los Angeles)
Phone: 608.849.0190

**MIDWEST**
Waunakee, WI (Madison)
Phone: 608.849.7300

**EAST**
Charlotte, NC
Phone: 608.849.0140

**CANADA**
Brampton, ON (Toronto)
Phone: 905.796.3606

1100200076/0410

# CAUSTIC MIXING TANK
# 65CUV68003

**Workshop drawing :**

- □ Approuved as is
- □ Approuved with correction(s)
- □ Rejected

**Approuved by**

Name : _____

Title : _____

Compagnie : _____

Signature : _____

# 2107-001B RESERVOIR 4300L
# 21716-02

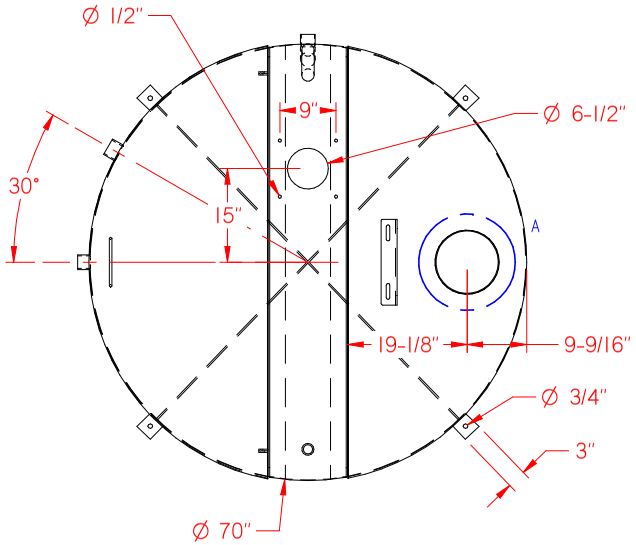


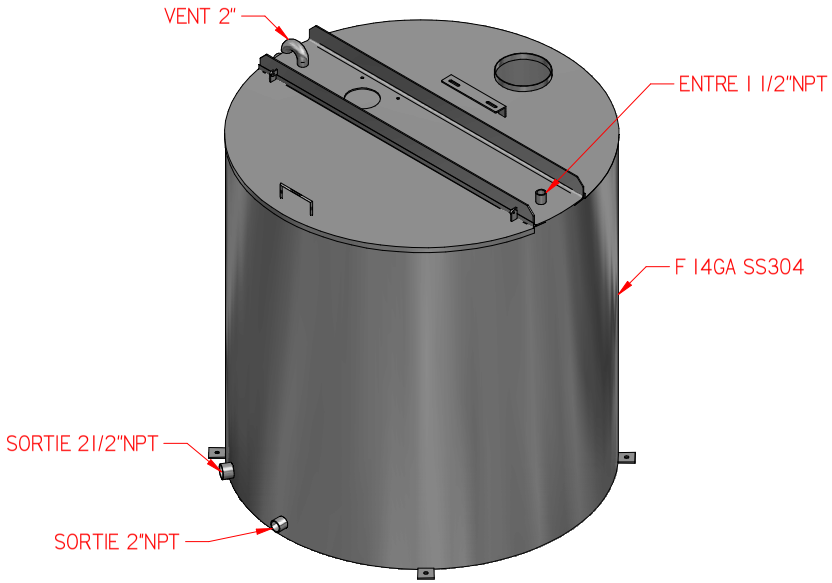


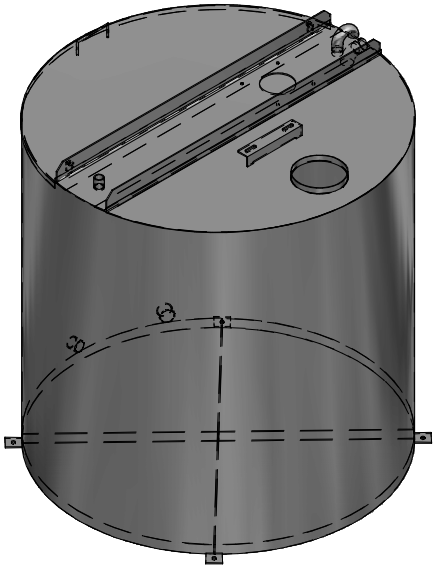

| DESSIN D'APPROBATION | |
|---|---|
| DATE: | |
| APPROUVÉ PAR (LETTRES MOULÉES): | |
| SIGNATURE: | |

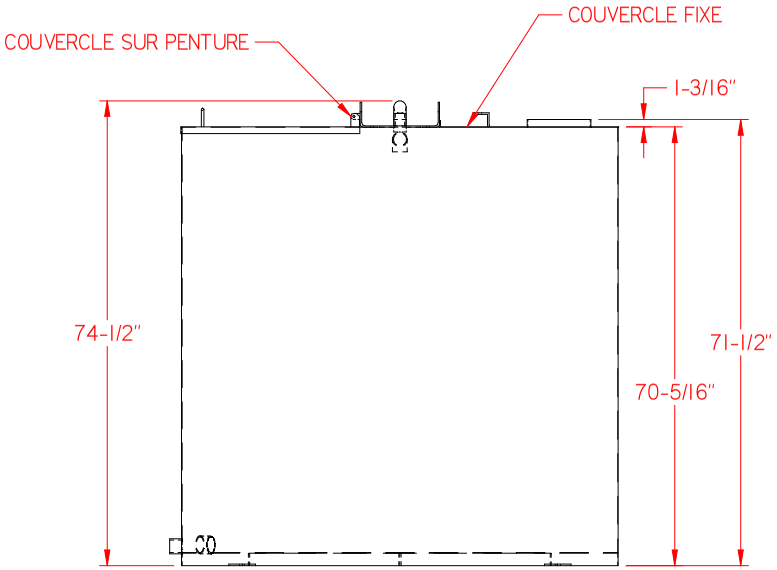


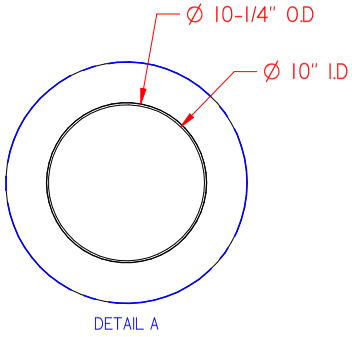


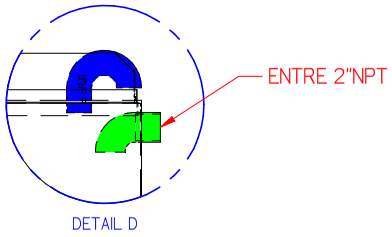


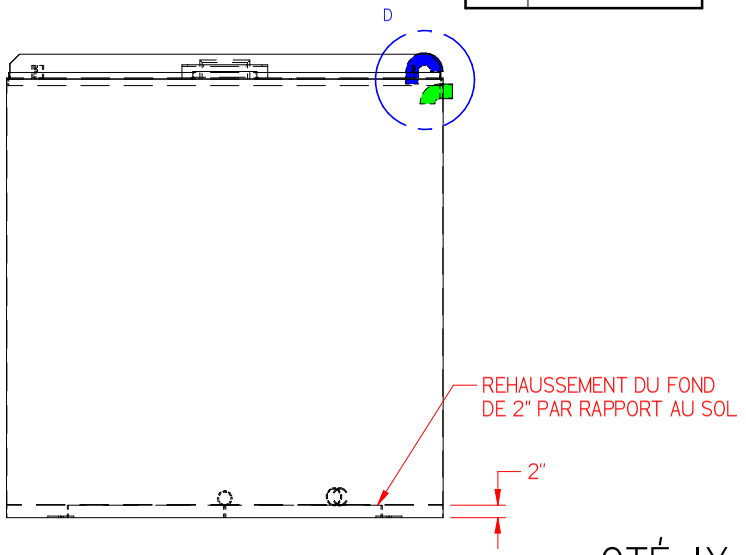


QTÉ: IX

Ce document est la propriété de Lacal Technologie Inc. Il ne doit pas être dévoilé, utilisé ou reproduit en tout ou en parties sans l'autorisation écrite de Lacal Technologie Inc.

Tolérancement (Sauf indications contraires): Coupe ±1/16" | Pliage ±0.5° | Usinage ±0.010" | Montage ±1/16"

LACAL

Fichier: 21716-00 PCP
Titre: RESERVOIR 4300 L ET 5075L
Dessiné par: DM | Date: 18-03-2021 | Vérifié par:
No dessin: 21716.00.APPROBATION

# CAUSTIC MIXING TANK AGITATOR
# 65AGI68010

**Workshop drawing :**

- □ Approuved as is
- □ Approuved with correction(s)
- □ Rejected

**Approuved by**

Name : _____

Title : _____

Compagnie : _____

Signature : _____

Sharpe Mixers
A Hayward Gordon Company
www.sharpemixers.com
P.O. Box 3906 - Seattle, WA 98124 - (800) 237-8815 (206) 767-5660

# MIXER DATA SHEET



**Customer:**

**Date :** mars 5, 2021
**Sharpe Ref# :**

**Application :**

**Design conditions :** Viscosity(cps): 50 , Sp.Grav: 1,00 Temp.: Ambient Pressure: Atmos.
**Tank dimensions :** 70 " Dia. Tank x 70" overall height from mixer mount to tank floor
M5QP-02012021 Tank Volume = ~1033 Gallons

| | |
|---|---|
| **Equipment :** | **SHARPE FIXED MOUNTED F-SERIES MIXER**<br>Quantity : 1 **Mixer Model #** **FGP-075** 0 |
| **Motor :** | 0,75 Horsepower, @ 1750 RPM, 3PH, 60Hz, 575 VOLTS TEFC<br>56C Frame, Motor Furnished by Sharpe , Mounted by Sharpe |
| **Mixer Drive :** | M5 Single-Reduction Helical Gear Drive , 5:1 Ratio, Rated at 4.8 Horsepower |
| **Mixer mounting :** | 11" sq. plate with vibration mounts |
| | Std Food Grade Viton Lip Seal in Nosecone/Spool |
| **Wetted Parts :** | SS316 NONE (bead blasted) |
| **Shaft :** | 0,75" Dia. x 51" long from mounting base, turning @ 350 RPM |
| **Impellers :** | Quantity: ( 1 ) 14,5" Dia. Hyflo 218 Energy Efficient Hydrofoil<br>1-Piece setscrewed design |

*Shipping Weight,each= 100 lbs*

| | | |
|---|---|---|
| Calculated Flow Generated = | 2988 | gallons per minute |
| Tank Turnovers Per Minute = | 2,89 | |
| Design Torque Load = | 228 | lbs-in |
| Calculated Design Overhung Moment = | 941 | lbs-in |

Prepared by:

***Sharpe Mixers***
*P.O.Box 3906*
*Seattle,WA 98124*

3-5-21 1:54 PM

Drawing not to scale. Drawing is for reference only. Use Certified prints for construction. Dimensions in inches.

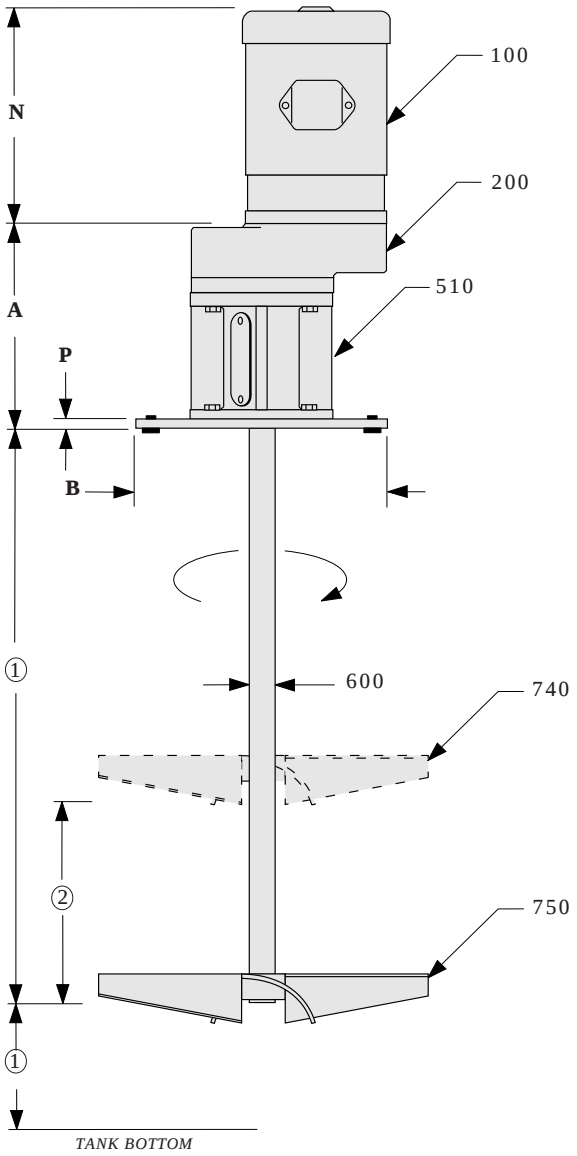


100 - MOTOR①

200 - GEAR REDUCER

510 - BEARING SPOOL①

600 - SHAFT①

740 - UPPER IMPELLER②

750 - LOWER IMPELLER①

①Impeller(s), shaft and other details are dependent on specific application and will be described in the Quotation/Data Sheet.

② Items are optional and will be described in the Quotation/Data Sheet if provided

## MOUNTING DETAIL
(includes vibration pads)

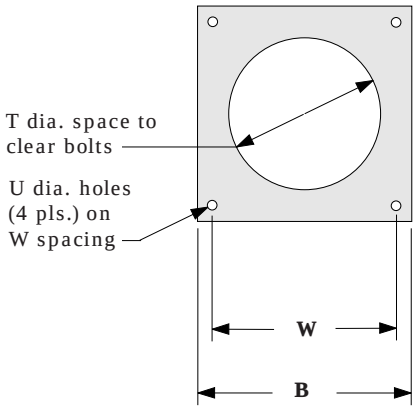


## MOTOR DIM'S

| NEMA FRAME | 'N' |
|---|---|
| 56C | 11 |
| 143TC | 10.25 |
| 145TC | 11.25 |
| 182TC | 11.75 |
| 184TC | 12.75 |

## OVERALL DIMENSIONS

| | 025 | 033 | 050 | 075 | 100 | 150 | 200 | |
|---|---|---|---|---|---|---|---|---|
| **A** | 10 | 10 | 10 | 10 | 10 | 10 | 10 | |
| **B** | 11 | 11 | 11 | 11 | 11 | 11 | 11 | |
| **P** | .38 | .38 | .38 | .38 | .38 | .38 | .38 | |
| **T** | 6.5 | 6.5 | 6.5 | 6.5 | 6.5 | 6.5 | 6.5 | |
| **U** | .47 | .47 | .47 | .47 | .47 | .47 | .47 | |
| **W** | 9 | 9 | 9 | 9 | 9 | 9 | 9 | |

# F - SERIES

*HELICAL GEAR DRIVE* PLATE MOUNT C-FACE MOTOR

DWG NO.: S6009

CADD# FGP-S REV.3 4/03

**SHARPE MIXERS** P.O. BOX 3906 SEATTLE, WA 98124 FAX (206) 767-9170 (206) 767-5660

# CAUSTIC DISTRIBUTION TANK
# 65TSO68003

**Workshop drawing :**

- □ Approuved as is
- □ Approuved with correction(s)
- □ Rejected

**Approuved by**

Name : _____

Title : _____

Compagnie : _____

Signature : _____

# 2107-001A RESERVOIR 4300L
# 21716-01

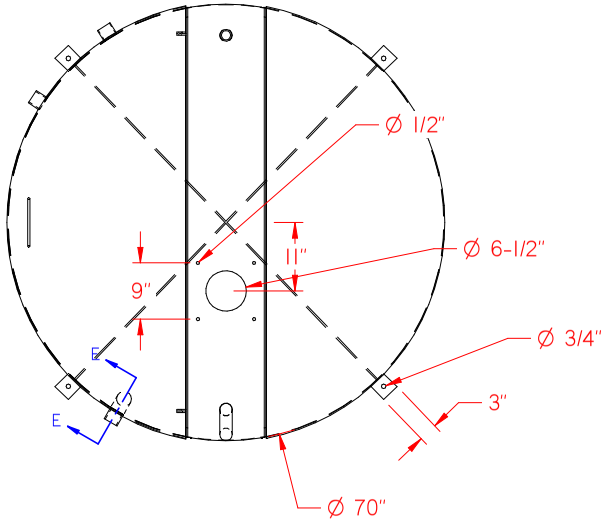


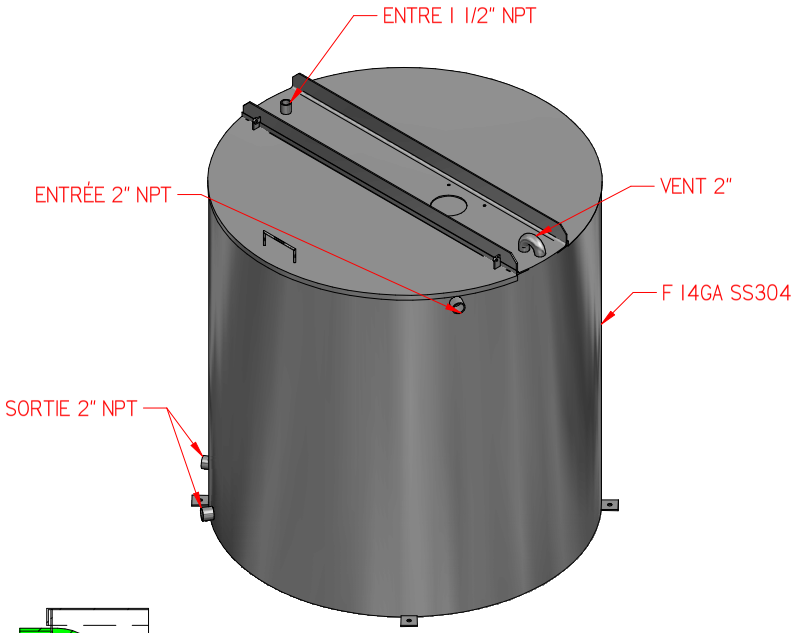


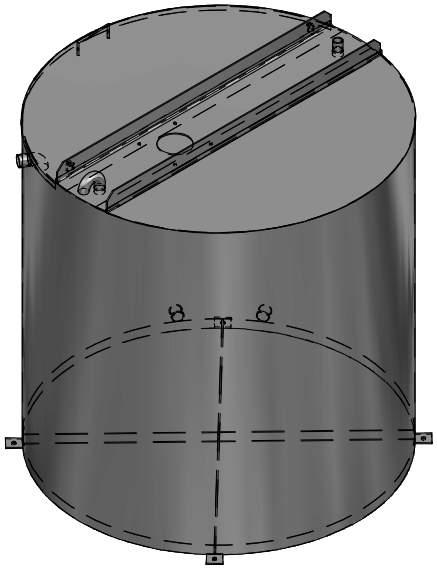

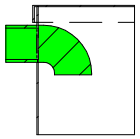

SECTION E-E

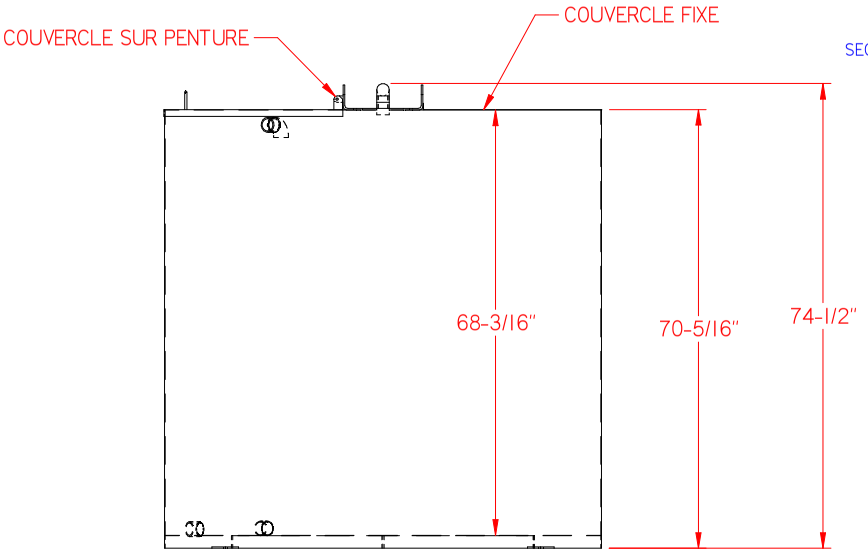


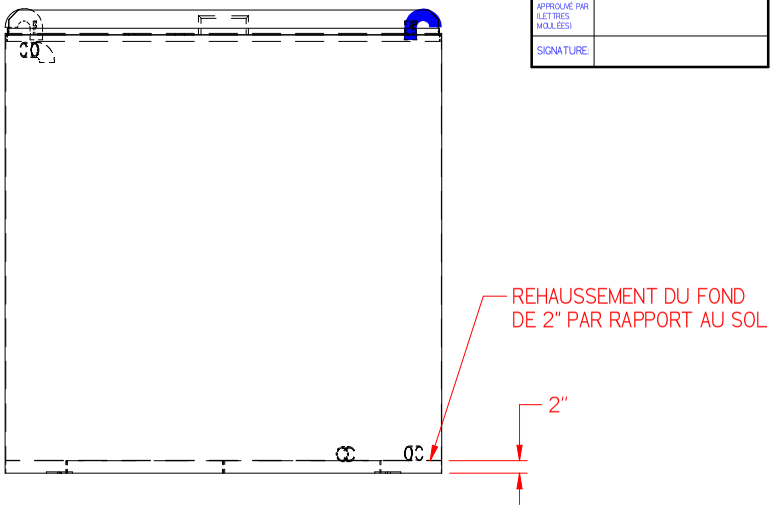


| DESSIN D'APPROBATION | |
|---|---|
| DATE: | |
| APPROUVÉ PAR (LETTRES MOULÉES) | |
| SIGNATURE: | |

QTÉ: 1X

Ce document est la propriété de Lacal Technologie Inc. Il ne doit pas être dévoilé, utilisé ou reproduit en tout ou en parties sans l'autorisation écrite de Lacal Technologie Inc.

| Tolérancement Sauf indications contraires | | | | | |
|---|---|---|---|---|---|
| Coupe | ±1/16" | LACAL | Projet: 21716-00 PCP | | Règle: 1/5 |
| Plage | ±0.5° | | Titre: RESERVOIR 4300L ET 5075L | | |
| Usinage | ±0.005" | | Dess. par: DM | Date: 18-03-2021 | Vérif. par: |
| Montage | ±1/16" | | No dessin: 21716.00.APPROBATION | | |

# CAUSTIC TRANSFER PUMP
# MODEL FC5010-17
# 1 HP, 575 VOLTS

**Workshop drawing :**

- □ Approuved as is
- □ Approuved with correction(s)
- □ Rejected

**Approuved by**

Name : _____

Title : _____

Compagnie : _____

Signature : _____

# TC & FC SERIES CENTRIFUGAL PUMPS

## Pro-Stainless Steel Series Centrifugal Pumps

The **Webtrol Pro-Stainless Steel Series Centrifugal** are designed for dependable performance and rugged continuous duty service.

When you need a corrosion and erosion resistant pump, the Pro-Stainless Steel Centrifugal line of pumps from Webtrol is your logical choice.

These pumps are guaranteed tough, engineered for the professional and built for lasting performance and value.



### Features And Benefits

- **Close Coupled** design saves space and simplifies maintenance and installation.
- **Centerline Discharge** ensures maximum resistance to misalignment and distortion caused by the piping connections.
- **Back Pullout** design allows for maintenance of impeller and mechanical seal without removal of suction/discharge piping.
- **High Operating Efficiencies** over a wide range of capacities which lowers operating cost.
- **Mechanical Seals** and case o-rings are of high quality materials for standard pumping requirements. Optional high temperature and chemical resistant are available.

### Performance

Capacities to 600 GPM
Pressures to 120 PSI

### Typical Services

- Pressure Boosting
- Ultrapure Water Systems
- Deionized Systems
- Distribution Systems
- Pharmaceutical Services
- Water Reclamation
- Sprinkler And Irrigation
- General Pump Applications
- Beverage Processing
- Parts Washers
- Cooling Towers
- Jockey Pump
- Liquid Transfer
- Heat Exchangers
- Car Wash
- Spray systems
- Scrubbers
- Poultry

# TC & FC STAINLESS STEEL CENTRIFUGAL SPECIFICATIONS



## TC Models

| | | |
|---|---|---|
| **Size:** | Suction | TC70 . . . . . .1 1/4" NPT<br>TC120 . . . . . .1 1/4" NPT<br>TC200 . . . . . .1 1/2" NPT |
| | Discharge | All TC Models . . . . . .1" NPT |
| **HP Range:** | | 1/2 HP to 1 1/2 HP - 1750 RPM<br>3/4 HP to 3 HP - 3450 RPM |
| **Performance:** | | Capacity - 5.5 GPM to 90 GPM<br>Discharge - 8 PSI to 63 PSI<br>Liquid - clean water<br>Liquid Temp. - 212°F (250°F opt.)<br>Max. Working Pressure - 125 PSI |
| **Materials:** | | Casing - 304L Stainless<br>Impeller - 304L Stainless<br>Shaft - Stainless<br>Mechanical Seal - Type 21 |
| **Motor:** | | NEMA 56J frame / 60 Hz<br>Built in overload protection<br>(single phase models) |



## FC Models

| | | |
|---|---|---|
| **Size:** | Suction<br>150 lb. ANSI | FC32 . . . . . .2" ANSI<br>FC40 . . . . . .2 1/2" ANSI<br>FC50 . . . . . .2 1/2" ANSI<br>FC65 . . . . . .3" ANSI |
| | Discharge<br>150 lb. ANSI | FC32 . . . . . .1 1/4" ANSI<br>FC40 . . . . . .1 1/2" ANSI<br>FC50 . . . . . .2" ANSI<br>FC65 . . . . . .2 1/2" ANSI |
| **HP Range:** | | 1 HP to 2 HP - 1750 RPM<br>3 HP to 30 HP - 3450 RPM |
| **Performance:** | | Capacity - 13 GPM to 600 GPM<br>Discharge - 6 PSI to 120 PSI<br>Liquid - clean water<br>Liquid Temp. - 212°F (250°F opt.)<br>Max. Working Pressure - 230 PSI |
| **Materials:** | | Casing - 304L Stainless<br>Impeller - 304L Stainless<br>Shaft - Stainless<br>Mechanical Seal - Type 21 |
| **Motor:** | | NEMA JM, TC, TSC frame / 60 Hz |

# FC50 SERIES GROUP CURVES

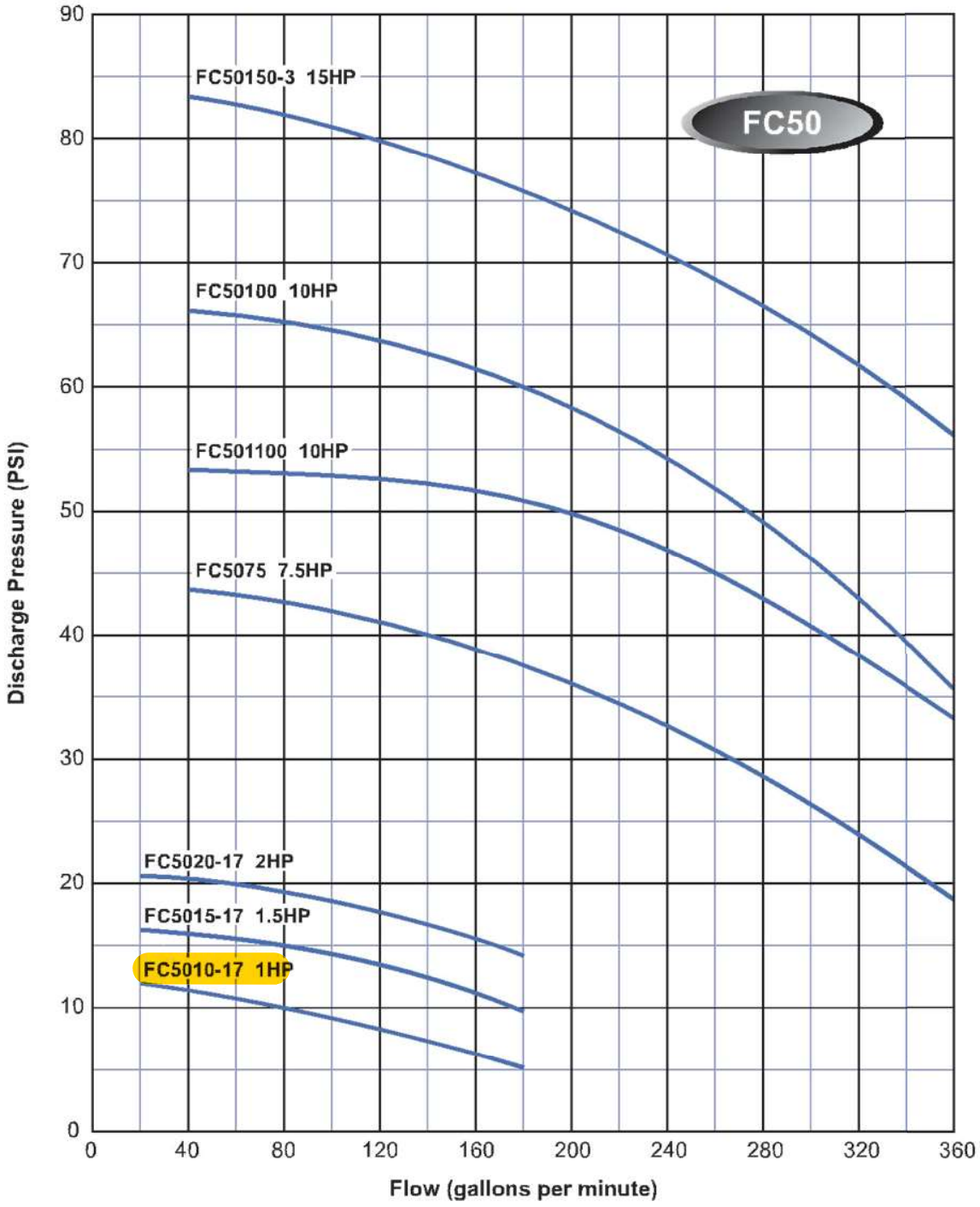

# STAINLESS STEEL CENTRIFUGAL CURVES - FC Series

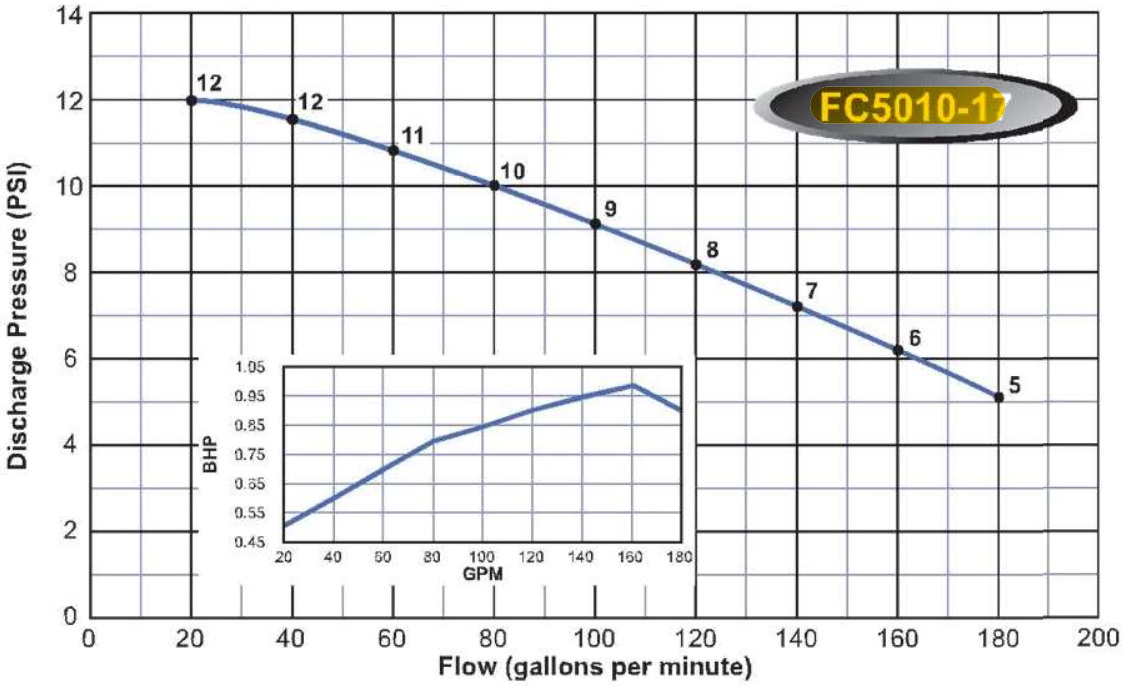


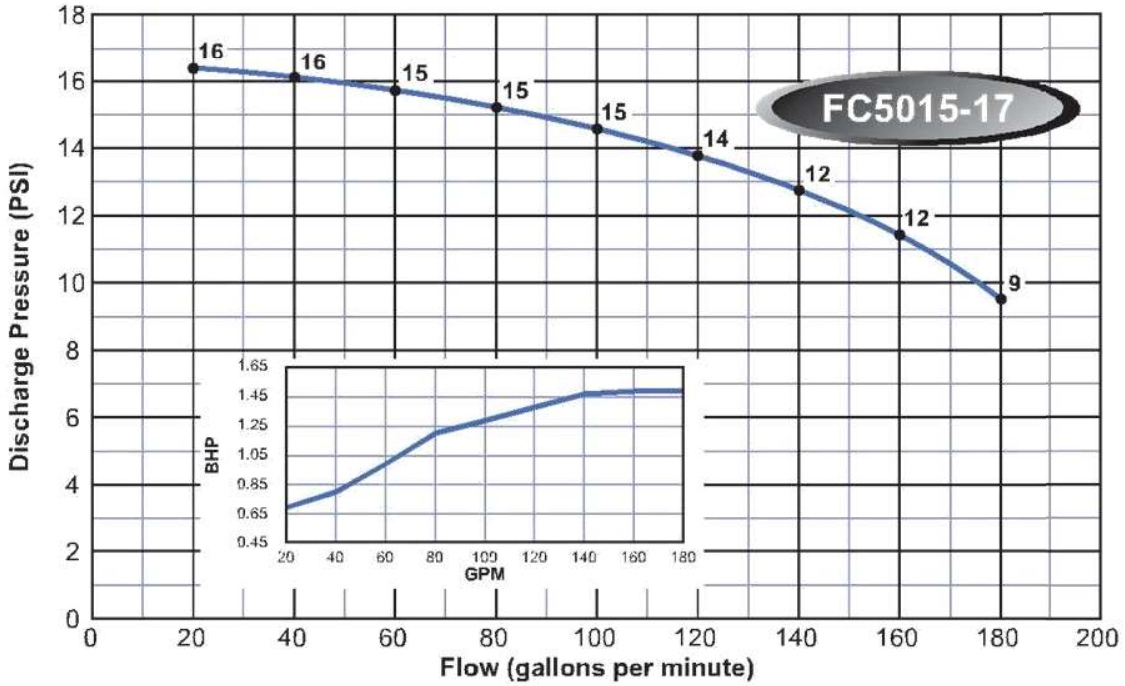


Note:
Curves are based on 60 Hz 3450 rpm motors. 50 Hz 2875 rpm curves are available. These curves are for general guidance only, individual pump curves are available upon request. A certified curve may be requested for an additional cost. Webtrol will build pumps to fit your specific needs, contact factory for pricing.

# STAINLESS STEEL CENTRIFUGAL PUMP
## Dimensions For FC Series - Page 1

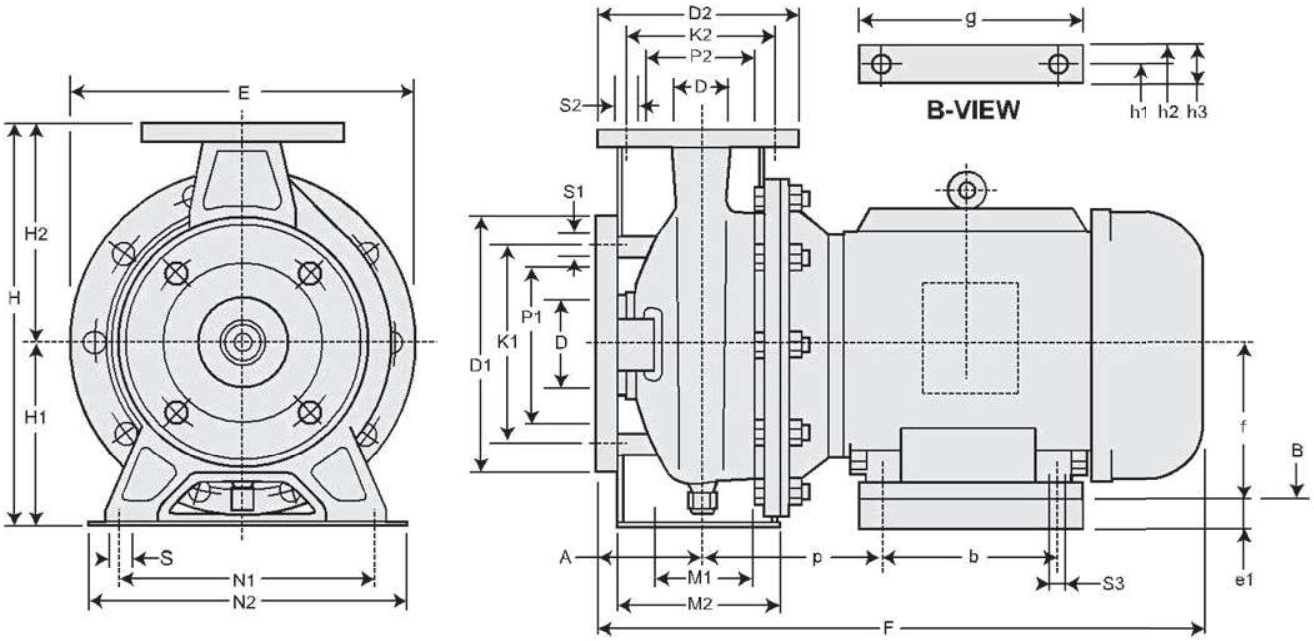


| Model No. | Suction Flange (inches) | | | | | Discharge Flange (inches) | | | | | Pump Dimension (inches) | | | | | | | | | |
|---|---|---|---|---|---|---|---|---|---|---|---|---|---|---|---|---|---|---|---|---|
| | D | P1 | K1 | D1 | S1 | D | P2 | K2 | D2 | S2 | A | E | H | H1 | H2 | M1 | M2 | N1 | N2 | S |
| FC3230 | 2 | 3 3/4 | 4 15/16 | 6 1/2 | 11/16 | 1 1/4 | 2 1/2 | 3 1/2 | 5 1/2 | 5/8 | 3 1/8 | 8 3/8 | 9 15/16 | 4 7/16 | 5 1/2 | 2 3/4 | 4 1/2 | 5 1/2 | 7 1/2 | 9/16 |
| FC32A50 | 2 | 3 3/4 | 4 15/16 | 6 1/2 | 11/16 | 1 1/4 | 2 1/2 | 3 1/2 | 5 1/2 | 5/8 | 3 1/8 | 10 | 11 1/2 | 5 3/16 | 6 5/16 | 2 3/4 | 4 5/8 | 7 1/2 | 9 7/16 | 9/16 |
| FC32B50 | 2 | 3 3/4 | 4 15/16 | 6 1/2 | 11/16 | 1 1/4 | 2 1/2 | 3 1/2 | 5 1/2 | 5/8 | 3 1/8 | 10 | 11 1/2 | 5 3/16 | 6 5/16 | 2 3/4 | 4 5/8 | 7 1/2 | 9 7/16 | 9/16 |
| FC3275 | 2 | 3 3/4 | 4 15/16 | 6 1/2 | 11/16 | 1 1/4 | 2 1/2 | 3 1/2 | 5 1/2 | 5/8 | 3 1/8 | 11 9/16 | 13 3/8 | 6 5/16 | 7 1/16 | 2 3/4 | 4 11/16 | 7 1/2 | 9 7/16 | 9/16 |
| FC32100 | 2 | 3 3/4 | 4 15/16 | 6 1/2 | 11/16 | 1 1/4 | 2 1/2 | 3 1/2 | 5 1/2 | 5/8 | 3 1/8 | 11 9/16 | 13 3/8 | 6 5/16 | 7 1/16 | 2 3/4 | 4 11/16 | 7 1/2 | 9 7/16 | 9/16 |
| FC40A50 | 2 1/2 | 4 9/16 | 5 11/16 | 7 5/16 | 11/16 | 1 1/2 | 2 7/8 | 3 7/8 | 5 7/8 | 5/8 | 3 1/8 | 8 3/8 | 9 15/16 | 4 7/16 | 5 1/2 | 2 3/4 | 4 1/2 | 6 5/16 | 8 1/4 | 9/16 |
| FC40B50 | 2 1/2 | 4 9/16 | 5 11/16 | 7 5/16 | 11/16 | 1 1/2 | 2 7/8 | 3 7/8 | 5 7/8 | 5/8 | 3 1/8 | 8 3/8 | 9 15/16 | 4 7/16 | 5 1/2 | 2 3/4 | 4 1/2 | 6 5/16 | 8 1/4 | 9/16 |
| FC4075 | 2 1/2 | 4 9/16 | 5 11/16 | 7 5/16 | 11/16 | 1 1/2 | 2 7/8 | 3 7/8 | 5 7/8 | 5/8 | 3 1/8 | 10 | 11 1/2 | 5 3/16 | 6 5/16 | 2 3/4 | 4 5/8 | 7 1/2 | 9 7/16 | 9/16 |
| FC40100 | 2 1/2 | 4 9/16 | 5 11/16 | 7 5/16 | 11/16 | 1 1/2 | 2 7/8 | 3 7/8 | 5 7/8 | 5/8 | 3 1/8 | 10 | 11 1/2 | 5 3/16 | 6 5/16 | 2 3/4 | 4 5/8 | 7 1/2 | 9 7/16 | 9/16 |
| FC40A150-3 | 2 1/2 | 4 9/16 | 5 11/16 | 7 5/16 | 11/16 | 1 1/2 | 2 7/8 | 3 7/8 | 5 7/8 | 5/8 | 3 15/16 | 11 9/16 | 13 3/8 | 6 5/16 | 7 1/16 | 2 3/4 | 4 1/2 | 8 3/8 | 10 7/16 | 9/16 |
| FC40B150-3 | 2 1/2 | 4 9/16 | 5 11/16 | 7 5/16 | 11/16 | 1 1/2 | 2 7/8 | 3 7/8 | 5 7/8 | 5/8 | 3 15/16 | 11 9/16 | 13 3/8 | 6 5/16 | 7 1/16 | 2 3/4 | 4 1/2 | 8 3/8 | 10 7/16 | 9/16 |
| FC5075 | 2 1/2 | 4 9/16 | 5 11/16 | 7 5/16 | 11/16 | 2 | 3 3/4 | 4 15/16 | 6 1/2 | 11/16 | 3 15/16 | 10 | 11 1/2 | 5 3/16 | 6 5/16 | 2 3/4 | 4 1/2 | 7 1/2 | 9 7/16 | 9/16 |
| FC50100 | 2 1/2 | 4 9/16 | 5 11/16 | 7 5/16 | 11/16 | 2 | 3 3/4 | 4 15/16 | 6 1/2 | 11/16 | 3 15/16 | 10 | 11 1/2 | 5 3/16 | 6 5/16 | 2 3/4 | 4 1/2 | 7 1/2 | 9 7/16 | 9/16 |
| FC50150-3 | 2 1/2 | 4 9/16 | 5 11/16 | 7 5/16 | 11/16 | 2 | 3 3/4 | 4 15/16 | 6 1/2 | 11/16 | 3 15/16 | 11 11/16 | 13 3/8 | 6 5/16 | 7 1/16 | 2 3/4 | 4 1/2 | 8 3/8 | 10 7/16 | 9/16 |

Note: Motor dimensions on following page.

DRAWING #: 6600-000-I-1210

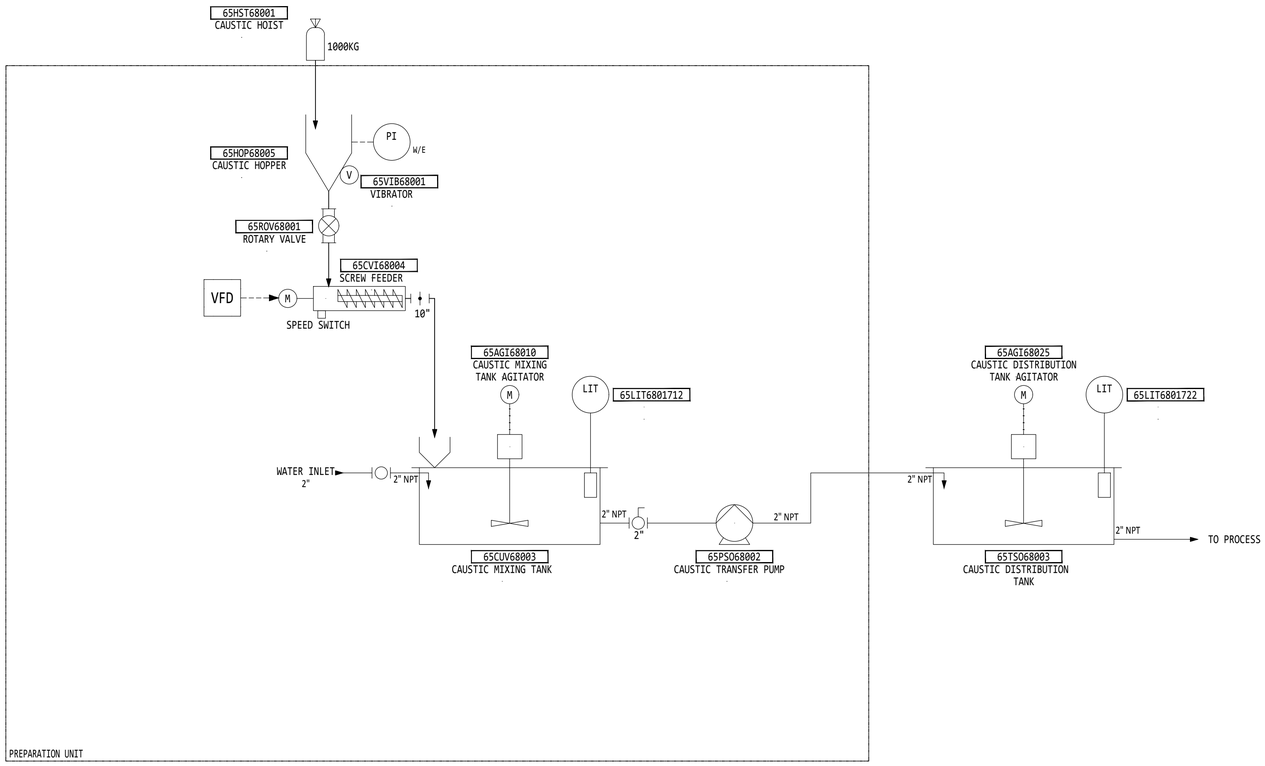


**FOR TENDER**
DO NOT USE FOR CONSTRUCTION

SEAL & SIGNATURE

| REV. | DATE | DESCRIPTION | BY | VER. | APP. |
|---|---|---|---|---|---|
| T0 | 2021-04-08 | FOR TENDER | AN | DM/EC | DM/EC |

THE INFORMATION HERE ON IS THE PROPERTY OF ASDR AND MUST BE RETURNED UPON REQUEST. WITHOUT WRITTEN PERMISSION, ANY COPYING TRANSMITTAL TO OTHERS AND ANY USE EXCEPT THAT FOR WHICH IT IS LOANED IS PROHIBITED.

CLIENT

| | |
|---|---|
| INFO CLIENT | - |

| | |
|---|---|
| DRAWN BY | AMINATA NIASSE, CEP |
| VERIFIED BY | DAN MISIANO / ETIENNE CLERMONT |
| APPROVED BY | DAN MISIANO / ETIENNE CLERMONT |

| CREATION DATE | SCALE | PROJECTION |
|---|---|---|
| 2021-04-06 | N.TS. | |

DRAWING TITLE

PROCESS WATER TREATEMENT - GENERAL
INSTRUMENTATION
PREPARATION UNIT
SODIUM HYDROXYDE

| PROJECT # | DRAWING # | REV. | SHEET |
|---|---|---|---|
| 01939 | 6600-000-I-1210 | T0 | 1/1 |

SECTOR-LEVEL – DISCIPLINE – SEQUENTIAL #

IMPRIMÉ PAR : Aminata Amary Niasse | DATE D'IMPRESSION : 2021-05-05 | PLUME D'IMPRESSION : ASDR Noir.ctb
FORMAT DE PAPIER : ISO A1 (594 mm x 841 mm [23.4" x 33.1"]) | PRÉSENTATION : ISO 5457

EN

# VFS

*BUTTERFLY VALVES*

1

# TECHNICAL CATALOGUE

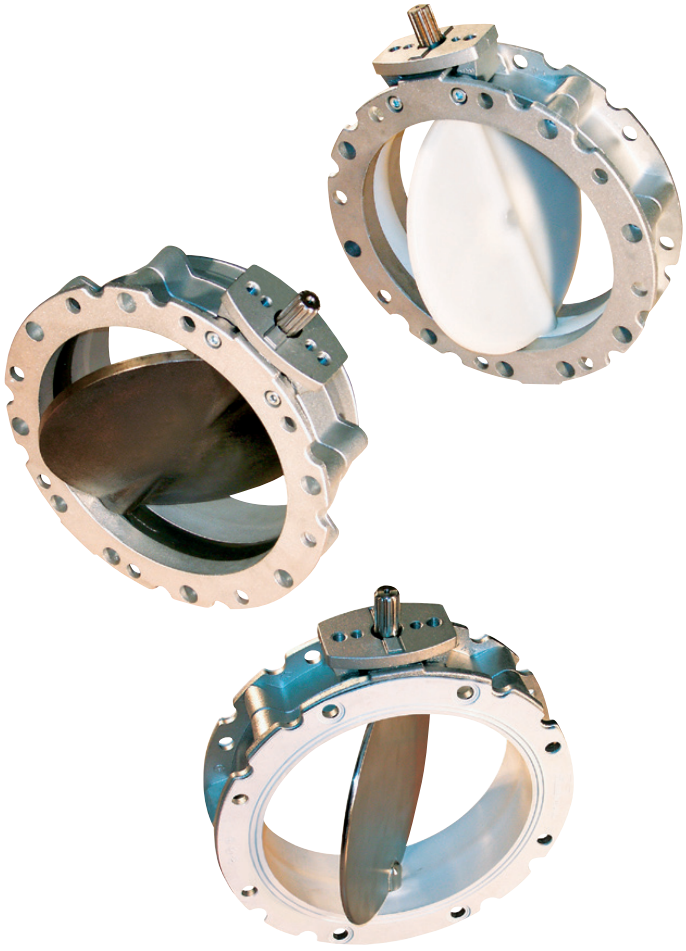


**Manual No. VAL.126.--.T.EN Issue: A1**
**Latest update: January 2015**

**ORIGINAL INSTRUCTIONS IN ENGLISH**



**WAMGROUP S.p.A.**
Via Cavour, 338
41030 Ponte Motta
Cavezzo (MO) - ITALY

☎ + 39 / 0535 / 618111
**fax** + 39 / 0535 / 618226
**e-mail** info@wamgroup.com
**internet** www.wamgroup.com


WAMGROUP®

WAM®

All the products described in this catalogue are manufactured according to **WAMGROUP S.p.A. Quality System procedures**. The Company's Quality System, certified in July 1994 according to International Standards **UNI EN ISO 9002** and extended to the latest release of **UNI EN ISO 9001**, ensures that the entire production process, starting from the processing of the order to the technical service after delivery, is carried out in a controlled manner that guarantees the quality standard of the product.

**This publication cancels and replaces any previous edition and revision.**
**We reserve the right to implement modifications without notice.**
**This catalogue cannot be reproduced, even partially, without prior written consent by the Manufacturer.**

## SUMMARY

**1.0** DESCRIPTION + FUNCTION ..... 1
**2.0** APPLICATIONS ..... 1
**3.0** STANDARD SUPPLY AND OPTIONS ..... 2
**3.1** Description of the standard valve version ..... 2
**3.2** Range ..... 3
**3.3** Options ..... 3
**3.4** Actuators and accessories ..... 4
**3.5** Compatibility (valves only) ..... 5
**4.0** LIMITS OF USE ..... 6
**5.0** DIMENSIONS, WEIGHT, MAINTENANCE AREAS ..... 7
**6.0** TECHNICAL REQUIREMENTS ..... 9
**6.1** Electrical requirements ..... 9
**6.2** Pneumatic requirements ..... 9
**6.3** Mechanical requirements ..... 9
**7.0** CERTIFICATES AND PATENTS ..... 10

## 1.0 DESCRIPTION + FUNCTION

**VFS** Butterfly Valves consist of two high-pressure die-cast semi-bodies manufactured from aluminium alloy, a disc and a seal which is made from materials and shaped to be chosen on the basis of the application type.

**VFS** Butterfly Valves are used in all types of powder and granular material processing plants where interception of gravity-fed or pneumatically conveyed dry materials is required. They are fitted beneath hoppers, bins, silos, screw or other type conveyors, or to intercept pneumatic conveying ducts. Due to their special design and to the engineering materials used, they represent a particularly cost-effective yet most efficient solution

## 2.0 APPLICATIONS

The **VFS** Butterfly Valve it closes hoppers, bins, silos that contain powder or granular material.

What used to be custom-built items for specific applications, have been turned by **WAM®** into a mass-produced industrial product with features that allow extremely versatile use.

## 3.1 Description of the standard valve version

The standard supply of the **VFS** Butterfly Valve is not provided with an actuator.
The **VFS** Butterfly Valve consist of two high-pressure die-cast semi-bodies manufactured from aluminium alloy, a swivel disc made from cast iron or stainless steel and **SINT**® engineering polymer coating and an elastomer seal.
For the food industry a version with stainless steel disc and an FDA-approved integral seal is available.
While V1FS comes with a top flange and a bottom section suitable for the attachment of a flexible sleeve, V2FS has an identical top and bottom flange.

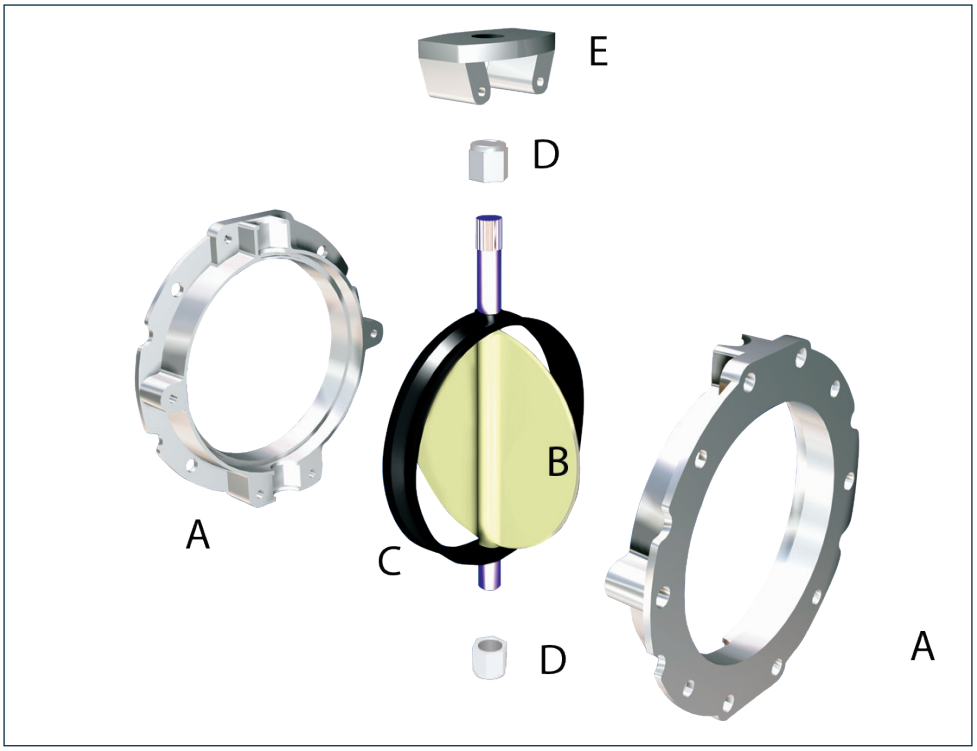


**A)** 2 semi bodies manufactured from aluminium alloy;
**B)** Disc;
**C)** Disc seal;
**D)** 2 antifriction bushes;
**E)** Support bracket.

## 3.2 Range

**Butterfly valve elements:**

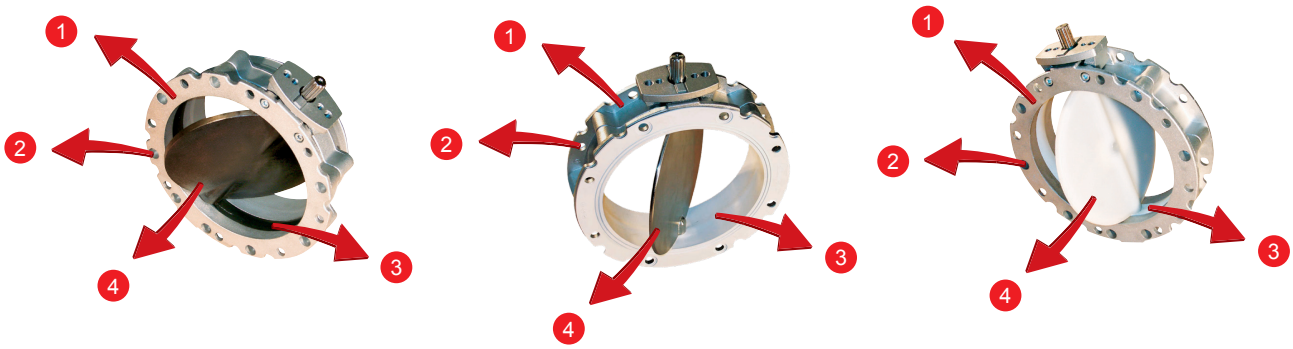


**1)** Aluminium alloy half-bodies
**2)** DN: 100, 150, 200, 250, 300, 350, 400
**3)** NBR seal
**4)** Discs: cast iron (GB), engineering polymer **SINT®** (S), SS 304 (Z)

The standard supply includes: two flanges aluminium alloy butterfly valve, a NBR white seal with an engineering polymer dustproof disc (for gravity flow applications).

## 3.3 Options

| | Version | Ø 100÷300 mm | Ø 350÷400 mm |
|---|---|---|---|
| **Double flange** | V2 | O | O |
| **Single flange** | V1 | O | O |
| **White NBR seal** | B | O | O |
| **Black NBR seal** | N | O | O |
| **Food industry FDA approved White NBR seal** | I | O | |
| **SINT® engineering polymer disc** | S | O | O |
| **SS disc** | Z | O | O |
| **Cast iron disc** | GB | O | O |
| **Pressure-proof seal up to 0.2 bar** | T | O | O |

It is available the version for operation in potentially explosive atmosphere (Directive 94/9/EC) that matches the requirements for the II group, 3D T4 (135°C) category.

## 3.4 Actuators and accessories

On all valves there can be applied several actuators:



1 - Manual actuator **(CM version)**

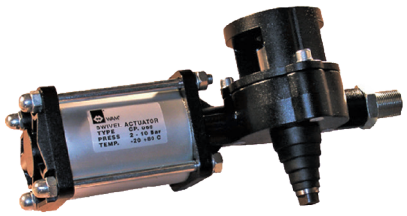

2 - Pneumatic actuator **(CP version)**



3 - Electromechanical actuator **(AE version)**

All these systems are perfectly interchangeable (see cat.040)

The valves don't envisage specific accessories but the actuators do.
The different actuators and accessories are supplied unfitted and separately from the device.

| | Type | Pneumatic | Electromechanical | Manual |
|---|---|---|---|---|
| **Microswitch box** | MIC | O | O | |
| **Mechanical limit switch plate** | LSM0 | O | O | |
| **Inductive limit switch plate** | LSM3 | | | O |
| **Mechanical limit switch** | LSM9 | O | O | |
| **Inductive limit switch** | KXS1 | | | O |
| **Monostable/Bistable solenoid valve** | V5V | O | | |
| **Coils** | BOB | O | | |
| **Safety wheel** | CV | | O | |

## 3.5 Compatibility (valves only)



### WITH MANUAL ACTUATOR

| | |
|---|---|
| 100 | CM2 |
| 150 | CM2 |
| 200 | CM2 |
| 250 | CM2 |
| 300 | CM2 |
| 350 | CM3B |
| 400 | CM3B |



### WITH ELECTROPNEUMATIC ACTUATOR

| | little load | high load |
|---|---|---|
| 100 | CP063 | CP063 |
| 150 | CP063 | CP101 |
| 200 | CP101 | CP101 |
| 250 | CP101 | CP126* |
| 300 | CP101 | CP126* |
| 350 | CP126 | CP126T |
| 400 | CP126 | CP126T |

Actuators accessories

V5V8 (CP063, CP101) + BOB 02450 AC / BOB 04850 AC / BOB 11050 AC / BOB 22050 AC

V5V4 (CP126, CP126T) + BOB 024CC DC / BOB 048CC DC / BOB 110CC DC / BOB 220CC DC

\+ MIC 23 o LSM0+LSM9

* bushing adaptor required

The choice of the actuator type depends on the material type and the application.

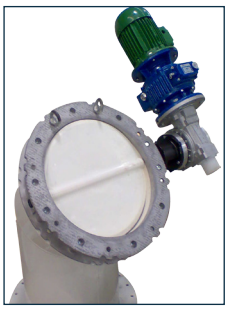

### WITH DRIVE UNIT

| | little load | high load |
|---|---|---|
| 100 | AE040A11 | AE050A11 |
| 150 | AE040A11 | AE051A11 |
| 200 | AE051A11 | AE060A11 |
| 250 | AE051A11 | AE070A1D |
| 300 | AE060A11 | AE070A21 |
| 350 | AE060A21 | AE070A2D |
| 400 | AE070A2D | AE070A2D |

Actuators accessories

\+ MIC 23• o (LSM0+LSM9) •

• Signalling system required

The choice of the actuator type depends on the material type and the application.

- Environmental
  - environment temperature: -20°C/ + 40°C
  - material temperature: according to the disc type chosen +80 °C with a engineering polymer, +110°C with a stainless steel or cast iron disc
  - operation pressure: differential pressure up to 0.2 bar
  - the empty run noise level values is 20 db(A) at 1 m distance; this can vary on the basis of the material handled or of the actuator fitted
  - hazards: for possible chemical and physical compatibility tests between the powder and the material the valve is made from, please contact WAMGROUP®
- Application limits: these valves are specifically designed for dry powders
- ATEX
  - the valve was designed and tested to operate in potentially explosive atmosphere classified as zone 22 and with explosion class powders that doesn't exceed St2 (see chapter 7.0 CERTIFICATES AND PATENTS)

All dimensions are expressed in mm unless otherwise specified.

Dimensions tolerance: ± 3 mm on main dimensions, ± 2 mm on detailed dimensions.

## V1FS, V2FS

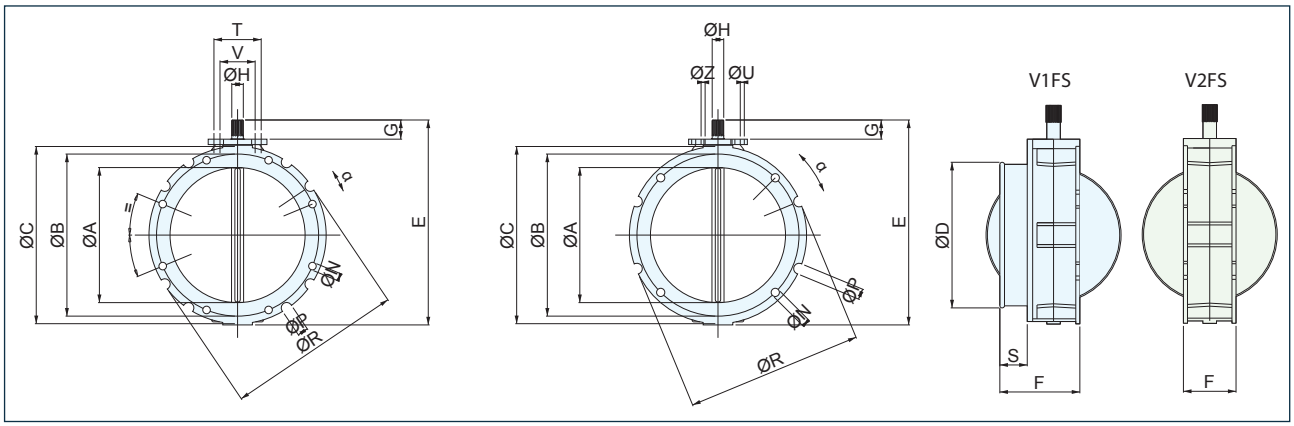


## SINGLE FLANGE BUTTERFLY VALVE FOR SLEEVE CONNECTION

| TYPE | Ø A | Ø B | Ø C | Ø D | E | F | G | ØH DIN 5482 | N Drilling | P External grooves | Ø R | α | S | T | U | V | Z | kg |
|---|---|---|---|---|---|---|---|---|---|---|---|---|---|---|---|---|---|---|
| V1FS 100. | 95 | 180 | 220 | 105 | 250 | 115 | 35 | 22x19 | N°4 x Ø14 | N°4 x Ø20 | 220 | 22°30′ | 40 | 80 | M12 | 50 | M10 | 4 |
| V1FS 150. | 150 | 200 | 228 | 163 | 290 | 115 | 35 | 22x19 | N°4 x Ø14 | N°4 x Ø20 | 228 | 22°30′ | 40 | 80 | M12 | 50 | M10 | 5 |
| V1FS 200. | 200 | 250 | 278 | 213 | 340 | 115 | 35 | 22x19 | N°4 x Ø14 | N°4 x Ø20 | 278 | 22°30′ | 40 | 80 | M12 | 50 | M10 | 6.5 |
| V1FS 250. | 250 | 300 | 328 | 263 | 390 | 115 | 35 | 22x19 | N°8 x Ø14 | N°8 x Ø20 | 325 | 11°15′ | 40 | 80 | M12 | 50 | M10 | 7.5 |
| V1FS 300. | 300 | 350 | 378 | 313 | 440 | 115 | 35 | 22x19 | N°8 x Ø14 | N°16 x Ø20 | 375 | 5°41′ | 40 | 80 | M12 | 50 | M10 | 9 |
| V1FS 350. | 350 | 400 | 440 | 363 | 530 | 123 | 50 | 28x25 | N°8 x Ø14 | N°8 x Ø20 | 440 | 10° | 40 | 80 | M12 | - | - | 16 |
| V1FS 400. | 400 | 470 | 530 | 413 | 580 | 123 | 50 | 28x25 | N°8 x Ø14 | N°16 x Ø20 | 530 | 4°30′ | 40 | 80 | M12 | - | - | 20.5 |

Dimensions in mm

## DOUBLE FLANGE BUTTERFLY VALVE

| TYPE | Ø A | Ø B | Ø C | E | F | G | Ø H DIN 5482 | N Drilling | P External grooves | Ø R | α | T | U | V | Z | kg |
|---|---|---|---|---|---|---|---|---|---|---|---|---|---|---|---|---|
| V2FS 100. | 95 | 180 | 220 | 250 | 77 | 35 | 22x19 | N°4 x Ø14 | N°4 x Ø20 | 220 | 22°30′ | 80 | M12 | 50 | M10 | 4 |
| V2FS 150. | 150 | 200 | 228 | 290 | 77 | 35 | 22x19 | N°4 x Ø14 | N°4 x Ø20 | 228 | 22°30′ | 80 | M12 | 50 | M10 | 5 |
| V2FS 200. | 200 | 250 | 278 | 340 | 77 | 35 | 22x19 | N°4 x Ø14 | N°4 x Ø20 | 278 | 22°30′ | 80 | M12 | 50 | M10 | 6.5 |
| V2FS 250. | 250 | 300 | 328 | 390 | 77 | 35 | 22x19 | N°8 x Ø14 | N°8 x Ø20 | 325 | 11°15′ | 80 | M12 | 50 | M10 | 7.5 |
| V2FS 300. | 300 | 350 | 378 | 440 | 77 | 35 | 22x19 | N°8 x Ø14 | N°16 x Ø20 | 375 | 5°41′ | 80 | M12 | 50 | M10 | 9 |
| V2FS 350. | 350 | 400 | 440 | 530 | 85 | 50 | 28x25 | N°8 x Ø14 | N°8 x Ø20 | 440 | 10° | 80 | M12 | - | - | 16 |
| V2FS 400. | 400 | 470 | 530 | 580 | 85 | 50 | 28x25 | N°8 x Ø14 | N°16 x Ø20 | 530 | 4°30′ | 80 | M12 | - | - | 20.5 |

Dimensions in mm

## V2FS AI

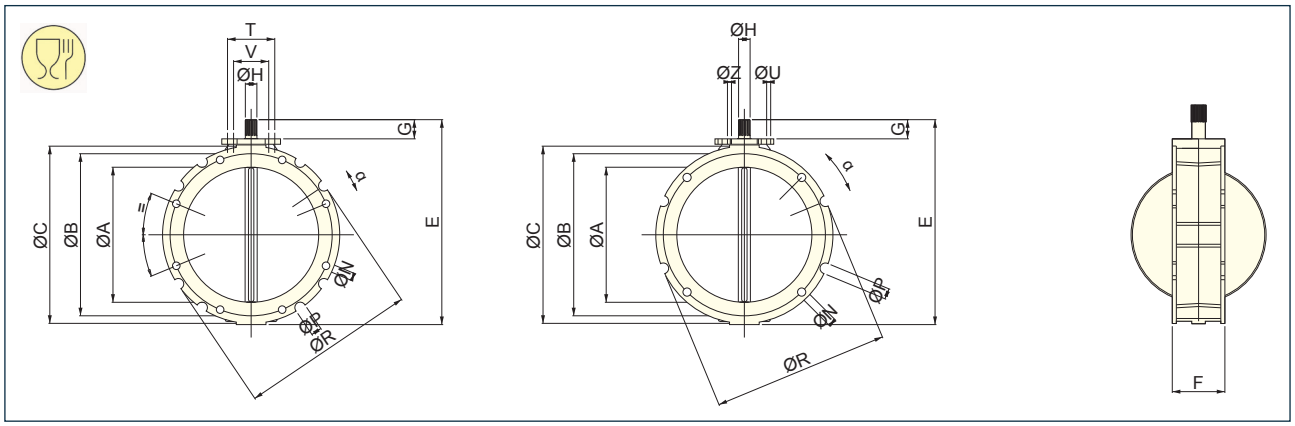


## FOOD-GRADE BUTTERFLY VALVE

| TYPE | Ø A | Ø B | Ø C | E | F | G | Ø H DIN 5482 | N Drilling | P External grooves | Ø R | α | T | U | V | Z | kg |
|---|---|---|---|---|---|---|---|---|---|---|---|---|---|---|---|---|
| V2FS 100. | 90 | 180 | 220 | 250 | 84 | 35 | 22x19 | N°4 x Ø14 | N°4 x Ø20 | 220 | 22°30′ | 80 | M12 | 50 | M10 | 4 |
| V2FS 150. | 145 | 200 | 228 | 290 | 84 | 35 | 22x19 | N°4 x Ø14 | N°4 x Ø20 | 228 | 22°30′ | 80 | M12 | 50 | M10 | 5 |
| V2FS 200. | 195 | 250 | 278 | 340 | 84 | 35 | 22x19 | N°4 x Ø14 | N°4 x Ø20 | 278 | 22°30′ | 80 | M12 | 50 | M10 | 6.5 |
| V2FS 250. | 245 | 300 | 328 | 390 | 84 | 35 | 22x19 | N°8 x Ø14 | N°8 x Ø20 | 325 | 11°15′ | 80 | M12 | 50 | M10 | 7.5 |
| V2FS 300. | 295 | 350 | 378 | 440 | 84 | 35 | 22x19 | N°8 x Ø14 | N°16 x Ø20 | 375 | 5°41′ | 80 | M12 | 50 | M10 | 9 |

Dimensions in mm

## 6.1 Electrical requirements

The standard device doesn't require electrical connections.
For actuators and accessories please refer to the actuator's manual.

## 6.2 Pneumatic requirements

The standard device doesn't require pneumatic connections.
For actuators and accessories please refer to the actuator's manual.

## 6.3 Mechanical requirements

These devices shall not be used as an external support for the machines placed beneath them. It is recommended to fit the valve using screws or stud bolts long enough to ensure a "sandwich" fixing of the valve between the upper and the bottom flanges. Tighten the external screws. The inner screws are used exclusively to secure the valve from the risk of falling in case the conveying machine detaches.
The actuator supplied separately shall be fitted on the valve using screws.

### FLANGE COMPATIBILITY

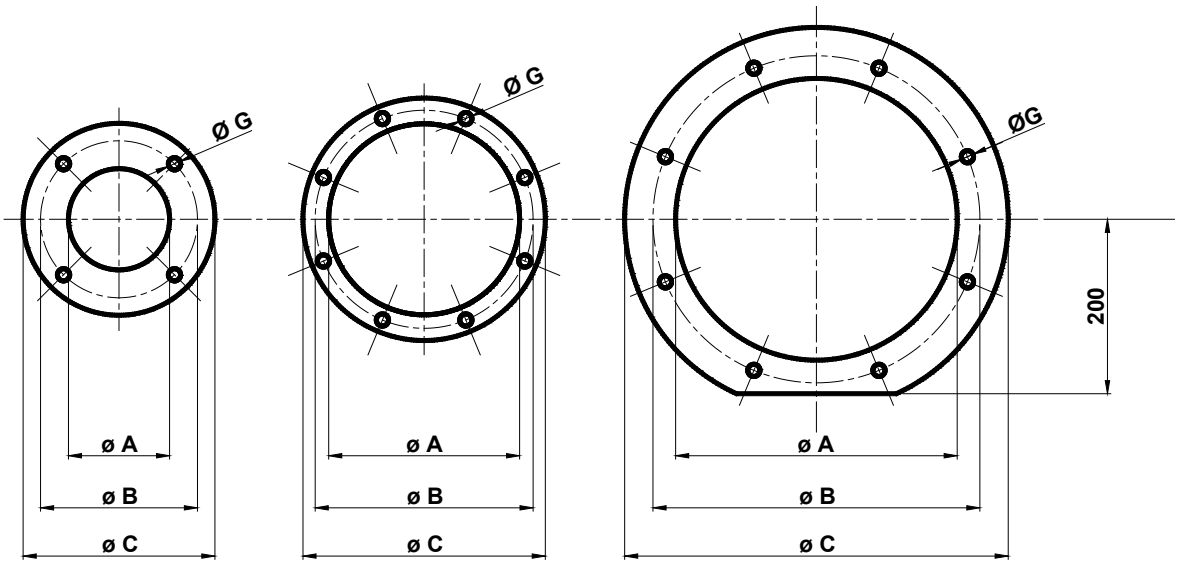

| Fig. | Code | Ø A | Ø B | Ø C | G | | Thickness | VFS | kg |
|---|---|---|---|---|---|---|---|---|---|
| | | | | | N° | Ø | | | |
| 1 | XKF291 | 141 | 180 | 220 | 4 | 13.5 | 6 | 100 | 1 |
| 1 | XKF301 | 118 | 180 | 220 | 4 | 14 | 6 | 100 | 1.5 |
| 1 | XKF311 | 188 | 200 | 228 | 4 | 14 | 6 | 150 | 1.0 |
| 1 | XKF321 | 193 | 250 | 278 | 4 | 14 | 6 | 200 | 1.7 |
| 2 | XKF331 | 219 | 250 | 278 | 8 | 14 | 6 | 200 | 1.3 |
| 2 | XKF341 | 273 | 300 | 328 | 8 | 14 | 6 | 250 | 1.5 |
| 2 | XKF351 | 323 | 350 | 378 | 8 | 14 | 6 | 300 | 1.7 |
| 3 | XKF361 | 323 | 375 | 440 | 8 | 14 | 6 | 300 | 4.0 |
| 2 | XKF371 | 357 | 400 | 440 | 8 | 14 | 6 | 350 | 3.0 |
| 2 | XKF381 | 408 | 470 | 530 | 8 | 14 | 6 | 400 | 5.0 |

## 7.0 CERTIFICATES AND PATENTS

It is available the version for operation in potentially explosive atmosphere (Directive 94/9/EC) that matches the requirements for the II group, 3D T4 (135°C) category.

The valve suits the EN1935/2004 standards.

# FC Series Kit Instructions

12/08 Edition

WEBTROL
Quality Pumps

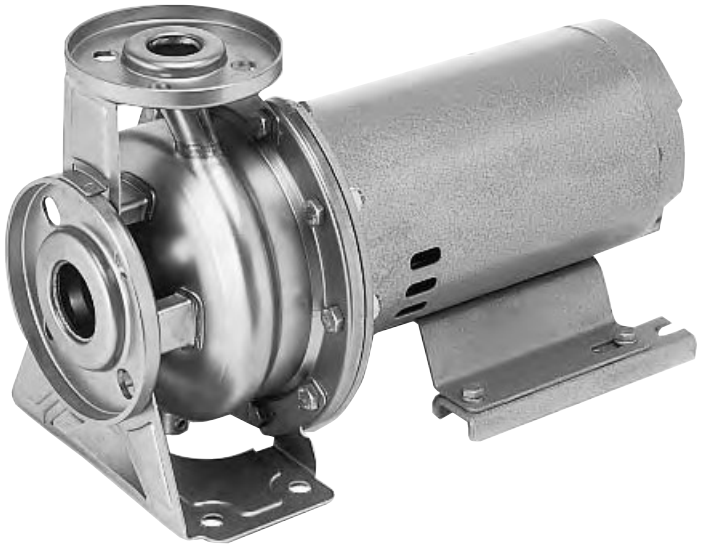

## FC Series
CENTRIFUGAL

## Congratulations On Your Choice In Purchasing This Webtrol Pump

Its Quality is unsurpassed in material and workmanship. If properly installed, it will give many years of trouble free service.

## Kit Inspection And Handling

After receiving your FC Kit, inspect the contents and report to the carrier any items that are damaged or missing. See parts list. Keep all packaging materials until the claim is resolved.



## Parts List

| Description | Qty. |
|---|---|
| Casing with drain plug | 1 |
| Cover | 1 |
| Bracket | 1 |
| Impeller | 1 |
| O-ring | 1 |
| Motor support | 2 |
| Suction seal | 1 |
| Discharge seal | 1 |
| Mechanical seal - (Pt. # 70X118-M purchased separately) | 1 |
| Hardware kit bag | 1 |
| 1) Bolts used to fasten bracket to motor. Size will vary according to pump model. | |
| A) Hex head bolt 3/8" - 16 X 1" | 4 |
| Lock washer external serrated 3/8" | 4 |
| B) Allen head cap screw 3/8" - 16 x 1" | 4 |
| Lock washer external serrated 3/8" | 4 |
| C) Hex head bolt 1/2" - 13 x 1 1/2" | 4 |
| Lock washer external serrated 1/2" | 4 |
| 2) Bolts /nuts used to fasten casing to bracket. Quantity/size will vary according to pump model. | |
| A) Hex head bolt M8 x 30mm (1 3/16") | 8 |
| Hex nut M8 | 8 |
| Lock washer external serrated M8 | 8 |
| B) Hex head bolt M10 x 35mm (1 3/8") | 10/12 |
| Hex nut M10 | 10/12 |
| Lock washer external serrated M10 | 10/12 |
| 3) Bolt used to fasten motor support to pump. Allen head cap screw 3/8" - 16 x 1" | 4 |
| 4) Impeller bolt with teflon gasket 3/8" - 16 x 5/8" | 1 |
| 5) Teflon gasket - see Motor Installation #1 | 1 |
| 6) Black nylon gasket - see mechanical seal installation Installation #6 | 1 |
| 7) Stainless steel shaft sleeve | 1 |
| 8) Key | 1 |

**Additional Parts Required for Assembly:**

Motor - NEMA JM frame / 60Hz / 3450 RPM

Mechanical seal - Pt. # 70X118-M / Type 21, 1 1/8" Ø, 150 PSI

**Lubricants & Sealants Required:**

3-in-1 Oil

Loctite thread locker 242

Silicon Grease

## Motor Installation

Make certain the motor is not connected to a power source. Do not assemble the pump on a motor connected to a power source. Serious injury could occur if the motor starts during pump assembly.

Position the motor on its end with the shaft up. The work surface should be level and capable of supporting the motor.

> **Note:** Prior to installation review Exploded view of FC pump on page 4.

**1.** Position the teflon gasket against the shoulder on the motor shaft. The inside diameter of the teflon gasket will easily slide over the motor shaft.

## Mechanical Seal Installation

**1. A)** For ease of assembly lubricate the driving ring on the mechanical seal with water. Carefully press the rotating seal assembly less spring and cup onto the stainless steel shaft sleeve. Locate as shown.

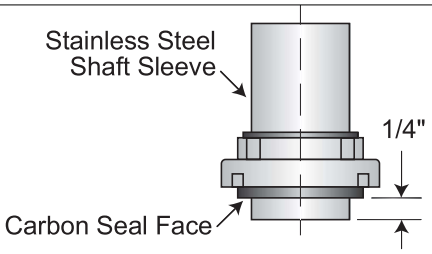


**Rotating Seal Assembly**

**B)** Clean seal cavity in the cover.

**C)** Lubricate the rubber seat ring with mineral oil. Using finger pressure only, press ceramic seat firmly and squarely into the casing cover.

**D)** Clean polished surface of ceramic seal with a soft cloth or tissue to remove all dust and grit.

**2.** Position the bracket over the motor shaft. Fasten the bracket to the motor, tightening the (4) bolts using a cross - tightening pattern. (Tighten the bolts to the factory recommended torque specifications of 3.4 Ft. Lbs.) Overtightening may cause stripping of threads.

**3.** Carefully position the cover containing the ceramic seat over the motor shaft. Be sure the seat face is not damaged during assembly (cracked, scratched, or chipped) or the seal will leak.

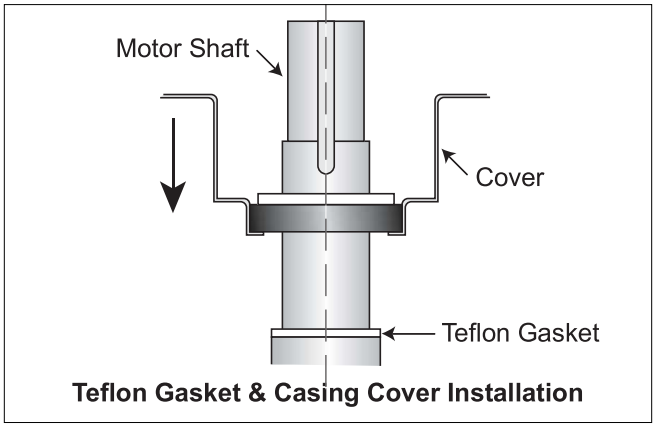


**Teflon Gasket & Casing Cover Installation**

4. To Prevent slip-stick lubricate both the ceramic and carbon seal face with mineral oil.

**Caution:** Do not let oil get on the motor shaft.

**5.** Slide the stainless steel shaft sleeve, with the carbon seal face over the motor shaft until the sleeve contacts the teflon gasket.

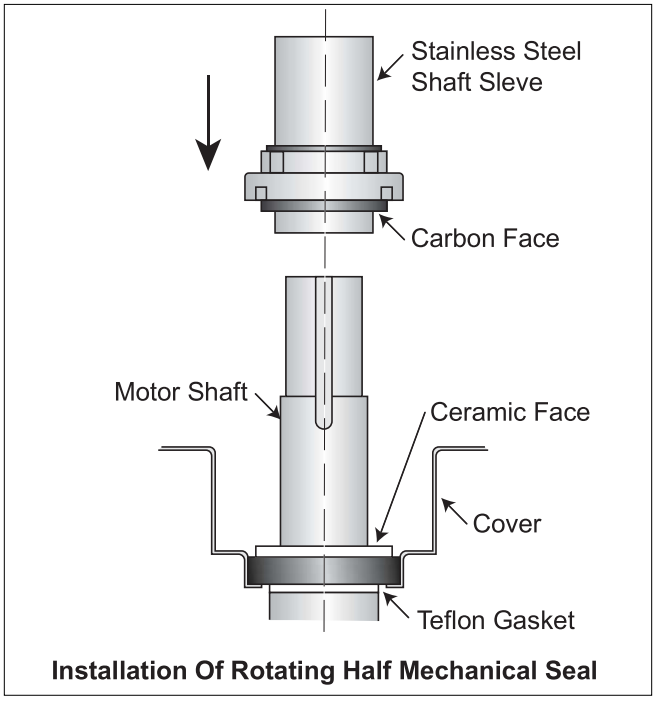


**Installation Of Rotating Half Mechanical Seal**

**6.** Place the spring and spring retainer over the stainless steel shaft sleeve. Then, snap the black nylon gasket into the spring retainer.

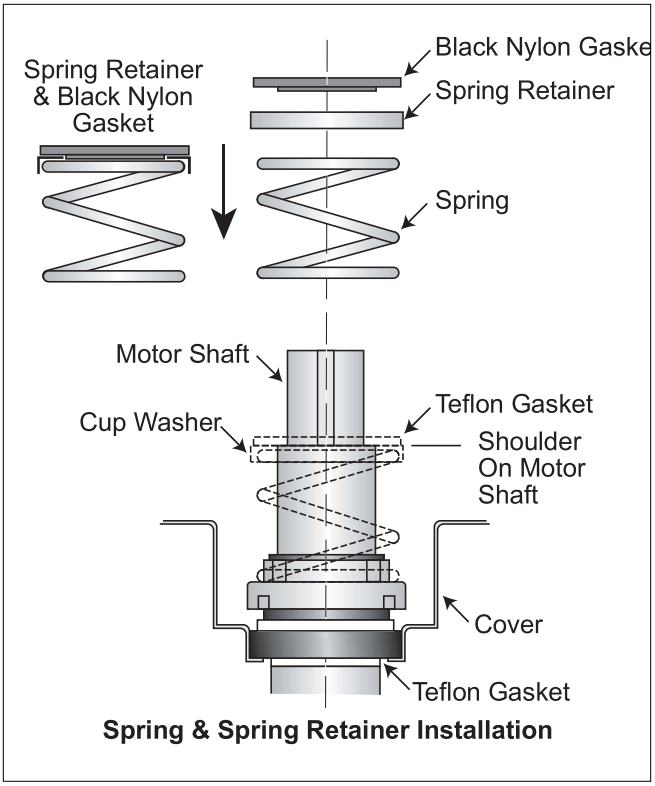


**Spring & Spring Retainer Installation**

**7.** Position the viton o-ring around the cover and lubricate the o-ring with silicon grease. Do not cut, nick, or damage the o-ring during the installation.

## Impeller & Casing Installation

**1.** Install the shaft key in the impeller hub keyway.

**2.** Firmly press the impeller into position by aligning the slot over the shaft key. Press the impeller down the motor shaft until it bottoms and sits squarely against the black nylon gasket and stainless steel shaft sleeve.

**3.** Prior to placing the teflon gasket on the impeller bolt, coat the gasket with silicon grease. This will cause the gasket to stick to the bolt. Install the impeller bolt to secure the impeller to the shaft. Torque bolt to 11 Ft. Lbs. Max. Do not over tighten the bolt, otherwise, the pump may leak. (Use a thread locker - Loctite 242, removable strength, to secure the bolt and prevent it from working loose).

**4.** Install the motor supports, using (4) allen head cap screws.

**5.** Install the casing over the cover. Rotate the casing to align the bolt holes and secure it with bolts, washers, and nuts. Cross tighten the bolts to a maximum torque of 3.4 Ft. Lbs.

## Final Inspection

After assembly, reposition the pump horizontally. Rotate the impeller. If you can turn the impeller with minimum effort and no drag, the pump is operable. If not repeat Impeller and Casing Installation.

## Exploded View

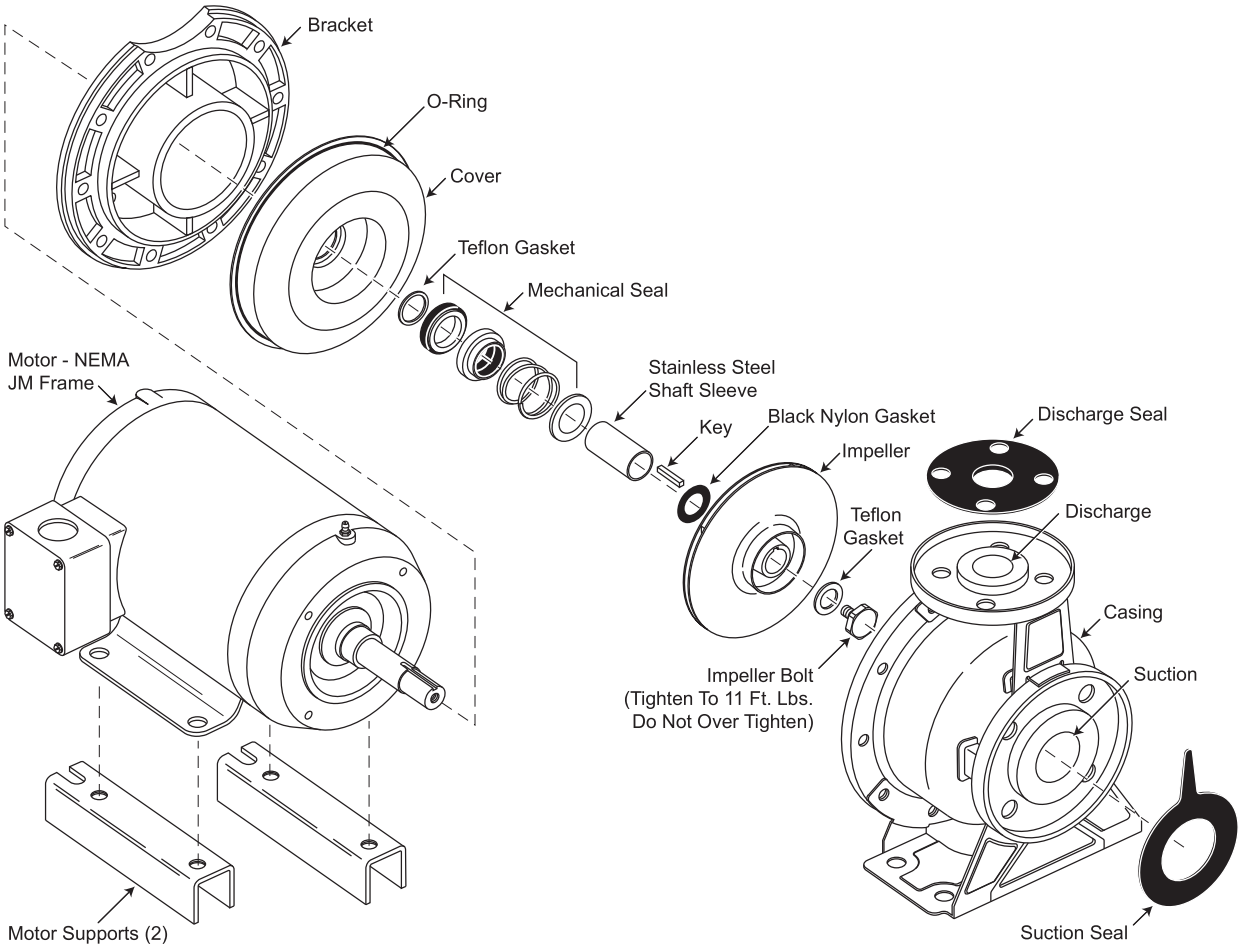


## A Typical Installation

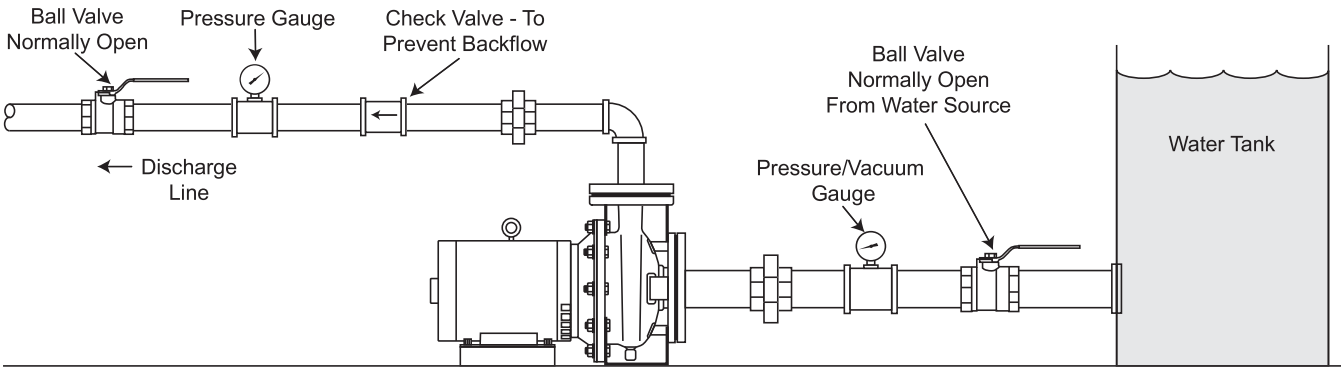


**Weber Industries, Inc. / Manufacturers of Webtrol Products**

8417 New Hampshire Ave. / St. Louis, MO 63123

**Phone:** (314) 631-9200 **Fax:** (314) 631-3738 **E-mail:** comments@webtrol.com

EN

# SBB

*FIBC DISCHARGERS*

1

# TECHNICAL CATALOGUE

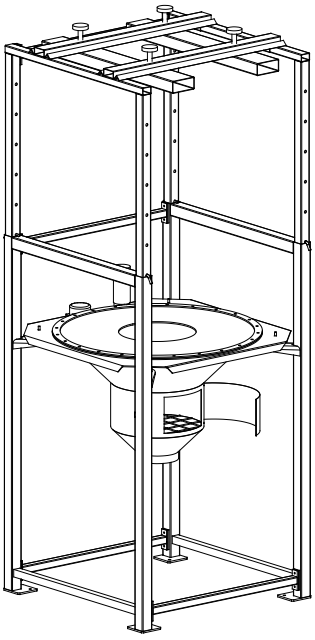

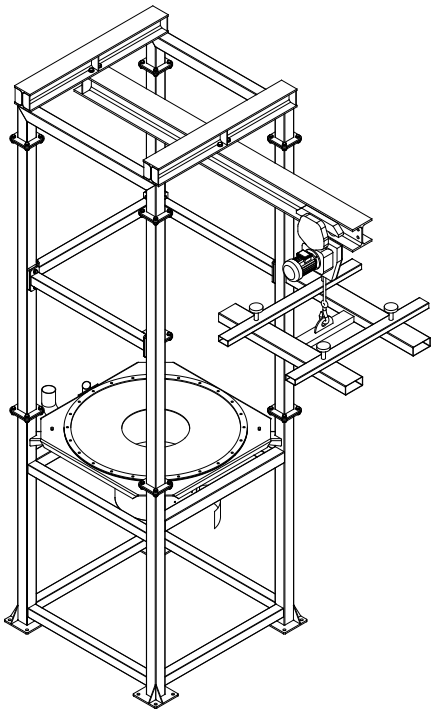


**Manual No. EXT.SBB.--.T.A4.0820.EN Issue: A4**
**Latest Update: August 2020**

**ORIGINAL INSTRUCTIONS IN ENGLISH**



**WAMGROUP S.p.A.**
Via Cavour, 338
41030 Ponte Motta
Cavezzo (MO) - ITALY

☎ + 39 / 0535 / 618111
**fax** + 39 / 0535 / 618226
**e-mail** info@wamgroup.com
**internet** www.wamgroup.com


WAMGROUP®

WAM®

All the products described in this catalogue are manufactured according to **WAMGROUP S.p.A. Quality System procedures**. The Company's Quality System, certified in July 1994 according to International Standards **UNI EN ISO 9002** and extended to the latest release of **UNI EN ISO 9001**, ensures that the entire production process, starting from the processing of the order to the technical service after delivery, is carried out in a controlled manner that guarantees the quality standard of the product.

**This publication cancels and replaces any previous edition and revision.**
**We reserve the right to implement modifications without notice.**
**This catalogue cannot be reproduced, even partially, without prior written consent by the Manufacturer.**

## SUMMARY

**1.0** DESCRIPTION AND TECHNICAL FEATURES ..... 1
**1.1** Description ..... 1
**1.2** Function ..... 1
**2.0** APPLICATION ..... 2
**2.1** Main features ..... 2
**2.2** Indications for use ..... 2
**3.0** STANDARD SUPPLY AND OPTIONS ..... 3
**3.1** Models available ..... 3
**3.2** Basic machine description ..... 5
**3.3** Range - Modular code ..... 9
**3.4** Options ..... 11
**3.5** Applications ..... 33
**4.0** OPERATING LIMITS ..... 36
**5.0** DIMENSIONS AND WEIGHTS ..... 37
**6.0** INFORMATION REQUIRED FOR SIZING THE EQUIPMENT ..... 50

## 1.1 Description

**SBB**-type **FIBC** Dischargers consist of a steel frame complete with a material discharge hopper and an upper mobile cross bar for lifting of the filled up bag by forklift truck into the Discharger.

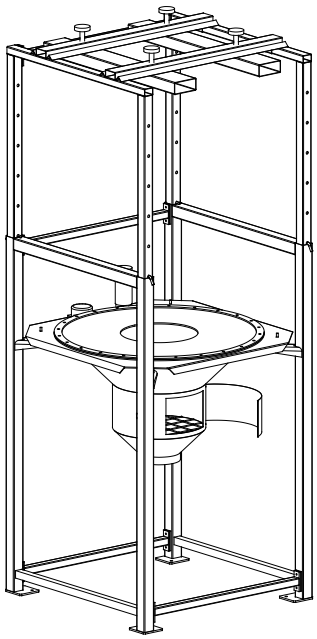

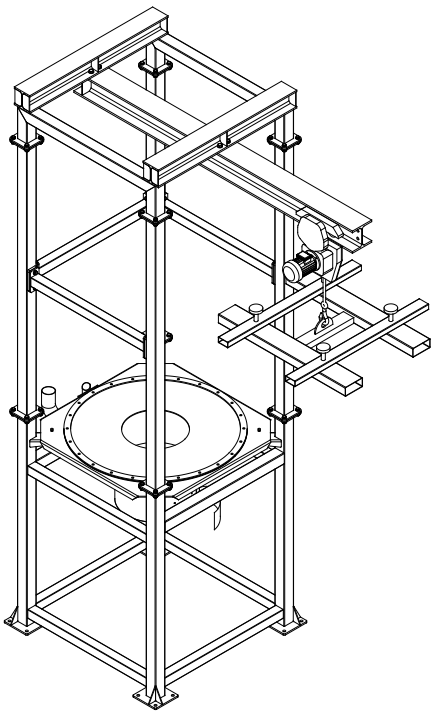

## 1.2 Function

**SBB** is a modular system for discharging **Flexible Intermediate Bulk Containers** (Big Bags) in different configurations depending on the application. Easy introduction of the **FIBC** into the support frame and dust-free discharging along with a variety of options make **SBB** extremely user-friendly.

The four loops of the **FIBC** are attached to the hooks of the detached cross bar that has previously been laid on top of the **FIBC**. The cross bar with the attached **FIBC** is then picked up by a forklift truck and introduced into the frame of the **SBB** Discharger. Once the **FIBC** has settled on the rubber seal of the discharge hopper the outlet closing rope of the **FIBC** can be pulled open through the inspection hatch of the discharge hopper.

## 2.1 Main features

The **FIBC**s, (code **SBB**) are devices suitable for discharging bulk bags of different shapes and sizes.

They are manufactured from shot-blasted, painted carbon steel; on request, they may be supplied in 304 stainless steel, entirely or only the parts in contact (304L SS) with the product to prevent its contamination.

The numerous models and sizes of **SBB** available, together with the complete range of accessories make these machines suitable for use in virtually all applications in various industrial sectors and with different types of **FIBC**s: in fact, the hopper, which can also be supplied alone, is specially designed for optimising the bulk material flow.

**MACHINE CODE**

- **SBB**

**MACHINE TYPE**

- FLEXIBLE INTERMEDIATE BULK CONTAINER UNLOADER

**USE**

- Emptying **FIBC**s of various sizes containing product in powder or granular form.

**ADVANTAGES**

- Equipment which can be assembled according to requirements.
- The model with hoist does not require the use of a forklift truck.
- The removable frame makes it possible to empty **FIBC**s 600 to 1800 mm in height.
- The operator is protected from falling **FIBC**s by the four posts of the frame.
- The **FIBC** valve can be accessed through the hatch.
- The pneumatic activators optimise the emptying of **FIBC**s.
- Product storage capacity in the hopper up to 330 l (model 125 and 510 l model 150).

## 2.2 Indications for use

The **FIBC** discharger is NOT designed for operating in potentially explosive atmospheres or with materials that could be hazardous by contact and/or inhalation, or else dangerous from a bacteriological or viral viewpoint.

**Danger - Warning**

**If the machine has to match similar requirements, please contact the Manufacturer.**

## 3.1 Models available

**MODEL T:**

UNLOADING HOPPER

- **SBB._.125.T**
- **SBB._.150.T**

Supplied separately, in two sizes, it is carefully designed to optimize the flowability of materials.

It comprises:
- seals made of material suitable for the type of use.
- adjustable weight motovibrator.
- vent pipe with filter bag.
- finger mesh.
- inspection hatch with seal.
- damper supports.

**MODEL C:**

HOPPER WITH FEET

- **SBB._.125.C**
- **SBB._.150.C**

Thanks to its structure, there is plenty of space for using different systems for loading the **FIBC**s.

It comprises:
- a unloading hopper.
- supporting frame made of tubular elements having suitable size and thickness to ensure sturdiness and solidity.
- cross with pegs for hooking **FIBC** harness, lifting hooks and tubular elements for lift truck forks. (for frame in Stainless Steel 304, the lifting cross is in Carbon Steel galvanized)

**MODEL S:**

HOPPER WITH REMOVABLE FRAME

- **SBB._.125.S**
- **SBB._.150.S**

Athough it is identical as regards design and use, the difference lies in the size of the **FIBC**s which can be accepted.

These comprise:
- an unloading hopper.
- a supporting tubular frame having size and thickness suitable to ensure sturdiness and solidity.
- a removable frame which makes it possible to adapt the Unloader for use with **FIBC**s of different heights.
- cross with pegs for hooking **FIBC** harness and tubular elements for lift truck forks. (for frame in Stainless Steel 304, the lifting cross is in Carbon Steel galvanized).

**MODEL M:**

FRAME WITH MONORAIL

- **SBB._.125.M**

The special feature of this equipment lies in the fact that it does not require the use of a fork lift truck for external loading of **FIBC**s, as it is designed for use with its own hoist (not supplied) which makes it possible to operate independently during the various phases.

The equipment comprises:

- an unloading hopper.
- a supporting frame made of suitably sized tubular elements thick enough to ensure the required sturdiness and solidity.
- a monorail for the hoist (hoist excluded) with frame in Stainless Steel 304, monorail for the hoist and hoist frame in Carbon Steel galvanized.
- cross with pegs for hooking the **FIBC** harness, lifting hooks and tubular elements for using a lift truck if necessary for handling **FIBC**s. (for frame in Stainless Steel 304, the lifting cross is in Carbon Steel galvanized)

**ACCESSORIES**

- Hopper seal made of food- grade material.
- Pneumatic activators.

Materials featuring poor flowability do not flow out of the **FIBC** easily. It is therefore necessary to use pneumatic activators. These devices act directly at the bottom of the **FIBC**, causing lifting and lowering of the opposite corners to stimulate the flow of material compacted at the bottom.

The gradual movement of the activators makes the **FIBC** assume a “V” shape, to eliminate the deadlock points.

For more information, see Technical Catalogue - Maintenance KSC.

- Cutting device.

It is used for cutting **FIBC**s without valves which cannot be recycled after emptying.

- Hose connector kit available in black or white food- grade rubber.
- Round or square flange for hopper.
- Raised feet for lifting the entire structure.
- Mechanical limit stop for signalling door open status.
- Manual gate valve at outlet.

## 3.2 Basic machine description

**SBB._.125.C** **SBB._.150.C**

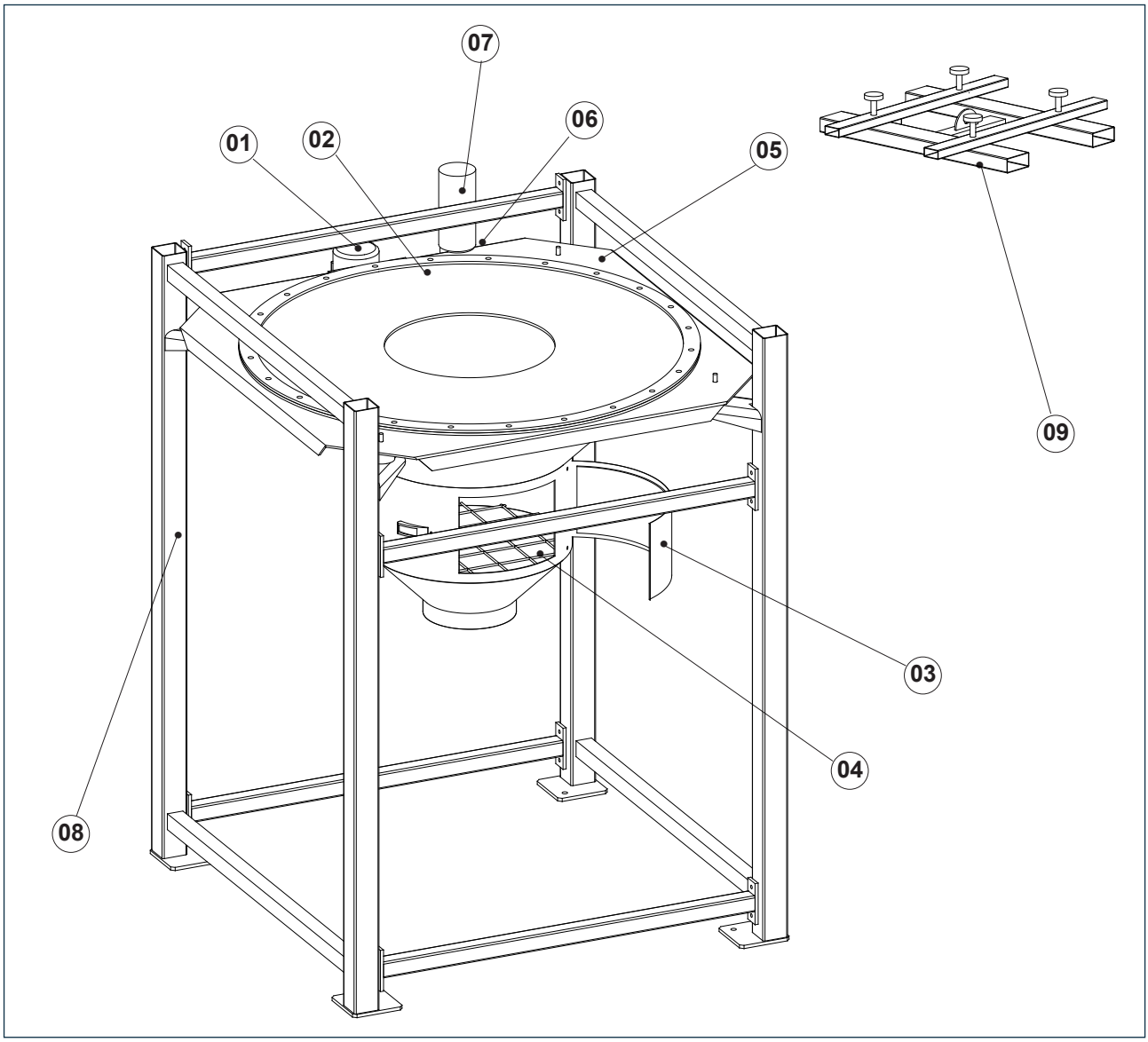


| ITEM POS. | DESCRIPTION | MATERIAL | FINISHING |
|---|---|---|---|
| 1 | Motovibrator | - | RAL 2004 |
| 2 | Seal | SBR | black |
| 3 | Access door | Carbon steel | RAL 7001 |
| 4 | Grille | 304 SS | - |
| 5 | Vibrating hopper | Carbon steel | RAL 7001 |
| 6 | Venting pipe | Carbon steel | RAL 7001 |
| 7 | Filter bag | Felt | - |
| 8 | Frame | Carbon steel | RAL 7001 |
| 9 | Lifting cross | Carbon steel | RAL 7001 |

**SBB._.125.S** **SBB._.150.S**

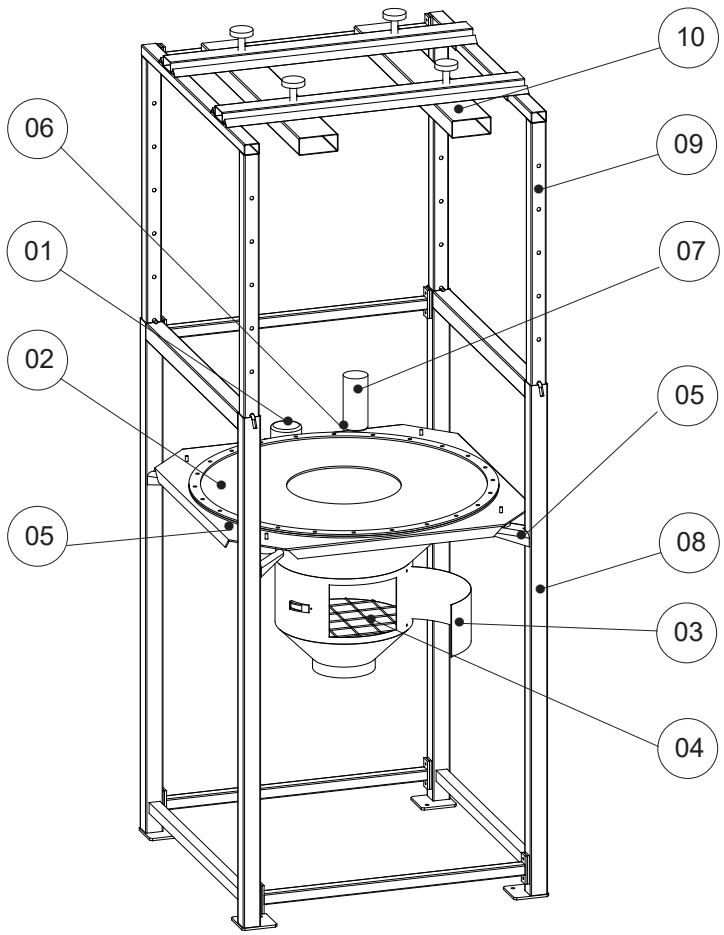


| ITEM POS. | DESCRIPTION | MATERIAL | FINISHING |
|---|---|---|---|
| **1** | Motovibrator | - | RAL 2004 |
| **2** | Seal | SBR | black |
| **3** | Access door | Carbon steel | RAL 7001 |
| **4** | Grille | 304 SS | - |
| **5** | Vibrating hopper | Carbon steel | RAL 7001 |
| **6** | Venting pipe | Carbon steel | RAL 7001 |
| **7** | Filter bag | Felt - *Filz* | - |
| **8** | Frame | Carbon steel | RAL 7001 |
| **9** | Monorail | Carbon steel | RAL 7001 |
| **10** | Lifting cross | Carbon steel | RAL 7001 |

## 125 M

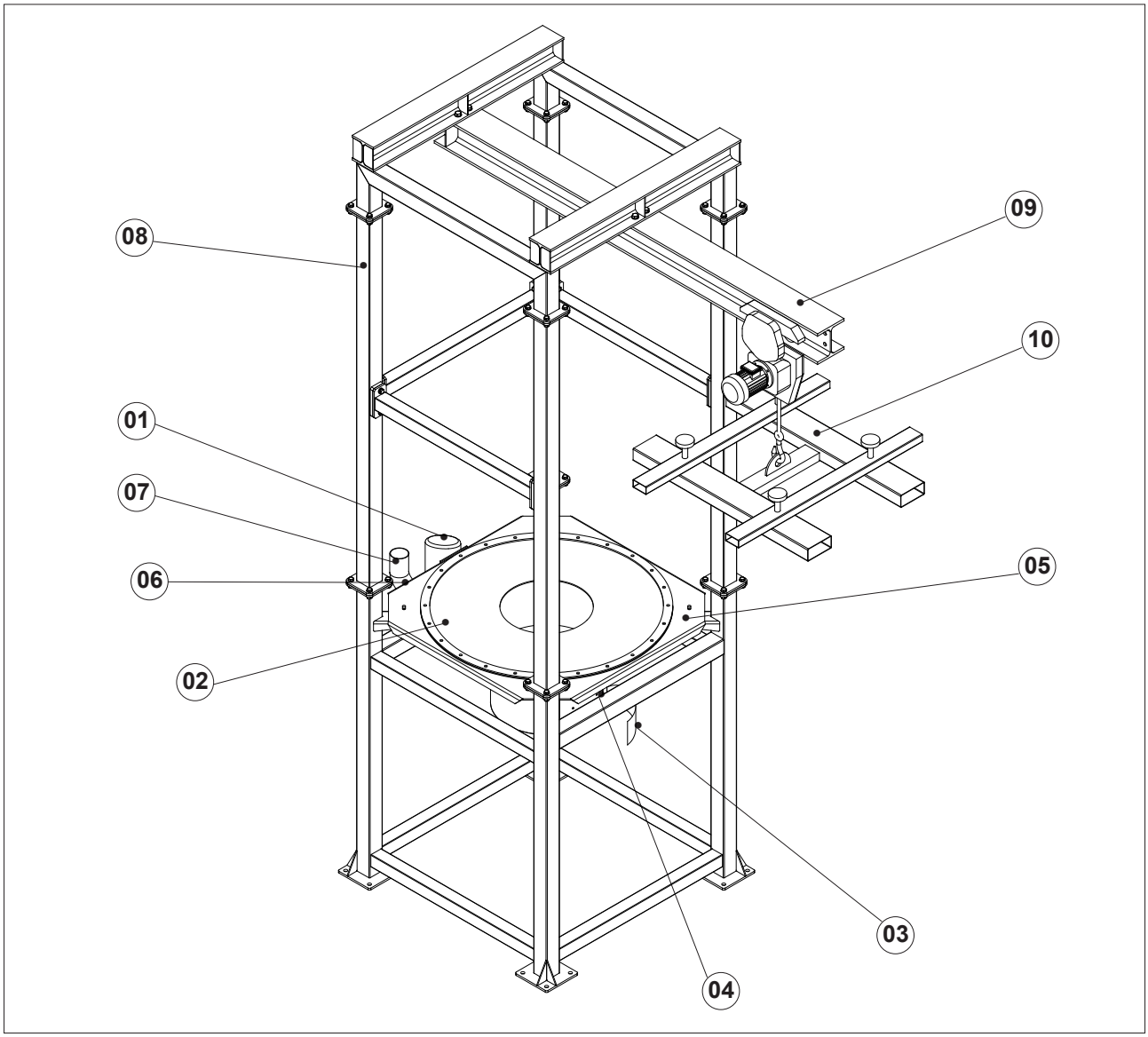


| ITEM POS. | DESCRIPTION | MATERIAL | FINISHING |
|---|---|---|---|
| 1 | Motovibrator | - | RAL 2004 |
| 2 | Seal | SBR | black |
| 3 | Access door | Carbon steel | RAL 7001 |
| 4 | Grille | 304 SS | - |
| 5 | Vibrating hopper | Carbon steel | RAL 7001 |
| 6 | Venting pipe | Carbon steel | RAL 7001 |
| 7 | Filter bag | Felt - *Filz* | - |
| 8 | Frame | Carbon steel | RAL 7001 |
| 9 | Monorail | Carbon steel | RAL 7001 |
| 10 | Lifting cross | Carbon steel | RAL 7001 |

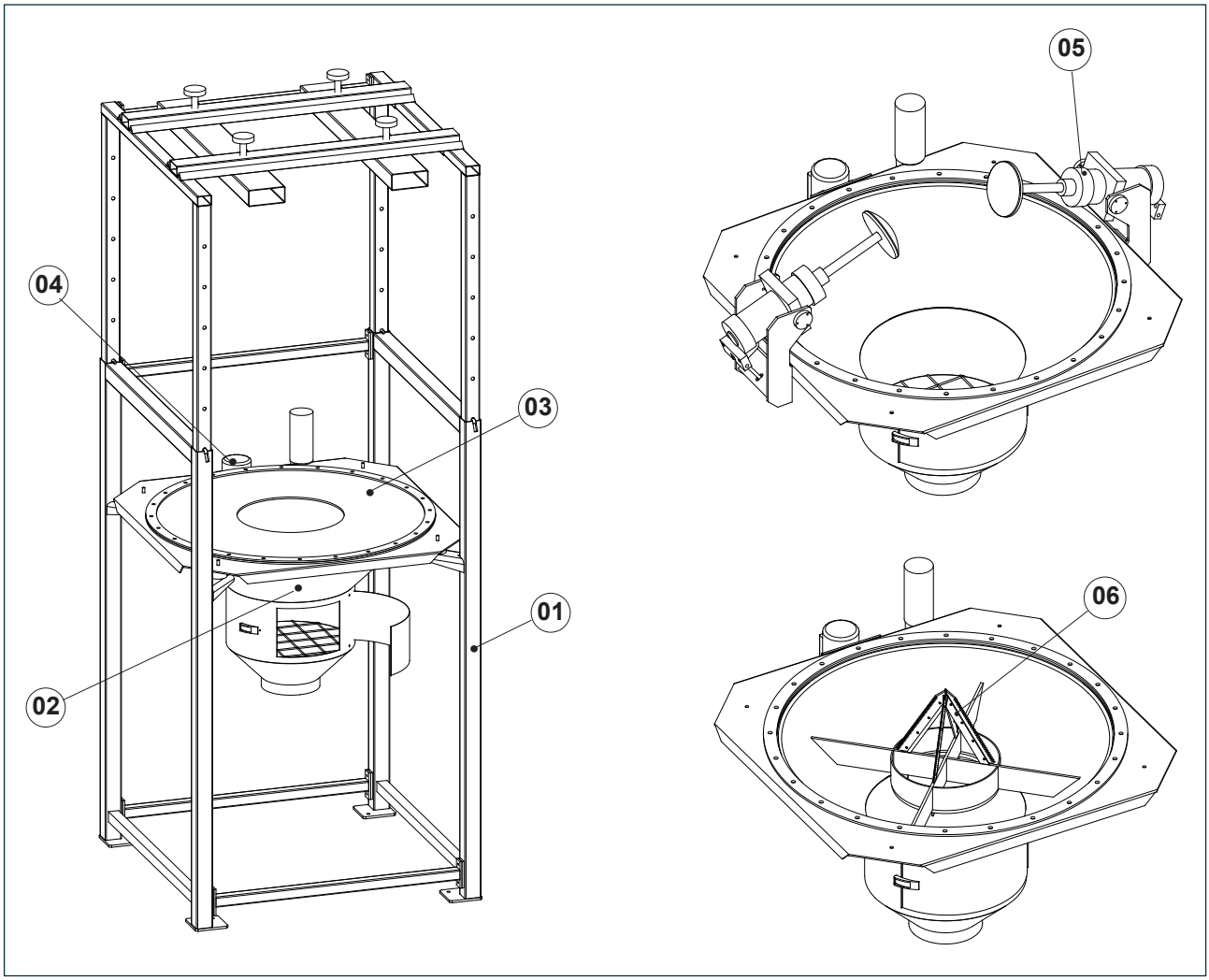


| ITEM POS. | DESCRIPTION | MATERIAL | FINISHING |
|---|---|---|---|
| 1 | Supporting frame | 304L SS. | Mesc buffing |
| 2 | Vibrating hopper | 304L SS. | Mesc buffing |
| 3 | Seal | NBR | white |
| | | food-grade | |
| 4 | Larger vibrator | - | RAL 2004 |
| 5 | Pneumatic activators Kit | Carbon steel | RAL 7001 |
| | | 304L SS | Mesc buffing |
| 6 | Cutting Kit | Carbon steel | RAL 7001 |
| | | 304L SS | Mesc buffing |

*According to UNI-EN 10088 (1997)/AISI (1974) / DIN 17440 (1985)

## 3.3 Range - Modular code

**SBB** 1 2 3 4 5 6 7 8 9 10 11 12

**HOPPER MATERIAL**
**1** = Mild Steel
**2** = 304L Stainless Steel
**3** = 316L Stainless Steel

**FRAME MATERIAL**
**+** = Without
**1** = Mild Steel
**2** = 304 Stainless Steel

**HOPPER DIAMETER**
**125** = 1250 mm
**150** = 1500 mm

**FRAME TYPE**
**T** = Hopper Without Frame
**C** = Short
**S** = Extensible
**M** = Hoist Rail

**HOPPER POSITION**
**A** = Std Level Discharging
**B** = Intermediate Discharging Level
**C** = Floor Level Discharding

**OUTLET TYPE**
**ST** = STD
**SM** = with manual slide gate

**OUTLET DIAMETER (mm)**
**219** = Ø219
**273** = Ø273
**600** = Ø600

**FLANGE**
**+** = Without
**A** = XKF3 Round Flange
**B** = XKF7 Square Flange
**C** = PN10 Flange
**E** = XKFL Flange

**FLEXIBLE SLEEVE**
**+** = Without
**B** = Black Rubber
**W** = White Food Rubber

**SEAL TYPE**
**N** = Black Rubber
**B** = White Food Grade Rubber

**VIBRATOR SIZE**
**++** = None
**10** = 0,10 kW
**18** = 0,18 kW

**VIBRATOR VOLTAGES**
**1** = 220-240/380-415V 50 Hz
**O** = 220-277/380-480V 60 Hz
**+** = None

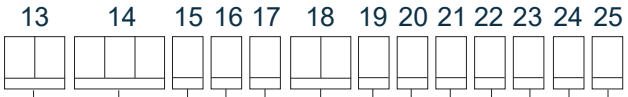


## SBB

**PACKING**
**B** = Base (Pallet)
**P** = Stacking Wood Crate for container

**EXTERNAL COLOR**
**0** = NONE
**B** = RAL1013
**C** = RAL 1015
**D** = RAL 5010
**E** = RAL 5015
**I** = RAL 7001
**H** = RAL 7032
**G** = RAL 7035
**N** = RAL 9010
**V** = Others

**EXTERNAL TREATMENT**
**0** = None
**1** =1 Primer coat (Alkyd)
**3** =1 Primer coat + 1 Paint coat (Alkyd)
**Q** = Silking 240

**INTERNAL COLOR**
**0** = None

**INTERNAL TREATMENT**
**0** = SA 2,5 raw (No primer)
**1** =1 Primer coat (Alkyd)
**9** =1 Primer coat (Food Epoxy)
**Q** = Silking 240

**FINISHING**
**4** = Accurate (Mild Steel)
**A** = Accurate (Stainless Steel)

**SCREW SUPPORT**
**+** = Without
**S** = Included for TX 168

**SUPPORT FEET**
**++** = Without
**10** = 100 mm
**15** = 150 mm
**20** = 200 mm
**25** = 250 mm
**30** = 300 mm

**FIBC CLOSURE VALVE**
**+** = Without
**P** = Predisposition (Valve Excluded)

**DOOR MICROSWITCH**
**+** = Without
**M** = Included

**LEVEL INDICATOR**
**+** = Without
**1** = Predisposition for level indicator 1 1/2”

**PNEUMATIC ACTIVATORS**
**+++** = Without
**KSP** = Predisposition Only
**KSC** = Pneumatic Actuators without control panel
**KSQ** = Pneumatic Actuators with control panel

**CUTTING KIT**
**++** = Without
**KT** = Included

## 3.4 Options

3

***HOPPER DIAMETER***

**125** = 1250 mm

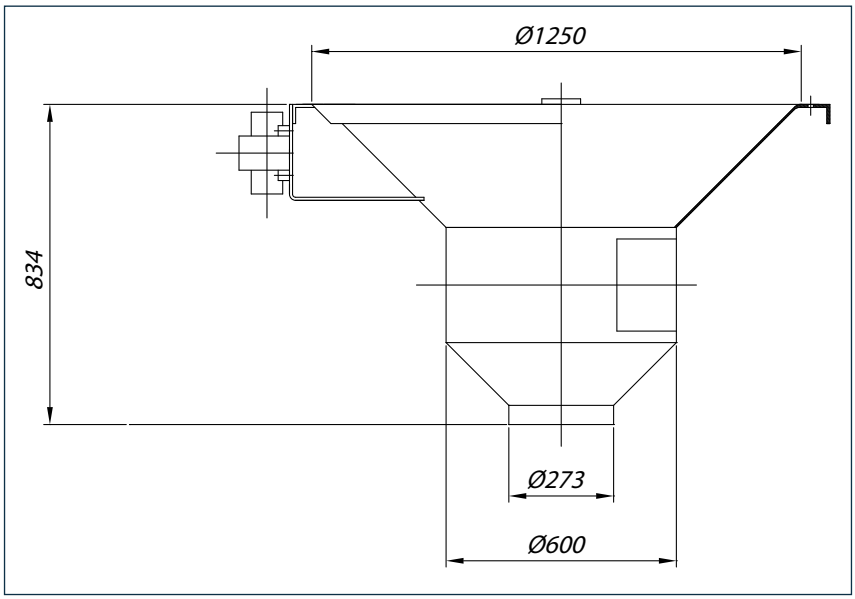


**150** = 1500 mm

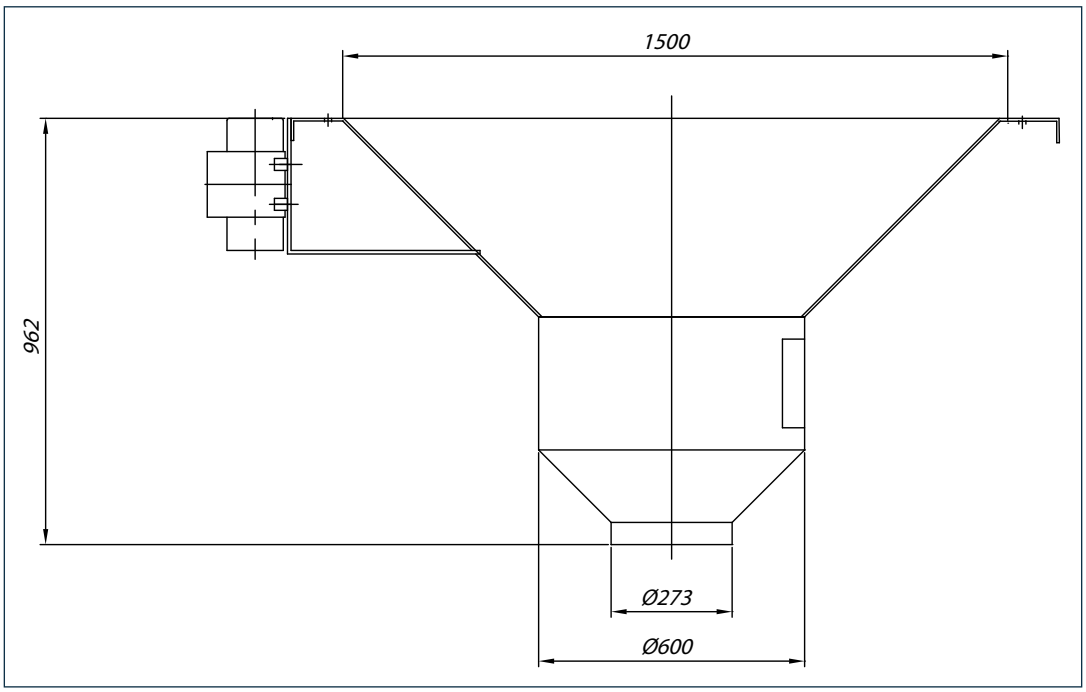

4

***FRAME TYPE***

**T** = Hopper Without Frame

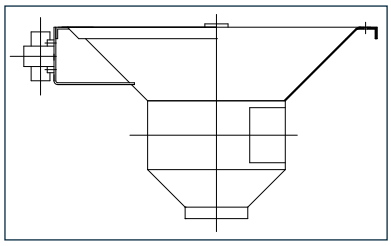

**C** = Short

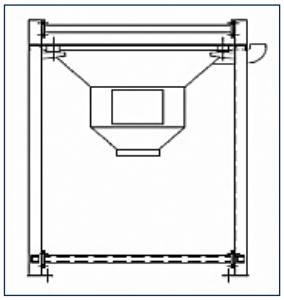

**S** = Extensible

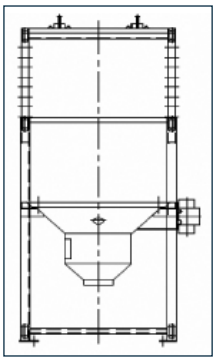

**M** = Hoist Rail

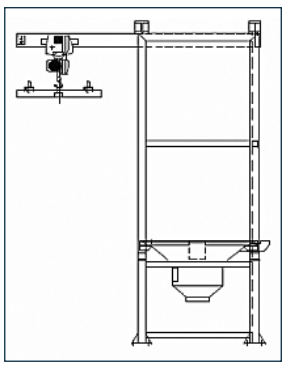

5

***HOPPER POSITION***

**A** = Std Level Discharging (900mm)
**B** = Intermediate Discharging Level (500mm)
**C** = Floor Level Discharding (100mm)

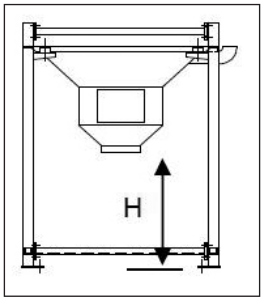

6

## *OUTLET TYPE*

**ST** = STD
**SM** = with Manual Slide Gate

### MANUAL GATE VALVE

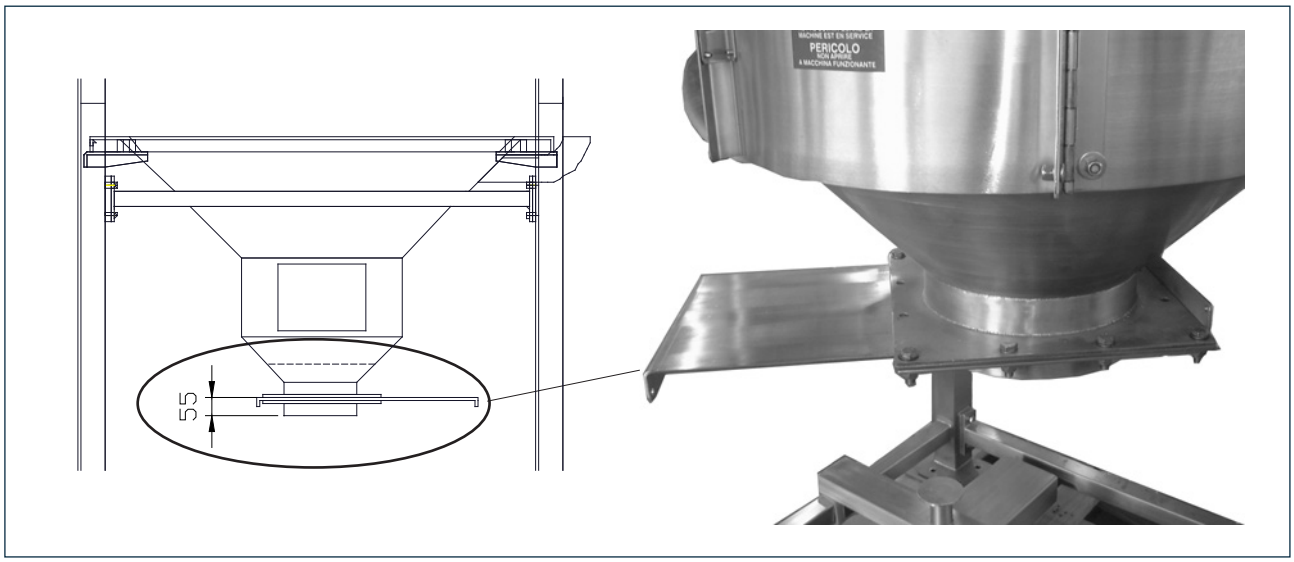


| MATERIAL | Code |
|---|---|
| Carbon steel | **KSMSBB2731A** |
| 304L SS | **KSMSBB2732A** |

7

***OUTLET DIAMETER (mm)***

**219** = Ø219
**273** = Ø273
**600** = Ø600

## REDUCTION SECTION FOR OUTLET SPOUT

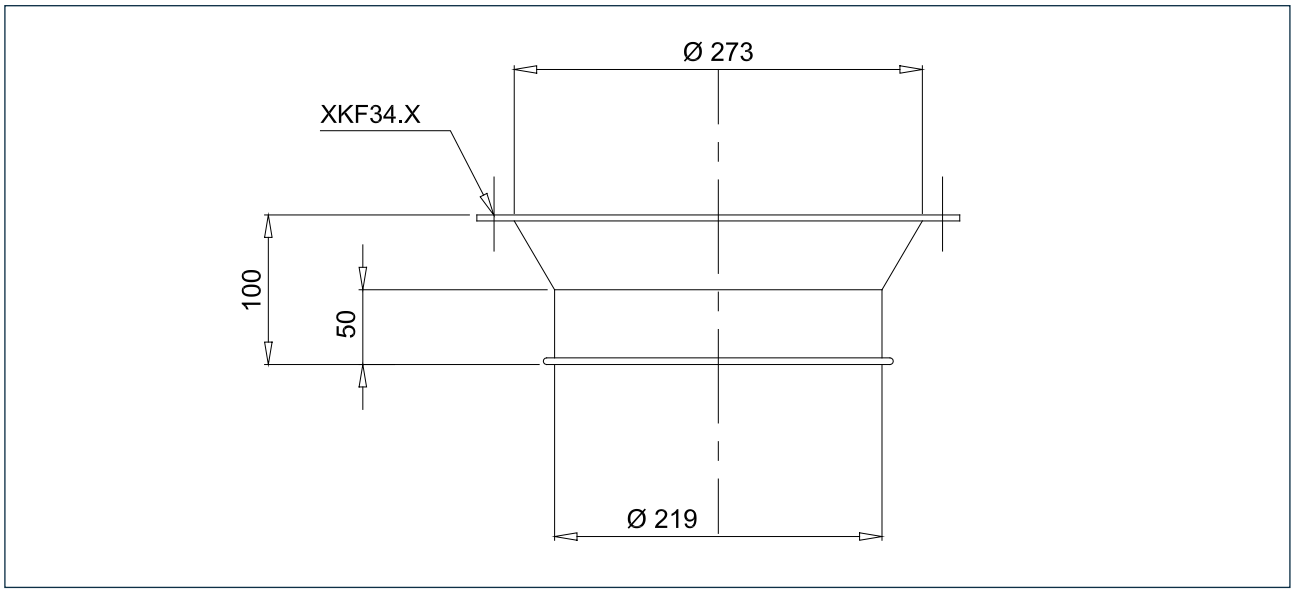


| MATERIAL | Code |
|---|---|
| Carbon steel | KMR2732191001 |
| 304 SS | KMR2732191002 |

8

***FLANGE***

**+** = Without
**A** = XKF3 Round Flange (VFS type)
**B** = XKF7 Square Flange (VIB type)
**C** = PN10 Flange
**E** = XKFL Round Flange (VFP type)

**ROUND FLANGE XKF 34._**

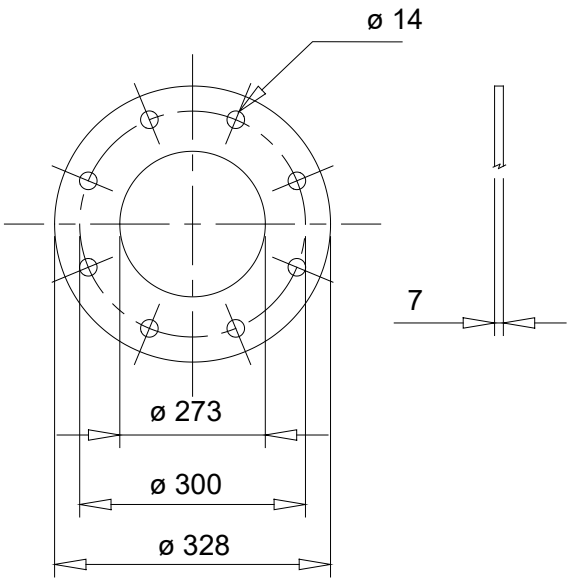


**SQUARE FLANGE XKF 74._**

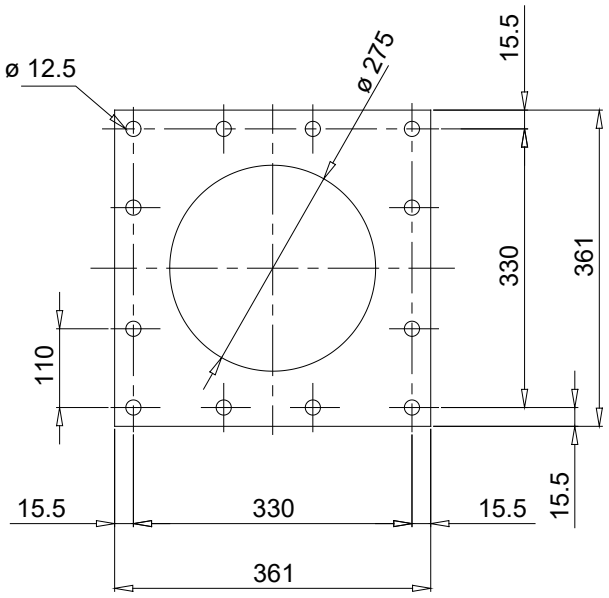


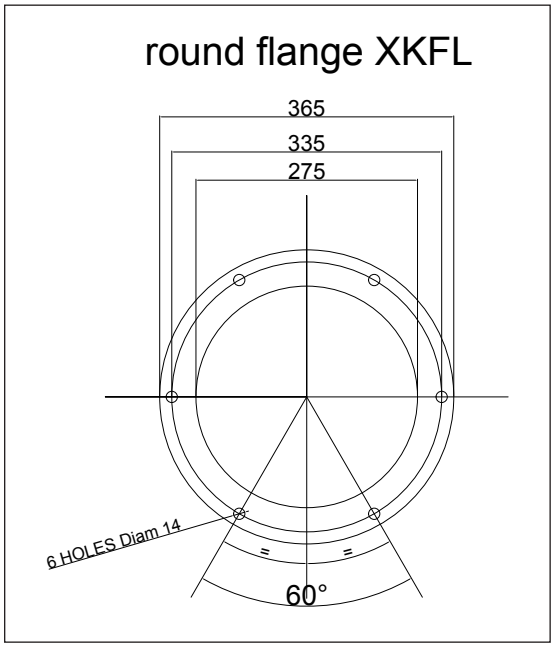

9

## *FLEXIBLE SLEEVE*

**+** = Without
**B** = Black Rubber
**W** = White Food Rubber

### FLEXIBLE ATTACHMENT KIT

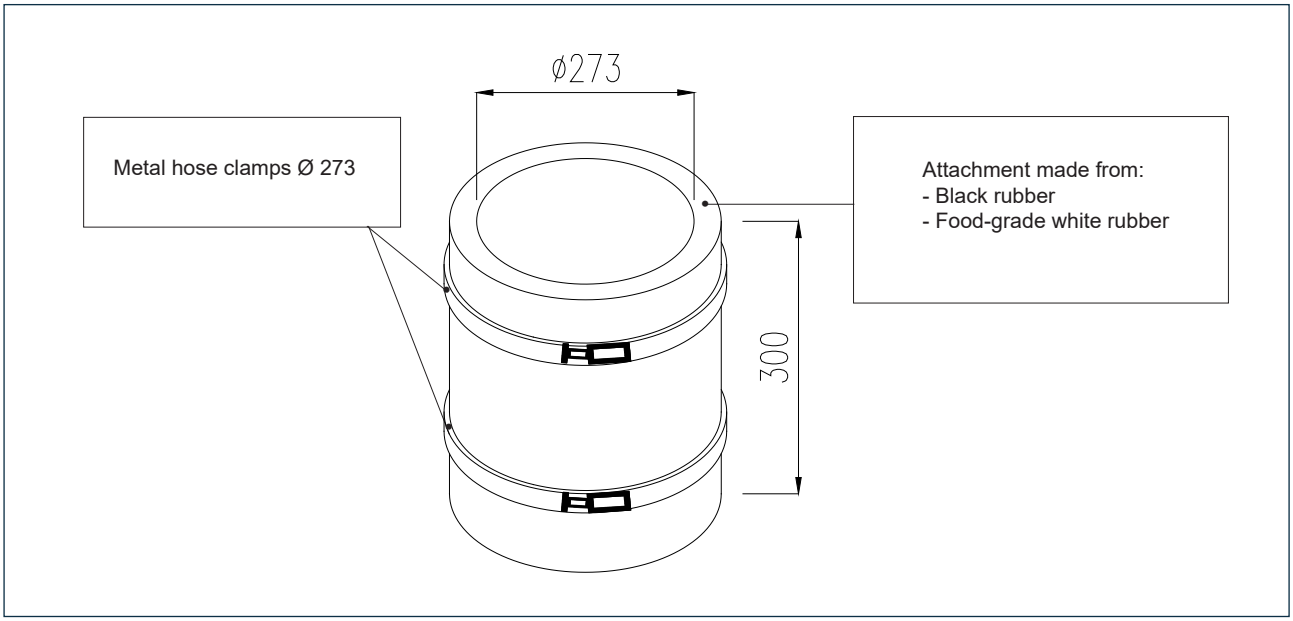


| CODE BLACK RUBBER | CODE WHITE RUBBER | 0 | L |
|---|---|---|---|
| XJN 273236 | XJN 273136 | 273 | 300 |

10

## *SEAL TYPE*

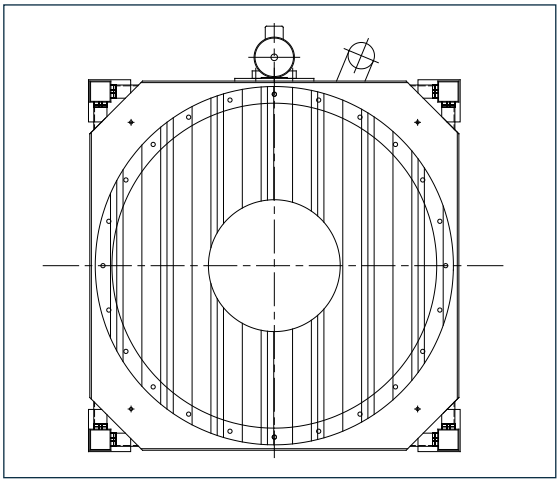

In field 8 of the order code it is possible to select the type of hopper gasket required, depending on the product to be handled; the following options are possible:

N: gasket made of black SBR.

B: gasket made of white NBR for food-grade use.

11

## *ELECTRIC VIBRATOR*

Each **SBB** model is provided with an electric vibrator to activate and facilitate descent of the product; the vibrating mass on each vibrator can be adjusted in a simple manner (see use and maintenance catalogue) to increase or decrease the centrifugal force.

For the **SBB._.125** model it is possible to mount a bigger electrical vibrator, as shown in the Table below.

In field 7 of the order code it is possible to select from the following options:

+ + = without vibrator

10 = electrical vibrator 0.10 kW (std for **SBB 125**)

18 = electrical vibrator 0.18 kW (std for **SBB 150**)

| SBB | TYPE | VIBRATOR MECHANICAL FEATURES | | | | ELECTRICAL FEATURES | | | | | |
|---|---|---|---|---|---|---|---|---|---|---|---|
| | | rpm/min | | CENTRIFUGAL FORCE kg | | kW | | A max. 50 Hz | | A max. 60 Hz | |
| | | 50Hz | 60Hz | 50Hz | 60Hz | 50Hz | 60Hz | 230V | 400V | 267V | 460V |
| 125 | MVE 100/3 | 3000 | 3600 | 99 | 107 | 0.1 | 0.11 | 0.33 | 0.19 | 0.32 | 0.18 |
| 125-150 | MVE 200/3 | 3000 | 3600 | 198 | 190 | 0.18 | 0.21 | 0.6 | 0.35 | 0.62 | 0.35 |

**TECHNICAL DATA:**

- Standard power supply:
  - 230/400 V 50 Hz
  - 264/470 V 60 Hz
- Protection degree IP 65.
- Standard tropicalization.
- Continuous running.
- Operating temperature:
  - from -30° to +40°C
- Standard applicable:
  - IEC 34.1 - CEI 2/3 ; 73/72/CEE - EN 292-89/CCE - EMC 89/336/CE
- Electric vibrators with voltages and frequencies different from the standard production can be supplied on request.

12

## *VIBRATOR VOLTAGES*

In field 9 of the order code it is possible to select the voltage and frequency of the electric electric vibrator from the following options:

+: without vibrator

1: 220-240/380 - 415V 50Hz (STD)

0: 220 - 277/380 - 480V 60Hz

Electric vibrator with special voltages and frequencies are available on request.

**SAFETY CABLE**

Each vibrator is provided with a safety cable, which connects the vibrator to the **FIBC** cone in order to prevent accidental falling in the event of breakage of the fixing feet.

13

## *CUTTING KIT*

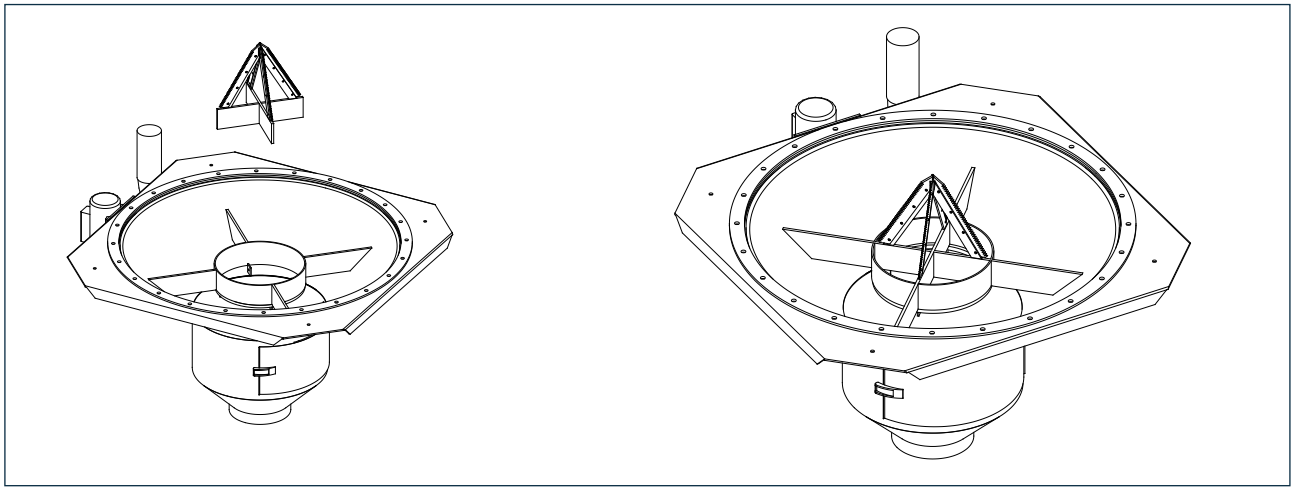

Its function is to cut valveless **FIBC**s which cannot be recycled.

**N.B.**: The blades can be removed so as to enable use also with **FIBC**s having valves.
Accessory applicable on all **SBB** models.The knife blade is always made of AISI 420 stainless steel, while the supporting frame is made of the same material as the **FIBC**.

14

## *KIT PNEUMATIC ACTIVATORS*

Materials featuring poor flowability do not flow out of the **FIBC** easily. It is therefore necessary to use pneumatic activators. These devices act directly at the bottom of the **FIBC**, causing lifting and lowering of the opposite corners to stimulate the flow of material compacted at the bottom. The gradual movement of the activators makes the **FIBC** assume a “V” shape, to eliminate the deadlock points.

In field 6 of the order code, select from the following options:

+ + + = **SBB** without actuators

KSC = Actuators Kit without control panel

KSQ = Actuators Kit with electro-pneumatic control panel

KSP = provision for actuators kit (in the latter case, the activators are not supplied)

**N.B.**: The pneumatic activators can be installed on **SSB** ONLY if provision has been made on the latter during the order phase.The weight of the pneumatic actuators is approximately 80 kg.

ADVANTAGES:

**1)** System functional and easy to install.

**2)** Possibility of adjustment to optimize operation.

EXECUTION:

**1)** Carbon steel

**2)** 304L SS depending on the material used for constructing the **SBB** frame.

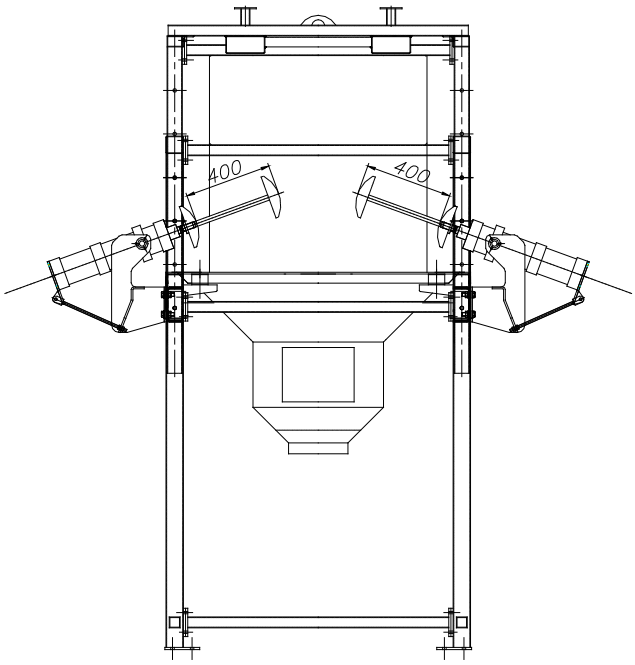


**NOTE:** For more information, see specific Catalogue **KSC**. Accessory applicable on all **SBB** models.

## ELECTRIC CONTROL PANEL

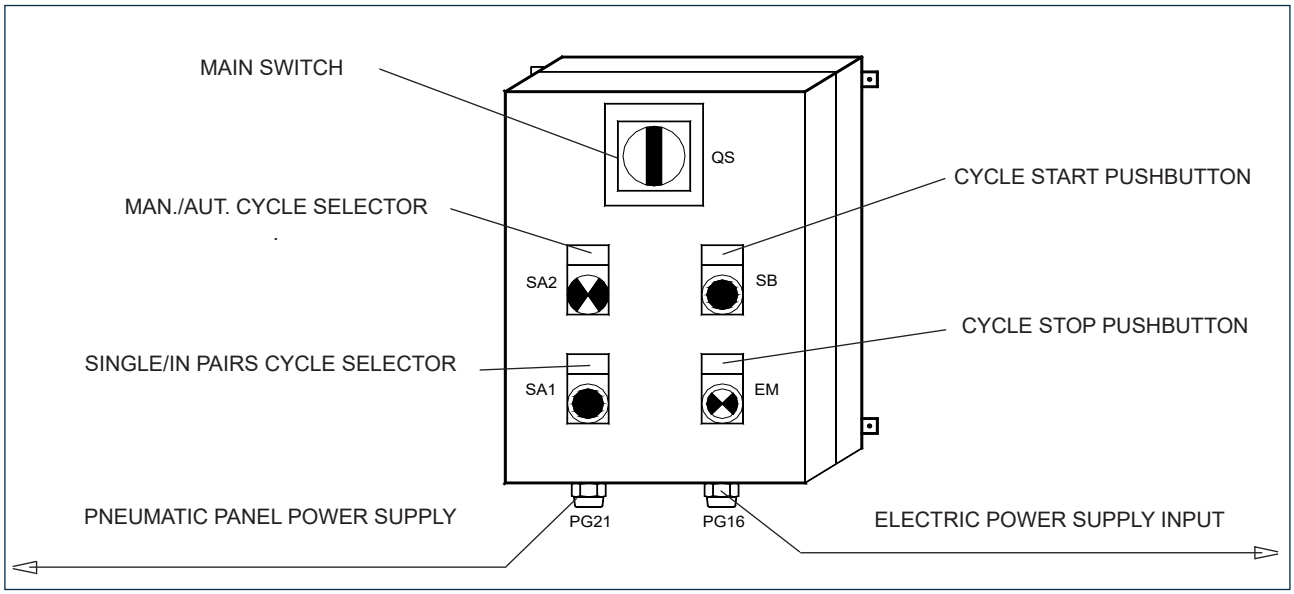


| ITEM | DESCRIPTION | COLOUR |
|---|---|---|
| **QS** | MAIN SWITCH | RED - YELLOW |
| **SB** | CYCLE START PUSHBUTTON | BLACK |
| **EM** | CYCLE STOP PUSHBUTTON | RED |
| **SA1** | SINGLE/IN PAIRS CYCLE SELECTOR | BLACK |
| **SA2** | MAN./AUT. CYCLE SELECTOR | BLACK |

The control board comprises a box with front door on which the controls and operation indicators are fitted.
Description of controls and indicators:
SB/EM = PUSHBUTTONS: controls with single operating mode;
SA = SELECTORS: double-function switches;
QS = SWITCHES: controls with two possible positions.

15

## *LEVEL INDICATOR*

**+** = Without
**1** = Predisposition for level indicator 1 1/2”

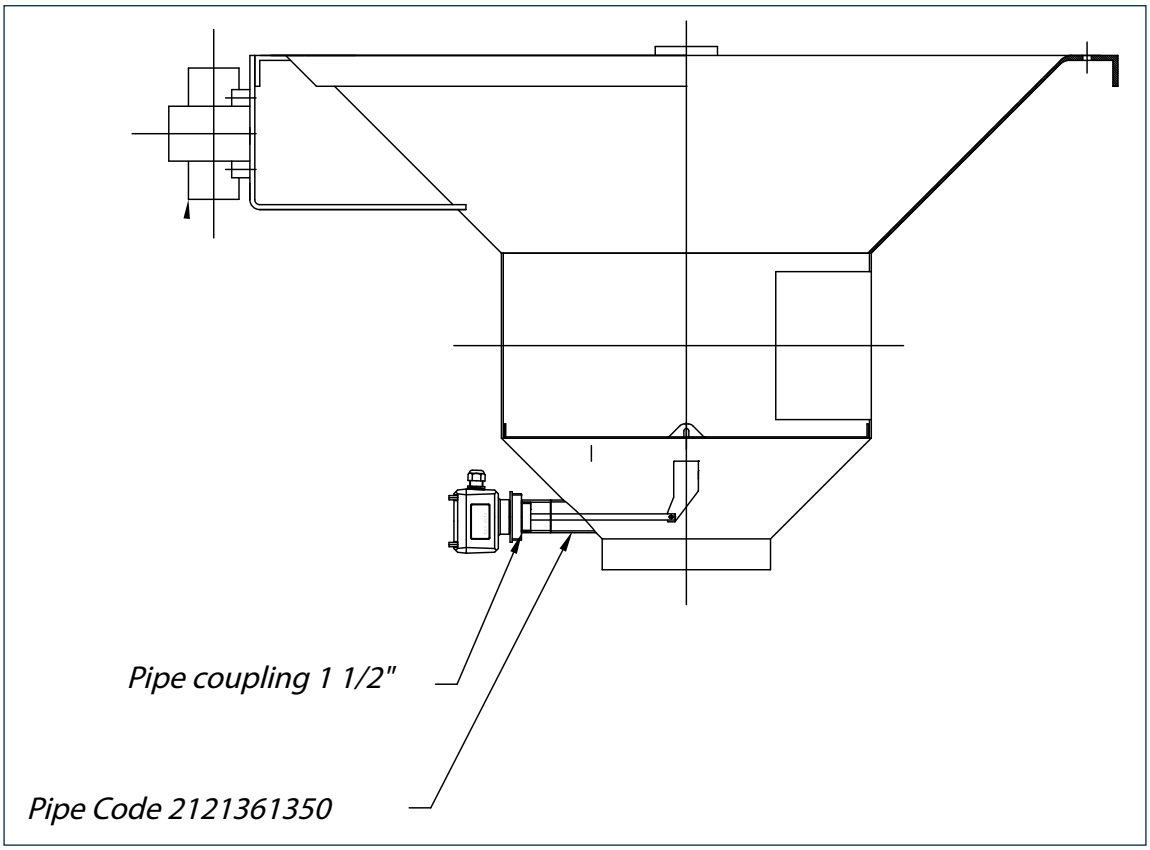

16

## *DOOR MICROSWITCH*

**+** = Without
**M** = Included

### DOOR OPEN MECHANICAL LIMIT STOP

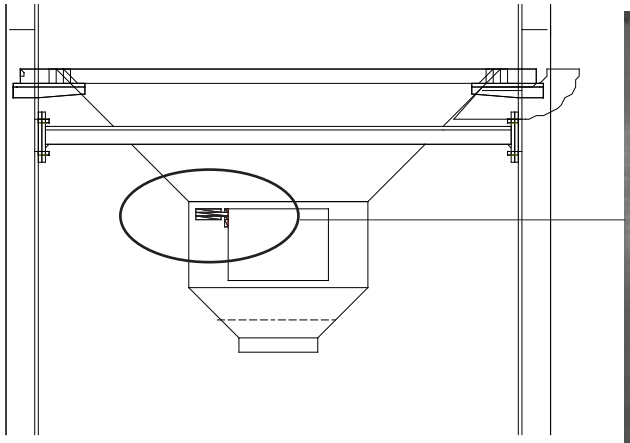



| MATERIAL | Code |
|---|---|
| Carbon steel | **KFMSBB1A** |
| 304L SS | **KFMSBB2A** |

Useful for preventing activation of the vibrator if the valve is not closed correctly.

17

## *FIBC CLOSURE VALVE*

**+** = Without
**P** = Prearranged (Valve Excluded)

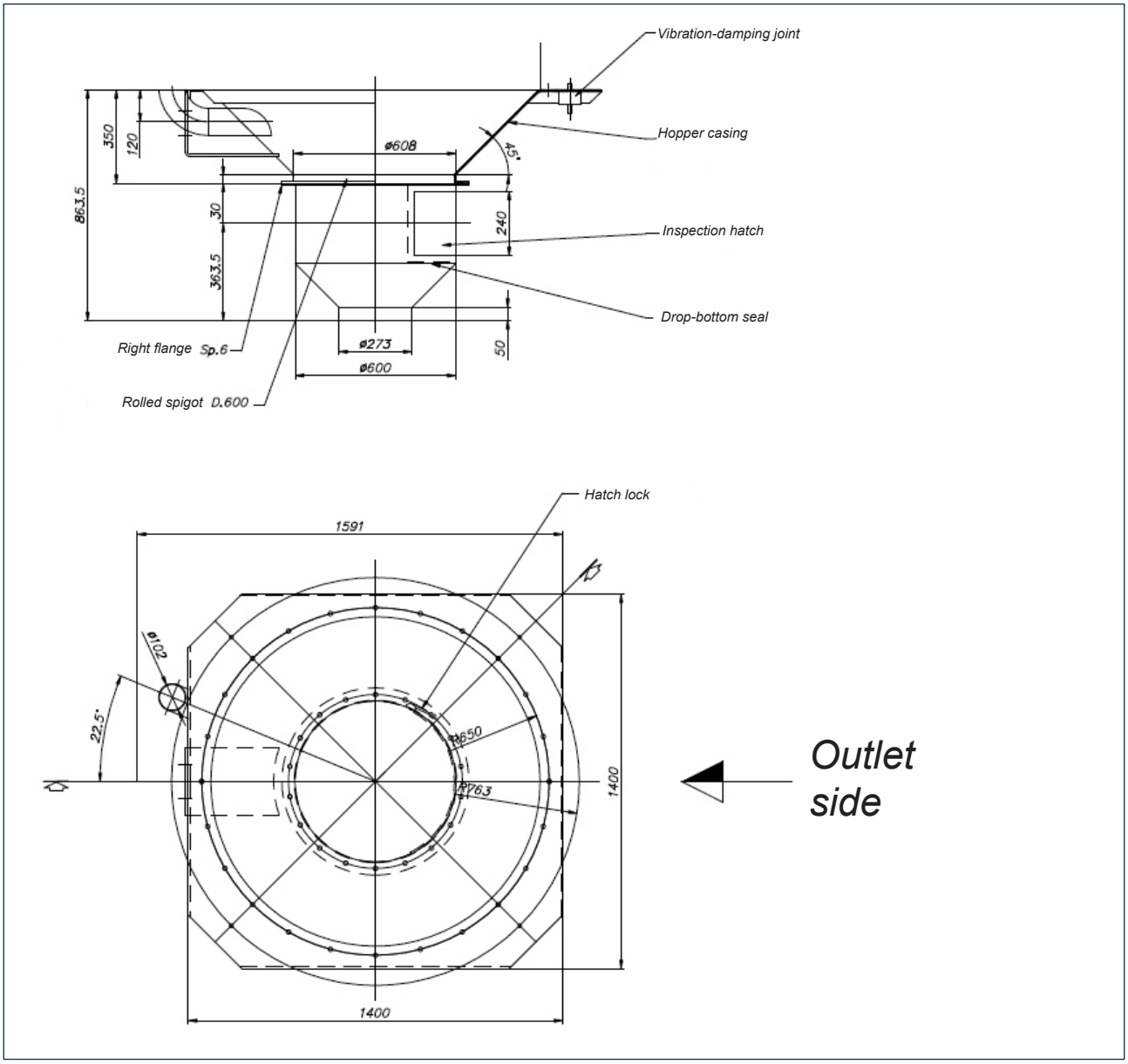

18

## *SUPPORT FEET*

**++** = Without
**10** = 100 mm
**15** = 150 mm
**20** = 200 mm
**25** = 250 mm
**30** = 300 mm

### FEET EXTENSIONS

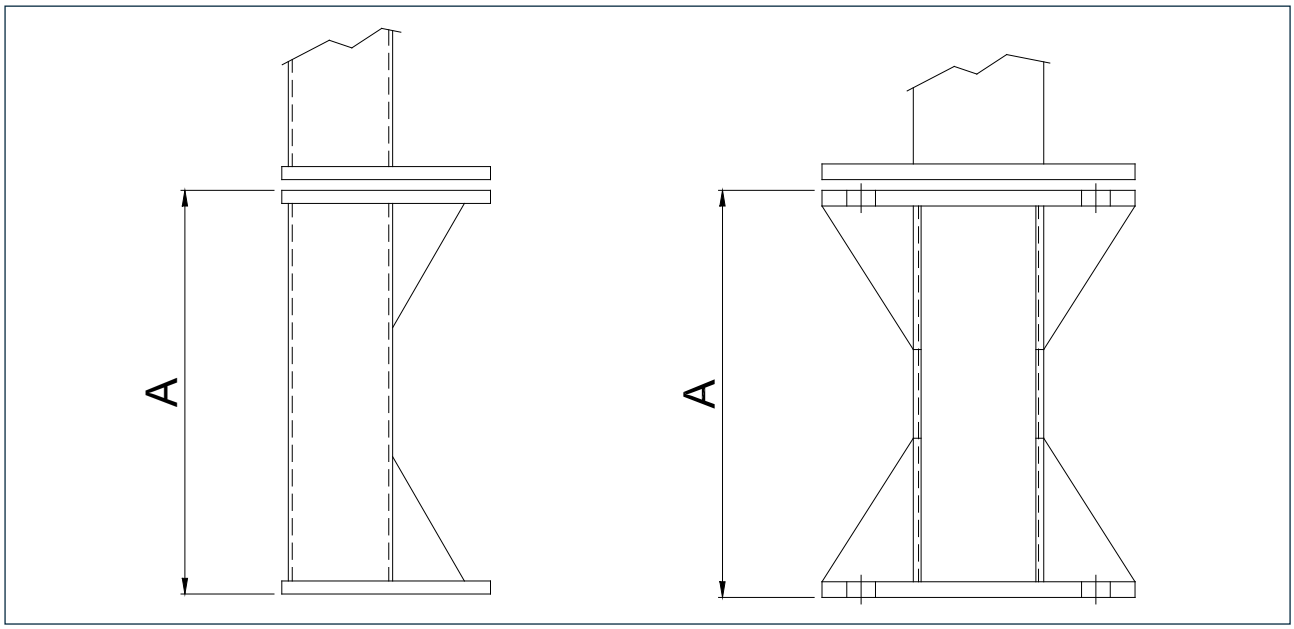


| SBB125C - SBB125S | SBB150C - SBB125M - SBB150S | A mm |
|---|---|---|
| Code | Code | |
| KFSBB**1**125S101**I** / KFSBB**2**125S10**G**0 | KFSBB**1**150S101**I** / KFSBB**2**150S10**G**0 | 100 |
| KFSBB**1**125S151**I** / KFSBB**2**125S15**G**0 | KFSBB**1**150S151**I** / KFSBB**2**150S15**G**0 | 150 |
| KFSBB**1**125S201**I** / KFSBB**2**125S20**G**0 | KFSBB**1**150S201**I** / KFSBB**2**150S20**G**0 | 200 |
| KFSBB**1**125S251**I** / KFSBB**2**125S25**G**0 | KFSBB**1**150S251**I** / KFSBB**2**150S25**G**0 | 250 |
| KFSBB**1**125S301**I** / KFSBB**2**125S10**G**0 | KFSBB**1**150S301**I** / KFSBB**2**150S30**G**0 | 300 |

**NOTE**: The kit comprises four feet.

THE FOUNDATION PLAN REMAINS UNCHANGED

**Materials available:**
- Carbon steel (Material **1**, Paint RAL7001_**I**)
- 304L SS (Material **2**, Glass Blasting _**G**)

19

## *SCREW SUPPORT*

**+** = Without
**S** = Included for TX 168

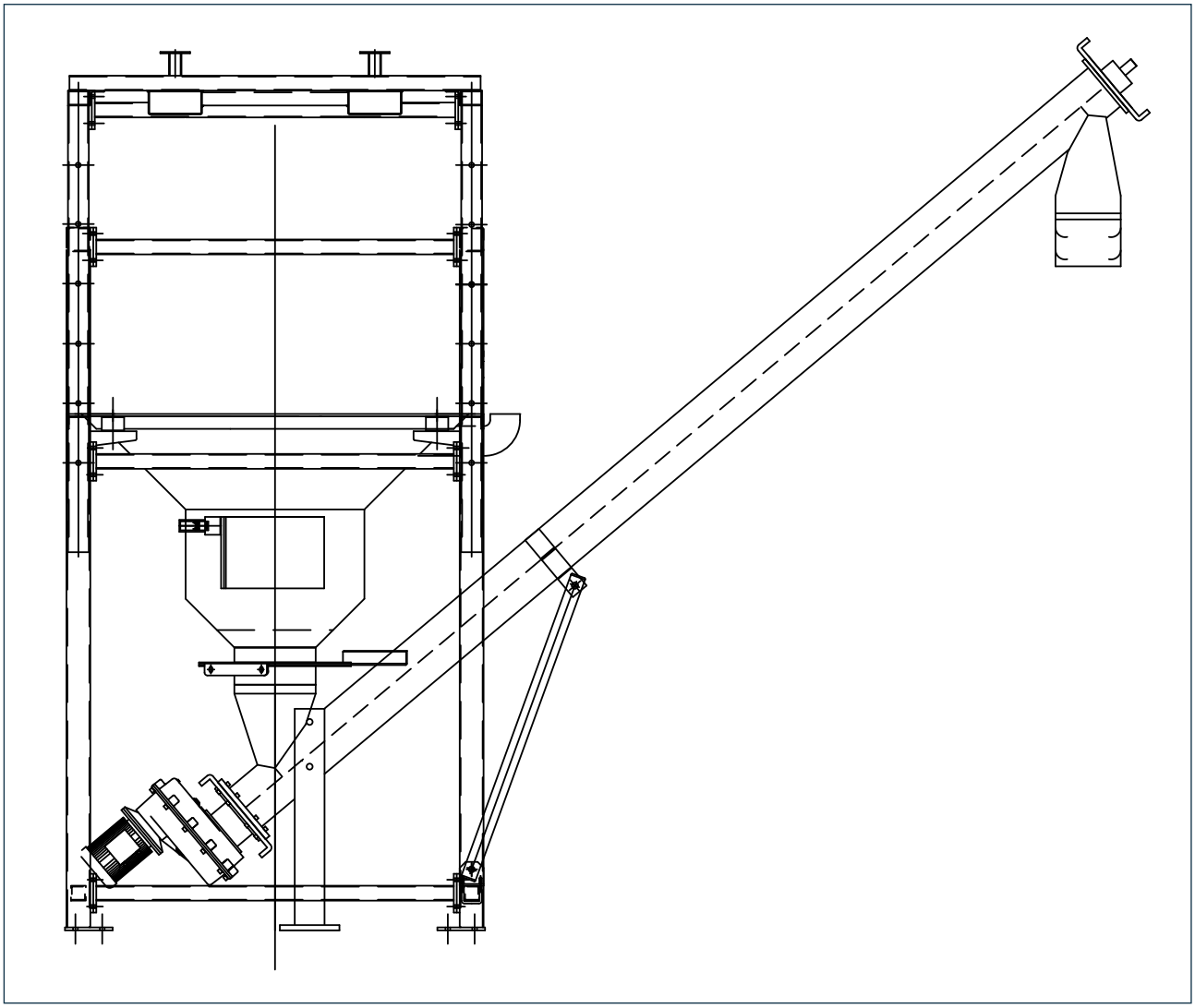

20

## *FINISHING*

*Finishing SSB made from carbon steel*

The term “finishing” includes the sequence and the operations necessary for machining and finishing a material.

The finishing provided for the internal and external surfaces of the feeders is classified as:

**“4” (ACCURATE)**

**“4” FINISHING (ACCURATE)**

| MATERIALS |
|---|
| Plates |

| OPERATION | FEATURES |
|---|---|
| **Plasma/Laser cut** | In normal mode, with attention to linearity and precision |
| **Welding** | Continuous, on all edges, MAG type, with attention to linearity |
| **Trimming** | Removal of rags and sharp edges by grinding and sanding |
| **Cleaning welds** | Mechanical cleaning of welding slag by grinding |
| **Sand blasting** | Internal and external sand blasting to prepare the surfaces for painting;, there must be no ruffles or projections; extreme care to create continuity |
| **Painting** | See treatments and shades of internal and external surfaces page T11 |

*Finishing SSB made from 304L SS*

The term “finishing” includes the sequence and the operations necessary for machining and finishing a material.

The finishing provided for the internal and external surfaces of the feeders is classified as:

**A (ACCURATE)**

| MATERIALS |
|---|
| Plates |

| OPERATION | FEATURES |
|---|---|
| **Plasma/Laser cut** | In normal mode, with attention to linearity and precision |
| **Satin finishing** | Carried out on the inner surface of the cone after turning, using grinder SA80 |
| **Welding** | Continuous, on all edges, type: TIG with facing for BA (040-100), MIG with flux cored wire BA (125-300) |
| **Trimming** | Removal of rags and sharp edges by grinding and sanding |
| **Cleaning welds** | Carried out with micro shot blasting or satin finishing SA240, depending on the selected finish |
| **Micro shoot blasting** | Internal and external micro shot blasting, depending the finish selected, there must be no ruffles or projections; extreme care to create continuity |
| **Satin finishing** | SA240, in successive passes, passing from SA80 to SA240 |

21 ***INTERNAL TREATMENT*** 22 ***INTERNAL COLOUR*** 23 ***EXTERNAL TREATMENT***

*Finishing **SBB** made from carbon steel*

## INTERNAL AND EXTERNAL SURFACE TREATMENT

| STANDARD | 4 | 1 | 0 | 3 | I |
|---|---|---|---|---|---|

| | Finishing |
|---|---|
| 4 | ACCURATE |

| | INTERNAL | |
|---|---|---|
| | Ra | Treatment |
| 0 | | none |
| 1 | 40 µm | Primer Coat C3 M (according ISO 12944) |

| | Paint colour |
|---|---|
| | See Table |

| | EXTERNAL |
|---|---|
| | Treatment |
| 0 | none |
| 1 | Primer Coat C3 M (according ISO 12944) |
| 3 | Top Coat C3 M (according ISO 12944) |

| | Paint colour |
|---|---|
| 0 | See Table |

## PAINT COLOUR INSIDE AND OUTSIDE

24 ***External colour***

| STANDARD | 4 | 1 | 0 | 3 | I |
|---|---|---|---|---|---|

| | RAL | Paint colour |
|---|---|---|
| B | RAL 1013 | pearl white |
| C | RAL 1015 | light ivory |
| D | RAL 5010 | gentian blue |
| E | RAL 5015 | sky blue |
| G | RAL 7035 | light grey |
| H | RAL 7032 | pebble grey |
| I | RAL 7001 | silver grey * |
| N | RAL 9010 | pure white |
| V | - | others |
| 0 | - / RAL 8023 | none / primer “beaver” |

**N.B.**: Finishing electric vibrators RAL 2004

* = standard

21 ***INTERNAL TREATMENT***

22 ***INTERNAL COLOUR***

23 ***EXTERNAL TREATMENT***

***SBB** finishing 304L / 316L SS*

## INTERNAL AND EXTERNAL SURFACE TREATMENT

## HOPPER SURFACE TREATMENT INSIDE AND OUTSIDE

**STANDARD** | A | D | 0 | D | 0 |

| Finishing | |
|---|---|
| A | ACCURATE |

| INTERNAL Treatment | |
|---|---|
| D | Silking SA 60-80 |
| E | Silking SA 120-180 |

| Paint colour | |
|---|---|
| 0 | None |

| EXTERNAL Treatment | |
|---|---|
| D | Silking SA 60-80 |

| Paint colour | |
|---|---|
| 0 | None |

**VERSION WITH CONTACT PARTS IN SS**
FRAME OUTSIDE SURFACE TREATMENT: POWDER (RAL 7001)

**VERSION ENTIRELY IN SS**
FRAME OUTSIDE SURFACE TREATMENT: Glass bead blasted

ELECTRIC VIBRATOR: RAL 2004

25

## *PACKAGING*

In field 10 of the order code it is possible to select the following options:

P = Pallet + shrink wrap (base)

G = WOODEN CRATE / HOLZKISTE

The FIBC is basically supplied on a pallet of suitable dimensions, protected with a heat-shrink polythene cover.

**STANDARD PACKAGING**

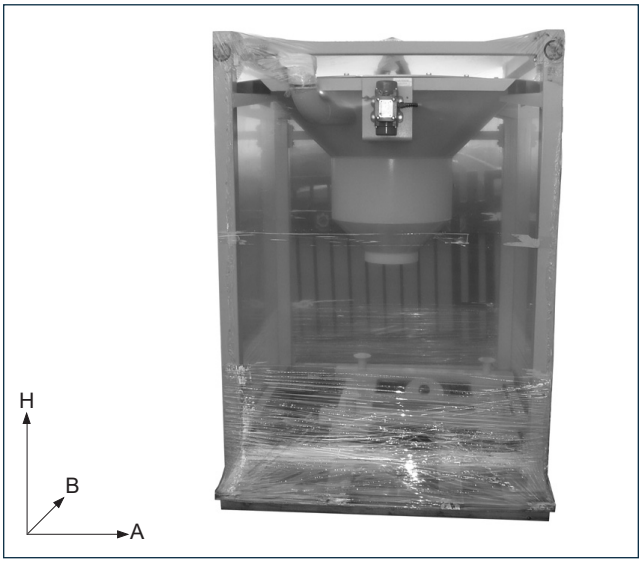


**WOODEN CRATE PACKAGING (FOR T,C,S VERSIONS)**

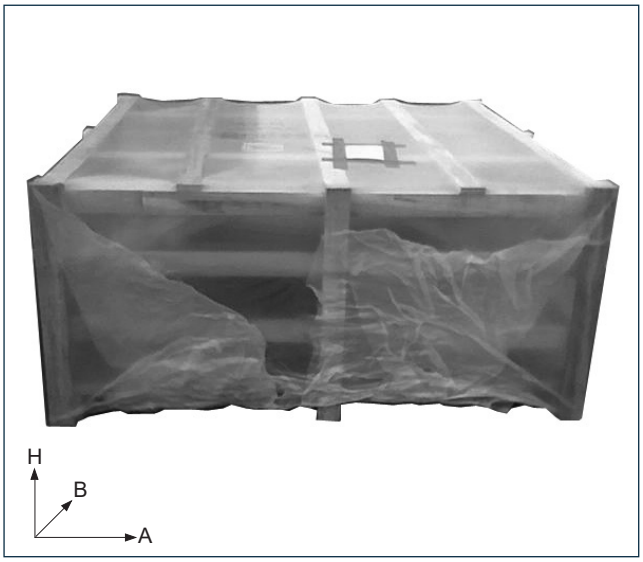


| Packing code | TYPE | A | B | H | Equipment weight kg | Packing weight kg | Total weight kg |
|---|---|---|---|---|---|---|---|
| **IME.SBB.125.T.P00** | SBB.x.125.T | 1684 | 1584 | 1102 | 125 | 53 | 178 |
| **IME.SBB.150.T.P00** | SBB.x.150.T | 1984 | 1834 | 1152 | 214 | 70 | 284 |
| **IME.SBB.125.C.P00** | SBB.x.125.C | 2034 | 1534 | 1102 | 321 | 60 | 381 |
| **IME.SBB.150.C.P00** | SBB.x.150.C | 2134 | 2034 | 1152 | 498 | 82 | 580 |
| **IME.SBB.125.S.P00** | SBB.x.125.S | 1684 | 2394 | 1102 | 400 | 84 | 484 |
| **IME.SBB.150.S.P00** | SBB.x.150.S | 2034 | 2584 | 1152 | 703 | 101 | 804 |
| **IME.SBB.125.M.P00** | SBB.x.125.M | 1684 | 1684 | 552 | 750 | 25 | 775 |

| | | | | | | | |
|---|---|---|---|---|---|---|---|
| **IME.SBB.125.T.G00** | SBB.x.125.T | 1718 | 1568 | 1102 | 125 | 89 | 214 |
| **IME.SBB.150.T.G00** | SBB.x.150.T | 2018 | 1868 | 1152 | 214 | 111 | 325 |
| **IME.SBB.125.C.G00** | SBB.x.125.C | 2068 | 1568 | 1102 | 321 | 98 | 419 |
| **IME.SBB.150.C.G00** | SBB.x.150.C | 2168 | 2068 | 1152 | 498 | 124 | 622 |
| **IME.SBB.125.S.G00** | SBB.x.125.S | 1718 | 2468 | 1102 | 400 | 124 | 524 |
| **IME.SBB.150.S.G00** | SBB.x.150.S | 2068 | 2618 | 1152 | 703 | 146 | 849 |
| **IME.SBB.125.M.G00** | SBB.x.125.M | - | - | - | - | - | - |

## 3.5 Applications

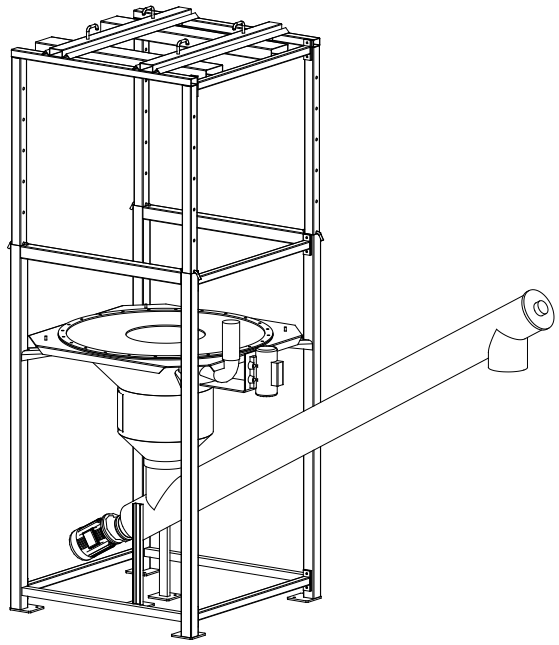

**SBB** + INCLINED SCREW FEEDER

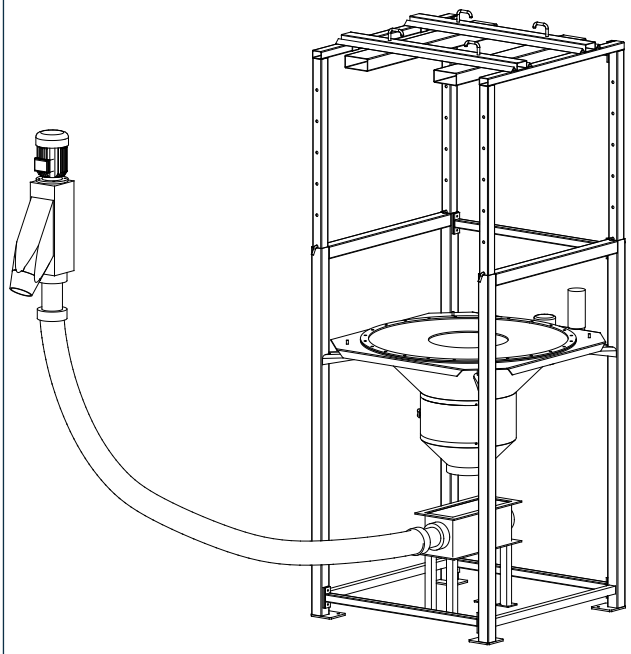

**SBB** + FLEXIBLE HELIX CONVEYOR

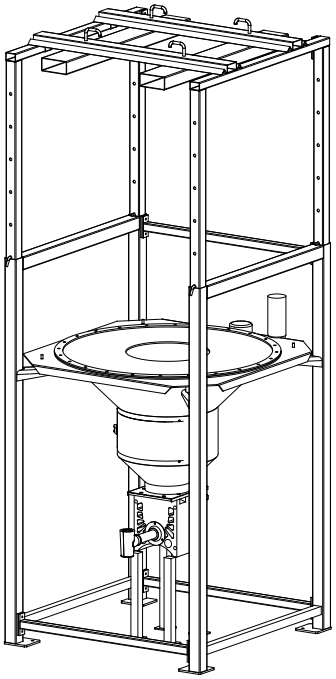

**SBB** + MICRO-BATCH FEEDER

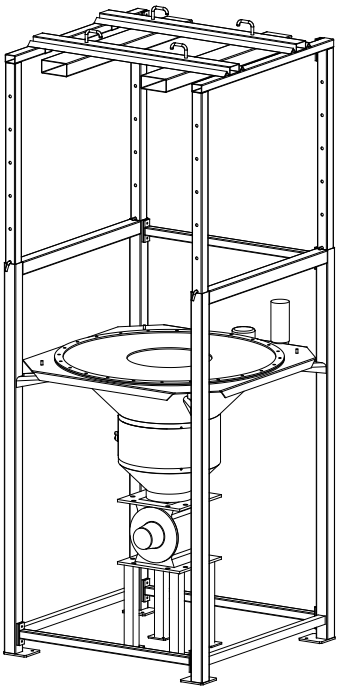

**SBB** + ROTARY VALVE

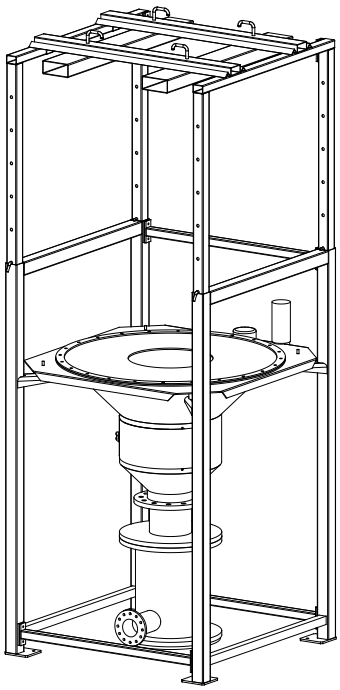

**SBB** + PNEUMATIC CONVEYING

## SBB with Ø 168 tubular screw conveyor

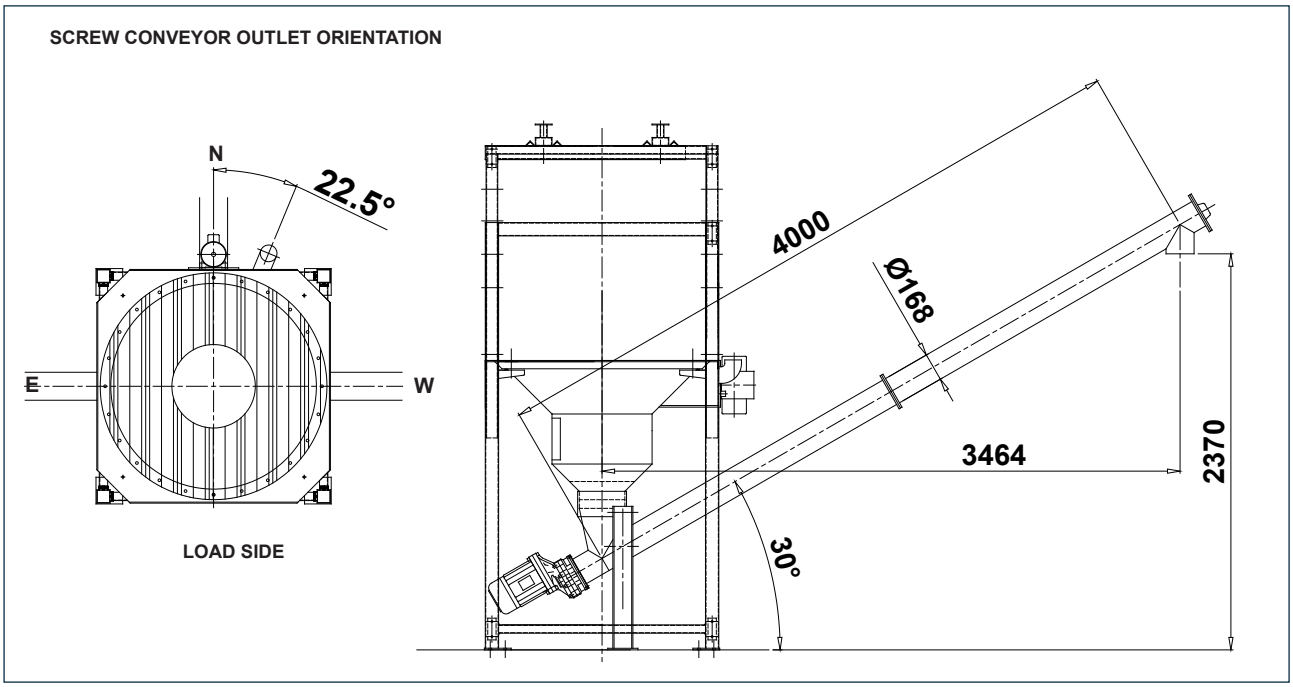


### INCLINED SCREW FEEDER

For this application it is advisable to use:
Ø168 tubular screw conveyor complete with:
- tapered inlet spout Ø168/Ø273.
- drive unit at inlet end.
- supporting base XJP168031.
- Ø273 flexible rubber sleeve 300mm long complete with hose clamp.

The length of the screw conveyor must be defined on the basis of the plant requirements, with maximum inclination angle of 30° (to be specified in the order phase).
The drawing represents an example of a 4000mm long screw conveyor.
However, it is the customer's responsibility to fix the final part of the screw conveyor rigidly.

## SBB with Ø 150 trough screw conveyor

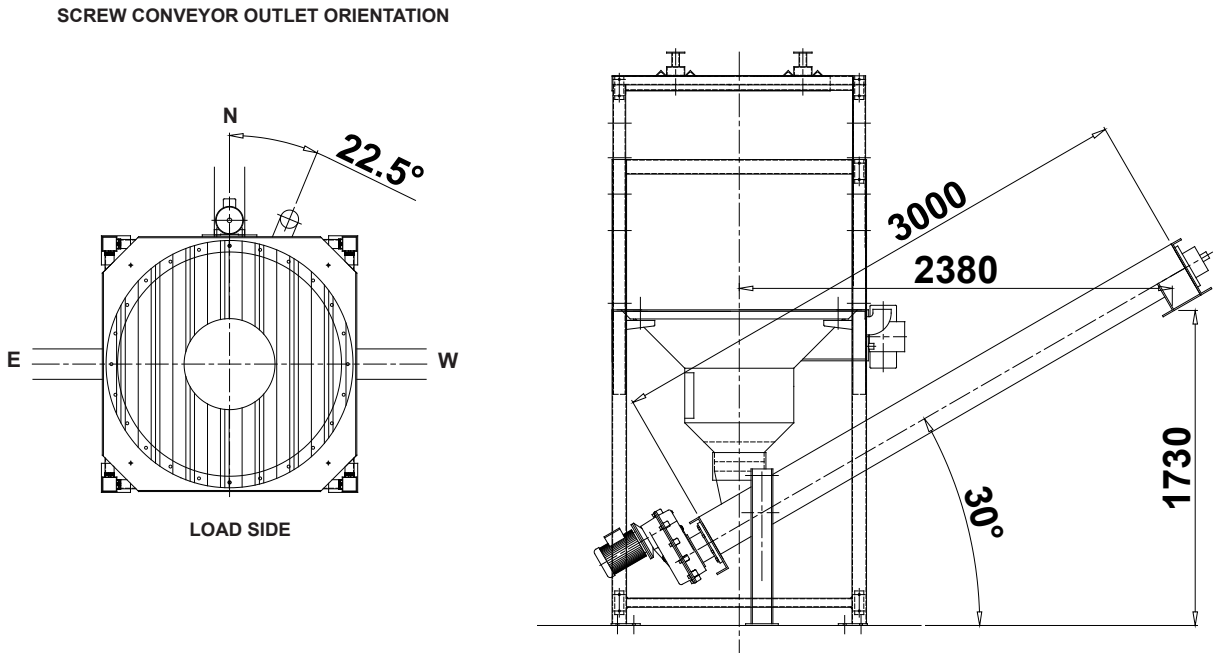


### INCLINED SCREW FEEDER

For this application it is advisable to use:
Ø150 trough screw conveyor complete with:
- tapered inlet spout Ø150/Ø 273.
- drive unit at inlet end.
- supporting base XJP168031.
- Ø 273 flexible rubber sleeve 300 mm long complete with hose clamps.

The length of the screw must be defined on the basis of the plant requirements, with maximum inclination angle of 30° (to be specified in the order phase).
The drawing represents an example of a 3000mm long screw conveyor, with outlet spout.
However, it is the Customer's responsibility to fix the final part of the screw conveyor rigidly.

The **SBB**-type **FIBC**s are designed and constructed for carrying out their function in compliance with the following limits of use:

Maximum operating temperature:

+40°C in continuous mode.

Minimum operating temperature:

- 20°C.

Height of **FIBC**:

- Min. 600mm;
- Max. 1800 mm. (for models S and M)
- Any.(for models T and C)

Hopper maximum capacity:

- **SBB125**: 330 l;
- **SBB150**: 510 l. l

*Operation noise*

The noise levels of the **SBB** with electric vibrator supplied by **WAM®** expressed in dB(A) are obtained by readings in a free field, at maximum performance, at four cardinal points at a distance of 1.5 m from the machine.

The value measured is **75 dB(A).**

The user may obtain values different from those indicated depending on the location.

It shall be the responsibility of the installer to have noise level checkings carried out on the machine applied to a silo filled with material (in operating conditions).

## SBB._.125.T

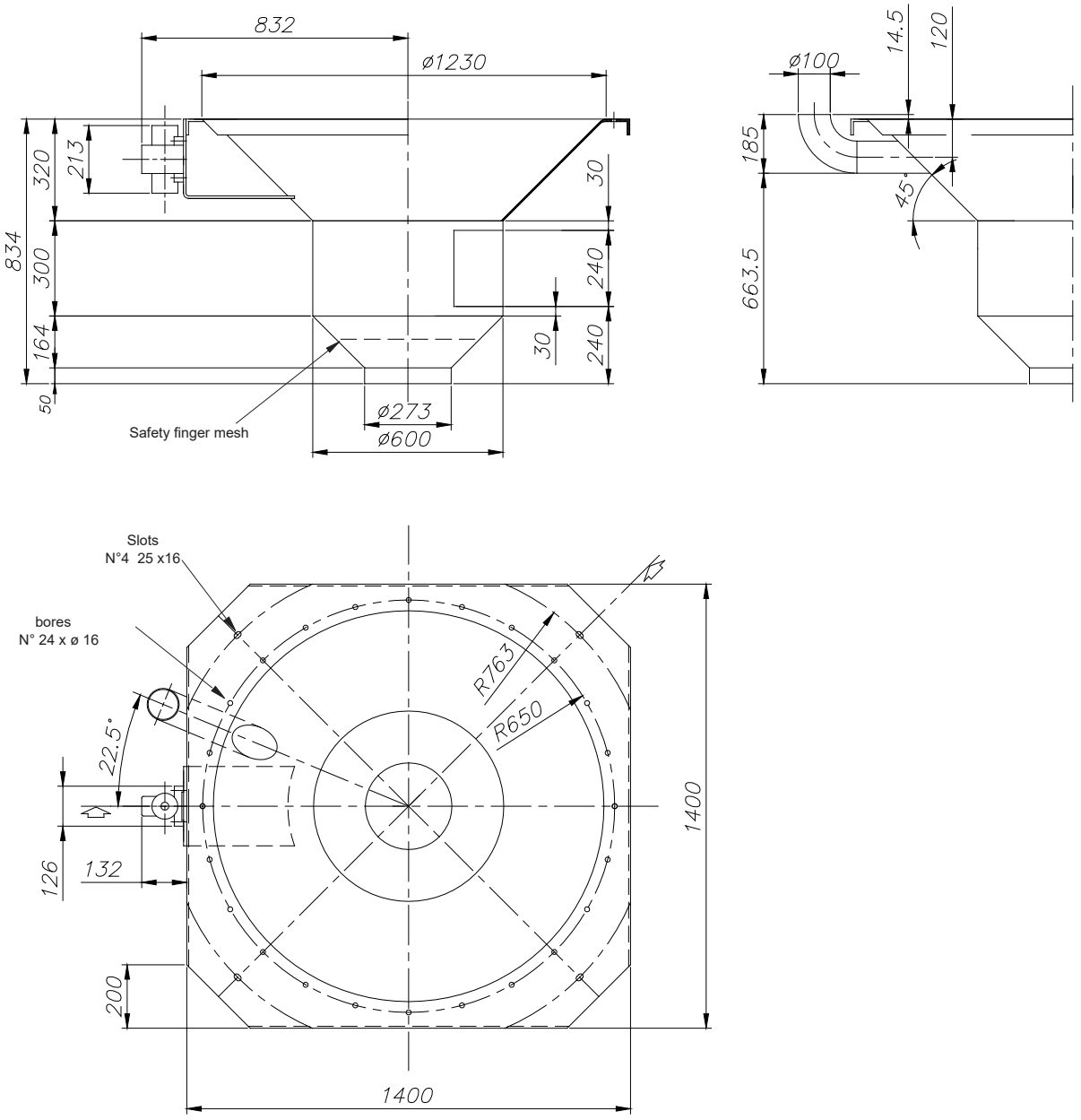
832
ø1230
320
213
834
300
164
50
30
240
30
240
ø273
ø600
Safety finger mesh
ø100
14.5
120
185
45°
663.5
Slots
N°4 25 x16
bores
N° 24 x ø 16
R763
R650
22.5°
126
132
200
1400
1400

## SBB._.150.T

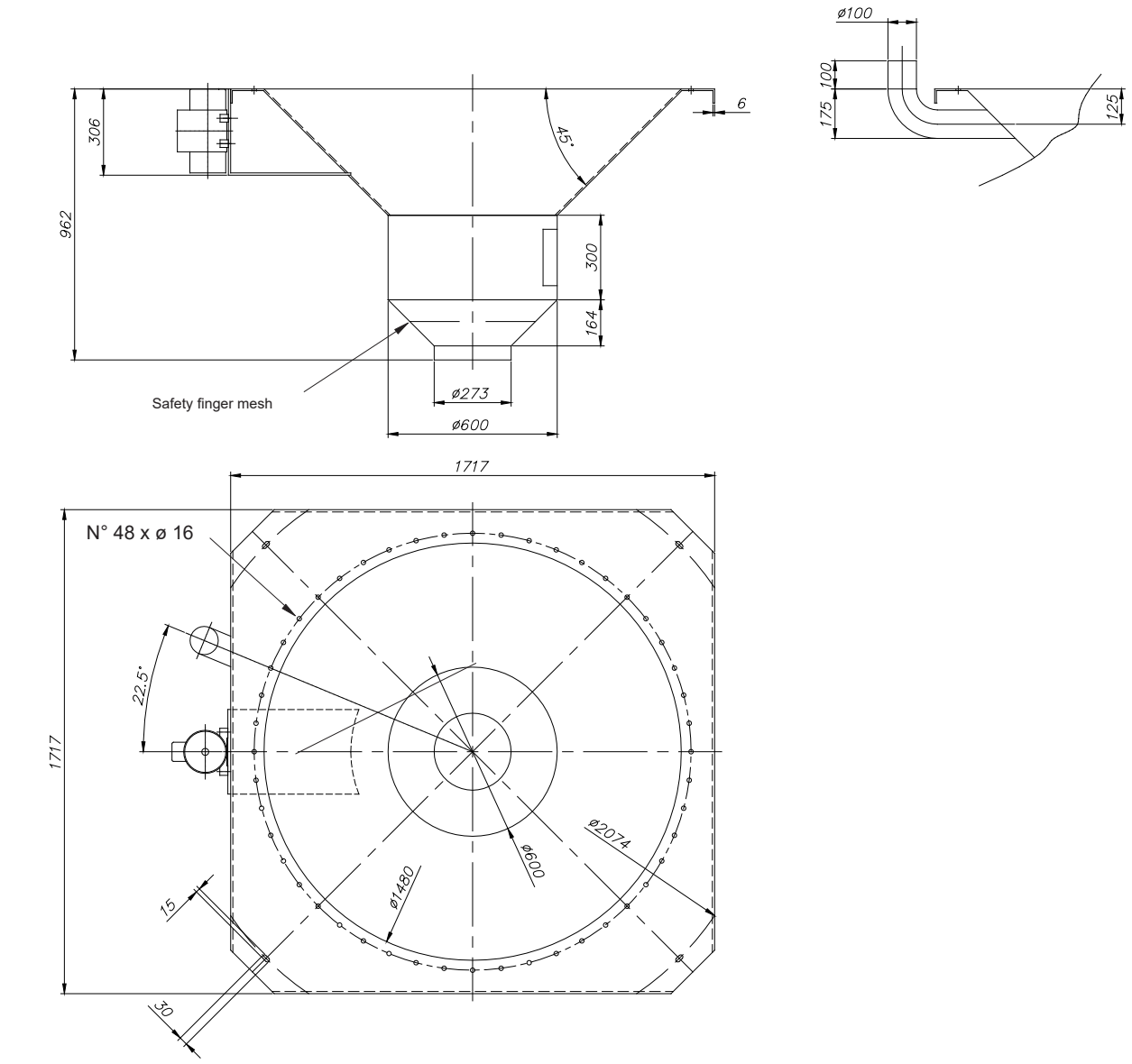


Feed side

## SBB._.125.C

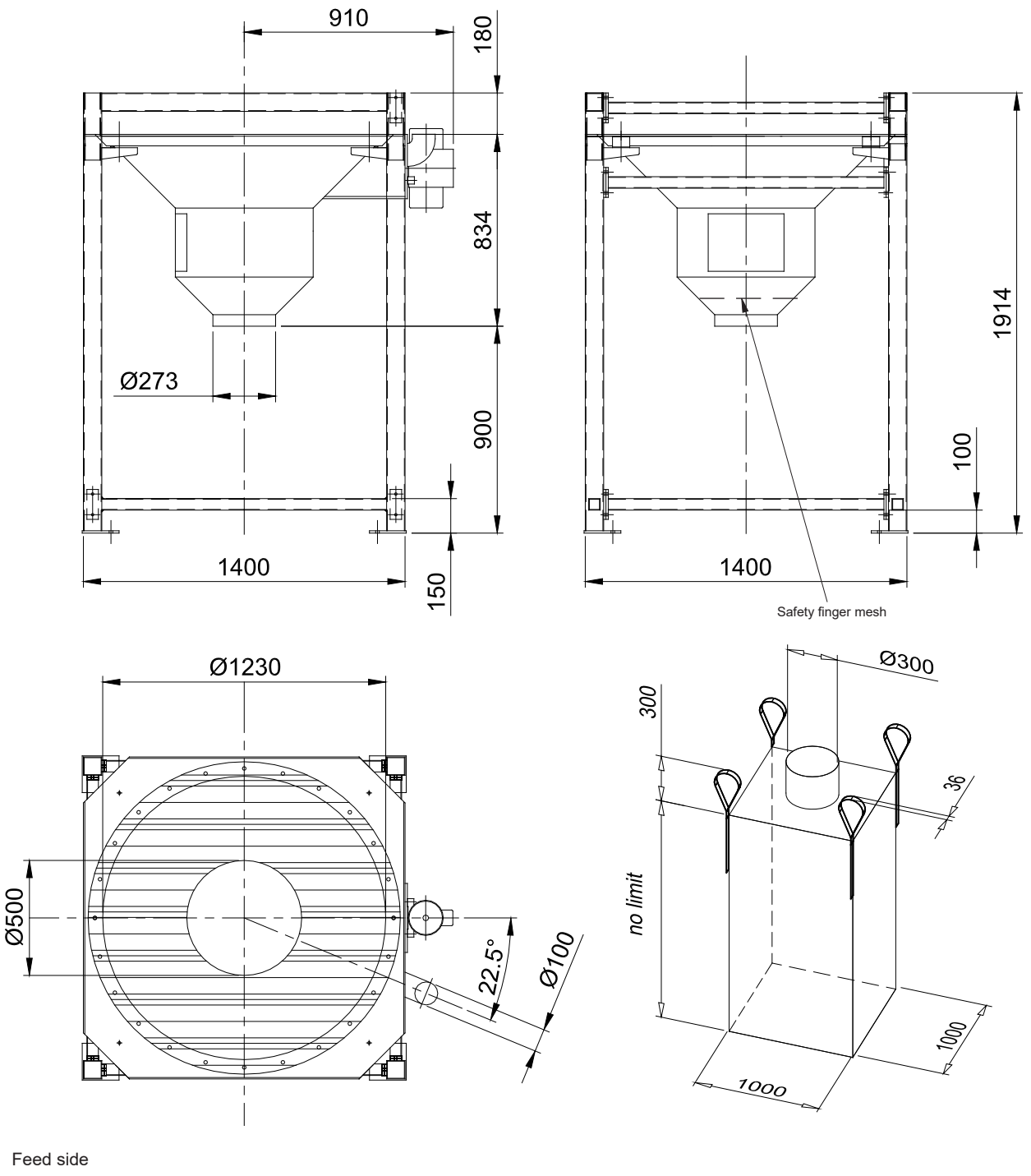
910
180
834
900
150
Ø273
1400
1914
100
1400
Safety finger mesh
Ø1230
Ø500
22.5°
Ø100
Ø300
300
36
no limit
1000
1000
Feed side

## SBB._.150.C

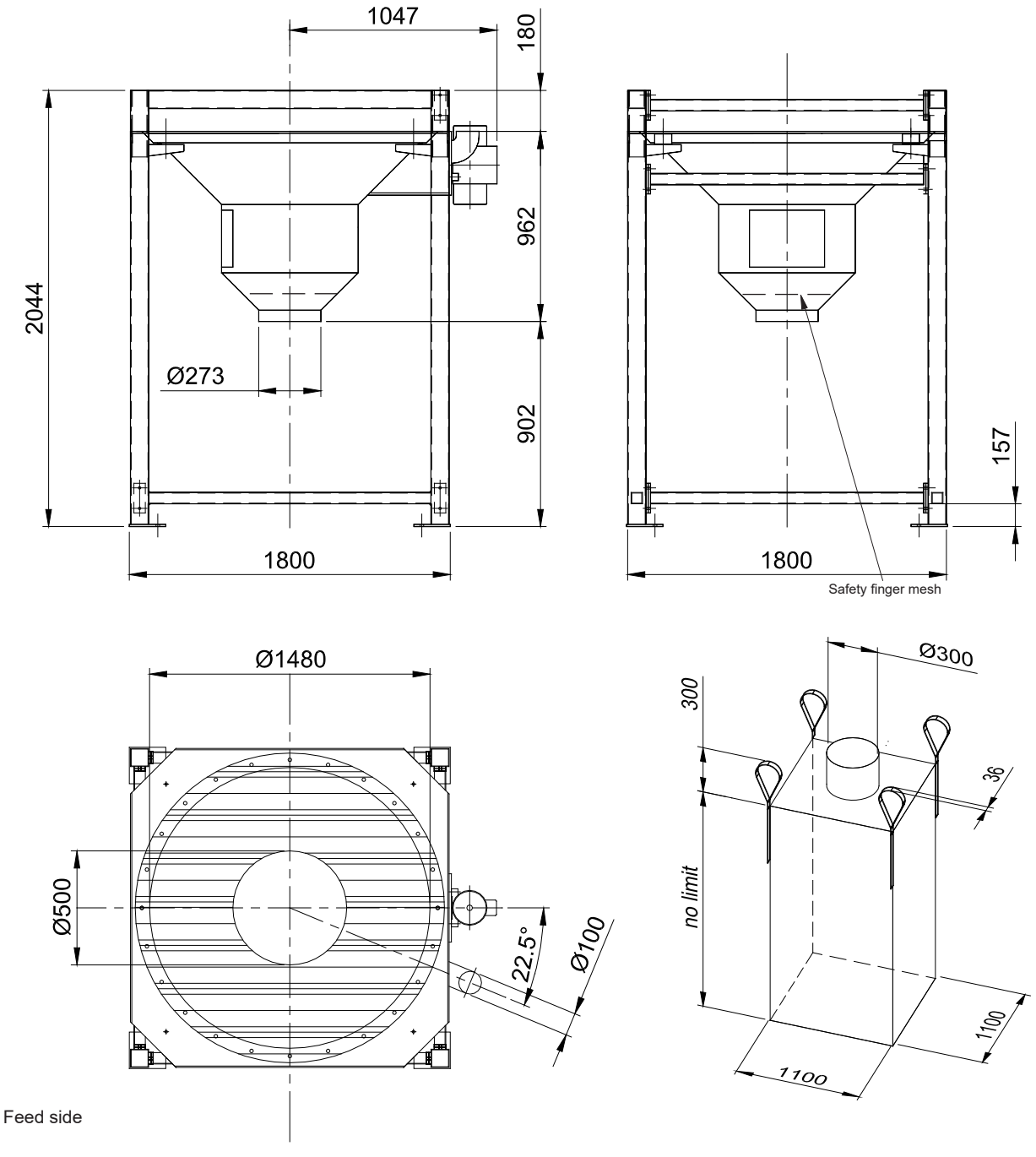
1047
180
962
902
2044
Ø273
1800
157
1800
Safety finger mesh
Ø1480
Ø500
22.5°
Ø100
Feed side
Ø300
300
36
no limit
1100
1100

## SBB._.125.S

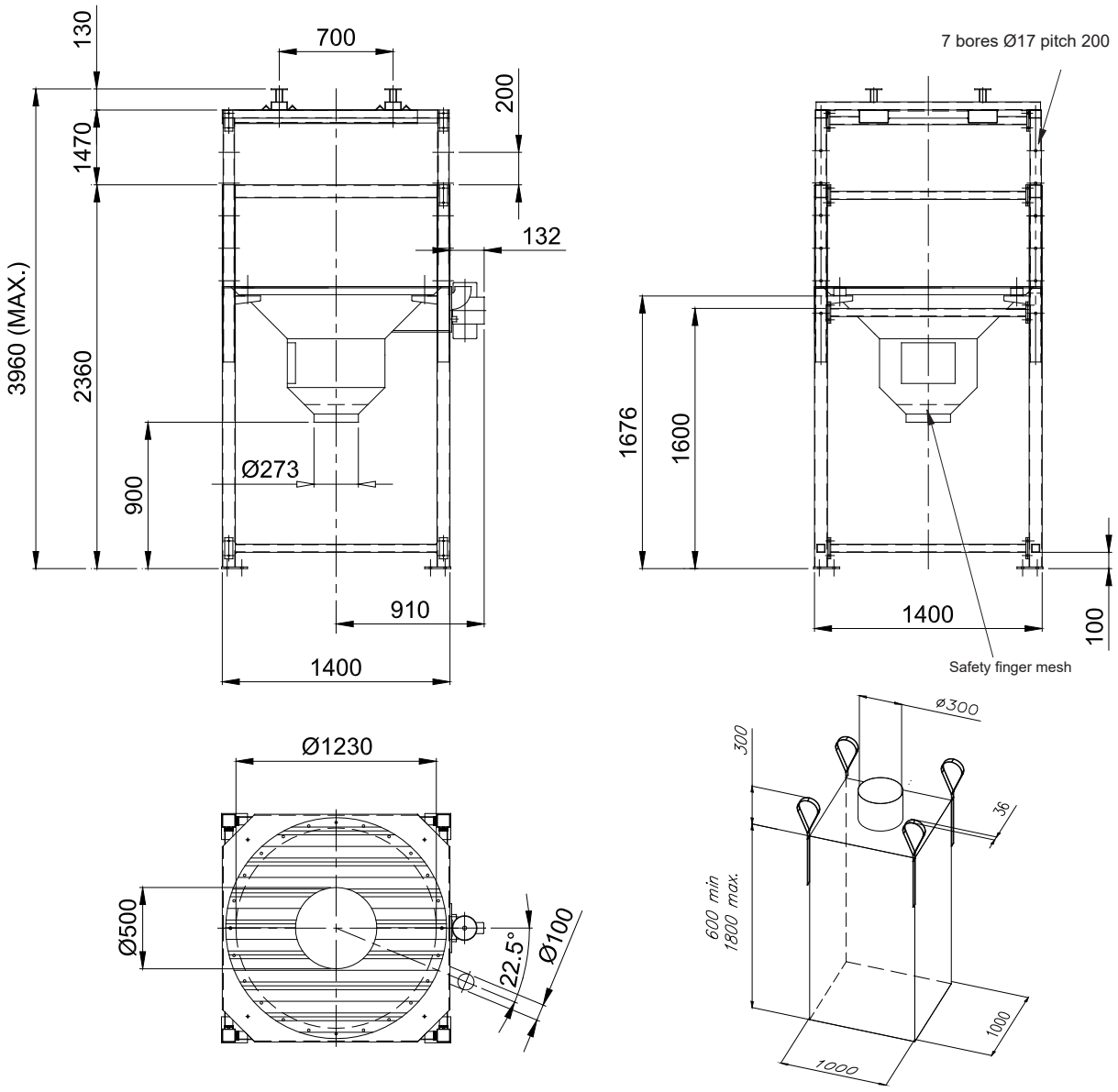


Feed side

**NOTE**: The heights given are theoretical.
They do not take into account deformation of filled **FIBC**s.

## SBB._.150.S

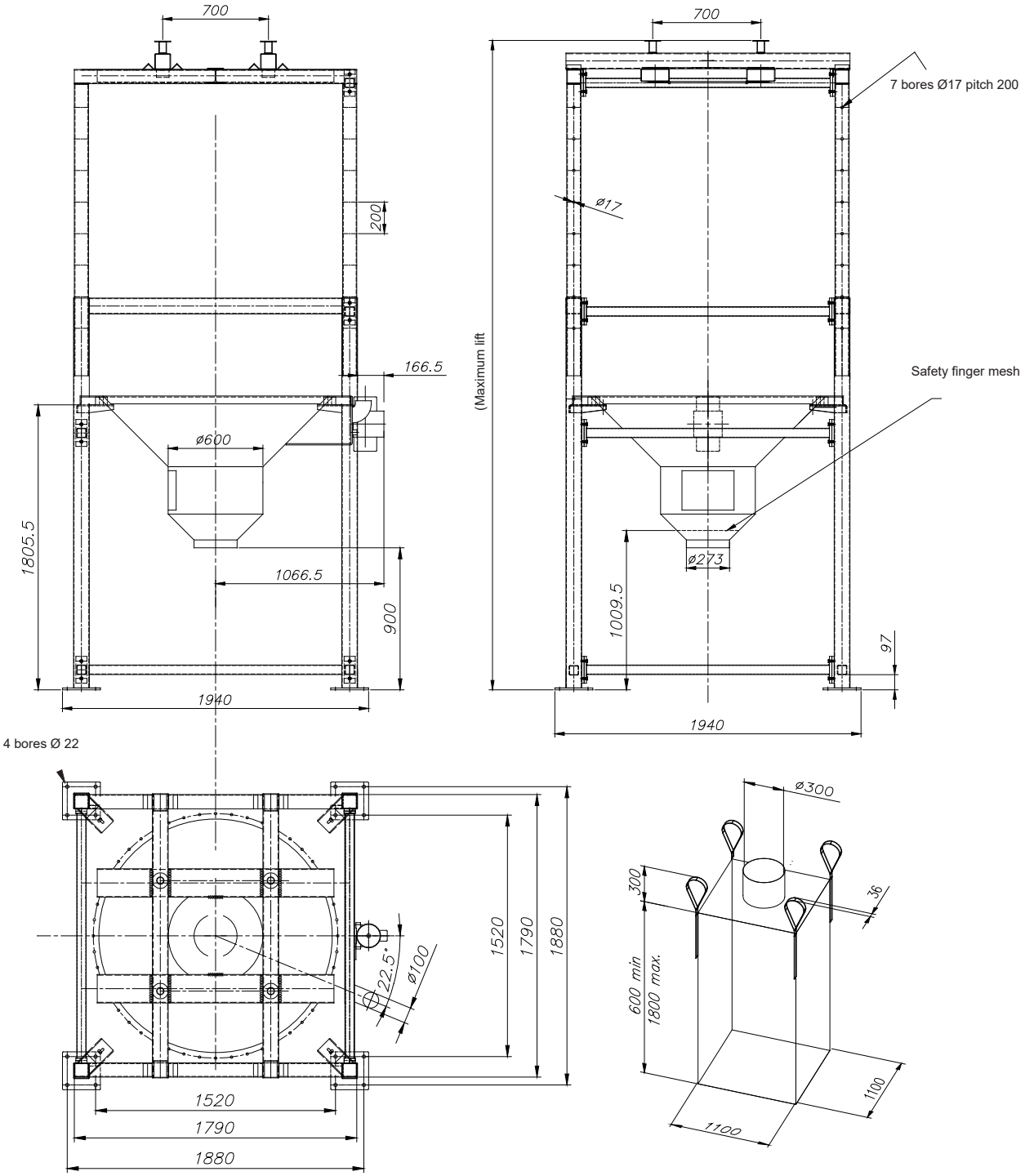


**NOTE**: The heights given are theoretical.
They do not take into account deformation of filled **FIBC**s.

## SBB._.125.M

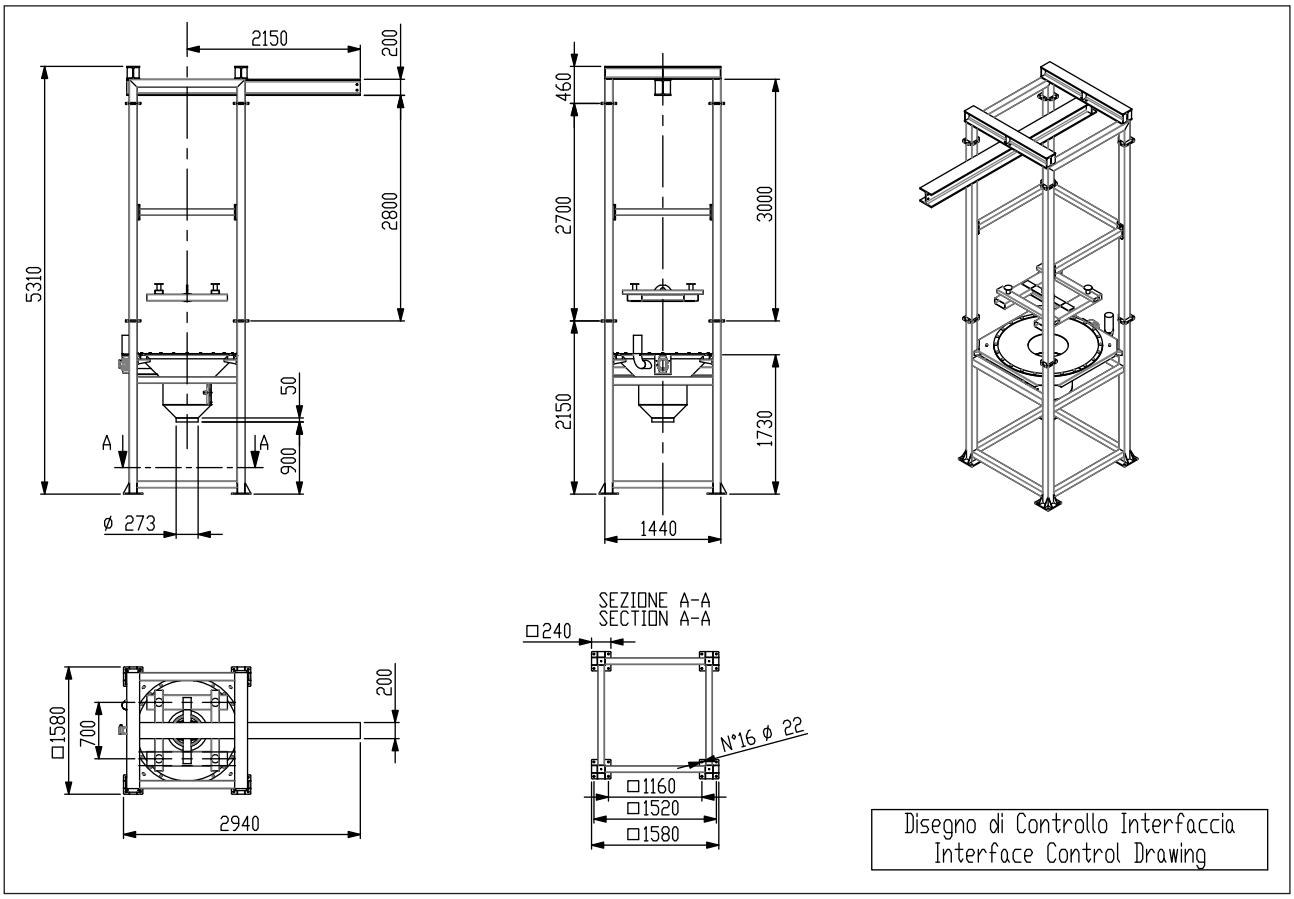
2150
200
2800
5310
50
900
A
A
ø 273
460
2700
3000
2150
1730
1440
SEZIONE A-A
SECTION A-A
□240
N°16 ø 22
□1160
□1520
□1580
200
□1580
700
2940
Disegno di Controllo Interfaccia
Interface Control Drawing

## SBB._.125.S

**MAX. CAPACITY 1600 daN ( CLASS A5 )**

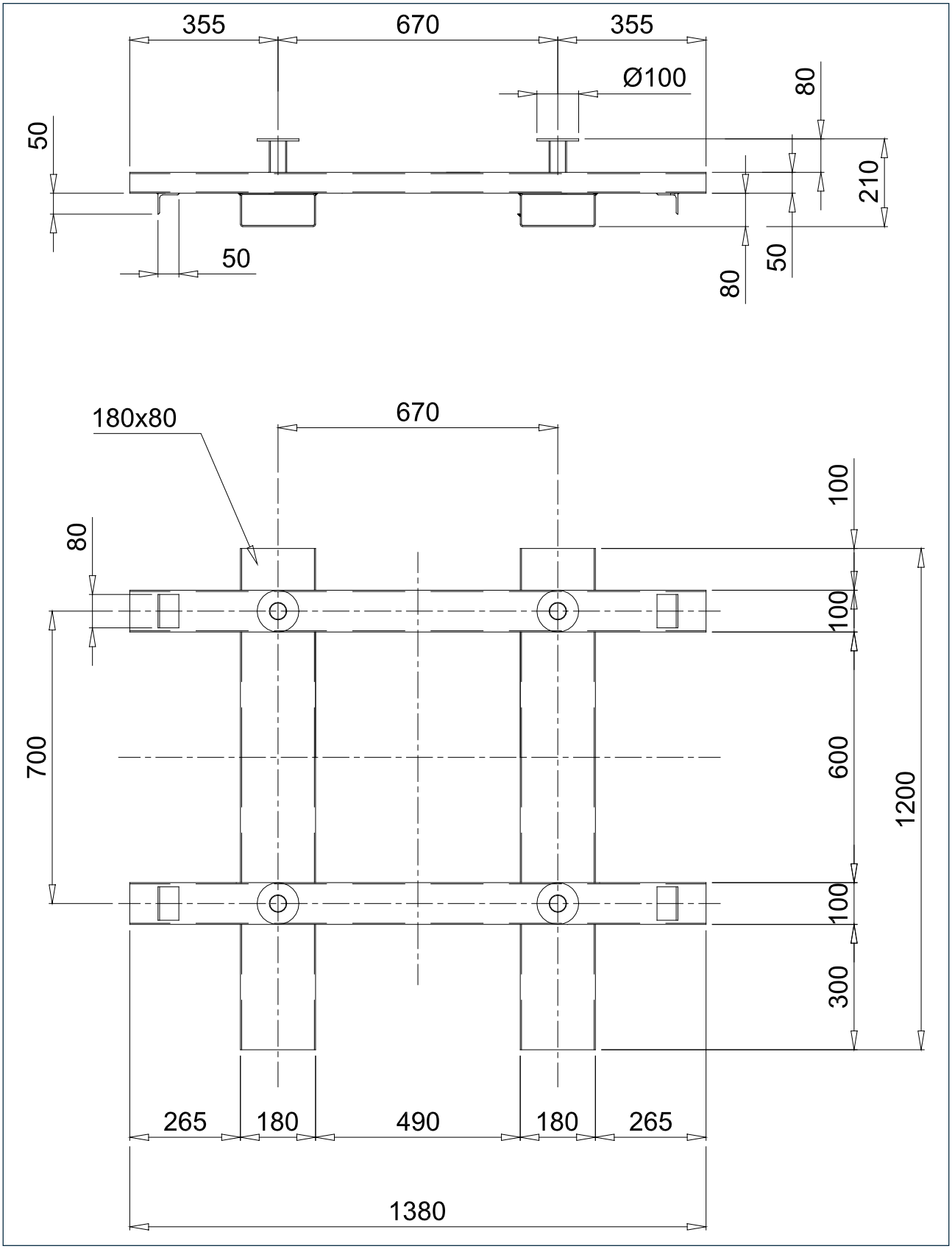

## SBB._.150.S

**MAX. CAPACITY 2500 daN ( CLASS A5 )**

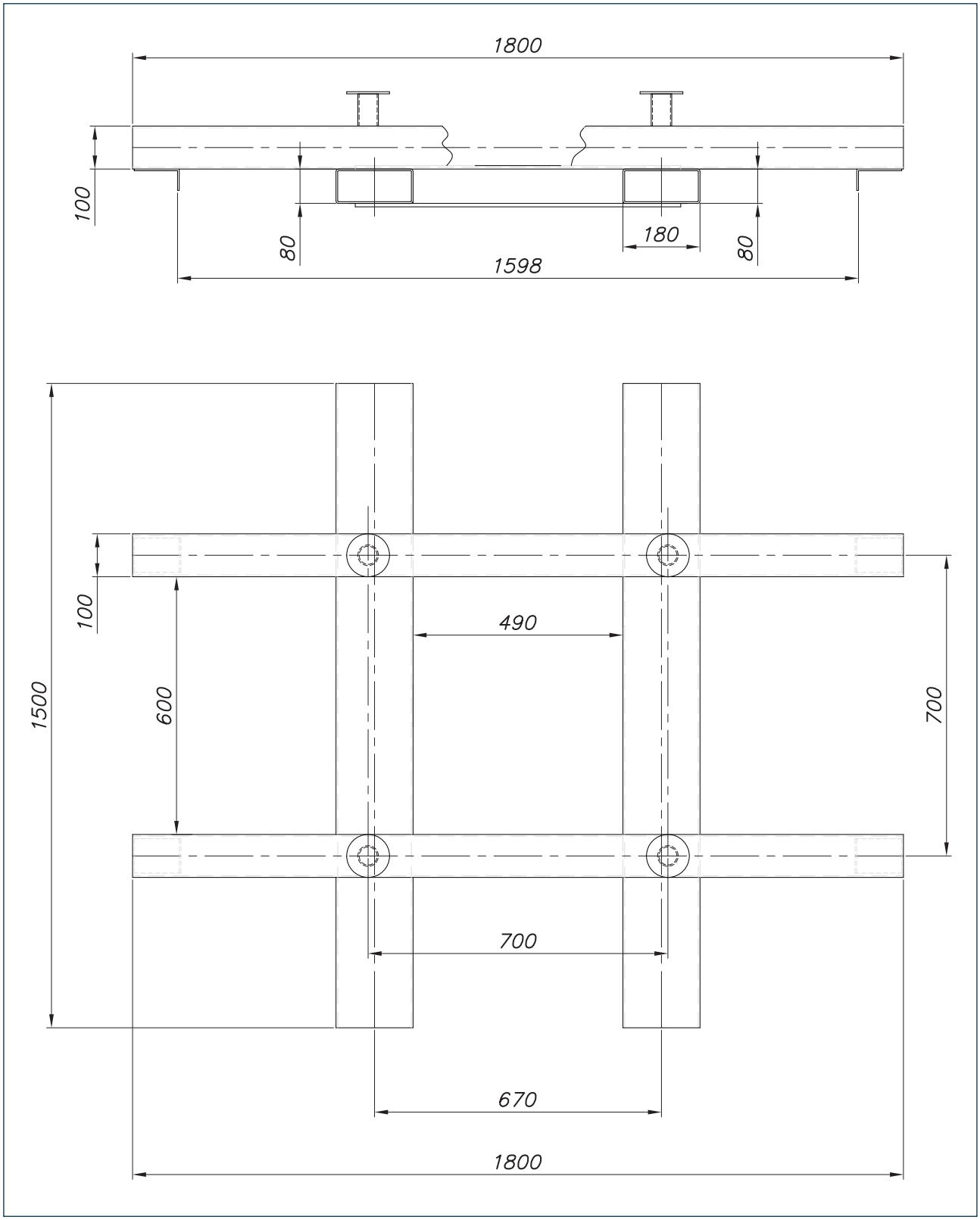

**SBB._.125.C** **SBB._.125.M** **SBB._.150.C**

**MAX. CAPACITY 2000 daN ( CLASS A5 )**

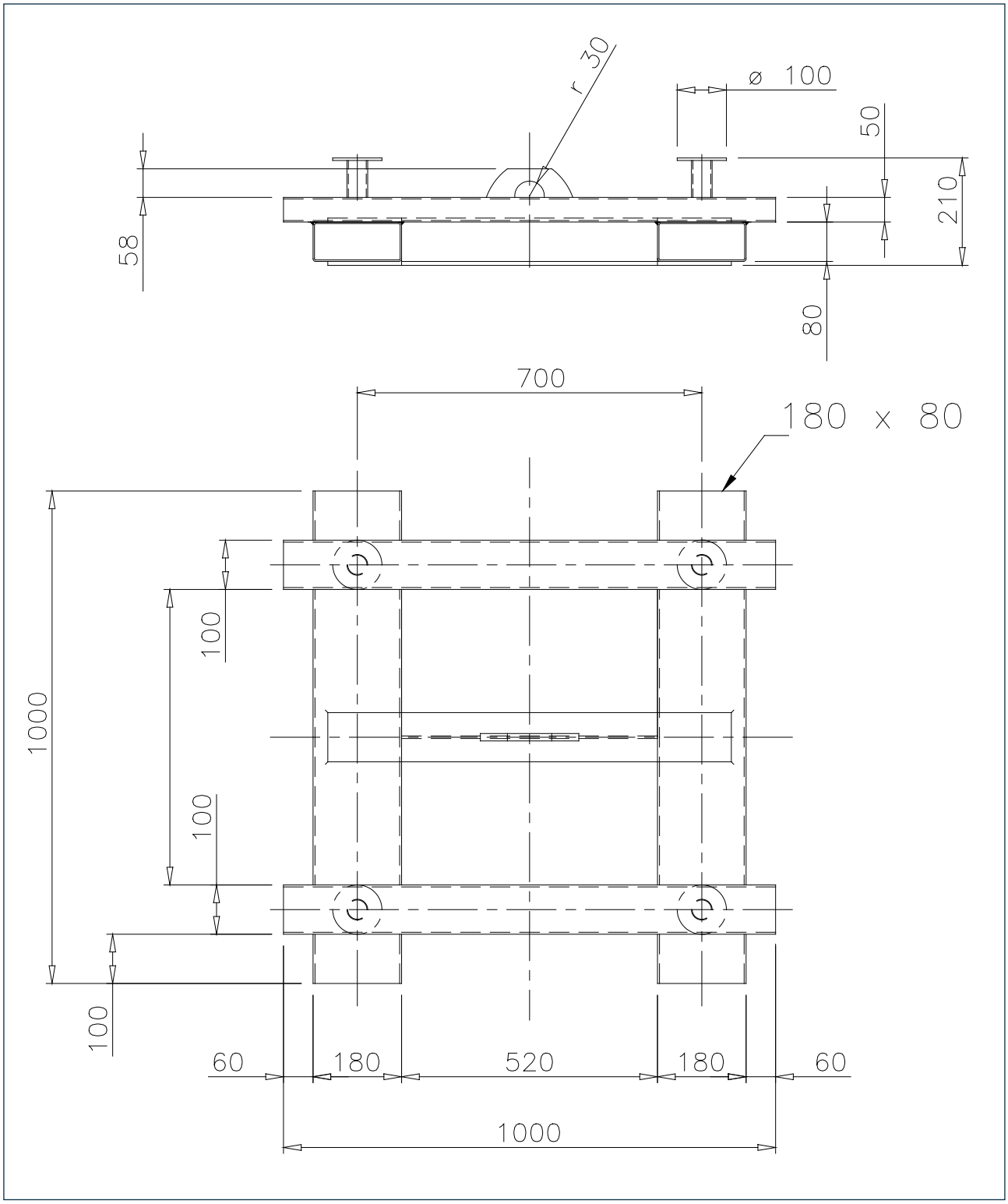

## SBB._.125.C SBB._.125.S

TOTAL DYNAMIC VERTICAL LOAD
**N max. = 2600 daN**

TOTAL TILTING TORQUE
**Mf max. = 358 daN · m**

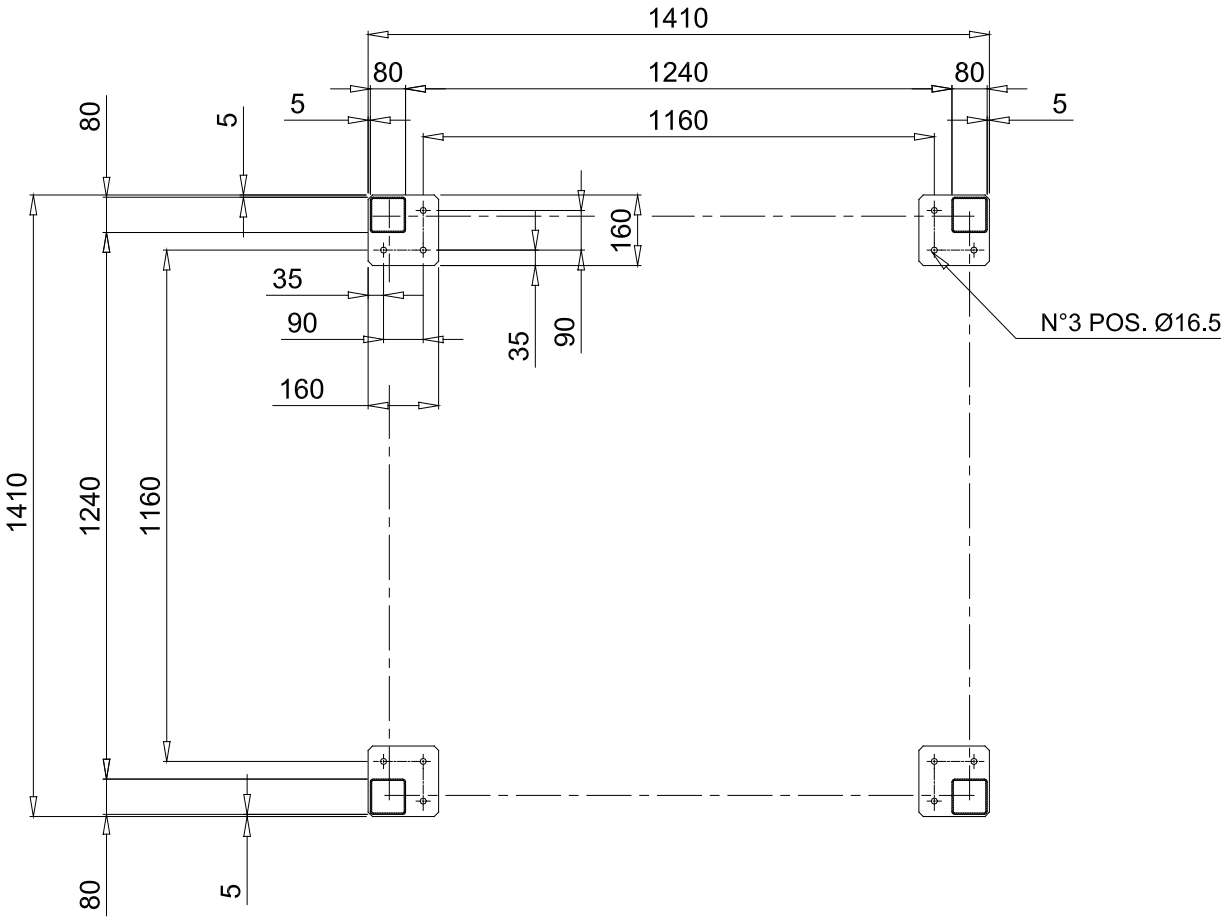


**MAX. CAPACITY 1600 daN (CLASS A5)**

**SBB._.150.C** **SBB._.150.S**

TOTAL DYNAMIC VERTICAL LOAD
**N max. = 4000 daN**

TOTAL TILTING TORQUE
**Mf max. = 1125 daN · m**

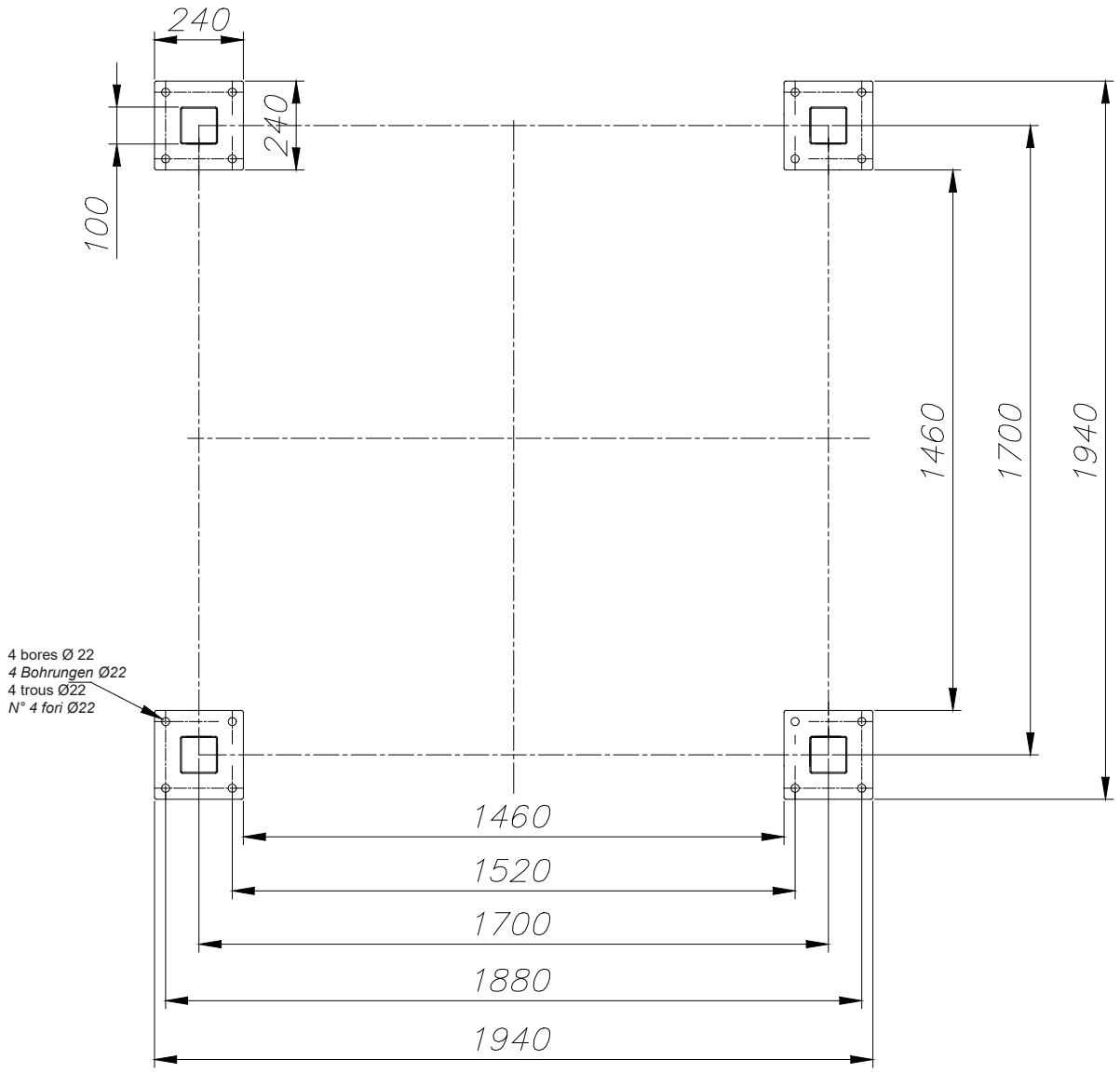


**MAX. CAPACITY 2500 daN (CLASS A5)**

## SBB._.125.M

TOTAL DYNAMIC VERTICAL LOAD
**N max. = 3400 daN**

TOTAL TILTING TORQUE
**Mf max. = 6150 daN · m**

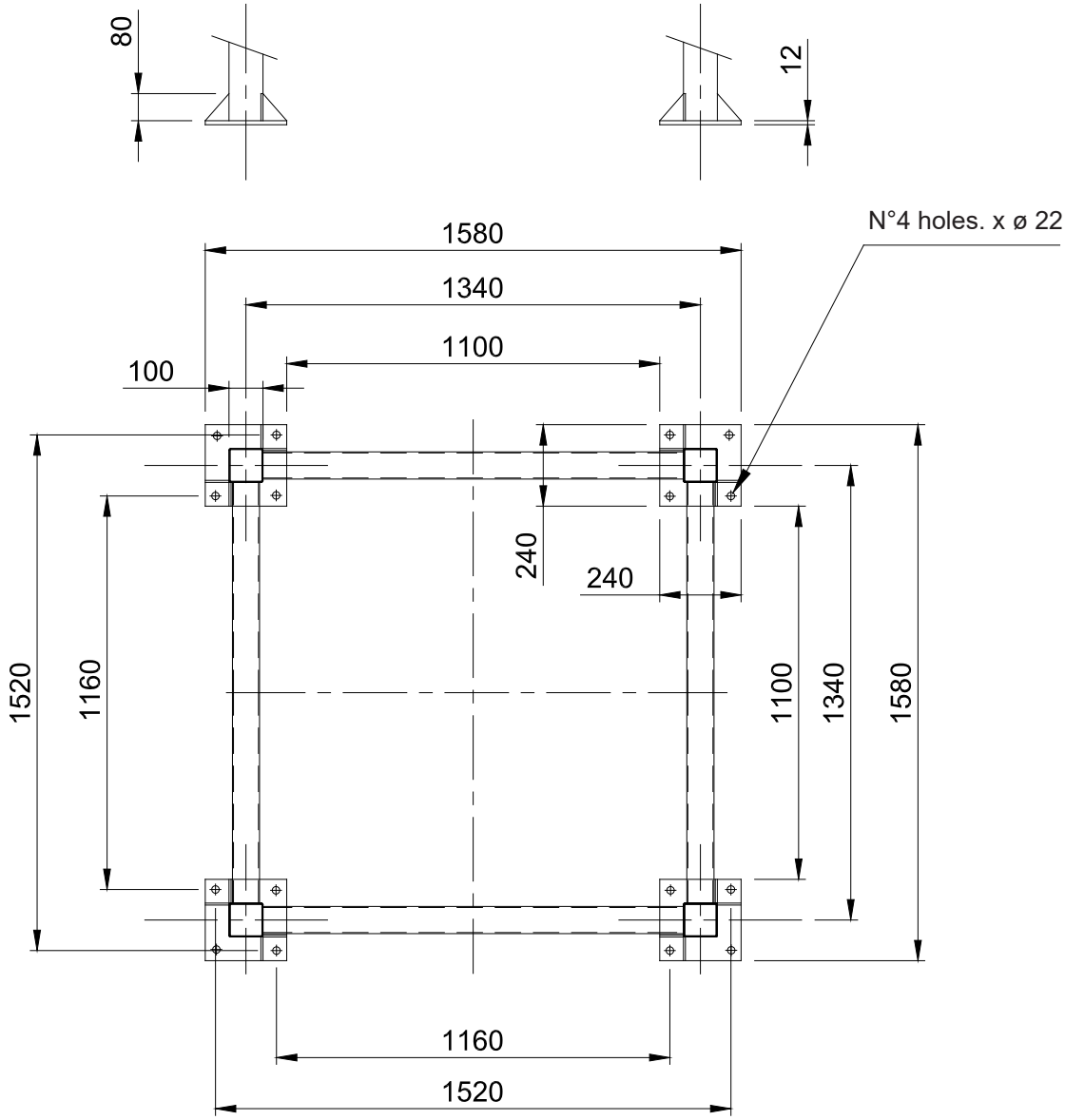


MAX. PULL FOR EACH ANCHORING BOLT: N1 = 1250 daN

**MAX. CAPACITY 2000 daN ( CLASS A5 )**

Refer to the chart below for all information necessary.

## FEATURES OF PRODUCT TO BE FEEDED

Name of products.....

Specific weight..... kg/dm³ or T/m³ **WAM®** Code.....

| PARTICLE SIZE | | | | | | | |
|---|---|---|---|---|---|---|---|
| micron | 0.1 - 0.5 | 0.5 - 1 | 1 - 5 | 5 - 10 | 10 - 50 | 50 - 100 | > 100 |
| % | | | | | | | |

Otherwise provide particle size graph

**Flowability**

highly flowable ☐ flowable ☐ slightly flowable ☐ Not flowable ☐

**Abrasivity**

slightly abrasive ☐ moderat. abrasive ☐ highly abrasive ☐

**Features of products**

| | | |
|---|---|---|
| generates static el. (G) ☐ | explosive (N) ☐ | highly corrosive (T) ☐ |
| alredy decomposes during storage (H) ☐ | hygroscopic (U) ☐ | has oils (W) ☐ |
| inflammable (J) ☐ | viscous (O) ☐ | compacted under pressure (X) ☐ |
| becomes plastic and soft (K) ☐ | contaminant (P) ☐ | very light and soft (Y) ☐ |
| very dusty (L) ☐ | degradable (Q) ☐ | high temperatures (Z) ☐ |
| becomes gas or fluid (M) ☐ | harmful on falling, produces gas, fumes (R) ☐ | |
| moderately corrosive (S) ☐ | becomes granular, twists, agglomerates (V) ☐ | |

**SSB SIZING**

**Flow rate required**.....$m^3/h$

**Construction:** Parts in contact: 304L SS ☐ 316L SS ☐

Completely made from: 304L SS ☐ 316L SS ☐

**FINISH**

☐ Fe **4.10.3I** (RAL 7001 ) ( std)

☐ 304L / 316L SS **AG0.G0** ( std)

☐ 304L / 316L SS **AQ0.G0** ( std) ☐ (on request)

**Internal finishing:**.....RAL:.....

**External finishing:**.....RAL:.....

**Electric vibrator finishing: WAM®** Std: **RAL 2004**

**ELECTRICAL FEATURES**

**Electric vibrator:** Supply voltage:.....V Phases:..... Frequency:.....Hz

**ACCESSORIES**

Flexible attachment kit:..... ☐

Round flange XKF 34._..... ☐

Square flange XKF 74._:..... ☐

Feet extensions..... ☐

Reduction section for outlet spout..... ☐

Manual gate valve:..... ☐

Door open mechanical limit stop:..... ☐

TOREX®

**TOREX® S.p.A.**
Via Canaletto, 139/A
41030 S. Prospero (MO) - ITALY

☎ ++39 / 059 / 8080811
**fax** ++39 / 059 / 908204
**e-mail** torex@torex.it
**internet** www.torex.it

WAMGROUP



# ILT

- **LEVEL INDICATOR**
  OPERATING AND MAINTENANCE
- ***FÜLLSTANDANZEIGER***
  BETRIEBS- UND WARTUNGSANLEITUNG
- **INDICATEURS DE NIVEAU**
  UTILISATION ET ENTRETIEN
- ***INDICATORE DI LIVELLO***
  USO E MANUTENZIONE

**Manual No. TOR.ILT.--.C.A7.0917.4L Issue: A7**
**Latest Update: September 2017**

**ORIGINAL INSTRUCTIONS IN ENGLISH**

*All rights reserved © WAMGROUP S.p.A.*

TOREX®

**ILT** - INDEX
- INHALTSVERZEICHNIS
- INDEX
- INDICE

**TOR.ILT.--.C.A7.0917.4L 2**


| | |
|---|---|
| INTRODUCTION, RULES AND GENERAL PROHIBITIONS | 3 - 5 |
| LIMITS OF USE | 6 |
| INTRODUCTION, RULES AND GENERAL PROHIBITIONS | 7 - 9 |
| GENERAL DIAGRAM | 10 |
| ORDER CODES | 11 |
| OTHER VERSIONS OF THE ILT AND ACCESSORIES | 12 - 13 |
| SAFETY NOCITES | 14 |
| CONNECTIONS | 15 - 16 |
| OPTIONS | 17 |
| VERSION FOR HIGH PROCESS TEMPERATURES | 18 |
| COMMISIONING - TESTING | 19 - 20 |
| MAINTENANCE | 21 |
| DEMOLITION | 22 |
| DECLARATION OF CONFORMITY | 23 - 26 |

| | |
|---|---|
| EINFÜHRUNG, ALLGEMEINE VORSCHRIFTEN GERÄTEBESCHREIBUNG | 3 - 5 |
| EINSATZGRENZEN | 6 |
| EINFÜHRUNG, ALLGEMEINE VORSCHRIFTEN GERÄTEBESCHREIBUNG | 7 - 9 |
| ALLGEMEINES SCHEMA | 10 |
| BESTELLCODES | 11 |
| ANDERE ILT-VERSIONEN UND ZUBEHÖR | 12 - 13 |
| SICHERHEITSHINWEISE | 14 |
| ANSCHLÜSSE | 15 - 16 |
| VARIANTEN | 17 |
| VERSION FÜR HOHE PROZESSTEMPERATUREN | 18 |
| ABNAHME UND INBETRIEBNAHME | 19 - 20 |
| WARTUNG | 21 |
| DEMONTAGE | 22 |
| KONFORMITÄTSERKLÄRUNG | 23 - 26 |

| | |
|---|---|
| INTRODUCTION, PRESCRIPTIONS ET CONSIGNES GENERALES | 3 - 5 |
| LIMITES D'UTILISATION | 6 |
| INTRODUCTION, PRESCRIPTIONS ET CONSIGNES GENERALES | 7 - 9 |
| SCHEMA GENERAL | 10 |
| CODES DE SELECTION | 11 |
| AUTRE VERSIONNES ILT ET ACCESSOIRES | 12 - 13 |
| INDICATIONS DE SÉCURITÉ | 14 |
| RACCORDEMENTS | 15 - 16 |
| OPTIONS | 17 |
| VERSION POUR PROCESSUS HAUTE TEMPÉRATURE | 18 |
| MISE EN SERVICE ET ESSAI DE RECEPTION | 19 - 20 |
| ENTRETIEN | 21 |
| DEMANTELEMENT | 22 |
| DÉCLARATION DE CONFORMITÉ | 23 - 26 |

| | |
|---|---|
| INTRODUZIONE, PRESCRIZIONI E DIVIETI GENERALI | 3 - 5 |
| LIMITI DI IMPIEGO | 6 |
| INTRODUZIONE, PRESCRIZIONI E DIVIETI GENERALI | 7 - 9 |
| SCHEMA GENERALE | 10 |
| CODICI DI SCELTA | 11 |
| ALTRE VERSIONI DELL'ILT ED ACCESSORI | 12 - 13 |
| ISTRUZIONI DI SICUREZZA | 14 |
| CONNESSIONI | 15 - 16 |
| OPZIONI | 17 |
| VERSIONE PER TEMPERATURE DI PROCESSO ALTE | 18 |
| MESSA IN SERVIZIO E COLLAUDO | 19 - 20 |
| MANUTENZIONE | 21 |
| DEMOLIZIONE | 22 |
| DICHIARAZIONE DI CONFORMITÀ | 23 - 26 |

This "OPERATING AND MAINTENANCE MANUAL" is an essential and integral part of the machine and must be readily available to operating and servicing personnel.

The owner, operator and maintenance Manager must be familiar with the contents of this Manual.

The description and illustrations used in thus Manual are not binding on Manufacturer.

While the basic characteristics of the machine remain unchanged as described, Manufacturer reserves the right to make any modifications to assemblies, parts and accessories it deems necessary for product improvement on for fabrication or marketing needs and this without prior notice and without being obliged to update this Manual at the time of modifications.

Die "BETRIEBS- UND WARTUNGSANLEITUNG" gehört zur Maschine und muß an einem Ort aufbewahrt werden, der dem Bedienungs- und Wartungspersonal gut zugänglich ist.

Betreiber, Bediener und Wartungspersonal sind verpflichtet, den Inhalt dieses Handbuchs zu kennen.

Unter Beibehaltung der wesentlichen Merkmale der beschriebenen Maschinen behält sich der Hersteller vor, jederzeit an Geräteteilen und/oder am Zubehör Änderungen im Sinne der Produktverbesserung oder aus technisch oder kaufmännisch notwendigen Gründen vorzunehmen.

La présente notice "UTILISATION ET ENTRETIEN" fait partie intégrante de la machine et elle doit être mise à la disposition du personnel préposé à la conduite et à la maintenance de la machine.
L'utilisateur, le conducteur et le technicien de maintenance ont l'obligation de connaître le contenu de cette notice d'instructions.
Les descriptions et les illustrations contenues dans la présente publication sont données sans engagement de la part du constructeur.

Bien que les caractéristiques principales des machines décrites dans les présentes demeurent inchangées, le constructeur se réserve le droit d'apporter, à tout moment et sans obligation, des modifications eventuelles d'organes, pièces et accessoires retenus nécessaires pour l'amélioration du produit ou pour des exigences de fabrication ainsi que commerciales ; et de mettre immédiatement à jour la présente publication.

Il presente libretto " USO E MANUTENZIONE" costituisce parte integrante della macchina e deve essere, facilmente reperibile dal personale addetto alla conduzione ed alla manutenzione.

L'utente, il conduttore e l'addetto alla manutenzione hanno l'obbligo di conoscere il contenuto dei presente libretto.

Le descrizioni e le illustrazioni contenuti nella presente pubblicazione si intendono non impegnative,

Ferme restando le caratteristiche essenziali delle macchine descritte, la ditta costruttrice si riserva il diritto di apportare, le eventuali modifiche di organi, dettagli e, accessori, che riterrà convenienti per il miglioramento del prodotto o per esigenze di carattere costruttivo o commerciale, in qualunque momento e senza impegnarsi ad aggiornare tempestivamente questa pubblicazione.

## GENERAL PROHIBITIONS AND REGULATIONS

- This machine must not be used even partially by unauthorised personnel.
- The shop foreman or Department Manager is responsible for Machine operator training and for checking training level achieved.
- The machine must not be used for purposes other than those is was designed for.
- Read carefully the warning notices attached to the machine.
- Do not remove the warning notices attached to the machine,
- When the machine is running, do not service, repair, regulate the machine or carry out any other operation not strictly required by the work cycle. ,Before any of the above listed operations, always disconnect the machine for all electric power supply sources.
- DO not remove the guards and the safety devices on the machine,
- DO not start to work with protections opened or do not open them during the work,
- Always wear safety gloves when working on the machine.
- At the end of the work shift, disconnect the machine from the electric supply.
- Any repair, service or maintenance work, whether electrical or otherwise, must be in compliance with CEI standards in force.

## ALLGEMEINE VORSCHRIFTEN

- Jegliche auch teilweise Bedienung der Maschine durch hierzu nicht ausdrücklich autorisiertes Personal ist untersagt.
- Der Betriebsleiter ist dafür verantwortlich, daß das zur Bedienung autorisierte Personal in der Bedienung der Maschine geschult wird.
- Die Maschine darf zu keinem anderen Zweck als zu dem in diesem Handbuch beschriebenen verwendet werden.
- Die Gefahren- und Hinweisschilder an der Maschine müssen beachtet werden.
- Es ist verboten, die Gefahren- und Hinweisschilder an der Maschine zu entfernen.
- Wartungs-, Reparatur-, und/oder vom Hersteller autorisierte Änderungsarbeiten dürfen nicht bei laufender Maschine durchgeführt werden. Vor der Durchführung solcher Arbeiten muß zuerst die Stromversorgung zur Maschine unterbrochen werden.
- Es ist verboten, die an der Maschine angebrachten Schutz- und Sicherheitseinrichtungen zu entfernen.
- Schulzeinrichtungen an der Maschine dürfen bei Kontroll-, Wartungs-, Reparatur- und/oder Anderungsarbeiten weder fehlen noch während dieser Arbeiten entfernt werden.
- Zum Ende der Arbeitsschicht die Stromversorgung der Maschine abschalten.
- Für alle elektrischen und nicht elektrischen Wartungsarbeiten die Vorschriften der geltenden Normen beachten.

## PRESCRIPTIONS ET CONSIGNES GENERALES

- L'utilisation, même partielle, de l'équipement de la part du personnel non autorisé est expressément interdit.
- Le chef d'usine et les chefs d'atelier ont l'obligation d'instruire et de contrôler le personnel préposé à l'utilisation de l'équipement.
- L'utilisation de l'équipement pour des usages différents de ceux pour lesquels ils ont été prévus, sont interdits.
- Lire attentivement les plaques signalétiques et de danger apposées sur l'équipement.
- Il est interdit d'enlever de l'équipement les plaques de signalisation et de danger.
- Il est interdit d'effectuer la maintenance, de réparer, de modifier ou de faire tout ce qui n'est pas strictement nécessaire au cycle de travail quand la machine est en marche.
- Il est interdit de démonter les protections et les sécurités présentes sur la machine.
- Il est interdit de commencer le travail avec les protections ouvertes ou de les ouvrir pendant le travail. Le port des gants de protection est obligatoire pour travailler sur la machine.
- A la fin des périodes de travail débrancher toujours la machine des alimentations électriques.
- Toute maintenance électrique et autres doivent être conformes aux normes en vigueur.

## PRESCRIZIONI E DIVIETI GENERALI

- E' vietato l'uso, anche parziale, dell'attrezzatura da parte del personale non espressamente autorizzato. L'istruzione del personale preposto all'uso è da realizzare e verificare a cura dei capo officina e dei capi reparto.
- E' vietato l'uso dell'attrezzatura per modalità diverse da quelle per cui è stata prevista.
- Leggere con attenzione le targhe di avvertenza e pericolo poste sulla macchina.
- E' vietato rimuovere le targhe di avvertenza e pericolo sulla macchina.
- E' vietato manutenzionare, eseguire riparazioni, modifiche e quanto non strettamente necessario al ciclo di lavoro con la macchina in movimento. Prima di tutto è obbligatorio disinnestare tutte le alimentazioni elettriche alla macchina.
- E' vietato rimuovere le protezioni e le sicurezze presenti sulla macchina.
- E' vietato iniziare il lavoro con le protezioni aperte o aprirle durante il lavoro.
- Operare sulla macchina solo con i guanti di protezione.
- Al termine dei periodi di lavoro scollegare sempre la macchina dalle alimentazioni elettriche.
- Qualsiasi manutenzione elettrica e non elettrica deve attenersi alle norme vigenti.

TOREX®

# ILT
- INTRODUCTION, RULES AND GENERAL PROHIBITIONS
- EINFÜHRUNG, ALLGEMEINE VORSCHRIFTEN GERÄTEBESCHREIBUNG
- INTRODUCTION, PRESCRIPTIONS ET CONSIGNES GENERALES
- INTRODUZIONE, PRESCRIZIONI E DIVIETI GENERALI

**TOR.ILT.--.C.A7.0917.4L 5**

**DESCRIPTION**
**Bin Level Indicator for point level limit detection in bulk materials**

**FUNCTION**
The device is used for level monitoring in all types of containers and silos.
It can be used with all powdery and granular bulk materials that do not show a strong propensity to form crusts or deposits.
When the material level reaches the measuring paddle the rotation is blocked.
The resulting reaction torque activates a limit switch output signal that stops the motor.
As soon as the material level sinks below the paddle radius, the switch returns to the OFF position and the motor is switched on.

**IMPROPER USE**
ILT level indicators are not designed to work in dangerous conditions or with dangerous materials. If the machine has to operate in these conditions, the manufacturer must be informed.

Dangerous materials:
- explosives,
- toxic,
- flammable,
- harmful and similar.

**BESCHREIBUNG**
**Füllstandmelder für Behälter zur punktuellen Füllstandbestimmung bei Schüttgütern**

**FUNKTION**
Das Gerät wird verwendet zur Füllstandüberwachung in Behältern und Silos aller Art.
Es ist einsetzbar für alle pulverförmigen Schüttgüter und Granulate, die nicht zu starker Ansatzbildung neigen.
Erreicht der Füllstand des Schüttgutes das Messpaddel, wird dessen Rotationsbewegung unterbrochen. Das entstehende Drehmoment aktiviert ein Ausgangssignal am Begrenzungsschalter, welches den Motor stoppt.
Sinkt der Füllstand unterhalb des Radius des Paddels, der Schalter kehrt in die AUS-Position zurück und der Motor ist eingeschaltet.

**UNZULÄSSIGE VERWENDUNGSZWECKE**
Die Füllstandanzeiger der Modellreihe ILT sind weder für gefährliche Anwendungen noch zum Handling von gefährlichen Medien geeignet. Sollte der Betreiber eine ILT - Füllstandanzeiger für gefährliche Medien bzw. Anwendungen einsetzen wollen, so muß er unbedingt vorher den Hersteller um Erlaubnis fragen.

Als gefährliche Medien gelten:
- explosive,
- giftige,
- feuergefährliche,
- in irgendeiner Weise schädliche.

**DESCRIPTION**
**Indicateur de niveau pour le contrôle du niveau des matériaux en vrac**

**FONCTION**
L'appareil sert à surveiller le niveau de remplissage dans les réservoirs et silos de types les plus divers.
Il peut être utilisé pour tous produits pulvérulents et granulés n'ayant pas tendance à former de dépôts importants.
Lorsque le niveau du matériau atteint la palette de mesure, la rotation est bloquée.
Le couple de réaction résultant active un signal de sortie de l'interrupteur de fin de course, qui arrête le moteur.
Dès que le niveau du matériau descend en dessous du rayon d'action de la palette, l'interrupteur revient à la position OFF (ARRÊT) et le moteur est remis en marche.

**CONTRE-INDICATION**
Les indicateurs de niveau standards de la classe ILT N'ONT pas été projetés pour travailler dans des conditions ou avec des produits dangereux; par conséquent si la, machine ne répond pas à ces exigences, le constructeur doit obligatoirement en être informé

Les produits suivants sont considérés comme dangereux, si ceux-si sont:
- explosifs,
- toxiques,
- inflammables,
- nocifs et/ou similaires.

**DESCRIZIONE:**
**Indicatore di livello a pala rotativa per il controllo di livello di materiale sfuso**

**FUNZIONE D'USO**
Il dispositivo è utilizzato per il monitoraggio del livello all'interno di container e sili di qualsiasi tipo.
Può essere utilizzato in presenza di polveri e granulati con scarsa tendenza alla formazione di incrostazioni o depositi.
Quando il livello del materiale raggiunge la paletta sensore, la rotazione si blocca.
La coppia risultante attiva un finecorsa che invia un segnale per fermare il motore.
Appena il livello del materiale scende al di sotto del raggio di azione della paletta, il finecorsa si disattiva e fa ripartire il motore.

**CONTROINDICAZIONI**
Gli indicatori di livello standard della ILT NON sono stati progettati per operare in condizioni o con materiali pericolosi pertanto quando la macchina deve assolvere a queste esigenze è d'obbligo informare il costruttore.

Si ritengono materiali pericolosi:
- esplosivi,
- tossici,
- infiammabili,
- nocivi e/o simili.

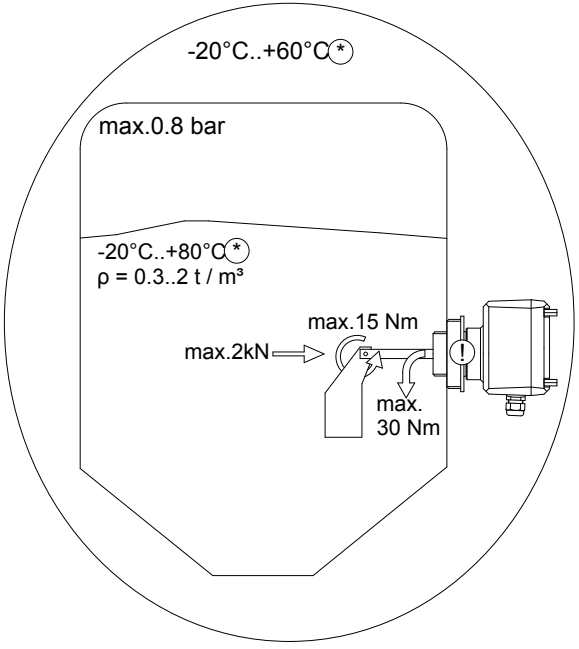


!

Maximum value of impact energy on connecting bush.

*Max. Schlagenenergie auf die Verbindungsbuchse.*

Valeur maximum de l'énergie d'impact sur la bague de connexion.

*Massimo valore dell'energia di impatto sulla boccola di connessione.*

1J

*

Different process and ambient temperatures available as an option.

*Verschiedene Prozess- und Umgebungstemperaturen als Option verfügbar.*

Différentes températures environnementales et de processus disponibles en option.

*Diverse temperatura ambiente e di processo disponibili come opzione.*

**Restrictions**

The bushing is suitable for withstanding sunlight and atmospheric agents. The mechanical features of the material are not guaranteed in case of acidic or basic environments.
These environmental conditions must be checked for each application.
The breaking load of the plastic material gets reduced over a period of time with the following proportions:
- approx. 50% in two years
- approx. 60% in five years

**Einschränkungen**

Die Buchse ist sonnenlicht- und witterungsbeständig. Die mechanischen Werkstoffeigenschaften werden bei saurer und Basischer umgebung nicht gewährleistet.
Die Umgebungsbedingungen müssen für jede Anwendung gesondert geprüft werden.
Die Bruchlast des Kunststoffs verringert sich im Laufe der Zeit im folgenden Verhält-nis:
- ca 50% in zwei Jahren
- ca 60% in fünf Jahren

**Restrictions**

La bague est adaptée pour résister à la lumière solaire et aux agents atmosphériques. Les caractéristiques mécaniques du matériau ne sont pas garanties en milieu acide et basique.
Ces conditions ambiantes doivent être vérifiées pour chaque application.
La charge de rupture de la matière plastique diminue dans le temps dans les proportions suivantes :
- 50% au bout de deux ans
- 60% au bout de cinq ans

**Restrizioni**

La boccola è adatta per resistere alla luce solare ed agenti atmosferici. Non sono garantite le caratteristiche meccaniche del materiale in caso di ambienti acidi e basici.
Tali condizioni ambientali devono essere verificate per ogni applicazione.
Il carico di rottura del materiale plastico si riduce nell'arco del tempo con le seguenti proporzioni:
- circa 50% in due anni
- circa 60% in cinque anni

| MECHANICAL DATA | |
|---|---|
| Enclosure | IP 65 |
| Process connection | Thread G1 1/4", G1 1/2", G2 1/2" |
| Material process-connection | Plastic and aluminium |
| Material vane shaft and measuring | Stainless steel |
| Paddle shaft clutch | Protection of the gearing from impacts on the measuring vane |
| Pickup delay | Approx. 1.3 sec. |
| Sensitivity | Adjustable via reset force of spring in three positions |
| Paddle speed | 1 rpm |

| ELECTRICAL DATA | |
|---|---|
| Supply voltage (!)* | AC: 24V / 48V / 115V / 230V 50/60Hz<br>DC: 12V / 24V (all voltage +/- 10%) |
| Power | 3W |
| Connection terminal | 1 x max. 1.5 mm2 |
| Signal output | Floating microswich max.250V (AC/DC), 2A. |
| Protection class | I |
| Over voltage category | II |

* Power supply voltage must never come directly from the mains but always obtained by a secondary transformation winding.

| MECHANISCHE DATEN | |
|---|---|
| Gehause | IP 65 |
| Prozessanschluss | Gewinde G1 1/4", G1 1/2", G2 1/2" |
| Material des Anschlussgewindes | Kunststoff und Aluminium |
| Material von Welle und Flugel | Rostfreier Stahl |
| Paddelklaue | Schutz der Messwelle vor Stoften auf das Messpaddel |
| Signalverzogerung | c.a 1.3 sec. |
| Empfindlichkeit | Einstellbar durch Ruckholfeder mit drei Stellungen |
| Umdrehungszahl Paddel | 1 Umdrehung/min. |

| ELEKTRISCHE DATEN | |
|---|---|
| Versorgungs-spannung (!)* | AC: 24V / 48V / 115V / 230V 50/60Hz<br>DC: 12V / 24V (alle Spannungen +/- 10%) |
| Leistung | 3W |
| Anschluftklemmen | 1 x max. 1.5 mm2 |
| Ausgangssignal | Potentialfreier mikroschalter max. 250V (AC/DC) 2A |
| Schutzart | I |
| Uberspannung Kategorie | II |

* Die Versorgungsspannung darf nie direkt aus der Netzleitung kommen, sondern muss immer über eine Trafospule geleitet werden.

| CARACTERISTIQUES MECANIQUES | |
|---|---|
| Enveloppe | IP 65 |
| Raccordement processus | Filetage G1 1/4", G1 1/2", G2 1/2" |
| Matiere du filetage de raccord | Plastique et aluminium |
| Matiere de l'arbre et de la palette | Acier inoxydable |
| Embrayage de l'arbre de la palette | Protection de l'engrenage contre les impacts sur la palette de mesure |
| Retard de signal | 1.3 s. environ. |
| Sensibilite | Reglable par le rappel du ressort dans trois positions |
| Vitesse de la palette | 1 tour/min |

| CARACTERISTIQUES ELECTRIQUES | |
|---|---|
| Tension d'alimentation (!) * | AC: 24V / 48V / 115V / 230V 50/60Hz<br>DC: 12V / 24V (toutes les tensions +/- 10%) |
| Energie | 3W |
| Borne | 1 x 1.5 $mm^2$ max. |
| Signal de sortie | Microrupteur flottant max. 250V (AC/DC), 2A |
| Classe de protection | I |
| Categorie de surtension | II |

* La tension d'alimentation ne doit jamais venir directement du réseau, mais toujours obtenue d'un transformateur secondaire.

| DATI MECCANICI | |
|---|---|
| Protezione | IP 65 |
| Connessioni standard | Filettato G1 1/4", G1 1/2", G2 1/2" |
| Materiale del mozzo di collegamento | Plastica e Alluminio |
| Materiale dell' albero e della paletta | Acciaio inossidabile |
| Frizione albero paletta | Protezione degli ingranaggi dagli impatti della paletta sensore |
| Ritardo di segnale | 1.3 sec. circa |
| Sensibilità | Regolabile mediante il tensionamento di una molla su 3 diverse posizioni |
| Velocità paletta | 1 giro/min |

| DATI ELETTRICI | |
|---|---|
| Tensione d'alimentazione (!)* | AC: 24V / 48V / 115V / 230V 50/60Hz<br>DC: 12V / 24V (tutte le tensioni +/- 10%) |
| Assorbimento | 3W |
| Morsetto d'attacco | 1 x 1.5 $mm^2$ max. |
| Segnale di uscita | Microinterruttore flottante max.250V (AC/DC), 2A |
| Classe di protezione | I |
| Categoria di sovratensione | II |

* La tensione di alimentazione non deve provenire direttamente dalla rete, ma dev'essere sempre ottenuta da un avvolgimento secondario.

TOREX®

**ILT**

- GENERAL DIAGRAM
- ALLGEMEINES SCHEMA
- SCHEMA GENERAL
- SCHEMA GENERALE

**TOR.ILT.--.C.A7.0917.4L 10**

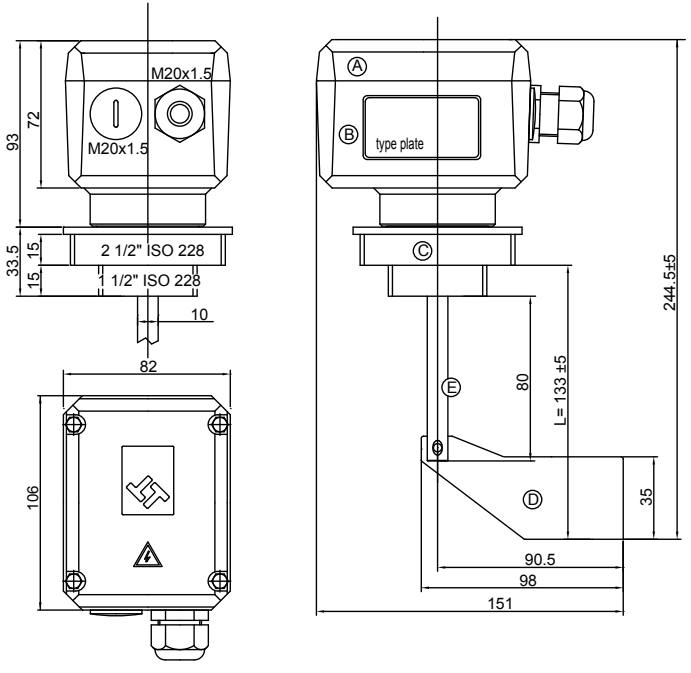


| Item pos. | Description - *Benennung* Designation - *Descrizione* | Quantity - *Stück* Quantitè - *Quantità* |
|---|---|---|
| **A** | Cover - *Deckel* Couvercle - *Coperchio* | 1 |
| **B** | Frame - *Gehäuse* Corps - *Corpo* | 1 |
| **C** | Shaft support *Anschlußgewinde mit Wellenführung* Support arbre *Supporto albero* | 1 |
| **D** | Paddle - *Drehfügel* Palette - *Paletta* | 1 |
| **E** | Shaft - *Welle* Arbre - *Albero* | 1 |

| ILT | A | 0 |
|---|---|---|

| | |
|---|---|
| **0** | 1 + ½“ - 2 + ½“ |
| **2** | 1 + ¼“ NPT cilindrical - *Zylindrisch* - cylindrique - *cilindrico* |

| | |
|---|---|
| **A** | 24/48 VAC - 50/60 Hz |
| **C** | 115/230 VAC - 50/60 Hz |
| **D** | 24 VDC |
| **E** | 12 VDC |
| **R** | 24 VDC - 22..230 VAC with rotation control - *mit Rotationskontrolle* - avec contrôle rotation - *con controllo rotazione* |

Level indicator - *Füllstandsmelder*
Indicateur de niveau - *Indicatore di livello*

| ACCESSORIES - *ZUBEHÖR* - ACCESSOIRES - *ACCESSORI* | |
|---|---|
| Sleeve 1+1/2" - *Manschette 1+1/2"*- Manchon 1+1/2"- *Manicotto 1+1/2"* | 4538020100 |
| Sleeve 2+1/2" - *Manschette 2+1/2"* - Manchon 2+1/2" - *Manicotto 2+1/2"* | 4538020150 |
| Double blade - *Doppelpaddel* - Palette double - *Paletta doppia* | 13N07051A (Pos.3) |
| Green lamp cover M20x1.5 - *Abdeckung der grünen Leuchte M20x1.5* - Couvercle lampe vert M20x1.5 - *Copri lampada verde M20x1.5* | 3848004510 (Pos.5) |
| Red lamp cover M20x1.5 - *Abdeckung der roten Leuchte M20x1.5* - Couvercle lampe rouge M20x1.5 - *Copri lampada verde M20x1.5* | 3848004530 (Pos.5) |
| 24 volt lamp - *Leuchte 24 V* - lampe 24 volt - *Lampada 24 volt* | 3848004050 (Pos.6) |
| 48 volt lamp - *Leuchte 48 V* - lampe 48 volt - *Lampada 48 volt* | 3848004055 (Pos.6) |
| 115 volt lamp - *Leuchte 115 V* - lampe 115 volt - *Lampada 115 volt* | 3848004100 (Pos.6) |
| 230 volt lamp - *Leuchte 230 V* - lampe 230 volt - *Lampada 230 volt* | 3848004150 (Pos.6) |
| 500 mm shaft extension (Carbon steel) - *Wellenzapfen 500 mm (unlegierter Stahl)* - 500 mm Rallonge pour arbre (acier au carbone) - *Prolunga per albero da 500 mm (Acciaio al carbonio)* | 3850001022 (Pos.2) |
| 1000 mm shaft extension (Carbon steel) - *Wellenzapfen 1000 mm (unlegierter Stahl)* - 1000 mm Rallonge pour arbre (acier au carbone) - *Prolunga per albero da 1000 mm (Acciaio al carbonio)* | 3850001038 (Pos.2) |
| 500 mm shaft extension (Stainless steel) - *Wellenzapfen 500 mm (Edelstahl)* - 500 mm Rallonge pour arbre (acier inoxydable) - *Prolunga per albero da 500 mm (Acciaio inossidabile)* | 3850001023 (Pos.2) |
| 1000 mm shaft extension (Stainless steel) - *Wellenzapfen 1000 mm (Edelstahl)* - 1000 mm Rallonge pour arbre (acier inoxydable) - *Prolunga per albero da 1000 mm (Acciaio inossidabile)* | 3850001027 (Pos.2) |
| Pin for shaft extensions - *Stift für Wellenzapfen* - Goupille pour rallonges arbre - *Perno per prolunghe albero* | 3850001039 (Pos.4) |
| Ø4x25 SS 304 DIN 94" - *Ø4x25 1.4301 Edelstahl DIN 94"* - Ø4x25 AISI 304 DIN 94" - *Ø4x25 AISI 304 DIN 94"* | 3024020275 (Pos.1) |

* assembly of the extensions is permitted only vertically and for a maximum of 3 m.
* *Es sind nur Verlängerungen bis zu max. 3 m zulässig, die vertikal zu montieren sind.*
* Le montage des prolonges est permis seulement en vertical et pour un maximum de 3 m.
* *il montaggio delle prolunghe è consentito solo in verticale e per un massimo di 3 m.*

When an extension set is purchased, make sure you include all components shown in the picture at page.13.
*Bei der Anschaffung eines Verlängerung-Bausatzes sicherstellen, dass alle aus der Abbildung von Seite 13 dargestellten Bauteile eingeschlossen sind.*
Lorsque vous achetez une extension, assurez-vous que tous les composants indiqués dans l'image à la page 13 ont été inclus.
*All'acquisto di una prolunga, assicuratevi di aver incluso tutte le componenti indicate nell'immagine alla pagina 13.*

Lamp - *Leuchte*
Lampe - *Lampada*

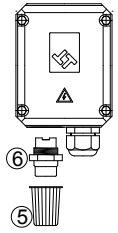


Multiple extension set - *Doppelpaddel mit Federung*
Rallonges en série - *Prolunghe in serie*

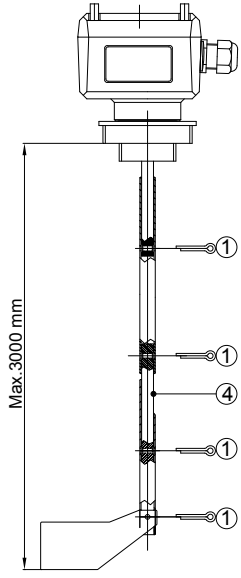


Extension - *Verlängerung*
Rallonge - *Prolunga*

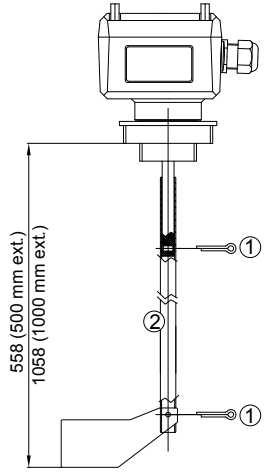


Double spring paddle - *Doppelpaddel mit Federung*
Double palette à ressort - *Pala doppia a molla*

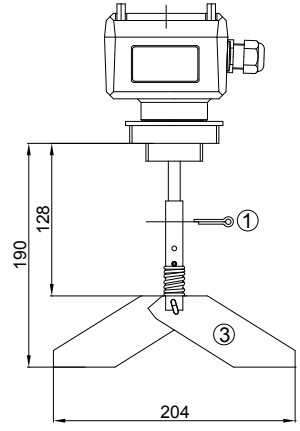

TOREX®

# ILT
- SAFETY NOCITES
- SICHERHEITSHINWEISE
- INDICATIONS DE SÉCURITÉ
- ISTRUZIONI DI SICUREZZA



**WARNING: high voltage!**

- Disconnect from all mains before opening the device.
- Start the device up only when the cover is closed.
- Before opening the lid take care that no dust deposits or whirlings are present.
- Do not allow any dust/water to enter the casing when the lid is open.
- Provide protection for relay contacts and output transistors to protect the device against spikes with inductive loads.
- Make sure that max. 8mm of the pigtails are bared (danger of contact with live parts).
- Make sure that the boots for protecting cable terminations are not longer than 8mm (danger of contact with live parts). Make sure that the screwed cable gland safely seals the cable and that it is tight (danger of water intrusion).
- A voltage-disconnecting switch must be provided near the device.
- In the case of inexpert handling or handling malpractice, the electric safety of the device cannot be guaranteed.
- In the case of a defect, the distribution voltage must automatically be cut off by a RCCB protective switch so as to protect the user of the device from indirect contact with dangerous electric tensions.
- Provide protection for relay contacts to protect the device against spikes, if inductive loads are connected.
- Provide a disconnect switch near the device.
- All field wirings must have insulation suitable for at least 250VAC. The temperature rating must be at least 90°C. (194°F).
- Protect the power of the device by means of a fuse.
- The device body has to be earthed to avoid static charges. This is particularly important in pneumatic conveying applications or with non-metallic containers.

**ACHTUNG: Hochspannung!**

- Vor der Öffnung des Geräts, dieses von allen Stromnetzen trennen.
- Das Gerät in Betrieb nehmen, nur wenn die Abdeckung geschlossen ist.
- Vor der Öffnung des Deckels sicherstellen, dass keine Staubablagerungen oder - aufwirbelungen vorhanden sind.
- Beim geöffneten Deckel darf kein Staub/Wasser innerhalb des Gehäuses gelangen.
- Zum Schutz vor Spannungsspitzen bei induktiven Lasten einen Schutz für Relaiskontakte / Ausgangstransistoren vorsehen.
- Darauf achten, daß die Anschlußlitzen max. 8 mm abisoliert werden (Gefahr der Berührung spannungs- führender Teile).
- Darauf achten, daß die Aderendhülsen der Anschlußkabel max. 8 mm lang sind (Gefahr der Berührung spannungsführender Teile).
- Darauf achten, daß die Kabelverschraubung das Kabel sicher dichtet u. fest angezogen ist (Wassereintritt).
- Es muß in der Nähe des Gerätes ein Schalter als Trennvorrichtung für die Anschlußspannung vorgesehen werden.
- Bei unsachgemäßem Gebrauch des Gerätes ist die elektr. Sicherheit nicht gewährleistet.
- Zum Schutz gegen indirektes Berühren gefährlicher Spannung muß im Fehlerfall ein automatisches Ausschalten (RCCB - Schutzschalter) der Versorgungsspannung gewährleistet sein.
- Für ein geeignetes System zum Schutz der Relaiskontakte sorgen, um die Vorrichtung vor Spannungsspitzen zu schützen, wenn induktive Lasten angelegt werden.
- Einen Trennschalter in der Nähe des Gerätes vorsehen.
- Alle Anschlusskabel müssen für wenigstens 250V AC Betriebsspannung isoliert sein. Die Temperaturbeständigkeit muss mindestens 90°C (194°F) betragen.
- Die Stromversorgung des Gerätes über eine Sicherung absichern.
- Um eine statische Aufladung zu vermeiden, muss das Gerätegehäuse geerdet sein. Dies ist insbesondere wichtig bei pneumatischer Materialförderung und bei nichtmetallischen Gehäusen.

**AVERTISSEMENT: haute tension!**

- Débranchez toutes alimentations électriques avant d'ouvrir le couvercle.
- Démarrer l'équipement seulement quand le couvercle est fermé.
- Avant d'ouvrir le couvercle assurez-vous qu'il n'y a pas de poussière ou des dépôts présents.
- Ne laissez pas la poussière/l'eau entrer dans le boîtier lorsque le couvercle est ouvert.
- Prévoir une protection pour les contacts de relais/les transistors de sortie afin de les protéger contre les pointes de tension en cas de charges inductives.
- Veiller à ce que les torons de raccordement soient dénudés à 8 mm au maximum (danger de contact avec des pièces sous tension).
- Veiller à ce que les cosses d'adhérence des câbles de connexion aient une longueur maximale de 8 mm (danger de contact avec des pièces sous tension).
- Veiller à ce que le presse étoupe ferme le câble hermétiquement et qu'il soit bien serré (arrivée d'eau).
- Prévoir un interrupteur à proximité de l'appareil.
- La garantie ne s'applique pas en cas de utilisation non conforme.
- En cas de défaut, l'alimentation doit être coupée automatiquement: (disjoncteur RCCB) pour protéger l'utilisateur contre toute tension dangereuse.
- Prévoir un dispositif approprié de protection des relais pour protéger l'équipement contre les pics de tension de courte durée, si les charges inductives sont reliées.
- Prévoir un interrupteur près du dispositif.
- Tous les câbles doivent être pourvus d'isolation appropriée d'au moins 250VAC. Le rapport de température doit être au moins 90°C (194°F).
- Protéger l'alimentation du dispositif avec un fusible.
- Le corps du dispositf doit être mis à la terre pour prévenir la formation de charges électrostatiques. Ceci est particulièrement important pour les applications de transport pneumatique ou dans le cas des conteneurs non-métalliques.

**ATTENZIONE: Tensione pericolosa!**

- Scollegare tutte le alimentazioni elettriche al dispositivo prima di aprire il coperchio.
- Avviare il dispositivo solamente con il coperchio del corpo chiuso.
- Prima di aprire il coperchio assicurarsi che non vi siano presenti depositi di polvere.
- Non far entrare la polvere/acqua all'interno della carcassa quando il coperchio viene aperto.
- Fornire una protezione per i contatti dei relè e i transistor d'uscita contro i picchi di tensione con cariche induttive.
- Assicurarsi che la superficie scoperta dei fili connettori non superi gli 8 mm (pericolo di contatto con parti sotto tensione).
- Assicurarsi che le guaine di protezione delle terminazioni dei cavi non superino gli 8 mm di lunghezza (pericolo di contatto con parti sotto tensione).
- Assicurarsi che il pressacavo stringa il cavo in modo sicuro, fissandolo adeguatamente (pericolo di infiltrazione d'acqua).
- Collocare un interruttore di tensione nei pressi del dispositivo.
- Non si garantisce la sicurezza elettrica del dispositivo in caso di impiego improprio o non conforme.
- In caso di guasto, l'alimentazione dovrà essere automaticamente interrotta mediante un interruttore di protezione RCCB al fine di proteggere l'utilizzatore dal contatto indiretto con tensioni elettriche pericolose.
- Predisporre un sistema idoneo di protezione dei contatti relé per proteggere il dispositivo da transitori di breve durata, se sono collegati i carichi induttivi.
- Prevedere un sezionatore vicino al dispositivo.
- Tutti i cavi devono disporre di isolamento idoneo ad almeno 250 VAC. IL rapporto di temperatura deve essere di almeno 90°C. (194°F).
- Proteggere l'alimentazione del dispositivo mediante fusibile.
- Il corpo del dispositivo deve essere collegato a terra per evitare la formazione di cariche elettrostatiche. Questo è particolarmente importante in applicazioni di trasporto pneumatico o con contenitori non metallici.

**ELECTRICAL CONNECTIONS**
The connection has to be carried out on the basis of the voltage indicated on the ID plate and according to the standards in force.
The wiring diagram is indicated on the electronic board (for AC devices) or inside the cover (for DC devices).

**ELEKTRISCHE ANSCHLÜSSE**
Der Anschluss muss aufgrund der auf dem Typenschild angegebenen Spannung und gemäß den geltenden Normen durchgeführt werden.
Das Schaltschema ist auf der elektronischen Karte (mit Wechselstrom betriebene Geräte) oder innerhalb der Abdeckung (mit Gleichstrom betriebene Geräte).

**RACCORDEMENTS ELECTRIQUES**
La connexion doit être effectuée conformément à la tension indiquée sur la plaque signalétique et conformément à la réglementation en vigueur. Le schéma de raccordement est montré sur la carte électronique (dispositifs alimentés en courant alternatif) ou à l'intérieur du couvercle (dispositifs alimentés en courant continu).

**COLLEGAMENTI ELETTRICI**
Il collegamento deve essere eseguito in accordo alla tensione riportata sulla targhetta identificativa ed in accordo alle normative vigenti.
Lo schema di connessione è riportato sulla scheda elettronica (dispositivi alimentati in corrente alternata) o sull'interno del coperchio (dispositivi in corrente continua).

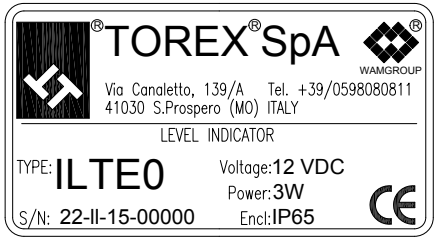


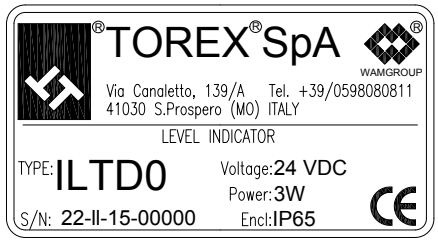


**DC version - *GS-Version* - Version CC - *Versione CC***

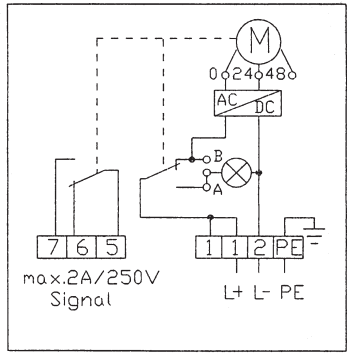

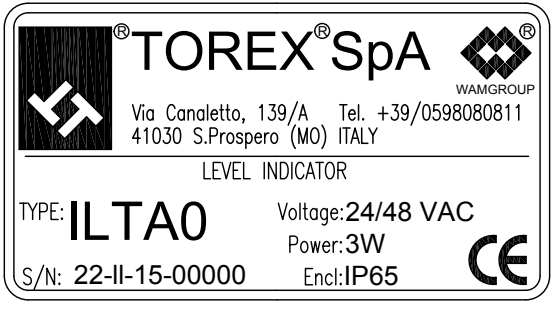


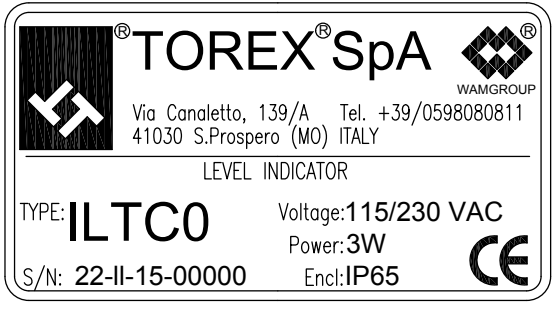


**AC version - *WS-Version* - Version CA - *Versione CA***

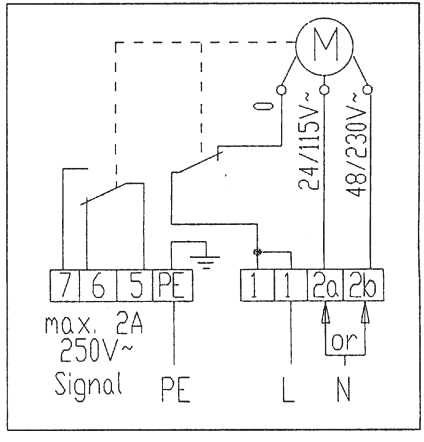

TOREX®

**ILT**
- **OPTIONS**
- **VARIANTEN**
- **OPTIONS**
- **OPZIONI**

# TOR.ILT.--.C.A7.0917.4L 17

Version with rotation control, universal voltage
*Version mit Rotationskontrolle, Universalspannung*
Version avec contrôle rotation, tension universelle
*Versione con controllo rotazione, tensione universale*

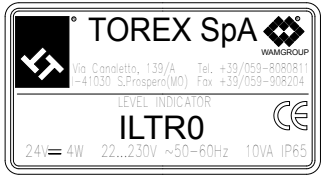


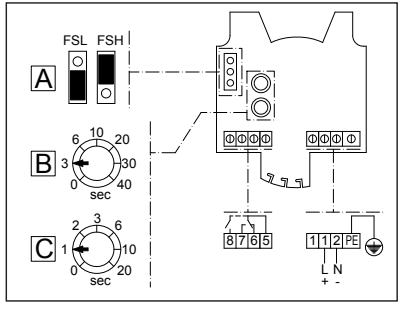


**Checking the rotation**
**Switching mode**
When the unit is switched on and works normally (paddle spinning freely or paddle stopped by material) contact 5-8 is Normally Closed.

In case of:
- missing power supply
- problems on connections
- unit defect

the contact 5-8 will open.

**Rotationsprüfung**
**Einschalt-Modus**
Wenn die Einheit eingeschaltet ist und normal funktioniert (das Paddel dreht sich unbehindert oder ist vom Material gestoppt), ist der Kontakt 5-8 ein Öffner.

Im Fall von:
- fehlender Spannungsversorgung,
- Problemen bei den Anschlüssen,
- Fehler der Einheit,

wird der Kontakt 5-8 öffnen.

**Contrôle de rotation**
**Mode de commutation**
Lorsque l'équipement est mis en marche et fonctionne normalement (avec la palette en rotation libre ou bloquée par le matériau) le contact 5-8 est Normal fermé.

En cas de :
- panne d'électricité
- problèmes de connexion
- appareil défectueux

le contact 5-8 s'ouvre.

**Controllo di rotazione**
**Modalità di commutazione**
Quando l'unità é avviata e funziona normalmente (con la paletta in rotazione libera o bloccata dal materiale) il contatto 5-8 é Normale Chiuso.

In caso di:
- blackout
- problemi di connessione
- unità difettosa

il contatto 5-8 si aprirà.

| | **Function; *Funktion*; Fonction; *Funzione*** | **Range; *Bereich;* Champ; *Campo*** | **Factory setting; *Werkseinstellung;* Réglages usine; *Impostazioni di fabbrica*** |
|---|---|---|---|
| A | Signal type; *Signaltyp;* Type de signal; *Tipo segnale* | FSL - FSH | FSL |
| B | Sensor covered -> free delay; *Verzögerung durch bedeckten Sensor -> frei;* Retard détecteur occupé -> libre; *Ritardo sensore occupato -> libero* | 0-60 s | 3s |
| C | Sensor free -> covered; *Verzögerung durch freien Sensor -> belegt;* Retard détecteur libre -> occupé; *Ritardo sensore libero -> occupato* | 0-20 s | 1s |
| 8-5 | Alarm output; *Alarmausgang;* Sortie alarme; *Uscita allarme* | max.250V - 2A | |
| 5-6-7 | Signal output; *Signalausgang;* Sortie signal; *Uscita segnale* | | |
| 1-2 | Power supply; *Speisung;* Alimentation; *Alimentazione* | 24V DC , max.4W | |
| | | 22..230V AC 50-60 Hz , max.10VA | |

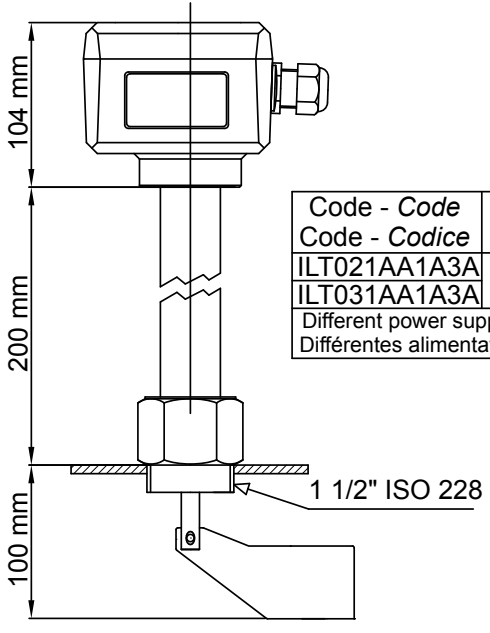


| Code - *Code*<br>Code - *Codice* | Power supply - *Speisung*<br>Alimentation - *Alimentazione* | Process temp. - *Prozesstemp.*<br>Temp. de processus - *Temp.Processo* |
|---|---|---|
| ILT021AA1A3A | 230 V AC 50-60 Hz | 150°C |
| ILT031AA1A3A | | 250°C |
| Different power supply available as an option; *Verschiedene Speisung als Option verfügbar;*<br>Différentes alimentations disponibles en option; *Alimentazioni diverse disponibili su richiesta* | | |

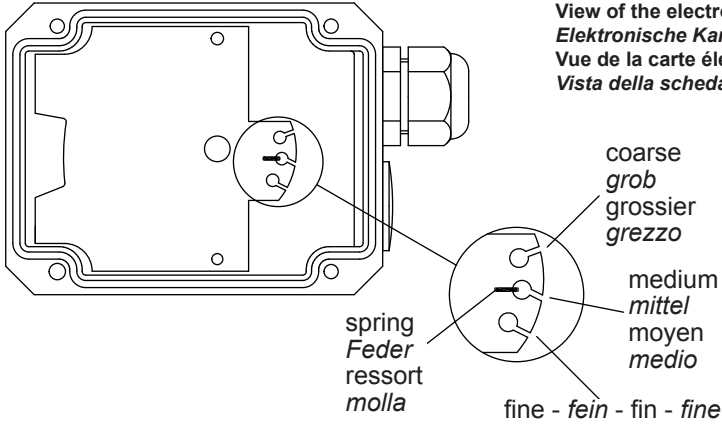


**View of the electronic board**
***Elektronische Karte - Ansicht***
**Vue de la carte électronique**
***Vista della scheda elettronica***

The spring is adjustable in 3 positions. It should be changed only if necessary.
Fine: for light material
Medium: suitable for nearly every material (factory setting)
Coarse: for very sticky material
The sping can be changed via a small plier

Die Feder ist in 3 Positionen einstellbar. Die Position sollte nur geändert werden, wenn dies erforderlich ist
Fein: für leichte Materialien
Mittel: für fast alle Materialien geeignet (Werkseinstellung)
Grob: für sehr klebriges/pappiges Material
Die Feder kann mit einer kleinen Zange gewechselt werden

Le ressort est réglable en 3 positions. Il ne doit être modifié que si cela est nécessaire
Fin : pour matériaux légers
Moyen : adapté pour presque tous les matériaux (réglage d'usine)
Grossier : pour matériaux très collants
Le ressort peut être modifié à l'aide de petites pinces

La molla è regolabile in 3 posizioni. Deve essere cambiata solo se necessario
Fine: per materiali leggeri
Medium: adatto per quasi ogni tipo di materiale (impostazione di fabbrica)
Grezzo: per il materiale molto appiccicoso
La posizione della molla può essere modificata tramite una piccola pinza.

**Switching logic**
***Logischer Umschaltplan***
**Schéma logique de commutation**
***Schema logico di commutazione***

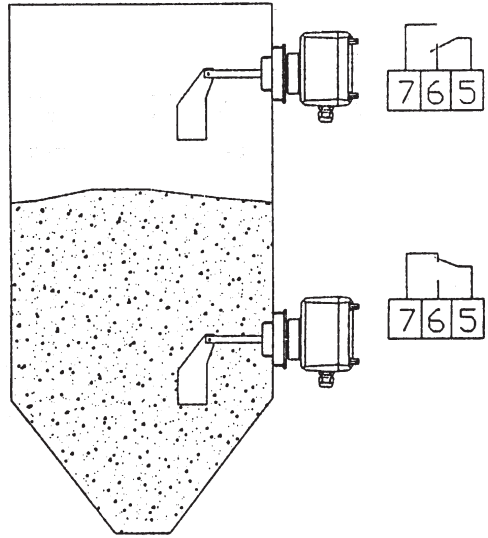

The unit must be mounted with the threaded fitting on the container. It is possible to use a suitable sealing material (teflon tape) to fix and seal the unit: fasten the plastic bush in manually, do not use any tool.
The cable gland must be downwards in order to prevent dust/water from entering the casing.
It is not possible to turn the housing after fastening.
All electrical connections must be made according to the connection diagram: make sure the cable is sealed tightly inside the cable gland.

*Die Einheit muss mit dem Gewindestück auf dem Behälter eingebaut werden. Es ist möglich, eine geeignete Dichtmasse zu verwenden (Band aus Teflon), um die Einheit zu befestigen oder abzudichten: die Buchse aus Kunststoff von Hand festschrauben, kein Werzkeug benutzen.*
*Um das Eintretten von Staub/Wasser innerhalb des Gehäuses zu vermeiden, muss die PG-Verschraubung nach unten zeigen. Es ist nicht möglich, das Gehäuse nach dem Festschrauben zu drehen.*
*Alle elektrischen Anschlüsse müssen gemäß dem Anschlussschema ausgeführt werden: sicherstellen, dass das Kabel innerhalb der PG-Verschraubung abgedichtet ist.*

L'unité doit être installée avec le raccord fileté sur le conteneur. Vous pouvez utiliser un joint d'étanchéité adéquat (téflon) pour la fixation et l'étanchéité de l'unité: serrer la douille en plastique manuellement, n'utilisez pas d'outils. La glande de câble doit être positionnée vers le bas pour empêcher l'entrée d'eau ou de la poussière. ce n'est pas possible de tourner la carcasse après fixation.Toutes les connexions électriques doivent être effectuées selon le schéma de câblage: assurez-vous que le câble est fixé à l'intérieur de la glande de câble.

*L'unità deve essere montata con il raccordo filettato sul contenitore. È possibile utilizzare un sigillante adatto (nastro teflon) per il fissaggio e la tenuta dell'unità: serrare manualmente la boccola di plastica, non utilizzare attrezzi.*
*Il pressacavo deve essere posizionato in basso per impedire l'entrata di acqua/polvere.*
*Non è possibile girare la carcassa dopo il fissaggio.*
*Tutte le connessioni elettriche devono essere eseguite secondo lo schema elettrico: assicurarsi che il cavo sia ben fissato all'interno del pressacavo.*

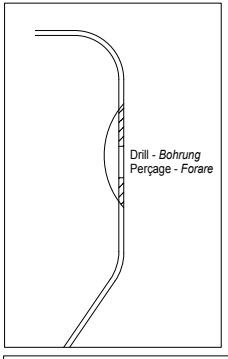


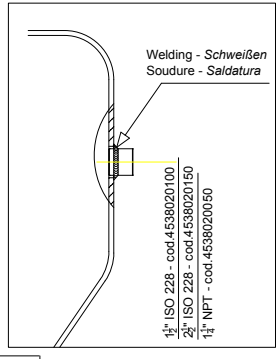


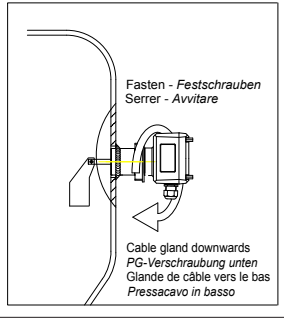

BEFORE CARRYNG OUT ANY TYPE OF WORK ON THE MACHINE STOP IT AND DISCONNECT IT FROM ALL ELECTRIC SUPPLY SOURCES

**N.B.: Failure to observe these instructions can cause problems and make the warranty null and void.**

VOR BEGINN DER WARTUNGSARBEITEN SICHERSTELLEN, DASS DIE MASCHINE UND DER HAUPTSCHALTER AUSGESCHALTET SIND.

**N.B.: Die Nichtbeachtung der oben genannten Vorschriften kann zu Betriebsstörungen und zum Verfall der auf die maschine gewährten Garantie führen.**

AVANT D' EFFECTUER UNE QUELCONQUE OPERATION SUR LA MACHINE, IL FAUT L' ARRETER ET LA DEBRANCHER DE TOUTES LES ALIMENTATIONS ELECTRIQUES.

**N.B.: L' inobservation de ces instructions peut provoquer des problémes et invalider la garantie sur les machines fournies.**

PRIMA DI ESEGUIRE QUALSIASI OPERAZIONE SULLA MACCHINA ARRESTARLA E SCOLLEGARE TUTTE LE ALIMENTAZIONI ELETTRICHE.

**N.B.: Il non attenersi strettamente alle suddette istruzioni può causare dei problemi ed invalidare la garanzia sulle macchine fornite.**

**BUILD REMOVAL - *ANBACKUNGEN ENTFERNEN* - ENLEVER LES INCRUSTATIONS - *RIMOZIONE DELLE INCROSTAZIONI***

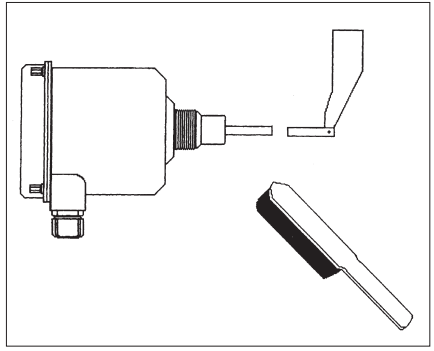

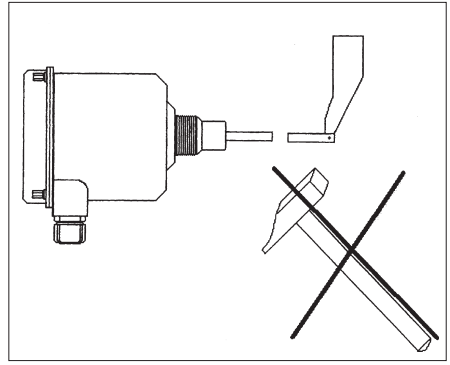

| To scrap: | Verschrottung: | En cas de mise à décharge: | In caso di rottamazione: |
|---|---|---|---|
| When the machine's working life ends, remove the plastic parts (seal rings) and take them to specialised disposal centres. The remaining components can be sent to metal salvage centres. | Nach Ausbau der Maschine, Teile aus Kunststoff (Wellendichtringe) ausbauen und bei der entsprechenden Sammelstelle abgeben. Alle restlichen Teile können als Alteisen verschrottet werden. | A la fin de la vie de la machine; démonter les pièces en matière plastique (anneaux d'étanchéité) et les destiner aux déchetteries spécialisées; les parties restantes sont destinées à la récupération des matériaux ferreux. | A fine vita della macchina, smontare le parti in materiale plastico (anelli di tenuta) e destinarle agli appositi centri di raccolta; le restanti parti sono da destinare al recupero dei materiali ferrosi. |
| When scrapping the machine, bear in mind the different kinds of material used to fabricated it. | Bei der Entsorgung der Maschine muß die unterschiedliche Beschaffenheit der Werkstoffe berücksichtigt werden, | En cas de mise à la décharge il faut tenir compte de la diversification et de la qualité des matériaux. | In caso di demolizione considerare la diversificazione della qualità dei materiali. |

***N.B***. *Rights reserved to modify technical specifications*
***N.B***. *Angaben ohne Gewähr. Änderungen können ohne Vorankündigung vorgenommen werden.*
***N.B***. *Toutes données portées dans le présent catalogue n'engagent pas le fabricant. Elles peuvent être modifiéès à tout moment.*
***N.B***. *Tutti i dati riportati nel presente catalogo non sono impegnativi e possono subire variazioni in qualsiasi momento.*

TOREX®

The manufacturer:

## TOREX S.p.A.

located in
Via Canaletto, 139/A - 41030 S.Prospero Modena - Italy

WAMGROUP

**under its own responsibility declares that:**

the level indicators type ILT

**complies with the requirements imposed by the following directives:**

**Directive 2014/30/EU** of the European Parliament and the Council of 26 February 2014 on the harmonisation of the laws of the Member States relating to electromagnetic compatibility;
Applied standards for evaluation of the unit:
EN 61326-1:2013 (Electrical equipment for measurement, control and laboratory use - EMC requirements - Part 1: General requirements)

**Directive 2014/35/EU** of the European Parliament and the Council of 26 February 2014 on the harmonisation of the laws of the Member States relating to the making available on the market of electrical equipment designed for use within certain voltage limits.
Applied standards for evaluation of the unit:
DIN EN 61010-1:2013 (Safety requirements for electrical equipment for measurement, control and laboratory use - Part.1: General requirements)
EN 60529:1997 (IEC 529) (Degrees of protection provided by enclosures - IP code)

**Directive 2011/65/EU RoHS** of the European Parliament and of the Council of 8 June 2011 on the restriction of the use of certain hazardous substances in electrical and electronic equipment.

The signing company is committed to provide, in response to a reasoned request by national authorities, relevant information on products covered by this declaration, without prejudice to the rights of intellectual property of the manufacturer. The information will be transmitted directly to the national authorities having requested.

Via Canaletto, 139/A - 41030 – S.Prospero Modena - Italy, July 1st 2016

The person authorized to provide the technical documentation:
Nino Ratti

The legal representative:
Nino Ratti

TOREX®

Der Hersteller:

**TOREX S.p.A.**

mit Sitz in

Via Canaletto, 139/A - 41030 S.Prospero Modena - Italien

WAMGROUP

**erklärt unter eigener Verantwortung wie folgt:**

die Füllstandsmelder Typ ILT

**konform ist mit den Anforderungen gemäß den folgenden Richtlinien:**

**Richtlinie 2014/30/EU** des Europäischen Parlaments und des Rates vom 26. Februar 2014 zur Harmonisierung der Rechtsvorschriften der Mitgliedstaaten über die elektromagnetische Verträglichkeit.
Angewendete Normen zur Einstufung des Gerätes:
EN 61326-1:2013 (Elektrische Betriebsmittel für Leittechnik und Laboreinsatz - EMV-Anforderungen - Teil 1: Allgemeine Anforderungen)

**Richtlinie 2014/35/EU** des Europäischen Parlaments und des Rates vom 26. Februar 2014 zur Harmonisierung der Rechtsvorschriften der Mitgliedstaaten über die Bereitstellung elektrischer Betriebsmittel zur Verwendung innerhalb bestimmter Spannungsgrenzen auf dem Markt.
Angewendete Normen zur Einstufung des Gerätes:
DIN EN 61010-1:2013 (Sicherheitsbestimmungen für elektrische Mess-, Steuer-, Regel- und Laborgeräte - Teil 1: Allgemeine Anforderungen)
EN 60529:1997 (IEC 529) (Schutzarten durch Gehäuse - IP kode)

**Richtlinie 2011/65/EU RoHS** des Europäischen Parlaments und des Rates vom 8. Juni 2011 über die Einschränkungen bei der Anwendung bestimmter gefährlicher Substanzen in elektrischen und elektronischen Geräten.

Das ausstellende Unternehmen ist verpflichtet, die technischen Unterlagen für diese Produkte auf begründetes Verlangen den Marktaufsichtsbehörden, unbeschadet der Rechte am geistigen Eigentum des Herstellers, zur Verfügung zu stellen. Die Unterlagen werden direkt an die anfordernde Behörde gesandt.

Via Canaletto, 139/A - 41030 – S.Prospero Modena - Italien, 01/07/2016

Bevollmächtigter für die Zusammenstellung der relevanten Technischen Unterlagen:
Nino Ratti

Für den Hersteller:
Nino Ratti

TOREX®

Le fabricant:

**TOREX S.p.A.**

ayant le siège social à

Via Canaletto, 139/A - 41030 S.Prospero Modena - Italie

WAMGROUP

**déclare sous sa propre responsabilité que**

les indicateurs de niveau type ILT

**est conforme aux exigences imposées par les directives suivantes:**

**Directive 2014/30/UE** du Parlement Européen et du Conseil du 26 février 2014 relative à l'harmonisation des législations des États membres concernant la compatibilité électromagnétique.
Le dispositif a été testé en appliquant les normes suivantes:
EN 61326-1:2013 (Des appareils électriques de mesurage, de régulation et de laboratoire - Exigences de compatibilité électromagnétique - Partie 1: Exigences générales)

**Directive 2014/35/UE** du Parlement Européen et du Conseil du 26 février 2014 relative à l'harmonisation des législations des États membres concernant la mise à disposition sur le marché du matériel électrique destiné à être employé dans certaines limites de tension.
Le dispositif a été testé en appliquant les normes suivantes:
DIN EN 61010-1:2013 (Règles de sécurité pour appareils électriques de mesurage, de régulation et de laboratoire - Partie 1: Exigences générales)
EN 60529:1997 (IEC 529) (Degrés de protection pour boîtiers - IP code)

**Directive 2011/65/UE RoHS** du Parlement Européen et du Conseil du 8 juin 2011 relative à la limitation de l'utilisation de certaines substances dangereuses dans les équipements électriques et électroniques.

La société signataire s'engage à fournir, en réponse à une demande motivée par les autorités nationales, toute information sur les produits couverts par cette déclaration, sans préjudice des droits de propriété intellectuelle du fabricant. Les informations seront transmises directement aux autorités nationales qui les ont demandées.

Via Canaletto, 139/A - 41030 – S.Prospero Modena - Italie, le 1er juillet 2016

La personne autorisée à fournir
la documentation technique:
Nino Ratti

Le représentant légal:
Nino Ratti

TOREX®

Il sottoscritto fabbricante:

**TOREX S.p.A.**

con sede legale in

Via Canaletto, 139/A - 41030 S.Prospero Modena - Italia

WAMGROUP

**dichiara sotto la propria responsabilità che:**

indicatori di livello tipo ILT

**risultano conformi alle esigenze imposte dalle seguenti Direttive:**

**Direttiva 2014/30/UE** del Parlamento Europeo e del Consiglio del 26 febbraio 2014 concernente l'armonizzazione delle legislazioni degli Stati membri relative alla compatibilità elettromagnetica;
Standards applicati per la valutazione dell'unità:
EN 61326-1:2013 (Apparecchi elettrici di misura, controllo e laboratorio - Prescrizioni di compatibilità elettromagnetica - Parte 1: Prescrizioni generali)

**Direttiva 2014/35/UE** del Parlamento Europeo e del Consiglio del 26 febbraio 2014 concernente l'armonizzazione delle legislazioni degli Stati membri relative alla messa a disposizione sul mercato del materiale elettrico destinato a essere adoperato entro taluni limiti di tensione.
Standards applicati per la valutazione dell'unità:
DIN EN 61010-1:2013 (Requisiti di sicurezza degli equipaggiamenti elettrici per la misurazione, il controllo e l'uso in laboratorio - Parte 1: Prescrizioni generali)
EN 60529:1997 (IEC 529) (Gradi di protezione degli involucri - codice IP)

**Direttiva 2011/65/EU RoHS** del Parlamento Europeo e del Consiglio dell'8 giugno 2011, sulla restrizione dell'uso di determinate sostanze pericolose nelle apparecchiature elettriche ed elettroniche.

L'azienda firmataria della presente si impegna a trasmettere, in risposta a una richiesta adeguatamente motivata delle autorità nazionali, informazioni pertinenti sui prodotti oggetto della presente dichiarazione, fatti salvi i diritti di proprietà intellettuale del fabbricante. Le informazioni verranno trasmesse direttamente all'autorità nazionale che le ha richieste.

Via Canaletto, 139/A - 41030 – S.Prospero Modena - Italia, 01/07/2016

La persona autorizzata
a costituire il fascicolo tecnico:
Nino Ratti

Il rappresentante legale:

Nino Ratti



TOREX®

**TOREX® S.p.A.**
Via Canaletto, 139/A
41030 S. Prospero (MO) - ITALY

☎ ++39 / 059 / 8080811
**fax** ++39 / 059 / 908204
**e-mail** torex@torex.it
**internet** www.torex.it

WAMGROUP®

Intelligent Drivesystems

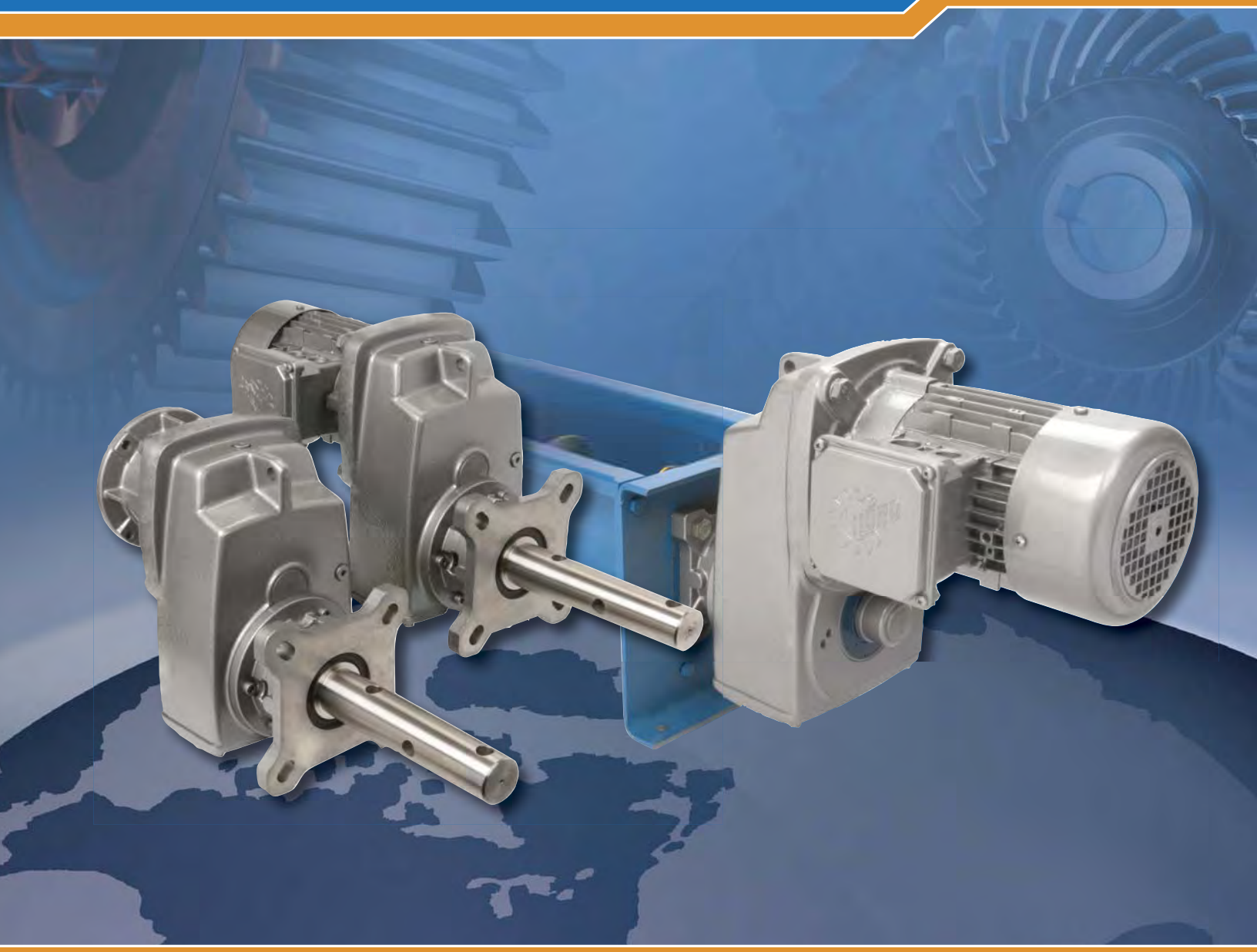

# SCREW CONVEYOR GEARMOTORS & SPEED REDUCERS

## Durable & Premium Efficient Gear Units

G1129

NORD DRIVESYSTEMS

# Screw Conveyor Package
# Innovative Design



## SCP - PRODUCT FEATURES

**OPTIMIZED SEALING SYSTEM**

- Dual Viton lip seals
- Grease impregnated packing seal
- Dual gap seals (excludes particles) – 0.03" gap
- Material evacuation ports
- Shaft material ditch
- Quadrilip™ sealing

**MOUNTING**

- Standard CEMA mounting
- Versatile flange – multiple bolt patterns
- 3-Hole tapered CEMA drive shaft
  - Easy mounting
  - Easy removal (less fretting – due to less material contact)
- Reduced bearing loads – tapered shaft allows for screw pipe misalignment
- Quick external removal feature

**FLANGE**

- Standard CEMA mounting
- High strength class 35 gray cast iron
- Versatile flange – multiple bolt patterns

## HIGH EFFICIENCY

The NORD SCP design is extremely effective due to the direct coupled gearmotor or NEMA C-face input design. Belted input systems have significantly lower total drive performance. You can further increase the overall efficiency by applying the NORD "H" line of energy efficient motors.

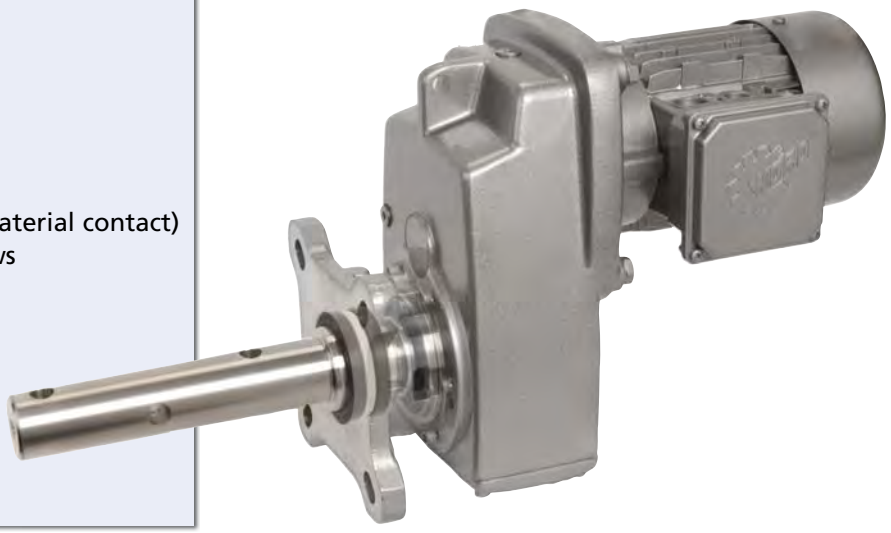

# TABLE OF CONTENTS


**Introduction** ..... 2

**Selections** ..... 29

Gearmotors Ratings Tables ..... 31

Combinations Ratings Tables ..... 65

**Dimensions** ..... 75

SK 1282 SCP ..... 76

SK 2282 SCP ..... 82

SK 3282 SCP ..... 88

SK 4282 SCP ..... 96

SK 5282 SCP ..... 102

SK 6282 SCP ..... 110

Other ..... 114

**Motors** ..... 119

Engineering Info ..... 123

Performance & Ordering Data ..... 142

Options Selections & Ratings ..... 128

**International Contacts** ..... 155

**Terms & Conditions** ..... 167


DRIVESYSTEMS

UNICASE™

www.nord.com





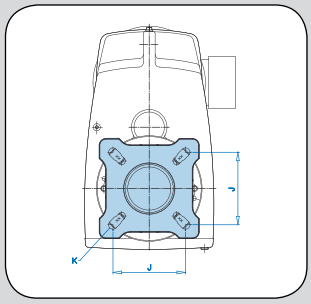





## Company Overview

Since 1965, NORD Gear has grown to global proportions on the strength of product performance, superior customer service, and intelligent solutions to a never ending variety of industrial challenges.

All mechanical and electrical drive components are available from NORD Gear. Our products cover the full range of drive equipment: helical in-line, Clincher™ shaft-mount, helical-bevel, and helical-worm gearboxes, motors and AC drives from 1/6 hp to 250 hp, with torques from 90 lb-in to 900,000 lb-in.

But NORD Gear does far more than manufacture the world's finest drive components. We provide our customers with optimum drive configurations for their specific purposes. NORD provides each and every one of them with truly complete and efficient systems at a price/quality ratio unmatched in today's fast-changing markets.

NORD Gear makes its wide range of products easily available through a global network that provides all customers with prompt delivery and expert support services to consistently exceed customer expectations. We are firmly committed to being totally responsive to the ideas and specifications of every customer, anywhere in the world.

## High-Performance Motors & Brakemotors

NORD motors are designed to run cool for longer service life. Low rotor inertia and high starting torque allow peak performance in the most difficult applications for inverter and vector duty per NEMA MG 1-2006 Section 31.4.4.2 voltage spikes. Our motors are internationally accepted, conforming to North American NEMA MG 1 and international IEC electrical specifications. High performance options include brakes, encoders, and forced cooling fans.



## Short, On-Time Delivery

As a NORD customer, you can rest assured that your order will be delivered on time. Because NORD has both decentralized assembly and manufacturing operations paired with a globally linked network, we have the ability to offer our customers:

- Fast, reliable responses
- Greater product versatility
- Shorter lead times
- Timely shipping
- Rapid delivery

## Quality

Quality is assured at NORD's assembly and manufacturing facilities, based on ISO 9000 standards — from careful inspection of incoming materials to closely monitored machining operations, including gear cutting, turning, hardening & grinding as well as finishing & assembly.

## NORD 911

Trouble? Just call 715-NORD-911 (in Canada, 905-796-3606). Emergency service is available 24 hours a day, 7 days a week. We'll answer your call, ship the parts, or build a unit and have it shipped directly to you to provide what you need, when you need it.



## Manufacturing

NORD continually invests in research, manufacturing and automation technology. This is to ensure the highest possible quality at affordable prices. NORD invests heavily in our North American facilities as well as our factories around the world. Recent examples include expanding our Waunakee factory and adding numerous new large gear unit assembly cells. In our Glinde, Germany gear factory we added a state-of-the-art multi-chamber vacuum carburization system.




## Global Availability

From Shanghai to Charlotte, and everywhere in-between, NORD reaches customers around the world. Deliveries, service, and product support are close at hand, regardless of your location.

## Worldwide Standards

NORD products are designed and manufactured based on the latest North American and global standards.

## Increased North American Presence

NORD covers North America with over 30 district offices and over 500 distributor branches. NORD operates manufacturing and assembly facilities in Waunakee, WI, Charlotte, NC, Corona, CA, Brampton, ON, and Monterrey, Mexico, resulting in an ever-increasing capacity in North America and giving our customers the shortest lead times in the industry.

## Energy Efficiency

Lowering your operating costs is one of our greatest goals! NORD research and development focuses on energy efficiency, with gearboxes, motors, and frequency inverters designed for lower energy consumption. Our fully diverse line of in-line or right-angle units and motors has been developed to suit your needs.

## Modular Design

NORD's modular design philosophy provides you with a competitive edge by allowing you to configure drive systems to exactly fit your applications.

More than 20,000,000 combinations of totally unique gearmotors and speed reducers are possible – assembled in-line or right-angle, mounted by foot or flange, featuring solid or hollow shafts with either metric or inch shaft extensions – to give you complete freedom to specify a drive solution that's perfect for you.

### Benefits

- More output speeds
- More mounting arrangements/Greater flexibility
- Fewer gear stages/Lower cost
- Metric and inch products

NORD engineers stand ready to assist you with your custom applications. Most standard drives can be modified to your purposes, and custom designs can be developed for special applications.

# Key Features



## Standard NORD features

### Modular Design

All NORD products including the SCP units are modular in design and provide extraordinary flexibility.The SCP unit may also be provided with a number of different input components including:

- Integral motor (Gearmotor)
- NEMA C-face motor adapter
- IEC B5 motor adapter
- Solid input shaft
- Custom motor adapter
  (servo, hydraulic motors, and more)

### Large Ratio Per Gear Stage

NORD gear cutting technology allows for the production of gear sets with a higher maximum ratio per stage than many other speed reducer manufacturers. NORD commonly produces gear sets with a maximum ratio of between 9:1 and 10:1 per stage. This allows for double reduction gear units with a maximum ratio between 72:1 and 100:1. Most speed reducer manufacturer's can only produce single-stage reduction of between 5:1 and 6:1. This means a two-stage reducer with a maximum reduction of about 25:1 to 35:1. NORD can often provide a two-stage reducer when most companies must provide three-stage units. The same situation applies to three, four and higher gear stages. This allows NORD to provide superior value and performance in many conditions.

**Benefits**

- Better value
- Higher efficiency
- Quieter operation
- Lower weight
- Longer life

### AUTOVENT™

The AUTOVENT™ prevents bearing damage by blocking entry of foreign material (water, dust, corrosives, etc.) through the breather. A ball and spring check valve opens at approximately 2 psi during operation and closes tightly when the gearbox cools, producing a slightly negative pressure that ensures the valve seals tight. This keeps contaminants out of the oil to maintain proper oil cleanliness reducing contamination, foaming and oxidation. The AUTOVENT™ is perfect for humid conditions, washdown applications, and dusty environments.

**Benefits**

- Cleaner gearbox oil
- Extended lubrication life
- Longer-lasting seals, gears, and bearings

### High-Quality Gearing (Infinite Life Design)

NORD continually invests in state-of-the-art gear production equipment and in gear research. This allows us to produce exceptionally high quality gears.

**Benefits**

- Designed & manufactured up to AGMA CLASS 13
- Infinite design life
- Case-hardened steel
- Exceptional hardness: 58 Rc minimum
- High-speed gears are ground;
  low speed gears are skive hobbed
- 275% momentary overload capacity
- Low noise
- Low maintenance

### Factory Oil Filled

All SCP units are filled at the factory with the proper quantity and type of lubrication. Oil fill before shipping prevents damage from dry start-ups.

**Benefits**

- No need for filling on-site
- Ensures proper oil grade and fill level

### NORD High-Performance Motors & Options

NORD motors are designed to run cool for producing longer service life. Low rotor inertia and high starting torque allow peak performance in the most difficult applications for inverter and vector duty per NEMA MG 1-2006 Section 31.4.4.2 voltage spikes. Our motors are internationally accepted, conforming to North American NEMA MG 1 and international IEC electrical specifications. High performance options include brakes, encoders, and forced cooling fans.



## Screw Conveyor Package Overview

NORD has developed a unique class of high performance right-angle speed reducers. The SCP are available as gearmotors and speed reducers with many mounting options. The SCP units provide high performance right-angle helical-bevel gear units at the cost effectiveness of a single worm system.

**SCP Clincher™ Gear Units** (76 - 113)

| | |
|---|---|
| SK 1282 SCP | SK 1382 SCP |
| SK 2282 SCP | SK 2382 SCP |
| SK 3282 SCP | SK 3382 SCP |
| SK 4282 SCP | SK 4382 SCP |
| SK 5282 SCP | SK 5382 SCP |
| SK 6282 SCP | SK 6382 SCP |

**SCP Bevel Gear Units** (118)

| | |
|---|---|
| SK 9012.1 SCP | SK 9013.1 SCP |
| SK 9022.1 SCP | SK 9023.1 SCP |
| SK 9032.1 SCP | SK 9033.1 SCP |
| SK 9042.1 SCP | SK 9043.1 SCP |
| SK 9052.1 SCP | SK 9053.1 SCP |

Please note that when ordering an SCP unit with a bevel gearbox that the lead times are slightly longer due to the extra manufacturing involved on this specialty product.

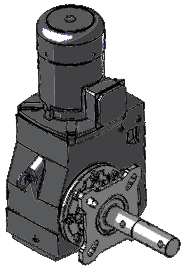

## Customer Benefits

Simplicity - The NORD SCP screw conveyor package eliminates the need for costly separate v-belt drives by directly coupling their motors to the C-face reducer. More space savings is also possible using an integral gearmotor with the SCP package.

- Reduced cost
- Reduced installation time
- No belt maintenance or guarding
- Space savings
- Higher efficiency
- More transferred torque

## UNICASE™ Design

NORD heavy-duty, one-piece housings are precisely machined to meticulous standards. Internal reinforcements further increase strength and rigidity. All bearings and seal seats are contained within the casting, eliminating splits or bolt-on carriers that can weaken the housing and allow oil leakage. Bores and mounting faces are machined in one step, producing extrememly precise tolerances – thus ensuring accurate positioning of gear teeth, bearings and seals, and longer life for all components.

## High-Quality Gearing (Infinite Life Design)

NORD continually invests in state-of-the-art gear production equipment and in gear research. This allows us to produce exceptionally high quality gears.

### Benefits

- Designed and manufactured up to AGMA CLASS 13
- Infinite design life
- Case-hardened steel
- Exceptional hardness: 58 Rc minimum
- High-speed gears are ground; low speed gears are skive hobbed
- 275% momentary overload capacity
- Low noise
- Low maintenance

## QUADRILIP™ Sealing

The QUADRILIP™ system has four components for sealing lubricant inside, and contaminants outside, the speed reducer. The system includes a double lip seal, single lip seal and greasepack barrier (grease lip). Furthermore, the shaft seal area is super-finished.

### Benefits

- Superior protection against leaks
- Long seal life
- Improved protection against contaminants
- Improved speed reducer life
- Reduced maintenance requirements & costs

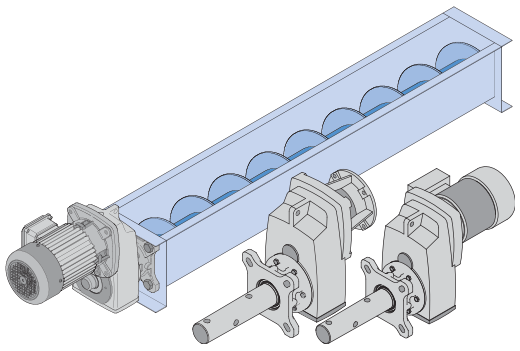

# Key Features



## SCP - Product Features

NORD offers a unique class of high performance screw conveyor drives. The NORD SCP line is based upon the premium efficient CLINCHER™ gear units. The SCP series of screw conveyor drives offers superior durability in the most severe load and service conditions. The SCP system may also be provided as right-angle helical-bevel gear drives.



### Optimized Sealing System

- **❶ Dual Fluropolymer lip seals**
  The SCP mounting flanges contains dual Fluropolymer seals to provide improved sealing. The Fluropolymer seals provide a high degree of chemical and mechanical protection.
- **❷ Dual gap seals (excludes particles) – 0.03" gap**
  The SCP mounting flange and CEMA drive shaft are designed to provide a mechanical sealing device referred to as a gap seal. The flange owns a clearance of 0.03" at two locations on the shaft. This forms a mechanical block to large particles and prevents their entrance into the gear unit.
- **❸ Shaft material ditch**
  Should any material penetrate the fluoropolymer seals, gap seals and greased packing felt seals, the shaft material ditch provides a material gravity break to divert anything that is working its way down the shaft towards the inside of the gearbox.
- **❹ Greased packing felt seal**
  Provides protection for small objects. If materials work their way past the first fluropolymer lip seal and gap seal it will be trapped within the grease felt sealing ring.
- **❺ Material evacuation ports**
  Provides an exit for any foreign material that infiltrates the external sealing system. Also provides a way to clean out the sealing system.
- **❻ QUADRILIP™ sealing**
  Please see page 5 for details

### Mounting

- **Standard CEMA mounting**
  The NORD SCP drives adhere to the CEMA standard mounting dimensions.
- **❼ 3-Hole tapered CEMA drive shaft**
  The NORD SCP CEMA drive shaft is a standard three hole shaft. This allows for mounting to either 2-bolt or 3-bolt connections. The drive shaft is tapered for easier mounting and removal. The taper also reduces shaft loading due to misalignments.
- **Easy mounting**
  The NORD SCP drive is easily mounted into the screw pipe. The taper shaft acts as a guide in assembling the drive shaft into the screw pipe.
- **Easy Removal** -
  There is less fretting due to less material contact.
- **Reduced bearing loads**
  Taper allows for screw pipe misalignment.
- **Quick external removal feature** -
  The SCP drive can be easily removed from the screw pipe in two ways. First is the conventional removal of the complete drive and shaft. Unbolt the mounting flange from the trough and remove the cross bolts from the pipe and shaft. After this is done the drive may be removed. This requires access to inside of the screw pipe which is not always possible.

  The Second way to remove the drive without screw pipe access by unbolting the SCP mounting flange from the drive and removing the drive, leaving the flange and drive shaft attached to the screw pipe.

### Flange

- **Standard CEMA mounting**
  The NORD SCP drives adhere to the CEMA standard mounting dimensions.
- **High strength class 35 gray cast iron**
  The SCP drives and screw conveyor flanges are made form high strength class 35 gray cast iron with a minimum tensile strength of 35,000psi.
- **❽ Versatile flange – multiple bolt patterns**
  The SCP mounting flanges often accommodate more that one CEMA bolt pattern. This allows one drive to be used on different screw sizes simply by switching out the drive shaft.

### High Efficiency

The NORD SCP design is extremely efficient due to the direct coupled gearmotor or NEMA C-face input design. Belted input systems have scientifically lower total drive efficiency. Efficiency may be further increased by using the NORD "H" line of energy efficient motors.

### Options

- Grease purge-able seal (PC) - see page 16
- Stainless steel CEMA drive shaft (SM5) - See page 16

## Screw Conveyor Key Features and Details

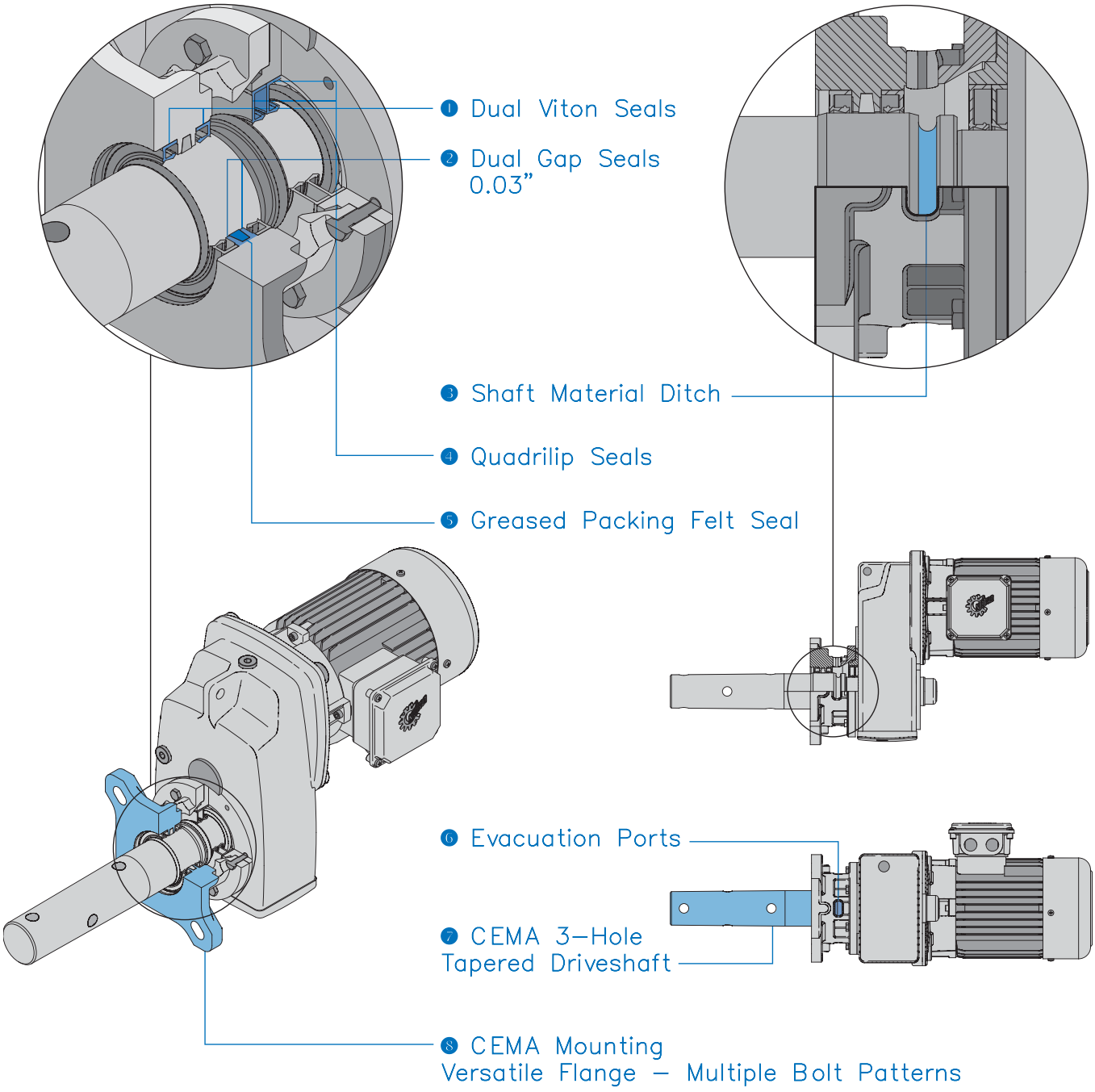

# Capacity , Ratings & Combinations





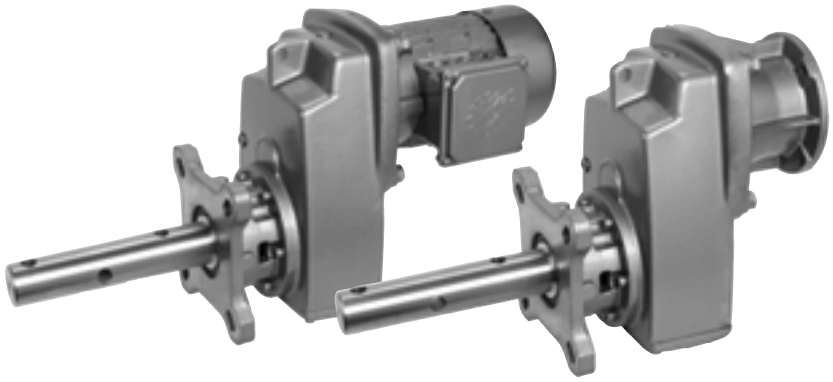

**Capacity & Ratings Overview**

| Model Type | Max Torque [lb-in] | Ratio Range [x:1] | Speed's [rpm] | Max Thrust Load Std Brgs [lb] | Max Thrust Load HD Brgs " VL " [lb] | Gear Stages | Efficiency [%] |
|---|---|---|---|---|---|---|---|
| **SK 1282 SCP** | 2620 | 4.79-109.5 | 365-16 | 1609 | 1609 | 2 | 97 |
| **SK 1382 SCP** | 2425 | 87.94-624.45 | 20-2.8 | 1550 | 1609 | 3 | 95 |
| **SK 2282 SCP** | 4611 | 4.51-127.51 | 388-14 | 2700 | 3375 | 2 | 97 |
| **SK 2382 SCP** | 4894 | 82.22-763.41 | 21-2.3 | 2700 | 3375 | 3 | 95 |
| **SK 3282 SCP** | 8363 | 4.48-112.23 | 391-16 | 3263 | 4500 | 2 | 97 |
| **SK 3382 SCP** | 9195 | 89.60-1022.42 | 20-1.7 | 3263 | 4500 | 3 | 95 |
| **SK 4282 SCP** | 16089 | 4.7-155.4 | 372-11 | 4950 | 6750 | 2 | 97 |
| **SK 4382 SCP** | 18381 | 86.83-1585.08 | 20-1.1 | 4950 | 6750 | 3 | 95 |
| **SK 5282 SCP** | 28630 | 4.32-134.03 | 405-13 | 7200 | 9000 | 2 | 97 |
| **SK 5382 SCP** | 28320 | 82.72-1367.08 | 21-1.3 | 7200 | 9000 | 3 | 95 |
| **SK 6282 SCP** | 40135 | 4.39-80.33 | 399-22 | 13219 | 13500 | 2 | 97 |
| **SK 6382 SCP** | 53100 | 24.42-551.58 | 72-3.2 | 13253 | 13500 | 3 | 95 |

**CEMA Drive Shaft Combinations**

| Model type | 1.5" shaft | 2" shaft | 2-7/16" shaft | 3" shaft | 3-7/16" shaft |
|---|---|---|---|---|---|
| **SK 1282 SCP** | X | X | X | | |
| **SK 1382 SCP** | X | X | X | | |
| **SK 2282 SCP** | X | X | X | | |
| **SK 2382 SCP** | X | X | X | | |
| **SK 3282 SCP** | X | X | X | X | |
| **SK 3382 SCP** | X | X | X | X | |
| **SK 4282 SCP** | | X | X | X | |
| **SK 4382 SCP** | | X | X | X | |
| **SK 5282 SCP** | | X | X | X | X |
| **SK 5382 SCP** | | X | X | X | X |
| **SK 6282 SCP** | | | | X | X |
| **SK 6382 SCP** | | | | X | X |



# SCP
# Ordering Guide

| | Gear Unit | Reducer Options | | Motor/Input | Motor Options |
|---|---|---|---|---|---|
| SK | ❶ | ❷ | ❸ | | ❹ |
| | | | | see page 19 | see page 128 |

❶

| Gear Unit |
|---|
| **1282 SCP** |
| **1382 SCP** |
| **2282 SCP** |
| **2382 SCP** |
| **3282 SCP** |
| **3382 SCP** |
| **4282 SCP** |
| **4382 SCP** |
| **5282 SCP** |
| **5382 SCP** |
| **6282 SCP** |
| **6382 SCP** |
| **Specialty Bevel Product** |

❷

| Reducer Options | |
|---|---|
| **ADP -** Additional Drain Plug | **PC -** Grease Purge Seal |
| **LL -** Long Term Storage | **RV -** Drain Valve |
| **MDP -** Magnetic Drain Plug | **SM5 -** Stainless Steel CEMA Shaft |
| **OA -** Oil Expansion Chamber | **VL -** Heavy Duty Bearings |
| **OSG -** Oil Sight Glass | |

❹

| Motor Options | |
|---|---|
| **F & FC -** Blower Cooling Fan | **OL -** Non Ventilated TENV W/Out Fan |
| **RD -** Drip Cover Canopy | **OLH -** Non Ventilated TENV W/Out Fan & Cover |
| **RDD -** Double Drip Cover Canopy | **WE -** Motor Second Shaft Extension |
| **KD -** Condensation Drain Holes | **Z -** High Inertia Motor Fan |
| **KB -** Condensation Drain Holes Plugged | **IG -** Incremental Encoderr |
| **IP66 -** IP66 Motor Enclosure | **TW -** Thermostat |
| **KKV -** Potted Terminal Box | **TF -** Thermistor |
| **MS -** Quick Power Disconnect, Harting Plug | **SH -** Anti-Condensation Space Heaters |

❸

| Input Shaft | NEMA Adapter | IEC Adapter | Integral Motors | Integral Energy Efficent Motors |
|---|---|---|---|---|
| **W** | **N56C** | **IEC 63** | **63S/4** - 0.16hp | **80LH/4** - 1hp |
| | **N140TC** | **IEC 71** | **63L/4** - 0.25hp | **90SH/4** - 1.5hp |
| | **N180TC** | **IEC 80** | **71S/4** - 0.33hp | **90LH/4** - 2hp |
| | **N210TC** | **IEC 90** | **71L/4** - 0.50hp | **100LH/4** - 3hp |
| | **N250TC** | **IEC 100** | **80S/4** - 0.75hp | **112MH/4** - 5hp |
| | **N280TC** | **IEC 112** | **80L/4** - 1hp | **132SH/4** - 7.5hp |
| | | **IEC 132** | **90S/4** - 1.5hp | **132MH/4** - 10hp |
| | | **IEC160** | **90L/4** - 2hp | **160MH/4** - 15hp |
| | | **IEC180** | **100L/4** - 3hp | **160LH/4** - 20hp |
| | | | **100LA/4** - 5hp | **180MH/4** - 25hp |
| | | | **112M/4** - 5.4hp | **180LH/4** - 30hp |
| | | | **132S/4** - 7.5hp | |
| | | | **132M/4** - 10hp | |
| | | | **160M/4** - 15hp | |
| | | | **160L/4** - 20hp | |
| | | | **180MX/4** - 25hp | |
| | | | **180LX/4** - 30hp | |
| | | | Other Speeds Available | Other Speeds Available |

## Product Specifications

**Ratio**

_____ :1

see pages 31 - 62

OR

**Output Speed**

_____ rpm

see pages 31 - 62

**Mounting Position**

- ❍ M1
- ❍ M2
- ❍ M3
- ❍ M4
- ❍ M5
- ❍ M6
- ❍ Special _____

**CEMA Shaft Diameter**

- ❍ 1-1/2"
- ❍ 2"
- ❍ 2-7/16"
- ❍ 3"
- ❍ 3-7/16"

**Paint**

- ❍ Standard Stainless Steel Paint
- ❍ NSD+ (gray)
- ❍ NSD+W (white)
- ❍ NSD-X3 (gray)
- ❍ NSD-X3W (white)
- ❍ Casting Primed
- ❍ Special _____

**Lubricant**

- ❍ Standard
- ❍ Synthetic
- ❍ Food Grade
- ❍ Other _____

## Gearmotor Only Details

**Voltage & Frequency**

- ❍ 230/460V-60Hz (460V only ≥ 40 hp)
- ❍ 575V-60Hz
- ❍ 208V-60Hz
- ❍ 400V-50Hz
- ❍ Other _____

**Terminal Box Pos.**

- ❍ TB1
- ❍ TB2
- ❍ TB3
- ❍ TB4

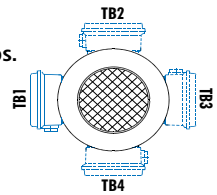


Mtg. Pos. M1 Shown

**Conduit Entry Loc.**

- ❍ CE I *
- ❍ CE II
- ❍ CE III *
- ❍ CE IV

* Brakemotor

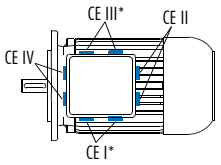


Mtg. Pos. M1 Shown





## Gearbox Selection

A number of factors are considered when selecting a gear unit, including gearbox rating, service factor, speed and speed variation, horsepower, thermal capacity, ratio, physical size, ambient conditions and cost. Below are some guideline steps to help aid in the gear unit selection.

1. Determine the speed and/or gear ratio
2. Determine the required power or torque
3. Determine Service Factor
4. Determine CEMA Shaft Diameter
5. Select the basic gearbox type and input
6. Determine the required mounting position
7. Select options
8. Checks – thrust load, NEMA moto weight, thermal considerations, & other application considerations

### 1. Speed and Gear Ratio

The first step in selecting a gear unit is determining the final output speed or speeds you need. This speed is normally described in revolutions per minute (rpm). This output speed or speeds is determined by the input speed to the gear unit divided by its gear ratio. Their relationship is described by the following formulas.

$$\text{i (gear ratio)} = \frac{\text{Input speed [rpm]}}{\text{Output speed [rpm]}}$$

$$\text{Output speed [rpm]} = \frac{\text{Input speed [rpm]}}{\text{i (gear ratio)}}$$

To specify a gear unit, you can identify either gear ratio needed or the output speed (rpm) if the input speed is known.

### 2. Power and Torque

The second step for selecting a gear unit is the required power or torque needed to power the load. Torque in this catalog is normally expressed in pound-inches [lb-in].

$$\text{Power [hp]} = \frac{\text{Torque [lb-in] x speed [rpm]}}{63025}$$

$$\text{Torque [lb-in]} = \frac{\text{Power [hp] x 63025}}{\text{speed [rpm]}}$$

For a proper selection you must ensure that the motor or other prime mover can produce enough torque or power and that the gear unit has adequate torque or power capacity.

To specify a gear unit you can identify either torque or power.

### 3. Service Factor or Service Class

In addition to power or torque, service factor must also be considered. A service factor is essentially the ratio of extra capacity in a gear unit compared to the power or torque that is needed to run that application. The goal of selecting a gear unit with extra capacity (service factor) is to provide adequate service life in operation.

One reason to apply a larger service factor is if a unit operates more hours per day. If a unit runs 24 hours per day it should normally have a higher service factor than a unit that runs 8 hours per day if you expect the same calendar life.

A second reason for applying a larger service factor is to cope with a more difficult application. Even if it takes the same power and speed to operate a rock crusher as a fan, the rock crusher needs a stronger gearbox (higher service factor) to give the same calendar operating life as the gear unit powering the fan.

The real question is how to determine the proper service factor for a gear unit in an application. Following are four possible methods.

#### Customer or User Specification

Many customers will have their own service factor guidelines or specifications.

#### AGMA Service Factoring

American Gear Manufacturers Association (AGMA) publishes lists of recommended service factors for different applications. These service factor recommendations have been determined from the experience of many gear manufactures and are in AGMA standard 6010.

#### AGMA Service Classes

American Gear Manufactures Association (AGMA) has another method for selecting gear units service factors. AGMA standard 6009 lists many applications by a service class (I, II, III) with class I being the simplest applications and class III being the hardest. These application service classes are associated with a range of service factors by the following table.

| AGMA Service Class | Service Factor |
|---|---|
| I | 1.00 to 1.39 |
| II | 1.40 to 1.99 |
| III | 2.00 and above |

In the gearmotors selection table each unit is also classified by an AGMA service class.



### NORD Mass Acceleration Service Factoring

NORD often uses a calculation based system to properly assign a service factor. This system considers hours of operation per day, the severity of the application and the number of times the equipment is cycled.

### AGMA Class of Service

This table has been developed from the collective experience of gearbox and screw conveyor manufacturers and users of speed reducers in typical applications. Maintaining speed reducer Service Factor (S.F.) provides compensation for non-measurable operating loads and daily length of time in service.

The speed reducer selected should have a service factor greater than or equal to service factor suggested for the particular application. This will result in trouble free operation for a reasonable period of time. Insufficient service factor inevitably ends with premature failure of the speed reducer. Note: Each screw conveyor manufacturer determines the proper "margin of safety" for their type of application and equipment.

| Operating conditions | Service Factor | | |
|---|---|---|---|
| | up to 3 hrs/day | 3-10 hrs/day | 10-24 hrs/day |
| Uniformly loaded or fed | I | I | II |
| Heavy duty | I | II | II |

from AGMA Standard 6009-A00

### 4. CEMA Drive Shaft Size

Available CEMA Shaft Sizes

- 1 - 1/2"
- 2"
- 2 - 7/16"
- 3"
- 3 - 7/16"

### CEMA Drive Shaft Connection Strength

For some selections the torque is limited by the CEMA drive shaft connection. It is important to consider the torque limits following when making a selection.

**Torque limits - CEMA 350-2003 (Table 3-5) excerpts**

| Shaft size [in] | 2-Bolt [lb-in] | 3-Bolt [lb-in] |
|---|---|---|
| 1 - 1/2 | 3,070 | 3,070 |
| 2 | 7,600 | 7,600 |
| 2 - 7/16 | 9,270 | 13,900 |
| 3 | 15,400 | 23,310 |
| 3 - 7/16 | 21,800 | 32,700 |

### 5. Gearbox Input

NORD's modular design allows for a number of different inputs to be added to NORD reducers including:

- Integral motor
- NEMA-C and IEC motor adapter
- Solid input shaft

### 6. Mounting Position

The gearbox mounting position is an important and often overlooked specification. The mounting position determines how much oil the gear reducer requires, in addition to determining the position of the oil drain, oil fill and vent on the gear drive. NORD offers six basic mounting positions. If your application requires a variation from the six basic mounting positions, please contact NORD.

### 7. Options

NORD offers a number of mechanical, protective, paint and lubrication options for gear reducers and motors. Please see page 16 for gear unit options and refer to the motor section for motor options.

### 8. Checks

### Thrust Loads (Axial)

Loads that are directed towards or away from the gearbox along the axis of the shaft are called thrust or axial loads. Output shaft thrust capacity [$F_A$] can be found in the gearmotor rating tables. Thrust load capacities should not exceed the values listed in the tables to ensure long bearing life. Contact NORD for combination loads or a more exact examination of the application.

### NEMA C-face Motor Weight Limits

When mounting a motor to a NORD NEMA C-face motor adapter it is important to consider the motor's weight. Following is a table that includes the maximum motor weight the NEMA adapter can support. If the motor exceeds the listed weight it must be externally supported. When a C-face mounted motor is externally supported care must be taken to ensure that the support system does not impose additional pre-loads on the NEMA motor adapter.

**NEMA Weights**

| Motor FRAME | 56C | 143TC | 145TC | 182TC |
|---|---|---|---|---|
| Max Weight [lb] | 66 | 88 | 110 | 130 |
| **Motor FRAME** | **184TC** | **210TC** | | |
| Max Weight [lb] | 175 | 220 | | |





**⚠ GENERAL WARNINGS & CAUTIONS ⚠**

Applications with risk of personal injury should be reviewed together with NORD. Examples of these are hoist, lifts or other applications where people may be at risk.

### NEMA and IEC Adapters

NEMA/IEC adapter have additional shaft coupling and additional bearing seats compared to integral motors so there are higher no-load losses with NEMA or IEC adapters. We recommend mounting the motor directly, since it offers both technical and cost advantages.

NEMA and IEC adapters used in hoist, lifts and other applications with danger of personal injury should be reviewed together with NORD.

### NEMA C-Face Adapter Capacity

The NEMA adapters are designed to handle the torques produced by the standard NEMA power assignment at 4-pole (1800 rpm) motor speeds. If a larger motor power than the power listed below is used, NORD should be consulted. Also if a NEMA adapter is being used for other than an AC induction motor NORD should be consulted.

| Adapter | Max Power [hp] |
|---|---|
| 56C | 1 |
| 140TC | 2 |
| 180TC | 5 |
| 210TC | 10 |

### External Installation, Tropical Use

Gearboxes installed outside, in damp rooms, or used in the tropics may require special seals and anti-corrosion options. Please contact NORD for application assistance.

### Special conditions

If special environmental or other conditions exist in transit, storage or operation these need to be considered in the unit selection. Special conditions may include (but are not limited to):

- Exposure to aggressive corrosive materials (contaminated air, gasses, acids, bases, salts, etc.)
- Very high relative humidity
- Direct contact between the motor and liquid
- Material build-up on the gear unit or motor (dirt, dust, sand, etc.)
- High atmospheric pressure
- Radiation
- Extreme temperatures, high, low or large temperature changes
- High vibration, acceleration, shocks or impacts
- Other abnormal conditions

### Gear Reducer Ratings

The permissible continuous power limit of gear reducers is limited by both the mechanical rating and the thermal rating. The mechanical rating depends upon the material strength of the gear reducer's gears, bearings, housing, shafts, etc. The mechanical input power limit to the reducer is also a function of the mechanical power rating divided by the relevant reducer service factor.

The thermal rating or thermal limit depends upon the amount of heat generated within the reducer and is influenced by a variety of factors including:

- Churning or splashing losses in the lubricant which depend upon reducer type, ratio, input style, mounting position or oil fill-level, and the circumferential travel velocities of the gear wheels.
- The actual speed and load conditions. These factors determine load-depedent losses in the gear areas and frictional losses in the gear, bearing & seal areas.
- Ambient Conditions:
  - Ambient Temperature.
  - Amount of free air circulation around the drive.
  - Possible near-by heat sources.
  - Heat dissipation or the ability of the reducer to transfer heat through the housing, shafts, and the mating sub-structure or mounting surface.

### Storage Before Installation

The gear units and motors should be stored in a dry area before they are to be installed. Special measures are required for longer storage. Please request long term storage instructions from NORD Gear or see page 17.



## Observing the Reducer's Thermal Limit

### When to Contact NORD

Through computer program analysis NORD can evaluate application conditions and the impact they have on a reducer's thermal capacity.

When applying SCP gear units of case size SK 6282 & larger, consult NORD if any two or more of the following conditions apply:

- Gear ratio, $i_{total} \leq 24:1$
- Input speed, $n_1 > 1800$
- Vertical positioning (mounting position M2 or M4)
- Input configuration: NEMA C-face, IEC, servo adapter or solid-shaft input (Type-W)
- An elevated ambient temperature ≥ 86° F (30 °C)

### Dangers of Reducer Overheating

The following problems may result when the reducer's thermal capacity or maximum oil sump temperatures are exceeded:

- Lubrication oxidation, breakdown & deterioration.
- A decrease in lubrication viscosity & film thickness.
- Loss of critical bearing and gear clearances required for proper lubrication.
- Increased contact pressures and increased operating temperatures in the critical load zones of the gearing and bearings.
- An increased possibility for metal-to-metal contact and premature component wear.
- A significant reduction in the lubricant's ability to prevent scuffing, pitting, and in extreme cases galling or welding.

### Maximum Oil Sump Temperature Limit

To prevent reducer overheating, the reducer's maximum oil sump temperature limit must not be exceeded for prolonged periods of operation (up to 3 hours continuous operation, depending upon reducer size).

| Oil Type | Maximum Oil Temperature Limit | |
|---|---|---|
| | NORD | AGMA 9005-D94 |
| Mineral | 80-85 °C (176-185 °F) | 95 °C (203 °F) |
| Synthetic | 105 °C (220 ° F) | 107 ° C (225 ° F) |

**IMPORTANT NOTE**

***Use caution when specifying gear reducers for high temperature service.*** If there is concern about exceeding the allowable safe operating temperatures, please consult NORD to discuss alternatives.

### Measures to Expand the Application Range

There are a variety of measures that may be taken in order to protect against thermal overload and expand the application range of the gear reducer. Common examples include the following:

- Recommending a change in lubrication viscosity and/or a specific synthetic lubricant type.
- Applying high-temperature seals.
- Increasing air flow around the gear unit.
- Shielding or protecting the reducer from high heat sources.
- Considering an integral motor instead of the bolt-on input assembly covers. In many cases the motor fan will substantially increase air-flow around the gear unit.



## Mounting Positions

The reducer mounting position determines the approximate oil fill level and the appropriate vent location. In some cases the mounting position may dictate possible variation in final reducer assembly. If considering any mounting positions that are not shown as catalog-standard options, it is critical that the customer consult with NORD prior to ordering.



### New Mounting Position System

NORD is in the processes of incorporating a new mounting position systems. Historically the NORD mounting position system was based on international motor standards. NORD is changing in an effort to simplify the system. The new system is based on the six sides of a cube. Below is a cross reference between the old and new mounting position codes.

**Mounting Position Cross Reference Table**

| New | M1 | M2 | M3 | M4 | M5 | M6 |
|---|---|---|---|---|---|---|
| Old | B3, B5 | V3, V6 | B8, B5I | V1, V5 | B5II, B6 | B7, B5III |

## Screw Conveyor Package

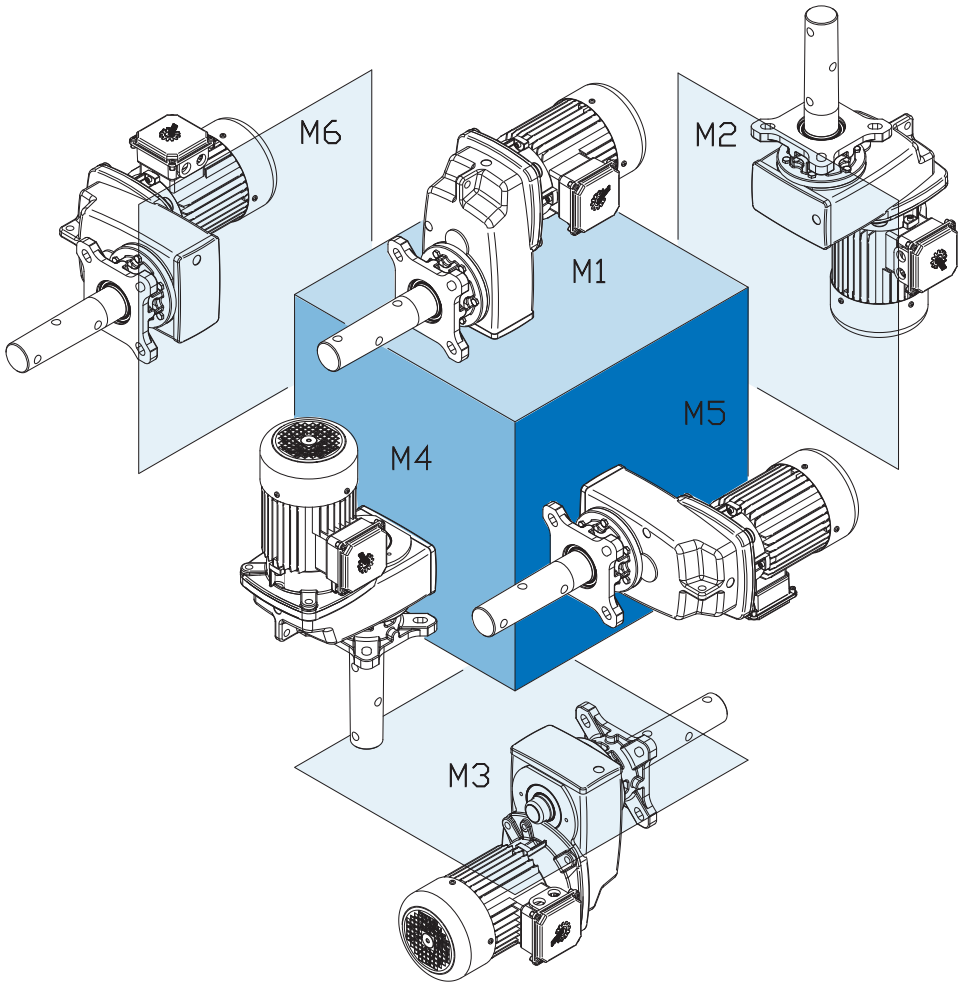



## Screw Conveyor Mounting

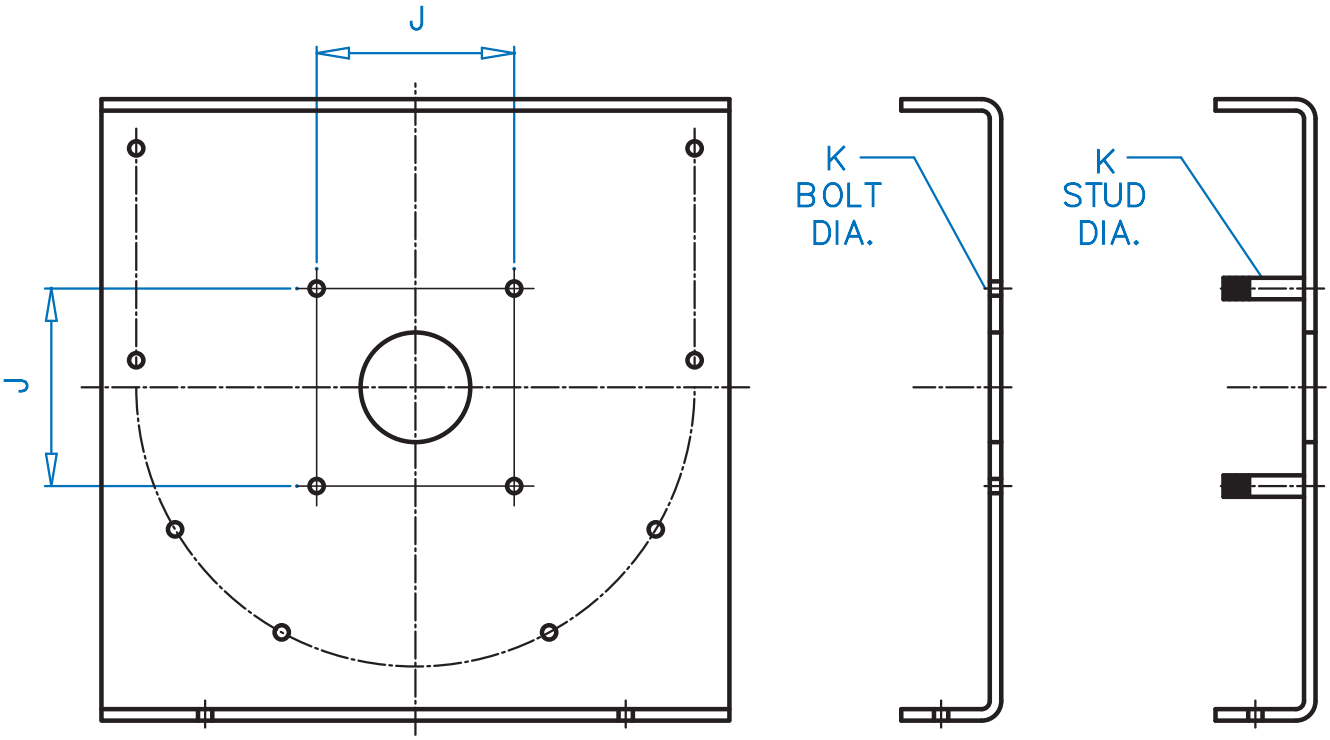




**Screw Conveyor mounting dimensions from CEMA 300-13 excerpts**

| Screw Diameter [in] | CEMA Drive shaft [in] | J Width [in] | K Bolt [in] | K Stud [in] |
|---|---|---|---|---|
| 6 | 1-1/2 | 4 | 1/2 | 7/16 |
| 9 | 1-1/2 | 4 | 1/2 | 7/16 |
| | 2 | 5-1/8 | 5/8 | 9/16 |
| 12 | 2 | 5-1/8 | 5/8 | 9/16 |
| | 2-7/16 | 5-5/8 | 5/8 | 9/16 |
| | 3 | 6 | 3/4 | 3/4 |
| 14 | 2-7/16 | 5-5/8 | 5/8 | 9/16 |
| | 3 | 6 | 3/4 | 3/4 |
| 16 | 3 | 6 | 3/4 | 3/4 |
| 18 | 3 | 6 | 3/4 | 3/4 |
| | 3-7/16 | 6-3/4 | 3/4 | 3/4 |
| 20 | 3 | 6 | 3/4 | 3/4 |
| | 3-7/16 | 6-3/4 | 3/4 | 3/4 |
| 24 | 3-7/16 | 6-3/4 | 3/4 | 3/4 |

# Gear Unit Options





### Screw Conveyor Package Gearbox Options

| Abbreviation | Description | Page |
|---|---|---|
| **ADP** | Additional drain plug | 17 |
| **LL** | Long term storage | 17 |
| **DR** | Autovent | 17 |
| **FV** | Filtered Vent | 17 |
| **MDP** | Magnetic drain plug | 17 |
| **OA** | Oil Expansion Chamber | 16 |
| **OSG** | Oil sight glass | 16 |
| **OV** | Open vent | 17 |
| **PC** | Grease Purge Seal | 16 |
| **SM5** | Stainless steel output shaft | 16 |
| **VL** | Heavy Duty Bearings | 16 |
| **none** | Special Drain Plugs | 17 |
| **none** | Paint coatings | 18 |

## Heavy Duty Output Bearings (VL)

Replacing standard output bearings with heavy-duty versions will increase the external load carrying capacity of the speed reducer. Increased capacity in either or both overhung (radial) or thrust (axial) loading insures that premature bearing failure will not occur due to high stresses in the bearing elements. The increased bearing capacity will also keep the speed reducer as small as possible by not having to select the next larger case size in order to handle the bearing loads. If increased bearing life is desired, larger bearings will reduce the relative stress on the bearings and increase B10 bearing life.

### Standard Bearing

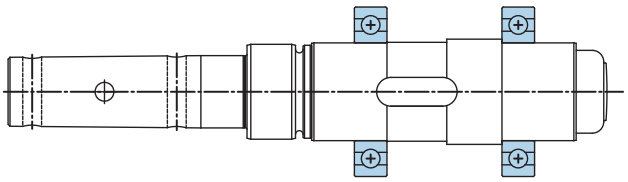

### Heavy Duty Bearings (VL)-option

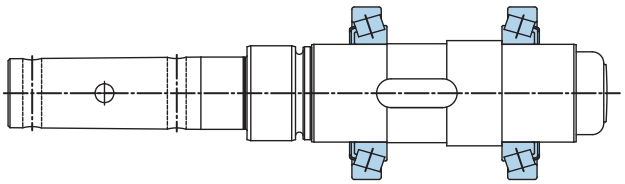

## Grease Purge Seal (PC)

The SCP screw conveyor package has an optional grease purgeable sealing system. The design replaces the greased packed felt packing seal with a grease filled cavity. The system also includes a grease nipple and relief to allow the seal to be flushed with fresh grease.

## Stainless Steel Output Shaft (SM5)

Output shafts made from stainless steel are available and are frequently used in food, pharmaceutical, and washdown applications. In some cases stainless steel solid input shafts may also be provided.

## Oil Expansion Chamber (OA)

Oil expansion chambers are available for most reducers. These chambers allow for expansion of the oil-air mix in the reducer that can occur during operation. This expansion chamber is similar to a car radiator over-flow chamber.

## Oil Sight Glass (OSG)

The oil sight glass provides a visible oil level indication on the reducer. The sight glass replaces the standard steel fill plug and consists of a sealed clear porthole centered in the middle of a brass plug. The sight glass allows for quick oil level and color inspection.



## Autovent™ (DR)

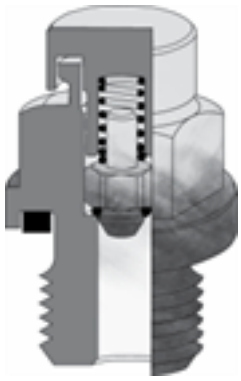

The Autovent™ prevents entry of foreign material, such as water, dust, corrosives, etc… and is perfect for washdown and dusty environments. The Autovent™ is a ball and spring check valve that opens at 2 psi and during operation and closes tightly when the gearbox cools. The Autovent™ is standard on all vented NORD reducers. Some of the benefits are cleaner gearbox oil, extended lubrication life and longer lasting seals, gears, and bearings.

## Open Vent (OV)

An open vent may be optionally supplied on NORD reducers. The open vent allows for air pressure differences between the inner space of the reducer and the atmosphere. This open vent will be closed upon delivery to prevent oil leakage. Before the reducer is put in service the open vent should be activated by removing the sealing plug.

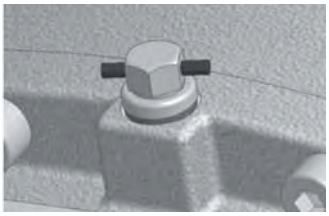

Sealed vent

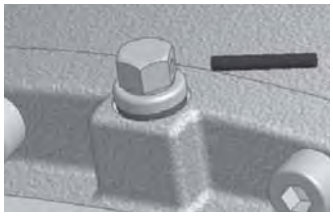

Activated vent

## Filtered Vent (FV)

NORD offers a filtered vent, which allows gases to permeate, but does not allow dust and debris to pass through the vent.

## Magnetic Drain Plug (MDP)

Magnetic drain plugs attract and hold ferrous metal particles that may circulate inside the reducer's lubrication system. These potentially abrasive particles may cause excessive wear in the reducer if they remain circulating. An increase of collected material may be a warning sign of future problems.

## Special Drain Plugs



NORD oil drain valves are offered to make draining the oil from the gearbox clean and easy. The drain hose needs to be supplied by the customer. The hose fittings are offered in either 90° or straight to accommodate the user.



A brass drain valve is threaded into the existing oil drain port of the gearbox. The spring valve is closed using a rubber o-ring. When the hose fitting is threaded into the drain valve, the spring valve is pushed open and allows oil to drain. When the hose fitting is removed, the drain valve closes. A brass, threaded cap is supplied to cover the drain valve when not in use.

## Additional Drain Plug Hole (ADP)

NORD can add an additional drain hole to the reducer housing for a small surcharge if required for special oil plumbing needs.

## Long Term Storage (LL)

Speed reducers are frequently put in storage prior to installation for long periods of time and in some cases exposed to the elements. NORD's long term storage option protects the unit from moisture or corrosion by coating all unpainted surfaces with a dry, transparent, durable waxy film. Once installation is necessary this waxy film can be easily removed with a commercial de-greaser or petroleum solvent. If possible the store room should be vented and dry, with room temperatures between 23°F and 104 °F (-5 °C and 40 °C).





## Paint Coatings

NORD's standard paint coating is a two component, aliphatic polyurethane finish contaning 316 stainless steel material. This gray stainless steel paint has excellent appearance and outstanding physical properties. It is suitable for both indoor and outdoor applications.

Advantages of NORD's stainless steel two component polyurethane:

- Excellent adhesion to cast iron, aluminum, steel, and plastics
- Excellent corrosion resistance
- Excellent chemical resistance
- Excellent gloss and color retention
- Suitable for indoor and outdoor exposure
- Nonporous and excellent abrasion resistance
- USDA compliant

NORD also offers a variety of severe duty paint coatings that provide a high level of protection against water and severe environments both indoors and outdoors. NSD+ (NORD Severe Duty) consists of a primer undercoat and a stainless steel polyurethane topcoat. For the most demanding environments, NORD offers NSD-X3 (NORD Severe Duty triple coated) which consists of a primer undercoat, stainless steel polyurethane coating, and a clear topcoat. Paint coatings are also available in alternate colors as seen in the table below.

| Finish | Color | Coating | Use |
|---|---|---|---|
| Standard (stainless steel paint) | Stainless steel silver (Gray) | 1 x Stainless steel (316) top coat (polyurethane) | Indoor or outdoor moderate environment |
| Alternate color | Black, Blue, Red, Orange | 1 x Color top coat (polyurethane) | Indoor or outdoor protected |
| NSD+ | | | |
| NORD Severe Duty + NSD+ | Stainless steel silver (Gray) | 1 x Primer high solid alkyd system<br>1 x Stainless steel (316) top coat (polyurethane) | Indoor or outdoor moderate environment |
| NORD Severe Duty +W NSD+W | White | 1 x Primer high solid alkyd system<br>1 x White top coat (polyurethane) | Indoor or outdoor moderate environment |
| Alternate color NSD+ | Black, Blue, Red, Orange | 1 x Primer high solid alkyd system<br>1 x Color top coat (polyurethane) | Indoor or outdoor moderate environment |
| NSD X3 | | | |
| NORD Severe Duty Extreme NSD-X3 | Stainless steel silver (Gray) | 1 x Primer high solid alkyd system<br>1 x Stainless steel (316) (polyurethane)<br>1 x Clear top coat (polyurethane) | Indoor or outdoor more severe environment |
| NORD Severe Duty Extreme NSD-X3W | White | 1 x Primer high solid alkyd system<br>1 x White (polyurethane)<br>1 x Clear top coat (polyurethane) | Indoor or outdoor more severe environment |
| Alternate color NSD-X3 | Black, Blue, Red, Orange | 1 x Primer high solid alkyd system<br>1 x Color (polyurethane)<br>1 x Clear top coat (polyurethane) | Indoor or outdoor more severe environment |

Special colors and paints possible please contact NORD with your specific requirements.



## Input

NORD's modular design allows for many different types of inputs to be added to gear reducers. All inputs are bolt on and include machined pilots to ensure simple and accurate assembly. NORD offers the following different input types:

- Integral motor
- NEMA C-face motor adapter
- IEC B5 motor adapter
- Solid input shaft
- Servo motor adapter
- Top mount motor platform
- Custom mounting interface

### Example Nomenclature

**SK3282SCP - W**

- **W** — Solid Input Shaft
- **SK3282SCP** — Gear unit

SCP Gear unit with solid input shaft.

**SK3282SCP -140TC**

- **140TC** — NEMA 140 TC Motor Adaptor
- **SK3282SCP** — Gear unit

SCP Gear unit to recieve standard NEMA C-Face motor adaptor.

**SK3282SCP - IEC80**

- **IEC80** — IEC 80 B5 Motor Adaptor
- **SK3282SCP** — Gear unit

SCP Gear unit to recieve standard metric IEC B5 flange mount motor adaptor.

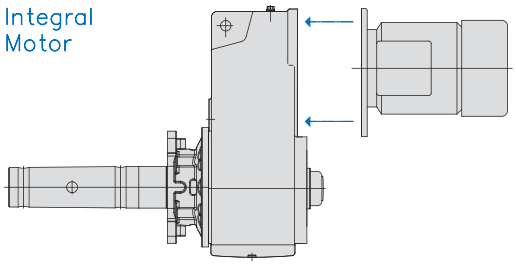


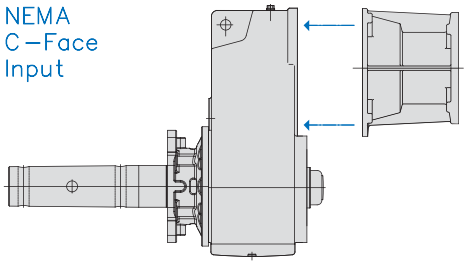


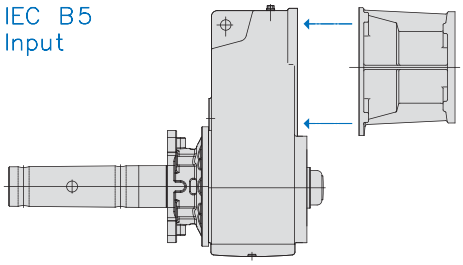


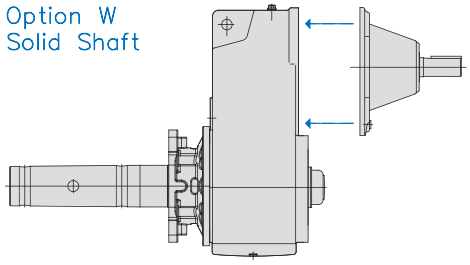


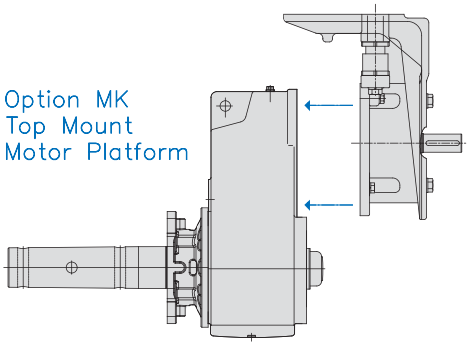





## Integral Motors

NORD provides integral motors that mount directly to the gearbox. Integral motor mounting eliminates the need for costly v-belts or sheaves and directly couples the motor to the reducer. This also results in a dimensionally compact one-piece package.

NORD high performance integral motors are available in many operational voltages, are inverter duty rated, and offer many valuable options including energy efficient motors and power off brakes. For more information on integral motors, see the motor section found on page 119.

## NEMA C-Face Motor Adapter

NEMA C-face motor adapters allow for easy installation and removal of industry standard C-face motors. NEMA C-face motor adapters consist of a coupling and an adapter housing that connects the motor to the gear reducer. Gear units with NEMA C-face adapters are commonly used where applications require specialized motors or the user wants to easily find a replacement motor if failure occurs. NORD also offers high performance NEMA C-face motors and brakemotors, that can be factory installed to the motor adapter.

NORD motor adapters deliver nearly 100% of the torque generated by the motor and can be used from -13°F (-25°C) to 212°F (100°C). Most motor adapters have specially sealed bearings that are lubricated for life.

The maximum input power of a gear unit with a NEMA C-face adapter is generally limited by the power rating of the standard NEMA C-face motor size. The power limit is indicated in the ratings table for a standard 4-pole 1750 rpm motor. In some cases the gearbox limit ($T2_{max}$) will be the limiting capacity. Both the NEMA adapter limit and the gearbox torque limit must be considered. If the speeds required exceed those included in the performance and speed reduction tables please contact NORD.

## IEC Motor Adapter

IEC motor adapters allow for easy installation and removal of industry standard IEC motors according to DIN 42677. The IEC adapter is very similar to the NEMA C-face adapter in construction. The maximum input power is generally limited by the IEC motor size. For ratings and dimensions, please consult NORDS metric catalogs that may be found online at www.nord.com under the document section.

## Solid Input Shaft

Designed to mount couplings, sheaves or sprockets, which transfer torque from the prime mover. The input shaft is made from ANSI 1045 or stronger material and is dimensioned with long keys according to ANSI B17 standards. The maximum gearbox input power rating is indicated in the speed reducer performance tables.

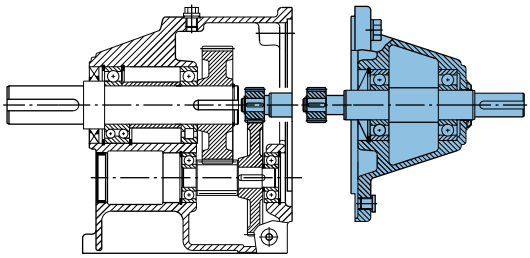

## Servo Motor Adapter

Servo motor adapters are designed to handle the highly dynamic capabilities of servo motors. NORD servo motor adapters have a square mounting flange and are available with either a keyed (SEP) or a key-less (SEK) coupling. They are suitable for speeds up to 3000 rpm and the high torques produced by servo motors. Higher input speeds can be handled for a short duration and the bearings and input shaft are designed to cope with the high torque loads.

## Top Motor Mount Platform

Some applications require the motor to be mounted on top of the reducer with a belt drive connection from the motor to the reducer. MK platforms can be bolted-on to all UNICASE™ gearboxes in any mounting position and offer the following advantages:

- Light, vibration inhibiting aluminum construction
- Corrosion resistant, easily adjustable mechanism for belt tensioning
- Corrosion resistant fasteners
- Available in all mounting positions
- Can be swung 90° to the right or left
- Platform has multiple bolt patterns for various motors

Motor platforms are pre-drilled and tapped to bolt on a standard NEMA footed motor. Each platform has belt tension adjusters. Motor, belts, sheaves and guard are supplied by the customer.



## Custom Mounting Interface

NORD can provide custom input adapters typically consisting of a special adapter plate and special coupling to mount non-standard dimensioned motors or other devices.

When a custom input adapter is required, special attention needs to be given for each application to be sure the customer receives the performance that is necessary. The following information is required:

- Motor Dimensional Drawing
- Motor Weight
- Motor performance specifications, including torque, horsepower and operating speed ranges.

NORD engineers will review the performance requirements and make a unit selection based on given parameters.

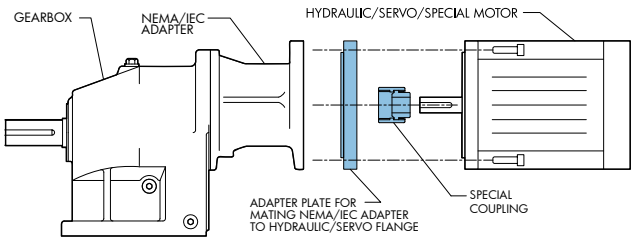


## Vertical Motor Adapter Applications

Gear units with motors frame sizes 250TC (IEC160) and larger, in a vertical up motor mounting position, NORD recommends using an integral gearmotor instead of a NEMA or IEC input adapter. If your application requires this mounting position and a NEMA or IEC input, please consult NORD. In vertical down motor mounted applications it is recommended to shorten the maintenance interval.

## Couplings

Couplings are made with tough abrasion resistant materials, which resist most chemicals and petroleum products. They are electrically isolated (prevent metal to metal contact) and require no lubrication or maintenance. Depending on the size of the C-face input, NORD provides either a gear or jaw type coupling.

## Gear Couplings

Gear couplings are used with 56C to 280TC adapters and provide a compact space saving design. C-face adapter input shafts have a machined male spline that meshes with a molded nylon spline on the coupling. This specially designed molded nylon sleeve that exhibits high torsional stiffness, resulting in minimum fit-up backlash and reduced internal frictional losses. Gear couplings lightweight design yields low inertia and use blind assembly and slip together components to make inspection easy without disassembly.

NORD incorporates two styles of gear couplings, the “J” and “M” styles. The “J” style is one-piece couplings consisting of a nylon sleeve and metal hub that are fused together. The “M” style is a two-piece coupling consisting of a separate nylon sleeve and metal hub.

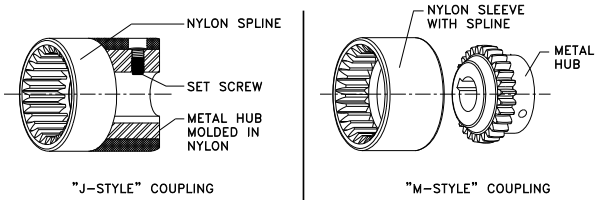


## Jaw Couplings

Jaw couplings are used with 320TC and larger adapters. The cast iron jaw type couplings have a urethane “spider” that provides smooth transmission of the motor torque and has excellent shock and vibration dampening characteristics. A set screw on the coupling prohibits axial movement along the motor shaft.

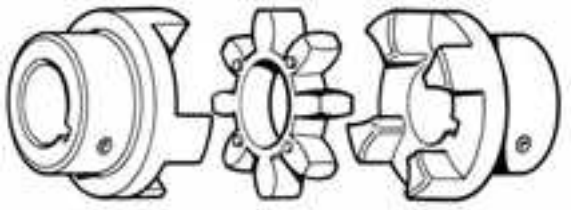





## The Importance of Proper Lubrication

Proper gearbox lubrication is essential in order to reduce friction and component wear, and protect against corrosion and rust. Gear lubricants reduce heat and wear by inserting a load-sharing "protective fluid film" between mating parts and preventing direct metal to metal contact. Properly selected lubricants will operate under various film conditions, improve heat transfer, optimize reducer efficiency, absorb shock loads, reduce noise, inhibit foaming, and separate water readily.

## Design Considerations

Along with many other factors, the gear designer must consider the gear load and speed conditions, and the expected operating oil temperatures. These factors help determine a generally suitable oil category, a desired additive package, preferred base-oil type, and oil viscosity.

It is important that the consumer be aware of these many design factors before making any changes in the critical areas (oil category, base-oil type, viscosity, etc.) One should consult their preferred lubrication supplier or NORD Gear when questions arise.

## Gear Oil Types, Categorized by Base Oil

### *Mineral Oil with an EP Additive (DIN 51517, Type CLP)*

High performance mineral gear oils are carefully engineered and manufactured to improve aging characteristics, minimize friction, offer good wear protection, provide corrosion and oxidation resistance, minimize foam, and separate water. Mineral gear oils are classified as API Group I or II oils, depending upon viscosity.

The standard NORD mineral gear oil has an extreme pressure (EP) additive ISO Viscosity Grade EP220 (AGMA 5 EP) and is generally acceptable for helical gear units. Good quality mineral oil should have the ability to operate at moderate sump temperatures (up to 80-85 °C) without losing viscosity or thickness. A minimum viscosity index (VI) of 93 or higher is suggested. The oil must also have good film strength to handle shock loads, high torque, and start-up conditions. A minimum FZG Scuffing Load Stage 12 is desirable.

**Advantages:**

- Most economical of all the gear oil types.
- Generally offers good compatibility with shaft seals, gaskets, paint finishes, etc.
- Offers good corrosion and oxidation protection.
- Effectively reduces internal friction and wear.

### *When Synthetic Oils Are Used*

Synthetic gear oils are suggested when mineral gear oils have reached their performance limit or when they no longer meet certain application requirements. NORD may recommend synthetic oil for any one of the following conditions:

- Severe duty applications or when gears are exposed to frequent starts and stops, high-load or shock.
- For applications in low or high temperature service.
- To extend oil service interval requirements.
- To eliminate the necessity for seasonal oil changes.
- To extend service life of factory-sealed or maintenance-free gear units.
- To take advantage of performance benefits: shear resistance, low traction coefficient, reduced internal friction, improved lubricity, reduced operating temperatures, improved gear efficiency, etc.

### *Performance Advantages of Synthetic Oil*

Compared to mineral oils, synthetic oils provide a number of performance advantages including:

- Ability to operate at higher temperatures without losing viscosity or thickness, due to a much improved viscosity index.
- Improved low-temperature stability due to a lower pour point
- Increased oil change intervals due to superior oxidative & wear resistance
- Lower tendency to form residues and increased resistance to foaming.
- Other benefits may include: very good shear resistance, low traction coefficient, reduced internal friction, improved lubricity, reduced operating temperatures, improved gear efficiency, extended component life and wear protection.

When application conditions warrant the use of synthetic oil, NORD may suggest a particular type of synthetic oil, depending upon the gear unit type and the application.



***Synthetic Hydrocarbon/Polyalphaolefin (SHC/PAO) Oil (DIN 51517, Type CLP-HC)***

Synthetic Hydrocarbons (SHC) or Polyalphaolefin (PAO) synthetic base oils offer good miscibility with mineral base oils and are very readily available. SHC/PAO oils are classified as API Group IV oils. The can be formulated with or without anti-wear (AW) or extreme pressure (EP) additives. They can also be formulated for acceptance in food-grade applications.

**Advantages:**

- Higher viscosity index and therefore greater high-temperature stability than mineral oil.
- Better low-temperature stability and lower pour point than mineral type gear oils
- High surface tension and lower tendency to foam compared to mineral oil, and water-soluble polyglycol gear oils.
- Compatible (miscible) with mineral oil.
- Better water seperability (demulsibility) than PG oils.

***Polyalkylene Glycol or Polyglycol Synthetic Oil (DIN 51517, Type CLP-PG)***

Polyalkylene glycol or polyglycol (PAG or PG) synthetic gear oils are made readily available through many lubrication suppliers. PG oils are classified as API Group V gear oils. They can also be formulated for acceptance in food-grade applications.

PG gear oils possess extremely low traction coefficients and a viscosity index higher than any of the other synthetics (often greater than 220 VI), resulting in excellent heat resistant, shear stability, and natural anti-wear properties.

Typical PG gear oils are formulated with a 1:1 or higher ratio of ethylene oxide to propylene oxide (50:50 or 60:40 is common); this makes PG gear oils water soluble, providing them with very good corrosion resistance even when water is present in concentrations that are higher then what is normally allowed.

**Advantages:**

- PG oils offer the highest viscosity index of any other synthetic resulting in excellent heat resistant, shear stability, and superior natural anti-wear properties without requiring EP-additives.
- PG gears oils minimize internal friction and often result in improved gear efficiency.
- PG oils have significantly higher film strength than mineral and SHC/PAO oils and out perform these oils at higher operating oil temperatures (approaching 80°C or higher).

***IMPORTANT NOTE***

Polyglycol (PG) oils are not miscible with other oil types and should never be mixed with mineral oil, hydrosynthesized synthetic or PAO synthetic oils.

## Food-Grade Lubricants

Food-grade lubricants should be manufactured in compliance with FDA 212 CFR 178.3570 and should either satisfy the former 1998 USDA Guidelines as an H1 lubricant or currently qualify as a NSF-H1 lubricant. Please consult with lubrication manufacturers for more information or visit www.nsf.org

H1 food grade oil can only contain additives which appear on the FDA "approved list" for food safe compounds. H1 oils are generally absent of common zinc-based AW additives, and sulfur-phosphorus based, EP chemistries, commonly found in many industrial gear oils.

Food manufacturers control risk and liability by following detailed guidelines outlined by the HACCP (Hazard Analysis and Critical Control Point) program, which includes food-grade H1 lubricants.

Food grade H1 lubricants may be formulated as highly refined mineral oils (white oils), SHC/PAO synthetic oils or PG synthetic oils.

The highly refined nature of good-quality food-grade white-oils provides good long-term oxidative stability and in most cases adequate lubrication under high-load (boundary) conditions. So long as food-grade white oils meet the minimum anti-wear requirements of the normally specified non-food grade oil, they are often acceptable.

Both food-grade white oils and PAO's have an inherent "purity" and absence of polar compounds, making them better than the average mineral oil or even PG oil in terms of demulsibility (water seperability).

Compared to food-grade white-oils, food-grade synthetic PAO or PG oils typically provide:

- Better wear and oxidation resistance.
- Improved high-temperature characteristics.
- Better cold-temperature behavior.





## The Importance of Oil Viscosity

Viscosity or the oil's resistance to shear under load, is often considered the single most important property of any gear oil.

NORD Gear Designers have selected the most appropriate ISO viscosity grade of oil, for each type or class of gear reducer. Gear oil viscosity is selected by assuming typical ambient conditions, at rated speed and load conditions.

**Important Considerations:**

- The correct viscosity selection helps provide proper lubrication and assures that a minimum film thickness is maintained between interacting surfaces.
- The degree to which viscosity changes with temperature or the viscosity index, varies from oil to oil, and depends upon the type of lubricant & additive agents used.
- Selecting too low of a viscosity can result in mixed boundary (partial metal-to metal contact) or boundary lubrication (full metal-to-metal contact) conditions, increasing internal friction heat build-up and wear.
- Selecting too high of a viscosity results in increased churning and squeezing losses in the load zone and excessive heat (especially when peripheral gear speeds are high); Ultimately, this causes the oil temperature to rise and the viscosity to go down, decreasing the effectiveness of the lubricant.

## Considering an Oil Viscosity Change

There are three primary reasons to consider a lubrication viscosity change as follows:

1. Low temperature gear oils should be selected so that the pour point is at least 9°F (5°C) lower than the expected minimum ambient temperature. In extreme cases, consider a lower ISO Viscosity rating and test the critical performance of the gear box under cold start-up.

2. High temperature applications may require an increase in the lubricants viscosity to assure proper lubrication conditions in the critical load zones of the gear unit. NORD also recommends switching to synthetic oil if oil sump temperatures exceed 176-185 °F (80-85 °C).

3. In cases of extreme load conditions, gear pairs and antifriction bearings may be more susceptible to scuffing wear. In these operating conditions, it may be beneficial to consider an increased lubrication viscosity and/or lubrication with improved antiwear additive packages.

**IMPORTANT NOTE**

NORD recommends that the user consult with their primary lubrication supplier when considering changes in oil viscosity.

## Maximum Oil Sump Temperature Limit

To prevent reducer overheating, the reducer's maximum oil sump temperature limit must not be exceeded for prolonged periods of operation (up to 3 hours continuous operation, depending upon reducer size).

| Oil Type | Maximum Oil Temperature Limit | |
|---|---|---|
| | NORD | AGMA 9005-D94 |
| Mineral | 80-85 °C (176-185 °F) | 95 °C (203 °F) |
| Synthetic | 105 °C (220 ° F) | 107 ° C (225 ° F) |

**IMPORTANT NOTE**

***Use caution when specifying gear reducers for high temperature service.*** If there is concern about exceeding the allowable safe operating temperatures, please consult NORD to discuss alternatives.



## Ventilation

Most gear reducers are equipped with a vent which helps compensate for air pressure differences between the inner space of the gear unit and the atmosphere.

The spring-pressure vent (Autovent™) is commonly supplied and factory-installed. Normally open vents may also be supplied as an option; normally-open vents are closed upon delivery in order to prevent oil leakage during transport. When normally open vents are supplied, the sealing plugs must be removed prior to commissioning the reducer.

Prior to reducer start-up, it is important to check the maintenance manual to verify that the vent is properly located with respect to mounting position.

## Mounting Position

The reducer mounting position determines the approximate oil fill-level and the appropriate vent location. In some cases mounting position may dictate possible variation in final reducer assembly.

If considering any mounting positions that are not shown as catalog-standard options, it is critical that the customer consult with NORD prior to ordering.

## Oil Fill Quantities

Oil fill quantities shown in the catalog or maintenance instructions are approximate amounts. The actual oil volume varies depending upon the gear ratio. Prior to commissioning the reducer, the oil-fill level should be checked using the reducer's oil-level plug. It may be necessary to drain excess oil or add additional oil.

Unless otherwise specified, NORD supplies most all gear units factory-filled with the standard lubrication type per the specified mounting position.

## Lubrication Replacement

If the gear unit is filled with mineral oil, the lubricant should be replaced at least after every 10,000 operating hours or after every two years. If the gear unit is filled with synthetic oil, the lubricant should be replaced at least after every 20,000 operating hours or after every four years. Often gear reducers are exposed to extreme ambient conditions, hostile environments, wet conditions, or dirty and dusty operating areas. Especially in these situations, it is important to establish a condition-based oil service interval.

## The Importance of Routine Oil Analysis

Routine oil analysis, sound lubrication practices, and good tracking of oil performance trends will help establish proper lubrication maintenance and change-out intervals. To maximize equipment reliability, NORD Gear generally recommends a condition-based lubrication maintenance program. One may take exceptions to this general recommendation on sealed-for-life or maintenance-free gear units or smaller and less costly gear units. In these instances, the replacement cost of the gear unit is often small compared to the costs associated with this type of oil analysis program.

NORD suggests replacing the gear oil if oil analysis indicates any of the following:

- Viscosity has changed by approximately 10% or more.
- Debris particles (silicon, dust, dirt or sand) exceed 25 ppm.
- Iron content exceeds 150-200 ppm.
- Water content is greater than 0.05% (500 ppm).
- The total acid number (TAN) tests indicate a significant level of oxidative break-down of the oil, and a critical reduction in performance; If the TAN number measured changes by more than 5% over the new oil, then an oil change would be recommended.







## Lubrication Types

Proper gearbox lubrication is essential in order to reduce friction, heat, and component wear. Lubricants reduce heat and wear by inserting a protective "fluid boundary" between mating parts and preventing direct metal to metal contact. Lubricants also help prevent corrosion and oxidation, minimize foam, improve heat transfer, optimize reducer efficiency, absorb shock loads and reduce noise.

Mounting position not only determines the proper fill-level but may also have some effect on final reducer assembly. If considering any mounting positions that are not shown as catalog-standard options, it is critical that the customer consult with NORD prior to ordering. Unless otherwise specified, NORD supplies all Screw conveyor gear units factory-filled with the standard mineral lubrication type and the appropriate quantity.

**Standard Oil Lubricants**

| Gear Unit Type | ISO Viscosity | Oil Type | Ambient Temperature Range | Manufacturer Brand/Type | Notes |
|---|---|---|---|---|---|
| Clincher™ SCP | VG220 | MIN-EP | 0 to 40°C (32 to 104°) | Mobilgear 600XP220 | ♦❶ |
| | VG220 | PAO | -35 to 60°C (-31 to 140°F) | Mobil SHC630 | ♦ |
| | VG220 | FG | -5 to 40°C (23 to 104°F) | Fuchs FM220 | ♦ |

**Optional Oil Lubricants**

| Gear Unit Type | ISO Viscosity | Oil Type | Ambient Temperature Range | Manufacturer Brand/Type | Notes |
|---|---|---|---|---|---|
| Clincher™ SCP | VG460 | PAO | -35 to 80°C (-31 to 176°F) | Mobil SHC 634 | - |
| | VG460 | FG-PAO | -35 to 80°C (-31 to 176°F) | Mobil/Cibus SHC460 | - |
| | VG220 | FG-PAO | -35 to 60°C (-31 to 140°F) | Mobil/Cibus SHC220 | - |
| | VG150 | PAO | -35 to 25°C (-31 to 77°F) | Mobil SHC629 | - |

**Standard Bearing Grease Lubricants**

| Grease Type/Thickener | NLGI Grade | Ambient Temperature Range | Manufacturer Brand/Type | Notes |
|---|---|---|---|---|
| Standard (Li-Complex) | NLGI 2 | -30 to 60°C (-22 to 140°F) | Mobil Grease XHP222 | ♦❶ |
| High Temp (Polyurea) | NLGI 2 | -25 to 80°C (-13 to 176°F) | Mobil Polyrex EP 2 | ♦ |
| Food-Grade (AL-Complex) | NLGI 2 | -25 to 40°C (-13 to 104°F) | Mobil Grease FM222 | ♦ |

♦ Stocked Lubricants

❶ Standard product on serviceable gear units

### *IMPORTANT NOTES*

- Food grade lubricants must be in compliance with FDA 212 CFR 178.3570 and qualify as a NSF-H1 lubricant. Please consult with lubrication manufacturer for more information.
- When making a lubrication change, check with the lubrication supplier to assure compatibility and to obtain recommended cleaning or flushing procedures.
- Do not to mix different oils with different additive packages or different base oil formulation types. Polyglycol(PG) oils are not miscible with other oil types and should never be mixed with mineral oil.
- Consult NORD if considering oils of ISO Viscosity VG100 or lower.

**Oil Formulation Codes**

| | |
|---|---|
| MIN-EP | Mineral Oil with EP Additive |
| PAO | Synthetic Polyalphaolefin Oil |
| FG | Food-Grade Oil |
| FG-PAO | Food-Grade, Synthetic Polyalphaolefin Oil |



# SCP Mounting Positions & Oil Fill Quantities



### Screw Conveyor Package lubrication

Unless otherwise noted below, the following NORD Gear reducers are shipped from the factory with a pre-determined oil fill level in accordance to the specified reducer size and mounting position. For additional information, please refer to the "Oil Plug & Vent Locations" documentation for your gear unit.

**STOP** ***HARMFUL SITUATION*** **STOP**

Actual oil volume can vary slightly depending upon the gear case size, mounting and ratio. Prior to commissioning the reducer, check the oil-fill level using the reducer's oil level plug and drain or add additional oil as needed.

For mounting orientations other than shown please consult NORD Gear. Reducer modifications may be required.

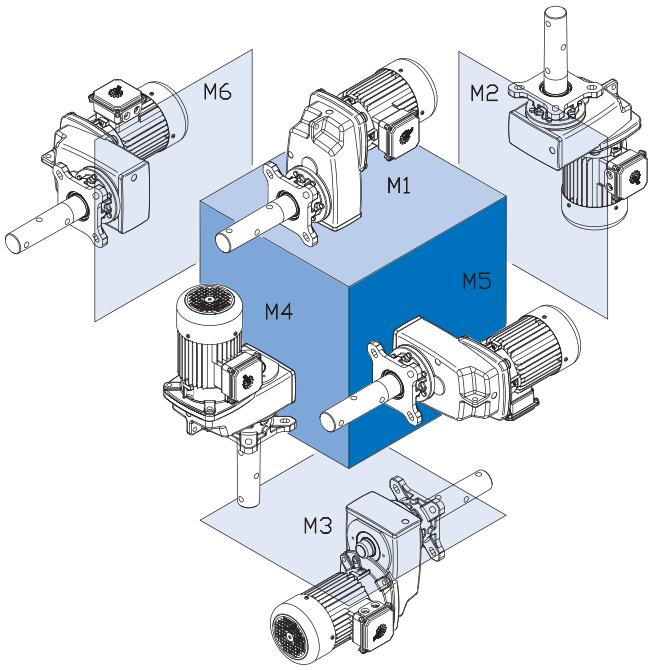


| Unit Type | Mounting Position | | | | | | | | | | | |
|---|---|---|---|---|---|---|---|---|---|---|---|---|
| | M1 | | M2 | | M3 | | M4 | | M5 | | M6 | |
| | Quarts | Liters | Quarts | Liters | Quarts | Liters | Quarts | Liters | Quarts | Liters | Quarts | Liters |
| **SK 1282** | 0.950 | 0.900 | 1.37 | 1.30 | 0.950 | 0.900 | 1.27 | 1.20 | 1.000 | 0.950 | 1.000 | 0.950 |
| **SK 1382** | 1.37 | 1.30 | 2.43 | 2.30 | 1.48 | 1.40 | 2.22 | 2.10 | 2.11 | 2.00 | 2.01 | 1.90 |
| **SK 2282** | 1.74 | 1.65 | 2.54 | 2.40 | 2.01 | 1.90 | 2.11 | 2.00 | 1.90 | 1.80 | 1.90 | 1.80 |
| **SK 2382** | 1.80 | 1.70 | 2.75 | 2.60 | 2.01 | 1.90 | 3.28 | 3.10 | 1.59 | 1.50 | 1.59 | 1.50 |
| **SK 3282** | 3.33 | 3.15 | 4.33 | 4.10 | 3.44 | 3.25 | 4.33 | 4.10 | 3.33 | 3.15 | 3.33 | 3.15 |
| **SK 3382** | 4.33 | 4.10 | 5.18 | 4.90 | 3.49 | 3.30 | 5.92 | 5.60 | 3.49 | 3.30 | 3.49 | 3.30 |
| **SK 4282** | 4.97 | 4.70 | 6.45 | 6.10 | 5.02 | 4.75 | 5.71 | 5.40 | 4.97 | 4.70 | 4.97 | 4.70 |
| **SK 4382** | 6.24 | 5.90 | 7.19 | 6.80 | 5.18 | 4.90 | 8.77 | 8.30 | 5.18 | 4.90 | 5.18 | 4.90 |
| **SK 5282** | 7.93 | 7.50 | 9.30 | 8.80 | 7.93 | 7.50 | 9.30 | 8.80 | 7.61 | 7.20 | 7.61 | 7.20 |
| **SK 5382** | 13.21 | 12.50 | 12.68 | 12.00 | 7.08 | 6.70 | 14.80 | 14.00 | 8.77 | 8.30 | 8.77 | 8.30 |
| **SK 6282** | 17.97 | 17.00 | 14.80 | 14.00 | 12.68 | 12.00 | 18.50 | 17.50 | 10.57 | 10.00 | 14.80 | 14.00 |
| **SK 6382** | 17.44 | 16.50 | 13.74 | 13.00 | 10.15 | 9.60 | 19.03 | 18.00 | 14.80 | 14.00 | 13.21 | 12.50 |

# SCP
# Weights





**Base Weight**

| Input Type | SK 1282 [lb] | SK 2282 [lb] | SK 3282 [lb] | SK 4282 [lb] | SK 5282 [lb] | SK 6282 [lb] |
|---|---|---|---|---|---|---|
| 3rd gear stage "3" | 8 | 8 | 11 | 27 | 35 | |
| 63S/4 | 39 | – | – | – | – | |
| 63L/4 | 40 | – | – | – | – | |
| 71S/4 | 43 | 67 | 100 | – | | |
| 71L/4 | 45 | 69 | 102 | – | – | |
| 80S/4 | 49 | 73 | 106 | – | – | |
| 80L/4 | 51 | 75 | 108 | – | – | |
| 90S/4 | 57 | 82 | 115 | 148 | 227 | |
| 90L/4 | 62 | 86 | 119 | 152 | 232 | |
| 100L/4 | 71 | 95 | 128 | 161 | 240 | |
| 100LA/4 | 77 | 101 | 135 | 168 | 247 | 432 |
| 112M/4 | 97 | 121 | 155 | 188 | 267 | 452 |
| 132S/4 | – | – | 185 | 218 | 298 | 483 |
| 132M/4 | – | – | 209 | 243 | 322 | 507 |
| 160M/4 | – | – | – | 282 | 362 | 547 |
| 160L/4 | – | – | – | 320 | 399 | 584 |
| 180MX/4 | – | – | – | – | 452 | 637 |
| 180LX/4 | – | – | – | – | 452 | 637 |
| 225S/4 | – | – | – | – | – | 867 |
| 225M/4 | – | – | – | – | – | 939 |
| 56C | 51 | 82 | 115 | 154 | 234 | – |
| 140TC | 51 | 82 | 115 | 154 | 234 | – |
| 180TC | 66 | 90 | 124 | 170 | 249 | 448 |
| 210TC | – | – | 143 | 201 | 280 | 476 |
| 250TC | – | – | – | 223 | 302 | 531 |
| 280TC | – | – | – | – | 322 | 531 |
| 320TC | – | – | – | – | – | 562 |
| 360TC | – | – | – | – | – | 562 |
| W | 40 | 77 | 110 | 165 | 245 | 474 |

**SCP Package Additional Weight**

| | 1-1/2" [lbs] | 2" [lbs] | 2-7/16" [lbs] | 3" [lbs] | 3-7/16" [lbs] |
|---|---|---|---|---|---|
| SK 1282 SCP | 15 | 23 | 28 | – | – |
| SK 2282 SCP | 18 | 27 | 31 | – | – |
| SK 3282 SCP | 23 | 35 | 39 | 46 | – |
| SK 4282 SCP | – | 41 | 44 | 51 | – |
| SK 5282 SCP | – | 58 | 60 | 67 | 80 |
| SK 6282 SCP | – | – | – | 76 | 89 |

# SCP Gearmotors & Speed Reducers

## Selection

- 0.16 hp
- 0.25 hp
- 0.5 hp
- 0.75 hp
- 1 hp
- 1.5 hp
- 2 hp
- 3 hp
- 5 hp
- 7.5 hp
- 10 hp
- 15 hp
- 20 hp
- 25 hp
- 30 hp
- 40 hp
- 50 hp

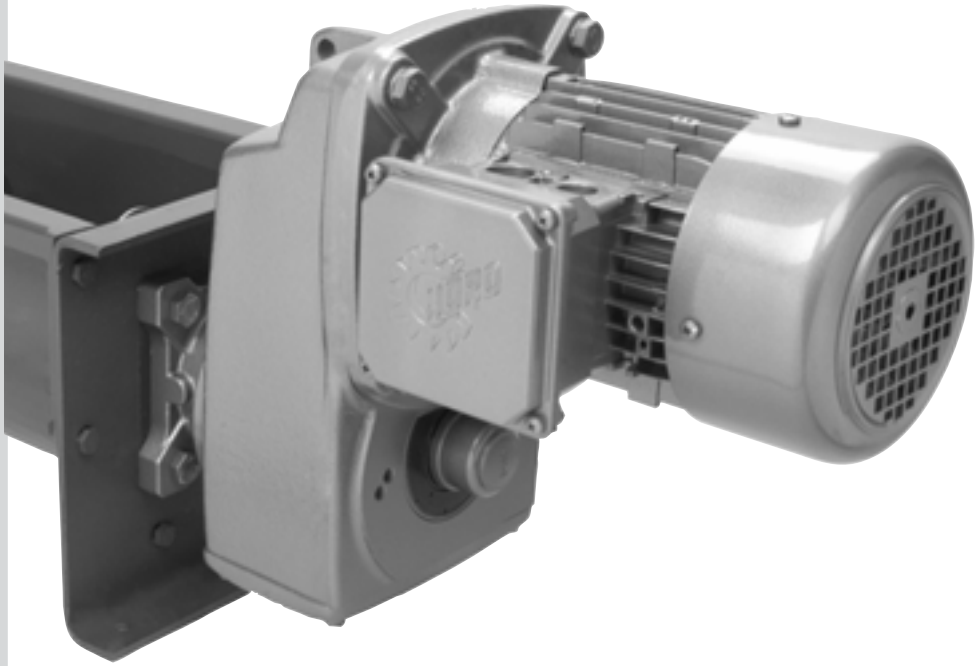

NORD DRIVESYSTEMS

www.nord.com

| Thrust | | Integral Gearmotor | | Reducer |
|---|---|---|---|---|
| Brg [lb] | HD Brg "VL" [lb] | Standard Efficiency Motor | Energy Efficient Motor | C-Face Input |
| 083 | 6750 | SK 4282 SCP - 90L/4 | SK 4282 SCP - 90LH/4 | SK 4282 SCP - 140TC |
| 516 | 6750 | SK 4282 SCP - 90L/4 | SK 4282 SCP - 90LH/4 | SK 4282 SCP - 140TC |
| 056 | 6750 | SK 4282 SCP - 90L/4 | SK 4282 SCP - 90LH/4 | SK 4282 SCP - 140TC |
| 950 | 6750 | SK 4282 SCP - 90L/4 | SK 4282 SCP - 90LH/4 | SK 4282 SCP - 140TC |
| 950 | 6750 | SK 4282 SCP - 90L/4 | SK 4282 SCP - 90LH/4 | SK 4282 SCP - 140TC |
| 950 | 6750 | SK 4282 SCP - 90L/4 | SK 4282 SCP - 90LH/4 | SK 4282 SCP - 140TC |
| 950 | 6750 | SK 4282 SCP - 90L/4 | SK 4282 SCP - 90LH/4 | SK 4282 SCP - 140TC |
| 950 | 6750 | SK 4282 SCP - 90L/4 | SK 4282 SCP - 90LH/4 | SK 4282 SCP - 140TC |
| 950 | 6750 | SK 4282 SCP - 90L/4 | SK 4282 SCP - 90LH/4 | SK 4282 SCP - 140TC |
| 950 | 6750 | SK 4282 SCP - 90L/4 | SK 4282 SCP - 90LH/4 | SK 4282 SCP - 140TC |
| 950 | 6750 | SK 4282 SCP - 90L/4 | SK 4282 SCP - 90LH/4 | SK 4282 SCP - 140TC |
| 50 | 6750 | SK 4282 SCP - 90L/4 | SK 4282 SCP - 90LH/4 | SK 4282 SCP - 140TC |
| | 6750 | SK 4282 SCP - 90L/4 | SK 4282 SCP - 90LH/4 | SK 4282 SCP - |





CLINCHER™



## Explanation of Selection Tables

**OUTPUT SPEED** – Output speed at NORD standard efficiency motor rated speed.

**OUTPUT TORQUE** – Output torque produced by motor.

**SERVICE FACTOR**

**AGMA SERVICE CLASS**

**TOTAL GEAR RATIO**

**NEMA C-FACE INPUT**



| Output Speed | Output Torque | SF | AGMA Class | Gear Ratio | Thrust | | Integral Gearmotor | | Reducer | CEMA DriveShaft | | | | |
|---|---|---|---|---|---|---|---|---|---|---|---|---|---|---|
| $n_2$ | $T_2$ | $f_a$ | | i | Std Brg | H.D. Brg " VL" | Standard Efficiency Motor | Energy Efficient Motor | C-Face Input | 1-1/2" | 2" | 2-7/16" | 3" | 3-7/16" |
| [rpm] | [lb-in] | | | | [lb] | [lb] | | | | | | | | |
| 355 | 29 | 26.1 | III | 4.79 | 1613 | 1609 | SK 1282 SCP - 63S/4 | | SK 1282 SCP - 56C | X | X | X | | |
| 311 | 33 | 25.3 | III | 5.47 | 1676 | 1609 | SK 1282 SCP - 63S/4 | | SK 1282 SCP - 56C | X | X | X | | |
| 264 | 38 | 24.4 | III | 6.43 | 1760 | 1609 | SK 1282 SCP - 63S/4 | | SK 1282 SCP - 56C | X | X | X | | |
| 235 | 43 | 23.5 | III | 7.24 | 1825 | 1609 | SK 1282 SCP - 63S/4 | | SK 1282 SCP - 56C | X | X | X | | |
| 207 | 49 | 26.1 | III | 8.21 | 1895 | 1609 | SK 1282 SCP - 63S/4 | | SK 1282 SCP - 56C | X | X | X | | |

**ENERGY EFFICIENCT MOTOR**

**STANDARD EFFICIENCY MOTOR**

**AXIAL LOAD RATING HEAVY DUTY BEARINGS "VL"**

**AXIAL LOAD RATING STANDARD BEARINGS**

**CEMA DRIVESHAFT AVAILABILITY, X=POSSIBLE COMBINATION**



# 0.16 hp Gearmotors & Speed Reducers

| Output Speed | Output Torque | SF | AGMA Class | Gear Ratio | Thrust | | Integral Gearmotor | | Reducer | CEMA DriveShaft | | | | |
|---|---|---|---|---|---|---|---|---|---|---|---|---|---|---|
| $n_2$ | $T_2$ | $f_a$ | | i | Std Brg | H.D. Brg " VL" | Standard Efficiency Motor | Energy Efficient Motor | C-Face Input | 1-1/2" | 2" | 2-7/16" | 3" | 3-7/16" |
| [rpm] | [lb-in] | | | | [lb] | [lb] | | | | | | | | |
| 355 | 29 | 26.1 | III | 4.79 | 1613 | 1609 | SK 1282 SCP - 63S/4 | | SK 1282 SCP - 56C | X | X | X | | |
| 311 | 33 | 25.3 | III | 5.47 | 1676 | 1609 | SK 1282 SCP - 63S/4 | | SK 1282 SCP - 56C | X | X | X | | |
| 264 | 38 | 24.4 | III | 6.43 | 1760 | 1609 | SK 1282 SCP - 63S/4 | | SK 1282 SCP - 56C | X | X | X | | |
| 235 | 43 | 23.5 | III | 7.24 | 1825 | 1609 | SK 1282 SCP - 63S/4 | | SK 1282 SCP - 56C | X | X | X | | |
| 207 | 49 | 26.1 | III | 8.21 | 1895 | 1609 | SK 1282 SCP - 63S/4 | | SK 1282 SCP - 56C | X | X | X | | |
| 206 | 49 | 22.6 | III | 8.24 | 1897 | 1609 | SK 1282 SCP - 63S/4 | | SK 1282 SCP - 56C | X | X | X | | |
| 185 | 55 | 24.4 | III | 9.18 | 1958 | 1609 | SK 1282 SCP - 63S/4 | | SK 1282 SCP - 56C | X | X | X | | |
| 164 | 62 | 23.5 | III | 10.34 | 2030 | 1609 | SK 1282 SCP - 63S/4 | | SK 1282 SCP - 56C | X | X | X | | |
| 145 | 70 | 22.6 | III | 11.76 | 2108 | 1609 | SK 1282 SCP - 63S/4 | | SK 1282 SCP - 56C | X | X | X | | |
| 120 | 84 | 22.1 | III | 14.11 | 2174 | 1609 | SK 1282 SCP - 63S/4 | | SK 1282 SCP - 56C | X | X | X | | |
| 99 | 103 | 19.3 | III | 17.21 | 2174 | 1609 | SK 1282 SCP - 63S/4 | | SK 1282 SCP - 56C | X | X | X | | |
| 83 | 123 | 16.2 | III | 20.57 | 2174 | 1609 | SK 1282 SCP - 63S/4 | | SK 1282 SCP - 56C | X | X | X | | |
| 67 | 150 | 13.2 | III | 25.22 | 2174 | 1609 | SK 1282 SCP - 63S/4 | | SK 1282 SCP - 56C | X | X | X | | |
| 60 | 169 | 11.8 | III | 28.33 | 2174 | 1609 | SK 1282 SCP - 63S/4 | | SK 1282 SCP - 56C | X | X | X | | |
| 53 | 191 | 10.6 | III | 32.08 | 2174 | 1609 | SK 1282 SCP - 63S/4 | | SK 1282 SCP - 56C | X | X | X | | |
| 37 | 276 | 6.3 | III | 46.19 | 2171 | 1609 | SK 1282 SCP - 63S/4 | | SK 1282 SCP - 56C | X | X | X | | |
| 31 | 330 | 6.3 | III | 55.39 | 2171 | 1609 | SK 1282 SCP - 63S/4 | | SK 1282 SCP - 56C | X | X | X | | |
| 26 | 395 | 6 | III | 66.23 | 2171 | 1609 | SK 1282 SCP - 63S/4 | | SK 1282 SCP - 56C | X | X | X | | |
| 21 | 484 | 5.4 | III | 81.17 | 2169 | 1609 | SK 1282 SCP - 63S/4 | | SK 1282 SCP - 56C | X | X | X | | |
| 18 | 552 | 3.7 | III | 92.48 | 2167 | 1609 | SK 1282 SCP - 63S/4 | | SK 1282 SCP - 56C | X | X | X | | |
| 16 | 653 | 2.8 | III | 109.5 | 2162 | 1609 | SK 1282 SCP - 63S/4 | | SK 1282 SCP - 56C | X | X | X | | |

Output speed and torque ratings are based on the "Standard Efficiency Motor" Power and speed. Performance will vary slightly for other motors.

# 0.25 hp Gearmotors & Speed Reducers



| Output Speed | Output Torque | SF | AGMA Class | Gear Ratio | Thrust | | Integral Gearmotor | | Reducer | CEMA DriveShaft | | | | |
|---|---|---|---|---|---|---|---|---|---|---|---|---|---|---|
| $n_2$ | $T_2$ | $f_a$ | | i | Std Brg | H.D. Brg " VL" | Standard Efficiency Motor | Energy Efficient Motor | C-Face Input | 1-1/2" | 2" | 2-7/16" | 3" | 3-7/16" |
| [rpm] | [lb-in] | | | | [lb] | [lb] | | | | | | | | |
| 351 | 46 | 16.3 | III | 4.79 | 1616 | 1609 | SK 1282 SCP - 63L/4 | | SK 1282 SCP - 56C | X | X | X | | |
| 307 | 52 | 15.8 | III | 5.47 | 1681 | 1609 | SK 1282 SCP - 63L/4 | | SK 1282 SCP - 56C | X | X | X | | |
| 261 | 61 | 15.2 | III | 6.43 | 1764 | 1609 | SK 1282 SCP - 63L/4 | | SK 1282 SCP - 56C | X | X | X | | |
| 232 | 69 | 14.7 | III | 7.24 | 1832 | 1609 | SK 1282 SCP - 63L/4 | | SK 1282 SCP - 56C | X | X | X | | |
| 205 | 78 | 16.3 | III | 8.21 | 1897 | 1609 | SK 1282 SCP - 63L/4 | | SK 1282 SCP - 56C | X | X | X | | |
| 204 | 79 | 14.1 | III | 8.24 | 1899 | 1609 | SK 1282 SCP - 63L/4 | | SK 1282 SCP - 56C | X | X | X | | |
| 183 | 88 | 15.2 | III | 9.18 | 1964 | 1609 | SK 1282 SCP - 63L/4 | | SK 1282 SCP - 56C | X | X | X | | |
| 162 | 99 | 14.7 | III | 10.34 | 2032 | 1609 | SK 1282 SCP - 63L/4 | | SK 1282 SCP - 56C | X | X | X | | |
| 143 | 112 | 14.1 | III | 11.76 | 2108 | 1609 | SK 1282 SCP - 63L/4 | | SK 1282 SCP - 56C | X | X | X | | |
| 119 | 135 | 13.8 | III | 14.11 | 2174 | 1609 | SK 1282 SCP - 63L/4 | | SK 1282 SCP - 56C | X | X | X | | |
| 98 | 165 | 12.1 | III | 17.21 | 2174 | 1609 | SK 1282 SCP - 63L/4 | | SK 1282 SCP - 56C | X | X | X | | |
| 82 | 197 | 10.1 | III | 20.57 | 2174 | 1609 | SK 1282 SCP - 63L/4 | | SK 1282 SCP - 56C | X | X | X | | |
| 67 | 241 | 8.3 | III | 25.22 | 2174 | 1609 | SK 1282 SCP - 63L/4 | | SK 1282 SCP - 56C | X | X | X | | |
| 59 | 271 | 7.4 | III | 28.33 | 2171 | 1609 | SK 1282 SCP - 63L/4 | | SK 1282 SCP - 56C | X | X | X | | |
| 52 | 307 | 6.6 | III | 32.08 | 2171 | 1609 | SK 1282 SCP - 63L/4 | | SK 1282 SCP - 56C | X | X | X | | |
| 36 | 442 | 3.9 | III | 46.19 | 2169 | 1609 | SK 1282 SCP - 63L/4 | | SK 1282 SCP - 56C | X | X | X | | |
| 30 | 529 | 3.9 | III | 55.39 | 2167 | 1609 | SK 1282 SCP - 63L/4 | | SK 1282 SCP - 56C | X | X | X | | |
| 25 | 633 | 3.8 | III | 66.23 | 2165 | 1609 | SK 1282 SCP - 63L/4 | | SK 1282 SCP - 56C | X | X | X | | |
| 21 | 776 | 3.4 | III | 81.17 | 2160 | 1609 | SK 1282 SCP - 63L/4 | | SK 1282 SCP - 56C | X | X | X | | |
| 18 | 884 | 2.3 | III | 92.48 | 2156 | 1609 | SK 1282 SCP - 63L/4 | | SK 1282 SCP - 56C | X | X | X | | |
| 15 | 1047 | 1.8 | II | 109.5 | 2147 | 1609 | SK 1282 SCP - 63L/4 | | SK 1282 SCP - 56C | X | X | X | | |

Output speed and torque ratings are based on the "Standard Efficiency Motor" Power and speed. Performance will vary slightly for other motors.



# 0.33 hp Gearmotors & Speed Reducers

| Output Speed | Output Torque | SF | AGMA Class | Gear Ratio | Thrust | | Integral Gearmotor | | Reducer | CEMA DriveShaft | | | | |
|---|---|---|---|---|---|---|---|---|---|---|---|---|---|---|
| $n_2$ | $T_2$ | $f_a$ | | i | Std Brg | H.D. Brg " VL" | Standard Efficiency Motor | Energy Efficient Motor | C-Face Input | 1-1/2" | 2" | 2-7/16" | 3" | 3-7/16" |
| [rpm] | [lb-in] | | | | [lb] | [lb] | | | | | | | | |
| 357 | 59 | 12.6 | III | 4.79 | 1607 | 1609 | SK 1282 SCP - 71S/4 | | SK 1282 SCP - 56C | X | X | X | | |
| 313 | 68 | 12.2 | III | 5.47 | 1672 | 1609 | SK 1282 SCP - 71S/4 | | SK 1282 SCP - 56C | X | X | X | | |
| 266 | 79 | 11.8 | III | 6.43 | 1751 | 1609 | SK 1282 SCP - 71S/4 | | SK 1282 SCP - 56C | X | X | X | | |
| 236 | 89 | 11.4 | III | 7.24 | 1814 | 1609 | SK 1282 SCP - 71S/4 | | SK 1282 SCP - 56C | X | X | X | | |
| 208 | 101 | 12.6 | III | 8.21 | 1888 | 1609 | SK 1282 SCP - 71S/4 | | SK 1282 SCP - 56C | X | X | X | | |
| 208 | 102 | 10.9 | III | 8.24 | 1888 | 1609 | SK 1282 SCP - 71S/4 | | SK 1282 SCP - 56C | X | X | X | | |
| 186 | 113 | 11.8 | III | 9.18 | 1946 | 1609 | SK 1282 SCP - 71S/4 | | SK 1282 SCP - 56C | X | X | X | | |
| 165 | 128 | 11.4 | III | 10.34 | 2016 | 1609 | SK 1282 SCP - 71S/4 | | SK 1282 SCP - 56C | X | X | X | | |
| 145 | 145 | 10.9 | III | 11.76 | 2095 | 1609 | SK 1282 SCP - 71S/4 | | SK 1282 SCP - 56C | X | X | X | | |
| 121 | 174 | 10.7 | III | 14.11 | 2174 | 1609 | SK 1282 SCP - 71S/4 | | SK 1282 SCP - 56C | X | X | X | | |
| 99 | 213 | 9.3 | III | 17.21 | 2174 | 1609 | SK 1282 SCP - 71S/4 | | SK 1282 SCP - 56C | X | X | X | | |
| 83 | 254 | 7.8 | III | 20.57 | 2174 | 1609 | SK 1282 SCP - 71S/4 | | SK 1282 SCP - 56C | X | X | X | | |
| 68 | 312 | 6.4 | III | 25.22 | 2171 | 1609 | SK 1282 SCP - 71S/4 | | SK 1282 SCP - 56C | X | X | X | | |
| 60 | 350 | 5.7 | III | 28.33 | 2171 | 1609 | SK 1282 SCP - 71S/4 | | SK 1282 SCP - 56C | X | X | X | | |
| 53 | 396 | 5.1 | III | 32.08 | 2171 | 1609 | SK 1282 SCP - 71S/4 | | SK 1282 SCP - 56C | X | X | X | | |
| 37 | 571 | 3 | III | 46.19 | 2167 | 1609 | SK 1282 SCP - 71S/4 | | SK 1282 SCP - 56C | X | X | X | | |
| 31 | 684 | 3 | III | 55.39 | 2162 | 1609 | SK 1282 SCP - 71S/4 | | SK 1282 SCP - 56C | X | X | X | | |
| 26 | 818 | 2.9 | III | 66.23 | 2158 | 1609 | SK 1282 SCP - 71S/4 | | SK 1282 SCP - 56C | X | X | X | | |
| 21 | 1003 | 2.6 | III | 81.17 | 2149 | 1609 | SK 1282 SCP - 71S/4 | | SK 1282 SCP - 56C | X | X | X | | |
| 18 | 1143 | 1.8 | II | 92.48 | 2142 | 1609 | SK 1282 SCP - 71S/4 | | SK 1282 SCP - 56C | X | X | X | | |
| 16 | 1353 | 1.4 | II | 109.5 | 2129 | 1609 | SK 1282 SCP - 71S/4 | | SK 1282 SCP - 56C | X | X | X | | |
| | | | | | | | | | | | | | | |
| 25 | 861 | 4.6 | III | 69.67 | 3155 | 3375 | SK 2282 SCP - 71S/4 | | SK 2282 SCP - 56C | X | X | X | | |
| 21 | 1018 | 4.1 | III | 82.42 | 3152 | 3375 | SK 2282 SCP - 71S/4 | | SK 2282 SCP - 56C | X | X | X | | |
| 17 | 1248 | 3.1 | III | 100.98 | 3146 | 3375 | SK 2282 SCP - 71S/4 | | SK 2282 SCP - 56C | X | X | X | | |
| 16 | 1286 | 2.7 | III | 104.07 | 3143 | 3375 | SK 2282 SCP - 71S/4 | | SK 2282 SCP - 56C | X | X | X | | |
| 13 | 1576 | 2.1 | III | 127.51 | 3132 | 3375 | SK 2282 SCP - 71S/4 | | SK 2282 SCP - 56C | X | X | X | | |
| | | | | | | | | | | | | | | |
| 24 | 872 | 5.7 | III | 70.56 | 5146 | 4500 | SK 3282 SCP - 71S/4 | | SK 3282 SCP - 56C | X | X | X | X | |
| 17 | 1247 | 5.7 | III | 100.88 | 5141 | 4500 | SK 3282 SCP - 71S/4 | | SK 3282 SCP - 56C | X | X | X | X | |
| 15 | 1387 | 4.9 | III | 112.23 | 5139 | 4500 | SK 3282 SCP - 71S/4 | | SK 3282 SCP - 56C | X | X | X | X | |

Output speed and torque ratings are based on the "Standard Efficiency Motor" Power and speed. Performance will vary slightly for other motors.

# 0.50 hp Gearmotors & Speed Reducers



| Output Speed | Output Torque | SF | AGMA Class | Gear Ratio | Thrust | | Integral Gearmotor | | Reducer | CEMA DriveShaft | | | | |
|---|---|---|---|---|---|---|---|---|---|---|---|---|---|---|
| $n_2$ | $T_2$ | $f_a$ | | i | Std Brg | H.D. Brg " VL" | Standard Efficiency Motor | Energy Efficient Motor | C-Face Input | 1-1/2" | 2" | 2-7/16" | 3" | 3-7/16" |
| [rpm] | [lb-in] | | | | [lb] | [lb] | | | | | | | | |
| 359 | 87 | 8.6 | III | 4.79 | 1598 | 1609 | SK 1282 SCP - 71L/4 | | SK 1282 SCP - 56C | X | X | X | | |
| 314 | 99 | 8.3 | III | 5.47 | 1663 | 1609 | SK 1282 SCP - 71L/4 | | SK 1282 SCP - 56C | X | X | X | | |
| 267 | 117 | 8 | III | 6.43 | 1744 | 1609 | SK 1282 SCP - 71L/4 | | SK 1282 SCP - 56C | X | X | X | | |
| 238 | 132 | 7.7 | III | 7.24 | 1805 | 1609 | SK 1282 SCP - 71L/4 | | SK 1282 SCP - 56C | X | X | X | | |
| 210 | 149 | 8.6 | III | 8.21 | 1874 | 1609 | SK 1282 SCP - 71L/4 | | SK 1282 SCP - 56C | X | X | X | | |
| 209 | 150 | 7.4 | III | 8.24 | 1874 | 1609 | SK 1282 SCP - 71L/4 | | SK 1282 SCP - 56C | X | X | X | | |
| 187 | 167 | 8 | III | 9.18 | 1937 | 1609 | SK 1282 SCP - 71L/4 | | SK 1282 SCP - 56C | X | X | X | | |
| 166 | 188 | 7.7 | III | 10.34 | 2005 | 1609 | SK 1282 SCP - 71L/4 | | SK 1282 SCP - 56C | X | X | X | | |
| 146 | 214 | 7.4 | III | 11.76 | 2081 | 1609 | SK 1282 SCP - 71L/4 | | SK 1282 SCP - 56C | X | X | X | | |
| 122 | 257 | 7.2 | III | 14.11 | 2174 | 1609 | SK 1282 SCP - 71L/4 | | SK 1282 SCP - 56C | X | X | X | | |
| 100 | 313 | 6.3 | III | 17.21 | 2171 | 1609 | SK 1282 SCP - 71L/4 | | SK 1282 SCP - 56C | X | X | X | | |
| 84 | 374 | 5.3 | III | 20.57 | 2171 | 1609 | SK 1282 SCP - 71L/4 | | SK 1282 SCP - 56C | X | X | X | | |
| 68 | 459 | 4.3 | III | 25.22 | 2169 | 1609 | SK 1282 SCP - 71L/4 | | SK 1282 SCP - 56C | X | X | X | | |
| 61 | 515 | 3.9 | III | 28.33 | 2167 | 1609 | SK 1282 SCP - 71L/4 | | SK 1282 SCP - 56C | X | X | X | | |
| 54 | 583 | 3.5 | III | 32.08 | 2165 | 1609 | SK 1282 SCP - 71L/4 | | SK 1282 SCP - 56C | X | X | X | | |
| 42 | 747 | 2.6 | III | 41.07 | 2160 | 1609 | SK 1282 SCP - 71L/4 | | SK 1282 SCP - 56C | X | X | X | | |
| 37 | 840 | 2.1 | III | 46.19 | 2156 | 1609 | SK 1282 SCP - 71L/4 | | SK 1282 SCP - 56C | X | X | X | | |
| 35 | 895 | 2.6 | III | 49.25 | 2153 | 1609 | SK 1282 SCP - 71L/4 | | SK 1282 SCP - 56C | X | X | X | | |
| 31 | 1007 | 2.1 | III | 55.39 | 2149 | 1609 | SK 1282 SCP - 71L/4 | | SK 1282 SCP - 56C | X | X | X | | |
| 29 | 1071 | 2.3 | III | 58.89 | 2144 | 1609 | SK 1282 SCP - 71L/4 | | SK 1282 SCP - 56C | X | X | X | | |
| 26 | 1204 | 2 | III | 66.23 | 2138 | 1609 | SK 1282 SCP - 71L/4 | | SK 1282 SCP - 56C | X | X | X | | |
| 24 | 1312 | 2 | III | 72.17 | 2131 | 1609 | SK 1282 SCP - 71L/4 | | SK 1282 SCP - 56C | X | X | X | | |
| 21 | 1476 | 1.8 | II | 81.17 | 2120 | 1609 | SK 1282 SCP - 71L/4 | | SK 1282 SCP - 56C | X | X | X | | |
| 19 | 1681 | 1.2 | I | 92.48 | 2102 | 1609 | SK 1282 SCP - 71L/4 | | SK 1282 SCP - 56C | X | X | X | | |
| 301 | 104 | 8.4 | III | 5.72 | 2203 | 3375 | SK 2282 SCP - 71L/4 | | SK 2282 SCP - 56C | X | X | X | | |
| 267 | 117 | 8.1 | III | 6.43 | 2282 | 3375 | SK 2282 SCP - 71L/4 | | SK 2282 SCP - 56C | X | X | X | | |
| 230 | 136 | 7.8 | III | 7.48 | 2383 | 3375 | SK 2282 SCP - 71L/4 | | SK 2282 SCP - 56C | X | X | X | | |
| 205 | 152 | 7.5 | III | 8.37 | 2464 | 3375 | SK 2282 SCP - 71L/4 | | SK 2282 SCP - 56C | X | X | X | | |
| 190 | 164 | 8.4 | III | 9.03 | 2525 | 3375 | SK 2282 SCP - 71L/4 | | SK 2282 SCP - 56C | X | X | X | | |
| 169 | 185 | 8.1 | III | 10.15 | 2610 | 3375 | SK 2282 SCP - 71L/4 | | SK 2282 SCP - 56C | X | X | X | | |

Output speed and torque ratings are based on the "Standard Efficiency Motor" Power and speed. Performance will vary slightly for other motors.



# 0.50 hp Gearmotors & Speed Reducers

| Output Speed | Output Torque | SF | AGMA Class | Gear Ratio | Thrust | | Integral Gearmotor | | Reducer | CEMA DriveShaft | | | | |
|---|---|---|---|---|---|---|---|---|---|---|---|---|---|---|
| $n_2$ | $T_2$ | $f_a$ | | i | Std Brg | H.D. Brg " VL" | Standard Efficiency Motor | Energy Efficient Motor | C-Face Input | 1-1/2" | 2" | 2-7/16" | 3" | 3-7/16" |
| [rpm] | [lb-in] | | | | [lb] | [lb] | | | | | | | | |
| 146 | 215 | 7.8 | III | 11.81 | 2729 | 3375 | SK 2282 SCP - 71L/4 | | SK 2282 SCP - 56C | X | X | X | | |
| 130 | 241 | 7.5 | III | 13.23 | 2824 | 3375 | SK 2282 SCP - 71L/4 | | SK 2282 SCP - 56C | X | X | X | | |
| 104 | 301 | 7.8 | III | 16.53 | 3015 | 3375 | SK 2282 SCP - 71L/4 | | SK 2282 SCP - 56C | X | X | X | | |
| 93 | 337 | 7.5 | III | 18.51 | 3119 | 3375 | SK 2282 SCP - 71L/4 | | SK 2282 SCP - 56C | X | X | X | | |
| 79 | 398 | 7.5 | III | 21.9 | 3164 | 3375 | SK 2282 SCP - 71L/4 | | SK 2282 SCP - 56C | X | X | X | | |
| 72 | 436 | 7.8 | III | 23.96 | 3164 | 3375 | SK 2282 SCP - 71L/4 | | SK 2282 SCP - 56C | X | X | X | | |
| 69 | 454 | 7.2 | III | 24.97 | 3164 | 3375 | SK 2282 SCP - 71L/4 | | SK 2282 SCP - 56C | X | X | X | | |
| 64 | 488 | 7.5 | III | 26.83 | 3161 | 3375 | SK 2282 SCP - 71L/4 | | SK 2282 SCP - 56C | X | X | X | | |
| 58 | 539 | 6.7 | III | 29.65 | 3161 | 3375 | SK 2282 SCP - 71L/4 | | SK 2282 SCP - 56C | X | X | X | | |
| 46 | 676 | 6 | III | 37.18 | 3159 | 3375 | SK 2282 SCP - 71L/4 | | SK 2282 SCP - 56C | X | X | X | | |
| 25 | 1267 | 3.1 | III | 69.67 | 3143 | 3375 | SK 2282 SCP - 71L/4 | | SK 2282 SCP - 56C | X | X | X | | |
| 21 | 1498 | 2.8 | III | 82.42 | 3134 | 3375 | SK 2282 SCP - 71L/4 | | SK 2282 SCP - 56C | X | X | X | | |
| 17 | 1836 | 2.1 | III | 100.98 | 3121 | 3375 | SK 2282 SCP - 71L/4 | | SK 2282 SCP - 56C | X | X | X | | |
| 17 | 1892 | 1.9 | II | 104.07 | 3119 | 3375 | SK 2282 SCP - 71L/4 | | SK 2282 SCP - 56C | X | X | X | | |
| 13 | 2318 | 1.5 | II | 127.51 | 3094 | 3375 | SK 2282 SCP - 71L/4 | | SK 2282 SCP - 56C | X | X | X | | |
| 207 | 151 | 8.5 | III | 8.31 | 2813 | 4381 | SK 3282 SCP - 71L/4 | | SK 3282 SCP - 56C | X | X | X | X | |
| 122 | 257 | 8.5 | III | 14.11 | 3296 | 4500 | SK 3282 SCP - 71L/4 | | SK 3282 SCP - 56C | X | X | X | X | |
| 103 | 303 | 8.5 | III | 16.67 | 3465 | 4500 | SK 3282 SCP - 71L/4 | | SK 3282 SCP - 56C | X | X | X | X | |
| 85 | 367 | 8.5 | III | 20.18 | 3659 | 4500 | SK 3282 SCP - 71L/4 | | SK 3282 SCP - 56C | X | X | X | X | |
| 80 | 389 | 8 | III | 21.38 | 3724 | 4500 | SK 3282 SCP - 71L/4 | | SK 3282 SCP - 56C | X | X | X | X | |
| 77 | 408 | 8.5 | III | 22.45 | 3778 | 4500 | SK 3282 SCP - 71L/4 | | SK 3282 SCP - 56C | X | X | X | X | |
| 73 | 431 | 7.7 | III | 23.71 | 3839 | 4500 | SK 3282 SCP - 71L/4 | | SK 3282 SCP - 56C | X | X | X | X | |
| 66 | 471 | 8 | III | 25.88 | 3938 | 4500 | SK 3282 SCP - 71L/4 | | SK 3282 SCP - 56C | X | X | X | X | |
| 60 | 522 | 7.7 | III | 28.7 | 4061 | 4500 | SK 3282 SCP - 71L/4 | | SK 3282 SCP - 56C | X | X | X | X | |
| 54 | 581 | 7.7 | III | 31.93 | 4185 | 4500 | SK 3282 SCP - 71L/4 | | SK 3282 SCP - 56C | X | X | X | X | |
| 46 | 687 | 6.9 | III | 37.77 | 4399 | 4500 | SK 3282 SCP - 71L/4 | | SK 3282 SCP - 56C | X | X | X | X | |
| 41 | 764 | 6.9 | III | 42.02 | 4534 | 4500 | SK 3282 SCP - 71L/4 | | SK 3282 SCP - 56C | X | X | X | X | |
| 24 | 1283 | 3.9 | III | 70.56 | 5141 | 4500 | SK 3282 SCP - 71L/4 | | SK 3282 SCP - 56C | X | X | X | X | |
| 17 | 1834 | 3.9 | III | 100.88 | 5132 | 4500 | SK 3282 SCP - 71L/4 | | SK 3282 SCP - 56C | X | X | X | X | |
| 15 | 2040 | 3.3 | III | 112.23 | 5130 | 4500 | SK 3282 SCP - 71L/4 | | SK 3282 SCP - 56C | X | X | X | X | |

Output speed and torque ratings are based on the "Standard Efficiency Motor" Power and speed. Performance will vary slightly for other motors.

# 0.75 hp Gearmotors & Speed Reducers



| Output Speed | Output Torque | SF | AGMA Class | Gear Ratio | Thrust | | Integral Gearmotor | | Reducer | CEMA DriveShaft | | | | |
|---|---|---|---|---|---|---|---|---|---|---|---|---|---|---|
| $n_2$ | $T_2$ | $f_a$ | | i | Std Brg | H.D. Brg " VL" | Standard Efficiency Motor | Energy Efficient Motor | C-Face Input | 1-1/2" | 2" | 2-7/16" | 3" | 3-7/16" |
| [rpm] | [lb-in] | | | | [lb] | [lb] | | | | | | | | |
| 357 | 133 | 5.6 | III | 4.79 | 1595 | 1609 | SK 1282 SCP - 80S/4 | | SK 1282 SCP - 56C | X | X | X | | |
| 313 | 151 | 5.5 | III | 5.47 | 1658 | 1609 | SK 1282 SCP - 80S/4 | | SK 1282 SCP - 56C | X | X | X | | |
| 266 | 178 | 5.3 | III | 6.43 | 1739 | 1609 | SK 1282 SCP - 80S/4 | | SK 1282 SCP - 56C | X | X | X | | |
| 236 | 200 | 5.1 | III | 7.24 | 1798 | 1609 | SK 1282 SCP - 80S/4 | | SK 1282 SCP - 56C | X | X | X | | |
| 208 | 227 | 5.6 | III | 8.21 | 1870 | 1609 | SK 1282 SCP - 80S/4 | | SK 1282 SCP - 56C | X | X | X | | |
| 208 | 228 | 4.9 | III | 8.24 | 1870 | 1609 | SK 1282 SCP - 80S/4 | | SK 1282 SCP - 56C | X | X | X | | |
| 186 | 254 | 5.3 | III | 9.18 | 1928 | 1609 | SK 1282 SCP - 80S/4 | | SK 1282 SCP - 56C | X | X | X | | |
| 165 | 286 | 5.1 | III | 10.34 | 1998 | 1609 | SK 1282 SCP - 80S/4 | | SK 1282 SCP - 56C | X | X | X | | |
| 145 | 325 | 4.9 | III | 11.76 | 2072 | 1609 | SK 1282 SCP - 80S/4 | | SK 1282 SCP - 56C | X | X | X | | |
| 121 | 391 | 4.8 | III | 14.11 | 2171 | 1609 | SK 1282 SCP - 80S/4 | | SK 1282 SCP - 56C | X | X | X | | |
| 99 | 476 | 4.2 | III | 17.21 | 2169 | 1609 | SK 1282 SCP - 80S/4 | | SK 1282 SCP - 56C | X | X | X | | |
| 83 | 569 | 3.5 | III | 20.57 | 2167 | 1609 | SK 1282 SCP - 80S/4 | | SK 1282 SCP - 56C | X | X | X | | |
| 68 | 698 | 2.9 | III | 25.22 | 2162 | 1609 | SK 1282 SCP - 80S/4 | | SK 1282 SCP - 56C | X | X | X | | |
| 60 | 784 | 2.5 | III | 28.33 | 2158 | 1609 | SK 1282 SCP - 80S/4 | | SK 1282 SCP - 56C | X | X | X | | |
| 53 | 888 | 2.3 | III | 32.08 | 2153 | 1609 | SK 1282 SCP - 80S/4 | | SK 1282 SCP - 56C | X | X | X | | |
| 42 | 1137 | 1.7 | II | 41.07 | 2142 | 1609 | SK 1282 SCP - 80S/4 | | SK 1282 SCP - 56C | X | X | X | | |
| 35 | 1363 | 1.7 | II | 49.25 | 2126 | 1609 | SK 1282 SCP - 80S/4 | | SK 1282 SCP - 56C | X | X | X | | |
| 29 | 1630 | 1.5 | II | 58.89 | 2106 | 1609 | SK 1282 SCP - 80S/4 | | SK 1282 SCP - 56C | X | X | X | | |
| 24 | 1998 | 1.3 | I | 72.17 | 2072 | 1609 | SK 1282 SCP - 80S/4 | | SK 1282 SCP - 56C | X | X | X | | |
| 299 | 158 | 5.5 | III | 5.72 | 2198 | 3375 | SK 2282 SCP - 80S/4 | | SK 2282 SCP - 56C | X | X | X | | |
| 266 | 178 | 5.3 | III | 6.43 | 2277 | 3375 | SK 2282 SCP - 80S/4 | | SK 2282 SCP - 56C | X | X | X | | |
| 229 | 207 | 5.1 | III | 7.48 | 2383 | 3375 | SK 2282 SCP - 80S/4 | | SK 2282 SCP - 56C | X | X | X | | |
| 204 | 232 | 4.9 | III | 8.37 | 2459 | 3375 | SK 2282 SCP - 80S/4 | | SK 2282 SCP - 56C | X | X | X | | |
| 189 | 250 | 5.5 | III | 9.03 | 2520 | 3375 | SK 2282 SCP - 80S/4 | | SK 2282 SCP - 56C | X | X | X | | |
| 168 | 281 | 5.3 | III | 10.15 | 2610 | 3375 | SK 2282 SCP - 80S/4 | | SK 2282 SCP - 56C | X | X | X | | |
| 145 | 327 | 5.1 | III | 11.81 | 2725 | 3375 | SK 2282 SCP - 80S/4 | | SK 2282 SCP - 56C | X | X | X | | |
| 129 | 366 | 4.9 | III | 13.23 | 2819 | 3375 | SK 2282 SCP - 80S/4 | | SK 2282 SCP - 56C | X | X | X | | |
| 103 | 458 | 5.1 | III | 16.53 | 3008 | 3375 | SK 2282 SCP - 80S/4 | | SK 2282 SCP - 56C | X | X | X | | |
| 92 | 512 | 4.9 | III | 18.51 | 3107 | 3375 | SK 2282 SCP - 80S/4 | | SK 2282 SCP - 56C | X | X | X | | |
| 78 | 606 | 4.9 | III | 21.9 | 3161 | 3375 | SK 2282 SCP - 80S/4 | | SK 2282 SCP - 56C | X | X | X | | |
| 71 | 663 | 5.1 | III | 23.96 | 3159 | 3375 | SK 2282 SCP - 80S/4 | | SK 2282 SCP - 56C | X | X | X | | |
| 68 | 691 | 4.7 | III | 24.97 | 3159 | 3375 | SK 2282 SCP - 80S/4 | | SK 2282 SCP - 56C | X | X | X | | |

Output speed and torque ratings are based on the "Standard Efficiency Motor" Power and speed. Performance will vary slightly for other motors.



# 0.75 hp Gearmotors & Speed Reducers

| Output Speed | Output Torque | SF | AGMA Class | Gear Ratio | Thrust | | Integral Gearmotor | | Reducer | CEMA DriveShaft | | | | |
|---|---|---|---|---|---|---|---|---|---|---|---|---|---|---|
| $n_2$ | $T_2$ | $f_a$ | | i | Std Brg | H.D. Brg " VL" | Standard Efficiency Motor | Energy Efficient Motor | C-Face Input | 1-1/2" | 2" | 2-7/16" | 3" | 3-7/16" |
| [rpm] | [lb-in] | | | | [lb] | [lb] | | | | | | | | |
| 64 | 743 | 4.9 | III | 26.83 | 3157 | 3375 | SK 2282 SCP - 80S/4 | | SK 2282 SCP - 56C | X | X | X | | |
| 58 | 821 | 4.4 | III | 29.65 | 3157 | 3375 | SK 2282 SCP - 80S/4 | | SK 2282 SCP - 56C | X | X | X | | |
| 46 | 1029 | 4 | III | 37.18 | 3150 | 3375 | SK 2282 SCP - 80S/4 | | SK 2282 SCP - 56C | X | X | X | | |
| 38 | 1249 | 3.2 | III | 45.11 | 3146 | 3375 | SK 2282 SCP - 80S/4 | | SK 2282 SCP - 56C | X | X | X | | |
| 32 | 1494 | 3 | III | 53.96 | 3137 | 3375 | SK 2282 SCP - 80S/4 | | SK 2282 SCP - 56C | X | X | X | | |
| 27 | 1767 | 2.6 | III | 63.83 | 3123 | 3375 | SK 2282 SCP - 80S/4 | | SK 2282 SCP - 56C | X | X | X | | |
| 25 | 1928 | 2 | III | 69.67 | 3116 | 3375 | SK 2282 SCP - 80S/4 | | SK 2282 SCP - 56C | X | X | X | | |
| 21 | 2281 | 1.9 | II | 82.42 | 3096 | 3375 | SK 2282 SCP - 80S/4 | | SK 2282 SCP - 56C | X | X | X | | |
| 17 | 2795 | 1.4 | II | 100.98 | 3060 | 3375 | SK 2282 SCP - 80S/4 | | SK 2282 SCP - 56C | X | X | X | | |
| 16 | 2880 | 1.2 | I | 104.07 | 3053 | 3375 | SK 2282 SCP - 80S/4 | | SK 2282 SCP - 56C | X | X | X | | |
| 13 | 3529 | 1 | I | 127.51 | 2997 | 3375 | SK 2282 SCP - 80S/4 | | SK 2282 SCP - 56C | X | X | X | | |
| 206 | 230 | 5.6 | III | 8.31 | 2813 | 4367 | SK 3282 SCP - 80S/4 | | SK 3282 SCP - 56C | X | X | X | X | |
| 121 | 391 | 5.6 | III | 14.11 | 3285 | 4500 | SK 3282 SCP - 80S/4 | | SK 3282 SCP - 56C | X | X | X | X | |
| 103 | 461 | 5.6 | III | 16.67 | 3454 | 4500 | SK 3282 SCP - 80S/4 | | SK 3282 SCP - 56C | X | X | X | X | |
| 85 | 559 | 5.6 | III | 20.18 | 3652 | 4500 | SK 3282 SCP - 80S/4 | | SK 3282 SCP - 56C | X | X | X | X | |
| 80 | 592 | 5.3 | III | 21.38 | 3710 | 4500 | SK 3282 SCP - 80S/4 | | SK 3282 SCP - 56C | X | X | X | X | |
| 76 | 621 | 5.6 | III | 22.45 | 3764 | 4500 | SK 3282 SCP - 80S/4 | | SK 3282 SCP - 56C | X | X | X | X | |
| 72 | 656 | 5.1 | III | 23.71 | 3825 | 4500 | SK 3282 SCP - 80S/4 | | SK 3282 SCP - 56C | X | X | X | X | |
| 66 | 716 | 5.3 | III | 25.88 | 3924 | 4500 | SK 3282 SCP - 80S/4 | | SK 3282 SCP - 56C | X | X | X | X | |
| 60 | 794 | 5.1 | III | 28.7 | 4039 | 4500 | SK 3282 SCP - 80S/4 | | SK 3282 SCP - 56C | X | X | X | X | |
| 54 | 884 | 5.1 | III | 31.93 | 4172 | 4500 | SK 3282 SCP - 80S/4 | | SK 3282 SCP - 56C | X | X | X | X | |
| 45 | 1045 | 4.6 | III | 37.77 | 4374 | 4500 | SK 3282 SCP - 80S/4 | | SK 3282 SCP - 56C | X | X | X | X | |
| 41 | 1163 | 4.6 | III | 42.02 | 4509 | 4500 | SK 3282 SCP - 80S/4 | | SK 3282 SCP - 56C | X | X | X | X | |
| 36 | 1330 | 3.7 | III | 48.04 | 4676 | 4500 | SK 3282 SCP - 80S/4 | | SK 3282 SCP - 56C | X | X | X | X | |
| 31 | 1544 | 3.7 | III | 55.79 | 4889 | 4500 | SK 3282 SCP - 80S/4 | | SK 3282 SCP - 56C | X | X | X | X | |
| 26 | 1824 | 3.7 | III | 65.89 | 5117 | 4500 | SK 3282 SCP - 80S/4 | | SK 3282 SCP - 56C | X | X | X | X | |
| 24 | 1953 | 2.6 | III | 70.56 | 5130 | 4500 | SK 3282 SCP - 80S/4 | | SK 3282 SCP - 56C | X | X | X | X | |
| 21 | 2208 | 3.4 | III | 79.76 | 5126 | 4500 | SK 3282 SCP - 80S/4 | | SK 3282 SCP - 56C | X | X | X | X | |
| 19 | 2456 | 3.4 | III | 88.74 | 5119 | 4500 | SK 3282 SCP - 80S/4 | | SK 3282 SCP - 56C | X | X | X | X | |
| 17 | 2792 | 2.6 | III | 100.88 | 5112 | 4500 | SK 3282 SCP - 80S/4 | | SK 3282 SCP - 56C | X | X | X | X | |
| 15 | 3106 | 2.2 | III | 112.23 | 5101 | 4500 | SK 3282 SCP - 80S/4 | | SK 3282 SCP - 56C | X | X | X | X | |

Output speed and torque ratings are based on the "Standard Efficiency Motor" Power and speed. Performance will vary slightly for other motors.

# 1 hp Gearmotors & Speed Reducers



| Output Speed | Output Torque | SF | AGMA Class | Gear Ratio | Thrust | | Integral Gearmotor | | Reducer | CEMA DriveShaft | | | | |
|---|---|---|---|---|---|---|---|---|---|---|---|---|---|---|
| $n_2$ | $T_2$ | $f_a$ | | i | Std Brg | H.D. Brg " VL" | Standard Efficiency Motor | Energy Efficient Motor | C-Face Input | 1-1/2" | 2" | 2-7/16" | 3" | 3-7/16" |
| [rpm] | [lb-in] | | | | [lb] | [lb] | | | | | | | | |
| 344 | 184 | 4.1 | III | 4.79 | 1604 | 1609 | SK 1282 SCP - 80L/4 | SK 1282 SCP - 80LH/4 | SK 1282 SCP - 140TC | X | X | X | | |
| 302 | 210 | 3.9 | III | 5.47 | 1670 | 1609 | SK 1282 SCP - 80L/4 | SK 1282 SCP - 80LH/4 | SK 1282 SCP - 140TC | X | X | X | | |
| 257 | 247 | 3.8 | III | 6.43 | 1746 | 1609 | SK 1282 SCP - 80L/4 | SK 1282 SCP - 80LH/4 | SK 1282 SCP - 140TC | X | X | X | | |
| 228 | 278 | 3.7 | III | 7.24 | 1809 | 1609 | SK 1282 SCP - 80L/4 | SK 1282 SCP - 80LH/4 | SK 1282 SCP - 140TC | X | X | X | | |
| 201 | 315 | 4.1 | III | 8.21 | 1879 | 1609 | SK 1282 SCP - 80L/4 | SK 1282 SCP - 80LH/4 | SK 1282 SCP - 140TC | X | X | X | | |
| 200 | 317 | 3.5 | III | 8.24 | 1877 | 1609 | SK 1282 SCP - 80L/4 | SK 1282 SCP - 80LH/4 | SK 1282 SCP - 140TC | X | X | X | | |
| 180 | 353 | 3.8 | III | 9.18 | 1937 | 1609 | SK 1282 SCP - 80L/4 | SK 1282 SCP - 80LH/4 | SK 1282 SCP - 140TC | X | X | X | | |
| 160 | 397 | 3.7 | III | 10.34 | 2003 | 1609 | SK 1282 SCP - 80L/4 | SK 1282 SCP - 80LH/4 | SK 1282 SCP - 140TC | X | X | X | | |
| 140 | 452 | 3.5 | III | 11.76 | 2077 | 1609 | SK 1282 SCP - 80L/4 | SK 1282 SCP - 80LH/4 | SK 1282 SCP - 140TC | X | X | X | | |
| 117 | 542 | 3.4 | III | 14.11 | 2167 | 1609 | SK 1282 SCP - 80L/4 | SK 1282 SCP - 80LH/4 | SK 1282 SCP - 140TC | X | X | X | | |
| 96 | 661 | 3 | III | 17.21 | 2162 | 1609 | SK 1282 SCP - 80L/4 | SK 1282 SCP - 80LH/4 | SK 1282 SCP - 140TC | X | X | X | | |
| 80 | 790 | 2.5 | III | 20.57 | 2158 | 1609 | SK 1282 SCP - 80L/4 | SK 1282 SCP - 80LH/4 | SK 1282 SCP - 140TC | X | X | X | | |
| 65 | 969 | 2.1 | III | 25.22 | 2151 | 1609 | SK 1282 SCP - 80L/4 | SK 1282 SCP - 80LH/4 | SK 1282 SCP - 140TC | X | X | X | | |
| 58 | 1088 | 1.8 | II | 28.33 | 2144 | 1609 | SK 1282 SCP - 80L/4 | SK 1282 SCP - 80LH/4 | SK 1282 SCP - 140TC | X | X | X | | |
| 51 | 1232 | 1.7 | II | 32.08 | 2135 | 1609 | SK 1282 SCP - 80L/4 | SK 1282 SCP - 80LH/4 | SK 1282 SCP - 140TC | X | X | X | | |
| 40 | 1578 | 1.2 | I | 41.07 | 2111 | 1609 | SK 1282 SCP - 80L/4 | SK 1282 SCP - 80LH/4 | SK 1282 SCP - 140TC | X | X | X | | |
| 34 | 1892 | 1.2 | I | 49.25 | 2084 | 1609 | SK 1282 SCP - 80L/4 | SK 1282 SCP - 80LH/4 | SK 1282 SCP - 140TC | X | X | X | | |
| 28 | 2262 | 1.1 | I | 58.89 | 2041 | 1609 | SK 1282 SCP - 80L/4 | SK 1282 SCP - 80LH/4 | SK 1282 SCP - 140TC | X | X | X | | |
| 23 | 2773 | 0.9 | * | 72.17 | 1971 | 1609 | SK 1282 SCP - 80L/4 | SK 1282 SCP - 80LH/4 | SK 1282 SCP - 140TC | X | X | X | | |
| 288 | 220 | 4 | III | 5.72 | 2221 | 3375 | SK 2282 SCP - 80L/4 | SK 2282 SCP - 80LH/4 | SK 2282 SCP - 140TC | X | X | X | | |
| 257 | 247 | 3.8 | III | 6.43 | 2295 | 3375 | SK 2282 SCP - 80L/4 | SK 2282 SCP - 80LH/4 | SK 2282 SCP - 140TC | X | X | X | | |
| 221 | 287 | 3.7 | III | 7.48 | 2396 | 3375 | SK 2282 SCP - 80L/4 | SK 2282 SCP - 80LH/4 | SK 2282 SCP - 140TC | X | X | X | | |
| 197 | 322 | 3.6 | III | 8.37 | 2480 | 3375 | SK 2282 SCP - 80L/4 | SK 2282 SCP - 80LH/4 | SK 2282 SCP - 140TC | X | X | X | | |
| 183 | 347 | 4 | III | 9.03 | 2536 | 3375 | SK 2282 SCP - 80L/4 | SK 2282 SCP - 80LH/4 | SK 2282 SCP - 140TC | X | X | X | | |
| 163 | 390 | 3.8 | III | 10.15 | 2621 | 3375 | SK 2282 SCP - 80L/4 | SK 2282 SCP - 80LH/4 | SK 2282 SCP - 140TC | X | X | X | | |
| 140 | 454 | 3.7 | III | 11.81 | 2745 | 3375 | SK 2282 SCP - 80L/4 | SK 2282 SCP - 80LH/4 | SK 2282 SCP - 140TC | X | X | X | | |
| 125 | 508 | 3.6 | III | 13.23 | 2831 | 3375 | SK 2282 SCP - 80L/4 | SK 2282 SCP - 80LH/4 | SK 2282 SCP - 140TC | X | X | X | | |
| 100 | 635 | 3.7 | III | 16.53 | 3022 | 3375 | SK 2282 SCP - 80L/4 | SK 2282 SCP - 80LH/4 | SK 2282 SCP - 140TC | X | X | X | | |
| 89 | 711 | 3.6 | III | 18.51 | 3128 | 3375 | SK 2282 SCP - 80L/4 | SK 2282 SCP - 80LH/4 | SK 2282 SCP - 140TC | X | X | X | | |
| 75 | 841 | 3.6 | III | 21.9 | 3157 | 3375 | SK 2282 SCP - 80L/4 | SK 2282 SCP - 80LH/4 | SK 2282 SCP - 140TC | X | X | X | | |
| 69 | 920 | 3.7 | III | 23.96 | 3155 | 3375 | SK 2282 SCP - 80L/4 | SK 2282 SCP - 80LH/4 | SK 2282 SCP - 140TC | X | X | X | | |

Output speed and torque ratings are based on the "Standard Efficiency Motor" Power and speed. Performance will vary slightly for other motors.



# 1 hp Gearmotors & Speed Reducers

| Output Speed | Output Torque | SF | AGMA Class | Gear Ratio | Thrust | | Integral Gearmotor | | Reducer | CEMA DriveShaft | | | | |
|---|---|---|---|---|---|---|---|---|---|---|---|---|---|---|
| $n_2$ | $T_2$ | $f_a$ | | i | Std Brg | H.D. Brg " VL" | Standard Efficiency Motor | Energy Efficient Motor | C-Face Input | 1-1/2" | 2" | 2-7/16" | 3" | 3-7/16" |
| [rpm] | [lb-in] | | | | [lb] | [lb] | | | | | | | | |
| 66 | 959 | 3.4 | III | 24.97 | 3152 | 3375 | SK 2282 SCP - 80L/4 | SK 2282 SCP - 80LH/4 | SK 2282 SCP - 140TC | X | X | X | | |
| 61 | 1031 | 3.6 | III | 26.83 | 3150 | 3375 | SK 2282 SCP - 80L/4 | SK 2282 SCP - 80LH/4 | SK 2282 SCP - 140TC | X | X | X | | |
| 56 | 1139 | 3.2 | III | 29.65 | 3148 | 3375 | SK 2282 SCP - 80L/4 | SK 2282 SCP - 80LH/4 | SK 2282 SCP - 140TC | X | X | X | | |
| 44 | 1428 | 2.9 | III | 37.18 | 3139 | 3375 | SK 2282 SCP - 80L/4 | SK 2282 SCP - 80LH/4 | SK 2282 SCP - 140TC | X | X | X | | |
| 37 | 1733 | 2.3 | III | 45.11 | 3125 | 3375 | SK 2282 SCP - 80L/4 | SK 2282 SCP - 80LH/4 | SK 2282 SCP - 140TC | X | X | X | | |
| 31 | 2073 | 2.2 | III | 53.96 | 3107 | 3375 | SK 2282 SCP - 80L/4 | SK 2282 SCP - 80LH/4 | SK 2282 SCP - 140TC | X | X | X | | |
| 26 | 2452 | 1.9 | II | 63.83 | 3085 | 3375 | SK 2282 SCP - 80L/4 | SK 2282 SCP - 80LH/4 | SK 2282 SCP - 140TC | X | X | X | | |
| 24 | 2677 | 1.5 | II | 69.67 | 3069 | 3375 | SK 2282 SCP - 80L/4 | SK 2282 SCP - 80LH/4 | SK 2282 SCP - 140TC | X | X | X | | |
| 20 | 3166 | 1.3 | I | 82.42 | 3031 | 3375 | SK 2282 SCP - 80L/4 | SK 2282 SCP - 80LH/4 | SK 2282 SCP - 140TC | X | X | X | | |
| 16 | 3879 | 1 | I | 100.98 | 2959 | 3375 | SK 2282 SCP - 80L/4 | SK 2282 SCP - 80LH/4 | SK 2282 SCP - 140TC | X | X | X | | |
| | | | | | | | | | | | | | | |
| 199 | 319 | 4 | III | 8.31 | 2831 | 4403 | SK 3282 SCP - 80L/4 | SK 3282 SCP - 80LH/4 | SK 3282 SCP - 140TC | X | X | X | X | |
| 117 | 542 | 4 | III | 14.11 | 3308 | 4500 | SK 3282 SCP - 80L/4 | SK 3282 SCP - 80LH/4 | SK 3282 SCP - 140TC | X | X | X | X | |
| 99 | 640 | 4 | III | 16.67 | 3474 | 4500 | SK 3282 SCP - 80L/4 | SK 3282 SCP - 80LH/4 | SK 3282 SCP - 140TC | X | X | X | X | |
| 82 | 775 | 4 | III | 20.18 | 3670 | 4500 | SK 3282 SCP - 80L/4 | SK 3282 SCP - 80LH/4 | SK 3282 SCP - 140TC | X | X | X | X | |
| 77 | 821 | 3.8 | III | 21.38 | 3735 | 4500 | SK 3282 SCP - 80L/4 | SK 3282 SCP - 80LH/4 | SK 3282 SCP - 140TC | X | X | X | X | |
| 73 | 862 | 4 | III | 22.45 | 3794 | 4500 | SK 3282 SCP - 80L/4 | SK 3282 SCP - 80LH/4 | SK 3282 SCP - 140TC | X | X | X | X | |
| 70 | 911 | 3.7 | III | 23.71 | 3843 | 4500 | SK 3282 SCP - 80L/4 | SK 3282 SCP - 80LH/4 | SK 3282 SCP - 140TC | X | X | X | X | |
| 64 | 994 | 3.8 | III | 25.88 | 3942 | 4500 | SK 3282 SCP - 80L/4 | SK 3282 SCP - 80LH/4 | SK 3282 SCP - 140TC | X | X | X | X | |
| 57 | 1103 | 3.7 | III | 28.7 | 4064 | 4500 | SK 3282 SCP - 80L/4 | SK 3282 SCP - 80LH/4 | SK 3282 SCP - 140TC | X | X | X | X | |
| 52 | 1227 | 3.7 | III | 31.93 | 4187 | 4500 | SK 3282 SCP - 80L/4 | SK 3282 SCP - 80LH/4 | SK 3282 SCP - 140TC | X | X | X | X | |
| 44 | 1451 | 3.3 | III | 37.77 | 4385 | 4500 | SK 3282 SCP - 80L/4 | SK 3282 SCP - 80LH/4 | SK 3282 SCP - 140TC | X | X | X | X | |
| 39 | 1614 | 3.3 | III | 42.02 | 4518 | 4500 | SK 3282 SCP - 80L/4 | SK 3282 SCP - 80LH/4 | SK 3282 SCP - 140TC | X | X | X | X | |
| 34 | 1846 | 2.6 | III | 48.04 | 4685 | 4500 | SK 3282 SCP - 80L/4 | SK 3282 SCP - 80LH/4 | SK 3282 SCP - 140TC | X | X | X | X | |
| 30 | 2143 | 2.7 | III | 55.79 | 4878 | 4500 | SK 3282 SCP - 80L/4 | SK 3282 SCP - 80LH/4 | SK 3282 SCP - 140TC | X | X | X | X | |
| 25 | 2531 | 2.7 | III | 65.89 | 5119 | 4500 | SK 3282 SCP - 80L/4 | SK 3282 SCP - 80LH/4 | SK 3282 SCP - 140TC | X | X | X | X | |
| 23 | 2711 | 1.8 | II | 70.56 | 5114 | 4500 | SK 3282 SCP - 80L/4 | SK 3282 SCP - 80LH/4 | SK 3282 SCP - 140TC | X | X | X | X | |
| 21 | 3064 | 2.5 | III | 79.76 | 5103 | 4500 | SK 3282 SCP - 80L/4 | SK 3282 SCP - 80LH/4 | SK 3282 SCP - 140TC | X | X | X | X | |
| 19 | 3409 | 2.5 | III | 88.74 | 5092 | 4500 | SK 3282 SCP - 80L/4 | SK 3282 SCP - 80LH/4 | SK 3282 SCP - 140TC | X | X | X | X | |
| 16 | 3876 | 1.8 | II | 100.88 | 5076 | 4500 | SK 3282 SCP - 80L/4 | SK 3282 SCP - 80LH/4 | SK 3282 SCP - 140TC | X | X | X | X | |
| 15 | 4312 | 1.6 | II | 112.23 | 5058 | 4500 | SK 3282 SCP - 80L/4 | SK 3282 SCP - 80LH/4 | SK 3282 SCP - 140TC | X | X | X | X | |

Output speed and torque ratings are based on the "Standard Efficiency Motor" Power and speed. Performance will vary slightly for other motors.

# 1.5 hp Gearmotors & Speed Reducers





| Output Speed | Output Torque | SF | AGMA Class | Gear Ratio | Thrust | | Integral Gearmotor | | Reducer | CEMA DriveShaft | | | | |
|---|---|---|---|---|---|---|---|---|---|---|---|---|---|---|
| $n_2$ | $T_2$ | $f_a$ | | i | Std Brg | H.D. Brg " VL" | Standard Efficiency Motor | Energy Efficient Motor | C-Face Input | 1-1/2" | 2" | 2-7/16" | 3" | 3-7/16" |
| [rpm] | [lb-in] | | | | [lb] | [lb] | | | | | | | | |
| 347 | 273 | 4.1 | III | 4.79 | 1591 | 1609 | SK 1282 SCP - 90S/4 | SK 1282 SCP - 90SH/4 | SK 1282 SCP - 140TC | X | X | X | | |
| 303 | 312 | 4.1 | III | 5.47 | 1652 | 1609 | SK 1282 SCP - 90S/4 | SK 1282 SCP - 90SH/4 | SK 1282 SCP - 140TC | X | X | X | | |
| 258 | 367 | 3.9 | III | 6.43 | 1728 | 1609 | SK 1282 SCP - 90S/4 | SK 1282 SCP - 90SH/4 | SK 1282 SCP - 140TC | X | X | X | | |
| 229 | 413 | 3.8 | III | 7.24 | 1791 | 1609 | SK 1282 SCP - 90S/4 | SK 1282 SCP - 90SH/4 | SK 1282 SCP - 140TC | X | X | X | | |
| 202 | 468 | 3 | III | 8.21 | 1856 | 1609 | SK 1282 SCP - 90S/4 | SK 1282 SCP - 90SH/4 | SK 1282 SCP - 140TC | X | X | X | | |
| 201 | 470 | 3.6 | III | 8.24 | 1854 | 1609 | SK 1282 SCP - 90S/4 | SK 1282 SCP - 90SH/4 | SK 1282 SCP - 140TC | X | X | X | | |
| 181 | 523 | 3.2 | III | 9.18 | 1913 | 1609 | SK 1282 SCP - 90S/4 | SK 1282 SCP - 90SH/4 | SK 1282 SCP - 140TC | X | X | X | | |
| 161 | 590 | 2.9 | III | 10.34 | 1976 | 1609 | SK 1282 SCP - 90S/4 | SK 1282 SCP - 90SH/4 | SK 1282 SCP - 140TC | X | X | X | | |
| 141 | 671 | 2.7 | III | 11.76 | 2045 | 1609 | SK 1282 SCP - 90S/4 | SK 1282 SCP - 90SH/4 | SK 1282 SCP - 140TC | X | X | X | | |
| 118 | 805 | 2.3 | III | 14.11 | 2158 | 1609 | SK 1282 SCP - 90S/4 | SK 1282 SCP - 90SH/4 | SK 1282 SCP - 140TC | X | X | X | | |
| 96 | 981 | 2 | III | 17.21 | 2149 | 1609 | SK 1282 SCP - 90S/4 | SK 1282 SCP - 90SH/4 | SK 1282 SCP - 140TC | X | X | X | | |
| 81 | 1173 | 1.7 | II | 20.57 | 2140 | 1609 | SK 1282 SCP - 90S/4 | SK 1282 SCP - 90SH/4 | SK 1282 SCP - 140TC | X | X | X | | |
| 66 | 1438 | 1.4 | II | 25.22 | 2122 | 1609 | SK 1282 SCP - 90S/4 | SK 1282 SCP - 90SH/4 | SK 1282 SCP - 140TC | X | X | X | | |
| 59 | 1615 | 1.2 | I | 28.33 | 2108 | 1609 | SK 1282 SCP - 90S/4 | SK 1282 SCP - 90SH/4 | SK 1282 SCP - 140TC | X | X | X | | |
| 52 | 1829 | 1.1 | I | 32.08 | 2088 | 1609 | SK 1282 SCP - 90S/4 | SK 1282 SCP - 90SH/4 | SK 1282 SCP - 140TC | X | X | X | | |
| 368 | 257 | 4.4 | III | 4.51 | 2054 | 3375 | SK 2282 SCP - 90S/4 | SK 2282 SCP - 90SH/4 | SK 2282 SCP - 140TC | X | X | X | | |
| 290 | 326 | 4.2 | III | 5.72 | 2203 | 3375 | SK 2282 SCP - 90S/4 | SK 2282 SCP - 90SH/4 | SK 2282 SCP - 140TC | X | X | X | | |
| 258 | 367 | 4 | III | 6.43 | 2277 | 3375 | SK 2282 SCP - 90S/4 | SK 2282 SCP - 90SH/4 | SK 2282 SCP - 140TC | X | X | X | | |
| 222 | 427 | 3.8 | III | 7.48 | 2381 | 3375 | SK 2282 SCP - 90S/4 | SK 2282 SCP - 90SH/4 | SK 2282 SCP - 140TC | X | X | X | | |
| 198 | 477 | 3.7 | III | 8.37 | 2455 | 3375 | SK 2282 SCP - 90S/4 | SK 2282 SCP - 90SH/4 | SK 2282 SCP - 140TC | X | X | X | | |
| 184 | 515 | 4.2 | III | 9.03 | 2513 | 3375 | SK 2282 SCP - 90S/4 | SK 2282 SCP - 90SH/4 | SK 2282 SCP - 140TC | X | X | X | | |
| 164 | 579 | 4 | III | 10.15 | 2599 | 3375 | SK 2282 SCP - 90S/4 | SK 2282 SCP - 90SH/4 | SK 2282 SCP - 140TC | X | X | X | | |
| 141 | 673 | 3.8 | III | 11.81 | 2714 | 3375 | SK 2282 SCP - 90S/4 | SK 2282 SCP - 90SH/4 | SK 2282 SCP - 140TC | X | X | X | | |
| 125 | 754 | 3.7 | III | 13.23 | 2804 | 3375 | SK 2282 SCP - 90S/4 | SK 2282 SCP - 90SH/4 | SK 2282 SCP - 140TC | X | X | X | | |
| 100 | 943 | 3.8 | III | 16.53 | 2986 | 3375 | SK 2282 SCP - 90S/4 | SK 2282 SCP - 90SH/4 | SK 2282 SCP - 140TC | X | X | X | | |
| 90 | 1056 | 3.7 | III | 18.51 | 3085 | 3375 | SK 2282 SCP - 90S/4 | SK 2282 SCP - 90SH/4 | SK 2282 SCP - 140TC | X | X | X | | |
| 76 | 1249 | 3.4 | III | 21.9 | 3146 | 3375 | SK 2282 SCP - 90S/4 | SK 2282 SCP - 90SH/4 | SK 2282 SCP - 140TC | X | X | X | | |
| 69 | 1366 | 2.8 | III | 23.96 | 3141 | 3375 | SK 2282 SCP - 90S/4 | SK 2282 SCP - 90SH/4 | SK 2282 SCP - 140TC | X | X | X | | |
| 66 | 1424 | 3 | III | 24.97 | 3139 | 3375 | SK 2282 SCP - 90S/4 | SK 2282 SCP - 90SH/4 | SK 2282 SCP - 140TC | X | X | X | | |
| 62 | 1530 | 2.5 | III | 26.83 | 3134 | 3375 | SK 2282 SCP - 90S/4 | SK 2282 SCP - 90SH/4 | SK 2282 SCP - 140TC | X | X | X | | |
| 56 | 1691 | 2.6 | III | 29.65 | 3128 | 3375 | SK 2282 SCP - 90S/4 | SK 2282 SCP - 90SH/4 | SK 2282 SCP - 140TC | X | X | X | | |
| 53 | 1781 | 2.2 | III | 31.23 | 3123 | 3375 | SK 2282 SCP - 90S/4 | SK 2282 SCP - 90SH/4 | SK 2282 SCP - 140TC | X | X | X | | |
| 45 | 2084 | 2.1 | III | 36.54 | 3107 | 3375 | SK 2282 SCP - 90S/4 | SK 2282 SCP - 90SH/4 | SK 2282 SCP - 140TC | X | X | X | | |
| 45 | 2120 | 1.9 | II | 37.18 | 3105 | 3375 | SK 2282 SCP - 90S/4 | SK 2282 SCP - 90SH/4 | SK 2282 SCP - 140TC | X | X | X | | |
| 38 | 2493 | 2 | III | 43.71 | 3083 | 3375 | SK 2282 SCP - 90S/4 | SK 2282 SCP - 90SH/4 | SK 2282 SCP - 140TC | X | X | X | | |

Output speed and torque ratings are based on the "Standard Efficiency Motor" Power and speed. Performance will vary slightly for other motors.



# 1.5 hp Gearmotors & Speed Reducers

| Output Speed | Output Torque | SF | AGMA Class | Gear Ratio | Thrust | | Integral Gearmotor | | Reducer | CEMA DriveShaft | | | | |
|---|---|---|---|---|---|---|---|---|---|---|---|---|---|---|
| $n_2$ | $T_2$ | $f_a$ | | i | Std Brg | H.D. Brg " VL" | Standard Efficiency Motor | Energy Efficient Motor | C-Face Input | 1-1/2" | 2" | 2-7/16" | 3" | 3-7/16" |
| [rpm] | [lb-in] | | | | [lb] | [lb] | | | | | | | | |
| 37 | 2572 | 1.5 | II | 45.11 | 3076 | 3375 | SK 2282 SCP - 90S/4 | SK 2282 SCP - 90SH/4 | SK 2282 SCP - 140TC | X | X | X | | |
| 32 | 2949 | 1.6 | II | 51.71 | 3049 | 3375 | SK 2282 SCP - 90S/4 | SK 2282 SCP - 90SH/4 | SK 2282 SCP - 140TC | X | X | X | | |
| 31 | 3077 | 1.5 | II | 53.96 | 3038 | 3375 | SK 2282 SCP - 90S/4 | SK 2282 SCP - 90SH/4 | SK 2282 SCP - 140TC | X | X | X | | |
| 26 | 3640 | 1.3 | I | 63.83 | 2986 | 3375 | SK 2282 SCP - 90S/4 | SK 2282 SCP - 90SH/4 | SK 2282 SCP - 140TC | X | X | X | | |
| 24 | 3973 | 1 | I | 69.67 | 2950 | 3375 | SK 2282 SCP - 90S/4 | SK 2282 SCP - 90SH/4 | SK 2282 SCP - 140TC | X | X | X | | |
| 20 | 4700 | 0.9 | * | 82.42 | 2858 | 3375 | SK 2282 SCP - 90S/4 | SK 2282 SCP - 90SH/4 | SK 2282 SCP - 140TC | X | X | X | | |
| 371 | 255 | 4.4 | III | 4.48 | 2351 | 3650 | SK 3282 SCP - 90S/4 | SK 3282 SCP - 90SH/4 | SK 3282 SCP - 140TC | X | X | X | X | |
| 292 | 324 | 4.8 | III | 5.68 | 2518 | 3911 | SK 3282 SCP - 90S/4 | SK 3282 SCP - 90SH/4 | SK 3282 SCP - 140TC | X | X | X | X | |
| 248 | 382 | 4.6 | III | 6.7 | 2642 | 4104 | SK 3282 SCP - 90S/4 | SK 3282 SCP - 90SH/4 | SK 3282 SCP - 140TC | X | X | X | X | |
| 200 | 474 | 4.4 | III | 8.31 | 2813 | 4361 | SK 3282 SCP - 90S/4 | SK 3282 SCP - 90SH/4 | SK 3282 SCP - 140TC | X | X | X | X | |
| 169 | 559 | 4.6 | III | 9.8 | 2952 | 4500 | SK 3282 SCP - 90S/4 | SK 3282 SCP - 90SH/4 | SK 3282 SCP - 140TC | X | X | X | X | |
| 146 | 649 | 4.6 | III | 11.38 | 3080 | 4500 | SK 3282 SCP - 90S/4 | SK 3282 SCP - 90SH/4 | SK 3282 SCP - 140TC | X | X | X | X | |
| 118 | 805 | 4.4 | III | 14.11 | 3278 | 4500 | SK 3282 SCP - 90S/4 | SK 3282 SCP - 90SH/4 | SK 3282 SCP - 140TC | X | X | X | X | |
| 100 | 951 | 4.4 | III | 16.67 | 3440 | 4500 | SK 3282 SCP - 90S/4 | SK 3282 SCP - 90SH/4 | SK 3282 SCP - 140TC | X | X | X | X | |
| 82 | 1151 | 4.4 | III | 20.18 | 3632 | 4500 | SK 3282 SCP - 90S/4 | SK 3282 SCP - 90SH/4 | SK 3282 SCP - 140TC | X | X | X | X | |
| 78 | 1219 | 4 | III | 21.38 | 3690 | 4500 | SK 3282 SCP - 90S/4 | SK 3282 SCP - 90SH/4 | SK 3282 SCP - 140TC | X | X | X | X | |
| 74 | 1280 | 4.4 | III | 22.45 | 3742 | 4500 | SK 3282 SCP - 90S/4 | SK 3282 SCP - 90SH/4 | SK 3282 SCP - 140TC | X | X | X | X | |
| 70 | 1352 | 3.9 | III | 23.71 | 3796 | 4500 | SK 3282 SCP - 90S/4 | SK 3282 SCP - 90SH/4 | SK 3282 SCP - 140TC | X | X | X | X | |
| 64 | 1476 | 4 | III | 25.88 | 3893 | 4500 | SK 3282 SCP - 90S/4 | SK 3282 SCP - 90SH/4 | SK 3282 SCP - 140TC | X | X | X | X | |
| 58 | 1637 | 3.9 | III | 28.7 | 4005 | 4500 | SK 3282 SCP - 90S/4 | SK 3282 SCP - 90SH/4 | SK 3282 SCP - 140TC | X | X | X | X | |
| 52 | 1821 | 3.9 | III | 31.93 | 4127 | 4500 | SK 3282 SCP - 90S/4 | SK 3282 SCP - 90SH/4 | SK 3282 SCP - 140TC | X | X | X | X | |
| 44 | 2154 | 3.4 | III | 37.77 | 4318 | 4500 | SK 3282 SCP - 90S/4 | SK 3282 SCP - 90SH/4 | SK 3282 SCP - 140TC | X | X | X | X | |
| 43 | 2202 | 2.5 | III | 38.62 | 4325 | 4500 | SK 3282 SCP - 90S/4 | SK 3282 SCP - 90SH/4 | SK 3282 SCP - 140TC | X | X | X | X | |
| 40 | 2396 | 3.4 | III | 42.02 | 4448 | 4500 | SK 3282 SCP - 90S/4 | SK 3282 SCP - 90SH/4 | SK 3282 SCP - 140TC | X | X | X | X | |
| 37 | 2558 | 2.6 | III | 44.85 | 4509 | 4500 | SK 3282 SCP - 90S/4 | SK 3282 SCP - 90SH/4 | SK 3282 SCP - 140TC | X | X | X | X | |
| 35 | 2739 | 1.8 | II | 48.04 | 4583 | 4500 | SK 3282 SCP - 90S/4 | SK 3282 SCP - 90SH/4 | SK 3282 SCP - 140TC | X | X | X | X | |
| 31 | 3021 | 2.5 | III | 52.97 | 4712 | 4500 | SK 3282 SCP - 90S/4 | SK 3282 SCP - 90SH/4 | SK 3282 SCP - 140TC | X | X | X | X | |
| 30 | 3181 | 1.8 | II | 55.79 | 4775 | 4500 | SK 3282 SCP - 90S/4 | SK 3282 SCP - 90SH/4 | SK 3282 SCP - 140TC | X | X | X | X | |
| 26 | 3656 | 2.5 | III | 64.12 | 4961 | 4500 | SK 3282 SCP - 90S/4 | SK 3282 SCP - 90SH/4 | SK 3282 SCP - 140TC | X | X | X | X | |
| 25 | 3757 | 1.8 | II | 65.89 | 4984 | 4500 | SK 3282 SCP - 90S/4 | SK 3282 SCP - 90SH/4 | SK 3282 SCP - 140TC | X | X | X | X | |
| 24 | 4024 | 1.2 | I | 70.56 | 5069 | 4500 | SK 3282 SCP - 90S/4 | SK 3282 SCP - 90SH/4 | SK 3282 SCP - 140TC | X | X | X | X | |
| 21 | 4548 | 1.7 | II | 79.76 | 5047 | 4500 | SK 3282 SCP - 90S/4 | SK 3282 SCP - 90SH/4 | SK 3282 SCP - 140TC | X | X | X | X | |
| 19 | 5060 | 1.7 | II | 88.74 | 5022 | 4500 | SK 3282 SCP - 90S/4 | SK 3282 SCP - 90SH/4 | SK 3282 SCP - 140TC | X | X | X | X | |
| 16 | 5753 | 1.2 | I | 100.88 | 4984 | 4500 | SK 3282 SCP - 90S/4 | SK 3282 SCP - 90SH/4 | SK 3282 SCP - 140TC | X | X | X | X | |
| 15 | 6400 | 1.1 | I | 112.23 | 4943 | 4500 | SK 3282 SCP - 90S/4 | SK 3282 SCP - 90SH/4 | SK 3282 SCP - 140TC | X | X | X | X | |

Output speed and torque ratings are based on the "Standard Efficiency Motor" Power and speed. Performance will vary slightly for other motors.

# 1.5 hp Gearmotors & Speed Reducers





| Output Speed | Output Torque | SF | AGMA Class | Gear Ratio | Thrust | | Integral Gearmotor | | Reducer | CEMA DriveShaft | | | | |
|---|---|---|---|---|---|---|---|---|---|---|---|---|---|---|
| $n_2$ | $T_2$ | $f_a$ | | i | Std Brg | H.D. Brg " VL" | Standard Efficiency Motor | Energy Efficient Motor | C-Face Input | 1-1/2" | 2" | 2-7/16" | 3" | 3-7/16" |
| [rpm] | [lb-in] | | | | [lb] | [lb] | | | | | | | | |
| 274 | 346 | 5.4 | III | 6.06 | 3652 | 6203 | SK 4282 SCP - 90S/4 | SK 4282 SCP - 90SH/4 | SK 4282 SCP - 140TC | | X | X | X | |
| 233 | 407 | 4.9 | III | 7.13 | 3832 | 6509 | SK 4282 SCP - 90S/4 | SK 4282 SCP - 90SH/4 | SK 4282 SCP - 140TC | | X | X | X | |
| 199 | 475 | 4.8 | III | 8.33 | 4007 | 6750 | SK 4282 SCP - 90S/4 | SK 4282 SCP - 90SH/4 | SK 4282 SCP - 140TC | | X | X | X | |
| 180 | 526 | 5.4 | III | 9.23 | 4131 | 6750 | SK 4282 SCP - 90S/4 | SK 4282 SCP - 90SH/4 | SK 4282 SCP - 140TC | | X | X | X | |
| 153 | 619 | 4.9 | III | 10.85 | 4340 | 6750 | SK 4282 SCP - 90S/4 | SK 4282 SCP - 90SH/4 | SK 4282 SCP - 140TC | | X | X | X | |
| 131 | 723 | 4.8 | III | 12.68 | 4534 | 6750 | SK 4282 SCP - 90S/4 | SK 4282 SCP - 90SH/4 | SK 4282 SCP - 140TC | | X | X | X | |
| 109 | 867 | 4.8 | III | 15.2 | 4786 | 6750 | SK 4282 SCP - 90S/4 | SK 4282 SCP - 90SH/4 | SK 4282 SCP - 140TC | | X | X | X | |
| 91 | 1037 | 4.8 | III | 18.18 | 5038 | 6750 | SK 4282 SCP - 90S/4 | SK 4282 SCP - 90SH/4 | SK 4282 SCP - 140TC | | X | X | X | |
| 77 | 1223 | 4.8 | III | 21.45 | 5294 | 6750 | SK 4282 SCP - 90S/4 | SK 4282 SCP - 90SH/4 | SK 4282 SCP - 140TC | | X | X | X | |
| 74 | 1277 | 4.6 | III | 22.39 | 5353 | 6750 | SK 4282 SCP - 90S/4 | SK 4282 SCP - 90SH/4 | SK 4282 SCP - 140TC | | X | X | X | |
| 63 | 1497 | 4.8 | III | 26.25 | 5607 | 6750 | SK 4282 SCP - 90S/4 | SK 4282 SCP - 90SH/4 | SK 4282 SCP - 140TC | | X | X | X | |
| 63 | 1507 | 4.6 | III | 26.43 | 5616 | 6750 | SK 4282 SCP - 90S/4 | SK 4282 SCP - 90SH/4 | SK 4282 SCP - 140TC | | X | X | X | |
| 51 | 1844 | 4.6 | III | 32.34 | 5958 | 6750 | SK 4282 SCP - 90S/4 | SK 4282 SCP - 90SH/4 | SK 4282 SCP - 140TC | | X | X | X | |
| 45 | 2099 | 4.1 | III | 36.81 | 6170 | 6750 | SK 4282 SCP - 90S/4 | SK 4282 SCP - 90SH/4 | SK 4282 SCP - 140TC | | X | X | X | |
| 41 | 2323 | 4.2 | III | 40.74 | 6359 | 6750 | SK 4282 SCP - 90S/4 | SK 4282 SCP - 90SH/4 | SK 4282 SCP - 140TC | | X | X | X | |
| 37 | 2569 | 4.1 | III | 45.05 | 6541 | 6750 | SK 4282 SCP - 90S/4 | SK 4282 SCP - 90SH/4 | SK 4282 SCP - 140TC | | X | X | X | |
| 22 | 4374 | 3.2 | III | 76.7 | 6878 | 6750 | SK 4282 SCP - 90S/4 | SK 4282 SCP - 90SH/4 | SK 4282 SCP - 140TC | | X | X | X | |
| 18 | 5162 | 2.7 | III | 90.52 | 6860 | 6750 | SK 4282 SCP - 90S/4 | SK 4282 SCP - 90SH/4 | SK 4282 SCP - 140TC | | X | X | X | |
| 15 | 6317 | 2.2 | III | 110.78 | 6829 | 6750 | SK 4282 SCP - 90S/4 | SK 4282 SCP - 90SH/4 | SK 4282 SCP - 140TC | | X | X | X | |
| 11 | 8862 | 1.3 | I | 155.4 | 6737 | 6750 | SK 4282 SCP - 90S/4 | SK 4282 SCP - 90SH/4 | SK 4282 SCP - 140TC | | X | X | X | |
| 191 | 496 | 5.7 | III | 8.7 | 5639 | 9000 | SK 5282 SCP - 90S/4 | SK 5282 SCP - 90SH/4 | SK 5282 SCP - 140TC | | X | X | X | X |
| 128 | 741 | 5.7 | III | 13 | 6338 | 9000 | SK 5282 SCP - 90S/4 | SK 5282 SCP - 90SH/4 | SK 5282 SCP - 140TC | | X | X | X | X |
| 108 | 877 | 5.7 | III | 15.38 | 6662 | 9000 | SK 5282 SCP - 90S/4 | SK 5282 SCP - 90SH/4 | SK 5282 SCP - 140TC | | X | X | X | X |
| 94 | 1003 | 5.6 | III | 17.59 | 6935 | 9000 | SK 5282 SCP - 90S/4 | SK 5282 SCP - 90SH/4 | SK 5282 SCP - 140TC | | X | X | X | X |
| 88 | 1077 | 5.7 | III | 18.88 | 7081 | 9000 | SK 5282 SCP - 90S/4 | SK 5282 SCP - 90SH/4 | SK 5282 SCP - 140TC | | X | X | X | X |
| 82 | 1161 | 5.6 | III | 20.36 | 7229 | 9000 | SK 5282 SCP - 90S/4 | SK 5282 SCP - 90SH/4 | SK 5282 SCP - 140TC | | X | X | X | X |
| 66 | 1426 | 5.6 | III | 25 | 7682 | 9000 | SK 5282 SCP - 90S/4 | SK 5282 SCP - 90SH/4 | SK 5282 SCP - 140TC | | X | X | X | X |
| 54 | 1739 | 5.5 | III | 30.5 | 8138 | 9000 | SK 5282 SCP - 90S/4 | SK 5282 SCP - 90SH/4 | SK 5282 SCP - 140TC | | X | X | X | X |
| 50 | 1906 | 5.6 | III | 33.43 | 8377 | 9000 | SK 5282 SCP - 90S/4 | SK 5282 SCP - 90SH/4 | SK 5282 SCP - 140TC | | X | X | X | X |
| 41 | 2327 | 5.5 | III | 40.8 | 8856 | 9000 | SK 5282 SCP - 90S/4 | SK 5282 SCP - 90SH/4 | SK 5282 SCP - 140TC | | X | X | X | X |
| 30 | 3168 | 5.3 | III | 55.55 | 9684 | 9000 | SK 5282 SCP - 90S/4 | SK 5282 SCP - 90SH/4 | SK 5282 SCP - 140TC | | X | X | X | X |
| 20 | 4654 | 3.5 | III | 81.61 | 10035 | 9000 | SK 5282 SCP - 90S/4 | SK 5282 SCP - 90SH/4 | SK 5282 SCP - 140TC | | X | X | X | X |
| 17 | 5713 | 3.5 | III | 100.19 | 10022 | 9000 | SK 5282 SCP - 90S/4 | SK 5282 SCP - 90SH/4 | SK 5282 SCP - 140TC | | X | X | X | X |
| 12 | 7643 | 3.1 | III | 134.03 | 9990 | 9000 | SK 5282 SCP - 90S/4 | SK 5282 SCP - 90SH/4 | SK 5282 SCP - 140TC | | X | X | X | X |

Output speed and torque ratings are based on the "Standard Efficiency Motor" Power and speed. Performance will vary slightly for other motors.



# 2 hp Gearmotors & Speed Reducers

| Output Speed | Output Torque | SF | AGMA Class | Gear Ratio | Thrust | | Integral Gearmotor | | Reducer | CEMA DriveShaft | | | | |
|---|---|---|---|---|---|---|---|---|---|---|---|---|---|---|
| $n_2$ | $T_2$ | $f_a$ | | i | Std Brg | H.D. Brg " VL" | Standard Efficiency Motor | Energy Efficient Motor | C-Face Input | 1-1/2" | 2" | 2-7/16" | 3" | 3-7/16" |
| [rpm] | [lb-in] | | | | [lb] | [lb] | | | | | | | | |
| 347 | 363 | 3.1 | III | 4.79 | 1577 | 1609 | SK 1282 SCP - 90L/4 | SK 1282 SCP - 90LH/4 | SK 1282 SCP - 140TC | X | X | X | | |
| 303 | 415 | 3.1 | III | 5.47 | 1636 | 1609 | SK 1282 SCP - 90L/4 | SK 1282 SCP - 90LH/4 | SK 1282 SCP - 140TC | X | X | X | | |
| 258 | 488 | 3 | III | 6.43 | 1712 | 1609 | SK 1282 SCP - 90L/4 | SK 1282 SCP - 90LH/4 | SK 1282 SCP - 140TC | X | X | X | | |
| 229 | 549 | 2.8 | III | 7.24 | 1771 | 1609 | SK 1282 SCP - 90L/4 | SK 1282 SCP - 90LH/4 | SK 1282 SCP - 140TC | X | X | X | | |
| 202 | 623 | 2.3 | III | 8.21 | 1841 | 1609 | SK 1282 SCP - 90L/4 | SK 1282 SCP - 90LH/4 | SK 1282 SCP - 140TC | X | X | X | | |
| 201 | 625 | 2.7 | III | 8.24 | 1829 | 1609 | SK 1282 SCP - 90L/4 | SK 1282 SCP - 90LH/4 | SK 1282 SCP - 140TC | X | X | X | | |
| 181 | 696 | 2.4 | III | 9.18 | 1890 | 1609 | SK 1282 SCP - 90L/4 | SK 1282 SCP - 90LH/4 | SK 1282 SCP - 140TC | X | X | X | | |
| 161 | 784 | 2.2 | III | 10.34 | 1951 | 1609 | SK 1282 SCP - 90L/4 | SK 1282 SCP - 90LH/4 | SK 1282 SCP - 140TC | X | X | X | | |
| 141 | 892 | 2 | III | 11.76 | 2016 | 1609 | SK 1282 SCP - 90L/4 | SK 1282 SCP - 90LH/4 | SK 1282 SCP - 140TC | X | X | X | | |
| 118 | 1070 | 1.7 | II | 14.11 | 2117 | 1609 | SK 1282 SCP - 90L/4 | SK 1282 SCP - 90LH/4 | SK 1282 SCP - 140TC | X | X | X | | |
| 96 | 1306 | 1.5 | II | 17.21 | 2131 | 1609 | SK 1282 SCP - 90L/4 | SK 1282 SCP - 90LH/4 | SK 1282 SCP - 140TC | X | X | X | | |
| 81 | 1560 | 1.3 | I | 20.57 | 2113 | 1609 | SK 1282 SCP - 90L/4 | SK 1282 SCP - 90LH/4 | SK 1282 SCP - 140TC | X | X | X | | |
| 66 | 1913 | 1 | I | 25.22 | 2081 | 1609 | SK 1282 SCP - 90L/4 | SK 1282 SCP - 90LH/4 | SK 1282 SCP - 140TC | X | X | X | | |
| 59 | 2149 | 0.9 | * | 28.33 | 2054 | 1609 | SK 1282 SCP - 90L/4 | SK 1282 SCP - 90LH/4 | SK 1282 SCP - 140TC | X | X | X | | |
| 368 | 342 | 3.3 | III | 4.51 | 2045 | 3375 | SK 2282 SCP - 90L/4 | SK 2282 SCP - 90LH/4 | SK 2282 SCP - 140TC | X | X | X | | |
| 290 | 434 | 3.1 | III | 5.72 | 2194 | 3375 | SK 2282 SCP - 90L/4 | SK 2282 SCP - 90LH/4 | SK 2282 SCP - 140TC | X | X | X | | |
| 258 | 488 | 3 | III | 6.43 | 2266 | 3375 | SK 2282 SCP - 90L/4 | SK 2282 SCP - 90LH/4 | SK 2282 SCP - 140TC | X | X | X | | |
| 222 | 567 | 2.9 | III | 7.48 | 2365 | 3375 | SK 2282 SCP - 90L/4 | SK 2282 SCP - 90LH/4 | SK 2282 SCP - 140TC | X | X | X | | |
| 198 | 635 | 2.8 | III | 8.37 | 2437 | 3375 | SK 2282 SCP - 90L/4 | SK 2282 SCP - 90LH/4 | SK 2282 SCP - 140TC | X | X | X | | |
| 184 | 685 | 3.1 | III | 9.03 | 2504 | 3375 | SK 2282 SCP - 90L/4 | SK 2282 SCP - 90LH/4 | SK 2282 SCP - 140TC | X | X | X | | |
| 164 | 770 | 3 | III | 10.15 | 2579 | 3375 | SK 2282 SCP - 90L/4 | SK 2282 SCP - 90LH/4 | SK 2282 SCP - 140TC | X | X | X | | |
| 141 | 896 | 2.9 | III | 11.81 | 2691 | 3375 | SK 2282 SCP - 90L/4 | SK 2282 SCP - 90LH/4 | SK 2282 SCP - 140TC | X | X | X | | |
| 125 | 1004 | 2.8 | III | 13.23 | 2777 | 3375 | SK 2282 SCP - 90L/4 | SK 2282 SCP - 90LH/4 | SK 2282 SCP - 140TC | X | X | X | | |
| 100 | 1254 | 2.9 | III | 16.53 | 2959 | 3375 | SK 2282 SCP - 90L/4 | SK 2282 SCP - 90LH/4 | SK 2282 SCP - 140TC | X | X | X | | |
| 90 | 1404 | 2.8 | III | 18.51 | 3049 | 3375 | SK 2282 SCP - 90L/4 | SK 2282 SCP - 90LH/4 | SK 2282 SCP - 140TC | X | X | X | | |
| 76 | 1661 | 2.6 | III | 21.9 | 3128 | 3375 | SK 2282 SCP - 90L/4 | SK 2282 SCP - 90LH/4 | SK 2282 SCP - 140TC | X | X | X | | |
| 69 | 1818 | 2.1 | III | 23.96 | 3121 | 3375 | SK 2282 SCP - 90L/4 | SK 2282 SCP - 90LH/4 | SK 2282 SCP - 140TC | X | X | X | | |
| 66 | 1894 | 2.3 | III | 24.97 | 3116 | 3375 | SK 2282 SCP - 90L/4 | SK 2282 SCP - 90LH/4 | SK 2282 SCP - 140TC | X | X | X | | |
| 62 | 2035 | 1.9 | II | 26.83 | 3110 | 3375 | SK 2282 SCP - 90L/4 | SK 2282 SCP - 90LH/4 | SK 2282 SCP - 140TC | X | X | X | | |
| 56 | 2249 | 2 | III | 29.65 | 3098 | 3375 | SK 2282 SCP - 90L/4 | SK 2282 SCP - 90LH/4 | SK 2282 SCP - 140TC | X | X | X | | |
| 53 | 2369 | 1.7 | II | 31.23 | 3089 | 3375 | SK 2282 SCP - 90L/4 | SK 2282 SCP - 90LH/4 | SK 2282 SCP - 140TC | X | X | X | | |
| 45 | 2772 | 1.6 | II | 36.54 | 3062 | 3375 | SK 2282 SCP - 90L/4 | SK 2282 SCP - 90LH/4 | SK 2282 SCP - 140TC | X | X | X | | |
| 45 | 2821 | 1.4 | II | 37.18 | 3058 | 3375 | SK 2282 SCP - 90L/4 | SK 2282 SCP - 90LH/4 | SK 2282 SCP - 140TC | X | X | X | | |
| 38 | 3316 | 1.5 | II | 43.71 | 3017 | 3375 | SK 2282 SCP - 90L/4 | SK 2282 SCP - 90LH/4 | SK 2282 SCP - 140TC | X | X | X | | |
| 37 | 3422 | 1.2 | I | 45.11 | 3006 | 3375 | SK 2282 SCP - 90L/4 | SK 2282 SCP - 90LH/4 | SK 2282 SCP - 140TC | X | X | X | | |
| 32 | 3923 | 1.2 | I | 51.71 | 2954 | 3375 | SK 2282 SCP - 90L/4 | SK 2282 SCP - 90LH/4 | SK 2282 SCP - 140TC | X | X | X | | |
| 31 | 4094 | 1.1 | I | 53.96 | 2936 | 3375 | SK 2282 SCP - 90L/4 | SK 2282 SCP - 90LH/4 | SK 2282 SCP - 140TC | X | X | X | | |
| 26 | 4842 | 1 | I | 63.83 | 2837 | 3375 | SK 2282 SCP - 90L/4 | SK 2282 SCP - 90LH/4 | SK 2282 SCP - 140TC | X | X | X | | |

Output speed and torque ratings are based on the "Standard Efficiency Motor" Power and speed. Performance will vary slightly for other motors.

# 2 hp Gearmotors & Speed Reducers



| Output Speed $n_2$ [rpm] | Output Torque $T_2$ [lb-in] | SF $f_a$ | AGMA Class | Gear Ratio i | Thrust Std Brg [lb] | Thrust H.D. Brg " VL" [lb] | Integral Gearmotor Standard Efficiency Motor | Integral Gearmotor Energy Efficient Motor | Reducer C-Face Input | CEMA DriveShaft 1-1/2" | 2" | 2-7/16" | 3" | 3-7/16" |
|---|---|---|---|---|---|---|---|---|---|---|---|---|---|---|
| 371 | 340 | 3.3 | III | 4.48 | 2340 | 3632 | SK 3282 SCP - 90L/4 | SK 3282 SCP - 90LH/4 | SK 3282 SCP - 140TC | X | X | X | X | |
| 292 | 431 | 3.6 | III | 5.68 | 2507 | 3886 | SK 3282 SCP - 90L/4 | SK 3282 SCP - 90LH/4 | SK 3282 SCP - 140TC | X | X | X | X | |
| 248 | 508 | 3.5 | III | 6.7 | 2633 | 4070 | SK 3282 SCP - 90L/4 | SK 3282 SCP - 90LH/4 | SK 3282 SCP - 140TC | X | X | X | X | |
| 200 | 630 | 3.3 | III | 8.31 | 2799 | 4327 | SK 3282 SCP - 90L/4 | SK 3282 SCP - 90LH/4 | SK 3282 SCP - 140TC | X | X | X | X | |
| 169 | 743 | 3.5 | III | 9.8 | 2936 | 4500 | SK 3282 SCP - 90L/4 | SK 3282 SCP - 90LH/4 | SK 3282 SCP - 140TC | X | X | X | X | |
| 146 | 863 | 3.5 | III | 11.38 | 3065 | 4500 | SK 3282 SCP - 90L/4 | SK 3282 SCP - 90LH/4 | SK 3282 SCP - 140TC | X | X | X | X | |
| 118 | 1070 | 3.3 | III | 14.11 | 3258 | 4500 | SK 3282 SCP - 90L/4 | SK 3282 SCP - 90LH/4 | SK 3282 SCP - 140TC | X | X | X | X | |
| 100 | 1265 | 3.3 | III | 16.67 | 3411 | 4500 | SK 3282 SCP - 90L/4 | SK 3282 SCP - 90LH/4 | SK 3282 SCP - 140TC | X | X | X | X | |
| 82 | 1531 | 3.3 | III | 20.18 | 3605 | 4500 | SK 3282 SCP - 90L/4 | SK 3282 SCP - 90LH/4 | SK 3282 SCP - 140TC | X | X | X | X | |
| 78 | 1622 | 3 | III | 21.38 | 3650 | 4500 | SK 3282 SCP - 90L/4 | SK 3282 SCP - 90LH/4 | SK 3282 SCP - 140TC | X | X | X | X | |
| 74 | 1703 | 3.3 | III | 22.45 | 3715 | 4500 | SK 3282 SCP - 90L/4 | SK 3282 SCP - 90LH/4 | SK 3282 SCP - 140TC | X | X | X | X | |
| 70 | 1799 | 2.9 | III | 23.71 | 3755 | 4500 | SK 3282 SCP - 90L/4 | SK 3282 SCP - 90LH/4 | SK 3282 SCP - 140TC | X | X | X | X | |
| 64 | 1963 | 3 | III | 25.88 | 3850 | 4500 | SK 3282 SCP - 90L/4 | SK 3282 SCP - 90LH/4 | SK 3282 SCP - 140TC | X | X | X | X | |
| 58 | 2177 | 2.9 | III | 28.7 | 3960 | 4500 | SK 3282 SCP - 90L/4 | SK 3282 SCP - 90LH/4 | SK 3282 SCP - 140TC | X | X | X | X | |
| 52 | 2422 | 2.9 | III | 31.93 | 4070 | 4500 | SK 3282 SCP - 90L/4 | SK 3282 SCP - 90LH/4 | SK 3282 SCP - 140TC | X | X | X | X | |
| 44 | 2865 | 2.6 | III | 37.77 | 4255 | 4500 | SK 3282 SCP - 90L/4 | SK 3282 SCP - 90LH/4 | SK 3282 SCP - 140TC | X | X | X | X | |
| 43 | 2930 | 1.9 | II | 38.62 | 4262 | 4500 | SK 3282 SCP - 90L/4 | SK 3282 SCP - 90LH/4 | SK 3282 SCP - 140TC | X | X | X | X | |
| 40 | 3188 | 2.6 | III | 42.02 | 4379 | 4500 | SK 3282 SCP - 90L/4 | SK 3282 SCP - 90LH/4 | SK 3282 SCP - 140TC | X | X | X | X | |
| 37 | 3402 | 1.9 | II | 44.85 | 4428 | 4500 | SK 3282 SCP - 90L/4 | SK 3282 SCP - 90LH/4 | SK 3282 SCP - 140TC | X | X | X | X | |
| 35 | 3644 | 1.3 | I | 48.04 | 4500 | 4500 | SK 3282 SCP - 90L/4 | SK 3282 SCP - 90LH/4 | SK 3282 SCP - 140TC | X | X | X | X | |
| 31 | 4018 | 1.9 | II | 52.97 | 4626 | 4500 | SK 3282 SCP - 90L/4 | SK 3282 SCP - 90LH/4 | SK 3282 SCP - 140TC | X | X | X | X | |
| 30 | 4232 | 1.3 | I | 55.79 | 4671 | 4500 | SK 3282 SCP - 90L/4 | SK 3282 SCP - 90LH/4 | SK 3282 SCP - 140TC | X | X | X | X | |
| 26 | 4864 | 1.8 | II | 64.12 | 4849 | 4500 | SK 3282 SCP - 90L/4 | SK 3282 SCP - 90LH/4 | SK 3282 SCP - 140TC | X | X | X | X | |
| 25 | 4999 | 1.3 | I | 65.89 | 4874 | 4500 | SK 3282 SCP - 90L/4 | SK 3282 SCP - 90LH/4 | SK 3282 SCP - 140TC | X | X | X | X | |
| 21 | 6051 | 1.2 | I | 79.76 | 4966 | 4500 | SK 3282 SCP - 90L/4 | SK 3282 SCP - 90LH/4 | SK 3282 SCP - 140TC | X | X | X | X | |
| 19 | 6732 | 1.2 | I | 88.74 | 4921 | 4500 | SK 3282 SCP - 90L/4 | SK 3282 SCP - 90LH/4 | SK 3282 SCP - 140TC | X | X | X | X | |
| 274 | 460 | 4.1 | III | 6.06 | 3638 | 6194 | SK 4282 SCP - 90L/4 | SK 4282 SCP - 90LH/4 | SK 4282 SCP - 140TC | | X | X | X | |
| 233 | 541 | 3.7 | III | 7.13 | 3818 | 6478 | SK 4282 SCP - 90L/4 | SK 4282 SCP - 90LH/4 | SK 4282 SCP - 140TC | | X | X | X | |
| 199 | 632 | 3.6 | III | 8.33 | 4001 | 6750 | SK 4282 SCP - 90L/4 | SK 4282 SCP - 90LH/4 | SK 4282 SCP - 140TC | | X | X | X | |
| 180 | 700 | 4.1 | III | 9.23 | 4124 | 6750 | SK 4282 SCP - 90L/4 | SK 4282 SCP - 90LH/4 | SK 4282 SCP - 140TC | | X | X | X | |
| 153 | 823 | 3.7 | III | 10.85 | 4320 | 6750 | SK 4282 SCP - 90L/4 | SK 4282 SCP - 90LH/4 | SK 4282 SCP - 140TC | | X | X | X | |

Output speed and torque ratings are based on the "Standard Efficiency Motor" Power and speed. Performance will vary slightly for other motors.



# 2 hp Gearmotors & Speed Reducers

| Output Speed | Output Torque | SF | AGMA Class | Gear Ratio | Thrust | | Integral Gearmotor | | Reducer | CEMA DriveShaft | | | | |
|---|---|---|---|---|---|---|---|---|---|---|---|---|---|---|
| $n_2$ | $T_2$ | $f_a$ | | i | Std Brg | H.D. Brg " VL" | Standard Efficiency Motor | Energy Efficient Motor | C-Face Input | 1-1/2" | 2" | 2-7/16" | 3" | 3-7/16" |
| [rpm] | [lb-in] | | | | [lb] | [lb] | | | | | | | | |
| 131 | 962 | 3.6 | III | 12.68 | 4518 | 6750 | SK 4282 SCP - 90L/4 | SK 4282 SCP - 90LH/4 | SK 4282 SCP - 140TC | | X | X | X | |
| 109 | 1153 | 3.6 | III | 15.2 | 4763 | 6750 | SK 4282 SCP - 90L/4 | SK 4282 SCP - 90LH/4 | SK 4282 SCP - 140TC | | X | X | X | |
| 91 | 1379 | 3.6 | III | 18.18 | 5013 | 6750 | SK 4282 SCP - 90L/4 | SK 4282 SCP - 90LH/4 | SK 4282 SCP - 140TC | | X | X | X | |
| 77 | 1627 | 3.6 | III | 21.45 | 5258 | 6750 | SK 4282 SCP - 90L/4 | SK 4282 SCP - 90LH/4 | SK 4282 SCP - 140TC | | X | X | X | |
| 74 | 1699 | 3.4 | III | 22.39 | 5317 | 6750 | SK 4282 SCP - 90L/4 | SK 4282 SCP - 90LH/4 | SK 4282 SCP - 140TC | | X | X | X | |
| 63 | 1991 | 3.6 | III | 26.25 | 5569 | 6750 | SK 4282 SCP - 90L/4 | SK 4282 SCP - 90LH/4 | SK 4282 SCP - 140TC | | X | X | X | |
| 63 | 2005 | 3.4 | III | 26.43 | 5587 | 6750 | SK 4282 SCP - 90L/4 | SK 4282 SCP - 90LH/4 | SK 4282 SCP - 140TC | | X | X | X | |
| 51 | 2453 | 3.4 | III | 32.34 | 5904 | 6750 | SK 4282 SCP - 90L/4 | SK 4282 SCP - 90LH/4 | SK 4282 SCP - 140TC | | X | X | X | |
| 45 | 2792 | 3.1 | III | 36.81 | 6122 | 6750 | SK 4282 SCP - 90L/4 | SK 4282 SCP - 90LH/4 | SK 4282 SCP - 140TC | | X | X | X | |
| 41 | 3091 | 3.2 | III | 40.74 | 6298 | 6750 | SK 4282 SCP - 90L/4 | SK 4282 SCP - 90LH/4 | SK 4282 SCP - 140TC | | X | X | X | |
| 37 | 3418 | 3.1 | III | 45.05 | 6489 | 6750 | SK 4282 SCP - 90L/4 | SK 4282 SCP - 90LH/4 | SK 4282 SCP - 140TC | | X | X | X | |
| 22 | 5819 | 2.4 | III | 76.7 | 6845 | 6750 | SK 4282 SCP - 90L/4 | SK 4282 SCP - 90LH/4 | SK 4282 SCP - 140TC | | X | X | X | |
| 18 | 6867 | 2.1 | III | 90.52 | 6813 | 6750 | SK 4282 SCP - 90L/4 | SK 4282 SCP - 90LH/4 | SK 4282 SCP - 140TC | | X | X | X | |
| 15 | 8404 | 1.7 | II | 110.78 | 6757 | 6750 | SK 4282 SCP - 90L/4 | SK 4282 SCP - 90LH/4 | SK 4282 SCP - 140TC | | X | X | X | |
| 11 | 11789 | 1 | I | 155.4 | 6590 | 6750 | SK 4282 SCP - 90L/4 | SK 4282 SCP - 90LH/4 | SK 4282 SCP - 140TC | | X | X | X | |
| 191 | 660 | 4.3 | III | 8.7 | 5612 | 9000 | SK 5282 SCP - 90L/4 | SK 5282 SCP - 90LH/4 | SK 5282 SCP - 140TC | | X | X | X | X |
| 128 | 986 | 4.3 | III | 13 | 6318 | 9000 | SK 5282 SCP - 90L/4 | SK 5282 SCP - 90LH/4 | SK 5282 SCP - 140TC | | X | X | X | X |
| 108 | 1167 | 4.3 | III | 15.38 | 6640 | 9000 | SK 5282 SCP - 90L/4 | SK 5282 SCP - 90LH/4 | SK 5282 SCP - 140TC | | X | X | X | X |
| 94 | 1334 | 4.2 | III | 17.59 | 6912 | 9000 | SK 5282 SCP - 90L/4 | SK 5282 SCP - 90LH/4 | SK 5282 SCP - 140TC | | X | X | X | X |
| 88 | 1432 | 4.3 | III | 18.88 | 7056 | 9000 | SK 5282 SCP - 90L/4 | SK 5282 SCP - 90LH/4 | SK 5282 SCP - 140TC | | X | X | X | X |
| 82 | 1545 | 4.2 | III | 20.36 | 7205 | 9000 | SK 5282 SCP - 90L/4 | SK 5282 SCP - 90LH/4 | SK 5282 SCP - 140TC | | X | X | X | X |
| 66 | 1897 | 4.2 | III | 25 | 7657 | 9000 | SK 5282 SCP - 90L/4 | SK 5282 SCP - 90LH/4 | SK 5282 SCP - 140TC | | X | X | X | X |
| 54 | 2314 | 4.1 | III | 30.5 | 8123 | 9000 | SK 5282 SCP - 90L/4 | SK 5282 SCP - 90LH/4 | SK 5282 SCP - 140TC | | X | X | X | X |
| 50 | 2536 | 4.2 | III | 33.43 | 8332 | 9000 | SK 5282 SCP - 90L/4 | SK 5282 SCP - 90LH/4 | SK 5282 SCP - 140TC | | X | X | X | X |
| 41 | 3095 | 4.1 | III | 40.8 | 8811 | 9000 | SK 5282 SCP - 90L/4 | SK 5282 SCP - 90LH/4 | SK 5282 SCP - 140TC | | X | X | X | X |
| 30 | 4214 | 4 | III | 55.55 | 9644 | 9000 | SK 5282 SCP - 90L/4 | SK 5282 SCP - 90LH/4 | SK 5282 SCP - 140TC | | X | X | X | X |
| 20 | 6191 | 2.6 | III | 81.61 | 10015 | 9000 | SK 5282 SCP - 90L/4 | SK 5282 SCP - 90LH/4 | SK 5282 SCP - 140TC | | X | X | X | X |
| 17 | 7601 | 2.6 | III | 100.19 | 9990 | 9000 | SK 5282 SCP - 90L/4 | SK 5282 SCP - 90LH/4 | SK 5282 SCP - 140TC | | X | X | X | X |
| 12 | 10168 | 2.3 | III | 134.03 | 9934 | 9000 | SK 5282 SCP - 90L/4 | SK 5282 SCP - 90LH/4 | SK 5282 SCP - 140TC | | X | X | X | X |

Output speed and torque ratings are based on the "Standard Efficiency Motor" Power and speed. Performance will vary slightly for other motors.

# 3 hp Gearmotors & Speed Reducers



| Output Speed | Output Torque | SF | AGMA Class | Gear Ratio | Thrust | | Integral Gearmotor | | Reducer | CEMA DriveShaft | | | | |
|---|---|---|---|---|---|---|---|---|---|---|---|---|---|---|
| $n_2$ | $T_2$ | $f_a$ | | i | Std Brg | H.D. Brg " VL" | Standard Efficiency Motor | Energy Efficient Motor | C-Face Input | 1-1/2" | 2" | 2-7/16" | 3" | 3-7/16" |
| [rpm] | [lb-in] | | | | [lb] | [lb] | | | | | | | | |
| 356 | 531 | 2.1 | III | 4.79 | 1541 | 1609 | SK 1282 SCP - 100L/4 | SK 1282 SCP - 100LH/4 | SK 1282 SCP - 180TC | X | X | X | | |
| 312 | 607 | 2.5 | III | 5.47 | 1595 | 1609 | SK 1282 SCP - 100L/4 | SK 1282 SCP - 100LH/4 | SK 1282 SCP - 180TC | X | X | X | | |
| 265 | 714 | 2.2 | III | 6.43 | 1667 | 1609 | SK 1282 SCP - 100L/4 | SK 1282 SCP - 100LH/4 | SK 1282 SCP - 180TC | X | X | X | | |
| 235 | 804 | 2.1 | III | 7.24 | 1719 | 1609 | SK 1282 SCP - 100L/4 | SK 1282 SCP - 100LH/4 | SK 1282 SCP - 180TC | X | X | X | | |
| 208 | 912 | 1.6 | II | 8.21 | 1784 | 1609 | SK 1282 SCP - 100L/4 | SK 1282 SCP - 100LH/4 | SK 1282 SCP - 180TC | X | X | X | | |
| 207 | 915 | 1.8 | II | 8.24 | 1775 | 1609 | SK 1282 SCP - 100L/4 | SK 1282 SCP - 100LH/4 | SK 1282 SCP - 180TC | X | X | X | | |
| 186 | 1019 | 1.6 | II | 9.18 | 1832 | 1609 | SK 1282 SCP - 100L/4 | SK 1282 SCP - 100LH/4 | SK 1282 SCP - 180TC | X | X | X | | |
| 165 | 1148 | 1.5 | II | 10.34 | 1886 | 1609 | SK 1282 SCP - 100L/4 | SK 1282 SCP - 100LH/4 | SK 1282 SCP - 180TC | X | X | X | | |
| 145 | 1306 | 1.4 | II | 11.76 | 1944 | 1609 | SK 1282 SCP - 100L/4 | SK 1282 SCP - 100LH/4 | SK 1282 SCP - 180TC | X | X | X | | |
| 121 | 1567 | 1.2 | I | 14.11 | 2039 | 1609 | SK 1282 SCP - 100L/4 | SK 1282 SCP - 100LH/4 | SK 1282 SCP - 180TC | X | X | X | | |
| 99 | 1911 | 1 | I | 17.21 | 2081 | 1609 | SK 1282 SCP - 100L/4 | SK 1282 SCP - 100LH/4 | SK 1282 SCP - 180TC | X | X | X | | |
| 83 | 2284 | 0.9 | * | 20.57 | 2039 | 1609 | SK 1282 SCP - 100L/4 | SK 1282 SCP - 100LH/4 | SK 1282 SCP - 180TC | X | X | X | | |
| 378 | 501 | 3.3 | III | 4.51 | 2012 | 3375 | SK 2282 SCP - 100L/4 | SK 2282 SCP - 100LH/4 | SK 2282 SCP - 180TC | X | X | X | | |
| 298 | 635 | 3 | III | 5.72 | 2151 | 3375 | SK 2282 SCP - 100L/4 | SK 2282 SCP - 100LH/4 | SK 2282 SCP - 180TC | X | X | X | | |
| 265 | 714 | 2.8 | III | 6.43 | 2219 | 3375 | SK 2282 SCP - 100L/4 | SK 2282 SCP - 100LH/4 | SK 2282 SCP - 180TC | X | X | X | | |
| 228 | 831 | 2.6 | III | 7.48 | 2313 | 3375 | SK 2282 SCP - 100L/4 | SK 2282 SCP - 100LH/4 | SK 2282 SCP - 180TC | X | X | X | | |
| 204 | 929 | 2.4 | III | 8.37 | 2385 | 3375 | SK 2282 SCP - 100L/4 | SK 2282 SCP - 100LH/4 | SK 2282 SCP - 180TC | X | X | X | | |
| 189 | 1003 | 3 | III | 9.03 | 2446 | 3375 | SK 2282 SCP - 100L/4 | SK 2282 SCP - 100LH/4 | SK 2282 SCP - 180TC | X | X | X | | |
| 168 | 1127 | 2.8 | III | 10.15 | 2522 | 3375 | SK 2282 SCP - 100L/4 | SK 2282 SCP - 100LH/4 | SK 2282 SCP - 180TC | X | X | X | | |
| 144 | 1311 | 2.6 | III | 11.81 | 2626 | 3375 | SK 2282 SCP - 100L/4 | SK 2282 SCP - 100LH/4 | SK 2282 SCP - 180TC | X | X | X | | |
| 129 | 1469 | 2.4 | III | 13.23 | 2707 | 3375 | SK 2282 SCP - 100L/4 | SK 2282 SCP - 100LH/4 | SK 2282 SCP - 180TC | X | X | X | | |
| 103 | 1835 | 2.3 | III | 16.53 | 2880 | 3375 | SK 2282 SCP - 100L/4 | SK 2282 SCP - 100LH/4 | SK 2282 SCP - 180TC | X | X | X | | |
| 92 | 2055 | 2.1 | III | 18.51 | 2959 | 3375 | SK 2282 SCP - 100L/4 | SK 2282 SCP - 100LH/4 | SK 2282 SCP - 180TC | X | X | X | | |
| 78 | 2432 | 1.7 | II | 21.9 | 3087 | 3375 | SK 2282 SCP - 100L/4 | SK 2282 SCP - 100LH/4 | SK 2282 SCP - 180TC | X | X | X | | |
| 71 | 2660 | 1.4 | II | 23.96 | 3069 | 3375 | SK 2282 SCP - 100L/4 | SK 2282 SCP - 100LH/4 | SK 2282 SCP - 180TC | X | X | X | | |
| 68 | 2773 | 1.6 | II | 24.97 | 3062 | 3375 | SK 2282 SCP - 100L/4 | SK 2282 SCP - 100LH/4 | SK 2282 SCP - 180TC | X | X | X | | |
| 64 | 2979 | 1.3 | I | 26.83 | 3047 | 3375 | SK 2282 SCP - 100L/4 | SK 2282 SCP - 100LH/4 | SK 2282 SCP - 180TC | X | X | X | | |
| 58 | 3292 | 1.3 | I | 29.65 | 3020 | 3375 | SK 2282 SCP - 100L/4 | SK 2282 SCP - 100LH/4 | SK 2282 SCP - 180TC | X | X | X | | |
| 55 | 3468 | 1.1 | I | 31.23 | 3002 | 3375 | SK 2282 SCP - 100L/4 | SK 2282 SCP - 100LH/4 | SK 2282 SCP - 180TC | X | X | X | | |
| 47 | 4057 | 1.1 | I | 36.54 | 2939 | 3375 | SK 2282 SCP - 100L/4 | SK 2282 SCP - 100LH/4 | SK 2282 SCP - 180TC | X | X | X | | |
| 39 | 4853 | 1 | I | 43.71 | 2837 | 3375 | SK 2282 SCP - 100L/4 | SK 2282 SCP - 100LH/4 | SK 2282 SCP - 180TC | X | X | X | | |
| 381 | 497 | 3.7 | III | 4.48 | 2309 | 3569 | SK 3282 SCP - 100L/4 | SK 3282 SCP - 100LH/4 | SK 3282 SCP - 180TC | X | X | X | X | |
| 300 | 631 | 3.6 | III | 5.68 | 2466 | 3818 | SK 3282 SCP - 100L/4 | SK 3282 SCP - 100LH/4 | SK 3282 SCP - 180TC | X | X | X | X | |
| 254 | 744 | 3.4 | III | 6.7 | 2583 | 3992 | SK 3282 SCP - 100L/4 | SK 3282 SCP - 100LH/4 | SK 3282 SCP - 180TC | X | X | X | X | |
| 205 | 923 | 3.1 | III | 8.31 | 2745 | 4230 | SK 3282 SCP - 100L/4 | SK 3282 SCP - 100LH/4 | SK 3282 SCP - 180TC | X | X | X | X | |
| 174 | 1088 | 3.4 | III | 9.8 | 2882 | 4430 | SK 3282 SCP - 100L/4 | SK 3282 SCP - 100LH/4 | SK 3282 SCP - 180TC | X | X | X | X | |
| 150 | 1264 | 3.4 | III | 11.38 | 3004 | 4500 | SK 3282 SCP - 100L/4 | SK 3282 SCP - 100LH/4 | SK 3282 SCP - 180TC | X | X | X | X | |
| 121 | 1567 | 3.1 | III | 14.11 | 3179 | 4500 | SK 3282 SCP - 100L/4 | SK 3282 SCP - 100LH/4 | SK 3282 SCP - 180TC | X | X | X | X | |

Output speed and torque ratings are based on the "Standard Efficiency Motor" Power and speed. Performance will vary slightly for other motors.



# 3 hp Gearmotors & Speed Reducers

| Output Speed | Output Torque | SF | AGMA Class | Gear Ratio | Thrust | | Integral Gearmotor | | Reducer | CEMA DriveShaft | | | | |
|---|---|---|---|---|---|---|---|---|---|---|---|---|---|---|
| $n_2$ | $T_2$ | $f_a$ | | i | Std Brg | H.D. Brg " VL" | Standard Efficiency Motor | Energy Efficient Motor | C-Face Input | 1-1/2" | 2" | 2-7/16" | 3" | 3-7/16" |
| [rpm] | [lb-in] | | | | [lb] | [lb] | | | | | | | | |
| 102 | 1851 | 3.1 | III | 16.67 | 3328 | 4500 | SK 3282 SCP - 100L/4 | SK 3282 SCP - 100LH/4 | SK 3282 SCP - 180TC | X | X | X | X | |
| 84 | 2241 | 3.1 | III | 20.18 | 3503 | 4500 | SK 3282 SCP - 100L/4 | SK 3282 SCP - 100LH/4 | SK 3282 SCP - 180TC | X | X | X | X | |
| 80 | 2374 | 2.7 | III | 21.38 | 3553 | 4500 | SK 3282 SCP - 100L/4 | SK 3282 SCP - 100LH/4 | SK 3282 SCP - 180TC | X | X | X | X | |
| 76 | 2493 | 2.8 | III | 22.45 | 3602 | 4500 | SK 3282 SCP - 100L/4 | SK 3282 SCP - 100LH/4 | SK 3282 SCP - 180TC | X | X | X | X | |
| 72 | 2633 | 2.5 | III | 23.71 | 3647 | 4500 | SK 3282 SCP - 100L/4 | SK 3282 SCP - 100LH/4 | SK 3282 SCP - 180TC | X | X | X | X | |
| 66 | 2874 | 2.6 | III | 25.88 | 3737 | 4500 | SK 3282 SCP - 100L/4 | SK 3282 SCP - 100LH/4 | SK 3282 SCP - 180TC | X | X | X | X | |
| 59 | 3187 | 2.4 | III | 28.7 | 3839 | 4500 | SK 3282 SCP - 100L/4 | SK 3282 SCP - 100LH/4 | SK 3282 SCP - 180TC | X | X | X | X | |
| 53 | 3545 | 2.2 | III | 31.93 | 3935 | 4500 | SK 3282 SCP - 100L/4 | SK 3282 SCP - 100LH/4 | SK 3282 SCP - 180TC | X | X | X | X | |
| 45 | 4194 | 1.8 | II | 37.77 | 4097 | 4500 | SK 3282 SCP - 100L/4 | SK 3282 SCP - 100LH/4 | SK 3282 SCP - 180TC | X | X | X | X | |
| 44 | 4288 | 1.3 | I | 38.62 | 4086 | 4500 | SK 3282 SCP - 100L/4 | SK 3282 SCP - 100LH/4 | SK 3282 SCP - 180TC | X | X | X | X | |
| 41 | 4666 | 1.8 | II | 42.02 | 4205 | 4500 | SK 3282 SCP - 100L/4 | SK 3282 SCP - 100LH/4 | SK 3282 SCP - 180TC | X | X | X | X | |
| 38 | 4980 | 1.3 | I | 44.85 | 4241 | 4500 | SK 3282 SCP - 100L/4 | SK 3282 SCP - 100LH/4 | SK 3282 SCP - 180TC | X | X | X | X | |
| 32 | 5882 | 1.3 | I | 52.97 | 4406 | 4500 | SK 3282 SCP - 100L/4 | SK 3282 SCP - 100LH/4 | SK 3282 SCP - 180TC | X | X | X | X | |
| 27 | 7120 | 1.3 | I | 64.12 | 4604 | 4500 | SK 3282 SCP - 100L/4 | SK 3282 SCP - 100LH/4 | SK 3282 SCP - 180TC | X | X | X | X | |
| 281 | 673 | 4.2 | III | 6.06 | 3593 | 6095 | SK 4282 SCP - 100L/4 | SK 4282 SCP - 100LH/4 | SK 4282 SCP - 180TC | | X | X | X | |
| 239 | 792 | 4 | III | 7.13 | 3764 | 6386 | SK 4282 SCP - 100L/4 | SK 4282 SCP - 100LH/4 | SK 4282 SCP - 180TC | | X | X | X | |
| 205 | 925 | 3.8 | III | 8.33 | 3935 | 6667 | SK 4282 SCP - 100L/4 | SK 4282 SCP - 100LH/4 | SK 4282 SCP - 180TC | | X | X | X | |
| 185 | 1025 | 4.2 | III | 9.23 | 4064 | 6750 | SK 4282 SCP - 100L/4 | SK 4282 SCP - 100LH/4 | SK 4282 SCP - 180TC | | X | X | X | |
| 157 | 1205 | 4 | III | 10.85 | 4250 | 6750 | SK 4282 SCP - 100L/4 | SK 4282 SCP - 100LH/4 | SK 4282 SCP - 180TC | | X | X | X | |
| 134 | 1408 | 3.8 | III | 12.68 | 4444 | 6750 | SK 4282 SCP - 100L/4 | SK 4282 SCP - 100LH/4 | SK 4282 SCP - 180TC | | X | X | X | |
| 112 | 1688 | 3.8 | III | 15.2 | 4685 | 6750 | SK 4282 SCP - 100L/4 | SK 4282 SCP - 100LH/4 | SK 4282 SCP - 180TC | | X | X | X | |
| 94 | 2019 | 3.8 | III | 18.18 | 4921 | 6750 | SK 4282 SCP - 100L/4 | SK 4282 SCP - 100LH/4 | SK 4282 SCP - 180TC | | X | X | X | |
| 79 | 2382 | 3.8 | III | 21.45 | 5162 | 6750 | SK 4282 SCP - 100L/4 | SK 4282 SCP - 100LH/4 | SK 4282 SCP - 180TC | | X | X | X | |
| 76 | 2486 | 3.4 | III | 22.39 | 5218 | 6750 | SK 4282 SCP - 100L/4 | SK 4282 SCP - 100LH/4 | SK 4282 SCP - 180TC | | X | X | X | |
| 65 | 2915 | 3.8 | III | 26.25 | 5472 | 6750 | SK 4282 SCP - 100L/4 | SK 4282 SCP - 100LH/4 | SK 4282 SCP - 180TC | | X | X | X | |
| 65 | 2935 | 3.4 | III | 26.43 | 5472 | 6750 | SK 4282 SCP - 100L/4 | SK 4282 SCP - 100LH/4 | SK 4282 SCP - 180TC | | X | X | X | |
| 53 | 3591 | 3.4 | III | 32.34 | 5778 | 6750 | SK 4282 SCP - 100L/4 | SK 4282 SCP - 100LH/4 | SK 4282 SCP - 180TC | | X | X | X | |
| 47 | 4042 | 3 | III | 36.4 | 5931 | 6750 | SK 4282 SCP - 100L/4 | SK 4282 SCP - 100LH/4 | SK 4282 SCP - 180TC | | X | X | X | |
| 46 | 4087 | 2.9 | III | 36.81 | 5978 | 6750 | SK 4282 SCP - 100L/4 | SK 4282 SCP - 100LH/4 | SK 4282 SCP - 180TC | | X | X | X | |
| 42 | 4524 | 3 | III | 40.74 | 6156 | 6750 | SK 4282 SCP - 100L/4 | SK 4282 SCP - 100LH/4 | SK 4282 SCP - 180TC | | X | X | X | |
| 39 | 4847 | 2.9 | III | 43.65 | 6228 | 6750 | SK 4282 SCP - 100L/4 | SK 4282 SCP - 100LH/4 | SK 4282 SCP - 180TC | | X | X | X | |
| 38 | 5002 | 2.8 | III | 45.05 | 6305 | 6750 | SK 4282 SCP - 100L/4 | SK 4282 SCP - 100LH/4 | SK 4282 SCP - 180TC | | X | X | X | |
| 33 | 5796 | 2.8 | III | 52.2 | 6523 | 6750 | SK 4282 SCP - 100L/4 | SK 4282 SCP - 100LH/4 | SK 4282 SCP - 180TC | | X | X | X | |
| 28 | 6840 | 2.3 | III | 61.6 | 6813 | 6750 | SK 4282 SCP - 100L/4 | SK 4282 SCP - 100LH/4 | SK 4282 SCP - 180TC | | X | X | X | |
| 23 | 8371 | 1.7 | II | 75.39 | 6757 | 6750 | SK 4282 SCP - 100L/4 | SK 4282 SCP - 100LH/4 | SK 4282 SCP - 180TC | | X | X | X | |
| 22 | 8517 | 1.7 | II | 76.7 | 6752 | 6750 | SK 4282 SCP - 100L/4 | SK 4282 SCP - 100LH/4 | SK 4282 SCP - 180TC | | X | X | X | |
| 19 | 10051 | 1.4 | II | 90.52 | 6683 | 6750 | SK 4282 SCP - 100L/4 | SK 4282 SCP - 100LH/4 | SK 4282 SCP - 180TC | | X | X | X | |
| 15 | 12301 | 1.2 | I | 110.78 | 6559 | 6750 | SK 4282 SCP - 100L/4 | SK 4282 SCP - 100LH/4 | SK 4282 SCP - 180TC | | X | X | X | |

Output speed and torque ratings are based on the "Standard Efficiency Motor" Power and speed. Performance will vary slightly for other motors.

# 3 hp Gearmotors & Speed Reducers



| Output Speed | Output Torque | SF | AGMA Class | Gear Ratio | Thrust | | Integral Gearmotor | | Reducer | CEMA DriveShaft | | | | |
|---|---|---|---|---|---|---|---|---|---|---|---|---|---|---|
| $n_2$ | $T_2$ | $f_a$ | | i | Std Brg | H.D. Brg " VL" | Standard Efficiency Motor | Energy Efficient Motor | C-Face Input | 1-1/2" | 2" | 2-7/16" | 3" | 3-7/16" |
| [rpm] | [lb-in] | | | | [lb] | [lb] | | | | | | | | |
| 269 | 703 | 4.7 | III | 6.33 | 5056 | 8498 | SK 5282 SCP - 100L/4 | SK 5282 SCP - 100LH/4 | SK 5282 SCP - 180TC | | X | X | X | X |
| 238 | 796 | 4.8 | III | 7.17 | 5245 | 8831 | SK 5282 SCP - 100L/4 | SK 5282 SCP - 100LH/4 | SK 5282 SCP - 180TC | | X | X | X | X |
| 196 | 966 | 4.4 | III | 8.7 | 5549 | 9000 | SK 5282 SCP - 100L/4 | SK 5282 SCP - 100LH/4 | SK 5282 SCP - 180TC | | X | X | X | X |
| 180 | 1050 | 4.7 | III | 9.46 | 5702 | 9000 | SK 5282 SCP - 100L/4 | SK 5282 SCP - 100LH/4 | SK 5282 SCP - 180TC | | X | X | X | X |
| 159 | 1189 | 4.8 | III | 10.71 | 5897 | 9000 | SK 5282 SCP - 100L/4 | SK 5282 SCP - 100LH/4 | SK 5282 SCP - 180TC | | X | X | X | X |
| 131 | 1443 | 4.4 | III | 13 | 6246 | 9000 | SK 5282 SCP - 100L/4 | SK 5282 SCP - 100LH/4 | SK 5282 SCP - 180TC | | X | X | X | X |
| 111 | 1708 | 4.4 | III | 15.38 | 6566 | 9000 | SK 5282 SCP - 100L/4 | SK 5282 SCP - 100LH/4 | SK 5282 SCP - 180TC | | X | X | X | X |
| 97 | 1953 | 4.2 | III | 17.59 | 6811 | 9000 | SK 5282 SCP - 100L/4 | SK 5282 SCP - 100LH/4 | SK 5282 SCP - 180TC | | X | X | X | X |
| 90 | 2096 | 4.4 | III | 18.88 | 6953 | 9000 | SK 5282 SCP - 100L/4 | SK 5282 SCP - 100LH/4 | SK 5282 SCP - 180TC | | X | X | X | X |
| 84 | 2261 | 4 | III | 20.36 | 7099 | 9000 | SK 5282 SCP - 100L/4 | SK 5282 SCP - 100LH/4 | SK 5282 SCP - 180TC | | X | X | X | X |
| 68 | 2776 | 4 | III | 25 | 7542 | 9000 | SK 5282 SCP - 100L/4 | SK 5282 SCP - 100LH/4 | SK 5282 SCP - 180TC | | X | X | X | X |
| 56 | 3387 | 3.6 | III | 30.5 | 7974 | 9000 | SK 5282 SCP - 100L/4 | SK 5282 SCP - 100LH/4 | SK 5282 SCP - 180TC | | X | X | X | X |
| 51 | 3712 | 4 | III | 33.43 | 8206 | 9000 | SK 5282 SCP - 100L/4 | SK 5282 SCP - 100LH/4 | SK 5282 SCP - 180TC | | X | X | X | X |
| 42 | 4530 | 3.6 | III | 40.8 | 8658 | 9000 | SK 5282 SCP - 100L/4 | SK 5282 SCP - 100LH/4 | SK 5282 SCP - 180TC | | X | X | X | X |
| 36 | 5249 | 4 | III | 47.27 | 8991 | 9000 | SK 5282 SCP - 100L/4 | SK 5282 SCP - 100LH/4 | SK 5282 SCP - 180TC | | X | X | X | X |
| 31 | 6168 | 3.1 | III | 55.55 | 9423 | 9000 | SK 5282 SCP - 100L/4 | SK 5282 SCP - 100LH/4 | SK 5282 SCP - 180TC | | X | X | X | X |
| 31 | 6207 | 3.7 | III | 55.9 | 9421 | 9000 | SK 5282 SCP - 100L/4 | SK 5282 SCP - 100LH/4 | SK 5282 SCP - 180TC | | X | X | X | X |
| 25 | 7621 | 3.4 | III | 68.63 | 9956 | 9000 | SK 5282 SCP - 100L/4 | SK 5282 SCP - 100LH/4 | SK 5282 SCP - 180TC | | X | X | X | X |
| 21 | 9062 | 1.8 | II | 81.61 | 9961 | 9000 | SK 5282 SCP - 100L/4 | SK 5282 SCP - 100LH/4 | SK 5282 SCP - 180TC | | X | X | X | X |
| 19 | 10194 | 2.4 | III | 91.81 | 9934 | 9000 | SK 5282 SCP - 100L/4 | SK 5282 SCP - 100LH/4 | SK 5282 SCP - 180TC | | X | X | X | X |
| 17 | 11125 | 1.8 | II | 100.19 | 9909 | 9000 | SK 5282 SCP - 100L/4 | SK 5282 SCP - 100LH/4 | SK 5282 SCP - 180TC | | X | X | X | X |
| 13 | 14882 | 1.6 | II | 134.03 | 9790 | 9000 | SK 5282 SCP - 100L/4 | SK 5282 SCP - 100LH/4 | SK 5282 SCP - 180TC | | X | X | X | X |
| 253 | 748 | 5.1 | III | 6.74 | 7515 | 10845 | SK 6282 SCP - 100L/4 | SK 6282 SCP - 100LH/4 | SK 6282 SCP - 180TC | | | | X | X |
| 218 | 868 | 4.9 | III | 7.82 | 7835 | 11324 | SK 6282 SCP - 100L/4 | SK 6282 SCP - 100LH/4 | SK 6282 SCP - 180TC | | | | X | X |
| 182 | 1043 | 4.6 | III | 9.39 | 8273 | 11979 | SK 6282 SCP - 100L/4 | SK 6282 SCP - 100LH/4 | SK 6282 SCP - 180TC | | | | X | X |
| 160 | 1181 | 5.1 | III | 10.64 | 8586 | 12409 | SK 6282 SCP - 100L/4 | SK 6282 SCP - 100LH/4 | SK 6282 SCP - 180TC | | | | X | X |
| 138 | 1371 | 4.9 | III | 12.35 | 8964 | 12978 | SK 6282 SCP - 100L/4 | SK 6282 SCP - 100LH/4 | SK 6282 SCP - 180TC | | | | X | X |
| 115 | 1647 | 4.6 | III | 14.83 | 9482 | 13500 | SK 6282 SCP - 100L/4 | SK 6282 SCP - 100LH/4 | SK 6282 SCP - 180TC | | | | X | X |
| 91 | 2076 | 4.6 | III | 18.7 | 10125 | 13500 | SK 6282 SCP - 100L/4 | SK 6282 SCP - 100LH/4 | SK 6282 SCP - 180TC | | | | X | X |
| 74 | 2548 | 4.6 | III | 22.95 | 10760 | 13500 | SK 6282 SCP - 100L/4 | SK 6282 SCP - 100LH/4 | SK 6282 SCP - 180TC | | | | X | X |
| 65 | 2893 | 4.4 | III | 26.05 | 11162 | 13500 | SK 6282 SCP - 100L/4 | SK 6282 SCP - 100LH/4 | SK 6282 SCP - 180TC | | | | X | X |
| 57 | 3320 | 4.2 | III | 29.9 | 11617 | 13500 | SK 6282 SCP - 100L/4 | SK 6282 SCP - 100LH/4 | SK 6282 SCP - 180TC | | | | X | X |
| 26 | 7266 | 4.1 | III | 65.44 | 13219 | 13500 | SK 6282 SCP - 100L/4 | SK 6282 SCP - 100LH/4 | SK 6282 SCP - 180TC | | | | X | X |
| 21 | 8920 | 4.1 | III | 80.33 | 13199 | 13500 | SK 6282 SCP - 100L/4 | SK 6282 SCP - 100LH/4 | SK 6282 SCP - 180TC | | | | X | X |

Output speed and torque ratings are based on the "Standard Efficiency Motor" Power and speed. Performance will vary slightly for other motors.



# 5 hp Gearmotors & Speed Reducers

| Output Speed | Output Torque | SF | AGMA Class | Gear Ratio | Thrust | | Integral Gearmotor | | Reducer | CEMA DriveShaft | | | | |
|---|---|---|---|---|---|---|---|---|---|---|---|---|---|---|
| $n_2$ | $T_2$ | $f_a$ | | i | Std Brg | H.D. Brg " VL" | Standard Efficiency Motor | Energy Efficient Motor | C-Face Input | 1-1/2" | 2" | 2-7/16" | 3" | 3-7/16" |
| [rpm] | [lb-in] | | | | [lb] | [lb] | | | | | | | | |
| 360 | 875 | 1.3 | I | 4.79 | 1487 | 1609 | SK 1282 SCP - 100LA/4 | SK 1282 SCP - 112MH/4 | SK 1282 SCP - 180TC | X | X | X | | |
| 315 | 1000 | 1.5 | II | 5.47 | 1537 | 1609 | SK 1282 SCP - 100LA/4 | SK 1282 SCP - 112MH/4 | SK 1282 SCP - 180TC | X | X | X | | |
| 268 | 1175 | 1.4 | II | 6.43 | 1595 | 1609 | SK 1282 SCP - 100LA/4 | SK 1282 SCP - 112MH/4 | SK 1282 SCP - 180TC | X | X | X | | |
| 238 | 1323 | 1.3 | I | 7.24 | 1638 | 1609 | SK 1282 SCP - 100LA/4 | SK 1282 SCP - 112MH/4 | SK 1282 SCP - 180TC | X | X | X | | |
| 210 | 1500 | 0.9 | * | 8.21 | 1701 | 1609 | SK 1282 SCP - 100LA/4 | SK 1282 SCP - 112MH/4 | SK 1282 SCP - 180TC | X | X | X | | |
| 209 | 1506 | 1.1 | I | 8.24 | 1683 | 1609 | SK 1282 SCP - 100LA/4 | SK 1282 SCP - 112MH/4 | SK 1282 SCP - 180TC | X | X | X | | |
| 188 | 1678 | 1 | I | 9.18 | 1737 | 1609 | SK 1282 SCP - 100LA/4 | SK 1282 SCP - 112MH/4 | SK 1282 SCP - 180TC | X | X | X | | |
| 167 | 1890 | 0.9 | * | 10.34 | 1780 | 1609 | SK 1282 SCP - 100LA/4 | SK 1282 SCP - 112MH/4 | SK 1282 SCP - 180TC | X | X | X | | |
| 382 | 824 | 2 | III | 4.51 | 1969 | 3375 | SK 2282 SCP - 100LA/4 | SK 2282 SCP - 112MH/4 | SK 2282 SCP - 180TC | X | X | X | | |
| 302 | 1045 | 1.8 | II | 5.72 | 2099 | 3375 | SK 2282 SCP - 100LA/4 | SK 2282 SCP - 112MH/4 | SK 2282 SCP - 180TC | X | X | X | | |
| 268 | 1175 | 1.7 | II | 6.43 | 2162 | 3375 | SK 2282 SCP - 100LA/4 | SK 2282 SCP - 112MH/4 | SK 2282 SCP - 180TC | X | X | X | | |
| 231 | 1367 | 1.6 | II | 7.48 | 2246 | 3375 | SK 2282 SCP - 100LA/4 | SK 2282 SCP - 112MH/4 | SK 2282 SCP - 180TC | X | X | X | | |
| 206 | 1530 | 1.5 | II | 8.37 | 2311 | 3375 | SK 2282 SCP - 100LA/4 | SK 2282 SCP - 112MH/4 | SK 2282 SCP - 180TC | X | X | X | | |
| 191 | 1650 | 1.8 | II | 9.03 | 2372 | 3375 | SK 2282 SCP - 100LA/4 | SK 2282 SCP - 112MH/4 | SK 2282 SCP - 180TC | X | X | X | | |
| 170 | 1855 | 1.7 | II | 10.15 | 2437 | 3375 | SK 2282 SCP - 100LA/4 | SK 2282 SCP - 112MH/4 | SK 2282 SCP - 180TC | X | X | X | | |
| 146 | 2158 | 1.6 | II | 11.81 | 2536 | 3375 | SK 2282 SCP - 100LA/4 | SK 2282 SCP - 112MH/4 | SK 2282 SCP - 180TC | X | X | X | | |
| 130 | 2418 | 1.5 | II | 13.23 | 2601 | 3375 | SK 2282 SCP - 100LA/4 | SK 2282 SCP - 112MH/4 | SK 2282 SCP - 180TC | X | X | X | | |
| 104 | 3021 | 1.4 | II | 16.53 | 2750 | 3375 | SK 2282 SCP - 100LA/4 | SK 2282 SCP - 112MH/4 | SK 2282 SCP - 180TC | X | X | X | | |
| 93 | 3383 | 1.3 | I | 18.51 | 2815 | 3375 | SK 2282 SCP - 100LA/4 | SK 2282 SCP - 112MH/4 | SK 2282 SCP - 180TC | X | X | X | | |
| 79 | 4002 | 1.1 | I | 21.9 | 2918 | 3375 | SK 2282 SCP - 100LA/4 | SK 2282 SCP - 112MH/4 | SK 2282 SCP - 180TC | X | X | X | | |
| 72 | 4379 | 0.9 | * | 23.96 | 2900 | 3375 | SK 2282 SCP - 100LA/4 | SK 2282 SCP - 112MH/4 | SK 2282 SCP - 180TC | X | X | X | | |
| 69 | 4563 | 1 | I | 24.97 | 2876 | 3375 | SK 2282 SCP - 100LA/4 | SK 2282 SCP - 112MH/4 | SK 2282 SCP - 180TC | X | X | X | | |
| 385 | 819 | 2.3 | III | 4.48 | 2264 | 3490 | SK 3282 SCP - 100LA/4 | SK 3282 SCP - 112MH/4 | SK 3282 SCP - 180TC | X | X | X | X | |
| 304 | 1038 | 2.2 | III | 5.68 | 2417 | 3715 | SK 3282 SCP - 100LA/4 | SK 3282 SCP - 112MH/4 | SK 3282 SCP - 180TC | X | X | X | X | |
| 257 | 1224 | 2.1 | III | 6.7 | 2527 | 3872 | SK 3282 SCP - 100LA/4 | SK 3282 SCP - 112MH/4 | SK 3282 SCP - 180TC | X | X | X | X | |
| 208 | 1519 | 1.9 | II | 8.31 | 2675 | 4091 | SK 3282 SCP - 100LA/4 | SK 3282 SCP - 112MH/4 | SK 3282 SCP - 180TC | X | X | X | X | |
| 176 | 1791 | 2.1 | III | 9.8 | 2799 | 4277 | SK 3282 SCP - 100LA/4 | SK 3282 SCP - 112MH/4 | SK 3282 SCP - 180TC | X | X | X | X | |
| 152 | 2080 | 2.1 | III | 11.38 | 2912 | 4446 | SK 3282 SCP - 100LA/4 | SK 3282 SCP - 112MH/4 | SK 3282 SCP - 180TC | X | X | X | X | |
| 122 | 2579 | 1.9 | II | 14.11 | 3074 | 4500 | SK 3282 SCP - 100LA/4 | SK 3282 SCP - 112MH/4 | SK 3282 SCP - 180TC | X | X | X | X | |
| 103 | 3047 | 1.9 | II | 16.67 | 3206 | 4500 | SK 3282 SCP - 100LA/4 | SK 3282 SCP - 112MH/4 | SK 3282 SCP - 180TC | X | X | X | X | |
| 85 | 3688 | 1.9 | II | 20.18 | 3359 | 4500 | SK 3282 SCP - 100LA/4 | SK 3282 SCP - 112MH/4 | SK 3282 SCP - 180TC | X | X | X | X | |
| 81 | 3907 | 1.6 | II | 21.38 | 3398 | 4500 | SK 3282 SCP - 100LA/4 | SK 3282 SCP - 112MH/4 | SK 3282 SCP - 180TC | X | X | X | X | |
| 77 | 4103 | 1.7 | II | 22.45 | 3447 | 4500 | SK 3282 SCP - 100LA/4 | SK 3282 SCP - 112MH/4 | SK 3282 SCP - 180TC | X | X | X | X | |
| 73 | 4333 | 1.5 | II | 23.71 | 3474 | 4500 | SK 3282 SCP - 100LA/4 | SK 3282 SCP - 112MH/4 | SK 3282 SCP - 180TC | X | X | X | X | |
| 67 | 4730 | 1.6 | II | 25.88 | 3553 | 4500 | SK 3282 SCP - 100LA/4 | SK 3282 SCP - 112MH/4 | SK 3282 SCP - 180TC | X | X | X | X | |
| 60 | 5245 | 1.5 | II | 28.7 | 3632 | 4500 | SK 3282 SCP - 100LA/4 | SK 3282 SCP - 112MH/4 | SK 3282 SCP - 180TC | X | X | X | X | |
| 54 | 5835 | 1.3 | I | 31.93 | 3713 | 4500 | SK 3282 SCP - 100LA/4 | SK 3282 SCP - 112MH/4 | SK 3282 SCP - 180TC | X | X | X | X | |
| 46 | 6903 | 1.1 | I | 37.77 | 3830 | 4500 | SK 3282 SCP - 100LA/4 | SK 3282 SCP - 112MH/4 | SK 3282 SCP - 180TC | X | X | X | X | |
| 41 | 7679 | 1.1 | I | 42.02 | 3906 | 4500 | SK 3282 SCP - 100LA/4 | SK 3282 SCP - 112MH/4 | SK 3282 SCP - 180TC | X | X | X | X | |

Output speed and torque ratings are based on the "Standard Efficiency Motor" Power and speed. Performance will vary slightly for other motors.

# 5 hp Gearmotors & Speed Reducers



| Output Speed | Output Torque | SF | AGMA Class | Gear Ratio | Thrust | | Integral Gearmotor | | Reducer | CEMA DriveShaft | | | | |
|---|---|---|---|---|---|---|---|---|---|---|---|---|---|---|
| $n_2$ | $T_2$ | $f_a$ | | i | Std Brg | H.D. Brg " VL" | Standard Efficiency Motor | Energy Efficient Motor | C-Face Input | 1-1/2" | 2" | 2-7/16" | 3" | 3-7/16" |
| [rpm] | [lb-in] | | | | [lb] | [lb] | | | | | | | | |
| 285 | 1107 | 2.5 | III | 6.06 | 3542 | 5987 | SK 4282 SCP - 100LA/4 | SK 4282 SCP - 112MH/4 | SK 4282 SCP - 180TC | | X | X | X | |
| 242 | 1303 | 2.4 | III | 7.13 | 3708 | 6264 | SK 4282 SCP - 100LA/4 | SK 4282 SCP - 112MH/4 | SK 4282 SCP - 180TC | | X | X | X | |
| 207 | 1522 | 2.3 | III | 8.33 | 3879 | 6530 | SK 4282 SCP - 100LA/4 | SK 4282 SCP - 112MH/4 | SK 4282 SCP - 180TC | | X | X | X | |
| 187 | 1687 | 2.5 | III | 9.23 | 3998 | 6743 | SK 4282 SCP - 100LA/4 | SK 4282 SCP - 112MH/4 | SK 4282 SCP - 180TC | | X | X | X | |
| 159 | 1983 | 2.4 | III | 10.85 | 4172 | 6750 | SK 4282 SCP - 100LA/4 | SK 4282 SCP - 112MH/4 | SK 4282 SCP - 180TC | | X | X | X | |
| 136 | 2317 | 2.3 | III | 12.68 | 4354 | 6750 | SK 4282 SCP - 100LA/4 | SK 4282 SCP - 112MH/4 | SK 4282 SCP - 180TC | | X | X | X | |
| 113 | 2778 | 2.3 | III | 15.2 | 4581 | 6750 | SK 4282 SCP - 100LA/4 | SK 4282 SCP - 112MH/4 | SK 4282 SCP - 180TC | | X | X | X | |
| 95 | 3322 | 2.3 | III | 18.18 | 4808 | 6750 | SK 4282 SCP - 100LA/4 | SK 4282 SCP - 112MH/4 | SK 4282 SCP - 180TC | | X | X | X | |
| 80 | 3920 | 2.3 | III | 21.45 | 5031 | 6750 | SK 4282 SCP - 100LA/4 | SK 4282 SCP - 112MH/4 | SK 4282 SCP - 180TC | | X | X | X | |
| 77 | 4092 | 2.1 | III | 22.39 | 5076 | 6750 | SK 4282 SCP - 100LA/4 | SK 4282 SCP - 112MH/4 | SK 4282 SCP - 180TC | | X | X | X | |
| 66 | 4797 | 2.3 | III | 26.25 | 5299 | 6750 | SK 4282 SCP - 100LA/4 | SK 4282 SCP - 112MH/4 | SK 4282 SCP - 180TC | | X | X | X | |
| 65 | 4830 | 2.1 | III | 26.43 | 5306 | 6750 | SK 4282 SCP - 100LA/4 | SK 4282 SCP - 112MH/4 | SK 4282 SCP - 180TC | | X | X | X | |
| 53 | 5910 | 2.1 | III | 32.34 | 5589 | 6750 | SK 4282 SCP - 100LA/4 | SK 4282 SCP - 112MH/4 | SK 4282 SCP - 180TC | | X | X | X | |
| 47 | 6652 | 1.8 | II | 36.4 | 5697 | 6750 | SK 4282 SCP - 100LA/4 | SK 4282 SCP - 112MH/4 | SK 4282 SCP - 180TC | | X | X | X | |
| 47 | 6727 | 1.7 | II | 36.81 | 5751 | 6750 | SK 4282 SCP - 100LA/4 | SK 4282 SCP - 112MH/4 | SK 4282 SCP - 180TC | | X | X | X | |
| 42 | 7445 | 1.8 | II | 40.74 | 5900 | 6750 | SK 4282 SCP - 100LA/4 | SK 4282 SCP - 112MH/4 | SK 4282 SCP - 180TC | | X | X | X | |
| 40 | 7977 | 1.8 | II | 43.65 | 5958 | 6750 | SK 4282 SCP - 100LA/4 | SK 4282 SCP - 112MH/4 | SK 4282 SCP - 180TC | | X | X | X | |
| 38 | 8233 | 1.7 | II | 45.05 | 6055 | 6750 | SK 4282 SCP - 100LA/4 | SK 4282 SCP - 112MH/4 | SK 4282 SCP - 180TC | | X | X | X | |
| 33 | 9540 | 1.7 | II | 52.2 | 6210 | 6750 | SK 4282 SCP - 100LA/4 | SK 4282 SCP - 112MH/4 | SK 4282 SCP - 180TC | | X | X | X | |
| 28 | 11258 | 1.4 | II | 61.6 | 6451 | 6750 | SK 4282 SCP - 100LA/4 | SK 4282 SCP - 112MH/4 | SK 4282 SCP - 180TC | | X | X | X | |
| 23 | 13778 | 1 | I | 75.39 | 6464 | 6750 | SK 4282 SCP - 100LA/4 | SK 4282 SCP - 112MH/4 | SK 4282 SCP - 180TC | | X | X | X | |
| 22 | 14017 | 1 | I | 76.7 | 6446 | 6750 | SK 4282 SCP - 100LA/4 | SK 4282 SCP - 112MH/4 | SK 4282 SCP - 180TC | | X | X | X | |
| 19 | 16543 | 0.9 | * | 90.52 | 6251 | 6750 | SK 4282 SCP - 100LA/4 | SK 4282 SCP - 112MH/4 | SK 4282 SCP - 180TC | | X | X | X | |
| 273 | 1157 | 2.9 | III | 6.33 | 5006 | 8417 | SK 5282 SCP - 100LA/4 | SK 5282 SCP - 112MH/4 | SK 5282 SCP - 180TC | | X | X | X | X |
| 241 | 1310 | 2.9 | III | 7.17 | 5186 | 8719 | SK 5282 SCP - 100LA/4 | SK 5282 SCP - 112MH/4 | SK 5282 SCP - 180TC | | X | X | X | X |
| 198 | 1590 | 2.7 | III | 8.7 | 5486 | 9000 | SK 5282 SCP - 100LA/4 | SK 5282 SCP - 112MH/4 | SK 5282 SCP - 180TC | | X | X | X | X |
| 182 | 1729 | 2.9 | III | 9.46 | 5627 | 9000 | SK 5282 SCP - 100LA/4 | SK 5282 SCP - 112MH/4 | SK 5282 SCP - 180TC | | X | X | X | X |
| 161 | 1957 | 2.9 | III | 10.71 | 5830 | 9000 | SK 5282 SCP - 100LA/4 | SK 5282 SCP - 112MH/4 | SK 5282 SCP - 180TC | | X | X | X | X |

Output speed and torque ratings are based on the "Standard Efficiency Motor" Power and speed. Performance will vary slightly for other motors.



# 5 hp Gearmotors & Speed Reducers

| Output Speed | Output Torque | SF | AGMA Class | Gear Ratio | Thrust | | Integral Gearmotor | | Reducer | CEMA DriveShaft | | | | |
|---|---|---|---|---|---|---|---|---|---|---|---|---|---|---|
| $n_2$ | $T_2$ | $f_a$ | | i | Std Brg | H.D. Brg " VL" | Standard Efficiency Motor | Energy Efficient Motor | C-Face Input | 1-1/2" | 2" | 2-7/16" | 3" | 3-7/16" |
| [rpm] | [lb-in] | | | | [lb] | [lb] | | | | | | | | |
| 133 | 2376 | 2.7 | III | 13 | 6154 | 9000 | SK 5282 SCP - 100LA/4 | SK 5282 SCP - 112MH/4 | SK 5282 SCP - 180TC | | X | X | X | X |
| 112 | 2811 | 2.7 | III | 15.38 | 6455 | 9000 | SK 5282 SCP - 100LA/4 | SK 5282 SCP - 112MH/4 | SK 5282 SCP - 180TC | | X | X | X | X |
| 98 | 3215 | 2.5 | III | 17.59 | 6707 | 9000 | SK 5282 SCP - 100LA/4 | SK 5282 SCP - 112MH/4 | SK 5282 SCP - 180TC | | X | X | X | X |
| 91 | 3450 | 2.7 | III | 18.88 | 6847 | 9000 | SK 5282 SCP - 100LA/4 | SK 5282 SCP - 112MH/4 | SK 5282 SCP - 180TC | | X | X | X | X |
| 85 | 3721 | 2.4 | III | 20.36 | 6980 | 9000 | SK 5282 SCP - 100LA/4 | SK 5282 SCP - 112MH/4 | SK 5282 SCP - 180TC | | X | X | X | X |
| 69 | 4569 | 2.4 | III | 25 | 7400 | 9000 | SK 5282 SCP - 100LA/4 | SK 5282 SCP - 112MH/4 | SK 5282 SCP - 180TC | | X | X | X | X |
| 57 | 5574 | 2.2 | III | 30.5 | 7805 | 9000 | SK 5282 SCP - 100LA/4 | SK 5282 SCP - 112MH/4 | SK 5282 SCP - 180TC | | X | X | X | X |
| 52 | 6109 | 2.4 | III | 33.43 | 8015 | 9000 | SK 5282 SCP - 100LA/4 | SK 5282 SCP - 112MH/4 | SK 5282 SCP - 180TC | | X | X | X | X |
| 42 | 7456 | 2.2 | III | 40.8 | 8444 | 9000 | SK 5282 SCP - 100LA/4 | SK 5282 SCP - 112MH/4 | SK 5282 SCP - 180TC | | X | X | X | X |
| 36 | 8639 | 2.5 | III | 47.27 | 8741 | 9000 | SK 5282 SCP - 100LA/4 | SK 5282 SCP - 112MH/4 | SK 5282 SCP - 180TC | | X | X | X | X |
| 31 | 10152 | 1.9 | II | 55.55 | 9140 | 9000 | SK 5282 SCP - 100LA/4 | SK 5282 SCP - 112MH/4 | SK 5282 SCP - 180TC | | X | X | X | X |
| 31 | 10216 | 2.3 | III | 55.9 | 9108 | 9000 | SK 5282 SCP - 100LA/4 | SK 5282 SCP - 112MH/4 | SK 5282 SCP - 180TC | | X | X | X | X |
| 25 | 12542 | 2.1 | III | 68.63 | 9603 | 9000 | SK 5282 SCP - 100LA/4 | SK 5282 SCP - 112MH/4 | SK 5282 SCP - 180TC | | X | X | X | X |
| 21 | 14915 | 1.1 | I | 81.61 | 9788 | 9000 | SK 5282 SCP - 100LA/4 | SK 5282 SCP - 112MH/4 | SK 5282 SCP - 180TC | | X | X | X | X |
| 19 | 16779 | 1.5 | II | 91.81 | 9716 | 9000 | SK 5282 SCP - 100LA/4 | SK 5282 SCP - 112MH/4 | SK 5282 SCP - 180TC | | X | X | X | X |
| 17 | 18310 | 1.1 | I | 100.19 | 9648 | 9000 | SK 5282 SCP - 100LA/4 | SK 5282 SCP - 112MH/4 | SK 5282 SCP - 180TC | | X | X | X | X |
| 13 | 24494 | 1 | I | 134.03 | 9308 | 9000 | SK 5282 SCP - 100LA/4 | SK 5282 SCP - 112MH/4 | SK 5282 SCP - 180TC | | X | X | X | X |
| 256 | 1232 | 3.1 | III | 6.74 | 7432 | 10742 | SK 6282 SCP - 100LA/4 | SK 6282 SCP - 112MH/4 | SK 6282 SCP - 180TC | | | | X | X |
| 221 | 1429 | 3 | III | 7.82 | 7772 | 11216 | SK 6282 SCP - 100LA/4 | SK 6282 SCP - 112MH/4 | SK 6282 SCP - 180TC | | | | X | X |
| 184 | 1716 | 2.8 | III | 9.39 | 8195 | 11846 | SK 6282 SCP - 100LA/4 | SK 6282 SCP - 112MH/4 | SK 6282 SCP - 180TC | | | | X | X |
| 162 | 1945 | 3.1 | III | 10.64 | 8501 | 12290 | SK 6282 SCP - 100LA/4 | SK 6282 SCP - 112MH/4 | SK 6282 SCP - 180TC | | | | X | X |
| 140 | 2257 | 3 | III | 12.35 | 8876 | 12854 | SK 6282 SCP - 100LA/4 | SK 6282 SCP - 112MH/4 | SK 6282 SCP - 180TC | | | | X | X |
| 116 | 2710 | 2.8 | III | 14.83 | 9358 | 13500 | SK 6282 SCP - 100LA/4 | SK 6282 SCP - 112MH/4 | SK 6282 SCP - 180TC | | | | X | X |
| 92 | 3417 | 2.8 | III | 18.7 | 10008 | 13500 | SK 6282 SCP - 100LA/4 | SK 6282 SCP - 112MH/4 | SK 6282 SCP - 180TC | | | | X | X |
| 75 | 4194 | 2.8 | III | 22.95 | 10616 | 13500 | SK 6282 SCP - 100LA/4 | SK 6282 SCP - 112MH/4 | SK 6282 SCP - 180TC | | | | X | X |
| 66 | 4761 | 2.7 | III | 26.05 | 10994 | 13500 | SK 6282 SCP - 100LA/4 | SK 6282 SCP - 112MH/4 | SK 6282 SCP - 180TC | | | | X | X |
| 58 | 5464 | 2.5 | III | 29.9 | 11439 | 13500 | SK 6282 SCP - 100LA/4 | SK 6282 SCP - 112MH/4 | SK 6282 SCP - 180TC | | | | X | X |
| 26 | 11959 | 2.5 | III | 65.44 | 13149 | 13500 | SK 6282 SCP - 100LA/4 | SK 6282 SCP - 112MH/4 | SK 6282 SCP - 180TC | | | | X | X |
| 21 | 14681 | 2.5 | III | 80.33 | 13095 | 13500 | SK 6282 SCP - 100LA/4 | SK 6282 SCP - 112MH/4 | SK 6282 SCP - 180TC | | | | X | X |

Output speed and torque ratings are based on the "Standard Efficiency Motor" Power and speed. Performance will vary slightly for other motors.

# 7.5 hp Gearmotors & Speed Reducers



| Output Speed | Output Torque | SF | AGMA Class | Gear Ratio | Thrust | | Integral Gearmotor | | Reducer | CEMA DriveShaft | | | | |
|---|---|---|---|---|---|---|---|---|---|---|---|---|---|---|
| $n_2$ | $T_2$ | $f_a$ | | i | Std Brg | H.D. Brg " VL" | Standard Efficiency Motor | Energy Efficient Motor | C-Face Input | 1-1/2" | 2" | 2-7/16" | 3" | 3-7/16" |
| [rpm] | [lb-in] | | | | [lb] | [lb] | | | | | | | | |
| 387 | 1221 | 3.3 | III | 4.48 | 2219 | 3402 | SK 3282 SCP - 132S/4 | SK 3282 SCP - 132SH/4 | SK 3282 SCP - 210TC | X | X | X | X | |
| 305 | 1547 | 3.2 | III | 5.68 | 2360 | 3602 | SK 3282 SCP - 132S/4 | SK 3282 SCP - 132SH/4 | SK 3282 SCP - 210TC | X | X | X | X | |
| 259 | 1824 | 2.9 | III | 6.7 | 2459 | 3744 | SK 3282 SCP - 132S/4 | SK 3282 SCP - 132SH/4 | SK 3282 SCP - 210TC | X | X | X | X | |
| 209 | 2263 | 2.6 | III | 8.31 | 2597 | 3935 | SK 3282 SCP - 132S/4 | SK 3282 SCP - 132SH/4 | SK 3282 SCP - 210TC | X | X | X | X | |
| 177 | 2669 | 2.8 | III | 9.8 | 2709 | 4104 | SK 3282 SCP - 132S/4 | SK 3282 SCP - 132SH/4 | SK 3282 SCP - 210TC | X | X | X | X | |
| 152 | 3099 | 2.3 | III | 11.38 | 2810 | 4237 | SK 3282 SCP - 132S/4 | SK 3282 SCP - 132SH/4 | SK 3282 SCP - 210TC | X | X | X | X | |
| 123 | 3842 | 2 | III | 14.11 | 2948 | 4417 | SK 3282 SCP - 132S/4 | SK 3282 SCP - 132SH/4 | SK 3282 SCP - 210TC | X | X | X | X | |
| 104 | 4539 | 1.6 | II | 16.67 | 3060 | 4500 | SK 3282 SCP - 132S/4 | SK 3282 SCP - 132SH/4 | SK 3282 SCP - 210TC | X | X | X | X | |
| 86 | 5495 | 1.3 | I | 20.18 | 3186 | 4500 | SK 3282 SCP - 132S/4 | SK 3282 SCP - 132SH/4 | SK 3282 SCP - 210TC | X | X | X | X | |
| 81 | 5822 | 1.1 | I | 21.38 | 3204 | 4500 | SK 3282 SCP - 132S/4 | SK 3282 SCP - 132SH/4 | SK 3282 SCP - 210TC | X | X | X | X | |
| 77 | 6113 | 1.2 | I | 22.45 | 3254 | 4500 | SK 3282 SCP - 132S/4 | SK 3282 SCP - 132SH/4 | SK 3282 SCP - 210TC | X | X | X | X | |
| 73 | 6456 | 1 | I | 23.71 | 3260 | 4500 | SK 3282 SCP - 132S/4 | SK 3282 SCP - 132SH/4 | SK 3282 SCP - 210TC | X | X | X | X | |
| 67 | 7047 | 1.1 | I | 25.88 | 3335 | 4500 | SK 3282 SCP - 132S/4 | SK 3282 SCP - 132SH/4 | SK 3282 SCP - 210TC | X | X | X | X | |
| 60 | 7815 | 1 | I | 28.7 | 3380 | 4500 | SK 3282 SCP - 132S/4 | SK 3282 SCP - 132SH/4 | SK 3282 SCP - 210TC | X | X | X | X | |
| 54 | 8695 | 0.9 | * | 31.93 | 3445 | 4500 | SK 3282 SCP - 132S/4 | SK 3282 SCP - 132SH/4 | SK 3282 SCP - 210TC | X | X | X | X | |
| 369 | 1280 | 4 | III | 4.7 | 3251 | 5492 | SK 4282 SCP - 132S/4 | SK 4282 SCP - 132SH/4 | SK 4282 SCP - 210TC | | X | X | X | |
| 347 | 1362 | 3.9 | III | 5 | 3310 | 5589 | SK 4282 SCP - 132S/4 | SK 4282 SCP - 132SH/4 | SK 4282 SCP - 210TC | | X | X | X | |
| 320 | 1479 | 3.9 | III | 5.43 | 3384 | 5706 | SK 4282 SCP - 132S/4 | SK 4282 SCP - 132SH/4 | SK 4282 SCP - 210TC | | X | X | X | |
| 286 | 1650 | 3.7 | III | 6.06 | 3488 | 5884 | SK 4282 SCP - 132S/4 | SK 4282 SCP - 132SH/4 | SK 4282 SCP - 210TC | | X | X | X | |
| 243 | 1942 | 3.5 | III | 7.13 | 3647 | 6134 | SK 4282 SCP - 132S/4 | SK 4282 SCP - 132SH/4 | SK 4282 SCP - 210TC | | X | X | X | |
| 208 | 2268 | 3.2 | III | 8.33 | 3800 | 6386 | SK 4282 SCP - 132S/4 | SK 4282 SCP - 132SH/4 | SK 4282 SCP - 210TC | | X | X | X | |
| 188 | 2513 | 3.7 | III | 9.23 | 3917 | 6581 | SK 4282 SCP - 132S/4 | SK 4282 SCP - 132SH/4 | SK 4282 SCP - 210TC | | X | X | X | |
| 160 | 2955 | 3.5 | III | 10.85 | 4086 | 6750 | SK 4282 SCP - 132S/4 | SK 4282 SCP - 132SH/4 | SK 4282 SCP - 210TC | | X | X | X | |
| 137 | 3453 | 3.2 | III | 12.68 | 4255 | 6750 | SK 4282 SCP - 132S/4 | SK 4282 SCP - 132SH/4 | SK 4282 SCP - 210TC | | X | X | X | |
| 114 | 4139 | 3.2 | III | 15.2 | 4464 | 6750 | SK 4282 SCP - 132S/4 | SK 4282 SCP - 132SH/4 | SK 4282 SCP - 210TC | | X | X | X | |
| 95 | 4951 | 3.2 | III | 18.18 | 4673 | 6750 | SK 4282 SCP - 132S/4 | SK 4282 SCP - 132SH/4 | SK 4282 SCP - 210TC | | X | X | X | |
| 81 | 5841 | 2.6 | III | 21.45 | 4871 | 6750 | SK 4282 SCP - 132S/4 | SK 4282 SCP - 132SH/4 | SK 4282 SCP - 210TC | | X | X | X | |
| 77 | 6097 | 2.5 | III | 22.39 | 4905 | 6750 | SK 4282 SCP - 132S/4 | SK 4282 SCP - 132SH/4 | SK 4282 SCP - 210TC | | X | X | X | |
| 66 | 7148 | 2 | III | 26.25 | 5121 | 6750 | SK 4282 SCP - 132S/4 | SK 4282 SCP - 132SH/4 | SK 4282 SCP - 210TC | | X | X | X | |
| 66 | 7197 | 2.2 | III | 26.43 | 5121 | 6750 | SK 4282 SCP - 132S/4 | SK 4282 SCP - 132SH/4 | SK 4282 SCP - 210TC | | X | X | X | |
| 65 | 7276 | 1.9 | II | 26.72 | 5078 | 6750 | SK 4282 SCP - 132S/4 | SK 4282 SCP - 132SH/4 | SK 4282 SCP - 210TC | | X | X | X | |
| 54 | 8725 | 1.8 | II | 32.04 | 5301 | 6750 | SK 4282 SCP - 132S/4 | SK 4282 SCP - 132SH/4 | SK 4282 SCP - 210TC | | X | X | X | |
| 54 | 8806 | 1.6 | II | 32.34 | 5351 | 6750 | SK 4282 SCP - 132S/4 | SK 4282 SCP - 132SH/4 | SK 4282 SCP - 210TC | | X | X | X | |
| 48 | 9912 | 1.2 | I | 36.4 | 5405 | 6750 | SK 4282 SCP - 132S/4 | SK 4282 SCP - 132SH/4 | SK 4282 SCP - 210TC | | X | X | X | |
| 47 | 10024 | 1.2 | I | 36.81 | 5488 | 6750 | SK 4282 SCP - 132S/4 | SK 4282 SCP - 132SH/4 | SK 4282 SCP - 210TC | | X | X | X | |
| 45 | 10432 | 1.7 | II | 38.31 | 5506 | 6750 | SK 4282 SCP - 132S/4 | SK 4282 SCP - 132SH/4 | SK 4282 SCP - 210TC | | X | X | X | |
| 43 | 11094 | 1.2 | I | 40.74 | 5609 | 6750 | SK 4282 SCP - 132S/4 | SK 4282 SCP - 132SH/4 | SK 4282 SCP - 210TC | | X | X | X | |
| 40 | 11886 | 1.2 | I | 43.65 | 5627 | 6750 | SK 4282 SCP - 132S/4 | SK 4282 SCP - 132SH/4 | SK 4282 SCP - 210TC | | X | X | X | |
| 39 | 12267 | 1.1 | I | 45.05 | 5715 | 6750 | SK 4282 SCP - 132S/4 | SK 4282 SCP - 132SH/4 | SK 4282 SCP - 210TC | | X | X | X | |
| 33 | 14214 | 1.1 | I | 52.2 | 5814 | 6750 | SK 4282 SCP - 132S/4 | SK 4282 SCP - 132SH/4 | SK 4282 SCP - 210TC | | X | X | X | |
| 28 | 16774 | 0.9 | * | 61.6 | 5994 | 6750 | SK 4282 SCP - 132S/4 | SK 4282 SCP - 132SH/4 | SK 4282 SCP - 210TC | | X | X | X | |

Output speed and torque ratings are based on the "Standard Efficiency Motor" Power and speed. Performance will vary slightly for other motors.



# 7.5 hp Gearmotors & Speed Reducers

| Output Speed | Output Torque | SF | AGMA Class | Gear Ratio | Thrust | | Integral Gearmotor | | Reducer | CEMA DriveShaft | | | | |
|---|---|---|---|---|---|---|---|---|---|---|---|---|---|---|
| $n_2$ | $T_2$ | $f_a$ | | i | Std Brg | H.D. Brg " VL" | Standard Efficiency Motor | Energy Efficient Motor | C-Face Input | 1-1/2" | 2" | 2-7/16" | 3" | 3-7/16" |
| [rpm] | [lb-in] | | | | [lb] | [lb] | | | | | | | | |
| 274 | 1724 | 4.2 | III | 6.33 | 4959 | 8323 | SK 5282 SCP - 132S/4 | SK 5282 SCP - 132SH/4 | SK 5282 SCP - 210TC | | X | X | X | X |
| 242 | 1952 | 4.1 | III | 7.17 | 5135 | 8622 | SK 5282 SCP - 132S/4 | SK 5282 SCP - 132SH/4 | SK 5282 SCP - 210TC | | X | X | X | X |
| 199 | 2369 | 3.8 | III | 8.7 | 5414 | 9000 | SK 5282 SCP - 132S/4 | SK 5282 SCP - 132SH/4 | SK 5282 SCP - 210TC | | X | X | X | X |
| 183 | 2576 | 4.2 | III | 9.46 | 5553 | 9000 | SK 5282 SCP - 132S/4 | SK 5282 SCP - 132SH/4 | SK 5282 SCP - 210TC | | X | X | X | X |
| 162 | 2916 | 4.1 | III | 10.71 | 5753 | 9000 | SK 5282 SCP - 132S/4 | SK 5282 SCP - 132SH/4 | SK 5282 SCP - 210TC | | X | X | X | X |
| 133 | 3540 | 3.8 | III | 13 | 6062 | 9000 | SK 5282 SCP - 132S/4 | SK 5282 SCP - 132SH/4 | SK 5282 SCP - 210TC | | X | X | X | X |
| 113 | 4188 | 3.8 | III | 15.38 | 6356 | 9000 | SK 5282 SCP - 132S/4 | SK 5282 SCP - 132SH/4 | SK 5282 SCP - 210TC | | X | X | X | X |
| 99 | 4790 | 3.6 | III | 17.59 | 6590 | 9000 | SK 5282 SCP - 132S/4 | SK 5282 SCP - 132SH/4 | SK 5282 SCP - 210TC | | X | X | X | X |
| 92 | 5141 | 3.8 | III | 18.88 | 6728 | 9000 | SK 5282 SCP - 132S/4 | SK 5282 SCP - 132SH/4 | SK 5282 SCP - 210TC | | X | X | X | X |
| 85 | 5544 | 3.4 | III | 20.36 | 6842 | 9000 | SK 5282 SCP - 132S/4 | SK 5282 SCP - 132SH/4 | SK 5282 SCP - 210TC | | X | X | X | X |
| 69 | 6808 | 3.4 | III | 25 | 7236 | 9000 | SK 5282 SCP - 132S/4 | SK 5282 SCP - 132SH/4 | SK 5282 SCP - 210TC | | X | X | X | X |
| 57 | 8305 | 3.1 | III | 30.5 | 7621 | 9000 | SK 5282 SCP - 132S/4 | SK 5282 SCP - 132SH/4 | SK 5282 SCP - 210TC | | X | X | X | X |
| 52 | 9103 | 2.2 | III | 33.43 | 7805 | 9000 | SK 5282 SCP - 132S/4 | SK 5282 SCP - 132SH/4 | SK 5282 SCP - 210TC | | X | X | X | X |
| 49 | 9656 | 2.5 | III | 35.46 | 7884 | 9000 | SK 5282 SCP - 132S/4 | SK 5282 SCP - 132SH/4 | SK 5282 SCP - 210TC | | X | X | X | X |
| 43 | 11110 | 2 | III | 40.8 | 8188 | 9000 | SK 5282 SCP - 132S/4 | SK 5282 SCP - 132SH/4 | SK 5282 SCP - 210TC | | X | X | X | X |
| 41 | 11421 | 2.5 | III | 41.94 | 8208 | 9000 | SK 5282 SCP - 132S/4 | SK 5282 SCP - 132SH/4 | SK 5282 SCP - 210TC | | X | X | X | X |
| 37 | 12872 | 1.7 | II | 47.27 | 8411 | 9000 | SK 5282 SCP - 132S/4 | SK 5282 SCP - 132SH/4 | SK 5282 SCP - 210TC | | X | X | X | X |
| 34 | 14021 | 2 | III | 51.49 | 8638 | 9000 | SK 5282 SCP - 132S/4 | SK 5282 SCP - 132SH/4 | SK 5282 SCP - 210TC | | X | X | X | X |
| 31 | 15127 | 1.3 | I | 55.55 | 8798 | 9000 | SK 5282 SCP - 132S/4 | SK 5282 SCP - 132SH/4 | SK 5282 SCP - 210TC | | X | X | X | X |
| 31 | 15222 | 1.5 | II | 55.9 | 8753 | 9000 | SK 5282 SCP - 132S/4 | SK 5282 SCP - 132SH/4 | SK 5282 SCP - 210TC | | X | X | X | X |
| 25 | 18688 | 1.4 | II | 68.63 | 9191 | 9000 | SK 5282 SCP - 132S/4 | SK 5282 SCP - 132SH/4 | SK 5282 SCP - 210TC | | X | X | X | X |
| 19 | 25001 | 1 | I | 91.81 | 9275 | 9000 | SK 5282 SCP - 132S/4 | SK 5282 SCP - 132SH/4 | SK 5282 SCP - 210TC | | X | X | X | X |
| 257 | 1835 | 4.5 | III | 6.74 | 7382 | 10672 | SK 6282 SCP - 132S/4 | SK 6282 SCP - 132SH/4 | SK 6282 SCP - 210TC | | | | X | X |
| 222 | 2129 | 4.3 | III | 7.82 | 7697 | 11144 | SK 6282 SCP - 132S/4 | SK 6282 SCP - 132SH/4 | SK 6282 SCP - 210TC | | | | X | X |
| 185 | 2557 | 4.1 | III | 9.39 | 8114 | 11732 | SK 6282 SCP - 132S/4 | SK 6282 SCP - 132SH/4 | SK 6282 SCP - 210TC | | | | X | X |
| 163 | 2897 | 4.5 | III | 10.64 | 8431 | 12173 | SK 6282 SCP - 132S/4 | SK 6282 SCP - 132SH/4 | SK 6282 SCP - 210TC | | | | X | X |
| 140 | 3363 | 4.3 | III | 12.35 | 8789 | 12690 | SK 6282 SCP - 132S/4 | SK 6282 SCP - 132SH/4 | SK 6282 SCP - 210TC | | | | X | X |
| 117 | 4038 | 4.1 | III | 14.83 | 9248 | 13381 | SK 6282 SCP - 132S/4 | SK 6282 SCP - 132SH/4 | SK 6282 SCP - 210TC | | | | X | X |
| 93 | 5092 | 4.1 | III | 18.7 | 9873 | 13500 | SK 6282 SCP - 132S/4 | SK 6282 SCP - 132SH/4 | SK 6282 SCP - 210TC | | | | X | X |
| 76 | 6249 | 4.1 | III | 22.95 | 10485 | 13500 | SK 6282 SCP - 132S/4 | SK 6282 SCP - 132SH/4 | SK 6282 SCP - 210TC | | | | X | X |
| 67 | 7094 | 3.9 | III | 26.05 | 10836 | 13500 | SK 6282 SCP - 132S/4 | SK 6282 SCP - 132SH/4 | SK 6282 SCP - 210TC | | | | X | X |
| 58 | 8142 | 3.7 | III | 29.9 | 11252 | 13500 | SK 6282 SCP - 132S/4 | SK 6282 SCP - 132SH/4 | SK 6282 SCP - 210TC | | | | X | X |
| 44 | 10751 | 2.6 | III | 39.48 | 12058 | 13500 | SK 6282 SCP - 132S/4 | SK 6282 SCP - 132SH/4 | SK 6282 SCP - 210TC | | | | X | X |
| 35 | 13547 | 2.6 | III | 49.75 | 12807 | 13500 | SK 6282 SCP - 132S/4 | SK 6282 SCP - 132SH/4 | SK 6282 SCP - 210TC | | | | X | X |
| 28 | 16633 | 2.4 | III | 61.08 | 13048 | 13500 | SK 6282 SCP - 132S/4 | SK 6282 SCP - 132SH/4 | SK 6282 SCP - 210TC | | | | X | X |
| 27 | 17820 | 1.7 | II | 65.44 | 13016 | 13500 | SK 6282 SCP - 132S/4 | SK 6282 SCP - 132SH/4 | SK 6282 SCP - 210TC | | | | X | X |
| 22 | 21874 | 1.7 | II | 80.33 | 12893 | 13500 | SK 6282 SCP - 132S/4 | SK 6282 SCP - 132SH/4 | SK 6282 SCP - 210TC | | | | X | X |

Output speed and torque ratings are based on the "Standard Efficiency Motor" Power and speed. Performance will vary slightly for other motors.

# 10 hp Gearmotors & Speed Reducers



| Output Speed | Output Torque | SF | AGMA Class | Gear Ratio | Thrust | | Integral Gearmotor | | Reducer | CEMA DriveShaft | | | | |
|---|---|---|---|---|---|---|---|---|---|---|---|---|---|---|
| $n_2$ | $T_2$ | $f_a$ | | i | Std Brg | H.D. Brg " VL" | Standard Efficiency Motor | Energy Efficient Motor | C-Face Input | 1-1/2" | 2" | 2-7/16" | 3" | 3-7/16" |
| [rpm] | [lb-in] | | | | [lb] | [lb] | | | | | | | | |
| 387 | 1627 | 2.5 | III | 4.48 | 2178 | 3314 | SK 3282 SCP - 132M/4 | SK 3282 SCP - 132MH/4 | SK 3282 SCP - 210TC | X | X | X | X | |
| 305 | 2064 | 2.4 | III | 5.68 | 2309 | 3494 | SK 3282 SCP - 132M/4 | SK 3282 SCP - 132MH/4 | SK 3282 SCP - 210TC | X | X | X | X | |
| 259 | 2435 | 2.2 | III | 6.7 | 2394 | 3614 | SK 3282 SCP - 132M/4 | SK 3282 SCP - 132MH/4 | SK 3282 SCP - 210TC | X | X | X | X | |
| 209 | 3020 | 2 | III | 8.31 | 2513 | 3769 | SK 3282 SCP - 132M/4 | SK 3282 SCP - 132MH/4 | SK 3282 SCP - 210TC | X | X | X | X | |
| 177 | 3561 | 2.1 | III | 9.8 | 2624 | 3922 | SK 3282 SCP - 132M/4 | SK 3282 SCP - 132MH/4 | SK 3282 SCP - 210TC | X | X | X | X | |
| 152 | 4136 | 1.8 | II | 11.38 | 2709 | 4037 | SK 3282 SCP - 132M/4 | SK 3282 SCP - 132MH/4 | SK 3282 SCP - 210TC | X | X | X | X | |
| 123 | 5128 | 1.5 | II | 14.11 | 2822 | 4169 | SK 3282 SCP - 132M/4 | SK 3282 SCP - 132MH/4 | SK 3282 SCP - 210TC | X | X | X | X | |
| 104 | 6058 | 1.2 | I | 16.67 | 2912 | 4277 | SK 3282 SCP - 132M/4 | SK 3282 SCP - 132MH/4 | SK 3282 SCP - 210TC | X | X | X | X | |
| 86 | 7333 | 1 | I | 20.18 | 3011 | 4388 | SK 3282 SCP - 132M/4 | SK 3282 SCP - 132MH/4 | SK 3282 SCP - 210TC | X | X | X | X | |
| 77 | 8158 | 0.9 | * | 22.45 | 3056 | 4446 | SK 3282 SCP - 132M/4 | SK 3282 SCP - 132MH/4 | SK 3282 SCP - 210TC | X | X | X | X | |
| 369 | 1708 | 3 | III | 4.7 | 3220 | 5423 | SK 4282 SCP - 132M/4 | SK 4282 SCP - 132MH/4 | SK 4282 SCP - 210TC | | X | X | X | |
| 347 | 1817 | 3 | III | 5 | 3272 | 5499 | SK 4282 SCP - 132M/4 | SK 4282 SCP - 132MH/4 | SK 4282 SCP - 210TC | | X | X | X | |
| 320 | 1973 | 2.9 | III | 5.43 | 3344 | 5616 | SK 4282 SCP - 132M/4 | SK 4282 SCP - 132MH/4 | SK 4282 SCP - 210TC | | X | X | X | |
| 286 | 2202 | 2.7 | III | 6.06 | 3440 | 5771 | SK 4282 SCP - 132M/4 | SK 4282 SCP - 132MH/4 | SK 4282 SCP - 210TC | | X | X | X | |
| 243 | 2591 | 2.6 | III | 7.13 | 3584 | 6008 | SK 4282 SCP - 132M/4 | SK 4282 SCP - 132MH/4 | SK 4282 SCP - 210TC | | X | X | X | |
| 208 | 3027 | 2.4 | III | 8.33 | 3728 | 6253 | SK 4282 SCP - 132M/4 | SK 4282 SCP - 132MH/4 | SK 4282 SCP - 210TC | | X | X | X | |
| 188 | 3354 | 2.7 | III | 9.23 | 3854 | 6446 | SK 4282 SCP - 132M/4 | SK 4282 SCP - 132MH/4 | SK 4282 SCP - 210TC | | X | X | X | |
| 160 | 3943 | 2.6 | III | 10.85 | 4005 | 6689 | SK 4282 SCP - 132M/4 | SK 4282 SCP - 132MH/4 | SK 4282 SCP - 210TC | | X | X | X | |
| 137 | 4608 | 2.4 | III | 12.68 | 4160 | 6750 | SK 4282 SCP - 132M/4 | SK 4282 SCP - 132MH/4 | SK 4282 SCP - 210TC | | X | X | X | |
| 114 | 5524 | 2.4 | III | 15.2 | 4352 | 6750 | SK 4282 SCP - 132M/4 | SK 4282 SCP - 132MH/4 | SK 4282 SCP - 210TC | | X | X | X | |
| 95 | 6607 | 2.4 | III | 18.18 | 4545 | 6750 | SK 4282 SCP - 132M/4 | SK 4282 SCP - 132MH/4 | SK 4282 SCP - 210TC | | X | X | X | |
| 81 | 7795 | 1.9 | II | 21.45 | 4718 | 6750 | SK 4282 SCP - 132M/4 | SK 4282 SCP - 132MH/4 | SK 4282 SCP - 210TC | | X | X | X | |
| 77 | 8137 | 1.8 | II | 22.39 | 4748 | 6750 | SK 4282 SCP - 132M/4 | SK 4282 SCP - 132MH/4 | SK 4282 SCP - 210TC | | X | X | X | |
| 66 | 9539 | 1.5 | II | 26.25 | 4930 | 6750 | SK 4282 SCP - 132M/4 | SK 4282 SCP - 132MH/4 | SK 4282 SCP - 210TC | | X | X | X | |
| 66 | 9605 | 1.6 | II | 26.43 | 4919 | 6750 | SK 4282 SCP - 132M/4 | SK 4282 SCP - 132MH/4 | SK 4282 SCP - 210TC | | X | X | X | |
| 65 | 9710 | 1.5 | II | 26.72 | 4869 | 6750 | SK 4282 SCP - 132M/4 | SK 4282 SCP - 132MH/4 | SK 4282 SCP - 210TC | | X | X | X | |
| 54 | 11643 | 1.4 | II | 32.04 | 5072 | 6750 | SK 4282 SCP - 132M/4 | SK 4282 SCP - 132MH/4 | SK 4282 SCP - 210TC | | X | X | X | |
| 54 | 11752 | 1.2 | I | 32.34 | 5126 | 6750 | SK 4282 SCP - 132M/4 | SK 4282 SCP - 132MH/4 | SK 4282 SCP - 210TC | | X | X | X | |
| 47 | 13377 | 0.9 | * | 36.81 | 5218 | 6750 | SK 4282 SCP - 132M/4 | SK 4282 SCP - 132MH/4 | SK 4282 SCP - 210TC | | X | X | X | |
| 45 | 13922 | 1.3 | I | 38.31 | 5213 | 6750 | SK 4282 SCP - 132M/4 | SK 4282 SCP - 132MH/4 | SK 4282 SCP - 210TC | | X | X | X | |
| 43 | 14805 | 0.9 | * | 40.74 | 5321 | 6750 | SK 4282 SCP - 132M/4 | SK 4282 SCP - 132MH/4 | SK 4282 SCP - 210TC | | X | X | X | |
| 39 | 16371 | 0.9 | * | 45.05 | 5387 | 6750 | SK 4282 SCP - 132M/4 | SK 4282 SCP - 132MH/4 | SK 4282 SCP - 210TC | | X | X | X | |

Output speed and torque ratings are based on the "Standard Efficiency Motor" Power and speed. Performance will vary slightly for other motors.



# 10 hp Gearmotors & Speed Reducers

| Output Speed | Output Torque | SF | AGMA Class | Gear Ratio | Thrust | | Integral Gearmotor | | Reducer | CEMA DriveShaft | | | | |
|---|---|---|---|---|---|---|---|---|---|---|---|---|---|---|
| $n_2$ | $T_2$ | $f_a$ | | i | Std Brg | H.D. Brg " VL" | Standard Efficiency Motor | Energy Efficient Motor | C-Face Input | 1-1/2" | 2" | 2-7/16" | 3" | 3-7/16" |
| [rpm] | [lb-in] | | | | [lb] | [lb] | | | | | | | | |
| 274 | 2300 | 3.2 | III | 6.33 | 4910 | 8255 | SK 5282 SCP - 132M/4 | SK 5282 SCP - 132MH/4 | SK 5282 SCP - 210TC | | X | X | X | X |
| 242 | 2606 | 3 | III | 7.17 | 5094 | 8539 | SK 5282 SCP - 132M/4 | SK 5282 SCP - 132MH/4 | SK 5282 SCP - 210TC | | X | X | X | X |
| 199 | 3162 | 2.9 | III | 8.7 | 5360 | 9000 | SK 5282 SCP - 132M/4 | SK 5282 SCP - 132MH/4 | SK 5282 SCP - 210TC | | X | X | X | X |
| 183 | 3438 | 3.2 | III | 9.46 | 5497 | 9000 | SK 5282 SCP - 132M/4 | SK 5282 SCP - 132MH/4 | SK 5282 SCP - 210TC | | X | X | X | X |
| 162 | 3892 | 3 | III | 10.71 | 5693 | 9000 | SK 5282 SCP - 132M/4 | SK 5282 SCP - 132MH/4 | SK 5282 SCP - 210TC | | X | X | X | X |
| 133 | 4724 | 2.9 | III | 13 | 5987 | 9000 | SK 5282 SCP - 132M/4 | SK 5282 SCP - 132MH/4 | SK 5282 SCP - 210TC | | X | X | X | X |
| 113 | 5589 | 2.9 | III | 15.38 | 6264 | 9000 | SK 5282 SCP - 132M/4 | SK 5282 SCP - 132MH/4 | SK 5282 SCP - 210TC | | X | X | X | X |
| 99 | 6392 | 2.7 | III | 17.59 | 6482 | 9000 | SK 5282 SCP - 132M/4 | SK 5282 SCP - 132MH/4 | SK 5282 SCP - 210TC | | X | X | X | X |
| 92 | 6861 | 2.9 | III | 18.88 | 6615 | 9000 | SK 5282 SCP - 132M/4 | SK 5282 SCP - 132MH/4 | SK 5282 SCP - 210TC | | X | X | X | X |
| 85 | 7399 | 2.6 | III | 20.36 | 6725 | 9000 | SK 5282 SCP - 132M/4 | SK 5282 SCP - 132MH/4 | SK 5282 SCP - 210TC | | X | X | X | X |
| 69 | 9085 | 2.6 | III | 25 | 7090 | 9000 | SK 5282 SCP - 132M/4 | SK 5282 SCP - 132MH/4 | SK 5282 SCP - 210TC | | X | X | X | X |
| 57 | 11084 | 2.3 | III | 30.5 | 7439 | 9000 | SK 5282 SCP - 132M/4 | SK 5282 SCP - 132MH/4 | SK 5282 SCP - 210TC | | X | X | X | X |
| 52 | 12148 | 1.7 | II | 33.43 | 7607 | 9000 | SK 5282 SCP - 132M/4 | SK 5282 SCP - 132MH/4 | SK 5282 SCP - 210TC | | X | X | X | X |
| 49 | 12886 | 1.9 | II | 35.46 | 7652 | 9000 | SK 5282 SCP - 132M/4 | SK 5282 SCP - 132MH/4 | SK 5282 SCP - 210TC | | X | X | X | X |
| 43 | 14827 | 1.5 | II | 40.8 | 7949 | 9000 | SK 5282 SCP - 132M/4 | SK 5282 SCP - 132MH/4 | SK 5282 SCP - 210TC | | X | X | X | X |
| 41 | 15241 | 1.9 | II | 41.94 | 7949 | 9000 | SK 5282 SCP - 132M/4 | SK 5282 SCP - 132MH/4 | SK 5282 SCP - 210TC | | X | X | X | X |
| 34 | 18712 | 1.5 | II | 51.49 | 8321 | 9000 | SK 5282 SCP - 132M/4 | SK 5282 SCP - 132MH/4 | SK 5282 SCP - 210TC | | X | X | X | X |
| 31 | 20187 | 0.9 | * | 55.55 | 8474 | 9000 | SK 5282 SCP - 132M/4 | SK 5282 SCP - 132MH/4 | SK 5282 SCP - 210TC | | X | X | X | X |
| | | | | | | | | | | | | | | |
| 257 | 2449 | 3.4 | III | 6.74 | 7335 | 10604 | SK 6282 SCP - 132M/4 | SK 6282 SCP - 132MH/4 | SK 6282 SCP - 210TC | | | | X | X |
| 222 | 2842 | 3.3 | III | 7.82 | 7659 | 11057 | SK 6282 SCP - 132M/4 | SK 6282 SCP - 132MH/4 | SK 6282 SCP - 210TC | | | | X | X |
| 185 | 3412 | 3.1 | III | 9.39 | 8060 | 11619 | SK 6282 SCP - 132M/4 | SK 6282 SCP - 132MH/4 | SK 6282 SCP - 210TC | | | | X | X |
| 163 | 3867 | 3.4 | III | 10.64 | 8361 | 12094 | SK 6282 SCP - 132M/4 | SK 6282 SCP - 132MH/4 | SK 6282 SCP - 210TC | | | | X | X |
| 140 | 4488 | 3.3 | III | 12.35 | 8714 | 12589 | SK 6282 SCP - 132M/4 | SK 6282 SCP - 132MH/4 | SK 6282 SCP - 210TC | | | | X | X |
| 117 | 5389 | 3.1 | III | 14.83 | 9185 | 13253 | SK 6282 SCP - 132M/4 | SK 6282 SCP - 132MH/4 | SK 6282 SCP - 210TC | | | | X | X |
| 93 | 6796 | 3.1 | III | 18.7 | 9767 | 13500 | SK 6282 SCP - 132M/4 | SK 6282 SCP - 132MH/4 | SK 6282 SCP - 210TC | | | | X | X |
| 76 | 8340 | 3.1 | III | 22.95 | 10350 | 13500 | SK 6282 SCP - 132M/4 | SK 6282 SCP - 132MH/4 | SK 6282 SCP - 210TC | | | | X | X |
| 67 | 9467 | 3 | III | 26.05 | 10674 | 13500 | SK 6282 SCP - 132M/4 | SK 6282 SCP - 132MH/4 | SK 6282 SCP - 210TC | | | | X | X |
| 58 | 10866 | 2.8 | III | 29.9 | 11093 | 13500 | SK 6282 SCP - 132M/4 | SK 6282 SCP - 132MH/4 | SK 6282 SCP - 210TC | | | | X | X |
| 44 | 14347 | 2 | III | 39.48 | 11844 | 13500 | SK 6282 SCP - 132M/4 | SK 6282 SCP - 132MH/4 | SK 6282 SCP - 210TC | | | | X | X |
| 35 | 18079 | 2 | III | 49.75 | 12517 | 13500 | SK 6282 SCP - 132M/4 | SK 6282 SCP - 132MH/4 | SK 6282 SCP - 210TC | | | | X | X |
| 28 | 22197 | 1.8 | II | 61.08 | 12881 | 13500 | SK 6282 SCP - 132M/4 | SK 6282 SCP - 132MH/4 | SK 6282 SCP - 210TC | | | | X | X |

Output speed and torque ratings are based on the "Standard Efficiency Motor" Power and speed. Performance will vary slightly for other motors.

# 15 hp Gearmotors & Speed Reducers



| Output Speed | Output Torque | SF | AGMA Class | Gear Ratio | Thrust | | Integral Gearmotor | | Reducer | CEMA DriveShaft | | | | |
|---|---|---|---|---|---|---|---|---|---|---|---|---|---|---|
| $n_2$ | $T_2$ | $f_a$ | | i | Std Brg | H.D. Brg " VL" | Standard Efficiency Motor | Energy Efficient Motor | C-Face Input | 1-1/2" | 2" | 2-7/16" | 3" | 3-7/16" |
| [rpm] | [lb-in] | | | | [lb] | [lb] | | | | | | | | |
| 377 | 2510 | 3.3 | III | 4.7 | 3130 | 5225 | SK 4282 SCP - 160M/4 | SK 4282 SCP - 160MH/4 | SK 4282 SCP - 250TC | | X | X | X | |
| 354 | 2672 | 3.2 | III | 5 | 3173 | 5301 | SK 4282 SCP - 160M/4 | SK 4282 SCP - 160MH/4 | SK 4282 SCP - 250TC | | X | X | X | |
| 326 | 2901 | 3.2 | III | 5.43 | 3238 | 5405 | SK 4282 SCP - 160M/4 | SK 4282 SCP - 160MH/4 | SK 4282 SCP - 250TC | | X | X | X | |
| 292 | 3238 | 3 | III | 6.06 | 3326 | 5544 | SK 4282 SCP - 160M/4 | SK 4282 SCP - 160MH/4 | SK 4282 SCP - 250TC | | X | X | X | |
| 248 | 3810 | 2.8 | III | 7.13 | 3458 | 5744 | SK 4282 SCP - 160M/4 | SK 4282 SCP - 160MH/4 | SK 4282 SCP - 250TC | | X | X | X | |
| 212 | 4451 | 2.5 | III | 8.33 | 3580 | 5940 | SK 4282 SCP - 160M/4 | SK 4282 SCP - 160MH/4 | SK 4282 SCP - 250TC | | X | X | X | |
| 192 | 4932 | 2.9 | III | 9.23 | 3697 | 6125 | SK 4282 SCP - 160M/4 | SK 4282 SCP - 160MH/4 | SK 4282 SCP - 250TC | | X | X | X | |
| 163 | 5797 | 2.6 | III | 10.85 | 3836 | 6314 | SK 4282 SCP - 160M/4 | SK 4282 SCP - 160MH/4 | SK 4282 SCP - 250TC | | X | X | X | |
| 140 | 6775 | 2.3 | III | 12.68 | 3951 | 6509 | SK 4282 SCP - 160M/4 | SK 4282 SCP - 160MH/4 | SK 4282 SCP - 250TC | | X | X | X | |
| 116 | 8122 | 2 | III | 15.2 | 4118 | 6743 | SK 4282 SCP - 160M/4 | SK 4282 SCP - 160MH/4 | SK 4282 SCP - 250TC | | X | X | X | |
| 97 | 9714 | 1.6 | II | 18.18 | 4255 | 6750 | SK 4282 SCP - 160M/4 | SK 4282 SCP - 160MH/4 | SK 4282 SCP - 250TC | | X | X | X | |
| 83 | 11461 | 1.3 | I | 21.45 | 4406 | 6750 | SK 4282 SCP - 160M/4 | SK 4282 SCP - 160MH/4 | SK 4282 SCP - 250TC | | X | X | X | |
| 79 | 11963 | 1.3 | I | 22.39 | 4399 | 6750 | SK 4282 SCP - 160M/4 | SK 4282 SCP - 160MH/4 | SK 4282 SCP - 250TC | | X | X | X | |
| 67 | 14026 | 1 | I | 26.25 | 4545 | 6750 | SK 4282 SCP - 160M/4 | SK 4282 SCP - 160MH/4 | SK 4282 SCP - 250TC | | X | X | X | |
| 67 | 14122 | 1.1 | I | 26.43 | 4525 | 6750 | SK 4282 SCP - 160M/4 | SK 4282 SCP - 160MH/4 | SK 4282 SCP - 250TC | | X | X | X | |
| 410 | 2308 | 4 | III | 4.32 | 4334 | 7286 | SK 5282 SCP - 160M/4 | SK 5282 SCP - 160MH/4 | SK 5282 SCP - 250TC | | X | X | X | X |
| 353 | 2677 | 3.9 | III | 5.01 | 4516 | 7585 | SK 5282 SCP - 160M/4 | SK 5282 SCP - 160MH/4 | SK 5282 SCP - 250TC | | X | X | X | X |
| 335 | 2827 | 3.8 | III | 5.29 | 4581 | 7693 | SK 5282 SCP - 160M/4 | SK 5282 SCP - 160MH/4 | SK 5282 SCP - 250TC | | X | X | X | X |
| 310 | 3051 | 3.7 | III | 5.71 | 4676 | 7844 | SK 5282 SCP - 160M/4 | SK 5282 SCP - 160MH/4 | SK 5282 SCP - 250TC | | X | X | X | X |
| 280 | 3382 | 3.5 | III | 6.33 | 4804 | 8060 | SK 5282 SCP - 160M/4 | SK 5282 SCP - 160MH/4 | SK 5282 SCP - 250TC | | X | X | X | X |
| 247 | 3831 | 3.3 | III | 7.17 | 4968 | 8336 | SK 5282 SCP - 160M/4 | SK 5282 SCP - 160MH/4 | SK 5282 SCP - 250TC | | X | X | X | X |
| 203 | 4649 | 3.1 | III | 8.7 | 5216 | 8762 | SK 5282 SCP - 160M/4 | SK 5282 SCP - 160MH/4 | SK 5282 SCP - 250TC | | X | X | X | X |
| 187 | 5055 | 3.5 | III | 9.46 | 5357 | 8973 | SK 5282 SCP - 160M/4 | SK 5282 SCP - 160MH/4 | SK 5282 SCP - 250TC | | X | X | X | X |
| 165 | 5723 | 3.3 | III | 10.71 | 5528 | 9000 | SK 5282 SCP - 160M/4 | SK 5282 SCP - 160MH/4 | SK 5282 SCP - 250TC | | X | X | X | X |
| 136 | 6946 | 3.1 | III | 13 | 5798 | 9000 | SK 5282 SCP - 160M/4 | SK 5282 SCP - 160MH/4 | SK 5282 SCP - 250TC | | X | X | X | X |
| 115 | 8218 | 2.8 | III | 15.38 | 6050 | 9000 | SK 5282 SCP - 160M/4 | SK 5282 SCP - 160MH/4 | SK 5282 SCP - 250TC | | X | X | X | X |
| 101 | 9399 | 2.6 | III | 17.59 | 6242 | 9000 | SK 5282 SCP - 160M/4 | SK 5282 SCP - 160MH/4 | SK 5282 SCP - 250TC | | X | X | X | X |
| 94 | 10088 | 2.3 | III | 18.88 | 6363 | 9000 | SK 5282 SCP - 160M/4 | SK 5282 SCP - 160MH/4 | SK 5282 SCP - 250TC | | X | X | X | X |
| 87 | 10879 | 2.5 | III | 20.36 | 6442 | 9000 | SK 5282 SCP - 160M/4 | SK 5282 SCP - 160MH/4 | SK 5282 SCP - 250TC | | X | X | X | X |
| 71 | 13358 | 1.9 | II | 25 | 6764 | 9000 | SK 5282 SCP - 160M/4 | SK 5282 SCP - 160MH/4 | SK 5282 SCP - 250TC | | X | X | X | X |
| 58 | 16297 | 1.6 | II | 30.5 | 7040 | 9000 | SK 5282 SCP - 160M/4 | SK 5282 SCP - 160MH/4 | SK 5282 SCP - 250TC | | X | X | X | X |
| 53 | 17862 | 1.1 | I | 33.43 | 7187 | 9000 | SK 5282 SCP - 160M/4 | SK 5282 SCP - 160MH/4 | SK 5282 SCP - 250TC | | X | X | X | X |
| 43 | 21800 | 1 | I | 40.8 | 7434 | 9000 | SK 5282 SCP - 160M/4 | SK 5282 SCP - 160MH/4 | SK 5282 SCP - 250TC | | X | X | X | X |

Output speed and torque ratings are based on the "Standard Efficiency Motor" Power and speed. Performance will vary slightly for other motors.



# 15 hp Gearmotors & Speed Reducers

| Output Speed | Output Torque | SF | AGMA Class | Gear Ratio | Thrust | | Integral Gearmotor | | Reducer | CEMA DriveShaft | | | | |
|---|---|---|---|---|---|---|---|---|---|---|---|---|---|---|
| $n_2$ | $T_2$ | $f_a$ | | i | Std Brg | H.D. Brg " VL" | Standard Efficiency Motor | Energy Efficient Motor | C-Face Input | 1-1/2" | 2" | 2-7/16" | 3" | 3-7/16" |
| [rpm] | [lb-in] | | | | [lb] | [lb] | | | | | | | | |
| 363 | 2607 | 4.1 | III | 4.88 | 6588 | 9509 | SK 6282 SCP - 160M/4 | SK 6282 SCP - 160MH/4 | SK 6282 SCP - 250TC | | | | X | X |
| 322 | 2939 | 4 | III | 5.5 | 6813 | 9835 | SK 6282 SCP - 160M/4 | SK 6282 SCP - 160MH/4 | SK 6282 SCP - 250TC | | | | X | X |
| 306 | 3088 | 3.9 | III | 5.78 | 6923 | 9979 | SK 6282 SCP - 160M/4 | SK 6282 SCP - 160MH/4 | SK 6282 SCP - 250TC | | | | X | X |
| 263 | 3601 | 3.7 | III | 6.74 | 7205 | 10402 | SK 6282 SCP - 160M/4 | SK 6282 SCP - 160MH/4 | SK 6282 SCP - 250TC | | | | X | X |
| 226 | 4178 | 3.6 | III | 7.82 | 7508 | 10827 | SK 6282 SCP - 160M/4 | SK 6282 SCP - 160MH/4 | SK 6282 SCP - 250TC | | | | X | X |
| 188 | 5017 | 3.3 | III | 9.39 | 7889 | 11381 | SK 6282 SCP - 160M/4 | SK 6282 SCP - 160MH/4 | SK 6282 SCP - 250TC | | | | X | X |
| 166 | 5685 | 3.7 | III | 10.64 | 8192 | 11826 | SK 6282 SCP - 160M/4 | SK 6282 SCP - 160MH/4 | SK 6282 SCP - 250TC | | | | X | X |
| 143 | 6599 | 3.6 | III | 12.35 | 8523 | 12290 | SK 6282 SCP - 160M/4 | SK 6282 SCP - 160MH/4 | SK 6282 SCP - 250TC | | | | X | X |
| 119 | 7924 | 3.3 | III | 14.83 | 8933 | 12895 | SK 6282 SCP - 160M/4 | SK 6282 SCP - 160MH/4 | SK 6282 SCP - 250TC | | | | X | X |
| 95 | 9992 | 3.3 | III | 18.7 | 9488 | 13500 | SK 6282 SCP - 160M/4 | SK 6282 SCP - 160MH/4 | SK 6282 SCP - 250TC | | | | X | X |
| 77 | 12263 | 3.3 | III | 22.95 | 10024 | 13500 | SK 6282 SCP - 160M/4 | SK 6282 SCP - 160MH/4 | SK 6282 SCP - 250TC | | | | X | X |
| 68 | 13919 | 2.9 | III | 26.05 | 10325 | 13500 | SK 6282 SCP - 160M/4 | SK 6282 SCP - 160MH/4 | SK 6282 SCP - 250TC | | | | X | X |
| 59 | 15976 | 2.5 | III | 29.9 | 10674 | 13500 | SK 6282 SCP - 160M/4 | SK 6282 SCP - 160MH/4 | SK 6282 SCP - 250TC | | | | X | X |
| 45 | 21095 | 1.3 | I | 39.48 | 11270 | 13500 | SK 6282 SCP - 160M/4 | SK 6282 SCP - 160MH/4 | SK 6282 SCP - 250TC | | | | X | X |
| 36 | 26583 | 1.3 | I | 49.75 | 11867 | 13500 | SK 6282 SCP - 160M/4 | SK 6282 SCP - 160MH/4 | SK 6282 SCP - 250TC | | | | X | X |
| 29 | 32636 | 1.2 | I | 61.08 | 12427 | 13500 | SK 6282 SCP - 160M/4 | SK 6282 SCP - 160MH/4 | SK 6282 SCP - 250TC | | | | X | X |

Output speed and torque ratings are based on the "Standard Efficiency Motor" Power and speed. Performance will vary slightly for other motors.

# 20 hp Gearmotors & Speed Reducers



| Output Speed | Output Torque | SF | AGMA Class | Gear Ratio | Thrust | | Integral Gearmotor | | Reducer | CEMA DriveShaft | | | | |
|---|---|---|---|---|---|---|---|---|---|---|---|---|---|---|
| $n_2$ | $T_2$ | $f_a$ | | i | Std Brg | H.D. Brg " VL" | Standard Efficiency Motor | Energy Efficient Motor | C-Face Input | 1-1/2" | 2" | 2-7/16" | 3" | 3-7/16" |
| [rpm] | [lb-in] | | | | [lb] | [lb] | | | | | | | | |
| 376 | 3357 | 2.5 | III | 4.7 | 3053 | 5076 | SK 4282 SCP - 160L/4 | SK 4282 SCP - 160LH/4 | SK 4282 SCP - 250TC | | X | X | X | |
| 353 | 3570 | 2.4 | III | 5 | 3096 | 5141 | SK 4282 SCP - 160L/4 | SK 4282 SCP - 160LH/4 | SK 4282 SCP - 250TC | | X | X | X | |
| 325 | 3877 | 2.4 | III | 5.43 | 3155 | 5234 | SK 4282 SCP - 160L/4 | SK 4282 SCP - 160LH/4 | SK 4282 SCP - 250TC | | X | X | X | |
| 291 | 4327 | 2.2 | III | 6.06 | 3233 | 5344 | SK 4282 SCP - 160L/4 | SK 4282 SCP - 160LH/4 | SK 4282 SCP - 250TC | | X | X | X | |
| 248 | 5091 | 2.1 | III | 7.13 | 3341 | 5508 | SK 4282 SCP - 160L/4 | SK 4282 SCP - 160LH/4 | SK 4282 SCP - 250TC | | X | X | X | |
| 212 | 5947 | 1.9 | II | 8.33 | 3449 | 5661 | SK 4282 SCP - 160L/4 | SK 4282 SCP - 160LH/4 | SK 4282 SCP - 250TC | | X | X | X | |
| 191 | 6590 | 2.2 | III | 9.23 | 3564 | 5837 | SK 4282 SCP - 160L/4 | SK 4282 SCP - 160LH/4 | SK 4282 SCP - 250TC | | X | X | X | |
| 163 | 7747 | 1.9 | II | 10.85 | 3663 | 5987 | SK 4282 SCP - 160L/4 | SK 4282 SCP - 160LH/4 | SK 4282 SCP - 250TC | | X | X | X | |
| 139 | 9053 | 1.7 | II | 12.68 | 3760 | 6125 | SK 4282 SCP - 160L/4 | SK 4282 SCP - 160LH/4 | SK 4282 SCP - 250TC | | X | X | X | |
| 116 | 10852 | 1.5 | II | 15.2 | 3888 | 6293 | SK 4282 SCP - 160L/4 | SK 4282 SCP - 160LH/4 | SK 4282 SCP - 250TC | | X | X | X | |
| 97 | 12980 | 1.2 | I | 18.18 | 3989 | 6406 | SK 4282 SCP - 160L/4 | SK 4282 SCP - 160LH/4 | SK 4282 SCP - 250TC | | X | X | X | |
| 82 | 15315 | 1 | I | 21.45 | 4086 | 6518 | SK 4282 SCP - 160L/4 | SK 4282 SCP - 160LH/4 | SK 4282 SCP - 250TC | | X | X | X | |
| 79 | 15986 | 0.9 | * | 22.39 | 4070 | 6458 | SK 4282 SCP - 160L/4 | SK 4282 SCP - 160LH/4 | SK 4282 SCP - 250TC | | X | X | X | |
| 409 | 3084 | 3 | III | 4.32 | 4282 | 7193 | SK 5282 SCP - 160L/4 | SK 5282 SCP - 160LH/4 | SK 5282 SCP - 250TC | | X | X | X | X |
| 352 | 3577 | 2.9 | III | 5.01 | 4462 | 7475 | SK 5282 SCP - 160L/4 | SK 5282 SCP - 160LH/4 | SK 5282 SCP - 250TC | | X | X | X | X |
| 334 | 3777 | 2.8 | III | 5.29 | 4511 | 7585 | SK 5282 SCP - 160L/4 | SK 5282 SCP - 160LH/4 | SK 5282 SCP - 250TC | | X | X | X | X |
| 309 | 4077 | 2.8 | III | 5.71 | 4606 | 7745 | SK 5282 SCP - 160L/4 | SK 5282 SCP - 160LH/4 | SK 5282 SCP - 250TC | | X | X | X | X |
| 279 | 4519 | 2.6 | III | 6.33 | 4723 | 7931 | SK 5282 SCP - 160L/4 | SK 5282 SCP - 160LH/4 | SK 5282 SCP - 250TC | | X | X | X | X |
| 246 | 5119 | 2.5 | III | 7.17 | 4883 | 8177 | SK 5282 SCP - 160L/4 | SK 5282 SCP - 160LH/4 | SK 5282 SCP - 250TC | | X | X | X | X |
| 203 | 6212 | 2.3 | III | 8.7 | 5105 | 8566 | SK 5282 SCP - 160L/4 | SK 5282 SCP - 160LH/4 | SK 5282 SCP - 250TC | | X | X | X | X |
| 187 | 6754 | 2.6 | III | 9.46 | 5243 | 8789 | SK 5282 SCP - 160L/4 | SK 5282 SCP - 160LH/4 | SK 5282 SCP - 250TC | | X | X | X | X |
| 165 | 7647 | 2.5 | III | 10.71 | 5398 | 9000 | SK 5282 SCP - 160L/4 | SK 5282 SCP - 160LH/4 | SK 5282 SCP - 250TC | | X | X | X | X |
| 136 | 9282 | 2.3 | III | 13 | 5643 | 9000 | SK 5282 SCP - 160L/4 | SK 5282 SCP - 160LH/4 | SK 5282 SCP - 250TC | | X | X | X | X |
| 115 | 10981 | 2.1 | III | 15.38 | 5868 | 9000 | SK 5282 SCP - 160L/4 | SK 5282 SCP - 160LH/4 | SK 5282 SCP - 250TC | | X | X | X | X |
| 100 | 12559 | 1.9 | II | 17.59 | 6032 | 9000 | SK 5282 SCP - 160L/4 | SK 5282 SCP - 160LH/4 | SK 5282 SCP - 250TC | | X | X | X | X |
| 93 | 13480 | 1.7 | II | 18.88 | 6149 | 9000 | SK 5282 SCP - 160L/4 | SK 5282 SCP - 160LH/4 | SK 5282 SCP - 250TC | | X | X | X | X |
| 87 | 14536 | 1.9 | II | 20.36 | 6206 | 9000 | SK 5282 SCP - 160L/4 | SK 5282 SCP - 160LH/4 | SK 5282 SCP - 250TC | | X | X | X | X |
| 71 | 17849 | 1.4 | II | 25 | 6476 | 9000 | SK 5282 SCP - 160L/4 | SK 5282 SCP - 160LH/4 | SK 5282 SCP - 250TC | | X | X | X | X |
| 58 | 21776 | 1.2 | I | 30.5 | 6687 | 9000 | SK 5282 SCP - 160L/4 | SK 5282 SCP - 160LH/4 | SK 5282 SCP - 250TC | | X | X | X | X |
| 53 | 23868 | 0.9 | * | 33.43 | 6784 | 9000 | SK 5282 SCP - 160L/4 | SK 5282 SCP - 160LH/4 | SK 5282 SCP - 250TC | | X | X | X | X |

Output speed and torque ratings are based on the "Standard Efficiency Motor" Power and speed. Performance will vary slightly for other motors.



# 20 hp Gearmotors & Speed Reducers

| Output Speed | Output Torque | SF | AGMA Class | Gear Ratio | Thrust | | Integral Gearmotor | | Reducer | CEMA DriveShaft | | | | |
|---|---|---|---|---|---|---|---|---|---|---|---|---|---|---|
| $n_2$ | $T_2$ | $f_a$ | | i | Std Brg | H.D. Brg " VL" | Standard Efficiency Motor | Energy Efficient Motor | C-Face Input | 1-1/2" | 2" | 2-7/16" | 3" | 3-7/16" |
| [rpm] | [lb-in] | | | | [lb] | [lb] | | | | | | | | |
| 362 | 3484 | 3.1 | III | 4.88 | 6532 | 9432 | SK 6282 SCP - 160L/4 | SK 6282 SCP - 160LH/4 | SK 6282 SCP - 250TC | | | | X | X |
| 321 | 3927 | 3 | III | 5.5 | 6743 | 9740 | SK 6282 SCP - 160L/4 | SK 6282 SCP - 160LH/4 | SK 6282 SCP - 250TC | | | | X | X |
| 305 | 4127 | 2.9 | III | 5.78 | 6831 | 9866 | SK 6282 SCP - 160L/4 | SK 6282 SCP - 160LH/4 | SK 6282 SCP - 250TC | | | | X | X |
| 262 | 4812 | 2.8 | III | 6.74 | 7130 | 10287 | SK 6282 SCP - 160L/4 | SK 6282 SCP - 160LH/4 | SK 6282 SCP - 250TC | | | | X | X |
| 226 | 5583 | 2.7 | III | 7.82 | 7418 | 10708 | SK 6282 SCP - 160L/4 | SK 6282 SCP - 160LH/4 | SK 6282 SCP - 250TC | | | | X | X |
| 188 | 6704 | 2.5 | III | 9.39 | 7765 | 11198 | SK 6282 SCP - 160L/4 | SK 6282 SCP - 160LH/4 | SK 6282 SCP - 250TC | | | | X | X |
| 166 | 7597 | 2.8 | III | 10.64 | 8064 | 11637 | SK 6282 SCP - 160L/4 | SK 6282 SCP - 160LH/4 | SK 6282 SCP - 250TC | | | | X | X |
| 143 | 8818 | 2.7 | III | 12.35 | 8372 | 12094 | SK 6282 SCP - 160L/4 | SK 6282 SCP - 160LH/4 | SK 6282 SCP - 250TC | | | | X | X |
| 119 | 10588 | 2.5 | III | 14.83 | 8780 | 12629 | SK 6282 SCP - 160L/4 | SK 6282 SCP - 160LH/4 | SK 6282 SCP - 250TC | | | | X | X |
| 94 | 13351 | 2.5 | III | 18.7 | 9297 | 13381 | SK 6282 SCP - 160L/4 | SK 6282 SCP - 160LH/4 | SK 6282 SCP - 250TC | | | | X | X |
| 77 | 16386 | 2.4 | III | 22.95 | 9765 | 13500 | SK 6282 SCP - 160L/4 | SK 6282 SCP - 160LH/4 | SK 6282 SCP - 250TC | | | | X | X |
| 68 | 18599 | 2.2 | III | 26.05 | 10037 | 13500 | SK 6282 SCP - 160L/4 | SK 6282 SCP - 160LH/4 | SK 6282 SCP - 250TC | | | | X | X |
| 59 | 21348 | 1.9 | II | 29.9 | 10330 | 13500 | SK 6282 SCP - 160L/4 | SK 6282 SCP - 160LH/4 | SK 6282 SCP - 250TC | | | | X | X |
| 45 | 28188 | 1 | I | 39.48 | 10787 | 13500 | SK 6282 SCP - 160L/4 | SK 6282 SCP - 160LH/4 | SK 6282 SCP - 250TC | | | | X | X |
| 35 | 35520 | 1 | I | 49.75 | 11268 | 13500 | SK 6282 SCP - 160L/4 | SK 6282 SCP - 160LH/4 | SK 6282 SCP - 250TC | | | | X | X |
| 29 | 43609 | 0.9 | * | 61.08 | 11678 | 13500 | SK 6282 SCP - 160L/4 | SK 6282 SCP - 160LH/4 | SK 6282 SCP - 250TC | | | | X | X |

Output speed and torque ratings are based on the "Standard Efficiency Motor" Power and speed. Performance will vary slightly for other motors.

# 25 hp Gearmotors & Speed Reducers



| Output Speed | Output Torque | SF | AGMA Class | Gear Ratio | Thrust | | Integral Gearmotor | | Reducer | CEMA DriveShaft | | | | |
|---|---|---|---|---|---|---|---|---|---|---|---|---|---|---|
| $n_2$ | $T_2$ | $f_a$ | | i | Std Brg | H.D. Brg " VL" | Standard Efficiency Motor | Energy Efficient Motor | C-Face Input | 1-1/2" | 2" | 2-7/16" | 3" | 3-7/16" |
| [rpm] | [lb-in] | | | | [lb] | [lb] | | | | | | | | |
| 405 | 3890 | 3.5 | III | 4.32 | 4239 | 7101 | SK 5282 SCP - 180MX/4 | SK 5282 SCP - 180MH/4 | SK 5282 SCP - 280TC | | X | X | X | X |
| 349 | 4510 | 3.3 | III | 5.01 | 4394 | 7369 | SK 5282 SCP - 180MX/4 | SK 5282 SCP - 180MH/4 | SK 5282 SCP - 280TC | | X | X | X | X |
| 331 | 4762 | 3.3 | III | 5.29 | 4457 | 7475 | SK 5282 SCP - 180MX/4 | SK 5282 SCP - 180MH/4 | SK 5282 SCP - 280TC | | X | X | X | X |
| 306 | 5140 | 3.1 | III | 5.71 | 4543 | 7607 | SK 5282 SCP - 180MX/4 | SK 5282 SCP - 180MH/4 | SK 5282 SCP - 280TC | | X | X | X | X |
| 276 | 5698 | 3.3 | III | 6.33 | 4649 | 7819 | SK 5282 SCP - 180MX/4 | SK 5282 SCP - 180MH/4 | SK 5282 SCP - 280TC | | X | X | X | X |
| 244 | 6455 | 3 | III | 7.17 | 4788 | 8035 | SK 5282 SCP - 180MX/4 | SK 5282 SCP - 180MH/4 | SK 5282 SCP - 280TC | | X | X | X | X |
| 201 | 7832 | 2.7 | III | 8.7 | 5011 | 8404 | SK 5282 SCP - 180MX/4 | SK 5282 SCP - 180MH/4 | SK 5282 SCP - 280TC | | X | X | X | X |
| 185 | 8516 | 2.4 | III | 9.46 | 5135 | 8593 | SK 5282 SCP - 180MX/4 | SK 5282 SCP - 180MH/4 | SK 5282 SCP - 280TC | | X | X | X | X |
| 163 | 9641 | 2.3 | III | 10.71 | 5272 | 8831 | SK 5282 SCP - 180MX/4 | SK 5282 SCP - 180MH/4 | SK 5282 SCP - 280TC | | X | X | X | X |
| 135 | 11703 | 2 | III | 13 | 5492 | 9000 | SK 5282 SCP - 180MX/4 | SK 5282 SCP - 180MH/4 | SK 5282 SCP - 280TC | | X | X | X | X |
| 114 | 13846 | 1.7 | II | 15.38 | 5688 | 9000 | SK 5282 SCP - 180MX/4 | SK 5282 SCP - 180MH/4 | SK 5282 SCP - 280TC | | X | X | X | X |
| 99 | 15835 | 1.5 | II | 17.59 | 5821 | 9000 | SK 5282 SCP - 180MX/4 | SK 5282 SCP - 180MH/4 | SK 5282 SCP - 280TC | | X | X | X | X |
| 93 | 16996 | 1.4 | II | 18.88 | 5931 | 9000 | SK 5282 SCP - 180MX/4 | SK 5282 SCP - 180MH/4 | SK 5282 SCP - 280TC | | X | X | X | X |
| 86 | 18329 | 1.5 | II | 20.36 | 5963 | 9000 | SK 5282 SCP - 180MX/4 | SK 5282 SCP - 180MH/4 | SK 5282 SCP - 280TC | | X | X | X | X |
| 70 | 22506 | 1.1 | I | 25 | 6185 | 9000 | SK 5282 SCP - 180MX/4 | SK 5282 SCP - 180MH/4 | SK 5282 SCP - 280TC | | X | X | X | X |
| 399 | 3952 | 4.6 | III | 4.39 | 6296 | 9106 | SK 6282 SCP - 180MX/4 | SK 6282 SCP - 180MH/4 | SK 6282 SCP - 280TC | | | | X | X |
| 359 | 4393 | 4.3 | III | 4.88 | 6478 | 9358 | SK 6282 SCP - 180MX/4 | SK 6282 SCP - 180MH/4 | SK 6282 SCP - 280TC | | | | X | X |
| 318 | 4951 | 4.1 | III | 5.5 | 6687 | 9646 | SK 6282 SCP - 180MX/4 | SK 6282 SCP - 180MH/4 | SK 6282 SCP - 280TC | | | | X | X |
| 303 | 5203 | 4 | III | 5.78 | 6773 | 9772 | SK 6282 SCP - 180MX/4 | SK 6282 SCP - 180MH/4 | SK 6282 SCP - 280TC | | | | X | X |
| 292 | 5392 | 3.9 | III | 5.99 | 6849 | 9866 | SK 6282 SCP - 180MX/4 | SK 6282 SCP - 180MH/4 | SK 6282 SCP - 280TC | | | | X | X |
| 260 | 6068 | 4 | III | 6.74 | 7056 | 10172 | SK 6282 SCP - 180MX/4 | SK 6282 SCP - 180MH/4 | SK 6282 SCP - 280TC | | | | X | X |
| 224 | 7040 | 3.4 | III | 7.82 | 7317 | 10553 | SK 6282 SCP - 180MX/4 | SK 6282 SCP - 180MH/4 | SK 6282 SCP - 280TC | | | | X | X |
| 186 | 8453 | 2.9 | III | 9.39 | 7655 | 11039 | SK 6282 SCP - 180MX/4 | SK 6282 SCP - 180MH/4 | SK 6282 SCP - 280TC | | | | X | X |
| 164 | 9578 | 4 | III | 10.64 | 7958 | 11491 | SK 6282 SCP - 180MX/4 | SK 6282 SCP - 180MH/4 | SK 6282 SCP - 280TC | | | | X | X |
| 142 | 11118 | 3.5 | III | 12.35 | 8255 | 11882 | SK 6282 SCP - 180MX/4 | SK 6282 SCP - 180MH/4 | SK 6282 SCP - 280TC | | | | X | X |
| 118 | 13350 | 3 | III | 14.83 | 8593 | 12389 | SK 6282 SCP - 180MX/4 | SK 6282 SCP - 180MH/4 | SK 6282 SCP - 280TC | | | | X | X |
| 94 | 16834 | 2.3 | III | 18.7 | 9079 | 13061 | SK 6282 SCP - 180MX/4 | SK 6282 SCP - 180MH/4 | SK 6282 SCP - 280TC | | | | X | X |
| 76 | 20660 | 1.9 | II | 22.95 | 9536 | 13500 | SK 6282 SCP - 180MX/4 | SK 6282 SCP - 180MH/4 | SK 6282 SCP - 280TC | | | | X | X |
| 67 | 23451 | 1.7 | II | 26.05 | 9758 | 13500 | SK 6282 SCP - 180MX/4 | SK 6282 SCP - 180MH/4 | SK 6282 SCP - 280TC | | | | X | X |
| 59 | 26917 | 1.5 | II | 29.9 | 9999 | 13500 | SK 6282 SCP - 180MX/4 | SK 6282 SCP - 180MH/4 | SK 6282 SCP - 280TC | | | | X | X |

Output speed and torque ratings are based on the "Standard Efficiency Motor" Power and speed. Performance will vary slightly for other motors.



# 30 hp Gearmotors & Speed Reducers

| Output Speed | Output Torque | SF | AGMA Class | Gear Ratio | Thrust | | Integral Gearmotor | | Reducer | CEMA DriveShaft | | | | |
|---|---|---|---|---|---|---|---|---|---|---|---|---|---|---|
| $n_2$ | $T_2$ | $f_a$ | | i | Std Brg | H.D. Brg " VL" | Standard Efficiency Motor | Energy Efficient Motor | C-Face Input | 1-1/2" | 2" | 2-7/16" | 3" | 3-7/16" |
| [rpm] | [lb-in] | | | | [lb] | [lb] | | | | | | | | |
| 406 | 4654 | 2.9 | III | 4.32 | 4174 | 7000 | SK 5282 SCP - 180LX/4 | SK 5282 SCP - 180LH/4 | SK 5282 SCP - 280TC | | X | X | X | X |
| 350 | 5397 | 2.8 | III | 5.01 | 4327 | 7250 | SK 5282 SCP - 180LX/4 | SK 5282 SCP - 180LH/4 | SK 5282 SCP - 280TC | | X | X | X | X |
| 332 | 5699 | 2.7 | III | 5.29 | 4381 | 7355 | SK 5282 SCP - 180LX/4 | SK 5282 SCP - 180LH/4 | SK 5282 SCP - 280TC | | X | X | X | X |
| 307 | 6151 | 2.6 | III | 5.71 | 4464 | 7475 | SK 5282 SCP - 180LX/4 | SK 5282 SCP - 180LH/4 | SK 5282 SCP - 280TC | | X | X | X | X |
| 277 | 6819 | 2.7 | III | 6.33 | 4568 | 7670 | SK 5282 SCP - 180LX/4 | SK 5282 SCP - 180LH/4 | SK 5282 SCP - 280TC | | X | X | X | X |
| 245 | 7724 | 2.5 | III | 7.17 | 4694 | 7855 | SK 5282 SCP - 180LX/4 | SK 5282 SCP - 180LH/4 | SK 5282 SCP - 280TC | | X | X | X | X |
| 202 | 9372 | 2.2 | III | 8.7 | 4892 | 8177 | SK 5282 SCP - 180LX/4 | SK 5282 SCP - 180LH/4 | SK 5282 SCP - 280TC | | X | X | X | X |
| 186 | 10191 | 2 | III | 9.46 | 5009 | 8404 | SK 5282 SCP - 180LX/4 | SK 5282 SCP - 180LH/4 | SK 5282 SCP - 280TC | | X | X | X | X |
| 164 | 11538 | 1.9 | II | 10.71 | 5137 | 8593 | SK 5282 SCP - 180LX/4 | SK 5282 SCP - 180LH/4 | SK 5282 SCP - 280TC | | X | X | X | X |
| 135 | 14005 | 1.7 | II | 13 | 5315 | 8901 | SK 5282 SCP - 180LX/4 | SK 5282 SCP - 180LH/4 | SK 5282 SCP - 280TC | | X | X | X | X |
| 114 | 16569 | 1.4 | II | 15.38 | 5495 | 9000 | SK 5282 SCP - 180LX/4 | SK 5282 SCP - 180LH/4 | SK 5282 SCP - 280TC | | X | X | X | X |
| 100 | 18950 | 1.3 | I | 17.59 | 5603 | 9000 | SK 5282 SCP - 180LX/4 | SK 5282 SCP - 180LH/4 | SK 5282 SCP - 280TC | | X | X | X | X |
| 93 | 20339 | 1.1 | I | 18.88 | 5697 | 9000 | SK 5282 SCP - 180LX/4 | SK 5282 SCP - 180LH/4 | SK 5282 SCP - 280TC | | X | X | X | X |
| 86 | 21934 | 1.3 | I | 20.36 | 5702 | 9000 | SK 5282 SCP - 180LX/4 | SK 5282 SCP - 180LH/4 | SK 5282 SCP - 280TC | | X | X | X | X |
| 70 | 26932 | 1 | I | 25 | 5873 | 9000 | SK 5282 SCP - 180LX/4 | SK 5282 SCP - 180LH/4 | SK 5282 SCP - 280TC | | X | X | X | X |
| 400 | 4729 | 3.8 | III | 4.39 | 6233 | 9005 | SK 6282 SCP - 180LX/4 | SK 6282 SCP - 180LH/4 | SK 6282 SCP - 280TC | | | | X | X |
| 360 | 5257 | 3.6 | III | 4.88 | 6413 | 9252 | SK 6282 SCP - 180LX/4 | SK 6282 SCP - 180LH/4 | SK 6282 SCP - 280TC | | | | X | X |
| 319 | 5925 | 3.4 | III | 5.5 | 6608 | 9540 | SK 6282 SCP - 180LX/4 | SK 6282 SCP - 180LH/4 | SK 6282 SCP - 280TC | | | | X | X |
| 304 | 6227 | 3.3 | III | 5.78 | 6703 | 9646 | SK 6282 SCP - 180LX/4 | SK 6282 SCP - 180LH/4 | SK 6282 SCP - 280TC | | | | X | X |
| 293 | 6453 | 3.3 | III | 5.99 | 6768 | 9740 | SK 6282 SCP - 180LX/4 | SK 6282 SCP - 180LH/4 | SK 6282 SCP - 280TC | | | | X | X |
| 260 | 7261 | 3.3 | III | 6.74 | 6948 | 10026 | SK 6282 SCP - 180LX/4 | SK 6282 SCP - 180LH/4 | SK 6282 SCP - 280TC | | | | X | X |
| 224 | 8424 | 2.8 | III | 7.82 | 7214 | 10402 | SK 6282 SCP - 180LX/4 | SK 6282 SCP - 180LH/4 | SK 6282 SCP - 280TC | | | | X | X |
| 187 | 10116 | 2.4 | III | 9.39 | 7544 | 10845 | SK 6282 SCP - 180LX/4 | SK 6282 SCP - 180LH/4 | SK 6282 SCP - 280TC | | | | X | X |
| 165 | 11462 | 3.3 | III | 10.64 | 7814 | 11270 | SK 6282 SCP - 180LX/4 | SK 6282 SCP - 180LH/4 | SK 6282 SCP - 280TC | | | | X | X |
| 142 | 13305 | 2.9 | III | 12.35 | 8087 | 11657 | SK 6282 SCP - 180LX/4 | SK 6282 SCP - 180LH/4 | SK 6282 SCP - 280TC | | | | X | X |
| 118 | 15976 | 2.5 | III | 14.83 | 8406 | 12114 | SK 6282 SCP - 180LX/4 | SK 6282 SCP - 180LH/4 | SK 6282 SCP - 280TC | | | | X | X |
| 94 | 20145 | 1.9 | II | 18.7 | 8840 | 12731 | SK 6282 SCP - 180LX/4 | SK 6282 SCP - 180LH/4 | SK 6282 SCP - 280TC | | | | X | X |
| 76 | 24724 | 1.6 | II | 22.95 | 9250 | 13295 | SK 6282 SCP - 180LX/4 | SK 6282 SCP - 180LH/4 | SK 6282 SCP - 280TC | | | | X | X |
| 67 | 28064 | 1.4 | II | 26.05 | 9448 | 13500 | SK 6282 SCP - 180LX/4 | SK 6282 SCP - 180LH/4 | SK 6282 SCP - 280TC | | | | X | X |
| 59 | 32211 | 1.2 | I | 29.9 | 9664 | 13500 | SK 6282 SCP - 180LX/4 | SK 6282 SCP - 180LH/4 | SK 6282 SCP - 280TC | | | | X | X |

Output speed and torque ratings are based on the "Standard Efficiency Motor" Power and speed. Performance will vary slightly for other motors.

# 40 hp & 50 hp Gearmotors & Speed Reducers





| Output Speed | Output Torque | SF | AGMA Class | Gear Ratio | Thrust | | Integral Gearmotor | | Reducer | CEMA DriveShaft | | | | |
|---|---|---|---|---|---|---|---|---|---|---|---|---|---|---|
| $n_2$ | $T_2$ | $f_a$ | | i | Std Brg | H.D. Brg " VL" | Standard Efficiency Motor | Energy Efficient Motor | C-Face Input | 1-1/2" | 2" | 2-7/16" | 3" | 3-7/16" |
| [rpm] | [lb-in] | | | | [lb] | [lb] | | | | | | | | |
| 405 | 6217 | 2.9 | III | 4.39 | 6098 | 8791 | SK 6282 SCP - 200L/4 | SK 6282 SCP - 200LH/4 | SK 6282 SCP - 320TC | | | | X | X |
| 365 | 6912 | 2.8 | III | 4.88 | 6253 | 9020 | SK 6282 SCP - 200L/4 | SK 6282 SCP - 200LH/4 | SK 6282 SCP - 320TC | | | | X | X |
| 324 | 7790 | 2.6 | III | 5.5 | 6442 | 9284 | SK 6282 SCP - 200L/4 | SK 6282 SCP - 200LH/4 | SK 6282 SCP - 320TC | | | | X | X |
| 308 | 8187 | 2.5 | III | 5.78 | 6512 | 9389 | SK 6282 SCP - 200L/4 | SK 6282 SCP - 200LH/4 | SK 6282 SCP - 320TC | | | | X | X |
| 297 | 8484 | 2.5 | III | 5.99 | 6572 | 9479 | SK 6282 SCP - 200L/4 | SK 6282 SCP - 200LH/4 | SK 6282 SCP - 320TC | | | | X | X |
| 264 | 9546 | 2.8 | III | 6.74 | 6748 | 9725 | SK 6282 SCP - 200L/4 | SK 6282 SCP - 200LH/4 | SK 6282 SCP - 320TC | | | | X | X |
| 228 | 11076 | 2.1 | III | 7.82 | 6977 | 10076 | SK 6282 SCP - 200L/4 | SK 6282 SCP - 200LH/4 | SK 6282 SCP - 320TC | | | | X | X |
| 190 | 13300 | 1.8 | II | 9.39 | 7252 | 10451 | SK 6282 SCP - 200L/4 | SK 6282 SCP - 200LH/4 | SK 6282 SCP - 320TC | | | | X | X |
| 167 | 15070 | 2.5 | III | 10.64 | 7538 | 10845 | SK 6282 SCP - 200L/4 | SK 6282 SCP - 200LH/4 | SK 6282 SCP - 320TC | | | | X | X |
| 144 | 17492 | 2.2 | III | 12.35 | 7760 | 11162 | SK 6282 SCP - 200L/4 | SK 6282 SCP - 200LH/4 | SK 6282 SCP - 320TC | | | | X | X |
| 120 | 21005 | 1.9 | II | 14.83 | 8026 | 11545 | SK 6282 SCP - 200L/4 | SK 6282 SCP - 200LH/4 | SK 6282 SCP - 320TC | | | | X | X |
| 95 | 26486 | 1.5 | II | 18.7 | 8368 | 12035 | SK 6282 SCP - 200L/4 | SK 6282 SCP - 200LH/4 | SK 6282 SCP - 320TC | | | | X | X |
| 78 | 32506 | 1.2 | I | 22.95 | 8683 | 12490 | SK 6282 SCP - 200L/4 | SK 6282 SCP - 200LH/4 | SK 6282 SCP - 320TC | | | | X | X |
| 402 | 7838 | 2.3 | III | 4.39 | 5994 | 8651 | SK 6282 SCP - 225S/4 | SK 6282 SCP - 225SH/4 | SK 6282 SCP - 320TC | | | | X | X |
| 362 | 8714 | 2.2 | III | 4.88 | 6143 | 8847 | SK 6282 SCP - 225S/4 | SK 6282 SCP - 225SH/4 | SK 6282 SCP - 320TC | | | | X | X |
| 321 | 9821 | 2.1 | III | 5.5 | 6307 | 9106 | SK 6282 SCP - 225S/4 | SK 6282 SCP - 225SH/4 | SK 6282 SCP - 320TC | | | | X | X |
| 305 | 10321 | 2 | III | 5.78 | 6374 | 9194 | SK 6282 SCP - 225S/4 | SK 6282 SCP - 225SH/4 | SK 6282 SCP - 320TC | | | | X | X |
| 295 | 10696 | 2 | III | 5.99 | 6422 | 9252 | SK 6282 SCP - 225S/4 | SK 6282 SCP - 225SH/4 | SK 6282 SCP - 320TC | | | | X | X |
| 262 | 12035 | 2.2 | III | 6.74 | 6599 | 9479 | SK 6282 SCP - 225S/4 | SK 6282 SCP - 225SH/4 | SK 6282 SCP - 320TC | | | | X | X |
| 226 | 13964 | 1.7 | II | 7.82 | 6784 | 9772 | SK 6282 SCP - 225S/4 | SK 6282 SCP - 225SH/4 | SK 6282 SCP - 320TC | | | | X | X |
| 188 | 16767 | 1.5 | II | 9.39 | 7025 | 10091 | SK 6282 SCP - 225S/4 | SK 6282 SCP - 225SH/4 | SK 6282 SCP - 320TC | | | | X | X |
| 166 | 18999 | 2 | III | 10.64 | 7279 | 10487 | SK 6282 SCP - 225S/4 | SK 6282 SCP - 225SH/4 | SK 6282 SCP - 320TC | | | | X | X |
| 143 | 22053 | 1.8 | II | 12.35 | 7459 | 10742 | SK 6282 SCP - 225S/4 | SK 6282 SCP - 225SH/4 | SK 6282 SCP - 320TC | | | | X | X |
| 119 | 26481 | 1.5 | II | 14.83 | 7661 | 11039 | SK 6282 SCP - 225S/4 | SK 6282 SCP - 225SH/4 | SK 6282 SCP - 320TC | | | | X | X |
| 94 | 33391 | 1.2 | I | 18.7 | 7931 | 11399 | SK 6282 SCP - 225S/4 | SK 6282 SCP - 225SH/4 | SK 6282 SCP - 320TC | | | | X | X |
| 77 | 40980 | 1 | I | 22.95 | 8141 | 11732 | SK 6282 SCP - 225S/4 | SK 6282 SCP - 225SH/4 | SK 6282 SCP - 320TC | | | | X | X |

Output speed and torque ratings are based on the "Standard Efficiency Motor" Power and speed. Performance will vary slightly for other motors.

# SCP Ratings & Combinations

## Selection

- SK 1282, 1382 SCP Ratings & Combinations
- SK 2282 & 2382 SCP Ratings & Combinations
- SK 3282 & 3382 SCP Ratings & Combinations
- SK 4282 & 4382 SCP Ratings & Combinations
- SK 5282 & 5382 SCP Ratings & Combinations
- SK 6282 & 6382 SCP Ratings & Combinations



NORD DRIVESYSTEMS

www.nord.com

CLINCHER™

| Thrust | | Integral Gearmotor | | Reducer |
|---|---|---|---|---|
| Brg [lb] | HD Brg "VL" [lb] | Standard Efficiency Motor | Energy Efficient Motor | C-Face Input |
| 083 | 6750 | SK 4282 SCP - 90L/4 | SK 4282 SCP - 90LH/4 | SK 4282 SCP - 140TC |
| 516 | 6750 | SK 4282 SCP - 90L/4 | SK 4282 SCP - 90LH/4 | SK 4282 SCP - 140TC |
| 056 | 6750 | SK 4282 SCP - 90L/4 | SK 4282 SCP - 90LH/4 | SK 4282 SCP - 140TC |
| 950 | 6750 | SK 4282 SCP - 90L/4 | SK 4282 SCP - 90LH/4 | SK 4282 SCP - 140TC |
| 950 | 6750 | SK 4282 SCP - 90L/4 | SK 4282 SCP - 90LH/4 | SK 4282 SCP - 140TC |
| 950 | 6750 | SK 4282 SCP - 90L/4 | SK 4282 SCP - 90LH/4 | SK 4282 SCP - 140TC |
| 950 | 6750 | SK 4282 SCP - 90L/4 | SK 4282 SCP - 90LH/4 | SK 4282 SCP - 140TC |
| 950 | 6750 | SK 4282 SCP - 90L/4 | SK 4282 SCP - 90LH/4 | SK 4282 SCP - 140TC |
| 950 | 6750 | SK 4282 SCP - 90L/4 | SK 4282 SCP - 90LH/4 | SK 4282 SCP - 140TC |
| 950 | 6750 | SK 4282 SCP - 90L/4 | SK 4282 SCP - 90LH/4 | SK 4282 SCP - 140TC |
| 950 | 6750 | SK 4282 SCP - 90L/4 | SK 4282 SCP - 90LH/4 | SK 4282 SCP - 140TC |
| 50 | 6750 | SK 4282 SCP - 90L/4 | SK 4282 SCP - 90LH/4 | SK 4282 SCP - 140TC |
| | 6750 | SK 4282 SCP - 90L/4 | SK 4282 SCP - 90LH/4 | SK 4282 SCP - |





# Screw Conveyor Package Ratings & Combinations



## Explanation of Selection Tables

**GEARBOX TYPE** – Nomenclature for specified gear unit.

**TOTAL GEAR RATIO**

**OUTPUT SPEED** – Based on 1750 rpm input speed

**MAXIMUM TORQUE RATINGS**

**MAX POWER RATING** – Based on 1750 rpm input speed

**NEMA C-FACE INPUT POSSIBLE COMBINATIONS**

**INTEGRAL MOTOR POSSIBLE COMBINATIONS**



| Type | Ratio | Output Speed 1750 rpm input $n_2$ [rpm] | Max Torque $T_{max}$ [lb-in] | Max Power 1750 rpm input $P_{max}$ [hp] | NEMA C-face | | | Integral Motor | | | | | | | | | |
|---|---|---|---|---|---|---|---|---|---|---|---|---|---|---|---|---|---|
| | | | | | 56C 1.0 hp | 140TC 2.0 hp | 180TC 5.0 hp | 63S/4 0.16 hp | 63L/4 0.25 hp | 71S/4 0.33 hp | 71L/4 0.5 hp | 80S/4 0.75 hp | 80L 80LH/4 1.0 hp | 90S 90SH/4 1.5 hp | 90L 90LH/4 2 .0 hp | 100L 100LH/4 3.0 hp | 100LA 112LH/4 5.0 hp |
| SK 1282 SCP | 4.79 | 365 | 1133 | 5.00 | X | X | X | X | X | X | X | X | X | X | X | X | X |
| | 5.47 | 320 | 1522 | 5.00 | X | X | X | X | X | X | X | X | X | X | X | X | X |
| | 6.43 | 272 | 1602 | 5.00 | X | X | X | X | X | X | X | X | X | X | X | X | X |
| | 7.24 | 242 | 1655 | 5.00 | X | X | X | X | X | X | X | X | X | X | X | X | X |

**X =** Available Combination



# SK 1282 SCP & SK 1382 SCP
# Ratings & Combinations

| Type | Ratio | Output Speed 1750 rpm input $n_2$ [rpm] | Max Torque $T_{max}$ [lb-in] | Max ◈ Power 1750 rpm input $P_{max}$ [hp] | NEMA C-face* 56C 1.0 hp | 140TC 2.0 hp | 180TC 5.0 hp | Integral Motor 63S/4 0.16 hp | 63L/4 0.25 hp | 71S/4 0.33 hp | 71L/4 0.5 hp | 80S/4 0.75 hp | 80L/4 80LH/4 1.0 hp | 90S/4 90SH/4 1.5 hp | 90L/4 90LH/4 2 .0 hp | 100L/4 100LH/4 3.0 hp | 100LA/4 112LH/4 5.0 hp |
|---|---|---|---|---|---|---|---|---|---|---|---|---|---|---|---|---|---|
| **SK 1282 SCP** | 4.79 | 365 | 1133 | *5.00* | X | X | X | X | X | X | X | X | X | X | X | X | X |
| | 5.47 | 320 | 1522 | *5.00* | X | X | X | X | X | X | X | X | X | X | X | X | X |
| | 6.43 | 272 | 1602 | *5.00* | X | X | X | X | X | X | X | X | X | X | X | X | X |
| | 7.24 | 242 | 1655 | *5.00* | X | X | X | X | X | X | X | X | X | X | X | X | X |
| | 8.21 | 213 | 1416 | 4.78 | X | X | X | X | X | X | X | X | X | X | X | X | X |
| | 8.24 | 212 | 1690 | 5.00 | X | X | X | X | X | X | X | X | X | X | X | X | X |
| | 9.18 | 191 | 1673 | *5.00* | X | X | X | X | X | X | X | X | X | X | X | X | X |
| | 10.34 | 169 | 1735 | 4.65 | X | X | X | X | X | X | X | X | X | X | X | X | X |
| | 11.76 | 149 | 1805 | 4.27 | X | X | X | X | X | X | X | X | X | X | X | X | X |
| | 14.11 | 124 | 1859 | 3.66 | X | X | X | X | X | X | X | X | X | X | X | X | X |
| | 17.21 | 102 | 1982 | 3.21 | X | X | X | X | X | X | X | X | X | X | X | X | X |
| | 20.57 | 85 | 1991 | 2.68 | X | X | X | X | X | X | X | X | X | X | X | X | X |
| | 25.22 | 69 | 1991 | 2.18 | X | X | X | X | X | X | X | X | X | X | X | X | X |
| | 28.33 | 62 | 1991 | 1.96 | X | X | | X | X | X | X | X | X | X | X | | |
| | 32.08 | 55 | 2036 | 1.78 | X | X | | X | X | X | X | X | X | X | X | | |
| | 41.07 | 43 | 1920 | 1.31 | X | X | | | | | X | X | X | | | | |
| | 46.19 | 38 | 1735 | 1.05 | X | | | X | X | X | X | | | | | | |
| | 49.25 | 36 | 2301 | 1.31 | X | X | | | | | X | X | X | | | | |
| | 55.39 | 32 | 2080 | 1.06 | X | | | X | X | X | X | | | | | | |
| | 58.89 | 30 | 2505 | 1.19 | X | X | | | | | X | X | X | | | | |
| | 66.23 | 26 | 2390 | 0.99 | X | | | X | X | X | X | | | | | | |
| | 72.17 | 24 | 2620 | 1.00 | X | X | | | | | X | X | X | | | | |
| | 81.17 | 22 | 2620 | 0.91 | X | | | X | X | X | X | | | | | | |
| | 92.48 | 19 | 2053 | 0.62 | X | | | X | X | X | X | | | | | | |
| | 109.50 | 16 | 1850 | 0.47 | X | | | X | X | X | | | | | | | |
| **SK 1382 SCP** | 87.94 | 20 | 2425 | 0.77 | X | | | X | X | X | X | | | | | | |
| | 105.11 | 17 | 2390 | 0.63 | X | | | X | X | X | X | | | | | | |
| | 128.82 | 14 | 1991 | 0.43 | X | | | X | X | X | X | | | | | | |
| | 163.93 | 11 | 1991 | 0.34 | X | | | X | X | X | X | | | | | | |
| | 209.87 | 8.3 | 2080 | 0.28 | X | | | X | X | X | X | | | | | | |
| | 251.67 | 7.0 | 2425 | 0.27 | X | | | X | X | X | X | | | | | | |
| | 300.93 | 5.8 | 2390 | 0.22 | X | | | X | X | X | X | | | | | | |
| | 368.79 | 4.8 | 1991 | 0.15 | X | | | X | X | X | X | | | | | | |
| | 414.78 | 4.2 | 1991 | 0.13 | X | | | X | X | X | X | | | | | | |
| | 472.60 | 3.7 | 1991 | 0.12 | X | | | X | X | X | X | | | | | | |
| | 556.83 | 3.1 | 1991 | 0.10 | X | | | X | X | X | | | | | | | |
| | 634.45 | 2.8 | 1965 | 0.09 | X | | | X | X | X | | | | | | | |

◈ The maximum input power limit shown is the largest motor power typically combined with the gear unit. *The Italicized power values shown are not the mechanical limit and often may be increased through discussion with our sales or engineering department.*

* The NEMA C-face power limit must also be considered when selecting a reducer. The C-face Adapter's Maximum Input Power values are displayed under the Available Combinations and based on a 1750 rpm motor.

# SK 2282 SCP & SK 2382 SCP
# Ratings & Combinations





| Type | Ratio | Output Speed 1750 rpm input $n_2$ [rpm] | Max Torque $T_{max}$ [lb-in] | Max ◈ Power 1750 rpm input $P_{max}$ [hp] | NEMA C-face* 56C 1.0 hp | 140TC 2.0 hp | 180TC 5.0 hp | Integral Motor 63S/4 0.16 hp | 63L/4 0.25 hp | 71S/4 0.33 hp | 71L/4 0.5 hp | 80S/4 0.75 hp | 80L/4 80LH/4 1.0 hp | 90S/4 90SH/4 1.5 hp | 90L/4 90LH/4 2 .0 hp | 100L/4 100LH/4 3.0 hp | 100LA/4 112LH/4 5.0 hp |
|---|---|---|---|---|---|---|---|---|---|---|---|---|---|---|---|---|---|
| **SK 2282 SCP** | 4.51 | 388 | 1646 | *5.00* | X | X | X | | | | X | X | X | X | X | X | X |
| | 5.72 | 306 | 1876 | *5.00* | X | X | X | | | | X | X | X | X | X | X | X |
| | 6.43 | 272 | 2000 | *5.00* | X | X | X | | | | X | X | X | X | X | X | X |
| | 7.48 | 234 | 2151 | *5.00* | X | X | X | | | | X | X | X | X | X | X | X |
| | 8.37 | 209 | 2266 | *5.00* | X | X | X | | | | X | X | X | X | X | X | X |
| | 9.03 | 194 | 2965 | *5.00* | X | X | X | | | | X | X | X | X | X | X | X |
| | 10.15 | 172 | 3151 | *5.00* | X | X | X | | | | X | X | X | X | X | X | X |
| | 11.81 | 148 | 3398 | *5.00* | X | X | X | | | | X | X | X | X | X | X | X |
| | 13.23 | 132 | 3584 | *5.00* | X | X | X | | | | X | X | X | X | X | X | X |
| | 16.53 | 106 | 4168 | *5.00* | X | X | X | | | | X | X | X | X | X | X | X |
| | 18.51 | 95 | 4301 | *5.00* | X | X | X | | | | X | X | X | X | X | X | X |
| | 21.90 | 80 | 4248 | *5.00* | X | X | X | | | | X | X | X | X | X | X | X |
| | 23.96 | 73 | 3850 | 4.46 | X | X | X | | | | X | X | X | X | X | X | X |
| | 24.97 | 70 | 4337 | 4.81 | X | X | X | | | | X | X | X | X | X | X | X |
| | 26.83 | 65 | 3885 | 4.01 | X | X | X | | | | X | X | X | X | X | X | X |
| | 29.65 | 59 | 4425 | 4.14 | X | X | X | | | | X | X | X | X | X | X | X |
| | 31.23 | 56 | 3938 | 3.50 | X | X | X | | | | | | | X | X | X | |
| | 36.54 | 48 | 4434 | 3.38 | X | X | X | | | | | | | X | X | X | |
| | 37.18 | 47 | 4071 | 3.03 | X | X | | | | | X | X | X | X | X | | |
| | 43.71 | 40 | 4983 | 3.16 | X | X | X | | | | | | | X | X | X | |
| | 45.11 | 39 | 3983 | 2.46 | X | X | | | | | | X | X | X | X | | |
| | 51.71 | 34 | 4611 | 2.49 | X | X | X | | | | | | | X | X | X | |
| | 53.96 | 32 | 4478 | 2.27 | X | X | | | | | | X | X | X | X | | |
| | 63.83 | 27 | 4611 | 1.97 | X | X | | | | | | X | X | X | X | | |
| | 69.67 | 25 | 3921 | 1.55 | X | X | | | | X | X | X | X | X | | | |
| | 82.42 | 21 | 4221 | 1.41 | X | X | | | | X | X | X | X | X | | | |
| | 100.98 | 17 | 3894 | 1.05 | X | X | | | | X | X | X | X | X | | | |
| | 104.07 | 17 | 3513 | 0.95 | X | X | | | | X | X | X | | | | | |
| | 127.51 | 14 | 3363 | 0.75 | X | X | | | | X | X | X | | | | | |
| **SK 2382 SCP** | 82.22 | 21 | 4965 | 1.50 | X | X | | X | X | X | X | X | X | | | | |
| | 98.35 | 18 | 4983 | 1.42 | X | X | | X | X | X | X | X | X | | | | |
| | 116.35 | 15 | 4611 | 1.10 | X | X | | X | X | X | X | X | X | | | | |
| | 131.86 | 13 | 4611 | 0.95 | X | X | | X | X | X | X | X | X | | | | |
| | 149.96 | 12 | 4611 | 0.88 | X | X | | X | X | X | X | X | X | | | | |
| | 185.11 | 9.5 | 4611 | 0.69 | X | X | | X | X | X | X | X | X | | | | |
| | 236.11 | 7.4 | 4186 | 0.49 | X | | | X | X | X | X | | | | | | |
| | 276.27 | 6.3 | 4894 | 0.49 | X | | | X | X | X | X | | | | | | |
| | 330.45 | 5.3 | 4983 | 0.42 | X | | | X | X | X | X | | | | | | |
| | 390.93 | 4.5 | 4611 | 0.33 | X | | | X | X | X | X | | | | | | |
| | 482.56 | 3.6 | 4611 | 0.26 | X | | | X | X | X | X | | | | | | |
| | 623.10 | 2.8 | 4611 | 0.20 | X | | | X | X | X | X | | | | | | |
| | 763.41 | 2.3 | 3876 | 0.14 | X | | | X | X | X | X | | | | | | |

◈ The maximum input power limit shown is the largest motor power typically combined with the gear unit. *The Italicized power values shown are not the mechanical limit and often may be increased through discussion with our sales or engineering department.*

* The NEMA C-face power limit must also be considered when selecting a reducer. The C-face Adapter's Maximum Input Power values are displayed under the Available Combinations and based on a 1750 rpm motor.



# SK 3282 SCP & SK 3382 SCP
# Ratings & Combinations

| Type | Ratio | Output Speed 1750 rpm input $n_2$ [rpm] | Max Torque $T_{max}$ [lb-in] | Max ◈ Power 1750 rpm input $P_{max}$ [hp] | NEMA C-face* | | | | Integral Motor | | | | | | | | | | | |
|---|---|---|---|---|---|---|---|---|---|---|---|---|---|---|---|---|---|---|---|---|
| | | | | | 56C | 140TC | 180TC | 210TC | 63L/4 | 71S/4 | 71L/4 | 80S/4 | 80L/4 80LH/4 | 90S/4 90SH/4 | 90L/4 90LH/4 | 100L/4 100LH/4 | 100LA/4 112LH/4 | 132S/SH/4 | 132M/MH/4 | |
| | | | | | 1.0 hp | 2.0 hp | 5.0 hp | 10 hp | 0.25 hp | 0.33 hp | 0.5 hp | 0.75 hp | 1.0 hp | 1.5 hp | 2 .0 hp | 3.0 hp | 5.0 hp | 7.5 hp | 10 hp | |
| **SK 3282 SCP** | 4.48 | 391 | 4080 | *10.00* | X | X | X | X | | | | | | X | X | X | X | X | X | |
| | 5.68 | 308 | 4912 | *10.00* | X | X | X | X | | | | | | X | X | X | X | X | X | |
| | 6.70 | 261 | 5372 | *10.00* | X | X | X | X | | | | | | X | X | X | X | X | X | |
| | 8.31 | 211 | 5983 | *10.00* | X | X | X | X | | | | X | X | X | X | X | X | X | X | |
| | 9.80 | 179 | 7425 | *10.00* | X | X | X | X | | | | | | X | X | X | X | X | X | |
| | 11.38 | 154 | 7266 | *10.00* | X | X | X | X | | | | | | X | X | X | X | X | X | |
| | 14.11 | 124 | 7584 | *10.00* | X | X | X | X | | | | X | X | X | X | X | X | X | X | |
| | 16.67 | 105 | 7443 | *10.00* | X | X | X | X | | | | X | X | X | X | X | X | X | X | |
| | 20.18 | 87 | 7275 | *10.00* | X | X | X | X | | | | X | X | X | X | X | X | X | X | |
| | 21.38 | 82 | 6390 | 8.31 | X | X | X | X | | | | X | X | X | X | X | X | X | X | |
| | 22.45 | 78 | 7080 | 8.76 | X | X | X | X | | | | X | X | X | X | X | X | X | X | |
| | 23.71 | 74 | 7124 | 8.36 | X | X | X | X | | | | X | X | X | X | X | X | X | X | |
| | 25.88 | 68 | 7487 | 8.07 | X | X | X | X | | | | X | X | X | X | X | X | X | X | |
| | 28.70 | 61 | 7700 | 7.45 | X | X | X | X | | | | X | X | X | X | X | X | X | X | |
| | 31.93 | 55 | 7761 | 6.77 | X | X | X | X | | | | X | X | X | X | X | X | X | X | |
| | 37.77 | 46 | 7390 | 5.39 | X | X | X | | | | | X | X | X | X | X | | | | |
| | 38.62 | 45 | 5611 | 4.00 | X | X | X | | | | | | | X | X | X | | | | |
| | 42.02 | 42 | 8222 | 5.48 | X | X | X | | | | | X | X | X | X | X | | | | |
| | 44.85 | 39 | 6522 | 4.03 | X | X | X | | | | | | | X | X | X | | | | |
| | 48.04 | 36 | 4885 | 2.79 | X | X | | | | | | X | X | X | X | | | | | |
| | 52.97 | 33 | 7478 | 3.91 | X | X | X | | | | | | | X | X | X | | | | |
| | 55.79 | 31 | 5682 | 2.79 | X | X | | | | | | X | X | X | X | | | | | |
| | 64.12 | 27 | 8983 | 3.85 | X | X | X | | | | | | | X | X | X | | | | |
| | 65.89 | 27 | 6708 | 2.87 | X | X | | | | | | X | X | X | X | | | | | |
| | 70.56 | 25 | 4991 | 1.98 | X | X | | | | X | X | X | X | X | | | | | | |
| | 79.76 | 22 | 7523 | 2.62 | X | X | | | | | | X | X | X | X | | | | | |
| | 88.74 | 20 | 8363 | 2.65 | X | X | | | | | | X | X | X | X | | | | | |
| | 100.88 | 17 | 7142 | 1.93 | X | X | | | | X | X | X | X | X | | | | | | |
| | 112.23 | 16 | 6815 | 1.73 | X | X | | | | X | X | X | X | X | | | | | | |
| **SK 3382 SCP** | 89.60 | 20 | 5496 | 1.50 | X | X | | | X | X | X | X | X | X | X | | | | | |
| | 104.05 | 17 | 6505 | 1.50 | X | X | | | X | X | X | X | X | X | X | | | | | |
| | 126.93 | 14 | 6850 | 1.50 | X | X | | | X | X | X | X | X | X | X | | | | | |
| | 161.46 | 11 | 6974 | 1.22 | X | X | | | X | X | X | X | X | X | X | | | | | |
| | 190.69 | 9.2 | 7664 | 1.12 | X | X | | | X | X | X | X | X | X | X | | | | | |
| | 230.83 | 7.6 | 8850 | 1.07 | X | X | | | X | X | X | X | X | X | X | | | | | |
| | 287.14 | 6.1 | 8301 | 0.80 | X | X | | | X | X | X | X | X | X | X | | | | | |
| | 408.58 | 4.3 | 7045 | 0.48 | X | | | | X | X | X | X | | | | | | | | |
| | 482.56 | 3.6 | 7664 | 0.44 | X | | | | X | X | X | X | | | | | | | | |
| | 584.13 | 3 | 8850 | 0.42 | X | | | | X | X | X | X | | | | | | | | |
| | 726.61 | 2.4 | 8354 | 0.32 | X | | | | X | X | X | X | | | | | | | | |
| | 808.42 | 2.2 | 9195 | 0.32 | X | | | | X | X | X | X | | | | | | | | |
| | 919.00 | 1.9 | 7275 | 0.22 | X | | | | X | X | X | X | | | | | | | | |
| | 1,022.42 | 1.7 | 6965 | 0.19 | X | | | | X | X | X | X | | | | | | | | |

◈ The maximum input power limit shown is the largest motor power typically combined with the gear unit. *The Italicized power values shown are not the mechanical limit and often may be increased through discussion with our sales or engineering department.*

* The NEMA C-face power limit must also be considered when selecting a reducer. The C-face Adapter's Maximum Input Power values are displayed under the Available Combinations and based on a 1750 rpm motor.

# SK 4282 SCP
# Ratings & Combinations



| Type | Ratio | Output Speed 1750 rpm input $n_2$ [rpm] | Max Torque $T_{max}$ [lb-in] | Max ◈ Power 1750 rpm input $P_{max}$ [hp] | NEMA C-face* | | | | | Integral Motor | | | | | | | |
|---|---|---|---|---|---|---|---|---|---|---|---|---|---|---|---|---|---|
| | | | | | 56C 1.0 hp | 140TC 2.0 hp | 180TC 5.0 hp | 210TC 10 hp | 250TC 20 hp | 90S/4 90SH/4 1.5 hp | 90L/4 90LH/4 2 .0 hp | 100L/4 100LH/4 3.0 hp | 100LA/4 112LH/4 5.0 hp | 132S/SH/4 7.5 hp | 132M/MH/4 10 hp | 160M/MH/4 15 hp | 160L/LH/4 20 hp |
| **SK 4282 SCP** | 4.70 | 372 | 9160 | *20.00* | | | X | X | X | | | | | X | X | X | X |
| | 5.00 | 350 | 9160 | *20.00* | | | X | X | X | | | | | X | X | X | X |
| | 5.43 | 322 | 9160 | *20.00* | | | X | X | X | X | X | X | X | X | X | X | X |
| | 6.06 | 289 | 10620 | *20.00* | X | X | X | X | X | X | X | X | X | X | X | X | X |
| | 7.13 | 245 | 10638 | *20.00* | X | X | X | X | X | X | X | X | X | X | X | X | X |
| | 8.33 | 210 | 11257 | *20.00* | X | X | X | X | X | X | X | X | X | X | X | X | X |
| | 9.23 | 190 | 14461 | *20.00* | X | X | X | X | X | X | X | X | X | X | X | X | X |
| | 10.85 | 161 | 15045 | *20.00* | X | X | X | X | X | X | X | X | X | X | X | X | X |
| | 12.68 | 138 | 15488 | *20.00* | X | X | X | X | X | X | X | X | X | X | X | X | X |
| | 15.20 | 115 | 15930 | *20.00* | X | X | X | X | X | X | X | X | X | X | X | X | X |
| | 18.18 | 96 | 15930 | *20.00* | X | X | X | X | X | X | X | X | X | X | X | X | X |
| | 21.45 | 82 | 14921 | 19.41 | X | X | X | X | X | X | X | X | X | X | X | X | X |
| | 22.39 | 78 | 15036 | 18.60 | X | X | X | X | X | X | X | X | X | X | X | X | X |
| | 26.25 | 67 | 14231 | 15.12 | X | X | X | X | X | X | X | X | X | X | X | X | X |
| | 26.43 | 66 | 15815 | 16.55 | X | X | X | X | X | X | X | X | X | X | X | X | X |
| | 26.72 | 65 | 14160 | 14.60 | | | X | X | | | | | | X | X | | |
| | 32.04 | 55 | 15797 | 13.78 | | | X | X | | | | | | X | X | | |
| | 32.34 | 54 | 14337 | 12.28 | X | X | X | X | X | X | X | X | X | X | X | X | X |
| | 36.40 | 48 | 12169 | 9.26 | | | X | X | | | | X | X | X | | | |
| | 36.81 | 48 | 12390 | 9.43 | X | X | X | X | | X | X | X | X | X | X | | |
| | 38.31 | 46 | 17700 | 12.91 | | | X | X | | | | | | X | X | | |
| | 40.74 | 43 | 13771 | 9.39 | X | X | X | X | | X | X | X | X | X | X | | |
| | 43.65 | 40 | 14160 | 8.98 | | | X | X | | | | X | X | X | | | |
| | 45.05 | 39 | 14107 | 8.73 | X | X | X | X | | X | X | X | X | X | X | | |
| | 52.20 | 34 | 16089 | 8.68 | | | X | X | | | | X | X | X | | | |
| | 61.60 | 28 | 15877 | 7.05 | | | X | X | | | | X | X | X | | | |
| | 75.39 | 23 | 14063 | 5.13 | | | X | X | | | | X | X | X | | | |
| | 90.52 | 19 | 14160 | 4.27 | X | X | X | | | X | X | X | X | | | | |
| | 110.78 | 16 | 14160 | 3.59 | X | X | X | | | X | X | X | X | | | | |
| | 155.40 | 11 | 11284 | 1.97 | X | X | | | | X | X | | | | | | |

◈ The maximum input power limit shown is the largest motor power typically combined with the gear unit. *The Italicized power values shown are not the mechanical limit and often may be increased through discussion with our sales or engineering department.*

* The NEMA C-face power limit must also be considered when selecting a reducer. The C-face Adapter's Maximum Input Power values are displayed under the Available Combinations and based on a 1750 rpm motor.



# SK 4382 SCP
# Ratings & Combinations

| Type | Ratio | Output Speed 1750 rpm input $n_2$ [rpm] | Max Torque $T_{max}$ [lb-in] | Max Power 1750 rpm input $P_{max}$ [hp] | NEMA C-face | | | Integral Motor | | | | | | | |
|---|---|---|---|---|---|---|---|---|---|---|---|---|---|---|---|
| | | | | | 56C 1.0 hp | 140TC 2.0 hp | 180TC 5.0 hp | 71S/4 0.33 hp | 71L/4 0.5 hp | 80S/4 0.75 hp | 80L 80LH/4 1.0 hp | 90S 90SH/4 1.5 hp | 90L 90LH/4 2 .0 hp | 100L 100LH/4 3.0 hp | 100LA 112LH/4 5.0 hp |
| **SK 4382 SCP** | 86.83 | 20 | 17523 | 5.00 | X | X | X | | X | X | X | X | X | X | X |
| | 103.82 | 17 | 17700 | 4.77 | X | X | X | | X | X | X | X | X | X | X |
| | 118.38 | 15 | 17700 | 4.21 | X | X | X | | X | X | X | X | X | X | X |
| | 140.60 | 12 | 17700 | 3.37 | X | X | X | | X | X | X | X | X | X | X |
| | 160.20 | 11 | 14664 | 2.56 | X | X | X | | X | X | X | X | X | X | X |
| | 191.57 | 9.1 | 17612 | 2.54 | X | X | X | | X | X | X | X | X | X | X |
| | 211.09 | 8.3 | 14470 | 1.90 | X | X | | | | X | X | X | X | | |
| | 253.12 | 6.9 | 17355 | 1.90 | X | X | | | | X | X | X | X | | |
| | 272.54 | 6.4 | 13912 | 1.41 | X | X | | X | X | X | X | X | | | |
| | 302.65 | 5.8 | 18381 | 1.69 | X | X | | | | X | X | X | X | | |
| | 326.81 | 5.4 | 16727 | 1.43 | X | X | | X | X | X | X | X | | | |
| | 344.84 | 5.1 | 14709 | 1.19 | X | X | | | | X | X | X | X | | |
| | 390.76 | 4.5 | 17700 | 1.26 | X | X | | X | X | X | X | X | | | |
| | 412.38 | 4.2 | 17612 | 1.17 | X | X | | | | X | X | X | X | | |
| | 445.23 | 3.9 | 14744 | 0.91 | X | X | | X | X | X | X | X | | | |
| | 532.44 | 3.3 | 17700 | 0.93 | X | X | | X | X | X | X | X | | | |
| | 605.88 | 2.9 | 13054 | 0.60 | X | X | | | | X | X | X | X | | |
| | 654.27 | 2.7 | 10912 | 0.47 | X | X | | X | X | X | X | X | | | |
| | 782.32 | 2.2 | 13063 | 0.46 | X | X | | X | X | X | X | X | | | |
| | 1,097.48 | 1.6 | 9629 | 0.24 | X | X | | X | X | X | X | X | | | |
| | 1,129.91 | 1.5 | 14160 | 0.34 | X | X | | X | X | X | X | X | | | |
| | 1,585.08 | 1.1 | 12567 | 0.22 | X | X | | X | X | X | X | X | | | |

◈ The maximum input power limit shown is the largest motor power typically combined with the gear unit. *The Italicized power values shown are not the mechanical limit and often may be increased through discussion with our sales or engineering department.*

* The NEMA C-face power limit must also be considered when selecting a reducer. The C-face Adapter's Maximum Input Power values are displayed under the Available Combinations and based on a 1750 rpm motor.

# SK 5282 SCP
# Ratings & Combinations



| Type | Ratio | Output Speed 1750 rpm input $n_2$ [rpm] | Max Torque $T_{max}$ [lb-in] | Max ◈ Power 1750 rpm input $P_{max}$ [hp] | NEMA C-face* | | | | | | Integral Motor | | | | | | | | | |
|---|---|---|---|---|---|---|---|---|---|---|---|---|---|---|---|---|---|---|---|---|
| | | | | | 56C | 140TC | 180TC | 210TC | 250TC | 280TC | 90S/4 90SH/4 | 90S/4 90LH/4 | 90L/4 100LH/4 | 100L/4 112LH/4 | 100LA/4 112LH/4 | 132S/SH/4 | 132M/MH/4 | 160M/MH/4 | 160L/LH/4 | 180MX/MH/4 | 180LX/LH/4 |
| | | | | | 1.0 hp | 2.0 hp | 5.0 hp | 10 hp | 20 hp | 30 hp | 1.5 hp | 2 .0 hp | 3.0 hp | 5.0 hp | 7.5 hp | 10 hp | 15 hp | 20 hp | 25 hp | 30 hp | |
| **SK 5282 SCP** | 4.32 | 405 | 13718 | *30.00* | | | | | X | X | | | | | | | X | X | X | X |
| | 5.01 | 349 | 15045 | *30.00* | | | | | X | X | | | | | | | X | X | X | X |
| | 5.29 | 331 | 15488 | *30.00* | | | | | X | X | | | | | | | X | X | X | X |
| | 5.71 | 306 | 15930 | *30.00* | | | | | X | X | | | | | | | X | X | X | X |
| | 6.33 | 276 | 18709 | *30.00* | | | X | X | X | X | | | X | X | X | X | X | X | X | X |
| | 7.17 | 244 | 19125 | *30.00* | | | X | X | X | X | | | X | X | X | X | X | X | X | X |
| | 8.70 | 201 | 20886 | *30.00* | X | X | X | X | X | X | X | X | X | X | X | X | X | X | X | X |
| | 9.46 | 185 | 20355 | *30.00* | | | X | X | X | X | | | X | X | X | X | X | X | X | X |
| | 10.71 | 163 | 22125 | *30.00* | | | X | X | X | X | | | X | X | X | X | X | X | X | X |
| | 13.00 | 135 | 23267 | *30.00* | X | X | X | X | X | X | X | X | X | X | X | X | X | X | X | X |
| | 15.38 | 114 | 23010 | *30.00* | X | X | X | X | X | X | X | X | X | X | X | X | X | X | X | X |
| | 17.59 | 99 | 24338 | *30.00* | X | X | X | X | X | X | X | X | X | X | X | X | X | X | X | X |
| | 18.88 | 93 | 23010 | *30.00* | X | X | X | X | X | X | X | X | X | X | X | X | X | X | X | X |
| | 20.36 | 86 | 27435 | *30.00* | X | X | X | X | X | X | X | X | X | X | X | X | X | X | X | X |
| | 25.00 | 70 | 25665 | 28.49 | X | X | X | X | X | X | X | X | X | X | X | X | X | X | X | X |
| | 30.50 | 57 | 25665 | 23.20 | X | X | X | X | X | | X | X | X | X | X | X | X | X | | |
| | 33.43 | 52 | 20355 | 16.79 | X | X | X | X | X | X | X | X | X | X | X | X | X | X | X | X |
| | 35.46 | 49 | 23895 | 18.57 | | | X | X | | | | | | | X | X | | | | |
| | 40.80 | 43 | 22125 | 15.09 | X | X | X | X | X | | X | X | X | X | X | X | X | X | | |
| | 41.94 | 42 | 28320 | 18.87 | | | X | X | | | | | | | X | X | | | | |
| | 47.27 | 37 | 21240 | 12.46 | | | X | X | | | | | X | X | X | | | | | |
| | 51.49 | 34 | 28630 | 15.44 | | | X | X | | | | | | | X | X | | | | |
| | 55.55 | 32 | 22125 | 11.23 | X | X | X | X | | | X | X | X | X | X | X | | | | |
| | 55.90 | 31 | 23010 | 11.31 | | | X | X | | | | | X | X | X | | | | | |
| | 68.63 | 25 | 26285 | 10.42 | | | X | X | | | | | X | X | X | | | | | |
| | 81.61 | 21 | 16178 | 5.39 | X | X | X | | | | X | X | X | X | | | | | | |
| | 91.81 | 19 | 24417 | 7.36 | | | X | X | | | | | X | X | X | | | | | |
| | 100.19 | 17 | 19833 | 5.35 | X | X | X | | | | X | X | X | X | | | | | | |
| | 134.03 | 13 | 23488 | 4.84 | X | X | X | | | | X | X | X | X | | | | | | |

◈ The maximum input power limit shown is the largest motor power typically combined with the gear unit. *The Italicized power values shown are not the mechanical limit and often may be increased through discussion with our sales or engineering department.*

* The NEMA C-face power limit must also be considered when selecting a reducer. The C-face Adapter's Maximum Input Power values are displayed under the Available Combinations and based on a 1750 rpm motor.



# SK 5382 SCP
# Ratings & Combinations

| Type | Ratio | Output Speed 1750 rpm input $n_2$ [rpm] | Max Torque $T_{max}$ [lb-in] | Max ◈ Power 1750 rpm input $P_{max}$ [hp] | NEMA C-face* | | | | Integral Motor | | | | | | | | |
|---|---|---|---|---|---|---|---|---|---|---|---|---|---|---|---|---|---|
| | | | | | 56C 1.0 hp | 140TC 2.0 hp | 180TC 5.0 hp | 210TC 10 hp | 71L/4 0.5 hp | 80S/4 0.75 hp | 80L/4 80LH/4 1.0 hp | 90S/4 90SH/4 1.5 hp | 90L/4 90LH/4 2 .0 hp | 100L/4 100LH/4 3.0 hp | 100LA/4 112LH/4 5.0 hp | 132S/SH/4 7.5 hp | 132M/MH/4 10 hp |
| **SK 5382 SCP** | 82.72 | 21 | 24736 | 7.50 | X | X | X | X | X | X | X | X | X | X | X | X | X |
| | 91.71 | 19 | 25665 | 7.50 | X | X | X | X | X | X | X | X | X | X | X | X | X |
| | 117.37 | 15 | 24338 | 5.79 | X | X | X | X | X | X | X | X | X | X | X | X | X |
| | 138.82 | 13 | 28320 | 5.84 | X | X | X | X | X | X | X | X | X | X | X | X | X |
| | 153.92 | 11 | 28320 | 4.94 | X | X | X | X | X | X | X | X | X | X | X | X | X |
| | 171.27 | 10 | 24780 | 3.93 | X | X | X | | X | X | X | X | X | X | X | | |
| | 202.57 | 8.6 | 28320 | 3.86 | X | X | X | | X | X | X | X | X | X | X | | |
| | 248.70 | 7 | 28320 | 3.14 | X | X | X | | X | X | X | X | X | X | X | | |
| | 269.99 | 6.5 | 23895 | 2.46 | X | X | X | | X | X | X | X | X | X | X | | |
| | 331.48 | 5.3 | 28320 | 2.38 | X | X | X | | X | X | X | X | X | X | X | | |
| | 361.69 | 4.8 | 24780 | 1.89 | X | X | | | | X | X | X | X | | | | |
| | 427.79 | 4.1 | 28320 | 1.84 | X | X | | | | X | X | X | X | | | | |
| | 525.20 | 3.3 | 28320 | 1.48 | X | X | | | | X | X | X | X | | | | |
| | 570.18 | 3.1 | 24780 | 1.22 | X | X | | | | X | X | X | X | | | | |
| | 700.03 | 2.5 | 28320 | 1.12 | X | X | | | | X | X | X | X | | | | |
| | 936.45 | 1.9 | 23895 | 0.72 | X | X | | | | X | X | X | X | | | | |
| | 1,367.08 | 1.3 | 23895 | 0.49 | X | X | | | | X | X | X | X | | | | |

◈ The maximum input power limit shown is the largest motor power typically combined with the gear unit. *The Italicized power values shown are not the mechanical limit and often may be increased through discussion with our sales or engineering department.*

* The NEMA C-face power limit must also be considered when selecting a reducer. The C-face Adapter's Maximum Input Power values are displayed under the Available Combinations and based on a 1750 rpm motor.

# SK 6282 SCP
# Ratings & Combinations



| Type | Ratio | Output Speed 1750 rpm input $n_2$ [rpm] | Max Torque $T_{max}$ [lb-in] | Max ◈ Power 1750 rpm input $P_{max}$ [hp] | NEMA C-face* | | | | | | Integral Motor | | | | | | | | | |
|---|---|---|---|---|---|---|---|---|---|---|---|---|---|---|---|---|---|---|---|---|
| | | | | | 180TC 5 hp | 210TC 10 hp | 250TC 20 hp | 280TC 30 hp | 320TC 40 hp | 360TC 50 hp | 100L/4 100LH/4 3.0 hp | 100LA/4 112LH/4 5.0 hp | 132S/SH/4 7.5 hp | 132M/MH/4 10 hp | 160M/MH/4 15 hp | 160L/LH/4 20 hp | 180MX/MH/4 25 hp | 180LX/LH/4 30 hp | 200 l/LH/4 40 hp | 225S/SH/4 225M/MH/4 50 hp |
| **SK 6282 SCP** | 4.39 | 399 | 18001 | *60.00* | | | X | X | X | X | | | | | | | X | X | X | X |
| | 4.88 | 359 | 19081 | *60.00* | X | X | X | X | X | X | | | | X | X | X | X | X | X | X |
| | 5.50 | 318 | 20275 | *60.00* | X | X | X | X | X | X | | | | X | X | X | X | X | X | X |
| | 5.78 | 303 | 20656 | *60.00* | X | X | X | X | X | X | | | | X | X | X | X | X | X | X |
| | 5.99 | 292 | 21169 | *60.00* | | | X | X | X | X | | | | | | | X | X | X | X |
| | 6.74 | 260 | 26462 | *60.00* | X | X | X | X | X | X | X | X | X | X | X | X | X | X | X | X |
| | 7.82 | 224 | 23736 | *60.00* | X | X | X | X | X | X | X | X | X | X | X | X | X | X | X | X |
| | 9.39 | 186 | 24373 | *60.00* | X | X | X | X | X | X | X | X | X | X | X | X | X | X | | |
| | 10.64 | 164 | 38179 | *60.00* | X | X | X | X | X | X | X | X | X | X | X | X | X | X | X | X |
| | 12.35 | 142 | 38843 | *60.00* | X | X | X | X | X | X | X | X | X | X | X | X | X | X | X | X |
| | 14.83 | 118 | 39604 | *60.00* | X | X | X | X | X | X | X | X | X | X | X | X | X | X | | |
| | 18.70 | 94 | 39179 | 58.43 | X | X | X | X | X | X | X | X | X | X | X | X | X | X | | |
| | 22.95 | 76 | 40135 | 48.40 | X | X | X | X | X | X | X | X | X | X | X | X | X | X | | |
| | 26.05 | 67 | 40117 | 42.65 | X | X | X | X | | | X | X | X | X | X | X | X | X | | |
| | 29.90 | 59 | 40152 | 37.59 | X | X | X | X | | | X | X | X | X | X | X | X | X | | |
| | 39.48 | 44 | 28320 | 19.77 | X | X | X | X | | | | | X | X | X | X | | | | |
| | 49.75 | 35 | 35754 | 19.86 | X | X | X | X | | | | | X | X | X | X | | | | |
| | 61.08 | 29 | 40135 | 18.47 | X | X | X | X | | | | | X | X | X | X | | | | |
| | 65.44 | 27 | 29816 | 12.77 | X | X | | | | | X | X | X | | | | | | | |
| | 80.33 | 22 | 36559 | 12.76 | X | X | | | | | X | X | X | | | | | | | |

◈ The maximum input power limit shown is the largest motor power typically combined with the gear unit. *The Italicized power values shown are not the mechanical limit and often may be increased through discussion with our sales or engineering department.*

* The NEMA C-face power limit must also be considered when selecting a reducer. The C-face Adapter's Maximum Input Power values are displayed under the Available Combinations and based on a 1750 rpm motor.

W + NEMA



# SK 6382 SCP
# Ratings & Combinations

| Type | Ratio | Output Speed 1750 rpm input $n_2$ [rpm] | Max Torque $T_{max}$ [lb-in] | Max ◈ Power 1750 rpm input $P_{max}$ [hp] | NEMA C-face* | | | | | | Integral Motor | | | | | | | | | |
|---|---|---|---|---|---|---|---|---|---|---|---|---|---|---|---|---|---|---|---|---|
| | | | | | 56C | 140TC | 180TC | 210TC | 250TC | 280TC | 90S/4 90SH/4 | 90L/4 90LH/4 | 100L/4 100LH/4 | 100LA/4 112LH/4 | 132S/SH/4 | 132M/MH/4 | 160M/MH/4 | 160L/LH/4 | 180MX/MH/4 | 180LX/LH/4 |
| | | | | | 1.0 hp | 2.0 hp | 5.0 hp | 10 hp | 15 hp | 20 hp | 1.5 hp | 2 .0 hp | 3.0 hp | 5.0 hp | 7.5 hp | 10 hp | 15 hp | 20 hp | 25 hp | 30 hp |
| **SK 6382 SCP** | 24.42 | 72 | 41507 | *30.00* | X | X | X | X | X | X | | | X | X | X | X | X | X | X | X |
| | 28.72 | 61 | 40710 | *30.00* | X | X | X | X | X | X | X | X | X | X | X | X | X | X | X | X |
| | 30.91 | 57 | 40268 | *30.00* | X | X | X | X | X | X | | | X | X | X | X | X | X | X | X |
| | 36.34 | 48 | 40268 | *30.00* | X | X | X | X | X | X | X | X | X | X | X | X | X | X | X | X |
| | 42.46 | 41 | 40268 | 26.20 | X | X | X | X | X | X | X | X | X | X | X | X | X | X | X | X |
| | 51.07 | 34 | 44958 | 24.25 | X | X | X | X | X | X | X | X | X | X | X | X | X | X | X | X |
| | 59.66 | 29 | 48675 | 22.40 | X | X | X | X | X | X | X | X | X | X | X | X | X | X | X | X |
| | 73.50 | 24 | 49295 | 18.77 | X | X | X | X | X | | X | X | X | X | X | X | X | X | | |
| | 75.18 | 23 | 53100 | 19.38 | X | X | X | X | X | X | X | X | X | X | X | X | X | X | X | X |
| | 92.63 | 19 | 53100 | 16.01 | X | X | X | X | X | | X | X | X | X | X | X | X | X | | |
| | 114.79 | 15 | 52038 | 12.39 | X | X | X | X | X | | X | X | X | X | X | X | X | X | | |
| | 126.87 | 14 | 40533 | 9.00 | X | X | X | X | | | X | X | X | X | X | X | | | | |
| | 159.88 | 11 | 51065 | 8.91 | X | X | X | X | | | X | X | X | X | X | X | | | | |
| | 171.34 | 10 | 49295 | 7.82 | | | X | X | | | | | X | X | X | X | | | | |
| | 212.33 | 8.2 | 41330 | 5.38 | | | X | X | | | | | X | X | X | X | | | | |
| | 225.79 | 7.8 | 35577 | 4.40 | X | X | X | | | | X | X | X | X | | | | | | |
| | 251.76 | 7.0 | 39648 | 4.40 | X | X | X | | | | X | X | X | X | | | | | | |
| | 267.59 | 6.5 | 52038 | 5.37 | | | X | X | | | | | X | X | X | X | | | | |
| | 317.28 | 5.5 | 49914 | 4.36 | X | X | X | | | | X | X | X | X | | | | | | |
| | 393.19 | 4.5 | 52038 | 3.72 | X | X | X | | | | X | X | X | X | | | | | | |
| | 445.09 | 3.9 | 36905 | 2.28 | X | X | | | | | X | X | | | | | | | | |
| | 551.58 | 3.2 | 45755 | 2.32 | X | X | | | | | X | X | | | | | | | | |

◈ The maximum input power limit shown is the largest motor power typically combined with the gear unit. *The Italicized power values shown are not the mechanical limit and often may be increased through discussion with our sales or engineering department.*

* The NEMA C-face power limit must also be considered when selecting a reducer. The C-face Adapter's Maximum Input Power values are displayed under the Available Combinations and based on a 1750 rpm motor.

# Notes



# Gearmotors & C-Face Reducers

- SK 1282 SCP
- SK 2282 SCP
- SK 3282 SCP
- SK 4282 SCP
- SK 5282 SCP
- SK 6282 SCP
- 3-Stage Gearmotors & Reducers
- NEMA C-Face Motors
- CEMA Drive Shaft Detail
- 3rd Party Shaft Design & Detail

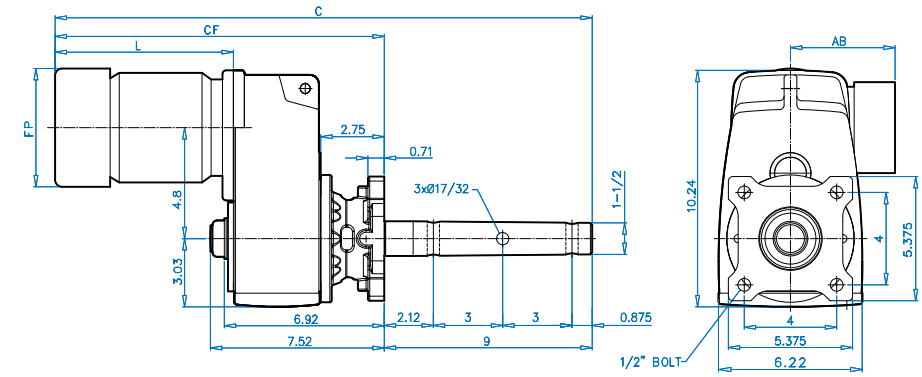


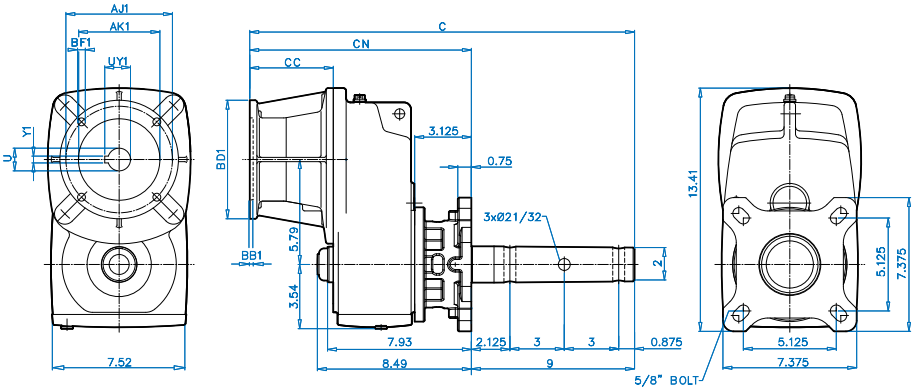


DRIVESYSTEMS

www.nord.com

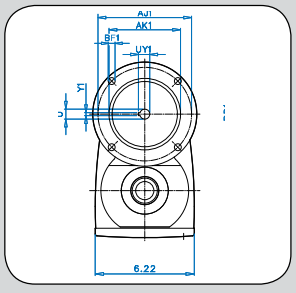


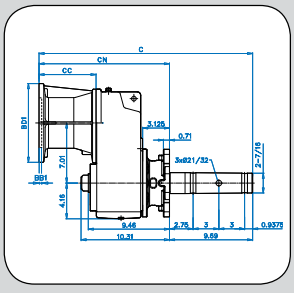


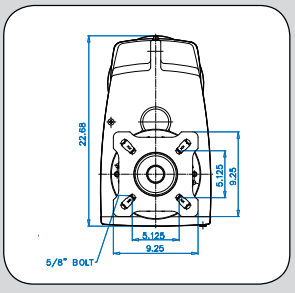


UNICASE™ CLINCHER™

# SK 1282 SCP + Motor
# 1-1/2" CEMA Drive Shaft

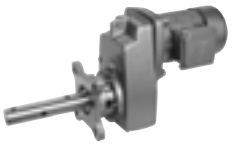

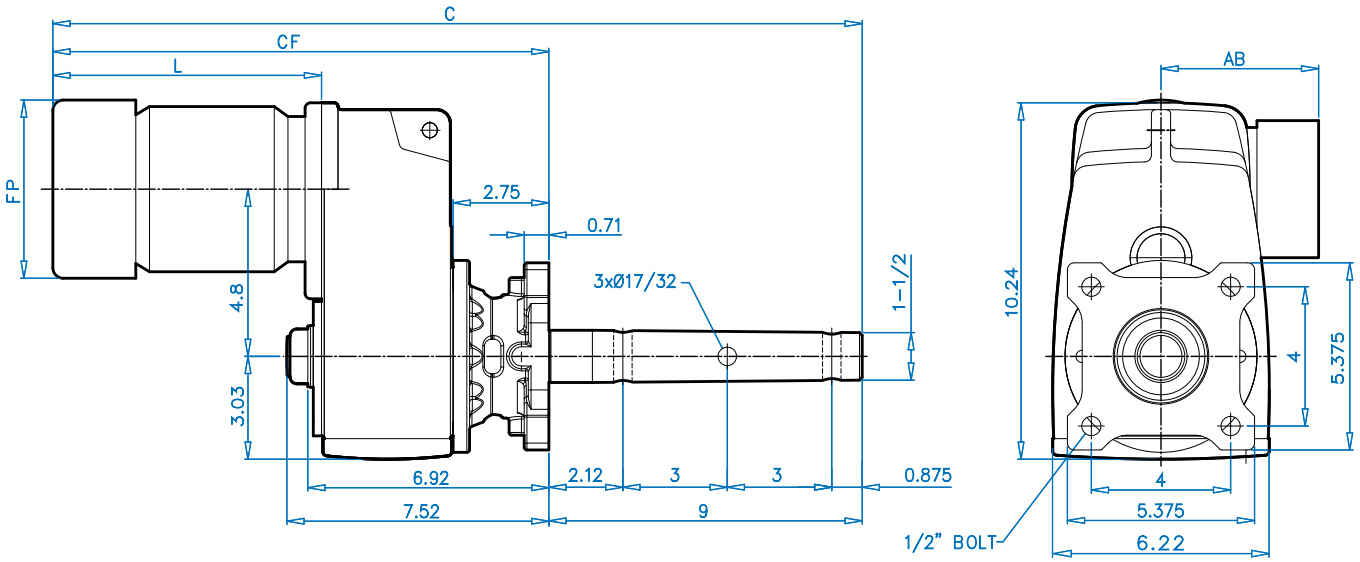


DIMENSIONS

| Motor Type | Overall | | Motor | | |
|---|---|---|---|---|---|
| | C | CF | L | FP | AB |
| 63S/L | 23.38 | 14.38 | 7.73 | 5.08 | 4.51 |
| 71S/L | 24.96 | 15.96 | 9.31 | 5.72 | 4.86 |
| 80S/L/LH | 25.94 | 16.94 | 10.29 | 6.43 | 5.59 |
| 90S/SH/L/LH | 27.52 | 18.28 | 11.87 | 7.19 | 5.79 |
| 100L/LA/LH | 28.74 | 19.74 | 13.09 | 7.90 | 6.65 |
| 112M | 29.61 | 20.61 | 13.96 | 8.87 | 7.05 |
| 112MH | 30.60 | 21.60 | 14.95 | 8.87 | 7.05 |

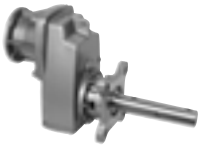

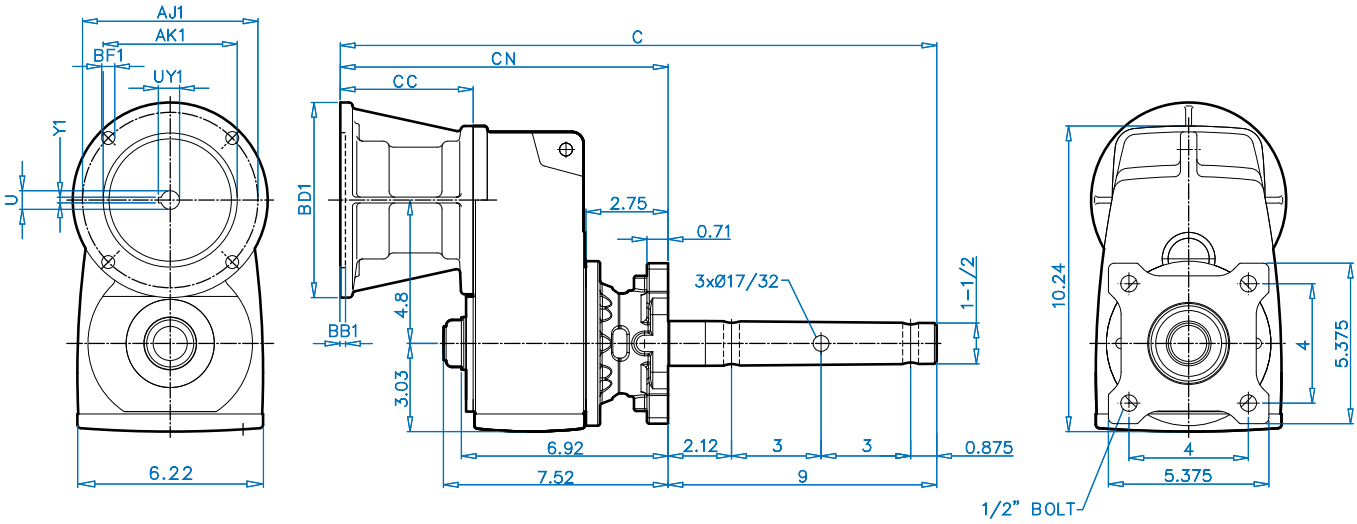




| NEMA | Overall | | NEMA Input | | | | | | Coupling | | |
|---|---|---|---|---|---|---|---|---|---|---|---|
| C-Face Input | C | CN | CC | AJ1 | AK1 | BB1 | BD1 | BF1 | U1 | UY1 | Y1 |
| **56C** | 20.10 | 11.10 | 4.45 | 5.875 | 4.50 | 0.20 | 6.54 | 0.43 | 0.625 | 0.71 | 0.188 |
| **140TC** | 20.10 | 11.10 | 4.45 | 5.875 | 4.50 | 0.20 | 6.54 | 0.43 | 0.875 | 0.96 | 0.188 |
| **180TC** | 21.30 | 12.30 | 5.65 | 7.250 | 8.50 | 0.23 | 9.17 | 0.59 | 1.125 | 1.24 | 0.250 |

# SK 1282 SCP + Motor
# 2” CEMA Drive Shaft

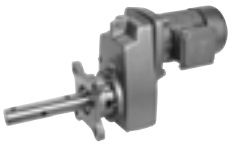



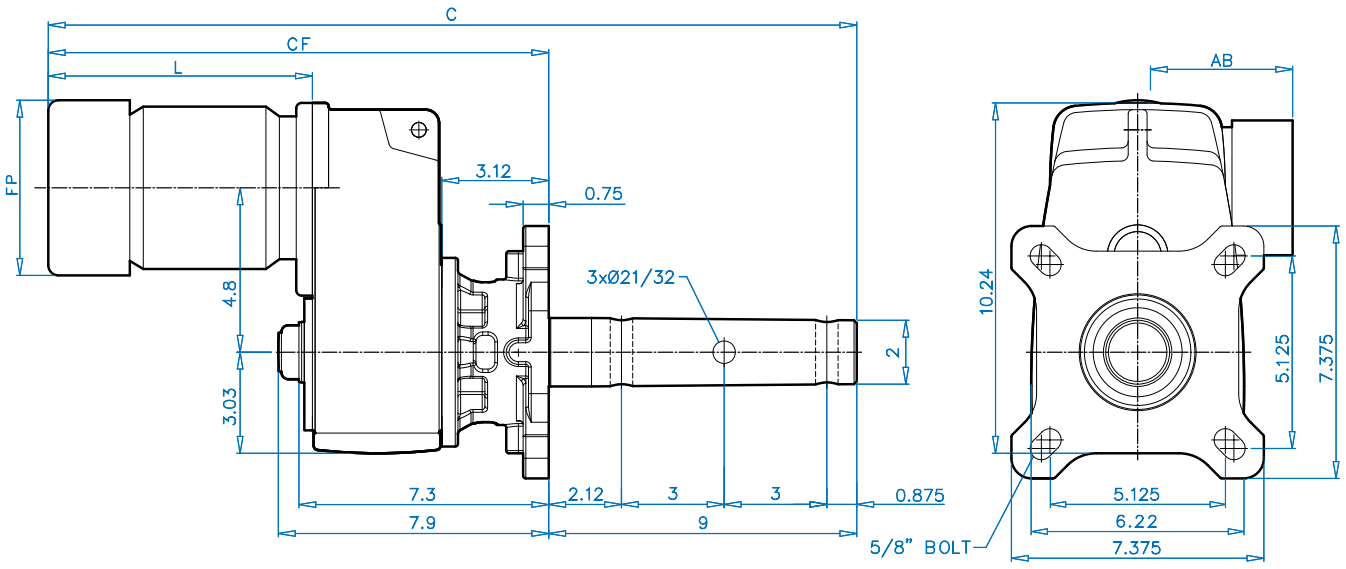


| Motor Type | Overall | | Motor | | |
|---|---|---|---|---|---|
| | C | CF | L | FP | AB |
| 63S/L | 23.76 | 14.76 | 7.73 | 5.08 | 4.51 |
| 71S/L | 25.33 | 16.33 | 9.31 | 5.72 | 4.86 |
| 80S/L/LH | 26.32 | 17.32 | 10.29 | 6.43 | 5.59 |
| 90S/SH/L/LH | 27.89 | 18.65 | 11.87 | 7.19 | 5.79 |
| 100L/LA/LH | 29.11 | 20.11 | 13.09 | 7.90 | 6.65 |
| 112M | 29.98 | 20.98 | 13.96 | 8.87 | 7.05 |
| 112MH | 30.97 | 21.97 | 14.95 | 8.87 | 7.05 |

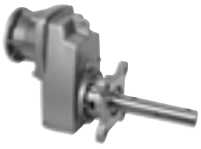

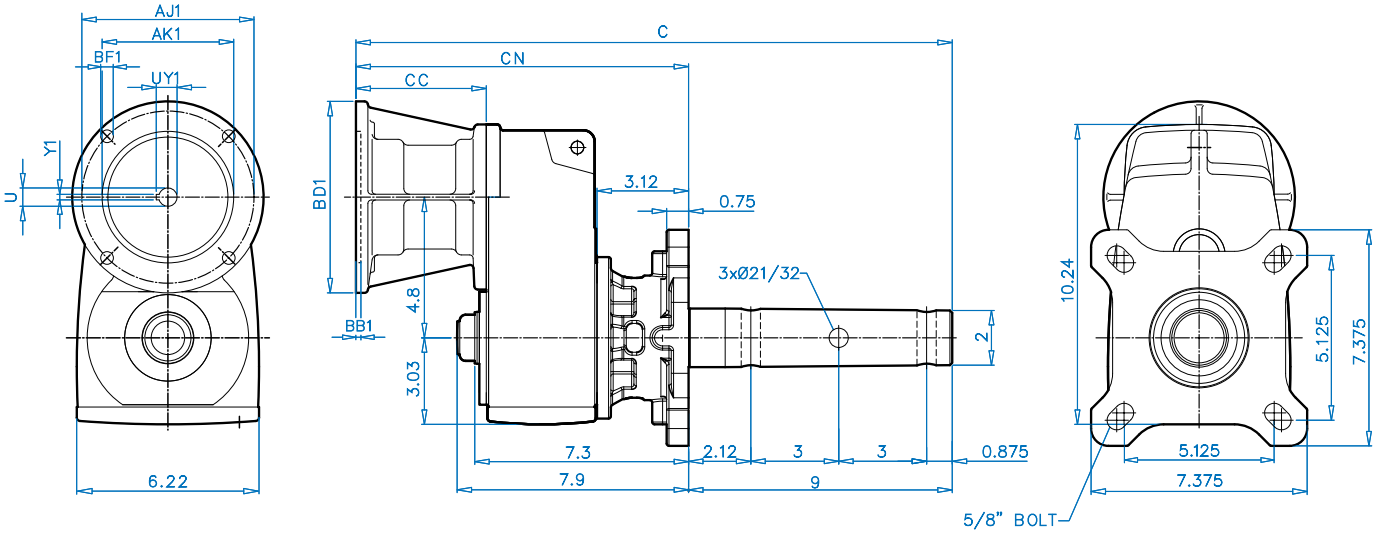


DIMENSIONS

| NEMA | Overall | | NEMA Input | | | | | | Coupling | | |
|---|---|---|---|---|---|---|---|---|---|---|---|
| C-Face Input | C | CN | CC | AJ1 | AK1 | BB1 | BD1 | BF1 | U1 | UY1 | Y1 |
| **56C** | 20.47 | 11.47 | 4.45 | 5.875 | 4.50 | 0.20 | 6.54 | 0.43 | 0.625 | 0.71 | 0.188 |
| **140TC** | 20.47 | 11.47 | 4.45 | 5.875 | 4.50 | 0.20 | 6.54 | 0.43 | 0.875 | 0.96 | 0.188 |
| **180TC** | 21.67 | 12.67 | 5.65 | 7.250 | 8.50 | 0.23 | 9.17 | 0.59 | 1.125 | 1.24 | 0.250 |

# SK 1282 SCP + Motor
# 2-7/16" CEMA Drive Shaft

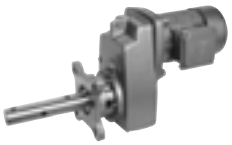

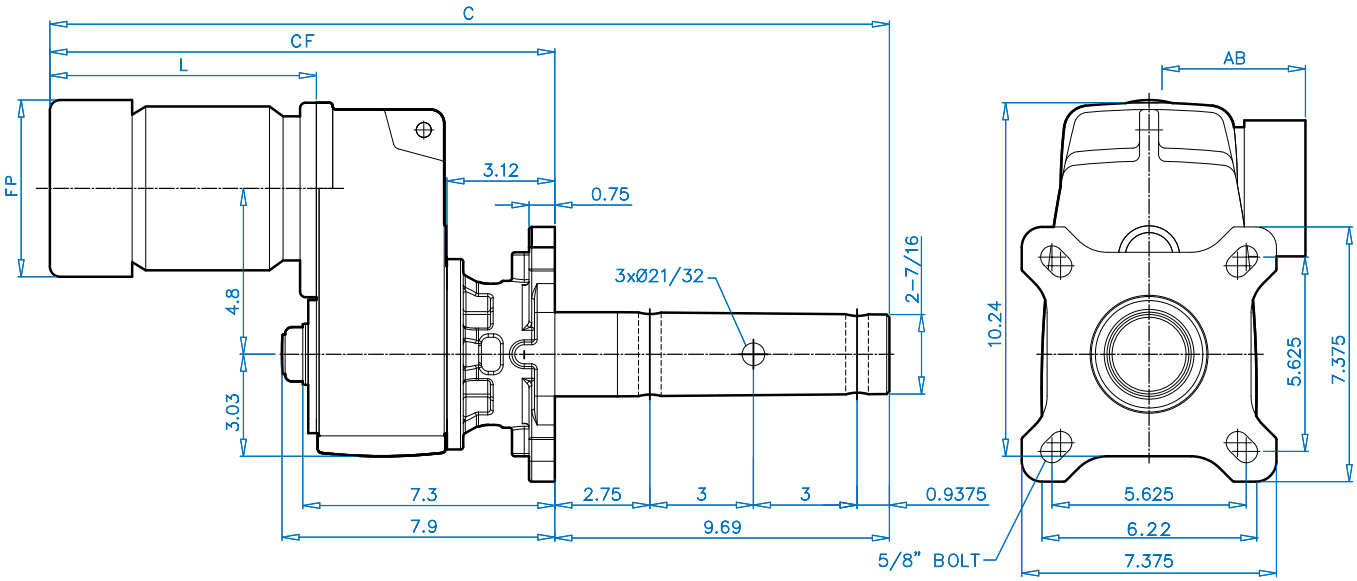


DIMENSIONS

| Motor Type | Overall | | Motor | | |
|---|---|---|---|---|---|
| | C | CF | L | FP | AB |
| 63S/L | 23.76 | 14.76 | 7.73 | 5.08 | 4.51 |
| 71S/L | 25.33 | 16.33 | 9.31 | 5.72 | 4.86 |
| 80S/L/LH | 26.32 | 17.32 | 10.29 | 6.43 | 5.59 |
| 90S/SH/L/LH | 27.89 | 18.65 | 11.87 | 7.19 | 5.79 |
| 100L/LA/LH | 29.11 | 20.11 | 13.09 | 7.90 | 6.65 |
| 112M | 29.98 | 20.98 | 13.96 | 8.87 | 7.05 |
| 112MH | 30.97 | 21.97 | 14.95 | 8.87 | 7.05 |

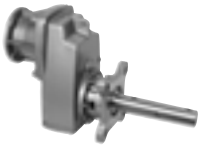

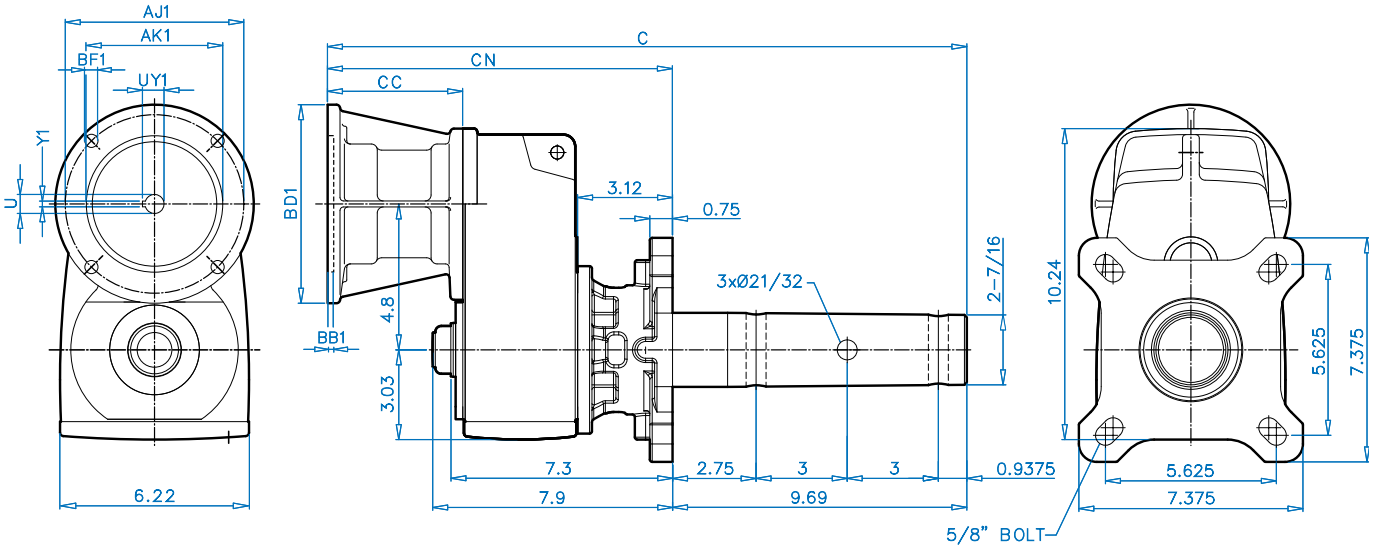


DIMENSIONS

| NEMA C-Face Input | Overall | | NEMA Input | | | | | | Coupling | | |
|---|---|---|---|---|---|---|---|---|---|---|---|
| | C | CN | CC | AJ1 | AK1 | BB1 | BD1 | BF1 | U1 | UY1 | Y1 |
| **56C** | 21.16 | 11.47 | 4.45 | 5.875 | 4.50 | 0.20 | 6.54 | 0.43 | 0.625 | 0.71 | 0.188 |
| **140TC** | 21.16 | 11.47 | 4.45 | 5.875 | 4.50 | 0.20 | 6.54 | 0.43 | 0.875 | 0.96 | 0.188 |
| **180TC** | 22.36 | 12.67 | 5.65 | 7.250 | 8.50 | 0.23 | 9.17 | 0.59 | 1.125 | 1.24 | 0.250 |

# SK 2282 SCP + Motor
# 1-1/2" CEMA Drive Shaft

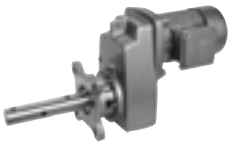

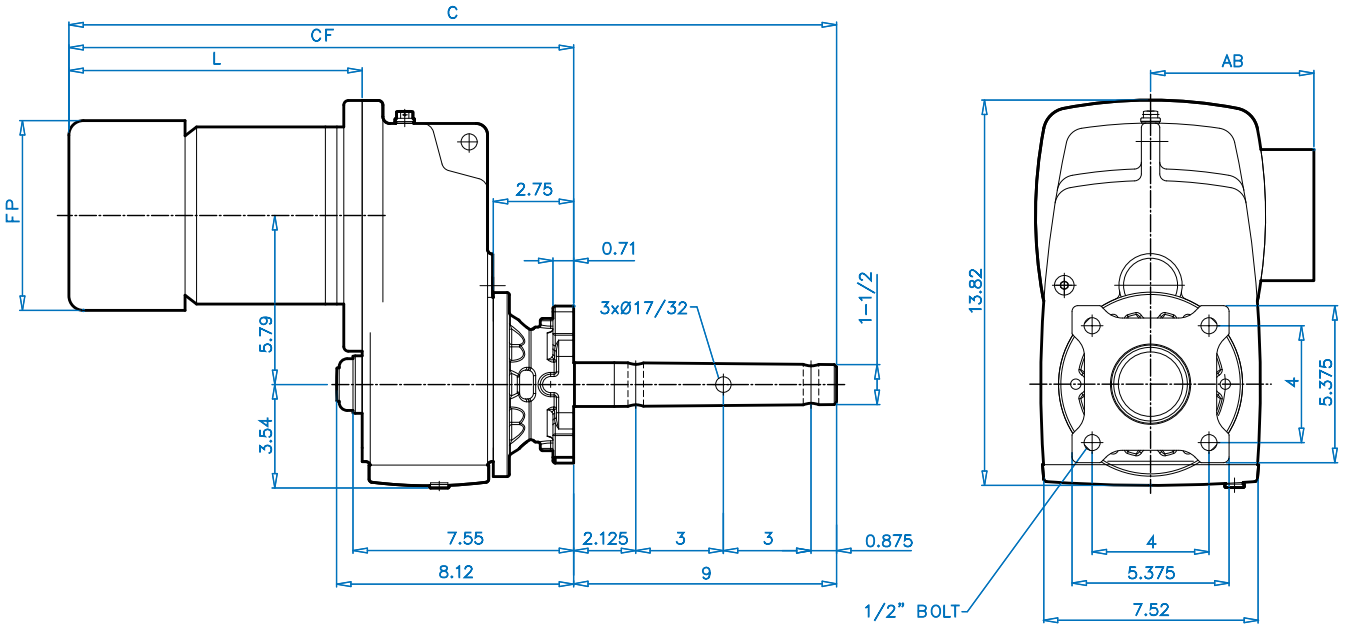


DIMENSIONS

| Motor Type | Overall | | Motor | | |
|---|---|---|---|---|---|
| | C | CF | L | FP | AB |
| **71S/L** | 25.51 | 16.51 | 9.07 | 5.72 | 4.86 |
| **80S/L/LH** | 26.49 | 17.49 | 10.06 | 6.43 | 5.59 |
| **90S/SH/L/LH** | 28.07 | 19.07 | 11.63 | 7.19 | 5.79 |
| **100L/LA/LH** | 29.29 | 20.29 | 12.85 | 7.90 | 6.65 |
| **112M** | 30.16 | 21.16 | 13.72 | 8.87 | 7.05 |
| **112MH** | 31.15 | 22.15 | 14.71 | 8.87 | 7.05 |

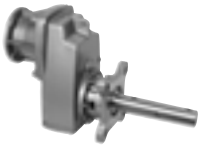

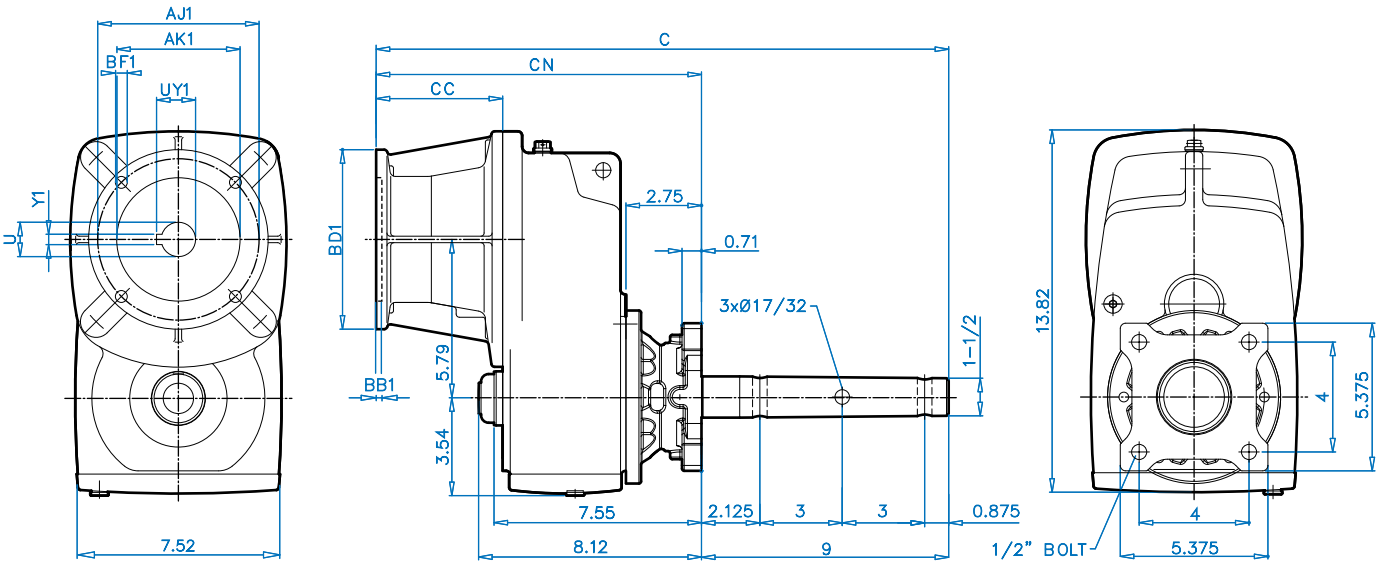




| NEMA | Overall | | NEMA Input | | | | | | Coupling | | |
|---|---|---|---|---|---|---|---|---|---|---|---|
| C-Face Input | C | CN | CC | AJ1 | AK1 | BB1 | BD1 | BF1 | U1 | UY1 | Y1 |
| **56C** | 21.04 | 12.04 | 4.61 | 5.875 | 4.50 | 0.20 | 6.54 | 0.43 | 0.625 | 0.71 | 0.188 |
| **140TC** | 21.04 | 12.04 | 4.61 | 5.875 | 4.50 | 0.20 | 6.54 | 0.43 | 0.875 | 0.96 | 0.188 |
| **180TC** | 23.08 | 14.08 | 6.65 | 7.250 | 8.50 | 0.23 | 9.17 | 0.59 | 1.125 | 1.24 | 0.250 |

# SK 2282 SCP + Motor
# 2” CEMA Drive Shaft

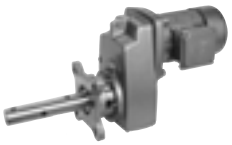



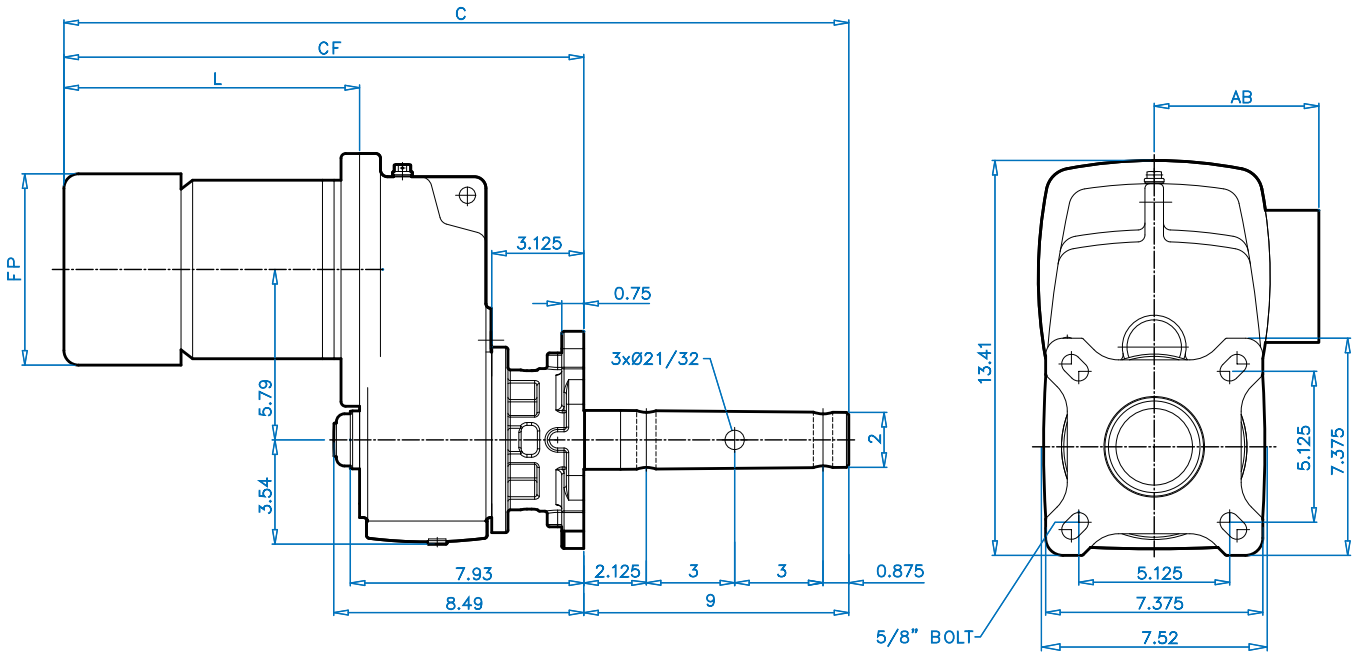


| Motor Type | Overall | | Motor | | |
|---|---|---|---|---|---|
| | C | CF | L | FP | AB |
| **71S/L** | 25.88 | 16.88 | 9.07 | 5.72 | 4.86 |
| **80S/L/LH** | 26.87 | 17.87 | 10.06 | 6.43 | 5.59 |
| **90S/SH/L/LH** | 28.44 | 19.44 | 11.63 | 7.19 | 5.79 |
| **100L/LA/LH** | 29.66 | 20.66 | 12.85 | 7.90 | 6.65 |
| **112M** | 30.53 | 21.53 | 13.72 | 8.87 | 7.05 |
| **112MH** | 31.53 | 22.53 | 14.71 | 8.87 | 7.05 |

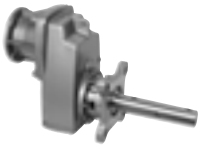

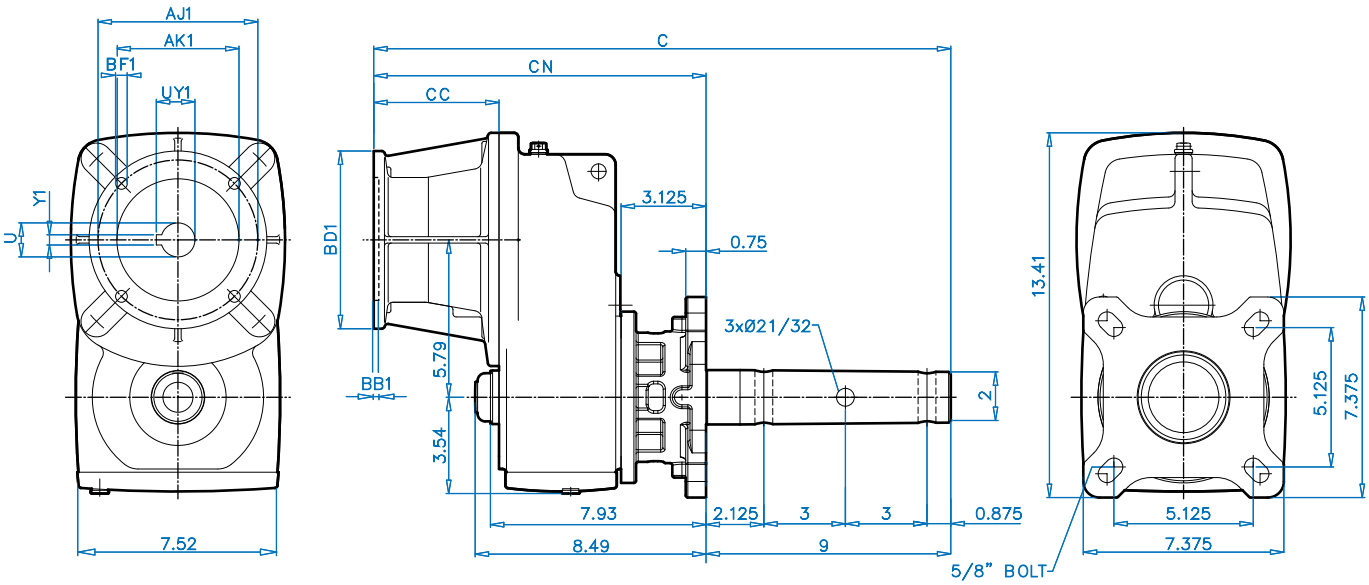




| NEMA | Overall | | NEMA Input | | | | | | Coupling | | |
|---|---|---|---|---|---|---|---|---|---|---|---|
| C-Face Input | C | CN | CC | AJ1 | AK1 | BB1 | BD1 | BF1 | U1 | UY1 | Y1 |
| **56C** | 21.42 | 12.42 | 4.61 | 5.875 | 4.50 | 0.20 | 6.54 | 0.43 | 0.625 | 0.71 | 0.188 |
| **140TC** | 21.42 | 12.42 | 4.61 | 5.875 | 4.50 | 0.20 | 6.54 | 0.43 | 0.875 | 0.96 | 0.188 |
| **180TC** | 23.46 | 14.46 | 6.65 | 7.250 | 8.50 | 0.23 | 9.17 | 0.59 | 1.125 | 1.24 | 0.250 |

# SK 2282 SCP + Motor
# 2-7/16” CEMA Drive Shaft

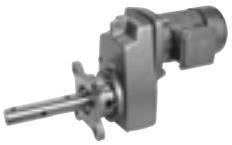

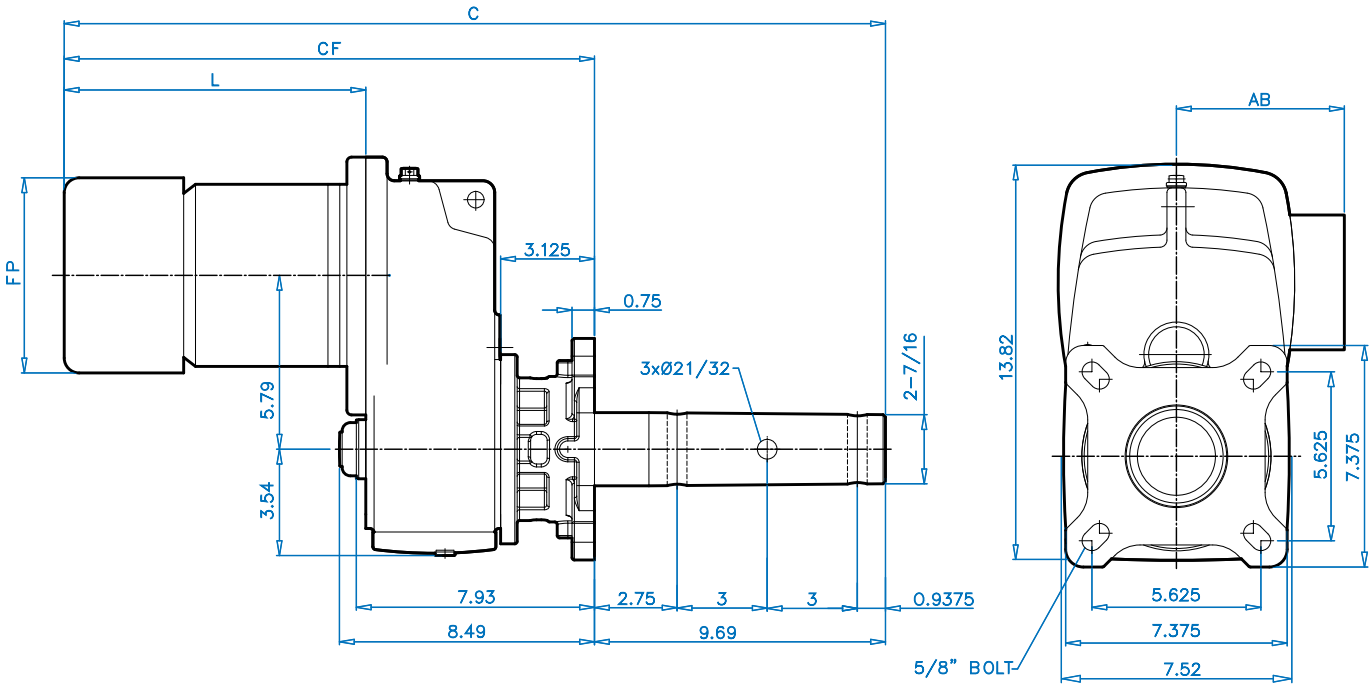


DIMENSIONS

| Motor Type | Overall | | Motor | | |
|---|---|---|---|---|---|
| | C | CF | L | FP | AB |
| **71S/L** | 26.57 | 16.88 | 9.07 | 5.72 | 4.86 |
| **80S/L/LH** | 27.56 | 17.87 | 10.06 | 6.43 | 5.59 |
| **90S/SH/L/LH** | 29.13 | 19.44 | 11.63 | 7.19 | 5.79 |
| **100L/LA/LH** | 30.35 | 20.66 | 12.85 | 7.90 | 6.65 |
| **112M** | 31.22 | 21.53 | 13.72 | 8.87 | 7.05 |
| **112MH** | 32.21 | 22.53 | 14.71 | 8.87 | 7.05 |

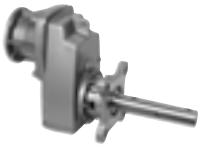

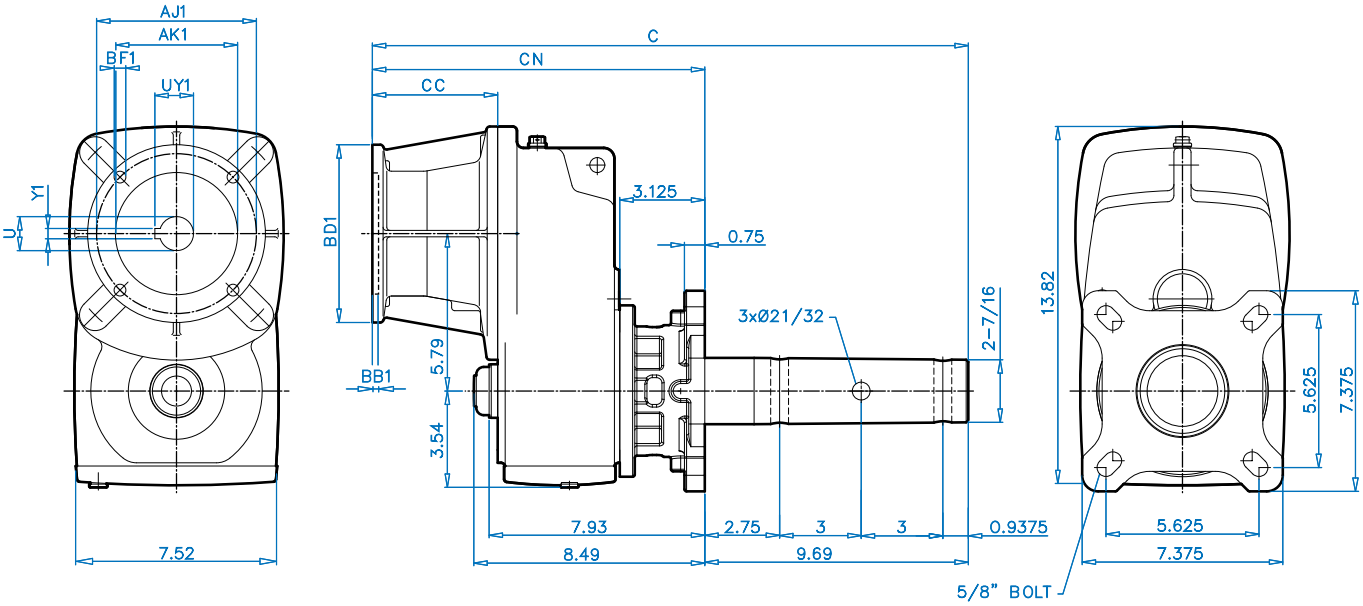


| NEMA | Overall | | NEMA Input | | | | | | Coupling | | |
|---|---|---|---|---|---|---|---|---|---|---|---|
| C-Face Input | C | CN | CC | AJ1 | AK1 | BB1 | BD1 | BF1 | U1 | UY1 | Y1 |
| **56C** | 22.11 | 12.42 | 4.61 | 5.875 | 4.50 | 0.20 | 6.54 | 0.43 | 0.625 | 0.71 | 0.188 |
| **140TC** | 22.11 | 12.42 | 4.61 | 5.875 | 4.50 | 0.20 | 6.54 | 0.43 | 0.875 | 0.96 | 0.188 |
| **180TC** | 24.15 | 14.46 | 6.65 | 7.250 | 8.50 | 0.23 | 9.17 | 0.59 | 1.125 | 1.24 | 0.250 |

# SK 3282 SCP + Motor
# 1-1/2" CEMA Drive Shaft

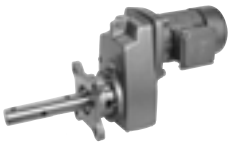

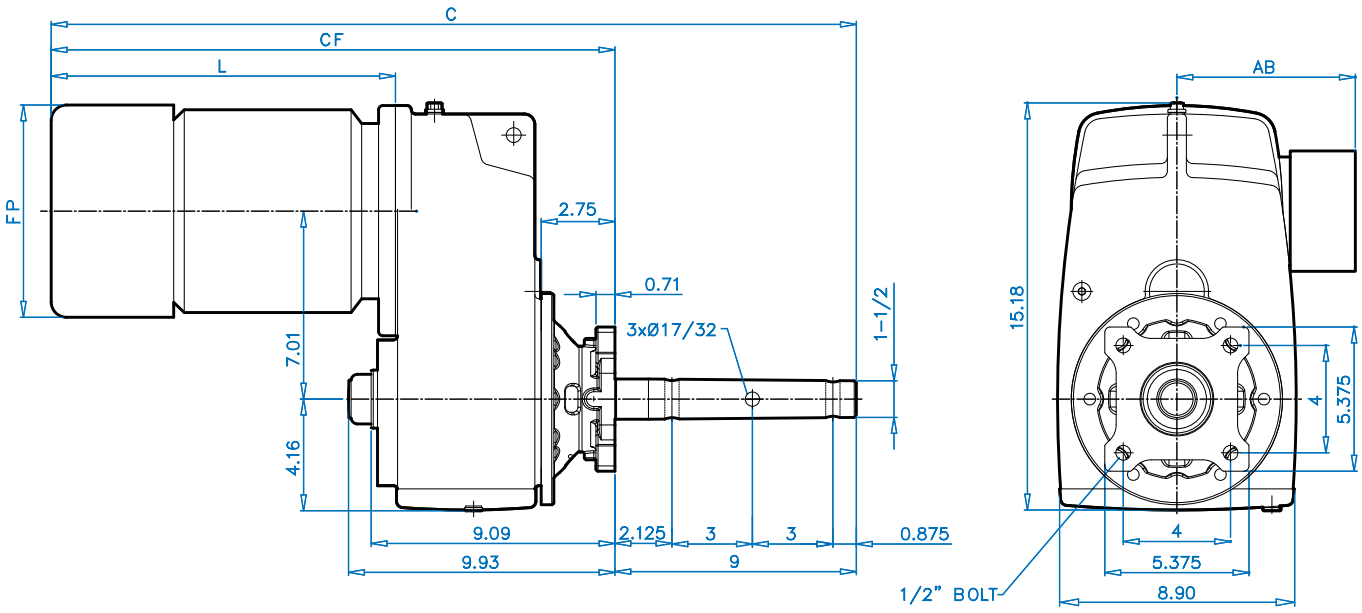


DIMENSIONS

| Motor Type | Overall | | Motor | | |
|---|---|---|---|---|---|
| | C | CF | L | FP | AB |
| **71S/L** | 26.49 | 17.41 | 9.07 | 5.72 | 4.86 |
| **80S/L/LH** | 27.47 | 18.47 | 10.06 | 6.43 | 5.59 |
| **90S/SH/L/LH** | 29.04 | 20.04 | 11.63 | 7.19 | 5.79 |
| **100L/LA/LH** | 30.27 | 21.27 | 12.85 | 7.90 | 6.65 |
| **112M** | 31.14 | 22.14 | 13.72 | 8.87 | 7.05 |
| **112MH** | 32.13 | 23.13 | 14.71 | 8.87 | 7.05 |
| **132S/SH/M/MH** | 34.56 | 25.56 | 17.14 | 10.45 | 8.03 |

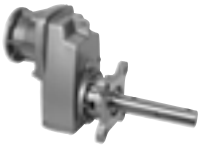

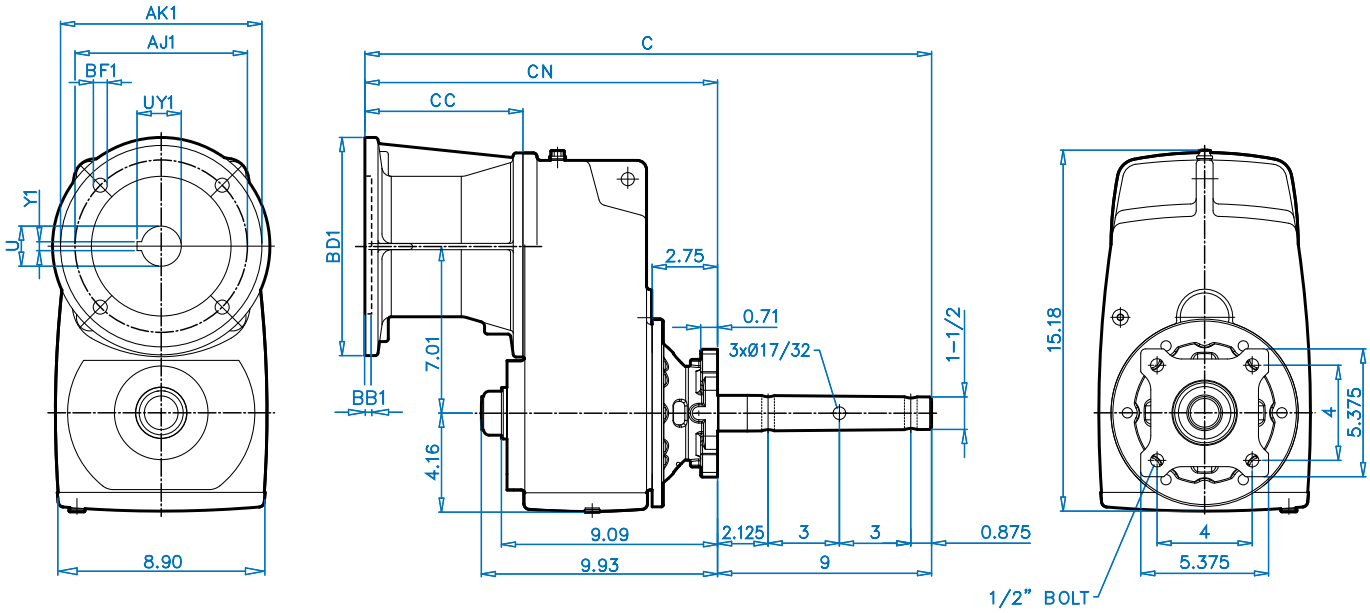




| NEMA | Overall | | NEMA Input | | | | | | Coupling | | |
|---|---|---|---|---|---|---|---|---|---|---|---|
| C-Face Input | C | CN | CC | AJ1 | AK1 | BB1 | BD1 | BF1 | U1 | UY1 | Y1 |
| **56C** | 22.02 | 13.02 | 4.61 | 5.875 | 4.50 | 0.20 | 6.54 | 0.43 | 0.625 | 0.71 | 0.188 |
| **140TC** | 22.02 | 13.02 | 4.61 | 5.875 | 4.50 | 0.20 | 6.54 | 0.43 | 0.875 | 0.96 | 0.188 |
| **180TC** | 24.06 | 15.06 | 6.65 | 7.250 | 8.50 | 0.23 | 9.17 | 0.59 | 1.125 | 1.24 | 0.250 |
| **210TC** | 24.06 | 15.06 | 6.65 | 7.250 | 8.50 | 0.23 | 9.17 | 0.59 | 1.375 | 1.52 | 0.310 |

# SK 3282 SCP + Motor
# 2” CEMA Drive Shaft

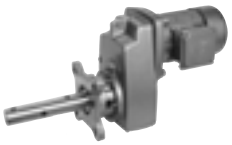

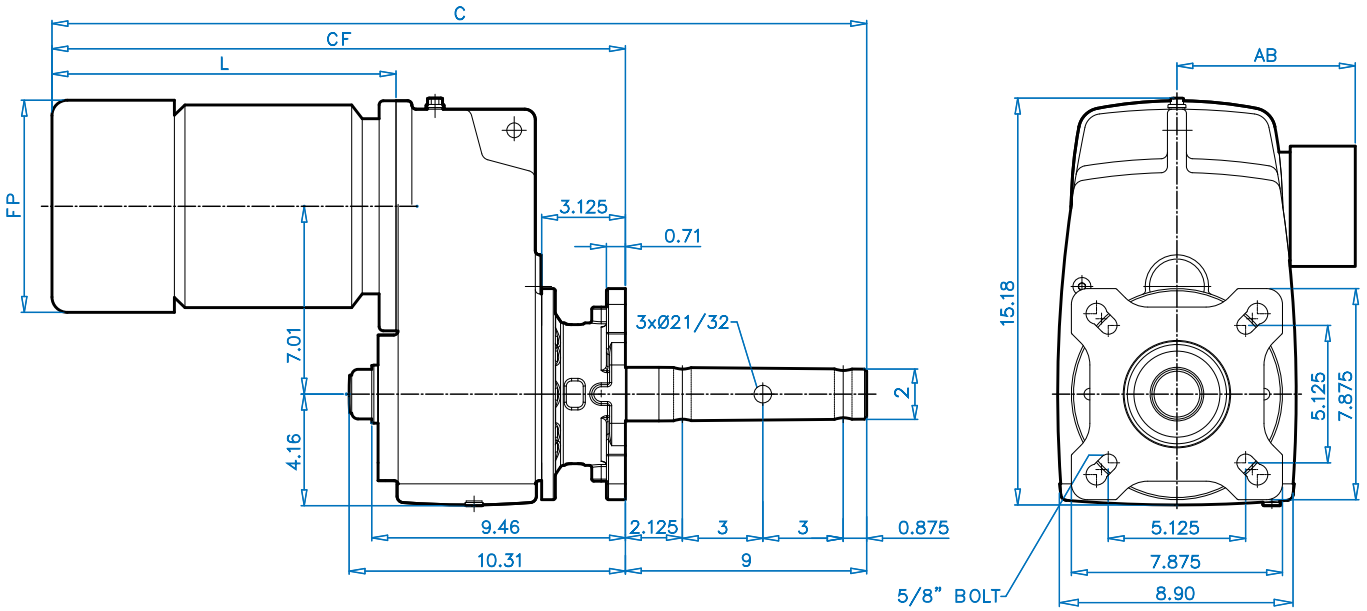


DIMENSIONS

| Motor Type | Overall | | Motor | | |
|---|---|---|---|---|---|
| | C | CF | L | FP | AB |
| **71S/L** | 26.86 | 17.79 | 9.07 | 5.72 | 4.86 |
| **80S/L/LH** | 27.85 | 18.85 | 10.06 | 6.43 | 5.59 |
| **90S/SH/L/LH** | 29.42 | 20.42 | 11.63 | 7.19 | 5.79 |
| **100L/LA/LH** | 30.64 | 21.64 | 12.85 | 7.90 | 6.65 |
| **112M** | 31.51 | 22.51 | 13.72 | 8.87 | 7.05 |
| **112MH** | 32.50 | 23.50 | 14.71 | 8.87 | 7.05 |
| **132S/SH/M/MH** | 34.93 | 25.93 | 17.14 | 10.45 | 8.03 |

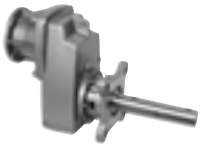

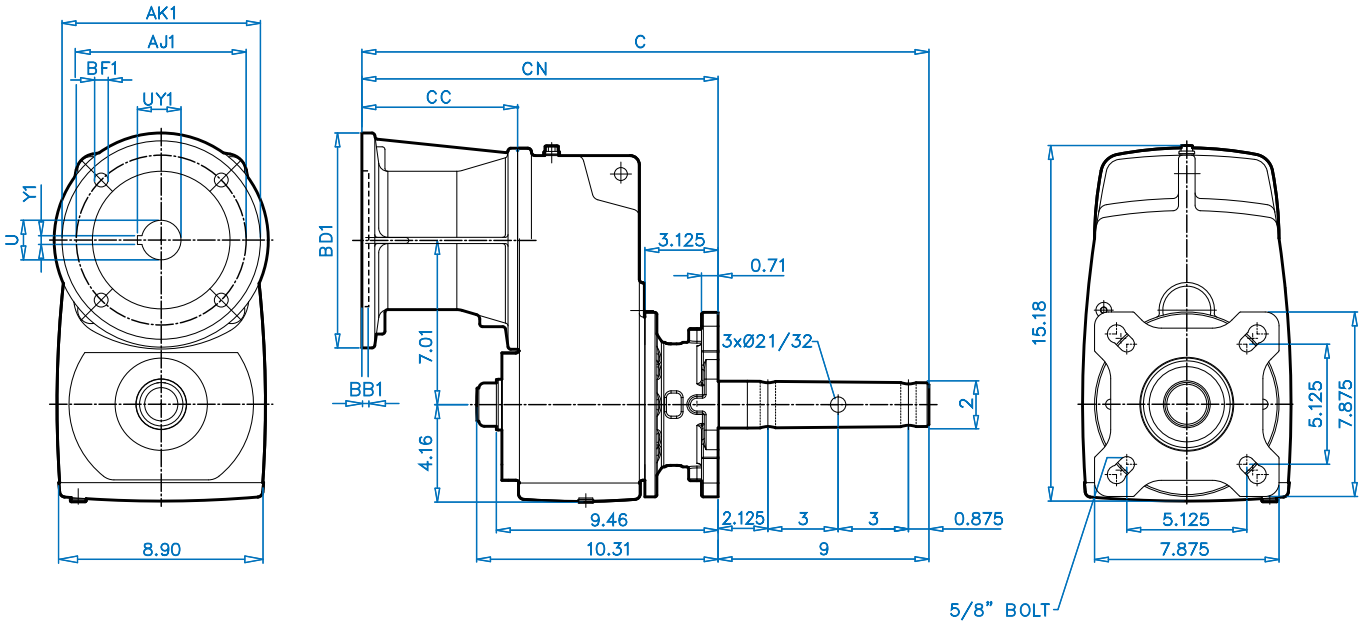


DIMENSIONS

| NEMA | Overall | | NEMA Input | | | | | | Coupling | | |
|---|---|---|---|---|---|---|---|---|---|---|---|
| C-Face Input | C | CN | CC | AJ1 | AK1 | BB1 | BD1 | BF1 | U1 | UY1 | Y1 |
| **56C** | 22.40 | 13.40 | 4.61 | 5.875 | 4.50 | 0.20 | 6.54 | 0.43 | 0.625 | 0.71 | 0.188 |
| **140TC** | 22.40 | 13.40 | 4.61 | 5.875 | 4.50 | 0.20 | 6.54 | 0.43 | 0.875 | 0.96 | 0.188 |
| **180TC** | 24.44 | 15.44 | 6.65 | 7.250 | 8.50 | 0.23 | 9.17 | 0.59 | 1.125 | 1.24 | 0.250 |
| **210TC** | 24.44 | 15.44 | 6.65 | 7.250 | 8.50 | 0.23 | 9.17 | 0.59 | 1.375 | 1.52 | 0.310 |

# SK 3282 SCP + Motor
# 2-7/16" CEMA Drive Shaft

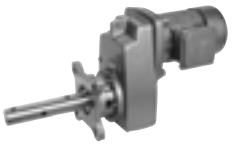

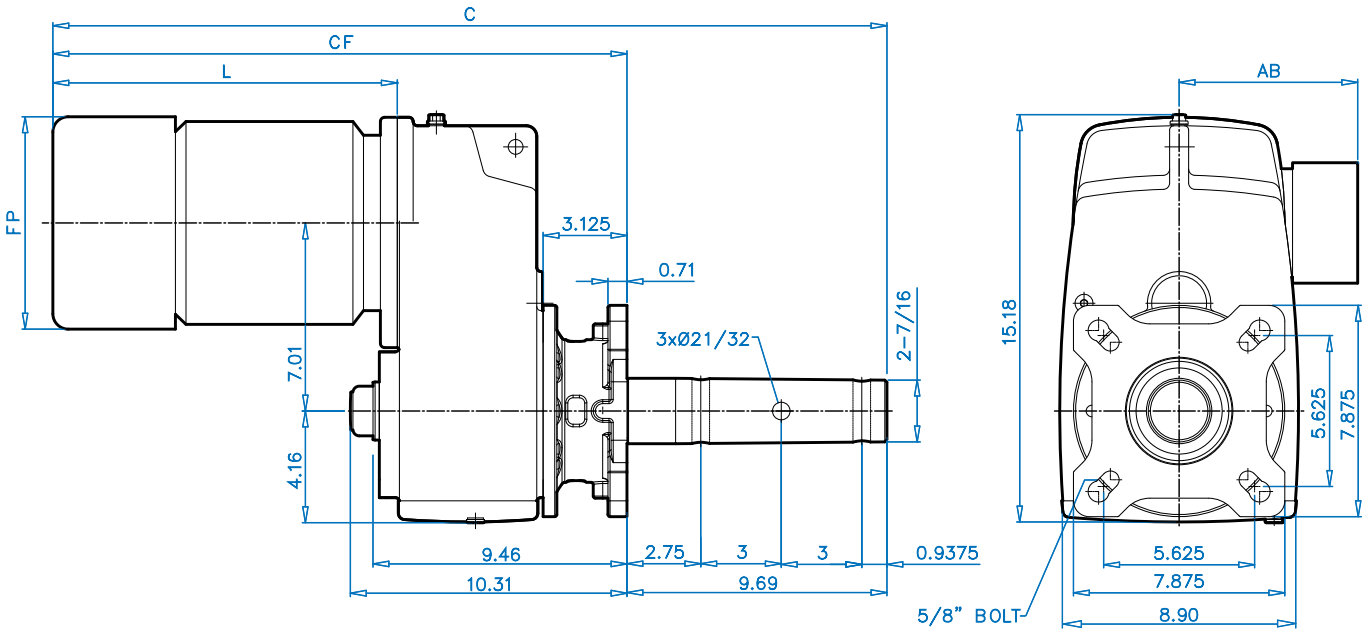


DIMENSIONS

| Motor Type | Overall | | Motor | | |
|---|---|---|---|---|---|
| | C | CF | L | FP | AB |
| **71S/L** | 27.55 | 18.48 | 9.07 | 5.72 | 4.86 |
| **80S/L/LH** | 28.53 | 18.85 | 10.06 | 6.43 | 5.59 |
| **90S/SH/L/LH** | 30.11 | 20.42 | 11.63 | 7.19 | 5.79 |
| **100L/LA/LH** | 31.33 | 21.64 | 12.85 | 7.90 | 6.65 |
| **112M** | 32.20 | 22.51 | 13.72 | 8.87 | 7.05 |
| **112MH** | 33.19 | 23.50 | 14.71 | 8.87 | 7.05 |
| **132S/SH/M/MH** | 35.62 | 25.93 | 17.14 | 10.45 | 8.03 |

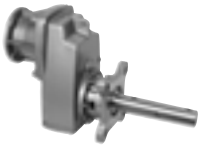

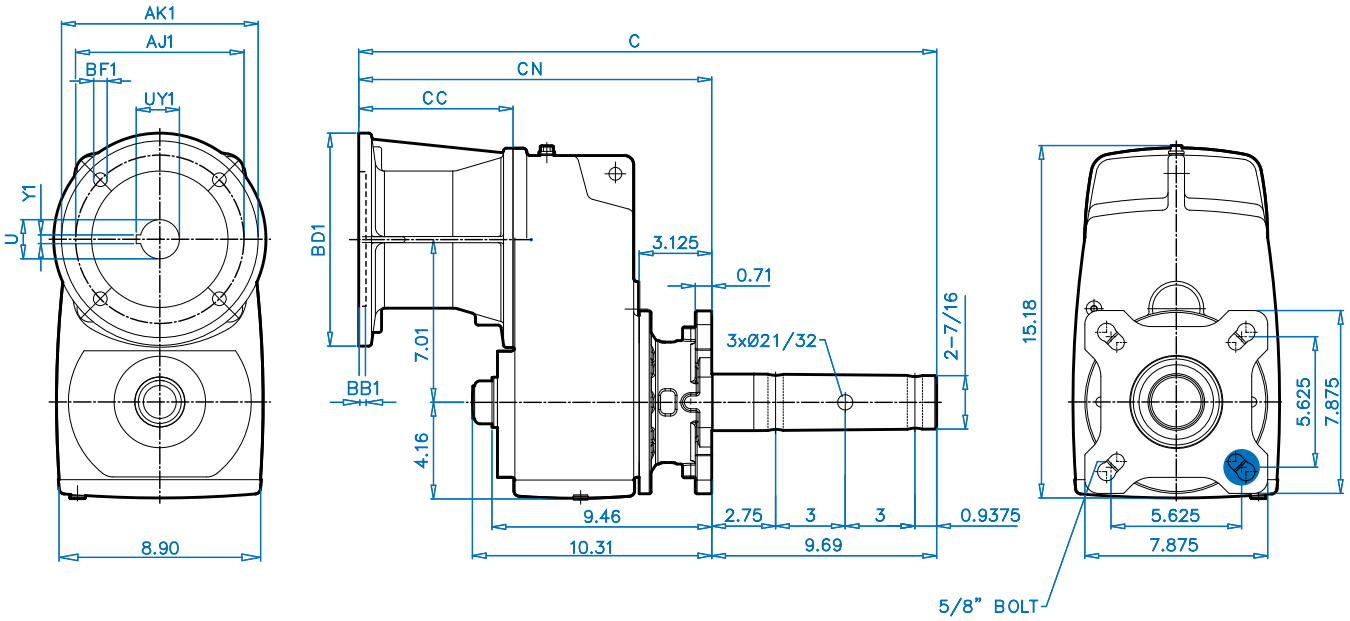


| NEMA | Overall | | NEMA Input | | | | | | Coupling | | |
|---|---|---|---|---|---|---|---|---|---|---|---|
| C-Face Input | C | CN | CC | AJ1 | AK1 | BB1 | BD1 | BF1 | U1 | UY1 | Y1 |
| **56C** | 23.08 | 13.40 | 4.61 | 5.875 | 4.50 | 0.20 | 6.54 | 0.43 | 0.625 | 0.71 | 0.188 |
| **140TC** | 23.08 | 13.40 | 4.61 | 5.875 | 4.50 | 0.20 | 6.54 | 0.43 | 0.875 | 0.96 | 0.188 |
| **180TC** | 25.12 | 15.44 | 6.65 | 7.250 | 8.50 | 0.23 | 9.17 | 0.59 | 1.125 | 1.24 | 0.250 |
| **210TC** | 25.12 | 15.44 | 6.65 | 7.250 | 8.50 | 0.23 | 9.17 | 0.59 | 1.375 | 1.52 | 0.310 |

# SK 3282 SCP + Motor
# 3” CEMA Drive Shaft

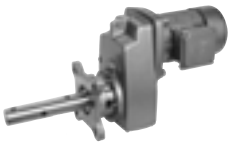

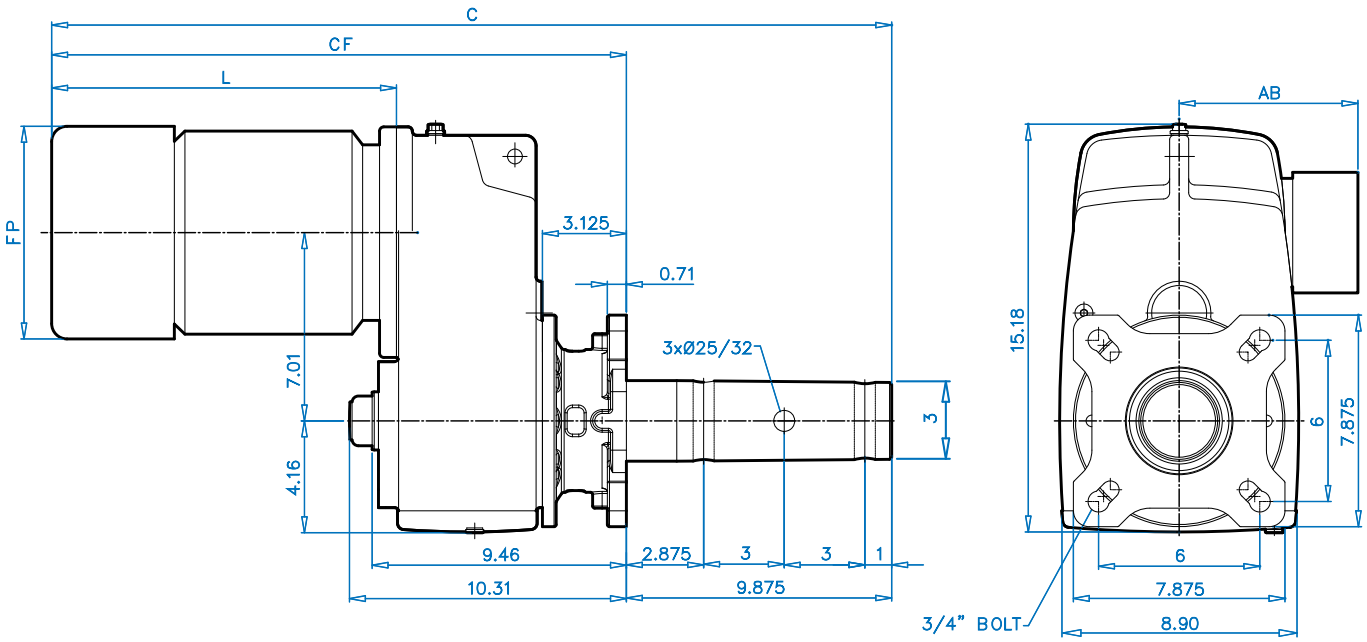


DIMENSIONS

| Motor Type | Overall | | Motor | | |
|---|---|---|---|---|---|
| | C | CF | L | FP | AB |
| **71S/L** | 27.74 | 18.66 | 9.07 | 5.72 | 4.86 |
| **80S/L/LH** | 28.72 | 18.85 | 10.06 | 6.43 | 5.59 |
| **90S/SH/L/LH** | 30.29 | 20.42 | 11.63 | 7.19 | 5.79 |
| **100L/LA/LH** | 31.52 | 21.64 | 12.85 | 7.90 | 6.65 |
| **112M** | 32.39 | 22.51 | 13.72 | 8.87 | 7.05 |
| **112MH** | 33.38 | 23.50 | 14.71 | 8.87 | 7.05 |
| **132S/SH/M/MH** | 35.81 | 25.93 | 17.14 | 10.45 | 8.03 |

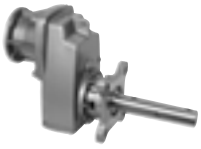

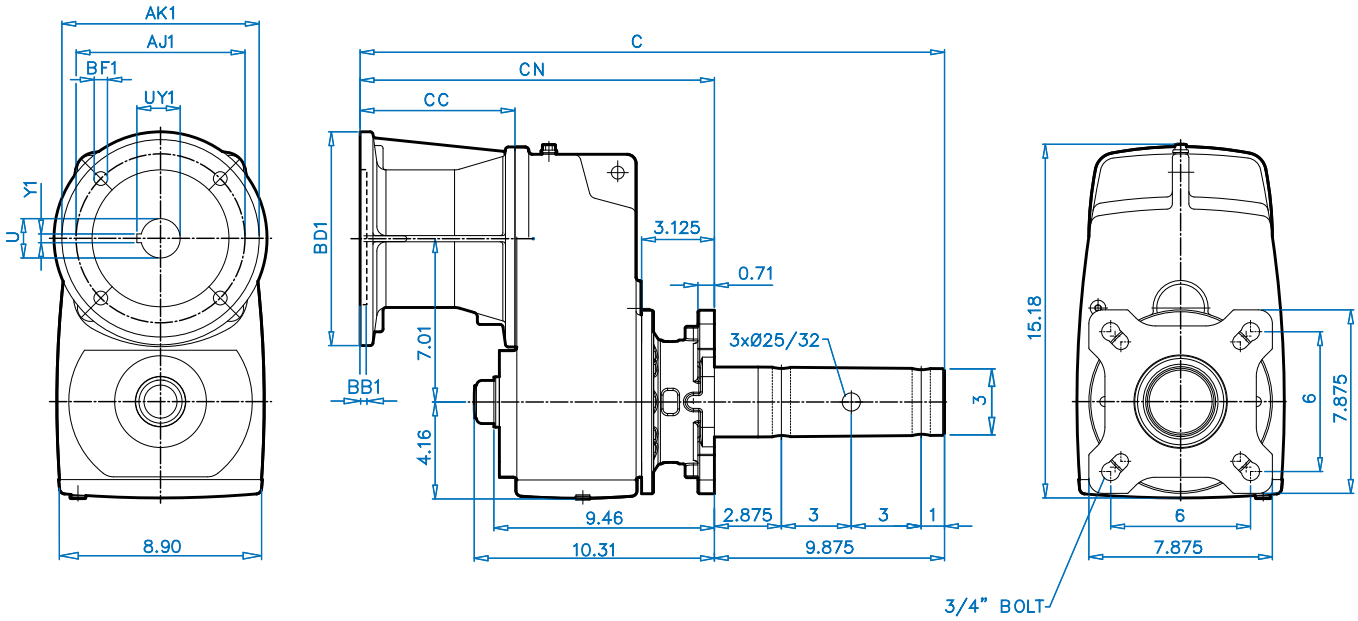




| NEMA | Overall | | NEMA Input | | | | | | Coupling | | |
|---|---|---|---|---|---|---|---|---|---|---|---|
| C-Face Input | C | CN | CC | AJ1 | AK1 | BB1 | BD1 | BF1 | U1 | UY1 | Y1 |
| **56C** | 23.27 | 13.40 | 4.61 | 5.875 | 4.50 | 0.20 | 6.54 | 0.43 | 0.625 | 0.71 | 0.188 |
| **140TC** | 23.27 | 13.40 | 4.61 | 5.875 | 4.50 | 0.20 | 6.54 | 0.43 | 0.875 | 0.96 | 0.188 |
| **180TC** | 25.31 | 15.44 | 6.65 | 7.250 | 8.50 | 0.23 | 9.17 | 0.59 | 1.125 | 1.24 | 0.250 |
| **210TC** | 25.31 | 15.44 | 6.65 | 7.250 | 8.50 | 0.23 | 9.17 | 0.59 | 1.375 | 1.52 | 0.310 |

# SK 4282 SCP + Motor
# 2” CEMA Drive Shaft

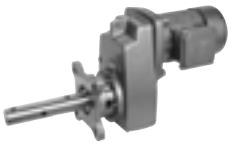

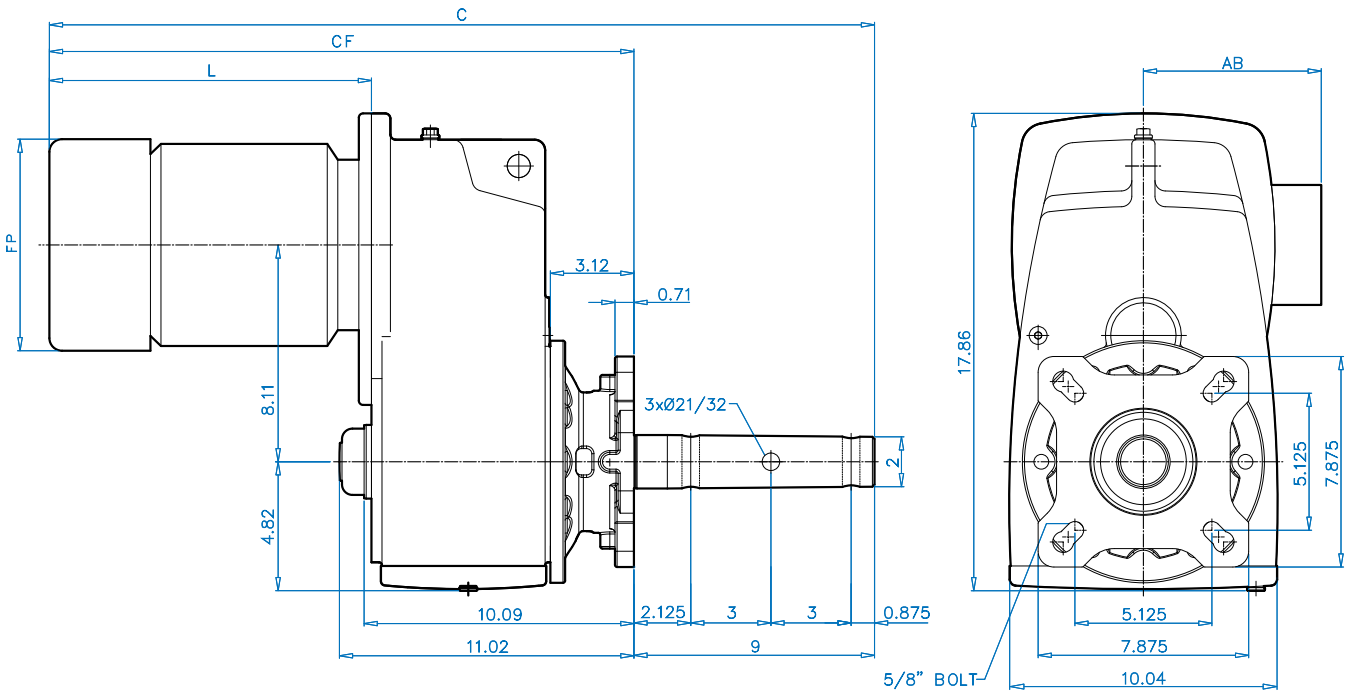


DIMENSIONS

| Motor Type | Overall | | Motor | | |
|---|---|---|---|---|---|
| | C | CF | L | FP | AB |
| 90S/SH/L/LH | 29.94 | 20.94 | 10.84 | 7.19 | 5.79 |
| 100L/LA/LH | 31.16 | 22.16 | 12.06 | 7.90 | 6.65 |
| 112M | 32.03 | 23.03 | 12.93 | 8.87 | 7.05 |
| 112MH | 33.02 | 24.02 | 13.93 | 8.87 | 7.05 |
| 132S/SH/M/MH | 35.45 | 26.45 | 16.35 | 10.45 | 8.03 |
| 160M/L | 38.51 | 29.51 | 19.41 | 12.56 | 9.53 |

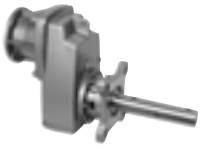

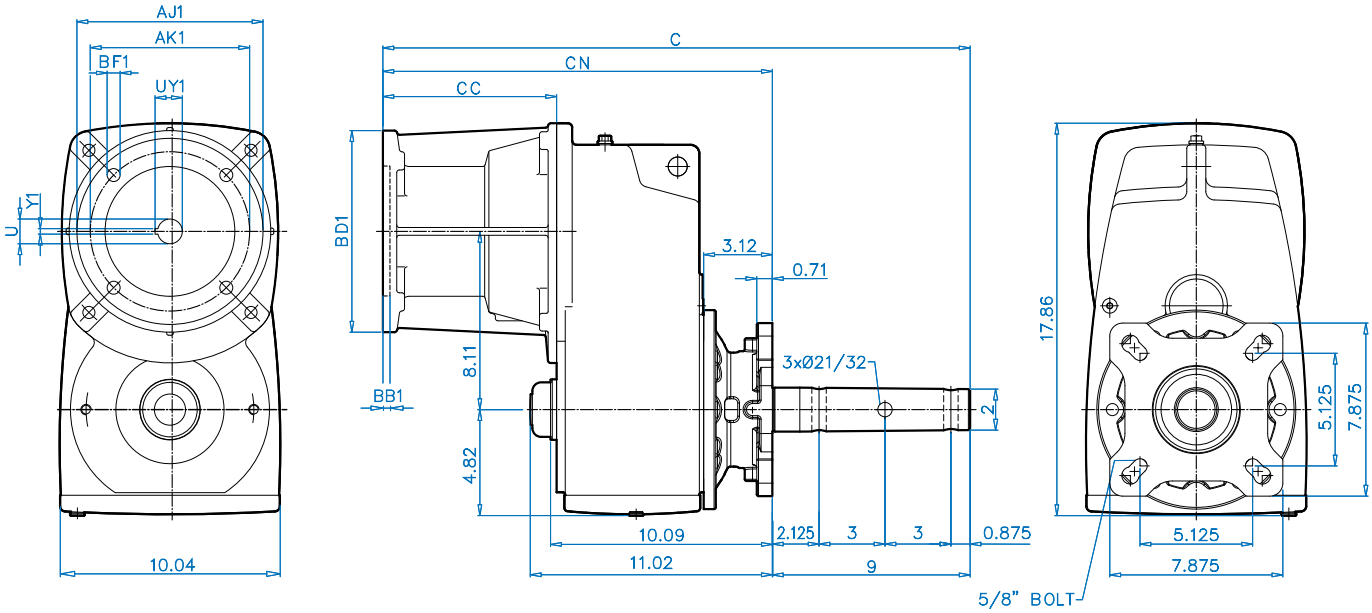




| NEMA | Overall | | NEMA Input | | | | | | Coupling | | |
|---|---|---|---|---|---|---|---|---|---|---|---|
| C-Face Input | C | CN | CC | AJ1 | AK1 | BB1 | BD1 | BF1 | U1 | UY1 | Y1 |
| **56C** | 23.43 | 14.43 | 4.33 | 5.875 | 4.50 | 0.20 | 6.54 | 0.43 | 0.625 | 0.71 | 0.188 |
| **140TC** | 23.43 | 14.43 | 4.33 | 5.875 | 4.50 | 0.20 | 6.54 | 0.43 | 0.875 | 0.96 | 0.188 |
| **180TC** | 27.17 | 18.17 | 8.07 | 7.250 | 8.50 | 0.23 | 9.17 | 0.59 | 1.125 | 1.24 | 0.250 |
| **210TC** | 27.17 | 18.17 | 8.07 | 7.250 | 8.50 | 0.23 | 9.17 | 0.59 | 1.375 | 1.52 | 0.312 |
| **250TC** | 27.01 | 18.01 | 7.91 | 7.250 | 8.50 | 0.23 | 9.17 | 0.59 | 1.625 | 1.80 | 0.375 |

# SK 4282 SCP + Motor
# 2-7/16” CEMA Drive Shaft

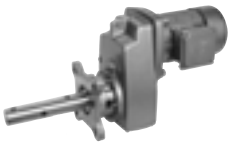



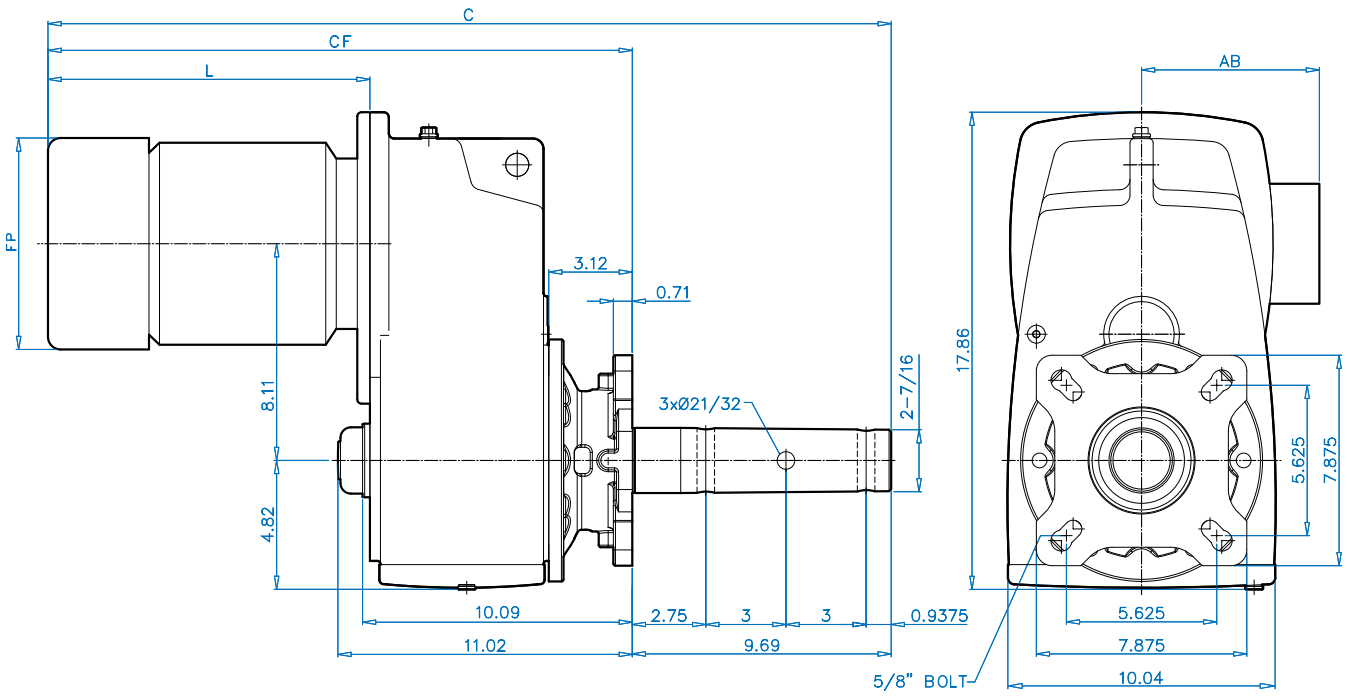


| Motor Type | Overall | | Motor | | |
|---|---|---|---|---|---|
| | C | CF | L | FP | AB |
| 90S/SH/L/LH | 30.63 | 20.94 | 10.84 | 7.19 | 5.79 |
| 100L/LA/LH | 31.85 | 22.16 | 12.06 | 7.90 | 6.65 |
| 112M | 32.72 | 23.03 | 12.93 | 8.87 | 7.05 |
| 112MH | 33.71 | 24.02 | 13.93 | 8.87 | 7.05 |
| 132S/SH/M/MH | 36.14 | 26.45 | 16.35 | 10.45 | 8.03 |
| 160M/L | 39.19 | 29.51 | 19.41 | 12.56 | 9.53 |

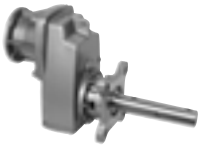

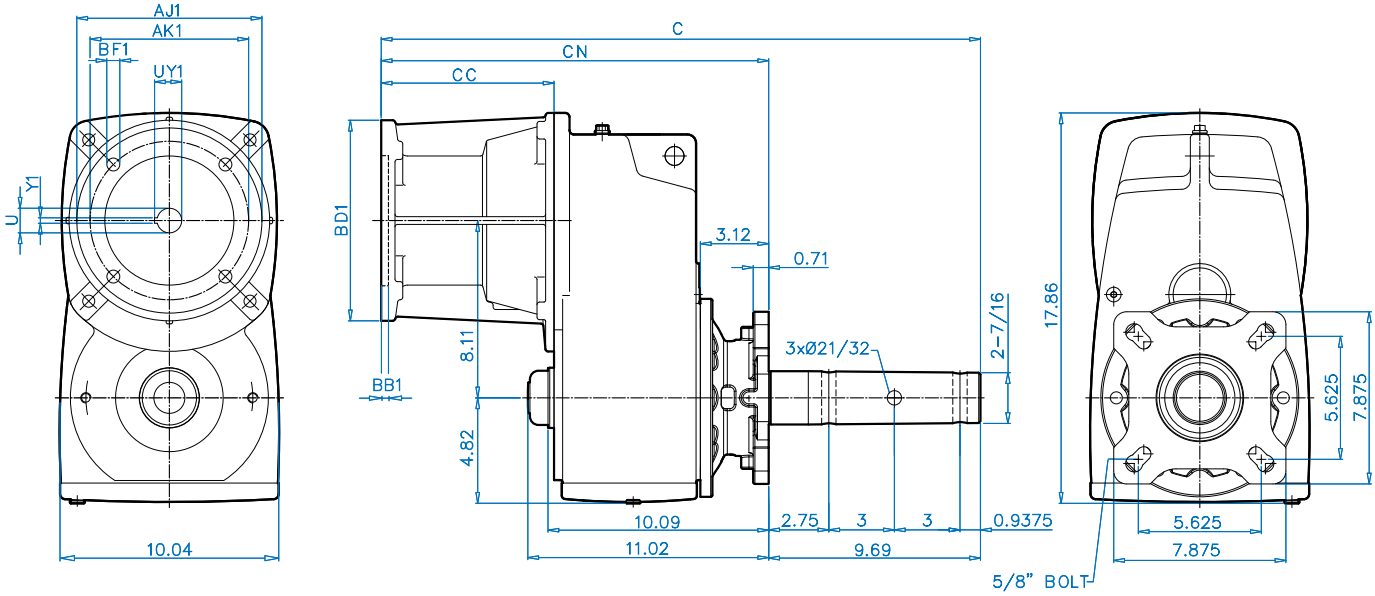


| NEMA | Overall | | NEMA Input | | | | | | Coupling | | |
|---|---|---|---|---|---|---|---|---|---|---|---|
| C-Face Input | C | CN | CC | AJ1 | AK1 | BB1 | BD1 | BF1 | U1 | UY1 | Y1 |
| **56C** | 24.11 | 14.43 | 4.33 | 5.875 | 4.50 | 0.20 | 6.54 | 0.43 | 0.625 | 0.71 | 0.188 |
| **140TC** | 24.11 | 14.43 | 4.33 | 5.875 | 4.50 | 0.20 | 6.54 | 0.43 | 0.875 | 0.96 | 0.188 |
| **180TC** | 27.85 | 18.17 | 8.07 | 7.250 | 8.50 | 0.23 | 9.17 | 0.59 | 1.125 | 1.24 | 0.250 |
| **210TC** | 27.85 | 18.17 | 8.07 | 7.250 | 8.50 | 0.23 | 9.17 | 0.59 | 1.375 | 1.52 | 0.312 |
| **250TC** | 27.70 | 18.01 | 7.91 | 7.250 | 8.50 | 0.23 | 9.17 | 0.59 | 1.625 | 1.80 | 0.375 |

# SK 4282 SCP + Motor
# 3” CEMA Drive Shaft

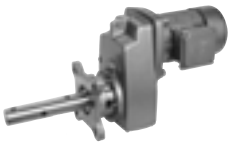



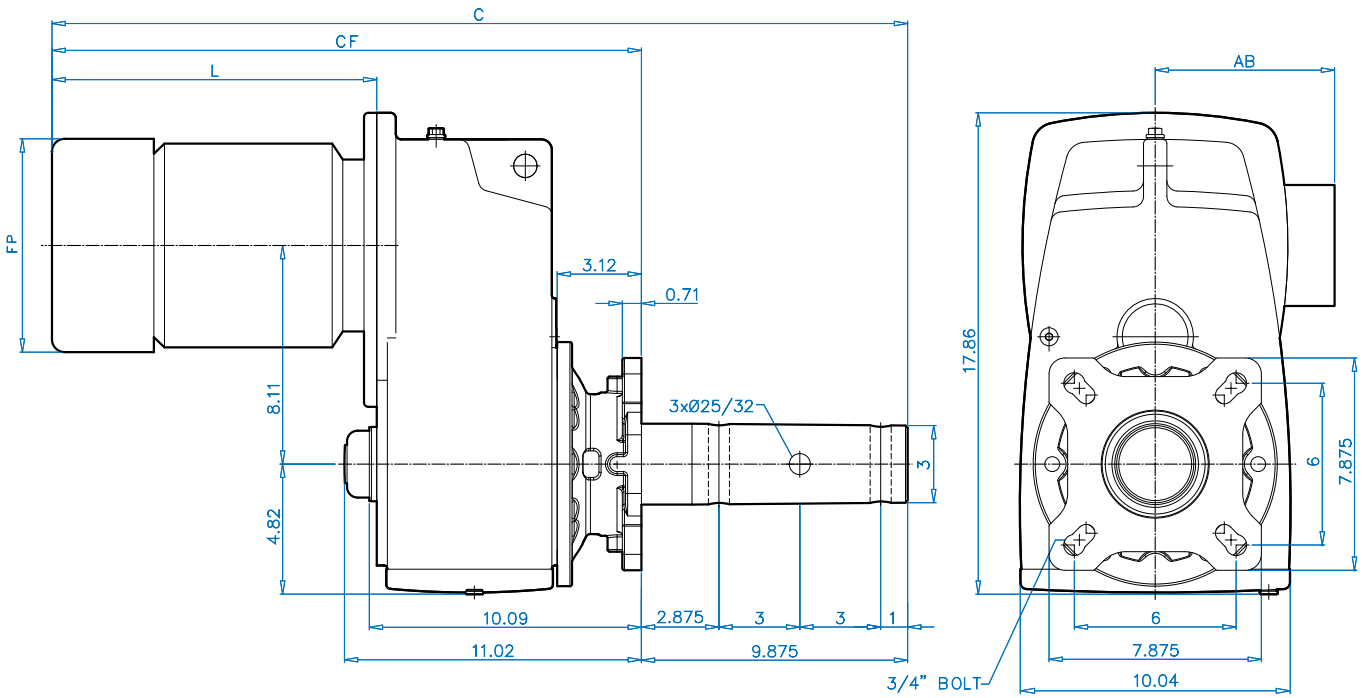


| Motor Type | Overall | | Motor | | |
|---|---|---|---|---|---|
| | C | CF | L | FP | AB |
| 90S/SH/L/LH | 30.81 | 20.94 | 10.84 | 7.19 | 5.79 |
| 100L/LA/LH | 32.03 | 22.16 | 12.06 | 7.90 | 6.65 |
| 112M | 32.90 | 23.03 | 12.93 | 8.87 | 7.05 |
| 112MH | 33.90 | 24.02 | 13.93 | 8.87 | 7.05 |
| 132S/SH/M/MH | 36.33 | 26.45 | 16.35 | 10.45 | 8.03 |
| 160M/L | 39.38 | 29.51 | 19.41 | 12.56 | 9.53 |

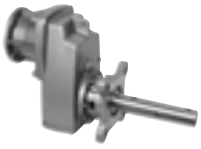

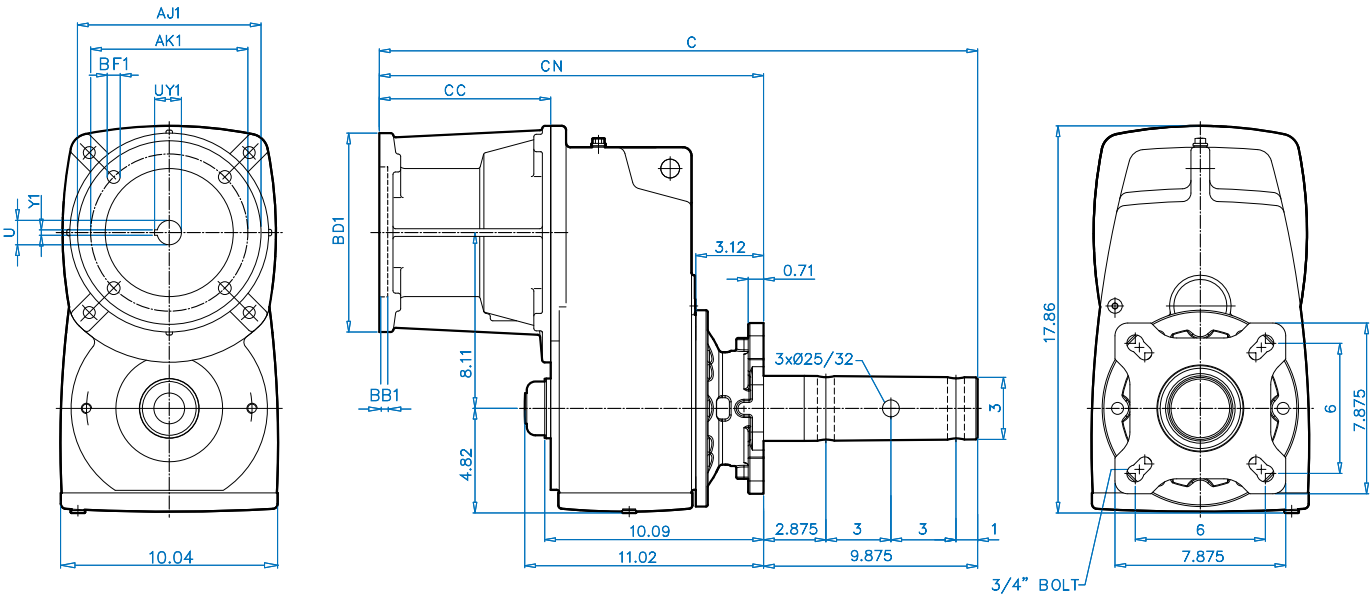


DIMENSIONS

| NEMA C-Face Input | Overall C | Overall CN | NEMA Input CC | AJ1 | AK1 | BB1 | BD1 | BF1 | Coupling U1 | UY1 | Y1 |
|---|---|---|---|---|---|---|---|---|---|---|---|
| **56C** | 24.30 | 14.43 | 4.33 | 5.875 | 4.50 | 0.20 | 6.54 | 0.43 | 0.625 | 0.71 | 0.188 |
| **140TC** | 24.30 | 14.43 | 4.33 | 5.875 | 4.50 | 0.20 | 6.54 | 0.43 | 0.875 | 0.96 | 0.188 |
| **180TC** | 28.04 | 18.17 | 8.07 | 7.250 | 8.50 | 0.23 | 9.17 | 0.59 | 1.125 | 1.24 | 0.250 |
| **210TC** | 28.04 | 18.17 | 8.07 | 7.250 | 8.50 | 0.23 | 9.17 | 0.59 | 1.375 | 1.52 | 0.312 |
| **250TC** | 27.88 | 18.01 | 7.91 | 7.250 | 8.50 | 0.23 | 9.17 | 0.59 | 1.625 | 1.80 | 0.375 |

# SK 5282 SCP + Motor
# 2” CEMA Drive Shaft

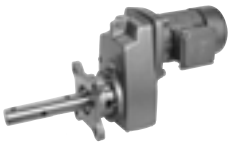

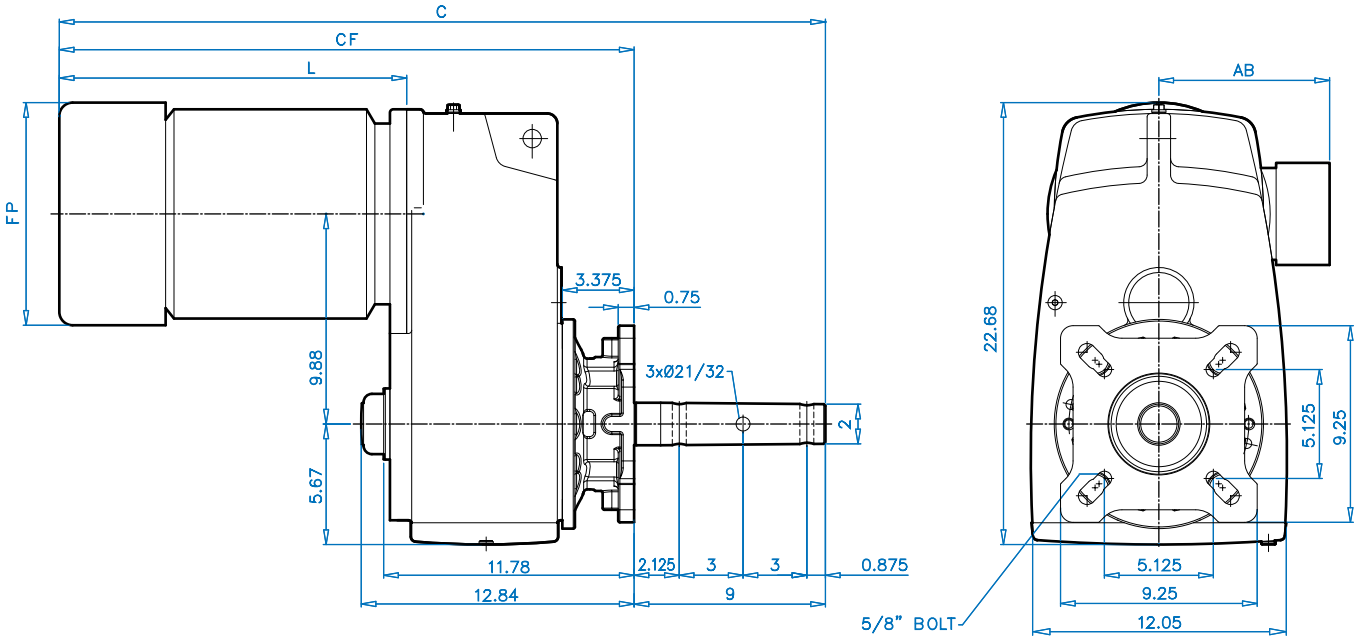


DIMENSIONS

| Motor Type | Overall | | Motor | | |
|---|---|---|---|---|---|
| | C | CF | L | FP | AB |
| 90S/SH/L/LH | 30.84 | 21.84 | 10.84 | 7.19 | 5.79 |
| 100L/LA/LH | 32.06 | 23.06 | 12.06 | 7.90 | 6.65 |
| 112M | 32.93 | 23.93 | 12.93 | 8.87 | 7.05 |
| 112MH | 33.92 | 24.92 | 13.93 | 8.87 | 7.05 |
| 132S/SH/M/MH | 36.35 | 27.35 | 16.35 | 10.45 | 8.03 |
| 160M/L | 39.41 | 30.41 | 19.41 | 12.56 | 9.53 |
| 180MX/LX | 39.41 | 30.41 | 19.41 | 12.56 | 9.53 |

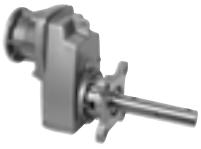

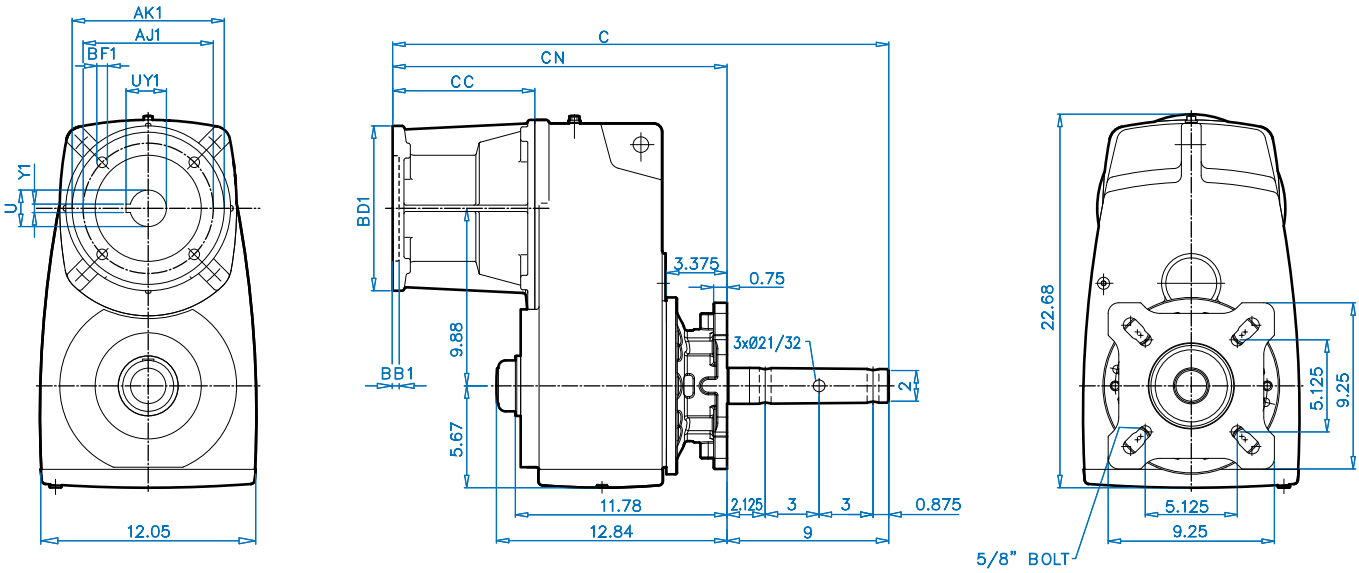




| NEMA | Overall | | NEMA Input | | | | | | Coupling | | |
|---|---|---|---|---|---|---|---|---|---|---|---|
| C-Face Input | C | CN | CC | AJ1 | AK1 | BB1 | BD1 | BF1 | U1 | UY1 | Y1 |
| 56C | 24.33 | 15.33 | 4.33 | 5.875 | 4.50 | 0.20 | 6.54 | 0.43 | 0.625 | 0.71 | 0.188 |
| 140TC | 24.33 | 15.33 | 4.33 | 5.875 | 4.50 | 0.20 | 6.54 | 0.43 | 0.875 | 0.96 | 0.188 |
| 180TC | 28.07 | 19.07 | 8.07 | 7.250 | 8.50 | 0.23 | 9.17 | 0.59 | 1.125 | 1.24 | 0.250 |
| 210TC | 28.07 | 19.07 | 8.07 | 7.250 | 8.50 | 0.23 | 9.17 | 0.59 | 1.375 | 1.52 | 0.312 |
| 250TC | 27.91 | 18.91 | 7.91 | 7.250 | 8.50 | 0.23 | 9.17 | 0.59 | 1.625 | 1.80 | 0.375 |
| 280TC | 28.54 | 19.54 | 8.54 | 9.000 | 10.50 | 0.23 | 13.78 | 0.55 | 1.875 | 2.10 | 0.500 |

# SK 5282 SCP + Motor
# 2-7/16" CEMA Drive Shaft

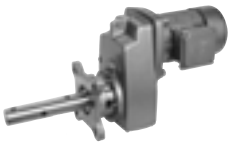



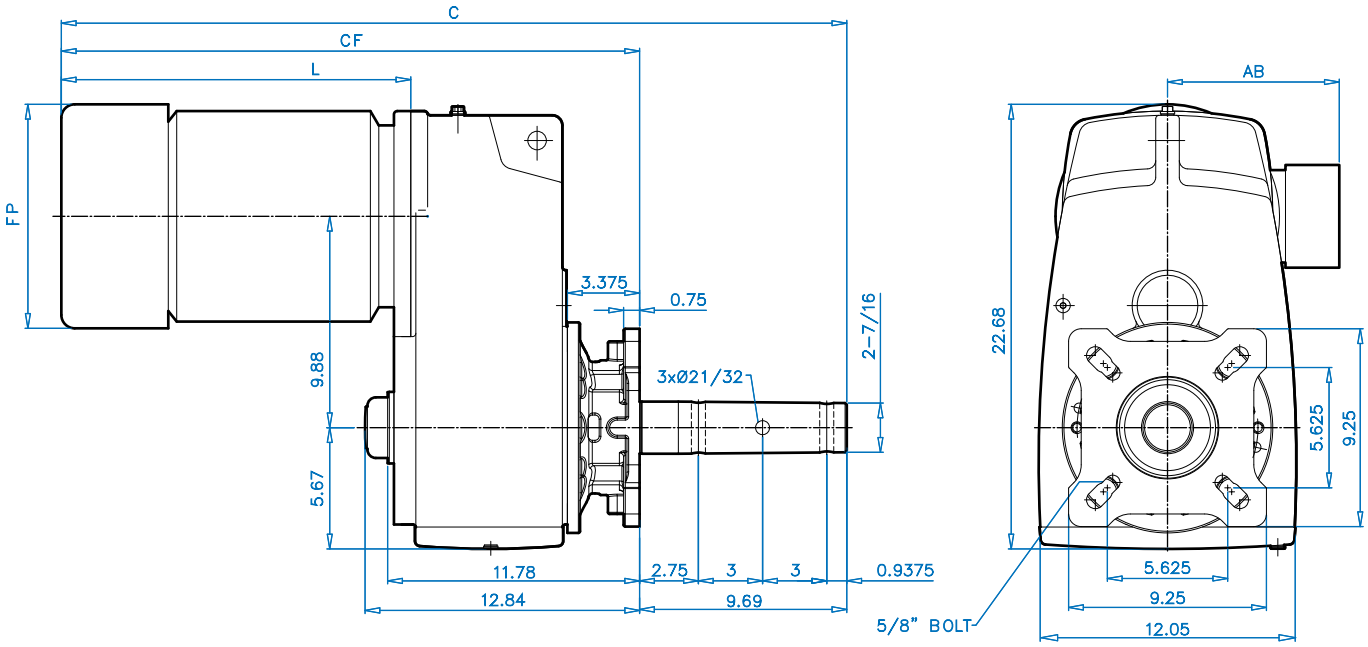


| Motor Type | Overall | | Motor | | |
|---|---|---|---|---|---|
| | C | CF | L | FP | AB |
| **90S/SH/L/LH** | 31.53 | 21.84 | 10.84 | 7.19 | 5.79 |
| **100L/LA/LH** | 32.75 | 23.06 | 12.06 | 7.90 | 6.65 |
| **112M** | 33.62 | 23.93 | 12.93 | 8.87 | 7.05 |
| **112MH** | 34.61 | 24.92 | 13.93 | 8.87 | 7.05 |
| **132S/SH/M/MH** | 37.04 | 27.35 | 16.35 | 10.45 | 8.03 |
| **160M/L** | 40.09 | 30.41 | 19.41 | 12.56 | 9.53 |
| **180MX/LX** | 40.09 | 30.41 | 19.41 | 12.56 | 9.53 |

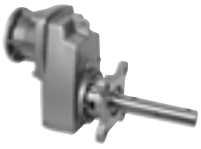

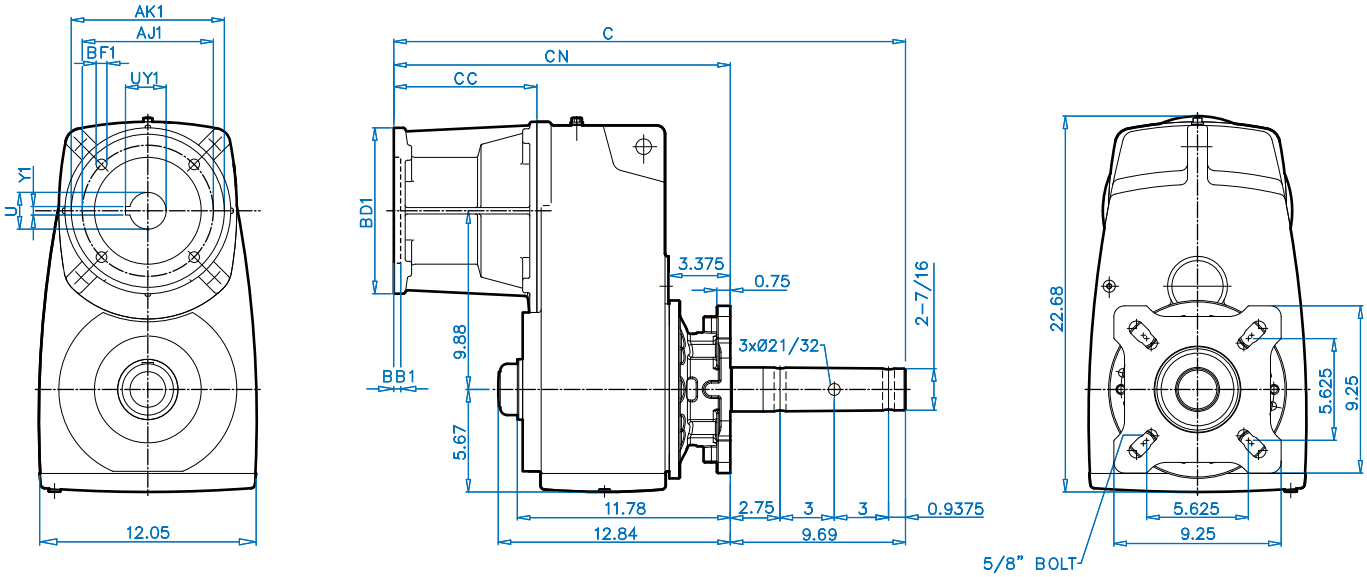


DIMENSIONS

| NEMA | Overall | | NEMA Input | | | | | | Coupling | | |
|---|---|---|---|---|---|---|---|---|---|---|---|
| C-Face Input | C | CN | CC | AJ1 | AK1 | BB1 | BD1 | BF1 | U1 | UY1 | Y1 |
| **56C** | 25.02 | 15.33 | 4.33 | 5.875 | 4.50 | 0.20 | 6.54 | 0.43 | 0.625 | 0.71 | 0.188 |
| **140TC** | 25.02 | 15.33 | 4.33 | 5.875 | 4.50 | 0.20 | 6.54 | 0.43 | 0.875 | 0.96 | 0.188 |
| **180TC** | 28.76 | 19.07 | 8.07 | 7.250 | 8.50 | 0.23 | 9.17 | 0.59 | 1.125 | 1.24 | 0.250 |
| **210TC** | 28.76 | 19.07 | 8.07 | 7.250 | 8.50 | 0.23 | 9.17 | 0.59 | 1.375 | 1.52 | 0.312 |
| **250TC** | 28.60 | 18.91 | 7.91 | 7.250 | 8.50 | 0.23 | 9.17 | 0.59 | 1.625 | 1.80 | 0.375 |
| **280TC** | 29.23 | 19.54 | 8.54 | 9.000 | 10.50 | 0.23 | 13.78 | 0.55 | 1.875 | 2.10 | 0.500 |

# SK 5282 SCP + Motor
# 3” CEMA Drive Shaft

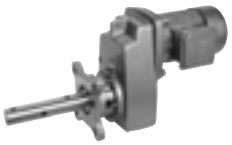

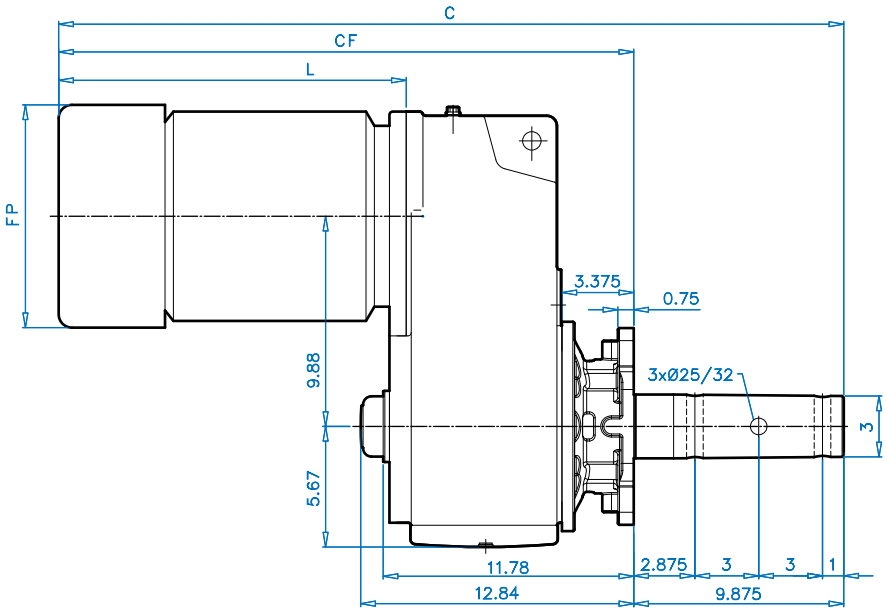


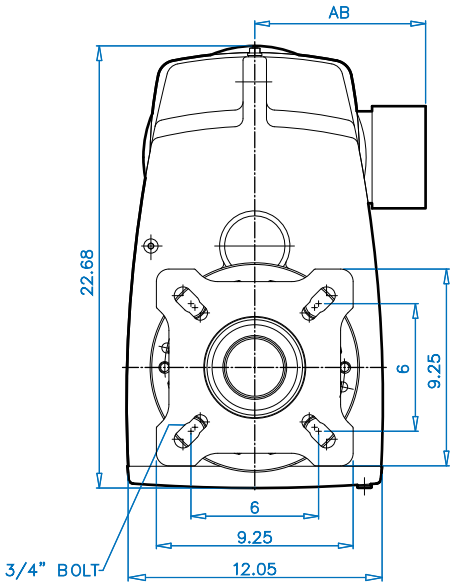


DIMENSIONS

| Motor Type | Overall | | Motor | | |
|---|---|---|---|---|---|
| | C | CF | L | FP | AB |
| 90S/SH/L/LH | 31.71 | 21.84 | 10.84 | 7.19 | 5.79 |
| 100L/LA/LH | 32.94 | 23.06 | 12.06 | 7.90 | 6.65 |
| 112M | 33.81 | 23.93 | 12.93 | 8.87 | 7.05 |
| 112MH | 34.80 | 24.92 | 13.93 | 8.87 | 7.05 |
| 132S/SH/M/MH | 37.23 | 27.35 | 16.35 | 10.45 | 8.03 |
| 160M/L | 40.28 | 30.41 | 19.41 | 12.56 | 9.53 |
| 180MX/LX | 40.28 | 30.41 | 19.41 | 12.56 | 9.53 |

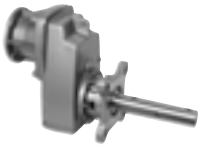

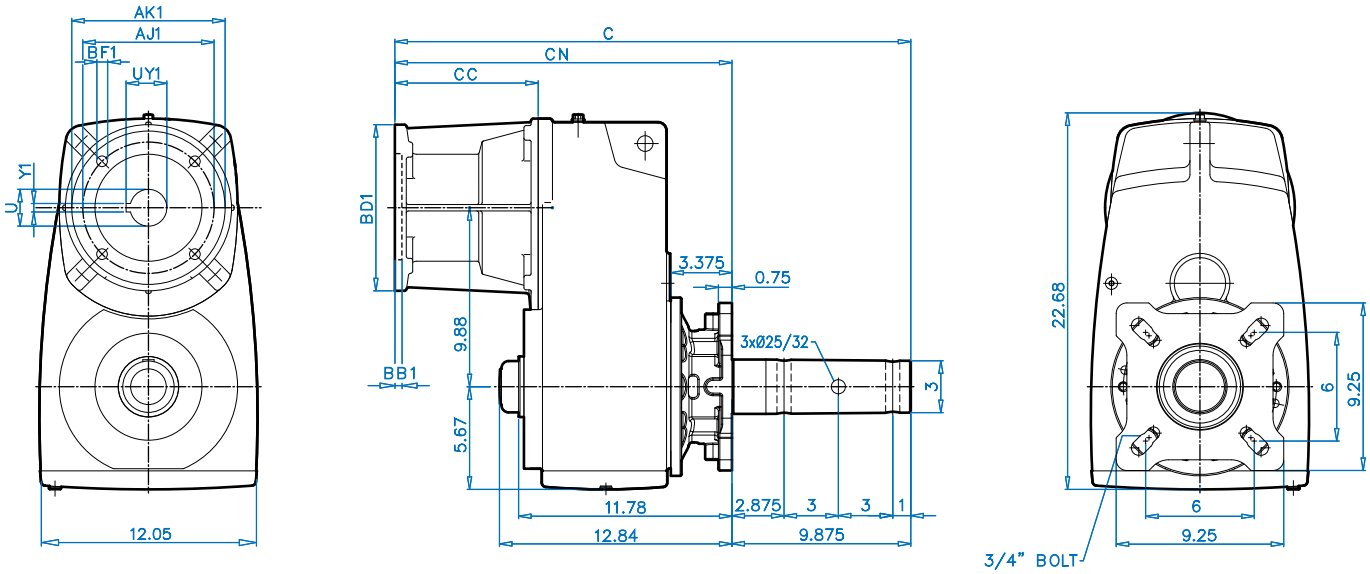




| NEMA | Overall | | NEMA Input | | | | | | Coupling | | |
|---|---|---|---|---|---|---|---|---|---|---|---|
| C-Face Input | C | CN | CC | AJ1 | AK1 | BB1 | BD1 | BF1 | U1 | UY1 | Y1 |
| **56C** | 25.20 | 15.33 | 4.33 | 5.875 | 4.50 | 0.20 | 6.54 | 0.43 | 0.625 | 0.71 | 0.188 |
| **140TC** | 25.20 | 15.33 | 4.33 | 5.875 | 4.50 | 0.20 | 6.54 | 0.43 | 0.875 | 0.96 | 0.188 |
| **180TC** | 28.94 | 19.07 | 8.07 | 7.250 | 8.50 | 0.23 | 9.17 | 0.59 | 1.125 | 1.24 | 0.250 |
| **210TC** | 28.94 | 19.07 | 8.07 | 7.250 | 8.50 | 0.23 | 9.17 | 0.59 | 1.375 | 1.52 | 0.312 |
| **250TC** | 28.79 | 18.91 | 7.91 | 7.250 | 8.50 | 0.23 | 9.17 | 0.59 | 1.625 | 1.80 | 0.375 |
| **280TC** | 29.42 | 19.54 | 8.54 | 9.000 | 10.50 | 0.23 | 13.78 | 0.55 | 1.875 | 2.10 | 0.500 |

# SK 5282 SCP + Motor
# 3-7/16"CEMA Drive Shaft

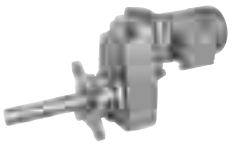



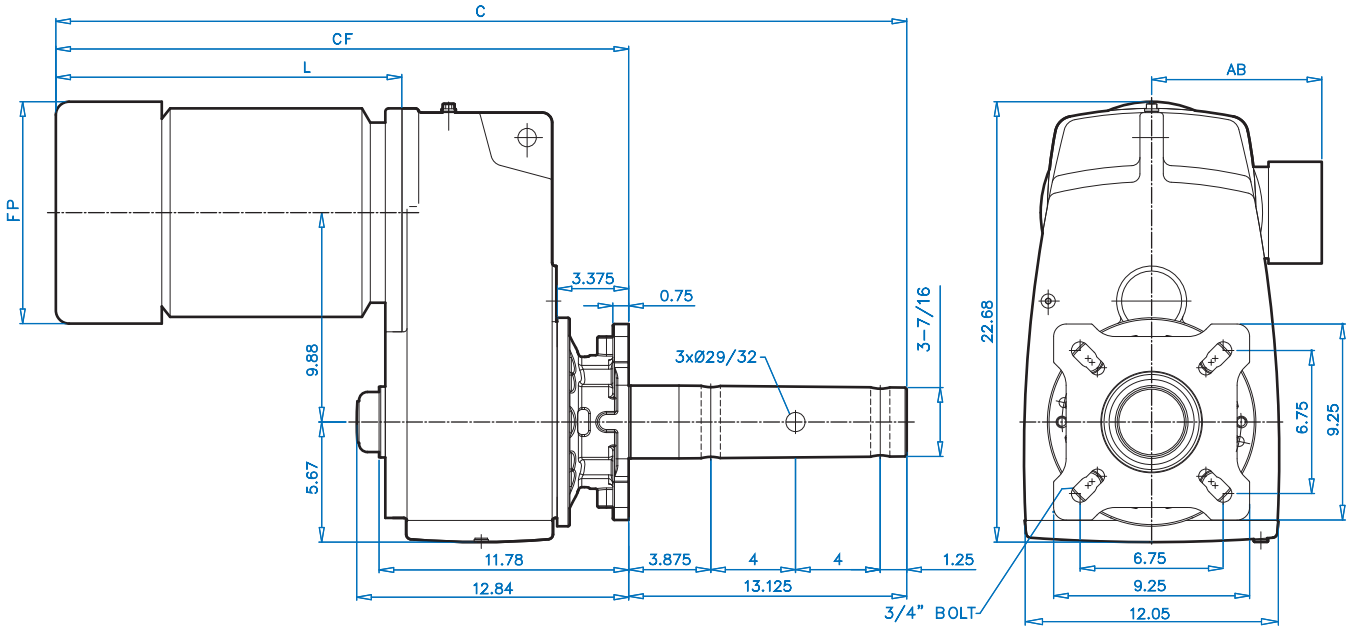


| Motor Type | Overall | | Motor | | |
|---|---|---|---|---|---|
| | C | CF | L | FP | AB |
| 90S/SH/L/LH | 34.96 | 21.84 | 10.84 | 7.19 | 5.79 |
| 100L/LA/LH | 35.87 | 22.75 | 12.06 | 7.90 | 6.65 |
| 112M | 37.06 | 23.93 | 12.93 | 8.87 | 7.05 |
| 112MH | 38.05 | 24.92 | 13.93 | 8.87 | 7.05 |
| 132S/SH/M/MH | 40.48 | 27.35 | 16.35 | 10.45 | 8.03 |
| 160M/L | 43.53 | 30.41 | 19.41 | 12.56 | 9.53 |
| 180MX/LX | 43.53 | 30.41 | 19.41 | 12.56 | 9.53 |

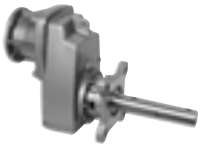

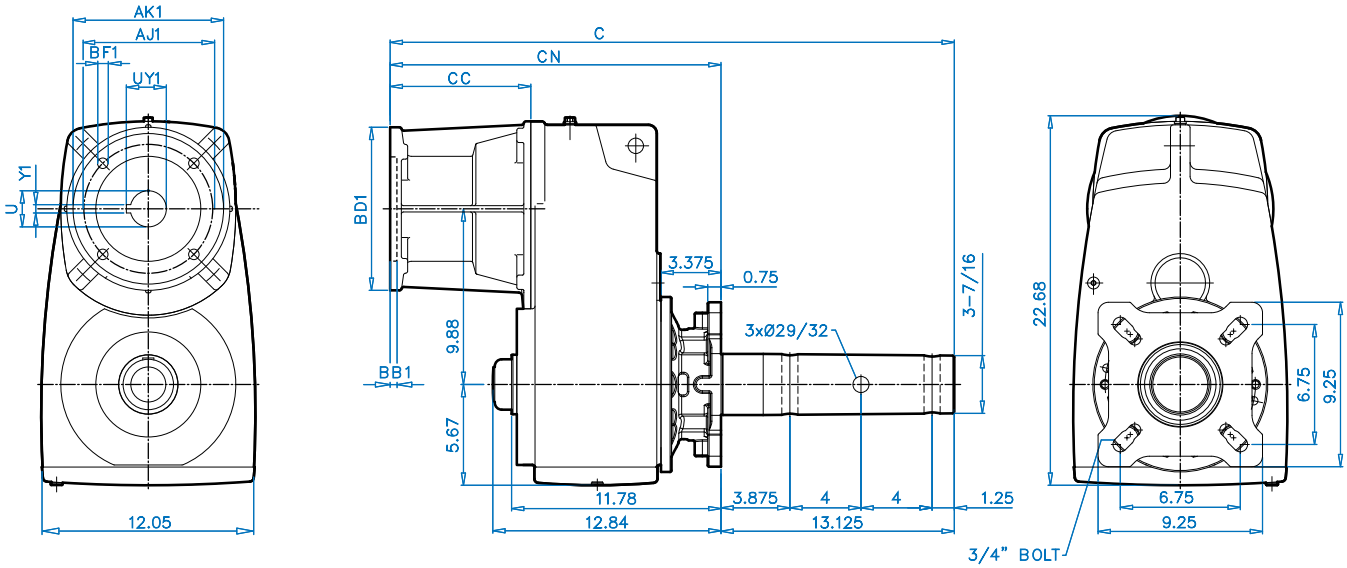


DIMENSIONS

| NEMA | Overall | | | NEMA Input | | | | | Coupling | | |
|---|---|---|---|---|---|---|---|---|---|---|---|
| C-Face Input | C | CN | CC | AJ1 | AK1 | BB1 | BD1 | BF1 | U1 | UY1 | Y1 |
| **56C** | 28.45 | 15.33 | 4.33 | 5.875 | 4.50 | 0.20 | 6.54 | 0.43 | 0.625 | 0.71 | 0.188 |
| **140TC** | 28.45 | 15.33 | 4.33 | 5.875 | 4.50 | 0.20 | 6.54 | 0.43 | 0.875 | 0.96 | 0.188 |
| **180TC** | 32.19 | 19.07 | 8.07 | 7.250 | 8.50 | 0.23 | 9.17 | 0.59 | 1.125 | 1.24 | 0.250 |
| **210TC** | 32.19 | 19.07 | 8.07 | 7.250 | 8.50 | 0.23 | 9.17 | 0.59 | 1.375 | 1.52 | 0.312 |
| **250TC** | 32.04 | 18.91 | 7.91 | 7.250 | 8.50 | 0.23 | 9.17 | 0.59 | 1.625 | 1.80 | 0.375 |
| **280TC** | 32.67 | 19.54 | 8.54 | 9.000 | 10.50 | 0.23 | 13.78 | 0.55 | 1.875 | 2.10 | 0.500 |

# SK 6282 SCP + Motor
# 3” CEMA Drive Shaft

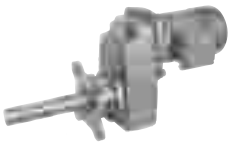

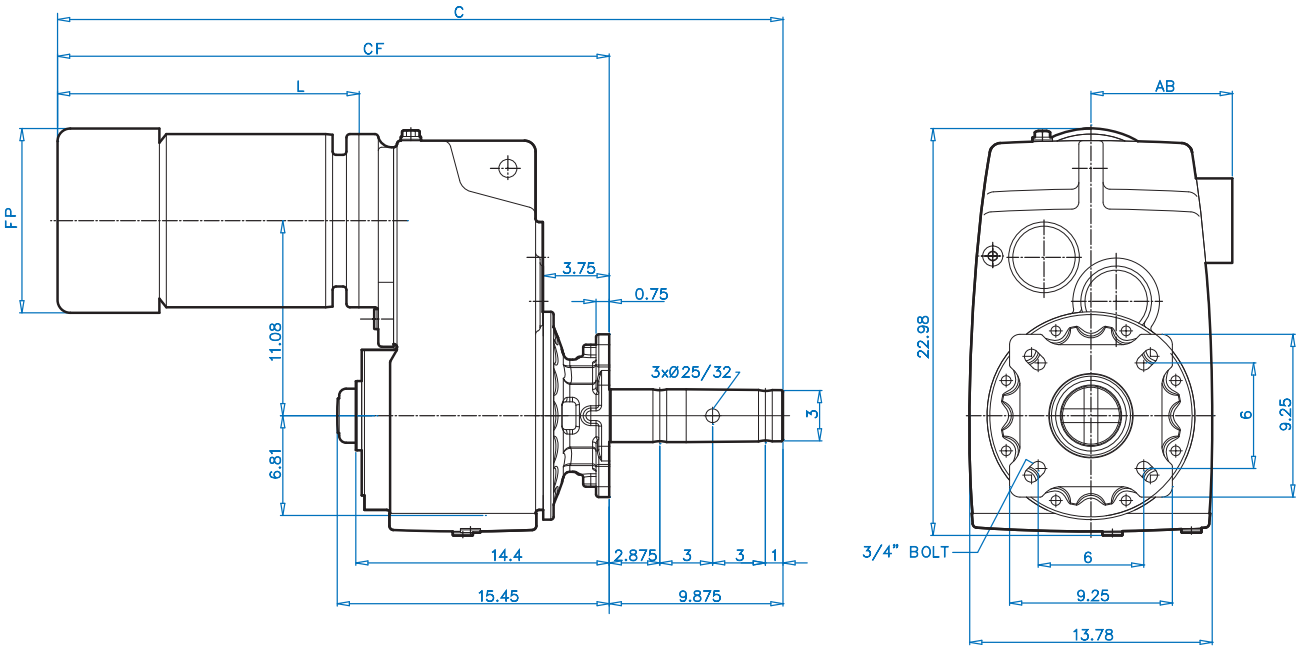


DIMENSIONS

| Motor Type | Overall | | Motor | | |
|---|---|---|---|---|---|
| | C | CF | L | FP | AB |
| 100L/LA/LH | 36.50 | 26.62 | 12.06 | 7.90 | 6.65 |
| 112M | 37.25 | 27.38 | 12.81 | 8.87 | 7.05 |
| 112MH | 38.24 | 28.37 | 13.81 | 8.87 | 7.05 |
| 132S/SH/M/MH | 41.58 | 31.70 | 17.14 | 10.45 | 8.03 |
| 160M/L | 43.84 | 33.97 | 19.41 | 12.56 | 9.53 |
| 180MX/LX | 43.84 | 33.97 | 19.41 | 12.56 | 9.53 |
| 200L | 51.52 | 41.65 | 27.09 | 15.83 | 12.01 |
| 225S/M | 51.52 | 41.65 | 27.09 | 15.83 | 12.01 |

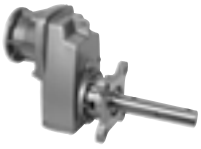

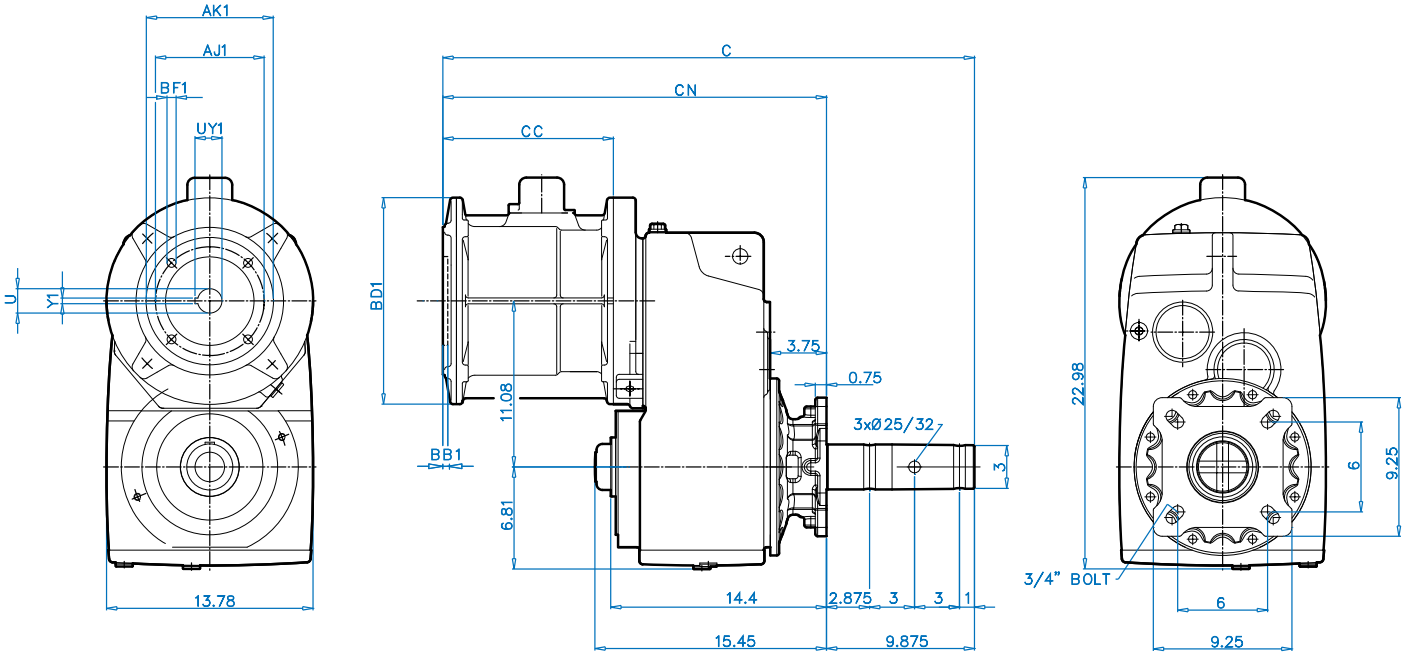


DIMENSIONS

| NEMA | Overall | | NEMA Input | | | | | | Coupling | | |
|---|---|---|---|---|---|---|---|---|---|---|---|
| C-Face Input | C | CN | CC | AJ1 | AK1 | BB1 | BD1 | BF1 | U1 | UY1 | Y1 |
| 180TC | 31.95 | 22.08 | 7.52 | 7.250 | 8.50 | 0.23 | 9.17 | 0.59 | 1.125 | 1.24 | 0.250 |
| 210TC | 31.95 | 22.08 | 7.52 | 7.250 | 8.50 | 0.23 | 9.17 | 0.59 | 1.375 | 1.52 | 0.312 |
| 250TC | 35.81 | 25.94 | 11.38 | 7.250 | 8.50 | 0.23 | 9.17 | 0.59 | 1.625 | 1.80 | 0.375 |
| 280TC | 35.81 | 25.94 | 11.38 | 9.000 | 10.50 | 0.23 | 13.78 | 0.55 | 1.875 | 2.10 | 0.500 |
| 320TC | 34.79 | 24.91 | 10.35 | 11.000 | 12.50 | 0.23 | 15.75 | 0.71 | 2.125 | 2.35 | 0.500 |
| 360 TC | 37.70 | 27.83 | 13.27 | 11.000 | 12.50 | 0.16 | 17.72 | 0.71 | 2.375 | 2.65 | 0.625 |

# SK 6282 SCP + Motor
# 3-7/16" CEMA Drive Shaft

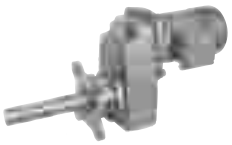



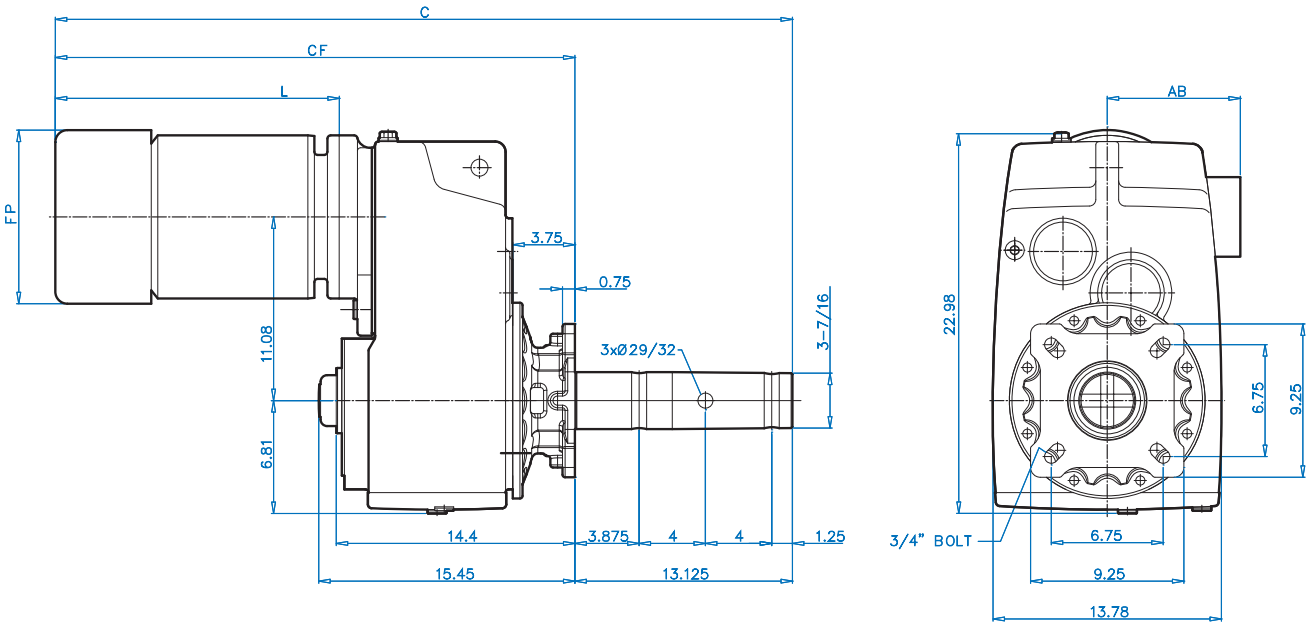


| Motor Type | Overall | | Motor | | |
|---|---|---|---|---|---|
| | C | CF | L | FP | AB |
| **100L/LA/LH** | 39.75 | 26.62 | 12.06 | 7.90 | 6.65 |
| **112M** | 40.50 | 27.38 | 12.81 | 8.87 | 7.05 |
| **112MH** | 41.49 | 28.37 | 13.81 | 8.87 | 7.05 |
| **132S/SH/M/MH** | 49.04 | 31.70 | 17.14 | 10.45 | 8.03 |
| **160M/L** | 47.09 | 33.97 | 19.41 | 12.56 | 9.53 |
| **180MX/LX** | 47.09 | 33.97 | 19.41 | 12.56 | 9.53 |
| **200L** | 54.77 | 41.65 | 27.09 | 15.83 | 12.01 |
| **225S/M** | 54.77 | 41.65 | 27.09 | 15.83 | 12.01 |

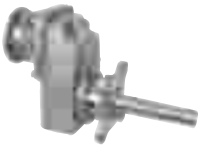

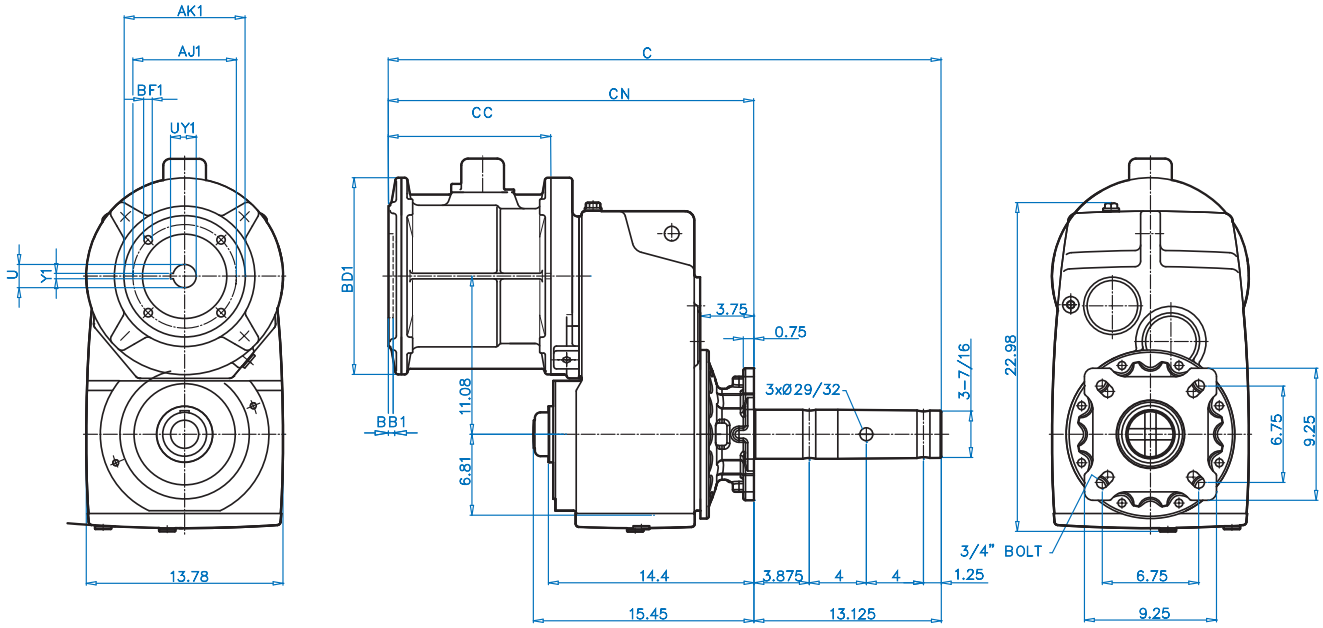


DIMENSIONS

| NEMA | Overall | | NEMA Input | | | | | | Coupling | | |
|---|---|---|---|---|---|---|---|---|---|---|---|
| C-Face Input | C | CN | CC | AJ1 | AK1 | BB1 | BD1 | BF1 | U1 | UY1 | Y1 |
| 180TC | 35.20 | 22.08 | 7.52 | 7.250 | 8.50 | 0.23 | 9.17 | 0.59 | 1.125 | 1.24 | 0.250 |
| 210TC | 35.20 | 22.08 | 7.52 | 7.250 | 8.50 | 0.23 | 9.17 | 0.59 | 1.375 | 1.52 | 0.312 |
| 250TC | 39.06 | 25.94 | 11.38 | 7.250 | 8.50 | 0.23 | 9.17 | 0.59 | 1.625 | 1.80 | 0.375 |
| 280TC | 38.95 | 25.82 | 11.26 | 9.000 | 10.50 | 0.23 | 13.78 | 0.55 | 1.875 | 2.10 | 0.500 |
| 320TC | 38.04 | 24.91 | 10.35 | 11.000 | 12.50 | 0.23 | 15.75 | 0.71 | 2.125 | 2.35 | 0.500 |
| 360 TC | 40.95 | 27.83 | 13.27 | 11.000 | 12.50 | 0.16 | 17.72 | 0.71 | 2.375 | 2.65 | 0.625 |

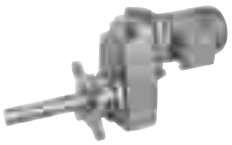

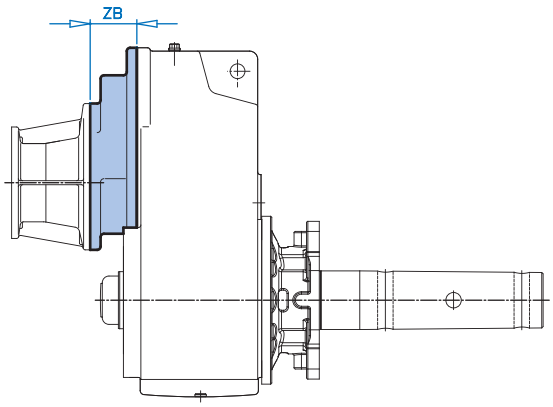


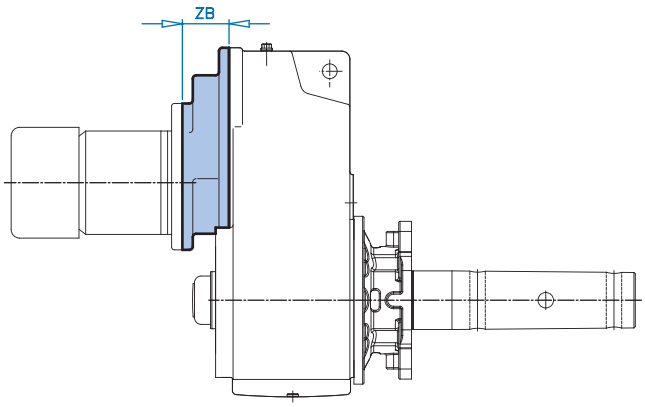




| Model Type | ZB |
|---|---|
| SK 1382 SCP | 2.28 |
| SK 2382 SCP | 2.36 |
| SK 3382 SCP | 2.36 |
| SK 4382 SCP | 2.72 |
| SK 5382 SCP | 2.72 |
| SK 6382 SCP | 0.00 |

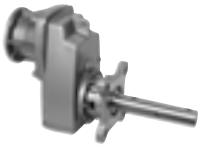

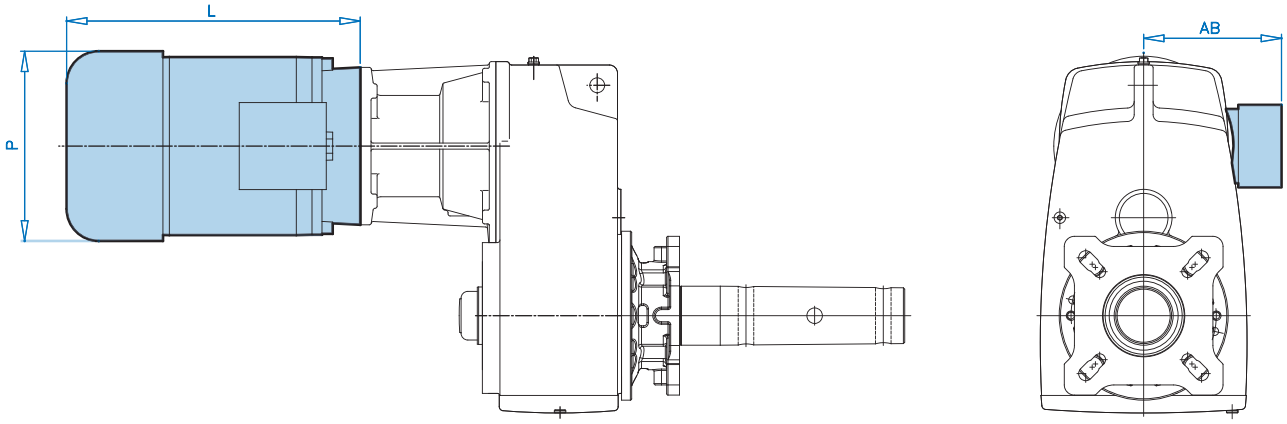




| Motor Type | AB | P | L |
|---|---|---|---|
| 63S-56C | 4.53 | 5.12 | 7.56 |
| 63L-56C | 4.53 | 5.12 | 7.56 |
| 71S-56C | 4.88 | 5.71 | 7.64 |
| 71L-56C | 4.88 | 5.71 | 7.64 |
| 80S-56C | 5.59 | 6.50 | 9.45 |
| 80L-143TC | 5.59 | 6.50 | 9.45 |
| 90S-145TC | 5.79 | 7.20 | 10.04 |
| 90L-145TC | 5.79 | 7.20 | 11.02 |
| 100L-182TC | 6.65 | 7.91 | 12.20 |
| 100L-184TC | 6.65 | 7.91 | 12.20 |
| 112M-184TC | 7.05 | 8.98 | 12.83 |
| 132S-213TC | 8.03 | 10.47 | 14.96 |
| 132M-215TC | 8.03 | 10.47 | 16.46 |

# SK SCP + Motor
# CEMA Drive Shaft

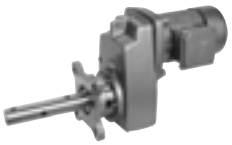



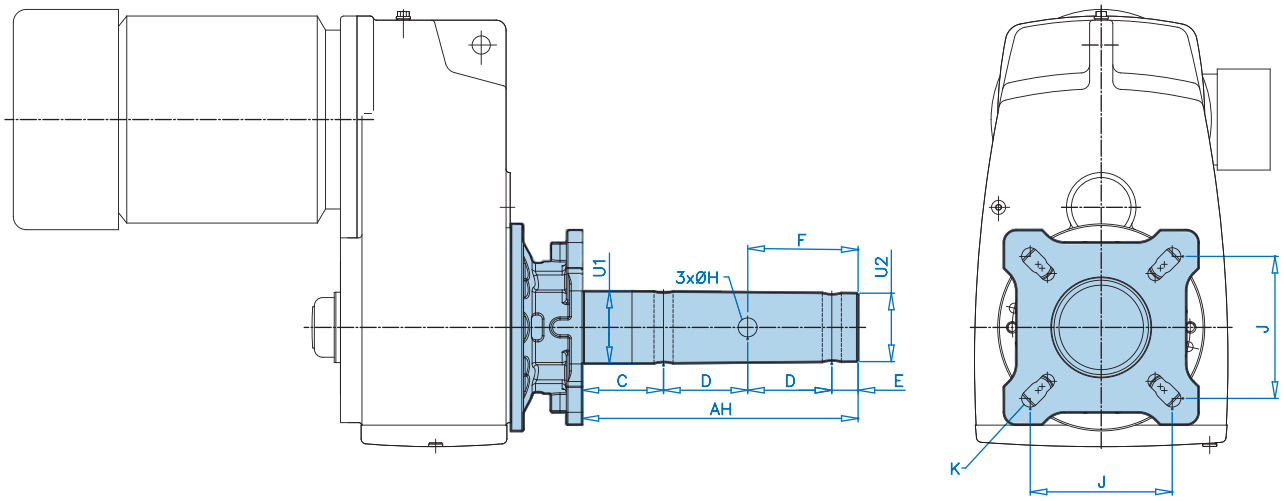


| Shaft Size | Shaft | | | | | | | | Flange | |
|---|---|---|---|---|---|---|---|---|---|---|
| | U1 | U2 | AH | C | D | E | F | H | J | K |
| **1-1/2** | 1.5 | 1.41 | 9.00 | 2.125 | 3.0 | 0.875 | 5 3/8 | 17/32 | 4 | 9/16 |
| **2** | 2.0 | 1.91 | 9.00 | 2.125 | 3.0 | 0.875 | 5 3/8 | 21/32 | 5-1/8 | 11/16 |
| **2-7/16** | 2.4375 | 2.34 | 9.6875 | 2.75 | 3.0 | 0.9375 | 5 7/16 | 21/32 | 5-5/8 | 11/16 |
| **3** | 3.0 | 2.91 | 9.875 | 2.875 | 3.0 | 1.00 | 5 1/2 | 25/32 | 6 | 13/16 |
| **3-7/16** | 3.4375 | 3.31 | 13.125 | 3.875 | 4.0 | 1.25 | 7 1/4 | 29/32 | 6-3/4 | 13/16 |

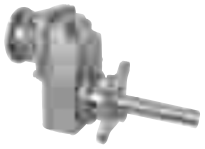

# CLINCHER™ SCP + NEMA CEMA Drive Shaft

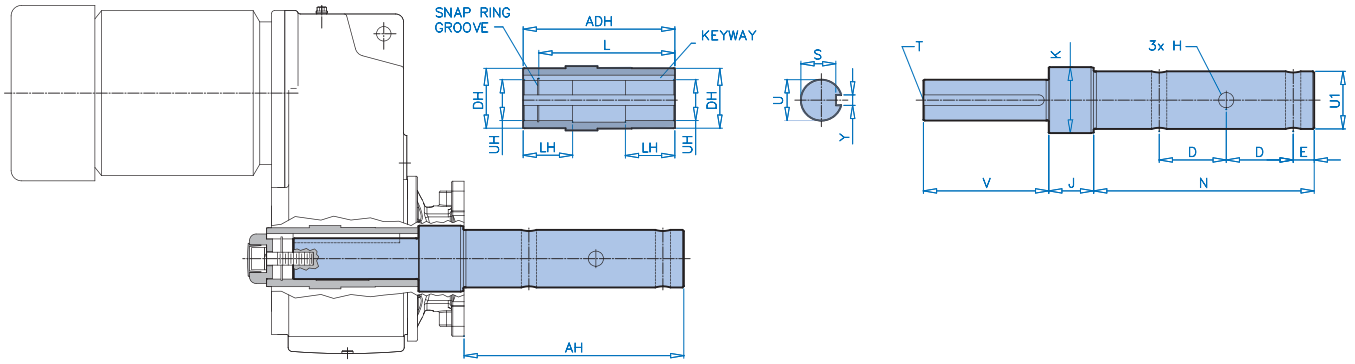




| Gear Unit Size | Hollow Shaft | | | | |
|---|---|---|---|---|---|
| | UH | ADH | L | LH | DH |
| SK 1282 SCP | 1-3/16 + 0.0008 | 4.80 | 3.85 | 1.57 | 1.77 |
| SK 2282 SCP | 1-7/16 + 0.0010 | 5.47 | 4.80 | 1.97 | 1.97 |
| SK 3282 SCP | 1-5/8 + 0.0010 | 6.85 | 6.14 | 2.28 | 2.17 |
| SK 4282 SCP | 2-1/16 + 0.0010 | 7.68 | 6.42 | 2.56 | 2.76 |
| SK 5282 SCP | 2-7/16 + 0.0012 | 9.06 | 7.58 | 2.95 | 3.35 |
| SK 6282 SCP | 2-3/4 + 0.0012 | 11.41 | 9.92 | 3.54 | 3.93 |

| | Shaft | | | | | | | | | | | | | | |
|---|---|---|---|---|---|---|---|---|---|---|---|---|---|---|---|
| | Shaft Size | U1 | AH | D | E | H | N | J | K | U | V | S | Y | T | Key |
| SK 1282 | 1-1/2 | 1-1/2 | 9 | 3 | 7/8 | 17/32 | 9.04 | 2.04 | 2.165 | 1.18752-0.0006 | 3.74 | 1.049 | 0.25 | 7/16-14 x 1 | 1/4 x 1/4 |
| | 2 | 2 | 9 | 3 | 7/8 | 21/32 | 9.04 | 2.41 | 2.559 | 1.18752-0.0006 | 3.74 | 1.049 | 0.25 | 7/16-14 x 1 | 1/4 x 1/4 |
| | 2-7/16 | 2-7/16 | 9-11/16 | 3 | 15/16 | 21/32 | 9.73 | 2.41 | 2.559 | 1.18752-0.0006 | 3.74 | 1.049 | 0.25 | 7/16-14 x 1 | 1/4 x 1/4 |
| SK 2282 | 1-1/2 | 1-1/2 | 9 | 3 | 7/8 | 17/32 | 9.04 | 2.04 | 2.165 | 1.43752-0.0006 | 4.65 | 1.225 | 0.375 | 5/8-11 x 1.5 | 3/8 x 3/8 |
| | 2 | 2 | 9 | 3 | 7/8 | 21/32 | 9.04 | 2.04 | 2.559 | 1.43752-0.0006 | 4.65 | 1.225 | 0.375 | 5/8-11 x 1.5 | 3/8 x 3/8 |
| | 2-7/16 | 2-7/16 | 9-11/16 | 3 | 15/16 | 21/32 | 9.73 | 2.41 | 2.559 | 1.43752-0.0006 | 4.65 | 1.225 | 0.375 | 5/8-11 x 1.5 | 3/8 x 3/8 |
| SK 3282 | 1-1/2 | 1-1/2 | 9 | 3 | 7/8 | 17/32 | 9.04 | 2.20 | 2.165 | 1.625-0.0006 | 5.91 | 1.478 | 0.375 | 5/8-11 x 1.5 | 3/8 x 1/4 |
| | 2 | 2 | 9 | 3 | 7/8 | 21/32 | 9.04 | 2.57 | 3.150 | 1.625-0.0006 | 5.91 | 1.478 | 0.375 | 5/8-11 x 1.5 | 3/8 x 1/4 |
| | 2-7/16 | 2-7/16 | 9-11/16 | 3 | 15/16 | 21/32 | 9.73 | 2.57 | 3.150 | 1.625-0.0006 | 5.91 | 1.478 | 0.375 | 5/8-11 x 1.5 | 3/8 x 1/4 |
| | 3 | 3 | 9-7/8 | 3 | 1 | 25/32 | 9.91 | 2.57 | 3.150 | 1.625-0.0006 | 5.91 | 1.478 | 0.375 | 5/8-11 x 1.5 | 3/8 x 1/4 |
| SK 4282 | 2 | 2 | 9 | 3 | 7/8 | 21/32 | 9.04 | 2.37 | 3.150 | 2.06252-0.0007 | 6.42 | 1.844 | 0.5 | 5/8-11 x 1.5 | 1/2 x 3/8 |
| | 2-7/16 | 2-7/16 | 9-11/16 | 3 | 15/16 | 21/32 | 9.73 | 2.37 | 3.150 | 2.06252-0.0007 | 6.42 | 1.844 | 0.5 | 5/8-11 x 1.5 | 1/2 x 3/8 |
| | 3 | 3 | 9-7/8 | 3 | 1 | 25/32 | 9.91 | 2.37 | 3.150 | 2.06252-0.0007 | 6.42 | 1.844 | 0.5 | 5/8-11 x 1.5 | 1/2 x 3/8 |
| SK 5282 | 2 | 2 | 9 | 3 | 7/8 | 21/32 | 9.04 | 2.68 | 3.937 | 2.43752-0.0007 | 7.48 | 2.084 | 0.625 | 3/4-10 x 2 | 5/8 x 5/8 |
| | 2-7/16 | 2-7/16 | 9-11/16 | 3 | 15/16 | 21/32 | 9.73 | 2.68 | 3.937 | 2.43752-0.0007 | 7.48 | 2.084 | 0.625 | 3/4-10 x 2 | 5/8 x 5/8 |
| | 3 | 3 | 9-7/8 | 3 | 1 | 25/32 | 9.91 | 2.68 | 3.937 | 2.43752-0.0007 | 7.48 | 2.084 | 0.625 | 3/4-10 x 2 | 5/8 x 5/8 |
| | 3-7/16 | 3-7/16 | 13-1/8 | 4 | 1-1/4 | 29/32 | 13.16 | 2.68 | 3.937 | 2.43752-0.0007 | 7.48 | 2.084 | 0.625 | 3/4-10 x 2 | 5/8 x 5/8 |
| SK 6282 | 3 | 3 | 9-7/8 | 3 | 1 | 25/32 | 9.91 | 2.94 | 3.937 | 2.750 - 0.0007 | 10.55 | 2.402 | 0.625 | 3/4-10 x 2 | 5/8 x 5/8 |
| | 3-7/16 | 3-7/16 | 13-1/8 | 4 | 1-1/4 | 29/32 | 13.16 | 2.94 | 3.937 | 2.750 - 0.0007 | 10.55 | 2.402 | 0.625 | 3/4-10 x 2 | 5/8 x 5/8 |

# SK 9012.1 - SK9053.1
# SCP Dimensions

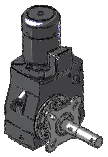

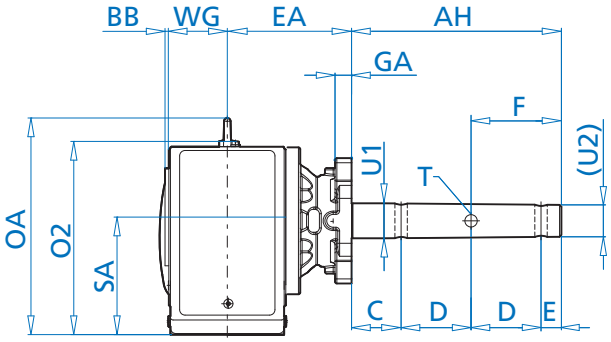


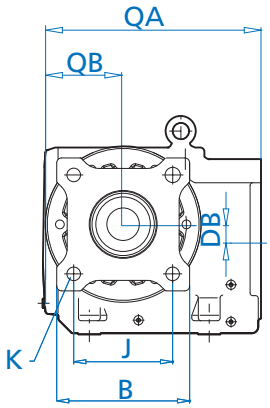


Standard Housing

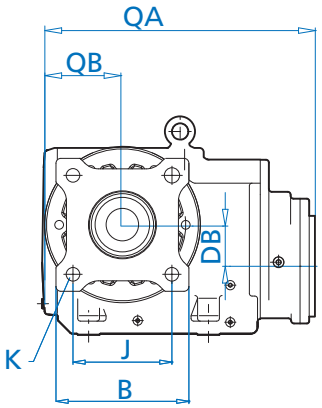


3rd Reduction Housing

## Bevel SCP Dimensions

| Unit | Shaft Dimensions | | | | | | | | Flange Dimensions | | | | Housing Dimensions | | | | | | | | |
|---|---|---|---|---|---|---|---|---|---|---|---|---|---|---|---|---|---|---|---|---|---|
| | U1 | U2 | AH | C | D | E | F | T | B | GA | J | K | BB | DB | EA | OA | O2 | SA | WG | QA | QB |
| SK 9012.1 | 1.500 | 1.41 | 9.00 | 2.125 | 3.00 | 0.875 | 3.875 | 3x17/32 | 5.375 | 0.71 | 4.000 | 0.5625 | 0.12 | 0.39 | 5.55 | 9.09 | 7.76 | 4.41 | 2.80 | 9.90 | 3.32 |
| | 2.000 | 1.91 | 9.00 | 2.125 | 3.00 | 0.875 | 3.875 | 3x21/32 | 7.375 | 0.75 | 5.125 | 0.6875 | 0.12 | 0.39 | 5.925 | 9.09 | 7.76 | 4.41 | 2.80 | 9.90 | 3.32 |
| | 2.4375 | 2.31 | 9.6875 | 2.750 | 3.00 | 0.9375 | 3.9375 | 3x21/32 | 7.375 | 0.75 | 5.625 | 0.6875 | 0.12 | 0.39 | 5.925 | 9.09 | 7.76 | 4.41 | 2.80 | 9.90 | 3.32 |
| SK 9013.1 | 1.500 | 1.41 | 9.00 | 2.125 | 3.00 | 0.875 | 3.875 | 3x17/32 | 5.375 | 0.71 | 4.000 | 0.5625 | 0.12 | 1.57 | 5.55 | 9.09 | 7.76 | 4.41 | 2.80 | 12.18 | 3.32 |
| | 2.000 | 1.91 | 9.00 | 2.125 | 3.00 | 0.875 | 3.875 | 3x21/32 | 7.375 | 0.75 | 5.125 | 0.6875 | 0.12 | 1.57 | 5.925 | 9.09 | 7.76 | 4.41 | 2.80 | 12.18 | 3.32 |
| | 2.4375 | 2.31 | 9.6875 | 2.750 | 3.00 | 0.9375 | 3.9375 | 3x21/32 | 7.375 | 0.75 | 5.625 | 0.6875 | 0.12 | 1.57 | 5.925 | 9.09 | 7.76 | 4.41 | 2.80 | 12.18 | 3.32 |
| SK 9022.1 | 1.500 | 1.41 | 9.00 | 2.125 | 3.00 | 0.875 | 3.875 | 3x17/32 | 5.375 | 0.71 | 4.000 | 0.5625 | 0.16 | 0.55 | 6.14 | 11.00 | 9.65 | 5.63 | 3.39 | 11.47 | 4.03 |
| | 2.000 | 1.91 | 9.00 | 2.125 | 3.00 | 0.875 | 3.875 | 3x21/32 | 7.375 | 0.75 | 5.125 | 0.6875 | 0.16 | 0.55 | 6.515 | 11.00 | 9.65 | 5.63 | 3.39 | 11.47 | 4.03 |
| | 2.4375 | 2.31 | 9.6875 | 2.750 | 3.00 | 0.9375 | 3.9375 | 3x21/32 | 7.375 | 0.75 | 5.625 | 0.6875 | 0.16 | 0.55 | 6.515 | 11.00 | 9.65 | 5.63 | 3.39 | 11.47 | 4.03 |
| SK 9023.1 | 1.500 | 1.41 | 9.00 | 2.125 | 3.00 | 0.875 | 3.875 | 3x17/32 | 5.375 | 0.71 | 4.000 | 0.5625 | 0.16 | 1.73 | 6.14 | 11.00 | 9.65 | 5.63 | 3.39 | 13.75 | 4.03 |
| | 2.000 | 1.91 | 9.00 | 2.125 | 3.00 | 0.875 | 3.875 | 3x21/32 | 7.375 | 0.75 | 5.125 | 0.6875 | 0.16 | 1.73 | 6.515 | 11.00 | 9.65 | 5.63 | 3.39 | 13.75 | 4.03 |
| | 2.4375 | 2.31 | 9.6875 | 2.750 | 3.00 | 0.9375 | 3.9375 | 3x21/32 | 7.375 | 0.75 | 5.625 | 0.6875 | 0.16 | 1.73 | 6.515 | 11.00 | 9.65 | 5.63 | 3.39 | 13.75 | 4.03 |
| SK 9032.1 | 1.500 | 1.41 | 9.00 | 2.125 | 3.00 | 0.875 | 3.875 | 3x17/32 | 5.375 | 0.71 | 4.000 | 0.5625 | 0.20 | 0.94 | 6.69 | 13.15 | 11.75 | 7.24 | 3.94 | 13.11 | 4.96 |
| | 2.000 | 1.91 | 9.00 | 2.125 | 3.00 | 0.875 | 3.875 | 3x21/32 | 7.875 | 0.71 | 5.125 | 0.6875 | 0.20 | 0.94 | 7.065 | 13.15 | 11.75 | 7.24 | 3.94 | 13.11 | 4.96 |
| | 2.4375 | 2.31 | 9.6875 | 2.750 | 3.00 | 0.9375 | 3.9375 | 3x21/32 | 7.875 | 0.71 | 5.625 | 0.6875 | 0.20 | 0.94 | 7.065 | 13.15 | 11.75 | 7.24 | 3.94 | 13.11 | 4.96 |
| | 3.000 | 2.91 | 9.875 | 2.875 | 3.00 | 1.000 | 4.000 | 3x25/32 | 7.875 | 0.71 | 6.000 | 0.8125 | 0.20 | 0.94 | 7.065 | 13.15 | 11.75 | 7.24 | 3.94 | 13.11 | 4.96 |
| SK 9033.1 | 1.500 | 1.41 | 9.00 | 2.125 | 3.00 | 0.875 | 3.875 | 3x17/32 | 5.375 | 0.71 | 4.000 | 0.5625 | 0.20 | 2.91 | 6.69 | 13.15 | 11.75 | 7.24 | 3.94 | 15.49 | 4.96 |
| | 2.000 | 1.91 | 9.00 | 2.125 | 3.00 | 0.875 | 3.875 | 3x21/32 | 7.875 | 0.71 | 5.125 | 0.6875 | 0.20 | 2.91 | 7.065 | 13.15 | 11.75 | 7.24 | 3.94 | 15.49 | 4.96 |
| | 2.4375 | 2.31 | 9.6875 | 2.750 | 3.00 | 0.9375 | 3.9375 | 3x21/32 | 7.875 | 0.71 | 5.625 | 0.6875 | 0.20 | 2.91 | 7.065 | 13.15 | 11.75 | 7.24 | 3.94 | 15.49 | 4.96 |
| | 3.000 | 2.91 | 9.875 | 2.875 | 3.00 | 1.000 | 4.000 | 3x25/32 | 7.875 | 0.71 | 6.000 | 0.8125 | 0.20 | 2.91 | 7.065 | 13.15 | 11.75 | 7.24 | 3.94 | 15.49 | 4.96 |
| SK 9042.1 | 2.000 | 1.91 | 9.00 | 2.125 | 3.00 | 0.875 | 3.875 | 3x21/32 | 9.250 | 0.75 | 5.125 | 0.6875 | 0.20 | 1.42 | 7.905 | 15.71 | 13.97 | 8.54 | 4.53 | 15.81 | 6.06 |
| | 2.4375 | 2.31 | 9.6875 | 2.750 | 3.00 | 0.9375 | 3.9375 | 3x21/32 | 9.250 | 0.75 | 5.625 | 0.6875 | 0.20 | 1.42 | 7.905 | 15.71 | 13.97 | 8.54 | 4.53 | 15.81 | 6.06 |
| | 3.000 | 2.91 | 9.875 | 2.875 | 3.00 | 1.000 | 4.000 | 3x25/32 | 9.250 | 0.75 | 6.000 | 0.8125 | 0.20 | 1.42 | 7.905 | 15.71 | 13.97 | 8.54 | 4.53 | 15.81 | 6.06 |
| | 3.4375 | 3.31 | 13.125 | 3.875 | 4.00 | 1.250 | 5.125 | 3x29/32 | 9.250 | 0.75 | 6.750 | 0.8125 | 0.20 | 1.42 | 7.905 | 15.71 | 13.97 | 8.54 | 4.53 | 15.81 | 6.06 |
| SK 9043.1 | 2.000 | 1.91 | 9.00 | 2.125 | 3.00 | 0.875 | 3.875 | 3x21/32 | 9.250 | 0.75 | 5.125 | 0.6875 | 0.20 | 3.82 | 7.905 | 15.71 | 13.97 | 8.54 | 4.53 | 18.55 | 6.06 |
| | 2.4375 | 2.31 | 9.6875 | 2.750 | 3.00 | 0.9375 | 3.9375 | 3x21/32 | 9.250 | 0.75 | 5.625 | 0.6875 | 0.20 | 3.82 | 7.905 | 15.71 | 13.97 | 8.54 | 4.53 | 18.55 | 6.06 |
| | 3.000 | 2.91 | 9.875 | 2.875 | 3.00 | 1.000 | 4.000 | 3x25/32 | 9.250 | 0.75 | 6.000 | 0.8125 | 0.20 | 3.82 | 7.905 | 15.71 | 13.97 | 8.54 | 4.53 | 18.55 | 6.06 |
| | 3.4375 | 3.31 | 13.125 | 3.875 | 4.00 | 1.250 | 5.125 | 3x29/32 | 9.250 | 0.75 | 6.750 | 0.8125 | 0.20 | 3.82 | 7.905 | 15.71 | 13.97 | 8.54 | 4.53 | 18.55 | 6.06 |
| SK 9052.1 | 3.000 | 2.91 | 9.875 | 2.875 | 3.00 | 1.000 | 4.000 | 3x25/32 | 9.250 | 0.75 | 6.000 | 0.8125 | 0.20 | 1.61 | 9.085 | 18.82 | 16.79 | 10.31 | 5.71 | 19.15 | 7.32 |
| | 3.4375 | 3.31 | 13.125 | 3.875 | 4.00 | 1.250 | 5.125 | 3x29/32 | 9.250 | 0.75 | 6.750 | 0.8125 | 0.20 | 1.61 | 9.085 | 18.82 | 16.79 | 10.31 | 5.71 | 19.15 | 7.32 |
| SK 9053.1 | 3.000 | 2.91 | 9.875 | 2.875 | 3.00 | 1.000 | 4.000 | 3x25/32 | 9.250 | 0.75 | 6.000 | 0.8125 | 0.20 | 4.61 | 9.085 | 18.82 | 16.79 | 10.31 | 5.71 | 21.89 | 7.32 |
| | 3.4375 | 3.31 | 13.125 | 3.875 | 4.00 | 1.250 | 5.125 | 3x29/32 | 9.250 | 0.75 | 6.750 | 0.8125 | 0.20 | 4.61 | 9.085 | 18.82 | 16.79 | 10.31 | 5.71 | 21.89 | 7.32 |

## Motors


- Order Form
- NEMA C-Face Motors
- Engineering Information
- Options
- Environmental Options
- AC Vector Drive Options
- SK 300E Trio AC Vector Drive
- Additional Options
- Ratings Tables
- Dimensions
- Connection Diagrams




NORD DRIVESYSTEMS

www.nord.com

INVERTER DUTY MOTOR



| Motor Type | Power Pn | | Nn Full-load | In Full-Load Current 230V[a] | In Full-Load Current 460V[a] |
|---|---|---|---|---|---|
| | [hp] | [kW] | [rpm] | [A] | [A] |
| 63S/4 | 0.16 | 0.12 | 1700 | 0.88 | 0.44 |
| 63L/4 | 0.25 | 0.18 | 1680 | 1.12 | 0.56 |
| 71S/4 | 0.33 | 0.25 | 1710 | 1.56 | 0.78 |
| 71L/4 | 0.5 | 0.37 | 1720 | 1.90 | 0.95 |
| 80S/4 | 0.75 | 0.55 | 1710 | 2.70 | 1.35 |
| 80L/4 | 1 | 0.75 | 1650 | 3.66 | 1.83 |
| 90S/4 | 1.5 | 1.1 | 1660 | 4.84 | 2.42 |
| 90L/4 | 2 | 1.5 | 1660 | 6.34 | 3.17 |
| 100L/4 | 3 | 2.2 | 1705 | 9.0 | 4.50 |
| 100LA/4 | 5 | 3.7 | 1725 | 15.2 | 7.62 |
| 132S/4 | 7.5 | 5.5 | 1735 | 19.8 | 9.9 |
| 132M/4 | 10 | 7.5 | 1735 | 25.8 | 12.9 |
| 160M/4 | 15 | 11 | 1770 | 38.4 | 19.2 |



# Motor Order Form



| | Frame | Size | Poles | Motor Options | Brake Size | Brake Options |
|---|---|---|---|---|---|---|
| **SK** | | | | | | |

| Frame | Size | Poles |
|---|---|---|
| 63 | S | 4 |
| 71 | SH | 2 |
| 80 | M | 6 |
| 90 | MH | 4-2 |
| 100 | MX | 8-2 |
| 112 | L | 8-4 |
| 132 | LA | 12-2 |
| | LH | Other |
| | LX | |

**Paint**

- ❍ Unpainted Aluminum Alloy
- ❍ Stainless Steel Paint
- ❍ NSD+ (gray)
- ❍ NSD+W (white)
- ❍ NSD-X3 (gray)
- ❍ NSD-X3W (white)
- ❍ Special _____

**Electrical Motor Options**

- ❒ **H** - Energy Efficient Motor
- ❒ **TW** - Thermostat
- ❒ **TF** - Thermistor
- ❒ **SH** - Space Heater (select voltage)
  - ❍ 110 Volt ❍ 230 Volt ❍ 460 Volt
- ❒ **ISO** H - Class H insulation
- ❒ **WU** - High Resistance Rotor
- ❒ **4-2** - 2-Speed, 4/2 Pole, 1800/3600rpm
- ❒ **8-2** - 2-Speed, 8/2 Pole, 900/3600rpm
- ❒ **ECR** - Single Phase Motor

**Environmental Options**

- ❒ **NSD+** - Nord Severe Duty Paint
- ❒ **NSDx3** - Nord Extreme Duty Paint
- ❒ **RD** - Canopy Drip Cover
- ❒ **RDD** - Double Fan Cover
- ❒ **KB** - Condensation Drain Holes (plugged)
- ❒ **KBO** - Condensation Drain Holes (open)
- ❒ **IP66** - IP66 Enclosure Protection
- ❒ **KKV** - Terminal Box Sealed with Resin
- ❒ **AICM** - Additional Insulation
- ❒ **EP** - Epoxy Dipped Windings

**AC Vector Drive Related Options**

- ❒ **F** - Blower Fan (200-575V 1 & 3 Phase)
- ❒ **FC** - Blower Cooling Fan (115V, 1 Phase)
- ❒ **IG__** - Incremental Encoder
- ❒ **IG__P** - Incremental Encoder with Plug
- ❒ **AG** - Absolute Encoder

**Additional Motor Options**

- ❒ **OL** - Totally Enclosed Non-Ventilated (TENV)
- ❒ **OL/H** - (TENV) Without Fan Cover
- ❒ **WE** - Second Shaft Extension (Fan Side)
- ❒ **HR** - Hand Wheel
- ❒ **Z** - High Inertia Cast Iron Fan
- ❒ **RLS** - Motor Backstop (rotation viewing fan)
  - ❍ Clockwise ❍ Counter-Clockwise
- ❒ **EKK** - Small Terminal Box (not UL approved)
- ❒ **MS** - Quick Power Plug Connector

| Brake Size |
|---|
| BRE 5 |
| BRE 10 |
| BRE 20 |
| BRE 40 |
| BRE 60 |
| BRE 100 |
| BRE 150 |

- ❒ **HL** - Hand Release Lever
- ❒ **FHL** - Locking Hand Release Lever
- ❒ **HLH** - Hand Release Lever with Hole
- ❒ **RG** - Corrosion Protected Brake
- ❒ **SR** - Dust and Corrosion Protected Brake
- ❒ **ADJ_____Nm** - Adjust Brake Torque
- ❒ **BIP66** - IP66 Brake Enclosure
- ❒ **MIK** - Micro-switch
- ❒ **BSH** - Brake Heating/Bifilar Coil
- ❒ **NRB1** - Quiet Brake Release
- ❒ **NRB2** - Quiet Brake Motor Operation
- ❒ **FBR** - Brass Foil
- ❒ **DBR** - Double Brake
- ❒ **G...P** - High Performance Rectifier
- ❒ **G...V** - Sealed Rectifier
- ❒ **IR** - Current Sensing Relay

**Rectifier Selection**

**Rectifier Wiring**

- ❍ Across the line (from motor terminal box)
- ❍ Separate power source (frequency AC vector drive, soft starter)

**Brake Supply Voltage**

- ❍ 24 VDC
- ❍ 115 VAC
- ❍ 200 VAC
- ❍ 230 VAC
- ❍ 400 VAC
- ❍ 460 VAC
- ❍ 500 VAC
- ❍ 575 VAC
- ❍ Other _____

**Braking Method**

- ❍ Method 10
- ❍ Method 15
- ❍ Method 20
- ❍ Method 25
- ❍ Method 30
- ❍ Method 35
- ❍ Method 40
- ❍ Method 45
- ❍ Method 50
- ❍ Method 55

**Hand Release Position**

- ❍ HL1
- ❍ HL2
- ❍ HL3
- ❍ HL4

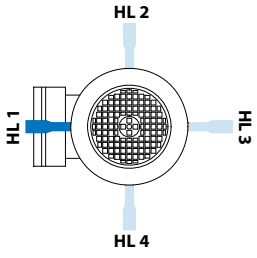


**Mounting**

- ❍ Integral to gearbox
- ❍ NEMA C-Face
- ❍ IEC B5 Mount

**Voltage & Frequency**

- ❍ 230/460V-60Hz
- ❍ 575V-60Hz
- ❍ 208V-60Hz
- ❍ 400V-50Hz
- ❍ 115/230V, 60Hz-1-ph.
- ❍ Other

**Terminal Box Pos.**

- ❍ TB1
- ❍ TB2
- ❍ TB3
- ❍ TB4

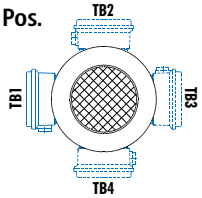


Mtg. Pos. M1 Shown

**Conduit Entry Loc.**

- ❍ CE I *
- ❍ CE II
- ❍ CE III *
- ❍ CE IV

*Brakemotor

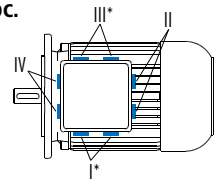


Mtg. Pos. M1 Shown

MOTORS



## Motor Options & Construction

NORD motors are stocked in one of two ways. The first method is to stock a complete motor that is ready to be assembled to a gear reducer or shipped as a stand alone motor. The second method, the motor is assembled from component parts. The Mod next to a motor option designates that the option can be added to a complete motor by simple modification. The Build next to a motor option indicates that the motor will need to be built from component parts in order to incorporate the motor option.

**Motor Options**

| Abbreviation | Description | Mod | Build | Page |
|---|---|---|---|---|
| **AG** | Absolute Encoder | | ✓ | 137 |
| **AICM** | Additional Insulation | | ✓ | 131 |
| **ECR** | Single Phase Motors, 60Hz | | ✓ | 130 |
| **EKK** | Small Terminal Box | ✓ | | 134 |
| **EP** | Epoxy Dipped Windings | | ✓ | 131 |
| **F** | Blower Cooling Fan | ✓ | | 135 |
| **FC** | Blower Cooling Fan | ✓ | | 135 |
| **HR** | Hand Wheel | | ✓ | 132 |
| **IG...P** | Incremental Encoder | | ✓ | 136 |
| **ISO H** | Class H Insulation | | ✓ | 130 |
| **KB** | Plugged Condensation Drain Holes | | ✓ | 131 |
| **KBO** | Open Condensation Drain Holes | | ✓ | 131 |
| **KKV** | Terminal Box Sealed with Resin | ✓ | | 131 |
| **MS** | Quick Power Plug Connector | ✓ | | 134 |
| **OL** | Totally Enclosed Non-Ventilated | ✓ | | 132 |
| **OL/H** | Totally Enclosed Non Ventilated without Fan Cover | | ✓ | 132 |
| **RD** | Canopy Drip Cover | ✓ | | 131 |
| **RDD** | Double Fan Cover | ✓ | | 131 |
| **RLS** | Motor Backstop | | ✓ | 133 |
| **SH** | Space Heater | | ✓ | 130 |
| **TF** | Thermistor | | ✓ | 129 |
| **TW** | Thermostat | | ✓ | 129 |
| **WE** | 2nd Shaft Extension on Fan Side | | ✓ | 132 |
| **WU** | High Resistance Rotor | | ✓ | 130 |
| **Z** | High Inertia Cast Iron Fan | | ✓ | 133 |
| **-** | IP65 Enclosure Protection | ✓ | | 131 |
| **-** | IP66 Enclosure Protection | ✓ | | 131 |
| **-** | Paint Coatings | ✓ | | 18 |

# Stocked NEMA C-Face Motors



## NEMA C-Face Motors

The National Electrical Manufacturers Association (NEMA) provides standardization of electrical equipment, enabling customers to select from a range of safe, effective and compatible products. A NEMA C-face motor has a machined face with a pilot and threaded holes for direct mounting onto a NORD reducer or other industrial equipment. NORD offers NEMA C-face motors stocked as finished goods and will also assemble NEMA C-face motors to your specifications. For ratings, see page 142.

## Stocked NEMA C-Face Motors

Stocked NEMA C-face motors are offered in standard efficiency, energy efficient and in a brakemotor design. They are available in 230/460V-60Hz and 575V-60Hz up to 10 hp. Part numbers for stocked NEMA C-face motors are in the table below.

## Assembled per Order NEMA C-Face Motors

NORD will assemble a NEMA C-face motor to your specifications based upon the available motor options from this catalog.

| Motor Type | Power | Part Number 230/460V-60Hz | Part Number 575V-60Hz | Weight [lb] |
|---|---|---|---|---|
| **High Performance Motors** | | | | |
| 63S/4-56C | 1/6 hp | 31110012 | 31110013 | 7.9 |
| 63L/4-56C | 1/4 hp | 31610012 | 31610013 | 9.3 |
| 71S/4-56C | 1/3 hp | 32110012 | 32110013 | 11.9 |
| 71L/4-56C | 1/2 hp | 32610012 | 32610013 | 13.9 |
| 80S/4-56C | 3/4 hp | 33110012 | 33110013 | 17.6 |
| 80L/4-56C | 1 hp | 33610022 | n/a | 19.8 |
| 80L/4-143TC | 1 hp | 33610012 | n/a | 19.8 |
| 90S/4-145TC | 1.5 hp | 34110012 | n/a | 26.5 |
| 90L/4-145TC | 2 hp | 34610012 | n/a | 30.9 |
| 100L/4-182TC | 3 hp | 35110012 | n/a | 39.7 |
| 100LA/4-184TC | 5 hp | 35610012 | n/a | 46.3 |
| 132S/4-213TC | 7.5 hp | 36410012 | n/a | 97.0 |
| 132M/4-215TC | 10 hp | 36710012 | n/a | 121.3 |
| 160M/4-254TC TW | 15 hp | 37310012 | n/a | 160.9 |
| 160L/4-256TC TW | 20 hp | 37510012 | n/a | 178.6 |
| 180MX/4-284TC TW | 25hp | 37610012 | n/a | 276.3 |
| 180LX/4-286TC TW | 30hp | 37810012 | n/a | 307.2 |
| **Energy Efficient Motors** | | | | |
| 80LH/4-56C | 1 hp | 33610094 | 33610095 | 19.8 |
| 80LH/4-143TC | 1 hp | 33610092 | 33610093 | 19.8 |
| 90SH/4-145TC | 1.5 hp | 34110092 | 34110093 | 26.5 |
| 90LH/4-145TC | 2 hp | 34610092 | 34610093 | 30.9 |
| 100LH/4-182TC | 3 hp | 35610092 | 35610093 | 39.7 |
| 112MH/4-184TC | 5 hp | 36110082 | 36110083 | 83.6 |
| 132SH/4-213TC | 7.5 hp | 36410092 | 36410093 | 97.0 |
| 132MH/4-215TC | 10 hp | 36710092 | 36710093 | 121.3 |
| 160MH/4-254TC TW | 15 hp | 37310092 | 37310093 | 160.9 |
| 160LH/4-256TC TW | 20 hp | 37510092 | 37510093 | 198.4 |



## Standards

All motors are in accordance with existing standards and regulations:

### NEMA MG 1 - Motors and Generators:

- Electrical performance
- Motors for operation on variable AC vector drive

### UL 1004 – Electric Motors

### CSA C22.2 No. 100-04 - Motors and Generators:

### Industrial Products
### IEC 60034 parts 1, 5, 6, 8, 9, 11 and 14.

- Part 1 – General rules
- Part 5 – Types of enclosures
- Part 6 – Types of cooling
- Part 8 – Terminal lead designations and sense of rotation
- Part 9 – Noise limits
- Part 11 – Integrated thermal protection
- Part 14 – Mechanical vibration

### IEC 60038 – Standard voltages

| | |
|---|---|
| CE | NORD motors carry the CE mark in accordance with the Low Voltage Directive and, if installed properly, the Electromagnetic Compatibility Directive (EMC). The CE mark is required for installation in European Union (EU) states. |
| ® | Many NORD motors from frame size 63 to 315 are an Underwriters Laboratories Recognized component per UL standard 1004.<br>Frames 63-132 File number E191510<br>Frames 160+ File number E227215 |
| C SP® US | The Canadian Standards Association CUS mark indicates that CSA has tested and approved NORD motors according to both US and Canadian standards. It is equivalent to the Underwriters Laboratories RU recognition mark (UL standard 1004) and the CSA mark according to CSA Standard C22.2 No. 100-04<br>Frames 63-132 File number LR112560<br>Frame 160+ File number LR13494 |
| ee | NORD Energy Efficient motors up to frame 160 have been evaluated by the United States Department of Energy and recieved a Certificate of Compliance to certify the efficiency ratings. The certificate of compliance is CC 092B. |
| CSA E | NORD energy efficient motors carry the CSA energy efficiency verification mark. This mark ensures that CSA has verified that NORD motors are designed and manufactured to meet energy efficiency requirements number EEV112560. |

## EPAct – US Energy Efficiency

The Energy Policy Act of 1992 (EPAct) covers efficiency levels of general purpose industrial electric motors and became effective October 24, 1997. The basic goal of the law is to promote energy conservation. This law mandated energy efficiency requirements for many devices including some types of industrial electric motors. The efficiency levels are defined in NEMA MG-1 table 12-10. The regulations to implement this law have been developed by the Department of Energy (DOE).

The law covers minimum efficiency levels for general purpose motors including:

- Single-speed, polyphase NEMA T frame (and IEC equivalents)
- 1 to 200 hp (0.75 to 150 kW)
- 1200, 1800 or 3600 rpm
- NEMA design A and B
- Continuous rated
- Foot-mounted
- 230/460V-60Hz

The law excludes the following motor types from minimum efficiency levels:

- Integral gearmotors
- Brake motors

The NORD "H" line of energy efficient motors are designed to meet the efficiency levels defined by EPAct. NORD offers these motors as an option in combination with our high efficiency gear units for superior energy savings.

Efficiency levels for enclosed 4-pole motors per EPAct and NEMA MG 1 - in percent efficiency [%]

### Efficiency for EPACT & NEMA MG1 4-Pole Motors

| hp | 1 | 1.5 | 2 | 3 | 5 | 7.5 | 10 |
|---|---|---|---|---|---|---|---|
| kW | 0.75 | 1.1 | 1.5 | 2.2 | 3.7 | 5.5 | 7.5 |
| Eff% | 82.5 | 84.0 | 84.0 | 87.5 | 87.5 | 89.5 | 89.5 |

| hp | 15 | 20 | 25 | 30 | 40 | 50 | 60 |
|---|---|---|---|---|---|---|---|
| kW | 11 | 15 | 18.5 | 22 | 30 | 37 | 45 |
| Eff% | 91.0 | 91.0 | 92.4 | 92.4 | 93.0 | 93.0 | 93.6 |

| hp | 75 | 100 | 125 | 150 | 200 |
|---|---|---|---|---|---|
| kW | 55 | 75 | 90 | 110 | 150 |
| Eff% | 94.1 | 94.5 | 94.5 | 95.0 | 95.0 |



## Canadian Energy Efficiency

The Energy Efficiency Act and the Energy Efficiency Regulations establish minimum energy performance levels for electric motors from 1 to 200 HP (0.75 to 150 kW) for sale or lease in Canada. The Energy Efficiency Regulations were developed by Natural Resources Canada (NRCan).

Certain National Electrical Manufacturers Association (NEMA) motors have been regulated since Feb. 3,1995. Effective Nov. 27, 1997, the Energy Efficiency Regulations were amended to include International Electrotechnical Commission (IEC) motors. This amendment also increased the minimum energy performance levels that motors must meet. For explosion-proof motors and motors contained within an integral gear assembly, the effective date of the Regulations is Nov. 27, 1999.

The regulations mandate that motors carry an energy efficiency verification mark that is authorized by Standards Council of Canada (SCC) accredited certification organization such as Canadian Standards Association (CSA).

## CEMEP Agreement
## European Efficiency Categories

CEMEP, the association of European Electric Motor Manufacturers, has reached an agreement with the European Commission's General Directorate for Energy so that in the future all 2 and 4-pole low voltage motors from 1 to 100kW will be categorized on the basis of their efficiency. The classification will be displayed on the nameplate and in catalogs. The following categories will be used: EFF1, EFF2 and EFF3.

| | |
|---|---|
| EFF 1 | EFF1-indicates a high efficiency factor. |
| EFF 2 | EFF2-indicates an improved efficiency factor. |
| EFF 3 | EFF3-Indicates a standard efficiency motor. |

NORD supplies both motors of EFF1 and EFF2 categories in its 4-pole motors. The category EFF2 motors are the standard efficiency motors and the EFF1 motors are the "H" line of energy efficient motors.

In the future NORD will mark all of its 50-Hz motor with the CEMEP efficiency symbols.

| kW | 1.1 | 1.5 | 2.2 | 3 | 4 | 5.5 |
|---|---|---|---|---|---|---|
| hp | 1.5 | 2 | 3 | 4 | 5.4 | 7.5 |
| EFF1 [%] | 83.3 | 85.0 | 86.4 | 87.4 | 88.3 | 89.2 |
| EFF2 [%] | 76.2 | 78.5 | 81.0 | 82.6 | 84.2 | 85.7 |
| EFF3 [%] | <76.2 | <78.5 | <81.0 | <82.6 | <84.2 | <85.7 |

| kW | 7.5 | 11 | 15 | 18.5 | 22 | 30 |
|---|---|---|---|---|---|---|
| hp | 10 | 15 | 20 | 25 | 30 | 40 |
| EFF1 [%] | 90.1 | 91.0 | 91.8 | 92.2 | 92.6 | 93.2 |
| EFF2 [%] | 87.0 | 88.4 | 89.4 | 90.0 | 90.5 | 91.4 |
| EFF3 [%] | <87.0 | <88.4 | <89.4 | <90.0 | <90.5 | <91.4 |

| kW | 37 | 45 | 55 | 75 | 90 |
|---|---|---|---|---|---|
| hp | 50 | 60 | 75 | 100 | 120 |
| EFF1 [%] | 93.6 | 93.9 | 94.2 | 94.7 | 95.0 |
| EFF2 [%] | 92.0 | 92.5 | 93.0 | 93.6 | 93.9 |
| EFF3 [%] | <92.0 | <92.5 | <93.0 | <93.6 | <93.9 |

INVERTER DUTY MOTOR

## Inverter/Vector Duty

NORD single–speed motors are Inverter/Vector Duty. The construction of the NORD motors insulating system takes into account the non-sinusoidal wave forms produced by variable frequency drives. NORD uses high grade insulating components and extra first turn protection as well as double coated wire to ensure long service life when connected to AC vector drives. NORD motors can produce full torque at zero speed if properly sized, selected and controlled.



## Voltage and Frequency

NORD motors are available in a wide range of voltages and frequencies for use in North America and around the world. For a more detailed list of choices see page 128.

NORD motors designed for North American voltages (208V, 230V, 460V and 575V) conform to the voltage and frequency tolerances in NEMA MG-1. The voltage tolerance is +/-10%, the frequency tolerance is +/- 5% or a combined voltage and frequency tolerance of +/-10%.

## Low Inertia

The motor inertia in all NORD motors is extremely low which allows for a much more dynamic motor control capability. Low motor inertia is a significant advantage when using NORD motors with AC vector drives or vector controllers. NORD motors can cycle more frequently and require less mechanical energy to start than standard NEMA frame motors. This leaves more energy to start the load.

## High Torque

The NORD motors produce higher starting torque than required by NEMA standards. This is achieved through improved motor winding, rotor design and construction.

## Non-Sparking Fan

The standard NORD motor fan is a non-sparking design. The fan will also provide proper airflow in either direction of rotation.

## Terminal Block

Each NORD motor uses a terminal block, which is a superior method of wire termination when compared to pigtail leads. A terminal block ensures long-term reliability of the power connections.

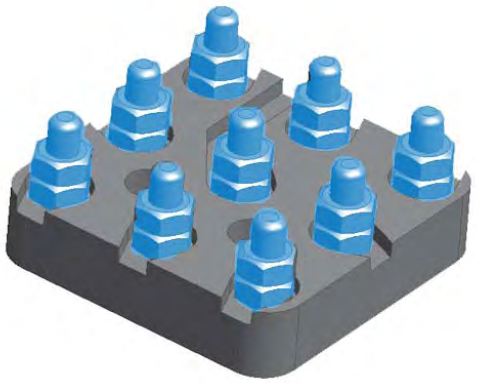

## Tropical Protection (Anti-fungal)

As a standard the NORD motor insulation system is tropically protected. The insulating and construction components are inorganic materials that resist fungal growth.

## Insulation Class

NORD motors are constructed with a thermal class F insulating system. The motors are also designed for a class B temperature rise (80°C). The use of class F insulation with a class B temperature rise provides increased operating life. Motors constructed with class H insulation are also available as an option.

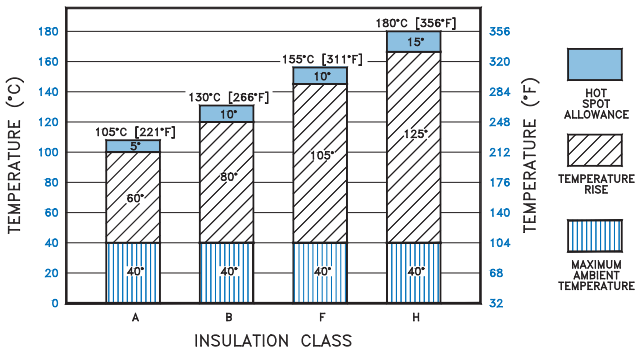


## Insulation System

NORD motor insulation system is designed to provide a superior degree of protection. NORD utilizes the following insulation components:

- Magnet wire – double coated insulation
- Varnish dip impregnation
- Slot liners
- Phase paper
- Phase separators
- Top sticks
- Connecting wire sleeves

Other motor manufacturers eliminate some of these insulating components for cost reduction.

## Inverter/Vector Duty – Voltage Spikes

All NORD motors are constructed with an insulating system designed to withstand the repeated voltage spikes generated by modern AC vector drives. The insulation system withstands the ratings in conformance with NEMA MG 1-2006 Section 31.4.4.2 Voltage Spikes.

$V_{peak} = 3.1 \times V_{rated}$ with a Rise time ≤ 0.1µs.



## Ambient Temperature

NORD motors are designed to operate with a maximum ambient temperature of 40°C (104°F). If the motor's operating environment exceeds 40°C, the motor's nominal power $P_n$ either needs to be de-rated (see table below) or use upgraded insulation.

| Ambient temp [°F] | 113 | 122 | 131 | 140 |
|---|---|---|---|---|
| Ambient temp [°C] | 45 | 50 | 55 | 60 |
| De-rate factor | 0.96 | 0.92 | 0.87 | 0.82 |

**Motor Rated Power = [$P_n$ x De-rate factor]**

## Elevation

NORD motors are designed to operate at an elevation of up to 3300 ft (1000 m) above sea level. At higher elevations the air is thinner resulting in less cooling capacity. If the motor's nominal power $P_n$ installation elevation exceeds 3300 ft (1000 m), the motor either needs to be de-rated (see table below) or requires upgraded insulation.

| Altitude [ft] | 5000 | 6500 | 8200 | 10000 | 11500 | 13000 |
|---|---|---|---|---|---|---|
| Altitude [m] | 1500 | 2000 | 2500 | 3000 | 3500 | 4000 |
| De-rate Factor | 0.97 | 0.94 | 0.90 | 0.86 | 0.83 | 0.80 |

**Motor Rated Power = [$P_n$ x De-rate factor]**

## Service Factor

Motors rated 230/460V-60Hz and 332/575V-60Hz have a service factor of 1.15. Almost all other motors have a service factor of 1.1 or 1.0.

## Duty Classes

The following duty types are defined in IEC 60034-1.

| Duty Type | Explanation Excerpts |
|---|---|
| S1 | Continuous operation at a constant load, the motor reaches thermal equilibrium |
| S2 | Short-time operation at a constant load for a given time followed by a time of rest until the motor is completely cooled down to ambient temperature.<br>Example: S2-10 minutes<br>Recommended values for determination: 10, 30 min. |
| S3 | Intermittent operation sequential, identical run and rest cycles with constant load. Temperature equilibrium is never reached. Starting current has little effect on temperature rise. The cyclic duration factor (cdf) indicates the portion of operation time in relation to a complete duty cycle. The typical duty cycle time is 10 minutes, unless otherwise specified.<br>Example: S3-40%<br>Recommended values for determination: 25, 40, 60% |
| S6 | Continuous operation with intermittent load sequential, identical cycles of running with constant load and running with no load. No rest periods.<br>Example: S6-40%<br>Recommended values for determination: 25, 40, 60% |

## Power Increasing Factor for Short-term & Intermittent Operation

Motor ratings in this catalog are based on continuous duty operation (S1). If a motor is designed for S1 duty, but is to be operated for short-time or intermittent operation it can be subjected to higher loads. The available motor power can be raised above the motor rated power by the "increasing factor" in the table below.

| Duty Type | | | Increasing factor |
|---|---|---|---|
| S2 | Operating time | 10 min | 1.40 |
| | | 30 min | 1.15 |
| S3 | Cyclic duration factor (cdf) | 25% | 1.33 |
| | | 40% | 1.18 |
| | | 60% | 1.08 |
| S6 | Cyclic duration factor (cdf) | 25% | 1.45 |
| | | 40% | 1.35 |
| | | 60% | 1.15 |

**Motor Rated Power = [$P_n$ x Increasing factor]**



## Enclosure

The NORD standard motors are provided with Totally Enclosed Fan-Cooled (TEFC) with an IP55 enclosure rating. Other enclosures are available, including Totally Enclosed Non-Ventilated (TENV), Totally Enclosed Blower-Cooled (TEBC), and IP66.

The motor integral cooling fan provides proper air flow in either direction of rotation. The IEC cooling classification is IC 411 according to IEC 60034-6.

## IP Enclosures per IEC 60034-5 - Simplified

| | 1st digit Foreign body protection | | 2nd digit Water protection |
|---|---|---|---|
| 0 | No protection | 0 | No Protection |
| 1 | Protected against solid objects 50mm (2 in) in diameter and larger | 1 | Protected against dripping water |
| 2 | Protected against solid objects 12 mm (1/2 in) in diameter and larger | 2 | Protected against dripping water up to a 15 degree angle |
| 3 | Protected against solid objects 2.5 mm (0.1 in) in diameter and larger | 3 | Protection against sprayed water |
| 4 | Protected against solid objects 1 mm (0.04 in) in diameter and larger | 4 | Protection against splashed water |
| 5 | Protected against dust | 5 | Protection against water jets |
| 6 | Dust tight | 6 | Protection against high pressure water jets |
| 7 | -- | 7 | Protection against intermittent submersion in water |
| 8 | -- | 8 | Protection against continuous submersion in water |

## Protective Features

All NORD Motors and Speed Reducers are constructed to provide a high degree of protection against wet and severe environments. NORD Motors and Speed Reducers are extremely well sealed against moisture ingress and use corrosion and moisture resistant components. NORD has recently made many enhancements in the motor and gear units standard construction to provide improved environmental protection. Many of the standard protection features of the NORD units are only available at an additional cost from other motor and gear drive suppliers. NORD designs all gearmotors, speed reducers and motors for installation in harsh industrial, commercial and municipal installation environments.

## Standard Construction

- Shaft lip seals on both ends of the motor shafts
- Stator to endbell connections sealed to exclude moisture
- Double coated magnetic wire insulation
- Inverter/vector duty insulation system conforms to NEMA MG1-1998, section 31.4.4.2 voltage spikes
- Moisture resistant varnish dipped windings improved varnish materials
- Inorganic insulating components for tropical protection
- Moisture resistant motor windings
- Conduit box sealed with gaskets
- Corrosion resistant alloy materials
- Threaded cable entry holes

### Motors for Indoor Operation - Option Codes

| | Dry Conditions | Wet or Humid Conditions |
|---|---|---|
| **Ambient Temperature Fluctuation** | – | KB, SH |
| **Paint** | – | NSD+ |
| **Vertical Motor Mount** 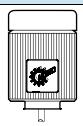 | RD | RDD |

### Motors for Outdoor Operation - Option Codes

| | Sheltered from the Elements | Exposed to the Elements |
|---|---|---|
| **Ambient Temperature Fluctuation** | KB, SH | KB, SH, KKV |
| **Paint** | NSD+ | NSDx3 |
| **Vertical Motor Mount** 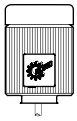 | RD | RDD |

### Option Code Key

| | | |
|---|---|---|
| KB | Condensation Drain Holes - Plugged | Page 131 |
| SH | Space Heater | Page 130 |
| KKV | Terminal Box Sealed with Resin | Page 131 |
| NSD+ | Nord Severe Duty Paint | Page 18 |
| NSDx3 | Nord Severe Extreme Duty X3 Paint | Page 18 |
| RD | Canopy Drip Cover | Page 131 |
| RDD | Double Fan Cover | Page 131 |

# General Options



## Voltage and Frequency

NORD motors are available in a number of voltages and frequencies. The standard voltages are commonly available. Optional voltages can be provided, but may include an increase in price and additional lead time. It also may be possible to provide motors with special voltages and frequency operation points.

### Standard Voltages

| Single speed motors | Two speed motors |
|---|---|
| 230/460V-60Hz (up to 30 hp) | 460V-60Hz |
| 460V-60Hz (40 hp and larger) | 230V-60Hz |
| 575V-60Hz | 575V-60Hz |
| 400V-50Hz | 400V-50Hz |

### Optional Voltages

| Single speed motors | Two speed motors |
|---|---|
| 208V-60Hz<br>(up to 10 hp, not available in energy efficient design) | Other voltages & frequencies available upon request |
| 380V-50Hz | |
| 415V-50Hz | |
| 380V-60Hz | |
| Other voltages & frequencies available upon request | |

## Poles / speeds

NORD offers a variety of single speed and two speed motors in addition to the standard 4 pole motor. NORD single speed motors are inverter/vector duty rated, however, it is not recommended to run a NORD two speed motor with an AC vector drive.

| Number of Poles | Synchronous Speed at 60Hz | Synchronous Speed at 50Hz | Notes: |
|---|---|---|---|
| **Single Speed Motors** | | | |
| **4** | 1800 rpm | 1500 rpm | – |
| **2** | 3600 rpm | 3000 rpm | – |
| **6** | 1200 rpm | 1000 rpm | – |
| **Two Speed Motors** | | | |
| **4-2** | 1800/3600 rpm | 1500/3000 rpm | Single winding |
| **8-2** | 900/3600 rpm | 750/3000 rpm | Two winding |
| **8-4** | 900/1800 rpm | 750/1500 rpm | Single winding |

Other speeds available upon request.

## US Canadian Standard (CUS)

CUS motor construction defines that NORD motors are constructed in accordance to UL 1004 (electric motors) and CSA C22.2 No. 100-04 (motors and generators) guidelines. This option is standard for 208, 230, 460, and 575 Volt operation at 60 Hz.

Motors nameplated with the CUS option will be marked and indicating that the Underwriters Laboratories and CSA have tested and approved NORD motors according to both US and Canadian standards.



## Motor Protection

Selecting the appropriate motor protective system is a key factor in reliable motor operation. There are two common classes of motor protection; current based and motor temperature based. Electrical installation codes require at least two types of protection in the motors circuit, both of which are normally current based. First is short-circuit protection normally accomplished by fuses or circuit breakers. Second is "motor overload protection" this is normally a device called a "motor overload" or a "heater." Current based protection is effective in some conditions. NORD can provide two different types of motor temperature based protection, a PTC thermistor (TF) or a bi-metallic thermostat (TW). Temperature based protection is more effective motor protection in many situations, see the table below.

| ⬆ = Good protection<br>⬌= Limited protection<br>⬇ = No protection | Fuses | Motor Overloads | PTC Thermistor (TF) | Bi-metallic Switch (TW) |
|---|---|---|---|---|
| Over current up to 200% | ⬇ | ⬆ | ⬆ | ⬆ |
| High inertia starting | ⬇ | ⬌ | ⬆ | ⬌ |
| Frequent motor starts | ⬇ | ⬌ | ⬆ | ⬆ |
| Stalling | ⬌ | ⬌ | ⬌ | ⬌ |
| Single phasing | ⬇ | ⬌ | ⬆ | ⬆ |
| Supply voltage deviations | ⬇ | ⬆ | ⬆ | ⬆ |
| Supply frequency deviations | ⬇ | ⬆ | ⬆ | ⬆ |
| Inadequate motor cooling | ⬇ | ⬇ | ⬆ | ⬆ |
| Bearing Damage | ⬇ | ⬇ | ⬆ | ⬆ |

## Thermostat (TW)

Build

Three bimetallic switches are connected in series in the motor windings, one per motor phase. Upon reaching the limit temperature, this device automatically opens circuits. The installer is responsible to wire the thermostat into the motor control circuit. After the temperature has fallen below the trip limit, the thermostat switch re-sets automatically. The auto resetting property must be considered when designing the safety aspects of the control scheme.

| TW Ratings | |
|---|---|
| NC (Normally Closed) | auto resetting |
| Voltage | 6 to 500VAC |
| Current | 1.6 A |
| Resistance | less than 50 mΩ |

## Thermistor (TF)

Build

Three positive temperature coefficient (PTC) thermistors are connected in series in the motor windings, one per motor phase. Thermistors require an external tripping device. Upon reaching the limit temperature, the thermistors change their resistance suddenly. In connection with a tripping device, this property is employed to monitor the motor temperature. The relay built into the tripping device has a make-and-break-contact, which is used in the control wiring. NORD does not provide the external tripping device with the TF thermistor option. You must request a thermistor tripping device separately. Many AC vecotor drives and PLCs include a built in PTC thermistor evaluation input.

| TF Ratings | |
|---|---|
| Transition Temperature | 150 °C +/- 5°C |
| Resistance < Transition | 20 ... 500 . Ω |
| Resistance > Transition | > 4k Ω. |
| Reed Voltage | < 7,5 V |
| Rated Current | < 1 mA |
| Motor Ambient Temp. | 40°C |

# General Options



## Space Heater (SH)

Build

Motors subjected to extreme temperature fluctuations or severe climatic conditions can be damaged by the formation of condensation. NORD can provide motor anti-condensation space heaters inside the motor to heat up the windings when the motor is not operating. This will prevent moisture from condensing inside the motor. The space heaters must not be switched on while the motor is running.

**Space Heater Voltage Must be specified**

| Voltages available |
|---|
| ❍ 115V – 50/60Hz |
| ❍ 230V – 50/60Hz |
| ❍ 460V – 50/60Hz |
| ❍ other voltages available on request |

## Class H Insulation (ISO H)

Build

NORD motors can be manufactured with class H insulation system. Standard NORD motors include double coated magnetic wire windings. When these windings are paired with a class H insulation it provides extra temperature capacity for the motor and will lengthen the motor's life. Class H insulation rated motors are also an advantage in some severe applications:

- Increased ambient temperature installations above 40°C (104°F)
- Increased elevation installations – above 3300 ft (1000 m)
- Applications with a high number of starts per hour.
- Meets class H insulation motor specifications
- Lower operating frequency when used with AC vector drive systems
- For additional information on insulation class see page 125.

## High Resistance Rotor (WU)

Build

Using Silumin rotor material, NORD offers a high resistance rotor to soften the motors operation and allow higher overload torques.

## Single Phase Motors, 60Hz (ECR)

Build

The ECR series of single phase motors is intended for demanding operation at 60Hz with a supply voltage of 115V or 230V. The permissible voltage range is 115/230V +/- 10%. The ECR motors have a 1.15 service factor and are available from 0.16 - 2 hp.



## Paint Coatings

Mod

NORD's standard paint coating is a two component, aliphatic polyurethane finish contaning 316 stainless steel material. This gray stainless steel paint has excellent appearance and outstanding physical properties. It is suitable for both indoor and outdoor applications. For more information and an explanation of all of our paint options please see page 18

## Condensation Drain Holes

NORD motors can be equipped with condensation drain holes. These drain holes are placed in the motor endbells at the lowest possible point. The drain holes are closed at the factory with plastic snap in plugs. They allow for condensation accumulation in the motor to drain after the closing plugs are removed.

The motor drain holes can be provided by NORD either open (KBO) or sealed with a closing plug (KB).

*IMPORTANT NOTE*

The motor must be installed in the mounting orientation specified on the nameplate or the drain holes will not function properly and may result with the motor filling with water.

## Condensation Drain Holes, Plugged (KB)

Build

KB drain holes are plugged for shipment. In order for the holes to effectively drain moisture, the plugs must be removed before using the motor.

## Condensation Drain Holes, Open (KBO)

Build

KBO drain holes are shipped open (not plugged).

## IP65 Enclosure Protection

Mod

NORD motors can be provided with an IP65 enclosure protection. IP65 protection is suitable for wet, low-pressure wash down and extremely dusty environments.

| IP | 1st digit Foreign body protection | IP | 2nd digit Water protection |
|---|---|---|---|
| 6 | Dust tight | 5 | Protection against water jets |

## IP66 Enclosure Protection

Mod

NORD motors can be provided with an IP66 enclosure protection. IP66 protection is suitable for wet, high-pressure wash down and extremely dusty environments, and includes all requirements included in IP65 enclosure protection.

| IP | 1st digit Foreign body protection | IP | 2nd digit Water protection |
|---|---|---|---|
| 6 | Dust tight | 6 | Protection against high pressure water jets |

## Terminal Box Sealed with Resin (KKV)

Mod

Terminal boxes can be sealed with a flexible, electrically safe resin to ensure that contaminants, water, and moisture cannot pass through the terminal box into the stator body. This option is helpful in extremely dusty, wet and humid environments. Another environment where this option is helpful is in installations that have frequent large temperature swings where condensation may form.

## Additional Insulation (AICM)

Build

NORD can provide additional insulation inside the motor to provide additional electrical protection in extremely wet or corrosive environments. An electrically safe insulating material is coated internally in the stator windings and on the rotor body

## Epoxy Dipped Windings (EP)

Build

In extremely wet environments, the motor windings are dipped in epoxy for improved moisture protection. The motor can also be treated with the standard NORD Severe Duty + (NSD+) package for an even higher degree of protection.

## Canopy Drip Cover (RD)

Mod



For wet or dirty installations where the fan end of the motor is mounted up, thus allowing water or debris to fall into the motor's fan guard, NORD offers a canopy drip cover to block this falling water or debris.

## Double Fan Cover (RDD)

Mod



For wet or dirty installations where the fan end of the motor is mounted up, the NORD Double Fan Cover provides protection against falling or wind blown water, snow, dirt or debris from entering the back of the motor.

# Additional Options



## Totally Enclosed Non-Ventilated (OL) Mod

NORD can provide totally enclosed non-ventilated (TENV) motor enclosure. TENV motors provide benefits in certain operating environments; such as extremely dusty or dirty applications, where cooling fans may have material accumulation, which can be detrimental to the motor and the application. The OL series of motors are the standard fan cooled motor construction including the fan cover, but provided without the fan. TENV motors can also be used to reduce cooling fan noise on a standard motor.

A TENV motor's frame size is larger then a totally enclosed fan cooled (TEFC) motor. For intermittent operation, a TENV motor can be operated at a 50% duty cycle at full rated power.

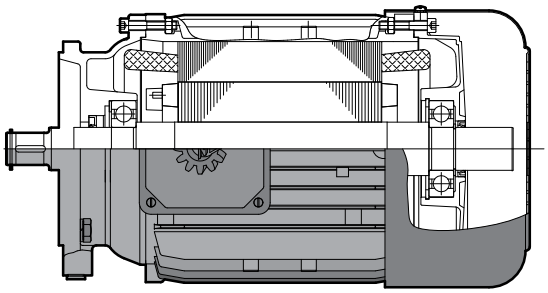

## Totally Enclosed Non-Ventilated, without Fan Cover (OL/H) Build

The OL/H series of TENV motors are more compact in space than the OL series. They do not include the rotor shaft extension through the back bearing end bell or the fan cover.

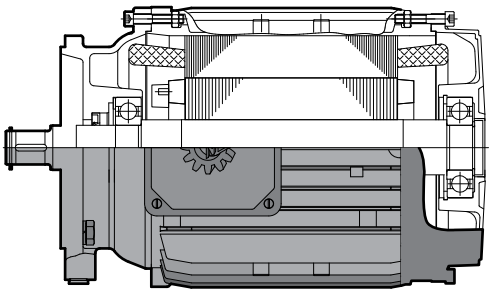

## 2nd Shaft Extension on Fan Side (WE) Build

NORD can provide a second shaft extension on the fan side of the motor that protrudes through the fan cover. This extension can be used as a power take-off or to mount customer supplied devices such as encoders and tachometers.

The shaft extension can be provided on both motors with and without brakes. The shaft extension can not be used on motors with blower fans (F) or (FC). For dimensions see pages 148 - 152.

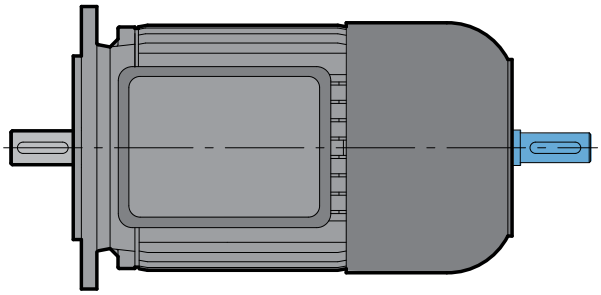

## Hand Wheel (HR) Build

Motors can be supplied with a hand wheel provided on the second shaft extension. The hand wheel can be used for manual operation during power outages, or for machine positioning setup. For dimensions see pages 148 - 152.

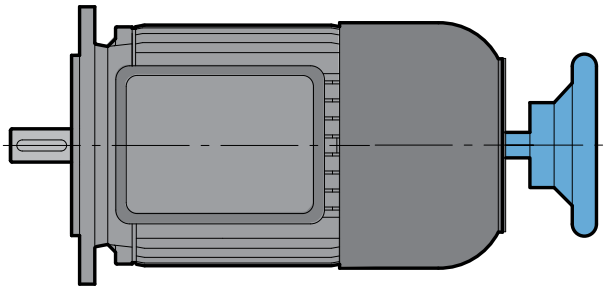

**WARNING**

The customer is required to provide appropriate safety guarding of the rotating hand wheel.

## High Inertia Cast Iron Fan (Z)

Build

An optional cast iron motor cooling fan is available. This fan is used as a mechanical soft start and/or soft stop. This fan adds inertia to the motor. The high inertia fan can also be used for a flywheel effect to store mechanical energy. This can be helpful in smoothing rapid load changes. The cast iron fan replaces the standard plastic motor fan. The motor length is the same as a brakemotor.



| Motor Frame | Fan Inertia $J_z$[lb-ft²] |
|---|---|
| 71 | 0.0475 |
| 80 | 0.1140 |
| 90 | 0.2375 |
| 100 | 0.2684 |
| 112 | 0.5653 |
| 132 | 0.9500 |

## Motor Backstop (RLS)

Build

NORD can provide backstops on many motor frames. A backstop will prevent the motor from rotating in one direction. A common use is to prevent a motor from allowing a load to move backwards when power is removed. A motor brake can also be used for this same purpose. A backstop adds length to the motor. For the motor length extension, see the table below.

**The allowable direction of rotation must be specified in the order.**

| Allowable Shaft Rotation |
|---|
| ❍ Clockwise - Back of Motor |
| ❍ Counter Clockwise - Back of Motor |

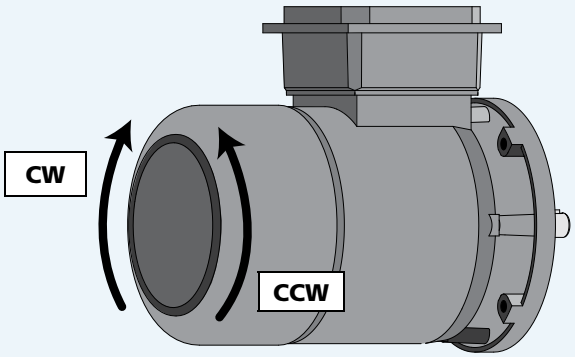


| Motor Size | Backstop Torque [lb-in] | Minimum Speed [rpm] | Motor Extension [in] |
|---|---|---|---|
| 80S/L | 1150 | 860 | 2.52 |
| 90S/L | 1150 | 860 | 2.95 |
| 100L | 1150 | 860 | 3.58 |
| 112M | 3270 | 750 | 3.66 |
| 132S/M | 3270 | 750 | 4.21 |
| 160M/L | 7880 | 670 | 6.57 |
| 180MX/LX | 7880 | 670 | 6.73 |
| 200L | 9120 | 630 | 6.57 |
| 225S/M | 9120 | 630 | 6.57 |
| 250M | 22130 | 400 | 9.84 |
| 280S/M | 51330 | 320 | 11.02 |

# Additional Options



## Quick Power Plug Connector (MS)

Mod

The quick power plug connector (MS) is a simple and fast way to connect and disconnect a motor or brake motor. The MS connector is available on NORD three-phase motors from frame size 63 to 132. The motor connections are made by a modular power plug manfacturer by Harting. After the first installation, the motor can be quickly changed by simply plugging and unplugging the electrical connections. This will ensure the new motor is properly wired. This is a significant advantage to equipment builders who fabricate machinery on site and then ship to another location. The motor with the MS connector can simply be plugged in during final installation.

NORD supplies the male connector half mounted on the motor conduit box. The customer must supply the female connector half mounted on the power wiring. NORD supplies a protective plastic cover on the motor male connector half to protect from dirt and damage prior to installation.





### Advantages:

- Simple motor wiring
- Accurate wiring of motor at final job site
- Fast motor replacement
- Accurate wiring of replacement motor
- Ideal for portable equipment
- Reduces the required personnel for motor replacement
- Faster motor changes reduce down time

## Plug ratings:

| | |
|---|---|
| **Manufacturer** | Harting |
| **Connector** | HAN 10 ES/HAN 10ESS<br>Cage Clamp Connectors |
| **Number of Pins** | 10-Male |
| **Voltage** | 600VAC per UL/CSA |
| **Current** | 16A - Continuous |

## Motor Power Plug Kits:

Includes conduit box, mounting hardware & Male Harting Motor Plug

| P/N | Motor size |
|---|---|
| 11035350 | 63 + 71 |
| 13035350 | 80 + 90 + 100 |
| 16035350 | 112 |
| 16335350 | 132 |

### Power Plug Positions

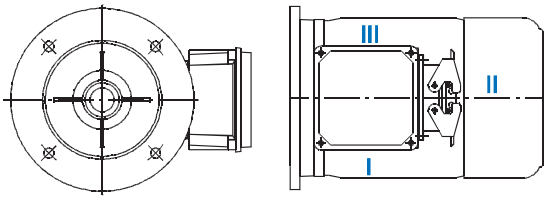


**Power plug position must be specified**

| Power Plug Position | | |
|---|---|---|
| ❍ I | ❍ II | ❍ III |

## Small Terminal Box (EKK)

Mod

The motor terminal box can be provided as a smaller, one-piece terminal design. This option is valid for standard motors 0.16 - 10 hp and is not available for Brakemotors.

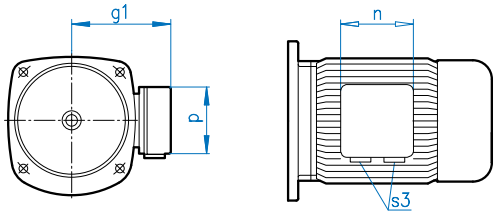


| EKK Dimensions | | | | |
|---|---|---|---|---|
| **Motor Frame** | **g1** | **n** | **p** | **S3** |
| **63** | 3.94 | 2.95 | 2.95 | 2x M16 x 1.5 |
| **71** | 4.29 | 2.95 | 2.95 | 2x M16 x 1.5 |
| **80** | 4.88 | 3.62 | 3.62 | 2x M20 x 1.5 |
| **90** | 5.08 | 3.62 | 3.62 | 2x M20 x 1.5 |
| **100** | 5.51 | 3.62 | 3.62 | 2x M20 x 1.5 |
| **112** | 5.91 | 3.62 | 3.62 | 2x M20 x 1.5 |
| **132** | 6.85 | 4.13 | 4.13 | 2x M25 x 1.5 |

## Blower Cooling Fan (F & FC)

Mod

NORD offers continuous running motor mounted cooling fans that provide motor cooling at low motor speeds. When a motor is operated on an AC vector drive at low frequency, standard rotor fans do not provide adequate airflow for cooling. NORD's separate powered motor cooling fans provide that necessary airflow. These separately powered fans replace the standard motor fan cover and fan.

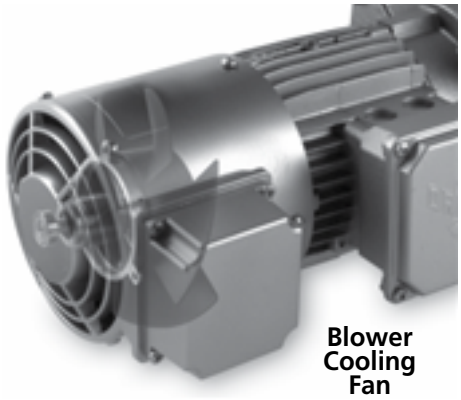

Blower Cooling Fan

### Option F – 3ph & 1ph 220-575V 50/60Hz

| Motor Frame | 60Hz Ratings | | | 50Hz Ratings | | |
|---|---|---|---|---|---|---|
| | Voltage [V] | Current [A] | Power [W] | Voltage [V] | Current [A] | Power [W] |
| Single phase connection - ⊥ (Delta) | | | | | | |
| 63 | 230 – 277 | 0.11 | 38 | 230 – 277 | 0.10 | 27 |
| 71 | 230 – 277 | 0.12 | 41 | 230 – 277 | 0.10 | 28 |
| 80 | 230 – 277 | 0.13 | 44 | 230 – 277 | 0.11 | 29 |
| 90 | 230 – 277 | 0.25 | 88 | 230 – 277 | 0.26 | 72 |
| 100 | 230 – 277 | 0.28 | 88 | 230 – 277 | 0.26 | 70 |
| 112 | 230 – 277 | 0.31 | 107 | 230 – 277 | 0.26 | 73 |
| 132 | 230 – 277 | 0.27 | 89 | 230 – 277 | 0.29 | 82 |
| 160 - 225 | 230 – 277 | 0.41 | 140 | 230 – 277 | 0.45 | 128 |
| Three phase low-voltage connection - ⊥ (Delta) | | | | | | |
| 63 | 220 – 332 | 0.08 | 23 | 220 – 290 | 0.10 | 27 |
| 71 | 220 – 332 | 0.08 | 24 | 220 – 290 | 0.10 | 30 |
| 80 | 220 – 332 | 0.08 | 25 | 220 – 290 | 0.01 | 29 |
| 90 | 220 – 332 | 0.21 | 64 | 220 – 290 | 0.28 | 86 |
| 100 | 220 – 332 | 0.21 | 66 | 220 – 290 | 0.27 | 86 |
| 112 | 220 – 332 | 0.23 | 70 | 220 – 290 | 0.27 | 85 |
| 132 | 220 – 332 | 0.25 | 74 | 220 – 290 | 0.32 | 96 |
| 160 - 225 | 220 – 322 | 0.49 | 165 | 220 – 290 | 0.52 | 155 |
| Three phase high-voltage connection - (Y) | | | | | | |
| 63 | 380 – 575 | 0.04 | 23 | 380 – 500 | 0.05 | 29 |
| 71 | 380 – 575 | 0.04 | 25 | 380 – 500 | 0.05 | 30 |
| 80 | 380 – 575 | 0.04 | 26 | 380 – 500 | 0.05 | 29 |
| 90 | 380 – 575 | 0.12 | 62 | 380 – 500 | 0.16 | 82 |
| 100 | 380 – 575 | 0.12 | 66 | 380 – 500 | 0.16 | 83 |
| 112 | 380 – 575 | 0.13 | 70 | 380 – 500 | 0.16 | 82 |
| 132 | 380 – 575 | 0.14 | 75 | 380 – 500 | 0.18 | 96 |
| 160 - 225 | 380 – 575 | 0.28 | 165 | 380 – 500 | 0.29 | 155 |

### Option FC – 115V 50/60Hz 1ph

| Motor Frame | 60Hz Ratings | | | 50Hz Ratings | | |
|---|---|---|---|---|---|---|
| | Voltage [V] | Current [A] | Power [W] | Voltage [V] | Current [A] | Power [W] |
| Single Phase Connection - ⊥ (Delta) | | | | | | |
| 63 | 100 – 135 | 0.23 | 42 | 100 – 135 | 0.30 | 42 |
| 71 | 100 – 135 | 0.23 | 47 | 100 – 135 | 0.30 | 44 |
| 80 | 100 – 135 | 0.27 | 57 | 100 – 135 | 0.30 | 43 |
| 90 | 100 – 135 | 0.46 | 102 | 100 – 135 | 0.57 | 78 |
| 100 | 100 – 135 | 0.53 | 105 | 100 – 135 | 0.54 | 78 |
| 112 | 100 – 135 | 0.60 | 115 | 100 – 135 | 0.55 | 80 |

# AC Vector Drive
# Related Options



## Incremental Encoder (IG..P)

Build

NORD can provide an incremental encoder mounted on the back of a motor or brake motor. Commonly encoders are used as speed or position feedback devices for use with AC drives, motion controllers or PLC's. Below are standard encoders; however, others can be supplied on request.

**?** **Encoder nomenclature must be specified.**

**Encoder nomenclature**

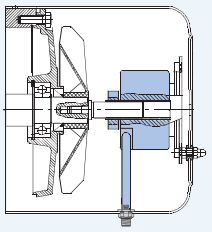

**Standard Motor with Encoder**

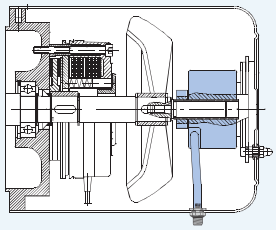

**Encoder with Brake Option**

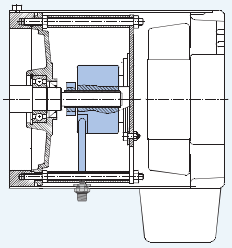

**Encoder with F Type Blower Fan**

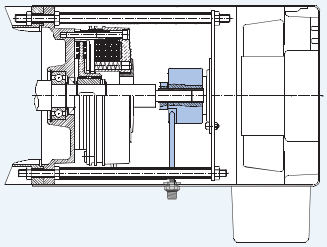

**Brake Option, Blower Fan with Encoder**



**Encoder Type: Quadrature Differential Marker pulse**

**M12 Connector Interface**

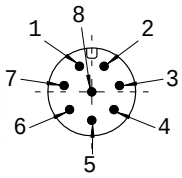


**Wiring Diagram**

| Pin | Conn | Cord |
|---|---|---|
| 1 | 0V | WH |
| 2 | +V | BN |
| 3 | A | GN |
| 4 | A\ | YE |
| 5 | B | GY |
| 6 | B\ | PK |
| 7 | Z | BU |
| 8 | Z\ | RD |
| Nut | Gnd | Open |

| | IG1 P | IG4 P | IG11 P | IG41 P | IG12 P | IG42 P | IG13 P | IG43 P |
|---|---|---|---|---|---|---|---|---|
| **Interface** | TTL/RS422 (26C31) | | TTL/RS422 (26C31) | | HTL/Push-pull (IC-WE) | | Line Driver (7272) | |
| **Logic [VDC]** | 5 | | 5 | | 10-30 | | 5-30 | |
| **Pulse Count [PPR]** | 1024 | 4096 | 1024 | 4096 | 1024 | 4096 | 1024 | 4096 |
| **Power Supply [VDC]** | 4-6 | 4-6 | 10-30 | 10-30 | 10-30 | 10-30 | 5-30 | 5-30 |
| **Part Number** | 19551500 | 19551520 | 19551502 | 19551522 | 19551501 | 19551521 | 19551503 | 19551523 |
| **Max Current Draw [mA]** | 100 | | | | 150 | | | |
| **Max Frequency [kHz]** | 300 | | | | | | | |
| **Ambient Temperature [°F]** | -4 to185 | | | | | | | |
| **Enclosure** | IP66 | | | | | | | |
| **Cable** | M12 8-pin male plug | | | | | | | |

## Pre-fabricated Encoder Cables



NORD can provide Turck pre-fabricated encoder molded cordsets (M12, 8-pin, shielded, twisted pair)

| Length | In-line | | Right-angle | |
|---|---|---|---|---|
| | NORD P/N | Turck P/N | NORD P/N | Turck P/N |
| **2m** | 19551580 | E-RKC 8T-264-2 | 19551584 | E-WKC 8T-264-2 |
| **5m** | 19551581 | E-RKC 8T-264-5 | 19551585 | E-WKC 8T-264-5 |
| **10m** | 19551582 | E-RKC 8T-264-10 | 19551586 | E-WKC 8T-264-10 |
| **15m** | 19551583 | E-RKC 8T-264-15 | 19551587 | E-WKC 8T-264-15 |
| **Field Wireable** | 19551588 | CMB 8181-0 | - | - |
| **Custom** | order from Turck | E-RKC 8T-264 | order from Turck | E-WKC 8T-264 |





## Encoders for NORD AC Drives

NORD AC vector drives with encoder inputs are designed to use TTL/RS422 encoders. There are also advantages in using an encoder with the 10-30VDC power supply system. The NORD AC vector drives can use a wide range of pulse counts, however the 1024PPR version provides good performance with minimal interference issues. A 4096 PPR encoder can also be used and will provide increased precision in some application but has some increased concerns with noise interference.

**Recommended encoder:** IG11P – 1024PPR/TTL/10-30VDC
**Alternate encoder:** IG41P – 4096PPR/TTL/10-30VDC

## Absolute Encoder (AG)

Build

Absolute encoders offer a unique value (voltage, binary count, etc.) for each mechanical position. When an absolute encoder is powered up, the position of the encoder is known. Absolute encoders are available in single or multi-turn versions. The encoder is attached under the fan cover with field bus connection outside the fan cover.

Absolute encoders can be provided to meet a variety of specifications:

- Resolution: up to 17 bits of resolution per turn (131,072 steps) with 4096 turns (12 bits of turns)
- Interfaces: Synchronous serial interface (SSI), SSI with incremental track, ProfiBus, DeviceNet, CANopen, CANlift, and other interfaces

# AC Vector Drive
# SK 300E Trio



## NORDAC SK 300E
## Motor Mounted Frequency AC Vector Drive

For select HP ratings, NORD can provide a fully programmable, high performance AC vector drive mounted on the motor. This motor mounted AC vector drives:

- Eliminates the need to separately mount & wire the AC drive
- Insures AC vector drive/motor compatibility
- Has an IP 55 washdown duty enclosure
- Provides Electronic Motor Overload protection
- Insures smooth constant torque operation down to 2 Hz (check motor thermal limitations)
- Features a unique plug-in construction where the program stays with the motor, minimizing return to service time in the event of AC vector drive replacement



### SK 300E AC Vector Drive Ratings

- 200-240 VAC 3 phase 50/60 Hz input, ½ through 3 HP
- 380-480 VAC 3 phase 50/60 Hz input, 3/4 through 5 HP
- Full range of built-in pre-engineered options available
- For dimensions see page 154

### Selection Steps

1) Choose the SK300E-trio AC vector drive based on motor ratings and input line voltage
2) Select the required Trio Interface (TI)
3) Select the braking resistor if required
4) Select additional customer based I/O if required (SK CU2-STD)
5) Select cover mounted technology unit if required
6) If remote wall mounting is required
7) Select any needed programming tools



### Step 1: AC vector drive Selection

| Basic NORD Motor Description | Power Rating HP/kW | P [in] | 240 VAC Input Inverter Type SK 300E | 480 VAC Input Inverter Type SK 300E |
|---|---|---|---|---|
| 63 S/4 | 0.16 / 0.12 | 5.12 | -370-323-B | -550-340-B |
| 63 L/4 | 0.25 / 0.18 | 5.12 | -370-323-B | -550-340-B |
| 71 S/4 | 0.33 / 0.25 | 5.71 | -370-323-B | -550-340-B |
| 71/L/4 | 0.50 / 0.37 | 5.71 | -370-323-B | -550-340-B |
| 80 S/4 | 0.75 / 0.55 | 6.50 | -550-323-B | -550-340-B |
| 80 L/4 | 1.00/ 0.75 | 6.50 | -750-323-B | -750-340-B |
| 90 S/4 | 1.50/ 1.1 | 7.20 | -111-323-B | -111-340-B |
| 90 L/4 | 2.00/ 1.5 | 7.20 | -151-323-B | -151-340-B |
| 100 L/4 | 3.00/ 2.2 | 7.91 | -221-323-B | -221-340-B |
| 100 L/40 | 5.00/ 3.7 | 7.91 | Not Available | -401-340-B |

### AC Vector Drive Ratings

| Type designation SK 300E | -370-323-B | -550-323-B | -750-323-B | -111-323B | -151-323-B | -221-323-B | -550-340-B | -750-340-B | -111-340-B | -151-340-B | -221-340-B | -301-340-B | -401-340-B |
|---|---|---|---|---|---|---|---|---|---|---|---|---|---|
| Supply Voltage | 3 Phase 200-240 VAC +/- 10%, 47-63 Hz | | | | | | 3 Phase 380-480 VAC, -20%/+10%, 47-63 Hz | | | | | | |
| Motor Rating | 1/2 HP | 3/4 | 1 HP | 1 1/2 HP | 2 HP | 3 HP | 3/4 HP | 1 HP | 1 1/2 HP | 2 HP | 3 HP | 4 HP | 5 HP |
| Rated Output Current Amps [RMS] | 2.2 | 3 | 4 | 5.5 | 7 | 9.5 | 1.6 | 2.2 | 3 | 3.7 | 5.5 | 7 | 9.2 |
| Typical Output Current Amps [RMS] | 3.1 | 4.2 | 5.6 | 7.7 | 9.8 | 13.3 | 2.5 | 3.1 | 4.2 | 5.2 | 7.7 | 9.8 | 12.9 |

## Step 2: Selection of Trio Interface (TI)

Following selection of the appropriate SK 300E AC vector drive rating from the preceding chart, an appropriate Trio Interface (TI) must be specified. The Trio Interface (TI) is an adapter that replaces the motor conduit box and contains a circuit board that the SK 300E plugs into.

A typical TI is shown below



### SK 300E Trio Interface (TI) Types

| | |
|---|---|
| **SK TI 0/1** | For standard 380-480 VAC units |
| **SK TI 0/1 - 230** | For standard 200-240 VAC units |
| **SK TI 0/2** | For 380-480 VAC units using Harting connectors |
| **SK TI 0/2 – 230** | 200-240 VAC units using Harting connectors |

### Harding H10E series connector options for side 1(CE1) of SK TI 0/2 (and -230) Interfaces

| | |
|---|---|
| **LE H10E** | Socket for AC supply input |
| **MA H10E** | Plug for motor output |

### Conduit plate options for side 3(CE3) of SK TI 0/2 (and -230) Interfaces

| | |
|---|---|
| **SK DA4** | Plate with 4 x M16 |
| **SK DA2** | Plate with 2 x M20 and 1 x M16<br>(Provided as standard with SK TI 0/2) |
| **SK DA1** | Plate with 1 x M25 and 2 x M16 |
| **SK DA0** | Plate with no entries |

### Added related components for Trio Interfaces

| | |
|---|---|
| **P/N 018524200** | M20 x ½ adapter<br>(Qty 2 provided as standard on assembled trios) |
| **P/N 011015410** | Adapter to mount Trio Interface on 63 & 71 frame motors |
| **P/N 013097000** | Gasket to mount Trio Interface on 63 & 71 frame motors |

## SK 300E Options & Related Information

## Step 3: Braking Resistors

Braking Resistor Options for SK 300E for mounting on Trio Interface

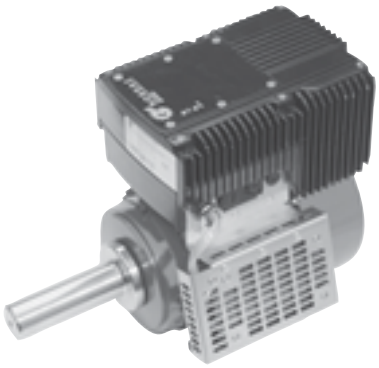

During dynamic braking, energy is delivered from the load through the motor (acting as a generator) to the AC vector drive. The AC vector drive dissipates this energy as heat via the integral brake chopper to the optional external braking resistors.

### For use with SK TI 0/1 adapters

| | |
|---|---|
| **SK BR3-120/100-TI 0/1** | 120 ohm/100 W for all ratings except 5 HP |
| **SK BR3-82/200-TI 0/1** | 82 ohm/200 W for 5 HP only |

### For use with SK TI 0/2 adapters

| | |
|---|---|
| **SK BR3-120/100-TI 0/2** | 120 ohm/100 W for all ratings except 5 HP |
| **SK BR3-82/200-TI 0/2** | 82 ohm/200 W for 5 HP only |



## Step 4: Customer I/O Based Control Interface Option - SK CU2-STD

The standard I/O based control available via the Trio Interface can be expanded via selection of an optional Customer Unit, **SK CU2-STD**, that plugs into the Trio Interface. Interface I/O points are listed on the following chart:




| I/O on standard Trio Interface | Additional I/O on SK CU2-STD Option |
|---|---|
| 1 X programmable digital input | 4 X programmable digital input |
| 5 VDC and 15 VDC power supplies | 2 X single-ended analog inputs |
| RS 485 interface via M-12 connector and terminals | +10 VDC reference supply |
| 1 X programmable relay output | 1 X selectable/programmable analog/digital output |
| | PID control access |

## Step 5: Cover Mounted Technology Unit (TU) Options

A variety of pre-engineered plug in Technology Unit (TU) options can be ordered to replace the standard blank cover of the SK 300E AC vector drive. Only a single TU can be installed on the AC vector drive at a given time. Available units include operator and field bus interfaces:



| Technology Unit (TU) Name | Description |
|---|---|
| **SK TU2-POT** | Analog reference potentiometer box with L/Off/R control switch |
| **SK TU2-CTR** | Digital control/programmer with 4 digit, 7 segment LED display |
| **SK TU2-PBR** | Profibus field bus interface |
| **SK TU2-PBR-24V** | Profibus field bus interface powered by customer 24 VDC supply |
| **SK TU2-PBR-KL** | Profibus field bus interface with clamp on connectors |
| **SK TU2-AS1** | AS (Actuator/Sensor) Interface |
| **SK TU2-CAO** | CANopen field bus interface |
| **SK TU2-DEV** | DeviceNet field bus interface |
| **SK TU2-IBS** | InterBus field bus interface |
| **SK TU2-DECKEL** | Original blank cover for TU slot (in case TU option is removed) |

## Step 6: Wall Mounting Option Kit, SK WMK-DA1

The wall mounting kit enables placing the SK 300E AC vector drive on a nearby wall or the machine instead of directly on the NORD motor or gearmotor. The Trio Interface (TI) is still required and all other options can be used.





## Step 7 : Additional Tools & Related Interface Options

In addition to the cover mounted SK TU2-CTR option, there are several additional options that enable simple programming and control of the SK 300E:

**Handheld Parameter Box (P-Box) with 10 foot cable, SK PAR-2H**

Detachable external add-on unit that can be used to program and display parameters and control the operation of the connected SK 300E. Features multi-line plain text display selectable in six languages. Manages and stores up to five unique AC vector drive programs. Cable plugs into M-12 connector in side of Trio Interface.

**Panel Mount Parameter Box (P-Box), SK PAR-2E**

Panel Mount version of Parameter Box with same functionality as SK PAR-2H. Installs in cut-out in front of customer supplied operator panel. Interface connection is performed by customer with their shielded cable via terminals on SK PAR-2E and SK 300E.



### NORD CON Software – Available free at NORD Website

NORD CON Software is a Windows-based PC program that enables the control and programming of NORDAC AC vector drives. It provides for accessing up to 31 AC vector drives simultaneously via the RS485 interface. It features both off-line and on-line programming and data management modes.

NORD CON allows user to:

- Program AC vector drives and upload/download parameter files
- Control connected AC vector drives for test/troubleshooting
- Monitor connected AC vector drives and examine up to four variables versus time with built-in oscilloscope feature
- Display parameter information in six languages

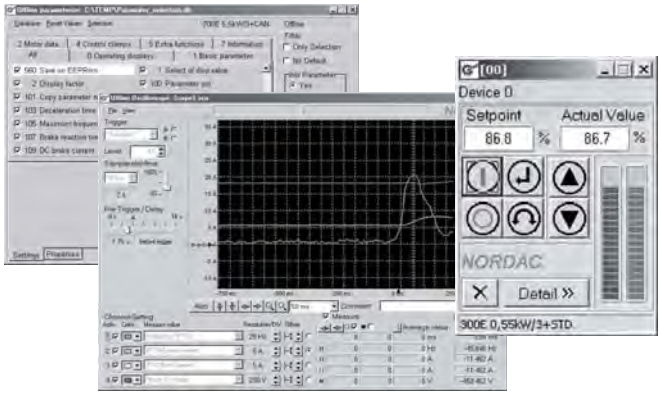


**Optional accessories required to interface user PC to SK 300E via NORD CON are:**

**SK IC1 – RS 485 to RS 232 interface converter**
Enables communication between RS 232 port on computer and RS 485 port on SK 300E

**Cable SK 300E –**
10 foot cable that connects between the 9-Pin D shell connector on the SK IC1 and the M-12 connector on the side of the SK 300E Trio Interface.

### Electromechanical Brake Interface & Coil Voltage Selection

As standard, the SK 300E provides a dedicated high voltage DC power supply and coordination software to directly control an Electromechanical Brake. This is equivalent to using a half wave rectifier, so the brake coil voltage must be specified per the following chart:

| Nominal Inverter AC Input Voltage | Brake Coil Voltage |
|---|---|
| 440 – 480 VAC | 205 VDC |
| 200 – 240 VAC | 105 VDC |
| 380 – 415 VAC | 180 VDC |

The brake gets connected to terminals +Br and –Br on the Trio Interface

### Motor overload protection

Electronic motor overload protection is provided as standard on the SK 300E AC vector drive. If required, more precise protection can be achieved via the use of motor thermostats (TW) or thermistor sensors (TF). These devices can be interfaced to the SK 300E via the programmable digital input to indicate a motor over temperature error.

# Performance Data



## Standard Efficiency

## 230/460V – 60Hz

Inverter duty • TEFC
Synchronous speed 1800rpm @ 60Hz • 4-pole • Three-phase
Voltages: 230/460V – 60Hz • 1.15 Service Factor
Continuous Duty • 40°C Ambient • up to 3300ft Elevation
Class B temperature rise • Class F insulation

| Motor Type | Power Pn | | Nn Full-load | In Full-Load Current 230V | In Full-Load Current 460V | Ia/In | Code Letter | Torque Tn | Ta/Tn | Tk/Tn | pf | Eff. | Jm Inertia |
|---|---|---|---|---|---|---|---|---|---|---|---|---|---|
| | [hp] | [kW] | [rpm] | [A] | [A] | [%] | | [lb-in] | | | | [%] | [lb-ft²] |
| **63S/4** | 0.16 | 0.12 | 1700 | 0.88 | 0.44 | 245 | F | 5.92 | 2.1 | 2.2 | 0.66 | 52 | 0.005 |
| **63L/4** | 0.25 | 0.18 | 1680 | 1.12 | 0.56 | 275 | E | 8.99 | 2.1 | 2.2 | 0.71 | 57 | 0.0067 |
| **71S/4** | 0.33 | 0.25 | 1710 | 1.56 | 0.78 | 310 | G | 12.3 | 2.5 | 2.4 | 0.64 | 63 | 0.017 |
| **71L/4** | 0.5 | 0.37 | 1720 | 1.90 | 0.95 | 355 | F | 18.0 | 2.45 | 2.6 | 0.69 | 71 | 0.0204 |
| **80S/4** | 0.75 | 0.55 | 1710 | 2.70 | 1.35 | 355 | F | 27.0 | 2.2 | 2.2 | 0.71 | 72 | 0.0259 |
| **80L/4** | 1 | 0.75 | 1650 | 3.66 | 1.83 | 390 | G | 38.1 | 2.2 | 2.3 | 0.74 | 70 | 0.0345 |
| **90S/4** | 1.5 | 1.1 | 1660 | 4.84 | 2.42 | 445 | G | 55.6 | 2.7 | 2.6 | 0.78 | 73 | 0.055 |
| **90L/4** | 2 | 1.5 | 1660 | 6.34 | 3.17 | 465 | G | 75.8 | 2.55 | 2.5 | 0.80 | 74 | 0.074 |
| **100L/4** | 3 | 2.2 | 1705 | 9.0 | 4.50 | 490 | G | 108 | 2.3 | 2.6 | 0.81 | 82 | 0.107 |
| **100LA/4** | 5 | 3.7 | 1725 | 15.2 | 7.62 | 510 | G | 180 | 2.7 | 3.1 | 0.75 | 81 | 0.141 |
| **132S/4** | 7.5 | 5.5 | 1735 | 19.8 | 9.9 | 545 | G | 267 | 2.45 | 2.75 | 0.82 | 86 | 0.55 |
| **132M/4** | 10 | 7.5 | 1735 | 25.8 | 12.9 | 645 | H | 363 | 2.9 | 3.2 | 0.84 | 87 | 0.752 |
| **160M/4** | 15 | 11 | 1770 | 38.4 | 19.2 | 665 | H | 522 | 2.45 | 3.0 | 0.82 | 88 | 0.95 |
| **160L/4** | 20 | 15 | 1765 | 49 | 24.5 | 725 | H | 713 | 2.9 | 3.3 | 0.86 | 89.4 | 1.23 |
| **180MX/4** | 25 | 18.5 | 1750 | 60 | 30 | 860 | K | 887 | 2.95 | 3.4 | 0.87 | 89 | 1.35 |
| **180LX/4** | 30 | 22 | 1755 | 71 | 35.5 | 980 | L | 1052 | 3.4 | 3.7 | 0.87 | 89.4 | 1.35 |

**Pn** - Full load power
**Nn** - Full load speed
**In** - Full load current
**Ia** - Locked-rotor current
**Ia/In** - Locked-rotor current ratio (%)
**Tn** - Full-load torque
**Ta** - Locked-rotor torque
**Ta/Tn** - Locked-rotor torque ratio
**Tk** - Break-down torque
**Tk/Tn** - Break-down torque ratio
**pf** - Power factor
**Eff** - Normal efficiency
**Jm** - Motor inertia





## Energy Efficient (EPAct)

# 230/460V – 60Hz / EE

Inverter duty • TEFC
Synchronous speed 1800rpm @ 60Hz • 4-pole • Three-phase
Voltages: 230/460V – 60Hz • 1.15 Service Factor
Continuous Duty • 40°C Ambient • up to 3300ft Elevation
Class B temperature rise • Class F insulation

| Motor Type | Power Pn | | Nn Full-load | In Full-Load Current | | Ia/In | Code Letter | Torque Tn | Ta/Tn | Tk/Tn | pf | Eff. | Jm Inertia |
|---|---|---|---|---|---|---|---|---|---|---|---|---|---|
| | | | | 230V | 460V | | | | | | | | |
| | [hp] | [kW] | [rpm] | [A] | [A] | [%] | | [lb-in] | | | | [%] | [lb-ft²] |
| **80LH/4** | 1 | 0.75 | 1750 | 3.88 | 1.94 | 600 | L | 36.0 | 4.6 | 4.3 | 0.59 | 82.5 | 0.051 |
| **90SH/4** | 1.5 | 1.1 | 1740 | 4.3 | 2.15 | 630 | J | 53.1 | 3.5 | 3.8 | 0.76 | 84.0 | 0.085 |
| **90LH/4** | 2 | 1.5 | 1745 | 6.3 | 3.15 | 670 | K | 72.1 | 4.3 | 4.5 | 0.71 | 84.0 | 0.092 |
| **100LH/4** | 3 | 2.2 | 1765 | 8.6 | 4.3 | 790 | L | 105 | 3.6 | 4.7 | 0.73 | 87.5 | 0.178 |
| **112MH/4** | 5 | 3.7 | 1770 | 14.4 | 7.2 | 810 | L | 176 | 4.0 | 4.8 | 0.76 | 87.5 | 0.304 |
| **132SH/4** | 7.5 | 5.5 | 1780 | 20.9 | 10.5 | 820 | L | 259 | 4.3 | 4.6 | 0.74 | 89.5 | 0.75 |
| **132MH/4** | 10 | 7.5 | 1770 | 27.0 | 13.5 | 735 | J | 356 | 3.2 | 4.0 | 0.78 | 89.5 | 0.84 |
| **160MH/4** | 15 | 11 | 1765 | 35.8 | 17.9 | 810 | J | 527 | 2.6 | 3.2 | 0.85 | 91.0 | 1.23 |
| **160LH/4** | 20 | 15 | 1765 | 49 | 24.5 | 850 | K | 712 | 2.8 | 3.5 | 0.85 | 91.0 | 1.35 |
| **180MH/4** | 25 | 18.5 | 1770 | 61 | 30.5 | 840 | K | 879 | 2.8 | 3.6 | 0.83 | 92.4 | 3.56 |
| **180LH/4** | 30 | 22 | 1770 | 72 | 36 | 880 | K | 1046 | 3.1 | 3.9 | 0.83 | 92.4 | 4.51 |

**Pn** - Full load power
**Nn** - Full load speed
**In** - Full load current
**Ia** - Locked-rotor current
**Ia/In** - Locked-rotor current ratio (%)
**Tn** - Full-load torque
**Ta** - Locked-rotor torque
**Ta/Tn** - Locked-rotor torque ratio
**Tk** - Break-down torque
**Tk/Tn** - Break-down torque ratio
**pf** - Power factor
**Eff** - Normal efficiency
**Jm** - Motor inertia

# Performance Data



## Standard Efficiency

**575V – 60Hz**

Inverter duty • TEFC
Synchronous speed 1800rpm @ 60Hz • 4-pole • Three-phase
Voltages: 332/575V – 60Hz • 1.15 Service Factor
Continuous Duty • 40°C Ambient • up to 3300ft Elevation
Class B temperature rise • Class F insulation

| Motor Type | Power Pn | | Nn Full-load | In Full-Load Current 575V | Ia/In | Code Letter | Torque Tn | Ta/Tn | Tk/Tn | pf | Eff. | Jm Inertia |
|---|---|---|---|---|---|---|---|---|---|---|---|---|
| | [hp] | [kW] | [rpm] | [A] | [%] | | [lb-in] | | | | [%] | [lb-ft²] |
| **63S/4** | 0.16 | 0.12 | 1700 | 0.37 | 245 | F | 5.92 | 2.1 | 2.2 | 0.66 | 52 | 0.005 |
| **63L/4** | 0.25 | 0.18 | 1680 | 0.46 | 275 | E | 8.99 | 2.1 | 2.2 | 0.71 | 57 | 0.0067 |
| **71S/4** | 0.33 | 0.25 | 1710 | 0.66 | 310 | G | 12.3 | 2.5 | 2.4 | 0.64 | 63 | 0.017 |
| **71L/4** | 0.5 | 0.37 | 1720 | 0.8 | 355 | F | 18.0 | 2.45 | 2.6 | 0.69 | 71 | 0.0204 |
| **80S/4** | 0.75 | 0.55 | 1710 | 1.12 | 355 | F | 27.0 | 2.2 | 2.2 | 0.71 | 72 | 0.0259 |
| **80L/4** | 1 | 0.75 | 1650 | 1.46 | 390 | G | 38.1 | 2.2 | 2.3 | 0.74 | 70 | 0.0345 |
| **90S/4** | 1.5 | 1.1 | 1660 | 1.94 | 445 | G | 55.6 | 2.7 | 2.6 | 0.78 | 73 | 0.055 |
| **90L/4** | 2 | 1.5 | 1660 | 2.54 | 465 | G | 75.8 | 2.55 | 2.5 | 0.80 | 74 | 0.074 |
| **100L/4** | 3 | 2.2 | 1705 | 3.6 | 490 | G | 108 | 2.3 | 2.6 | 0.81 | 82 | 0.107 |
| **100LA/4** | 5 | 3.7 | 1725 | 6.1 | 510 | G | 180 | 2.7 | 3.1 | 0.75 | 81 | 0.141 |
| **132S/4** | 7.5 | 5.5 | 1735 | 7.92 | 545 | G | 267 | 2.45 | 2.75 | 0.82 | 86 | 0.55 |
| **132M/4** | 10 | 7.5 | 1735 | 10.3 | 645 | H | 363 | 2.9 | 3.2 | 0.84 | 87 | 0.752 |
| **160M/4** | 15 | 11 | 1770 | 14.7 | 665 | H | 522 | 2.45 | 3.0 | 0.82 | 88 | 0.95 |
| **160L/4** | 20 | 15 | 1765 | 19.5 | 725 | H | 713 | 2.9 | 3.3 | 0.86 | 89.4 | 1.23 |
| **180MX/4** | 25 | 18.5 | 1750 | 24.0 | 860 | K | 887 | 2.95 | 3.4 | 0.87 | 89 | 1.35 |
| **180LX/4** | 30 | 22 | 1755 | 28.4 | 980 | L | 1052 | 3.4 | 3.7 | 0.87 | 89.4 | 1.35 |

**Pn** - **Full load power**
**Nn** - **Full load speed**
**In** - **Full load current**
**Ia** - **Locked-rotor current**
**Ia/In** - **Locked-rotor current ratio (%)**
**Tn** - **Full-load torque**
**Ta** - **Locked-rotor torque**
**Ta/Tn** - **Locked-rotor torque ratio**
**Tk** - **Break-down torque**
**Tk/Tn** - **Break-down torque ratio**
**pf** - **Power factor**
**Eff** - **Normal efficiency**
**Jm** - **Motor inertia**





## Energy Efficient (EPAct)

# 575V – 60Hz / EE

Inverter duty • TEFC
Synchronous speed 1800rpm @ 60Hz • 4-pole • Three-phase
Voltages: 332/575V – 60Hz • 1.15 Service Factor
Continuous Duty • 40°C Ambient • up to 3300ft Elevation
Class B temperature rise • Class F insulation

| Motor Type | Power Pn | | Nn Full-load | In Full-Load Current 575V | Ia/In | Code Letter | Torque Tn | Ta/Tn | Tk/Tn | pf | Eff. | Jm Inertia |
|---|---|---|---|---|---|---|---|---|---|---|---|---|
| | [hp] | [kW] | [rpm] | [A] | [%] | | [lb-in] | | | | [%] | [lb-ft²] |
| **80LH/4** | 1 | 0.75 | 1750 | 1.5 | 600 | L | 36.0 | 4.6 | 4.3 | 0.59 | 82.5 | 0.051 |
| **90SH/4** | 1.5 | 1.1 | 1740 | 1.75 | 630 | J | 53.1 | 3.5 | 3.8 | 0.76 | 84.0 | 0.085 |
| **90LH/4** | 2 | 1.5 | 1745 | 2.45 | 670 | K | 72.1 | 4.3 | 4.5 | 0.71 | 84.0 | 0.092 |
| **100LH/4** | 3 | 2.2 | 1765 | 3.4 | 790 | L | 105 | 3.6 | 4.7 | 0.73 | 87.5 | 0.178 |
| **112MH/4** | 5 | 3.7 | 1770 | 5.6 | 810 | L | 176 | 4.0 | 4.8 | 0.76 | 87.5 | 0.304 |
| **132SH/4** | 7.5 | 5.5 | 1780 | 8.3 | 820 | L | 259 | 4.3 | 4.6 | 0.74 | 89.5 | 0.75 |
| **132MH/4** | 10 | 7.5 | 1770 | 10.8 | 735 | J | 356 | 3.2 | 4.0 | 0.78 | 89.5 | 0.84 |
| **160MH/4** | 15 | 11 | 1765 | 14.3 | 810 | J | 527 | 2.6 | 3.2 | 0.85 | 91.0 | 1.23 |
| **160LH/4** | 20 | 15 | 1765 | 19.6 | 850 | K | 712 | 2.8 | 3.5 | 0.85 | 91.0 | 1.35 |
| **180MH/4** | 25 | 18.5 | 1770 | 24.4 | 840 | K | 879 | 2.8 | 3.6 | 0.83 | 92.4 | 3.56 |
| **180LH/4** | 30 | 22 | 1770 | 28.8 | 880 | K | 1046 | 3.1 | 3.9 | 0.83 | 92.4 | 4.51 |

**Pn** - Full load power
**Nn** - Full load speed
**In** - Full load current
**Ia** - Locked-rotor current
**Ia/In** - Locked-rotor current ratio (%)
**Tn** - Full-load torque
**Ta** - Locked-rotor torque

**Ta/Tn** - Locked-rotor torque ratio
**Tk** - Break-down torque
**Tk/Tn** - Break-down torque ratio
**pf** - Power factor
**Eff** - Normal efficiency
**Jm** - Motor inertia

# Performance Data



## Standard Efficiency

## 200-208V – 60Hz

Inverter duty • Induction motor • TEFC
Synchronous speed 1800rpm @ 60Hz • 4-pole • Three-phase
Voltages: 208V – 60Hz • 1.15 Service Factor
Continuous Duty • 40°C Ambient • up to 3300ft Elevation
Class B temperature rise • Class F insulation

| Motor Type | Power Pn | | Nn Full-load | In 208V | Ia/In | Code Letter | Torque Tn | Ta/Tn | Tk/Tn | pf | Eff. | Jm Inertia |
|---|---|---|---|---|---|---|---|---|---|---|---|---|
| | [hp] | [kW] | [rpm] | [A] | [%] | | [lb-in] | | | | [%] | [lb-ft²] |
| **63S/4** | 0.16 | 0.12 | 1700 | 0.97 | 245 | F | 5.93 | 2.1 | 2.2 | 0.66 | 52 | 0.005 |
| **63L/4** | 0.25 | 0.18 | 1680 | 1.24 | 275 | E | 9.38 | 2.1 | 2.2 | 0.71 | 57 | 0.0067 |
| **71S/4** | 0.33 | 0.25 | 1710 | 1.73 | 310 | G | 12.2 | 2.5 | 2.4 | 0.64 | 63 | 0.015 |
| **71L/4** | 0.5 | 0.37 | 1720 | 2.10 | 355 | F | 18.3 | 2.45 | 2.6 | 0.69 | 71 | 0.0181 |
| **80S/4** | 0.75 | 0.55 | 1710 | 2.99 | 355 | F | 27.6 | 2.2 | 2.2 | 0.71 | 72 | 0.0304 |
| **80L/4** | 1 | 0.75 | 1650 | 4.05 | 390 | G | 38.2 | 2.2 | 2.3 | 0.74 | 70 | 0.0392 |
| **90S/4** | 1.5 | 1.1 | 1660 | 5.35 | 445 | G | 57.0 | 2.7 | 2.6 | 0.78 | 73 | 0.0670 |
| **90L/4** | 2 | 1.5 | 1660 | 7.01 | 465 | G | 75.9 | 2.55 | 2.5 | 0.80 | 74 | 0.0855 |
| **100L/4** | 3 | 2.2 | 1705 | 9.95 | 490 | G | 111 | 2.3 | 2.6 | 0.81 | 82 | 0.107 |
| **100LA/4** | 5 | 3.7 | 1725 | 16.8 | 510 | G | 183 | 2.7 | 3.1 | 0.75 | 81 | 0.162 |
| **132S/4** | 7.5 | 5.5 | 1735 | 21.9 | 545 | G | 272 | 2.45 | 2.75 | 0.82 | 86 | 0.553 |
| **132M/4** | 10 | 7.5 | 1735 | 28.5 | 645 | H | 363 | 2.9 | 3.2 | 0.84 | 87 | 0.753 |

**Pn** - **Full load power**
**Nn** - **Full load speed**
**In** - **Full load current**
**Ia** - **Locked-rotor current**
**Ia/In** - **Locked-rotor current ratio (%)**
**Tn** - **Full-load torque**
**Ta** - **Locked-rotor torque**

**Ta/Tn** - **Locked-rotor torque ratio**
**Tk** - **Break-down torque**
**Tk/Tn** - **Break-down torque ratio**
**pf** - **Power factor**
**Eff** - **Normal efficiency**
**Jm** - **Motor inertia**



Frames 63-132
230 / 460V, 60Hz, 3Ø  200 / 400V, 50Hz, 3Ø
190 / 380V, 60Hz, 3Ø

120094410

WIRING DIAGRAM
3 PHASE MOTOR

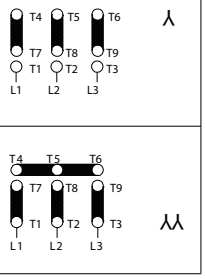


Frames 160 +
230 / 460V, 60Hz, 3Ø  200 / 400V, 50Hz, 3Ø
190 / 380V, 60Hz, 3Ø

120095260

WIRING DIAGRAM
3 PHASE MOTOR

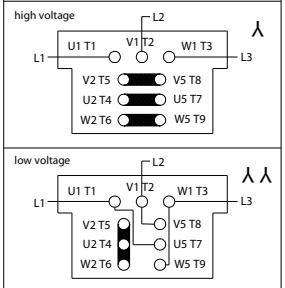


Frames 160 +
230 / 460V, 60Hz, 3Ø  200 / 400V, 50Hz, 3Ø
190 / 380V, 60Hz, 3Ø

120095500 REV 1

WIRING DIAGRAM
3 PHASE MOTOR

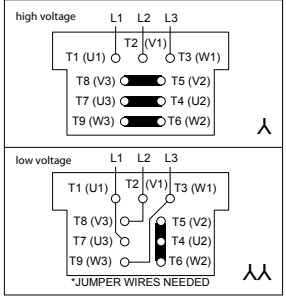


460 / 800V, 60Hz, 3Ø  230 / 400V, 50Hz, 3Ø
208 / 360V, 60Hz, 3Ø  400 / 690V, 50Hz, 3Ø
332 / 575V, 60Hz, 3Ø

120095270

WIRING DIAGRAM
3 PHASE MOTOR

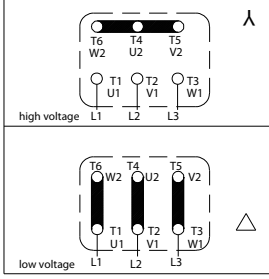


120094440

Normal Brake Reaction Time
(AC - Switching)

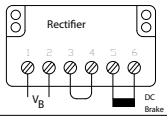


Rapid Brake Reaction Time
(DC - Switching)

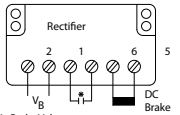


VB Brake Voltage
Terminals 1 & 2
- AC brake power input
Terminals 3 & 4
- DC switching, fast react
Terminals 5 & 6
- Brake coil, DC voltage out
* Customer supplied contact

STANDARD
BRAKE RECTIFIER

120094450

Normal Brake Reaction Time
(AC Switching)

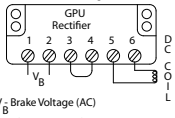


VB Brake Voltage (AC)
Terminals 1 & 2 - AC Brake Power Input
Terminals 3 & 4 - DC Switching, Fast React Terminals
Terminals 5 & 6 - DC Voltage Output to Brake.

Rapid Brake Reaction Time
(DC Switching - Internal)

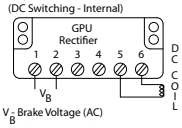


VB Brake Voltage (AC)
Terminals 1 & 2 - AC Brake Power Input
Terminals 3 & 4 - No Jumper Connected
Terminals 5 & 6 - DC Voltage Output to Brake.

GPU BRAKE
RECTIFIER

120094460

Rapid Brake Reaction Time
(DC Switching - External)

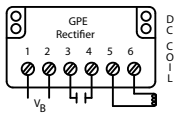


VB Brake Voltage (AC)
Terminals 1 & 2 - AC Brake Power Input
Terminals 3 & 4 - DC Switching, Contactor - IEC AC3
Terminals 5 & 6 -DC Voltage Output to Brake.

GPE BRAKE
RECTIFIER

Use with P/N's 19140230 & 19140240

2 - SPEED MOTORS
SINGLE WINDING (4-2 & 8-4 POLE)

120094400

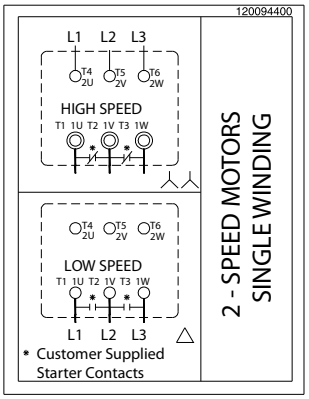


2 - SPEED MOTORS
SINGLE WINDING

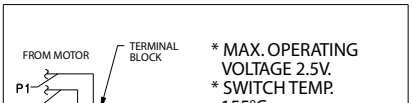


* MAX. OPERATING VOLTAGE 2.5V.
* SWITCH TEMP. 155°C
* RESPONSE TIME < 5 SECONDS

THERMISTOR
"TF" OPTION

120095240

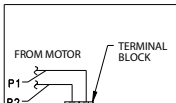


* NC (NORMALLY CLOSED) CONTACTS RATED 1.6A AT 2.50 VAC
* 6-500 VAC WORKING RANGE
* AUTOMATIC RESET AT 30 ± 15°C TEMP. DROP

THERMISTATS
"TW" OPTION

120095230

2 - SPEED MOTORS
DUAL WINDING (8-2 POLE)

120095310

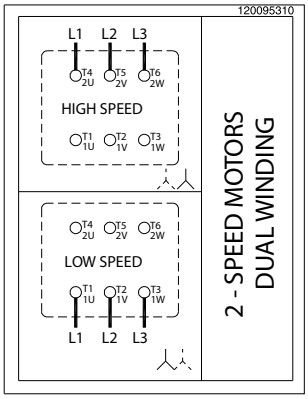


2 - SPEED MOTORS
DUAL WINDING

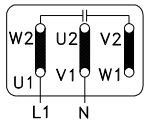


1 PHASE
115V*
50/60 Hz

* CAPACITOR IS SUPPLIED

BLOWER COOLING FAN
"FC" OPTION

120095460

OPTION "F" 1 PH

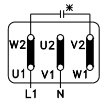


230V
50 / 60 Hz

OPTION "F" 3 PH

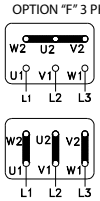


380-575V
50 / 60 Hz

220-332V
50 / 60 Hz

* CAPACITOR IS SUPPLIED

BLOWER COOLING FAN
"F" OPTION

120095250

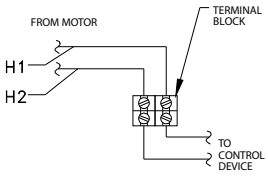


SPACE HEATER
"SH" OPTION

120095220

MOTORS

# Dimensions
# Motor Options



**Standard Motor**

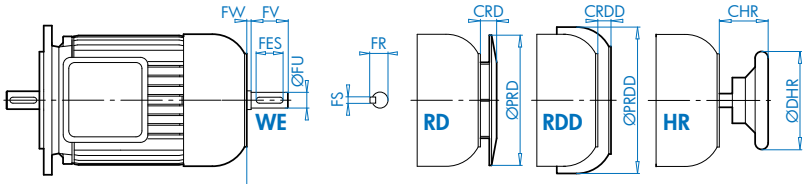


**Option IG**

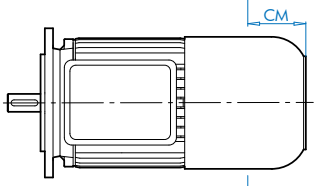


**Option F**

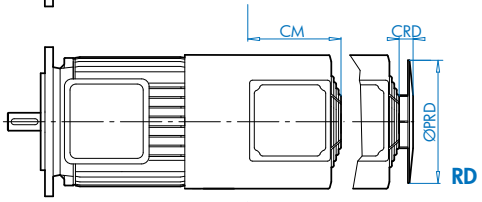


**Option IG F**

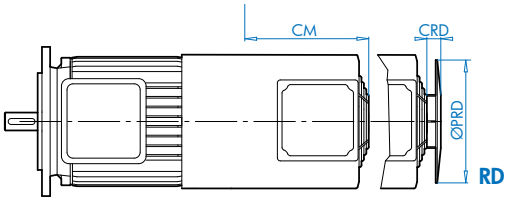


MOTORS

| Motor Type | WE | | | | | | RD | | RDD | | HR | | IG | F | IG F | RD/IG/IGF | |
|---|---|---|---|---|---|---|---|---|---|---|---|---|---|---|---|---|---|
| | FU | FR | FV | FW | FES | FS | PRD | CRD | PRDD | CRDD | DHR | CHR | CM | CM | CM | PRD | CRD |
| | [mm] | | | | | | [in] | | | | | | | | | | |
| **63S/L** | 11 | 12.5 | 23 | 0 | 16 | 4 | 4.84 | 0.47 | 6.02 | 1.06 | 3.94 | 1.54 | 2.20 | 3.46 | 6.22 | 5.24 | 1.46 |
| **71S/L** | 11 | 16.0 | 23 | 1 | 16 | 4 | 5.43 | 0.47 | 6.65 | 0.94 | 3.94 | 1.57 | 2.20 | 3.50 | 5.67 | 5.91 | 1.46 |
| **80S/L** | 14 | 21.5 | 30 | 3 | 20 | 5 | 6.14 | 0.63 | 7.20 | 1.22 | 3.94 | 1.93 | 2.40 | 3.54 | 5.51 | 6.69 | 1.57 |
| **90S/L** | 19 | 27.0 | 40 | 7 | 32 | 6 | 6.93 | 0.63 | 7.91 | 1.22 | 6.30 | 2.64 | 2.83 | 4.09 | 5.87 | 7.40 | 1.18 |
| **100L** | 24 | 31.0 | 50 | 6 | 40 | 8 | 7.64 | 0.63 | 8.86 | 1.10 | 6.30 | 2.95 | 2.71 | 3.74 | 6.10 | 8.27 | 1.10 |
| **112M** | 24 | 31.0 | 50 | 4 | 40 | 8 | 8.58 | 0.63 | 10.43 | 1.50 | 6.30 | 2.91 | 2.67 | 3.90 | 5.87 | 9.80 | 1.30 |
| **132S/M** | 32 | 41.0 | 80 | 18 | 70 | 10 | 10.12 | 0.71 | 12.51 | 1.61 | 7.87 | 4.57 | 2.48 | 4.53 | 6.10 | 11.81 | 0.98 |
| **160M/L** | 38 | 46.0 | 80 | 23 | 90 | 12 | 9.84 | 2.09 | 14.45 | 1.77 | 9.84 | 4.72 | 2.95 | 6.50 | 6.93 | 13.31 | 1.26 |
| **180MX/LX** | * | * | * | * | * | * | 13.39 | 3.15 | 15.87 | 2.76 | * | * | 4.13 | 5.87 | 7.83 | 13.31 | 1.26 |

* **Consult Factory**

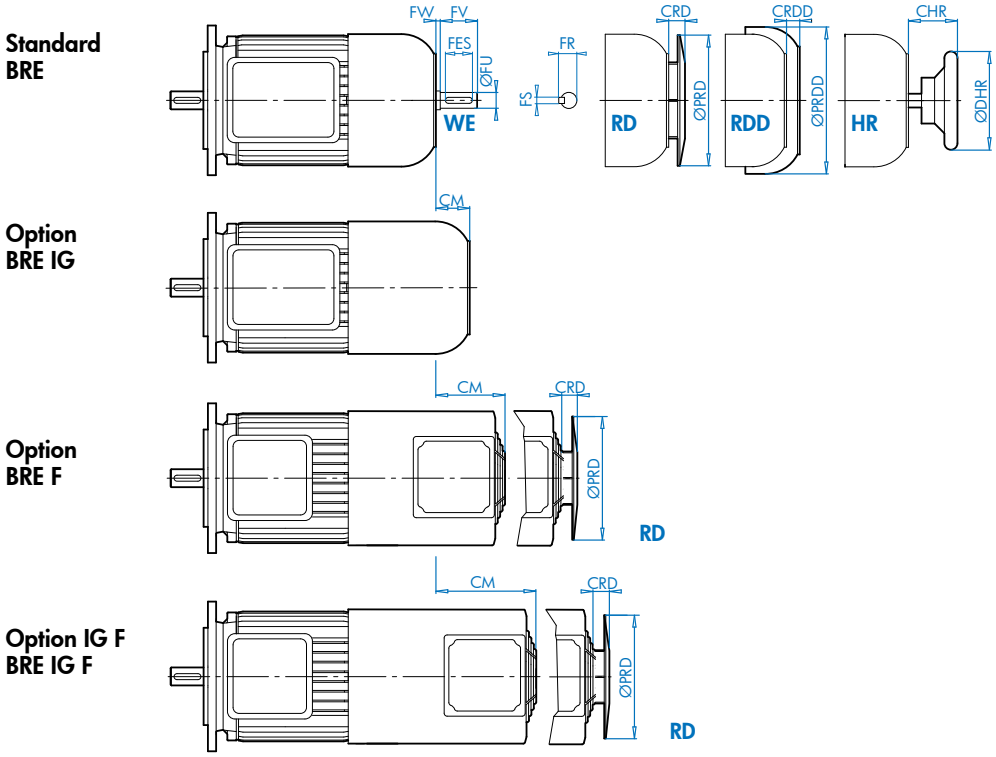


| Motor Type | WE | | | | | | RD | | RDD | | HR | | IG | F | IG F | RD/IG/IGF | |
|---|---|---|---|---|---|---|---|---|---|---|---|---|---|---|---|---|---|
| | FU | FR | FV | FW | FES | FS | PRD | CRD | PRDD | CRDD | DHR | CHR | CM | CM | CM | PRD | CRD |
| | [mm] | | | | | | [in] | | | | | | | | | | |
| **63S/L** | 11 | 12.5 | 23 | 3.5 | 16 | 4 | 4.84 | 0.47 | 6.02 | 1.02 | 0.39 | 1.69 | 2.44 | 3.54 | 4.92 | 5.24 | 1.46 |
| **71S/L** | 11 | 16.0 | 23 | 3.5 | 16 | 4 | 5.43 | 0.47 | 6.65 | 0.94 | 3.94 | 1.69 | 2.91 | 3.70 | 5.47 | 5.91 | 1.46 |
| **80S/L** | 14 | 21.5 | 30 | 4 | 20 | 5 | 6.14 | 0.63 | 7.20 | 1.22 | 3.94 | 1.97 | 2.20 | 3.50 | 5.47 | 6.69 | 1.57 |
| **90S/L** | 14 | 27.0 | 30 | 8 | 32 | 6 | 6.93 | 0.63 | 7.91 | 1.22 | 6.30 | 2.68 | 2.76 | 3.94 | 5.71 | 7.40 | 1.18 |
| **100L** | 24 | 31.0 | 50 | 10 | 40 | 8 | 7.64 | 0.63 | 8.86 | 0.87 | 6.30 | 3.07 | 2.80 | 4.13 | 5.52 | 8.27 | 1.10 |
| **112M** | 24 | 31.0 | 50 | 7 | 40 | 8 | 8.58 | 0.63 | 10.43 | 1.50 | 6.30 | 3.03 | 2.52 | 4.13 | 5.52 | 9.80 | 1.30 |
| **132S/M** | 32 | 41.0 | 80 | 10 | 70 | 10 | 10.12 | 0.71 | 12.60 | 1.61 | 7.87 | 4.25 | 2.56 | 4.92 | 6.10 | 11.81 | 0.98 |
| **160M/L** | 38 | 46.0 | 80 | 19 | 90 | 12 | 12.20 | 0.75 | 14.45 | 1.77 | 9.84 | 4.57 | 1.54 | 5.12 | 6.50 | 13.31 | 1.26 |
| **180MX/LX** | * | * | * | * | * | * | 13.70 | 0.75 | 15.87 | 2.76 | * | * | 1.97 | 5.71 | 8.46 | 13.31 | 1.26 |

*** Consult Factory**

# Dimensions
## Conduit Box & Cable Entry



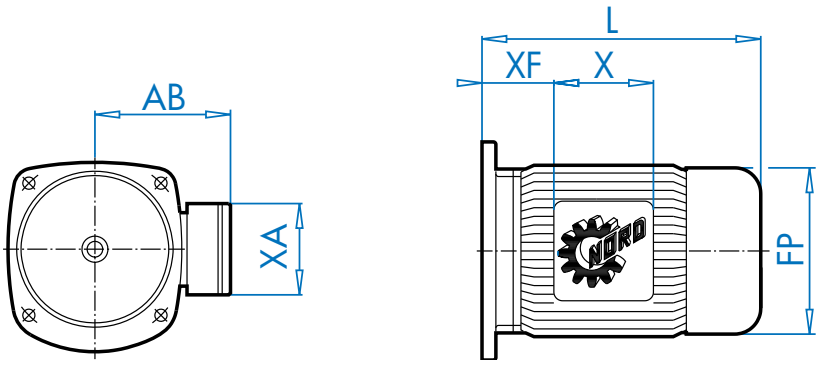


| Type / Flange | Options | Outline dimensions | | | | | | Cable entry | |
|---|---|---|---|---|---|---|---|---|---|
| 63S/L | | FP | AB | XF | X | L | XA | ce | ce-adapter |
| B14 | | 5.12 | 4.53 | 0.47 | 3.94 | 7.56 | 3.94 | 2 × M20×1.5 | 1/2" NPT |
| 160S | | 5.12 | 4.53 | 0.63 | 3.94 | 7.72 | 3.94 | 2 × M20×1.5 | 1/2" NPT |
| B14 | BRE | 5.12 | 4.84 | 0.71 | 5.28 | 9.76 | 3.50 | 2 × M20×1.5 | 1/2" NPT |
| 160S | BRE | 5.12 | 4.84 | 0.87 | 5.28 | 9.92 | 3.50 | 2 × M20×1.5 | 1/2" NPT |
| **71S/L** | | **FP** | **AB** | **XF** | **X** | **L** | **XA** | **ce** | **ce-adapter** |
| B14 | | 5.71 | 4.88 | 0.79 | 3.94 | 8.43 | 3.94 | 2 × M20×1.5 | 1/2" NPT |
| 160S | | 5.71 | 4.88 | 1.65 | 3.94 | 9.29 | 3.94 | 2 × M20×1.5 | 1/2" NPT |
| 250S | | 5.71 | 4.88 | 1.42 | 3.94 | 9.06 | 3.94 | 2 × M20×1.5 | 1/2" NPT |
| B14 | BRE | 5.75 | 5.24 | 1.02 | 5.28 | 10.71 | 3.50 | 2 × M20×1.5 | 1/2" NPT |
| 160S | BRE | 5.75 | 5.24 | 1.89 | 5.28 | 11.57 | 3.50 | 2 × M20×1.5 | 1/2" NPT |
| 250S | BRE | 5.75 | 5.24 | 1.65 | 5.28 | 11.34 | 3.50 | 2 × M20×1.5 | 1/2" NPT |
| **80S/L/LH** | | **FP** | **AB** | **XF** | **X** | **L** | **XA** | **ce** | **ce-adapter** |
| B14 | | 6.50 | 5.59 | 0.87 | 4.49 | 9.29 | 4.49 | 2 × M25×1.5 | 3/4" NPT |
| 160S | | 6.50 | 5.59 | 1.85 | 4.49 | 10.28 | 4.49 | 2 × M25×1.5 | 3/4" NPT |
| 250S | | 6.50 | 5.59 | 1.61 | 4.49 | 10.04 | 4.49 | 2 × M25×1.5 | 3/4" NPT |
| B14 | BRE | 6.50 | 5.59 | 1.02 | 6.02 | 11.81 | 4.25 | 2 × M25×1.5 | 3/4" NPT |
| 160S | BRE | 6.50 | 5.59 | 2.01 | 6.02 | 12.80 | 4.25 | 2 × M25×1.5 | 3/4" NPT |
| 250S | BRE | 6.50 | 5.59 | 1.77 | 6.02 | 12.56 | 4.25 | 2 × M25×1.5 | 3/4" NPT |
| **90S/L/SH/LH** | | **FP** | **AB** | **XF** | **X** | **L** | **XA** | **ce** | **ce-adapter** |
| B14 | | 7.20 | 5.79 | 1.02 | 4.49 | 10.87 | 4.49 | 2 × M25×1.5 | 3/4" NPT |
| 160S | | 7.20 | 5.79 | 2.05 | 4.49 | 11.89 | 4.49 | 2 × M25×1.5 | 3/4" NPT |
| 250S | | 7.20 | 5.79 | 1.81 | 4.49 | 11.65 | 4.49 | 2 × M25×1.5 | 3/4" NPT |
| 300S | | 7.20 | 5.79 | 1.02 | 4.49 | 10.87 | 4.49 | 2 × M25×1.5 | 3/4" NPT |
| B14 | BRE | 7.20 | 5.79 | 1.18 | 6.02 | 13.82 | 4.25 | 2 × M25×1.5 | 3/4" NPT |
| 160S | BRE | 7.20 | 5.79 | 2.20 | 6.02 | 14.84 | 4.25 | 2 × M25×1.5 | 3/4" NPT |
| 250S | BRE | 7.20 | 5.79 | 1.97 | 6.02 | 14.61 | 4.25 | 2 × M25×1.5 | 3/4" NPT |
| 300S | BRE | 7.20 | 5.79 | 1.18 | 6.02 | 13.82 | 4.25 | 2 × M25×1.5 | 3/4" NPT |



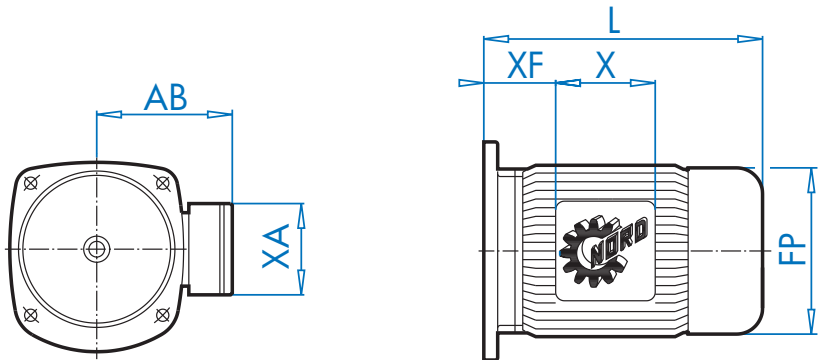


| Type / Flange | Options | Outline dimensions | | | | | | Cable entry | |
|---|---|---|---|---|---|---|---|---|---|
| 100L/L/LA/LH | | FP | AB | XF | X | L | XA | ce | ce-adapter |
| B14 | | 7.91 | 6.65 | 1.26 | 4.49 | 12.05 | 4.49 | 2 × M32×1.5 | 1" NPT |
| 160S | | 7.91 | 6.65 | 2.28 | 4.49 | 13.07 | 4.49 | 2 × M32×1.5 | 1" NPT |
| 250S | | 7.91 | 6.65 | 2.05 | 4.49 | 12.83 | 4.49 | 2 × M32×1.5 | 1" NPT |
| 300S | | 7.91 | 6.65 | 1.26 | 4.49 | 12.05 | 4.49 | 2 × M32×1.5 | 1" NPT |
| Ø 250 | | 7.91 | 6.65 | 1.26 | 4.49 | 12.05 | 4.49 | 2 × M32×1.5 | 1" NPT |
| B14 | BRE | 7.91 | 6.77 | 1.42 | 6.02 | 15.63 | 4.25 | 2 × M25×1.5 | 1" NPT |
| 160S | BRE | 7.91 | 6.77 | 2.44 | 6.02 | 16.65 | 4.25 | 2 × M25×1.5 | 1" NPT |
| 250S | BRE | 7.91 | 6.77 | 2.20 | 6.02 | 16.42 | 4.25 | 2 × M25×1.5 | 1" NPT |
| 300S | BRE | 7.91 | 6.77 | 1.42 | 6.02 | 15.63 | 4.25 | 2 × M25×1.5 | 1" NPT |
| Ø 250 | BRE | 7.91 | 6.77 | 1.42 | 6.02 | 15.63 | 4.25 | 2 × M25×1.5 | 1" NPT |

| 112M/SH/MH | | FP | AB | XF | X | L | XA | ce | ce-adapter |
|---|---|---|---|---|---|---|---|---|---|
| B14 | | 8.98 | 7.05 | 1.77 | 4.49 | 12.83 | 4.49 | 2 × M32×1.5 | 1" NPT |
| 160S | | 8.98 | 7.05 | 2.91 | 4.49 | 13.98 | 4.49 | 2 × M32×1.5 | 1" NPT |
| 250S | | 8.98 | 7.05 | 2.68 | 4.49 | 13.74 | 4.49 | 2 × M32×1.5 | 1" NPT |
| 300S | | 8.98 | 7.05 | 1.89 | 4.49 | 12.95 | 4.49 | 2 × M32×1.5 | 1" NPT |
| Ø 250 | | 8.98 | 7.05 | 1.77 | 4.49 | 12.83 | 4.49 | 2 × M32×1.5 | 1" NPT |
| B14 | BRE | 8.98 | 7.17 | 1.93 | 6.02 | 16.50 | 4.25 | 2 × M25×1.5 | 1" NPT |
| 160S | BRE | 8.98 | 7.17 | 3.07 | 6.02 | 17.64 | 4.25 | 2 × M25×1.5 | 1" NPT |
| 250S | BRE | 8.98 | 7.17 | 2.83 | 6.02 | 17.40 | 4.25 | 2 × M25×1.5 | 1" NPT |
| 300S | BRE | 8.98 | 7.17 | 2.05 | 6.02 | 16.61 | 4.25 | 2 × M25×1.5 | 1" NPT |
| Ø 250 | BRE | 8.98 | 7.17 | 1.93 | 6.02 | 16.50 | 4.25 | 2 × M25×1.5 | 1" NPT |

| 132S/M/SH/MH | | FP | AB | XF | X | L | XA | ce | ce-adapter |
|---|---|---|---|---|---|---|---|---|---|
| B14 | | 10.47 | 8.03 | 2.09 | 4.80 | 16.42 | 4.80 | 2 × M32×1.5 | 1" NPT |
| 250S | | 10.47 | 8.03 | 2.80 | 4.80 | 17.13 | 4.80 | 2 × M32×1.5 | 1" NPT |
| 300S | | 10.47 | 8.03 | 2.01 | 4.80 | 16.34 | 4.80 | 2 × M32×1.5 | 1" NPT |
| Ø 250 | | 10.47 | 8.03 | 2.80 | 4.80 | 17.13 | 4.80 | 2 × M32×1.5 | 1" NPT |
| B14 | BRE | 10.47 | 7.91 | 1.77 | 7.28 | 20.59 | 5.47 | 2 × M25×1.5 | 1" NPT |
| 250S | BRE | 10.47 | 7.91 | 7.28 | 7.28 | 21.34 | 5.47 | 2 × M25×1.5 | 1" NPT |
| 300S | BRE | 10.47 | 7.91 | 1.73 | 7.28 | 20.55 | 5.47 | 2 × M25×1.5 | 1" NPT |
| Ø 250 | BRE | 10.47 | 7.91 | 2.52 | 7.28 | 21.34 | 5.47 | 2 × M25×1.5 | 1" NPT |

# Dimensions
## Conduit Box & Cable Entry



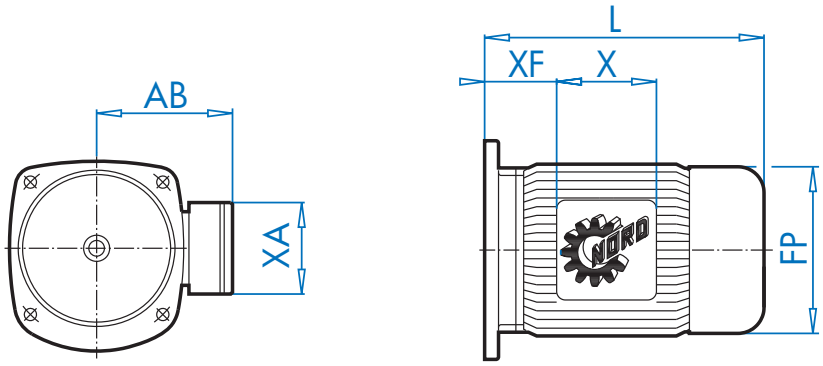


| Type / Flange | Options | Outline dimensions | | | | | | Cable entry | |
|---|---|---|---|---|---|---|---|---|---|
| 160M/L/MH | | FP | AB | XF | X | L | XA | ce | ce-adapter |
| 300S | | 12.60 | 8.90 | 3.07 | 6.50 | 18.82 | 6.50 | 2 × M40×1.5 | 1.0" NPT |
| Ø 300 | | 12.60 | 8.90 | 3.07 | 6.50 | 18.82 | 6.50 | 2 × M40×1.5 | 1.0" NPT |
| Ø 350 | | 12.60 | 8.90 | 3.07 | 6.50 | 18.82 | 6.50 | 2 × M40×1.5 | 1.0" NPT |
| 300S | BRE | 12.60 | 8.90 | 3.07 | 6.50 | 25.39 | 6.50 | 2 × M40×1.5 | 1.0" NPT |
| Ø 300 | BRE | 12.60 | 8.90 | 3.07 | 6.50 | 25.39 | 6.50 | 2 × M40×1.5 | 1.0" NPT |
| Ø 350 | BRE | 12.60 | 8.90 | 3.07 | 6.50 | 25.39 | 6.50 | 2 × M40×1.5 | 1.0" NPT |
| 160LH | | FP | AB | XF | X | L | XA | ce | ce-adapter |
| 300S | | 12.60 | 8.90 | 3.07 | 6.50 | 20.39 | 6.50 | 2 × M40×1.5 | 1.0" NPT |
| Ø 300 | | 12.60 | 8.90 | 3.07 | 6.50 | 20.39 | 6.50 | 2 × M40×1.5 | 1.0" NPT |
| Ø 350 | | 12.60 | 8.90 | 3.07 | 6.50 | 20.39 | 6.50 | 2 × M40×1.5 | 1.0" NPT |
| 300S | BRE | 12.60 | 8.90 | 3.07 | 6.50 | 27.13 | 6.50 | 2 × M40×1.5 | 1.0" NPT |
| Ø 300 | BRE | 12.60 | 8.90 | 3.07 | 6.50 | 27.13 | 6.50 | 2 × M40×1.5 | 1.0" NPT |
| Ø 350 | BRE | 12.60 | 8.90 | 3.07 | 6.50 | 27.13 | 6.50 | 2 × M40×1.5 | 1.0" NPT |
| 180MX/LX | | FP | AB | XF | X | L | XA | ce | ce-adapter |
| 300S | | 12.60 | 8.90 | 3.07 | 6.50 | 20.39 | 6.50 | 2 × M40×1.5 | 1.0" NPT |
| Ø 300 | | 12.60 | 8.90 | 3.07 | 6.50 | 20.39 | 6.50 | 2 × M40×1.5 | 1.0" NPT |
| Ø 350 | | 12.60 | 8.90 | 3.07 | 6.50 | 20.39 | 6.50 | 2 × M40×1.5 | 1.0" NPT |
| 300S | BRE | 12.60 | 8.90 | 3.07 | 6.50 | 27.13 | 6.50 | 2 × M40×1.5 | 1.0" NPT |
| Ø 300 | BRE | 12.60 | 8.90 | 3.07 | 6.50 | 27.13 | 6.50 | 2 × M40×1.5 | 1.0" NPT |
| Ø 350 | BRE | 12.60 | 8.90 | 3.07 | 6.50 | 27.13 | 6.50 | 2 × M40×1.5 | 1.0" NPT |
| 180MH/LH | | FP | AB | XF | X | L | XA | ce | ce-adapter |
| Ø 300 | | 14.09 | 10.20 | 4.45 | 5.20 | 24.49 | 5.98 | 2 × M40×1.5 | 1.0" NPT |
| Ø 350 | | 14.09 | 10.20 | 3.66 | 5.20 | 23.70 | 5.98 | 2 × M40×1.5 | 1.0" NPT |
| Ø 300 | BRE | 14.09 | 10.20 | 3.86 | 6.38 | 28.62 | 6.38 | 2 × M40×1.5 | 1.0" NPT |
| Ø 350 | BRE | 14.09 | 10.20 | 3.07 | 6.38 | 27.83 | 6.38 | 2 × M40×1.5 | 1.0" NPT |

## Motor Dimensions with SK 200E Motor Mounted AC Vector Drive

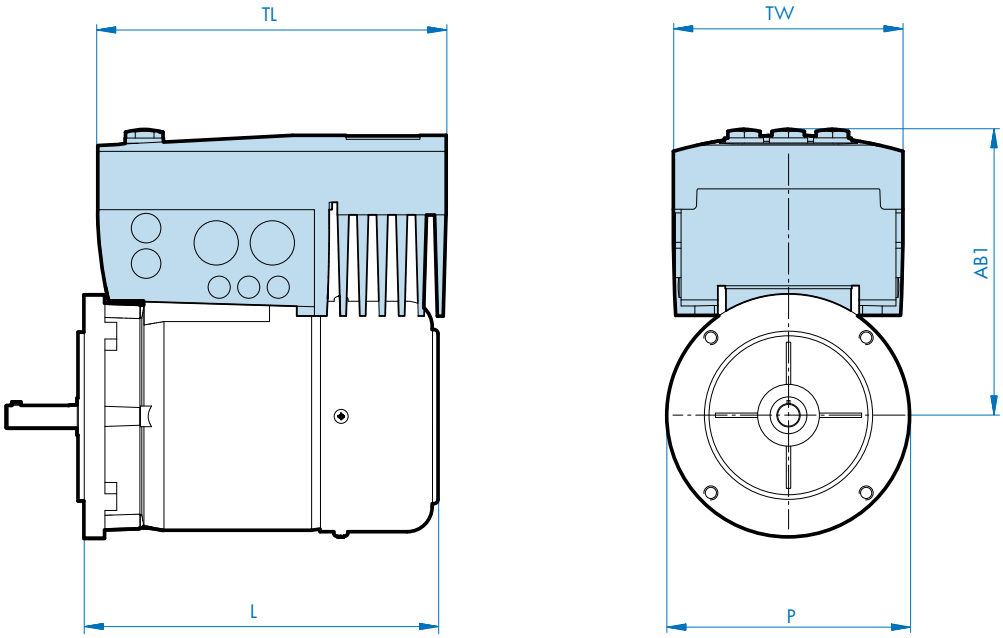


| AC Vector Drive Size | Motor | Width | | Length | | | |
|---|---|---|---|---|---|---|---|
| | | P [in] | TW [in] | L [in] | TL [in] | AB1 [in] | Weight [lbs] |
| Size 1 | 71S/L | 5.71 | 6.14 | 8.43 | 9.29 | 7.91 | 6.61 |
| | 80S/L | 6.50 | | 9.29 | | 7.68 | |
| | 90S/L | 7.20 | | 10.87 | | 7.87 | |
| | 100L/LA | 7.91 | | 12.05 | | 8.23 | |
| Size 2 | 80S/L | 6.50 | 6.93 | 9.29 | 10.47 | 7.95 | 9.04 |
| | 90S/L | 7.20 | | 10.87 | | 8.15 | |
| | 100L/LA | 7.91 | | 12.05 | | 8.58 | |
| | 112M | 8.98 | | 12.83 | | 8.98 | |
| Size 3 | 100L/LA | 7.91 | 8.58 | 12.05 | 12.99 | 9.88 | 15.21 |
| | 112M | 8.98 | | 12.83 | | 10.28 | |
| | 132S/M | 10.47 | | 16.18 | | 10.31 | |
| Size 4 | 132S/M | 10.47 | 12.01 | 16.18 | 18.90 | 12.32 | 37.48 |
| | 160M/L | 12.60 | | 19.37 | | 12.52 | |
| | 180MX/LX | 14.09 | | 24.17 | | 13.19 | |

# Dimensions
# SK 300E Trio AC Vector Drive



## Motor Dimensions with SK 300E Motor Mounted AC Vector Drive

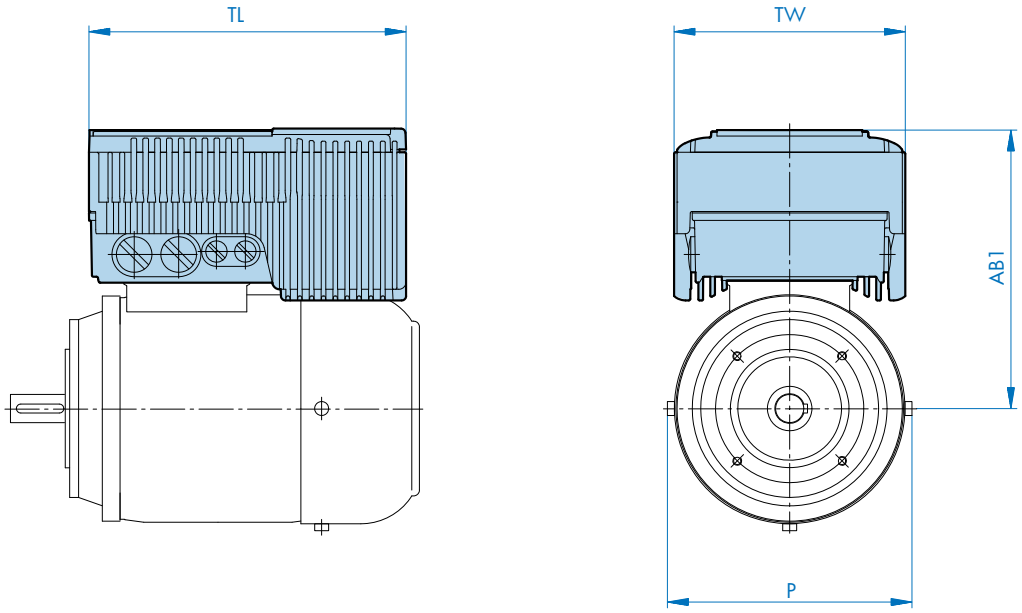


| Basic NORD Motor Description | 240 VAC Input AC Vector Drive | | | 480 VAC Input AC Vector Drive | | |
|---|---|---|---|---|---|---|
| | Type SK 300E | AC Vector Drive Size | AB1 [in] | Type SK 300E | AC Vector Drive Size | AB1 [in] |
| **63S/4** | **-370-323-B** | Size 1 | 7.48 | **-550-340-B** | Size 1 | 7.48 |
| **63L/4** | **-370-323-B** | Size 1 | 7.48 | **-550-340-B** | Size 1 | 7.48 |
| **71S/4** | **-370-323-B** | Size 1 | 7.78 | **-550-340-B** | Size 1 | 7.78 |
| **71L/4** | **-370-323-B** | Size 1 | 7.78 | **-550-340-B** | Size 1 | 7.78 |
| **80S/4** | **-550-323-B** | Size 1 | 7.42 | **-550-340-B** | Size 1 | 7.42 |
| **80L/4** | **-750-323-B** | Size 1 | 7.42 | **-750-340-B** | Size 1 | 7.42 |
| **90S/4** | **-111-323-B** | Size 2 | 8.69 | **-111-340-B** | Size 1 | 7.62 |
| **90L/4** | **-151-323-B** | Size 2 | 8.69 | **-151-340-B** | Size 1 | 7.62 |
| **100L/4** | **-221-323-B** | Size 2 | 9.19 | **-221-340-B** | Size 2 | 9.19 |
| **100LA/4** | **Not Available** | N/A | N/A | **-401-340-B** | Size 2 | 9.19 |

| AC Vector Drive Size | TL [in] | TW [in] | Weight [lbs] |
|---|---|---|---|
| Size 1 | 8.43 | 6.14 | 8.8 |
| Size 2 | 11.14 | 7.72 | 18.5 |

## Contact Information:

- North America
- Global



DRIVESYSTEMS

www.nord.com

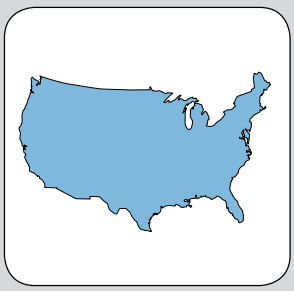





# International
# Contacts - North America

## United States

**NORD Gear Corporation - Midwest Headquarters**
800 Nord Drive, P.O. 367
Waunakee, WI 53597

toll free: 1-888-314-6673
phone: 1-608-849-7300
fax: 1-800-373-6673
eMail: info.us@nord.com

**NORD Gear Corporation - East**
100 Forsyth Hall Drive
Building 100B
Charlotte, NC 28273

toll free: 1-888-314-6673
phone: 1-608-849-0140
fax: 1-888-259-6673
eMail: info.us@nord.com

**NORD Gear Corporation - West**
1137 W. Bradford Circle
Corona, CA 92882

toll free: 1-888-314-6673
phone: 1-608-849-0190
fax: 1-888-408-6673
eMail: info.us@nord.com

**For Sales office or distributors please contact us or see our website at www.nord.com**

## Canada

**NORD Gear Limited**
41 West Drive
Brampton, Ontario L6T 4A1

toll free: 1-800-668-4378
Phone: 1-905-796-3606
fax: 1-905-796-8130
eMail: info.ca@nord.com

**Engrenages NORD Limitée**
1405 Trans-Canada Hwy.
Suite 245
Dorval, Quebec H9P 2V9

toll free: 1-800-668-4378
phone: 1-514-421-1044
fax: 1-514-421-3973
eMail: info.ca@nord.com

**For Sales office or distributors please contact us or see our website at www.nord.com**

## Mexico

**Mexico NORD Drivesystems SA DE CV**
Mexico Regional Office
Av. Ruiz Cortines 831 Ote.
Guadalupe, N.L.
México, C.P. 67110

phone: +52-81-8327-4733
fax: +52-81-8327-4735
eMail: info.mx@nord.com

**For Sales office or distributors please contact us or see our website at www.nord.com**

### Global
**Getriebebau NORD GmbH & Co. KG**
Rudolf-Diesel Str.1
22941 Bargteheide / Hamburg Germany
Phone: +49-4532-401 0 Fax: +49-4532-401 254
Email: info@nord-de.com

### Afghanistan
**Getriebebau NORD GmbH & Co. KG**
Rudolf-Diesel Str.1
22941 Bargteheide / Hamburg Germany
Phone: +49-4532-4010 Fax: +49-4532-401254
Email: info@af.nord.com

### Algeria
**Tunesia S.I.A. Ben Djemaa & CIE**
220 Avenue des Martyrs
TN - 3000 Sfax
Phone: +216-74-408 446 Fax: +216-74-408 065
Email: bendjemaa@planet.tn

### Algeria
**EURL Agence Maghrebine Des Echanges Commerciaux**
35 Avenue 5 Juillet
Borj El Kiffane
Phone: +213-76-288837 Fax: +213-21-201209
Email: bendjemaa@planet.tn

### Angola
**Power Drives a division of Bearing Man Ltd.**
Bearing Man Park, Droste Cresent
Droste Park Ext. 7, Johannesburg 2001
P.O. Box 33431
Jeppestown 2043, South Africa
Phone: +27-11-620 1500 Fax: +27-11-620 1670
Email: powerdrives@bearingman.co.za

### Argentina
**Chilicote S.A.**
Avda. Julio A. Roca 546
1067 Buenos Aires
Phone: +54-11-4343 8469 Fax: +54-11-4331 4278
Email: chilicote@chilicote.com.ar

### Armenia
**Getriebebau NORD GmbH & Co. KG**
Rudolf-Diesel Str.1
22941 Bargteheide / Hamburg Germany
Phone: +49-4532-4010 Fax: +49-4532-401254
Email: info@nord-de.com

### Australia
**CMG Pty Ltd.**
19 Corporate Avenue
Rowville, VIC 3178
PO Box 2340, Rowville, VIC 3178 - Australia
Phone: +61-3-9237 4000 Fax: +61-3-9237 4010
Email: mark.alexander@cmggroup.com.au

### Austria
**Getriebebau NORD GmbH**
Deggendorfstraße 8
A-4030 Linz
Phone: +43-732-31 89 20 Fax: +43-732-31 89 20-85
Email: info@nord-at.com

### Bahrain
**Eight Industries**
P.O. Box 32095
Dubai/U.A.E.
Phone: +971-4-3200 770 Fax: +971-4-3200 771
Email: eight@emirates.net.ae

### Bangladesh
**Getriebebau NORD GmbH & Co. KG**
Rudolf-Diesel Str.1
22941 Bargteheide / Hamburg Germany
Phone: +49-4532-4010 Fax: +49-4532-401254
Email: info@bd.nord.com

### Belarus
**OOO NORD PRIVODY**
P.O. 51
BY-220121 Minsk
Phone: +375-17-205 04 27 Fax: +375-17-205 04 27
Email: info@by.nord.com

### Belgium
**NORD Aandrijvingen België N.V.**
NORD Transmission Belgique S.A.
Boutersemdreef 24
B-2240 Zandhoven
Phone: +32-3-484 59 21 Fax: +32-3-484 59 24
Email: info@nord-be.com

### Bhutan
**Getriebebau NORD GmbH & Co. KG**
Rudolf-Diesel Str.1
22941 Bargteheide / Hamburg Germany
Phone: +49-4532-4010 Fax: +49-4532-401254
Email: info@bt.nord.com

### Bolivia
**Variadores S.A.**
Carrera 50 (Aut. Sur)
No. 2 Sur 271 - A.A. 053811
Medellin, Columbia
Phone: +57-94-2552200 Fax: +57-94-2557450
Email: variadores@variadores.com.co

### Brazil
**NORD Motoredutores do Brasil Ltda**
Rua Dr. Moacyr Antonio de Morais, 700
Parque Santo Agostinho
Guarulhos – São Paulo
CEP 07140-285
Phone: +55-11-6402 8855 Fax: +55-11-6402 8830
Email: info@nord-br.com

# International Contacts

**Bulgaria**
**MELSICON Ltd.**
P.Wolov 47-49
BG-1504 SOFIA
Phone: +359-2-9434150 Fax: +359-2-9434160
Email: melsicon@applet-bg.com

**Burundi**
**Power Drives a division of Bearing Man Ltd.**
Bearing Man Park, Droste Cresent
Droste Park Ext. 7, Johannesburg 2001
P.O. Box 33431 Jeppestown 2043
South Africa
Phone: +27-11-620 1500 Fax: +27-11-620 1670
Email: daver@bearingman.co.za

**Cameroon**
**Getriebebau NORD GmbH & Co. KG**
Rudolf-Diesel Str.1
22941 Bargteheide / Hamburg Germany
Phone: +49-4532-4010 Fax: +49-4532-401254
Email: export2@nord-de.com

**Canada**
**NORD Gear Limited**
41 West Drive
Brampton, Ontario L6T 4A1
Phone: (905) 796-3606 Fax: (905) 796-8130
Email: info.ca@nord.com

**Chile**
**TDC Techno Drive Center S.A.**
Los Leones No. 133-2° Piso
Providencia Santiago de Chile
Chile
Phone: +56-2-234 0084 Fax: +56-2-334 9633
Email: tdc@technodrive.cl

**China**
**NORD (Beijing)**
Power Transmission Co. Ltd.
No. 5, Tangjiacun,
Guangqudonglu, Chaoyangqu
Beijing 100022
Phone: +86-10-67704305 Fax: +86-10-67704330
Email: info@nord-cn.com

**China**
**NORD (Suzhou)**
Power Transmission Co. Ltd.
No.510 Changyang Street
Suzhou Ind. Park
Jiangsu 215021
Phone: +86-512-85180277 Fax: +86-512-85180278
Email: info@nord-cn.com

**Colombia**
**Variadores S.A.**
Carrera 50 (Aut. Sur)
No. 2 Sur 271 - A.A. 053811
Medellin
Phone: +57-4-2552200 Fax: +57-4-2557450
Email: variadores@variadores.com.co

**Costa Rica**
**Variadores S.A.**
Carrera 50 (Aut. Sur)
No. 2 Sur 271 - A.A. 053811
Medellin, Columbia
Phone: +57-94-2552200 Fax: +57-94-2557450
Email: variadores@variadores.com.co

**Croatia**
**NORD-Pogoni d.o.o**
Obrtnicka 9
HR-48260 Krizevci
Phone: +385-48-711 900 Fax: +385-48-270 494
Email: info@nord-hr.com

**Cyprus**
**Getriebebau NORD GmbH & Co. KG**
Rudolf-Diesel Str.1
22941 Bargteheide / Hamburg Germany
Phone: +49-4532-401 441 Fax: +49-4532-401 254
Email: export2@nord-de.com

**Czech Republic**
**NORD-Poháncí technika, s. r. o.**
Palackého 359
500 03 Hradec Králové
Phone: +420 495 580 310 Fax: +420 495 580 312
Email: HZubr@nord-cz.com

**Dem. Rep. Congo**
**Power Drives a division of Bearing Man Ltd.**
Bearing Man Park, Droste Cresent
Droste Park Ext. 7, Johannesburg 2001
P.O. Box 33431 Jeppestown 2043, South Africa
Phone: +27-11-620 1500 Fax: +27-11-620 1670
Email: daver@bearingman.co.za

**Denmark**
**NORD-Gear Danmark A/S**
Kliplev Erhvervspark 28 - Kliplev
DK - 6200 Aabenraa
Phone: +45 73 68 78 00 Fax: +45 73 68 78 10
Email: info@nord-dk.com

**Ecuador**
**Variadores S.A.**
Carrera 50 (Aut. Sur)
No. 2 Sur 271 - A.A. 053811
Medellin, Columbia
Phone: +57-94-2552200 Fax: +57-94-2557450
Email: variadores@variadores.com.co

### Egypt
**IED-International Engineering Development**
4 Abu Gafar El Nahas Street
El Golf, Heliopolis
Cairo
Phone: +20-2-2900475 Fax: +20-2-4185637
Email: ied@thewayout.net

### El Salvador
**Maquinaria E Insumos Industriales, S.A.**
67 Av Sur Edificio #144 Local #3,.
Col Escalon
San Salvador, C.A
Phone: +503-22243059 Fax: +503-22246272
Email: maquinsa@integra.com.sv

### Estonia
**Technobalt Eesti Ltd.**
Läike tee 10
Peetri küla, Rae vald
EE-75301 Harjumaa
Phone: +372-6-684 400 Fax: +372-6-613 165
Email: info@technobalt.ee

### Finland
**NORD Gear Oy**
Aunankorvenkatu 7
FI - 33840 Tampere
Phone: +358-3-254 1800 Fax: +358-3-254 1820
Email: info@nord-fi.com

### France
**NORD Réducteurs**
Bureaux commerciaux
17, Av. Georges Clémenceau
FR-93421 Villepinte Cedex
Phone: +33-1-4963 0189 Fax: +33-1-4963 0811
Email: info@nord-fr.com

### Germany
**Getriebebau NORD GmbH & Co. KG**
Postfach 12 62
Rudolf-Diesel-Strasse 1
D-22941 Bargteheide
Phone: +49-4532-401-0 Fax: +49-4532-401-253
Email: info@nord-de.com

### Ghana
**Getriebebau NORD GmbH & Co. KG**
Rudolf-Diesel Str.1
22941 Bargteheide / Hamburg Germany
Phone: +49-4532-4010 Fax: +49-4532-401254
Email: export2@nord-de.com

### Greece
**Mangrinox S.A.**
14 Grevenon Str.
Votanikos
GR-11855 Athens
Phone: +30-210-3423201-3 Fax: +30-210-3459767, 3459928
Email: magrinox@mail.otenet.gr

### Guatemala
**Maquinaria E Insumos Industriales, S.A.**
19 Avenida 16-56 Zona 10
Empresarial Santa Fe Bodega 4
Guatemala 01010
Phone: +502-23674490 Fax: +502-23674493
Email: maquinsa@inteinet.net.gt

### Guinea
**Getriebebau NORD GmbH & Co. KG**
Rudolf-Diesel Str.1
22941 Bargteheide / Hamburg Germany
Phone: +49-4532-4010 Fax: +49-4532-401254
Email: export2@nord-de.com

### Hungary
**NORD Hajtastechnika Kft.**
Törökkö u. 5-7
HU-1037 Budapest
Phone: +36 1 437 0127 Fax: +36 1 250 5549
Email: info@nord-hu.com

### Iceland
**Varmaverk Ltd.**
Dalshrauni 5
IS-220 Hafnarfiroei
Phone: +354-5651750 Fax: +354-5651951
Email: pall@varmaverk.is

### India
**NORD Drivesystems Pvt. Ltd.**
282/ 2, 283/2, Plot No. 15
Mauje, Village Mann
Tal Mulshi, Adj. Hinjewadi Phase- II
Pune Maharashtra 411 057
Phone: +91-20-39801200 Fax: +91-20-39801216
Email: info@nord-in.com

### Indonesia
**PT. NORD Indonesia**
Jln. Raya Serpong KM7,
Kompleks Rumah Multi Guna Blok D-No. 1
Pakulonan, Serpong 15310 - Tangerang
West Java
Phone: +62-21-5312 2222 Fax: +62-21-5312 2288
Email: info@nord-id.com

# International Contacts

### Iran
**Paralog Engineering Co. Ltd.**
P.O.Box 19395-7366
No. 6, Shangarf Street
Mirdamad Blvd.
Tehran 15489
Phone: +98-21-22905551 / -2 Fax: +98-21-22905550
Email: nord@Paralog.ir

### Ireland
**NORD Gear Limited (UK)**
11 Barton Lane, Abingdon Science Park,
Abingdon,
Oxfordshire OX14 3NB
Phone: +353(0) 87 69 -48 7 11 Fax: +353 (0) 49 85 - 43 7 34
Email: pfinnegan@nord-ie.com

### Israel
**Ringel Bros. Ltd**
Hertzel St. 134
5148 Tel-Aviv
Phone: +972-3-6824027 Fax: +972-3-6822041
Email: mringel@netvision.net.il

### Italy
**NORD-Motoriduttori s.r.l.**
Via Newton 22
IT-40017 San Giovanni in Persiceto (BO)
Phone: +39-051-6870 711 Fax: +39-051-6870 793
Email: info@nord-it.com

### Ivory Coast
**Getriebebau NORD GmbH & Co. KG**
Rudolf-Diesel Str.1
22941 Bargteheide / Hamburg Germany
Phone: +49-4532-4010 Fax: +49-4532-401254
Email: export2@nord-de.com

### Jordan
**Arab Co. For Power Transmissions Technology**
"GearTech Co"
P.O Box 830641
Amman 11183
Phone: +962-6-5692283 Fax: +962-6-5656750
Email: indgroup@wanadoo.jo

### Kazakhstan
**NORD Privody KZ**
Chaykovski str.,
h.131, of.12. KZ - Almaty, 050 000
Phone: +7-3272-61 02 99 Fax: +7-3272-61 02 99
Email: info@kz.nord.com

### Kenya
**Jos. Hansen & Soehne (East Africa) Ltd.**
Baba Dogo Road, Ruaraka
P.O.Box 30196
Nairobi
Phone: +254-2-861 637 Fax: +254-2-861 640
Email: hansenkenya@swiftkenya.com

### Kongo
**Power Drives a division of Bearing Man Ltd.**
Bearing Man Park, Droste Cresent
Droste Park Ext. 7, Johannesburg 2001
P.O. Box 33431 Jeppestown 2043
South Africa
Phone: +27-11-620 1500 Fax: +27-11-620 1670
Email: powerdrives@bearingman.co.za

### Korea
**POWERKING GEAR Co.**
216-8, No-onsa,
Gwangmyung, Gyunggi, 423-080
Phone: +82-2-2615-6044 Fax: +82-2-2060-7044
Email: sales@pkgear.com

### Kuwait
**Eight Industries**
P.O. Box 32095
Dubai/U.A.E.
Phone: +971-4-3200 770 Fax: +971-4-3200 771
Email: eight@emirates.net.ae

### Kyrgyzstand
**Getriebebau NORD GmbH & Co. KG**
Rudolf-Diesel Str.1
22941 Bargteheide / Hamburg Germany
Phone: +49-4532-4010 Fax: +49-4532-401254
Email: info@nord-de.com

### Latvia
**SIA Technobalt**
Skaistkalnes 1
Riga LV - 1004
Phone: +371-7605 046 Fax: +371-7605 062
Email: technobalt@technobalt.lv

### Lebanon
**Hosny Homany**
P.O. Box 102
Ghobery, Beirut
Phone: +961 5 480661/2 Fax: +961 5 480660
Email: hhomany@cyberia.net.lb

### Liberia
**Getriebebau NORD GmbH & Co. KG**
Rudolf-Diesel Str.1
22941 Bargteheide / Hamburg Germany
Phone: +49-4532-4010 Fax: +49-4532-401254
Email: export2@nord-de.com

### Lithuania
**Technobalt Group**
UAB Technobalta
Titnago g.10
LT-02300 Vilnius
Phone: +370-5-260 2503 Fax: +370-5-2653288
Email: lietuva@technobalt.com

### Malaysia
**GTM Sdn Bhd**
No. 19, Jalan Tambur 33/19,
Shah Alam Technology Park, Section 33,
40400, Shah Alam,
Selangor Darul Ehsan
Phone: +60-3-51 24 67 73 Fax: +60-3-51 24 68 10
Email: jenny.multidrive@gmail.com

### Marocco
**Societe Marocaine des Etablissements Moulin**
14 Rue Allal Ben Ahmed AMKIK et 7,
Rue Saint Saens
Belvédère - Casablanca
Phone: +212-22-406777 Fax: +212-22-406782
Email: etsmoulin@wanadoo.net.ma

### Mauritius
**Power Drives a division of Bearing Man Ltd.**
Bearing Man Park, Droste Cresent
Droste Park Ext. 7, Johannesburg 2001
P.O. Box 33431
Jeppestown 2043
South Africa
Phone: +27-11-620 1500 Fax: +27-11-620 1670
Email: powerdrives@bearingman.co.za

### Mexico
**NORD DRIVESYSTEMS SA DE CV**
Av. Lázaro Cárdenas 1007 Pte.
San Pedro Garza Garcia, N.L.
México, C.P. 66266
Phone: +52-81-8220-9165 Fax: +52-81-8220-9044
Email: info.mx@nord.com

### Namibia
**Power Drives a division of Bearing Man Ltd.**
Bearing Man Park, Droste Cresent
Droste Park Ext. 7, Johannesburg 2001
P.O. Box 33431
Jeppestown 2043
South Africa
Phone: +27-11-620 1500 Fax: +27-11-620 1670
Email: powerdrives@bearingman.co.za

### Nepal
**Getriebebau NORD GmbH & Co. KG**
Rudolf-Diesel Str.1
22941 Bargteheide / Hamburg Germany
Phone: +49-4532-4010 Fax: +49-4532-401254
Email: info@np.nord.com

### Netherlands
**NORD Aandrijvingen Nederland B.V.**
Voltstraat 12
NL-2181 HA Hillegom
P.O.Box 136
NL-2180 AC Hillegom
Phone: +31-252 529544 Fax: +31-252 522222
Email: info@nord-nl.com

### New Zealand
**CMG Electric Motors (NZ) Limited**
2 Ross Reid Avenue
East Tamaki, Auckland
Phone: +64-9-273 9162 Fax: +64-9-273 9062
Email: Mark.Alexander@cmggroup.com.au

### Nigeria
**Jos. Hansen & Soehne (Nigeria) Ltd.**
km 16, Ikorodu Road (near Bata)
Ojota
Lagos
Phone: +234-1-4974 304 Fax: +234-1-4976 936
Email: joshansen@linkserve.com

### Norway
**NORD GEAR NORGE A/S**
Solgaard Skog 7,
PB85
N-1501 Moss
Phone: +47-69 20 69 90 Fax: +47-69 20 69 93
Email: MHansen@nord-no.com

### Oman
**Eight Industries**
P.O. Box 32095
Dubai/U.A.E.
Phone: +971-4-3200 770 Fax: +971-4-3200 771
Email: eight@emirates.net.ae

### Pakistan
**OTC**
Flat # 3, 89B/C-II,
Gulberg-III
Lahore 54660
Phone: +92-42-587 2667-9 Fax: +92-42-587 2670
Email: sajjad@otc.com.pk

### Panama
**Variadores S.A.**
Carrera 50 (Aut. Sur)
No. 2 Sur 271 - A.A. 053811
Medellin, Columbia
Phone: +57-94-2552200 Fax: +57-94-2557450
Email: variadores@variadores.com.co

# International Contacts

### Peru
**Delcrosa S.A.**
Av. Argentina 1515
Lima
Phone: +51-1-336 6614 Fax: +51-1-336 8189
Email: viviana@delcrosa.com.pe

### Philippines
**Mheco Mechanical Handling Equipment Company Inc**
Suite 812 Herrera Tower,
Herrera cor. Valero Sts.
Salcedo Village, Makati City
P.O.Box 1004
Makati 1250
Phone: +63-2-844 8901-05 Fax: +63-2-845 1535
Email: mheco@skyinet.net

### Poland
**NORD Napedy sp. z o.o.**
Ul. Grottgera 30
PL-32-020 Wieliczka
S d Rejonowy dla Krakowa Zródmiescia
NIP: 683-17-20-355
Kapital ZakBadowy 770 000, 00 PLN
Phone: +48-0122889900 Fax: +48-0122889911
Email: biuro@nord-pl.com

### Portugal
**NORD Motorreductores**
Apdo de Correos 166,
ES-08200 Sabadell - Spain
Phone: +34-93-723 5322 Fax: +34-93-723 3147
Email: info@nord-es.com

### Qatar
**Eight Industries**
P.O. Box 32095
Dubai/U.A.E.
Phone: +971-4-3200 770 Fax: +971-4-3200 771
Email: eight@emirates.net.ae

### Romania
**S.C.NORD Drivesystems S.R.L.**
Str.Nicolae Iorga,Nr.55/3
RO-550387 SIBIU
Phone: +40/269/232880 Fax: +40/269/232880
Email: UPiringer@ro.nord.com

### Russian Federation
**OOO NORD PRIVODY**
Ul. A. Nevsky 9
RU-191167 St.Petersburg
Phone: +7-812-327 0192 Fax: +7-812-327 0192
Email: info@nord-ru.com

### Rwanda
**Power Drives a division of Bearing Man Ltd.**
Bearing Man Park, Droste Cresent
Droste Park Ext. 7, Johannesburg 2001
P.O. Box 33431 Jeppestown 2043
South Africa
Phone: +27-11-620 1500 Fax: +27-11-620 1670
Email: powerdrives@bearingman.co.za

### Saudi Arabia
**Al-Musairiey Industrial Equipment. Co.**
P.O. Box 40966
Riyadh - 11511
Phone: +966-1-448 3808 Fax: +966-1-446 9244
Email: info@almusairiey.com

### Senegal
**Getriebebau NORD GmbH & Co. KG**
Rudolf-Diesel Str.1
22941 Bargteheide / Hamburg Germany
Phone: +49-4532-4010 Fax: +49-4532-401254
Email: export2@nord-de.com

### Singapore
**NORD GEAR Pte Ltd**
33 Kian Teck Drive
Jurong, Singapore 628850
Phone: +65-6265-9118 Fax: +65-6265-6841
Email: info@nord-sg.com

### Slovakia
**NORD Pohony, s.r.o.**
Juzná Trieda 74
SK - 04001 Kosice
Phone: +421-55-729 9600 Fax: +421-55-729 9599
Email: Info@nord-sk.com

### Slovenia
**Getriebebau NORD GmbH**
Deggendorfstraße 8
A-4030 Linz
Phone: +43-732-31 89 20 Fax: +43-732-31 89 20-85
Email: info@nord-at.com

### South Africa
**Power Drives a division of Bearing Man Ltd.**
6 Tetford Circle,
Millennium Bridge Business Park,
La Lucia Ridge 4320 (Durban)
P.O. Box 25191, Gateway 4321 (Durban)
Phone: +27-11-62 01 61 3 Fax: +27-11-62 01 67 0
Email: powerdrives@bearingman.co.za

### Spain
**NORD Motorreductores S.A.**
Aptdo de Correos 166
ES - 08200 Sabadell
Phone: +34-93-723 5322 Fax: +34-93-723 3147
Email: info@nord-es.com

### Sri Lanka
**Getriebebau NORD GmbH & Co. KG**
Rudolf-Diesel Str.1
22941 Bargteheide / Hamburg Germany
Phone: +49-4532-4010 Fax: +49-4532-401254
Email: info@lk.nord.com

### Sweden
**NORD Drivsystem AB**
Box 2097
Ryttargatan 277
SE-194 02 Upplands Väsby
Phone: +46-8-594 114 00 Fax: +46-8-594 114 14
Email: info@nord-se.com

### Switzerland
**Getriebebau NORD AG**
Bächigenstr.18
CH-9212 Arnegg
Phone: +41-71-38899 11 Fax: +41-71-38899 15
Email: info@nord-ch.com

### Syria
**Elias Brothers Co.**
Al' Kowatly St. 2
P.O. Box 4282
Homs
Phone: +963-31-2771 004 Fax: +963-31-2771 003
Email: eliasbrothersco@mail.sy

### Taiwan
**TACT Trans-Asia Consulting & Trade Co., Ltd.**
1F, No. 157-1, Sec. 1, Beisin Road.,
Sindian City,
Taipei County 231, Taiwan R.O.C.
Phone: + 886-2-29188768 Fax: + 886-2-29185985
Email: TACT@trans-asia.com.tw

### Tanzania
**Jos. Hansen & Soehne (Tanzania) Ltd.**
Holland House, Ohio Street
P.O.Box 9521
Dar es Salaam
Phone: +255-22-211 5746 Fax: +255-22-211 2948
Email: jhs-t@africaonline.co.tz

### Thailand
**Charoen Muang Machinery Co. Ltd.**
164/1 Wisutkasat Rd.
Banpanthom, Pranakorn
Bangkok 10200
Phone: +66-2-281 5331 Fax: +66-2-280 8033-4
Email: info@nord-sg.com

### Tunisia
**Tunesia S.I.A. Ben Djemaa & CIE**
220 Avenue des Martyrs
TN - 3000 Sfax
Phone: +216-74-408 446 Fax: +216-74-408 065
Email: bendjemaa@planet.tn

### Turkey
**NORD-REMAS**
Redüktör Sanayi ve
Ticaret Ltd. Sti.
Tepeören Köyü
34959 - Tuzla - Istanbul
Phone: +90-216-304 13 60 Fax: +90-216-304 13 69
Email: info@nord-tr.com

### Uganda
**Jos. Hansen & Soehne (Uganda) Ltd.**
Workers House Plot 1
Pilkington Road
P.O.Box 2333
Kampala
Phone: +256-41-251 324 Fax: +256-41-251 325
Email: hansenuganda@africaonline.co.ug

### Ukraine
**GETRIEBEBAU NORD GmbH**
Vasilkovskaja, 1
office 306
03040 KIEW
Phone: + 380-44-537 0615 Fax: + 380-44-537 0615
Email: vtsoka@nord-ukr.com

### United Arab Emirates
**Eight Industries**
P.O. Box 32095
Dubai/U.A.E.
Phone: +971-4-3200 770 Fax: +971-4-3200 771
Email: eight@emirates.net.ae

### United Kingdom
**NORD Gear Limited (UK)**
11 Barton Lane, Abingdon Science Park,
Abingdon,
Oxfordshire OX14 3NB
Phone: +44-1235-534404 Fax: +44-1235-534414
Email: info@nord-uk.com

# International Contacts

**United States - Midwest**
**NORD Gear Corporation**
800 Nord Drive, P.O. 367
Waunakee, WI 53597
Phone: 1-888-314-6673 Fax: 1-800-373-6673
Phone: 1-608-849-7300
Email: info.us@nord.com

**United States - West**
**NORD Gear Corporation**
1137 W. Bradford Circle
Corona, CA 92882
Toll free: 1-888-314-6673 Fax: 1-888-408-6673
Phone: 1-608-849-0190
Email: info.us@nord.com

**United States - East**
**NORD Gear Corporation**
100 Forsyth Hall Drive
Building 100B
Charlotte, NC 28273
Toll free: 1-888-314-6673 Fax: 1-888-259-6673
Phone: 1-608-849-0140
Email: info.us@nord.com

**Uzbekistan**
**Getriebebau NORD GmbH & Co. KG**
Rudolf-Diesel Str.1
22941 Bargteheide / Hamburg Germany
Phone: +49-4532-4010 Fax: +49-4532-401254
Email: info@nord-de.com

**Venezuela**
**Getriebebau NORD GmbH & Co. KG**
Rudolf-Diesel Str.1
22941 Bargteheide / Hamburg Germany
Phone: +49-4532-4010 Fax: +49-4532-401254
Email: info@nord-de.com

**Vietnam**
**NORD Gear Pte. Ltd**
Representative office
Unit 401, 4F, An Dinh Building,
18 Nam Quoc Cang Street
Pham Ngu Lao Ward
District 1, Ho Chi Minh City, Vietnam
Phone: +84 8 925 7270 Fax: +84 8 925 7271
Email: info@vn.nord.com

**Zambia**
**PROVIDENT INVESTMENT Ltd**
Mr.Y.M.Mulambya
1st. Floor - Angoni House
Obote Avenenue
Kitwe
Phone: +260-2-22 60 84 Fax: +260-2-22 67 10
Email: provident@zamtel.zm

**Zimbabwe**
**Power Drives a division of Bearing Man Ltd.**
Bearing Man Park, Droste Cresent
P.O. Box 33431 Jeppestown 2043
South Africa
Phone: +27-11-620 1500 Fax: +27-11-620 1670
Email: powerdrives@bearingman.co.za



# SCP
# Ordering Guide

| | Gear Unit | Reducer Options | Motor/Input | Motor Options |
|---|---|---|---|---|
| SK | ❶ | ❷ | ❸ | ❹ |
| | | | see page 19 | see page 128 |

❶

| Gear Unit |
|---|
| 1282 SCP |
| 1382 SCP |
| 2282 SCP |
| 2382 SCP |
| 3282 SCP |
| 3382 SCP |
| 4282 SCP |
| 4382 SCP |
| 5282 SCP |
| 5382 SCP |
| 6282 SCP |
| 6382 SCP |
| Specialty Bevel Product |

❷

| Reducer Options | |
|---|---|
| **ADP -** Additional Drain Plug | **PC -** Grease Purge Seal |
| **LL -** Long Term Storage | **RV -** Drain Valve |
| **MDP -** Magnetic Drain Plug | **SM5 -** Stainless Steel CEMA Shaft |
| **OA -** Oil Expansion Chamber | **VL -** Heavy Duty Bearings |
| **OSG -** Oil Sight Glass | |

❹

| Motor Options | |
|---|---|
| **F & FC -** Blower Cooling Fan | **OL -** Non Ventilated TENV W/Out Fan |
| **RD -** Drip Cover Canopy | **OLH -** Non Ventilated TENV W/Out Fan & Cover |
| **RDD -** Double Drip Cover Canopy | **WE -** Motor Second Shaft Extension |
| **KD -** Condensation Drain Holes | **Z -** High Inertia Motor Fan |
| **KB -** Condensation Drain Holes Plugged | **IG -** Incremental Encoderr |
| **IP66 -** IP66 Motor Enclosure | **TW -** Thermostat |
| **KKV -** Potted Terminal Box | **TF -** Thermistor |
| **MS -** Quick Power Disconnect, Harting Plug | **SH -** Anti-Condensation Space Heaters |

❸

| Input Shaft | NEMA Adapter | IEC Adapter | Integral Motors | Integral Energy Efficent Motors |
|---|---|---|---|---|
| **W** | **N56C** | **IEC 63** | **63S/4** - 0.16hp | **80LH/4** - 1hp |
| | **N140TC** | **IEC 71** | **63L/4** - 0.25hp | **90SH/4** - 1.5hp |
| | **N180TC** | **IEC 80** | **71S/4** - 0.33hp | **90LH/4** - 2hp |
| | **N210TC** | **IEC 90** | **71L/4** - 0.50hp | **100LH/4** - 3hp |
| | **N250TC** | **IEC 100** | **80S/4** - 0.75hp | **112MH/4** - 5hp |
| | **N280TC** | **IEC 112** | **80L/4** - 1hp | **132SH/4** - 7.5hp |
| | | **IEC 132** | **90S/4** - 1.5hp | **132MH/4** - 10hp |
| | | **IEC160** | **90L/4** - 2hp | **160MH/4** - 15hp |
| | | **IEC180** | **100L/4** - 3hp | **160LH/4** - 20hp |
| | | | **100LA/4** - 5hp | **180MH/4** - 25hp |
| | | | **112M/4** - 5.4hp | **180LH/4** - 30hp |
| | | | **132S/4** - 7.5hp | |
| | | | **132M/4** - 10hp | |
| | | | **160M/4** - 15hp | |
| | | | **160L/4** - 20hp | |
| | | | **180MX/4** - 25hp | |
| | | | **180LX/4** - 30hp | |
| | | | Other Speeds Available | Other Speeds Available |

## Product Specifications

**Ratio**

_____ :1

see pages 31 - 62

OR

**Output Speed**

_____ rpm

see pages 31 - 62

**Mounting Position**

- ❍ M1
- ❍ M2
- ❍ M3
- ❍ M4
- ❍ M5
- ❍ M6
- ❍ Special _____

**CEMA Shaft Diameter**

- ❍ 1-1/2″
- ❍ 2″
- ❍ 2-7/16″
- ❍ 3″
- ❍ 3-7/16″

**Paint**

- ❍ Standard Stainless Steel Paint
- ❍ NSD+ (gray)
- ❍ NSD+W (white)
- ❍ NSD-X3 (gray)
- ❍ NSD-X3W (white)
- ❍ Casting Primed
- ❍ Special _____

**Lubricant**

- ❍ Standard
- ❍ Synthetic
- ❍ Food Grade
- ❍ Other _____

CONTACTS

## Gearmotor Only Details

**Voltage & Frequency**

- ❍ 230/460V-60Hz (460V only ≥ 40 hp)
- ❍ 575V-60Hz
- ❍ 208V-60Hz
- ❍ 400V-50Hz
- ❍ Other _____

**Terminal Box Pos.**

- ❍ TB1
- ❍ TB2
- ❍ TB3
- ❍ TB4

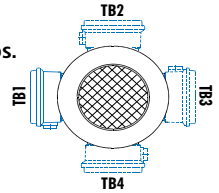


Mtg. Pos. M1 Shown

**Conduit Entry Loc.**

- ❍ CE I *
- ❍ CE II
- ❍ CE III *
- ❍ CE IV

* Brakemotor

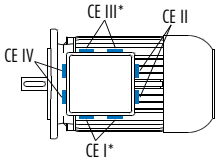


Mtg. Pos. M1 Shown

# Capacity , Ratings & Combinations



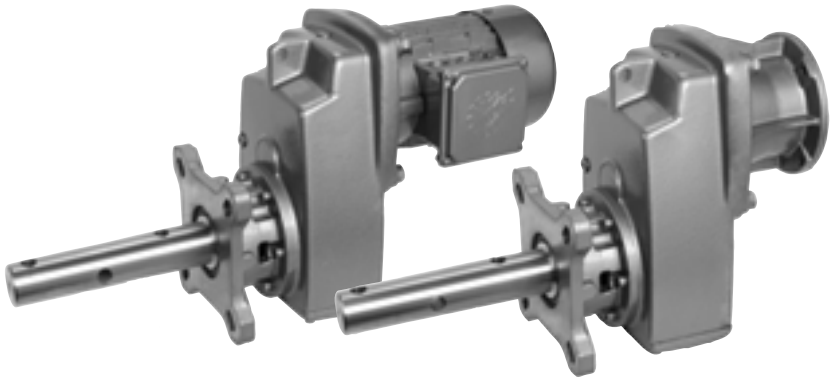

**Capacity & Ratings Overview**

| Model Type | Max Torque [lb-in] | Ratio Range [x:1] | Speed's [rpm] | Max Thrust Load Std Brgs [lb] | Max Thrust Load HD Brgs " VL" [lb] | Gear Stages | Efficiency [%] |
|---|---|---|---|---|---|---|---|
| SK 1282 SCP | 2620 | 4.79-109.5 | 365-16 | 1609 | 1609 | 2 | 97 |
| SK 1382 SCP | 2425 | 87.94-624.45 | 20-2.8 | 1550 | 1609 | 3 | 95 |
| SK 2282 SCP | 4611 | 4.51-127.51 | 388-14 | 2700 | 3375 | 2 | 97 |
| SK 2382 SCP | 4894 | 82.22-763.41 | 21-2.3 | 2700 | 3375 | 3 | 95 |
| SK 3282 SCP | 8363 | 4.48-112.23 | 391-16 | 3263 | 4500 | 2 | 97 |
| SK 3382 SCP | 9195 | 89.60-1022.42 | 20-1.7 | 3263 | 4500 | 3 | 95 |
| SK 4282 SCP | 16089 | 4.7-155.4 | 372-11 | 4950 | 6750 | 2 | 97 |
| SK 4382 SCP | 18381 | 86.83-1585.08 | 20-1.1 | 4950 | 6750 | 3 | 95 |
| SK 5282 SCP | 28630 | 4.32-134.03 | 405-13 | 7200 | 9000 | 2 | 97 |
| SK 5382 SCP | 28320 | 82.72-1367.08 | 21-1.3 | 7200 | 9000 | 3 | 95 |
| SK 6282 SCP | 40135 | 4.39-80.33 | 399-22 | 13219 | 13500 | 2 | 97 |
| SK 6382 SCP | 53100 | 24.42-551.58 | 72-3.2 | 13253 | 13500 | 3 | 95 |

**CEMA Drive Shaft Combinations**

| Model type | 1.5" shaft | 2" shaft | 2-7/16" shaft | 3" shaft | 3-7/16" shaft |
|---|---|---|---|---|---|
| SK 1282 SCP | X | X | X | | |
| SK 1382 SCP | X | X | X | | |
| SK 2282 SCP | X | X | X | | |
| SK 2382 SCP | X | X | X | | |
| SK 3282 SCP | X | X | X | X | |
| SK 3382 SCP | X | X | X | X | |
| SK 4282 SCP | | X | X | X | |
| SK 4382 SCP | | X | X | X | |
| SK 5282 SCP | | X | X | X | X |
| SK 5382 SCP | | X | X | X | X |
| SK 6282 SCP | | | | X | X |
| SK 6382 SCP | | | | X | X |

# NORD GEAR CORPORATION

## Conditions of Sale

**1. CONTRACT**

Any contract between Nord Gear Corporation, hereinafter designated as Seller, and the Buyer is subject to the terms and conditions of sale hereinafter set forth. Any deviation from such terms and conditions must be specifically set forth in writing and consented to by Seller. Accordingly, the Buyer and Seller acknowledge and agree that the terms and conditions set forth below and on the face hereof shall govern Buyer's purchase of the goods described on the face hereof and shall take precedence over and represents the final agreement between Buyer and Seller, notwithstanding any inconsistent, contradictory or other prior or further conditions contained in any oral or written request or purchase order issued by Buyer or any other document furnished by Buyer in connection with its purchase of the Goods, regardless of whether such document or documents are exchanged simultaneously with this Invoice or prior or subsequent thereto. Any additional or different terms or conditions which may appear in any communicaiton, oral or written, from Seller, its officers, employees, agents or representatives, are hereby expressly rejected and shall not be effective or binding upon the Seller, unless specifically hereafter agreed to in writing by Seller and no such additional or different terms or conditions in any document submitted to Seller by Buyer shall become part of the contract between Buyer and Seller, unless such written acceptance by Seller specifically recognizes and assents to their inclusion. Any objection by Buyer to the terms and conditions hereof shall be ineffective unless Seller is advised in writing thereof within two (2) days of the date of this Invoice.

**2. CONFIRMATION**

An order shall be deemed accepted only when duly confirmed by Seller, at Nord Gear Corporation's home office in Waunakee, Wisconsin, and upon such confirmation the order shall become a contract binding upon the parties hereto, their successors and assigns.

**3. PRICES**

Prices shown are list prices and may be subject to applicable discounts. Unless otherwise agreed upon in writing, prices are FOB factory Waunakee, Wisconsin. Prices and discounts are subject to change without notice until order is accepted. Seller's prices do not include cost of any inspection permits required.

**4. LIMITED WARRANTY**

Seller warrants the goods sold hereunder to be free from defects in material and workmanship under normal use and service not arising from misuse, negligence, or accident, including but not limited to the use, installation, and transportation of the goods by the Buyer, its agents, servants, employees, or by carriers. Such obligations under this warranty are limited to remedying any deficiencies in the goods at Waunakee, Wisconsin, or at such place or places in the United States of America as may be designated by Seller. THIS WARRANTY SHALL PERTAIN TO ANY PART OR PARTS OF ANY GOODS TO WHICH BUYER OR ITS ASSIGNS HAS GIVEN WRITTEN NOTICE OF CLAIMED DEFECTS TO SELLER. NORD GEAR CORP. WARRANTS ITS PRODUCTS AGAINST DEFECTS IN MATERIAL AND WORKMANSHIP FOR A PERIOD OF 12 MONTHS FROM DATE OF INSTALLATION OR 18 MONTHS FROM DATE OF SHIPMENT WHICHEVER COMES FIRST ON ALL COMPONENTS. 36 MONTHS FROM DATE OF INVOICE OR 24 MONTHS FROM DATE OF INSTALLATION WHICHEVER COMES FIRST ON GEARS AND HOUSINGS ONLY. PARTS WHICH ARE SUBJECT TO OPERATIONAL WEAR AND TEAR, SUCH AS BELTS & TRACTION DISCS, ARE NOT COVERED BY THE LIMITED WARRANTY. Buyer shall be required to furnish Seller with details of such defects and this warranty shall be effective as to such goods which Seller's examination shall disclose to its satisfaction to have been defective and which at Seller's option shall promptly thereafter be returned to Seller or its nominees. THE LIMITED WARRANTY SET FORTH HEREIN IS IN LIEU OF ALL OTHER WARRANTIES, EXPRESS OR IMPLIED. EXCEPT FOR THE EXPRESS WARRANTIES SET FORTH HEREIN, SELLER HAS MADE AND MAKES NO OTHER WARRANTIES, EXPRESS OR IMPLIED, AS TO THE GOODS SOLD HEREUNDER, INCLUDING, BUT NOT LIMITED TO, THEIR MERCHANTABILITY OR FITNESS FOR ANY PARTICULAR PURPOSE. ANY DESCRIPTION OR MODEL OF THE GOODS IS FOR IDENTIFICATION OR ILLUSTRATIVE PURPOSES ONLY AND SHALL NOT BE DEEMED TO CREATE ANY WARRANTY, EXPRESS OR IMPLIED. SELLER MAKES NO REPRESENTATIONS AS TO THE CAPACITY OR PERFORMANCE OF THE GOODS SOLD HEREUNDER, EXCEPT AS SET FORTH IN THE INVOICE'S SPECIFICATIONS OR OTHER VALID AGREEMENT OR CONDITION AGREED TO BETWEEN THE PARTIES, AND ANY SUCH REPRESENTATIONS ARE EXPRESSLY CONDITIONED UPON THE CORRECTNESS OF THE DATA AND INFORMATION FURNISHED BY THE BUYER AND UPON THE GOODS BEING PROPERLY INSTALLED AND MAINTAINED. THE REMEDIES OF THE BUYER PROVIDED HEREUNDER ARE EXCLUSIVE. In no event shall the Seller be liable to the Buyer or to any other person for any loss or damage, direct or indirect, arising out of or caused by the use or operation of the goods, or for the loss of profits, business, or good will, or for any incidental, special or consequential damages. Seller shall in no event be liable to any person or firm (including any assignee or Buyer) except Buyer and its successors. Unless specifically authorized by Seller in writing, Seller shall not become responsible for any repair work done by Buyer or any other party on any goods sold. Any and all costs of the return to the Seller of such goods and all related costs to remove and re-install such goods, shall be borne by Buyer. Goods sold but not manufactured by the Seller are being warranted as to defects in material and workmanship consistent with the limited warranty policy of the original manufacturer of the goods and if there is not such a limited warranty policy, the warranty shall be limited to the provision of the preceding paragraph of Article 4 herein. Standards for the operating characteristics of the gearboxes and the gearmotors are in conformity with Seller's tests.

**5. SHORTAGE AND NONCONFORMITY**

Any claim of shortage or that the goods do not conform with the specifications of the order or model must be made in writing within ten (10) days after delivery of the goods (as to which such claim is made) to Buyer or its nominees, but in no event shall the claim be later than within the time limit provided by the carrier or insurance company, otherwise such claim shall be deemed waived. Buyer may not return any goods claimed to be in non-conformity without Seller's prior written authorization. Goods returned without permission will not be accepted, including for credit, and will be returned to Buyer, F.O.B. Sellter's plant. Any claim based on the receipt of damaged Goods must be filed with the carrier which delivered the goods. The samples, measurements, dimensions and weights contained in the Seller's catalogs, sales manuals, photographs and drawings constitute only an approximate guide. The Seller reserves the right to make any change which the Seller, in its absolute discretion, considers necessary. While the goods will be delivered principally according to specifications or standards or quantities agreed upon, insignificant deviations or insignificant changes in construction are permissible. The same applies to partial deliveries, In the event that Buyer has a verified claim of shortage or nonconformity of the goods to the specifications of the order or the model, and if such claim has been submitted within the required time limit as set forth above, the Seller shall, at its own expense, make up for the shortage of the goods, or replace or repair the goods, as the case may be, but in no event shall Seller be or become liable to Buyer or to any other person or persons for any loss in damage, direct or indirect, arising out of or caused by such incidents or for the loss of profits, business or good will. The liability of the Seller to Buyer, if any hereunder, for breach of warranty, contract, negligence or otherwise, shall in no event exceed the amount of the purchase price of the goods sold with respect to which any damages are claimed. Shipping dates are estimates unless parties expressly agree on time of the essence.

**6. FORCE MAJEURE**

The obligation of the Seller shall be modified or excused, as the case may be, for reasons of Acts of God, war, governmental law regulations, strikes or lock-outs, fire, breakdown of machinery, whether in its own business enterprise, or if for any other cause beyond Seller's control, the goods cannot be delivered or their delivery becomes delayed in whole or in part. In the above instances time for delivery shall be extended for the period of the delay caused, with the proviso, however, that either party may cancel in writing the undelivered portion of the order or contract if the delay exceeds six (6) months from the delivery date originally confirmed by Seller. In no event shall Seller become liable in the aforesaid instances to Buyer or any third party for consequential damages or business loss.

**7. SHIPMENT AS UNIT**

Each shipment by Seller shall be treated as a separate and distinct unit with respect, but only with respect to forwarding, terms of payment, and the making of claims by the Buyer: provided, however, that if the Buyer defaults in the payment of any obligation to Seller or any installments thereof, under any agreement between Buyer and Seller, or if Buyer refuses to accept any goods when tendered for delivery, the Seller may, on fifteen (15) days written notice to the Buyer, without prejudice to Seller's other lawful remedies, either defer further performance until the defaulted payments are made in full, or make future deliveries for cash in advance only, or treat the entire contract or contracts with Buyer as breached by the Buyer and pursue its remedies for breach.

**8. BUYER'S REFUSAL OF DELIVERY**

If Buyer refuses to accept delivery of any goods tendered for delivery, then Seller, without prejudice to Seller's other lawful remedies, may either store or cause such goods to be stored in a warehouse, for buyer's account and at Buyer's cost, risk and expense, or sell such goods (without notice) to any purchases at public or private sale, and hold the Buyer liable for any difference between (a) the contract price of the goods, and (b) the price at which goods are resold less the costs and expense of such resale including brokerage commissions, or restocking charges.

**9. GOODS IN TRANSIT**

If prior to delivery or while the goods are in transit, Buyer or Seller becomes bankrupt or insolvent, or any petition in bankruptcy or for the reorganization or for a state court receivership is filed against Buyer or Seller, as the case may be, then the other party hereto may forthwith terminate this contract by giving written notice of such termination. Such termination shall not affect any claim for damages available to the Buyer, provided that if Buyer is then indebted to Seller, the amount of any such damage claim shall be abated to the extent that the indebtedness of Buyer to Seller, as actually paid in money, is abated by any order of judgement entered or any plan adopted in any bankruptcy, reorganization, receivership, or similar proceeding. Such termination shall not prejudice the Seller's rights to any amounts then due under the contract. If Buyer becomes bankrupt or insolvent or any petition in bankruptcy or for reorganizing or if a state court receivership is filed against Buyer, then, at its option Seller may take possession of any goods theretofore sold to Buyer, in connection with which the full purchase price has not been paid, analogous to the terms and provisions set forth in Paragraphs 11 and 12 hereinafter.

**10. DELIVERY**

(a) Any indicated dates of delivery are approximate only, but NORD Gear will attempt to meet them whenever possible. (b) NORD Gear will not be liable for any penalty clausess contained in any specifications or order submitted unless agreed to in writing by an authorized officer of NORD Gear Corporation. (c) Unless otherwise agreed, delivery of the goods to any carrier shall constitute delivery to the Buyer, and thereafter the risk of loss or damage to the goods shall be upon the Buyer. (d) If the Buyer does not give delivery instructions to the Seller at least (10) days prior to the delivery date ex factory confirmed by the Seller, the Seller may deliver the goods to a carrier of its own choosing, at Buyer's cost and risk, or, at Seller's option, may store the goods on the pier or any warehouse, at Buyer's cost and risk. Any purchase price in such event becomes due and payable within ten (10) days of such storage.

**11. PAYMENT OF PURCHASE PRICE**

Time of payment is of the essence under the contract. Unless otherwise provided, terms of payment are 30 days net from the date of invoice with a 1% discount if paid within 10 days of date of invoice. Upon default in any of the terms of the contract, or failure to comply with any of the conditions thereof, or upon seizure of the property under execution or other legal process, or if the Buyer becomes bankrupt or insolvent, or any petition for reorganization or for a state court receivership is filed against Buyer, or if the Buyer makes any assignment for the benefit of it's creditors or otherwise sells, encumbers or disposes of the goods, or if for any other reason the Seller should deem itself insecure, the full amount of the purchase price then remaining unpaid shall at once become due and payable at the option of the Seller.

**12. BUYER'S DEFAULT**

Upon the Buyer's default, the Seller may dispose of the merchandise in any manner that it deems fit and, if it desires to resell same, may do so at private or public sale, with or without notice, and with or without the property being at the place of sale, subject, however, to applicable laws. The Seller or its assigns shall have the right to bid at such sale and may become the purchaser of the property. The proceeds of the sale shall first be applied to the expenses incurred in retaking, repairing, storing and selling the goods, reasonable attorney's fees included, and then shall be applied to the payment of the balance due under the contract. Any surplus amount shall be paid to the Buyer. If a deficiency results after the resale, the Buyer agrees to pay such forthwith, together with reasonable attorney's fees, for the recovery of the goods incurred by the Seller. If upon the Buyer's default, the Seller elects not to resell any goods which it may repossess, then the cost of repossession, including reasonable attorney's fees, shall forthwith be due and payable from Buyer to Seller. Buyer agrees to pay all reasonable costs and reasonable attorneys' fees incurred by Seller in enforcing Seller's rights against Buyer, including Seller's right to payment of the purchase price of the goods and Buyer's payment of all other amounts owing to Seller required under this Invoice and Conditions of Sale.

**13. SECURITY INTEREST AND TITLE**

In states and localities which are governed by the Uniform Commercial Code, this contract shall serve as security agreement, reserving in Seller a security interest until full payment of purchase price. The provisions of the Uniform Commercial Code regarding security interest shall have preference and apply if inconsistent with other terms of the conditions of sale. In states and localities where the Uniform Commercial Code does not apply, title to the goods shall remain in the Seller or its assigns until full payment of the purchase price. Buyer agrees to execute forthwith any and all documents in such a way and form as Seller may need for filing or recording the security interest under the Uniform Commercial Code with the proper registers or offices, or for filing or recording the conditional sales contract.

**14. SALES AND USE TAX**

Buyer agrees to bear and pay any sales or use tax in connection with the purchase herein, and to hold the Seller harmless from payment. At the option the Seller, Buyer shall give evidence of payment or of exemption certificate.

**15. INSURANCE**

The Buyer shall keep the goods insured against damage by fire, water or other casualty as required by Seller, with a company acceptable to Seller, with loss payable to Seller for the total purchase price until the Seller is fully paid. Seller, if it so elects, may place said insurance at Buyer's expense; Seller may cancel such insurance at any time and without notice and may receive the return premium, if any.

**16. MODIFICATION BY SELLER**

Any contract may be assigned or transferred by the Seller, or the time for the making of any payment due by Buyer may be extended by Seller without derogation of any of the rights of the Seller or its assigns. Waiver by any party of any default shall not be deemed a waiver of any subsequent default.

**17. RETURNED GOODS**

No goods will be accepted for return unless authorized in writing by Seller. In all cases, transportation and restocking charges will be borne by Buyer.

**18. PACKING**

The Buyer will be charged for export packaging or other special packing desired. Cost for cartage to ship or transfer express will be added to the invoice. No credit will be allowed if no packing is required.

**19. CHANGES/CANCELLATION**

NORD Gear will not accept changes in specifications to a confirmed order unless such changes are requested in writing and confirmed back in writing. In addition, the purchaser must to agree to any additional charges that may arise from the change. Placing orders on hold or cancellation of orders require Seller's written approval, and are subject to cancellation and/or restocking charges.

**20. BUYER'S RESPONSIBILITY AS TO MAINTENANCE**

Buyer shall use and shall require its employees and agents to use all safety devices and guards and shall maintain the same in proper working order. Buyer shall use and require its employees and agents to use safe operation procedures in operating the equipment and shall further obey and have its employees and agents obey safety instructions given by Seller. If Buyer fails to meet the obligations herein, Buyer agrees to defend, indemnify and save Seller harmless from any liability or obligation with regard to any personal injuries or property damages directly or indirectly connected with the operation of the equipment. Buyer further agrees to notify Seller promptly and in any event not later than ten (10) days after notice or knowledge of any accident or malfunction involving Seller's equipment which has caused personal injury or property damages and to cooperate fully with Seller in investigating and determining the causes of such accident and malfunction. In the event that Buyer fails to give such notice to Seller or to cooperate with Seller, Buyer shall be obligated to defend, indemnify and save Seller harmless from any such claims arising from such accident.

**21. MISCELLANEOUS PROVISIONS**

(a) If for any reason a provision of a contract is legally invalid, then in such event the rest of the contract shall remain in full force and affect, except that the parties shall try to replace such invalid provision closest to their original mutual intentions. (b) This Invoice and these Conditions of Sale constitute the entire agreement between the parties regarding the subject matter hereof and supercedes all prior agreements, understandings and statements, whether oral or written, regarding such subject matter. No modification to, change in or departure from, the provisions of this Invoice and Conditions of Sale shall be valid or binding on Seller, unless approved in writing by Seller. No course of dealing or usage of trade shall be applicable unless expressly incorporated into this Invoice and Conditions of Sale. Any amendments to any contract or contracts between the parties shall be valid only upon the written consent of both parties.

**22. NON ASSIGNMENT BY BUYER**

Contract or contracts may not be assigned by the Buyer without prior written consent of the Seller.

**23. APPLICABLE LAW AND VENUE**

All contracts and their interpretation are governed by the applicable, substantive laws of the State of Wisconsin. Any litigation brought by the Buyer regarding this Invoice or goods purchased hereunder may only be brought in the Circuit Court for Dane County, Wisconsin.

# NORD GEAR LIMITED

# Terms and Conditions of Sale

## 1. CONTRACT

Any contract between Nord Gear Limited, hereinafter designated as Seller, and the Buyer is subject to the terms and conditions of sale hereinafter set forth. Any deviation from such terms and conditions must be specifically set forth in writing and consented to by Seller.

## 2. CONFIRMATION

An order shall be deemed accepted only when duly confirmed by Seller, at Nord Gear Limited's home office in Brampton, Ontario, and upon such confirmation the order shall become a contract binding upon the parties hereto, their successors and assigns.

## 3. PRICES

Prices shown are list prices and may be subject to applicable discounts. Unless otherwise agreed upon in writing, prices are FOB factory Braenton, Ontario. Prices and discounts are subject to change without notice until order is accepted. Seller's prices do not include cost of any inspection permits required.

## 4. LIMITED WARRANTY

Seller warrants the goods sold hereunder to be free from defects in material and workmanship under normal use and service not arising from misuse, negligence, or accident, including but not limited to the use, installation, and transportation of the goods by the Buyer, its agents, servants, employees, or by carriers. Such obligations under this warranty are limited to remedying any deficiencies in the goods at Brampton, Ontario, or at such place or places in Canada as may be designated by Seller. This warranty shall pertain to any part or parts of any goods to which Buyer or its assigns has, within one year from date of original factory invoice, given written notice of claimed defects to Seller. Buyer shall be required to furnish Seller with details of such defects and this warranty shall be effective as to such goods which Seller's examination shall disclose to its satisfaction to have been defective and which at Seller's option shall promptly thereafter be returned to Seller or its nominees. EXCEPT FOR THE EXPRESS WARRANTIES SET FORTH ABOVE, SELLER HAS MADE NO WARRANTIES, EXPRESS, IMPLIED OR STATUTORY, AS TO THE GOODS SOLD HEREUNDER, INCLUDING, BUT NOT LIMITED TO THEIR MERCHANTABILITY OR FITNESS FOR ANY PARTICULAR PURPOSE. ANY DESCRIPTION OR MODEL OF THE GOODS IS FOR IDENTIFICATION OR ILLUSTRATIVE PURPOSES ONLY AND SHALL NOT BE DEEMED TO CREATE AN EXPRESS WARRANTY. THE REMEDIES OF THE BUYER SET FORTH IN THIS SECTION ARE EXCLUSIVE. In no event shall the Seller be liable to the Buyer or to any other person for any loss or damage, direct or indirect, arising out of or caused by the use or operation of the goods, or for the loss of profits, business, or good will, or for any incidental, special or consequential damages. Seller shall in no event be liable to any person or firm (including any assignee or Buyer) except Buyer and its successors. Unless specifically authorized by Seller in writing, Seller shall not become responsible for any repair work done by Buyer or any other party on any goods sold. Any costs of the return of such goods to Seller shall be borne by Buyer. Goods sold but not manufactured by the Seller are being warranted as to defects in material and workmanship consistent with the limited warranty policy of the original manufacturer of the goods and if there is not such a limited warranty policy, the warranty shall be limited to the provisions of the preceding paragraph of Article 4 herein. Standards for the operating characteristics of the gearboxes and the gearmotors are in conformity with Seller's test. THIS WARRANTY IS IN LIEU OF ALL OTHER EXPRESS OR IMPLIED WARRANTIES, INCLUDING ANY IMPLIED WARRANTY OF MERCHANTABILITY OR FITNESS FOR ANY PARTICULAR PURPOSE THE SELLER DOES NOT ASSUME, NOR DOES IT AUTHORIZE ANY PERSON TO ASSUME, ON ITS BEHALF, ANY OTHER OBLIGATION OR LIABILITY.

## 5. SHORTAGE AND NONCONFORMITY

Any claim of shortage or that the goods do not conform with the specifications of the order or model must be made in writing within ten (10) days after delivery of the goods (as to which such claim is made) to Buyer or its nominees, but in no event shall the claim be later than within the time limit provided by the carrier or insurance company, otherwise such claim shall be deemed waived. The samples, measurements, dimensions and weights contained in the Seller's catalogs, sales manuals, photographs and drawings constitute only an approximate guide. The Seller reserves the right to make any changes which the Seller, in its absolute discretion, considers necessary. While the goods will be delivered principally according to specifications or standards or quantities agreed upon, insignificant deviations or insignificant changes in construction are permissible. The same applies to partial deliveries. In the event that Buyer has a verified claim of shortage or nonconformity of the goods to the specifications of the order or the model, and if such claim has been submitted within the required time limit as set forth above, the Seller shall, at its own expense, make up for the shortage of the goods, or replace or repair the goods, as the case may be, but in no event shall Seller be or become liable to Buyer or to any other person or persons for any loss in damage, direct or indirect, arising out of or caused by such incidents or for the loss of profits, business or good will. Shipping dates are estimates unless parties expressly agree on time of the essence.

## 6. FORCE MAJEURE

The obligation of the Seller shall be modified or excused, as the case may be, for reasons of Acts of God, war, governmental law regulations, strikes or lock outs, fire, breakdown of machinery, whether in its own business enterprise, or if for any other course beyond Seller's control, the goods cannot be delivered or their delivery becomes delayed in whole or in part. In the above instances time for delivery shall be extended for the period of the delay caused, with the proviso, however, that either party may cancel in writing the undelivered portion of the order or contract if the delay exceeds six (6) months from the delivery date originally confirmed by Seller. In no event shall Seller become liable in the aforesaid instances to Buyer or any third party for consequential damages or business loss.

## 7. SHIPMENT AS UNIT

Each shipment by Seller shall be treated as a separate and distinct unit with respect, but only with respect to forwarding, terms of payment, and the making of claims by the Buyer; provided, however, that if the Buyer defaults in the payment of any obligation to Seller or any installment thereof, under any agreement between Buyer and Seller, or if Buyer refuses to accept any goods when tendered for delivery, the Seller may, on fifteen (15) days' written notice to the Buyer, without prejudice to Seller's other lawful remedies, either defer further performance until the defaulted payments are made in full, or make future deliveries for cash in advance only, or treat the entire contract or contracts with Buyer as breached by the Buyer and pursue its remedies for breach.

## 8. BUYER'S REFUSAL OF DELIVERY

If Buyer refuses to accept delivery of any goods tendered for delivery, then Seller, without prejudice to Seller's other lawful remedies, may either store or cause such goods to be stored in a warehouse, for Buyer's account and at Buyer's cost, risk and expense, or sell such goods (without notice) to any purchaser at public or private sale, and hold Buyer liable for any difference between (a) the contract price of the goods, and (b) the price at which goods are resold less the costs and expense of such resale including brokerage commissions, or restocking charges.

## 9. GOODS IN TRANSIT

If prior to delivery or while the goods are in transit, Buyer or Seller becomes bankrupt or insolvent, or any petition in bankruptcy or for the reorganization or for appointment of a receiver is filed against Buyer or Seller, as the case may be, then the other party hereto may forthwith terminate this contract by giving written notice of such termination. Such termination shall not affect any claim for damages available to the Buyer, provided that if Buyer is then indebted to Seller, the amount of any such damage claim shall be abated to the extent that the indebtedness of Buyer to Seller, as actually paid in money, is abated by any order or judgment entered or any plan adopted in any bankruptcy, reorganization, receivership, or similar proceeding. Such termination shall not prejudice the Seller's rights to any amounts then due under the contract. If Buyer becomes bankrupt or insolvent or any petition in bankruptcy or for reorganization or if a state court receivership is filed against Buyer, then, at its option, Seller may take possession of any goods theretofore sold to Buyer, in connection with which the full purchase price has not been paid, analogous to the terms and provisions set forth in Paragraphs 11 and 12 hereinafter.

## 10. DELIVERY

(a) Unless otherwise agreed, delivery of the goods to any carrier shall constitute delivery to the Buyer, and thereafter the risk of loss or damage to the goods shall be upon the Buyer. (b) If the Buyer does not give delivery instructions to the Seller at least (10) days prior to the delivery date ex factory confirmed by the Seller, the Seller may deliver the goods to a carrier of its own choosing, at Buyer's cost and risk, or, at Seller's option, may store the goods on the pier or on any warehouse, at Buyer's cost and risk. Any purchase price in such event becomes due and payable within ten (10) days of such storage.

## 11. PAYMENT OF PURCHASE PRICE

Time of payment is of the essence under the contract. Upon default in any of the terms of the contract, or failure to comply with any of the conditions thereof, or upon seizure of the property under execution or other legal process, or if the Buyer becomes bankrupt or insolvent, or any petition for reorganization or for appointment of a receiver is filed against Buyer, or if the Buyer makes any assignment for the benefit of its creditors or otherwise sells, encumbers or disposes of the goods, or if for any other reason the Seller should deem itself insecure, the full amount of the purchase price then remaining unpaid shall at once become due and payable at the option of the Seller.

## 12. BUYER'S DEFAULT

Upon the Buyer's default, the Seller may dispose of the merchandise in any manner that it deems fit and, if it desires to resell same, may do so at private or public sale, with or without notice, and with or without the property being at the place of sale, subject, however, to applicable laws. The Seller or its assigns shall have the right to bid at such sale and may become the purchaser of the property. The proceeds of the sale shall first be applied to the expenses incurred in retaking, repairing, storing and selling the goods, reasonable solicitor's fees included, and then shall be applied to the payment of the balance due under the contract. Any surplus amount shall be paid to the Buyer. If a deficiency results after the resale, the Buyer agrees to pay such forthwith, together with reasonable solicitor's fees, for the recovery of the goods incurred by the Seller. If upon the Buyer's default, the Seller elects not to resell any goods which it may repossess, then the cost of repossession, including reasonable solicitor's fees, shall forthwith be due and payable from Buyer to Seller.

## 13. SECURITY INTEREST AND TITLE

In provinces which are governed by a Personal Property Security Act, this contract shall serve as Security Agreement, reserving in Seller a security interest until full payment of purchase price. The provisions of the Personal Property Security Act regarding security interest shall have preference and apply if inconsistent with other terms of the conditions of sale herein. In provinces where a Personal Property Security Act does not apply, title to the goods shall remain in the Seller or its assigns until full payment of the purchase price. Buyer agrees to execute forthwith any and all documents in such a way and form as Seller may need for filing or recording the security interest under a Personal Property Security Act with the proper registers or offices, or for filing or recording the Conditional Sales Contract herein.

## 14. SALES AND USE TAX

The Seller's prices do not include sales, use, excise or other taxes payable to any governmental authority in respect of the sale of Seller's goods. The Buyer shall pay, in addition to the Seller's price the amount of any such taxes or shall reimburse the Seller for the amount thereof that the Seller may be required to pay. At the option of the Seller, Buyer shall give evidence of payment or of exemption certificate.

## 15. INSURANCE

The Buyer shall keep the goods insured against damage by fire, water or other casualty as required by Seller, with a company acceptable to Seller, with loss payable to Seller for the total purchase price until the Seller is fully paid. Seller, if it so elects, may place said insurance at Buyer's expense; Seller may cancel such insurance at any time and without notice and may receive the return premium, if any.

## 16. MODIFICATION BY SELLER

Any contract may be assigned or transferred by the Seller, or the time for the making of any payment due by Buyer may be extended by Seller without derogation of any of the rights of the Seller or its assigns. Waiver by any party of any default shall not be deemed a waiver of any subsequent default.

## 17. RETURNED GOODS

No goods will be accepted for return unless authorized in writing by Seller. In all cases, transportation and restocking charges will be borne by Buyer.

## 18. PACKING

The Seller does not charge for standard packaging for domestic shipment. The Buyer will be charged, however, for export packaging or other special packing desired. Cost for cartage to ship or transfer express will be added to the invoice. No credit will be allowed if no packing is required.

## 19. EXPORT ORDER

Export orders are to be accompanied by a confirmed irrevocable Letter of Credit in Seller's favour, in Canadian currency, with an accredited Canadian bank, subject to Seller's draft, with shipping documents attached.

## 20. CANCELLATION

Placing orders on hold or cancellation of orders require Seller's written approval, and are subject to cancellation and/or restocking charges.

## 21. BUYER'S RESPONSIBILITY AS TO MAINTENANCE

Buyer shall use and shall require its employees and agents to use all safety devices and guards and shall maintain the same in proper working order. Buyer shall use and require its employees and agents to use safe operating procedures in operating the equipment and shall further obey and have its employees and agents obey safety instructions given by Seller. If Buyer fails to meet the obligations herein, Buyer agrees to indemnify and save Seller harmless from any liability or obligation with regard to any personal injuries or property damages directly or indirectly connected with the operation of the equipment. Buyer further agrees to notify Seller promptly and in any event not later than ten (10) days after notice or knowledge of any accident or malfunction involving Seller's equipment which has caused personal injury or property damages and to cooperate fully with Seller in investigating and determining the causes of such accident and malfunction. In the event that Buyer fails to give such notice to Seller or to cooperate with Seller, Buyer shall be obligated to indemnify and save Seller harmless from any such claims arising from such accident.

## 22. MISCELLANEOUS PROVISIONS

(a) If for any reason a provision of a contract is legally invalid, then in such event the rest of the contract shall remain in full force and effect; except that the parties shall try to replace such invalid provision with a provision closest to their original mutual intentions. (b) Any amendments to any contract or contracts require the consent in writing by both parties.

## 23. NON ASSIGNMENT BY BUYER

Contract or contracts may not be assigned by the Buyer without prior written consent of the Seller.

## 24. APPLICABLE LAW

All contracts are governed by the applicable laws of Ontario.

**25.** This instrument sets forth the entire understanding and agreement of the parties hereto in respect of the subject matter hereof, and all prior undertakings between the parties hereto, together with all representations and obligations of such parties in respect of such subject matter, shall be superceded by and merged into this instrument.

**26.** The provisions of this agreement shall bind and ensure to the benefit of the parties hereto and their respective heirs, executors, administrators, successors and (subject to any restrictions or assignment herein above set forth) assigns, as the case may be.

**27.** The parties acknowledge that they have requested this Contract and all notices or other documents relating thereto be drafted in the English language.

Les parties reconnaissent qu'ils ont requis que ce contrat et tous les avis ou autres documents qui s'y rapportent soient rédigés en langue anglaise.

*"Terms and Conditions in French available upon request."*

# Product Overview

## UNICASE™ SPEED REDUCERS



**HELICAL IN-LINE**
- Foot or Flange Mount
- Torque up to 205,000 lb-in
- Gear ratios – 1.82:1 to over 300,000:1



**NORDBLOC®.1 HELICAL IN-LINE**
- Foot or Flange Mount
- Torque up to 26,550 lb-in
- Gear ratios – 1.88:1 to over 370:1



**PARALLEL HELICAL CLINCHER™**
- Shaft, Flange or Foot Mount
- Torque up to 797,000 lb-in
- Gear ratios – 4.26:1 to over 300,000:1

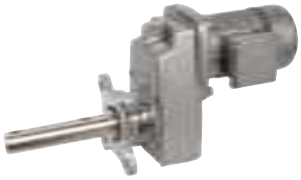

**SCP SCREW CONVEYOR PACKAGE**
- Shaft, or Flange Mount
- Torque up to 53,100 lb-in
- Gear ratios – 4.32:1 to over 1500:1



**RIGHT ANGLE HELICAL-BEVEL 2-STAGE**
- Foot, Flange or Shaft Mount
- Torque up to 5,840 lb-in
- Gear ratios – 4.1:1 to 72:1



**RIGHT ANGLE HELICAL-BEVEL**
- Foot, Flange or Shaft Mount
- Torque up to 283,000 lb-in
- Gear ratios – 8.04:1 to over 300,000:1



**RIGHT ANGLE HELICAL-WORM**
- Foot, Flange or Shaft Mount
- Torque up to 27,585 lb-in
- Gear ratios – 4.40:1 to over 300,000:1

## HIGH PERFORMANCE MOTORS & BRAKEMOTORS



**INVERTER/VECTOR DUTY**
- Standard or Energy Efficient
- Integral, NEMA or Metric IEC
- 1/6 to 250 hp

## UNICASE™ SPEED REDUCERS



**MINICASE™ RIGHT ANGLE WORM**
- Foot, Flange or Shaft Mount
- Torque up to 3,540 lb-in
- Gear ratios – 5:1 to 500:1



**FLEXBLOC™ WORM**
- Modular bolt-on options
- Torque up to 4,683 lb-in
- Gear ratios – 5:1 to 3,000:1



**MAXXDRIVE™ LARGE INDUSTRIAL GEAR UNITS PARALLEL HELICAL**
- Modular bolt-on options
- Torque up to 2,027,000 lb-in
- Gear ratios – 5:1 to 1,600:1



**MAXXDRIVE™ LARGE INDUSTRIAL GEAR UNITS HELICAL-BEVEL**
- Modular bolt-on options
- Torque up to 2,027,000 lb-in
- Gear ratios – 5:1 to 1,600:1

## NORDAC AC VECTOR DRIVES



**SK200E**
- Decentralized, high performance
- 380-480V, 3-phase to 10 hp
- 200-240V, 3-phase to 5 hp
- 200-240V, 1-phase to 1.5 hp
- 100-120V, 1-phase to 1 hp



**SK500/520/530E**
- Compact, high performance
- 380-480V, 3-phase, to 30hp
- 200-240V, 3-phase, to 15hp
- 200-240V, 1-phase, to 3hp
- 110-120V, 1-phase, to 1.5hp



**SK700E**
- Flexible high performance
- 380-460V, 3-phase, to 200hp

NORD DRIVESYSTEMS



DRIVESYSTEMS

**www.nord.com**

## NORD Gear Corporation

National Customer Service Toll-Free: 888.314.6673
info.us@nord.com

## NORD Gear Limited

Toll-Free in Canada: 800.668.4378
info.ca@nord.com

**WEST**
Corona, CA (Los Angeles)
Phone: 608.849.0190

**MIDWEST**
Waunakee, WI (Madison)
Phone: 608.849.7300

**EAST**
Charlotte, NC
Phone: 608.849.0140

**CANADA**
Brampton, ON (Toronto)
Phone: 905.796.3606

1100200076/0410

# Motion Sensors

## SITRANS WM100

Operating Instructions · 05/2010



SITRANS

SIEMENS

**Safety Guidelines:** Warning notices must be observed to ensure personal safety as well as that of others, and to protect the product and the connected equipment. These warning notices are accompanied by a clarification of the level of caution to be observed.

**Qualified Personnel:** This device/system may only be set up and operated in conjunction with this manual. Qualified personnel are only authorized to install and operate this equipment in accordance with established safety practices and standards.

**Unit Repair and Excluded Liability:**

- The user is responsible for all changes and repairs made to the device by the user or the user's agent.
- All new components are to be provided by Siemens Milltronics Process Instruments Inc.
- Restrict repair to faulty components only.
- Do not reuse faulty components.

**Warning:** Cardboard shipping package provides limited humidity and moisture protection. This product can only function properly and safely if it is correctly transported, stored, installed, set up, operated, and maintained.
**This product is intended for use in industrial areas. Operation of this equipment in a residential area may cause interference to several frequency based communications.**

**Note:** Always use product in accordance with specifications.


| **Copyright Siemens Milltronics Process Instruments Inc. 2010. All Rights Reserved** | **Disclaimer of Liability** |
|---|---|
| This document is available in bound version and in electronic version. We encourage users to purchase authorized bound manuals, or to view electronic versions as designed and authored by Siemens Milltronics Process Instruments Inc. Siemens Milltronics Process Instruments Inc. will not be responsible for the contents of partial or whole reproductions of either bound or electronic versions. | While we have verified the contents of this manual for agreement with the instrumentation described, variations remain possible. Thus we cannot guarantee full agreement. The contents of this manual are regularly reviewed and corrections are included in subsequent editions. Please check the website shown below for the latest manual revisions.<br>We welcome all suggestions for improvement.<br><br>Technical data subject to change. |


MILLTRONICS® is a registered trademark of Siemens Milltronics Process Instruments Inc.


**Contact SMPI Technical Publications at the following address:**
Technical Publications
Siemens Milltronics Process Instruments Inc.
1954 Technology Drive, P.O. Box 4225
Peterborough, Ontario, Canada, K9J 7B1
Email: **techpubs.smpi@siemens.com**

**European Authorized Representative**

Siemens AG
Industry Sector
76181 Karlsruhe
Deutschland


- For a selection of Siemens Milltronics level measurement manuals, go to: **www. siemens.com/level**. Choose **Support**, and then **Manuals / Operating Instructions.**
- For a selection of Siemens Milltronics weighing manuals, go to: **www. siemens.com/weighing**. Choose **Support**, and then **Manuals / Operating Instructions**.

© Siemens Milltronics Process Instruments Inc. 2010

# Table of Contents

**SITRANS WM100 Motion Sensing Switch** ..... **1**
Safety Notes ..... 1
Safety marking symbols ..... 1
The Manual ..... 2
**Specifications** ..... **3**
**Installation** ..... **4**
Environment ..... 4
**WM100 Circuit Card** ..... **5**
**WM100 Connection** ..... **6**
**WM100 Typical Wiring** ..... **7**
**Operation** ..... **8**
Typical Performance ..... 8
Performance Examples ..... 9
**Dimensions** ..... **10**
**Maintenance** ..... **10**

# SITRANS WM100 Motion Sensing Switch

SITRANS WM100 motion sensing switch is a heavy-duty zero speed alarm. It is used to detect the absence or presence of motion of rotating, reciprocating, or conveying equipment. The WM100 has a circuit card and a magnetic assembly potted in the probe body. The WM100 is powered from the line voltage and provides a set of dry relay contacts to indicate motion when the ferrous targets of the machinery being monitored pass in front of the probe.

## Safety Notes

Special attention must be paid to warnings and notes highlighted from the rest of the text by grey boxes.



**WARNING: relates to a caution symbol on the product, and means that failure to observe the necessary precautions can result in death, serious injury, and/or considerable material damage.**



**WARNING[1]: means that failure to observe the necessary precautions can result in death, serious injury, and/or considerable material damage.**

**CAUTION: means that failure to observe the necessary precautions can result in considerable material damage.**

**Note:** means important information about the product or that part of the operating manual.

## Safety marking symbols

| In manual | On Product | Description |
|---|---|---|
|  |  | Caution: refer to accompanying documents (manual) for details. |
|  |  | Protective Conductor Terminal |

1. This symbol is used when there is no corresponding caution symbol on the product.

# The Manual

**Notes:**

- The SITRANS WM100 product is to be used only in the manner outlined in this instruction manual.
- This product is intended for use in industrial areas. Operation of this equipment in a residential area may cause interference to several frequency based communications.

This instruction manual covers the installation, operation and maintenance of the SITRANS WM100. It is essential that this manual be referred to for proper installation and operation of your unit. Adhering to the installation and operating procedures will ensure a quick, trouble free installation and allow for the maximum accuracy and reliability of your motion sensing probe.

If you have any questions, comments, or suggestions about the manual contents, please email us at techpubs.smpi@siemens.com.

For the complete library of Siemens manuals, go to www.siemens.com/processautomation.

# Specifications

## Power

- 115 V AC, 50/60 Hz, 7 VA
  or
- 230 V AC, 50/60 Hz, 7 VA
- ±10% of rated voltage

## Output

- 1 form C (SPDT) dry relay contacts, rated 5 A at 250 V AC non-inductive, fail-safe operation
- time delay :
  - start up : 10 to 14 seconds (or 5 to 7 seconds with 5 sec/12 PPM jumper installed)
  - zero speed : 5 seconds ±1 (minimum speed 10 to 15 ppm)[1] or 10 seconds ±2 (minimum speed 5 to 7.5 ppm)[1]
  - LED indicates detection of changes in magnetic field (resets zero speed timer)

## Operating Temperature

- – 40 to +60 °C (– 40 to +140 °F)

## Environmental

- location: indoor/outdoor
- altitude: 2000 m (6562 ft.) max.
- ambient temperature: -40 to +60 °C (-40 to +140 °F)
- relative humidity: suitable for outdoor (Type 4 / NEMA 4, Type 4X / NEMA 4X, Type 6 / NEMA 6, IP67)
- installation category: II
- pollution degree: 4

## Dynamic Range

- minimum 6 or 12 pulses per minute[1]
- maximum 3000 pulses per minute

## Shipping Weight

- 2 kg (4.4 lbs)

## Approvals

- $CSA_{US/C}$, CE, C-TICK

1. Selected via a common jumper. Refer to Operation.

# Installation

**WARNING: The probe face is magnetic. Keep it away from magnetosensitive materials such as computer discs and audio or video tapes.**

**WARNING: All field wiring must have insulation suitable for at least 250 V and the maximum ambient temperature of +60°C (+140 °F).**

**Notes:**

- The Protective Earth Terminal indicated by (⏚) must be connected to reliable ground.
- All wiring must be done by qualified personnel in accordance with all governing regulations.
- The equipment must be protected by a 15 A fuse or circuit breaker in the building installation.
- A circuit breaker or switch in the building installation, marked as a disconnect switch, shall be in close proximity to the equipment and within easy reach of the operator.
- Relay contact terminals are for use with equipment which has no accessible live parts and wiring which has insulation suitable for at least 250 V.

# Environment

The WM100 must be mounted in an area that is non-hazardous, within the ambient temperature range and non-corrosive to the materials of construction. Refer to Dimensions for materials of construction.

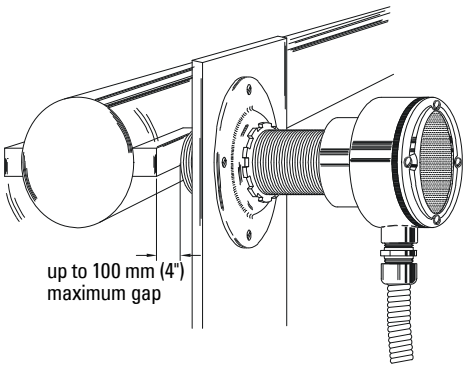


The probe should be mounted using the supplied mounting flange, onto a vibration free structure. The gap between the probe and the target should be sufficient such that there is no danger of the target damaging the probe. The maximum allowable gap ranges from 20 mm to over 100 mm from the face of the target to the face of the probe. The range is dependent on the target type and range of speed expected. See typical performance graphs on page 9 for examples.

The WM100 is sensitive to lateral disturbances to its magnetic field. If the WM100 is responding to motion from an interfering target, move the WM100 or install a ferrous plate (steel ) as a shield between the WM100 and the interfering target.

Where possible, the probe should be mounted so the conduit entry is pointing down to avoid accumulation of condensation in the casing. Connection of the probe should be made via flexible conduit for easier removal or adjustment of the probe.

**Note:** In climates where direct sunlight may cause the SITRANS WM100 temperature to rise above the specified limit, shade the unit by installing a sun shield.

# WM100 Circuit Card

⚠ **WARNING: Disconnect power before opening top cover.**

**Note:** Check nameplate for proper operation voltage (115 V AC or 230 V AC).

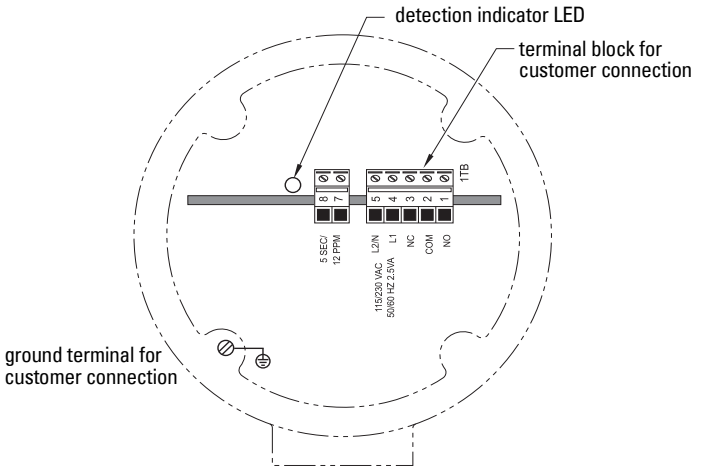

# WM100 Connection

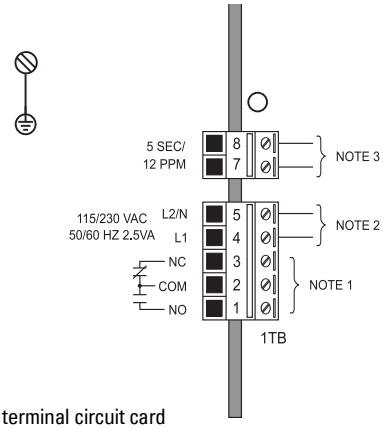


terminal circuit card

**Notes:**

1. Dry contacts shown in de-energized (alarm or shelf) state.
2. WM100 is manufactured for either 115 or 230 V AC operation. Check WM100 nameplate for applicable voltage. Correct voltage must be supplied. Voltages lower than specified will result in an inoperative condition. Voltages higher than specified will severely damage unit.
3. For 5 second time delay and minimum 12 ppm range, connect jumper across terminals 7 and 8. Without a jumper, the default is 10 second time delay and minimum 6 ppm range.

# WM100 Typical Wiring

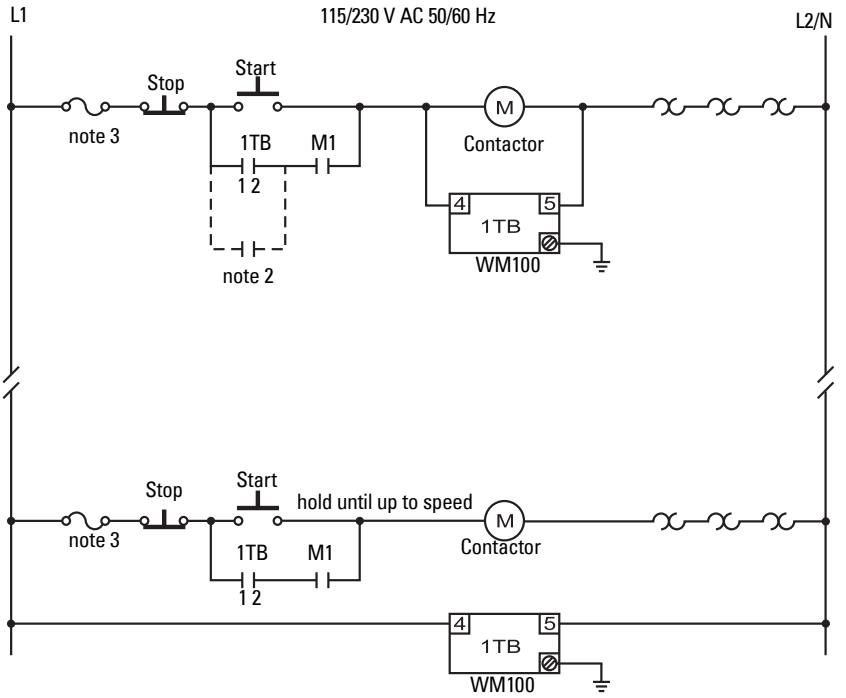


Should the time delay feature on start up not be required, power should be applied continuously from a separate source. Typically this would be desirable for automatic up-stream start up of conveying devices after down stream drive has reached its operation speed.

**Notes:**

1. Interlocks and safety pull switches are not shown.
2. If 'START' is initiated by programmable logic controller, closure time may be of insufficient duration to allow WM100 contact to latch. In such a case, program a timer contact into circuit.
3. CSA requires a 3 A or less fuse to protect contacts. For 240 V AC, protect contacts with a 1500 VA transformer as well.

# Operation

When power is initially applied to the WM100, the alarm relay is energized and held artificially by the timing circuit. This will simulate the normal operation of the WM100 for a start up delay of >10 seconds (or >5 seconds if a jumper is wired across terminals 7 and 8).

As a ferromagnetic object passes through the probe's permanent magnet field, the distortion of the flux is sensed by the magnetic detection circuit. If the distortion is of suitable magnitude, a short pulse is generated to reset the timing circuit, visible to the user by the LED shown in the lid window. This action keeps the alarm relay energized providing fail-safe operation of the contacts.

If no change in flux (target motion) is sensed for a period of 10 seconds (or 5 seconds if a jumper is wired across terminals 7 and 8), the timing circuit will not be reset. This will cause the alarm relay to de-energize and the contacts to change state.

Thus the WM100 cannot detect the motion of uniform ferromagnetic masses such as a rotating pulley or a keyless shaft.

When adjusting the WM100 mounting position, it may take up to 10 seconds for the detection circuit to adjust to the new ambient magnetic environment. During this adjustment period, the LED may fail to flash for an otherwise normally detectable moving target.

## Typical Performance

The maximum air gap for which the WM100 will reliably detect the moving ferrous target varies according to the target's size, shape, orientation and direction of motion, as well as the material to which the target is attached.

An example shown below compares typical results from steel blocks used as targets on a wheel (either ferrous or non-ferrous). As shown, a larger detection range can typically be achieved when there is a ferrous object behind the target. The WM100 provides excellent detection of a relatively small target, such as a 3/16" (~5 mm) shaft key installed in a 5/8" (~16 mm) motor shaft with < 0.125" (~3 mm) of the key protruding beyond the shaft envelope.

To ensure proper operation in any setup, use the LED indicator to confirm consistent detection of the target over the full range of expected operational speeds. Note that detection range may vary slightly with voltage supply and temperature, so it is recommended to use the minimum air gap that is physically safe to implement.

# Performance Examples

## Wheel Driven Examples

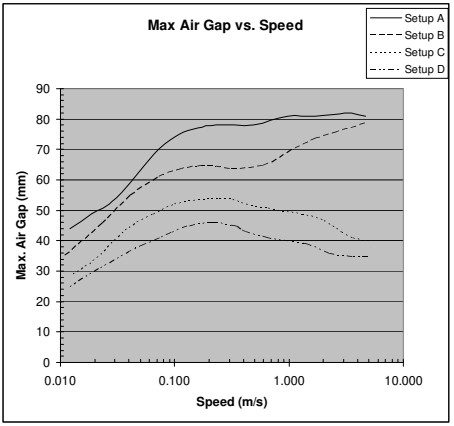


Setup A: WM100 with two 1"x2"x2" steel targets mounted on steel wheel

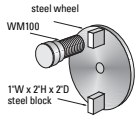


Setup B: WM100 with two 1"x2"x1" steel targets mounted on steel wheel

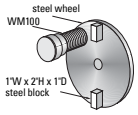


Setup C: WM100 with two 1"x2"x2" steel targets mounted on non-ferrous wheel

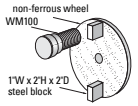


Setup D: WM100 with two 1"x2"x1" steel targets mounted on non-ferrous wheel

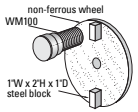


Setup E: DC motor with 5/8" drive shaft and 3/16" square key

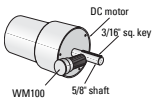


## Shaft Driven Example

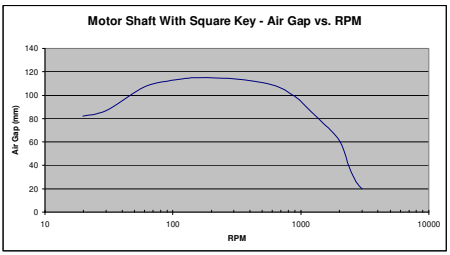


Note: 1 m/s ~ 200 ft/min; 25 mm ~ 1.0"

# Dimensions

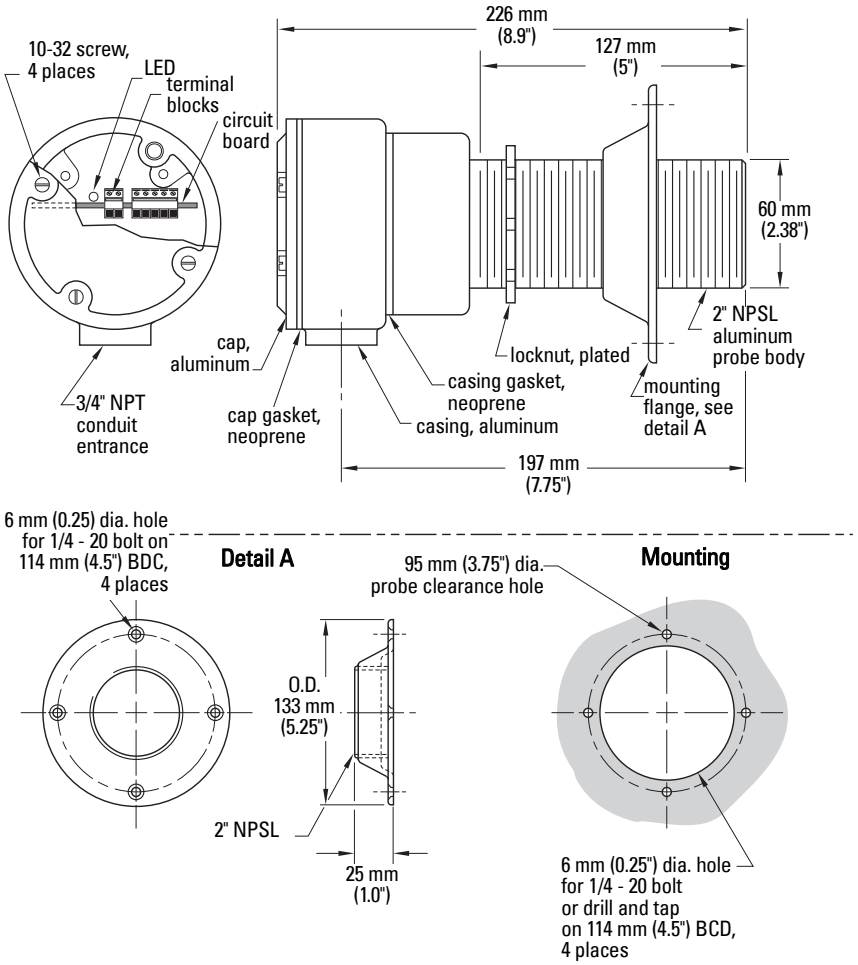


# Maintenance

The WM100 can be cleaned by wiping the enclosure exterior with a damp cloth. No further maintenance is required for the device.

## For more information

**www.siemens.com/level**

**www.siemens.com/continuous-weighing**

Siemens Milltronics Process Instruments Inc.
Industry Automation (IA)
1954 Technology Drive
P.O. Box 4225
Peterborough, ON
Canada K9J 7B1

email: techpubs.smpi@siemens.com

**www.siemens.com/processautomation**

Subject to change without prior notice
Rev. 1.0

© Siemens Milltronics Process Instruments Inc. 2010

7ML19985WM01
Printed in Canada

WAM Texas Division

x 2

**Assembly Department**
**Quality Checklist**

Order Number 14715 Customer Name Pompes + Equipment (PCP)

Item No. 14715 Date Received 5-28-21

**Materials of Construction:**
☐ Carbon Steel ✓Stainless Steel ☐ Other _____

**Dimensional Checks:**
Trough Straightness – To be within ¼-inch in both horizontal and vertical directions

Overall length 212 5/8" Height 30 3/4"

Width 13 3/4"

Screw to Trough Clearance ✓Per Order or Drawing 1/2"

Overall Length of Conveyor ✓Per Order or Drawing 212 5/8"

Inlet to Discharge Centerline Locations ✓Per Order or Drawing 164"

Inlet Size ☐ Per Order or Drawing 10"

Discharge Size ✓Per Order or Drawing 10"

Inlet and Discharge Hole Patterns & Diameter ✓Per Order or Drawing _____

Screw Pitch ☐ ½ ☐ 2/3 ☐ FULL ✓VARIABLE _____

**Visual Checks:**

| | | | | |
|---|---|---|---|---|
| Screw Welding | ✓STD | | ☐ CW1 | ☐ CW2 |
| Screw(1) Rotation(s) | ✓R/H | ☐ L/H | ✓CW | ☐ CCW |
| Screw(2) Rotation(s) | ☐ R/H | ☐ L/H | ☐ CW | ☐ CCW |
| Screw(3) Rotation(s) | ☐ R/H | ☐ L/H | ☐ CW | ☐ CCW |
| Screw(4) Rotation(s) | ☐ R/H | ☐ L/H | ☐ CW | ☐ CCW |

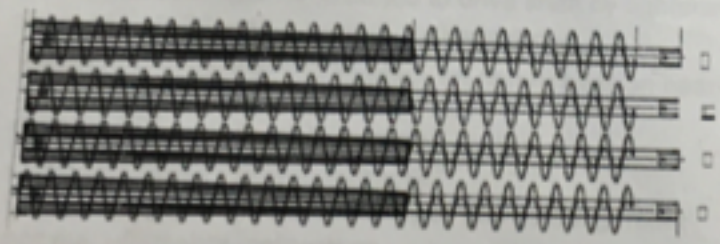

Bare Pipe of Screw Located Over Discharge ✓YES ☐ NO

Variable Pitch Located at Inlet End ☐ YES ✓NO

Inlet and Discharge Welding ☐ CONTINUOUS INSIDE ☐ SKIP WELDED INSIDE ✓continuous outside

Inlet and Discharge Flange Straightness

Drive Location ☐ INLET END ✓DISCHARGE END

Drive Position ✓12:00 ☐ 3:00 ☐ 6:00 ☐ 9:00

Motor Size and Type HP 3HP ✓TEFC ✓PREMIUM EFFICIENT

☐ EXPLOSION PROOF ☐ OTHER _____

QC Assembly

**Fit and Measure Checks:**

Accessory Components ☐ SPEED SWITCHES ☐ LIMIT SWITCHES
☐ SAFETY PULL SWITCHES ☐ OTHER _____

**Inspection Hold Points:**

Assembler and Leadman to check the following prior to Run Test:

Type of Assembly Bolts Required - Stainless steel ✓ Zinc plated ____

All assembly bolts in place and tightened to the proper torque value ☑ YES ☐ NO

Bolts marked with a paint marker on both the nut and the threaded end of the bolt to assure that all bolts have been tightening properly ☑ YES ☐ NO

Hold-downs properly located and adjusted ☐ YES ☑ NO

Coupling shafts in place and bolts tightened to proper value ☐ YES ☑ NO

Hangers and hanger bearings in location and properly secured ☐ YES ☑ NO

Shaft Seals are located in proper location and securely fastened ☑ YES ☐ NO

**Pillow Block Bearings:**

Expansion bearing must be located at the non-drive end. Internal locking ring must be removed to allow for expansion.

Non-expansion or fixed bearing must be located at the drive end. Internal locking ring must be in place to prevent expansion.

Bearings assembled per manufacturers instructions ☐ YES ☑ NO

Expansion bearing located on non-drive end ☐ YES ☑ NO

Non-expansion bearing located on drive end ☐ YES ☑ NO

Non-expansion bearing fastened to drive shaft by tightening locking collar ☐ YES ☑ NO

Locking collar secured in place by keeper ring ☐ YES ☑ NO

Snap rings in appropriate location on non-expansion bearing ☐ YES ☑ NO

**Drive and Drive Shaft Alignment:**

Drive shaft keys installed correctly ☑ YES ☐ NO

Drive couplings installed with proper gap and alignment per manufacturers instructions ☑ YES ☐ NO

Drive coupling setscrew tightened to proper value ☑ YES ☐ NO

Guards in specified location and securely fastened ☑ YES ☐ NO

**Assembler Signature** Jose Rodriguez **Date** 5-28-21

**Assembly Leadman Signature** Jose Rodriguez **Date** 5-28-21

**Quality Manager Signature:** S Wolfe **Date** 5/28/21

**Run Testing:**

Direction of Rotation ☑ CLOCKWISE ☐ COUNTER CLOCK WISE

Motor Current Draw 1.60 AMPS ☐ HAND TURNED

Drive Movement ☑ NO VISUAL MOVEMENT ☐ ACCEPTABLE ☐ UNACCEPTABLE

**Carbon Steel Surface Finish:**

☐ HAND TOOL CLEAN - SSPC-SP2 ☐ POWER TOOL CLEAN - SSPC-SP3

☑ COMMERCIAL BLAST - SSPC-SP6 ☐ NEAR WHITE BLAST - SSPC-SP10

**Carbon Steel Painting:**

Prime Coat ☐ WAM GRAY ENAMEL ☐ OTHER _____

Finish Coat ☐ WAM GRAY ENAMEL ☐ WAM HIGH TEMP SILVER

☐ OTHER Commercial Blast

**Surface Finish:**

| | | | | |
|---|---|---|---|---|
| Internal Surfaces | | | | |
| Screws - | | | | |
| Pipe | ☑ MILL FINISH | ☐ 150 GRIT | ☐ BEAD BLAST | ☐ OTHER |
| Flights | ☑ MILL FINISH | ☐ 150 GRIT | ☐ BEAD BLAST | ☐ OTHER |
| Welds | ☑ MILL FINISH | ☐ 150 GRIT | ☐ BEAD BLAST | ☐ OTHER |
| Troughs - | ☑ MILL FINISH | ☐ 150 GRIT | ☑ BEAD BLAST | ☐ OTHER |
| External Surfaces | | | | |
| Troughs - | ☐ MILL FINISH | ☐ 150 GRIT | ☑ BEAD BLAST | ☐ OTHER |
| Covers - | ☐ MILL FINISH | ☐ 150 GRIT | ☑ BEAD BLAST | ☐ OTHER |

**Comments:**

**Approvals:**

**Assembler Signature:** _____ **Date** 5-28-21

**Assembly Leadman Signature:** _____ **Date** 5-28-21

**Assembly Supervisor Signature:** _____ **Date** _____

**Sales Person or Project Manager Signature:** _____ **Date** _____

**Quality Manager Signature:** _____ **Date** 5/28/21

## LOOSE PARTS LIST

JOB # 14715

| PART # | DESCRIPTION | QTY | PACKED BY | DATE |
|---|---|---|---|---|
| 14715-4 | Flange feet + Hardware | 2 | | |
| 14715-18 | WM100 Alarm Switch | 2 | | |
| | | | | |
| | | | | |
| | | | | |
| | | | | |
| | | | | |
| | | | | |
| | | | | |
| | | | | |
| | | | | |
| | | | | |
| | | | | |
| | | | | |
| | | | | |
| | | | | |
| | | | | |
| | | | | |
| | | | | |
| | | | | |
| | | | | |
| | | | | |
| | | | | |
| | | | | |
| | | | | |
| | | | | |

WAM Texas Division

Screw Department
Quality Checklist

Order Number 14715 Ship Date _____

Date Received 05-25-21 Date Complete _____ Total Time: _____

Type of Screw(s): Helicoid _____ Sectional ✓ Ribbon _____ Paddle _____

Diameter (OD): 9" Actual: _____ OAL: 178" Bare Pipe: 9"

Pitch 1: 6" Pitch OAL: 12" Actual: _____ Thickness: 3/16" R H ✓ L H ___

Pitch 2: 9" Pitch OAL: 157" Actual: _____ Thickness: 3/16" R H ✓ L H ___

Pitch 3: _____ Pitch OAL: _____ Actual: _____ Thickness: _____ R H ___ L H ___

Taper: Small Diameter: _____ Large Diameter: _____ Length of Taper: _____

Material: Mild Steel _____ AR235 _____ AR400 _____ T-304SS: _____ T-316SS: ✓

Pipe Size: 3" Schedule: 40 Bushing ID: 2" Drilling: 2 OD Caps _____

Weld Type: STD Stitch (Skip): ✓ Special Stitch _____ CW1 _____ CW2 _____

Weld Finish (Clean Up): #2 ✓ #3 _____ # 4 _____ # 5 _____

Hard Surface: YES: _____ NO: _____

Hard Surface Area: Width: _____ Carrying Side: _____ Back Side: _____ OD: _____ Pipe: _____

Special Instructions or Information: _____

Welder: PEDRO CHAVEZ

Straightner: [signature]

Leadsman: Gilbert Sosa

QC: [signature] - 5/26/21

WAM Texas Division

Screw Department
Quality Checklist

Order Number 14715 [redacted] Ship Date _____

Date Received 05-25-21 Date Complete _____ Total Time: _____

Type of Screw(s): Helicoid _____ Sectional ✓ Ribbon _____ Paddle _____

Diameter (OD): 9" Actual: _____ OAL: 178" Bare Pipe: 9"

Pitch 1: 6" Pitch OAL: 12" Actual: _____ Thickness: 3/16" R H ✓ L H ___

Pitch 2: 9" Pitch OAL: 157" Actual: _____ Thickness: 3/16" R H ✓ L H ___

Pitch 3: _____ Pitch OAL: _____ Actual: _____ Thickness: _____ R H ___ L H ___

Taper: Small Diameter: _____ Large Diameter: _____ Length of Taper: _____

Material: Mild Steel _____ AR235 _____ AR400 _____ T-304SS: _____ T-316SS: ✓

Pipe Size: 3" Schedule: 40 Bushing ID: 2" Drilling: 2 QD Caps _____

Weld Type: STD Stitch (Skip): ✓ Special Stitch _____ CW1 _____ CW2 _____

Weld Finish (Clean Up): #2 ✓ #3 _____ # 4 _____ # 5 _____

Hard Surface: YES: _____ NO: _____

Hard Surface Area: Width: _____ Carrying Side: _____ Back Side: _____ OD: _____ Pipe: _____

Special Instructions or Information: _____

Welder: PEDRO CHAVEZ

Straightner: [signature]

Leadsman: Gilbert Soto

QC: [signature] 5/26/21

# INSTALLATION, OPERATION & MAINTENANCE MANUAL

## 9” DIA X 15’ -0”
## LONG 30 DEG.
## INCLINED SCREW
## FEEDER

## POMPES & EQUIPMENT

## PO #C14-204979R2

## WAM JOB #30014715


**WAM INC. TEXAS DIVISION**

**1300 TRIAD BLVD.**

**FORT WORTH, TX 76131**

**TEL: 817-232-2678 FAX: 817-232-2676**


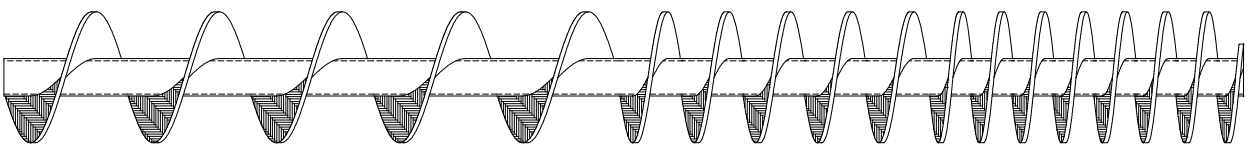

# TABLE OF CONTENTS

**SECTION I** – BILL OF MATERIALS

**SECTION II** – CEMA INSTALLATION

AND MAINTENANCE MANUAL

**SECTION III** – COMPONENT CUT SHEETS

**SECTION IV** – ASSEMBLY DRAWINGS

# SECTION I

## BILL OF MATERIALS

| ITEM NO. | QTY. EACH | PART NUMBER | MAT'L | DESCRIPTION |
|---|---|---|---|---|
| 1 | 1 | 14715-A1 | 316SS | 9TO10-F, SPLIT TUBULAR TROUGH HALF, 9" DIA X .135 THK X 60" LONG |
| 2 | 1 | 14715-A2 | 316SS | 9TO10-F, SPLIT TUBULAR TROUGH HALF, 9" DIA X .135 THK X 60" LONG |
| 3 | 1 | 14715-A3 | 316SS | 9TO10-F, SPLIT TUBULAR TROUGH HALF, 9" DIA X .135 THK X 120" LONG |
| 4 | 1 | 14715-A4 | 316SS | 9TO10-F, SPLIT TUBULAR TROUGH HALF, 9" DIA X .135 THK X 120" LONG |
| 5 | 8 | 14715-A5 | 316SS | 9FO-F-GA, END FLANGE, SPLIT TUBULAR TROUGH, 9" DIA X .250 THK |
| 6 | 1 | 14715-A6 | 316SS | INCLINED ROUND DISCHARGE, FLANGE TO MATE WITH V1FS250 BUTTERFLY VALVE |
| 7 | 2 | 14715-A7 | 316SS | 9EF4-O-BB, TROUGH END, TUBULAR, WITH FOOT, 9" SIZE X .250 THK., 2" SHAFT, DRILLED FOR BALL BEARING |
| 8 | 1 | 14715-A8 | 316SS | 9S412, SECTIONAL SCREW, 9" DIA X 178" LG, 3/16" THK. RH VARIABLE PITCH WITH 9" BARE PIPE, MOUNTED ON A 3" SCH. 40 PIPE, BUSHED AND DRILLED ON BOTH ENDS FOR 2", 2 BOLT SHAFT, FLIGHTING: FIRST 12" TO BE 6" PITCH, REMAINDER FULL PITCH |
| 9 | 1 | 14715-A9 | 316SS | 4ES-B, END SHAFT, 2" DIA X 10 3/8" LG FOR BALL BEARING AND SEAL, CEMA 2 BOLT DRILLED |
| 10 | 4 | 14715-A10 | 316SS | 4CB, COUPLING BOLT WITH LOCK NUT, 5/8 - 11 UNC X 3 5/8" LG WITH A 2 7/8" LG SHANK, FOR 2 1/2" (2.875 OD) PIPE |
| 11 | 1 | 14715-A11 | | SE.4CP, WAM-SHIELD SEAL, 2" SHAFT, NON SPLIT |
| 12 | 1 | 14715-A12 | | 4BF-B, BALL BEARING, FLANGED, 2 SHAFT |
| 13 | 1 | 14715-A13 | 316SS | INCLINED ROUND INLET STUB WITH PORT FOR ILT LEVEL INDICATOR |
| 14 | 2 | 14715-A14 | 316SS | 9FF, FLANGE FEET, 9" SIZE, .188 THK., INCLINED |
| 15 | 1 | 14715-A15 | 316SS | 9SL10, SADDLE MOUNT, FOR 9 SIZE X 0.135 THK TROUGH, .250 THK |
| 16 | 1 | 14715-A16 | | NORD SK4282SCP/VL-180TC SCREW CONVEYOR DRIVE, 52.2:1 RATIO, 180TC NEMA ADAPTER, M1 MOUNTING POSITION, 2" CEMA DRIVE SHAFT |
| 17 | 1 | 14715-A17 | | NORD 100LP/4, 3 HP PREM. EFF., 1770 RPM, TEFC, NEMA 182TC C FACE MTR, 3/60/332-575V |
| 18 | 1 | 14715-A18 | | SITRANS WM100 ZERO-SPEED ALARM SWITCH |
| 19 | 1 | 14715-A19 | 316SS | SENSOR MOUNTING BRACKET, FITTED TO TROUGH, .188 THK SHEET / PLATE |
| 20 | 36 | - | 18-8SS | HEX HEAD BOLT, 3/8-16 X 1.5 LG X 1.5 THREAD LG |
| 21 | 6 | - | 18-8SS | HEX HEAD BOLT, 3/8-16 X 1.75 LG X 1.75 THREAD LG |
| 22 | 4 | - | 18-8SS | HEX HEAD BOLT, 5/8-11 X 4 LG X 4 THREAD LG |
| 23 | 42 | - | 18-8SS | HEX NUT, 3/8-16 |
| 24 | 4 | - | 18-8SS | HEX NUT, 5/8-11 |
| 25 | 84 | - | 18-8SS | FLAT WASHER, 3/8 |

| | | | | |
|---|---|---|---|---|
| 26 | 8 | - | 18-8SS | FLAT WASHER, 5/8 |
| 27 | 42 | - | 18-8SS | SPRING LOCK WASHER, 3/8 |
| 28 | 4 | - | 18-8SS | SPRING LOCK WASHER, 5/8 |

WAM® Inc.

WAMGROUP®

# SECTION II

## CEMA INSTALLATION AND MAINTANENCE MANUAL

**CEMA STANDARD NO: 352-2012**
**Approved: September 19, 2012**
Copyright 2012

# SCREW CONVEYOR SAFETY OPERATION AND MAINTENANCE MANUAL

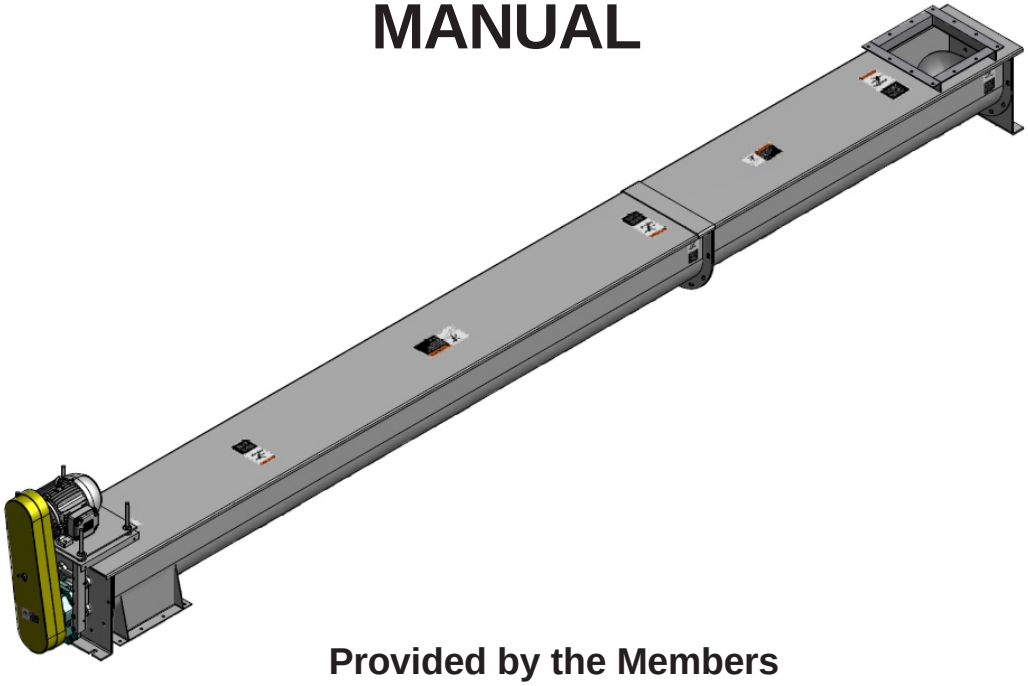

**Provided by the Members**
**of the**
**Screw Conveyor and Bucket Elevator Section**
**of the**
**Conveyor Equipment Manufacturers Association**
**as a service to the industry**

ISBN: 978-1-891171-43-7

# DISCLAIMER

The information provided herein is advisory only.

These recommendations provided by CEMA are general in nature and are not intended as a substitute for professional advice. Users should seek the advice, supervision and/or consultation of qualified engineers, safety consultants, and other qualified professionals.

Any use of this publication, or any information contained herein, or any other CEMA publication is made with the agreement and understanding that the user and the user's company assume full responsibility for the designs, safety, specifications, suitability and adequacy of any conveyor system, system component, mechanical or electrical device designed or manufactured using this information.

The user and the user's company understand and agree that CEMA, its member companies, its officers, agents and employees are not and shall not be liable in any manner under any theory of liability to anyone for reliance on or use of these recommendations. The user and the user's companies agree to release, hold harmless and indemnify and defend CEMA, its member companies, successors, assigns, officers, agents and employees from any and all claims of liability, costs, fees (including attorney's fees), or damages arising in any way out of the use of this information.

CEMA and its member companies, successors, assigns, officers, agents and employees make no representations or warranties whatsoever, either expressed or implied, about the information contained herein, including, but not limited to, representations or warranties that the information and recommendations contained herein conform to any federal, state or local laws, regulations, guidelines or ordinances.

**Conveyor Equipment Manufacturers Association**
5672 Strand Court, Suite 2
Naples, Florida 34110-3314
www.cemanet.org
CEMA Screw Conveyor Safety, Operation & Maintenance Manual
Copyright - September 2012

# TABLE OF CONTENTS


| | | | |
|---|---|---|---|
| **SECTION A - SAFETY** | | **Page 1** | **PDF Page 5** |
| **SECTION B - INSTALLATION** | | **Page 4** | **PDF Page 8** |
| **SECTION C - OPERATION** | | **Page 10** | **PDF Page 14** |
| **SECTION D - MAINTENANCE** | | **Page 11** | **PDF Page 15** |
| **SECTION E - SHUTDOWN AND STORAGE** | | **Page 12** | **PDF Page 16** |
| **SECTION F - TROUBLESHOOTING** | | **Page 15** | **PDF Page 17** |
| **Bolt Torque Guide** | | **Page 16** | **PDF Page 19** |

# INTRODUCTION

The Screw Conveyor and Bucket Elevator Engineering Committee of the CEMA (Conveyor Equipment Manufacturers Association) Engineering Conference was assigned the task of bringing together, under one cover, the accumulated experience of many individuals and their companies in an effort to provide a common basis for the safety, operation and maintenance of screw conveyors.

The CEMA Safety, Operation & Maintenance Manual contains instructions for the safe installation, operation and maintenance of screw conveyors. The reliability and service life depend on the proper care taken while installing and preparing the equipment for its intended use.

Read **ALL** instructions in this manual and manufacturer's manuals **BEFORE** installing, operating and maintaining the equipment.

# SECTION A - SAFETY

Screw conveyor safety begins with a plan that considers every possible danger and potential hazard. Operation and maintenance personnel must be thoroughly trained in safe operating procedures, recognition of possible hazards, and maintenance of a safe area around screw conveyors.

CEMA has a comprehensive safety program that includes:

- Warning and Safety Reminder for Screw Conveyors, Drag Conveyors and Bucket Elevators - (CEMA Document: SC2004-01)
- CEMA Safety Label Brochure - (CEMA Document: 201)
- CEMA Safety Label Placement Guidelines:
  - Screw Conveyor - (CEMA Document: SC-2)
  - Vertical Screw Conveyor - (CEMA Document: SC-3)
- Screw Conveyor Safety Poster - (CEMA Screw Conveyor Safety Poster)
- Screw Conveyor, Drag Conveyor and Bucket Elevator Safety Video - (CEMA Document: AV6) This video describes key safety practices that personnel must follow when operating and maintaining screw conveyors, drag conveyors and bucket elevators.

Screw conveyor accidents can be avoided by implementation and enforcement of an in-plant safety program. A number of safety precautions are included in this manual. Carefully study and follow the safety precautions. Remember - accidents are usually caused by negligence or carelessness.

*CEMA Document: SC 2004-01*

# WARNING AND SAFETY REMINDERS FOR SCREW , DRAG , AND BUCKET ELEVATOR CONVEYORS

*APPROVED FOR DISTRIBUTION BY THE SCREW CONVEYOR SECTION OF THE CONVEYOR EQUIPMENT MANUFACTURERS ASSOCIATION (CEMA)*

It is the responsibility of the contractor, installer, owner and user to install, maintain and operate the conveyor, components and, conveyor assemblies in such a manner as to comply with the Occupational Safety and Health Act and with all state and local laws and ordinances and the American National Standards Institute (ANSI) B20.1 Safety Code.

In order to avoid an unsafe or hazardous condition, the assemblies or parts must be installed and operated in accordance with the following minimum provisions.

1. Conveyors shall not be operated unless all covers and/or guards for the conveyor and drive unit are in place. If the conveyor is to be opened for inspection cleaning, maintenance or observation, the electric power to the motor driving the conveyor must be LOCKED OUT in such a manner that the conveyor cannot be restarted by anyone; however remote from the area, until conveyor cover or guards and drive guards have been properly replaced.

2. If the conveyor must have an open housing as a condition of its use and application, the entire conveyor is then to be guarded by a railing or fence in accordance with ANSI standard B20.1.(Request current edition and addenda)

3. Feed openings for shovel, front loaders or other manual or mechanical equipment shall be constructed in such a way that the conveyor opening is covered by a grating. If the nature of the material is such that a grating cannot be used, then the exposed section of the conveyor is to be guarded by a railing or fence and there shall be a warning sign posted.

4. Do not attempt any maintenance or repairs of the conveyor until power has been LOCKED OUT.

5. Always operate conveyor in accordance with these instructions and those contained on the caution labels affixed to the equipment.

6. Do not place hands, feet, or any part of your body, in the conveyor.

7. Never walk on conveyor covers, grating or guards.

8. Do not use conveyor for any purpose other than that for which it was intended.

9. Do not poke or prod material into the conveyor with a bar or stick inserted through the openings.

10. Keep area around conveyor drive and control station free of debris and obstacles.

11. Eliminate all sources of stored energy (materials or devices that could cause conveyor components to move without power applied) before opening the conveyor

12. Do not attempt to clear a jammed conveyor until power has been LOCKED OUT.

13. Do not attempt field modification of conveyor or components.

14. Conveyors are not normally manufactured or designed to handle materials that are hazardous to personnel. These materials which are hazardous include those that are explosive, flammable, toxic or otherwise dangerous to personnel. Conveyors may be designed to handle these materials. Conveyors are not manufactured or designed to comply with local, state or federal codes for unfired pressure vessels. If hazardous materials are to be conveyed or if the conveyor is to be subjected to internal or external pressure, manufacturer should be consulted prior to any modifications.

CEMA insists that disconnecting and locking out the power to the motor driving the unit provides the only real protection against injury. Secondary safety devices are available; however, the decision as to their need and the type required must be made by the owner-assembler as we have no information regarding plant wiring, plant environment, the interlocking of the screw conveyor with other equipment, extent of plant automation, etc. Other devices should not be used as a substitute for locking out the power prior to removing guards or covers. We caution that use of the secondary devices may cause employees to develop a false sense of security and fail to lock out power before removing covers or guards. This could result in a serious injury should the secondary device fail or malfunction.

There are many kinds of electrical devices for interlocking of conveyors and conveyor systems such that if one conveyor in a system or process is stopped other equipment feeding it, or following it can also be automatically stopped.

Electrical controls, machinery guards, railings, walkways, arrangement of installation, training of personnel, etc., are necessary ingredients for a safe working place. It is the responsibility of the contractor, installer, owner and user to supplement the materials and services furnished with these necessary items to make the conveyor installation comply with the law and accepted standards.

Conveyor inlet and discharge openings are designed to connect to other equipment or machinery so that the flow of material into and out of the conveyor is completely enclosed.

One or more warning labels should be visible on conveyor housings, conveyor covers and elevator housings. If the labels attached to the equipment become illegible, please order replacement warning labels from the OEM or CEMA.

The Conveyor Equipment Manufacturers Association (CEMA) has produced an audio-visual presentation entitled “Safe Operation of Screw Conveyors, Drag Conveyors, and Bucket Elevators.” CEMA encourages acquisition and use of this source of safety information to supplement your safety program.

**SEE NEXT PAGE FOR SAFETY LABELS**

## CEMA Safety Labels

*CEMA Document: SC 2004-01*

The CEMA safety labels shown below should be used on screw conveyors, drag conveyors, and bucket elevators. Safety labels should be placed on inlets, discharges, troughs, covers, inspection doors & drive guards. See CEMA Safety Label Placement Guidelines on CEMA Web Site: http://www.cemanet.org

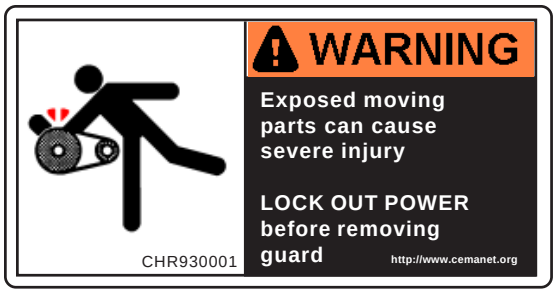





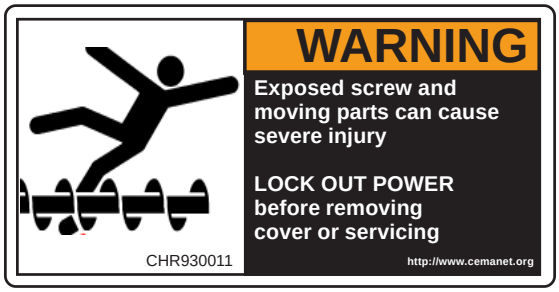





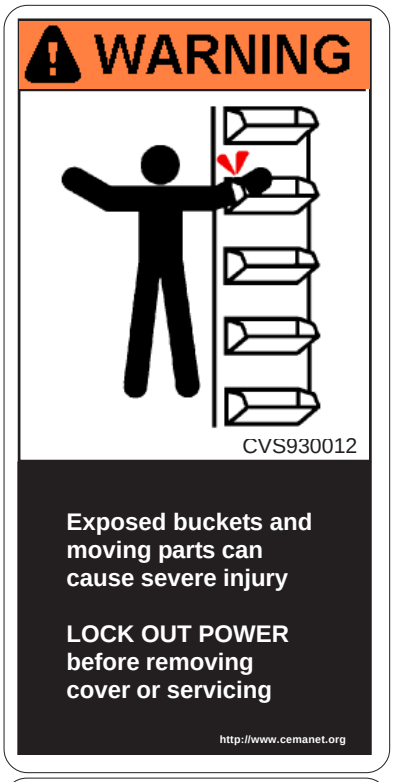


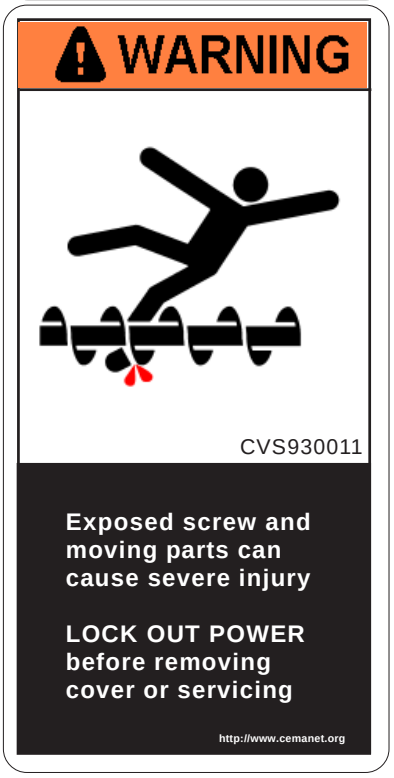


***PROMINENTLY DISPLAY THESE SAFETY LABELS ON INSTALLED EQUIPMENT***

***SEE PREVIOUS PAGE FOR SAFETY REMINDERS***

***Note: Labels alone do not substitute for a thorough in-plant safety training program centered on the hazards associated with operating your installed equipment.***

***Contact CEMA or Your Equipment Manufacturer for Replacement Labels***

**CONVEYOR EQUIPMENT MANUFACTURERS ASSOCIATION**
5624 Strand Court, Suite 2., Naples, Florida 34110
239-514-3441
http://www.cemanet.org

## CEMA Safety Labels — *Placement Guidelines*

## Product: Bulk Handling Equipment

### Equipment: Screw Conveyor

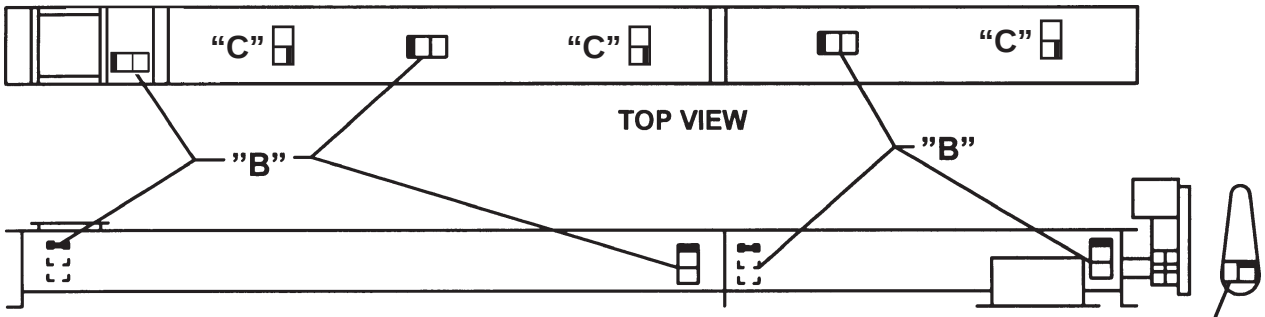


SIDE VIEW




"B"

To be placed on inlets and discharges, troughs, covers, and inspection doors of screw conveyors to provide warning against exposed moving parts while in operation.




"A"




"C"

To be placed on removable guards to warn that operation of the machinery with guards removed would expose chains, belts, gears, shafts, pulleys, couplings, etc. which create hazards

NEAR SIDE

FAR SIDE

USE LABEL "A" ON BELT GUARD
USE LABEL "B" ON ENDS OF TROUGH, MIDDLE OF COVERS AND AT INLET OPENING.
USE LABEL "C: ON TOP OF COVERS

SC-2

## CEMA Safety Labels — *Placement Guidelines*

## Product: Bulk Handling Equipment

**Equipment: Vertical Screw Conveyor**

USE LABEL "A" ON BELT GUARD

USE LABEL "B" ON ENDS OF TROUGH,
ON INTAKE INSPECTION DOOR,
AND
BOTH SIDES OF DISCHARGE SPOUT

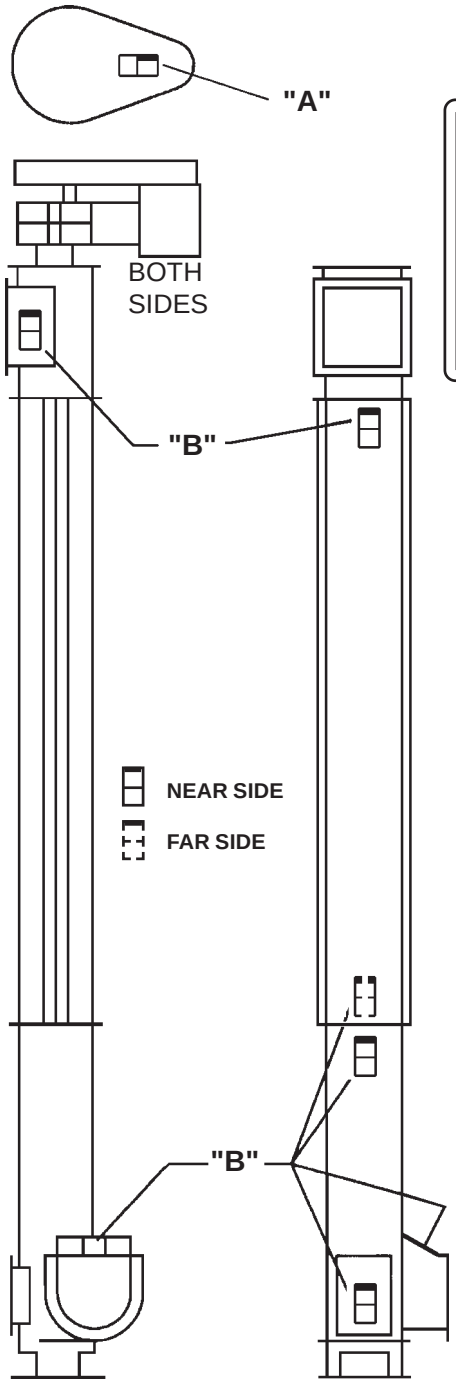


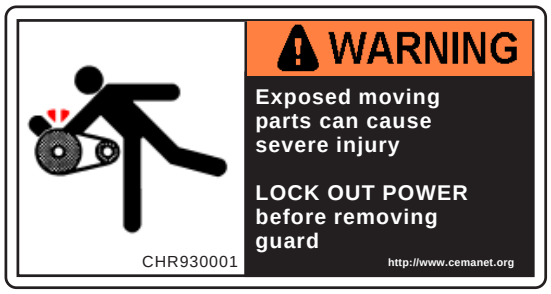


"A"

To be placed on removable guards to warn that operation of the machinery with guards removed would expose chains, belts, gears, shafts, pulleys, couplings, etc. which create hazards




"B"

To be placed on inlets and discharges, troughs, covers, and inspection doors of screw conveyors to provide warning against exposed moving parts while in operation.

SC-3

# Screw Conveyor Safety




| | | |
|---|---|---|
|  Do Not Climb, Sit, Stand or Walk, On Conveyor At Any Time |  Do Not Perform Maintenance on Conveyor Until Electrical, Air, Hudraulic and Gravity Energy Sources Have Been Locked Out and Blocked | 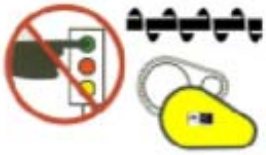 Operate Equipment Only With All Approved Covers and Guards in Place |
|  LOCK OUT ALL Power and Block Gravity Loads Before Servicing |  Ensure That All Personnel Are Clear of Equipment Before Starting |  Allow Only Authorized And Trained Personnel To Operate or Maintain Conveyors and Accessories |
|  Keep Clothing, Body Parts, and Hair Away from Conveyors | 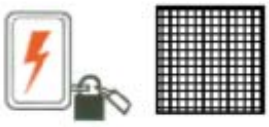 Clean Up Spillage Near Moving Parts ONLY When the Power Is Locked Out AND Guards Are In Place |  DO NOT Modify Conveyor Controls |
| 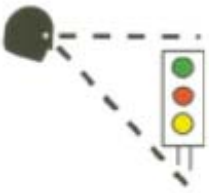 Ensure That All Controls are Visible and Accessible |  Operate Equipment Only With All Approved Covers, Guards, and Safety Labels In Place |  Report All Unsafe Conditions |

**POST IN PROMINENT AREA**

# SCREW CONVEYOR COMPONENTS

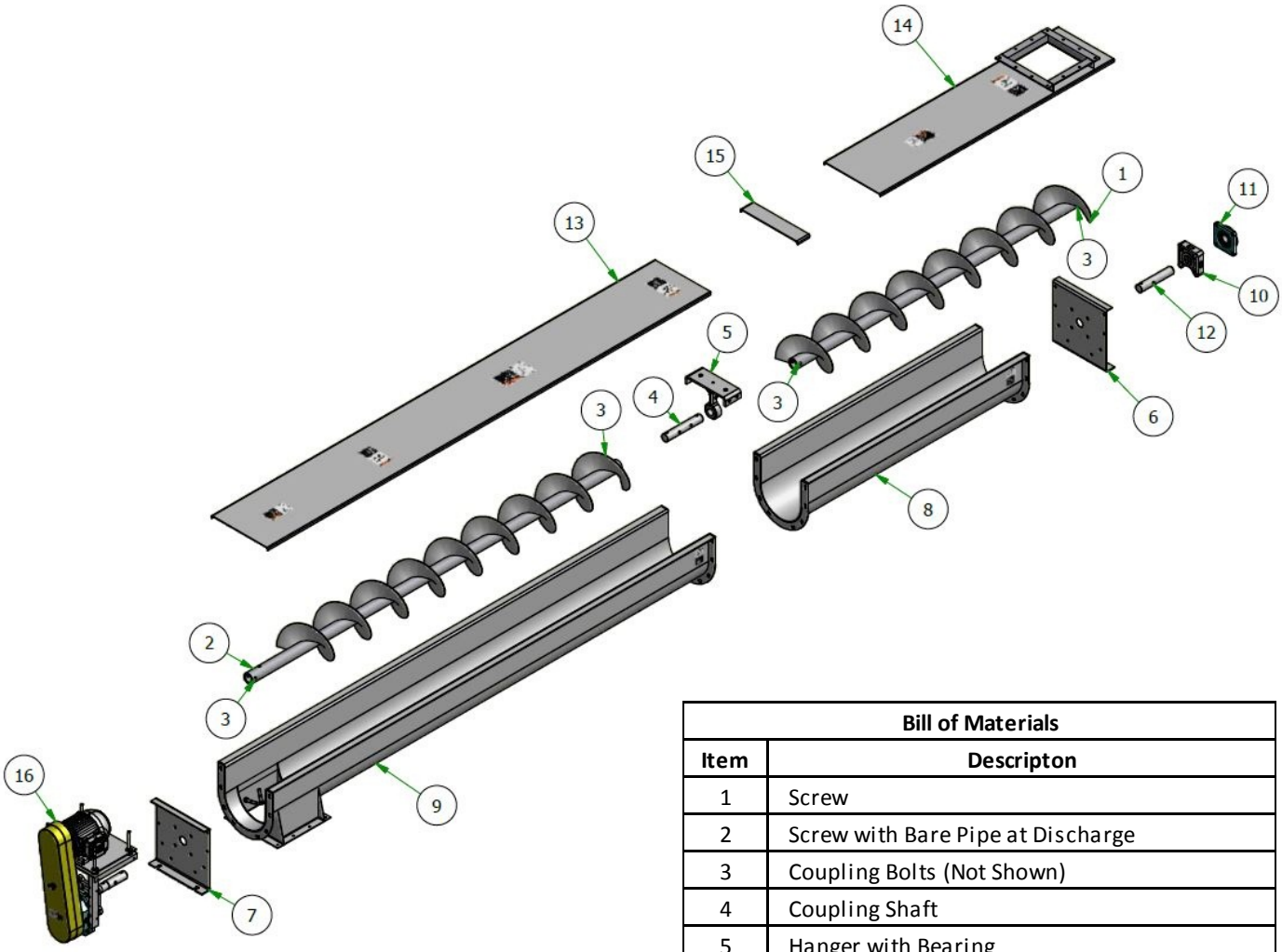


| Bill of Materials | |
|---|---|
| **Item** | **Descripton** |
| 1 | Screw |
| 2 | Screw with Bare Pipe at Discharge |
| 3 | Coupling Bolts (Not Shown) |
| 4 | Coupling Shaft |
| 5 | Hanger with Bearing |
| 6 | Tail End Trough End |
| 7 | Trough End for Screw Conveyor Drive |
| 8 | Trough End for Screw Conveyor Drive |
| 9 | Trough with Discharge Spout |
| 10 | Seal |
| 11 | Bearing |
| 12 | Tail Shaft |
| 13 | Flanged Cover |
| 14 | Flanged Cover with Inlet |
| 15 | Buttstrap |
| 16 | Screw Conveyor Drive Unit with Motor Mount, V-Belt Drive, and Guard |

## SECTION B - INSTALLATION

### RECEIVING

1. Screw conveyors may be ordered as individual components with all the assembly operations performed in the field, or assembled completely by the manufacturer, with drawings and bill of materials.
2. Immediately upon receipt all items in the shipment should be checked against shipping papers for shortages and inspected for damage.
3. Items to be inspected include troughs, screws, covers and drive units.
4. DO NOT ATTEMPT TO INSTALL DAMAGED COMPONENTS OR ASSEMBLIES.

### LIFTING AND MOVING

1. Extreme care must be taken to prevent damage when moving assembled conveyors or components.
2. Spreader bars with slings are the recommended support method for lifting.
3. Unsupported span should be no greater than 12 feet.
4. NEVER LIFT A CONVEYOR WITH ONLY ONE SUPPORT POINT.
5. Unusually heavy items such as drives or gates shall be considered when choosing support points because of load balance and their bending effect.
6. Shop assembled conveyors are typically match marked and shipped in the longest sections for practical shipment.

### ASSEMBLY

1. The mounting surface for supporting the conveyor must be level and true.
2. Screw conveyor troughs must be assembled straight and true with no distortion.
3. Place troughs in proper sequence with discharge spout properly located.
4. Connect the joints loosely. DO NOT TIGHTEN BOLTS.
5. Assemble each trough end to proper end of conveyor.
6. Attach piano wire full length of conveyor at centerline. Make sure piano wire is pulled tight. Refer to Figure 1 at the end of this section.
7. Tighten trough flange bolts keeping the trough assembly true to piano wire. Alignment must be checked in both horizontal and vertical directions. Maximum deviation in either direction at any point along the length of the conveyor is 1/8". Torque bolts to proper torque rating per Chart A.
8. Anchor trough assembly to mounting surface. Make sure entire length of trough is straight and true. CEMA recommends supporting trough assemblies every 10 to 12 feet. Saddles and feet may be required.
9. Mount drive or thrust unit on correct trough end. Drive or thrust units are normally located at discharge end of conveyor. Make sure drive or thrust unit is centered in seal and trough end openings. Torque bolts to proper torque rating per Chart A.
10. Place the first screw section in the trough starting at the drive or thrust end. Install screw so end lugs are opposite carrying side of flight.
11. Insert screw onto drive shaft and install coupling bolts. DO NOT TIGHTEN COUPLING BOLTS.
12. Insert coupling shaft into opposite end of screw and install coupling bolts. DO NOT TIGHTEN COUPLING BOLTS.
13. Pull screw section away from drive or thrust unit to seat thrust connection.
14. Insert hanger onto coupling shaft.
15. Raise hanger and screw section until hanger top bar is flush with top of trough. Make sure correct clearance exist between outside diameter of screw and inside of trough. Match mark and drill troughs to mount hanger assembly. Insert hanger assembly bolts and hand tighten.
16. Assemble screw sections, couplings and hangers until all are installed by repeating steps 10 through 15. Install screw sections so flighting is 180-degrees from end of flighting of previous screw section.

17. Center hanger bearings between screw sections. Torque hanger assembly bolts to proper torque rating per Chart A.
18. Assemble seal and bearing to opposite trough end. Make sure end shaft is centered in seal and trough end openings. Torque bolts to proper torque rating per Chart A.
19. Insert end shaft through end bearing and into last screw section and install coupling bolts. DO NOT TIGHTEN COUPLING BOLTS.
20. Rotate entire screw assembly to check alignment and adjust hanger assemblies as required.
21. Torque ALL coupling bolts to proper torque rating. Over tightening of coupling bolts could result in failure in tension. CEMA recommends tightening coupling bolts to 75-percent of the values given in the Bolt Torque Guide to eliminate over tightening of coupling bolts.
22. Adjust seals as required.
23. Remove all debris from conveyor.
24. Install covers in proper sequence starting at inlet end and attach with provided fasteners.
25. Lubricate drive and all bearings in accordance with manufacturer's instructions. DRIVES GENERALLY SHIPPED WITHOUT OIL.
26. MAKE SURE ALL CEMA SAFETY LABELS ARE IN PROPER LOCATIONS.

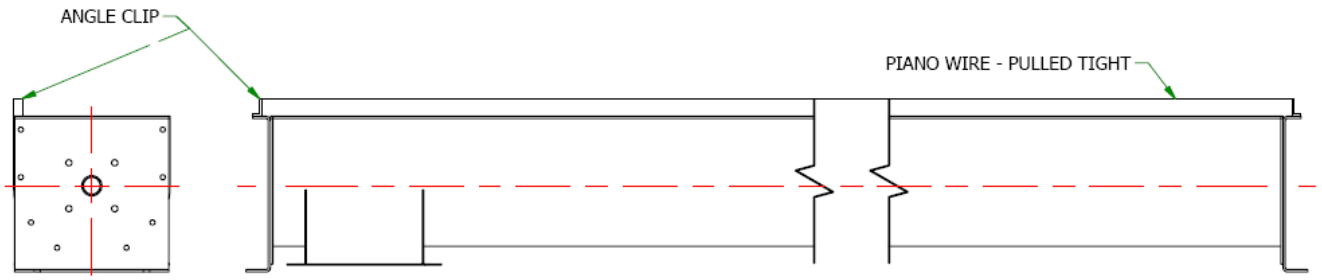


*CEMA COMMONLY USED PIANO WIRE SETUP*

PIANO WIRE ATTACHED TO TOP OF CONVEYOR ON SIDE

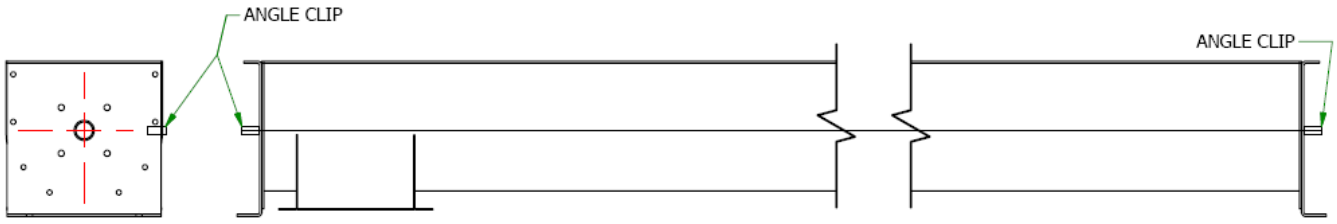


*OPTIONAL PIANO WIRE SETUP*

PIANO WIRE ATTACHED TO CENTERLINE OF CONVEYOR ON SIDE

**Figure 1 - Piano Wire Setup Diagrams**

## SECTION C - OPERATION

BEFORE INITIAL START-UP:

1. LOCKOUT/TAGOUT ALL POWER.
2. Lubricate all bearings in accordance with manufacturer's instructions.
3. Lubricate all gear reducers in accordance with manufacturer's instructions. Gear reducers are normally shipped without lubrication.
4. Check conveyor to ensure all tools and foreign materials have been removed.
5. Turn drive unit by hand to check for alignment and obstructions.
6. Check conveyor to ensure all covers, guards and safety devices are installed and operating properly.
7. Attach gates to inlet and discharge chutes, where applicable.

INITIAL START-UP (WITHOUT MATERIAL):

1. Reenergize power to conveyor.
2. Start conveyor momentarily to check for proper conveyor rotation. If conveyor rotation is NOT correct, quickly shutdown and have qualified electrician change wiring.
3. Operate conveyor without material for several hours as a break in period. Observe for excessive bearing temperature, unusual noise or drive misalignment. If these conditions occur refer to Troubleshooting Section of this document.
4. Stop the conveyor and LOCKOUT/TAGOUT ALL POWER.
5. Remove covers and check tightness of coupling bolts. Torque bolts to proper torque rating. Over tightening of coupling bolts could result in failure in tension. CEMA recommends tightening coupling bolts to 75-percent of the values given in the Bolt Torque Guide to eliminate over tightening of coupling bolts. Replace covers.
6. Check all assembly and mounting bolts. Torque bolts to proper torque rating.
7. Check conveyor discharge. Discharge must be clear to ensure that material flow out of conveyor will not be impeded.

INITIAL START-UP (WITH MATERIAL):

1. Reenergize power to conveyor.
2. Start conveyor and operate without material for several minutes.
3. Feed material gradually until design capacity is reached.
4. DO NOT EXCEED CONVEYOR SPEED, CAPACITY AND MATERIAL DENSITY.
5. Start and stop conveyor several times. Operate conveyor for several hours with material.
6. Check motor amperage when conveying at design capacity and compare to full load amperage of motor. Problems may exist if amperage is excessive. Check voltage to ensure that it is within normal operating limits.
7. Stop the conveyor and LOCKOUT/TAGOUT ALL POWER.
8. Remove covers and check tightness of coupling bolts. Torque bolts to proper torque rating. Over tightening of coupling bolts could result in failure in tension. CEMA recommends tightening coupling bolts to 75-percent of the values given in the Bolt Torque Guide to eliminate over tightening of coupling bolts.
9. Check hanger bearings and realign if necessary.
10. Replace covers.
11. Check all assembly and mounting bolts. Torque bolts to proper torque rating per Chart A.

## SECTION D – MAINTENANCE

Practice good housekeeping. Keep area around conveyor clean and free of obstacles to provide easy access and to avoid interference with the function of the conveyor.

Establish routine periodic inspection of the entire conveyor to ensure continuous maximum operating performance. LOCKOUT/TAGOUT ALL POWER BEFORE INSPECTION OF CONVEYORS. Periodic inspections should be made of the following:

- Bearings – Check for proper lubrication. Lubricate all bearings in accordance with manufacturer's instructions. Check hanger bearings for proper alignment and excessive wear. Replace hanger bearings when wear exceeds 1/8 inch.
- Gear Reducers – Check for proper lubrication. Lubricate all gear reducers in accordance with manufacturer's instructions.
- Drives – Check for wear on belts and proper tension. Check for lubrication on chains and proper tension. Replace belts or chains as necessary.
- Screws – Check for damage, excessive wear and material buildup. Replace screw sections as necessary.
- Troughs – Check for damage, excessive wear and material buildup. Check trough alignment using piano wire as described in Assembly Section of this document. Replace trough sections as necessary.
- Shafts – Check for bolt hole elongation and wear. Check for run-out. Replace shafts when wear exceeds 1/8 inch.
- Seals – Check for leakage. Adjust seal or replace packing as necessary.
- Coupling Bolts – Check for wear. Replace worn coupling bolts as necessary. It is recommended to replace coupling bolts and lock nuts when replacing screw sections. Torque ALL coupling bolts to proper torque rating. Over tightening of coupling bolts could result in failure in tension. CEMA recommends tightening coupling bolts to 75-percent of the values given in the Bolt Torque Guide to eliminate over tightening of coupling bolts.
- Assembly Bolts – Check for tightness. Torque ALL assembly bolts to proper torque rating per **Chart A**.
- Guards – Check for clearance and bolt tightness. Check oil level on oil-tight guards.

**REPLACING SCREW CONVEYOR COMPONENTS:**

1. LOCKOUT/TAGOUT ALL POWER
2. Removal of a screw section must proceed from the end opposite the drive or thrust unit.
3. Remove trough end, screw sections, coupling shafts and hangers until the damaged screw section is reached and removed.
4. Reassemble conveyor components in accordance with the Assembly Section of this document.

**NOTE:** Quick disconnect screws can be removed at intermediate locations without first removing adjacent sections.

## SECTION E – SHUTDOWN AND STORAGE

**EMERGENCY SHUTDOWN**

An emergency shutdown may be necessary to clear obstructions or to replace damaged or worn components.

1. LOCKOUT/TAGOUT ALL POWER.
2. Remove all covers.
3. Remove all obstructions and product from conveyor.
4. Inspect all components for damage or wear. Check conveyor components in accordance with the Maintenance Section of this document.
5. Replace all damaged or worn components. Replace conveyor components in accordance with the Assembly Section of this document.
6. Turn drive unit by hand to check for alignment and obstructions.
7. Replace all covers and guards.
8. Restart conveyor in accordance with the Operation Section of this document.

**EXTENDED SHUTDOWN**

An extended shutdown may be necessary if the conveyor is not in operation for a long period of time.

1. Operate conveyor until all product is removed.
2. LOCKOUT/TAGOUT ALL POWER.
3. Remove all covers.
4. Remove all obstructions and product from conveyor.
5. Inspect all components for damage or wear. Check conveyor components in accordance with the Maintenance Section of this document.
6. Replace all damaged or worn components. Replace conveyor components in accordance with the Assembly Section of this document.
7. Lubricate drive and all bearings in accordance with manufacturer's instructions.
8. Coat all exposed metal surfaces with rust preventative.
9. Rotate screws by hand every week. Screws may sag and permanently deform if not rotated.

**NOTE:** When operation is to resume, restart conveyor in accordance with the Operation Section of this document.

**STORAGE**

1. Protect conveyor from weather, moisture and extreme temperatures. DO NOT use coverings that promote condensation.
2. Coat all exposed metal surfaces with rust preventative.
3. Rotate screws by hand every week. Screws may sag and permanently deform if not rotated.

**NOTE:** When operation is to resume, restart conveyor in accordance with the Operation Section of this document.

## SECTION F – TROUBLESHOOTING GUIDE

| PROBLEM | CAUSE | REMEDY |
|---|---|---|
| **1. ACCELERATED FLIGHT WEAR** | FLIGHT THICKNESS TOO LIGHT | INCREASE FLIGHT THICKNESS. USE ABRASION RESISTANT METERIALS OR HARDFACING |
| | RPM TOO HIGH OR TROUGH LOADING TOO HIGH | REDUCE SPEED. CONSULT CEMA 350 BOOK TO DETERMINE RECOMMENDED SPEED AND TROUGH LOADING. |
| **2. HANGER BEARING FAILURE** | INCORRECT ALIGNMENT | REALIGN TROUGH ASSEMBLY AND HANGERS IN ACCORDANCE WITH ASSEMBLY SECTION OF THIS DOCUMENT. |
| | IMPROPER SPEED AND TROUGH LOADING | CONSULT CEMA 350 BOOK TO DETERMINE RECOMMENDED SPEED AND TROUGH LOADING. |
| | IMPROPER HANGER BEARING MATERIAL | CONSULT CEMA 350 BOOK TO DETERMINE RECOMMENDED BEARING MATERIAL. |
| | EXCESSIVE BEARING WEAR | REPLACE HANGER BEARING. |
| **3. PREMATURE TROUGH FAILURE** | TROUGH THICKNESS TOO LIGHT | INCREASE TROUGH THICKNESS.<br>USE ABRASION RESISTANT MATERIAL.<br>CONSULT CEMA 350 BOOK TO DETERMINE RECOMMENDED TROUGH THICKNESS. |
| | SCREW DEFLECTION | CONSULT CEMA 350 BOOK TO DETERMINE PROPER PIPE SIZE AND SCRW LENGTH. |
| | BENT SCREW | STRAIGHTEN OR REPLACE SCREW. |
| **4. SHAFT HOLE ELONGATION** | INSUFFICIENT NUMBER OF COUPLING BOLTS | INCREASE NUMBER OF COUPLING BOLTS |
| | CONVEYOR SUBJECT TO FREQUENT STOP/START | CEASE FREQUENT STOP/START. INCREASE BEARING CAPACITY OF SHAFT AND/OR INCREASE NUMBER OF COUPLING BOLTS |
| | FREQUENT OVERLOADS | |
| **5. DRIVE SHAFT BREAKAGE** | EXCESSIVE TORQUE | CONSULT CEMA 350 BOOK TO DETERMINE PROPER TORQUE RATING. |

## SECTION F – TROUBLESHOOTING GUIDE - Continued

| PROBLEM | CAUSE | REMEDY |
|---|---|---|
| **6. MOTOR OVERLOAD** | MOTOR UNDERSIZED | CONSULT CEMA 350 BOOK TO DETERMINE PROPER HORSEPOWER REQUIREMENTS. |
| | UPSET LOADING CONDITION | EMPTY TROUGH, CONTROL FEED AND OPERATE UNDER DESIGN SPECIFICATIONS. |
| **7. TROUGH END BEARING FAILURE** | BEARING CONTAMINATION | UPGRADE OR REPLACE SEAL. CHANGE TO OUTBOARD BEARING. |
| | INSUFFICIENT LUBRICATION | LUBRICATE IN ACCORDANCE WITH MAINTENANCE SECTION OF THIS DOCUMENT. |
| | IMPROPER SHAFT RUNOUT | CHECK SCREW STRAIGHTNESS AND REPLACE AS NECESSARY. |
| **8. COUPLING SHAFT BREAKAGE** | EXCESSIVE TORQUE | CONSULT CEMA 350 BOOK TO DETERMINE PROPER TORQUE RATING. |
| | INCORRECT ALIGNMENT | REALIGN TROUGH ASSEMBLY AND HANGERS IN ACCORDANCE WITH ASSEMBLY SECTION OF THIS DOCUMENT. |
| | EXCESSIVE SHAFT WEAR | REPLACE COUPLING SHAFT. |

# CHART A - BOLT TORQUE GUIDE

## GENERAL BOLT TIGHTENING TORQUE (Ft. lbs.)

| Bolt Dia. (inches) | Threads Per Inch (UNC) | SAE 2 | SAE 5 | SAE 8 | 18-8 & 316 Stainless Steel |
|---|---|---|---|---|---|
| **1/4** | **20** | 5 | 9 | 12 | 6 |
| **5/16** | **18** | 11 | 18 | 25 | 11 |
| **3/8** | **16** | 18 | 31 | 44 | 20 |
| **7/16** | **14** | 28 | 49 | 69 | 29 |
| **1/2** | **13** | 44 | 73 | 105 | 40 |
| **9/16** | **12** | 63 | 108 | 149 | 52 |
| **5/8** | **11** | 96 | 147 | 212 | 86 |
| **3/4** | **10** | 158 | 252 | 351 | 115 |
| **7/8** | **9** | 219 | 389 | 552 | 180 |
| **1** | **8** | 316 | 589 | 784 | 240 |

All bolted applications should be evaluated to determine optimum tightening torque.
K factor in the formula below is considered an estimate.
The most commonly used K factor is 0.20 for plain finished bolts.

Formula: T= K x D x P

- T Target tighten torque (the result of this formula is in inch pounds, dividing by 12 yields foot pounds)
- K Coefficient of friction (nut factor), always an estimation in this formula
- D Bolts nominal diameter in inches
- P Bolt's desired tensile load in pounds (generally 75% of yield strength)
  [P(lbs) = (75%) Yield Strength * Tensile Stress Area]

Bolt Torque Guide is for fasteners used to assemble screw conveyors and does not include coupling bolts. Over tightening of coupling bolts could result in failure in tension.
CEMA recommends tightening coupling bolts to 75-percent of the values given in the Bolt Torque Guide to eliminate over tightening of coupling bolts

END OF DOCUMENT



# CONVEYOR EQUIPMENT MANUFACTURERS ASSOCIATION

**5672 Strand Court, Suite 2**
**Naples, Florida 34110-3314**

**Tel: 239-514-3441**

**http://www.cemanet.org**

# Control of Hazardous Energy (Lockout/Tagout) 29 CFR 1910.147



# What Is Lockout/Tagout?

- Referred to as LOTO
- Blocks flow of energy from power source to the equipment
- Provides means of warning (tag)



# Regulatory Requirements

- 29 CFR 1910.147–Control of Hazardous Energy
- Covers operators and service personnel
- Requires training of employees



# Types of Lockout Devices

- Locks
- Blocks
- Chains
- Multilock hasps
- Wheel valve covers
- Ball valve covers



# Requirements For Lockout/Tagout Devices

They must be:

- Durable
- Standardized
- Substantial
- Identifiable



# Energy Sources

- Electricity
- Hydraulic
- Pneumatic
- Steam
- Thermal
- Chemical
- Gravity



# Typical Equipment Requiring LOTO

- Presses
- Saws
- Conveyors
- Pumps
- Production Equipment
- Trash Compactors
- Ovens



# When Must LOTO Be Used?

When servicing or maintaining equipment where:

- Hazardous energy exists
- Unexpected start-up could occur
- Either of these could harm an employee



# LOTO Shall Be Used When:

- Employees are required to remove or bypass a safety device
- Employees are required to place any part of their body in harm's way
- Employees are exposed to hazardous energy



# LOTO Exceptions

- Work where hazardous energy does not exist
- Activities performed during routine production processes
- Work on cord-controlled devices
- Hot tap operations where shutdown is not feasible



# Typical LOTO Procedures

- Performing a shutdown
- Isolating equipment
- Applying and removing lockout devices
- Safely releasing stored energy



# Affected Employees

Employees who

- Operate
- Work around
- Occasionally adjust equipment that is subject to LOTO



# Authorized Employee

- Maintains equipment
- Services equipment
- Is trained to use LOTO



# Company Responsibilities

- Ensure de-energization of equipment
- Ensure employee awareness
- Provide appropriate levels of training
- Review program effectiveness
- Maintain and revise program
- Administer appropriate disciplinary actions



# Maintenance Responsibilities

- Lockout/Tagout prior to service or repair
- Remove or cut locks off isolation devices
- Ensure proper training of authorized employees



# Affected Employee Responsibilities

- Notify maintenance, etc., when equipment needs repair or adjustment
- Leave all LOTO devices in place
- Verify equipment is safe to operate following LOTO
- Follow all safety rules while operating the equipment



# Authorized Employee Responsibilities

- Repair or service equipment as needed
- Ensure that all energy sources are locked out
- Test equipment to verify residual energy is dissipated
- Place a “Danger—Do Not Operate” tag on equipment



# Authorized Employee Responsibilities (cont.)

- Obtain assistance when necessary
- Remove locks and/or tags following LOTO
- Coordinate multi-shift repair



# Training Requirements

- Authorized employees—initially and at least annually
- Affected employees—at least initially
- Authorized and affected—whenever changes are made to jobs or procedures
- Authorized and affected—when program deficiencies are noted

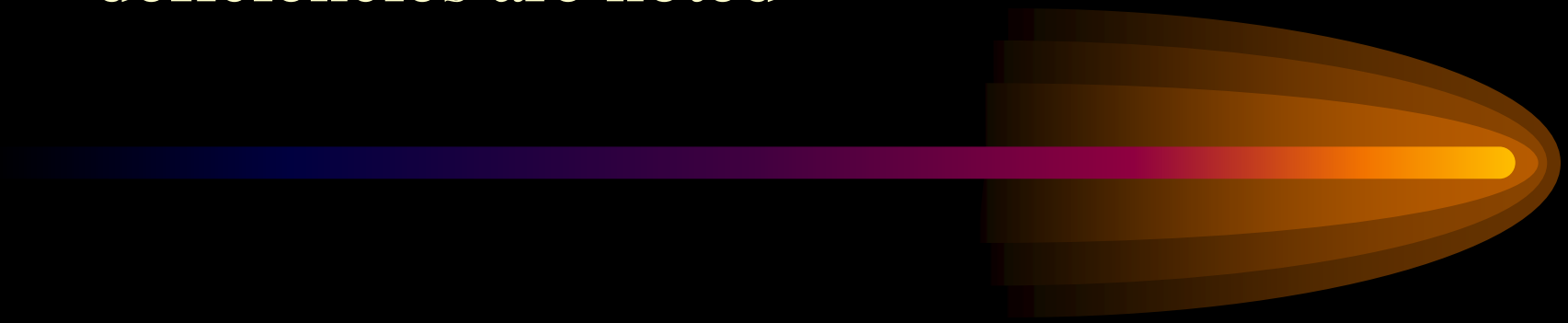

# How to Perform LOTO Safely

- Follow company safety procedures for LOTO
- Refer to procedures on how to lockout specific equipment
- Keep everyone informed when equipment is repaired or serviced
- Stay alert
- Use common sense



# Quiz

1. The LOTO standard is designed to block the flow of energy to a piece of equipment. True or False
2. Types of LOTO devices include _____, _____, and _____.
3. It is not required that a company have written procedures for proper lockout/tagout. True or False
4. An authorized employee is one who _____ or _____ the equipment.
5. If a safety device is removed from a piece of equipment, LOTO is not required. True or False

# Quiz (cont.)

6. Typical energy sources found on equipment include: _____, _____, and _____.
7. Affected employees are those who operate or work around a piece of equipment. True or False
8. As long as an employee has had training on LOTO, the employer or company has no additional responsibilities under 1910.147. True or False
9. Training for authorized employees must be conducted _____ and at least _____.
10. Locks should always stay on the equipment during a shift change. True or False

# Quiz Answers

1. True. It should block the flow of energy and provide a means of warning.
2. Types of LOTO devices include locks, blocks, chains, hasps, wheel valve covers and ball valve covers.
3. False. If lockout is required, a company must have a written program and procedures.
4. An authorized employee is one who services or maintains the equipment.
5. False. LOTO is required when a safety device is removed, an employee is in harms way or when employees are exposed to hazardous energy.

# Quiz Answers (cont.)

6. Typical energy sources include: electricity, hydraulics, pneumatics, steam, thermal, chemical and gravity.
7. True. Affected employees are those who operate or work around the equipment.
8. False. Training is just one of the responsibilities of a company.
9. Training for authorized employees must be conducted initially and at least annually.
10. False. Locks should be removed during shift change and the shift coming on duty should place their locks on the equipment.

# SECTION III

## COMPONENT CUT SHEETS

# FEATURES/BENEFITS



## Setscrew Ball Bearings

For over 70 years, DODGE has been talking to mounted bearing users and listening to their needs. This experience lead to the design of the optimum mounted ball bearing. A state-of-the-art facility was built in Rogersville, Tennessee, to manufacture the new DODGE design.

The result is the DODGE SC/SCM VSC/SL line. it is the most current design setscrew mounted ball bearing on the market and provides the user unmatched quality and true total value.

- Light Duty Narrow Inner Ring (SL)
- Intermediate Duty Narrow Inner Ring (VSC)
- Normal Duty Wide Inner Ring (SC)
- Medium Duty Wide Inner Ring (SCM)
- Wide Variety of Housing Configurations
- Available in 1/2 to 3-1/2 (17 to 90mm) Bore Sizes
- Seal Options:
  - Flingers on SC/SCM (flingers are standard on E-Z KLEEN® nickel plated and Screw Conveyor Hanger Bearings)
  - Low friction labyrinth on SC/SCM
- Other Options:
  - Corrosion resistant inserts for SC/SCM, E-Z KLEEN and nickel plate
  - FDA/USDA lubricant and other special lubricants
  - High temperature SC/SCM designed for temperatures from 225ºF to 400ºF. Factory assembled to order.

For application assistance, contact DODGE Engineering

Phone 864-281-2195
Fax 864-281-2317

**DODGE End Covers**
Available from stock to fit SC, SCM and VSC mounted units, these end covers are designed for added protection from contaminants as well as for OSHA requirements. Covers are OSHA yellow.




### Superior Locking Forces



The DODGE SC/SCM/VSC/SL line uses 65˚ design which offers an optimum balance between locking force and inner ring stress.





## Setscrew Ball Bearings

### The DODGE PROGUARD™ Seal

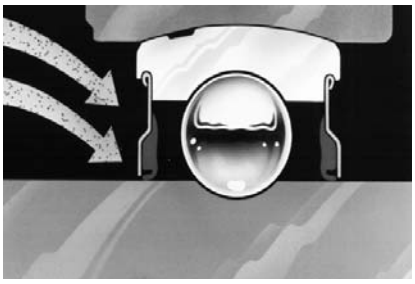

PROGUARD positive contact, low drag rubber seal

DODGE SC/SCM/SSC/SL mounted ball bearings use the field proven PROGUARD land-riding contact seal with steel shield protection. This highly effective positive seal design assures uniform lip contact with the inner ring to seal out contaminants and seal in lubricants.

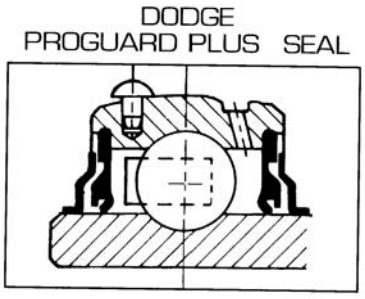


On SC/SCM optional flingers can be added to form a tight labyrinth with the PROGUARD seal and provide additional seal protection against contaminants and trash.

### Stronger, More Flexible Cage

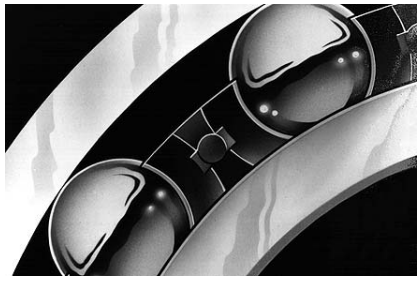

Reinforced, stabilized nylon cage

The ball cage is made of heat stabilized nylon with 33% fill short fiberglass reinforcement for added strength. The nylon material provides a natural lubricity for longer life. Fiberglass reinforcement allows higher operating temperatures than plain nylon, yet is more resistant to fatigue than metallic cages. Short fiberglass allows greater flexibility than steel or normal fiberglass, especially under misalignment. That means longer life in mounted bearings where some degree of misalignment is unavoidably encountered.

### Anti-Rotation Pin (SC/SCM)

An anti-rotation pin prevents rotation of the outer race within the housing. Simple and effective, it makes system inserts easier to replace. There is no need to remove and replace grease fittings, location pins or other devices.



Simplified Anti-rotation device

### DODGE E-Z KLEEN Ball Bearings

Available with Polymer and stainless steel housing, with corrosion resistant bearing inserts. These features make the SC ball bearing uniquely suited for the food, chemical and processing industries.



# HOW TO ORDER/ NOMENCLATURE



## Setscrew Ball Bearings

### HOW TO ORDER

There are two ways to specify DODGE Bearings. Most of the product offering have part numbers with listings shown throughout this catalog. Use of part numbers ensures accurate ordering processing.

When part numbers are not shown, the product may be specified by description or part name. This method is used when ordering units that include modifications or options. To order by description, use the nomenclature key shown below and add any special instructions to the end of the description for options not covered by the nomenclature.

### NOMENCLATURE

**P2B - SC - 104S - NL**

Modification or Feature
- CR = Corrosion Resistant Insert
- E = Expansion
- FF = ProGard Plus seals (with Flingers)
- HT = High Temperature option (400º F maximum)
- LL = Low torque labyrinth seal
- MOD = Modified
- NL = No Lube (sealed for life)
- RL = Relube (used with SL flanges)

Shaft Size

Inches:
- First digit = Number of inches
- Second & third digits = Number of sixteenths of an inch
  - 104 = Indicates 1-4/16 or 1-1/4
- S = Next smaller ring size. E.g. 1-1/4 206 would be written as 104S
- L = Next larger ring size. E.g. 1/2 204 would be written as 008L

Metric:
- First two digits = number of millimeters
- M = Metric

Bearing Type:
- CC = Wide inner ring, normal duty, setscrew locking (for Fan & Blower pillow blocks)
- SC = Wide inner ring, normal duty, 65º setscrew locking
- SCM = Wide inner ring, medium duty, 65º setscrew locking
- SL = Narrow inner ring, light duty, stamped steel housing, 65o setscrew locking
- VSC = Narrow inner ring, intermediate duty, 65º setscrew locking"

Suffixes to the above:
- AH = Air handling
- B = Low backing height pillow block
- H = High backing height (used with non-expansion and expansion units)
- U = Higher back pillow block (for interchangeability with competitor pillow blocks)

Housing:
- CYL = Cylindrical Unit
- F2B = 2 bolt flange
- F2BZ = 2 bolt flange with pilot machined on the back side (used with metric <D> Lok bearings)
- F3B = 3 bolt flange
- F4B = 4 bolt flange
- FB = Flange bracket
- FC = Flanged cartridge (piloted flange)
- F&B = Fan and blower pillow block
- HNG = Hanger bearing
- LF = 3 bolt light duty flange
- LFT = 2 bolt light duty flange
- NSTU = Narrow slot take-up
- P2B = 2 bolt base pillow block
- SCHB = Screw conveyor hanger bearing
- TB = Tapped base pillow block
- TP = Top angle take-up
- WSTU = Wide slot take-up



## Setscrew Ball Bearings

DODGE mounted ball bearings are primarily designed for radial loading. However, they have the capacity to carry thrust loads and combined radial/thrust loads. The maximum recommended load which can be applied is limited by various components in the system, such as bearing, housing, shaft attachments, speed and life requirements. DODGE mounted ball bearings have been applied successfully when these limits have been exceeded under controlled operating conditions. Contact DODGE Engineering for applications which exceed these recommendations.

Select a bearing from the Selection Chart that has a radial load rating at the operating speed equal to or greater than the calculated Equivalent Radial load for a desired $L_{10}$ life. This simple method is all that is required for the majority of general applications and provides for occasional average shock loads.

**$L_{10}$ Hours Life**-is the life which may be expected for at least 90% of a given group of bearings operating under identical conditions. For an $L_{10}$ hours life other than those listed in the Selection Chart, multiply the equivalent Radial load by one of the following factors. For 50,000 $L_{10}$ hours life, use a factor of 1.18 and for 80,000, use 1.39. Then select a bearing from the bold face (30,000) $L_{10}$ ratings only in the Selection Chart that has a rating equal to or greater than this value.

**Heavy Service**-For heavy shock loads, frequent shock loads or severe vibrations, add up to 50% (according to severity of conditions) to the Equivalent Radial Load to obtain a Modified Equivalent Radial Load. Consult Application Engineering for additional selection assistance.

A thrust load value of C/10 is recommended as a guide for general applications and will give adequate $L_{10}$ life. Where substantial radial load pulls the housing away from the mounting base, both the hold-down bolts and housing must be of adequate strength. Auxiliary load carrying devices, such as sheer bars, are advisable for side or end-loading of pillow blocks and radial loads for flange units.

To determine the $L_{10}$ hours life for loads and RPM's not listed use the following equation:

$$L_{10} = \left(\frac{C}{P}\right)^3 \times \frac{16667}{RPM}$$

Where:
$L_{10}$ = Life, hours
C = Dynamic Capacity, lbs. or N
P = Equivalent Radial Load, lbs. or N

When the load on a ball bearing is solely a radial load with no thrust (axial) load, the Equivalent Radial Load (P) is equal to the actual radial load. However, when a thrust (axial) load is applied, the radial and thrust loads applied must be converted into an Equivalent Radial Load. The use of the X (radial factor) and Y (thrust factor) from Table 1 convert the actual applied thrust and radial loads to an Equivalent Radial Load which has the same effect on the life of a bearing as a radial load of this magnitude.

$P = (X \times F_R) + (Y \times F_A)$

Where:
P = Equivalent Radial Load, lbs.
$F_R$ = Radial load, lbs.
$F_A$ = Thrust load, lbs.
e = Thrust load to radial load factor (Table 1)
X = Radial load factor (Table 1)
Y = Thrust Factor (Table 1)
$C_O$ = Basic static capacity

To find X and Y, first calculate $F_A/C_O$ to determine e. Calculate $F_A/F_R$ and compare to e to determine the X and Y factors to use from Table 1.

Substitute all known values into the Equivalent Radial Load equation. The Equivalent Radial loads (P) thus determined can be used in the $L_{10}$ life formula or compared to the allowable Equivalent Radial Load rating desired in the expanded rating chart to select a bearing (Table 2).

If calculated value of P is less than $F_R$, use $P=F_R$.

| $\frac{F_A}{C_0}$ | e | Radial/Thrust Factors | | | |
|---|---|---|---|---|---|
| | | If $F_A/F_R$ is equal to or less than e | | If $F_A/F_R$ is greater than e | |
| | | $F_A/F_R \le e$ | | $F_A/F_R > e$ | |
| | | X | Y | X | Y |
| .014 | .19 | 1 | 0 | 0.56 | 2.30 |
| .021 | .21 | 1 | 0 | 0.56 | 2.15 |
| .028 | .22 | 1 | 0 | 0.56 | 1.99 |
| .042 | .24 | 1 | 0 | 0.56 | 1.85 |
| .056 | .26 | 1 | 0 | 0.56 | 1.71 |
| .070 | .27 | 1 | 0 | 0.56 | 1.63 |
| .084 | .28 | 1 | 0 | 0.56 | 1.55 |
| .110 | .30 | 1 | 0 | 0.56 | 1.45 |
| .170 | .34 | 1 | 0 | 0.56 | 1.31 |
| .280 | .38 | 1 | 0 | 0.56 | 1.15 |
| .420 | .42 | 1 | 0 | 0.56 | 1.04 |
| .560 | .44 | 1 | 0 | 0.56 | 1.00 |

**Lubrication**-DODGE Ball Bearings are lubricated at the factory and are ready to run. The bearings are initially lubricated with Shell Alvania #2 and should be relubricated with the same or some equivalent. For high speeds, high loads, extreme temperatures and other abnormal operating conditions, special greases may be required. Contact DODGE Application Engineering for recommendations on these types of applications.

**Misalignment**-DODGE Ball Bearings are designed to allow a maximum of ± 2° static misalignment. These bearings are not suitable for dynamic misalignment. To ensure good alignment, mounting surfaces must be checked for flatness and must lie in the same plane. When tightening base bolts, each bolt should be alternately tightened in incremental torque values until full torque is achieved to prevent the angular shifting of the pillow block that occurs when one bolt is tightened to its full torque. Shimming may be required to minimize misalignment.

| Shaft Tolerances | | |
|---|---|---|
| Normal Shaft Size Inches | Commercial Shaft Tolerances Inches | Recommended Shaft Tolerances Set Screw Ball Bearings Inches |
| Up to 1-1/2" | +0.000 -0.002 | +0.0000 -0.0005 |
| Over 1-1/2" to 2-1/2" | +0.000 -0.003 | +0.0000 -0.0010 |
| Over 2-1/2" to 4" | +0.000 -0.004 | +0.0000 -0.0010 |


| FEATURES/BENEFITS PAGE B3-2 | NOMENCLATURE PAGE B3-6 | SELECTION/DIMENSIONS PAGE B3-10 | MODIFICATION/ACCESSORIES PAGE B3-132 |
|---|---|---|---|

# SELECTION/DIMENSIONS



## Setscrew Ball Bearings

### SCM MEDIUM DUTY 4-BOLT FLANGE BEARINGS

**Lube Fitting Thread Size:**
203 - 204 series - 1/4-28 tapered thread
207 - 207 series - 1/8-27 NPT

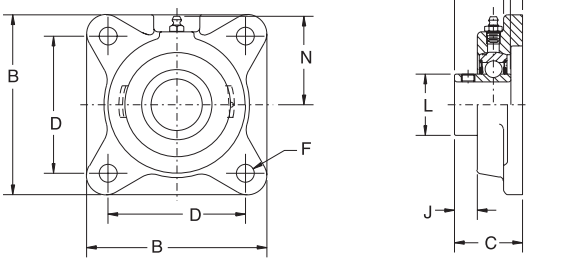


| Series | Shaft Size | Standard | | No-Lube/Sealed for Life (-NL) | | With Flingers | |
|---|---|---|---|---|---|---|---|
| | | Part No. | Description | Part No. | Description | Part No. | Description |
| 206 | 1 | **126226** | F4B-SCM-100 | **052017** | F4B-SCM-100-NL | @ | F4B-SCM-100-FF |
| | *25mm* | ***125965*** | *F4B-SCM-25M* | @ | *F4B-SCM-25M-NL* | @ | *F4B-SCM-25M-FF* |
| 207 | 1-3/16 | **126227** | F4B-SCM-103 | @ | F4B-SCM-103-NL | **064681** | F4B-SCM-103-FF |
| | 1-1/4 | **124206** | F4B-SC-104 | **126528** | F4B-SC-104-NL | **052508** | F4B-SC-104-FF |
| | *30mm* | ***125966*** | *F4B-SCM-30M* | @ | *F4B-SCM-30M-NL* | @ | *F4B-SCM-30M-FF* |
| 208 | 1-7/16 | **126187** | F4B-SCM-107 | @ | F4B-SCM-107-NL | **053197** | F4B-SCM-107-FF |
| | *35mm* | ***125967*** | *F4B-SCM-35M* | @ | *F4B-SCM-35M-NL* | @ | *F4B-SCM-35M-FF* |
| 209 | 1-1/2 | **126188** | F4B-SCM-108 | **062897** | F4B-SCM-108-NL | **054856** | F4B-SCM-108-FF |
| | 1-5/8 | **125170** | F4B-SC-110L | @ | F4B-SC-110L-NL | @ | F4B-SC-110L-FF |
| | *40mm* | ***125968*** | *F4B-SCM-40M* | @ | *F4B-SCM-40M-NL* | @ | *F4B-SCM-40M-FF* |
| 210 | 1-11/16 | **126189** | F4B-SCM-111 | **065576** | F4B-SCM-111-NL | **050137** | F4B-SCM-111-FF |
| | 1-3/4 | **126190** | F4B-SCM-112 | @ | F4B-SCM-112-NL | **126274** | F4B-SCM-112-FF |
| | *45mm* | ***125969*** | *F4B-SCM-45M* | @ | *F4B-SCM-45M-NL* | @ | *F4B-SCM-45M-FF* |
| 211 | 1-15/16 | **126191** | F4B-SCM-115 | **052302** | F4B-SCM-115-NL | **126115** | F4B-SCM-115-FF |
| | 2 | **126192** | F4B-SCM-200 | **052004** | F4B-SCM-200-NL | **126132** | F4B-SCM-200-FF |
| | *50mm* | ***125970*** | *F4B-SCM-50M* | @ | *F4B-SCM-50M-NL* | @ | *F4B-SCM-50M-FF* |
| 212 | 2-3/16 | **126193** | F4B-SCM-203 | **052003** | F4B-SCM-203-NL | **050276** | F4B-SCM-203-FF |
| | 2-1/4 | **126283** | F4B-SCM-204 | **126537** | F4B-SCM-204-NL | **054482** | F4B-SCM-204-FF |
| | *55mm* | ***125971*** | *F4B-SCM-55M* | @ | *F4B-SCM-55M-NL* | @ | *F4B-SCM-55M-FF* |
| 214 | 2-7/16 | **126194** | F4B-SCM-207 | **052002** | F4B-SCM-207-NL | **126116** | F4B-SCM-207-FF |
| | 2-1/2 | **126195** | F4B-SCM-208 | **065653** | F4B-SCM-208-NL | **126326** | F4B-SCM-208-FF |
| | *65mm* | ***125972*** | *F4B-SCM-65M* | @ | *F4B-SCM-65M-NL* | @ | *F4B-SCM-65M-FF* |
| 215 | 2-11/16 | **126186** | F4B-SCM-211 | @ | F4B-SCM-211-NL | **064715** | F4B-SCM-211-FF |
| | *70mm* | ***125973*** | *F4B-SCM-70M* | @ | *F4B-SCM-70M-NL* | @ | *F4B-SCM-70M-FF* |
| 216 | 2-15/16 | **126196** | F4B-SCM-215 | **126538** | F4B-SCM-215-NL | **051599** | F4B-SCM-215-FF |
| | 3 | **126197** | F4B-SCM-300 | **126539** | F4B-SCM-300-NL | **126781** | F4B-SCM-300-FF |
| | *75mm* | ***125974*** | *F4B-SCM-75M* | @ | *F4B-SCM-75M-NL* | @ | *F4B-SCM-75M-FF* |
| 218 | 3-7/16 | **126198** | F4B-SCM-307 | **126540** | F4B-SCM-307-NL | **126271** | F4B-SCM-307-FF |
| | 3-1/2 | **126199** | F4B-SCM-308 | **126541** | F4B-SCM-308-NL | **056713** | F4B-SCM-308-FF |
| | *85mm* | ***125975*** | *F4B-SCM-85M* | @ | *F4B-SCM-85M-NL* | @ | *F4B-SCM-85M-FF* |

@ Assembled to order

FEATURES/BENEFITS PAGE B3-2 | NOMENCLATURE PAGE B3-4 | SELECTION PAGE B3-5 | RELATED PRODUCTS PAGE B3-133



## Setscrew Ball Bearings
### SCM MEDIUM DUTY 4-BOLT FLANGE BEARINGS

| Series | Shaft Size | Weight lbs. *kgs.* | A | B | C | D | F Bolt Dia. | H | J | L | N |
|---|---|---|---|---|---|---|---|---|---|---|---|
| 206 | 1<br>*25mm* | 3.0<br>*1.3* | 1-25/64<br>*35.3* | 4-1/4<br>*108.0* | 1-17/32<br>*38.9* | 3-1/4<br>*82.6* | 7/16<br>*M10* | 1/2<br>*12.7* | 15/32<br>*11.9* | 1-37/64<br>*40.1* | 2-3/16<br>*55.6* |
| 207 | 1-3/16<br>1-1/4<br>*30mm* | 4.1<br>4.0<br>*1.4* | 1-17/32<br>*38.9* | 4-3/4<br>*120.7* | 1-3/4<br>*44.5* | 3-5/8<br>*92.1* | 1/2<br>*M12* | 9/16<br>*14.3* | 17/32<br>*13.5* | 1-27/32<br>*46.8* | 2-7/16<br>*61.9* |
| 208 | 1-7/16<br>*35mm* | 5.0<br>*2.1* | 1-11/16<br>*42.9* | 5-1/8<br>*130.2* | 1-7/8<br>*47.6* | 4<br>*101.6* | 1/2<br>*M12* | 9/16<br>*14.3* | 17/32<br>*13.5* | 2-3/64<br>*52.0* | 2-3/8<br>*60.3* |
| 209 | 1-1/2<br>1-5/8<br>*40mm* | 6.1<br>6.1<br>*2.7* | 1-23/32<br>*43.7* | 5-3/8<br>*136.5* | 1-15/16<br>*49.2* | 4-1/8<br>*104.8* | 1/2<br>*M14* | 5/8<br>*15.9* | 17/32<br>*13.5* | 2-7/32<br>*56.4* | 2-3/4<br>*69.9* |
| 210 | 1-11/16<br>1-3/4<br>*45mm* | 7.1<br>6.9<br>*3.0* | 1-3/4<br>*44.5* | 5-5/8<br>*142.9* | 2<br>*50.8* | 4-3/8<br>*111.1* | 1/2<br>*M16* | 5/8<br>*15.9* | 17/32<br>*13.5* | 2-7/16<br>*61.9* | 2-7/8<br>*73.0* |
| 211 | 1-15/16<br>2<br>*50mm* | 9.5<br>9.3<br>*4.1* | 1-27/32<br>*46.8* | 6-1/2<br>*165.1* | 2-5/32<br>*54.8* | 5-1/8<br>*130.2* | 5/8<br>*M16* | 11/16<br>*17.5* | 9/16<br>*14.3* | 2-23/32<br>*69.1* | 3-1/4<br>*82.6* |
| 212 | 2-3/16<br>2-1/4<br>*55mm* | 11.3<br>11.1<br>*6.0* | 1-63/64<br>*50.4* | 6-7/8<br>*174.6* | 2-9/32<br>*57.9* | 5-5/8<br>*142.9* | 5/8<br>*M16* | 11/16<br>*17.5* | 9/16<br>*14.3* | 2-31/32<br>*75.4* | 3-1/2<br>*88.9* |
| 214 | 2-7/16<br>2-1/2<br>*65mm* | 16.2<br>16.0<br>*7.3* | 2-15/64<br>*56.8* | 7-3/8<br>*187.3* | 2-3/4<br>*69.9* | 5-7/8<br>*149.2* | 5/8<br>*M16* | 11/16<br>*17.5* | 9/16<br>*14.3* | 3-5/16<br>*84.1* | 3-11/16<br>*93.7* |
| 215 | 2-11/16<br>*70mm* | 18.3<br>*8.0* | 2-9/32<br>*57.9* | 7-3/4<br>*196.9* | 2-57/64<br>*73.4* | 6.0<br>*152.4* | 3/4<br>*M18* | 1<br>*25.4* | 41/64<br>*16.3* | 3-5/8<br>*92.1* | 3-7/8<br>*98.4* |
| 216 | 2-15/16<br>3<br>*75mm* | 21.5<br>21.2<br>*9.4* | 2-11/32<br>*59.5* | 7-3/4<br>*196.9* | 3-3/32<br>*78.6* | 6<br>*152.4* | 3/4<br>*M18* | 7/8<br>*22.2* | 19/32<br>*15.1* | 3-53/64<br>*97.2* | 4-3/32<br>*104.0* |
| 218 | 3-7/16<br>3-1/2<br>*85mm* | 28.0<br>27.4<br>*12.2* | 2-31/64<br>*63.1* | 8-7/16<br>*214.3* | 3-11/32<br>*84.9* | 6-3/4<br>*171.5* | 3/4<br>*M18* | 1<br>*25.4* | 9/16<br>*14.3* | 4-23/64<br>*110.7* | 4-5/8<br>*117.5* |


| FEATURES/BENEFITS PAGE B3-2 | NOMENCLATURE PAGE B3-4 | SELECTION PAGE B3-5 | RELATED PRODUCTS PAGE B3-133 |
|---|---|---|---|

# MODIFICATIONS/ ACCESSORIES



## Setscrew Ball Bearings

### LUBRICANTS
DODGE ball bearings are factory lubricated with Shell Alvania #2 lubricant. For applications where extreme ambient temperatures or speeds are anticipated or environmental considerations require a different lubricant, DODGE has a wide variety of lubricants available. Special lubricant options usually require set-up charges and premiums
.

### SEALS
The PROGUARD PLUS seal is a highly effective positive contact, land riding seal with flingers pressed on to each side of the inner ring offering added protection from wash down or extreme contamination. For high speeds or where seal drag would be an impediment, an all metallic labyrinth seal is available.

### HIGH TEMPERATURE
DODGE high temperature bearings are designed to operate in temperatures from 225°F (108°C) to 400°F (205° C). The bearings have adjusted internal clearances, metallic labyrinth seals, high temperature retainers, heat stabilized outer rings, and lubricants to meet the temperature needs of the application. To insure proper replacement, the bearing is identified by a six digit part number etched on a stainless steel nameplate riveted to the housing. The part number identifies the specific feature of the bearing. High temperature bearings are factory assembled to order and are available at extra cost. Consult Dodge Engineering for application assistance at (864)297-4800 or fax (864)281-2317.

### AIR HANDLING
Industrial fans and blowers generally operate at high speeds with bearing requirements of long life and quiet operation. Dodge stocks SC, and SCM Air Handling Pillow Blocks and flange bearings that are specifically designed to meet the requirements of the air handling industry. These bearings are 100% noise tested, and have an air handling fit for long life and quiet operation. These bearings are recommended for fan and blower applications. Sizes and housing configurations not listed can be supplied on a made to order basis.

### HOUSING MATERIAL
For extra corrosion resistance, a variety of housing finishes are available. Special materials include stainless steel or polymer housing, as an option. These coatings conform to U.S.D.A. and F.D.A. requirements. SC and SCM inserts can be supplied with a corrosion resistant coating on the inner and outer rings, stainless steel balls and set-screws, and nickel plated flingers as well as F.D.A. lubricant.

### OTHER MODIFICATIONS
For applications requiring modifications not listed, we encourage you to contact our Customer Order Engineering Department at (864)284-5700 or fax (864)281-2317.

## Mounted Bearings Life Adjustment Factor

**1.1 GENERAL.** For certain applications, it is desirable to specify life for reliability other than 90%. In such cases a life adjustment factor for reliability may be applied to the RATING LIFE. Section 1.2 discusses life adjustment factors for reliability.

Some bearing steels; e.g., vacuum-melted steels, and improved processing techniques, permit manufacture of bearings which offer endurance greater than that calculated by the RATING LIFE formula. Section 1.3 recommends methods to incorporate life adjustment factors for bearing materials into the life formula.

Bearing life calculated according to the RATING LIFE formula assumes proper application conditions. If lubrication is not adequate, loading unusual, or temperatures extreme, the ability of the bearing to attain or exceed the RATING LIFE is seriously impaired. Section 1.4 contains some basic recommendations concerning the effect of unusual application conditions on bearing life.

**1.2 LIFE ADJUSTMENT FACTOR FOR RELIABILITY.** Bearing life estimated in accordance with this standard is RATING LIFE; i.e., the life associated With 90% reliability or the life which 90% of a group of apparently identical bearings in a given application under similar conditions of load and speed will complete or exceed. While RATING LIFE has proven useful over a period of years as a criterion of performance, some applications require definition of life at reliabilities greater than 90%.

To determine bearing life with reliabilities other than 90% (as previously calculated from the Selection Procedure) the L10 must be adjusted by a factor a1, such that $L_n = a_1 \times L10$.

The life adjustment factors for reliability of Table 11 are recommended.

**Table 11: Life Adjustment Factors For Reliability**

| Reliability % | $L_n$ | Life Adjustment Factor for Reliability $a_1$ |
|---|---|---|
| 90 | $L_{10}$ | 1 |
| 95 | $L_5$ | 0.62 |
| 96 | $L_4$ (Rating Life) | 0.53 |
| 97 | $L_3$ | 0.44 |
| 98 | $L_2$ | 0.33 |
| 99 | $L_1$ | 0.21 |

**1.3 LIFE ADJUSTMENT FACTOR FOR MATERIAL**. For bearings, which incorporate improved materials and processing, the $L_{10}$ (as previously calculated in Selection Procedure) must be adjusted by a factor $a_2$. Factor $a_2$ depends upon steel analysis, metallurgical processing, forming methods, heat treatment and manufacturing methods in general.

Bearings fabricated from consumable vacuum remelted steels and certain other special analysis steels have demonstrated extraordinarily long endurance. These steels are of exceptionally high quality, and bearings fabricated from these are usually considered special manufacture. As such, $a_2$ values will not be specified for such steels in this discussion. Generally, $a_2$ values for such steels can be obtained from the bearing manufacturer.

**1.4 LIFE ADJUSTMENT FACTOR FOR APPLICATION CONDITIONS.** Application conditions which affect bearing life include:

1. Lubrication.
2. Load distribution (including effects of clearance, misalignment, housing, and shaft stiffness, type of loading and thermal gradients).
3. Temperature.

Consideration of (1.2) and (1.3) above requires analytical and experimental techniques beyond the scope of this discussion, therefore, the user should consult the bearing manufacturer for evaluations and recommendations.

In most bearing applications, lubrication serves to separate the rolling surfaces; i.e., rolling elements and raceways; to reduce retainer-rolling elements and retainer-land friction and sometimes to act as a coolant to remove frictional heat generated by the bearing.

If all limitations and qualifications specified by this discussion are observed, then the life adjustment application factor for bearings which are adequately lubricated is 1; i.e., $a_3$=1.

Operating conditions where $a_3$ might be less than 1 include:

a. exceptionally low values of Ndm (rpm times bore diameter in mm); e.g., Ndm 1000.
b. Lubricant viscosity less than 20.4 centistokes (100 SSU) at operating temperature.
c. Excessively high operating temperatures.

When a3 is less than 1, it may not be assumed that the deficiency in lubrication can be overcome by using an improved steel.

**1.5 FACTOR COMBINATIONS.** A fatigue life formula embodying the foregoing life adjustment factors is:

For Ball Bearings:

$$L_n = a_1 \times a_2 \times a_3 \left(\frac{C^*}{P}\right)^3 \times \frac{(16{,}667)}{RPM}$$

For Tapered Roller Bearings:

$$L_n = a_1 \times a_2 \times a_3 \left(\frac{C90^*}{P}\right)^{10/3} \times \frac{(1{,}5000{,}000)}{RPM}$$

For Spherical Roller Bearings:

$$L_n = a_1 \times a_2 \times a_3 \left(\frac{C^*}{P}\right)^{10/3} \times \frac{(16{,}667)}{RPM}$$

Indiscriminate application of the life adjustment factors in this formula may lead to serious over-estimation of bearing endurance, since fatigue life is only one criterion for bearing selection.

Care must be exercised to select bearings which are of sufficient size for the application. Undersizing of shaft and housing structures by using bearings which appear adequate from a life standpoint could lead to misalignment and fitting problems which could invalidate the formulas in this discussion.

* C = Basic Load Rating computed in accordance with ABMA-ANSI Standards.
C90 = C x.259

# INSTRUCTION MANUAL FOR DODGE® SETSCREW, ECCENTRIC COLLAR, D-LOK, H, H-E SERIES & EZ-KLEEN MOUNTED BALL BEARINGS

## INSTALLATION

**WARNING**

To ensure that drive is not unexpectedly started, turn off and lock out or tag power source before proceeding. Failure to observe these precautions could result in bodily injury.

**Under certain operating conditions it is possible for a static electric charge to build-up on E-Z KLEEN® Polymer Housings. Do not operate these bearings in any environment where a sudden static discharge may cause either an operating hazard or personnel discomfort.**

1. Clean shaft and bearing bore thoroughly. Measure and confirm shaft size and tolerance. File flats on shaft at setscrew locations to permit easy removal of bearing.
2. Slip bearing into position. Be sure that bearing is not on a worn section of the shaft. For tighter fits, tap inner ring face only with soft driver. DO NOT HAMMER ON HOUSING.
3. The bearing outer ring OD is spherical and swivels in the housing to accommodate misalignment. Snug hold-down bolts and use shaft to swivel each bearing until its final position is in the center of free movement top to bottom as well as side to side. Pass shaft through both bearings without forcing. This will prevent preloading of the bearings. Housing slippage depends on the mounting hold-down bolt tightening torque, number of bolts and friction characteristics between mounting surfaces. Auxiliary load carrying devices such as shear bars are advisable for side or end loading of pillow blocks and radial loads for flange units where normal to heavy loading or shock loading is encountered.
   **NOTE:** On coated and non-metallic housings, hold-down bolts should be tightened carefully with flat washers to prevent damage to the coating. Coated housings have reduced friction characteristics, so auxiliary load carrying devices are even more important in those applications.
4. Tighten hold-down bolts to proper torque (Table 1). Turn shaft by hand. Resistance to turning should be the same as before full tightening of hold-down bolts.
5. For setscrew mounted bearings: **After final alignment of the shaft, tighten both setscrews hand tight**, then the setscrews should be tightened alternately and in small increments to the torque specified in Table 1. After 24 hours operation, the setscrews should be retightened to the torque in Table 1 to assure full locking of the inner race to the shaft. Care should be taken that the socket key or driver is in good condition with no rounded corners and the key is fully engaged in the setscrew and held square with the setscrew to prevent rounding out of the setscrew socket when applying maximum torque. Do not drill through the setscrew holes for spot drilling of the shaft. (Some inner rings have tempered setscrew threads and can be damaged by a drill.) If spot drilling is required, locate bearings on the shaft and center punch through the setscrew hole. Remove bearing and spot drill the shaft, then reassemble over the spot drilled position and assemble as above. Milled or filed flats are preferable to spot drilling.
   **NOTE: On all SC Product the setscrews can be re-torqued many times without damage to the bearing system. To achieve maximum shaft holding power it is highly recommended that setscrews be replaced with new hardware after any disassembly operation.**
6. For eccentric collar mounted bearings, slide collar against cam end of inner race. Use a punch in the hole provided in the collar, tap collar smartly in the direction of shaft rotation. Tighten setscrews to proper torque (Table 1). To remove bearings, loosen setscrew and tap collar in the direction opposite of shaft rotation.
7. For D-LOK mounted bearings, be sure collar is square and tight against shoulder on inner ring. Tighten cap screw to recommended torque shown in Table 1.
8. For expansion bearings (H-E Series), locate inner unit in housing to allow expansion in the desired direction before locking to the shaft.

**WARNING:** Because of the possible danger to persons(s) or property from accidents which may result from the improper use of products, it is important that correct procedures be followed: Products must be used in accordance with the engineering information specified in the catalog. Proper installation, maintenance and operation procedures must be observed. The instructions in the instruction manuals must be followed. Inspections should be made as necessary to assure safe operation under prevailing conditions. Proper guards and other suitable safety devices or procedures as may be desirable or as may be specified in safety codes should be provided, and are neither provided by Rockwell Automation nor are the responsibility of Rockwell Automation. This unit and its associated equipment must be installed, adjusted and maintained by qualified personnel who are familiar with the construction and operation of all equipment in the system and the potential hazards involved. When risk to persons or property may be involved, a holding device or shear bars must be an integral part of the driven equipment.

| SETSCREWS | | | | | D-LOK | | | MOUNTING BOLTS | | | | | |
|---|---|---|---|---|---|---|---|---|---|---|---|---|---|
| | | Recommended Torque | | | | | | Metal Housings | | EZ-KLEEN Housed Bearings | | | |
| Setscrew Size | Key Hex Across Flats | Standard Ball Bearing Insert | | Corrosion Resistant-Stainless Steel | Cap Screw Size | Recom-mended Torque | E-Z Kleen Recom-mended Torque | Bolt Size | Recom-mended Dry Torque (Grade 2) | 2-Bolt PB, 2 & 4-Bolt Fig. And Fig. Brackets | | Tapped-Base PB | |
| | | Min | Max | | | | | | | Bolt Size | Torque* | Bolt Size | Torque** |
| (in.) | (in.) | (in-lbs.) | (in-lbs.) | (in-lbs.) | (in.) | (in-lbs.) | (in-lbs.) | (in.) | (in-lbs.) | (in.) | (in-lbs.) | (in.) | (in-lbs.) |
| #10 | 3/32 | 28 | 33 | 25 | #8-32 | 58 | 46 | 3/8-16 | 240 | 3/8-16 | 225 | 3/8-16 | 175 |
| 1/4 | 1/8 | 66 | 80 | 60 | #10-32 | 90 | 72 | 7/16-14 | 384 | 7/16-14 | 350 | 7/16-14 | 350 |
| 5/16 | 5/32 | 126 | 156 | 117 | 1/4-28 | 180 | 144 | 1/2-13 | 600 | 1/2-13 | 500 | 1/2-13 | 400 |
| 3/8 | 3/16 | 228 | 275 | 206 | 5/16-24 | 400 | 320 | 5/8-11 | 1200 | 9/16-12 | 650 | | |
| 7/16 | 7/32 | 342 | 428 | 321 | 3/8-24 | 750 | 600 | 3/4-10 | 1950 | 5/8-11 | 1000 | | |
| | | | | | | | | 7/8-9 | 2890 | | | | |
| (mm) | (mm) | (N-m) | (N-m) | (N-m) | (mm) | (N-m) | (N-m) | (mm) | (N-m) | (mm) | (N-m) | *Torque for Austenitic (18-8) Stainless<br>**Max. torque values published. Do not exceed. | |
| M5 | 2.5 | 3.2 | 3.7 | 2.8 | M4 | 5.85 | 4.68 | M10 | 29 | M8 | 15 | | |
| M6 | 3 | 6.2 | 7.7 | 5.8 | M5 | 10.75 | 8.6 | M12 | 50 | M10 | 25 | | |
| M8 | 4 | 14.2 | 17.8 | 13.4 | M6 | 20.5 | 16.4 | M16 | 124 | M12 | 50 | | |
| M10 | 5 | 26 | 31 | 23 | M8 | 45 | 36 | M20 | 238 | M14 | 75 | | |
| M12 | 6 | 46 | 57 | 43 | | | | M22 | 322 | M16 | 125 | | |

## LUBRICATION

High Speed Operation — In the higher speed ranges, too much grease will cause over-heating. The amount of grease that the bearing will take for a particular high speed application can only be determined by experience. If excess grease in the bearing causes overheating, it will be necessary to remove grease fitting to permit excess grease to escape. The bearing has been greased at the factory and is ready to run. When establishing a relubrication schedule, note that a small amount of grease at frequent intervals is preferable to a large amount at infrequent intervals.

### Lubrication Guide

**Use a No. 2 Lithium complex base grease or equivalent.***

| Hours Run per Day | Suggested Lubrication Period in Weeks | | | | | | | |
|---|---|---|---|---|---|---|---|---|
| | 1 to 250 RPM | 251 to 500 RPM | 501 to 750 RPM | 751 to 1000 RPM | 1001 to 1500 RPM | 1501 to 2000 RPM | 2001 to 2500 RPM | 2501 to 3000 RPM |
| 8 | 12 | 12 | 10 | 7 | 5 | 4 | 3 | 2 |
| 16 | 12 | 7 | 5 | 4 | 2 | 2 | 1 | 1 |
| 24 | 10 | 5 | 3 | 2 | 1 | 1 | 1 | 1 |

* For H and H-E series bearings, use Exxon Unirex N3 or equivalent suitable to 300° F.

Lubrication recommendations are intended for standard products applied in general operating conditions. For modified products, high temperature applications, and other anomalous applications contact product engineering at 864-284-5700

**www.rockwellautomation.com** **www.ptplace.com** **www.dodge-pt.com** **www.reliance.com** **www.ptplace.ca**

**Corporate Headquarters**
Rockwell Automation, 777 East Wisconsin Avenue, Suite 1400, Milwaukee, WI, 53202-5302 USA, Tel: (1) 414.212.5200, Fax: (1) 414.212.5201

**Headquarters for Dodge and Reliance Electric Products**
Americas: Rockwell Automation, 6040 Ponders Court, Greenville, SC 29615-4617 USA, Tel: (1) 864.297.4800, Fax: (1) 864.281.2433
Europe/Middle East/Africa: Rockwell Automation, Brühlstraße 22, D-74834 Elztal-Dallau, Germany, Tel: (49) 6261 9410, Fax: (49) 6261 17741
Asia Pacific: Rockwell Automation, 55 Newton Road, #11-01/02 Revenue House, Singapore 307987, Tel: (65) 6356-9077, Fax: (65) 6356-9011

**Headquarters for Allen-Bradley Products, Rockwell Software Products and Global Manufacturing Solutions**
Americas: Rockwell Automation, 1201 South Second Street, Milwaukee, WI 53204-2496 USA, Tel: (1) 414.382.2000, Fax: (1) 414.382.4444
Europe/Middle East/Africa: Rockwell Automation SA/NV, Vorstlaan/Boulevard du Souverain 36, 1170 Brussels, Belgium, Tel: (32) 2 663 0600, Fax: (32) 2 663 0640
Asia Pacific: Rockwell Automation, 27/F Citicorp Centre, 18 Whitfield Road, Causeway Bay, Hong Kong, Tel: (852) 2887 4788, Fax: (852) 2508 1846

2/05

Copyright © 2004 Rockwell Automation. All rights reserved. Printed in USA.
DODGE, D-LOK and EZ-KLEEN are trademarks of Rockwell Automation.

IM 499498

WAM Inc.

# New CinchPack CEMA CinchSeal

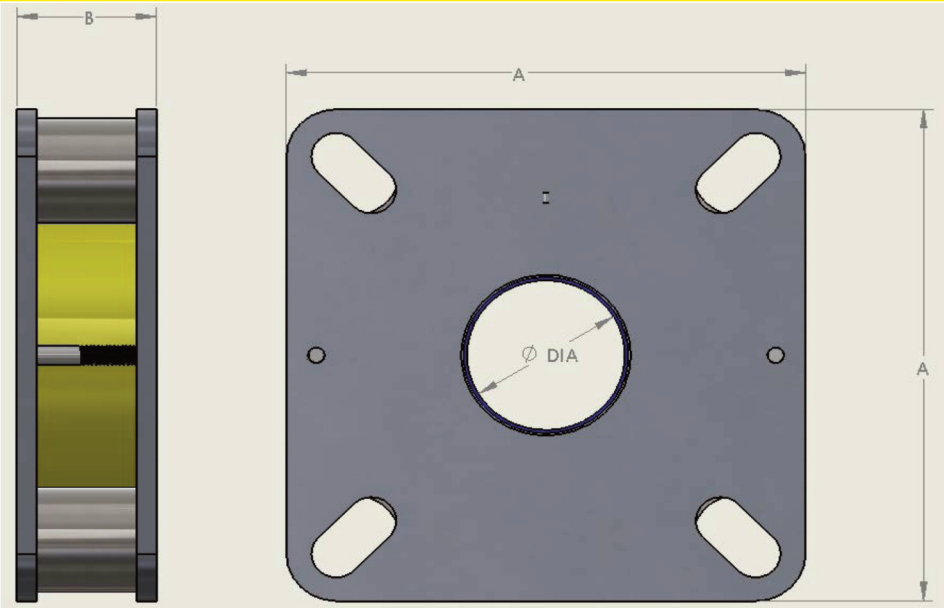





| Shaft Size | Part Number | A | B |
|---|---|---|---|
| 1.50″ | SE.3C | 5 3/8 | 1 3/4 |
| 2.00″ | SE.4C | 6 1/2 | 1 3/4 |
| 2.43″ | SE.5C | 7 3/8 | 1 3/4 |
| 3.00″ | SE.6C | 7 3/4 | 1 3/4 |
| 3.43″ | SE.7C | 9 1/4 | 1 3/4 |

- Designed for C.E.M.A screw conveyors to replace lip seals and waste packs
- Doesn't score rotating shafts
- Designed to handle 1/4" total shaft misalignment
- Purge with air, 5 to 8 psi above vessel pressure. Each seal should have its own dedicated airline. Sharing a single airline between multiple seals is not permitted. Use separate air regulators for each seal.
- Zero maintenance due to unique self adjusting design
  Maximum Operating temperature is 425F
- Torque Setting for seal mounting 25 ft-lbs
- Field repairable
- FDA Approved
- Standard Housing Material is 6061 aluminum alloy
- Standard Elastomer Material is silicone based, FDA approved Elastomer
- Maximum shaft speed is 400 FPM, air purged

**WAM Inc - Texas Division, 1300 Triad Blvd., Fort Worth, TX 76131**
**817-232-2678, www.waminc.com**

# MOTORS - AC INDUCTION, SINGLE & POLYPHASE

## 1. Overview

This user manual applies to NORD Motor products and it provides general information for motor operation, installation, maintenance, inspection, repair, and trouble shooting, which is relevant to most of the motor products shipped by NORD. Information and instructions provided in this manual, safety and commissioning information and all other manuals applicable to any items supplied by NORD must be observed.

This instruction manual is not intended to include comprehensive details and information related to all possible design variations or accessories options available with NORD motors. If there is any uncertainty about specific procedures, instructions or motor details, then please refer these questions to NORD for additional information or clarification.

Before installing, operating, or performing maintenance on any electrical motor become familiar with the following:

- The detailed operating instructions and wiring diagrams.
- All applicable national, local and system-specific regulations, codes and practices.
- The national / regional regulations governing safety and accident prevention.
- The proper use of any tools, transportation or hoisting equipment, and safety equipment needed to complete the installation.
- To avoid serious injury or possible damage to the equipment or machine, compliance with all safety and information notes is mandatory!

**⚠ *WARNING* ⚠**

All work involved in the transport, connection, commissioning and maintenance of any NORD product must be carried out by qualified and responsible technicians. All applicable national, regional, and local work regulations and safety requirements must also be complied with. NORD assumes no liability for personal injury, accidental death, or equipment damage and malfunctions resulting from failure to comply with installation or operating instructions, safety notes, or any work regulations and laws!

**⚠ *WARNING* ⚠**

To avoid electrocution, injury or death, make certain the motor is properly grounded, completely de-energized and brought to a no-voltage condition prior to working on any electrical connections.

## 2. Motor Types

NORD AC electric induction motors described in this manual generally include the following types:

- Single speed or two-speed design.
- Three phase alternating current or single phase design.
- Enclosure types: TEFC, TENV, and TEBC.

## 3. Enclosure Types

**Totally enclosed fan cooled (TEFC).**

TEFC motor designs rely on fan that is mounted on the motor's rotor shaft so the cooling capacity can vary based upon the motor's operating speed.

**Totally enclosed, non-ventilated (TENV)**

The TENV motor designs rely purely on convection cooling and they have no fan. Often TENV designs are labeled for intermittent or periodic duty or at a lower power rating than is typical for the given motor frame size.

**Totally enclosed, blower cooled (TEBC)**

The TEBC design uses separate blower or ventilator fan, with its own low wattage motor and a separate power supply, to provide continuous airflow and cooling. The blower can be used to extend the speed range of the motor and allow extreme slow speed operation without causing a concern for overheating. Blower data is provided in Table 6, page 11.

## 4. Voltage and Frequency Variation

Voltage and frequency variations are based upon the assumption that the nameplate horsepower will not be exceeded and that the motor temperature may increase. Standard allowable deviations are based upon the type of motor labeling.

**NEMA and CSA Labeled Motors**

Variations are based upon the nominal utilization voltage, and not the service (supply) voltage as per ANSI C84.1.

| Service Voltages | Utilization Voltages |
|---|---|
| 120V, 208V, 240V, 480V, 600V | 115V, 200V, 230V, 460V, 575V |

- Voltage variation at rated frequency = ±10%.
- Frequency variations at rated voltage = ±5%.
- Combined voltage/frequency variation = ±5%.

### CE Labeled Motors

Per IEC 60038, allowable service voltage variations on in the current system, compared to the previous system, are as indicated.

| Previous Service Voltages | Current Service Voltages |
|---|---|
| 220V, 380V, 660V | 230V, 400V, 690V +6/-10% |
| 240V, 415V | 230V, 400V +10/-6% |

- Per EN 60034-1 a ±5% voltage variation and a ±2% frequency variation can be tolerated.
- The allowed variations are based upon the voltage (or voltage range) indicated on the motor nameplate.

# MOTORS - AC INDUCTION, SINGLE & POLYPHASE

## 5. Motor Nameplate Information

The motor nameplate and the display of technical information may vary slightly depending upon the global standard/s that the motor conforms to and the efficiency level. Please reference the examples below.

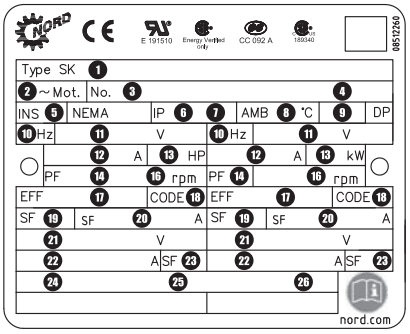


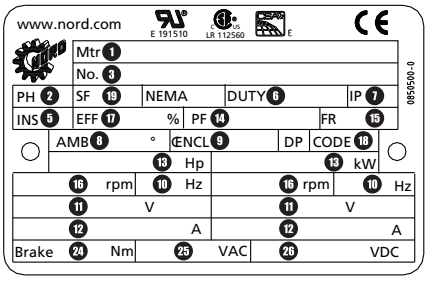


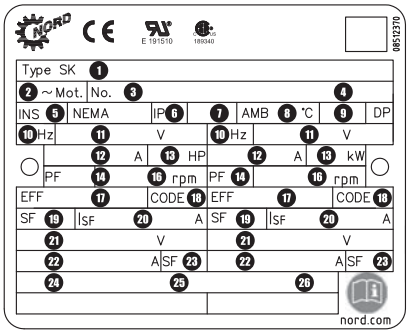


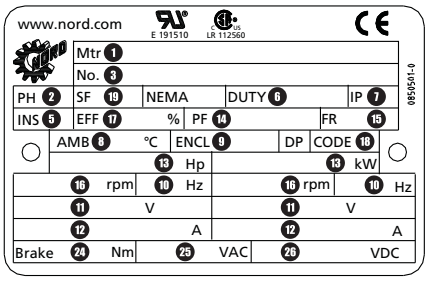


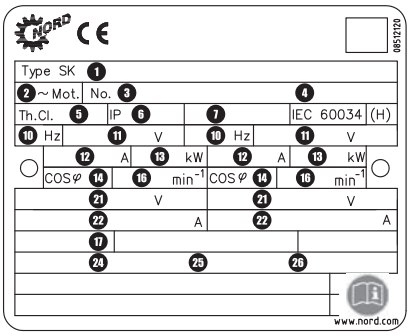


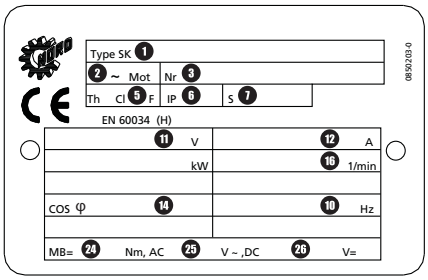


**Table 1. Nameplate Data**

| Field | Definition |
|---|---|
| 1 | Model / Type |
| 2 | Number of Phases |
| 3 | Order Number |
| 4 | Serial Number |
| 5 | Insulation Class |
| 6 | IP (Ingress Protection) Enclosure Rating |
| 7 | Duty Cycle |
| 8 | Ambient Temperature Rating (°C) |
| 9 | Enclosure Type |
| 10 | Motor Frequency (Hz) |
| 11 | Voltage Rating (V) |
| 12 | Current Rating (A) |
| 13 | Rated Power (HP or kW) |

| Field | Definition |
|---|---|
| 14 | Power Factor |
| 15 | Motor Frame Size |
| 16 | Full Load Speed (rpm or 1/min$^2$) |
| 17 | Efficiency |
| 18 | NEMA Code Letter |
| 19 | Service Factor |
| 20 | Current Rating (If Service Factor ≥ 1.15) |
| 21 | Operating Voltage Rage (A) |
| 22 | Current Rating at Operating Voltage Range (A) |
| 23 | Service Factor at Operating Voltage Range (A) |
| 24 | Brake Rating (Nm) |
| 25 | Brake Supply Voltage (VAC) |
| 26 | Brake Coil Voltage (VDC) |

## 6. Motor Options And Nomenclature

NORD offers many options for its motors. The option code will be shown in the motor nomenclature. Below are commonly used options.

| Code | Description |
|---|---|
| **AICM** | Additional Internal Insulation Coating Applied |
| **BRE** | With Brake |
| **EAR** | Single Phase, Start Cap/Run Cap |
| **ECR** | Single Phase, Start Cap/Run Cap Increased SF |
| **EHB** | Single Phase, Run Capacitor Only |
| **EP** | Epoxy Dipped Windings |
| **F** | Blower Cooling Fan - 3ph & 1ph |
| **FC** | Blower Cooling Fan - 1ph |
| **FHL** | Brake – Lockable Manual Release |
| **H** | Energy Efficient |
| **HL** | Brake – Manual Hand Release |
| **IG** | Incremental Encoder |
| **IP66** | IP66 Environmental Protection |
| **IR** | Brake – Current Sensing Relay |
| **KB** | Condensation Holes - Removable Plugs |
| **KD** | Condensation Holes - Open |
| **MIK** | Brake – Microswitch |
| **MS** | Power Plug Connector |

| Code | Description |
|---|---|
| **OL** | TENV Motor – Without Fan / With Cover |
| **OL/H** | TENV Motor - Without Fan & Cover |
| **P** | Premium Efficient Motors |
| **RD** | Canopy Cover |
| **RDD** | Double Canopy Cover |
| **RG** | Brake – Corrosion Protected |
| **RLS** | Backstop |
| **SH** | Motor Space Heater |
| **SR** | Brake – Dust Protected |
| **TF** | Thermistor |
| **TW** | Thermostat |
| **VN** | 10:1 Constant Torque Rated Motor |
| **VR** | 5:1 Constant Torque Rated Motor |
| **VW** | 20:1 Constant Torque Rated Motor |
| **VZ-F** | 1000+:1 Constant Torque Rated Motor |
| **WE** | 2nd Motor Shaft End |
| **WU** | High Slip Rotor |
| **Z** | High Inertia Motor Fan |

### Motor Nomenclature

**100L / 4 BRE 40 ...**

- ... — Other Options
- 40 — Brake Size Nm
- BRE — Brake
- 4 — Number of Poles
- 100L — Frame Size

### Ordering Examples

**100L 4 BRE 100 HL RG**

- RG — Corrosion Protection
- HL — Hand Release Lever
- 100 — 100 Nm Brake Torque
- BRE — Brake
- 4 — 4 Poles
- 100L — Motor Frame Size

100 Frame Motor with 4 poles, Brake, 100 Nm with a hand release lever, corrosion protected brake, and a current sensing relay.

**160L 2 BRE 40 FHL SR**

- SR — Dust & Corrosion Prot.
- FHL — Locking Hand Release Lever
- 40 — 40 Nm Brake Torque
- BRE — Brake
- 2 — 2 Poles
- 160L — Motor Frame Size

63 Frame Energy efficient motor with 4 poles, Brake, 40 Nm with a locking hand release lever and dust & corrosion protection.

## 7. Application Conditions

Standard NORD motors are designed to operate in dusty or moist environments and have anti-fungal, thermal class F insulation.

- Enclosure Protection Rating = IP55 (minimum).
- Maximum Installation Height = 3300 ft (1000 m).
- Ambient Temperature = -4 to 104°F (-20 to 40 °C).
- Tropical-proof, Thermal Class F insulation.

The protection level and maximum ambient temperature are stated on the motor nameplate.

*IMPORTANT NOTE*

NORD can provide motors for an expanded range of applications and service conditions including higher protection levels, extreme ambient conditions and, higher altitudes.

*WARNING*

Consult NORD for recommendations if motors are operated under extreme loading conditions, exposed to high inertia loads, or need to operate under unusually high cycling conditions with high starting and stopping frequency.

*WARNING*

Special design and assembly considerations are needed if NORD motors are subject to any of the following conditions:

- Outdoor installation with motor in a vertical position.
- Direct contact with aggressive or corrosive materials (acids, bases, salts, certain gases, etc.).
- Exposure to extreme high or low temperatures, high relative humidity, condensation moisture or very wet environments.
- Subject to extreme material build-up on the unit (dirt, dust, sand, etc.).
- Hazardous Locations (risk of fire or explosion).

## 8. Transportation

During transportation observe the following:

- Make sure that all eyebolts and lifting lugs are tight and firmly against their supporting surface.
- Use all the lifting eyes that are intentionally supplied with the motor.
- Lift only at designed points.
- Protect the mounting surface from possible damage during transportation.
- Always use sufficiently rated handling equipment, lift mechanisms and lifting straps.
- With heavier objects or unbalanced loads, it may be appropriate to use more than one lifting point or an additional strap or sling to assure safe transportation of the assembly. This is especially true of assembled gearmotors and motorized reducers.
- Once the NORD motor or assembly is properly installed, remove the transportation fixtures completely or make certain they are properly re-secured and tightened.

*WARNING*

**Transportation – Use of Lifting Devices**

To avoid death, serious injury or equipment damage…

- Hoisting lugs or lifting eyes attached to the motor are designed for the weight of the motor only! Do not attach any additional loads!
- The motor must only be transported and lifted using the lifting eyes, in a position that is appropriate for its type of construction. Otherwise, it could fall over or slip in the lifting tackle.
- During suspended transport, two straps must be able to carry the entire load weight safely.
- When required use additional, suitable means of support for transportation, installation or removal.
- Always secure the support equipment to prevent it from slipping.

## 9. Storage

If the motor is not in service, store it according to the following conditions:

- Store the motor in a clean, dry, dirt-free, vibration free area.
- Storage temperatures of 10°C (50°F) to 50°C (120°F) must be maintained.
- Relative humidity must not exceed 60%.
- If vibration in the area exceeds 0.002 inch (0.05 mm) at 60 hertz, then vibration isolation pads are suggested to prevent brinelling of the bearings.
- Treat the unprotected shaft end and mating flange surfaces with a corrosion inhibitor that can be cleaned off prior to commissioning.
- Before placing the motor into service, visually inspect the motor exterior for evidence of deterioration during storage. Turn the motor shaft by hand to make sure the shaft turns freely.
- Motor space heaters, when provided, are to be connected and energized whenever there is a possibility that the storage ambient conditions will reach the dew point. Space heaters are optional. Remove motor from the storage container when the heater is energized.
- If the motor needs to be stored for extended periods, or if it is stored in less than favorable conditions, it is recommend that the winding insulation resistance be checked prior to commissioning (page 7).
- Even if stored in favorable conditions, the antifriction motor bearings and motor shaft seals may need to be replaced if the storage period is more than 4 years.

## 10. Safety Considerations

When installing, servicing or replacing electric motors it is important to be working in a “voltage-free” state. Observe the following safety rules.

**Five Safety Rules**

1. Disconnect the system. Disconnect the auxiliary circuits (brakes, space heaters, etc.).
2. Prevent reconnection (follow safe lock-out/tag-out practices).
3. Make sure that the equipment is at zero voltage.
4. Make certain the equipment is properly grounded and short-circuited.
5. Cover or isolate nearby components that are still electrically live.

To energize the system, apply the measures in reverse order.

**Qualified Personnel**

All work involved in the transport, connection, commissioning and maintenance of any NORD product must be carried out by qualified and responsible technicians.

For the purpose of this documentation, a qualified personnel is taken to mean a person or people who fulfill the following requirements:

- Through appropriate training and experience, they are able to recognize and avoid risks and potential dangers in their particular field of activity.
- They have been instructed to carry out work on the machine by the appropriate person responsible.
- They are responsible for knowing and complying with all applicable national, regional, and local work regulations and safety requirements.

**10. Safety Considerations Ctd.**

**General Warnings and Cautions**

⚠ *WARNING* ⚠

To avoid electrocution, injury or death, make certain all electrical devices (motors, brakes, variable frequency drives, etc.) are properly grounded, completely de-energized, and brought to a no-voltage condition prior to working on any electrical connections. Remember that most of these devices carry potentially dangerous energy levels for a period of time after power is removed. Always follow proper lock-out/tag-out procedures.

⚠ *WARNING* ⚠

Electrical machines contain dangerous voltage levels, electrically live parts, rotating surfaces and hot surfaces. To prevent injury, death or possible equipment damage always observe the following:

- Keep all safety covers and guards in place during operation. Remove and replace covers in compliance with the applicable safety regulations.
- Allow the machine to cool down before starting any work on it.
- Operate the machines properly.
- Perform regular maintenance on the machine.
- Secure and guard free-standing shaft extensions.

⚠ *WARNING* ⚠

**Electrically Live Parts**

Electrical machines contain electrically live parts. Fatal or severe injuries and substantial material damage can occur if the required covers are removed or if the machines are not handled, operated, or maintained properly.

⚠ *WARNING* ⚠

**Rotating Parts**

Electrical machines contain dangerous rotating parts. Fatal or severe injuries and substantial material damage can occur if the required covers are removed or if the machines are not handled, operated, or maintained properly.

⚠ *WARNING* ⚠

**Hot Surfaces**

Electrical machines have hot surfaces. Fatal or severe injuries and substantial material damage can occur if the required covers are removed or if the machines are not handled, operated, or maintained properly. Allow the machine to cool down before starting any work on it.

⚠ *WARNING* ⚠

**Maintain Proper Cooling**

Operating the motor without the intended cooling fan may cause overheating and result in very hot surfaces, personal injury and material damage. Never commission a motor intended to be fan cooled when it is missing the shaft-driven fan or external blower assembly.

⚠ *WARNING* ⚠

**Condensation Drain Holes (Optional)**

Inserting objects into the condensation drain holes can damage the winding and can result in death, serious injury and damage to property!

- Before opening sealed drain holes, make sure the motor is in a no-voltage condition. Close the condensation drain holes before re-commissioning.
- Exercise caution around drain holes that are intended to be left open, especially when the motor is energized.

STOP *HARMFUL SITUATION* STOP

Before start-up check the following:

- All electrical connections are secure, well grounded and properly made.
- The motor is rotating in the correct direction (when de-coupled from the driven load).
- There are no temperature-sensitive parts (cables etc.), in contact with motor enclosure.
- Condensation drain holes are always located at the lowest point of the motor.

## 11. Checking the Insulation

Before putting the motor into operation for the first time, after a lengthy period of storage or standstill (approx. 6 months), the insulation resistance of the winding should be checked.

**⚠ WARNING ⚠**

During and directly after measurement the motor connection terminals carry hazardous voltages.

### A. Control

The insulation resistance of new, cleaned, or repaired motor windings against the grounded housing and against one another should be > 200 Mega-Ohms.

### B. Measurement

Using a Mega-Ohm meter apply a DC voltage of 500 VDC to the motor winding for a period of 60 seconds and record the winding insulation resistance compared to ground.

- The 500 VDC test voltage is applicable to low voltage motors up to 1000 VAC.
- When performing this test the temperature of the windings should be 25°C ± 15°C (77°F ± 27°F).

### C. Verification

- If the insulation resistance of the winding is less than 50 Mega-Ohms, the cause may be moisture. The windings should be dried and the test should be repeated.
- After any lengthy period of operation the insulation resistance may drop. So long as the measured value does not fall below the critical value of 50 Mega-Ohm, the motor may continue to be operated.
- If the measured value falls below the critical 50 Mega-Ohm level, the cause must be established and the windings or winding sections must be cleaned, dried, repaired, or replaced as needed.

## 12. Bearing Lubrication

NORD motor frame sizes 63 up to and including 225 are normally supplied with internally grease lubricated bearings and require no lubrication during normal operation.

NORD motor frame sizes 250 and larger are supplied with grease fittings for re-greasing the motor bearings.

**IMPORTANT NOTE**

Motors with grease fittings are normally supplied with a label indicating the grease type used, the suggested re-lubrication interval, and the amount of new grease to be applied. General bearing maintence guidelines are listed in Table 3.

Typical motor bearing grease is an NLGI No. 2 consistency, high grade product with a polyurea base thickener, synthetic or blended mineral/synthetic oil, and stabilizing agents to protect against heat and oxidation.

**Table 3 – Motor Bearing Maintence Guidelines**

| Frame Size | Power | Poles | Re-greasing Interval |
|---|---|---|---|
| 63-225 | 0.16-60 HP (0.12-45 kW) | All | Maintence Free |
| 250 to 280 | 75-125 HP (55-75 kW) | 2 | 4000 h |
| | | 4 to 8 | 8000 h |
| 315 | 150-250 HP (132-200 kW) | 2 | 3000 h |
| | | 4 to 8 | 6000 h |

**STOP HARMFUL SITUATION STOP**

When re-greasing motor bearings do not to mix different greases without verifying the compatibility with a reputable grease lubrication supplier. Mixing incompatible products can lead to bearing failure.

## 13. Mechanical Installation

Integral motors, NEMA C-face motors, and IEC flange mounted motors must be rigidly secured to their mating connection surface using all fastening screws tightened to the proper bolt torque. It is good practice to apply a medium strength thread- locking agent (Loctite® 242) to the mounting screws.

Foot mounted motors must be securely installed to a rigid and level foundation or mounting surface to minimize vibration and maintain alignment between the motor and shaft load. All mounting hole locations must be utilized. Tighten all hold down screws or bolts to the proper bolt torque.

**STOP HARMFUL SITUATION STOP**

Failure to provide a proper mounting surface may cause vibration, misalignment and bearing damage.

Accurate alignment and proper balancing of output devices (couplings, belts, pulleys, etc.) is required to assure quite, low vibration, trouble free operation. When the motor is directly coupled to a gear drive or a driven machine make sure that the motor shaft and driven machine shaft are aligned with one another axially.

**STOP HARMFUL SITUATION STOP**

Inaccurate alignment may lead to bearing damage, excessive vibrations and shaft breakage.

**IMPORTANT NOTE**

For motor replacement guidelines see section 20 on page 15 and section 21 on page 16.

## 14. Electrical Connections

**⚠ WARNING ⚠**

To avoid electrocution, injury or death, make certain all electrical devices (motors, brakes, variable frequency drives, etc.) are properly grounded, completely de-energized, and brought to a no-voltage condition prior to working on any electrical connections. Remember that most of these devices potentially dangerous energy levels for a period of time after power is removed. Always follow proper lock-out/tag-out procedures.

**IMPORTANT NOTE**

External motor brakes have their own connection requirements as indicated in the appropriate brake instruction manuals.

**⚠ WARNING ⚠**

If the motor has an integral brake, make certain there is no load connected to the driven equipment before releasing the brake. Otherwise serious injury, death, or damage to the equipment may result.

- The supply voltage and frequency must agree with the motor nameplate data.
- Always feed the connecting leads into the terminal box using appropriate mating cable glands. The mating connection cables and cable glands should be suitable for temperatures ≥ 194°F (90°C).
- Provide the ends of the connecting leads and ground lead with cable lugs or curved ring eyelets before connecting them to the terminal board.
- Make certain that the wiring connections and arrangement of the terminal board jumpers conform to the appropriate wiring diagram as provided in the motor terminal box and/or page 9 of this manual.
- Tighten the terminal board screw connections on the on the main terminal board per the table below.

**Table 4 – Tightening Torque: Terminal Board and Grounding Screws**

| Thread Size | Nut Size [mm] | Tightening Torque [lb-ft] | Tightening Torque [N-m] |
|---|---|---|---|
| M4 | 7 | 0.6-0.9 | 0.8-1.2 |
| M5 | 8 | 1.3-1.8 | 1.8-2.5 |
| M6 | 10 | 2.0-3.0 | 2.7-4 |
| M8 | 13 | 4.0-5.9 | 5.5-8 |
| M10 | 17 | 6.6-9.6 | 9-13 |
| M12 | 19 | 11.8-14.8 | 16-20 |

- Upon final assembly, the terminal box cover must be sealed so that it is dust-tight and water-tight.

**Table 5 – Tightening Torque: Terminal Box Cover Screws**

| Thread Size | Tightening Torque [lb-ft] | Tightening Torque [N-m] |
|---|---|---|
| M4 | 0.6-0.9 | 0.8-1.2 |
| M5 | 0.9-1.3 | 1.2-1.8 |
| M6 | 1.1-1.8 | 1.5-2.5 |
| M8 | 2.2-3.7 | 3.0-5.0 |

# MOTORS - AC INDUCTION, SINGLE & POLYPHASE

## 15. Wiring Diagrams

Frames 63-132
230 / 460V, 60Hz, 3Ø | 200 / 400V, 50Hz, 3Ø
190 / 380V, 60Hz, 3Ø

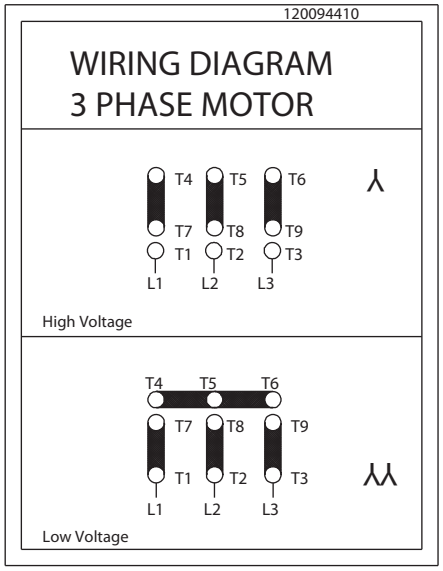


Frames 160 +
230 / 460V, 60Hz, 3Ø | 200 / 400V, 50Hz, 3Ø
190 / 380V, 60Hz, 3Ø

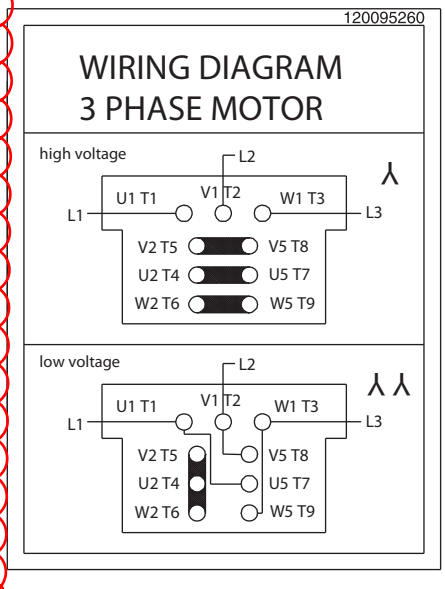


Frames 160 +
230 / 460V, 60Hz, 3Ø | 200 / 400V, 50Hz, 3Ø
190 / 380V, 60Hz, 3Ø

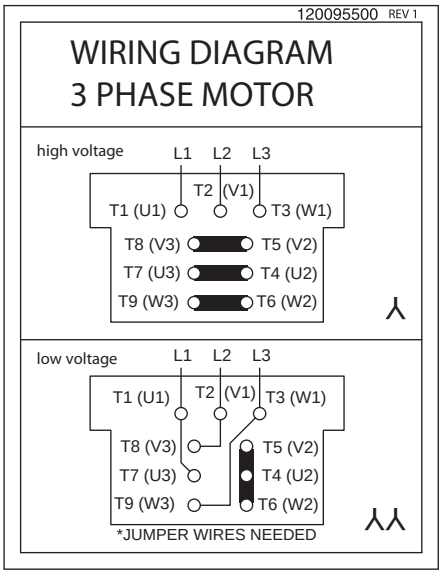


460 / 800V, 60Hz, 3Ø | 230 / 400V, 50Hz, 3Ø
208 / 360V, 60Hz, 3Ø | 400 / 690V, 50Hz, 3Ø
332 / 575V, 60Hz, 3Ø

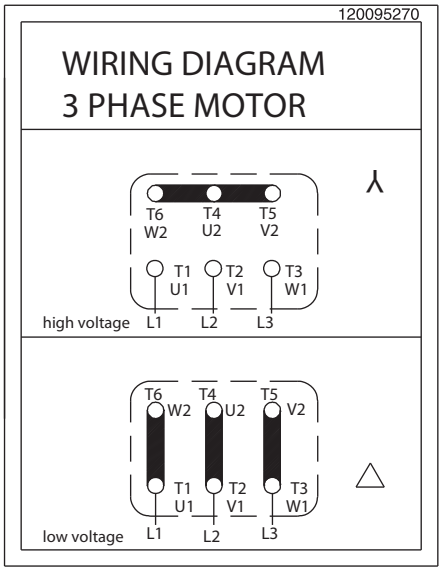


2 - SPEED MOTORS
SINGLE WINDING (4-2 & 8-4 POLE)

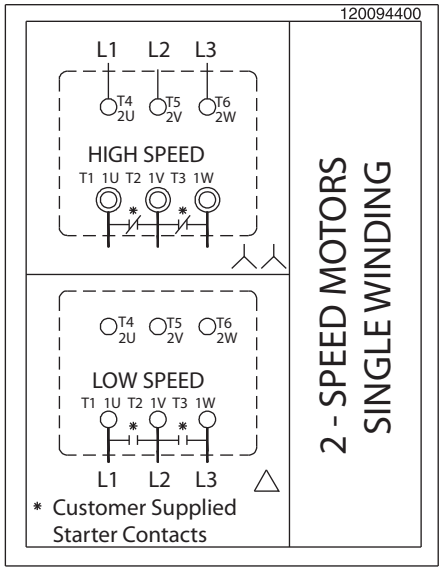


2 - SPEED MOTORS
DUAL WINDING (8-2 POLE)

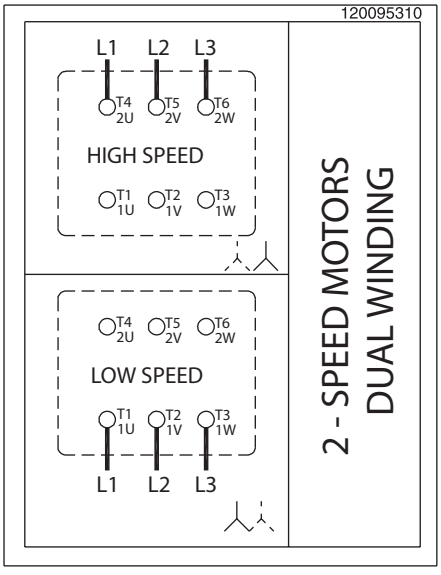

**15. Wiring Diagrams Ctd.**

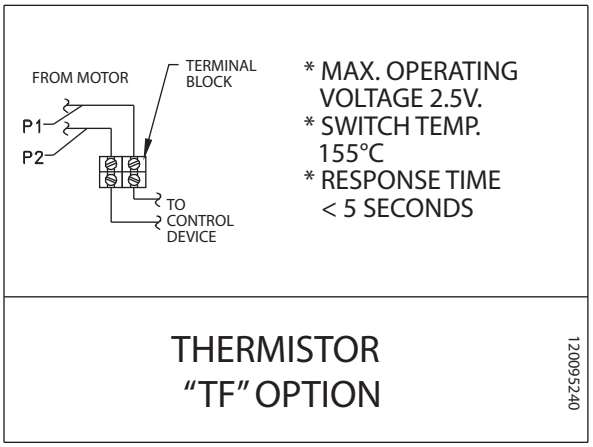


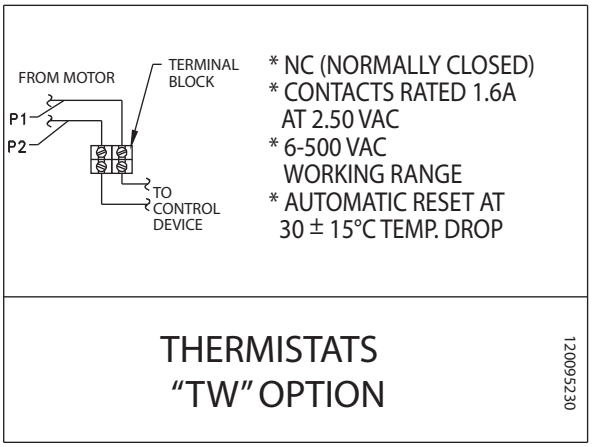


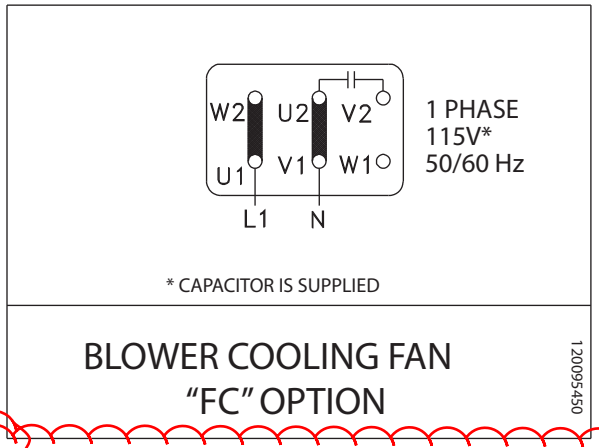


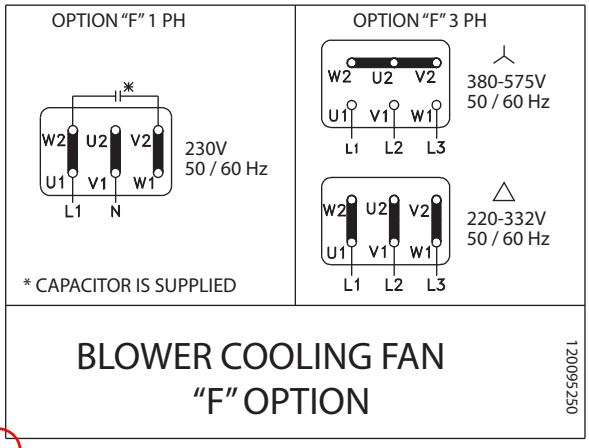


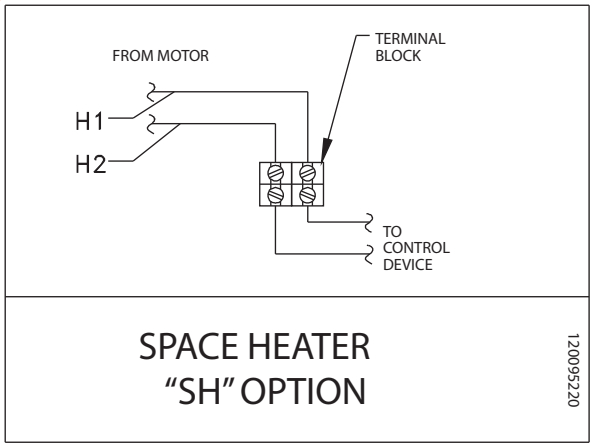

## 16. Motor Accessories

### Blower Cooling Fan (Option F & FC)

- Connection Diagram Shown on page 10
- Option FC is 1-phase, 115V
- Option F has capability of 1 phase by connecting a supplied capacitor

### Option F – 3ph & 1ph 220-575V 50/60Hz

| Motor Frame | 60Hz Ratings | | | 50Hz Ratings | | |
|---|---|---|---|---|---|---|
| | Voltage [V] | Current [A] | Power [W] | Voltage [V] | Current [A] | Power [W] |
| **Single phase connection - ⊥ (Delta)** | | | | | | |
| **63** | 230 – 277 | 0.11 | 38 | 230 – 277 | 0.10 | 27 |
| **71** | 230 – 277 | 0.12 | 41 | 230 – 277 | 0.10 | 28 |
| **80** | 230 – 277 | 0.13 | 44 | 230 – 277 | 0.11 | 29 |
| **90** | 230 – 277 | 0.25 | 88 | 230 – 277 | 0.26 | 72 |
| **100** | 230 – 277 | 0.28 | 88 | 230 – 277 | 0.26 | 70 |
| **112** | 230 – 277 | 0.31 | 107 | 230 – 277 | 0.26 | 73 |
| **132** | 230 – 277 | 0.27 | 89 | 230 – 277 | 0.29 | 82 |
| **160 - 225** | 230 – 277 | 0.41 | 140 | 230 – 277 | 0.45 | 128 |
| **Three phase low-voltage connection - (Delta)** | | | | | | |
| **63** | 220 – 332 | 0.08 | 23 | 220 – 290 | 0.10 | 27 |
| **71** | 220 – 332 | 0.08 | 24 | 220 – 290 | 0.10 | 30 |
| **80** | 220 – 332 | 0.08 | 25 | 220 – 290 | 0.01 | 29 |
| **90** | 220 – 332 | 0.21 | 64 | 220 – 290 | 0.28 | 86 |
| **100** | 220 – 332 | 0.21 | 66 | 220 – 290 | 0.27 | 86 |
| **112** | 220 – 332 | 0.23 | 70 | 220 – 290 | 0.27 | 85 |
| **132** | 220 – 332 | 0.25 | 74 | 220 – 290 | 0.32 | 96 |
| **160 - 225** | 220 – 322 | 0.49 | 165 | 220 – 290 | 0.52 | 155 |
| **Three phase high-voltage connection - (Y)** | | | | | | |
| **63** | 380 – 575 | 0.04 | 23 | 380 – 500 | 0.05 | 29 |
| **71** | 380 – 575 | 0.04 | 25 | 380 – 500 | 0.05 | 30 |
| **80** | 380 – 575 | 0.04 | 26 | 380 – 500 | 0.05 | 29 |
| **90** | 380 – 575 | 0.12 | 62 | 380 – 500 | 0.16 | 82 |
| **100** | 380 – 575 | 0.12 | 66 | 380 – 500 | 0.16 | 83 |
| **112** | 380 – 575 | 0.13 | 70 | 380 – 500 | 0.16 | 82 |
| **132** | 380 – 575 | 0.14 | 75 | 380 – 500 | 0.18 | 96 |
| **160 - 225** | 380 – 575 | 0.28 | 165 | 380 – 500 | 0.29 | 155 |

### Option FC – 115V 50/60Hz 1ph

| Motor Frame | 60Hz Ratings | | | 50Hz Ratings | | |
|---|---|---|---|---|---|---|
| | Voltage [V] | Current [A] | Power [W] | Voltage [V] | Current [A] | Power [W] |
| **Single Phase Connection - ⊥ (Delta)** | | | | | | |
| **63** | 100 – 135 | 0.23 | 42 | 100 – 135 | 0.30 | 42 |
| **71** | 100 – 135 | 0.23 | 47 | 100 – 135 | 0.30 | 44 |
| **80** | 100 – 135 | 0.27 | 57 | 100 – 135 | 0.30 | 43 |
| **90** | 100 – 135 | 0.46 | 102 | 100 – 135 | 0.57 | 78 |
| **100** | 100 – 135 | 0.53 | 105 | 100 – 135 | 0.54 | 78 |
| **112** | 100 – 135 | 0.60 | 115 | 100 – 135 | 0.55 | 80 |

**Table 6 – Option F & FC**

## 16. Motor Accessories Ctd.

### Thermostats (Option TW and Option 2TW)

| | |
|---|---|
| **Standard connection** | Series connected, one per phase |
| **Contact** | NC (Normally Closed)/ Auto Re-setting |
| **Response Temperature (Option TW)** | 311 °F (155 °C) Shut-Off Device |
| **Response Temperature (Option 2TW)** | 311 °F (155 °C) Shut-Off Device<br>+ 266°F (130 °C) Alarm Device |
| **Nominal Current** | 1.6 Amp at 250 V |
| **Resistance** | < 50 mΩ |
| **Switch Rebound** | < 1ms |
| **Insulation Rating** | 2000 VAC |
| **Cycles** | 10,000 max |
| **Lead Identification (inside terminal box)** | P1 and P2 or<br>TB1 and TB2 / 2TB1 and 2TB2 |

Motor thermostats or bi-metallic switches can be wired directly into the control circuit without a separate control module or tripping device. Thermostats operate on a relatively high control voltage so they are much less sensitive to voltage interference from the main power supply. Often one can run thermostat leads and motor power leads next to each other when using the appropriate shielded cable. The installer is responsible to wire the thermostats into the motor control circuit. The leads may be labeled in a variety of ways as indicated.

### Thermistors (Option TF)

| | |
|---|---|
| **Standard Connection** | Three devices, series connected, one per phase |
| **Type** | Positive temperature coefficient (PTC) |
| **Transition Temperature** | 150°C±5 °C |
| **Resistance** | 20… 500Ω (below transition)<br>> 4 kΩ (above transition) |
| **Reed Current** | < 1mA |
| **Max Voltage** | 30V |
| **Lead Identification (inside terminal box)** | P1 and P2 or<br>TP1 and TP2 |

With a separate control module or tripping device (ex. Kirwan INT69) thermistors are used to sense motor overload/ over temperature conditions by converting the critical operating temperature limit into large internal resistance change. Due to their small size, heat sink construction, and high change in resistance value, minor resistance variations caused by relatively long lead runs can be tolerated. This feature also allows for one controller to be used for several temperature sensing locations. Many variable frequency drives come with on-board thermistor inputs. NORD does not supply the thermistor control module.

**⚠ WARNING ⚠**

Thermostats and Thermistors will automatically reset.

**⚠ WARNING ⚠**

All wiring must be completed by qualified personal and adhere to all local codes.

### Space Heaters (Option SH)

- Connection Diagram shown on Page 9
- Space Heaters are mounted directly on the motor winding
- The leads are brought into the terminal box and labeled H1 and H2
- They require a separate voltage supply and must not be energized when the motor is energized
- The heaters will keep the winding of the motor approximately 5°C above the surrounding ambient

**Table 5. Space Heater Data**

| Frame Size | Wattage | Voltages | Heater Strips/MTR |
|---|---|---|---|
| **63 & 71** | 18W | 110V | 1 |
| | | 230V | |
| | | 460V | |
| **80** | 25W | 110V | 1 |
| | | 230V | |
| | | 460V | |
| **90 – 112** | 50W | 110V | 2 |
| | | 230V | |
| | | 460V | |
| **132-180** | 100W | 110V | 2 |
| | | 230V | |
| | | 460V | |
| **200 & 225** | 120W | 110V | 2 |
| | | 230V | |
| | | 460V | |

### Encoder (Option IG)

- Most standard encoders will be enclosed inside the fan cover
- Incremental, Quadrature, Differential, Marker Channel
- IP66 Protection
- IG1 = 1024PPR, IG2 = 2048PPR, IG4 = 4096PPR
- TTL/RS422, HTL/Push-Pull, Line Driver.
- 5V or 10-30V available.
- Absolute encoders also available.
- Seperate encoder wiring instructions are provided by NORD.

## 17. Inspection

Inspect the motor after every 500 operating hours.

⚠ *WARNING* ⚠

If it is necessary to clean the motor exterior, do not use shop air. Shop air can force contaminents into the motor and may cause parts damage or result in blowing debris causing injury.

**Table 8 - Inspection Guidelines**

| Inspect | Check | Action |
|---|---|---|
| **Motor Exterior** | Check the external surfaces for contamination. Accumulation of dirt and fibrous deposits must be removed. | Clean the motor external surfaces using clean, lint-free cloths. |
| | | Clean deposits from between cooling fins using a vacuum cleaner and a stiff-bristled nylon brush. |
| | Check the external surfaces for oil film and greasy deposits. | Clean the oil film and greasy deposits from the motor surface using clean, lint-free cloths. |
| | | If necessary, moisten the cloth with an approved non-flammable, residue-free solvent. Do not pour solvent on the motor. |
| | Check for evidence of damage or overheating. | If the motor has physical damage, replace the motor. |
| **Motor Mountings** | Make sure the mounting hardware is secure. | If the mounting hardware is not secure, check the motor/gearbox alignment, and tighten the mounting hardware. |
| **Motor Electrical Connections** | Check that all electrical connections are secure. | If the electrical connections are not secure, tighten them. |
| | Check the electrical connections for evidence of arcing. | Loose electrical connections can cause arcing, which is evident by discoloration and charring. If you find evidence of arcing, replace the damaged connections. |
| **Insulation Resistance** | Using an ohmmeter, check and record the resistance of motor winding insulation. | Compare the current resistance reading to previous readings. If the resistance drops significantly, perform an internal inspection for insulation damage or deterioration. |
| **Motor Brake** | On motors that have a brake, use a feeler gauge to check the air gap in between the brake pad and the rotor according to the appropriate user manual. | If the air gap exceeds the maximum allowed for that brake configuration provided in the manual, adjust the air gap or replace the brake pad according to user manual U35000. |

## 18. Parts List

If you are ordering a part, provide the model and order number (table 1, page 2) of your motor. This will determine the specific part number you need.

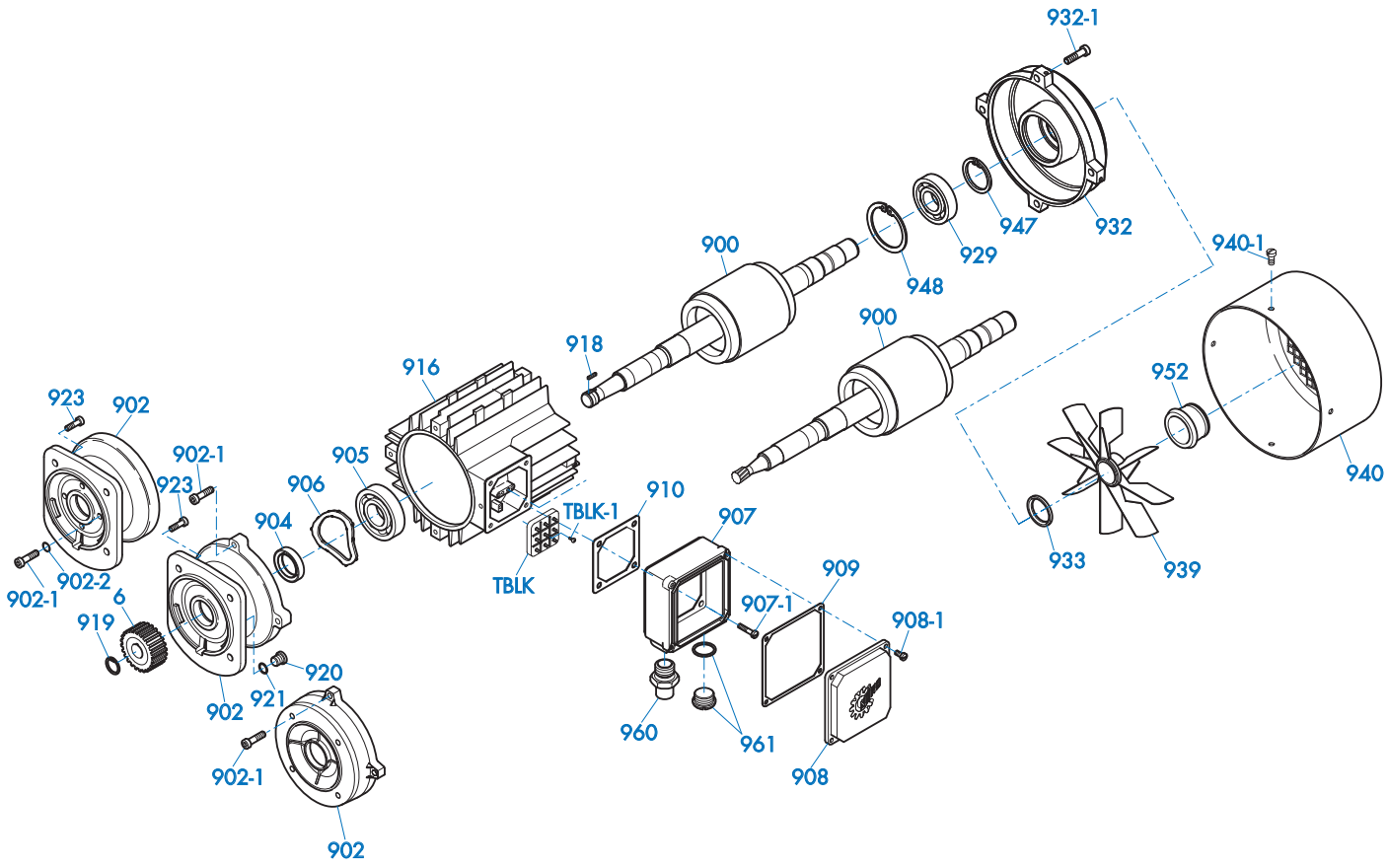


| Part Number | Part Description | Qty per Assembly |
|---|---|---|
| 6 | Input Pinion | 1 |
| 900 | Rotor Assembly | 1 |
| 902 | A-Endbell | 1 |
| 902-1 | Screw | 4 |
| 902-2 | Dubo Seal | 4 |
| 904 | Oil Seal | 1 |
| 905 | Bearing | 1 |
| 906 | Preload Spring | 1 |
| 907 | Terminal Box Frame | 1 |
| 907-1 | Screw | 4 |
| 908 | Terminal Box Cover | 1 |
| 908-1 | Screw | 4 |
| 909 | Gasket - Terminal Box Frame | 1 |
| 910 | Gasket - Terminal Box Cover | 1 |
| 916 | Stator | 1 |
| 918 | Key | 1 |
| 919 | Retaining Ring | 1 |
| 920 | Oil Plug | 1 |

| Part Number | Part Description | Qty per Assembly |
|---|---|---|
| 921 | Gasket | 1 |
| 923 | Screw | 4 |
| 929 | Bearing | 1 |
| 932 | B-Endbell | 1 |
| 932-1 | Screw | 4 |
| 933 | Oil Seal | 1 |
| 939 | Fan | 1 |
| 940 | Fan Cover | 1 |
| 940-1 | Screw | 4 |
| 947 | Retaining Ring | 1 |
| 948 | Retaining Ring | 1 |
| 952 | Fan Clip | 1 |
| 960 | NPT Thread Adapter | 1 |
| 961 | Plug (includes O-ring) | 1 |
| TBLK | Terminal Block | 1 |
| TBLK-1 | Screw, Terminal Block Mounting | 2 |
| | Jumper Bar (not illustrated) | AR |

### 19. Repair

Reference the parts list drawing on page 14 for clarification.

A. Disassemble the motor according to the general exploded view in PARTS INFORMATION. Disassemble only as far as necessary to replace the failed parts.

B. Whenever the motor is disassembled, clean all dust and contamination from the motor interior using a vacuum cleaner and a soft-bristled nylon brush.

C. The following parts must be replaced if they are removed:

- Oil seal (904), Oil seal (933)
- Gasket (909), Gasket (910), Gasket (921)
- Gasket on plug (961) • Self-locking screws (907-1, 908-1, 923, 932-1, 940-1)
- Dubo Seals (902-2)

D. If the following parts are removed, inspect them, and replace them if they are deformed or damaged:

- Retaining ring (919), Retaining ring (947), Retaining ring (948)
- Fan clip (952)

### 20. Removing and Replacing Integral Motors

Reference the parts list on Page 14 for clarification.

A. Disconnect the power to the electric motor. Make certain the motor is properly grounded, de-energized and secured with a lock-out/tag-out device.

B. Drain the oil from the mating gearbox, or rotate the motor/gearbox assembly so that the motor is up, to prevent oil from spilling from the gearbox when the motor is removed.

C. Support the motor and prepare it for removal. Steady the motor and support it. For larger motors, use of mechanical lifting or support devices to may be appropriate.

D. Remove the fastening screws that hold the motor to the reducer input.

**IMPORTANT NOTE**

Most integral motor installations have mounting bolts accessible from the motor exterior. If the bolts are not clearly visible, unbolt the input flange from the gearbox. Remove the bolts securing the motor to the reducer input flange, and discard the old DUBO sealing rings that were under the screw heads.

E. Maintain motor shaft alignment and move the motor directly away from its mounting surface until the motor shaft and mating input gear clear both the internal gear mesh and reducer input.

F. Remove and discard the old flange gasket.

G. Clean the gasket faces on the motor and gearbox, making sure no cleaning debris enters the gearbox.

H. Check the replacement motor to make sure the motor flange, motor shaft, and motor pinion are identical to the motor that was removed.

I. Place a new gasket between the gearbox and new motor.

J. Position the motor on the gearbox, making sure the input pinion meshes with the input gear. Rotate the motor as necessary to align the bolt holes and seat the motor flange. Make sure the gasket remains properly aligned and seated

K. Apply a medium strength thread locking compound to the bolt threads. Install the bolts and tighten them to the appropriate torque.

**IMPORTANT NOTE**

If the motor/gearbox installation uses an input flange, first mount the input flange to the motor using the four mounting bolts and NEW DUBO sealing rings under the head of each fastening screw. Make sure the fastening screws are clean and apply new thread sealant if necessary.

L. Check the gearbox oil level in accordance with the appropriate User Manual/s. If necessary fill or add oil to the gearbox.

**HARMFUL SITUATION**

Do not mix different types of oil!

M. Re-establish the electrical connection to the motor.

N. Observe the subsequent start-up closely to make certain the equipment is operating properly and there are no seal or gasket leaks.

### 21. Removing and Replacing NEMA C-Face or IEC Fange-Mounted Motors

For further clarification of these instructions, reference the parts list on Page 14 of this manual.

A. Disconnect the power to the electric motor. Make certain the motor is properly grounded, de-energized and secured with a lock-out/tag-out device.

B. Support the motor and prepare it for removal. Steady the motor and support it. For larger motors, use of mechanical lifting or support devices to may be appropriate.

C. Remove the fastening screws that hold the motor to the C-face or IEC mounting flange.

D. Maintain motor shaft alignment, and move the motor directly away from its mounting surface until the motor shaft and mating coupling clear the mounting flange surface of the driven equipment.

E. Measure and record the proper placement of the motor shaft coupling prior to removing it from the old motor.

F. Make sure the new motor shaft, key and key slot are free of all nicks, burrs, and lubrication or grease.

G. Install the new shaft key on the new motor. If the shaft key is not captured or if an open-ended key slot is utilized it is good practice to secure the key into the key slot with a medium strength thread locking agent or alternatively one may stake the key in place.

H. Re-install the coupling on the new motor shaft, making sure the placement of the coupling is in the same location as it was on the old motor (See Step E).

I. Clean all old gasket material, sealants, contamination, and corrosion from the flange surface on the driven equipment.

J. If the motor is utilized in a wet or wash down environment apply a sealing gasket or gasket eliminating compound to the mating flange surface, as would seem most appropriate for the application.

K. Support the new motor and mount it flush against the mating flange surface of the driven equipment.

L. Apply a medium strength thread locking agent to the bolt threads.

M. Install the bolts and tighten them to the appropriate torque.

N. Re-establish the electrical connection to the motor.

O. Observe the subsequent start-up closely to make certain the equipment is operating properly.

### 22. Testing

*IMPORTANT NOTE*

NORD electric motors do not require periodic testing. However, if a motor is removed from its installation, NORD recommends that the motor be checked according to the following static and dynamic testing procedures before it is reinstalled. Finding a condition that will require future repair before the motor is reinstalled decreases the overall maintenance time.

This section provides general test information and functional checks for the types of motors covered by this manual. Read and understand the tests and checks before performing them on your motor.

Record and date all measurements taken.

If the motor fails any of the test procedures provided below, use the troubleshooting guide to determine the motor problem.

**Static Testing**

A. The motor can only be static tested if it is disconnected from the component it drives and securely mounted on a fixture or mounting plate. These tests are usually conducted when a motor has been removed for any reason other than failure

B. Turn the motor shaft slowly by hand. Feel and listen for evidence of a failed bearing, which is indicated by a rough feel as the shaft rotates, and by noise.

C. Check for smooth rotation, with no evidence of binding or catching. If the shaft does not rotate smoothly, or binds or catches, the bearings are worn or failing, lack lubrication, or are contaminated.

D. Check the motor shaft for side play by applying pressure at right angles to the shaft in several places around the circumference. If the shaft moves perceptibly, the front bearing may be worn.

**Dynamic Testing**

A. Find the motor voltage and rated load current values as listed on the motor nameplate.

B. Using a volt-ohmmeter, verify that the motor power supply is in the correct range.

C. Run the motor with no load. As the motor is operating, listen for unusual motor noise and check for excessive vibration. Vibration and motor noise are indications of bearing contamination, lack of lubrication, damage, or failure.

D. Use an ammeter to measure the no-load current. Record the no-load current for comparison with previous readings, and for reference during future testing.

E. If the motor passes the no-load test, operate the motor at rated load and check and record the current.

F. Check the motor operating temperature at rated load. If the motor operates at a higher than normal temperature, the motor may be damaged, overloaded or failing.

## 23. Troubleshooting

| Fault | Likely Cause | Corrective Action |
|---|---|---|
| **Motor fails to start.** | • Motor is mis-wired<br>• Brake is may not be releasing.<br>• Fan guard damaged and contacting fan.<br>• Motor protection device has tripped or does not switch<br>• 1-Ph Capacitor or start switch has failed. | • Verify and correct motor wiring.<br>• Troubleshoot brake per User Manual U35000.<br>• Replace damaged fan guard.<br>• Check motor protection device for correct setting and correct error.<br>• Discharge capacitor and use a volt-ohm meter to check the capacitor for an open circuit - replace if needed. Inspect switch and connections. Replace if contacts look burned or pitted. |
| **Fuses blow or motor protection faults immediately.** | • Short circuit in line.<br>• Lines connected incorrectly.<br>• Fuse or circuit breaker tripped.<br>• Motor is overloaded or equipment jammed.<br>• Stator is shorted or went to ground. | • Rectify short circuit.<br>• Check circuit diagram and make corrections.<br>• Replace fuse or circuit breaker.<br>• Make sure load is free. Verify motor amp draw compared to nameplate rating.<br>• A damaged or blown stator will show a burn mark. Stator must be repaired or replaced. |
| **Motor hums and has high current consumption** | • Brake may not be releasing.<br>• Rotor may be rubbing stator.<br>• Defective or incorrect stator winding. | • Troubleshoot brake per User Manual U35000.<br>• Send motor to a repair specialist. |
| **Severe speed loss under load or excessive acceleration time.** | • Overload.<br>• Excessive voltage drop.<br>• Damaged or failing motor bearings.<br>• Damaged or worn gear unit.<br>• 1-Ph Capacitor or start switch has failed. | • Check load conditions and make certain system is unobstructed. Reduce load or consider a larger motor.<br>• Verify service voltage is within specification. Check if nearby equipment is affecting incoming power. Make sure connection harness and wiring is adequate.<br>• Replace motor bearings.<br>• Replace or repair damaged gear unit.<br>• See instructions under "Motor fails to start". |
| **Motor runs the incorrect direction.** | • Incorrect wiring. | • Rewire motor according to system schematic and/or switch two incoming motor phases. |
| **Motor heats up excessively or thermal overload protection trips** | • Overload.<br>• Ambient temperature is too high.<br>• Inadequate cooling.<br>• Operation is outside the allowed duty cycle.<br>• Motor protection device may be defective.<br>• Excessive supply voltage.<br>• System short or damaged stator. | • Make sure load is free. Verify motor amp draw compared to nameplate rating. Reduce load or consider a larger motor.<br>• Do not operate above the rated conditions.<br>• Correct cooling air supply. Open and clear cooling air passages. Retrofit with forced ventilator fan if needed.<br>• Adjust operating duty cycle or contact a specialist to select a suitable motor or drive.<br>• Replace motor protection device.<br>• Adapt motor supply voltage.<br>• Check for loose, cut or damaged wires. Check stator winding for defects or burn damage. |
| **Excessive Noise or Vibration** | • Motor bearings contaminated or damaged.<br>• Excessive motor shaft end play.<br>• Misaligned or imbalanced load. | • Test motor by itself. If bearings are bad noise may be heard or roughness detected. Replace bearings. Add lubrication if bearings have grease fittings.<br>• Check shaft endplay with motor and system power disconnected. If shaft movement is excessive replace motor shaft bearings.<br>• Check all mating shaft connections for proper alignment and correct all imbalanced load conditions. |
| **1 Ph Start Capacitor Failures** | • Motor is not coming up to speed quickly enough.<br>• Motor is being cycled frequently<br>• Start switch is defective or damaged. | • Verify motor size to load conditions. Motor should come up to speed in no more than 2-3 seconds.<br>• Verify duty cycle and consult specialist for recommendations.<br>• Replace start switch. |
| **1 Ph Run Capacitor Failures** | • Possible power surge to motor caused by transient voltage or lightening.<br>• Excessive ambient temperature. | • Install proper surge protection.<br>• Verify ambient conditions do not exceed nameplate value. |

# HIGH PERFORMANCE
# MOTOR RATINGS

| Motor Type | $P_n$ Full Load Power | | $n_n$ Full-Load Speed | $I_n$ Full-Load Current | | | $I_a/I_n$ Locked Rotor Current Ratio | NEMA Code Letter | $T_n$ Full-Load Torque | $T_a/T_n$ Locked Rotor Torque Ratio | $T_k/T_n$ Break Down Torque Ratio | pf Power Factor | η Full Load Efficiency | $J_m$ Rotor Inertia | Duty Cycle |
|---|---|---|---|---|---|---|---|---|---|---|---|---|---|---|---|
| | | | | 230V | 460V | 575V | | | | | | | | | |
| | [hp] | [kW] | [rpm] | [A] | [A] | [A] | [%] | | [lb-in] | | | | [%] | [lb-ft²] | |
| **High Performance Motors** | | | | | | | | | | | | | | | |
| **63 S/4** | 0.16 | 0.12 | 1700 | 0.88 | 0.44 | 0.37 | 250% | F | 5.93 | 2.7 | 3.5 | 0.66 | 52.0% | 0.0050 | S1 cont |
| **63 L/4** | 0.25 | 0.18 | 1680 | 1.12 | 0.56 | 0.46 | 270% | E | 9.38 | 2.3 | 2.5 | 0.71 | 57.0% | 0.0066 | S1 cont. |
| **71 S/4** | 0.33 | 0.25 | 1710 | 1.56 | 0.78 | 0.66 | 310% | G | 12.2 | 2.4 | 2.7 | 0.64 | 63.0% | 0.017 | S1 cont. |
| **80 L/4** | 1 | 0.75 | 1650 | 3.66 | 1.83 | 1.46 | 390% | G | 38.2 | 2.2 | 2.3 | 0.74 | 70.0% | 0.034 | 60 min |
| **90 S/4** | 1.5 | 1.1 | 1660 | 4.84 | 2.42 | 1.94 | 490% | G | 57.0 | 2.5 | 2.8 | 0.78 | 73.0% | 0.056 | 60 min |
| **90 L/4** | 2 | 1.5 | 1660 | 6.34 | 3.17 | 2.54 | 510% | H | 75.9 | 2.5 | 2.8 | 0.80 | 74.0% | 0.074 | 60 min |
| **100 L/4** | 3 | 2.2 | 1705 | 9.00 | 4.50 | 3.63 | 490% | G | 111 | 2.3 | 2.6 | 0.81 | 76.0% | 0.107 | 60 min |
| **100 LA/4** | 5 | 3.7 | 1725 | 15.2 | 7.60 | 6.10 | 510% | G | 183 | 2.7 | 3.1 | 0.75 | 81.0% | 0.142 | 60 min |
| **132 S/4** | 7.5 | 5.5 | 1735 | 19.8 | 9.90 | 7.92 | 540% | G | 272 | 2.4 | 2.7 | 0.82 | 85.0% | 0.570 | 60 min |
| **132 M/4** | 10 | 7.5 | 1735 | 25.8 | 12.9 | 10.3 | 630% | H | 363 | 2.9 | 3.2 | 0.84 | 87.0% | 0.759 | 60 min |
| **160 M/4** | 15 | 11 | 1770 | 35.8 | 17.9 | 14.5 | 820% | J | 534 | 2.9 | 3.8 | 0.85 | 90.7% | 1.19 | 60 min |
| **160 L/4** | 20 | 15 | 1760 | 48.4 | 24.2 | 19.3 | 850% | K | 716 | 2.9 | 3.9 | 0.87 | 89.4% | 1.59 | 60 min |
| **180 MX/4** | 25 | 18.5 | 1760 | 59.0 | 29.5 | 23.6 | 880% | K | 895 | 3.4 | 4.3 | 0.87 | 90.5% | 1.90 | 60 min |
| **180 LX/4** | 30 | 22 | 1765 | 74.4 | 37.2 | 29.8 | 890% | K | 1071 | 3.6 | 4.4 | 0.80 | 92.8% | 2.18 | 60 min |
| **200 LX/4** | 40 | 30 | 1770 | 98.6 | 49.3 | 39.4 | 690% | H | 1424 | 3.2 | 3.6 | 0.83 | 92.1% | 3.80 | 60 min |
| **Premium Efficient Motors** | | | | | | | | | | | | | | | |
| **80 LP/4** | 1 | 0.75 | 1730 | 3.14 | 1.57 | 1.26 | 650 | K | 36.4 | 3.5 | 3.8 | 0.70 | 86.1 | 0.045 | S1 cont. |
| **90 SP/4** | 1.5 | 1.1 | 1740 | 4.20 | 2.10 | 1.68 | 840 | L | 54.3 | 4.2 | 4.9 | 0.76 | 86.9 | 0.081 | S1 cont. |
| **90 LP/4** | 2 | 1.5 | 1730 | 5.60 | 2.80 | 2.24 | 760 | K | 72.9 | 3.9 | 4.3 | 0.78 | 87.0 | 0.093 | S1 cont. |
| **100 LP/4** | 3 | 2.2 | 1770 | 7.68 | 3.84 | 3.07 | 920 | L | 107 | 3.0 | 4.5 | 0.79 | 90.0 | 0.192 | S1 cont. |
| **112 MP/4** | 5 | 3.7 | 1755 | 13.0 | 6.50 | 5.20 | 950 | L | 180 | 4.1 | 4.6 | 0.80 | 90.3 | 0.332 | S1 cont. |
| **132 SP/4** | 7.5 | 5.5 | 1770 | 19.5 | 9.75 | 7.80 | 1020 | M | 267 | 4.7 | 5.0 | 0.77 | 91.7 | 0.759 | S1 cont. |
| **132 MP/4** | 10 | 7.5 | 1765 | 26.7 | 13.4 | 10.7 | 960 | M | 357 | 4.7 | 5.0 | 0.77 | 91.7 | 0.831 | S1 cont. |
| **160 MP/4** | 15 | 11 | 1770 | 35.6 | 17.8 | 14.2 | 880 | K | 534 | 3.2 | 3.8 | 0.84 | 92.5 | 1.59 | S1 cont. |
| **160 LP/4** | 20 | 15 | 1775 | 47.6 | 23.8 | 19.0 | 1080 | M | 710 | 4.3 | 4.7 | 0.85 | 93.0 | 2.18 | S1 cont. |
| **180 MP/4** | 25 | 18.5 | 1780 | 60.6 | 30.3 | 24.2 | 1010 | L | 885 | 3.9 | 4.0 | 0.82 | 93.6 | 3.80 | S1 cont. |
| **180 LP/4** | 30 | 22 | 1780 | 69.6 | 34.8 | 27.8 | 880 | K | 1062 | 3.3 | 3.4 | 0.85 | 93.6 | 3.80 | S1 cont. |
| **225 RP/4** | 40 | 30 | 1785 | - | 49.5 | 39.6 | 890% | K | 1420 | 3.4 | 3.8 | 0.81 | 94.5% | 11.63 | S1 cont. |
| **225 SP/4** | 50 | 37 | 1785 | - | 59.7 | 47.8 | 880% | K | 1752 | 3.0 | 3.7 | 0.82 | 94.6% | 12.81 | S1 cont. |
| **225 MP/4** | 60 | 45 | 1785 | - | 72.0 | 57.6 | 910% | K | 2131 | 3.3 | 3.6 | 0.83 | 95.2% | 15.90 | S1 cont. |
| **250 WP/4** | 75 | 55 | 1785 | - | 84.4 | 67.5 | 920% | J | 2604 | 2.9 | 3.2 | 0.86 | 95.4% | 19.46 | S1 cont. |

With energy efficient gearing, inverter-duty motors, and AC variable frequency drives, NORD provides an intelligent energy saving product portfolio. NORD can be your partner in selecting motors to match each application for ideal performance and maximum energy savings. In keeping with this concept, NORD offers a variety of high performance motors including:

- NORD ***continuous duty, premium efficient motors (1–75 HP)*** satisfy global energy efficiency mandates, NORD's premium efficient motors provide maximum energy savings, offer low rotor inertia, provide quick starts & stops, & handle high cycle rates in dynamic applications.
- NORD ***60 minute duty motors (1 - 40 HP)*** motors are labeled "60 MIN" duty & are perfectly suited for intermittent or time limited applications. These motors offer higher cycling capacity, lower motor rotor inertia, & lower energy consumption while starting or stopping, as comparedto the NORD Premium Efficient motors. NORD can also provide motors that satisfy other periodic duty or intermittent duty ratings.
- NORD ***continuous duty, standard efficient motors (0.16 – 0.75 HP)*** satisfy global energy efficiency mandates. They are exempt from the June 1, 2016 mandate requiring NEMA Premium Efficiency Levels ( D.O.E. 10 CFR Part 431). Like 60 minute duty motors, these motors offer higher cycling capacity, lower motor rotor inertia, and lower energy consumption while starting or stopping, as compared to the NORD Premium Efficient motors.

Effective June 1, 2016, most general purpose, 1- 500 Hp, continuous duty motors sold in the U.S., must meet NEMA Premium Efficiency Levels (D.O.E. 10 CFR Part 431). Intermittent-rated motors (60 Min. Duty) and fractional horsepower/totally-enclosed motors are exempt from this latest U.S. efficiency mandate; properly applied, these motors often lead to less energy consumption, especially during starts and stops.

# CONSTANT SPEED DRIVES







## SIMPLE RELIABLE EFFICIENT

UNICASE™

NORD DRIVESYSTEMS

DRIVESYSTEMS





# Clincher™ Ordering Guide

| | Gear Unit | Shaft/Mounting | Reducer Options | | Motor/Input | Motor Options |
|---|---|---|---|---|---|---|
| **SK** | ❶ | ❷ | ❸ | – | ❹ | |
| | | | | | see page 690 | see page 690 |

❶

| Gear Unit | | | |
|---|---|---|---|
| 0182NB | 1382NB | 1282/02 | 6382/22 |
| 0282NB | 2382 | 2282/02 | 6382/32 |
| 1282 | 3382 | 3282/12 | 7382/22 |
| 2282 | 4382 | 4282/12 | 7382/32 |
| 3282 | 5382 | 5282/12 | 8382/22 |
| 4282 | 6382 | | 8382/32 |
| 5282 | 7382 | | 9382/42 |
| 6282 | 8382 | | 9382/52 |
| 7282 | 9382 | | 10382/52 |
| 8282 | 10382 | | 11382/52 |
| 9282 | 11382 | | |
| 10282 | 12382 | | |
| 11282 | | | |

❷

| Shaft/Mounting | | |
|---|---|---|
| **VZ -** Solid Shaft/B14 Flange | **VX -** Solid Shaft/Foot | **AZ** - Hollow Shaft/B14 Flange |
| **VF -** Solid Shaft/B5 Flange | **LX -** Double Solid Shaft/Foot | **AF** - Hollow Shaft/B5 Flange |
| **SCP -** Screw Conveyor Package | | **AX** - Hollow Shaft/Foot |

❸

| Reducer Options | | |
|---|---|---|
| ❒ **B -** Fixing Element Kit | ❒ **VL -** Heavy Duty Output Bearings | ❒ **VI -** Fluoro-rubber Seals |
| ❒ **G -** Rubber Buffers | ❒ **VL2 -** Spread Bearing Design | ❒ **OSG -** Oil Sight Glass |
| ❒ **VG -** Heavy Duty Rubber Buffers | ❒ **VL3 -** Oil Safe Spread Bearing Design | ❒ **OA -** Oil Expansion Chamber |
| ❒ **H -** Hollow Shaft Cover | ❒ **VL4-** Drywell Drop Bearing Design | ❒ **OC -** Oil Cooler |
| ❒ **H66 -** IP66 Hollow Shaft Cover | ❒ **LX-** Double Solid Shaft | ❒ **WC -** Water Cooling Cover |
| ❒ **SH -** Shrink Disc & Cover | ❒ **SM5 -** Stainless Steel Output Shaft | ❒ **OT -** Oil Reservoir Tank |
| ❒ **VSH -** Heavy Duty Shrink Disc & Cover | ❒ **SWA -** Special Hollow Shaft | ❒ **MDP -** Magnetic Drain Plug |
| ❒ **PR -** Flange Pilot Removal | ❒ **SWV -** Special Solid Shaft | ❒ **ADP -** Additional Drain Plug |
| ❒ **LL -** Long Term Storage | ❒ Cross Drilled Shaft | |

❹

| Input Shaft | NEMA Adapter | IEC | Integral Motors | | Integral Energy Efficent Motors | | Scoop | Motor Platform | Servo Adapter (Keyed) |
|---|---|---|---|---|---|---|---|---|---|
| W | N56C | IEC 63 | **63S/4** - 0.16hp | **160L/4** - 20hp | **80LH/4** - 1hp | **200LH/4** - 40hp | S56 | MKN056 | SEP 100 |
| | N140TC | IEC 71 | **63L/4** - 0.25hp | **180MX/4** - 25hp | **90SH/4** - 1.5hp | **225SH/4** - 50hp | S140T | MKN140 | SEP 130 |
| | N180TC | IEC 80 | **71S/4** - 0.33hp | **180LX/4** - 30hp | **90LH/4** - 2hp | **225MH/4** - 60hp | S180T | MKN180 | SEP 165 |
| | N210TC | IEC 90 | **71L/4** - 0.50hp | **200L/4** - 40hp | **100LH/4** - 3hp | **250MH/4** - 75hp | S210T | MKN210 | SEP 215 |
| | N250TC | IEC 100 | **80S/4** - 0.75hp | **225S/4** - 50hp | **112MH/4** - 5hp | **280SH/4** - 100hp | S250T | MKN250 | SEP 300 |
| | N280TC | IEC 112 | **80L/4** - 1hp | **225M/4** - 60hp | **132SH/4** - 7.5hp | **280MH/4** - 125hp | S280T | MKN280 | Servo Adapter (Clamp) |
| | N320TC | IEC 132 | **90S/4** - 1.5hp | **250M/4** - 75hp | **132MH/4** - 10hp | **315SH/4** - 150hp | S320T | MKN320 | |
| | N360TC | IEC 160 | **90L/4** - 2hp | **280S/4** - 100hp | **160MH/4** - 15hp | **315MH/4** - 175hp | S360T | MKN360 | SEK 100 |
| | N400TC | IEC 180 | **100L/4** - 3hp | **280M/4** - 125hp | **160LH/4** - 20hp | **315MAH/4** - 200hp | S400T | MKN400 | SEK 130 |
| | | IEC 200 | **100LA/4** - 5hp | **315S/4** - 150hp | **180MH/4** - 25hp | **315LH/4** - 250hp | | | SEK 165 |
| | | IEC 225 | **112M/4** - 5.4hp | **315M/4** - 175hp | **180LH/4** - 30hp | | | | SEK 215 |
| | | IEC 250 | **132S/4** - 7.5hp | **315MA/4** - 200hp | | | | | SEK 300 |
| | | IEC 280 | **132M/4** - 10hp | **315L/4** - 250hp | | | | | |
| | | IEC 315 | **160M/4** - 15hp | Other Speeds Available | | Other Speeds Available | | | |

## Product Specifications

**Ratio**

_____ :1

see pages 244 - 288

— OR —

**Output Speed**

_____ rpm

see pages 244 - 288

**Mounting Position**

- ❍ M1
- ❍ M2
- ❍ M3
- ❍ M4
- ❍ M5
- ❍ M6
- ❍ Special _____

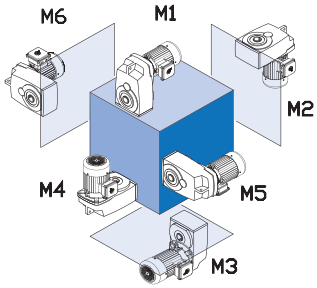


**Paint**

- ❍ Standard Stainles Steel Paint
- ❍ NSD+ (gray)
- ❍ NSD+W (white)
- ❍ NSD-X3 (gray)
- ❍ NSD-X3W (white)
- ❍ Casting Primed
- ❍ Special _____

**Lubricant**

- ❍ Standard
- ❍ Synthetic
- ❍ Food Grade
- ❍ Other _____

**Hollow Shaft Diameter** (If required)

_____

see pages 388 - 393

**B5 Flange Diameter** (If required)

_____

**SCP Drive Shaft Diameter** (If required)

_____

see page 29

## Gearmotor Only Details

**Voltage & Frequency**

- ❍ 230/460V-60Hz (460V only ≥ 40 hp)
- ❍ 575V-60Hz
- ❍ 208V-60Hz
- ❍ 400V-50Hz
- ❍ 115/230V-60Hz, 1 ph.
- ❍ Other _____

**Terminal Box Pos.**

- ❍ TB1
- ❍ TB2
- ❍ TB3
- ❍ TB4

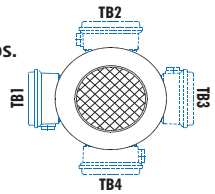


Mtg. Pos. M1 Shown

**Conduit Entry Loc.**

- ❍ CE I *
- ❍ CE II
- ❍ CE III *
- ❍ CE IV

* Brakemotor

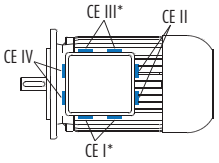


Mtg. Pos. M1 Shown

## 1. Importance of the operating instructions

These operating instructions are intended to provide general information and safety guidelines. It is the responsibility of the buyer, machine builder, installer and user of the NORD product to make sure that all the proper safetynotes and operating instructions have been reviewed and understood. If the contents of this instruction or any applicable operating instructions are not understood, please consult NORD.

**⚠ *WARNING* ⚠**

Electric motors, gearmotors, electrical brakes, variable frequency drives, and gear reducers contain potentially dangerous high-voltage, rotating-components and surfaces that may become hot during operation. All work involved in the transport, connection, commissioning and maintenance of any NORD product must be carried out by qualified and responsible technicians.

## 2. Inspect incoming freight

Before accepting shipment from the freight company, thoroughly inspect the NORD equipment for any shipping and handling damage. If any goods called for in the bill of lading or express receipt are damaged, or if the quantity is short, do not accept until the freight express agent makes an appropriate notation on your freight bill or express receipt. If any concealed loss or damage is discovered later, notify your freight carrier or express agent at once, and request a formal review of your claim.

Claims for loss or damage in shipment must not be deducted from the NORD invoice, nor should payment of the NORD invoice be withheld awaiting adjustment of such claims, as the carrier guarantees safe delivery. NORD will try to assist in collecting claims for loss or damage during shipment; however, this willingness on our part does not remove the transportation company's responsibility in reimbursing you for collection of claims or replacement of material.

## 3. Obtaining detailed operating instructions

One can receive the detailed installation and maintenance instructions by entering a serial number (or NORD order number) at the appropriate location on the NORD web site.

i. Record the serial number from your gearmotor, gear reducer, or motor nameplate, or record the serial number found on your order confirmation.

ii. Go to **www.nord.com/docs** to download the appropriate operating instructions.

**EXAMPLE: www.nord.com/docs**

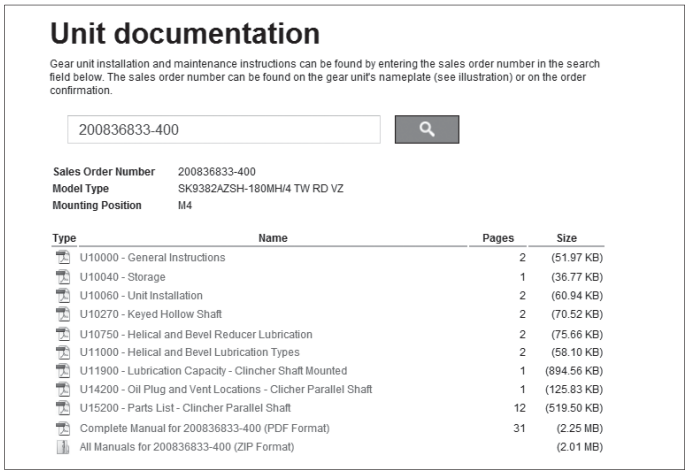

### Unit documentation

Gear unit installation and maintenance instructions can be found by entering the sales order number in the search field below. The sales order number can be found on the gear unit's nameplate (see illustration) or on the order confirmation.

200836833-400

| | |
|---|---|
| **Sales Order Number** | 200836833-400 |
| **Model Type** | SK9382AZSH-180MH/4 TW RD VZ |
| **Mounting Position** | M4 |

| Type | Name | Pages | Size |
|---|---|---|---|
| | U10000 - General Instructions | 2 | (51.97 KB) |
| | U10040 - Storage | 1 | (36.77 KB) |
| | U10060 - Unit Installation | 2 | (60.94 KB) |
| | U10270 - Keyed Hollow Shaft | 2 | (70.52 KB) |
| | U10750 - Helical and Bevel Reducer Lubrication | 2 | (75.66 KB) |
| | U11000 - Helical and Bevel Lubrication Types | 2 | (58.10 KB) |
| | U11900 - Lubrication Capacity - Clincher Shaft Mounted | 1 | (894.56 KB) |
| | U14200 - Oil Plug and Vent Locations - Clicher Parallel Shaft | 1 | (125.83 KB) |
| | U15200 - Parts List - Clincher Parallel Shaft | 12 | (519.50 KB) |
| | Complete Manual for 200836833-400 (PDF Format) | 31 | (2.25 MB) |
| | All Manuals for 200836833-400 (ZIP Format) | | (2.01 MB) |

## 4. Intended use

NORD is a supplier of electric motors, gearmotors, reducers, electromechanical brakes, mechanical variators, and electrical variable frequency drives that are intended for commercial installations on larger systems and machines.

**⚠ *WARNING* ⚠**

NORD does not accept any liability for damage or injury caused by:

- Inappropriate use, operation or adaptation of the drive system.
- Unauthorized removal of housing covers, safety and inspection covers, guarding, etc.
- Unauthorized modifications to the drive system.
- Improper servicing or repair work on the drive system.
- Damage caused during shipment or transportation.
- Disregard of the important Safety Notes or Operating Instructions.

### 5. Notes concerning warranty and liability

All units are supplied according to the terms described in our standard "Conditions of Sale." The unit limited warranty is also defined in our "Conditions of Sale" and is located in the back of our product catalogs as well as the back of your order invoice.

All NORD Safety Notes and all related NORD Operating instructions shall be considered up-to-date at the time in which they were compiled by the buyer, machine builder, installer or user. NORD reserves the right to incorporate technical modifications and information updates to any safety/operating instructions that are within the scope of providing additional knowledge or clarification, communicating design changes, or product enhancements. Information updates may include any NORD product, or subsequent products purchased and supplied by NORD; No specific claims can be derived from the information or illustrations and descriptions contained in the safety notes or related operating instructions.

⚠ *WARNING* ⚠

NORD assumes no liability for personal injury, equipment damage or malfunctions resulting from failure to comply with any installation safety notes. The applicable national, regional, and local work regulations and safety requirements must also be complied with. Failure to comply with any safety notes or regulations may result in serious injury, damage to property, or even death.

### 6. Checklist for installation and operation

- ☑ Verify that the purchased NORD product has been supplied with the expected accessories & options. Check the received goods and packing slip to make sure items are properly received.
- ☑ Make sure that you have all of the required Operating Instructions for your NORD electric motor, gearmotor, reducer, electromechanical brake, mechanical variable speed drives, or electrical variable frequency drives.
- ☑ Consult NORD if you feel you are missing any documentation or if you have questions.

# SAFETY NOTES

## 1. Safety & information symbols

**All work** including transportation, storage, installation, electrical connection, commissioning, servicing, maintenance and repair must be performed **only by qualified specialists or personnel**. It is recommended that repairs to NORD Products are carried out by the NORD Service Department. Instructions related to operational safety will be emphasized as shown.

| Symbol | Meaning |
|---|---|
| ⚠ | **General Warning or Hazard -** Severe risk or danger of personal injury or death by working around dangerously high electrical voltage or moving machinery. Proper safety precautions must be taken. |
| STOP | **Possible Harmful Situation -** Care must be taken to avoid the possibility of damaging the drive unit, driven machine, or the environment. |
| ℹ | **Important Note -** Useful note or tip to help assure trouble-free operation. |
| ♻ | **Material Disposal Note -** Important note concerning suggested material disposal. |

## 2. Safety warnings

### ⚠ GENERAL WARNINGS ⚠

- All work involved in the transport, connection, commissioning and maintenance of any NORD product must be carried out by qualified and responsible technicians. All applicable national, regional, and local work regulations and safety requirements must also be complied with. **NORD assumes no liability for personal injury, accidental death, or equipment damage and malfunctions resulting from failure to comply with installation or operating instructions, safety notes, or any work regulations and laws!**
- Gear unit installation and maintenance work may only be performed when no power is available to the prime mover or motor. Electric motors, electrical brakes, and variable frequency drives, contain potentially dangerous high-voltage. Prior to installation or maintenance, shut down the power at the circuit breaker or power switch. **While working on the drive, make sure the power from the prime mover is isolated or secured on "lock-out" to prevent accidental start-up and to safeguard against injury!**
- Surfaces of motors and gear units may become hot during operation or shortly after start-up. In some instances additional protection against accidental contact may be necessary. **Use caution to avoid burns or serious injury!**

## 3. Observe published performance range & nameplate data

### STOP HARMFUL SITUATION STOP

Observe the data on all reducer nameplates and verify published ratings for the NORD item/s in question. Do not operate any NORD equipment outside the published performance range. Failure to comply may result in damage to the drive unit, driven machine, or the environment.

**U.S. Nameplate**

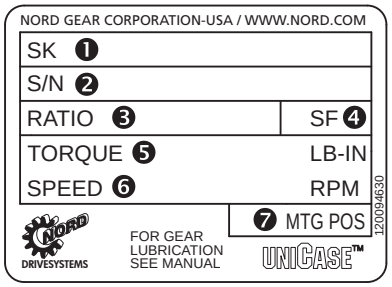


❶ Model/Type
❷ Serial Number
❸ Gear Ratio
❹ Service Factor
❺ Torque Rating
❻ Output Speed RPM
❼ Mounting Position

**European Nameplate**

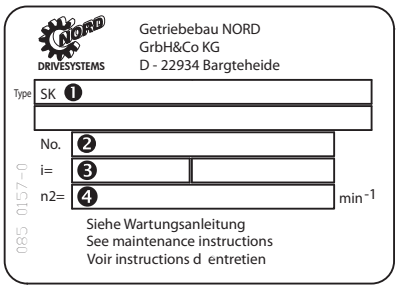


❶ Model/Type
❷ Serial Number
❸ Gear Ratio
❹ Speed

## 4. Transportation and handling

Make sure that all eyebolts and lifting lugs are tight and lift only at designed points. Protect the mounting surface from possible damage during transportation.

### ⚠ WARNING ⚠

Do not attach other machinery or loads to the NORD assembly, since the supplied lifting bolts are not designed for this purpose.

If the gearmotor or assembly is equipped with two suspension eye bolts, then both locations should be used for transportation and placement of the unit; in this case the tension force of the slings must not exceed a 45° angle.

In some instances it may be appropriate to use additional lifting straps or slings in order to assure safe transportation of the assembly. Always use sufficiently rated handling equipment and ensure that adequate safety measures are taken to protect personnel from injury during transportation. Once the NORD assembly is properly installed, remove the transportation fixtures.

## 7. DISPOSAL

### MATERIAL DISPOSAL

Properly dispose of all used gear units and internal parts in accordance with all local regulations. In particular, all lubricants must be properly collected and disposed.

For confirmation of specific materials used in a specific reducer or gearmotor assembly, please consult NORD with the appropriate unit identification or serial number.

| Components | Material |
|---|---|
| Gear wheels, shafts, rolling bearings, parallel keys, snap rings, spacers, shims, etc. | Steel |
| Gear housing and housing components | Cast iron or Aluminum (depending on type and size) |
| Worm gears | Bronze alloy |
| Radial seals, sealing caps, and rubber components | Elastomers with some steel |
| Coupling components | Plastic or Elastomer with Steel |
| Housing gaskets and flat oil seals | Asbestos-free sealing or gasket material (various types used) |
| Gear Oil | Mineral, SHC-Synthetic or PG-Synthetic (can vary) |

## 1. Installation site

Drives must be properly installed if they are to produce the rated torque. Improper installation may lead to oil leaks, reduced life, or even catastrophic failure. NORD gear drives and motors are intended to be installed at a suitable mounting site under the following conditions:

- Unimpeded airflow to and around the units.
- Accessibility to oil drain, level and breather plugs.
- On brakemotors, allow adequate space for removing the fan guard and replacing and adjusting the brake.
- Mounting surfaces must be flat, torsionally rigid, and dampened against vibration.
- Unless special measures are taken, the immediate vicinity around the gear drive or motor should not be exposed to any aggressive or corrosive substances, contaminated air, ozone, gases, solvents, acids, alkalis, salts, radioactivity, etc.

## 2. Mounting position

Reducer mounting position charts illustrate the standard mounting positions for horizontal and vertical mounting. All gear units are assembled with the oil fill-level, oil-drain and vent plugs installed in their proper locations, **according to the customer-specified mounting position**. For mounting orientations other than shown consult NORD Gear.

STOP *HARMFUL SITUATION* STOP

The gear reducer may not receive proper lubrication if the unit is not mounted in the position for which it is designed. Observe the mounting position designated on the reducer nameplate, or specified in the order acknowledgement. Consult NORD prior to changing mounting position in the field. While it is often possible to simply relocate the oil fill-level and vent locations, and adjust the oil fill amount, in some cases, different mounting positions may lend themselves to different internal construction features.

## 3. Reducer mounting

- The support foundation must be straight, level and flat. Whether the gear unit is foot-mounted or flange-mounted, NORD recommends that the straightness and flatness of the customer-supplied support foundation follow **Table 1**.
- The gear unit must be properly aligned with the driven shaft of the machine in order to prevent additional stress or load forces from being imposed upon the gear unit.
- To facilitate oil drainage it may be desirable to elevate the gear box foundation above the surrounding support structure.
- All bolting surfaces must be clean and free from contamination and corrosion.

**Table 1: Recommended Straightness and Flatness of Customer-Supplied Support Foundation**

| Above (in) | To & Including (in) | General Tolerance on Straigtness & Flatness ISO 2768-2, Tolerance Class K |
|---|---|---|
| 0.00 | 0.39 | +/- 0.002 in |
| 0.39 | 1.18 | +/- 0.004 in |
| 1.18 | 3.9 | +/- 0.008 in |
| 3.9 | 11.8 | +/- 0.016 in |
| 11.8 | 39 | +/- 0.024 in |
| 39 | 118 | +/- 0.031 in |

| Above (mm) | To & Including (mm) | General Tolerance on Straigtness & Flatness ISO 2768-2, Tolerance Class K |
|---|---|---|
| 0 | 10 | +/- 0.05 mm |
| 10 | 30 | +/- 0.1 mm |
| 30 | 100 | +/- 0.2 mm |
| 100 | 300 | +/- 0.4 mm |
| 300 | 1000 | +/- 0.6 mm |
| 1000 | 3000 | +/- 0.8 mm |

**Straightness: Based upon the length of the corresponding line.**

**Flatness: Based upon the longer lateral surface or the diameter of the circular surface.**

STOP *HARMFUL SITUATION* STOP

The responsibility for the design and construction of the support foundation is with the user. The foundation must be adequate to withstand normal operating loads and possible overloads while maintaining alignment to attached system components under such loads. ***Motors and drive components mounted on prefabricated base plates can become misaligned during shipment. Always check alignment after installation.***

## 4. Steel foundation

An engineered structural steel foundation should be designed to provide adequate rigidity and prevent loads from distorting the housing or causing misalignment of internal gears and shafts. When foot-mounting the gear reducer, a base plate or sole plate with suitable thickness (generally equal or greater than the thickness of the drive feet) should be securely bolted to steel supports and extend under the entire gear drive assembly. When flange-mounting the gear unit, the bulk head plate must be engineered to minimize buckling distortions and support the cantilevered weight of the gear unit or gear motor.

STOP *HARMFUL SITUATION* STOP

Do not weld on the gear unit or use the gear unit as an earth or ground connection for any welding procedure as this may cause permanent damage to the bearings and gears.

## 5. Concrete foundation

If a concrete foundation is used, allow the concrete to set firmly before bolting down the gear drive. Grout structural steel mounting pads and bolts of sufficient size into the concrete, to adequately distribute the load stress onto the concrete foundation.

**Figure 1: Concrete Foundation**

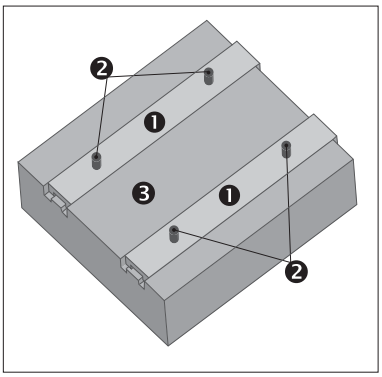


❶ Grouted Structural Steel Mounting Pads
❷ Mounting Bolts
❸ Concrete Foundation

## 6. Bolt connections for footed & flange mounted units

NORD footed reducers and flange-mount reducers (with B5 flange) have clearance designed into the mounting holes to allow for some minor adjustments in alignment. Bolt size, strength and quantity should be verified to insure proper torque reaction capacity whatever the mounting arrangement. Tightening torque for gear reducer mounting bolts, and recommended fastener grades, are provided in Table 2.

**Table 2A: Tightening Torque for Inch Reducer Mounting Bolts**

| Thread Size | Grade SAE 5 / ASTM A449 | | Grade SAE 8 | |
|---|---|---|---|---|
| (in) | (lb-ft) | (Nm) | (lb-ft) | (Nm) |
| 1/4-20 | 7.1 | 9.6 | 10.0 | 13.6 |
| 5/16-18 | 16 | 21 | 22 | 30 |
| 3/8-16 | 28 | 37 | 39 | 53 |
| 1/2-13 | 69 | 93 | 98 | 132 |
| 5/8-11 | 138 | 188 | 195 | 264 |
| 3/4-10 | 247 | 334 | 348 | 472 |
| 7/8-9 | 396 | 537 | 558 | 757 |
| 1-8 | 592 | 802 | 833 | 1,130 |
| 1 1/8-7 | - | - | 1,233 | 1,672 |
| 1 1/4-7 | - | - | 1,717 | 2,327 |
| 1 3/8-6 | - | - | 2,267 | 3,073 |
| 1 1/2-6 | - | - | 2,983 | 4,045 |
| 1 3/4-5 | - | - | 4,458 | 6,045 |

- Calculated tightening torques are based a conventional 60°, clean and dry (un-lubricated) thread, with thread-friction and head-friction equal to 0.15.
- When using inch-fasteners, NORD recommends a minimum Grade SAE 5 (ASTM A-449) for sizes up to 1-8 UNC, and Grade SAE 8 for all larger sizes.

**Table 2B: Tightening Torque for Metric Reducer Mounting Bolts**

| Above | ISO Grade 8.8 | | ISO Grade 10.9 | | ISO Grade 12.9 | |
|---|---|---|---|---|---|---|
| (mm) | (lb-ft) | (Nm) | (lb-ft) | (Nm) | (lb-ft) | (Nm) |
| M4 | 2.4 | 3.2 | 3.5 | 4.7 | 4.1 | 5.5 |
| M5 | 4.7 | 6.4 | 6.9 | 9.3 | 8.1 | 11 |
| M6 | 8 | 11 | 12 | 16 | 14 | 19 |
| M8 | 20 | 27 | 29 | 39 | 34 | 46 |
| M10 | 39 | 53 | 58 | 78 | 67 | 91 |
| M12 | 68 | 92 | 100 | 135 | 110 | 155 |
| M14 | 107 | 145 | 159 | 215 | 180 | 250 |
| M16 | 170 | 230 | 247 | 335 | 290 | 390 |
| M18 | 240 | 325 | 343 | 465 | 400 | 540 |
| M20 | 339 | 460 | 487 | 660 | 570 | 770 |
| M22 | 465 | 630 | 664 | 900 | 770 | 1,050 |
| M24 | 583 | 790 | 848 | 1,150 | 960 | 1,300 |
| M27 | 848 | 1,150 | 1,217 | 1,650 | 1,440 | 1,950 |
| M30 | 1,180 | 1,600 | 1,660 | 2,250 | 1,950 | 2,650 |
| M36 | 2,050 | 2,780 | 2,884 | 3,910 | 3,470 | 4,710 |
| M42 | 3,297 | 4,470 | 4,639 | 6,290 | 5,560 | 7,540 |
| M48 | 4,940 | 6,700 | 7,010 | 9,500 | 8,260 | 11,200 |

- Calculated tightening torques are based on a conventional 60°, clean and dry (un-lubricated) thread, with thread-friction and head-friction equal to 0.15.
- When using metric-fasteners, NORD recommends a minimum ISO Grade 8.8 bolt.

## 7. Mounting the prime mover

When the motor is not flange mounted or integrally mounted to the gearbox, it is important to properly secure and align the gear drive with respect to the driven machine before attempting to align the prime mover or motor.

A. After the main gear drive is properly aligned and bolted in place, align the prime mover with respect to the reducer input shaft.

B. Use shims under the feet of the prime mover as needed, and secure in place with the proper mounting bolts. Dowel pins may be field-installed to help prevent misalignment and ensure proper realignment if removed for service.

*IMPORTANT NOTE*

When using a high speed coupling connection between the prime mover and the reducer, check alignment per the coupling manufacturers recommendations. If the coupling is misaligned, the reducer alignment or shimming is incorrect. Re-align the gear reducer and re-check the high-speed coupling alignment before re-aligning the motor.

# STORAGE & COMMISSIONING

## 1. Storage

**IMPORTANT NOTE**

For storage periods longer than 9 months, or for storage in less than desirable conditions, please consult NORD for recommendations.

Storage for up to 9 months is possible, so long as the following conditions are observed:

- Store the gear unit in its actual mounting position in accordance with the specified oil fill-level, in a clean and dry temperature controlled area. Avoid temperature fluctuations within the range of 0°C and 40°C (32°F to 104°F) and avoid relative humidity conditions in excess of 60%.
- Protect all exposed or unpainted shaft and flange surfaces with an anti-corrosion agent or grease.
- Store in a location free from shock and vibration, to avoid false brinelling of bearing elements and raceways.
- Whenever possible, rotate the shafts periodically, by hand if necessary, to help prevent brinelling (bearing damage) and to help keep the shaft seals pliable.
- Avoid direct exposure to the sun or UV light and aggressive or corrosive materials in the environment (ozone, gases, solvents, acids, caustic solutions, salts, radioactivity, etc.

## 2. Commissioning

Prior to gear unit start-up, complete the following:

- Check the lubricant and be sure the gear unit is filled with the proper oil type, to the proper level, as determined by the mounting position.

**IMPORTANT NOTE**

Some smaller gear units are supplied as maintenance free/ lubricated for life gear units. Oil level may not be checked on some of these units.

- Check the condition of all shaft seals and all assembled flange gasket areas. If any change is detected in the shape, color, hardness or permeability, or if any leaks are detected, the corresponding shaft seals and/or gaskets must be replaced.
- Remove all anti-corrosive metal protectant from otherwise bare metal surfaces. Follow product manufacturers directions and warnings during surface protection removal.
- Check the resistance of all motor and brake windings to verify the integrity of the winding insulation and inspect all terminal box openings and wire connection areas to verify that all components are dry and free of corrosion.

## 3. Long-Term Storage

By taking special precautions, problems such as seal leakage and reducer failure due to the lack of lubrication, improper lubrication quantity, or contamination can be avoided. The following precautions will protect gear reducers during periods of extended storage:

- Store the gear unit in its actual mounting position in accordance with the specified oil fill-level, in a clean and dry temperature controlled area. Avoid temperature fluctuations within the range of 0°C and 40°C (32°F to 104°F) and avoid relative humidity conditions in excess of 60%.
- Fill the reducer full with oil that is compatible with the product normally used or recommended during service.
- Apply grease to all unpainted or unprotected shafts, bores, keyways, flange surfaces, tapped holes, and to the exterior of all oil seals.
- Store in a location free from shock and vibration, to avoid false brinelling of bearing elements and raceways.
- Once every few months rotate the input shaft approximately 10-20 revolutions to redistribute the weight of gears and shafts and to prevent brinnelling of the bearings and drying of the seal track.
- Avoid direct exposure to the sun or UV light and aggressive or corrosive materials in the environment (ozone, gases, solvents, acids, caustic solutions, salts, radioactivity, etc.)

## 4. Commissioning After Long-Term Storage

- Remove all anti-corrosive metal protectant from otherwise bare metal surfaces. Follow product manufacturers directions and warnings during surface protection removal.
- Drain the reducer and refill it with the proper type and amount of lubricant.
- Observe start-up and initial operation to make sure there are no seal or gasket leaks, or unusual sounds, vibration or heat rise during operation.
- Check the resistance of all motor and brake windings to verify the integrity of the winding insulation and inspect all terminal box openings and wire connection areas to verify that all components are dry and free of corrosion.

# HELICAL & BEVEL REDUCER LUBRICATION

## 1. Importance of proper lubrication

Proper gearbox lubrication is essential in order to reduce friction, heat, and component wear. Lubricants reduce heat and wear by inserting a protective "fluid boundary" between mating parts and preventing direct metal to metal contact. Lubricants also help prevent corrosion and oxidation, minimize foam, improve heat transfer, optimize reducer efficiency, absorb shock loads and reduce noise.

Most NORD reducers are shipped from the factory with a pre-determined oil fill level in accordance to the specified reducer size and mounting position.

## 2. Standard oil type

The following tables indicate the standard oil fill type used. Please see user manual U11000 for more specific information and for optional helical and bevel gear lubricants:

| Serviceable Gear Units | |
|---|---|
| Helical In-line | Standard Oil Fill: ISO VG 220, Mineral Oil |
| Clincher Parallel-Shaft | |
| Right-Angle Bevel | |
| NORDBLOC® Series In-line | |
| NORDBLOC®.1 Series In-line | |
| Standard Series In-line | |

*IMPORTANT NOTE*

For shipping purposes, the following large Clincher™ gear units are supplied without oil:
• Clincher™ Sizes SK11282, SK11382 and SK12382

| Maintenance-free / Lubricated For Life Gear Units | |
|---|---|
| Clincher™ sizes SK0182NB, SK0282NB & SK1382NB | Standard Oil Fill: ISO VG220 SHC/PAO Synthetic Oil |
| NORDBLOC® Sizes SK172, SK272, SK371F, SK372, SK373, SK320 | |

*IMPORTANT NOTE*

Maintenance-free units are supplied as sealed units with no vent-plug. Consult NORD prior to ordering if interested in ordering any of the above sizes as serviceable gear units.

*IMPORTANT NOTE*

Consult the sticker adjacent to the fill plug to determine the type of lubricant installed at the factory. Some units have special lubricants designed to operate in certain environments or intended to extend the service life or service temperature range of the lubricant. If in doubt about which lubricant is needed for a certain application, please contact NORD Gear.

## 3. Lubrication replacement

If the gear unit is filled with mineral oil, the lubricant should be replaced at least after every 10,000 operating hours or after every two years. If the gear unit is filled with synthetic oil, the lubricant should be replaced at least after every 20,000 operating hours or after every four years. Often gear reducers are exposed to extreme ambient conditions, hostile environments, wet conditions, or dirty and dusty operating areas. Especially in these situations, it is important to establish a condition-based oil service interval.

## 4. Oil viscosity

Viscosity, or the oil's resistance to shear under load, is often considered the single most important property of any gear oil.

- Often one will consider making a viscosity correction to the oil to improve the performance when operating the gear unit at low temperature or high temperature.
- In cases of extreme load conditions, gear pairs and antifriction bearings may be more susceptible to sliding or scuffing wear. In these operating conditions, it may also be beneficial to consider an increased lubrication viscosity and/or a lubrication with improved antiwear additive packages.

*IMPORTANT NOTE*

The user should consult with their primary lubrication supplier before considering changes in oil type or viscosity.

## 5. Maximum oil sump temperature limit

To prevent reducer overheating, the reducer's maximum oil sump temperature limit must not be exceeded for prolonged periods of operation (up to 3 hours continuous operation depending upon reducer size).

| Oil Type | Maximum Oil Temperature Limit | |
|---|---|---|
| | NORD | AGMA 9005-D94 |
| Mineral | 80-85°C (176-185°F) | 95°C (203°F) |
| Synthetic | 105°C (220°F) | 107°C (225°F) |

*IMPORTANT NOTE*

***Use caution when specifying gear reducers for high temperature service.*** If there is concern about exceeding the allowable safe operating temperatures, please consult NORD to discuss alternatives.

# HELICAL & BEVEL REDUCER LUBRICATION

### 6. The importance of routine oil analysis

Routine oil analysis, sound lubrication practices, and good tracking of oil performance trends will help establish proper lubrication maintenance and change-out intervals. To maximize equipment reliability, NORD Gear generally recommends a condition-based lubrication maintenance program. One may take exceptions to this general recommendation on sealed-for-life or maintenance-free gear units or smaller and less costly gear units. In these instances, the replacement cost of the gear unit is often small compared to the costs associated with this type of oil analysis program.

**STOP** *HARMFUL SITUATION* **STOP**

NORD suggests replacing the gear oil if oil analysis indicates any of the following:

- Viscosity has changed by approximately 10% or more.
- Debris particles (silicon, dust, dirt or sand) exceed 25 ppm.
- Iron content exceeds 150-200 ppm.
- Water content is greater than 0.05% (500 ppm).
- The total acid number (TAN) tests indicate a significant level of oxidative break-down of the oil, and a critical reduction in performance; If the TAN number measured changes by more than 5% over the new oil, then an oil change would be recommended.

### 7. Mounting position and oil fill quantity

All NORD Gear reducers are shipped from the factory with a pre-determined oil fill level in accordance to the specified reducer size and mounting position. ***For additional information, please see the seperate mounting position diagrams and the corresponding oil fill quantity tables for the specified gear unit.***

The gearbox nametag will indicate the mounting position that was provided. ***For mounting orientations other than shown in the mounting position charts, please consult NORD Gear.***

**STOP** *HARMFUL SITUATION* **STOP**

Actual oil volume can vary slightly depending upon the gear case size, mounting and ratio. Prior to commissioning the reducer, check the oil-fill level using the reducer's oil-level plug and drain or add additional oil as needed. The minimum acceptable oil level is 0.15 in (4mm) below the oil level hole.

### 8. Oil plug locations

All gear units are assembled with the oil fill-level, oil-drain and vent plugs installed in their proper locations, according to the specified mounting position. All standard plugs are metric and utilize sealing gaskets between the head of the plug and the reducer housing.

### 9. Drain and fill-level plugs

All reducer drain plugs are metric socket head cap screws. For easier identification, it is NORD's standard practice to provide a hex-head screw for the fill-level plug. For ease of draining the used oil from the gear reducer, use the socket head screw located at the lowest part of the gearbox.



Drain Plug

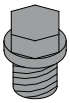

Fill Level Plug

### 10. Vent plug locations

Reducer venting allows for air pressure differences that occur during operation, between the inner space of the reducer and the atmosphere, while ensuring leak-free operation. The AUTOVENT™ is standard for all vented gear units, unless otherwise noted.

**AUTOVENT™** - The AUTOVENT™ helps prevent bearing and gear damage by behaving like a check valve to block the entry of foreign material (water, dust, corrosives, etc.). The breather opens at approximately 2-3 psi during operation and closes tightly as the gearbox cools. This option is perfect for humid conditions and wash-down environments, helping to maintain proper oil cleanliness, and reducing foaming and oxidation. NORD may choose to offer one of two style options as shown in Figure 1. The Type 2 AUTOVENT™ comes closed upon delivery with a transportation sealing plug (see Warning).

**Figure 1 AUTOVENT™ Types**



Type 1

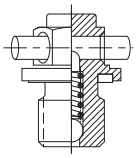



Type 2 with transportation plug

**Open Vent** - An optional open vent can be supplied by NORD. The open vent comes closed upon delivery with a transportation sealing plug (see Warning).

⚠ *WARNING* ⚠

To prevent build-up of excessive pressure, sealed vents must be activated as shown prior to gear unit start up.

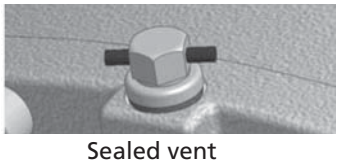

Sealed vent

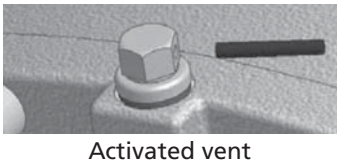

Activated vent

**Filtered Vent** - NORD may offer an optional filtered vent, which allows gases to permeate, but does not allow dust and debris to pass through the vent.

# HELICAL & BEVEL REDUCER LUBRICATION TYPES



## Lubrication Tables – Helical and Bevel Gear Units

**Standard Oil Lubricants**

| ISO Viscosity | Oil Type | Ambient Temperature Range | Manufacturer Brand/Type | Notes |
|---|---|---|---|---|
| VG220 | MIN-EP | 0 to 40°C (32 to 104°) | Mobilgear 600XP220 | ♦❶ |
| | PAO | -35 to 60°C (-31 to 140°F) | Mobil SHC630 | ♦❷ |
| | FG | -5 to 40°C (23 to 104°F) | Fuchs FM220 | ♦ |

**Optional Oil Lubricants**

| ISO Viscosity | Oil Type | Ambient Temperature Range | Manufacturer Brand/Type | Notes |
|---|---|---|---|---|
| VG460 | PAO | -35 to 80°C (-31 to 176°F) | Mobil SHC 634 | - |
| | FG-PAO | -35 to 80°C (-31 to 176°F) | Mobil SHC Cibus 460 | - |
| VG220 | FG-PAO | -35 to 60°C (-31 to 140°F) | Mobil SHC Cibus 220 | - |
| VG150 | PAO | -35 to 25°C (-31 to 77°F) | Mobil SHC629 | - |

**Grease Options (applied to greased bearings and seal cavities)**

| NLGI Grade | Grease Type/Thickener | Ambient Temperature Range | Manufacturer Brand/Type | Notes |
|---|---|---|---|---|
| NLGI 2 | Standard (Li-Complex) | -30 to 60°C (-22 to 140°F) | Mobil Grease XHP222 | ♦❶ |
| | High Temp (Polyurea) | -40 to 80°C (-40 to 176°F) | Mobil / Polyrex EP 2 | ♦❷ |
| | Food-Grade (Polyurea) | -30 to 40°C (-22 to 104°F) | Mobil SHC Polyrex 222 | ♦ |

♦ Stocked Lubricants

❶ Standard product on serviceable gear units

❷ Standard product on maintenance free gear units

### *IMPORTANT NOTES*

- The "Ambient Temperature" is intended to be an operation guideline based upon the typical properties of all the lubricant. The viscosity and other properties of the lubricant change based upon load, speed, ambient conditions, and reducer operating temperatures. The user should consult with their lubrication supplier & NORD gear before considering changes in oil type or viscosity.
- To prevent reducer overheating, observe the maximum operating oil temperature limits:
  Mineral Oil: 80-85 °C (176 – 180 °F).
  Synthetic Oil: 105 °C (225 °F).
- In the following instances, please consult NORD for specific recommendations:
  - √ Gear units will operate in high ambient temperature conditions exceeding 40 °C (104 °F).
  - √ Gear units will operate in cold ambient temperature conditions approaching 0 °C (32 °F) or lower.
  - √ Lower than an ISO VG100 viscosity oil is being considered for a cold-temperature service.
  - √ Fluid grease is required for lubricating the gear unit.
- Observe the general lubrication guidelines outlined in user manual U10750.

**Oil Formulation Codes**

MIN-EP - Mineral Oil with EP Additive
PAO-EP - Synthetic Polyalphaolefin Oil with EP Additive
PAO - Synthetic Polyalphaolefin Oil
PG - Synthetic Polyglycol Oil
FG - Food-Grade Oil
FG-PAO - Food-Grade, Synthetic Poyalphaolefin Oil
FG-PG - Food-Grade, Synthetic Polyglycol Oil

**Lubrication Notes**

- Avoid using (EP) gear oils in worm gears that contain sulfur-phosphorous chemistries, as these additives can react adversely with bronze worm gears and accelerate wear.
- Food grade lubricants must be in compliance with FDA 212 CFR 178.3570 and qualify as a NSF-H1 lubricant. Please consult with lubrication manufacturer for more information.
- When making a lubrication change, check with the lubrication supplier to assure compatibility and to obtain recommended cleaning or flushing procedures.
- Do not to mix different oils with different additive packages or different base oil formulation types. Polyglycol (PG) oils are not miscible with other oil types and should never be mixed with mineral oil or polyalphaolefin (PAO) synthetic oil.

# HELICAL & BEVEL REDUCER LUBRICATION TYPES

**Oil Cross-reference Chart**

| ISO Viscosity | Oil Type | Ambient Temperature Range | Mobil | Shell | Castrol | FUCHS | KLÜBER LUBRICATION |
|---|---|---|---|---|---|---|---|
| VG150 | MIN-EP | 0 to 25°C (32 to 77°F) | Mobilgear 600XP150 | Omala 150 | Alpha SP150 | Renolin EP150 | Klüberoil GEM 1-150N |
| | PAO-EP | -30 to 25 °C (-22 to 77 °F) | Mobilgear SHC150 | Omala HD 150 | Alphasyn EP150 | Gearmaster SYN150/NA | Klübersynth EG 4-150 |
| | PAO | -30 to 25°C (-22 to 77°F) | Mobil SHC629 | Omala RL 150 | Alphasyn T150 | N/A | Klübersynth GEM 4-150N |
| | PG | -25 to 25°C (-13 to 77°F) | Mobil Glygoyle 150 | Tivela S150 | Alphasyn PG150 | Renolin PG150 | Klübersynth GH 6-150 |
| | FG | 0 to 25°C (32 to 77°F) | Mobil DTE FM 150 | N/A | N/A | N/A | N/A |
| | FG-PAO | -15 to 25°C (5 to 77°F) | Mobil SHC Cibus 150 | N/A | N/A | Cassida GL150 | Klüberoil 4 UH 1-150N |
| | FG-PG | -25 to 25°C (-13 to 77°F) | Mobil Glygoyle 150 | N/A | N/A | N/A | Klübersynth UH1 6-150 |
| VG220 | MIN-EP | 0 to 40°C (32 to 104°) | Mobilgear 600XP220 | Omala 220 | Alpha SP220 | Renolin EP220 | Klüberoil GEM 1-220N |
| | PAO-EP | -30 to 60 °C (-22 to 140 °F) | Mobilgear SHC220 | Omala HD220 | Alphasyn EP220 | Gearmaster SYN220/NA | Klübersynth EG 4-220 |
| | PAO | -30 to 60°C (-22 to 140°F) | Mobil SHC630 | Omala RL220 | Alphasyn T220 | N/A | Klübersynth GEM 4-220N |
| | PG | -25 to 60°C (-13 to 140°F) | Mobil Glygoyle 220 | Tivela S220 | Alphasyn PG220 | Renolin PG220 | Klübersynth GH 6-220 |
| | FG | 0 to 40°C (32 to 104°F) | Mobil DTE FM 220 | N/A | N/A | Fuchs FM220 | N/A |
| | FG-PAO | -25 to 60°C (-13 to 140°F) | Mobil SHC Cibus 220 | N/A | N/A | Cassida GL220 | Klüberoil 4 UH 1-220N |
| | FG-PG | -25 to 60°C (-13 to 140°F) | Mobil Glygoyle 220 | N/A | N/A | Cassida WG220 | Klübersynth UH1 6-220 |
| VG460 | MIN-EP | 0 to 40°C (32 to 104°F) | Mobilgear 600XP460 | Omala 460 | Alpha SP460 | Renolin EP460 | Klüberoil GEM 1-460N |
| | PAO-EP | -20 to 80°C (-4 to 176°F) | Mobilgear SHC460 | Omala HD460 | Alphasyn EP460 | Gearmaster SYN460/NA | Klübersynth EG 4-460 |
| | PAO | -20 to 80°C (-4 to 176°F) | Mobil SHC 634 | Omala RL460 | Alphasyn T460 | N/A | Klübersynth GEM 4-460N |
| | PG | -20 to 80°C (-4 to 176°F) | Mobil Glygoyle 460 | Tivela S460 | Alphasyn PG460 | N/A | Klübersynth GH 6-460 |
| | FG | 0 to 40°C (32 to 104°F) | Mobil DTE FM460 | N/A | N/A | Fuchs FM460 | N/A |
| | FG-PAO | -20 to 80°C (-4 to 176°F) | Mobil SHC Cibus 460 | N/A | N/A | Cassida GL460 | Klüberoil 4 UH 1-460N |
| | FG-PG | -20 to 80°C (-4 to 176°F) | Mobil Glygoyle 460 | N/A | N/A | Cassida WG460 | Klübersynth UH1 6-460 |

Low-end service temperature limit may vary for a specific lubricant; Please also see the important notes on Page 1.

# CLINCHER™ OIL FILL QUANTITIES



## CLINCHER™ lubrication

Unless otherwise noted below, the following NORD Gear reducers are shipped from the factory with a pre-determined oil fill level in accordance to the specified reducer size and mounting position. For additional information, please refer to the "Oil Plug & Vent Locations" documentation for your gear unit.

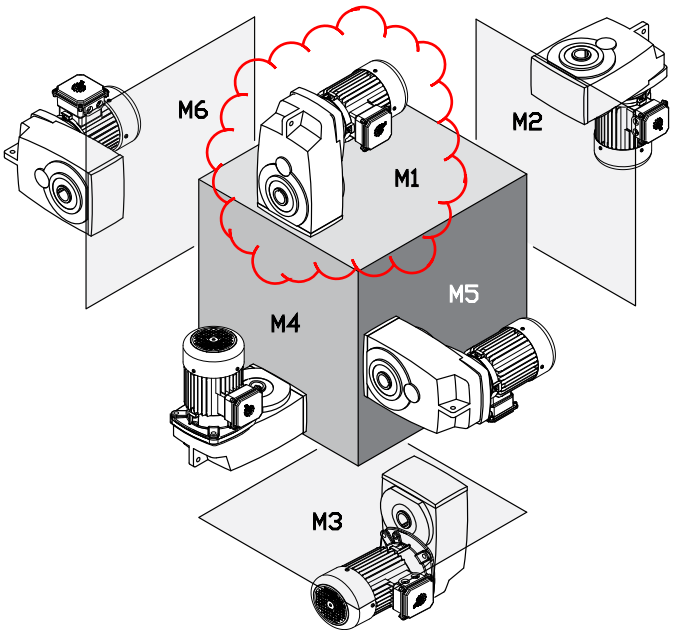


### HARMFUL SITUATION

Actual oil volume can vary slightly depending upon the gear case size, mounting and ratio. Prior to commissioning the reducer, check the oil-fill level using the reducer's oil level plug and drain or add addition oil as needed. The minimum acceptable oil level is 0.15 in (4mm) below the oil level hole.

For mounting orientations other than shown please consult NORD Gear. Reducer modifications may be required.

| Type | M1 | | M2 | | M3 | | M4 | | M5 | | M6 | |
|---|---|---|---|---|---|---|---|---|---|---|---|---|
| | Quarts | Liters | Quarts | Liters | Quarts | Liters | Quarts | Liters | Quarts | Liters | Quarts | Liters |
| SK 0182NB | 0.42 | 0.40 | 0.58 | 0.55 | 0.58 | 0.55 | 0.42 | 0.40 | 0.42 | 0.40 | 0.42 | 0.40 |
| SK 0282NB | 0.74 | 0.70 | 1.16 | 1.10 | 0.85 | 0.80 | 1.16 | 1.10 | 0.95 | 0.90 | 0.95 | 0.90 |
| SK 1282 | 1.00 | 0.95 | 1.37 | 1.30 | 0.95 | 0.90 | 1.37 | 1.30 | 1.06 | 1.00 | 1.06 | 1.00 |
| SK 1382NB | 1.48 | 1.40 | 2.43 | 2.30 | 2.32 | 2.20 | 2.32 | 2.20 | 2.11 | 2.00 | 2.11 | 2.00 |
| SK 1382 | 1.53 | 1.45 | 1.69 | 1.60 | 1.22 | 1.15 | 1.80 | 1.70 | 1.16 | 1.10 | 1.16 | 1.10 |
| SK 2282 | 1.80 | 1.70 | 2.43 | 2.30 | 1.80 | 1.70 | 2.32 | 2.20 | 2.01 | 1.90 | 2.01 | 1.90 |
| SK 2382 | 2.43 | 2.30 | 2.85 | 2.70 | 2.22 | 2.10 | 3.38 | 3.20 | 2.11 | 2.00 | 2.11 | 2.00 |
| SK 3282 | 2.96 | 2.80 | 4.23 | 4.00 | 3.49 | 3.30 | 4.02 | 3.80 | 3.17 | 3.00 | 3.17 | 3.00 |
| SK 3382 | 4.02 | 3.80 | 4.54 | 4.30 | 3.17 | 3.00 | 5.81 | 5.50 | 3.17 | 3.00 | 3.17 | 3.00 |
| SK 4282 | 4.44 | 4.20 | 5.71 | 5.40 | 4.65 | 4.40 | 5.28 | 5.00 | 4.44 | 4.20 | 4.44 | 4.20 |
| SK 4382 | 6.45 | 6.10 | 7.29 | 6.90 | 5.18 | 4.90 | 8.88 | 8.40 | 5.28 | 5.00 | 5.28 | 5.00 |
| SK 5282 | 7.93 | 7.50 | 9.30 | 8.80 | 7.93 | 7.50 | 9.30 | 8.80 | 7.61 | 7.20 | 7.61 | 7.20 |
| SK 5382 | 13.2 | 12.5 | 12.7 | 12.0 | 7.08 | 6.70 | 14.8 | 14.0 | 8.77 | 8.30 | 8.77 | 8.30 |
| SK 6282 | 18.0 | 17.0 | 16.4 | 15.5 | 13.2 | 12.5 | 18.5 | 17.5 | 11.6 | 11.0 | 14.8 | 14.0 |
| SK 6382 | 16.9 | 16.0 | 13.7 | 13.0 | 10.6 | 10.0 | 19.0 | 18.0 | 14.8 | 14.0 | 13.2 | 12.5 |
| SK 7282 | 26.9 | 25.5 | 22.2 | 21.0 | 21.7 | 20.5 | 28.5 | 27.0 | 16.9 | 16.0 | 22.2 | 21.0 |
| SK 7382 | 23.2 | 22.0 | 22.2 | 21.0 | 16.9 | 16.0 | 26.4 | 25.0 | 24.3 | 23.0 | 23.2 | 22.0 |
| SK 8282 | 39.6 | 37.5 | 34.9 | 33.0 | 32.2 | 30.5 | 46.5 | 44.0 | 32.8 | 31.0 | 32.8 | 31.0 |
| SK 8382 | 36.5 | 34.5 | 34.3 | 32.5 | 26.4 | 25.0 | 40.2 | 38.0 | 37.0 | 35.0 | 31.7 | 30.0 |
| SK 9282 | 79.0 | 75.0 | 74.0 | 70.0 | 59.0 | 56.0 | 85.0 † | 80.0 † | 69.0 | 65.0 | 62.0 | 59.0 |
| SK 9382 | 78.0 | 74.0 | 74.0 | 70.0 | 45.4 | 43.0 | 79.0 † | 75.0 † | 69.0 | 65.0 | 63.0 | 60.0 |
| SK 10282 | 95.0 | 90.0 | 95.0 | 90.0 | 42.3 | 40.0 | 95.0 † | 90.0 † | 63.0 | 60.0 | 87.0 | 82.0 |
| SK 10382 | 90.0 | 85.0 | 95.0 | 90.0 | 77.0 | 73.0 | 106 † | 100 † | 85 | 80.0 | 85.0 | 80.0 |
| SK 11282* | 174 | 165 | 169 | 160 | 153 | 145 | 206 † | 195 † | 106 | 100 | 148 | 140 |
| SK 11382* | 169 | 160 | 164 | 155 | 148 | 140 | 222 † | 210 † | 164 | 155 | 143 | 135 |
| SK 12382* | 169 | 160 | 164 | 155 | 148 | 140 | 222 † | 210 † | 164 | 155 | 143 | 135 |

*** For shipping purposes the larger Clincher™ gear units are supplied without oil.**

**† Oil quantities shown are for the gearbox only. When the OT (oil tank) option is used, the oil must be filled to the level shown on the dipstick which is located inside of the oil tank. Even when the gear unit is filled by NORD, the user MUST add more oil untill the oil is filled to the proper level.**

# SK 4282 SCP + Motor
# 2” CEMA Drive Shaft

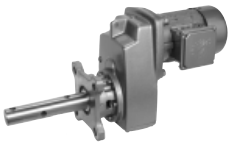

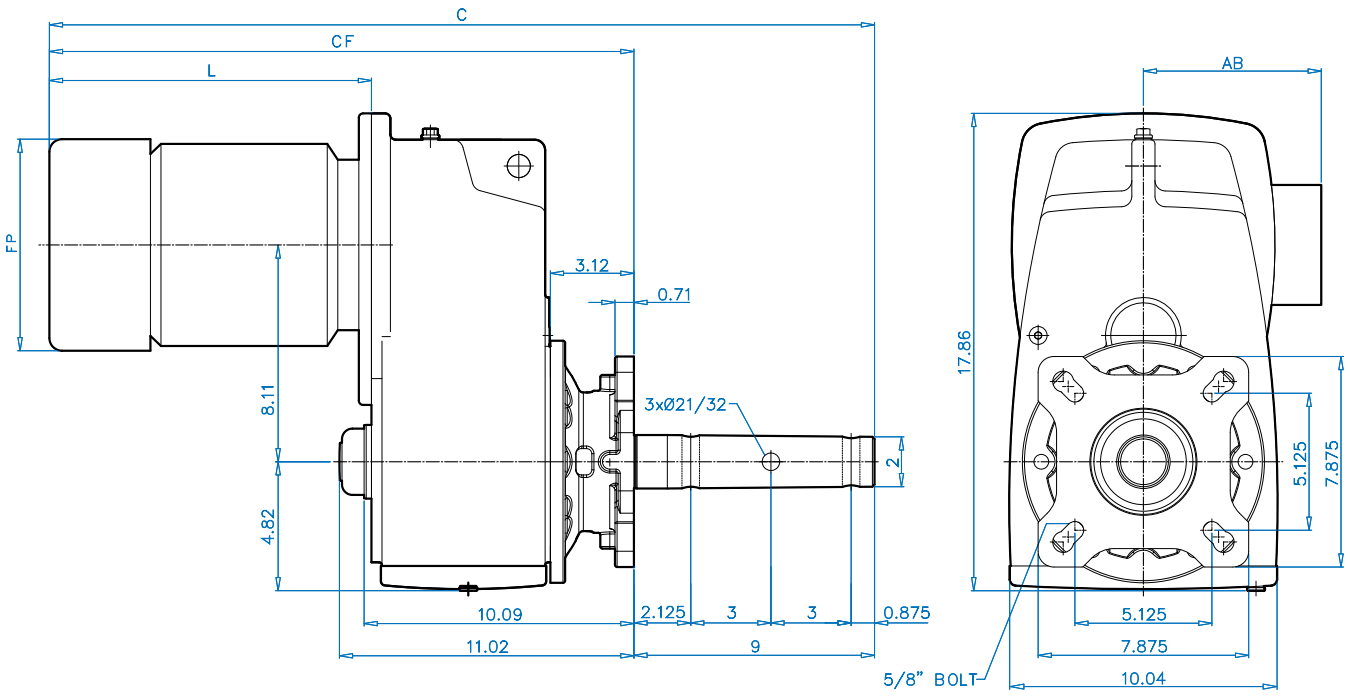


DIMENSIONS

| Motor Type | Overall | | Motor | | |
|---|---|---|---|---|---|
| | C | CF | L | FP | AB |
| 90S/SH/L/LH | 29.94 | 20.94 | 10.84 | 7.19 | 5.79 |
| 100L/LA/LH | 31.16 | 22.16 | 12.06 | 7.90 | 6.65 |
| 112M | 32.03 | 23.03 | 12.93 | 8.87 | 7.05 |
| 112MH | 33.02 | 24.02 | 13.93 | 8.87 | 7.05 |
| 132S/SH/M/MH | 35.45 | 26.45 | 16.35 | 10.45 | 8.03 |
| 160M/L | 38.51 | 29.51 | 19.41 | 12.56 | 9.53 |

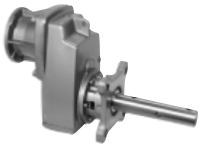

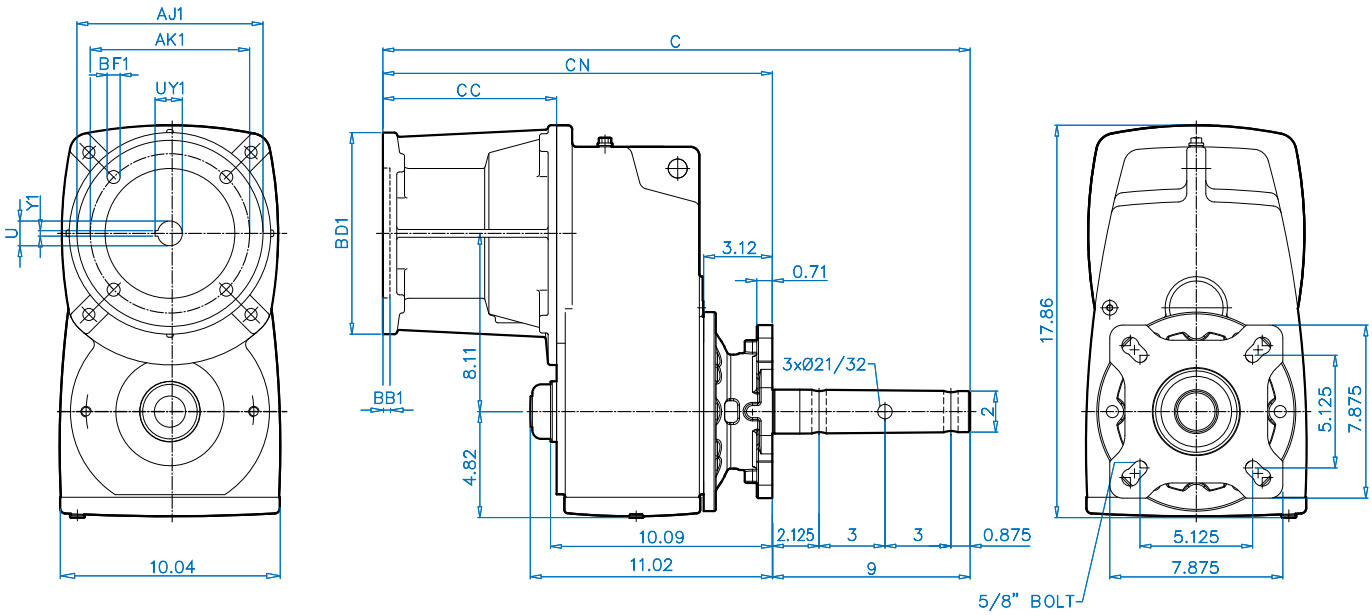




| NEMA | Overall | | NEMA Input | | | | | | Coupling | | |
|---|---|---|---|---|---|---|---|---|---|---|---|
| C-Face Input | C | CN | CC | AJ1 | AK1 | BB1 | BD1 | BF1 | U1 | UY1 | Y1 |
| **56C** | 23.43 | 14.43 | 4.33 | 5.875 | 4.50 | 0.20 | 6.54 | 0.43 | 0.625 | 0.71 | 0.188 |
| **140TC** | 23.43 | 14.43 | 4.33 | 5.875 | 4.50 | 0.20 | 6.54 | 0.43 | 0.875 | 0.96 | 0.188 |
| **180TC** | 27.17 | 18.17 | 8.07 | 7.250 | 8.50 | 0.23 | 9.17 | 0.59 | 1.125 | 1.24 | 0.250 |
| **210TC** | 27.17 | 18.17 | 8.07 | 7.250 | 8.50 | 0.23 | 9.17 | 0.59 | 1.375 | 1.52 | 0.312 |
| **250TC** | 27.01 | 18.01 | 7.91 | 7.250 | 8.50 | 0.23 | 9.17 | 0.59 | 1.625 | 1.80 | 0.375 |

# Fixing Element Kit

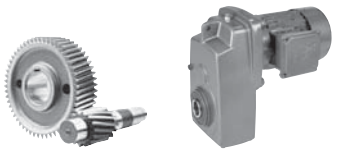





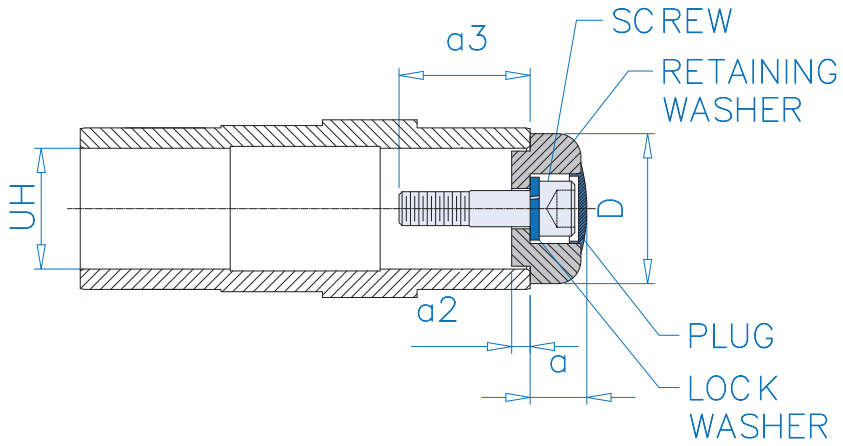


**Inch Shaft Hollow Bore (in)**

| UH | D | a | a2 | Screw ❶ | a3 ❶ | Screw ❷ | a3 ❷ | Screw ❸ | a3 ❸ |
|---|---|---|---|---|---|---|---|---|---|
| 0.5000 | 0.984 | 0.565 | 0.110 | 10 - 32 x 5/8 | 0.499 | - | - | - | - |
| 0.7500 | 1.181 | 0.557 | 0.118 | 1/4 - 20 x 3/4 | 0.652 | 1/4 - 20 x 1 | 0.902 | - | - |
| 1.0000 | 1.496 | 0.767 | 0.150 | 3/8 - 16 x 3/4 | 0.624 | 3/8 - 16 x 1-1/4 | 1.124 | - | - |
| 1.1875 | 1.575 | 0.769 | 0.150 | 7/16 - 14 x 2-1/16 | 2.016 | - | - | - | - |
| 1.2500 | 1.575 | 0.769 | 0.150 | 7/16 - 14 x 2-1/16 | 2.016 | - | - | - | - |
| 1.3750 | 1.772 | 0.946 | 0.197 | 5/8 - 11 x 1-1/2 | 1.461 | 5/8 - 11 x 2-1/4 | 2.211 | 5/8 - 11 x 1 | 0.961 |
| 1.4375 | 1.772 | 0.946 | 0.197 | 5/8 - 11 x 1-1/2 | 1.461 | 5/8 - 11 x 2-1/4 | 2.211 | 5/8 - 11 x 1 | 0.961 |
| 1.5000 | 1.772 | 0.946 | 0.197 | 5/8 - 11 x 1-1/2 | 1.461 | 5/8 - 11 x 2-1/4 | 2.211 | 5/8 - 11 x 1 | 0.961 |
| 1.6250 | 2.165 | 0.927 | 0.315 | 5/8 - 11 x 2 | 2.000 | 5/8 - 11 x 1-1/2 | 1.500 | - | - |
| 1.6875 | 2.165 | 0.927 | 0.315 | 5/8 - 11 x 2 | 2.000 | 5/8 - 11 x 1-1/2 | 1.500 | - | - |
| 1.9375 | 2.362 | 0.966 | 0.315 | 5/8 - 11 x 2-1/4 | 2.000 | - | - | - | - |
| 2.0000 | 2.559 | 0.971 | 0.315 | 5/8 - 11 x 2-1/4 | 2.250 | - | - | - | - |
| 2.0625 | 2.559 | 0.971 | 0.315 | 5/8 - 11 x 2-1/4 | 2.250 | - | - | - | - |
| 2.1875 | 2.559 | 0.971 | 0.315 | 5/8 - 11 x 2-1/4 | 2.250 | - | - | - | - |
| 2.3750 | 2.953 | 1.129 | 0.354 | 3/4 - 10 x 2-1/2 | 2.500 | - | - | - | - |
| 2.4375 | 2.953 | 1.129 | 0.354 | 3/4 - 10 x 2-1/2 | 2.500 | - | - | - | - |
| 2.7500 | 3.740 | 1.132 | 0.354 | 3/4 - 10 x 2-1/2 | 2.500 | - | - | - | - |
| 2.9375 | 3.740 | 1.132 | 0.354 | 3/4 - 10 x 2-1/2 | 2.500 | - | - | - | - |
| 3.1875 | 3.740 | 1.132 | 0.354 | 3/4 - 10 x 2-1/2 | 2.500 | - | - | - | - |
| 3.2500 | 4.106 | 1.132 | 0.354 | 3/4 - 10 x 2-1/2 | 2.500 | - | - | - | - |
| 3.4375 | 4.106 | 1.132 | 0.354 | 3/4 - 10 x 2-1/2 | 2.500 | - | - | - | - |
| 3.9375 | 4.724 | 1.299 | 0.394 | 7/8 - 9 x 3-1/2 | 3.500 | - | - | - | - |
| 4.0000 | 4.724 | 1.299 | 0.394 | 7/8 - 9 x 3-1/2 | 3.500 | - | - | - | - |
| 4.0625 | 4.724 | 1.299 | 0.394 | 7/8 - 9 x 3-1/2 | 3.500 | - | - | - | - |
| 4.4375 | 5.315 | 1.299 | 0.386 | 7/8 - 9 x 3-1/2 | 3.500 | - | - | - | - |
| 4.7500 | 5.906 | 1.299 | 0.394 | 7/8 - 9 x 3-1/2 | 3.500 | - | - | - | - |
| 4.9375 | 5.906 | 1.299 | 0.394 | 7/8 - 9 x 3-1/2 | 3.500 | - | - | - | - |

Standard snap ring groove is machined into input (motor) side of hollow shaft.
Fixing element can be installed into opposite side but requires a special shaft. Consult NORD.

**Metric Hollow Bore (mm)**

| UH | D | a | a2 | Screw ❶ | a3 ❶ | Screw ❷ | a3 ❷ |
|---|---|---|---|---|---|---|---|
| 25 | 38 | 19 | 3.8 | M10 x 45 | 41.8 | M10 x 30 | 26.8 |
| 30 | 40 | 19 | 3.8 | M10 x 45 | 43.8 | M10 x 30 | 28.8 |
| 35 | 45 | 23.5 | 5 | M12 x 55 | 54 | M12 x 35 | 34 |
| 40 | 55 | 23.7 | 8 | M16 x 70 | 70 | M16 x 45 | 45 |
| 50 | 65 | 24.7 | 8 | M16 x 70 | 70 | M16 x 45 | 45 |
| 60 | 75 | 29 | 9 | M20 x 90 | 90 | M20 x 55 | 55 |
| 70 | 95 | 29.3 | 9 | M20 x 90 | 90 | M20 x 55 | 55 |
| 80 | 102 | 29 | 9 | M20 x 100 | 100 | M20 x 55 | 55 |
| 100 | 120 | 34.5 | 10 | M24 x 110 | 110 | M24 x 65 | 65 |
| 120 | 150 | 34.5 | 10 | M24 x 110 | 110 | M24 x 65 | 65 |

❶, ❷, ❸ - Each fixing element kit may contain up to 3 different kinds of screws

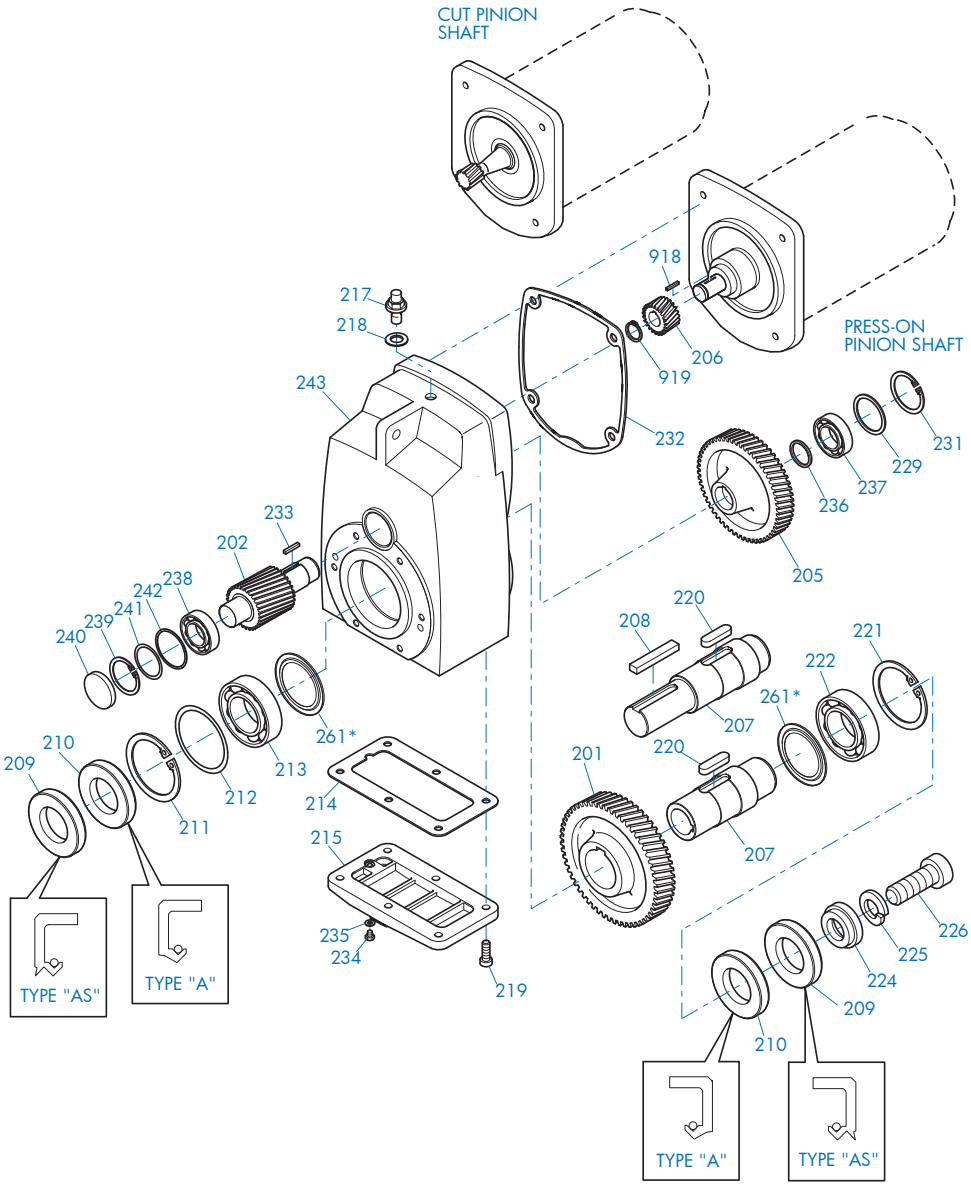


## SK 0182NB - SK 5282

| | | |
|---|---|---|
| 201 Gear | 217 Vent Plug | 234 Drain Plug |
| 202 Pinion Shaft | 218 Gasket | 235 Gasket |
| 205 Gear | 219 Bolt | 236 Thrust Washer |
| 206 Pinion | 220 Key | 237 Anti-Friction Bearing |
| 207 Output Shaft | 221 Snap Ring | 238 Anti-Friction Bearing |
| 208 Key | 222 Anti-Friction Bearing | 239 Snap Ring |
| 209 Oil Seal | 224 Retaining Washer | 240 Bore Plug |
| 210 Oil Seal | 225 Lock Washer | 241 Shim |
| 211 Snap Ring | 226 Bolt | 242 Thrust Washer |
| 212 Shim | 229 Thrust Washer | 243 Gearcase |
| 213 Anti-Friction Bearing | 231 Snap Ring | 261 Nilos Ring* |
| 214 Gasket | 232 Gasket | 918 Key |
| 215 Inspection Cover | 233 Key | 919 Snap Ring |

* Conditionally used part

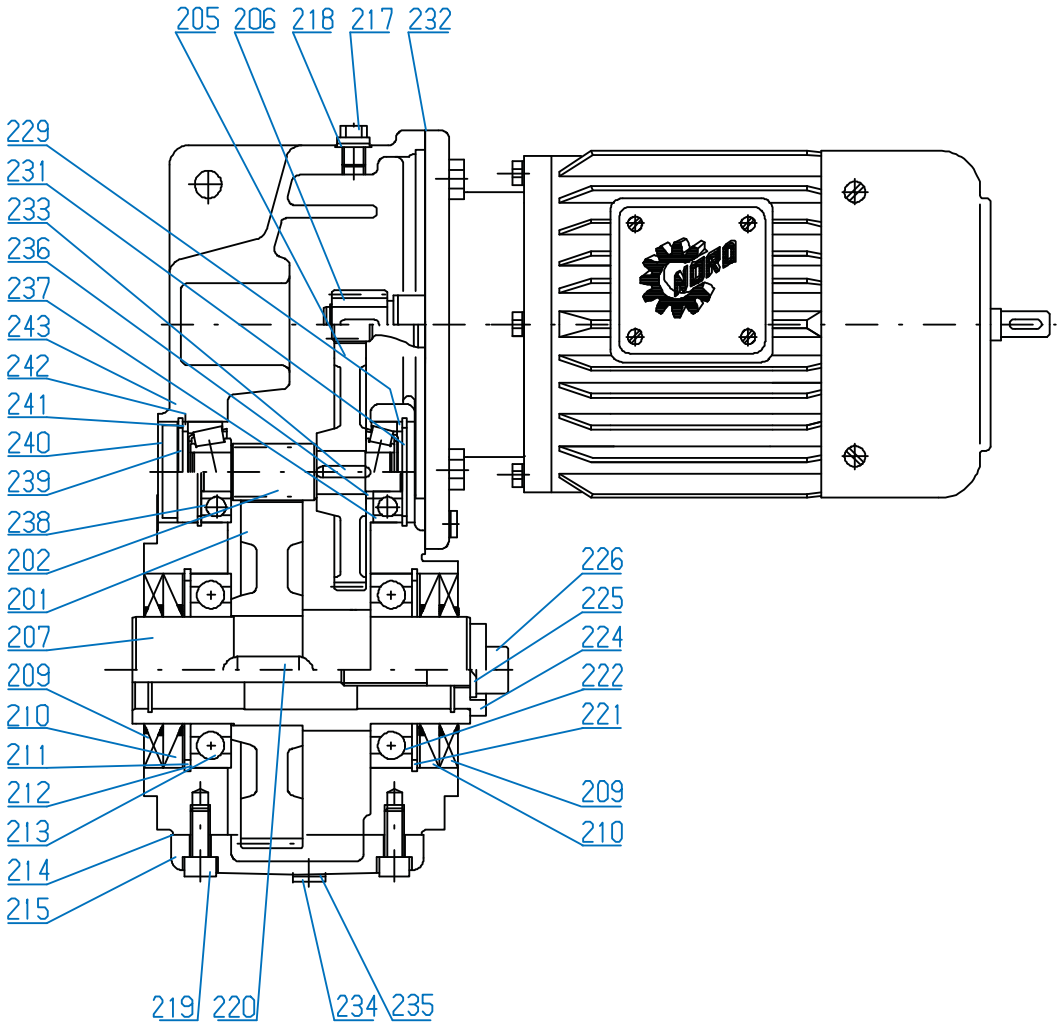


## SK 0182NB - SK 5282

| | | |
|---|---|---|
| 201 Gear | 217 Vent Plug | 233 Key |
| 202 Pinion Shaft | 218 Gasket | 234 Drain Plug |
| 205 Gear | 219 Bolt | 235 Gasket |
| 206 Pinion | 220 Key | 236 Thrust Washer |
| 207 Output Shaft | 221 Snap Ring | 237 Anti-Friction Bearing |
| 209 Oil Seal | 222 Anti-Friction Bearing | 238 Anti-Friction Bearing |
| 210 Oil Seal | 224 Retaining Washer | 239 Snap Ring |
| 211 Snap Ring | 225 Lock Washer | 240 Bore Plug |
| 212 Shim | 226 Bolt | 241 Shim |
| 213 Anti-Friction Bearing | 229 Thrust Washer | 242 Thrust Washer |
| 214 Gasket | 231 Snap Ring | 243 Gearcase |
| 215 Inspection Cover | 232 Gasket | 261 Nilos Ring* |

* Conditionally used part

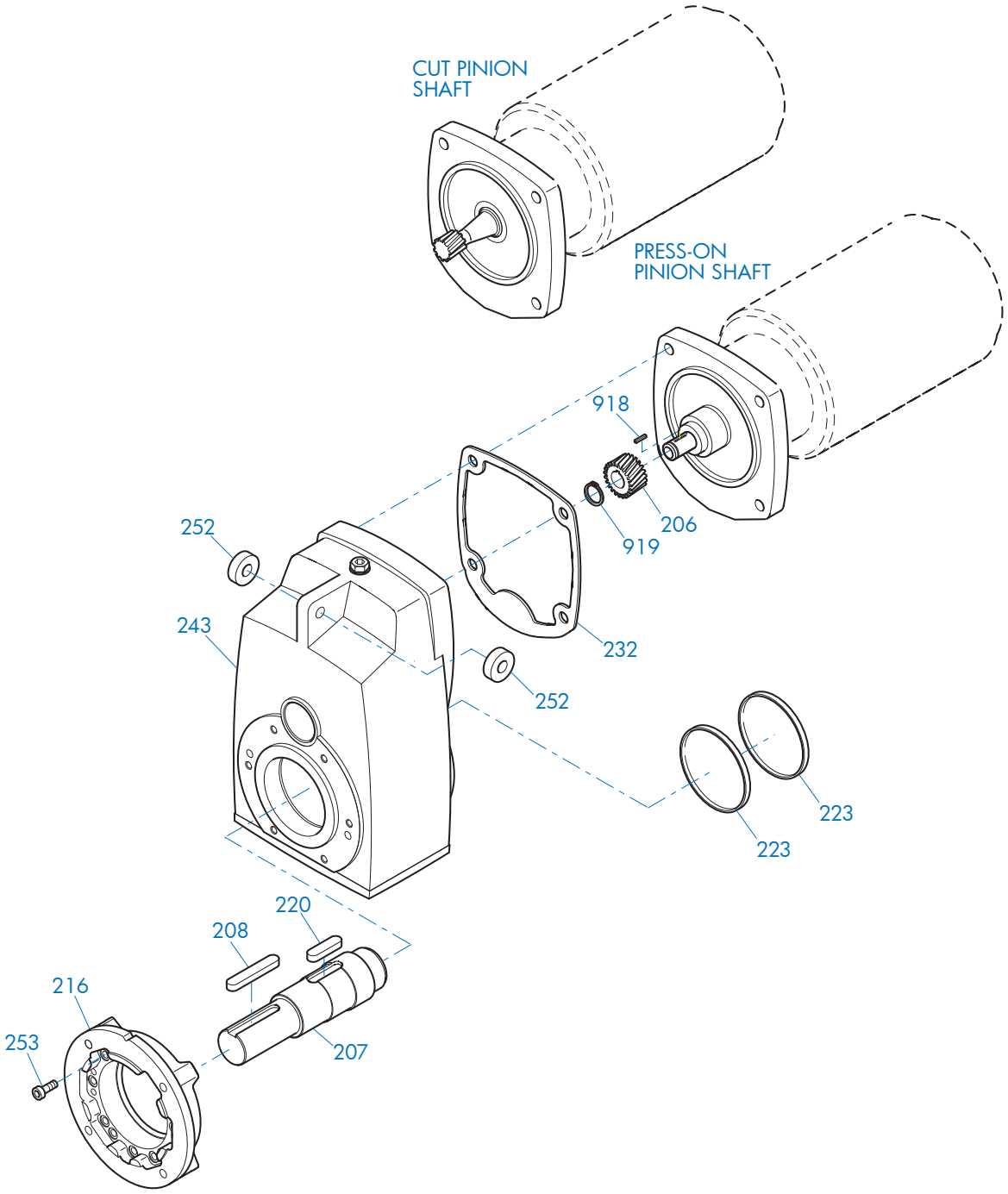


## SK 0182NB - SK 11282 & SK 1382 - SK 11382

| | | |
|---|---|---|
| 206 Pinion | 220 Key | 252 Rubber Buffer |
| 207 Output Shaft | 223 Bore Plug | 253 Bolt |
| 208 Key | 232 Gasket | 918 Key |
| 216 Flange | 243 Gearcase | 919 Snap Ring |

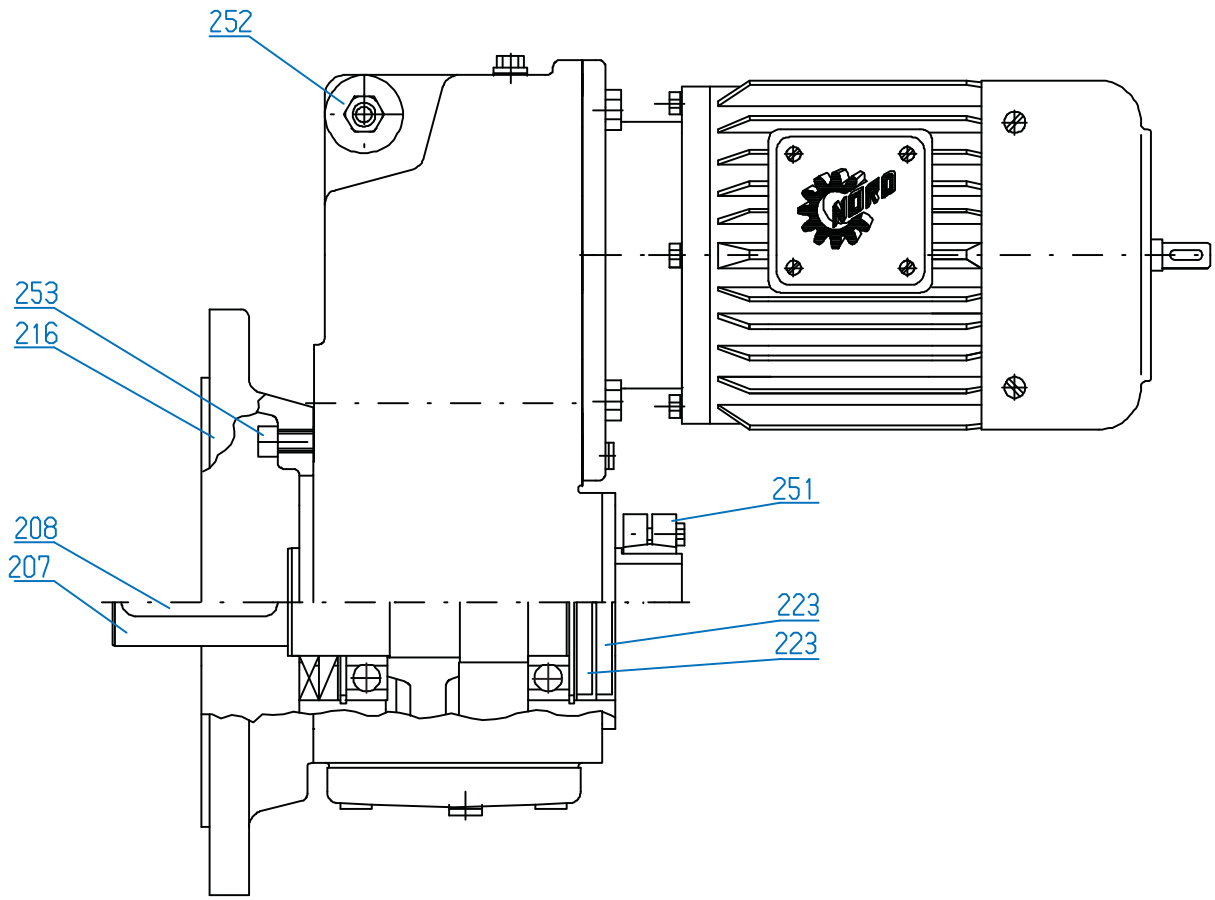


## SK 0182NB - SK 11282 & SK 1382 - SK 11382

| | | |
|---|---|---|
| 207 Output Shaft | 223 Bore Plug | 253 Bolt |
| 208 Key | 251 Shrink Disc | |
| 216 Flange | 252 Rubber Buffer | |

# SK SCP + Motor
# CEMA Drive Shaft

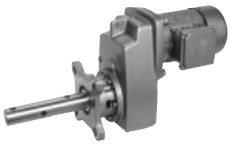



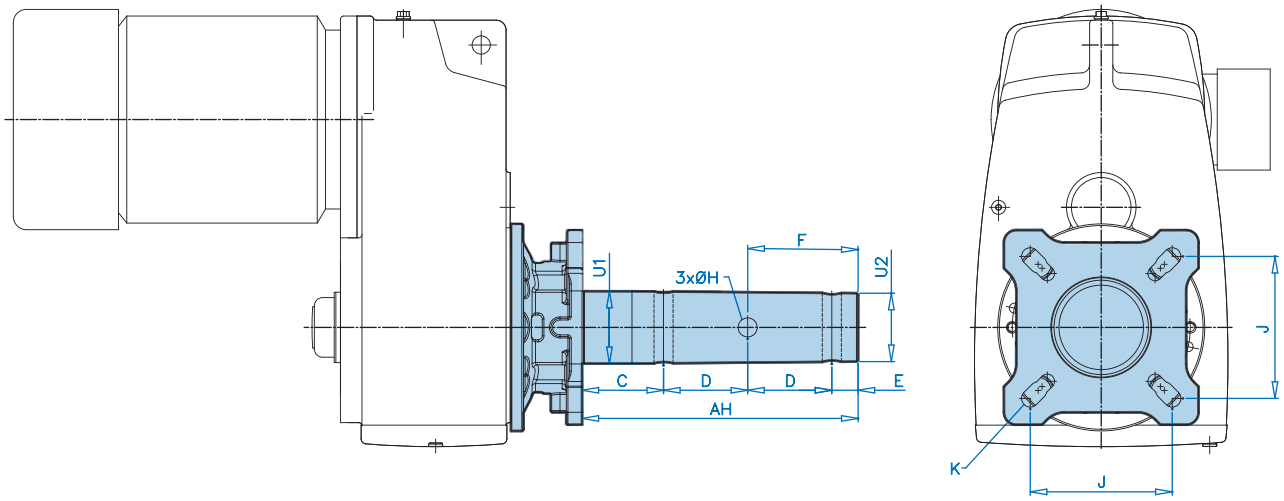


| Shaft Size | Shaft | | | | | | | | Flange | |
|---|---|---|---|---|---|---|---|---|---|---|
| | U1 | U2 | AH | C | D | E | F | H | J | K |
| **1-1/2** | 1.5 | 1.41 | 9.00 | 2.125 | 3.0 | 0.875 | 5 3/8 | 17/32 | 4 | 9/16 |
| **2** | 2.0 | 1.91 | 9.00 | 2.125 | 3.0 | 0.875 | 5 3/8 | 21/32 | 5-1/8 | 11/16 |
| **2-7/16** | 2.4375 | 2.34 | 9.6875 | 2.75 | 3.0 | 0.9375 | 5 7/16 | 21/32 | 5-5/8 | 11/16 |
| **3** | 3.0 | 2.91 | 9.875 | 2.875 | 3.0 | 1.00 | 5 1/2 | 25/32 | 6 | 13/16 |
| **3-7/16** | 3.4375 | 3.31 | 13.125 | 3.875 | 4.0 | 1.25 | 7 1/4 | 29/32 | 6-3/4 | 13/16 |

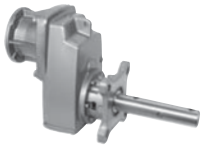

# CLINCHER™ SCP + NEMA CEMA Drive Shaft

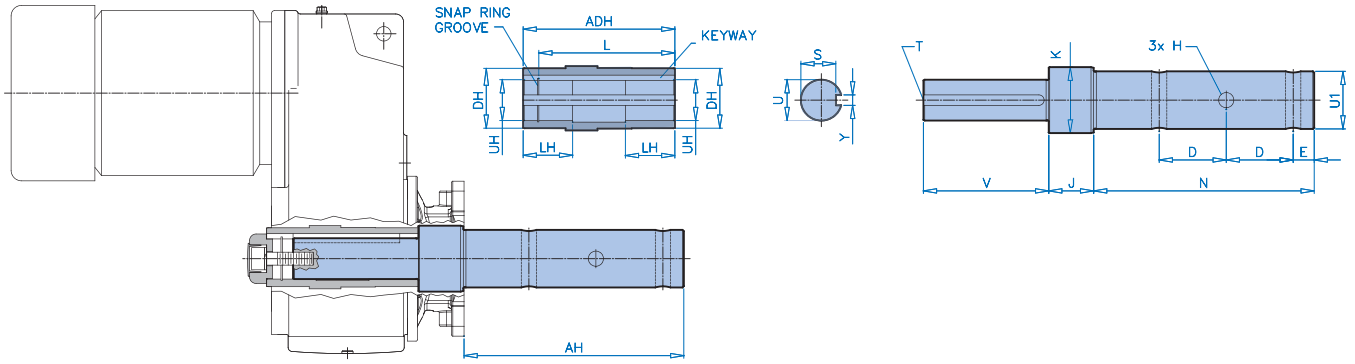




| Gear Unit Size | Hollow Shaft | | | | |
|---|---|---|---|---|---|
| | UH | ADH | L | LH | DH |
| SK 1282 SCP | 1-3/16 + 0.0008 | 4.80 | 3.85 | 1.57 | 1.77 |
| SK 2282 SCP | 1-7/16 + 0.0010 | 5.47 | 4.80 | 1.97 | 1.97 |
| SK 3282 SCP | 1-5/8 + 0.0010 | 6.85 | 6.14 | 2.28 | 2.17 |
| SK 4282 SCP | 2-1/16 + 0.0010 | 7.68 | 6.42 | 2.56 | 2.76 |
| SK 5282 SCP | 2-7/16 + 0.0012 | 9.06 | 7.58 | 2.95 | 3.35 |
| SK 6282 SCP | 2-3/4 + 0.0012 | 11.41 | 9.92 | 3.54 | 3.93 |

| | Shaft | | | | | | | | | | | | | | |
|---|---|---|---|---|---|---|---|---|---|---|---|---|---|---|---|
| | Shaft Size | U1 | AH | D | E | H | N | J | K | U | V | S | Y | T | Key |
| SK 1282 | 1-1/2 | 1-1/2 | 9 | 3 | 7/8 | 17/32 | 9.04 | 2.04 | 2.165 | 1.18752-0.0006 | 3.74 | 1.049 | 0.25 | 7/16-14 x 1 | 1/4 x 1/4 |
| | 2 | 2 | 9 | 3 | 7/8 | 21/32 | 9.04 | 2.41 | 2.559 | 1.18752-0.0006 | 3.74 | 1.049 | 0.25 | 7/16-14 x 1 | 1/4 x 1/4 |
| | 2-7/16 | 2-7/16 | 9-11/16 | 3 | 15/16 | 21/32 | 9.73 | 2.41 | 2.559 | 1.18752-0.0006 | 3.74 | 1.049 | 0.25 | 7/16-14 x 1 | 1/4 x 1/4 |
| SK 2282 | 1-1/2 | 1-1/2 | 9 | 3 | 7/8 | 17/32 | 9.04 | 2.04 | 2.165 | 1.43752-0.0006 | 4.65 | 1.225 | 0.375 | 5/8-11 x 1.5 | 3/8 x 3/8 |
| | 2 | 2 | 9 | 3 | 7/8 | 21/32 | 9.04 | 2.04 | 2.559 | 1.43752-0.0006 | 4.65 | 1.225 | 0.375 | 5/8-11 x 1.5 | 3/8 x 3/8 |
| | 2-7/16 | 2-7/16 | 9-11/16 | 3 | 15/16 | 21/32 | 9.73 | 2.41 | 2.559 | 1.43752-0.0006 | 4.65 | 1.225 | 0.375 | 5/8-11 x 1.5 | 3/8 x 3/8 |
| SK 3282 | 1-1/2 | 1-1/2 | 9 | 3 | 7/8 | 17/32 | 9.04 | 2.20 | 2.165 | 1.625-0.0006 | 5.91 | 1.478 | 0.375 | 5/8-11 x 1.5 | 3/8 x 1/4 |
| | 2 | 2 | 9 | 3 | 7/8 | 21/32 | 9.04 | 2.57 | 3.150 | 1.625-0.0006 | 5.91 | 1.478 | 0.375 | 5/8-11 x 1.5 | 3/8 x 1/4 |
| | 2-7/16 | 2-7/16 | 9-11/16 | 3 | 15/16 | 21/32 | 9.73 | 2.57 | 3.150 | 1.625-0.0006 | 5.91 | 1.478 | 0.375 | 5/8-11 x 1.5 | 3/8 x 1/4 |
| | 3 | 3 | 9-7/8 | 3 | 1 | 25/32 | 9.91 | 2.57 | 3.150 | 1.625-0.0006 | 5.91 | 1.478 | 0.375 | 5/8-11 x 1.5 | 3/8 x 1/4 |
| SK 4282 | 2 | 2 | 9 | 3 | 7/8 | 21/32 | 9.04 | 2.37 | 3.150 | 2.06252-0.0007 | 6.42 | 1.844 | 0.5 | 5/8-11 x 1.5 | 1/2 x 3/8 |
| | 2-7/16 | 2-7/16 | 9-11/16 | 3 | 15/16 | 21/32 | 9.73 | 2.37 | 3.150 | 2.06252-0.0007 | 6.42 | 1.844 | 0.5 | 5/8-11 x 1.5 | 1/2 x 3/8 |
| | 3 | 3 | 9-7/8 | 3 | 1 | 25/32 | 9.91 | 2.37 | 3.150 | 2.06252-0.0007 | 6.42 | 1.844 | 0.5 | 5/8-11 x 1.5 | 1/2 x 3/8 |
| SK 5282 | 2 | 2 | 9 | 3 | 7/8 | 21/32 | 9.04 | 2.68 | 3.937 | 2.43752-0.0007 | 7.48 | 2.084 | 0.625 | 3/4-10 x 2 | 5/8 x 5/8 |
| | 2-7/16 | 2-7/16 | 9-11/16 | 3 | 15/16 | 21/32 | 9.73 | 2.68 | 3.937 | 2.43752-0.0007 | 7.48 | 2.084 | 0.625 | 3/4-10 x 2 | 5/8 x 5/8 |
| | 3 | 3 | 9-7/8 | 3 | 1 | 25/32 | 9.91 | 2.68 | 3.937 | 2.43752-0.0007 | 7.48 | 2.084 | 0.625 | 3/4-10 x 2 | 5/8 x 5/8 |
| | 3-7/16 | 3-7/16 | 13-1/8 | 4 | 1-1/4 | 29/32 | 13.16 | 2.68 | 3.937 | 2.43752-0.0007 | 7.48 | 2.084 | 0.625 | 3/4-10 x 2 | 5/8 x 5/8 |
| SK 6282 | 3 | 3 | 9-7/8 | 3 | 1 | 25/32 | 9.91 | 2.94 | 3.937 | 2.750 - 0.0007 | 10.55 | 2.402 | 0.625 | 3/4-10 x 2 | 5/8 x 5/8 |
| | 3-7/16 | 3-7/16 | 13-1/8 | 4 | 1-1/4 | 29/32 | 13.16 | 2.94 | 3.937 | 2.750 - 0.0007 | 10.55 | 2.402 | 0.625 | 3/4-10 x 2 | 5/8 x 5/8 |

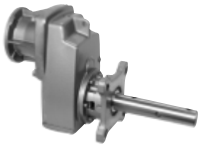

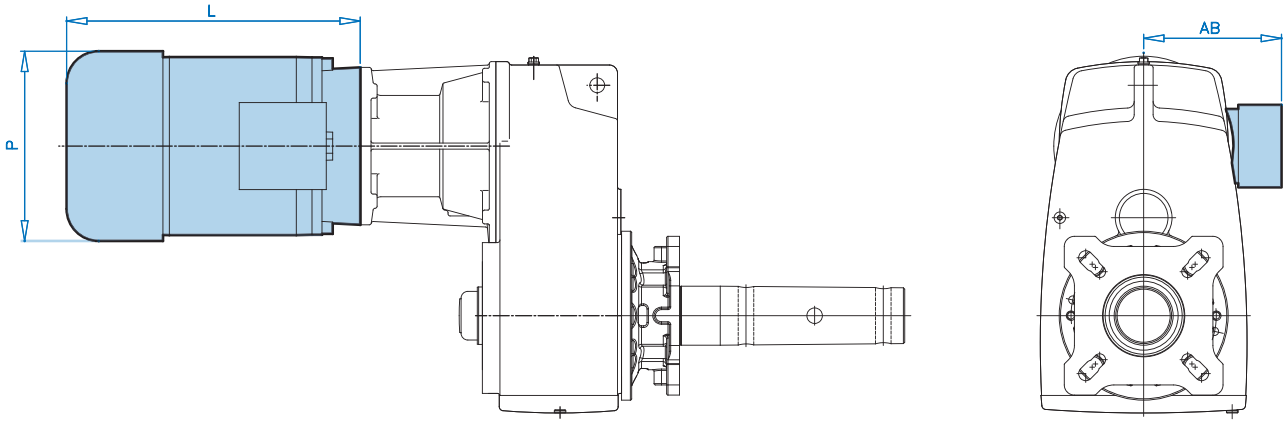




| Motor Type | AB | P | L |
|---|---|---|---|
| 63S-56C | 4.53 | 5.12 | 7.56 |
| 63L-56C | 4.53 | 5.12 | 7.56 |
| 71S-56C | 4.88 | 5.71 | 7.64 |
| 71L-56C | 4.88 | 5.71 | 7.64 |
| 80S-56C | 5.59 | 6.50 | 9.45 |
| 80L-143TC | 5.59 | 6.50 | 9.45 |
| 90S-145TC | 5.79 | 7.20 | 10.04 |
| 90L-145TC | 5.79 | 7.20 | 11.02 |
| 100L-182TC | 6.65 | 7.91 | 12.20 |
| 100L-184TC | 6.65 | 7.91 | 12.20 |
| 112M-184TC | 7.05 | 8.98 | 12.83 |
| 132S-213TC | 8.03 | 10.47 | 14.96 |
| 132M-215TC | 8.03 | 10.47 | 16.46 |

## Input NEMA

**56C**
**140TC**
**180TC**

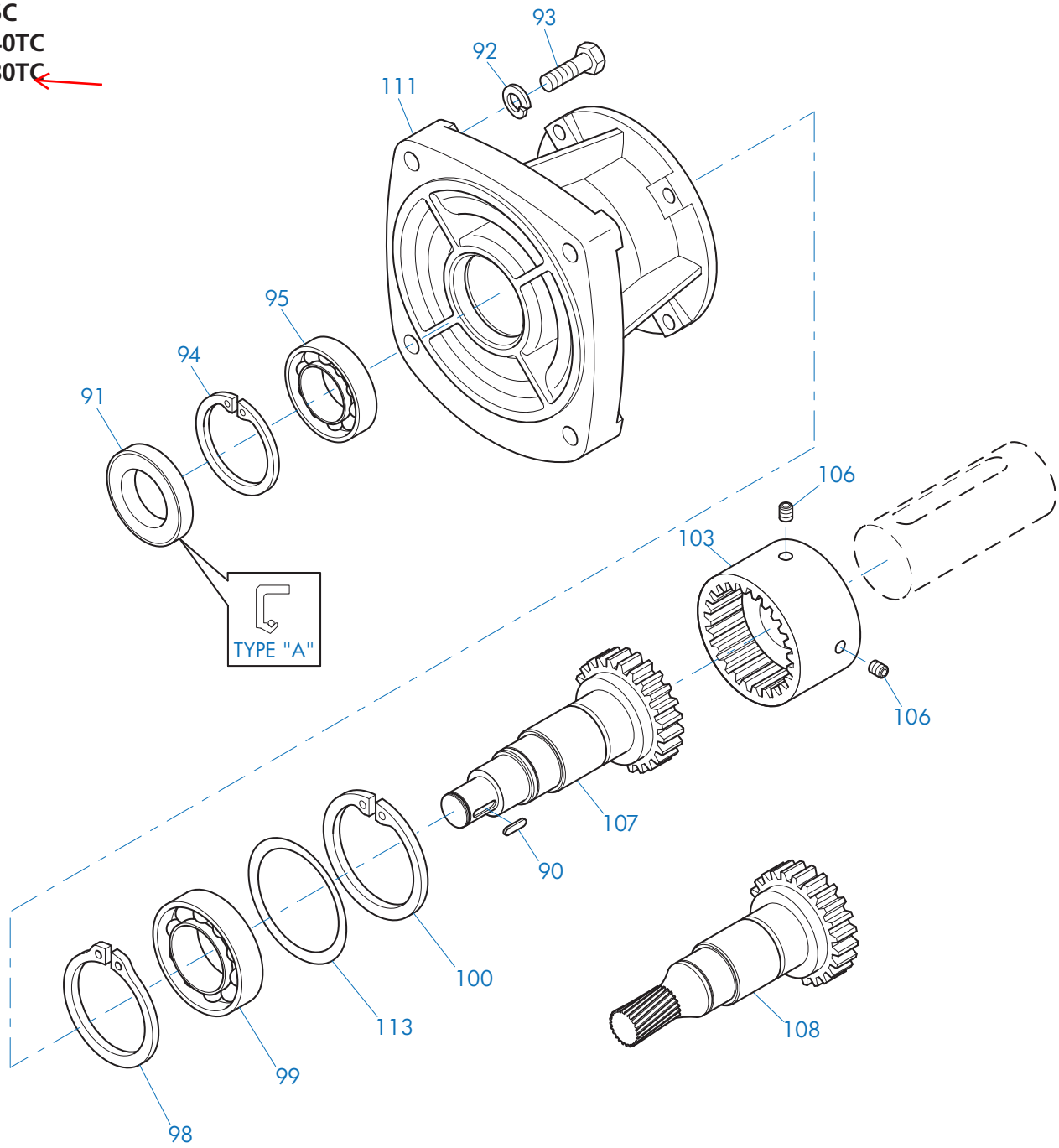


| | | | | | |
|---|---|---|---|---|---|
| 90 | Key | 95 | Anti-Friction Bearing | 106 | Set Screw |
| 91 | Oil Seal | 98 | Snap Ring | 107 | Input Shaft, Plain |
| 92 | Lock Washer | 99 | Anti-Friction Bearing | 108 | Input Shaft, Gearcut |
| 93 | Bolt | 100 | Snap Ring | 111 | NEMA Adapter |
| 94 | Snap Ring | 103 | Coupling | 113 | Shim |

## Input NEMA

**180TC**
**210TC**
**250TC**
**280TC**

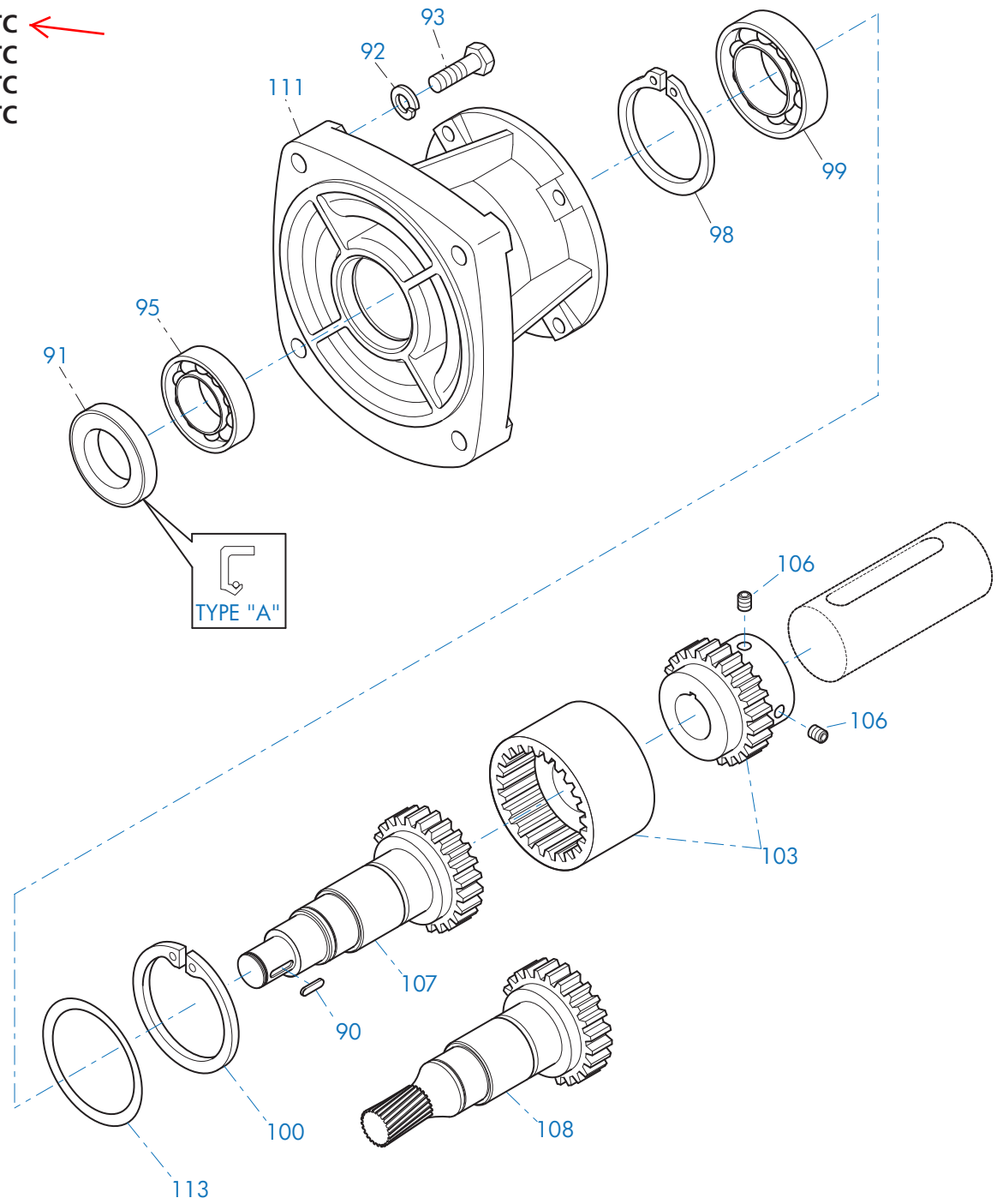


| | | | | | |
|---|---|---|---|---|---|
| 90 | Key | 98 | Snap Ring | 107 | Input Shaft, Plain |
| 91 | Oil Seal | 99 | Anti-Friction Bearing | 108 | Input Shaft, Gearcut |
| 92 | Lock Washer | 100 | Snap Ring | 111 | NEMA Adapter |
| 93 | Bolt | 103 | Coupling | 113 | Shim |
| 95 | Anti-Friction Bearing | 106 | Set screw | | |

# NORD Gearbox Inputs
# Installation and Maintenance Instructions

**BIM 1009**

**USA**

**CDN**

## Retain These Safety Instructions For Future Use

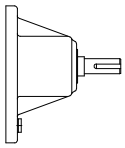

**W-STYLE**

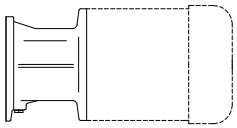

**NEMA/IEC**

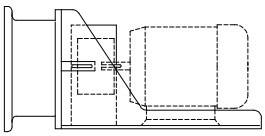

**SUGAR SCOOP**

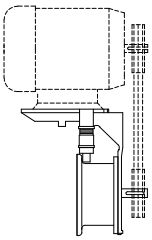

**MOTOR MOUNT PLATFORM**

**⚠ WARNING:**
**LOCK OUT POWER before any maintenance is performed. Make absolutely sure that no voltage is applied while work is being done on the gearbox.**

## NEMA/ IEC Motor Adapters

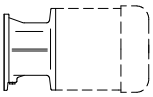

NORD Gear supplies a coupling that is to be mounted onto the motor shaft. It is important that the coupling is properly positioned. For **NEMA Input Adapters**, follow the Motor Installation Instructions below to insure full coupling engagement onto the input shaft. For **IEC Input Adapters**, the supplied coupling will mount directly against the motor shaft shoulder. No locating measurements need to be taken. *NOTE: Some of the larger IEC inputs will have a coupling spacer included to help locate the coupling. Slide the spacer against the motor shaft shoulder, slide the coupling against the spacer and tighten set screw(s).*

For the larger motor adapters (IEC160 / N250TC and larger), an **Automatic Lubricator** is supplied. **This will need to be activated at the time of startup.** For operation and activation instructions, refer to the "*Automatic Lubricator*" section.

NORD supplies three different types of couplings depending on the size of input: "J" style, "M" style and "Jaw" style coupling. Following are instructions on how to properly mount each type of coupling onto the motor. First, identify which coupling has been supplied to you by referring to the "*Couplings for the NEMA and IEC Adapters*" section on the next page. Make sure the motor flange and shaft are cleaned and verify that the proper key is in the motor shaft.

### "J" Style Coupling
### NEMA C-face Motor Installation Instructions

1. Measure the distance from the face of the input adapter to the face of the splined shaft and record that measurement.
2. Subtract 0.08" (~2mm) from the distance. ***This needs to be done so that the coupling will not be preloaded after installation!***
3. Use that measurement to locate the coupling from the face of the motor onto the shaft.
4. Once in place, tighten the set screw to lock the coupling in place. It is recommended that the key is staked or bonded (Loctite) in place to prohibit the key from vibrating out.
5. Mount the motor onto the input adapter with customer supplied bolts. Make sure that the coupling from the adapter and the motor engage securely. Use lock washers or Loctite to prohibit bolts from becoming loose from vibration.

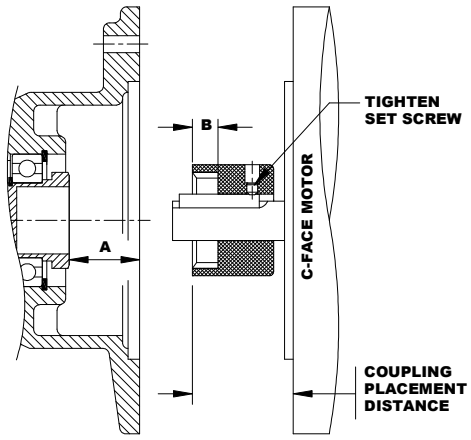


### "M" Style Coupling
### NEMA C-face Motor Installation Instructions

1. Measure the distance from the face of the input adapter to the face of the splined shaft and record that measurement.
2. Subtract 0.31" (~8mm) from the distance. ***This needs to be done so that the coupling will not be preloaded after installation!***
3. Use that measurement to locate the coupling from the face of the motor onto the shaft.
4. Once in place, tighten the set screw to lock the coupling in place. It is recommended that the key is staked or bonded (Loctite) in place to prohibit the key from vibrating out.
5. Mount the motor onto the input adapter with customer supplied bolts. Make sure that the coupling from the adapter and the motor engage securely. Use lock washers or Loctite to prohibit bolts from becoming loose from vibration.

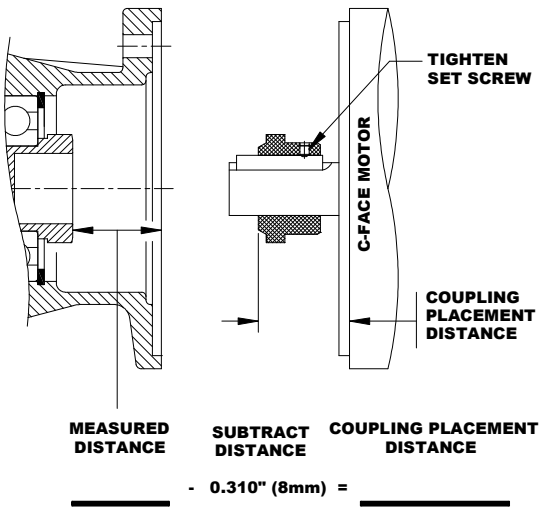

## Couplings for the NEMA and IEC Adapters

Depending on the size of the input adapter to the gearbox, NORD Gear supplies two styles of couplings - BoWex® (gear tooth) and Rotex® (jaw) couplings.

### BoWex® Couplings

NORD C-face adapter input shafts have a machined spline on the end. NORD incorporates two styles of BoWex® couplings, the "J" and "M" styles. The "J" style is a one-piece coupling with a metal hub and nylon spline. The "M" style is a two-piece coupling – the metal hub and a nylon sleeve. Nylon and steel components allow them to operate in high ambient temperatures without lubrication or maintenance.

- Nylon sleeves resist dirt, moisture, most chemicals and petroleum products
- No lubrication required
- Operating Conditions: -22°F - 195°F (-30°C - 90°C)
- Higher temperature coupling sleeve available up to 250°F (120°C)
- Special bore available

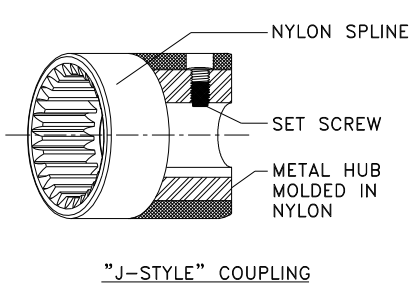


"J–STYLE" COUPLING

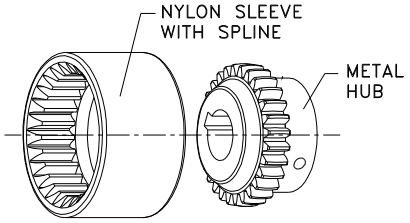


"M–STYLE" COUPLING

### BoWex® Mechanical Ratings

**"J" Style**

| Coupling Type | Available Bore Sizes | Cont. / Peak Torque | Input |
|---|---|---|---|
| J14 | 11, 14 mm<br>5/8 in. | 10 / 20 Nm<br>89 / 177 lb-in | IEC 63, 71<br>NEMA 56C |
| J24 | 19, 24 mm<br>5/8, 7/8 in | 20 / 40 Nm<br>177 / 354 lb-in | IEC 80, 90<br>NEMA 56C,140TC |
| J28 | 28mm<br>1-1/8 in | 45 / 90 Nm<br>399 / 797 lb-in | IEC 100, 112<br>NEMA 180TC |

**"M" Style**

| Coupling Type | Available Bore Sizes | Cont. / Peak Torque | Input |
|---|---|---|---|
| M14/M24/M28 | Same as "J" style | Same as "J" style | Same as "J" style |
| M38 | 38 mm<br>1-1/8, 1-3/8 in. | 80 / 160 Nm<br>708 / 1,416 lb-in | IEC 132<br>NEMA 180TC, 210TC |
| M42 | 42 mm<br>1-5/8 in | 100 / 200 Nm<br>885 / 1,770 lb-in | IEC 160<br>NEMA 250TC |
| M48 | 48 mm<br>1-7/8 in | 140 / 280 Nm<br>1240 / 2,478 lb-in | IEC 180<br>NEMA 280TC |

## Rotex® Couplings

The cast iron jaw type couplings have an integral urethane "spider" that provides smooth transmission of the motor torque. A set screw on the coupling prohibits axial movement along the motor shaft.

- Excellent shock and vibration dampening
- Excellent resistance to oils and most chemicals
- No metal-to-metal contact
- Operating Conditions: -40°F - 195°F (-40°C - 90°C)
- Higher temperature material (Hytrel) spider available up to 230°F (110°C)
- Special bores available

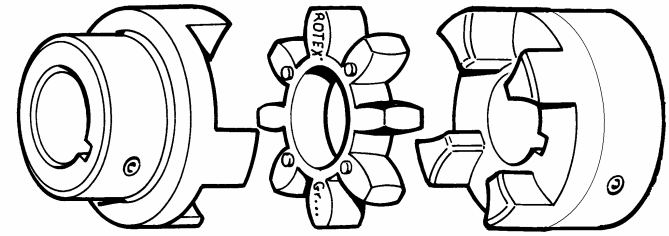


**Hub Design 1** **Spider** **Hub Design 1a**

### Rotex® Mechanical Ratings

| Coupling Type | Available Bore Sizes | Continuous / Peak Torque | Inputs Used With | Spider |
|---|---|---|---|---|
| R19 | 14, 19 mm | 17 / 34 Nm<br>150 / 300 lb-in | SEK/SEP 100 | Urethane<br>98 Shore A Hardness<br>Color: Red |
| R24 | 19, 24 mm | 60 / 120 Nm<br>530 / 1,060 lb-in | SEK/SEP 100, 130 | |
| R28 | 32, 38 mm | 95 / 190 Nm<br>840 / 1,680 lb-in | SEK/SEP 165, 215 | Urethane<br>92 Shore A Hardness<br>Color: Yellow |
| R38 | 1.89" (48mm)<br>Max Bore | 190 / 382 Nm<br>1,680 / 3,380 lb-in | - | |
| R42 | 2.44" (62mm)<br>Max Bore | 310 / 620 Nm<br>2,740 / 5,480 lb-in | - | |
| R48 | 42, 48 mm<br>1-5/8, 1-7/8 in | 310 / 620 Nm<br>2,740 / 5,485 lb-in | IEC 160, 180<br>NEMA 250T, 280T<br>SEK/SEP 300, 215 | |
| R65 | 60 mm<br>2-1/8, 2-3/8 in | 625 / 1,250 Nm<br>5,530 / 11,060 lb-in | IEC 225<br>NEMA 320T, 360T | |
| R90 | 65, 75, 80 mm<br>2-1/8, 2-3/8 in | 2,400 / 4,800 Nm<br>21,240 / 42,480 lb-in | IEC 250, 280, 315<br>NEMA 360T, 400TS, 440TS | |

**Jaw" Style Coupling**
**NEMA C-face Installation Instructions**

1. Measure the distance from the face of the input adapter to the face of the coupling as shown and record that measurement.
2. Subtract the "X" dimension from the measured distance. ***This needs to be done so that the coupling will not be preloaded after installation!***
3. Use that measurement to locate the coupling from the face of the motor onto the shaft.
4. The metal portion of the coupling should be heated up prior to assembly, generally 250°F to 300°F (120°C to 150°C). ***DO NOT HEAT THE URETHANE SPIDER.**
5. Once in place, tighten the setscrew to lock coupling in place. Let the coupling cool down before placing the spider into the jaws. It is recommended that the key is staked or bonded (Loctite) in place to prohibit the key from vibrating out.
6. Mount the motor onto the input adapter with customer supplied bolts. Make sure that the coupling from the adapter and the motor engage securely. Use lock washers or Loctite to prohibit bolts from becoming loose from vibration.

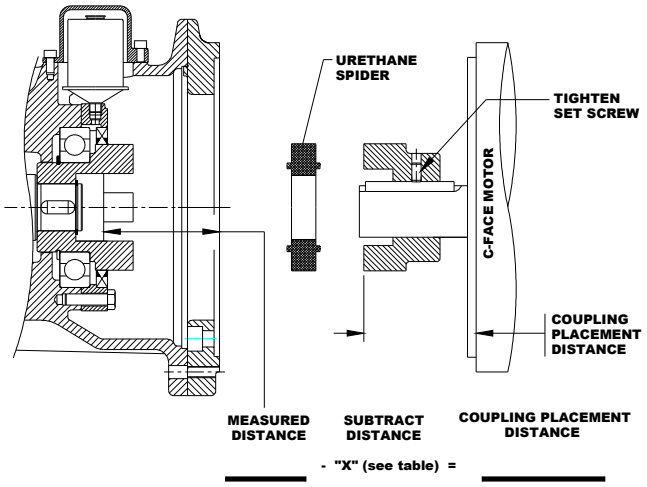


| Coupling Size | "X" *(Subtract this value from measured distance)* |
|---|---|
| R14 | 0.06" (1.5mm) |
| R19 & R24 | 0.08" (2.0mm) |
| R28 | 0.10" (2.5mm) |
| R38/42 | 0.12" (3.0mm) |
| R48 | 0.14" (3.5mm) |
| R65 | 0.18" (4.5mm) |
| R90 | 0.22" (5.5mm) |

## Automatic Lubricator

NORD Gear supplies the larger C-face motor adapters with an Automatic Lubricator. This will provide additional grease lubrication to the outboard bearing. As the pressure from the lubricator canistor pushes the new grease into the bearing, the old grease will flow into the cavity towards the gearbox. When the cavity is filled with the "used" grease, the pressure from the new grease pushes the used grease into the gear box thru the input seal. The old grease mixes with the oil but will not cause harm to the gearing or bearings. Regular oil changes with the gearbox will remove the old grease which has been pushed into the gearbox. Refer to the PARTS LISTS for inputs equipped with the Automatic Lubricator.




**Principle of Operation**

After tightening the plastic activating screw, the Zinc-Molybdenum pellet drops into the Citric Acid electrolyte. The chemical reaction builds up pressure that causes the piston to move forward. The lubricant is continuously injected into the lubrication point. At the end of the lubrication period, the discharge indicator cap becomes clearly visible indicating the lubricant has been fully discharged. The lubrication period is determined and defined by the color of the activating screw.

For the bearings used in NORD Gear products, a 12-month lubrication period is standard, indicated by a **gray activating screw**. This applies for an average operating time of 8 hours/day. For longer operating times, the replacement interval decreases to 6 months. Lubrication canisters are also available for cold temperature applications. Contact NORD Gear for more information.

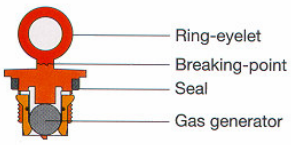


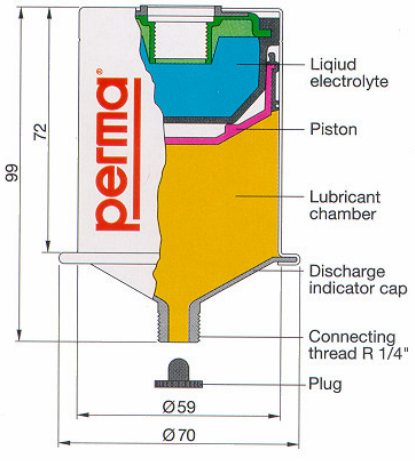


**Assembly Instructions**

1. Remove the plug from the male connecting thread.
2. Screw male fitting into bearing housing within Input Adapter.
3. Insert activating screw into end of canister. Tighten until the ring-eyelet breaks off.
4. Replace every twelve months.

**Perma Classic Specifications**

| | |
|---|---|
| Standard Lubricant | Klüber Petamo GHY 133 (synthetic) |
| NORD Part Number | 28301000 |
| Lubricant Volume | 120 mL (4 oz.) |
| Operating Temperature Range★ | -30°C to 150°C (-22°F to 302°F) |
| Discharge Time | 12 months at 25°C (77°F) |
| Operating Position | Independent of mounting position, operates even under water. |
| Male Connecting Thread | 1/4" NPT |

★ *The temperature range shown is for the Perma Classic Lubricator only and does not apply to other components and/or lubricants within the gear reducer.*

**MK Motor Mount Platform**

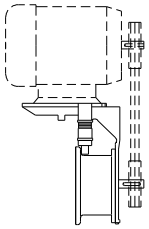

For proper installation of the belt drive, consult the V-belts manufacturer. NORD MK motor mounts are adjustable in two ways. Slotted holes are provided at the input cylinder for the initial height adjustment. There are two fine adjustments at the Yolk to increase/decrease tension. Two Spanner head wrenches will be needed to tighten/loosen the fine adjustments. The four bolts holding the motor platform to the input cylinder must be loosened in order to use the fine adjustments.

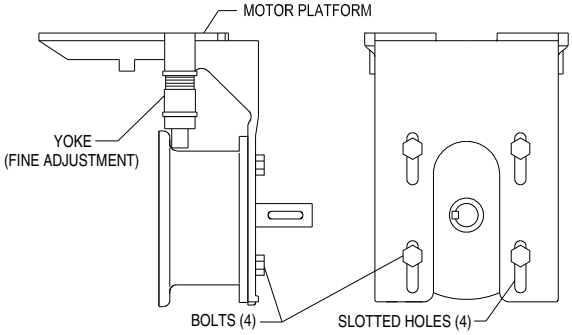


The motor mounting platform has tapped holes to accept the foot pattern of the standard footed NEMA or IEC motor. All MK mounting input shaft diameters are metric.

Align the sheaves or sprockets square and parallel by placing a straight edge across their faces. Alignment of bushed sheaves and sprockets should be checked after bushings have been tightened. Check horizontal shaft alignment by placing a level vertically against the face of the sheave or sprocket. Adjust belt or chain tension per the manufacturer's specified procedure. After a period of operation, recheck alignment and adjust as required.

**WARNING:**

**NORD Gear does not furnish the safety guards for the traction mechanism. It is the responsibility of the customer to install a safety guard to conform to OSHA standards.**

**Solid Shaft (W-Type)**

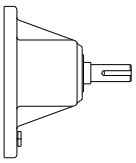

The shaft will be inch or metric, depending on how the unit was ordered. Measure and verify the shaft before mounting anything on the shaft. Below are the tolerances used for the solid shafts.

All solid input shafts have a tapped hole on the end for customer use. The chart below indicated the tap size for each shaft. Keys are also supplied with solid shaft.

Outboard pinion and sprocket fits should be as recommended by the manufacturer. The components should be heated according to the manufacturer's recommendations, generally 250°F to 300°F, (120°C to 150°C) before assembling to the shaft. The coupling hub or sprocket should be mounted per Figure 1.

On larger gearboxes (SK62, SK6282, SK9062.1), there is grease fitting on the W-Type inputs to grease the outboard bearing. About 0.75 ounce (20 - 25g) of synthetic grease should be added every 4,000 service hours. There is a sticker adjacent to the grease fitting detailing which grease should be used. **USE ONLY SYNTHETIC GREASE – NOT MINERAL.**

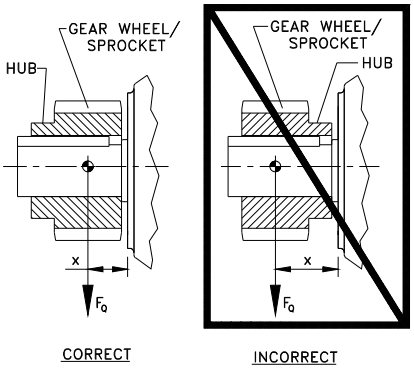


**Figure 1.** Mounting a coupling or a sprocket on a shaft.

**Output and Input Shaft Diameter Tolerance**

Metric (mm)

≤ ∅ 18 = +0.012/+0.001
> ∅ 18 ≤ ∅ 30 = +0.015/+0.002
> ∅ 30 ≤ ∅ 50 = +0.018/+0.002
> ∅ 50 ≤ ∅ 80 = +0.030/+0.011
> ∅ 80 ≤ ∅ 120 = +0.035/+0.013
> ∅ 120 ≤ ∅ 180 = +0.040/+0.015

Inch

≤ ∅ 1.750 = +0.0000/-0.0005
> ∅ 1.750 = +0.0000/-0.0010

**Solid Shaft Drill and Tap Shaft End**

Metric (mm)

≤ ∅ 16 = M5
> ∅ 16 ≤ ∅ 21 = M6
> ∅ 21 ≤ ∅ 24 = M8
> ∅ 24 ≤ ∅ 30 = M10
> ∅ 30 ≤ ∅ 38 = M12
> ∅ 38 ≤ ∅ 50 = M16
> ∅ 50 ≤ ∅ 85 = M20
> ∅ 85 ≤ ∅ 130 = M24

Inch

≤ ∅ 0.500 = #10-24 x 0.4 deep
> ∅ 0.500 ≤ ∅ 0.875 = ¼-20 x 0.6 deep
> ∅ 0.875 ≤ ∅ 0.938 = 5/16-18 x 0.7 deep
> ∅ 0.938 ≤ ∅ 1.100 = 3/8-16 x 0.9 deep
> ∅ 1.100 ≤ ∅ 1.300 = 1/2-13 x 1.1 deep
> ∅ 1.300 ≤ ∅ 1.875 = 5/8-11 x 1.4 deep
> ∅ 1.875 ≤ ∅ 3.500 = 3/4-10 x 1.7 deep
> ∅ 3.500 = 1-8 x 2.2 deep

**Sugar Scoop**

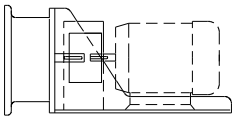

Each sugar scoop includes the coupling for the motor and the coupling guard. The coupling guard must be mounted when the machine is in use. NORD's standard supplied coupling is the jaw type. Make sure the set screw is tighten after coupling is in place. The coupling hub or sprocket should be mounted per Figure 2.

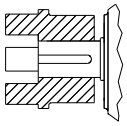

**Figure 2.** Place coupling flush with end of motor shaft and tighten setscrew.

Motor Installation Instructions

1. Make sure that the motor shaft is clean
2. Mount the coupling onto the motor. Place the coupling so that the inside face is flush with the end of the motor shaft (see Figure 2). The coupling should be heated prior to assembly, generally 250°F to 300°F (120°C to 150°C). ***DO NOT HEAT THE URETHANE SPIDER.** Once in place, tighten the setscrew into the motor shaft to lock coupling in place.
3. Let the coupling cool down before mounting the spider into the jaws. The spider should not be under axial compression when installed.
4. Place the motor onto the scoop and engage the couplings together. The scoop has slotted holes for axial alignment.

****The motor and input shaft must be aligned in all directions to assure proper operation of the system.**

5. Before tightening the motor feet down, check the coupling alignment with a straight edge or a level. Maximum parallel misalignment should not exceed 0.015" and angular misalignment should be held to 1.5°. Shim the motor feet to align the couplings. Careful alignment extends the life of not only the coupling but all the components of the drive train.
6. Once aligned, tighten the bolts on the feet to the scoop. Check the coupling alignment again due to compression of the shims.
7. Mount the supplied coupling guard to the scoop.
8. After a period of operation, recheck alignment and adjust as required.

NOTES

## PARTS LIST
## C-FACE INPUTS FOR "UNICASE" GEARBOXES

**NEMA 56C - 180TC**
**IEC 63 – IEC 112**

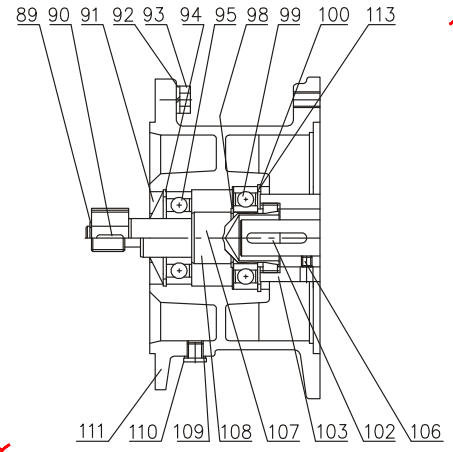


**NEMA 210TC - 280TC**
**IEC 132 – IEC 180**

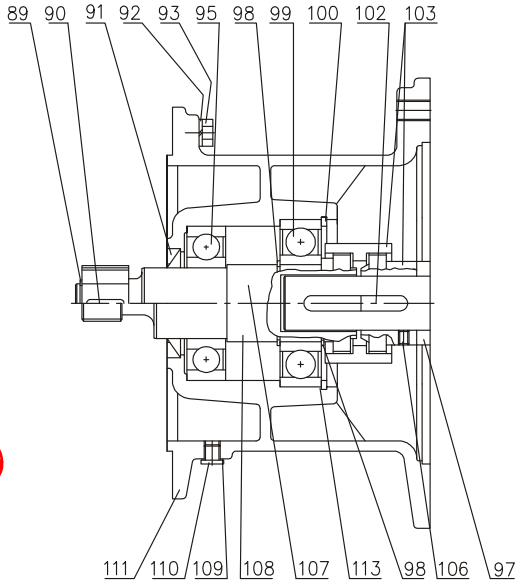


| | |
|---|---|
| 89 | Circlip |
| 90 | Key |
| 91 | Shaft seal |
| 92 | Washer |
| 93 | Hexagon screw |
| 94 | Circlip |
| 95 | Clutch shaft bearing |
| 97 | Spacer |
| 98 | Circlip |
| 99 | Clutch shaft bearing |
| 100 | Circlip |
| 101 | Key |
| 102 | Key |
| 103 | Coupling |
| 104 | Coupling |
| 105 | Coupling |
| 106 | Set screw |
| 107 | Clutch shaft |
| 108 | Clutch pinion shaft |
| 109 | Seal |
| 110 | Oil-plug |
| 111 | NEMA / IEC Adapter |
| 112 | Oil flinger |
| 113 | Shim |
| 140 | Shim |
| 141 | Shim |
| 142 | Shim |
| 143 | Socket head screw |
| 144 | Cover |
| 145 | Automatic lubricator |
| 146 | Adapter |
| 147 | Bearing cover |
| 148 | Hexagon screw |
| 149 | Washer |
| 150 | Shaft seal |

**NEMA 250TC – 400TC**
**IEC 160 – IEC 315**

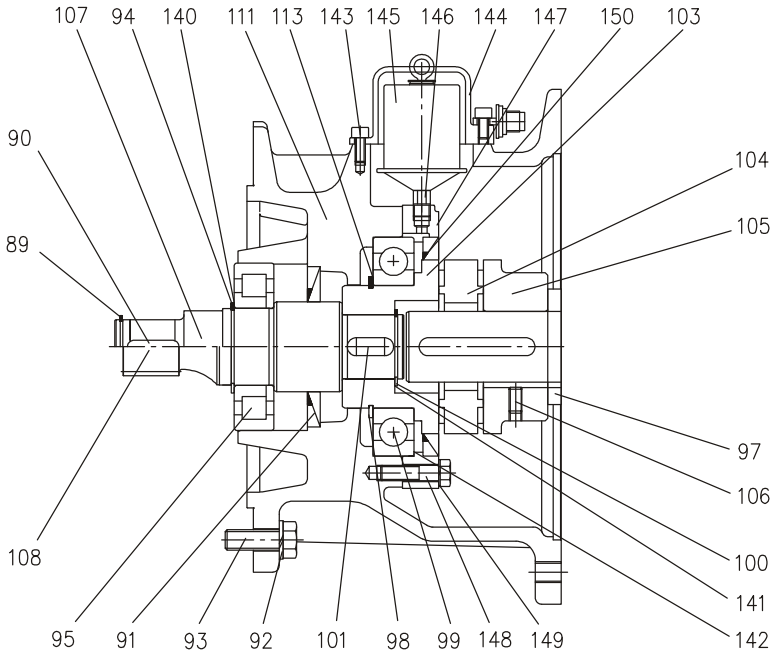


### RECOMMENDED SPARE PARTS

Bearings – *all* Gaskets – *all* Shims – *all*
Seals – *all* Seal Plugs – *all*

**IMPORTANT!**

When ordering parts, it is necessary to have the ***NORD SERIAL NUMBER*** from the unit the parts are for. The serial number will dictate the correct parts for that particular unit. The gearbox nameplate will have the serial number on it.

# TROUBLESHOOTING

## Troubleshooting

This section identifies some of the most common issues involved with NORD Gear speed reducers , and provides recommendations to assist you in defining and answering your questions as you work with our products. You may also contact our Engineering/Application departments if your questions are not answered in the table below.

| Problem With the Reducer | | Possible Causes | Suggested Remedy |
|---|---|---|---|
| **Runs Hot** | Overloading | Load exceeds the capacity of the reducer | Check rated capacity of reducer, replace with unit of sufficient capacity or reduce the load. |
| | Improper lubrication | Insufficient lubrication | Check lubricant level and adjust up to recommended levels |
| | | Excessive lubrication | Check lubricant level and adjust down to recommended levels. |
| | | Wrong lubrication | Flush out and refill with correct lubricant as recommended |
| **Runs Noisy** | Loose foundation bolts | Weak mounting structure | Inspect mounting of reducer. Tighten loose bolts and/or reinforce mounting and structure. |
| | | Loose hold down bolts | Tighten bolts |
| | Failure of bearings | May be due to lack of lubricant | Replace bearing. Clean and flush reducer and fill with recommended lubricant. |
| | | Overload | Check rated capacity of reducer. |
| | Insufficient lubricant | Level of lubricant in reducer not properly maintained. | Check lubricant level and adjust to factory recommended level. |
| **Output shaft does not turn** | Internal parts are broken or missing | Overloading of reducer can cause damage | Replace broken parts. Check rated capacity of reducer. |
| | | Key missing or sheared off on input shaft. | Replace key. |
| | | Coupling loose or disconnected | Properly allign reducer and coupling. Tighten coupling. |
| **Oil Leakage** | Worn seals | Caused by dirt or grit entering seal. | Replace seals. Autovent may be clogged. Replace or clean. |
| | Unit runs hot or leaks | Overfilled reducer | Check lubricant level and adjust to recommended level. |
| | | Vent clogged. | Clean or replace, being sure to prevent any dirt from falling into the reducer. |
| | Incorrect fill level | Improper mounting position, such as wall or ceiling mount of horizontal reducer. | Check mounting position on the name tag & verify with mounting chart in manual. |

© Siemens AG 2012



## SITRANS WM100

### Overview



SITRANS WM100 is a heavy-duty zero-speed alarm switch. This non-contacting unit provides cost-effective equipment protection even in the harshest conditions.

### Benefits

- Up to 100 mm (4 inch) gap between SITRANS WM100 and targets
- Rugged, low maintenance suitable for tough environments
- 1 SPDT Form C relay contact
- Provides cost-effective protection
- Visual indication of target triggered pulse

### Application

This rugged unit is impervious to dust, dirt, build-up and moisture and is ideal for such primary industries as mining, aggregate, and cement. Operating where other systems are prone to failure, the non-contacting design eliminates the need for lubricating, cleaning and part replacement. Downtime and clean-up expenses associated with conveying equipment failure are reduced by the SITRANS WM100. It alarms to minimize spillage, prevent extensive damage or even fire caused by belt slippage at the head pulley and warn against conveyor malfunction.

The SITRANS WM100 has built-in selectable start delays and 1 Form C relay contact. With an aluminum body, it operates from -40 to +60 °C (-40 to +140 °F).

- Key Applications: tail pulleys, driven pulleys, motor shaft sensing, screw conveyor flights, bucket elevators

### Design

***Mounting***

The WM100 probe should be mounted, using the supplied mounting flange, onto a vibration-free structure. The gap between the probe and the target should be sufficient such that there is no danger of the target damaging the probe. The maximum allowable gap is 100 mm (4 inch) from the face of the target to the face of the probe for 4.5 x 4.5 mm (3/16 x 3/16 inch) keyway. The WM100 is sensitive to lateral disturbances to its magnetic field. If the WM100 is responding to motion from an interfering target, move the WM100 or install a ferrous plate (steel) as a shield between the WM100 and the interfering target. Where possible, the probe should be mounted such that the cable inlet is pointing downward to avoid accumulation of condensation in the casing. Connection of the probe should be made via flexible conduit for easier removal or adjustment of the probe.

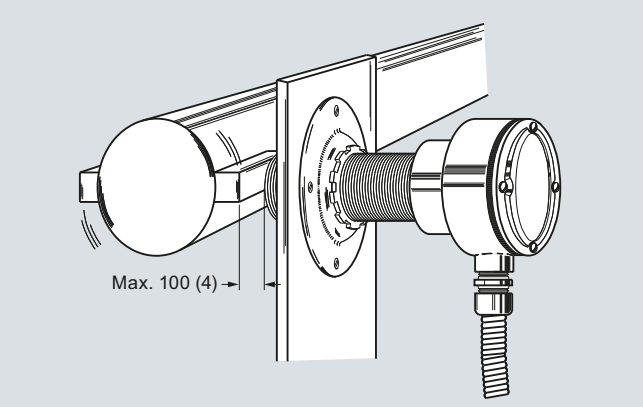


SITRANS WM100 mounting, dimensions in mm (inch)

### Technical specifications

| | |
|---|---|
| **Mode of operation** | |
| Measuring principle | Disruption of magnetic field by ferrous target |
| Typical application | Monitors absence or presence of motion in harsh conditions |
| **Output** | |
| Contact | 1 SPDT Form C dry relay contact, rated 5 A at 250 V AC, fail-safe operation |
| Time delay | Start up: 10 ... 14 seconds (5 ... 7 seconds with 12 ppm jumper installed) |
| Zero Speed (selected via a common jumper) | • 5 seconds ± 1 (minimum speed 10 ... 15 ppm) or<br>• 10 seconds ± 2 (minimum speed 5 ... 7.5 ppm) |
| **Rated operating conditions** | |
| Operating temperature | -40 ... +60 °C (-40 ... +140 °F) |
| **Design** | |
| Probe body | Aluminum |
| Process mounting | 2" NPSL |
| Connection box | Aluminum, ¾" NPT conduit entrance, 5 screw terminals plus grounding terminal for electrical connection, max. 12 AWG (3.30 $mm^2$) wire size |
| Gasketing | Neoprene |
| Display | Red LED for verification of pulses |
| Enclosure rating | Type NEMA 4x, 6, IP67 |
| **Dynamic range** | Minimum 6 or 12 pulses per minute<br>Maximum 3 000 pulses per minute |
| **Shipping weight** | 2 kg (4.4 lb) |
| **Power supply** | • 115 V AC/50 ... 60 Hz, 7 VA<br>• 230 V AC/50 ... 60 Hz, 7 VA<br>• ± 10 % of rated voltage |
| **Certificates and approvals** | $CSA_{US/C}$, CE, C-TICK |

© Siemens AG 2012



| Selection and Ordering data | Order No. |
|---|---|
| **SITRANS WM100** | **7MH7158 -** |
| A heavy-duty zero-speed alarm switch that does not require a controller. | **0 ■ A 0 0** |
| **Model** | |
| 115 V AC | **A** |
| 230 V AC | **B** |

| Selection and Ordering data | Order code |
|---|---|
| ***Further designs*** | |
| Please add **"-Z"** to Order No. and specify Order code(s). | |
| Manufacturer's Test Certificate: According to EN 10204-2.2 | **C11** |
| Acrylic coated, stainless steel tag [13 x 45 mm (0.5 x 1.75 inch)]: Measuring-point number/identification (max. 16 characters), specify in plain text | **Y17** |
| ***Operating Instructions*** | Order No. |
| SITRANS WM100, English | **7ML1998-5MW01** |
| SITRANS WM100, German | **7ML1998-5MW31** |
| Note: The operating instructions should be ordered as a separate item on the order. This device is shipped with the Siemens Milltronics manual CD containing the complete operating instructions library. | |
| Locknut, for WM100 and Millpulse 600 | **7MH7723-1CR** |
| Mounting flange, for WM100 and Millpulse 600 | **7MH7723-1CS** |
| Motion cable gland adaptor kit | **7MH7723-1JN** |

## Dimensional drawings

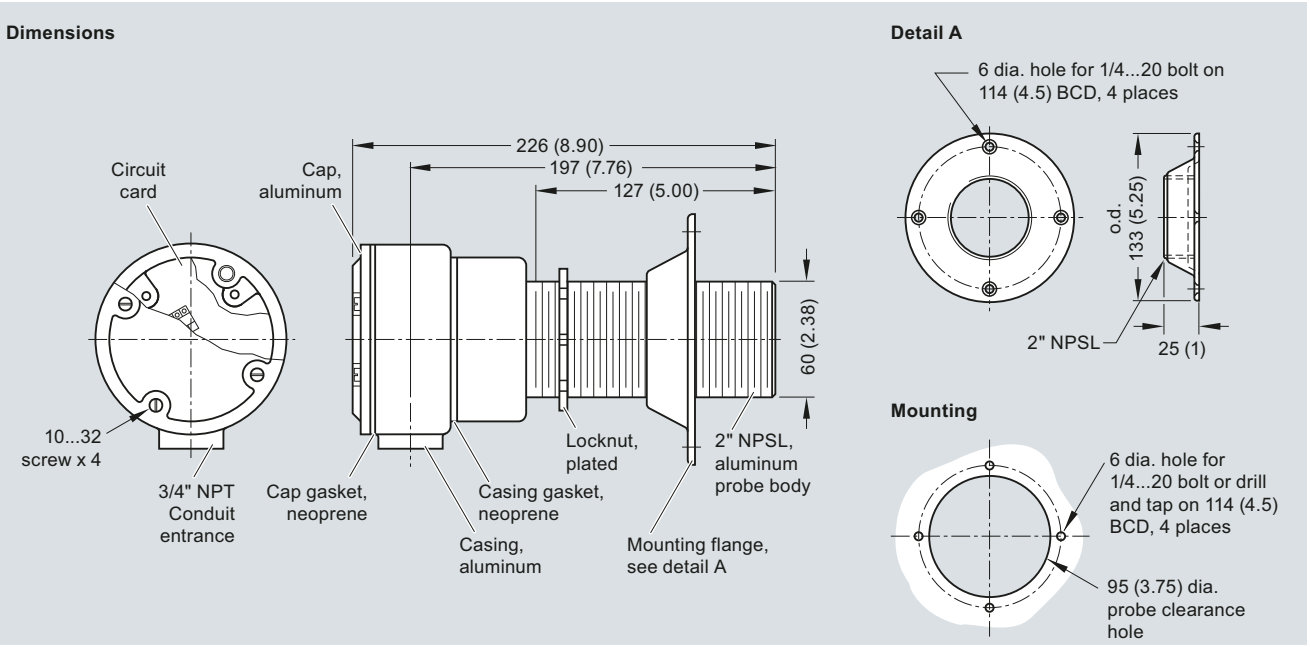


SITRANS WM100 mounting, dimensions in mm (inch)

6

© Siemens AG 2012



## SITRANS WM100

### Schematics

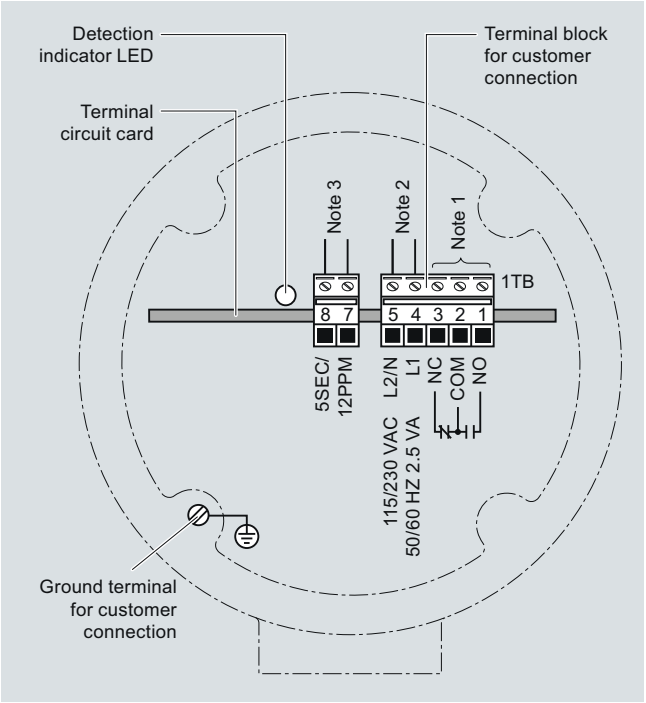


SITRANS WM100 wiring

Notes:

1. Dry contacts shown in de-energized (alarm or shelf) state.
2. SITRANS WM100 is manufactured for either 115 or 230 V AC operation. Check WM100 nameplate for applicable voltage. Correct voltage must be supplied. Voltages lower than specified will result in an inoperative condition. Voltages higher than specified will severely damage unit.
3. For 5 second time delay and a minimum 12 ppm range, connect jumper across terminals 7 and 8. Without a jumper, the default is a 10 second time delay and a minimum 6 ppm range.

# SECTION IV

## ASSEMBLY DRAWINGS

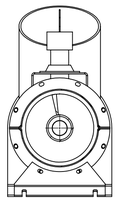

SECTION A-A

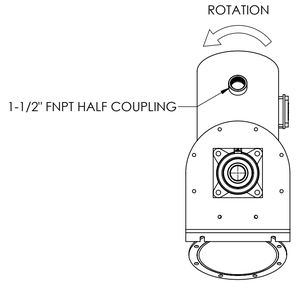


INLET END

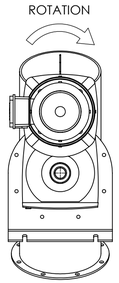


DISCHARGE / DRIVE END

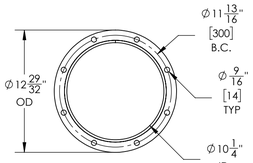


DISCHARGE FLANGE
SCALE 1 : 8

SPECIFICATIONS:
QTY: TWO (2), 9" DIA X 15'-0" LONG 30 DEG. INCLINED SCREW FEEDER WITH A 3 HP @ 34 RPM DRIVE UNIT TO CONVEY 221 CFH, OF A FLOOD FED CAUSTIC SODA AND SODIUM THIOSULPHATE @ 60 TO 75 LB/FT$^3$, SHOP ASSEMBLED AND CONSISTING OF:

NOTES:
- ALL 316SS CONSTRUCTION UNLESS NOTED
- INTERIOR (PRODUCT CONTACT) FINISH EXCL. SCREW: CEMA II WELDS, SURFACE FINISH AS-IS
- SCREW FINISH: CEMA II STD. SKIP WELDING, SURFACES AS-IS
- EXTERIOR FINISH: CEMA II WELDS, SURFACES TO BE SSPC-SP6 COMMERCIAL BLAST CLEAN
- ALL FABRICATED GUARDS TO BE PAINTED SAFETY YELLOW
- ALL PURCHASED ITEMS TO HAVE MANUFACTURERS STD. FINISH
- 18-8 SS ASSEMBLY BOLTS
- 1/8" THK CLOSED CELL NEOPRENE COVER GASKETS
- SILICONE CAULK TROUGH FLANGE GASKETS
- CEMA SAFETY LABELS
- SERIAL NUMBER(S): 30014715-01 THRU 02

| ITEM NO. | QTY. EACH | MAT'L | DESCRIPTION |
|---|---|---|---|
| 1 | 2 | 316SS | 9TO10-F, SPLIT TUBULAR TROUGH HALF, 9" DIA X .135 THK X 60" LONG |
| 2 | 2 | 316SS | 9TO10-F, SPLIT TUBULAR TROUGH HALF, 9" DIA X .135 THK X 120" LONG |
| 3 | 8 | 316SS | 9FO-F-GA, END FLANGE, SPLIT TUBULAR TROUGH, 9" DIA X .250 THK |
| 4 | 1 | 316SS | INCLINED ROUND DISCHARGE, FLANGE TO MATE WITH V1FS250 BUTTERFLY VALVE |
| 5 | 2 | 316SS | 9EF4-O-BB, TROUGH END, TUBULAR, WITH FOOT, 9" SIZE X .250 THK., 2" SHAFT, DRILLED FOR BALL BEARING |
| 6 | 1 | 316SS | 9S412, SECTIONAL SCREW, 9" DIA X 178" LG, 3/16" THK, RH VARIABLE PITCH WITH 9" BARE PIPE, MOUNTED ON A 3" SCH. 40 PIPE, BUSHED AND DRILLED ON BOTH ENDS FOR 2", 2 BOLT SHAFT, FLIGHTING: FIRST 12" TO BE 6" PITCH, REMAINDER FULL PITCH |
| 7 | 1 | 316SS | 4ES-B, END SHAFT, 2" DIA X 10 3/8" LG FOR BALL BEARING AND SEAL, CEMA 2 BOLT DRILLED |
| 8 | 4 | 316SS | 4CB, COUPLING BOLT WITH LOCK NUT, 5/8 - 11 UNC X 3 5/8" LG WITH A 2 7/8" LG SHANK, FOR 2 1/2" (2.875 OD) PIPE |
| 9 | 1 | | SE.4CP, WAM-SHIELD SEAL, 2" SHAFT, NON SPLIT |
| 10 | 1 | | 4BF-B, BALL BEARING, FLANGED, 2 SHAFT |
| 11 | 1 | 316SS | INCLINED ROUND INLET STUB WITH PORT FOR ILT LEVEL INDICATOR |
| 12 | 2 | 316SS | 9FF, FLANGE FEET, 9" SIZE, .188 THK., INCLINED |
| 13 | 1 | 316SS | 9SL10, SADDLE MOUNT, FOR 9" SIZE X .135 THK TROUGH, .250 THK |
| 14 | 1 | | NORD SK4282SCP/VL-180TC SCREW CONVEYOR DRIVE, 52.2:1 RATIO, 180TC NEMA ADAPTER, M1 MOUNTING POSITION, 2" CEMA DRIVE SHAFT |
| 15 | 1 | | NORD 100LP/4, 3 HP PREM. EFF., 1770 RPM, TEFC, NEMA 182TC C FACE MTR, 3/60/332-575V |
| 16 | 1 | | SITRANS WM100 ZERO-SPEED ALARM SWITCH |
| 17 | 1 | 316SS | SENSOR MOUNTING BRACKET, FITTED TO TROUGH, .188 THK SHEET / PLATE |

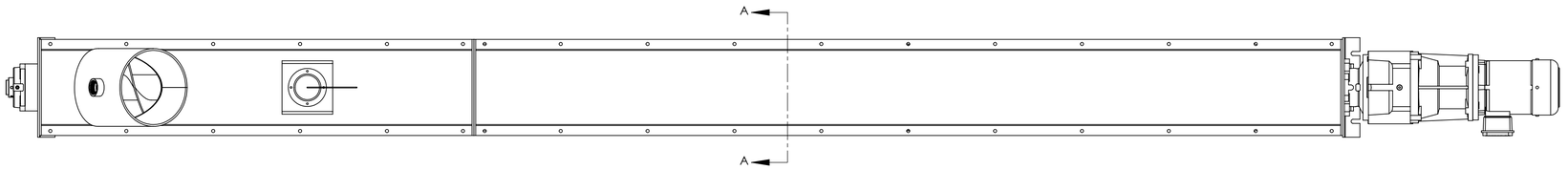


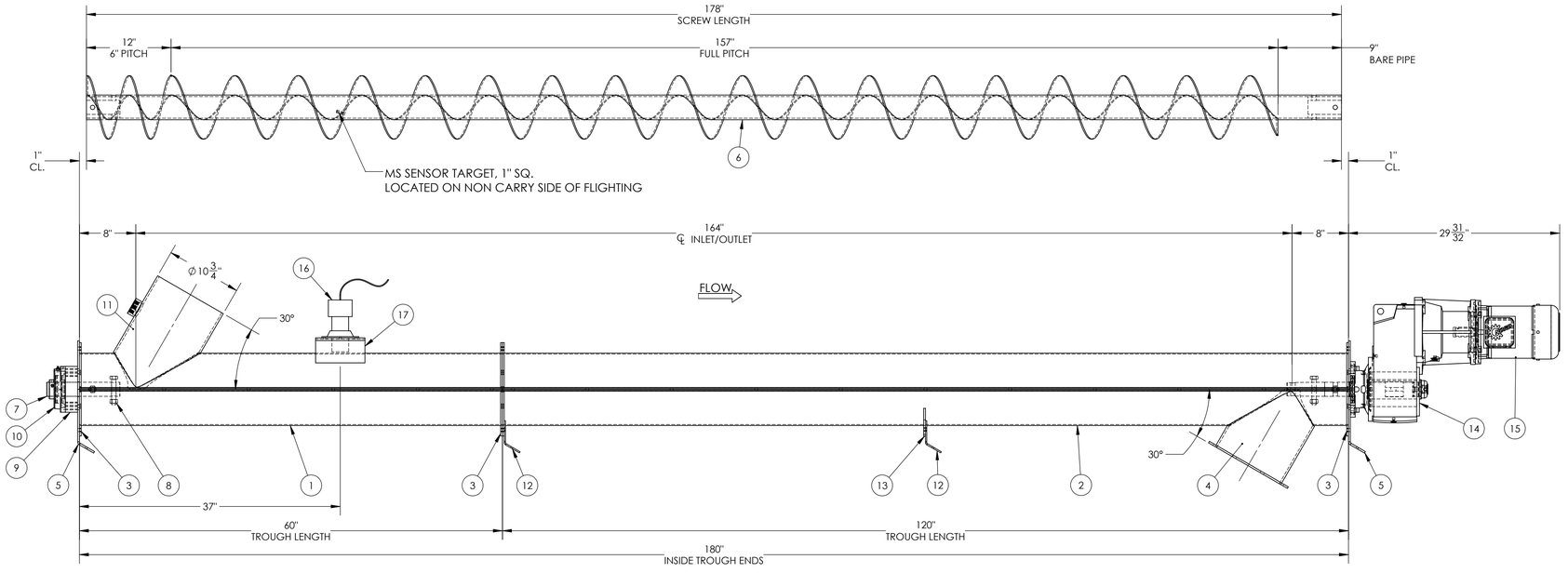


CERTIFIED DRAWING

DATE: 3/26/2021

| REVISIONS | | | |
|---|---|---|---|
| REV. | BY | DESCRIPTION | DATE |
| 1 | JAH | ADDED SPEED SWITH AND BRACKET, CHANGED MOTOR VOLTAGE | 3/26/2021 |

UNLESS OTHERWISE SPECIFIED:
ALL DIMENSIONS ARE IN INCHES

ALL ITEMS MANUFACUTRED PER CEMA 300 TOLERANCES WHEN APPLICABLE

FOR ALL REMAINING ITEMS, GENERAL TOLERANCES ARE AS FOLLOWS:
FRACTIONS = ±1/16
X.XX = ±0.01
X.XXX = ±0.005
ANGLES = ±2°

CUSTOMER:
POMPES & EQUIPMENT (PCP)
3076 A, RUE BERNARD-PILON
ST-MATHIEU-DE-BELOEIL, QC J3G 4S5

SHIP TO:
POMPES & EQUIPMENT (PCP)
3076 A, RUE BERNARD-PILON
ST-MATHIEU-DE-BELOEIL, QC J3G 4S5

QUOTE:
Y010821A-SYS-B

CUSTOMER PO:
C14-204979R2

CONFIDENTIALITY NOTE: THIS DRAWING AND ALL DESIGNS, DETAILS, INVENTIONS AND/OR DEVELOPMENTS COVERED ARE CONFIDENTIAL AND THE EXCLUSIVE PROPERTY OF WAM INC., WHICH RESERVES ALL PATENT AND OTHER RIGHTS. IT IS NOT TO BE PRINTED, PHOTOGRAPHED, COPIED, LOANED OR USED WITHOUT PERMISSION. IT MUST BE RETURNED ON REQUEST AND USED SUBJECT TO THE ABOVE CONDITIONS AND ONLY ON WORK AUTHORIZED BY WAM INC.

WAM® USA INC.
1300 TRIAD BLVD., FORT WORTH, TX 76131
PH. #817-232-2678, FAX #817-232-2676

DESCRIPTION:
9" DIA X 15'-0" LONG 30 DEG. INCLINED SCREW FEEDER WITH A 3 HP @ 34 RPM DRIVE UNIT

SHEET 1 OF 1
SIZE D
REV 1

| DRAWN | CHKD. | DATE | SCALE | DRAWING NO. |
|---|---|---|---|---|
| JAH | | 3/12/21 | 1:10 | 30014715 |

WEBTROL

*There when you need us most*

# FC Series TC Series

## Stainless Steel Centrifugal Pumps

# Installation & Operating Manual



**Congratulations on Your Choice in Purchasing this Webtrol Pump!**

Its Quality is unsurpassed in material and workmanship and has been factory tested.
If properly installed, it will give many years of trouble free service.

FC/TC Series
10/20 Edition

# Table Of Contents


**Introduction** ..... **2**

**Performance / Specifications** ..... **3**

**Pump Inspection And Handling** ..... **3**

**Exploded View** ..... **4**

**Pre-Installation** ..... **5**

**Installation** ..... **5-6**
- Location
- Mounting
- Piping

**Electrical Connections** ..... **8-15**

**Start-up Procedure** ..... **16**
- Shaft Rotation
- Valves
- Priming
- Starting
- Final Inspection

**Lubrication** ..... **17**

**Chemical Compatibility Chart** ..... **18**

**Trouble Shooting** ..... **19**


# Introduction

This manual was prepared to assist the installer and/or operator in understanding the proper method of installing, operating and maintaining the SS series centrifugal pump. We recommend that you thoroughly understand the proper installation and start-up procedures, prior to starting the pump. If these procedures are followed, you will have years of trouble-free service.

# WARNING

## Rules For Safe Installation And Operation

1. Read these rules and instructions carefully. Failure to follow them could cause serious bodily injury and/or property damage.
2. Check your local codes before installing.
3. For maximum safety, this product should be connected to a grounded circuit equipped with a ground fault interrupter device.
4. Before installing this product, have the electrical circuit checked by an electrician to make sure it is properly grounded.
5. Before installing or servicing your pump, BE CERTAIN pump power source is disconnected.
6. Make sure the line voltage and frequency of the electrical current supply agree with the motor wiring. If motor is dual voltage type, BE SURE it is wired correctly for your power supply.
7. Complete pump and piping system MUST be protected against below freezing temperature. Failure to do so could cause severe damage and voids the Warranty.
8. Do not run the pump dry. If it is, there will be damage to the pump seal.
9. Do not operate the pump in flammable and / or explosive atmosphere.

# Performance And Specifications

## TC Models

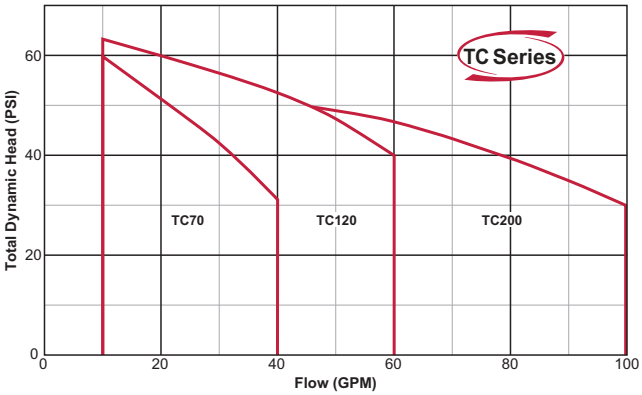


**Size:** Suction TC70 1-1/4" NPT
TC120 1-1/4" NPT
TC200 1-1/2" NPT

Discharge All TC Models 1" NPT

**HP Range:** 1/3 HP to 1-1/2 HP - 1750 RPM
3/4 HP to 3 HP - 3450 RPM

**Performance:** Capacity - 5.5 GPM to 100 GPM
Head - 23 to 144 feet
Liquid - clean water
Liquid Temp. - 212° F
(250°F opt.)
Working Pressure - 125 PSI

**Materials:** Casing - 304 Stainless
Impeller - 304 Stainless
Shaft - Stainless
Mechanical Seal - Carbon/Ceramic
Viton

**Motor:** Nema 56J frame / 60 Hz
Built in overload protection
(single phase models)

## FC Models

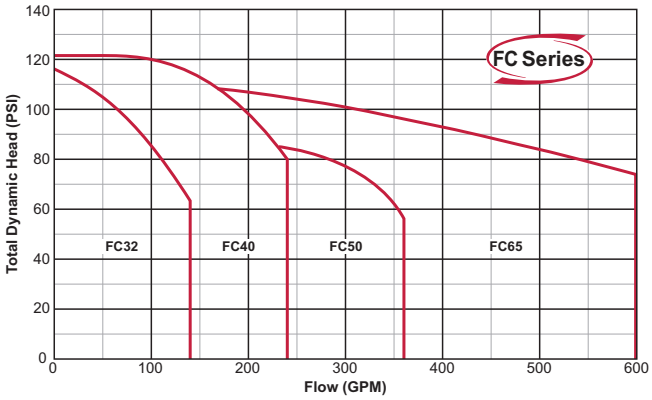


**Size:** Suction 150 lb. ANSI FC32 2" ANSI
FC40 2-1/2" ANSI
FC50 2-1/2" ANSI

Discharge 150 lb. ANSI FC32 1-1/4" ANSI
FC40 1-1/2" ANSI
FC50 2" ANSI

**HP Range:** 1 HP to 2 HP - 1750 RPM
3 HP to 30 HP - 3450 RPM

**Performance:** Capacity - 13 GPM to 600 GPM
Head - 33 to 285 feet
Liquid Temp. - 212° F
(250°F opt.)
Working Pressure - 230 PSI

**Materials:** Casing - 304 Stainless
Impeller - 304 Stainless
Shaft - Stainless
Mechanical Seal - Carbon/Ceramic
Viton

**Motor:** Nema JM frame / 60 Hz

# Pump Inspection and Handling

When receiving your pump, check to see if the shipment has been damaged in any way or if any parts seem to be missing. If so, note the damage or shortage on the bill of lading and the freight bill. Make any claims to the transportation company immediately. Keep all packaging materials until the claim is resolved.

The Webtrol Stainless Steel Centrifugal pump should remain in the shipping carton until it is ready to be installed.

Do not drop or mishandle the pump prior to installation.

# Exploded Views

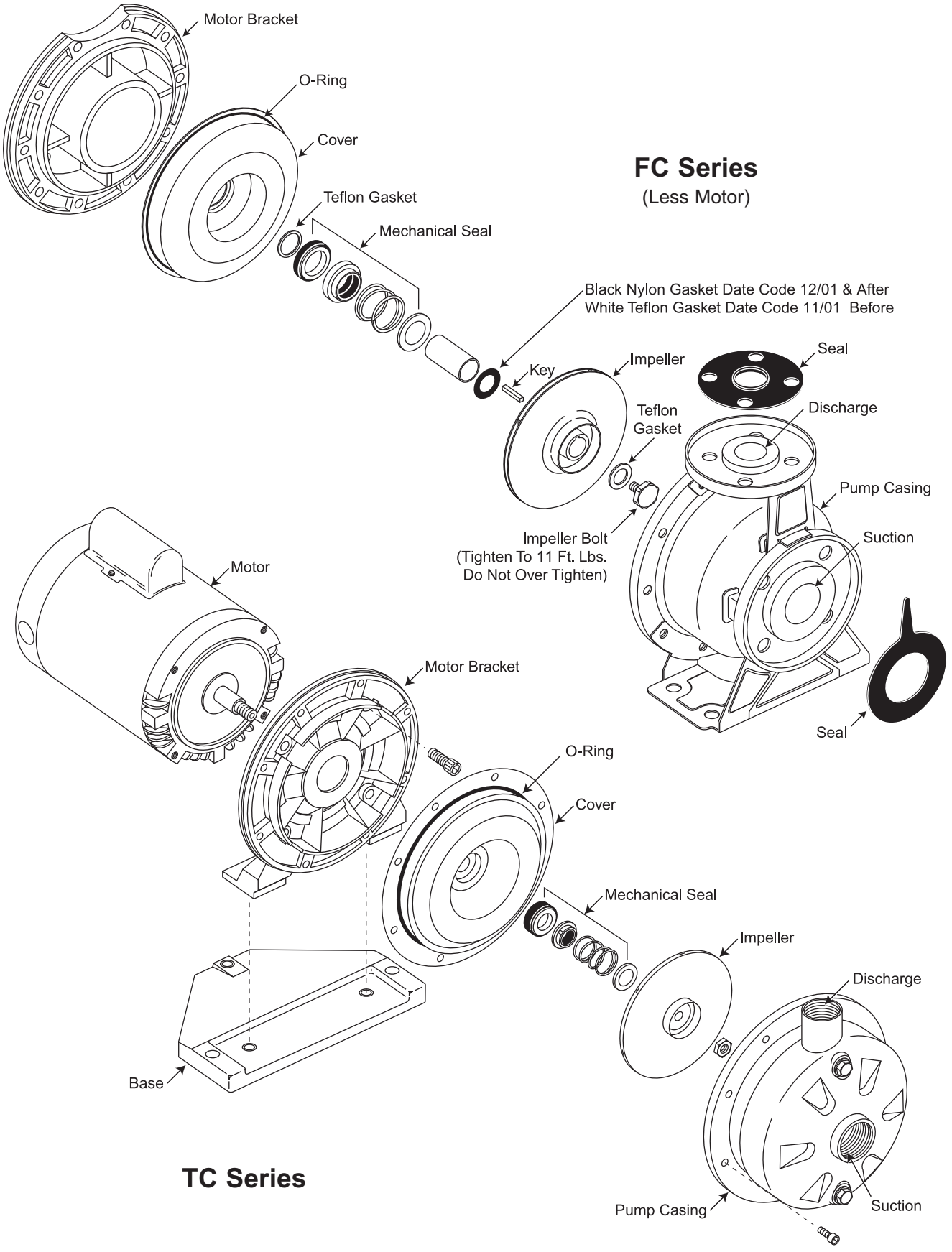

## Pre-Installation

Pump is non-submersible. Keep motor dry at all times. Do not wash or immerse the motor.

**Warning:** Never run the pump dry. The internal running surfaces of the pump and mechanical seal require water lubrication for consistent operation. Allowing the pump to run dry will severely damage pump and mechanical seal.

Do not pump chemicals or corrosive liquids with the pump unless they are compatible with the pump component materials. Consult the chemical compatibility chart on page 15 of this manual or call Webtrol at (314) 631-9200 for verification. Use with nonflammable liquids.

To avoid internal damage to the pump, do not operate with the water temperature above 212° F.

Pump must be full of liquid before operating. Do not pump dirty water or abrasive liquids. To do so, will cause the carbon seal face, and elastomers in the mechanical seal to wear and leak. Mechanical seal materials, compatible with liquids containing abrasives, are available upon request.

Avoid air pockets in suction piping or air will accumulate at the high points, making priming difficult.

Do not allow the pump or any system component to freeze. To do so may damage the pump and void the warranty.

## Installation

**Locate** the pump as close to the liquid source as possible, so that a short, direct suction pipe may be used. Place the unit so that it is readily accessible for service, maintenance and allows air to circulate freely around the motor.

**Mount** pump in a dry location, on a secure base or foundation. This will prevent noise and vibration.

**Piping** should be stainless steel, rigid plastic or other suitable pipe that will not collapse or burst when exposed to suction and discharge pressure. The piping should be as free from turns and bends as possible, as elbows and fittings greatly increase friction losses.

Pipes must line up and not be forced into position by unions. The suction pipe should be at least one size larger than the suction inlet tapping, and have a minimum number of elbows and fittings to reduce friction losses. Also, the discharge piping should never be smaller than the pump tapping and should preferably be one size larger.

Piping should be independently supported near the pump so that no strain will be placed on the pump casing. Where any noise is objectionable, the pump should be insulated from the piping with rubber connections.

Figure 1 - The normal position of the TC Series discharge is top vertical.

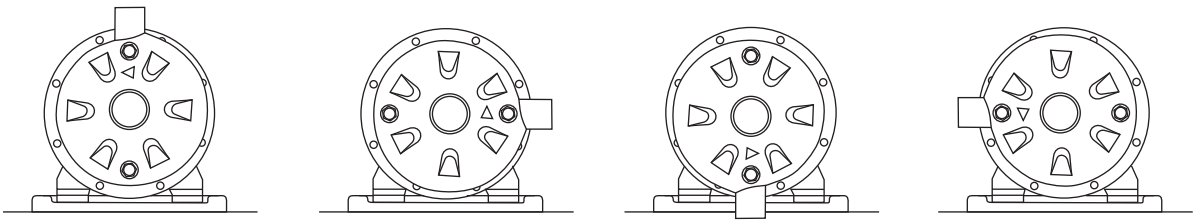

Normal Position of Discharge | Discharge Rotated 90° Clockwise | Discharge Rotated 180° Clockwise | Discharge Rotated 270° Clockwise

**Figure 1**

**Note:** The FC Series discharge can only be used in the normal position.

Figure 2 - Connection to a water tank which provides a gravity flow - flooded suction.

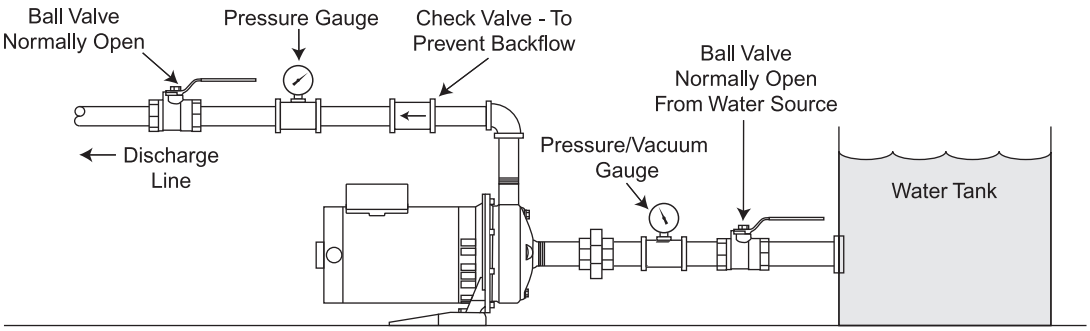


**Figure 2**

Figure 3 - Connection to a pressurized water system.

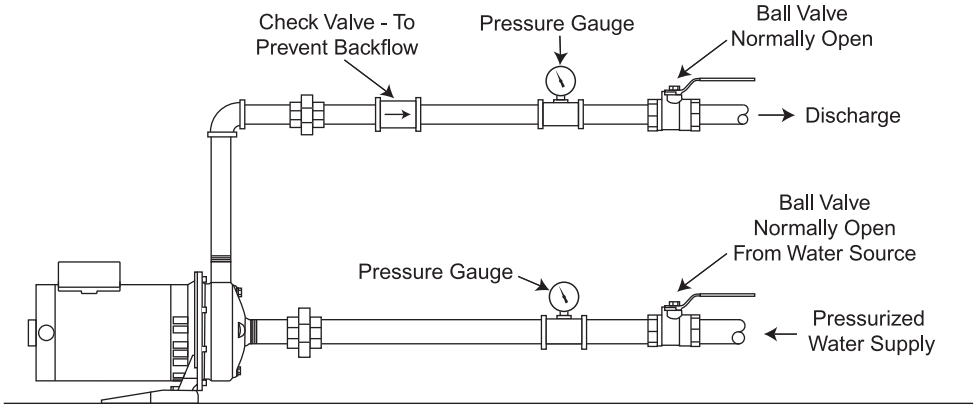


**Figure 3**

Figure 4 - Pump used on a suction lift application from a pond, cistern or container.

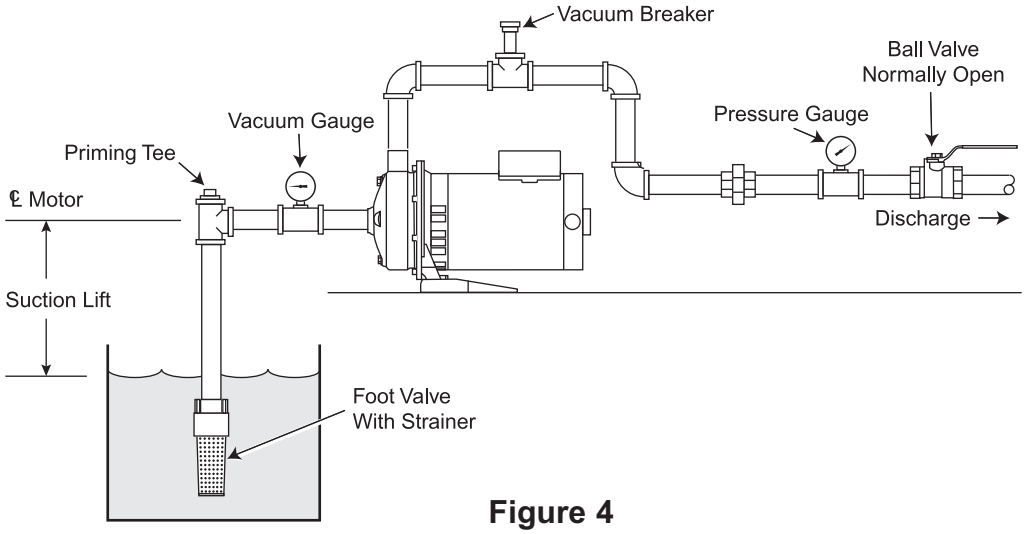


**Figure 4**

1. Install a service tee with a pipe plug, at the highest point in the suction line for initial priming
2. Install a foot valve at the end of the suction line.
3. Install a vacuum gauge in the suction line.
4. To retain water in the pump after turning the pump off, install a vacuum breaker in the discharge line. The horizontal run of pipe containing the vacuum breaker should be above the horizontal run of pipe containing the vacuum gauge.

# Electrical Connections - **TC Pump**

**TC Series**



Before wiring the pump to the power source, verify that the voltage of the motor matches the voltage of the power supply. See motor nameplate. The supply voltage must be within ± 10% of nameplate voltage. Incorrect voltage can cause fire or seriously damage the motor and voids the warranty.

Wire motor according to the diagram shown on the motor nameplate. If the nameplate diagram differs from the wiring diagrams shown in this manual, follow the nameplate diagram.

Install ground wire and maintain this pump in compliance with the National Electrical Code (NEC) or the Canadian Electrical Code (CEC) and with all local codes and ordinances that apply. Consult your local building inspector for local code information.

The motors used on the TC Model pumps are commonly manufactured by Emerson, Baldor, or Bluffton. The motors used on the FC Models are manufactured by Baldor, U.S. Motor.

Both, 1 phase and 3 phase **TC pump motors are factory wired for 230 volts.** Motor frame is Nema 56J. If the supply voltage for a 1 phase motor is 115 volts, refer to the motor wiring connections shown below to properly rewire the motor.

| U.S. Motors 1 Phase ODP Motor | | |
|---|---|---|
| **Catalog Number** | **See Figure** | **HP** |
| EU0502 | 5 | 1/2 |
| EU0752 | 5 | 3/4 |
| EU1002 | 5 | 1 |
| EU1502 | 5 | 1-1/2 |
| EU2002 | 5 | 2 |
| EU3002 | 6 | 3* |

| U.S. Motors 3 Phase ODP Motor | | |
|---|---|---|
| **Catalog Number** | **See Figure** | **HP** |
| EE155 | 7 | 1/2 |
| EE446 | 7 | 3/4 |
| EE506 | 7 | 1 |
| EE607 | 7 | 1-1/2 |
| EE733 | 7 | 2 |
| EE734 | 7 | 3 |

*The 3 HP - 1 Phase motor is dual voltage (208/230v) and cannot be connected to 115v.

U.S. Motors -
TC Pump Connection Diagrams

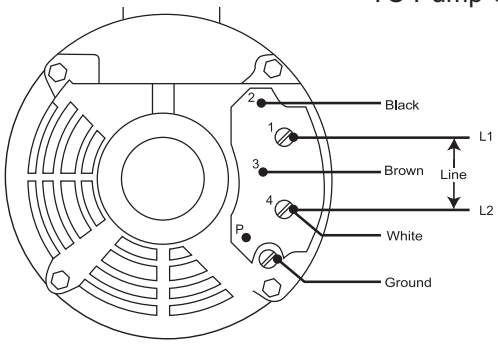


1 Phase, 1/2 - 2 HP
Wired 115v

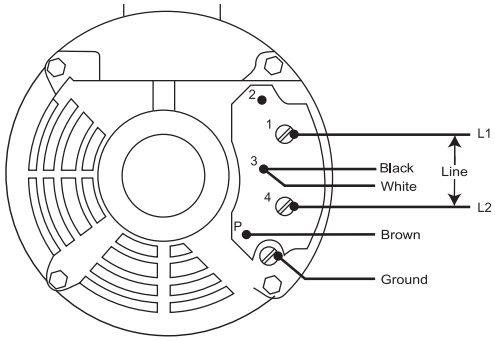


1 Phase, 1/2 - 2 HP
Factory Wired 208/230v

**Figure 5**

U.S. Motors -
TC Pump Connection Diagram

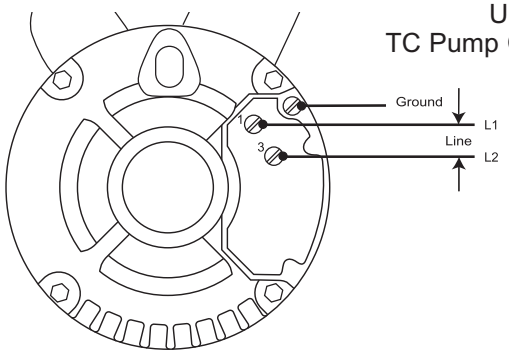


1 Phase, 3 - 10 HP
Factory Wired 208/230v

**Figure 6**

U.S. Motors -
TC Pump Connection Diagrams

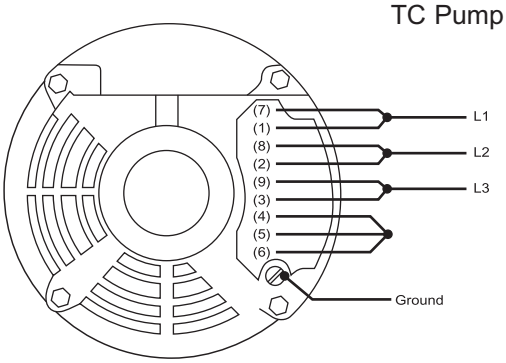


3 Phase, 1 - 30 HP
Factory Wired 208/230v

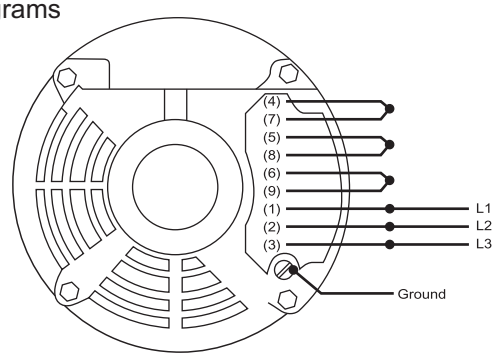


3 Phase, 1 - 30 HP
Wired 460v

**Figure 7**

| Baldor 1 Phase ODP Motor | | |
|---|---|---|
| **Catalog Number** | **See Figure** | **HP** |
| JL1303A | 8 | 1/2 |
| JL1306A | 8 | 3/4 |
| JL1309A | 8 | 1 |
| JL1313A | 8 | 1-1/2 |
| JL1317A | 8 | 2 |
| JL1323A | 9 | 3* |
| 36J685-0190G1 | 9 | 5* |

| Baldor 3 Phase ODP Motor | | |
|---|---|---|
| **Catalog Number** | **See Figure** | **HP** |
| JM3107 | 10 | 1/2 |
| JM3111 | 10 | 3/4 |
| JM3115 | 10 | 1 |
| JM3120 | 10 | 1-1/2 |
| JM3155 | 10 | 2 |
| JM3158 | 10 | 3 |
| 36J642W243G1 | 10 | 5 |

*The 3 & 5 HP 1 Phase motor is single voltage (230v) and cannot be connected to 115v.

Baldor Motors - TC Pump Connection Diagrams

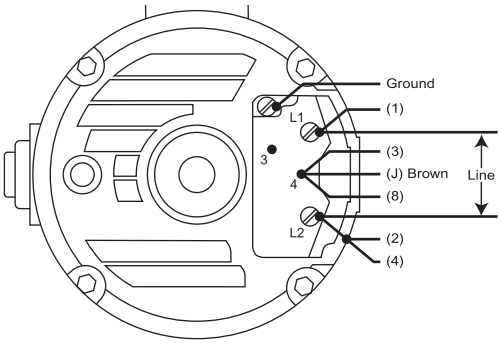


1 Phase, 1/2 - 2 HP
Wired 115v

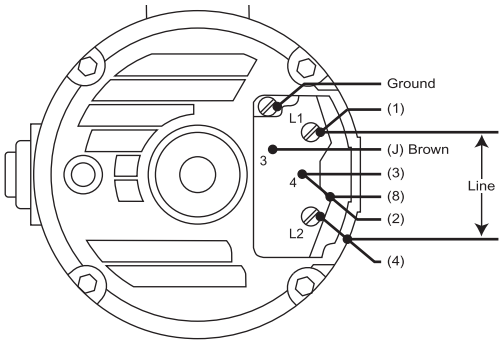


1 Phase, 1/2 - 2 HP
Factory Wired 230v

**Figure 8**

Baldor Motors - TC Pump Connection Diagrams

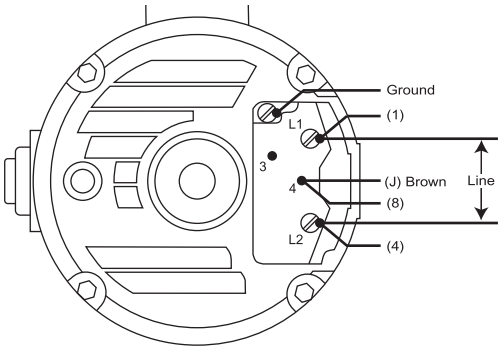


1 Phase, 3 HP
Factory Wired 230v

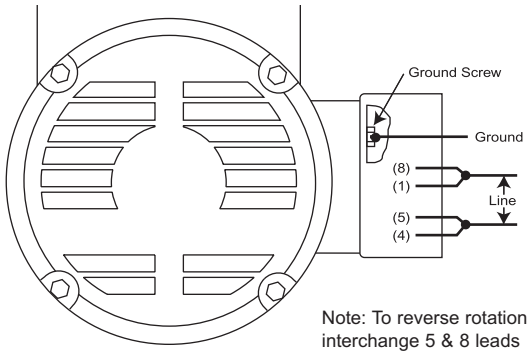


Note: To reverse rotation
interchange 5 & 8 leads

1 Phase, 5 HP
Factory Wired 230v

**Figure 9**

Baldor Motors - TC Pump Connection Diagrams

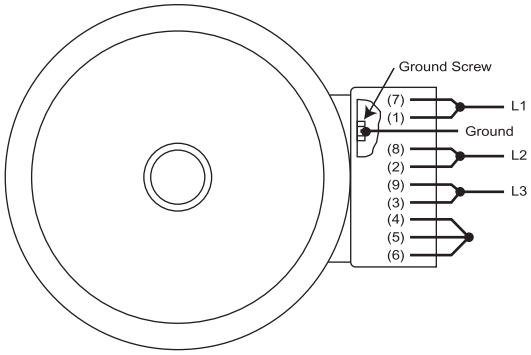


3 Phase, 1/2 - 5 HP
Factory Wired 230v

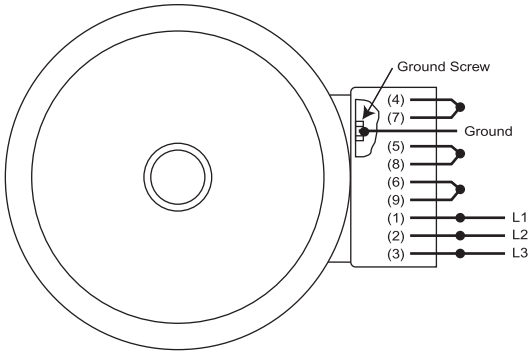


3 Phase, 1/2 - 5 HP
Wired 460v

**Figure 10**

If the supply voltage for a 1 phase motor is 115 volts, refer to the motor wiring connections shown below to properly rewire the motor.

| Century Electric 1 Phase ODP Motor | | |
|---|---|---|
| **Stock Number** | **See Figure** | **HP** |
| T1052 | 11 | 1/2 |
| T1072 | 11 | 3/4 |
| T1102 | 11 | 1 |
| T1152 | 11 | 1-1/2 |
| T1202 | 11 | 2 |
| ST1302VI | 12 | 3 |

| Century Electric 3 Phase ODP Motor | | |
|---|---|---|
| **Stock Number** | **See Figure** | **HP** |
| T3052 | 13 | 1/2 |
| T3072 | 13 | 3/4 |
| T3102 | 13 | 1 |
| T3152 | 13 | 1-1/2 |
| T3202 | 13 | 2 |
| H741 | 13 | 3 |

Century Motors - TC Pump Connection Diagrams

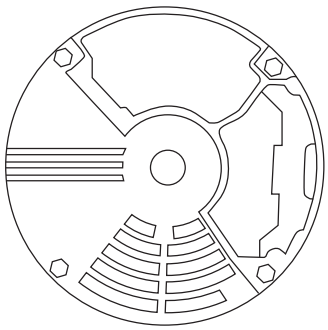

1 Phase, 1/2 - 2 HP
Wired 115v

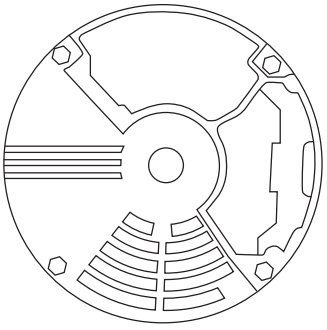

1 Phase, 1/2 - 2 HP
Factory Wired 230v

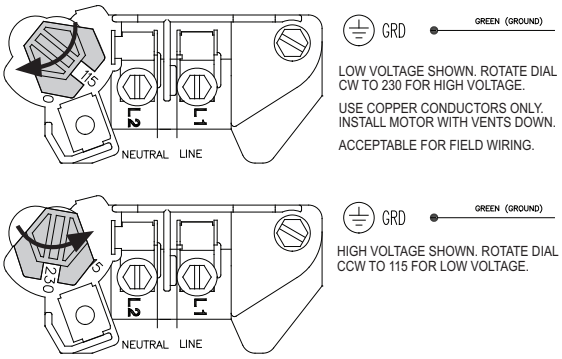


**Figure 11**

Century Motors - TC Pump Connection Diagrams

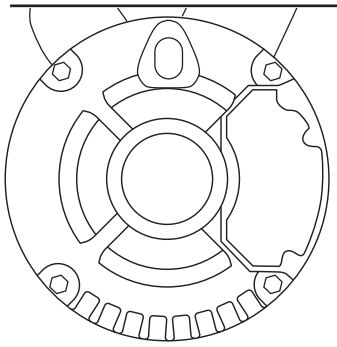

1 Phase, 3 HP
Factory Wired
208/230v

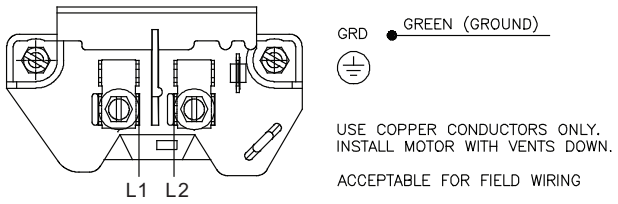


**Figure 12**

Century Motors - TC Pump Connection Diagrams

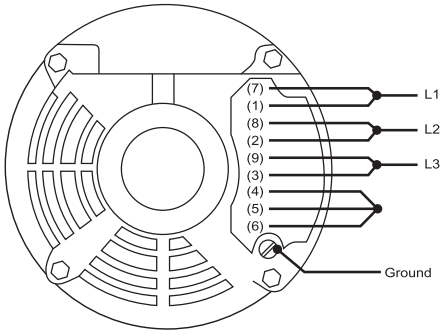


3 Phase,
1/2 - 3 HP
Factory Wired
208/230v

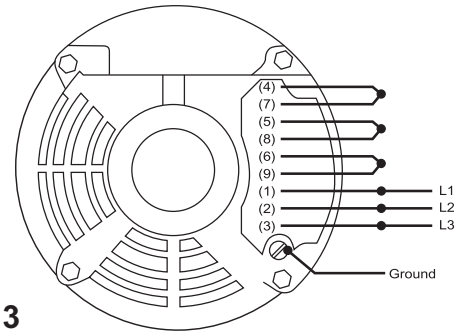


3 Phase,
1/2 - 3 HP
Wired 460v

**Figure 13**

If the supply voltage is 460 volts, refer to the motor wiring diagram show in (Figure 5) to properly rewire the motor.

**Motor shaft rotation - 3 phase motors**

1. Turn the power off.
2. Remove the circular end cap located on the back of the motor. This will expose the motor shaft.
3. Momentarily start pump. If the connection is correct, the shaft will rotate clockwise. If not reverse any two incoming lines (Power Leads).

| WEG 1 Phase ODP Motor | | |
|---|---|---|
| **Catalog Number** | **See Figure** | **HP** |
| .5036OS1BJPRW56J-S | 14 | 1/2 |
| .7536OS1BJPRW56J-S | 14 | 3/4 |
| 00136OS1BJPR56J-S | 14 | 1 |
| 00156OS1BJPR56J-S | 14 | 1 1/2 |
| 00236OS1BJPR56J-S | 14 | 2 |
| 00336OS1DJPR56J | 15 | 3* |

| WEG 3 Phase ODP Motor | | |
|---|---|---|
| **Catalog Number** | **See Figure** | **HP** |
| .5036OS3EJPR56J-S | 16 | 1/2 |
| .7536OS3EJPR56J-S | 16 | 3/4 |
| 00136OS3EJPR56J-S | 16 | 1 |
| 00156OS3EJPR56J-S | 16 | 1 1/2 |
| 00236OS3EJPR56J-S | 16 | 2 |
| 00336OS3EJPR56J-S | 16 | 3 |

*The 3 HP - 1 Phase motor is single voltage (230v) and cannot be connected to 115v.
Please check motor nameplate before wiring.

WEG Motors - TC Pump Connection Diagrams

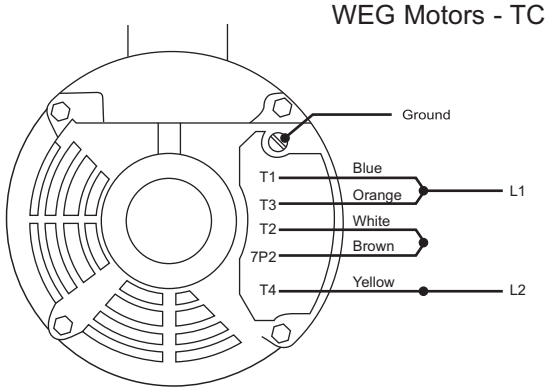


1 Phase, 2 HP
Wired 115v

**Figure 14**

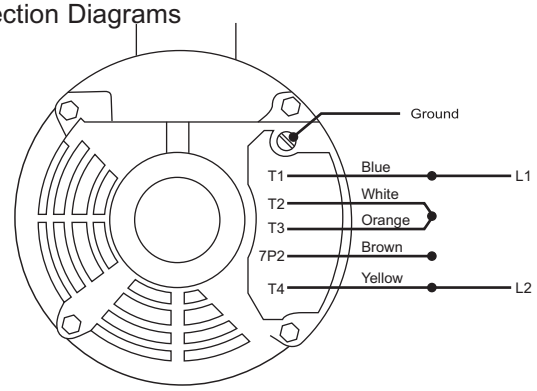


1 Phase, 2 HP
Factory Wired 208/230v

WEG Motors - TC Pump Connection Diagrams

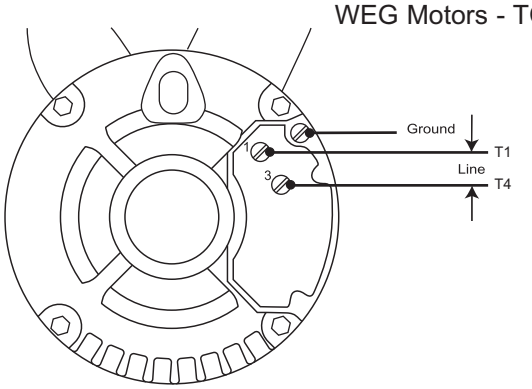


1 Phase, 3 - 10 HP
Factory Wired 208/230v

**Figure 15**

WEG Motors - TC Pump Connection Diagrams

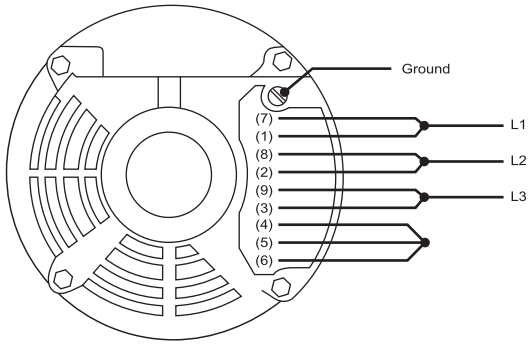


3 Phase, 1 - 30 HP
Factory Wired 208/230v

**Figure 16**

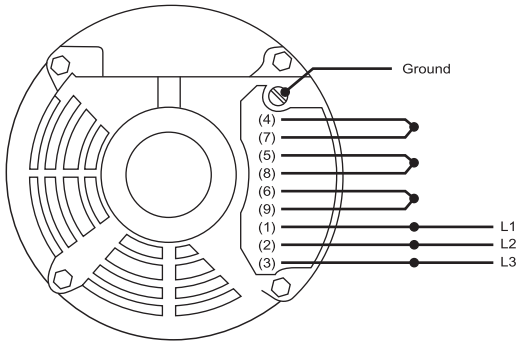


3 Phase, 1 - 30 HP
Wired 460v

# Electrical Connections - **FC Pump**

**FC Series**



FC Pump motors are factory wired for 230 volts. Motor is Nema JM frame. If the supply voltage for a 1 phase motor is 115 volts refer to the wiring diagrams shown below to properly rewire the motor.

**Note:** For 1 phase motors, Baldor has a wiring diagram on the motor for standard rotation. Standard rotation is counter clockwise facing the end opposite the shaft extension.

However, the **shaft must rotate clockwise for proper operation of the pump**. Instructions are shown on the wiring diagram for opposite standard rotation (clockwise facing end opposite shaft extension).

**Since the pump has been factory tested, the motor is wired correctly for 230 volts.** If the voltage is 115 volts, rewire the motor accordingly.

The information stated above also applies to the U.S. Motors.

| U.S. Motors 1 Phase ODP Motor | | |
|---|---|---|
| **Catalog Number** | **See Figure** | **HP** |
| JML1406T | 17 | 3 |
| JML1409T | 17 | 5 |
| JML1509T | 17 | 7-1/2 |
| JML1511T | 17 | 10 |

*The 3 HP - 1 Phase motor is dual voltage (208/230v) and cannot be connected to 115v.

| U.S. Motors 3 Phase ODP Motor | | |
|---|---|---|
| **Catalog Number** | **See Figure** | **HP** |
| EJMM3155T | 18 | 2 |
| EJMM3158T | 18 | 3 |
| EJMM3212T | 18 | 5 |
| EJMM3219T | 18 | 7-1/2 |
| EJMM3312T | 18 | 10 |
| EJMM3314T | 18 | 15 |
| EJMM2514T | 18 | 20 |
| EJMM2516T | 18 | 25 |
| EJMM2534T | 18 | 30 |

U.S. Motors -
FC Pump Connection Diagram

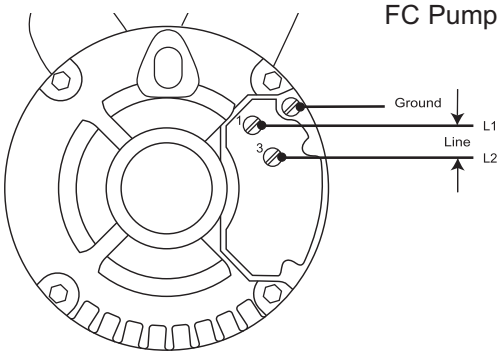


1 Phase, 3 -10 HP
Factory Wired 208/230v

**Figure 17**

U.S. Motors -
FC Pump Connection Diagrams

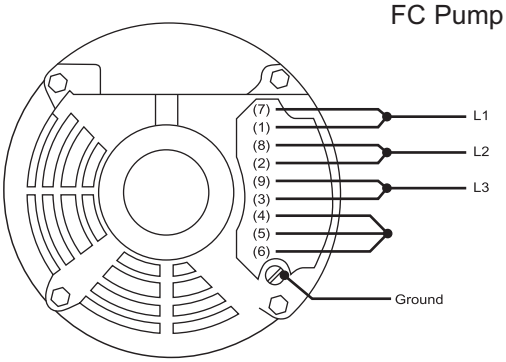


3 Phase, 1 - 30 HP
Factory Wired 208/230v

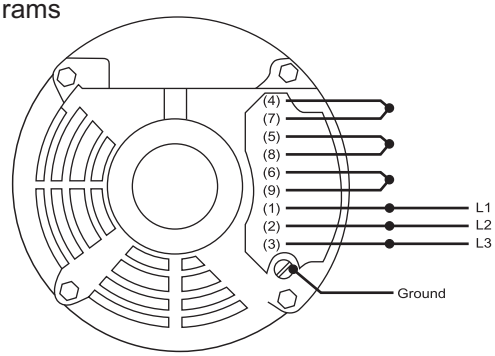


3 Phase, 1 - 30 HP
Wired 460v

**Figure 18**

| Baldor 1 Phase ODP FC Motor | | |
|---|---|---|
| **Catalog Number** | **See Figure** | **HP** |
| JML3606T | 19 | 3 |
| JML3608T | 20 | 5 |
| JML1509T | 20 | 7.5 |
| JML1511T | 20 | 10 |

*Motor rated for 230v and cannot be connected to 115v.

| Baldor 3 Phase ODP FC Motor | | |
|---|---|---|
| **Catalog Number** | **See Figure** | **HP** |
| EJMM3555T | 21 | 2 |
| EJMM3610T | 21 | 3 |
| EJMM3613T | 21 | 5 |
| EJMM3709T | 21 | 7.5 |
| EJMM3711T | 21 | 10 |
| EJMM2394T | 21 | 15 |
| EJMM2514T | 21 | 20 |
| EJMM2516T | 21 | 25 |
| EJMM2534T | 21 | 30 |

Baldor Motors - FC Pump 1 Phase Connection Diagram

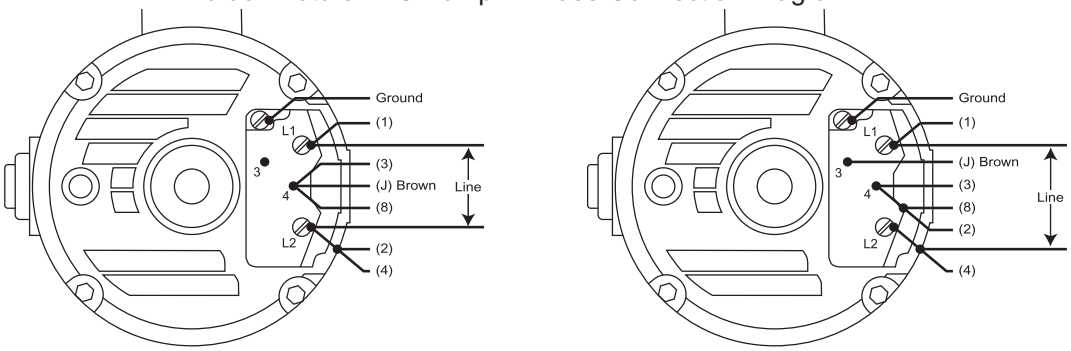


1 Phase, 2 HP
Wired 115v

1 Phase, 2 HP
Factory Wired 230v

**Figure 19**

Baldor Motors - FC Pump 1 Phase Connection Diagram

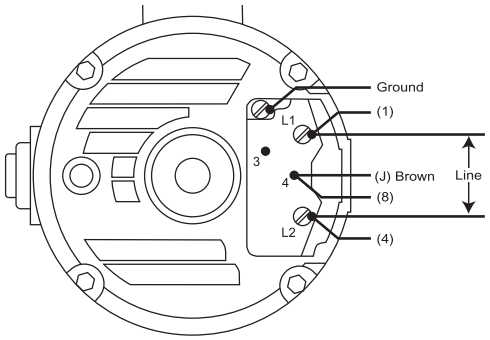


1 Phase, 3 - 10 HP
Factory Wired 230v

**Figure 20**

Baldor Motors - FC Pump 3 Phase Connection Diagrams

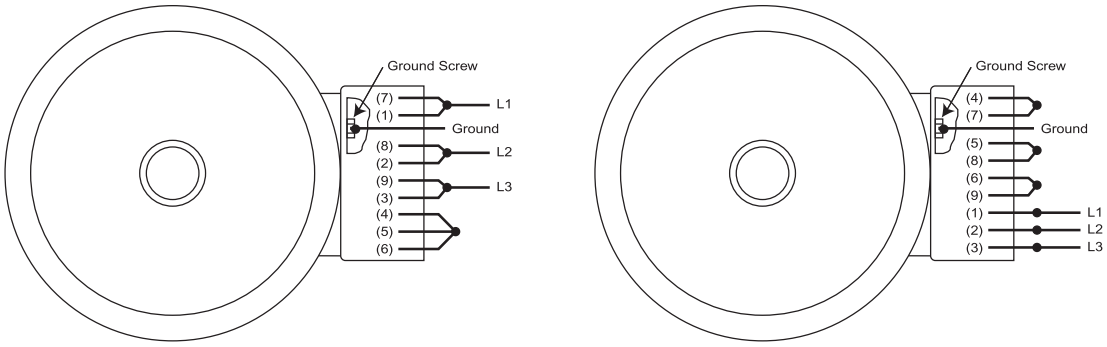


3 Phase, 2 - 30 HP
Factory Wired 230v

**Figure 21**

3 Phase, 2 - 30 HP
Wired 460v

| WEG 1 Phase TEFC Motor | | |
|---|---|---|
| **Catalog Number** | **See Figure** | **HP** |
| 00336ES1E145JM-W22 | 22 | 3 |
| 00536ES1E184JM-W22 | 22 | 5 |
| 00736ES1E213JM-W22 | 22 | 7 1/2 |
| 01036ES1E215JM-W22 | 22 | 10 |

*The 3 HP - 1 Phase motor is single voltage (230v) and cannot be connected to 115v.
Please check motor nameplate before wiring.

| WEG 3 Phase TEFC Motor | | |
|---|---|---|
| **Catalog Number** | **See Figure** | **HP** |
| 00236ET3E145JM-S | 23 | 2 |
| 00336ET3E182JM-S | 23 | 3 |
| 00536ET3E184JM-S | 23 | 5 |
| 00736ET3E213JM-S | 23 | 7 1/2 |
| 01036ET3E215JM-S | 23 | 10 |
| 01536ET3E254JM-S | 23 | 15 |
| 02036OT3E254JM-S | 23 | 20 |
| 02536OT3E256JM-S | 23 | 25 |
| 03036OT3E284JM | 23 | 30 |

WEG Motors - FC Pump Connection Diagrams

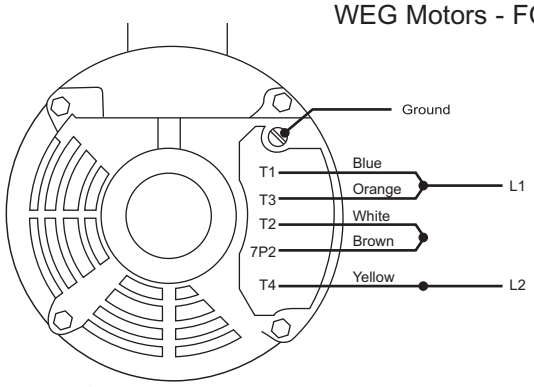


1 Phase, 2 HP
Wired 115v

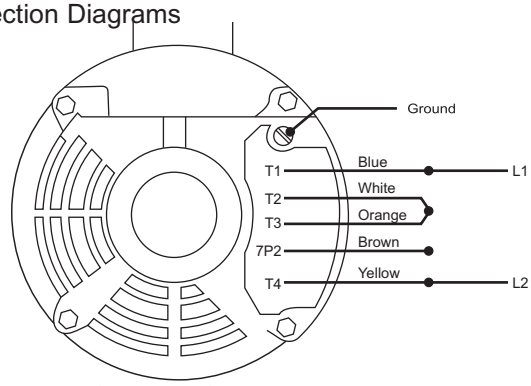


1 Phase, 2 HP
Factory Wired 208/230v

WEG Motors - FC Pump Connection Diagram

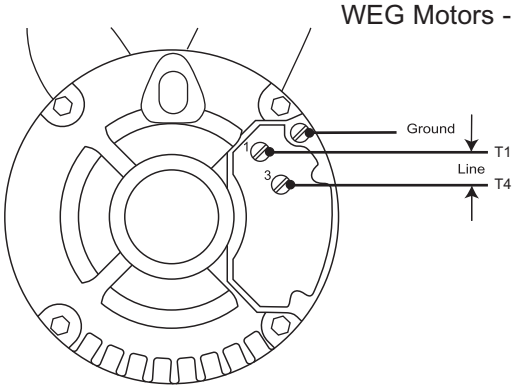


1 Phase, 3 - 10 HP
Factory Wired 208/230v

**Figure 22**

WEG Motors - FC Pump Connection Diagrams

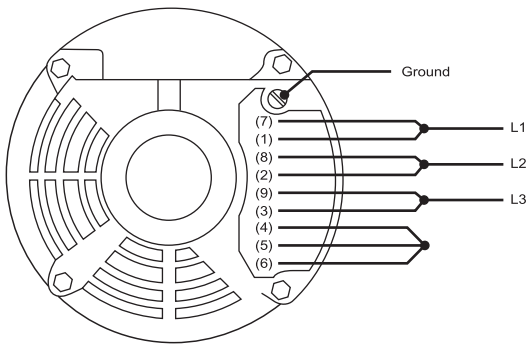


3 Phase, 1 - 30 HP
Factory Wired 208/230v

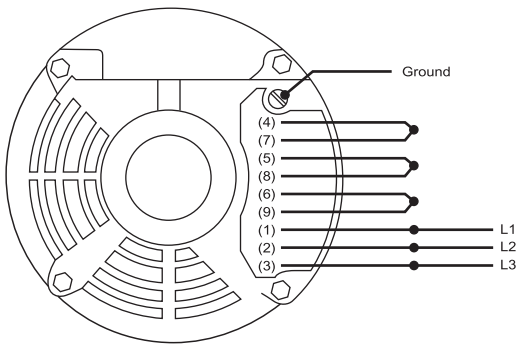


3 Phase, 1 - 30 HP
Wired 460v

**Figure 23**

# Start-Up Procedures

To check for a free turning pump turn the power off and rotate the pump shaft. On pumps (TC models) that use a 56J frame motor (3/4 - 3 HP), this can be done by removing the motor end cap located on the back of the motor. Rotate the motor shaft in a clockwise direction. *(See Warning 1)*

For FC pumps, use a 30mm deep well socket to rotate the impeller bolt clockwise when viewed from the pump end looking into the suction. Access to the bolt head is thru the suction inlet.

**Shaft Rotation - 3 Phase Motors (3/4 - 3 HP) -** After the preceding instructions have been completed, turn the motor on for 1 second. If the connection is correct, the shaft will rotate clockwise, when viewed from the end opposite the motor shaft extension. If the rotation is not correct, switch connections L1 and L2. The rotation will now be correct.

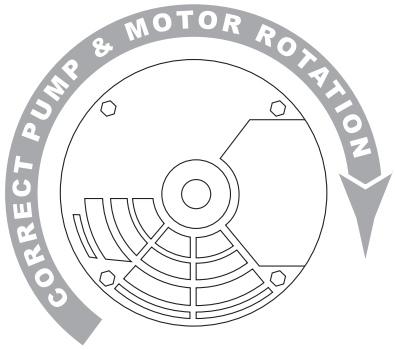


View facing end
opposite shaft extension

**Warning:** 1. Do not start the pump if the motor shaft cannot be rotated.

2. During operation, a minimum reading of 2 PSI is required at all times on the pressure gauge installed in the inlet line.

**Valves -** The suction inlet valve should be fully open and the discharge valve should be partially open. This will allow the pump to develop back pressure when it is started.

**Priming -** The pump must be primed before starting. The pump casing and suction piping must be filled with water before starting the motor. On TC models, remove the vent plug in the top of the casing while pouring in priming water. When water is poured into the pump to prime, remove all the air before starting the motor.

The pump will automatically fill with water when the pump is connected to a city main or hydrant. To relieve the trapped air inside the pump, allow the water supply to run a minimum of 1 minute before starting the pump. After filling the pump and inlet pipe with water, turn the motor on and off several times. Repeat this priming sequence several times to be sure that all the air has been removed from the pump.

Once the preceding instructions have been completed, the pump can be started. The pump should be pumping water and rapidly build pressure. If not repeat the priming instructions. During operation, a minimum reading of 2 PSI is required at all times on the pressure gauge installed in the inlet line.

**Final Inspection -** Once the proceeding instructions have been completed, the pump can be started. During the first few hours of operation, inspect the pump, piping and auxiliary equipment, used in conjunction with the pump. Check for leaks, vibration or noises.

If a problem arises, consult a Webtrol representative or call Webtrol at (314) 631-9200 for assistance.

# Lubrication

On the TC SS Series Centrifugal, it is not necessary to lubricate the pump or motor. The motor is designed with sealed ball bearings.

The motors used on the FC SS Series Centrifugal pumps require periodic lubrication. Good results can be obtained if the following recommendations are used in your maintenance program.

A high grade ball or roller bearing grease should be used.

| Recommended Greases | |
|---|---|
| **Name** | **Manufacturer** |
| SR1 (Factory Installed) | Chevron |
| Rykon Premium #2 | American Oil Co. |
| Shell Dolium R | Shell Oil Co. |

| Amount of Grease | | | |
|---|---|---|---|
| **By Weight** | | **By Volume** | |
| **Ounce** | **Grams** | **$In^3$** | **Teaspoon** |
| 0.30 | 8.4 | 0.6 | 2 |

| Service Conditions | | | |
|---|---|---|---|
| **Severity Of Service** | **Ambient Temperature** | **Atmospheric Contamination** | **Regreasing Interval** |
| Standard | 104° F | Clean, Little Corrosion | 5500 Hours |
| Severe | 130° F | Moderate Dirt, Corrosion | 2750 Hours |

## Lubrication Procedure

1. Stop motor
2. Clean grease fitting or remove outlet plug (See Photo)
3. Add the recommended amount of grease while motor is warm
4. Reinstall grease outlet plug

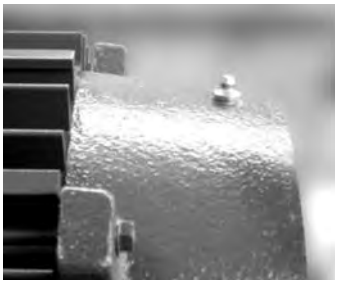

Grease Fitting

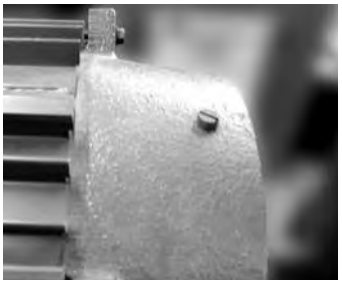

Outlet Plug

# Chemical Compatibility Chart

| Item No. | Pumpage Type | Conc. % | Temp. °F | Code Level |
|---|---|---|---|---|
| 1 | Acetic acid | 10 | 68 | B |
| 2 | Ammonium bicarbonate | 10 | 68 | B |
| 3 | Ammonium carbonate | | 140 | C |
| 4 | Ammonium chloride | 10 | 68 | C |
| 5 | Ammonium hydroxide | 10 | <175 | C |
| 6 | Ammonium nitrate | 5 | | C |
| 7 | Beer | | | A |
| 8 | Benzilic acid | 10 | 68 | B |
| 9 | Boric acid | 5 | 68 | A |
| 10 | Boric acid | 5 | 175 | B |
| 11 | Brine | | | B |
| 12 | Butyric acid | Wat. Sol. | | B |
| 13 | Calcium chloride | | 68 | C |
| 14 | Calcium nitrate | 10 | | B |
| 15 | Calcium phosphate | 10 | ≤212 | B |
| 16 | Citric acid | 5 | 68 | B |
| 17 | Coffee | | | A |
| 18 | Copper sulfate | 5 | 68 | B |
| 19 | Ethylene glycol | | | A |
| 20 | Fluosilicic acid | 20 | 68 | NR |
| 21 | Fruit juices | | | A |
| 22 | Hydrocyanic acid | | 68 | B |
| 23 | Hydrogen peroxide | | 68 | B |
| 24 | Lactic acid | 5 | ≤150 | C |
| 25 | Lactic acid | 10 | 68 | B |
| 26 | Magnesium chloride | | | C |
| 27 | Magnesium sulfate | | 68 | B |
| 28 | Maleic acid | 10 | 68 | C |
| 29 | Milk | | | A |
| 30 | Nitric acid | 20 | 68 | NR |
| 31 | Nitric acid | 20 | 155 | NR |
| 32 | Oleic acid | 20 | 68 | C |
| 33 | Oxalic acid | ≤10 | ≤68 | B |
| 34 | Oxalic acid | 10 | 155 | NR |
| 35 | Phoshoric acid | | ≤175 | C |
| 36 | Phthalic acid | | 68 | B |
| 37 | Potassium bicarbonate | 30 | 68 | A |
| 38 | Potassium carbonate | 40 | 68 | A |
| 39 | Potassium chloride | 10 | 68 | B |
| 40 | Potassium hydroxide | 10 | <175 | B |
| 41 | Potassium permanganate | | 68 | B |
| 42 | Potassium phosphate | 10 | 175 | C |
| 43 | Potassium sulfate | | | B |
| 44 | Propionic acid | 20 | 68 | B |
| 45 | Propylene glycol | 60 | 68 | C |
| 46 | Salicyclic acid | | 68 | B |
| 47 | Sodium bicarbonate | 10 | 68 | A |
| 48 | Sodium carbonate | | <140 | A |
| 49 | Sodium chloride | | | C |
| 50 | Sodium hydroxide | <10 | 140 | B |
| 51 | Sodium nitrate | 10 | | B |
| 52 | Sodium phosphate | | ≤212 | A |
| 53 | Sodium sulfate | 5 | <140 | B |
| 54 | Sulfuric acid | 10 | 68 | NR |
| 55 | Sulfurous acid | Sat | 68 | C |
| 56 | Sulfurous acid | 10 | 68 | B |
| 57 | Tannic acid | 10 | 68 | A |
| 58 | Tartaric acid | 10 | 68 | B |
| 59 | Tea | | | A |
| 60 | Vinegar | | ≤140 | A |
| 61 | Water | | ≤230 | A |
| 62 | Water, condensation | | | A |
| 63 | Water, de-cationized | | | C |
| 64 | Water, demineralized | | | A |
| 65 | Water, distilled | | | A |
| 66 | Water, mine | | | A |
| 67 | Water, sea | | | C |
| 68 | Water, thermal | | | A |
| 69 | Wine-Whiskey | | | A |

**Code Key: A = Good B = Fair C = Poor**
**NR = Not Recommended**

Important-Pumpages coded C “poor” may result in reduced or unsatisfactory service life.

Where hot and aggressive liquids are to be pumped, in addition to checking the chemical compatibility, any deviations in temperature, density and viscosity from the reference data would bring about variations in terms of power input, hydraulic performance and suction capacity. Make sure, in all cases, that the power input is not higher than the rated power and the suction lift does not exceed the permissible values.

## Motor Fails To Start Or Run At Full Speed

| Possible Cause Of Trouble | Corrective Action |
|---|---|
| Start capacitor failed - 1 phase motor (motor hums) | Replace start capacitor |
| Power Loss | Replace bad fuse or reset circuit breaker (check for correct fuse/breaker size) |
| Incorrect voltage - voltage must be within ± 10% of motor rated voltage.<br>Example: Rated voltage 230 volts Range: 207 - 253 volts | 1. check incoming voltage, contact power company<br>2. Verify that the voltage of the motor matches the power supply voltage<br>3. Check wire size from main switch to motor. |
| Defective wire or connections | Replace defective wires, tighten and clean connections. |
| Grounded motor | Have motor rewound with new winding or replace motor. |

## Pump Leaks

| Possible Cause Of Trouble | Corrective Action |
|---|---|
| Worn mechanical seal due to abrasive liquid/corrosion | 1. Replace seal with materials compatible with liquid pumped.<br>2. Install filter on inlet line. |
| Lack of water - carbon seal on mechanical seal face overheats and wears rapidly | 1. Replace seal<br>2. Verify inlet pressure, minimum pressure on inlet gauge is 2 PSIG |
| Inlet pressure to high | Reduce inlet pressure |
| Misalignment | Check for a bent motor shaft |
| Worn “O” ring seal | Replace O-ring seal |
| Teflon gasket leaks “bowed” | For FC Series only. Tighten bolt shown In exploded view sheet to 11 Ft. Lbs. |

## Pump Operates, But Delivers Little Or No Water

| Possible Cause Of Trouble | Corrective Action |
|---|---|
| Incorrect rotation on 3 phase motor | Interchange any two incoming power leads to the motor. |
| Low line voltage | (See motor trouble shooting section above) |
| Air Locked Pump | Fill pump & inlet pipe with water - jog motor on and off several times. Refill with water. Repeat procedure several times to remove all air |
| Worn or plugged impeller | 1. Replace impeller<br>2. Clean clogged impeller, install filter on Inlet |
| Inadequate inlet pressure | Minimum pressure on the inlet side of pump is 2 PSIG |
| Diameter of suction/discharge pipe is to small | 1. Size of inlet pipe should be at least equal to the threaded inlet size in the pipe inlet housing<br>2. Calculate friction losses for the discharge pipe. Replace undersized piping. For assistance call Webtrol (314) 631-9200 |
| Broken Shaft | If motor shaft is broken replace motor |

## Excessive Noise While Pump Is Operating

| Possible Cause Of Trouble | Corrective Action |
|---|---|
| Cavitation (noise like gravel in pump) | 1. Increase size of inlet line<br>2. Reduce flow rate - GPM<br>3. Too viscous (liquid is too thick) maximum viscosity is 80 centipoise (CPS) |
| Pump not secured to firm foundation | Bolt down to secure and rigid base |
| Noisy motor | 1. Ensure that motor fan is clear<br>2. Remove motor from pump. If noise persists check for smooth bearing operation. Replace bad bearings/or motor |

## Thank You for Purchasing a Stainless Steel Centrifugal Pump

We at Webtrol are constantly working on new products to make your job easier, while making your systems more efficient, reliable and affordable.

Your opinion means a lot to us, so please let us know what you think about our FC or TC Series Pump.

WEBTROL

*There when you need us most*

8417 New Hampshire Ave. | St. Louis, MO 63123
**Phone:** (314) 631-9200 **Fax:** (314) 631-3738 **E-mail:** comments@webtrol.com

VULCAN
HOIST - PALAN

# OPERATOR'S MANUAL

## ELECTRIC CHAIN HOISTS
## ¼ TON TO 10 TON CAPACITY

**WARNING**

DO NOT INSTALL, OPERATE OR PERFORM MAINTENANCE ON THIS EQUIPMENT BEFORE READING ALL THE CONTENT OF THIS MANUAL. FAILURE TO READ AND COMPLY WITH THE CONTENTS OF THIS MANUAL CAN RESULT IN SERIOUS BODILY INJURY OR DEATH AND/OR PROPERTY DAMAGE.

VER 2020-11-17

**The Vulcan Hoist Company Ltd.**
3435 Cremazie East, Montreal (Quebec)  H1Z 2J2

514 728-4527  |  vulcanhoist.com

# Table of contents


**1 Important information and warnings** ..... 5

**2 Technical information** ..... 9
2.1 Product identification
2.2 Nomenclature
2.3 Product specifications
2.4 Hook dimensions
2.5 Hoist applicable standards

**3 Unpacking and installation** ..... 11
3.1 Unpacking
3.2 Chain container installation
3.3 Mounting the hoist
3.4 Chain
3.5 Electrical connection
3.6 Functional verification and trial operation

**4 Operation** ..... 19
4.1 Introduction
4.2 Instruction for operation
4.3 Daily or prestart inspection
4.4 Hoist control

**5 Inspection** ..... 24
5.1 General
5.2 Inspection classification
5.3 Frequent inspection
5.4 Periodic inspection
5.5 Occasionally used hoists
5.6 Inspection records
5.7 Inspection methods and criteria

**6 Maintenance** ..... 31
6.1 Maintenance schedule and records
6.2 Lubrication - load chain, hooks, and suspension
6.3 Lubrication - transmission
6.4 Load chain
6.5 Adjusting your Vulcan limit switches
6.6 Disc brake adjustment
6.7 Storage
6.8 Outdoor installation
6.9 Operational environment

**7 Troubleshooting** ..... 37

**8 Parts list** ..... 39

**9 Warranty** ..... 40

**Appendix** ..... 41

# 1. Important information and warning

THIS MANUAL CONTAINS IMPORTANT SAFETY, INSTALLATION, OPERATION AND MAINTENANCE INFORMATION. MAKE THIS MANUAL AVAILABLE TO ALL PERSONS RESPONSIBLE FOR THE OPERATION, INSTALLATION AND MAINTENANCE OF THESE PRODUCTS. UNLESS OTHERWISE NOTED, TONS IN THIS MANUAL ARE US TONS; (2,000 LBS).

## Danger, Warning, Caution and Notice

Throughout this manual, there are steps and procedures which, if not followed, may result in an injury, death, or substantial property damage if the warning is ignored.




Indicates an imminently hazardous situation which, if not avoided, will result in death or serious injury.




Indicates a potentially hazardous situation, which, if not avoided, could result in death or serious injury.




Indicates a potentially hazardous situation, which, if not avoided, could result in minor or moderate injury or property damage.

**NOTICE**

Indicates information or a company policy that relates directly or indirectly to the safety of personnel or protection of property.

## For any questions or comments:

Phone: 514 728-4527
E-mail: info@vulcanhoist.com

## WARNING

**Equipment described herein is not designed for and must not be used for lifting, supporting, or transporting people or for lifting or supporting loads over people.**

Equipment described herein should not be used in conjunction with other equipment unless necessary applicable and/or required safety devices relevant to the system, crane, or application have been properly installed by the system designer, system manufacturer, crane manufacturer, installer or user.

Modifications to upgrade, rerate, or otherwise alter this equipment shall be authorized only by the original equipment manufacturer.

Equipment described herein may be used in the design and manufacture of larger machines like cranes or monorails. In those cases, additional equipment or devices may be required for the crane and monorail to comply with applicable design and safety standards. The crane designer, crane manufacturer, or user is responsible for furnishing said equipment. Refer to AISI/ASME B30.17, "Overhead and Gantry Cranes (Top Running Bridge, Single Girder, Underhung Hoist)"; AISI/ASME B30.2 "Overhead and Gantry Cranes (Top Running Bridge, Single or Multiple Girder, Top Running Trolley Hoist)"; and AISI/ASME B30.11 "Monorails and Underhung Cranes".

If a below the hook lifting device or a sling is used with the hoist, the user is responsible for their proper use and maintenance and should refer to ANSI/ASME B30.9 "Slings" or ANSI/ASME B30.20 "Below-The-Hook Lifting Devices".

Hoists and cranes used to handle molten material may require additional equipment or devices. Refer to ANSI Z241.2, "Safety Requirements for Melting and pouring of Metals in the Metal Casting Industry".

Electrical equipment described herein is designed and built in compliance with Vulcan Hoist's interpretation of ANSI/NFPA 70,"National Electric Code" and CSA C22.1, "Canadian Electric Code". The system designer, system manufacturer, crane designer, crane manufacturer, installer or user is responsible to ensure that the installation and associated wiring of these electrical components is in compliance with and all applicable Federal, State, Provincial and Local Codes.

FAILURE TO COMPLY WITH ANY ONE OF THE LIMITATIONS NOTED HEREIN CAN RESULT IN SERIOUS BODILY INJURY OR DEATH, AND/OR PROPERTY DAMAGE.

## DANGER

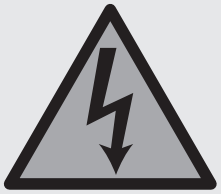

**Hazardous voltages are present in the electrical components and connections between these components.**

Before performing ANY mechanical or electrical maintenance on the equipment, disconnect the main switch supplying power to the equipment and lock and tag the main switch in the position.

Refer to ANSI Z244.1, "Personal Protection — Lockout/Tag out of Energy Sources".

Only trained and competent qualified personnel should inspect and repair this equipment.

## NOTICE

It is the responsibility of the owner/user to install, inspect, test, maintain, and operate a hoist in accordance with ANSI/ASME B30.16, "Overhead Hoists (Underhung)". If the hoist is installed as part of a larger lifting system, such as an overhead crane or monorail, it is also the responsibility of the owner/user to comply with the applicable ANSI/ASME B30 volumes that address that type of equipment.

It is the responsibility of the owner/user to have all personnel involved with the installation, inspection, testing, maintenance and operation of a hoist read the content of this manual and applicable portions of ANSI/ASME B30.16, "Overhead Hoists (Underhung)". If the hoist is installed as part of a larger lifting system, such as an overhead crane or monorail the applicable ANSI/ASME B30 volumes that address that type of equipment must also be read by all personnel involved.

If the hoist owner/user requires additional information, or if any information in the manual is not clear, contact Vulcan Hoist. Do not install, inspect, test, maintain, or operate this hoist unless this information is fully understood.

Inspection of the hoist must be performed on a regular basis in accordance with the ANSI/ASME B30.16 standard by a qualified individual. The owner/user is responsible for maintaining a record of all inspections performed on the hoist. A regular schedule of inspection of the hoist in accordance with the requirements of ANSI/ASME B30.16 should be established and records maintained.

## Warning labels

The warning label illustrated below is supplied with each hoist shipped from the factory. If the label is not on your hoist, order a label from the factory or the distributor and install it.

Read and follow all warnings attached to this hoist.

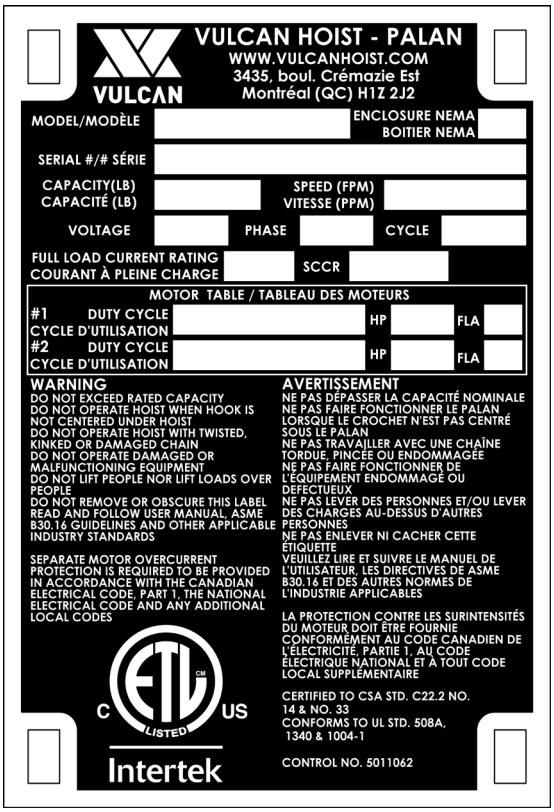


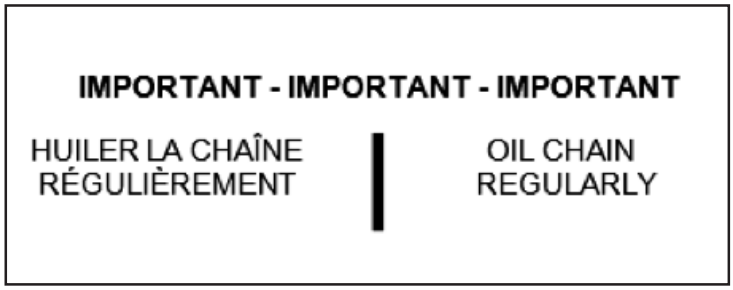


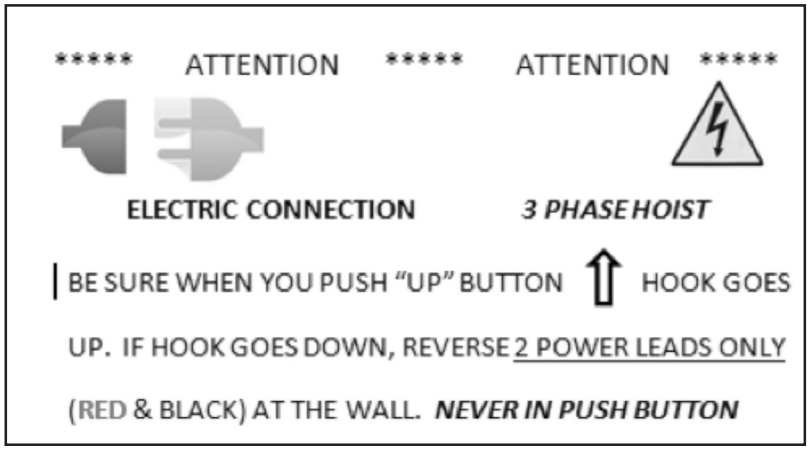

# 2. Technical Information

## 2.1 Product Identification

### Model number

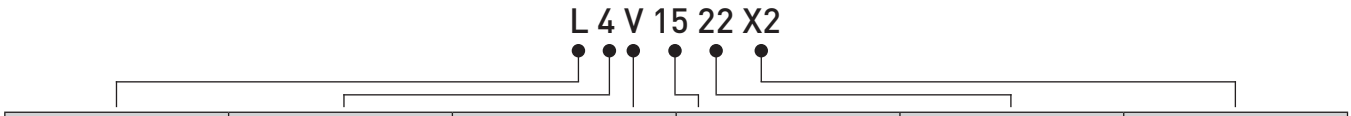


| Type of chain | Capacity | Voltage | Lifting speed | Gear ratio | Number of speed |
|---|---|---|---|---|---|
| L= Link chain<br>R= Roller chain | 0.5= ¼ ton<br>1= ½ ton<br>2= 1 ton<br>3= 1.5 tons<br>4= 2 tons<br>6= 3 tons<br>10= 5 tons<br>20= 10 tons | A= 115 V. 1 Ph.<br>F= 230 V. 1 Ph.<br>H= 230 V. 3 Ph.<br>T= 460 V. 3 Ph.<br>V= 575 V. 3 Ph. | 3 ft/min<br>to<br>50 ft/min | Primary:<br>1 to 6<br>Secondary:<br>blank or 2 | Blank : 1 Speed<br>X2 : 2 Speeds |

### Serial number

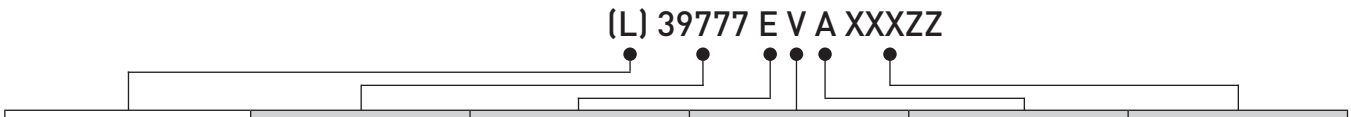


| | | Motor Brand | Brake Brand | Limit Switch | Date |
|---|---|---|---|---|---|
| Blank = Std. hook<br>L = Low headroom | **Sequential Number** | E = Emerson<br>D = Doerr<br>N = Nidec<br>A = AGI | V = Vulcan<br>S = Supplier | Blank =<br>Mechanical<br>A = Adjustable | XXX = Year<br>ZZ = Month |

### Operating Conditions and Environment

| | |
|---|---|
| **Temperature range** | - 20˚ C to 40˚C |
| **Humidity** | 85% or less |
| **Enclosure Rating** | Optional NEMA 4 Hoist and pendant |
| **Duty rating** | HST - 1 |

# 2.2 Hoist applicable standards

a. All Vulcan hoists are manufactured in compliance with Vulcan Hoist's interpretation of the applicable sections of ANSI/ASME B30.16 "Overhead Hoists (Underhung)" standard.

b. The user is responsible for installing the equipment in accordance with all provincial/state and local regulations applicable to the location where the equipment will be used.

c. Hoists accompanied by this manual meet ANSI/ASME HST - 1M "Performance Standard for Electric Chain Hoists" hoist duty class ratings.

d. Vulcan Hoist hoists meet the following standards according to Intertek approval:
   - CSA C22.2 no. 33 Electrical safety requirements for cranes and hoists
   - UL 1340 Standard for Hoists
   - UL 1004-1 Standard for Rotating Electrical Machines - General Requirements

e. In addition, Vulcan Hoist is part of Intertek's control panel manufacturer program, which covers the hoist control.
   - CSA C22.2 no 14 Industrial control equipment
   - UL508A Industrial Control Panels

# 3. Unpacking and installation

## 3.1 Unpacking

After opening the box, carefully remove the cardboard tray and set the control cables to the side of the box. Using an external lifting device, use the upper hook of the hoist to raise it until it is completely out of the box. It may be necessary to hold the box down.

Once the hoist is out of the box, carefully break off the packaging foam from the hoist. Do not use tools like a hammer or an axe to remove foam as this could damage and/or break the hoist.

Ensure that all parts of the hoist, including the chain, are free of any debris or packaging material. Inspect hoist for any scratches, dents or other damage that may have occurred during transport. When hoist is used without a chain container, the loose end of chain must be attached to the hoist as shown below.

**Figure 3 - 1**

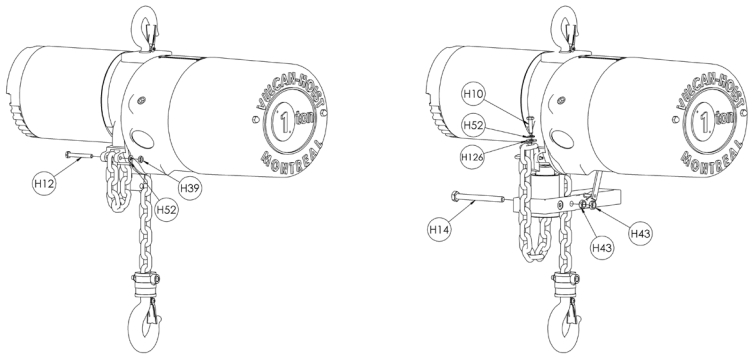


## 3.2 Chain container installation

**DANGER**

Improper installation of chain container could result in chain and hoist damage leading to a potentially hazardous situation, which, if not avoided, could result in death or serious injury.

Follow installation instructions below.

### 3.2.1 Without chain guide

1. Run the load hook down, so that there are 2 feet of chain left on the unloaded side.
2. Shut off and lockout/tag out the main power source to the hoist.
3. Bolt chain container to the link on the bottom of the hoist casting. Pass bolt H14 through the chain container and the link with one 116A bushing on each side of the link. Tighten the two H43 nuts: see Figure 3-2 below.

4. Remove bolt H12 & nut H39. Place load chain end in chain container. Connect chain from chain container to hoist with bolt H12 & nut H39.

5. Re - connect the power.

6. Verify if load chain is rubbing on chain container; this would cause premature chain container wear. If chain is rubbing on container, adjust chain on chain container by one link.

7. A) Run hoist **WITHOUT** load and verify that chain falls properly in chain container.
   B) Run hoist **WITH** load, verifying that chain falls properly in chain container.

8. Ensure load is not hitting the chain container. A load that is hitting the chain container may cause chain to knot or break and/or cause serious injury to operator and others. Adjust limit switch to stop load before it comes in contact with chain container.

9. Install supporting chain to the side of the hoist body.

10. Once the chain container is securely in place, feed the free end of the load chain gradually into the chain container to prevent the chain from bundling.

11. When using a Vulcan steel chain container, refer to the instructions provided with the container for correct assembly and attachment.

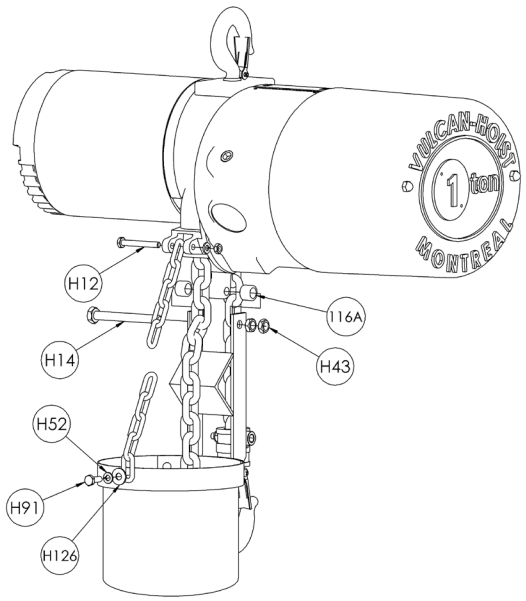


**Figure 3 - 2**

### 3.2.2 With chain guide

1. Run the load hook down, so that there are 2 feet of chain left on the slack side.

2. Disconnect the power.

3. Remove bolt H14 from limit lever # 25, install chain container arms on outside of limit lever # 25. Install bolt H14 through chain container arms and limit lever # 25. Install 2 nuts H43 lock nuts together (do not tighten to limit lever # 25). (See Figure 3-3 below.)

4. Install end of chain attached to chain container into designated hole on # 45 casting with bolt H91 and washers H52 & h16.

5. Manually verify if limit lever # 25 moves freely. This is your safety limit switch control.

6. Adjust chain container level.
7. Connect the power.
8. A) Run hoist **WITHOUT** load; verify that chain falls in chain container.
   B) Run hoist **WITH** load; verify that chain falls in chain container.
9. Ensure load is not hitting the chain container. A load that is hitting the chain container may cause chain to knot or break and/or cause serious injury to operator and others. Adjust limit switch to stop load before it comes in contact with chain container.
10. Install supporting chain to the side of the hoist body.
11. Once the chain container is securely in place, feed the free end of the load chain gradually into the chain container to prevent the chain from bundling.
12. When using a Vulcan steel chain container, refer to the instructions provided with the container for correct assembly and attachment.

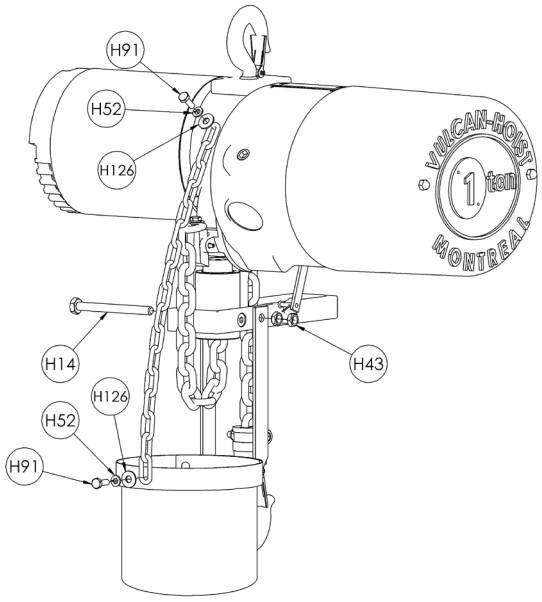


**Figure 3 - 3**

**WARNING**

DO NOT modify or install a homemade chain container. Use only the Vulcan Hoist chain container.

NEVER knot chain or attach foreign objects to the chain to act as limits or chain holders. This could cause serious injury and/or serious damage to chain and hoist.

# 3.3 Mounting the hoist

**Manual trolley —** Follow the instructions in the operator's Manual provided with the trolley.

**Motorized trolley —** Follow the instructions in the operator's Manual provided with the trolley.

**Hook mounted to a fixed location —** Attach the hoist's top hook to the fixed suspension point.

**WARNING**

Ensure the fixed suspension point rests on the center of the hook's saddle and that the hook's safety latch is engaged.







# 3.4 Chain

The number of chain links depends on the hoist model, capacity and options. Never operate the hoist with incorrect, missing, or damaged chain links. Refer to figure below to identify components.

**1 chain fall**



**2 chain falls**



**3 chain falls**



When the hoist is used without a chain container, the free end of the chain is attached to the hoist body. Make sure it remains free of twists before operating the hoist.

**WARNING**

Verify that the load chain is not twisted or tangled prior to operating the hoist. Make sure bottom hook on 2 and 3 fall models (2 ton and over) is not capsized. Always ensure that the welds on the chain links are properly oriented. Correct all chain irregularities before operating hoist.



# 3.5 Electrical connection

**WARNING**

**If motor rotation is incorrect (power phases have been reversed), the limit switch will not function properly, which may cause serious damage to the hoist and/or serious injury to the operator and others.**

**All electrical wiring of the hoist should be performed by a qualified electrician. Verify current draw of hoist and distance to electrical inlet when hoist is at the FURTHEST POSITION from the inlet. Inadequate wiring may cause the motor to burn, EVEN IF THERE IS NO LOAD ON THE HOIST.**

The hoist should be connected to a branch circuit which complies with the requirements of the National Electrical Code and applicable local codes.

### 3.5.1 Wiring of hoist to local power source

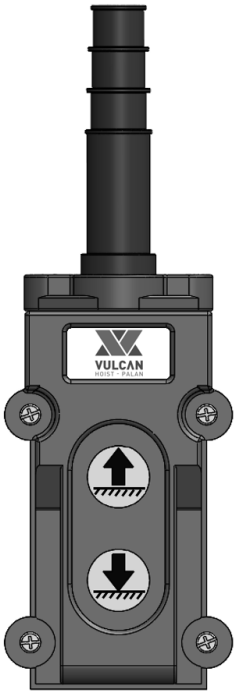


**Figure 3 - 4**

The hoist must be connected to the power source such that its direction of operation corresponds to the up-and-down commands issued from the pendant control, i.e. pushing the UP button moves the load chain up and pushing the DOWN button moves the load chain down. Please follow the steps below to wire the hoist:

1. Make a temporary connection at the power supply and make sure supply to the hoist can be quickly disconnected in case of a problem.
2. Push the up button momentarily and observe movement of the hook:
   a. If hook rises up, connections are correct and can be made permanent.
   b. If hook lowers down, the motor phasing must be changed. To do so, turn the power off and:
      i. If your model uses a 3-phase motor (208, 230, 380, 460, or 575 volts), switch the position of any two of the three phases **at the power source**.
      ii. If your model uses a 1-phase motor (115 or 230 volts), please contact Vulcan for additional details.

The hoist is equipped with upper and lower limit switches whose proper operation is dependent on the correct motor phasing, rotation and pendant signal:

- Limit switches are factory preconfigured – when required, always reverse phasing at the power source, never in the pendant.
- If the phasing is incorrect, the limit switches will not function properly which could result in serious damage to the hoist and/or serious injury to the operator and others.

**NOTICE**

115 V motors: do not plug the hoist into a standard household outlet. Although some models will work with these outlets, they may draw more current and exceed the capacity of the electrical circuit, or interfere with other devices on the same circuit. Always do the connections in a junction box. Always consult a qualified electrician when you wired one or more hoists to the electrical network.



### 3.5.2 Checking for adequate voltage at hoist

The hoist must be supplied with adequate electrical power in order to operate properly.
For proper operation, the voltage (measured at the hoist end of the standard power cord with the hoist operating in the up direction with full load) must be within 5 % of nominal voltage.

## SIGNS OF INADEQUATE ELECTRICAL POWER (LOW VOLTAGE) ARE:

- Noisy hoist operations due to brake and/or contactor chattering.
- Dimming of lights or slowing of motors connected to the same circuit.
- Heating of the hoist motor and other internal components as well as heating of the wires and connectors in the circuit feeding the hoists.
- Failure of the hoist to lift the load due to motor stalling.

| COPPER CONDUCTOR SIZES FOR 2% DROP IN POTENTIAL ON 110-120 VOLTS 2 CONDUCTORS | | | | | | | | | | | | | | | | | | |
|---|---|---|---|---|---|---|---|---|---|---|---|---|---|---|---|---|---|---|
| CURRENT AMPERES | Aproximate Distance in Feet to Center of Distribution | | | | | | | | | | | | | | | | | |
| | 20 | 30 | 40 | 50 | 60 | 70 | 80 | 90 | 100 | 120 | 140 | 160 | 180 | 200 | 240 | 280 | 320 | 360 |
| | Copper Conductor Sizes in AWG. Calculated for Conductor Temperature of 60C and Ambient 30C | | | | | | | | | | | | | | | | | |
| 1 | - | - | - | - | - | - | - | - | - | - | - | - | - | - | 16 | - | - | - |
| 1,5 | - | - | - | - | - | - | - | - | - | - | - | 16 | - | - | - | 14 | - | - |
| 2 | - | - | - | - | - | - | - | - | - | 16 | - | - | - | 14 | - | - | 12 | - |
| 3 | - | - | - | - | - | - | 16 | - | - | - | 14 | - | - | 12 | - | - | - | 10 |
| 4 | - | - | - | - | 16 | - | - | - | 14 | - | - | 12 | - | - | 10 | - | - | - |
| 5 | - | - | - | 16 | - | - | 14 | - | - | 12 | - | - | - | 10 | - | - | 8 | - |
| 6 | - | - | 16 | - | - | 14 | - | - | 12 | - | - | - | 10 | - | - | 8 | - | - |
| 7 | - | - | - | - | 14 | - | - | 12 | - | - | 10 | - | - | - | 8 | - | - | 6 |
| 8 | - | 16 | - | 14 | - | - | 12 | - | - | - | - | - | - | 8 | - | - | 6 | - |
| 9 | - | - | - | - | - | 12 | - | - | - | 10 | - | - | 8 | - | - | 6 | - | - |
| 10 | - | - | 14 | - | 12 | - | - | - | 10 | - | - | 8 | - | - | 6 | - | 5 | - |
| 12 | 16 | - | - | 12 | - | - | 10 | - | - | - | 8 | - | - | 6 | - | 5 | - | 4 |
| 14 | - | 14 | - | - | - | 10 | - | - | - | 8 | - | - | 6 | - | 5 | 4 | - | 3 |
| 16 | - | - | 12 | - | 10 | - | - | - | 8 | - | - | 6 | - | 5 | - | - | 3 | - |
| 18 | - | - | - | - | - | - | - | 8 | - | - | 6 | - | 5 | - | 4 | 3 | - | 2 |
| 20 | 14 | 12 | - | 10 | - | - | 8 | - | - | 6 | - | 5 | - | 4 | 3 | - | 2 | - |
| 25 | - | - | 10 | - | 8 | - | - | - | 6 | - | 5 | 4 | - | 3 | 2 | - | 1 | - |
| 30 | 12 | - | - | 8 | - | - | - | 6 | 5 | - | 4 | - | 3 | 2 | - | 1 | 1/0 | - |
| 35 | - | 10 | - | - | - | 6 | - | 5 | - | 4 | 3 | - | 2 | | 1 | 1/0 | - | 2/0 |
| 40 | - | - | 8 | - | - | - | 5 | - | 4 | - | - | 2 | - | 1 | 1/0 | - | 2/0 | - |
| 45 | - | - | - | - | 6 | 5 | - | 4 | - | 3 | 2 | - | 1 | - | - | 2/0 | - | 3/0 |
| 50 | - | 8 | - | 6 | 5 | - | - | - | 3 | 2 | - | 1 | | 1/0 | 2/0 | - | 3/0 | - |
| 60 | - | - | 6 | 5 | - | 4 | - | 3 | 2 | - | 1 | - | 1/0 | 2/0 | - | 3/0 | - | 4/0 |
| 70 | - | - | - | - | 4 | 3 | - | 2 | - | 1 | 1/0 | - | 2/0 | - | 3/0 | 4/0 | | |
| 80 | - | 6 | 5 | 4 | - | - | - | - | 1 | - | - | 2/0 | - | 3/0 | | | | |
| 90 | - | - | - | - | 3 | 2 | - | 1 | - | 1/0 | 2/0 | - | 3/0 | - | 4/0 | | | |
| 100 | - | 5 | - | 3 | 2 | - | 1 | - | 1/0 | 2/0 | - | 3/0 | - | 4/0 | | | | |
| 125 | - | - | - | 2 | 1 | - | 1/0 | - | 2/0 | 3/0 | - | 4/0 | | | | | | |
| 150 | - | - | - | 1 | - | 1/0 | 2/0 | - | 3/0 | - | 4/0 | | | | | | | |
| 175 | - | - | - | - | 1/0 | 2/0 | - | 3/0 | - | 4/0 | | | | | | | | |
| 200 | - | - | - | - | 2/0 | | | | | | | | | | | | | |
| 250 | - | - | - | - | - | 3/0 | 4/0 | | | | | | | | | | | |
| 300 | - | - | - | - | - | 4/0 | | | | | | | | | | | | |

1. This Table is calculated for wire sizes No. 16 to No. 4/0 AWG and gives for each size specified, the approximate maximum distance in feet of the distribution center for a 2% drop in potential at a given current. Inductive reactance has not been included since it is a function of conductor size and spacing.

2. This Table is based on conductor resistance at 60C. For conductor temperatures above 60C, multiply distances in feet in the column headings by a factor as follows to retain 2% drop in potential.

| Conductor Temperature | Distance Correction Factor |
|---|---|
| 75C | 0.94 |
| 85-90C | 0.9 |
| 110C | 0.83 |
| 125C | 0.79 |
| 200C | 0.64 |

3. For 220-240 volts, multiply the distance in feet in the column headings by two, for the same percentage drop.

4. Example on use of Table:
   Consider a 2-conductor circuit carrying 10 amperes at 110-120 volts. From the Table opposite "10 amperes", it will be found that a No. 14 AWG circuit can be run 40 feet from the distribution center to the load without exceeding a 2% drop. Beyond this distance, a larger size of conductor is required (i.e. No. 12 AWG beyond 40 feet up to and including 60 feet).

- Blowing of fuses or tripping of circuit breakers.

# 3.6 Functional verification and trial operations

**3.6.1** Confirm the adequacy of the rated capacity for all slings, chains, wire ropes and all other lifting attachments before use. Inspect all load suspension members for damage prior to use and replace or repair all damaged parts.

**3.6.2** Verify and correct all chain irregularities prior to operating the hoist. Refer to Section 3.4.

**3.6.3** Measure and record the "k" dimension of all hooks on back cover of this manual. See Table 5 - 4 under Section 5, "Inspection".

**3.6.4** Record the hoist's model and Serial Number (from the name plate on the hoist, see page 9) in the space provided on the cover of this manual.

**3.6.5** Ensure that the hoist is properly installed to either a fixed point or trolley, whichever applies.

**3.6.6** If hoist is installed on a trolley, ensure that:

- The trolley is properly installed on the beam.
- Drop Stop for the trolley are correctly positioned and securely installed on the beam.

**3.6.7** Ensure that all nuts, bolts, and split pins (cotter pins) are sufficiently fastened.

**3.6.8** Pull down on the pendant and ensure that the Cord Strain Relief Cable takes the force, not the Pendant Cord.

**3.6.9** Check supply voltage before everyday use. If the voltage is lower than 5% below nominal voltage for the motor, do not operate the hoist.

**3.6.10** Confirm proper operation:

- Before operating, read and become familiar with Section 4 – Operation.
- Before operating, ensure that the hoist (and trolley) meets the Inspection, Testing and Maintenance requirements and ANSI/ASME B30.16.
- Before operating, ensure that nothing will interfere with the full range of the hoist's (and trolley's) operation.

**3.6.11** The hoist must be connected to the power source such that its direction of operation corresponds to the up-and-down commands issued from the pendant control, i.e. pushing the UP button moves the load chain up and pushing the DOWN button moves the load chain down. If the hoist does not operate correctly, refer to section 3.5 for proper wiring of the motor. Failure to do so could result in serious damage to the equipment and/or serious injury to the operator and others.

**3.6.12** After hoist is connected, ALWAYS test limit switches by raising the hook until it stops about 4 - 6" from the hoist body. Then lower the hook until it stops, leaving about 12" of loose chain on the unloaded side.

# 4. Operation

## 4.1 Introduction

The operation of an overhead hoist involves more than activating the hoist's controls. As per the ANSI/ASME B30 standards, the use of an overhead hoist is subject to certain hazards that cannot be mitigated by engineered features, but only by the exercise of intelligence, care, common sense, and experience in anticipating the effects and results of activating the hoist's controls. Use this guidance in conjunction with other warnings, cautions, and notices in this manual to govern the operation and use of your overhead hoist.

**WARNING**

Hoist operators shall be required to read the operation section of this manual, the warnings contained in this manual and warning labels on the hoist or lifting system, and the operation section of ANSI/ASME B30.16 and ANSI/ASME B30.10. The operator shall also be required to be familiar with the hoist and hoist controls before being authorized to operate the hoist or lifting system.

Hoist operators should be trained in proper procedures for the attachment of loads to the hoist hook.

Hoist operators should be trained to be aware of potential malfunctions of the equipment that require adjustment or repair, and to be instructed to stop operations if such malfunctions occur, and to immediately advise their supervisor so corrective actions can be taken.

Hoist operators should have adequate depth perception, field of vision, reaction time, manual dexterity, and coordination.

Hoist operators should not have a history of or be prone to seizures, loss of physical control, emotional instability or operate under the influence of alcohol, drugs or medication.

Overhead hoists are intended only for vertical lifting service of freely suspended unguided loads. Do not use hoist for loads that are not lifted vertically, loads that are not freely suspended, or loads that are guided.

# 4.2 Instructions for operation

**Taking precedence over any specific rule, however, is the most important rule of all: "USE COMMON SENSE".**

It is the responsibility of the hoist owner/user to establish programs to:

1. Train and designate hoist operators.
2. Train and designate hoist inspection and maintenance personnel.

The words **shall** and **should** are used throughout this manual in accordance with definitions in the ANSI/ASME B30 standards as follows:

**shall** this word indicates that a rule is mandatory and must be followed.

**should** this word indicates that a rule is a recommendation, the advisability of which depends on the facts in each situation.

Hoist operator and hoist inspection and maintenance personnel training programs should be based on requirements in accordance with the latest edition of ANSI/ASME B30.16, "Overhead Hoists (Underhung)".

**WARNING**

Improper operation of a hoist can create a potentially hazardous situation which, if not avoided, could result in death, serious injury or substantial property damage. To avoid such a potentially hazardous situation, the operator must be familiar with the instructions listed in this section.

## THE OPERATOR SHALL:

1. **NOT** operate a damaged, malfunctioning or abnormally performing hoist.
2. **NOT** operate a hoist until he has thoroughly read and understood Manufacturer's Operating and Maintenance Instructions or Manuals.
3. **NOT** operate a hoist that has been modified without the manufacturer's approval or without certification that it is in conformity with ANSI/ASME B30 volumes.
4. **NOT** lift more than the rated load for the hoist.
5. **NOT** use hoist with twisted, kinked, damaged, or worn load chain.
6. **NOT** use the hoist to lift, support, or transport people.
7. **NOT** lift loads over people.
8. **NOT** operate a hoist unless all persons are and remain clear of the supported load.
9. **NOT** operate unless load is centered under hoist.
10. **NOT** attempt to lengthen the load chain or repair a damaged load chain.

11. **NOT** operate hoist when it is restricted from forming a straight line from hook to support in the direction of loading.
12. **NOT** use load chain as a sling or wrap load chain around load.
13. **NOT** apply the load to the tip of the hook or to the hook latch.
14. **NOT** apply load unless the load chain is properly seated in it grooves.
15. **NOT** lift any load if the weight of the load is not evenly distributed across all the chain falls.
16. **NOT** operate beyond the limits of the load chain travel.
17. **NOT** allow the load chain or hook to be used as an electrical or welding ground.
18. **NOT** allow the load chain or hook to be touched by a live welding electrode.
19. **NOT** remove or obscure the warning label on the hoist.
20. **NOT** operate a hoist on which the safety plates or decals are missing or illegible.
21. **NOT** use the hoist in such a way that could result in shock or impact loads being applied to the hoist.
22. **NOT** use the hoist load limiting or warning device to measure load.
23. **NOT** use limit switches as routine operating stops. They are emergency devices only.
24. **NOT** allow the hoist to be subjected to sharp contact with other hoists, structures, or objects through misuse.
25. **NOT** adjust or repair the hoist unless qualified to perform such adjustments or repairs.
26. **NOT** "jerk" the hoist in position to tighten the grip on the load or to facilitate the unloading process.

## THE OPERATOR SHALL:

1. Protect the hoist's load chain from weld splatter or other damaging contaminants.
2. Be familiar with operating controls, procedures, and warnings.
3. Take up slack carefully – make sure load is balanced and load-holding action is secure before continuing.
4. Shut down a hoist that malfunctions or performs abnormally and report such malfunction.
5. Make sure hoist limit switches function properly.
6. Warn personnel before lifting or moving a load.
7. Warn personnel of an approaching load.
8. Maintain firm footing when operating the hoist.
9. Check brake function by tensioning the hoist prior to each lift operation.
10. Use hook latches. Latches are to retain slings chains, etc. under slack conditions only.
11. Make sure the load is free to move and will clear all obstructions.

12. Make sure hook travel is in the same direction as shown on controls.
13. Inspect the hoist regularly, replace damaged or worn parts, and keep appropriate records of maintenance.
14. Use the hoist manufacturer's recommended parts when repairing the unit.
15. Lubricate the load chain as per Vulcan's recommendations.
16. Make sure the hook latches are closed and not supporting any parts of the load.
17. Avoid swinging the load or hook.

# 4.3 Daily or prestart inspection

In accordance with the requirements of ANSI/ASME B30.16, the hoist operator should perform daily (prestart) inspections at the start of each shift or at the time of the hoist's first use during each shift. The daily inspection is a visual and audible examination of the hoist. Records of the daily inspection are not required except as required by the hoist owner/user. Daily inspection items that should be performed include the following:

TABLE 4 - 1: HOIST DAILY INSPECTION

| Inspection item | Description of inspection |
|---|---|
| **Tagged Hoist** | Check that hoist is not tagged with an out-of-order sign. |
| **Control Devices** | Check that all travel motions agree with control device markings. When checking hoist travel motion, always use the lifting or up control first. |
| **Brakes** | Check that all travel motions do not have excessive drift and that stopping distances are normal. |
| **Hook** | Check for damage, cracks, nicks, gouges, deformation of the throat opening, wear on saddle or load bearing point, and twist. |
| **Hook Latch** | Check that hook latch is not missing and that it operates properly. |
| **Load Chain** | Check for nicks, gouges, and any type of deformation or damage to the chain. Check for lubrication of load chain. |
| **Reeving** | Check that load chain is properly reeved, that load chain is not kinked or twisted, and that load chain parts are not twisted about each other. |
| **Limit Devices** | Check that the primary upper limit device stops lifting motion of the hoist load block at the upper limit of travel. Then, check that the lower limit device stops lowering motion of the hoist load back at the lower limit of travel. |
| **Oil Leakage** | Check for any sign of oil leakage on the hoist and on the floor area beneath the hoist. |
| **Unusual Sounds** | Check for any unusual sounds from the hoist and hoist mechanism while operating the hoist. |
| **Warning Labels** | Check that warning and other safety labels are not missing and that they are legible. |

# 4.4 Hoist control

**4.4.1** For hoists mounted to motorized trolleys follow the control instruction included in the trolley's Owner's Manual.

**4.4.2** Single Speed Pendant Control – When using the pendant control depress the UP button to raise the hoist load chain/hook or the DOWN button to lower the hoist load chain/hook as shown in Figure 4 - 2. To stop motion release the buttons.

**4.4.3** Dual Speed Control – Pendant controls supplied with dual speed hoists have two step control buttons. For low speed depress the button to the first step and for high speed, depress the
button fully to the second step. Use the UP button to raise the hoist load chain/hook or the DOWN button to lower the hoist load chain/hook as shown in Figure 4 - 2. To stop motion,
release the buttons.




**Figure 4 - 2**

**4.4.4** **OPTIONAL** Emergency Stop Button – Press the Emergency Stop Button to perform an emergency stop and lock-out of hoist motion controls. Turn the Emergency Stop Button clockwise to unlock the controls and allow hoist operation.

**CAUTION!** Make sure the hoist completely stops before reversing direction.

# 5.0 Inspection

## 5.1 General

**5.1.1** The inspection procedure and the following definitions are based on the ANSI/ASME B30.16 standard and pertain to the inspection procedure below:

- **Designated Person** – a person selected or assigned as being able to perform the specific duties to which he/she is assigned.
- **Qualified Person -** a person who, by possession of a recognized degree or certified professional standing, or who by extensive knowledge, training, and experience, has successfully demonstrated the ability to solve or resolve problems relating to the subject matter and work.
- **Normal Service** – service that involves operation with randomly distributed loads within the rated load limit or uniform loads less than 65% of rated load for not more than 25% of the time.
- **Heavy Service** – service which involves operation within the rated load limit which exceeds normal service.
- **Severe Service** – service which involves normal or heavy service with abnormal operating conditions.

## 5.2 Inspection classification

**5.2.1** **Initial Inspection** – prior to initial use, all new, altered, or modified hoists shall be inspected by a designated person to ensure compliance with the applicable provisions of this manual.

**5.2.2** **Inspection Classification** – the inspection procedure for hoists in regular service is divided into two general classifications based upon the intervals at which inspection should be performed. The intervals in turn are dependent upon the nature of the critical components of the hoist and the degree of their exposure to wear, deterioration, or malfunction. The two general classifications are herein designated as FREQUENT and PERIODIC, with respective intervals between inspections as defined below.

**5.2.3** **FREQUENT Inspection** – visual examinations by the operator or other designated personnel with intervals as per the following criteria:

- Normal service – monthly
- Heavy service – weekly to monthly
- Severe service – daily to weekly
- Special or infrequent service – as recommended by a qualified person before and after each occurrence.

**5.2.4** **PERIODIC Inspection** – visual inspection by designated person with intervals as per the following criteria:

- Normal service : yearly
- Heavy service : semi-annually
- Severe service : quarterly

- Special or infrequent service : as recommended by qualified person before the first such occurrence and as directed by the qualified person for any subsequent occurrences.

# 5.3 Frequent inspection

**5.3.1** Inspections should be made on a FREQUENT basis in accordance with Table 5 - 1, "Frequent Inspection". Included in these Inspections are observations made during operation for any defects or damage that might appear between Periodic Inspections. Evaluation and resolution of the results of FREQUENT Inspections shall be made by a designated person such that the hoist is maintained in safe working condition.

| TABLE 5 - 1 FREQUENT INSPECTION |
|---|
| All functional operating mechanisms for maladjustment and unusual sounds. |
| Operation of limit switches and associated components. |
| Hoist braking system for proper operation. |
| Hooks are compliant with Section 5.7.3 and ANSI/ASME B30.10. |
| Hook latch operation . |
| Load chain is compliant with Section 5.7.2. |
| Idle sprocket does not show signs of excessive wear. |
| Check for any loose parts or fasteners on the hoist structure. |

# 5.4 Periodic inspection

**5.4.1** Inspections should be made on a PERIODIC basis in accordance with Table 5 - 2, "Periodic Inspection." Evaluation and resolution of the results of PERIODIC Inspections shall be made by a designated person such that the hoist is maintained in a safe working condition.

**5.4.2** For inspections where load suspension parts of the hoist are disassembled, a load test as per ANSI / ASME B30.16 must be performed on the hoist after it is re - assembled and prior to its return to service.

| TABLE 5 - 2 PERIODIC INSPECTION |
|---|
| Requirements of frequent inspection (see Table 5-1). |
| Evidence of loose bolts, nuts or rivets. |
| Evidence of worn, corroded, cracked or distorted parts such as load blocks, suspension housing, chain attachments, clevises, yokes, suspension bolts, shafts, gears, bearings, pins and rollers. |
| Evidence of damage or excessive wear of load and idler sprocket. |
| Evidence of excessive wear on brake. |
| Electrical contactors for signs of pitting or any deterioration of visible controller contact. |
| Evidence of damage of supporting structure or trolley, if used. |
| Legible function labels on pendant control stations. |
| Legible warning label properly attached to the hoist |
| End connections of load chain. |

# 5.5 Occasionally used hoists

- Hoist Idle More Than 1 Month, Less Than 1 Year: Inspect following FREQUENT Inspection criteria in Section 5.3.
- Hoist Idle More Than 1 Year: Inspect following PERIODIC Inspection criteria in Section 5.4.

# 5.6 Inspection records

**5.6.1** Dated inspection reports and records should be maintained at time intervals corresponding to those that apply for the hoist's PERIODIC intervals as per Section 5.4. These records should be stored where they are available to personnel involved with the inspection, maintenance or operation of the hoist.

**5.6.2** A long-term chain inspection program should be established and should include records of examination of chains removed from service so a relationship can be established between visual observation and actual condition of the chain.

# 5.7 Inspection methods and criteria

**5.7.1** This section covers the inspection of specific items. The list of items in this section is based on those listed in ANSI/ASME B30.16 for the Frequent and Periodic Inspections. In accordance with ANSI / ASME B30.16, these inspections are not intended to involve disassembly of the hoist. Disassembly for further inspection would be required if frequent or periodic inspection results indicate so. Such disassembly and further inspection should be performed by a Vulcan Hoist qualified technician.

TABLE 5-3: HOIST INSPECTION METHODS AND CRITERIA

| Item | Method | Criteria | Action |
|---|---|---|---|
| Functional operating mechanisms | Visual Auditory | Mechanisms should be properly adjusted and should not produce unusual sounds when operated. | Repair or replace as required. |
| Limit Switches (Upper and lower) | Function | Proper operation. Actuation of limit switch should stop hoist. | Adjust or replace as required. |
| Braking System Operation | Function | Should stop the load without significant travel after motor is turned off. | Adjust or replace. |
| Hooks – Fretting wear | Measure | Excessive wear of original hook dimensions resulting in reduction of the load bearing cross section area of 10% or more. Refer to section 5.7.3 for details. | Replace |
| Hooks – Stretch | Measure | Any distortion resulting in throat opening larger than 5% of the original dimension. For additional details, refer to section 5.7.3. | Replace |
| Hooks – Bent Shank or Neck | Visual | Shank and neck portions of hook should be free of deformations. | Replace |

| | | | |
|---|---|---|---|
| Hooks – Swivel Bearing | Visual<br>Function | Bearing parts and surfaces should not show significant wear, and should be free of dirt, grime and deformations. Hook should rotate freely with no roughness. | Clean/lubricate, or replace as required. |
| Hooks – Yoke Assembly | Visual | Should be free of significant rust, weld splatter, nicks, and gouges. Holes should not be elongated. | Measure, tighten, or replace as required. |
| Hooks – Idle Sprocket and Bearings (Bottom Hook on 2 & 3 Fall Hoist) | Visual<br>Function | Pockets of Idle Sprocket should be free of significant wear. Idle Sprocket surfaces should be free of nicks, gouges, dirt, and grime. Bearing parts and surfaces of Idle Sprocket should not show significant wear. Idle Sprocket should rotate freely with no roughness or significant free play. | Clean/lubricate, or replace as required. |
| Hooks – Hook Latches | Visual<br>Function | Latch should not be deformed. Attachment of latch to hook should not be loose. Latch spring should not be missing and should not be weak, latch movement should not be stiff – when depressed and released latch should snap quickly to its closed position. | Replace |
| Load Chain –<br>Surface Condition | Visual | Should be free of rust, nicks, gouges, dents and weld splatter. Links should not be deformed, and should not show signs of abrasion. Surfaces where links touch should be free of significant wear. | Replace |
| Load Chain –<br>Pitch and Wire Diameter | Measure | The "P" dimension should not be greater than maximum value listed in section 5.7.2. The "d" dimension should not be less than minimum value listed in section 5.7.2. | Replace. Inspect Load Sprocket (and Idle Sprocket for 2 & 3 fall hoist). |
| Load Chain – Lubrication | Visual<br>Auditory | Entire surface of each chain link should be coated with lubricant and should be free of dirt and grime. Chain should not emit cracking noise when hoisting a load. | Clean/lubricate (see Section 6.2). |
| Load Chain – Reeving | Visual | Chain should be reeved properly through Load Sprocket (and Idle Sprocket for 2 & 3 fall hoist). | Reeve/Install chain properly (refer to section 6.4). |
| Load chain – Connection Yoke Chain Pin (2 & 3 Fall Hoists Only) | Measure | The Connection Yoke Chain Pin should not have any apparent deformation. The "d" dimension should not be less than the discard value listed at the bottom of Section 5.7.2. | Replace |
| Chain Container | Visual | Container should not be damaged. Brackets should not be deformed or missing. | Replace |
| Bolts, Nuts, and Rivets | Visual | Bolts, nuts, and rivets should not be loose. | Tighten or replace as required. |

| | | | |
|---|---|---|---|
| Electromagnetic Brake Assembly | Measure Visual | The electromagnetic motor brake gap is directly related to brake disk wear. As the disk wears, the brake gap will increase. The brake gap/wear dimension should not be more than 0.050". Bolts and screws should not be loose. | Section 6.6 for disc brake adjustment. |
| Contactors | Visual | Contact should be free of significant pitting or deterioration. | Replace |
| Load Sprocket | Visual | Pockets of Load Sprocket should be free of excessive wear. | Replace |
| Pendant – Housing | Visual | Pendant housing should be free of cracks and mating surfaces of parts should seal without gaps. | Replace |
| Pendant – Wiring | Visual | Wire connections to switches in pendant should not be loose or damaged. | Replace |
| Pendant – Switches | Function | Depressing and releasing push-button should make and break contact in switch contact block and result in corresponding electrical continuity or open circuit. Push-buttons should be interlocked either mechanically or electrically to prevent simultaneous energization of circuits for opposing motions. (up and down). | Replace |
| Pendant –Cable | Visual Electrical Continuity | Surface of cable should be free from nicks, gouges, and abrasions. Each conductor in cord should have 100% electrical continuity even when cord is flexed back-and forth. | Replace |
| Pendant - Cable Strain Relief Cable | Visual Functional | Pendant Cable Strain Relief Cable should absorb the entire load associated with forces applied to the pendant. | Replace |
| Pendant - Labels | Visual | Labels denoting functions should be legible. | Replace |
| Warning Labels | Visual | Warning Labels should be affixed to the hoist (see Section 1) and they should be legible. | Replace |
| Hoist Capacity Tag | Visual | The tag that indicates the capacity of the hoist should be legible and securely attached to the hoist cover. | Replace |
| Nameplates | Visual | The nameplates that indicate the hoist model, speed and motor data should be legible and securely attached to the hoist. | Replace |

### 5.7.2 Load Chain Discard Criteria

The load chain used on VULCAN HOISTS is heat treated. No link or links can be added or welded after leaving factory. **DO NOT USE** hoist, even if there is only one (1) link worn out or elongated beyond the permissible dimensions listed below:

| Capacity | Diameter | Length of 11 Links | |
|---|---|---|---|
| | | Nominal | Permissible |
| ALL | 7.9 mm | 9.961" (253 mm) | 10.157" (258 mm) |

The sketch below shows the method of measuring the pitch in eleven (11) links.

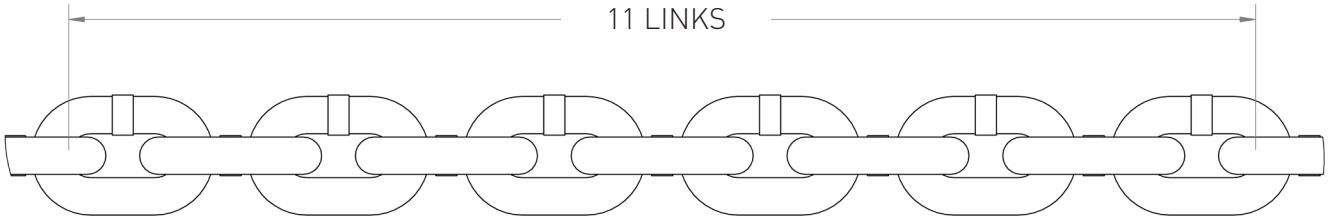

### 5.7.3 Hook Measurements and Discard Criteria

As per the ASME B30.10 guidelines, Vulcan recommends changing any hook that exhibits the following signs of wear:

1. Missing or illegible hook identification and/or working load limit.
2. Excessive pitting, corrosion, cracks, nicks, or gouges on the hook body or retaining pin.
3. Any signs of welding or heat damage on the hook body or retaining pin.
4. Any wear, resulting in dimension change of more than 10% the original value on the hook body or retaining pin.
5. Permanent deformation resulting in throat opening exceeding the original value by 5%.

Note: if there is excessive throat opening, DO NOT attempt to repair by closing the hook. The strength of the hook will not be the same as the original.

The user is responsible for measuring the exact initial dimensions of the hook for future maintenance purposes. The following table can be used as a reference; please note that the dimensions provided are nominal and the actual hook dimensions may vary.

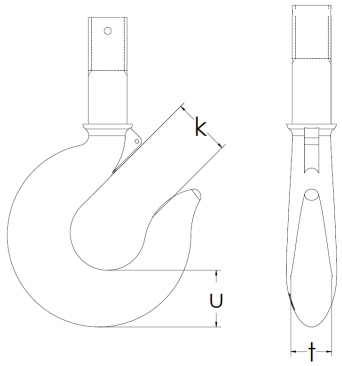


TABLE 5-4: HOOK DEFORMATION

| Hook Capacity | k | | t | | u | |
|---|---|---|---|---|---|---|
| | Initial | Discard | Initial | Discard | Initial | Discard |
| 1/4T - 1T | 1.29 | ≥ 1.35 | 0.79 | ≤ 0.71<br>≥ 0.87 | 0.96 | ≤ 0.86<br>≥ 1.06 |
| 1/4T - 1 1/2T | 1.10 | ≥ 1.16 | 0.87 | ≤ 0.78<br>≥ 0.96 | 1.11 | ≤ 1.00<br>≥ 1.22 |
| 2T, 3T and 5T | 1.28 | ≥ 1.34 | 1.15 | ≤ 1.04<br>≥ 1.27 | 1.45 | ≤ 1.31<br>≥ 1.60 |

* All dimensions are in inches.

# 6.0 Maintenance

## 6.1 Maintenance schedule and records

Maintenance schedule should be based on inspection results and any maintenance procedure should be recorded in a log book for future reference.

## 6.2 Lubrication — load chain, hooks, and suspension

### 6.2.1 Load Chain

- For longer life, the load chain should be lubricated.
- The load chain lubrication should be accomplished after cleaning the load chain with an acid-free cleaning solution.
- Machine or gear oil (grade ISO VG 46 or 68 or equivalent) may be used as an alternative lubricant but must be applied more frequently.
- The chain should be lubricated every 3 months (more frequently for heavier usage or severe conditions).
- For dusty environments, it is acceptable to use a dry lubricant.

### 6.2.2 Hooks and Suspension Components:

- Hooks - Bearings should be cleaned and lubricated at least once per year for normal usage. Clean and lubricate more frequently for heavier usage or severe conditions.
- Suspension Pins – Lubricate at least twice per year for normal usage; more frequently for heavier usage or severe conditions.

## 6.3 Lubrication — transmission

**6.3.1** **Oil level** – The oil level should be just below the hole when the hoist is leveled.

**6.3.2** **Replacing oil** – Change gear oil once after the first 6 months of purchase and once every 2 years afterwards. The oil should be changed more frequently depending on the hoist's usage and operating environment. Follow the procedure below for replacing the gearbox oil for your hoist:

- To drain the current oil from the hoist, remove the "Oil Plug" on top of the hoist and the "Oil Drain Plug" on the bottom of the hoist. Allow the old oil to drain completely.
- NOTICE: Dispose of the used oil in accordance with local regulations.
- Refill the reducer with Meropa 320 (regular), Meropa EP 220 (synthetic) or equivalent oil until the oil level is just below the hole when the hoist is leveled.
- Warning! Using the incorrect type, grade and/or volume of oil and/or mixing different types of oil may cause serious damage to the reducer gearing.

# 6.4 Load chain

**6.4.1 Lubrication and Cleaning** – see Section 6.2.1.

**6.4.2 Load Chain Replacement:**

**DANGER**

The hoist must be properly powered and operational in order to perform the following procedures.

Be certain that the replacement chain is obtained from Vulcan Hoist Co. Ltd. and is the exact size, grade and construction as the original chain. The new load chain must have an odd number of links so that both its end links have the same orientation. If the load chain is being replaced due to damage or wear, destroy the old chain to prevent its reuse.

When replacing load chain, check for wear on mating parts, i.e. Load Sprocket, Chain Guides and Idle Sprocket, and replace parts if necessary.

1. Remove all chain components including the Bottom Hook Set Assembly and Stoppers from the chain for reuse on new chain. Inspect and replace any damaged or worn parts.
2. Activate the down button until there is approximately 12" of chain on the no load side.
3. Using a C-link, attach the new chain to the end link of the old chain on the no-load side. The end link of the new load chain should be connected so that the welded portions of the load chain's standing links are oriented to the outside as they pass over the sprocket.
4. Operate the hoist down to move the chain though the hoist body. Stop when a sufficient amount of new chain is accumulated on the load side.
5. Single fall hoists – Attach the components (step 4 above) to the chain. See sections 3.2, 3.3, and 3.4 for the proper locations.
6. 2 & 3 falls– Feed the end link on the load side of the new chain through the required chain components (step 4 above) and the bottom hook's idle Sprocket. Attach the remaining chain components to the chain referring to the sections 3.2, 3.3, and 3.4 for the proper locations. Connect the end link to the top connection yoke with the chain pin, slotted nut, and cotter pin. Ensure that chain remains free of twists. Refer to Section 3.4.
7. After installation has been completed, perform steps outlined in Section 3.6, "Functional verification and trial operations".

# 6.5 Adjusting your Vulcan limit switches

**WARNING**

DO NOT suspend a load on the hook when adjusting the limit switches.

1. Remove the bolts holding the plastic cover in place.
2. Remove the plastic cover, revealing the limit switch assembly.

**Lower limit adjustment**

To make your hoist stop at a certain height when lowering the hook:

3. Bring the hook to the desired height using the pendant control.
4. Loosen the two screws (9) on the limit switch without removing them.
5. Pull back the adjustment bar (10) so that the adjustment wheels can turn freely.
6. Turn on the lower limit adjustment wheel (7) towards the micro limit switch (12) until it clicks (see Figure 6-1 below).
7. Put back the adjustment bar (10) in place and tighten both screws (9).
8. Test the lower limit a few times until the hoist stops at the desired height. If not, repeat steps 3 to 8 for finer tuning. Test the lower limit a few times until the hoist stops at the desired height.

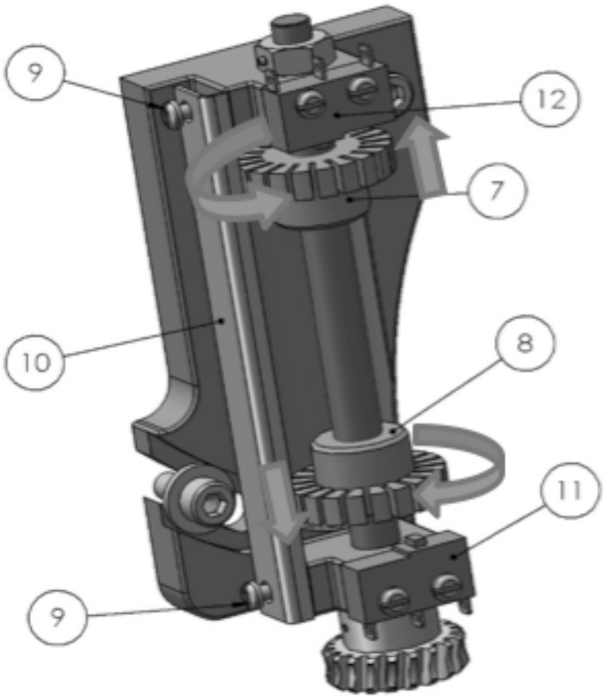


**Figure 6-1**

**Upper limit adjustment**

To make your hoist stop at a certain height when raising the hook:

10. Bring the hook to the desired height using the pendant control.
11. Loosen the two screws (9) on the limit switch without removing them.
12. Pull back the adjustment bar (10) so that the adjustment wheels can turn freely.
13. Turn on the upper limit adjustment wheel (8) towards the micro limit switch (11) until it clicks (see Figure 6-1 above).
14. Put back the adjustment bar (10) in place and tighten both screws (9).
15. Test the upper limit a few times until the hoist stops at the desired height. If not, repeat steps 10 to 15 for finer tuning.

**Note:** 2 to 3 teeth on the adjustment wheel represent approximately 1 foot of chain. Putting the adjustment wheel (7) closer to the micro switch (12) will reduce (restrain) the lower limit. Putting it further will increase it.

**NOTICE**

The limit switch is not 100% accurate, which means that the height calibrated for either upper or lower limit WILL vary up to 6 inches every time. Keep that in mind while adjusting your limit switch and make sure you test it a few times before operating the hoist.

**WARNING**

When adjusting the lower limit, always make sure that there is no tension in the free end of the chain. Failure to adjust the lower limit properly will damage your hoist and /or your chain.

When adjusting the upper limit, always make sure that you have a safe distance between the hook and the hoist body. Failure to adjust the upper limit properly will damage your hoist and or your chain.

# 6.6 Disc brake adjustment

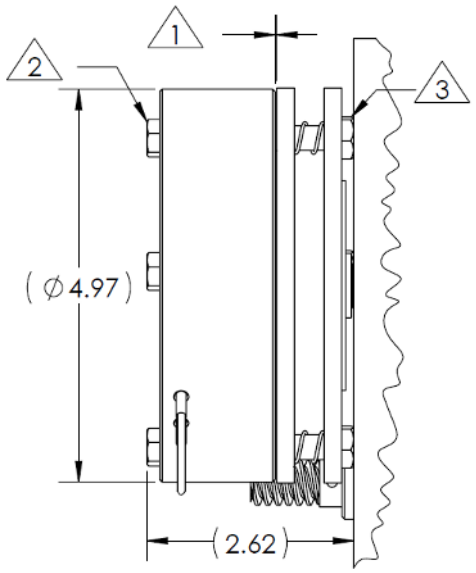


| ADJUSTMENT PROCEDURE | |
|---|---|
| 1 | Tighten all three mounting bolts (2) to snug, 3-4 N-m / 2.2-3.0 ft-lb |
| 2 | Adjust the gap (1) to .010 in by tightening or loosening the three bolts (3). Use a thickness gauge to check the gap at all three bolts (3) |
| 3 | Tighten all three mounting bolts (2) to 5-6 N-m / 3.7-4.4 ft-lb |
| 4 | Recheck the gap (1) with a thickness gauge. Repeat steps 2, 3 and 4 until the gap is adjusted to .010 in |

**CAUTION**

Check the brake gap regularly and/or during the periodic maintenance of the equipment hoist. **Readjust the brake if the gap is larger than .030 in.**

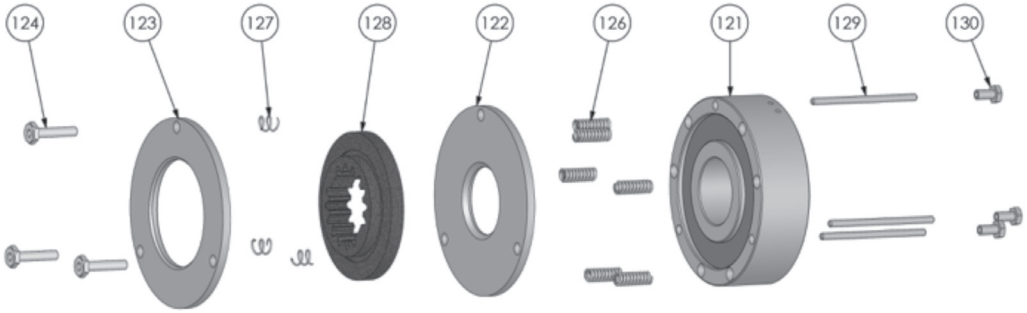


**Figure 6-2**

# 6.7 Storage

**6.7.1** All hoists equipped with a vented oil cap should be stored with the cap oriented upwards to prevent oil leakage.

**6.7.2** The storage location should be clean and dry.

# 6.8 Outdoor installation

**6.8.1** For hoist installations that are outdoors, the hoist MUST BE covered and protected from the weather at all times.

**6.8.2** Possibility of corrosion on components of the hoist increases for installation where salt air and high humidity are present. The hoist may require more frequent lubrication. Make frequent and regular inspections of the unit's condition and operation.

**6.8.3** For hoist installations where temperature variations introduce condensation into the hoist additional inspection and more frequent lubrication may be required.

**6.8.4** Refer to for allowable environmental conditions.

# 6.9 Operational environment

Unless otherwise specified, the hoist does not conform to the following operational environments and should therefore not be used for any such applications:

- Explosive gases or vapor.
- Organic solvents or volatile power.
- Excessive amounts of powder and dust of general substances.
- Excessive amount of acids or salts.

# 7.0 Troubleshooting

**WARNING**

**Hazardous voltages are present in the hoist and in connections between components.**

De-energize equipment before performing ANY maintenance. Refer to ANSIZ244.1, "Personnel Protection – Lockout/Tag out of Energy Sources".

To avoid a shock hazard, DO NOT perform ANY mechanical or electrical maintenance on the dual-speed (or VFD control) hoist within 5 minutes of de-energizing (disconnecting) the trolley or hoist.

Only trained and qualified personnel should inspect and repair this equipment.

TABLE 7-1: TROUBLESHOOTING GUIDE

| Symptom | Cause | Remedy |
|---|---|---|
| **Hoist moving in wrong direction** | Power supply reversed phased | Switch 2 of the 3 power supply cords wired at the power source. (see Section 3.5 for instructions on how to check for correct power supply phase connections). |
| | Improper electrical connections | Refer to wiring diagram and check all connections. |
| **Hoist will not operate** | Loss of power | Check circuit breakers, switches, fuses, and connections on power lines/cable. |
| | Low voltage in hoist's power supply | Determine cause of low voltage and bring to within plus or minus 10% of the voltage specified on the motor nameplate. The voltage should be measured at the hoist contactor. |
| | Wrong voltage or frequency | Check voltage and frequency of power supply against the rating on the nameplate of the motor. |
| | Hoist overloaded | Reduce load to within rated capacity of hoist. |
| | Motor overheated and thermal overload protector has tripped | See Troubleshooting Problem "Motor or brake overheating". |
| | Improper, loose, or broken wire in hoist electrical system | Shut off power supply, check wiring connection on hoist control panel and inside push - button pendant. |
| | Brake does not release | Check motor brake coil for continuity. Replace brake if needed. |
| | Faulty magnetic contractor | Check coil for open or short circuit. Check all connections in the control circuit. Check for open contactors. Replace as needed. |
| | Emergency Stop Depressed on Push Button Pendant Control | Turn the Emergency Stop Button Clockwise to unlock the control and allow hoist operation. |
| | Defect in control transformer | Check transformer coil for signs of overheating. Disconnect transformer and check for open winding. |

| TABLE 7-1 TROUBLESHOOTING GUIDE (CONT'D) | | |
|---|---|---|
| **Symptom** | **Cause** | **Remedy** |
| **Hoist Will not Operate** | Motor burned out | Replace motor frame/stator, shaft/rotor, and any other damaged parts. |
| | Down circuit open | Check circuit for loose connections. Check down side of limit switch for malfunction. |
| | Broken conductor in pendant cord | Check the continuity for each conductor in the cable. If one is broken, replace entire cable. |
| | Faulty magnetic contactors | Check coils for open or short circuit. Check all connections on motor circuit. Check for burned contact. Replace as needed. |
| **Hoist lifts but will not lower** | Faulty switch in pendant | Check electrical continuity. Check electrical connections. Replace or repair as needed. |
| | Hoist overloaded | Reduce load within rated capacity. |
| | Up circuit | Check circuit for loose connections. Check up side of limit switch for malfunction. |
| | Broken conductor in pendant cord | Check the continuity of each conductor in the cable. If one is broken, replace entire cable. |
| **Hoist lowers but will not lift** | Faulty magnetic contactor | Check coils for open or short circuit. Check all connections on motor circuit. Check for burned contacts. Replace as needed. |
| | Faulty switch in pendant | Check electrical continuity. Check electrical connections. Repair or replace as needed. |
| **Hoist will not lift rated load or does not have the proper lifting speed** | Hoist overloaded | Reduce load to within rated capacity. |
| | Low voltage in hoist's power supply. | Determine cause of low voltage and bring to within plus or minus 5% of voltage specified on the motor nameplate. The voltage should be measured at the hoist contactor. |
| **Load drifts excessively when hoist is stopped** | Motor brake not holding | Check brake for proper "Brake Gap" dimension (section 6.6). Replace if needed. |
| **Motor or brake overheating** | Excessive load | Reduce load to within rated capacity of hoist. |
| | Excessive duty cycle | Reduce frequency of lifts. |
| | Wrong voltage or frequency | Check voltage and frequency of power supply against the rating on the nameplate on the motor. |
| | Extreme external heating | Above an ambient temperature of 40°C, the frequency of hoist operation must be reduced to avoid overheating of the motor. Special provisions should be made to ventilate the hoist or otherwise shield it from the heat. |
| **Hoist operates intermittently** | Connectors making poor contact | Check movement of spring loaded arm, weak spring, connections and shoe. Replace as needed. |
| | Contactor contacts arcing | Check for burned contacts. Replace as needed. |
| | Loose connection in circuit | Check all wires and terminals for bad connections. Replace as needed. |
| | Broken conductor in Pendant Cord | Check for intermittent continuity in each conductor in the Pendant Cord. Replace entire Pendant Cord if continuity is not constant. |

# 8.0 Part list

Please consult our website vulcanhoist.com for the complete parts list.

# 9.0 Warranty

## Warranty explanation and terms

All product sold by the Vulcan Hoist Company Ltd. (hereinafter referred to as, Vulcan) are warranted to be free from defects in material and workmanship from date of shipment by Vulcan for the following periods:

**Vulcan Manual products – 2 years**

**Nova Manual products – 1 year**

**Electric Hoists & Trolleys– 2 years**

**Spare / Replacement Parts – 1 year**

The product must be used in accordance with manufacturer's recommendations and must not have been subject to abuse, lack of maintenance, misuse, negligence, or unauthorized repairs or alterations.

Should any defect in material or workmanship occur during the above time period in any product as determined by Vulcan's inspection of the product, Vulcan agrees, at its discretion, either to replace (not including installation) or repair the part or product free of charge and deliver said item F.O.B. Vulcan place of business to customer.

Customer must obtain a Return Good Authorization as directed by Vulcan prior to shipping the product for warranty evaluation. An explanation of the complaint must accompany the product. Product must be returned freight prepaid. Upon repair, the product will be covered for the remainder of the original warranty period. If it is determined there is no defect, or that the defect resulted from causes not within the scope of Vulcan's warranty, the customer will be responsible for the costs of returning the product.

Vulcan disclaims any and all other warranties of any kind expressed or implied as to the product's merchantability or fitness for a particular application. Vulcan will not be liable for any deaths or injuries to people, any property damages, or any additional expenses resulting from failure to follow the guidelines (intentionally or due to negligence) for safe installation, use, maintenance and inspection described in this manual and all applicable standards.

# APPENDIX

## DEFINITIONS OF VARIOUS HOIST TERMS

**Abnormal operating conditions -** Environmental conditions that are unfavorable, harmful, or detrimental to or for the operation of a hoist, such as excessively high or low ambient temperatures, exposure to weather, corrosive fumes, dust laden or moisture laden atmospheres, and hazardous locations.

**Below - the - hook lifting devices -** Devices that are not normally reeved onto the hoist chain, such as hook - on buckets, magnets, grabs, and other supplemental devices used for ease of handling certain types of loads. The weight of these devices is to be considered part of the load to be lifted.

**Block loads -** An action that facilitates the removal of slings or other lifting devices from under the load, accomplished by bringing the load to rest on wood, metal, or other spacers between the floor and load.

**Brake, holding -** A friction brake for a hoist that is automatically applied and prevents motion when power to the brake is removed.

**Chain, load -** Welded ling chain rated for lifting.

**Chain, roller -** A series of alternately assembled roller links and pin links in which the pins articulate inside the bushings and the rollers are free to tum on the bushings. Pins and bushings are press fit in their respective link plates.

**Chain, welded link -** A chain consisting of a series of interwoven links formed and welded.

**Designated person -** A person selected or assigned by the employer or the employer's representative as being competent to perform specific duties.

**Guide, chain -** A means to guide the load chain at the load sprocket.

**Hoist -** A machinery unit that is used for lifting or lowering a freely suspended (unguided) load.

**Lifting devices -** Devices that are not normally reeved onto the hoist chain, such as hook - on buckets, magnets, grabs, and other supplemental devices used for ease of handling certain types of loads. The weight of these devices is to be considered part of the load to be lifted.

**Limit device -** A device that is operated by some part or motion of a power driven hoist to limit motion.

**Limit device, primary upper -** See primary upper - limit device.

**Load -** The total superimposed weight on the load block or hook.

**Load, rated -** The maximum load for which a hoist is designated by the manufacturer or a qualified person.

**Load block -** The assembly of hook, swivel, bearing, sprockets, pins, and frame suspended by the hoisting load chain. This shall include any appurtenances reeved in the hoisting load chain.

**Load chain -** See chain, load.

**Load suspension parts -** The load suspension parts of the hoist are the means of suspending the hoist structure and load such as hooks, lugs, load blocks, drum and rope/cable, or sprocket and chain.

**Normal operating conditions -** Conditions during which a hoist is performing functions within the scope of the original design.

**Overload -** Any load greater than the rated load.

**Over travel restraint -** A device used to prevent the slack load chain from inadvertently being lowered out of the load sprocket.

**Parts (lines) -** Number of lines of chain supporting the load blocks or hook.

**Pendant station -** Controls suspended from the hoist for operating the unit from the floor.

**Power transmission parts -** The machinery components including the gears, shafts, clutches, couplings, bearings, motors, and brakes.

**Primary upper - limit device -** The primary upper - limit device is the first limit device that will be activated to control the upper limit of travel of the load block when a hoist is equipped with more than one upper - limit device.

**Qualified person -** A person who, by possession of a recognized degree in an applicable field or a certificate of professional standing, or who by extensive knowledge, training, and experience, has successfully demonstrated the ability to solve or resolve problems relating to the subject matter and work.

**Rated load -** See load, rated.

**Reeving -** A system in which a chain travels around sprockets, roller chain - See chain, roller.

**Sheave -** A grooved wheel or sprocket used with a chain to change direction and point of application of a pulling force.

**Sprocket, idler -** A freely rotating device that changes the direction of the load chain.

**Sprocket, load -** A hoist component that transmits motion to the load chain. This component is sometimes called load wheel, load sheave, pocket wheel, or chain wheel.

**Switch -** A device for making, breaking, or changing the connections in an electric or pneumatic circuit (valve).

**Trolley -** A machine unit that travels on a monorail track or crane bridge girder.

**Trolley hoist -** A hoist and trolley unit consisting of a hoist suspended from or mounted to a trolley, or a hoist with an integral trolley.

**Welded link chain -** See chain, welded link.

# Nomenclature

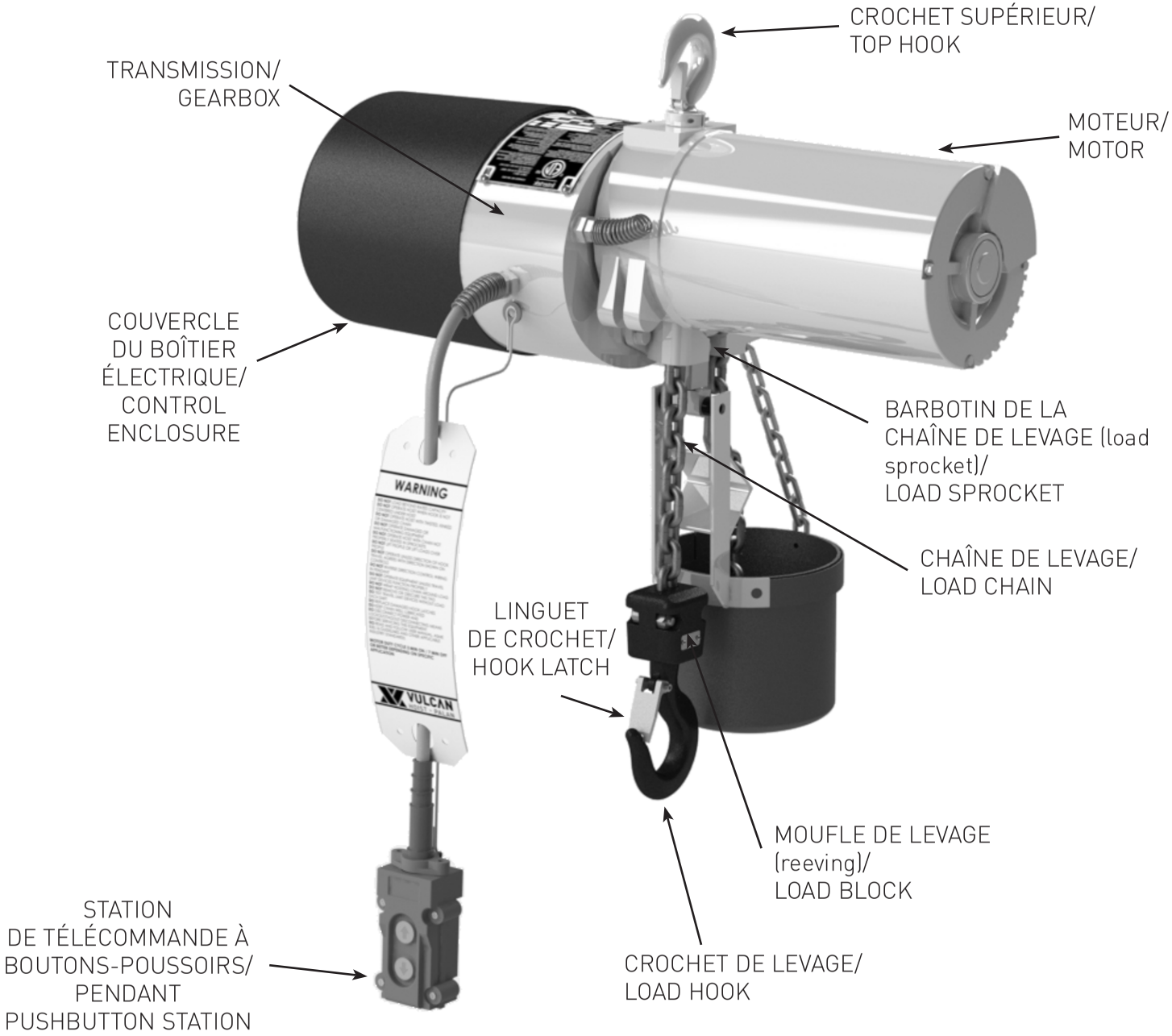

# Spécifications des produits / Product specifications

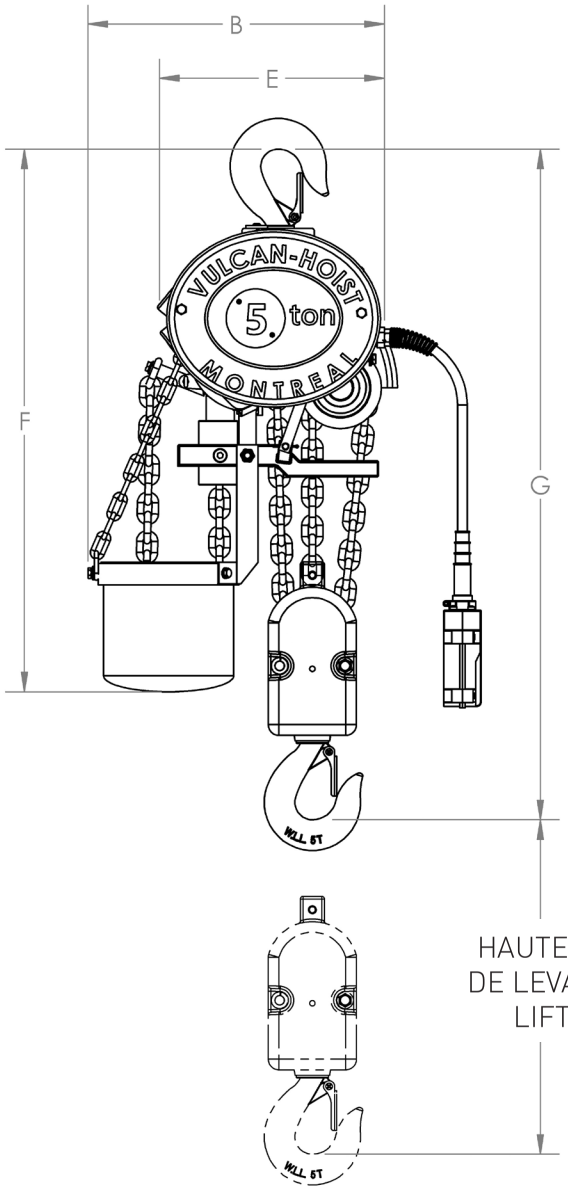


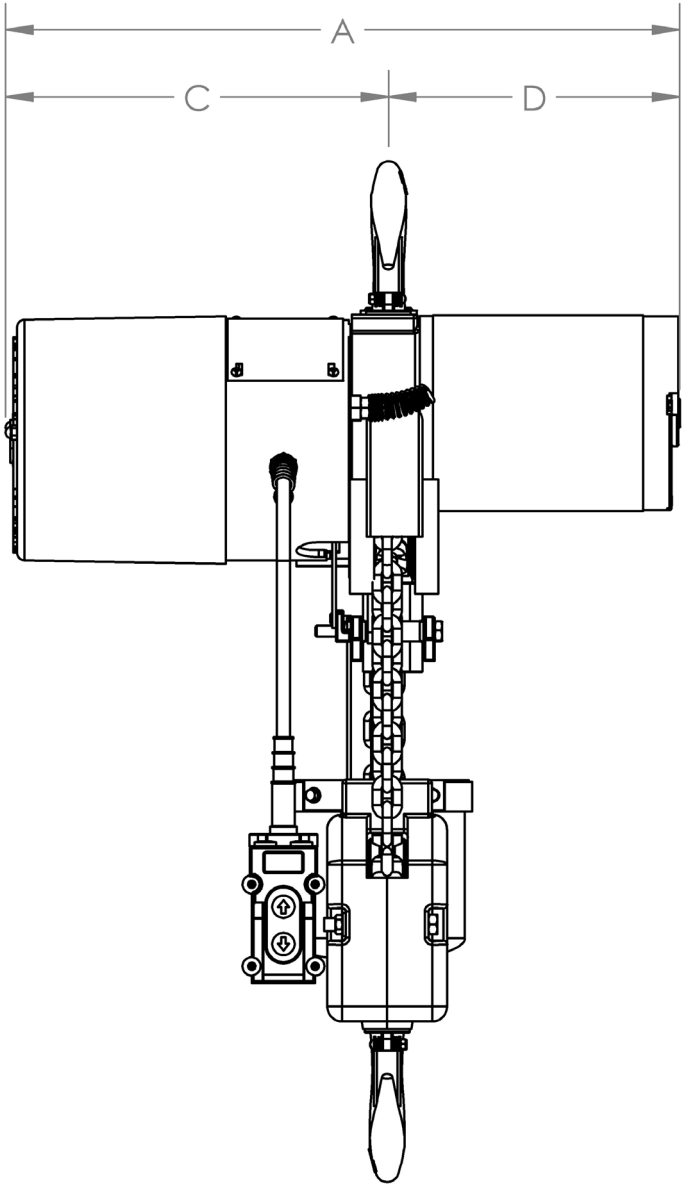

| TABLEAU 2 - 1: MODÈLES À UNE VITESSE / TABLE 2 - 1: SINGLE SPEED MODELS | | | | | | | | | | | | | | |
|---|---|---|---|---|---|---|---|---|---|---|---|---|---|---|
| **Capacité Capacity** | **Volt** | **Phase** | **Modèle Model** | **Vitesse de levage (ppm) Lifting speed (fpm)** | **Hp** | **Retom-bée(s) Chain fall(s)** | **Poids (lbs) incluant crochets et 10' de chaine Weight (lbs) including hooks and chain for 10ft lift** | **Dimensions en pouces (in) Dimensions in inches (in)** | | | | | | |
| | | | | | | | | **A** | **B** | **C** | **D** | **E** | **F** | **G** |
| **MODÈLES À UNE VITESSE / SINGLE SPEED MODELS** | | | | | | | | | | | | | | |
| 1/4 TONNE / TON | 115 | 1 | L05A08 | 8 | 3/4 | 1 | 100 | 23 1/4 | 13 1/2 | 12 7/8 | 10 3/8 | 10 | 23 7/8 | 18 7/8 |
| | | | L05A14 | 14 | 3/4 | 1 | 100 | 23 1/4 | 13 1/2 | 12 7/8 | 10 3/8 | 10 | 23 7/8 | 18 7/8 |
| | | | L05A20 | 20 | 1 1/2 | 1 | 105 | 24 1/4 | 13 1/2 | 12 7/8 | 11 3/8 | 10 | 23 7/8 | 18 7/8 |
| | | | L05A26 | 26 | 1 1/2 | 1 | 105 | 24 1/4 | 13 1/2 | 12 7/8 | 11 3/8 | 10 | 23 7/8 | 18 7/8 |
| | | | L05A33 | 33 | 1 1/2 | 1 | 105 | 24 1/4 | 13 1/2 | 12 7/8 | 11 3/8 | 10 | 23 7/8 | 21 7/8 |
| | | | L05A40 | 40 | 1 1/2 | 1 | 105 | 24 1/4 | 13 1/2 | 12 7/8 | 11 3/8 | 10 | 23 7/8 | 21 7/8 |
| | | | L05A52 | 52 | 1 1/2 | 1 | 105 | 24 1/4 | 13 1/2 | 12 7/8 | 11 3/8 | 10 | 23 7/8 | 21 7/8 |
| | 230 | 1 | L05F10 | 10 | 3/4 | 1 | 100 | 23 1/4 | 13 1/2 | 12 7/8 | 10 3/8 | 10 | 23 7/8 | 18 7/8 |
| | | | L05F16 | 16 | 3/4 | 1 | 100 | 23 1/4 | 13 1/2 | 12 7/8 | 10 3/8 | 10 | 23 7/8 | 18 7/8 |
| | | | L05F20 | 20 | 1 1/2 | 1 | 105 | 24 1/4 | 13 1/2 | 12 7/8 | 11 3/8 | 10 | 23 7/8 | 18 7/8 |
| | | | L05F26 | 26 | 1 1/2 | 1 | 105 | 24 1/4 | 13 1/2 | 12 7/8 | 11 3/8 | 10 | 23 7/8 | 18 7/8 |
| | | | L05F33 | 33 | 1 1/2 | 1 | 105 | 24 1/4 | 13 1/2 | 12 7/8 | 11 3/8 | 10 | 23 7/8 | 21 7/8 |
| | | | L05F40 | 40 | 1 1/2 | 1 | 105 | 24 1/4 | 13 1/2 | 12 7/8 | 11 3/8 | 10 | 23 7/8 | 21 7/8 |
| | | | L05F52 | 52 | 1 1/2 | 1 | 105 | 24 1/4 | 13 1/2 | 12 7/8 | 11 3/8 | 10 | 23 7/8 | 21 7/8 |
| | 230 | 3 | L05H16 | 16 | 1 | 1 | 103 | 23 1/4 | 13 1/2 | 12 7/8 | 10 3/8 | 10 | 23 7/8 | 18 7/8 |
| | | | L05H20 | 20 | 2 | 1 | 103 | 24 1/4 | 13 1/2 | 12 7/8 | 11 3/8 | 10 | 23 7/8 | 18 7/8 |
| | | | L05H28 | 28 | 2 | 1 | 103 | 24 1/4 | 13 1/2 | 12 7/8 | 11 3/8 | 10 | 23 7/8 | 18 7/8 |
| | | | L05H33 | 33 | 2 | 1 | 103 | 24 1/4 | 13 1/2 | 12 7/8 | 11 3/8 | 10 | 23 7/8 | 21 7/8 |
| | | | L05H40 | 40 | 2 | 1 | 103 | 24 1/4 | 13 1/2 | 12 7/8 | 11 3/8 | 10 | 23 7/8 | 21 7/8 |
| | | | L05H52 | 52 | 2 | 1 | 103 | 24 1/4 | 13 1/2 | 12 7/8 | 11 3/8 | 10 | 23 7/8 | 21 7/8 |

| | | | | | | | | | | | | | |
|---|---|---|---|---|---|---|---|---|---|---|---|---|---|
| 1/4 TONNE / TON | 460 | 3 | L05T16 | 16 | 1 | 1 | 94 | 22 3/4 | 13 1/2 | 12 7/8 | 9 7/8 | 10 | 23 7/8 | 18 7/8 |
| | | | L05T20 | 20 | 2 | 1 | 103 | 24 1/4 | 13 1/2 | 12 7/8 | 11 3/8 | 10 | 23 7/8 | 18 7/8 |
| | | | L05T28 | 28 | 2 | 1 | 103 | 24 1/4 | 13 1/2 | 12 7/8 | 11 3/8 | 10 | 23 7/8 | 18 7/8 |
| | | | L05T33 | 33 | 2 | 1 | 103 | 24 1/4 | 13 1/2 | 12 7/8 | 11 3/8 | 10 | 23 7/8 | 21 7/8 |
| | | | L05T40 | 40 | 2 | 1 | 103 | 24 1/4 | 13 1/2 | 12 7/8 | 11 3/8 | 10 | 23 7/8 | 21 7/8 |
| | | | L05T52 | 52 | 2 | 1 | 103 | 24 1/4 | 13 1/2 | 12 7/8 | 11 3/8 | 10 | 23 7/8 | 21 7/8 |
| | 575 | 3 | L05V10 | 10 | 1 | 1 | 94 | 22 3/4 | 13 1/2 | 11 3/8 | 9 7/8 | 10 | 23 7/8 | 18 7/8 |
| | | | L05V16 | 16 | 1 | 1 | 94 | 22 3/4 | 13 1/2 | 11 3/8 | 9 7/8 | 10 | 23 7/8 | 18 7/8 |
| | | | L05V20 | 20 | 2 | 1 | 103 | 24 1/4 | 13 1/2 | 11 3/8 | 11 3/8 | 10 | 23 7/8 | 18 7/8 |
| | | | L05V28 | 28 | 2 | 1 | 103 | 24 1/4 | 13 1/2 | 11 3/8 | 11 3/8 | 10 | 23 7/8 | 18 7/8 |
| | | | L05V33 | 33 | 2 | 1 | 103 | 24 1/4 | 13 1/2 | 11 3/8 | 11 3/8 | 10 | 23 7/8 | 21 7/8 |
| | | | L05V40 | 40 | 2 | 1 | 103 | 24 1/4 | 13 1/2 | 11 3/8 | 11 3/8 | 10 | 23 7/8 | 21 7/8 |
| | | | L05V52 | 52 | 2 | 1 | 103 | 24 1/4 | 13 1/2 | 11 3/8 | 11 3/8 | 10 | 23 7/8 | 21 7/8 |
| 1/2 TONNE / TON | 115 | 1 | L1A08 | 8 | 3/4 | 1 | 100 | 23 1/4 | 13 1/2 | 11 3/8 | 10 3/8 | 10 | 23 7/8 | 18 7/8 |
| | | | L1A14 | 14 | 3/4 | 1 | 100 | 23 1/4 | 13 1/2 | 11 3/8 | 10 3/8 | 10 | 23 7/8 | 18 7/8 |
| | | | L1A20 | 20 | 1 1/2 | 1 | 105 | 24 1/4 | 13 1/2 | 11 3/8 | 11 3/8 | 10 | 23 7/8 | 18 7/8 |
| | | | L1A26 | 26 | 1 1/2 | 1 | 105 | 24 1/4 | 13 1/2 | 11 3/8 | 11 3/8 | 10 | 23 7/8 | 18 7/8 |
| | | | L1A33 | 33 | 1 1/2 | 1 | 105 | 24 1/4 | 13 1/2 | 11 3/8 | 11 3/8 | 10 | 23 7/8 | 21 7/8 |
| | 230 | 1 | L1F10 | 10 | 3/4 | 1 | 100 | 23 1/4 | 13 1/2 | 11 3/8 | 10 3/8 | 10 | 23 7/8 | 18 7/8 |
| | | | L1F16 | 16 | 3/4 | 1 | 100 | 23 1/4 | 13 1/2 | 11 3/8 | 10 3/8 | 10 | 23 7/8 | 18 7/8 |
| | | | L1F20 | 20 | 1 1/2 | 1 | 105 | 24 1/4 | 13 1/2 | 11 3/8 | 11 3/8 | 10 | 23 7/8 | 18 7/8 |
| | | | L1F26 | 26 | 1 1/2 | 1 | 105 | 24 1/4 | 13 1/2 | 11 3/8 | 11 3/8 | 10 | 23 7/8 | 18 7/8 |
| | | | L1F33 | 33 | 1 1/2 | 1 | 105 | 24 1/4 | 13 1/2 | 11 3/8 | 11 3/8 | 10 | 23 7/8 | 21 7/8 |
| | | | L1F40 | 40 | 2 | 1 | 111 | 24 1/4 | 13 1/2 | 11 3/8 | 11 3/8 | 10 | 23 7/8 | 21 7/8 |
| | 230 | 3 | L1H10 | 10 | 1 | 1 | 94 | 22 3/4 | 13 1/2 | 11 3/8 | 9 7/8 | 10 | 23 7/8 | 18 7/8 |
| | | | L1H13 | 13 | 1 | 1 | 94 | 22 3/4 | 13 1/2 | 11 3/8 | 9 7/8 | 10 | 23 7/8 | 18 7/8 |
| | | | L1H16 | 16 | 1 | 1 | 94 | 22 3/4 | 13 1/2 | 11 3/8 | 9 7/8 | 10 | 23 7/8 | 18 7/8 |
| | | | L1H20 | 20 | 2 | 1 | 103 | 24 1/4 | 13 1/2 | 11 3/8 | 11 | 10 | 23 7/8 | 18 7/8 |
| | | | L1H28 | 28 | 2 | 1 | 103 | 24 1/4 | 13 1/2 | 11 3/8 | 11 3/8 | 10 | 23 7/8 | 18 7/8 |
| | | | L1H33 | 33 | 2 | 1 | 103 | 24 1/4 | 13 1/2 | 11 3/8 | 11 3/8 | 10 | 23 7/8 | 21 7/8 |
| | | | L1H40 | 40 | 2 | 1 | 103 | 24 1/4 | 13 1/2 | 11 3/8 | 11 3/8 | 10 | 23 7/8 | 21 7/8 |
| | | | L1H52 | 52 | 2 | 1 | 103 | 24 1/4 | 13 1/2 | 11 3/8 | 11 3/8 | 10 | 23 7/8 | 21 7/8 |

## TABLEAU 2 - 1: MODÈLES À UNE VITESSE / TABLE 2 - 1: SINGLE SPEED MODELS

| Capacité Capacity | Volt | Phase | Modèle Model | Vitesse de levage (ppm) Lifting speed (fpm) | Hp | Retom-bée(s) Chain fall(s) | Poids (lbs) incluant crochets et 10' de chaine Weight (lbs) including hooks and chain for 10ft lift | Dimensions en pouces (in) Dimensions in inches (in) | | | | | | |
|---|---|---|---|---|---|---|---|---|---|---|---|---|---|---|
| | | | | | | | | A | B | C | D | E | F | G |
| **MODÈLE À UNE VITESSE / SINGLE SPEED MODELS** | | | | | | | | | | | | | | |
| 1/2 TONNE / TON | 460 | 3 | L1T10 | 10 | 1 | 1 | 94 | 24 1/4 | 13 1/2 | 11 3/8 | 9 7/8 | 10 | 23 7/8 | 18 7/8 |
| | | | L1T13 | 13 | 1 | 1 | 94 | 24 1/4 | 13 1/2 | 11 3/8 | 9 7/8 | 10 | 23 7/8 | 18 7/8 |
| | | | L1T16 | 16 | 1 | 1 | 94 | 24 1/4 | 13 1/2 | 11 3/8 | 9 7/8 | 10 | 23 7/8 | 18 7/8 |
| | | | L1T20 | 20 | 2 | 1 | 103 | 24 1/4 | 13 1/2 | 11 3/8 | 11 3/8 | 10 | 23 7/8 | 18 7/8 |
| | | | L1T28 | 28 | 2 | 1 | 103 | 24 1/4 | 13 1/2 | 11 3/8 | 11 3/8 | 10 | 23 7/8 | 18 7/8 |
| | | | L1T33 | 33 | 2 | 1 | 103 | 24 1/4 | 13 1/2 | 11 3/8 | 11 3/8 | 10 | 23 7/8 | 21 7/8 |
| | | | L1T40 | 40 | 2 | 1 | 103 | 24 1/4 | 13 1/2 | 11 3/8 | 11 3/8 | 10 | 23 7/8 | 21 7/8 |
| | | | L1T52 | 52 | 2 | 1 | 103 | 24 1/4 | 13 1/2 | 11 3/8 | 11 3/8 | 10 | 23 7/8 | 21 7/8 |
| | 575 | 3 | L1V10 | 10 | 1 | 1 | 94 | 22 3/4 | 13 1/2 | 12 7/8 | 9 7/8 | 10 | 23 7/8 | 18 7/8 |
| | | | L1V13 | 13 | 1 | 1 | 94 | 22 3/4 | 13 1/2 | 12 7/8 | 9 7/8 | 10 | 23 7/8 | 18 7/8 |
| | | | L1V16 | 16 | 1 | 1 | 94 | 22 3/4 | 13 1/2 | 12 7/8 | 9 7/8 | 10 | 23 7/8 | 18 7/8 |
| | | | L1V20 | 20 | 2 | 1 | 103 | 24 1/4 | 13 1/2 | 12 7/8 | 11 3/8 | 10 | 23 7/8 | 18 7/8 |
| | | | L1V28 | 28 | 2 | 1 | 103 | 24 1/4 | 13 1/2 | 12 7/8 | 11 3/8 | 10 | 23 7/8 | 18 7/8 |
| | | | L1V33 | 33 | 2 | 1 | 103 | 24 1/4 | 13 1/2 | 12 7/8 | 11 3/8 | 10 | 23 7/8 | 21 7/8 |
| | | | L1V40 | 40 | 2 | 1 | 103 | 24 1/4 | 13 1/2 | 12 7/8 | 11 3/8 | 10 | 23 7/8 | 21 7/8 |
| | | | L1V52 | 52 | 2 | 1 | 103 | 24 1/4 | 13 1/2 | 12 7/8 | 11 3/8 | 10 | 23 7/8 | 21 7/8 |
| 1 TONNE / TON | 115 | 1 | L2A07 | 7 | 3/4 | 1 | H100 | 23 1/4 | 13 1/2 | 12 7/8 | 10 3/8 | 10 | 23 7/8 | 18 7/8 |
| | 230 | 1 | L2F07 | 7 | 3/4 | 1 | 100 | 23 1/4 | 13 1/2 | 12 7/8 | 10 3/8 | 10 | 23 7/8 | 18 7/8 |
| | | | L2F14 | 14 | 1 1/2 | 1 | 105 | 24 1/4 | 13 1/2 | 12 7/8 | 11 3/8 | 10 | 23 7/8 | 18 7/8 |
| | | | L2F20 | 20 | 2 | 1 | 111 | 24 1/4 | 13 1/2 | 12 7/8 | 11 3/8 | 10 | 23 7/8 | 18 7/8 |
| | 230 | 3 | L2H10 | 10 | 2 | 1 | 103 | 24 1/4 | 13 1/2 | 12 7/8 | 11 3/8 | 10 | 23 7/8 | 18 7/8 |
| | | | L2H14 | 14 | 2 | 1 | 103 | 24 1/4 | 13 1/2 | 12 7/8 | 11 3/8 | 10 | 23 7/8 | 18 7/8 |
| | | | L2H20 | 20 | 2 | 1 | 103 | 24 1/4 | 13 1/2 | 12 7/8 | 11 3/8 | 10 | 23 7/8 | 18 7/8 |
| | | | L2H33 | 33 | 4 1/2 | 1 | 114 | 24 7/8 | 13 1/2 | 12 7/8 | 12 | 10 | 23 7/8 | 21 7/8 |

| | | | | | | | | | | | | | | |
|---|---|---|---|---|---|---|---|---|---|---|---|---|---|---|
| 1 TONNE / TON | 230 | 3 | L2H40 | 40 | 4 1/2 | 1 | 114 | 24 7/8 | 13 1/2 | 12 7/8 | 12 | 10 | 23 7/8 | 21 7/8 |
| | | | L2H52 | 52 | 4 1/2 | 1 | 114 | 24 7/8 | 13 1/2 | 12 7/8 | 12 | 10 | 23 7/8 | 21 7/8 |
| | 460 | 3 | L2T10 | 10 | 1 | 1 | 94 | 22 3/4 | 13 1/2 | 12 7/8 | 9 7/8 | 10 | 23 7/8 | 18 7/8 |
| | | | L2T14 | 14 | 1 | 1 | 94 | 22 3/4 | 13 1/2 | 12 7/8 | 9 7/8 | 10 | 23 7/8 | 18 7/8 |
| | | | L2T33 | 33 | 4 1/2 | 1 | 114 | 24 7/8 | 13 1/2 | 12 7/8 | 12 | 10 | 23 7/8 | 21 7/8 |
| | | | L2T40 | 40 | 4 1/2 | 1 | 114 | 24 7/8 | 13 1/2 | 12 7/8 | 12 | 10 | 23 7/8 | 21 7/8 |
| | | | L2T52 | 52 | 4 1/2 | 1 | 114 | 24 7/8 | 13 1/2 | 12 7/8 | 12 | 10 | 23 7/8 | 21 7/8 |
| | 575 | 3 | L2V14 | 14 | 2 | 1 | 103 | 24 1/4 | 13 1/2 | 12 7/8 | 11 3/8 | 10 | 23 7/8 | 18 7/8 |
| | | | L2V20 | 20 | 2 | 1 | 103 | 24 1/4 | 13 1/2 | 12 7/8 | 11 3/8 | 10 | 23 7/8 | 18 7/8 |
| | | | L2V26 | 26 | 2 | 1 | 103 | 24 1/4 | 13 1/2 | 12 7/8 | 11 3/8 | 10 | 23 7/8 | 18 7/8 |
| | | | L2V33 | 33 | 3 | 1 | 107 | 24 1/4 | 13 1/2 | 12 7/8 | 11 3/8 | 10 | 23 7/8 | 21 7/8 |
| | | | L2V40 | 40 | 3 | 1 | 107 | 24 1/4 | 13 1/2 | 12 7/8 | 11 3/8 | 10 | 23 7/8 | 21 7/8 |
| | | | L2V52 | 52 | 4 1/2 | 1 | 114 | 24 7/8 | 13 1/2 | 12 7/8 | 12 | 10 | 24 3/8 | 24 1/2 |
| 1 1/2 TONNE / TON | 230 | 1 | L3F07 | 7 | 1 1/2 | 1 | 105 | 24 1/4 | 13 1/2 | 12 7/8 | 11 3/8 | 10 | 24 3/8 | 21 1/ |
| | | | L3F13 | 13 | 2 | 1 | 111 | 24 1/4 | 13 1/2 | 12 7/8 | 11 3/8 | 10 | 24 3/8 | 21 1/2 |
| | 230 | 3 | L3H13 | 13 | 2 | 1 | 103 | 24 1/4 | 13 1/2 | 12 7/8 | 11 3/8 | 10 | 24 3/8 | 21 1/2 |
| | | | L3H20 | 20 | 4 1/2 | 1 | 114 | 24 7/8 | 13 1/2 | 12 7/8 | 12 | 10 | 24 3/8 | 21 1/2 |
| | | | L3H26 | 26 | 4 1/2 | 1 | 114 | 24 7/8 | 13 1/2 | 12 7/8 | 12 | 10 | 24 3/8 | 21 1/2 |
| | | | L3H33 | 33 | 4 1/2 | 1 | 114 | 24 7/8 | 13 1/2 | 12 7/8 | 12 | 10 | 24 3/8 | 24 1/2 |
| | 460 | 3 | L3T20 | 20 | 4 1/2 | 1 | 114 | 24 7/8 | 13 1/2 | 12 7/8 | 12 | 10 | 24 3/8 | 21 1/2 |
| | | | L3T26 | 26 | 4 1/2 | 1 | 114 | 24 7/8 | 13 1/2 | 12 7/8 | 12 | 10 | 24 3/8 | 21 1/2 |
| | | | L3T33 | 33 | 4 1/2 | 1 | 114 | 24 7/8 | 13 1/2 | 12 7/8 | 12 | 10 | 24 3/8 | 24 1/2 |
| | 575 | 3 | L3V20 | 20 | 3 | 1 | 107 | 24 1/4 | 13 1/2 | 12 7/8 | 11 3/8 | 10 | 24 3/8 | 21 1/2 |
| | | | L3V26 | 26 | 4 1/2 | 1 | 114 | 24 7/8 | 13 1/2 | 12 7/8 | 12 | 10 | 24 3/8 | 21 1/2 |
| | | | L3V33 | 33 | 4 1/2 | 1 | 114 | 24 7/8 | 13 1/2 | 12 7/8 | 12 | 10 | 24 3/8 | 24 1/2 |

TABLEAU 2 - 1: MODÈLES À UNE VITESSE / TABLE 2 - 1: SINGLE SPEED MODELS

| Capacité Capacity | Volt | Phase | Modèle Model | Vitesse de levage (ppm) Lifting speed (fpm) | Hp | Retom-bée(s) Chain fall(s) | Poids (lbs) incluant crochets et 10' de chaine Weight (lbs) including hooks and chain for 10ft lift | Dimensions en pouces (in) Dimensions in inches (in) | | | | | | |
|---|---|---|---|---|---|---|---|---|---|---|---|---|---|---|
| | | | | | | | | A | B | C | D | E | F | G |
| **MODÈLES À UNE VITESSE / SINGLE SPEED MODELS** | | | | | | | | | | | | | | |
| 2 TONNES / TONS | 115 | 1 | L4A04 | 4 | 3/4 | 2 | 122 | 23 1/4 | 13 1/2 | 12 7/8 | 10 3/8 | 10 | 31 3/8 | 25 1/4 |
| | 230 | 1 | L4F04 | 4 | 3/4 | 2 | 128 | 23 1/4 | 13 1/2 | 12 7/8 | 10 3/8 | 10 | 31 3/8 | 25 1/4 |
| | | | L4F10 | 10 | 2 | 2 | 133 | 24 1/4 | 13 1/2 | 12 7/8 | 11 3/8 | 10 | 31 3/8 | 25 1/4 |
| | | | L4F13 | 13 | 2 | 2 | 133 | 24 1/4 | 13 1/2 | 12 7/8 | 11 3/8 | 10 | 31 3/8 | 25 1/4 |
| | 230 | 3 | L4H06 | 6 | 2 | 2 | 126 | 24 1/4 | 13 1/2 | 12 7/8 | 11 3/8 | 10 | 31 3/8 | 25 1/4 |
| | | | L4H10 | 10 | 2 | 2 | 126 | 24 1/4 | 13 1/2 | 12 7/8 | 11 3/8 | 10 | 31 3/8 | 25 1/4 |
| | | | L4H15 | 15 | 2 | 2 | 126 | 24 1/4 | 13 1/2 | 12 7/8 | 11 3/8 | 10 | 31 3/8 | 25 1/4 |
| | | | L4H20 | 20 | 4 1/2 | 2 | 137 | 24 7/8 | 13 1/2 | 12 7/8 | 12 | 10 | 31 3/8 | 28 1/4 |
| | | | L4H26 | 26 | 4 1/2 | 2 | 137 | 24 7/8 | 13 1/2 | 12 7/8 | 12 | 10 | 31 3/8 | 28 1/4 |
| | 460 | 3 | L4T06 | 6 | 2 | 2 | 126 | 24 1/4 | 13 1/2 | 12 7/8 | 11 3/8 | 10 | 31 3/8 | 25 1/4 |
| | | | L4T20 | 20 | 4 1/2 | 2 | 137 | 24 7/8 | 13 1/2 | 12 7/8 | 12 | 10 | 31 3/8 | 28 1/4 |
| | | | L4T26 | 26 | 4 1/2 | 2 | 137 | 24 7/8 | 13 1/2 | 12 7/8 | 12 | 10 | 31 3/8 | 28 1/4 |
| | 575 | 3 | L4V06 | 6 | 2 | 2 | 126 | 24 1/4 | 13 1/2 | 12 7/8 | 11 3/8 | 10 | 31 3/8 | 25 1/4 |
| | | | L4V10 | 10 | 2 | 2 | 126 | 24 1/4 | 13 1/2 | 12 7/8 | 11 3/8 | 10 | 31 3/8 | 25 1/4 |
| | | | L4V15 | 15 | 2 | 2 | 126 | 24 1/4 | 13 1/2 | 12 7/8 | 11 3/8 | 10 | 31 3/8 | 25 1/4 |
| | | | L4V20 | 20 | 3 | 2 | 130 | 24 1/4 | 13 1/2 | 12 7/8 | 11 3/8 | 10 | 31 3/8 | 28 1/4 |
| | | | L4V26 | 26 | 4 1/2 | 2 | 137 | 24 7/8 | 13 1/2 | 12 7/8 | 12 | 10 | 31 3/8 | 28 1/4 |

| | | | | | | | | | | | | | |
|---|---|---|---|---|---|---|---|---|---|---|---|---|---|
| 3 TONNES / TONS | 230 | 1 | L6F04 | 4 | 2 | 2 | 131 | 24 1/4 | 13 1/2 | 12 7/8 | 11 3/8 | 10 | 31 3/8 | 25 1/4 |
| | | | L6F07 | 7 | 2 | 2 | 137 | 24 1/4 | 14 3/8 | 11 3/8 | 10 7/8 | 10 | 37 3/8 | 30 1/2 |
| | 230 | 3 | L6H05 | 5 | 2 | 2 | 129 | 24 1/4 | 13 1/2 | 12 7/8 | 11 3/8 | 10 | 31 3/8 | 25 1/4 |
| | | | L6H09 | 9 | 4 1/2 | 2 | 140 | 24 7/8 | 13 1/2 | 12 7/8 | 12 | 10 | 31 3/8 | 25 1/4 |
| | | | L6H15 | 15 | 4 1/2 | 2 | 140 | 24 7/8 | 13 1/2 | 12 7/8 | 12 | 10 | 31 3/8 | 25 1/4 |
| | | | L6H20 | 20 | 4 1/2 | 2 | 140 | 24 7/8 | 13 1/2 | 12 7/8 | 12 | 10 | 31 3/8 | 28 1/4 |
| | 460 | 3 | L6T05 | 5 | 2 | 2 | 129 | 24 1/4 | 13 1/2 | 12 7/8 | 11 3/8 | 10 | 31 3/8 | 25 1/4 |
| | | | L6T09 | 9 | 4 1/2 | 2 | 140 | 24 7/8 | 13 1/2 | 12 7/8 | 12 | 10 | 31 3/8 | 25 1/4 |
| | | | L6T15 | 15 | 4 1/2 | 2 | 140 | 24 7/8 | 13 1/2 | 12 7/8 | 12 | 10 | 31 3/8 | 25 1/4 |
| | | | L6T20 | 20 | 4 1/2 | 2 | 140 | 24 7/8 | 13 1/2 | 12 7/8 | 12 | 10 | 31 3/8 | 28 1/4 |
| | 575 | 3 | L6V05 | 5 | 2 | 2 | 129 | 24 1/4 | 13 1/2 | 12 7/8 | 11 3/8 | 10 | 31 3/8 | 25 1/4 |
| | | | L6V09 | 9 | 4 1/2 | 2 | 140 | 24 7/8 | 13 1/2 | 12 7/8 | 12 | 10 | 31 3/8 | 28 1/4 |
| | | | L6V15 | 15 | 4 1/2 | 2 | 140 | 24 7/8 | 13 1/2 | 12 7/8 | 12 | 10 | 31 3/8 | 28 1/4 |
| | | | L6V20 | 20 | 4 1/2 | 2 | 140 | 24 7/8 | 13 1/2 | 12 7/8 | 12 | 10 | 31 3/8 | 28 1/4 |
| 5 TONNES / TONS | 115 | 1 | L10A02 | 2 | 1 1/2 | 3 | 165 | 24 1/4 | 14 3/8 | 12 7/8 | 11 3/8 | 10 7/8 | 37 3/8 | 30 1/2 |
| | 230 | 1 | L10F02 | 2 | 1 1/2 | 3 | 165 | 24 1/4 | 14 3/8 | 12 7/8 | 11 3/8 | 10 7/8 | 37 3/8 | 30 1/2 |
| | | | L10F04 | 4 | 2 | 3 | 170 | 24 1/4 | 14 3/8 | 12 7/8 | 11 3/8 | 10 7/8 | 37 3/8 | 30 1/2 |
| | 230 | 3 | L10H05 | 5 | 4 1/2 | 3 | 173 | 24 7/8 | 14 3/8 | 12 7/8 | 12 | 10 7/8 | 37 3/8 | 30 1/2 |
| | | | L10H10 | 10 | 4 1/2 | 3 | 173 | 24 7/8 | 14 3/8 | 12 7/8 | 12 | 10 7/8 | 37 3/8 | 30 1/2 |
| | | | L10H13 | 13 | 4 1/2 | 3 | 173 | 24 7/8 | 14 3/8 | 12 7/8 | 12 | 10 7/8 | 37 3/8 | 30 1/2 |
| | 460 | 3 | L10T05 | 5 | 4 1/2 | 3 | 173 | 24 7/8 | 14 3/8 | 12 7/8 | 12 | 10 7/8 | 37 3/8 | 30 1/2 |
| | | | L10T10 | 10 | 4 1/2 | 3 | 173 | 24 7/8 | 14 3/8 | 12 7/8 | 12 | 10 7/8 | 37 3/8 | 30 1/2 |
| | | | L10T13 | 13 | 4 1/2 | 3 | 173 | 24 7/8 | 14 3/8 | 12 7/8 | 12 | 10 7/8 | 37 3/8 | 30 1/2 |
| | 575 | 3 | L10V05 | 5 | 3 | 3 | 167 | 24 1/4 | 14 3/8 | 12 7/8 | 11 3/8 | 10 7/8 | 37 3/8 | 30 1/2 |
| | | | L10V10 | 10 | 4 1/2 | 3 | 173 | 24 7/8 | 14 3/8 | 12 7/8 | 12 | 10 7/8 | 37 3/8 | 30 1/2 |
| | | | L10V13 | 13 | 4 1/2 | 3 | 173 | 24 7/8 | 14 3/8 | 12 7/8 | 12 | 10 7/8 | 37 3/8 | 30 1/2 |

| TABLEAU 2 - 2: MODÈLES À DEUX VITESSES / TABLE 2 - 1: SINGLE SPEED MODELS | | | | | | | | | | | | | | | |
|---|---|---|---|---|---|---|---|---|---|---|---|---|---|---|---|
| **Capacité Capacity** | **Volt** | **Phase** | **Modèle Model** | **Vitesse de levage (ppm) Lifting speed (fpm)** | **Hp** | **Retom-bée(s) Chain fall(s)** | **Poids (lbs) incluant crochets et 10' de chaine Weight (lbs) including hooks and chain for 10ft lift** | **Dimensions en pouces (in) Dimensions in inches (in)** | | | | | | |
| | | | | | | | | **A** | **B** | **C** | **D** | **E** | **F** | **G** |
| **MODÈLES À DEUX VITESSES / DUAL SPEED MODELS** | | | | | | | | | | | | | | |
| 1/4 TONNE / TON | 230 | 3 | L05H13X2 | 13 | 4.3 | 1 | 114 | 24 7/8 | 13 1/2 | 12 7/8 | 12 | 10 | 23 7/8 | 18 7/8 |
| | | | L05H20X2 | 20 | 6.7 | 1 | 114 | 24 7/8 | 13 1/2 | 12 7/8 | 12 | 10 | 23 7/8 | 18 7/8 |
| | | | L05H26X2 | 26 | 8.7 | 1 | 114 | 24 7/8 | 13 1/2 | 12 7/8 | 12 | 10 | 23 7/8 | 18 7/8 |
| | | | L05H33X2 | 33 | 11.0 | 1 | 114 | 24 7/8 | 13 1/2 | 12 7/8 | 12 | 10 | 23 7/8 | 21 7/8 |
| | | | L05H40X2 | 40 | 13.3 | 1 | 114 | 24 7/8 | 13 1/2 | 12 7/8 | 12 | 10 | 23 7/8 | 21 7/8 |
| | | | L05H52X2 | 52 | 17.3 | 1 | 114 | 24 7/8 | 13 1/2 | 12 7/8 | 12 | 10 | 23 7/8 | 21 7/8 |
| | 460 | 3 | L05T13X2 | 13 | 4.3 | 1 | 114 | 24 7/8 | 13 1/2 | 12 7/8 | 12 | 10 | 23 7/8 | 18 7/8 |
| | | | L05T20X2 | 20 | 6.7 | 1 | 114 | 24 7/8 | 13 1/2 | 12 7/8 | 12 | 10 | 23 7/8 | 18 7/8 |
| | | | L05T26X2 | 26 | 8.7 | 1 | 114 | 24 7/8 | 13 1/2 | 12 7/8 | 12 | 10 | 23 7/8 | 18 7/8 |
| | | | L05T26X2 | 33 | 11.0 | 1 | 114 | 24 7/8 | 13 1/2 | 12 7/8 | 12 | 10 | 23 7/8 | 21 7/8 |
| | | | L05T40X2 | 40 | 13.3 | 1 | 114 | 24 7/8 | 13 1/2 | 12 7/8 | 12 | 10 | 23 7/8 | 21 7/8 |
| | | | L05T52X2 | 52 | 17.3 | 1 | 114 | 24 7/8 | 13 1/2 | 12 7/8 | 12 | 10 | 23 7/8 | 21 7/8 |
| | 575 | 3 | L05V13X2 | 13 | 4.3 | 1 | 114 | 24 7/8 | 13 1/2 | 12 7/8 | 12 | 10 | 23 7/8 | 18 7/8 |
| | | | L05V20X2 | 20 | 6.7 | 1 | 114 | 24 7/8 | 13 1/2 | 12 7/8 | 12 | 10 | 23 7/8 | 18 7/8 |
| | | | L05V26X2 | 26 | 8.7 | 1 | 114 | 24 7/8 | 13 1/2 | 12 7/8 | 12 | 10 | 23 7/8 | 18 7/8 |
| | | | L05V33X2 | 33 | 11.0 | 1 | 114 | 24 7/8 | 13 1/2 | 12 7/8 | 12 | 10 | 23 7/8 | 21 7/8 |
| | | | L05V40X2 | 40 | 13.3 | 1 | 114 | 24 7/8 | 13 1/2 | 12 7/8 | 12 | 10 | 23 7/8 | 21 7/8 |
| | | | L05V52X2 | 52 | 17.3 | 1 | 114 | 24 7/8 | 13 1/2 | 12 7/8 | 12 | 10 | 23 7/8 | 21 7/8 |
| 1/2 TONNE / TON | 230 | 3 | L1T07X2 | 7 | 2.3 | 1 | 114 | 24 7/8 | 13 1/2 | 12 7/8 | 12 | 10 | 23 7/8 | 18 7/8 |
| | | | L1H13X2 | 13 | 4.3 | 1 | 114 | 24 7/8 | 13 1/2 | 12 7/8 | 12 | 10 | 23 7/8 | 18 7/8 |
| | | | L1H20X2 | 20 | 6.7 | 1 | 114 | 24 7/8 | 13 1/2 | 12 7/8 | 12 | 10 | 23 7/8 | 18 7/8 |
| | | | L1H26X2 | 26 | 8.7 | 1 | 114 | 24 7/8 | 13 1/2 | 12 7/8 | 12 | 10 | 23 7/8 | 18 7/8 |
| | | | L1H33X2 | 33 | 11.0 | 1 | 114 | 24 7/8 | 13 1/2 | 12 7/8 | 12 | 10 | 23 7/8 | 21 7/8 |
| | | | L1H40X2 | 40 | 13.3 | 1 | 114 | 24 7/8 | 13 1/2 | 12 7/8 | 12 | 10 | 23 7/8 | 21 7/8 |
| | | | L1H52X2 | 52 | 17.3 | 1 | 114 | 24 7/8 | 13 1/2 | 12 7/8 | 12 | 10 | 23 7/8 | 21 7/8 |

| | | | | | | | | | | | | | | |
|---|---|---|---|---|---|---|---|---|---|---|---|---|---|---|
| 1/2 TONNE / TON | 460 | 3 | L1T07X2 | 7 | 2.3 | 1 | 114 | 24 7/8 | 13 1/2 | 12 7/8 | 12 | 10 | 23 7/8 | 18 7/8 |
| | | | L1T13X2 | 13 | 4.3 | 1 | 114 | 24 7/8 | 13 1/2 | 12 7/8 | 12 | 10 | 23 7/8 | 18 7/8 |
| | | | L1T20X2 | 20 | 6.7 | 1 | 114 | 24 7/8 | 13 1/2 | 12 7/8 | 12 | 10 | 23 7/8 | 18 7/8 |
| | | | L1T26X2 | 26 | 8.7 | 1 | 114 | 24 7/8 | 13 1/2 | 12 7/8 | 12 | 10 | 23 7/8 | 18 7/8 |
| | | | L1T33X2 | 33 | 11.0 | 1 | 114 | 24 7/8 | 13 1/2 | 12 7/8 | 12 | 10 | 23 7/8 | 21 7/8 |
| | | | L1T40X2 | 40 | 13.3 | 1 | 114 | 24 7/8 | 13 1/2 | 12 7/8 | 12 | 10 | 23 7/8 | 21 7/8 |
| | | | L1T52X2 | 52 | 17.3 | 1 | 114 | 24 7/8 | 13 1/2 | 12 7/8 | 12 | 10 | 23 7/8 | 21 7/8 |
| | 575 | 3 | L1V07X2 | 7 | 2.3 | 1 | 114 | 24 7/8 | 13 1/2 | 12 7/8 | 12 | 10 | 23 7/8 | 18 7/8 |
| | | | L1V13X2 | 13 | 4.3 | 1 | 114 | 24 7/8 | 13 1/2 | 12 7/8 | 12 | 10 | 23 7/8 | 18 7/8 |
| | | | L1V20X2 | 20 | 6.7 | 1 | 114 | 24 7/8 | 13 1/2 | 12 7/8 | 12 | 10 | 23 7/8 | 18 7/8 |
| | | | L1V26X2 | 26 | 8.7 | 1 | 114 | 24 7/8 | 13 1/2 | 12 7/8 | 12 | 10 | 23 7/8 | 18 7/8 |
| | | | L1V33X2 | 33 | 11.0 | 1 | 114 | 24 7/8 | 13 1/2 | 12 7/8 | 12 | 10 | 23 7/8 | 21 7/8 |
| | | | L1V40X2 | 40 | 13.3 | 1 | 114 | 24 7/8 | 13 1/2 | 12 7/8 | 12 | 10 | 23 7/8 | 21 7/8 |
| | | | L1V52X2 | 52 | 17.3 | 1 | 114 | 24 7/8 | 13 1/2 | 12 7/8 | 12 | 10 | 23 7/8 | 21 7/8 |
| 1 TONN / TON | 230 | 3 | L2H07X2 | 7 | 2.3 | 1 | 114 | 24 7/8 | 13 1/2 | 12 7/8 | 12 | 10 | 23 7/8 | 18 7/8 |
| | | | L2H13X2 | 13 | 4.3 | 1 | 114 | 24 7/8 | 13 1/2 | 12 7/8 | 12 | 10 | 23 7/8 | 18 7/8 |
| | | | L2H20X2 | 20 | 6.7 | 1 | 114 | 24 7/8 | 13 1/2 | 12 7/8 | 12 | 10 | 23 7/8 | 18 7/8 |
| | | | L2H26X2 | 26 | 8.7 | 1 | 114 | 24 7/8 | 13 1/2 | 12 7/8 | 12 | 10 | 23 7/8 | 18 7/8 |
| | 460 | 3 | L2T07X2 | 7 | 2.3 | 1 | 114 | 24 7/8 | 13 1/2 | 12 7/8 | 12 | 10 | 23 7/8 | 18 7/8 |
| | | | L2T13X2 | 3 | 4.3 | 1 | 114 | 24 7/8 | 13 1/2 | 12 7/8 | 12 | 10 | 23 7/8 | 18 7/8 |
| | | | L2T20X2 | 20 | 6.7 | 1 | 114 | 24 7/8 | 13 1/2 | 12 7/8 | 12 | 10 | 23 7/8 | 18 7/8 |
| | | | L2T26X2 | 26 | 8.7 | 1 | 114 | 24 7/8 | 13 1/2 | 12 7/8 | 12 | 10 | 23 7/8 | 18 7/8 |
| | 575 | 3 | L2V07X2 | 7 | 2.3 | 1 | 114 | 24 7/8 | 13 1/2 | 12 7/8 | 12 | 10 | 23 7/8 | 18 7/8 |
| | | | L2V13X2 | 3 | 4.3 | 1 | 114 | 24 7/8 | 13 1/2 | 12 7/8 | 12 | 10 | 23 7/8 | 18 7/8 |
| | | | L2V20X2 | 20 | 6.7 | 1 | 114 | 24 7/8 | 13 1/2 | 12 7/8 | 12 | 10 | 23 7/8 | 18 7/8 |
| | | | L2V26X2 | 26 | 8.7 | 1 | 114 | 24 7/8 | 13 1/2 | 12 7/8 | 12 | 10 | 23 7/8 | 18 7/8 |
| 1/2 TONNE / TONS | 230 | 3 | L3H13X2 | 13 | 4.3 | 1 | 114 | 24 7/8 | 13 1/2 | 12 7/8 | 12 | 10 | 24 3/8 | 21 1/2 |
| | 460 | 3 | L3T13X2 | 13 | 4.3 | 1 | 114 | 24 7/8 | 13 1/2 | 12 7/8 | 12 | 10 | 24 3/8 | 21 1/2 |

| TABLEAU 2 - 2: MODÈLES À DEUX VITESSES / TABLE 2 - 1: SINGLE SPEED MODELS | | | | | | | | | | | | | | |
|---|---|---|---|---|---|---|---|---|---|---|---|---|---|---|
| **Capacité Capacity** | **Volt** | **Phase** | **Modèle Model** | **Vitesse de levage (ppm) Lifting speed (fpm)** | **Hp** | **Retom-bée(s) Chain fall(s)** | **Poids (lbs) incluant crochets et 10' de chaine Weight (lbs) including hooks and chain for 10ft lift** | **Dimensions en pouces (in) Dimensions in inches (in)** | | | | | | |
| | | | | | | | | **A** | **B** | **C** | **D** | **E** | **F** | **G** |
| **MODÈLES À DEUX VITESSES** | | | | | | | | | | | | | | |
| 1 1/2 TONNE / TON | 575 | 3 | L3V13X2 | 13 | 4.3 | 1 | 114 | 24 7/8 | 13 1/2 | 12 7/8 | 12 | 10 | 24 3/8 | 21 1/2 |
| 2 TONNES / TONS | 230 | 3 | L4H10X2 | 10 | 3.3 | 2 | 137 | 24 7/8 | 13 1/2 | 12 7/8 | 12 | 10 | 31 3/8 | 25 1/4 |
| | | | L4H13X2 | 13 | 4.3 | 2 | 137 | 24 7/8 | 13 1/2 | 12 7/8 | 12 | 10 | 31 3/8 | 25 1/4 |
| | 460 | 3 | L4T10X2 | 10 | 3.3 | 2 | 137 | 24 7/8 | 13 1/2 | 12 7/8 | 12 | 10 | 31 3/8 | 25 1/4 |
| | | | L4T13X2 | 3 | 4.3 | 2 | 137 | 24 7/8 | 13 1/2 | 12 7/8 | 12 | 10 | 31 3/8 | 25 1/4 |
| | 575 | 3 | L4V10X2 | 10 | 3.3 | 2 | 137 | 24 7/8 | 13 1/2 | 12 7/8 | 12 | 10 | 31 3/8 | 25 1/4 |
| | | | L4V13X2 | 13 | 4.3 | 2 | 137 | 24 7/8 | 13 1/2 | 12 7/8 | 12 | 10 | 31 3/8 | 25 1/4 |
| 3 TONNES / TONS | 230 | 3 | L6H07X2 | 7 | 2.3 | 2 | 140 | 24 7/8 | 13 1/2 | 12 7/8 | 12 | 10 | 31 3/8 | 25 1/4 |
| | 460 | 3 | L6T07X2 | 7 | 2.3 | 2 | 140 | 24 7/8 | 13 1/2 | 12 7/8 | 12 | 10 | 31 3/8 | 25 1/4 |
| | 575 | 3 | L6V07X2 | 7 | 2.3 | 2 | 140 | 24 7/8 | 13 1/2 | 12 7/8 | 12 | 10 | 31 3/8 | 25 1/4 |

# Dimensions des crochets / Hook dimensions

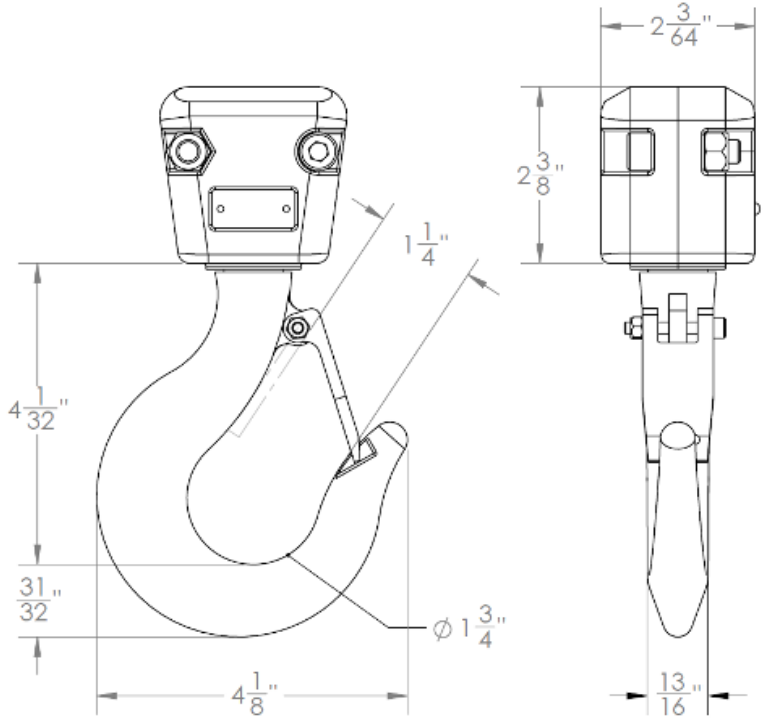


**Une retombée (1/4T - 1T)**
**1 chain fall (1/4T - 1T)**

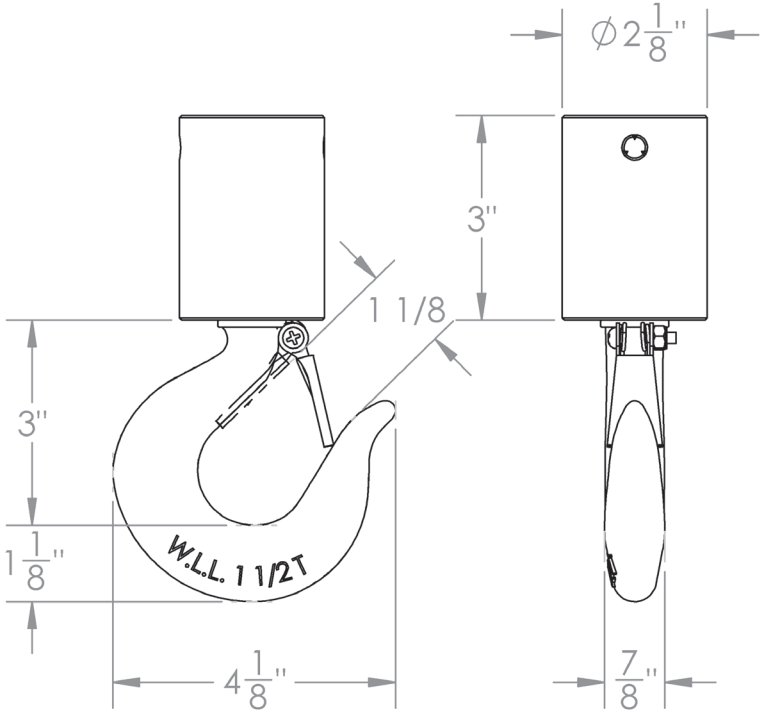


**Une retombée (1/4T - 1 1/2 T)**
**1 chain fall (1/4T - 1 1/2 T)**

# Dimensions des crochets / Hook dimensions

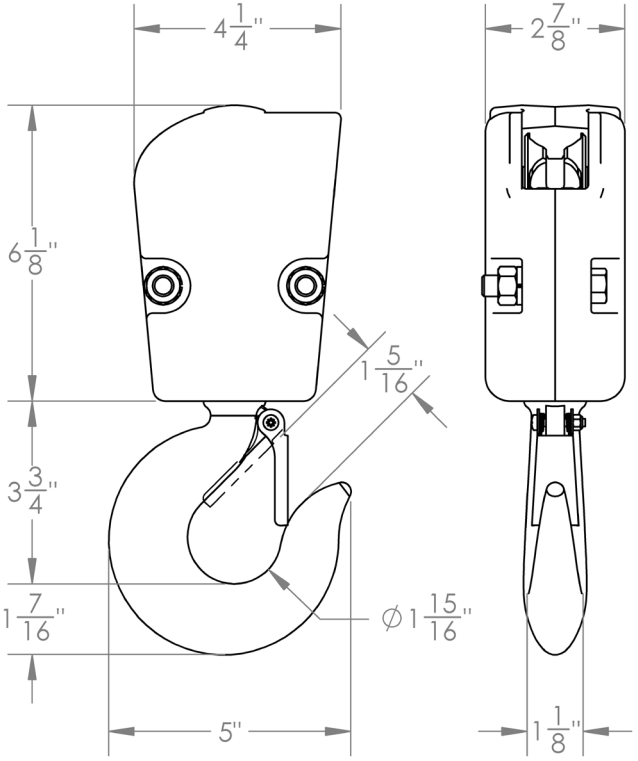


**2 retombées (2T - 3T)**
**2 chain falls (2T - 3T)**

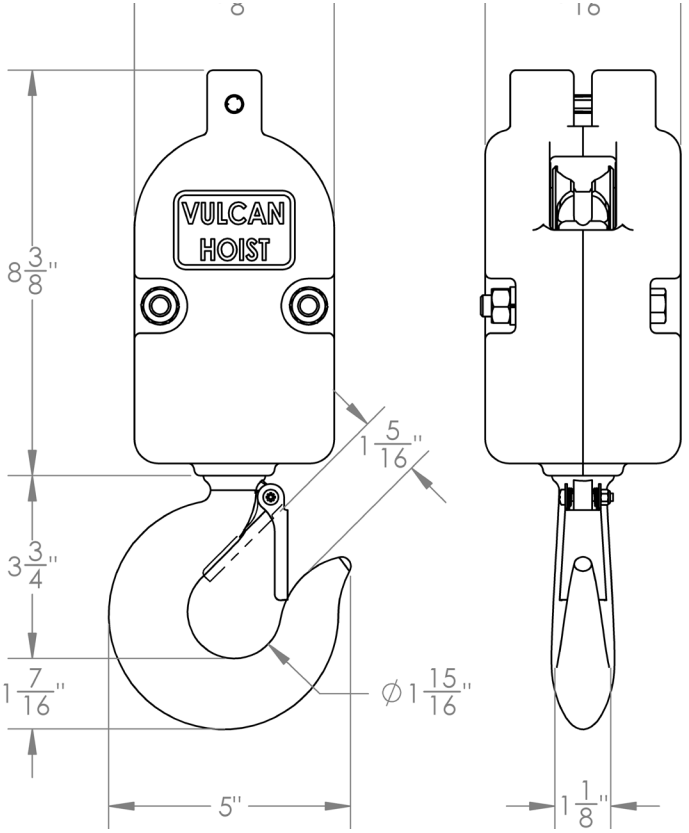


**3 retombées (3T et 5T)**
**3 chain falls (3T and 5T)**

# Caractéristiques techniques du palan / Hoist specifications

NUMÉRO DE COMMANDE / ORDER NUMBER: _____

NUMÉRO DE MODÈLE / MODEL NUMBER: _____

NUMÉRO DE SÉRIE / SERIAL NUMBER: _____

DATE D'ACHAT / PURCHASE DATE : _____

TENSION / VOLTAGE: _____

CHARGE NOMINALE / RATED LOAD : _____

HAUTEUR DE LEVAGE / LIFT HEIGHT : _____

TAILLE DU PANIER DE CHAÎNE / CHAIN CONTAINER SIZE: _____

TRAITEMENT DE LA CHAÎNE (AUCUN OU ZINC) / CHAIN TREATMENT (BARE OR ZINC) : _____

## IMPORTANT

AVANT D'UTILISER LE PALAN, MESURER LES TROIS DIMENSIONS INDIQUÉES
CI-DESSOUS ET PRENEZ-LES EN NOTE : /
BEFORE USING, TAKE AND RECORD THE FOLLWING 3 DIMENSIONS AS SHOWN BELOW:

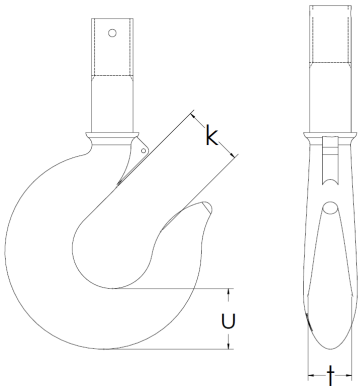


| | |
|---|---|
| k | |
| t | |
| u | |

**LISTE DE PIECES ET**
**MANUEL D'OPÉRATION**

**CHARIOT ÉLECTRIQUE VULCAN**

**PARTS LIST AND**
**OPERATING INSTRUCTIONS**

**VULCAN ELECTRIC TROLLEY**

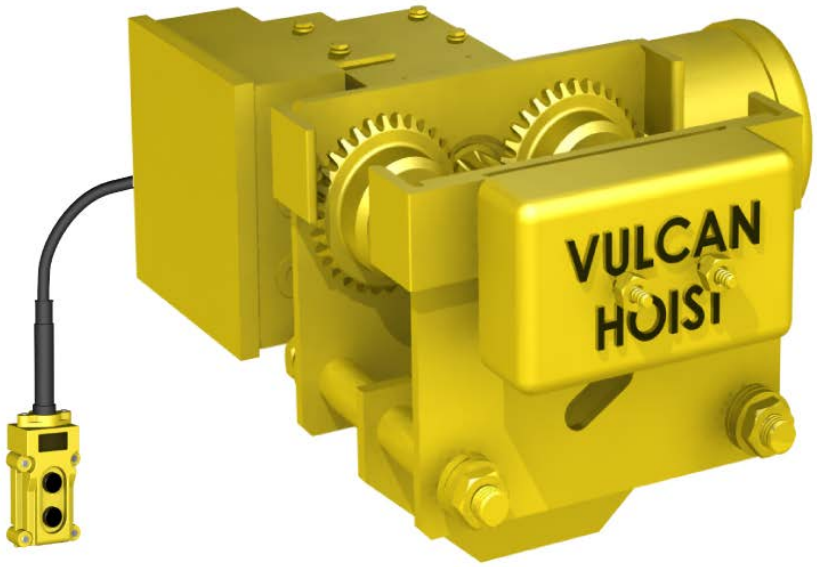







C SA US

VULCAN
HOIST - PALAN

Vulcan Cie de Palans Ltée / The Vulcan Hoist Company Ltd.
3435, Crémazie est, Montréal (Québec) Canada, H1Z 2J2
Tél. : 514 728.4527 Fax : 514 374.4231

MARCHE À SUIVRE POUR L'INSTALLATION ET L'UTILISATION DE VOTRE
**CHARIOT ÉLECTRIQUE VULCAN**

1. Votre CHARIOT ELECTRIQUE VULCAN est l'un des plus sécuritaires qu'il y ait sur le marché
   Il a été conçu pour vous donner des années de service, tout en étant économique
   Avant d'expédier un chariot, il est testé pour s'assurer qu'il soit sécuritaire et que tous les contrôles fonctionnent comme ils se doivent
   Un test électrique et mécanique avec pleine charge est aussi effectué.
2. L'huile dans ce chariot est de l'huile à engrenage de grade 320
   Pour utilisation extérieure ou condition extrême : huile synthétique à engrenage de grade 220.
3. *CYCLE DE TRAVAIL*: continuel
   2 vitesses avec ratio autre que 2/1 , cycle de travail est
   1 minute en marche - 3 minutes arrêt pour **basse vitesse seulement.**
4. Après avoir déballé votre chariot, assurez-vous:
   A. qu'il n'ait pas été endommagé lors du transport
   B. que la capacité soit adéquate à vos besoins
   C. que le voltage, phase et cycle soient selon ce que vous avez commandé et disponibles sur les lieux
   D. que l'ajustement des boulons d'ancrage soit bien de la même largeur que votre poutre
   E. que votre poutre soit bien pour des roues de type I ou de type H.
5. RACCORDEMENTS ÉLECTRIQUES: votre chariot est muni d'un dispositif contre une surcharge électrique. Il est très important que vous installiez un fusible selon les indications de la plaque signalétique de votre chariot / palan
   En démarrant, votre chariot / palan prendront de 3 à 4 fois l'ampérage normal **sur 1 phase.**
6. INSTALLATION
   A. Enlever l'arrêt à l'une des extrémités de la poutre et insérer le chariot par le côté (p.8, FIG.1)
   B. S'il n'y a pas d'accès par l'extrémité de la poutre, enlever les noix des boulons d'ancrage d'un côté du chariot, placer une paire de roues sur un côté de la poutre, ensuite , placer l'autre paire de roues sur l'autre côté de la poutre, et réinstaller les boulons d'ancrage et les noix. (p.8, FIG.2)
   C. IMPORTANT: assurez-vous que toutes les entretoises (spacers), rondelles et noix soient aux bons endroits, (p.8, FIG.2)
      Il ne doit pas y avoir plus que 3/16" d'espace entre les roues et la poutre
   D. Les chariots **1 TONNE** équipés d'un arrêt d'urgence et d'une alarme dans le panneau de raccordements, sont munis d'une roue d'ajustement pour prévenir un débalancement du chariot. La roue est montée sur une rainure conique. Lorsque le chariot est installé, vérifier pour qu'il soit au niveau, ensuite pousser la roue d'ajustement en montant, jusque sous la base de la poutre et resserrer les noix . (p.8, FIG.3)

OPERATING AND INSTALLATION INSTRUCTIONS FOR
**VULCAN ELECTRIC TROLLEY**

1. Your **VULCAN ELECTRIC TROLLEY** is one of the safest yet, the simplest on the market.
   It has been engineered to give you years of economic service
   Each and every electric trolley is factory tested for safety and to insure that all electrical controls are working.
2. There is oil in this trolley : gear oil grade 320
   outdoor or extreme conditions : synthetic gear oil grade 220
3. *:Duty cycle:* continuous
   2 speed trolley with ratio's more than 2 to 1 , duty cycle is
   1 minute on - 3 minutes off on **low speed only**
4. After removing your Vulcan Trolley from the box:
   A. verify if damaged in transport
   B. verify if capacity meets your needs
   C. verify if voltage, phase and cycle are correct and available on site
   D. verify if the flange width is adjusted to the proper width of your beam
   E. verify if beam matches wheels I or H beam.
5. ELECTRICAL CONNECTIONS: your trolley is equipped with an electric overload.
   So, it is important that you fuse your trolley / hoist according to name plate
   Remember, **on single phase** your trolley / hoist will surge 3 to 4 times amperage when starting.
6. INSTALLATION
   A. Remove stopper at one end of the beam and push the trolley on the beam (p.8, FIG.1)
   B. If you do not have access to the beam from the ends, remove nuts from stay bolts on one side of trolley. Place one set of wheels on beam flange, then, place other set of wheels on the other side of beam, and then, reinstall nuts on stay bolts (p.8, FIG.2)
   C. IMPORTANT: verify if all spacers, lock washers & nuts are in the correct places, (p.8, fig.2)
      There should be no more than 3/16" gap between wheels & beam
   D. On **1 TON** Vulcan electric trolleys with stop and alarm in control panel, there is an under running wheel on trolley: this is to prevent trolley from being out of balance. The wheel is mounted on a tapered slot. When the trolley is installed, check if trolley is levelled, then push the under running wheel up to the under side of beam flange and tighten the nuts
      (p.8, FIG. 3)
   E. Install hoist on trolley
   F. Install cable from hoist into trolley connections, connect numbered leads to the same number on terminal block. **Do not change any internal connection.**

E. Installer le palan sur le chariot

F. Raccorder les fils du palan dans le bornier du chariot, raccorder les fils numérotés aux fils de mêmes numéros ou au bornier. **Ne changer aucun raccordement interne.**

7. RACCORDEMENT du courant simple phase 115 ou 230 volts

   Il n'y a pas de raccordement spécial. Pour vous assurer que le fil soit du bon calibre VULCAN HOIST recommande de faire vérifier par un électricien. Lorsque le chariot est à L'EXTRÉMITÉ de la poutre, vérifiez l'ampérage du palan: figurez la longueur de votre poutre et ajoutez la distance de l'entrée de l'HYDRO.

   A. Un fil trop petit créera un bas voltage et fera brûler le moteur, **même s'il n'y a aucune charge sur le chariot / palan**

   B. Pour un meilleur rendement en simple phase , il est toujours recommandé de raccorder le chariot au 230V. Un moteur raccordé à 230V. prend 50% moins d'ampérage qu'à 115V. et la grosseur du fil n'est pas aussi importante que pour 115V
   Le 230V. est disponible dans TOUS les systèmes desservis par HYDRO

   C. 115 volts: il est déconseillé de raccorder le chariot / palan dans une prise murale. Certains modèles de palans 1/2 H.P. opéreront dans une prise murale, **mais pas** lorsqu'il y a une baisse de voltage. Tous les palans avec moteur 1.5 HP (20 amps approx. ) sont conçus pour être raccordés **à l'entrée** de l'Hydro et avec la grosseur de fil adéquate
   Les chariots sont munis d'un moteur ½ HP minimum. **Voir page #32 du manuel palan électrique.**

8. RACCORDEMENT du courant triphasé 208/230/380/460/575

   A. Direction droite ou gauche: pas de différence à moins qu'il y ait des interrupteurs de fin de course fournis avec le chariot, auquel cas, des directives spéciales seront fournies avec le chariot

   B. Toujours vérifier les directives d'opération du palan pour vous assurer qu'il soit raccordé au bon voltage et phase et que les interrupteurs de fin de course fonctionnent adéquatement.

9. CONSEILS DE SÉCURITÉ

   Votre chariot VULCAN est maintenant installé et raccordé

   A. La capacité a été vérifiée

   B. Voltage, phase et cycle ont été raccordés

   C. Les interrupteurs de fin de course du palan ont été vérifiés, ainsi que ceux du chariot, si applicable

   D. Vérifier la longueur du fil du bouton poussoir: s'il est trop long, le raccourcir à la longueur requise

   E. Les dimensions de la poutre ont été vérifiées

7. SINGLE PHASE power connection instructions 115 or 230 volts

   There is no special connection. VULCAN HOIST CO. LTD recommends that a qualified electrician verifies to insure that your wiring is adequate. Verify amperage of trolley and hoist and distance to HYDRO inlet , when trolley and hoist are at the FAR END of beam.

   A. Inadequate wiring will cause low voltage and motor burn out, **even if there is no load on trolley / hoist**

   B. It is always recommended that you connect your trolley on 230 volts for best single-phase service. Advantages over 115 volts: motor draws 50% less amperage and wire size is not as critical as on 115 volts

      230v. is available in ALL systems serviced by Hydro

   C. 115 volts: it is not recommended that you plug your trolley into household type outlets. Some 1/2 H.P. models will operate in normal household plugs, **but not** where low voltage occurs.

      All hoists with 1 ½ H.P. motor (approx. 20 amps) are designed and engineered to be connected with correct wire size to your Hydro **outlet**

      Trolleys are equipped with ½ H.P motor, minimum

      **See page #32 electric hoist catalogue.**

8. THREE PHASE power connection instructions 208/230/380/460/575

   A. Trolley direction left or right makes no difference unless supplied with limits.

      If there are limits, special instructions will come with trolley

   B. Always check operation instructions for hoist to be sure it is phased correctly and limits are working.

9. OPERATION SAFETY

   Now your VULCAN trolley has been installed and connected

   A. Capacity has been verified
   B. Voltage, phase and cycle have been connected
   C. Limits have been verified on hoist and trolley, if applicable
   D. Verify if push button cable is at proper length,if too long, shorten cable to required length
   E. Beam dimensions have been checked
   F. Verify if nuts are tight against the stay bolts
   G. Always lift straight up, not sideways
   H. NEVER pull or lift people with hoist / trolley
   I. NEVER pull or lift load over people
   J. Always operate complete travel of trolley, hoist and crane to ensure that motors or electric components cannot come in contact with foreign objects.

F. Vérifier si les noix sont bien serrées sur les boulons d'ancrage
G. Toujours lever une charge tout droit, pas de coté
H. Ne JAMAIS tirer ou lever de personne avec un chariot / palan
I. Ne JAMAIS tirer ou lever de charge au-dessus d'une personne
J. Toujours faire un trajet complet du chariot, du palan et du pont roulant, pour s'assurer qu'aucune de ces machines ou composantes ne viennent en contact avec rien d'autre.

10. GARANTIE:

Votre chariot VULCAN est GARANTI POUR DEUX (2) ANS contre tout défaut de matériel et/ou de fabrication et ce, à compter de la date d'achat

A. Avant de commencer une réparation ou une modification, VULCAN HOIST doit donner son approbation pour valider la garantie
B. Aucun crédit ne sera émis pour pièces défectueuses. Vulcan enverra seulement des pièces de rechange, sujettes à inspection de garantie
C. Le coût de la main-d'œuvre sera accordé à un taux prédéterminé, selon la nature de la réparation
D. Pour des réparations majeures: transmission ou composantes d'entraînement, le chariot doit être retourné PRÉPAYÉ chez Vulcan Hoist, pour inspection et / ou réparation.
Si la réparation est faite sous garantie, le chariot sera retourné prépayé.

11. ENTRETIEN À FAIRE À TOUS LES 3 MOIS

A. Vérifier s'il n'y a pas de fuite d'huile provenant de la transmission. Le niveau d'huile doit être maintenu afin d'éviter l'usure prématurée de l'engrenage
B. Vérifier l'ajustement du frein. (si applicable)
C. Vérifier les disjoncteurs de tension # 11 afin que les fils d'alimentation et des boutons soient raccordés comme ils se doivent
D. Vérifier si la plaque de suspension est usée
E. Afin de prévenir un bris du bouton et du fil du bouton, vérifier si le tendeur de fil # 8C n'est pas endommagé
F. Visuellement, vérifier si les roues et l'arbre du pinion ne sont pas usés, ensuite les graisser
G. Vérifier si les interrupteurs de fin de course fonctionnent :les faire fonctionner manuellement si applicable
H. Vérifier si les noix #ET57 sont bien serrées sur les boulons d'ancrage # ET54
I. Changer l'huile de la transmission et la vidanger une fois l'an. Ceci prolongera la vie de la transmission
J. Les coussinets des roues et le coussinet de l'arbre du pinion sont lubrifiés à vie.

10. WARRANTY

    Your Vulcan trolley is guaranteed against defects in materials & workmanship **FOR 2 YEARS** from the date of purchase

    A. VULCAN HOIST must approve all guarantees, **before starting** any repairs or alterations
    B. No credit will be issued for defective part; **Vulcan** will ship **only** replacement parts, subject to warranty inspection
    C. Labour will be paid on a pre-set rate according to problem
    D. For major problems, transmission or drive components, trolley must be returned, PREPAID, to Vulcan Hoist for inspection and repair. If trolley is repaired on guarantee, it will be returned prepaid.

11. MAINTENANCE INSTRUCTIONS TO PERFORM EVERY 3 MONTHS

    A. Verify transmission for oil leaks

       Oil level must be maintained to prevent premature gear wear
    B. Verify brake adjustment (if applicable)
    C. Verify the power and push button strain relievers #11 to insure proper electrical connections
    D. Verify if suspension plate is worn
    E. Verify push button and strain reliever wire # 8C for damage

       This will prevent damage to push button or push button cable
    F. Visually, verify wheels and pinion shaft for wear; grease wheels & pinion shaft
    G. Verify if limits are working, by manually operating limit switches (if applicable)
    H. Verify if nuts #ET57 are tight on stay bolts #ET54
    I. Change oil and flush transmission yearly to prolong transmission life
    J. Wheel ball bearings and pinion shaft ball bearing are life time lubricated.

When ordering parts, always specify model & serial # on trolley name plate (not motor)

## INSTALLATION

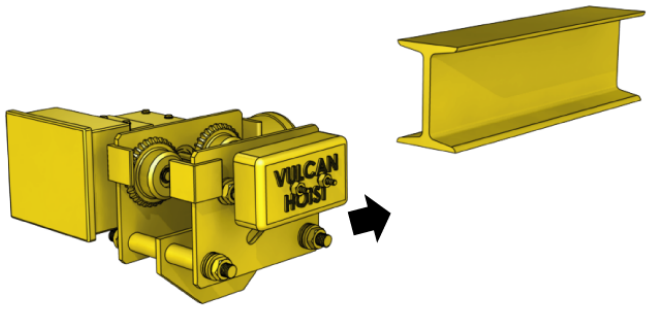


fig. 1

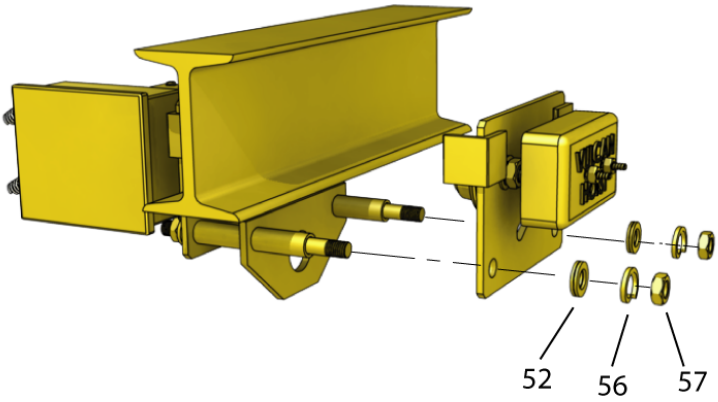


fig. 2

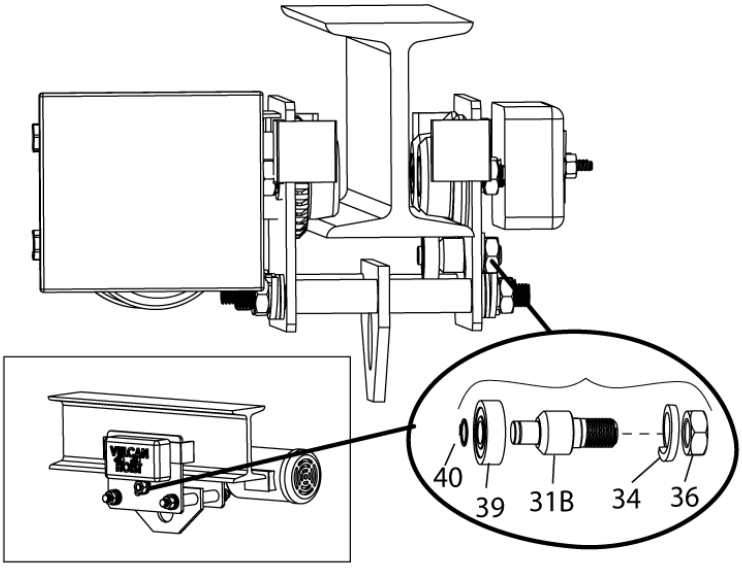


fig. 3

#31B on 1 ton only

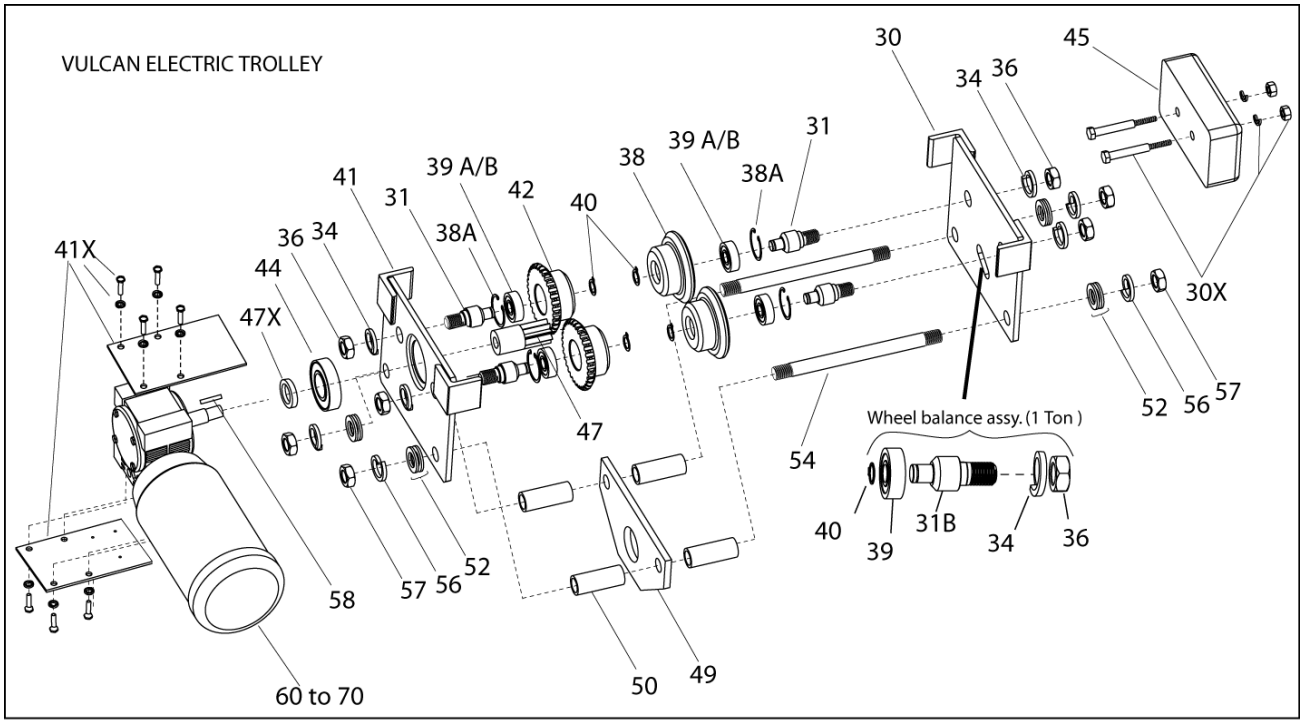


| # | TROLLEY PARTS | QTY |
|---|---|---|
| ET 30 | Plain side plate, including #30X | 1 |
| ET 30 **X** | Mounting bolts for #45 + nuts & lock washers | 2 sets |
| ET 31 | Wheel pins | 4 |
| ET 31B | Wheel pin for balance (on 1 Ton only) see pages 2/3, 6D | 1 |
| ET 33 | Name plate with 3 rivets | 1 |
| ET 34 | Lock washers | 4 |
| ET 36 | Hexagon nuts | 4 |
| ET 38 | Plain wheels | 2 |
| ET 38A | Snap rings for wheels | 4 |
| ET 39A | Ball Bearings (1 to 3T) | 4 |
| ET 39B | Ball Bearings (5T. and over) | 8 |
| ET 40 | Snap rings for #31 | 4 |
| ET 41 | Gear side plate includes #41X | 1 |
| ET 41 **X** | Gear box mounting plates with bolts & lock washers | 2 sets |
| ET 42 | Gear wheels | 2 |
| ET 44 | Pinion bearing | 1 |
| ET 45 | Counterweight | 1 |
| ET 47 | Pinion, including #47X | 1 |
| ET 47 **X** | shim for pinion | 1 |
| ET 49 | Suspension plate | 1 |
| ET 50 | Stay pipe adjustment collars | 4 |
| ET 52 | Adjustment washers | variable |
| ET 54 | Stay bolts, short or long | 2 |
| ET 56 | Lock washers | 4 |
| ET 57 | Hexagon nuts | 4 |
| ET 58 | Key for pinion | 1 |
| ET 59 | Key for motor ( not illustrated ) | 1 |
| | **MOTOR ½ HP** | |
| ET 60 | 1800 RPM ODP All voltages & phases | 1 |
| ET 62 | 1800 RPM TEFC All voltages & phases | 1 |
| ET 66 | 3600 RPM All voltages & phases | 1 |
| ET 68 | 2 Speeds 1800-900 RPM All voltages, 3 phase | 1 |
| ET 70 | 2 Speeds All voltages, 3 phase | 1 |

**X**=WELDING REQUIRED

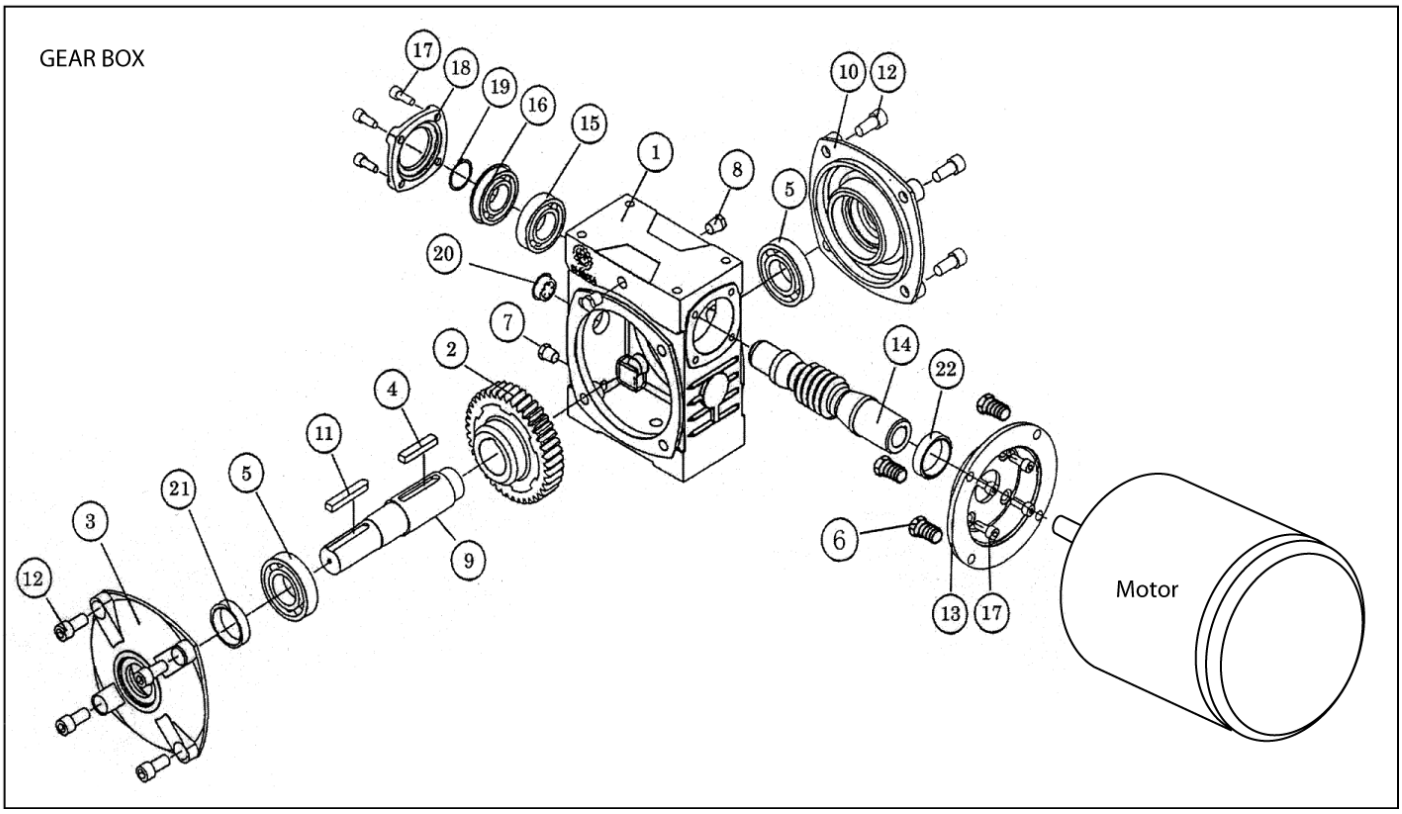


| # | GEAR BOX PARTS | QTY | COMMENTS |
|---|---|---|---|
| ET 1 | Housing | 1 | |
| ET 2 | Worm gear | 1 | |
| ET 3 | Output cover for shaft end | 1 | |
| ET 4 | Key | 1 | Specify length & diameter |
| ET 5 | Bearing | 2 | |
| ET 6 | Mounting bolts for motor | 4 | |
| ET 7 | Plug | 1 | |
| ET 8 | Plug | 3 | |
| ET 9 | Output shaft | 1 | Specify complete dimension or sample |
| ET 10 | Output cover not shaft end | 1 | |
| ET 11 | Key | 1 | |
| ET 12 | Socket head cap screw | 8 | |
| ET 13 | Motor adaptor flange | 1 | |
| ET 14 | Input shaft (worm shaft) | 1 | |
| ET 15 | Bearing | 1 | |
| ET 16 | Bearing | 1 | |
| ET 17 | Socket head cap screw | 8 | |
| ET 18 | Input cover | 1 | |
| ET 19 | Snap ring | 1 | |
| ET 20 | Oil gauge | 1 | Comes with #1 |
| ET 21 | Output seal for pinion | 1 | |
| ET 22 | Input seal | 1 | In #1 or in #13 new style |
| ET 23 | Oil | 7oz | |
| ET 24 | Synthetic oil | 7oz | |
| ET 25 | **Complete gear box ( # 1 TO # 23 )** | 1 | Specify reduction , 5 10 15 20 40 50 to 1 |

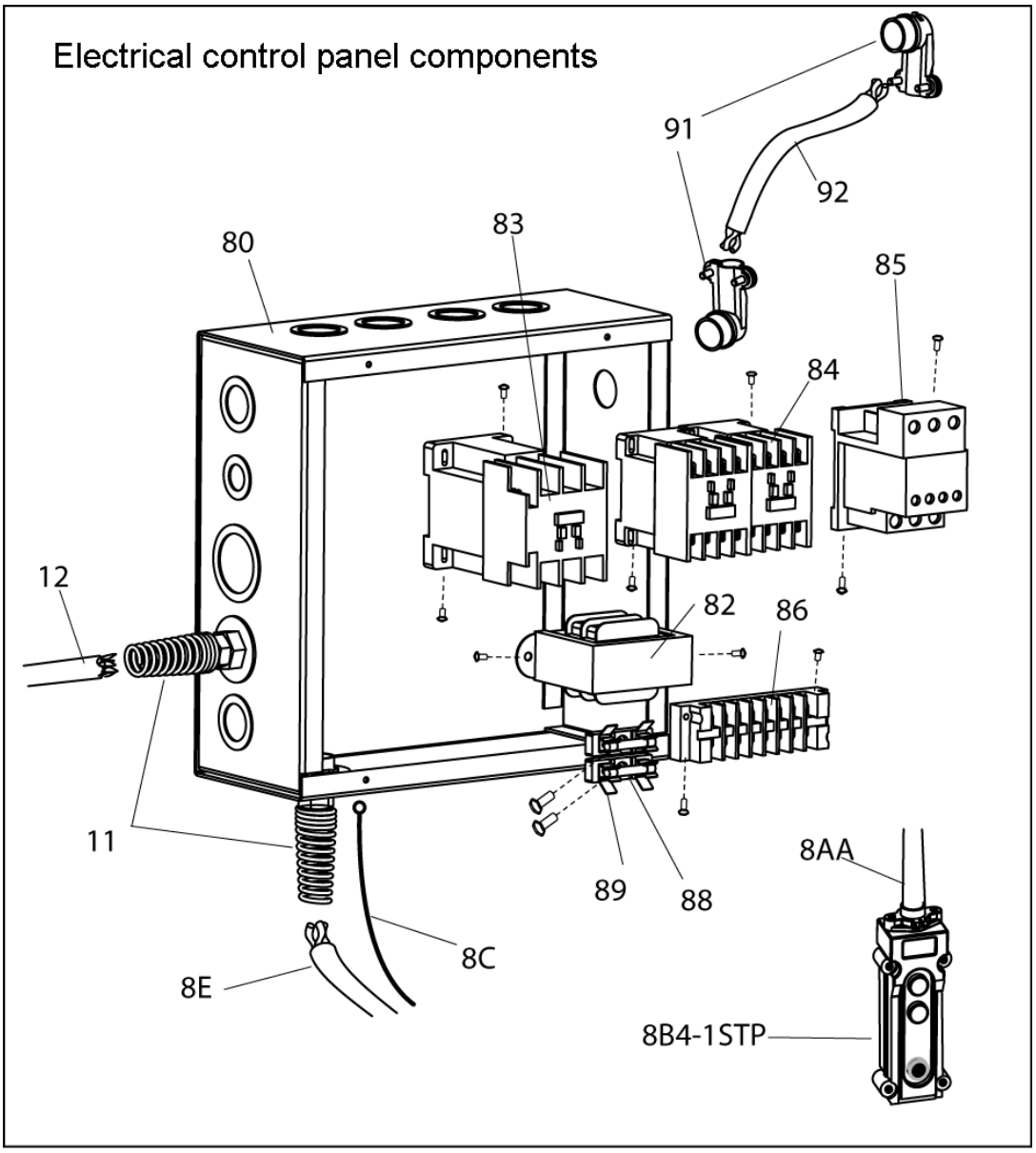


| # | ELECTRICAL COMPONENTS | QTY |
|---|---|---|
| 8AA | Grummet ( rubber ) | 1 |
| 8B4-1STP | Pendant control-specify how many buttons & functions | 1 |
| 8C | Strain reliever wire w/2 oval sleeves-specify length | 1 |
| 8E | Push button cable-specify length | 1 |
| 11 | Strain reliever for push button & power cable | 2 |
| 12 | Power cable | 1 |
| ET 80 | Control panel | 1 |
| ET 81 | Nema 4 control panel ( not illustrated ) | 1 |
| ET 82 | Transformer w/bolt & lock washer-specify voltage & phase | 1 |
| ET 83 | Main line contactor w/2bolts & 2 lock washers | 1 |
| ET 84 | Contactor w/2bolts & 2 lock washers | 1 |
| ET 85 | Overload relay w/2bolts & 2 lock washers | 1 |
| ET 86 | Terminal block w/2bolts & 2 lock washers | 1 |
| ET 88 | Fuse | 2 |
| ET 89 | Fuse holder w/2bolts & 2 lock washers | 2 |
| ET 91 | 90° connector for motor | 2 |
| ET 92 | Cable for motor | 2 ft |

## ÉGALEMENT DISPONIBLE – ALSO AVAILABLE

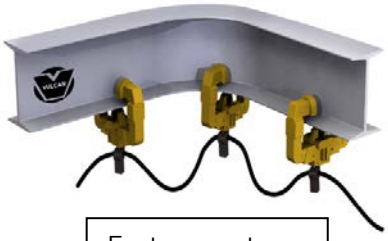

Festoon system



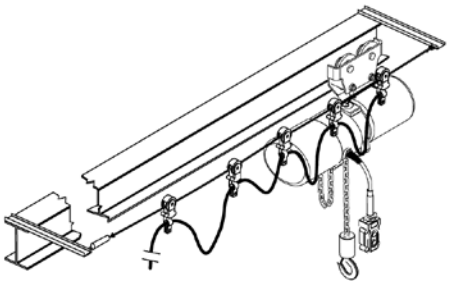




***NOUVEAU - NEW***



Plate clamp –
Pince pour plaque









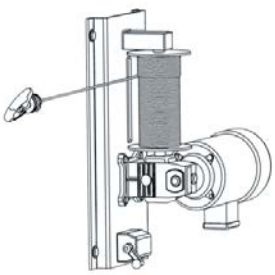

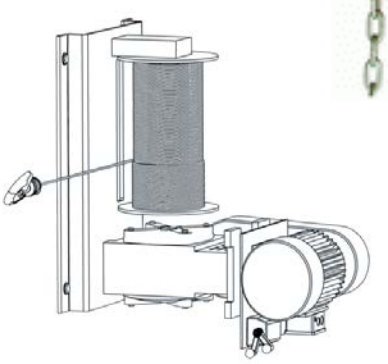



PCP
Pompes & équipements

# ULTRASONIC SENSOR SODIUM HYDROXIDE AND SODIUM THIOSULFATE FMU30-CAHGAARGF

**Workshop drawing :**

- ☐ Approuved as is
- ☐ Approuved with correction(s)
- ☐ Rejected

**Approuved by**

Name : _____

Title : _____

Compagnie : _____

Signature : _____

AGNICO EAGLE

**Vendor Document Status**

| | |
|---|---|
| 1 ☐ | Proceed to next submission and status. |
| 2 ☐ | Proceed with exceptions as noted to next submission and status. |
| 3 ☐ | Do not proceed. Revise as noted and resubmit next submission and status. |
| 4 ☑ | Complete, no further submission required. |

By: Sébastien Perron Instrumentation Date: 2021-03-18

Review and authorization to fabricate are only for general conformance with the design concept of the Project as expressed in the Contract Documents. Sole responsibility for the accuracy and completeness of this document, including but not limited to dimensions and quantities, remains with the Supplier/Contractor. Agnico Eagle does not warrant the accuracy or completeness of any of the information contained herein, nor does Agnico Eagle authorize or approve any construction means, methods, techniques, sequences or any safety precautions or procedures.

Agnico Eagle No. 3.02 6526-S265-605B-135_SENSOR CAUSTIC_FMU30-CAHGAARGF R: SENSOR CAUSTIC_FMU30-CAHGA

**DOCUMENT FOR INFORMATION**

Level | Pressure | Flow | Temperature | Liquid Analysis | Registration | Systems Components | Services | Solutions

Technical Information

# Prosonic T FMU30

## Ultrasonic Level Measurement
## Compact transmitters for non-contact level measurement of fluids, pastes and coarse bulk materials





### Application

- Continuous, non-contact level measurement in fluids, pastes, sullages and coarse bulk materials
- System integration via 4 to 20 mA
- Maximum measuring range:
  - 1½" sensor: 5 m (16 ft) in fluids
    2 m (6 ft) in bulk materials
  - 2" sensor: 8 m (26 ft) in fluids
    3.5 m (11 ft) in bulk materials

### Features and benefits

- Quick and simple commissioning via menu-guided on-site operation with four-line plain text display; 7 languages selectable
- Envelope curves on the on-site display for simple diagnosis
- Linearization function (up to 32 points) for conversion of the measured value into any unit of length, volume or flow rate
- Non-contact measurement method minimizes service requirements
- Installation possible from thread G 1½“ or NPT 1½“ upwards
- Integrated temperature sensor for automatic correction of the temperature dependent sound velocity

TI00440F/00/EN/15.14
71225633

Endress+Hauser
People for Process Automation

# Function and system design

**Measuring principle**

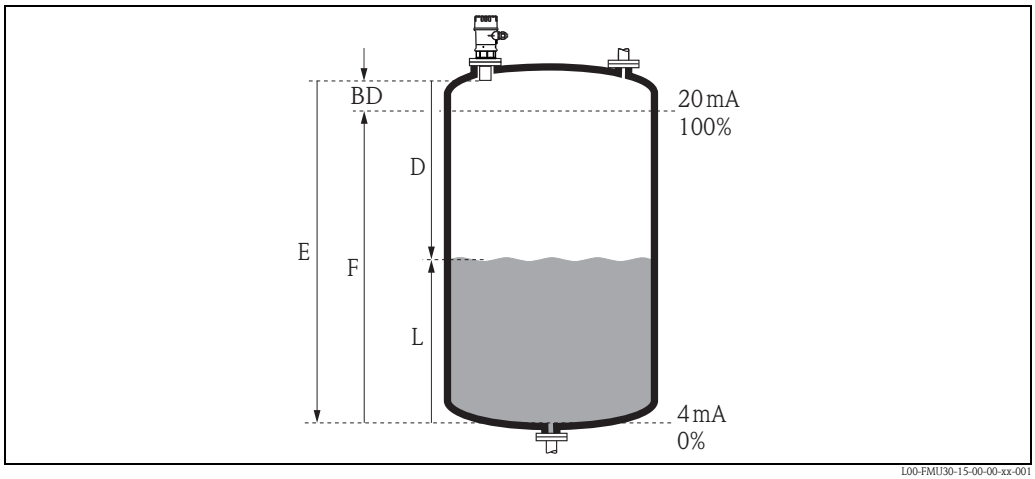


*BD* *Blocking distance*
*D* *Distance from sensor membrane – product surface*
*E* *Empty distance*
*F* *Span (full distance)*
*L* *Level*

| Sensor | BD | Max. range fluids | Max. range bulk materials |
|---|---|---|---|
| 1½" | 0.25 m (0.8 ft) | 5 m (16 ft) | 2 m (6.6 ft) |
| 2" | 0.35 m (1.1 ft) | 8 m (26 ft) | 3.5 m (11 ft) |

### Time-of-flight method

The sensor of the instrument transmits ultrasonic pulses in the direction of the product surface. There, they are reflected back and received by the sensor. The instrument measures the time t between pulse transmission and reception. The instrument uses the time t (and the velocity of sound c) to calculate the distance D between the sensor membrane and the product surface:

$D = c \cdot t/2$

As the device knows the empty distance E from a user entry, it can calculate the level as follows:

$L = E - D$

An integrated temperature sensor (NTC) compensates for changes in the velocity of sound caused by temperature changes.

### Interference echo suppression

The interference echo suppression feature on the instrument ensures that interference echos (e.g. from edges, welded joints and installations) are not interpreted as a level echo.

### Calibration

Enter the empty distance E and the span F to calibrate the device.

### Blocking distance

Span F may not extend into the blocking distance BD. Level echos within the blocking distance cannot be evaluated due to the transient characteristics of the sensor.

| | |
|---|---|
| **Supply voltage** | 14-35 V |
| **Terminals** | Cable cross-section: 0.25 to 2.5 mm2 (24 to 14 AWG) |
| **Cable entry** | G ½" or ½" NPT |
| **Cable gland** | M20x1.5 (recommended cable diameter 6 to 10 mm (0.24 to 0.39 in)) |
| **Power consumption** | 51 mW to 800 mW |
| **Current consumption** | 3.6 to 22 mA |

# Performance characteristics

| | |
|---|---|
| **Reaction time** | The reaction time depends on the parameter settings. The minimum value is: min. 2 s |
| **Reference operating conditions** | ■ Temperature = +20 °C (+68 °F)<br>■ Pressure = 1013 mbar abs. (15 psi abs.)<br>■ Humidity = 50 %<br>■ Ideal reflective surface (e.g. calm, smooth fluid surface)<br>■ No interference reflections within signal beam<br>■ Set application parameters:<br>– Tank shape = dome ceiling<br>– Medium property = liquid<br>– process conditions = standard liquid |
| **Measured value resolution** | 1 mm (0.04 in) |
| **Pulse frequency** | max. 0.5 Hz<br>The exact values are dependent on the type of device and the parameter settings. |
| **Maximum measuring error[1) 2)]** | ±0.2 % of the maximum span of the sensor |
| **Typical measuring error[2)]** | Include linearity, repeatability, and hysteresis<br>Better than: ±3 mm (±0.12 in) or 0.2 % of measuring distance*<br><br>* whichever is greater |
| **Influence of the vapor pressure** | The vapor pressure at 20 °C (68 °F) gives a hint on the accuracy of the ultrasonic level measurement. If the vapor pressure at 20 °C (68 °F) is below 50 mbar (1 psi), ultrasonic level measurement is possible with a very high accuracy. This is valid for water, aqueous solutions, water-solid-solutions, dilute acids (hydrochloric acid, sulfuric acid, ...), dilute bases (caustic soda, ...), oils, greases, slurries, pastes, ...<br>High vapor pressures or outgassing media (ethanol, acetone, ammonia, ...) can influence the accuracy. If conditions like these are present, please contact your Endress+Hauser sales representative. |

1) according to EN 61298-2
2) with reference operating conditions

# Ordering information

**FMU30**

Versions that mutually exclude one another are not marked.

| 010 | Approval: |
|---|---|
| | AA Non-hazardous area |
| | BB ATEX II 1/2G Ex ia IIC T5 |
| | CA CSA C/US General Purpose |
| | CB CSA C/US IS CI.I Div.1 Gr.A-D |
| | IB IEC Ex zone 0/1, Ex ia IIC T5 Ga/Gb |
| | NB NEPSI zone 0/1, Ex ia IIC T5 Ga/Gb |
| | 99 Special version |

| 020 | Display; Operating: |
|---|---|
| | G W/o; via spare part display FMU30 |
| | H Envelope curve display on site; push button |
| | Y Special version |

| 030 | Electrical Connection: |
|---|---|
| | E Gland M20, IP68 |
| | F Thread G1/2, IP68 |
| | G Thread NPT1/2, IP68 |
| | Y Special version |

| 040 | Sensor; Max Range; Blocking Distance: |
|---|---|
| | AA 1-1/2"; 5m liquid/2m solid; 0.25m |
| | AB 2"; 8m liquid/3.5m solid; 0.35m |
| | YY Special version |

| 050 | Process Connection: |
|---|---|
| | GGF Thread ISO228 G1-1/2, PP |
| | GHF Thread ISO228 G2, PP |
| | RGF Thread ANSI MNPT1-1/2, PP |
| | RHF Thread ANSI MNPT2, PP |
| | YYY Special version |

| 620 | Accessory Enclosed: |
|---|---|
| | RA UNI flange 2"/DN50/50, PP max 4bar abs/58psia, suitable for 2" 150lbs/DN50 PN16/10K 50 |
| | RB UNI flange 2"/DN50/50, PVDF max 4bar abs/58psia, suitable for 2" 150lbs/DN50 PN16/10K 50 |
| | RC UNI flange 2"/DN50/50, 316L max 4bar abs/58psia, suitable for 2" 150lbs/DN50 PN16/10K 50 |
| | RD UNI flange 3"/DN80/80, PP max 4bar abs/58psia, suitable for 3" 150lbs/DN80 PN16/10K 80 |
| | RE UNI flange 3"/DN80/80, PVDF max 4bar abs/58psia, suitable for 3" 150lbs/DN80 PN16/10K 80 |
| | RF UNI flange 3"/DN80/80, 316L max 4bar abs/58psia, suitable for 3" 150lbs/DN80 PN16/10K 80 |
| | RG UNI flange 4"/DN100/100, PP max 4bar abs/58psia, suitable for 4" 150lbs/DN100 PN16/10K 100 |
| | RH UNI flange 4"/DN100/100, PVDF max 4bar abs/58psia, suitable for 4" 150lbs/DN100 PN16/10K 100 |
| | RI UNI flange 4"/DN100/100, 316L max 4bar abs/58psia, suitable for 4" 150lbs/DN100 PN16/10K 100 |
| | R9 Special version |

| 895 | Marking: |
|---|---|
| | Z1 Tagging (TAG), see additional spec. |

You can enter the versions for the specific feature in the following table. The versions entered make up the complete order code. Options which are mutually exclucive are not marked.

| | 010 | 020 | 030 | 040 | 050 | 620 | 895 |
|---|---|---|---|---|---|---|---|
| FMU30 - | | | | | | | |

Endress+Hauser supplies DIN/EN flanges made of stainless steel AISI 316L with the material number 1.4404 or 1.4435. With regard to their temperature stability properties, the materials 1.4404 and 1.4435 are grouped under 13E0 in EN 1092-1 Tab. 18. The chemical composition of the two materials can be identical.

Level | Pressure | Flow | Temperature | Liquid Analysis | Registration | Systems Components | Services | Solutions

Technical Information

# Prosonic T FMU30

## Ultrasonic Level Measurement
## Compact transmitters for non-contact level measurement of fluids, pastes and coarse bulk materials





### Application

- Continuous, non-contact level measurement in fluids, pastes, sullages and coarse bulk materials
- System integration via 4 to 20 mA
- Maximum measuring range:
  - 1½" sensor: 5 m (16 ft) in fluids
    2 m (6 ft) in bulk materials
  - 2" sensor: 8 m (26 ft) in fluids
    3.5 m (11 ft) in bulk materials

### Features and benefits

- Quick and simple commissioning via menu-guided on-site operation with four-line plain text display; 7 languages selectable
- Envelope curves on the on-site display for simple diagnosis
- Linearization function (up to 32 points) for conversion of the measured value into any unit of length, volume or flow rate
- Non-contact measurement method minimizes service requirements
- Installation possible from thread G 1½“ or NPT 1½“ upwards
- Integrated temperature sensor for automatic correction of the temperature dependent sound velocity

TI00440F/00/EN/15.14
71225633

Endress+Hauser
People for Process Automation

# Table of contents

**Function and system design . . . . . 3**
Measuring principle . . . . . 3
Equipment architecture . . . . . 4

**Input . . . . . 5**
Measured variable . . . . . 5
Measuring range . . . . . 5
Operating frequency . . . . . 6

**Output . . . . . 6**
Output signal . . . . . 6
Signal on alarm . . . . . 6
Output damping . . . . . 6
Linearization . . . . . 6

**Power supply . . . . . 7**
Terminal compartment . . . . . 7
Terminal assignment . . . . . 7
Supply voltage . . . . . 8
Terminals . . . . . 8
Cable entry . . . . . 8
Cable gland . . . . . 8
Power consumption . . . . . 8
Current consumption . . . . . 8

**Performance characteristics . . . . . 8**
Reaction time . . . . . 8
Reference operating conditions . . . . . 8
Measured value resolution . . . . . 8
Pulse frequency . . . . . 8
Maximum measuring error . . . . . 8
Typical measuring error . . . . . 8
Influence of the vapor pressure . . . . . 8

**Installation . . . . . 9**
Installation variants . . . . . 9
Installation conditions for level measurements . . . . . 10
Installation in narrow shafts . . . . . 10
Installation conditions for flow measurements . . . . . 11
Blocking distance, nozzle installation . . . . . 12

**Environment . . . . . 13**
Ambient temperature range . . . . . 13
Storage temperature . . . . . 13
Resistance to alternating temperature cycles . . . . . 13
Climate class . . . . . 13
Ingress protection . . . . . 13
Vibration resistance . . . . . 13
Electromagnetic compatibility (EMC) . . . . . 13

**Process . . . . . 13**
Process temperature range . . . . . 13
Process pressure range . . . . . 13

**Mechanical construction . . . . . 14**
Design; dimensions . . . . . 14
Weight . . . . . 14
Housing design . . . . . 14
Process connection . . . . . 14
Materials . . . . . 15

**Operability . . . . . 16**
Display and operating elements . . . . . 16
On-site operation . . . . . 18
Remote operation . . . . . 18

**Certificates and Approvals . . . . . 20**
CE mark . . . . . 20
Ex approvals . . . . . 20
Ex approval . . . . . 20
External standards and guidelines . . . . . 20

**Ordering information . . . . . 21**
FMU30 . . . . . 21
Scope of delivery . . . . . 22

**Accessories . . . . . 22**
Installation bracket . . . . . 22
Screw in flange . . . . . 23
Cantilever with mounting frame or wall bracket . . . . . 24
Weather protection cover . . . . . 26
Commubox FXA291 . . . . . 27
ToF Adapter FXA291 . . . . . 27

**Documentation . . . . . 27**
Operating manual . . . . . 27
Description of device functions . . . . . 27
Short instructions . . . . . 27
Safety Instructions . . . . . 27

# Function and system design

**Measuring principle**

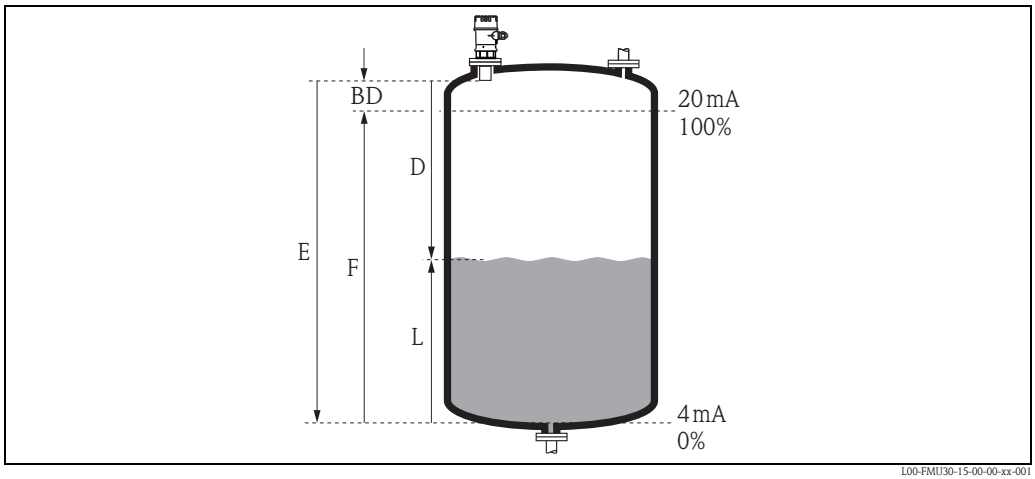


*BD* *Blocking distance*
*D* *Distance from sensor membrane – product surface*
*E* *Empty distance*
*F* *Span (full distance)*
*L* *Level*

| Sensor | BD | Max. range fluids | Max. range bulk materials |
|---|---|---|---|
| 1½" | 0.25 m (0.8 ft) | 5 m (16 ft) | 2 m (6.6 ft) |
| 2" | 0.35 m (1.1 ft) | 8 m (26 ft) | 3.5 m (11 ft) |

### Time-of-flight method

The sensor of the instrument transmits ultrasonic pulses in the direction of the product surface. There, they are reflected back and received by the sensor. The instrument measures the time t between pulse transmission and reception. The instrument uses the time t (and the velocity of sound c) to calculate the distance D between the sensor membrane and the product surface:

$D = c \cdot t/2$

As the device knows the empty distance E from a user entry, it can calculate the level as follows:

$L = E - D$

An integrated temperature sensor (NTC) compensates for changes in the velocity of sound caused by temperature changes.

### Interference echo suppression

The interference echo suppression feature on the instrument ensures that interference echos (e.g. from edges, welded joints and installations) are not interpreted as a level echo.

### Calibration

Enter the empty distance E and the span F to calibrate the device.

### Blocking distance

Span F may not extend into the blocking distance BD. Level echos within the blocking distance cannot be evaluated due to the transient characteristics of the sensor.

**Equipment architecture**

The complete measuring system consists of:

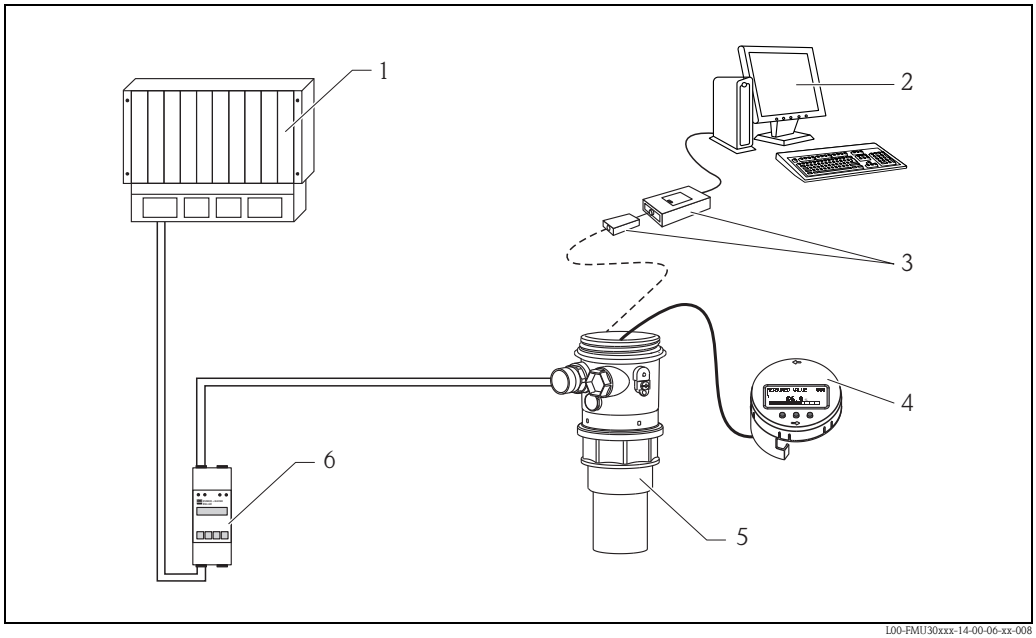


*1 PLC (programmable logic controller)*
*2 Computer with operating tool (e.g. FieldCare)*
*3 Commubox FXA291 and ToF Adapter FXA291*
*4 Operating and display module*
*5 Prosonic FMU30*
*6 Transmitter power supply unit RMA42 or RN221N*

### On-site operation

- With display and operating module
- With a PC, Commubox FXA291 + ToF Adapter FXA291 and the operating software FieldCare

# Input

**Measured variable**

The distance D between the sensor membrane and the product surface is measured, see also figure → 🖹 3.

Using the linearization function, the device uses D to calculate:
- Level L in any units
- Volume V in any units
- Flow Q across measuring weirs or open channels in any units

**Measuring range**

The measuring range is limited by the range of a sensor. The sensor range is, in turn, dependent on the operating conditions. To estimate the actual range, proceed as follows (see also the calculation example in the diagram):

1. Determine which of the influences shown in the following table are appropriate for your process.
2. Add the corresponding attenuation values.
3. From the total attenuation, use the diagram to calculate the range.

| Fluid surface | Attenuation |
|---|---|
| Calm | 0 dB |
| Waves | 5 to 10 dB |
| Strong turbulence (e.g. stirrers) | 10 to 20 dB |
| Foaming | Please contact your Endress+Hauser sales representative. |

| Bulk material surface | Attenuation |
|---|---|
| Hard, rough (e.g. rubble) | 40 dB |
| Soft (e.g. peat, dust-covered clinker) | 40 to 60 dB |

| Dust | Attenuation |
|---|---|
| No dust formation | 0 dB |
| Little dust formation | 5 dB |
| Heavy dust formation | 5 to 20 dB |

| Filling curtain in detection range | Attenuation |
|---|---|
| None | 0 dB |
| Small quantities | 5 to 10 dB |
| Large quantities | 10 to 40 dB |

| Temperature difference between sensor and product surface | Attenuation |
|---|---|
| to 20 °C (68 °F) | 0 dB |
| to 40 °C (104 °F) | 5 to 10 dB |
| to 60 °C (140 °F) | 10 to 15 dB |

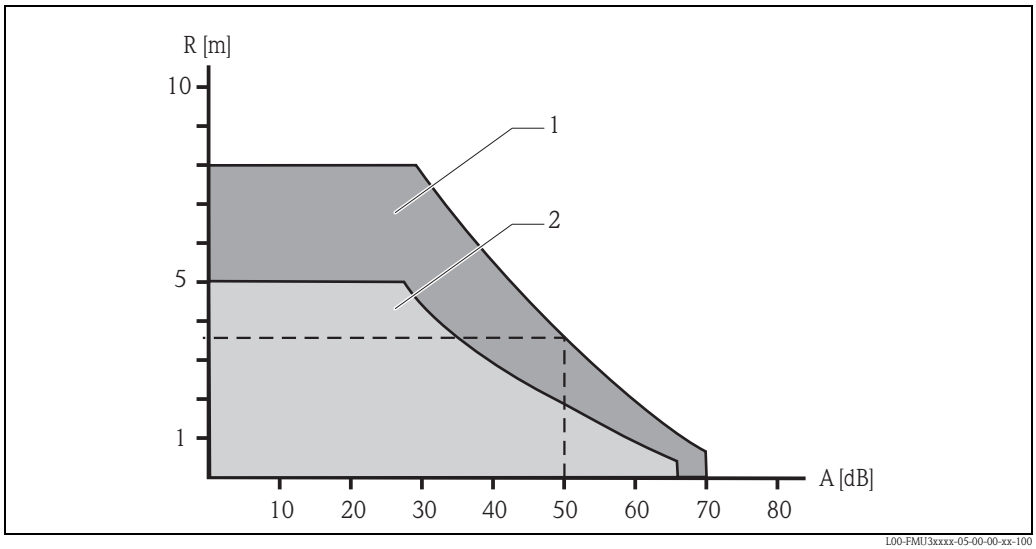


*1* *Sensor 2"*
*2* *Sensor 1½"*
*A* *Attenuation (dB)*
*R* *Range (m)*

**Example**

| | | |
|---|---|---|
| ■ Strong turbulence surface | approx. 50 dB | |
| ■ No dust formation | 0 dB | |
| ■ Filling curtain in detection range | 10 dB | |
| ■ Temperature diff. < 20 °C (68 °F) | 0 dB | |
| | approx. 50 dB | ⇒ range approx. 3.5 m (11 ft) for FMU30 2" sensor |

These measuring conditions have been taken into account during the calculation of the maximum measuring range in solid applications.

**Operating frequency**

| 1½" sensor | 2" sensor |
|---|---|
| approx. 70 kHz | approx. 50 kHz |

# Output

**Output signal**

4 to 20 mA

**Signal on alarm**

Error information can be accessed via the following interfaces:
- On-site display (error symbol, error code and plain text description)
- Current output, signal on error can be selected (e.g. according to NAMUR recommendation NE43)

**Output damping**

Freely selectable, 0 to 255 s

**Linearization**

The linearization function of the instrument allows conversion of the measured value into any unit of length or volume. In open channels or measuring weirs, also a flow linearization is possible (calculation of the flow from the measured level).
The linearization table for calculating the volume in an horizontal cylindrical tank is preprogrammed. You can also enter any number of other tables containing up to 32 value pairs either manually or semi-automatically (by filling the vessel under controlled conditions).

# Power supply

**Terminal compartment**

The terminals are located underneath the housing cover.

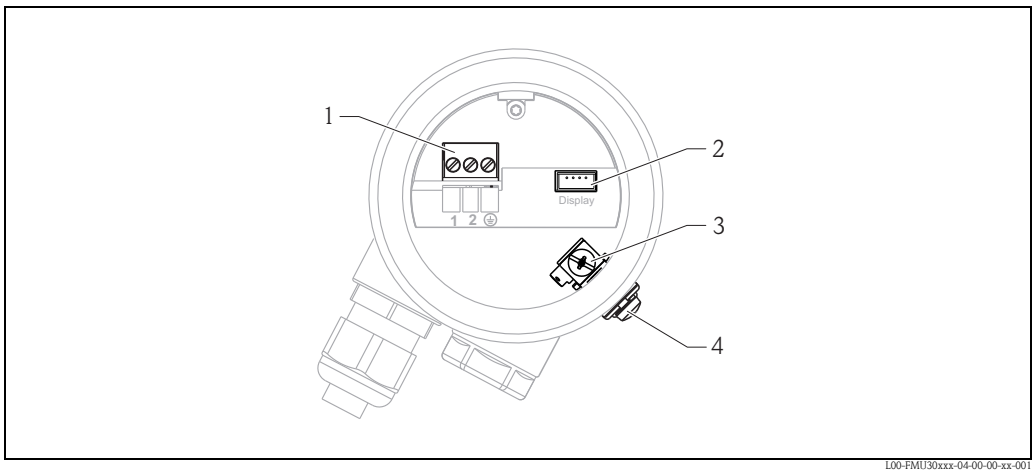


L00-FMU30xxx-04-00-00-xx-001

*1 Terminals*
*2 Optional: display*
*3 Internal earth terminal*
*4 External earth terminal*

**Terminal assignment**

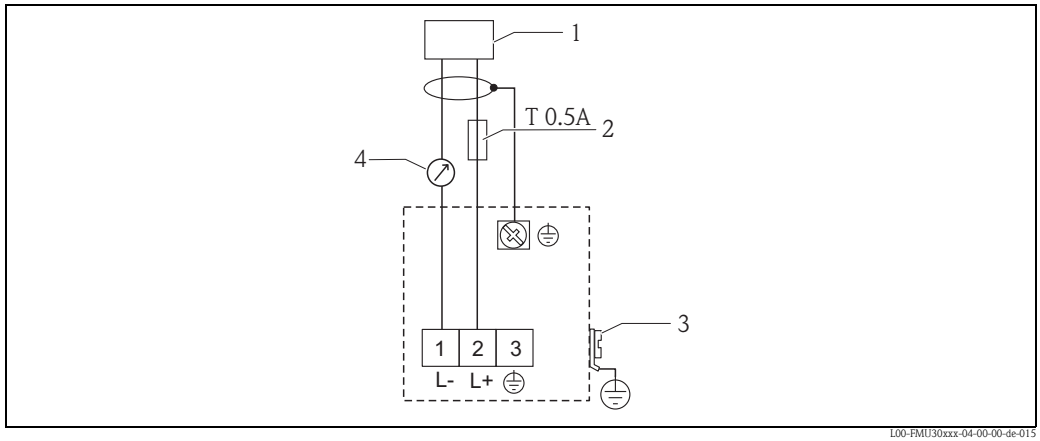


L00-FMU30xxx-04-00-00-de-015

*1 Power*
*2 Fuse as per IEC 60127, T 0.5 A*
*3 Plant ground*
*3 4...20 mA*

- Connect the connecting line to the screw terminals (line cross-sections of 0.25 to 2.5 $mm^2$ (24...14 AWG)) in the terminal compartment.
- A standard installation cable is sufficient for the connection.
- Protective circuitry against reverse polarity, RFI and over-voltage peaks is built into the device (see also Technical Information TI00241F/00/EN "EMC Test Procedures")

| | |
|---|---|
| **Supply voltage** | 14-35 V |
| **Terminals** | Cable cross-section: 0.25 to 2.5 mm2 (24 to 14 AWG) |
| **Cable entry** | G ½" or ½" NPT |
| **Cable gland** | M20x1.5 (recommended cable diameter 6 to 10 mm (0.24 to 0.39 in)) |
| **Power consumption** | 51 mW to 800 mW |
| **Current consumption** | 3.6 to 22 mA |

# Performance characteristics

| | |
|---|---|
| **Reaction time** | The reaction time depends on the parameter settings. The minimum value is: min. 2 s |
| **Reference operating conditions** | ■ Temperature = +20 °C (+68 °F)<br>■ Pressure = 1013 mbar abs. (15 psi abs.)<br>■ Humidity = 50 %<br>■ Ideal reflective surface (e.g. calm, smooth fluid surface)<br>■ No interference reflections within signal beam<br>■ Set application parameters:<br>– Tank shape = dome ceiling<br>– Medium property = liquid<br>– process conditions = standard liquid |
| **Measured value resolution** | 1 mm (0.04 in) |
| **Pulse frequency** | max. 0.5 Hz<br>The exact values are dependent on the type of device and the parameter settings. |
| **Maximum measuring error[1) 2)]** | ±0.2 % of the maximum span of the sensor |
| **Typical measuring error[2)]** | Include linearity, repeatability, and hysteresis<br>Better than: ±3 mm (±0.12 in) or 0.2 % of measuring distance*<br><br>* whichever is greater |
| **Influence of the vapor pressure** | The vapor pressure at 20 °C (68 °F) gives a hint on the accuracy of the ultrasonic level measurement. If the vapor pressure at 20 °C (68 °F) is below 50 mbar (1 psi), ultrasonic level measurement is possible with a very high accuracy. This is valid for water, aqueous solutions, water-solid-solutions, dilute acids (hydrochloric acid, sulfuric acid, ...), dilute bases (caustic soda, ...), oils, greases, slurries, pastes, ...<br>High vapor pressures or outgassing media (ethanol, acetone, ammonia, ...) can influence the accuracy. If conditions like these are present, please contact your Endress+Hauser sales representative. |

1) according to EN 61298-2
2) with reference operating conditions

# Installation

**Installation variants**

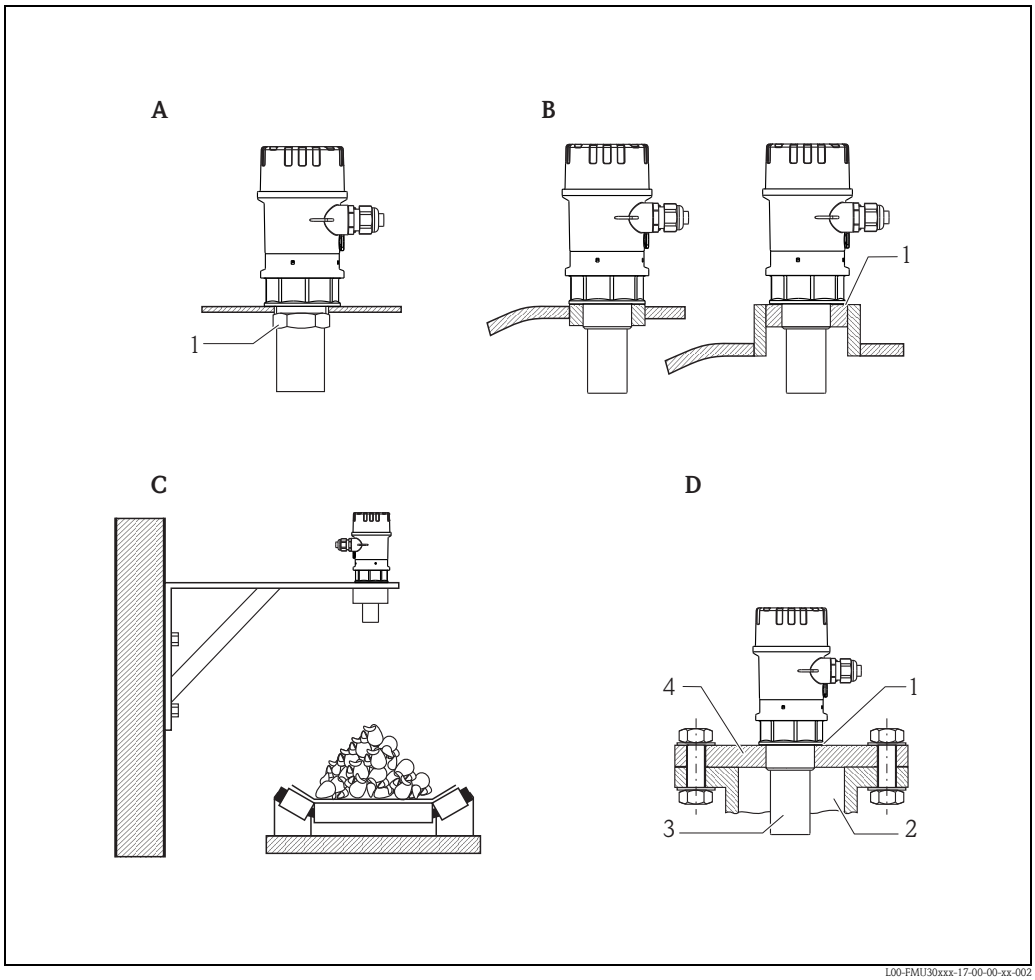


L00-FMU30xxx-17-00-00-xx-002

**A** *Installation with counter nut*
*1 counter nut (PC) supplied for G1½ and G2 instruments*
**B** *Installation with sleeve*
*1 sealing (EPDM) supplied*
**C** *Installation with installation bracket*
**D** *Installation with screw in flange*
*1 sealing (EPDM) supplied*
*2 nozzle*
*3 sensor*
*4 screw in flange*

For installation bracket or screw in flange → 22, "Accessories".

**Installation conditions for level measurements**

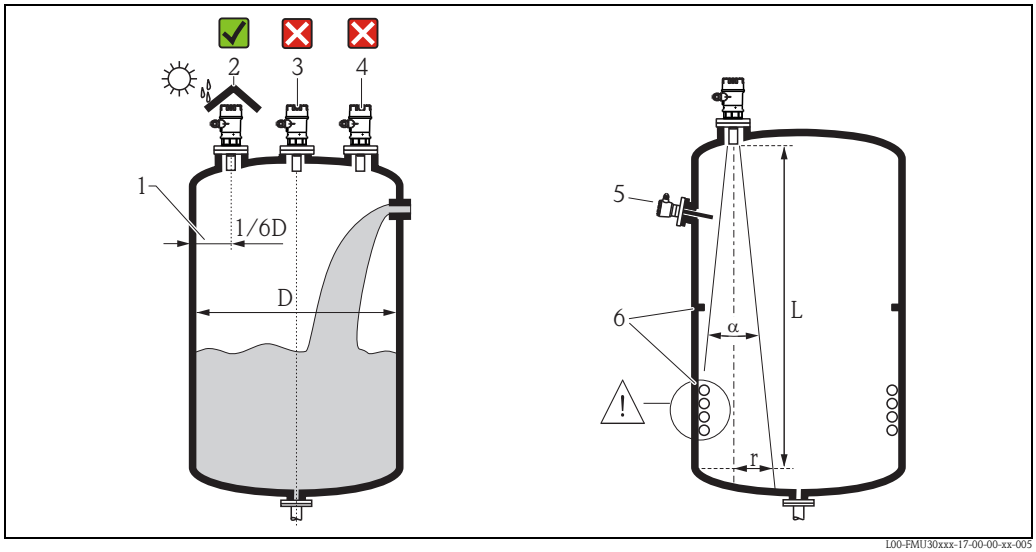


- Do not install the sensor in the middle of the tank (3). We recommend leaving a distance between the sensor and the tank wall (1) measuring 1/6 of the tank diameter.
- Protect the device against direct sun or rain (2) → 📄 26 "Weather protection cover".
- Avoid measurements through the filling curtain (4).
- For solid application where bulk solid cones appear, align the sensor membrane perpendicular to the surface.
- Make sure that equipment (5) such as limit switches, temperature sensors, etc. are not located within the emitting angle α. In particular, symmetrical equipment (6) such as heating coils, baffles etc. can influence measurement.
- Never install two ultrasonic measuring devices in a tank, as the two signals may affect each other.
- To estimate the detection range, use the 3 dB emitting angle α.

| Sensor | α | $L_{max}$ | $r_{max}$ |
|---|---|---|---|
| 1½" | 11° | 5 m (16 ft) | 0.48 m (1.6 ft) |
| 2" | 11° | 8 m (26 ft) | 0.77 m (2.5 ft) |

**Installation in narrow shafts**

In narrow shafts with strong interference echoes, we recommend using an ultrasound guide pipe (e.g. PE or PVC wastewater pipe) with a minimum diameter of 100 mm (3.94 in).
Make sure that the pipe is not soiled by accumulated dirt. If necessary, clean the pipe at regular intervals.

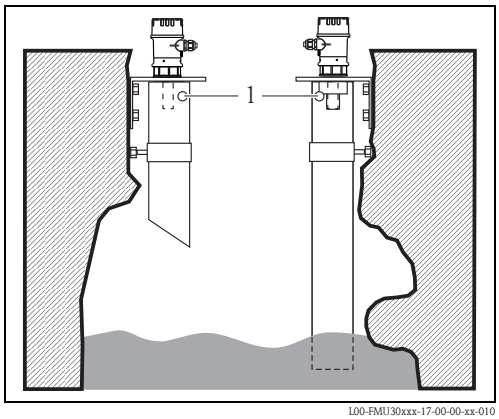


*1 Venting hole*

**Installation conditions for flow measurements**

- Install the instrument at the inflow side (B), as close above the maximum water level $H_{max}$ as possible (take into account the blocking distance BD).
- Position the instrument in the middle of the channel or weir.
- Align the sensor membrane parallel to the water surface.
- Keep to the installation distance of the channel or weir.

**Example: Khafagi-Venturi flume**

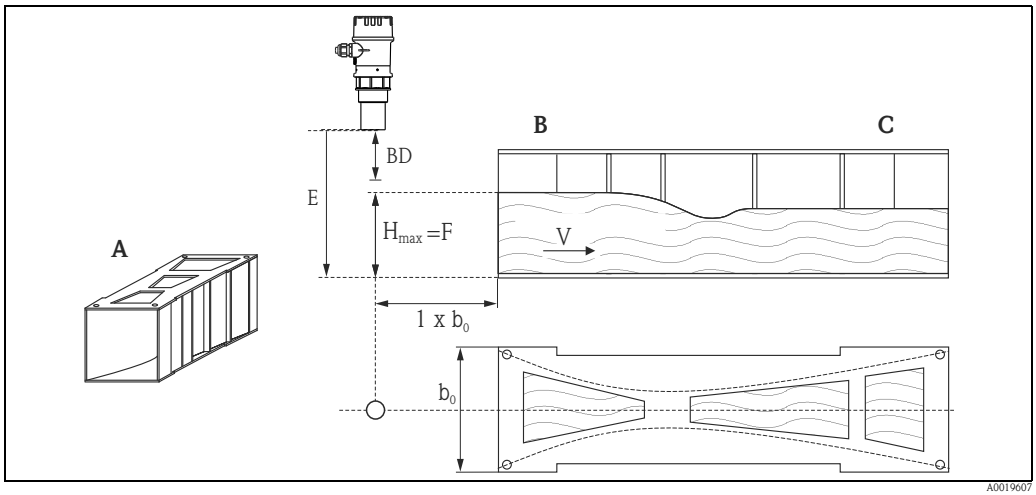


**A** *Khafagi-Venturi flume*
**B** *Inflow*
**C** *Outflow*

*BD* *Blocking distance*
*E* *Empty calibration*
*F* *Full calibration*
*V* *Direction of flow*

**Example: Triangular weir**

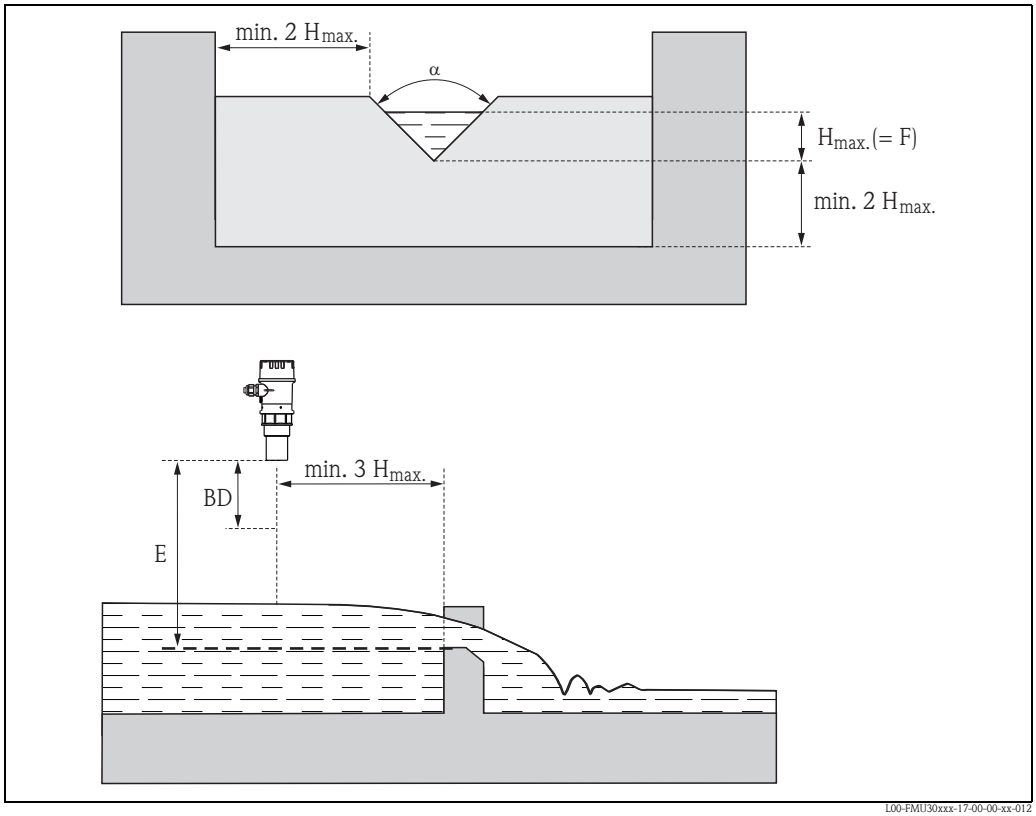


*BD* *Blocking distance*
*E* *Empty calibration*
*F* *Full calibration*

**Blocking distance, nozzle installation**

Install the instrument at a height so that the blocking distance BD is not undershot, even at maximum fill level. Use a pipe nozzle if you cannot maintain the blocking distance in any other way. The interior of the nozzle must be smooth and may not contain any edges or welded joints. In particular, there should be no burr on the inside of the tank side nozzle end. Note the specified limits for nozzle diameter and length. To minimise disturbing factors, we recommend an angled socket edge (ideally 45°).

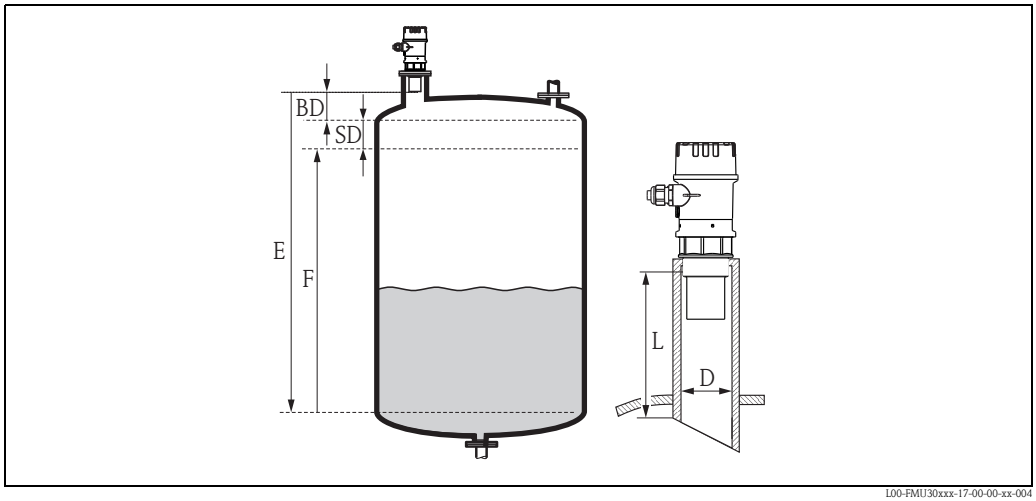


*BD Blocking distance*
*SD Safety distance*
*E Empty calibration*
*F Full calibration (span)*
*D Nozzle diameter*
*L Nozzle length*

| | Maximum nozzle length mm (in) | |
|---|---|---|
| **Nozzle diameter** | **1½" sensor** | **2" sensor** |
| DN50/2" | 80 (3.15) | – |
| DN80/3" | 240 (9.45) | 240 (9.45) |
| DN100/4" | 300 (11.8) | 300 (11.8) |
| DN150/6" | 400 (15.7) | 400 (15.7) |
| DN200/8" | 400 (15.7) | 400 (15.7) |
| DN250/10" | 400 (15.7) | 400 (15.7) |
| DN300/12" | 400 (15.7) | 400 (15.7) |
| **Sensor characteristics** | | |
| Emitting angle α | 11° | 11° |
| Blocking distance (m [ft]) | 0.25 (0.8) | 0.35 (1.1) |
| Max. range (m [ft]) in liquids | 5 (16) | 8 (26) |
| Max. range (m [ft]) in solids | 2 (6.6) | 3.5 (11) |

Caution!
If the blocking distance is undershot, it may cause device malfunction.

Note!
In order to notice if the level approaches the blocking distance, you can specify a safety distance (SD). If the level is within this safety distance, the instrument outputs a warning or alarm message.

# Environment

| | |
|---|---|
| **Ambient temperature range** | –20 °C to +60 °C (–4 °F to +140 °F)<br>Use a protective cover, in order to protect the sensor from direct sun or rain → 📄 26, "Weather protection cover". |
| **Storage temperature** | –40 °C to +80 °C (–40 °F to +176 °F) |
| **Resistance to alternating temperature cycles** | To DIN EN 60068-2-14; Nb test : +60°C/–20°C (+140 °F/–4 °F), 0.5 K/min, 100 cycles |
| **Climate class** | DIN EN 60068-2-38 (Test Z/AD) DIN/IEC 68 T2-30Db |
| **Ingress protection** | ■ With closed housing, tested according to<br>– IP68, 24h at 1.83 m (6.0 ft) under water surface<br>– IP66<br>■ With open housing: IP20 (also ingress protection of the display) |
| **Vibration resistance** | DIN EN 60068-2-64 / IEC 68-2-64: 20 to 2000 Hz, 1 $(m/s^2)^2$/Hz; 3 x 100 min |
| **Electromagnetic compatibility (EMC)** | ■ Electromagnetic compatibility to EN 61326. For details refer to the declaration of conformity.<br>■ With regard to interference immunity the requirements for "industrial environment" are met.<br>■ Influence of EMC < 1 % FS |

# Process

| | |
|---|---|
| **Process temperature range** | –20 °C to +60 °C (–4 °F to +140 °F)<br>A temperature sensor is integrated in the sensor for correction of the temperature-dependent time-of-flight. |
| **Process pressure range** | 0.7 bar to 3 bar abs. (10.15 psi to 43.5 psi) |

# Mechanical construction

**Design; dimensions**

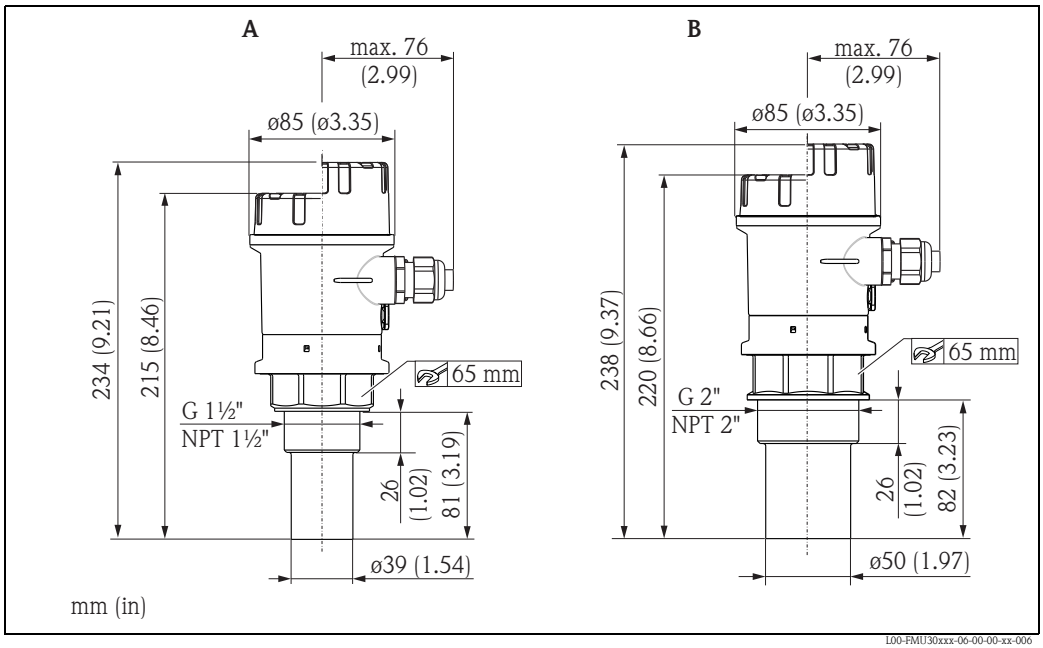


**A** *Sensor 1½"*
**B** *Sensor 2"*

**Weight**

| Sensor | Weight |
|---|---|
| 1½" | approx. 0.75 kg (1.65 lbs) |
| 2" | approx. 0.8 kg (1.76 lbs) |

**Housing design**

**Type of housing**

F16 plastic housing

**Cover**

Plastic cover

- For version without on-site display (low, grey)
- For version with on-site display (high, transparent)

**Process connection**

| Sensor | Process connection |
|---|---|
| 1½" | ■ Thread G 1½“, PP<br>■ Thread MNPT 1½“ - 11.5 |
| 2" | ■ Thread 2", PP<br>■ Thread MNPT 2" - 11.5 |

**Materials**

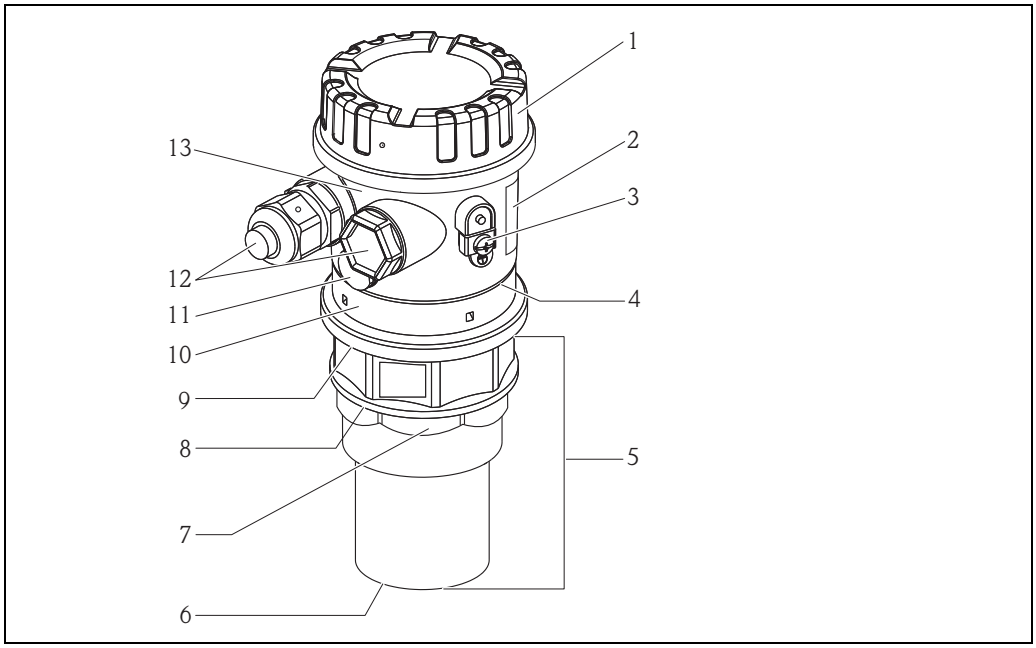


L00-FMU3xxxx-16-00-00-xx-001

| Pos. | Part | Material |
|---|---|---|
| 1 | Cover (grey) | PBT |
| | Cover (transparent) | PA |
| | O-ring | EPDM |
| 2 | Ground terminal:<br>Screws<br>Spring washer<br>Clamp<br>Holder | <br>A2<br>A4<br>304 (1.4301)<br>301 (1.4310) |
| 3 | Nameplate | Polyester |
| 4 | O-ring | EPDM |
| 5 | Sensor (in contact with process) | PP |
| 6 | Matching Layer (in contact with process) | EPDM |
| 7 | Counter nut (in contact with process) | PC |
| 8 | Sealing (in contact with process) | EPDM |
| 9 | Sealing | EPDM |
| 10 | Adapter of housing | PBT GF 30-FR |
| 11 | Goretex filter | PBT-20GF / grey RAL7035 |
| 12 | Cable gland | Polyamid (PA) |
| | Plug | PBT-GF30 |
| 13 | Housing | PBT-FR |

Note!
The chemical compatibility of the sensors must be checked before installation with compatibility charts.

# Operability

**Display and operating elements**

The LCD module for display and operation is located beneath the housing cover. Open the cover to operate the device.

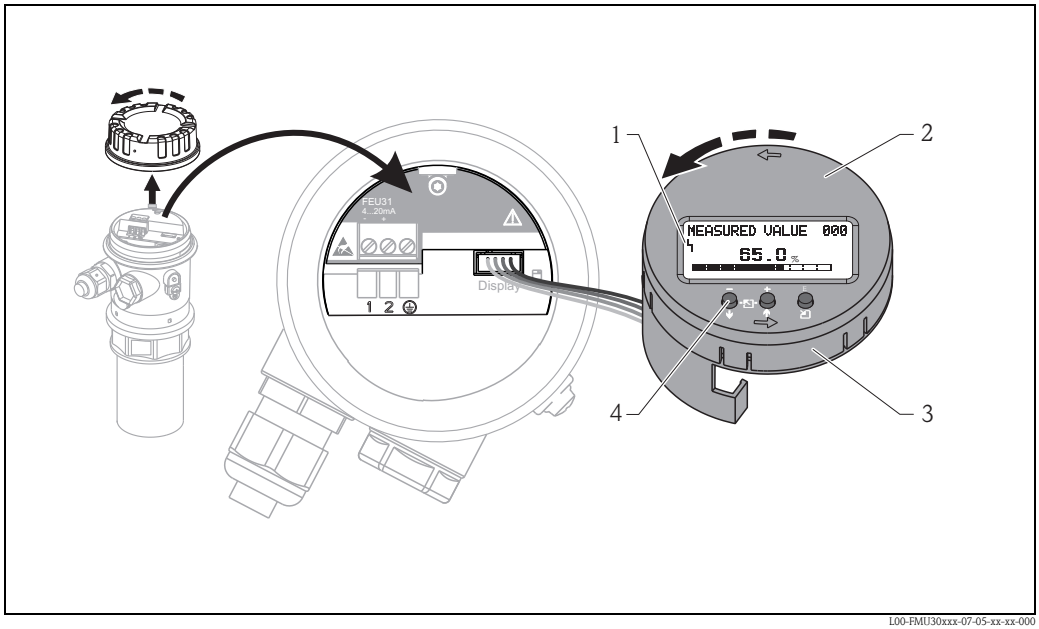


L00-FMU30xxx-07-05-xx-xx-000

*1 Display symbol*
*2 Display (rotatable)*
*3 Plug-in module*
*4 Function keys*

| **Symbol in display** | continuous | flashing | |
|---|---|---|---|
| **Meaning** | Alarm | Warning | Security Locking |

**Function of the keys**

| **Key(s)**<br>(The keys to press are displayed in grey.) | **Meaning** |
|---|---|
| 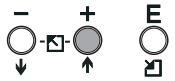 | Navigate upwards in the selection list<br>Edit numeric value within a function |
|  | Navigate downwards in the selection list<br>Edit numeric value within a function |
| 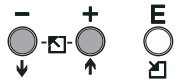 | Navigate to the left within a function group |
|  | Navigate to the right within a function group, confirmation. |
|  <br>or<br> 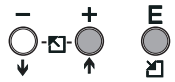 | Contrast settings of the LCD |
| 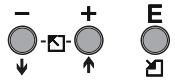 | Hardware lock / unlock<br>After a hardware lock, an operation of the instrument via display or communication is not possible!<br>The hardware can only be unlocked via the display. An unlock parameter must be entered to do so (unlock parameter: 100). |

## On-site operation

### Operation

The LC-Display allows configuration via 3 keys directly at the instrument. All device functions can be set through a menu system. The menu consists of function groups and functions. Within a function, application parameters can be read or adjusted. The user is guided through a complete configuration procedure. For ease operation can choose between 7 language: (de: german; en: english; es: spanish; fr: french; it: italian; ja: japanese; nl: dutch).

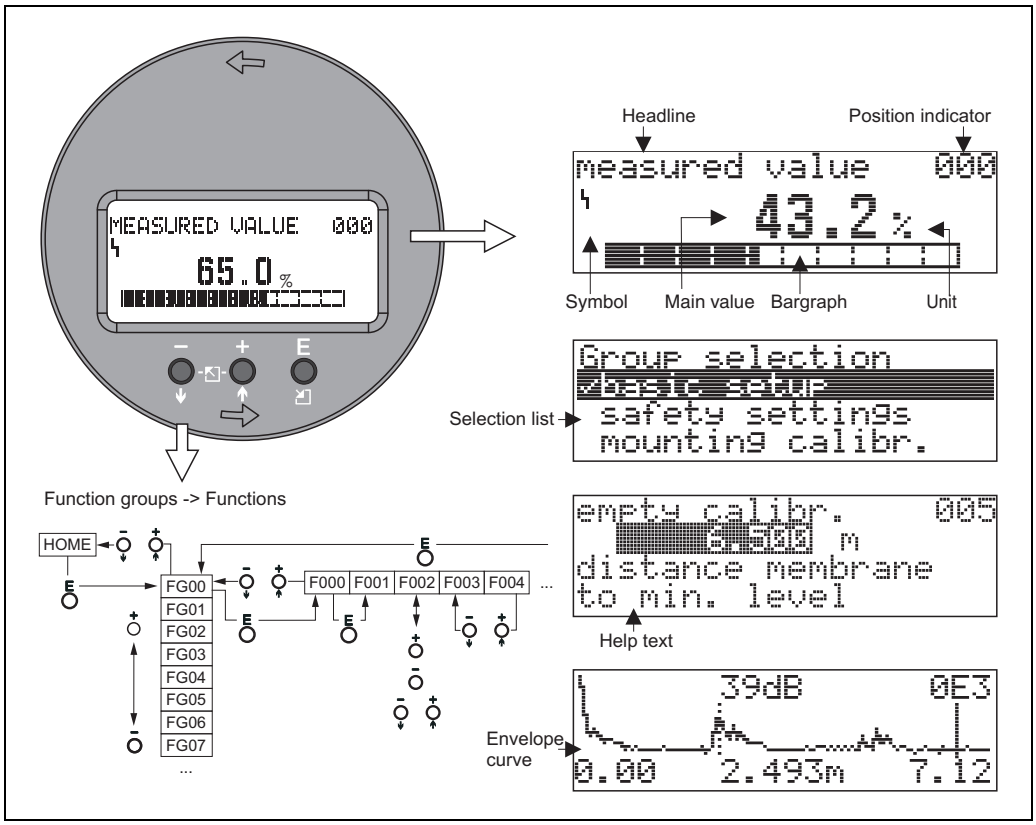


L00-FMU30xxx-07-00-00-en-004

## Remote operation

### Operation with FieldCare

FieldCare is Endress+Hauser's FDT based Plant Asset Management Tool. It can configure all intelligent field devices in your plant and supports you in managing them. By using status information, it also provides a simple but effective means of checking their health.

- Supports Ethernet, HART, PROFIBUS PA, FOUNDATION Fieldbus etc.
- Operates all Endress+Hauser devices
- Operates all third-party actuators, I/O systems and sensors supporting the FDT standard
- Ensures full functionality for all devices with DTMs
- Offers generic profile operation for any third-party fieldbus device that does not have a vendor DTM

Connection for FMU30:
- Commubox FXA291 and ToF adapter FXA291 (available as accessory)

Using the following functions:
- Signal analysis via envelope curve
- Linearization table (graphically supported creation, editing, importing and exporting)
- Loading and saving of instrument data (Upload/Download)
- Documentation of measuring point

*Menu-guided commissioning:*

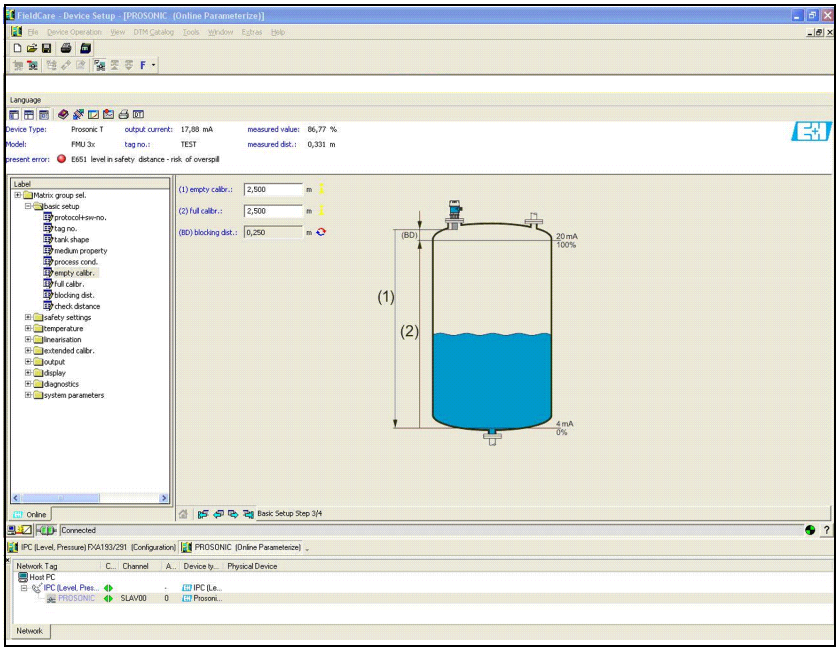

*Signal analysis via envelope curve:*

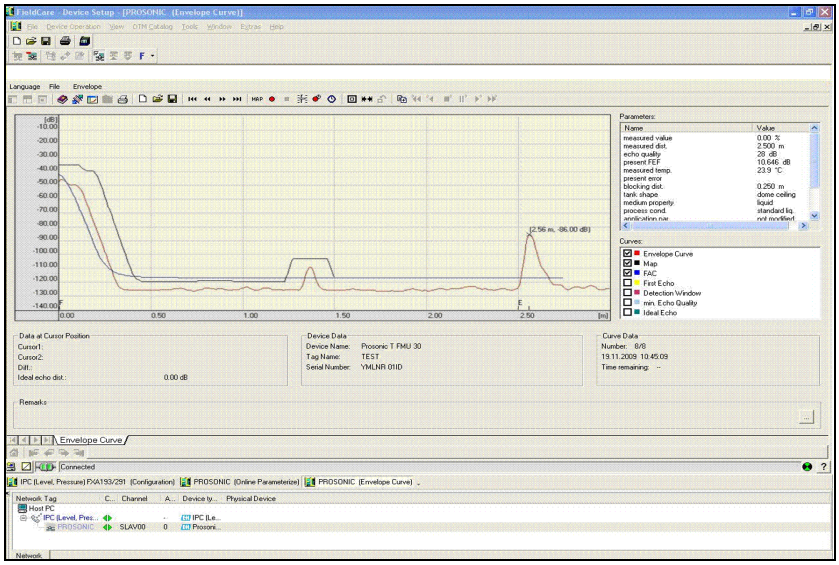

# Certificates and Approvals

**CE mark**

The measuring system meets the legal requirements of the EC-guidelines. Endress+Hauser confirms the instrument passing the required tests by attaching the CE-mark.

**Ex approvals**

- ATEX
- IECEx
- CSA C/US
- NEPSI

Additional safety instructions must be observed for applications in hazardous areas. They arecontained in the separate "Safety Instructions" (XA) document, which is included in the scope ofdelivery. Reference is made to the XA on the nameplate of the device.

Note!
Details on the available certificats as well as the associated XAs can be found in the Associated documentation chapter documentation → 27.

**Ex approval**

The available certificates are listed in the ordering information. Note the associated safety instructions (XA) and control or installation drawings (ZD).

**External standards and guidelines**

**EN 60529**

Protection class of housing (IP-code)

**EN 61326 series**

EMC product family standard for electrical equipment for measurement, control and laboratory use

**NAMUR**

User association for automation technology in process industries

# Ordering information

**FMU30**

Versions that mutually exclude one another are not marked.

| | | |
|---|---|---|
| **010** | **Approval:** | |
| | AA | Non-hazardous area |
| | BB | ATEX II 1/2G Ex ia IIC T5 |
| | CA | CSA C/US General Purpose |
| | CB | CSA C/US IS CI.I Div.1 Gr.A-D |
| | IB | IEC Ex zone 0/1, Ex ia IIC T5 Ga/Gb |
| | NB | NEPSI zone 0/1, Ex ia IIC T5 Ga/Gb |
| | 99 | Special version |
| **020** | **Display; Operating:** | |
| | G | W/o; via spare part display FMU30 |
| | H | Envelope curve display on site; push button |
| | Y | Special version |
| **030** | **Electrical Connection:** | |
| | E | Gland M20, IP68 |
| | F | Thread G1/2, IP68 |
| | G | Thread NPT1/2, IP68 |
| | Y | Special version |
| **040** | **Sensor; Max Range; Blocking Distance:** | |
| | AA | 1-1/2"; 5m liquid/2m solid; 0.25m |
| | AB | 2"; 8m liquid/3.5m solid; 0.35m |
| | YY | Special version |
| **050** | **Process Connection:** | |
| | GGF | Thread ISO228 G1-1/2, PP |
| | GHF | Thread ISO228 G2, PP |
| | RGF | Thread ANSI MNPT1-1/2, PP |
| | RHF | Thread ANSI MNPT2, PP |
| | YYY | Special version |
| **620** | **Accessory Enclosed:** | |
| | RA | UNI flange 2"/DN50/50, PP max 4bar abs/58psia, suitable for 2" 150lbs/DN50 PN16/10K 50 |
| | RB | UNI flange 2"/DN50/50, PVDF max 4bar abs/58psia, suitable for 2" 150lbs/DN50 PN16/10K 50 |
| | RC | UNI flange 2"/DN50/50, 316L max 4bar abs/58psia, suitable for 2" 150lbs/DN50 PN16/10K 50 |
| | RD | UNI flange 3"/DN80/80, PP max 4bar abs/58psia, suitable for 3" 150lbs/DN80 PN16/10K 80 |
| | RE | UNI flange 3"/DN80/80, PVDF max 4bar abs/58psia, suitable for 3" 150lbs/DN80 PN16/10K 80 |
| | RF | UNI flange 3"/DN80/80, 316L max 4bar abs/58psia, suitable for 3" 150lbs/DN80 PN16/10K 80 |
| | RG | UNI flange 4"/DN100/100, PP max 4bar abs/58psia, suitable for 4" 150lbs/DN100 PN16/10K 100 |
| | RH | UNI flange 4"/DN100/100, PVDF max 4bar abs/58psia, suitable for 4" 150lbs/DN100 PN16/10K 100 |
| | RI | UNI flange 4"/DN100/100, 316L max 4bar abs/58psia, suitable for 4" 150lbs/DN100 PN16/10K 100 |
| | R9 | Special version |
| **895** | **Marking**: | |
| | Z1 | Tagging (TAG), see additional spec. |

You can enter the versions for the specific feature in the following table. The versions entered make up the complete order code. Options which are mutually exclucive are not marked.

| | 010 | 020 | 030 | 040 | 050 | 620 | 895 |
|---|---|---|---|---|---|---|---|
| FMU30 - | | | | | | | |

Endress+Hauser supplies DIN/EN flanges made of stainless steel AISI 316L with the material number 1.4404 or 1.4435. With regard to their temperature stability properties, the materials 1.4404 and 1.4435 are grouped under 13E0 in EN 1092-1 Tab. 18. The chemical composition of the two materials can be identical.

**Scope of delivery**

- Instrument according to the version ordered
- Short instructions KA01054F; additional documentations on the supplied CD-ROM
- For certified instrument versions: Safety Instructions, Control- or Installation drawings
- Counter nut (PC): option 50, versions GGF/GHF, → 📄 21 "Ordering information"
- Sealing ring (EPDM): option 50, versions GGF/GHF → 📄 21 "Ordering information"
- For gland M20x1.5: 1 cable gland for 2-wire instruments
  The cable gland is mounted on delivery.

# Accessories

**Installation bracket**

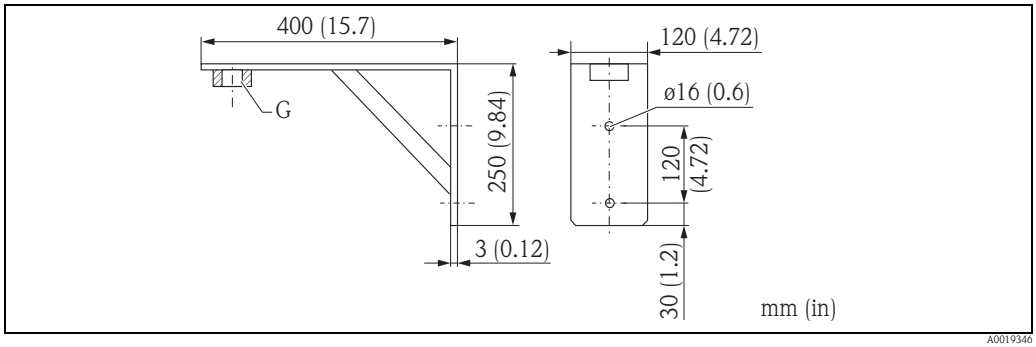


| Process connection | Order No. | Material | Weight |
|---|---|---|---|
| G 1½" | 942669-0000 | 316 Ti (1.4571) | 3.4 kg (7.5 lbs) |
| G 2" | 942669-0001 | | |

suited for NPT 1½" and 2" as well

**Screw in flange**

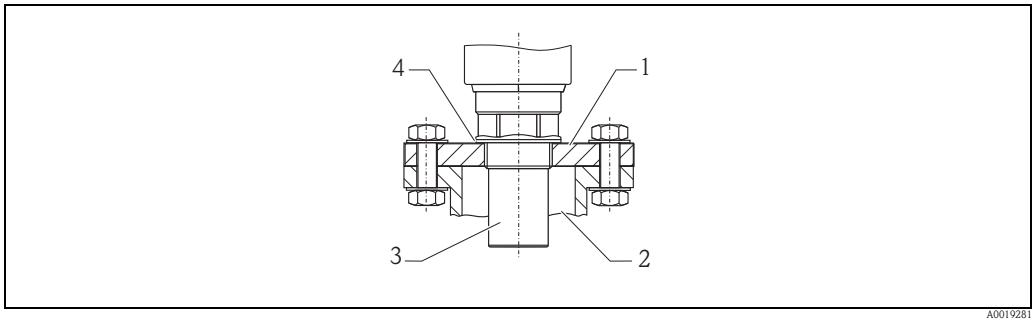


*1 Screw in flange*
*2 Nozzle*
*3 Sensor*
*4 Sealing ring EPDM (supplied)*

### Screw in flange FAX50

| 015 | Material: | |
|---|---|---|
| | BR1 | DN50 PN10/16 A, steel flange EN1092-1 |
| | BS1 | DN80 PN10/16 A, steel flange EN1092-1 |
| | BT1 | DN100 PN10/16 A, steel flange EN1092-1 |
| | JF1 | 2" 150lbs FF, steel flange ANSI B16.5 |
| | JG1 | 3" 150lbs FF, steel flange ANSI B16.5 |
| | JH1 | 4" 150lbs FF, steel flange ANSI B16.5 |
| | JK2 | 8" 150lbs FF, PP max 3bar abs/44psia flange ANSI B16.5 |
| | XIF | UNI flange 2"/DN50/50, PVDF max 4bar abs/58psia, suitable for 2" 150lbs/DN50 PN16/10K 50 |
| | XIG | UNI flange 2"/DN50/50, PP max 4bar abs/58psia, suitable for 2" 150lbs/DN50 PN16/10K 50 |
| | XIJ | UNI flange 2"/DN50/50, 316L max 4bar abs/58psia, suitable for 2" 150lbs/DN50 PN16/10K 50 |
| | XJF | UNI flange 3"/DN80/80, PVDF max 4bar abs/58psia, suitable for 3" 150lbs/DN80 PN16/10K 80 |
| | XJG | UNI flange 3"/DN80/80, PP max 4bar abs/58psia, suitable for 3" 150lbs/DN80 PN16/10K 80 |
| | XJJ | UNI flange 3"/DN80/80, 316L max 4bar abs/58psia, suitable for 3" 150lbs/DN80 PN16/10K 80 |
| | XKF | UNI flange 4"/DN100/100, PVDF max 4bar abs/58psia, suitable for 4" 150lbs/DN100 PN16/10K 100 |
| | XKG | UNI flange 4"/DN100/100, PP max 4bar abs/58psia, suitable for 4" 150lbs/DN100 PN16/10K 100 |
| | XKJ | UNI flange 4"/DN100/100, 316L max 4bar abs/58psia, suitable for 4" 150lbs/DN100 PN16/10K 100 |
| | XLF | UNI flange 6"/DN150/150, PVDF max 4bar abs/58psia, suitable for 6" 150lbs/DN150 PN16/10K 150 |
| | XLG | UNI flange 6"/DN150/150, PP max 4bar abs/58psia, suitable for 6" 150lbs/DN150 PN16/10K 150 |
| | XLJ | UNI flange 6"/DN150/150, 316L max 4bar abs/58psia, suitable for 6" 150lbs/DN150 PN16/10K 150 |
| | XMG | UNI flange DN200/200, PP max 4bar abs/58psia, suitable for DN200 PN16/10K 200 |
| | XNG | UNI flange DN250/250, PP max 4bar abs/58psia, suitable for DN250 PN16/10K 250 |
| | YYY | Special version |

| 020 | Sensor Connection: | |
|---|---|---|
| | A | Thread ISO228 G3/4 |
| | B | Thread ISO228 G1 |
| | C | Thread ISO228 G1-1/2 |
| | D | Thread ISO228 G2 |
| | E | Thread ANSI NPT3/4 |
| | F | Thread ANSI NPT1 |
| | G | Thread ANSI NPT1-1/2 |
| | H | Thread ANSI NPT2 |
| | Y | Special version |

The filled in options result in the complete order code.

| | 015 | 020 |
|---|---|---|
| FAX50 - | | |

For more information, see the documentation TI00426F/00/EN.

**Cantilever with mounting frame or wall bracket**

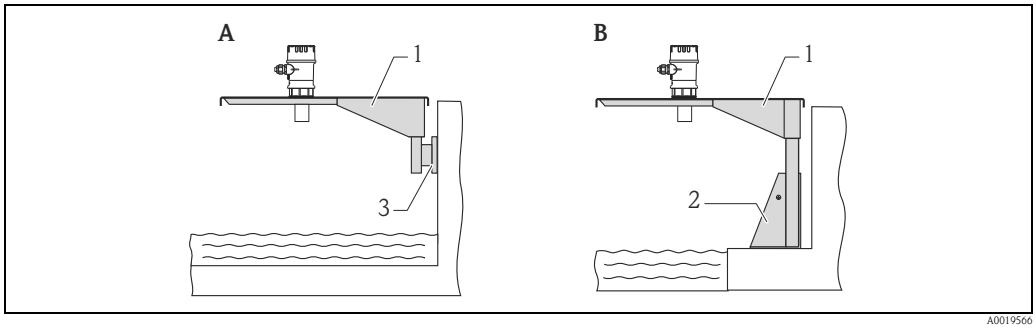


**A** *Installation with cantilever and wall bracket*
**B** *Installation with cantilever and mounting frame*
*1 Cantilever*
*2 Mounting frame*
*3 Wall bracket*

### Cantilever

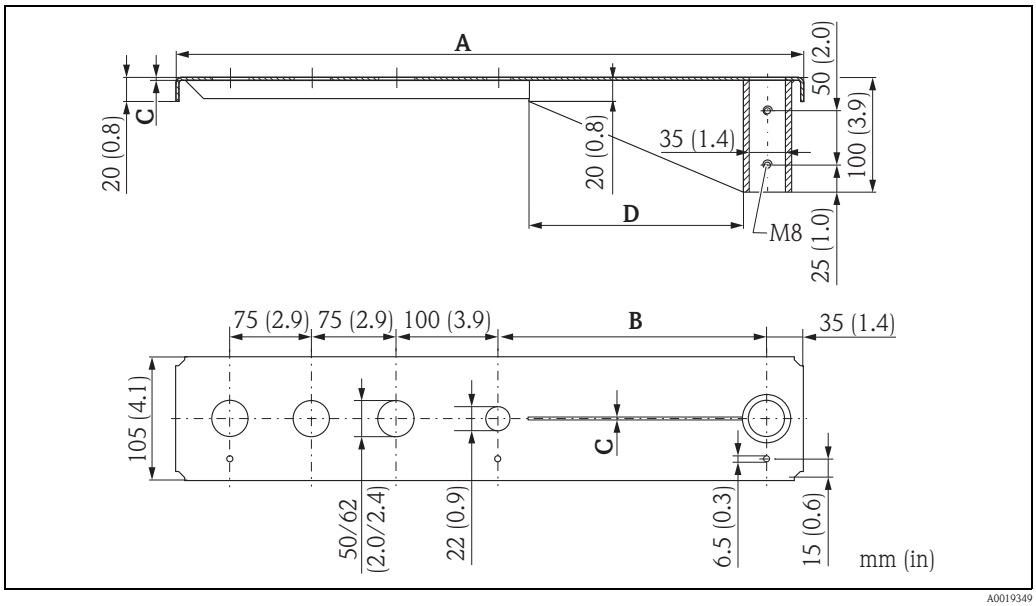


| A | B | C | D | Weight | Sensor | Material | Order Code |
|---|---|---|---|---|---|---|---|
| 585 (23) | 250 (9.84) | 2 (0.08) | 200 (7.87) | 1.9 kg (4.19 lbs) | 1½" | 316Ti (1.4571) | 52014132 |
| | | | | | | galv. steel | 52014131 |
| | | | | | 2" | 316Ti (1.4571) | 52014136 |
| | | | | | | galv. steel | 52014135 |
| 1085 (42.7) | 750 (29.5) | 3 (0.12) | 300 (11.8) | 4.4 kg (9.7 lbs) | 1½" | 316Ti (1.4571) | 52014134 |
| | | | | | | galv. steel | 52014133 |
| | | | | | 2" | 316Ti (1.4571) | 52014138 |
| | | | | | | galv. steel | 52014137 |

mm (in)

- The 50 mm (2.17 in) or 62 mm (2.44 in) orifices serve for the mounting of the 1½" or 2" sensor, respecitvely.
- The 22 mm (0.87 in) orifice may be used for an additional sensor.

Fixing screws are supplied.

**Mounting Frame**

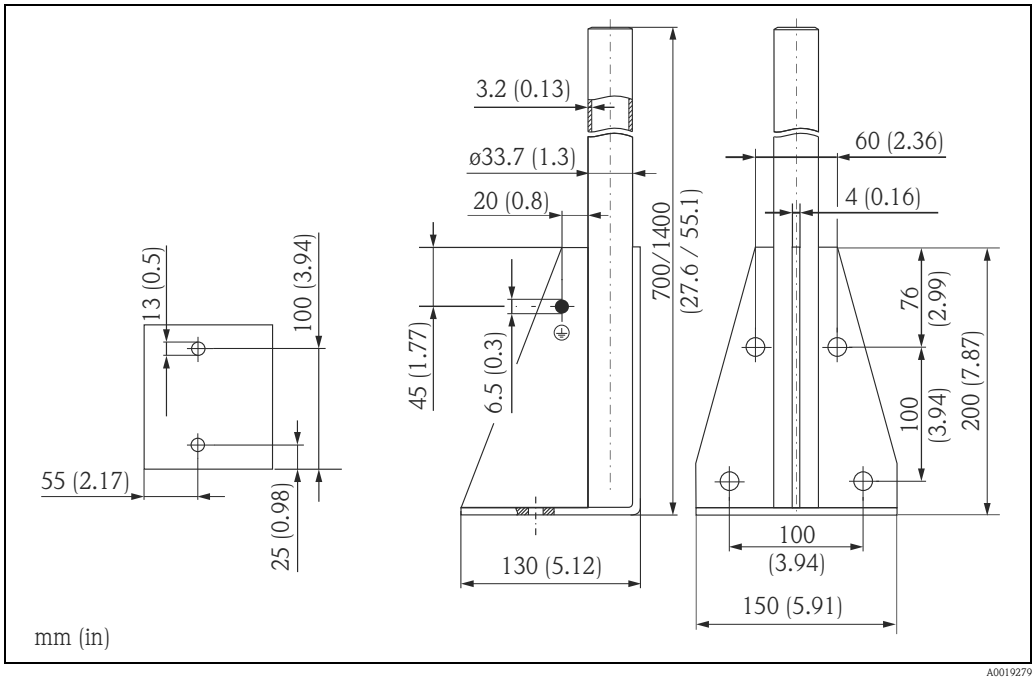


| Height | Material | Weight | Order Code |
|---|---|---|---|
| 700 (27.6) | galv. steel | 3.2 kg (7.06 lbs) | 919791-0000 |
| 700 (27.6) | 316Ti (1.4571) | | 919791-0001 |
| 1400 (55.1) | galv. steel | 4.9 kg (10.08 lbs) | 919791-0002 |
| 1400 (55.1) | 316Ti (1.4571) | | 919791-0003 |

mm (in)

**Wall Bracket**

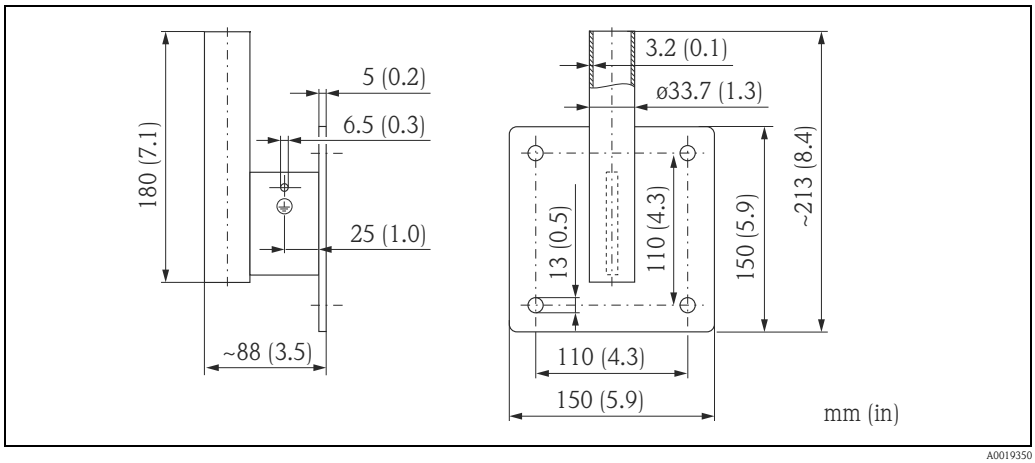


| Material | Weight | Order Code |
|---|---|---|
| galv. steel | 1.4 kg (3.09 lbs) | 919792-0000 |
| 316Ti (1.4571) | | 919792-0001 |

**Weather protection cover**

A Weather protection cover is recommended for outdoor mounting.

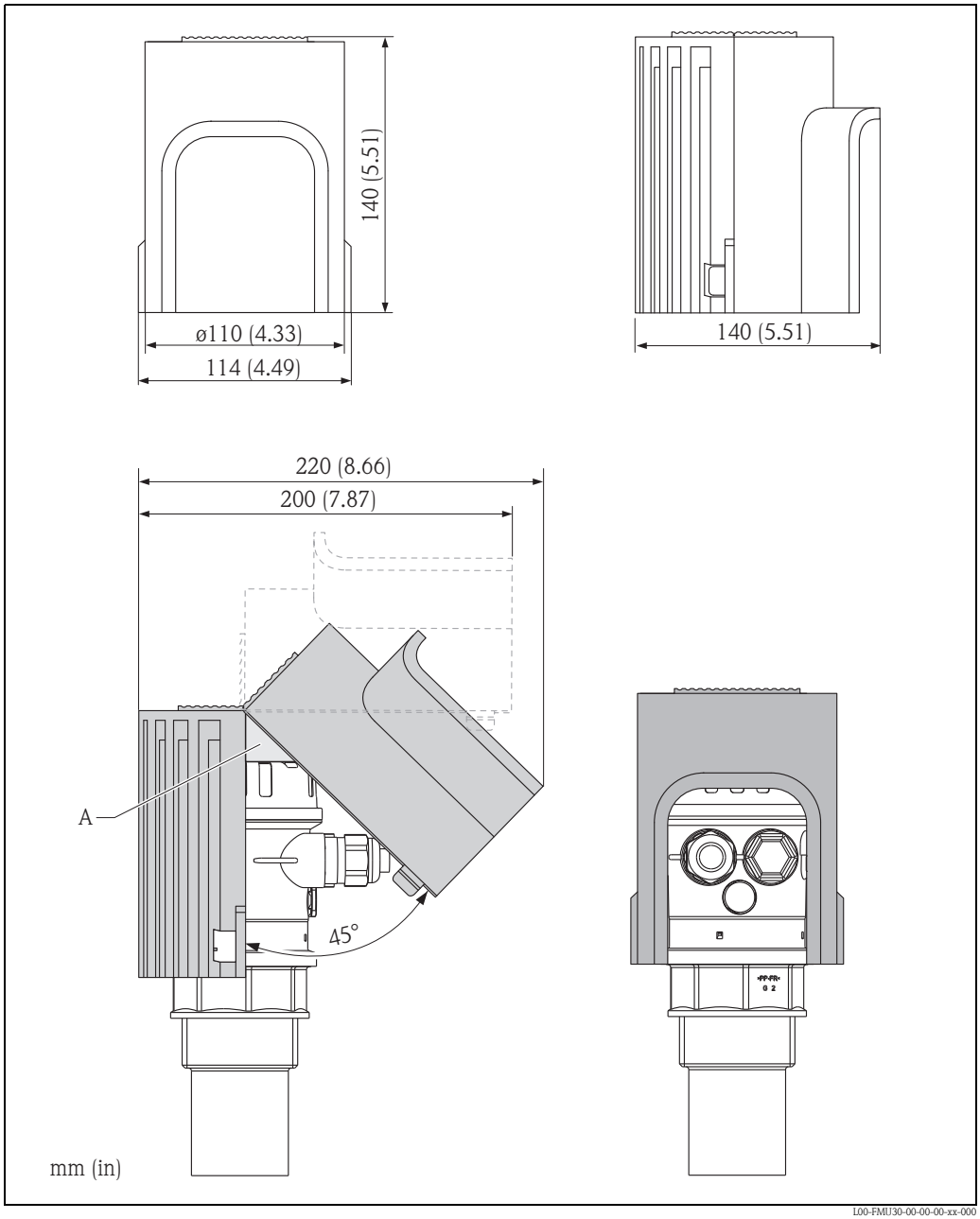


*A Foam pad*

| Material | Order No. | Weight | Operating conditions |
|---|---|---|---|
| PBT, grey | 71127762 | 240 g (8.46 oz) | –50 °C to +150 °C (–58 °F to +302 °F) |

**Commubox FXA291**

The Commubox FXA291 connects Endress+Hauser field instruments via the service interface to the USB interface of a personal computer or a notebook. For details refer to TI00405C/07/EN.

Note!
For the FMU30 you need the "ToF Adapter FXA291" as an additional accessory.

**ToF Adapter FXA291**

The ToF Adapter FXA291 connects the Commubox FXA291 via the USB interface of a personal computer or a notebook to the FMU30.
For details refer to KA00271F/00/A2.

# Documentation

**Operating manual**

**BA00387F**

This instruction describe the installation and first commissioning of the instrument. From the operating menu, all functions are included, which are required for standard measurement tasks. Additional functions are not contained in the manual.
The documentation can be found on the supplied documentation CD. The documentation is also available via the Internet → siehe: www.endress.com → Download.

**Description of device functions**

**BA00388F**

This contains a detailed description of all the functions of the isntrument and is valid for all communication variants.
The documentation can be found on the supplied documentation CD. The documentation is also available via the Internet → www.endress.com → Download.

**Short instructions**

**KA01054F**

is for rapid commissioning of the device. The instructions are attached to the device. The documentation can be found on the supplied documentation CD.
The documentation is also available via the Internet → www.endress.com → Download.

**KA00290F**

can be found under the device housing cover.
The most important menu functions are summarised on this sheet. It is intended primarily as a memory jogger for users who are familiar with the operating concept of Endress+Hauser time-of-flight instruments.

**Safety Instructions**

Depending on the approval, the following Safety Instructions (XA) are supplied with the device. They are an integral part of the Operating Instructions.

| Certificate/type of protection | Documentation | Order code | |
|---|---|---|---|
| | | Feature | Version |
| ATEX II 1/2 G Ex ia IIC T5 Ga/Gb | XA01054F | 10 | BB |
| IECEx, Ex ia IIC T5 Ga/Gb | | | CB |
| Ex ia Class I, Division 1, Group A-D, T5<br>Class I, Zone 0, AEx/Ex ia IIC T5 Ga | XA01080F | | IB |
| NEPSI Zone 0/1, Ex ia IIC T5 Ga/Gb | XA01264F | | NB |

For certified devices the relevant Safety Instructions (XA) are indicated on the nameplate.

**Instruments International**

Endress+Hauser
Instruments International AG
Kaegenstrasse 2
4153 Reinach
Switzerland

Tel.+41 61 715 81 00
Fax+41 61 715 25 00
www.endress.com
info@ii.endress.com

Endress+Hauser

People for Process Automation

TI00440F/00/EN/15.14
71225633
SGML+FM10

71225633

# MIXER- TANK SODIUM HYDROXIDE
# 65AGI68010

**Workshop drawing :**

- □ Approuved as is
- □ Approuved with correction(s)
- □ Rejected

**Approuved by**

Name : _____

Title : _____

Compagnie : _____

Signature : _____

AGNICO EAGLE

**Vendor Document Status**

1 ☐ **Proceed to next submission and status.**

2 ☐ **Proceed with exceptions as noted to next submission and status.**

3 ☐ **Do not proceed.**
**Revise as noted and resubmit next submission and status.**

4 ☑ **Complete, no further submission required.**

**By:** Sébastien Perron
Instrumentation **Date:** 2021-03-24

**Review and authorization to fabricate are only for general conformance with the design concept of the Project as expressed in the Contract Documents. Sole responsibility for the accuracy and completeness of this document, including but not limited to dimensions and quantities, remains with the Supplier/Contractor. Agnico Eagle does not warrant the accuracy or completeness of any of the information contained herein, nor does Agnico Eagle authorize or approve any construction means, methods, techniques, sequences or any safety precautions or procedures.**

**Agnico Eagle No.** 3.02 6526 [illegible]

**DOCUMENT FOR INFORMATION**

Sharpe Mixers
A Hayward Gordon Company
www.sharpemixers.com
P.O. Box 3906 - Seattle, WA 98124 - (800) 237-8815 (206) 767-5660

# MIXER DATA SHEET



**Customer:**

**Date :** mars 5, 2021
**Sharpe Ref# :**

**Application :**

**Design conditions :** Viscosity(cps): 50 , Sp.Grav: 1,00 Temp.: Ambient Pressure: Atmos.
**Tank dimensions :** 70 " Dia. Tank x 70" overall height from mixer mount to tank floor
M5QP-02012021 Tank Volume = ~1033 Gallons

| | |
|---|---|
| **Equipment :** | **SHARPE FIXED MOUNTED F-SERIES MIXER**<br>Quantity : 1 **Mixer Model #** **FGP-075** 0 |
| **Motor :** | 0,75 Horsepower, @ 1750 RPM, 3PH, 60Hz, 575 VOLTS TEFC<br>56C Frame, Motor Furnished by Sharpe , Mounted by Sharpe |
| **Mixer Drive :** | M5 Single-Reduction Helical Gear Drive , 5:1 Ratio, Rated at 4.8 Horsepower |
| **Mixer mounting :** | 11" sq. plate with vibration mounts |
| | Std Food Grade Viton Lip Seal in Nosecone/Spool |
| **Wetted Parts :** | SS316 NONE (bead blasted) |
| **Shaft :** | 0,75" Dia. x 51" long from mounting base, turning @ 350 RPM |
| **Impellers :** | Quantity: ( 1 ) 14,5" Dia. Hyflo 218 Energy Efficient Hydrofoil<br>1-Piece setscrewed design |

*Shipping Weight,each= 100 lbs*

| | | |
|---|---|---|
| Calculated Flow Generated = | 2988 | gallons per minute |
| Tank Turnovers Per Minute = | 2,89 | |
| Design Torque Load = | 228 | lbs-in |
| Calculated Design Overhung Moment = | 941 | lbs-in |

Prepared by:

***Sharpe Mixers***
*P.O.Box 3906*
*Seattle,WA 98124*

3-5-21 1:54 PM

# OPERATION and MAINTENANCE INSTRUCTIONS for SHARPE MIXERS TOP ENTRY OPEN TANK F-SERIES MIXERS

## TABLE OF CONTENTS


Section 1: INITIAL INSPECTION, RECEIVING AND STORAGE ..... 1
Section 2: MOUNTING ..... 2
Section 3: INSTALLING THE MIXER SHAFT & IMPELLER ..... 2
Section 4: POSITIONING ..... 2
Section 5: INSTALLING THE STEADY BEARING ..... 3
Section 6: MOTOR CONNECTIONS ..... 4
Section 7: LUBRICATION ..... 4
Section 8: OPERATION ..... 5
Section 9: DIRECT DRIVE DISASSEMBLY ..... 6
Section 10: GEAR DRIVE DISASSEMBLY ..... 9
Section 11: MIXER OFFSET GUIDE ..... 10
Section 12: TROUBLE SHOOTING GUIDE ..... 11
Section 13: ACCESSORIES ..... 12


**CAUTION**

Because neither manufacturer nor seller can control the application or installation of this product, their only obligation shall be to replace this part if defective and shall not be liable for any injury, loss, or damage, direct or consequential, arising from the installation of this product. User assumes all risk in using this product and is therefore cautioned in selecting the product suitable to the intended use. Refer to inside cover of this manual for Terms and Conditions.

## SECTION 1
## INITIAL INSPECTION, RECEIVING AND STORAGE

1.1 Immediately upon receipt of the equipment check the crating and contents for any damage that may have occurred in transit. Report any damage immediately to the carrier and to Sharpe Mixers. Check against the packing slip to be sure that all parts were received. Report missing items to the carrier and to Sharpe Mixers.

1.2 Mixer and impellers are normally packed together. The mixer shaft is packed in a separate container. Impellers are usually banded or lag-bolted to drive skid. If space allows, keep shipping containers for possible future use.

1.3 Storage: Storage is when a) mixer has been delivered to the job site and is awaiting installation, b) mixer has been installed, but regular operation is delayed, c) there are long idle periods between operating cycles, d) plant/department operation is shut down. Store mixer in a clean, dry location, with circulating air, free from wide variations in temperature. Electric motors are easily damaged by moisture. Store the entire unit off the floor, covered with plastic, and use desiccants to reduce moisture buildup. Do not seal the plastic cover as this traps moisture. If the motor shows signs of moisture absorption before start-up, dry the motor out by applying 10% voltage on two leads ( if in doubt, measure resistance in windings). This will give approximately 50% rated current. There are also sprays available to help dry out motors. Relubricate motor before start-up when in storage six months or more. When gear drive models have been in storage for more than a year, the condition of the gear lubricant should be inspected (see Paragraph 7.1).

## SECTION 2
## MOUNTING

2.1 Both the plate mount and angle mount use four (4) 3/8" bolts on a nine inch (9") square spacing (see page 8) to mount the mixer to your mixer support above the tank. Double nutting is recommended to prevent bolts from loosening by equipment vibration.

2.2 Mounting structure must be stable and strong enough to allow the vibration mounts to flex under mixer load which minimizes stress on longer shafts. If mounting to an unstable support, mixer loads may cause damage to the equipment, tank, or other hazards.

## SECTION 3
## INSTALLING THE MIXER SHAFT & IMPELLER

*(refer to pages 7 or 8)*

**WARNING**: Always lockout power before installing or servicing the mixer shaft and impeller.

3.1 The mixer shaft will have one end (marked: motor end) ground to fit the drive bearing and coupling. Slide the impeller(s) onto the opposite end with the concave side of the blades facing AWAY from motor end of shaft. A single impeller is best mounted at the end of the shaft or 1-2 prop diameters above tank bottom. The upper impeller (if supplied) is normally mounted a minimum of 2 impeller diameters below the liquid surface. Tighten the set screws securely. High horsepower units will have "divots" into which the set screws must be tightened.

3.2 Remove the service window (512) from the mixer spool so the bearing and coupling are visible (see page 7 or 8 ). Rotate the coupling until the two clamping bolts (651) are accessible. Install the mixer shaft (with the end marked motor end) up through the lip seal, bearing, and into the drive coupling (650) . Using the 3/16" hex wrench supplied, *TIGHTEN THE TWO BOLTS IN THE COUPLING* (651), gripping the mixer shaft in position. Tighten SECURELY as these bolts transmit the mixer torque. *TIGHTEN THE TWO BEARING SET SCREWS* (310) , using the 1/8" hex wrench provided.

## SECTION 4
## POSITIONING

**WARNING**: Always lockout power before positioning or repositioning the mixer.

4.1 The following drawings are for reference only. If there is any question concerning the proper position of your F-series mixer, please contact your Sharpe Mixers representative or the factory as your specific application may be different than recommendations shown.

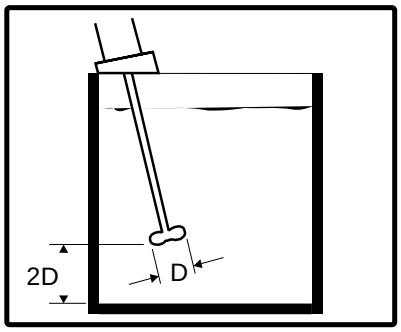


4.2 If tank diameter is approximately equal to liquid depth, use 1 prop, placed at least 2 prop diameters from the bottom of the tank.

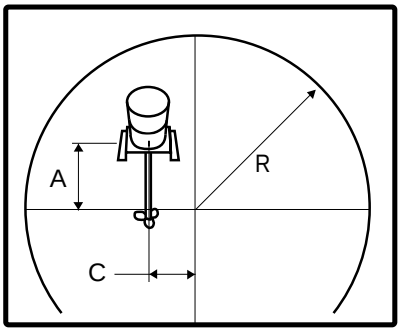


4.3 See drawing A2787 in section 11 for angular offset mounting dimensions. Consult factory for special applications, including square/rectangular tanks.

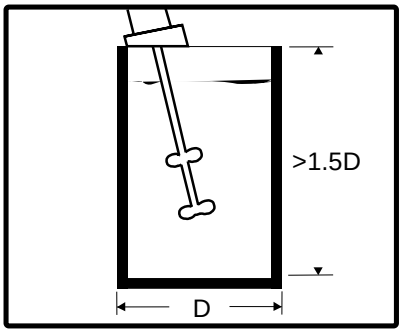


4.4 If tank height is greater than 1.5x the diameter, use 2 props. Position lower prop at least 2 prop diameters from bottom. Place upper prop halfway between bottom and top of liquid level.

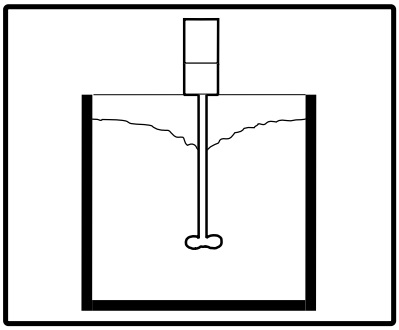

4.5 For drawing down light powders, position mixer in center of tank to create a vortex. A vortex may not be recommended for some products. Depth of prop will vary vortex.

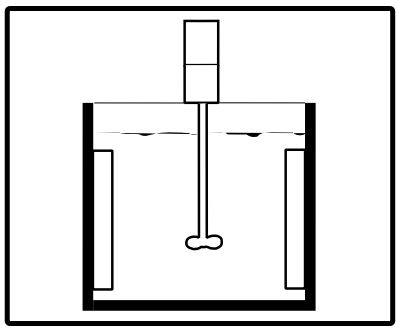

4.6 Baffles may be used to prevent vortexing when mixer is mounted on center. Baffling may not be required with more viscous products or square/rectangular tanks.

## SECTION 5
## INSTALLING THE STEADY BEARING
*(optional equipment)*

**WARNING**: Always lockout power before installing or servicing the steady bearing. Never run mixer without the steady bearing installed.

5.1 This section is for mixers which include an optional steady bearing to accommodate longer than standard mixer shafts. A steady bearing must be installed only after the drive assembly and lower mixer shaft have been assembled and firmly bolted in place. DO NOT predetermine the bearing location from tank and mixer outline dimension drawings. The vertical center line of the steady bearing must coincide with the shaft's natural axis of rotation to minimize bearing preload (see Figure B5.1). This axis may not necessarily be at the center of the tank. The mixer shaft must be hand rotated (using input shaft coupling or motor fan) with a fixture attached to the shaft to mark a line on the tank bottom. The center of this inscribed area will be the location for the center of the steady bearing.

5.2 The steady bearing must be securely installed with its vertical centerline aligned with the axis of rotation of the shaft, as established in Paragraph 5.1. The amount of lateral movement required to bring the shaft into proper alignment with the final steady bearing location will vary depending upon the shaft length and diameter.

5.3 The shaft/wear sleeve must be fully engaged with the bearing.

5.4 The steady bearing and wear sleeve are wearing parts and should be checked periodically. Sharpe Mixers recommends that a spare bearing and wear sleeve be kept in stock at all times.

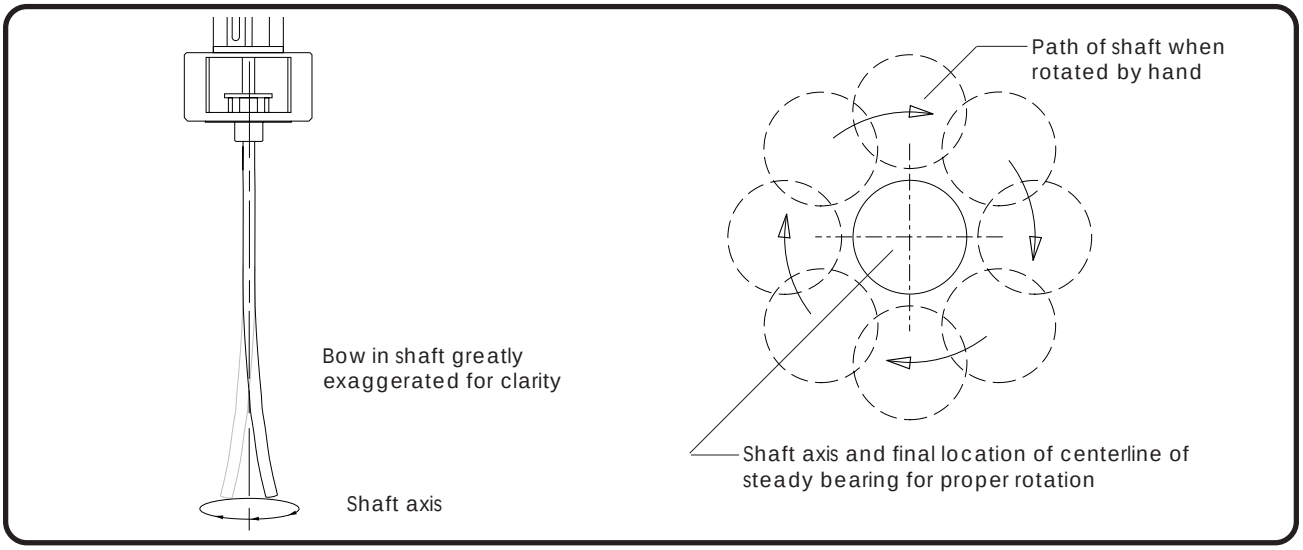


*FIGURE 5.1*

## SECTION 6
## MOTOR CONNECTIONS

**WARNING:** High voltage and rotating parts can cause serious or fatal injury. Electric machinery can be hazardous. Installation, operation, and maintenance of electric machinery should be performed by qualified personnel. Familiarity with NEMA safety standards, National Electrical Code and local building codes are required.

6.1 **Wiring**: Starting and overload control devices must be matched to motor rating. Follow control manufacturer's instructions for proper connections and installation.

6.2 Electrical connections must conform to National Electrical code and all local regulations. Line voltage and wire capacity must match motor rating stamped on motor nameplate.

**WARNING:** Ground the mixer motor properly to avoid serious injury to personnel. Grounding needs to be in accordance with the National Electrical Code and consistent with local building codes.

6.3 **Electric motors - Single phase:** If your mixer is supplied with a single phase motor it may be wired by the factory with a ten foot cord and an on/off switch. If no cord or switch is provided refer to the wiring diagram on the motor for correct connections. Check that the switch is in the off position before plugging the cord into a 110 volt outlet. *Check for proper rotation!* Interchange lines if necessary for proper rotation (see assembly drawing).

6.4 **Electric motors - 3 phase**: Motors requiring 3 phase power must be wired according to the wiring diagrams on the motor. Rotation of the impeller must be according to the assembly drawing and data sheet. Interchange lines if necessary for proper rotation.

6.5 **Electric Variable Speed**: Electric motors using an SCR or variable frequency controller must be wired following the instructions supplied with the controller. Many adjustments are often required to the controller and instructions must be read carefully before applying power. Adjust the controller to limit the maximum speed to the motor nameplate R.P.M. (or refer to the motor speed in the data sheet at the front of this manual ).

6.6 **Air motors:** Air driven mixers must always have a filter, lubricator and moisture trap installed in the air line ahead of the motor to prevent damage. Use the same size or next pipe size larger than intake port of motor. A regulator may be used to govern the mixer speed. Install the air line in the proper port to provide proper rotation. These accessories are available from Sharpe Mixers.

**WARNING:** Damage to equipment or serious injury to personnel can result if speed limitations are not followed.

## SECTION 7
## LUBRICATION

7.1 Your mixer has been lubricated at the factory with the proper type and amount of lubrication for mixer service (gear drive units only). This lubricant needn't be changed under normal conditions for a period of 3 years. Under extreme conditions it is recommended that the lubricant in the gear box be changed more frequently . Remove motor to repack gearbox. Refer to the chart below for the lubricant recommended for temperatures in your area. When changing to a different lubricant, clean gearbox with mineral spirits before repacking.

| SERVICE | LUBRICANT | CHEVRON EQUIVALENT |
|---|---|---|
| 32°F (0°C) and up | Oil based EP semi fluid grease | BLACK PEARL NLGI 1 (standard from factory) |
| Down to -20°F (-29°C) and up to 300°F (149°C) | Synthetic EP-2 | ULTI-PLEX Synthetic grease EP (Grade 1) |
| Food grade | Food grade EP-2 | Chevron FM grease EP2 |

7.2 **Electric motor bearings** are usually sealed and need no relubrication. If zirc fittings are present, lubricate with a No. 2 consistency lithium soap base and petroleum compound. Relubricate every 6 months to 3 years depending on usage. Open and clean drains. Add grease until new grease is forced out drain. Remove excess grease and replace input plugs. Run motor one half hour before replacing drain plugs. Mixer shaft bearings are sealed and need no relubrication.

7.3 **Air motor lubrication:** Lubricator needs to be adjusted to feed one drop of oil for every 50 - 75 CFM of air through the motor. Use a detergent SAE #10 automotive engine oil.

## SECTION 8
## OPERATION

**WARNING:** High voltage and rotating parts can cause serious or fatal injury. Lockout/Tagout power before servicing.

8.1 Rotate mixer shaft by hand to check shaft straightness to assure that the impeller is free of any obstructions in the tank.

8.2 **Always operate mixer with the lower impeller immersed** in the liquid by at least one prop diameter. Never operate mixer if fluid level falls near the lower impeller.

8.3 Unless otherwise stated in the data sheet, the propeller rotates clockwise when viewed from above. Opposite rotation may cause overload and inefficient mixing.

8.4 Vortexing may occur if liquid level is too close to the upper impeller. This will cause aeration of the product and excessive vibration of the equipment. When mixing products of dissimilar viscosities and/or specific gravities the lighter or less viscous material should be introduced first. Gradually add the heavier material or powders into the center of the tank while the agitator is running. Never dump large amounts of powder or solids into the mixing tank. This may create clotting or "sanding in" of impeller and cause damage to the equipment.

8.5 If impeller is buried in solids prior to starting mixer, solids must be dispersed. This may be achieved with an air hose, a recirculating pump, or a large stirring stick if necessary.

8.6 Shaft vibration is normal with an F-series mixer. The rubber vibration mounts on the mixer mount are designed to allow shaft vibration without damaging the mixer drive. Excessive vibration may be caused by a shaft or impeller which has been bent, possibly in shipment. Consult factory for recommendations.

8.7 Keep motors free from oil, dust, dirt, water, and chemicals. Keep air intakes and outlets free from foreign material. Electric motors supplied, although designed for outdoor use, may be damaged due to weather. A rain hood or other protection may be necessary to prolong motor life. Consult factory for recommendations.

8.8 **CAUTION:** Do not drive air motors above 1750 R.P.M.. See Figure 8.1 and 8.2 for proper air consumption and pressures.

8.9 Regular maintenance is the best assurance of trouble free, long life mixer operation. Inspect and relubricate at regular intervals. Frequency and thoroughness depends on operation, nature of service, and environment.

8.10 In the event of a break down within the warranty period, Sharpe Mixers must be notified within 15 days if it is intended that the warranty is to cover the problem. When requesting spare/replacement parts anytime, have serial number and model number off mixer nameplate readily available. Do not disassemble components or otherwise modify equipment without prior authorization from Sharpe Mixers or warranty will be voided. Sharpe Mixers will not accept back charges for any repair work that has not been previously authorized.

| 4AM AIR MOTOR @ 1750 MAXIMUM R.P.M. | | | | | |
|---|---|---|---|---|---|
| **H.P.** | 0.25 | 0.5 | 0.75 | 1.0 | 1.2 |
| **C.F.M.** | 14 | 22 | 30 | 39 | 48 |
| **P.S.I.** | 20 | 40 | 60 | 80 | 100 |

*FIGURE 8.1*

| 6AM AIR MOTOR @ 1750 MAXIMUM R.P.M. | | | | | |
|---|---|---|---|---|---|
| **H.P.** | 0.5 | 0.5 | 1.0 | 2.2 | 2.6 |
| **C.F.M.** | 23 | 39 | 53 | 68 | 82 |
| **P.S.I.** | 20 | 40 | 60 | 80 | 100 |

*FIGURE 8.2*

8.11 **Start-Up Checklist**

Prior and during start-up please check that the following things have been done:

a. Manual has been read and followed ☐

b. Coupling bolts tight (3/16" hex "tee" wrench) ☐

c. Bearing setscrews tight (1/8" hex allen wrench) ☐

d. Impeller is immersed in liquid ☐

e. Sufficient protection for motor (if outdoors) ☐

f. Impeller(s) installed correctly (see Paragraph 3.1) ☐

g. Impellers spaced correctly (if two or more) for maximum and minimum liquid level (see Paragraph 3.1) ☐

h. Correct heaters installed for overload protection ☐

i. All mounting bolts and impeller bolts tight ☐

j. Proper type and amount of lubricant (when serviced; see Paragraph 7.1) ☐

k. Wiring correctly installed, grounded and insulated ☐

l. Proper shaft rotation (clockwise looking down) ☐

m. Steady bearing installed properly (if supplied) ☐

n. Correct voltage/amperage upon starting (check against motor nameplate data) ☐
Record: _____Volts_____amps

o. Excessive noise after start-up ? ☐
Record: _____db_____@3'

p. Excessive vibration of mixer support ? ☐

INSPECTOR _____ DATE _____

## SECTION 9
## DIRECT DRIVE DISASSEMBLY

9.1 Disconnect power from the mixer.

**WARNING:** High voltage and rotating parts can cause serious or fatal injury. Lockout/Tagout power before servicing.

9.2 Remove the service window (512). Loosen the two bearing setscrews (310) and the two lower coupling bolts (651) and remove the mixer shaft. Remove the four 3/8" bolts mounting the motor to the spool and then the two may be separated.

9.2 BEARING AND SEAL REMOVAL: Place the mixer spool in a bench press with the motor mounting face down. Use a 1 - 1/2" diameter arbor in the press on top of the lip seal (360) and press the lip seal and the bearing (301) down and out of the spool.

9.3 Reinstall the bearing from the inside of the spool, using a LOCTITE® sealant (609 or better) to hold the bearing in place. The lip seal (360) should be installed from the outside of the spool into position as shown in the drawing.

9.5 To reassemble, reverse procedure, being sure the shaft has full engagement in the split coupling (650) and all fasteners are tight.

# DIRECT DRIVE PARTS LIST

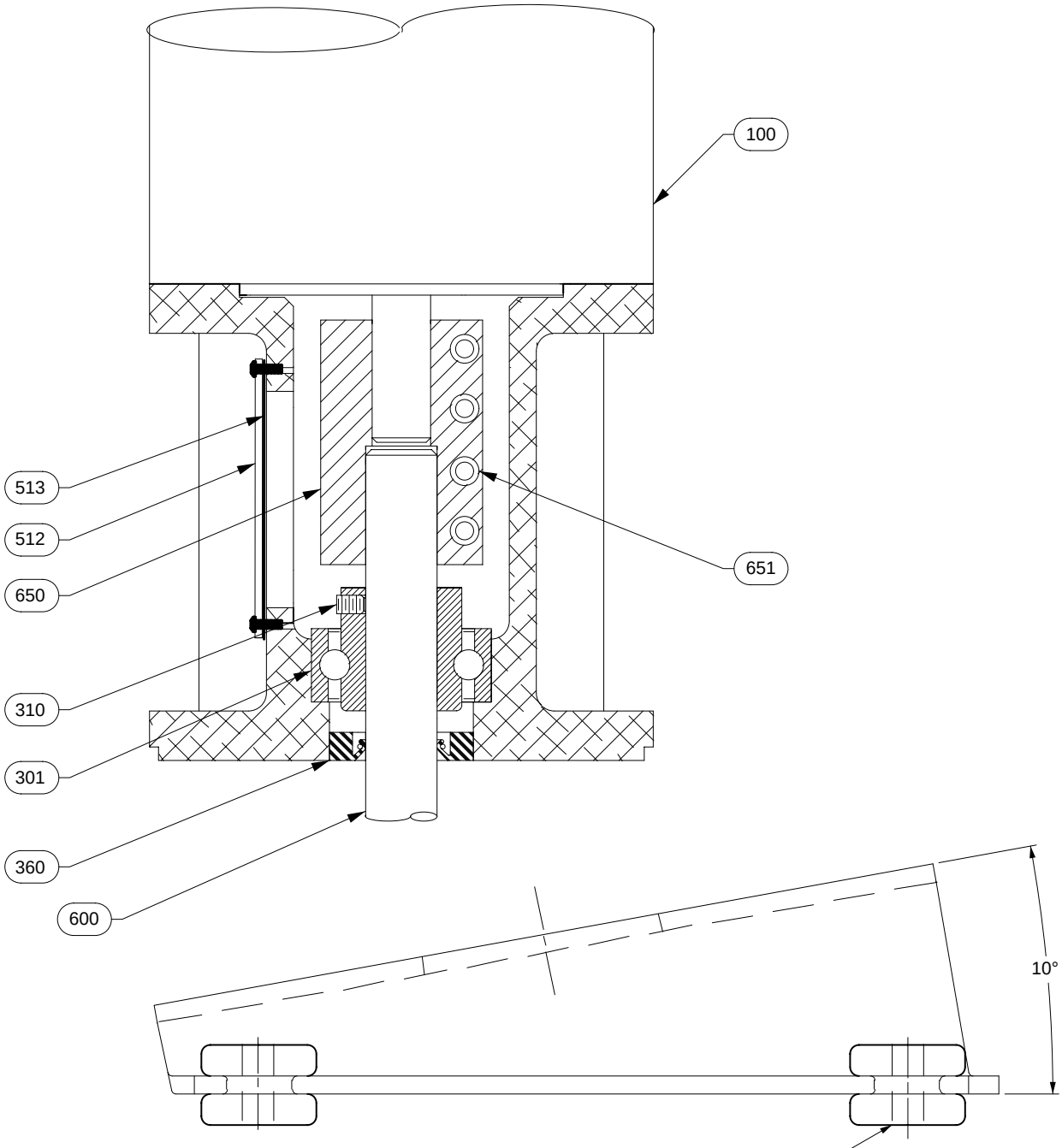


**FOR PLATE AND ANGLE MOUNTINGS**

7/16" HOLES (4 PLS.) ON
9" SQUARE SPACING
THROUGH RUBBER VIBRATION MOUNTS

100 - MOTOR
▷ 301 - BEARING*
▷ 310 - (2) S. S. BRASS TIPPED SET SCREWS
▷ 360 - LIP SEAL*
512 - SERVICE WINDOW
513 - SERVICE WINDOW GASKET
600 - MIXER SHAFT*
▷ 650 - COUPLING*
651 - (4) SPLIT COUPLING BOLTS
750 - IMPELLER (SEE OPPOSITE PAGE)

* NOTE - WHEN ORDERING PARTS, GIVE SERIAL NO. AND SHAFT SIZE.

▷ DENOTES RECOMMENDED SPARE PART

# GEAR DRIVE PARTS LIST

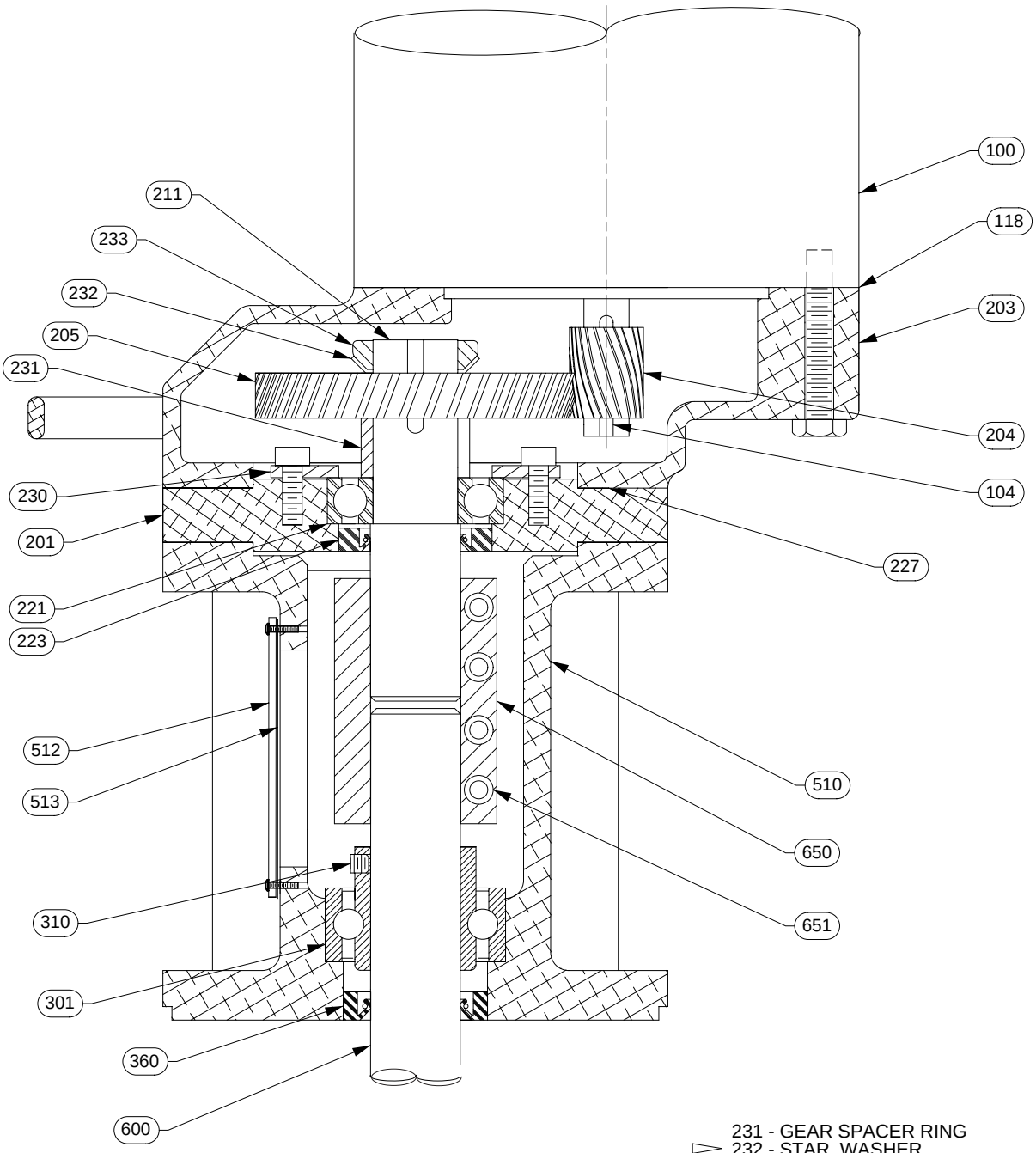


- 100 - MOTOR
- 104 - PINION GEAR KEY
- 118 - C-FACE GASKET
- 201 - BEARING PLATE
- 203 - GEAR HOUSING
- 204 - PINION GEAR
- 205 - HELICAL GEAR
- 211 - GEAR SHAFT
- 221 - GEARBOX BEARING
- 223 - GEARBOX LIP SEAL
- 227 - GEARBOX GASKET
- 230 - BEARING RETAINER
- 231 - GEAR SPACER RING
- 232 - STAR WASHER
- 233 - GEAR NUT
- 301 - SHAFT BEARING*
- 310 - (2) S. S. BRASS TIPPED SET SCREWS
- 360 - SHAFT LIP SEAL*
- 510 - BEARING SPOOL
- 512 - SERVICE WINDOW
- 513 - SERVICE WINDOW GASKET
- 600 - MIXER SHAFT*
- 650 - COUPLING*
- 651 - (4) SPLIT COUPLING BOLTS

* NOTE - WHEN ORDERING PARTS, GIVE SERIAL NO. AND SHAFT SIZE.

DENOTES RECOMMENDED SPARE PART

## SECTION 10
## GEAR DRIVE DISASSEMBLY

10.1 Disconnect power from the mixer.

**WARNING:** High voltage and rotating parts can cause serious or fatal injury. Lockout/Tagout power before servicing.

10.2 Remove the service window (512). Loosen the two bearing set screws (310) and the two lower coupling bolts (651) and remove the mixer shaft.

10.3 Remove the three motor bolts and the motor may be lifted off the gear head assembly. Remove the four (4) 3/8" gear head assembly bolts and lift off the gearbox housing (253). The bearing plate (201) may now be removed with the gear, gear shaft and coupling assembled. Clean the assembly of grease and rinse with mineral spirits. Handling the gear shaft subassembly is best accomplished using a piece of round bar the same diameter as the mixer shaft. Clamp the round bar in a bench vise and tighten the drive coupling (650) onto the round bar. If a round bar is not available clamp the coupling in the vise using two pieces of wood so as not to damage the coupling. To remove the gear nut (233) first bend down the locking tab on the star washer from the slot in the gear nut. Using a spanner wrench, loosen the gear nut from the shaft. Remove the gear nut and the star washer. The slow speed gear (205) may be removed using a gear puller if it is too tight to remove by hand. Gear teeth are hardened and are easily chipped. Use care when handling. Loosen the upper two coupling bolts and remove the gear shaft/bearing plate assembly from the coupling. Place the subassembly in a press with the threaded end of the shaft pointing up. Remove the spacer ring (231) from the gear shaft. Press the gear shaft (211) down, out of the bearing plate. Remove the four 1/4" cap screws and the bearing retaining ring (230). Turn the bearing plate upside down so that the lip seal (223) is on top. Using a 2" diameter arbor press the lip seal and the bearing out of the bearing plate. See Paragraph 9.2 for removal of bearing and lip seal in the spool.

10.4 To remove pinion gear (204) from the motor shaft, first clean the pinion gear and motor shaft of grease. Support the motor shaft with a soft block to prevent damage when removing the pinion gear. The pinion gear may be removed from the motor shaft using a gear puller. Use care to not chip the teeth of the hardened gear. Apply heat to break the adhesion of the Loctite®.

10.5 To reassemble a new gear on an existing motor, clean all parts and trial fit the pinion gear on the shaft. Never pound the pinion gear into place. Assemble gear and key flush with the end of the motor shaft using Loctite® # RC-680 compound. Remove any excess Loctite® from the gear, especially from the gear teeth. If replacing both the motor and pinion gear, Sharpe Mixers will normally supply the motor with the pinion gear installed. Pack the gearbox full with the appropriate lubricant (see Section 7).

Always reference mixer serial number when making a parts inquiry or placing an order. This serial number is located on the Sharpe Mixer nameplate and on the front cover of the service manual.

MARINE PROPELLERS ARE STANDARD ON DIRECT DRIVE F-SERIES MIXERS

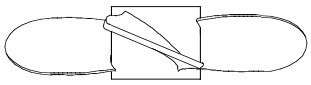

HYFLO II ENERGY EFFICIENT IMPELLERS ARE STANDARD ON GEAR DRIVE F-SERIES MIXERS

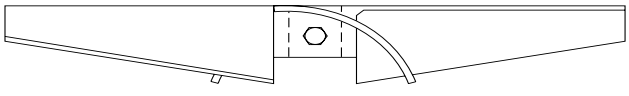

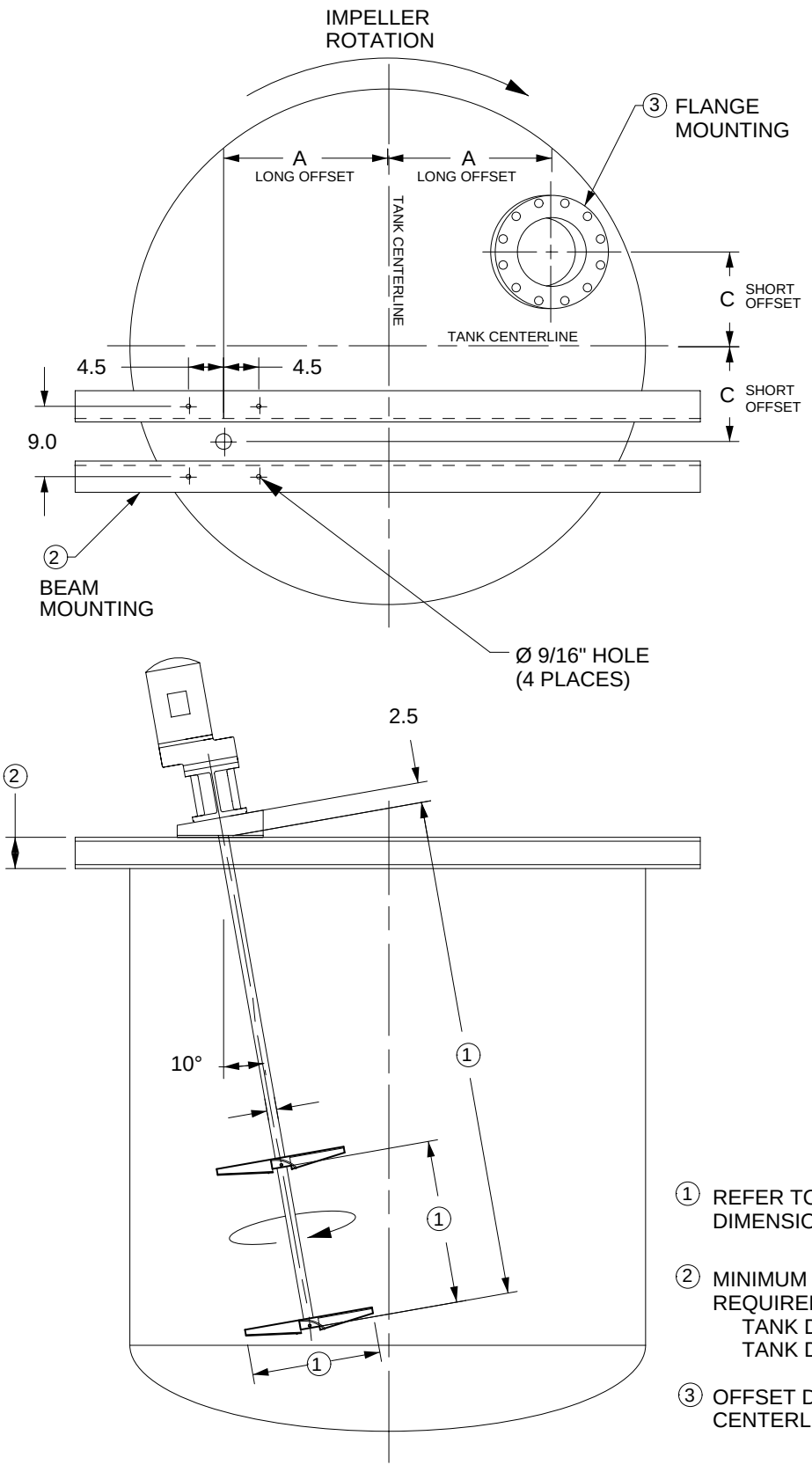


| TANK DIA. | A | C |
|---|---|---|
| 24 | 4.88 | 2.88 |
| 27 | 6.25 | 3.63 |
| 30 | 7.38 | 4.25 |
| 33 | 8.50 | 4.88 |
| 36 | 9.75 | 5.63 |
| 39 | 10.88 | 6.25 |
| 42 | 11.88 | 6.88 |
| 45 | 13.25 | 7.63 |
| 48 | 14.13 | 8.13 |
| 51 | 15.38 | 8.88 |
| 54 | 16.5 | 9.50 |
| 57 | 17.5 | 10.13 |
| 60 | 18.88 | 10.88 |
| 63 | 20.0 | 11.50 |
| 66 | 21.0 | 12.13 |
| 69 | 22.13 | 12.75 |
| 72 | 23.38 | 13.50 |
| 75 | 24.5 | 14.13 |
| 78 | 25.5 | 14.75 |
| 81 | 26.63 | 15.38 |
| 84 | 27.88 | 16.13 |
| 87 | 29.0 | 16.75 |
| 90 | 30.13 | 17.38 |
| 93 | 31.25 | 18.13 |
| 96 | 32.50 | 18.75 |
| 99 | 33.50 | 19.38 |
| 102 | 34.63 | 20 |
| 105 | 35.75 | 20.75 |
| 108 | 36.88 | 21.38 |
| 111 | 38.13 | 22 |
| 114 | 39.25 | 22.63 |
| 117 | 40.38 | 23.38 |
| 120 | 42.18 | 24 |
| 126 | 43.88 | 25.38 |
| 132 | 46.13 | 26.63 |
| 138 | 48.38 | 28 |
| 144 | 50.88 | 29.25 |
| 150 | 53.0 | 30.63 |
| 156 | 55.25 | 32 |
| 162 | 57.50 | 33.25 |
| 168 | 59.88 | 34.63 |

| TANK DIA. | A | C |
|---|---|---|

1. REFER TO DATA SHEET FOR DIMENSIONS.

2. MINIMUM MOUNTING CHANNEL REQUIRED:
   TANK DIA. UP TO 96" - 4" x 7.25#
   TANK DIA. OVER 96" - 6" - 8.2 #

3. OFFSET DIMENSIONS ARE TO CENTERLINES ON TOP OF FLANGE.

TANK DETAIL FOR ANGULAR-OFFSET PLATE MOUNTING

DWG NO.: A2787

7520 - 10 - 704

*TANK,MNT,ANGLE,OFFSET.S by:KWS 11/97 revision: 1 - 7-20-04 JDH Dimensions are for reference only. Use certified prints for construction. Dimensions are in inches.

## SECTION 12
## TROUBLE SHOOTING GUIDE

| PROBLEM | POSSIBLE CAUSE | SOLUTION |
|---|---|---|
| •Shaft will not fit into drive | •Wrong end of shaft (only one end fits) | •Install end marked "motor end" |
| | •(2) bearing set screws (310) extend into bearing bore | •Loosen set screws |
| | •(2) coupling bolts (651) too tight | •Loosen bolts |
| | •Shaft over size (proper dia. 0.001" - 0.002" under nominal dia. | •Measure and consult factory |
| | •Wrong size shaft (600), coupling (650), or bearing (301) | •Consult factory |
| | •Damaged shaft (600), coupling (650), or bearing (301) | •Consult factory |
| •Mixer will not start | •Incorrect wiring | •Check wiring diagram and wire correctly |
| | •Loose connections | •Check and tighten connections |
| | •Blown fuse | •Replace fuse |
| | •Incorrect voltage | •Wire for correct voltage |
| | •Mechanical jamming | •Free all debris for rotation |
| | •Water damage to motor | •Service or replace motor |
| | •Wrong size heaters in starter | •Replace heaters |
| •Mixer will not reach correct speed | •Overload of motor | •Check amperage against nameplate data |
| | •Loose drive coupling bolts (651) | •Check coupling bolt tension (coupling and/or shaft maybe damaged if mixer has been run with slipping coupling) |
| | •Air motor vanes/ports dirty | •Flush air motor with non-combustible solvent - relubricate |
| | • Insufficient pressure for air motor | • Increase air line, compressor size, decrease air compressor distance from air motor |
| | •See "Mixer will not start" | |
| •Motor runs hot | •Low or high voltage | •Wire for correct voltage |
| | •Amperage overload | •Contact factory |
| | •Product too viscous | •Check viscosity and specific gravity of product (consult factory) |
| | •Restricted ventilation | •Clear vents |
| | •Frequent starting and stopping | •Check with factory - a special motor may be required |
| | •Unbalanced voltage between phases | •Consult electrician |
| | •Incorrect rotation | •Change motor leads per nameplate instructions |
| | • Air motor not lubricated properly | • Lubricate (see Paragraph 7.1) |
| | • Impeller upside-down | • Reinstall in correct position |
| | • Exceeding maximum speed | • Adjust variable speed drive to limit R.P.M. |

| PROBLEM | POSSIBLE CAUSE | SOLUTION |
|---|---|---|
| •Noisy | •Loose drive coupling bolts (651) or bearing set screws (310)<br>•Insufficient lubricant<br>•Foreign material in lubricant<br>•Incorrect lubricant<br>•Worn or faulty bearings / gears<br>•Dry lip seal (360) in spool | •Check and tighten coupling bolts and set screws<br>•Fill proper amount of lubricant<br>•Change lubricant<br>•Change to correct lubricant<br>•Check bearings/gears replace if necessary<br>•Apply lubricant to lip seal |
| •Bearing failure | •High temperature product<br>•Excessive overhung load<br>•Water damage<br>•See all items under “Noisy” | •Provide heat shield<br>•Consult factory<br>•Replace bearing (check all other parts) |
| •Gear failure | •Excessive loading (check amps)<br>•Lack of (or improper) lubrication<br>•Start-stop-start loading (product burying impeller with solids)<br>•Foreign material in lubricant | •Consult factory<br>•Fill with recommended lubricant or equivalent (see Paragraph 7.1)<br>•Free impeller of any solids at start-up (pre stir with air hose or paddle)<br>•Replace lubricant |
| •Oil leakage | •Excessive lubricant<br>•Damaged/broken gasket<br>•Loose bolts around side plates<br>•Seals worn or damaged | •Check manual for proper amount lubricant and drain excess<br>•Replace gasket<br>•Check and tighten bolts<br>•Replace seals |
| •Shaft vibration | •Impeller not immersed in liquid<br>•Impeller too close to surface<br>•Bent mixer shaft<br>•Unstable mounting platform<br>•Operating at critical speed | •Fill tank<br>•Fill tank or lower impeller (see Paragraph 3.1)<br>•Consult factory<br>•Reinforce platform<br>•Consult factory |

## SECTION 13
## ACCESSORIES

**AIR FILTER, REGULATOR, LUBRICATOR**



An air filter, regulator, and lubricator must be used with air drive portable mixers. If your system already has a filter, regulator, and lubricator, a needle valve is used for motor speed adjustment. These are available from Sharpe Mixers




A "Mixer Fixer Kit" is available for rebuilding your Sharpe portable mixer. This kit includes all bearings, seals, (gears, when applicable) and other recommended spare parts as shown on pages 7 and 8 of this manual (motor optional). Call Sharpe - Mixers for current prices.

# TRIPLEX SODIUM HYDROXIDE
# 351-PVC-1800

AGNICO EAGLE

**Vendor Document Status**

1 ☐ Proceed to next submission and status.

2 ☐ Proceed with exceptions as noted to next submission and status.

3 ☐ Do not proceed.
Revise as noted and resubmit next submission and status.

4 ☑ Complete, no further submission required.

By: Sébastien Perron — Instrumentation  Date: 2021-04-07

Review and authorization to fabricate are only for general conformance with the design concept of the Project as expressed in the Contract Documents. Sole responsibility for the accuracy and completeness of this document, including but not limited to dimensions and quantities, remains with the Supplier/Contractor. Agnico Eagle does not warrant the accuracy or completeness of any of the information contained herein, nor does Agnico Eagle authorize or approve any construction means, methods, techniques, sequences or any safety precautions or procedures.

Agnico Eagle No. 6526-S265-605B-135_TRIPLEX SULFURIC ACID 351-CPVC-250_ WD_R1 R: TRIPLEX SULFURIC ACID 35...

**DOCUMENT FOR INFORMATION**

**Workshop drawing :**

- ☐ Approuved as is
- ☐ Approuved with correction(s)
- ☐ Rejected

**Approuved by**

Name : _____

Title : _____

Compagnie : _____

Signature : _____

Skid manual valves arrangement to be validated with P&ID drawing.

| | |
|---|---|
| Skid Material: | HDPE |
| dimension L xP xH: | 76" x 60" x 30" |
| Pump model: | RF410.2-1450e |
| Pumps L/Hours: | 1740 L/hour |
| Head material: | PVC |
| Pressure: | 3.5 BAR |

**COMPONENT MATERIAL**

| | |
|---|---|
| Plumbing & size: | -Entry 1 1/2" NPT<br>-Dosing 1" NPT |
| Ball valve O ring: | EPDM |
| Relief Valve: | TVBP10-PVC |
| Calibration Cylinder: | PV#2-20000 |
| Gauge Pressure: | 0-160 PSI |
| Tubing pump connec.: | LDPE |

**DOORS**

| | |
|---|---|
| Door product: | Polycarbonate 3/8" |
| | Stainless steel |
| Bolt & washer: | Stainless steel |

**Pump Identification:**

Pump #1: 65PME68006A
Pump #2: 65PME68006B
Pump #3: 65PME68006C

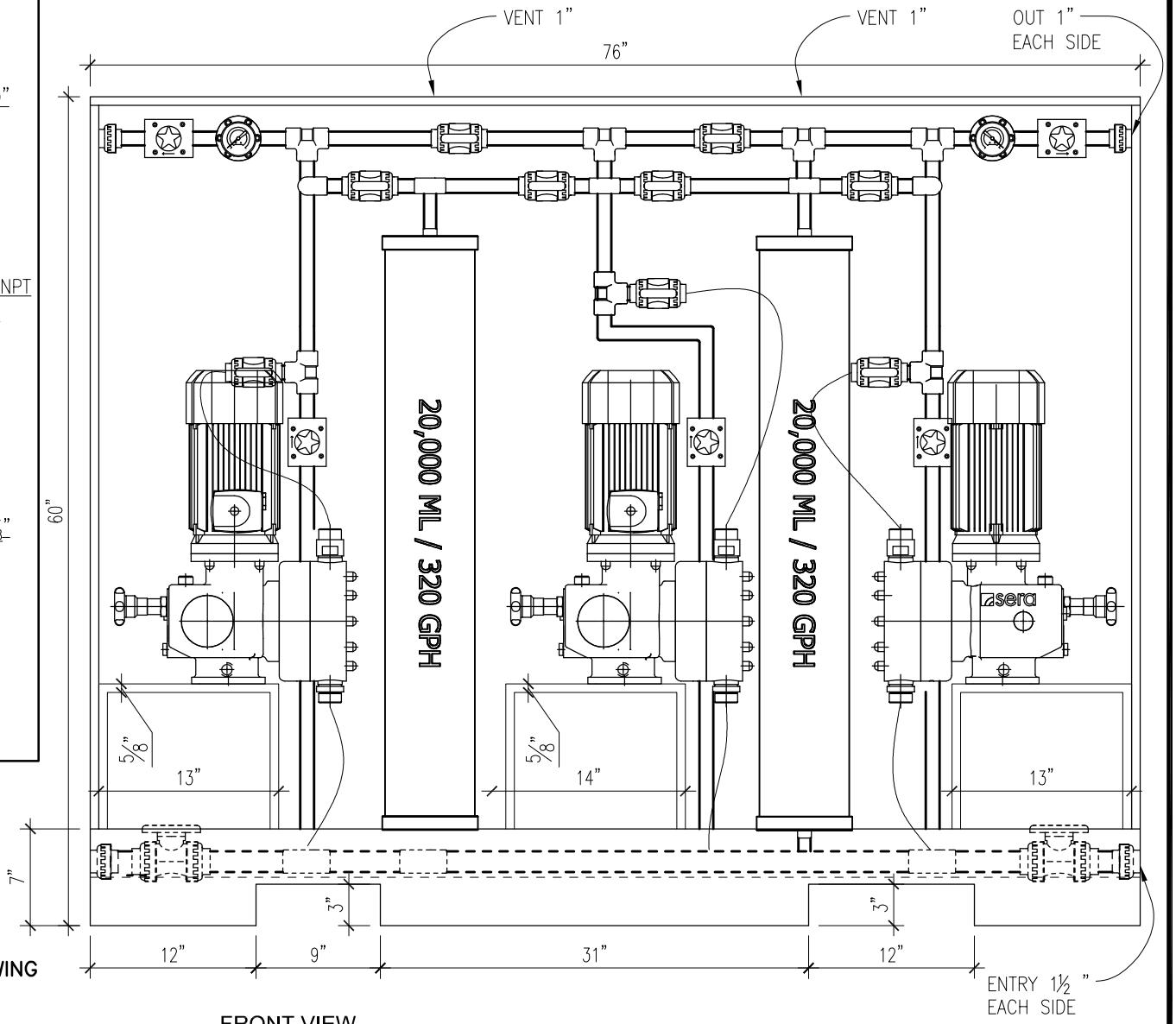


FRONT VIEW

**Notes :**
1. DIMENSIONS ARE IN INCHES
2. DO NOT MEASURE THE DRAWING

PCP Pompes & équipements

| | | | | | | |
|---|---|---|---|---|---|---|
| DREW BY: V. BLUTEAU | TITRE: TRIPLEX SODIUM HYDROXIDE 351-PVC-1800 | REV: | DATE: | MODIF.: | APP.: | DATE: 2021-03-03 |
| PURCHASE ORDER: BC21-14244 | | | | | | # DESSIN: |
| APP. BY: E. CLERMONT | PROJET: 0193970501 | | | | | 1 DE 2 |

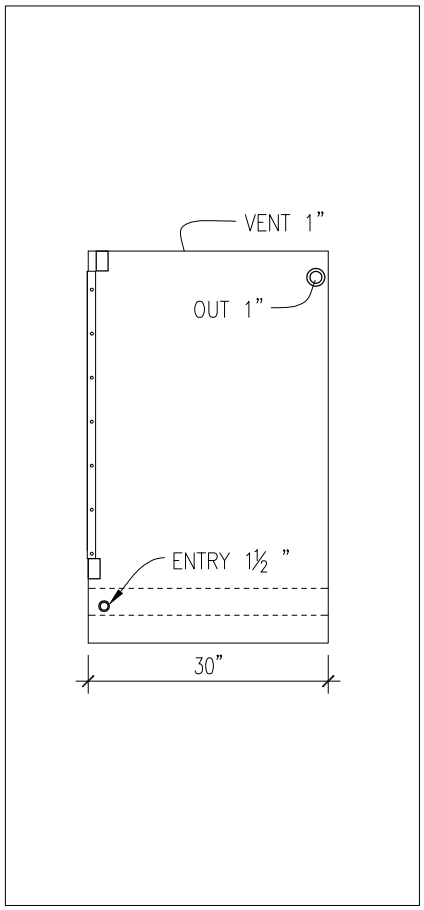


SIDE VIEW

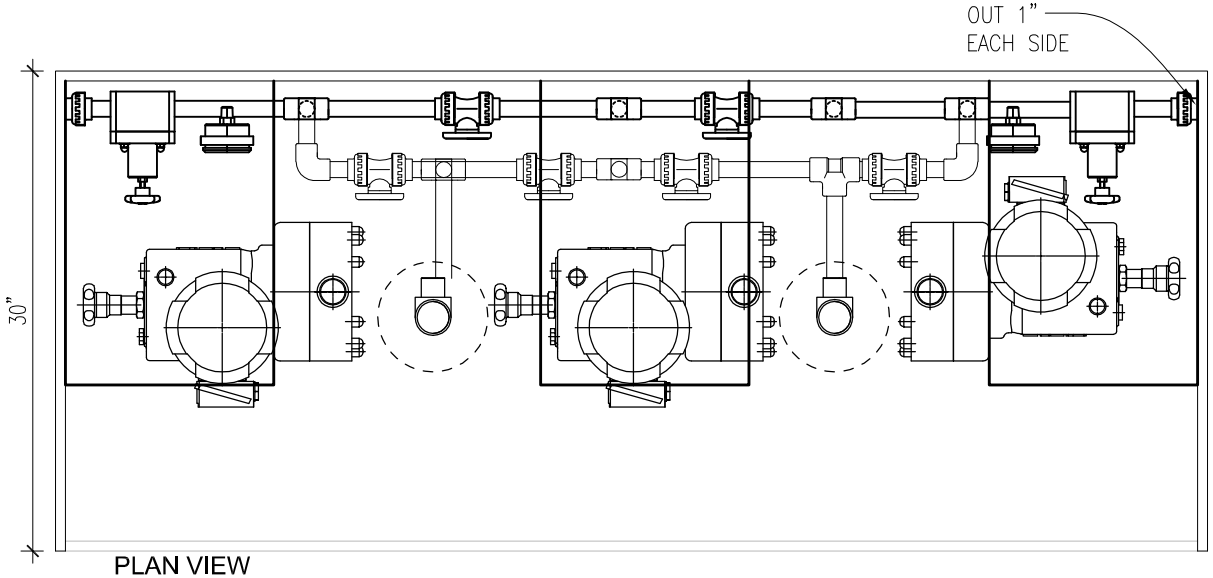


PLAN VIEW

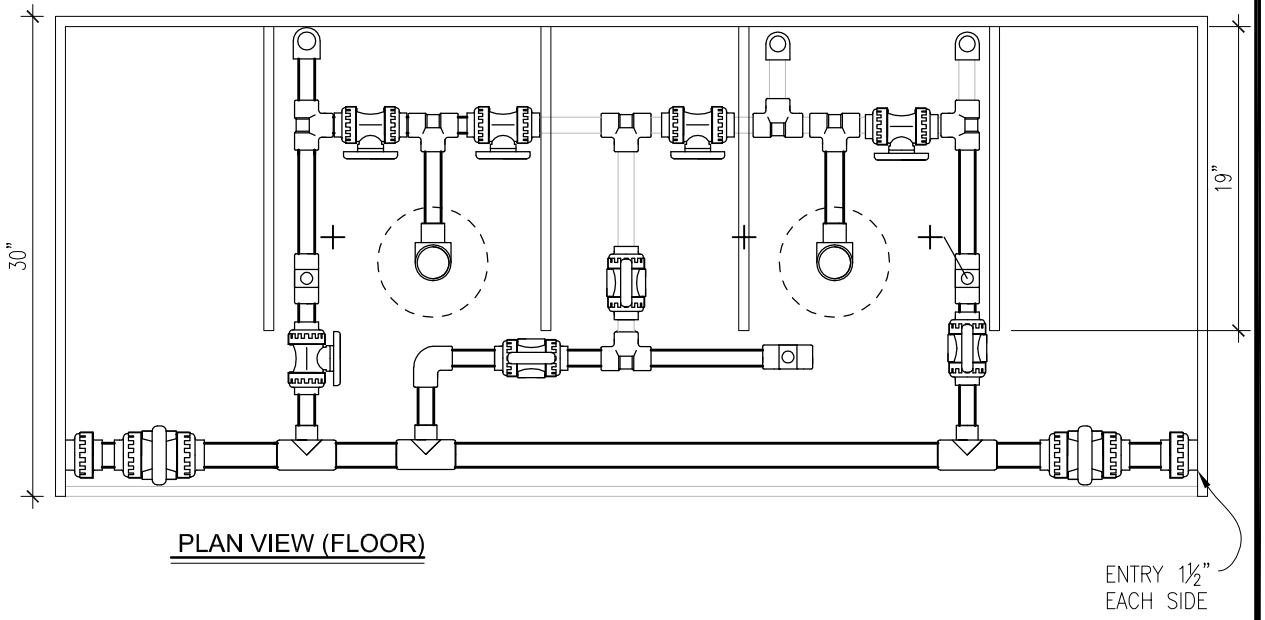


PLAN VIEW (FLOOR)

Notes :
1. DIMENSIONS ARE IN INCHES
2. DO NOT MEASURE THE DRAWING

PCP
Pompes & équipements

| | | | | | | | |
|---|---|---|---|---|---|---|---|
| DREW BY: V. BLUTEAU | TITRE: TRIPLEX SODIUM HYDROXIDE 351-PVC-1800 | REV: | DATE: | MODIF.: | APP.: | DATE: 2021-03-03 |
| PURCHASE ORDER: BC21-14244 | | | | | | # DESSIN: |
| APP. BY: E. CLERMONT | PROJET: 0193970501 | | | | | 1 DE 2 |

# PUMP MODEL RF410.2-1450E

## PUMP #1: 65PME68006A
## PUMP #2: 65PME68006B
## PUMP #3: 65PME68006C

**Workshop drawing :**

- □ Approuved as is
- □ Approuved with correction(s)
- □ Rejected

**Approuved by**

Name : _____

Title : _____

Compagnie : _____

Signature : _____

Single diaphragm pump : RF410.2 – 1450e

Nominal capacity (QN) : 1 x 0 – 1740 l/h at 60HZ

Suction height : 3mWC

Counter pressure (p2max) : 5bar

Nominal stroke frequency (nN) : 97 per minute at 60Hz

Pump body : PVC-U

Single valves : PVC-U

Valve balls : PTFE

Valve seals : EPDM

Working diaphragm : PTFE faced

Connections : G1 1/4

Drive : 3-phase motor

- 1.75kW, 575V +/-5% 60Hz
- IP55, insul.cl. F
- for converter operation 5 to 60Hz
- thermistors
- efficiency IE3
- electrical by UL/CSA

Capacity adjustment : manual stroke length adjustment

Painting : Sera-standard surface protection

PRODUCT INFORMATION

# SERIES 4
# DIAPHRAGM PUMPS




INSPIRED. SOLUTIONS. FOR CUSTOMERS.

# DIAPHRAGM PUMPS - ALLROUNDERS

**sera** diaphragm pumps are oscillating displacement pumps for dosing liquids. The medium to be pumped is separated from the drive by a diaphragm. This is thus protected from damaging influences of the medium.

They are used everywhere where leak-free and exact dosing is important, such as for aggressive, odorous, abrasive, radioactive, flammable, viscous or toxic media.

Delivery rate adjustment by means of stroke frequency adjustment using external frequency converter and manual stroke length adjustment for optimal adaptation to every requirement.

## APPLICATIONS

- Beverage industry
- Food industry
- Manufacture of paints and varnishes
- Power plants
- Water treatment
- Shipbuilding
- Electroplating
- Textile industry
- Waste water treatment

## AUTOMATIC DELIVERY RATE ADJUSTMENT

- Three-phase motors suitable for frequency converter operation for stroke frequency change using an external frequency converter
- Actuators with position controllers for automatic stroke length change

## OVERVIEW OF ADVANTAGES

- High dosing accuracy
- Long diaphragm service lives
- Linear control characteristics
- Leak-free
- Low-maintenance
- ATEX-compliant versions are available (not in stock)
- Unlimited dry running safety

## OPTIONAL VERSIONS

- Diaphragm monitoring
- Suction height 8 mWC
- Controllable variant (C version)





# VERSIONS

## MATERIALS
The high quality of the materials guarantees reliable continuous operation. The optimum material is available for every requirement.

## PUMP BODY AND VALVES
PVC, PP, PVDF, PP-GFP, PVDF-GFP, 1.4571

## VALVE BALLS
PTFE, 1.4401

## VALVE SEALS
EPDM, FPM, FEP-coated

## DRIVE DIAPHRAGMS
PTFE-coated

## MANUAL VENTILATION VALVE (2,4e)
PP-GFP, PVDF-GFP

## DRIVE
The drive unit in each case consists of a proven motor make, coupled with stroke gearing in a robust case.
**sera** cases are also suitable for the harshest operating conditions. Material thickness and surface treatment even resist chemical attacks.

The flow rate is constant or continuously adjustable. This is done manually by changing the stroke length for the controllable version. The delivery rate can be adjusted automatically using the following options:

- Three-phase motors suitable for frequency converter operation for stroke frequency change using an external frequency converter
- Actuators with position controllers for automatic stroke length change

## SPECIAL VERSIONS
We provide the individual solution for special dosing tasks:
Among other things, pump bodies with special nominal diameters, heating equipment, valves as double valves, with spring loading, with elastic ball seats, rinsing equipment for interval or final rinsing for prevention of deposits in the pump body, attachment of stroke counter, diaphragm rupture monitoring, special materials such as titanium or Hastelloy, design that can be cleaned.

## ACCESSORIES
All necessary accessory parts for the optimal installation of dosing pumps such as pressure relief valves, pressure-maintaining valves, pulsation dampers, dosing valves, dosing tanks, flow monitors etc. can be ordered from us.

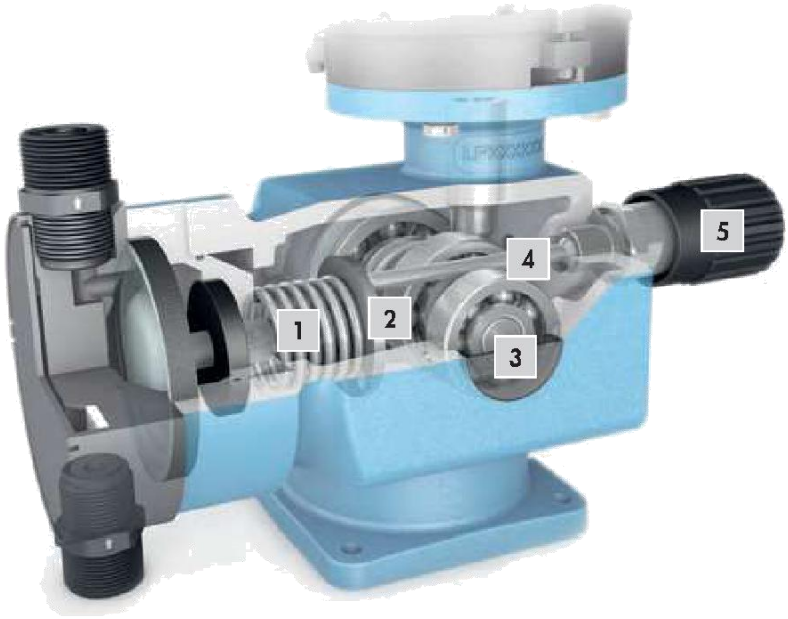


| | |
|---|---|
| 1 | Return spring |
| 2 | Push rod plate |
| 3 | Eccentric shaft |
| 4 | Adjusting spindle |
| 5 | Adjusting wheel |

# TECHNICAL DATA
# DIAPHRAGM PUMP RF410.2

| PUMP DATA | | | RF 410.2-... | | | |
|---|---|---|---|---|---|---|
| | | | 280e | 570e | 900e | 1450e |
| Permissible pressure $p_{2max.}$ at the pump outlet | bar | | 8 | 6 | 5 | 5 * |
| Nominal capacity QN at $p_{2max.}$ | l/h | 50 Hz | 0-280 | 0-570 | 0-900 | 0-1.450 |
| | | 60 Hz | 0-336 | 0-684 | 0-1.080 | 0-1.740 |
| Quantity per stroke | ml/stroke | (100%) | 46 | 98 | 155 | 245 |
| Max. suction height | mWC | | 5 | 5 | 3 | 3 |
| Min./max. permissible pressure at the pump inlet | bar | $p_{1min/max}$ | -0,5/0 | -0,5/0 | -0,3/0 | -0,3/0 |
| Recommended nominal diameter DN of the connecting pipes | mm | | 15 | 15 | 20 | 25 |
| Nominal stroke frequency | 1/min | 50 Hz | 97 | 97 | 97 | 97 |
| | | 60 Hz | 116 | 116 | 116 | – |
| Weight approx. | kg | plastic | 35 | 35 | 37 | 41 |
| | | stainless steel | 42 | 42 | 52 | 59 |

* at 60 Hz is the permissible pressure 3,5 bar

| ELECTRICAL DATA | | RF 410.2-... | | | |
|---|---|---|---|---|---|
| | | 280e | 570e | 900e | 1450e |
| Power consumption | kW | **0,75** | **0,75** | **1,1** | **1,5** |
| Voltage | V | **230/400V 50Hz, 460V 60Hz, 575V 60Hz** | | | |
| Frequency | Hz | **50/60** | | | |
| Insulation class | ISO | F | | | |
| Enclosure | IP | 55 | | | |

# CALIBRATION CYLINDERS
# PV#2-20000

**Workshop drawing :**

- □ Approuved as is
- □ Approuved with correction(s)
- □ Rejected

**Approuved by**

Name : _____

Title : _____

Compagnie : _____

Signature : _____

# ACCUDRAW® Calibration Cylinders

***"For Accuracy That Counts"***

***For complete product information visit our website: primaryfluid.com***



Flanged: Glass, PVC



Flanged: PVC

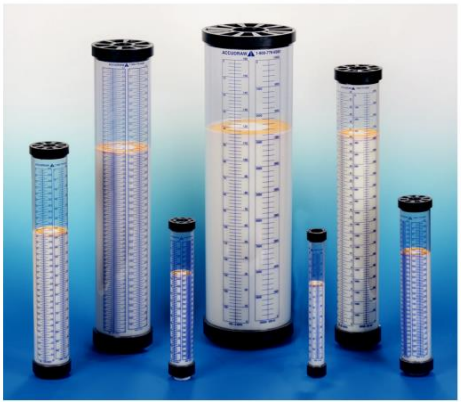

PV#4

## Sizing and Ordering Information:

**ACCUDRAW Standard Materials of Construction**

AC = All polypropylene construction (see below for options)
PV = All polyvinylchloride construction (see below for options)
ACS = Glass*

***Note: Cylinders are NOT pressure vessels***

**Example: AC#1-1000B**

AC = PP (polypropylene)
#1 = Bottom threaded connection only
1000 = 1000 ml
B = BSP Thread

**e.g. Part # AC #1 - 1000 B**

**Type:**
AC = Polypropylene
PV = PVC
ACS = Glass

**Style:**
1 = Bottom threaded conn. only
2 = Top and Bottom threaded conn.
3 = Bottom threaded conn. c/w removable vented dust cap
4 = Top/Bottom threaded conn. c/w removable "O" ring sealed top and float ring level indicator
* ***Glass calibration cylinders available in Style 2 only***

**Graduation Scale:**
PP - ml only
PVC - ml and GPH
Glass - ml only

**Std. connection is NPT thread**
**Optional: add suffix as follows**
S = Socket weld connection (PVC only)
GTV = Glass/TFE construction
GKV = Glass/PVDF construction
GCV = Glass/CPVC construction
GSV = Glass/SS construction
B = BSP Thread
F= Flanged

Substitute **E** for **V**
for **EPDM** wetted "O" ring seal

| Size: | | | Material | Conn. |
|---|---|---|---|---|
| 100 | = 100 ml | (1.6 GPH) | PP, PVC, Glass | ½" |
| 250 | = 250 ml | (4 GPH) | PP, PVC, Glass | ½" |
| 500 | = 500 ml | (8 GPH) | PP, PVC, Glass | ½" |
| 1000 | = 1000 ml | (16 GPH) | PP, PVC, Glass | ½" |
| 2000 | = 2000 ml | (32 GPH) | PP, PVC, Glass | 1" |
| 4000 | = 4000 ml | (64 GPH) | PP, PVC, Glass | 1" |
| 6000 | = 6000 ml | | Glass only | 2" |
| 8000 | = 8000 ml | | Glass only | 2" |
| 10000 | = 10000 ml | (160 GPH) | PVC, Glass | 2" |
| 15000 | = 15000 ml | (240 GPH) | PVC only | 2" |
| 20000 | = 20000 ml | (320 GPH) | PVC, Glass | 2" |

***Custom sizes and materials available.***

# RELIEF VALV AND BACK-PRESSURE VALV TVBP10-PVC

**Workshop drawing :**

- □ Approuved as is
- □ Approuved with correction(s)
- □ Rejected

**Approuved by**

Name : _____

Title : _____

Compagnie : _____

Signature : _____

*PAT For detailed product information visit our website:

# Back Pressure/Anti-Siphon and Pressure Relief Valves

## Description

This line of diaphragm style, back pressure/anti-siphon and pressure relief valves features a completely adjustable pressure range to 350 PSIG and a built-in air release to reduce priming difficulties. The valves are available in sizes from 1/4" through 2", eight materials of construction, offer a three year warranty and are available with socket weld, flanged or special threaded connections. High temperature to (300°F/149°C) valves are available. *CRN certification available. Please contact factory.*

## Ordering Information e.g. Part # TVBP50-S/S-V-S

**TV - B - P - 50 - S/S - V - S**

**TOP VALVE**

**Valve Type:**
B = Backpressure
P = Pressure Relief (3 port)
P2 = Pressure Relief (2 port)

**Valve Style or Connection:**

| | |
|---|---|
| P | = Backpressure, FNPT thread |
| R | = Pressure Relief, FNPT thr'd (3 port) |
| FW | = Welded Flange |
| FT | = Thread Companion Flanged |
| F | = Flanged Non-Metallic |
| S | = Socket |
| B | = BSP thread |
| T | = High Temperature (300°F/149°C) |
| H | = High Pressure (to 350 psig) Metallic Bodies |
| M | = Mid-Range Pressure (to 230 psig) Thermoplastic Bodies |
| U | = Union Type Connection |

**Valve Port Connection Size:**

| | |
|---|---|
| 25 = 1/4" | 10 = 1" |
| 45 = 1/4" X 1/2" | 15 = 1 1/2" |
| 50 = 1/2" | 20 = 2" |
| 75 = 3/4" | |

**Top Options:**
C = CPVC Top (standard)
A = Aluminum Top
S = 316L S/S Top
XXX = Custom spring range

**Miscellaneous Options:**
E = EPDM Diaphragm
P = PVC Diaphragm
V = Viton Diaphragm
G = Gauge Port

**Body Material of Construction:**

| | |
|---|---|
| PVC | = polyvinylchloride |
| CPVC | = Corzan |
| PP | = polypropylene |
| TFE | = 24% glass filled PTFE |
| PVDF | = polyvinylfluoride |
| S/S | = 316L Stainless Steel |
| ALL20 | = Alloy 20 |
| Hast | = Hastelloy C 276 |

## Flow Rates

Flow capacity through TOP VALVE back pressure/anti-siphon and pressure relief valves under continuous flow conditions @ **50 PSIG** with ambient temperature water.

| Size | 1/4" | 1/4" / 1/2" | 1/2" | 3/4" | 1" | 1 1/2" | 2" |
|---|---|---|---|---|---|---|---|
| Flow rate USGPM | 4 | 4 | 6 | 8 | 14 | 25 | 40 |

**Note:** Capacities will increase with pressure. If pressure is doubled, flow rate wll approximately double. For capacities of valves with pulsating flow, use approximately 1/3 of the given flow rates.

## Typical Installations

The installations below are typical installation examples only. Consult your engineering department for the appropriate installation of your application or call Primary Fluid Systems Inc. for advice.

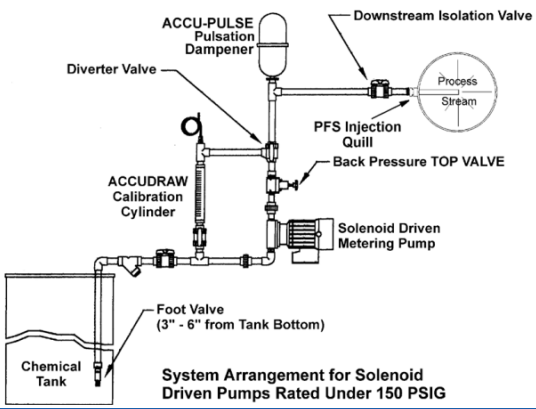

System Arrangement for Solenoid Driven Pumps Rated Under 150 PSIG

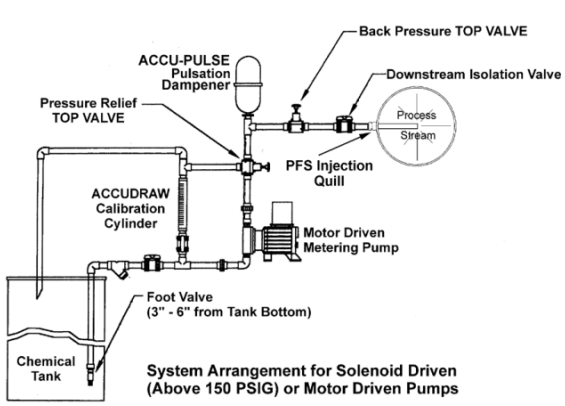

System Arrangement for Solenoid Driven (Above 150 PSIG) or Motor Driven Pumps


**Distributed By:**

PRIMARY FLUID SYSTEMS INC.

**Distribution Territories Available**

**Call Toll Free 1-800-776-6580**
Tel: (905) 333-8743
Fax: (905) 333-8746

*E-mail: primary@primaryfluid.com*
*www.primaryfluid.com*



® Registered Trade Mark of Primary Fluid Systems
*PAT 5,857,486/5,944,050

PCP
Pompes & équipements

# PRESSURE GAUGES GI2.5-160 CB AND AG25A50AMT-PVC

**Workshop drawing :**

- □ Approuved as is
- □ Approuved with correction(s)
- □ Rejected

**Approuved by**

Name : _____

Title : _____

Compagnie : _____

Signature : _____

# ACCUGUARD GAUGES

ACCUGUARD Pressure Gauges are designed to enhance the performance of chemical feed systems. Adding a pressure gauge to any system will help to ensure that optimal pressures are monitored and maintained.




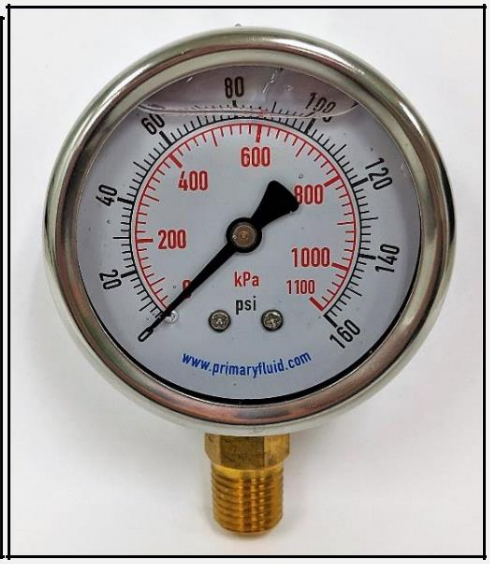


## Series Information

| Series | Gauge Diameter | Gauge Connection Size and Type | Gauge Housing | Gauge Internals | Liquid Filled | *Accuracy Rating |
|---|---|---|---|---|---|---|
| **Economy** | 2" / 2.5" | 1/4" NPT | Steel Case | Brass | No | ± 2.5% |
| **Intermediate** | 2.5" / 4" | 1/4" NPT | 304 S/S | Brass | Yes | ± 1.6% |
| **Premium** | 2.5" / 4" | 1/4" NPT | 304S/S | 316L S/S | Yes | ± 1.6% |

*Accuracy Rating = Full Scale Range

### HOW TO ORDER - AccuGuard Gauges

*Example Part Number: GE2-160-CB*

**G E 2 - 160 - CB**

**AccuGuard Gauge**

**Gauge Series**
- E = Economy
- I = Intermediate
- P = Premium

**Gauge Diameter**
- 2 = 2 Inches
- 2.5 = 2-1/2 Inches
- 4 = 4 Inches

**Gauge Mounting Orientation**
- CB = Center Back
- BM = Bottom Mount

**Gauge Indication**
- 60 = 0-60 PSIG / 0-400 KPA
- 160 = 0-160 PSIG / 0-1100 KPA
- 200 = 0-200 PSIG / 0-1400 KPA
- 300 = 0-300 PSIG / 0-2000 KPA
- 400 = 0-400 PSIG / 0-2800 KPA

*4" Gauge Diameter Available in Bottom Mount Orientation Only*

*For Price & Availability of Other Pressures - Call Factory*

Primary Fluid Systems Inc. | 1050 Cooke Blvd. | Burlington | Ontario | L7T 4A8 | Canada
www.primaryfluid.com | primary@primaryfluid.com | North American Toll Free: 1-800-776-6580

# ACCUGUARD Diaphragm Seals

Without proper protection, process fluids can contaminate and damage in-line instrumentation. ACCUGUARD Diaphragm Seals are designed to protect and isolate pressure gauges and expensive instrumentation from corrosive, high temperature, or viscous, process media.



## Features

- Transfers process pressure accurately without direct contact with process fluids
- Removes the need for expensive instrumentation
- Easily installed and available in five chemically resistant Materials of Construction
- Optional Diaphragm Materials
- Available with ¼" & ½" Bottom Connection Sizes in FNPT & BSPT Female Connection Types
- Thermoplastic Units Rated to 240 PSIG (16 BARG) @ 21°C (70°F)
- 316L S/S Units Rated to 5800 PSIG (400 BARG) @ 21°C (70°F)
- Approved – 316 S/S Diaphragm Seals with CRN (Canadian Registration Number)

## HOW TO ORDER - AccuGuard

*Example Part Number: AG25A25A-PVC-V-M-[Optional Gauge]*

**AG 25 A 25 A - PVC - V - M - [Optional Gauge]**

*See Gauge List*

**AccuGuard Diaphragm Seal**

**Connection Size (Top)**
- 25 = 1/4"

**Connection Type (Top)**
- A = FNPT

**Connection Size (Bottom)**
- 25 = 1/4"
- 50 = 1/2"

**Connection Type (Bottom)**
- A = FNPT
- B = BSPT

**Options**
- M = Mounted Gauge/Glycerin Filled

**Diaphram Materials**
- V = Viton (Thermoplastic Body Only)
- E = EPDM (Thermoplastic Body Only)
- T = PTFE (Thermoplastic Body Only)
- S/S = 316 S/S (S/S & S/SV Body Only)

**Body Materials**
- PVC = Polyvinylchloride
- CPVC = CPVC Corzan
- PP = Polypropylene (Not Available with PTFE Diaphragm)
- PVDF = Polyvinyldene Fluoride (PTFE Diaphragm Only)
- S/S = 316L Stainless Steel
- S/SV = Vented 316L Stainless Steel

*- Optional Gauge Appears as Separate Line Item When Ordered*

*- Diaphragm Seals With Gauges = Glycerin Filled As Standard*

*- 1/4" & 1/2" MNPT Nipples Available - Call Factory for Details*

Primary Fluid Systems Inc. | 1050 Cooke Blvd. | Burlington | Ontario | L7T 4A8 | Canada
www.primaryfluid.com | primary@primaryfluid.com | North American Toll Free: 1-800-776-6580

DRAWING #: 6600-000-I-1212

NOTE:
ALL CONNECTIONS ARE NPT TYPE

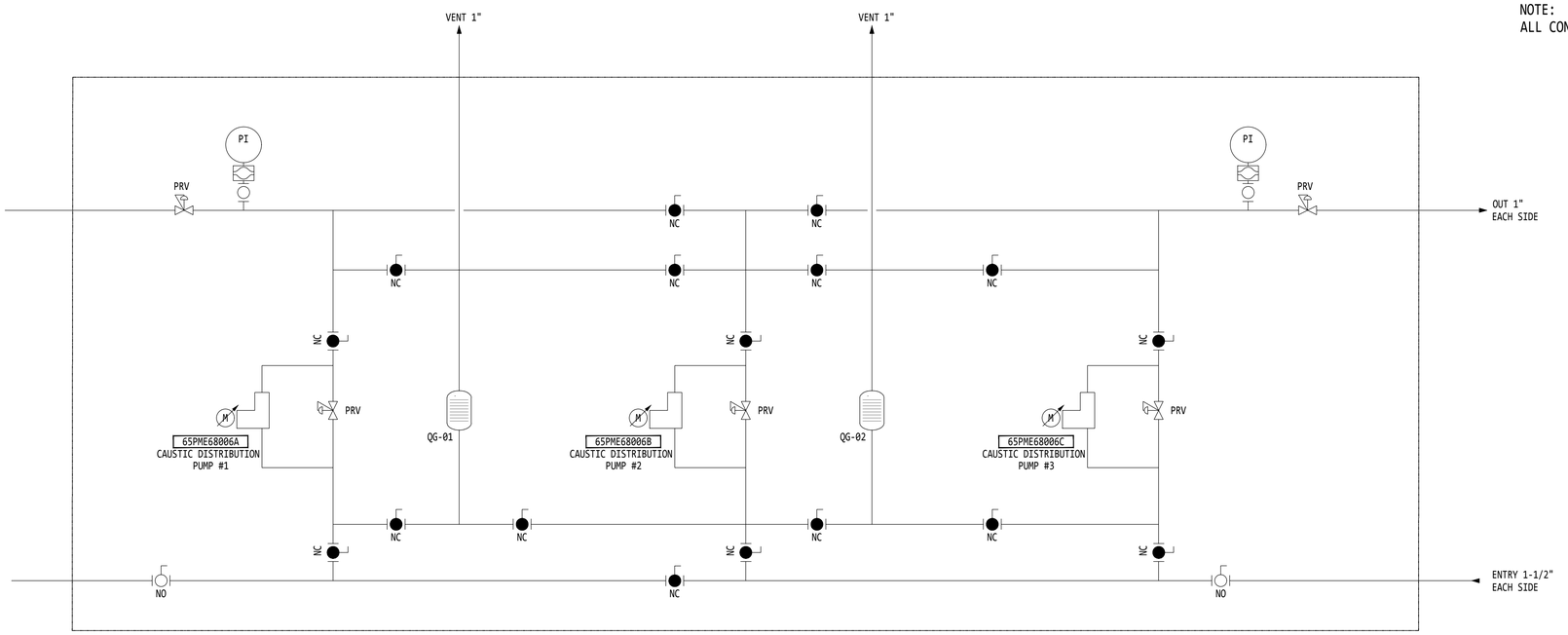


**65PME68006A/B/C**
DOSING PUMPS
CAPACITY: 1740 L/HOUR

**QG-01/02**
CYLINDER 20000mL / 320GPH

ASDR
**FOR TENDER**
DO NOT USE FOR CONSTRUCTION

SEAL & SIGNATURE

| REV. | DATE | DESCRIPTION | BY | VER. | APP. |
|---|---|---|---|---|---|
| T0 | 2021-04-08 | FOR TENDER | AN | DM/EC | DM/EC |

THE INFORMATION HERE ON IS THE PROPERTY OF ASDR AND MUST BE RETURNED UPON REQUEST. WITHOUT WRITTEN PERMISSION, ANY COPYING TRANSMITTAL TO OTHERS AND ANY USE EXCEPT THAT FOR WHICH IT IS LOANED IS PROHIBITED.

CLIENT

| | |
|---|---|
| INFO CLIENT | - |

ASDR

| | |
|---|---|
| DRAWN BY | AMINATA NIASSE, CEP |
| VERIFIED BY | DAN MISIANO / ETIENNE CLERMONT |
| APPROVED BY | DAN MISIANO / ETIENNE CLERMONT |

| CREATION DATE | SCALE | PROJECTION |
|---|---|---|
| 2021-04-06 | N.TS. | |

DRAWING TITLE
PROCESS WATER TREATEMENT - GENERAL
INSTRUMENTATION
TRIPLEX DISTRIBUTION UNIT
SODIUM HYDROXYDE

| PROJECT # | DRAWING # | REV. | SHEET |
|---|---|---|---|
| 01939 | 6600-000-I-1212 | T0 | 1/1 |

SECTOR–LEVEL – DISCIPLINE – SEQUENTIAL #

IMPRIMÉ PAR : Aminata Amary Niasse | DATE D'IMPRESSION : 2021-05-05 | PLUME D'IMPRESSION : ASDR Noir.ctb
FORMAT DE PAPIER : ISO A1 (594 mm x 841 mm [23.4" x 33.1"]) | PRÉSENTATION : ISO 5457

# TOP VALVE

Pat. #5,857,486 & 5,944,050

## Back Pressure and Pressure Relief Valves

## Instruction Manual

**PLEASE NOTE:**
**This instruction manual provides detailed information and instructions that must be read, understood and followed to ensure that the equipment is installed, operated and serviced in an appropriate manner. Failure to do so before using may result in hazardous consequences and/or improper operation.**

10/2020

**TEMPERATURE LIMIT NOTATION:**
**If the application in which this valve is to be installed has a temperature greater than 73°F (23°C) including radiant heat, refer to page 11 for temperature correction vs. pressure limits.**

Rev. 8

**NOTE:**
**See Gauge Installation Instructions before removal of gauge plug to avoid thread damage. (Gauge port is optional)**

Manufactured by:



**PRIMARY FLUID SYSTEMS INC.**
1050 COOKE BLVD., BURLINGTON, ON. CANADA L7T 4A8
TEL :(905)333-8743 FAX:(905)333-8746
1-800-776-6580
primary@primaryfluid.com

# I N D E X


**INTRODUCTION** ..... **3**

**Special Features of TOP VALVE** ..... **3**

**Back Pressure Valve** ..... **3**

**Back Pressure Valves: Reason for Selection and Use** ..... **4**

**Pressure Relief Valves** ..... **4**

**Pressure Relief Valves: Reason for Selection and Use** ..... **4**

**Installation and Maintenance of Back Pressure Valves** ..... **4**

**Installation and Maintenance of Pressure Relief Valves** ..... **5**

**Gauge Installation Instructions: (When ordered with valve only)** ..... **5**

**Manual Air Release** ..... **6**

**Typical Installations** ..... **7**

**ALL New Clamping Device for TOP VALVE, Back Pressure and Pressure Relief Valves** ..... **8**

***Exploded Parts View – Back Pressure & Pressure Relief Valve*** ..... ***9***

**Dimensions – Top Valve – Back Pressure** ..... **10**

**Dimensions – Top Valve – Pressure Relief** ..... **10**

**Flow Rates** ..... **11**

**Temperature Correction Factors: Thermoplastics** ..... **11**

**LIMITED WARRANTY** ..... **12**

## INTRODUCTION

The following instructions are to provide information on the Installation, operation and maintenance of TOP VALVE, 150# rated diaphragm style Back Pressure and Pressure Relief Valves, manufactured by Primary Fluid Systems Inc. The valves are designed to improve the performance and safe operation of most pumps used for metering applications.

Various materials of construction are available dependent on the requirements of the application and the type of fluids being transferred.

The valve(s) are factory set at 50 PSIG with a field adjustment range of 15-150 PSIG*. Other factory set pressure ranges (within the range of the valve) are available upon request.

## Special Features of TOP VALVE

- PVC, PP, TFE, CPVC, PVDF, Hastelloy C, Alloy 20 or 316 S/S wetted construction
- PTFE laminated to EPDM backer diaphragm
- Turn down handle limits pressure to 150 PSIG
- Handle shaped for ease of adjustment
- Color-coded handles indicate size at a glance
- (Optional) Built-in matching material gauge port plug is easily removed for gauge option
- Rectangular shape for ease of installation
- Specially designed spring provides consistent pressure adjustments through the range (15-150 PSIG*)
- Valve top specially designed for mounting clamp to help reduce pipeline stress when required
- Built-in downstream manual air release, for ease of pump priming
- Built-in anti-siphon

***Pressures under 15 PSIG require rubber elastomeric diaphragm.**

## Back Pressure Valve

Diaphragm Back Pressure Valves serve two primary functions. The first is to provide a constant discharge pressure on the pump, which improves the performance, efficiency and consistency of the delivered volume. Secondly, the valve performs as an anti-siphon mechanism against positive or negative pressures in the downstream line. The valve is designed to allow for the venting of air into the downstream pipeline. This provides for easier priming of metering pumps that function under a suction lift. This is accomplished by a simple adjustment of the handle.

The valve is available with an optional gauge port, pre-plugged at the factory or can be ordered complete with gauge to suit application. This eliminates the need to install extra fittings in the line to accommodate the addition of a gauge for the purpose of reading and setting of pressure.

**CAUTION:**
**The gauge port is solely for the installation of the gauge and must not be used for the bleeding or venting of the system. Improper operation of the valve and/or hazardous consequences could result.** ***(see gauge installation instructions)***

## Back Pressure Valves: Reason for Selection and Use

Metering pumps having an atmospheric discharge system pressure of less than 20 psi and will benefit from the installation of a back pressure control valve. Metering pumps in general require downstream back pressure to ensure smoother function of the discharge check assemblies, which enhances the accuracy of the discharge flow.

## Pressure Relief Valves

Diaphragm Pressure Relief Valves are designed to relieve excess line pressure that exceeds the set pressure of the valve. This protects the system piping from overpressure that could result in hazardous leakage and/or damage to the pump and other system components.

The Pressure Relief Valves are normally recommended to be set between 5 and 10 PSIG above the system operating pressure.

The valve is of an in-line flow through design with bottom NPT relief port for piping back to supply tank or feed side of pump.

The valve is available with an optional gauge port, pre-plugged at the factory or can be ordered complete with gauge to suit application. This eliminates the need to install extra fittings in the line to accommodate the addition of a gauge for the purpose of reading and setting of pressure.

**CAUTION:**
**The gauge port is solely for the installation of the gauge and cannot be used for the bleeding or venting of the system. Improper operation and/or hazardous consequences could result.** ***(see gauge installation instructions)***

## Pressure Relief Valves: Reason for Selection and Use

When using motor driven metering pumps, a pressure relief valve should always be installed on the downstream side of the pump to protect the system from over pressure which can cause pipe leakage and/or rupture.

## Installation and Maintenance of Back Pressure Valves

Back pressure control valves are installed on the discharge line of the pump. The valve should be located within a 2 (two)-foot distance of the pump discharge to ensure check valve seating. When pumping to a process line without an injection valve, the back pressure valve should be installed as close as possible to the injection point to prevent siphoning.

When used in conjunction with a pressure relief valve, always locate the back pressure valve on the downstream side of the relief valve.

The valve is supplied from the factory pre-set at 50 psig. To increase the pressure setting, back off the lock nut located beneath the colour coded handle. Turn the handle clockwise to increase pressure setting or counter clockwise to reduce pressure setting. Approximately one (1) full turn of the handle is equal to 10 psig.

*If maintenance is required on the valve:*

1. Ensure that the valve is properly isolated from the line, not under pressure and properly flushed of chemical before proceeding to disassembly.
2. Turn knob on the top of valve, counterclockwise until all spring pressure is released **before** proceeding to undo retaining nuts, to remove top of valve for diaphragm replacement.
3. All working components ie. diaphragm, spring can be accessed by removing the four retaining nuts located on the top of the valve (item # 9 of parts breakdown). For ¼" and ¼" x ½" Top Valves, use 5/32" Allen Key / #4 Hex Key. For ½" sizes and up, use a 3/16" Allen Key / #5 Hex key.
4. When replacing the diaphragm, ensure the PTFE coated side of the diaphragm is facing down when viewed from the top of the valve. The installed diaphragm also functions as the body seal. (Torque nuts to 55 inch pounds when reassembling.)

**Set Pressure Safety Feature**

The valve adjustment handle/bolt length is designed to prevent operators from engaging the spring to a coil binding situation that would cause serious function and safety concerns.

In order to achieve max pressures within the top 10% of the valve range, the lock nut on the adjustment handle/bolt must be removed prior to setting the pressure. Ensure that all system pressure has been released before removing the lock nut and re-installing the approved valve handle/bolt.

The valve handle/bolt is the only approved adjustment component to be used on our valves. Deviation from this will void manufacturer warranty and liability.

**Installation and Maintenance of Pressure Relief Valves**

Pressure relief valves are installed on the discharge line of a pump and should be located as close as possible to the metering pump. The valve is of an in-line flow through design with a bottom NPT relief port for piping back to the supply tank or feed side of the pump.

Never install shut-off/isolation valves between pump discharge and in-line pressure relief valves. When using in conjunction with a back pressure control valve, always install back pressure valve downstream of pressure relief valve. The relief port on the pressure relief valve should be piped back to the feed tank or suction side of the pump (see typical installation schematics).

**CAUTION:**
**The plastic valve bodies have standard NPT threads, which are tapered. When installing pipe into the body, hand tighten only to avoid cracking**.

## Gauge Installation Instructions: (When ordered with valve only)

For the convenience of pressure setting and reading, there is an optional plugged gauge port provided, if the valve has not been ordered complete with gauge. **Important:** use a ***TORX style # T-45*** wrench or screwdriver **only** to remove plug from plastic valves. Any other tool will strip the body of the plug and require an extractor to remove the threaded plug.

**CAUTION:**
**Before removing the gauge port plug to install a gauge, ensure that the discharge line is not under pressure and lines are flushed with water prior to proceeding. Ensure that the gauge you are using is chemical resistant to the fluid before installing.**

## Manual Air Release for Back Pressure Valve Only

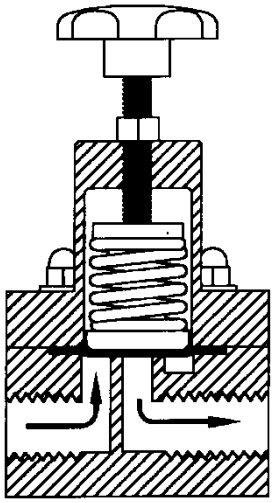

DIAPHRAGM POSITION AT
50 PSI BACK PRESSURE

**The valve is shipped with a factory set pressure of 50 psig. The diagram to the left shows a cut-away view of the position of the diaphragm on the seat.**

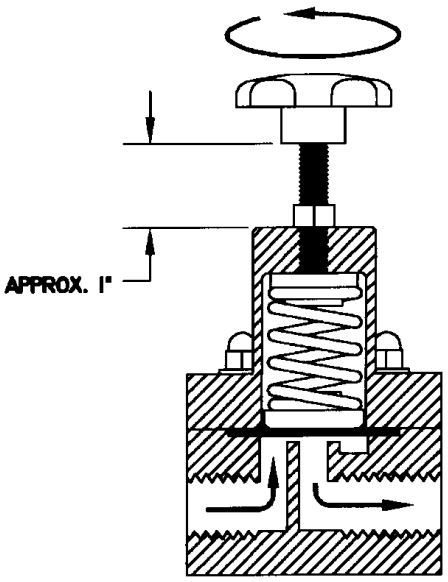


AIR RELEASE POSITION WITH
HANDLE BACKED OFF

**To adjust the valve to relieve air or gas downstream:**

**1. Back off lock nut located beneath the colour coded handle.**

**2. Turn handle counter clockwise until approximately 1 inch of thread is exposed.**

**3. At this adjustment, the spring has relieved all tension from the diaphragm allowing air or gas to be vented downstream.**

---

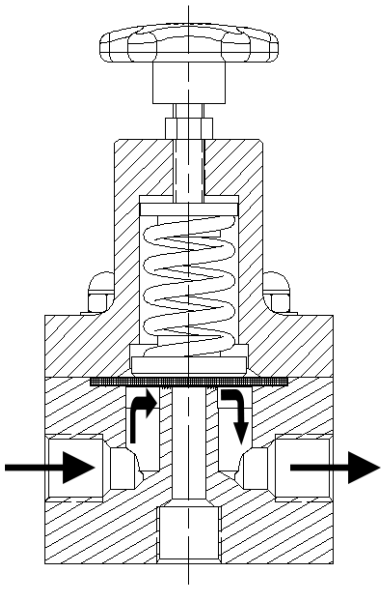

**Flow through design Pressure Relief Valve**

**The bottom port relieves over pressure.**



www.primaryfluid.com Toll Free 1-800-776-6580 email: primary@primaryfluid.com

# Typical Installations

The installations below are typical installation examples only. Consult your Engineering Department for the appropriate installation for your application or call the factory for advice.

**EXAMPLE A: SOLENOID DRIVEN PUMPS RATED UNDER 150 PSIG**

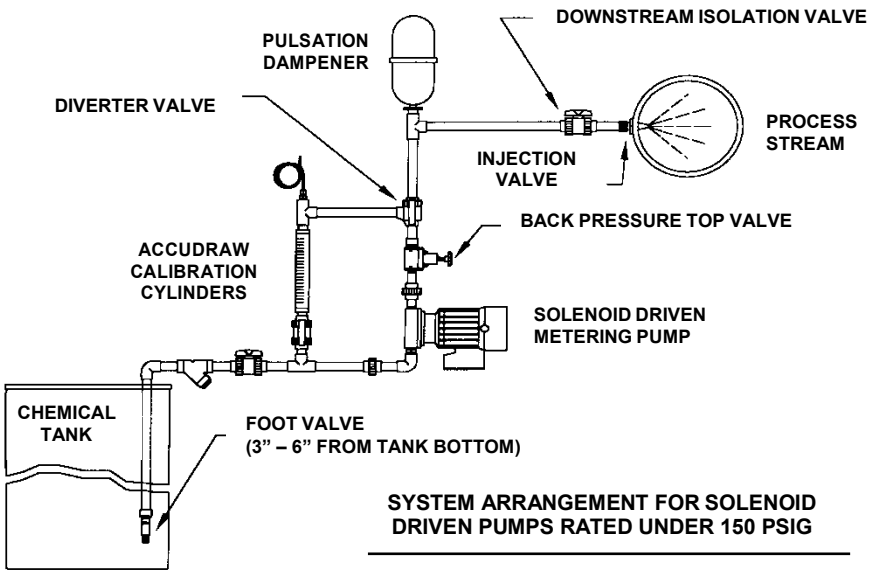


SYSTEM ARRANGEMENT FOR SOLENOID DRIVEN PUMPS RATED UNDER 150 PSIG

---

**EXAMPLE B: SYSTEM ARRANGEMENT FOR SOLENOID DRIVEN (ABOVE 150 PSIG) OR MOTOR DRIVEN PUMPS.**

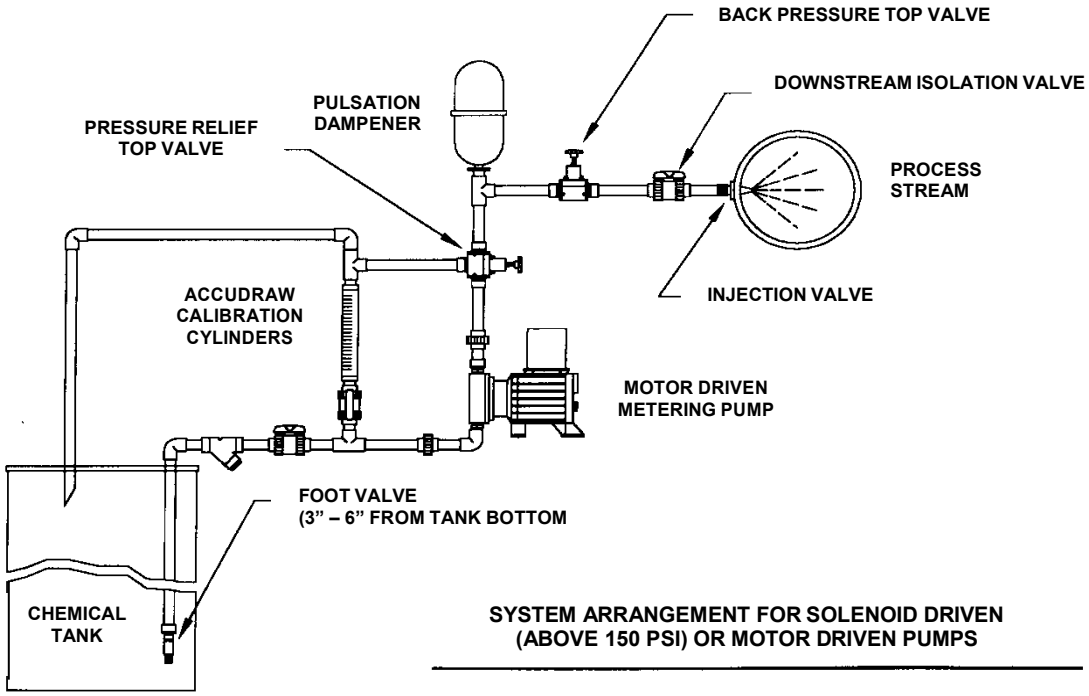


SYSTEM ARRANGEMENT FOR SOLENOID DRIVEN (ABOVE 150 PSI) OR MOTOR DRIVEN PUMPS



www.primaryfluid.com Toll Free 1-800-776-6580 email: primary@primaryfluid.com

# Exploded Parts View- Back Pressure & Pressure Relief Valve

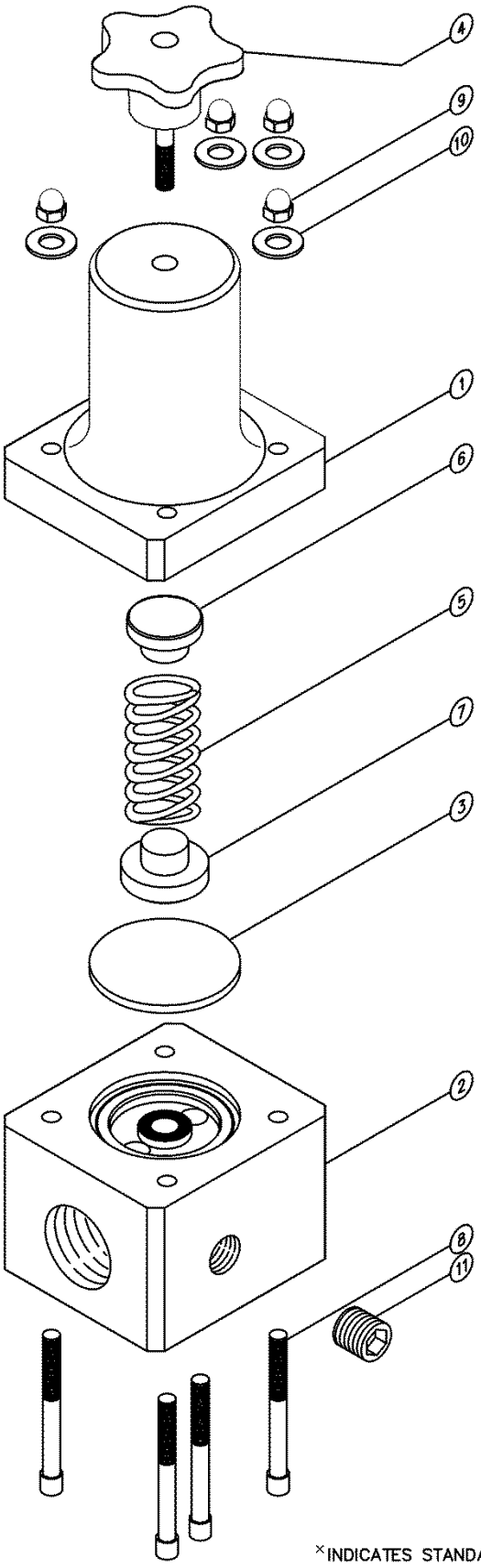


MATERIAL/SIZE CODING

X = PVC = (TYPE 1 PVC)×
X = CPVC = (CPVC CORZAN)
X = S6 = (316 STAINLESS STEEL)
X = A = (ALUMINUM )
X = P = (POLYCARBONATE)

** = 25 = 1/4" & 1/4/1/2" VALVES
** = 57 = 1/2" & 3/4" VALVES
** = 10 = 1" VALVES
** = 15 = 1-1/2" VALVES
** = 20 = 2" VALVES

Ω = B = BACK PRESSURE
Ω = P =PRESSURE RELIEF

∅ = "BLANK" = STD PTFE LAM. EPDM×
∅ = V = OPTIONAL VITON
∅ = E = OPTIONAL EPDM
∅ = P = OPTIONAL PVC

Φ = 25 = 1/4" VALVES
Φ = 45 = 1/4/1/2" VALVES
Φ = 50 = 1/2" VALVES
Φ = 75 = 3/4" VALVES
Φ = 10 = 1" VALVES
Φ = 15 = 1-1/2" VALVES
Φ = 20 = 2" VALVES

^ = PVC = (PVC TYPE 1)
^ = CPVC = (CPVC CORZAN)
^ = PP= (POLYPROPYLENE)
^ = PTFE = (PTFE)
^ = PVDF = (POLYVINYLIDENE FLUORIDE KYNAR)
^ = S/S = (316 STAINLESS STEEL)
^ = HASTC = (HASTELLOY C276)
^ = ALL20 = (ALLOY20)

⊗ = G = GREEN = 1/4" VALVES
⊗ = O = ORANGE = 1/4/1/2" VALVES
⊗ = Y = YELLOW = 1/2" VALVES
⊗ = R = RED = 3/4" VALVES
⊗ = B = BLUE = 1" VALVES
⊗ = BK = BLACK = 1-1/2" VALVES
⊗ = W = WHITE = 2" VALVES

⊕ = 25 = 1/4" & 1/4"/1/2" VALVES
⊕ = 51 = 1/2" THRU 2" VALVES

| ITEM# | QTY | DESCRIPTION | PART# |
|---|---|---|---|
| 1 | 1 | TOP | TVT-1 X - ** |
| 2 | 1 | BODY | TVΩ-2 ^ -Φ |
| 3 | 1 | DIAPHRAGM | TVD-3- ** -∅ |
| 4 | 1 | KNOB | TV⊗K-4 |
| 5 | 1 | SPRING | TVS-5-⊕ |
| 6 | 1 | TOP DISC | TVTD-6-⊕ |
| 7 | 1 | BOTTOM DISC | TVBD-7-⊕ |
| 8 | 4 | BOLTS* | TVΩB-8 -** |
| 9 | 4 | NUTS | TVN-9-⊕ |
| 10 | 4 | WASHERS | TVW-10-⊕ |
| 11 | 1 | GAUGE PLUG (OPTIONAL) | TVP-11- ^ |

_UNDERLINED ITEMS REQUIRE CODES FROM ABOVE CHART
*1-1/2" PRESSURE RELIEF VALVES USE TVBB-8-15
*2" PRESSURE RELIEF VALVES USE TVBB-8-20

×INDICATES STANDARD CONSTRUCTION

DO NOT COPY WITHOUT PRIOR WRITTEN APPROVAL FROM PRIMARY FLUID SYSTEMS INC.

**PRIMARY FLUID SYSTEMS INC.**
1050 Cooke Blvd., Burlington, Ontario L7T 4A8

BACK PRESSURE & PRESSURE RELIEF VALVE EXPLODED PARTS VIEW

| | | |
|---|---|---|
| DATE ISSUED: 19-OCT-11 | SCALE: NTS | SHEET: 1 OF 1 |
| PROJECT: TOP VALVE | | DRAWN BY: BRB |
| APPROVED BY: | DWG NO.: TV-PA-257520STD-XPL | REV.#: 5 |

## Dimensions – Top Valve – Back Pressure

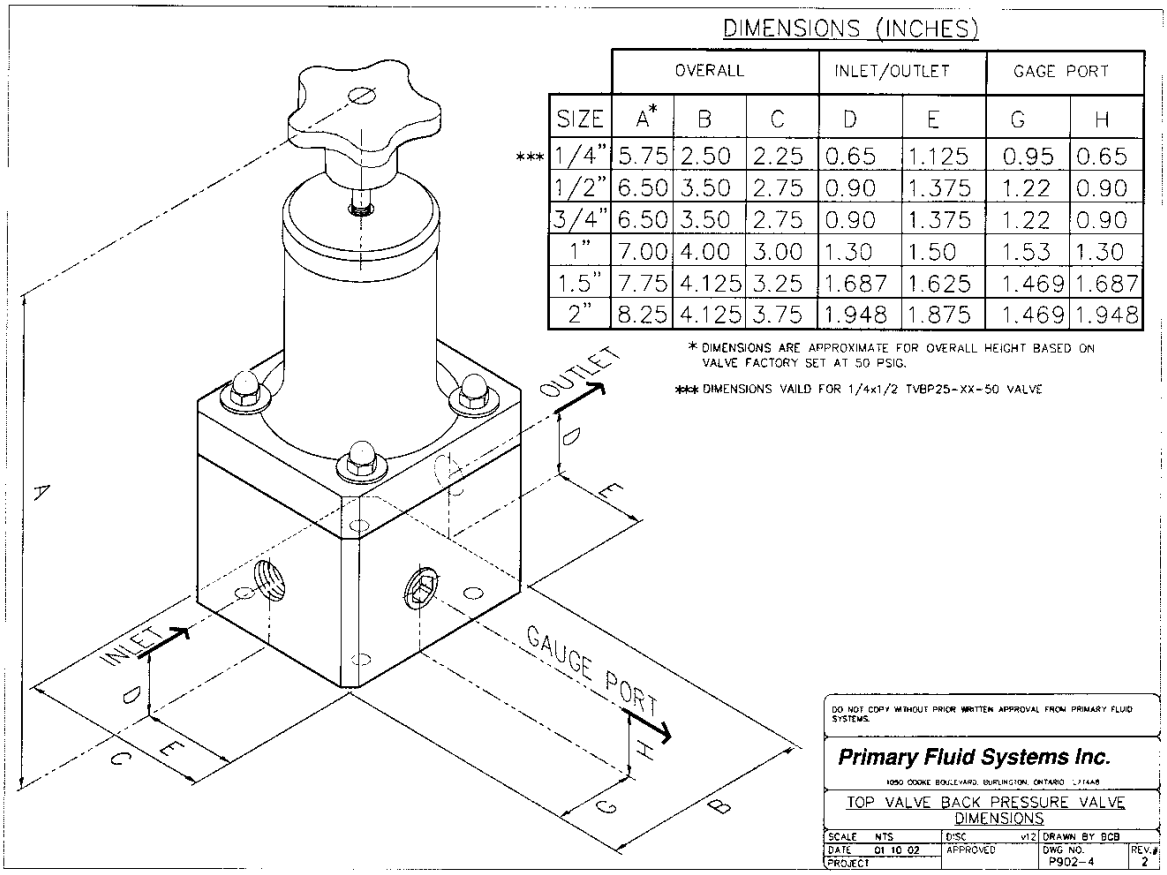


DIMENSIONS (INCHES)

| | | OVERALL | | | INLET/OUTLET | | GAGE PORT | |
|---|---|---|---|---|---|---|---|---|
| | SIZE | A* | B | C | D | E | G | H |
| *** | 1/4" | 5.75 | 2.50 | 2.25 | 0.65 | 1.125 | 0.95 | 0.65 |
| | 1/2" | 6.50 | 3.50 | 2.75 | 0.90 | 1.375 | 1.22 | 0.90 |
| | 3/4" | 6.50 | 3.50 | 2.75 | 0.90 | 1.375 | 1.22 | 0.90 |
| | 1" | 7.00 | 4.00 | 3.00 | 1.30 | 1.50 | 1.53 | 1.30 |
| | 1.5" | 7.75 | 4.125 | 3.25 | 1.687 | 1.625 | 1.469 | 1.687 |
| | 2" | 8.25 | 4.125 | 3.75 | 1.948 | 1.875 | 1.469 | 1.948 |

* DIMENSIONS ARE APPROXIMATE FOR OVERALL HEIGHT BASED ON VALVE FACTORY SET AT 50 PSIG.

*** DIMENSIONS VAILD FOR 1/4x1/2 TVBP25-XX-50 VALVE

DO NOT COPY WITHOUT PRIOR WRITTEN APPROVAL FROM PRIMARY FLUID SYSTEMS.

**Primary Fluid Systems Inc.**

1050 COOKE BOULEVARD, BURLINGTON, ONTARIO L7T4A8

TOP VALVE BACK PRESSURE VALVE DIMENSIONS

| | | | |
|---|---|---|---|
| SCALE NTS | DISC v12 | DRAWN BY BCB | |
| DATE 01 10 02 | APPROVED | DWG NO. P902-4 | REV.# 2 |
| PROJECT | | | |

## Dimensions – Top Valve – Pressure Relief

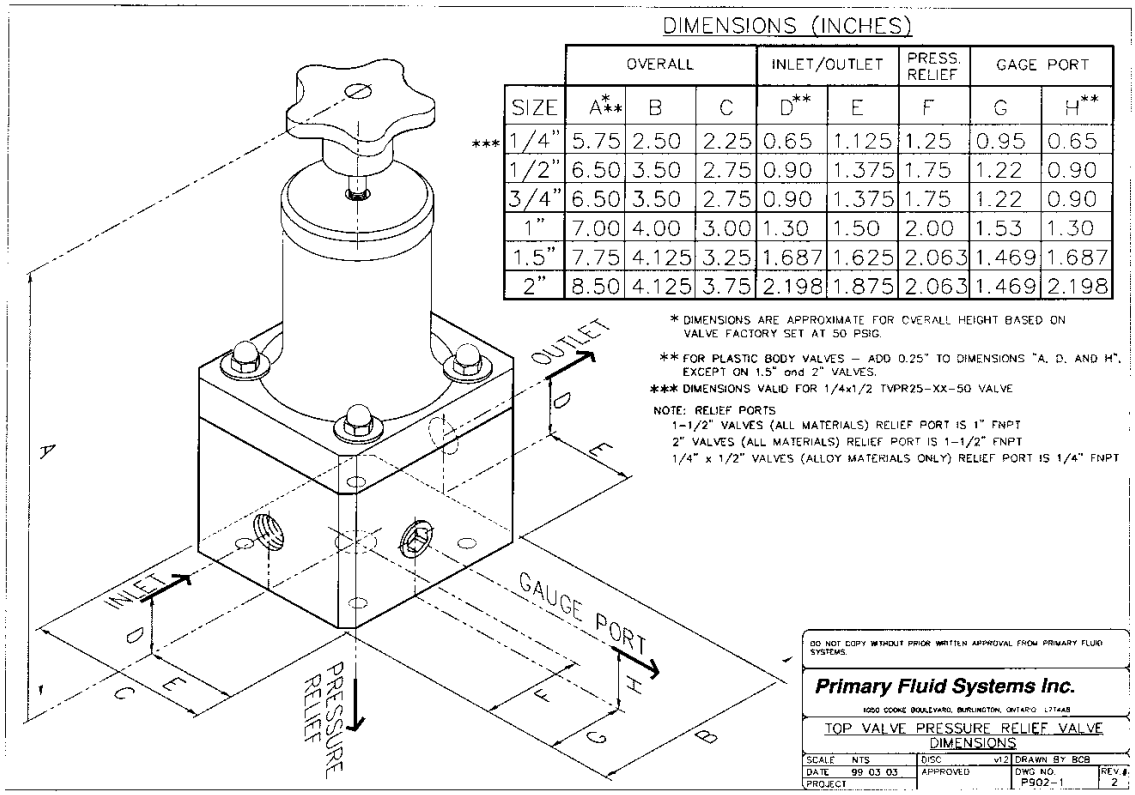


DIMENSIONS (INCHES)

| | | OVERALL | | | INLET/OUTLET | | PRESS. RELIEF | GAGE PORT | |
|---|---|---|---|---|---|---|---|---|---|
| | SIZE | A*** | B | C | D** | E | F | G | H** |
| *** | 1/4" | 5.75 | 2.50 | 2.25 | 0.65 | 1.125 | 1.25 | 0.95 | 0.65 |
| | 1/2" | 6.50 | 3.50 | 2.75 | 0.90 | 1.375 | 1.75 | 1.22 | 0.90 |
| | 3/4" | 6.50 | 3.50 | 2.75 | 0.90 | 1.375 | 1.75 | 1.22 | 0.90 |
| | 1" | 7.00 | 4.00 | 3.00 | 1.30 | 1.50 | 2.00 | 1.53 | 1.30 |
| | 1.5" | 7.75 | 4.125 | 3.25 | 1.687 | 1.625 | 2.063 | 1.469 | 1.687 |
| | 2" | 8.50 | 4.125 | 3.75 | 2.198 | 1.875 | 2.063 | 1.469 | 2.198 |

* DIMENSIONS ARE APPROXIMATE FOR OVERALL HEIGHT BASED ON VALVE FACTORY SET AT 50 PSIG.

** FOR PLASTIC BODY VALVES – ADD 0.25" TO DIMENSIONS "A, D, AND H", EXCEPT ON 1.5" and 2" VALVES.

*** DIMENSIONS VALID FOR 1/4x1/2 TVPR25-XX-50 VALVE

NOTE: RELIEF PORTS
1-1/2" VALVES (ALL MATERIALS) RELIEF PORT IS 1" FNPT
2" VALVES (ALL MATERIALS) RELIEF PORT IS 1-1/2" FNPT
1/4" x 1/2" VALVES (ALLOY MATERIALS ONLY) RELIEF PORT IS 1/4" FNPT

DO NOT COPY WITHOUT PRIOR WRITTEN APPROVAL FROM PRIMARY FLUID SYSTEMS.

**Primary Fluid Systems Inc.**

1050 COOKE BOULEVARD, BURLINGTON, ONTARIO L7T4A8

TOP VALVE PRESSURE RELIEF VALVE DIMENSIONS

| | | | |
|---|---|---|---|
| SCALE NTS | DISC v12 | DRAWN BY BCB | |
| DATE 99 03 03 | APPROVED | DWG NO. P902-1 | REV.# 2 |
| PROJECT | | | |

**ALL New Clamping Device for TOP VALVE, Back Pressure and Pressure Relief Valves**

This new polypropylene-clamping device now makes it even easier than ever to support TOP VALVE, back pressure or pressure relief valves in service, to help eliminate pipe strain and the need for expensive mounting brackets.

It's simple to install, economical to purchase and we've reworked the top of the valve body now available on all new valves, to assist with the support.

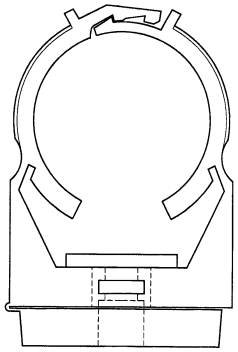

**TV-_ _ -CLAMP**

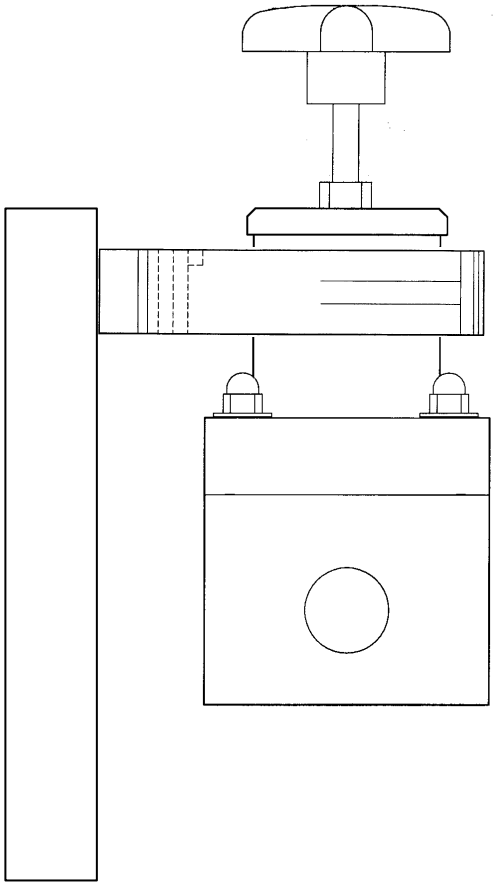

**Sample Installation**

**Part #**

TV-25-CLAMP to fit ¼" Valves and ¼ - ½" Valves

TV-51-CLAMP to fit ½" through 2" Valves

## Flow Rates

Subject: Flow capacity through TOP VALVE, back pressure and pressure relief valves. Under continuous flow conditions: @ **50 PSI** with ambient temperature water

| | | |
|---|---|---|
| ¼" valve | 4 | USGPM |
| ¼"/½" valve | 4 | USGPM |
| ½" valve | 6 | USGPM |
| ¾" valve | 8 | USGPM |
| 1" valve | 14 | USGPM |
| 1½"valve | 25 | USGPM |
| 2" valve | 40 | USGPM |

Note: Capacities will increase with pressure. (If pressure is doubled, flow rate will approximately double.) For capacities of valves with pulsating flow use approximately ⅓ of the above given flow values.

## Temperature Correction Factors: Thermoplastics

**Temperature Effects:** Thermoplastics and thermosets will decrease in tensile strength as the temperature increases: therefore, the working pressure must be reduced accordingly. The following factors will apply:

| Operating Temperatures | | {Factors} | | | |
|---|---|---|---|---|---|
| ***F*** | ***C*** | ***PVC*** | ***CPVC*** | ***PP*** | ***PVDF*** |
| 70 | 21 | 1.00 | 1.00 | 1.00 | 1.00 |
| 80 | 27 | 1.00 | 1.00 | 1.00 | 1.00 |
| 90 | 32 | 1.00 | 1.00 | 1.00 | 1.00 |
| 100 | 38 | .90 | 1.00 | 1.00 | 1.00 |
| 110 | 43 | .83 | 1.00 | .91 | 1.00 |
| 115 | 46 | .75 | 1.00 | .87 | 1.00 |
| 120 | 49 | .66 | 1.00 | .83 | 1.00 |
| 125 | 52 | .58 | .97 | .79 | 1.00 |
| 130 | 54 | .50 | .95 | .75 | 1.00 |
| 140 | 60 | .33 | .90 | .66 | 1.00 |
| 150 | 66 | NR | .80 | .60 | .97 |
| 160 | 71 | NR | .70 | .53 | .93 |
| 170 | 77 | NR | .60 | .43 | .86 |
| 180 | 82 | NR | .50 | .33 | .80 |
| 200 | 93 | NR | .33 | NR | .66 |
| 210 | 99 | NR | NR | NR | .60 |
| 240 | 116 | NR | NR | NR | .40 |
| 280 | 138 | NR | NR | NR | .16 |

**Example:**
Maximum Pressure for PVDF valve at 280°F (138°C)
Factor = 0.16 x 150psig = 24psig max. pressure
Factor = 0.16 x 1034kPa = 165.44kPa max. pressure

The maximum pressure rating for valves regardless of size is 150 PSIG (1034 kPa) at 73° F (22°C)

**NR** = not recommended

Primary Fluid Systems, Inc. takes no responsibility for the enclosed data.

**NOTE**: If the material of the valve you have chosen is rated below the working pressure of your system than you must reconsider your choice. The standard valve top material of construction is PVC and should be taken into temperature consideration. (Other materials of construction are available, consult price list or factory)

**NOTE: When considering working temperature, include ambient and potential collective surface temperature (Radiant Heat).**

# LIMITED WARRANTY

Primary Fluid Systems Inc. (Primary) warrants its products against defects in workmanship or materials for one (1) year under normal use. Three-(3) year available when application card is completed and returned to factory. Application card can be obtained by emailing request to sales@primaryfluid.com

Primary's obligations and liabilities under this warranty shall be limited to replacement of the product, or a refund of an amount not to exceed the purchase price of the product(s) to which such warranty claim is made. Repairs or replacements are made subject to our inspection of the returned product(s). Primary's decision of one of these alternatives shall be the buyer's exclusive remedy.

This warranty does not extend to damage by corrosion or other decomposition by chemical action. Primary does not warrant damages caused by (a) improper use of the product, (b) unauthorized modification or attachment to product, (c) misuse, abuse, accident or negligent handling or installation of product, or (d) alterations or repairs made by purchaser.

The materials of construction offered are recommendations only, subject in all cases to acceptance by purchaser. These recommendations do not constitute any guarantee against corrosion or decomposition, but are based on previous experience and best available information of the industry.

Statements and instructions set forth herein are based on the best information and practices known to Primary, but it should not be assumed that every acceptable safety procedure is contained herein. Of necessity Primary cannot guarantee that actions in accordance with such statements and instructions will result in the complete elimination of hazards and it assumes no liability for accidents that may occur.

Except as specifically provided herein, Primary makes no warranty, representations, promise or guarantee, either express or implied, statutory or otherwise, with respect to the product and technical information provided, including the products' quality, performance, merchantability, or fitness for a particular purpose.

In no event will Primary be liable for indirect, special, incidental, economic, covert or consequential damages arising out of the use or inability to use the product, including without limitation, damages or costs relating to the loss of profits, business and good will even if advised of the possibility of such damages. In no event shall Primary's liability exceed the amount paid by you for the product.

The warranty and remedies set forth herein are exclusive and in lieu of all others, oral or written, express or implied. No Primary dealer, distributor, agent or employee is authorized to make any modification or addition to this warranty. This warranty gives you specific legal rights and you may also have other rights which vary from state to state.

**VISIT OUR WEBSITE**
**@**
**primaryfluid.com**

TECHNICAL MANUAL

# DIAPHRAGM PUMP 409.2...e / 410.2...e




TRANSLATION OF THE ORIGINAL TECHNICAL MANUAL! EN

## PUMP TYPE

| | | | |
|---|---|---|---|
| RF/R/MF/M 409.2 - 1,6e | C 409.2 - 1,6e Pro+ | RF/R/MF/M 410.2 - 280e | C 410.2 - 280e |
| RF/R/MF/M 409.2 - 2,4e | C 409.2 - 2,4e Pro+ | RF/R/MF/M 410.2 - 570e | C 410.2 - 570e |
| RF/R/MF/M 409.2 - 7,0e | C 409.2 - 7,0e Pro+ | RF/R/MF/M 410.2 - 900e | C 410.2 - 900e |
| RF/R/MF/M 409.2 - 12e | C 409.2 - 12e Pro+ | RF/R/MF/M 410.2 - 1450e | C 410.2 - 1450e |
| RF/R/MF/M 409.2 - 18e | C 409.2 - 18e Pro+ | | |
| RF/R/MF/M 409.2 - 25e | C 409.2 - 25e Pro+ | | |
| RF/R/MF/M 409.2 - 50e | C 409.2 - 50e Pro+ | | |
| RF/R/MF/M 409.2 - 75e | C 409.2 - 75e Pro+ | | |
| RF/R/MF/M 409.2 - 90e | C 409.2 - 90e Pro+ | | |
| RF/R/MF/M 409.2 - 115e | C 409.2 - 115e Pro+ | | |
| RF/R/MF/M 409.2 - 140e | C 409.2 - 140e Pro+ | | |
| RF/R/MF/M 409.2 - 180e | C 409.2 - 180e Pro+ | | |
| RF/R/MF/M 409.2 - 250e | C 409.2 - 250e Pro+ | | |
| RF/R/MF/M 409.2 - 350e | C 409.2 - 350e Pro+ | | |

**NOTE**

Record the exact type and serial number here ► can be read off the type plate on the pump.
These data are important in the case of queries or for ordering spare and/or wear parts and must always be stated.

TYPE:

SERIAL NO:

**NOTE**

Keep the operating manual for future use!

**ATTENTION**

Subject to technical modifications!

### Quality notes

The **sera** quality management and quality assurance system is certified in accordance with DIN EN ISO 9001:2015.
The **sera** product complies with the applicable safety requirements and accident prevention regulations.

## About this instructions

Special notes in these instructions are marked with text and danger symbols.

**NOTE**

Notes or instructions that faciliate work and ensure a safe operation.

**ATTENTION**

The non-observance of these safety instructions can result in malfunctions or material damages.

**WARNING**

The non-observance of these safety instructions can lead to material damages and personal injuries.




Note on the additional instructions „SAFETY INSTRUCTIONS“.

These technical manual is divided into the following main parts:


| | |
|---|---|
| TRANSPORT & STORAGE | page 6 |
| PRODUCT DESCRIPTION | page 7 |
| TECHNICAL DATA | page 24 |
| ASSEMBLY / INSTALLATION | page 44 |
| OPERATION / EXPLOSION-HAZARDOUS AREAS | page 51 |
| START-UP | page 53 |
| ELECTRICAL CONNECTION | page 54 |
| MAINTENANCE | page 55 |
| FAULT ANALYSIS / CORRECTIVE ACTION | page 65 |
| SHUT-DOWN / DISPOSAL | page 67 |
| CLEARANCE CERTIFICATE | page 68 |


Depending on the pump type (see order confirmation) the following additional instructions are included:

| | |
|---|---|
| Control PRO+ | TM04 |
| INTERFACE MODULE PROFIBUS | TM05 |
| Control C410.2 | TM10 |
| Control PROFIBUS C410.2 | TM13 |
| Motor ATEX | supplier documentation |
| AC motor | supplier documentation |
| Electrical actuator | supplier documentation |
| Electrical actuator ATEX | supplier documentation |
| Pneumatic actuator | supplier documentation |
| Frequency converter | supplier documentation |
| Special construction | **sera** drawing |

TRANSPORT & STORAGE ..... 6
General ..... 6
Storage ..... 6
PRODUCT DESCRIPTION ..... 7
Type key ..... 7
Type plate ..... 8
Notes attached to the product ..... 8
Materials ..... 8
Components ...409.2 ..... 9
Components of C409.2 ..... 10
Components ...410.2 ..... 11
Components of C410.2 ..... 12
ELECTRICAL DATA ..... 23
ELECTRICAL DATA ..... 23
TECHNICAL DATA ..... 24
NOISE MEASUREMENT ..... 24
VISCOSITY, PUMPED MEDIUM ..... 24
TEMPERATURE DATA ..... 24
AMBIENT CONDITIONS ..... 24
Characteristics ..... 25
Dimensions RF409.2 standard ..... 28
Dimensions ...409.2 options ..... 30
Dimensions C409.2 standard ..... 32
Dimensions C409.2 options ..... 34
Dimensions RF410.2 standard ..... 36
Dimensions ...410.2 options ..... 38
Dimensions C410.2 standard ..... 40
Dimensions C410.2 options ..... 42
ASSEMBLY / INSTALLATION ..... 44
OPERATION / EXPLOSION-HAZARDOUS AREAS ..... 51
Operation in Ex-zone C409.2 / C410.2 ..... 51
Operation in Ex-zone R/M 409.2 / R/M 410.2 ..... 51
START-UP ..... 53
ELECTRICAL CONNECTIONS ..... 54
MAINTENANCE ..... 55
Drive motor ..... 55
Oil change ..... 56
Overview of the tightening torques ..... 57
Changing the Diaphragm ..... 58
Spare and wearing parts ..... 62
FAULT ANALYSIS / CORRECTIVE ACTION ..... 65
SHUT-DOWN / DISPOSAL ..... 67
Shut-down ..... 67
Disposal ..... 67
CLEARANCE CERTIFICATE ..... 68

## TRANSPORT & STORAGE

**WARNING**

Observe and follow the safety instructions by all means.
See the additional instructions „SAFETY INSTRUCTIONS".
Man, machine and environment are endangered if the safety instructions are not observed.




### General

**sera** products are checked for perfect condition and function previous to shipment.
Check for transport damage immediately after arrival of goods. If damage is found, this is to be reported immediately to the responsible carrier and the manufacturer.

### Storage

An undamaged packaging protects the unit during storage and should only be opened when the product is installed.
Proper storage increases the service life of the product and includes prevention of negative influences such as heat, moisture, dust, chemicals etc.

The following storage specifications are to be obsered:

- Storage place: cool, dry, dustfree and slightly ventilated
- Storage temperature and relative air humidity see Chapter „TECHNICAL DATA".
- The maximum storage time for the standard packaging is 12 months.

If these values are exceeded, metal products should be sealed in foil and protected from condensation water with a suitable desiccant.

Do not store solvents, fuels, lubricants, chemicals, acids, disinfectants and similar in the storage room.

## Type key

**1** — Type of drive (combinations possible)

| | |
|---|---|
| C | controllable |
| M | not adjustable |
| R | adjustable |
| F | Motor suitable for frequency converter operation |
| i | Frequency converter, mounted on the motor |
| K | Stroke mechanism with side drive shaft and connected to the drive via a clutch |
| Z | twin design |
| X | Stroke mechanism with two opposite pump heads, combined suction and pressure side |
| Y | Stroke mechanism with two opposite pump heads |

**2** — Series

| | |
|---|---|
| 204 | (solenoid driven pumps) |
| 409 | (motor driven pumps) |
| 410 | (motor driven pumps) |
| 509 | (motor driven pumps) |

**3** — Revision index

**4** — max. Nominal capacity (litre/hour (each pump head))

**5** — Displacer (type of construction)

| | |
|---|---|
| e | Single diap hragm |
| ML | Multy-layer diaphragm |
| KM | Piston daphragm |
| K | Piston |

**6** — Type of control

Pro+

| 1 | 2 | | 3 | | 4 | 5 | 6 | |
|---|---|---|---|---|---|---|---|---|
| C | 409 | . | 2 | - | 50 | e | Pro+ | *(example)* |

## Type plate

Each **sera** pump is factory provided with a type plate. The following information can be found on this type plate.

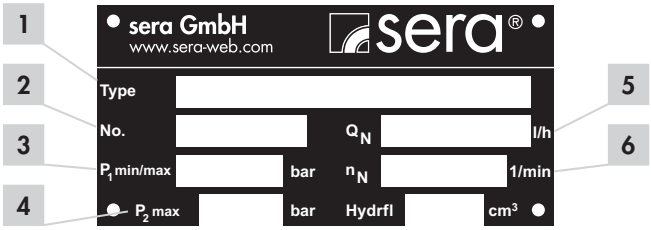


| No. | Designation |
|---|---|
| 1 | Pump type |
| 2 | Serial number of the pump |
| 3 | Minimum/maximum permissible pressure in the pump inlet<br>Minimum/maximum permissible pressure in the inlet cross section which the pump can be used for.<br>Please consider that pressure depends on rotation speed, delivery rate, temperature and static pressure at the inlet. |
| 4 | Maximum permissible pressure in the pump outlet<br>Maximum permissible pressure in the outlet cross section which the pump can be used for. Please consider that pressure depends on rotation speed, delivery rate, temperature and static pressure at the outlet. |
| 5 | Nominal delivery rate<br>Delivery rate which the pump was ordered for, based on the nominal rotation speed nN, the nominal delivery height p2max. and the delivery medium stated in the supply contract. |
| 6 | Nominal stroke frequency |

## Notes attached to the product

Symbols which are directly attached to the pump, e.g. arrows for direction of rotation or symbols for fluid connections are to be observed and kept in legible condition.

## Materials

The materials used are stated in the order confirmation and the product description.

**sera** dosing pumps are run-dry safe oscillating displacement pumps that are characterised by high tightness of the dosing head. The fluid is conveyed by a deformable diaphragm.

## Components ...409.2

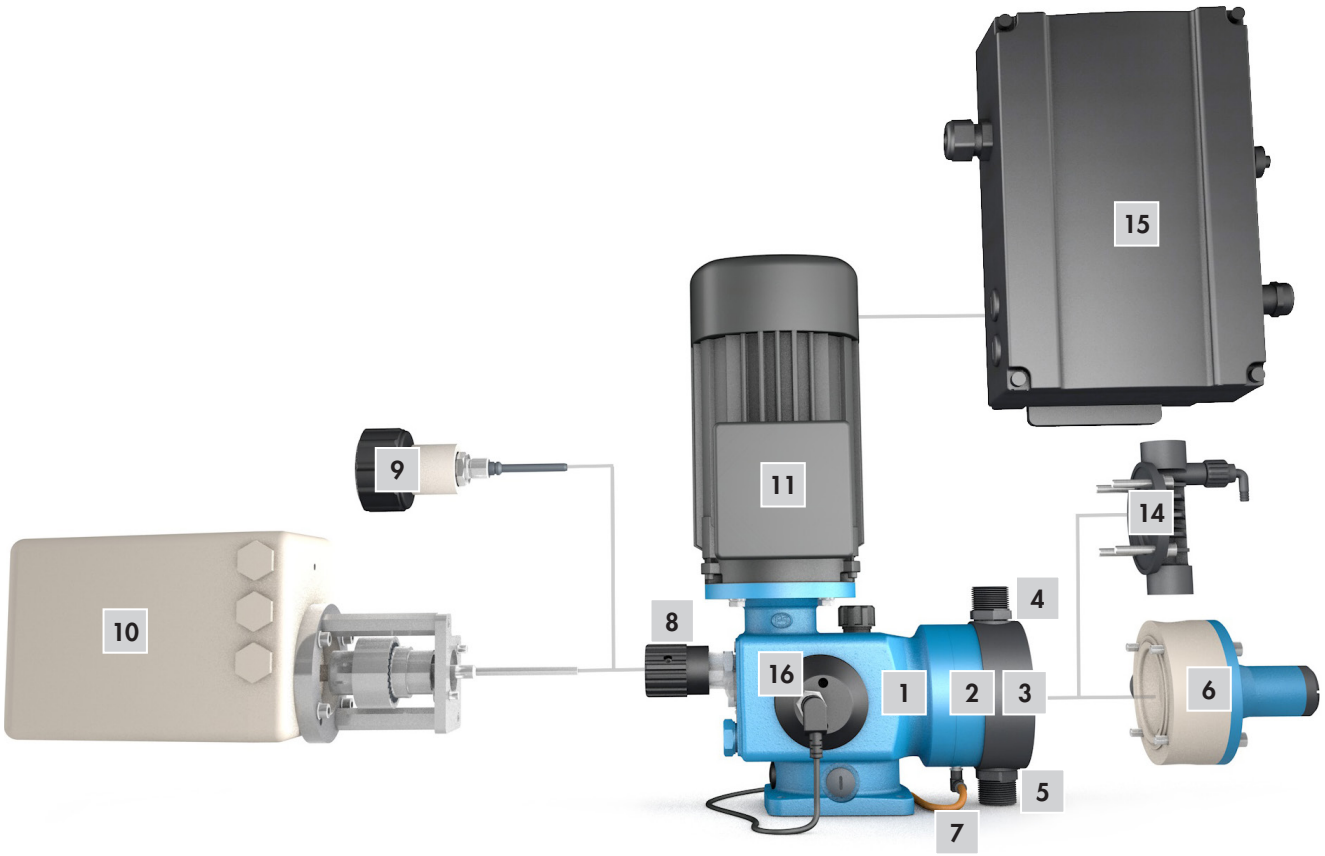


| No. | Designation | Remark |
|---|---|---|
| 1 | Stroke mechanism | |
| 2 | Assembly pump | |
| 3 | Pump body | |
| 4 | Pressure valve | |
| 5 | Suction valve | |
| 6 | Pump body with integrated overflow valve | |
| 7 | Diaphragm rupture monitoring device | option |
| 8 | Manual stroke length adjustment | |
| 9 | Manual stroke length adjustment with position indicator | option |
| 10 | Stroke length adjustment with actuator | option |
| 11 | Motor | |
| 14 | Pump body with manual vent valve | ...409.2-1,6e; -2,4e |
| 15 | Frequency converter * | option |
| 16 | Stroke frequency transmitter | option |
| not illustrated | Blind plug | option (M-design) |
| not illustrated | Motor for Ex-area * | option (R-design) |
| not illustrated | Actuator for Ex-area * | option |
| not illustrated | Pneumatic actuator * | option |

* see enclosed documentation

## Components of C409.2




| No. | Designation | Remark |
|---|---|---|
| **1** | Stroke mechanism | |
| **2** | Assembly pump | |
| **3** | Pump body | |
| **4** | Pressure valve | |
| **5** | Suction valve | |
| **6** | Pump body with integrated overflow valve | |
| **7** | Diaphragm rupture monitoring device | |
| **8** | Manual stroke length adjustment | |
| **9** | Manual stroke length adjustment with position indicator | option |
| **10** | Stroke length adjustment with actuator | option |
| **11** | Motor | |
| **12** | Control Pro+ with removable control element | |
| **13** | INTERFACE MODULE | accessories |
| **14** | Pump body with manual vent valve | ...409.2-1,6, -2,4e |
| not illustrated | Suction lances connection | accessories |

## Components ...410.2

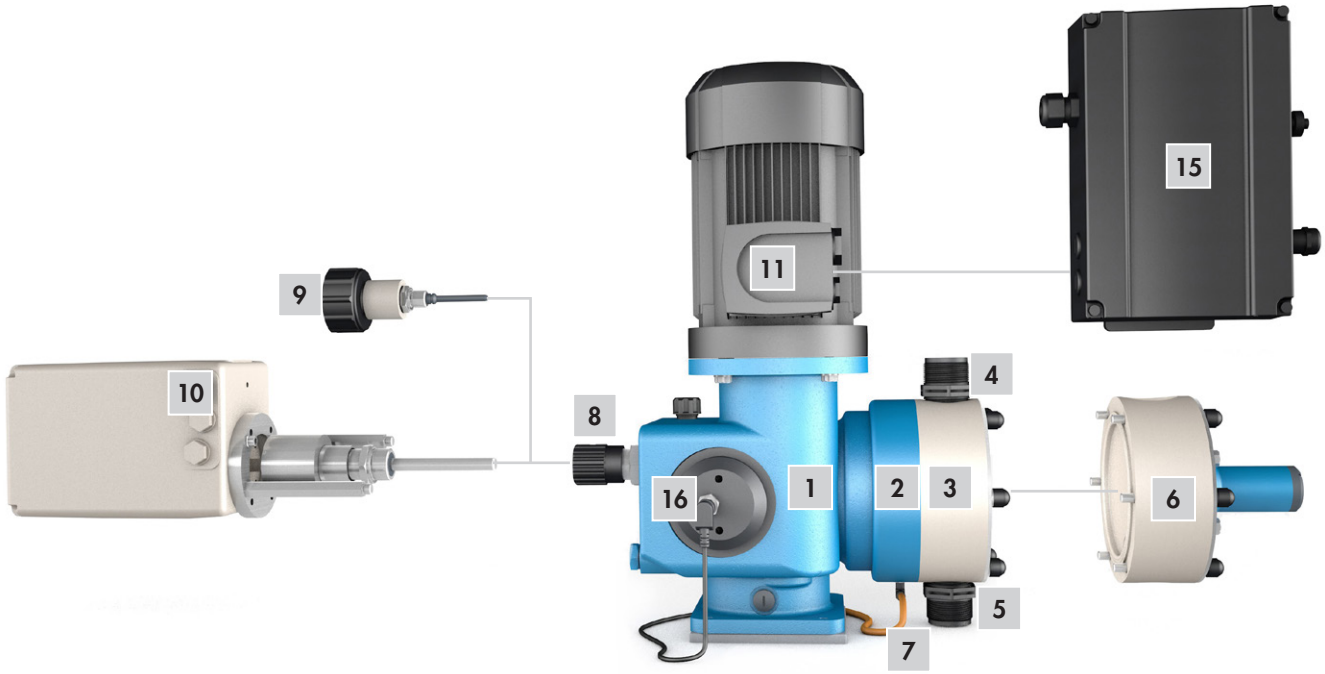


| No. | Designation | Remark |
|---|---|---|
| 1 | Stroke mechanism | |
| 2 | Assembly pump | |
| 3 | Pump body | |
| 4 | Pressure valve | |
| 5 | Suction valve | |
| 6 | Pump body with integrated overflow valve | |
| 7 | Diaphragm rupture monitoring device | option |
| 8 | Manual stroke length adjustment | |
| 9 | Manual stroke length adjustment with position indicator | option |
| 10 | Stroke length adjustment with actuator | option |
| 11 | Motor | |
| 15 | Frequency converter * | option |
| 16 | Stroke frequency transmitter | option |
| not illustrated | Blind plug | option (M-design) |
| not illustrated | Motor for Ex-area * | option (R-design) |
| not illustrated | Actuator for Ex-area * | option |
| not illustrated | Pneumatic actuator * | option |

* see enclosed documentation

## Components of C410.2




| No. | Designation | Remark |
|---|---|---|
| 1 | Stroke mechanism | |
| 2 | Assembly pump | |
| 3 | Pump body | |
| 4 | Pressure valve | |
| 5 | Suction valve | |
| 6 | Pump body with integrated overflow valve | |
| 7 | Diaphragm rupture monitoring device | |
| 8 | Manual stroke length adjustment | |
| 9 | Manual stroke length adjustment with position indicator | option |
| 10 | Stroke length adjustment with actuator | option |
| 11 | Motor | |
| 12 | Control C410.2 | |
| not illustrated | Suction lances connection | accessories |

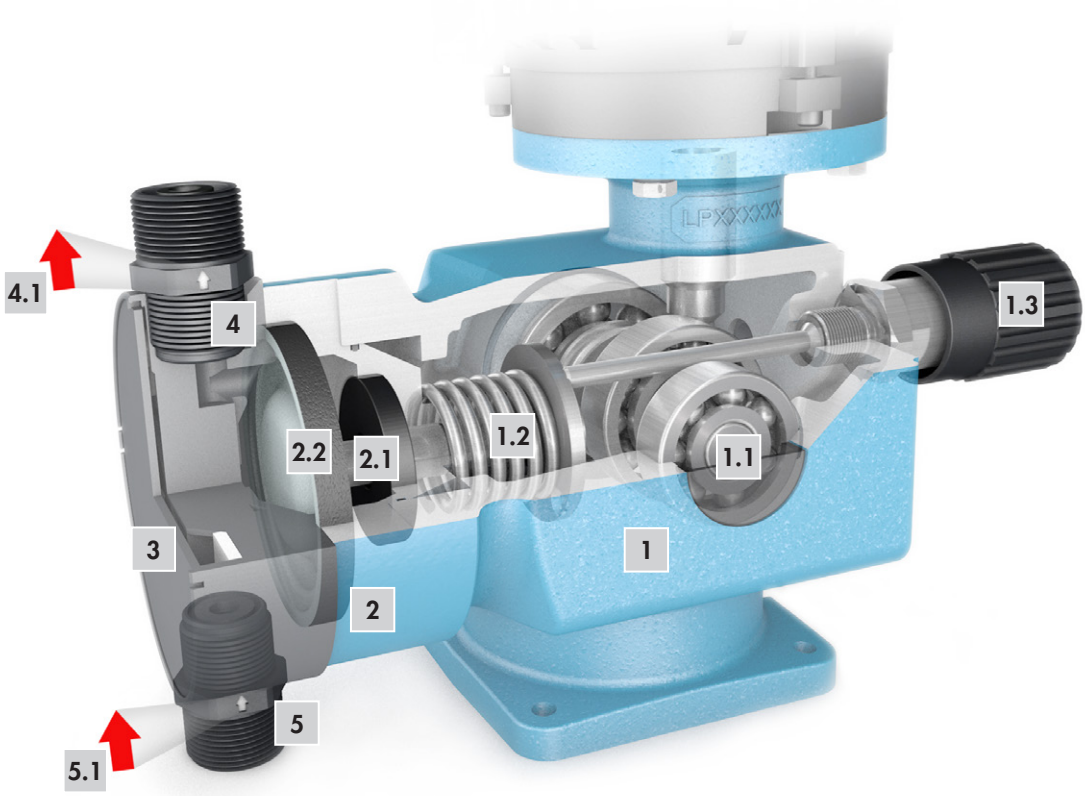


## Stroke mechanism (1)

Piston diaphragm pumps of this type series use a rotary cam drive to transmit the rotation of the drive motor to the displacement body.
In case of the rotary cam drive, the eccentric (**1.1**) provides the pressure stroke while the suction stroke is performed by a pressure spring (return spring) (**1.2**).
The effective stroke length can be changed by means of an adjustable scale knob (**1.3**) which prevents the connecting rod from following the rotary cam up to the rear dead centre during suction stroke (see stroke length adjustment).

## Assembly pump (2)

The drive diaphragm (**2.2**) connected to the drive via the connecting rod (**2.1**) transmits the stroke movement directly to the pumped medium.

## Pump body (3)

Depending on the applied backpressure, movements of the plastic pump body in elastic materials are possible.
This does not affect the pumps's service life or operational reliability.

## Pressure valve / Suction valve (4/5)

The pump valves are ball valves that only work properly in a vertical position. The condition of the valves has a deciding effect on the operating capability of the pump. Valves must be exchanged as complete units. When replacing the valves it is important to check the flow direction (**4.1/5.1**) .

**ATTENTION**

Pressure valve above, suction valve below!

## Pump body with integrated overflow valve (6)

The integrated diaphragm overflow valve protects the pump from unacceptable overpressure at closed pressure line. Pipes and fittings, however, are not protected and have to be protected separately, if necessary. It can be used for liquid media without solid matters according to the manufacturer specifications.
Pump bodies with integrated overflow valve are equipped with an additional relief channel (**6.1**) through which the pumped medium is drained in case of an unacceptable overpressure.
The relief channel is closed by the mechanically prestressed diaphragm (**6.2**) of the overflow valve.
The mechanical prestress which is executed by a pressure spring (**6.3**) can be adjusted with a set screw (**6.4**). If the pressure of the pumped medium on the diaphragm exceeds the set pressure, the diaphragm is lifted and the pumped medium flows into the relief channel.
When the pressure in the pump body falls below the pressure set the diaphragm closes the inlet channel again.

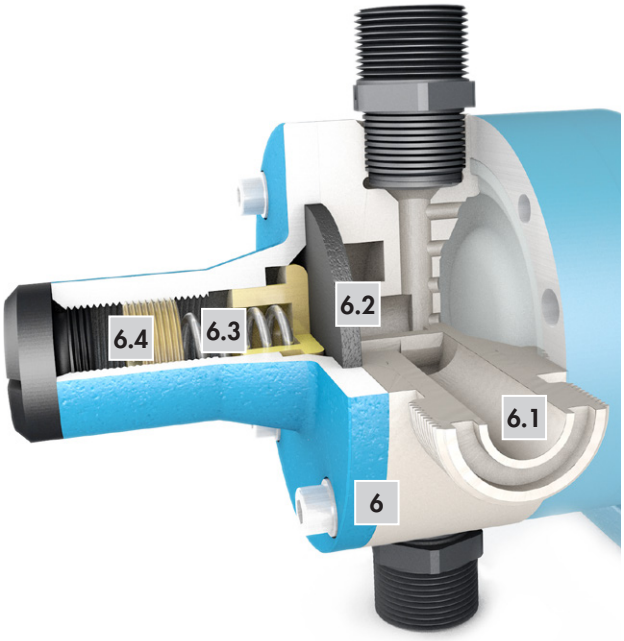


## Pump body with manual vent valve (14) (409.2-1,6e; -2,4e)

The vent valve is used to release the manual pressure in the pump body (**15**) during commissioning. Open vent valve when pump primes first time.
When vent valve is opened gas including medium escapes into the feedback line. The vent valve must be closed again as soon as only medium without gas constituent escapes. The pump now feeds the medium into the pressure line.
Open again for another ventilation. The vent valve consists of a vent screw (**15.1**) with integrated hose nozzle Ø 6,5 (**15.2**), which must be fitted with a hose (**15.3**) (inside diameter 6 mm) as feedback line. The leaking medium incl. the gas admixtures must be disposed off properly.
The vent screw is inserted during normal operation.

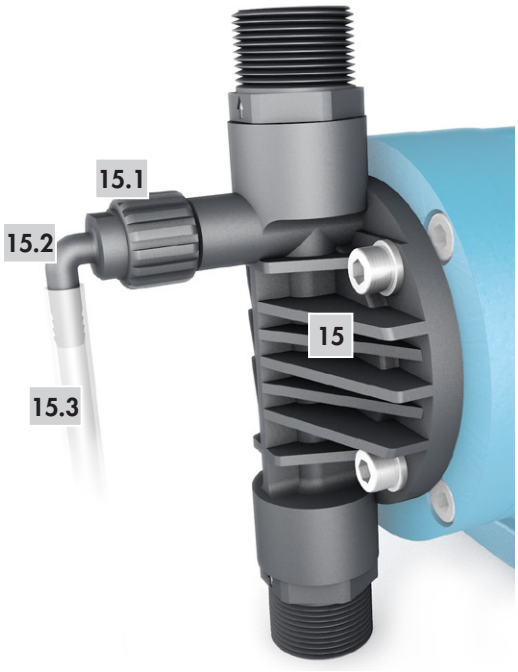


**ATTENTION**

Open vent screw with great caution and perform max. 1 turn. Take care that the tightness of the thread is still guaranteed.

**ATTENTION**

The vent screw must always be closed during the driving process.

## Diaphragm rupture monitoring device (7)

### C409.2 /C410.2 (standard)

**sera** - pumps of the C409.2 series are equipped with a conductive diaphragm rupture monitoring device.

**NOTE**

The sensitivity of the diaphragm rupture electrode can be adapted to the conductivity of the medium via the electronics (see the technical manual of the control). Preset ex works to 50% approx. 10 µS/cm.

### ...409.2 / ...410.2 (option)

**sera** pumps of the R(F)/M(F)409.2 /R(F)/M(F)410.2 series can be equipped with a conductive diaphragm rupture monitoring device as option.

**ATTENTION**

The pumped medium must have a minimum conductivity of at least 5 µS/cm!

An electrode together with an approprate evaluation unit (option, e.g. **sera** diaphragm rupture relay, type ER-104 (or ER-142 for Ex-areas respectively) is used for monitoring. The diaphragm rupture electrode is mounted directly to the pump, the evaluation unit inside the switch cabinet.
The diaphragm rupture electrode type MBE-02 is not mounted by sera due to transport. We put the MBE-02 electrode onto the cable and fix it to the pump in a separate bag.
Put the diaphragm rupture electrode is in the base ring (**2**) of the pump from below (see pig. „Components ...").

## Stroke length adjustment

The delivery rate of the pump is set by changing the stroke length. The stroke length is infinitely variable between 0% and 100%..

**NOTE**

A linear dosing behaviour is achieved with stroke length adjustments between 20% and 100%.

## Manual stroke length adjustment (standard) (8)

The effective stroke length of the connecting rod is changed by turning the scale knob.
The stroke length should be adjusted during operation of the pump.
The set stroke length can be read off a scale, e.g. 75%.
With the 20-steps adjustment on the scale knob, the stroke length can be set individually with a tolerance of 0.5%..

A protecting cap can be provided for the protection of the stroke length adjustment against unintentional adjustment.

...409.2

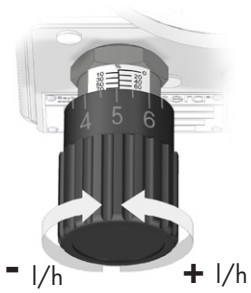


...410.2-280e ... 900e

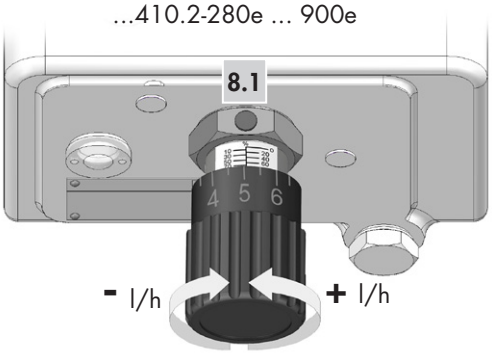


...410.2-1450e

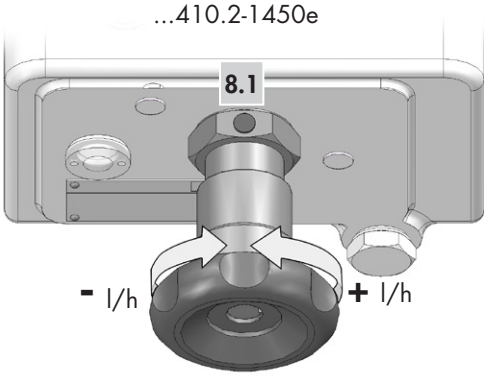


**ACHTUNG**

The locking (**8.1**) is to be released (us-ing a spanner SW3) before the stroke length is changed. Then the locking must be tightened again. This ensures that the set stroke length does not change during opera-tion.

## Manual stroke length adjustment by a dial scale with indication of percent (option) (9)

The stroke length is adjusted by turning the hand wheel.
The stroke length shuold be adjusted during operation of the pump.
The set stroke length can be read off the percent scale (the example shows a set stroke length of 65%).
In delivery state, the stroke length adjustment is factory set to 50%.

**ATTENTION**

The dial scale with indication of percent may become misadjusted during transport.
If the indicator does not match the 50% setting, then the percent scale must be re-adjusted during operation (!) of the pump!

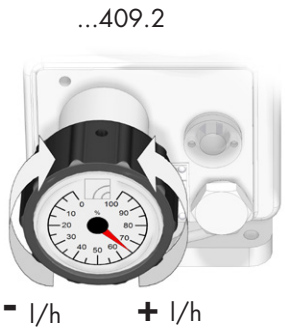


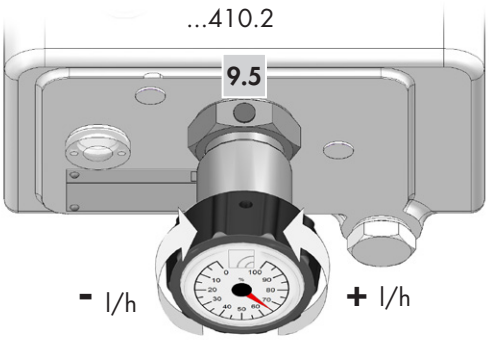


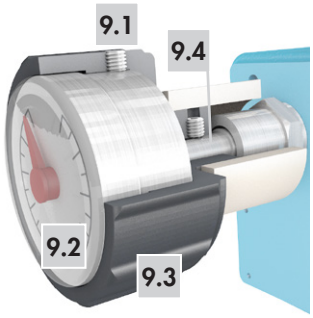


**Adjusting the percent scale:**

- Switch on the pump.
- Loosen setscrew (**9.1**).
- Remove percent scale (**9.2**) from the hand wheel (**9.3**).
- Manually turn the percent scale to 0% setting.
- Loosen the locking (**9.5**) ► bei ...410.2.
- Use the hand wheel to set the stroke length to 0%.
- Turn hand wheel clockwise until there is no further stroke movement (connecting rod does no longer hit the adjusting spindle (**9.4**)).
- Insert percent scale again.
- Use the setscrew to secure the percent scale to the hand wheel.
- Adjust desired stroke length.
- Tighten the locking (**9.5**) ► bei ...410.2.

## Automatic stroke length adjustment by means of an electrical actuator (10)

The electrical actuator is directly mounted to the stroke mechanism (**1**) of the pump. A clutch transmits the rotary motion of the actuator drive shaft to the adjusting spindle. The axial displacement is compensated in the clutch.
In case of dosing pumps with electrical actuator, a manual adjustment of the stroke length on the pump is no longer possible. (Exception: actuator with hand wheel)
The actuator is equipped with two integrated limit switches as well as a position potentiometer for position feedback as standard. Both limit switches are factory set so that the drive will switch off at a stroke length of 0% and 100%, even if a control voltage is applied.
This guarantees that adjustments can only be made within the permissible range. The position potentiometer is driven by a safety clutch which prevents damage caused by incorrectly adjusted limit switches.
Activation is performed by appropriate control units (see **sera** - accessories).
The set stroke length can be read off on the pump (percent scale).
Information on the electrical connection is given inside the cover of the actuator.

**ATTENTION**

The adjustment is only possible when the pump is running!

## Automatic stroke length adjustment by means of an electrical actuator with integrated positioner

same as Chapter „Automatic stroke length adjustment by means of an electrical actuator (10)", additionally:

This positioner which is integrated in the actuator enables an actuator setting from 0…100% that is proportional to the connected input signal.
As an option, the actuator can also be provided with a collective interference signal. Information on the electrical connection is given inside the cover of the actuator.

## Drive motor C409.2 / C410.2

A **sera** motor pump of series C409.2 is driven by a threephase-motor controlled by the electronics.

A protective motor switch is not necessary due to the fact that a thermic overload protection is integrated in the pump for the protection of the motor.

## Drive motor ...409.2 / ...410.2

**sera** motor pumps R(F)/M(F)409.2 /R(F)/M(F)410.2 are driven either by a three-phase motor.
Standard: three-phase motor (with PTC thermistor; suitable for operation with frequency converter).

## Motor connection

**In case of a three-phase motor**

The motor connection depends on the voltage indication on the type plate and the applied supply voltage.

*Example:*

| | |
|---|---|
| Indication on the type plate: | Δ 230V/ Y400V 50Hz |
| Three-phase power system on sit: | Y400V 50 Hz |
| Correct motor connection: | Star connection (Y) |

Δ Delta connection

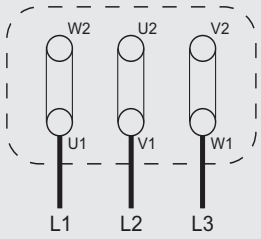


Y Star connection

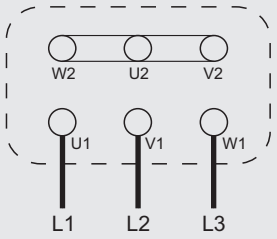


**In case of an AC motor**

The AC motor has a main and an auxiliary winding. The running capacitor is switched in series to the auxiliary phase.

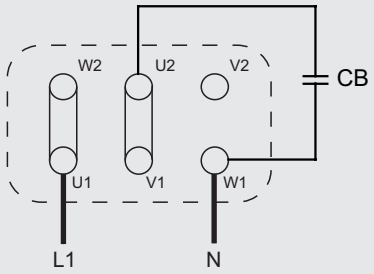


## Direction of rotation

The direction of rotation of the drive motor is arbitrary.

## Terminal box

Before closing the terminal box, please check that:

- All terminal connections are tightly fitted.
- The interior is clean and free of foreign bodies.
- Unused cable entries are closed and screw plugs are tightened.
- The sealing is correctly inserted in the cover of the terminal box; check proper condition of all sealing surfaces so that the demands of the protection category are fulfilled.

## Motor protection

Provide for adequate motor protective equipment in order to protect the motor from overload (e.g. motor protection switch with thermal overcurrent release).
Connect the ground wire to the marked earth screw in accordance with VDE 0100.

**ATTENTION**

Fuses do not protect the motor!

## Conrol C409.2 Pro+/ C410.2 (12)

Among other things, the control enable the proportional dosing via analogue signals 4 … 20 mA or contact signals with the possibility of pulse division or pulse multiplication.
The graphical display shows information about the current status of the pump.
A connection for flow monitoring or flow rate measurement and an „empty" signal with pre-alarm and dry run alarm are available as standard.

## INTERFACE MODULE (13) (accessories C409.2)

The INTERFACE MODULE provides level input and PROFIBUS connectivity (see TM05).

## Stroke frequency transmitter (16) (option RF409.2 / RF410.2)

**sera** pumps R(F)/M(F)409.2 /R(F)/M(F)410.2 are oscillating displacement pumps with an exactly defined stroke volume per each pump stroke.
If these dosing pumps should be used for automatic filling processes or charge dosing, then the single pump strokes must be determined and converted into electrical signals.
For this purpose, a stroke frequency transmitter (inductive contactor) is added to the pump (the option cannot mounted additionally) and reports each single pump stroke to the evaluation unit (e.g. preselection counter, SPC-control unit, etc.).

| Technical data | |
|---|---|
| Rated voltage | 10 - 60 V DC |
| Constant current | < 200 mA |
| Short circuit-proof: | |
| Connection mode | plug connector with 2 m cable |
| LED (green) | indicates supply voltage |
| LED (yellow) | indicates switching status |

Wiring diagram

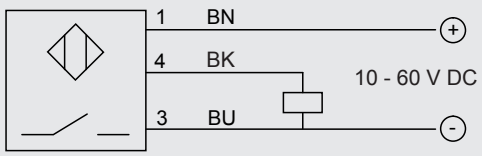


**ATTENTION**

When switching inductive loads (protectors, relays, etc.), surge protectors (varistors) must be fitted owing to the high self-induction voltage!

**ATTENTION**

When the pump is deployed in exlosion-hazardous areas a NAMUR type stoke frequency transmitter (II2G EExia IICT6, acc. to. ATEX95) is to be provided!

## TECHNICAL DATA

| PUMP DATA (* 8mWS = performance losses of nominal capacity QN of 20-25%) | | | RF 409.2-... | | | | | |
|---|---|---|---|---|---|---|---|---|
| | | | 1,6e | 2,4e | 7,0e | 12e | 18e | 25e |
| Permissible pressure $p_{2max.}$ at the pump outlet | bar | | 10 | 10 | 10 | 10 | 10 | 10 |
| Nominal capacity QN at $p_{2max.}$ | l/h | 50 Hz | 0-1,6 | 0-2,4 | 0-7,0 | 0-12 | 0-18 | 0-25 |
| | | 60 Hz | 0-1,9 | 0-2,9 | 0-8,4 | 0-14,4 | 0-21,5 | 0-30 |
| Quantity per stroke | ml/stroke | (100%) | 0,27 | 0,27 | 0,78 | 2,0 | 3,0 | 2,8 |
| Max. suction height | mWC | | 3 | | | | | 3 ( 8* ) |
| Min./max. permissible pressure at the pump inlet | bar | $p_{1min/max}$ | -0,3/0 | | | | | -0,3/0 ( -0,8/0* ) |
| Recomm. nominal diameter DN of the connecting pipes | mm | | 5 | 5 | 5 | 10 | 10 | 10 |
| Nominal stroke frequency | 1/min | 50 Hz | 100 | 150 | 150 | 100 | 100 | 150 |
| | | 60 Hz | 120 | 180 | 180 | 120 | 120 | 180 |
| Weight approx. | kg | plastic | 9 | 9 | 9 | 9 | 9 | 9 |
| | | stainless steel | 10 | 10 | 10 | 10 | 10 | 10 |

| PUMP DATA (* 8mWS = performance losses of nominal capacity QN of 20-25%) | | | RF 409.2-... | | | | | | | |
|---|---|---|---|---|---|---|---|---|---|---|
| | | | 50e | 75e | 90e | 115e | 140e | 180e | 250e | 350e |
| Permissible pressure $p_{2max.}$ at the pump outlet | bar | | 10 | 10 | 8 | 4 | 8 | 4 | 3 | 3 |
| Nominal capacity QN at $p_{2max.}$ | l/h | 50 Hz | 0-50 | 0-75 | 0-90 | 0-115 | 0-140 | 0-180 | 0-250 | 0-350 |
| | | 60 Hz | 0-60 | 0-90 | 0-108 | 0-138 | 0-168 | 0-216 | 0-300 | - |
| Quantity per stroke | ml/stroke | (100%) | 8,3 | 8,3 | 15,0 | 19,2 | 15,6 | 20,0 | 41,7 | 38,9 |
| Max. suction height | mWC | | 3 (8 *) | | | | | | 3 | |
| Min./max. permissible pressure at the pump inlet | bar | $p_{1min/max}$ | -0,3/0 (-0,8/0) | | | | | | -0,3/0 | |
| Recomm. nominal diameter DN of the connecting pipes | mm | | 10 | 15 | 15 | 15 | 15 | 15 | 15 | 15 |
| Nominal stroke frequency | 1/min | 50 Hz | 100 | 150 | 100 | 100 | 150 | 150 | 100 | 150 |
| | | 60 Hz | 120 | 180 | 120 | 120 | 180 | 180 | 120 | – |
| Weight approx. | kg | plastic | 9 | 9 | 11 | 10 | 11 | 10 | 13 | 13 |
| | | stainless steel | 10 | 10 | 13 | 13 | 13 | 13 | 21 | 21 |

Linear dosing range at a stroke length between 20% and 100%.
Linear dosing range at a stroke length between 30% and 100% ► RF409.2-1,6, -2,4e (50Hz), RF409.2-7,0e, -12e (60Hz).
The nominal data refer to water, 20°C and nominal pressure. With lower counterpressure it can come to be soaked off achievements.

| PUMP DATA | | | C 409.2-... Pro+ | | | | | |
|---|---|---|---|---|---|---|---|---|
| | | | 1,6e | 2,4e | 7,0e | 12e | 18e | 25e |
| Permissible pressure $p_{2max.}$ at the pump outlet | bar | | 10 | 10 | 10 | 10 | 10 | 10 |
| Nominal capacity QN at $p_{2max.}$ | l/h | 50/60 H | 0-1,6 | 0-2,4 | 0-7 | 0-12 | 0-18 | 0-25 |
| Quantity per stroke | ml/stroke | (100%) | 0,27 | 0,27 | 0,78 | 3,0 | 3,0 | 3,0 |
| Max. suction height | mWC | | 3 | | | | | |
| Min./max. permissible pressure at the pump inlet | bar | $p_{1min/max}$ | -0,3/0 | | | | | |
| Recomm. nominal diameter DN of the connecting pipes | mm | | 10 | 10 | 10 | 10 | 10 | 10 |
| Nominal stroke frequency | 1/min | 50/60 Hz | 100 | 150 | 150 | 67 | 100 | 150 |
| Weight approx. | kg | plastic | 11 | 11 | 11 | 11 | 11 | 8,5 |
| | | stainless st. | | | | | | |

| PUMP DATA (* 8mWS = performance losses of nominal capacity QN of 20-25%) | | | C 409.2-... Pro+ | | | | | | | |
|---|---|---|---|---|---|---|---|---|---|---|
| | | | 50e | 75e | 90e | 115e | 140e | 180e | 250e | 350e |
| Permissible pressure $p_{2max.}$ at the pump outlet | bar | | 10 | 10 | 8 | 4 | 8 | 4 | 3 | 3 |
| Nominal capacity QN at $p_{2max.}$ | l/h | 50/60 Hz | 0-50 | 0-75 | 0-90 | 0-115 | 0-140 | 0-180 | 0-250 | 0-350 |
| Quantity per stroke | ml/stroke | (100%) | 8,3 | 8,3 | 15,0 | 19,2 | 15,6 | 20,0 | 41,7 | 38,9 |
| Max. suction height | mWC | | 3 | | | (8*) | | | 3 | |
| Min./max. permissible pressure at the pump inlet | bar | $p_{1min/max}$ | -0,3/0 | | | (-0,8/0*) | | | -0,3/0 | |
| Recomm. nominal diameter DN of the connecting pipes | mm | | 15 | 15 | 15 | 15 | 15 | 15 | 15 | 15 |
| Nominal stroke frequency | 1/min | 50/60 H | 150 | 150 | 100 | 100 | 150 | 150 | 100 | 150 |
| Weight approx. | kg | plastic | 8,5 | 8,5 | 10,5 | 9,0 | 10,5 | 9,0 | 13,0 | 13,0 |
| | | stainless st. | | | | | | | | |

Linear dosing range at a stroke length between 20% and 100% and at a stroke frequency between 5 and 100%.
The nominal data refer to water, 20°C and nominal pressure. With lower counterpressure it can come to be soaked off achievements.

## TECHNICAL DATA

| PUMP DATA | | | RF 410.2-... | | | |
|---|---|---|---|---|---|---|
| | | | 280e | 570e | 900e | 1450e |
| Permissible pressure $p_{2max.}$ at the pump outlet | bar | | 8 | 6 | 5 | 5 * |
| Nominal capacity QN at $p_{2max.}$ | l/h | 50 Hz | 0-280 | 0-570 | 0-900 | 0-1.450 |
| | | 60 Hz | 0-336 | 0-684 | 0-1.080 | 0-1.740 |
| Quantity per stroke | ml/stroke | (100%) | 46 | 98 | 155 | 245 |
| Max. suction height | mWC | | 5 | 5 | 3 | 3 |
| Min./max. permissible pressure at the pump inlet | bar | $p_{1min/max}$ | -0,5/0 | -0,5/0 | -0,3/0 | -0,3/0 |
| Recommended nominal diameter DN of the connecting pipes | mm | | 15 | 15 | 20 | 25 |
| Nominal stroke frequency | 1/min | 50 Hz | 97 | 97 | 97 | 97 |
| | | 60 Hz | 116 | 116 | 116 | --- |
| Weight approx. | kg | plastic | 35 | 35 | 37 | 41 |
| | | stainless steel | 42 | 42 | 52 | 59 |

| PUMP DATA | | | C 410.2-... | | | |
|---|---|---|---|---|---|---|
| | | | 280e | 570e | 900e | 1450e |
| Permissible pressure $p_{2max.}$ at the pump outlet | bar | | 8 | 6 | 5 | 5 |
| Nominal capacity QN at $p_{2max.}$ | l/h | 50/60 Hz | 0-280 | 0-570 | 0-900 | 0-1.450 |
| Quantity per stroke | ml/stroke | (100%) | 46 | 98 | 155 | 245 |
| Max. suction height | mWC | | 5 | 5 | 3 | 3 |
| Min./max. permissible pressure at the pump inlet | bar | $p_{1min/max}$ | -0,5/0 | -0,5/0 | -0,3/0 | -0,3/0 |
| Recommended nominal diameter DN of the connecting pipes | mm | | 15 | 15 | 20 | 25 |
| Nominal stroke frequency | 1/min | 50 Hz | 97 | 97 | 97 | 97 |
| Weight approx. | kg | plastic | 38 | 38 | 49 | 49 |
| | | stainless steel | 45 | 45 | 64 | 64 |

* at 60 Hz is the permissible pressure 3,5 bar

Linear dosing range at a stroke length between 20% and 100%.
The nominal data refer to water, 20°C and nominal pressure. With lower counterpressure it can come to be soaked off achievements.

| ELECTRICAL DATA | | RF409.2-1,6e ... RF409.2-25e |
|---|---|---|
| Power consumption | kW | 0,18 |
| Voltage | V | 230/400V 50Hz, 460V 60Hz |
| Frequency | Hz | 50/60 |
| Insulation class | ISO | F |
| Enclosure | IP | 55 |

| ELECTRICAL DATA | | RF409.2-50e ... RF409.2-350e |
|---|---|---|
| Power consumption | kW | 0,37 |
| Voltage | V | 230/400V 50Hz, 460V 60Hz |
| Frequency | Hz | 50/60 |
| Insulation class | ISO | F |
| Enclosure | IP | 55 |

| ELECTRICAL DATA | | C 409.2-1,6e Pro+ ... C 409.2-25e Pro+ | |
|---|---|---|---|
| | | 230 V, 50/60 Hz | 115 V, 50/60 Hz |
| Power consumption | kW | 0,18 | |
| Voltage | V | 210 - 250 | 100 - 125 |
| Frequency | Hz | 50/60 | |
| Inlet voltage, control input | V DC | 5...30 | |
| Minimum contact signal time | ms | 55 | |
| Analogue input resistance | Ω | 39 | |
| Digital output internal/external supply | | PNP max. 24V DC, 30mA /max. 30V DC, 30mA | |
| Recommended fuse | (circuit breaker) | C6A | C10A |
| Insulation class | ISO | F | |
| Enclosure | IP | 55 | |

| ELECTRICAL DATA | | C 409.2-50e Pro+ ... C 409.2-350e Pro+ | |
|---|---|---|---|
| | | 230 V, 50/60 Hz | 115 V, 50/60 Hz |
| Power consumption | kW | (...-50e = 0,18 kW) | 0,37 |
| Voltage | V | 210 - 250 | 100 - 125 |
| Frequency | Hz | 50/60 | |
| Inlet voltage, control input | V DC | 5...30 | |
| Minimum contact signal time | ms | 55 | |
| Analogue input resistance | Ω | 39 | |
| Digital output internal/external supply | | PNP max. 24V DC, 30mA /max. 30V DC, 30mA | |
| Recommended fuse | (circuit breaker) | C6A | C10A |
| Insulation class | ISO | F | |
| Enclosure | IP | 55 | |

## TECHNICAL DATA

| ELECTRICAL DATA | | RF 410.2-... | | | |
|---|---|---|---|---|---|
| | | 280e | 570e | 900e | 1450e |
| Power consumption | kW | 0,75 | 0,75 | 1,1 | 1,5 |
| Voltage | V | 230/400V 50Hz, 460V 60Hz | | | |
| Frequency | Hz | 50/60 | | | |
| Insulation class | ISO | F | | | |
| Enclosure | IP | 55 | | | |

| ELECTRICAL DATA | | C 410.2-... | | | |
|---|---|---|---|---|---|
| | | 280e | 570e | 900e | 1450e |
| Power consumption | kW | 0,75 | 0,75 | 1,5 | 1,5 |
| Voltage | V | 380-420 | | | |
| Frequency | Hz | 50/60 | | | |
| Inlet voltage, control input | V DC | 5...30 | | | |
| Minimum contact signal time | ms | 55 | | | |
| Analogue input resistance | Ω | 100 | | | |
| Digital output internal/external supply | | PNP max. 15V DC, 50mA /max. 30V DC, 350mA | | | |
| Recommended fuse | (circuit breaker) | C10A | | | |
| Insulation class | ISO | F | | | |
| Enclosure | IP | 55 | | | |

### NOTE

The motor data can be read off the type plate on the drive motor of the respective pump!

| NOISE MEASUREMENT | |
|---|---|
| Max. sound pressure at max. burden | 50 - 65 dB(A) |

| VISCOSITY, PUMPED MEDIUM | |
|---|---|
| Max. viscosity with non-spring-loaded valves | 100 mPas (=cP) |

| TEMPERATURE DATA | |
|---|---|
| Max. liquid temperature | 60 °C |
| Min. liquid temperature | 10 °C |
| Max. operating temperature | 40 °C |
| Min. operating temperature | 0 °C |
| Max. storage temperature | 40 °C |
| Min. storage temperature | 0 °C |

| AMBIENT CONDITIONS | |
|---|---|
| Max. installation altitude above sea level | 1000 m |
| Max. relative air humidity | < 90% |

## Characteristics

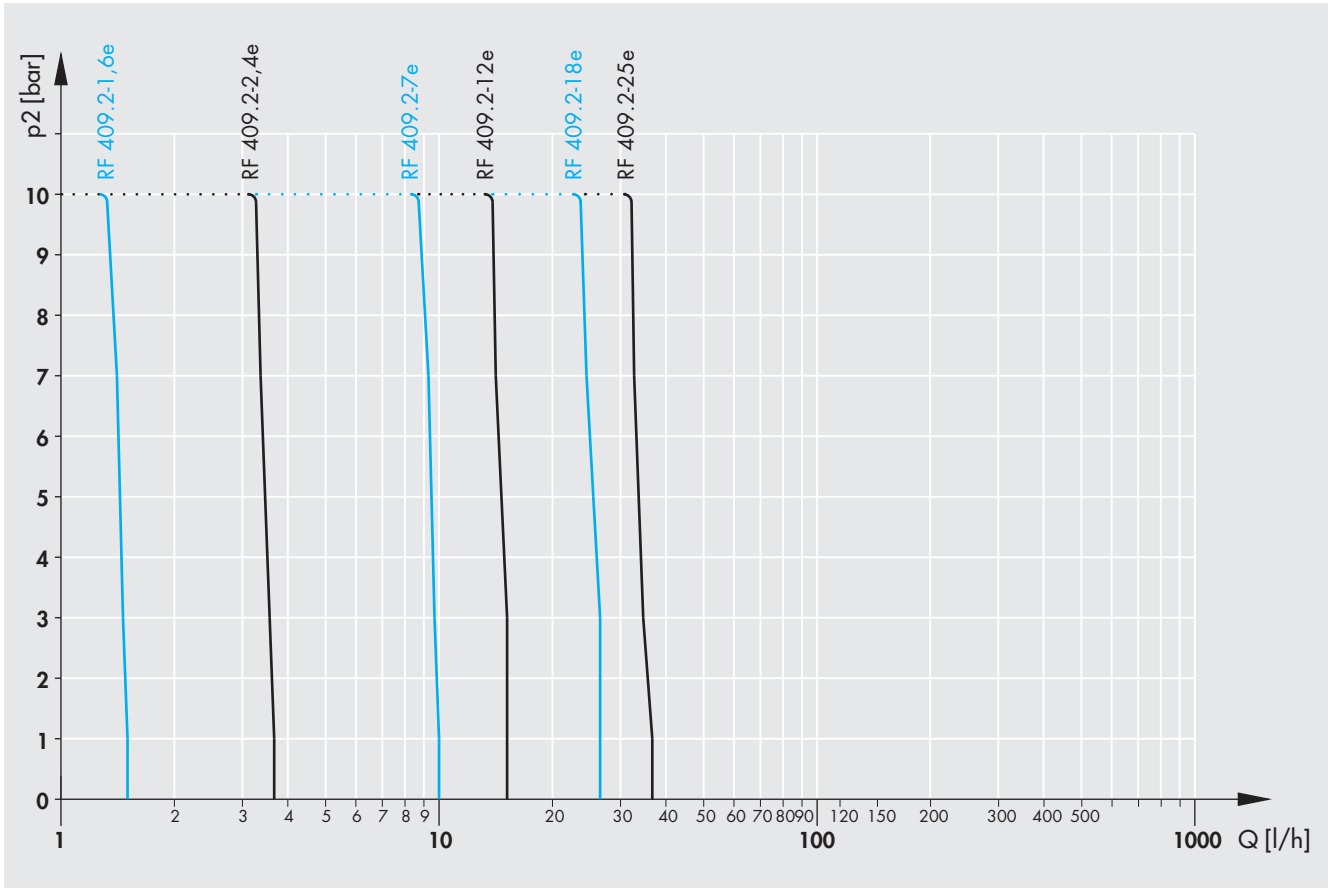


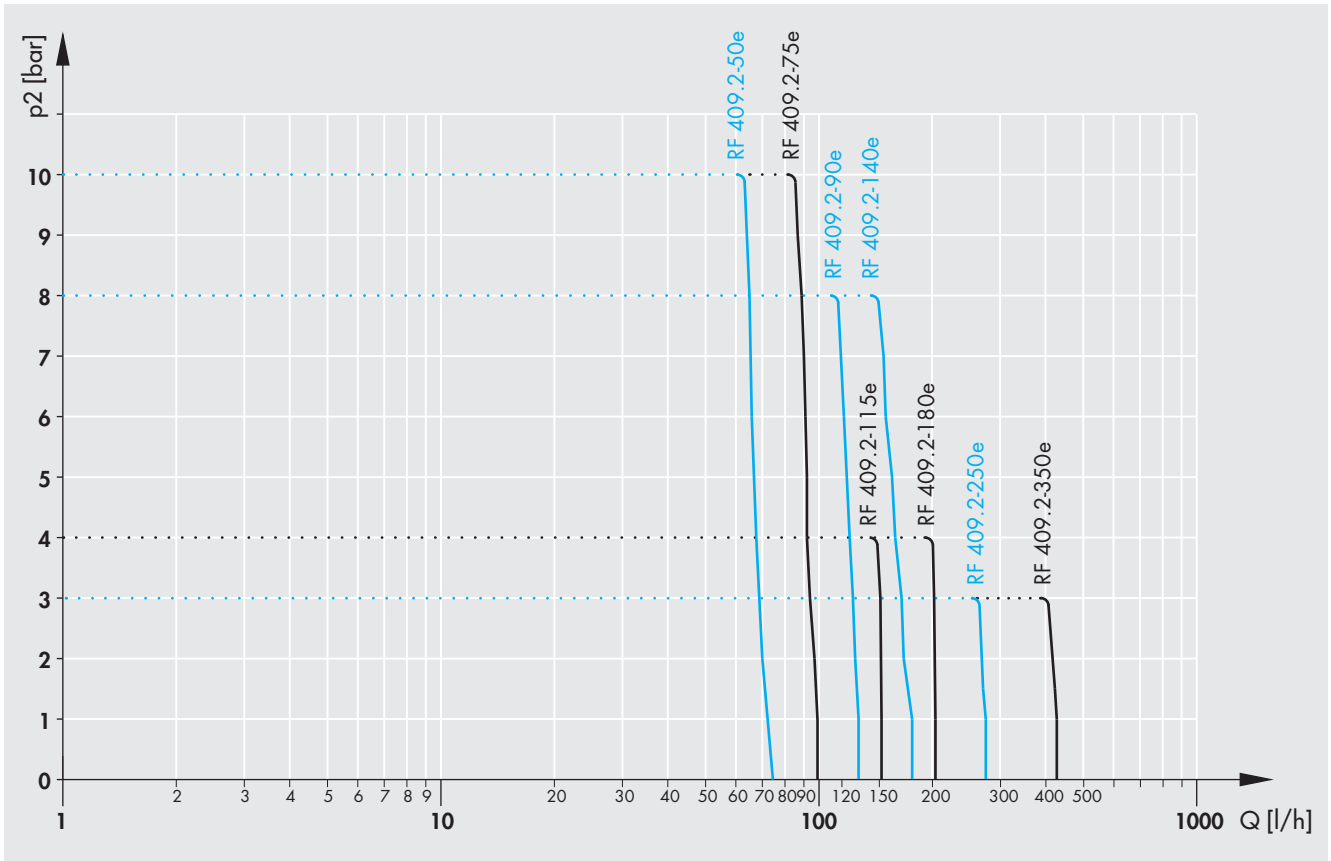

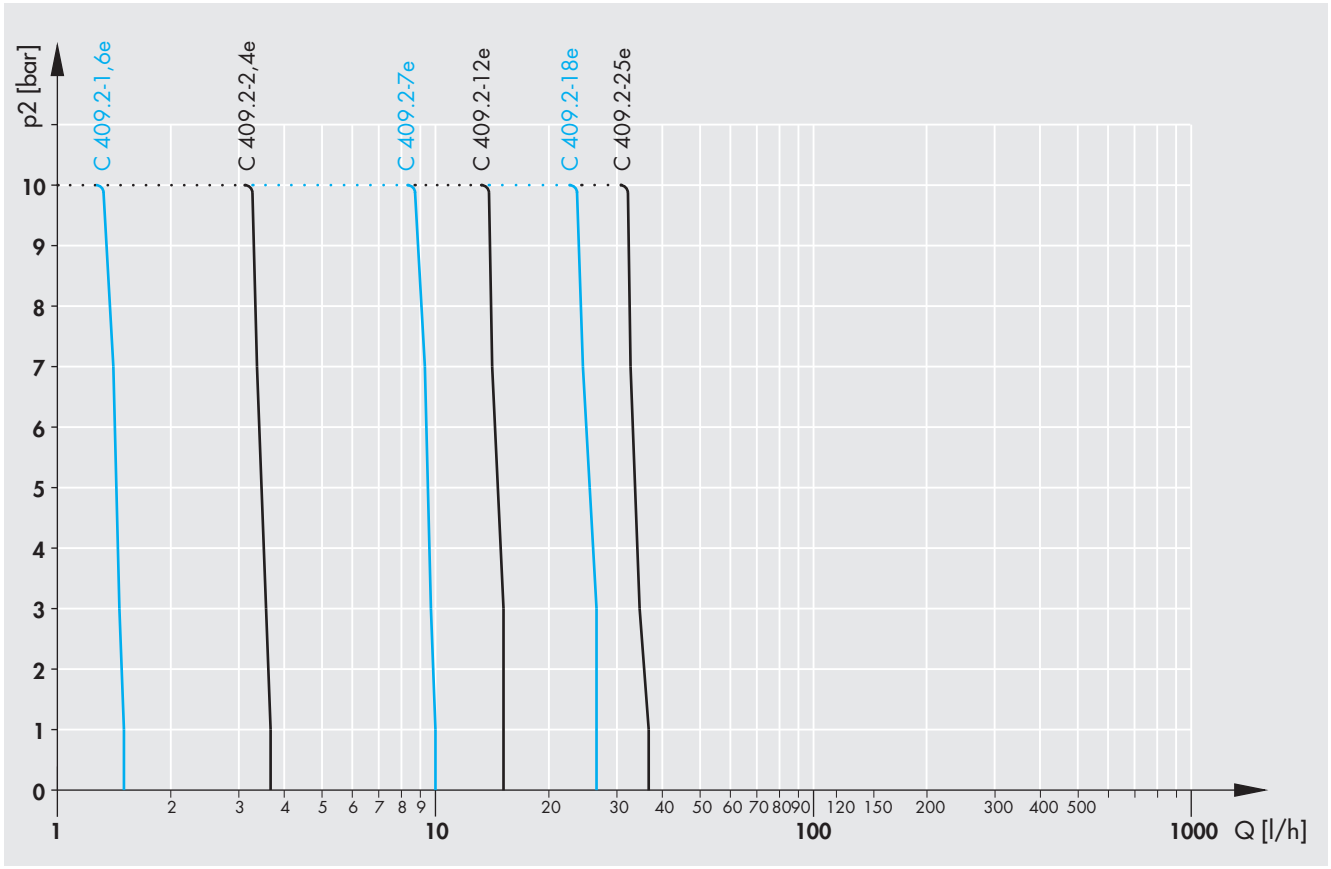
p2 [bar]
C 409.2-1,6e
C 409.2-2,4e
C 409.2-7e
C 409.2-12e
C 409.2-18e
C 409.2-25e
0 1 2 3 4 5 6 7 8 9 10
1 2 3 4 5 6 7 8 9 10 20 30 40 50 60 70 80 90 100 120 150 200 300 400 500 1000
Q [l/h]

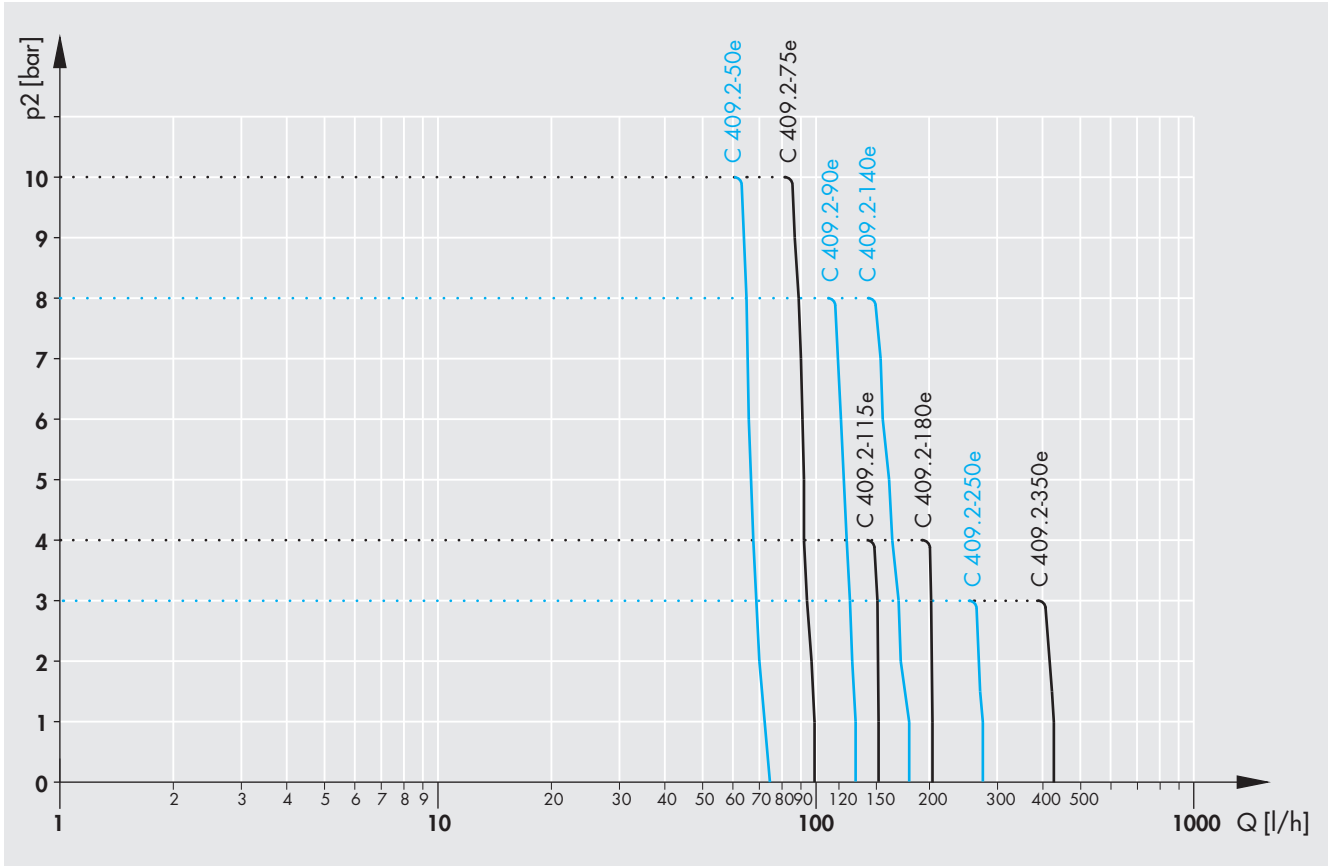
p2 [bar]
C 409.2-50e
C 409.2-75e
C 409.2-90e
C 409.2-140e
C 409.2-115e
C 409.2-180e
C 409.2-250e
C 409.2-350e
0 1 2 3 4 5 6 7 8 9 10
1 2 3 4 5 6 7 8 9 10 20 30 40 50 60 70 80 90 100 120 150 200 300 400 500 1000
Q [l/h]

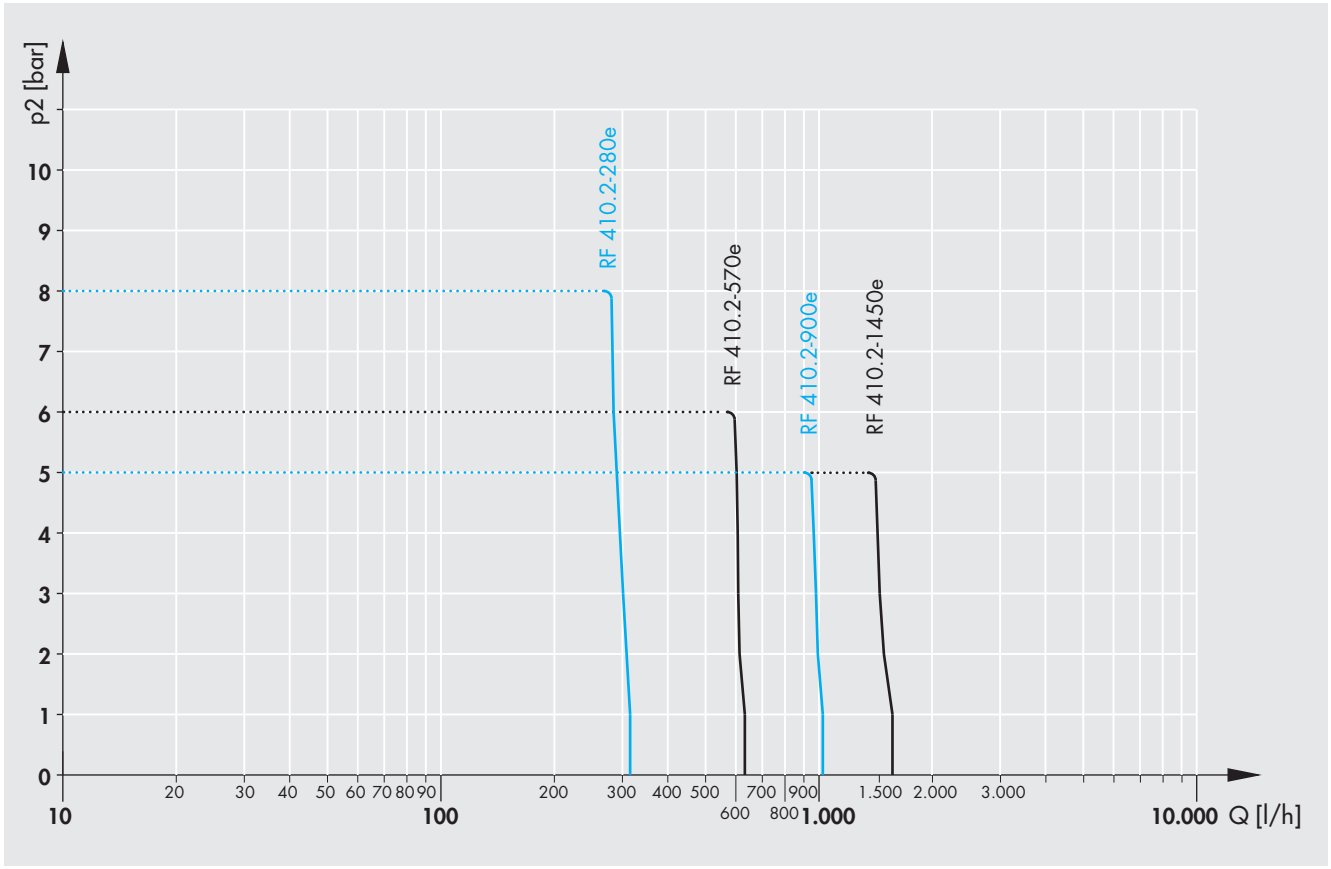
p2 [bar]
10
9
8
7
6
5
4
3
2
1
0
RF 410.2-280e
RF 410.2-570e
RF 410.2-900e
RF 410.2-1450e
20
30
40
50
60
70
80
90
100
200
300
400
500
600
700
800
900
1.000
1.500
2.000
3.000
10.000
Q [l/h]

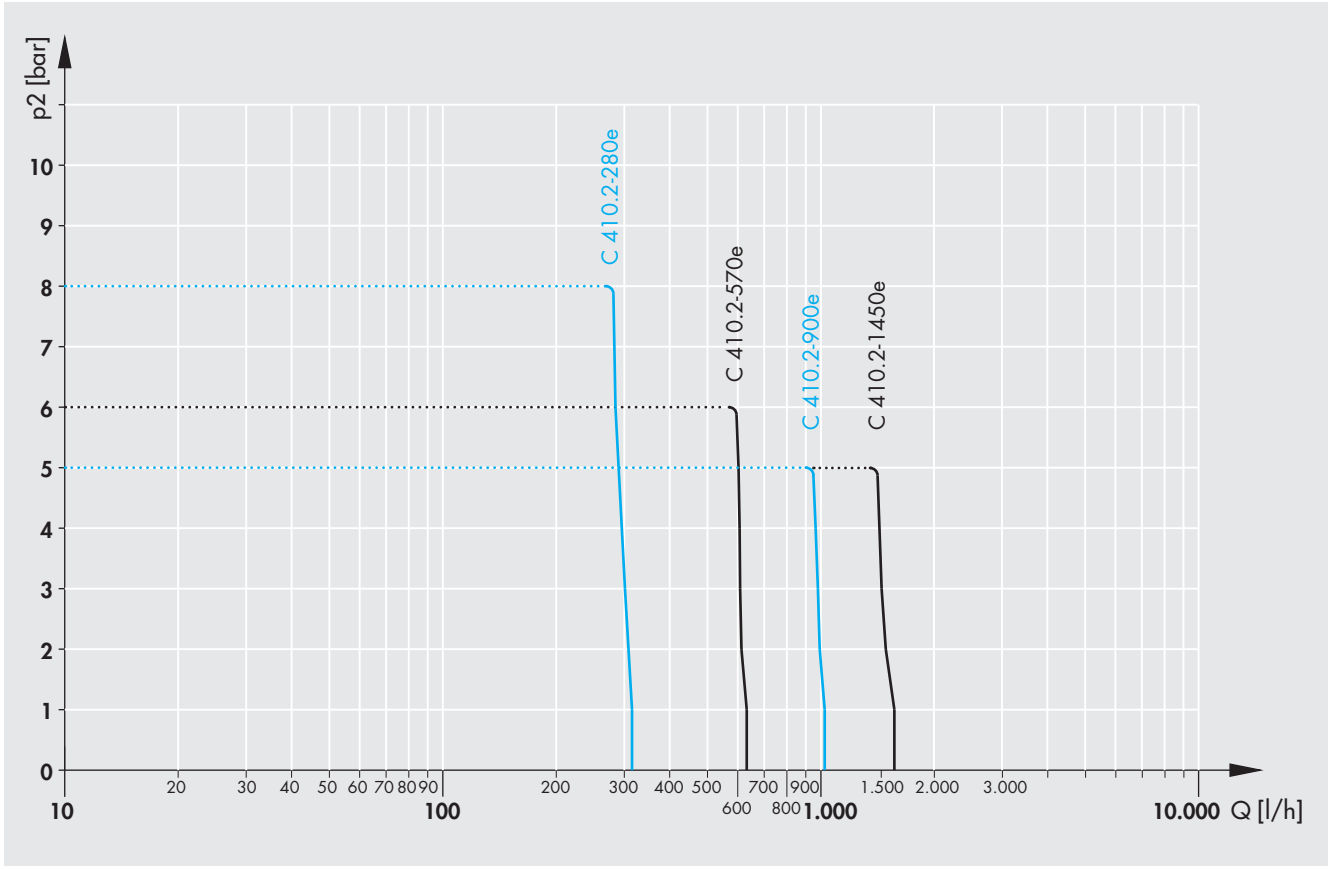
p2 [bar]
10
9
8
7
6
5
4
3
2
1
0
C 410.2-280e
C 410.2-570e
C 410.2-900e
C 410.2-1450e
20
30
40
50
60
70
80
90
100
200
300
400
500
600
700
800
900
1.000
1.500
2.000
3.000
10.000
Q [l/h]

## Dimensions RF409.2 standard

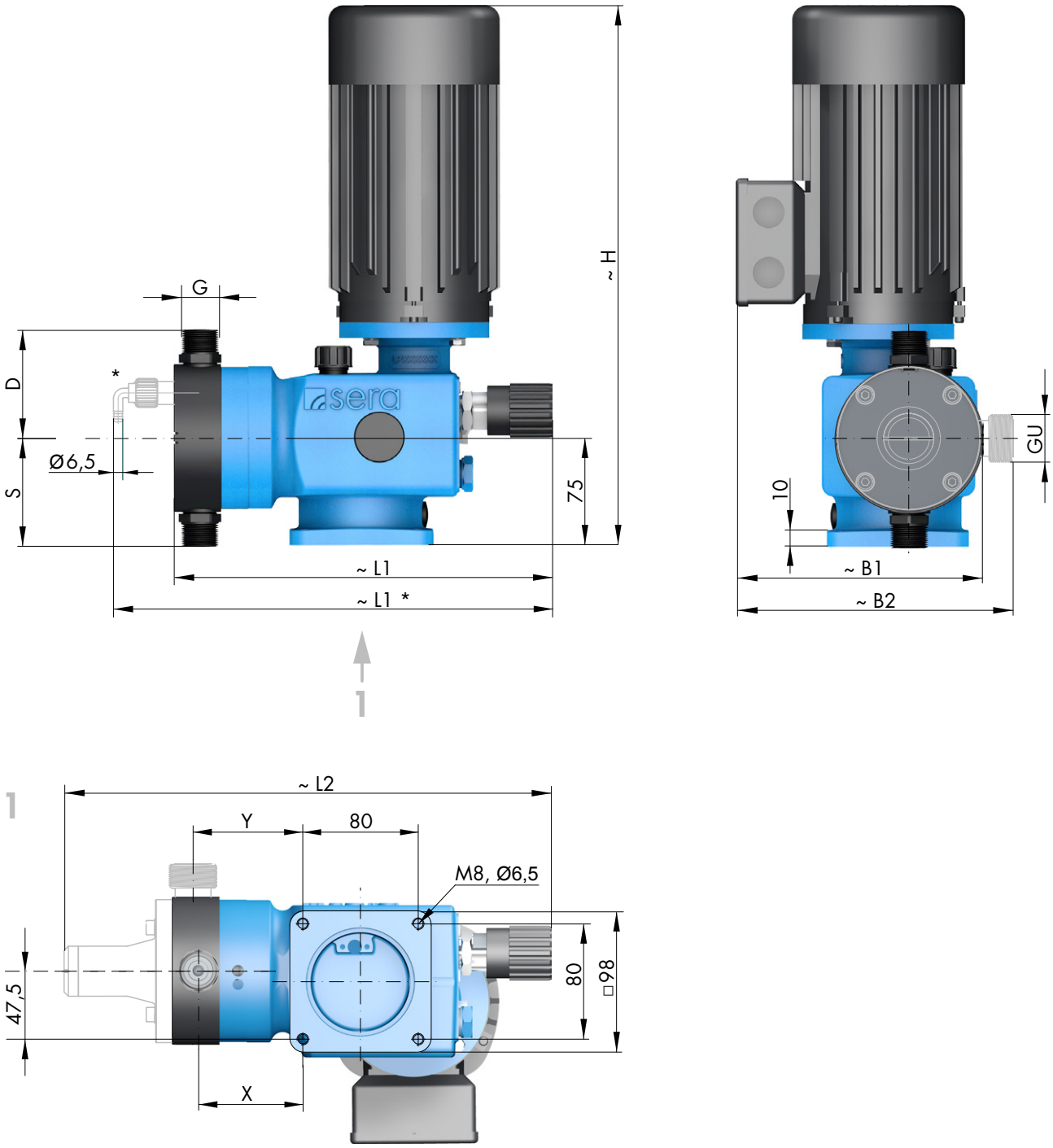


* Pump body with manual vent valve RF/MF409.2-1,6, -2,4e PP-FRP, PVDF-FRP

| | | RF 409.2-... | | | | | | | | | | | | | |
|---|---|---|---|---|---|---|---|---|---|---|---|---|---|---|---|
| **SUCTION VALVES** | | ...-1,6e | ...-2,4e | ...-7,0e | ...-12e | ...-18e | ...-25e | ...-50e | ...-75e | ...-90e | ...-115e | ...-140e | ...-180e | ...-250e | ...-350e |
| **DN** | Nominal width | 5 | 5 | 5 | 5 | 8 | 8 | 8 | 8 | 8 | 8 | 8 | 8 | 20[1] | 20[1] |
| **G** | Connection thread | G¾ | G¾ | G¾ | G¾ | G¾ | G¾ | G¾ | G¾ | G¾ | G¾ | G¾ | G¾ | G1¼[1] | G1¼[1] |
| **S** | PP-FRP / PVDF-FRP | 80 | 80 | 56 | 56 | 56 | 56 | 69 | 69 | 76 | 76 | 76 | 76 | 122 | 122 |
| **S** | PP-FRP / PVDF-FRP [2] | – | – | 57 | 60 | 60 | 60 | 67 | 67 | 76 | 76 | 76 | 76 | 122 | 122 |
| **S** | PVC-U | 70 | 70 | 62 | 65 | 63 | 63 | 70 | 70 | 78 | 78 | 78 | 78 | 119 | 119 |
| **S** | PVC-U [2] | – | – | 52 | 52 | 63 | 63 | 70 | 70 | 78 | 78 | 78 | 78 | 119 | 119 |
| **S** | 1.4571 | 70 | 70 | 57 | 61 | 61 | 61 | 68 | 68 | 76 | 76 | 76 | 76 | 122 | 122 |
| **S** | 1.4571[2] | – | – | 57 | 61 | 61 | 61 | 68 | 68 | 76 | 76 | 76 | 76 | 122 | 122 |
| **PRESSURE VALVES** | | | | | | | | | | | | | | | |
| **DN** | Nominal width | 5 | 5 | 5 | 5 | 8 | 8 | 8 | 8 | 8 | 8 | 8 | 8 | 20[1] | 20[1] |
| **G** | Connection thread | G¾ | G¾ | G¾ | G¾ | G¾ | G¾ | G¾ | G¾ | G¾ | G¾ | G¾ | G¾ | G1¼[1] | G1¼[1] |
| **D** | PP-FRP / PVDF-FRP | 80 | 80 | 64 | 64 | 64 | 64 | 69 | 69 | 76 | 76 | 76 | 76 | 122 | 122 |
| **D** | PP-FRP / PVDF-FRP [2] | – | – | 57 | 60 | 60 | 60 | 67 | 67 | 76 | 76 | 76 | 76 | 122 | 122 |
| **D** | PVC-U | 70 | 70 | 62 | 65 | 70 | 70 | 77 | 77 | 85 | 85 | 85 | 85 | 138 | 138 |
| **D** | PVC-U [2] | – | – | 65 | 65 | 70 | 70 | 77 | 77 | 85 | 85 | 85 | 85 | 138 | 138 |
| **D** | 1.4571 | 70 | 70 | 57 | 61 | 61 | 61 | 68 | 68 | 76 | 76 | 76 | 76 | 122 | 122 |
| **D** | 1.4571[2] | – | – | 57 | 61 | 61 | 61 | 68 | 68 | 76 | 76 | 76 | 76 | 122 | 122 |
| **MAX. TOTAL HEIGHT** | | | | | | | | | | | | | | | |
| **H** | | 330 | 330 | 330 | 330 | 330 | 330 | 370 | 370 | 370 | 370 | 370 | 370 | 370 | 370 |
| **MAX. TOTAL WIDTH** | | | | | | | | | | | | | | | |
| **B1** | | 175 | 175 | 175 | 175 | 175 | 175 | 185 | 185 | 185 | 185 | 185 | 185 | 220 | 220 |
| **B2** | (with relief valve) | – | – | 175 | 175 | 175 | 175 | 185 | 185 | 210 | 210 | 210 | 210 | 245 | 245 |
| **MAX. TOTAL LENGTH** | | | | | | | | | | | | | | | |
| **L1** | | 310 | 310 | 285 | 285 | 285 | 285 | 295 | 295 | 300 | 300 | 300 | 300 | 355 | 355 |
| **L2** | (with relief valve) | – | – | 345 | 345 | 345 | 345 | 360 | 360 | 370 | 370 | 370 | 370 | 435 | 435 |
| **RELIEF VALVE CONNECTION** | | | | | | | | | | | | | | | |
| **GU** | | – | – | G¾ | G¾ | G¾ | G¾ | G¾ | G¾ | G1 | G1 | G1 | G1 | G1¼[1] | G1¼[1] |
| **CONNECTION DIMENSIONS** | | | | | | | | | | | | | | | |
| **X** | | 72 | 72 | 66 | 67 | 67 | 67 | 69 | 69 | 73 | 73 | 73 | 73 | 101 | 101 |
| **Y** | | – | – | 71 | 69 | 69 | 69 | 69 | 69 | 78 | 78 | 78 | 78 | 101 | 101 |

(Measurements in mm)

[1] DN15 / G1 at valves of PVC-U
[2] Pump body with relief valve

## Dimensions ...409.2 options

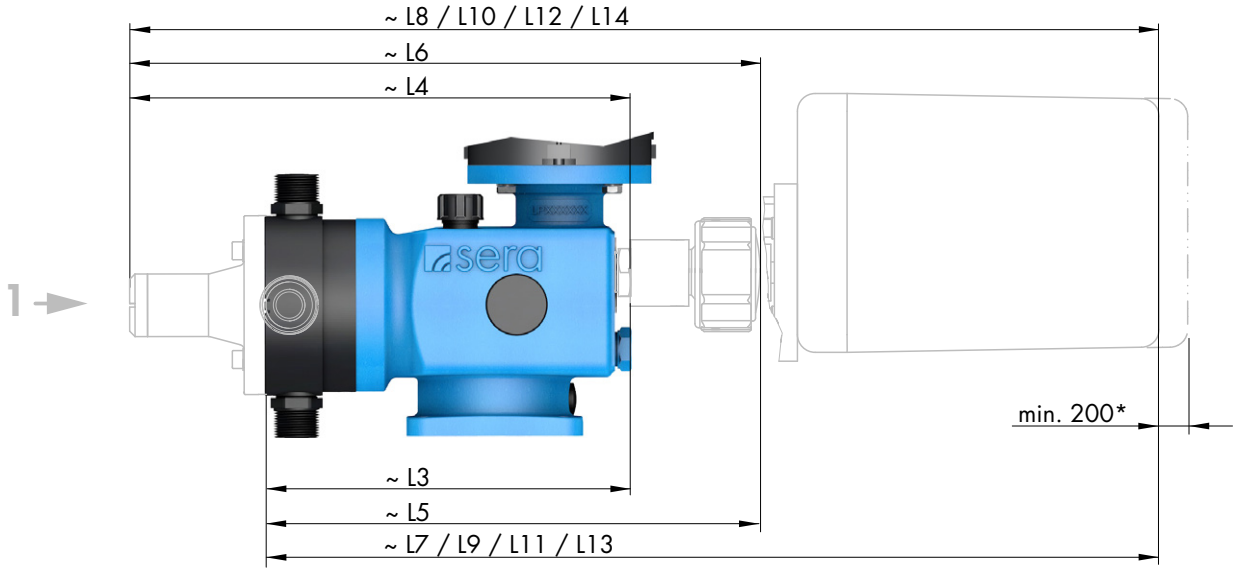


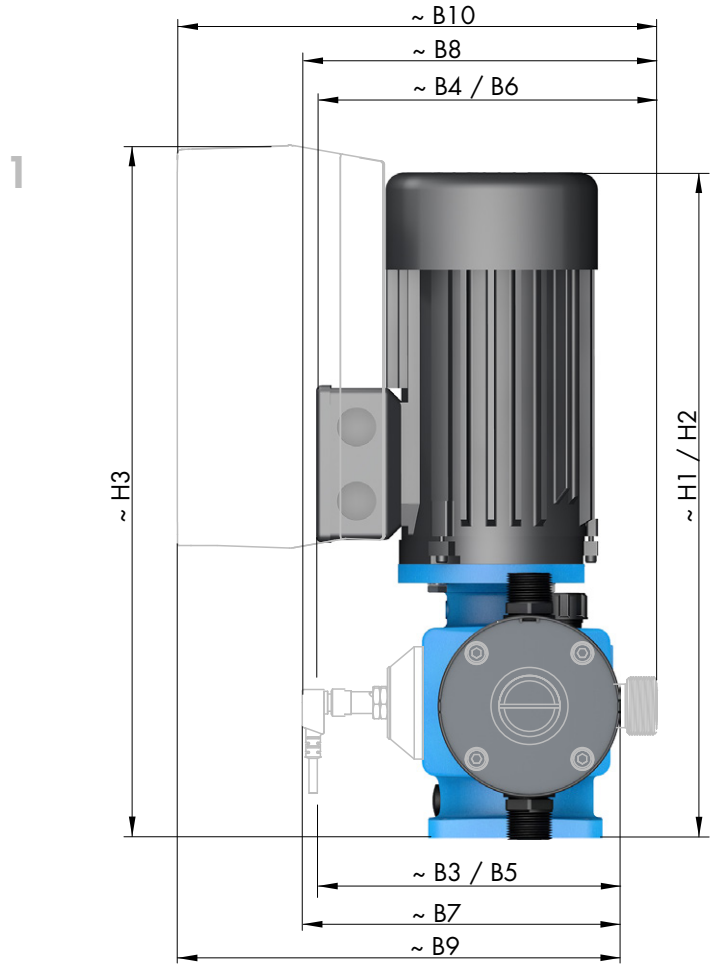


* for removing the actuar cover

| OPTIONS | | ... 409.2-... | | | | | | | | | | | | | |
|---|---|---|---|---|---|---|---|---|---|---|---|---|---|---|---|
| MAX. TOTAL HEIGHT | | ...-1,6e | ...-2,4e | ...-7,0e | ...-12e | ...-18e | ...-25e | ...-50e | ...-75e | ...-90e | ...-115e | ...-140e | ...-180e | ...-250e | ...-350e |
| **H1** | with AC motor | 335 | 335 | 335 | 335 | 335 | 335 | 370 | 375 | 375 | 375 | 375 | 375 | 375 | 375 |
| **H2** | with motor ATEX | 305 | 305 | 305 | 305 | 305 | 305 | 335 | 335 | 335 | 335 | 335 | 335 | 335 | 335 |
| **H3** | with frequency converter | 410 | 410 | 410 | 410 | 410 | 410 | 410 | 410 | 410 | 410 | 410 | 410 | 410 | 410 |
| **MAX. TOTAL WIDTH** | | | | | | | | | | | | | | | |
| **B3** | with AC motor | 180 | 180 | 180 | 180 | 180 | 180 | 190 | 190 | 190 | 190 | 190 | 190 | 190 | 190 |
| **B4** | with AC motor | – | – | 180 | 180 | 180 | 180 | 195 | 195 | 210 | 210 | 210 | 210 | 245 | 245 |
| **B5** | with motor ATEX | 185 | 185 | 185 | 185 | 185 | 185 | 195 | 195 | 195 | 195 | 195 | 195 | 195 | 195 |
| **B6** | with motor ATEX | – | – | 190 | 190 | 190 | 190 | 205 | 205 | 220 | 220 | 220 | 220 | 255 | 255 |
| **B7** | with stroke freq. transmitter | 175 | 175 | 175 | 175 | 175 | 175 | 175 | 175 | 175 | 175 | 175 | 175 | 175 | 175 |
| **B8** | with stroke freq. transmitter | – | – | 180 | 180 | 180 | 180 | 190 | 190 | 205 | 205 | 205 | 205 | 235 | 235 |
| **B9** | with frequency converter | 260 | 260 | 260 | 260 | 260 | 260 | 270 | 270 | 270 | 270 | 270 | 270 | 305 | 305 |
| **B10** | with frequency converter | – | – | 260 | 260 | 260 | 260 | 270 | 270 | 295 | 295 | 295 | 295 | 330 | 330 |
| **MAX. TOTAL LENGTH** | | | | | | | | | | | | | | | |
| **L3** | mit blind plug (M(F)...) | 250 | 250 | 215 | 210 | 190 | 190 | 190 | 190 | 190 | 190 | 190 | 190 | 220 | 220 |
| **L4** | mit blind plug (M(F)...) | – | – | 270 | 270 | 270 | 270 | 270 | 270 | 285 | 285 | 285 | 285 | 350 | 350 |
| **L5** | HLV with position indicator | 450 | 450 | 315 | 310 | 290 | 290 | 290 | 290 | 295 | 295 | 295 | 295 | 320 | 320 |
| **L6** | HLV with position indicator | – | – | 375 | 370 | 370 | 370 | 375 | 375 | 390 | 390 | 390 | 390 | 450 | 450 |
| **L7** | HLV with actuator | 480 | 480 | 445 | 440 | 420 | 420 | 420 | 420 | 425 | 425 | 425 | 425 | 450 | 450 |
| **L8** | HLV with actuator | – | – | 505 | 500 | 500 | 500 | 505 | 505 | 520 | 520 | 520 | 520 | 580 | 580 |
| **L9** | HLV with actuator with integrated positioner | 560 | 560 | 525 | 520 | 500 | 500 | 500 | 500 | 505 | 505 | 505 | 505 | 530 | 530 |
| **L10** | HLV with actuator with integrated positioner | – | – | 585 | 580 | 580 | 580 | 585 | 585 | 600 | 600 | 600 | 600 | 660 | 660 |
| **L11** | HLV with actuator ATEX | 655 | 655 | 620 | 615 | 595 | 595 | 595 | 595 | 595 | 595 | 595 | 595 | 625 | 625 |
| **L12** | HLV with actuator ATEX | – | – | 675 | 675 | 675 | 675 | 680 | 680 | 690 | 690 | 690 | 690 | 755 | 755 |
| **L13** | HLV with pneumatic actuator | – | – | 590 | 590 | 590 | 590 | 600 | 600 | 605 | 605 | 605 | 605 | 660 | 660 |
| **L14** | HLV with pneumatic actuator | – | – | 650 | 650 | 650 | 650 | 665 | 665 | 675 | 675 | 675 | 675 | 740 | 740 |

HLV ► Manual stroke length adjustment
(Measurements in mm)

## Dimensions C409.2 standard

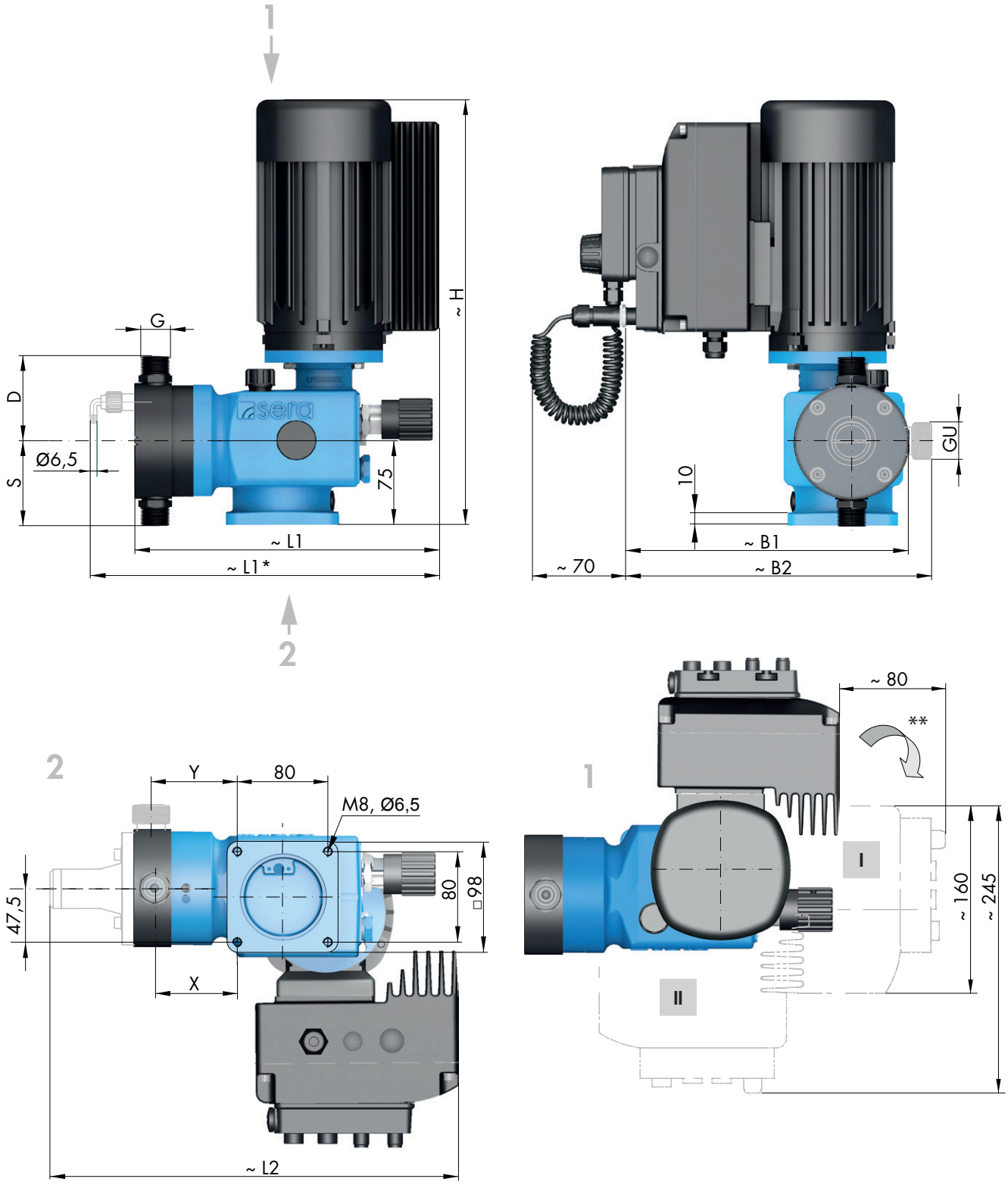


* Pump body with manual vent valve RF/MF409.2-1,6, -2,4e PP-FRP, PVDF-FRP
** Drive with electronics can be rotated throughout 90° each and can be put to the positions I and II.
(release the motor fastening screws, put the motor carefully to the desired position and fasten with screws again).

| STANDARD | | C 409.2-... | | | | | | | | | | | | | |
|---|---|---|---|---|---|---|---|---|---|---|---|---|---|---|---|
| SUCTION VALVES | | ...-1,6e | ...-2,4e | ...-7,0e | ...-12e | ...-18e | ...-25e | ...-50e | ...-75e | ...-90e | ...-115e | ...-140e | ...-180e | ...-250e | ...-350e |
| **DN** | Nominal width | 5 | 5 | 5 | 5 | 8 | 8 | 8 | 8 | 8 | 8 | 8 | 8 | 20[1] | 20[1] |
| **G** | Connection thread | G¾ | G¾ | G¾ | G¾ | G¾ | G¾ | G¾ | G¾ | G¾ | G¾ | G¾ | G¾ | G1¼[1] | G1¼[1] |
| **S** | PP-FRP / PVDF-FRP | 80 | 80 | 56 | 56 | 56 | 56 | 69 | 69 | 76 | 76 | 76 | 76 | 122 | 122 |
| **S** | PP-FRP / PVDF-FRP [2] | – | – | 57 | 60 | 60 | 60 | 67 | 67 | 76 | 76 | 76 | 76 | 122 | 122 |
| **S** | PVC-U | 70 | 70 | 62 | 65 | 63 | 63 | 70 | 70 | 78 | 78 | 78 | 78 | 119 | 119 |
| **S** | PVC-U [2] | – | – | 52 | 52 | 63 | 63 | 70 | 70 | 78 | 78 | 78 | 78 | 119 | 119 |
| **S** | 1.4571 | 70 | 70 | 57 | 61 | 61 | 61 | 68 | 68 | 76 | 76 | 76 | 76 | 122 | 122 |
| **S** | 1.4571 [2] | – | – | 57 | 61 | 61 | 61 | 68 | 68 | 76 | 76 | 76 | 76 | 122 | 122 |
| **PRESSURE VALVES** | | | | | | | | | | | | | | | |
| **DN** | Nominal width | 5 | 5 | 5 | 5 | 8 | 8 | 8 | 8 | 8 | 8 | 8 | 8 | 20[1] | 20[1] |
| **G** | Connection thread | G¾ | G¾ | G¾ | G¾ | G¾ | G¾ | G¾ | G¾ | G¾ | G¾ | G¾ | G¾ | G1¼[1] | G1¼[1] |
| **D** | PP-FRP / PVDF-FRP | 80 | 80 | 64 | 64 | 64 | 64 | 69 | 69 | 76 | 76 | 76 | 76 | 122 | 122 |
| **D** | PP-FRP / PVDF-FRP [2] | – | – | 57 | 60 | 60 | 60 | 67 | 67 | 76 | 76 | 76 | 76 | 122 | 122 |
| **D** | PVC-U | 70 | 70 | 62 | 65 | 70 | 70 | 77 | 77 | 85 | 85 | 85 | 85 | 138 | 138 |
| **D** | PVC-U [2] | – | – | 65 | 65 | 70 | 70 | 77 | 77 | 85 | 85 | 85 | 85 | 138 | 138 |
| **D** | 1.4571 | 70 | 70 | 57 | 61 | 61 | 61 | 68 | 68 | 76 | 76 | 76 | 76 | 122 | 122 |
| **D** | 1.4571 [2] | – | – | 57 | 61 | 61 | 61 | 68 | 68 | 76 | 76 | 76 | 76 | 122 | 122 |
| **MAX. TOTAL HEIGHT** | | | | | | | | | | | | | | | |
| **H** | | 330 | 330 | 330 | 330 | 330 | 330 | 330 | 370 | 370 | 370 | 370 | 370 | 370 | 370 |
| **MAX. TOTAL WIDTH** | | | | | | | | | | | | | | | |
| **B1** | | 240 | 240 | 240 | 240 | 240 | 240 | 240 | 250 | 250 | 250 | 250 | 250 | 285 | 285 |
| **B2** | (with relief valve) | – | – | 250 | 250 | 250 | 250 | 250 | 255 | 275 | 275 | 275 | 275 | 300 | 300 |
| **MAX. TOTAL LENGTH** | | | | | | | | | | | | | | | |
| **L1** | | 310 | 310 | 285 | 285 | 285 | 285 | 295 | 295 | 300 | 300 | 300 | 300 | 355 | 355 |
| **L2** | (with relief valve) | – | – | 345 | 345 | 345 | 345 | 360 | 360 | 370 | 370 | 370 | 370 | 435 | 435 |
| **RELIEF VALVE CONNECTION** | | | | | | | | | | | | | | | |
| **GU** | | – | – | G¾ | G¾ | G¾ | G¾ | G¾ | G¾ | G1 | G1 | G1 | G1 | G1¼[1] | G1¼[1] |
| **CONNECTION DIMENSIONS** | | | | | | | | | | | | | | | |
| **X** | | 72 | 72 | 66 | 67 | 67 | 67 | 69 | 69 | 73 | 73 | 73 | 73 | 101 | 101 |
| **Y** | | – | – | 71 | 69 | 69 | 69 | 69 | 69 | 78 | 78 | 78 | 78 | 101 | 101 |

(Measurements in mm)

[1] DN15 / G1 at valves of PVC-U
[2] Pump body with relief valve

## Dimensions C409.2 options

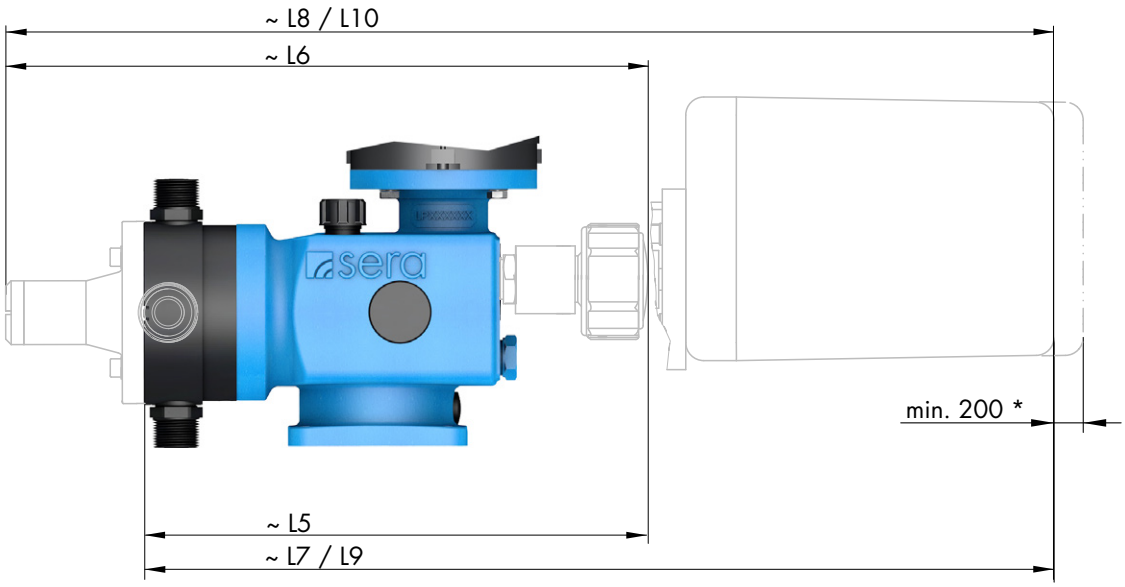


* for removing the actuar cover

| OPTIONS | | C 409.2-... | | | | | | | | | | | | | |
|---|---|---|---|---|---|---|---|---|---|---|---|---|---|---|---|
| MAX. TOTAL LENGTH | | ...-1,6e | ...-2,4e | ...-7,0e | ...-12e | ...-18e | ...-25e | ...-50e | ...-75e | ...-90e | ...-115e | ...-140e | ...-180e | ...-250e | ...-350e |
| **L5** | HLV with position indicator | 450 | 450 | 315 | 310 | 290 | 290 | 290 | 290 | 295 | 295 | 295 | 295 | 320 | 320 |
| **L6** | HLV with position indicator | – | – | 375 | 370 | 370 | 370 | 375 | 375 | 390 | 390 | 390 | 390 | 450 | 450 |
| **L7** | HLV with actuator | 480 | 480 | 445 | 440 | 420 | 420 | 420 | 420 | 425 | 425 | 425 | 425 | 450 | 450 |
| **L8** | HLV with actuator | – | – | 505 | 500 | 500 | 500 | 505 | 505 | 520 | 520 | 520 | 520 | 580 | 580 |
| **L9** | HLV with actuator with integrated positioner | 560 | 560 | 525 | 520 | 500 | 500 | 500 | 500 | 505 | 505 | 505 | 505 | 530 | 530 |
| **L10** | HLV with actuator with integrated positioner | – | – | 585 | 580 | 580 | 580 | 585 | 585 | 600 | 600 | 600 | 600 | 660 | 660 |

HLV ► Manual stroke length adjustment
(Measurements in mm)

## Dimensions RF410.2 standard

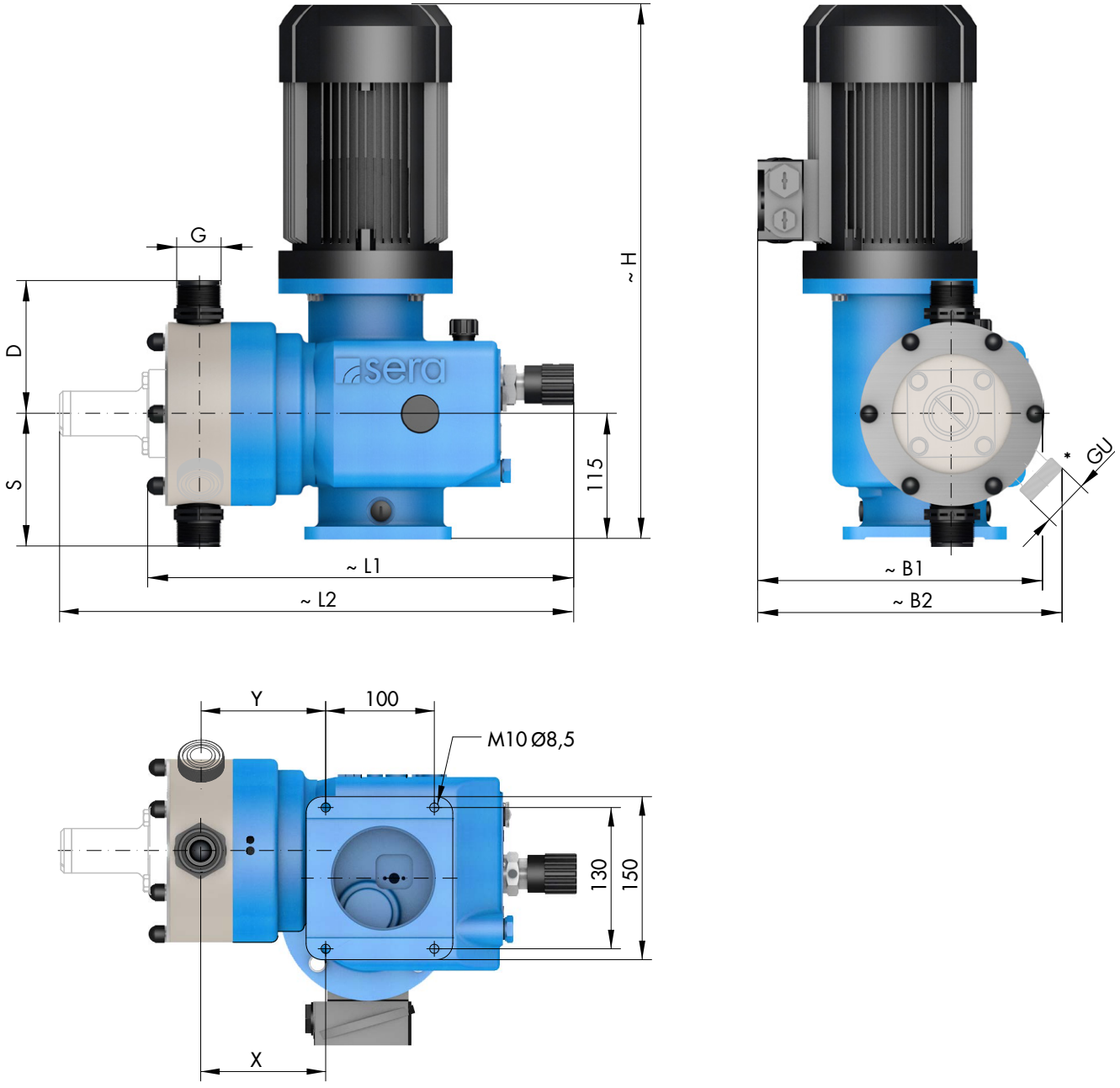


* Angle 45° - socket overflow valve

| | | RF 410.2-... | | | |
|---|---|---|---|---|---|
| **SUCTION VALVES** | | **...280e** | **...570e** | **...900e** | **...1450e** |
| **DN** | Nominal width | 20 [1] | 20 [1] | 20 | 20 |
| **G** | Connection thread | G1¼ [1] | G1¼ [1] | G1¼ | G1¼ |
| **S** | PP-FRP / PVDF-FRP | 122 | 122 | 148 | 148 |
| **S** | PVC-U | 119 | 119 | 150 | 150 |
| **S** | 1.4571 | 122 | 122 | 148 | 148 |
| **PRESSURE VALVES** | | | | | |
| **DN** | Nominal width | 20 [1] | 20 [1] | 20 | 20 |
| **G** | Connection thread | G1¼ [1] | G1¼ [1] | G1¼ | G1¼ |
| **D** | PP-FRP / PVDF-FRP | 122 | 122 | 148 | 148 |
| **D** | PVC-U | 138 | 138 | 170 | 170 |
| **D** | 1.4571 | 122 | 122 | 148 | 148 |
| **MAX. TOTAL HEIGHT** | | | | | |
| **H** | | 500 | 500 | 500 | 540 |
| **MAX. TOTAL WIDTH** | | | | | |
| **B1** | | 265 | 265 | 295 | 295 |
| **B2** | (with relief valve) | 280 | 280 | – | – |
| **MAX. TOTAL LENGTH** | | | | | |
| **L1** | | 430 | 430 | 460 | 460 |
| **L2** | (with relief valve) | 535 | 535 | – | – |
| **RELIEF VALVE CONNECTION** | | | | | |
| **GU** | | G1¼ [1] | G1¼ [1] | – | – |
| **CONNECTION DIMENSIONS** | | | | | |
| **X** | | 115 | 115 | 138 | 138 |
| **Y** | | 115 | 115 | – | – |

(Measurements in mm)

[1] DN15 / G1 at valves of PVC-U

## Dimensions ...410.2 options

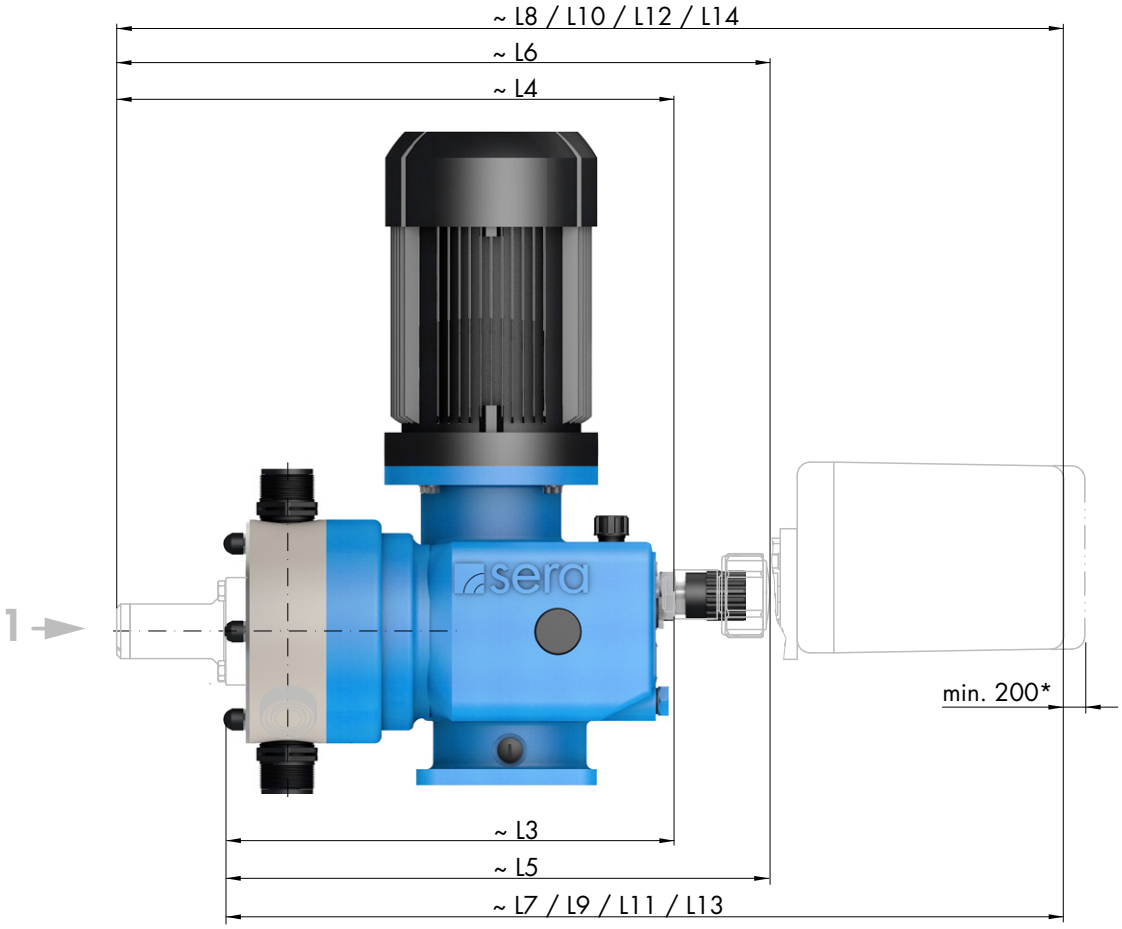


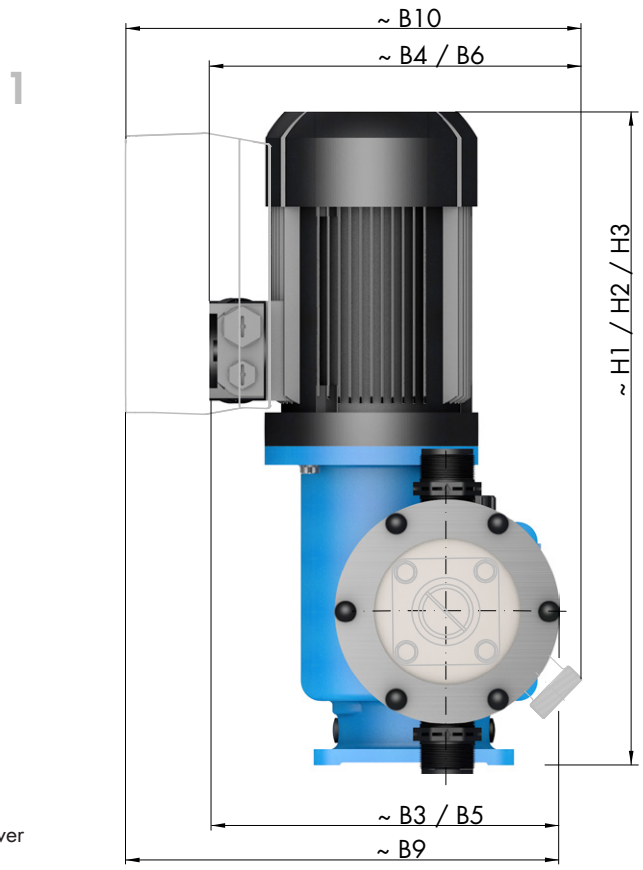


* for removing the actuar cover

| OPTIONS | | ...410.2-.... | | | |
|---|---|---|---|---|---|
| MAX. TOTAL HEIGHT | | ...280e | ...570e | ...900e | ...1450e |
| **H1** | with AC motor | 500 | 500 | 500 | 585 |
| **H2** | with motor ATEX | 450 | 450 | 490 | 490 |
| **H3** | with frequency converter | 500 | 500 | 500 | 540 |
| MAX. TOTAL WIDTH | | | | | |
| **B3** | with AC motor | 265 | 265 | 290 | 295 |
| **B4** | with AC motor | 290 | 290 | – | – |
| **B5** | with motor ATEX | 285 | 285 | 310 | 310 |
| **B6** | with motor ATEX | 255 | 255 | – | – |
| **B9** | with frequency converter | 340 | 340 | 365 | 370 |
| **B10** | with frequency converter | 365 | 365 | – | – |
| MAX. TOTAL LENGTH | | | | | |
| **L3** | mit blind plug (M(F)...) | 365 | 365 | 395 | 395 |
| **L4** | mit blind plug (M(F)...) | 470 | 470 | – | – |
| **L5** | HLV with position indicator | 465 | 465 | 495 | 495 |
| **L6** | HLV with position indicator | 570 | 570 | – | – |
| **L7** | HLV with actuator | 615 | 615 | 645 | 645 |
| **L8** | HLV with actuator | 715 | 715 | – | – |
| **L9** | HLV with actuator with integrated positioner | 690 | 690 | 720 | 720 |
| **L10** | HLV with actuator with integrated positioner | 795 | 795 | – | – |
| **L11** | HLV with actuator ATEX | 780 | 780 | 810 | 810 |
| **L12** | HLV with actuator ATEX | 885 | 885 | – | – |
| **L13** | HLV with pneumatic actuator | 790 | 790 | 820 | 820 |
| **L14** | HLV with pneumatic actuator | 895 | 895 | – | – |

HLV ► Manual stroke length adjustment
(Measurements in mm)

## Dimensions C410.2 standard

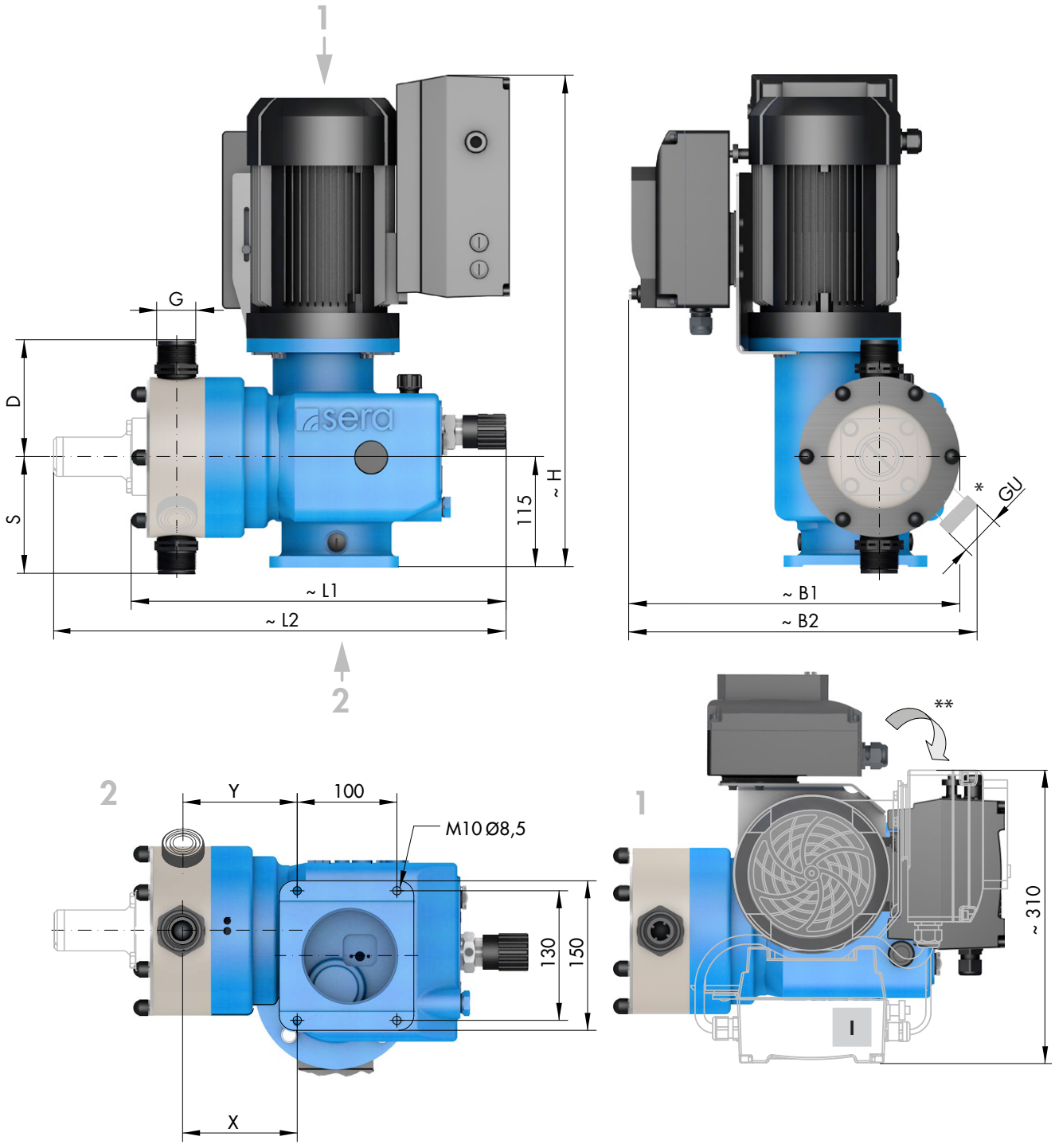


* Angle 45° - socket overflow valve
** Drive with electronics can be rotated throughout 90° each and can be put to the positions I.
(release the motor fastening screws, put the motor carefully to the desired position and fasten with screws again).

| | | C 410.2-... | | | |
|---|---|---|---|---|---|
| **SUCTION VALVES** | | **...280e** | **...570e** | **...900e** | **...1450e** |
| **DN** | Nominal width | 20 [1] | 20 [1] | 20 | 20 |
| **G** | Connection thread | G1¼ [1] | G1¼ [1] | G1¼ | G1¼ |
| **S** | PP-FRP / PVDF-FRP | 122 | 122 | 148 | 148 |
| **S** | PVC-U | 119 | 119 | 150 | 150 |
| **S** | 1.4571 | 122 | 122 | 148 | 148 |
| **PRESSURE VALVES** | | | | | |
| **DN** | Nominal width | 20 [1] | 20 [1] | 20 | 20 |
| **G** | Connection thread | G1¼ [1] | G1¼ [1] | G1¼ | G1¼ |
| **D** | PP-FRP / PVDF-FRP | 122 | 122 | 148 | 148 |
| **D** | PVC-U | 138 | 138 | 170 | 170 |
| **D** | 1.4571 | 122 | 122 | 148 | 148 |
| **MAX. TOTAL HEIGHT** | | | | | |
| **H** | | 520 | 520 | 520 | 560 |
| **MAX. TOTAL WIDTH** | | | | | |
| **B1** | | 350 | 350 | 375 | 375 |
| **B2** | (with relief valve) | 375 | 375 | – | – |
| **MAX. TOTAL LENGTH** | | | | | |
| **L1** | | 430 | 430 | 460 | 460 |
| **L2** | (with relief valve) | 535 | 535 | – | – |
| **RELIEF VALVE CONNECTION** | | | | | |
| **GU** | | G1¼ [1] | G1¼ [1] | – | – |
| **CONNECTION DIMENSIONS** | | | | | |
| **X** | | 115 | 115 | 138 | 138 |
| **Y** | | 115 | 115 | – | – |

(Measurements in mm)

[1] DN15 / G1 at valves of PVC-U

## Dimensions C410.2 options

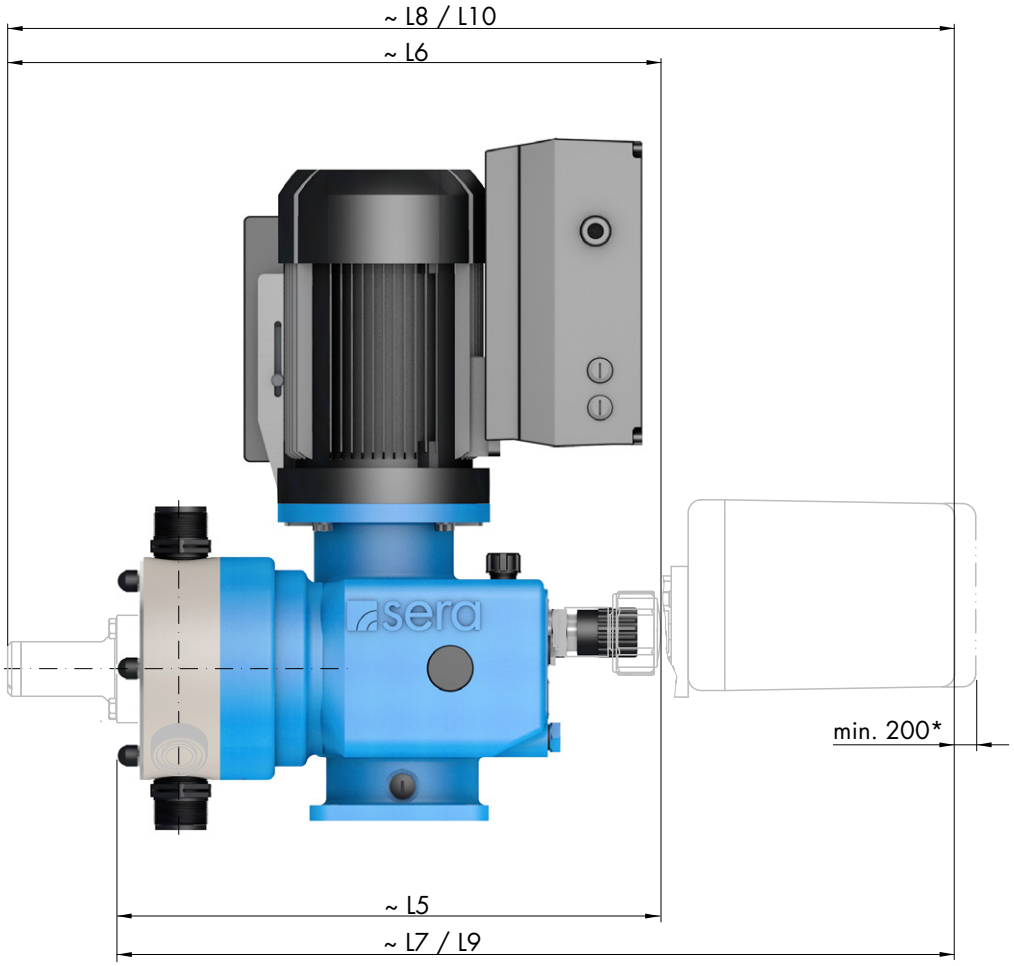


* for removing the actuar cover

| OPTIONS | | C 410.2-.... | | | |
|---|---|---|---|---|---|
| MAX. TOTAL LENGTH | | ...280e | ...570e | ...900e | ...1450e |
| **L5** | HLV with position indicator | 465 | 465 | 495 | 495 |
| **L6** | HLV with position indicator | 570 | 570 | – | – |
| **L7** | HLV with actuator | 615 | 615 | 645 | 645 |
| **L8** | HLV with actuator | 715 | 715 | – | – |
| **L9** | HLV with actuator with integrated positioner | 690 | 690 | 720 | 720 |
| **L10** | HLV with actuator with integrated positioner | 795 | 795 | – | – |

HLV ► Manual stroke length adjustment
(Measurements in mm)

## WARNING

Observe and follow the safety instructions by all means.
See the additional instructions „SAFETY INSTRUCTIONS".
Man, machine and environment are endangered if the safety instructions are not observed.




## NOTE

Pump design data for dosing and its temperature can be found in the order confirmation.

## NOTE

Operating conditions:
Ambient temperature, relative air humidity and max. installation altitude ► see chapter „Technical data".

- The standard model of the pump is only approved for installation in dry areas in a non-aggressive atmosphere.
- Protect the pump from heat sources, direct sunlight and UV light.
- See "Dimensions" chapter for dimensions of the pump connections and fixing holes.
- Fixing the pump with at least four bolts above the pump base is required for safe operation.
- Install the pump so that there is no vibration and no tension and that it is aligned precisely.
- Install the pump at the optimum possible operating height. Mount the pump so that the valves are vertical.
- Ensure that there is sufficient space around the pump body and the suction and pressure valve so that these parts can be easily dismantled if required.
- Design the nominal diameters of the downstream piping and the valves installed in the system to be the same size or larger than the nominal inlet and outlet diameters of the pump.
- To check the pressure ratios in the piping system, it is recommended to provide connections for pressure measurement fittings (e.g. manometers) near the suction and pressure ports.
- Drain valves must be provided.
- Before connecting the pipes, remove the plastic caps on the suction and pressure ports of the pump.
- Check the fastening bolts for the pump body for tightness and tighten if necessary, see chapter "Overview of the tightening torques".
- Connect pipes to the pump so that there are no forces acting on the pump, such as e.g. misalignment, weight or strain of the pipe.
- Keep the suction pipes as short as possible.
- Use pressure and medium resistant hoses / pipes.
- All pipes and containers connected to the pump must comply with the regulations and must be cleaned, tension-free and intact.
- Display devices must be easily accessible and readable.

In order to avoid cavitation, overload or excessive delivery, the following points should be noted:

- Avoid high suction heights.
- Keep pipes as short as possible.
- Select sufficiently large nominal diameters.
- Avoid unnecessary choke points.
- Install a pulsation damper.
- Install overpressure protection.
- Install a pressure-sustaining valve, if necessary
- Provide feed line for outgassing media.

## WARNING

The pump with a control is only designed for operation outside Ex-zonest!

## SUCTION SIDE (1)

The following fittings can be used on the suction side:

**1.1** Line strainer



**1.2** Suction aid
Siphon vessel



**1.3** Suction lance

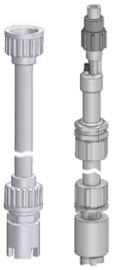

**1.4** Multifunction device



**1.5** Foot valve



**1.6** Shut-off valve








## PRESSURE SIDE (2)

The following fittings can be used on the pressure side:

**2.1** Vent valve



**2.2** Injection fitting

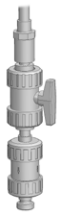

**2.3** Dosing valve



**2.4** Pulsation damper



**2.5** Diaphragm pressure keeping valve



**2.6** Diaphragm relief valve



**2.7** Multifunction valve



**2.8** Flow meter [1]

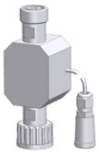

**2.9** Flow monitor [1]



**2.10** Shut-off valve



[1] only for diaphragm pumps with a control






## SUCTION SIDE (1)

### Line strainer (1.1)

Connect suction line slightly above the bottom of the tank and install a line strainer (0.1 – 0.5 mm mesh size – depending on valve nominal diameter of the pump).

**ATTENTION**

If impurities are not removed, this results in malfunctions of the pump and the system.

### Suction aid / siphon vessel (1.2)

For high tanks without connection on the bottom of the tank ► install suction aid / siphon vessel.
Thereby, pay attention to accelerating pressures which may be generated in a long suction pipe.

### Suction lance (1.3)

Install a suction lance for removal of chemicals from tanks and barrels.
The integrated foot valve prevents the backflow of the suctioned medium.
The suction lances are equipped with a level switch for „empty“ signal.

### Multifunction device (1.4)

The multifunction device is installed in the suction side piping of the pump and is used for determination of the delivery rate of pumps under real operating conditions.
The device can be filled either using a pending tank volume (communicating container) or using a hand vacuum pump.

### Foot valve (1.5)

To prevent running dry of the suction line ► install foot valve (check valve) at the end of the suction line.

## PRESSURE SIDE (2)

### Vent valve (2.1)

If air can be drawn in due to falling liquid level in the suction tank and at the same time delivered to a pressurised line or against a pressure-sustaining valve ► install vent valve in the pressure line.

**NOTE**

The delivery flow can be interrupted if there is air in the suction line!

### Injection fitting (2.2)

Install an injection fitting that routes into a main line to prevent the backflow of the pumped medium in the dosing line.

**WARNING**

Unwanted mixing in the dosing line occurs if any possible backflow from the main line is not prevented.

### Dosing valve (2.3)

Installation of the dosing valve prevents the liquid from the system to be treated being able to penetrate into the dosing line.

### Pulsation damper (2.4)

Damping of the pulsation by installation of pulsation dampers if:

- a low-pulsation delivery flow is desired for process reasons,
- acceleration forces caused by the piping geometry must be removed.

Install pulsation damper as close as possible to the pump head.
If both pulsation damper and pressure-sustaining valve should be integrated, install the pressure-sustaining valve between pump and pulsation damper.

**WARNING**

Undamped acceleration forces can result in the following faults / damage:

- flow rate fluctuations
- dosing errors
- pressure surges
- valve shocks
- increased wear on the suction and pressure sides of the pump
- mechanical destruction of the pump
- leaks and valve shocks if the permissible maximum pressure on the pump pressure
- side is exceeded
- damage to the piping and its installed fittings

### Diaphragm pressure-keeping valve (2.5)

If dosing into a main line with negative pressure ► install pressure-keeping valve in the dosing line.

**ATTENTION**

It must be ensured during the installation that excess delivery (due to positive pressure difference (≥ > 1 bar) between pressure and suction sides) is avoided.

### Diaphragm relief valve (2.6)

If the permissible pressure in the system can be exceeded by closing any shut-off valve or by clogging of the line ► install diaphragm relief valve.

When using an external overflow valve, the following is applicable for the return line:

- Route the return line sloping downward into the storage tank which is under atmospheric pressure or into an open drainage channel.
- Or connect directly to the pump suction line, but only if there is no check valve in the suction line (e.g. foot valve of a suction lance).

**ATTENTION**

Shut-off valves must not be closed when the pump is running!

**WARNING**

An overpressure protection device (e.g. relief valve) must generally be provided if the permissible operating pressure can be exceeded.

**ATTENTION**

If the permissible operating pressure is exceeded and the pump is not equipped with overpressure protection, the pump will be damaged.

**WARNING**

The pumped medium can spray out if the pump is damaged.

### Multifunction valve (2.7)

The multifunction valve provides the following functions:

- pressure-keeping valve function,
- overflow valve function,
- pressure relief function,
- venting.

The multifunction valve is mounted directly on the pump pressure port.

### Flow meter (2.8)

For measurement and monitoring of the flow rate ► install flow meter.
The application range is restricted to media that are similar to water.
The flow meter is screwed upright on the pressure port of the pump and connected to the pump electronics via the input for flow monitoring.

### Flow monitor (2.9)

To record the flow rate of the pump ► install flow monitor.
The application range is restricted to media that are similar to water.
The flow monitor is screwed upright on the suction port of the pump and connected to the pump electronics via the input for flow monitoring.

## Operation in Ex-zone C409.2 / C410.2

**WARNING**

The pump with a control is only designed for operation outside Ex-zonest!

## Operation in Ex-zone R/M 409.2 / R/M 410.2

**WARNING**

The prerequisite for the use in explosion-hazardous areas is an appropriate design of the pump.

The product supplied by **sera** meets the requirements of directive 2014/34/EU if it is correspondingly marked. This guarantees safe operation in explosion-hazardous areas.

**WARNING**

It is the operator's task to define the field of application and to check whether the pump is suited for this application. He/she must clearly define the zone, the device category, the explosion group and the temperature class.

**WARNING**

Avoid build up electrostatic conditions!

**WARNING**

To avoid contamination of the valves strainers in the suction line have to be installed!

### Identification

The pump has a label stating the zone/device category /explosion group/temperature class in compliance with directive 2014/34/EU.

**Ex II2G c IIBT4** bzw.
**Ex II2G c IICT4**
(note special specifications in the confirmation of order.)

### Installation

The intended operating conditions in explosion-hazardous areas according to directive 2014/34/EU are stated in the confirmation of order or the product description. The indicated limit values should not be fallen below or exceeded. Installation regulations given in the operating instructions must be adhered to.

**WARNING**

Use only suitable tools for performing assembly and maintenance work on machines or plants in explosion-hazardous areas. Directive 99/92/EC must be observed.

## Potential equalization

After mounting the pump the proper connection to the site potential equalization is to be ensured. The max. bleed resistor (1MΩ) has to be checked and documented.

## Start-up

After installation, the pump must immediately be used for the suction of fluids, i.e. the pump must immediately be started after the tank has been installed and filled.

## Operation

The intended operating conditions in explosion-hazardous areas according to directive 2014/34/EU are stated in the confirmation of order or the product description. The indicated limit values should not be fallen below or exceeded. Details about explosion zone, device category, explosion group and temperature class can be seen from the Declaration of Conformity.

**Degassing of the pumped medium:**

- Never let the pump run dry.
- Check the liquid level in the tank during operation of the pump.
- Make sure that the pump is switched off when the liquid level in the tank falls below the minimum level required (explosive atmosphere may be carried over)..

Vapour bubbles from the pumped medium are harmless as they have no explosive potential.

**WARNING**

Formation of an explosive gas mixture must be prevented.

## Temperature indications

Permissible ambient temperature: -10°C ≤ Ta ≤ +40°C

## Maintenance

The maintenance notes listed in Chapter 10 are generally applicable. **Exception:**

**ATTENTION**

The oil level in the stroke mechanism of the pump must be checked once a week!

**WARNING**

Observe and follow the safety instructions by all means.
See the additional instructions „SAFETY INSTRUCTIONS“.
Man, machine and environment are endangered if the safety instructions are not observed.




Adequate fastening at the pump foot and compliance with the operating parameters specified in the technical data are required for the operation of the pump.

Checks before every start-up:

- Check all connections for tightness.
- Tighten fixing bolts of the pump body with the specified tightening torques (see „Overview of the tightening torques“ chapter).
- Check of the electrical connections.
- Check of the mains voltage on the rating plate with the local conditions.

## Driving motor

**Preconditions:**

- Make sure that voltage and frequency correspond with the indications on the type plate of the motor. Permissible voltage tolerance (DIN VDE 0530).
- For rated voltage ► + 10 %
- For rated voltage range ► ± 5 %
- The connecting cable must be dimensioned according to the motor characteristics.
- Secure connecting cable with a strain relief.
- The nominal motor power refers to an ambient temperature and an installation site ► see chapter „TECHNICAL DATA“ . Motor output will be reduced if these values are exceeded (see VDE 0530).
- Adapted for “moderate” groupe of climates according to IEC 721-2-1.

## NOTE

Operating voltage range see chapter „TECHNICAL DATA“.

## NOTE

**Pump without control:**
Motor connection see chapter „Drive motor“ in the PRODUCT DESCRIPTION.

## NOTE

**Pump with a control:**
Electrical iterfaces see the additional operation instructions for the CONTROL.

## ATTENTION

**Pump with a control:**
The pump restarts in the selected operating mode with the specified parameters after switching on again or after restoration of the power supply following a power failure.

**WARNING**

Observe and follow the safety instructions by all means.
See the additional instructions „SAFETY INSTRUCTIONS“.
Man, machine and environment are endangered if the safety instructions are not observed.




Check the following at regular intervals:

- Tight fit of piping.
- Tight fit of pressure and suction valve.
- Proper condition of the electrical connections.
- Tight fit of the screws for fastening the pump body (check this at least every three months).
- For the tightening torques of the mounting screws, please see Chapter „Overview of the tightening torques“.
- Additionally with motor pumps: Check oil level regularly (oil eye).

## Drive motor

The electric motor should always be kept clean so that neither dust, dirt, oil nor other contaminates may affect the correct operation.

In addition, we recommend to ensure that:

- The motor does not produce strong vibrations
- Suction and blowing openings for the supply of cooling air are not closed or restricted (may lead to unnecessary high temperatures in the windings)

The ball bearings inserted in the motor are lubricated for life.

## Oil change

Check oil level at regular intervals (oil sight glass (**1**))

Perform an oil change once a year.
To do so, proceed as follows:

- Unscrew the venting screw (**5**).
- Prepare an appropriate container (**2**).
- Open the screw plug (**3**) and drain off oil.
- Close hole with screw plug (pay attention to the sealing ring (**4**)!).
- Fill oil in threaded hole of the venting screw.
- Screw in venting screw (**5**).

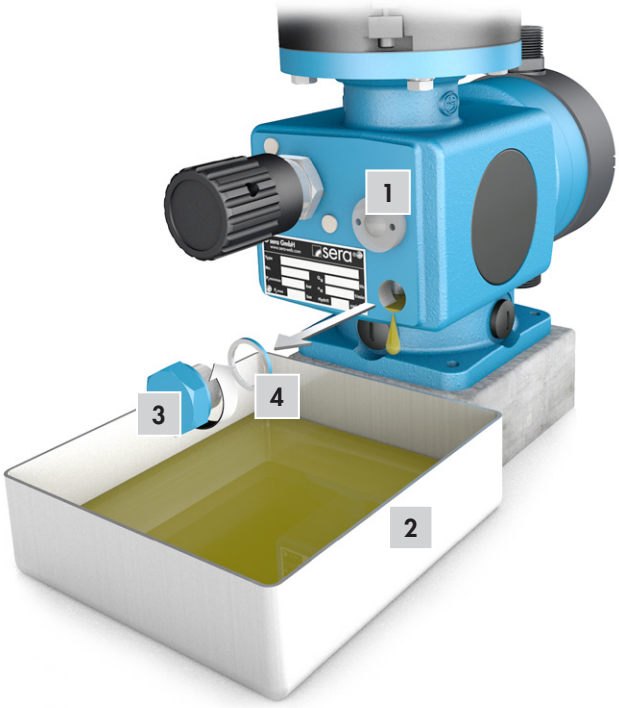





| Gear oil | | | |
|---|---|---|---|
| Pump type | Specification | sera use | Quantity (litres) |
| ...409.2 | CLP VG220 DIN51517-3 | ARAL Degol BG220 | 0,3 |
| ...410.2 | CLP VG220 DIN51517-3 | ARAL Degol BG220 | 1,25 |

## Overview of the tightening torques

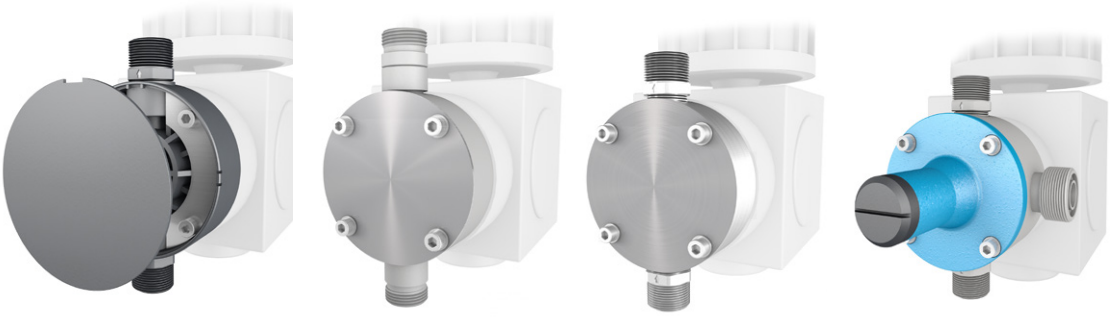

| | Pump body PP-FRP, PVDF-FRP | Pump body PVC | Pump body 1.4571 | Pump body with integrated overflow valve |
|---|---|---|---|---|
| | | Nm | | |
| ...409.2-1,6e | 5,0 | 4,5 | 5,0 | – |
| ...409.2-2,4e | 5,0 | 4,5 | 5,0 | – |
| ...409.2-7,0e | 4,0 | 4,0 | 4,0 | 4,5 |
| ...409.2-12e | 4,0 | 4,0 | 4,0 | 4,5 |
| ...409.2-18e | 4,0 | 4,0 | 4,0 | 4,5 |
| ...409.2-25e | 4,0 | 4,0 | 4,0 | 4,5 |
| ...409.2-50e | 7,0 | 8,0 | 7,0 | 8,0 |
| ...409.2-75e | 7,0 | 8,0 | 7,0 | 8,0 |
| ...409.2-90e | 7,0 | 8,0 | 7,0 | 8,0 |
| ...409.2-115e | 7,0 | 8,0 | 7,0 | 8,0 |
| ...409.2-140e | 7,0 | 8,0 | 7,0 | 8,0 |
| ...409.2-180e | 7,0 | 8,0 | 7,0 | 8,0 |
| ...409.2-250e * | 15,0 | 15,0 | 15,0 | 15,0 |
| ...409.2-350e * | 15,0 | 15,0 | 15,0 | 15,0 |

* Pump body PP/PVDF

| | Pump body PP, PVDF | Pump body PVC | Pump body 1.4571 | Pump body with integrated overflow valve |
|---|---|---|---|---|
| | | Nm | | |
| ...410.2-280e | 15,0 | 15,0 | 15,0 | 15,0 |
| ...410.2-570e | 15,0 | 15,0 | 15,0 | 15,0 |
| ...410.2-900e | 15,0 | 15,0 | 15,0 | – |
| ...410.2-1450e | 15,0 | 15,0 | 15,0 | – |

## Changing the Diaphragm

In order to ensure a correct function of the diaphragm pump and to fulfil the required safety and protective provisions it is absolutely necessary to check and replace the diaphragms at regular intervals.

After 3000 operating hours or at the latest after one year, a service message requiring diaphragm replacement is shown on the graphical display of the pump with a control (see additional instructions of the control). An earlier diaphragm replacement can be necessary depending on the medium and the application area.

**WARNING**

**Pump with a control:**
Observe the instructions on the graphical display for the replacement of wear parts!

- Set the stroke length adjustment to a stroke length of 0% (front position).
- Remove cover plate (**1**) of the pump body (FRP design, ...409.2).

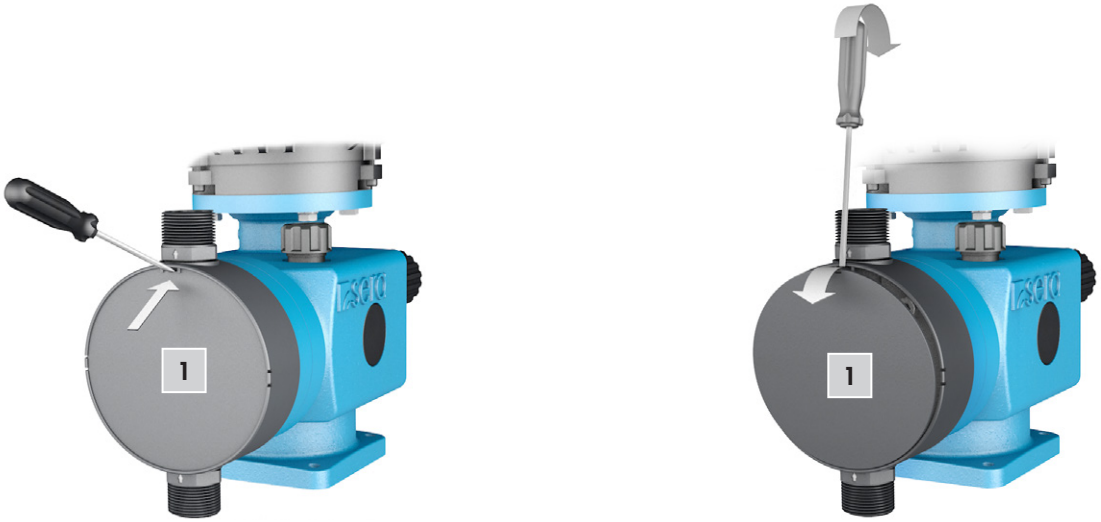


- Loosen fixing bolts (**2**) on the pump body.
- Remove pump body (3), front plate (**4**) (PVC design) or insertion plates (**5**) (FRP design, ...409.2) to the front.

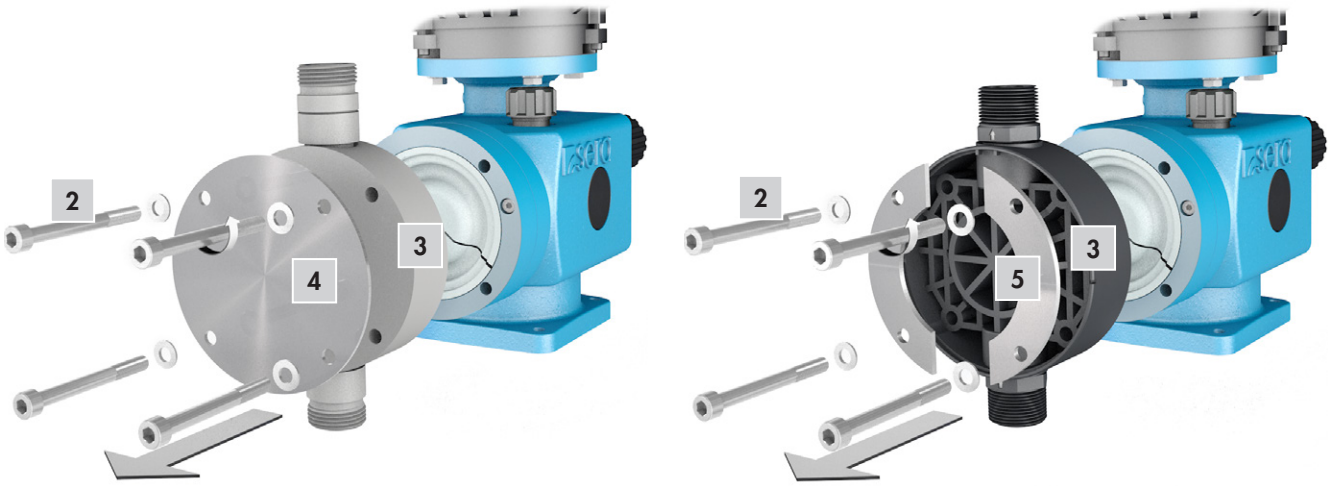

- Unscrew defective drive diaphragm (**6**) from the push rod (**7**).
- Unscrew pressure plate (**8**) from the set screw of the dia-phragm (with EPDM, FPM drive diaphragm).




- Clean pressure plate and screw plate on the new diaphragm.

**Assemble the pump in reversed order:**

- Screw on new diaphragm hand-tight – the diaphragm must be in the middle position.
- Set the stroke length to 50%.
- If the pump is not equipped with a stroke length adjustment (M-design), move the diaphragm to the middle position by turning the fan blade of the drive motor.
- Observe tightening torques of the fixing bolts (**2**); see chapter „Overview of the tightening torques“.
- When assembling the pump body, please note:suction valve below, pressure valve above!

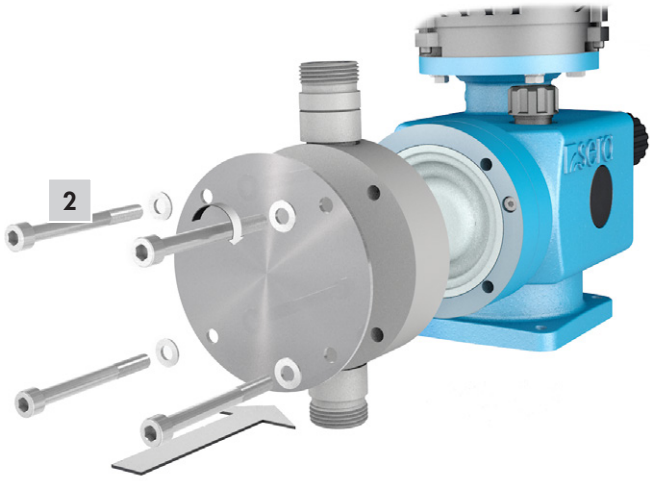


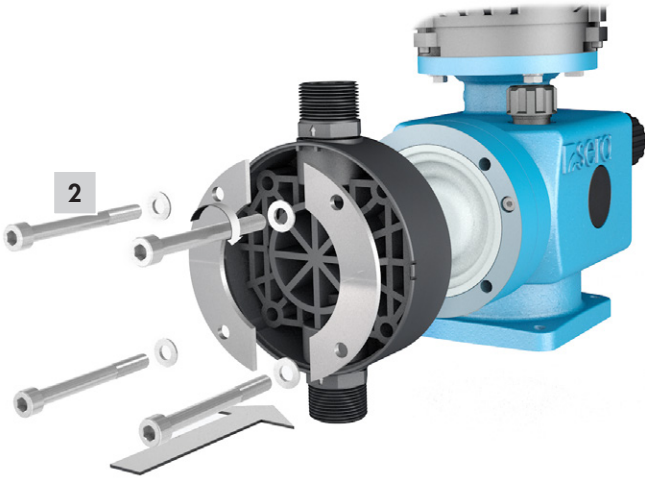


Add the suction and pressure line and connect pump to the power supply. The diaphragm pump is then again ready for operation.

## Overflow valve

Proceed as follows to change the diaphragm of the overflow valve (only pumps with integrated overflow valve).

**NOTE**

All diaphragms should be replaced completely.

- Loosen and unscrew the lid (**1**) of the overflow valve.

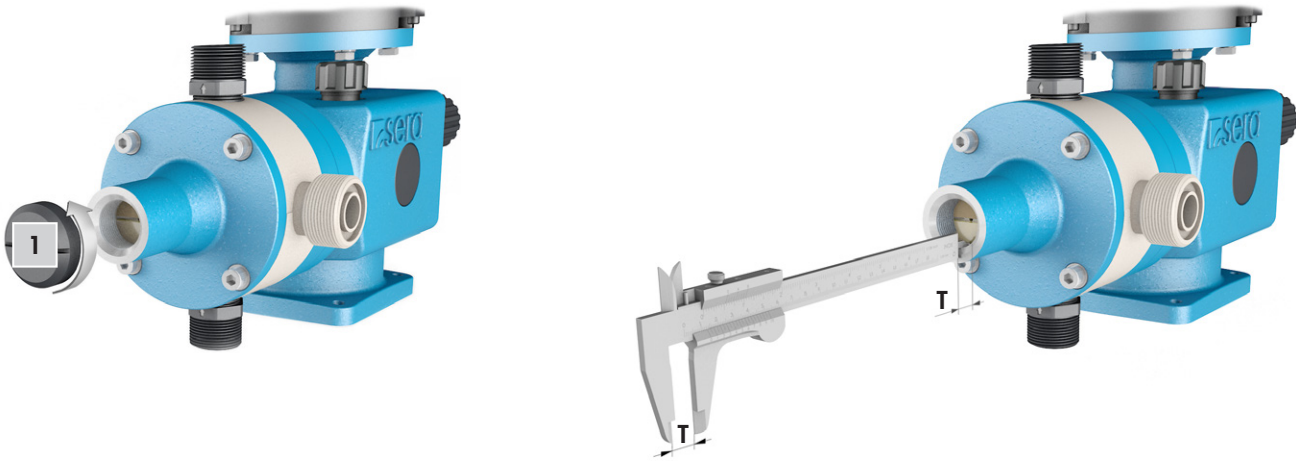


**NOTE**

Before the set screw is unscrewed the dimension **T** (dis-tance between top edge of the cover and the set screw) is to be determined and documented.
This ensures that the overflow valve can be reset to the same pressure NOTE! during subsequent assembly.

- Unscrew the set screw (**3**).
- Remove pressure spring (**2**).
- Loosen and unscrew fixing screws (**5**).
- Remove cover (**7**) and pump body (**8**) to the front.
- Remove pressure disk (**4**) and diaphragm (**6**).
- Check overflow valve for damage and contamination.

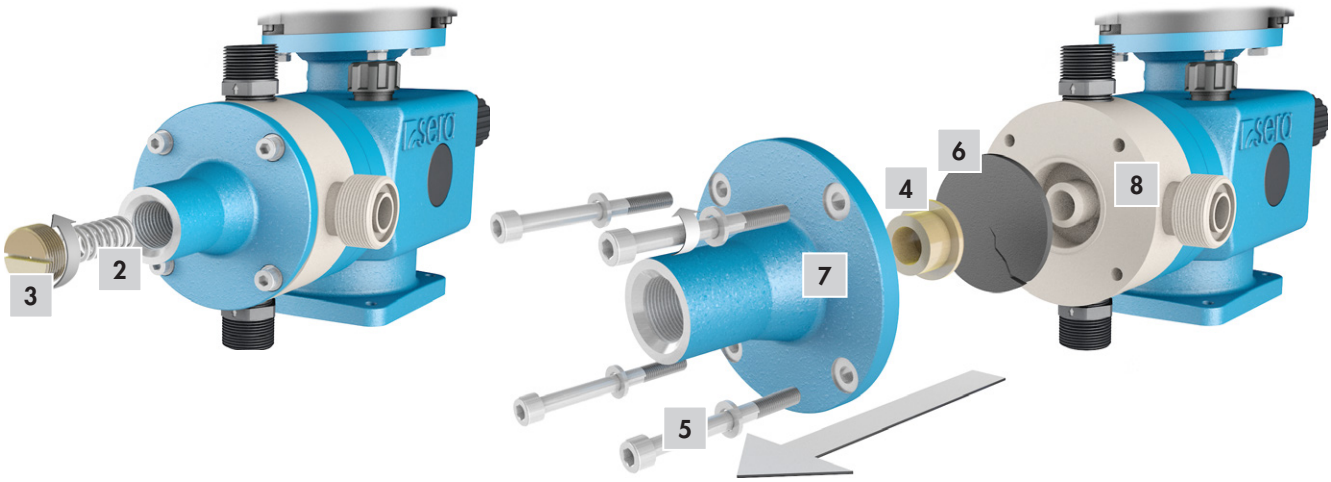


- Insert a new diaphragm. In case of PTFE-laminated diaphragms the PTFE-coated side must point towards the pump body.

Assemble the pump in reversed order.

**NOTE**

The individual components should be cleaned thoroughly before assembly!!

**NOTE**

When the set nut is screwed in the dimension "**T**" which was determined beforehand is of great importance.

The initial opening pressure of the overflow valve is only reached when the NOTE! set screw is screwed in exactly according to dimension "**T**"!

**ATTENTION**

The screw-in depth of the set screw must not exceed the initial value. If the set pressure is increased, **sera** has to be consulted beforehand!

**ATTENTION**

Never screw in the set screw to a depth so that the pressure spring is compressed to solid length!

## Spare and wearing parts

**The following parts are considered as wearing parts of the pump:**

- Drive diaphragm (diaphragm kit)
- Diaphragm (diaphragm kit) ► diaphragm of the integrated overflow valve
- Diaphragm rupture electrode (diaphragm kit)
- Valve kit (including O-ring kit)
- O-ring kit

Depending on their use and period of use, wearing parts must be replaced at regular intervals in order to ensure a safe function of the diaphragm pump.

We recommend to replace the wearing parts after 3000 operating hours or at least once a year.

In case of a premature diaphragm rupture caused by hard operating conditions, switch off the diaphragm pump and replace the diaphragms (see chapter „Changing the diaphragm").

**The following parts are considered as spare parts of the pump:**

- Pump body kit (including mounting kit)
- Mounting kit
- Cover kit ► pump with integrated overflow valve
- Setting kit ► pump with integrated overflow valve

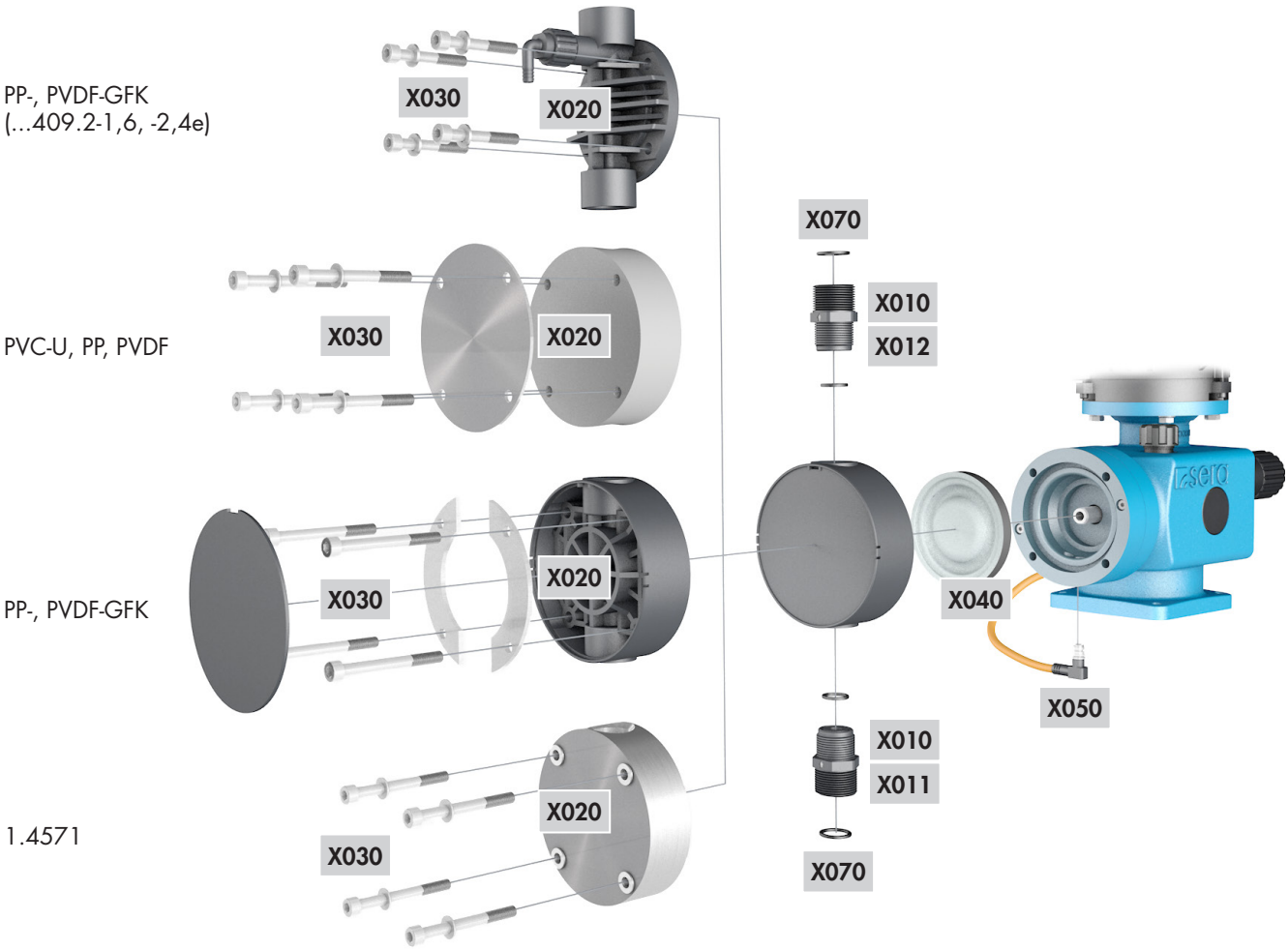


| Pos. | Kit | Materials | consisting of |
|---|---|---|---|
| X010 | Valves | PVC-U<br>PP-FRP<br>PVDF-FRP | Suction valve<br>Pressure valve<br>O-ring kit |
| X011 | Suction valve | 1.4571 | Suction valve<br>O-ring kit |
| X012 | Pressure valve | 1.4571 | Pressure valve<br>O-ring kit |
| X020 | Pump body | PVC-U<br>PP<br>PVDF | Pump body<br>Front plate<br>Mounting kit |
| X020 | Pump body | PP-FRP<br>PVDF-FRP | Pump body<br>Cover plate<br>Insertion plates<br>Mounting kit |
| X020 | Pump body | 1.4571 | Pump body<br>Mounting kit |
| X030 | Mounting | | Screws, complete |
| X040 | Diaphragm | | Drive diaphragm<br>Pressure plate (FPM-, EPDM-diaphragm)<br>Diaphragm rupture electrode ► C409.2 / C410.2 |
| X050 | Diaphragm rupture electrode | | Diaphragm rupture electrode ► ...409.2 / ...410.2 |
| X070 | O-rings | | |

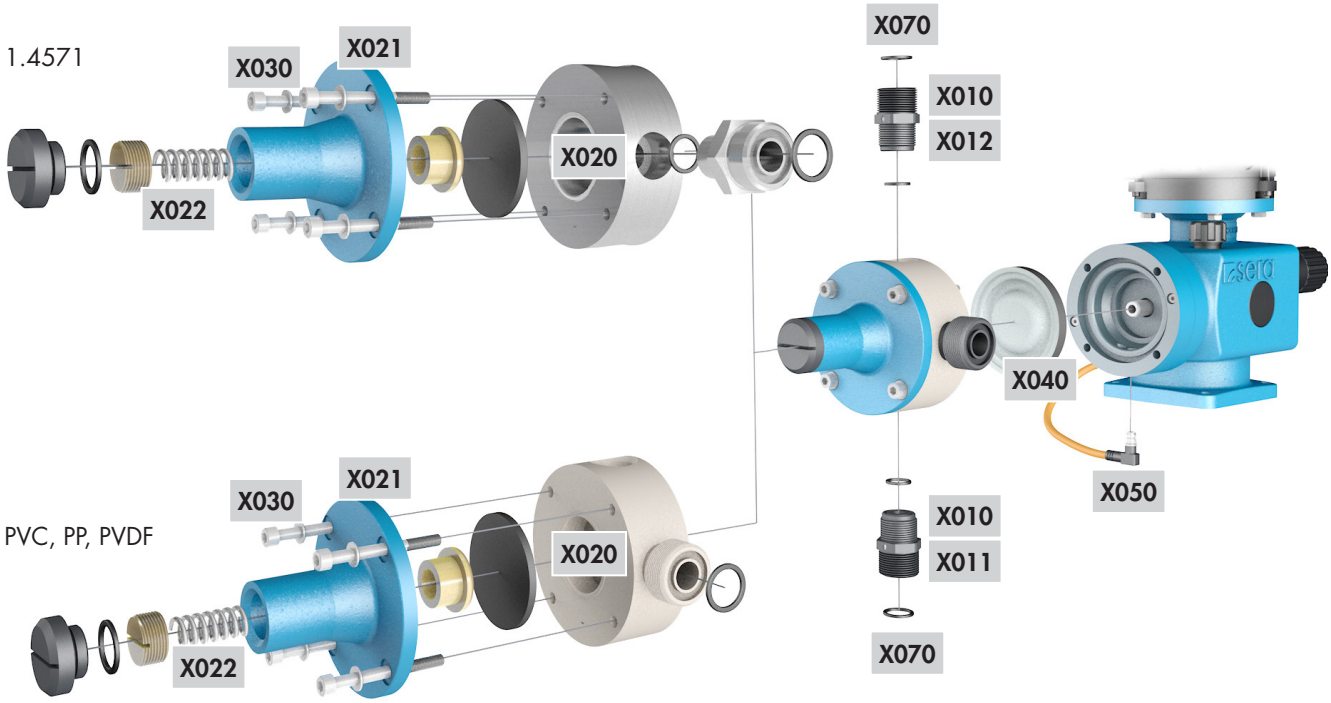


| Pos. | Kit | Materials | consisting of |
|---|---|---|---|
| X010 | Valves | PVC-U<br>PP-FRP<br>PVDF-FRP | Suction valve<br>Pressure valve<br>O-ring kit |
| X011 | Suction valve | 1.4571 | Suction valve<br>O-ring kit |
| X012 | Pressure valve | 1.4571 | Pressure valve<br>O-ring kit |
| X020 | Pump body | PVC<br>PP<br>PVDF | Pump body<br>Mounting kit<br>O-ring |
| X020 | Pump body | 1.4571 | Pump body<br>Mounting kit<br>Socket<br>O-rings |
| X021 | Cover | | Cover<br>Lid<br>O-ring |
| X022 | Setting kit | | Set screw<br>Pressure spring<br>Pressure disk |
| X030 | Mounting | | Screws, complete |
| X040 | Diaphragm | | Drive diaphragm<br>Pressure plate (FPM-, EPDM-diaphragm)<br>Diaphragm<br>Diaphragm rupture electrode ► C409.2 / C410.2 |
| X050 | Diaphragm rupture electrode | | Diaphragm rupture electrode ► ...409.2 / ...410.2 |
| X070 | O-rings | | |

**sera** products are sophisticated technical products which are only shipped after having been thoroughly tested and checked at our factory.
Should there be any faults, these can be detected and rectified easily and quickly based the instructions in the tables.

## NOTE

Analysis of the error messages in the display for the pumps with a control ► see the operation instructions of the control!

| Fault type | | | | | | | | | | | | | | | Possible cause | Corrective action |
|---|---|---|---|---|---|---|---|---|---|---|---|---|---|---|---|---|
| Corrective action! | Display, LED not lit! ▲ Pump with control | Motor does not start! ▲ diaphragm pump | Damage to stroke mechanism / drive! | Pump does not draw in! | Pump does not deliver! | Flow rate is not reached! | Delivery head is not reached! | Flow rate fluctuates! | Maximum permissible flow rate exceeded! | Pipe oscillates heavily! | Too high noise development! | Service life of the drive diaphragm too low! | Drive is overloaded (periodically occurring noises)! | Leakage on pump head! | | |
| | | | | ■ | ■ | ■ | | | | | | | | | Suction height too high. | Reduce suction height or suction resistance. |
| | | | | ■ | ■ | ■ | | ■ | | | | | | | Suction pipe leaking. | Check seals, tighten pipe connections. |
| | | | | ■ | ■ | | | | | | | ■ | ■ | ■ | Shut-off valves in piping closed. | Open shut-off valves or check opening state ► check pump for possible damage. |
| | | | | ■ | ■ | ■ | | | | | | | | | No pumped medium in storage tank. | Fill storage tank. |
| | | | | ■ | ■ | ■ | ■ | ■ | | | | | | | Pump valves leaking. | Remove and clean valves. |
| | | | | ■ | ■ | | ■ | ■ | | | | | | | Pump valves (ball seats) damaged. | Remove and clean valves, check function; replace valves if necessary. |
| | | | | ■ | ■ | | | | | | | | | | Pump valves incorrectly mounted or valve balls missing. | Check installation position and completeness ► replace missing parts or install correctly. |
| | | | | ■ | ■ | ■ | | ■ | | | | | | | Filter in suction line clogged. | Clean filter. |
| | | | | ■ | ■ | ■ | ■ | ■ | | | | | ■ | | Electrical data of the pump do not match mains data. | Check order data.<br>Check electrical installation.<br>Adjust motor to the network on site (for diaphragm pumps). |
| | | | | | ■ | ■ | ■ | ■ | | ■ | | ■ | ■ | ■ | Backpressure too high. | Measure pressure with manometer directly above pressure valve if possible and compare with permissible backpressure. |
| | | | | ■ | ■ | ■ | ■ | ■ | | | | | | | Foreign matter in the pump valves. | Remove and clean valves. |
| | | | | | | | | ■ | ■ | | | | | | Pressure on suction side higher than at the end of the pressure pipe. | Check geodetic conditions, install float valve or pressure keeping valve if necessary. |
| | | | | | | ■ | ■ | ■ | | ■ | ■ | ■ | ■ | ■ | Acceleration height too high due to pipe geometry. | Check acceleration height on suction and pressure sides with manometer and compare with design data ► install a pulsation damper if necessary. |
| | | | | | | | | | | | | ■ | | ■ | Materials coming into contact with the medium not suitable for the pumped medium. | Check whether the pumped medium matches the design data and select other materials if necessary. |

# FAULT ANALYSIS / CORRECTIVE ACTION

| Fault type | | | | | | | | | | | | | | | Possible cause | Corrective action |
|---|---|---|---|---|---|---|---|---|---|---|---|---|---|---|---|---|
| Corrective action! | Display, LED not lit! ▲ Pump with control | Motor does not start! ▲ diaphragm pump | Damage to stroke mechanism / drive! | Pump does not draw in! | Pump does not deliver! | Flow rate is not reached! | Delivery head is not reached! | Flow rate fluctuates! | Maximum permissible flow rate exceeded! | Pipe oscillates heavily! | Too high noise development! | Service life of the drive diaphragm too low! | Drive is overloaded (periodically occurring noises)! | Leakage on pump head! | | |
| | | | | ■ | | ■ | ■ | ■ | | | | | | | Viscosity of the pumped medium too high. | Check viscosity of the pumped medium and compare with design data ► reduce concentration or increase temperature if necessary. |
| | | | | | ■ | ■ | | ■ | | | | | | | Pumped medium is outgassing in the suction pipe and/or the pump body. | Check geodetic conditions and compare with data of the pumped medium. Operate pump with suction side supply, reduce temperature of the pumped medium. |
| | | | | ■ | | | | | | | | | | | Air in suction line while pressure is present on the pressure side. | Vent pressure side. |
| | ■ | | | | | | | | | | | | | | Power supply failed / switched off. | Restore power supply. |
| | | | | ■ | ■ | ■ | ■ | ■ | | | | | | | Pipe connections leaking. | Tighten connections according to type of material. Be careful with plastic ► risk of fracture!! |
| | | | | ■ | ■ | | | | | | | | | | Pumped medium frozen in pipe. | PRemove pump and check for possible damage - increase temperature of the pumped medium. |
| ■ | ■ | | | | ■ | | | | | | | | | | No mains power connection. | Connect mains power supply. |
| | | | | ■ | | | | | | | | | | | Pump valves dry. | Moisten pump body and valves.<br>Open vent valve. |
| | | | | ■ | ■ | ■ | | | | | | | | ■ | Temperature too low. | Check flowability of the dosing medium. Temperature of the medium see „Technical data“. |
| | | | | ■ | ■ | ■ | ■ | ■ | | | | ■ | | ■ | Diaphragm rupture. | Replace the diaphragm according to the descriptions in Chapter „Replacing the diaphragm“. |
| ■ | | | | | | | | | | | | | | | Reversible thermal fuse of the pump has tripped. | Let temperature of the pump cool down.<br>Check ambient temperature. |
| | ■ | | | | | | | | | | | | | | Fuse in electronics blown. ► Pump with control | Return pump for repair. |
| | | | | ■ | ■ | ■ | ■ | | | | | | | | Compensating valve not adjusted to operating conditions. ► diaphragm pump KM | Set compensating valve according to operating conditions. ► diaphragm pump KM |

**WARNING**

Observe and follow the safety instructions by all means.
See the additional instructions „SAFETY INSTRUCTIONS“.
Man, machine and environment are endangered if the safety instructions are not observed.




## Shut-down

- Switch off piston diaphragm pump.
- Rinse pump head and remove pumped medium; make sure that the rinsing agent is suitable for pumped medium and pump head.

## Disposal

- Shut-down system. Please see “Shut-down“.

## Dismantling and transport

- Shut-down system. Please see “Shut-down“.
- Remove all fluid residues from pump body, clean thoroughly, neutralize and decontaminate.
- Package unit and ship.

**NOTE**

A clearance certificate must be filled in when systems are returned to the manufacturer.
Acceptance will be rejected if this clearance certificate is not attached.

## Complete disposal

- Remove all fluid residues from unit.
- Drain off lubricants and dispose of according to regulations!
- Dismount materials and send them to a suitable waste disposal company!

**NOTE**

Inspection / repair of machines and machine parts is only carried out after the opposite clearance certificate was filled in correctly and completely by authorized and qualified personnel.

**NOTE**

Acceptance will be refused if parts are returned to the manufacturer without a proper clearance certificate.

All industrial companies are obligated by the legal provisions for occupational health, e.g. the workplaces ordinances, the Ordinance on Hazardous Substances, the regulations for prevention of accidents and the environmental protection regulations such as the Waste Management Act and the German Household Water Act to protect their employees or man and the environment from detrimental effects when handling hazardous substances.

Should special safety precautions be necessary despite careful draining and cleaning of the product the necessary information are to be provided.

Machines which are operated with radioactive media shall only be inspected and/or repaired in the safety area of the owner by a **sera** specialized fitter.

The clearance certificate is part of the inspection-/repair order.
**sera** reserves the right to refuse acceptance of the order for other reasons.

**NOTE**

Please make a copy and leave the original with the operating instructions!
(can also be downloaded from: www.sera-web.com)

# Clearance Certificate

## Product

Type _____ Serial-No. _____

**the product was carefully emptied before shipping / delivery, and cleaned inside and outside.** ☐ **YES**

## Conveying medium

Designation _____ Concentration _____ %

### Properties

Please tick!

If either of the listed properties, then enclose the appropriate safety and handling instructions.

☐ Harmless

☐ Toxic ☐ Corrosive ☐ Flammable ☐ Oxidising ☐ Unhealthy

☐ Explosive ☐ Dangerous for the environment ☐ Irritant ☐ Bio-hazardous ☐ Radioactive

The product was used with health or water-polluting substances and came up with labeling requirements and pollution prone media in contact. ☐ **YES** ☐ **NO**

Special security arrangements with respect to health or water-hazardous media are in the further handling ☐ **not required** ☐ **required**

The following safety precautions regarding rinsing, residual liquids and waste disposal are required:

## Process data

The product was used with the following operating conditions described conveying medium:

Temperature _____ °C Pressure _____ bar

## Sender

Company: _____ Telephone: _____

Contact person: _____ FAX: _____

Address: _____ E-mail: _____

Zip code, City: _____ Your order No: _____

**We confirm that we have the information in this safety certificate (Clearance Certificate) have been correctly and completely and that the returned parts were carefully cleaned.**

**The parts are sent free of residues of dangerous amount.**

Place, Date _____ Department _____ Signature (and company stamp) _____

QSF 469-01 en / 11.2014 / PM

FOLLOW US

EXCELLENCE IN FLUID TECHNOLOGY

**sera ProDos GmbH**
sera-Str. 1
34376 Immenhausen
Germany
Tel. +49 5673 999 02
Fax +49 5673 999 03
info-prodos@sera-web.com
www.sera-web.com

TM01-03 EN 190110 **sera**® is a registered trademark of **sera** GmbH.
Technical details subject to change. **sera** shall not accept any liability for errors or omissions or for printing errors.

# ACCUGUARD Diaphragm Seals

Without proper protection, process fluids can contaminate and damage in-line instrumentation. ACCUGUARD Diaphragm Seals are designed to protect and isolate pressure gauges and expensive instrumentation from corrosive, high temperature, or viscous, process media.



## Features

- Transfers process pressure accurately without direct contact with process fluids
- Removes the need for expensive instrumentation
- Easily installed and available in five chemically resistant Materials of Construction
- Optional Diaphragm Materials
- Available with ¼" & ½" Bottom Connection Sizes in FNPT & BSPT Female Connection Types
- Thermoplastic Units Rated to 240 PSIG (16 BARG) @ 21°C (70°F)
- 316L S/S Units Rated to 5800 PSIG (400 BARG) @ 21°C (70°F)
- Approved – 316 S/S Diaphragm Seals with CRN (Canadian Registration Number)

## HOW TO ORDER - AccuGuard

*Example Part Number: AG25A25A-PVC-V-M-[Optional Gauge]*

**AG 25 A 25 A - PVC - V - M - [Optional Gauge]**

*See Gauge List*

**AccuGuard Diaphragm Seal**

**Connection Size (Top)**
25 = 1/4"

**Connection Type (Top)**
A = FNPT

**Connection Size (Bottom)**
25 = 1/4"
50 = 1/2"

**Connection Type (Bottom)**
A = FNPT
B = BSPT

**Options**
M = Mounted Gauge/Glycerin Filled

**Diaphram Materials**
V = Viton (Thermoplastic Body Only)
E = EPDM (Thermoplastic Body Only)
T = PTFE (Thermoplastic Body Only)
S/S = 316 S/S (S/S & S/SV Body Only)

**Body Materials**
PVC = Polyvinylchloride
CPVC = CPVC Corzan
PP = Polypropylene (Not Available with PTFE Diaphragm)
PVDF = Polyvinyldene Fluoride (PTFE Diaphragm Only)
S/S = 316L Stainless Steel
S/SV = Vented 316L Stainless Steel

*- Optional Gauge Appears as Separate Line Item When Ordered*
*- Diaphragm Seals With Gauges = Glycerin Filled As Standard*
*- 1/4" & 1/2" MNPT Nipples Available - Call Factory for Details*

Primary Fluid Systems Inc. | 1050 Cooke Blvd. | Burlington | Ontario | L7T 4A8 | Canada
www.primaryfluid.com | primary@primaryfluid.com | North American Toll Free: 1-800-776-6580

# ACCUGUARD Diaphragm Seals

## Technical Information

### Temperature Correction Factors: Thermoplastics Temperature Effects:

Thermoplastics and thermosets will decrease in tensile strength as the temperature increases: therefore, the working pressure must be reduced accordingly. For additional Information, please visit: www.eco-valve.com.

### Canadian Registration Number:

Approved - 316L S/S ACCUGUARD Diaphragm Seals with CRN (Canadian Registration Number) Certification for all of Canada.

## Dimensions & Parts

### Thermoplastic Diaphragm Seals

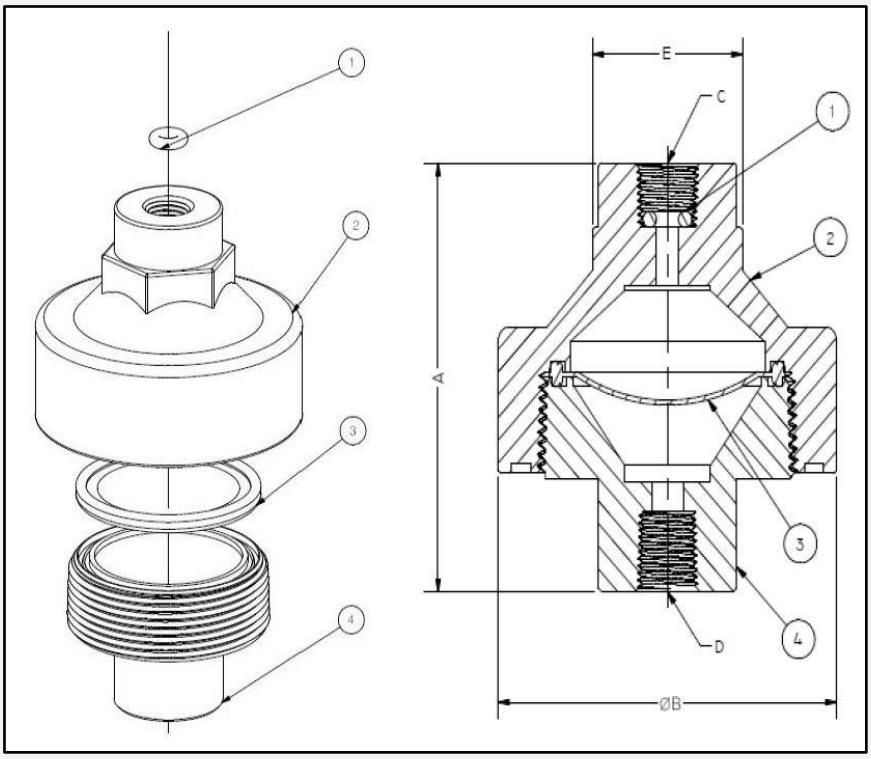


### Alloy Diaphragm Seals

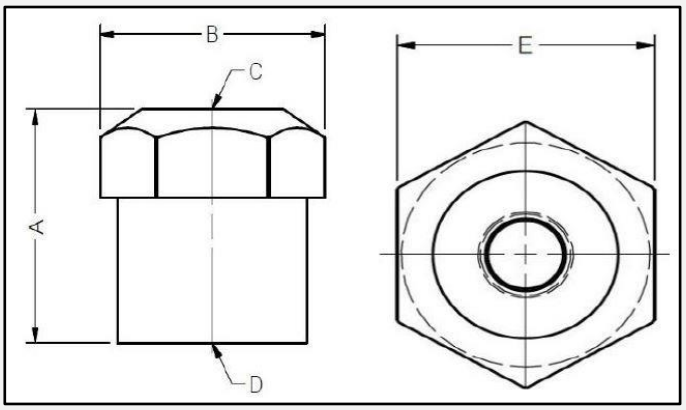


### Vented Alloy Diaphragm Seals

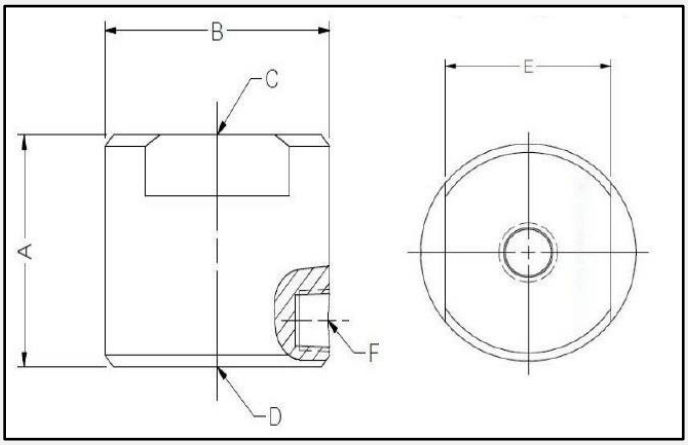


**Dimensional Information**

| Dimension | Thermoplastic | Alloy | Vented Alloy |
|---|---|---|---|
| A | 3.3" [84.68mm] | 1.5" [38.61mm] | 1.57" [40.00mm] |
| B | 3.1" [78.49mm] | 1.7" [43.43mm] | 2.05" [52.00mm] |
| C | *See "How to Order"* | *See "How to Order"* | *See "How to Order"* |
| D | *See "How to Order"* | *See "How to Order"* | *See "How to Order"* |
| E | 1.4" [35.00mm] | 1.5" [38.10mm] | 1.57" [40.00mm] |
| F | N/A | N/A | 1/8" FNPT |

**Thermoplastic Diaphragm Seal Parts & Materials**

| Item Number | Description | Material of Construction |
|---|---|---|
| 1 | O-Ring | EPDM |
| 2 | Upper Housing | Polypropylene (PVC, CPVC, & PP Lower Housings) Or PVDF (PVDF Lower Housing Only) |
| 3 | Diaphragm | *See "How to Order"* |
| 4 | Lower Housing | *See "How to Order" (Body Materials)* |

- *Alloy Units = Sealed – No Parts Available*

Primary Fluid Systems Inc. | 1050 Cooke Blvd. | Burlington | Ontario | L7T 4A8 | Canada
www.primaryfluid.com | primary@primaryfluid.com | North American Toll Free: 1-800-776-6580

# ACCUGUARD GAUGES

ACCUGUARD Pressure Gauges are designed to enhance the performance of chemical feed systems. Adding a pressure gauge to any system will help to ensure that optimal pressures are monitored and maintained.







## Series Information

| Series | Gauge Diameter | Gauge Connection Size and Type | Gauge Housing | Gauge Internals | Liquid Filled | *Accuracy Rating |
|---|---|---|---|---|---|---|
| **Economy** | 2" / 2.5" | 1/4" NPT | Steel Case | Brass | No | ± 2.5% |
| **Intermediate** | 2.5" / 4" | 1/4" NPT | 304 S/S | Brass | Yes | ± 1.6% |
| **Premium** | 2.5" / 4" | 1/4" NPT | 304S/S | 316L S/S | Yes | ± 1.6% |

*Accuracy Rating = Full Scale Range

### HOW TO ORDER - AccuGuard Gauges

*Example Part Number: GE2-160-CB*

**G E 2 - 160 - CB**

**AccuGuard Gauge**

**Gauge Series**
- E = Economy
- I = Intermediate
- P = Premium

**Gauge Diameter**
- 2 = 2 Inches
- 2.5 = 2-1/2 Inches
- 4 = 4 Inches

**Gauge Mounting Orientation**
- CB = Center Back
- BM = Bottom Mount

**Gauge Indication**
- 60 = 0-60 PSIG / 0-400 KPA
- 160 = 0-160 PSIG / 0-1100 KPA
- 200 = 0-200 PSIG / 0-1400 KPA
- 300 = 0-300 PSIG / 0-2000 KPA
- 400 = 0-400 PSIG / 0-2800 KPA

*4" Gauge Diameter Available in Bottom Mount Orientation Only*

*For Price & Availability of Other Pressures - Call Factory*

Primary Fluid Systems Inc. | 1050 Cooke Blvd. | Burlington | Ontario | L7T 4A8 | Canada
www.primaryfluid.com | primary@primaryfluid.com | North American Toll Free: 1-800-776-6580

# ACCUDRAW® PVC Calibration Instructions

***Note: Before starting either of the calibration procedures below, ensure that the pump is primed and void of any trapped air.***

**Using the USGPH scale:** (scale is based on **time**, in one (1) minute volume discharge)

1. Fill the calibration to the top "0" mark on the USGPH scale.
2. Close isolation valve (#2) from supply tank, open isolation valve (#1) below cylinder and start the pump.
3. Use a stopwatch to measure the time of one (1) minute (60 seconds) and record the volume dispensed by the metering pump, using the draw down scale.
4. Adjust the pump volume control higher or lower to meet with your desired output.
5. Repeat above steps 1 through 4, until the desired output is met.
6. Divide the measured USGPH number by 60 to determine the **USGPM volume**, if required.

If you wish to shorten the time of dispensing for calibration by one half (1/2) or one quarter (1/4), you must multiply the measured volume by the same number used to divide the time by.

e.g. 10 USGPH in 1 minute equals
5 USGPH X 2 in 30 seconds or
2.5 USGPH X 4 in 15 seconds

**Using the ml scale:** (scale is based on **volume** pumped, over any given time)

1. Fill the calibration cylinder to the top "0" mark on the ml scale.
2. Close isolation valve (#2) from supply tank, open isolation valve (#1) below cylinder and start the pump.
3. Use a stopwatch to measure the time it takes to pump down a given volume (ml) in 60 seconds.
4. Multiply the volume by 60 to determine the **ml per hour** volume, if required.
5. Adjust the pump volume control higher or lower to meet with your desired output.
6. Repeat above steps 1 through 5, until the desired output is met.

If you wish to shorten the time of dispensing for calibration by one half (1/2) or one quarter (1/4), you must multiply the volume by the same number used to divide the time by to determine ml per minute or hour.

e.g. 100 ml in 60 seconds equals
50 ml X 2 in 30 seconds or
25 ml X 4 in 15 seconds

## Typical Installations ("A" and "B")

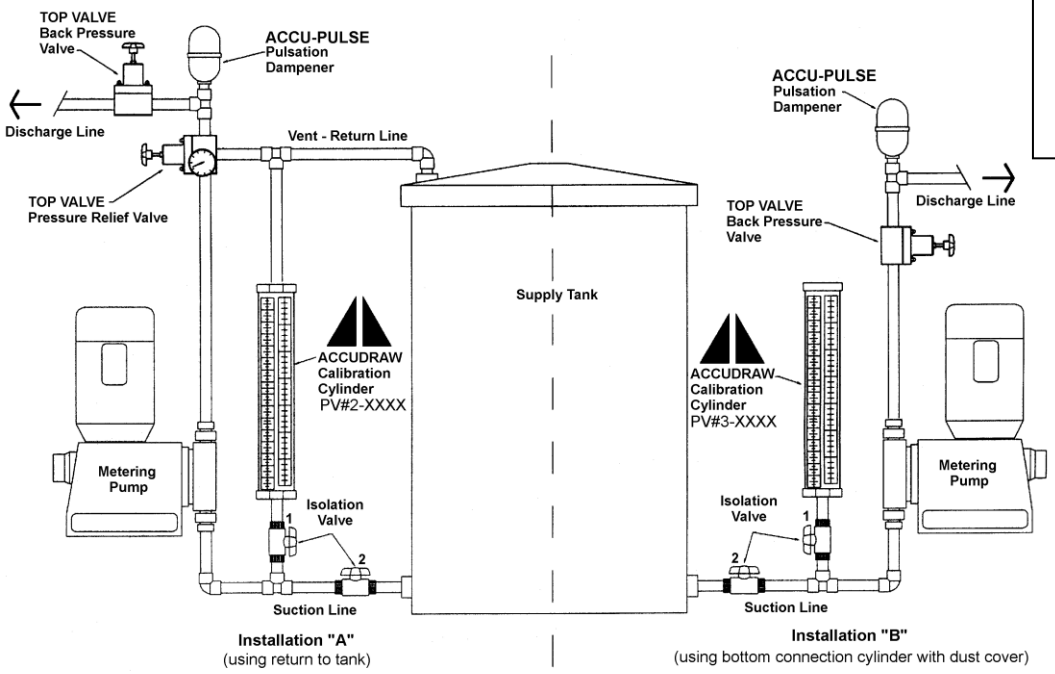


**Conversion Factors**
1ml = 1 cc
1000 ml – 1 liter
ml/sec x 60 = ml/min
1 US gal/min x 0.063 = liters/sec
1 US gal = 3.786 liters

**Caution:**
Do not use as a Pressure Vessel.


**PRIMARY FLUID SYSTEMS INC.**

**Call Toll Free 1-800-776-6580**
**Tel: (905) 333-8743 Fax: (905) 333-8746**

***E-Mail: primary@ primaryfluid.com***
***www.primaryfluid.com***


***® Registered Trade Mark of Primary Fluid Systems Inc.***

# Metering Pump Accessories Save $$$$

## *Prevent unsafe and inefficient systems by design.*

### **ACCUDRAW** Calibration Cylinders

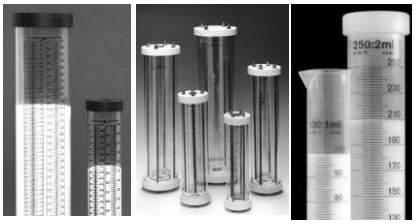

**PVC** **Glass** **Poly**

- *PVC, glass, polypropylene*
- *translucent, chemical resistant*
- *coloured graduations and lettering*
- *threaded or socket connections*
- *standard sizes 100 ml to 20,000 ml*

***Custom built in other sizes and materials.***

### **TOP VALVE** Back Pressure/Pressure Relief



- *long life diaphragm*
- *range of 0 – 150 PSIG*
- *air release, optional gauge port*
- *PVC, CPVC, PVDF, PTFE, polypropylene, stainless, Alloy 20 and Hastelloy C*
- *7 sizes ¼" – 2" NPT*
- *colour coded handles indicate size*

***Designed to enhance the <u>accuracy</u> and <u>safety</u> of your metering pumps.***

### **ACCU-PULSE**
Pulsation Dampeners



***Designed to remove pulsating flows from positive displacement pumps.***

- *increase system efficiency and pump life*
- *decrease maintenance and costs*
- *protect pipes, meters, valves and instrumentation from pulsation and vibration*
- *ensure meter accuracy, longevity and repeatability*
- *prevent foaming and splashing*
- *extensive range of materials and sizes*
- *lightweight, compact design*

### Typical Metering Pump System

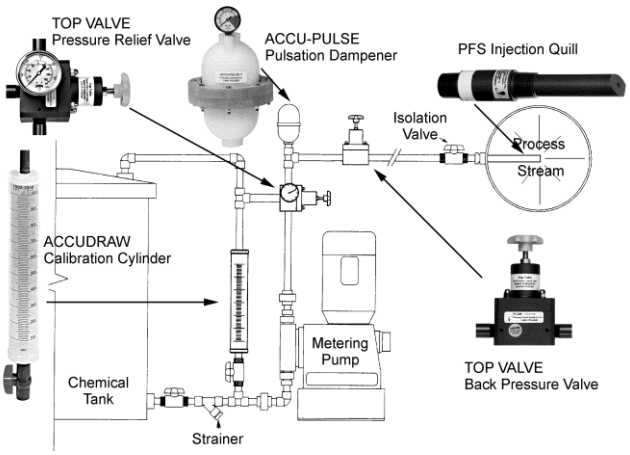


***AutoCad drawings available from our web site.***
***Visit www.primaryfluid.com***

### PFS Injection Quills



***Designed to inject chemical into the center stream of process.***

- *provides for a more homogenous mix in the pipeline*
- *built-in checks to prevent back siphoning*
- *2 sizes 6" and 8" length*
- *½" or ¾" NPT, BPST, or Flg'd Conn.*
- *PVC, CPVC, PVDF, polypropylene, Stainless, Hastelloy C & Titanium*
- *pressure to 3000 PSIG*
- *temperature to 260°C (500°F)*

***Custom built in other sizes and materials.***

### Accu-Vent

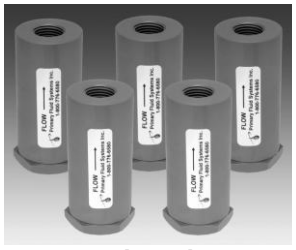

***Designed to automatically vent gases and vapours.***

- *vents gases and vapors released from Sodium Hypochlorite, Sulfuric Acid & Hydrogen Peroxide*
- *CPVC (Corzan) and Viton corrosion resistant wetted materials of construction*
- *specially designed float material automatically vents built up gases on system start up and under working pressure*
- *standard 1/2" or 3/4" NPT threaded connections or optional socket weld*
- *available in other materials*

### PFS Corporation Stops



***Designed to inject chemical into the center stream of process.***

- *isolation valve allows for ease of maintenance*
- *available in 6 materials of construction*
- *wetted components have comparable or greater chemical resistance than quill construction material*
- *standard and custom lengths available*
- *connection in NPT, metric or flanged*

***Custom built in other sizes & materials.***

**Call Toll Free 1-800-776-6580**
**Tel: (905) 333-8743 Fax: (905) 333-8746**

# *Technical Sheet*

***WWW.POMPESCP.COM***

| | | | |
|---|---|---|---|
| ***Client:*** | ***ASDR*** | ***Assembly serial number:*** | ***0192*** |
| ***Quotation:*** | ***PP-204196*** | ***Drawing number :*** | ***351-PVC-1800*** |
| Mounting type: box ☒ wall ☐ | | Pump model: **RF410.2-1450e** | |
| With door ☒ Without door ☐ | | S/N pump 1: WP387219 S/N pump 2: WP387220 | |
| Simplex ☐ Duplex ☐ Triplex ☒ Quadruplex ☐ | | S/N pump 3: WP387221 S/N pump 4: | |
| Skid Material: HDPE ☒ SS ☐ | | Pump capacity L/H : 0-1740 | |
| Skid dimension: 76'' X 60'' X 30'' | | Maximum pressure (PSI): 50.76 | |
| O-ring: Viton ☐ EPDM ☒ Teflon ☐ | | Pump head material: PVC | |
| Relief valve model: TVBP10-PVC | | Valve material: PVC | |
| Back pressure valve model: | | Valve: simple ☒ double ☐ | |
| Valve material: PVC | | Ball type: PTFE | |
| Calibration cylinder model: (PV#2-20000)X2 | | O-ring: EPDM | |
| Pressure gauge model: GI2.5-160 CB | | Diaphragm: AG25A50A-PVC-T-M | |
| Piping : PVC ☒ SS ☐ PVDF ☐ CPVC ☐ | | | |
| Piping dimension: ½'' ☐ ¾'' ☐ 1'' ☒ 1 ¼'' ☐ 1 ½'' ☒ 2'' ☐ | | | |

| ***Pressure test and tightness*** | | ***Adjusting valves*** | |
|---|---|---|---|
| Pressure test period, min.: | 10 | Release valve, PSI: | 50 |
| Pressure test, PSI: | 60 | Back pressure valve, PSI: | 50 |

***Signature : _____*** ***Date : ___June 03 2021_____***

***3076A, rue Bernard-Pilon, St-Mathieu-de-Beloeil (Qc) J3G 4S5***
***Tél : 450-922-4224 Fax : 450-922-4223***

PCP
Pompes & équipements

# MAKE DOWN SODIUM THIOSULFATE UNIT WAM/PCP/ST

AGNICO EAGLE

**Vendor Document Status**

1 ☐ Proceed to next submission and status.

2 ☐ Proceed with exceptions as noted to next submission and status.

3 ☐ Do not proceed.
Revise as noted and resubmit next submission and status.

4 ☑ Complete, no further submission required.

By: Sébastien Perron
Instrumentation
Date: 2021-04-08

Review and authorization to fabricate are only for general conformance with the design concept of the Project as expressed in the Contract Documents. Sole responsibility for the accuracy and completeness of this document, including but not limited to dimensions and quantities, remains with the Supplier/Contractor. Agnico Eagle does not warrant the accuracy or completeness of any of the information contained herein, nor does Agnico Eagle authorize or approve any construction means, methods, techniques, sequences or any safety precautions or procedures.

Agnico Eagle No. 6526-S265-605B-135_MAKEDOWN THIOSULFATE UNIT WAMPCPST _DOC_R1 R: MAKEDOWN THIOSULFATE UNIT W

**DOCUMENT FOR INFORMATION**

**Workshop drawing :**

- ☐ Approuved as is
- ☐ Approuved with correction(s)
- ☐ Rejected

**Approuved by**

Name : _____

Title : _____

Compagnie : _____

Signature : _____

# SODIUM THIOSULFATE HOPPER
# 65HOP68006

**Workshop drawing :**

- □ Approuved as is
- □ Approuved with correction(s)
- □ Rejected

**Approuved by**

Name : _____

Title : _____

Compagnie : _____

Signature : _____

| ITEM NO. | QTY. EACH | PART NUMBER | MAT'L | DESCRIPTION |
|---|---|---|---|---|
| 1 | 1 | 30014715-A | 316SS | 9" DIA X 15'-0" LONG 30 DEG. INCLINED SCREW FEEDER WITH A 3 HP @ 34 RPM DRIVE UNIT |
| 2 | 1 | 30014715-B | NOTED | SBB CONE AND FRAME ASSEMBLY, TYPE SBB/3.1.125.M.A., LESS HOIST, 316L HOPPER, MS FRAME |
| 3 | 1 | X.JN.273.236 | | WAM X.JN.273.236 FLEXIBLE CONNECTION, BLACK NEOPRENE |
| 4 | 1 | ILT | | WAM #ILT.C.2 ROTARY LEVEL INDICATOR, 1 1/2" NPT THREAD, 110/220VAC, 50/60HZ |
| 5 | 1 | V1FS250.ZB | | WAM #V1FS250.ZB SINGLE FLANGE BUTTYERFLY VALVE, 10" DIA, CAST ALUMINUM BODY, 304SS DISC, WITH WAM #AE070A1D ELECTROMECHANICAL ROTARY ACTUATOR AE70 22X19, 575V, 60 HZ, 0.75 KW; WAM #MIC23 POSITION LIMIT SWITCH |

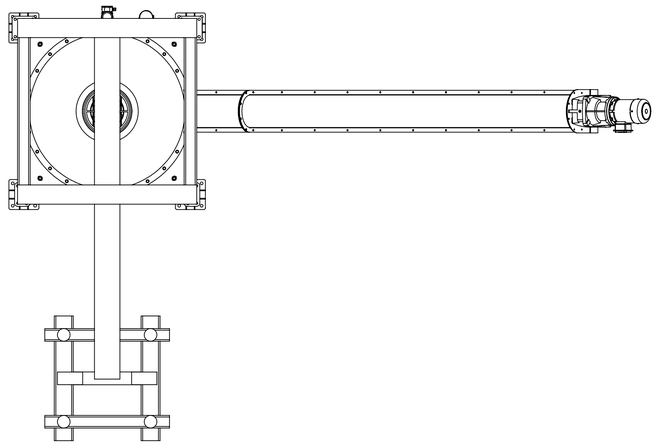

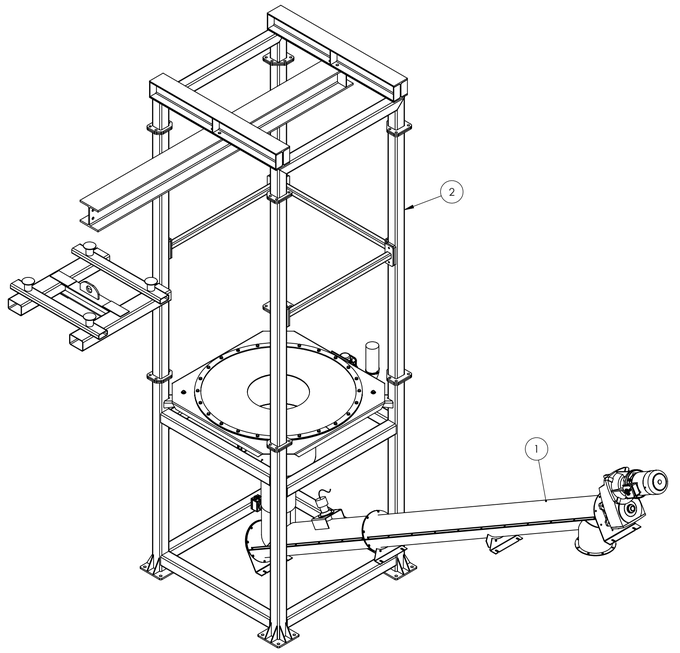


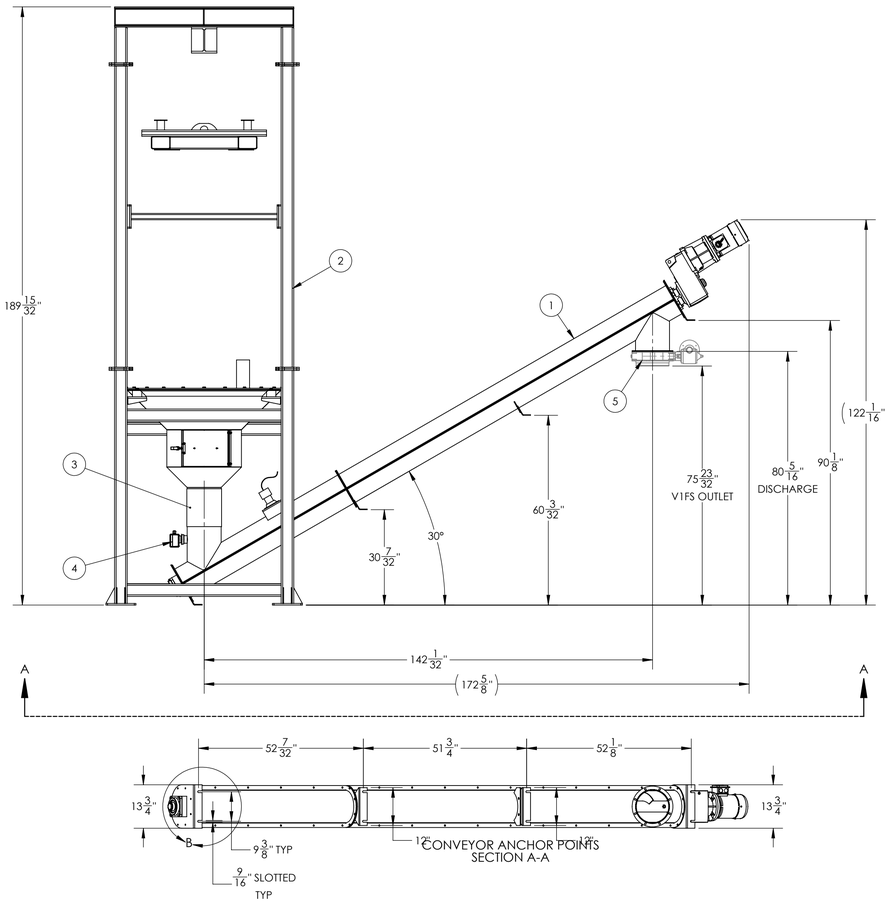


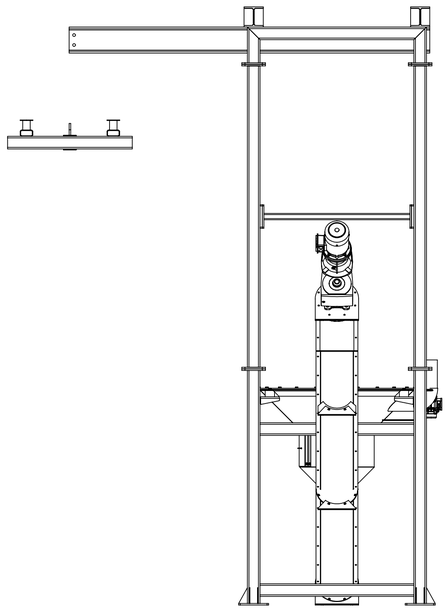




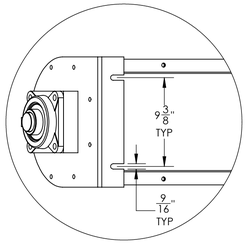


DETAIL B
SCALE 1 : 8

CERTIFIED DRAWING

DATE: 3/26/2021

| REVISIONS | | | |
|---|---|---|---|
| REV. | BY | DESCRIPTION | DATE |
| 1 | JAH | REVISIONS TO FEEDER | 3/26/2021 |

UNLESS OTHERWISE SPECIFIED:
ALL DIMENSIONS ARE IN INCHES

ALL ITEMS MANUFACTURED PER CEMA 300 TOLERANCES WHEN APPLICABLE

FOR ALL REMAINING ITEMS, GENERAL TOLERANCES ARE AS FOLLOWS:
FRACTIONS = ±1/16
X.XX = ±0.01
X.XXX = ±0.005
ANGLES = ±2°

CUSTOMER:
POMPES & EQUIPMENT
3076 A. RUE BERNARD-PILON
ST-MATHIEU-DE-BELOEIL, QC J3G 4S5

SHIP TO:
POMPES & EQUIPMENT (PCP)
3076 A. RUE BERNARD-PILON
ST-MATHIEU-DE-BELOEIL, QC J3G 4S5

QUOTE:
Y010821A-SYS-B

CUSTOMER PO:
C14-204979R2

CONFIDENTIALITY NOTE: THIS DRAWING AND ALL DESIGNS, DETAILS, INVENTIONS AND/OR DEVELOPMENTS COVERED ARE CONFIDENTIAL AND THE EXCLUSIVE PROPERTY OF WAM INC. WHICH RESERVES ALL PATENT AND OTHER RIGHTS. IT IS NOT TO BE PRINTED, PHOTOGRAPHED, COPIED, LOANED OR USED WITHOUT PERMISSION. IT MUST BE RETURNED ON REQUEST AND USED SUBJECT TO THE ABOVE CONDITIONS AND ONLY ON WORK AUTHORIZED BY WAM INC.

WAM® USA INC.
1300 TRIAD BLVD., FORT WORTH, TX 76131
PH. #817-232-2678, FAX #817-232-2676

DESCRIPTION:
SBB BULK BAG UNLOADER AND SCREW CONVEYOR GA

SHEET 1 OF 1

SIZE D

| DRAWN | CHKD. | DATE | SCALE | DRAWING NO. | REV |
|---|---|---|---|---|---|
| JAH | | 3/17/21 | 1:24 | 30014715-GA | 1 |

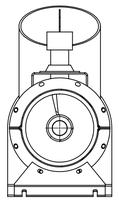

SECTION A-A

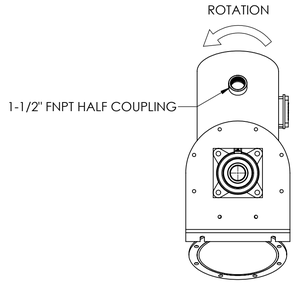


INLET END

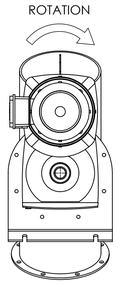


DISCHARGE / DRIVE END

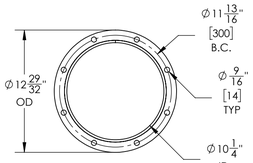


DISCHARGE FLANGE
SCALE 1 : 8

SPECIFICATIONS:
QTY: TWO (2), 9" DIA X 15'-0" LONG 30 DEG. INCLINED SCREW FEEDER WITH A 3 HP @ 34 RPM DRIVE UNIT TO CONVEY 221 CFH, OF A FLOOD FED CAUSTIC SODA AND SODIUM THIOSULPHATE @ 60 TO 75 LB/FT$^3$, SHOP ASSEMBLED AND CONSISTING OF:

NOTES:
- ALL 316SS CONSTRUCTION UNLESS NOTED
- INTERIOR (PRODUCT CONTACT) FINISH EXCL. SCREW: CEMA II WELDS, SURFACE FINISH AS-IS
- SCREW FINISH: CEMA II STD. SKIP WELDING, SURFACES AS-IS
- EXTERIOR FINISH: CEMA II WELDS, SURFACES TO BE SSPC-SP6 COMMERCIAL BLAST CLEAN
- ALL FABRICATED GUARDS TO BE PAINTED SAFETY YELLOW
- ALL PURCHASED ITEMS TO HAVE MANUFACTURERS STD. FINISH
- 18-8 SS ASSEMBLY BOLTS
- 1/8" THK CLOSED CELL NEOPRENE COVER GASKETS
- SILICONE CAULK TROUGH FLANGE GASKETS
- CEMA SAFETY LABELS
- SERIAL NUMBER(S): 30014715-01 THRU 02

| ITEM NO. | QTY. EACH | MAT'L | DESCRIPTION |
|---|---|---|---|
| 1 | 2 | 316SS | 9TO10-F, SPLIT TUBULAR TROUGH HALF, 9" DIA X .135 THK X 60" LONG |
| 2 | 2 | 316SS | 9TO10-F, SPLIT TUBULAR TROUGH HALF, 9" DIA X .135 THK X 120" LONG |
| 3 | 8 | 316SS | 9FO-F-GA, END FLANGE, SPLIT TUBULAR TROUGH, 9" DIA X .250 THK |
| 4 | 1 | 316SS | INCLINED ROUND DISCHARGE, FLANGE TO MATE WITH V1FS250 BUTTERFLY VALVE |
| 5 | 2 | 316SS | 9EF4-O-BB, TROUGH END, TUBULAR, WITH FOOT, 9" SIZE X .250 THK., 2" SHAFT, DRILLED FOR BALL BEARING |
| 6 | 1 | 316SS | 9S412, SECTIONAL SCREW, 9" DIA X 178" LG, 3/16" THK, RH VARIABLE PITCH WITH 9" BARE PIPE, MOUNTED ON A 3" SCH. 40 PIPE, BUSHED AND DRILLED ON BOTH ENDS FOR 2", 2 BOLT SHAFT, FLIGHTING: FIRST 12" TO BE 6" PITCH, REMAINDER FULL PITCH |
| 7 | 1 | 316SS | 4ES-B, END SHAFT, 2" DIA X 10 3/8" LG FOR BALL BEARING AND SEAL, CEMA 2 BOLT DRILLED |
| 8 | 4 | 316SS | 4CB, COUPLING BOLT WITH LOCK NUT, 5/8 - 11 UNC X 3 5/8" LG WITH A 2 7/8" LG SHANK, FOR 2 1/2" (2.875 OD) PIPE |
| 9 | 1 | | SE.4CP, WAM-SHIELD SEAL, 2" SHAFT, NON SPLIT |
| 10 | 1 | | 4BF-B, BALL BEARING, FLANGED, 2 SHAFT |
| 11 | 1 | 316SS | INCLINED ROUND INLET STUB WITH PORT FOR ILT LEVEL INDICATOR |
| 12 | 2 | 316SS | 9FF, FLANGE FEET, 9" SIZE, .188 THK., INCLINED |
| 13 | 1 | 316SS | 9SL10, SADDLE MOUNT, FOR 9" SIZE X .135 THK TROUGH, .250 THK |
| 14 | 1 | | NORD SK4282SCP/VL-180TC SCREW CONVEYOR DRIVE, 52.2:1 RATIO, 180TC NEMA ADAPTER, M1 MOUNTING POSITION, 2" CEMA DRIVE SHAFT |
| 15 | 1 | | NORD 100LP/4, 3 HP PREM. EFF., 1770 RPM, TEFC, NEMA 182TC C FACE MTR, 3/60/332-575V |
| 16 | 1 | | SITRANS WM100 ZERO-SPEED ALARM SWITCH |
| 17 | 1 | 316SS | SENSOR MOUNTING BRACKET, FITTED TO TROUGH, .188 THK SHEET / PLATE |

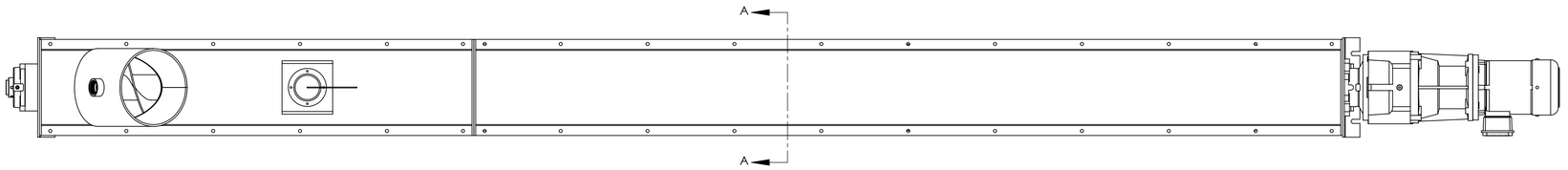


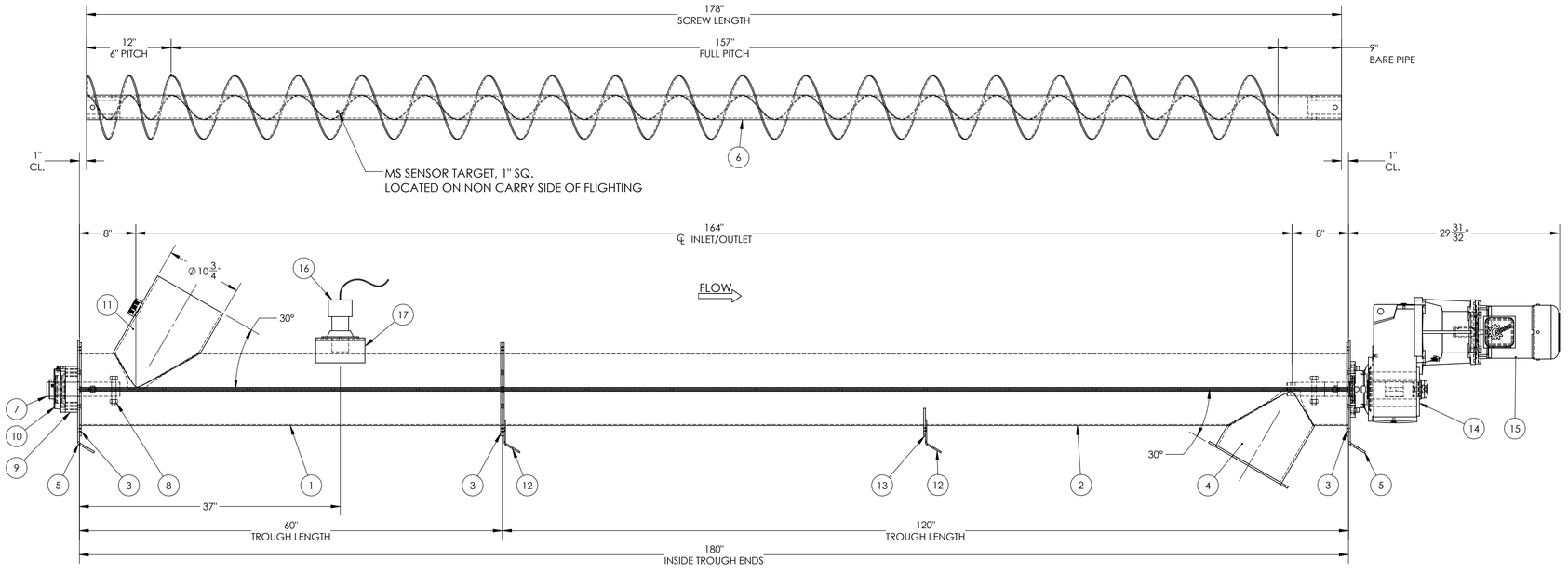


CERTIFIED DRAWING

DATE: 3/26/2021

| REVISIONS | | | |
|---|---|---|---|
| REV. | BY | DESCRIPTION | DATE |
| 1 | JAH | ADDED SPEED SWITH AND BRACKET, CHANGED MOTOR VOLTAGE | 3/26/2021 |

UNLESS OTHERWISE SPECIFIED:
ALL DIMENSIONS ARE IN INCHES

ALL ITEMS MANUFACUTRED PER CEMA 300 TOLERANCES WHEN APPLICABLE

FOR ALL REMAINING ITEMS, GENERAL TOLERANCES ARE AS FOLLOWS:
FRACTIONS = ±1/16
X.XX = ±0.01
X.XXX = ±0.005
ANGLES = ±2°

CUSTOMER:
POMPES & EQUIPMENT (PCP)
3076 A, RUE BERNARD-PILON
ST-MATHIEU-DE-BELOEIL, QC J3G 4S5

SHIP TO:
POMPES & EQUIPMENT (PCP)
3076 A, RUE BERNARD-PILON
ST-MATHIEU-DE-BELOEIL, QC J3G 4S5

QUOTE:
Y010821A-SYS-B

CUSTOMER PO:
C14-204979R2

CONFIDENTIALITY NOTE: THIS DRAWING AND ALL DESIGNS, DETAILS, INVENTIONS AND/OR DEVELOPMENTS COVERED ARE CONFIDENTIAL AND THE EXCLUSIVE PROPERTY OF WAM INC., WHICH RESERVES ALL PATENT AND OTHER RIGHTS. IT IS NOT TO BE PRINTED, PHOTOGRAPHED, COPIED, LOANED OR USED WITHOUT PERMISSION. IT MUST BE RETURNED ON REQUEST AND USED SUBJECT TO THE ABOVE CONDITIONS AND ONLY ON WORK AUTHORIZED BY WAM INC.

WAM® USA INC.
1300 TRIAD BLVD., FORT WORTH, TX 76131
PH. #817-232-2678, FAX #817-232-2676

DESCRIPTION:
9" DIA X 15'-0" LONG 30 DEG. INCLINED SCREW FEEDER WITH A 3 HP @ 34 RPM DRIVE UNIT

SHEET 1 OF 1
SIZE D
REV 1

| DRAWN | CHKD. | DATE | SCALE | DRAWING NO. |
|---|---|---|---|---|
| JAH | | 3/12/21 | 1:10 | 30014715 |

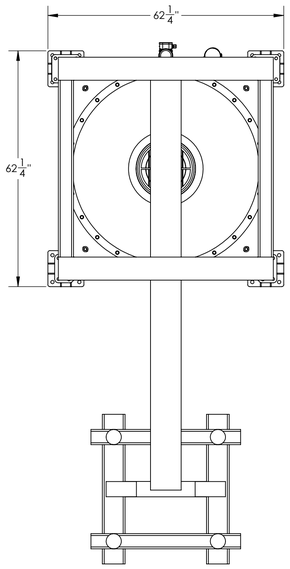


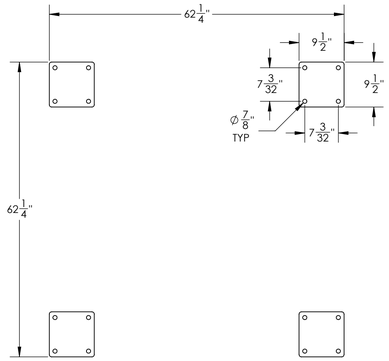


SECTION A-A
SCALE 1 : 16

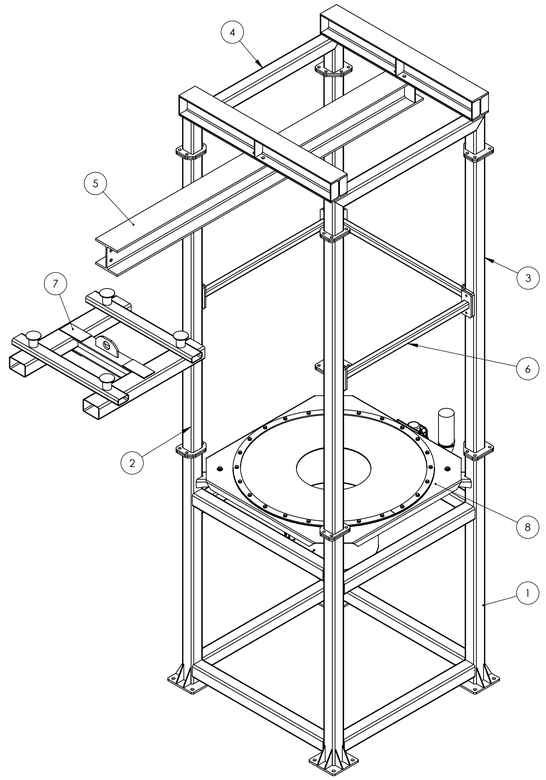


SPECIFICATIONS:

- QTY: TWO (2) SBB BULK BAG UNLOADERS
- FRAME TO BE ALL MS (UNLESS NOTED)
- FRAME FINISH: CEMA II WELDS, SURFACES TO BE SSPC-SP6 COMMERCIAL BLAST CLEAN, FOLLOWED BY ONE (1) RED OXIDE PRIMER COAT AND ONE (1) TOP COAT RAL 7001
- HOPPER TO BE 316L
- HOPPER FINISH: INTERNAL TREATMENT = SILKING 240, EXTERNAL GLASS BEAD BLASTING
- ZINC PLATED ASSEMBLY BOLTS
- UNIT TO BE ASSEMBLED TO VERIFY FIT, THEN DISASSEMBLED AND PALLETIZED FOR SHIPMENT
- SERAIL NUMBER(S): 30014715-B-01 THRU 02

| ITEM NO. | QTY. EACH | MAT'L | DESCRIPTION |
|---|---|---|---|
| 1 | 1 | MS | SBB CONE SUPPORT FRAME |
| 2 | 2 | MS | FRAME FRONT LEG |
| 3 | 2 | MS | FRAME REAR LEG |
| 4 | 1 | MS | FRAME TOP AND HOIST SUPPORT |
| 5 | 1 | MS | HOIST I-BEAM ASSEMBLY, W8 X 40 |
| 6 | 3 | MS | FRAME CROSS BRACE |
| 7 | 1 | MS | LIFTING FRAME |
| 8 | 1 | 316SS | WAMGROUP SBB CONE, CONSISTING OF 1250MM HOPPER, STD LEVEL DISCHARGING HOPPER POSITION, 273MM OUTLET DIAMETER, BLACK RUBBER SEAL, WITH 0.18 KW, 575V, 60 HZ VIBRATOR AND CUTTING SYSTEM |

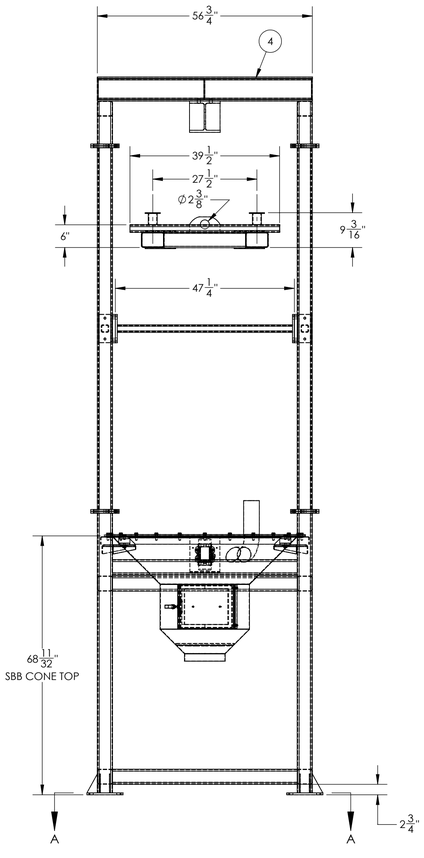


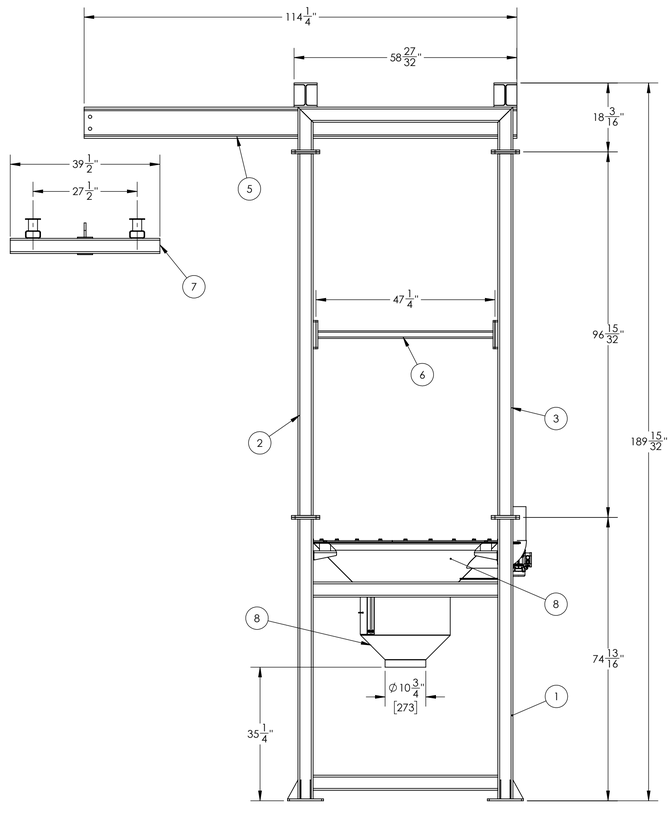


APPROVAL DRAWING

CUSTOMER NOTE: NO FABRICATION WILL TAKE PLACE BY WAM USA INC. WITHOUT A SIGNED AND APPROVED COPY FROM THE CUSTOMER. ANY CHANGES / MARKUPS WILL REQUIRE A REVISION AND RESUBMITTAL FOR FINAL APPROVAL. SHIP DATE CANNOT BE PROVIDED BEFORE FINAL APPROVAL.

_____ APPROVED AS DRAWN
_____ NOT APPROVED, RESUBMITTAL REQD.

SIGNED BY: _____

DATE: _____

| REVISIONS | | | |
|---|---|---|---|
| REV. | BY | DESCRIPTION | DATE |

UNLESS OTHERWISE SPECIFIED:
ALL DIMENSIONS ARE IN INCHES

ALL ITEMS MANUFACTURED PER CEMA 300 TOLERANCES WHEN APPLICABLE

FOR ALL REMAINING ITEMS, GENERAL TOLERANCES ARE AS FOLLOWS:
FRACTIONS = ±1/16
X.XX = ±0.01
X.XXX = ±0.005
ANGLES = ±2°

CUSTOMER:
POMPES & EQUIPMENT (PCP)
3076 A, RUE BERNARD-PILON
ST-MATHIEU-DE-BELOEIL, QC J3G 4S5

SHIP TO:
PCP INC
3076 A BERNARD-PILON
ST-MATHIEU-DE-BELOEIL, QC J3G 4S5
CANADA

QUOTE:
Y010821A-SYS-B

CUSTOMER PO:
C14-204979R2

WAM® USA INC.
1300 TRIAD BLVD., FORT WORTH, TX 76131
PH. #817-232-2678, FAX #817-232-2676

DESCRIPTION
SBB CONE AND FRAME ASSEMBLY, TYPE SBB/3.1.125.M.A., LESS HOIST, 316L HOPPER, MS FRAME

SHEET 1 OF 4

SIZE D

| DRAWN | CHKD. | DATE | SCALE | DRAWING NO. | REV |
|---|---|---|---|---|---|
| JAH | | 3/16/21 | 1:20 | 30014715-B | ~ |

CONFIDENTIALITY NOTE: THIS DRAWING AND ALL DESIGNS, DETAILS, INVENTIONS AND/OR DEVELOPMENTS COVERED ARE CONFIDENTIAL AND THE EXCLUSIVE PROPERTY OF WAM INC. WHICH RESERVES ALL PATENT AND OTHER RIGHTS. IT IS NOT TO BE PRINTED, PHOTOGRAPHED, COPIED, LOANED OR USED WITHOUT PERMISSION. IT MUST BE RETURNED ON REQUEST AND USED SUBJECT TO THE ABOVE CONDITIONS AND ONLY ON WORK AUTHORIZED BY WAM INC.

# RESERVOIR 4300L

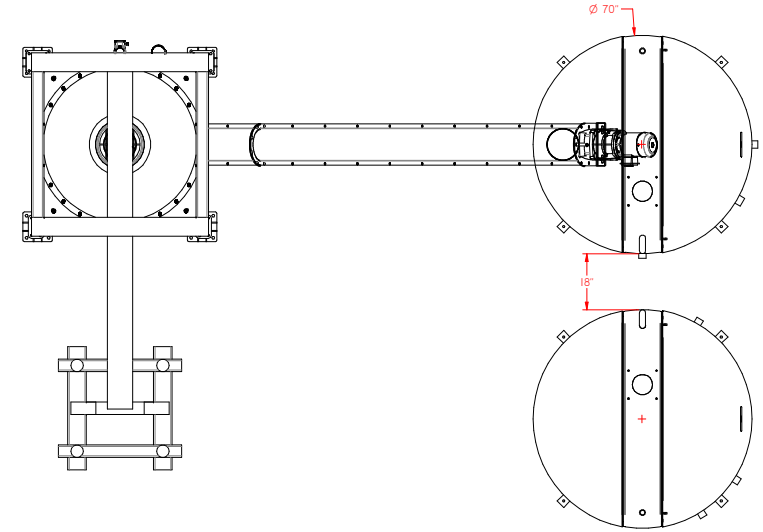


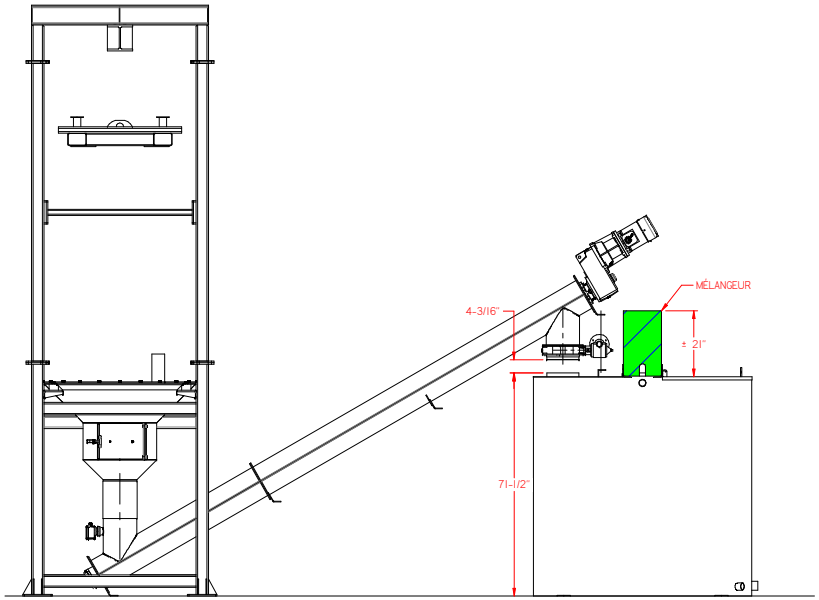


# RESERVOIR 5075L

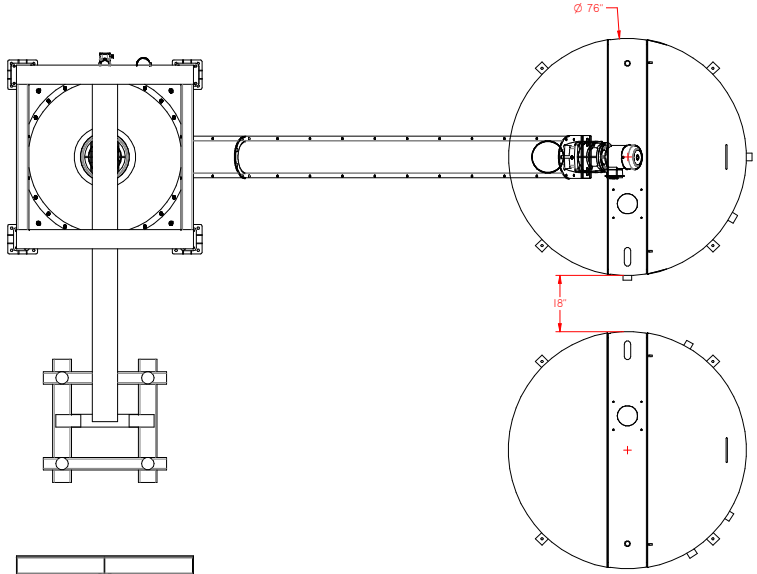


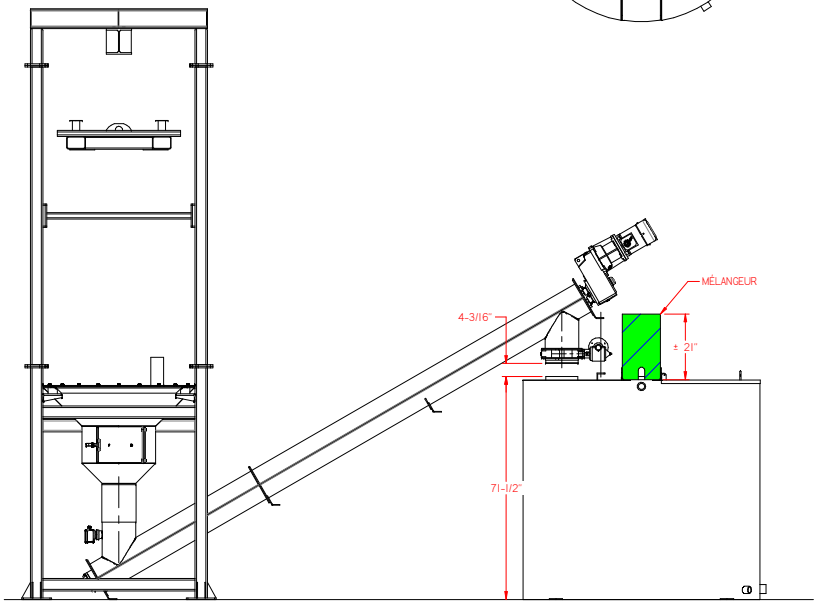


Ce document est la propriété de Lacal Technologie Inc. Il ne doit pas être dévoilé, utilisé ou reproduit en tout ou en parties sans l'autorisation écrite de Lacal Technologie Inc.

Tolérancement
Sauf indications contraires
Coupe ± 1/16"
Pliage ± 0.5°
Usinage ± 0.005"
Montage ± 1/16"

LACAL

Projet: 21716-00 PCP
Titre: RESERVOIR 4300L ET 5075L
Dessiné par: DM
Date: 18-03-2021
Vérifié par:
No dessin: 21716.00.APPROBATION

Pages: 5/5

# SODIUM THIOSULFATE HOIST
# 65HST68002

**Workshop drawing :**

- □ Approuved as is
- □ Approuved with correction(s)
- □ Rejected

**Approuved by**

Name : _____

Title : _____

Compagnie : _____

Signature : _____

*3076 A, Bernard-Pilon, St-Mathieu de Beloeil, Qc, J3G 4S5  Tél.: (450) 922-4224 / Fax: (450) 922-4223*

VULCAN HOIST 1.5T 575/3/60 16 'LIFTING

1.5T SELF-LOCKING HOOK OPTION

32 FEET ZINC TREATED CHAIN

ZINC TREATMENT HOOK 1 FALL

PUSH BUTTON NEMA 4

SYNTHETIC OIL

30 'BASKET FOR RING CHAIN WITH ANGLE IRON

16 'LIFT, 12' CONTROL WIRE, 15 'FEED WIRE

SPEED: 26 PPM CAPACITY: 1.5 MT

# ELECTRIC HOIST

VULCAN
HOIST - PALAN

## VULCAN'S ELECTRIC HOIST:

- TWO YEARS WARRANTY
- Build to **ASME B30.16**
- Certified to **CSA C22.2 NO. 14 & NO. 33**
- Conforms **UL 508A & 1004-1**
- Design factor **5:1**

MADE IN CANADA CUSTOM-MADE

**VULCAN IS THE ONLY CANADIAN MANUFACTURER** of electric chain hoists, trolleys and winches.

Intertek




### Rugged Worm Gear Drive

- Worm gear drive: robust, reliable and the only one to offer controlled lowering of the load
- Speeds: 2ft/min to 52ft/min
- High quality ball bearing
- Industrial alloy gears running in oil bath

### Calibrated load chain

- High performance welded link chain: GR80, tempered and case-hardened alloy steel
- Black finish or zinc plated *(optional)*

### Safety brake

- Electromechanical brake reteins load even if power is lost
- Brake holds 200% of hoist working load limit

### Electric motor

- Voltages: 115/230-1Ph-50/60Hz, 230/460/575-3Ph-50/60Hz
- Instantly reversible electronic starter (single phase motors)
- Insulation: Class B (standard motors), Class F (high performance motors)
- Options: 2 speeds 3Ph motor, thermal relay, acidity/humidity treatment, TENV or TEFC

### Limit switches

- Adjustable upper/lower limit switches
- Chain guide with integrated limit switch *(optional)*

### Hooks

- Forged hooks with safety latches
- Bearing-mounted lower hooks
- Options: low headroom (lug), self-locking hook, zinc plating/epoxy paint (lower hooks)

### Control

- Standard voltage: 24VAC
- Options: 115VAC, NEMA 4 pendant, ergonomic pendant, emergency stop, radio-control, simultaneous hoist operation, Festoon power system

### Other options

- Hour/cycle counter
- Electromechanical overload protection
- Vinyl or metal chain container
- Raincoat cover
- Synthetic oil
- Inverted hoist (theater hoist)

3435, boul. Crémazie Est, Montréal (Québec) H1Z 2J2 / Tel.: 514 728.4527 / Fax: 514 374.4231 / vulcanhoist.com / info@vulcanhoist.com

# ELECTRIC HOIST

VULCAN
HOIST - PALAN

| 1 SPEED MODELS | | 1 Phase | | | 3 Phases | | | | |
|---|---|---|---|---|---|---|---|---|---|
| CAPACITY | Speed | 115 V. | 230 V. | HP | 230 V | 460 V | HP | 575 V | HP |
| 1/4T 1 FALL | 08 | L05A08 | | | | | | | |
| | 10 | | L05F10 | 3/4 | | | | | |
| | 14 | L05A14 | | 3/4 | | | | | |
| | 16 | | L05F16 | 3/4 | L05H16 | L05T16 | 1 | L05V16 | 1 |
| | 20 | L05A20 | L05F20 | 1 1/2 | L05H20 | L05H20 | 2 | L05V20 | 2 |
| | 26 | L05A26 | L05F26 | 1 1/2 | | | | | |
| | 28 | | | | L05H28 | L05T28 | 2 | L05V28 | 2 |
| | 33 | L05A33 | L05F33 | 1 1/2 | L05H33 | L05T33 | 2 | L05V33 | 2 |
| | 40 | L05A40 | L05F40 | 1 1/2 | L05H40 | L05T40 | 2 | L05V40 | 2 |
| | 52 | L05A52 | L05F52 | 1 1/2 | L05H52 | L05T52 | 2 | L05V52 | 2 |
| 1/2T 1 FALL | 08 | L1A08 | | 3/4 | | | | | |
| | 10 | | L1F10 | 3/4 | L1H10 | L1T10 | 1 | L1V10 | 1 |
| | 14 | L1A14 | | 3/4 | | | | | |
| | 16 | | L1F16 | 3/4 | L1H16 | L1T16 | 1 | L1V16 | 1 |
| | 20 | L1A20 | L1F20 | 1 1/2 | L1H20 | L1T20 | 2 | L1V20 | 2 |
| | 26 | L1A26 | L1F26 | 1 1/2 | | | | | |
| | 28 | | | | L1H28 | L1T28 | 2 | L1V28 | 2 |
| | 33 | L1A33 | L1F33 | 1 1/2 | L1H33 | L1T33 | 2 | L1V33 | 2 |
| | 40 | | L1F40 | 2 | L1H40 | L1T40 | 2 | L1V40 | 2 |
| | 52 | | | | L1H52 | L1T52 | 2 | L1V52 | 2 |
| 1T 1 FALL | 07 | L2A07 | L2F07 | 3/4 | | | | | |
| | 10 | | | | L2H10 | L2T10 | 1 | | 1 |
| | 14 | | L2F14 | 1 1/2 | L2H14 | L2T14 | 2 | L2V14 | 1 |
| | 20 | | L2F20 | 2 | L2H20 | | 2 | L2V20 | 2 |
| | 26 | | | 2 | | | | | |
| | 27 | | | | | | 2 | L2V27 | 2 |
| | 33 | | | | L2H33 | L2T33 | 4 1/2 | L2V33 | 3 |
| | 40 | | | | L2H40 | L2T40 | 4 1/2 | L2V40 | 3 |
| | 52 | | | | L2H52 | L2T52 | 4 1/2 | L2V52 | 3 |
| 1 1/2T 1 FALL | 07 | | L3F07 | 1 1/2 | | | | | |
| | 13 | | L3F13 | 2 | | | 2 | L3V13 | 2 |
| | 20 | | | | L3H20 | L3T20 | 4 1/2 | L3V20 | 3 |
| | 26 | | | | L3H26 | L3T26 | 4 1/2 | L3V26 | 4 1/2 |
| | 33 | | | | L3H33 | L3T33 | 4 1/2 | L3V33 | 4 1/2 |
| 2T 2 FALLS | 04 | L4A04 | L4F04 | 3/4 | | | | | |
| | 06 | | | | L4H06 | L4T06 | 2 | L4V06 | 2 |
| | 10 | | L4F10 | 2 | L4H10 | | 2 | L4V10 | 2 |
| | 13 | | L4F13 | 2 | | | | | |
| | 15 | | | | L4H15 | | 2 | L4V15 | 2 |
| | 20 | | | | L4H20 | L4T20 | 4 1/2 | L4V20 | 3 |
| | 26 | | | | L4H26 | L4T26 | 4 1/2 | L4V26 | 3 |

3435, boul. Crémazie Est, Montréal (Québec) H1Z 2J2 / Tel.: 514 728.4527 / Fax: 514 374.4231 / vulcanhoist.com / info@vulcanhoist.com

# ELECTRIC HOIST

VULCAN
HOIST - PALAN

| 1 SPEED MODELS | | 1 Phase | | | 3 Phases | | | | |
|---|---|---|---|---|---|---|---|---|---|
| CAPACITY | Speed | 115 V. | 230 V. | HP | 230 V | 460 V | HP | 575 V | HP |
| 3T 2 FALLS | 04 | | L6F04 | 1 1/2 | | | | | |
| | 05 | | | | L6H05 | L6T05 | 2 | L6V05 | 1 1/2 |
| | 07 | | L6F07 | 2 | | | | | |
| | 09 | | | | L6H09 | L6T09 | 4 1/2 | L6V09 | 3 |
| | 15 | | | | L6H16 | L6T16 | 4 1/2 | L6V16 | 3 |
| | 20 | | | | L6h20 | L6T20 | 4 1/2 | L6V20 | 4 1/2 |
| 5T 3 FALLS | 02 | L10A02 | L10F02 | 1 1/2 | | | | | |
| | 05 | | L10F04 | 2 | L10H05 | L10T05 | 4 1/2 | L10V05 | 3 |
| | 10 | | | | L10H10 | L10T10 | 4 1/2 | L10V10 | 4 1/2 |
| | 13 | | | | L10H13 | L10T13 | 4 1/2 | L10V13 | 4 1/2 |
| 10T 6 FALLS | 07 | | | | L20H07 | L20T07 | 9 | L20V07 | 9 |

| 2 SPEEDS MODELS | Speed | | 3 Phases | | | |
|---|---|---|---|---|---|---|
| CAPACITY | High | Low | 230 V | 460 V | 575 V | HP |
| 1/4T 1 FALL | 13 | 4,3 | L05H13X2 | L05T13X2 | L05V13X2 | 2 |
| | 20 | 6,7 | L05H20X2 | L05T20X2 | L05V20X2 | 2 |
| | 26 | 8,7 | L05H26X2 | L05T26X2 | L05V26X2 | 2 |
| | 33 | 11,0 | L05H33X2 | L05T33X2 | L05V33X2 | 2 |
| | 40 | 13,3 | L05H40X2 | L05T40X2 | L05V40X2 | 2 |
| | 52 | 17,3 | L05H52X2 | L05T52X2 | L05V52X2 | 2 |
| 1/2T 1 FALL | 07 | 2,3 | L1H07X2 | L1T07X2 | L1V07X2 | 2 |
| | 13 | 4,3 | L1H13X2 | L1T13X2 | L1V13X2 | 2 |
| | 20 | 6,7 | L1H20X2 | L1T20X2 | L1V20X2 | 2 |
| | 26 | 8,7 | L1H26X2 | L1T26X2 | L1V26X2 | 2 |
| | 33 | 11,0 | L1H33X2 | L1T33X2 | L1V33X2 | 2 |
| | 40 | 13,3 | L1H40X2 | L1T40X2 | L1V40X2 | 3 |
| | 52 | 17,3 | L1H52X2 | L1T52X2 | L1V52X2 | 3 |
| 1T 1 FALL | 07 | 2,3 | L2H07X2 | L2T07X2 | L2V07X2 | 2 |
| | 13 | 4,3 | L2H13X2 | L2T13X2 | L2V13X2 | 3 |
| | 20 | 6,7 | L2H20X2 | L2T20X2 | L2V20X2 | 3 |
| | 26 | 8,7 | L2H26X2 | L2T26X2 | L2V26X2 | 3 |
| 1 1/2T 1 FALL | 13 | 4,3 | L3H13X2 | L3T13X2 | L3V13X2 | 3 |
| | 20 | 6,7 | L3H20X2 | L3T20X2 | L3V20X2 | 3 |
| 2T 2 FALLS | 10 | 3,3 | L4H10X2 | L4T10X2 | L4V10X2 | 3 |
| | 13 | 4,3 | L4H13X2 | L4T13X2 | L4V13X2 | 3 |
| 3T 2 FALLS | 07 | 2,3 | L6H07X2 | L6T07X2 | L6V07X2 | 3 |

3435, boul. Crémazie Est, Montréal (Québec) H1Z 2J2 / Tel.: 514 728.4527 / Fax: 514 374.4231 / vulcanhoist.com / info@vulcanhoist.com

# ELECTRIC HOIST

VULCAN
HOIST - PALAN

## Standard hoist dimensions

| Capacity | Model | Falls | Weight (lbs) | A (in.) | B (in.) | C (in.) |
|---|---|---|---|---|---|---|
| 1/4T | L05 | 1 | 100 | 10 5/8 | 13 3/4 | 1 |
| 1/2T | L1 | 1 | 100 | 10 5/8 | 13 3/4 | 1 |
| 1T | L2 | 1 | 100 | 10 5/8 | 13 3/4 | 1 |
| 1 1/2T | L3 | 1 | 105 | 10 5/8 | 13 3/4 | 1 1/8 |
| 2T | L4 | 2 | 120 | 10 5/8 | 13 3/4 | 1 3/8 |
| 3T | L6 | 2 | 130 | 10 5/8 | 13 3/4 | 1 3/8 |
| 5T | L10 | 3 | 165 | 11 1/4 | 14 3/8 | 1 3/8 |

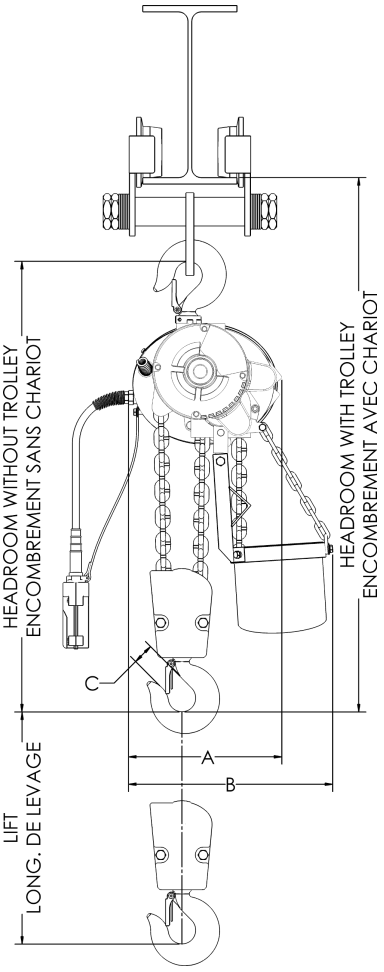


## Headroom clearances

| Capacity | Model | Hook mount* | | | Low headroom lug* | |
|---|---|---|---|---|---|---|
| | | Hoist only | w/ Electric Trolley | w/ Nova Trolley | w/ Electric Trolley | w/ Nova Trolley |
| 1/4T | L05 | 18 7/8 | 23 1/8 | 23 3/8 | 20 1/8 | 19 5/8 |
| 1/2T | L1 | 18 7/8 | 23 1/8 | 23 3/8 | 20 1/8 | 19 5/8 |
| 1T | L2 | 18 7/8 | 23 1/8 | 24 | 20 1/8 | 20 |
| 1 1/2T | L3 | 21 1/2 | 26 | 27 1/4 | 22 3/8 | 23 1/8 |
| 2T | L4 | 25 1/4 | 29 3/4 | 31 1/4 | 25 3/8 | 26 1/8 |
| 3T | L6 | 25 1/4 | 31 | 31 1/4 | 26 1/8 | 26 3/4 |
| 5T | L10 | 30 1/2 | 36 3/4 | 39 1/8 | 31 3/4 | 33 1/4 |

** Excluding chain guide. Chain guide adds 5 inches to headroom and is installed by default on hoists with linear chain speed ≥ 33 fpm, otherwise optional.*

## Motor options

| Motor | M (in.)** |
|---|---|
| 3/4 HP , 1 phase | 10 1/8 |
| 1 1/2 HP , 1 phase | 11 1/8 |
| 2 HP , 1 phase | 11 1/4 |
| 1 HP , 3 phases | 9 1/2 |
| 2 HP , 3 phases | 11 |
| 3 HP , 3 phases | 11 |
| 4 1/2 HP , 3 phases | 11 7/8 |
| 2 HP dual speed , 3 phases | 11 7/8 |
| 3 HP dual speed , 3 phases | 11 7/8 |

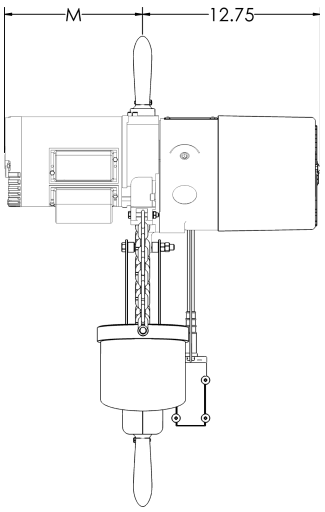


*** Motors with a fan will be approximately 1 ¼ inch longer*

3435, boul. Crémazie Est, Montréal (Québec) H1Z 2J2 / Tel.: 514 728.4527 / Fax: 514 374.4231 / vulcanhoist.com / info@vulcanhoist.com

2T VULCAN TROLLEY 24 PPM 575/3/60 BEAM-H

EMERGENCY STOP BUTTON WITH CONTACTOR

NEMA 4 CONTROL BOX

ENGINE TREATMENT (ACIDITY / HUMIDITY)

SYNTHETIC OIL

*3076 A, Bernard-Pilon, St-Mathieu de Beloeil, Qc, J3G 4S5  Tél.: (450) 922-4224 /  Fax: (450) 922-4223*

# ELECTRIC TROLLEY

VULCAN
HOIST - PALAN

## VULCAN'S ELECTRIC TROLLEY,
## a sturdy, durable equipment with leading edge safety features*:

Intertek

FABRIQUÉ AU CANADA
FAIT SUR MESURE

**VULCAN IS THE ONLY CANADIAN MANUFACTURER of electric chain hoists, trolleys and winches.**

### COMPATIBLE WITH ALL BEAMS
Whether the beam has an H profile, an I profile or a non-standard shape, Vulcan's electric trolley can adapt to it.

### LIMIT SWITCH
For a precise movement of the trolley on the beam.

### NEMA 4 OR NEMA 12 CASE
For an improved protection against humidity and/or dust.

### REVOLVING LIGHT
High-intensity revolving light for visible travels.

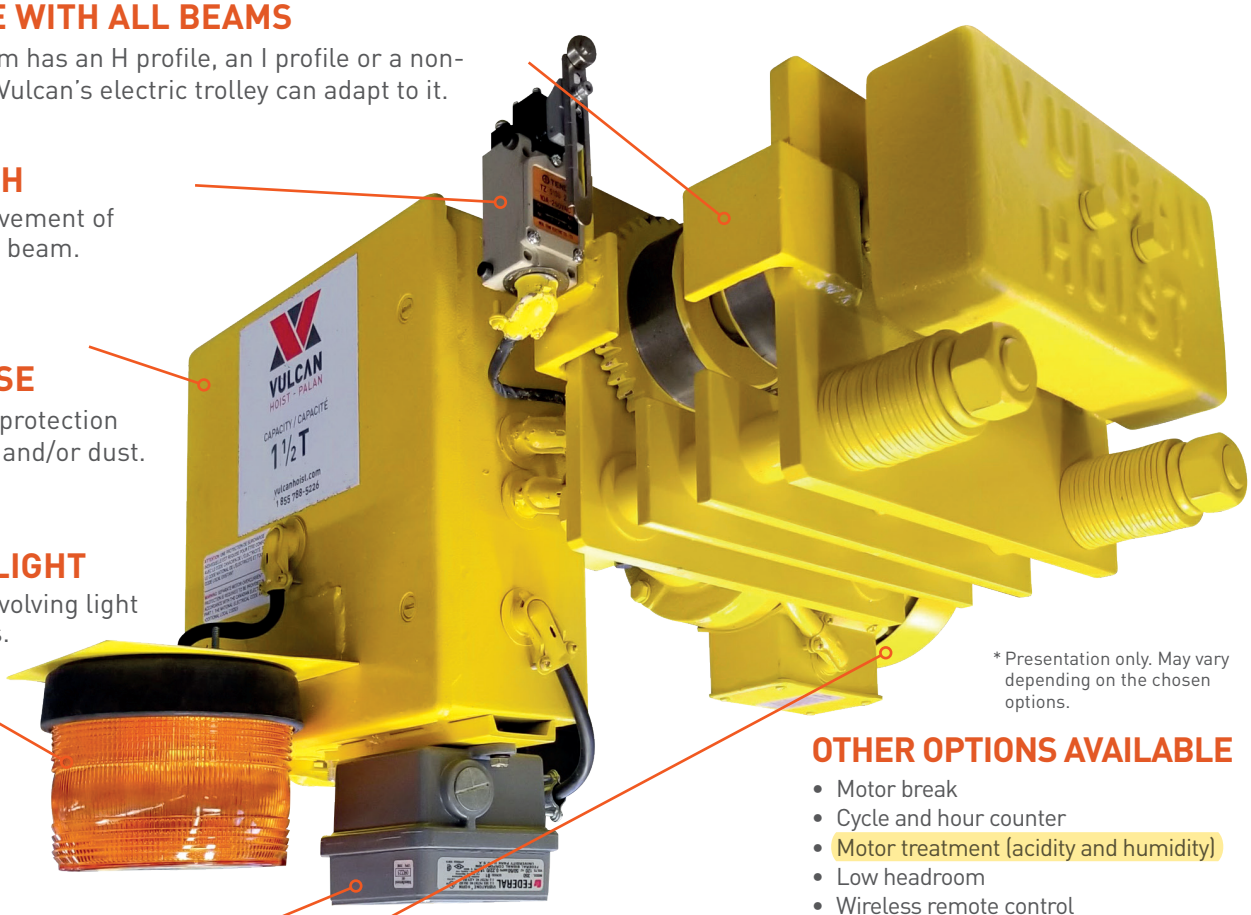


* Presentation only. May vary depending on the chosen options.

### HORN
Device produces a sound signal.

### MOTOR TREATMENTS
To use trolley in acidic, damp and/or dusty conditions.

### BASE FEATURES
- Emergency stop
- Thermal overload relay
- Controls & pendants
- TEFC motor
- Insulation Class F

### OTHER OPTIONS AVAILABLE
- Motor break
- Cycle and hour counter
- Motor treatment (acidity and humidity)
- Low headroom
- Wireless remote control
- Simultaneous control of multiple trolleys
- Synthetic oil
- Revolving light
- Buzzer / horn
- Festoon power system
- Travel limit switch
- Epoxy paint and custom colors
- NEMA 4 push button control pendant
- NEMA 4 & NEMA 12 control enclosure

PLEASE CONTACT US FOR MORE INFORMATIONS

3435, boul. Crémazie Est, Montréal (Québec) H1Z 2J2 / Tel.: 514 728.4527 / Fax: 514 374.4231 / vulcanhoist.com / info@vulcanhoist.com

# ELECTRIC TROLLEY

VULCAN HOIST - PALAN

## VULCAN'S ELECTRIC TROLLEY:

- Two-year warranty
- Sturdy design
- Machined-steel wheels and gears
- Built-in bumper and drop stop
- Single or double-speed motor
- Multiple travel speeds available
- ANSI/ASME B30.11 & CSA

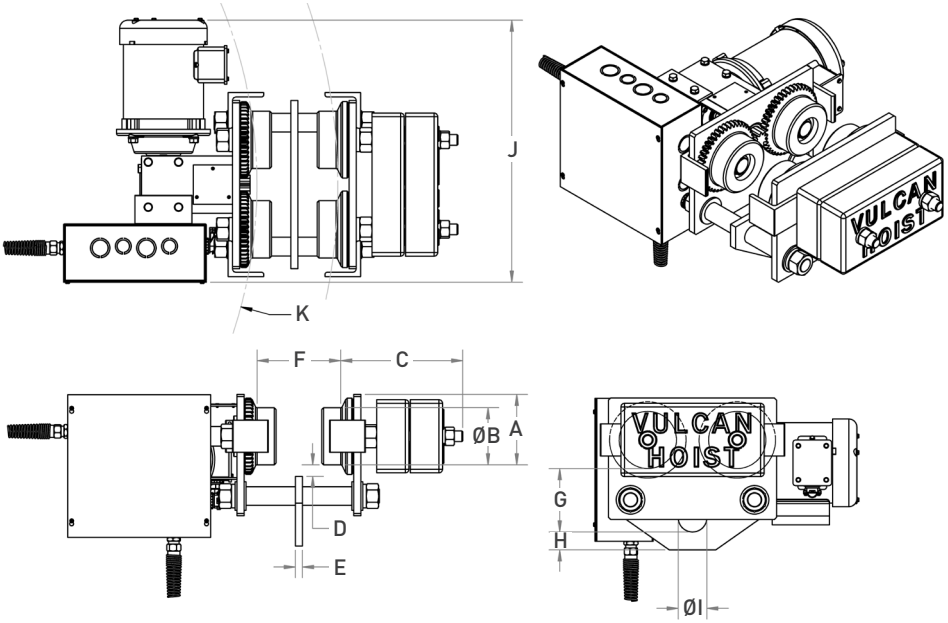


Like Vulcan's electric chain hoists, electric trolleys have a sturdy, durable design. Their wheels and gears are made of machined, case-hardened steel that provide a maximum resistance to wear. Bumpers and drop stops are built into the design to provide better safety and a protection against contacts.

The trolley design, with 2 support bolts (3 for the 10T model) provides an increased sturdiness under all load conditions.

Mainly designed to be used with Vulcan hoists, these trolleys can also be combined with hoists from other manufacturers on a wide array of H or I beam dimensions. Vulcan's electrical hoists are available with several travel speed options, as well as with a single speed or double-speed motor.

Lastly, depending on the chosen hoist-trolley combination and options, we carry a complete line of available controls, including wireless remote controls.

| MODEL | Capacity | A | B | C | D | E | F (Beam Flange)** | | G | H | I | J* | K (min. curve radius) | Counter-weight* | Weight (lb)* | Available speeds (fpm) (single-speed motor) | Available speeds (fpm) (double-speed motor) |
|---|---|---|---|---|---|---|---|---|---|---|---|---|---|---|---|---|---|
| | lb | | | | | | Min. | Max. | | | | | | | | | |
| ET1T | 2,000 | 4.0 | 2.8 | 7.8 | 0.75 | 0.38 | 2.50 | 5.50 | 4.3 | 1.00 | 2.0 | 18.5 | 28 | 2 | 156 | 9, 12, 18, 24, 36, 48, 72 | 18/6, 24/8, 36/12, 72/24 |
| ET2T | 4,000 | 4.9 | 4.0 | 8.5 | 0.81 | 0.50 | 4.00 | 6.50 | 4.4 | 1.25 | 2.0 | 18.5 | 33 | 1 | 170 | 9, 12, 18, 24, 36, 48, 72 | 18/6, 24/8, 36/12, 72/24 |
| ET3T | 6,000 | 5.8 | 4.5 | 5.8 | 0.81 | 0.63 | 4.00 | 6.50 | 5.8 | 1.25 | 2.0 | 18.8 | 35 | 1 | 207 | 9, 12, 18, 24, 36, 48 | 18/6, 24/8, 36/12 |
| ET5T | 10,000 | 6.3 | 5.3 | 6.0 | 0.69 | 0.63 | 4.00 | 7.00 | 6.2 | 1.25 | 2.0 | 19.8 | 50 | 1 | 267 | 9, 12, 18, 24, 36, 48 | 18/6, 24/8, 36/12 |
| ET10T | 20,000 | 7.4 | 6.0 | 4.2 | 1.63 | 0.75 | 4.00 | 6.25 | 9.3 | 1.81 | 2.5 | 21.5 | 61 | 0 | 390 | 18, 24, 36, 48 | 18/6, 24/8, 36/12 |

All measurements displayed in inches.

* Can vary depending on chosen options
** For larger beam flanges, please contact us

3435, boul. Crémazie Est, Montréal (Québec) H1Z 2J2 / Tel.: 514 728.4527 / Fax: 514 374.4231 / vulcanhoist.com / info@vulcanhoist.com

# SELF-LOCKING HOOK

VULCAN
HOIST - PALAN

## VULCAN'S SELF-LOCKING HOOK:

- Sturdy and safe build - requires minimal maintenance
- 1/4T to 5T capacity
- Complies with ANSI B30.10 and B30.16 standards
- 5:1 Safety Factor

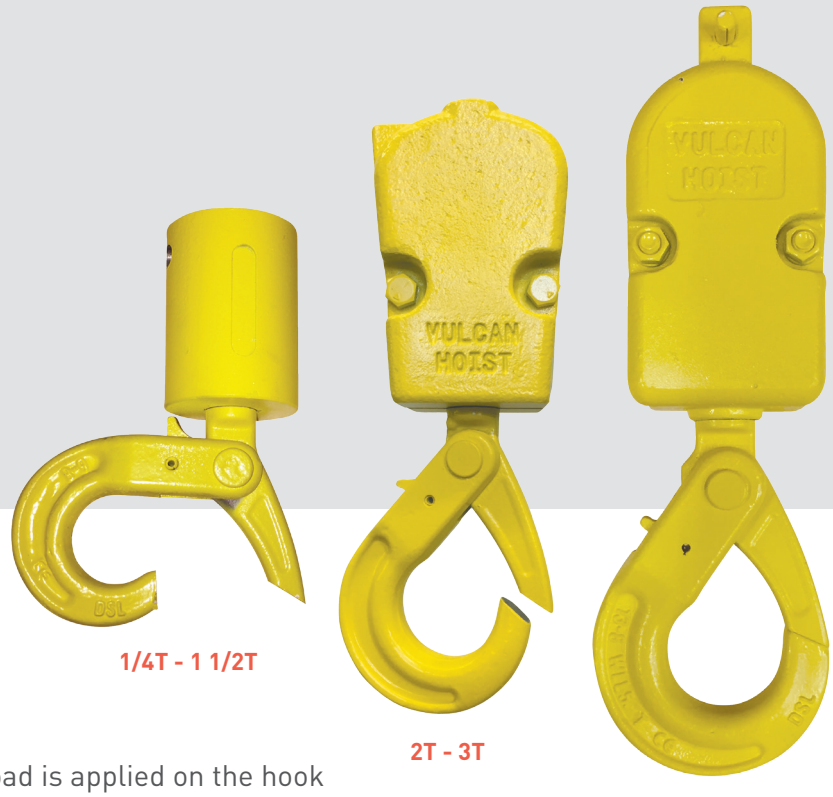


1/4T - 1 1/2T

2T - 3T

5T

### Sturdy

- Hook made of grade-80 forged steel alloy
- Safety yellow finish

### Safe

- Latch automatically closes and locks once load is applied on the hook
- Load fitting is secured inside the hook when hook is closed
- Once close, latch fits the hook profile perfectly

### Minimal maintenance

- No spring latch to replace
- Save time and money

### Easy to handle

- Simplified hook opening with ergonomic release

3435, boul. Crémazie Est, Montréal (Québec) H1Z 2J2 / Tel.: 514 728.4527 / Fax: 514 374.4231 / vulcanhoist.com / info@vulcanhoist.com

# SELF-LOCKING HOOK

VULCAN
HOIST - PALAN

## Vulcan hook for lifting mold installation

| MODEL | Capacity | Net weight | Dimensions | | | | | | | | |
|---|---|---|---|---|---|---|---|---|---|---|---|
| | | | A | B | C | D | D1 | E | I | J | K |
| | Tons (MT) | lb | in | | | | | | | | |
| HOPHL-301A | 0.25 | 0.75 | 3.66 | 0.81 | 2.75 | 1.09 | 1.30 | 0.91 | 1.31 | 0.88 | 0.47 |
| HOPHL-301B | 0.5 | 0.75 | 3.66 | 0.81 | 2.75 | 1.09 | 1.30 | 0.91 | 1.31 | 0.88 | 0.47 |
| HOPHL-301 | 1 | 0.75 | 3.66 | 0.81 | 2.75 | 1.09 | 1.30 | 0.91 | 1.31 | 0.88 | 0.47 |
| HOPHL-301C | 1.5 | 2.5 | 5.38 | 1.17 | 4.25 | 1.72 | 2.25 | 1.25 | 2.13 | 1.38 | 0.78 |
| HOPHL-302 | 2 | 2.5 | 5.38 | 1.17 | 4.25 | 1.72 | 2.25 | 1.25 | 2.13 | 1.38 | 0.78 |
| HOPHL-303 | 3 | 2.5 | 5.38 | 1.17 | 4.25 | 1.72 | 2.25 | 1.25 | 2.13 | 1.38 | 0.78 |
| HOPHL-305 | 5 | 6 | 6.50 | 1.56 | 5.31 | 2.00 | 2.50 | 1.50 | 2.50 | 1.72 | 0.84 |

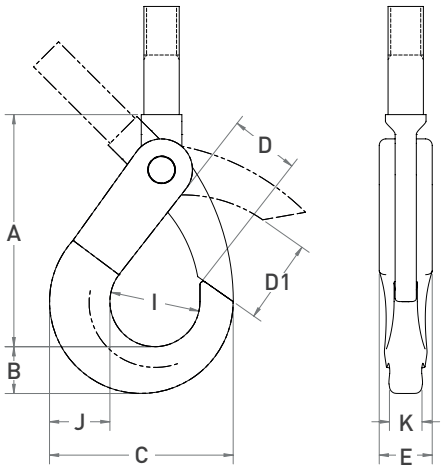


## Self-locking hook is also available already mounted in the Vulcan lifting mold

- 360-degree swivelling hook
- Steel ball bearing
- Shear-resisting steel alloy connecting pin for the chain

**1 FALL**
**1/4T - 1T**

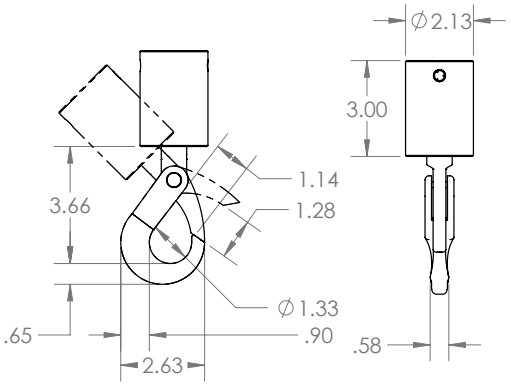


**2 FALLS**
**2T - 3T**

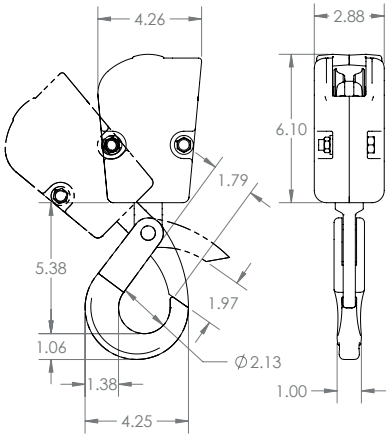


**1 FALL**
**1 1/2T**

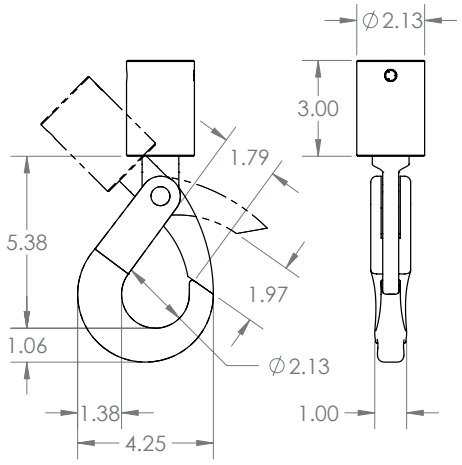


**3 FALLS**
**5T**

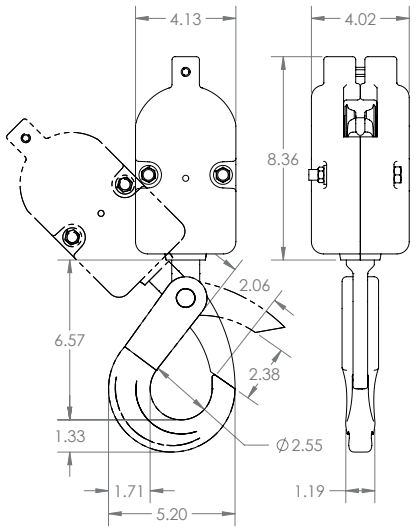


3435, boul. Crémazie Est, Montréal (Québec) H1Z 2J2 / Tel.: 514 728.4527 / Fax: 514 374.4231 / vulcanhoist.com / info@vulcanhoist.com

OLI

# VIBRATEURS INDUSTRIELS

## VIBRATEURS ÉLECTRIQUES POUR APPLICATIONS INDUSTRIELLES

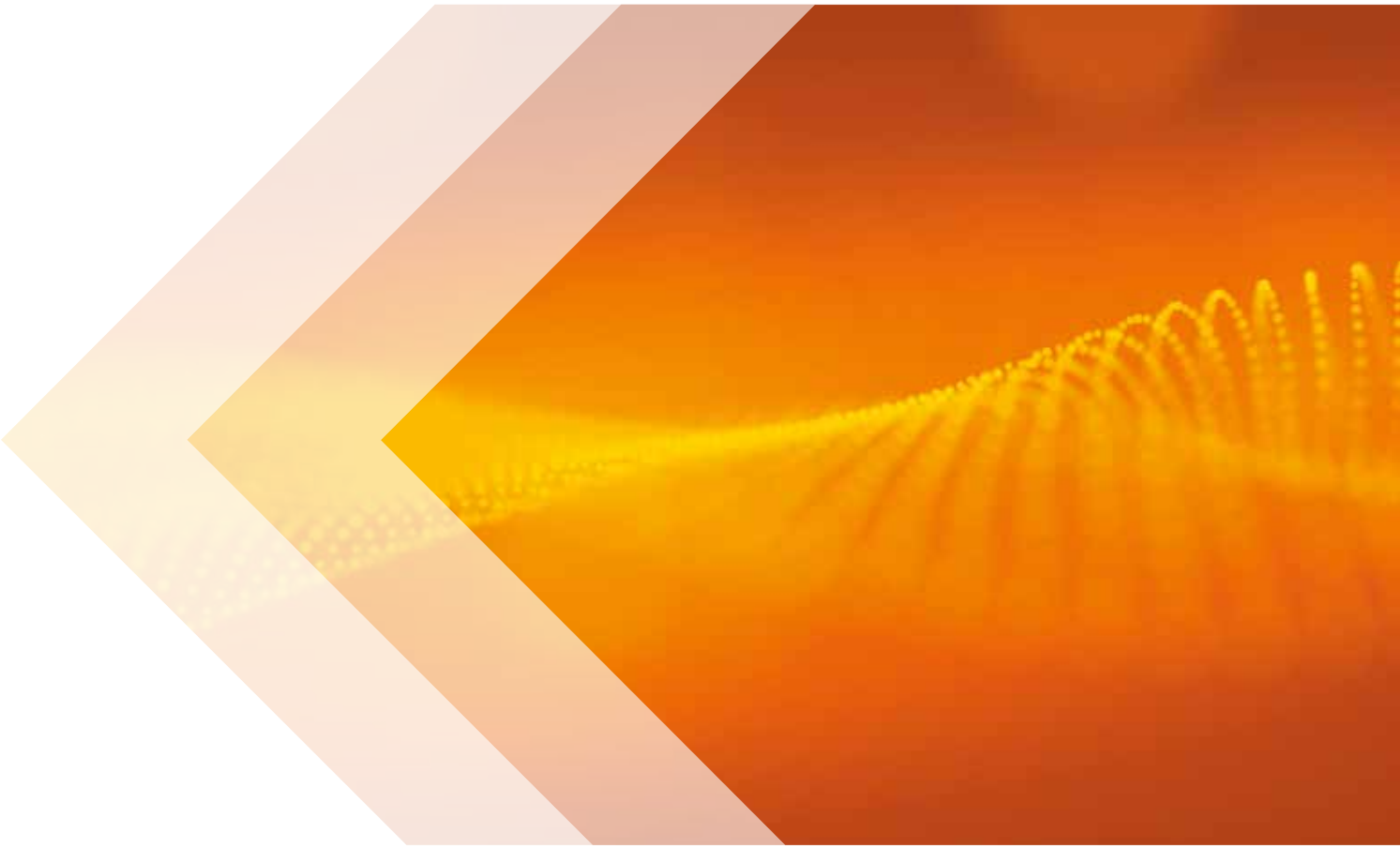

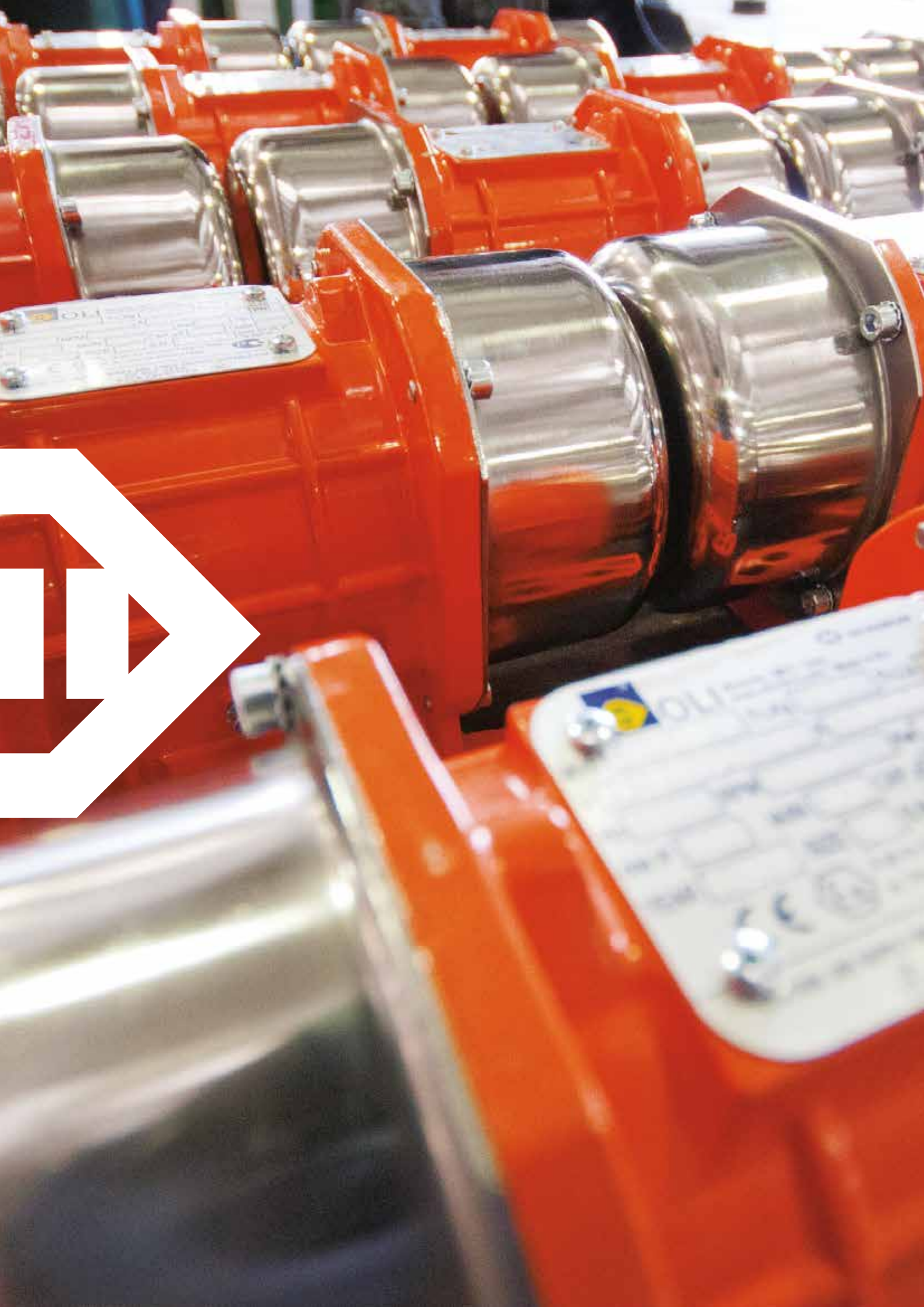



## Intro


Profil société 4
Caractéristiques techniques 6
Specifications standard 7
La gamme des vibrateurs OLI 8
Certifications 9
Comment choisir un motovibrateur? 10
Tensions nominales standard 11
Options 11


## MVE Gamme Standard


2 pôles 12
4 pôles 14
6 pôles 16
8 pôles 18
2 pôles monophasés 20
MICRO 22
MVE DC courant continu 24


## MVE-Exe Sécurité Accrue


2 pôles 26
4 pôles 28
6 pôles 30
8 pôles 32


## MVE-Exd Antidéflagrant


2 and 4 pôles 34
6 and 8 pôles 36


## MVE-Milling Minoterie


6, 8, 10, 12 pôles 38


## MVE-SV Spécial Crible


4 pôles 40


## MVE-SS Tout Inox


2, 4, 6, 8 pôles 42


## Installation


Montage 44
Comment modifier l'intensité des vibrations 46


## Dessins Techniques


Plan 2D pagina extra



# Leader mondial dans la technologie de vibration

OLI est **le leader global dans la fabrication des vibrateurs pneumatiques et électriques**. Un niveau élevé de service à la clientèle est garanti à travers 20 filiales de commerce OLI 70+ entrepots et nos 4 usines de fabrication dans le monde entier.

## LES 3 DIVISIONS OLI

### FOURNISSENT DES SOLUTIONS OPTIMALES POUR TOUTES LES EXIGENCES DES CLIENTS

| VIBRATEUR INDUSTRIELS | MATÉRIELS D'AIDE À L ÉCOULEMENT | CONSOLIDATION DU BÉTON |
|---|---|---|
|  |  |  |
| Vibarteurs électriques pour équipements vibrant. | Gamme complète de vibrateurs électriques et pneumatiques pour faciliter l'écoulement de produits. | Aiguilles vibrantes et convertisseur de fréquence pour une compaction efficace du béton. |



Initialement spécialisé dans les vibrateurs à immersion pour la compaction du béton, OLI est maintenant le leader mondial sur l'ensemble des technologies de la vibration, avec une **gamme complète de vibrateurs électriques et pneumatiques internes et externes.**

En fournissant des solutions et des **produits compétitifs de haute qualité pour les applications les plus rigoureuses**, OLI allie **performance** et **fiabilité** pour un marché en constante évolution. Promoteur de l'innovation, OLI s'efforce continuellement d'être en avance sur ses concurrents.

En tant que leader mondial dans les technologies de la vibration industrielle, l'une des principales préoccupations de la stratégie de OLI est la **livraison rapide à tout moment et partout dans le monde.**
Le service à la clientèle est d'une importance cruciale: il garantit le **traitement rapide des commandes** et les clients du monde entier peuvent avoir accès à des produits et des services de haute qualité.

Une equipe d'ingenieurs specialisees
dans la conception de solutions efficaces, fiables
et sures soutenues par un **management certifié**
**au niveau mondial permettent un partage de l'ensemble de nos expériences partout dans le monde.**

OLI fournit à ses clients des équipements de pointe  et le plan d'action pour la prochaine génération de produits est déjà en cours.



# CARACTÉRISTIQUES TECHNIQUES

## QUALITÉ



Matériaux de classe mondiale
Isolation classe F
Étanchéité durable
Roulements de qualité Premium
Conception robuste conçue FEM
Isolation sous vide
Analyse FMEA
Contrôle qualité 3D

## RENDEMENT

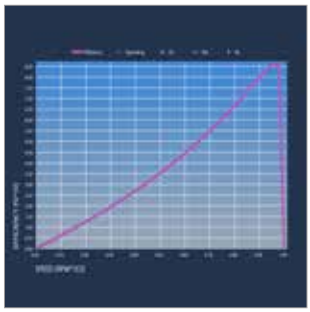

Rapport puissance/poids optimisé
Service continu S1
Conception électrique optimisée

## FIABILITÉ



Thermistance 130 °C
Dispositif de séparation de la graisse
Tropicalisation standard
Protection IP66
Isolation classe F

## FLEXIBILITÉ



Réglage facile de la masse
Différentes tensions et fréquences disponibles
Accès facile à la boîte de jonction
Anneaux de levage multiples



# Spécifications standards

| | GAMME | | | | | |
|---|---|---|---|---|---|---|
| Spécification | Standard | Sécurité accrue | Antidéflagrant | Minoterie | Spécial Crible | Tout Inox |
| **Alimentation électrique:** | Triphasé de 12V à 690V, 50Hz or 60Hz; Monophasé 110V 60Hz et 220V 50Hz. Les moteurs triphasés sont conçus pour les applications avec convertisseur. | Triphasés de 230 V à 500 V. 50 Hz à 60 Hz. Tous les moteurs sont conçus pour une application de type convertisseur de 20 Hz à la fréquence nominale. | Triphasés de 220 V à 575 V. 50 Hz à 60 Hz. Tous les moteurs sont conçus pour une application de type convertisseur de 20 Hz à la fréquence nominale. | | Triphasés de 220 V à 575 V. 50 Hz à 60 Hz. Tous les moteurs sont conçus pour une application de type convertisseur de 20 Hz à la fréquence nominale. | |
| **Temporisation** | Service continu (S1). | | | | | |
| **Structure de protection** | Protection mécanique IP66 selon CEI 60529. | | | | | |
| **Paliers** | Roulements à billes de la taille MICRO à 50. Roulements à rouleaux de la taille 60 à 110. | Roulements à billes de la taille 10 à 50. Roulements à rouleaux de la taille 60 à 90. | Roulements à rouleaux. | | | Roulements à billes de la taille 10 à 50 * Roulement à rouleaux pour taille 60. |
| **Couleur revêtement** | Revêtement en poudre polyester. Couleur standard RAL 2009. Peinture spéciale anticorrosion disponible sur demande sur la gamme Standard uniquement. | | | | | AISI 316 CORPS Sans revêtement |
| **Fixation** | Compatibilité avec les fixations des marques les plus connus, à la demande | | | | | / |
| **Installation et environnement de fonctionnement** | Pour utilisation à l'abri et en plein air | | | | | |
| | Température environnementale: -20 °C à +40 °C. Jusqu'à +55 ° C disponible sur demande. | Température environnementale: -20 °C à +40 °C. | Température environnementale: -20 °C à +40 °C. Jusqu'à +60 ° C disponible sur demande. | Température environnementale: -20 °C à +40 °C. | Température environnementale: -20 °C à +40 °C. | Température environnementale: -20 °C à +40 °C. |
| **Normes respectées** | Conformité avec la Directive européenne, Basse tension 2014/35/UE Directive Machines 2006/42/EC, ATEX 2014/34/UE | | | | | |
| **Couvercles masses** | Aluminium, pour vibrateurs de taille 10 à taille 50 et taille 100, 105, 110. Acier doux, de la taille 60 à la taille 91. Acier inoxydable AISI 304, pour motovibrateurs à courant continu. | Aluminium, pour vibrateurs de la taille 10 à la taille 50. Acier doux, de la taille 60 à la taille 91. | Acier inoxydable AISI 304 . | Acier. | Aluminium. | Acier inoxydable AISI 304 . |
| **Enroulements** | moteur asynchrone 2, 4, 6 et 8 pôles triphasés de taille 10 à 110; 2 pôles monophasé de taille 10 à 30. | moteur asynchrone 2, 4, 6 et 8 pôles triphasés. | | 6, 8 et 10 pôles moteur asynchrone triphasé. | 4 pôles. | moteur asynchrone 2, 4, 6 et 8 pôles triphasés. |
| | Matériaux d'isolement classe F (155 °C). Enroulements imprégnés sous vide; Thermistance 130 °C standard de taille 60. | | Interrupteur thermique 130 °C standard à partir de la taille 60. | Matériaux d'isolement classe F (155 °C). Enroulements imprégnés sous vide; Thermistance 130 °C standard de taille 60. | Interrupteur thermique 130 °C. | Matériaux d'isolement classe F (155 °C). Enroulements imprégnés sous vide. |
| **Brides** | Boîtier en fonte jusqu'à la taille 80 (y compris), fonte sphéroïdale à partir de la taille 100. | | | | Fonte sphéroïdale. | AISI 316 |
| **Cadre** | En aluminium jusqu'à la taille 50, fonte à partir de la taille 60. | | | | Aluminium. | AISI 316 |
| **Arbre** | Alliage d'acier hautement résistant au stress. | | | | | |
| **Masses excentriques** | Complètement réglable. | | | | | |

* Sauf pour MVE 710/15N-50A0 et MVE 510/1N-50A0

# La gamme des vibrateurs OLI

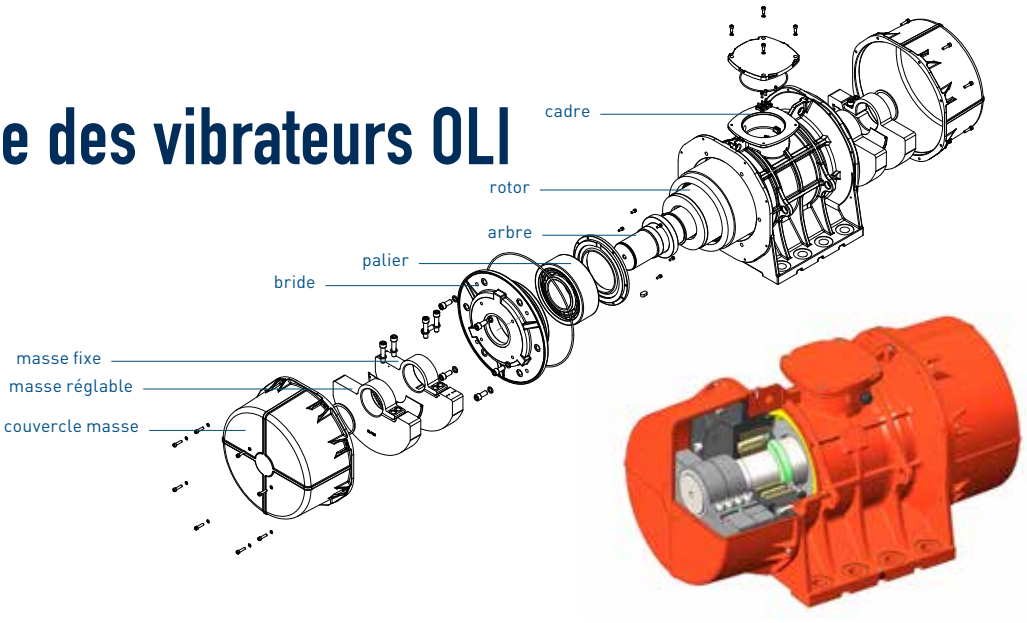


Fournissant une force centrifuge allant jusqu'a 26 000 kg et plusieurs tension d'alimentation possible, la gamme des moto-vibrateurs électriques OLI couvre plusieurs domaines d'application dans tous les pays et dans tous les secteurs industriels: des aliments aux minéraux, de la fonderie au recyclage et bien plus encore.
Les moto vibrateurs électriques OLI sont conçus et fabriqués en utilisant les dernières technologies et des matériaux et des composants haut de gamme.
Les corps des moteurs, les brides et les arbres de support sont conçus et fabriqués FMEA en alliage d'aluminium de première qualité, fonte et alliage d'acier pour résister aux applications lourdes et garantir un fonctionnement sans danger dans toutes les conditions.

Les enroulements imprégnés sous vide et les matériaux d'isolement classe F améliorent la fiabilité et la longévité.
Les roulements de qualité supérieure et le système de répartition de la graisse assurent une performance et une fiabilité sur le long terme.

Les masses excentriques réglables permettent un réglage facile de la force centrifuge fournie par le moteur.
Plusieurs certifications pour l'utilisation dans des environnements dangereux sont disponibles dans la gamme OLI afin de correspondre à la spécification plus exigeante dans le monde entier.

## ZONES ATEX

- RISQUE TRÈS OCCASIONEL
- RISQUE OCCASIONEL
- RISQUE CONSTANT

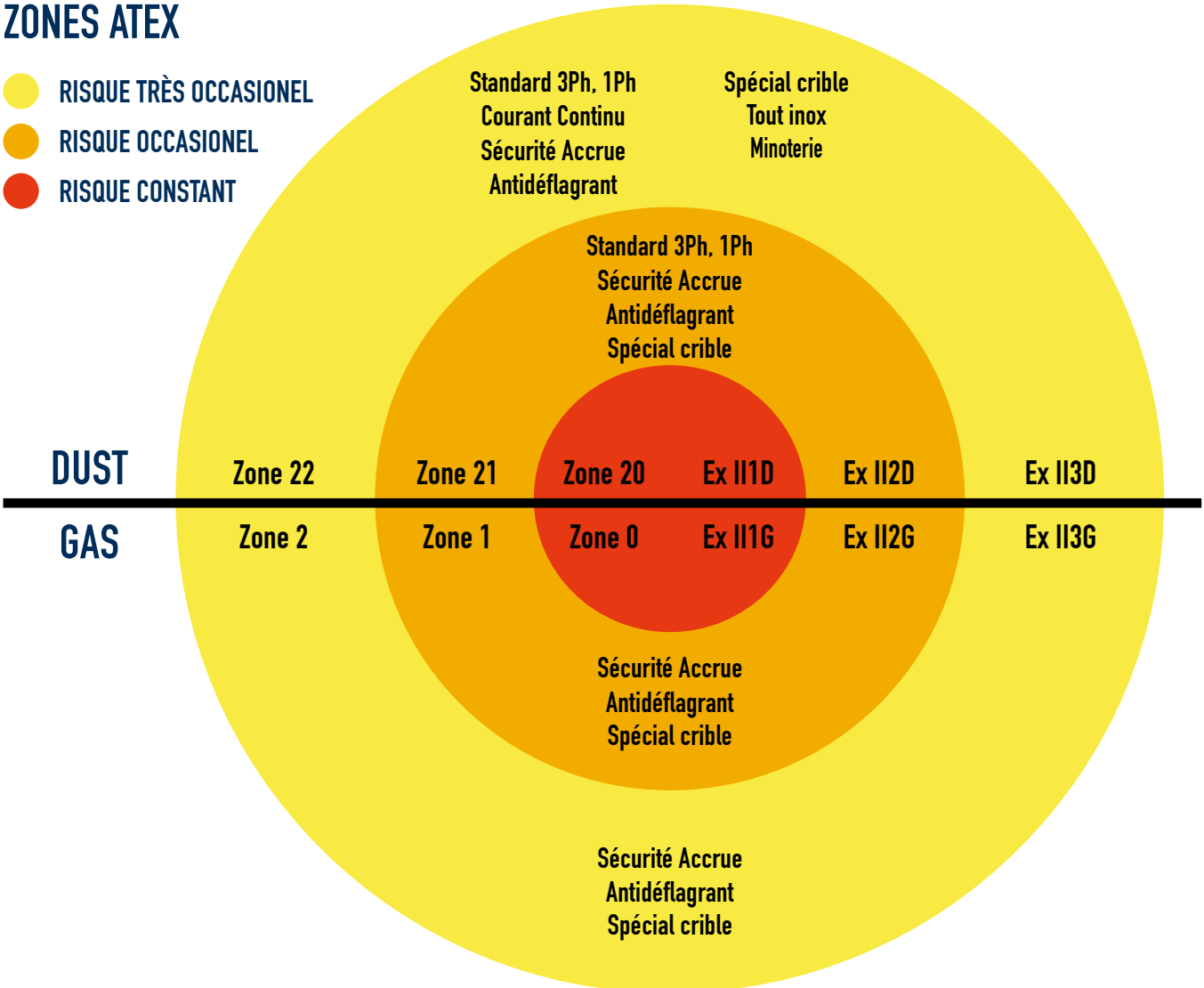

# Certifications

## Standard

Confirmité avec la directive Européene - Basse tension 2014/35/UE;Directive machine 2006/42/EC; ATEX 2014/34/UE - UL 1836. UL 1004-1 - SAC22.2 NO 25. 100. 145

| CATÉGORIE | CERTIFICATIONS | DIRECTIVE | GAZ | POUSSIÈRE |
|---|---|---|---|---|
| **ATEX zone 21**<br>Class II Div.2<br>Température nominale<br>-20/+40 °C * | | EN 60079-0, EN 60079-31 | n/a | II2D Ex tb IIIC Tx Db IP66 |
| | | IEC 60079-0, IEC 60079-31 | n/a | Ex tb IIIC Tx Db IP66 |
| | | UL 1004-1, UL 60079-0, UL 60079-31<br>CSA 22.2 100, CSA 22.2 60079-0,<br>CSA 22.2 60079-31 | n/a | Class II Div.2 Groups F, G T4 |

*Température ambiante de 55°C disponible à la demande

**Gamme MVE DC:** II3D Ex tc IIIC T100 IP66

Tx = T100°C jusqu'à la taille 30 inclus
Tx = T135°C à partir de la taille 40 et suppérieur"

## Traitement du grain, acier inoxydable et vibrateur à tamis

Confirmité avec la directive Européene - Basse tension 2014/35/UE; Directive machine 2006/42/EC; ATEX 2014/34/UE

| CATÉGORIE | CERTIFICATIONS | DIRECTIVE | GAZ | POUSSIÈRE |
|---|---|---|---|---|
| **ATEX zone 22**<br>Température nominale<br>-20/+40 °C | | EN 60079-0, EN 60079-31 | n/a | II3D Ex tc IIIC T100 IP66 |
| | | UL 1446, CSA C22.2 NO 0-10 | n/a | n/a |

## Sécurité Accrue

Confirmité avec la directive Européene - Basse tension 2014/35/UE; Directive machine 2006/42/EC; ATEX 2014/34/UE - UL 1836. UL 1004-1 - SAC22.2 NO 25. 100. 145

| CATÉGORIE | CERTIFICATIONS | DIRECTIVE | GAZ | POUSSIÈRE |
|---|---|---|---|---|
| **ATEX zone 1-21**<br>Class II Div.2 (dust)<br>Class I Div.2 (gas)<br>Température nominale<br>-20/+40 °C | | EN 60079-0, EN 60079-7 | II 2G Ex eb IIC T3 Gb | II2D Ex tb IIIC Tx Db IP66 |
| | | IEC 60079-0, IEC 60079-7 | Ex eb IIC T3 Gb | Ex tb IIIC Tx Db IP66 |
| | | UL 1004-1, UL 60079-0, UL 60079-7<br>CSA 22.2 100, CSA 22.2 60079-0,<br>CSA 22.2 60079-7 | Class I Div.2<br>Group A, B, C, D T3 | Class II Div.2 Groups F, G T4 |

Tx = T100°C jusqu'à la taille 30 inclus
Tx = T135°C à partir de la taille 40 et suppérieur"

## Antidéflagrant et vibrateur tamis

Confirmité avec la directive Européene - Basse tension 2014/35/UE; Directive machine 2006/42/EC; ATEX 2014/34/UE- UL 1836. UL 1004-1. UL 674 - CSAC22.2 NO 25. 100. 145

| CATÉGORIE | CERTIFICATIONS | DIRECTIVE | GAZ | POUSSIÈRE |
|---|---|---|---|---|
| **ATEX zone 1-21**<br>Class I Div.1<br>Class II Div.1 **<br>Température<br>nominale<br>-20/+60 °C | | EN 60079-0, EN 60079-31, EN 60079-1 | ATEX II 2G Ex db IIB T4 Gb | ATEX II 2D Ex tb IIIC T135°C Db |
| | | IEC 60079-0, IEC 60079-31,<br>IEC 60079-1 | IECEx Ex db IIB T4 Gb | IECEX Ex tb IIIC T135°C Db |
| | c UL us LISTED E488916 CLASS I DIV.1 GROUP C,D T4 | UL 1004-1,<br>UL 1004-3,UL1203;UL674,<br>CSA C22.2 No.145,<br>CSA C22.2 No.30-M1986. | CLASS I Div.1<br>Group C, D T4 IP66 | CLASS II Div.1 GROUP E,F,G** |

* Le vibrateur à tamis est également disponible avec les mêmes certifications que la gamme standard, non antidéflagrante, mentionnée dans le premier tableau de cette page.
** Bientôt disponible.

# Comment choisir un motovibrateur

## 1.

Choisissez tr/min et l'amplitude "e" (max. 0) adapté à votre application :

Vibration circulaire

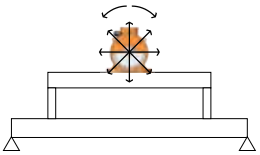

Vibration linéaire

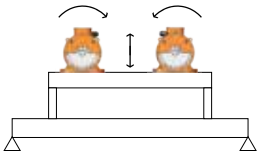

| Procédés d'application | Vibration | | Tours par minute | | | | | |
|---|---|---|---|---|---|---|---|---|
| | | | 50Hz | 750 | 1000 | 1500 | 3000 | 6000 |
| | Circulaire | Linéaire | 60Hz | 900 | 1200 | 1800 | 3600 | - |
| Transport | | ✓ | | | ✓ | ✓ | | |
| Séparation / Dégrillage / Dimensionnement | | ✓ | | ✓ | ✓ | ✓ | | |
| Positionnement / Dosage | | ✓ | | ✓ | ✓ | ✓ | | |
| Nettoyage filtre | ✓ | | | | | | ✓ | |
| Déchargement silo/ trémie | ✓ | | | | | | ✓ | |
| Lits fluidisés | | ✓ | | ✓ | ✓ | | | |
| Fonds vibrants | ✓ | | | | | ✓ | ✓ | |
| Compactage | | ✓ | | | | | ✓ | ✓ |
| Consolidation du béton | ✓ | | | | | | ✓ | ✓ |

| rpm | e (mm) | |
|---|---|---|
| | Min. | Max. |
| 3.600 | 0,3 | 0,6 |
| 3.000 | 0,3 | 0,8 |
| 1.800 | 1,2 | 2,2 |
| 1.500 | 1,4 | 2,6 |
| 1.200 | 2,5 | 4,0 |
| 1.000 | 3,0 | 5,2 |
| 9.00 | 3,5 | 5,5 |
| 750 | 3,5 | 6,0 |

## 2.

Choisissez un vibrateur MVE des tableaux des pages suivantes et utiliser son Wm dans cette formule:

$$e = 5 \times \frac{n \times Wm}{n \times M_{mot} + M_{vm}}$$

e = amplitude de vibration 0-pic (mm)

n = nombre de moteurs de vibration

Wm = moment dynamique (kgcm)

$M_{mot}$ = poids moteur (kg)

$M_{vm}$ = poids de la machine vibrante (sans matériel et moteurs)

## 3.

Vérifiez la valeur obtenue “e”:

- Si elle est similaire à celle nécessaire (étape 1) ➡ le modèle MVE est le bon.
- Si elle n’est pas similaire à celle nécessaire (étape 1) ➡ répétez le processus (étape 2) avec un modèle différent de MVE.

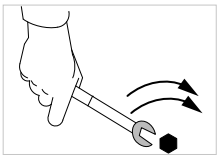

Pour obtenir des informations sur l’installation, voir annexe.

# Tensions nominales standard

Plusieurs tensions sont disponibles pour correspondre aux spécifications électriques locales
dans le monde entier à 50 Hz et 60 Hz.

Tous les vibrateurs OLI peuvent fonctionner avec une double tension en changeant simplement les connexions à l'intérieur de la boîte à bornes de **Star** à **Delta** ou vice-versa.

**En règle générale, les MVE avec une puissance nominale > 4,3kW ont une connexion de boîte à bornes Delta standard** , à la seule exception du MVE 5000/3E-75A1. **Les MVE plus petits ont une connexion de boîte à bornes Star standard.** Se référer aux tableaux de spécifications du produit pour voir le réglage d'usine de chaque modèle.
*Pour plus de détails sur les connexions « Star » et « Delta », voir page 45.*

| | Voltzahlen | Hz |
|---|---|---|
| | 200-230/345-400 V | 50/60 |
| | 220-240/380-415 V | 50 |
| | 380-415 V (Delta) * | 50 |
| | 230/460 V * | 60 |
| | 460 V (Delta) | 60 |
| | 330/575 V | 60 |
| | 575 V (Delta) * | 60 |
| | 460 V (Delta) | 60 |
| | 290-300/500-525 V | 50 |
| | 500-525 V (Delta) | 50 |
| | 207-253/414-480 V | 60 |
| | 220-240/380-415 V | 50 |
| | 220-277/380-480 V | 60 |
| | 380/415 V (Delta) | 50 |
| | 460 V (Delta) | 60 |

*** Tolérance de tension ± 10%**

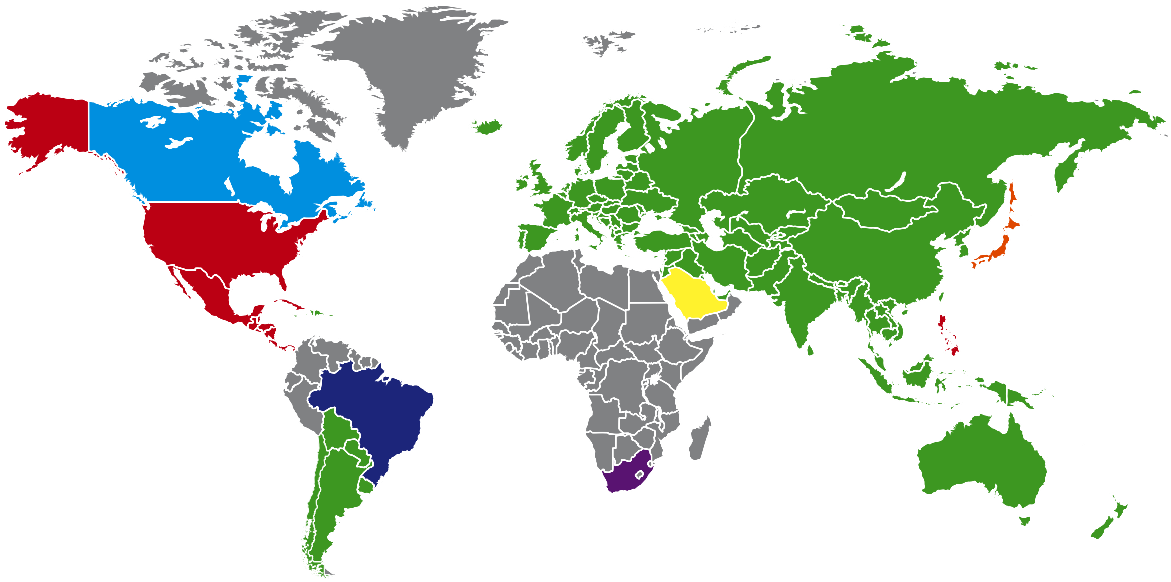

# Options



**ACIER-IT**
Spécialement développé pour les applications alimentaires avec un revêtement spécial contenant de l'acier inoxydable AiSi 316L.



**ARBRES ALLONGÉS**
Conçus pour l'utilisation de plusieurs vibrateurs.
Disponibles sur demande.



**COUVERCLES EN ACIER INOXYDABLE**
Disponibles avec une finition propre.
Couvercles de masse en acier inoxydable AiSi 304 (sur demande) pour les applications les plus exigeantes. Disponibles jusqu'à la taille 91.



**CHAUFFAGE**
À utiliser dans un environnement très froid.



**COUVERCLES FENDUS**
Développés pour les applications peu encombrantes. Disponibles à partir de la taille 60 et au-delà.



**EMPREINTE**
Empreinte du concurrent disponible sur demande.

**IMPORTANT:**
La tension nominale peut varier en fonction du niveau de certification admis lorsque certaines options sont choisies.

# MVE GAMME STANDARD

## 2 PÔLES – 3000/3600 rpm

Class II Div.2: Temp. Class **T4**
ExII 2D Temp. Class: ● 100 °C ● 135 °C

* Raccordements des bornes : **Y** Haute tension ; **Δ** Basse tension

| Wm (kgcm) | | Modèle | | Force centrifuge (kg) | | Poids (kg) | | SPÉCIFICATIONS ÉLECTRIQUES | | | | | | | | |
|---|---|---|---|---|---|---|---|---|---|---|---|---|---|---|---|---|
| | | | | | | | | Puissance d'entrée (kW) | | Courant nominal | | * Raccordements des bornes | Ia/In | | Presse-étoupe | |
| 50Hz | 60Hz | 50Hz | 60Hz | 50Hz | 60Hz | 50Hz | 60Hz | 50Hz | 60Hz | 50Hz (400V) | 60Hz (460V) | | 50Hz | 60Hz | Metrico | |
| 1,3 | 1,0 | MVE 60/3E-10A0 | MVE 60/36E-10A0 | 66 | 71 | 4 | | 0,09 | 0,09 | 0,25 | 0,23 | Y | 3,2 | 3,2 | M16 | ● |
| 2,0 | 1,3 | MVE 100/3E-10A0 | MVE 100/36E-10A0 | 98 | 95 | 5 | | 0,09 | 0,09 | 0,25 | 0,23 | Y | 3,2 | 3,2 | M16 | ● |
| 3,7 | 2,6 | MVE 200/3E-20A0 | MVE 200/36E-20A0 | 187 | 189 | 7 | | 0,15 | 0,18 | 0,35 | 0,30 | Y | 3,5 | 3,5 | M20 | ● |
| 3,7 | 2,6 | MVE 200/3E-23A0 | MVE 200/36E-23A0 | 187 | 189 | 7 | | 0,15 | 0,18 | 0,35 | 0,30 | Y | 3,5 | 3,5 | M20 | ● |
| 6,4 | 4,5 | MVE 300/3E-30A0 | MVE 300/36E-30A0 | 321 | 323 | 10 | | 0,25 | 0,28 | 0,52 | 0,45 | Y | 3,8 | 3,7 | M20 | ● |
| 8,0 | 5,7 | MVE 400/3E-30A0 | MVE 400/36E-30A0 | 407 | 411 | 10 | | 0,27 | 0,33 | 0,58 | 0,60 | Y | 3,7 | 3,7 | M20 | ● |
| 10,3 | 7,4 | MVE 500/3E-40A0 | MVE 500/36E-40A0 | 530 | 534 | 16 | | 0,50 | 0,58 | 0,96 | 0,97 | Y | 4,2 | 4,4 | M20 | ● |
| 14,9 | 10,6 | MVE 700/3E-40A0 | MVE 700/36E-40A0 | 758 | 765 | 17 | | 0,59 | 0,61 | 1,25 | 1,24 | Y | 4,5 | 5,2 | M20 | ● |
| 15,7 | 11,1 | MVE 800/3E-50A0 | MVE 800/36E-50A0 | 794 | 800 | 20 | | 0,70 | 0,84 | 1,45 | 1,50 | Y | 4,0 | 4,0 | M20 | ● |
| 20,3 | 14,0 | MVE 1200/3E-50A0 | MVE 1200/36E-50A0 | 1.005 | 1.013 | 21 | | 0,95 | 1,15 | 1,85 | 1,95 | Y | 4,6 | 4,7 | M20 | ● |
| 26,6 | 18,6 | MVE 1300/3E-50A0 | MVE 1300/36E-50A0 | 1.355 | 1.365 | 22 | | 1,30 | 1,38 | 2,44 | 2,25 | Y | 5,4 | 5,2 | M20 | ● |
| 26,6 | 18,6 | MVE 1300/3E-51A0 | MVE 1300/36E-51A0 | 1.355 | 1.365 | 22 | | 1,30 | 1,38 | 2,44 | 2,25 | Y | 5,4 | 5,2 | M20 | ● |
| 31,3 | 22,2 | MVE 1600/3E-60A0 | MVE 1600/36E-60A0 | 1.601 | 1.608 | 51 | 50 | 1,54 | 1,60 | 2,94 | 2,61 | Y | 6,1 | 6,4 | M25 | ● |
| 36,8 | 27,6 | MVE 2000/3E-60A0 | MVE 2000/36E-60A0 | 2.027 | 1.997 | 52 | 50 | 2,10 | 2,10 | 3,75 | 3,42 | Y | 6,7 | 6,6 | M25 | ● |
| 46,0 | 31,9 | MVE 2300/3E-60A0 | MVE 2300/36E-60A0 | 2.302 | 2.306 | 53 | 51 | 2,40 | 2,45 | 4,44 | 3,45 | Y | 6,2 | 6,5 | M25 | ● |
| 68,1 | 43,9 | MVE 3200/3E-75A1 | MVE 3200/36E-75A1 | 3.252 | 3.176 | 103 | 101 | 2,76 | 2,90 | 5,30 | 4,61 | Y | 8,5 | 8,4 | M32 | ● |
| 79,4 | 56,0 | MVE 4000/3E-75A1 | MVE 4000/36E-75A1 | 4.033 | 4.052 | 107 | 104 | 2,90 | 2,90 | 5,30 | 4,61 | Y | 8,7 | 9,9 | M32 | ● |
| 103,2 | 69,8 | MVE 5000/3E-75A1 | MVE 5000/36E-75A1 | 5.009 | 5.048 | 111 | 106 | 4,00 | 4,00 | 7,22 | 6,28 | Y | 8,7 | 10,0 | M32 | ● |
| 129,6 | 90,5 | MVE 6500/3E-85A0 | MVE 6500/36E-85A0 | 6.510 | 6.552 | 228 | 230 | 5,23 | 5,50 | 9,43 | 8,20 | Δ | 8,7 | 9,0 | M32 | ● |
| 179,6 | 129,6 | MVE 9000/3E-85A0 | MVE 9000/36E-85A0 | 9.025 | 9.375 | 240 | 235 | 9,50 | 9,30 | 17,80 | 14,40 | Δ | 8,6 | 8,8 | M32 | ● |
| 129,6 | 90,5 | MVE 6500/3E-86A0 | MVE 6500/36E-86A0 | 6.510 | 6.552 | 228 | 230 | 5,50 | 6,30 | 9,50 | 9,50 | Δ | 8,2 | 7,7 | M32 | ● |
| 179,6 | 129,6 | MVE 9000/3E-86A0 | MVE 9000/36E-86A0 | 9.025 | 9.375 | 240 | 235 | 6,60 | 7,70 | 11,50 | 11,50 | Δ | 8,2 | 8,2 | M32 | ● |

*Taille 10A0*



*Taille 60A0*



*Taille 105A0*



JUSQU'À LA TAILLE 60 (NON COMPRIS)
60Hz masses = 50Hz masses ajustées à 70%

SUPÉRIEUR À LA TAILLE 60 (Y COMPRIS)
Masses spécifiques pour 60Hz

Pour convertir les kg en Newton: N = 9.81 · kg

- II2D Ex tb IIIC Tx Db IP66
- Équipement et système de protection destinés pour l'utilisation en atmosphères explosibles (Zone 21) - Directive 2014/34/UE
- Conformité avec les Exigences Essentielles de Santé et de Sécurité
- IEC 60034-1, IEC EN 60079-0, IEC EN 60079-31

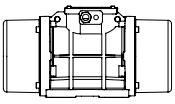

Dessins techniques sur la dernière page



| Modèle | | Dessein | Taille | SPÉCIFICATIONS DIMENSIONNELLES (mm) | | | | | | | | | | | | | | |
|---|---|---|---|---|---|---|---|---|---|---|---|---|---|---|---|---|---|---|
| | | | | C | | M | | A | B | Ø G | Trous | D | E | F | H | I | L | N |
| 50Hz | 60Hz | | | 50Hz | 60Hz | 50Hz | 60Hz | | | | N° | | | | | | | |
| MVE 60/3E-10A0 | MVE 60/36E-10A0 | A1 | 10A0 | 213 | | 45 | | Empreinte multiple | | | 4 | 130 | 135 | 11 | 50 | 96 | 107 | 85 |
| | | | | | | | | 62-74 | 106 | 9 | | | | | | | | |
| | | | | | | | | 33 | 83-102 | 7 | | | | | | | | |
| MVE 100/3E-10A0 | MVE 100/36E-10A0 | A1 | 10A0 | 213 | | 45 | | Empreinte multiple | | | 4 | 130 | 135 | 11 | 50 | 96 | 107 | 85 |
| | | | | | | | | 62-74 | 106 | 9 | | | | | | | | |
| | | | | | | | | 33 | 83-102 | 7 | | | | | | | | |
| MVE 200/3E-20A0 | MVE 200/36E-20A0 | B1 | 20A0 | 233 | | 54 | | 62-74 | 106 | 9 | 4 | 130 | 154 | 15 | 65 | 125 | 120 | 112 |
| MVE 200/3E-23A0 | MVE 200/36E-23A0 | G | 23A0 | 222 | | 55 | | Empreinte multiple | | | 4 | 164 | 140 | 25 | 82 | 116 | 159 | 110 |
| | | | | | | | | 62-74 | 106 | 9 | | | | | | | | |
| | | | | | | | | 65 | 140 | 13 | | | | | | | | |
| | | | | | | | | 115 | 135 | 11 | | | | | | | | |
| | | | | | | | | 135 | 115 | 11 | | | | | | | | |
| MVE 300/3E-30A0 | MVE 300/36E-30A0 | C1 | 30A0 | 254 | | 42 | | Empreinte multiple | | | 4 | 150 | 173 | 15 | 79 | 150 | 166 | 134 |
| | | | | | | | | 80 | 110 | 11 | | | | | | | | |
| | | | | | | | | 90 | 125 | 13 | | | | | | | | |
| | | | | | | | | 124 | 110 | 11 | | | | | | | | |
| | | | | | | | | 135 | 115 | 11 | | | | | | | | |
| MVE 400/3E-30A0 | MVE 400/36E-30A0 | C1 | 30A0 | 274 | | 52 | | Empreinte multiple | | | 4 | 150 | 173 | 15 | 79 | 150 | 166 | 134 |
| | | | | | | | | 80 | 110 | 11 | | | | | | | | |
| | | | | | | | | 90 | 125 | 13 | | | | | | | | |
| | | | | | | | | 124 | 110 | 11 | | | | | | | | |
| | | | | | | | | 135 | 115 | 11 | | | | | | | | |
| MVE 500/3E-40A0 | MVE 500/36E-40A0 | D1 | 40A0 | 330 | | 78 | | 105 | 140 | 13 | 4 | 170 | 196 | 20 | 92 | 169 | 166 | 158 |
| MVE 700/3E-40A0 | MVE 700/36E-40A0 | D1 | 40A0 | 330 | | 78 | | 105 | 140 | 13 | 4 | 170 | 196 | 20 | 92 | 169 | 166 | 158 |
| MVE 800/3E-50A0 | MVE 800/36E-50A0 | D1 | 50A0 | 321 | | 62 | | 120 | 170 | 17 | 4 | 208 | 210 | 22 | 96 | 185 | 192 | 170 |
| MVE 1200/3E-50A0 | MVE 1200/36E-50A0 | D1 | 50A0 | 321 | | 62 | | 120 | 170 | 17 | 4 | 208 | 210 | 22 | 96 | 185 | 192 | 170 |
| MVE 1300/3E-50A0 | MVE 1300/36E-50A0 | D1 | 50A0 | 321 | | 62 | | 120 | 170 | 17 | 4 | 208 | 210 | 22 | 96 | 185 | 192 | 170 |
| MVE 1300/3E-51A0 | MVE 1300/36E-51A0 | D1 | 51A0 | 326 | | 63 | | 120 | 170 | 17 | 4 | 208 | 220 | 25 | 105 | 203 | 192 | 187 |
| MVE 1600/3E-60A0 | MVE 1600/36E-60A0 | D1 | 60A0 | 402 | | 90 | | 140 | 190 | 17 | 4 | 230 | 260 | 26 | 124 | 240 | 218 | 222 |
| MVE 2000/3E-60A0 | MVE 2000/36E-60A0 | D1 | 60A0 | 402 | | 90 | | 140 | 190 | 17 | 4 | 230 | 260 | 26 | 124 | 240 | 218 | 222 |
| MVE 2300/3E-60A0 | MVE 2300/36E-60A0 | D1 | 60A0 | 402 | | 90 | | 140 | 190 | 17 | 4 | 230 | 260 | 26 | 124 | 240 | 218 | 222 |
| MVE 3200/3E-75A1 | MVE 3200/36E-75A1 | D1 | 75A1 | 516 | | 117 | | 155 | 255 | 25 | 4 | 304 | 314 | 30 | 147 | 285 | 277 | 265 |
| MVE 4000/3E-75A1 | MVE 4000/36E-75A1 | D1 | 75A1 | 516 | | 117 | | 155 | 255 | 25 | 4 | 304 | 314 | 30 | 147 | 285 | 277 | 265 |
| MVE 5000/3E-75A1 | MVE 5000/36E-75A1 | D1 | 75A1 | 564 | 516 | 141 | 117 | 155 | 255 | 25 | 4 | 304 | 314 | 30 | 147 | 285 | 277 | 265 |
| MVE 6500/3E-85A0 | MVE 6500/36E-85A0 | D1 | 85A0 | 624 | | 130 | | 200 | 320 | 28 | 4 | 385 | 402 | 40 | 203 | 394 | 360 | 378 |
| MVE 9000/3E-85A0 | MVE 9000/36E-85A0 | D1 | 85A0 | 624 | | 130 | | 200 | 320 | 28 | 4 | 385 | 402 | 40 | 203 | 394 | 360 | 378 |
| MVE 6500/3E-86A0 | MVE 6500/36E-86A0 | D1 | 86A0 | 624 | | 130 | | 200 | 320 | 28 | 4 | 385 | 402 | 40 | 203 | 394 | 360 | 378 |
| MVE 9000/3E-86A0 | MVE 9000/36E-86A0 | D1 | 86A0 | 624 | | 130 | | 200 | 320 | 28 | 4 | 385 | 402 | 40 | 203 | 394 | 360 | 378 |

## Note:

REMARQUE: Dimensions avec précision grossière conformément à UNI 22768/1

Ces informations sont fournies sans garantie, représentation, incitation ou licence d'aucune sorte. Les informations sont précises selon la connaissance de OLI ou sont obtenues de sources considérées comme exactes. OLI n'assume donc aucune responsabilité légale.
La dernière version du catalogue mis à jour est disponible en ligne.

Intertek

» Class II Div.2 Group F, G T4
» Conforme à UL 1004-1,UL 1004-3, UL60079-31, UL60079-0, CSA 60079-0, CSA 60079- 31, CSA 22.2 N°100, CSA 22.2 N°77

# MVE GAMME STANDARD

## 4 PÔLES – 1500/1800 rpm

Class II Div.2: Temp. Class **T4**
ExII 2D Temp. Class: ● 100 °C ● 135 °C

* Raccordements des bornes : **Y** Haute tension ; **Δ** Basse tension

| Wm (Kgcm) | | Modèle | | Force centrifuge (kg) | | Poids (kg) | | SPÉCIFICATIONS ÉLECTRIQUES | | | | | | | | |
|---|---|---|---|---|---|---|---|---|---|---|---|---|---|---|---|---|
| | | | | | | | | Puissance d'entrée (kW) | | Courant nominal | | * Raccordements des bornes | Ia/In | | Presse-étoupe | |
| 50Hz | 60Hz | 50 Hz | 60 Hz | 50Hz | 60Hz | 50Hz | 60Hz | 50Hz | 60Hz | 50Hz (400V) | 60Hz (460V) | | 50Hz | 60Hz | Metrico | |
| 2.0 | 2.0 | MVE 40/15E-10A0 | MVE 40/18E-10A0 | 25 | 36 | 5 | | 0,05 | 0,04 | 0,31 | 0,31 | Y | 2,2 | 2,2 | M16 | ● |
| 6.0 | 4.2 | MVE 90/15E-20A0 | MVE 90/18E-20A0 | 75 | 76 | 7 | | 0,07 | 0,08 | 0,31 | 0,25 | Y | 2,2 | 2,2 | M20 | ● |
| 6.0 | 4.2 | MVE 90/15E-23A0 | MVE 90/18E-23A0 | 75 | 76 | 7 | | 0,07 | 0,08 | 0,31 | 0,25 | Y | 2,2 | 2,2 | M20 | ● |
| 7.7 | 5,4 | MVE 100/15E-20A0 | MVE 100/18E-20A0 | 97 | 98 | 7 | | 0.07 | 0.08 | 0.31 | 0.25 | Y | 2.2 | 2.2 | M20 | ● |
| 15.4 | 10.8 | MVE 200/15E-30A0 | MVE 200/18E-30A0 | 194 | 196 | 12 | | 0,12 | 0,15 | 0,49 | 0,50 | Y | 2,2 | 2,2 | M20 | ● |
| 33.4 | 23.4 | MVE 400/15E-40A0 | MVE 400/18E-40A0 | 420 | 423 | 20 | | 0,27 | 0,32 | 0,84 | 0,86 | Y | 2,7 | 2,7 | M20 | ● |
| 40.1 | 28.1 | MVE 500/15E-40A0 | MVE 500/18E-40A0 | 504 | 508 | 21 | | 0,35 | 0,40 | 1,06 | 1,09 | Y | 3,0 | 2,9 | M20 | ● |
| 26.6 | 18.6 | MVE 300/15E-50A0 | MVE 300/18E-50A0 | 334 | 336 | 22 | | 0,62 | 0,73 | 1,32 | 1,20 | Y | 3,2 | 3,4 | M20 | ● |
| 26.6 | 18.6 | MVE 300/15E-51A0 | MVE 300/18E-51A0 | 334 | 336 | 22 | | 0,62 | 0,73 | 1,32 | 1,20 | Y | 3,2 | 3,4 | M20 | ● |
| 56.8 | 39.4 | MVE 700/15E-50A0 | MVE 700/18E-50A0 | 714 | 712 | 27 | | 0,62 | 0,73 | 1,32 | 1,20 | Y | 3,2 | 3,4 | M20 | ● |
| 56.8 | 39.4 | MVE 710/15E-50A0 | MVE 710/18E-50A0 | 714 | 712 | 27 | | 0,62 | 0,73 | 1,32 | 1,20 | Y | 3,2 | 3,4 | M20 | ● |
| 75.6 | 52.9 | MVE 950/15E-50A0 | MVE 950/18E-50A0 | 950 | 957 | 33 | | 0,64 | 0,77 | 1,40 | 1,35 | Y | 4,2 | 4,2 | M20 | ● |
| 87.7 | 61.4 | MVE 1100/15E-51A0 | MVE 1100/18E-51A0 | 1.102 | 1.110 | 35 | 28,5 | 0,64 | 0,77 | 1,40 | 1,35 | Y | 4,0 | 4,0 | M20 | ● |
| 108.6 | 76.7 | MVE 1400/15E-60A0 | MVE 1400/18E-60A0 | 1.364 | 1.388 | 63,5 | 60,5 | 0,70 | 0,84 | 1,78 | 1,78 | Y | 4,2 | 4,2 | M25 | ● |
| 137.3 | 92.0 | MVE 1700/15E-60A0 | MVE 1700/18E-60A0 | 1.725 | 1.664 | 67,5 | 64 | 1,13 | 1,30 | 2,16 | 2,09 | Y | 4,9 | 4,7 | M25 | ● |
| 187.7 | 137.4 | MVE 2400/15E-60A0 | MVE 2400/18E-60A0 | 2.358 | 2.485 | 68 | 65 | 1,57 | 1,88 | 3,20 | 3,20 | Y | 5,1 | 5,1 | M25 | ● |
| 203.5 | 135.6 | MVE 2500/15E-70A0 | MVE 2500/18E-70A0 | 2.557 | 2.454 | 86,5 | 74 | 1,76 | 2,00 | 3,08 | 3,00 | Y | 6,2 | 6,3 | M25 | ● |
| 248.7 | 169.8 | MVE 3000/15E-70A0 | MVE 3000/18E-70A0 | 3.124 | 3.071 | 94,5 | 87 | 1,90 | 2,30 | 3,68 | 3,30 | Y | 6,7 | 6,8 | M25 | ● |
| 306.7 | 204.7 | MVE 3800/15E-75A0 | MVE 3800/18E-75A0 | 3.853 | 3.704 | 125 | 113 | 2,20 | 2,60 | 4,15 | 4,15 | Y | 7,0 | 7,0 | M32 | ● |
| 343.2 | 240.9 | MVE 4300/15E-75A0 | MVE 4300/18E-75A0 | 4.312 | 4.359 | 136 | 120 | 2,50 | 3,00 | 4,50 | 4,60 | Y | 7,2 | 7,4 | M32 | ● |
| 437.4 | 303.7 | MVE 5500/15E-80A0 | MVE 5500/18E-80A0 | 5.495 | 5.495 | 181 | 169 | 2,88 | 3,45 | 6,50 | 5,50 | Y | 7,3 | 7,2 | M32 | ● |
| 576.8 | 397.3 | MVE 7200/15E-85A0 | MVE 7200/18E-85A0 | 7.246 | 7.188 | 237 | 231 | 4,00 | 4,80 | 8,50 | 8,70 | Δ | 7,0 | 7,1 | M32 | ● |
| 718.0 | 498.8 | MVE 9000/15E-85A0 | MVE 9000/18E-85A0 | 9.020 | 9.023 | 252 | 241 | 7,35 | 8,50 | 13,40 | 12,00 | Δ | 7,2 | 7,2 | M32 | ● |
| 579.9 | 406.0 | MVE 7200/15E-86A0 | MVE 7200/18E-86A0 | 7.286 | 7.345 | 237 | 231 | 6,00 | 6,50 | 11,00 | 10,80 | Δ | 4,7 | 4,5 | M32 | ● |
| 724.8 | 507.0 | MVE 9000/15E-86A0 | MVE 9000/18E-86A0 | 9.106 | 9.172 | 252 | 241 | 6,00 | 6,50 | 11,00 | 10,80 | Δ | 4,7 | 4,5 | M32 | ● |
| 800.1 | 588.3 | MVE 10000/15E-90A0 | MVE 10000/18E-90A0 | 10.052 | 10.643 | 300 | 286 | 5,40 | 7,00 | 13,00 | 13,00 | Δ | 6,7 | 6,6 | M32 | ● |
| 835.7 | 581.3 | MVE 10000/15E-91A0 | MVE 10000/18E-91A0 | 10.499 | 10.517 | 300 | 286 | 7,00 | 8,20 | 13,10 | 13,10 | Δ | 7,2 | 7,7 | M32 | ● |
| 939 | 655 | MVE 11500/15E-100A0 | MVE 11500/18E-100A0 | 11.779 | 11.853 | 445 | 422 | 9,00 | 10,00 | 15,50 | 15,50 | Δ | 7,0 | 7,0 | M32 | ● |
| 1.142 | 838 | MVE 14500/15E-100A0 | MVE 14500/18E-100A0 | 14.352 | 15.153 | 460 | 442 | 11,00 | 13,00 | 18,50 | 18,50 | Δ | 8,0 | 8,0 | M32 | ● |

JUSQU'À LA TAILLE 60 (NON COMPRIS)
60Hz masses = 50Hz masses ajustées à 70%

Ausgenommen Type MVE 1100/15 - 1100/18

SUPÉRIEUR À LA TAILLE 60 (Y COMPRIS)
Masses spécifiques pour 60Hz

Pour convertir les kg en Newton: N = 9.81 · kg

- II2D Ex tb IIIC Tx Db IP66
- Équipement et système de protection destinés pour l'utilisation en atmosphères explosibles (Zone 21) - Directive 2014/34/UE
- Conformité avec les Exigences Essentielles de Santé et de Sécurité
- IEC 60034-1, IEC EN 60079-0, IEC EN 60079-31

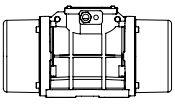

Dessins techniques sur la dernière page



| Modèle | | Dessein | Taille | SPÉCIFICATIONS DIMENSIONNELLES (mm) | | | | | | | | | | | | | | |
|---|---|---|---|---|---|---|---|---|---|---|---|---|---|---|---|---|---|---|
| | | | | C | | M | | A | B | Ø G | Trous | D | E | F | H | I | L | N |
| 50 Hz | 60 Hz | | | 50Hz | 60Hz | 50Hz | 60Hz | | | | N° | | | | | | | |
| MVE 40/15E-10A0 | MVE 40/18E-10A0 | A | 10A0 | 213 | | 45 | | Empreinte multiple<br>62-74<br>33 | 106<br>83-102 | 9<br>7 | 4 | 130 | 135 | 11 | 50 | 96 | 107 | 85 |
| MVE 90/15E-20A0 | MVE 90/18E-20A0 | B | 20A0 | 233 | | 54 | | 62-74 | 106 | 9 | 4 | 130 | 154 | 15 | 65 | 125 | 120 | 112 |
| MVE 90/15E-23A0 | MVE 90/18E-23A0 | G | 23A0 | 222 | | 55 | | Empreinte multiple<br>62-74<br>65<br>115<br>135 | 106<br>140<br>135<br>115 | 9<br>13<br>11<br>11 | 4 | 164 | 140 | 25 | 82 | 116 | 159 | 110 |
| MVE 100/15E-20A0 | MVE 100/18E-20A0 | B | 20A0 | 233 | | 54 | | 62-74 | 106 | 9 | 4 | 130 | 154 | 15 | 65 | 125 | 120 | 112 |
| MVE 200/15E-30A0 | MVE 200/18E-30A0 | C | 30A0 | 274 | | 52 | | Empreinte multiple<br>80<br>90<br>124<br>135 | 110<br>125<br>110<br>115 | 11<br>13<br>11<br>11 | 4 | 150 | 173 | 15 | 79 | 150 | 166 | 134 |
| MVE 400/15E-40A0 | MVE 400/18E-40A0 | D1 | 40A0 | 330 | | 78 | | 105 | 140 | 13 | 4 | 170 | 196 | 20 | 92 | 174 | 166 | 160 |
| MVE 500/15E-40A0 | MVE 500/18E-40A0 | D1 | 40A0 | 330 | | 78 | | 105 | 140 | 13 | 4 | 170 | 196 | 20 | 92 | 174 | 166 | 160 |
| MVE 300/15E-50A0 | MVE 300/18E-50A0 | D1 | 50A0 | 321 | | 62 | | 120 | 170 | 17 | 4 | 208 | 210 | 22 | 96 | 185 | 192 | 170 |
| MVE 300/15E-51A0 | MVE 300/18E-51A0 | D1 | 51A0 | 326 | | 63 | | 120 | 170 | 17 | 4 | 208 | 220 | 25 | 105 | 202 | 192 | 187 |
| MVE 700/15E-50A0 | MVE 700/18E-50A0 | D1 | 50A0 | 391 | | 97 | | 120 | 170 | 17 | 4 | 208 | 210 | 22 | 96 | 185 | 192 | 170 |
| MVE 710/15E-50A0 | MVE 710/18E-50A0 | D1 | 50A0 | 391 | | 97 | | 120 | 170 | 17 | 4 | 208 | 210 | 22 | 96 | 185 | 192 | 170 |
| MVE 950/15E-50A0 | MVE 950/18E-50A0 | D1 | 50A0 | 455 | | 129 | | 120 | 170 | 17 | 4 | 208 | 210 | 22 | 96 | 185 | 192 | 170 |
| MVE 1100/15E-51A0 | MVE 1100/18E-51A0 | D1 | 51A0 | 414 | | 106 | | 120 | 170 | 17 | 4 | 208 | 220 | 25 | 105 | 202 | 192 | 187 |
| MVE 1400/15E-60A0 | MVE 1400/18E-60A0 | D1 | 60A0 | 446 | | 112 | | 140 | 190 | 17 | 4 | 230 | 260 | 26 | 124 | 240 | 218 | 222 |
| MVE 1700/15E-60A0 | MVE 1700/18E-60A0 | D1 | 60A0 | 446 | | 112 | | 140 | 190 | 17 | 4 | 230 | 260 | 26 | 124 | 240 | 218 | 222 |
| MVE 2400/15E-60A0 | MVE 2400/18E-60A0 | D1 | 60A0 | 490 | 446 | 134 | 112 | 140 | 190 | 17 | 4 | 230 | 260 | 26 | 124 | 240 | 218 | 222 |
| MVE 2500/15E-70A0 | MVE 2500/18E-70A0 | D1 | 70A0 | 501 | | 123 | | 155 | 225 | 22 | 4 | 275 | 290 | 30 | 140 | 256 | 250 | 236 |
| MVE 3000/15E-70A0 | MVE 3000/18E-70A0 | D1 | 70A0 | 535 | 501 | 140 | 123 | 155 | 225 | 22 | 4 | 275 | 290 | 30 | 140 | 256 | 250 | 236 |
| MVE 3800/15E-75A0 | MVE 3800/18E-75A0 | D1 | 75A0 | 564 | 536 | 151 | 117 | 155 | 255 | 23.5 | 4 | 304 | 314 | 30 | 147 | 285 | 277 | 265 |
| MVE 4300/15E-75A0 | MVE 4300/18E-75A0 | D1 | 75A0 | 584 | 564 | 151 | 141 | 155 | 255 | 23.5 | 4 | 304 | 314 | 30 | 147 | 285 | 277 | 265 |
| MVE 5500/15E-80A0 | MVE 5500/18E-80A0 | D1 | 80A0 | 603 | | 143 | | 180 | 280 | 26 | 4 | 332 | 360 | 37 | 167 | 345 | 304 | 310 |
| MVE 7200/15E-85A0 | MVE 7200/18E-85A0 | D1 | 85A0 | 624 | | 130 | | 200 | 320 | 28 | 4 | 385 | 402 | 40 | 203 | 394 | 360 | 378 |
| MVE 9000/15E-85A0 | MVE 9000/18E-85A0 | D1 | 85A0 | 624 | | 130 | | 200 | 320 | 28 | 4 | 385 | 402 | 40 | 203 | 394 | 360 | 378 |
| MVE 7200/15E-86A0 | MVE 7200/18E-86A0 | D1 | 86A0 | 624 | | 130 | | 200 | 320 | 28 | 4 | 385 | 402 | 40 | 203 | 394 | 360 | 378 |
| MVE 9000/15E-86A0 | MVE 9000/18E-86A0 | D1 | 86A0 | 624 | | 130 | | 200 | 320 | 28 | 4 | 385 | 402 | 40 | 203 | 394 | 360 | 378 |
| MVE 10000/15E-90A0 | MVE 10000/18E-90A0 | E1 | 90A0 | 728 | | 170 | | 125 | 380 | 39 | 6 | 452 | 415 | 40 | 205 | 394 | 380 | 378 |
| MVE 10000/15E-91A0 | MVE 10000/18E-91A0 | E1 | 91A0 | 728 | | 170 | | 125 | 380 | 39 | 6 | 452 | 415 | 40 | 205 | 394 | 380 | 378 |
| MVE 11500/15E-100A0 | MVE 11500/18E-100A0 | E | 100 | 890 | | 210 | | 140 | 440 | 45 | 6 | 530 | 484 | 37 | 232 | 446 | 470 | 424 |
| MVE 14500/15E-100A0 | MVE 14500/18E-100A0 | E | 100 | 890 | | 210 | | 140 | 440 | 45 | 6 | 530 | 484 | 37 | 232 | 446 | 470 | 424 |

REMARQUE: Dimensions avec précision grossière conformément à UNI 22768/1

Ces informations sont fournies sans garantie, représentation, incitation ou licence d'aucune sorte. Les informations sont précises selon la connaissance de OLI ou sont obtenues de sources considérées comme exactes. OLI n'assume donc aucune responsabilité légale.
La dernière version du catalogue mis à jour est disponible en ligne.

» Class II Div.2 Group F, G T4
» Conforme à UL 1004-1,UL 1004-3, UL60079-31, UL60079-0, CSA 60079-0, CSA 60079- 31, CSA 22.2 N°100, CSA 22.2 N°77

# MVE GAMME STANDARD

## 6 PÔLES – 1000/1200 rpm

Class II Div.2: Temp. Class **T4**
ExII 2D Temp. Class: 100 °C 135 °C

* Raccordements des bornes : **Y** Haute tension ; **Δ** Basse tension

| Wm (Kgcm) | | Modèle | | Force centrifuge (kg) | | Poids (kg) | | SPÉCIFICATIONS ÉLECTRIQUES | | | | | | | | |
|---|---|---|---|---|---|---|---|---|---|---|---|---|---|---|---|---|
| | | | | | | | | Puissance d'entrée (kW) | | Courant nominal | | * | Ia/In | | Presse-étoupe | |
| 50Hz | 60Hz | 50Hz | 60Hz | 50Hz | 60Hz | 50Hz | 60Hz | 50Hz | 60Hz | 50Hz (400V) | 60Hz (460V) | Raccordements des bornes | 50Hz | 60Hz | Metrico | |
| 9,5 | 6,6 | MVE 50/1E-30A0 | MVE 50/12E-30A0 | 53 | 53 | 10 | | 0,12 | 0,14 | 0,30 | 0,40 | Y | 2,2 | 2,2 | M20 | ● |
| 18,8 | 13,2 | MVE 100/1E-30A0 | MVE 100/12E-30A0 | 105 | 106 | 11 | | 0,12 | 0,14 | 0,30 | 0,40 | Y | 2,2 | 2,2 | M20 | ● |
| 33,5 | 23,4 | MVE 200/1E-40A0 | MVE 200/12E-40A0 | 187 | 188 | 19 | | 0,15 | 0,18 | 0,65 | 0,63 | Y | 2,2 | 2,2 | M20 | ● |
| 56,9 | 39,9 | MVE 300/1E-50A0 | MVE 300/12E-50A0 | 318 | 320 | 26 | | 0,25 | 0,30 | 0,67 | 0,64 | Y | 2,7 | 2,7 | M20 | ● |
| 91,9 | 64,3 | MVE 500/1E-50A0 | MVE 500/12E-50A0 | 513 | 517 | 34 | | 0,55 | 0,40 | 1,22 | 1,15 | Y | 3,0 | 2,9 | M20 | ● |
| 91,9 | 91,9 | MVE 510/1E-51A0 | MVE 510/12E-51A0 | 513 | 739 | 34 | | 0,55 | 0,40 | 1,20 | 1,15 | Y | 3,0 | 2,9 | M20 | ● |
| 137,4 | 108,6 | MVE 800/1E-60A0 | MVE 800/12E-60A0 | 767 | 873 | 60 | 58 | 0,75 | 0,80 | 1,42 | 1,32 | Y | 3,4 | 3,3 | M25 | ● |
| 187,7 | 137,3 | MVE 1100/1E-60A0 | MVE 1100/12E-60A0 | 1.048 | 1.104 | 78 | 72 | 0,75 | 0,80 | 1,42 | 1,32 | Y | 3,4 | 3,3 | M25 | ● |
| 284,8 | 196,5 | MVE 1500/1E-60A0 | MVE 1500/12E-60A0 | 1.590 | 1.580 | 84 | 73 | 0,90 | 1,08 | 1,80 | 2,00 | Y | 3,5 | 3,5 | M25 | ● |
| 299,6 | 203,5 | MVE 1600/1E-70A0 | MVE 1600/12E-70A0 | 1.673 | 1.636 | 90 | 79 | 0,90 | 1,08 | 2,40 | 2,30 | Y | 3,9 | 3,8 | M25 | ● |
| 373,1 | 248,7 | MVE 2100/1E-70A0 | MVE 2100/12E-70A0 | 2.083 | 2.000 | 105 | 91 | 1,50 | 1,80 | 3,00 | 3,20 | Y | 4,5 | 4,6 | M25 | ● |
| 401,0 | 275,2 | MVE 2200/1E-70A0 | MVE 2200/12E-70A0 | 2.239 | 2.213 | 107 | 93 | 1,50 | 1,80 | 3,00 | 3,20 | Y | 4,5 | 4,6 | M25 | ● |
| 467,4 | 306,7 | MVE 2600/1E-75A0 | MVE 2600/12E-75A0 | 2.610 | 2.466 | 146.5 | 126.5 | 1,96 | 2,10 | 4,10 | 4,00 | Y | 5,0 | 5,0 | M32 | ● |
| 540,3 | 379,7 | MVE 3000/1E-75A0 | MVE 3000/12E-75A0 | 3.017 | 3.053 | 155 | 138 | 2,20 | 2,40 | 4,50 | 4,30 | Y | 5,2 | 5,2 | M32 | ● |
| 702,5 | 465,6 | MVE 3700/1E-75A0 | MVE 3700/12E-75A0 | 3.797 | 3.744 | 159 | 142 | 2,20 | 2,40 | 4,50 | 4,30 | Y | 5,2 | 5,2 | M32 | ● |
| 680,4 | 437,4 | MVE 3800/1E-80A0 | MVE 3800/12E-80A0 | 3.799 | 3.517 | 216 | 195 | 2,50 | 3,00 | 5,50 | 5,30 | Y | 6,1 | 6,2 | M32 | ● |
| 838,3 | 584,2 | MVE 4700/1E-80A0 | MVE 4700/12E-80A0 | 4.681 | 4.697 | 220 | 201 | 3,20 | 3,90 | 6,50 | 6,95 | Y | 5,7 | 5,9 | M32 | ● |
| 929,9 | 654,6 | MVE 5200/1E-85A0 | MVE 5200/12E-85A0 | 5.192 | 5.263 | 264 | 248 | 3,80 | 4,00 | 6,92 | 6,36 | Y | 5,7 | 5,7 | M32 | ● |
| 1.165,2 | 824,0 | MVE 6500/1E-85A0 | MVE 6500/12E-85A0 | 6.506 | 6.625 | 288 | 265 | 4,30 | 5,00 | 7,76 | 7,81 | Y | 6,4 | 6,2 | M32 | ● |
| 1.436,0 | 929,8 | MVE 8000/1E-85A0 | MVE 8000/12E-85A0 | 8.018 | 7.476 | 309 | 274 | 5,50 | 6,60 | 12,60 | 11,60 | Δ | 6,2 | 6,4 | M32 | ● |
| 1.600,4 | 1.165,2 | MVE 9000/1E-85A0 | MVE 9000/12E-85A0 | 8.936 | 9.369 | 322 | 291 | 6,20 | 7,45 | 13,20 | 12,60 | Δ | 6,5 | 6,4 | M32 | ● |
| 1.434,0 | 929,8 | MVE 8000/1E-86A0 | MVE 8000/12E-86A0 | 8.007 | 7.476 | 309 | 274 | 4,60 | 5,50 | 9,00 | 10,00 | Δ | 6,0 | 6,2 | M32 | ● |
| 1.598,0 | 1.165,2 | MVE 9000/1E-86A0 | MVE 9000/12E-86A0 | 8.923 | 9.369 | 322 | 291 | 4,60 | 5,50 | 9,00 | 10,00 | Δ | 6,0 | 6,2 | M32 | ● |
| 1.788,4 | 1.240,0 | MVE 10000/1E-90A0 | MVE 10000/12E-90A0 | 9.986 | 9.970 | 374 | 348 | 6,10 | 6,40 | 14,00 | 12,70 | Δ | 6,6 | 6,6 | M32 | ● |
| 2.329,8 | 1.647,4 | MVE 13000/1E-90A0 | MVE 13000/12E-90A0 | 13.009 | 13.246 | 411 | 364 | 7,50 | 8,30 | 16,40 | 16,00 | Δ | 6,4 | 6,5 | M32 | ● |
| 1.802,9 | 1.240,0 | MVE 10000/1E-91A0 | MVE 10000/12E-91A0 | 10.067 | 9.970 | 373 | 348 | 6,40 | 7,70 | 13,00 | 14,50 | Δ | 6,0 | 6,0 | M32 | ● |
| 2.056,9 | 1.433,0 | MVE 11400/1E-91A0 | MVE 11400/12E-91A0 | 11.485 | 11.522 | 404 | 361 | 6,40 | 7,70 | 13,00 | 14,50 | Δ | 6,0 | 6,0 | M32 | ● |
| 2.311,0 | 1.647,4 | MVE 13000/1E-91A0 | MVE 13000/12E-91A0 | 12.904 | 13.246 | 411 | 364 | 8,00 | 8,90 | 17,20 | 18,10 | Δ | 5,6 | 6,3 | M32 | ● |
| 2.253 | 1.550 | MVE 12000/1E-100A0 | MVE 12000/12E-100A0 | 12.580 | 12.466 | 522 | 476 | 8,00 | 9,50 | 15,00 | 15,00 | Δ | 5,0 | 5,5 | M32 | ● |
| 2.634 | 1.856 | MVE 15000/1E-105A0 | MVE 15000/12E-105A0 | 14.706 | 14.923 | 672 | 630 | 10,10 | 12,00 | 18,00 | 18,00 | Δ | 5,8 | 5,8 | M32 | ● |
| 3.220 | 2.147 | MVE 17500/1E-105A0 | MVE 17500/12E-105A0 | 17.980 | 17.264 | 744 | 684 | 11,90 | 14,20 | 21,00 | 21,00 | Δ | 5,6 | 5,9 | M32 | ● |
| 3.632 | 2.525 | MVE 19500/1E-105A0 | MVE 19500/12E-105A0 | 20.285 | 20.299 | 768 | 728 | 12,00 | 14,50 | 24,00 | 24,00 | Δ | 5,4 | 5,6 | M32 | ● |
| 4.067 | 2.622 | MVE 22000/1E-110A0 | MVE 22000/12E-110A0 | 22.711 | 21.079 | 916 | 868 | 13,90 | 17,00 | 28,00 | 28,00 | Δ | 4,8 | 5,3 | M32 | ● |
| 4.572 | 3.163 | MVE 25000/1E-110A0 | MVE 25000/12E-110A0 | 25.532 | 25.432 | 994 | 937 | 13,90 | 17,00 | 28,00 | 28,00 | Δ | 4,8 | 5,3 | M32 | ● |

JUSQU'À LA TAILLE 60 (NON COMPRIS)
60Hz masses = 50Hz masses ajustées à 70%

SUPÉRIEUR À LA TAILLE 60 (Y COMPRIS)
Masses spécifiques pour 60Hz

Pour convertir les kg en Newton: N = 9.81 · kg

- II2D Ex tb IIIC Tx Db IP66
- Équipement et système de protection destinés pour l'utilisation en atmosphères explosibles (Zone 21) - Directive 2014/34/UE
- Conformité avec les Exigences Essentielles de Santé et de Sécurité
- IEC 60034-1, IEC EN 60079-0, IEC EN 60079-31

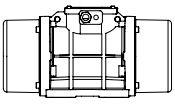

Dessins techniques sur la dernière page



| Modèle | | Dessein | Taille | SPÉCIFICATIONS DIMENSIONNELLES (mm) | | | | | | | | | | | | | | | |
|---|---|---|---|---|---|---|---|---|---|---|---|---|---|---|---|---|---|---|---|
| | | | | C | | M | | A | B | ØG | Trous | D | E | F | H | I | L | N |
| 50Hz | 60Hz | | | 50Hz | 60Hz | 50Hz | 60Hz | | | | N° | | | | | | | |
| MVE 50/1E-30A0 | MVE 50/12E-30A0 | C | 30A0 | 274 | | 52 | | Empreinte multiple<br>80 / 90 / 124 / 135 | 110 / 125 / 110 / 115 | 11 / 13 / 11 / 11 | 4 | 150 | 173 | 15 | 79 | 150 | 166 | 134 |
| MVE 100/1E-30A0 | MVE 100/12E-30A0 | C | 30A0 | 304 | | 67 | | Empreinte multiple<br>80 / 90 / 124 / 135 | 110 / 125 / 110 / 115 | 11 / 13 / 11 / 11 | 4 | 150 | 173 | 15 | 79 | 150 | 166 | 134 |
| MVE 200/1E-40A0 | MVE 200/12E-40A0 | D1 | 40A0 | 330 | | 78 | | 105 | 140 | 13 | 4 | 170 | 196 | 20 | 92 | 174 | 166 | 160 |
| MVE 300/1E-50A0 | MVE 300/12E-50A0 | D1 | 50A0 | 391 | | 97 | | 120 | 170 | 17 | 4 | 208 | 210 | 22 | 96 | 185 | 192 | 170 |
| MVE 500/1E-50A0 | MVE 500/12E-50A0 | D1 | 50A0 | 455 | | 129 | | 120 | 170 | 17 | 4 | 208 | 210 | 22 | 96 | 185 | 192 | 170 |
| MVE 510/1E-51A0 | MVE 510/12E-51A0 | D1 | 51A0 | 455 | | 129 | | 120 | 170 | 17 | 4 | 208 | 210 | 22 | 96 | 185 | 192 | 170 |
| MVE 800/1E-60A0 | MVE 800/12E-60A0 | D1 | 60A0 | 446 | | 112 | | 140 | 190 | 17 | 4 | 230 | 260 | 26 | 124 | 240 | 218 | 222 |
| MVE 1100/1E-60A0 | MVE 1100/12E-60A0 | D1 | 60A0 | 490 | 446 | 134 | 112 | 140 | 190 | 17 | 4 | 230 | 260 | 26 | 124 | 240 | 218 | 222 |
| MVE 1500/1E-60A0 | MVE 1500/12E-60A0 | D1 | 60A0 | 566 | 490.0 | 172 | 134 | 140 | 190 | 17 | 4 | 230 | 260 | 26 | 124 | 240 | 218 | 222 |
| MVE 1600/1E-70A0 | MVE 1600/12E-70A0 | D1 | 70A0 | 563 | 501 | 154 | 123 | 155 | 225 | 22 | 4 | 275 | 290 | 30 | 140 | 256 | 250 | 236 |
| MVE 2100/1E-70A0 | MVE 2100/12E-70A0 | D1 | 70A0 | 623 | 563 | 184 | 154 | 155 | 225 | 22 | 4 | 275 | 290 | 30 | 140 | 256 | 250 | 236 |
| MVE 2200/1E-70A0 | MVE 2200/12E-70A0 | D1 | 70A0 | 623 | | 184 | | 155 | 225 | 22 | 4 | 275 | 290 | 30 | 140 | 256 | 250 | 236 |
| MVE 2600/1E-75A0 | MVE 2600/12E-75A0 | D1 | 75A0 | 692 | 584 | 205 | 151 | 155 | 255 | 23.5 | 4 | 304 | 314 | 30 | 147 | 285 | 277 | 265 |
| MVE 3000/1E-75A0 | MVE 3000/12E-75A0 | D1 | 75A0 | 692 | | 205 | | 155 | 255 | 23.5 | 4 | 304 | 314 | 30 | 147 | 285 | 277 | 265 |
| MVE 3700/1E-75A0 | MVE 3700/12E-75A0 | D1 | 75A0 | 734 | 692 | 226 | 205 | 155 | 255 | 23.5 | 4 | 304 | 314 | 30 | 147 | 285 | 277 | 265 |
| MVE 3800/1E-80A0 | MVE 3800/12E-80A0 | D1 | 80A0 | 683 | 603 | 183 | 143 | 180 | 280 | 26 | 4 | 332 | 354 | 32 | 170 | 330 | 312 | 311 |
| MVE 4700/1E-80A0 | MVE 4700/12E-80A0 | D1 | 80A0 | 733 | 683 | 208 | 183 | 180 | 280 | 26 | 4 | 332 | 354 | 32 | 170 | 330 | 312 | 311 |
| MVE 5200/1E-85A0 | MVE 5200/12E-85A0 | D1 | 85A0 | 704 | 624 | 170.0 | 130.0 | 200 | 320 | 28 | 4 | 385 | 402 | 40 | 203 | 394 | 360 | 378 |
| MVE 6500/1E-85A0 | MVE 6500/12E-85A0 | D1 | 85A0 | 704 | | 170 | | 200 | 320 | 28 | 4 | 385 | 402 | 40 | 203 | 394 | 360 | 378 |
| MVE 8000/1E-85A0 | MVE 8000/12E-85A0 | D1 | 85A0 | 774 | 704 | 205 | 170 | 200 | 320 | 28 | 4 | 385 | 402 | 40 | 203 | 394 | 360 | 378 |
| MVE 9000/1E-85A0 | MVE 9000/12E-85A0 | D1 | 85A0 | 774 | 704 | 205 | 170 | 200 | 320 | 28 | 4 | 385 | 402 | 40 | 203 | 394 | 360 | 378 |
| MVE 8000/1E-86A0 | MVE 8000/12E-86A0 | D1 | 86A0 | 774 | | 205 | | 200 | 320 | 28 | 4 | 385 | 402 | 40 | 203 | 394 | 360 | 378 |
| MVE 9000/1E-86A0 | MVE 9000/12E-86A0 | D1 | 86A0 | 774 | | 205 | | 200 | 320 | 28 | 4 | 385 | 402 | 40 | 203 | 394 | 360 | 378 |
| MVE 10000/1E-90A0 | MVE 10000/12E-90A0 | E1 | 90A0 | 908 | 798 | 260 | 205 | 125 | 380 | 39 | 6 | 452 | 415 | 40 | 205 | 394 | 380 | 378 |
| MVE 13000/1E-90A0 | MVE 13000/12E-90A0 | E1 | 90A0 | 948 | 798 | 280 | 205 | 125 | 380 | 39 | 6 | 452 | 415 | 40 | 205 | 394 | 380 | 378 |
| MVE 10000/1E-91A0 | MVE 10000/12E-91A0 | E1 | 91A0 | 908 | | 260 | | 125 | 380 | 39 | 6 | 452 | 415 | 40 | 205 | 394 | 380 | 378 |
| MVE 11400/1E-91A0 | MVE 11400/12E-91A0 | E1 | 91A0 | 908 | | 260 | | 125 | 380 | 39 | 6 | 452 | 415 | 40 | 205 | 394 | 380 | 378 |
| MVE 13000/1E-91A0 | MVE 13000/12E-91A0 | E1 | 91A0 | 948 | | 280 | | 125 | 380 | 39 | 6 | 452 | 415 | 40 | 205 | 394 | 380 | 378 |
| MVE 12000/1E-100A0 | MVE 12000/12E-100A0 | E | 100 | 1,020 | | 275 | | 140 | 440 | 45 | 6 | 530 | 484 | 37 | 232 | 446 | 470 | 424 |
| MVE 15000/1E-105A0 | MVE 15000/12E-105A0 | H | 105 | 980 | | 210 | | 140 | 480 | 45 | 8 | 570 | 542 | 48 | 268 | 510 | 560 | 490 |
| MVE 17500/1E-105A0 | MVE 17500/12E-105A0 | H | 105 | 1,060 | | 250 | | 140 | 480 | 45 | 8 | 570 | 542 | 48 | 268 | 510 | 560 | 490 |
| MVE 19500/1E-105A0 | MVE 19500/12E-105A0 | H | 105 | 1,060 | | 250 | | 140 | 480 | 45 | 8 | 570 | 542 | 48 | 268 | 510 | 560 | 490 |
| MVE 22000/1E-110A0 | MVE 22000/12E-110A0 | H | 110 | 1,130 | | 285 | | 140 | 520 | 45 | 8 | 610 | 594 | 42 | 297 | 560 | 560 | 530 |
| MVE 25000/1E-110A0 | MVE 25000/12E-110A0 | H | 110 | 1,130 | | 285 | | 140 | 520 | 45 | 8 | 610 | 594 | 42 | 297 | 560 | 560 | 530 |

REMARQUE: Dimensions avec précision grossière conformément à UNI 22768/1

Ces informations sont fournies sans garantie, représentation, incitation ou licence d'aucune sorte. Les informations sont précises selon la connaissance de OLI ou sont obtenues de sources considérées comme exactes. OLI n'assume donc aucune responsabilité légale.
La dernière version du catalogue mis à jour est disponible en ligne.

» Class II Div.2 Group F, G T4
» Conforme à UL 1004-1,UL 1004-3, UL60079-31, UL60079-0, CSA 60079-0, CSA 60079- 31, CSA 22.2 N°100, CSA 22.2 N°77

# MVE GAMME STANDARD

## 8 PÔLES – 750/900 rpm

Class II Div.2: Temp. Class **T4**
ExII 2D Temp. Class: ● 100 °C ● 135 °C

* Raccordements des bornes : **Y** Haute tension ; **Δ** Basse tension

| Wm (Kgcm) | | Modèle | | Force centrifuge (kg) | | Poids (kg) | | SPÉCIFICATIONS ÉLECTRIQUES | | | | | | | | |
|---|---|---|---|---|---|---|---|---|---|---|---|---|---|---|---|---|
| | | | | | | | | Puissance d'entrée (kW) | | Courant nominal | | * Raccordements des bornes | Ia/In | | Presse-étoupe | |
| 50Hz | 60Hz | 50Hz | 60Hz | 50Hz | 60Hz | 50Hz | 60Hz | 50Hz | 60Hz | 50Hz (400V) | 60Hz (460V) | | 50Hz | 60Hz | Metrico | |
| 33,4 | | MVE 150/075E-40A0 | MVE 150/090E-40A0 | 105 | 151 | 21 | | 0,23 | 0,25 | 1,14 | 1,14 | Y | 1,7 | 1,7 | M20 | ● |
| 56,9 | | MVE 250/075E-50A0 | MVE 250/090E-50A0 | 179 | 257 | 29 | | 0,25 | 0,30 | 0,90 | 0,89 | Y | 1,9 | 1,9 | M20 | ● |
| 84,0 | | MVE 400/075E-51A0 | MVE 400/090E-51A0 | 264 | 380 | 34 | | 0,25 | 0,30 | 0,90 | 0,89 | Y | 2,1 | 2,1 | M20 | ● |
| 137,3 | | MVE 650/075E-60A0 | MVE 650/090E-60A0 | 431 | 621 | 63 | | 0,37 | 0,45 | 1,20 | 1,20 | Y | 2,4 | 2,4 | M25 | ● |
| 187,7 | | MVE 900/075E-60A0 | MVE 900/090E-60A0 | 589 | 849 | 70 | | 0,55 | 0,54 | 1,23 | 1,29 | Y | 2,7 | 2,7 | M25 | ● |
| 299,6 | | MVE 1300/075E-70A0 | MVE 1300/090E-70A0 | 941 | 1.355 | 90 | | 0,75 | 0,90 | 2,20 | 2,20 | Y | 3,2 | 3,2 | M25 | ● |
| 467,4 | | MVE 2100/075E-75A0 | MVE 2100/090E-75A0 | 1.468 | 2.114 | 150 | | 1,00 | 1,20 | 2,81 | 2,89 | Y | 4,4 | 4,3 | M32 | ● |
| 680,3 | | MVE 3100/075E-80A0 | MVE 3100/090E-80A0 | 2.137 | 3.077 | 201 | | 2,00 | 2,30 | 4,50 | 4,40 | Y | 4,2 | 4,2 | M32 | ● |
| 838,4 | | MVE 3800/075E-80A0 | MVE 3800/090E-80A0 | 2.633 | 3.792 | 219 | | 2,50 | 3,00 | 6,00 | 6,00 | Y | 4,1 | 4,2 | M32 | ● |
| 929,7 | | MVE 4200/075E-85A0 | MVE 4200/090E-85A0 | 2.920 | 4.205 | 268 | | 2,90 | 3,40 | 6,50 | 6,50 | Y | 4,0 | 3,9 | M32 | ● |
| 1.165,2 | | MVE 5300/075E-85A0 | MVE 5300/090E-85A0 | 3.660 | 5.270 | 289 | | 3,70 | 4,30 | 8,00 | 8,20 | Y | 4,0 | 4,4 | M32 | ● |
| 1.435,9 | | MVE 6500/075E-85A0 | MVE 6500/090E-85A0 | 4.510 | 6.494 | 308 | | 3,80 | 4,20 | 8,78 | 8,30 | Y | 3,8 | 4,2 | M32 | ● |
| 2.200,4 | | MVE 10000/075E-90A0 | MVE 10000/090E-90A0 | 6.911 | 9.952 | 422 | | 6,80 | 7,50 | 13,50 | 12,50 | Δ | 3,7 | 4,4 | M32 | ● |
| 2.311,0 | | MVE 10000/075E-91A0 | MVE 10000/090E-91A0 | 7.258 | 10.452 | 422 | | 6,00 | 7,00 | 14,40 | 14,00 | Δ | 4,7 | 4,7 | M32 | ● |
| 2.835 | 2.553 | MVE 12000/075E-100A0 | MVE 12000/090E-100A0 | 8.904 | 11.546 | 571 | 553 | 7,50 | 8,00 | 13,50 | 13,50 | Δ | 3,8 | 4,0 | M32 | ● |
| 3.713 | 3.220 | MVE 14000/075E-105A0 | MVE 14000/090E-105A0 | 11.661 | 14.563 | 751 | 725 | 9,00 | 10,60 | 19,00 | 19,00 | Δ | 4,5 | 5,0 | M32 | ● |
| 4.401 | 3.920 | MVE 17000/075E-105A0 | MVE 17000/090E-105A0 | 13.822 | 17.729 | 812 | 792 | 9,10 | 11,00 | 20,00 | 20,00 | Δ | 5,3 | 5,8 | M32 | ● |
| 5.857 | 4.999 | MVE 22000/075E-110A0 | MVE 22000/090E-110A0 | 18.395 | 22.610 | 982 | 937 | 13,80 | 16,50 | 28,00 | 28,00 | Δ | 5,6 | 5,2 | M32 | ● |
| - | 5.857 | NA | MVE 26000/090E-110A0 | - | 26.489 | - | 982 | - | 16,50 | - | 28,00 | Δ | - | 5,2 | M32 | ● |

*Taille 40A0*



*Taille 50A0*



*Taille 60A0*



AB GRÖSSE 90 (EINSCHLIESSLICH)
60Hz Masse= 50Hz Massen auf 100% angepasst

BIS ZUR GRÖSSE 90 (NICHT EINGESCHLOSSEN)
Spezifische Massen für 60Hz

Pour convertir les kg en Newton: N = 9.81 · kg

- II2D Ex tb IIIC Tx Db IP66
- Équipement et système de protection destinés pour l'utilisation en atmosphères explosibles (Zone 21) - Directive 2014/34/UE
- Conformité avec les Exigences Essentielles de Santé et de Sécurité
- IEC 60034-1, IEC EN 60079-0, IEC EN 60079-31

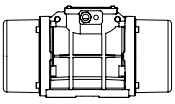

Dessins techniques sur la dernière page

| Modèle | | Dessein | Taille | SPÉCIFICATIONS DIMENSIONNELLES (mm) | | | | | | | | | | | | |
|---|---|---|---|---|---|---|---|---|---|---|---|---|---|---|---|---|
| | | | | C | M | A | B | Ø G | Trous | D | E | F | H | I | L | N |
| 50Hz | 60Hz | | | 50Hz-60Hz | 50Hz-60Hz | | | | N° | | | | | | | |
| MVE 150/075E-40A0 | MVE 150/090E-40A0 | D1 | 40A0 | 330 | 78 | 105 | 140 | 13 | 4 | 170 | 196 | 20 | 92 | 174 | 166 | 160 |
| MVE 250/075E-50A0 | MVE 250/090E-50A0 | D1 | 50A0 | 391 | 97 | 120 | 170 | 17 | 4 | 208 | 210 | 22 | 96 | 185 | 192 | 170 |
| MVE 400/075E-51A0 | MVE 400/090E-51A0 | D1 | 51A0 | 455 | 129 | 120 | 170 | 17 | 4 | 208 | 210 | 22 | 96 | 185 | 192 | 170 |
| MVE 650/075E-60A0 | MVE 650/090E-60A0 | D1 | 60A0 | 446 | 112 | 140 | 190 | 17 | 4 | 230 | 260 | 26 | 124 | 240 | 218 | 222 |
| MVE 900/075E-60A0 | MVE 900/090E-60A0 | D1 | 60A0 | 490 | 134 | 140 | 190 | 17 | 4 | 230 | 260 | 26 | 124 | 240 | 218 | 222 |
| MVE 1300/075E-70A0 | MVE 1300/090E-70A0 | D1 | 70A0 | 563 | 154 | 155 | 225 | 22 | 4 | 275 | 290 | 30 | 140 | 256 | 250 | 236 |
| MVE 2100/075E-75A0 | MVE 2100/090E-75A0 | D1 | 75A0 | 692 | 205 | 155 | 255 | 23.5 | 4 | 304 | 314 | 30 | 147 | 285 | 277 | 265 |
| MVE 3100/075E-80A0 | MVE 3100/090E-80A0 | D1 | 80A0 | 683 | 183 | 180 | 280 | 26 | 4 | 332 | 354 | 32 | 170 | 330 | 312 | 311 |
| MVE 3800/075E-80A0 | MVE 3800/090E-80A0 | D1 | 80A0 | 733 | 208 | 180 | 280 | 26 | 4 | 332 | 354 | 32 | 170 | 330 | 312 | 311 |
| MVE 4200/075E-85A0 | MVE 4200/090E-85A0 | D1 | 85A0 | 704 | 170 | 200 | 320 | 28 | 4 | 385 | 402 | 40 | 203 | 394 | 360 | 378 |
| MVE 5300/075E-85A0 | MVE 5300/090E-85A0 | D1 | 85A0 | 704 | 170 | 200 | 320 | 28 | 4 | 385 | 402 | 40 | 203 | 394 | 360 | 378 |
| MVE 6500/075E-85A0 | MVE 6500/090E-85A0 | D1 | 85A0 | 774 | 205 | 200 | 320 | 28 | 4 | 385 | 402 | 40 | 203 | 394 | 360 | 378 |
| MVE 10000/075E-90A0 | MVE 10000/090E-90A0 | E1 | 90A0 | 948 | 280 | 125 | 380 | 39 | 6 | 452 | 415 | 40 | 205 | 394 | 380 | 378 |
| MVE 10000/075E-91A0 | MVE 10000/090E-91A0 | E1 | 91A0 | 948 | 280 | 125 | 380 | 39 | 6 | 452 | 415 | 40 | 205 | 394 | 380 | 378 |
| MVE 12000/075E-100A0 | MVE 12000/090E-100A0 | E | 100 | 1,020 | 275 | 140 | 440 | 45 | 6 | 530 | 484 | 37 | 232 | 446 | 470 | 424 |
| MVE 14000/075E-105A0 | MVE 14000/090E-105A0 | H | 105 | 1,060 | 250 | 140 | 480 | 45 | 8 | 570 | 542 | 48 | 268 | 510 | 560 | 490 |
| MVE 17000/075E-105A0 | MVE 17000/090E-105A0 | H | 105 | 1,120 | 280 | 140 | 480 | 45 | 8 | 570 | 542 | 48 | 268 | 510 | 560 | 490 |
| MVE 22000/075E-110A0 | MVE 22000/090E-110A0 | H | 110 | 1,130 | 285 | 140 | 520 | 45 | 8 | 610 | 594 | 42 | 297 | 560 | 560 | 530 |
| NA | MVE 26000/090E-110A0 | H | 110 | 1,130 | 285 | 140 | 520 | 45 | 8 | 610 | 594 | 42 | 297 | 560 | 560 | 530 |

## Note:

REMARQUE: Dimensions avec précision grossière conformément à UNI 22768/1

Ces informations sont fournies sans garantie, représentation, incitation ou licence d'aucune sorte. Les informations sont précises selon la connaissance de OLI ou sont obtenues de sources considérées comme exactes. OLI n'assume donc aucune responsabilité légale.
La dernière version du catalogue mis à jour est disponible en ligne.

» Class II Div.2 Group F, G T4
» Conforme à UL 1004-1,UL 1004-3, UL60079-31, UL60079-0, CSA 60079-0, CSA 60079- 31, CSA 22.2 N°100, CSA 22.2 N°77

# MVE GAMME STANDARD

## 2 PÔLES MONOPHASÉ – 3000/3600 rpm

Class II Div.2: Temp. Class **T4**
ExII 2D Temp. Class: ● 100 °C ● 135 °C

* Terminal Connections: **Y** High Voltage; **Δ** Low Voltage

| Wm (Kgcm) | | Modèle | | Force centrifuge (kg) | | Poids (kg) | | SPÉCIFICATIONS ÉLECTRIQUES | | | | | | | |
|---|---|---|---|---|---|---|---|---|---|---|---|---|---|---|---|
| | | | | | | | | Puissance d'entrée (kW) | | Courant nominal A Max | | Presse-étoupe | Condensateur * | | |
| 50Hz | 60Hz | 50Hz | 60Hz | 50Hz | 60Hz | 50Hz | 60Hz | 50Hz | 60Hz | 50Hz (230V ) | 60Hz (115V) | Metrico | 50Hz (230V) | 60Hz (115V) | |
| 1,3 | 1,0 | MVE 60/3E-10A0-M | MVE 60/36E-10A0-M | 66 | 71 | 4 | | 0,08 | 0,09 | 0,43 | 1,03 | M16 | 3,0 | 6,3 | ● |
| 2,0 | 1,3 | MVE 100/3E-10A0-M | MVE 100/36E-10A0-M | 98 | 95 | 5 | | 0,10 | 0,11 | 0,54 | 1,30 | M16 | 4,0 | 8,0 | ● |
| 3,7 | 2,6 | MVE 200/3E-20A0-M | MVE 200/36E-20A0-M | 187 | 189 | 7 | | 0,18 | 0,21 | 1,14 | 2,62 | M20 | 8,0 | 16,0 | ● |
| 3,7 | 2,6 | MVE 200/3E-23A0-M | MVE 200/36E-23A0-M | 187 | 189 | 7 | | 0,18 | 0,21 | 1,14 | 2,62 | M20 | 8,0 | 16,0 | ● |
| 6,4 | 4,5 | MVE 300/3E-30A0-M | MVE 300/36E-30A0-M | 321 | 323 | 10 | | 0,27 | 0,28 | 1,58 | 3,43 | M20 | 12,5 | 25,0 | ● |

** REMARQUE: Condensateur non fourni avec vibrateur (à commander séparément)*

*Taille 10A0*



*Taille 20A0*



*Taille 30A0*



Pour convertir les kg en Newton: N = 9.81 · kg

- II2D Ex tb IIIC Tx Db IP66
- Équipement et système de protection destinés pour l'utilisation en atmosphères explosibles (Zone 21) - Directive 2014/34/UE
- Conformité avec les Exigences Essentielles de Santé et de Sécurité
- IEC 60034-1, IEC EN 60079-0, IEC EN 60079-31

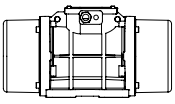

Dessins techniques sur la dernière page



| Modèle | | Dessein | Taille | SPÉCIFICATIONS DIMENSIONNELLES (mm) | | | | | | | | | | | | | | |
|---|---|---|---|---|---|---|---|---|---|---|---|---|---|---|---|---|---|---|
| | | | | C | | M | | A | B | Ø G | Trous | D | E | F | H | I | L | N |
| 50Hz | 60Hz | | | 50Hz | 60Hz | 50Hz | 60Hz | | | | N° | | | | | | | |
| MVE 60/3E-10A0-M | MVE 60/36E-10A0-M | A1 | 10A0 | 213 | | 45 | | Empreinte multiple<br>62-74<br>33 | 106<br>83-102 | 9<br>7 | 4 | 130 | 135 | 11 | 50 | 96 | 107 | 85 |
| MVE 100/3E-10A0-M | MVE 100/36E-10A0-M | A1 | 10A0 | 213 | | 45 | | Empreinte multiple<br>62-74<br>33 | 106<br>83-102 | 9<br>7 | 4 | 130 | 135 | 11 | 50 | 96 | 107 | 85 |
| MVE 200/3E-20A0-M | MVE 200/36E-20A0-M | B1 | 20A0 | 233 | | 54 | | 62-74 | 106 | 9 | 4 | 130 | 154 | 15 | 65 | 125 | 120 | 112 |
| MVE 200/3E-23A0-M | MVE 200/36E-23A0-M | G | 23A0 | 222 | | 55 | | Empreinte multiple<br>62-74<br>65<br>115<br>135 | 106<br>140<br>135<br>115 | 9<br>13<br>11<br>11 | 4 | 164 | 140 | 25 | 82 | 116 | 159 | 110 |
| MVE 300/3E-30A0-M | MVE 300/36E-30A0-M | C1 | 30A0 | 254 | | 42 | | Empreinte multiple<br>80<br>90<br>124<br>135 | 110<br>125<br>110<br>115 | 11<br>13<br>11<br>11 | 4 | 154 | 173 | 15 | 79 | 150 | 166 | 134 |

## Note:

REMARQUE: Dimensions avec précision grossière conformément à UNI 22768/1

Ces informations sont fournies sans garantie, représentation, incitation ou licence d'aucune sorte. Les informations sont précises selon la connaissance de OLI ou sont obtenues de sources considérées comme exactes. OLI n'assume donc aucune responsabilité légale.
La dernière version du catalogue mis à jour est disponible en ligne.

# MVE GAMME STANDARD

## MVE-MICRO - 3000/3600 rpm

Class II Div.2: Temp. Class **T4**
II 3D Temp. Class: ● 100 °C ● 135 °C

* Terminal Connections: **Y** High Voltage; **Δ** Low Voltage

## TRIPHASÉ

| Wm (kgcm) | | Modèle | | Force centrifuge (kg) | | Poids (kg) | | SPÉCIFICATIONS ÉLECTRIQUES | | | | | | |
|---|---|---|---|---|---|---|---|---|---|---|---|---|---|---|
| | | | | | | | | Puissance d'entrée (kW) | | Courant nominal A Max | | | * Raccordements des bornes | Presse-étoupe |
| 50Hz | 60Hz | 50Hz | 60Hz | 50Hz | 60Hz | 50Hz | 60Hz | 50Hz | 60Hz | 50Hz (230V) | 50Hz (400V) | 60Hz (460V) | | Metrico |
| 0,4 | 0,4 | MVE 21/3E-MICRO | MVE 21/36E-MICRO | 20 | 29 | 2 | | 0,04 | 0,04 | 0,21 | 0,12 | 0,12 | Y | M16 ● |
| 0,9 | 0,9 | MVE 41/3E-MICRO | MVE41/36E-MICRO | 45 | 65 | 2 | | 0,06 | 0,06 | 0,30 | 0,18 | 0,18 | Y | M16 ● |

## MONOPHASÉ

| Wm (kgcm) | | Modèle | | Force centrifuge (kg) | | Poids (kg) | | SPÉCIFICATIONS ÉLECTRIQUES | | | | |
|---|---|---|---|---|---|---|---|---|---|---|---|---|
| | | | | | | | | Puissance d'entrée (kW) | | Courant nominal A Max | | Presse-étoupe * |
| 50Hz | 60Hz | 50Hz | 60Hz | 50Hz | 60Hz | 50Hz | 60Hz | 50Hz | 60Hz | 50Hz (230V) | 60Hz (115V) | Metrico |
| 0,1 | 0,1 | MVE 3/3E-MICRO-M | MVE 3/36E-MICRO-M | 4 | 6 | 1,6 | | 0,03 | 0,04 | 0,30 | 0,80 | M16 ● |
| 0,1 | 0,1 | MVE 6/3E-MICRO-M | MVE 6/36E-MICRO-M | 6 | 9 | 1,6 | | 0,03 | 0,04 | 0,30 | 0,80 | M16 ● |
| 0,4 | 0,4 | MVE 21/3E-MICRO-M | MVE 21/36E-MICRO-M | 20 | 29 | 2 | | 0,04 | 0,07 | 0,20 | 0,80 | M16 ● |
| 0,9 | 0,9 | MVE 41/3E-MICRO-M | MVE 41/36E-MICRO-M | 45 | 65 | 2,4 | | 0,05 | 0,07 | 0,25 | 0,80 | M16 ● |

*MICRO*



*REMARQUE: Condensateur intégré dans le câble*

Pour convertir les kg en Newton: N = 9.81 · kg

- II2D Ex tb IIIC Tx Db IP66
- Équipement et système de protection destinés pour l'utilisation en atmosphères explosibles (Zone 21) - Directive 2014/34/UE
- Conformité avec les Exigences Essentielles de Santé et de Sécurité
- IEC 60034-1, IEC EN 60079-0, IEC EN 60079-31

**F**

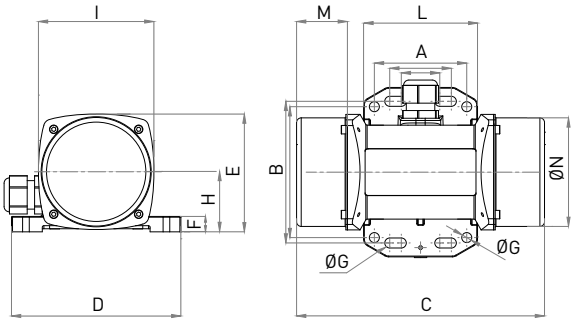


**I**

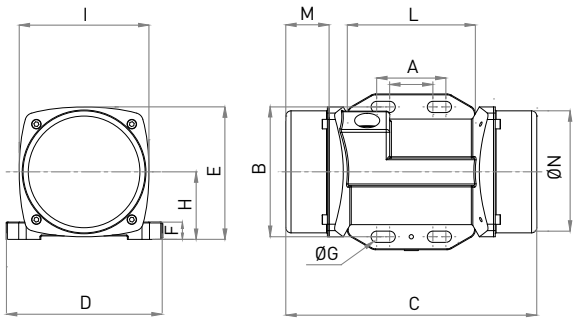


| Modèle | | Dessein | SPÉCIFICATIONS DIMENSIONNELLES (mm) | | | | | | | | | | | | | |
|---|---|---|---|---|---|---|---|---|---|---|---|---|---|---|---|---|
| | | | C | M | A | B | Ø G | Trous | D | E | F | H | I | L | N |
| 50Hz | 60Hz | | 50Hz | 50Hz | | | | N° | | | | | | | |
| MVE 21/3E-MICRO | MVE21/36E-MICRO | F | 145 | 25 | Empreinte multiple: 25-40 / 92 / 6.5; 60 / 85 / 6.5 | | | 4 | 110 | 76 | 10 | 39 | 75 | 74 | 70 |
| MVE 41/3E-MICRO | MVE 41/36E-MICRO | F | 161 | 33 | Empreinte multiple: 25-40 / 92 / 6.5; 60 / 85 / 6.5 | | | 4 | 110 | 76 | 10 | 39 | 75 | 74 | 70 |

| Modèle | | Dessein | SPÉCIFICATIONS DIMENSIONNELLES (mm) | | | | | | | | | | | | | |
|---|---|---|---|---|---|---|---|---|---|---|---|---|---|---|---|---|
| | | | C | M | A | B | Ø G | Trous | D | E | F | H | I | L | N |
| 50Hz | 60Hz | | 50Hz | 50Hz | | | | N° | | | | | | | |
| MVE 3/3E-MICRO-M | MVE 3/36E-MICRO-M | F | 145 | 25 | Empreinte multiple: 25-40 / 92 / 6.5; 60 / 85 / 6.5 | | | 4 | 110 | 76 | 10 | 39 | 75 | 74 | 70 |
| MVE 6/3E-MICRO-M | MVE 6/36E-MICRO-M | I | 145 | 25 | Empreinte multiple: 25-40 / 75 / 6.5; - / - / - | | | 4 | 90 | 76 | 10 | 39 | 75 | 74 | 70 |
| MVE 21/3E-MICRO-M | MVE 21/36E-MICRO-M | F | 145 | 25 | Empreinte multiple: 25-40 / 92 / 6.5; 60 / 85 / 6.5 | | | 4 | 110 | 76 | 10 | 39 | 75 | 74 | 70 |
| MVE 41/3E-MICRO-M | MVE 41/36E-MICRO-M | F | 161 | 25 | Empreinte multiple: 25-40 / 92 / 6.5; 60 / 85 / 6.5 | | | 4 | 110 | 76 | 10 | 39 | 75 | 74 | 70 |

## Note:

REMARQUE: Dimensions avec précision grossière conformément à UNI 22768/1

Ces informations sont fournies sans garantie, représentation, incitation ou licence d'aucune sorte. Les informations sont précises selon la connaissance de OLI ou sont obtenues de sources considérées comme exactes. OLI n'assume donc aucune responsabilité légale.
La dernière version du catalogue mis à jour est disponible en ligne.

» Class II Div.2 Group F, G T4
» Conforme à UL 1004-1,UL 1004-3, UL60079-31, UL60079-0, CSA 60079-0, CSA 60079- 31, CSA 22.2 N°100, CSA 22.2 N°77

# MVE GAMME STANDARD

## MVE-DC COURANT CONTINU – 3000 rpm

* Rac

II 3D Temp. Class: ○ 100 °C

| Wm (kgcm) | Modèle | rpm | Force centrifuge (kg) | Poids (kg) | SPÉCIFICATIONS ÉLECTRIQUES | | | |
|---|---|---|---|---|---|---|---|---|
| | | | | | Puissance d'entrée (kW) | Courant nominal A Max | Presse-étoupe | |
| 1,0 | MVE 50/3N-10A0-12V | 3,000 | 50 | 4,4 | 0,08 | 6,60 | M16 | ○ |
| 1,0 | MVE 50/3N-10A0-24V | 3,000 | 50 | 4,4 | 0,08 | 3,30 | M16 | ○ |
| 1,1 | MVE 120/3N-23A0-12V | 3,000 | 117 | 7,2 | 0,12 | 9,50 | M20 | ○ |
| 1,1 | MVE 120/3N-23A0-24V | 3,000 | 117 | 7,2 | 0,12 | 4,80 | M20 | ○ |
| 4,2 | MVE 200/3N-23A0-12V | 3,000 | 200 | 7,2 | 0,16 | 13,30 | M20 | ○ |
| 4,2 | MVE 200/3N-23A0-24V | 3,000 | 200 | 7,2 | 0,16 | 6,70 | M20 | ○ |
| 10,4 | MVE 500/3N-40A0-24V | 3,000 | 530 | 15,8 | 0,26 | 11,00 | M20 | ○ |
| 22,4 | MVE 1500/3N-50A0-24V | 3,000 | 1.616 | 23 | 0,52 | 21,50 | M20 | ○ |

*Taille 23A0*



*Taille 40A0*



*Taille 50A0*



Pour convertir les kg en Newton: N = 9.81 · kg

- II3D Ex tc IIIC T100 IP66
- Équipement et système de protection destinés pour l'utilisation en atmosphères explosibles (Zone 22) - Directive 2014/34/UE
- Conformité avec les Exigences Essentielles de Santé et de Sécurité
- EN 60079-0, EN 60079-31

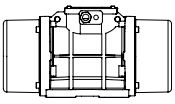

Dessins techniques sur la dernière page



| Modèle | Dessein | Taille | SPÉCIFICATIONS DIMENSIONNELLES (mm) | | | | | | | | | | | | |
|---|---|---|---|---|---|---|---|---|---|---|---|---|---|---|---|
| | | | C | M | A | B | Ø G | Trous N° | D | E | F | H | I | L | N |
| MVE 50/3N-10A0-12V | A | 10A0 | 211 | 45 | Empreinte multiple | | | 4 | 130 | 136 | 12 | 48 | 94 | 121 | 85 |
| | | | | | 62-74 | 106 | 9 | | | | | | | | |
| MVE 50/3N-10A0-24V | A | 10A0 | 211 | 45 | 33 | 83-102 | 7 | 4 | 130 | 136 | 12 | 48 | 94 | 121 | 85 |
| MVE 120/3N-23A0-12V | G | 23A0 | 218 | 53 | Empreinte multiple | | | 4 | 164 | 140 | 25 | 82 | 116 | 159 | 110 |
| | | | | | 62-74 | 106 | 9 | | | | | | | | |
| MVE 120/3N-23A0-24V | G | 23A0 | 218 | 53 | 65 | 140 | 13 | 4 | 164 | 140 | 25 | 82 | 116 | 159 | 110 |
| MVE 200/3N-23A0-12V | G | 23A0 | 218 | 53 | 115 | 135 | 11 | 4 | 164 | 140 | 25 | 82 | 116 | 159 | 110 |
| MVE 200/3N-23A0-24V | G | 23A0 | 218 | 53 | 135 | 115 | 11 | 4 | 164 | 140 | 25 | 82 | 116 | 159 | 110 |
| MVE 500/3N-40A0-24V | D1 | 40A0 | 330 | 78 | 105 | 140 | 13 | 4 | 170 | 195 | 15 | 92 | 174 | 166 | 160 |
| MVE 1500/3N-50A0-24V | D1 | 50A0 | 324 | 63 | 120 | 170 | 18 | 4 | 208 | 210 | 18 | 96 | 185 | 192 | 165 |

## Note:

REMARQUE: Dimensions avec précision grossière conformément à UNI 22768/1

Ces informations sont fournies sans garantie, représentation, incitation ou licence d'aucune sorte. Les informations sont précises selon la connaissance de OLI ou sont obtenues de sources considérées comme exactes. OLI n'assume donc aucune responsabilité légale.
La dernière version du catalogue mis à jour est disponible en ligne.

# MVE-Exe SÉCURITÉ ACCRUE

## 2 PÔLES – 3000/3600 rpm

Ex II 2G: Temp. Class **T3** - ExII 2D Temp. Class: ● 100 °C ● 135 °C
Class II Div.2: Temp. Class **T4**
EX e, tE: **5**

* Terminal Connections: **Y** High Voltage; **Δ** Low Voltage

| Wm (kgcm) | | Modèle | | Force centrifuge (kg) | | Poids (kg) | | SPÉCIFICATIONS ÉLECTRIQUES | | | | | | | | |
|---|---|---|---|---|---|---|---|---|---|---|---|---|---|---|---|---|
| | | | | | | | | Puissance d'entrée (kW) | | Courant nominal | | * Raccordements des bornes | Ia/In | | Presse-étoupe | |
| 50Hz | 60Hz | 50Hz | 60Hz | 50Hz | 60Hz | 50Hz | 60Hz | 50 Hz | 60 Hz | 50Hz (400V) | 60Hz (460V) | | 50Hz | 60Hz | Metrico | |
| 3,7 | 2,6 | MVE 200/3X-20A0 | MVE 200/36X-20A0 | 187 | 189 | 7 | | 0,15 | 0,18 | 0,35 | 0,30 | Y | 3,0 | 3,5 | M20 | ● |
| 3,7 | 2,6 | MVE 200/3X-23A0 | MVE 200/36X-23A0 | 187 | 189 | 7 | | 0,15 | 0,18 | 0,35 | 0,30 | Y | 3,5 | 3,5 | M20 | ● |
| 6,4 | 4,5 | MVE 300/3X-30A0 | MVE 300/36X-30A0 | 321 | 323 | 10 | | 0,25 | 0,28 | 0,52 | 0,45 | Y | 3,8 | 3,7 | M20 | ● |
| 8,0 | 5,7 | MVE 400/3X-30A0 | MVE 400/36X-30A0 | 407 | 411 | 10 | | 0,27 | 0,33 | 0,58 | 0,60 | Y | 3,7 | 3,7 | M20 | ● |
| 10,3 | 7,4 | MVE 500/3X-40A0 | MVE 500/36X-40A0 | 530 | 534 | 16 | | 0,50 | 0,58 | 0,96 | 0,97 | Y | 4,2 | 4,4 | M20 | ● |
| 14,9 | 10,6 | MVE 700/3X-40A0 | MVE 700/36X-40A0 | 758 | 765 | 17 | | 0,59 | 0,61 | 1,25 | 1,24 | Y | 4,5 | 5,2 | M20 | ● |
| 15,7 | 11,1 | MVE 800/3X-50A0 | MVE 800/36X-50A0 | 794 | 800 | 20 | | 0,70 | 0,84 | 1,45 | 1,50 | Y | 4,0 | 4,0 | M20 | ● |
| 20,3 | 14,0 | MVE 1200/3X-50A0 | MVE 1200/36X-50A0 | 1.005 | 1.013 | 21 | | 0,95 | 1,15 | 1,85 | 1,95 | Y | 4,6 | 4,7 | M20 | ● |
| 26,6 | 18,6 | MVE 1300/3X-50A0 | MVE 1300/36X-50A0 | 1.355 | 1.365 | 22 | | 1,30 | 1,38 | 2,44 | 2,25 | Y | 5,4 | 5,2 | M20 | ● |
| 26,6 | 18,6 | MVE 1300/3X-51A0 | MVE 1300/36X-51A0 | 1.355 | 1.365 | 22 | | 1,30 | 1,38 | 2,44 | 2,25 | Y | 5,4 | 5,2 | M20 | ● |
| 31,3 | 22,2 | MVE 1600/3X-60A0 | MVE 1600/36X-60A0 | 1.601 | 1.608 | 51 | 50 | 1,54 | 1,60 | 2,94 | 2,61 | Y | 6,1 | 6,4 | M25 | ● |
| 36,8 | 27,6 | MVE 2000/3X-60A0 | MVE 2000/36X-60A0 | 2.027 | 1.997 | 52 | 50 | 2,10 | 2,10 | 3,75 | 3,42 | Y | 6,7 | 6,6 | M25 | ● |
| 46,0 | 31,9 | MVE 2300/3X-60A0 | MVE 2300/36X-60A0 | 2.302 | 2.306 | 53 | 51 | 2,40 | 2,45 | 4,44 | 3,45 | Y | 6,2 | 6,5 | M25 | ● |
| 68,1 | 43,9 | MVE 3200/3X-75A1 | MVE 3200/36X-75A1 | 3.252 | 3.176 | 103 | 101 | 2,76 | 2,90 | 5,30 | 4,61 | Y | 8,5 | 8,4 | M32 | ● |
| 79,4 | 56,0 | MVE 4000/3X-75A1 | MVE 4000/36X-75A1 | 4.033 | 4.052 | 107 | 104 | 2,90 | 2,90 | 5,30 | 4,61 | Y | 8,7 | 9,9 | M32 | ● |

*Taille 40A0*



*Taille 50A0*



*Taille 60A0*



JUSQU'À LA TAILLE 60 (NON COMPRIS)
60Hz masses = 50Hz masses ajustées à 70%

SUPÉRIEUR À LA TAILLE 60 (Y COMPRIS)
Masses spécifiques pour 60Hz

Pour convertir les kg en Newton: N = 9.81 · kg

- II 2D Ex tb IIIC Tx Db IP66
- II 2G Ex eb IIC T3 Gb
- Équipement et système de protection destinés pour l'utilisation en atmosphères explosibles (Zone 21) - Directive 2014/34/UE
- Conformité avec les Exigences Essentielles de Santé et de Sécurité
- IEC 60034-1, IEC EN 60079-0, IEC EN 60079-31, IEC EN 60079-7

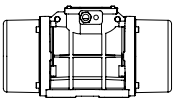

Dessins techniques sur la dernière page

| Modèle | | Dessein | Taille | SPÉCIFICATIONS DIMENSIONNELLES (mm) | | | | | | | | | | | | | | |
|---|---|---|---|---|---|---|---|---|---|---|---|---|---|---|---|---|---|---|
| | | | | C | | M | | A | B | Ø G | Trous | D | E | F | H | I | L | N |
| 50Hz | 60Hz | | | 50Hz | 60Hz | 50Hz | 60Hz | | | | N° | | | | | | | |
| MVE 200/3X-20A0 | MVE 200/36X-20A0 | B1 | 20A0 | 233 | | 54 | | 62-74 | 106 | 9 | 4 | 130 | 154 | 15 | 65 | 125 | 120 | 112 |
| MVE 200/3X-23A0 | MVE 200/36X-23A0 | G | 23A0 | 222 | | 55 | | Empreinte multiple<br>62-74<br>65<br>115<br>135 | 106<br>140<br>135<br>115 | 9<br>13<br>11<br>11 | 4 | 164 | 140 | 25 | 82 | 116 | 159 | 110 |
| MVE 300/3X-30A0 | MVE 300/36X-30A0 | C1 | 30A0 | 254 | | 42 | | Empreinte multiple<br>80<br>90<br>124<br>135 | 110<br>125<br>110<br>115 | 11<br>13<br>11<br>11 | 4 | 150 | 173 | 15 | 79 | 150 | 166 | 134 |
| MVE 400/3X-30A0 | MVE 400/36X-30A0 | C1 | 30A0 | 274 | | 52 | | Empreinte multiple<br>80<br>90<br>124<br>135 | 110<br>125<br>110<br>115 | 11<br>13<br>11<br>11 | 4 | 150 | 173 | 15 | 79 | 150 | 166 | 134 |
| MVE 500/3X-40A0 | MVE 500/36X-40A0 | D1 | 40A0 | 330 | | 78 | | 105 | 140 | 13 | 4 | 170 | 196 | 20 | 92 | 169 | 166 | 158 |
| MVE 700/3X-40A0 | MVE 700/36X-40A0 | D1 | 40A0 | 330 | | 78 | | 105 | 140 | 13 | 4 | 170 | 196 | 20 | 92 | 169 | 166 | 158 |
| MVE 800/3X-50A0 | MVE 800/36X-50A0 | D1 | 50A0 | 321 | | 62 | | 120 | 170 | 17 | 4 | 208 | 210 | 22 | 96 | 185 | 192 | 170 |
| MVE 1200/3X-50A0 | MVE 1200/36X-50A0 | D1 | 50A0 | 321 | | 62 | | 120 | 170 | 17 | 4 | 208 | 210 | 22 | 96 | 185 | 192 | 170 |
| MVE 1300/3X-50A0 | MVE 1300/36X-50A0 | D1 | 50A0 | 321 | | 62 | | 120 | 170 | 17 | 4 | 208 | 210 | 22 | 96 | 185 | 192 | 170 |
| MVE 1300/3X-51A0 | MVE 1300/36X-51A0 | D1 | 51A0 | 326 | | 63 | | 120 | 170 | 17 | 4 | 208 | 220 | 25 | 105 | 203 | 192 | 187 |
| MVE 1600/3X-60A0 | MVE 1600/36X-60A0 | D1 | 60A0 | 402 | | 90 | | 140 | 190 | 17 | 4 | 230 | 260 | 26 | 124 | 240 | 218 | 222 |
| MVE 2000/3X-60A0 | MVE 2000/36X-60A0 | D1 | 60A0 | 402 | | 90 | | 140 | 190 | 17 | 4 | 230 | 260 | 26 | 124 | 240 | 218 | 222 |
| MVE 2300/3X-60A0 | MVE 2300/36X-60A0 | D1 | 60A0 | 402 | | 90 | | 140 | 190 | 17 | 4 | 230 | 260 | 26 | 124 | 240 | 218 | 222 |
| MVE 3200/3X-75A1 | MVE 3200/36X-75A1 | D1 | 75A1 | 516 | | 117 | | 155 | 255 | 25 | 4 | 304 | 314 | 30 | 147 | 285 | 277 | 265 |
| MVE 4000/3X-75A1 | MVE 4000/36X-75A1 | D1 | 75A1 | 516 | | 117 | | 155 | 255 | 25 | 4 | 304 | 314 | 30 | 147 | 285 | 277 | 265 |

## Note:

REMARQUE: Dimensions avec précision grossière conformément à UNI 22768/1

Ces informations sont fournies sans garantie, représentation, incitation ou licence d'aucune sorte. Les informations sont précises selon la connaissance de OLI ou sont obtenues de sources considérées comme exactes. OLI n'assume donc aucune responsabilité légale.
La dernière version du catalogue mis à jour est disponible en ligne.

- Class I, Div.2 Group A, B, C, D T3
- Class II Div.2 Group F, G T4
- Conforme à UL 1004-1,UL 1004-3, UL60079-31, UL60079-0, CSA 60079-0, CSA 60079-31, CSA 22.2 N°100, CSA 22.2 N°77, CSA 22.2 N°60079-7

# MVE-Exe SÉCURITÉ ACCRUE

## 4 PÔLES – 1500/1800 rpm

Ex II 2G: Temp. Class **T3** - ExII 2D Temp. Class: ● 100 °C ● 135 °C
Class II Div.2: Temp. Class **T4**
EX e, tE: **5**

* Raccordements des bornes : **Y** Haute tension ; **Δ** Basse tension

| Wm (kgcm) | | Modèle | | Force centrifuge (kg) | | Poids (kg) | | SPÉCIFICATIONS ÉLECTRIQUES | | | | | | | | |
|---|---|---|---|---|---|---|---|---|---|---|---|---|---|---|---|---|
| | | | | | | | | Puissance d'entrée (kW) | | Courant nominal | | * Raccordements des bornes | Ia / In | | Presse-étoupe | |
| 50Hz | 60Hz | 50Hz | 60Hz | 50Hz | 60Hz | 50Hz | 60Hz | 50Hz | 60Hz | 50Hz (400V) | 60Hz (460V) | | 50Hz | 60Hz | Metrico | |
| 15,4 | 10,8 | MVE 200/15X-30A0 | MVE 200/18X-30A0 | 194 | 196 | 12 | | 0,12 | 0,15 | 0,49 | 0,50 | Y | 2,2 | 2,2 | M20 | ● |
| 33,4 | 23,4 | MVE 400/15X-40A0 | MVE 400/18X-40A0 | 420 | 423 | 20 | | 0,27 | 0,32 | 0,84 | 0,86 | Y | 2,7 | 2,7 | M20 | ● |
| 40,1 | 28,1 | MVE 500/15X-40A0 | MVE 500/18X-40A0 | 504 | 508 | 21 | | 0,35 | 0,40 | 1,06 | 1,09 | Y | 3,0 | 2,9 | M20 | ● |
| 26,6 | 18,6 | MVE 300/15X-50A0 | MVE 300/18X-50A0 | 334 | 336 | 22 | | 0,62 | 0,73 | 1,32 | 1,20 | Y | 3,2 | 3,4 | M20 | ● |
| 26,6 | 18,6 | MVE 300/15X-51A0 | MVE 300/18X-51A0 | 334 | 336 | 22 | | 0,62 | 0,73 | 1,32 | 1,20 | Y | 3,2 | 3,4 | M20 | ● |
| 56,8 | 39,4 | MVE 700/15X-50A0 | MVE 700/18X-50A0 | 714 | 712 | 27 | | 0,62 | 0,73 | 1,32 | 1,20 | Y | 3,2 | 3,4 | M20 | ● |
| 56,8 | 39,4 | MVE 710/15X-50A0 | MVE 710/18X-50A0 | 714 | 712 | 27 | | 0,62 | 0,73 | 1,32 | 1,20 | Y | 3,2 | 3,4 | M20 | ● |
| 75,6 | 52,9 | MVE 950/15X-50A0 | MVE 950/18X-50A0 | 950 | 957 | 33 | | 0,64 | 0,77 | 1,40 | 1,35 | Y | 4,2 | 4,2 | M20 | ● |
| 87,7 | 61,4 | MVE 1100/15X-51A0 | MVE 1100/18X-51A0 | 1.102 | 1.110 | 35 | 28,5 | 0,64 | 0,77 | 1,40 | 1,35 | Y | 4,0 | 4,0 | M20 | ● |
| 108,6 | 76,7 | MVE 1400/15X-60A0 | MVE 1400/18X-60A0 | 1.364 | 1.388 | 63 | 60 | 0,70 | 0,84 | 1,78 | 1,78 | Y | 4,2 | 4,2 | M25 | ● |
| 137,3 | 92,0 | MVE 1700/15X-60A0 | MVE 1700/18X-60A0 | 1.725 | 1.664 | 62 | 59 | 1,13 | 1,30 | 2,16 | 2,09 | Y | 4,9 | 4,7 | M25 | ● |
| 187,7 | 137,4 | MVE 2400/15X-60A0 | MVE 2400/18X-60A0 | 2.358 | 2.485 | 68 | 62 | 1,57 | 1,88 | 3,20 | 3,20 | Y | 5,1 | 5,1 | M25 | ● |
| 203,5 | 135,6 | MVE 2500/15X-70A0 | MVE 2500/18X-70A0 | 2.557 | 2.454 | 80 | 74 | 1,76 | 2,00 | 3,08 | 3,00 | Y | 6,2 | 6,3 | M25 | ● |
| 248,7 | 169,8 | MVE 3000/15X-70A0 | MVE 3000/18X-70A0 | 3.124 | 3.071 | 94 | 87 | 1,90 | 2,30 | 3,68 | 3,30 | Y | 6,7 | 6,8 | M25 | ● |
| 306,7 | 204,7 | MVE 3800/15X-75A0 | MVE 3800/18X-75A0 | 3.853 | 3.704 | 146 | | 2,20 | 2,60 | 4,15 | 4,15 | Y | 7,0 | 7,0 | M32 | ● |
| 343,2 | 240,9 | MVE 4300/15X-75A0 | MVE 4300/18X-75A0 | 4.312 | 4.359 | 136 | 125 | 2,50 | 3,00 | 4,50 | 4,60 | Y | 7,2 | 7,4 | M32 | ● |
| 437,4 | 303,7 | MVE 5500/15X-80A0 | MVE 5500/18X-80A0 | 5.495 | 5.495 | 181 | 169 | 2,88 | 3,45 | 6,50 | 5,50 | Y | 7,3 | 7,2 | M32 | ● |
| 576,8 | 397,3 | MVE 7200/15X-85A0 | MVE 7200/18X-85A0 | 7.246 | 7.188 | 237 | 231 | 4,00 | 4,80 | 8,50 | 8,70 | Δ | 7,0 | 7,1 | M32 | ● |
| 718,0 | 498,8 | MVE 9000/15X-85A0 | MVE 9000/18X-85A0 | 9.020 | 9.023 | 252 | 241 | 7,35 | 8,50 | 13,40 | 12,00 | Δ | 7,2 | 7,2 | M32 | ● |
| 579,9 | 406,0 | MVE 7200/15X-86A0 | MVE 7200/18X-86A0 | 7.286 | 7.345 | 237 | 231 | 6,00 | 6,50 | 11,00 | 10,80 | Δ | 4,7 | 4,5 | M32 | ● |
| 724,8 | 507,0 | MVE 9000/15X-86A0 | MVE 9000/18X-86A0 | 9.106 | 9.172 | 252 | 241 | 6,00 | 6,50 | 11,00 | 10,80 | Δ | Δ | 4,5 | M32 | ● |
| 800,1 | 588,3 | MVE 10000/15X-90A0 | MVE 10000/18X-90A0 | 10.052 | 10.643 | 300 | 286 | 5,40 | 7,00 | 13,00 | 13,00 | Δ | 6,7 | 6,6 | M32 | ● |
| 835,7 | 581,3 | MVE 10000/15X-91A0 | MVE 10000/18X-91A0 | 10.499 | 10.517 | 300 | 286 | 7,00 | 8,20 | 13,10 | 13,10 | Δ | 7,2 | 7,7 | M32 | ● |

*Taille 70A0*



*Taille 75A0*



*Taille 80A0*



JUSQU'À LA TAILLE 60 (NON COMPRIS)
60Hz masses = 50Hz masses ajustées à 70%

Ausgenommen Type MVE 1100/15E - 1100/18E

SUPÉRIEUR À LA TAILLE 60 (Y COMPRIS)
Masses spécifiques pour 60Hz

Pour convertir les kg en Newton: N = 9.81 · kg

- II 2D Ex tb IIIC Tx Db IP66
- II 2G Ex eb IIC T3 Gb
- Équipement et système de protection destinés pour l'utilisation en atmosphères explosibles (Zone 21) - Directive 2014/34/UE
- Conformité avec les Exigences Essentielles de Santé et de Sécurité
- IEC 60034-1, IEC EN 60079-0, IEC EN 60079-31, IEC EN 60079-7

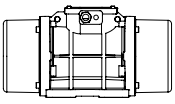

Dessins techniques sur la dernière page



| Modèle | | Dessein | Taille | SPÉCIFICATIONS DIMENSIONNELLES (mm) | | | | | | | | | | | | | | |
|---|---|---|---|---|---|---|---|---|---|---|---|---|---|---|---|---|---|---|
| | | | | C | | M | | A | B | Ø G | Trous | D | E | F | H | I | L | N |
| 50Hz | 60Hz | | | 50Hz | 60Hz | 50Hz | 60Hz | | | | N° | | | | | | | |
| MVE 200/15X-30A0 | MVE 200/18X-30A0 | C | 30A0 | 274 | | 52 | | Empreinte multiple<br>80<br>90<br>124<br>135 | 110<br>125<br>110<br>115 | 11<br>13<br>11<br>11 | 4 | 150 | 173 | 15 | 79 | 150 | 166 | 134 |
| MVE 400/15X-40A0 | MVE 400/18X-40A0 | D1 | 40A0 | 330 | | 78 | | 105 | 140 | 13 | 4 | 170 | 196 | 20 | 92 | 174 | 166 | 160 |
| MVE 500/15X-40A0 | MVE 500/18X-40A0 | D1 | 40A0 | 330 | | 78 | | 105 | 140 | 13 | 4 | 170 | 196 | 20 | 92 | 174 | 166 | 160 |
| MVE 300/15X-50A0 | MVE 300/18X-50A0 | D1 | 50A0 | 321 | | 62 | | 120 | 170 | 17 | 4 | 208 | 210 | 22 | 96 | 185 | 192 | 170 |
| MVE 300/15X-51A0 | MVE 300/18X-51A0 | D1 | 51A0 | 321 | | 62 | | 120 | 170 | 17 | 4 | 208 | 220 | 25 | 105 | 202 | 192 | 187 |
| MVE 700/15X-50A0 | MVE 700/18X-50A0 | D1 | 50A0 | 391 | | 97 | | 120 | 170 | 17 | 4 | 208 | 210 | 22 | 96 | 185 | 192 | 170 |
| MVE 710/15X-50A0 | MVE 710/18X-50A0 | D1 | 50A0 | 391 | | 97 | | 120 | 170 | 17 | 4 | 208 | 210 | 22 | 96 | 185 | 192 | 170 |
| MVE 950/15X-50A0 | MVE 950/18X-50A0 | D1 | 50A0 | 455 | | 129 | | 120 | 170 | 17 | 4 | 208 | 210 | 22 | 96 | 185 | 192 | 170 |
| MVE 1100/15X-51A0 | MVE 1100/18X-51A0 | D1 | 51A0 | 414 | | 106 | | 120 | 170 | 17 | 4 | 208 | 220 | 25 | 105 | 202 | 192 | 187 |
| MVE 1400/15X-60A0 | MVE 1400/18X-60A0 | D1 | 60A0 | 446 | | 112 | | 140 | 190 | 17 | 4 | 230 | 260 | 26 | 124 | 240 | 218 | 222 |
| MVE 1700/15X-60A0 | MVE 1700/18X-60A0 | D1 | 60A0 | 446 | | 112 | | 140 | 190 | 17 | 4 | 230 | 260 | 26 | 124 | 240 | 218 | 222 |
| MVE 2400/15X-60A0 | MVE 2400/18X-60A0 | D1 | 60A0 | 490 | 446 | 134 | 112 | 140 | 190 | 17 | 4 | 230 | 260 | 26 | 124 | 240 | 218 | 222 |
| MVE 2500/15X-70A0 | MVE 2500/18X-70A0 | D1 | 70A0 | 501 | | 123 | | 155 | 225 | 22 | 4 | 275 | 290 | 30 | 140 | 256 | 250 | 236 |
| MVE 3000/15X-70A0 | MVE 3000/18X-70A0 | D1 | 70A0 | 535 | 501 | 140 | 123 | 155 | 225 | 22 | 4 | 275 | 290 | 30 | 140 | 256 | 250 | 236 |
| MVE 3800/15X-75A0 | MVE 3800/18X-75A0 | D1 | 75A0 | 564 | 536 | 151 | 117 | 155 | 255 | 23.5 | 4 | 304 | 314 | 30 | 147 | 285 | 277 | 265 |
| MVE 4300/15X-75A0 | MVE 4300/18X-75A0 | D1 | 75A0 | 584 | 564 | 151 | 141 | 155 | 255 | 23.5 | 4 | 304 | 314 | 30 | 147 | 285 | 277 | 265 |
| MVE 5500/15X-80A0 | MVE 5500/18X-80A0 | E1 | 80A0 | 603 | | 143 | | 180 | 280 | 26 | 4 | 332 | 360 | 37 | 167 | 345 | 304 | 310 |
| MVE 7200/15X-85A0 | MVE 7200/18X-85A0 | D1 | 85A0 | 624 | | 130 | | 200 | 320 | 28 | 4 | 385 | 402 | 40 | 203 | 394 | 360 | 378 |
| MVE 9000/15X-85A0 | MVE 9000/18X-85A0 | D1 | 85A0 | 624 | | 130 | | 200 | 320 | 28 | 4 | 385 | 402 | 40 | 203 | 394 | 360 | 378 |
| MVE 7200/15X-86A0 | MVE 7200/18X-86A0 | D1 | 86A0 | 624 | | 130 | | 200 | 320 | 28 | 4 | 385 | 402 | 40 | 203 | 394 | 360 | 378 |
| MVE 9000/15X-86A0 | MVE 9000/18X-86A0 | D1 | 86A0 | 624 | | 130 | | 200 | 320 | 28 | 4 | 385 | 402 | 40 | 203 | 394 | 360 | 378 |
| MVE 10000/15X-90A0 | MVE 10000/18X-90A0 | E1 | 90A0 | 728 | | 170 | | 125 | 380 | 39 | 6 | 452 | 415 | 40 | 205 | 394 | 380 | 378 |
| MVE 10000/15X-91A0 | MVE 10000/18X-91A0 | E1 | 91A0 | 728 | | 170 | | 125 | 380 | 39 | 6 | 452 | 415 | 40 | 205 | 394 | 380 | 378 |

## Note:

REMARQUE: Dimensions avec précision grossière conformément à UNI 22768/1

Ces informations sont fournies sans garantie, représentation, incitation ou licence d'aucune sorte. Les informations sont précises selon la connaissance de OLI ou sont obtenues de sources considérées comme exactes. OLI n'assume donc aucune responsabilité légale.
La dernière version du catalogue mis à jour est disponible en ligne.

- Class I, Div.2 Group A, B, C, D T3
- Class II Div.2 Group F, G T4
- Conforme à UL 1004-1,UL 1004-3, UL60079-31, UL60079-0, CSA 60079-0, CSA 60079-31, CSA 22.2 N°100, CSA 22.2 N°77, CSA 22.2 N°60079-7

# MVE-Exe SÉCURITÉ ACCRUE

## 6 PÔLES – 1000/1200 rpm

Ex II 2G: Temp. Class **T3** - ExII 2D Temp. Class: ● 100 °C ● 135 °C
Class II Div.2: Temp. Class **T4**
EX e, tE: **5**

* Raccordements des bornes : **Y** Haute tension ; **Δ** Basse tension

| Wm (kgcm) | | Modèle | | Force centrifuge (kg) | | Poids (kg) | | SPÉCIFICATIONS ÉLECTRIQUES | | | | | | | | |
|---|---|---|---|---|---|---|---|---|---|---|---|---|---|---|---|---|
| | | | | | | | | Puissance d'entrée (kW) | | Courant nominal | | * Raccordements des bornes | Ia / In | | Presse-étoupe | |
| 50Hz | 60Hz | 50Hz | 60Hz | 50Hz | 60Hz | 50Hz | 60Hz | 50Hz | 60Hz | 50Hz (400V) | 60Hz (460V) | | 50Hz | 60Hz | Metrico | |
| 9,5 | 6,6 | MVE 50/1X-30A0 | MVE 50/12X-30A0 | 53 | 53 | 10 | | 0,12 | 0,14 | 0,30 | 0,40 | Y | 2,2 | 2,2 | M20 | ● |
| 18,8 | 13,2 | MVE 100/1X-30A0 | MVE 100/12X-30A0 | 105 | 106 | 11 | | 0,12 | 0,14 | 0,30 | 0,40 | Y | 2,2 | 2,2 | M20 | ● |
| 33,5 | 23,4 | MVE 200/1X-40A0 | MVE 200/12X-40A0 | 187 | 188 | 19 | | 0,15 | 0,18 | 0,65 | 0,63 | Y | 2,2 | 2,2 | M20 | ● |
| 56,9 | 39,9 | MVE 300/1X-50A0 | MVE 300/12X-50A0 | 318 | 320 | 26 | | 0,25 | 0,30 | 0,67 | 0,64 | Y | 2,7 | 2,7 | M20 | ● |
| 91,9 | 64,3 | MVE 500/1X-50A0 | MVE 500/12X-50A0 | 513 | 517 | 34 | | 0,55 | 0,40 | 1,22 | 1,15 | Y | 3,0 | 2,9 | M20 | ● |
| 91,9 | 91,9 | MVE 510/1X-51A0 | MVE 510/12X-51A0 | 513 | 739 | 34 | | 0,55 | 0,40 | 1,20 | 1,15 | Y | 3,0 | 2,9 | M20 | ● |
| 137,4 | 108,6 | MVE 800/1X-60A0 | MVE 800/12X-60A0 | 767 | 873 | 60 | 58 | 0,75 | 0,80 | 1,42 | 1,32 | Y | 3,4 | 3,3 | M25 | ● |
| 187,7 | 137,3 | MVE 1100/1X-60A0 | MVE 1100/12X-60A0 | 1.048 | 1.104 | 78 | 72 | 0,75 | 0,80 | 1,42 | 1,32 | Y | 3,4 | 3,3 | M25 | ● |
| 284,8 | 196,5 | MVE 1500/1X-60A0 | MVE 1500/12X-60A0 | 1.590 | 1.580 | 84 | 73 | 0,90 | 1,08 | 1,80 | 2,00 | Y | 3,5 | 3,5 | M25 | ● |
| 299,6 | 203,5 | MVE 1600/1X-70A0 | MVE 1600/12X-70A0 | 1.673 | 1.636 | 90 | 79 | 0,90 | 1,08 | 2,40 | 2,30 | Y | 3,9 | 3,8 | M25 | ● |
| 373,1 | 248,7 | MVE 2100/1X-70A0 | MVE 2100/12X-70A0 | 2.083 | 2.000 | 105 | 91 | 1,50 | 1,80 | 3,00 | 3,20 | Y | 4,5 | 4,6 | M25 | ● |
| 401,0 | 275,2 | MVE 2200/1X-70A0 | MVE 2200/12X-70A0 | 2.239 | 2.213 | 107 | 93 | 1,50 | 1,80 | 3,00 | 3,20 | Y | 4,5 | 4,6 | M25 | ● |
| 467,4 | 306,7 | MVE 2600/1X-75A0 | MVE 2600/12X-75A0 | 2.610 | 2.466 | 146,5 | 126,5 | 1,96 | 2,10 | 4,10 | 4,00 | Y | 5,0 | 5,0 | M32 | ● |
| 540,3 | 379,7 | MVE 3000/1X-75A0 | MVE 3000/12X-75A0 | 3.017 | 3.053 | 155 | 138 | 2,20 | 2,40 | 4,50 | 4,30 | Y | 5,2 | 5,2 | M32 | ● |
| 702,5 | 465,6 | MVE 3700/1X-75A0 | MVE 3700/12X-75A0 | 3.797 | 3.744 | 159 | 142 | 2,20 | 2,40 | 4,50 | 4,30 | Y | 5,2 | 5,2 | M32 | ● |
| 680,4 | 437,4 | MVE 3800/1X-80A0 | MVE 3800/12X-80A0 | 3.799 | 3.517 | 216 | 195 | 2,50 | 3,00 | 5,50 | 5,30 | Y | 6,1 | 6,2 | M32 | ● |
| 838,3 | 584,2 | MVE 4700/1X-80A0 | MVE 4700/12X-80A0 | 4.681 | 4.697 | 220 | 201 | 3,20 | 3,90 | 6,50 | 6,95 | Y | 5,7 | 5,9 | M32 | ● |
| 929,9 | 654,6 | MVE 5200/1X-85A0 | MVE 5200/12X-85A0 | 5.192 | 5.263 | 264 | 248 | 3,80 | 4,00 | 6,92 | 6,36 | Y | 5,7 | 5,7 | M32 | ● |
| 1.165,2 | 824,0 | MVE 6500/1X-85A0 | MVE 6500/12X-85A0 | 6.506 | 6.625 | 288 | 265 | 4,30 | 5,00 | 7,76 | 7,81 | Y | 6,4 | 6,2 | M32 | ● |
| 1.436,0 | 929,8 | MVE 8000/1X-85A0 | MVE 8000/12X-85A0 | 8.018 | 7.476 | 309 | 274 | 5,50 | 6,60 | 12,60 | 11,60 | Δ | 6,2 | 6,4 | M32 | ● |
| 1.600,4 | 1.165,2 | MVE 9000/1X-85A0 | MVE 9000/12X-85A0 | 8.936 | 9.369 | 322 | 291 | 6,20 | 7,45 | 13,20 | 12,60 | Δ | 6,5 | 6,4 | M32 | ● |
| 1.434,0 | 929,8 | MVE 8000/1X-86A0 | MVE 8000/12X-86A0 | 8.007 | 7.476 | 309 | 274 | 4,60 | 5,50 | 9,00 | 10,00 | Δ | 6,0 | 6,2 | M32 | ● |
| 1.598,0 | 1.165,2 | MVE 9000/1X-86A0 | MVE 9000/12X-86A0 | 8.923 | 9.369 | 322 | 291 | 4,60 | 5,50 | 9,00 | 10,00 | Δ | 6,0 | 6,2 | M32 | ● |
| 1.788,4 | 1.240,0 | MVE 10000/1X-90A0 | MVE 10000/12X-90A0 | 9.986 | 9.970 | 374 | 348 | 6,10 | 6,40 | 14,00 | 12,70 | Δ | 6,6 | 6,6 | M32 | ● |
| 2.329,8 | 1.647,4 | MVE 13000/1X-90A0 | MVE 13000/12X-90A0 | 13.009 | 13.246 | 411 | 364 | 7,50 | 8,30 | 16,40 | 16,00 | Δ | 6,4 | 6,5 | M32 | ● |
| 1.802,9 | 1.240,0 | MVE 10000/1X-91A0 | MVE 10000/12X-91A0 | 10.067 | 9.970 | 373 | 348 | 6,40 | 7,70 | 13,00 | 14,50 | Δ | 6,0 | 6,0 | M32 | ● |
| 2.056,9 | 1.433,0 | MVE 11400/1X-91A0 | MVE 11400/12X-91A0 | 11.485 | 11.522 | 404 | 361 | 6,40 | 7,70 | 13,00 | 7,50 | Δ | 6,0 | 6,0 | M32 | ● |

JUSQU'À LA TAILLE 60 (NON COMPRIS)
60Hz masses = 50Hz masses ajustées à 70%

SUPÉRIEUR À LA TAILLE 60 (Y COMPRIS)
Masses spécifiques pour 60Hz

Pour convertir les kg en Newton: N = 9.81 · kg

- II 2D Ex tb IIIC Tx Db IP66
- II 2G Ex eb IIC T3 Gb
- Équipement et système de protection destinés pour l'utilisation en atmosphères explosibles (Zone 21) - Directive 2014/34/UE
- Conformité avec les Exigences Essentielles de Santé et de Sécurité
- IEC 60034-1, IEC EN 60079-0, IEC EN 60079-31, IEC EN 60079-7

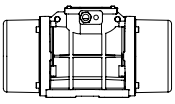

Dessins techniques sur la dernière page



| Modèle | | Dessein | Taille | SPÉCIFICATIONS DIMENSIONNELLES (mm) | | | | | | | | | | | | | | | |
|---|---|---|---|---|---|---|---|---|---|---|---|---|---|---|---|---|---|---|---|
| | | | | C | | M | | A | B | Ø G | Trous | D | E | F | H | I | L | N |
| 50Hz | 60Hz | | | 50Hz | 60Hz | 50Hz | 60Hz | | | | N° | | | | | | | |
| MVE 50/1X-30A0 | MVE 50/12X-30A0 | C | 30A0 | 274 | | 52 | | Empreinte multiple<br>80 110 11<br>90 125 13<br>124 110 11<br>135 115 11 | | | 4 | 150 | 173 | 15 | 79 | 150 | 166 | 134 |
| MVE 100/1X-30A0 | MVE 100/12X-30A0 | C | 30A0 | 304 | | 67 | | Empreinte multiple<br>80 110 11<br>90 125 13<br>124 110 11<br>135 115 11 | | | 4 | 150 | 173 | 15 | 79 | 150 | 166 | 134 |
| MVE 200/1X-40A0 | MVE 200/12X-40A0 | D1 | 40A0 | 330 | | 78 | | 105 | 140 | 13 | 4 | 170 | 196 | 20 | 92 | 174 | 166 | 160 |
| MVE 300/1X-50A0 | MVE 300/12X-50A0 | D1 | 50A0 | 391 | | 97 | | 120 | 170 | 17 | 4 | 208 | 210 | 22 | 96 | 185 | 192 | 170 |
| MVE 500/1X-50A0 | MVE 500/12X-50A0 | D1 | 50A0 | 455 | | 129 | | 120 | 170 | 17 | 4 | 208 | 210 | 22 | 96 | 185 | 192 | 170 |
| MVE 510/1X-51A0 | MVE 510/12X-51A0 | D1 | 51A0 | 455 | | 129 | | 120 | 170 | 17 | 4 | 208 | 210 | 22 | 96 | 185 | 192 | 170 |
| MVE 800/1X-60A0 | MVE 800/12X-60A0 | D1 | 60A0 | 446 | | 112 | | 140 | 190 | 17 | 4 | 230 | 260 | 26 | 124 | 240 | 218 | 222 |
| MVE 1100/1X-60A0 | MVE 1100/12X-60A0 | D1 | 60A0 | 490 | 446 | 134 | 112 | 140 | 190 | 17 | 4 | 230 | 260 | 26 | 124 | 240 | 218 | 222 |
| MVE 1500/1X-60A0 | MVE 1500/12X-60A0 | D1 | 60A0 | 566 | 490 | 172 | 134 | 140 | 190 | 17 | 4 | 230 | 260 | 26 | 124 | 240 | 218 | 222 |
| MVE 1600/1X-70A0 | MVE 1600/12X-70A0 | D1 | 70A0 | 563 | 501 | 154 | 123 | 155 | 225 | 22 | 4 | 275 | 290 | 30 | 140 | 256 | 250 | 236 |
| MVE 2100/1X-70A0 | MVE 2100/12X-70A0 | D1 | 70A0 | 623 | 563 | 184 | 154 | 155 | 225 | 22 | 4 | 275 | 290 | 30 | 140 | 256 | 250 | 236 |
| MVE 2200/1X-70A0 | MVE 2200/12X-70A0 | D1 | 70A0 | 623 | | 184 | | 155 | 225 | 22 | 4 | 275 | 290 | 30 | 140 | 256 | 250 | 236 |
| MVE 2600/1X-75A0 | MVE 2600/12X-75A0 | D1 | 75A0 | 692 | 584 | 205 | 151 | 155 | 255 | 23.5 | 4 | 304 | 314 | 30 | 147 | 285 | 277 | 265 |
| MVE 3000/1X-75A0 | MVE 3000/12X-75A0 | D1 | 75A0 | 692 | | 205 | | 155 | 255 | 23.5 | 4 | 304 | 314 | 30 | 147 | 285 | 277 | 265 |
| MVE 3700/1X-75A0 | MVE 3700/12X-75A0 | D1 | 75A0 | 734 | 692 | 226 | 205 | 155 | 255 | 23.5 | 4 | 304 | 314 | 30 | 147 | 285 | 277 | 265 |
| MVE 3800/1X-80A0 | MVE 3800/12X-80A0 | D1 | 80A0 | 683 | 603 | 183 | 143 | 180 | 280 | 26 | 4 | 332 | 354 | 32 | 170 | 330 | 312 | 311 |
| MVE 4700/1X-80A0 | MVE 4700/12X-80A0 | D1 | 80A0 | 733 | 683 | 208 | 183 | 180 | 280 | 26 | 4 | 332 | 354 | 32 | 170 | 330 | 312 | 311 |
| MVE 5200/1X-85A0 | MVE 5200/12X-85A0 | D1 | 85A0 | 704 | 624 | 170 | 130 | 200 | 320 | 28 | 4 | 385 | 402 | 40 | 20 | 394 | 360 | 378 |
| MVE 6500/1X-85A0 | MVE 6500/12X-85A0 | D1 | 85A0 | 704 | | 170 | | 200 | 320 | 28 | 4 | 385 | 402 | 40 | 20 | 394 | 360 | 378 |
| MVE 8000/1X-85A0 | MVE 8000/12X-85A0 | D1 | 85A0 | 774 | 704 | 205 | 170 | 200 | 320 | 28 | 4 | 385 | 402 | 40 | 203 | 394 | 360 | 378 |
| MVE 9000/1X-85A0 | MVE 9000/12X-85A0 | D1 | 85A0 | 774 | 704 | 205 | 170 | 200 | 320 | 28 | 4 | 385 | 402 | 40 | 203 | 394 | 360 | 378 |
| MVE 8000/1X-86A0 | MVE 8000/12X-86A0 | D1 | 86A0 | 774 | | 205 | | 200 | 320 | 28 | 4 | 385 | 402 | 40 | 203 | 394 | 360 | 378 |
| MVE 9000/1X-86A0 | MVE 9000/12X-86A0 | D1 | 86A0 | 774 | | 205 | | 200 | 320 | 28 | 4 | 385 | 402 | 40 | 203 | 394 | 360 | 378 |
| MVE 10000/1X-90A0 | MVE 10000/12X-90A0 | E1 | 90A0 | 908 | 798 | 260 | 205 | 125 | 380 | 39 | 6 | 452 | 415 | 40 | 205 | 394 | 380 | 378 |
| MVE 13000/1X-90A0 | MVE 13000/12X-90A0 | E1 | 90A0 | 948 | 798 | 280 | 205 | 125 | 380 | 39 | 6 | 452 | 415 | 40 | 205 | 394 | 380 | 378 |
| MVE 10000/1X-91A0 | MVE 10000/12X-91A0 | E1 | 91A0 | 908 | | 260 | | 125 | 380 | 39 | 6 | 452 | 415 | 40 | 205 | 394 | 380 | 378 |
| MVE 11400/1X-91A0 | MVE 11400/12X-91A0 | E1 | 91A0 | 908 | | 260 | | 125 | 380 | 39 | 6 | 452 | 415 | 40 | 205 | 394 | 380 | 378 |

REMARQUE: Dimensions avec précision grossière conformément à UNI 22768/1

Ces informations sont fournies sans garantie, représentation, incitation ou licence d'aucune sorte. Les informations sont précises selon la connaissance de OLI ou sont obtenues de sources considérées comme exactes. OLI n'assume donc aucune responsabilité légale.
La dernière version du catalogue mis à jour est disponible en ligne.

- Class I, Div.2 Group A, B, C, D T3
- Class II Div.2 Group F, G T4
- Conforme à UL 1004-1,UL 1004-3, UL60079-31, UL60079-0, CSA 60079-0, CSA 60079-31, CSA 22.2 N°100, CSA 22.2 N°77, CSA 22.2 N°60079-7

# MVE-Exe SÉCURITÉ ACCRUE

## 8 PÔLES – 750/900 rpm

Ex II 2G: Temp. Class **T3** - ExII 2D Temp. Class: ● 100 °C ● 135 °C
Class II Div.2: Temp. Class **T4**
EX e, tE: **5**

* Raccordements des bornes : **Y** Haute tension ; **Δ** Basse tension

| Wm (kgcm) | | Modèle | | Force centrifuge (kg) | | Poids (kg) | | SPÉCIFICATIONS ÉLECTRIQUES | | | | | | | | |
|---|---|---|---|---|---|---|---|---|---|---|---|---|---|---|---|---|
| | | | | | | | | Puissance d'entrée (kW) | | Courant nominal | | * Raccordements des bornes | Ia / In | | Presse-étoupe | |
| 50Hz | 60Hz | 50Hz | 60Hz | 50Hz | 60Hz | 50Hz | 60Hz | 50Hz | 60Hz | 50Hz (400V) | 60Hz (460V) | | 50Hz | 60Hz | Metrico | |
| 33,4 | | MVE 150/075X-40A0 | MVE 150/090X-40A0 | 105 | 151 | 21 | | 0,23 | 0,25 | 1,14 | 1,14 | Y | 1,7 | 1,7 | M20 | ● |
| 56,9 | | MVE 250/075X-50A0 | MVE 250/090X-50A0 | 179 | 257 | 29 | | 0,25 | 0,30 | 0,90 | 0,89 | Y | 1,9 | 1,9 | M20 | ● |
| 84,0 | | MVE 400/075X-51A0 | MVE 400/090X-51A0 | 264 | 380 | 34 | | 0,25 | 0,30 | 0,90 | 0,89 | Y | 2,1 | 2,1 | M20 | ● |
| 137,3 | | MVE 650/075X-60A0 | MVE 650/090X-60A0 | 431 | 621 | 63 | | 0,37 | 0,45 | 1,20 | 1,20 | Y | 2,4 | 2,4 | M25 | ● |
| 187,7 | | MVE 900/075X-60A0 | MVE 900/090X-60A0 | 589 | 849 | 70 | | 0,55 | 0,54 | 1,23 | 1,29 | Y | 2,7 | 2,7 | M25 | ● |
| 299,6 | | MVE 1300/075X-70A0 | MVE 1300/090X-70A0 | 941 | 1.355 | 90 | | 0,75 | 0,90 | 2,20 | 2,20 | Y | 3,2 | 3,2 | M25 | ● |
| 467,4 | | MVE 2100/075X-75A0 | MVE 2100/090X-75A0 | 1.468 | 2.114 | 150 | | 1,00 | 1,20 | 2,81 | 2,89 | Y | 4,4 | 4,3 | M32 | ● |
| 680,3 | | MVE 3100/075X-80A0 | MVE 3100/090X-80A0 | 2.137 | 3.077 | 201 | | 2,00 | 2,30 | 4,50 | 4,40 | Y | 4,2 | 4,2 | M32 | ● |
| 838,4 | | MVE 3800/075X-80A0 | MVE 3800/090X-80A0 | 2.633 | 3.792 | 219 | | 2,50 | 3,00 | 6,00 | 6,00 | Y | 4,1 | 4,2 | M32 | ● |
| 929,7 | | MVE 4200/075X-85A0 | MVE 4200/090X-85A0 | 2.920 | 4.205 | 268 | | 2,90 | 3,40 | 6,50 | 6,50 | Y | 4,0 | 3,9 | M32 | ● |
| 1.165,2 | | MVE 5300/075X-85A0 | MVE 5300/090X-85A0 | 3.660 | 5.270 | 289 | | 3,70 | 4,30 | 8,00 | 8,20 | Y | 4,0 | 4,4 | M32 | ● |
| 1.435,9 | | MVE 6500/075X-85A0 | MVE 6500/090X-85A0 | 4.510 | 6.494 | 308 | | 3,80 | 4,20 | 8,78 | 8,30 | Y | 3,8 | 4,2 | M32 | ● |
| 2.200,4 | | MVE 10000/075X-90A0 | MVE 10000/090X-90A0 | 6.911 | 9.952 | 422 | | 6,80 | 7,50 | 13,50 | 12,50 | Δ | 3,7 | 4,4 | M32 | ● |
| 2.311,0 | | MVE 10000/075X-91A0 | MVE 10000/090X-91A0 | 7.258 | 10.452 | 422 | | 6,00 | 7,00 | 14,40 | 14,00 | Δ | 4,7 | 4,7 | M32 | ● |

*Taille 80A0*



*Taille 86A0*



*Taille 91A0*



60Hz masses = 50Hz masses adjusted at 100%

Pour convertir les kg en Newton: N = 9.81 · kg

- II 2D Ex tb IIIC Tx Db IP66
- II 2G Ex eb IIC T3 Gb
- Équipement et système de protection destinés pour l'utilisation en atmosphères explosibles (Zone 21) - Directive 2014/34/UE
- Conformité avec les Exigences Essentielles de Santé et de Sécurité
- IEC 60034-1, IEC EN 60079-0, IEC EN 60079-31, IEC EN 60079-7

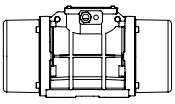

Dessins techniques sur la dernière page

| Modèle | | Dessein | Taille | SPÉCIFICATIONS DIMENSIONNELLES (mm) | | | | | | | | | | | | |
|---|---|---|---|---|---|---|---|---|---|---|---|---|---|---|---|---|
| | | | | C | M | A | B | Ø G | Trous | D | E | F | H | I | L | N |
| 50Hz | 60Hz | | | 50Hz-60Hz | 50Hz-60Hz | | | | N° | | | | | | | |
| MVE 150/075X-40A0 | MVE 150/090X-40A0 | D1 | 40A0 | 330 | 78 | 105 | 140 | 13 | 4 | 170 | 196 | 20 | 92 | 174 | 166 | 160 |
| MVE 250/075X-50A0 | MVE 250/090X-50A0 | D1 | 50A0 | 391 | 97 | 120 | 170 | 17 | 4 | 208 | 210 | 22 | 96 | 185 | 192 | 170 |
| MVE 400/075X-51A0 | MVE 400/090X-51A0 | D1 | 51A0 | 455 | 129 | 120 | 170 | 17 | 4 | 208 | 210 | 22 | 96 | 185 | 192 | 170 |
| MVE 650/075X-60A0 | MVE 650/090X-60A0 | D1 | 60A0 | 446 | 112 | 140 | 190 | 17 | 4 | 230 | 260 | 26 | 124 | 240 | 218 | 222 |
| MVE 900/075X-60A0 | MVE 900/090X-60A0 | D1 | 60A0 | 490 | 134 | 140 | 190 | 17 | 4 | 230 | 260 | 26 | 124 | 240 | 218 | 222 |
| MVE 1300/075X-70A0 | MVE 1300/090X-70A0 | D1 | 70A0 | 563 | 154 | 155 | 225 | 22 | 4 | 275 | 290 | 30 | 140 | 256 | 250 | 236 |
| MVE 2100/075X-75A0 | MVE 2100/090X-75A0 | D1 | 75A0 | 692 | 205 | 155 | 255 | 23.5 | 4 | 304 | 314 | 30 | 147 | 285 | 277 | 265 |
| MVE 3100/075X-80A0 | MVE 3100/090X-80A0 | D1 | 80A0 | 683 | 183 | 180 | 280 | 26 | 4 | 332 | 354 | 32 | 170 | 330 | 312 | 311 |
| MVE 3800/075X-80A0 | MVE 3800/090X-80A0 | D1 | 80A0 | 733 | 208 | 180 | 280 | 26 | 4 | 332 | 354 | 32 | 170 | 330 | 312 | 311 |
| MVE 4200/075X-85A0 | MVE 4200/090X-85A0 | D1 | 85A0 | 704 | 170 | 200 | 320 | 28 | 4 | 385 | 402 | 40 | 203 | 394 | 360 | 378 |
| MVE 5300/075X-85A0 | MVE 5300/090X-85A0 | D1 | 85A0 | 704 | 170 | 200 | 320 | 28 | 4 | 385 | 402 | 40 | 203 | 394 | 360 | 378 |
| MVE 6500/075X-85A0 | MVE 6500/090X-85A0 | D1 | 85A0 | 774 | 205 | 200 | 320 | 28 | 4 | 385 | 402 | 40 | 203 | 394 | 360 | 378 |
| MVE 10000/075X-90A0 | MVE 10000/090X-90A0 | E1 | 90A0 | 948 | 280 | 125 | 380 | 39 | 6 | 452 | 415 | 40 | 205 | 394 | 380 | 378 |
| MVE 10000/075X-91A0 | MVE 10000/090X-91A0 | E1 | 91A0 | 948 | 280 | 125 | 380 | 39 | 6 | 452 | 415 | 40 | 205 | 394 | 380 | 378 |

## Note:

REMARQUE: Dimensions avec précision grossière conformément à UNI 22768/1

Ces informations sont fournies sans garantie, représentation, incitation ou licence d'aucune sorte. Les informations sont précises selon la connaissance de OLI ou sont obtenues de sources considérées comme exactes. OLI n'assume donc aucune responsabilité légale.
La dernière version du catalogue mis à jour est disponible en ligne.

- Class I, Div.2 Group A, B, C, D T3
- Class II Div.2 Group F, G T4
- Conforme à UL 1004-1,UL 1004-3, UL60079-31, UL60079-0, CSA 60079-0, CSA 60079-31, CSA 22.2 N°100, CSA 22.2 N°77, CSA 22.2 N°60079-7

# MVE-Exd ANTIDÉFLAGRANT

Ex II 2G: Temp. Class **T4**
Class1 Div.1: Temp. Class **T4**
Ex II 2D Temp. Class: ● **135 °C**

* Raccordements des bornes : **Y** Haute tension ; **Δ** Basse tension

## 2 PÔLES - 3000/3600 rpm

| Wm (kgcm) | | Modèle | | Force centrifuge (kg) | | Poids (kg) | | SPÉCIFICATIONS ÉLECTRIQUES | | | | | | | | |
|---|---|---|---|---|---|---|---|---|---|---|---|---|---|---|---|---|
| | | | | | | | | Puissance d'entrée (kW) | | Courant nominal | | * Raccordements des bornes | Ia / In | | Presse-étoupe | |
| 50Hz | 60Hz | 50Hz | 60Hz | 50Hz | 60Hz | 50Hz | 60Hz | 50Hz | 60Hz | 50Hz (400V) | 60Hz (460V) | | 50Hz | 60Hz | Metrico | |
| 15,7 | 11,1 | MVE 800/3D-50A0 | MVE 800/36D-50A0 | 794 | 800 | 40 | | 0,75 | 0,90 | 1,45 | 1,50 | Y | 3,8 | 3,8 | 3/4" NPT 110 °C | ● |
| 26,6 | 18,6 | MVE 1300/3D-50A0 | MVE 1300/36D-50A0 | 1.355 | 1.365 | 41 | | 1,10 | 1,10 | 2,00 | 2,75 | Y | 5,2 | 5,0 | 3/4" NPT 110 °C | ● |
| 31,3 | 22,2 | MVE 1600/3D-60A0 | MVE 1600/36D-60A0 | 1.601 | 1.608 | 63 | 62 | 1,57 | 1,60 | 2,94 | 2,61 | Y | 5,9 | 6,2 | 3/4" NPT 110 °C | ● |
| 36,8 | 27,6 | MVE 2000/3D-60A0 | MVE 2000/36D-60A0 | 2.027 | 1.997 | 64 | 63 | 1,25 | 1,40 | 3,20 | 2,80 | Y | 6,5 | 6,4 | 3/4" NPT 110 °C | ● |
| 46,0 | 31,9 | MVE 2300/3D-60A1 | MVE 2300/36D-60A1 | 2.302 | 2.306 | 65 | 63 | 1,25 | 1,40 | 3,20 | 2,80 | Y | 6,0 | 6,3 | 3/4" NPT 110 °C | ● |
| 68,1 | 43,9 | MVE 3200/3D-75A0 | MVE 3200/36D-75A0 | 3.252 | 3.176 | 105 | 103 | 3,00 | 3,00 | 5,20 | 4,60 | Y | 8,3 | 8,2 | 3/4" NPT 110 °C | ● |
| 79,4 | 56,0 | MVE 4000/3D-75A0 | MVE 4000/36D-75A0 | 4.033 | 4.052 | 108 | 104 | 3,00 | 3,00 | 5,20 | 4,60 | Y | 8,5 | 9,7 | 3/4" NPT 110 °C | ● |

## 4 PÔLES - 1500/1800 rpm

| Wm (kgcm) | | Modèle | | Force centrifuge (kg) | | Poids (kg) | | SPÉCIFICATIONS ÉLECTRIQUES | | | | | | | | |
|---|---|---|---|---|---|---|---|---|---|---|---|---|---|---|---|---|
| | | | | | | | | Puissance d'entrée (kW) | | Courant nominal | | * Raccordements des bornes | Ia/In | | Presse-étoupe | |
| 50Hz | 60Hz | 50Hz | 60Hz | 50Hz | 60Hz | 50Hz | 60Hz | 50Hz | 60Hz | 50Hz (400V) | 60Hz (460V) | | 50Hz | 60Hz | Metrico | |
| 56,8 | 39,4 | MVE 700/15D-50A0 | MVE 700/18D-50A0 | 714 | 712 | 45 | | 0,55 | 0,66 | 1,00 | 1,00 | Y | 3,0 | 3,2 | 3/4" NPT 110 °C | ● |
| 88,7 | 56,8 | MVE 1100/15D-50A0 | MVE 1100/18D-50A0 | 1.114 | 1.028 | 52 | 45 | 0,60 | 0,68 | 1,27 | 1,50 | Y | 3,8 | 3,8 | 3/4" NPT 110 °C | ● |
| 108,6 | 76,7 | MVE 1400/15D-60A0 | MVE 1400/18D-60A0 | 1.364 | 1.388 | 73 | 70 | 0,75 | 1,00 | 1,67 | 1,80 | Y | 4,0 | 4,0 | 3/4" NPT 110 °C | ● |
| 137,3 | 92,0 | MVE 1700/15D-60A1 | MVE 1700/18D-60A1 | 1.725 | 1.664 | 76 | 61 | 1,00 | 1,20 | 1,95 | 2,00 | Y | 4,7 | 4,5 | 3/4" NPT 110 °C | ● |
| 187,7 | 137,4 | MVE 2400/15D-60A1 | MVE 2400/18D-60A1 | 2.358 | 2.485 | 78 | 72 | 1,25 | 1,40 | 2,80 | 2,70 | Y | 4,9 | 4,9 | 3/4" NPT 110 °C | ● |
| 203,5 | 135,6 | MVE 2500/15D-70A0 | MVE 2500/18D-70A0 | 2.557 | 2.454 | 99 | 93 | 1,50 | 1,60 | 2,70 | 2,60 | Y | 6,0 | 6,1 | 3/4" NPT110 °C | ● |
| 248,7 | 169,8 | MVE 3000/15D-70A0 | MVE 3000/18D-70A0 | 3.124 | 3.071 | 105 | 97 | 1,65 | 1,90 | 2,80 | 2,70 | Y | 6,5 | 6,6 | 3/4" NPT 110 °C | ● |
| 306,7 | 204,7 | MVE 3800/15D-75A0 | MVE 3800/18D-75A0 | 3.853 | 3.704 | 136 | 125 | 2,30 | 2,25 | 4,10 | 3,96 | Y | 6,8 | 6,8 | 3/4" NPT 110 °C | ● |
| 343,2 | 240,9 | MVE 4300/15D-75A0 | MVE 4300/18D-75A0 | 4.312 | 4.359 | 140 | 130 | 2,40 | 2,60 | 4,30 | 4,10 | Y | 7,0 | 7,2 | 3/4" NPT 110 °C | ● |
| 437,4 | 303,7 | MVE 5500/15D-80A0 | MVE 5500/18D-80A0 | 5.495 | 5.495 | 193 | 183 | 3,10 | 3,10 | 5,70 | 5,30 | Y | 7,1 | 7,0 | 3/4" NPT 110 °C | ● |

*Taille 50A0*



JUSQU'À LA TAILLE 50 (Y COMPRIS)
60Hz masses = 50Hz masses ajustées à 70%

Ausgenommen Type MVE 1100/15D - 1100/18D

SUPÉRIEUR À LA TAILLE 50 (NON COMPRIS)
Masses spécifiques pour 60Hz

Pour convertir les kg en Newton: N = 9.81 · kg

- II 2G Ex db IIB T4 Gb,
- II 2D Ex tb IIIC T135°C Db
- Ex db IIB T4 Gb
- Ex tb IIIC T135°C Db
- Température ambiante de -20 °C à + 60 °C

- Conformité avec les Exigences Essentielles de Santé et de Sécurité
- IEC EN 60079-0, IEC EN 60079-31, IEC EN 60079-1

X

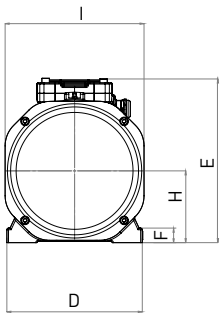


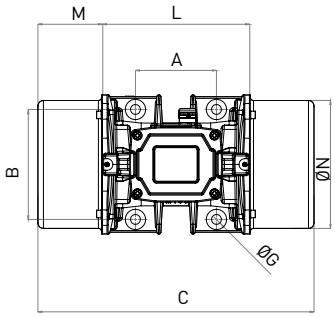


Y

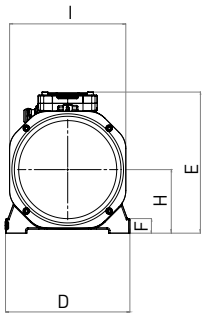


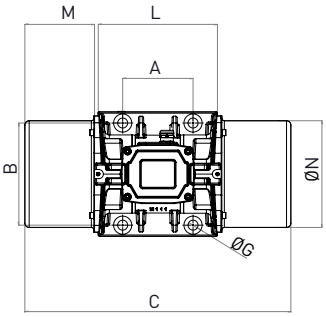


| Modèle | | Dessein | Taille | SPÉCIFICATIONS DIMENSIONNELLES (mm) | | | | | | | | | | | | | | |
|---|---|---|---|---|---|---|---|---|---|---|---|---|---|---|---|---|---|---|
| | | | | C | | M | | A | B | Ø G | Trous | D | E | F | H | I | L | N |
| 50Hz | 60Hz | | | 50Hz | 60Hz | 50Hz | 60Hz | | | | N° | | | | | | | |
| MVE 800/3D-50A0 | MVE 800/36D-50A0 | X | 50A0 | 332 | | 63 | | 120 | 170 | 17 | 4 | 209 | 251 | 27 | 103 | 185 | 205 | 165 |
| MVE 1300/3D-50A0 | MVE 1300/36D-50A0 | X | 50A0 | 332 | | 63 | | 120 | 170 | 17 | 4 | 209 | 251 | 27 | 103 | 185 | 205 | 165 |
| MVE 1600/3D-60A0 | MVE 1600/36D-60A0 | X | 60A0 | 477 | | 111 | | 140 | 190 | 17 | 4 | 234 | 283 | 25 | 124 | 240 | 254 | 221 |
| MVE 2000/3D-60A0 | MVE 2000/36D-60A0 | X | 60A0 | 477 | | 111 | | 140 | 190 | 17 | 4 | 234 | 283 | 25 | 124 | 240 | 254 | 221 |
| MVE 2300/3D-60A1 | MVE 2300/36D-60A1 | X | 60A1 | 477 | | 111 | | 140 | 190 | 22 | 4 | 234 | 283 | 25 | 124 | 240 | 254 | 221 |
| MVE 3200/3D-75A0 | MVE 3200/36D-75A0 | Y | 75A0 | 540 | | 118 | | 155 | 255 | 23.5 | 4 | 302 | 330 | 30 | 150 | 280 | 304 | 265 |
| MVE 4000/3D-75A0 | MVE 4000/36D-75A0 | Y | 75A0 | 554 | | 125 | | 155 | 255 | 23.5 | 4 | 302 | 330 | 30 | 150 | 280 | 304 | 265 |

| Modèle | | Dessein | Taille | SPÉCIFICATIONS DIMENSIONNELLES (mm) | | | | | | | | | | | | | | |
|---|---|---|---|---|---|---|---|---|---|---|---|---|---|---|---|---|---|---|
| | | | | C | | M | | A | B | Ø G | Trous | D | E | F | H | I | L | N |
| 50Hz | 60Hz | | | 50Hz | 60Hz | 50Hz | 60Hz | | | | N° | | | | | | | |
| MVE 700/15D-50A0 | MVE 700/18D-50A0 | X | 50A0 | 396 | | 95 | | 120 | 170 | 17 | 4 | 209 | 251 | 27 | 103 | 185 | 205 | 165 |
| MVE 1100/15D-50A0 | MVE 1100/18D-50A0 | X | 50A0 | 466 | 396 | 130 | 95 | 120 | 170 | 17 | 4 | 209 | 251 | 27 | 103 | 185 | 205 | 165 |
| MVE 1400/15D-60A0 | MVE 1400/18D-60A0 | X | 60A0 | 477 | | 111 | | 140 | 190 | 17 | 4 | 234 | 283 | 25 | 124 | 240 | 254 | 221 |
| MVE 1700/15D-60A1 | MVE 1700/18D-60A1 | X | 60A1 | 477 | | 111 | | 140 | 190 | 22 | 4 | 234 | 283 | 25 | 124 | 240 | 254 | 221 |
| MVE 2400/15D-60A1 | MVE 2400/18D-60A1 | X | 60A1 | 521 | | 133 | | 140 | 190 | 22 | 4 | 234 | 283 | 25 | 124 | 240 | 254 | 221 |
| MVE 2500/15D-70A0 | MVE 2500/18D-70A0 | Y | 70A0 | 525 | | 123 | | 155 | 225 | 22 | 4 | 274 | 311 | 32 | 140 | 256 | 279 | 235 |
| MVE 3000/15D-70A0 | MVE 3000/18D-70A0 | Y | 70A0 | 586 | | 153 | | 155 | 225 | 22 | 4 | 274 | 311 | 32 | 140 | 256 | 279 | 235 |
| MVE 3800/15D-75A0 | MVE 3800/18D-75A0 | Y | 75A0 | 596 | | 146 | | 155 | 255 | 23.5 | 4 | 302 | 330 | 30 | 150 | 280 | 304 | 265 |
| MVE 4300/15D-75A0 | MVE 4300/18D-75A0 | Y | 75A0 | 616 | | 156 | | 155 | 255 | 23.5 | 4 | 302 | 330 | 30 | 150 | 280 | 304 | 265 |
| MVE 5500/15D-80A0 | MVE 5500/18D-80A0 | Y | 80A0 | 612 | | 127 | | 180 | 280 | 26 | 4 | 330 | 379 | 33 | 176 | 330 | 358 | 310 |

## Note:

REMARQUE: Dimensions avec précision grossière conformément à UNI 22768/1

Ces informations sont fournies sans garantie, représentation, incitation ou licence d'aucune sorte. Les informations sont précises selon la connaissance de OLI ou sont obtenues de sources considérées comme exactes. OLI n'assume donc aucune responsabilité légale.
La dernière version du catalogue mis à jour est disponible en ligne.

c UL us LISTED CLASS I DIV.1 GROUP C,D T4
E488916

» Class I, Div.1 Group C, D T4 IP66
» Conforme à UL 1004-1,UL 1004-3,UL1203;UL674,CSA C22.2 No.145, CSA C22.2 No.30-M1986.

# MVE-Exd ANTIDÉFLAGRANT

Ex II 2G: Temp. Class **T4**
Class1 Div.1: Temp. Class **T4**
Ex II 2D Temp. Class: ● **135 °C**

* Raccordements des bornes : **Y** Haute tension ; **Δ** Basse tension

## 6 PÔLES – 1000/1200 rpm

| Wm (kgcm) | | Modèle | | Force centrifuge (kg) | | Poids (kg) | | SPÉCIFICATIONS ÉLECTRIQUES | | | | | | | | |
|---|---|---|---|---|---|---|---|---|---|---|---|---|---|---|---|---|
| | | | | | | | | Puissance d'entrée (kW) | | Courant nominal | | * Raccordements des bornes | Ia/In | | Presse-étoupe | |
| 50Hz | 60Hz | 50Hz | 60Hz | 50Hz | 60Hz | 50Hz | 60Hz | 50Hz | 60Hz | 50Hz (400V) | 60Hz (460V) | | 50Hz | 60Hz | Metrico | |
| 91,9 | | MVE 500/1D-50A0 | MVE 500/12D-50A0 | 513 | 739 | 54 | | 0,30 | 0,32 | 1,10 | 1,05 | Y | 2,8 | 2,7 | 3/4" NPT 110 °C | ● |
| 137,4 | 108,6 | MVE 800/1D-60A0 | MVE 800/12D-60A0 | 767 | 873 | 73 | 71 | 0,57 | 0,68 | 1,14 | 1,21 | Y | 3,2 | 3,1 | 3/4" NPT 110 °C | ● |
| 187,7 | 137,3 | MVE 1100/1D-60A1 | MVE 1100/12D-60A1 | 1.048 | 1.104 | 80 | 74 | 0,56 | 0,58 | 1,40 | 1,30 | Y | 3,2 | 3,1 | 3/4" NPT 110 °C | ● |
| 284,8 | 196,5 | MVE 1500/1D-60A0 | MVE 1500/12D-60A0 | 1.590 | 1.580 | 94 | 83 | 0,80 | 0,90 | 1,60 | 1,70 | Y | 3,3 | 3,3 | 3/4" NPT 110 °C | ● |
| 299,6 | 203,5 | MVE 1600/1D-70A0 | MVE 1600/12D-70A0 | 1.673 | 1.636 | 109 | 99 | 1,00 | 1,13 | 2,50 | 2,72 | Y | 3,7 | 3,6 | 3/4" NPT110 °C | ● |
| 373,1 | 248,7 | MVE 2100/1D-70A0 | MVE 2100/12D-70A0 | 2.083 | 2.000 | 121 | 107 | 1,20 | 1,35 | 2,80 | 3,00 | Y | 4,3 | 4,4 | 3/4" NPT 110 °C | ● |
| 467,4 | 306,7 | MVE 2600/1D-75A0 | MVE 2600/12D-75A0 | 2.610 | 2.466 | 153 | 136 | 1,50 | 1,60 | 3,50 | 3,30 | Y | 4,8 | 4,8 | 3/4" NPT 110 °C | ● |
| 540,3 | 379,7 | MVE 3000/1D-75A0 | MVE 3000/12D-75A0 | 3.017 | 3.053 | 161 | 135 | 1,75 | 1,90 | 4,30 | 4,00 | Y | 5,0 | 5,0 | 3/4" NPT 110 °C | ● |
| 680,4 | 437,4 | MVE 3800/1D-80A0 | MVE 3800/12D-80A0 | 3.799 | 3.517 | 215 | 196 | 2,10 | 2,30 | 5,00 | 4,80 | Y | 5,9 | 6,0 | 3/4" NPT110 °C | ● |
| 838,3 | 584,2 | MVE 4700/1D-80A0 | MVE 4700/12D-80A0 | 4.681 | 4.697 | 231 | 212 | 2,50 | 2,80 | 6,20 | 6,00 | Y | 5,5 | 5,7 | 3/4" NPT 110 °C | ● |

## 8 PÔLES – 750/900 rpm

| Wm (kgcm) | | Modèle | | Force centrifuge (kg) | | Poids (kg) | SPÉCIFICATIONS ÉLECTRIQUES | | | | | | | | |
|---|---|---|---|---|---|---|---|---|---|---|---|---|---|---|---|
| | | | | | | | Puissance d'entrée (kW) | | Courant nominal | | * Raccordements des bornes | Ia/In | | Presse-étoupe | |
| 50Hz | 60Hz | 50Hz | 60Hz | 50Hz | 60Hz | 50Hz-60Hz | 50Hz | 60Hz | 50Hz (400V) | 60Hz (460V) | | 50Hz | 60Hz | Metrico | |
| 56,9 | | MVE 250/075D-50A0 | MVE 250/090D-50A0 | 179 | 257 | 47 | 0,35 | 0,38 | 1,15 | 1,15 | Y | 1,7 | 1,7 | 3/4" NPT 110 °C | ● |
| 84,0 | | MVE 400/075D-50A0 | MVE 400/090D-50A0 | 264 | 380 | 54 | 0,35 | 0,38 | 1,15 | 1,15 | Y | 1,9 | 1,9 | 3/4" NPT 110 °C | ● |
| 137,3 | | MVE 650/075D-60A0 | MVE 650/090D-60A0 | 431 | 621 | 73 | 0,43 | 0,50 | 1,12 | 1,10 | Y | 2,2 | 2,2 | 3/4" NPT 110 °C | ● |
| 187,7 | | MVE 900/075D-60A0 | MVE 900/090D-60A0 | 589 | 849 | 82 | 0,55 | 0,60 | 1,40 | 1,20 | Y | 2,5 | 2,5 | 3/4" NPT 110 °C | ● |
| 299,6 | | MVE 1300/075D-70A0 | MVE 1300/090D-70A0 | 941 | 1.355 | 109 | 0,80 | 0,80 | 2,20 | 2,10 | Y | 3,0 | 3,0 | 3/4" NPT 110 °C | ● |
| 467,4 | | MVE 2100/075D-75A0 | MVE 2100/090D-75A0 | 1.468 | 2.114 | 153 | 1,25 | 1,30 | 3,20 | 2,80 | Y | 4,2 | 4,1 | 3/4" NPT 110 °C | ● |
| 680,3 | | MVE 3100/075D-80A0 | MVE 3100/090D-80A0 | 2.137 | 3.077 | 214 | 1,50 | 1,80 | 3,80 | 3,80 | Y | 4,0 | 4,0 | 3/4" NPT 110 °C | ● |
| 838,4 | | MVE 3800/075D-80A0 | MVE 3800/090D-80A0 | 2.633 | 3.792 | 230 | 2,50 | 3,20 | 5,50 | 5,70 | Y | 3,9 | 4,0 | 3/4" NPT 110 °C | ● |

*Taille 60A0*



Pour convertir les kg en Newton: N = 9.81 · kg

- II 2G Ex db IIB T4 Gb,
- II 2D Ex tb IIIC T135°C Db
- Ex db IIB T4 Gb
- Ex tb IIIC T135°C Db
- Température ambiante de -20 °C à + 60 °C
- Conformité avec les Exigences Essentielles de Santé et de Sécurité
- IEC EN 60079-0, IEC EN 60079-31, IEC EN 60079-1

X

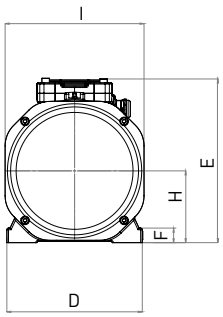


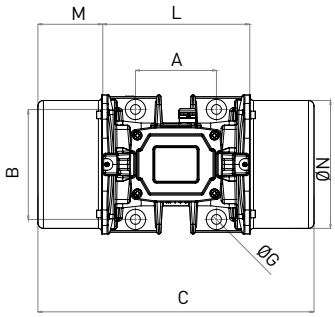


Y

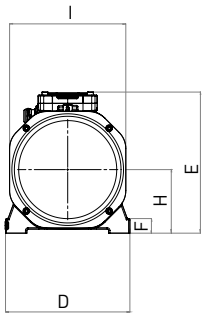


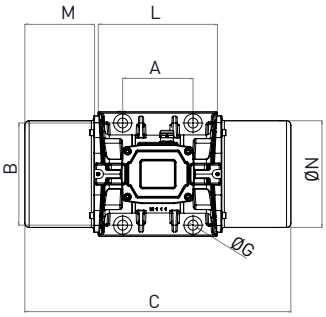


| Modèle | | Dessein | Taille | SPÉCIFICATIONS DIMENSIONNELLES (mm) | | | | | | | | | | | | | | |
|---|---|---|---|---|---|---|---|---|---|---|---|---|---|---|---|---|---|---|
| | | | | C | | M | | A | B | Ø G | Trous | D | E | F | H | I | L | N |
| 50Hz | 60Hz | | | 50Hz | 60Hz | 50Hz | 60Hz | | | | N° | | | | | | | |
| MVE 500/1D-50A0 | MVE 500/12D-50A0 | X | 50A0 | 466 | | 130 | | 120 | 170 | 17 | 4 | 209 | 251 | 27 | 103 | 185 | 205 | 165 |
| MVE 800/1D-60A0 | MVE 800/12D-60A0 | X | 60A0 | 477 | | 111 | | 140 | 190 | 17 | 4 | 234 | 283 | 25 | 124 | 240 | 254 | 221 |
| MVE 1100/1D-60A1 | MVE 1100/12D-60A1 | X | 60A1 | 521 | | 133 | | 140 | 190 | 22 | 4 | 234 | 283 | 25 | 124 | 240 | 254 | 221 |
| MVE 1500/1D-60A0 | MVE 1500/12D-60A0 | X | 60A0 | 597 | | 171 | | 140 | 190 | 17 | 4 | 234 | 283 | 25 | 124 | 240 | 254 | 221 |
| MVE 1600/1D-70A0 | MVE 1600/12D-70A0 | Y | 70A0 | 586 | | 153 | | 155 | 225 | 22 | 4 | 274 | 311 | 32 | 140 | 256 | 279 | 235 |
| MVE 2100/1D-70A0 | MVE 2100/12D-70A0 | Y | 70A0 | 646 | | 183 | | 155 | 225 | 22 | 4 | 274 | 311 | 32 | 140 | 256 | 279 | 235 |
| MVE 2600/1D-75A0 | MVE 2600/12D-75A0 | Y | 75A0 | 724 | | 210 | | 155 | 255 | 23.5 | 4 | 302 | 330 | 30 | 150 | 280 | 304 | 264 |
| MVE 3000/1D-75A0 | MVE 3000/12D-75A0 | Y | 75A0 | 724 | | 210 | | 155 | 255 | 23.5 | 4 | 302 | 330 | 30 | 150 | 280 | 304 | 264 |
| MVE 3800/1D-80A0 | MVE 3800/12D-80A0 | Y | 80A0 | 692 | | 167 | | 180 | 280 | 26 | 4 | 330 | 379 | 33 | 176 | 330 | 358 | 310 |
| MVE 4700/1D-80A0 | MVE 4700/12D-80A0 | Y | 80A0 | 744 | | 193 | | 180 | 280 | 26 | 4 | 330 | 379 | 33 | 176 | 330 | 358 | 310 |

| Modèle | | Dessein | Taille | SPÉCIFICATIONS DIMENSIONNELLES (mm) | | | | | | | | | | | | | |
|---|---|---|---|---|---|---|---|---|---|---|---|---|---|---|---|---|---|
| | | | | C | M | A | B | Ø G | Trous | D | E | F | H | I | L | N | |
| 50Hz | 60Hz | | | 50Hz-60Hz | 50Hz-60Hz | | | | N° | | | | | | | | |
| MVE 250/075D-50A0 | MVE 250/090D-50A0 | X | 50A0 | 396 | 95 | 120 | 170 | 17 | 4 | 209 | 251 | 27 | 103 | 185 | 205 | 165 | |
| MVE 400/075D-50A0 | MVE 400/090D-50A0 | X | 50A0 | 466 | 130 | 120 | 170 | 17 | 4 | 209 | 251 | 27 | 103 | 185 | 205 | 165 | |
| MVE 650/075D-60A0 | MVE 650/090D-60A0 | X | 60A0 | 477 | 111 | 140 | 190 | 17 | 4 | 234 | 283 | 25 | 124 | 240 | 254 | 221 | |
| MVE 900/075D-60A0 | MVE 900/090D-60A0 | X | 60A0 | 521 | 133 | 140 | 190 | 17 | 4 | 234 | 283 | 25 | 124 | 240 | 254 | 221 | |
| MVE 1300/075D-70A0 | MVE 1300/090D-70A0 | Y | 70A0 | 586 | 153 | 155 | 225 | 22 | 4 | 274 | 311 | 32 | 140 | 256 | 279 | 235 | |
| MVE 2100/075D-75A0 | MVE 2100/090D-75A0 | Y | 75A0 | 724 | 210 | 155 | 255 | 23.5 | 4 | 302 | 330 | 30 | 150 | 280 | 304 | 264 | |
| MVE 3100/075D-80A0 | MVE 3100/090D-80A0 | Y | 80A0 | 692 | 167 | 180 | 280 | 26 | 4 | 330 | 379 | 33 | 176 | 330 | 358 | 310 | |
| MVE 3800/075D-80A0 | MVE 3800/090D-80A0 | Y | 80A0 | 744 | 193 | 180 | 280 | 26 | 4 | 330 | 379 | 33 | 176 | 330 | 358 | 310 | |

## Note:

REMARQUE: Dimensions avec précision grossière conformément à UNI 22768/1

Ces informations sont fournies sans garantie, représentation, incitation ou licence d'aucune sorte. Les informations sont précises selon la connaissance de OLI ou sont obtenues de sources considérées comme exactes. OLI n'assume donc aucune responsabilité légale.
La dernière version du catalogue mis à jour est disponible en ligne.

c UL us LISTED CLASS I DIV.1 GROUP C,D T4
E488916

» Class I, Div.1 Group C, D T4 IP66
» Conforme à UL 1004-1,UL 1004-3,UL1203;UL674,CSA C22.2 No.145, CSA C22.2 No.30-M1986.

# MVE-Milling TRAITEMENT DU GRAIN

Ex II 3D Temp. Class: ● 100 °C ● 135 °C

* Raccordements des bornes : **Y** Haute tension ; **Δ** Basse tension

## 6 PÔLES – 1000/1200 rpm – Épierreuse/Table densimétrique

| Wm (kgcm) | | Modèle | | Force centrifuge (kg) | | Poids (kg) | | SPÉCIFICATIONS ÉLECTRIQUES | | | | | | | | |
|---|---|---|---|---|---|---|---|---|---|---|---|---|---|---|---|---|
| | | | | | | | | Puissance d'entrée (kW) | | Courant nominal | | * Raccordements des bornes | Ia / In | | Presse-étoupe | |
| 50Hz | 60Hz | 50Hz | 60Hz | 50Hz | 60Hz | 50Hz | 60Hz | 50Hz | 60Hz | 50Hz (400V) | 60Hz (460V) | | 50Hz | 60Hz | Metrico | |
| 111 | 87.7 | MVE 610/1N-51A0 | MVE 610/12N-51A0 | 622 | 705 | 40 | 37 | 0,35 | 0,40 | 1,22 | 1,15 | Y | 3,0 | 3,0 | M20 | ● |
| 138 | - | MVE 750/1N-58A0 | NA | 771 | - | 39,5 | | 0,75 | | 1,42 | - | Y | 3,4 | - | M25 | ● |

## 8 PÔLES – 750 rpm – Sasseur

| Wm (kgcm) | | Modèle | | Force centrifuge (kg) | | Poids (kg) | | SPÉCIFICATIONS ÉLECTRIQUES | | | | | | | | |
|---|---|---|---|---|---|---|---|---|---|---|---|---|---|---|---|---|
| | | | | | | | | Puissance d'entrée (kW) | | Courant nominal | | * Raccordements des bornes | Ia / In | | Presse-étoupe | |
| 50Hz | 60Hz | 50Hz | 60Hz | 50Hz | 60Hz | 50Hz | 60Hz | 50Hz | 60Hz | 50Hz (400V) | 60Hz (460V) | | 50Hz | 60Hz | Metrico | |
| 383 | - | MVE 1200/075N-60A | NA | 1203 | - | 94 | - | 0,65 | - | 1,30 | - | Y | 2,5 | - | M25 | ● |
| 471 | - | MVE 1400/075N-60A | NA | 1480 | - | 104 | - | 0,65 | - | 1,50 | - | Y | 2,5 | - | M25 | ● |

## 10 PÔLES – 600/720 rpm – Sasseur

| Wm (kgcm) | | Modèle | | Force centrifuge (kg) | | Poids (kg) | | SPÉCIFICATIONS ÉLECTRIQUES | | | | | | | | |
|---|---|---|---|---|---|---|---|---|---|---|---|---|---|---|---|---|
| | | | | | | | | Puissance d'entrée (kW) | | Courant nominal | | * Raccordements des bornes | Ia / In | | Presse-étoupe | |
| 50Hz | 60Hz | 50Hz | 60Hz | 50Hz | 60Hz | 50Hz | 60Hz | 50Hz | 60Hz | 50Hz (400V) | 60Hz (460V) | | 50Hz | 60Hz | Metrico | |
| 247 | 247 | MVE 505/060N-51A0 | MVE 505/072N-51A0 | 497 | 715 | 54 | | 0,35 | 0,35 | 1,22 | 0,98 | Y | 2,8 | 2,8 | M20 | ● |
| 274 | 274 | MVE 550/060N-51A0 | MVE 550/072N-51A0 | 551 | 793 | 57 | | 0,35 | 0,35 | 1,22 | 0,98 | Y | 2,8 | 2,8 | M20 | ● |
| 329 | 329 | MVE 780/060N-61A0 | MVE 780/072N-61A0 | 661 | 952 | 73 | | 0,40 | 0,40 | 1,20 | 1,00 | Y | 2,5 | 2,5 | M20 | ● |
| 383 | 383 | MVE 1200/060N-60A | MVE 1200/072N-60A0 | 770 | 1110 | 94 | | 0,78 | 0,78 | 1,40 | 1,30 | Y | 2,5 | 2,5 | M25 | ● |
| 471 | 471 | MVE 1400/060N-60A | MVE 1400/072N-60A0 | 947 | 1364 | 104 | | 0,78 | 0,78 | 1,40 | 1,30 | Y | 2,5 | 2,5 | M25 | ● |

## 12 PÔLES – 600 rpm – Sasseur

| Wm (kgcm) | | Modèle | | Force centrifuge (kg) | | Poids (kg) | | SPÉCIFICATIONS ÉLECTRIQUES | | | | | | | | |
|---|---|---|---|---|---|---|---|---|---|---|---|---|---|---|---|---|
| | | | | | | | | Puissance d'entrée (kW) | | Courant nominal | | * Raccordements des bornes | Ia / In | | Presse-étoupe | |
| 50Hz | 60Hz | 50Hz | 60Hz | 50Hz | 60Hz | 50Hz | 60Hz | 50Hz | 60Hz | 50Hz (400V) | 60Hz (460V) | | 50Hz | 60Hz | Metrico | |
| - | 247 | NA | MVE 505/059N-51A0 | - | 497 | 54 | | - | 0,35 | - | 0,98 | Y | - | 2,8 | M20 | ● |
| - | 274 | NA | MVE 550/059N-51A0 | - | 551 | 57 | | - | 0,35 | - | 0,98 | Y | - | 2,8 | M20 | ● |
| - | 329 | NA | MVE 780/059N-61A0 | - | 952 | 73 | | - | 0,40 | - | 1 | Y | - | 2,3 | M20 | ● |

*MVE-MILLING*



60Hz masses = 50Hz masses ajustées à 100%

Pour convertir les kg en Newton: N = 9.81 · kg

- II3D Ex tc IIIC Tx IP66
- Équipement et système de protection destinés pour l'utilisation en atmosphères explosibles (Zone 22) - Directive 2014/34/UE
- Conformité avec les Exigences Essentielles de Santé et de Sécurité
- EN 60079-0, EN 60079-31

L

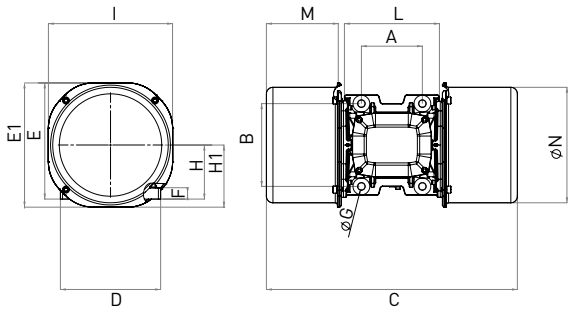


M

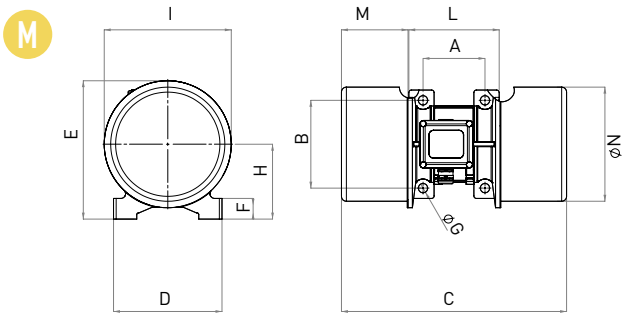


| Modèle | | Dessein | Taille | SPÉCIFICATIONS DIMENSIONNELLES (mm) | | | | | | | | | | | | | | | | |
|---|---|---|---|---|---|---|---|---|---|---|---|---|---|---|---|---|---|---|---|---|
| | | | | C | | M | | A | B | Ø G | Trous | D | E | F | H | I | L | N | | |
| 50Hz | 60Hz | | | 50Hz | 60Hz | 50Hz | 60Hz | | | | N° | | | | | | | | | |
| MVE 610/1N-51A0 | MVE 610/12N-51A0 | M | 51A0 | 434 | | 117 | | 120 | 170 | 17 | 4 | 208 | 223 | 25 | 105 | 203 | 192 | 184 | | |
| MVE 750/1N-58A0 | NA | M | 58A0 | 436 | | 129 | | 120 | 170 | 17 | 4 | 210 | 268 | 40 | 145 | 246 | 175 | 221 | | |

| Modèle | | Dessein | Taille | SPÉCIFICATIONS DIMENSIONNELLES (mm) | | | | | | | | | | | | | | | | | |
|---|---|---|---|---|---|---|---|---|---|---|---|---|---|---|---|---|---|---|---|---|---|
| | | | | C | | M | | A | B | Ø G | Trous | D | E | E1 | F | H | H1 | I | L | N | |
| 50Hz | 60Hz | | | 50Hz | 60Hz | 50Hz | 60Hz | | | | N° | | | | | | | | | | |
| MVE 1200/075N-60A | NA | L | 60A0 | 576 | | 165 | | 140 | 190 | 17 | 4 | 230 | 266 | 285 | 26 | 124 | 143 | 285 | 218 | 265 | |
| MVE 1400/075N-60A | NA | L | 60A0 | 576 | | 165 | | 140 | 190 | 17 | 4 | 230 | 266 | 285 | 26 | 124 | 143 | 285 | 218 | 265 | |

| Modèle | | Dessein | Taille | SPÉCIFICATIONS DIMENSIONNELLES (mm) | | | | | | | | | | | | | | | | | |
|---|---|---|---|---|---|---|---|---|---|---|---|---|---|---|---|---|---|---|---|---|---|
| | | | | C | | M | | A | B | Ø G | Trous | D | E | E1 | F | H | H1 | I | L | N | |
| 50Hz | 60Hz | | | 50Hz | 60Hz | 50Hz | 60Hz | | | | N° | | | | | | | | | | |
| MVE 505/060N-51A0 | MVE 505/072N-51A0 | L | 51A0 | 492 | | 134 | | 120 | 170 | 17 | 4 | 208 | 225 | 240 | 22 | 105 | 120 | 240 | 192 | 222 | |
| MVE 550/060N-51A0 | MVE 550/072N-51A0 | L | 51A0 | 492 | | 134 | | 120 | 170 | 17 | 4 | 208 | 225 | 240 | 22 | 105 | 120 | 240 | 192 | 222 | |
| MVE 780/060N-61A0 | MVE 780/072N-61A0 | L | 61A0 | 576 | | 165 | | 140 | 190 | 17 | 4 | 230 | 266 | 285 | 26 | 124 | 143 | 285 | 218 | 265 | |
| MVE 1200/060N-60A | MVE 1200/072N-60A0 | L | 60A0 | 576 | | 165 | | 140 | 190 | 17 | 4 | 230 | 266 | 285 | 26 | 124 | 143 | 285 | 218 | 265 | |
| MVE 1400/060N-60A | MVE 1400/072N-60A0 | L | 60A0 | 576 | | 165 | | 140 | 190 | 17 | 4 | 230 | 266 | 285 | 26 | 124 | 143 | 285 | 218 | 265 | |

| Modèle | | Dessein | Taille | SPÉCIFICATIONS DIMENSIONNELLES (mm) | | | | | | | | | | | | | | | | | |
|---|---|---|---|---|---|---|---|---|---|---|---|---|---|---|---|---|---|---|---|---|---|
| | | | | C | | M | | A | B | Ø G | Trous | D | E | E1 | F | H | H1 | I | L | N | |
| 50Hz | 60Hz | | | 50Hz | 60Hz | 50Hz | 60Hz | | | | N° | | | | | | | | | | |
| NA | MVE 505/059N-51A0 | L | 51A0 | 492 | | 134 | | 120 | 170 | 17 | 4 | 208 | 225 | 240 | 22 | 105 | 120 | 240 | 192 | 222 | |
| NA | MVE 550/059N-51A0 | L | 51A0 | 492 | | 134 | | 120 | 170 | 17 | 4 | 208 | 225 | 240 | 22 | 105 | 120 | 240 | 192 | 222 | |
| NA | MVE 780/059N-61A0 | L | 61A0 | 576 | | 165 | | 140 | 190 | 17 | 4 | 230 | 266 | 285 | 26 | 124 | 143 | 285 | 218 | 265 | |

## Note:

REMARQUE: Dimensions avec précision grossière conformément à UNI 22768/1

Ces informations sont fournies sans garantie, représentation, incitation ou licence d'aucune sorte. Les informations sont précises selon la connaissance de OLI ou sont obtenues de sources considérées comme exactes. OLI n'assume donc aucune responsabilité légale.
La dernière version du catalogue mis à jour est disponible en ligne.

» Déclaration de conformité "type B" selon: 2014/35/UE - 2006/42/EC - EN 60034-1
» Conforme à UL1446 et CSA 22.2 No 0-10

# MVE-SV SPÉCIAL CRIBLE

Ex II 2G: Temp. Class **T4**
Class1 Div.1: Temp. Class **T4**
Ex II 2D Temp. Class: ● **135 °C**

* Raccordements des bornes : **Y** Haute tension ; **Δ** Basse tension

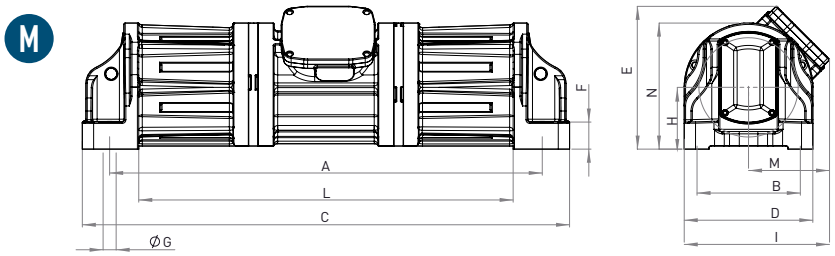


## 4 PÔLES ANTIDÉFLAGRANT – 1500/1800 rpm

| Wm (kgcm) | | Modèle | | Force centrifuge (kg) | | Poids (kg) | | SPÉCIFICATIONS ÉLECTRIQUES | | | | | | | | |
|---|---|---|---|---|---|---|---|---|---|---|---|---|---|---|---|---|
| | | | | | | | | Puissance d'entrée (kW) | | Courant nominal | | * Raccordements des bornes | Ia / In (Ampere) | | Presse-étoupe | |
| 50Hz | 60Hz | 50Hz | 60Hz | 50Hz | 60Hz | 50Hz | 60Hz | 50Hz | 60Hz | 50Hz (400V) | 60Hz (460V) | | 50Hz | 60Hz | Metrico | |
| 279 | 193 | MVE 3500/15D-SV-75A0 | MVE 3500/18D-SV-75A0 | 3.500 | 3.502 | 180 | 170 | 2,2 | 2,6 | 4,3 | 4,3 | Y | 6,5 | 6,5 | 3/4" NPT 110°C | ● |
| 279 | 193 | MVE 3500/15D-SV-75D0 | MVE 3500/18D-SV-75D0 | 3.500 | 3.502 | 180 | 170 | 2,2 | 2,6 | 4,3 | 4,3 | Y | 6,5 | 6,5 | 3/4" NPT 110°C | ● |
| 417 | 292 | MVE 5300/15D-SV-80A0 | MVE 5300/18D-SV-80A0 | 5.240 | 5.283 | 211 | 200 | 2,6 | 3,0 | 5,5 | 5,2 | Y | 7,1 | 7,0 | 3/4" NPT 110°C | ● |
| 620 | 434 | MVE 8000/15D-SV-85A0 | MVE 8000/18D-SV-85A0 | 7.790 | 7.851 | 280 | 260 | 3,2 | 3,8 | 6,3 | 6,3 | Y | 7,1 | 7,0 | 3/4" NPT 110°C | ● |

## 4 PÔLES GAMME STANDARD – 1500/1800 rpm

Le MVE-SV est également disponible dans la gamme « standard », avec la certification Ex II 3D : Ex II 3D Temp. Classe : ● 135 °C
Les spécifications électriques et dimensionnelles sont les mêmes que pour la gamme « antidéflagrante ».

*REMARQUE : Le nom du modèle dans la gamme standard est différent : la lettre « D » change en « N ».*

- II3D Ex tc IIIC Tx IP66
- Équipement et système de protection destinés pour l'utilisation en atmosphères explosibles (Zone 22) - Directive 2014/34/UE
- Conformité avec les Exigences Essentielles de Santé et de Sécurité
- EN 60079-0, EN 60079-31

- Déclaration de conformité "type B" selon: 2014/35/UE - 2006/42/EC - EN 60034-1
- Conforme à UL1446 et CSA 22.2 No 0-10

*SV Taille 75A0*



*SV Taille 85A0*



*REMARQUE : Force centrifuge réglable.*

Pour convertir les kg en Newton: N = 9.81 · kg

- II 2G Ex db IIB T4 Gb,
- II 2D Ex tb IIIC T135°C Db
- Ex db IIB T4 Gb
- Ex tb IIIC T135°C Db
- Température ambiante de -20 °C à + 60 °C

- Conformité avec les Exigences Essentielles de Santé et de Sécurité
- IEC EN 60079-0, IEC EN 60079-31, IEC EN 60079-1

**N**

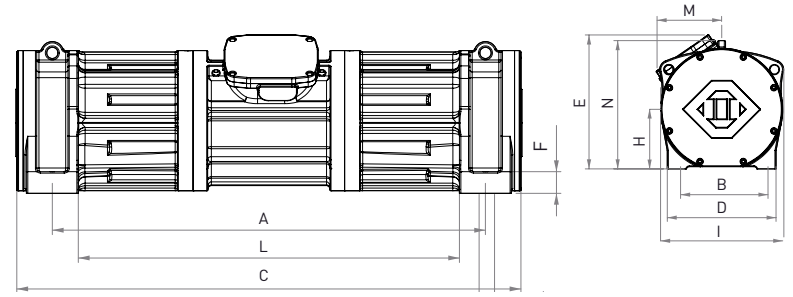


**O**

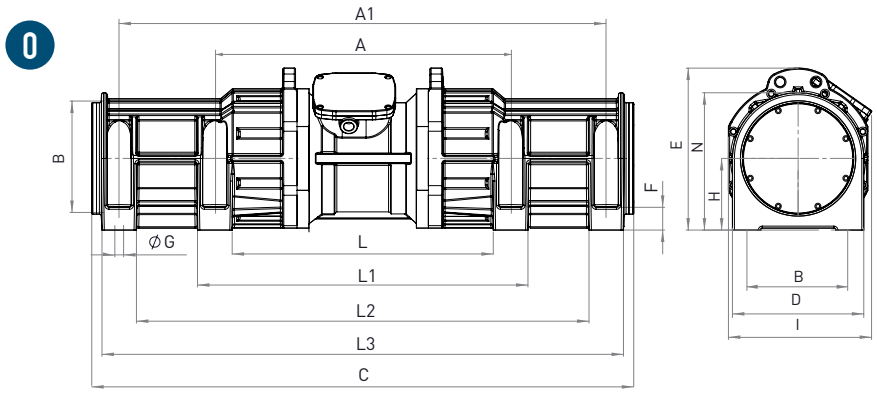


| Modèle | | Dessein | Taille | SPÉCIFICATIONS DIMENSIONNELLES (mm) | | | | | | | | | | | | | | | | |
|---|---|---|---|---|---|---|---|---|---|---|---|---|---|---|---|---|---|---|---|---|
| 50Hz | 60Hz | | | C | M | A | A1 | B | Ø G | Trous N° | D | E | F | H | I | L | L1 | L2 | L3 | N |
| MVE 3500/15D-SV-75A0 | MVE 3500/18D-SV-75A0 | M | 75A0 | 1.080 | 179 | 959 | - | 229 | 29 | 4 | 285 | 316 | 60 | 137 | 322 | 830 | - | - | - | 279 |
| MVE 3500/15D-SV-75D0 | MVE 3500/18D-SV-75D0 | M | 75D0 | 1.080 | 179 | 959 | - | 241 | 20 | 4 | 285 | 316 | 60 | 137 | 322 | 830 | - | - | - | 279 |
| MVE 5300/15D-SV-80A0 | MVE 5300/18D-SV-80A0 | N | 80A0 | 1.116 | 170 | 959 | - | 229 | 29 | 4 | 285 | 351 | 48 | 156 | 333 | 844 | - | - | - | 316 |
| MVE 8000/15D-SV-85A0 | MVE 8000/18D-SV-85A0 | O | 85A0 | 1.425 | / | 800 | 1.280 | 280 | 22 | 8 | 330 | 407 | 57 | 180 | 360 | 714 | 886 | 1.193 | 1.366 | 345 |

## Note:

REMARQUE: Dimensions avec précision grossière conformément à UNI 22768/1

Ces informations sont fournies sans garantie, représentation, incitation ou licence d'aucune sorte. Les informations sont précises selon la connaissance de OLI ou sont obtenues de sources considérées comme exactes. OLI n'assume donc aucune responsabilité légale.
La dernière version du catalogue mis à jour est disponible en ligne.

c UL us LISTED CLASS I DIV.1 GROUP C,D T4
E488916

» Class I, Div.1 Group C, D T4 IP66
» Conforme à UL 1004-1,UL 1004-3,UL1203;UL674,CSA C22.2 No.145, CSA C22.2 No.30-M1986.

# MVE-SS TOUT INOX

Ex II 3D Temp. Class: ● 100 °C ● 135 °C

* Raccordements des bornes : **Y** Haute tension ; **Δ** Basse tension

## 2 PÔLES – 1000/1200 rpm

| Wm (kgcm) | | Modèle | | Force centrifuge (kg) | | Poids (kg) | | SPÉCIFICATIONS ÉLECTRIQUES | | | | | | | | |
|---|---|---|---|---|---|---|---|---|---|---|---|---|---|---|---|---|
| | | | | | | | | Puissance d'entrée (kW) | | Courant nominal | | * Raccordements des bornes | Ia / In | | Presse-étoupe | |
| 50Hz | 60Hz | 50Hz | 60Hz | 50Hz | 60Hz | 50Hz | 60Hz | 50Hz | 60Hz | 50Hz (400V) | 60Hz (460V) | | 50Hz | 60Hz | Metrico | |
| 6,4 | 4,5 | MVE 300/3N-SS-30A0 | MVE 300/36N-SS-30A0 | 321 | 323 | 16 | | 0,25 | 0,28 | 0,52 | 0,45 | Y | 3,8 | 3,7 | M20 | ● |
| 14,9 | 10,6 | MVE 700/3N-SS-40A0 | MVE 700/36N-SS-40A0 | 758 | 765 | 25 | | 0,59 | 0,61 | 1,25 | 1,24 | Y | 4,5 | 5,2 | M20 | ● |
| 15,7 | 11,1 | MVE 800/3N-SS-50A0 | MVE 800/36N-SS-50A0 | 794 | 800 | 32 | 31 | 0,70 | 0,84 | 1,45 | 1,50 | Y | 4,0 | 4,0 | M20 | ● |

## 4 PÔLES – 1500/1800 rpm

| Wm (kgcm) | | Modèle | | Force centrifuge (kg) | | Poids (kg) | | SPÉCIFICATIONS ÉLECTRIQUES | | | | | | | | |
|---|---|---|---|---|---|---|---|---|---|---|---|---|---|---|---|---|
| | | | | | | | | Puissance d'entrée (kW) | | Courant nominal | | * Raccordements des bornes | Ia / In | | Presse-étoupe | |
| 50Hz | 60Hz | 50Hz | 60Hz | 50Hz | 60Hz | 50Hz | 60Hz | 50Hz | 60Hz | 50Hz (400V) | 60Hz (460V) | | 50Hz | 60Hz | Metrico | |
| 15,4 | 10,8 | MVE 200/15N-SS-30A0 | MVE 200/18N-SS-30A0 | 194 | 196 | 18,5 | | 0,12 | 0,15 | 0,49 | 0,50 | Y | 2,2 | 2,2 | M20 | ● |
| 40,1 | 28,1 | MVE 500/15N-SS-40A0 | MVE 500/18N-SS-40A0 | 504 | 508 | 30 | | 0,35 | 0,40 | 1,06 | 1,09 | Y | 3,0 | 2,9 | M20 | ● |
| 56,8 | 39,4 | MVE 710/15N-SS-50A0 | MVE 710/18N-SS-50A0 | 714 | 712 | 27 | | 0,62 | 0,73 | 1,32 | 1,20 | Y | 3,2 | 3,4 | M20 | ● |
| 88,7 | 62,0 | MVE 1100/15N-SS-50A0 | MVE 1100/18N-SS-50A0 | 1.114 | 1.122 | 47 | | 0,64 | 0,77 | 1,40 | 1,35 | Y | 4,0 | 4,0 | M20 | ● |
| 108,6 | 76,7 | MVE 1400/15N-SS-60A0 | MVE 1400/18N-SS-60A0 | 1.364 | 1.388 | 65 | | 0,70 | 0,84 | 1,78 | 1,78 | Y | 4,2 | 4,2 | M25 | ● |
| 187,7 | 137,4 | MVE 2400/15N-SS-60A0 | MVE 2400/18N-SS-60A0 | 2.358 | 2.485 | 70 | | 1,57 | 1,88 | 3,20 | 3,20 | Y | 5,1 | 5,1 | M25 | ● |

## 6 PÔLES – 1000/1200 rpm

| Wm (kgcm) | | Modèle | | Force centrifuge (kg) | | Poids (kg) | | SPÉCIFICATIONS ÉLECTRIQUES | | | | | | | | |
|---|---|---|---|---|---|---|---|---|---|---|---|---|---|---|---|---|
| | | | | | | | | Puissance d'entrée (kW) | | Courant nominal | | * Raccordements des bornes | Ia / In | | Presse-étoupe | |
| 50Hz | 60Hz | 50Hz | 60Hz | 50Hz | 60Hz | 50Hz | 60Hz | 50Hz | 60Hz | 50Hz (400V) | 60Hz (460V) | | 50Hz | 60Hz | Metrico | |
| 33,5 | 23,4 | MVE 200/1N-SS-40A0 | MVE 200/12N-SS-40A0 | 187 | 188 | 28 | | 0,15 | 0,18 | 0,65 | 0,62 | Y | 2,2 | 2,2 | M20 | ● |
| 91,9 | 91,9 | MVE 510/1N-SS-50A0 | MVE 510/12N-SS-50A0 | 513 | 739 | 46 | | 0,55 | 0,40 | 0,67 | 1,15 | Y | 3,0 | 2,9 | M20 | ● |
| 137,4 | 108,6 | MVE 800/1N-SS-60A0 | MVE 800/12N-SS-60A0 | 767 | 873 | 60 | 58 | 0,75 | 0,80 | 1,42 | 1,32 | Y | 3,4 | 3,3 | M25 | ● |
| 284,8 | 196,5 | MVE 1500/1N-SS-60A0 | MVE 1500/12N-SS-60A0 | 1.590 | 1.580 | 84 | 73 | 0,90 | 1,08 | 1,80 | 2,00 | Y | 3,5 | 3,5 | M25 | ● |

## 8 PÔLES – 750/900 rpm

| Wm (kgcm) | | Modèle | | Force centrifuge (kg) | | Poids (kg) | | SPÉCIFICATIONS ÉLECTRIQUES | | | | | | | | |
|---|---|---|---|---|---|---|---|---|---|---|---|---|---|---|---|---|
| | | | | | | | | Puissance d'entrée (kW) | | Courant nominal | | * Raccordements des bornes | Ia / In | | Presse-étoupe | |
| 50Hz | 60Hz | 50Hz | 60Hz | 50Hz | 60Hz | 50Hz | 60Hz | 50Hz | 60Hz | 50Hz (400V) | 60Hz (460V) | | 50Hz | 60Hz | Metrico | |
| 33,4 | | MVE 150/075N-SS-40A0 | MVE 150/090N-SS-40A0 | 105 | 151 | 30 | | 0,23 | 0,25 | 1,14 | 1,14 | Y | 1,7 | 1,7 | M20 | ● |
| 84,0 | | MVE 400/075N-SS-50A0 | MVE 400/090N-SS-50A0 | 264 | 380 | 46 | | 0,25 | 0,30 | 0,90 | 0,89 | Y | 2,1 | 2,1 | M20 | ● |
| 137,3 | | MVE 650/075N-SS-60A0 | MVE 650/090N-SS-60A0 | 431 | 621 | 63 | | 0,37 | 0,45 | 1,20 | 1,20 | Y | 2,4 | 2,4 | M25 | ● |
| 187,7 | | MVE 900/075N-SS-60A0 | MVE 900/090N-SS-60A0 | 589 | 849 | 70 | | 0,55 | 0,54 | 1,23 | 1,29 | Y | 2,7 | 2,7 | M25 | ● |

*Taille 30A0*



*Taille 50A0*



2, 4, 6 POLES
60Hz masses = 50Hz masses ajustées à 70%

8 POLES
60Hz masses = 50Hz masses ajustées à 100%

Pour convertir les kg en Newton: N = 9.81 · kg

- II3D Ex tc IIIC Tx IP66
- Équipement et système de protection destinés pour l'utilisation en atmosphères explosibles (Zone 22) - Directive 2014/34/UE
- Conformité avec les Exigences Essentielles de Santé et de Sécurité
- EN 60079-0, EN 60079-31

P

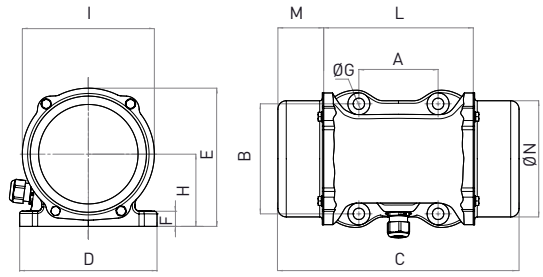


Q

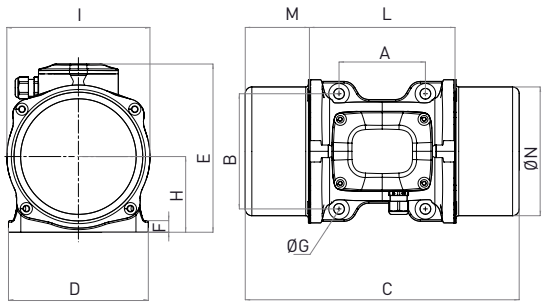


| Modèle | | Dessein | Taille | SPÉCIFICATIONS DIMENSIONNELLES (mm) | | | | | | | | | | | | | | |
|---|---|---|---|---|---|---|---|---|---|---|---|---|---|---|---|---|---|---|
| | | | | C | | M | | A | B | Ø G | Trous | D | E | F | H | I | L | N |
| 50Hz | 60Hz | | | 50Hz | 60Hz | 50Hz | 60Hz | | | | N° | | | | | | | |
| MVE 300/3N-SS-30A0 | MVE 300/36N-SS-30A0 | P | 30A0 | 298 | | 64 | | 90 | 125 | 13 | 4 | 156 | 157 | 17 | 82 | 150 | 164 | 134 |
| MVE 700/3N-SS-40A0 | MVE 700/36N-SS-40A0 | Q | 40A0 | 333 | | 78 | | 105 | 140 | 13 | 4 | 170 | 204 | 14 | 92 | 174 | 174 | 156 |
| MVE 800/3N-SS-50A0 | MVE 800/36N-SS-50A0 | Q | 50A0 | 324 | | 63,5 | | 120 | 170 | 17 | 4 | 208 | 223 | 18 | 96 | 185 | 197 | 165 |

| Modèle | | Dessein | Taille | SPÉCIFICATIONS DIMENSIONNELLES (mm) | | | | | | | | | | | | | | |
|---|---|---|---|---|---|---|---|---|---|---|---|---|---|---|---|---|---|---|
| | | | | C | | M | | A | B | Ø G | Trous | D | E | F | H | I | L | N |
| 50Hz | 60Hz | | | 50Hz | 60Hz | 50Hz | 60Hz | | | | N° | | | | | | | |
| MVE 200/15N-SS-30A0 | MVE 200/18N-SS-30A0 | P | 30A0 | 298 | | 64 | | 90 | 125 | 13 | 4 | 156 | 157 | 17 | 82 | 150 | 164 | 134 |
| MVE 500/15N-SS-40A0 | MVE 500/18N-SS-40A0 | Q | 40A0 | 333 | | 78 | | 105 | 140 | 13 | 4 | 170 | 204 | 14 | 92 | 174 | 174 | 156 |
| MVE 710/15N-SS-50A0 | MVE 710/18N-SS-50A0 | Q | 50A0 | 388 | | 95 | | 120 | 170 | 17 | 4 | 208 | 223 | 18 | 96 | 185 | 197 | 165 |
| MVE 1100/15N-SS-50A0 | MVE 1100/18N-SS-50A0 | Q | 50A0 | 458 | | 129 | | 120 | 170 | 17 | 4 | 208 | 223 | 18 | 96 | 185 | 192 | 170 |
| MVE 1400/15N-SS-60A0 | MVE 1400/18N-SS-60A0 | Q | 60A0 | 445 | | 111 | | 140 | 190 | 17 | 4 | 230 | 250 | 26 | 124 | 240 | 218 | 221 |
| MVE 2400/15N-SS-60A0 | MVE 2400/18N-SS-60A0 | Q | 60A0 | 489 | | 133 | | 140 | 190 | 17 | 4 | 230 | 250 | 26 | 124 | 240 | 218 | 221 |

| Modèle | | Dessein | Taille | SPÉCIFICATIONS DIMENSIONNELLES (mm) | | | | | | | | | | | | | | |
|---|---|---|---|---|---|---|---|---|---|---|---|---|---|---|---|---|---|---|
| | | | | C | | M | | A | B | Ø G | Trous | D | E | F | H | I | L | N |
| 50Hz | 60Hz | | | 50Hz | 60Hz | 50Hz | 60Hz | | | | N° | | | | | | | |
| MVE 200/1N-SS-40A0 | MVE 200/12N-SS-40A0 | Q | 40A0 | 330 | | 78 | | 105 | 140 | 13 | 4 | 170 | 204 | 14 | 92 | 174 | 174 | 156 |
| MVE 510/1N-SS-50A0 | MVE 510/12N-SS-50A0 | Q | 50A0 | 458 | | 129 | | 120 | 170 | 17 | 4 | 208 | 223 | 18 | 96 | 185 | 192 | 170 |
| MVE 800/1N-SS-60A0 | MVE 800/12N-SS-60A0 | Q | 60A0 | 445 | | 111 | | 140 | 190 | 17 | 4 | 230 | 250 | 26 | 124 | 240 | 218 | 221 |
| MVE 1500/1N-SS-60A0 | MVE 1500/12N-SS-60A0 | Q | 60A0 | 565 | 489 | 171 | 133 | 140 | 190 | 17 | 4 | 230 | 250 | 26 | 124 | 240 | 218 | 221 |

| Modèle | | Dessein | Taille | SPÉCIFICATIONS DIMENSIONNELLES (mm) | | | | | | | | | | | | | | |
|---|---|---|---|---|---|---|---|---|---|---|---|---|---|---|---|---|---|---|
| | | | | C | | M | | A | B | Ø G | Trous | D | E | F | H | I | L | N |
| 50Hz | 60Hz | | | 50Hz | 60Hz | 50Hz | 60Hz | | | | N° | | | | | | | |
| MVE 150/075N-SS-40A0 | MVE 150/090N-SS-40A0 | Q | 40A0 | 330 | | 78 | | 105 | 140 | 13 | 4 | 170 | 204 | 14 | 92 | 174 | 174 | 156 |
| MVE 400/075N-SS-50A0 | MVE 400/090N-SS-50A0 | Q | 50A0 | 458 | | 129 | | 120 | 170 | 17 | 4 | 208 | 223 | 18 | 96 | 185 | 192 | 170 |
| MVE 650/075N-SS-60A0 | MVE 650/090N-SS-60A0 | Q | 60A0 | 445 | | 111 | | 140 | 190 | 17 | 4 | 230 | 250 | 26 | 124 | 240 | 218 | 221 |
| MVE 900/075N-SS-60A0 | MVE 900/090N-SS-60A0 | Q | 60A0 | 489 | | 133 | | 140 | 190 | 17 | 4 | 230 | 250 | 26 | 124 | 240 | 218 | 221 |

## Note:

REMARQUE: Dimensions avec précision grossière conformément à UNI 22768/1

Ces informations sont fournies sans garantie, représentation, incitation ou licence d'aucune sorte. Les informations sont précises selon la connaissance de OLI ou sont obtenues de sources considérées comme exactes. OLI n'assume donc aucune responsabilité légale.
La dernière version du catalogue mis à jour est disponible en ligne.

» Déclaration de conformité "type B" selon: 2014/35/UE - 2006/42/EC - EN 60034-1
» Conforme à UL1446 et CSA 22.2 No 0-10



# INSTALLATION

## Montage

La surface de la plaque de base où le vibrateur est monté doit être totalement plate avec une tolérance maximum de 0.25mm (0,01in), afin que les surfaces reposent uniformément l'une contre l'autre pour éviter les tensions internes qui peuvent provoquer la rupture du pied du moteur vibrateur.
Utiliser des boulons 8.8, des écrous type 8.0 et des rondelles plates appartenant à la catégorie A EN ISO 7089 / 7092.
Le graphique suivant affiche les paramètres du couple correct pour les différentes tailles de boulons utilisés sur les moteurs vibrateurs.

### Interface moteur / machine

| Vis | | Rondelle | | Couple de serrage | |
|---|---|---|---|---|---|
| Métrique | Impérial | Métrique UNI 6592 | Impérial Rondelle plate | (Nm) | (ftlb) |
| M6 | 1/4" | 6.4 x 12 | 1/4" | 9 | 6,5 |
| M8 | 5/16" | 8.4 x 16 | 5/16" | 23 | 16,5 |
| M10 | 3/8" | 10.5 x 20 | 3/8" | 45 | 33 |
| M12 | 1/2" | 13 x 24 | 1/2" | 80 | 58 |
| M16 | 5/8" | 17 x 30 | 5/8" | 185 | 137 |
| M20 | 13/16" | 21 x 37 | 13/16" | 373 | 275 |
| M22 | 7/8" | 23 x 39 | 7/8" | 550 | 411 |
| M24 | 15/16" | 25 x 44 | 15/16" | 696 | 513 |
| M27 | 1" | 28 x 50 | 1" | 873 | 645 |
| M36 | 1-3/8" | 37 x 66 | 1-3/8" | 1.864 | 1.370 |
| M42 | 1 5/8" | 37 x 66 | 1 5/8" | 2.850 | 2.102 |

### FIXATION

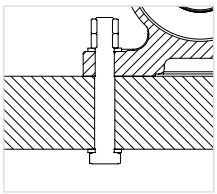

Lisse par
trou de forage
+ vis
+ rondelle plate, écrou et
contre-écrou

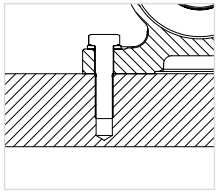

Trou taraudé
+ vis
+ rondelle plate

### TOLÉRANCE DE PLANÉITÉ SURFACE

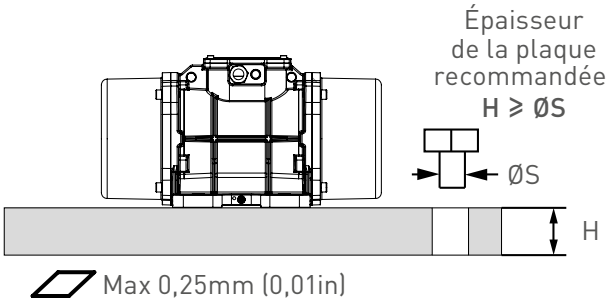




**PLAQUE DE SUPPORT USINÉE ET PAS PEINTE**



# Raccordement électrique

Assurez-vous que l'alimentation en tension et la fréquence correspondent à celles indiquées sur la plaque signalétique du vibrateur électrique.
Si le moteur est alimenté par un entraînement à fréquence variable ne pas démarrer en dessous 20 Hz et au-dessus de la fréquence nominale.
Insérer le câble d'alimentation dans le presse-étoupe. Les câbles doivent être de type œillet, préalablement isolés, avec un alésage pour les bornes de la boîte de jonction afin d'éviter une surchauffe du fil. Utiliser seulement les conducteurs qui ont une section appropriée.

Connecter les câbles aux goupilles (tel que illustré dans le diagramme ci-dessous) et serrer avec le couple spécifié:

**N'oubliez pas de fixer le câble de mise à la terre aux goujons fournis**
**→ connexion obligatoire!**
Avant de fermer la boîte de jonction assurez-vous que le joint du couvercle est fixé afin de maintenir la protection IP spécifiée.
Pour plus de détails sur l'installation du moteur, consulter les manuels du produit.

| Écrous boîtier de dérivation couple de serrage | | |
|---|---|---|
| Vite | Nm | ftlb |
| M4 | 2.5 | 1,84 |
| M5 | 4 | 2,95 |
| M6 | 5 | 3,69 |
| M8 | 6 | 4,43 |
| M10 | 8 | 5,90 |

**RACCORDEMENTS DES BORNES**

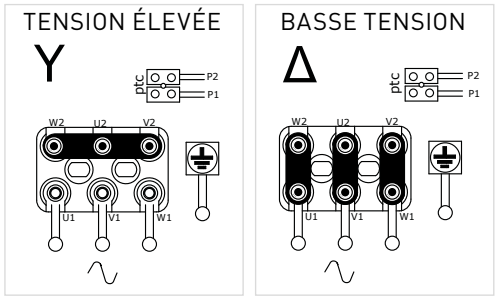


Vérifier l'étiquette de la colonne « Raccordements des bornes » pour connaître le raccordement préréglé en usine de chaque moteur.

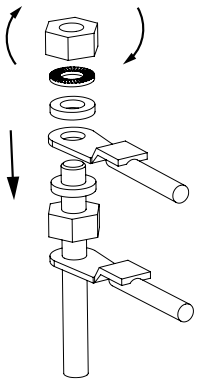

# Protection contre les surcharges

Tous les vibrateurs électriques doivent être connectés à une protection contre les surcharges externes.
En utilisant deux vibrateurs électriques synchronisés, chacun d'eux doit être raccordé à un disjoncteur de surcharge externe et ces dispositifs de protection contre la surcharge doivent être verrouillés pour s'assurer que les deux moteurs s'arrêtent en cas de défaillance.

Utilisez toujours un disjoncteur magnéto-thermique pour la protection du moteur, avec seuil de retard, pour éviter d'arrêter le moteur au démarrage quand le courant absorbé est supérieur à la puissance nominale pendant quelques secondes.
Le seuil de protection contre les surcharges doit être défini à un maximum de 10 % du courant nominal.

# COMMENT MODIFIER L'INTENSITÉ DES VIBRATIONS

## Masses réglables – Type A

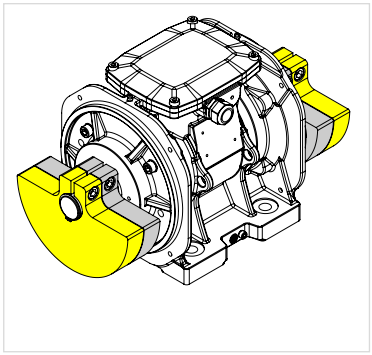

MASSES A 100%

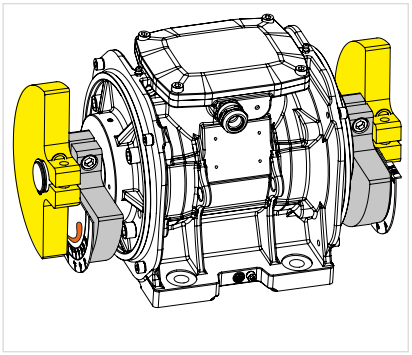

MASSES AJUSTÉS

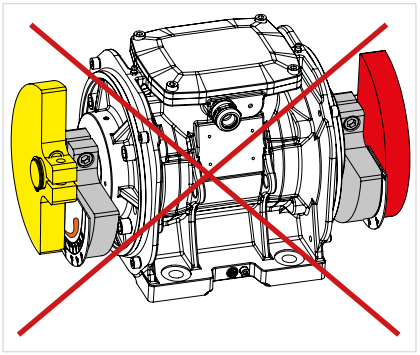

MASSES MAL AJUSTÉS

**2 CONSEILS POUR BIEN AJUSTER LES MASSES:**

Faire tourner la masse selon le dessin sur la plaque: de la pointe plus épaisse vers la pointe fine.

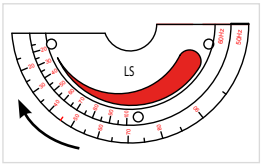


*côté gauche du moteur, pour des tailles jusqu'à 60*

Faire pivoter les masses dans la direction opposée au presse-étoupe.

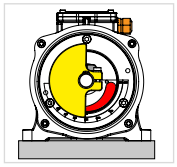

*côté gauche*

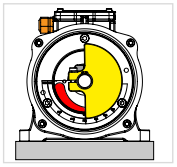

*côté droit*

## Masses réglables– Type B

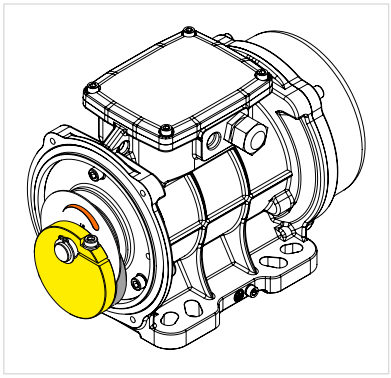

MASSES A 100%

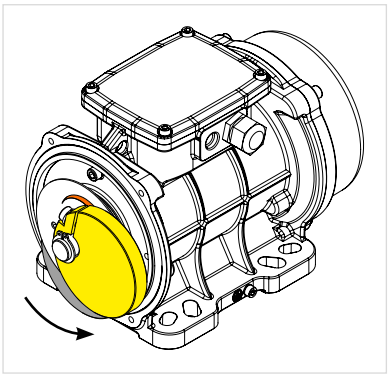

MASSES AJUSTÉS

La fissure dans la masse indique le degré de réglage.



Faire tourner la masse selon le dessin sur la plaque: de la pointe plus épaisse vers la pointe fine.

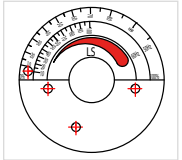



## Masses réglables – Type C (masses de lame)

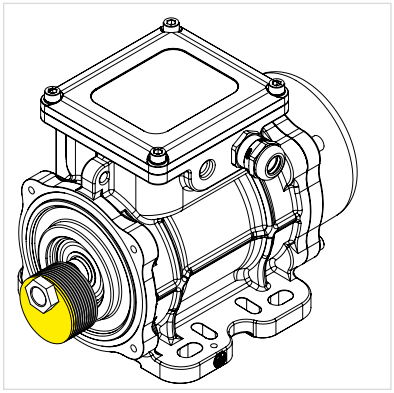

MASSES A 100%

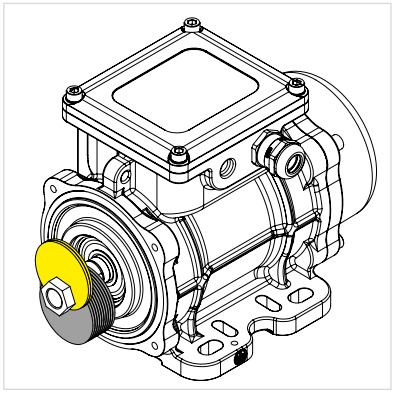

MASSES AJUSTÉS

Pour des informations techniques sur le réglage des masses de la lame consulter le manuel d'utilisation et d'entretien.

### Avertissement:
### NE PAS graisser de moteurs neufs avant l'installation.

Les roulements à rouleaux OLI pour moteurs quittent l'usine remplis avec la bonne quantité de graisse, tandis que ceux avec roulement à billes n'ont pas besoin de graissage.

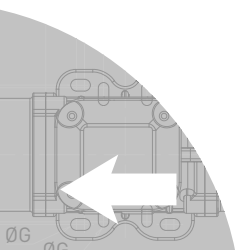

## DESSINS TECHNIQUES

**A**

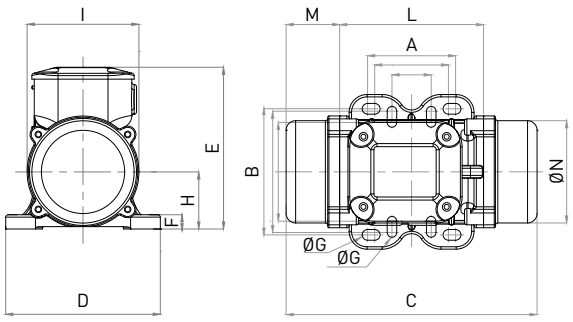


**A1**

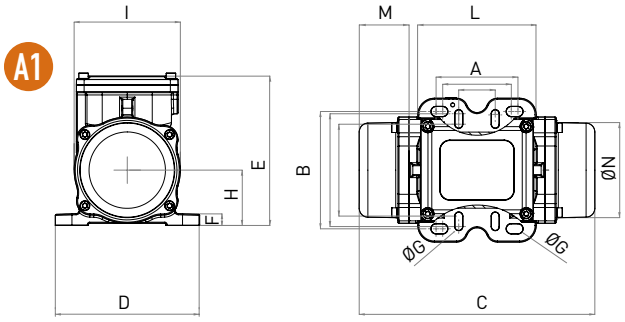


**B**

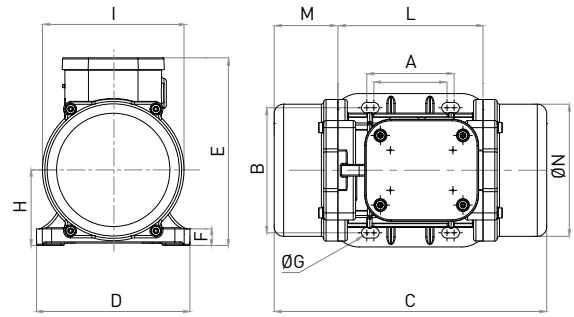


**B1**

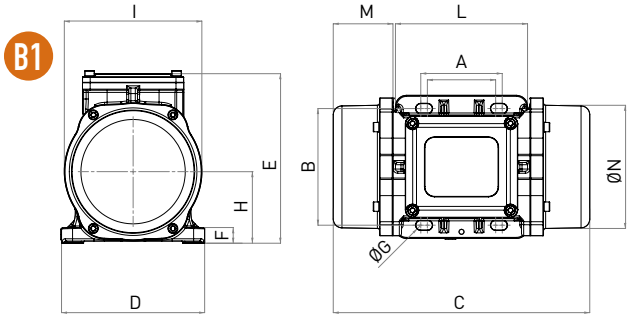


**C**

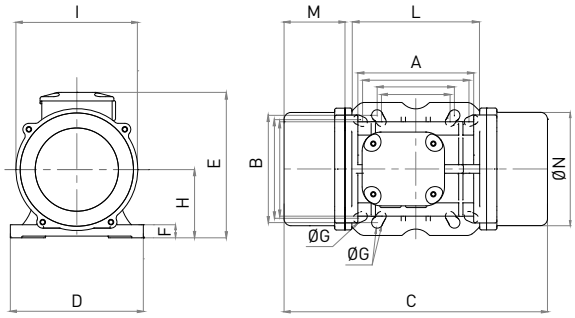


**C1**

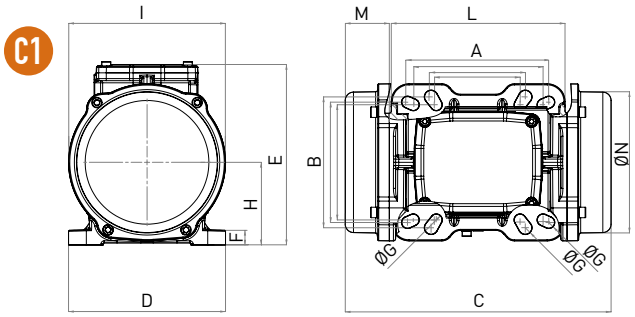


**D1**

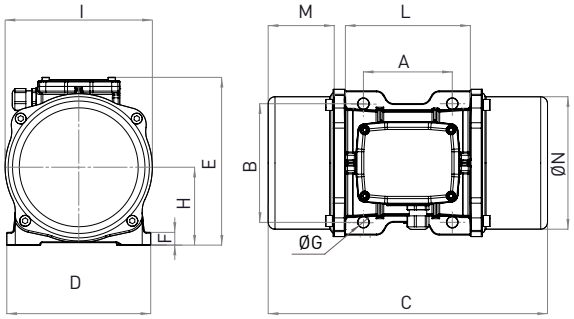


**E1**

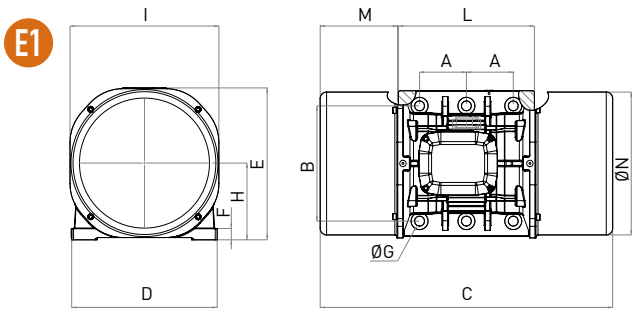


**E**

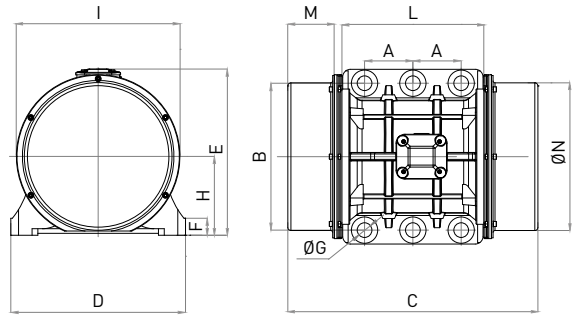


**G**

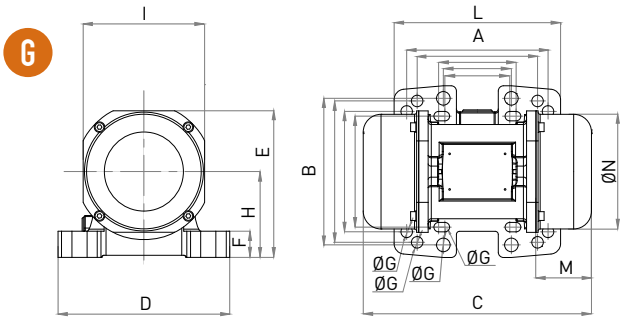


**H**

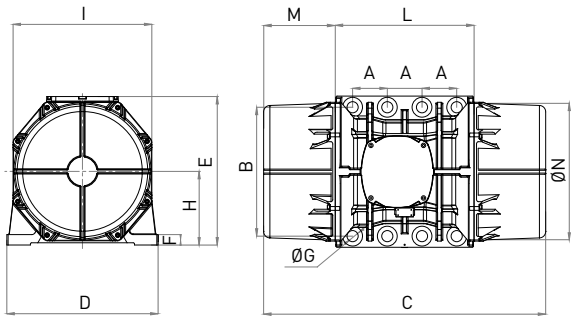

# WHEN YOU NEED IT, WHERE YOU NEED IT.

## THE WORLDWIDE LEADER IN VIBRATION TECHNOLOGY

**www.olivibra.com**




### OLI siège social

VIA CANALAZZO, 35
41036 MEDOLLA (MO) - ITALY

+39 0535 41 06 11

INFO@OLIVIBRA.COM

### OLI France S.a.S.

9 RUE DU GÉNÉRAL MOCQUERY
37550 ST AVERTIN
FRANCE

+33 (0)2 47 71 98 36

CONTACT@OLIVIBRA.FR


### OLI dans le monde entier

OLI Australie
OLI Benelux
OLI Brésil
OLI Chine
OLI Far East
OLI France
OLI Allemagne
OLI Inde
OLI Italie
OLI Malte
OLI Moyen-Orient
OLI Pays nordiques
OLI Russie
OLI Afrique du Sud
OLI Espagne
OLI Thaïlande
OLI Turquie
OLI UK
OLI USA

OLI

TOREX®

**TOREX® S.p.A.**
Via Canaletto, 139/A
41030 S. Prospero (MO) - ITALY

☎ ++39 / 059 / 8080811
**fax** ++39 / 059 / 908204
**e-mail** torex@torex.it
**internet** www.torex.it

WAMGROUP



# ILT

- **LEVEL INDICATOR**
  OPERATING AND MAINTENANCE
- ***FÜLLSTANDANZEIGER***
  BETRIEBS- UND WARTUNGSANLEITUNG
- **INDICATEURS DE NIVEAU**
  UTILISATION ET ENTRETIEN
- ***INDICATORE DI LIVELLO***
  USO E MANUTENZIONE

**Manual No. TOR.ILT.--.C.A7.0917.4L Issue: A7**
**Latest Update: September 2017**

**ORIGINAL INSTRUCTIONS IN ENGLISH**

*All rights reserved © WAMGROUP S.p.A.*

TOREX®

**ILT** - INDEX
- INHALTSVERZEICHNIS
- INDEX
- INDICE

**TOR.ILT.--.C.A7.0917.4L 2**


| | |
|---|---|
| INTRODUCTION, RULES AND GENERAL PROHIBITIONS | 3 - 5 |
| LIMITS OF USE | 6 |
| INTRODUCTION, RULES AND GENERAL PROHIBITIONS | 7 - 9 |
| GENERAL DIAGRAM | 10 |
| ORDER CODES | 11 |
| OTHER VERSIONS OF THE ILT AND ACCESSORIES | 12 - 13 |
| SAFETY NOCITES | 14 |
| CONNECTIONS | 15 - 16 |
| OPTIONS | 17 |
| VERSION FOR HIGH PROCESS TEMPERATURES | 18 |
| COMMISIONING - TESTING | 19 - 20 |
| MAINTENANCE | 21 |
| DEMOLITION | 22 |
| DECLARATION OF CONFORMITY | 23 - 26 |

| | |
|---|---|
| EINFÜHRUNG, ALLGEMEINE VORSCHRIFTEN GERÄTEBESCHREIBUNG | 3 - 5 |
| EINSATZGRENZEN | 6 |
| EINFÜHRUNG, ALLGEMEINE VORSCHRIFTEN GERÄTEBESCHREIBUNG | 7 - 9 |
| ALLGEMEINES SCHEMA | 10 |
| BESTELLCODES | 11 |
| ANDERE ILT-VERSIONEN UND ZUBEHÖR | 12 - 13 |
| SICHERHEITSHINWEISE | 14 |
| ANSCHLÜSSE | 15 - 16 |
| VARIANTEN | 17 |
| VERSION FÜR HOHE PROZESSTEMPERATUREN | 18 |
| ABNAHME UND INBETRIEBNAHME | 19 - 20 |
| WARTUNG | 21 |
| DEMONTAGE | 22 |
| KONFORMITÄTSERKLÄRUNG | 23 - 26 |

| | |
|---|---|
| INTRODUCTION, PRESCRIPTIONS ET CONSIGNES GENERALES | 3 - 5 |
| LIMITES D'UTILISATION | 6 |
| INTRODUCTION, PRESCRIPTIONS ET CONSIGNES GENERALES | 7 - 9 |
| SCHEMA GENERAL | 10 |
| CODES DE SELECTION | 11 |
| AUTRE VERSIONNES ILT ET ACCESSOIRES | 12 - 13 |
| INDICATIONS DE SÉCURITÉ | 14 |
| RACCORDEMENTS | 15 - 16 |
| OPTIONS | 17 |
| VERSION POUR PROCESSUS HAUTE TEMPÉRATURE | 18 |
| MISE EN SERVICE ET ESSAI DE RECEPTION | 19 - 20 |
| ENTRETIEN | 21 |
| DEMANTELEMENT | 22 |
| DÉCLARATION DE CONFORMITÉ | 23 - 26 |

| | |
|---|---|
| INTRODUZIONE, PRESCRIZIONI E DIVIETI GENERALI | 3 - 5 |
| LIMITI DI IMPIEGO | 6 |
| INTRODUZIONE, PRESCRIZIONI E DIVIETI GENERALI | 7 - 9 |
| SCHEMA GENERALE | 10 |
| CODICI DI SCELTA | 11 |
| ALTRE VERSIONI DELL'ILT ED ACCESSORI | 12 - 13 |
| ISTRUZIONI DI SICUREZZA | 14 |
| CONNESSIONI | 15 - 16 |
| OPZIONI | 17 |
| VERSIONE PER TEMPERATURE DI PROCESSO ALTE | 18 |
| MESSA IN SERVIZIO E COLLAUDO | 19 - 20 |
| MANUTENZIONE | 21 |
| DEMOLIZIONE | 22 |
| DICHIARAZIONE DI CONFORMITÀ | 23 - 26 |

This "OPERATING AND MAINTENANCE MANUAL" is an essential and integral part of the machine and must be readily available to operating and servicing personnel.

The owner, operator and maintenance Manager must be familiar with the contents of this Manual.

The description and illustrations used in thus Manual are not binding on Manufacturer.

While the basic characteristics of the machine remain unchanged as described, Manufacturer reserves the right to make any modifications to assemblies, parts and accessories it deems necessary for product improvement on for fabrication or marketing needs and this without prior notice and without being obliged to update this Manual at the time of modifications.

Die "BETRIEBS- UND WARTUNGSANLEITUNG" gehört zur Maschine und muß an einem Ort aufbewahrt werden, der dem Bedienungs- und Wartungspersonal gut zugänglich ist.

Betreiber, Bediener und Wartungspersonal sind verpflichtet, den Inhalt dieses Handbuchs zu kennen.

Unter Beibehaltung der wesentlichen Merkmale der beschriebenen Maschinen behält sich der Hersteller vor, jederzeit an Geräteteilen und/oder am Zubehör Änderungen im Sinne der Produktverbesserung oder aus technisch oder kaufmännisch notwendigen Gründen vorzunehmen.

La présente notice "UTILISATION ET ENTRETIEN" fait partie intégrante de la machine et elle doit être mise à la disposition du personnel préposé à la conduite et à la maintenance de la machine.
L'utilisateur, le conducteur et le technicien de maintenance ont l'obligation de connaître le contenu de cette notice d'instructions.
Les descriptions et les illustrations contenues dans la présente publication sont données sans engagement de la part du constructeur.

Bien que les caractéristiques principales des machines décrites dans les présentes demeurent inchangées, le constructeur se réserve le droit d'apporter, à tout moment et sans obligation, des modifications eventuelles d'organes, pièces et accessoires retenus nécessaires pour l'amélioration du produit ou pour des exigences de fabrication ainsi que commerciales ; et de mettre immédiatement à jour la présente publication.

Il presente libretto " USO E MANUTENZIONE" costituisce parte integrante della macchina e deve essere, facilmente reperibile dal personale addetto alla conduzione ed alla manutenzione.

L'utente, il conduttore e l'addetto alla manutenzione hanno l'obbligo di conoscere il contenuto dei presente libretto.

Le descrizioni e le illustrazioni contenuti nella presente pubblicazione si intendono non impegnative,

Ferme restando le caratteristiche essenziali delle macchine descritte, la ditta costruttrice si riserva il diritto di apportare, le eventuali modifiche di organi, dettagli e, accessori, che riterrà convenienti per il miglioramento del prodotto o per esigenze di carattere costruttivo o commerciale, in qualunque momento e senza impegnarsi ad aggiornare tempestivamente questa pubblicazione.

## GENERAL PROHIBITIONS AND REGULATIONS

- This machine must not be used even partially by unauthorised personnel.
- The shop foreman or Department Manager is responsible for Machine operator training and for checking training level achieved.
- The machine must not be used for purposes other than those is was designed for.
- Read carefully the warning notices attached to the machine.
- Do not remove the warning notices attached to the machine,
- When the machine is running, do not service, repair, regulate the machine or carry out any other operation not strictly required by the work cycle. ,Before any of the above listed operations, always disconnect the machine for all electric power supply sources.
- DO not remove the guards and the safety devices on the machine,
- DO not start to work with protections opened or do not open them during the work,
- Always wear safety gloves when working on the machine.
- At the end of the work shift, disconnect the machine from the electric supply.
- Any repair, service or maintenance work, whether electrical or otherwise, must be in compliance with CEI standards in force.

## ALLGEMEINE VORSCHRIFTEN

- Jegliche auch teilweise Bedienung der Maschine durch hierzu nicht ausdrücklich autorisiertes Personal ist untersagt.
- Der Betriebsleiter ist dafür verantwortlich, daß das zur Bedienung autorisierte Personal in der Bedienung der Maschine geschult wird.
- Die Maschine darf zu keinem anderen Zweck als zu dem in diesem Handbuch beschriebenen verwendet werden.
- Die Gefahren- und Hinweisschilder an der Maschine müssen beachtet werden.
- Es ist verboten, die Gefahren- und Hinweisschilder an der Maschine zu entfernen.
- Wartungs-, Reparatur-, und/oder vom Hersteller autorisierte Änderungsarbeiten dürfen nicht bei laufender Maschine durchgeführt werden. Vor der Durchführung solcher Arbeiten muß zuerst die Stromversorgung zur Maschine unterbrochen werden.
- Es ist verboten, die an der Maschine angebrachten Schutz- und Sicherheitseinrichtungen zu entfernen.
- Schulzeinrichtungen an der Maschine dürfen bei Kontroll-, Wartungs-, Reparatur- und/oder Anderungsarbeiten weder fehlen noch während dieser Arbeiten entfernt werden.
- Zum Ende der Arbeitsschicht die Stromversorgung der Maschine abschalten.
- Für alle elektrischen und nicht elektrischen Wartungsarbeiten die Vorschriften der geltenden Normen beachten.

## PRESCRIPTIONS ET CONSIGNES GENERALES

- L'utilisation, même partielle, de l'équipement de la part du personnel non autorisé est expressément interdit.
- Le chef d'usine et les chefs d'atelier ont l'obligation d'instruire et de contrôler le personnel préposé à l'utilisation de l'équipement.
- L'utilisation de l'équipement pour des usages différents de ceux pour lesquels ils ont été prévus, sont interdits.
- Lire attentivement les plaques signalétiques et de danger apposées sur l'équipement.
- Il est interdit d'enlever de l'équipement les plaques de signalisation et de danger.
- Il est interdit d'effectuer la maintenance, de réparer, de modifier ou de faire tout ce qui n'est pas strictement nécessaire au cycle de travail quand la machine est en marche.
- Il est interdit de démonter les protections et les sécurités présentes sur la machine.
- Il est interdit de commencer le travail avec les protections ouvertes ou de les ouvrir pendant le travail. Le port des gants de protection est obligatoire pour travailler sur la machine.
- A la fin des périodes de travail débrancher toujours la machine des alimentations électriques.
- Toute maintenance électrique et autres doivent être conformes aux normes en vigueur.

## PRESCRIZIONI E DIVIETI GENERALI

- E' vietato l'uso, anche parziale, dell'attrezzatura da parte del personale non espressamente autorizzato. L'istruzione del personale preposto all'uso è da realizzare e verificare a cura dei capo officina e dei capi reparto.
- E' vietato l'uso dell'attrezzatura per modalità diverse da quelle per cui è stata prevista.
- Leggere con attenzione le targhe di avvertenza e pericolo poste sulla macchina.
- E' vietato rimuovere le targhe di avvertenza e pericolo sulla macchina.
- E' vietato manutenzionare, eseguire riparazioni, modifiche e quanto non strettamente necessario al ciclo di lavoro con la macchina in movimento. Prima di tutto è obbligatorio disinnestare tutte le alimentazioni elettriche alla macchina.
- E' vietato rimuovere le protezioni e le sicurezze presenti sulla macchina.
- E' vietato iniziare il lavoro con le protezioni aperte o aprirle durante il lavoro.
- Operare sulla macchina solo con i guanti di protezione.
- Al termine dei periodi di lavoro scollegare sempre la macchina dalle alimentazioni elettriche.
- Qualsiasi manutenzione elettrica e non elettrica deve attenersi alle norme vigenti.

TOREX®

# ILT
- INTRODUCTION, RULES AND GENERAL PROHIBITIONS
- EINFÜHRUNG, ALLGEMEINE VORSCHRIFTEN GERÄTEBESCHREIBUNG
- INTRODUCTION, PRESCRIPTIONS ET CONSIGNES GENERALES
- INTRODUZIONE, PRESCRIZIONI E DIVIETI GENERALI

**TOR.ILT.--.C.A7.0917.4L 5**

**DESCRIPTION**
**Bin Level Indicator for point level limit detection in bulk materials**

**FUNCTION**
The device is used for level monitoring in all types of containers and silos.
It can be used with all powdery and granular bulk materials that do not show a strong propensity to form crusts or deposits.
When the material level reaches the measuring paddle the rotation is blocked.
The resulting reaction torque activates a limit switch output signal that stops the motor.
As soon as the material level sinks below the paddle radius, the switch returns to the OFF position and the motor is switched on.

**IMPROPER USE**
ILT level indicators are not designed to work in dangerous conditions or with dangerous materials. If the machine has to operate in these conditions, the manufacturer must be informed.

Dangerous materials:
- explosives,
- toxic,
- flammable,
- harmful and similar.

**BESCHREIBUNG**
**Füllstandmelder für Behälter zur punktuellen Füllstandbestimmung bei Schüttgütern**

**FUNKTION**
Das Gerät wird verwendet zur Füllstandüberwachung in Behältern und Silos aller Art.
Es ist einsetzbar für alle pulverförmigen Schüttgüter und Granulate, die nicht zu starker Ansatzbildung neigen.
Erreicht der Füllstand des Schüttgutes das Messpaddel, wird dessen Rotationsbewegung unterbrochen. Das entstehende Drehmoment aktiviert ein Ausgangssignal am Begrenzungsschalter, welches den Motor stoppt.
Sinkt der Füllstand unterhalb des Radius des Paddels, der Schalter kehrt in die AUS-Position zurück und der Motor ist eingeschaltet.

**UNZULÄSSIGE VERWENDUNGSZWECKE**
Die Füllstandanzeiger der Modellreihe ILT sind weder für gefährliche Anwendungen noch zum Handling von gefährlichen Medien geeignet. Sollte der Betreiber eine ILT - Füllstandanzeiger für gefährliche Medien bzw. Anwendungen einsetzen wollen, so muß er unbedingt vorher den Hersteller um Erlaubnis fragen.

Als gefährliche Medien gelten:
- explosive,
- giftige,
- feuergefährliche,
- in irgendeiner Weise schädliche.

**DESCRIPTION**
**Indicateur de niveau pour le contrôle du niveau des matériaux en vrac**

**FONCTION**
L'appareil sert à surveiller le niveau de remplissage dans les réservoirs et silos de types les plus divers.
Il peut être utilisé pour tous produits pulvérulents et granulés n'ayant pas tendance à former de dépôts importants.
Lorsque le niveau du matériau atteint la palette de mesure, la rotation est bloquée.
Le couple de réaction résultant active un signal de sortie de l'interrupteur de fin de course, qui arrête le moteur.
Dès que le niveau du matériau descend en dessous du rayon d'action de la palette, l'interrupteur revient à la position OFF (ARRÊT) et le moteur est remis en marche.

**CONTRE-INDICATION**
Les indicateurs de niveau standards de la classe ILT N'ONT pas été projetés pour travailler dans des conditions ou avec des produits dangereux; par conséquent si la, machine ne répond pas à ces exigences, le constructeur doit obligatoirement en être informé

Les produits suivants sont considérés comme dangereux, si ceux-si sont:
- explosifs,
- toxiques,
- inflammables,
- nocifs et/ou similaires.

**DESCRIZIONE:**
**Indicatore di livello a pala rotativa per il controllo di livello di materiale sfuso**

**FUNZIONE D'USO**
Il dispositivo è utilizzato per il monitoraggio del livello all'interno di container e sili di qualsiasi tipo.
Può essere utilizzato in presenza di polveri e granulati con scarsa tendenza alla formazione di incrostazioni o depositi.
Quando il livello del materiale raggiunge la paletta sensore, la rotazione si blocca.
La coppia risultante attiva un finecorsa che invia un segnale per fermare il motore.
Appena il livello del materiale scende al di sotto del raggio di azione della paletta, il finecorsa si disattiva e fa ripartire il motore.

**CONTROINDICAZIONI**
Gli indicatori di livello standard della ILT NON sono stati progettati per operare in condizioni o con materiali pericolosi pertanto quando la macchina deve assolvere a queste esigenze è d'obbligo informare il costruttore.

Si ritengono materiali pericolosi:
- esplosivi,
- tossici,
- infiammabili,
- nocivi e/o simili.

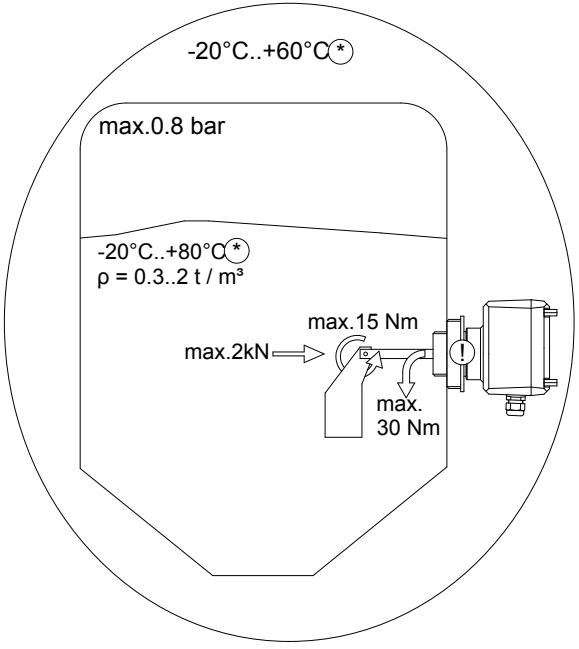


!

Maximum value of impact energy on connecting bush.

*Max. Schlagenenergie auf die Verbindungsbuchse.*

Valeur maximum de l'énergie d'impact sur la bague de connexion.

*Massimo valore dell'energia di impatto sulla boccola di connessione.*

1J

*

Different process and ambient temperatures available as an option.

*Verschiedene Prozess- und Umgebungstemperaturen als Option verfügbar.*

Différentes températures environnementales et de processus disponibles en option.

*Diverse temperatura ambiente e di processo disponibili come opzione.*

**Restrictions**

The bushing is suitable for withstanding sunlight and atmospheric agents. The mechanical features of the material are not guaranteed in case of acidic or basic environments.
These environmental conditions must be checked for each application.
The breaking load of the plastic material gets reduced over a period of time with the following proportions:
- approx. 50% in two years
- approx. 60% in five years

**Einschränkungen**

Die Buchse ist sonnenlicht- und witterungsbeständig. Die mechanischen Werkstoffeigenschaften werden bei saurer und Basischer umgebung nicht gewährleistet.
Die Umgebungsbedingungen müssen für jede Anwendung gesondert geprüft werden.
Die Bruchlast des Kunststoffs verringert sich im Laufe der Zeit im folgenden Verhält-nis:
- ca 50% in zwei Jahren
- ca 60% in fünf Jahren

**Restrictions**

La bague est adaptée pour résister à la lumière solaire et aux agents atmosphériques. Les caractéristiques mécaniques du matériau ne sont pas garanties en milieu acide et basique.
Ces conditions ambiantes doivent être vérifiées pour chaque application.
La charge de rupture de la matière plastique diminue dans le temps dans les proportions suivantes :
- 50% au bout de deux ans
- 60% au bout de cinq ans

**Restrizioni**

La boccola è adatta per resistere alla luce solare ed agenti atmosferici. Non sono garantite le caratteristiche meccaniche del materiale in caso di ambienti acidi e basici.
Tali condizioni ambientali devono essere verificate per ogni applicazione.
Il carico di rottura del materiale plastico si riduce nell'arco del tempo con le seguenti proporzioni:
- circa 50% in due anni
- circa 60% in cinque anni

| MECHANICAL DATA | |
|---|---|
| Enclosure | IP 65 |
| Process connection | Thread G1 1/4", G1 1/2", G2 1/2" |
| Material process-connection | Plastic and aluminium |
| Material vane shaft and measuring | Stainless steel |
| Paddle shaft clutch | Protection of the gearing from impacts on the measuring vane |
| Pickup delay | Approx. 1.3 sec. |
| Sensitivity | Adjustable via reset force of spring in three positions |
| Paddle speed | 1 rpm |

| ELECTRICAL DATA | |
|---|---|
| Supply voltage (!)* | AC: 24V / 48V / 115V / 230V 50/60Hz<br>DC: 12V / 24V (all voltage +/- 10%) |
| Power | 3W |
| Connection terminal | 1 x max. 1.5 mm2 |
| Signal output | Floating microswich max.250V (AC/DC), 2A. |
| Protection class | I |
| Over voltage category | II |

* Power supply voltage must never come directly from the mains but always obtained by a secondary transformation winding.

| MECHANISCHE DATEN | |
|---|---|
| Gehause | IP 65 |
| Prozessanschluss | Gewinde G1 1/4", G1 1/2", G2 1/2" |
| Material des Anschlussgewindes | Kunststoff und Aluminium |
| Material von Welle und Flugel | Rostfreier Stahl |
| Paddelklaue | Schutz der Messwelle vor Stoften auf das Messpaddel |
| Signalverzogerung | c.a 1.3 sec. |
| Empfindlichkeit | Einstellbar durch Ruckholfeder mit drei Stellungen |
| Umdrehungszahl Paddel | 1 Umdrehung/min. |

| ELEKTRISCHE DATEN | |
|---|---|
| Versorgungs-spannung (!)* | AC: 24V / 48V / 115V / 230V 50/60Hz<br>DC: 12V / 24V (alle Spannungen +/- 10%) |
| Leistung | 3W |
| Anschluftklemmen | 1 x max. 1.5 mm2 |
| Ausgangssignal | Potentialfreier mikroschalter max. 250V (AC/DC) 2A |
| Schutzart | I |
| Uberspannung Kategorie | II |

* Die Versorgungsspannung darf nie direkt aus der Netzleitung kommen, sondern muss immer über eine Trafospule geleitet werden.

| CARACTERISTIQUES MECANIQUES | |
|---|---|
| Enveloppe | IP 65 |
| Raccordement processus | Filetage G1 1/4", G1 1/2", G2 1/2" |
| Matiere du filetage de raccord | Plastique et aluminium |
| Matiere de l'arbre et de la palette | Acier inoxydable |
| Embrayage de l'arbre de la palette | Protection de l'engrenage contre les impacts sur la palette de mesure |
| Retard de signal | 1.3 s. environ. |
| Sensibilite | Reglable par le rappel du ressort dans trois positions |
| Vitesse de la palette | 1 tour/min |

| CARACTERISTIQUES ELECTRIQUES | |
|---|---|
| Tension d'alimentation (!) * | AC: 24V / 48V / 115V / 230V 50/60Hz<br>DC: 12V / 24V (toutes les tensions +/- 10%) |
| Energie | 3W |
| Borne | 1 x 1.5 $mm^2$ max. |
| Signal de sortie | Microrupteur flottant max. 250V (AC/DC), 2A |
| Classe de protection | I |
| Categorie de surtension | II |

* La tension d'alimentation ne doit jamais venir directement du réseau, mais toujours obtenue d'un transformateur secondaire.

| DATI MECCANICI | |
|---|---|
| Protezione | IP 65 |
| Connessioni standard | Filettato G1 1/4", G1 1/2", G2 1/2" |
| Materiale del mozzo di collegamento | Plastica e Alluminio |
| Materiale dell' albero e della paletta | Acciaio inossidabile |
| Frizione albero paletta | Protezione degli ingranaggi dagli impatti della paletta sensore |
| Ritardo di segnale | 1.3 sec. circa |
| Sensibilità | Regolabile mediante il tensionamento di una molla su 3 diverse posizioni |
| Velocità paletta | 1 giro/min |

| DATI ELETTRICI | |
|---|---|
| Tensione d'alimentazione (!)* | AC: 24V / 48V / 115V / 230V 50/60Hz<br>DC: 12V / 24V (tutte le tensioni +/- 10%) |
| Assorbimento | 3W |
| Morsetto d'attacco | 1 x 1.5 $mm^2$ max. |
| Segnale di uscita | Microinterruttore flottante max.250V (AC/DC), 2A |
| Classe di protezione | I |
| Categoria di sovratensione | II |

* La tensione di alimentazione non deve provenire direttamente dalla rete, ma dev'essere sempre ottenuta da un avvolgimento secondario.

TOREX®

**ILT**

- GENERAL DIAGRAM
- ALLGEMEINES SCHEMA
- SCHEMA GENERAL
- SCHEMA GENERALE

**TOR.ILT.--.C.A7.0917.4L 10**

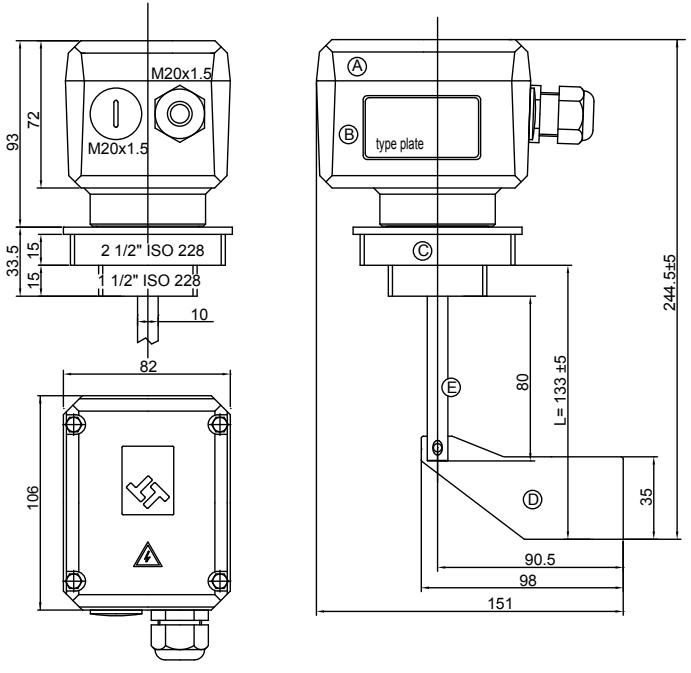


| Item pos. | Description - *Benennung* Designation - *Descrizione* | Quantity - *Stück* Quantitè - *Quantità* |
|---|---|---|
| **A** | Cover - *Deckel* Couvercle - *Coperchio* | 1 |
| **B** | Frame - *Gehäuse* Corps - *Corpo* | 1 |
| **C** | Shaft support *Anschlußgewinde mit Wellenführung* Support arbre *Supporto albero* | 1 |
| **D** | Paddle - *Drehfügel* Palette - *Paletta* | 1 |
| **E** | Shaft - *Welle* Arbre - *Albero* | 1 |

| ILT | A | 0 |
|---|---|---|

| | |
|---|---|
| **0** | 1 + ½“ - 2 + ½“ |
| **2** | 1 + ¼“ NPT cilindrical - *Zylindrisch* - cylindrique - *cilindrico* |

| | |
|---|---|
| **A** | 24/48 VAC - 50/60 Hz |
| **C** | 115/230 VAC - 50/60 Hz |
| **D** | 24 VDC |
| **E** | 12 VDC |
| **R** | 24 VDC - 22..230 VAC with rotation control - *mit Rotationskontrolle* - avec contrôle rotation - *con controllo rotazione* |

Level indicator - *Füllstandsmelder*
Indicateur de niveau - *Indicatore di livello*

| ACCESSORIES - *ZUBEHÖR* - ACCESSOIRES - *ACCESSORI* | |
|---|---|
| Sleeve 1+1/2" - *Manschette 1+1/2"*- Manchon 1+1/2"- *Manicotto 1+1/2"* | 4538020100 |
| Sleeve 2+1/2" - *Manschette 2+1/2"* - Manchon 2+1/2" - *Manicotto 2+1/2"* | 4538020150 |
| Double blade - *Doppelpaddel* - Palette double - *Paletta doppia* | 13N07051A (Pos.3) |
| Green lamp cover M20x1.5 - *Abdeckung der grünen Leuchte M20x1.5* - Couvercle lampe vert M20x1.5 - *Copri lampada verde M20x1.5* | 3848004510 (Pos.5) |
| Red lamp cover M20x1.5 - *Abdeckung der roten Leuchte M20x1.5* - Couvercle lampe rouge M20x1.5 - *Copri lampada verde M20x1.5* | 3848004530 (Pos.5) |
| 24 volt lamp - *Leuchte 24 V* - lampe 24 volt - *Lampada 24 volt* | 3848004050 (Pos.6) |
| 48 volt lamp - *Leuchte 48 V* - lampe 48 volt - *Lampada 48 volt* | 3848004055 (Pos.6) |
| 115 volt lamp - *Leuchte 115 V* - lampe 115 volt - *Lampada 115 volt* | 3848004100 (Pos.6) |
| 230 volt lamp - *Leuchte 230 V* - lampe 230 volt - *Lampada 230 volt* | 3848004150 (Pos.6) |
| 500 mm shaft extension (Carbon steel) - *Wellenzapfen 500 mm (unlegierter Stahl)* - 500 mm Rallonge pour arbre (acier au carbone) - *Prolunga per albero da 500 mm (Acciaio al carbonio)* | 3850001022 (Pos.2) |
| 1000 mm shaft extension (Carbon steel) - *Wellenzapfen 1000 mm (unlegierter Stahl)* - 1000 mm Rallonge pour arbre (acier au carbone) - *Prolunga per albero da 1000 mm (Acciaio al carbonio)* | 3850001038 (Pos.2) |
| 500 mm shaft extension (Stainless steel) - *Wellenzapfen 500 mm (Edelstahl)* - 500 mm Rallonge pour arbre (acier inoxydable) - *Prolunga per albero da 500 mm (Acciaio inossidabile)* | 3850001023 (Pos.2) |
| 1000 mm shaft extension (Stainless steel) - *Wellenzapfen 1000 mm (Edelstahl)* - 1000 mm Rallonge pour arbre (acier inoxydable) - *Prolunga per albero da 1000 mm (Acciaio inossidabile)* | 3850001027 (Pos.2) |
| Pin for shaft extensions - *Stift für Wellenzapfen* - Goupille pour rallonges arbre - *Perno per prolunghe albero* | 3850001039 (Pos.4) |
| Ø4x25 SS 304 DIN 94" - *Ø4x25 1.4301 Edelstahl DIN 94"* - Ø4x25 AISI 304 DIN 94" - *Ø4x25 AISI 304 DIN 94"* | 3024020275 (Pos.1) |

* assembly of the extensions is permitted only vertically and for a maximum of 3 m.
* *Es sind nur Verlängerungen bis zu max. 3 m zulässig, die vertikal zu montieren sind.*
* Le montage des prolonges est permis seulement en vertical et pour un maximum de 3 m.
* *il montaggio delle prolunghe è consentito solo in verticale e per un massimo di 3 m.*

When an extension set is purchased, make sure you include all components shown in the picture at page.13.
*Bei der Anschaffung eines Verlängerung-Bausatzes sicherstellen, dass alle aus der Abbildung von Seite 13 dargestellten Bauteile eingeschlossen sind.*
Lorsque vous achetez une extension, assurez-vous que tous les composants indiqués dans l'image à la page 13 ont été inclus.
*All'acquisto di una prolunga, assicuratevi di aver incluso tutte le componenti indicate nell'immagine alla pagina 13.*

Lamp - *Leuchte*
Lampe - *Lampada*

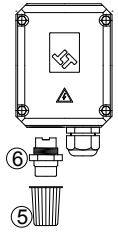


Multiple extension set - *Doppelpaddel mit Federung*
Rallonges en série - *Prolunghe in serie*

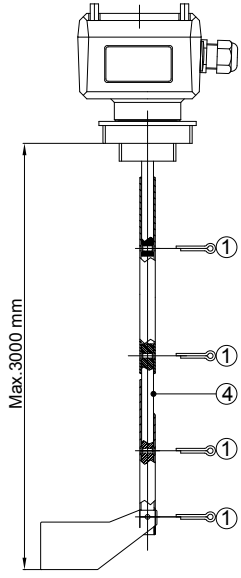


Extension - *Verlängerung*
Rallonge - *Prolunga*

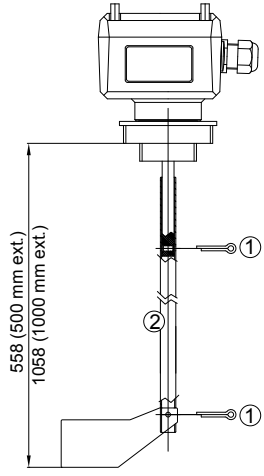


Double spring paddle - *Doppelpaddel mit Federung*
Double palette à ressort - *Pala doppia a molla*

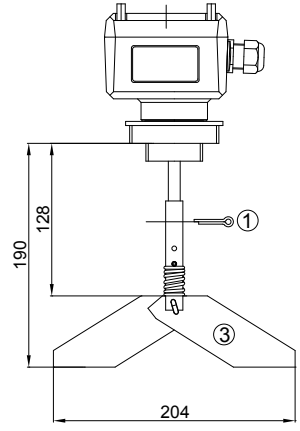

TOREX®

# ILT
- SAFETY NOCITES
- SICHERHEITSHINWEISE
- INDICATIONS DE SÉCURITÉ
- ISTRUZIONI DI SICUREZZA



**WARNING: high voltage!**

- Disconnect from all mains before opening the device.
- Start the device up only when the cover is closed.
- Before opening the lid take care that no dust deposits or whirlings are present.
- Do not allow any dust/water to enter the casing when the lid is open.
- Provide protection for relay contacts and output transistors to protect the device against spikes with inductive loads.
- Make sure that max. 8mm of the pigtails are bared (danger of contact with live parts).
- Make sure that the boots for protecting cable terminations are not longer than 8mm (danger of contact with live parts). Make sure that the screwed cable gland safely seals the cable and that it is tight (danger of water intrusion).
- A voltage-disconnecting switch must be provided near the device.
- In the case of inexpert handling or handling malpractice, the electric safety of the device cannot be guaranteed.
- In the case of a defect, the distribution voltage must automatically be cut off by a RCCB protective switch so as to protect the user of the device from indirect contact with dangerous electric tensions.
- Provide protection for relay contacts to protect the device against spikes, if inductive loads are connected.
- Provide a disconnect switch near the device.
- All field wirings must have insulation suitable for at least 250VAC. The temperature rating must be at least 90°C. (194°F).
- Protect the power of the device by means of a fuse.
- The device body has to be earthed to avoid static charges. This is particularly important in pneumatic conveying applications or with non-metallic containers.

**ACHTUNG: Hochspannung!**

- Vor der Öffnung des Geräts, dieses von allen Stromnetzen trennen.
- Das Gerät in Betrieb nehmen, nur wenn die Abdeckung geschlossen ist.
- Vor der Öffnung des Deckels sicherstellen, dass keine Staubablagerungen oder - aufwirbelungen vorhanden sind.
- Beim geöffneten Deckel darf kein Staub/Wasser innerhalb des Gehäuses gelangen.
- Zum Schutz vor Spannungsspitzen bei induktiven Lasten einen Schutz für Relaiskontakte / Ausgangstransistoren vorsehen.
- Darauf achten, daß die Anschlußlitzen max. 8 mm abisoliert werden (Gefahr der Berührung spannungs- führender Teile).
- Darauf achten, daß die Aderendhülsen der Anschlußkabel max. 8 mm lang sind (Gefahr der Berührung spannungsführender Teile).
- Darauf achten, daß die Kabelverschraubung das Kabel sicher dichtet u. fest angezogen ist (Wassereintritt).
- Es muß in der Nähe des Gerätes ein Schalter als Trennvorrichtung für die Anschlußspannung vorgesehen werden.
- Bei unsachgemäßem Gebrauch des Gerätes ist die elektr. Sicherheit nicht gewährleistet.
- Zum Schutz gegen indirektes Berühren gefährlicher Spannung muß im Fehlerfall ein automatisches Ausschalten (RCCB - Schutzschalter) der Versorgungsspannung gewährleistet sein.
- Für ein geeignetes System zum Schutz der Relaiskontakte sorgen, um die Vorrichtung vor Spannungsspitzen zu schützen, wenn induktive Lasten angelegt werden.
- Einen Trennschalter in der Nähe des Gerätes vorsehen.
- Alle Anschlusskabel müssen für wenigstens 250V AC Betriebsspannung isoliert sein. Die Temperaturbeständigkeit muss mindestens 90°C (194°F) betragen.
- Die Stromversorgung des Gerätes über eine Sicherung absichern.
- Um eine statische Aufladung zu vermeiden, muss das Gerätegehäuse geerdet sein. Dies ist insbesondere wichtig bei pneumatischer Materialförderung und bei nichtmetallischen Gehäusen.

**AVERTISSEMENT: haute tension!**

- Débranchez toutes alimentations électriques avant d'ouvrir le couvercle.
- Démarrer l'équipement seulement quand le couvercle est fermé.
- Avant d'ouvrir le couvercle assurez-vous qu'il n'y a pas de poussière ou des dépôts présents.
- Ne laissez pas la poussière/l'eau entrer dans le boîtier lorsque le couvercle est ouvert.
- Prévoir une protection pour les contacts de relais/les transistors de sortie afin de les protéger contre les pointes de tension en cas de charges inductives.
- Veiller à ce que les torons de raccordement soient dénudés à 8 mm au maximum (danger de contact avec des pièces sous tension).
- Veiller à ce que les cosses d'adhérence des câbles de connexion aient une longueur maximale de 8 mm (danger de contact avec des pièces sous tension).
- Veiller à ce que le presse étoupe ferme le câble hermétiquement et qu'il soit bien serré (arrivée d'eau).
- Prévoir un interrupteur à proximité de l'appareil.
- La garantie ne s'applique pas en cas de utilisation non conforme.
- En cas de défaut, l'alimentation doit être coupée automatiquement: (disjoncteur RCCB) pour protéger l'utilisateur contre toute tension dangereuse.
- Prévoir un dispositif approprié de protection des relais pour protéger l'équipement contre les pics de tension de courte durée, si les charges inductives sont reliées.
- Prévoir un interrupteur près du dispositif.
- Tous les câbles doivent être pourvus d'isolation appropriée d'au moins 250VAC. Le rapport de température doit être au moins 90°C (194°F).
- Protéger l'alimentation du dispositif avec un fusible.
- Le corps du dispositf doit être mis à la terre pour prévenir la formation de charges électrostatiques. Ceci est particulièrement important pour les applications de transport pneumatique ou dans le cas des conteneurs non-métalliques.

**ATTENZIONE: Tensione pericolosa!**

- Scollegare tutte le alimentazioni elettriche al dispositivo prima di aprire il coperchio.
- Avviare il dispositivo solamente con il coperchio del corpo chiuso.
- Prima di aprire il coperchio assicurarsi che non vi siano presenti depositi di polvere.
- Non far entrare la polvere/acqua all'interno della carcassa quando il coperchio viene aperto.
- Fornire una protezione per i contatti dei relè e i transistor d'uscita contro i picchi di tensione con cariche induttive.
- Assicurarsi che la superficie scoperta dei fili connettori non superi gli 8 mm (pericolo di contatto con parti sotto tensione).
- Assicurarsi che le guaine di protezione delle terminazioni dei cavi non superino gli 8 mm di lunghezza (pericolo di contatto con parti sotto tensione).
- Assicurarsi che il pressacavo stringa il cavo in modo sicuro, fissandolo adeguatamente (pericolo di infiltrazione d'acqua).
- Collocare un interruttore di tensione nei pressi del dispositivo.
- Non si garantisce la sicurezza elettrica del dispositivo in caso di impiego improprio o non conforme.
- In caso di guasto, l'alimentazione dovrà essere automaticamente interrotta mediante un interruttore di protezione RCCB al fine di proteggere l'utilizzatore dal contatto indiretto con tensioni elettriche pericolose.
- Predisporre un sistema idoneo di protezione dei contatti relé per proteggere il dispositivo da transitori di breve durata, se sono collegati i carichi induttivi.
- Prevedere un sezionatore vicino al dispositivo.
- Tutti i cavi devono disporre di isolamento idoneo ad almeno 250 VAC. IL rapporto di temperatura deve essere di almeno 90°C. (194°F).
- Proteggere l'alimentazione del dispositivo mediante fusibile.
- Il corpo del dispositivo deve essere collegato a terra per evitare la formazione di cariche elettrostatiche. Questo è particolarmente importante in applicazioni di trasporto pneumatico o con contenitori non metallici.

**ELECTRICAL CONNECTIONS**
The connection has to be carried out on the basis of the voltage indicated on the ID plate and according to the standards in force.
The wiring diagram is indicated on the electronic board (for AC devices) or inside the cover (for DC devices).

**ELEKTRISCHE ANSCHLÜSSE**
Der Anschluss muss aufgrund der auf dem Typenschild angegebenen Spannung und gemäß den geltenden Normen durchgeführt werden.
Das Schaltschema ist auf der elektronischen Karte (mit Wechselstrom betriebene Geräte) oder innerhalb der Abdeckung (mit Gleichstrom betriebene Geräte).

**RACCORDEMENTS ELECTRIQUES**
La connexion doit être effectuée conformément à la tension indiquée sur la plaque signalétique et conformément à la réglementation en vigueur. Le schéma de raccordement est montré sur la carte électronique (dispositifs alimentés en courant alternatif) ou à l'intérieur du couvercle (dispositifs alimentés en courant continu).

**COLLEGAMENTI ELETTRICI**
Il collegamento deve essere eseguito in accordo alla tensione riportata sulla targhetta identificativa ed in accordo alle normative vigenti.
Lo schema di connessione è riportato sulla scheda elettronica (dispositivi alimentati in corrente alternata) o sull'interno del coperchio (dispositivi in corrente continua).

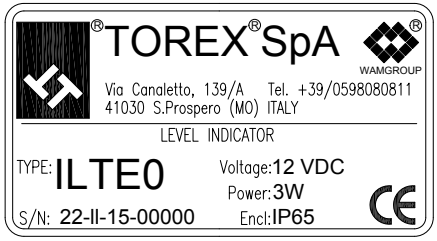


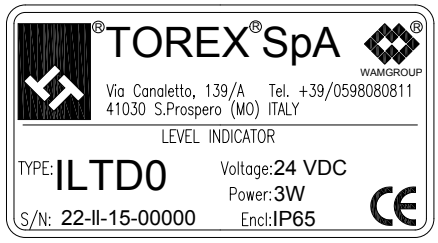


**DC version - *GS-Version* - Version CC - *Versione CC***

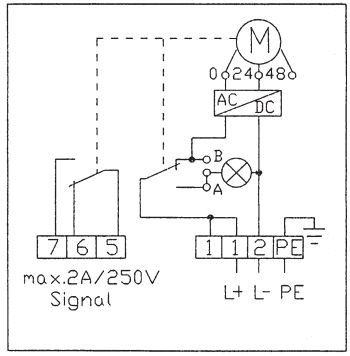

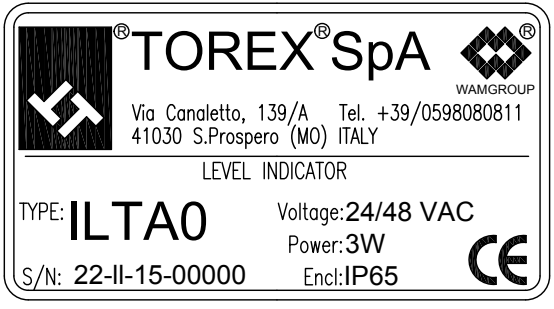


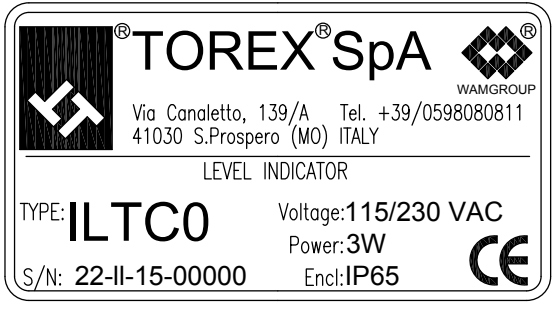


**AC version - *WS-Version* - Version CA - *Versione CA***

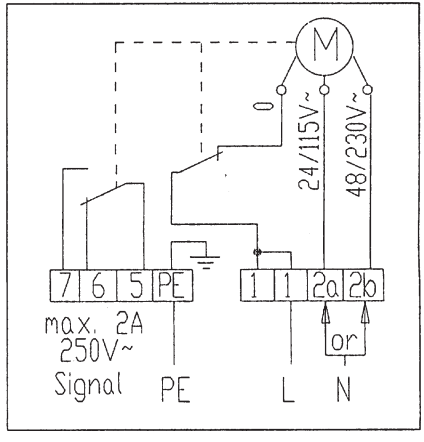

TOREX®

**ILT**
- **OPTIONS**
- **VARIANTEN**
- **OPTIONS**
- **OPZIONI**

# TOR.ILT.--.C.A7.0917.4L 17

Version with rotation control, universal voltage
*Version mit Rotationskontrolle, Universalspannung*
Version avec contrôle rotation, tension universelle
*Versione con controllo rotazione, tensione universale*

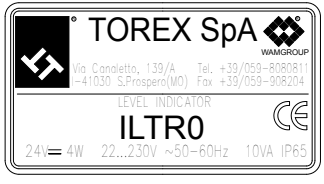


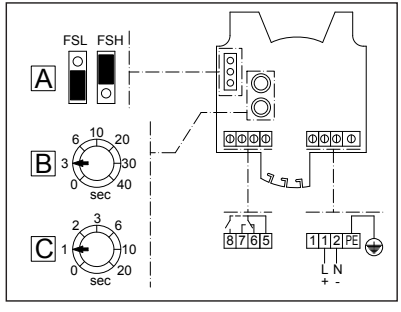


**Checking the rotation**
**Switching mode**
When the unit is switched on and works normally (paddle spinning freely or paddle stopped by material) contact 5-8 is Normally Closed.

In case of:
- missing power supply
- problems on connections
- unit defect

the contact 5-8 will open.

**Rotationsprüfung**
**Einschalt-Modus**
Wenn die Einheit eingeschaltet ist und normal funktioniert (das Paddel dreht sich unbehindert oder ist vom Material gestoppt), ist der Kontakt 5-8 ein Öffner.

Im Fall von:
- fehlender Spannungsversorgung,
- Problemen bei den Anschlüssen,
- Fehler der Einheit,

wird der Kontakt 5-8 öffnen.

**Contrôle de rotation**
**Mode de commutation**
Lorsque l'équipement est mis en marche et fonctionne normalement (avec la palette en rotation libre ou bloquée par le matériau) le contact 5-8 est Normal fermé.

En cas de :
- panne d'électricité
- problèmes de connexion
- appareil défectueux

le contact 5-8 s'ouvre.

**Controllo di rotazione**
**Modalità di commutazione**
Quando l'unità é avviata e funziona normalmente (con la paletta in rotazione libera o bloccata dal materiale) il contatto 5-8 é Normale Chiuso.

In caso di:
- blackout
- problemi di connessione
- unità difettosa

il contatto 5-8 si aprirà.

| | **Function; *Funktion*; Fonction; *Funzione*** | **Range; *Bereich;* Champ; *Campo*** | **Factory setting; *Werkseinstellung;* Réglages usine; *Impostazioni di fabbrica*** |
|---|---|---|---|
| A | Signal type; *Signaltyp;* Type de signal; *Tipo segnale* | FSL - FSH | FSL |
| B | Sensor covered -> free delay; *Verzögerung durch bedeckten Sensor -> frei;* Retard détecteur occupé -> libre; *Ritardo sensore occupato -> libero* | 0-60 s | 3s |
| C | Sensor free -> covered; *Verzögerung durch freien Sensor -> belegt;* Retard détecteur libre -> occupé; *Ritardo sensore libero -> occupato* | 0-20 s | 1s |
| 8-5 | Alarm output; *Alarmausgang;* Sortie alarme; *Uscita allarme* | max.250V - 2A | |
| 5-6-7 | Signal output; *Signalausgang;* Sortie signal; *Uscita segnale* | | |
| 1-2 | Power supply; *Speisung;* Alimentation; *Alimentazione* | 24V DC , max.4W | |
| | | 22..230V AC 50-60 Hz , max.10VA | |

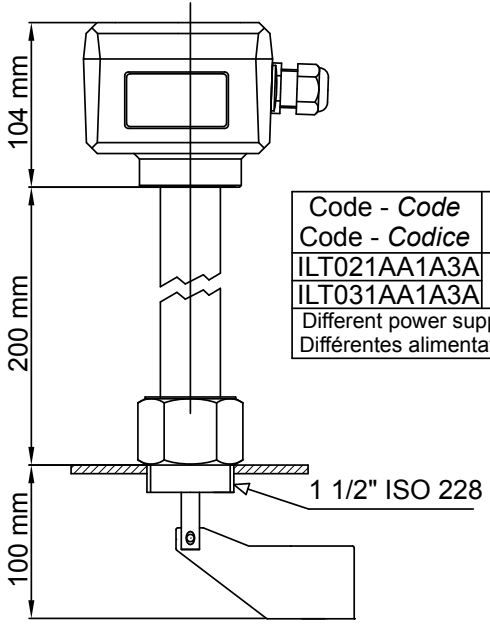


| Code - *Code*<br>Code - *Codice* | Power supply - *Speisung*<br>Alimentation - *Alimentazione* | Process temp. - *Prozesstemp.*<br>Temp. de processus - *Temp.Processo* |
|---|---|---|
| ILT021AA1A3A | 230 V AC 50-60 Hz | 150°C |
| ILT031AA1A3A | | 250°C |
| Different power supply available as an option; *Verschiedene Speisung als Option verfügbar;*<br>Différentes alimentations disponibles en option; *Alimentazioni diverse disponibili su richiesta* | | |

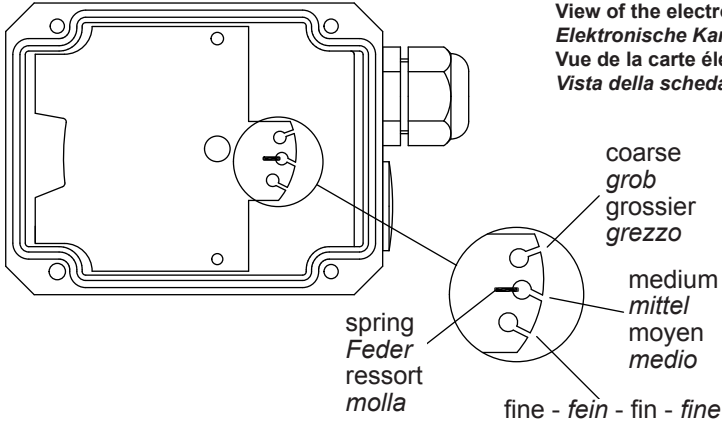


**View of the electronic board**
***Elektronische Karte - Ansicht***
**Vue de la carte électronique**
***Vista della scheda elettronica***

The spring is adjustable in 3 positions. It should be changed only if necessary.
Fine: for light material
Medium: suitable for nearly every material (factory setting)
Coarse: for very sticky material
The sping can be changed via a small plier

Die Feder ist in 3 Positionen einstellbar. Die Position sollte nur geändert werden, wenn dies erforderlich ist
Fein: für leichte Materialien
Mittel: für fast alle Materialien geeignet (Werkseinstellung)
Grob: für sehr klebriges/pappiges Material
Die Feder kann mit einer kleinen Zange gewechselt werden

Le ressort est réglable en 3 positions. Il ne doit être modifié que si cela est nécessaire
Fin : pour matériaux légers
Moyen : adapté pour presque tous les matériaux (réglage d'usine)
Grossier : pour matériaux très collants
Le ressort peut être modifié à l'aide de petites pinces

La molla è regolabile in 3 posizioni. Deve essere cambiata solo se necessario
Fine: per materiali leggeri
Medium: adatto per quasi ogni tipo di materiale (impostazione di fabbrica)
Grezzo: per il materiale molto appiccicoso
La posizione della molla può essere modificata tramite una piccola pinza.

**Switching logic**
***Logischer Umschaltplan***
**Schéma logique de commutation**
***Schema logico di commutazione***

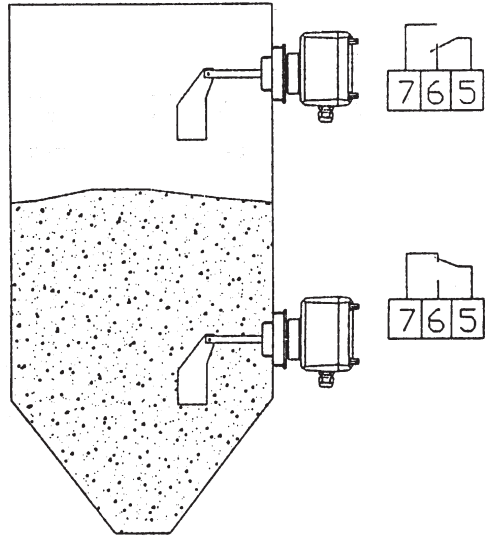

The unit must be mounted with the threaded fitting on the container. It is possible to use a suitable sealing material (teflon tape) to fix and seal the unit: fasten the plastic bush in manually, do not use any tool.
The cable gland must be downwards in order to prevent dust/water from entering the casing.
It is not possible to turn the housing after fastening.
All electrical connections must be made according to the connection diagram: make sure the cable is sealed tightly inside the cable gland.

*Die Einheit muss mit dem Gewindestück auf dem Behälter eingebaut werden. Es ist möglich, eine geeignete Dichtmasse zu verwenden (Band aus Teflon), um die Einheit zu befestigen oder abzudichten: die Buchse aus Kunststoff von Hand festschrauben, kein Werzkeug benutzen.*
*Um das Eintretten von Staub/Wasser innerhalb des Gehäuses zu vermeiden, muss die PG-Verschraubung nach unten zeigen. Es ist nicht möglich, das Gehäuse nach dem Festschrauben zu drehen.*
*Alle elektrischen Anschlüsse müssen gemäß dem Anschlussschema ausgeführt werden: sicherstellen, dass das Kabel innerhalb der PG-Verschraubung abgedichtet ist.*

L'unité doit être installée avec le raccord fileté sur le conteneur. Vous pouvez utiliser un joint d'étanchéité adéquat (téflon) pour la fixation et l'étanchéité de l'unité: serrer la douille en plastique manuellement, n'utilisez pas d'outils. La glande de câble doit être positionnée vers le bas pour empêcher l'entrée d'eau ou de la poussière. ce n'est pas possible de tourner la carcasse après fixation.Toutes les connexions électriques doivent être effectuées selon le schéma de câblage: assurez-vous que le câble est fixé à l'intérieur de la glande de câble.

*L'unità deve essere montata con il raccordo filettato sul contenitore. È possibile utilizzare un sigillante adatto (nastro teflon) per il fissaggio e la tenuta dell'unità: serrare manualmente la boccola di plastica, non utilizzare attrezzi.*
*Il pressacavo deve essere posizionato in basso per impedire l'entrata di acqua/polvere.*
*Non è possibile girare la carcassa dopo il fissaggio.*
*Tutte le connessioni elettriche devono essere eseguite secondo lo schema elettrico: assicurarsi che il cavo sia ben fissato all'interno del pressacavo.*

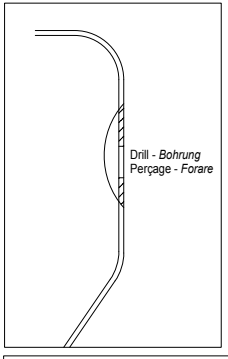


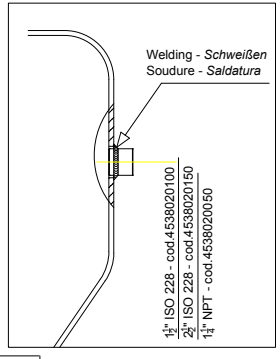


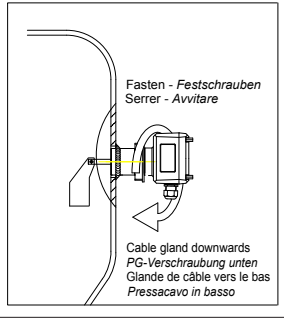

BEFORE CARRYNG OUT ANY TYPE OF WORK ON THE MACHINE STOP IT AND DISCONNECT IT FROM ALL ELECTRIC SUPPLY SOURCES

**N.B.: Failure to observe these instructions can cause problems and make the warranty null and void.**

VOR BEGINN DER WARTUNGSARBEITEN SICHERSTELLEN, DASS DIE MASCHINE UND DER HAUPTSCHALTER AUSGESCHALTET SIND.

**N.B.: Die Nichtbeachtung der oben genannten Vorschriften kann zu Betriebsstörungen und zum Verfall der auf die maschine gewährten Garantie führen.**

AVANT D' EFFECTUER UNE QUELCONQUE OPERATION SUR LA MACHINE, IL FAUT L' ARRETER ET LA DEBRANCHER DE TOUTES LES ALIMENTATIONS ELECTRIQUES.

**N.B.: L' inobservation de ces instructions peut provoquer des problémes et invalider la garantie sur les machines fournies.**

PRIMA DI ESEGUIRE QUALSIASI OPERAZIONE SULLA MACCHINA ARRESTARLA E SCOLLEGARE TUTTE LE ALIMENTAZIONI ELETTRICHE.

**N.B.: Il non attenersi strettamente alle suddette istruzioni può causare dei problemi ed invalidare la garanzia sulle macchine fornite.**

**BUILD REMOVAL - *ANBACKUNGEN ENTFERNEN* - ENLEVER LES INCRUSTATIONS - *RIMOZIONE DELLE INCROSTAZIONI***

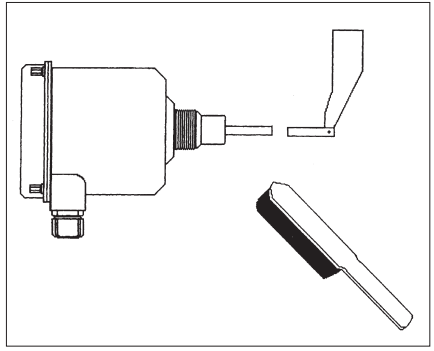

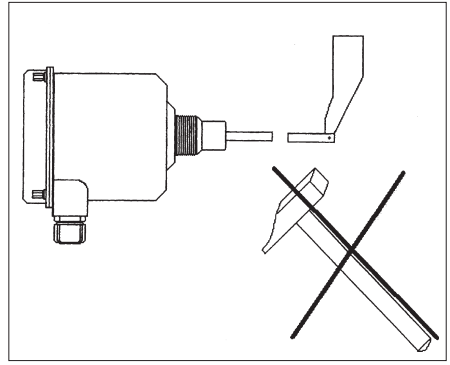

| To scrap: | Verschrottung: | En cas de mise à décharge: | In caso di rottamazione: |
|---|---|---|---|
| When the machine's working life ends, remove the plastic parts (seal rings) and take them to specialised disposal centres. The remaining components can be sent to metal salvage centres. | Nach Ausbau der Maschine, Teile aus Kunststoff (Wellendichtringe) ausbauen und bei der entsprechenden Sammelstelle abgeben. Alle restlichen Teile können als Alteisen verschrottet werden. | A la fin de la vie de la machine; démonter les pièces en matière plastique (anneaux d'étanchéité) et les destiner aux déchetteries spécialisées; les parties restantes sont destinées à la récupération des matériaux ferreux. | A fine vita della macchina, smontare le parti in materiale plastico (anelli di tenuta) e destinarle agli appositi centri di raccolta; le restanti parti sono da destinare al recupero dei materiali ferrosi. |
| When scrapping the machine, bear in mind the different kinds of material used to fabricated it. | Bei der Entsorgung der Maschine muß die unterschiedliche Beschaffenheit der Werkstoffe berücksichtigt werden, | En cas de mise à la décharge il faut tenir compte de la diversification et de la qualité des matériaux. | In caso di demolizione considerare la diversificazione della qualità dei materiali. |

***N.B***. *Rights reserved to modify technical specifications*
***N.B***. *Angaben ohne Gewähr. Änderungen können ohne Vorankündigung vorgenommen werden.*
***N.B***. *Toutes données portées dans le présent catalogue n'engagent pas le fabricant. Elles peuvent être modifiéès à tout moment.*
***N.B***. *Tutti i dati riportati nel presente catalogo non sono impegnativi e possono subire variazioni in qualsiasi momento.*

TOREX®

The manufacturer:

## TOREX S.p.A.

located in
Via Canaletto, 139/A - 41030 S.Prospero Modena - Italy

WAMGROUP

**under its own responsibility declares that:**

the level indicators type ILT

**complies with the requirements imposed by the following directives:**

**Directive 2014/30/EU** of the European Parliament and the Council of 26 February 2014 on the harmonisation of the laws of the Member States relating to electromagnetic compatibility;
Applied standards for evaluation of the unit:
EN 61326-1:2013 (Electrical equipment for measurement, control and laboratory use - EMC requirements - Part 1: General requirements)

**Directive 2014/35/EU** of the European Parliament and the Council of 26 February 2014 on the harmonisation of the laws of the Member States relating to the making available on the market of electrical equipment designed for use within certain voltage limits.
Applied standards for evaluation of the unit:
DIN EN 61010-1:2013 (Safety requirements for electrical equipment for measurement, control and laboratory use - Part.1: General requirements)
EN 60529:1997 (IEC 529) (Degrees of protection provided by enclosures - IP code)

**Directive 2011/65/EU RoHS** of the European Parliament and of the Council of 8 June 2011 on the restriction of the use of certain hazardous substances in electrical and electronic equipment.

The signing company is committed to provide, in response to a reasoned request by national authorities, relevant information on products covered by this declaration, without prejudice to the rights of intellectual property of the manufacturer. The information will be transmitted directly to the national authorities having requested.

Via Canaletto, 139/A - 41030 – S.Prospero Modena - Italy, July 1st 2016

The person authorized to provide the technical documentation:
Nino Ratti

The legal representative:
Nino Ratti

TOREX®

Der Hersteller:

**TOREX S.p.A.**

mit Sitz in

Via Canaletto, 139/A - 41030 S.Prospero Modena - Italien

WAMGROUP

**erklärt unter eigener Verantwortung wie folgt:**

die Füllstandsmelder Typ ILT

**konform ist mit den Anforderungen gemäß den folgenden Richtlinien:**

**Richtlinie 2014/30/EU** des Europäischen Parlaments und des Rates vom 26. Februar 2014 zur Harmonisierung der Rechtsvorschriften der Mitgliedstaaten über die elektromagnetische Verträglichkeit.
Angewendete Normen zur Einstufung des Gerätes:
EN 61326-1:2013 (Elektrische Betriebsmittel für Leittechnik und Laboreinsatz - EMV-Anforderungen - Teil 1: Allgemeine Anforderungen)

**Richtlinie 2014/35/EU** des Europäischen Parlaments und des Rates vom 26. Februar 2014 zur Harmonisierung der Rechtsvorschriften der Mitgliedstaaten über die Bereitstellung elektrischer Betriebsmittel zur Verwendung innerhalb bestimmter Spannungsgrenzen auf dem Markt.
Angewendete Normen zur Einstufung des Gerätes:
DIN EN 61010-1:2013 (Sicherheitsbestimmungen für elektrische Mess-, Steuer-, Regel- und Laborgeräte - Teil 1: Allgemeine Anforderungen)
EN 60529:1997 (IEC 529) (Schutzarten durch Gehäuse - IP kode)

**Richtlinie 2011/65/EU RoHS** des Europäischen Parlaments und des Rates vom 8. Juni 2011 über die Einschränkungen bei der Anwendung bestimmter gefährlicher Substanzen in elektrischen und elektronischen Geräten.

Das ausstellende Unternehmen ist verpflichtet, die technischen Unterlagen für diese Produkte auf begründetes Verlangen den Marktaufsichtsbehörden, unbeschadet der Rechte am geistigen Eigentum des Herstellers, zur Verfügung zu stellen. Die Unterlagen werden direkt an die anfordernde Behörde gesandt.

Via Canaletto, 139/A - 41030 – S.Prospero Modena - Italien, 01/07/2016

Bevollmächtigter für die Zusammenstellung der relevanten Technischen Unterlagen:
Nino Ratti

Für den Hersteller:
Nino Ratti

TOREX®

Le fabricant:

**TOREX S.p.A.**

ayant le siège social à

Via Canaletto, 139/A - 41030 S.Prospero Modena - Italie

WAMGROUP

**déclare sous sa propre responsabilité que**

les indicateurs de niveau type ILT

**est conforme aux exigences imposées par les directives suivantes:**

**Directive 2014/30/UE** du Parlement Européen et du Conseil du 26 février 2014 relative à l'harmonisation des législations des États membres concernant la compatibilité électromagnétique.
Le dispositif a été testé en appliquant les normes suivantes:
EN 61326-1:2013 (Des appareils électriques de mesurage, de régulation et de laboratoire - Exigences de compatibilité électromagnétique - Partie 1: Exigences générales)

**Directive 2014/35/UE** du Parlement Européen et du Conseil du 26 février 2014 relative à l'harmonisation des législations des États membres concernant la mise à disposition sur le marché du matériel électrique destiné à être employé dans certaines limites de tension.
Le dispositif a été testé en appliquant les normes suivantes:
DIN EN 61010-1:2013 (Règles de sécurité pour appareils électriques de mesurage, de régulation et de laboratoire - Partie 1: Exigences générales)
EN 60529:1997 (IEC 529) (Degrés de protection pour boîtiers - IP code)

**Directive 2011/65/UE RoHS** du Parlement Européen et du Conseil du 8 juin 2011 relative à la limitation de l'utilisation de certaines substances dangereuses dans les équipements électriques et électroniques.

La société signataire s'engage à fournir, en réponse à une demande motivée par les autorités nationales, toute information sur les produits couverts par cette déclaration, sans préjudice des droits de propriété intellectuelle du fabricant. Les informations seront transmises directement aux autorités nationales qui les ont demandées.

Via Canaletto, 139/A - 41030 – S.Prospero Modena - Italie, le 1er juillet 2016

La personne autorisée à fournir
la documentation technique:
Nino Ratti

Le représentant légal:
Nino Ratti

TOREX®

Il sottoscritto fabbricante:

**TOREX S.p.A.**

con sede legale in

Via Canaletto, 139/A - 41030 S.Prospero Modena - Italia

WAMGROUP

**dichiara sotto la propria responsabilità che:**

indicatori di livello tipo ILT

**risultano conformi alle esigenze imposte dalle seguenti Direttive:**

**Direttiva 2014/30/UE** del Parlamento Europeo e del Consiglio del 26 febbraio 2014 concernente l'armonizzazione delle legislazioni degli Stati membri relative alla compatibilità elettromagnetica;
Standards applicati per la valutazione dell'unità:
EN 61326-1:2013 (Apparecchi elettrici di misura, controllo e laboratorio - Prescrizioni di compatibilità elettromagnetica - Parte 1: Prescrizioni generali)

**Direttiva 2014/35/UE** del Parlamento Europeo e del Consiglio del 26 febbraio 2014 concernente l'armonizzazione delle legislazioni degli Stati membri relative alla messa a disposizione sul mercato del materiale elettrico destinato a essere adoperato entro taluni limiti di tensione.
Standards applicati per la valutazione dell'unità:
DIN EN 61010-1:2013 (Requisiti di sicurezza degli equipaggiamenti elettrici per la misurazione, il controllo e l'uso in laboratorio - Parte 1: Prescrizioni generali)
EN 60529:1997 (IEC 529) (Gradi di protezione degli involucri - codice IP)

**Direttiva 2011/65/EU RoHS** del Parlamento Europeo e del Consiglio dell'8 giugno 2011, sulla restrizione dell'uso di determinate sostanze pericolose nelle apparecchiature elettriche ed elettroniche.

L'azienda firmataria della presente si impegna a trasmettere, in risposta a una richiesta adeguatamente motivata delle autorità nazionali, informazioni pertinenti sui prodotti oggetto della presente dichiarazione, fatti salvi i diritti di proprietà intellettuale del fabbricante. Le informazioni verranno trasmesse direttamente all'autorità nazionale che le ha richieste.

Via Canaletto, 139/A - 41030 – S.Prospero Modena - Italia, 01/07/2016

La persona autorizzata
a costituire il fascicolo tecnico:
Nino Ratti

Il rappresentante legale:

Nino Ratti



TOREX®

**TOREX® S.p.A.**
Via Canaletto, 139/A
41030 S. Prospero (MO) - ITALY

☎ ++39 / 059 / 8080811
**fax** ++39 / 059 / 908204
**e-mail** torex@torex.it
**internet** www.torex.it

WAMGROUP®

LEVEL MONITORING

# Rotating Level Indicators

## ILT








WAMGROUP®

TOREX®

Rotating Level Indicators ILT

# PRECISE AND RELIABLE LEVEL INDICATORS FOR POWDERY AND GRANULAR MATERIALS

ILT Rotating Level indicators are designed for level monitoring of bins, hoppers or silos by means of the rotating paddle.

When the material level reaches the measuring paddle the rotation is blocked. The motor is freely suspended within the casing.

The resulting reaction torque activates a limit switch output signal that stops the motor.

As soon as the material level sinks below the paddle radius, a spring pulls the motor back into its operating position. The switch returns to the OFF position and the motor is switched on.

The top or side-mounted indicators are commonly used for materials having a minimum bulk density of 0.3 t/m$^3$ (0.01 lbs per cu in).

## Features

### MECHANICAL DATA

- Enclosure: IP 66
- Process connection: Thread G1 1/4", G1 1/2", G2 1/2"
- Material process connection: Plastic and aluminium
- Material shaft and measuring vane: stainless steel
- Friction clutch: Protection of the gearing from impact of the measuring vane
- Pickup delay: Approx. 1.3 sec
- Sensitivity: adjustable via reset force of spring in three positions
- Speed of measuring vane: 1 r.p.m.

### ELECTRICAL DATA

- Mains voltage: 24/48V 50-60Hz or 115V / 230V, 50-60Hz or 24V DC (all voltages +10% / -15%)
- Installed load: 3 VA (3W)
- Signal output: Floating micro-switch
- Signal output: Floating micro-switch ( AC max. 250V, 2 A, 500W - DC max. 300V, 2A, 60W )
- Protection class: I

### OPERATING CONDITIONS

- Container excess pressure: max. 0.8 bar
- Temperature inside vessel: -4F~176F (-4F / 482F with high temperature version)
- Ambient temperature inside the casing: -4F~158F

## Overall Dimensions

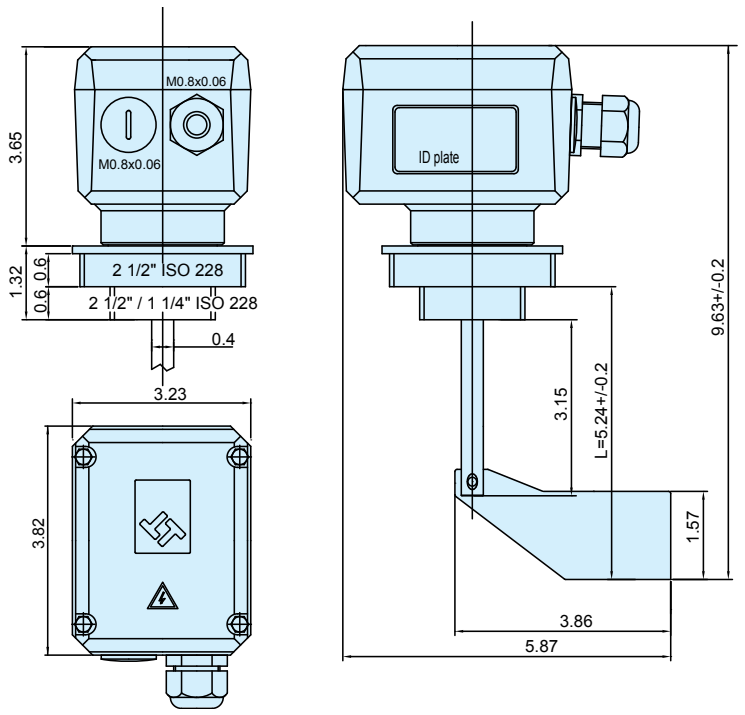


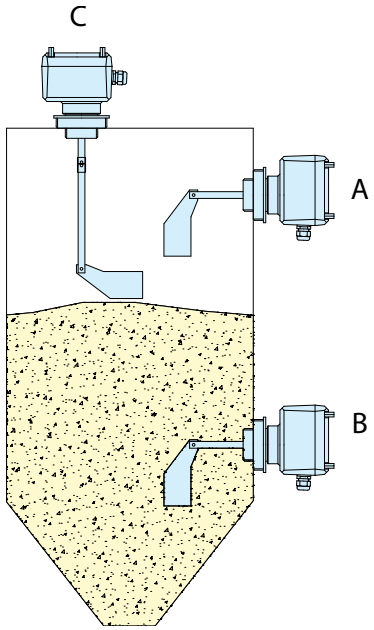


A = Maximum horizontal installation level
B = Minimum installation level
C = Maximum vertical installation level

## Benefits

- ✓ ATEX certified version available for use in hazardous classified areas;
- ✓ High or low process temperature options;
- ✓ Various process connections (flange and thread);
- ✓ Easy installation;
- ✓ Uninfluenced by material properties such as conductivity, dust, dielectricity;
- ✓ Extremely reliable level measuring of bulk solids;
- ✓ Different measuring paddle types, suitable for all densities.




### 1 ROTATING PADDLE

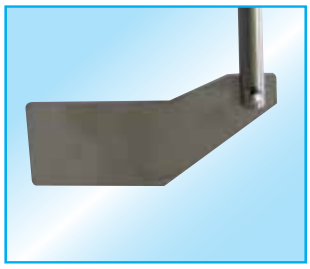

Made from 304 Stainless Steel

### 2 CASING



Die-cast Aluminium
Protection IP66
Electronic Panel Included

### 3 THREADED FITTING

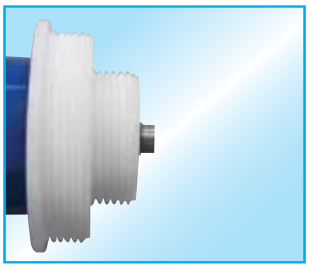

**Standard**
Thread: 1" ½ ISO 228
Thread: 2" ½ ISO 228
Material: Delrin

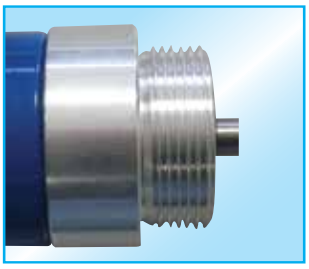

**ATEX Ex II 1/2 D IP66 T 100°C**
Thread: 1" ½ ISO 228
Material: Aluminum

## Accessories

### Threaded bushes

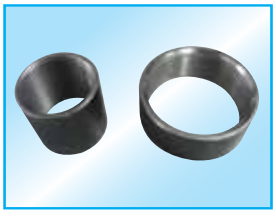

Made from carbon steel, to be welded on to the silo/hopper wall to facilitate installation of the ILT
Thread: 1" ½ ISO 228
Thread: 2" ½ ISO 228

### Double paddle for light materials

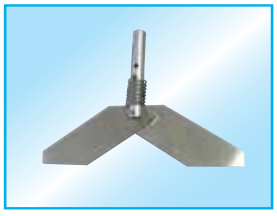

### External light

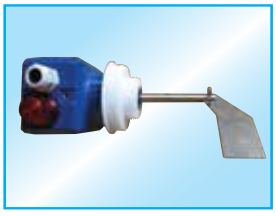

### Rotation control



ILTRO is the code for rotation control multi-voltage version of ILT indicators

### Shaft extension



Shaft extensions are available in zinc-coated carbon steel or 304 stainless steel

- Available 19.69 inch and 39.37 inch pieces
- Modular extension-type
- Maximum extension length allowed: 118.1 inch
- To be used in vertical position only

## Application






ILT Rotating Level Indicators are fitted on the walls of a bin, silo or hopper, depending on the type of detection they are installed for.



WAMGROUP®

WAM® FLITECH® MAP® EXTRAC® SPECO® TOREX® OLI® RONCUZZI® TECNO CM

January 2014 Rights reserved to modify technical specifications.

TOREX®

**WAM Inc.**
Georgia Division
75 Boulderbrook Circle
Lawrenceville, GA 30045
Tel.: (770) 339 - 6767
Fax: (770) 339 - 4727
wamgeorgia@waminc.com
www.extrac-usa.com
www.waminc.com

**WAM Inc.**
Texas Division
1300 Triad Blvd.
Fort Worth, TX 76131
Tel.: (817) 232 - 2678
Fax: (817) 232 - 2676
wamtexas@waminc.com
www.extrac-usa.com
www.waminc.com

UNI EN ISO 9001 Certified Company

www.wamgroup.com

Intelligent Drivesystems

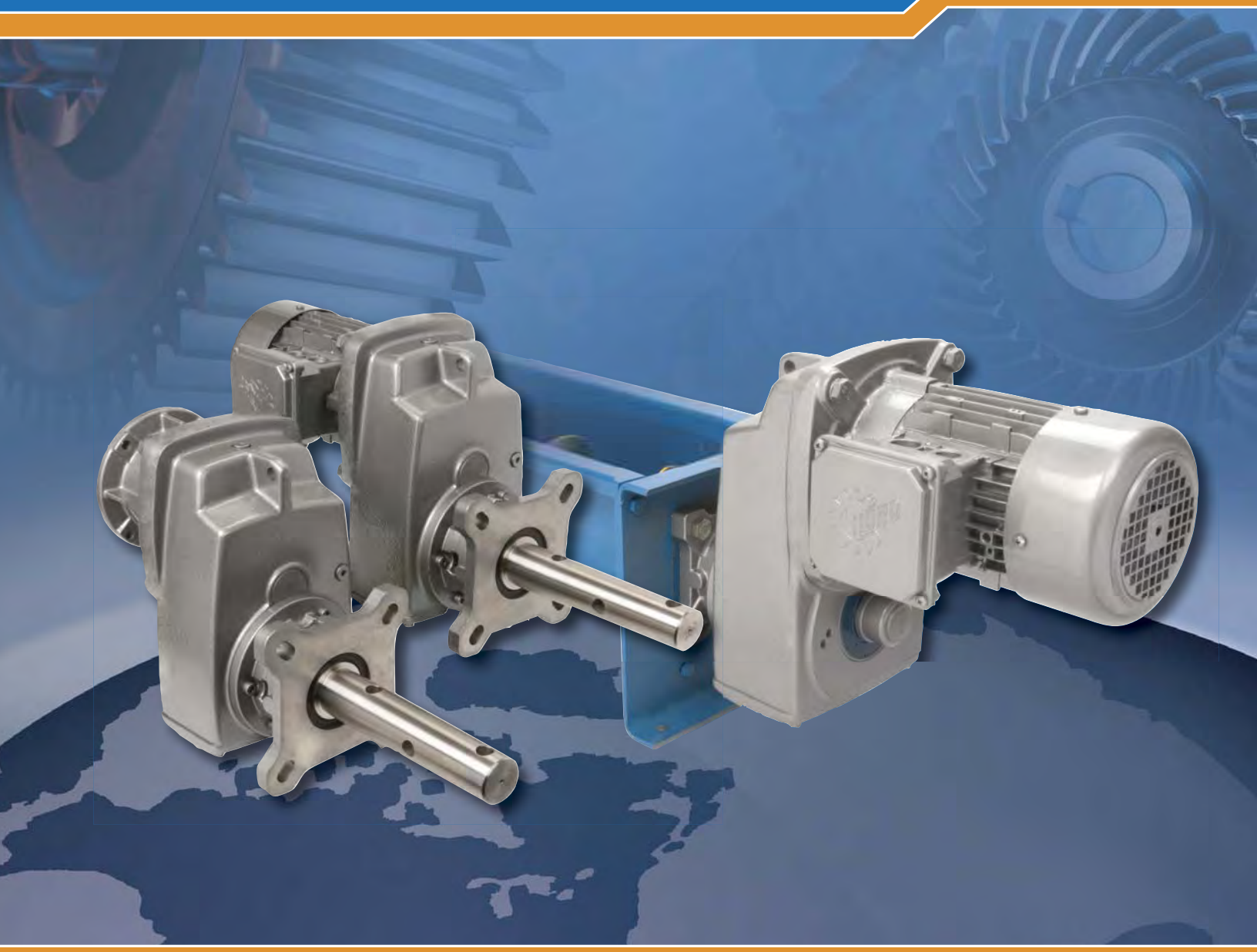

# SCREW CONVEYOR GEARMOTORS & SPEED REDUCERS

## Durable & Premium Efficient Gear Units

G1129

NORD DRIVESYSTEMS

# Screw Conveyor Package
# Innovative Design



## SCP - PRODUCT FEATURES

**OPTIMIZED SEALING SYSTEM**

- Dual Viton lip seals
- Grease impregnated packing seal
- Dual gap seals (excludes particles) – 0.03" gap
- Material evacuation ports
- Shaft material ditch
- Quadrilip™ sealing

**MOUNTING**

- Standard CEMA mounting
- Versatile flange – multiple bolt patterns
- 3-Hole tapered CEMA drive shaft
  - Easy mounting
  - Easy removal (less fretting – due to less material contact)
- Reduced bearing loads – tapered shaft allows for screw pipe misalignment
- Quick external removal feature

**FLANGE**

- Standard CEMA mounting
- High strength class 35 gray cast iron
- Versatile flange – multiple bolt patterns

## HIGH EFFICIENCY

The NORD SCP design is extremely effective due to the direct coupled gearmotor or NEMA C-face input design. Belted input systems have significantly lower total drive performance. You can further increase the overall efficiency by applying the NORD "H" line of energy efficient motors.

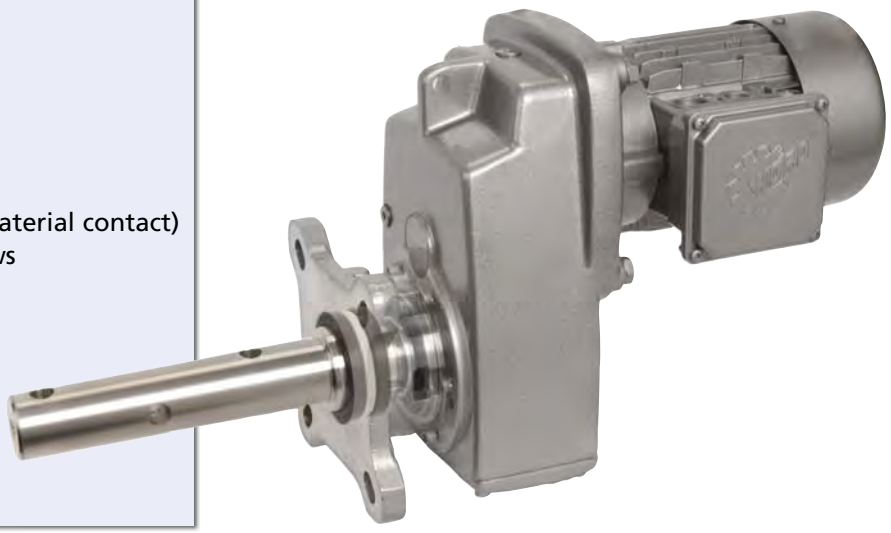

# TABLE OF CONTENTS


**Introduction** ..... 2

**Selections** ..... 29

Gearmotors Ratings Tables ..... 31

Combinations Ratings Tables ..... 65

**Dimensions** ..... 75

SK 1282 SCP ..... 76

SK 2282 SCP ..... 82

SK 3282 SCP ..... 88

SK 4282 SCP ..... 96

SK 5282 SCP ..... 102

SK 6282 SCP ..... 110

Other ..... 114

**Motors** ..... 119

Engineering Info ..... 123

Performance & Ordering Data ..... 142

Options Selections & Ratings ..... 128

**International Contacts** ..... 155

**Terms & Conditions** ..... 167


DRIVESYSTEMS

UNICASE™

www.nord.com





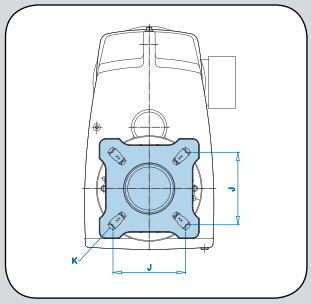





## Company Overview

Since 1965, NORD Gear has grown to global proportions on the strength of product performance, superior customer service, and intelligent solutions to a never ending variety of industrial challenges.

All mechanical and electrical drive components are available from NORD Gear. Our products cover the full range of drive equipment: helical in-line, Clincher™ shaft-mount, helical-bevel, and helical-worm gearboxes, motors and AC drives from 1/6 hp to 250 hp, with torques from 90 lb-in to 900,000 lb-in.

But NORD Gear does far more than manufacture the world's finest drive components. We provide our customers with optimum drive configurations for their specific purposes. NORD provides each and every one of them with truly complete and efficient systems at a price/quality ratio unmatched in today's fast-changing markets.

NORD Gear makes its wide range of products easily available through a global network that provides all customers with prompt delivery and expert support services to consistently exceed customer expectations. We are firmly committed to being totally responsive to the ideas and specifications of every customer, anywhere in the world.

## High-Performance Motors & Brakemotors

NORD motors are designed to run cool for longer service life. Low rotor inertia and high starting torque allow peak performance in the most difficult applications for inverter and vector duty per NEMA MG 1-2006 Section 31.4.4.2 voltage spikes. Our motors are internationally accepted, conforming to North American NEMA MG 1 and international IEC electrical specifications. High performance options include brakes, encoders, and forced cooling fans.



## Short, On-Time Delivery

As a NORD customer, you can rest assured that your order will be delivered on time. Because NORD has both decentralized assembly and manufacturing operations paired with a globally linked network, we have the ability to offer our customers:

- Fast, reliable responses
- Greater product versatility
- Shorter lead times
- Timely shipping
- Rapid delivery

## Quality

Quality is assured at NORD's assembly and manufacturing facilities, based on ISO 9000 standards — from careful inspection of incoming materials to closely monitored machining operations, including gear cutting, turning, hardening & grinding as well as finishing & assembly.

## NORD 911

Trouble? Just call 715-NORD-911 (in Canada, 905-796-3606). Emergency service is available 24 hours a day, 7 days a week. We'll answer your call, ship the parts, or build a unit and have it shipped directly to you to provide what you need, when you need it.



## Manufacturing

NORD continually invests in research, manufacturing and automation technology. This is to ensure the highest possible quality at affordable prices. NORD invests heavily in our North American facilities as well as our factories around the world. Recent examples include expanding our Waunakee factory and adding numerous new large gear unit assembly cells. In our Glinde, Germany gear factory we added a state-of-the-art multi-chamber vacuum carburization system.




## Global Availability

From Shanghai to Charlotte, and everywhere in-between, NORD reaches customers around the world. Deliveries, service, and product support are close at hand, regardless of your location.

## Worldwide Standards

NORD products are designed and manufactured based on the latest North American and global standards.

## Increased North American Presence

NORD covers North America with over 30 district offices and over 500 distributor branches. NORD operates manufacturing and assembly facilities in Waunakee, WI, Charlotte, NC, Corona, CA, Brampton, ON, and Monterrey, Mexico, resulting in an ever-increasing capacity in North America and giving our customers the shortest lead times in the industry.

## Energy Efficiency

Lowering your operating costs is one of our greatest goals! NORD research and development focuses on energy efficiency, with gearboxes, motors, and frequency inverters designed for lower energy consumption. Our fully diverse line of in-line or right-angle units and motors has been developed to suit your needs.

## Modular Design

NORD's modular design philosophy provides you with a competitive edge by allowing you to configure drive systems to exactly fit your applications.

More than 20,000,000 combinations of totally unique gearmotors and speed reducers are possible – assembled in-line or right-angle, mounted by foot or flange, featuring solid or hollow shafts with either metric or inch shaft extensions – to give you complete freedom to specify a drive solution that's perfect for you.

### Benefits

- More output speeds
- More mounting arrangements/Greater flexibility
- Fewer gear stages/Lower cost
- Metric and inch products

NORD engineers stand ready to assist you with your custom applications. Most standard drives can be modified to your purposes, and custom designs can be developed for special applications.

# Key Features



## Standard NORD features

### Modular Design

All NORD products including the SCP units are modular in design and provide extraordinary flexibility.The SCP unit may also be provided with a number of different input components including:

- Integral motor (Gearmotor)
- NEMA C-face motor adapter
- IEC B5 motor adapter
- Solid input shaft
- Custom motor adapter
  (servo, hydraulic motors, and more)

### Large Ratio Per Gear Stage

NORD gear cutting technology allows for the production of gear sets with a higher maximum ratio per stage than many other speed reducer manufacturers. NORD commonly produces gear sets with a maximum ratio of between 9:1 and 10:1 per stage. This allows for double reduction gear units with a maximum ratio between 72:1 and 100:1. Most speed reducer manufacturer's can only produce single-stage reduction of between 5:1 and 6:1. This means a two-stage reducer with a maximum reduction of about 25:1 to 35:1. NORD can often provide a two-stage reducer when most companies must provide three-stage units. The same situation applies to three, four and higher gear stages. This allows NORD to provide superior value and performance in many conditions.

**Benefits**

- Better value
- Higher efficiency
- Quieter operation
- Lower weight
- Longer life

### AUTOVENT™

The AUTOVENT™ prevents bearing damage by blocking entry of foreign material (water, dust, corrosives, etc.) through the breather. A ball and spring check valve opens at approximately 2 psi during operation and closes tightly when the gearbox cools, producing a slightly negative pressure that ensures the valve seals tight. This keeps contaminants out of the oil to maintain proper oil cleanliness reducing contamination, foaming and oxidation. The AUTOVENT™ is perfect for humid conditions, washdown applications, and dusty environments.

**Benefits**

- Cleaner gearbox oil
- Extended lubrication life
- Longer-lasting seals, gears, and bearings

### High-Quality Gearing (Infinite Life Design)

NORD continually invests in state-of-the-art gear production equipment and in gear research. This allows us to produce exceptionally high quality gears.

**Benefits**

- Designed & manufactured up to AGMA CLASS 13
- Infinite design life
- Case-hardened steel
- Exceptional hardness: 58 Rc minimum
- High-speed gears are ground;
  low speed gears are skive hobbed
- 275% momentary overload capacity
- Low noise
- Low maintenance

### Factory Oil Filled

All SCP units are filled at the factory with the proper quantity and type of lubrication. Oil fill before shipping prevents damage from dry start-ups.

**Benefits**

- No need for filling on-site
- Ensures proper oil grade and fill level

### NORD High-Performance Motors & Options

NORD motors are designed to run cool for producing longer service life. Low rotor inertia and high starting torque allow peak performance in the most difficult applications for inverter and vector duty per NEMA MG 1-2006 Section 31.4.4.2 voltage spikes. Our motors are internationally accepted, conforming to North American NEMA MG 1 and international IEC electrical specifications. High performance options include brakes, encoders, and forced cooling fans.



## Screw Conveyor Package Overview

NORD has developed a unique class of high performance right-angle speed reducers. The SCP are available as gearmotors and speed reducers with many mounting options. The SCP units provide high performance right-angle helical-bevel gear units at the cost effectiveness of a single worm system.

**SCP Clincher™ Gear Units** (76 - 113)

| | |
|---|---|
| SK 1282 SCP | SK 1382 SCP |
| SK 2282 SCP | SK 2382 SCP |
| SK 3282 SCP | SK 3382 SCP |
| SK 4282 SCP | SK 4382 SCP |
| SK 5282 SCP | SK 5382 SCP |
| SK 6282 SCP | SK 6382 SCP |

**SCP Bevel Gear Units** (118)

| | |
|---|---|
| SK 9012.1 SCP | SK 9013.1 SCP |
| SK 9022.1 SCP | SK 9023.1 SCP |
| SK 9032.1 SCP | SK 9033.1 SCP |
| SK 9042.1 SCP | SK 9043.1 SCP |
| SK 9052.1 SCP | SK 9053.1 SCP |

Please note that when ordering an SCP unit with a bevel gearbox that the lead times are slightly longer due to the extra manufacturing involved on this specialty product.

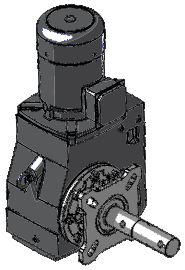

## Customer Benefits

Simplicity - The NORD SCP screw conveyor package eliminates the need for costly separate v-belt drives by directly coupling their motors to the C-face reducer. More space savings is also possible using an integral gearmotor with the SCP package.

- Reduced cost
- Reduced installation time
- No belt maintenance or guarding
- Space savings
- Higher efficiency
- More transferred torque

## UNICASE™ Design

NORD heavy-duty, one-piece housings are precisely machined to meticulous standards. Internal reinforcements further increase strength and rigidity. All bearings and seal seats are contained within the casting, eliminating splits or bolt-on carriers that can weaken the housing and allow oil leakage. Bores and mounting faces are machined in one step, producing extrememly precise tolerances – thus ensuring accurate positioning of gear teeth, bearings and seals, and longer life for all components.

## High-Quality Gearing (Infinite Life Design)

NORD continually invests in state-of-the-art gear production equipment and in gear research. This allows us to produce exceptionally high quality gears.

### Benefits

- Designed and manufactured up to AGMA CLASS 13
- Infinite design life
- Case-hardened steel
- Exceptional hardness: 58 Rc minimum
- High-speed gears are ground; low speed gears are skive hobbed
- 275% momentary overload capacity
- Low noise
- Low maintenance

## QUADRILIP™ Sealing

The QUADRILIP™ system has four components for sealing lubricant inside, and contaminants outside, the speed reducer. The system includes a double lip seal, single lip seal and greasepack barrier (grease lip). Furthermore, the shaft seal area is super-finished.

### Benefits

- Superior protection against leaks
- Long seal life
- Improved protection against contaminants
- Improved speed reducer life
- Reduced maintenance requirements & costs

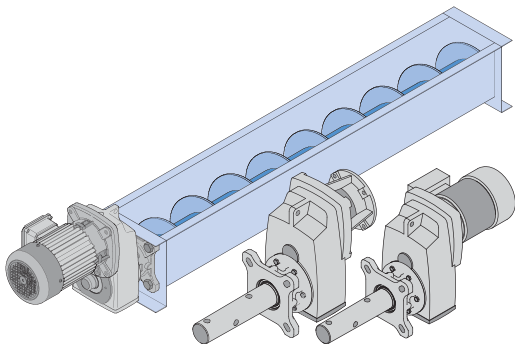

# Key Features



## SCP - Product Features

NORD offers a unique class of high performance screw conveyor drives. The NORD SCP line is based upon the premium efficient CLINCHER™ gear units. The SCP series of screw conveyor drives offers superior durability in the most severe load and service conditions. The SCP system may also be provided as right-angle helical-bevel gear drives.



### Optimized Sealing System

- **❶ Dual Fluropolymer lip seals**
  The SCP mounting flanges contains dual Fluropolymer seals to provide improved sealing. The Fluropolymer seals provide a high degree of chemical and mechanical protection.
- **❷ Dual gap seals (excludes particles) – 0.03" gap**
  The SCP mounting flange and CEMA drive shaft are designed to provide a mechanical sealing device referred to as a gap seal. The flange owns a clearance of 0.03" at two locations on the shaft. This forms a mechanical block to large particles and prevents their entrance into the gear unit.
- **❸ Shaft material ditch**
  Should any material penetrate the fluoropolymer seals, gap seals and greased packing felt seals, the shaft material ditch provides a material gravity break to divert anything that is working its way down the shaft towards the inside of the gearbox.
- **❹ Greased packing felt seal**
  Provides protection for small objects. If materials work their way past the first fluropolymer lip seal and gap seal it will be trapped within the grease felt sealing ring.
- **❺ Material evacuation ports**
  Provides an exit for any foreign material that infiltrates the external sealing system. Also provides a way to clean out the sealing system.
- **❻ QUADRILIP™ sealing**
  Please see page 5 for details

### Mounting

- **Standard CEMA mounting**
  The NORD SCP drives adhere to the CEMA standard mounting dimensions.
- **❼ 3-Hole tapered CEMA drive shaft**
  The NORD SCP CEMA drive shaft is a standard three hole shaft. This allows for mounting to either 2-bolt or 3-bolt connections. The drive shaft is tapered for easier mounting and removal. The taper also reduces shaft loading due to misalignments.
- **Easy mounting**
  The NORD SCP drive is easily mounted into the screw pipe. The taper shaft acts as a guide in assembling the drive shaft into the screw pipe.
- **Easy Removal** -
  There is less fretting due to less material contact.
- **Reduced bearing loads**
  Taper allows for screw pipe misalignment.
- **Quick external removal feature** -
  The SCP drive can be easily removed from the screw pipe in two ways. First is the conventional removal of the complete drive and shaft. Unbolt the mounting flange from the trough and remove the cross bolts from the pipe and shaft. After this is done the drive may be removed. This requires access to inside of the screw pipe which is not always possible.

  The Second way to remove the drive without screw pipe access by unbolting the SCP mounting flange from the drive and removing the drive, leaving the flange and drive shaft attached to the screw pipe.

### Flange

- **Standard CEMA mounting**
  The NORD SCP drives adhere to the CEMA standard mounting dimensions.
- **High strength class 35 gray cast iron**
  The SCP drives and screw conveyor flanges are made form high strength class 35 gray cast iron with a minimum tensile strength of 35,000psi.
- **❽ Versatile flange – multiple bolt patterns**
  The SCP mounting flanges often accommodate more that one CEMA bolt pattern. This allows one drive to be used on different screw sizes simply by switching out the drive shaft.

### High Efficiency

The NORD SCP design is extremely efficient due to the direct coupled gearmotor or NEMA C-face input design. Belted input systems have scientifically lower total drive efficiency. Efficiency may be further increased by using the NORD "H" line of energy efficient motors.

### Options

- Grease purge-able seal (PC) - see page 16
- Stainless steel CEMA drive shaft (SM5) - See page 16

## Screw Conveyor Key Features and Details

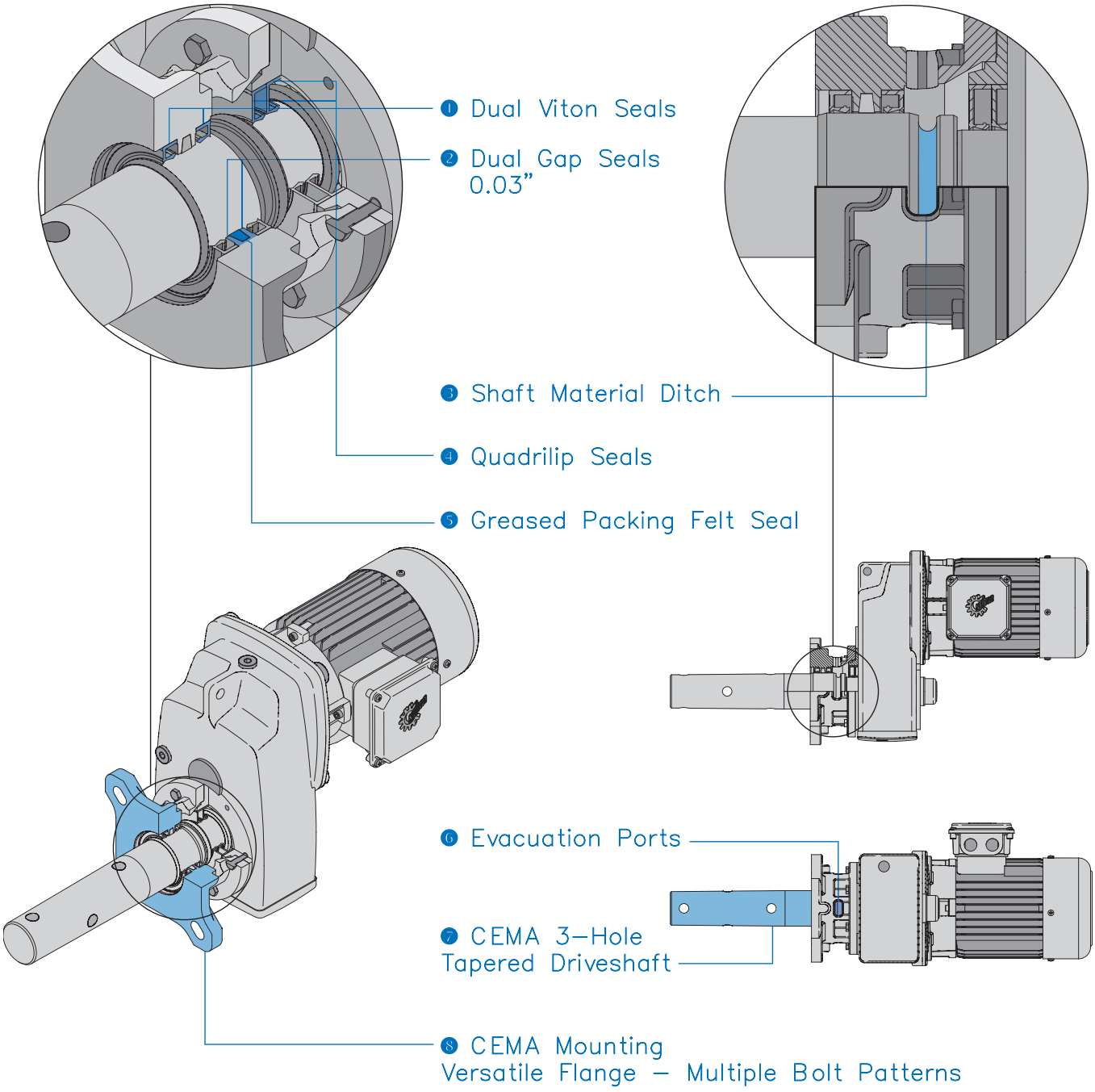

# Capacity , Ratings & Combinations





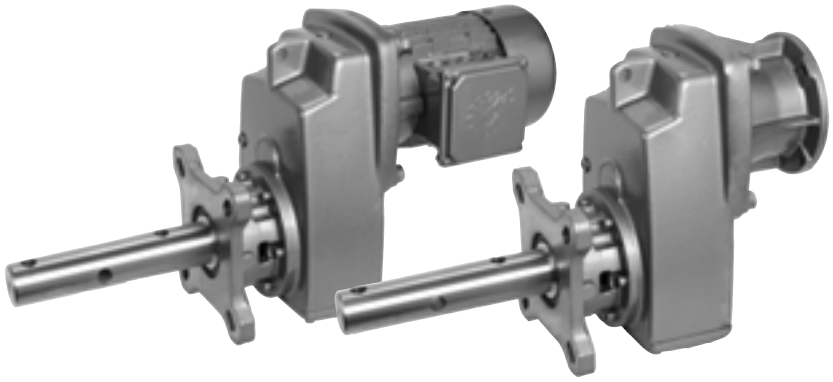

**Capacity & Ratings Overview**

| Model Type | Max Torque [lb-in] | Ratio Range [x:1] | Speed's [rpm] | Max Thrust Load Std Brgs [lb] | Max Thrust Load HD Brgs " VL " [lb] | Gear Stages | Efficiency [%] |
|---|---|---|---|---|---|---|---|
| **SK 1282 SCP** | 2620 | 4.79-109.5 | 365-16 | 1609 | 1609 | 2 | 97 |
| **SK 1382 SCP** | 2425 | 87.94-624.45 | 20-2.8 | 1550 | 1609 | 3 | 95 |
| **SK 2282 SCP** | 4611 | 4.51-127.51 | 388-14 | 2700 | 3375 | 2 | 97 |
| **SK 2382 SCP** | 4894 | 82.22-763.41 | 21-2.3 | 2700 | 3375 | 3 | 95 |
| **SK 3282 SCP** | 8363 | 4.48-112.23 | 391-16 | 3263 | 4500 | 2 | 97 |
| **SK 3382 SCP** | 9195 | 89.60-1022.42 | 20-1.7 | 3263 | 4500 | 3 | 95 |
| **SK 4282 SCP** | 16089 | 4.7-155.4 | 372-11 | 4950 | 6750 | 2 | 97 |
| **SK 4382 SCP** | 18381 | 86.83-1585.08 | 20-1.1 | 4950 | 6750 | 3 | 95 |
| **SK 5282 SCP** | 28630 | 4.32-134.03 | 405-13 | 7200 | 9000 | 2 | 97 |
| **SK 5382 SCP** | 28320 | 82.72-1367.08 | 21-1.3 | 7200 | 9000 | 3 | 95 |
| **SK 6282 SCP** | 40135 | 4.39-80.33 | 399-22 | 13219 | 13500 | 2 | 97 |
| **SK 6382 SCP** | 53100 | 24.42-551.58 | 72-3.2 | 13253 | 13500 | 3 | 95 |

**CEMA Drive Shaft Combinations**

| Model type | 1.5" shaft | 2" shaft | 2-7/16" shaft | 3" shaft | 3-7/16" shaft |
|---|---|---|---|---|---|
| **SK 1282 SCP** | X | X | X | | |
| **SK 1382 SCP** | X | X | X | | |
| **SK 2282 SCP** | X | X | X | | |
| **SK 2382 SCP** | X | X | X | | |
| **SK 3282 SCP** | X | X | X | X | |
| **SK 3382 SCP** | X | X | X | X | |
| **SK 4282 SCP** | | X | X | X | |
| **SK 4382 SCP** | | X | X | X | |
| **SK 5282 SCP** | | X | X | X | X |
| **SK 5382 SCP** | | X | X | X | X |
| **SK 6282 SCP** | | | | X | X |
| **SK 6382 SCP** | | | | X | X |



# SCP
# Ordering Guide

| | Gear Unit | Reducer Options | | Motor/Input | Motor Options |
|---|---|---|---|---|---|
| SK | ❶ | ❷ | ❸ | | ❹ |
| | | | | see page 19 | see page 128 |

❶

| Gear Unit |
|---|
| **1282 SCP** |
| **1382 SCP** |
| **2282 SCP** |
| **2382 SCP** |
| **3282 SCP** |
| **3382 SCP** |
| **4282 SCP** |
| **4382 SCP** |
| **5282 SCP** |
| **5382 SCP** |
| **6282 SCP** |
| **6382 SCP** |
| **Specialty Bevel Product** |

❷

| Reducer Options | |
|---|---|
| **ADP -** Additional Drain Plug | **PC -** Grease Purge Seal |
| **LL -** Long Term Storage | **RV -** Drain Valve |
| **MDP -** Magnetic Drain Plug | **SM5 -** Stainless Steel CEMA Shaft |
| **OA -** Oil Expansion Chamber | **VL -** Heavy Duty Bearings |
| **OSG -** Oil Sight Glass | |

❹

| Motor Options | |
|---|---|
| **F & FC -** Blower Cooling Fan | **OL -** Non Ventilated TENV W/Out Fan |
| **RD -** Drip Cover Canopy | **OLH -** Non Ventilated TENV W/Out Fan & Cover |
| **RDD -** Double Drip Cover Canopy | **WE -** Motor Second Shaft Extension |
| **KD -** Condensation Drain Holes | **Z -** High Inertia Motor Fan |
| **KB -** Condensation Drain Holes Plugged | **IG -** Incremental Encoderr |
| **IP66 -** IP66 Motor Enclosure | **TW -** Thermostat |
| **KKV -** Potted Terminal Box | **TF -** Thermistor |
| **MS -** Quick Power Disconnect, Harting Plug | **SH -** Anti-Condensation Space Heaters |

❸

| Input Shaft | NEMA Adapter | IEC Adapter | Integral Motors | Integral Energy Efficent Motors |
|---|---|---|---|---|
| **W** | **N56C** | **IEC 63** | **63S/4** - 0.16hp | **80LH/4** - 1hp |
| | **N140TC** | **IEC 71** | **63L/4** - 0.25hp | **90SH/4** - 1.5hp |
| | **N180TC** | **IEC 80** | **71S/4** - 0.33hp | **90LH/4** - 2hp |
| | **N210TC** | **IEC 90** | **71L/4** - 0.50hp | **100LH/4** - 3hp |
| | **N250TC** | **IEC 100** | **80S/4** - 0.75hp | **112MH/4** - 5hp |
| | **N280TC** | **IEC 112** | **80L/4** - 1hp | **132SH/4** - 7.5hp |
| | | **IEC 132** | **90S/4** - 1.5hp | **132MH/4** - 10hp |
| | | **IEC160** | **90L/4** - 2hp | **160MH/4** - 15hp |
| | | **IEC180** | **100L/4** - 3hp | **160LH/4** - 20hp |
| | | | **100LA/4** - 5hp | **180MH/4** - 25hp |
| | | | **112M/4** - 5.4hp | **180LH/4** - 30hp |
| | | | **132S/4** - 7.5hp | |
| | | | **132M/4** - 10hp | |
| | | | **160M/4** - 15hp | |
| | | | **160L/4** - 20hp | |
| | | | **180MX/4** - 25hp | |
| | | | **180LX/4** - 30hp | |
| | | | Other Speeds Available | Other Speeds Available |

## Product Specifications

**Ratio**

_____ :1

see pages 31 - 62

OR

**Output Speed**

_____ rpm

see pages 31 - 62

**Mounting Position**

- ❍ M1
- ❍ M2
- ❍ M3
- ❍ M4
- ❍ M5
- ❍ M6
- ❍ Special _____

**CEMA Shaft Diameter**

- ❍ 1-1/2"
- ❍ 2"
- ❍ 2-7/16"
- ❍ 3"
- ❍ 3-7/16"

**Paint**

- ❍ Standard Stainless Steel Paint
- ❍ NSD+ (gray)
- ❍ NSD+W (white)
- ❍ NSD-X3 (gray)
- ❍ NSD-X3W (white)
- ❍ Casting Primed
- ❍ Special _____

**Lubricant**

- ❍ Standard
- ❍ Synthetic
- ❍ Food Grade
- ❍ Other _____

## Gearmotor Only Details

**Voltage & Frequency**

- ❍ 230/460V-60Hz (460V only ≥ 40 hp)
- ❍ 575V-60Hz
- ❍ 208V-60Hz
- ❍ 400V-50Hz
- ❍ Other _____

**Terminal Box Pos.**

- ❍ TB1
- ❍ TB2
- ❍ TB3
- ❍ TB4

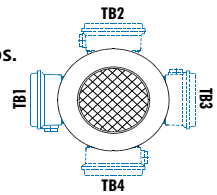


Mtg. Pos. M1 Shown

**Conduit Entry Loc.**

- ❍ CE I *
- ❍ CE II
- ❍ CE III *
- ❍ CE IV

* Brakemotor

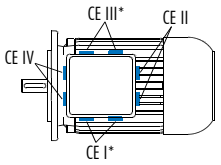


Mtg. Pos. M1 Shown





## Gearbox Selection

A number of factors are considered when selecting a gear unit, including gearbox rating, service factor, speed and speed variation, horsepower, thermal capacity, ratio, physical size, ambient conditions and cost. Below are some guideline steps to help aid in the gear unit selection.

1. Determine the speed and/or gear ratio
2. Determine the required power or torque
3. Determine Service Factor
4. Determine CEMA Shaft Diameter
5. Select the basic gearbox type and input
6. Determine the required mounting position
7. Select options
8. Checks – thrust load, NEMA moto weight, thermal considerations, & other application considerations

### 1. Speed and Gear Ratio

The first step in selecting a gear unit is determining the final output speed or speeds you need. This speed is normally described in revolutions per minute (rpm). This output speed or speeds is determined by the input speed to the gear unit divided by its gear ratio. Their relationship is described by the following formulas.

$$\text{i (gear ratio)} = \frac{\text{Input speed [rpm]}}{\text{Output speed [rpm]}}$$

$$\text{Output speed [rpm]} = \frac{\text{Input speed [rpm]}}{\text{i (gear ratio)}}$$

To specify a gear unit, you can identify either gear ratio needed or the output speed (rpm) if the input speed is known.

### 2. Power and Torque

The second step for selecting a gear unit is the required power or torque needed to power the load. Torque in this catalog is normally expressed in pound-inches [lb-in].

$$\text{Power [hp]} = \frac{\text{Torque [lb-in] x speed [rpm]}}{63025}$$

$$\text{Torque [lb-in]} = \frac{\text{Power [hp] x 63025}}{\text{speed [rpm]}}$$

For a proper selection you must ensure that the motor or other prime mover can produce enough torque or power and that the gear unit has adequate torque or power capacity.

To specify a gear unit you can identify either torque or power.

### 3. Service Factor or Service Class

In addition to power or torque, service factor must also be considered. A service factor is essentially the ratio of extra capacity in a gear unit compared to the power or torque that is needed to run that application. The goal of selecting a gear unit with extra capacity (service factor) is to provide adequate service life in operation.

One reason to apply a larger service factor is if a unit operates more hours per day. If a unit runs 24 hours per day it should normally have a higher service factor than a unit that runs 8 hours per day if you expect the same calendar life.

A second reason for applying a larger service factor is to cope with a more difficult application. Even if it takes the same power and speed to operate a rock crusher as a fan, the rock crusher needs a stronger gearbox (higher service factor) to give the same calendar operating life as the gear unit powering the fan.

The real question is how to determine the proper service factor for a gear unit in an application. Following are four possible methods.

#### Customer or User Specification

Many customers will have their own service factor guidelines or specifications.

#### AGMA Service Factoring

American Gear Manufacturers Association (AGMA) publishes lists of recommended service factors for different applications. These service factor recommendations have been determined from the experience of many gear manufactures and are in AGMA standard 6010.

#### AGMA Service Classes

American Gear Manufactures Association (AGMA) has another method for selecting gear units service factors. AGMA standard 6009 lists many applications by a service class (I, II, III) with class I being the simplest applications and class III being the hardest. These application service classes are associated with a range of service factors by the following table.

| AGMA Service Class | Service Factor |
|---|---|
| I | 1.00 to 1.39 |
| II | 1.40 to 1.99 |
| III | 2.00 and above |

In the gearmotors selection table each unit is also classified by an AGMA service class.



### NORD Mass Acceleration Service Factoring

NORD often uses a calculation based system to properly assign a service factor. This system considers hours of operation per day, the severity of the application and the number of times the equipment is cycled.

### AGMA Class of Service

This table has been developed from the collective experience of gearbox and screw conveyor manufacturers and users of speed reducers in typical applications. Maintaining speed reducer Service Factor (S.F.) provides compensation for non-measurable operating loads and daily length of time in service.

The speed reducer selected should have a service factor greater than or equal to service factor suggested for the particular application. This will result in trouble free operation for a reasonable period of time. Insufficient service factor inevitably ends with premature failure of the speed reducer. Note: Each screw conveyor manufacturer determines the proper "margin of safety" for their type of application and equipment.

| Operating conditions | Service Factor | | |
|---|---|---|---|
| | up to 3 hrs/day | 3-10 hrs/day | 10-24 hrs/day |
| Uniformly loaded or fed | I | I | II |
| Heavy duty | I | II | II |

from AGMA Standard 6009-A00

### 4. CEMA Drive Shaft Size

Available CEMA Shaft Sizes

- 1 - 1/2"
- 2"
- 2 - 7/16"
- 3"
- 3 - 7/16"

### CEMA Drive Shaft Connection Strength

For some selections the torque is limited by the CEMA drive shaft connection. It is important to consider the torque limits following when making a selection.

**Torque limits - CEMA 350-2003 (Table 3-5) excerpts**

| Shaft size [in] | 2-Bolt [lb-in] | 3-Bolt [lb-in] |
|---|---|---|
| 1 - 1/2 | 3,070 | 3,070 |
| 2 | 7,600 | 7,600 |
| 2 - 7/16 | 9,270 | 13,900 |
| 3 | 15,400 | 23,310 |
| 3 - 7/16 | 21,800 | 32,700 |

### 5. Gearbox Input

NORD's modular design allows for a number of different inputs to be added to NORD reducers including:

- Integral motor
- NEMA-C and IEC motor adapter
- Solid input shaft

### 6. Mounting Position

The gearbox mounting position is an important and often overlooked specification. The mounting position determines how much oil the gear reducer requires, in addition to determining the position of the oil drain, oil fill and vent on the gear drive. NORD offers six basic mounting positions. If your application requires a variation from the six basic mounting positions, please contact NORD.

### 7. Options

NORD offers a number of mechanical, protective, paint and lubrication options for gear reducers and motors. Please see page 16 for gear unit options and refer to the motor section for motor options.

### 8. Checks

### Thrust Loads (Axial)

Loads that are directed towards or away from the gearbox along the axis of the shaft are called thrust or axial loads. Output shaft thrust capacity [$F_A$] can be found in the gearmotor rating tables. Thrust load capacities should not exceed the values listed in the tables to ensure long bearing life. Contact NORD for combination loads or a more exact examination of the application.

### NEMA C-face Motor Weight Limits

When mounting a motor to a NORD NEMA C-face motor adapter it is important to consider the motor's weight. Following is a table that includes the maximum motor weight the NEMA adapter can support. If the motor exceeds the listed weight it must be externally supported. When a C-face mounted motor is externally supported care must be taken to ensure that the support system does not impose additional pre-loads on the NEMA motor adapter.

**NEMA Weights**

| Motor FRAME | 56C | 143TC | 145TC | 182TC |
|---|---|---|---|---|
| Max Weight [lb] | 66 | 88 | 110 | 130 |
| **Motor FRAME** | **184TC** | **210TC** | | |
| Max Weight [lb] | 175 | 220 | | |





**⚠ GENERAL WARNINGS & CAUTIONS ⚠**

Applications with risk of personal injury should be reviewed together with NORD. Examples of these are hoist, lifts or other applications where people may be at risk.

### NEMA and IEC Adapters

NEMA/IEC adapter have additional shaft coupling and additional bearing seats compared to integral motors so there are higher no-load losses with NEMA or IEC adapters. We recommend mounting the motor directly, since it offers both technical and cost advantages.

NEMA and IEC adapters used in hoist, lifts and other applications with danger of personal injury should be reviewed together with NORD.

### NEMA C-Face Adapter Capacity

The NEMA adapters are designed to handle the torques produced by the standard NEMA power assignment at 4-pole (1800 rpm) motor speeds. If a larger motor power than the power listed below is used, NORD should be consulted. Also if a NEMA adapter is being used for other than an AC induction motor NORD should be consulted.

| Adapter | Max Power [hp] |
|---|---|
| 56C | 1 |
| 140TC | 2 |
| 180TC | 5 |
| 210TC | 10 |

### External Installation, Tropical Use

Gearboxes installed outside, in damp rooms, or used in the tropics may require special seals and anti-corrosion options. Please contact NORD for application assistance.

### Special conditions

If special environmental or other conditions exist in transit, storage or operation these need to be considered in the unit selection. Special conditions may include (but are not limited to):

- Exposure to aggressive corrosive materials (contaminated air, gasses, acids, bases, salts, etc.)
- Very high relative humidity
- Direct contact between the motor and liquid
- Material build-up on the gear unit or motor (dirt, dust, sand, etc.)
- High atmospheric pressure
- Radiation
- Extreme temperatures, high, low or large temperature changes
- High vibration, acceleration, shocks or impacts
- Other abnormal conditions

### Gear Reducer Ratings

The permissible continuous power limit of gear reducers is limited by both the mechanical rating and the thermal rating. The mechanical rating depends upon the material strength of the gear reducer's gears, bearings, housing, shafts, etc. The mechanical input power limit to the reducer is also a function of the mechanical power rating divided by the relevant reducer service factor.

The thermal rating or thermal limit depends upon the amount of heat generated within the reducer and is influenced by a variety of factors including:

- Churning or splashing losses in the lubricant which depend upon reducer type, ratio, input style, mounting position or oil fill-level, and the circumferential travel velocities of the gear wheels.
- The actual speed and load conditions. These factors determine load-depedent losses in the gear areas and frictional losses in the gear, bearing & seal areas.
- Ambient Conditions:
  - Ambient Temperature.
  - Amount of free air circulation around the drive.
  - Possible near-by heat sources.
  - Heat dissipation or the ability of the reducer to transfer heat through the housing, shafts, and the mating sub-structure or mounting surface.

### Storage Before Installation

The gear units and motors should be stored in a dry area before they are to be installed. Special measures are required for longer storage. Please request long term storage instructions from NORD Gear or see page 17.



## Observing the Reducer's Thermal Limit

### When to Contact NORD

Through computer program analysis NORD can evaluate application conditions and the impact they have on a reducer's thermal capacity.

When applying SCP gear units of case size SK 6282 & larger, consult NORD if any two or more of the following conditions apply:

- Gear ratio, $i_{total} \leq 24:1$
- Input speed, $n_1 > 1800$
- Vertical positioning (mounting position M2 or M4)
- Input configuration: NEMA C-face, IEC, servo adapter or solid-shaft input (Type-W)
- An elevated ambient temperature ≥ 86° F (30 °C)

### Dangers of Reducer Overheating

The following problems may result when the reducer's thermal capacity or maximum oil sump temperatures are exceeded:

- Lubrication oxidation, breakdown & deterioration.
- A decrease in lubrication viscosity & film thickness.
- Loss of critical bearing and gear clearances required for proper lubrication.
- Increased contact pressures and increased operating temperatures in the critical load zones of the gearing and bearings.
- An increased possibility for metal-to-metal contact and premature component wear.
- A significant reduction in the lubricant's ability to prevent scuffing, pitting, and in extreme cases galling or welding.

### Maximum Oil Sump Temperature Limit

To prevent reducer overheating, the reducer's maximum oil sump temperature limit must not be exceeded for prolonged periods of operation (up to 3 hours continuous operation, depending upon reducer size).

| Oil Type | Maximum Oil Temperature Limit | |
|---|---|---|
| | NORD | AGMA 9005-D94 |
| Mineral | 80-85 °C (176-185 °F) | 95 °C (203 °F) |
| Synthetic | 105 °C (220 ° F) | 107 ° C (225 ° F) |

**IMPORTANT NOTE**

***Use caution when specifying gear reducers for high temperature service.*** If there is concern about exceeding the allowable safe operating temperatures, please consult NORD to discuss alternatives.

### Measures to Expand the Application Range

There are a variety of measures that may be taken in order to protect against thermal overload and expand the application range of the gear reducer. Common examples include the following:

- Recommending a change in lubrication viscosity and/or a specific synthetic lubricant type.
- Applying high-temperature seals.
- Increasing air flow around the gear unit.
- Shielding or protecting the reducer from high heat sources.
- Considering an integral motor instead of the bolt-on input assembly covers. In many cases the motor fan will substantially increase air-flow around the gear unit.



## Mounting Positions

The reducer mounting position determines the approximate oil fill level and the appropriate vent location. In some cases the mounting position may dictate possible variation in final reducer assembly. If considering any mounting positions that are not shown as catalog-standard options, it is critical that the customer consult with NORD prior to ordering.



### New Mounting Position System

NORD is in the processes of incorporating a new mounting position systems. Historically the NORD mounting position system was based on international motor standards. NORD is changing in an effort to simplify the system. The new system is based on the six sides of a cube. Below is a cross reference between the old and new mounting position codes.

**Mounting Position Cross Reference Table**

| New | M1 | M2 | M3 | M4 | M5 | M6 |
|---|---|---|---|---|---|---|
| Old | B3, B5 | V3, V6 | B8, B5I | V1, V5 | B5II, B6 | B7, B5III |

## Screw Conveyor Package

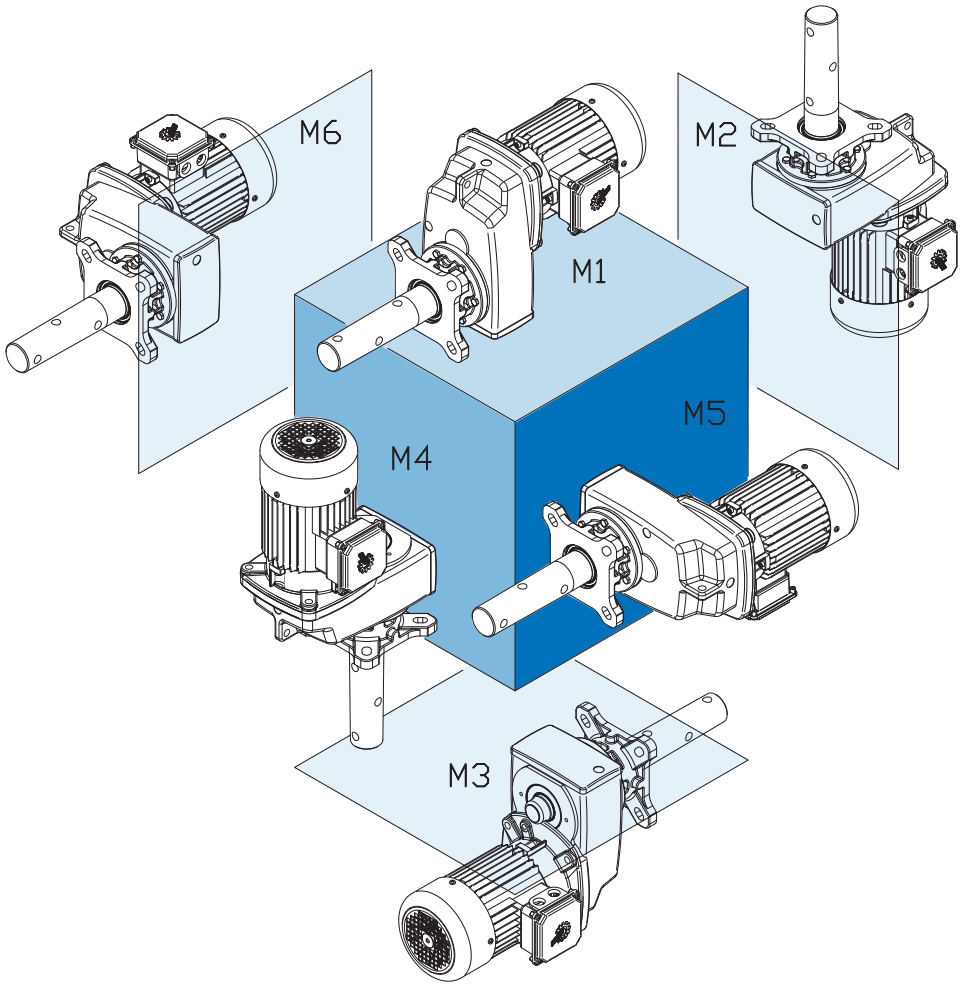



## Screw Conveyor Mounting

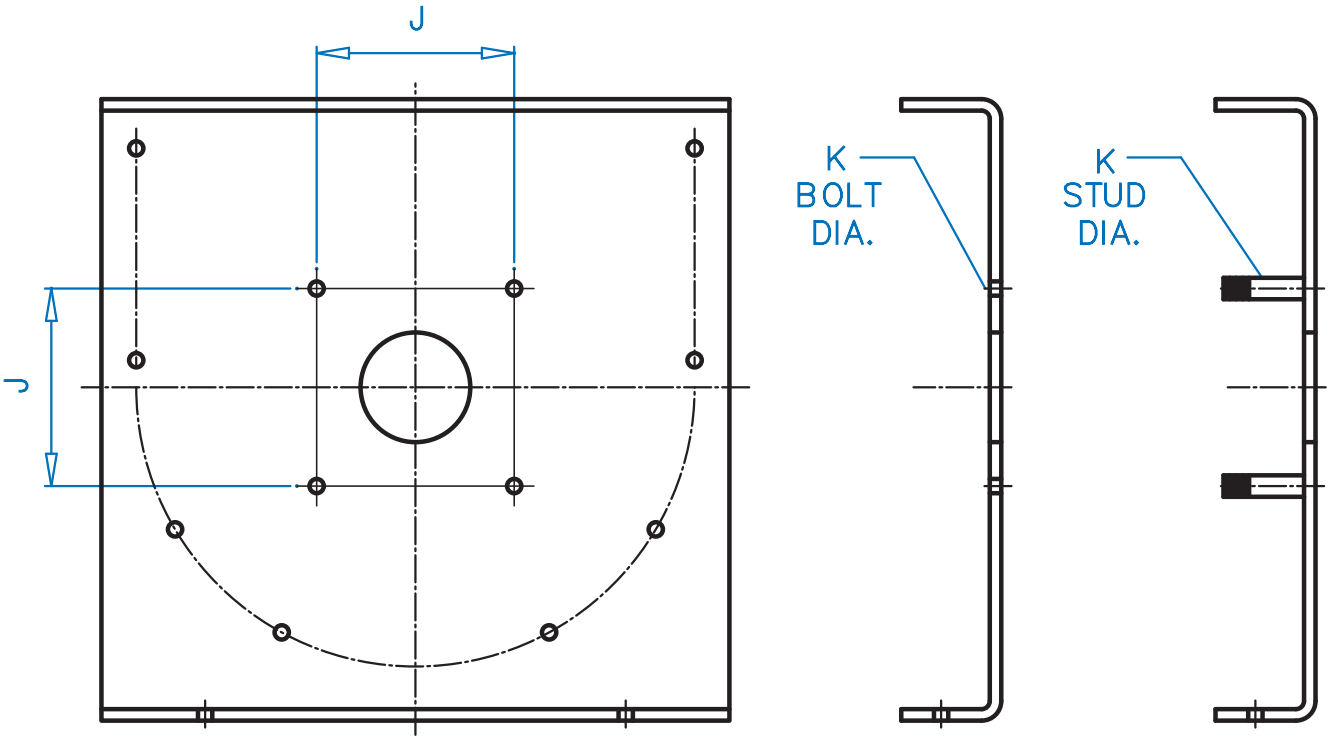




**Screw Conveyor mounting dimensions from CEMA 300-13 excerpts**

| Screw Diameter [in] | CEMA Drive shaft [in] | J Width [in] | K Bolt [in] | K Stud [in] |
|---|---|---|---|---|
| 6 | 1-1/2 | 4 | 1/2 | 7/16 |
| 9 | 1-1/2 | 4 | 1/2 | 7/16 |
| | 2 | 5-1/8 | 5/8 | 9/16 |
| 12 | 2 | 5-1/8 | 5/8 | 9/16 |
| | 2-7/16 | 5-5/8 | 5/8 | 9/16 |
| | 3 | 6 | 3/4 | 3/4 |
| 14 | 2-7/16 | 5-5/8 | 5/8 | 9/16 |
| | 3 | 6 | 3/4 | 3/4 |
| 16 | 3 | 6 | 3/4 | 3/4 |
| 18 | 3 | 6 | 3/4 | 3/4 |
| | 3-7/16 | 6-3/4 | 3/4 | 3/4 |
| 20 | 3 | 6 | 3/4 | 3/4 |
| | 3-7/16 | 6-3/4 | 3/4 | 3/4 |
| 24 | 3-7/16 | 6-3/4 | 3/4 | 3/4 |

# Gear Unit Options





### Screw Conveyor Package Gearbox Options

| Abbreviation | Description | Page |
|---|---|---|
| **ADP** | Additional drain plug | 17 |
| **LL** | Long term storage | 17 |
| **DR** | Autovent | 17 |
| **FV** | Filtered Vent | 17 |
| **MDP** | Magnetic drain plug | 17 |
| **OA** | Oil Expansion Chamber | 16 |
| **OSG** | Oil sight glass | 16 |
| **OV** | Open vent | 17 |
| **PC** | Grease Purge Seal | 16 |
| **SM5** | Stainless steel output shaft | 16 |
| **VL** | Heavy Duty Bearings | 16 |
| **none** | Special Drain Plugs | 17 |
| **none** | Paint coatings | 18 |

## Heavy Duty Output Bearings (VL)

Replacing standard output bearings with heavy-duty versions will increase the external load carrying capacity of the speed reducer. Increased capacity in either or both overhung (radial) or thrust (axial) loading insures that premature bearing failure will not occur due to high stresses in the bearing elements. The increased bearing capacity will also keep the speed reducer as small as possible by not having to select the next larger case size in order to handle the bearing loads. If increased bearing life is desired, larger bearings will reduce the relative stress on the bearings and increase B10 bearing life.

### Standard Bearing

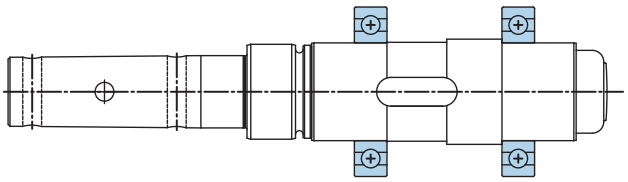

### Heavy Duty Bearings (VL)-option

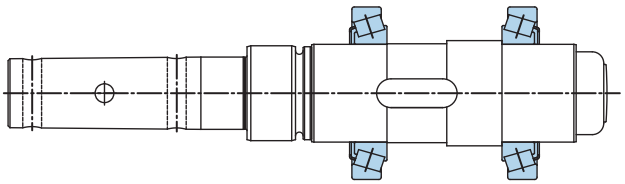

## Grease Purge Seal (PC)

The SCP screw conveyor package has an optional grease purgeable sealing system. The design replaces the greased packed felt packing seal with a grease filled cavity. The system also includes a grease nipple and relief to allow the seal to be flushed with fresh grease.

## Stainless Steel Output Shaft (SM5)

Output shafts made from stainless steel are available and are frequently used in food, pharmaceutical, and washdown applications. In some cases stainless steel solid input shafts may also be provided.

## Oil Expansion Chamber (OA)

Oil expansion chambers are available for most reducers. These chambers allow for expansion of the oil-air mix in the reducer that can occur during operation. This expansion chamber is similar to a car radiator over-flow chamber.

## Oil Sight Glass (OSG)

The oil sight glass provides a visible oil level indication on the reducer. The sight glass replaces the standard steel fill plug and consists of a sealed clear porthole centered in the middle of a brass plug. The sight glass allows for quick oil level and color inspection.



## Autovent™ (DR)

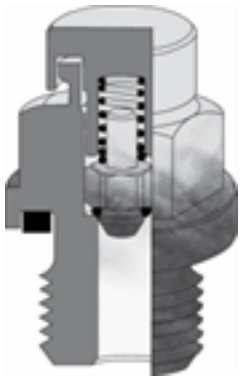

The Autovent™ prevents entry of foreign material, such as water, dust, corrosives, etc… and is perfect for washdown and dusty environments. The Autovent™ is a ball and spring check valve that opens at 2 psi and during operation and closes tightly when the gearbox cools. The Autovent™ is standard on all vented NORD reducers. Some of the benefits are cleaner gearbox oil, extended lubrication life and longer lasting seals, gears, and bearings.

## Open Vent (OV)

An open vent may be optionally supplied on NORD reducers. The open vent allows for air pressure differences between the inner space of the reducer and the atmosphere. This open vent will be closed upon delivery to prevent oil leakage. Before the reducer is put in service the open vent should be activated by removing the sealing plug.

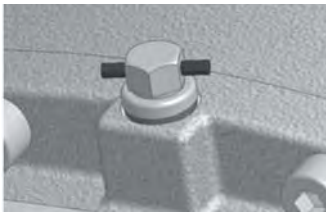

Sealed vent

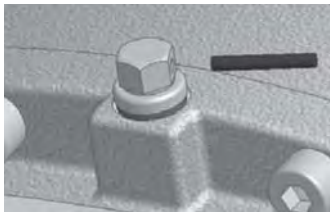

Activated vent

## Filtered Vent (FV)

NORD offers a filtered vent, which allows gases to permeate, but does not allow dust and debris to pass through the vent.

## Magnetic Drain Plug (MDP)

Magnetic drain plugs attract and hold ferrous metal particles that may circulate inside the reducer's lubrication system. These potentially abrasive particles may cause excessive wear in the reducer if they remain circulating. An increase of collected material may be a warning sign of future problems.

## Special Drain Plugs



NORD oil drain valves are offered to make draining the oil from the gearbox clean and easy. The drain hose needs to be supplied by the customer. The hose fittings are offered in either 90° or straight to accommodate the user.



A brass drain valve is threaded into the existing oil drain port of the gearbox. The spring valve is closed using a rubber o-ring. When the hose fitting is threaded into the drain valve, the spring valve is pushed open and allows oil to drain. When the hose fitting is removed, the drain valve closes. A brass, threaded cap is supplied to cover the drain valve when not in use.

## Additional Drain Plug Hole (ADP)

NORD can add an additional drain hole to the reducer housing for a small surcharge if required for special oil plumbing needs.

## Long Term Storage (LL)

Speed reducers are frequently put in storage prior to installation for long periods of time and in some cases exposed to the elements. NORD's long term storage option protects the unit from moisture or corrosion by coating all unpainted surfaces with a dry, transparent, durable waxy film. Once installation is necessary this waxy film can be easily removed with a commercial de-greaser or petroleum solvent. If possible the store room should be vented and dry, with room temperatures between 23°F and 104 °F (-5 °C and 40 °C).





## Paint Coatings

NORD's standard paint coating is a two component, aliphatic polyurethane finish contaning 316 stainless steel material. This gray stainless steel paint has excellent appearance and outstanding physical properties. It is suitable for both indoor and outdoor applications.

Advantages of NORD's stainless steel two component polyurethane:

- Excellent adhesion to cast iron, aluminum, steel, and plastics
- Excellent corrosion resistance
- Excellent chemical resistance
- Excellent gloss and color retention
- Suitable for indoor and outdoor exposure
- Nonporous and excellent abrasion resistance
- USDA compliant

NORD also offers a variety of severe duty paint coatings that provide a high level of protection against water and severe environments both indoors and outdoors. NSD+ (NORD Severe Duty) consists of a primer undercoat and a stainless steel polyurethane topcoat. For the most demanding environments, NORD offers NSD-X3 (NORD Severe Duty triple coated) which consists of a primer undercoat, stainless steel polyurethane coating, and a clear topcoat. Paint coatings are also available in alternate colors as seen in the table below.

| Finish | Color | Coating | Use |
|---|---|---|---|
| Standard (stainless steel paint) | Stainless steel silver (Gray) | 1 x Stainless steel (316) top coat (polyurethane) | Indoor or outdoor moderate environment |
| Alternate color | Black, Blue, Red, Orange | 1 x Color top coat (polyurethane) | Indoor or outdoor protected |
| NSD+ | | | |
| NORD Severe Duty + NSD+ | Stainless steel silver (Gray) | 1 x Primer high solid alkyd system<br>1 x Stainless steel (316) top coat (polyurethane) | Indoor or outdoor moderate environment |
| NORD Severe Duty +W NSD+W | White | 1 x Primer high solid alkyd system<br>1 x White top coat (polyurethane) | Indoor or outdoor moderate environment |
| Alternate color NSD+ | Black, Blue, Red, Orange | 1 x Primer high solid alkyd system<br>1 x Color top coat (polyurethane) | Indoor or outdoor moderate environment |
| NSD X3 | | | |
| NORD Severe Duty Extreme NSD-X3 | Stainless steel silver (Gray) | 1 x Primer high solid alkyd system<br>1 x Stainless steel (316) (polyurethane)<br>1 x Clear top coat (polyurethane) | Indoor or outdoor more severe environment |
| NORD Severe Duty Extreme NSD-X3W | White | 1 x Primer high solid alkyd system<br>1 x White (polyurethane)<br>1 x Clear top coat (polyurethane) | Indoor or outdoor more severe environment |
| Alternate color NSD-X3 | Black, Blue, Red, Orange | 1 x Primer high solid alkyd system<br>1 x Color (polyurethane)<br>1 x Clear top coat (polyurethane) | Indoor or outdoor more severe environment |

Special colors and paints possible please contact NORD with your specific requirements.



## Input

NORD's modular design allows for many different types of inputs to be added to gear reducers. All inputs are bolt on and include machined pilots to ensure simple and accurate assembly. NORD offers the following different input types:

- Integral motor
- NEMA C-face motor adapter
- IEC B5 motor adapter
- Solid input shaft
- Servo motor adapter
- Top mount motor platform
- Custom mounting interface

### Example Nomenclature

**SK3282SCP - W**

- **W** — Solid Input Shaft
- **SK3282SCP** — Gear unit

SCP Gear unit with solid input shaft.

**SK3282SCP -140TC**

- **140TC** — NEMA 140 TC Motor Adaptor
- **SK3282SCP** — Gear unit

SCP Gear unit to recieve standard NEMA C-Face motor adaptor.

**SK3282SCP - IEC80**

- **IEC80** — IEC 80 B5 Motor Adaptor
- **SK3282SCP** — Gear unit

SCP Gear unit to recieve standard metric IEC B5 flange mount motor adaptor.

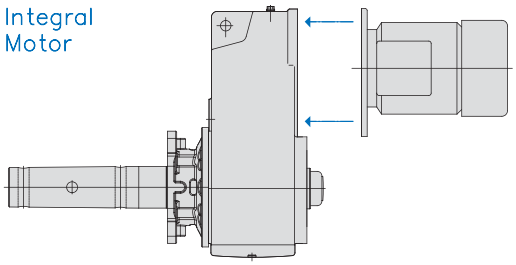


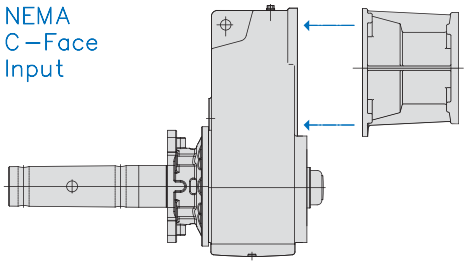


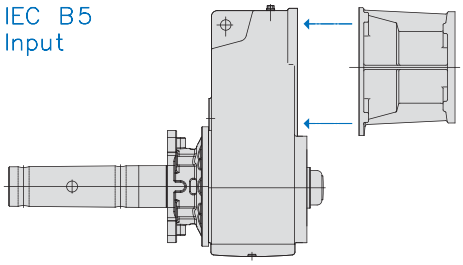


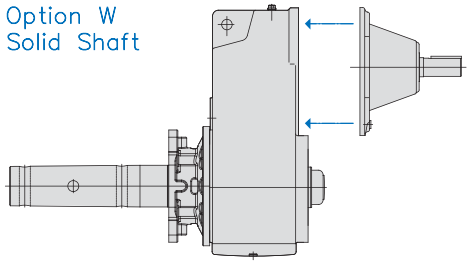


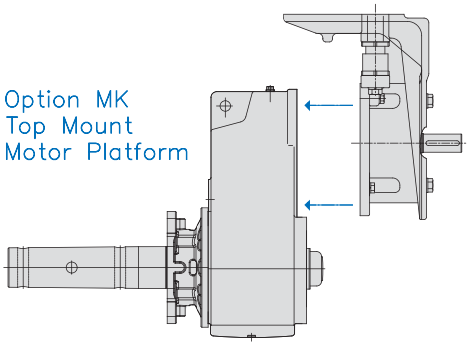





## Integral Motors

NORD provides integral motors that mount directly to the gearbox. Integral motor mounting eliminates the need for costly v-belts or sheaves and directly couples the motor to the reducer. This also results in a dimensionally compact one-piece package.

NORD high performance integral motors are available in many operational voltages, are inverter duty rated, and offer many valuable options including energy efficient motors and power off brakes. For more information on integral motors, see the motor section found on page 119.

## NEMA C-Face Motor Adapter

NEMA C-face motor adapters allow for easy installation and removal of industry standard C-face motors. NEMA C-face motor adapters consist of a coupling and an adapter housing that connects the motor to the gear reducer. Gear units with NEMA C-face adapters are commonly used where applications require specialized motors or the user wants to easily find a replacement motor if failure occurs. NORD also offers high performance NEMA C-face motors and brakemotors, that can be factory installed to the motor adapter.

NORD motor adapters deliver nearly 100% of the torque generated by the motor and can be used from -13°F (-25°C) to 212°F (100°C). Most motor adapters have specially sealed bearings that are lubricated for life.

The maximum input power of a gear unit with a NEMA C-face adapter is generally limited by the power rating of the standard NEMA C-face motor size. The power limit is indicated in the ratings table for a standard 4-pole 1750 rpm motor. In some cases the gearbox limit ($T2_{max}$) will be the limiting capacity. Both the NEMA adapter limit and the gearbox torque limit must be considered. If the speeds required exceed those included in the performance and speed reduction tables please contact NORD.

## IEC Motor Adapter

IEC motor adapters allow for easy installation and removal of industry standard IEC motors according to DIN 42677. The IEC adapter is very similar to the NEMA C-face adapter in construction. The maximum input power is generally limited by the IEC motor size. For ratings and dimensions, please consult NORDS metric catalogs that may be found online at www.nord.com under the document section.

## Solid Input Shaft

Designed to mount couplings, sheaves or sprockets, which transfer torque from the prime mover. The input shaft is made from ANSI 1045 or stronger material and is dimensioned with long keys according to ANSI B17 standards. The maximum gearbox input power rating is indicated in the speed reducer performance tables.

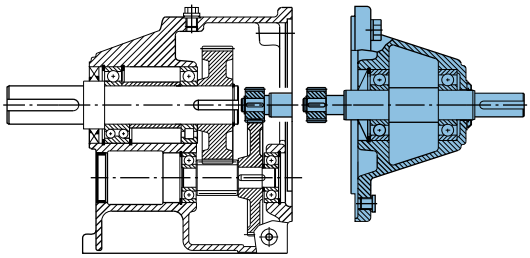

## Servo Motor Adapter

Servo motor adapters are designed to handle the highly dynamic capabilities of servo motors. NORD servo motor adapters have a square mounting flange and are available with either a keyed (SEP) or a key-less (SEK) coupling. They are suitable for speeds up to 3000 rpm and the high torques produced by servo motors. Higher input speeds can be handled for a short duration and the bearings and input shaft are designed to cope with the high torque loads.

## Top Motor Mount Platform

Some applications require the motor to be mounted on top of the reducer with a belt drive connection from the motor to the reducer. MK platforms can be bolted-on to all UNICASE™ gearboxes in any mounting position and offer the following advantages:

- Light, vibration inhibiting aluminum construction
- Corrosion resistant, easily adjustable mechanism for belt tensioning
- Corrosion resistant fasteners
- Available in all mounting positions
- Can be swung 90° to the right or left
- Platform has multiple bolt patterns for various motors

Motor platforms are pre-drilled and tapped to bolt on a standard NEMA footed motor. Each platform has belt tension adjusters. Motor, belts, sheaves and guard are supplied by the customer.



## Custom Mounting Interface

NORD can provide custom input adapters typically consisting of a special adapter plate and special coupling to mount non-standard dimensioned motors or other devices.

When a custom input adapter is required, special attention needs to be given for each application to be sure the customer receives the performance that is necessary. The following information is required:

- Motor Dimensional Drawing
- Motor Weight
- Motor performance specifications, including torque, horsepower and operating speed ranges.

NORD engineers will review the performance requirements and make a unit selection based on given parameters.

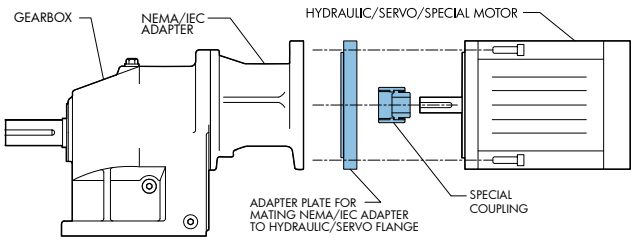


## Vertical Motor Adapter Applications

Gear units with motors frame sizes 250TC (IEC160) and larger, in a vertical up motor mounting position, NORD recommends using an integral gearmotor instead of a NEMA or IEC input adapter. If your application requires this mounting position and a NEMA or IEC input, please consult NORD. In vertical down motor mounted applications it is recommended to shorten the maintenance interval.

## Couplings

Couplings are made with tough abrasion resistant materials, which resist most chemicals and petroleum products. They are electrically isolated (prevent metal to metal contact) and require no lubrication or maintenance. Depending on the size of the C-face input, NORD provides either a gear or jaw type coupling.

## Gear Couplings

Gear couplings are used with 56C to 280TC adapters and provide a compact space saving design. C-face adapter input shafts have a machined male spline that meshes with a molded nylon spline on the coupling. This specially designed molded nylon sleeve that exhibits high torsional stiffness, resulting in minimum fit-up backlash and reduced internal frictional losses. Gear couplings lightweight design yields low inertia and use blind assembly and slip together components to make inspection easy without disassembly.

NORD incorporates two styles of gear couplings, the “J” and “M” styles. The “J” style is one-piece couplings consisting of a nylon sleeve and metal hub that are fused together. The “M” style is a two-piece coupling consisting of a separate nylon sleeve and metal hub.

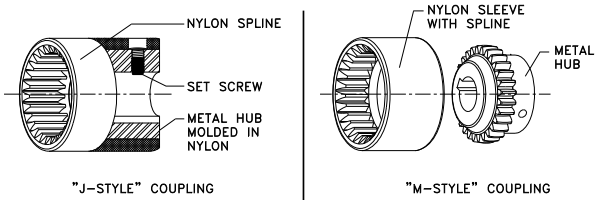


## Jaw Couplings

Jaw couplings are used with 320TC and larger adapters. The cast iron jaw type couplings have a urethane “spider” that provides smooth transmission of the motor torque and has excellent shock and vibration dampening characteristics. A set screw on the coupling prohibits axial movement along the motor shaft.

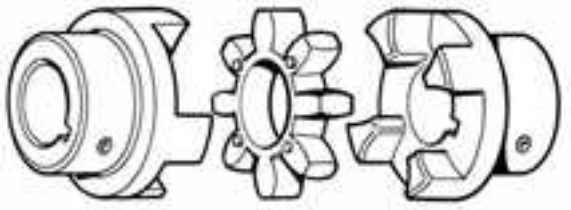





## The Importance of Proper Lubrication

Proper gearbox lubrication is essential in order to reduce friction and component wear, and protect against corrosion and rust. Gear lubricants reduce heat and wear by inserting a load-sharing "protective fluid film" between mating parts and preventing direct metal to metal contact. Properly selected lubricants will operate under various film conditions, improve heat transfer, optimize reducer efficiency, absorb shock loads, reduce noise, inhibit foaming, and separate water readily.

## Design Considerations

Along with many other factors, the gear designer must consider the gear load and speed conditions, and the expected operating oil temperatures. These factors help determine a generally suitable oil category, a desired additive package, preferred base-oil type, and oil viscosity.

It is important that the consumer be aware of these many design factors before making any changes in the critical areas (oil category, base-oil type, viscosity, etc.) One should consult their preferred lubrication supplier or NORD Gear when questions arise.

## Gear Oil Types, Categorized by Base Oil

### *Mineral Oil with an EP Additive (DIN 51517, Type CLP)*

High performance mineral gear oils are carefully engineered and manufactured to improve aging characteristics, minimize friction, offer good wear protection, provide corrosion and oxidation resistance, minimize foam, and separate water. Mineral gear oils are classified as API Group I or II oils, depending upon viscosity.

The standard NORD mineral gear oil has an extreme pressure (EP) additive ISO Viscosity Grade EP220 (AGMA 5 EP) and is generally acceptable for helical gear units. Good quality mineral oil should have the ability to operate at moderate sump temperatures (up to 80-85 °C) without losing viscosity or thickness. A minimum viscosity index (VI) of 93 or higher is suggested. The oil must also have good film strength to handle shock loads, high torque, and start-up conditions. A minimum FZG Scuffing Load Stage 12 is desirable.

**Advantages:**

- Most economical of all the gear oil types.
- Generally offers good compatibility with shaft seals, gaskets, paint finishes, etc.
- Offers good corrosion and oxidation protection.
- Effectively reduces internal friction and wear.

### *When Synthetic Oils Are Used*

Synthetic gear oils are suggested when mineral gear oils have reached their performance limit or when they no longer meet certain application requirements. NORD may recommend synthetic oil for any one of the following conditions:

- Severe duty applications or when gears are exposed to frequent starts and stops, high-load or shock.
- For applications in low or high temperature service.
- To extend oil service interval requirements.
- To eliminate the necessity for seasonal oil changes.
- To extend service life of factory-sealed or maintenance-free gear units.
- To take advantage of performance benefits: shear resistance, low traction coefficient, reduced internal friction, improved lubricity, reduced operating temperatures, improved gear efficiency, etc.

### *Performance Advantages of Synthetic Oil*

Compared to mineral oils, synthetic oils provide a number of performance advantages including:

- Ability to operate at higher temperatures without losing viscosity or thickness, due to a much improved viscosity index.
- Improved low-temperature stability due to a lower pour point
- Increased oil change intervals due to superior oxidative & wear resistance
- Lower tendency to form residues and increased resistance to foaming.
- Other benefits may include: very good shear resistance, low traction coefficient, reduced internal friction, improved lubricity, reduced operating temperatures, improved gear efficiency, extended component life and wear protection.

When application conditions warrant the use of synthetic oil, NORD may suggest a particular type of synthetic oil, depending upon the gear unit type and the application.



***Synthetic Hydrocarbon/Polyalphaolefin (SHC/PAO) Oil (DIN 51517, Type CLP-HC)***

Synthetic Hydrocarbons (SHC) or Polyalphaolefin (PAO) synthetic base oils offer good miscibility with mineral base oils and are very readily available. SHC/PAO oils are classified as API Group IV oils. The can be formulated with or without anti-wear (AW) or extreme pressure (EP) additives. They can also be formulated for acceptance in food-grade applications.

**Advantages:**

- Higher viscosity index and therefore greater high-temperature stability than mineral oil.
- Better low-temperature stability and lower pour point than mineral type gear oils
- High surface tension and lower tendency to foam compared to mineral oil, and water-soluble polyglycol gear oils.
- Compatible (miscible) with mineral oil.
- Better water seperability (demulsibility) than PG oils.

***Polyalkylene Glycol or Polyglycol Synthetic Oil (DIN 51517, Type CLP-PG)***

Polyalkylene glycol or polyglycol (PAG or PG) synthetic gear oils are made readily available through many lubrication suppliers. PG oils are classified as API Group V gear oils. They can also be formulated for acceptance in food-grade applications.

PG gear oils possess extremely low traction coefficients and a viscosity index higher than any of the other synthetics (often greater than 220 VI), resulting in excellent heat resistant, shear stability, and natural anti-wear properties.

Typical PG gear oils are formulated with a 1:1 or higher ratio of ethylene oxide to propylene oxide (50:50 or 60:40 is common); this makes PG gear oils water soluble, providing them with very good corrosion resistance even when water is present in concentrations that are higher then what is normally allowed.

**Advantages:**

- PG oils offer the highest viscosity index of any other synthetic resulting in excellent heat resistant, shear stability, and superior natural anti-wear properties without requiring EP-additives.
- PG gears oils minimize internal friction and often result in improved gear efficiency.
- PG oils have significantly higher film strength than mineral and SHC/PAO oils and out perform these oils at higher operating oil temperatures (approaching 80°C or higher).

***IMPORTANT NOTE***

Polyglycol (PG) oils are not miscible with other oil types and should never be mixed with mineral oil, hydrosynthesized synthetic or PAO synthetic oils.

## Food-Grade Lubricants

Food-grade lubricants should be manufactured in compliance with FDA 212 CFR 178.3570 and should either satisfy the former 1998 USDA Guidelines as an H1 lubricant or currently qualify as a NSF-H1 lubricant. Please consult with lubrication manufacturers for more information or visit www.nsf.org

H1 food grade oil can only contain additives which appear on the FDA "approved list" for food safe compounds. H1 oils are generally absent of common zinc-based AW additives, and sulfur-phosphorus based, EP chemistries, commonly found in many industrial gear oils.

Food manufacturers control risk and liability by following detailed guidelines outlined by the HACCP (Hazard Analysis and Critical Control Point) program, which includes food-grade H1 lubricants.

Food grade H1 lubricants may be formulated as highly refined mineral oils (white oils), SHC/PAO synthetic oils or PG synthetic oils.

The highly refined nature of good-quality food-grade white-oils provides good long-term oxidative stability and in most cases adequate lubrication under high-load (boundary) conditions. So long as food-grade white oils meet the minimum anti-wear requirements of the normally specified non-food grade oil, they are often acceptable.

Both food-grade white oils and PAO's have an inherent "purity" and absence of polar compounds, making them better than the average mineral oil or even PG oil in terms of demulsibility (water seperability).

Compared to food-grade white-oils, food-grade synthetic PAO or PG oils typically provide:

- Better wear and oxidation resistance.
- Improved high-temperature characteristics.
- Better cold-temperature behavior.





## The Importance of Oil Viscosity

Viscosity or the oil's resistance to shear under load, is often considered the single most important property of any gear oil.

NORD Gear Designers have selected the most appropriate ISO viscosity grade of oil, for each type or class of gear reducer. Gear oil viscosity is selected by assuming typical ambient conditions, at rated speed and load conditions.

**Important Considerations:**

- The correct viscosity selection helps provide proper lubrication and assures that a minimum film thickness is maintained between interacting surfaces.
- The degree to which viscosity changes with temperature or the viscosity index, varies from oil to oil, and depends upon the type of lubricant & additive agents used.
- Selecting too low of a viscosity can result in mixed boundary (partial metal-to metal contact) or boundary lubrication (full metal-to-metal contact) conditions, increasing internal friction heat build-up and wear.
- Selecting too high of a viscosity results in increased churning and squeezing losses in the load zone and excessive heat (especially when peripheral gear speeds are high); Ultimately, this causes the oil temperature to rise and the viscosity to go down, decreasing the effectiveness of the lubricant.

## Considering an Oil Viscosity Change

There are three primary reasons to consider a lubrication viscosity change as follows:

1. Low temperature gear oils should be selected so that the pour point is at least 9°F (5°C) lower than the expected minimum ambient temperature. In extreme cases, consider a lower ISO Viscosity rating and test the critical performance of the gear box under cold start-up.

2. High temperature applications may require an increase in the lubricants viscosity to assure proper lubrication conditions in the critical load zones of the gear unit. NORD also recommends switching to synthetic oil if oil sump temperatures exceed 176-185 °F (80-85 °C).

3. In cases of extreme load conditions, gear pairs and antifriction bearings may be more susceptible to scuffing wear. In these operating conditions, it may be beneficial to consider an increased lubrication viscosity and/or lubrication with improved antiwear additive packages.

**IMPORTANT NOTE**

NORD recommends that the user consult with their primary lubrication supplier when considering changes in oil viscosity.

## Maximum Oil Sump Temperature Limit

To prevent reducer overheating, the reducer's maximum oil sump temperature limit must not be exceeded for prolonged periods of operation (up to 3 hours continuous operation, depending upon reducer size).

| Oil Type | Maximum Oil Temperature Limit | |
|---|---|---|
| | NORD | AGMA 9005-D94 |
| Mineral | 80-85 °C (176-185 °F) | 95 °C (203 °F) |
| Synthetic | 105 °C (220 ° F) | 107 ° C (225 ° F) |

**IMPORTANT NOTE**

***Use caution when specifying gear reducers for high temperature service.*** If there is concern about exceeding the allowable safe operating temperatures, please consult NORD to discuss alternatives.



## Ventilation

Most gear reducers are equipped with a vent which helps compensate for air pressure differences between the inner space of the gear unit and the atmosphere.

The spring-pressure vent (Autovent™) is commonly supplied and factory-installed. Normally open vents may also be supplied as an option; normally-open vents are closed upon delivery in order to prevent oil leakage during transport. When normally open vents are supplied, the sealing plugs must be removed prior to commissioning the reducer.

Prior to reducer start-up, it is important to check the maintenance manual to verify that the vent is properly located with respect to mounting position.

## Mounting Position

The reducer mounting position determines the approximate oil fill-level and the appropriate vent location. In some cases mounting position may dictate possible variation in final reducer assembly.

If considering any mounting positions that are not shown as catalog-standard options, it is critical that the customer consult with NORD prior to ordering.

## Oil Fill Quantities

Oil fill quantities shown in the catalog or maintenance instructions are approximate amounts. The actual oil volume varies depending upon the gear ratio. Prior to commissioning the reducer, the oil-fill level should be checked using the reducer's oil-level plug. It may be necessary to drain excess oil or add additional oil.

Unless otherwise specified, NORD supplies most all gear units factory-filled with the standard lubrication type per the specified mounting position.

## Lubrication Replacement

If the gear unit is filled with mineral oil, the lubricant should be replaced at least after every 10,000 operating hours or after every two years. If the gear unit is filled with synthetic oil, the lubricant should be replaced at least after every 20,000 operating hours or after every four years. Often gear reducers are exposed to extreme ambient conditions, hostile environments, wet conditions, or dirty and dusty operating areas. Especially in these situations, it is important to establish a condition-based oil service interval.

## The Importance of Routine Oil Analysis

Routine oil analysis, sound lubrication practices, and good tracking of oil performance trends will help establish proper lubrication maintenance and change-out intervals. To maximize equipment reliability, NORD Gear generally recommends a condition-based lubrication maintenance program. One may take exceptions to this general recommendation on sealed-for-life or maintenance-free gear units or smaller and less costly gear units. In these instances, the replacement cost of the gear unit is often small compared to the costs associated with this type of oil analysis program.

NORD suggests replacing the gear oil if oil analysis indicates any of the following:

- Viscosity has changed by approximately 10% or more.
- Debris particles (silicon, dust, dirt or sand) exceed 25 ppm.
- Iron content exceeds 150-200 ppm.
- Water content is greater than 0.05% (500 ppm).
- The total acid number (TAN) tests indicate a significant level of oxidative break-down of the oil, and a critical reduction in performance; If the TAN number measured changes by more than 5% over the new oil, then an oil change would be recommended.







## Lubrication Types

Proper gearbox lubrication is essential in order to reduce friction, heat, and component wear. Lubricants reduce heat and wear by inserting a protective "fluid boundary" between mating parts and preventing direct metal to metal contact. Lubricants also help prevent corrosion and oxidation, minimize foam, improve heat transfer, optimize reducer efficiency, absorb shock loads and reduce noise.

Mounting position not only determines the proper fill-level but may also have some effect on final reducer assembly. If considering any mounting positions that are not shown as catalog-standard options, it is critical that the customer consult with NORD prior to ordering. Unless otherwise specified, NORD supplies all Screw conveyor gear units factory-filled with the standard mineral lubrication type and the appropriate quantity.

**Standard Oil Lubricants**

| Gear Unit Type | ISO Viscosity | Oil Type | Ambient Temperature Range | Manufacturer Brand/Type | Notes |
|---|---|---|---|---|---|
| Clincher™ SCP | VG220 | MIN-EP | 0 to 40°C (32 to 104°) | Mobilgear 600XP220 | ♦❶ |
| | VG220 | PAO | -35 to 60°C (-31 to 140°F) | Mobil SHC630 | ♦ |
| | VG220 | FG | -5 to 40°C (23 to 104°F) | Fuchs FM220 | ♦ |

**Optional Oil Lubricants**

| Gear Unit Type | ISO Viscosity | Oil Type | Ambient Temperature Range | Manufacturer Brand/Type | Notes |
|---|---|---|---|---|---|
| Clincher™ SCP | VG460 | PAO | -35 to 80°C (-31 to 176°F) | Mobil SHC 634 | - |
| | VG460 | FG-PAO | -35 to 80°C (-31 to 176°F) | Mobil/Cibus SHC460 | - |
| | VG220 | FG-PAO | -35 to 60°C (-31 to 140°F) | Mobil/Cibus SHC220 | - |
| | VG150 | PAO | -35 to 25°C (-31 to 77°F) | Mobil SHC629 | - |

**Standard Bearing Grease Lubricants**

| Grease Type/Thickener | NLGI Grade | Ambient Temperature Range | Manufacturer Brand/Type | Notes |
|---|---|---|---|---|
| Standard (Li-Complex) | NLGI 2 | -30 to 60°C (-22 to 140°F) | Mobil Grease XHP222 | ♦❶ |
| High Temp (Polyurea) | NLGI 2 | -25 to 80°C (-13 to 176°F) | Mobil Polyrex EP 2 | ♦ |
| Food-Grade (AL-Complex) | NLGI 2 | -25 to 40°C (-13 to 104°F) | Mobil Grease FM222 | ♦ |

♦ Stocked Lubricants

❶ Standard product on serviceable gear units

### *IMPORTANT NOTES*

- Food grade lubricants must be in compliance with FDA 212 CFR 178.3570 and qualify as a NSF-H1 lubricant. Please consult with lubrication manufacturer for more information.
- When making a lubrication change, check with the lubrication supplier to assure compatibility and to obtain recommended cleaning or flushing procedures.
- Do not to mix different oils with different additive packages or different base oil formulation types. Polyglycol(PG) oils are not miscible with other oil types and should never be mixed with mineral oil.
- Consult NORD if considering oils of ISO Viscosity VG100 or lower.

**Oil Formulation Codes**

| | |
|---|---|
| MIN-EP | Mineral Oil with EP Additive |
| PAO | Synthetic Polyalphaolefin Oil |
| FG | Food-Grade Oil |
| FG-PAO | Food-Grade, Synthetic Polyalphaolefin Oil |



# SCP Mounting Positions & Oil Fill Quantities



### Screw Conveyor Package lubrication

Unless otherwise noted below, the following NORD Gear reducers are shipped from the factory with a pre-determined oil fill level in accordance to the specified reducer size and mounting position. For additional information, please refer to the "Oil Plug & Vent Locations" documentation for your gear unit.

**STOP** ***HARMFUL SITUATION*** **STOP**

Actual oil volume can vary slightly depending upon the gear case size, mounting and ratio. Prior to commissioning the reducer, check the oil-fill level using the reducer's oil level plug and drain or add additional oil as needed.

For mounting orientations other than shown please consult NORD Gear. Reducer modifications may be required.

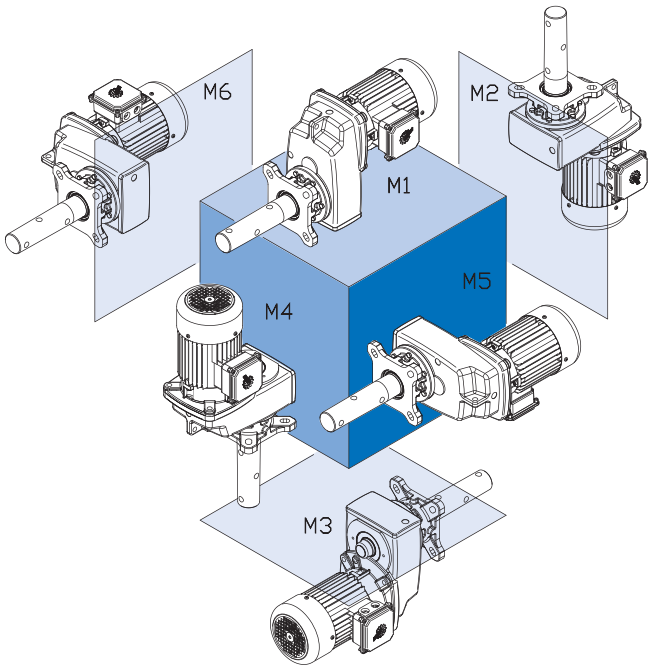


| Unit Type | Mounting Position | | | | | | | | | | | |
|---|---|---|---|---|---|---|---|---|---|---|---|---|
| | M1 | | M2 | | M3 | | M4 | | M5 | | M6 | |
| | Quarts | Liters | Quarts | Liters | Quarts | Liters | Quarts | Liters | Quarts | Liters | Quarts | Liters |
| **SK 1282** | 0.950 | 0.900 | 1.37 | 1.30 | 0.950 | 0.900 | 1.27 | 1.20 | 1.000 | 0.950 | 1.000 | 0.950 |
| **SK 1382** | 1.37 | 1.30 | 2.43 | 2.30 | 1.48 | 1.40 | 2.22 | 2.10 | 2.11 | 2.00 | 2.01 | 1.90 |
| **SK 2282** | 1.74 | 1.65 | 2.54 | 2.40 | 2.01 | 1.90 | 2.11 | 2.00 | 1.90 | 1.80 | 1.90 | 1.80 |
| **SK 2382** | 1.80 | 1.70 | 2.75 | 2.60 | 2.01 | 1.90 | 3.28 | 3.10 | 1.59 | 1.50 | 1.59 | 1.50 |
| **SK 3282** | 3.33 | 3.15 | 4.33 | 4.10 | 3.44 | 3.25 | 4.33 | 4.10 | 3.33 | 3.15 | 3.33 | 3.15 |
| **SK 3382** | 4.33 | 4.10 | 5.18 | 4.90 | 3.49 | 3.30 | 5.92 | 5.60 | 3.49 | 3.30 | 3.49 | 3.30 |
| **SK 4282** | 4.97 | 4.70 | 6.45 | 6.10 | 5.02 | 4.75 | 5.71 | 5.40 | 4.97 | 4.70 | 4.97 | 4.70 |
| **SK 4382** | 6.24 | 5.90 | 7.19 | 6.80 | 5.18 | 4.90 | 8.77 | 8.30 | 5.18 | 4.90 | 5.18 | 4.90 |
| **SK 5282** | 7.93 | 7.50 | 9.30 | 8.80 | 7.93 | 7.50 | 9.30 | 8.80 | 7.61 | 7.20 | 7.61 | 7.20 |
| **SK 5382** | 13.21 | 12.50 | 12.68 | 12.00 | 7.08 | 6.70 | 14.80 | 14.00 | 8.77 | 8.30 | 8.77 | 8.30 |
| **SK 6282** | 17.97 | 17.00 | 14.80 | 14.00 | 12.68 | 12.00 | 18.50 | 17.50 | 10.57 | 10.00 | 14.80 | 14.00 |
| **SK 6382** | 17.44 | 16.50 | 13.74 | 13.00 | 10.15 | 9.60 | 19.03 | 18.00 | 14.80 | 14.00 | 13.21 | 12.50 |

# SCP
# Weights





**Base Weight**

| Input Type | SK 1282 [lb] | SK 2282 [lb] | SK 3282 [lb] | SK 4282 [lb] | SK 5282 [lb] | SK 6282 [lb] |
|---|---|---|---|---|---|---|
| 3rd gear stage "3" | 8 | 8 | 11 | 27 | 35 | |
| 63S/4 | 39 | – | – | – | – | |
| 63L/4 | 40 | – | – | – | – | |
| 71S/4 | 43 | 67 | 100 | – | | |
| 71L/4 | 45 | 69 | 102 | – | – | |
| 80S/4 | 49 | 73 | 106 | – | – | |
| 80L/4 | 51 | 75 | 108 | – | – | |
| 90S/4 | 57 | 82 | 115 | 148 | 227 | |
| 90L/4 | 62 | 86 | 119 | 152 | 232 | |
| 100L/4 | 71 | 95 | 128 | 161 | 240 | |
| 100LA/4 | 77 | 101 | 135 | 168 | 247 | 432 |
| 112M/4 | 97 | 121 | 155 | 188 | 267 | 452 |
| 132S/4 | – | – | 185 | 218 | 298 | 483 |
| 132M/4 | – | – | 209 | 243 | 322 | 507 |
| 160M/4 | – | – | – | 282 | 362 | 547 |
| 160L/4 | – | – | – | 320 | 399 | 584 |
| 180MX/4 | – | – | – | – | 452 | 637 |
| 180LX/4 | – | – | – | – | 452 | 637 |
| 225S/4 | – | – | – | – | – | 867 |
| 225M/4 | – | – | – | – | – | 939 |
| 56C | 51 | 82 | 115 | 154 | 234 | – |
| 140TC | 51 | 82 | 115 | 154 | 234 | – |
| 180TC | 66 | 90 | 124 | 170 | 249 | 448 |
| 210TC | – | – | 143 | 201 | 280 | 476 |
| 250TC | – | – | – | 223 | 302 | 531 |
| 280TC | – | – | – | – | 322 | 531 |
| 320TC | – | – | – | – | – | 562 |
| 360TC | – | – | – | – | – | 562 |
| W | 40 | 77 | 110 | 165 | 245 | 474 |

**SCP Package Additional Weight**

| | 1-1/2" [lbs] | 2" [lbs] | 2-7/16" [lbs] | 3" [lbs] | 3-7/16" [lbs] |
|---|---|---|---|---|---|
| SK 1282 SCP | 15 | 23 | 28 | – | – |
| SK 2282 SCP | 18 | 27 | 31 | – | – |
| SK 3282 SCP | 23 | 35 | 39 | 46 | – |
| SK 4282 SCP | – | 41 | 44 | 51 | – |
| SK 5282 SCP | – | 58 | 60 | 67 | 80 |
| SK 6282 SCP | – | – | – | 76 | 89 |

# SCP Gearmotors & Speed Reducers

## Selection

- 0.16 hp
- 0.25 hp
- 0.5 hp
- 0.75 hp
- 1 hp
- 1.5 hp
- 2 hp
- 3 hp
- 5 hp
- 7.5 hp
- 10 hp
- 15 hp
- 20 hp
- 25 hp
- 30 hp
- 40 hp
- 50 hp

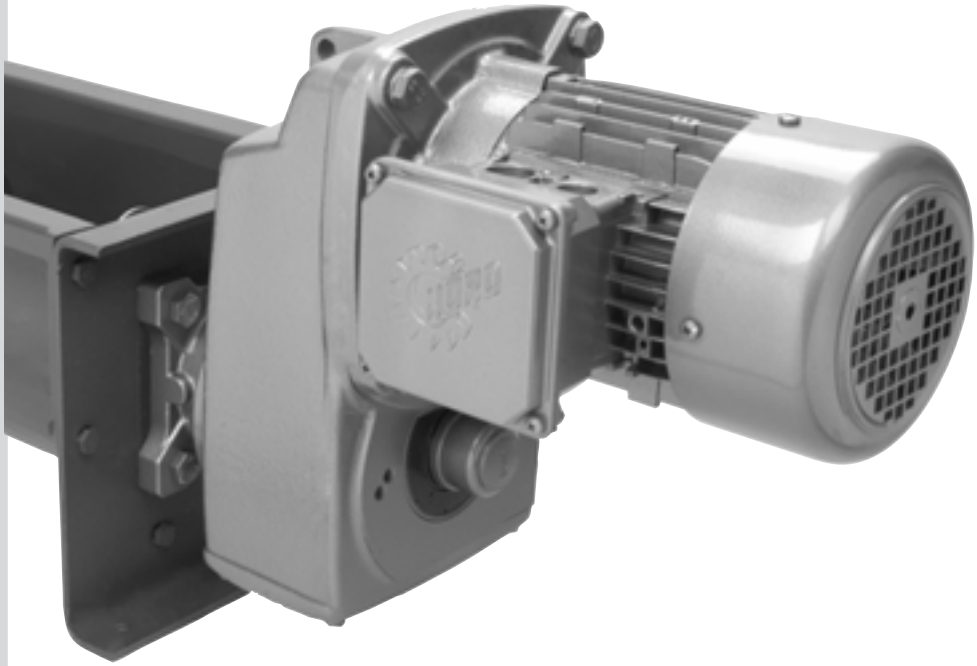

NORD DRIVESYSTEMS

www.nord.com

| Thrust | | Integral Gearmotor | | Reducer |
|---|---|---|---|---|
| Brg [lb] | HD Brg "VL" [lb] | Standard Efficiency Motor | Energy Efficient Motor | C-Face Input |
| 083 | 6750 | SK 4282 SCP - 90L/4 | SK 4282 SCP - 90LH/4 | SK 4282 SCP - 140TC |
| 516 | 6750 | SK 4282 SCP - 90L/4 | SK 4282 SCP - 90LH/4 | SK 4282 SCP - 140TC |
| 056 | 6750 | SK 4282 SCP - 90L/4 | SK 4282 SCP - 90LH/4 | SK 4282 SCP - 140TC |
| 950 | 6750 | SK 4282 SCP - 90L/4 | SK 4282 SCP - 90LH/4 | SK 4282 SCP - 140TC |
| 950 | 6750 | SK 4282 SCP - 90L/4 | SK 4282 SCP - 90LH/4 | SK 4282 SCP - 140TC |
| 950 | 6750 | SK 4282 SCP - 90L/4 | SK 4282 SCP - 90LH/4 | SK 4282 SCP - 140TC |
| 950 | 6750 | SK 4282 SCP - 90L/4 | SK 4282 SCP - 90LH/4 | SK 4282 SCP - 140TC |
| 950 | 6750 | SK 4282 SCP - 90L/4 | SK 4282 SCP - 90LH/4 | SK 4282 SCP - 140TC |
| 950 | 6750 | SK 4282 SCP - 90L/4 | SK 4282 SCP - 90LH/4 | SK 4282 SCP - 140TC |
| 950 | 6750 | SK 4282 SCP - 90L/4 | SK 4282 SCP - 90LH/4 | SK 4282 SCP - 140TC |
| 950 | 6750 | SK 4282 SCP - 90L/4 | SK 4282 SCP - 90LH/4 | SK 4282 SCP - 140TC |
| 50 | 6750 | SK 4282 SCP - 90L/4 | SK 4282 SCP - 90LH/4 | SK 4282 SCP - 140TC |
| | 6750 | SK 4282 SCP - 90L/4 | SK 4282 SCP - 90LH/4 | SK 4282 SCP - |





CLINCHER™



## Explanation of Selection Tables

**OUTPUT SPEED** – Output speed at NORD standard efficiency motor rated speed.

**OUTPUT TORQUE** – Output torque produced by motor.

**SERVICE FACTOR**

**AGMA SERVICE CLASS**

**TOTAL GEAR RATIO**

**NEMA C-FACE INPUT**



| Output Speed | Output Torque | SF | AGMA Class | Gear Ratio | Thrust | | Integral Gearmotor | | Reducer | CEMA DriveShaft | | | | |
|---|---|---|---|---|---|---|---|---|---|---|---|---|---|---|
| $n_2$ | $T_2$ | $f_a$ | | i | Std Brg | H.D. Brg " VL" | Standard Efficiency Motor | Energy Efficient Motor | C-Face Input | 1-1/2" | 2" | 2-7/16" | 3" | 3-7/16" |
| [rpm] | [lb-in] | | | | [lb] | [lb] | | | | | | | | |
| 355 | 29 | 26.1 | III | 4.79 | 1613 | 1609 | SK 1282 SCP - 63S/4 | | SK 1282 SCP - 56C | X | X | X | | |
| 311 | 33 | 25.3 | III | 5.47 | 1676 | 1609 | SK 1282 SCP - 63S/4 | | SK 1282 SCP - 56C | X | X | X | | |
| 264 | 38 | 24.4 | III | 6.43 | 1760 | 1609 | SK 1282 SCP - 63S/4 | | SK 1282 SCP - 56C | X | X | X | | |
| 235 | 43 | 23.5 | III | 7.24 | 1825 | 1609 | SK 1282 SCP - 63S/4 | | SK 1282 SCP - 56C | X | X | X | | |
| 207 | 49 | 26.1 | III | 8.21 | 1895 | 1609 | SK 1282 SCP - 63S/4 | | SK 1282 SCP - 56C | X | X | X | | |

**ENERGY EFFICIENCT MOTOR**

**STANDARD EFFICIENCY MOTOR**

**AXIAL LOAD RATING HEAVY DUTY BEARINGS "VL"**

**AXIAL LOAD RATING STANDARD BEARINGS**

**CEMA DRIVESHAFT AVAILABILITY, X=POSSIBLE COMBINATION**



# 0.16 hp Gearmotors & Speed Reducers

| Output Speed | Output Torque | SF | AGMA Class | Gear Ratio | Thrust | | Integral Gearmotor | | Reducer | CEMA DriveShaft | | | | |
|---|---|---|---|---|---|---|---|---|---|---|---|---|---|---|
| $n_2$ | $T_2$ | $f_a$ | | i | Std Brg | H.D. Brg " VL" | Standard Efficiency Motor | Energy Efficient Motor | C-Face Input | 1-1/2" | 2" | 2-7/16" | 3" | 3-7/16" |
| [rpm] | [lb-in] | | | | [lb] | [lb] | | | | | | | | |
| 355 | 29 | 26.1 | III | 4.79 | 1613 | 1609 | SK 1282 SCP - 63S/4 | | SK 1282 SCP - 56C | X | X | X | | |
| 311 | 33 | 25.3 | III | 5.47 | 1676 | 1609 | SK 1282 SCP - 63S/4 | | SK 1282 SCP - 56C | X | X | X | | |
| 264 | 38 | 24.4 | III | 6.43 | 1760 | 1609 | SK 1282 SCP - 63S/4 | | SK 1282 SCP - 56C | X | X | X | | |
| 235 | 43 | 23.5 | III | 7.24 | 1825 | 1609 | SK 1282 SCP - 63S/4 | | SK 1282 SCP - 56C | X | X | X | | |
| 207 | 49 | 26.1 | III | 8.21 | 1895 | 1609 | SK 1282 SCP - 63S/4 | | SK 1282 SCP - 56C | X | X | X | | |
| 206 | 49 | 22.6 | III | 8.24 | 1897 | 1609 | SK 1282 SCP - 63S/4 | | SK 1282 SCP - 56C | X | X | X | | |
| 185 | 55 | 24.4 | III | 9.18 | 1958 | 1609 | SK 1282 SCP - 63S/4 | | SK 1282 SCP - 56C | X | X | X | | |
| 164 | 62 | 23.5 | III | 10.34 | 2030 | 1609 | SK 1282 SCP - 63S/4 | | SK 1282 SCP - 56C | X | X | X | | |
| 145 | 70 | 22.6 | III | 11.76 | 2108 | 1609 | SK 1282 SCP - 63S/4 | | SK 1282 SCP - 56C | X | X | X | | |
| 120 | 84 | 22.1 | III | 14.11 | 2174 | 1609 | SK 1282 SCP - 63S/4 | | SK 1282 SCP - 56C | X | X | X | | |
| 99 | 103 | 19.3 | III | 17.21 | 2174 | 1609 | SK 1282 SCP - 63S/4 | | SK 1282 SCP - 56C | X | X | X | | |
| 83 | 123 | 16.2 | III | 20.57 | 2174 | 1609 | SK 1282 SCP - 63S/4 | | SK 1282 SCP - 56C | X | X | X | | |
| 67 | 150 | 13.2 | III | 25.22 | 2174 | 1609 | SK 1282 SCP - 63S/4 | | SK 1282 SCP - 56C | X | X | X | | |
| 60 | 169 | 11.8 | III | 28.33 | 2174 | 1609 | SK 1282 SCP - 63S/4 | | SK 1282 SCP - 56C | X | X | X | | |
| 53 | 191 | 10.6 | III | 32.08 | 2174 | 1609 | SK 1282 SCP - 63S/4 | | SK 1282 SCP - 56C | X | X | X | | |
| 37 | 276 | 6.3 | III | 46.19 | 2171 | 1609 | SK 1282 SCP - 63S/4 | | SK 1282 SCP - 56C | X | X | X | | |
| 31 | 330 | 6.3 | III | 55.39 | 2171 | 1609 | SK 1282 SCP - 63S/4 | | SK 1282 SCP - 56C | X | X | X | | |
| 26 | 395 | 6 | III | 66.23 | 2171 | 1609 | SK 1282 SCP - 63S/4 | | SK 1282 SCP - 56C | X | X | X | | |
| 21 | 484 | 5.4 | III | 81.17 | 2169 | 1609 | SK 1282 SCP - 63S/4 | | SK 1282 SCP - 56C | X | X | X | | |
| 18 | 552 | 3.7 | III | 92.48 | 2167 | 1609 | SK 1282 SCP - 63S/4 | | SK 1282 SCP - 56C | X | X | X | | |
| 16 | 653 | 2.8 | III | 109.5 | 2162 | 1609 | SK 1282 SCP - 63S/4 | | SK 1282 SCP - 56C | X | X | X | | |

Output speed and torque ratings are based on the "Standard Efficiency Motor" Power and speed. Performance will vary slightly for other motors.

# 0.25 hp Gearmotors & Speed Reducers



| Output Speed | Output Torque | SF | AGMA Class | Gear Ratio | Thrust | | Integral Gearmotor | | Reducer | CEMA DriveShaft | | | | |
|---|---|---|---|---|---|---|---|---|---|---|---|---|---|---|
| $n_2$ | $T_2$ | $f_a$ | | i | Std Brg | H.D. Brg " VL" | Standard Efficiency Motor | Energy Efficient Motor | C-Face Input | 1-1/2" | 2" | 2-7/16" | 3" | 3-7/16" |
| [rpm] | [lb-in] | | | | [lb] | [lb] | | | | | | | | |
| 351 | 46 | 16.3 | III | 4.79 | 1616 | 1609 | SK 1282 SCP - 63L/4 | | SK 1282 SCP - 56C | X | X | X | | |
| 307 | 52 | 15.8 | III | 5.47 | 1681 | 1609 | SK 1282 SCP - 63L/4 | | SK 1282 SCP - 56C | X | X | X | | |
| 261 | 61 | 15.2 | III | 6.43 | 1764 | 1609 | SK 1282 SCP - 63L/4 | | SK 1282 SCP - 56C | X | X | X | | |
| 232 | 69 | 14.7 | III | 7.24 | 1832 | 1609 | SK 1282 SCP - 63L/4 | | SK 1282 SCP - 56C | X | X | X | | |
| 205 | 78 | 16.3 | III | 8.21 | 1897 | 1609 | SK 1282 SCP - 63L/4 | | SK 1282 SCP - 56C | X | X | X | | |
| 204 | 79 | 14.1 | III | 8.24 | 1899 | 1609 | SK 1282 SCP - 63L/4 | | SK 1282 SCP - 56C | X | X | X | | |
| 183 | 88 | 15.2 | III | 9.18 | 1964 | 1609 | SK 1282 SCP - 63L/4 | | SK 1282 SCP - 56C | X | X | X | | |
| 162 | 99 | 14.7 | III | 10.34 | 2032 | 1609 | SK 1282 SCP - 63L/4 | | SK 1282 SCP - 56C | X | X | X | | |
| 143 | 112 | 14.1 | III | 11.76 | 2108 | 1609 | SK 1282 SCP - 63L/4 | | SK 1282 SCP - 56C | X | X | X | | |
| 119 | 135 | 13.8 | III | 14.11 | 2174 | 1609 | SK 1282 SCP - 63L/4 | | SK 1282 SCP - 56C | X | X | X | | |
| 98 | 165 | 12.1 | III | 17.21 | 2174 | 1609 | SK 1282 SCP - 63L/4 | | SK 1282 SCP - 56C | X | X | X | | |
| 82 | 197 | 10.1 | III | 20.57 | 2174 | 1609 | SK 1282 SCP - 63L/4 | | SK 1282 SCP - 56C | X | X | X | | |
| 67 | 241 | 8.3 | III | 25.22 | 2174 | 1609 | SK 1282 SCP - 63L/4 | | SK 1282 SCP - 56C | X | X | X | | |
| 59 | 271 | 7.4 | III | 28.33 | 2171 | 1609 | SK 1282 SCP - 63L/4 | | SK 1282 SCP - 56C | X | X | X | | |
| 52 | 307 | 6.6 | III | 32.08 | 2171 | 1609 | SK 1282 SCP - 63L/4 | | SK 1282 SCP - 56C | X | X | X | | |
| 36 | 442 | 3.9 | III | 46.19 | 2169 | 1609 | SK 1282 SCP - 63L/4 | | SK 1282 SCP - 56C | X | X | X | | |
| 30 | 529 | 3.9 | III | 55.39 | 2167 | 1609 | SK 1282 SCP - 63L/4 | | SK 1282 SCP - 56C | X | X | X | | |
| 25 | 633 | 3.8 | III | 66.23 | 2165 | 1609 | SK 1282 SCP - 63L/4 | | SK 1282 SCP - 56C | X | X | X | | |
| 21 | 776 | 3.4 | III | 81.17 | 2160 | 1609 | SK 1282 SCP - 63L/4 | | SK 1282 SCP - 56C | X | X | X | | |
| 18 | 884 | 2.3 | III | 92.48 | 2156 | 1609 | SK 1282 SCP - 63L/4 | | SK 1282 SCP - 56C | X | X | X | | |
| 15 | 1047 | 1.8 | II | 109.5 | 2147 | 1609 | SK 1282 SCP - 63L/4 | | SK 1282 SCP - 56C | X | X | X | | |

Output speed and torque ratings are based on the "Standard Efficiency Motor" Power and speed. Performance will vary slightly for other motors.



# 0.33 hp Gearmotors & Speed Reducers

| Output Speed | Output Torque | SF | AGMA Class | Gear Ratio | Thrust | | Integral Gearmotor | | Reducer | CEMA DriveShaft | | | | |
|---|---|---|---|---|---|---|---|---|---|---|---|---|---|---|
| $n_2$ | $T_2$ | $f_a$ | | i | Std Brg | H.D. Brg " VL" | Standard Efficiency Motor | Energy Efficient Motor | C-Face Input | 1-1/2" | 2" | 2-7/16" | 3" | 3-7/16" |
| [rpm] | [lb-in] | | | | [lb] | [lb] | | | | | | | | |
| 357 | 59 | 12.6 | III | 4.79 | 1607 | 1609 | SK 1282 SCP - 71S/4 | | SK 1282 SCP - 56C | X | X | X | | |
| 313 | 68 | 12.2 | III | 5.47 | 1672 | 1609 | SK 1282 SCP - 71S/4 | | SK 1282 SCP - 56C | X | X | X | | |
| 266 | 79 | 11.8 | III | 6.43 | 1751 | 1609 | SK 1282 SCP - 71S/4 | | SK 1282 SCP - 56C | X | X | X | | |
| 236 | 89 | 11.4 | III | 7.24 | 1814 | 1609 | SK 1282 SCP - 71S/4 | | SK 1282 SCP - 56C | X | X | X | | |
| 208 | 101 | 12.6 | III | 8.21 | 1888 | 1609 | SK 1282 SCP - 71S/4 | | SK 1282 SCP - 56C | X | X | X | | |
| 208 | 102 | 10.9 | III | 8.24 | 1888 | 1609 | SK 1282 SCP - 71S/4 | | SK 1282 SCP - 56C | X | X | X | | |
| 186 | 113 | 11.8 | III | 9.18 | 1946 | 1609 | SK 1282 SCP - 71S/4 | | SK 1282 SCP - 56C | X | X | X | | |
| 165 | 128 | 11.4 | III | 10.34 | 2016 | 1609 | SK 1282 SCP - 71S/4 | | SK 1282 SCP - 56C | X | X | X | | |
| 145 | 145 | 10.9 | III | 11.76 | 2095 | 1609 | SK 1282 SCP - 71S/4 | | SK 1282 SCP - 56C | X | X | X | | |
| 121 | 174 | 10.7 | III | 14.11 | 2174 | 1609 | SK 1282 SCP - 71S/4 | | SK 1282 SCP - 56C | X | X | X | | |
| 99 | 213 | 9.3 | III | 17.21 | 2174 | 1609 | SK 1282 SCP - 71S/4 | | SK 1282 SCP - 56C | X | X | X | | |
| 83 | 254 | 7.8 | III | 20.57 | 2174 | 1609 | SK 1282 SCP - 71S/4 | | SK 1282 SCP - 56C | X | X | X | | |
| 68 | 312 | 6.4 | III | 25.22 | 2171 | 1609 | SK 1282 SCP - 71S/4 | | SK 1282 SCP - 56C | X | X | X | | |
| 60 | 350 | 5.7 | III | 28.33 | 2171 | 1609 | SK 1282 SCP - 71S/4 | | SK 1282 SCP - 56C | X | X | X | | |
| 53 | 396 | 5.1 | III | 32.08 | 2171 | 1609 | SK 1282 SCP - 71S/4 | | SK 1282 SCP - 56C | X | X | X | | |
| 37 | 571 | 3 | III | 46.19 | 2167 | 1609 | SK 1282 SCP - 71S/4 | | SK 1282 SCP - 56C | X | X | X | | |
| 31 | 684 | 3 | III | 55.39 | 2162 | 1609 | SK 1282 SCP - 71S/4 | | SK 1282 SCP - 56C | X | X | X | | |
| 26 | 818 | 2.9 | III | 66.23 | 2158 | 1609 | SK 1282 SCP - 71S/4 | | SK 1282 SCP - 56C | X | X | X | | |
| 21 | 1003 | 2.6 | III | 81.17 | 2149 | 1609 | SK 1282 SCP - 71S/4 | | SK 1282 SCP - 56C | X | X | X | | |
| 18 | 1143 | 1.8 | II | 92.48 | 2142 | 1609 | SK 1282 SCP - 71S/4 | | SK 1282 SCP - 56C | X | X | X | | |
| 16 | 1353 | 1.4 | II | 109.5 | 2129 | 1609 | SK 1282 SCP - 71S/4 | | SK 1282 SCP - 56C | X | X | X | | |
| | | | | | | | | | | | | | | |
| 25 | 861 | 4.6 | III | 69.67 | 3155 | 3375 | SK 2282 SCP - 71S/4 | | SK 2282 SCP - 56C | X | X | X | | |
| 21 | 1018 | 4.1 | III | 82.42 | 3152 | 3375 | SK 2282 SCP - 71S/4 | | SK 2282 SCP - 56C | X | X | X | | |
| 17 | 1248 | 3.1 | III | 100.98 | 3146 | 3375 | SK 2282 SCP - 71S/4 | | SK 2282 SCP - 56C | X | X | X | | |
| 16 | 1286 | 2.7 | III | 104.07 | 3143 | 3375 | SK 2282 SCP - 71S/4 | | SK 2282 SCP - 56C | X | X | X | | |
| 13 | 1576 | 2.1 | III | 127.51 | 3132 | 3375 | SK 2282 SCP - 71S/4 | | SK 2282 SCP - 56C | X | X | X | | |
| | | | | | | | | | | | | | | |
| 24 | 872 | 5.7 | III | 70.56 | 5146 | 4500 | SK 3282 SCP - 71S/4 | | SK 3282 SCP - 56C | X | X | X | X | |
| 17 | 1247 | 5.7 | III | 100.88 | 5141 | 4500 | SK 3282 SCP - 71S/4 | | SK 3282 SCP - 56C | X | X | X | X | |
| 15 | 1387 | 4.9 | III | 112.23 | 5139 | 4500 | SK 3282 SCP - 71S/4 | | SK 3282 SCP - 56C | X | X | X | X | |

Output speed and torque ratings are based on the "Standard Efficiency Motor" Power and speed. Performance will vary slightly for other motors.

# 0.50 hp Gearmotors & Speed Reducers



| Output Speed | Output Torque | SF | AGMA Class | Gear Ratio | Thrust | | Integral Gearmotor | | Reducer | CEMA DriveShaft | | | | |
|---|---|---|---|---|---|---|---|---|---|---|---|---|---|---|
| $n_2$ | $T_2$ | $f_a$ | | i | Std Brg | H.D. Brg " VL" | Standard Efficiency Motor | Energy Efficient Motor | C-Face Input | 1-1/2" | 2" | 2-7/16" | 3" | 3-7/16" |
| [rpm] | [lb-in] | | | | [lb] | [lb] | | | | | | | | |
| 359 | 87 | 8.6 | III | 4.79 | 1598 | 1609 | SK 1282 SCP - 71L/4 | | SK 1282 SCP - 56C | X | X | X | | |
| 314 | 99 | 8.3 | III | 5.47 | 1663 | 1609 | SK 1282 SCP - 71L/4 | | SK 1282 SCP - 56C | X | X | X | | |
| 267 | 117 | 8 | III | 6.43 | 1744 | 1609 | SK 1282 SCP - 71L/4 | | SK 1282 SCP - 56C | X | X | X | | |
| 238 | 132 | 7.7 | III | 7.24 | 1805 | 1609 | SK 1282 SCP - 71L/4 | | SK 1282 SCP - 56C | X | X | X | | |
| 210 | 149 | 8.6 | III | 8.21 | 1874 | 1609 | SK 1282 SCP - 71L/4 | | SK 1282 SCP - 56C | X | X | X | | |
| 209 | 150 | 7.4 | III | 8.24 | 1874 | 1609 | SK 1282 SCP - 71L/4 | | SK 1282 SCP - 56C | X | X | X | | |
| 187 | 167 | 8 | III | 9.18 | 1937 | 1609 | SK 1282 SCP - 71L/4 | | SK 1282 SCP - 56C | X | X | X | | |
| 166 | 188 | 7.7 | III | 10.34 | 2005 | 1609 | SK 1282 SCP - 71L/4 | | SK 1282 SCP - 56C | X | X | X | | |
| 146 | 214 | 7.4 | III | 11.76 | 2081 | 1609 | SK 1282 SCP - 71L/4 | | SK 1282 SCP - 56C | X | X | X | | |
| 122 | 257 | 7.2 | III | 14.11 | 2174 | 1609 | SK 1282 SCP - 71L/4 | | SK 1282 SCP - 56C | X | X | X | | |
| 100 | 313 | 6.3 | III | 17.21 | 2171 | 1609 | SK 1282 SCP - 71L/4 | | SK 1282 SCP - 56C | X | X | X | | |
| 84 | 374 | 5.3 | III | 20.57 | 2171 | 1609 | SK 1282 SCP - 71L/4 | | SK 1282 SCP - 56C | X | X | X | | |
| 68 | 459 | 4.3 | III | 25.22 | 2169 | 1609 | SK 1282 SCP - 71L/4 | | SK 1282 SCP - 56C | X | X | X | | |
| 61 | 515 | 3.9 | III | 28.33 | 2167 | 1609 | SK 1282 SCP - 71L/4 | | SK 1282 SCP - 56C | X | X | X | | |
| 54 | 583 | 3.5 | III | 32.08 | 2165 | 1609 | SK 1282 SCP - 71L/4 | | SK 1282 SCP - 56C | X | X | X | | |
| 42 | 747 | 2.6 | III | 41.07 | 2160 | 1609 | SK 1282 SCP - 71L/4 | | SK 1282 SCP - 56C | X | X | X | | |
| 37 | 840 | 2.1 | III | 46.19 | 2156 | 1609 | SK 1282 SCP - 71L/4 | | SK 1282 SCP - 56C | X | X | X | | |
| 35 | 895 | 2.6 | III | 49.25 | 2153 | 1609 | SK 1282 SCP - 71L/4 | | SK 1282 SCP - 56C | X | X | X | | |
| 31 | 1007 | 2.1 | III | 55.39 | 2149 | 1609 | SK 1282 SCP - 71L/4 | | SK 1282 SCP - 56C | X | X | X | | |
| 29 | 1071 | 2.3 | III | 58.89 | 2144 | 1609 | SK 1282 SCP - 71L/4 | | SK 1282 SCP - 56C | X | X | X | | |
| 26 | 1204 | 2 | III | 66.23 | 2138 | 1609 | SK 1282 SCP - 71L/4 | | SK 1282 SCP - 56C | X | X | X | | |
| 24 | 1312 | 2 | III | 72.17 | 2131 | 1609 | SK 1282 SCP - 71L/4 | | SK 1282 SCP - 56C | X | X | X | | |
| 21 | 1476 | 1.8 | II | 81.17 | 2120 | 1609 | SK 1282 SCP - 71L/4 | | SK 1282 SCP - 56C | X | X | X | | |
| 19 | 1681 | 1.2 | I | 92.48 | 2102 | 1609 | SK 1282 SCP - 71L/4 | | SK 1282 SCP - 56C | X | X | X | | |
| 301 | 104 | 8.4 | III | 5.72 | 2203 | 3375 | SK 2282 SCP - 71L/4 | | SK 2282 SCP - 56C | X | X | X | | |
| 267 | 117 | 8.1 | III | 6.43 | 2282 | 3375 | SK 2282 SCP - 71L/4 | | SK 2282 SCP - 56C | X | X | X | | |
| 230 | 136 | 7.8 | III | 7.48 | 2383 | 3375 | SK 2282 SCP - 71L/4 | | SK 2282 SCP - 56C | X | X | X | | |
| 205 | 152 | 7.5 | III | 8.37 | 2464 | 3375 | SK 2282 SCP - 71L/4 | | SK 2282 SCP - 56C | X | X | X | | |
| 190 | 164 | 8.4 | III | 9.03 | 2525 | 3375 | SK 2282 SCP - 71L/4 | | SK 2282 SCP - 56C | X | X | X | | |
| 169 | 185 | 8.1 | III | 10.15 | 2610 | 3375 | SK 2282 SCP - 71L/4 | | SK 2282 SCP - 56C | X | X | X | | |

Output speed and torque ratings are based on the "Standard Efficiency Motor" Power and speed. Performance will vary slightly for other motors.



# 0.50 hp Gearmotors & Speed Reducers

| Output Speed | Output Torque | SF | AGMA Class | Gear Ratio | Thrust | | Integral Gearmotor | | Reducer | CEMA DriveShaft | | | | |
|---|---|---|---|---|---|---|---|---|---|---|---|---|---|---|
| $n_2$ | $T_2$ | $f_a$ | | i | Std Brg | H.D. Brg " VL" | Standard Efficiency Motor | Energy Efficient Motor | C-Face Input | 1-1/2" | 2" | 2-7/16" | 3" | 3-7/16" |
| [rpm] | [lb-in] | | | | [lb] | [lb] | | | | | | | | |
| 146 | 215 | 7.8 | III | 11.81 | 2729 | 3375 | SK 2282 SCP - 71L/4 | | SK 2282 SCP - 56C | X | X | X | | |
| 130 | 241 | 7.5 | III | 13.23 | 2824 | 3375 | SK 2282 SCP - 71L/4 | | SK 2282 SCP - 56C | X | X | X | | |
| 104 | 301 | 7.8 | III | 16.53 | 3015 | 3375 | SK 2282 SCP - 71L/4 | | SK 2282 SCP - 56C | X | X | X | | |
| 93 | 337 | 7.5 | III | 18.51 | 3119 | 3375 | SK 2282 SCP - 71L/4 | | SK 2282 SCP - 56C | X | X | X | | |
| 79 | 398 | 7.5 | III | 21.9 | 3164 | 3375 | SK 2282 SCP - 71L/4 | | SK 2282 SCP - 56C | X | X | X | | |
| 72 | 436 | 7.8 | III | 23.96 | 3164 | 3375 | SK 2282 SCP - 71L/4 | | SK 2282 SCP - 56C | X | X | X | | |
| 69 | 454 | 7.2 | III | 24.97 | 3164 | 3375 | SK 2282 SCP - 71L/4 | | SK 2282 SCP - 56C | X | X | X | | |
| 64 | 488 | 7.5 | III | 26.83 | 3161 | 3375 | SK 2282 SCP - 71L/4 | | SK 2282 SCP - 56C | X | X | X | | |
| 58 | 539 | 6.7 | III | 29.65 | 3161 | 3375 | SK 2282 SCP - 71L/4 | | SK 2282 SCP - 56C | X | X | X | | |
| 46 | 676 | 6 | III | 37.18 | 3159 | 3375 | SK 2282 SCP - 71L/4 | | SK 2282 SCP - 56C | X | X | X | | |
| 25 | 1267 | 3.1 | III | 69.67 | 3143 | 3375 | SK 2282 SCP - 71L/4 | | SK 2282 SCP - 56C | X | X | X | | |
| 21 | 1498 | 2.8 | III | 82.42 | 3134 | 3375 | SK 2282 SCP - 71L/4 | | SK 2282 SCP - 56C | X | X | X | | |
| 17 | 1836 | 2.1 | III | 100.98 | 3121 | 3375 | SK 2282 SCP - 71L/4 | | SK 2282 SCP - 56C | X | X | X | | |
| 17 | 1892 | 1.9 | II | 104.07 | 3119 | 3375 | SK 2282 SCP - 71L/4 | | SK 2282 SCP - 56C | X | X | X | | |
| 13 | 2318 | 1.5 | II | 127.51 | 3094 | 3375 | SK 2282 SCP - 71L/4 | | SK 2282 SCP - 56C | X | X | X | | |
| 207 | 151 | 8.5 | III | 8.31 | 2813 | 4381 | SK 3282 SCP - 71L/4 | | SK 3282 SCP - 56C | X | X | X | X | |
| 122 | 257 | 8.5 | III | 14.11 | 3296 | 4500 | SK 3282 SCP - 71L/4 | | SK 3282 SCP - 56C | X | X | X | X | |
| 103 | 303 | 8.5 | III | 16.67 | 3465 | 4500 | SK 3282 SCP - 71L/4 | | SK 3282 SCP - 56C | X | X | X | X | |
| 85 | 367 | 8.5 | III | 20.18 | 3659 | 4500 | SK 3282 SCP - 71L/4 | | SK 3282 SCP - 56C | X | X | X | X | |
| 80 | 389 | 8 | III | 21.38 | 3724 | 4500 | SK 3282 SCP - 71L/4 | | SK 3282 SCP - 56C | X | X | X | X | |
| 77 | 408 | 8.5 | III | 22.45 | 3778 | 4500 | SK 3282 SCP - 71L/4 | | SK 3282 SCP - 56C | X | X | X | X | |
| 73 | 431 | 7.7 | III | 23.71 | 3839 | 4500 | SK 3282 SCP - 71L/4 | | SK 3282 SCP - 56C | X | X | X | X | |
| 66 | 471 | 8 | III | 25.88 | 3938 | 4500 | SK 3282 SCP - 71L/4 | | SK 3282 SCP - 56C | X | X | X | X | |
| 60 | 522 | 7.7 | III | 28.7 | 4061 | 4500 | SK 3282 SCP - 71L/4 | | SK 3282 SCP - 56C | X | X | X | X | |
| 54 | 581 | 7.7 | III | 31.93 | 4185 | 4500 | SK 3282 SCP - 71L/4 | | SK 3282 SCP - 56C | X | X | X | X | |
| 46 | 687 | 6.9 | III | 37.77 | 4399 | 4500 | SK 3282 SCP - 71L/4 | | SK 3282 SCP - 56C | X | X | X | X | |
| 41 | 764 | 6.9 | III | 42.02 | 4534 | 4500 | SK 3282 SCP - 71L/4 | | SK 3282 SCP - 56C | X | X | X | X | |
| 24 | 1283 | 3.9 | III | 70.56 | 5141 | 4500 | SK 3282 SCP - 71L/4 | | SK 3282 SCP - 56C | X | X | X | X | |
| 17 | 1834 | 3.9 | III | 100.88 | 5132 | 4500 | SK 3282 SCP - 71L/4 | | SK 3282 SCP - 56C | X | X | X | X | |
| 15 | 2040 | 3.3 | III | 112.23 | 5130 | 4500 | SK 3282 SCP - 71L/4 | | SK 3282 SCP - 56C | X | X | X | X | |

Output speed and torque ratings are based on the "Standard Efficiency Motor" Power and speed. Performance will vary slightly for other motors.

# 0.75 hp Gearmotors & Speed Reducers



| Output Speed | Output Torque | SF | AGMA Class | Gear Ratio | Thrust | | Integral Gearmotor | | Reducer | CEMA DriveShaft | | | | |
|---|---|---|---|---|---|---|---|---|---|---|---|---|---|---|
| $n_2$ | $T_2$ | $f_a$ | | i | Std Brg | H.D. Brg " VL" | Standard Efficiency Motor | Energy Efficient Motor | C-Face Input | 1-1/2" | 2" | 2-7/16" | 3" | 3-7/16" |
| [rpm] | [lb-in] | | | | [lb] | [lb] | | | | | | | | |
| 357 | 133 | 5.6 | III | 4.79 | 1595 | 1609 | SK 1282 SCP - 80S/4 | | SK 1282 SCP - 56C | X | X | X | | |
| 313 | 151 | 5.5 | III | 5.47 | 1658 | 1609 | SK 1282 SCP - 80S/4 | | SK 1282 SCP - 56C | X | X | X | | |
| 266 | 178 | 5.3 | III | 6.43 | 1739 | 1609 | SK 1282 SCP - 80S/4 | | SK 1282 SCP - 56C | X | X | X | | |
| 236 | 200 | 5.1 | III | 7.24 | 1798 | 1609 | SK 1282 SCP - 80S/4 | | SK 1282 SCP - 56C | X | X | X | | |
| 208 | 227 | 5.6 | III | 8.21 | 1870 | 1609 | SK 1282 SCP - 80S/4 | | SK 1282 SCP - 56C | X | X | X | | |
| 208 | 228 | 4.9 | III | 8.24 | 1870 | 1609 | SK 1282 SCP - 80S/4 | | SK 1282 SCP - 56C | X | X | X | | |
| 186 | 254 | 5.3 | III | 9.18 | 1928 | 1609 | SK 1282 SCP - 80S/4 | | SK 1282 SCP - 56C | X | X | X | | |
| 165 | 286 | 5.1 | III | 10.34 | 1998 | 1609 | SK 1282 SCP - 80S/4 | | SK 1282 SCP - 56C | X | X | X | | |
| 145 | 325 | 4.9 | III | 11.76 | 2072 | 1609 | SK 1282 SCP - 80S/4 | | SK 1282 SCP - 56C | X | X | X | | |
| 121 | 391 | 4.8 | III | 14.11 | 2171 | 1609 | SK 1282 SCP - 80S/4 | | SK 1282 SCP - 56C | X | X | X | | |
| 99 | 476 | 4.2 | III | 17.21 | 2169 | 1609 | SK 1282 SCP - 80S/4 | | SK 1282 SCP - 56C | X | X | X | | |
| 83 | 569 | 3.5 | III | 20.57 | 2167 | 1609 | SK 1282 SCP - 80S/4 | | SK 1282 SCP - 56C | X | X | X | | |
| 68 | 698 | 2.9 | III | 25.22 | 2162 | 1609 | SK 1282 SCP - 80S/4 | | SK 1282 SCP - 56C | X | X | X | | |
| 60 | 784 | 2.5 | III | 28.33 | 2158 | 1609 | SK 1282 SCP - 80S/4 | | SK 1282 SCP - 56C | X | X | X | | |
| 53 | 888 | 2.3 | III | 32.08 | 2153 | 1609 | SK 1282 SCP - 80S/4 | | SK 1282 SCP - 56C | X | X | X | | |
| 42 | 1137 | 1.7 | II | 41.07 | 2142 | 1609 | SK 1282 SCP - 80S/4 | | SK 1282 SCP - 56C | X | X | X | | |
| 35 | 1363 | 1.7 | II | 49.25 | 2126 | 1609 | SK 1282 SCP - 80S/4 | | SK 1282 SCP - 56C | X | X | X | | |
| 29 | 1630 | 1.5 | II | 58.89 | 2106 | 1609 | SK 1282 SCP - 80S/4 | | SK 1282 SCP - 56C | X | X | X | | |
| 24 | 1998 | 1.3 | I | 72.17 | 2072 | 1609 | SK 1282 SCP - 80S/4 | | SK 1282 SCP - 56C | X | X | X | | |
| 299 | 158 | 5.5 | III | 5.72 | 2198 | 3375 | SK 2282 SCP - 80S/4 | | SK 2282 SCP - 56C | X | X | X | | |
| 266 | 178 | 5.3 | III | 6.43 | 2277 | 3375 | SK 2282 SCP - 80S/4 | | SK 2282 SCP - 56C | X | X | X | | |
| 229 | 207 | 5.1 | III | 7.48 | 2383 | 3375 | SK 2282 SCP - 80S/4 | | SK 2282 SCP - 56C | X | X | X | | |
| 204 | 232 | 4.9 | III | 8.37 | 2459 | 3375 | SK 2282 SCP - 80S/4 | | SK 2282 SCP - 56C | X | X | X | | |
| 189 | 250 | 5.5 | III | 9.03 | 2520 | 3375 | SK 2282 SCP - 80S/4 | | SK 2282 SCP - 56C | X | X | X | | |
| 168 | 281 | 5.3 | III | 10.15 | 2610 | 3375 | SK 2282 SCP - 80S/4 | | SK 2282 SCP - 56C | X | X | X | | |
| 145 | 327 | 5.1 | III | 11.81 | 2725 | 3375 | SK 2282 SCP - 80S/4 | | SK 2282 SCP - 56C | X | X | X | | |
| 129 | 366 | 4.9 | III | 13.23 | 2819 | 3375 | SK 2282 SCP - 80S/4 | | SK 2282 SCP - 56C | X | X | X | | |
| 103 | 458 | 5.1 | III | 16.53 | 3008 | 3375 | SK 2282 SCP - 80S/4 | | SK 2282 SCP - 56C | X | X | X | | |
| 92 | 512 | 4.9 | III | 18.51 | 3107 | 3375 | SK 2282 SCP - 80S/4 | | SK 2282 SCP - 56C | X | X | X | | |
| 78 | 606 | 4.9 | III | 21.9 | 3161 | 3375 | SK 2282 SCP - 80S/4 | | SK 2282 SCP - 56C | X | X | X | | |
| 71 | 663 | 5.1 | III | 23.96 | 3159 | 3375 | SK 2282 SCP - 80S/4 | | SK 2282 SCP - 56C | X | X | X | | |
| 68 | 691 | 4.7 | III | 24.97 | 3159 | 3375 | SK 2282 SCP - 80S/4 | | SK 2282 SCP - 56C | X | X | X | | |

Output speed and torque ratings are based on the "Standard Efficiency Motor" Power and speed. Performance will vary slightly for other motors.



# 0.75 hp Gearmotors & Speed Reducers

| Output Speed | Output Torque | SF | AGMA Class | Gear Ratio | Thrust | | Integral Gearmotor | | Reducer | CEMA DriveShaft | | | | |
|---|---|---|---|---|---|---|---|---|---|---|---|---|---|---|
| $n_2$ | $T_2$ | $f_a$ | | i | Std Brg | H.D. Brg " VL" | Standard Efficiency Motor | Energy Efficient Motor | C-Face Input | 1-1/2" | 2" | 2-7/16" | 3" | 3-7/16" |
| [rpm] | [lb-in] | | | | [lb] | [lb] | | | | | | | | |
| 64 | 743 | 4.9 | III | 26.83 | 3157 | 3375 | SK 2282 SCP - 80S/4 | | SK 2282 SCP - 56C | X | X | X | | |
| 58 | 821 | 4.4 | III | 29.65 | 3157 | 3375 | SK 2282 SCP - 80S/4 | | SK 2282 SCP - 56C | X | X | X | | |
| 46 | 1029 | 4 | III | 37.18 | 3150 | 3375 | SK 2282 SCP - 80S/4 | | SK 2282 SCP - 56C | X | X | X | | |
| 38 | 1249 | 3.2 | III | 45.11 | 3146 | 3375 | SK 2282 SCP - 80S/4 | | SK 2282 SCP - 56C | X | X | X | | |
| 32 | 1494 | 3 | III | 53.96 | 3137 | 3375 | SK 2282 SCP - 80S/4 | | SK 2282 SCP - 56C | X | X | X | | |
| 27 | 1767 | 2.6 | III | 63.83 | 3123 | 3375 | SK 2282 SCP - 80S/4 | | SK 2282 SCP - 56C | X | X | X | | |
| 25 | 1928 | 2 | III | 69.67 | 3116 | 3375 | SK 2282 SCP - 80S/4 | | SK 2282 SCP - 56C | X | X | X | | |
| 21 | 2281 | 1.9 | II | 82.42 | 3096 | 3375 | SK 2282 SCP - 80S/4 | | SK 2282 SCP - 56C | X | X | X | | |
| 17 | 2795 | 1.4 | II | 100.98 | 3060 | 3375 | SK 2282 SCP - 80S/4 | | SK 2282 SCP - 56C | X | X | X | | |
| 16 | 2880 | 1.2 | I | 104.07 | 3053 | 3375 | SK 2282 SCP - 80S/4 | | SK 2282 SCP - 56C | X | X | X | | |
| 13 | 3529 | 1 | I | 127.51 | 2997 | 3375 | SK 2282 SCP - 80S/4 | | SK 2282 SCP - 56C | X | X | X | | |
| 206 | 230 | 5.6 | III | 8.31 | 2813 | 4367 | SK 3282 SCP - 80S/4 | | SK 3282 SCP - 56C | X | X | X | X | |
| 121 | 391 | 5.6 | III | 14.11 | 3285 | 4500 | SK 3282 SCP - 80S/4 | | SK 3282 SCP - 56C | X | X | X | X | |
| 103 | 461 | 5.6 | III | 16.67 | 3454 | 4500 | SK 3282 SCP - 80S/4 | | SK 3282 SCP - 56C | X | X | X | X | |
| 85 | 559 | 5.6 | III | 20.18 | 3652 | 4500 | SK 3282 SCP - 80S/4 | | SK 3282 SCP - 56C | X | X | X | X | |
| 80 | 592 | 5.3 | III | 21.38 | 3710 | 4500 | SK 3282 SCP - 80S/4 | | SK 3282 SCP - 56C | X | X | X | X | |
| 76 | 621 | 5.6 | III | 22.45 | 3764 | 4500 | SK 3282 SCP - 80S/4 | | SK 3282 SCP - 56C | X | X | X | X | |
| 72 | 656 | 5.1 | III | 23.71 | 3825 | 4500 | SK 3282 SCP - 80S/4 | | SK 3282 SCP - 56C | X | X | X | X | |
| 66 | 716 | 5.3 | III | 25.88 | 3924 | 4500 | SK 3282 SCP - 80S/4 | | SK 3282 SCP - 56C | X | X | X | X | |
| 60 | 794 | 5.1 | III | 28.7 | 4039 | 4500 | SK 3282 SCP - 80S/4 | | SK 3282 SCP - 56C | X | X | X | X | |
| 54 | 884 | 5.1 | III | 31.93 | 4172 | 4500 | SK 3282 SCP - 80S/4 | | SK 3282 SCP - 56C | X | X | X | X | |
| 45 | 1045 | 4.6 | III | 37.77 | 4374 | 4500 | SK 3282 SCP - 80S/4 | | SK 3282 SCP - 56C | X | X | X | X | |
| 41 | 1163 | 4.6 | III | 42.02 | 4509 | 4500 | SK 3282 SCP - 80S/4 | | SK 3282 SCP - 56C | X | X | X | X | |
| 36 | 1330 | 3.7 | III | 48.04 | 4676 | 4500 | SK 3282 SCP - 80S/4 | | SK 3282 SCP - 56C | X | X | X | X | |
| 31 | 1544 | 3.7 | III | 55.79 | 4889 | 4500 | SK 3282 SCP - 80S/4 | | SK 3282 SCP - 56C | X | X | X | X | |
| 26 | 1824 | 3.7 | III | 65.89 | 5117 | 4500 | SK 3282 SCP - 80S/4 | | SK 3282 SCP - 56C | X | X | X | X | |
| 24 | 1953 | 2.6 | III | 70.56 | 5130 | 4500 | SK 3282 SCP - 80S/4 | | SK 3282 SCP - 56C | X | X | X | X | |
| 21 | 2208 | 3.4 | III | 79.76 | 5126 | 4500 | SK 3282 SCP - 80S/4 | | SK 3282 SCP - 56C | X | X | X | X | |
| 19 | 2456 | 3.4 | III | 88.74 | 5119 | 4500 | SK 3282 SCP - 80S/4 | | SK 3282 SCP - 56C | X | X | X | X | |
| 17 | 2792 | 2.6 | III | 100.88 | 5112 | 4500 | SK 3282 SCP - 80S/4 | | SK 3282 SCP - 56C | X | X | X | X | |
| 15 | 3106 | 2.2 | III | 112.23 | 5101 | 4500 | SK 3282 SCP - 80S/4 | | SK 3282 SCP - 56C | X | X | X | X | |

Output speed and torque ratings are based on the "Standard Efficiency Motor" Power and speed. Performance will vary slightly for other motors.

# 1 hp Gearmotors & Speed Reducers



| Output Speed | Output Torque | SF | AGMA Class | Gear Ratio | Thrust | | Integral Gearmotor | | Reducer | CEMA DriveShaft | | | | |
|---|---|---|---|---|---|---|---|---|---|---|---|---|---|---|
| $n_2$ | $T_2$ | $f_a$ | | i | Std Brg | H.D. Brg " VL" | Standard Efficiency Motor | Energy Efficient Motor | C-Face Input | 1-1/2" | 2" | 2-7/16" | 3" | 3-7/16" |
| [rpm] | [lb-in] | | | | [lb] | [lb] | | | | | | | | |
| 344 | 184 | 4.1 | III | 4.79 | 1604 | 1609 | SK 1282 SCP - 80L/4 | SK 1282 SCP - 80LH/4 | SK 1282 SCP - 140TC | X | X | X | | |
| 302 | 210 | 3.9 | III | 5.47 | 1670 | 1609 | SK 1282 SCP - 80L/4 | SK 1282 SCP - 80LH/4 | SK 1282 SCP - 140TC | X | X | X | | |
| 257 | 247 | 3.8 | III | 6.43 | 1746 | 1609 | SK 1282 SCP - 80L/4 | SK 1282 SCP - 80LH/4 | SK 1282 SCP - 140TC | X | X | X | | |
| 228 | 278 | 3.7 | III | 7.24 | 1809 | 1609 | SK 1282 SCP - 80L/4 | SK 1282 SCP - 80LH/4 | SK 1282 SCP - 140TC | X | X | X | | |
| 201 | 315 | 4.1 | III | 8.21 | 1879 | 1609 | SK 1282 SCP - 80L/4 | SK 1282 SCP - 80LH/4 | SK 1282 SCP - 140TC | X | X | X | | |
| 200 | 317 | 3.5 | III | 8.24 | 1877 | 1609 | SK 1282 SCP - 80L/4 | SK 1282 SCP - 80LH/4 | SK 1282 SCP - 140TC | X | X | X | | |
| 180 | 353 | 3.8 | III | 9.18 | 1937 | 1609 | SK 1282 SCP - 80L/4 | SK 1282 SCP - 80LH/4 | SK 1282 SCP - 140TC | X | X | X | | |
| 160 | 397 | 3.7 | III | 10.34 | 2003 | 1609 | SK 1282 SCP - 80L/4 | SK 1282 SCP - 80LH/4 | SK 1282 SCP - 140TC | X | X | X | | |
| 140 | 452 | 3.5 | III | 11.76 | 2077 | 1609 | SK 1282 SCP - 80L/4 | SK 1282 SCP - 80LH/4 | SK 1282 SCP - 140TC | X | X | X | | |
| 117 | 542 | 3.4 | III | 14.11 | 2167 | 1609 | SK 1282 SCP - 80L/4 | SK 1282 SCP - 80LH/4 | SK 1282 SCP - 140TC | X | X | X | | |
| 96 | 661 | 3 | III | 17.21 | 2162 | 1609 | SK 1282 SCP - 80L/4 | SK 1282 SCP - 80LH/4 | SK 1282 SCP - 140TC | X | X | X | | |
| 80 | 790 | 2.5 | III | 20.57 | 2158 | 1609 | SK 1282 SCP - 80L/4 | SK 1282 SCP - 80LH/4 | SK 1282 SCP - 140TC | X | X | X | | |
| 65 | 969 | 2.1 | III | 25.22 | 2151 | 1609 | SK 1282 SCP - 80L/4 | SK 1282 SCP - 80LH/4 | SK 1282 SCP - 140TC | X | X | X | | |
| 58 | 1088 | 1.8 | II | 28.33 | 2144 | 1609 | SK 1282 SCP - 80L/4 | SK 1282 SCP - 80LH/4 | SK 1282 SCP - 140TC | X | X | X | | |
| 51 | 1232 | 1.7 | II | 32.08 | 2135 | 1609 | SK 1282 SCP - 80L/4 | SK 1282 SCP - 80LH/4 | SK 1282 SCP - 140TC | X | X | X | | |
| 40 | 1578 | 1.2 | I | 41.07 | 2111 | 1609 | SK 1282 SCP - 80L/4 | SK 1282 SCP - 80LH/4 | SK 1282 SCP - 140TC | X | X | X | | |
| 34 | 1892 | 1.2 | I | 49.25 | 2084 | 1609 | SK 1282 SCP - 80L/4 | SK 1282 SCP - 80LH/4 | SK 1282 SCP - 140TC | X | X | X | | |
| 28 | 2262 | 1.1 | I | 58.89 | 2041 | 1609 | SK 1282 SCP - 80L/4 | SK 1282 SCP - 80LH/4 | SK 1282 SCP - 140TC | X | X | X | | |
| 23 | 2773 | 0.9 | * | 72.17 | 1971 | 1609 | SK 1282 SCP - 80L/4 | SK 1282 SCP - 80LH/4 | SK 1282 SCP - 140TC | X | X | X | | |
| 288 | 220 | 4 | III | 5.72 | 2221 | 3375 | SK 2282 SCP - 80L/4 | SK 2282 SCP - 80LH/4 | SK 2282 SCP - 140TC | X | X | X | | |
| 257 | 247 | 3.8 | III | 6.43 | 2295 | 3375 | SK 2282 SCP - 80L/4 | SK 2282 SCP - 80LH/4 | SK 2282 SCP - 140TC | X | X | X | | |
| 221 | 287 | 3.7 | III | 7.48 | 2396 | 3375 | SK 2282 SCP - 80L/4 | SK 2282 SCP - 80LH/4 | SK 2282 SCP - 140TC | X | X | X | | |
| 197 | 322 | 3.6 | III | 8.37 | 2480 | 3375 | SK 2282 SCP - 80L/4 | SK 2282 SCP - 80LH/4 | SK 2282 SCP - 140TC | X | X | X | | |
| 183 | 347 | 4 | III | 9.03 | 2536 | 3375 | SK 2282 SCP - 80L/4 | SK 2282 SCP - 80LH/4 | SK 2282 SCP - 140TC | X | X | X | | |
| 163 | 390 | 3.8 | III | 10.15 | 2621 | 3375 | SK 2282 SCP - 80L/4 | SK 2282 SCP - 80LH/4 | SK 2282 SCP - 140TC | X | X | X | | |
| 140 | 454 | 3.7 | III | 11.81 | 2745 | 3375 | SK 2282 SCP - 80L/4 | SK 2282 SCP - 80LH/4 | SK 2282 SCP - 140TC | X | X | X | | |
| 125 | 508 | 3.6 | III | 13.23 | 2831 | 3375 | SK 2282 SCP - 80L/4 | SK 2282 SCP - 80LH/4 | SK 2282 SCP - 140TC | X | X | X | | |
| 100 | 635 | 3.7 | III | 16.53 | 3022 | 3375 | SK 2282 SCP - 80L/4 | SK 2282 SCP - 80LH/4 | SK 2282 SCP - 140TC | X | X | X | | |
| 89 | 711 | 3.6 | III | 18.51 | 3128 | 3375 | SK 2282 SCP - 80L/4 | SK 2282 SCP - 80LH/4 | SK 2282 SCP - 140TC | X | X | X | | |
| 75 | 841 | 3.6 | III | 21.9 | 3157 | 3375 | SK 2282 SCP - 80L/4 | SK 2282 SCP - 80LH/4 | SK 2282 SCP - 140TC | X | X | X | | |
| 69 | 920 | 3.7 | III | 23.96 | 3155 | 3375 | SK 2282 SCP - 80L/4 | SK 2282 SCP - 80LH/4 | SK 2282 SCP - 140TC | X | X | X | | |

Output speed and torque ratings are based on the "Standard Efficiency Motor" Power and speed. Performance will vary slightly for other motors.



# 1 hp Gearmotors & Speed Reducers

| Output Speed | Output Torque | SF | AGMA Class | Gear Ratio | Thrust | | Integral Gearmotor | | Reducer | CEMA DriveShaft | | | | |
|---|---|---|---|---|---|---|---|---|---|---|---|---|---|---|
| $n_2$ | $T_2$ | $f_a$ | | i | Std Brg | H.D. Brg " VL" | Standard Efficiency Motor | Energy Efficient Motor | C-Face Input | 1-1/2" | 2" | 2-7/16" | 3" | 3-7/16" |
| [rpm] | [lb-in] | | | | [lb] | [lb] | | | | | | | | |
| 66 | 959 | 3.4 | III | 24.97 | 3152 | 3375 | SK 2282 SCP - 80L/4 | SK 2282 SCP - 80LH/4 | SK 2282 SCP - 140TC | X | X | X | | |
| 61 | 1031 | 3.6 | III | 26.83 | 3150 | 3375 | SK 2282 SCP - 80L/4 | SK 2282 SCP - 80LH/4 | SK 2282 SCP - 140TC | X | X | X | | |
| 56 | 1139 | 3.2 | III | 29.65 | 3148 | 3375 | SK 2282 SCP - 80L/4 | SK 2282 SCP - 80LH/4 | SK 2282 SCP - 140TC | X | X | X | | |
| 44 | 1428 | 2.9 | III | 37.18 | 3139 | 3375 | SK 2282 SCP - 80L/4 | SK 2282 SCP - 80LH/4 | SK 2282 SCP - 140TC | X | X | X | | |
| 37 | 1733 | 2.3 | III | 45.11 | 3125 | 3375 | SK 2282 SCP - 80L/4 | SK 2282 SCP - 80LH/4 | SK 2282 SCP - 140TC | X | X | X | | |
| 31 | 2073 | 2.2 | III | 53.96 | 3107 | 3375 | SK 2282 SCP - 80L/4 | SK 2282 SCP - 80LH/4 | SK 2282 SCP - 140TC | X | X | X | | |
| 26 | 2452 | 1.9 | II | 63.83 | 3085 | 3375 | SK 2282 SCP - 80L/4 | SK 2282 SCP - 80LH/4 | SK 2282 SCP - 140TC | X | X | X | | |
| 24 | 2677 | 1.5 | II | 69.67 | 3069 | 3375 | SK 2282 SCP - 80L/4 | SK 2282 SCP - 80LH/4 | SK 2282 SCP - 140TC | X | X | X | | |
| 20 | 3166 | 1.3 | I | 82.42 | 3031 | 3375 | SK 2282 SCP - 80L/4 | SK 2282 SCP - 80LH/4 | SK 2282 SCP - 140TC | X | X | X | | |
| 16 | 3879 | 1 | I | 100.98 | 2959 | 3375 | SK 2282 SCP - 80L/4 | SK 2282 SCP - 80LH/4 | SK 2282 SCP - 140TC | X | X | X | | |
| | | | | | | | | | | | | | | |
| 199 | 319 | 4 | III | 8.31 | 2831 | 4403 | SK 3282 SCP - 80L/4 | SK 3282 SCP - 80LH/4 | SK 3282 SCP - 140TC | X | X | X | X | |
| 117 | 542 | 4 | III | 14.11 | 3308 | 4500 | SK 3282 SCP - 80L/4 | SK 3282 SCP - 80LH/4 | SK 3282 SCP - 140TC | X | X | X | X | |
| 99 | 640 | 4 | III | 16.67 | 3474 | 4500 | SK 3282 SCP - 80L/4 | SK 3282 SCP - 80LH/4 | SK 3282 SCP - 140TC | X | X | X | X | |
| 82 | 775 | 4 | III | 20.18 | 3670 | 4500 | SK 3282 SCP - 80L/4 | SK 3282 SCP - 80LH/4 | SK 3282 SCP - 140TC | X | X | X | X | |
| 77 | 821 | 3.8 | III | 21.38 | 3735 | 4500 | SK 3282 SCP - 80L/4 | SK 3282 SCP - 80LH/4 | SK 3282 SCP - 140TC | X | X | X | X | |
| 73 | 862 | 4 | III | 22.45 | 3794 | 4500 | SK 3282 SCP - 80L/4 | SK 3282 SCP - 80LH/4 | SK 3282 SCP - 140TC | X | X | X | X | |
| 70 | 911 | 3.7 | III | 23.71 | 3843 | 4500 | SK 3282 SCP - 80L/4 | SK 3282 SCP - 80LH/4 | SK 3282 SCP - 140TC | X | X | X | X | |
| 64 | 994 | 3.8 | III | 25.88 | 3942 | 4500 | SK 3282 SCP - 80L/4 | SK 3282 SCP - 80LH/4 | SK 3282 SCP - 140TC | X | X | X | X | |
| 57 | 1103 | 3.7 | III | 28.7 | 4064 | 4500 | SK 3282 SCP - 80L/4 | SK 3282 SCP - 80LH/4 | SK 3282 SCP - 140TC | X | X | X | X | |
| 52 | 1227 | 3.7 | III | 31.93 | 4187 | 4500 | SK 3282 SCP - 80L/4 | SK 3282 SCP - 80LH/4 | SK 3282 SCP - 140TC | X | X | X | X | |
| 44 | 1451 | 3.3 | III | 37.77 | 4385 | 4500 | SK 3282 SCP - 80L/4 | SK 3282 SCP - 80LH/4 | SK 3282 SCP - 140TC | X | X | X | X | |
| 39 | 1614 | 3.3 | III | 42.02 | 4518 | 4500 | SK 3282 SCP - 80L/4 | SK 3282 SCP - 80LH/4 | SK 3282 SCP - 140TC | X | X | X | X | |
| 34 | 1846 | 2.6 | III | 48.04 | 4685 | 4500 | SK 3282 SCP - 80L/4 | SK 3282 SCP - 80LH/4 | SK 3282 SCP - 140TC | X | X | X | X | |
| 30 | 2143 | 2.7 | III | 55.79 | 4878 | 4500 | SK 3282 SCP - 80L/4 | SK 3282 SCP - 80LH/4 | SK 3282 SCP - 140TC | X | X | X | X | |
| 25 | 2531 | 2.7 | III | 65.89 | 5119 | 4500 | SK 3282 SCP - 80L/4 | SK 3282 SCP - 80LH/4 | SK 3282 SCP - 140TC | X | X | X | X | |
| 23 | 2711 | 1.8 | II | 70.56 | 5114 | 4500 | SK 3282 SCP - 80L/4 | SK 3282 SCP - 80LH/4 | SK 3282 SCP - 140TC | X | X | X | X | |
| 21 | 3064 | 2.5 | III | 79.76 | 5103 | 4500 | SK 3282 SCP - 80L/4 | SK 3282 SCP - 80LH/4 | SK 3282 SCP - 140TC | X | X | X | X | |
| 19 | 3409 | 2.5 | III | 88.74 | 5092 | 4500 | SK 3282 SCP - 80L/4 | SK 3282 SCP - 80LH/4 | SK 3282 SCP - 140TC | X | X | X | X | |
| 16 | 3876 | 1.8 | II | 100.88 | 5076 | 4500 | SK 3282 SCP - 80L/4 | SK 3282 SCP - 80LH/4 | SK 3282 SCP - 140TC | X | X | X | X | |
| 15 | 4312 | 1.6 | II | 112.23 | 5058 | 4500 | SK 3282 SCP - 80L/4 | SK 3282 SCP - 80LH/4 | SK 3282 SCP - 140TC | X | X | X | X | |

Output speed and torque ratings are based on the "Standard Efficiency Motor" Power and speed. Performance will vary slightly for other motors.

# 1.5 hp Gearmotors & Speed Reducers





| Output Speed | Output Torque | SF | AGMA Class | Gear Ratio | Thrust | | Integral Gearmotor | | Reducer | CEMA DriveShaft | | | | |
|---|---|---|---|---|---|---|---|---|---|---|---|---|---|---|
| $n_2$ | $T_2$ | $f_a$ | | i | Std Brg | H.D. Brg " VL" | Standard Efficiency Motor | Energy Efficient Motor | C-Face Input | 1-1/2" | 2" | 2-7/16" | 3" | 3-7/16" |
| [rpm] | [lb-in] | | | | [lb] | [lb] | | | | | | | | |
| 347 | 273 | 4.1 | III | 4.79 | 1591 | 1609 | SK 1282 SCP - 90S/4 | SK 1282 SCP - 90SH/4 | SK 1282 SCP - 140TC | X | X | X | | |
| 303 | 312 | 4.1 | III | 5.47 | 1652 | 1609 | SK 1282 SCP - 90S/4 | SK 1282 SCP - 90SH/4 | SK 1282 SCP - 140TC | X | X | X | | |
| 258 | 367 | 3.9 | III | 6.43 | 1728 | 1609 | SK 1282 SCP - 90S/4 | SK 1282 SCP - 90SH/4 | SK 1282 SCP - 140TC | X | X | X | | |
| 229 | 413 | 3.8 | III | 7.24 | 1791 | 1609 | SK 1282 SCP - 90S/4 | SK 1282 SCP - 90SH/4 | SK 1282 SCP - 140TC | X | X | X | | |
| 202 | 468 | 3 | III | 8.21 | 1856 | 1609 | SK 1282 SCP - 90S/4 | SK 1282 SCP - 90SH/4 | SK 1282 SCP - 140TC | X | X | X | | |
| 201 | 470 | 3.6 | III | 8.24 | 1854 | 1609 | SK 1282 SCP - 90S/4 | SK 1282 SCP - 90SH/4 | SK 1282 SCP - 140TC | X | X | X | | |
| 181 | 523 | 3.2 | III | 9.18 | 1913 | 1609 | SK 1282 SCP - 90S/4 | SK 1282 SCP - 90SH/4 | SK 1282 SCP - 140TC | X | X | X | | |
| 161 | 590 | 2.9 | III | 10.34 | 1976 | 1609 | SK 1282 SCP - 90S/4 | SK 1282 SCP - 90SH/4 | SK 1282 SCP - 140TC | X | X | X | | |
| 141 | 671 | 2.7 | III | 11.76 | 2045 | 1609 | SK 1282 SCP - 90S/4 | SK 1282 SCP - 90SH/4 | SK 1282 SCP - 140TC | X | X | X | | |
| 118 | 805 | 2.3 | III | 14.11 | 2158 | 1609 | SK 1282 SCP - 90S/4 | SK 1282 SCP - 90SH/4 | SK 1282 SCP - 140TC | X | X | X | | |
| 96 | 981 | 2 | III | 17.21 | 2149 | 1609 | SK 1282 SCP - 90S/4 | SK 1282 SCP - 90SH/4 | SK 1282 SCP - 140TC | X | X | X | | |
| 81 | 1173 | 1.7 | II | 20.57 | 2140 | 1609 | SK 1282 SCP - 90S/4 | SK 1282 SCP - 90SH/4 | SK 1282 SCP - 140TC | X | X | X | | |
| 66 | 1438 | 1.4 | II | 25.22 | 2122 | 1609 | SK 1282 SCP - 90S/4 | SK 1282 SCP - 90SH/4 | SK 1282 SCP - 140TC | X | X | X | | |
| 59 | 1615 | 1.2 | I | 28.33 | 2108 | 1609 | SK 1282 SCP - 90S/4 | SK 1282 SCP - 90SH/4 | SK 1282 SCP - 140TC | X | X | X | | |
| 52 | 1829 | 1.1 | I | 32.08 | 2088 | 1609 | SK 1282 SCP - 90S/4 | SK 1282 SCP - 90SH/4 | SK 1282 SCP - 140TC | X | X | X | | |
| 368 | 257 | 4.4 | III | 4.51 | 2054 | 3375 | SK 2282 SCP - 90S/4 | SK 2282 SCP - 90SH/4 | SK 2282 SCP - 140TC | X | X | X | | |
| 290 | 326 | 4.2 | III | 5.72 | 2203 | 3375 | SK 2282 SCP - 90S/4 | SK 2282 SCP - 90SH/4 | SK 2282 SCP - 140TC | X | X | X | | |
| 258 | 367 | 4 | III | 6.43 | 2277 | 3375 | SK 2282 SCP - 90S/4 | SK 2282 SCP - 90SH/4 | SK 2282 SCP - 140TC | X | X | X | | |
| 222 | 427 | 3.8 | III | 7.48 | 2381 | 3375 | SK 2282 SCP - 90S/4 | SK 2282 SCP - 90SH/4 | SK 2282 SCP - 140TC | X | X | X | | |
| 198 | 477 | 3.7 | III | 8.37 | 2455 | 3375 | SK 2282 SCP - 90S/4 | SK 2282 SCP - 90SH/4 | SK 2282 SCP - 140TC | X | X | X | | |
| 184 | 515 | 4.2 | III | 9.03 | 2513 | 3375 | SK 2282 SCP - 90S/4 | SK 2282 SCP - 90SH/4 | SK 2282 SCP - 140TC | X | X | X | | |
| 164 | 579 | 4 | III | 10.15 | 2599 | 3375 | SK 2282 SCP - 90S/4 | SK 2282 SCP - 90SH/4 | SK 2282 SCP - 140TC | X | X | X | | |
| 141 | 673 | 3.8 | III | 11.81 | 2714 | 3375 | SK 2282 SCP - 90S/4 | SK 2282 SCP - 90SH/4 | SK 2282 SCP - 140TC | X | X | X | | |
| 125 | 754 | 3.7 | III | 13.23 | 2804 | 3375 | SK 2282 SCP - 90S/4 | SK 2282 SCP - 90SH/4 | SK 2282 SCP - 140TC | X | X | X | | |
| 100 | 943 | 3.8 | III | 16.53 | 2986 | 3375 | SK 2282 SCP - 90S/4 | SK 2282 SCP - 90SH/4 | SK 2282 SCP - 140TC | X | X | X | | |
| 90 | 1056 | 3.7 | III | 18.51 | 3085 | 3375 | SK 2282 SCP - 90S/4 | SK 2282 SCP - 90SH/4 | SK 2282 SCP - 140TC | X | X | X | | |
| 76 | 1249 | 3.4 | III | 21.9 | 3146 | 3375 | SK 2282 SCP - 90S/4 | SK 2282 SCP - 90SH/4 | SK 2282 SCP - 140TC | X | X | X | | |
| 69 | 1366 | 2.8 | III | 23.96 | 3141 | 3375 | SK 2282 SCP - 90S/4 | SK 2282 SCP - 90SH/4 | SK 2282 SCP - 140TC | X | X | X | | |
| 66 | 1424 | 3 | III | 24.97 | 3139 | 3375 | SK 2282 SCP - 90S/4 | SK 2282 SCP - 90SH/4 | SK 2282 SCP - 140TC | X | X | X | | |
| 62 | 1530 | 2.5 | III | 26.83 | 3134 | 3375 | SK 2282 SCP - 90S/4 | SK 2282 SCP - 90SH/4 | SK 2282 SCP - 140TC | X | X | X | | |
| 56 | 1691 | 2.6 | III | 29.65 | 3128 | 3375 | SK 2282 SCP - 90S/4 | SK 2282 SCP - 90SH/4 | SK 2282 SCP - 140TC | X | X | X | | |
| 53 | 1781 | 2.2 | III | 31.23 | 3123 | 3375 | SK 2282 SCP - 90S/4 | SK 2282 SCP - 90SH/4 | SK 2282 SCP - 140TC | X | X | X | | |
| 45 | 2084 | 2.1 | III | 36.54 | 3107 | 3375 | SK 2282 SCP - 90S/4 | SK 2282 SCP - 90SH/4 | SK 2282 SCP - 140TC | X | X | X | | |
| 45 | 2120 | 1.9 | II | 37.18 | 3105 | 3375 | SK 2282 SCP - 90S/4 | SK 2282 SCP - 90SH/4 | SK 2282 SCP - 140TC | X | X | X | | |
| 38 | 2493 | 2 | III | 43.71 | 3083 | 3375 | SK 2282 SCP - 90S/4 | SK 2282 SCP - 90SH/4 | SK 2282 SCP - 140TC | X | X | X | | |

Output speed and torque ratings are based on the "Standard Efficiency Motor" Power and speed. Performance will vary slightly for other motors.



# 1.5 hp Gearmotors & Speed Reducers

| Output Speed | Output Torque | SF | AGMA Class | Gear Ratio | Thrust | | Integral Gearmotor | | Reducer | CEMA DriveShaft | | | | |
|---|---|---|---|---|---|---|---|---|---|---|---|---|---|---|
| $n_2$ | $T_2$ | $f_a$ | | i | Std Brg | H.D. Brg " VL" | Standard Efficiency Motor | Energy Efficient Motor | C-Face Input | 1-1/2" | 2" | 2-7/16" | 3" | 3-7/16" |
| [rpm] | [lb-in] | | | | [lb] | [lb] | | | | | | | | |
| 37 | 2572 | 1.5 | II | 45.11 | 3076 | 3375 | SK 2282 SCP - 90S/4 | SK 2282 SCP - 90SH/4 | SK 2282 SCP - 140TC | X | X | X | | |
| 32 | 2949 | 1.6 | II | 51.71 | 3049 | 3375 | SK 2282 SCP - 90S/4 | SK 2282 SCP - 90SH/4 | SK 2282 SCP - 140TC | X | X | X | | |
| 31 | 3077 | 1.5 | II | 53.96 | 3038 | 3375 | SK 2282 SCP - 90S/4 | SK 2282 SCP - 90SH/4 | SK 2282 SCP - 140TC | X | X | X | | |
| 26 | 3640 | 1.3 | I | 63.83 | 2986 | 3375 | SK 2282 SCP - 90S/4 | SK 2282 SCP - 90SH/4 | SK 2282 SCP - 140TC | X | X | X | | |
| 24 | 3973 | 1 | I | 69.67 | 2950 | 3375 | SK 2282 SCP - 90S/4 | SK 2282 SCP - 90SH/4 | SK 2282 SCP - 140TC | X | X | X | | |
| 20 | 4700 | 0.9 | * | 82.42 | 2858 | 3375 | SK 2282 SCP - 90S/4 | SK 2282 SCP - 90SH/4 | SK 2282 SCP - 140TC | X | X | X | | |
| 371 | 255 | 4.4 | III | 4.48 | 2351 | 3650 | SK 3282 SCP - 90S/4 | SK 3282 SCP - 90SH/4 | SK 3282 SCP - 140TC | X | X | X | X | |
| 292 | 324 | 4.8 | III | 5.68 | 2518 | 3911 | SK 3282 SCP - 90S/4 | SK 3282 SCP - 90SH/4 | SK 3282 SCP - 140TC | X | X | X | X | |
| 248 | 382 | 4.6 | III | 6.7 | 2642 | 4104 | SK 3282 SCP - 90S/4 | SK 3282 SCP - 90SH/4 | SK 3282 SCP - 140TC | X | X | X | X | |
| 200 | 474 | 4.4 | III | 8.31 | 2813 | 4361 | SK 3282 SCP - 90S/4 | SK 3282 SCP - 90SH/4 | SK 3282 SCP - 140TC | X | X | X | X | |
| 169 | 559 | 4.6 | III | 9.8 | 2952 | 4500 | SK 3282 SCP - 90S/4 | SK 3282 SCP - 90SH/4 | SK 3282 SCP - 140TC | X | X | X | X | |
| 146 | 649 | 4.6 | III | 11.38 | 3080 | 4500 | SK 3282 SCP - 90S/4 | SK 3282 SCP - 90SH/4 | SK 3282 SCP - 140TC | X | X | X | X | |
| 118 | 805 | 4.4 | III | 14.11 | 3278 | 4500 | SK 3282 SCP - 90S/4 | SK 3282 SCP - 90SH/4 | SK 3282 SCP - 140TC | X | X | X | X | |
| 100 | 951 | 4.4 | III | 16.67 | 3440 | 4500 | SK 3282 SCP - 90S/4 | SK 3282 SCP - 90SH/4 | SK 3282 SCP - 140TC | X | X | X | X | |
| 82 | 1151 | 4.4 | III | 20.18 | 3632 | 4500 | SK 3282 SCP - 90S/4 | SK 3282 SCP - 90SH/4 | SK 3282 SCP - 140TC | X | X | X | X | |
| 78 | 1219 | 4 | III | 21.38 | 3690 | 4500 | SK 3282 SCP - 90S/4 | SK 3282 SCP - 90SH/4 | SK 3282 SCP - 140TC | X | X | X | X | |
| 74 | 1280 | 4.4 | III | 22.45 | 3742 | 4500 | SK 3282 SCP - 90S/4 | SK 3282 SCP - 90SH/4 | SK 3282 SCP - 140TC | X | X | X | X | |
| 70 | 1352 | 3.9 | III | 23.71 | 3796 | 4500 | SK 3282 SCP - 90S/4 | SK 3282 SCP - 90SH/4 | SK 3282 SCP - 140TC | X | X | X | X | |
| 64 | 1476 | 4 | III | 25.88 | 3893 | 4500 | SK 3282 SCP - 90S/4 | SK 3282 SCP - 90SH/4 | SK 3282 SCP - 140TC | X | X | X | X | |
| 58 | 1637 | 3.9 | III | 28.7 | 4005 | 4500 | SK 3282 SCP - 90S/4 | SK 3282 SCP - 90SH/4 | SK 3282 SCP - 140TC | X | X | X | X | |
| 52 | 1821 | 3.9 | III | 31.93 | 4127 | 4500 | SK 3282 SCP - 90S/4 | SK 3282 SCP - 90SH/4 | SK 3282 SCP - 140TC | X | X | X | X | |
| 44 | 2154 | 3.4 | III | 37.77 | 4318 | 4500 | SK 3282 SCP - 90S/4 | SK 3282 SCP - 90SH/4 | SK 3282 SCP - 140TC | X | X | X | X | |
| 43 | 2202 | 2.5 | III | 38.62 | 4325 | 4500 | SK 3282 SCP - 90S/4 | SK 3282 SCP - 90SH/4 | SK 3282 SCP - 140TC | X | X | X | X | |
| 40 | 2396 | 3.4 | III | 42.02 | 4448 | 4500 | SK 3282 SCP - 90S/4 | SK 3282 SCP - 90SH/4 | SK 3282 SCP - 140TC | X | X | X | X | |
| 37 | 2558 | 2.6 | III | 44.85 | 4509 | 4500 | SK 3282 SCP - 90S/4 | SK 3282 SCP - 90SH/4 | SK 3282 SCP - 140TC | X | X | X | X | |
| 35 | 2739 | 1.8 | II | 48.04 | 4583 | 4500 | SK 3282 SCP - 90S/4 | SK 3282 SCP - 90SH/4 | SK 3282 SCP - 140TC | X | X | X | X | |
| 31 | 3021 | 2.5 | III | 52.97 | 4712 | 4500 | SK 3282 SCP - 90S/4 | SK 3282 SCP - 90SH/4 | SK 3282 SCP - 140TC | X | X | X | X | |
| 30 | 3181 | 1.8 | II | 55.79 | 4775 | 4500 | SK 3282 SCP - 90S/4 | SK 3282 SCP - 90SH/4 | SK 3282 SCP - 140TC | X | X | X | X | |
| 26 | 3656 | 2.5 | III | 64.12 | 4961 | 4500 | SK 3282 SCP - 90S/4 | SK 3282 SCP - 90SH/4 | SK 3282 SCP - 140TC | X | X | X | X | |
| 25 | 3757 | 1.8 | II | 65.89 | 4984 | 4500 | SK 3282 SCP - 90S/4 | SK 3282 SCP - 90SH/4 | SK 3282 SCP - 140TC | X | X | X | X | |
| 24 | 4024 | 1.2 | I | 70.56 | 5069 | 4500 | SK 3282 SCP - 90S/4 | SK 3282 SCP - 90SH/4 | SK 3282 SCP - 140TC | X | X | X | X | |
| 21 | 4548 | 1.7 | II | 79.76 | 5047 | 4500 | SK 3282 SCP - 90S/4 | SK 3282 SCP - 90SH/4 | SK 3282 SCP - 140TC | X | X | X | X | |
| 19 | 5060 | 1.7 | II | 88.74 | 5022 | 4500 | SK 3282 SCP - 90S/4 | SK 3282 SCP - 90SH/4 | SK 3282 SCP - 140TC | X | X | X | X | |
| 16 | 5753 | 1.2 | I | 100.88 | 4984 | 4500 | SK 3282 SCP - 90S/4 | SK 3282 SCP - 90SH/4 | SK 3282 SCP - 140TC | X | X | X | X | |
| 15 | 6400 | 1.1 | I | 112.23 | 4943 | 4500 | SK 3282 SCP - 90S/4 | SK 3282 SCP - 90SH/4 | SK 3282 SCP - 140TC | X | X | X | X | |

Output speed and torque ratings are based on the "Standard Efficiency Motor" Power and speed. Performance will vary slightly for other motors.

# 1.5 hp Gearmotors & Speed Reducers





| Output Speed | Output Torque | SF | AGMA Class | Gear Ratio | Thrust | | Integral Gearmotor | | Reducer | CEMA DriveShaft | | | | |
|---|---|---|---|---|---|---|---|---|---|---|---|---|---|---|
| $n_2$ | $T_2$ | $f_a$ | | i | Std Brg | H.D. Brg " VL" | Standard Efficiency Motor | Energy Efficient Motor | C-Face Input | 1-1/2" | 2" | 2-7/16" | 3" | 3-7/16" |
| [rpm] | [lb-in] | | | | [lb] | [lb] | | | | | | | | |
| 274 | 346 | 5.4 | III | 6.06 | 3652 | 6203 | SK 4282 SCP - 90S/4 | SK 4282 SCP - 90SH/4 | SK 4282 SCP - 140TC | | X | X | X | |
| 233 | 407 | 4.9 | III | 7.13 | 3832 | 6509 | SK 4282 SCP - 90S/4 | SK 4282 SCP - 90SH/4 | SK 4282 SCP - 140TC | | X | X | X | |
| 199 | 475 | 4.8 | III | 8.33 | 4007 | 6750 | SK 4282 SCP - 90S/4 | SK 4282 SCP - 90SH/4 | SK 4282 SCP - 140TC | | X | X | X | |
| 180 | 526 | 5.4 | III | 9.23 | 4131 | 6750 | SK 4282 SCP - 90S/4 | SK 4282 SCP - 90SH/4 | SK 4282 SCP - 140TC | | X | X | X | |
| 153 | 619 | 4.9 | III | 10.85 | 4340 | 6750 | SK 4282 SCP - 90S/4 | SK 4282 SCP - 90SH/4 | SK 4282 SCP - 140TC | | X | X | X | |
| 131 | 723 | 4.8 | III | 12.68 | 4534 | 6750 | SK 4282 SCP - 90S/4 | SK 4282 SCP - 90SH/4 | SK 4282 SCP - 140TC | | X | X | X | |
| 109 | 867 | 4.8 | III | 15.2 | 4786 | 6750 | SK 4282 SCP - 90S/4 | SK 4282 SCP - 90SH/4 | SK 4282 SCP - 140TC | | X | X | X | |
| 91 | 1037 | 4.8 | III | 18.18 | 5038 | 6750 | SK 4282 SCP - 90S/4 | SK 4282 SCP - 90SH/4 | SK 4282 SCP - 140TC | | X | X | X | |
| 77 | 1223 | 4.8 | III | 21.45 | 5294 | 6750 | SK 4282 SCP - 90S/4 | SK 4282 SCP - 90SH/4 | SK 4282 SCP - 140TC | | X | X | X | |
| 74 | 1277 | 4.6 | III | 22.39 | 5353 | 6750 | SK 4282 SCP - 90S/4 | SK 4282 SCP - 90SH/4 | SK 4282 SCP - 140TC | | X | X | X | |
| 63 | 1497 | 4.8 | III | 26.25 | 5607 | 6750 | SK 4282 SCP - 90S/4 | SK 4282 SCP - 90SH/4 | SK 4282 SCP - 140TC | | X | X | X | |
| 63 | 1507 | 4.6 | III | 26.43 | 5616 | 6750 | SK 4282 SCP - 90S/4 | SK 4282 SCP - 90SH/4 | SK 4282 SCP - 140TC | | X | X | X | |
| 51 | 1844 | 4.6 | III | 32.34 | 5958 | 6750 | SK 4282 SCP - 90S/4 | SK 4282 SCP - 90SH/4 | SK 4282 SCP - 140TC | | X | X | X | |
| 45 | 2099 | 4.1 | III | 36.81 | 6170 | 6750 | SK 4282 SCP - 90S/4 | SK 4282 SCP - 90SH/4 | SK 4282 SCP - 140TC | | X | X | X | |
| 41 | 2323 | 4.2 | III | 40.74 | 6359 | 6750 | SK 4282 SCP - 90S/4 | SK 4282 SCP - 90SH/4 | SK 4282 SCP - 140TC | | X | X | X | |
| 37 | 2569 | 4.1 | III | 45.05 | 6541 | 6750 | SK 4282 SCP - 90S/4 | SK 4282 SCP - 90SH/4 | SK 4282 SCP - 140TC | | X | X | X | |
| 22 | 4374 | 3.2 | III | 76.7 | 6878 | 6750 | SK 4282 SCP - 90S/4 | SK 4282 SCP - 90SH/4 | SK 4282 SCP - 140TC | | X | X | X | |
| 18 | 5162 | 2.7 | III | 90.52 | 6860 | 6750 | SK 4282 SCP - 90S/4 | SK 4282 SCP - 90SH/4 | SK 4282 SCP - 140TC | | X | X | X | |
| 15 | 6317 | 2.2 | III | 110.78 | 6829 | 6750 | SK 4282 SCP - 90S/4 | SK 4282 SCP - 90SH/4 | SK 4282 SCP - 140TC | | X | X | X | |
| 11 | 8862 | 1.3 | I | 155.4 | 6737 | 6750 | SK 4282 SCP - 90S/4 | SK 4282 SCP - 90SH/4 | SK 4282 SCP - 140TC | | X | X | X | |
| 191 | 496 | 5.7 | III | 8.7 | 5639 | 9000 | SK 5282 SCP - 90S/4 | SK 5282 SCP - 90SH/4 | SK 5282 SCP - 140TC | | X | X | X | X |
| 128 | 741 | 5.7 | III | 13 | 6338 | 9000 | SK 5282 SCP - 90S/4 | SK 5282 SCP - 90SH/4 | SK 5282 SCP - 140TC | | X | X | X | X |
| 108 | 877 | 5.7 | III | 15.38 | 6662 | 9000 | SK 5282 SCP - 90S/4 | SK 5282 SCP - 90SH/4 | SK 5282 SCP - 140TC | | X | X | X | X |
| 94 | 1003 | 5.6 | III | 17.59 | 6935 | 9000 | SK 5282 SCP - 90S/4 | SK 5282 SCP - 90SH/4 | SK 5282 SCP - 140TC | | X | X | X | X |
| 88 | 1077 | 5.7 | III | 18.88 | 7081 | 9000 | SK 5282 SCP - 90S/4 | SK 5282 SCP - 90SH/4 | SK 5282 SCP - 140TC | | X | X | X | X |
| 82 | 1161 | 5.6 | III | 20.36 | 7229 | 9000 | SK 5282 SCP - 90S/4 | SK 5282 SCP - 90SH/4 | SK 5282 SCP - 140TC | | X | X | X | X |
| 66 | 1426 | 5.6 | III | 25 | 7682 | 9000 | SK 5282 SCP - 90S/4 | SK 5282 SCP - 90SH/4 | SK 5282 SCP - 140TC | | X | X | X | X |
| 54 | 1739 | 5.5 | III | 30.5 | 8138 | 9000 | SK 5282 SCP - 90S/4 | SK 5282 SCP - 90SH/4 | SK 5282 SCP - 140TC | | X | X | X | X |
| 50 | 1906 | 5.6 | III | 33.43 | 8377 | 9000 | SK 5282 SCP - 90S/4 | SK 5282 SCP - 90SH/4 | SK 5282 SCP - 140TC | | X | X | X | X |
| 41 | 2327 | 5.5 | III | 40.8 | 8856 | 9000 | SK 5282 SCP - 90S/4 | SK 5282 SCP - 90SH/4 | SK 5282 SCP - 140TC | | X | X | X | X |
| 30 | 3168 | 5.3 | III | 55.55 | 9684 | 9000 | SK 5282 SCP - 90S/4 | SK 5282 SCP - 90SH/4 | SK 5282 SCP - 140TC | | X | X | X | X |
| 20 | 4654 | 3.5 | III | 81.61 | 10035 | 9000 | SK 5282 SCP - 90S/4 | SK 5282 SCP - 90SH/4 | SK 5282 SCP - 140TC | | X | X | X | X |
| 17 | 5713 | 3.5 | III | 100.19 | 10022 | 9000 | SK 5282 SCP - 90S/4 | SK 5282 SCP - 90SH/4 | SK 5282 SCP - 140TC | | X | X | X | X |
| 12 | 7643 | 3.1 | III | 134.03 | 9990 | 9000 | SK 5282 SCP - 90S/4 | SK 5282 SCP - 90SH/4 | SK 5282 SCP - 140TC | | X | X | X | X |

Output speed and torque ratings are based on the "Standard Efficiency Motor" Power and speed. Performance will vary slightly for other motors.



# 2 hp Gearmotors & Speed Reducers

| Output Speed | Output Torque | SF | AGMA Class | Gear Ratio | Thrust | | Integral Gearmotor | | Reducer | CEMA DriveShaft | | | | |
|---|---|---|---|---|---|---|---|---|---|---|---|---|---|---|
| $n_2$ | $T_2$ | $f_a$ | | i | Std Brg | H.D. Brg " VL" | Standard Efficiency Motor | Energy Efficient Motor | C-Face Input | 1-1/2" | 2" | 2-7/16" | 3" | 3-7/16" |
| [rpm] | [lb-in] | | | | [lb] | [lb] | | | | | | | | |
| 347 | 363 | 3.1 | III | 4.79 | 1577 | 1609 | SK 1282 SCP - 90L/4 | SK 1282 SCP - 90LH/4 | SK 1282 SCP - 140TC | X | X | X | | |
| 303 | 415 | 3.1 | III | 5.47 | 1636 | 1609 | SK 1282 SCP - 90L/4 | SK 1282 SCP - 90LH/4 | SK 1282 SCP - 140TC | X | X | X | | |
| 258 | 488 | 3 | III | 6.43 | 1712 | 1609 | SK 1282 SCP - 90L/4 | SK 1282 SCP - 90LH/4 | SK 1282 SCP - 140TC | X | X | X | | |
| 229 | 549 | 2.8 | III | 7.24 | 1771 | 1609 | SK 1282 SCP - 90L/4 | SK 1282 SCP - 90LH/4 | SK 1282 SCP - 140TC | X | X | X | | |
| 202 | 623 | 2.3 | III | 8.21 | 1841 | 1609 | SK 1282 SCP - 90L/4 | SK 1282 SCP - 90LH/4 | SK 1282 SCP - 140TC | X | X | X | | |
| 201 | 625 | 2.7 | III | 8.24 | 1829 | 1609 | SK 1282 SCP - 90L/4 | SK 1282 SCP - 90LH/4 | SK 1282 SCP - 140TC | X | X | X | | |
| 181 | 696 | 2.4 | III | 9.18 | 1890 | 1609 | SK 1282 SCP - 90L/4 | SK 1282 SCP - 90LH/4 | SK 1282 SCP - 140TC | X | X | X | | |
| 161 | 784 | 2.2 | III | 10.34 | 1951 | 1609 | SK 1282 SCP - 90L/4 | SK 1282 SCP - 90LH/4 | SK 1282 SCP - 140TC | X | X | X | | |
| 141 | 892 | 2 | III | 11.76 | 2016 | 1609 | SK 1282 SCP - 90L/4 | SK 1282 SCP - 90LH/4 | SK 1282 SCP - 140TC | X | X | X | | |
| 118 | 1070 | 1.7 | II | 14.11 | 2117 | 1609 | SK 1282 SCP - 90L/4 | SK 1282 SCP - 90LH/4 | SK 1282 SCP - 140TC | X | X | X | | |
| 96 | 1306 | 1.5 | II | 17.21 | 2131 | 1609 | SK 1282 SCP - 90L/4 | SK 1282 SCP - 90LH/4 | SK 1282 SCP - 140TC | X | X | X | | |
| 81 | 1560 | 1.3 | I | 20.57 | 2113 | 1609 | SK 1282 SCP - 90L/4 | SK 1282 SCP - 90LH/4 | SK 1282 SCP - 140TC | X | X | X | | |
| 66 | 1913 | 1 | I | 25.22 | 2081 | 1609 | SK 1282 SCP - 90L/4 | SK 1282 SCP - 90LH/4 | SK 1282 SCP - 140TC | X | X | X | | |
| 59 | 2149 | 0.9 | * | 28.33 | 2054 | 1609 | SK 1282 SCP - 90L/4 | SK 1282 SCP - 90LH/4 | SK 1282 SCP - 140TC | X | X | X | | |
| 368 | 342 | 3.3 | III | 4.51 | 2045 | 3375 | SK 2282 SCP - 90L/4 | SK 2282 SCP - 90LH/4 | SK 2282 SCP - 140TC | X | X | X | | |
| 290 | 434 | 3.1 | III | 5.72 | 2194 | 3375 | SK 2282 SCP - 90L/4 | SK 2282 SCP - 90LH/4 | SK 2282 SCP - 140TC | X | X | X | | |
| 258 | 488 | 3 | III | 6.43 | 2266 | 3375 | SK 2282 SCP - 90L/4 | SK 2282 SCP - 90LH/4 | SK 2282 SCP - 140TC | X | X | X | | |
| 222 | 567 | 2.9 | III | 7.48 | 2365 | 3375 | SK 2282 SCP - 90L/4 | SK 2282 SCP - 90LH/4 | SK 2282 SCP - 140TC | X | X | X | | |
| 198 | 635 | 2.8 | III | 8.37 | 2437 | 3375 | SK 2282 SCP - 90L/4 | SK 2282 SCP - 90LH/4 | SK 2282 SCP - 140TC | X | X | X | | |
| 184 | 685 | 3.1 | III | 9.03 | 2504 | 3375 | SK 2282 SCP - 90L/4 | SK 2282 SCP - 90LH/4 | SK 2282 SCP - 140TC | X | X | X | | |
| 164 | 770 | 3 | III | 10.15 | 2579 | 3375 | SK 2282 SCP - 90L/4 | SK 2282 SCP - 90LH/4 | SK 2282 SCP - 140TC | X | X | X | | |
| 141 | 896 | 2.9 | III | 11.81 | 2691 | 3375 | SK 2282 SCP - 90L/4 | SK 2282 SCP - 90LH/4 | SK 2282 SCP - 140TC | X | X | X | | |
| 125 | 1004 | 2.8 | III | 13.23 | 2777 | 3375 | SK 2282 SCP - 90L/4 | SK 2282 SCP - 90LH/4 | SK 2282 SCP - 140TC | X | X | X | | |
| 100 | 1254 | 2.9 | III | 16.53 | 2959 | 3375 | SK 2282 SCP - 90L/4 | SK 2282 SCP - 90LH/4 | SK 2282 SCP - 140TC | X | X | X | | |
| 90 | 1404 | 2.8 | III | 18.51 | 3049 | 3375 | SK 2282 SCP - 90L/4 | SK 2282 SCP - 90LH/4 | SK 2282 SCP - 140TC | X | X | X | | |
| 76 | 1661 | 2.6 | III | 21.9 | 3128 | 3375 | SK 2282 SCP - 90L/4 | SK 2282 SCP - 90LH/4 | SK 2282 SCP - 140TC | X | X | X | | |
| 69 | 1818 | 2.1 | III | 23.96 | 3121 | 3375 | SK 2282 SCP - 90L/4 | SK 2282 SCP - 90LH/4 | SK 2282 SCP - 140TC | X | X | X | | |
| 66 | 1894 | 2.3 | III | 24.97 | 3116 | 3375 | SK 2282 SCP - 90L/4 | SK 2282 SCP - 90LH/4 | SK 2282 SCP - 140TC | X | X | X | | |
| 62 | 2035 | 1.9 | II | 26.83 | 3110 | 3375 | SK 2282 SCP - 90L/4 | SK 2282 SCP - 90LH/4 | SK 2282 SCP - 140TC | X | X | X | | |
| 56 | 2249 | 2 | III | 29.65 | 3098 | 3375 | SK 2282 SCP - 90L/4 | SK 2282 SCP - 90LH/4 | SK 2282 SCP - 140TC | X | X | X | | |
| 53 | 2369 | 1.7 | II | 31.23 | 3089 | 3375 | SK 2282 SCP - 90L/4 | SK 2282 SCP - 90LH/4 | SK 2282 SCP - 140TC | X | X | X | | |
| 45 | 2772 | 1.6 | II | 36.54 | 3062 | 3375 | SK 2282 SCP - 90L/4 | SK 2282 SCP - 90LH/4 | SK 2282 SCP - 140TC | X | X | X | | |
| 45 | 2821 | 1.4 | II | 37.18 | 3058 | 3375 | SK 2282 SCP - 90L/4 | SK 2282 SCP - 90LH/4 | SK 2282 SCP - 140TC | X | X | X | | |
| 38 | 3316 | 1.5 | II | 43.71 | 3017 | 3375 | SK 2282 SCP - 90L/4 | SK 2282 SCP - 90LH/4 | SK 2282 SCP - 140TC | X | X | X | | |
| 37 | 3422 | 1.2 | I | 45.11 | 3006 | 3375 | SK 2282 SCP - 90L/4 | SK 2282 SCP - 90LH/4 | SK 2282 SCP - 140TC | X | X | X | | |
| 32 | 3923 | 1.2 | I | 51.71 | 2954 | 3375 | SK 2282 SCP - 90L/4 | SK 2282 SCP - 90LH/4 | SK 2282 SCP - 140TC | X | X | X | | |
| 31 | 4094 | 1.1 | I | 53.96 | 2936 | 3375 | SK 2282 SCP - 90L/4 | SK 2282 SCP - 90LH/4 | SK 2282 SCP - 140TC | X | X | X | | |
| 26 | 4842 | 1 | I | 63.83 | 2837 | 3375 | SK 2282 SCP - 90L/4 | SK 2282 SCP - 90LH/4 | SK 2282 SCP - 140TC | X | X | X | | |

Output speed and torque ratings are based on the "Standard Efficiency Motor" Power and speed. Performance will vary slightly for other motors.

# 2 hp Gearmotors & Speed Reducers



| Output Speed $n_2$ [rpm] | Output Torque $T_2$ [lb-in] | SF $f_a$ | AGMA Class | Gear Ratio i | Thrust Std Brg [lb] | Thrust H.D. Brg " VL" [lb] | Integral Gearmotor Standard Efficiency Motor | Integral Gearmotor Energy Efficient Motor | Reducer C-Face Input | CEMA DriveShaft 1-1/2" | 2" | 2-7/16" | 3" | 3-7/16" |
|---|---|---|---|---|---|---|---|---|---|---|---|---|---|---|
| 371 | 340 | 3.3 | III | 4.48 | 2340 | 3632 | SK 3282 SCP - 90L/4 | SK 3282 SCP - 90LH/4 | SK 3282 SCP - 140TC | X | X | X | X | |
| 292 | 431 | 3.6 | III | 5.68 | 2507 | 3886 | SK 3282 SCP - 90L/4 | SK 3282 SCP - 90LH/4 | SK 3282 SCP - 140TC | X | X | X | X | |
| 248 | 508 | 3.5 | III | 6.7 | 2633 | 4070 | SK 3282 SCP - 90L/4 | SK 3282 SCP - 90LH/4 | SK 3282 SCP - 140TC | X | X | X | X | |
| 200 | 630 | 3.3 | III | 8.31 | 2799 | 4327 | SK 3282 SCP - 90L/4 | SK 3282 SCP - 90LH/4 | SK 3282 SCP - 140TC | X | X | X | X | |
| 169 | 743 | 3.5 | III | 9.8 | 2936 | 4500 | SK 3282 SCP - 90L/4 | SK 3282 SCP - 90LH/4 | SK 3282 SCP - 140TC | X | X | X | X | |
| 146 | 863 | 3.5 | III | 11.38 | 3065 | 4500 | SK 3282 SCP - 90L/4 | SK 3282 SCP - 90LH/4 | SK 3282 SCP - 140TC | X | X | X | X | |
| 118 | 1070 | 3.3 | III | 14.11 | 3258 | 4500 | SK 3282 SCP - 90L/4 | SK 3282 SCP - 90LH/4 | SK 3282 SCP - 140TC | X | X | X | X | |
| 100 | 1265 | 3.3 | III | 16.67 | 3411 | 4500 | SK 3282 SCP - 90L/4 | SK 3282 SCP - 90LH/4 | SK 3282 SCP - 140TC | X | X | X | X | |
| 82 | 1531 | 3.3 | III | 20.18 | 3605 | 4500 | SK 3282 SCP - 90L/4 | SK 3282 SCP - 90LH/4 | SK 3282 SCP - 140TC | X | X | X | X | |
| 78 | 1622 | 3 | III | 21.38 | 3650 | 4500 | SK 3282 SCP - 90L/4 | SK 3282 SCP - 90LH/4 | SK 3282 SCP - 140TC | X | X | X | X | |
| 74 | 1703 | 3.3 | III | 22.45 | 3715 | 4500 | SK 3282 SCP - 90L/4 | SK 3282 SCP - 90LH/4 | SK 3282 SCP - 140TC | X | X | X | X | |
| 70 | 1799 | 2.9 | III | 23.71 | 3755 | 4500 | SK 3282 SCP - 90L/4 | SK 3282 SCP - 90LH/4 | SK 3282 SCP - 140TC | X | X | X | X | |
| 64 | 1963 | 3 | III | 25.88 | 3850 | 4500 | SK 3282 SCP - 90L/4 | SK 3282 SCP - 90LH/4 | SK 3282 SCP - 140TC | X | X | X | X | |
| 58 | 2177 | 2.9 | III | 28.7 | 3960 | 4500 | SK 3282 SCP - 90L/4 | SK 3282 SCP - 90LH/4 | SK 3282 SCP - 140TC | X | X | X | X | |
| 52 | 2422 | 2.9 | III | 31.93 | 4070 | 4500 | SK 3282 SCP - 90L/4 | SK 3282 SCP - 90LH/4 | SK 3282 SCP - 140TC | X | X | X | X | |
| 44 | 2865 | 2.6 | III | 37.77 | 4255 | 4500 | SK 3282 SCP - 90L/4 | SK 3282 SCP - 90LH/4 | SK 3282 SCP - 140TC | X | X | X | X | |
| 43 | 2930 | 1.9 | II | 38.62 | 4262 | 4500 | SK 3282 SCP - 90L/4 | SK 3282 SCP - 90LH/4 | SK 3282 SCP - 140TC | X | X | X | X | |
| 40 | 3188 | 2.6 | III | 42.02 | 4379 | 4500 | SK 3282 SCP - 90L/4 | SK 3282 SCP - 90LH/4 | SK 3282 SCP - 140TC | X | X | X | X | |
| 37 | 3402 | 1.9 | II | 44.85 | 4428 | 4500 | SK 3282 SCP - 90L/4 | SK 3282 SCP - 90LH/4 | SK 3282 SCP - 140TC | X | X | X | X | |
| 35 | 3644 | 1.3 | I | 48.04 | 4500 | 4500 | SK 3282 SCP - 90L/4 | SK 3282 SCP - 90LH/4 | SK 3282 SCP - 140TC | X | X | X | X | |
| 31 | 4018 | 1.9 | II | 52.97 | 4626 | 4500 | SK 3282 SCP - 90L/4 | SK 3282 SCP - 90LH/4 | SK 3282 SCP - 140TC | X | X | X | X | |
| 30 | 4232 | 1.3 | I | 55.79 | 4671 | 4500 | SK 3282 SCP - 90L/4 | SK 3282 SCP - 90LH/4 | SK 3282 SCP - 140TC | X | X | X | X | |
| 26 | 4864 | 1.8 | II | 64.12 | 4849 | 4500 | SK 3282 SCP - 90L/4 | SK 3282 SCP - 90LH/4 | SK 3282 SCP - 140TC | X | X | X | X | |
| 25 | 4999 | 1.3 | I | 65.89 | 4874 | 4500 | SK 3282 SCP - 90L/4 | SK 3282 SCP - 90LH/4 | SK 3282 SCP - 140TC | X | X | X | X | |
| 21 | 6051 | 1.2 | I | 79.76 | 4966 | 4500 | SK 3282 SCP - 90L/4 | SK 3282 SCP - 90LH/4 | SK 3282 SCP - 140TC | X | X | X | X | |
| 19 | 6732 | 1.2 | I | 88.74 | 4921 | 4500 | SK 3282 SCP - 90L/4 | SK 3282 SCP - 90LH/4 | SK 3282 SCP - 140TC | X | X | X | X | |
| 274 | 460 | 4.1 | III | 6.06 | 3638 | 6194 | SK 4282 SCP - 90L/4 | SK 4282 SCP - 90LH/4 | SK 4282 SCP - 140TC | | X | X | X | |
| 233 | 541 | 3.7 | III | 7.13 | 3818 | 6478 | SK 4282 SCP - 90L/4 | SK 4282 SCP - 90LH/4 | SK 4282 SCP - 140TC | | X | X | X | |
| 199 | 632 | 3.6 | III | 8.33 | 4001 | 6750 | SK 4282 SCP - 90L/4 | SK 4282 SCP - 90LH/4 | SK 4282 SCP - 140TC | | X | X | X | |
| 180 | 700 | 4.1 | III | 9.23 | 4124 | 6750 | SK 4282 SCP - 90L/4 | SK 4282 SCP - 90LH/4 | SK 4282 SCP - 140TC | | X | X | X | |
| 153 | 823 | 3.7 | III | 10.85 | 4320 | 6750 | SK 4282 SCP - 90L/4 | SK 4282 SCP - 90LH/4 | SK 4282 SCP - 140TC | | X | X | X | |

Output speed and torque ratings are based on the "Standard Efficiency Motor" Power and speed. Performance will vary slightly for other motors.



# 2 hp Gearmotors & Speed Reducers

| Output Speed | Output Torque | SF | AGMA Class | Gear Ratio | Thrust | | Integral Gearmotor | | Reducer | CEMA DriveShaft | | | | |
|---|---|---|---|---|---|---|---|---|---|---|---|---|---|---|
| $n_2$ | $T_2$ | $f_a$ | | i | Std Brg | H.D. Brg " VL" | Standard Efficiency Motor | Energy Efficient Motor | C-Face Input | 1-1/2" | 2" | 2-7/16" | 3" | 3-7/16" |
| [rpm] | [lb-in] | | | | [lb] | [lb] | | | | | | | | |
| 131 | 962 | 3.6 | III | 12.68 | 4518 | 6750 | SK 4282 SCP - 90L/4 | SK 4282 SCP - 90LH/4 | SK 4282 SCP - 140TC | | X | X | X | |
| 109 | 1153 | 3.6 | III | 15.2 | 4763 | 6750 | SK 4282 SCP - 90L/4 | SK 4282 SCP - 90LH/4 | SK 4282 SCP - 140TC | | X | X | X | |
| 91 | 1379 | 3.6 | III | 18.18 | 5013 | 6750 | SK 4282 SCP - 90L/4 | SK 4282 SCP - 90LH/4 | SK 4282 SCP - 140TC | | X | X | X | |
| 77 | 1627 | 3.6 | III | 21.45 | 5258 | 6750 | SK 4282 SCP - 90L/4 | SK 4282 SCP - 90LH/4 | SK 4282 SCP - 140TC | | X | X | X | |
| 74 | 1699 | 3.4 | III | 22.39 | 5317 | 6750 | SK 4282 SCP - 90L/4 | SK 4282 SCP - 90LH/4 | SK 4282 SCP - 140TC | | X | X | X | |
| 63 | 1991 | 3.6 | III | 26.25 | 5569 | 6750 | SK 4282 SCP - 90L/4 | SK 4282 SCP - 90LH/4 | SK 4282 SCP - 140TC | | X | X | X | |
| 63 | 2005 | 3.4 | III | 26.43 | 5587 | 6750 | SK 4282 SCP - 90L/4 | SK 4282 SCP - 90LH/4 | SK 4282 SCP - 140TC | | X | X | X | |
| 51 | 2453 | 3.4 | III | 32.34 | 5904 | 6750 | SK 4282 SCP - 90L/4 | SK 4282 SCP - 90LH/4 | SK 4282 SCP - 140TC | | X | X | X | |
| 45 | 2792 | 3.1 | III | 36.81 | 6122 | 6750 | SK 4282 SCP - 90L/4 | SK 4282 SCP - 90LH/4 | SK 4282 SCP - 140TC | | X | X | X | |
| 41 | 3091 | 3.2 | III | 40.74 | 6298 | 6750 | SK 4282 SCP - 90L/4 | SK 4282 SCP - 90LH/4 | SK 4282 SCP - 140TC | | X | X | X | |
| 37 | 3418 | 3.1 | III | 45.05 | 6489 | 6750 | SK 4282 SCP - 90L/4 | SK 4282 SCP - 90LH/4 | SK 4282 SCP - 140TC | | X | X | X | |
| 22 | 5819 | 2.4 | III | 76.7 | 6845 | 6750 | SK 4282 SCP - 90L/4 | SK 4282 SCP - 90LH/4 | SK 4282 SCP - 140TC | | X | X | X | |
| 18 | 6867 | 2.1 | III | 90.52 | 6813 | 6750 | SK 4282 SCP - 90L/4 | SK 4282 SCP - 90LH/4 | SK 4282 SCP - 140TC | | X | X | X | |
| 15 | 8404 | 1.7 | II | 110.78 | 6757 | 6750 | SK 4282 SCP - 90L/4 | SK 4282 SCP - 90LH/4 | SK 4282 SCP - 140TC | | X | X | X | |
| 11 | 11789 | 1 | I | 155.4 | 6590 | 6750 | SK 4282 SCP - 90L/4 | SK 4282 SCP - 90LH/4 | SK 4282 SCP - 140TC | | X | X | X | |
| 191 | 660 | 4.3 | III | 8.7 | 5612 | 9000 | SK 5282 SCP - 90L/4 | SK 5282 SCP - 90LH/4 | SK 5282 SCP - 140TC | | X | X | X | X |
| 128 | 986 | 4.3 | III | 13 | 6318 | 9000 | SK 5282 SCP - 90L/4 | SK 5282 SCP - 90LH/4 | SK 5282 SCP - 140TC | | X | X | X | X |
| 108 | 1167 | 4.3 | III | 15.38 | 6640 | 9000 | SK 5282 SCP - 90L/4 | SK 5282 SCP - 90LH/4 | SK 5282 SCP - 140TC | | X | X | X | X |
| 94 | 1334 | 4.2 | III | 17.59 | 6912 | 9000 | SK 5282 SCP - 90L/4 | SK 5282 SCP - 90LH/4 | SK 5282 SCP - 140TC | | X | X | X | X |
| 88 | 1432 | 4.3 | III | 18.88 | 7056 | 9000 | SK 5282 SCP - 90L/4 | SK 5282 SCP - 90LH/4 | SK 5282 SCP - 140TC | | X | X | X | X |
| 82 | 1545 | 4.2 | III | 20.36 | 7205 | 9000 | SK 5282 SCP - 90L/4 | SK 5282 SCP - 90LH/4 | SK 5282 SCP - 140TC | | X | X | X | X |
| 66 | 1897 | 4.2 | III | 25 | 7657 | 9000 | SK 5282 SCP - 90L/4 | SK 5282 SCP - 90LH/4 | SK 5282 SCP - 140TC | | X | X | X | X |
| 54 | 2314 | 4.1 | III | 30.5 | 8123 | 9000 | SK 5282 SCP - 90L/4 | SK 5282 SCP - 90LH/4 | SK 5282 SCP - 140TC | | X | X | X | X |
| 50 | 2536 | 4.2 | III | 33.43 | 8332 | 9000 | SK 5282 SCP - 90L/4 | SK 5282 SCP - 90LH/4 | SK 5282 SCP - 140TC | | X | X | X | X |
| 41 | 3095 | 4.1 | III | 40.8 | 8811 | 9000 | SK 5282 SCP - 90L/4 | SK 5282 SCP - 90LH/4 | SK 5282 SCP - 140TC | | X | X | X | X |
| 30 | 4214 | 4 | III | 55.55 | 9644 | 9000 | SK 5282 SCP - 90L/4 | SK 5282 SCP - 90LH/4 | SK 5282 SCP - 140TC | | X | X | X | X |
| 20 | 6191 | 2.6 | III | 81.61 | 10015 | 9000 | SK 5282 SCP - 90L/4 | SK 5282 SCP - 90LH/4 | SK 5282 SCP - 140TC | | X | X | X | X |
| 17 | 7601 | 2.6 | III | 100.19 | 9990 | 9000 | SK 5282 SCP - 90L/4 | SK 5282 SCP - 90LH/4 | SK 5282 SCP - 140TC | | X | X | X | X |
| 12 | 10168 | 2.3 | III | 134.03 | 9934 | 9000 | SK 5282 SCP - 90L/4 | SK 5282 SCP - 90LH/4 | SK 5282 SCP - 140TC | | X | X | X | X |

Output speed and torque ratings are based on the "Standard Efficiency Motor" Power and speed. Performance will vary slightly for other motors.

# 3 hp Gearmotors & Speed Reducers



| Output Speed | Output Torque | SF | AGMA Class | Gear Ratio | Thrust | | Integral Gearmotor | | Reducer | CEMA DriveShaft | | | | |
|---|---|---|---|---|---|---|---|---|---|---|---|---|---|---|
| $n_2$ | $T_2$ | $f_a$ | | i | Std Brg | H.D. Brg " VL" | Standard Efficiency Motor | Energy Efficient Motor | C-Face Input | 1-1/2" | 2" | 2-7/16" | 3" | 3-7/16" |
| [rpm] | [lb-in] | | | | [lb] | [lb] | | | | | | | | |
| 356 | 531 | 2.1 | III | 4.79 | 1541 | 1609 | SK 1282 SCP - 100L/4 | SK 1282 SCP - 100LH/4 | SK 1282 SCP - 180TC | X | X | X | | |
| 312 | 607 | 2.5 | III | 5.47 | 1595 | 1609 | SK 1282 SCP - 100L/4 | SK 1282 SCP - 100LH/4 | SK 1282 SCP - 180TC | X | X | X | | |
| 265 | 714 | 2.2 | III | 6.43 | 1667 | 1609 | SK 1282 SCP - 100L/4 | SK 1282 SCP - 100LH/4 | SK 1282 SCP - 180TC | X | X | X | | |
| 235 | 804 | 2.1 | III | 7.24 | 1719 | 1609 | SK 1282 SCP - 100L/4 | SK 1282 SCP - 100LH/4 | SK 1282 SCP - 180TC | X | X | X | | |
| 208 | 912 | 1.6 | II | 8.21 | 1784 | 1609 | SK 1282 SCP - 100L/4 | SK 1282 SCP - 100LH/4 | SK 1282 SCP - 180TC | X | X | X | | |
| 207 | 915 | 1.8 | II | 8.24 | 1775 | 1609 | SK 1282 SCP - 100L/4 | SK 1282 SCP - 100LH/4 | SK 1282 SCP - 180TC | X | X | X | | |
| 186 | 1019 | 1.6 | II | 9.18 | 1832 | 1609 | SK 1282 SCP - 100L/4 | SK 1282 SCP - 100LH/4 | SK 1282 SCP - 180TC | X | X | X | | |
| 165 | 1148 | 1.5 | II | 10.34 | 1886 | 1609 | SK 1282 SCP - 100L/4 | SK 1282 SCP - 100LH/4 | SK 1282 SCP - 180TC | X | X | X | | |
| 145 | 1306 | 1.4 | II | 11.76 | 1944 | 1609 | SK 1282 SCP - 100L/4 | SK 1282 SCP - 100LH/4 | SK 1282 SCP - 180TC | X | X | X | | |
| 121 | 1567 | 1.2 | I | 14.11 | 2039 | 1609 | SK 1282 SCP - 100L/4 | SK 1282 SCP - 100LH/4 | SK 1282 SCP - 180TC | X | X | X | | |
| 99 | 1911 | 1 | I | 17.21 | 2081 | 1609 | SK 1282 SCP - 100L/4 | SK 1282 SCP - 100LH/4 | SK 1282 SCP - 180TC | X | X | X | | |
| 83 | 2284 | 0.9 | * | 20.57 | 2039 | 1609 | SK 1282 SCP - 100L/4 | SK 1282 SCP - 100LH/4 | SK 1282 SCP - 180TC | X | X | X | | |
| 378 | 501 | 3.3 | III | 4.51 | 2012 | 3375 | SK 2282 SCP - 100L/4 | SK 2282 SCP - 100LH/4 | SK 2282 SCP - 180TC | X | X | X | | |
| 298 | 635 | 3 | III | 5.72 | 2151 | 3375 | SK 2282 SCP - 100L/4 | SK 2282 SCP - 100LH/4 | SK 2282 SCP - 180TC | X | X | X | | |
| 265 | 714 | 2.8 | III | 6.43 | 2219 | 3375 | SK 2282 SCP - 100L/4 | SK 2282 SCP - 100LH/4 | SK 2282 SCP - 180TC | X | X | X | | |
| 228 | 831 | 2.6 | III | 7.48 | 2313 | 3375 | SK 2282 SCP - 100L/4 | SK 2282 SCP - 100LH/4 | SK 2282 SCP - 180TC | X | X | X | | |
| 204 | 929 | 2.4 | III | 8.37 | 2385 | 3375 | SK 2282 SCP - 100L/4 | SK 2282 SCP - 100LH/4 | SK 2282 SCP - 180TC | X | X | X | | |
| 189 | 1003 | 3 | III | 9.03 | 2446 | 3375 | SK 2282 SCP - 100L/4 | SK 2282 SCP - 100LH/4 | SK 2282 SCP - 180TC | X | X | X | | |
| 168 | 1127 | 2.8 | III | 10.15 | 2522 | 3375 | SK 2282 SCP - 100L/4 | SK 2282 SCP - 100LH/4 | SK 2282 SCP - 180TC | X | X | X | | |
| 144 | 1311 | 2.6 | III | 11.81 | 2626 | 3375 | SK 2282 SCP - 100L/4 | SK 2282 SCP - 100LH/4 | SK 2282 SCP - 180TC | X | X | X | | |
| 129 | 1469 | 2.4 | III | 13.23 | 2707 | 3375 | SK 2282 SCP - 100L/4 | SK 2282 SCP - 100LH/4 | SK 2282 SCP - 180TC | X | X | X | | |
| 103 | 1835 | 2.3 | III | 16.53 | 2880 | 3375 | SK 2282 SCP - 100L/4 | SK 2282 SCP - 100LH/4 | SK 2282 SCP - 180TC | X | X | X | | |
| 92 | 2055 | 2.1 | III | 18.51 | 2959 | 3375 | SK 2282 SCP - 100L/4 | SK 2282 SCP - 100LH/4 | SK 2282 SCP - 180TC | X | X | X | | |
| 78 | 2432 | 1.7 | II | 21.9 | 3087 | 3375 | SK 2282 SCP - 100L/4 | SK 2282 SCP - 100LH/4 | SK 2282 SCP - 180TC | X | X | X | | |
| 71 | 2660 | 1.4 | II | 23.96 | 3069 | 3375 | SK 2282 SCP - 100L/4 | SK 2282 SCP - 100LH/4 | SK 2282 SCP - 180TC | X | X | X | | |
| 68 | 2773 | 1.6 | II | 24.97 | 3062 | 3375 | SK 2282 SCP - 100L/4 | SK 2282 SCP - 100LH/4 | SK 2282 SCP - 180TC | X | X | X | | |
| 64 | 2979 | 1.3 | I | 26.83 | 3047 | 3375 | SK 2282 SCP - 100L/4 | SK 2282 SCP - 100LH/4 | SK 2282 SCP - 180TC | X | X | X | | |
| 58 | 3292 | 1.3 | I | 29.65 | 3020 | 3375 | SK 2282 SCP - 100L/4 | SK 2282 SCP - 100LH/4 | SK 2282 SCP - 180TC | X | X | X | | |
| 55 | 3468 | 1.1 | I | 31.23 | 3002 | 3375 | SK 2282 SCP - 100L/4 | SK 2282 SCP - 100LH/4 | SK 2282 SCP - 180TC | X | X | X | | |
| 47 | 4057 | 1.1 | I | 36.54 | 2939 | 3375 | SK 2282 SCP - 100L/4 | SK 2282 SCP - 100LH/4 | SK 2282 SCP - 180TC | X | X | X | | |
| 39 | 4853 | 1 | I | 43.71 | 2837 | 3375 | SK 2282 SCP - 100L/4 | SK 2282 SCP - 100LH/4 | SK 2282 SCP - 180TC | X | X | X | | |
| 381 | 497 | 3.7 | III | 4.48 | 2309 | 3569 | SK 3282 SCP - 100L/4 | SK 3282 SCP - 100LH/4 | SK 3282 SCP - 180TC | X | X | X | X | |
| 300 | 631 | 3.6 | III | 5.68 | 2466 | 3818 | SK 3282 SCP - 100L/4 | SK 3282 SCP - 100LH/4 | SK 3282 SCP - 180TC | X | X | X | X | |
| 254 | 744 | 3.4 | III | 6.7 | 2583 | 3992 | SK 3282 SCP - 100L/4 | SK 3282 SCP - 100LH/4 | SK 3282 SCP - 180TC | X | X | X | X | |
| 205 | 923 | 3.1 | III | 8.31 | 2745 | 4230 | SK 3282 SCP - 100L/4 | SK 3282 SCP - 100LH/4 | SK 3282 SCP - 180TC | X | X | X | X | |
| 174 | 1088 | 3.4 | III | 9.8 | 2882 | 4430 | SK 3282 SCP - 100L/4 | SK 3282 SCP - 100LH/4 | SK 3282 SCP - 180TC | X | X | X | X | |
| 150 | 1264 | 3.4 | III | 11.38 | 3004 | 4500 | SK 3282 SCP - 100L/4 | SK 3282 SCP - 100LH/4 | SK 3282 SCP - 180TC | X | X | X | X | |
| 121 | 1567 | 3.1 | III | 14.11 | 3179 | 4500 | SK 3282 SCP - 100L/4 | SK 3282 SCP - 100LH/4 | SK 3282 SCP - 180TC | X | X | X | X | |

Output speed and torque ratings are based on the "Standard Efficiency Motor" Power and speed. Performance will vary slightly for other motors.



# 3 hp Gearmotors & Speed Reducers

| Output Speed | Output Torque | SF | AGMA Class | Gear Ratio | Thrust | | Integral Gearmotor | | Reducer | CEMA DriveShaft | | | | |
|---|---|---|---|---|---|---|---|---|---|---|---|---|---|---|
| $n_2$ | $T_2$ | $f_a$ | | i | Std Brg | H.D. Brg " VL" | Standard Efficiency Motor | Energy Efficient Motor | C-Face Input | 1-1/2" | 2" | 2-7/16" | 3" | 3-7/16" |
| [rpm] | [lb-in] | | | | [lb] | [lb] | | | | | | | | |
| 102 | 1851 | 3.1 | III | 16.67 | 3328 | 4500 | SK 3282 SCP - 100L/4 | SK 3282 SCP - 100LH/4 | SK 3282 SCP - 180TC | X | X | X | X | |
| 84 | 2241 | 3.1 | III | 20.18 | 3503 | 4500 | SK 3282 SCP - 100L/4 | SK 3282 SCP - 100LH/4 | SK 3282 SCP - 180TC | X | X | X | X | |
| 80 | 2374 | 2.7 | III | 21.38 | 3553 | 4500 | SK 3282 SCP - 100L/4 | SK 3282 SCP - 100LH/4 | SK 3282 SCP - 180TC | X | X | X | X | |
| 76 | 2493 | 2.8 | III | 22.45 | 3602 | 4500 | SK 3282 SCP - 100L/4 | SK 3282 SCP - 100LH/4 | SK 3282 SCP - 180TC | X | X | X | X | |
| 72 | 2633 | 2.5 | III | 23.71 | 3647 | 4500 | SK 3282 SCP - 100L/4 | SK 3282 SCP - 100LH/4 | SK 3282 SCP - 180TC | X | X | X | X | |
| 66 | 2874 | 2.6 | III | 25.88 | 3737 | 4500 | SK 3282 SCP - 100L/4 | SK 3282 SCP - 100LH/4 | SK 3282 SCP - 180TC | X | X | X | X | |
| 59 | 3187 | 2.4 | III | 28.7 | 3839 | 4500 | SK 3282 SCP - 100L/4 | SK 3282 SCP - 100LH/4 | SK 3282 SCP - 180TC | X | X | X | X | |
| 53 | 3545 | 2.2 | III | 31.93 | 3935 | 4500 | SK 3282 SCP - 100L/4 | SK 3282 SCP - 100LH/4 | SK 3282 SCP - 180TC | X | X | X | X | |
| 45 | 4194 | 1.8 | II | 37.77 | 4097 | 4500 | SK 3282 SCP - 100L/4 | SK 3282 SCP - 100LH/4 | SK 3282 SCP - 180TC | X | X | X | X | |
| 44 | 4288 | 1.3 | I | 38.62 | 4086 | 4500 | SK 3282 SCP - 100L/4 | SK 3282 SCP - 100LH/4 | SK 3282 SCP - 180TC | X | X | X | X | |
| 41 | 4666 | 1.8 | II | 42.02 | 4205 | 4500 | SK 3282 SCP - 100L/4 | SK 3282 SCP - 100LH/4 | SK 3282 SCP - 180TC | X | X | X | X | |
| 38 | 4980 | 1.3 | I | 44.85 | 4241 | 4500 | SK 3282 SCP - 100L/4 | SK 3282 SCP - 100LH/4 | SK 3282 SCP - 180TC | X | X | X | X | |
| 32 | 5882 | 1.3 | I | 52.97 | 4406 | 4500 | SK 3282 SCP - 100L/4 | SK 3282 SCP - 100LH/4 | SK 3282 SCP - 180TC | X | X | X | X | |
| 27 | 7120 | 1.3 | I | 64.12 | 4604 | 4500 | SK 3282 SCP - 100L/4 | SK 3282 SCP - 100LH/4 | SK 3282 SCP - 180TC | X | X | X | X | |
| 281 | 673 | 4.2 | III | 6.06 | 3593 | 6095 | SK 4282 SCP - 100L/4 | SK 4282 SCP - 100LH/4 | SK 4282 SCP - 180TC | | X | X | X | |
| 239 | 792 | 4 | III | 7.13 | 3764 | 6386 | SK 4282 SCP - 100L/4 | SK 4282 SCP - 100LH/4 | SK 4282 SCP - 180TC | | X | X | X | |
| 205 | 925 | 3.8 | III | 8.33 | 3935 | 6667 | SK 4282 SCP - 100L/4 | SK 4282 SCP - 100LH/4 | SK 4282 SCP - 180TC | | X | X | X | |
| 185 | 1025 | 4.2 | III | 9.23 | 4064 | 6750 | SK 4282 SCP - 100L/4 | SK 4282 SCP - 100LH/4 | SK 4282 SCP - 180TC | | X | X | X | |
| 157 | 1205 | 4 | III | 10.85 | 4250 | 6750 | SK 4282 SCP - 100L/4 | SK 4282 SCP - 100LH/4 | SK 4282 SCP - 180TC | | X | X | X | |
| 134 | 1408 | 3.8 | III | 12.68 | 4444 | 6750 | SK 4282 SCP - 100L/4 | SK 4282 SCP - 100LH/4 | SK 4282 SCP - 180TC | | X | X | X | |
| 112 | 1688 | 3.8 | III | 15.2 | 4685 | 6750 | SK 4282 SCP - 100L/4 | SK 4282 SCP - 100LH/4 | SK 4282 SCP - 180TC | | X | X | X | |
| 94 | 2019 | 3.8 | III | 18.18 | 4921 | 6750 | SK 4282 SCP - 100L/4 | SK 4282 SCP - 100LH/4 | SK 4282 SCP - 180TC | | X | X | X | |
| 79 | 2382 | 3.8 | III | 21.45 | 5162 | 6750 | SK 4282 SCP - 100L/4 | SK 4282 SCP - 100LH/4 | SK 4282 SCP - 180TC | | X | X | X | |
| 76 | 2486 | 3.4 | III | 22.39 | 5218 | 6750 | SK 4282 SCP - 100L/4 | SK 4282 SCP - 100LH/4 | SK 4282 SCP - 180TC | | X | X | X | |
| 65 | 2915 | 3.8 | III | 26.25 | 5472 | 6750 | SK 4282 SCP - 100L/4 | SK 4282 SCP - 100LH/4 | SK 4282 SCP - 180TC | | X | X | X | |
| 65 | 2935 | 3.4 | III | 26.43 | 5472 | 6750 | SK 4282 SCP - 100L/4 | SK 4282 SCP - 100LH/4 | SK 4282 SCP - 180TC | | X | X | X | |
| 53 | 3591 | 3.4 | III | 32.34 | 5778 | 6750 | SK 4282 SCP - 100L/4 | SK 4282 SCP - 100LH/4 | SK 4282 SCP - 180TC | | X | X | X | |
| 47 | 4042 | 3 | III | 36.4 | 5931 | 6750 | SK 4282 SCP - 100L/4 | SK 4282 SCP - 100LH/4 | SK 4282 SCP - 180TC | | X | X | X | |
| 46 | 4087 | 2.9 | III | 36.81 | 5978 | 6750 | SK 4282 SCP - 100L/4 | SK 4282 SCP - 100LH/4 | SK 4282 SCP - 180TC | | X | X | X | |
| 42 | 4524 | 3 | III | 40.74 | 6156 | 6750 | SK 4282 SCP - 100L/4 | SK 4282 SCP - 100LH/4 | SK 4282 SCP - 180TC | | X | X | X | |
| 39 | 4847 | 2.9 | III | 43.65 | 6228 | 6750 | SK 4282 SCP - 100L/4 | SK 4282 SCP - 100LH/4 | SK 4282 SCP - 180TC | | X | X | X | |
| 38 | 5002 | 2.8 | III | 45.05 | 6305 | 6750 | SK 4282 SCP - 100L/4 | SK 4282 SCP - 100LH/4 | SK 4282 SCP - 180TC | | X | X | X | |
| 33 | 5796 | 2.8 | III | 52.2 | 6523 | 6750 | SK 4282 SCP - 100L/4 | SK 4282 SCP - 100LH/4 | SK 4282 SCP - 180TC | | X | X | X | |
| 28 | 6840 | 2.3 | III | 61.6 | 6813 | 6750 | SK 4282 SCP - 100L/4 | SK 4282 SCP - 100LH/4 | SK 4282 SCP - 180TC | | X | X | X | |
| 23 | 8371 | 1.7 | II | 75.39 | 6757 | 6750 | SK 4282 SCP - 100L/4 | SK 4282 SCP - 100LH/4 | SK 4282 SCP - 180TC | | X | X | X | |
| 22 | 8517 | 1.7 | II | 76.7 | 6752 | 6750 | SK 4282 SCP - 100L/4 | SK 4282 SCP - 100LH/4 | SK 4282 SCP - 180TC | | X | X | X | |
| 19 | 10051 | 1.4 | II | 90.52 | 6683 | 6750 | SK 4282 SCP - 100L/4 | SK 4282 SCP - 100LH/4 | SK 4282 SCP - 180TC | | X | X | X | |
| 15 | 12301 | 1.2 | I | 110.78 | 6559 | 6750 | SK 4282 SCP - 100L/4 | SK 4282 SCP - 100LH/4 | SK 4282 SCP - 180TC | | X | X | X | |

Output speed and torque ratings are based on the "Standard Efficiency Motor" Power and speed. Performance will vary slightly for other motors.

# 3 hp Gearmotors & Speed Reducers



| Output Speed | Output Torque | SF | AGMA Class | Gear Ratio | Thrust | | Integral Gearmotor | | Reducer | CEMA DriveShaft | | | | |
|---|---|---|---|---|---|---|---|---|---|---|---|---|---|---|
| $n_2$ | $T_2$ | $f_a$ | | i | Std Brg | H.D. Brg " VL" | Standard Efficiency Motor | Energy Efficient Motor | C-Face Input | 1-1/2" | 2" | 2-7/16" | 3" | 3-7/16" |
| [rpm] | [lb-in] | | | | [lb] | [lb] | | | | | | | | |
| 269 | 703 | 4.7 | III | 6.33 | 5056 | 8498 | SK 5282 SCP - 100L/4 | SK 5282 SCP - 100LH/4 | SK 5282 SCP - 180TC | | X | X | X | X |
| 238 | 796 | 4.8 | III | 7.17 | 5245 | 8831 | SK 5282 SCP - 100L/4 | SK 5282 SCP - 100LH/4 | SK 5282 SCP - 180TC | | X | X | X | X |
| 196 | 966 | 4.4 | III | 8.7 | 5549 | 9000 | SK 5282 SCP - 100L/4 | SK 5282 SCP - 100LH/4 | SK 5282 SCP - 180TC | | X | X | X | X |
| 180 | 1050 | 4.7 | III | 9.46 | 5702 | 9000 | SK 5282 SCP - 100L/4 | SK 5282 SCP - 100LH/4 | SK 5282 SCP - 180TC | | X | X | X | X |
| 159 | 1189 | 4.8 | III | 10.71 | 5897 | 9000 | SK 5282 SCP - 100L/4 | SK 5282 SCP - 100LH/4 | SK 5282 SCP - 180TC | | X | X | X | X |
| 131 | 1443 | 4.4 | III | 13 | 6246 | 9000 | SK 5282 SCP - 100L/4 | SK 5282 SCP - 100LH/4 | SK 5282 SCP - 180TC | | X | X | X | X |
| 111 | 1708 | 4.4 | III | 15.38 | 6566 | 9000 | SK 5282 SCP - 100L/4 | SK 5282 SCP - 100LH/4 | SK 5282 SCP - 180TC | | X | X | X | X |
| 97 | 1953 | 4.2 | III | 17.59 | 6811 | 9000 | SK 5282 SCP - 100L/4 | SK 5282 SCP - 100LH/4 | SK 5282 SCP - 180TC | | X | X | X | X |
| 90 | 2096 | 4.4 | III | 18.88 | 6953 | 9000 | SK 5282 SCP - 100L/4 | SK 5282 SCP - 100LH/4 | SK 5282 SCP - 180TC | | X | X | X | X |
| 84 | 2261 | 4 | III | 20.36 | 7099 | 9000 | SK 5282 SCP - 100L/4 | SK 5282 SCP - 100LH/4 | SK 5282 SCP - 180TC | | X | X | X | X |
| 68 | 2776 | 4 | III | 25 | 7542 | 9000 | SK 5282 SCP - 100L/4 | SK 5282 SCP - 100LH/4 | SK 5282 SCP - 180TC | | X | X | X | X |
| 56 | 3387 | 3.6 | III | 30.5 | 7974 | 9000 | SK 5282 SCP - 100L/4 | SK 5282 SCP - 100LH/4 | SK 5282 SCP - 180TC | | X | X | X | X |
| 51 | 3712 | 4 | III | 33.43 | 8206 | 9000 | SK 5282 SCP - 100L/4 | SK 5282 SCP - 100LH/4 | SK 5282 SCP - 180TC | | X | X | X | X |
| 42 | 4530 | 3.6 | III | 40.8 | 8658 | 9000 | SK 5282 SCP - 100L/4 | SK 5282 SCP - 100LH/4 | SK 5282 SCP - 180TC | | X | X | X | X |
| 36 | 5249 | 4 | III | 47.27 | 8991 | 9000 | SK 5282 SCP - 100L/4 | SK 5282 SCP - 100LH/4 | SK 5282 SCP - 180TC | | X | X | X | X |
| 31 | 6168 | 3.1 | III | 55.55 | 9423 | 9000 | SK 5282 SCP - 100L/4 | SK 5282 SCP - 100LH/4 | SK 5282 SCP - 180TC | | X | X | X | X |
| 31 | 6207 | 3.7 | III | 55.9 | 9421 | 9000 | SK 5282 SCP - 100L/4 | SK 5282 SCP - 100LH/4 | SK 5282 SCP - 180TC | | X | X | X | X |
| 25 | 7621 | 3.4 | III | 68.63 | 9956 | 9000 | SK 5282 SCP - 100L/4 | SK 5282 SCP - 100LH/4 | SK 5282 SCP - 180TC | | X | X | X | X |
| 21 | 9062 | 1.8 | II | 81.61 | 9961 | 9000 | SK 5282 SCP - 100L/4 | SK 5282 SCP - 100LH/4 | SK 5282 SCP - 180TC | | X | X | X | X |
| 19 | 10194 | 2.4 | III | 91.81 | 9934 | 9000 | SK 5282 SCP - 100L/4 | SK 5282 SCP - 100LH/4 | SK 5282 SCP - 180TC | | X | X | X | X |
| 17 | 11125 | 1.8 | II | 100.19 | 9909 | 9000 | SK 5282 SCP - 100L/4 | SK 5282 SCP - 100LH/4 | SK 5282 SCP - 180TC | | X | X | X | X |
| 13 | 14882 | 1.6 | II | 134.03 | 9790 | 9000 | SK 5282 SCP - 100L/4 | SK 5282 SCP - 100LH/4 | SK 5282 SCP - 180TC | | X | X | X | X |
| 253 | 748 | 5.1 | III | 6.74 | 7515 | 10845 | SK 6282 SCP - 100L/4 | SK 6282 SCP - 100LH/4 | SK 6282 SCP - 180TC | | | | X | X |
| 218 | 868 | 4.9 | III | 7.82 | 7835 | 11324 | SK 6282 SCP - 100L/4 | SK 6282 SCP - 100LH/4 | SK 6282 SCP - 180TC | | | | X | X |
| 182 | 1043 | 4.6 | III | 9.39 | 8273 | 11979 | SK 6282 SCP - 100L/4 | SK 6282 SCP - 100LH/4 | SK 6282 SCP - 180TC | | | | X | X |
| 160 | 1181 | 5.1 | III | 10.64 | 8586 | 12409 | SK 6282 SCP - 100L/4 | SK 6282 SCP - 100LH/4 | SK 6282 SCP - 180TC | | | | X | X |
| 138 | 1371 | 4.9 | III | 12.35 | 8964 | 12978 | SK 6282 SCP - 100L/4 | SK 6282 SCP - 100LH/4 | SK 6282 SCP - 180TC | | | | X | X |
| 115 | 1647 | 4.6 | III | 14.83 | 9482 | 13500 | SK 6282 SCP - 100L/4 | SK 6282 SCP - 100LH/4 | SK 6282 SCP - 180TC | | | | X | X |
| 91 | 2076 | 4.6 | III | 18.7 | 10125 | 13500 | SK 6282 SCP - 100L/4 | SK 6282 SCP - 100LH/4 | SK 6282 SCP - 180TC | | | | X | X |
| 74 | 2548 | 4.6 | III | 22.95 | 10760 | 13500 | SK 6282 SCP - 100L/4 | SK 6282 SCP - 100LH/4 | SK 6282 SCP - 180TC | | | | X | X |
| 65 | 2893 | 4.4 | III | 26.05 | 11162 | 13500 | SK 6282 SCP - 100L/4 | SK 6282 SCP - 100LH/4 | SK 6282 SCP - 180TC | | | | X | X |
| 57 | 3320 | 4.2 | III | 29.9 | 11617 | 13500 | SK 6282 SCP - 100L/4 | SK 6282 SCP - 100LH/4 | SK 6282 SCP - 180TC | | | | X | X |
| 26 | 7266 | 4.1 | III | 65.44 | 13219 | 13500 | SK 6282 SCP - 100L/4 | SK 6282 SCP - 100LH/4 | SK 6282 SCP - 180TC | | | | X | X |
| 21 | 8920 | 4.1 | III | 80.33 | 13199 | 13500 | SK 6282 SCP - 100L/4 | SK 6282 SCP - 100LH/4 | SK 6282 SCP - 180TC | | | | X | X |

Output speed and torque ratings are based on the "Standard Efficiency Motor" Power and speed. Performance will vary slightly for other motors.



# 5 hp Gearmotors & Speed Reducers

| Output Speed | Output Torque | SF | AGMA Class | Gear Ratio | Thrust | | Integral Gearmotor | | Reducer | CEMA DriveShaft | | | | |
|---|---|---|---|---|---|---|---|---|---|---|---|---|---|---|
| $n_2$ | $T_2$ | $f_a$ | | i | Std Brg | H.D. Brg " VL" | Standard Efficiency Motor | Energy Efficient Motor | C-Face Input | 1-1/2" | 2" | 2-7/16" | 3" | 3-7/16" |
| [rpm] | [lb-in] | | | | [lb] | [lb] | | | | | | | | |
| 360 | 875 | 1.3 | I | 4.79 | 1487 | 1609 | SK 1282 SCP - 100LA/4 | SK 1282 SCP - 112MH/4 | SK 1282 SCP - 180TC | X | X | X | | |
| 315 | 1000 | 1.5 | II | 5.47 | 1537 | 1609 | SK 1282 SCP - 100LA/4 | SK 1282 SCP - 112MH/4 | SK 1282 SCP - 180TC | X | X | X | | |
| 268 | 1175 | 1.4 | II | 6.43 | 1595 | 1609 | SK 1282 SCP - 100LA/4 | SK 1282 SCP - 112MH/4 | SK 1282 SCP - 180TC | X | X | X | | |
| 238 | 1323 | 1.3 | I | 7.24 | 1638 | 1609 | SK 1282 SCP - 100LA/4 | SK 1282 SCP - 112MH/4 | SK 1282 SCP - 180TC | X | X | X | | |
| 210 | 1500 | 0.9 | * | 8.21 | 1701 | 1609 | SK 1282 SCP - 100LA/4 | SK 1282 SCP - 112MH/4 | SK 1282 SCP - 180TC | X | X | X | | |
| 209 | 1506 | 1.1 | I | 8.24 | 1683 | 1609 | SK 1282 SCP - 100LA/4 | SK 1282 SCP - 112MH/4 | SK 1282 SCP - 180TC | X | X | X | | |
| 188 | 1678 | 1 | I | 9.18 | 1737 | 1609 | SK 1282 SCP - 100LA/4 | SK 1282 SCP - 112MH/4 | SK 1282 SCP - 180TC | X | X | X | | |
| 167 | 1890 | 0.9 | * | 10.34 | 1780 | 1609 | SK 1282 SCP - 100LA/4 | SK 1282 SCP - 112MH/4 | SK 1282 SCP - 180TC | X | X | X | | |
| 382 | 824 | 2 | III | 4.51 | 1969 | 3375 | SK 2282 SCP - 100LA/4 | SK 2282 SCP - 112MH/4 | SK 2282 SCP - 180TC | X | X | X | | |
| 302 | 1045 | 1.8 | II | 5.72 | 2099 | 3375 | SK 2282 SCP - 100LA/4 | SK 2282 SCP - 112MH/4 | SK 2282 SCP - 180TC | X | X | X | | |
| 268 | 1175 | 1.7 | II | 6.43 | 2162 | 3375 | SK 2282 SCP - 100LA/4 | SK 2282 SCP - 112MH/4 | SK 2282 SCP - 180TC | X | X | X | | |
| 231 | 1367 | 1.6 | II | 7.48 | 2246 | 3375 | SK 2282 SCP - 100LA/4 | SK 2282 SCP - 112MH/4 | SK 2282 SCP - 180TC | X | X | X | | |
| 206 | 1530 | 1.5 | II | 8.37 | 2311 | 3375 | SK 2282 SCP - 100LA/4 | SK 2282 SCP - 112MH/4 | SK 2282 SCP - 180TC | X | X | X | | |
| 191 | 1650 | 1.8 | II | 9.03 | 2372 | 3375 | SK 2282 SCP - 100LA/4 | SK 2282 SCP - 112MH/4 | SK 2282 SCP - 180TC | X | X | X | | |
| 170 | 1855 | 1.7 | II | 10.15 | 2437 | 3375 | SK 2282 SCP - 100LA/4 | SK 2282 SCP - 112MH/4 | SK 2282 SCP - 180TC | X | X | X | | |
| 146 | 2158 | 1.6 | II | 11.81 | 2536 | 3375 | SK 2282 SCP - 100LA/4 | SK 2282 SCP - 112MH/4 | SK 2282 SCP - 180TC | X | X | X | | |
| 130 | 2418 | 1.5 | II | 13.23 | 2601 | 3375 | SK 2282 SCP - 100LA/4 | SK 2282 SCP - 112MH/4 | SK 2282 SCP - 180TC | X | X | X | | |
| 104 | 3021 | 1.4 | II | 16.53 | 2750 | 3375 | SK 2282 SCP - 100LA/4 | SK 2282 SCP - 112MH/4 | SK 2282 SCP - 180TC | X | X | X | | |
| 93 | 3383 | 1.3 | I | 18.51 | 2815 | 3375 | SK 2282 SCP - 100LA/4 | SK 2282 SCP - 112MH/4 | SK 2282 SCP - 180TC | X | X | X | | |
| 79 | 4002 | 1.1 | I | 21.9 | 2918 | 3375 | SK 2282 SCP - 100LA/4 | SK 2282 SCP - 112MH/4 | SK 2282 SCP - 180TC | X | X | X | | |
| 72 | 4379 | 0.9 | * | 23.96 | 2900 | 3375 | SK 2282 SCP - 100LA/4 | SK 2282 SCP - 112MH/4 | SK 2282 SCP - 180TC | X | X | X | | |
| 69 | 4563 | 1 | I | 24.97 | 2876 | 3375 | SK 2282 SCP - 100LA/4 | SK 2282 SCP - 112MH/4 | SK 2282 SCP - 180TC | X | X | X | | |
| 385 | 819 | 2.3 | III | 4.48 | 2264 | 3490 | SK 3282 SCP - 100LA/4 | SK 3282 SCP - 112MH/4 | SK 3282 SCP - 180TC | X | X | X | X | |
| 304 | 1038 | 2.2 | III | 5.68 | 2417 | 3715 | SK 3282 SCP - 100LA/4 | SK 3282 SCP - 112MH/4 | SK 3282 SCP - 180TC | X | X | X | X | |
| 257 | 1224 | 2.1 | III | 6.7 | 2527 | 3872 | SK 3282 SCP - 100LA/4 | SK 3282 SCP - 112MH/4 | SK 3282 SCP - 180TC | X | X | X | X | |
| 208 | 1519 | 1.9 | II | 8.31 | 2675 | 4091 | SK 3282 SCP - 100LA/4 | SK 3282 SCP - 112MH/4 | SK 3282 SCP - 180TC | X | X | X | X | |
| 176 | 1791 | 2.1 | III | 9.8 | 2799 | 4277 | SK 3282 SCP - 100LA/4 | SK 3282 SCP - 112MH/4 | SK 3282 SCP - 180TC | X | X | X | X | |
| 152 | 2080 | 2.1 | III | 11.38 | 2912 | 4446 | SK 3282 SCP - 100LA/4 | SK 3282 SCP - 112MH/4 | SK 3282 SCP - 180TC | X | X | X | X | |
| 122 | 2579 | 1.9 | II | 14.11 | 3074 | 4500 | SK 3282 SCP - 100LA/4 | SK 3282 SCP - 112MH/4 | SK 3282 SCP - 180TC | X | X | X | X | |
| 103 | 3047 | 1.9 | II | 16.67 | 3206 | 4500 | SK 3282 SCP - 100LA/4 | SK 3282 SCP - 112MH/4 | SK 3282 SCP - 180TC | X | X | X | X | |
| 85 | 3688 | 1.9 | II | 20.18 | 3359 | 4500 | SK 3282 SCP - 100LA/4 | SK 3282 SCP - 112MH/4 | SK 3282 SCP - 180TC | X | X | X | X | |
| 81 | 3907 | 1.6 | II | 21.38 | 3398 | 4500 | SK 3282 SCP - 100LA/4 | SK 3282 SCP - 112MH/4 | SK 3282 SCP - 180TC | X | X | X | X | |
| 77 | 4103 | 1.7 | II | 22.45 | 3447 | 4500 | SK 3282 SCP - 100LA/4 | SK 3282 SCP - 112MH/4 | SK 3282 SCP - 180TC | X | X | X | X | |
| 73 | 4333 | 1.5 | II | 23.71 | 3474 | 4500 | SK 3282 SCP - 100LA/4 | SK 3282 SCP - 112MH/4 | SK 3282 SCP - 180TC | X | X | X | X | |
| 67 | 4730 | 1.6 | II | 25.88 | 3553 | 4500 | SK 3282 SCP - 100LA/4 | SK 3282 SCP - 112MH/4 | SK 3282 SCP - 180TC | X | X | X | X | |
| 60 | 5245 | 1.5 | II | 28.7 | 3632 | 4500 | SK 3282 SCP - 100LA/4 | SK 3282 SCP - 112MH/4 | SK 3282 SCP - 180TC | X | X | X | X | |
| 54 | 5835 | 1.3 | I | 31.93 | 3713 | 4500 | SK 3282 SCP - 100LA/4 | SK 3282 SCP - 112MH/4 | SK 3282 SCP - 180TC | X | X | X | X | |
| 46 | 6903 | 1.1 | I | 37.77 | 3830 | 4500 | SK 3282 SCP - 100LA/4 | SK 3282 SCP - 112MH/4 | SK 3282 SCP - 180TC | X | X | X | X | |
| 41 | 7679 | 1.1 | I | 42.02 | 3906 | 4500 | SK 3282 SCP - 100LA/4 | SK 3282 SCP - 112MH/4 | SK 3282 SCP - 180TC | X | X | X | X | |

Output speed and torque ratings are based on the "Standard Efficiency Motor" Power and speed. Performance will vary slightly for other motors.

# 5 hp Gearmotors & Speed Reducers



| Output Speed | Output Torque | SF | AGMA Class | Gear Ratio | Thrust | | Integral Gearmotor | | Reducer | CEMA DriveShaft | | | | |
|---|---|---|---|---|---|---|---|---|---|---|---|---|---|---|
| $n_2$ | $T_2$ | $f_a$ | | i | Std Brg | H.D. Brg " VL" | Standard Efficiency Motor | Energy Efficient Motor | C-Face Input | 1-1/2" | 2" | 2-7/16" | 3" | 3-7/16" |
| [rpm] | [lb-in] | | | | [lb] | [lb] | | | | | | | | |
| 285 | 1107 | 2.5 | III | 6.06 | 3542 | 5987 | SK 4282 SCP - 100LA/4 | SK 4282 SCP - 112MH/4 | SK 4282 SCP - 180TC | | X | X | X | |
| 242 | 1303 | 2.4 | III | 7.13 | 3708 | 6264 | SK 4282 SCP - 100LA/4 | SK 4282 SCP - 112MH/4 | SK 4282 SCP - 180TC | | X | X | X | |
| 207 | 1522 | 2.3 | III | 8.33 | 3879 | 6530 | SK 4282 SCP - 100LA/4 | SK 4282 SCP - 112MH/4 | SK 4282 SCP - 180TC | | X | X | X | |
| 187 | 1687 | 2.5 | III | 9.23 | 3998 | 6743 | SK 4282 SCP - 100LA/4 | SK 4282 SCP - 112MH/4 | SK 4282 SCP - 180TC | | X | X | X | |
| 159 | 1983 | 2.4 | III | 10.85 | 4172 | 6750 | SK 4282 SCP - 100LA/4 | SK 4282 SCP - 112MH/4 | SK 4282 SCP - 180TC | | X | X | X | |
| 136 | 2317 | 2.3 | III | 12.68 | 4354 | 6750 | SK 4282 SCP - 100LA/4 | SK 4282 SCP - 112MH/4 | SK 4282 SCP - 180TC | | X | X | X | |
| 113 | 2778 | 2.3 | III | 15.2 | 4581 | 6750 | SK 4282 SCP - 100LA/4 | SK 4282 SCP - 112MH/4 | SK 4282 SCP - 180TC | | X | X | X | |
| 95 | 3322 | 2.3 | III | 18.18 | 4808 | 6750 | SK 4282 SCP - 100LA/4 | SK 4282 SCP - 112MH/4 | SK 4282 SCP - 180TC | | X | X | X | |
| 80 | 3920 | 2.3 | III | 21.45 | 5031 | 6750 | SK 4282 SCP - 100LA/4 | SK 4282 SCP - 112MH/4 | SK 4282 SCP - 180TC | | X | X | X | |
| 77 | 4092 | 2.1 | III | 22.39 | 5076 | 6750 | SK 4282 SCP - 100LA/4 | SK 4282 SCP - 112MH/4 | SK 4282 SCP - 180TC | | X | X | X | |
| 66 | 4797 | 2.3 | III | 26.25 | 5299 | 6750 | SK 4282 SCP - 100LA/4 | SK 4282 SCP - 112MH/4 | SK 4282 SCP - 180TC | | X | X | X | |
| 65 | 4830 | 2.1 | III | 26.43 | 5306 | 6750 | SK 4282 SCP - 100LA/4 | SK 4282 SCP - 112MH/4 | SK 4282 SCP - 180TC | | X | X | X | |
| 53 | 5910 | 2.1 | III | 32.34 | 5589 | 6750 | SK 4282 SCP - 100LA/4 | SK 4282 SCP - 112MH/4 | SK 4282 SCP - 180TC | | X | X | X | |
| 47 | 6652 | 1.8 | II | 36.4 | 5697 | 6750 | SK 4282 SCP - 100LA/4 | SK 4282 SCP - 112MH/4 | SK 4282 SCP - 180TC | | X | X | X | |
| 47 | 6727 | 1.7 | II | 36.81 | 5751 | 6750 | SK 4282 SCP - 100LA/4 | SK 4282 SCP - 112MH/4 | SK 4282 SCP - 180TC | | X | X | X | |
| 42 | 7445 | 1.8 | II | 40.74 | 5900 | 6750 | SK 4282 SCP - 100LA/4 | SK 4282 SCP - 112MH/4 | SK 4282 SCP - 180TC | | X | X | X | |
| 40 | 7977 | 1.8 | II | 43.65 | 5958 | 6750 | SK 4282 SCP - 100LA/4 | SK 4282 SCP - 112MH/4 | SK 4282 SCP - 180TC | | X | X | X | |
| 38 | 8233 | 1.7 | II | 45.05 | 6055 | 6750 | SK 4282 SCP - 100LA/4 | SK 4282 SCP - 112MH/4 | SK 4282 SCP - 180TC | | X | X | X | |
| 33 | 9540 | 1.7 | II | 52.2 | 6210 | 6750 | SK 4282 SCP - 100LA/4 | SK 4282 SCP - 112MH/4 | SK 4282 SCP - 180TC | | X | X | X | |
| 28 | 11258 | 1.4 | II | 61.6 | 6451 | 6750 | SK 4282 SCP - 100LA/4 | SK 4282 SCP - 112MH/4 | SK 4282 SCP - 180TC | | X | X | X | |
| 23 | 13778 | 1 | I | 75.39 | 6464 | 6750 | SK 4282 SCP - 100LA/4 | SK 4282 SCP - 112MH/4 | SK 4282 SCP - 180TC | | X | X | X | |
| 22 | 14017 | 1 | I | 76.7 | 6446 | 6750 | SK 4282 SCP - 100LA/4 | SK 4282 SCP - 112MH/4 | SK 4282 SCP - 180TC | | X | X | X | |
| 19 | 16543 | 0.9 | * | 90.52 | 6251 | 6750 | SK 4282 SCP - 100LA/4 | SK 4282 SCP - 112MH/4 | SK 4282 SCP - 180TC | | X | X | X | |
| 273 | 1157 | 2.9 | III | 6.33 | 5006 | 8417 | SK 5282 SCP - 100LA/4 | SK 5282 SCP - 112MH/4 | SK 5282 SCP - 180TC | | X | X | X | X |
| 241 | 1310 | 2.9 | III | 7.17 | 5186 | 8719 | SK 5282 SCP - 100LA/4 | SK 5282 SCP - 112MH/4 | SK 5282 SCP - 180TC | | X | X | X | X |
| 198 | 1590 | 2.7 | III | 8.7 | 5486 | 9000 | SK 5282 SCP - 100LA/4 | SK 5282 SCP - 112MH/4 | SK 5282 SCP - 180TC | | X | X | X | X |
| 182 | 1729 | 2.9 | III | 9.46 | 5627 | 9000 | SK 5282 SCP - 100LA/4 | SK 5282 SCP - 112MH/4 | SK 5282 SCP - 180TC | | X | X | X | X |
| 161 | 1957 | 2.9 | III | 10.71 | 5830 | 9000 | SK 5282 SCP - 100LA/4 | SK 5282 SCP - 112MH/4 | SK 5282 SCP - 180TC | | X | X | X | X |

Output speed and torque ratings are based on the "Standard Efficiency Motor" Power and speed. Performance will vary slightly for other motors.



# 5 hp Gearmotors & Speed Reducers

| Output Speed | Output Torque | SF | AGMA Class | Gear Ratio | Thrust | | Integral Gearmotor | | Reducer | CEMA DriveShaft | | | | |
|---|---|---|---|---|---|---|---|---|---|---|---|---|---|---|
| $n_2$ | $T_2$ | $f_a$ | | i | Std Brg | H.D. Brg " VL" | Standard Efficiency Motor | Energy Efficient Motor | C-Face Input | 1-1/2" | 2" | 2-7/16" | 3" | 3-7/16" |
| [rpm] | [lb-in] | | | | [lb] | [lb] | | | | | | | | |
| 133 | 2376 | 2.7 | III | 13 | 6154 | 9000 | SK 5282 SCP - 100LA/4 | SK 5282 SCP - 112MH/4 | SK 5282 SCP - 180TC | | X | X | X | X |
| 112 | 2811 | 2.7 | III | 15.38 | 6455 | 9000 | SK 5282 SCP - 100LA/4 | SK 5282 SCP - 112MH/4 | SK 5282 SCP - 180TC | | X | X | X | X |
| 98 | 3215 | 2.5 | III | 17.59 | 6707 | 9000 | SK 5282 SCP - 100LA/4 | SK 5282 SCP - 112MH/4 | SK 5282 SCP - 180TC | | X | X | X | X |
| 91 | 3450 | 2.7 | III | 18.88 | 6847 | 9000 | SK 5282 SCP - 100LA/4 | SK 5282 SCP - 112MH/4 | SK 5282 SCP - 180TC | | X | X | X | X |
| 85 | 3721 | 2.4 | III | 20.36 | 6980 | 9000 | SK 5282 SCP - 100LA/4 | SK 5282 SCP - 112MH/4 | SK 5282 SCP - 180TC | | X | X | X | X |
| 69 | 4569 | 2.4 | III | 25 | 7400 | 9000 | SK 5282 SCP - 100LA/4 | SK 5282 SCP - 112MH/4 | SK 5282 SCP - 180TC | | X | X | X | X |
| 57 | 5574 | 2.2 | III | 30.5 | 7805 | 9000 | SK 5282 SCP - 100LA/4 | SK 5282 SCP - 112MH/4 | SK 5282 SCP - 180TC | | X | X | X | X |
| 52 | 6109 | 2.4 | III | 33.43 | 8015 | 9000 | SK 5282 SCP - 100LA/4 | SK 5282 SCP - 112MH/4 | SK 5282 SCP - 180TC | | X | X | X | X |
| 42 | 7456 | 2.2 | III | 40.8 | 8444 | 9000 | SK 5282 SCP - 100LA/4 | SK 5282 SCP - 112MH/4 | SK 5282 SCP - 180TC | | X | X | X | X |
| 36 | 8639 | 2.5 | III | 47.27 | 8741 | 9000 | SK 5282 SCP - 100LA/4 | SK 5282 SCP - 112MH/4 | SK 5282 SCP - 180TC | | X | X | X | X |
| 31 | 10152 | 1.9 | II | 55.55 | 9140 | 9000 | SK 5282 SCP - 100LA/4 | SK 5282 SCP - 112MH/4 | SK 5282 SCP - 180TC | | X | X | X | X |
| 31 | 10216 | 2.3 | III | 55.9 | 9108 | 9000 | SK 5282 SCP - 100LA/4 | SK 5282 SCP - 112MH/4 | SK 5282 SCP - 180TC | | X | X | X | X |
| 25 | 12542 | 2.1 | III | 68.63 | 9603 | 9000 | SK 5282 SCP - 100LA/4 | SK 5282 SCP - 112MH/4 | SK 5282 SCP - 180TC | | X | X | X | X |
| 21 | 14915 | 1.1 | I | 81.61 | 9788 | 9000 | SK 5282 SCP - 100LA/4 | SK 5282 SCP - 112MH/4 | SK 5282 SCP - 180TC | | X | X | X | X |
| 19 | 16779 | 1.5 | II | 91.81 | 9716 | 9000 | SK 5282 SCP - 100LA/4 | SK 5282 SCP - 112MH/4 | SK 5282 SCP - 180TC | | X | X | X | X |
| 17 | 18310 | 1.1 | I | 100.19 | 9648 | 9000 | SK 5282 SCP - 100LA/4 | SK 5282 SCP - 112MH/4 | SK 5282 SCP - 180TC | | X | X | X | X |
| 13 | 24494 | 1 | I | 134.03 | 9308 | 9000 | SK 5282 SCP - 100LA/4 | SK 5282 SCP - 112MH/4 | SK 5282 SCP - 180TC | | X | X | X | X |
| 256 | 1232 | 3.1 | III | 6.74 | 7432 | 10742 | SK 6282 SCP - 100LA/4 | SK 6282 SCP - 112MH/4 | SK 6282 SCP - 180TC | | | | X | X |
| 221 | 1429 | 3 | III | 7.82 | 7772 | 11216 | SK 6282 SCP - 100LA/4 | SK 6282 SCP - 112MH/4 | SK 6282 SCP - 180TC | | | | X | X |
| 184 | 1716 | 2.8 | III | 9.39 | 8195 | 11846 | SK 6282 SCP - 100LA/4 | SK 6282 SCP - 112MH/4 | SK 6282 SCP - 180TC | | | | X | X |
| 162 | 1945 | 3.1 | III | 10.64 | 8501 | 12290 | SK 6282 SCP - 100LA/4 | SK 6282 SCP - 112MH/4 | SK 6282 SCP - 180TC | | | | X | X |
| 140 | 2257 | 3 | III | 12.35 | 8876 | 12854 | SK 6282 SCP - 100LA/4 | SK 6282 SCP - 112MH/4 | SK 6282 SCP - 180TC | | | | X | X |
| 116 | 2710 | 2.8 | III | 14.83 | 9358 | 13500 | SK 6282 SCP - 100LA/4 | SK 6282 SCP - 112MH/4 | SK 6282 SCP - 180TC | | | | X | X |
| 92 | 3417 | 2.8 | III | 18.7 | 10008 | 13500 | SK 6282 SCP - 100LA/4 | SK 6282 SCP - 112MH/4 | SK 6282 SCP - 180TC | | | | X | X |
| 75 | 4194 | 2.8 | III | 22.95 | 10616 | 13500 | SK 6282 SCP - 100LA/4 | SK 6282 SCP - 112MH/4 | SK 6282 SCP - 180TC | | | | X | X |
| 66 | 4761 | 2.7 | III | 26.05 | 10994 | 13500 | SK 6282 SCP - 100LA/4 | SK 6282 SCP - 112MH/4 | SK 6282 SCP - 180TC | | | | X | X |
| 58 | 5464 | 2.5 | III | 29.9 | 11439 | 13500 | SK 6282 SCP - 100LA/4 | SK 6282 SCP - 112MH/4 | SK 6282 SCP - 180TC | | | | X | X |
| 26 | 11959 | 2.5 | III | 65.44 | 13149 | 13500 | SK 6282 SCP - 100LA/4 | SK 6282 SCP - 112MH/4 | SK 6282 SCP - 180TC | | | | X | X |
| 21 | 14681 | 2.5 | III | 80.33 | 13095 | 13500 | SK 6282 SCP - 100LA/4 | SK 6282 SCP - 112MH/4 | SK 6282 SCP - 180TC | | | | X | X |

Output speed and torque ratings are based on the "Standard Efficiency Motor" Power and speed. Performance will vary slightly for other motors.

# 7.5 hp Gearmotors & Speed Reducers



| Output Speed | Output Torque | SF | AGMA Class | Gear Ratio | Thrust | | Integral Gearmotor | | Reducer | CEMA DriveShaft | | | | |
|---|---|---|---|---|---|---|---|---|---|---|---|---|---|---|
| $n_2$ | $T_2$ | $f_a$ | | i | Std Brg | H.D. Brg " VL" | Standard Efficiency Motor | Energy Efficient Motor | C-Face Input | 1-1/2" | 2" | 2-7/16" | 3" | 3-7/16" |
| [rpm] | [lb-in] | | | | [lb] | [lb] | | | | | | | | |
| 387 | 1221 | 3.3 | III | 4.48 | 2219 | 3402 | SK 3282 SCP - 132S/4 | SK 3282 SCP - 132SH/4 | SK 3282 SCP - 210TC | X | X | X | X | |
| 305 | 1547 | 3.2 | III | 5.68 | 2360 | 3602 | SK 3282 SCP - 132S/4 | SK 3282 SCP - 132SH/4 | SK 3282 SCP - 210TC | X | X | X | X | |
| 259 | 1824 | 2.9 | III | 6.7 | 2459 | 3744 | SK 3282 SCP - 132S/4 | SK 3282 SCP - 132SH/4 | SK 3282 SCP - 210TC | X | X | X | X | |
| 209 | 2263 | 2.6 | III | 8.31 | 2597 | 3935 | SK 3282 SCP - 132S/4 | SK 3282 SCP - 132SH/4 | SK 3282 SCP - 210TC | X | X | X | X | |
| 177 | 2669 | 2.8 | III | 9.8 | 2709 | 4104 | SK 3282 SCP - 132S/4 | SK 3282 SCP - 132SH/4 | SK 3282 SCP - 210TC | X | X | X | X | |
| 152 | 3099 | 2.3 | III | 11.38 | 2810 | 4237 | SK 3282 SCP - 132S/4 | SK 3282 SCP - 132SH/4 | SK 3282 SCP - 210TC | X | X | X | X | |
| 123 | 3842 | 2 | III | 14.11 | 2948 | 4417 | SK 3282 SCP - 132S/4 | SK 3282 SCP - 132SH/4 | SK 3282 SCP - 210TC | X | X | X | X | |
| 104 | 4539 | 1.6 | II | 16.67 | 3060 | 4500 | SK 3282 SCP - 132S/4 | SK 3282 SCP - 132SH/4 | SK 3282 SCP - 210TC | X | X | X | X | |
| 86 | 5495 | 1.3 | I | 20.18 | 3186 | 4500 | SK 3282 SCP - 132S/4 | SK 3282 SCP - 132SH/4 | SK 3282 SCP - 210TC | X | X | X | X | |
| 81 | 5822 | 1.1 | I | 21.38 | 3204 | 4500 | SK 3282 SCP - 132S/4 | SK 3282 SCP - 132SH/4 | SK 3282 SCP - 210TC | X | X | X | X | |
| 77 | 6113 | 1.2 | I | 22.45 | 3254 | 4500 | SK 3282 SCP - 132S/4 | SK 3282 SCP - 132SH/4 | SK 3282 SCP - 210TC | X | X | X | X | |
| 73 | 6456 | 1 | I | 23.71 | 3260 | 4500 | SK 3282 SCP - 132S/4 | SK 3282 SCP - 132SH/4 | SK 3282 SCP - 210TC | X | X | X | X | |
| 67 | 7047 | 1.1 | I | 25.88 | 3335 | 4500 | SK 3282 SCP - 132S/4 | SK 3282 SCP - 132SH/4 | SK 3282 SCP - 210TC | X | X | X | X | |
| 60 | 7815 | 1 | I | 28.7 | 3380 | 4500 | SK 3282 SCP - 132S/4 | SK 3282 SCP - 132SH/4 | SK 3282 SCP - 210TC | X | X | X | X | |
| 54 | 8695 | 0.9 | * | 31.93 | 3445 | 4500 | SK 3282 SCP - 132S/4 | SK 3282 SCP - 132SH/4 | SK 3282 SCP - 210TC | X | X | X | X | |
| 369 | 1280 | 4 | III | 4.7 | 3251 | 5492 | SK 4282 SCP - 132S/4 | SK 4282 SCP - 132SH/4 | SK 4282 SCP - 210TC | | X | X | X | |
| 347 | 1362 | 3.9 | III | 5 | 3310 | 5589 | SK 4282 SCP - 132S/4 | SK 4282 SCP - 132SH/4 | SK 4282 SCP - 210TC | | X | X | X | |
| 320 | 1479 | 3.9 | III | 5.43 | 3384 | 5706 | SK 4282 SCP - 132S/4 | SK 4282 SCP - 132SH/4 | SK 4282 SCP - 210TC | | X | X | X | |
| 286 | 1650 | 3.7 | III | 6.06 | 3488 | 5884 | SK 4282 SCP - 132S/4 | SK 4282 SCP - 132SH/4 | SK 4282 SCP - 210TC | | X | X | X | |
| 243 | 1942 | 3.5 | III | 7.13 | 3647 | 6134 | SK 4282 SCP - 132S/4 | SK 4282 SCP - 132SH/4 | SK 4282 SCP - 210TC | | X | X | X | |
| 208 | 2268 | 3.2 | III | 8.33 | 3800 | 6386 | SK 4282 SCP - 132S/4 | SK 4282 SCP - 132SH/4 | SK 4282 SCP - 210TC | | X | X | X | |
| 188 | 2513 | 3.7 | III | 9.23 | 3917 | 6581 | SK 4282 SCP - 132S/4 | SK 4282 SCP - 132SH/4 | SK 4282 SCP - 210TC | | X | X | X | |
| 160 | 2955 | 3.5 | III | 10.85 | 4086 | 6750 | SK 4282 SCP - 132S/4 | SK 4282 SCP - 132SH/4 | SK 4282 SCP - 210TC | | X | X | X | |
| 137 | 3453 | 3.2 | III | 12.68 | 4255 | 6750 | SK 4282 SCP - 132S/4 | SK 4282 SCP - 132SH/4 | SK 4282 SCP - 210TC | | X | X | X | |
| 114 | 4139 | 3.2 | III | 15.2 | 4464 | 6750 | SK 4282 SCP - 132S/4 | SK 4282 SCP - 132SH/4 | SK 4282 SCP - 210TC | | X | X | X | |
| 95 | 4951 | 3.2 | III | 18.18 | 4673 | 6750 | SK 4282 SCP - 132S/4 | SK 4282 SCP - 132SH/4 | SK 4282 SCP - 210TC | | X | X | X | |
| 81 | 5841 | 2.6 | III | 21.45 | 4871 | 6750 | SK 4282 SCP - 132S/4 | SK 4282 SCP - 132SH/4 | SK 4282 SCP - 210TC | | X | X | X | |
| 77 | 6097 | 2.5 | III | 22.39 | 4905 | 6750 | SK 4282 SCP - 132S/4 | SK 4282 SCP - 132SH/4 | SK 4282 SCP - 210TC | | X | X | X | |
| 66 | 7148 | 2 | III | 26.25 | 5121 | 6750 | SK 4282 SCP - 132S/4 | SK 4282 SCP - 132SH/4 | SK 4282 SCP - 210TC | | X | X | X | |
| 66 | 7197 | 2.2 | III | 26.43 | 5121 | 6750 | SK 4282 SCP - 132S/4 | SK 4282 SCP - 132SH/4 | SK 4282 SCP - 210TC | | X | X | X | |
| 65 | 7276 | 1.9 | II | 26.72 | 5078 | 6750 | SK 4282 SCP - 132S/4 | SK 4282 SCP - 132SH/4 | SK 4282 SCP - 210TC | | X | X | X | |
| 54 | 8725 | 1.8 | II | 32.04 | 5301 | 6750 | SK 4282 SCP - 132S/4 | SK 4282 SCP - 132SH/4 | SK 4282 SCP - 210TC | | X | X | X | |
| 54 | 8806 | 1.6 | II | 32.34 | 5351 | 6750 | SK 4282 SCP - 132S/4 | SK 4282 SCP - 132SH/4 | SK 4282 SCP - 210TC | | X | X | X | |
| 48 | 9912 | 1.2 | I | 36.4 | 5405 | 6750 | SK 4282 SCP - 132S/4 | SK 4282 SCP - 132SH/4 | SK 4282 SCP - 210TC | | X | X | X | |
| 47 | 10024 | 1.2 | I | 36.81 | 5488 | 6750 | SK 4282 SCP - 132S/4 | SK 4282 SCP - 132SH/4 | SK 4282 SCP - 210TC | | X | X | X | |
| 45 | 10432 | 1.7 | II | 38.31 | 5506 | 6750 | SK 4282 SCP - 132S/4 | SK 4282 SCP - 132SH/4 | SK 4282 SCP - 210TC | | X | X | X | |
| 43 | 11094 | 1.2 | I | 40.74 | 5609 | 6750 | SK 4282 SCP - 132S/4 | SK 4282 SCP - 132SH/4 | SK 4282 SCP - 210TC | | X | X | X | |
| 40 | 11886 | 1.2 | I | 43.65 | 5627 | 6750 | SK 4282 SCP - 132S/4 | SK 4282 SCP - 132SH/4 | SK 4282 SCP - 210TC | | X | X | X | |
| 39 | 12267 | 1.1 | I | 45.05 | 5715 | 6750 | SK 4282 SCP - 132S/4 | SK 4282 SCP - 132SH/4 | SK 4282 SCP - 210TC | | X | X | X | |
| 33 | 14214 | 1.1 | I | 52.2 | 5814 | 6750 | SK 4282 SCP - 132S/4 | SK 4282 SCP - 132SH/4 | SK 4282 SCP - 210TC | | X | X | X | |
| 28 | 16774 | 0.9 | * | 61.6 | 5994 | 6750 | SK 4282 SCP - 132S/4 | SK 4282 SCP - 132SH/4 | SK 4282 SCP - 210TC | | X | X | X | |

Output speed and torque ratings are based on the "Standard Efficiency Motor" Power and speed. Performance will vary slightly for other motors.



# 7.5 hp Gearmotors & Speed Reducers

| Output Speed | Output Torque | SF | AGMA Class | Gear Ratio | Thrust | | Integral Gearmotor | | Reducer | CEMA DriveShaft | | | | |
|---|---|---|---|---|---|---|---|---|---|---|---|---|---|---|
| $n_2$ | $T_2$ | $f_a$ | | i | Std Brg | H.D. Brg " VL" | Standard Efficiency Motor | Energy Efficient Motor | C-Face Input | 1-1/2" | 2" | 2-7/16" | 3" | 3-7/16" |
| [rpm] | [lb-in] | | | | [lb] | [lb] | | | | | | | | |
| 274 | 1724 | 4.2 | III | 6.33 | 4959 | 8323 | SK 5282 SCP - 132S/4 | SK 5282 SCP - 132SH/4 | SK 5282 SCP - 210TC | | X | X | X | X |
| 242 | 1952 | 4.1 | III | 7.17 | 5135 | 8622 | SK 5282 SCP - 132S/4 | SK 5282 SCP - 132SH/4 | SK 5282 SCP - 210TC | | X | X | X | X |
| 199 | 2369 | 3.8 | III | 8.7 | 5414 | 9000 | SK 5282 SCP - 132S/4 | SK 5282 SCP - 132SH/4 | SK 5282 SCP - 210TC | | X | X | X | X |
| 183 | 2576 | 4.2 | III | 9.46 | 5553 | 9000 | SK 5282 SCP - 132S/4 | SK 5282 SCP - 132SH/4 | SK 5282 SCP - 210TC | | X | X | X | X |
| 162 | 2916 | 4.1 | III | 10.71 | 5753 | 9000 | SK 5282 SCP - 132S/4 | SK 5282 SCP - 132SH/4 | SK 5282 SCP - 210TC | | X | X | X | X |
| 133 | 3540 | 3.8 | III | 13 | 6062 | 9000 | SK 5282 SCP - 132S/4 | SK 5282 SCP - 132SH/4 | SK 5282 SCP - 210TC | | X | X | X | X |
| 113 | 4188 | 3.8 | III | 15.38 | 6356 | 9000 | SK 5282 SCP - 132S/4 | SK 5282 SCP - 132SH/4 | SK 5282 SCP - 210TC | | X | X | X | X |
| 99 | 4790 | 3.6 | III | 17.59 | 6590 | 9000 | SK 5282 SCP - 132S/4 | SK 5282 SCP - 132SH/4 | SK 5282 SCP - 210TC | | X | X | X | X |
| 92 | 5141 | 3.8 | III | 18.88 | 6728 | 9000 | SK 5282 SCP - 132S/4 | SK 5282 SCP - 132SH/4 | SK 5282 SCP - 210TC | | X | X | X | X |
| 85 | 5544 | 3.4 | III | 20.36 | 6842 | 9000 | SK 5282 SCP - 132S/4 | SK 5282 SCP - 132SH/4 | SK 5282 SCP - 210TC | | X | X | X | X |
| 69 | 6808 | 3.4 | III | 25 | 7236 | 9000 | SK 5282 SCP - 132S/4 | SK 5282 SCP - 132SH/4 | SK 5282 SCP - 210TC | | X | X | X | X |
| 57 | 8305 | 3.1 | III | 30.5 | 7621 | 9000 | SK 5282 SCP - 132S/4 | SK 5282 SCP - 132SH/4 | SK 5282 SCP - 210TC | | X | X | X | X |
| 52 | 9103 | 2.2 | III | 33.43 | 7805 | 9000 | SK 5282 SCP - 132S/4 | SK 5282 SCP - 132SH/4 | SK 5282 SCP - 210TC | | X | X | X | X |
| 49 | 9656 | 2.5 | III | 35.46 | 7884 | 9000 | SK 5282 SCP - 132S/4 | SK 5282 SCP - 132SH/4 | SK 5282 SCP - 210TC | | X | X | X | X |
| 43 | 11110 | 2 | III | 40.8 | 8188 | 9000 | SK 5282 SCP - 132S/4 | SK 5282 SCP - 132SH/4 | SK 5282 SCP - 210TC | | X | X | X | X |
| 41 | 11421 | 2.5 | III | 41.94 | 8208 | 9000 | SK 5282 SCP - 132S/4 | SK 5282 SCP - 132SH/4 | SK 5282 SCP - 210TC | | X | X | X | X |
| 37 | 12872 | 1.7 | II | 47.27 | 8411 | 9000 | SK 5282 SCP - 132S/4 | SK 5282 SCP - 132SH/4 | SK 5282 SCP - 210TC | | X | X | X | X |
| 34 | 14021 | 2 | III | 51.49 | 8638 | 9000 | SK 5282 SCP - 132S/4 | SK 5282 SCP - 132SH/4 | SK 5282 SCP - 210TC | | X | X | X | X |
| 31 | 15127 | 1.3 | I | 55.55 | 8798 | 9000 | SK 5282 SCP - 132S/4 | SK 5282 SCP - 132SH/4 | SK 5282 SCP - 210TC | | X | X | X | X |
| 31 | 15222 | 1.5 | II | 55.9 | 8753 | 9000 | SK 5282 SCP - 132S/4 | SK 5282 SCP - 132SH/4 | SK 5282 SCP - 210TC | | X | X | X | X |
| 25 | 18688 | 1.4 | II | 68.63 | 9191 | 9000 | SK 5282 SCP - 132S/4 | SK 5282 SCP - 132SH/4 | SK 5282 SCP - 210TC | | X | X | X | X |
| 19 | 25001 | 1 | I | 91.81 | 9275 | 9000 | SK 5282 SCP - 132S/4 | SK 5282 SCP - 132SH/4 | SK 5282 SCP - 210TC | | X | X | X | X |
| 257 | 1835 | 4.5 | III | 6.74 | 7382 | 10672 | SK 6282 SCP - 132S/4 | SK 6282 SCP - 132SH/4 | SK 6282 SCP - 210TC | | | | X | X |
| 222 | 2129 | 4.3 | III | 7.82 | 7697 | 11144 | SK 6282 SCP - 132S/4 | SK 6282 SCP - 132SH/4 | SK 6282 SCP - 210TC | | | | X | X |
| 185 | 2557 | 4.1 | III | 9.39 | 8114 | 11732 | SK 6282 SCP - 132S/4 | SK 6282 SCP - 132SH/4 | SK 6282 SCP - 210TC | | | | X | X |
| 163 | 2897 | 4.5 | III | 10.64 | 8431 | 12173 | SK 6282 SCP - 132S/4 | SK 6282 SCP - 132SH/4 | SK 6282 SCP - 210TC | | | | X | X |
| 140 | 3363 | 4.3 | III | 12.35 | 8789 | 12690 | SK 6282 SCP - 132S/4 | SK 6282 SCP - 132SH/4 | SK 6282 SCP - 210TC | | | | X | X |
| 117 | 4038 | 4.1 | III | 14.83 | 9248 | 13381 | SK 6282 SCP - 132S/4 | SK 6282 SCP - 132SH/4 | SK 6282 SCP - 210TC | | | | X | X |
| 93 | 5092 | 4.1 | III | 18.7 | 9873 | 13500 | SK 6282 SCP - 132S/4 | SK 6282 SCP - 132SH/4 | SK 6282 SCP - 210TC | | | | X | X |
| 76 | 6249 | 4.1 | III | 22.95 | 10485 | 13500 | SK 6282 SCP - 132S/4 | SK 6282 SCP - 132SH/4 | SK 6282 SCP - 210TC | | | | X | X |
| 67 | 7094 | 3.9 | III | 26.05 | 10836 | 13500 | SK 6282 SCP - 132S/4 | SK 6282 SCP - 132SH/4 | SK 6282 SCP - 210TC | | | | X | X |
| 58 | 8142 | 3.7 | III | 29.9 | 11252 | 13500 | SK 6282 SCP - 132S/4 | SK 6282 SCP - 132SH/4 | SK 6282 SCP - 210TC | | | | X | X |
| 44 | 10751 | 2.6 | III | 39.48 | 12058 | 13500 | SK 6282 SCP - 132S/4 | SK 6282 SCP - 132SH/4 | SK 6282 SCP - 210TC | | | | X | X |
| 35 | 13547 | 2.6 | III | 49.75 | 12807 | 13500 | SK 6282 SCP - 132S/4 | SK 6282 SCP - 132SH/4 | SK 6282 SCP - 210TC | | | | X | X |
| 28 | 16633 | 2.4 | III | 61.08 | 13048 | 13500 | SK 6282 SCP - 132S/4 | SK 6282 SCP - 132SH/4 | SK 6282 SCP - 210TC | | | | X | X |
| 27 | 17820 | 1.7 | II | 65.44 | 13016 | 13500 | SK 6282 SCP - 132S/4 | SK 6282 SCP - 132SH/4 | SK 6282 SCP - 210TC | | | | X | X |
| 22 | 21874 | 1.7 | II | 80.33 | 12893 | 13500 | SK 6282 SCP - 132S/4 | SK 6282 SCP - 132SH/4 | SK 6282 SCP - 210TC | | | | X | X |

Output speed and torque ratings are based on the "Standard Efficiency Motor" Power and speed. Performance will vary slightly for other motors.

# 10 hp Gearmotors & Speed Reducers



| Output Speed | Output Torque | SF | AGMA Class | Gear Ratio | Thrust | | Integral Gearmotor | | Reducer | CEMA DriveShaft | | | | |
|---|---|---|---|---|---|---|---|---|---|---|---|---|---|---|
| $n_2$ | $T_2$ | $f_a$ | | i | Std Brg | H.D. Brg " VL" | Standard Efficiency Motor | Energy Efficient Motor | C-Face Input | 1-1/2" | 2" | 2-7/16" | 3" | 3-7/16" |
| [rpm] | [lb-in] | | | | [lb] | [lb] | | | | | | | | |
| 387 | 1627 | 2.5 | III | 4.48 | 2178 | 3314 | SK 3282 SCP - 132M/4 | SK 3282 SCP - 132MH/4 | SK 3282 SCP - 210TC | X | X | X | X | |
| 305 | 2064 | 2.4 | III | 5.68 | 2309 | 3494 | SK 3282 SCP - 132M/4 | SK 3282 SCP - 132MH/4 | SK 3282 SCP - 210TC | X | X | X | X | |
| 259 | 2435 | 2.2 | III | 6.7 | 2394 | 3614 | SK 3282 SCP - 132M/4 | SK 3282 SCP - 132MH/4 | SK 3282 SCP - 210TC | X | X | X | X | |
| 209 | 3020 | 2 | III | 8.31 | 2513 | 3769 | SK 3282 SCP - 132M/4 | SK 3282 SCP - 132MH/4 | SK 3282 SCP - 210TC | X | X | X | X | |
| 177 | 3561 | 2.1 | III | 9.8 | 2624 | 3922 | SK 3282 SCP - 132M/4 | SK 3282 SCP - 132MH/4 | SK 3282 SCP - 210TC | X | X | X | X | |
| 152 | 4136 | 1.8 | II | 11.38 | 2709 | 4037 | SK 3282 SCP - 132M/4 | SK 3282 SCP - 132MH/4 | SK 3282 SCP - 210TC | X | X | X | X | |
| 123 | 5128 | 1.5 | II | 14.11 | 2822 | 4169 | SK 3282 SCP - 132M/4 | SK 3282 SCP - 132MH/4 | SK 3282 SCP - 210TC | X | X | X | X | |
| 104 | 6058 | 1.2 | I | 16.67 | 2912 | 4277 | SK 3282 SCP - 132M/4 | SK 3282 SCP - 132MH/4 | SK 3282 SCP - 210TC | X | X | X | X | |
| 86 | 7333 | 1 | I | 20.18 | 3011 | 4388 | SK 3282 SCP - 132M/4 | SK 3282 SCP - 132MH/4 | SK 3282 SCP - 210TC | X | X | X | X | |
| 77 | 8158 | 0.9 | * | 22.45 | 3056 | 4446 | SK 3282 SCP - 132M/4 | SK 3282 SCP - 132MH/4 | SK 3282 SCP - 210TC | X | X | X | X | |
| 369 | 1708 | 3 | III | 4.7 | 3220 | 5423 | SK 4282 SCP - 132M/4 | SK 4282 SCP - 132MH/4 | SK 4282 SCP - 210TC | | X | X | X | |
| 347 | 1817 | 3 | III | 5 | 3272 | 5499 | SK 4282 SCP - 132M/4 | SK 4282 SCP - 132MH/4 | SK 4282 SCP - 210TC | | X | X | X | |
| 320 | 1973 | 2.9 | III | 5.43 | 3344 | 5616 | SK 4282 SCP - 132M/4 | SK 4282 SCP - 132MH/4 | SK 4282 SCP - 210TC | | X | X | X | |
| 286 | 2202 | 2.7 | III | 6.06 | 3440 | 5771 | SK 4282 SCP - 132M/4 | SK 4282 SCP - 132MH/4 | SK 4282 SCP - 210TC | | X | X | X | |
| 243 | 2591 | 2.6 | III | 7.13 | 3584 | 6008 | SK 4282 SCP - 132M/4 | SK 4282 SCP - 132MH/4 | SK 4282 SCP - 210TC | | X | X | X | |
| 208 | 3027 | 2.4 | III | 8.33 | 3728 | 6253 | SK 4282 SCP - 132M/4 | SK 4282 SCP - 132MH/4 | SK 4282 SCP - 210TC | | X | X | X | |
| 188 | 3354 | 2.7 | III | 9.23 | 3854 | 6446 | SK 4282 SCP - 132M/4 | SK 4282 SCP - 132MH/4 | SK 4282 SCP - 210TC | | X | X | X | |
| 160 | 3943 | 2.6 | III | 10.85 | 4005 | 6689 | SK 4282 SCP - 132M/4 | SK 4282 SCP - 132MH/4 | SK 4282 SCP - 210TC | | X | X | X | |
| 137 | 4608 | 2.4 | III | 12.68 | 4160 | 6750 | SK 4282 SCP - 132M/4 | SK 4282 SCP - 132MH/4 | SK 4282 SCP - 210TC | | X | X | X | |
| 114 | 5524 | 2.4 | III | 15.2 | 4352 | 6750 | SK 4282 SCP - 132M/4 | SK 4282 SCP - 132MH/4 | SK 4282 SCP - 210TC | | X | X | X | |
| 95 | 6607 | 2.4 | III | 18.18 | 4545 | 6750 | SK 4282 SCP - 132M/4 | SK 4282 SCP - 132MH/4 | SK 4282 SCP - 210TC | | X | X | X | |
| 81 | 7795 | 1.9 | II | 21.45 | 4718 | 6750 | SK 4282 SCP - 132M/4 | SK 4282 SCP - 132MH/4 | SK 4282 SCP - 210TC | | X | X | X | |
| 77 | 8137 | 1.8 | II | 22.39 | 4748 | 6750 | SK 4282 SCP - 132M/4 | SK 4282 SCP - 132MH/4 | SK 4282 SCP - 210TC | | X | X | X | |
| 66 | 9539 | 1.5 | II | 26.25 | 4930 | 6750 | SK 4282 SCP - 132M/4 | SK 4282 SCP - 132MH/4 | SK 4282 SCP - 210TC | | X | X | X | |
| 66 | 9605 | 1.6 | II | 26.43 | 4919 | 6750 | SK 4282 SCP - 132M/4 | SK 4282 SCP - 132MH/4 | SK 4282 SCP - 210TC | | X | X | X | |
| 65 | 9710 | 1.5 | II | 26.72 | 4869 | 6750 | SK 4282 SCP - 132M/4 | SK 4282 SCP - 132MH/4 | SK 4282 SCP - 210TC | | X | X | X | |
| 54 | 11643 | 1.4 | II | 32.04 | 5072 | 6750 | SK 4282 SCP - 132M/4 | SK 4282 SCP - 132MH/4 | SK 4282 SCP - 210TC | | X | X | X | |
| 54 | 11752 | 1.2 | I | 32.34 | 5126 | 6750 | SK 4282 SCP - 132M/4 | SK 4282 SCP - 132MH/4 | SK 4282 SCP - 210TC | | X | X | X | |
| 47 | 13377 | 0.9 | * | 36.81 | 5218 | 6750 | SK 4282 SCP - 132M/4 | SK 4282 SCP - 132MH/4 | SK 4282 SCP - 210TC | | X | X | X | |
| 45 | 13922 | 1.3 | I | 38.31 | 5213 | 6750 | SK 4282 SCP - 132M/4 | SK 4282 SCP - 132MH/4 | SK 4282 SCP - 210TC | | X | X | X | |
| 43 | 14805 | 0.9 | * | 40.74 | 5321 | 6750 | SK 4282 SCP - 132M/4 | SK 4282 SCP - 132MH/4 | SK 4282 SCP - 210TC | | X | X | X | |
| 39 | 16371 | 0.9 | * | 45.05 | 5387 | 6750 | SK 4282 SCP - 132M/4 | SK 4282 SCP - 132MH/4 | SK 4282 SCP - 210TC | | X | X | X | |

Output speed and torque ratings are based on the "Standard Efficiency Motor" Power and speed. Performance will vary slightly for other motors.



# 10 hp Gearmotors & Speed Reducers

| Output Speed | Output Torque | SF | AGMA Class | Gear Ratio | Thrust | | Integral Gearmotor | | Reducer | CEMA DriveShaft | | | | |
|---|---|---|---|---|---|---|---|---|---|---|---|---|---|---|
| $n_2$ | $T_2$ | $f_a$ | | i | Std Brg | H.D. Brg " VL" | Standard Efficiency Motor | Energy Efficient Motor | C-Face Input | 1-1/2" | 2" | 2-7/16" | 3" | 3-7/16" |
| [rpm] | [lb-in] | | | | [lb] | [lb] | | | | | | | | |
| 274 | 2300 | 3.2 | III | 6.33 | 4910 | 8255 | SK 5282 SCP - 132M/4 | SK 5282 SCP - 132MH/4 | SK 5282 SCP - 210TC | | X | X | X | X |
| 242 | 2606 | 3 | III | 7.17 | 5094 | 8539 | SK 5282 SCP - 132M/4 | SK 5282 SCP - 132MH/4 | SK 5282 SCP - 210TC | | X | X | X | X |
| 199 | 3162 | 2.9 | III | 8.7 | 5360 | 9000 | SK 5282 SCP - 132M/4 | SK 5282 SCP - 132MH/4 | SK 5282 SCP - 210TC | | X | X | X | X |
| 183 | 3438 | 3.2 | III | 9.46 | 5497 | 9000 | SK 5282 SCP - 132M/4 | SK 5282 SCP - 132MH/4 | SK 5282 SCP - 210TC | | X | X | X | X |
| 162 | 3892 | 3 | III | 10.71 | 5693 | 9000 | SK 5282 SCP - 132M/4 | SK 5282 SCP - 132MH/4 | SK 5282 SCP - 210TC | | X | X | X | X |
| 133 | 4724 | 2.9 | III | 13 | 5987 | 9000 | SK 5282 SCP - 132M/4 | SK 5282 SCP - 132MH/4 | SK 5282 SCP - 210TC | | X | X | X | X |
| 113 | 5589 | 2.9 | III | 15.38 | 6264 | 9000 | SK 5282 SCP - 132M/4 | SK 5282 SCP - 132MH/4 | SK 5282 SCP - 210TC | | X | X | X | X |
| 99 | 6392 | 2.7 | III | 17.59 | 6482 | 9000 | SK 5282 SCP - 132M/4 | SK 5282 SCP - 132MH/4 | SK 5282 SCP - 210TC | | X | X | X | X |
| 92 | 6861 | 2.9 | III | 18.88 | 6615 | 9000 | SK 5282 SCP - 132M/4 | SK 5282 SCP - 132MH/4 | SK 5282 SCP - 210TC | | X | X | X | X |
| 85 | 7399 | 2.6 | III | 20.36 | 6725 | 9000 | SK 5282 SCP - 132M/4 | SK 5282 SCP - 132MH/4 | SK 5282 SCP - 210TC | | X | X | X | X |
| 69 | 9085 | 2.6 | III | 25 | 7090 | 9000 | SK 5282 SCP - 132M/4 | SK 5282 SCP - 132MH/4 | SK 5282 SCP - 210TC | | X | X | X | X |
| 57 | 11084 | 2.3 | III | 30.5 | 7439 | 9000 | SK 5282 SCP - 132M/4 | SK 5282 SCP - 132MH/4 | SK 5282 SCP - 210TC | | X | X | X | X |
| 52 | 12148 | 1.7 | II | 33.43 | 7607 | 9000 | SK 5282 SCP - 132M/4 | SK 5282 SCP - 132MH/4 | SK 5282 SCP - 210TC | | X | X | X | X |
| 49 | 12886 | 1.9 | II | 35.46 | 7652 | 9000 | SK 5282 SCP - 132M/4 | SK 5282 SCP - 132MH/4 | SK 5282 SCP - 210TC | | X | X | X | X |
| 43 | 14827 | 1.5 | II | 40.8 | 7949 | 9000 | SK 5282 SCP - 132M/4 | SK 5282 SCP - 132MH/4 | SK 5282 SCP - 210TC | | X | X | X | X |
| 41 | 15241 | 1.9 | II | 41.94 | 7949 | 9000 | SK 5282 SCP - 132M/4 | SK 5282 SCP - 132MH/4 | SK 5282 SCP - 210TC | | X | X | X | X |
| 34 | 18712 | 1.5 | II | 51.49 | 8321 | 9000 | SK 5282 SCP - 132M/4 | SK 5282 SCP - 132MH/4 | SK 5282 SCP - 210TC | | X | X | X | X |
| 31 | 20187 | 0.9 | * | 55.55 | 8474 | 9000 | SK 5282 SCP - 132M/4 | SK 5282 SCP - 132MH/4 | SK 5282 SCP - 210TC | | X | X | X | X |
| | | | | | | | | | | | | | | |
| 257 | 2449 | 3.4 | III | 6.74 | 7335 | 10604 | SK 6282 SCP - 132M/4 | SK 6282 SCP - 132MH/4 | SK 6282 SCP - 210TC | | | | X | X |
| 222 | 2842 | 3.3 | III | 7.82 | 7659 | 11057 | SK 6282 SCP - 132M/4 | SK 6282 SCP - 132MH/4 | SK 6282 SCP - 210TC | | | | X | X |
| 185 | 3412 | 3.1 | III | 9.39 | 8060 | 11619 | SK 6282 SCP - 132M/4 | SK 6282 SCP - 132MH/4 | SK 6282 SCP - 210TC | | | | X | X |
| 163 | 3867 | 3.4 | III | 10.64 | 8361 | 12094 | SK 6282 SCP - 132M/4 | SK 6282 SCP - 132MH/4 | SK 6282 SCP - 210TC | | | | X | X |
| 140 | 4488 | 3.3 | III | 12.35 | 8714 | 12589 | SK 6282 SCP - 132M/4 | SK 6282 SCP - 132MH/4 | SK 6282 SCP - 210TC | | | | X | X |
| 117 | 5389 | 3.1 | III | 14.83 | 9185 | 13253 | SK 6282 SCP - 132M/4 | SK 6282 SCP - 132MH/4 | SK 6282 SCP - 210TC | | | | X | X |
| 93 | 6796 | 3.1 | III | 18.7 | 9767 | 13500 | SK 6282 SCP - 132M/4 | SK 6282 SCP - 132MH/4 | SK 6282 SCP - 210TC | | | | X | X |
| 76 | 8340 | 3.1 | III | 22.95 | 10350 | 13500 | SK 6282 SCP - 132M/4 | SK 6282 SCP - 132MH/4 | SK 6282 SCP - 210TC | | | | X | X |
| 67 | 9467 | 3 | III | 26.05 | 10674 | 13500 | SK 6282 SCP - 132M/4 | SK 6282 SCP - 132MH/4 | SK 6282 SCP - 210TC | | | | X | X |
| 58 | 10866 | 2.8 | III | 29.9 | 11093 | 13500 | SK 6282 SCP - 132M/4 | SK 6282 SCP - 132MH/4 | SK 6282 SCP - 210TC | | | | X | X |
| 44 | 14347 | 2 | III | 39.48 | 11844 | 13500 | SK 6282 SCP - 132M/4 | SK 6282 SCP - 132MH/4 | SK 6282 SCP - 210TC | | | | X | X |
| 35 | 18079 | 2 | III | 49.75 | 12517 | 13500 | SK 6282 SCP - 132M/4 | SK 6282 SCP - 132MH/4 | SK 6282 SCP - 210TC | | | | X | X |
| 28 | 22197 | 1.8 | II | 61.08 | 12881 | 13500 | SK 6282 SCP - 132M/4 | SK 6282 SCP - 132MH/4 | SK 6282 SCP - 210TC | | | | X | X |

Output speed and torque ratings are based on the "Standard Efficiency Motor" Power and speed. Performance will vary slightly for other motors.

# 15 hp Gearmotors & Speed Reducers



| Output Speed | Output Torque | SF | AGMA Class | Gear Ratio | Thrust | | Integral Gearmotor | | Reducer | CEMA DriveShaft | | | | |
|---|---|---|---|---|---|---|---|---|---|---|---|---|---|---|
| $n_2$ | $T_2$ | $f_a$ | | i | Std Brg | H.D. Brg " VL" | Standard Efficiency Motor | Energy Efficient Motor | C-Face Input | 1-1/2" | 2" | 2-7/16" | 3" | 3-7/16" |
| [rpm] | [lb-in] | | | | [lb] | [lb] | | | | | | | | |
| 377 | 2510 | 3.3 | III | 4.7 | 3130 | 5225 | SK 4282 SCP - 160M/4 | SK 4282 SCP - 160MH/4 | SK 4282 SCP - 250TC | | X | X | X | |
| 354 | 2672 | 3.2 | III | 5 | 3173 | 5301 | SK 4282 SCP - 160M/4 | SK 4282 SCP - 160MH/4 | SK 4282 SCP - 250TC | | X | X | X | |
| 326 | 2901 | 3.2 | III | 5.43 | 3238 | 5405 | SK 4282 SCP - 160M/4 | SK 4282 SCP - 160MH/4 | SK 4282 SCP - 250TC | | X | X | X | |
| 292 | 3238 | 3 | III | 6.06 | 3326 | 5544 | SK 4282 SCP - 160M/4 | SK 4282 SCP - 160MH/4 | SK 4282 SCP - 250TC | | X | X | X | |
| 248 | 3810 | 2.8 | III | 7.13 | 3458 | 5744 | SK 4282 SCP - 160M/4 | SK 4282 SCP - 160MH/4 | SK 4282 SCP - 250TC | | X | X | X | |
| 212 | 4451 | 2.5 | III | 8.33 | 3580 | 5940 | SK 4282 SCP - 160M/4 | SK 4282 SCP - 160MH/4 | SK 4282 SCP - 250TC | | X | X | X | |
| 192 | 4932 | 2.9 | III | 9.23 | 3697 | 6125 | SK 4282 SCP - 160M/4 | SK 4282 SCP - 160MH/4 | SK 4282 SCP - 250TC | | X | X | X | |
| 163 | 5797 | 2.6 | III | 10.85 | 3836 | 6314 | SK 4282 SCP - 160M/4 | SK 4282 SCP - 160MH/4 | SK 4282 SCP - 250TC | | X | X | X | |
| 140 | 6775 | 2.3 | III | 12.68 | 3951 | 6509 | SK 4282 SCP - 160M/4 | SK 4282 SCP - 160MH/4 | SK 4282 SCP - 250TC | | X | X | X | |
| 116 | 8122 | 2 | III | 15.2 | 4118 | 6743 | SK 4282 SCP - 160M/4 | SK 4282 SCP - 160MH/4 | SK 4282 SCP - 250TC | | X | X | X | |
| 97 | 9714 | 1.6 | II | 18.18 | 4255 | 6750 | SK 4282 SCP - 160M/4 | SK 4282 SCP - 160MH/4 | SK 4282 SCP - 250TC | | X | X | X | |
| 83 | 11461 | 1.3 | I | 21.45 | 4406 | 6750 | SK 4282 SCP - 160M/4 | SK 4282 SCP - 160MH/4 | SK 4282 SCP - 250TC | | X | X | X | |
| 79 | 11963 | 1.3 | I | 22.39 | 4399 | 6750 | SK 4282 SCP - 160M/4 | SK 4282 SCP - 160MH/4 | SK 4282 SCP - 250TC | | X | X | X | |
| 67 | 14026 | 1 | I | 26.25 | 4545 | 6750 | SK 4282 SCP - 160M/4 | SK 4282 SCP - 160MH/4 | SK 4282 SCP - 250TC | | X | X | X | |
| 67 | 14122 | 1.1 | I | 26.43 | 4525 | 6750 | SK 4282 SCP - 160M/4 | SK 4282 SCP - 160MH/4 | SK 4282 SCP - 250TC | | X | X | X | |
| 410 | 2308 | 4 | III | 4.32 | 4334 | 7286 | SK 5282 SCP - 160M/4 | SK 5282 SCP - 160MH/4 | SK 5282 SCP - 250TC | | X | X | X | X |
| 353 | 2677 | 3.9 | III | 5.01 | 4516 | 7585 | SK 5282 SCP - 160M/4 | SK 5282 SCP - 160MH/4 | SK 5282 SCP - 250TC | | X | X | X | X |
| 335 | 2827 | 3.8 | III | 5.29 | 4581 | 7693 | SK 5282 SCP - 160M/4 | SK 5282 SCP - 160MH/4 | SK 5282 SCP - 250TC | | X | X | X | X |
| 310 | 3051 | 3.7 | III | 5.71 | 4676 | 7844 | SK 5282 SCP - 160M/4 | SK 5282 SCP - 160MH/4 | SK 5282 SCP - 250TC | | X | X | X | X |
| 280 | 3382 | 3.5 | III | 6.33 | 4804 | 8060 | SK 5282 SCP - 160M/4 | SK 5282 SCP - 160MH/4 | SK 5282 SCP - 250TC | | X | X | X | X |
| 247 | 3831 | 3.3 | III | 7.17 | 4968 | 8336 | SK 5282 SCP - 160M/4 | SK 5282 SCP - 160MH/4 | SK 5282 SCP - 250TC | | X | X | X | X |
| 203 | 4649 | 3.1 | III | 8.7 | 5216 | 8762 | SK 5282 SCP - 160M/4 | SK 5282 SCP - 160MH/4 | SK 5282 SCP - 250TC | | X | X | X | X |
| 187 | 5055 | 3.5 | III | 9.46 | 5357 | 8973 | SK 5282 SCP - 160M/4 | SK 5282 SCP - 160MH/4 | SK 5282 SCP - 250TC | | X | X | X | X |
| 165 | 5723 | 3.3 | III | 10.71 | 5528 | 9000 | SK 5282 SCP - 160M/4 | SK 5282 SCP - 160MH/4 | SK 5282 SCP - 250TC | | X | X | X | X |
| 136 | 6946 | 3.1 | III | 13 | 5798 | 9000 | SK 5282 SCP - 160M/4 | SK 5282 SCP - 160MH/4 | SK 5282 SCP - 250TC | | X | X | X | X |
| 115 | 8218 | 2.8 | III | 15.38 | 6050 | 9000 | SK 5282 SCP - 160M/4 | SK 5282 SCP - 160MH/4 | SK 5282 SCP - 250TC | | X | X | X | X |
| 101 | 9399 | 2.6 | III | 17.59 | 6242 | 9000 | SK 5282 SCP - 160M/4 | SK 5282 SCP - 160MH/4 | SK 5282 SCP - 250TC | | X | X | X | X |
| 94 | 10088 | 2.3 | III | 18.88 | 6363 | 9000 | SK 5282 SCP - 160M/4 | SK 5282 SCP - 160MH/4 | SK 5282 SCP - 250TC | | X | X | X | X |
| 87 | 10879 | 2.5 | III | 20.36 | 6442 | 9000 | SK 5282 SCP - 160M/4 | SK 5282 SCP - 160MH/4 | SK 5282 SCP - 250TC | | X | X | X | X |
| 71 | 13358 | 1.9 | II | 25 | 6764 | 9000 | SK 5282 SCP - 160M/4 | SK 5282 SCP - 160MH/4 | SK 5282 SCP - 250TC | | X | X | X | X |
| 58 | 16297 | 1.6 | II | 30.5 | 7040 | 9000 | SK 5282 SCP - 160M/4 | SK 5282 SCP - 160MH/4 | SK 5282 SCP - 250TC | | X | X | X | X |
| 53 | 17862 | 1.1 | I | 33.43 | 7187 | 9000 | SK 5282 SCP - 160M/4 | SK 5282 SCP - 160MH/4 | SK 5282 SCP - 250TC | | X | X | X | X |
| 43 | 21800 | 1 | I | 40.8 | 7434 | 9000 | SK 5282 SCP - 160M/4 | SK 5282 SCP - 160MH/4 | SK 5282 SCP - 250TC | | X | X | X | X |

Output speed and torque ratings are based on the "Standard Efficiency Motor" Power and speed. Performance will vary slightly for other motors.



# 15 hp Gearmotors & Speed Reducers

| Output Speed | Output Torque | SF | AGMA Class | Gear Ratio | Thrust | | Integral Gearmotor | | Reducer | CEMA DriveShaft | | | | |
|---|---|---|---|---|---|---|---|---|---|---|---|---|---|---|
| $n_2$ | $T_2$ | $f_a$ | | i | Std Brg | H.D. Brg " VL" | Standard Efficiency Motor | Energy Efficient Motor | C-Face Input | 1-1/2" | 2" | 2-7/16" | 3" | 3-7/16" |
| [rpm] | [lb-in] | | | | [lb] | [lb] | | | | | | | | |
| 363 | 2607 | 4.1 | III | 4.88 | 6588 | 9509 | SK 6282 SCP - 160M/4 | SK 6282 SCP - 160MH/4 | SK 6282 SCP - 250TC | | | | X | X |
| 322 | 2939 | 4 | III | 5.5 | 6813 | 9835 | SK 6282 SCP - 160M/4 | SK 6282 SCP - 160MH/4 | SK 6282 SCP - 250TC | | | | X | X |
| 306 | 3088 | 3.9 | III | 5.78 | 6923 | 9979 | SK 6282 SCP - 160M/4 | SK 6282 SCP - 160MH/4 | SK 6282 SCP - 250TC | | | | X | X |
| 263 | 3601 | 3.7 | III | 6.74 | 7205 | 10402 | SK 6282 SCP - 160M/4 | SK 6282 SCP - 160MH/4 | SK 6282 SCP - 250TC | | | | X | X |
| 226 | 4178 | 3.6 | III | 7.82 | 7508 | 10827 | SK 6282 SCP - 160M/4 | SK 6282 SCP - 160MH/4 | SK 6282 SCP - 250TC | | | | X | X |
| 188 | 5017 | 3.3 | III | 9.39 | 7889 | 11381 | SK 6282 SCP - 160M/4 | SK 6282 SCP - 160MH/4 | SK 6282 SCP - 250TC | | | | X | X |
| 166 | 5685 | 3.7 | III | 10.64 | 8192 | 11826 | SK 6282 SCP - 160M/4 | SK 6282 SCP - 160MH/4 | SK 6282 SCP - 250TC | | | | X | X |
| 143 | 6599 | 3.6 | III | 12.35 | 8523 | 12290 | SK 6282 SCP - 160M/4 | SK 6282 SCP - 160MH/4 | SK 6282 SCP - 250TC | | | | X | X |
| 119 | 7924 | 3.3 | III | 14.83 | 8933 | 12895 | SK 6282 SCP - 160M/4 | SK 6282 SCP - 160MH/4 | SK 6282 SCP - 250TC | | | | X | X |
| 95 | 9992 | 3.3 | III | 18.7 | 9488 | 13500 | SK 6282 SCP - 160M/4 | SK 6282 SCP - 160MH/4 | SK 6282 SCP - 250TC | | | | X | X |
| 77 | 12263 | 3.3 | III | 22.95 | 10024 | 13500 | SK 6282 SCP - 160M/4 | SK 6282 SCP - 160MH/4 | SK 6282 SCP - 250TC | | | | X | X |
| 68 | 13919 | 2.9 | III | 26.05 | 10325 | 13500 | SK 6282 SCP - 160M/4 | SK 6282 SCP - 160MH/4 | SK 6282 SCP - 250TC | | | | X | X |
| 59 | 15976 | 2.5 | III | 29.9 | 10674 | 13500 | SK 6282 SCP - 160M/4 | SK 6282 SCP - 160MH/4 | SK 6282 SCP - 250TC | | | | X | X |
| 45 | 21095 | 1.3 | I | 39.48 | 11270 | 13500 | SK 6282 SCP - 160M/4 | SK 6282 SCP - 160MH/4 | SK 6282 SCP - 250TC | | | | X | X |
| 36 | 26583 | 1.3 | I | 49.75 | 11867 | 13500 | SK 6282 SCP - 160M/4 | SK 6282 SCP - 160MH/4 | SK 6282 SCP - 250TC | | | | X | X |
| 29 | 32636 | 1.2 | I | 61.08 | 12427 | 13500 | SK 6282 SCP - 160M/4 | SK 6282 SCP - 160MH/4 | SK 6282 SCP - 250TC | | | | X | X |

Output speed and torque ratings are based on the "Standard Efficiency Motor" Power and speed. Performance will vary slightly for other motors.

# 20 hp Gearmotors & Speed Reducers



| Output Speed | Output Torque | SF | AGMA Class | Gear Ratio | Thrust | | Integral Gearmotor | | Reducer | CEMA DriveShaft | | | | |
|---|---|---|---|---|---|---|---|---|---|---|---|---|---|---|
| $n_2$ | $T_2$ | $f_a$ | | i | Std Brg | H.D. Brg " VL" | Standard Efficiency Motor | Energy Efficient Motor | C-Face Input | 1-1/2" | 2" | 2-7/16" | 3" | 3-7/16" |
| [rpm] | [lb-in] | | | | [lb] | [lb] | | | | | | | | |
| 376 | 3357 | 2.5 | III | 4.7 | 3053 | 5076 | SK 4282 SCP - 160L/4 | SK 4282 SCP - 160LH/4 | SK 4282 SCP - 250TC | | X | X | X | |
| 353 | 3570 | 2.4 | III | 5 | 3096 | 5141 | SK 4282 SCP - 160L/4 | SK 4282 SCP - 160LH/4 | SK 4282 SCP - 250TC | | X | X | X | |
| 325 | 3877 | 2.4 | III | 5.43 | 3155 | 5234 | SK 4282 SCP - 160L/4 | SK 4282 SCP - 160LH/4 | SK 4282 SCP - 250TC | | X | X | X | |
| 291 | 4327 | 2.2 | III | 6.06 | 3233 | 5344 | SK 4282 SCP - 160L/4 | SK 4282 SCP - 160LH/4 | SK 4282 SCP - 250TC | | X | X | X | |
| 248 | 5091 | 2.1 | III | 7.13 | 3341 | 5508 | SK 4282 SCP - 160L/4 | SK 4282 SCP - 160LH/4 | SK 4282 SCP - 250TC | | X | X | X | |
| 212 | 5947 | 1.9 | II | 8.33 | 3449 | 5661 | SK 4282 SCP - 160L/4 | SK 4282 SCP - 160LH/4 | SK 4282 SCP - 250TC | | X | X | X | |
| 191 | 6590 | 2.2 | III | 9.23 | 3564 | 5837 | SK 4282 SCP - 160L/4 | SK 4282 SCP - 160LH/4 | SK 4282 SCP - 250TC | | X | X | X | |
| 163 | 7747 | 1.9 | II | 10.85 | 3663 | 5987 | SK 4282 SCP - 160L/4 | SK 4282 SCP - 160LH/4 | SK 4282 SCP - 250TC | | X | X | X | |
| 139 | 9053 | 1.7 | II | 12.68 | 3760 | 6125 | SK 4282 SCP - 160L/4 | SK 4282 SCP - 160LH/4 | SK 4282 SCP - 250TC | | X | X | X | |
| 116 | 10852 | 1.5 | II | 15.2 | 3888 | 6293 | SK 4282 SCP - 160L/4 | SK 4282 SCP - 160LH/4 | SK 4282 SCP - 250TC | | X | X | X | |
| 97 | 12980 | 1.2 | I | 18.18 | 3989 | 6406 | SK 4282 SCP - 160L/4 | SK 4282 SCP - 160LH/4 | SK 4282 SCP - 250TC | | X | X | X | |
| 82 | 15315 | 1 | I | 21.45 | 4086 | 6518 | SK 4282 SCP - 160L/4 | SK 4282 SCP - 160LH/4 | SK 4282 SCP - 250TC | | X | X | X | |
| 79 | 15986 | 0.9 | * | 22.39 | 4070 | 6458 | SK 4282 SCP - 160L/4 | SK 4282 SCP - 160LH/4 | SK 4282 SCP - 250TC | | X | X | X | |
| 409 | 3084 | 3 | III | 4.32 | 4282 | 7193 | SK 5282 SCP - 160L/4 | SK 5282 SCP - 160LH/4 | SK 5282 SCP - 250TC | | X | X | X | X |
| 352 | 3577 | 2.9 | III | 5.01 | 4462 | 7475 | SK 5282 SCP - 160L/4 | SK 5282 SCP - 160LH/4 | SK 5282 SCP - 250TC | | X | X | X | X |
| 334 | 3777 | 2.8 | III | 5.29 | 4511 | 7585 | SK 5282 SCP - 160L/4 | SK 5282 SCP - 160LH/4 | SK 5282 SCP - 250TC | | X | X | X | X |
| 309 | 4077 | 2.8 | III | 5.71 | 4606 | 7745 | SK 5282 SCP - 160L/4 | SK 5282 SCP - 160LH/4 | SK 5282 SCP - 250TC | | X | X | X | X |
| 279 | 4519 | 2.6 | III | 6.33 | 4723 | 7931 | SK 5282 SCP - 160L/4 | SK 5282 SCP - 160LH/4 | SK 5282 SCP - 250TC | | X | X | X | X |
| 246 | 5119 | 2.5 | III | 7.17 | 4883 | 8177 | SK 5282 SCP - 160L/4 | SK 5282 SCP - 160LH/4 | SK 5282 SCP - 250TC | | X | X | X | X |
| 203 | 6212 | 2.3 | III | 8.7 | 5105 | 8566 | SK 5282 SCP - 160L/4 | SK 5282 SCP - 160LH/4 | SK 5282 SCP - 250TC | | X | X | X | X |
| 187 | 6754 | 2.6 | III | 9.46 | 5243 | 8789 | SK 5282 SCP - 160L/4 | SK 5282 SCP - 160LH/4 | SK 5282 SCP - 250TC | | X | X | X | X |
| 165 | 7647 | 2.5 | III | 10.71 | 5398 | 9000 | SK 5282 SCP - 160L/4 | SK 5282 SCP - 160LH/4 | SK 5282 SCP - 250TC | | X | X | X | X |
| 136 | 9282 | 2.3 | III | 13 | 5643 | 9000 | SK 5282 SCP - 160L/4 | SK 5282 SCP - 160LH/4 | SK 5282 SCP - 250TC | | X | X | X | X |
| 115 | 10981 | 2.1 | III | 15.38 | 5868 | 9000 | SK 5282 SCP - 160L/4 | SK 5282 SCP - 160LH/4 | SK 5282 SCP - 250TC | | X | X | X | X |
| 100 | 12559 | 1.9 | II | 17.59 | 6032 | 9000 | SK 5282 SCP - 160L/4 | SK 5282 SCP - 160LH/4 | SK 5282 SCP - 250TC | | X | X | X | X |
| 93 | 13480 | 1.7 | II | 18.88 | 6149 | 9000 | SK 5282 SCP - 160L/4 | SK 5282 SCP - 160LH/4 | SK 5282 SCP - 250TC | | X | X | X | X |
| 87 | 14536 | 1.9 | II | 20.36 | 6206 | 9000 | SK 5282 SCP - 160L/4 | SK 5282 SCP - 160LH/4 | SK 5282 SCP - 250TC | | X | X | X | X |
| 71 | 17849 | 1.4 | II | 25 | 6476 | 9000 | SK 5282 SCP - 160L/4 | SK 5282 SCP - 160LH/4 | SK 5282 SCP - 250TC | | X | X | X | X |
| 58 | 21776 | 1.2 | I | 30.5 | 6687 | 9000 | SK 5282 SCP - 160L/4 | SK 5282 SCP - 160LH/4 | SK 5282 SCP - 250TC | | X | X | X | X |
| 53 | 23868 | 0.9 | * | 33.43 | 6784 | 9000 | SK 5282 SCP - 160L/4 | SK 5282 SCP - 160LH/4 | SK 5282 SCP - 250TC | | X | X | X | X |

Output speed and torque ratings are based on the "Standard Efficiency Motor" Power and speed. Performance will vary slightly for other motors.



# 20 hp Gearmotors & Speed Reducers

| Output Speed | Output Torque | SF | AGMA Class | Gear Ratio | Thrust | | Integral Gearmotor | | Reducer | CEMA DriveShaft | | | | |
|---|---|---|---|---|---|---|---|---|---|---|---|---|---|---|
| $n_2$ | $T_2$ | $f_a$ | | i | Std Brg | H.D. Brg " VL" | Standard Efficiency Motor | Energy Efficient Motor | C-Face Input | 1-1/2" | 2" | 2-7/16" | 3" | 3-7/16" |
| [rpm] | [lb-in] | | | | [lb] | [lb] | | | | | | | | |
| 362 | 3484 | 3.1 | III | 4.88 | 6532 | 9432 | SK 6282 SCP - 160L/4 | SK 6282 SCP - 160LH/4 | SK 6282 SCP - 250TC | | | | X | X |
| 321 | 3927 | 3 | III | 5.5 | 6743 | 9740 | SK 6282 SCP - 160L/4 | SK 6282 SCP - 160LH/4 | SK 6282 SCP - 250TC | | | | X | X |
| 305 | 4127 | 2.9 | III | 5.78 | 6831 | 9866 | SK 6282 SCP - 160L/4 | SK 6282 SCP - 160LH/4 | SK 6282 SCP - 250TC | | | | X | X |
| 262 | 4812 | 2.8 | III | 6.74 | 7130 | 10287 | SK 6282 SCP - 160L/4 | SK 6282 SCP - 160LH/4 | SK 6282 SCP - 250TC | | | | X | X |
| 226 | 5583 | 2.7 | III | 7.82 | 7418 | 10708 | SK 6282 SCP - 160L/4 | SK 6282 SCP - 160LH/4 | SK 6282 SCP - 250TC | | | | X | X |
| 188 | 6704 | 2.5 | III | 9.39 | 7765 | 11198 | SK 6282 SCP - 160L/4 | SK 6282 SCP - 160LH/4 | SK 6282 SCP - 250TC | | | | X | X |
| 166 | 7597 | 2.8 | III | 10.64 | 8064 | 11637 | SK 6282 SCP - 160L/4 | SK 6282 SCP - 160LH/4 | SK 6282 SCP - 250TC | | | | X | X |
| 143 | 8818 | 2.7 | III | 12.35 | 8372 | 12094 | SK 6282 SCP - 160L/4 | SK 6282 SCP - 160LH/4 | SK 6282 SCP - 250TC | | | | X | X |
| 119 | 10588 | 2.5 | III | 14.83 | 8780 | 12629 | SK 6282 SCP - 160L/4 | SK 6282 SCP - 160LH/4 | SK 6282 SCP - 250TC | | | | X | X |
| 94 | 13351 | 2.5 | III | 18.7 | 9297 | 13381 | SK 6282 SCP - 160L/4 | SK 6282 SCP - 160LH/4 | SK 6282 SCP - 250TC | | | | X | X |
| 77 | 16386 | 2.4 | III | 22.95 | 9765 | 13500 | SK 6282 SCP - 160L/4 | SK 6282 SCP - 160LH/4 | SK 6282 SCP - 250TC | | | | X | X |
| 68 | 18599 | 2.2 | III | 26.05 | 10037 | 13500 | SK 6282 SCP - 160L/4 | SK 6282 SCP - 160LH/4 | SK 6282 SCP - 250TC | | | | X | X |
| 59 | 21348 | 1.9 | II | 29.9 | 10330 | 13500 | SK 6282 SCP - 160L/4 | SK 6282 SCP - 160LH/4 | SK 6282 SCP - 250TC | | | | X | X |
| 45 | 28188 | 1 | I | 39.48 | 10787 | 13500 | SK 6282 SCP - 160L/4 | SK 6282 SCP - 160LH/4 | SK 6282 SCP - 250TC | | | | X | X |
| 35 | 35520 | 1 | I | 49.75 | 11268 | 13500 | SK 6282 SCP - 160L/4 | SK 6282 SCP - 160LH/4 | SK 6282 SCP - 250TC | | | | X | X |
| 29 | 43609 | 0.9 | * | 61.08 | 11678 | 13500 | SK 6282 SCP - 160L/4 | SK 6282 SCP - 160LH/4 | SK 6282 SCP - 250TC | | | | X | X |

Output speed and torque ratings are based on the "Standard Efficiency Motor" Power and speed. Performance will vary slightly for other motors.

# 25 hp Gearmotors & Speed Reducers



| Output Speed | Output Torque | SF | AGMA Class | Gear Ratio | Thrust | | Integral Gearmotor | | Reducer | CEMA DriveShaft | | | | |
|---|---|---|---|---|---|---|---|---|---|---|---|---|---|---|
| $n_2$ | $T_2$ | $f_a$ | | i | Std Brg | H.D. Brg " VL" | Standard Efficiency Motor | Energy Efficient Motor | C-Face Input | 1-1/2" | 2" | 2-7/16" | 3" | 3-7/16" |
| [rpm] | [lb-in] | | | | [lb] | [lb] | | | | | | | | |
| 405 | 3890 | 3.5 | III | 4.32 | 4239 | 7101 | SK 5282 SCP - 180MX/4 | SK 5282 SCP - 180MH/4 | SK 5282 SCP - 280TC | | X | X | X | X |
| 349 | 4510 | 3.3 | III | 5.01 | 4394 | 7369 | SK 5282 SCP - 180MX/4 | SK 5282 SCP - 180MH/4 | SK 5282 SCP - 280TC | | X | X | X | X |
| 331 | 4762 | 3.3 | III | 5.29 | 4457 | 7475 | SK 5282 SCP - 180MX/4 | SK 5282 SCP - 180MH/4 | SK 5282 SCP - 280TC | | X | X | X | X |
| 306 | 5140 | 3.1 | III | 5.71 | 4543 | 7607 | SK 5282 SCP - 180MX/4 | SK 5282 SCP - 180MH/4 | SK 5282 SCP - 280TC | | X | X | X | X |
| 276 | 5698 | 3.3 | III | 6.33 | 4649 | 7819 | SK 5282 SCP - 180MX/4 | SK 5282 SCP - 180MH/4 | SK 5282 SCP - 280TC | | X | X | X | X |
| 244 | 6455 | 3 | III | 7.17 | 4788 | 8035 | SK 5282 SCP - 180MX/4 | SK 5282 SCP - 180MH/4 | SK 5282 SCP - 280TC | | X | X | X | X |
| 201 | 7832 | 2.7 | III | 8.7 | 5011 | 8404 | SK 5282 SCP - 180MX/4 | SK 5282 SCP - 180MH/4 | SK 5282 SCP - 280TC | | X | X | X | X |
| 185 | 8516 | 2.4 | III | 9.46 | 5135 | 8593 | SK 5282 SCP - 180MX/4 | SK 5282 SCP - 180MH/4 | SK 5282 SCP - 280TC | | X | X | X | X |
| 163 | 9641 | 2.3 | III | 10.71 | 5272 | 8831 | SK 5282 SCP - 180MX/4 | SK 5282 SCP - 180MH/4 | SK 5282 SCP - 280TC | | X | X | X | X |
| 135 | 11703 | 2 | III | 13 | 5492 | 9000 | SK 5282 SCP - 180MX/4 | SK 5282 SCP - 180MH/4 | SK 5282 SCP - 280TC | | X | X | X | X |
| 114 | 13846 | 1.7 | II | 15.38 | 5688 | 9000 | SK 5282 SCP - 180MX/4 | SK 5282 SCP - 180MH/4 | SK 5282 SCP - 280TC | | X | X | X | X |
| 99 | 15835 | 1.5 | II | 17.59 | 5821 | 9000 | SK 5282 SCP - 180MX/4 | SK 5282 SCP - 180MH/4 | SK 5282 SCP - 280TC | | X | X | X | X |
| 93 | 16996 | 1.4 | II | 18.88 | 5931 | 9000 | SK 5282 SCP - 180MX/4 | SK 5282 SCP - 180MH/4 | SK 5282 SCP - 280TC | | X | X | X | X |
| 86 | 18329 | 1.5 | II | 20.36 | 5963 | 9000 | SK 5282 SCP - 180MX/4 | SK 5282 SCP - 180MH/4 | SK 5282 SCP - 280TC | | X | X | X | X |
| 70 | 22506 | 1.1 | I | 25 | 6185 | 9000 | SK 5282 SCP - 180MX/4 | SK 5282 SCP - 180MH/4 | SK 5282 SCP - 280TC | | X | X | X | X |
| 399 | 3952 | 4.6 | III | 4.39 | 6296 | 9106 | SK 6282 SCP - 180MX/4 | SK 6282 SCP - 180MH/4 | SK 6282 SCP - 280TC | | | | X | X |
| 359 | 4393 | 4.3 | III | 4.88 | 6478 | 9358 | SK 6282 SCP - 180MX/4 | SK 6282 SCP - 180MH/4 | SK 6282 SCP - 280TC | | | | X | X |
| 318 | 4951 | 4.1 | III | 5.5 | 6687 | 9646 | SK 6282 SCP - 180MX/4 | SK 6282 SCP - 180MH/4 | SK 6282 SCP - 280TC | | | | X | X |
| 303 | 5203 | 4 | III | 5.78 | 6773 | 9772 | SK 6282 SCP - 180MX/4 | SK 6282 SCP - 180MH/4 | SK 6282 SCP - 280TC | | | | X | X |
| 292 | 5392 | 3.9 | III | 5.99 | 6849 | 9866 | SK 6282 SCP - 180MX/4 | SK 6282 SCP - 180MH/4 | SK 6282 SCP - 280TC | | | | X | X |
| 260 | 6068 | 4 | III | 6.74 | 7056 | 10172 | SK 6282 SCP - 180MX/4 | SK 6282 SCP - 180MH/4 | SK 6282 SCP - 280TC | | | | X | X |
| 224 | 7040 | 3.4 | III | 7.82 | 7317 | 10553 | SK 6282 SCP - 180MX/4 | SK 6282 SCP - 180MH/4 | SK 6282 SCP - 280TC | | | | X | X |
| 186 | 8453 | 2.9 | III | 9.39 | 7655 | 11039 | SK 6282 SCP - 180MX/4 | SK 6282 SCP - 180MH/4 | SK 6282 SCP - 280TC | | | | X | X |
| 164 | 9578 | 4 | III | 10.64 | 7958 | 11491 | SK 6282 SCP - 180MX/4 | SK 6282 SCP - 180MH/4 | SK 6282 SCP - 280TC | | | | X | X |
| 142 | 11118 | 3.5 | III | 12.35 | 8255 | 11882 | SK 6282 SCP - 180MX/4 | SK 6282 SCP - 180MH/4 | SK 6282 SCP - 280TC | | | | X | X |
| 118 | 13350 | 3 | III | 14.83 | 8593 | 12389 | SK 6282 SCP - 180MX/4 | SK 6282 SCP - 180MH/4 | SK 6282 SCP - 280TC | | | | X | X |
| 94 | 16834 | 2.3 | III | 18.7 | 9079 | 13061 | SK 6282 SCP - 180MX/4 | SK 6282 SCP - 180MH/4 | SK 6282 SCP - 280TC | | | | X | X |
| 76 | 20660 | 1.9 | II | 22.95 | 9536 | 13500 | SK 6282 SCP - 180MX/4 | SK 6282 SCP - 180MH/4 | SK 6282 SCP - 280TC | | | | X | X |
| 67 | 23451 | 1.7 | II | 26.05 | 9758 | 13500 | SK 6282 SCP - 180MX/4 | SK 6282 SCP - 180MH/4 | SK 6282 SCP - 280TC | | | | X | X |
| 59 | 26917 | 1.5 | II | 29.9 | 9999 | 13500 | SK 6282 SCP - 180MX/4 | SK 6282 SCP - 180MH/4 | SK 6282 SCP - 280TC | | | | X | X |

Output speed and torque ratings are based on the "Standard Efficiency Motor" Power and speed. Performance will vary slightly for other motors.



# 30 hp Gearmotors & Speed Reducers

| Output Speed | Output Torque | SF | AGMA Class | Gear Ratio | Thrust | | Integral Gearmotor | | Reducer | CEMA DriveShaft | | | | |
|---|---|---|---|---|---|---|---|---|---|---|---|---|---|---|
| $n_2$ | $T_2$ | $f_a$ | | i | Std Brg | H.D. Brg " VL" | Standard Efficiency Motor | Energy Efficient Motor | C-Face Input | 1-1/2" | 2" | 2-7/16" | 3" | 3-7/16" |
| [rpm] | [lb-in] | | | | [lb] | [lb] | | | | | | | | |
| 406 | 4654 | 2.9 | III | 4.32 | 4174 | 7000 | SK 5282 SCP - 180LX/4 | SK 5282 SCP - 180LH/4 | SK 5282 SCP - 280TC | | X | X | X | X |
| 350 | 5397 | 2.8 | III | 5.01 | 4327 | 7250 | SK 5282 SCP - 180LX/4 | SK 5282 SCP - 180LH/4 | SK 5282 SCP - 280TC | | X | X | X | X |
| 332 | 5699 | 2.7 | III | 5.29 | 4381 | 7355 | SK 5282 SCP - 180LX/4 | SK 5282 SCP - 180LH/4 | SK 5282 SCP - 280TC | | X | X | X | X |
| 307 | 6151 | 2.6 | III | 5.71 | 4464 | 7475 | SK 5282 SCP - 180LX/4 | SK 5282 SCP - 180LH/4 | SK 5282 SCP - 280TC | | X | X | X | X |
| 277 | 6819 | 2.7 | III | 6.33 | 4568 | 7670 | SK 5282 SCP - 180LX/4 | SK 5282 SCP - 180LH/4 | SK 5282 SCP - 280TC | | X | X | X | X |
| 245 | 7724 | 2.5 | III | 7.17 | 4694 | 7855 | SK 5282 SCP - 180LX/4 | SK 5282 SCP - 180LH/4 | SK 5282 SCP - 280TC | | X | X | X | X |
| 202 | 9372 | 2.2 | III | 8.7 | 4892 | 8177 | SK 5282 SCP - 180LX/4 | SK 5282 SCP - 180LH/4 | SK 5282 SCP - 280TC | | X | X | X | X |
| 186 | 10191 | 2 | III | 9.46 | 5009 | 8404 | SK 5282 SCP - 180LX/4 | SK 5282 SCP - 180LH/4 | SK 5282 SCP - 280TC | | X | X | X | X |
| 164 | 11538 | 1.9 | II | 10.71 | 5137 | 8593 | SK 5282 SCP - 180LX/4 | SK 5282 SCP - 180LH/4 | SK 5282 SCP - 280TC | | X | X | X | X |
| 135 | 14005 | 1.7 | II | 13 | 5315 | 8901 | SK 5282 SCP - 180LX/4 | SK 5282 SCP - 180LH/4 | SK 5282 SCP - 280TC | | X | X | X | X |
| 114 | 16569 | 1.4 | II | 15.38 | 5495 | 9000 | SK 5282 SCP - 180LX/4 | SK 5282 SCP - 180LH/4 | SK 5282 SCP - 280TC | | X | X | X | X |
| 100 | 18950 | 1.3 | I | 17.59 | 5603 | 9000 | SK 5282 SCP - 180LX/4 | SK 5282 SCP - 180LH/4 | SK 5282 SCP - 280TC | | X | X | X | X |
| 93 | 20339 | 1.1 | I | 18.88 | 5697 | 9000 | SK 5282 SCP - 180LX/4 | SK 5282 SCP - 180LH/4 | SK 5282 SCP - 280TC | | X | X | X | X |
| 86 | 21934 | 1.3 | I | 20.36 | 5702 | 9000 | SK 5282 SCP - 180LX/4 | SK 5282 SCP - 180LH/4 | SK 5282 SCP - 280TC | | X | X | X | X |
| 70 | 26932 | 1 | I | 25 | 5873 | 9000 | SK 5282 SCP - 180LX/4 | SK 5282 SCP - 180LH/4 | SK 5282 SCP - 280TC | | X | X | X | X |
| 400 | 4729 | 3.8 | III | 4.39 | 6233 | 9005 | SK 6282 SCP - 180LX/4 | SK 6282 SCP - 180LH/4 | SK 6282 SCP - 280TC | | | | X | X |
| 360 | 5257 | 3.6 | III | 4.88 | 6413 | 9252 | SK 6282 SCP - 180LX/4 | SK 6282 SCP - 180LH/4 | SK 6282 SCP - 280TC | | | | X | X |
| 319 | 5925 | 3.4 | III | 5.5 | 6608 | 9540 | SK 6282 SCP - 180LX/4 | SK 6282 SCP - 180LH/4 | SK 6282 SCP - 280TC | | | | X | X |
| 304 | 6227 | 3.3 | III | 5.78 | 6703 | 9646 | SK 6282 SCP - 180LX/4 | SK 6282 SCP - 180LH/4 | SK 6282 SCP - 280TC | | | | X | X |
| 293 | 6453 | 3.3 | III | 5.99 | 6768 | 9740 | SK 6282 SCP - 180LX/4 | SK 6282 SCP - 180LH/4 | SK 6282 SCP - 280TC | | | | X | X |
| 260 | 7261 | 3.3 | III | 6.74 | 6948 | 10026 | SK 6282 SCP - 180LX/4 | SK 6282 SCP - 180LH/4 | SK 6282 SCP - 280TC | | | | X | X |
| 224 | 8424 | 2.8 | III | 7.82 | 7214 | 10402 | SK 6282 SCP - 180LX/4 | SK 6282 SCP - 180LH/4 | SK 6282 SCP - 280TC | | | | X | X |
| 187 | 10116 | 2.4 | III | 9.39 | 7544 | 10845 | SK 6282 SCP - 180LX/4 | SK 6282 SCP - 180LH/4 | SK 6282 SCP - 280TC | | | | X | X |
| 165 | 11462 | 3.3 | III | 10.64 | 7814 | 11270 | SK 6282 SCP - 180LX/4 | SK 6282 SCP - 180LH/4 | SK 6282 SCP - 280TC | | | | X | X |
| 142 | 13305 | 2.9 | III | 12.35 | 8087 | 11657 | SK 6282 SCP - 180LX/4 | SK 6282 SCP - 180LH/4 | SK 6282 SCP - 280TC | | | | X | X |
| 118 | 15976 | 2.5 | III | 14.83 | 8406 | 12114 | SK 6282 SCP - 180LX/4 | SK 6282 SCP - 180LH/4 | SK 6282 SCP - 280TC | | | | X | X |
| 94 | 20145 | 1.9 | II | 18.7 | 8840 | 12731 | SK 6282 SCP - 180LX/4 | SK 6282 SCP - 180LH/4 | SK 6282 SCP - 280TC | | | | X | X |
| 76 | 24724 | 1.6 | II | 22.95 | 9250 | 13295 | SK 6282 SCP - 180LX/4 | SK 6282 SCP - 180LH/4 | SK 6282 SCP - 280TC | | | | X | X |
| 67 | 28064 | 1.4 | II | 26.05 | 9448 | 13500 | SK 6282 SCP - 180LX/4 | SK 6282 SCP - 180LH/4 | SK 6282 SCP - 280TC | | | | X | X |
| 59 | 32211 | 1.2 | I | 29.9 | 9664 | 13500 | SK 6282 SCP - 180LX/4 | SK 6282 SCP - 180LH/4 | SK 6282 SCP - 280TC | | | | X | X |

Output speed and torque ratings are based on the "Standard Efficiency Motor" Power and speed. Performance will vary slightly for other motors.

# 40 hp & 50 hp Gearmotors & Speed Reducers





| Output Speed | Output Torque | SF | AGMA Class | Gear Ratio | Thrust | | Integral Gearmotor | | Reducer | CEMA DriveShaft | | | | |
|---|---|---|---|---|---|---|---|---|---|---|---|---|---|---|
| $n_2$ | $T_2$ | $f_a$ | | i | Std Brg | H.D. Brg " VL" | Standard Efficiency Motor | Energy Efficient Motor | C-Face Input | 1-1/2" | 2" | 2-7/16" | 3" | 3-7/16" |
| [rpm] | [lb-in] | | | | [lb] | [lb] | | | | | | | | |
| 405 | 6217 | 2.9 | III | 4.39 | 6098 | 8791 | SK 6282 SCP - 200L/4 | SK 6282 SCP - 200LH/4 | SK 6282 SCP - 320TC | | | | X | X |
| 365 | 6912 | 2.8 | III | 4.88 | 6253 | 9020 | SK 6282 SCP - 200L/4 | SK 6282 SCP - 200LH/4 | SK 6282 SCP - 320TC | | | | X | X |
| 324 | 7790 | 2.6 | III | 5.5 | 6442 | 9284 | SK 6282 SCP - 200L/4 | SK 6282 SCP - 200LH/4 | SK 6282 SCP - 320TC | | | | X | X |
| 308 | 8187 | 2.5 | III | 5.78 | 6512 | 9389 | SK 6282 SCP - 200L/4 | SK 6282 SCP - 200LH/4 | SK 6282 SCP - 320TC | | | | X | X |
| 297 | 8484 | 2.5 | III | 5.99 | 6572 | 9479 | SK 6282 SCP - 200L/4 | SK 6282 SCP - 200LH/4 | SK 6282 SCP - 320TC | | | | X | X |
| 264 | 9546 | 2.8 | III | 6.74 | 6748 | 9725 | SK 6282 SCP - 200L/4 | SK 6282 SCP - 200LH/4 | SK 6282 SCP - 320TC | | | | X | X |
| 228 | 11076 | 2.1 | III | 7.82 | 6977 | 10076 | SK 6282 SCP - 200L/4 | SK 6282 SCP - 200LH/4 | SK 6282 SCP - 320TC | | | | X | X |
| 190 | 13300 | 1.8 | II | 9.39 | 7252 | 10451 | SK 6282 SCP - 200L/4 | SK 6282 SCP - 200LH/4 | SK 6282 SCP - 320TC | | | | X | X |
| 167 | 15070 | 2.5 | III | 10.64 | 7538 | 10845 | SK 6282 SCP - 200L/4 | SK 6282 SCP - 200LH/4 | SK 6282 SCP - 320TC | | | | X | X |
| 144 | 17492 | 2.2 | III | 12.35 | 7760 | 11162 | SK 6282 SCP - 200L/4 | SK 6282 SCP - 200LH/4 | SK 6282 SCP - 320TC | | | | X | X |
| 120 | 21005 | 1.9 | II | 14.83 | 8026 | 11545 | SK 6282 SCP - 200L/4 | SK 6282 SCP - 200LH/4 | SK 6282 SCP - 320TC | | | | X | X |
| 95 | 26486 | 1.5 | II | 18.7 | 8368 | 12035 | SK 6282 SCP - 200L/4 | SK 6282 SCP - 200LH/4 | SK 6282 SCP - 320TC | | | | X | X |
| 78 | 32506 | 1.2 | I | 22.95 | 8683 | 12490 | SK 6282 SCP - 200L/4 | SK 6282 SCP - 200LH/4 | SK 6282 SCP - 320TC | | | | X | X |
| 402 | 7838 | 2.3 | III | 4.39 | 5994 | 8651 | SK 6282 SCP - 225S/4 | SK 6282 SCP - 225SH/4 | SK 6282 SCP - 320TC | | | | X | X |
| 362 | 8714 | 2.2 | III | 4.88 | 6143 | 8847 | SK 6282 SCP - 225S/4 | SK 6282 SCP - 225SH/4 | SK 6282 SCP - 320TC | | | | X | X |
| 321 | 9821 | 2.1 | III | 5.5 | 6307 | 9106 | SK 6282 SCP - 225S/4 | SK 6282 SCP - 225SH/4 | SK 6282 SCP - 320TC | | | | X | X |
| 305 | 10321 | 2 | III | 5.78 | 6374 | 9194 | SK 6282 SCP - 225S/4 | SK 6282 SCP - 225SH/4 | SK 6282 SCP - 320TC | | | | X | X |
| 295 | 10696 | 2 | III | 5.99 | 6422 | 9252 | SK 6282 SCP - 225S/4 | SK 6282 SCP - 225SH/4 | SK 6282 SCP - 320TC | | | | X | X |
| 262 | 12035 | 2.2 | III | 6.74 | 6599 | 9479 | SK 6282 SCP - 225S/4 | SK 6282 SCP - 225SH/4 | SK 6282 SCP - 320TC | | | | X | X |
| 226 | 13964 | 1.7 | II | 7.82 | 6784 | 9772 | SK 6282 SCP - 225S/4 | SK 6282 SCP - 225SH/4 | SK 6282 SCP - 320TC | | | | X | X |
| 188 | 16767 | 1.5 | II | 9.39 | 7025 | 10091 | SK 6282 SCP - 225S/4 | SK 6282 SCP - 225SH/4 | SK 6282 SCP - 320TC | | | | X | X |
| 166 | 18999 | 2 | III | 10.64 | 7279 | 10487 | SK 6282 SCP - 225S/4 | SK 6282 SCP - 225SH/4 | SK 6282 SCP - 320TC | | | | X | X |
| 143 | 22053 | 1.8 | II | 12.35 | 7459 | 10742 | SK 6282 SCP - 225S/4 | SK 6282 SCP - 225SH/4 | SK 6282 SCP - 320TC | | | | X | X |
| 119 | 26481 | 1.5 | II | 14.83 | 7661 | 11039 | SK 6282 SCP - 225S/4 | SK 6282 SCP - 225SH/4 | SK 6282 SCP - 320TC | | | | X | X |
| 94 | 33391 | 1.2 | I | 18.7 | 7931 | 11399 | SK 6282 SCP - 225S/4 | SK 6282 SCP - 225SH/4 | SK 6282 SCP - 320TC | | | | X | X |
| 77 | 40980 | 1 | I | 22.95 | 8141 | 11732 | SK 6282 SCP - 225S/4 | SK 6282 SCP - 225SH/4 | SK 6282 SCP - 320TC | | | | X | X |

Output speed and torque ratings are based on the "Standard Efficiency Motor" Power and speed. Performance will vary slightly for other motors.

# SCP Ratings & Combinations

## Selection

- SK 1282, 1382 SCP Ratings & Combinations
- SK 2282 & 2382 SCP Ratings & Combinations
- SK 3282 & 3382 SCP Ratings & Combinations
- SK 4282 & 4382 SCP Ratings & Combinations
- SK 5282 & 5382 SCP Ratings & Combinations
- SK 6282 & 6382 SCP Ratings & Combinations



NORD DRIVESYSTEMS

www.nord.com

CLINCHER™

| Thrust | | Integral Gearmotor | | Reducer |
|---|---|---|---|---|
| Brg [lb] | HD Brg "VL" [lb] | Standard Efficiency Motor | Energy Efficient Motor | C-Face Input |
| 083 | 6750 | SK 4282 SCP - 90L/4 | SK 4282 SCP - 90LH/4 | SK 4282 SCP - 140TC |
| 516 | 6750 | SK 4282 SCP - 90L/4 | SK 4282 SCP - 90LH/4 | SK 4282 SCP - 140TC |
| 056 | 6750 | SK 4282 SCP - 90L/4 | SK 4282 SCP - 90LH/4 | SK 4282 SCP - 140TC |
| 950 | 6750 | SK 4282 SCP - 90L/4 | SK 4282 SCP - 90LH/4 | SK 4282 SCP - 140TC |
| 950 | 6750 | SK 4282 SCP - 90L/4 | SK 4282 SCP - 90LH/4 | SK 4282 SCP - 140TC |
| 950 | 6750 | SK 4282 SCP - 90L/4 | SK 4282 SCP - 90LH/4 | SK 4282 SCP - 140TC |
| 950 | 6750 | SK 4282 SCP - 90L/4 | SK 4282 SCP - 90LH/4 | SK 4282 SCP - 140TC |
| 950 | 6750 | SK 4282 SCP - 90L/4 | SK 4282 SCP - 90LH/4 | SK 4282 SCP - 140TC |
| 950 | 6750 | SK 4282 SCP - 90L/4 | SK 4282 SCP - 90LH/4 | SK 4282 SCP - 140TC |
| 950 | 6750 | SK 4282 SCP - 90L/4 | SK 4282 SCP - 90LH/4 | SK 4282 SCP - 140TC |
| 950 | 6750 | SK 4282 SCP - 90L/4 | SK 4282 SCP - 90LH/4 | SK 4282 SCP - 140TC |
| 50 | 6750 | SK 4282 SCP - 90L/4 | SK 4282 SCP - 90LH/4 | SK 4282 SCP - 140TC |
| | 6750 | SK 4282 SCP - 90L/4 | SK 4282 SCP - 90LH/4 | SK 4282 SCP - |





# Screw Conveyor Package Ratings & Combinations



## Explanation of Selection Tables

**GEARBOX TYPE** – Nomenclature for specified gear unit.

**TOTAL GEAR RATIO**

**OUTPUT SPEED** – Based on 1750 rpm input speed

**MAXIMUM TORQUE RATINGS**

**MAX POWER RATING** – Based on 1750 rpm input speed

**NEMA C-FACE INPUT POSSIBLE COMBINATIONS**

**INTEGRAL MOTOR POSSIBLE COMBINATIONS**



| Type | Ratio | Output Speed 1750 rpm input $n_2$ [rpm] | Max Torque $T_{max}$ [lb-in] | Max Power 1750 rpm input $P_{max}$ [hp] | NEMA C-face | | | Integral Motor | | | | | | | | | |
|---|---|---|---|---|---|---|---|---|---|---|---|---|---|---|---|---|---|
| | | | | | 56C 1.0 hp | 140TC 2.0 hp | 180TC 5.0 hp | 63S/4 0.16 hp | 63L/4 0.25 hp | 71S/4 0.33 hp | 71L/4 0.5 hp | 80S/4 0.75 hp | 80L 80LH/4 1.0 hp | 90S 90SH/4 1.5 hp | 90L 90LH/4 2 .0 hp | 100L 100LH/4 3.0 hp | 100LA 112LH/4 5.0 hp |
| SK 1282 SCP | 4.79 | 365 | 1133 | 5.00 | X | X | X | X | X | X | X | X | X | X | X | X | X |
| | 5.47 | 320 | 1522 | 5.00 | X | X | X | X | X | X | X | X | X | X | X | X | X |
| | 6.43 | 272 | 1602 | 5.00 | X | X | X | X | X | X | X | X | X | X | X | X | X |
| | 7.24 | 242 | 1655 | 5.00 | X | X | X | X | X | X | X | X | X | X | X | X | X |

**X =** Available Combination



# SK 1282 SCP & SK 1382 SCP
# Ratings & Combinations

| Type | Ratio | Output Speed 1750 rpm input $n_2$ [rpm] | Max Torque $T_{max}$ [lb-in] | Max ◈ Power 1750 rpm input $P_{max}$ [hp] | NEMA C-face* 56C 1.0 hp | 140TC 2.0 hp | 180TC 5.0 hp | Integral Motor 63S/4 0.16 hp | 63L/4 0.25 hp | 71S/4 0.33 hp | 71L/4 0.5 hp | 80S/4 0.75 hp | 80L/4 80LH/4 1.0 hp | 90S/4 90SH/4 1.5 hp | 90L/4 90LH/4 2 .0 hp | 100L/4 100LH/4 3.0 hp | 100LA/4 112LH/4 5.0 hp |
|---|---|---|---|---|---|---|---|---|---|---|---|---|---|---|---|---|---|
| **SK 1282 SCP** | 4.79 | 365 | 1133 | *5.00* | X | X | X | X | X | X | X | X | X | X | X | X | X |
| | 5.47 | 320 | 1522 | *5.00* | X | X | X | X | X | X | X | X | X | X | X | X | X |
| | 6.43 | 272 | 1602 | *5.00* | X | X | X | X | X | X | X | X | X | X | X | X | X |
| | 7.24 | 242 | 1655 | *5.00* | X | X | X | X | X | X | X | X | X | X | X | X | X |
| | 8.21 | 213 | 1416 | 4.78 | X | X | X | X | X | X | X | X | X | X | X | X | X |
| | 8.24 | 212 | 1690 | 5.00 | X | X | X | X | X | X | X | X | X | X | X | X | X |
| | 9.18 | 191 | 1673 | *5.00* | X | X | X | X | X | X | X | X | X | X | X | X | X |
| | 10.34 | 169 | 1735 | 4.65 | X | X | X | X | X | X | X | X | X | X | X | X | X |
| | 11.76 | 149 | 1805 | 4.27 | X | X | X | X | X | X | X | X | X | X | X | X | X |
| | 14.11 | 124 | 1859 | 3.66 | X | X | X | X | X | X | X | X | X | X | X | X | X |
| | 17.21 | 102 | 1982 | 3.21 | X | X | X | X | X | X | X | X | X | X | X | X | X |
| | 20.57 | 85 | 1991 | 2.68 | X | X | X | X | X | X | X | X | X | X | X | X | X |
| | 25.22 | 69 | 1991 | 2.18 | X | X | X | X | X | X | X | X | X | X | X | X | X |
| | 28.33 | 62 | 1991 | 1.96 | X | X | | X | X | X | X | X | X | X | X | | |
| | 32.08 | 55 | 2036 | 1.78 | X | X | | X | X | X | X | X | X | X | X | | |
| | 41.07 | 43 | 1920 | 1.31 | X | X | | | | | X | X | X | | | | |
| | 46.19 | 38 | 1735 | 1.05 | X | | | X | X | X | X | | | | | | |
| | 49.25 | 36 | 2301 | 1.31 | X | X | | | | | X | X | X | | | | |
| | 55.39 | 32 | 2080 | 1.06 | X | | | X | X | X | X | | | | | | |
| | 58.89 | 30 | 2505 | 1.19 | X | X | | | | | X | X | X | | | | |
| | 66.23 | 26 | 2390 | 0.99 | X | | | X | X | X | X | | | | | | |
| | 72.17 | 24 | 2620 | 1.00 | X | X | | | | | X | X | X | | | | |
| | 81.17 | 22 | 2620 | 0.91 | X | | | X | X | X | X | | | | | | |
| | 92.48 | 19 | 2053 | 0.62 | X | | | X | X | X | X | | | | | | |
| | 109.50 | 16 | 1850 | 0.47 | X | | | X | X | X | | | | | | | |
| **SK 1382 SCP** | 87.94 | 20 | 2425 | 0.77 | X | | | X | X | X | X | | | | | | |
| | 105.11 | 17 | 2390 | 0.63 | X | | | X | X | X | X | | | | | | |
| | 128.82 | 14 | 1991 | 0.43 | X | | | X | X | X | X | | | | | | |
| | 163.93 | 11 | 1991 | 0.34 | X | | | X | X | X | X | | | | | | |
| | 209.87 | 8.3 | 2080 | 0.28 | X | | | X | X | X | X | | | | | | |
| | 251.67 | 7.0 | 2425 | 0.27 | X | | | X | X | X | X | | | | | | |
| | 300.93 | 5.8 | 2390 | 0.22 | X | | | X | X | X | X | | | | | | |
| | 368.79 | 4.8 | 1991 | 0.15 | X | | | X | X | X | X | | | | | | |
| | 414.78 | 4.2 | 1991 | 0.13 | X | | | X | X | X | X | | | | | | |
| | 472.60 | 3.7 | 1991 | 0.12 | X | | | X | X | X | X | | | | | | |
| | 556.83 | 3.1 | 1991 | 0.10 | X | | | X | X | X | | | | | | | |
| | 634.45 | 2.8 | 1965 | 0.09 | X | | | X | X | X | | | | | | | |

◈ The maximum input power limit shown is the largest motor power typically combined with the gear unit. *The Italicized power values shown are not the mechanical limit and often may be increased through discussion with our sales or engineering department.*

* The NEMA C-face power limit must also be considered when selecting a reducer. The C-face Adapter's Maximum Input Power values are displayed under the Available Combinations and based on a 1750 rpm motor.

# SK 2282 SCP & SK 2382 SCP
# Ratings & Combinations





| Type | Ratio | Output Speed 1750 rpm input $n_2$ [rpm] | Max Torque $T_{max}$ [lb-in] | Max ◈ Power 1750 rpm input $P_{max}$ [hp] | NEMA C-face* 56C 1.0 hp | 140TC 2.0 hp | 180TC 5.0 hp | Integral Motor 63S/4 0.16 hp | 63L/4 0.25 hp | 71S/4 0.33 hp | 71L/4 0.5 hp | 80S/4 0.75 hp | 80L/4 80LH/4 1.0 hp | 90S/4 90SH/4 1.5 hp | 90L/4 90LH/4 2 .0 hp | 100L/4 100LH/4 3.0 hp | 100LA/4 112LH/4 5.0 hp |
|---|---|---|---|---|---|---|---|---|---|---|---|---|---|---|---|---|---|
| **SK 2282 SCP** | 4.51 | 388 | 1646 | *5.00* | X | X | X | | | | X | X | X | X | X | X | X |
| | 5.72 | 306 | 1876 | *5.00* | X | X | X | | | | X | X | X | X | X | X | X |
| | 6.43 | 272 | 2000 | *5.00* | X | X | X | | | | X | X | X | X | X | X | X |
| | 7.48 | 234 | 2151 | *5.00* | X | X | X | | | | X | X | X | X | X | X | X |
| | 8.37 | 209 | 2266 | *5.00* | X | X | X | | | | X | X | X | X | X | X | X |
| | 9.03 | 194 | 2965 | *5.00* | X | X | X | | | | X | X | X | X | X | X | X |
| | 10.15 | 172 | 3151 | *5.00* | X | X | X | | | | X | X | X | X | X | X | X |
| | 11.81 | 148 | 3398 | *5.00* | X | X | X | | | | X | X | X | X | X | X | X |
| | 13.23 | 132 | 3584 | *5.00* | X | X | X | | | | X | X | X | X | X | X | X |
| | 16.53 | 106 | 4168 | *5.00* | X | X | X | | | | X | X | X | X | X | X | X |
| | 18.51 | 95 | 4301 | *5.00* | X | X | X | | | | X | X | X | X | X | X | X |
| | 21.90 | 80 | 4248 | *5.00* | X | X | X | | | | X | X | X | X | X | X | X |
| | 23.96 | 73 | 3850 | 4.46 | X | X | X | | | | X | X | X | X | X | X | X |
| | 24.97 | 70 | 4337 | 4.81 | X | X | X | | | | X | X | X | X | X | X | X |
| | 26.83 | 65 | 3885 | 4.01 | X | X | X | | | | X | X | X | X | X | X | X |
| | 29.65 | 59 | 4425 | 4.14 | X | X | X | | | | X | X | X | X | X | X | X |
| | 31.23 | 56 | 3938 | 3.50 | X | X | X | | | | | | | X | X | X | |
| | 36.54 | 48 | 4434 | 3.38 | X | X | X | | | | | | | X | X | X | |
| | 37.18 | 47 | 4071 | 3.03 | X | X | | | | | X | X | X | X | X | | |
| | 43.71 | 40 | 4983 | 3.16 | X | X | X | | | | | | | X | X | X | |
| | 45.11 | 39 | 3983 | 2.46 | X | X | | | | | | X | X | X | X | | |
| | 51.71 | 34 | 4611 | 2.49 | X | X | X | | | | | | | X | X | X | |
| | 53.96 | 32 | 4478 | 2.27 | X | X | | | | | | X | X | X | X | | |
| | 63.83 | 27 | 4611 | 1.97 | X | X | | | | | | X | X | X | X | | |
| | 69.67 | 25 | 3921 | 1.55 | X | X | | | | X | X | X | X | X | | | |
| | 82.42 | 21 | 4221 | 1.41 | X | X | | | | X | X | X | X | X | | | |
| | 100.98 | 17 | 3894 | 1.05 | X | X | | | | X | X | X | X | X | | | |
| | 104.07 | 17 | 3513 | 0.95 | X | X | | | | X | X | X | | | | | |
| | 127.51 | 14 | 3363 | 0.75 | X | X | | | | X | X | X | | | | | |
| **SK 2382 SCP** | 82.22 | 21 | 4965 | 1.50 | X | X | | X | X | X | X | X | X | | | | |
| | 98.35 | 18 | 4983 | 1.42 | X | X | | X | X | X | X | X | X | | | | |
| | 116.35 | 15 | 4611 | 1.10 | X | X | | X | X | X | X | X | X | | | | |
| | 131.86 | 13 | 4611 | 0.95 | X | X | | X | X | X | X | X | X | | | | |
| | 149.96 | 12 | 4611 | 0.88 | X | X | | X | X | X | X | X | X | | | | |
| | 185.11 | 9.5 | 4611 | 0.69 | X | X | | X | X | X | X | X | X | | | | |
| | 236.11 | 7.4 | 4186 | 0.49 | X | | | X | X | X | X | | | | | | |
| | 276.27 | 6.3 | 4894 | 0.49 | X | | | X | X | X | X | | | | | | |
| | 330.45 | 5.3 | 4983 | 0.42 | X | | | X | X | X | X | | | | | | |
| | 390.93 | 4.5 | 4611 | 0.33 | X | | | X | X | X | X | | | | | | |
| | 482.56 | 3.6 | 4611 | 0.26 | X | | | X | X | X | X | | | | | | |
| | 623.10 | 2.8 | 4611 | 0.20 | X | | | X | X | X | X | | | | | | |
| | 763.41 | 2.3 | 3876 | 0.14 | X | | | X | X | X | X | | | | | | |

◈ The maximum input power limit shown is the largest motor power typically combined with the gear unit. *The Italicized power values shown are not the mechanical limit and often may be increased through discussion with our sales or engineering department.*

* The NEMA C-face power limit must also be considered when selecting a reducer. The C-face Adapter's Maximum Input Power values are displayed under the Available Combinations and based on a 1750 rpm motor.



# SK 3282 SCP & SK 3382 SCP
# Ratings & Combinations

| Type | Ratio | Output Speed 1750 rpm input $n_2$ [rpm] | Max Torque $T_{max}$ [lb-in] | Max ◈ Power 1750 rpm input $P_{max}$ [hp] | NEMA C-face* | | | | Integral Motor | | | | | | | | | | | |
|---|---|---|---|---|---|---|---|---|---|---|---|---|---|---|---|---|---|---|---|---|
| | | | | | 56C | 140TC | 180TC | 210TC | 63L/4 | 71S/4 | 71L/4 | 80S/4 | 80L/4 80LH/4 | 90S/4 90SH/4 | 90L/4 90LH/4 | 100L/4 100LH/4 | 100LA/4 112LH/4 | 132S/SH/4 | 132M/MH/4 | |
| | | | | | 1.0 hp | 2.0 hp | 5.0 hp | 10 hp | 0.25 hp | 0.33 hp | 0.5 hp | 0.75 hp | 1.0 hp | 1.5 hp | 2 .0 hp | 3.0 hp | 5.0 hp | 7.5 hp | 10 hp | |
| **SK 3282 SCP** | 4.48 | 391 | 4080 | *10.00* | X | X | X | X | | | | | | X | X | X | X | X | X | |
| | 5.68 | 308 | 4912 | *10.00* | X | X | X | X | | | | | | X | X | X | X | X | X | |
| | 6.70 | 261 | 5372 | *10.00* | X | X | X | X | | | | | | X | X | X | X | X | X | |
| | 8.31 | 211 | 5983 | *10.00* | X | X | X | X | | | | X | X | X | X | X | X | X | X | |
| | 9.80 | 179 | 7425 | *10.00* | X | X | X | X | | | | | | X | X | X | X | X | X | |
| | 11.38 | 154 | 7266 | *10.00* | X | X | X | X | | | | | | X | X | X | X | X | X | |
| | 14.11 | 124 | 7584 | *10.00* | X | X | X | X | | | | X | X | X | X | X | X | X | X | |
| | 16.67 | 105 | 7443 | *10.00* | X | X | X | X | | | | X | X | X | X | X | X | X | X | |
| | 20.18 | 87 | 7275 | *10.00* | X | X | X | X | | | | X | X | X | X | X | X | X | X | |
| | 21.38 | 82 | 6390 | 8.31 | X | X | X | X | | | | X | X | X | X | X | X | X | X | |
| | 22.45 | 78 | 7080 | 8.76 | X | X | X | X | | | | X | X | X | X | X | X | X | X | |
| | 23.71 | 74 | 7124 | 8.36 | X | X | X | X | | | | X | X | X | X | X | X | X | X | |
| | 25.88 | 68 | 7487 | 8.07 | X | X | X | X | | | | X | X | X | X | X | X | X | X | |
| | 28.70 | 61 | 7700 | 7.45 | X | X | X | X | | | | X | X | X | X | X | X | X | X | |
| | 31.93 | 55 | 7761 | 6.77 | X | X | X | X | | | | X | X | X | X | X | X | X | X | |
| | 37.77 | 46 | 7390 | 5.39 | X | X | X | | | | | X | X | X | X | X | | | | |
| | 38.62 | 45 | 5611 | 4.00 | X | X | X | | | | | | | X | X | X | | | | |
| | 42.02 | 42 | 8222 | 5.48 | X | X | X | | | | | X | X | X | X | X | | | | |
| | 44.85 | 39 | 6522 | 4.03 | X | X | X | | | | | | | X | X | X | | | | |
| | 48.04 | 36 | 4885 | 2.79 | X | X | | | | | | X | X | X | X | | | | | |
| | 52.97 | 33 | 7478 | 3.91 | X | X | X | | | | | | | X | X | X | | | | |
| | 55.79 | 31 | 5682 | 2.79 | X | X | | | | | | X | X | X | X | | | | | |
| | 64.12 | 27 | 8983 | 3.85 | X | X | X | | | | | | | X | X | X | | | | |
| | 65.89 | 27 | 6708 | 2.87 | X | X | | | | | | X | X | X | X | | | | | |
| | 70.56 | 25 | 4991 | 1.98 | X | X | | | | X | X | X | X | X | | | | | | |
| | 79.76 | 22 | 7523 | 2.62 | X | X | | | | | | X | X | X | X | | | | | |
| | 88.74 | 20 | 8363 | 2.65 | X | X | | | | | | X | X | X | X | | | | | |
| | 100.88 | 17 | 7142 | 1.93 | X | X | | | | X | X | X | X | X | | | | | | |
| | 112.23 | 16 | 6815 | 1.73 | X | X | | | | X | X | X | X | X | | | | | | |
| **SK 3382 SCP** | 89.60 | 20 | 5496 | 1.50 | X | X | | | X | X | X | X | X | X | X | | | | | |
| | 104.05 | 17 | 6505 | 1.50 | X | X | | | X | X | X | X | X | X | X | | | | | |
| | 126.93 | 14 | 6850 | 1.50 | X | X | | | X | X | X | X | X | X | X | | | | | |
| | 161.46 | 11 | 6974 | 1.22 | X | X | | | X | X | X | X | X | X | X | | | | | |
| | 190.69 | 9.2 | 7664 | 1.12 | X | X | | | X | X | X | X | X | X | X | | | | | |
| | 230.83 | 7.6 | 8850 | 1.07 | X | X | | | X | X | X | X | X | X | X | | | | | |
| | 287.14 | 6.1 | 8301 | 0.80 | X | X | | | X | X | X | X | X | X | X | | | | | |
| | 408.58 | 4.3 | 7045 | 0.48 | X | | | | X | X | X | X | | | | | | | | |
| | 482.56 | 3.6 | 7664 | 0.44 | X | | | | X | X | X | X | | | | | | | | |
| | 584.13 | 3 | 8850 | 0.42 | X | | | | X | X | X | X | | | | | | | | |
| | 726.61 | 2.4 | 8354 | 0.32 | X | | | | X | X | X | X | | | | | | | | |
| | 808.42 | 2.2 | 9195 | 0.32 | X | | | | X | X | X | X | | | | | | | | |
| | 919.00 | 1.9 | 7275 | 0.22 | X | | | | X | X | X | X | | | | | | | | |
| | 1,022.42 | 1.7 | 6965 | 0.19 | X | | | | X | X | X | X | | | | | | | | |

◈ The maximum input power limit shown is the largest motor power typically combined with the gear unit. *The Italicized power values shown are not the mechanical limit and often may be increased through discussion with our sales or engineering department.*

* The NEMA C-face power limit must also be considered when selecting a reducer. The C-face Adapter's Maximum Input Power values are displayed under the Available Combinations and based on a 1750 rpm motor.

# SK 4282 SCP
# Ratings & Combinations



| Type | Ratio | Output Speed 1750 rpm input $n_2$ [rpm] | Max Torque $T_{max}$ [lb-in] | Max ◈ Power 1750 rpm input $P_{max}$ [hp] | NEMA C-face* | | | | | Integral Motor | | | | | | | |
|---|---|---|---|---|---|---|---|---|---|---|---|---|---|---|---|---|---|
| | | | | | 56C 1.0 hp | 140TC 2.0 hp | 180TC 5.0 hp | 210TC 10 hp | 250TC 20 hp | 90S/4 90SH/4 1.5 hp | 90L/4 90LH/4 2 .0 hp | 100L/4 100LH/4 3.0 hp | 100LA/4 112LH/4 5.0 hp | 132S/SH/4 7.5 hp | 132M/MH/4 10 hp | 160M/MH/4 15 hp | 160L/LH/4 20 hp |
| **SK 4282 SCP** | 4.70 | 372 | 9160 | *20.00* | | | X | X | X | | | | | X | X | X | X |
| | 5.00 | 350 | 9160 | *20.00* | | | X | X | X | | | | | X | X | X | X |
| | 5.43 | 322 | 9160 | *20.00* | | | X | X | X | X | X | X | X | X | X | X | X |
| | 6.06 | 289 | 10620 | *20.00* | X | X | X | X | X | X | X | X | X | X | X | X | X |
| | 7.13 | 245 | 10638 | *20.00* | X | X | X | X | X | X | X | X | X | X | X | X | X |
| | 8.33 | 210 | 11257 | *20.00* | X | X | X | X | X | X | X | X | X | X | X | X | X |
| | 9.23 | 190 | 14461 | *20.00* | X | X | X | X | X | X | X | X | X | X | X | X | X |
| | 10.85 | 161 | 15045 | *20.00* | X | X | X | X | X | X | X | X | X | X | X | X | X |
| | 12.68 | 138 | 15488 | *20.00* | X | X | X | X | X | X | X | X | X | X | X | X | X |
| | 15.20 | 115 | 15930 | *20.00* | X | X | X | X | X | X | X | X | X | X | X | X | X |
| | 18.18 | 96 | 15930 | *20.00* | X | X | X | X | X | X | X | X | X | X | X | X | X |
| | 21.45 | 82 | 14921 | 19.41 | X | X | X | X | X | X | X | X | X | X | X | X | X |
| | 22.39 | 78 | 15036 | 18.60 | X | X | X | X | X | X | X | X | X | X | X | X | X |
| | 26.25 | 67 | 14231 | 15.12 | X | X | X | X | X | X | X | X | X | X | X | X | X |
| | 26.43 | 66 | 15815 | 16.55 | X | X | X | X | X | X | X | X | X | X | X | X | X |
| | 26.72 | 65 | 14160 | 14.60 | | | X | X | | | | | | X | X | | |
| | 32.04 | 55 | 15797 | 13.78 | | | X | X | | | | | | X | X | | |
| | 32.34 | 54 | 14337 | 12.28 | X | X | X | X | X | X | X | X | X | X | X | X | X |
| | 36.40 | 48 | 12169 | 9.26 | | | X | X | | | | X | X | X | | | |
| | 36.81 | 48 | 12390 | 9.43 | X | X | X | X | | X | X | X | X | X | X | | |
| | 38.31 | 46 | 17700 | 12.91 | | | X | X | | | | | | X | X | | |
| | 40.74 | 43 | 13771 | 9.39 | X | X | X | X | | X | X | X | X | X | X | | |
| | 43.65 | 40 | 14160 | 8.98 | | | X | X | | | | X | X | X | | | |
| | 45.05 | 39 | 14107 | 8.73 | X | X | X | X | | X | X | X | X | X | X | | |
| | 52.20 | 34 | 16089 | 8.68 | | | X | X | | | | X | X | X | | | |
| | 61.60 | 28 | 15877 | 7.05 | | | X | X | | | | X | X | X | | | |
| | 75.39 | 23 | 14063 | 5.13 | | | X | X | | | | X | X | X | | | |
| | 90.52 | 19 | 14160 | 4.27 | X | X | X | | | X | X | X | X | | | | |
| | 110.78 | 16 | 14160 | 3.59 | X | X | X | | | X | X | X | X | | | | |
| | 155.40 | 11 | 11284 | 1.97 | X | X | | | | X | X | | | | | | |

◈ The maximum input power limit shown is the largest motor power typically combined with the gear unit. *The Italicized power values shown are not the mechanical limit and often may be increased through discussion with our sales or engineering department.*

* The NEMA C-face power limit must also be considered when selecting a reducer. The C-face Adapter's Maximum Input Power values are displayed under the Available Combinations and based on a 1750 rpm motor.



# SK 4382 SCP
# Ratings & Combinations

| Type | Ratio | Output Speed 1750 rpm input $n_2$ [rpm] | Max Torque $T_{max}$ [lb-in] | Max Power 1750 rpm input $P_{max}$ [hp] | NEMA C-face | | | Integral Motor | | | | | | | |
|---|---|---|---|---|---|---|---|---|---|---|---|---|---|---|---|
| | | | | | 56C 1.0 hp | 140TC 2.0 hp | 180TC 5.0 hp | 71S/4 0.33 hp | 71L/4 0.5 hp | 80S/4 0.75 hp | 80L 80LH/4 1.0 hp | 90S 90SH/4 1.5 hp | 90L 90LH/4 2 .0 hp | 100L 100LH/4 3.0 hp | 100LA 112LH/4 5.0 hp |
| **SK 4382 SCP** | 86.83 | 20 | 17523 | 5.00 | X | X | X | | X | X | X | X | X | X | X |
| | 103.82 | 17 | 17700 | 4.77 | X | X | X | | X | X | X | X | X | X | X |
| | 118.38 | 15 | 17700 | 4.21 | X | X | X | | X | X | X | X | X | X | X |
| | 140.60 | 12 | 17700 | 3.37 | X | X | X | | X | X | X | X | X | X | X |
| | 160.20 | 11 | 14664 | 2.56 | X | X | X | | X | X | X | X | X | X | X |
| | 191.57 | 9.1 | 17612 | 2.54 | X | X | X | | X | X | X | X | X | X | X |
| | 211.09 | 8.3 | 14470 | 1.90 | X | X | | | | X | X | X | X | | |
| | 253.12 | 6.9 | 17355 | 1.90 | X | X | | | | X | X | X | X | | |
| | 272.54 | 6.4 | 13912 | 1.41 | X | X | | X | X | X | X | X | | | |
| | 302.65 | 5.8 | 18381 | 1.69 | X | X | | | | X | X | X | X | | |
| | 326.81 | 5.4 | 16727 | 1.43 | X | X | | X | X | X | X | X | | | |
| | 344.84 | 5.1 | 14709 | 1.19 | X | X | | | | X | X | X | X | | |
| | 390.76 | 4.5 | 17700 | 1.26 | X | X | | X | X | X | X | X | | | |
| | 412.38 | 4.2 | 17612 | 1.17 | X | X | | | | X | X | X | X | | |
| | 445.23 | 3.9 | 14744 | 0.91 | X | X | | X | X | X | X | X | | | |
| | 532.44 | 3.3 | 17700 | 0.93 | X | X | | X | X | X | X | X | | | |
| | 605.88 | 2.9 | 13054 | 0.60 | X | X | | | | X | X | X | X | | |
| | 654.27 | 2.7 | 10912 | 0.47 | X | X | | X | X | X | X | X | | | |
| | 782.32 | 2.2 | 13063 | 0.46 | X | X | | X | X | X | X | X | | | |
| | 1,097.48 | 1.6 | 9629 | 0.24 | X | X | | X | X | X | X | X | | | |
| | 1,129.91 | 1.5 | 14160 | 0.34 | X | X | | X | X | X | X | X | | | |
| | 1,585.08 | 1.1 | 12567 | 0.22 | X | X | | X | X | X | X | X | | | |

◈ The maximum input power limit shown is the largest motor power typically combined with the gear unit. *The Italicized power values shown are not the mechanical limit and often may be increased through discussion with our sales or engineering department.*

* The NEMA C-face power limit must also be considered when selecting a reducer. The C-face Adapter's Maximum Input Power values are displayed under the Available Combinations and based on a 1750 rpm motor.

# SK 5282 SCP
# Ratings & Combinations



| Type | Ratio | Output Speed 1750 rpm input $n_2$ [rpm] | Max Torque $T_{max}$ [lb-in] | Max ◈ Power 1750 rpm input $P_{max}$ [hp] | NEMA C-face* | | | | | | Integral Motor | | | | | | | | | |
|---|---|---|---|---|---|---|---|---|---|---|---|---|---|---|---|---|---|---|---|---|
| | | | | | 56C | 140TC | 180TC | 210TC | 250TC | 280TC | 90S/4 90SH/4 | 90S/4 90LH/4 | 90L/4 100LH/4 | 100L/4 112LH/4 | 100LA/4 112LH/4 | 132S/SH/4 | 132M/MH/4 | 160M/MH/4 | 160L/LH/4 | 180MX/MH/4 | 180LX/LH/4 |
| | | | | | 1.0 hp | 2.0 hp | 5.0 hp | 10 hp | 20 hp | 30 hp | 1.5 hp | 2 .0 hp | 3.0 hp | 5.0 hp | 7.5 hp | 10 hp | 15 hp | 20 hp | 25 hp | 30 hp | |
| **SK 5282 SCP** | 4.32 | 405 | 13718 | *30.00* | | | | | X | X | | | | | | | X | X | X | X |
| | 5.01 | 349 | 15045 | *30.00* | | | | | X | X | | | | | | | X | X | X | X |
| | 5.29 | 331 | 15488 | *30.00* | | | | | X | X | | | | | | | X | X | X | X |
| | 5.71 | 306 | 15930 | *30.00* | | | | | X | X | | | | | | | X | X | X | X |
| | 6.33 | 276 | 18709 | *30.00* | | | X | X | X | X | | | X | X | X | X | X | X | X | X |
| | 7.17 | 244 | 19125 | *30.00* | | | X | X | X | X | | | X | X | X | X | X | X | X | X |
| | 8.70 | 201 | 20886 | *30.00* | X | X | X | X | X | X | X | X | X | X | X | X | X | X | X | X |
| | 9.46 | 185 | 20355 | *30.00* | | | X | X | X | X | | | X | X | X | X | X | X | X | X |
| | 10.71 | 163 | 22125 | *30.00* | | | X | X | X | X | | | X | X | X | X | X | X | X | X |
| | 13.00 | 135 | 23267 | *30.00* | X | X | X | X | X | X | X | X | X | X | X | X | X | X | X | X |
| | 15.38 | 114 | 23010 | *30.00* | X | X | X | X | X | X | X | X | X | X | X | X | X | X | X | X |
| | 17.59 | 99 | 24338 | *30.00* | X | X | X | X | X | X | X | X | X | X | X | X | X | X | X | X |
| | 18.88 | 93 | 23010 | *30.00* | X | X | X | X | X | X | X | X | X | X | X | X | X | X | X | X |
| | 20.36 | 86 | 27435 | *30.00* | X | X | X | X | X | X | X | X | X | X | X | X | X | X | X | X |
| | 25.00 | 70 | 25665 | 28.49 | X | X | X | X | X | X | X | X | X | X | X | X | X | X | X | X |
| | 30.50 | 57 | 25665 | 23.20 | X | X | X | X | X | | X | X | X | X | X | X | X | X | | |
| | 33.43 | 52 | 20355 | 16.79 | X | X | X | X | X | X | X | X | X | X | X | X | X | X | X | X |
| | 35.46 | 49 | 23895 | 18.57 | | | X | X | | | | | | | X | X | | | | |
| | 40.80 | 43 | 22125 | 15.09 | X | X | X | X | X | | X | X | X | X | X | X | X | X | | |
| | 41.94 | 42 | 28320 | 18.87 | | | X | X | | | | | | | X | X | | | | |
| | 47.27 | 37 | 21240 | 12.46 | | | X | X | | | | | X | X | X | | | | | |
| | 51.49 | 34 | 28630 | 15.44 | | | X | X | | | | | | | X | X | | | | |
| | 55.55 | 32 | 22125 | 11.23 | X | X | X | X | | | X | X | X | X | X | X | | | | |
| | 55.90 | 31 | 23010 | 11.31 | | | X | X | | | | | X | X | X | | | | | |
| | 68.63 | 25 | 26285 | 10.42 | | | X | X | | | | | X | X | X | | | | | |
| | 81.61 | 21 | 16178 | 5.39 | X | X | X | | | | X | X | X | X | | | | | | |
| | 91.81 | 19 | 24417 | 7.36 | | | X | X | | | | | X | X | X | | | | | |
| | 100.19 | 17 | 19833 | 5.35 | X | X | X | | | | X | X | X | X | | | | | | |
| | 134.03 | 13 | 23488 | 4.84 | X | X | X | | | | X | X | X | X | | | | | | |

◈ The maximum input power limit shown is the largest motor power typically combined with the gear unit. *The Italicized power values shown are not the mechanical limit and often may be increased through discussion with our sales or engineering department.*

* The NEMA C-face power limit must also be considered when selecting a reducer. The C-face Adapter's Maximum Input Power values are displayed under the Available Combinations and based on a 1750 rpm motor.



# SK 5382 SCP
# Ratings & Combinations

| Type | Ratio | Output Speed 1750 rpm input $n_2$ [rpm] | Max Torque $T_{max}$ [lb-in] | Max ◈ Power 1750 rpm input $P_{max}$ [hp] | NEMA C-face* | | | | Integral Motor | | | | | | | | |
|---|---|---|---|---|---|---|---|---|---|---|---|---|---|---|---|---|---|
| | | | | | 56C 1.0 hp | 140TC 2.0 hp | 180TC 5.0 hp | 210TC 10 hp | 71L/4 0.5 hp | 80S/4 0.75 hp | 80L/4 80LH/4 1.0 hp | 90S/4 90SH/4 1.5 hp | 90L/4 90LH/4 2 .0 hp | 100L/4 100LH/4 3.0 hp | 100LA/4 112LH/4 5.0 hp | 132S/SH/4 7.5 hp | 132M/MH/4 10 hp |
| **SK 5382 SCP** | 82.72 | 21 | 24736 | 7.50 | X | X | X | X | X | X | X | X | X | X | X | X | X |
| | 91.71 | 19 | 25665 | 7.50 | X | X | X | X | X | X | X | X | X | X | X | X | X |
| | 117.37 | 15 | 24338 | 5.79 | X | X | X | X | X | X | X | X | X | X | X | X | X |
| | 138.82 | 13 | 28320 | 5.84 | X | X | X | X | X | X | X | X | X | X | X | X | X |
| | 153.92 | 11 | 28320 | 4.94 | X | X | X | X | X | X | X | X | X | X | X | X | X |
| | 171.27 | 10 | 24780 | 3.93 | X | X | X | | X | X | X | X | X | X | X | | |
| | 202.57 | 8.6 | 28320 | 3.86 | X | X | X | | X | X | X | X | X | X | X | | |
| | 248.70 | 7 | 28320 | 3.14 | X | X | X | | X | X | X | X | X | X | X | | |
| | 269.99 | 6.5 | 23895 | 2.46 | X | X | X | | X | X | X | X | X | X | X | | |
| | 331.48 | 5.3 | 28320 | 2.38 | X | X | X | | X | X | X | X | X | X | X | | |
| | 361.69 | 4.8 | 24780 | 1.89 | X | X | | | | X | X | X | X | | | | |
| | 427.79 | 4.1 | 28320 | 1.84 | X | X | | | | X | X | X | X | | | | |
| | 525.20 | 3.3 | 28320 | 1.48 | X | X | | | | X | X | X | X | | | | |
| | 570.18 | 3.1 | 24780 | 1.22 | X | X | | | | X | X | X | X | | | | |
| | 700.03 | 2.5 | 28320 | 1.12 | X | X | | | | X | X | X | X | | | | |
| | 936.45 | 1.9 | 23895 | 0.72 | X | X | | | | X | X | X | X | | | | |
| | 1,367.08 | 1.3 | 23895 | 0.49 | X | X | | | | X | X | X | X | | | | |

◈ The maximum input power limit shown is the largest motor power typically combined with the gear unit. *The Italicized power values shown are not the mechanical limit and often may be increased through discussion with our sales or engineering department.*

* The NEMA C-face power limit must also be considered when selecting a reducer. The C-face Adapter's Maximum Input Power values are displayed under the Available Combinations and based on a 1750 rpm motor.

# SK 6282 SCP
# Ratings & Combinations



| Type | Ratio | Output Speed 1750 rpm input $n_2$ [rpm] | Max Torque $T_{max}$ [lb-in] | Max ◈ Power 1750 rpm input $P_{max}$ [hp] | NEMA C-face* | | | | | | Integral Motor | | | | | | | | | |
|---|---|---|---|---|---|---|---|---|---|---|---|---|---|---|---|---|---|---|---|---|
| | | | | | 180TC 5 hp | 210TC 10 hp | 250TC 20 hp | 280TC 30 hp | 320TC 40 hp | 360TC 50 hp | 100L/4 100LH/4 3.0 hp | 100LA/4 112LH/4 5.0 hp | 132S/SH/4 7.5 hp | 132M/MH/4 10 hp | 160M/MH/4 15 hp | 160L/LH/4 20 hp | 180MX/MH/4 25 hp | 180LX/LH/4 30 hp | 200 l/LH/4 40 hp | 225S/SH/4 225M/MH/4 50 hp |
| **SK 6282 SCP** | 4.39 | 399 | 18001 | *60.00* | | | X | X | X | X | | | | | | | X | X | X | X |
| | 4.88 | 359 | 19081 | *60.00* | X | X | X | X | X | X | | | | X | X | X | X | X | X | X |
| | 5.50 | 318 | 20275 | *60.00* | X | X | X | X | X | X | | | | X | X | X | X | X | X | X |
| | 5.78 | 303 | 20656 | *60.00* | X | X | X | X | X | X | | | | X | X | X | X | X | X | X |
| | 5.99 | 292 | 21169 | *60.00* | | | X | X | X | X | | | | | | | X | X | X | X |
| | 6.74 | 260 | 26462 | *60.00* | X | X | X | X | X | X | X | X | X | X | X | X | X | X | X | X |
| | 7.82 | 224 | 23736 | *60.00* | X | X | X | X | X | X | X | X | X | X | X | X | X | X | X | X |
| | 9.39 | 186 | 24373 | *60.00* | X | X | X | X | X | X | X | X | X | X | X | X | X | X | | |
| | 10.64 | 164 | 38179 | *60.00* | X | X | X | X | X | X | X | X | X | X | X | X | X | X | X | X |
| | 12.35 | 142 | 38843 | *60.00* | X | X | X | X | X | X | X | X | X | X | X | X | X | X | X | X |
| | 14.83 | 118 | 39604 | *60.00* | X | X | X | X | X | X | X | X | X | X | X | X | X | X | | |
| | 18.70 | 94 | 39179 | 58.43 | X | X | X | X | X | X | X | X | X | X | X | X | X | X | | |
| | 22.95 | 76 | 40135 | 48.40 | X | X | X | X | X | X | X | X | X | X | X | X | X | X | | |
| | 26.05 | 67 | 40117 | 42.65 | X | X | X | X | | | X | X | X | X | X | X | X | X | | |
| | 29.90 | 59 | 40152 | 37.59 | X | X | X | X | | | X | X | X | X | X | X | X | X | | |
| | 39.48 | 44 | 28320 | 19.77 | X | X | X | X | | | | | X | X | X | X | | | | |
| | 49.75 | 35 | 35754 | 19.86 | X | X | X | X | | | | | X | X | X | X | | | | |
| | 61.08 | 29 | 40135 | 18.47 | X | X | X | X | | | | | X | X | X | X | | | | |
| | 65.44 | 27 | 29816 | 12.77 | X | X | | | | | X | X | X | | | | | | | |
| | 80.33 | 22 | 36559 | 12.76 | X | X | | | | | X | X | X | | | | | | | |

◈ The maximum input power limit shown is the largest motor power typically combined with the gear unit. *The Italicized power values shown are not the mechanical limit and often may be increased through discussion with our sales or engineering department.*

* The NEMA C-face power limit must also be considered when selecting a reducer. The C-face Adapter's Maximum Input Power values are displayed under the Available Combinations and based on a 1750 rpm motor.

W + NEMA



# SK 6382 SCP
# Ratings & Combinations

| Type | Ratio | Output Speed 1750 rpm input $n_2$ [rpm] | Max Torque $T_{max}$ [lb-in] | Max ◈ Power 1750 rpm input $P_{max}$ [hp] | NEMA C-face* | | | | | | Integral Motor | | | | | | | | | |
|---|---|---|---|---|---|---|---|---|---|---|---|---|---|---|---|---|---|---|---|---|
| | | | | | 56C | 140TC | 180TC | 210TC | 250TC | 280TC | 90S/4 90SH/4 | 90L/4 90LH/4 | 100L/4 100LH/4 | 100LA/4 112LH/4 | 132S/SH/4 | 132M/MH/4 | 160M/MH/4 | 160L/LH/4 | 180MX/MH/4 | 180LX/LH/4 |
| | | | | | 1.0 hp | 2.0 hp | 5.0 hp | 10 hp | 15 hp | 20 hp | 1.5 hp | 2 .0 hp | 3.0 hp | 5.0 hp | 7.5 hp | 10 hp | 15 hp | 20 hp | 25 hp | 30 hp |
| **SK 6382 SCP** | 24.42 | 72 | 41507 | *30.00* | X | X | X | X | X | X | | | X | X | X | X | X | X | X | X |
| | 28.72 | 61 | 40710 | *30.00* | X | X | X | X | X | X | X | X | X | X | X | X | X | X | X | X |
| | 30.91 | 57 | 40268 | *30.00* | X | X | X | X | X | X | | | X | X | X | X | X | X | X | X |
| | 36.34 | 48 | 40268 | *30.00* | X | X | X | X | X | X | X | X | X | X | X | X | X | X | X | X |
| | 42.46 | 41 | 40268 | 26.20 | X | X | X | X | X | X | X | X | X | X | X | X | X | X | X | X |
| | 51.07 | 34 | 44958 | 24.25 | X | X | X | X | X | X | X | X | X | X | X | X | X | X | X | X |
| | 59.66 | 29 | 48675 | 22.40 | X | X | X | X | X | X | X | X | X | X | X | X | X | X | X | X |
| | 73.50 | 24 | 49295 | 18.77 | X | X | X | X | X | | X | X | X | X | X | X | X | X | | |
| | 75.18 | 23 | 53100 | 19.38 | X | X | X | X | X | X | X | X | X | X | X | X | X | X | X | X |
| | 92.63 | 19 | 53100 | 16.01 | X | X | X | X | X | | X | X | X | X | X | X | X | X | | |
| | 114.79 | 15 | 52038 | 12.39 | X | X | X | X | X | | X | X | X | X | X | X | X | X | | |
| | 126.87 | 14 | 40533 | 9.00 | X | X | X | X | | | X | X | X | X | X | X | | | | |
| | 159.88 | 11 | 51065 | 8.91 | X | X | X | X | | | X | X | X | X | X | X | | | | |
| | 171.34 | 10 | 49295 | 7.82 | | | X | X | | | | | X | X | X | X | | | | |
| | 212.33 | 8.2 | 41330 | 5.38 | | | X | X | | | | | X | X | X | X | | | | |
| | 225.79 | 7.8 | 35577 | 4.40 | X | X | X | | | | X | X | X | X | | | | | | |
| | 251.76 | 7.0 | 39648 | 4.40 | X | X | X | | | | X | X | X | X | | | | | | |
| | 267.59 | 6.5 | 52038 | 5.37 | | | X | X | | | | | X | X | X | X | | | | |
| | 317.28 | 5.5 | 49914 | 4.36 | X | X | X | | | | X | X | X | X | | | | | | |
| | 393.19 | 4.5 | 52038 | 3.72 | X | X | X | | | | X | X | X | X | | | | | | |
| | 445.09 | 3.9 | 36905 | 2.28 | X | X | | | | | X | X | | | | | | | | |
| | 551.58 | 3.2 | 45755 | 2.32 | X | X | | | | | X | X | | | | | | | | |

◈ The maximum input power limit shown is the largest motor power typically combined with the gear unit. *The Italicized power values shown are not the mechanical limit and often may be increased through discussion with our sales or engineering department.*

* The NEMA C-face power limit must also be considered when selecting a reducer. The C-face Adapter's Maximum Input Power values are displayed under the Available Combinations and based on a 1750 rpm motor.

# Notes



# Gearmotors & C-Face Reducers

- SK 1282 SCP
- SK 2282 SCP
- SK 3282 SCP
- SK 4282 SCP
- SK 5282 SCP
- SK 6282 SCP
- 3-Stage Gearmotors & Reducers
- NEMA C-Face Motors
- CEMA Drive Shaft Detail
- 3rd Party Shaft Design & Detail

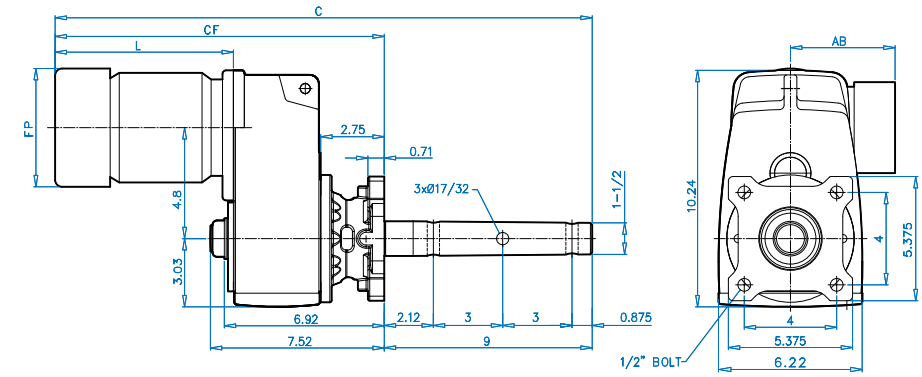


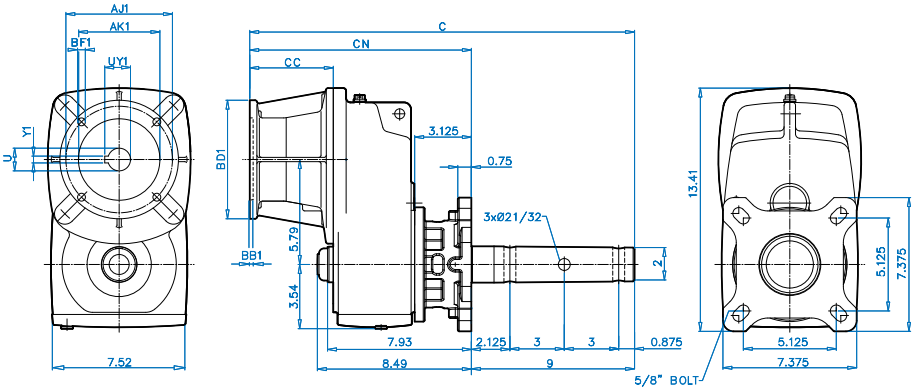


DRIVESYSTEMS

www.nord.com

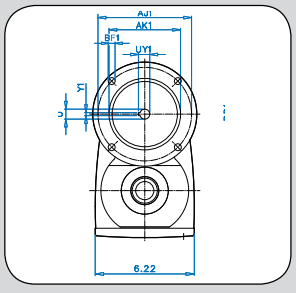


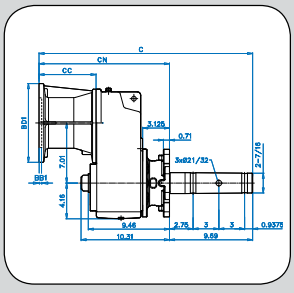


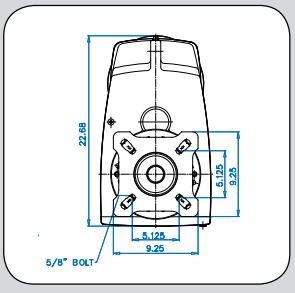


UNICASE™ CLINCHER™

# SK 1282 SCP + Motor
# 1-1/2" CEMA Drive Shaft

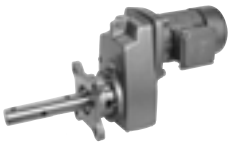

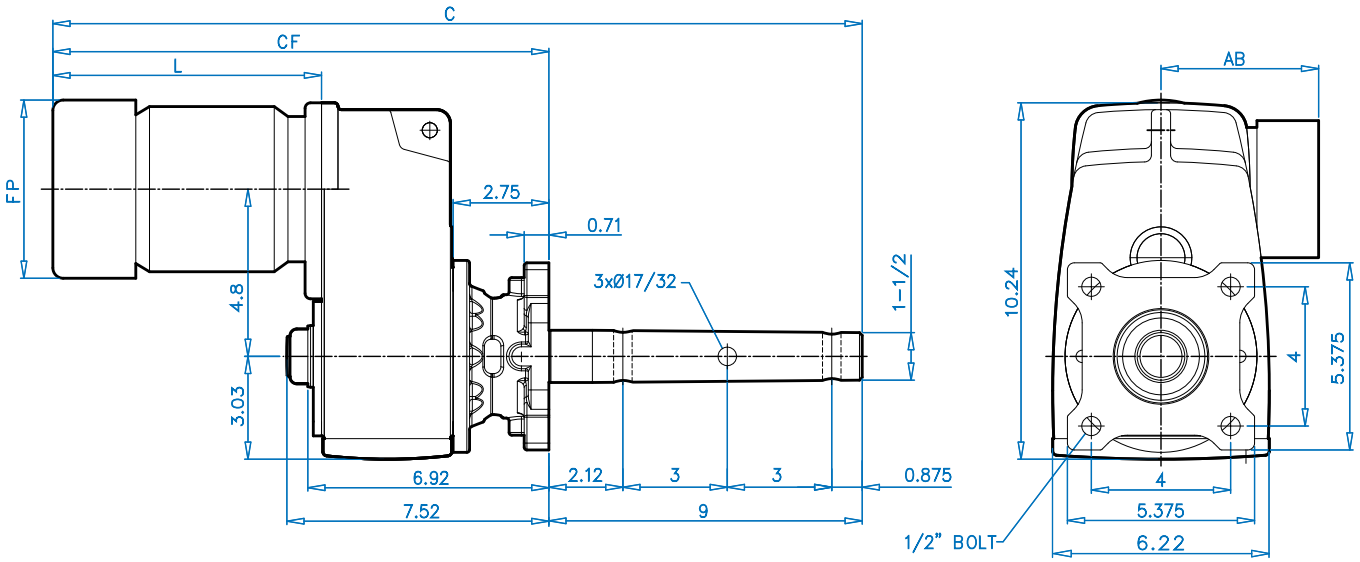


DIMENSIONS

| Motor Type | Overall | | Motor | | |
|---|---|---|---|---|---|
| | C | CF | L | FP | AB |
| 63S/L | 23.38 | 14.38 | 7.73 | 5.08 | 4.51 |
| 71S/L | 24.96 | 15.96 | 9.31 | 5.72 | 4.86 |
| 80S/L/LH | 25.94 | 16.94 | 10.29 | 6.43 | 5.59 |
| 90S/SH/L/LH | 27.52 | 18.28 | 11.87 | 7.19 | 5.79 |
| 100L/LA/LH | 28.74 | 19.74 | 13.09 | 7.90 | 6.65 |
| 112M | 29.61 | 20.61 | 13.96 | 8.87 | 7.05 |
| 112MH | 30.60 | 21.60 | 14.95 | 8.87 | 7.05 |

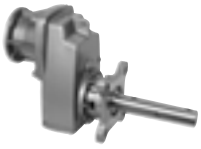

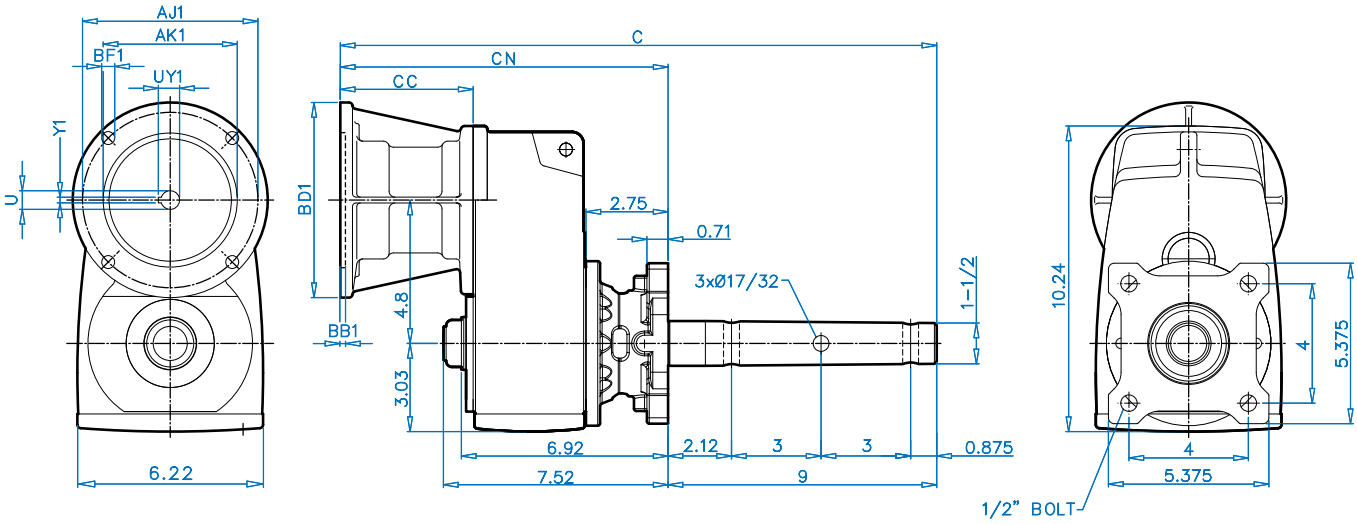




| NEMA | Overall | | NEMA Input | | | | | | Coupling | | |
|---|---|---|---|---|---|---|---|---|---|---|---|
| C-Face Input | C | CN | CC | AJ1 | AK1 | BB1 | BD1 | BF1 | U1 | UY1 | Y1 |
| **56C** | 20.10 | 11.10 | 4.45 | 5.875 | 4.50 | 0.20 | 6.54 | 0.43 | 0.625 | 0.71 | 0.188 |
| **140TC** | 20.10 | 11.10 | 4.45 | 5.875 | 4.50 | 0.20 | 6.54 | 0.43 | 0.875 | 0.96 | 0.188 |
| **180TC** | 21.30 | 12.30 | 5.65 | 7.250 | 8.50 | 0.23 | 9.17 | 0.59 | 1.125 | 1.24 | 0.250 |

# SK 1282 SCP + Motor
# 2” CEMA Drive Shaft

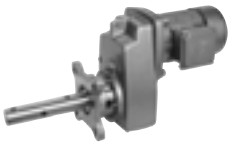



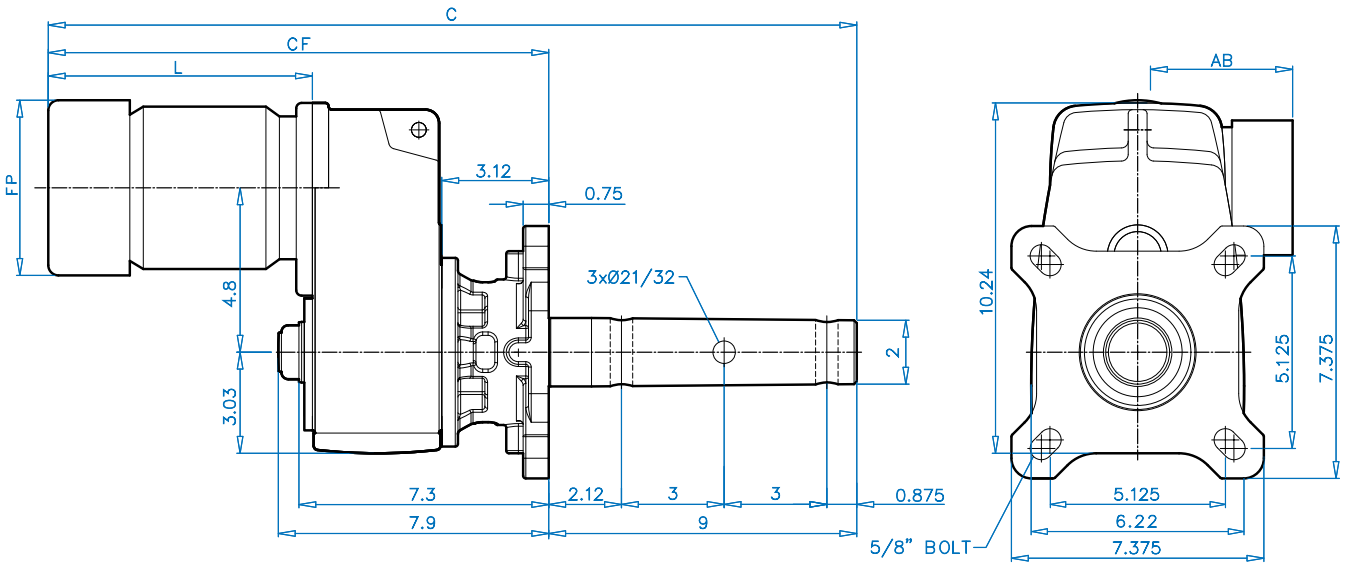


| Motor Type | Overall | | Motor | | |
|---|---|---|---|---|---|
| | C | CF | L | FP | AB |
| 63S/L | 23.76 | 14.76 | 7.73 | 5.08 | 4.51 |
| 71S/L | 25.33 | 16.33 | 9.31 | 5.72 | 4.86 |
| 80S/L/LH | 26.32 | 17.32 | 10.29 | 6.43 | 5.59 |
| 90S/SH/L/LH | 27.89 | 18.65 | 11.87 | 7.19 | 5.79 |
| 100L/LA/LH | 29.11 | 20.11 | 13.09 | 7.90 | 6.65 |
| 112M | 29.98 | 20.98 | 13.96 | 8.87 | 7.05 |
| 112MH | 30.97 | 21.97 | 14.95 | 8.87 | 7.05 |

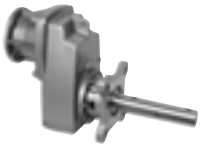

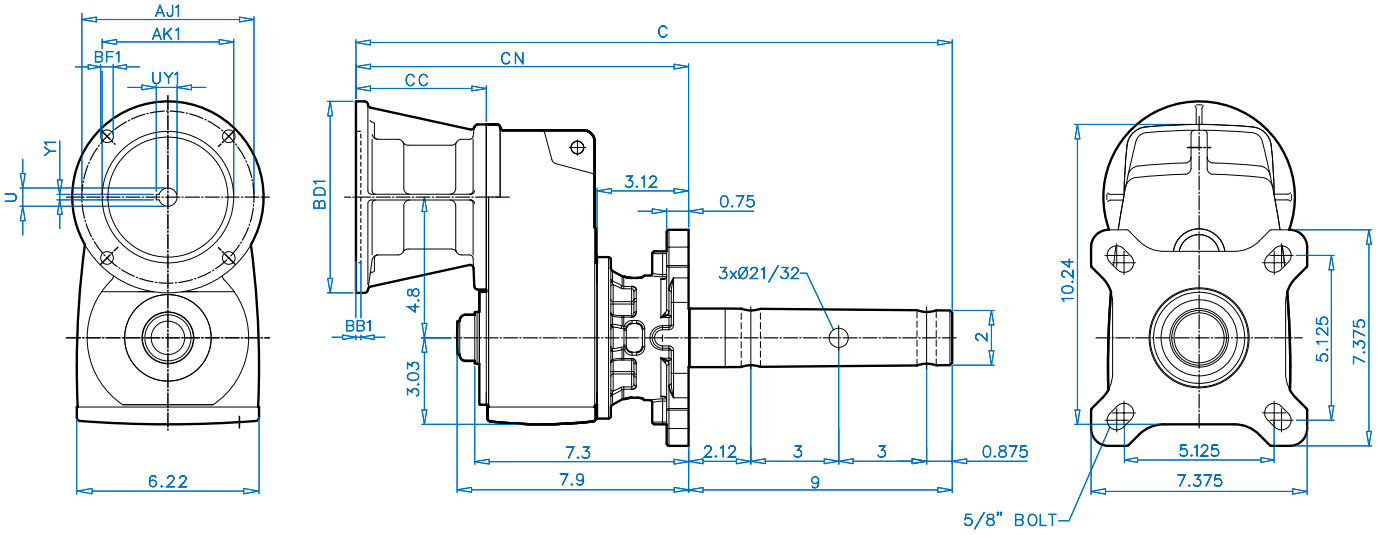


DIMENSIONS

| NEMA | Overall | | NEMA Input | | | | | | Coupling | | |
|---|---|---|---|---|---|---|---|---|---|---|---|
| C-Face Input | C | CN | CC | AJ1 | AK1 | BB1 | BD1 | BF1 | U1 | UY1 | Y1 |
| **56C** | 20.47 | 11.47 | 4.45 | 5.875 | 4.50 | 0.20 | 6.54 | 0.43 | 0.625 | 0.71 | 0.188 |
| **140TC** | 20.47 | 11.47 | 4.45 | 5.875 | 4.50 | 0.20 | 6.54 | 0.43 | 0.875 | 0.96 | 0.188 |
| **180TC** | 21.67 | 12.67 | 5.65 | 7.250 | 8.50 | 0.23 | 9.17 | 0.59 | 1.125 | 1.24 | 0.250 |

# SK 1282 SCP + Motor
# 2-7/16" CEMA Drive Shaft

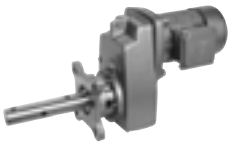

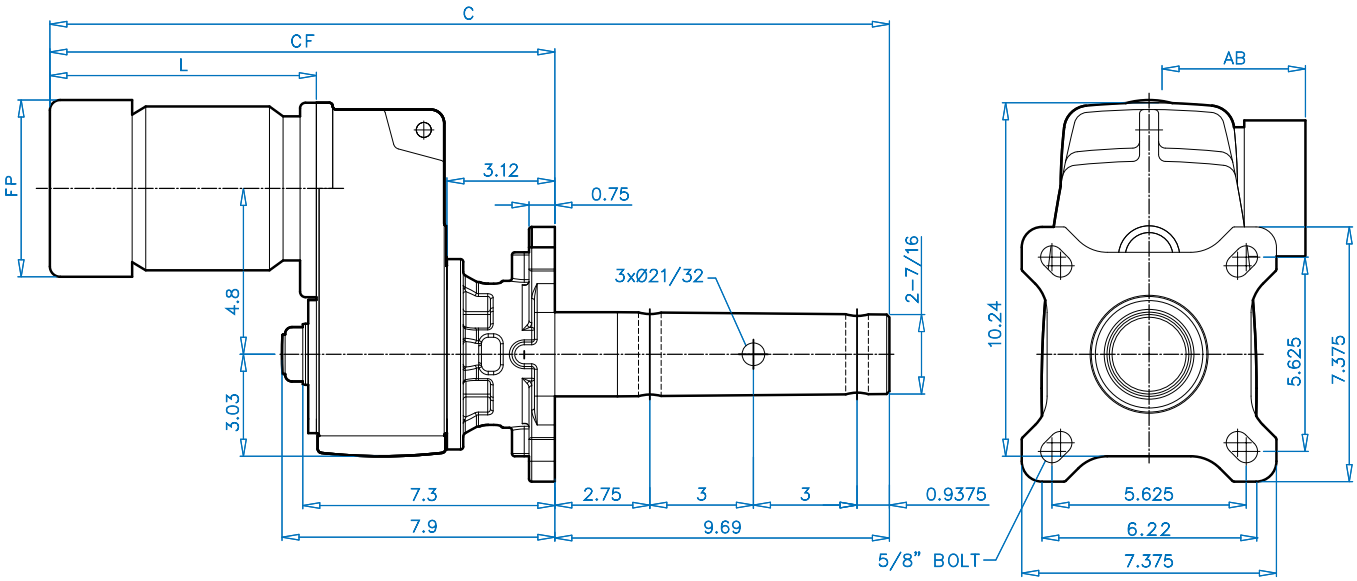


DIMENSIONS

| Motor Type | Overall | | Motor | | |
|---|---|---|---|---|---|
| | C | CF | L | FP | AB |
| 63S/L | 23.76 | 14.76 | 7.73 | 5.08 | 4.51 |
| 71S/L | 25.33 | 16.33 | 9.31 | 5.72 | 4.86 |
| 80S/L/LH | 26.32 | 17.32 | 10.29 | 6.43 | 5.59 |
| 90S/SH/L/LH | 27.89 | 18.65 | 11.87 | 7.19 | 5.79 |
| 100L/LA/LH | 29.11 | 20.11 | 13.09 | 7.90 | 6.65 |
| 112M | 29.98 | 20.98 | 13.96 | 8.87 | 7.05 |
| 112MH | 30.97 | 21.97 | 14.95 | 8.87 | 7.05 |

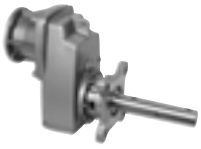

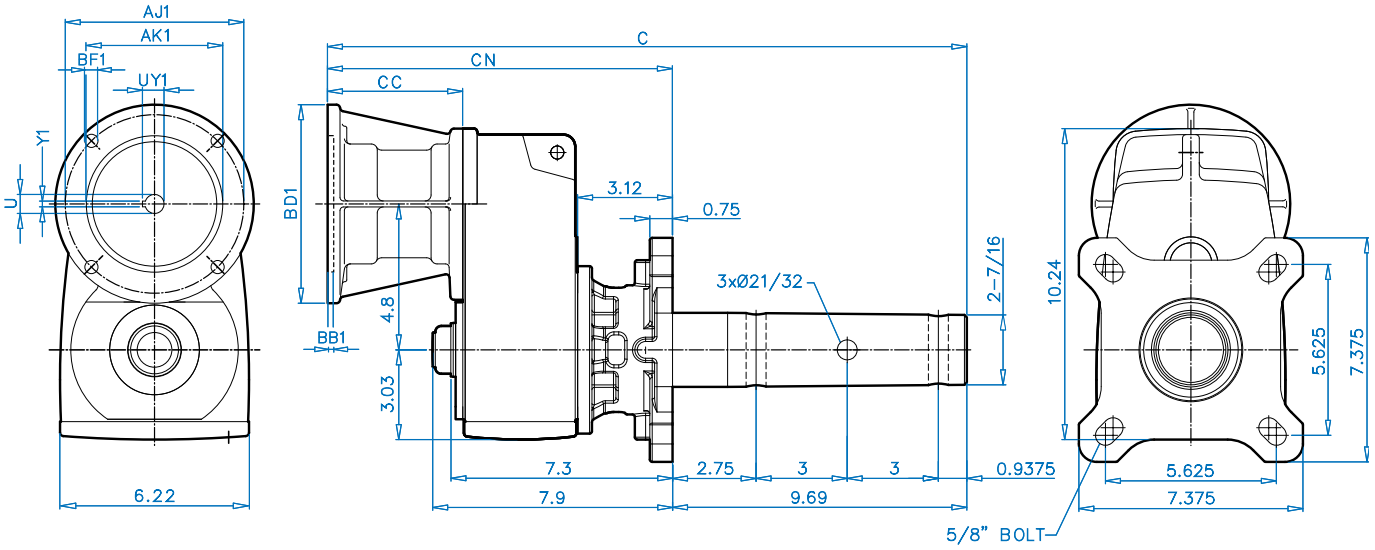


DIMENSIONS

| NEMA C-Face Input | Overall | | NEMA Input | | | | | | Coupling | | |
|---|---|---|---|---|---|---|---|---|---|---|---|
| | C | CN | CC | AJ1 | AK1 | BB1 | BD1 | BF1 | U1 | UY1 | Y1 |
| **56C** | 21.16 | 11.47 | 4.45 | 5.875 | 4.50 | 0.20 | 6.54 | 0.43 | 0.625 | 0.71 | 0.188 |
| **140TC** | 21.16 | 11.47 | 4.45 | 5.875 | 4.50 | 0.20 | 6.54 | 0.43 | 0.875 | 0.96 | 0.188 |
| **180TC** | 22.36 | 12.67 | 5.65 | 7.250 | 8.50 | 0.23 | 9.17 | 0.59 | 1.125 | 1.24 | 0.250 |

# SK 2282 SCP + Motor
# 1-1/2" CEMA Drive Shaft

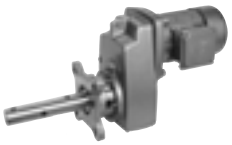

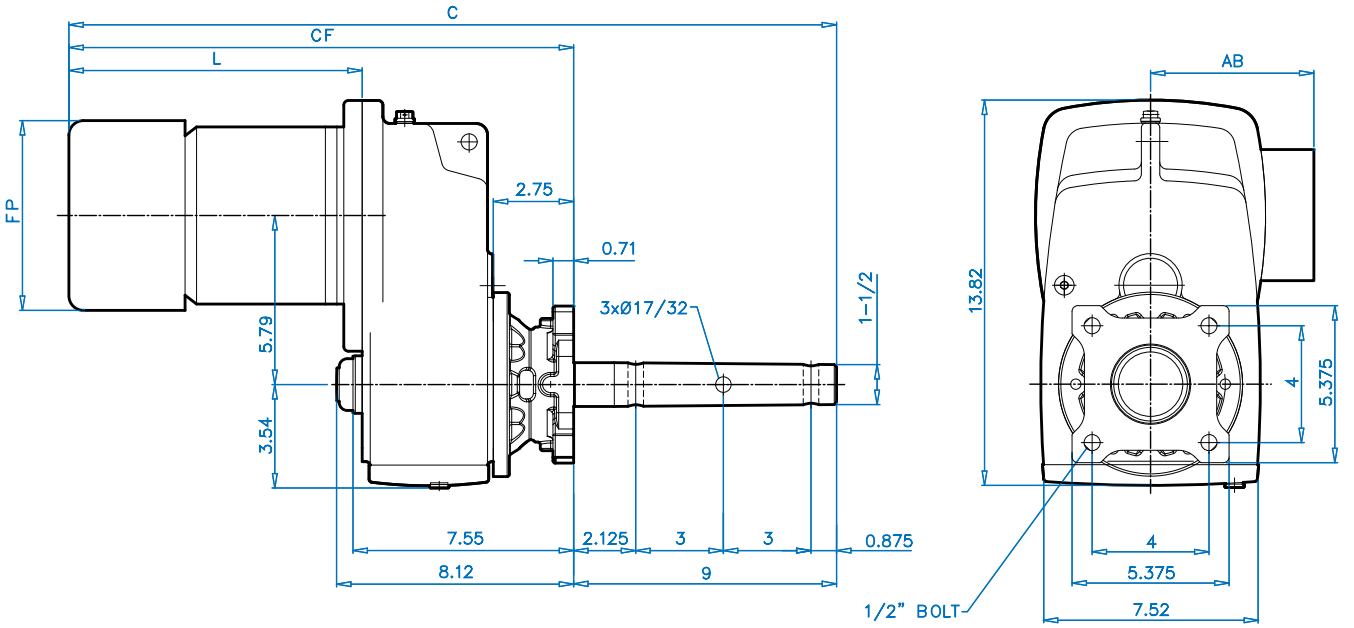


DIMENSIONS

| Motor Type | Overall | | Motor | | |
|---|---|---|---|---|---|
| | C | CF | L | FP | AB |
| **71S/L** | 25.51 | 16.51 | 9.07 | 5.72 | 4.86 |
| **80S/L/LH** | 26.49 | 17.49 | 10.06 | 6.43 | 5.59 |
| **90S/SH/L/LH** | 28.07 | 19.07 | 11.63 | 7.19 | 5.79 |
| **100L/LA/LH** | 29.29 | 20.29 | 12.85 | 7.90 | 6.65 |
| **112M** | 30.16 | 21.16 | 13.72 | 8.87 | 7.05 |
| **112MH** | 31.15 | 22.15 | 14.71 | 8.87 | 7.05 |

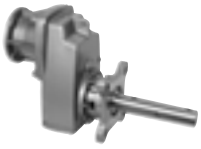

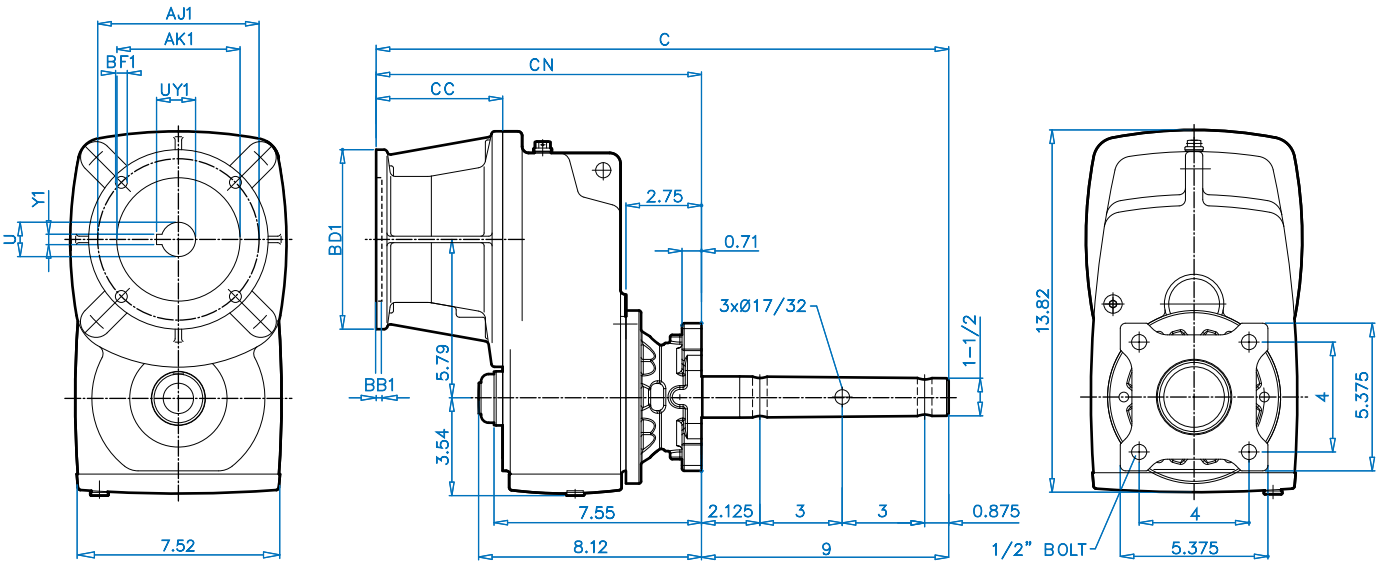




| NEMA | Overall | | NEMA Input | | | | | | Coupling | | |
|---|---|---|---|---|---|---|---|---|---|---|---|
| C-Face Input | C | CN | CC | AJ1 | AK1 | BB1 | BD1 | BF1 | U1 | UY1 | Y1 |
| **56C** | 21.04 | 12.04 | 4.61 | 5.875 | 4.50 | 0.20 | 6.54 | 0.43 | 0.625 | 0.71 | 0.188 |
| **140TC** | 21.04 | 12.04 | 4.61 | 5.875 | 4.50 | 0.20 | 6.54 | 0.43 | 0.875 | 0.96 | 0.188 |
| **180TC** | 23.08 | 14.08 | 6.65 | 7.250 | 8.50 | 0.23 | 9.17 | 0.59 | 1.125 | 1.24 | 0.250 |

# SK 2282 SCP + Motor
# 2” CEMA Drive Shaft

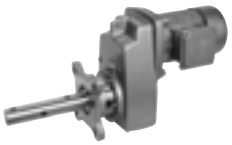



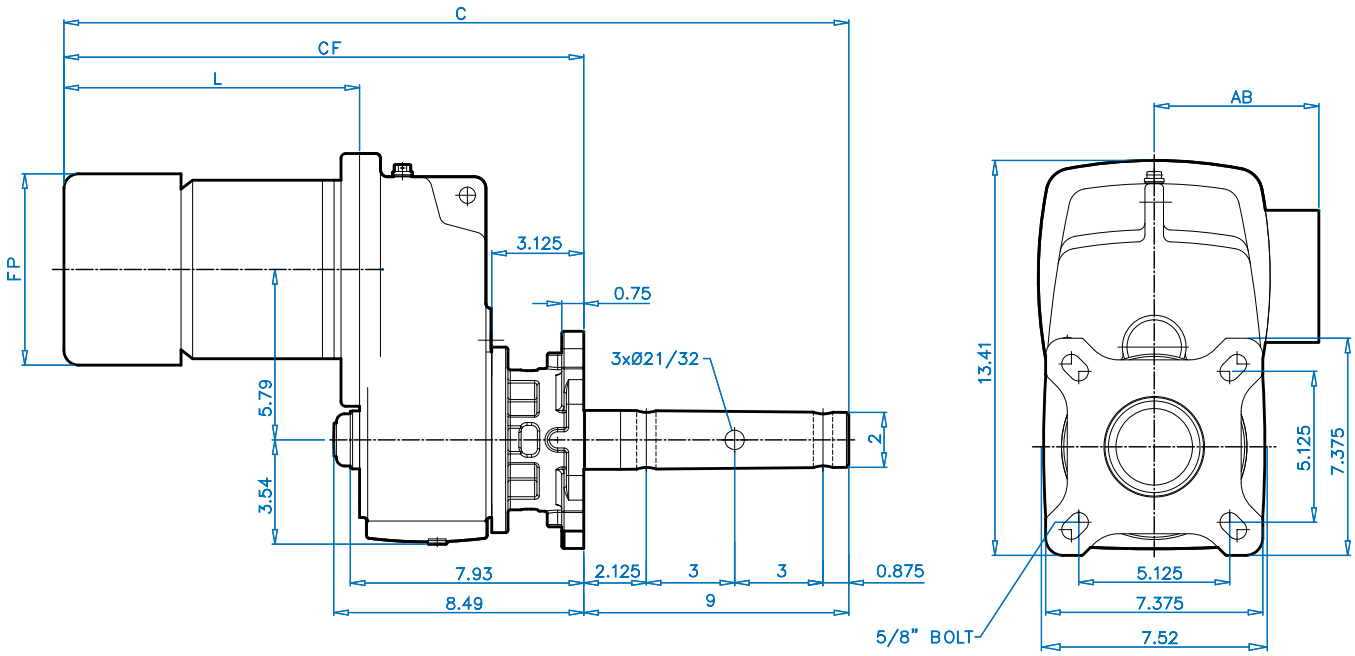


| Motor Type | Overall | | Motor | | |
|---|---|---|---|---|---|
| | C | CF | L | FP | AB |
| **71S/L** | 25.88 | 16.88 | 9.07 | 5.72 | 4.86 |
| **80S/L/LH** | 26.87 | 17.87 | 10.06 | 6.43 | 5.59 |
| **90S/SH/L/LH** | 28.44 | 19.44 | 11.63 | 7.19 | 5.79 |
| **100L/LA/LH** | 29.66 | 20.66 | 12.85 | 7.90 | 6.65 |
| **112M** | 30.53 | 21.53 | 13.72 | 8.87 | 7.05 |
| **112MH** | 31.53 | 22.53 | 14.71 | 8.87 | 7.05 |

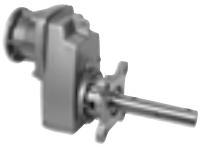

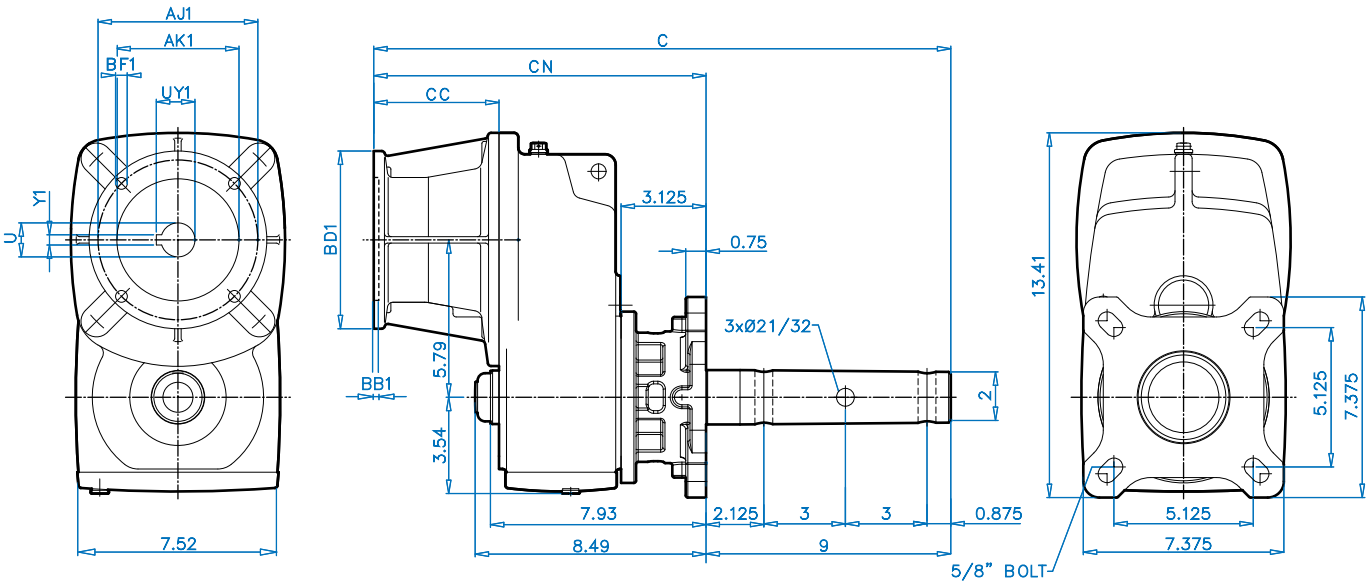




| NEMA | Overall | | NEMA Input | | | | | | Coupling | | |
|---|---|---|---|---|---|---|---|---|---|---|---|
| C-Face Input | C | CN | CC | AJ1 | AK1 | BB1 | BD1 | BF1 | U1 | UY1 | Y1 |
| **56C** | 21.42 | 12.42 | 4.61 | 5.875 | 4.50 | 0.20 | 6.54 | 0.43 | 0.625 | 0.71 | 0.188 |
| **140TC** | 21.42 | 12.42 | 4.61 | 5.875 | 4.50 | 0.20 | 6.54 | 0.43 | 0.875 | 0.96 | 0.188 |
| **180TC** | 23.46 | 14.46 | 6.65 | 7.250 | 8.50 | 0.23 | 9.17 | 0.59 | 1.125 | 1.24 | 0.250 |

# SK 2282 SCP + Motor
# 2-7/16” CEMA Drive Shaft

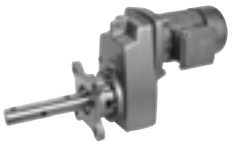

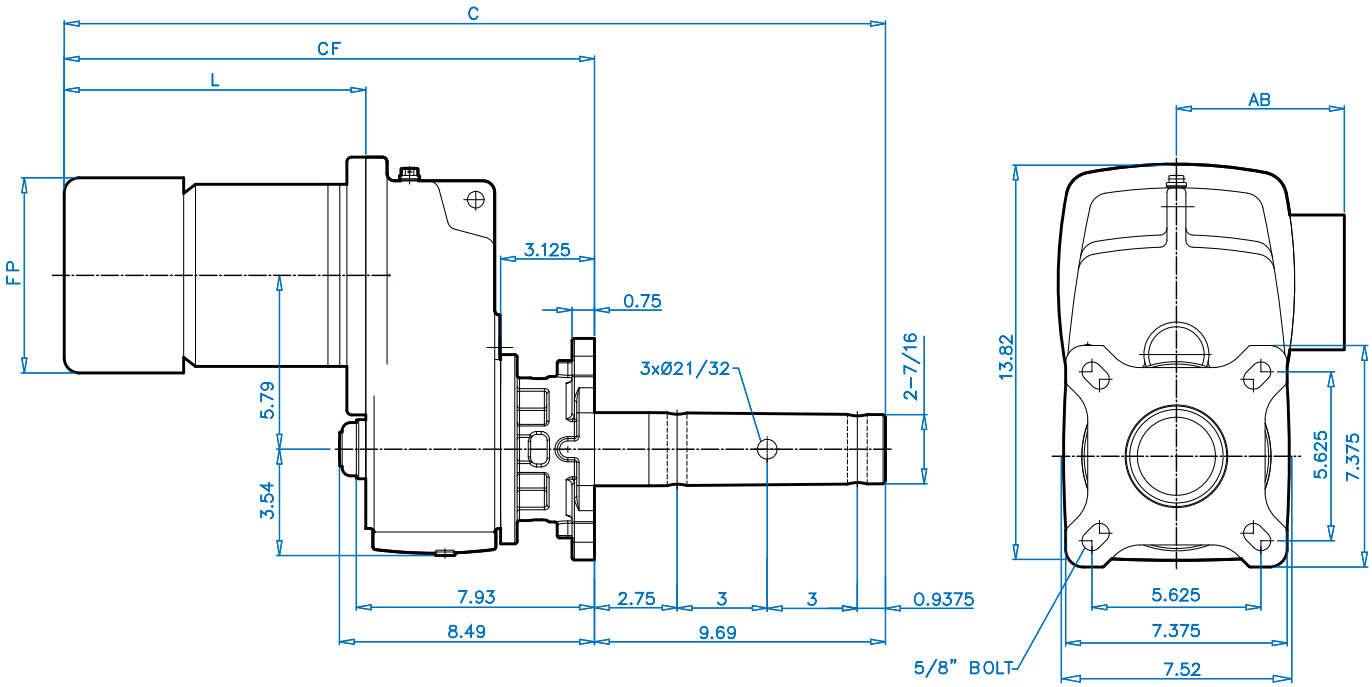


DIMENSIONS

| Motor Type | Overall | | Motor | | |
|---|---|---|---|---|---|
| | C | CF | L | FP | AB |
| **71S/L** | 26.57 | 16.88 | 9.07 | 5.72 | 4.86 |
| **80S/L/LH** | 27.56 | 17.87 | 10.06 | 6.43 | 5.59 |
| **90S/SH/L/LH** | 29.13 | 19.44 | 11.63 | 7.19 | 5.79 |
| **100L/LA/LH** | 30.35 | 20.66 | 12.85 | 7.90 | 6.65 |
| **112M** | 31.22 | 21.53 | 13.72 | 8.87 | 7.05 |
| **112MH** | 32.21 | 22.53 | 14.71 | 8.87 | 7.05 |

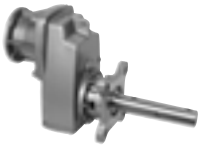

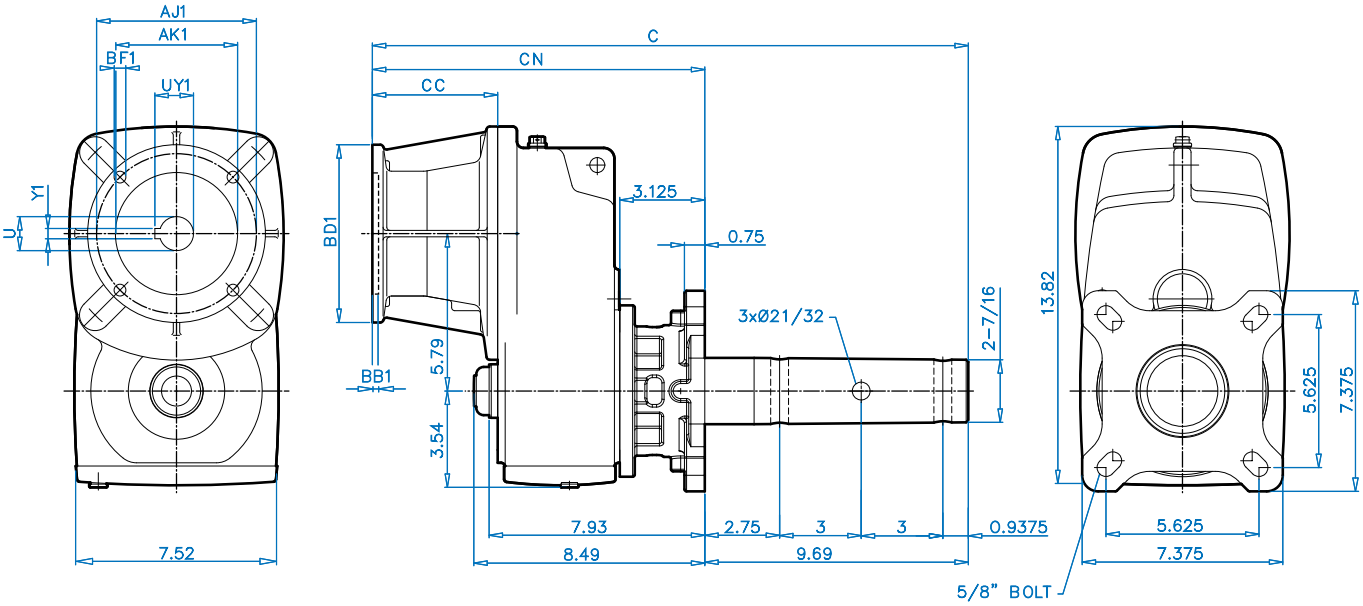


| NEMA | Overall | | NEMA Input | | | | | | Coupling | | |
|---|---|---|---|---|---|---|---|---|---|---|---|
| C-Face Input | C | CN | CC | AJ1 | AK1 | BB1 | BD1 | BF1 | U1 | UY1 | Y1 |
| **56C** | 22.11 | 12.42 | 4.61 | 5.875 | 4.50 | 0.20 | 6.54 | 0.43 | 0.625 | 0.71 | 0.188 |
| **140TC** | 22.11 | 12.42 | 4.61 | 5.875 | 4.50 | 0.20 | 6.54 | 0.43 | 0.875 | 0.96 | 0.188 |
| **180TC** | 24.15 | 14.46 | 6.65 | 7.250 | 8.50 | 0.23 | 9.17 | 0.59 | 1.125 | 1.24 | 0.250 |

# SK 3282 SCP + Motor
# 1-1/2" CEMA Drive Shaft

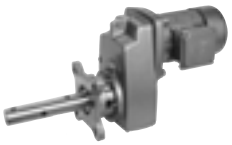

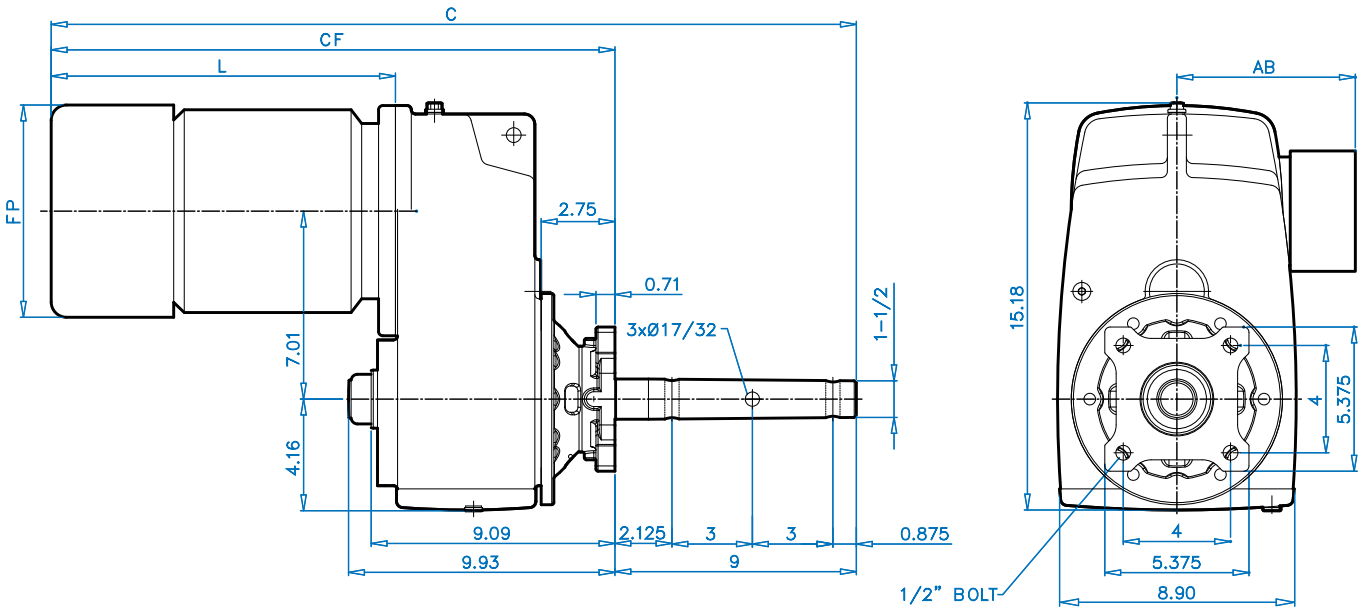


DIMENSIONS

| Motor Type | Overall | | Motor | | |
|---|---|---|---|---|---|
| | C | CF | L | FP | AB |
| **71S/L** | 26.49 | 17.41 | 9.07 | 5.72 | 4.86 |
| **80S/L/LH** | 27.47 | 18.47 | 10.06 | 6.43 | 5.59 |
| **90S/SH/L/LH** | 29.04 | 20.04 | 11.63 | 7.19 | 5.79 |
| **100L/LA/LH** | 30.27 | 21.27 | 12.85 | 7.90 | 6.65 |
| **112M** | 31.14 | 22.14 | 13.72 | 8.87 | 7.05 |
| **112MH** | 32.13 | 23.13 | 14.71 | 8.87 | 7.05 |
| **132S/SH/M/MH** | 34.56 | 25.56 | 17.14 | 10.45 | 8.03 |

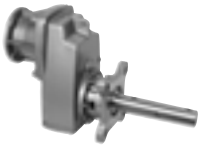

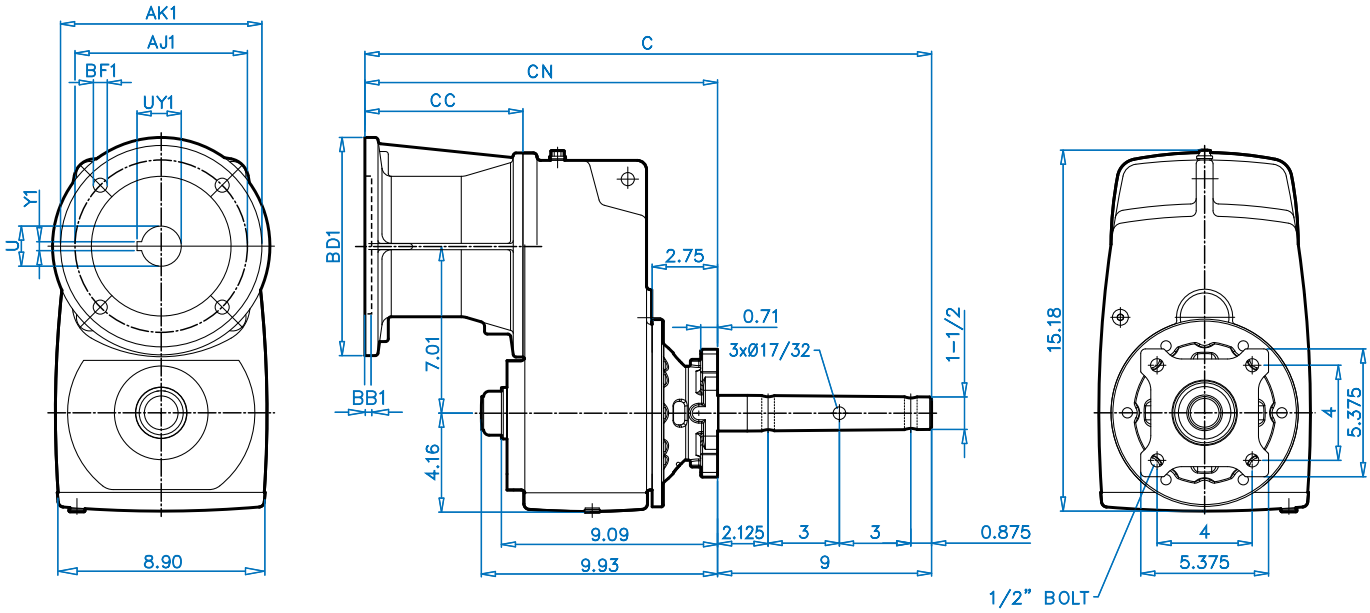




| NEMA | Overall | | NEMA Input | | | | | | Coupling | | |
|---|---|---|---|---|---|---|---|---|---|---|---|
| C-Face Input | C | CN | CC | AJ1 | AK1 | BB1 | BD1 | BF1 | U1 | UY1 | Y1 |
| **56C** | 22.02 | 13.02 | 4.61 | 5.875 | 4.50 | 0.20 | 6.54 | 0.43 | 0.625 | 0.71 | 0.188 |
| **140TC** | 22.02 | 13.02 | 4.61 | 5.875 | 4.50 | 0.20 | 6.54 | 0.43 | 0.875 | 0.96 | 0.188 |
| **180TC** | 24.06 | 15.06 | 6.65 | 7.250 | 8.50 | 0.23 | 9.17 | 0.59 | 1.125 | 1.24 | 0.250 |
| **210TC** | 24.06 | 15.06 | 6.65 | 7.250 | 8.50 | 0.23 | 9.17 | 0.59 | 1.375 | 1.52 | 0.310 |

# SK 3282 SCP + Motor
# 2” CEMA Drive Shaft

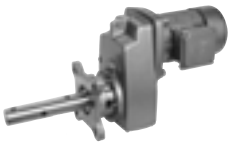

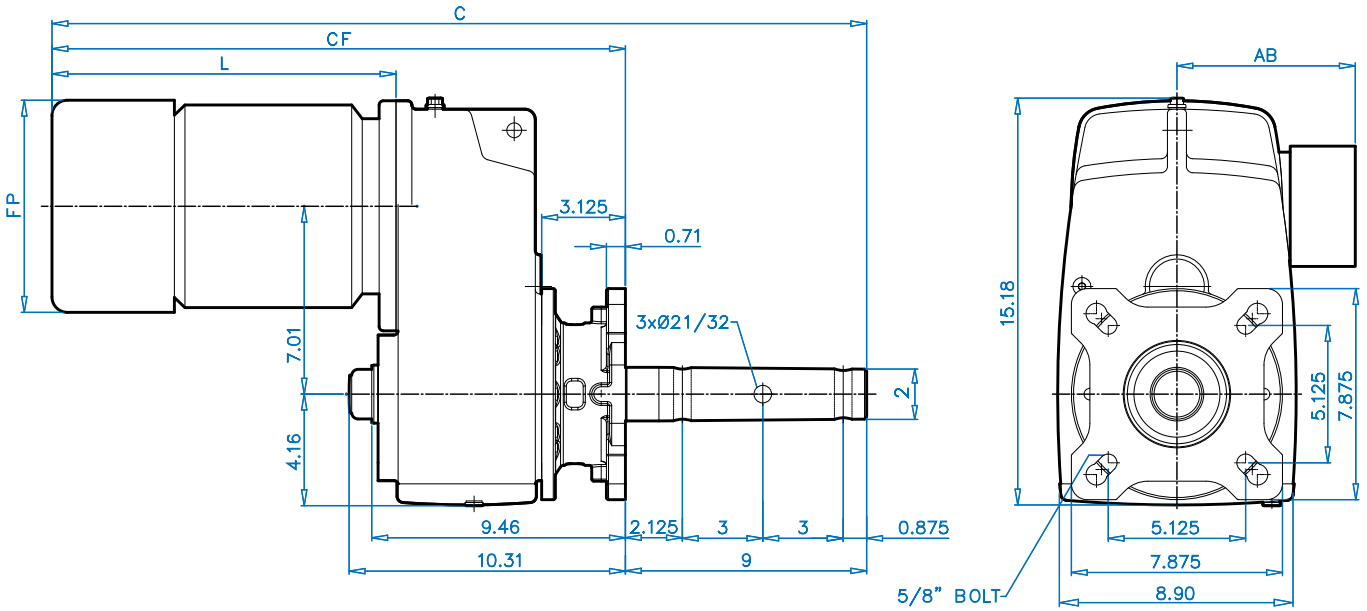


DIMENSIONS

| Motor Type | Overall | | Motor | | |
|---|---|---|---|---|---|
| | C | CF | L | FP | AB |
| **71S/L** | 26.86 | 17.79 | 9.07 | 5.72 | 4.86 |
| **80S/L/LH** | 27.85 | 18.85 | 10.06 | 6.43 | 5.59 |
| **90S/SH/L/LH** | 29.42 | 20.42 | 11.63 | 7.19 | 5.79 |
| **100L/LA/LH** | 30.64 | 21.64 | 12.85 | 7.90 | 6.65 |
| **112M** | 31.51 | 22.51 | 13.72 | 8.87 | 7.05 |
| **112MH** | 32.50 | 23.50 | 14.71 | 8.87 | 7.05 |
| **132S/SH/M/MH** | 34.93 | 25.93 | 17.14 | 10.45 | 8.03 |

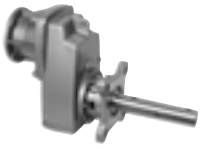

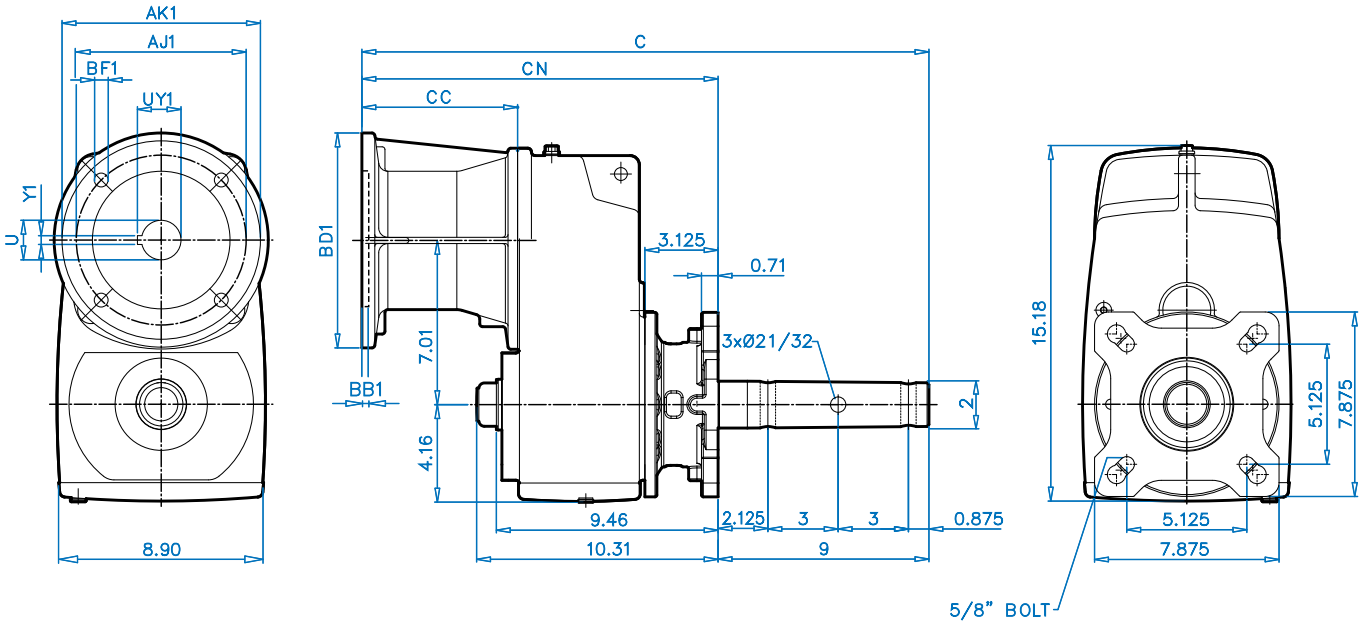


DIMENSIONS

| NEMA | Overall | | NEMA Input | | | | | | Coupling | | |
|---|---|---|---|---|---|---|---|---|---|---|---|
| C-Face Input | C | CN | CC | AJ1 | AK1 | BB1 | BD1 | BF1 | U1 | UY1 | Y1 |
| **56C** | 22.40 | 13.40 | 4.61 | 5.875 | 4.50 | 0.20 | 6.54 | 0.43 | 0.625 | 0.71 | 0.188 |
| **140TC** | 22.40 | 13.40 | 4.61 | 5.875 | 4.50 | 0.20 | 6.54 | 0.43 | 0.875 | 0.96 | 0.188 |
| **180TC** | 24.44 | 15.44 | 6.65 | 7.250 | 8.50 | 0.23 | 9.17 | 0.59 | 1.125 | 1.24 | 0.250 |
| **210TC** | 24.44 | 15.44 | 6.65 | 7.250 | 8.50 | 0.23 | 9.17 | 0.59 | 1.375 | 1.52 | 0.310 |

# SK 3282 SCP + Motor
# 2-7/16" CEMA Drive Shaft

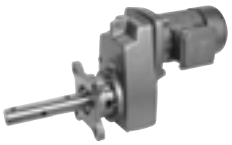

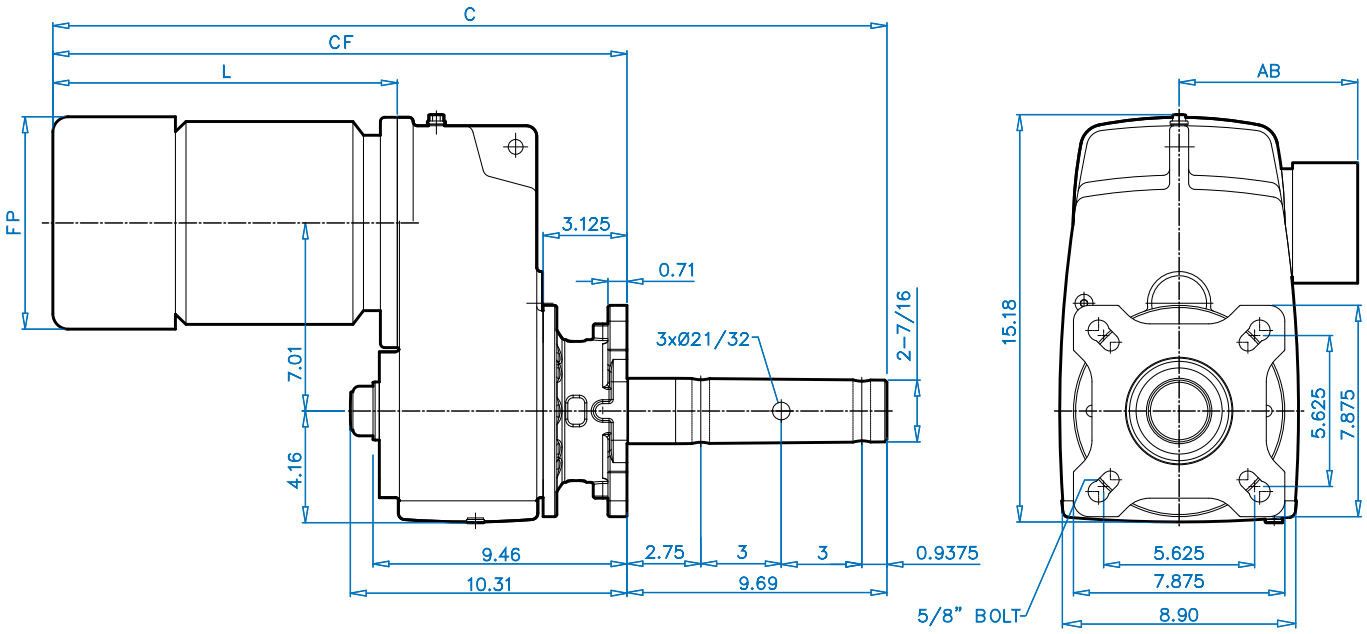


DIMENSIONS

| Motor Type | Overall | | Motor | | |
|---|---|---|---|---|---|
| | C | CF | L | FP | AB |
| **71S/L** | 27.55 | 18.48 | 9.07 | 5.72 | 4.86 |
| **80S/L/LH** | 28.53 | 18.85 | 10.06 | 6.43 | 5.59 |
| **90S/SH/L/LH** | 30.11 | 20.42 | 11.63 | 7.19 | 5.79 |
| **100L/LA/LH** | 31.33 | 21.64 | 12.85 | 7.90 | 6.65 |
| **112M** | 32.20 | 22.51 | 13.72 | 8.87 | 7.05 |
| **112MH** | 33.19 | 23.50 | 14.71 | 8.87 | 7.05 |
| **132S/SH/M/MH** | 35.62 | 25.93 | 17.14 | 10.45 | 8.03 |

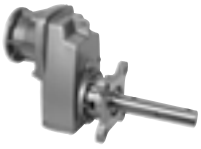

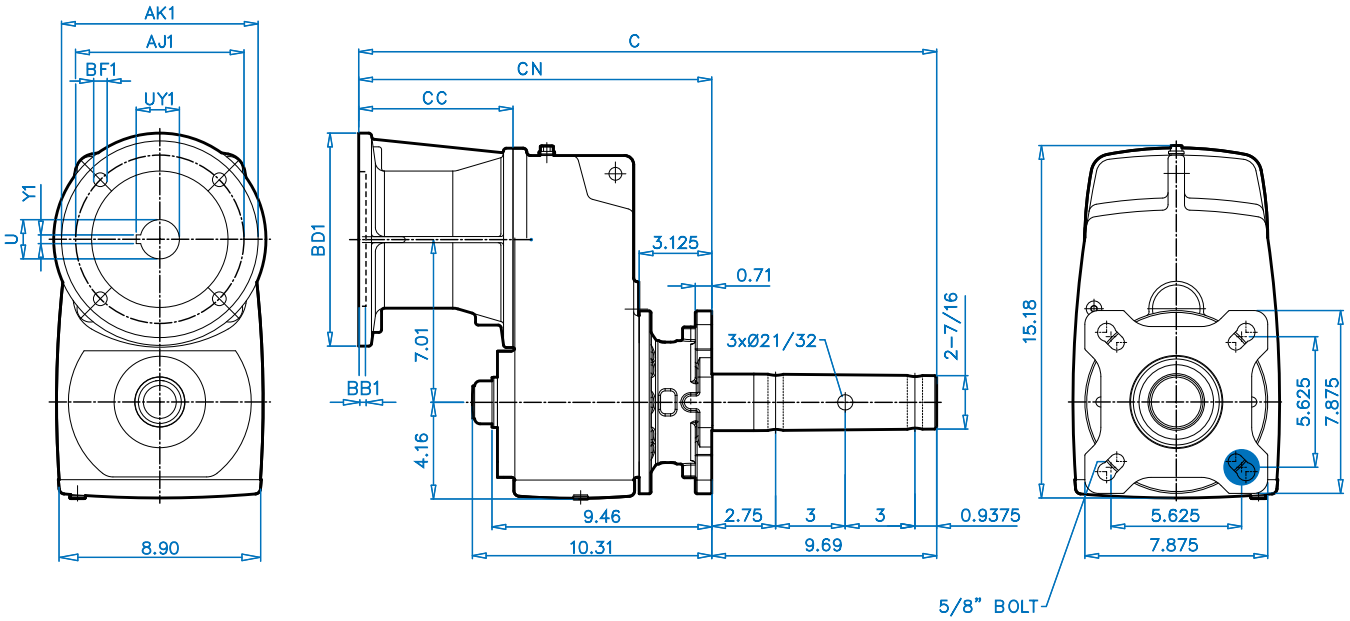


| NEMA | Overall | | NEMA Input | | | | | | Coupling | | |
|---|---|---|---|---|---|---|---|---|---|---|---|
| C-Face Input | C | CN | CC | AJ1 | AK1 | BB1 | BD1 | BF1 | U1 | UY1 | Y1 |
| **56C** | 23.08 | 13.40 | 4.61 | 5.875 | 4.50 | 0.20 | 6.54 | 0.43 | 0.625 | 0.71 | 0.188 |
| **140TC** | 23.08 | 13.40 | 4.61 | 5.875 | 4.50 | 0.20 | 6.54 | 0.43 | 0.875 | 0.96 | 0.188 |
| **180TC** | 25.12 | 15.44 | 6.65 | 7.250 | 8.50 | 0.23 | 9.17 | 0.59 | 1.125 | 1.24 | 0.250 |
| **210TC** | 25.12 | 15.44 | 6.65 | 7.250 | 8.50 | 0.23 | 9.17 | 0.59 | 1.375 | 1.52 | 0.310 |

# SK 3282 SCP + Motor
# 3” CEMA Drive Shaft

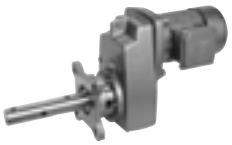

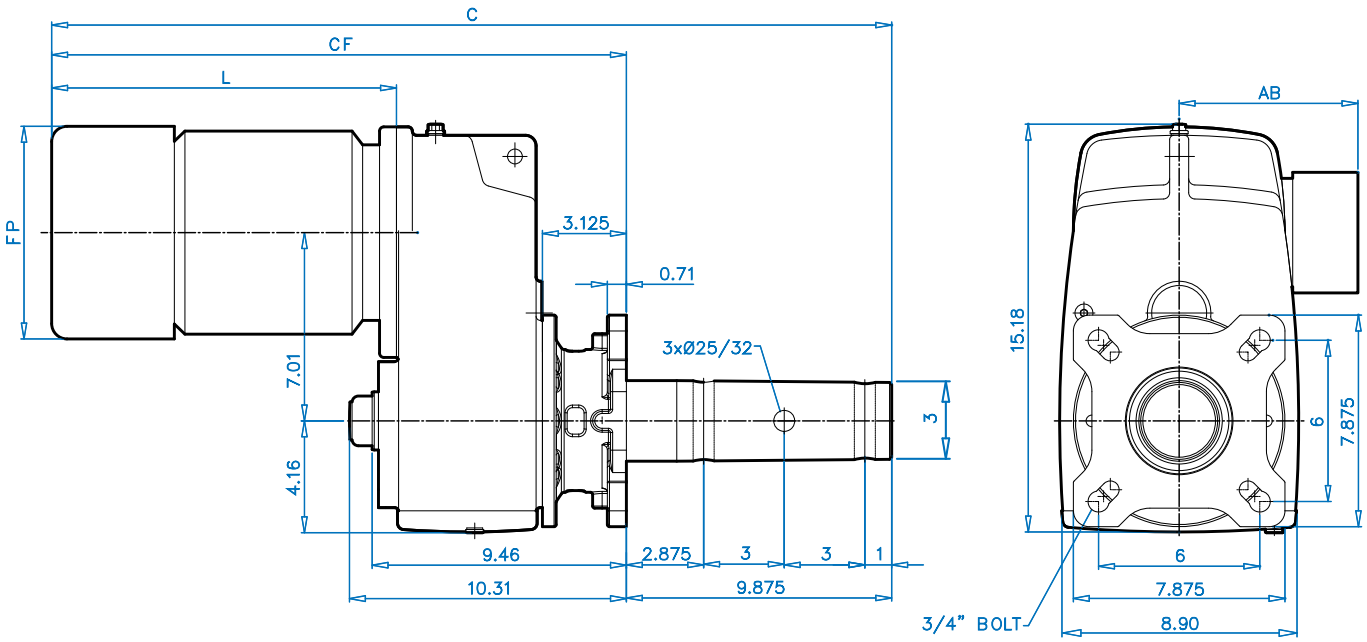


DIMENSIONS

| Motor Type | Overall | | Motor | | |
|---|---|---|---|---|---|
| | C | CF | L | FP | AB |
| **71S/L** | 27.74 | 18.66 | 9.07 | 5.72 | 4.86 |
| **80S/L/LH** | 28.72 | 18.85 | 10.06 | 6.43 | 5.59 |
| **90S/SH/L/LH** | 30.29 | 20.42 | 11.63 | 7.19 | 5.79 |
| **100L/LA/LH** | 31.52 | 21.64 | 12.85 | 7.90 | 6.65 |
| **112M** | 32.39 | 22.51 | 13.72 | 8.87 | 7.05 |
| **112MH** | 33.38 | 23.50 | 14.71 | 8.87 | 7.05 |
| **132S/SH/M/MH** | 35.81 | 25.93 | 17.14 | 10.45 | 8.03 |

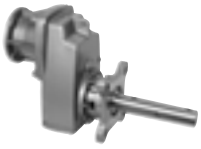

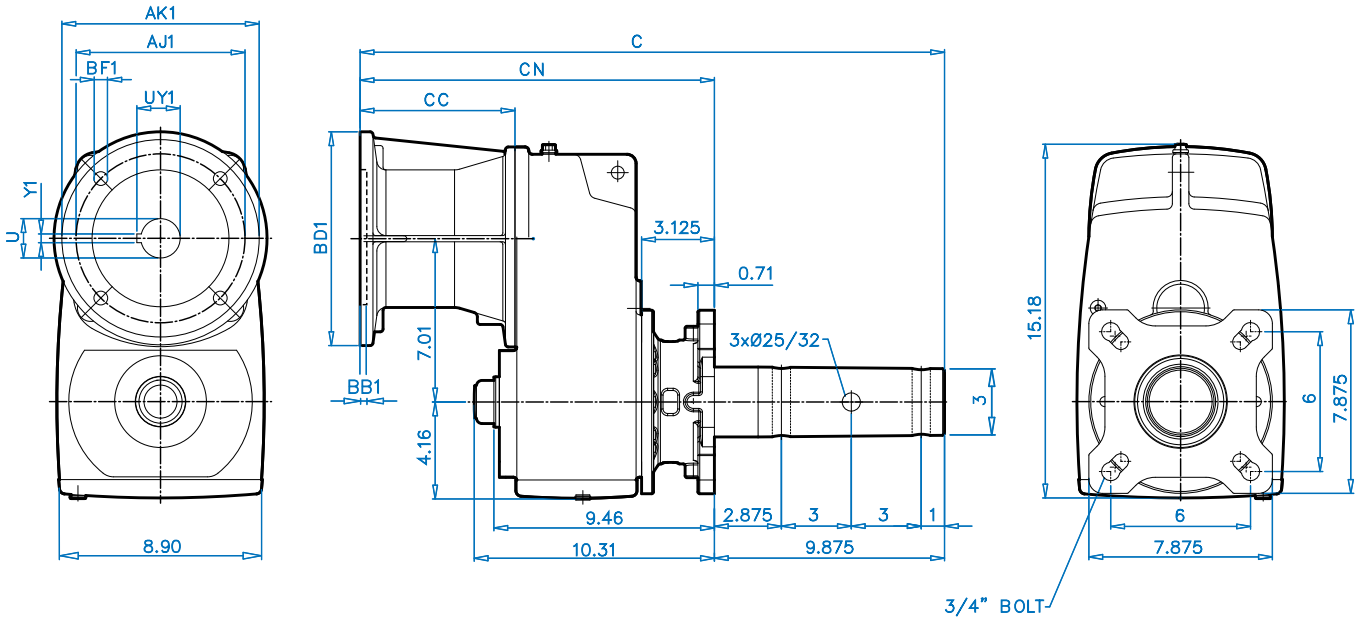




| NEMA | Overall | | NEMA Input | | | | | | Coupling | | |
|---|---|---|---|---|---|---|---|---|---|---|---|
| C-Face Input | C | CN | CC | AJ1 | AK1 | BB1 | BD1 | BF1 | U1 | UY1 | Y1 |
| **56C** | 23.27 | 13.40 | 4.61 | 5.875 | 4.50 | 0.20 | 6.54 | 0.43 | 0.625 | 0.71 | 0.188 |
| **140TC** | 23.27 | 13.40 | 4.61 | 5.875 | 4.50 | 0.20 | 6.54 | 0.43 | 0.875 | 0.96 | 0.188 |
| **180TC** | 25.31 | 15.44 | 6.65 | 7.250 | 8.50 | 0.23 | 9.17 | 0.59 | 1.125 | 1.24 | 0.250 |
| **210TC** | 25.31 | 15.44 | 6.65 | 7.250 | 8.50 | 0.23 | 9.17 | 0.59 | 1.375 | 1.52 | 0.310 |

# SK 4282 SCP + Motor
# 2” CEMA Drive Shaft

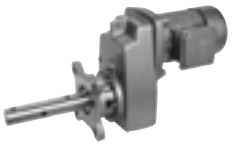

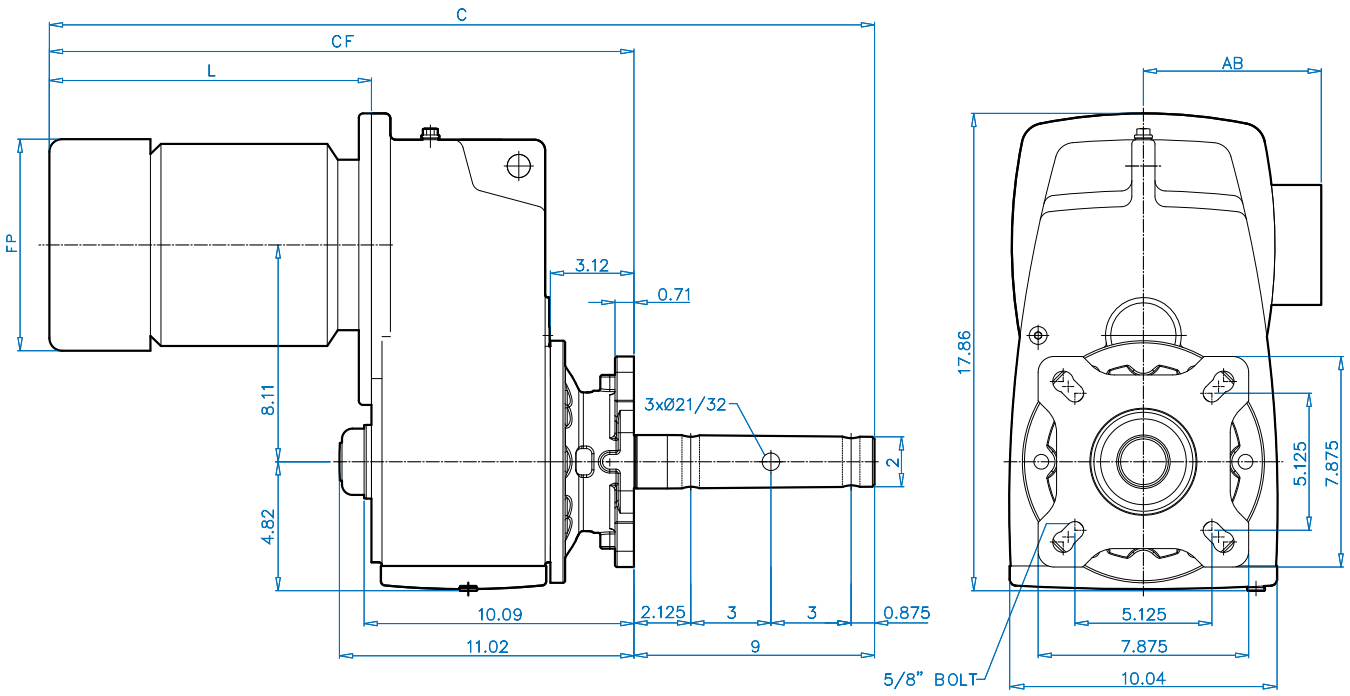


DIMENSIONS

| Motor Type | Overall | | Motor | | |
|---|---|---|---|---|---|
| | C | CF | L | FP | AB |
| 90S/SH/L/LH | 29.94 | 20.94 | 10.84 | 7.19 | 5.79 |
| 100L/LA/LH | 31.16 | 22.16 | 12.06 | 7.90 | 6.65 |
| 112M | 32.03 | 23.03 | 12.93 | 8.87 | 7.05 |
| 112MH | 33.02 | 24.02 | 13.93 | 8.87 | 7.05 |
| 132S/SH/M/MH | 35.45 | 26.45 | 16.35 | 10.45 | 8.03 |
| 160M/L | 38.51 | 29.51 | 19.41 | 12.56 | 9.53 |

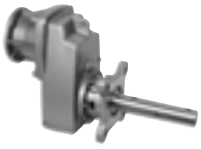

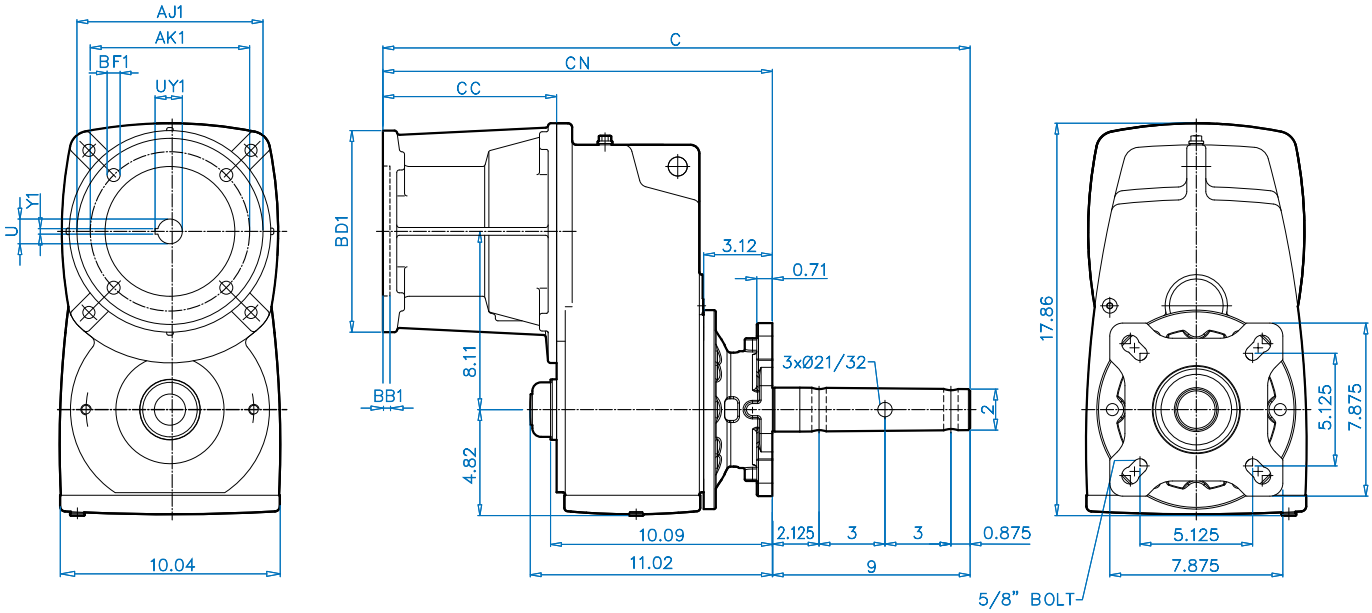




| NEMA | Overall | | NEMA Input | | | | | | Coupling | | |
|---|---|---|---|---|---|---|---|---|---|---|---|
| C-Face Input | C | CN | CC | AJ1 | AK1 | BB1 | BD1 | BF1 | U1 | UY1 | Y1 |
| **56C** | 23.43 | 14.43 | 4.33 | 5.875 | 4.50 | 0.20 | 6.54 | 0.43 | 0.625 | 0.71 | 0.188 |
| **140TC** | 23.43 | 14.43 | 4.33 | 5.875 | 4.50 | 0.20 | 6.54 | 0.43 | 0.875 | 0.96 | 0.188 |
| **180TC** | 27.17 | 18.17 | 8.07 | 7.250 | 8.50 | 0.23 | 9.17 | 0.59 | 1.125 | 1.24 | 0.250 |
| **210TC** | 27.17 | 18.17 | 8.07 | 7.250 | 8.50 | 0.23 | 9.17 | 0.59 | 1.375 | 1.52 | 0.312 |
| **250TC** | 27.01 | 18.01 | 7.91 | 7.250 | 8.50 | 0.23 | 9.17 | 0.59 | 1.625 | 1.80 | 0.375 |

# SK 4282 SCP + Motor
# 2-7/16” CEMA Drive Shaft

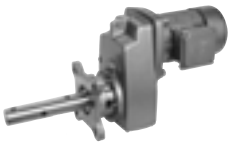



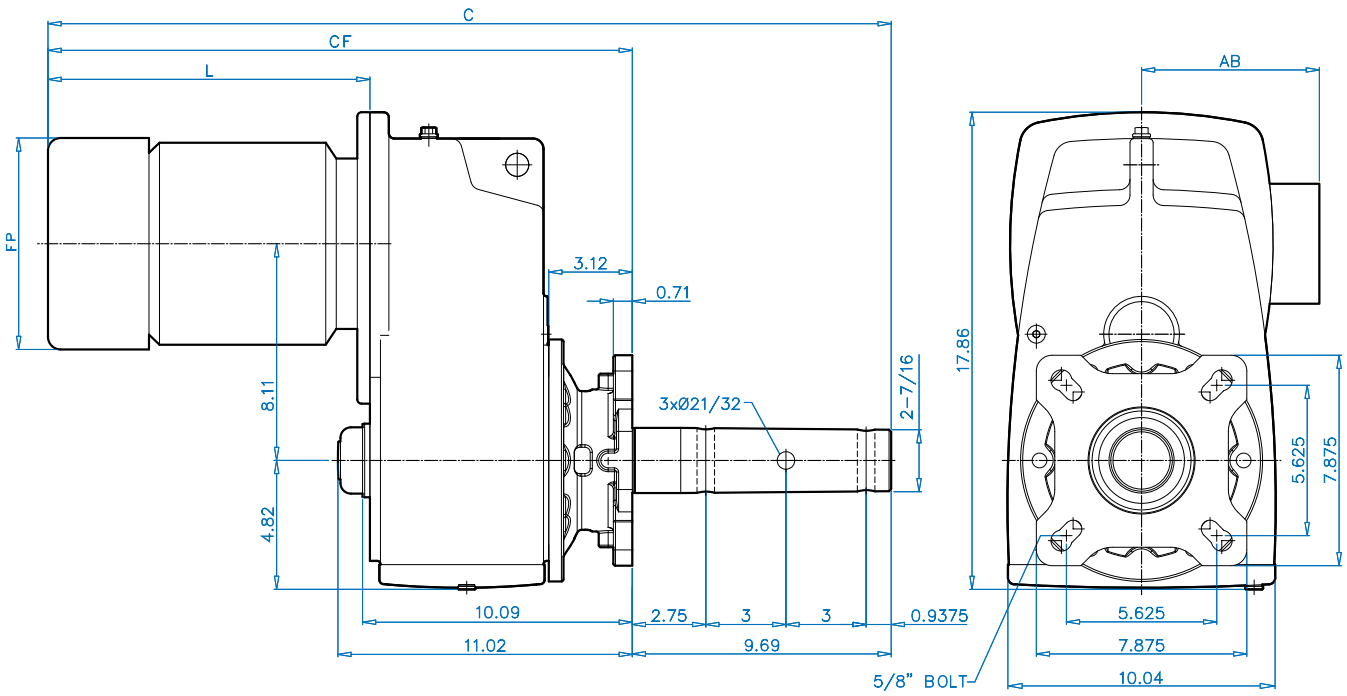


| Motor Type | Overall | | Motor | | |
|---|---|---|---|---|---|
| | C | CF | L | FP | AB |
| 90S/SH/L/LH | 30.63 | 20.94 | 10.84 | 7.19 | 5.79 |
| 100L/LA/LH | 31.85 | 22.16 | 12.06 | 7.90 | 6.65 |
| 112M | 32.72 | 23.03 | 12.93 | 8.87 | 7.05 |
| 112MH | 33.71 | 24.02 | 13.93 | 8.87 | 7.05 |
| 132S/SH/M/MH | 36.14 | 26.45 | 16.35 | 10.45 | 8.03 |
| 160M/L | 39.19 | 29.51 | 19.41 | 12.56 | 9.53 |

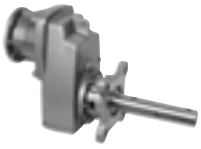

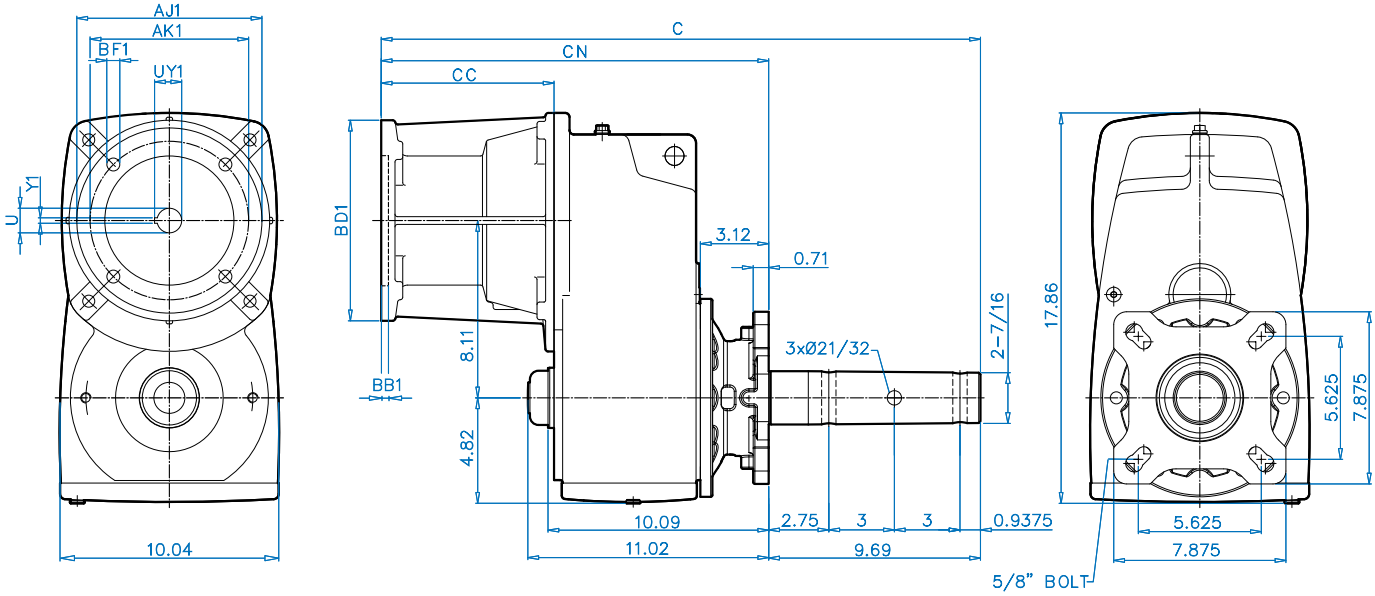


| NEMA | Overall | | NEMA Input | | | | | | Coupling | | |
|---|---|---|---|---|---|---|---|---|---|---|---|
| C-Face Input | C | CN | CC | AJ1 | AK1 | BB1 | BD1 | BF1 | U1 | UY1 | Y1 |
| **56C** | 24.11 | 14.43 | 4.33 | 5.875 | 4.50 | 0.20 | 6.54 | 0.43 | 0.625 | 0.71 | 0.188 |
| **140TC** | 24.11 | 14.43 | 4.33 | 5.875 | 4.50 | 0.20 | 6.54 | 0.43 | 0.875 | 0.96 | 0.188 |
| **180TC** | 27.85 | 18.17 | 8.07 | 7.250 | 8.50 | 0.23 | 9.17 | 0.59 | 1.125 | 1.24 | 0.250 |
| **210TC** | 27.85 | 18.17 | 8.07 | 7.250 | 8.50 | 0.23 | 9.17 | 0.59 | 1.375 | 1.52 | 0.312 |
| **250TC** | 27.70 | 18.01 | 7.91 | 7.250 | 8.50 | 0.23 | 9.17 | 0.59 | 1.625 | 1.80 | 0.375 |

# SK 4282 SCP + Motor
# 3” CEMA Drive Shaft

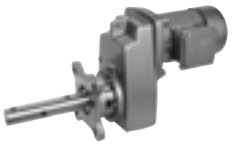



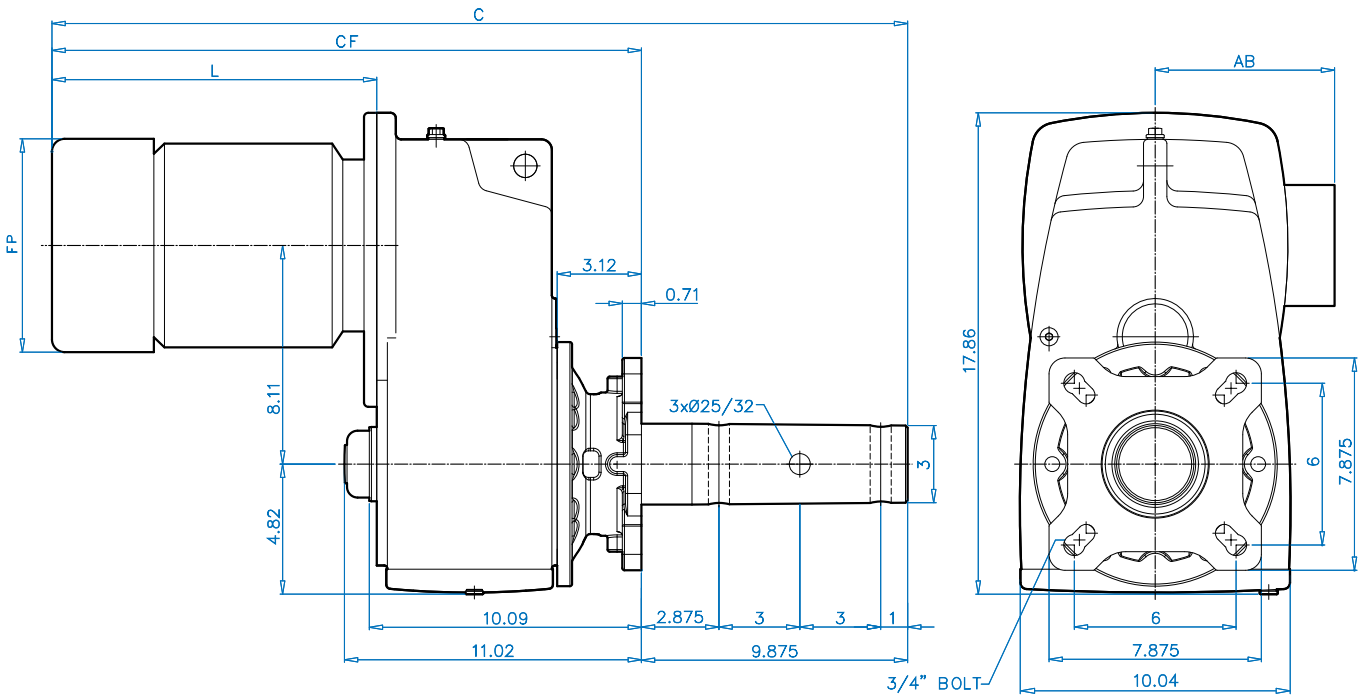


| Motor Type | Overall | | Motor | | |
|---|---|---|---|---|---|
| | C | CF | L | FP | AB |
| 90S/SH/L/LH | 30.81 | 20.94 | 10.84 | 7.19 | 5.79 |
| 100L/LA/LH | 32.03 | 22.16 | 12.06 | 7.90 | 6.65 |
| 112M | 32.90 | 23.03 | 12.93 | 8.87 | 7.05 |
| 112MH | 33.90 | 24.02 | 13.93 | 8.87 | 7.05 |
| 132S/SH/M/MH | 36.33 | 26.45 | 16.35 | 10.45 | 8.03 |
| 160M/L | 39.38 | 29.51 | 19.41 | 12.56 | 9.53 |

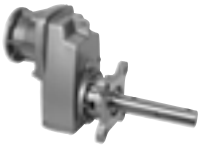

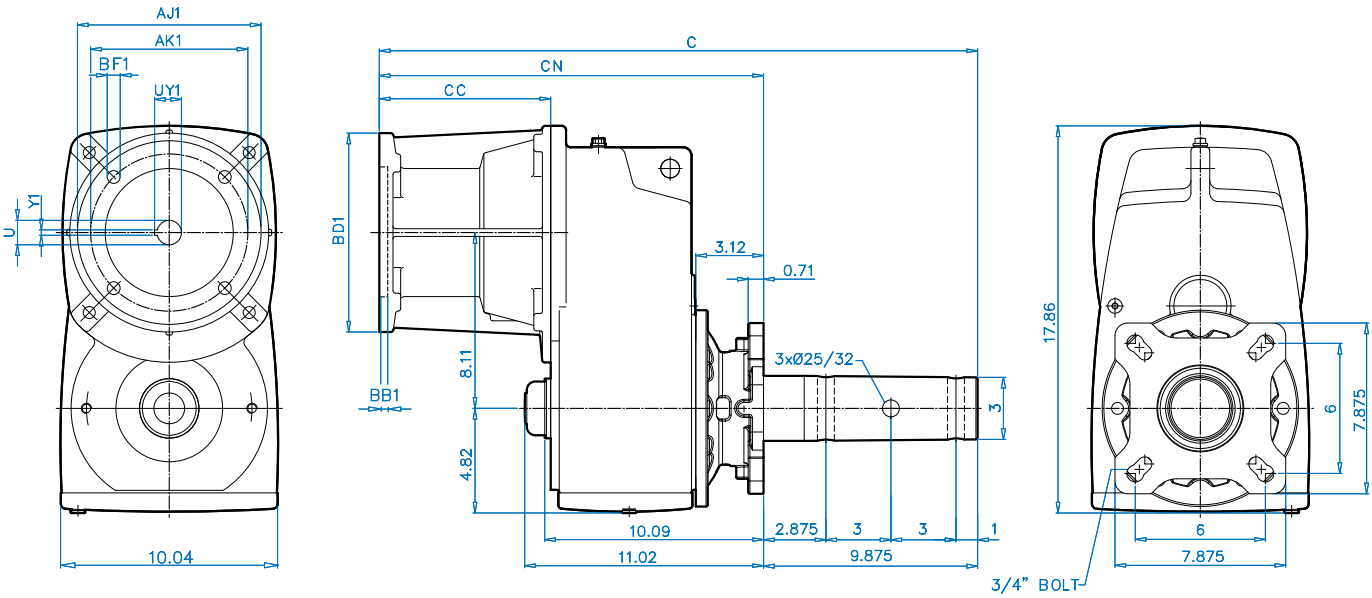


DIMENSIONS

| NEMA C-Face Input | Overall C | Overall CN | NEMA Input CC | AJ1 | AK1 | BB1 | BD1 | BF1 | Coupling U1 | UY1 | Y1 |
|---|---|---|---|---|---|---|---|---|---|---|---|
| **56C** | 24.30 | 14.43 | 4.33 | 5.875 | 4.50 | 0.20 | 6.54 | 0.43 | 0.625 | 0.71 | 0.188 |
| **140TC** | 24.30 | 14.43 | 4.33 | 5.875 | 4.50 | 0.20 | 6.54 | 0.43 | 0.875 | 0.96 | 0.188 |
| **180TC** | 28.04 | 18.17 | 8.07 | 7.250 | 8.50 | 0.23 | 9.17 | 0.59 | 1.125 | 1.24 | 0.250 |
| **210TC** | 28.04 | 18.17 | 8.07 | 7.250 | 8.50 | 0.23 | 9.17 | 0.59 | 1.375 | 1.52 | 0.312 |
| **250TC** | 27.88 | 18.01 | 7.91 | 7.250 | 8.50 | 0.23 | 9.17 | 0.59 | 1.625 | 1.80 | 0.375 |

# SK 5282 SCP + Motor
# 2” CEMA Drive Shaft

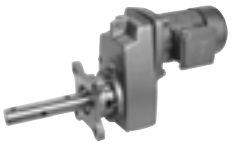

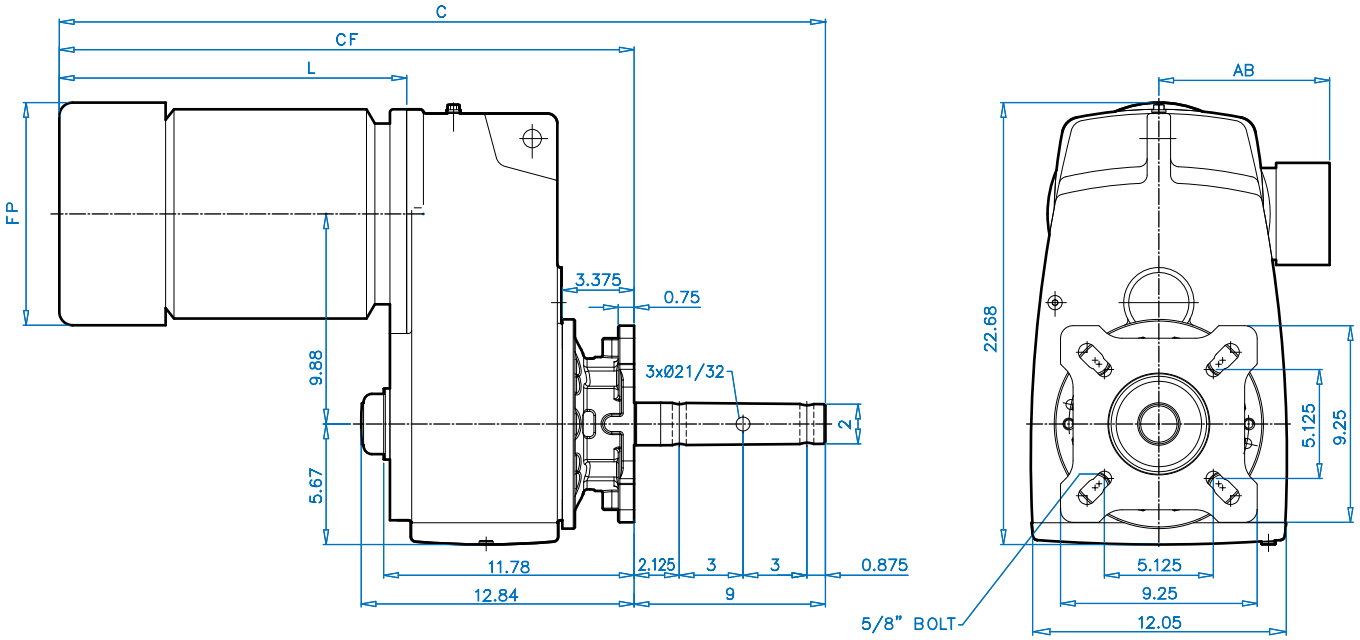


DIMENSIONS

| Motor Type | Overall | | Motor | | |
|---|---|---|---|---|---|
| | C | CF | L | FP | AB |
| 90S/SH/L/LH | 30.84 | 21.84 | 10.84 | 7.19 | 5.79 |
| 100L/LA/LH | 32.06 | 23.06 | 12.06 | 7.90 | 6.65 |
| 112M | 32.93 | 23.93 | 12.93 | 8.87 | 7.05 |
| 112MH | 33.92 | 24.92 | 13.93 | 8.87 | 7.05 |
| 132S/SH/M/MH | 36.35 | 27.35 | 16.35 | 10.45 | 8.03 |
| 160M/L | 39.41 | 30.41 | 19.41 | 12.56 | 9.53 |
| 180MX/LX | 39.41 | 30.41 | 19.41 | 12.56 | 9.53 |

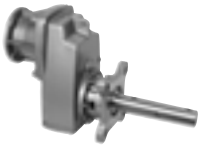

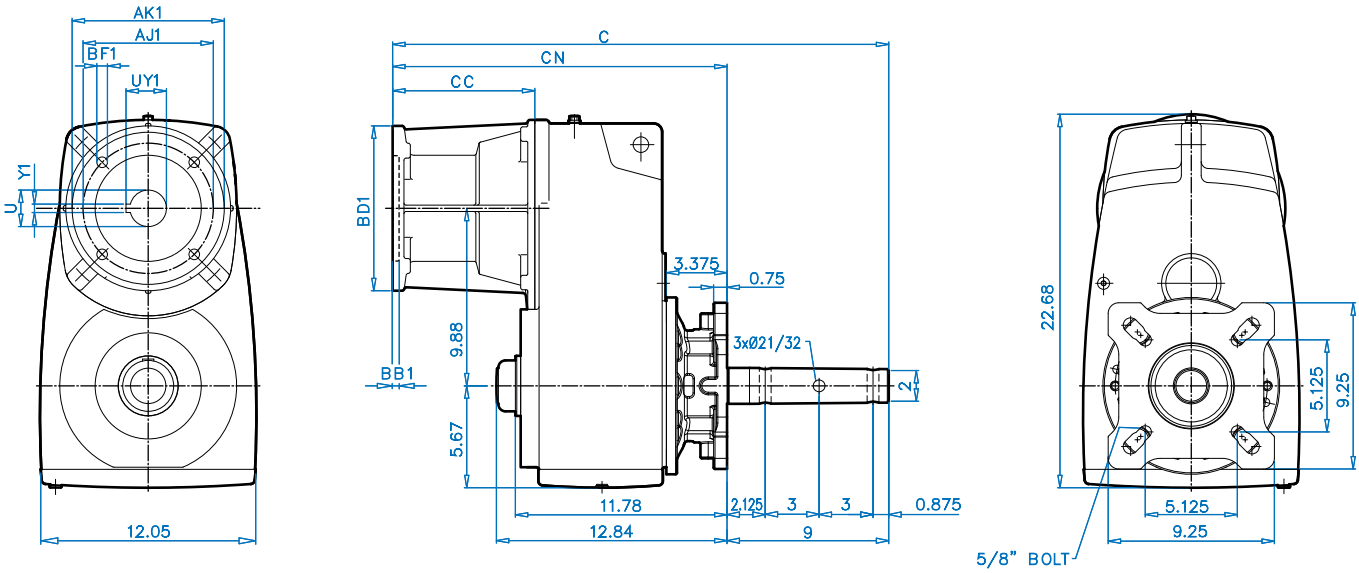




| NEMA | Overall | | NEMA Input | | | | | | Coupling | | |
|---|---|---|---|---|---|---|---|---|---|---|---|
| C-Face Input | C | CN | CC | AJ1 | AK1 | BB1 | BD1 | BF1 | U1 | UY1 | Y1 |
| 56C | 24.33 | 15.33 | 4.33 | 5.875 | 4.50 | 0.20 | 6.54 | 0.43 | 0.625 | 0.71 | 0.188 |
| 140TC | 24.33 | 15.33 | 4.33 | 5.875 | 4.50 | 0.20 | 6.54 | 0.43 | 0.875 | 0.96 | 0.188 |
| 180TC | 28.07 | 19.07 | 8.07 | 7.250 | 8.50 | 0.23 | 9.17 | 0.59 | 1.125 | 1.24 | 0.250 |
| 210TC | 28.07 | 19.07 | 8.07 | 7.250 | 8.50 | 0.23 | 9.17 | 0.59 | 1.375 | 1.52 | 0.312 |
| 250TC | 27.91 | 18.91 | 7.91 | 7.250 | 8.50 | 0.23 | 9.17 | 0.59 | 1.625 | 1.80 | 0.375 |
| 280TC | 28.54 | 19.54 | 8.54 | 9.000 | 10.50 | 0.23 | 13.78 | 0.55 | 1.875 | 2.10 | 0.500 |

# SK 5282 SCP + Motor
# 2-7/16" CEMA Drive Shaft

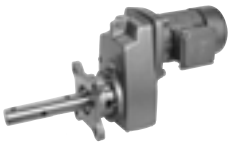



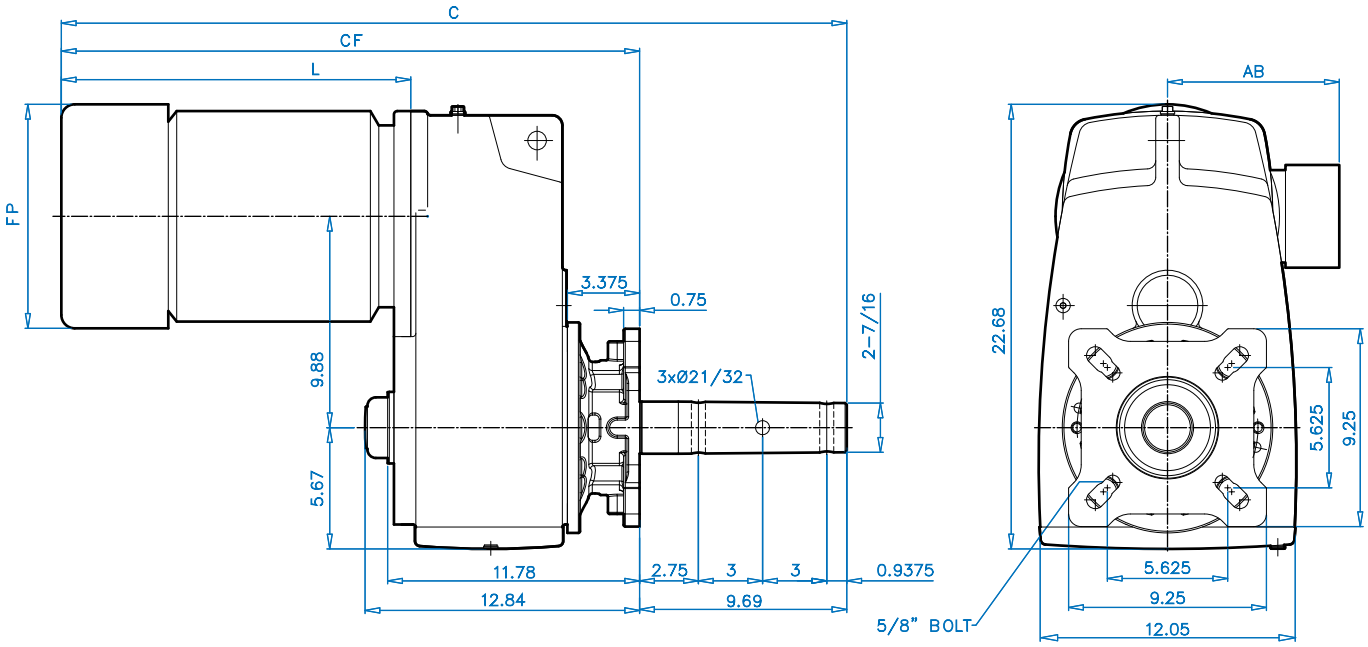


| Motor Type | Overall | | Motor | | |
|---|---|---|---|---|---|
| | C | CF | L | FP | AB |
| **90S/SH/L/LH** | 31.53 | 21.84 | 10.84 | 7.19 | 5.79 |
| **100L/LA/LH** | 32.75 | 23.06 | 12.06 | 7.90 | 6.65 |
| **112M** | 33.62 | 23.93 | 12.93 | 8.87 | 7.05 |
| **112MH** | 34.61 | 24.92 | 13.93 | 8.87 | 7.05 |
| **132S/SH/M/MH** | 37.04 | 27.35 | 16.35 | 10.45 | 8.03 |
| **160M/L** | 40.09 | 30.41 | 19.41 | 12.56 | 9.53 |
| **180MX/LX** | 40.09 | 30.41 | 19.41 | 12.56 | 9.53 |

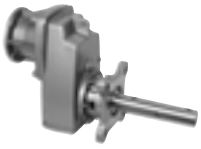

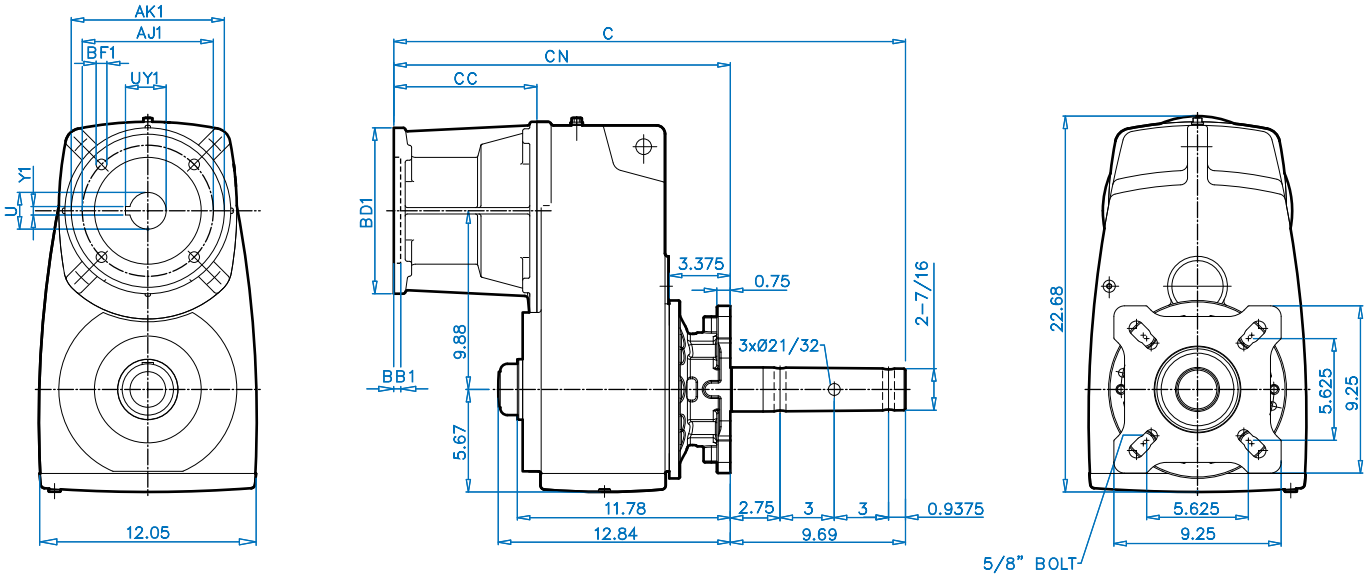


DIMENSIONS

| NEMA | Overall | | NEMA Input | | | | | | Coupling | | |
|---|---|---|---|---|---|---|---|---|---|---|---|
| C-Face Input | C | CN | CC | AJ1 | AK1 | BB1 | BD1 | BF1 | U1 | UY1 | Y1 |
| **56C** | 25.02 | 15.33 | 4.33 | 5.875 | 4.50 | 0.20 | 6.54 | 0.43 | 0.625 | 0.71 | 0.188 |
| **140TC** | 25.02 | 15.33 | 4.33 | 5.875 | 4.50 | 0.20 | 6.54 | 0.43 | 0.875 | 0.96 | 0.188 |
| **180TC** | 28.76 | 19.07 | 8.07 | 7.250 | 8.50 | 0.23 | 9.17 | 0.59 | 1.125 | 1.24 | 0.250 |
| **210TC** | 28.76 | 19.07 | 8.07 | 7.250 | 8.50 | 0.23 | 9.17 | 0.59 | 1.375 | 1.52 | 0.312 |
| **250TC** | 28.60 | 18.91 | 7.91 | 7.250 | 8.50 | 0.23 | 9.17 | 0.59 | 1.625 | 1.80 | 0.375 |
| **280TC** | 29.23 | 19.54 | 8.54 | 9.000 | 10.50 | 0.23 | 13.78 | 0.55 | 1.875 | 2.10 | 0.500 |

# SK 5282 SCP + Motor
# 3” CEMA Drive Shaft

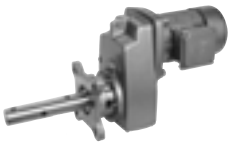

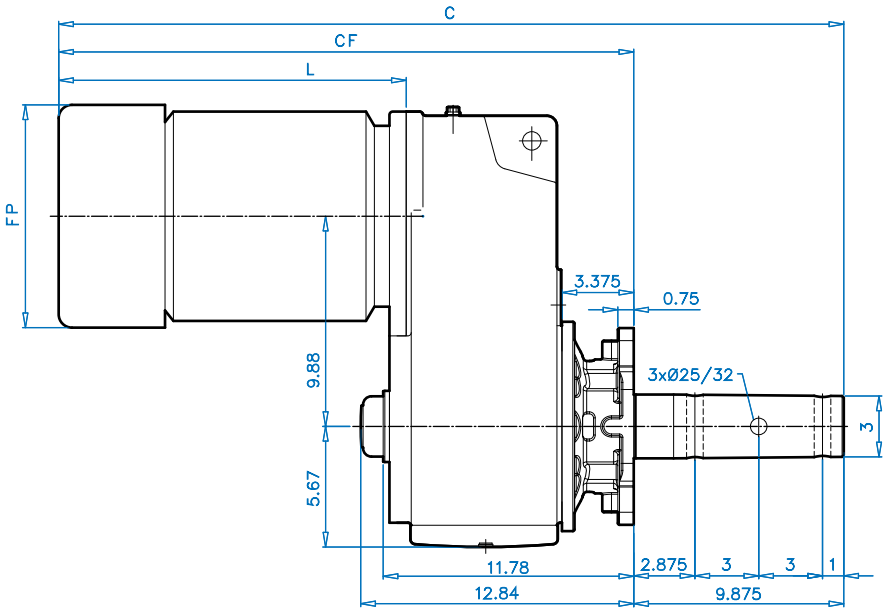


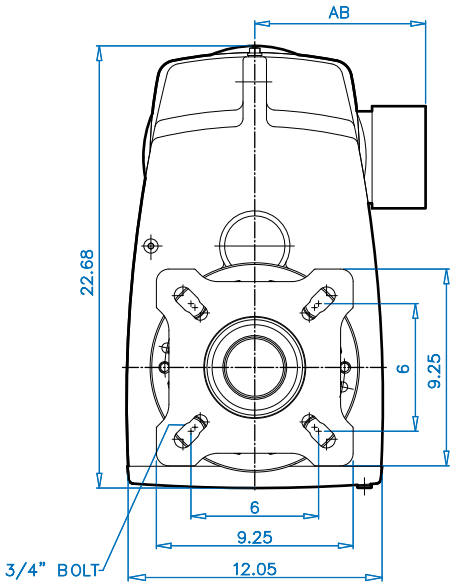


DIMENSIONS

| Motor Type | Overall | | Motor | | |
|---|---|---|---|---|---|
| | C | CF | L | FP | AB |
| 90S/SH/L/LH | 31.71 | 21.84 | 10.84 | 7.19 | 5.79 |
| 100L/LA/LH | 32.94 | 23.06 | 12.06 | 7.90 | 6.65 |
| 112M | 33.81 | 23.93 | 12.93 | 8.87 | 7.05 |
| 112MH | 34.80 | 24.92 | 13.93 | 8.87 | 7.05 |
| 132S/SH/M/MH | 37.23 | 27.35 | 16.35 | 10.45 | 8.03 |
| 160M/L | 40.28 | 30.41 | 19.41 | 12.56 | 9.53 |
| 180MX/LX | 40.28 | 30.41 | 19.41 | 12.56 | 9.53 |

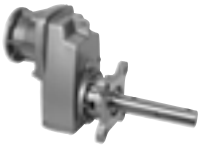

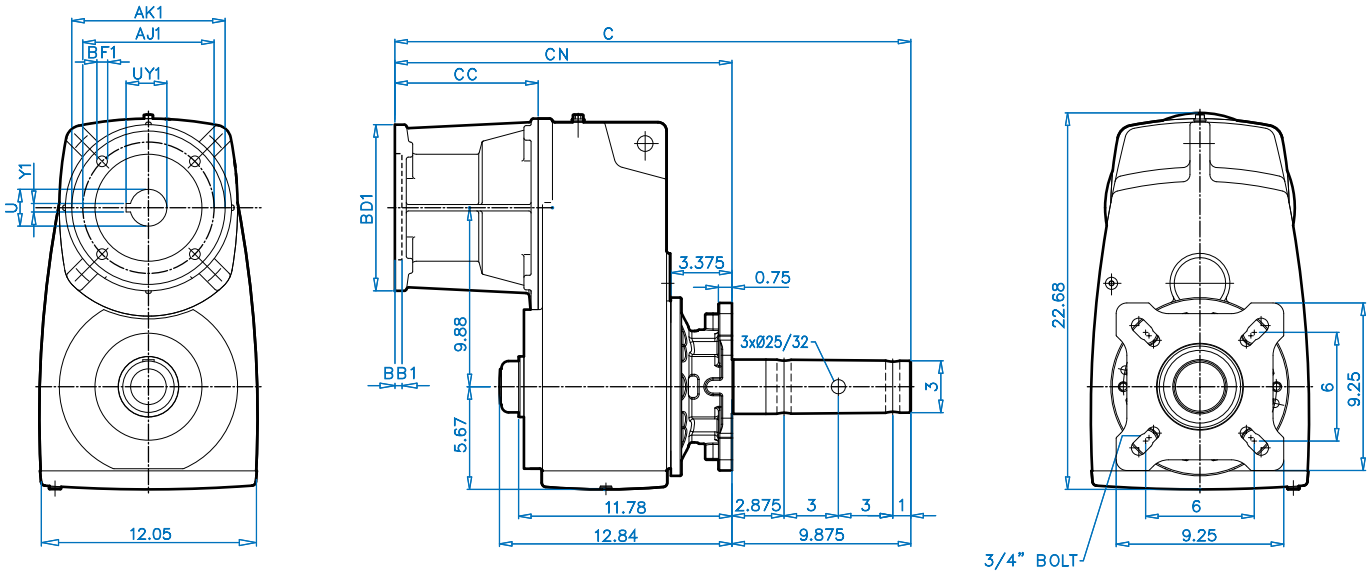




| NEMA | Overall | | NEMA Input | | | | | | Coupling | | |
|---|---|---|---|---|---|---|---|---|---|---|---|
| C-Face Input | C | CN | CC | AJ1 | AK1 | BB1 | BD1 | BF1 | U1 | UY1 | Y1 |
| **56C** | 25.20 | 15.33 | 4.33 | 5.875 | 4.50 | 0.20 | 6.54 | 0.43 | 0.625 | 0.71 | 0.188 |
| **140TC** | 25.20 | 15.33 | 4.33 | 5.875 | 4.50 | 0.20 | 6.54 | 0.43 | 0.875 | 0.96 | 0.188 |
| **180TC** | 28.94 | 19.07 | 8.07 | 7.250 | 8.50 | 0.23 | 9.17 | 0.59 | 1.125 | 1.24 | 0.250 |
| **210TC** | 28.94 | 19.07 | 8.07 | 7.250 | 8.50 | 0.23 | 9.17 | 0.59 | 1.375 | 1.52 | 0.312 |
| **250TC** | 28.79 | 18.91 | 7.91 | 7.250 | 8.50 | 0.23 | 9.17 | 0.59 | 1.625 | 1.80 | 0.375 |
| **280TC** | 29.42 | 19.54 | 8.54 | 9.000 | 10.50 | 0.23 | 13.78 | 0.55 | 1.875 | 2.10 | 0.500 |

# SK 5282 SCP + Motor
# 3-7/16"CEMA Drive Shaft

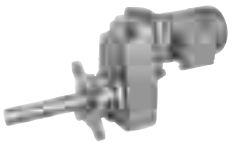



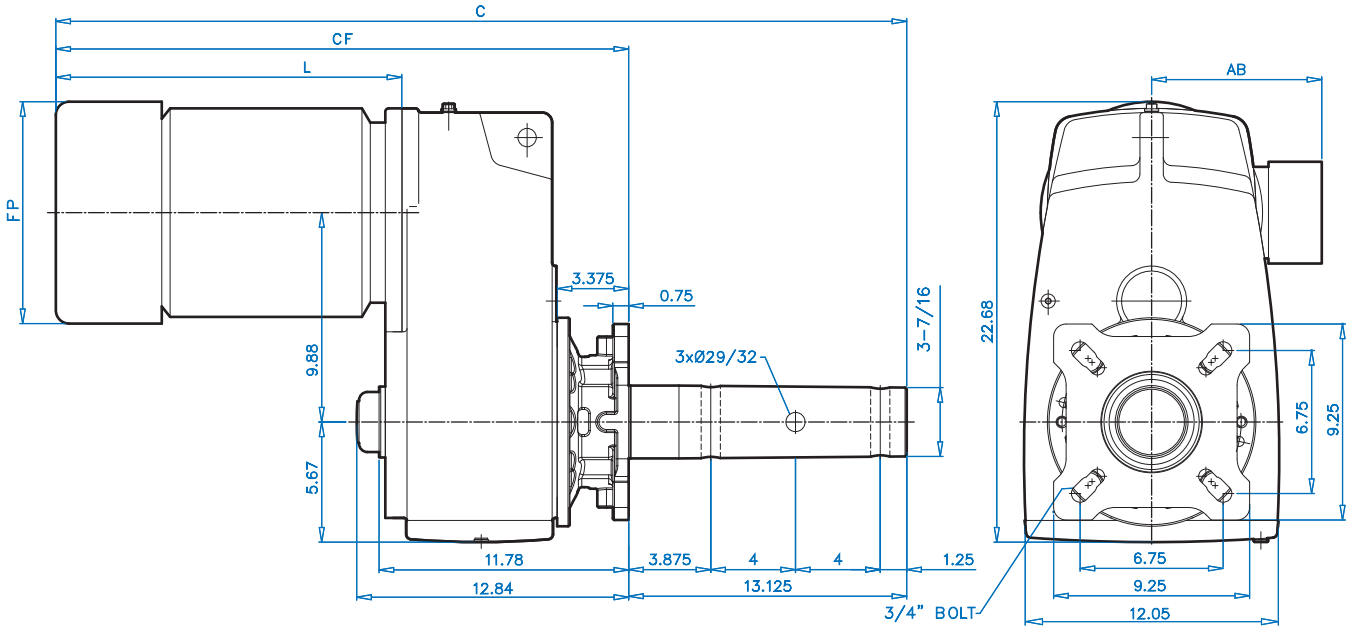


| Motor Type | Overall | | Motor | | |
|---|---|---|---|---|---|
| | C | CF | L | FP | AB |
| 90S/SH/L/LH | 34.96 | 21.84 | 10.84 | 7.19 | 5.79 |
| 100L/LA/LH | 35.87 | 22.75 | 12.06 | 7.90 | 6.65 |
| 112M | 37.06 | 23.93 | 12.93 | 8.87 | 7.05 |
| 112MH | 38.05 | 24.92 | 13.93 | 8.87 | 7.05 |
| 132S/SH/M/MH | 40.48 | 27.35 | 16.35 | 10.45 | 8.03 |
| 160M/L | 43.53 | 30.41 | 19.41 | 12.56 | 9.53 |
| 180MX/LX | 43.53 | 30.41 | 19.41 | 12.56 | 9.53 |

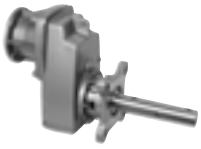

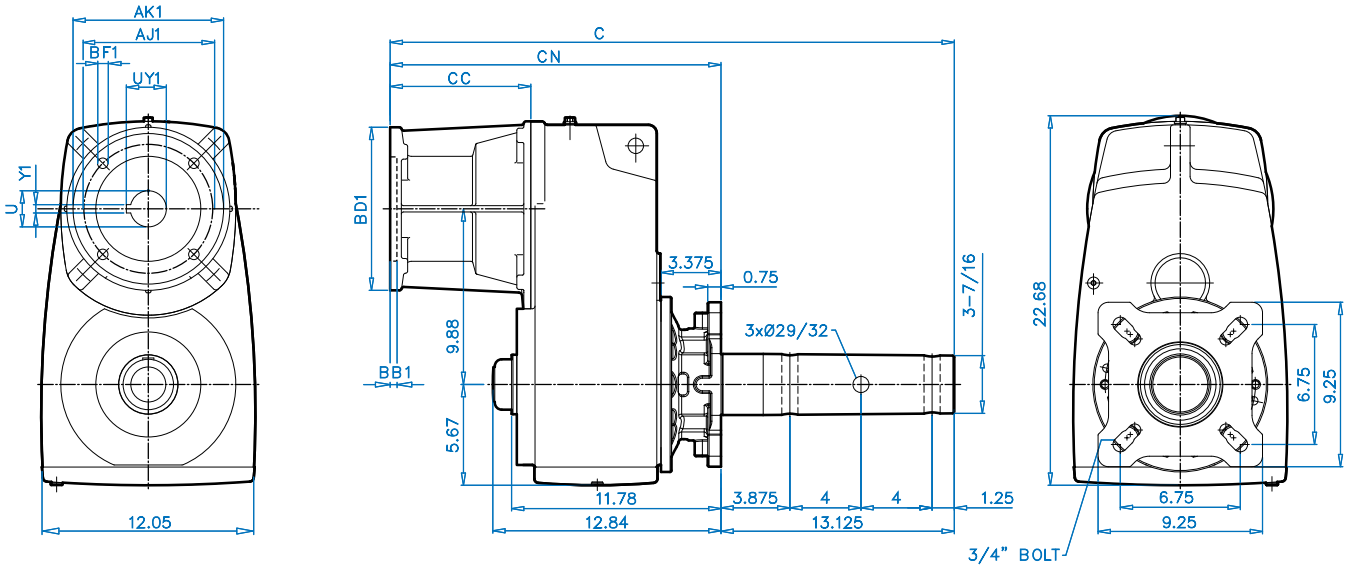


DIMENSIONS

| NEMA | Overall | | | NEMA Input | | | | | Coupling | | |
|---|---|---|---|---|---|---|---|---|---|---|---|
| C-Face Input | C | CN | CC | AJ1 | AK1 | BB1 | BD1 | BF1 | U1 | UY1 | Y1 |
| **56C** | 28.45 | 15.33 | 4.33 | 5.875 | 4.50 | 0.20 | 6.54 | 0.43 | 0.625 | 0.71 | 0.188 |
| **140TC** | 28.45 | 15.33 | 4.33 | 5.875 | 4.50 | 0.20 | 6.54 | 0.43 | 0.875 | 0.96 | 0.188 |
| **180TC** | 32.19 | 19.07 | 8.07 | 7.250 | 8.50 | 0.23 | 9.17 | 0.59 | 1.125 | 1.24 | 0.250 |
| **210TC** | 32.19 | 19.07 | 8.07 | 7.250 | 8.50 | 0.23 | 9.17 | 0.59 | 1.375 | 1.52 | 0.312 |
| **250TC** | 32.04 | 18.91 | 7.91 | 7.250 | 8.50 | 0.23 | 9.17 | 0.59 | 1.625 | 1.80 | 0.375 |
| **280TC** | 32.67 | 19.54 | 8.54 | 9.000 | 10.50 | 0.23 | 13.78 | 0.55 | 1.875 | 2.10 | 0.500 |

# SK 6282 SCP + Motor
# 3” CEMA Drive Shaft

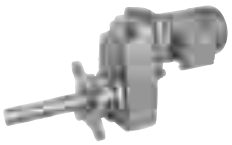

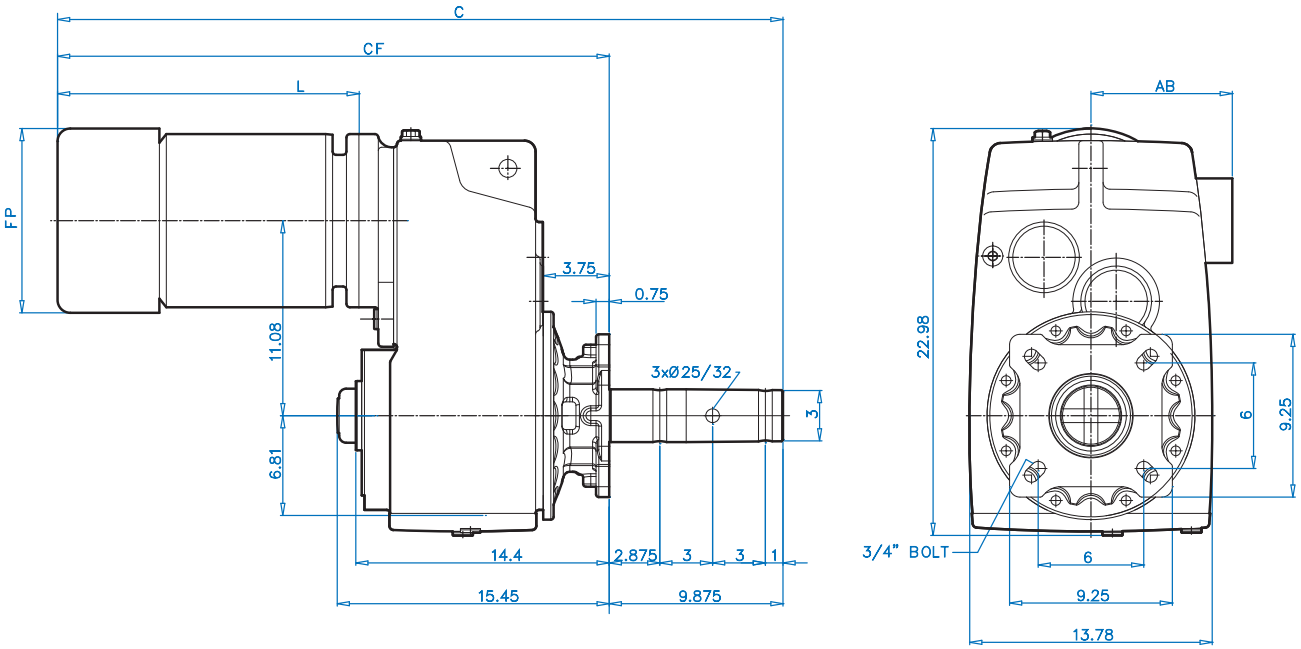


DIMENSIONS

| Motor Type | Overall | | Motor | | |
|---|---|---|---|---|---|
| | C | CF | L | FP | AB |
| 100L/LA/LH | 36.50 | 26.62 | 12.06 | 7.90 | 6.65 |
| 112M | 37.25 | 27.38 | 12.81 | 8.87 | 7.05 |
| 112MH | 38.24 | 28.37 | 13.81 | 8.87 | 7.05 |
| 132S/SH/M/MH | 41.58 | 31.70 | 17.14 | 10.45 | 8.03 |
| 160M/L | 43.84 | 33.97 | 19.41 | 12.56 | 9.53 |
| 180MX/LX | 43.84 | 33.97 | 19.41 | 12.56 | 9.53 |
| 200L | 51.52 | 41.65 | 27.09 | 15.83 | 12.01 |
| 225S/M | 51.52 | 41.65 | 27.09 | 15.83 | 12.01 |

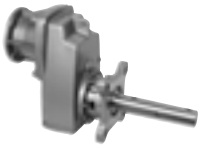

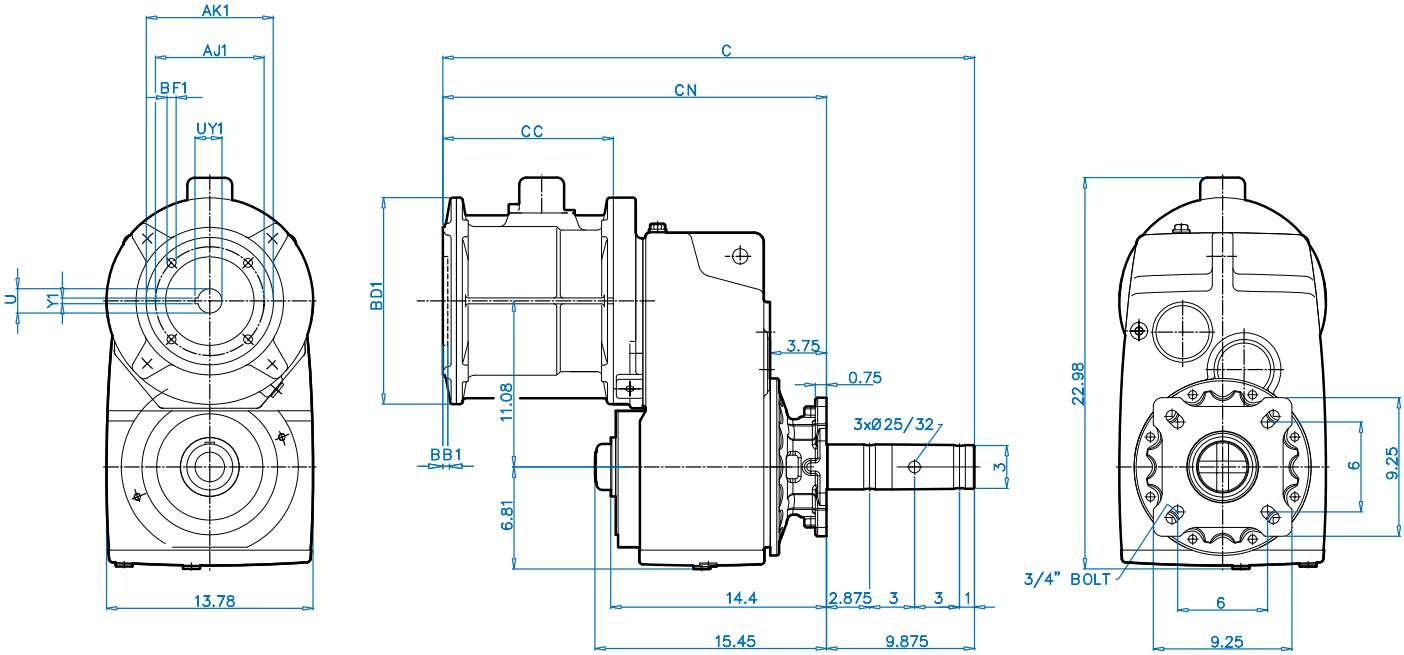


DIMENSIONS

| NEMA | Overall | | NEMA Input | | | | | | Coupling | | |
|---|---|---|---|---|---|---|---|---|---|---|---|
| C-Face Input | C | CN | CC | AJ1 | AK1 | BB1 | BD1 | BF1 | U1 | UY1 | Y1 |
| 180TC | 31.95 | 22.08 | 7.52 | 7.250 | 8.50 | 0.23 | 9.17 | 0.59 | 1.125 | 1.24 | 0.250 |
| 210TC | 31.95 | 22.08 | 7.52 | 7.250 | 8.50 | 0.23 | 9.17 | 0.59 | 1.375 | 1.52 | 0.312 |
| 250TC | 35.81 | 25.94 | 11.38 | 7.250 | 8.50 | 0.23 | 9.17 | 0.59 | 1.625 | 1.80 | 0.375 |
| 280TC | 35.81 | 25.94 | 11.38 | 9.000 | 10.50 | 0.23 | 13.78 | 0.55 | 1.875 | 2.10 | 0.500 |
| 320TC | 34.79 | 24.91 | 10.35 | 11.000 | 12.50 | 0.23 | 15.75 | 0.71 | 2.125 | 2.35 | 0.500 |
| 360 TC | 37.70 | 27.83 | 13.27 | 11.000 | 12.50 | 0.16 | 17.72 | 0.71 | 2.375 | 2.65 | 0.625 |

# SK 6282 SCP + Motor
# 3-7/16" CEMA Drive Shaft

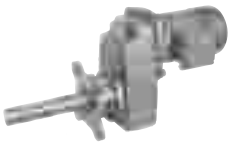



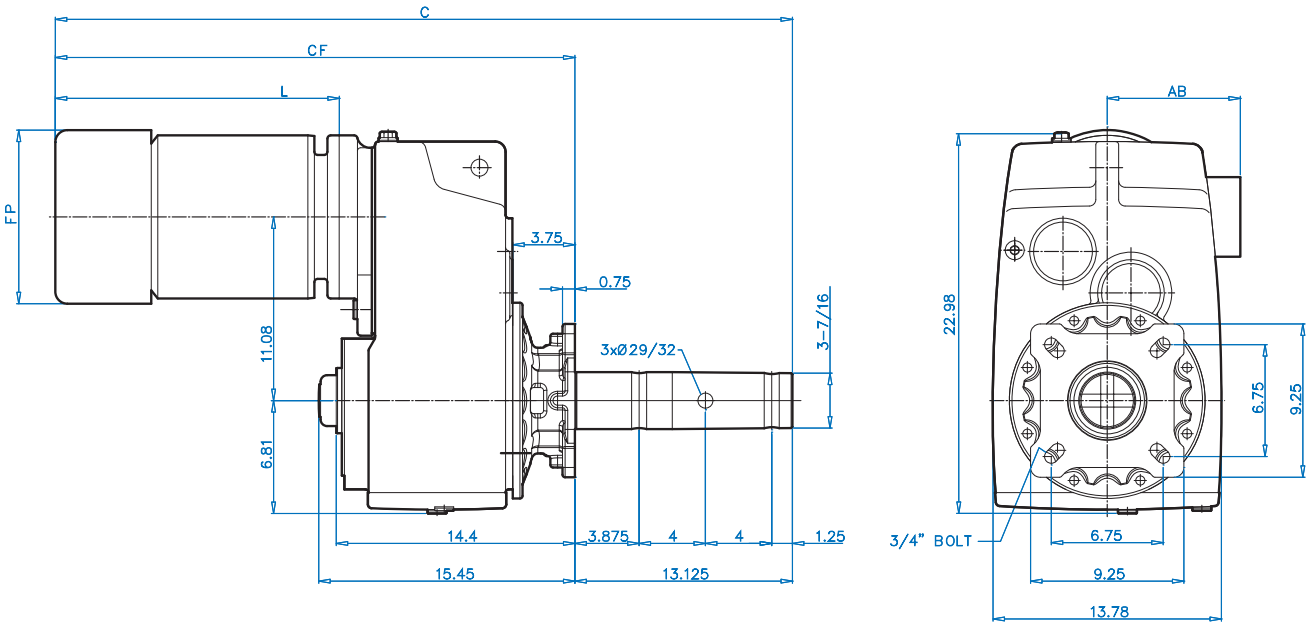


| Motor Type | Overall | | Motor | | |
|---|---|---|---|---|---|
| | C | CF | L | FP | AB |
| **100L/LA/LH** | 39.75 | 26.62 | 12.06 | 7.90 | 6.65 |
| **112M** | 40.50 | 27.38 | 12.81 | 8.87 | 7.05 |
| **112MH** | 41.49 | 28.37 | 13.81 | 8.87 | 7.05 |
| **132S/SH/M/MH** | 49.04 | 31.70 | 17.14 | 10.45 | 8.03 |
| **160M/L** | 47.09 | 33.97 | 19.41 | 12.56 | 9.53 |
| **180MX/LX** | 47.09 | 33.97 | 19.41 | 12.56 | 9.53 |
| **200L** | 54.77 | 41.65 | 27.09 | 15.83 | 12.01 |
| **225S/M** | 54.77 | 41.65 | 27.09 | 15.83 | 12.01 |

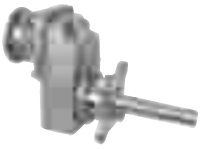

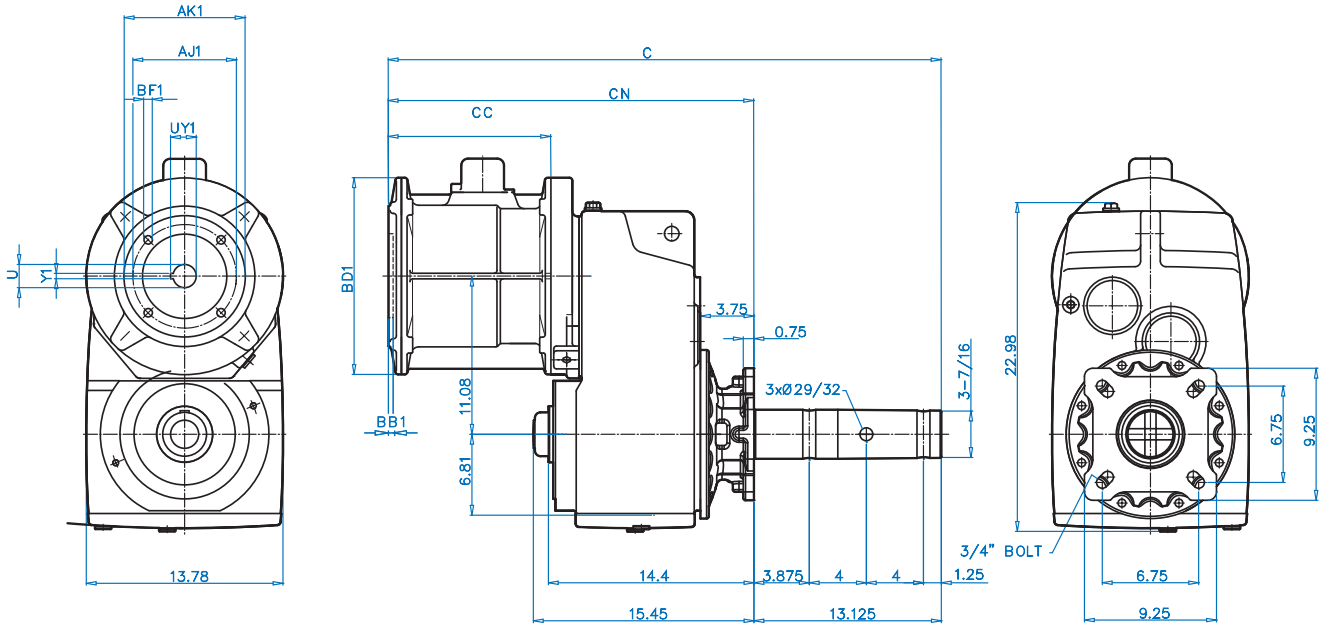


DIMENSIONS

| NEMA | Overall | | NEMA Input | | | | | | Coupling | | |
|---|---|---|---|---|---|---|---|---|---|---|---|
| C-Face Input | C | CN | CC | AJ1 | AK1 | BB1 | BD1 | BF1 | U1 | UY1 | Y1 |
| 180TC | 35.20 | 22.08 | 7.52 | 7.250 | 8.50 | 0.23 | 9.17 | 0.59 | 1.125 | 1.24 | 0.250 |
| 210TC | 35.20 | 22.08 | 7.52 | 7.250 | 8.50 | 0.23 | 9.17 | 0.59 | 1.375 | 1.52 | 0.312 |
| 250TC | 39.06 | 25.94 | 11.38 | 7.250 | 8.50 | 0.23 | 9.17 | 0.59 | 1.625 | 1.80 | 0.375 |
| 280TC | 38.95 | 25.82 | 11.26 | 9.000 | 10.50 | 0.23 | 13.78 | 0.55 | 1.875 | 2.10 | 0.500 |
| 320TC | 38.04 | 24.91 | 10.35 | 11.000 | 12.50 | 0.23 | 15.75 | 0.71 | 2.125 | 2.35 | 0.500 |
| 360 TC | 40.95 | 27.83 | 13.27 | 11.000 | 12.50 | 0.16 | 17.72 | 0.71 | 2.375 | 2.65 | 0.625 |

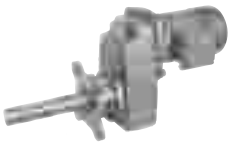

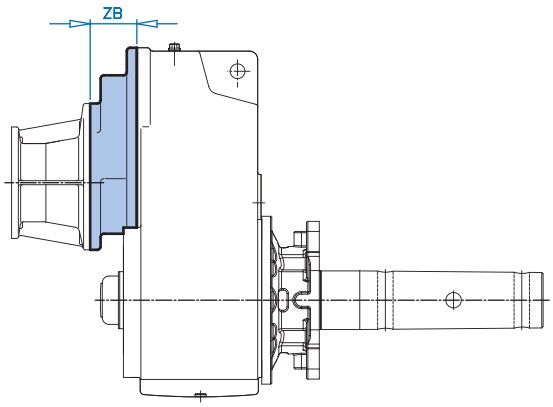


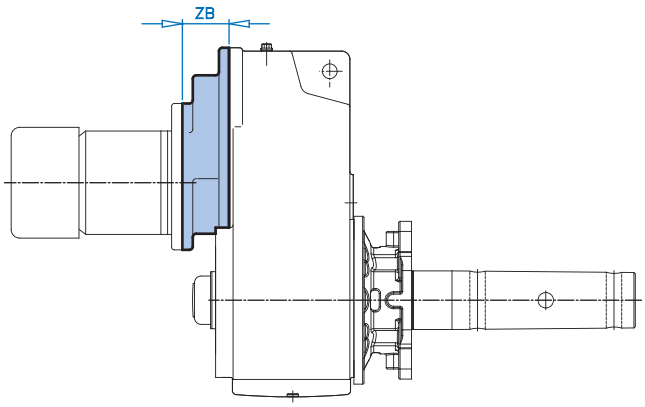




| Model Type | ZB |
|---|---|
| SK 1382 SCP | 2.28 |
| SK 2382 SCP | 2.36 |
| SK 3382 SCP | 2.36 |
| SK 4382 SCP | 2.72 |
| SK 5382 SCP | 2.72 |
| SK 6382 SCP | 0.00 |

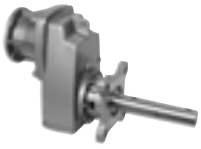

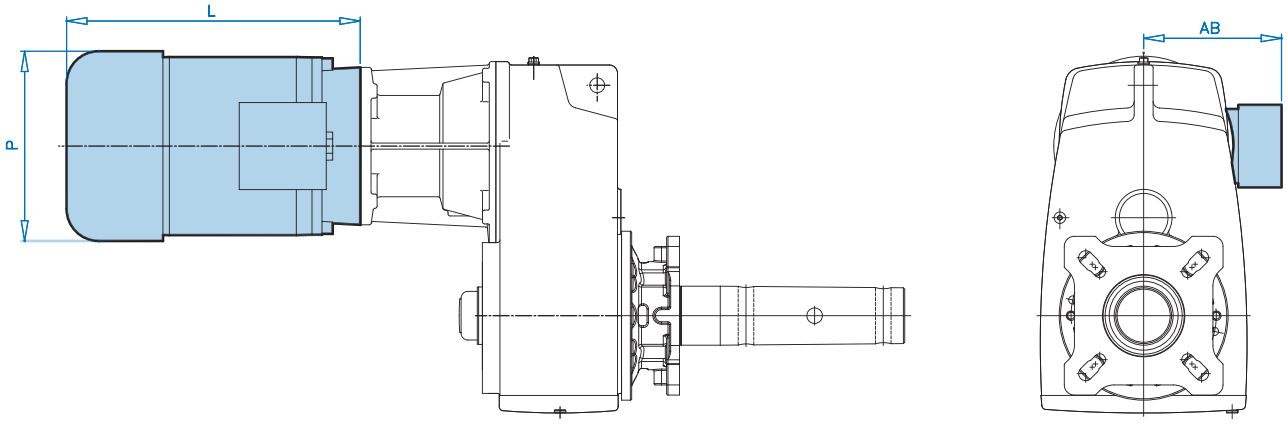




| Motor Type | AB | P | L |
|---|---|---|---|
| 63S-56C | 4.53 | 5.12 | 7.56 |
| 63L-56C | 4.53 | 5.12 | 7.56 |
| 71S-56C | 4.88 | 5.71 | 7.64 |
| 71L-56C | 4.88 | 5.71 | 7.64 |
| 80S-56C | 5.59 | 6.50 | 9.45 |
| 80L-143TC | 5.59 | 6.50 | 9.45 |
| 90S-145TC | 5.79 | 7.20 | 10.04 |
| 90L-145TC | 5.79 | 7.20 | 11.02 |
| 100L-182TC | 6.65 | 7.91 | 12.20 |
| 100L-184TC | 6.65 | 7.91 | 12.20 |
| 112M-184TC | 7.05 | 8.98 | 12.83 |
| 132S-213TC | 8.03 | 10.47 | 14.96 |
| 132M-215TC | 8.03 | 10.47 | 16.46 |

# SK SCP + Motor
# CEMA Drive Shaft

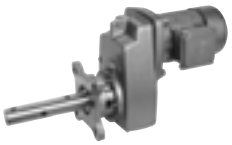



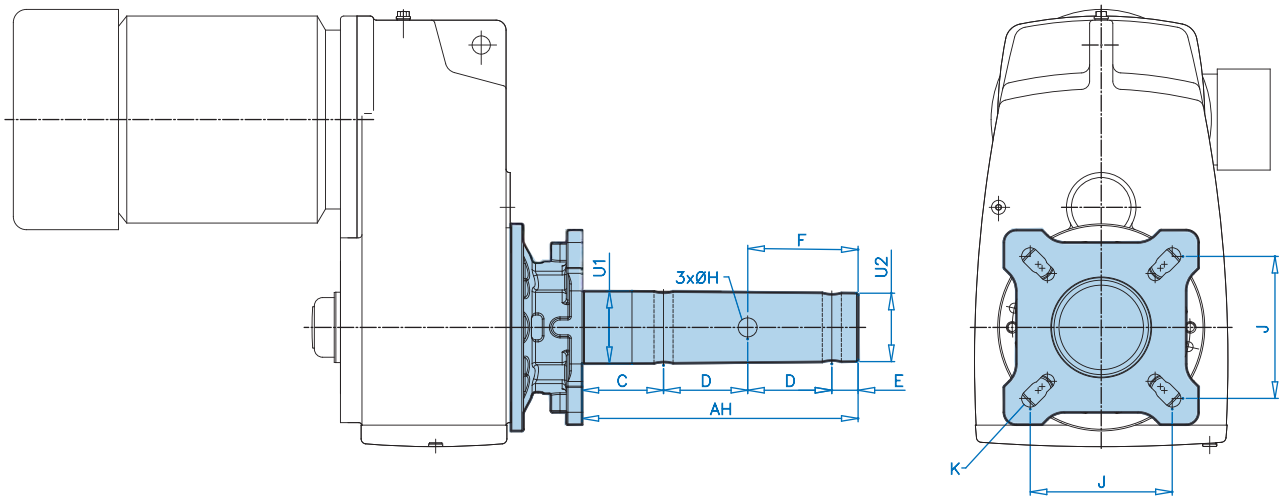


| Shaft Size | Shaft | | | | | | | | Flange | |
|---|---|---|---|---|---|---|---|---|---|---|
| | U1 | U2 | AH | C | D | E | F | H | J | K |
| **1-1/2** | 1.5 | 1.41 | 9.00 | 2.125 | 3.0 | 0.875 | 5 3/8 | 17/32 | 4 | 9/16 |
| **2** | 2.0 | 1.91 | 9.00 | 2.125 | 3.0 | 0.875 | 5 3/8 | 21/32 | 5-1/8 | 11/16 |
| **2-7/16** | 2.4375 | 2.34 | 9.6875 | 2.75 | 3.0 | 0.9375 | 5 7/16 | 21/32 | 5-5/8 | 11/16 |
| **3** | 3.0 | 2.91 | 9.875 | 2.875 | 3.0 | 1.00 | 5 1/2 | 25/32 | 6 | 13/16 |
| **3-7/16** | 3.4375 | 3.31 | 13.125 | 3.875 | 4.0 | 1.25 | 7 1/4 | 29/32 | 6-3/4 | 13/16 |

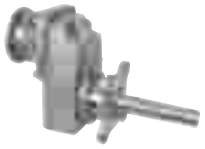

# CLINCHER™ SCP + NEMA CEMA Drive Shaft

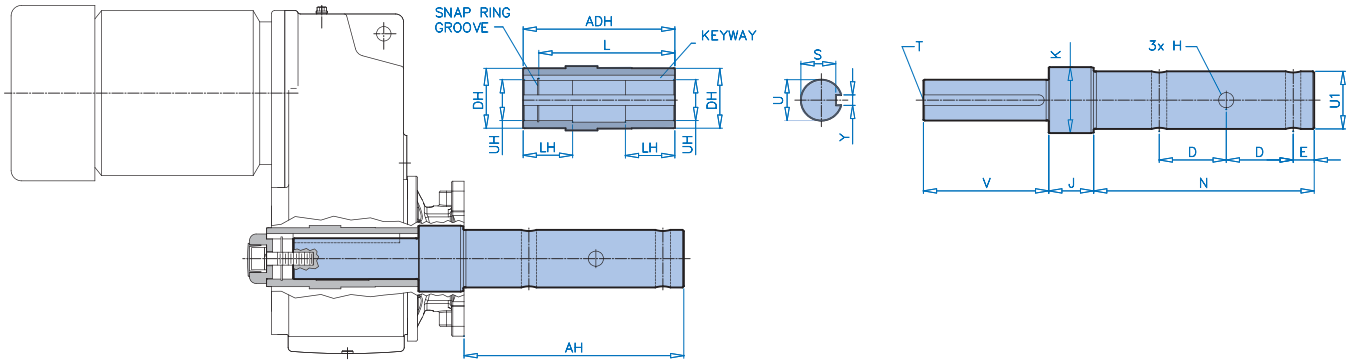




| Gear Unit Size | Hollow Shaft | | | | |
|---|---|---|---|---|---|
| | UH | ADH | L | LH | DH |
| SK 1282 SCP | 1-3/16 + 0.0008 | 4.80 | 3.85 | 1.57 | 1.77 |
| SK 2282 SCP | 1-7/16 + 0.0010 | 5.47 | 4.80 | 1.97 | 1.97 |
| SK 3282 SCP | 1-5/8 + 0.0010 | 6.85 | 6.14 | 2.28 | 2.17 |
| SK 4282 SCP | 2-1/16 + 0.0010 | 7.68 | 6.42 | 2.56 | 2.76 |
| SK 5282 SCP | 2-7/16 + 0.0012 | 9.06 | 7.58 | 2.95 | 3.35 |
| SK 6282 SCP | 2-3/4 + 0.0012 | 11.41 | 9.92 | 3.54 | 3.93 |

| | Shaft | | | | | | | | | | | | | | |
|---|---|---|---|---|---|---|---|---|---|---|---|---|---|---|---|
| | Shaft Size | U1 | AH | D | E | H | N | J | K | U | V | S | Y | T | Key |
| SK 1282 | 1-1/2 | 1-1/2 | 9 | 3 | 7/8 | 17/32 | 9.04 | 2.04 | 2.165 | 1.18752-0.0006 | 3.74 | 1.049 | 0.25 | 7/16-14 x 1 | 1/4 x 1/4 |
| | 2 | 2 | 9 | 3 | 7/8 | 21/32 | 9.04 | 2.41 | 2.559 | 1.18752-0.0006 | 3.74 | 1.049 | 0.25 | 7/16-14 x 1 | 1/4 x 1/4 |
| | 2-7/16 | 2-7/16 | 9-11/16 | 3 | 15/16 | 21/32 | 9.73 | 2.41 | 2.559 | 1.18752-0.0006 | 3.74 | 1.049 | 0.25 | 7/16-14 x 1 | 1/4 x 1/4 |
| SK 2282 | 1-1/2 | 1-1/2 | 9 | 3 | 7/8 | 17/32 | 9.04 | 2.04 | 2.165 | 1.43752-0.0006 | 4.65 | 1.225 | 0.375 | 5/8-11 x 1.5 | 3/8 x 3/8 |
| | 2 | 2 | 9 | 3 | 7/8 | 21/32 | 9.04 | 2.04 | 2.559 | 1.43752-0.0006 | 4.65 | 1.225 | 0.375 | 5/8-11 x 1.5 | 3/8 x 3/8 |
| | 2-7/16 | 2-7/16 | 9-11/16 | 3 | 15/16 | 21/32 | 9.73 | 2.41 | 2.559 | 1.43752-0.0006 | 4.65 | 1.225 | 0.375 | 5/8-11 x 1.5 | 3/8 x 3/8 |
| SK 3282 | 1-1/2 | 1-1/2 | 9 | 3 | 7/8 | 17/32 | 9.04 | 2.20 | 2.165 | 1.625-0.0006 | 5.91 | 1.478 | 0.375 | 5/8-11 x 1.5 | 3/8 x 1/4 |
| | 2 | 2 | 9 | 3 | 7/8 | 21/32 | 9.04 | 2.57 | 3.150 | 1.625-0.0006 | 5.91 | 1.478 | 0.375 | 5/8-11 x 1.5 | 3/8 x 1/4 |
| | 2-7/16 | 2-7/16 | 9-11/16 | 3 | 15/16 | 21/32 | 9.73 | 2.57 | 3.150 | 1.625-0.0006 | 5.91 | 1.478 | 0.375 | 5/8-11 x 1.5 | 3/8 x 1/4 |
| | 3 | 3 | 9-7/8 | 3 | 1 | 25/32 | 9.91 | 2.57 | 3.150 | 1.625-0.0006 | 5.91 | 1.478 | 0.375 | 5/8-11 x 1.5 | 3/8 x 1/4 |
| SK 4282 | 2 | 2 | 9 | 3 | 7/8 | 21/32 | 9.04 | 2.37 | 3.150 | 2.06252-0.0007 | 6.42 | 1.844 | 0.5 | 5/8-11 x 1.5 | 1/2 x 3/8 |
| | 2-7/16 | 2-7/16 | 9-11/16 | 3 | 15/16 | 21/32 | 9.73 | 2.37 | 3.150 | 2.06252-0.0007 | 6.42 | 1.844 | 0.5 | 5/8-11 x 1.5 | 1/2 x 3/8 |
| | 3 | 3 | 9-7/8 | 3 | 1 | 25/32 | 9.91 | 2.37 | 3.150 | 2.06252-0.0007 | 6.42 | 1.844 | 0.5 | 5/8-11 x 1.5 | 1/2 x 3/8 |
| SK 5282 | 2 | 2 | 9 | 3 | 7/8 | 21/32 | 9.04 | 2.68 | 3.937 | 2.43752-0.0007 | 7.48 | 2.084 | 0.625 | 3/4-10 x 2 | 5/8 x 5/8 |
| | 2-7/16 | 2-7/16 | 9-11/16 | 3 | 15/16 | 21/32 | 9.73 | 2.68 | 3.937 | 2.43752-0.0007 | 7.48 | 2.084 | 0.625 | 3/4-10 x 2 | 5/8 x 5/8 |
| | 3 | 3 | 9-7/8 | 3 | 1 | 25/32 | 9.91 | 2.68 | 3.937 | 2.43752-0.0007 | 7.48 | 2.084 | 0.625 | 3/4-10 x 2 | 5/8 x 5/8 |
| | 3-7/16 | 3-7/16 | 13-1/8 | 4 | 1-1/4 | 29/32 | 13.16 | 2.68 | 3.937 | 2.43752-0.0007 | 7.48 | 2.084 | 0.625 | 3/4-10 x 2 | 5/8 x 5/8 |
| SK 6282 | 3 | 3 | 9-7/8 | 3 | 1 | 25/32 | 9.91 | 2.94 | 3.937 | 2.750 - 0.0007 | 10.55 | 2.402 | 0.625 | 3/4-10 x 2 | 5/8 x 5/8 |
| | 3-7/16 | 3-7/16 | 13-1/8 | 4 | 1-1/4 | 29/32 | 13.16 | 2.94 | 3.937 | 2.750 - 0.0007 | 10.55 | 2.402 | 0.625 | 3/4-10 x 2 | 5/8 x 5/8 |

# SK 9012.1 - SK9053.1
# SCP Dimensions

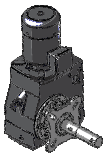

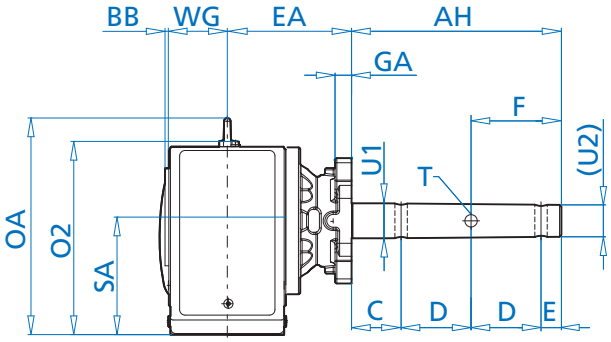


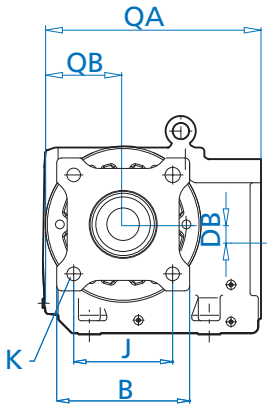


Standard Housing

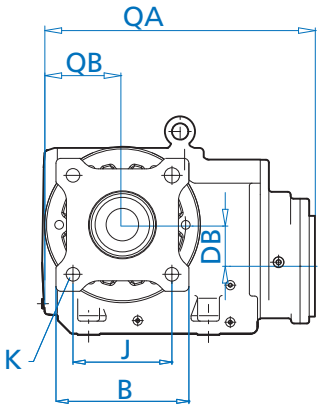


3rd Reduction Housing

## Bevel SCP Dimensions

| Unit | Shaft Dimensions | | | | | | | | Flange Dimensions | | | | Housing Dimensions | | | | | | | | |
|---|---|---|---|---|---|---|---|---|---|---|---|---|---|---|---|---|---|---|---|---|---|
| | U1 | U2 | AH | C | D | E | F | T | B | GA | J | K | BB | DB | EA | OA | O2 | SA | WG | QA | QB |
| SK 9012.1 | 1.500 | 1.41 | 9.00 | 2.125 | 3.00 | 0.875 | 3.875 | 3x17/32 | 5.375 | 0.71 | 4.000 | 0.5625 | 0.12 | 0.39 | 5.55 | 9.09 | 7.76 | 4.41 | 2.80 | 9.90 | 3.32 |
| | 2.000 | 1.91 | 9.00 | 2.125 | 3.00 | 0.875 | 3.875 | 3x21/32 | 7.375 | 0.75 | 5.125 | 0.6875 | 0.12 | 0.39 | 5.925 | 9.09 | 7.76 | 4.41 | 2.80 | 9.90 | 3.32 |
| | 2.4375 | 2.31 | 9.6875 | 2.750 | 3.00 | 0.9375 | 3.9375 | 3x21/32 | 7.375 | 0.75 | 5.625 | 0.6875 | 0.12 | 0.39 | 5.925 | 9.09 | 7.76 | 4.41 | 2.80 | 9.90 | 3.32 |
| SK 9013.1 | 1.500 | 1.41 | 9.00 | 2.125 | 3.00 | 0.875 | 3.875 | 3x17/32 | 5.375 | 0.71 | 4.000 | 0.5625 | 0.12 | 1.57 | 5.55 | 9.09 | 7.76 | 4.41 | 2.80 | 12.18 | 3.32 |
| | 2.000 | 1.91 | 9.00 | 2.125 | 3.00 | 0.875 | 3.875 | 3x21/32 | 7.375 | 0.75 | 5.125 | 0.6875 | 0.12 | 1.57 | 5.925 | 9.09 | 7.76 | 4.41 | 2.80 | 12.18 | 3.32 |
| | 2.4375 | 2.31 | 9.6875 | 2.750 | 3.00 | 0.9375 | 3.9375 | 3x21/32 | 7.375 | 0.75 | 5.625 | 0.6875 | 0.12 | 1.57 | 5.925 | 9.09 | 7.76 | 4.41 | 2.80 | 12.18 | 3.32 |
| SK 9022.1 | 1.500 | 1.41 | 9.00 | 2.125 | 3.00 | 0.875 | 3.875 | 3x17/32 | 5.375 | 0.71 | 4.000 | 0.5625 | 0.16 | 0.55 | 6.14 | 11.00 | 9.65 | 5.63 | 3.39 | 11.47 | 4.03 |
| | 2.000 | 1.91 | 9.00 | 2.125 | 3.00 | 0.875 | 3.875 | 3x21/32 | 7.375 | 0.75 | 5.125 | 0.6875 | 0.16 | 0.55 | 6.515 | 11.00 | 9.65 | 5.63 | 3.39 | 11.47 | 4.03 |
| | 2.4375 | 2.31 | 9.6875 | 2.750 | 3.00 | 0.9375 | 3.9375 | 3x21/32 | 7.375 | 0.75 | 5.625 | 0.6875 | 0.16 | 0.55 | 6.515 | 11.00 | 9.65 | 5.63 | 3.39 | 11.47 | 4.03 |
| SK 9023.1 | 1.500 | 1.41 | 9.00 | 2.125 | 3.00 | 0.875 | 3.875 | 3x17/32 | 5.375 | 0.71 | 4.000 | 0.5625 | 0.16 | 1.73 | 6.14 | 11.00 | 9.65 | 5.63 | 3.39 | 13.75 | 4.03 |
| | 2.000 | 1.91 | 9.00 | 2.125 | 3.00 | 0.875 | 3.875 | 3x21/32 | 7.375 | 0.75 | 5.125 | 0.6875 | 0.16 | 1.73 | 6.515 | 11.00 | 9.65 | 5.63 | 3.39 | 13.75 | 4.03 |
| | 2.4375 | 2.31 | 9.6875 | 2.750 | 3.00 | 0.9375 | 3.9375 | 3x21/32 | 7.375 | 0.75 | 5.625 | 0.6875 | 0.16 | 1.73 | 6.515 | 11.00 | 9.65 | 5.63 | 3.39 | 13.75 | 4.03 |
| SK 9032.1 | 1.500 | 1.41 | 9.00 | 2.125 | 3.00 | 0.875 | 3.875 | 3x17/32 | 5.375 | 0.71 | 4.000 | 0.5625 | 0.20 | 0.94 | 6.69 | 13.15 | 11.75 | 7.24 | 3.94 | 13.11 | 4.96 |
| | 2.000 | 1.91 | 9.00 | 2.125 | 3.00 | 0.875 | 3.875 | 3x21/32 | 7.875 | 0.71 | 5.125 | 0.6875 | 0.20 | 0.94 | 7.065 | 13.15 | 11.75 | 7.24 | 3.94 | 13.11 | 4.96 |
| | 2.4375 | 2.31 | 9.6875 | 2.750 | 3.00 | 0.9375 | 3.9375 | 3x21/32 | 7.875 | 0.71 | 5.625 | 0.6875 | 0.20 | 0.94 | 7.065 | 13.15 | 11.75 | 7.24 | 3.94 | 13.11 | 4.96 |
| | 3.000 | 2.91 | 9.875 | 2.875 | 3.00 | 1.000 | 4.000 | 3x25/32 | 7.875 | 0.71 | 6.000 | 0.8125 | 0.20 | 0.94 | 7.065 | 13.15 | 11.75 | 7.24 | 3.94 | 13.11 | 4.96 |
| SK 9033.1 | 1.500 | 1.41 | 9.00 | 2.125 | 3.00 | 0.875 | 3.875 | 3x17/32 | 5.375 | 0.71 | 4.000 | 0.5625 | 0.20 | 2.91 | 6.69 | 13.15 | 11.75 | 7.24 | 3.94 | 15.49 | 4.96 |
| | 2.000 | 1.91 | 9.00 | 2.125 | 3.00 | 0.875 | 3.875 | 3x21/32 | 7.875 | 0.71 | 5.125 | 0.6875 | 0.20 | 2.91 | 7.065 | 13.15 | 11.75 | 7.24 | 3.94 | 15.49 | 4.96 |
| | 2.4375 | 2.31 | 9.6875 | 2.750 | 3.00 | 0.9375 | 3.9375 | 3x21/32 | 7.875 | 0.71 | 5.625 | 0.6875 | 0.20 | 2.91 | 7.065 | 13.15 | 11.75 | 7.24 | 3.94 | 15.49 | 4.96 |
| | 3.000 | 2.91 | 9.875 | 2.875 | 3.00 | 1.000 | 4.000 | 3x25/32 | 7.875 | 0.71 | 6.000 | 0.8125 | 0.20 | 2.91 | 7.065 | 13.15 | 11.75 | 7.24 | 3.94 | 15.49 | 4.96 |
| SK 9042.1 | 2.000 | 1.91 | 9.00 | 2.125 | 3.00 | 0.875 | 3.875 | 3x21/32 | 9.250 | 0.75 | 5.125 | 0.6875 | 0.20 | 1.42 | 7.905 | 15.71 | 13.97 | 8.54 | 4.53 | 15.81 | 6.06 |
| | 2.4375 | 2.31 | 9.6875 | 2.750 | 3.00 | 0.9375 | 3.9375 | 3x21/32 | 9.250 | 0.75 | 5.625 | 0.6875 | 0.20 | 1.42 | 7.905 | 15.71 | 13.97 | 8.54 | 4.53 | 15.81 | 6.06 |
| | 3.000 | 2.91 | 9.875 | 2.875 | 3.00 | 1.000 | 4.000 | 3x25/32 | 9.250 | 0.75 | 6.000 | 0.8125 | 0.20 | 1.42 | 7.905 | 15.71 | 13.97 | 8.54 | 4.53 | 15.81 | 6.06 |
| | 3.4375 | 3.31 | 13.125 | 3.875 | 4.00 | 1.250 | 5.125 | 3x29/32 | 9.250 | 0.75 | 6.750 | 0.8125 | 0.20 | 1.42 | 7.905 | 15.71 | 13.97 | 8.54 | 4.53 | 15.81 | 6.06 |
| SK 9043.1 | 2.000 | 1.91 | 9.00 | 2.125 | 3.00 | 0.875 | 3.875 | 3x21/32 | 9.250 | 0.75 | 5.125 | 0.6875 | 0.20 | 3.82 | 7.905 | 15.71 | 13.97 | 8.54 | 4.53 | 18.55 | 6.06 |
| | 2.4375 | 2.31 | 9.6875 | 2.750 | 3.00 | 0.9375 | 3.9375 | 3x21/32 | 9.250 | 0.75 | 5.625 | 0.6875 | 0.20 | 3.82 | 7.905 | 15.71 | 13.97 | 8.54 | 4.53 | 18.55 | 6.06 |
| | 3.000 | 2.91 | 9.875 | 2.875 | 3.00 | 1.000 | 4.000 | 3x25/32 | 9.250 | 0.75 | 6.000 | 0.8125 | 0.20 | 3.82 | 7.905 | 15.71 | 13.97 | 8.54 | 4.53 | 18.55 | 6.06 |
| | 3.4375 | 3.31 | 13.125 | 3.875 | 4.00 | 1.250 | 5.125 | 3x29/32 | 9.250 | 0.75 | 6.750 | 0.8125 | 0.20 | 3.82 | 7.905 | 15.71 | 13.97 | 8.54 | 4.53 | 18.55 | 6.06 |
| SK 9052.1 | 3.000 | 2.91 | 9.875 | 2.875 | 3.00 | 1.000 | 4.000 | 3x25/32 | 9.250 | 0.75 | 6.000 | 0.8125 | 0.20 | 1.61 | 9.085 | 18.82 | 16.79 | 10.31 | 5.71 | 19.15 | 7.32 |
| | 3.4375 | 3.31 | 13.125 | 3.875 | 4.00 | 1.250 | 5.125 | 3x29/32 | 9.250 | 0.75 | 6.750 | 0.8125 | 0.20 | 1.61 | 9.085 | 18.82 | 16.79 | 10.31 | 5.71 | 19.15 | 7.32 |
| SK 9053.1 | 3.000 | 2.91 | 9.875 | 2.875 | 3.00 | 1.000 | 4.000 | 3x25/32 | 9.250 | 0.75 | 6.000 | 0.8125 | 0.20 | 4.61 | 9.085 | 18.82 | 16.79 | 10.31 | 5.71 | 21.89 | 7.32 |
| | 3.4375 | 3.31 | 13.125 | 3.875 | 4.00 | 1.250 | 5.125 | 3x29/32 | 9.250 | 0.75 | 6.750 | 0.8125 | 0.20 | 4.61 | 9.085 | 18.82 | 16.79 | 10.31 | 5.71 | 21.89 | 7.32 |

## Motors


- Order Form
- NEMA C-Face Motors
- Engineering Information
- Options
- Environmental Options
- AC Vector Drive Options
- SK 300E Trio AC Vector Drive
- Additional Options
- Ratings Tables
- Dimensions
- Connection Diagrams




NORD DRIVESYSTEMS

www.nord.com

INVERTER DUTY MOTOR



| Motor Type | Power Pn | | Nn Full-load | In Full-Load Current 230V[a] | In Full-Load Current 460V[a] |
|---|---|---|---|---|---|
| | [hp] | [kW] | [rpm] | [A] | [A] |
| 63S/4 | 0.16 | 0.12 | 1700 | 0.88 | 0.44 |
| 63L/4 | 0.25 | 0.18 | 1680 | 1.12 | 0.56 |
| 71S/4 | 0.33 | 0.25 | 1710 | 1.56 | 0.78 |
| 71L/4 | 0.5 | 0.37 | 1720 | 1.90 | 0.95 |
| 80S/4 | 0.75 | 0.55 | 1710 | 2.70 | 1.35 |
| 80L/4 | 1 | 0.75 | 1650 | 3.66 | 1.83 |
| 90S/4 | 1.5 | 1.1 | 1660 | 4.84 | 2.42 |
| 90L/4 | 2 | 1.5 | 1660 | 6.34 | 3.17 |
| 100L/4 | 3 | 2.2 | 1705 | 9.0 | 4.50 |
| 100LA/4 | 5 | 3.7 | 1725 | 15.2 | 7.62 |
| 132S/4 | 7.5 | 5.5 | 1735 | 19.8 | 9.9 |
| 132M/4 | 10 | 7.5 | 1735 | 25.8 | 12.9 |
| 160M/4 | 15 | 11 | 1770 | 38.4 | 19.2 |



# Motor Order Form



| | Frame | Size | Poles | Motor Options | Brake Size | Brake Options |
|---|---|---|---|---|---|---|
| **SK** | | | | | | |

| Frame | Size | Poles |
|---|---|---|
| 63 | S | 4 |
| 71 | SH | 2 |
| 80 | M | 6 |
| 90 | MH | 4-2 |
| 100 | MX | 8-2 |
| 112 | L | 8-4 |
| 132 | LA | 12-2 |
| | LH | Other |
| | LX | |

**Paint**

- ❍ Unpainted Aluminum Alloy
- ❍ Stainless Steel Paint
- ❍ NSD+ (gray)
- ❍ NSD+W (white)
- ❍ NSD-X3 (gray)
- ❍ NSD-X3W (white)
- ❍ Special _____

**Electrical Motor Options**

- ❒ **H** - Energy Efficient Motor
- ❒ **TW** - Thermostat
- ❒ **TF** - Thermistor
- ❒ **SH** - Space Heater (select voltage)
  - ❍ 110 Volt ❍ 230 Volt ❍ 460 Volt
- ❒ **ISO** H - Class H insulation
- ❒ **WU** - High Resistance Rotor
- ❒ **4-2** - 2-Speed, 4/2 Pole, 1800/3600rpm
- ❒ **8-2** - 2-Speed, 8/2 Pole, 900/3600rpm
- ❒ **ECR** - Single Phase Motor

**Environmental Options**

- ❒ **NSD+** - Nord Severe Duty Paint
- ❒ **NSDx3** - Nord Extreme Duty Paint
- ❒ **RD** - Canopy Drip Cover
- ❒ **RDD** - Double Fan Cover
- ❒ **KB** - Condensation Drain Holes (plugged)
- ❒ **KBO** - Condensation Drain Holes (open)
- ❒ **IP66** - IP66 Enclosure Protection
- ❒ **KKV** - Terminal Box Sealed with Resin
- ❒ **AICM** - Additional Insulation
- ❒ **EP** - Epoxy Dipped Windings

**AC Vector Drive Related Options**

- ❒ **F** - Blower Fan (200-575V 1 & 3 Phase)
- ❒ **FC** - Blower Cooling Fan (115V, 1 Phase)
- ❒ **IG__** - Incremental Encoder
- ❒ **IG__P** - Incremental Encoder with Plug
- ❒ **AG** - Absolute Encoder

**Additional Motor Options**

- ❒ **OL** - Totally Enclosed Non-Ventilated (TENV)
- ❒ **OL/H** - (TENV) Without Fan Cover
- ❒ **WE** - Second Shaft Extension (Fan Side)
- ❒ **HR** - Hand Wheel
- ❒ **Z** - High Inertia Cast Iron Fan
- ❒ **RLS** - Motor Backstop (rotation viewing fan)
  - ❍ Clockwise ❍ Counter-Clockwise
- ❒ **EKK** - Small Terminal Box (not UL approved)
- ❒ **MS** - Quick Power Plug Connector

| Brake Size |
|---|
| BRE 5 |
| BRE 10 |
| BRE 20 |
| BRE 40 |
| BRE 60 |
| BRE 100 |
| BRE 150 |

- ❒ **HL** - Hand Release Lever
- ❒ **FHL** - Locking Hand Release Lever
- ❒ **HLH** - Hand Release Lever with Hole
- ❒ **RG** - Corrosion Protected Brake
- ❒ **SR** - Dust and Corrosion Protected Brake
- ❒ **ADJ_____Nm** - Adjust Brake Torque
- ❒ **BIP66** - IP66 Brake Enclosure
- ❒ **MIK** - Micro-switch
- ❒ **BSH** - Brake Heating/Bifilar Coil
- ❒ **NRB1** - Quiet Brake Release
- ❒ **NRB2** - Quiet Brake Motor Operation
- ❒ **FBR** - Brass Foil
- ❒ **DBR** - Double Brake
- ❒ **G...P** - High Performance Rectifier
- ❒ **G...V** - Sealed Rectifier
- ❒ **IR** - Current Sensing Relay

**Rectifier Selection**

**Rectifier Wiring**

- ❍ Across the line (from motor terminal box)
- ❍ Separate power source (frequency AC vector drive, soft starter)

**Brake Supply Voltage**

- ❍ 24 VDC
- ❍ 115 VAC
- ❍ 200 VAC
- ❍ 230 VAC
- ❍ 400 VAC
- ❍ 460 VAC
- ❍ 500 VAC
- ❍ 575 VAC
- ❍ Other _____

**Braking Method**

- ❍ Method 10
- ❍ Method 15
- ❍ Method 20
- ❍ Method 25
- ❍ Method 30
- ❍ Method 35
- ❍ Method 40
- ❍ Method 45
- ❍ Method 50
- ❍ Method 55

**Hand Release Position**

- ❍ HL1
- ❍ HL2
- ❍ HL3
- ❍ HL4

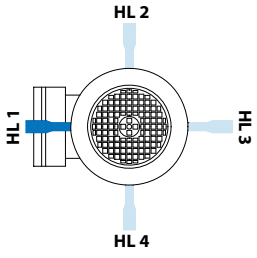


**Mounting**

- ❍ Integral to gearbox
- ❍ NEMA C-Face
- ❍ IEC B5 Mount

**Voltage & Frequency**

- ❍ 230/460V-60Hz
- ❍ 575V-60Hz
- ❍ 208V-60Hz
- ❍ 400V-50Hz
- ❍ 115/230V, 60Hz-1-ph.
- ❍ Other

**Terminal Box Pos.**

- ❍ TB1
- ❍ TB2
- ❍ TB3
- ❍ TB4

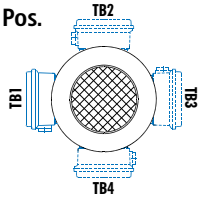


Mtg. Pos. M1 Shown

**Conduit Entry Loc.**

- ❍ CE I *
- ❍ CE II
- ❍ CE III *
- ❍ CE IV

*Brakemotor

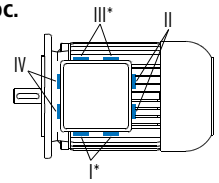


Mtg. Pos. M1 Shown

MOTORS



## Motor Options & Construction

NORD motors are stocked in one of two ways. The first method is to stock a complete motor that is ready to be assembled to a gear reducer or shipped as a stand alone motor. The second method, the motor is assembled from component parts. The Mod next to a motor option designates that the option can be added to a complete motor by simple modification. The Build next to a motor option indicates that the motor will need to be built from component parts in order to incorporate the motor option.

**Motor Options**

| Abbreviation | Description | Mod | Build | Page |
|---|---|---|---|---|
| **AG** | Absolute Encoder | | ✓ | 137 |
| **AICM** | Additional Insulation | | ✓ | 131 |
| **ECR** | Single Phase Motors, 60Hz | | ✓ | 130 |
| **EKK** | Small Terminal Box | ✓ | | 134 |
| **EP** | Epoxy Dipped Windings | | ✓ | 131 |
| **F** | Blower Cooling Fan | ✓ | | 135 |
| **FC** | Blower Cooling Fan | ✓ | | 135 |
| **HR** | Hand Wheel | | ✓ | 132 |
| **IG...P** | Incremental Encoder | | ✓ | 136 |
| **ISO H** | Class H Insulation | | ✓ | 130 |
| **KB** | Plugged Condensation Drain Holes | | ✓ | 131 |
| **KBO** | Open Condensation Drain Holes | | ✓ | 131 |
| **KKV** | Terminal Box Sealed with Resin | ✓ | | 131 |
| **MS** | Quick Power Plug Connector | ✓ | | 134 |
| **OL** | Totally Enclosed Non-Ventilated | ✓ | | 132 |
| **OL/H** | Totally Enclosed Non Ventilated without Fan Cover | | ✓ | 132 |
| **RD** | Canopy Drip Cover | ✓ | | 131 |
| **RDD** | Double Fan Cover | ✓ | | 131 |
| **RLS** | Motor Backstop | | ✓ | 133 |
| **SH** | Space Heater | | ✓ | 130 |
| **TF** | Thermistor | | ✓ | 129 |
| **TW** | Thermostat | | ✓ | 129 |
| **WE** | 2nd Shaft Extension on Fan Side | | ✓ | 132 |
| **WU** | High Resistance Rotor | | ✓ | 130 |
| **Z** | High Inertia Cast Iron Fan | | ✓ | 133 |
| **-** | IP65 Enclosure Protection | ✓ | | 131 |
| **-** | IP66 Enclosure Protection | ✓ | | 131 |
| **-** | Paint Coatings | ✓ | | 18 |

# Stocked NEMA C-Face Motors



## NEMA C-Face Motors

The National Electrical Manufacturers Association (NEMA) provides standardization of electrical equipment, enabling customers to select from a range of safe, effective and compatible products. A NEMA C-face motor has a machined face with a pilot and threaded holes for direct mounting onto a NORD reducer or other industrial equipment. NORD offers NEMA C-face motors stocked as finished goods and will also assemble NEMA C-face motors to your specifications. For ratings, see page 142.

## Stocked NEMA C-Face Motors

Stocked NEMA C-face motors are offered in standard efficiency, energy efficient and in a brakemotor design. They are available in 230/460V-60Hz and 575V-60Hz up to 10 hp. Part numbers for stocked NEMA C-face motors are in the table below.

## Assembled per Order NEMA C-Face Motors

NORD will assemble a NEMA C-face motor to your specifications based upon the available motor options from this catalog.

| Motor Type | Power | Part Number 230/460V-60Hz | Part Number 575V-60Hz | Weight [lb] |
|---|---|---|---|---|
| **High Performance Motors** | | | | |
| 63S/4-56C | 1/6 hp | 31110012 | 31110013 | 7.9 |
| 63L/4-56C | 1/4 hp | 31610012 | 31610013 | 9.3 |
| 71S/4-56C | 1/3 hp | 32110012 | 32110013 | 11.9 |
| 71L/4-56C | 1/2 hp | 32610012 | 32610013 | 13.9 |
| 80S/4-56C | 3/4 hp | 33110012 | 33110013 | 17.6 |
| 80L/4-56C | 1 hp | 33610022 | n/a | 19.8 |
| 80L/4-143TC | 1 hp | 33610012 | n/a | 19.8 |
| 90S/4-145TC | 1.5 hp | 34110012 | n/a | 26.5 |
| 90L/4-145TC | 2 hp | 34610012 | n/a | 30.9 |
| 100L/4-182TC | 3 hp | 35110012 | n/a | 39.7 |
| 100LA/4-184TC | 5 hp | 35610012 | n/a | 46.3 |
| 132S/4-213TC | 7.5 hp | 36410012 | n/a | 97.0 |
| 132M/4-215TC | 10 hp | 36710012 | n/a | 121.3 |
| 160M/4-254TC TW | 15 hp | 37310012 | n/a | 160.9 |
| 160L/4-256TC TW | 20 hp | 37510012 | n/a | 178.6 |
| 180MX/4-284TC TW | 25hp | 37610012 | n/a | 276.3 |
| 180LX/4-286TC TW | 30hp | 37810012 | n/a | 307.2 |
| **Energy Efficient Motors** | | | | |
| 80LH/4-56C | 1 hp | 33610094 | 33610095 | 19.8 |
| 80LH/4-143TC | 1 hp | 33610092 | 33610093 | 19.8 |
| 90SH/4-145TC | 1.5 hp | 34110092 | 34110093 | 26.5 |
| 90LH/4-145TC | 2 hp | 34610092 | 34610093 | 30.9 |
| 100LH/4-182TC | 3 hp | 35610092 | 35610093 | 39.7 |
| 112MH/4-184TC | 5 hp | 36110082 | 36110083 | 83.6 |
| 132SH/4-213TC | 7.5 hp | 36410092 | 36410093 | 97.0 |
| 132MH/4-215TC | 10 hp | 36710092 | 36710093 | 121.3 |
| 160MH/4-254TC TW | 15 hp | 37310092 | 37310093 | 160.9 |
| 160LH/4-256TC TW | 20 hp | 37510092 | 37510093 | 198.4 |



## Standards

All motors are in accordance with existing standards and regulations:

### NEMA MG 1 - Motors and Generators:

- Electrical performance
- Motors for operation on variable AC vector drive

### UL 1004 – Electric Motors

### CSA C22.2 No. 100-04 - Motors and Generators:

### Industrial Products
### IEC 60034 parts 1, 5, 6, 8, 9, 11 and 14.

- Part 1 – General rules
- Part 5 – Types of enclosures
- Part 6 – Types of cooling
- Part 8 – Terminal lead designations and sense of rotation
- Part 9 – Noise limits
- Part 11 – Integrated thermal protection
- Part 14 – Mechanical vibration

### IEC 60038 – Standard voltages

| | |
|---|---|
| CE | NORD motors carry the CE mark in accordance with the Low Voltage Directive and, if installed properly, the Electromagnetic Compatibility Directive (EMC). The CE mark is required for installation in European Union (EU) states. |
| ® | Many NORD motors from frame size 63 to 315 are an Underwriters Laboratories Recognized component per UL standard 1004.<br>Frames 63-132 File number E191510<br>Frames 160+ File number E227215 |
| C SP® US | The Canadian Standards Association CUS mark indicates that CSA has tested and approved NORD motors according to both US and Canadian standards. It is equivalent to the Underwriters Laboratories RU recognition mark (UL standard 1004) and the CSA mark according to CSA Standard C22.2 No. 100-04<br>Frames 63-132 File number LR112560<br>Frame 160+ File number LR13494 |
| ee | NORD Energy Efficient motors up to frame 160 have been evaluated by the United States Department of Energy and recieved a Certificate of Compliance to certify the efficiency ratings. The certificate of compliance is CC 092B. |
| CSA E | NORD energy efficient motors carry the CSA energy efficiency verification mark. This mark ensures that CSA has verified that NORD motors are designed and manufactured to meet energy efficiency requirements number EEV112560. |

## EPAct – US Energy Efficiency

The Energy Policy Act of 1992 (EPAct) covers efficiency levels of general purpose industrial electric motors and became effective October 24, 1997. The basic goal of the law is to promote energy conservation. This law mandated energy efficiency requirements for many devices including some types of industrial electric motors. The efficiency levels are defined in NEMA MG-1 table 12-10. The regulations to implement this law have been developed by the Department of Energy (DOE).

The law covers minimum efficiency levels for general purpose motors including:

- Single-speed, polyphase NEMA T frame (and IEC equivalents)
- 1 to 200 hp (0.75 to 150 kW)
- 1200, 1800 or 3600 rpm
- NEMA design A and B
- Continuous rated
- Foot-mounted
- 230/460V-60Hz

The law excludes the following motor types from minimum efficiency levels:

- Integral gearmotors
- Brake motors

The NORD "H" line of energy efficient motors are designed to meet the efficiency levels defined by EPAct. NORD offers these motors as an option in combination with our high efficiency gear units for superior energy savings.

Efficiency levels for enclosed 4-pole motors per EPAct and NEMA MG 1 - in percent efficiency [%]

### Efficiency for EPACT & NEMA MG1 4-Pole Motors

| hp | 1 | 1.5 | 2 | 3 | 5 | 7.5 | 10 |
|---|---|---|---|---|---|---|---|
| kW | 0.75 | 1.1 | 1.5 | 2.2 | 3.7 | 5.5 | 7.5 |
| Eff% | 82.5 | 84.0 | 84.0 | 87.5 | 87.5 | 89.5 | 89.5 |

| hp | 15 | 20 | 25 | 30 | 40 | 50 | 60 |
|---|---|---|---|---|---|---|---|
| kW | 11 | 15 | 18.5 | 22 | 30 | 37 | 45 |
| Eff% | 91.0 | 91.0 | 92.4 | 92.4 | 93.0 | 93.0 | 93.6 |

| hp | 75 | 100 | 125 | 150 | 200 |
|---|---|---|---|---|---|
| kW | 55 | 75 | 90 | 110 | 150 |
| Eff% | 94.1 | 94.5 | 94.5 | 95.0 | 95.0 |



## Canadian Energy Efficiency

The Energy Efficiency Act and the Energy Efficiency Regulations establish minimum energy performance levels for electric motors from 1 to 200 HP (0.75 to 150 kW) for sale or lease in Canada. The Energy Efficiency Regulations were developed by Natural Resources Canada (NRCan).

Certain National Electrical Manufacturers Association (NEMA) motors have been regulated since Feb. 3,1995. Effective Nov. 27, 1997, the Energy Efficiency Regulations were amended to include International Electrotechnical Commission (IEC) motors. This amendment also increased the minimum energy performance levels that motors must meet. For explosion-proof motors and motors contained within an integral gear assembly, the effective date of the Regulations is Nov. 27, 1999.

The regulations mandate that motors carry an energy efficiency verification mark that is authorized by Standards Council of Canada (SCC) accredited certification organization such as Canadian Standards Association (CSA).

## CEMEP Agreement
## European Efficiency Categories

CEMEP, the association of European Electric Motor Manufacturers, has reached an agreement with the European Commission's General Directorate for Energy so that in the future all 2 and 4-pole low voltage motors from 1 to 100kW will be categorized on the basis of their efficiency. The classification will be displayed on the nameplate and in catalogs. The following categories will be used: EFF1, EFF2 and EFF3.

| | |
|---|---|
| EFF 1 | EFF1-indicates a high efficiency factor. |
| EFF 2 | EFF2-indicates an improved efficiency factor. |
| EFF 3 | EFF3-Indicates a standard efficiency motor. |

NORD supplies both motors of EFF1 and EFF2 categories in its 4-pole motors. The category EFF2 motors are the standard efficiency motors and the EFF1 motors are the "H" line of energy efficient motors.

In the future NORD will mark all of its 50-Hz motor with the CEMEP efficiency symbols.

| kW | 1.1 | 1.5 | 2.2 | 3 | 4 | 5.5 |
|---|---|---|---|---|---|---|
| hp | 1.5 | 2 | 3 | 4 | 5.4 | 7.5 |
| EFF1 [%] | 83.3 | 85.0 | 86.4 | 87.4 | 88.3 | 89.2 |
| EFF2 [%] | 76.2 | 78.5 | 81.0 | 82.6 | 84.2 | 85.7 |
| EFF3 [%] | <76.2 | <78.5 | <81.0 | <82.6 | <84.2 | <85.7 |

| kW | 7.5 | 11 | 15 | 18.5 | 22 | 30 |
|---|---|---|---|---|---|---|
| hp | 10 | 15 | 20 | 25 | 30 | 40 |
| EFF1 [%] | 90.1 | 91.0 | 91.8 | 92.2 | 92.6 | 93.2 |
| EFF2 [%] | 87.0 | 88.4 | 89.4 | 90.0 | 90.5 | 91.4 |
| EFF3 [%] | <87.0 | <88.4 | <89.4 | <90.0 | <90.5 | <91.4 |

| kW | 37 | 45 | 55 | 75 | 90 |
|---|---|---|---|---|---|
| hp | 50 | 60 | 75 | 100 | 120 |
| EFF1 [%] | 93.6 | 93.9 | 94.2 | 94.7 | 95.0 |
| EFF2 [%] | 92.0 | 92.5 | 93.0 | 93.6 | 93.9 |
| EFF3 [%] | <92.0 | <92.5 | <93.0 | <93.6 | <93.9 |

INVERTER DUTY MOTOR

## Inverter/Vector Duty

NORD single–speed motors are Inverter/Vector Duty. The construction of the NORD motors insulating system takes into account the non-sinusoidal wave forms produced by variable frequency drives. NORD uses high grade insulating components and extra first turn protection as well as double coated wire to ensure long service life when connected to AC vector drives. NORD motors can produce full torque at zero speed if properly sized, selected and controlled.



## Voltage and Frequency

NORD motors are available in a wide range of voltages and frequencies for use in North America and around the world. For a more detailed list of choices see page 128.

NORD motors designed for North American voltages (208V, 230V, 460V and 575V) conform to the voltage and frequency tolerances in NEMA MG-1. The voltage tolerance is +/-10%, the frequency tolerance is +/- 5% or a combined voltage and frequency tolerance of +/-10%.

## Low Inertia

The motor inertia in all NORD motors is extremely low which allows for a much more dynamic motor control capability. Low motor inertia is a significant advantage when using NORD motors with AC vector drives or vector controllers. NORD motors can cycle more frequently and require less mechanical energy to start than standard NEMA frame motors. This leaves more energy to start the load.

## High Torque

The NORD motors produce higher starting torque than required by NEMA standards. This is achieved through improved motor winding, rotor design and construction.

## Non-Sparking Fan

The standard NORD motor fan is a non-sparking design. The fan will also provide proper airflow in either direction of rotation.

## Terminal Block

Each NORD motor uses a terminal block, which is a superior method of wire termination when compared to pigtail leads. A terminal block ensures long-term reliability of the power connections.

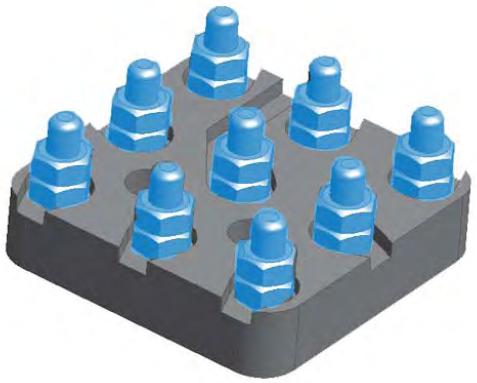

## Tropical Protection (Anti-fungal)

As a standard the NORD motor insulation system is tropically protected. The insulating and construction components are inorganic materials that resist fungal growth.

## Insulation Class

NORD motors are constructed with a thermal class F insulating system. The motors are also designed for a class B temperature rise (80°C). The use of class F insulation with a class B temperature rise provides increased operating life. Motors constructed with class H insulation are also available as an option.

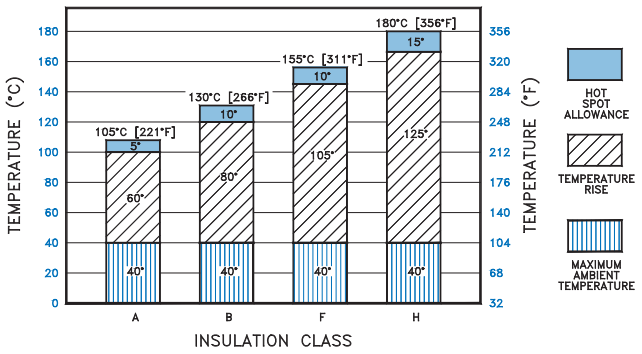


## Insulation System

NORD motor insulation system is designed to provide a superior degree of protection. NORD utilizes the following insulation components:

- Magnet wire – double coated insulation
- Varnish dip impregnation
- Slot liners
- Phase paper
- Phase separators
- Top sticks
- Connecting wire sleeves

Other motor manufacturers eliminate some of these insulating components for cost reduction.

## Inverter/Vector Duty – Voltage Spikes

All NORD motors are constructed with an insulating system designed to withstand the repeated voltage spikes generated by modern AC vector drives. The insulation system withstands the ratings in conformance with NEMA MG 1-2006 Section 31.4.4.2 Voltage Spikes.

$V_{peak} = 3.1 \times V_{rated}$ with a Rise time ≤ 0.1µs.



## Ambient Temperature

NORD motors are designed to operate with a maximum ambient temperature of 40°C (104°F). If the motor's operating environment exceeds 40°C, the motor's nominal power $P_n$ either needs to be de-rated (see table below) or use upgraded insulation.

| Ambient temp [°F] | 113 | 122 | 131 | 140 |
|---|---|---|---|---|
| Ambient temp [°C] | 45 | 50 | 55 | 60 |
| De-rate factor | 0.96 | 0.92 | 0.87 | 0.82 |

**Motor Rated Power = [$P_n$ x De-rate factor]**

## Elevation

NORD motors are designed to operate at an elevation of up to 3300 ft (1000 m) above sea level. At higher elevations the air is thinner resulting in less cooling capacity. If the motor's nominal power $P_n$ installation elevation exceeds 3300 ft (1000 m), the motor either needs to be de-rated (see table below) or requires upgraded insulation.

| Altitude [ft] | 5000 | 6500 | 8200 | 10000 | 11500 | 13000 |
|---|---|---|---|---|---|---|
| Altitude [m] | 1500 | 2000 | 2500 | 3000 | 3500 | 4000 |
| De-rate Factor | 0.97 | 0.94 | 0.90 | 0.86 | 0.83 | 0.80 |

**Motor Rated Power = [$P_n$ x De-rate factor]**

## Service Factor

Motors rated 230/460V-60Hz and 332/575V-60Hz have a service factor of 1.15. Almost all other motors have a service factor of 1.1 or 1.0.

## Duty Classes

The following duty types are defined in IEC 60034-1.

| Duty Type | Explanation Excerpts |
|---|---|
| S1 | Continuous operation at a constant load, the motor reaches thermal equilibrium |
| S2 | Short-time operation at a constant load for a given time followed by a time of rest until the motor is completely cooled down to ambient temperature.<br>Example: S2-10 minutes<br>Recommended values for determination: 10, 30 min. |
| S3 | Intermittent operation sequential, identical run and rest cycles with constant load. Temperature equilibrium is never reached. Starting current has little effect on temperature rise. The cyclic duration factor (cdf) indicates the portion of operation time in relation to a complete duty cycle. The typical duty cycle time is 10 minutes, unless otherwise specified.<br>Example: S3-40%<br>Recommended values for determination: 25, 40, 60% |
| S6 | Continuous operation with intermittent load sequential, identical cycles of running with constant load and running with no load. No rest periods.<br>Example: S6-40%<br>Recommended values for determination: 25, 40, 60% |

## Power Increasing Factor for Short-term & Intermittent Operation

Motor ratings in this catalog are based on continuous duty operation (S1). If a motor is designed for S1 duty, but is to be operated for short-time or intermittent operation it can be subjected to higher loads. The available motor power can be raised above the motor rated power by the "increasing factor" in the table below.

| Duty Type | | | Increasing factor |
|---|---|---|---|
| S2 | Operating time | 10 min | 1.40 |
| | | 30 min | 1.15 |
| S3 | Cyclic duration factor (cdf) | 25% | 1.33 |
| | | 40% | 1.18 |
| | | 60% | 1.08 |
| S6 | Cyclic duration factor (cdf) | 25% | 1.45 |
| | | 40% | 1.35 |
| | | 60% | 1.15 |

**Motor Rated Power = [$P_n$ x Increasing factor]**



## Enclosure

The NORD standard motors are provided with Totally Enclosed Fan-Cooled (TEFC) with an IP55 enclosure rating. Other enclosures are available, including Totally Enclosed Non-Ventilated (TENV), Totally Enclosed Blower-Cooled (TEBC), and IP66.

The motor integral cooling fan provides proper air flow in either direction of rotation. The IEC cooling classification is IC 411 according to IEC 60034-6.

## IP Enclosures per IEC 60034-5 - Simplified

| | 1st digit Foreign body protection | | 2nd digit Water protection |
|---|---|---|---|
| 0 | No protection | 0 | No Protection |
| 1 | Protected against solid objects 50mm (2 in) in diameter and larger | 1 | Protected against dripping water |
| 2 | Protected against solid objects 12 mm (1/2 in) in diameter and larger | 2 | Protected against dripping water up to a 15 degree angle |
| 3 | Protected against solid objects 2.5 mm (0.1 in) in diameter and larger | 3 | Protection against sprayed water |
| 4 | Protected against solid objects 1 mm (0.04 in) in diameter and larger | 4 | Protection against splashed water |
| 5 | Protected against dust | 5 | Protection against water jets |
| 6 | Dust tight | 6 | Protection against high pressure water jets |
| 7 | -- | 7 | Protection against intermittent submersion in water |
| 8 | -- | 8 | Protection against continuous submersion in water |

## Protective Features

All NORD Motors and Speed Reducers are constructed to provide a high degree of protection against wet and severe environments. NORD Motors and Speed Reducers are extremely well sealed against moisture ingress and use corrosion and moisture resistant components. NORD has recently made many enhancements in the motor and gear units standard construction to provide improved environmental protection. Many of the standard protection features of the NORD units are only available at an additional cost from other motor and gear drive suppliers. NORD designs all gearmotors, speed reducers and motors for installation in harsh industrial, commercial and municipal installation environments.

## Standard Construction

- Shaft lip seals on both ends of the motor shafts
- Stator to endbell connections sealed to exclude moisture
- Double coated magnetic wire insulation
- Inverter/vector duty insulation system conforms to NEMA MG1-1998, section 31.4.4.2 voltage spikes
- Moisture resistant varnish dipped windings improved varnish materials
- Inorganic insulating components for tropical protection
- Moisture resistant motor windings
- Conduit box sealed with gaskets
- Corrosion resistant alloy materials
- Threaded cable entry holes

### Motors for Indoor Operation - Option Codes

| | Dry Conditions | Wet or Humid Conditions |
|---|---|---|
| **Ambient Temperature Fluctuation** | – | KB, SH |
| **Paint** | – | NSD+ |
| **Vertical Motor Mount** 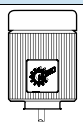 | RD | RDD |

### Motors for Outdoor Operation - Option Codes

| | Sheltered from the Elements | Exposed to the Elements |
|---|---|---|
| **Ambient Temperature Fluctuation** | KB, SH | KB, SH, KKV |
| **Paint** | NSD+ | NSDx3 |
| **Vertical Motor Mount** 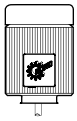 | RD | RDD |

### Option Code Key

| | | |
|---|---|---|
| KB | Condensation Drain Holes - Plugged | Page 131 |
| SH | Space Heater | Page 130 |
| KKV | Terminal Box Sealed with Resin | Page 131 |
| NSD+ | Nord Severe Duty Paint | Page 18 |
| NSDx3 | Nord Severe Extreme Duty X3 Paint | Page 18 |
| RD | Canopy Drip Cover | Page 131 |
| RDD | Double Fan Cover | Page 131 |

# General Options



## Voltage and Frequency

NORD motors are available in a number of voltages and frequencies. The standard voltages are commonly available. Optional voltages can be provided, but may include an increase in price and additional lead time. It also may be possible to provide motors with special voltages and frequency operation points.

### Standard Voltages

| Single speed motors | Two speed motors |
|---|---|
| 230/460V-60Hz (up to 30 hp) | 460V-60Hz |
| 460V-60Hz (40 hp and larger) | 230V-60Hz |
| 575V-60Hz | 575V-60Hz |
| 400V-50Hz | 400V-50Hz |

### Optional Voltages

| Single speed motors | Two speed motors |
|---|---|
| 208V-60Hz<br>(up to 10 hp, not available in energy efficient design) | Other voltages & frequencies available upon request |
| 380V-50Hz | |
| 415V-50Hz | |
| 380V-60Hz | |
| Other voltages & frequencies available upon request | |

## Poles / speeds

NORD offers a variety of single speed and two speed motors in addition to the standard 4 pole motor. NORD single speed motors are inverter/vector duty rated, however, it is not recommended to run a NORD two speed motor with an AC vector drive.

| Number of Poles | Synchronous Speed at 60Hz | Synchronous Speed at 50Hz | Notes: |
|---|---|---|---|
| **Single Speed Motors** | | | |
| **4** | 1800 rpm | 1500 rpm | – |
| **2** | 3600 rpm | 3000 rpm | – |
| **6** | 1200 rpm | 1000 rpm | – |
| **Two Speed Motors** | | | |
| **4-2** | 1800/3600 rpm | 1500/3000 rpm | Single winding |
| **8-2** | 900/3600 rpm | 750/3000 rpm | Two winding |
| **8-4** | 900/1800 rpm | 750/1500 rpm | Single winding |

Other speeds available upon request.

## US Canadian Standard (CUS)

CUS motor construction defines that NORD motors are constructed in accordance to UL 1004 (electric motors) and CSA C22.2 No. 100-04 (motors and generators) guidelines. This option is standard for 208, 230, 460, and 575 Volt operation at 60 Hz.

Motors nameplated with the CUS option will be marked and indicating that the Underwriters Laboratories and CSA have tested and approved NORD motors according to both US and Canadian standards.



## Motor Protection

Selecting the appropriate motor protective system is a key factor in reliable motor operation. There are two common classes of motor protection; current based and motor temperature based. Electrical installation codes require at least two types of protection in the motors circuit, both of which are normally current based. First is short-circuit protection normally accomplished by fuses or circuit breakers. Second is "motor overload protection" this is normally a device called a "motor overload" or a "heater." Current based protection is effective in some conditions. NORD can provide two different types of motor temperature based protection, a PTC thermistor (TF) or a bi-metallic thermostat (TW). Temperature based protection is more effective motor protection in many situations, see the table below.

| ⬆ = Good protection<br>⬌= Limited protection<br>⬇ = No protection | Fuses | Motor Overloads | PTC Thermistor (TF) | Bi-metallic Switch (TW) |
|---|---|---|---|---|
| Over current up to 200% | ⬇ | ⬆ | ⬆ | ⬆ |
| High inertia starting | ⬇ | ⬌ | ⬆ | ⬌ |
| Frequent motor starts | ⬇ | ⬌ | ⬆ | ⬆ |
| Stalling | ⬌ | ⬌ | ⬌ | ⬌ |
| Single phasing | ⬇ | ⬌ | ⬆ | ⬆ |
| Supply voltage deviations | ⬇ | ⬆ | ⬆ | ⬆ |
| Supply frequency deviations | ⬇ | ⬆ | ⬆ | ⬆ |
| Inadequate motor cooling | ⬇ | ⬇ | ⬆ | ⬆ |
| Bearing Damage | ⬇ | ⬇ | ⬆ | ⬆ |

## Thermostat (TW)

Build

Three bimetallic switches are connected in series in the motor windings, one per motor phase. Upon reaching the limit temperature, this device automatically opens circuits. The installer is responsible to wire the thermostat into the motor control circuit. After the temperature has fallen below the trip limit, the thermostat switch re-sets automatically. The auto resetting property must be considered when designing the safety aspects of the control scheme.

| TW Ratings | |
|---|---|
| NC (Normally Closed) | auto resetting |
| Voltage | 6 to 500VAC |
| Current | 1.6 A |
| Resistance | less than 50 mΩ |

## Thermistor (TF)

Build

Three positive temperature coefficient (PTC) thermistors are connected in series in the motor windings, one per motor phase. Thermistors require an external tripping device. Upon reaching the limit temperature, the thermistors change their resistance suddenly. In connection with a tripping device, this property is employed to monitor the motor temperature. The relay built into the tripping device has a make-and-break-contact, which is used in the control wiring. NORD does not provide the external tripping device with the TF thermistor option. You must request a thermistor tripping device separately. Many AC vecotor drives and PLCs include a built in PTC thermistor evaluation input.

| TF Ratings | |
|---|---|
| Transition Temperature | 150 °C +/- 5°C |
| Resistance < Transition | 20 ... 500 . Ω |
| Resistance > Transition | > 4k Ω. |
| Reed Voltage | < 7,5 V |
| Rated Current | < 1 mA |
| Motor Ambient Temp. | 40°C |

# General Options



## Space Heater (SH)

Build

Motors subjected to extreme temperature fluctuations or severe climatic conditions can be damaged by the formation of condensation. NORD can provide motor anti-condensation space heaters inside the motor to heat up the windings when the motor is not operating. This will prevent moisture from condensing inside the motor. The space heaters must not be switched on while the motor is running.

**Space Heater Voltage Must be specified**

| Voltages available |
|---|
| ❍ 115V – 50/60Hz |
| ❍ 230V – 50/60Hz |
| ❍ 460V – 50/60Hz |
| ❍ other voltages available on request |

## Class H Insulation (ISO H)

Build

NORD motors can be manufactured with class H insulation system. Standard NORD motors include double coated magnetic wire windings. When these windings are paired with a class H insulation it provides extra temperature capacity for the motor and will lengthen the motor's life. Class H insulation rated motors are also an advantage in some severe applications:

- Increased ambient temperature installations above 40°C (104°F)
- Increased elevation installations – above 3300 ft (1000 m)
- Applications with a high number of starts per hour.
- Meets class H insulation motor specifications
- Lower operating frequency when used with AC vector drive systems
- For additional information on insulation class see page 125.

## High Resistance Rotor (WU)

Build

Using Silumin rotor material, NORD offers a high resistance rotor to soften the motors operation and allow higher overload torques.

## Single Phase Motors, 60Hz (ECR)

Build

The ECR series of single phase motors is intended for demanding operation at 60Hz with a supply voltage of 115V or 230V. The permissible voltage range is 115/230V +/- 10%. The ECR motors have a 1.15 service factor and are available from 0.16 - 2 hp.



## Paint Coatings

Mod

NORD's standard paint coating is a two component, aliphatic polyurethane finish contaning 316 stainless steel material. This gray stainless steel paint has excellent appearance and outstanding physical properties. It is suitable for both indoor and outdoor applications. For more information and an explanation of all of our paint options please see page 18

## Condensation Drain Holes

NORD motors can be equipped with condensation drain holes. These drain holes are placed in the motor endbells at the lowest possible point. The drain holes are closed at the factory with plastic snap in plugs. They allow for condensation accumulation in the motor to drain after the closing plugs are removed.

The motor drain holes can be provided by NORD either open (KBO) or sealed with a closing plug (KB).

*IMPORTANT NOTE*

The motor must be installed in the mounting orientation specified on the nameplate or the drain holes will not function properly and may result with the motor filling with water.

## Condensation Drain Holes, Plugged (KB)

Build

KB drain holes are plugged for shipment. In order for the holes to effectively drain moisture, the plugs must be removed before using the motor.

## Condensation Drain Holes, Open (KBO)

Build

KBO drain holes are shipped open (not plugged).

## IP65 Enclosure Protection

Mod

NORD motors can be provided with an IP65 enclosure protection. IP65 protection is suitable for wet, low-pressure wash down and extremely dusty environments.

| IP | 1st digit Foreign body protection | IP | 2nd digit Water protection |
|---|---|---|---|
| 6 | Dust tight | 5 | Protection against water jets |

## IP66 Enclosure Protection

Mod

NORD motors can be provided with an IP66 enclosure protection. IP66 protection is suitable for wet, high-pressure wash down and extremely dusty environments, and includes all requirements included in IP65 enclosure protection.

| IP | 1st digit Foreign body protection | IP | 2nd digit Water protection |
|---|---|---|---|
| 6 | Dust tight | 6 | Protection against high pressure water jets |

## Terminal Box Sealed with Resin (KKV)

Mod

Terminal boxes can be sealed with a flexible, electrically safe resin to ensure that contaminants, water, and moisture cannot pass through the terminal box into the stator body. This option is helpful in extremely dusty, wet and humid environments. Another environment where this option is helpful is in installations that have frequent large temperature swings where condensation may form.

## Additional Insulation (AICM)

Build

NORD can provide additional insulation inside the motor to provide additional electrical protection in extremely wet or corrosive environments. An electrically safe insulating material is coated internally in the stator windings and on the rotor body

## Epoxy Dipped Windings (EP)

Build

In extremely wet environments, the motor windings are dipped in epoxy for improved moisture protection. The motor can also be treated with the standard NORD Severe Duty + (NSD+) package for an even higher degree of protection.

## Canopy Drip Cover (RD)

Mod



For wet or dirty installations where the fan end of the motor is mounted up, thus allowing water or debris to fall into the motor's fan guard, NORD offers a canopy drip cover to block this falling water or debris.

## Double Fan Cover (RDD)

Mod



For wet or dirty installations where the fan end of the motor is mounted up, the NORD Double Fan Cover provides protection against falling or wind blown water, snow, dirt or debris from entering the back of the motor.

# Additional Options



## Totally Enclosed Non-Ventilated (OL) Mod

NORD can provide totally enclosed non-ventilated (TENV) motor enclosure. TENV motors provide benefits in certain operating environments; such as extremely dusty or dirty applications, where cooling fans may have material accumulation, which can be detrimental to the motor and the application. The OL series of motors are the standard fan cooled motor construction including the fan cover, but provided without the fan. TENV motors can also be used to reduce cooling fan noise on a standard motor.

A TENV motor's frame size is larger then a totally enclosed fan cooled (TEFC) motor. For intermittent operation, a TENV motor can be operated at a 50% duty cycle at full rated power.

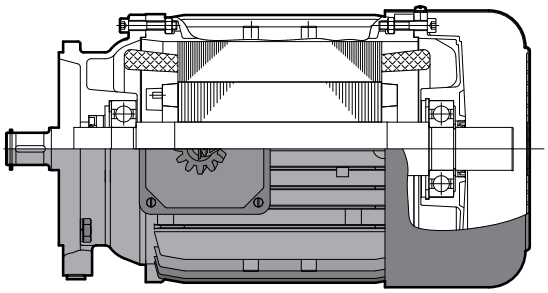

## Totally Enclosed Non-Ventilated, without Fan Cover (OL/H) Build

The OL/H series of TENV motors are more compact in space than the OL series. They do not include the rotor shaft extension through the back bearing end bell or the fan cover.

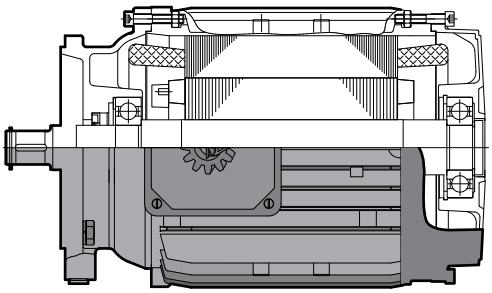

## 2nd Shaft Extension on Fan Side (WE) Build

NORD can provide a second shaft extension on the fan side of the motor that protrudes through the fan cover. This extension can be used as a power take-off or to mount customer supplied devices such as encoders and tachometers.

The shaft extension can be provided on both motors with and without brakes. The shaft extension can not be used on motors with blower fans (F) or (FC). For dimensions see pages 148 - 152.

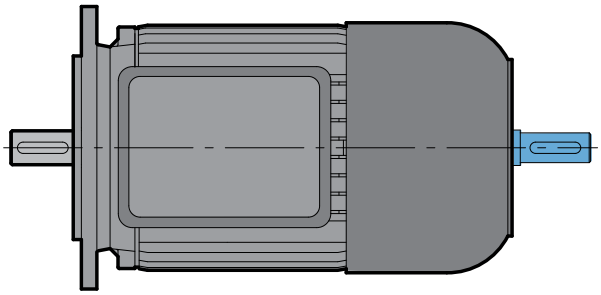

## Hand Wheel (HR) Build

Motors can be supplied with a hand wheel provided on the second shaft extension. The hand wheel can be used for manual operation during power outages, or for machine positioning setup. For dimensions see pages 148 - 152.

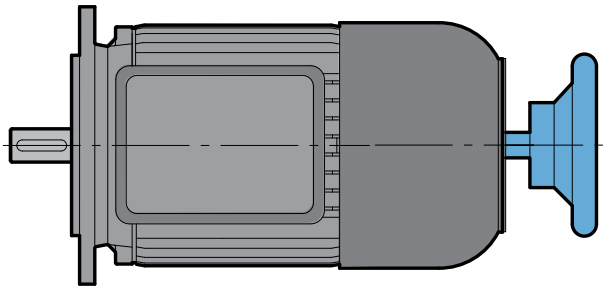

**WARNING**

The customer is required to provide appropriate safety guarding of the rotating hand wheel.

## High Inertia Cast Iron Fan (Z)

Build

An optional cast iron motor cooling fan is available. This fan is used as a mechanical soft start and/or soft stop. This fan adds inertia to the motor. The high inertia fan can also be used for a flywheel effect to store mechanical energy. This can be helpful in smoothing rapid load changes. The cast iron fan replaces the standard plastic motor fan. The motor length is the same as a brakemotor.



| Motor Frame | Fan Inertia $J_z$[lb-ft²] |
|---|---|
| 71 | 0.0475 |
| 80 | 0.1140 |
| 90 | 0.2375 |
| 100 | 0.2684 |
| 112 | 0.5653 |
| 132 | 0.9500 |

## Motor Backstop (RLS)

Build

NORD can provide backstops on many motor frames. A backstop will prevent the motor from rotating in one direction. A common use is to prevent a motor from allowing a load to move backwards when power is removed. A motor brake can also be used for this same purpose. A backstop adds length to the motor. For the motor length extension, see the table below.

**The allowable direction of rotation must be specified in the order.**

| Allowable Shaft Rotation |
|---|
| ❍ Clockwise - Back of Motor |
| ❍ Counter Clockwise - Back of Motor |

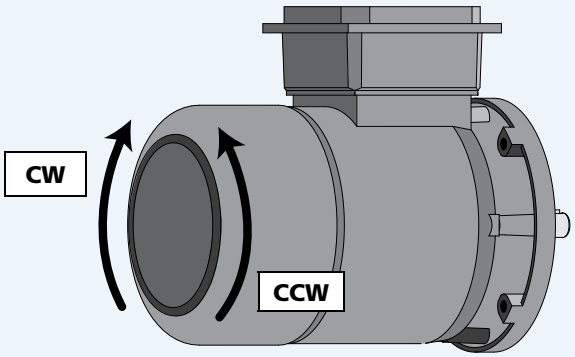


| Motor Size | Backstop Torque [lb-in] | Minimum Speed [rpm] | Motor Extension [in] |
|---|---|---|---|
| 80S/L | 1150 | 860 | 2.52 |
| 90S/L | 1150 | 860 | 2.95 |
| 100L | 1150 | 860 | 3.58 |
| 112M | 3270 | 750 | 3.66 |
| 132S/M | 3270 | 750 | 4.21 |
| 160M/L | 7880 | 670 | 6.57 |
| 180MX/LX | 7880 | 670 | 6.73 |
| 200L | 9120 | 630 | 6.57 |
| 225S/M | 9120 | 630 | 6.57 |
| 250M | 22130 | 400 | 9.84 |
| 280S/M | 51330 | 320 | 11.02 |

# Additional Options



## Quick Power Plug Connector (MS)

Mod

The quick power plug connector (MS) is a simple and fast way to connect and disconnect a motor or brake motor. The MS connector is available on NORD three-phase motors from frame size 63 to 132. The motor connections are made by a modular power plug manfacturer by Harting. After the first installation, the motor can be quickly changed by simply plugging and unplugging the electrical connections. This will ensure the new motor is properly wired. This is a significant advantage to equipment builders who fabricate machinery on site and then ship to another location. The motor with the MS connector can simply be plugged in during final installation.

NORD supplies the male connector half mounted on the motor conduit box. The customer must supply the female connector half mounted on the power wiring. NORD supplies a protective plastic cover on the motor male connector half to protect from dirt and damage prior to installation.





### Advantages:

- Simple motor wiring
- Accurate wiring of motor at final job site
- Fast motor replacement
- Accurate wiring of replacement motor
- Ideal for portable equipment
- Reduces the required personnel for motor replacement
- Faster motor changes reduce down time

## Plug ratings:

| | |
|---|---|
| **Manufacturer** | Harting |
| **Connector** | HAN 10 ES/HAN 10ESS<br>Cage Clamp Connectors |
| **Number of Pins** | 10-Male |
| **Voltage** | 600VAC per UL/CSA |
| **Current** | 16A - Continuous |

## Motor Power Plug Kits:

Includes conduit box, mounting hardware & Male Harting Motor Plug

| P/N | Motor size |
|---|---|
| 11035350 | 63 + 71 |
| 13035350 | 80 + 90 + 100 |
| 16035350 | 112 |
| 16335350 | 132 |

### Power Plug Positions

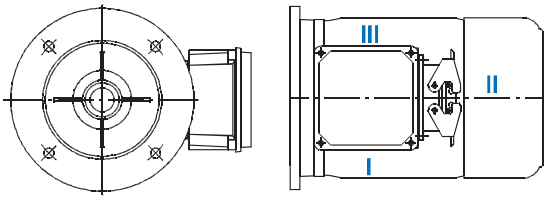


**Power plug position must be specified**

| Power Plug Position | | |
|---|---|---|
| ❍ I | ❍ II | ❍ III |

## Small Terminal Box (EKK)

Mod

The motor terminal box can be provided as a smaller, one-piece terminal design. This option is valid for standard motors 0.16 - 10 hp and is not available for Brakemotors.

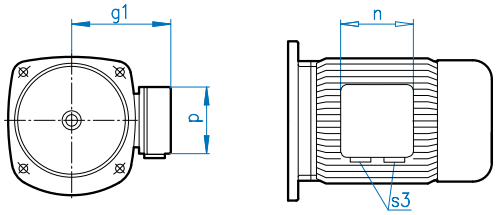


| EKK Dimensions | | | | |
|---|---|---|---|---|
| **Motor Frame** | **g1** | **n** | **p** | **S3** |
| **63** | 3.94 | 2.95 | 2.95 | 2x M16 x 1.5 |
| **71** | 4.29 | 2.95 | 2.95 | 2x M16 x 1.5 |
| **80** | 4.88 | 3.62 | 3.62 | 2x M20 x 1.5 |
| **90** | 5.08 | 3.62 | 3.62 | 2x M20 x 1.5 |
| **100** | 5.51 | 3.62 | 3.62 | 2x M20 x 1.5 |
| **112** | 5.91 | 3.62 | 3.62 | 2x M20 x 1.5 |
| **132** | 6.85 | 4.13 | 4.13 | 2x M25 x 1.5 |

## Blower Cooling Fan (F & FC)

Mod

NORD offers continuous running motor mounted cooling fans that provide motor cooling at low motor speeds. When a motor is operated on an AC vector drive at low frequency, standard rotor fans do not provide adequate airflow for cooling. NORD's separate powered motor cooling fans provide that necessary airflow. These separately powered fans replace the standard motor fan cover and fan.

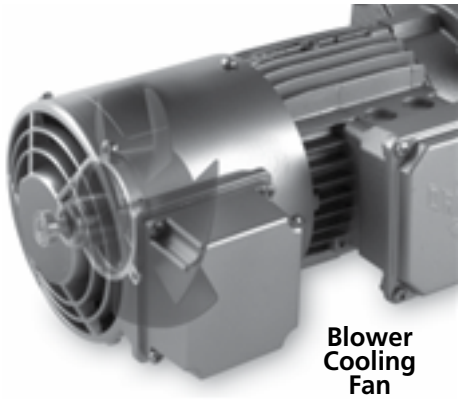

Blower Cooling Fan

### Option F – 3ph & 1ph 220-575V 50/60Hz

| Motor Frame | 60Hz Ratings | | | 50Hz Ratings | | |
|---|---|---|---|---|---|---|
| | Voltage [V] | Current [A] | Power [W] | Voltage [V] | Current [A] | Power [W] |
| Single phase connection - ⊥ (Delta) | | | | | | |
| 63 | 230 – 277 | 0.11 | 38 | 230 – 277 | 0.10 | 27 |
| 71 | 230 – 277 | 0.12 | 41 | 230 – 277 | 0.10 | 28 |
| 80 | 230 – 277 | 0.13 | 44 | 230 – 277 | 0.11 | 29 |
| 90 | 230 – 277 | 0.25 | 88 | 230 – 277 | 0.26 | 72 |
| 100 | 230 – 277 | 0.28 | 88 | 230 – 277 | 0.26 | 70 |
| 112 | 230 – 277 | 0.31 | 107 | 230 – 277 | 0.26 | 73 |
| 132 | 230 – 277 | 0.27 | 89 | 230 – 277 | 0.29 | 82 |
| 160 - 225 | 230 – 277 | 0.41 | 140 | 230 – 277 | 0.45 | 128 |
| Three phase low-voltage connection - ⊥ (Delta) | | | | | | |
| 63 | 220 – 332 | 0.08 | 23 | 220 – 290 | 0.10 | 27 |
| 71 | 220 – 332 | 0.08 | 24 | 220 – 290 | 0.10 | 30 |
| 80 | 220 – 332 | 0.08 | 25 | 220 – 290 | 0.01 | 29 |
| 90 | 220 – 332 | 0.21 | 64 | 220 – 290 | 0.28 | 86 |
| 100 | 220 – 332 | 0.21 | 66 | 220 – 290 | 0.27 | 86 |
| 112 | 220 – 332 | 0.23 | 70 | 220 – 290 | 0.27 | 85 |
| 132 | 220 – 332 | 0.25 | 74 | 220 – 290 | 0.32 | 96 |
| 160 - 225 | 220 – 322 | 0.49 | 165 | 220 – 290 | 0.52 | 155 |
| Three phase high-voltage connection - (Y) | | | | | | |
| 63 | 380 – 575 | 0.04 | 23 | 380 – 500 | 0.05 | 29 |
| 71 | 380 – 575 | 0.04 | 25 | 380 – 500 | 0.05 | 30 |
| 80 | 380 – 575 | 0.04 | 26 | 380 – 500 | 0.05 | 29 |
| 90 | 380 – 575 | 0.12 | 62 | 380 – 500 | 0.16 | 82 |
| 100 | 380 – 575 | 0.12 | 66 | 380 – 500 | 0.16 | 83 |
| 112 | 380 – 575 | 0.13 | 70 | 380 – 500 | 0.16 | 82 |
| 132 | 380 – 575 | 0.14 | 75 | 380 – 500 | 0.18 | 96 |
| 160 - 225 | 380 – 575 | 0.28 | 165 | 380 – 500 | 0.29 | 155 |

### Option FC – 115V 50/60Hz 1ph

| Motor Frame | 60Hz Ratings | | | 50Hz Ratings | | |
|---|---|---|---|---|---|---|
| | Voltage [V] | Current [A] | Power [W] | Voltage [V] | Current [A] | Power [W] |
| Single Phase Connection - ⊥ (Delta) | | | | | | |
| 63 | 100 – 135 | 0.23 | 42 | 100 – 135 | 0.30 | 42 |
| 71 | 100 – 135 | 0.23 | 47 | 100 – 135 | 0.30 | 44 |
| 80 | 100 – 135 | 0.27 | 57 | 100 – 135 | 0.30 | 43 |
| 90 | 100 – 135 | 0.46 | 102 | 100 – 135 | 0.57 | 78 |
| 100 | 100 – 135 | 0.53 | 105 | 100 – 135 | 0.54 | 78 |
| 112 | 100 – 135 | 0.60 | 115 | 100 – 135 | 0.55 | 80 |

# AC Vector Drive
# Related Options



## Incremental Encoder (IG..P)

Build

NORD can provide an incremental encoder mounted on the back of a motor or brake motor. Commonly encoders are used as speed or position feedback devices for use with AC drives, motion controllers or PLC's. Below are standard encoders; however, others can be supplied on request.

**?** **Encoder nomenclature must be specified.**

**Encoder nomenclature**

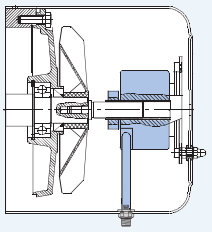

**Standard Motor with Encoder**

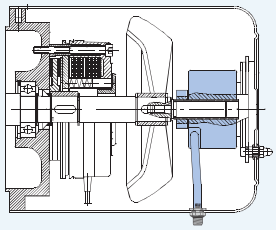

**Encoder with Brake Option**

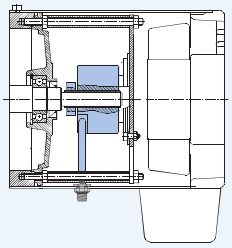

**Encoder with F Type Blower Fan**

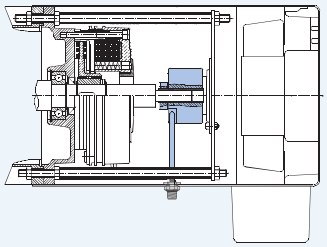

**Brake Option, Blower Fan with Encoder**



**Encoder Type: Quadrature Differential Marker pulse**

**M12 Connector Interface**

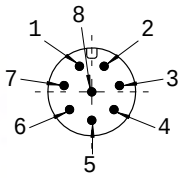


**Wiring Diagram**

| Pin | Conn | Cord |
|---|---|---|
| 1 | 0V | WH |
| 2 | +V | BN |
| 3 | A | GN |
| 4 | A\ | YE |
| 5 | B | GY |
| 6 | B\ | PK |
| 7 | Z | BU |
| 8 | Z\ | RD |
| Nut | Gnd | Open |

| | IG1 P | IG4 P | IG11 P | IG41 P | IG12 P | IG42 P | IG13 P | IG43 P |
|---|---|---|---|---|---|---|---|---|
| **Interface** | TTL/RS422 (26C31) | | TTL/RS422 (26C31) | | HTL/Push-pull (IC-WE) | | Line Driver (7272) | |
| **Logic [VDC]** | 5 | | 5 | | 10-30 | | 5-30 | |
| **Pulse Count [PPR]** | 1024 | 4096 | 1024 | 4096 | 1024 | 4096 | 1024 | 4096 |
| **Power Supply [VDC]** | 4-6 | 4-6 | 10-30 | 10-30 | 10-30 | 10-30 | 5-30 | 5-30 |
| **Part Number** | 19551500 | 19551520 | 19551502 | 19551522 | 19551501 | 19551521 | 19551503 | 19551523 |
| **Max Current Draw [mA]** | 100 | | | | 150 | | | |
| **Max Frequency [kHz]** | 300 | | | | | | | |
| **Ambient Temperature [°F]** | -4 to185 | | | | | | | |
| **Enclosure** | IP66 | | | | | | | |
| **Cable** | M12 8-pin male plug | | | | | | | |

## Pre-fabricated Encoder Cables



NORD can provide Turck pre-fabricated encoder molded cordsets (M12, 8-pin, shielded, twisted pair)

| Length | In-line | | Right-angle | |
|---|---|---|---|---|
| | NORD P/N | Turck P/N | NORD P/N | Turck P/N |
| **2m** | 19551580 | E-RKC 8T-264-2 | 19551584 | E-WKC 8T-264-2 |
| **5m** | 19551581 | E-RKC 8T-264-5 | 19551585 | E-WKC 8T-264-5 |
| **10m** | 19551582 | E-RKC 8T-264-10 | 19551586 | E-WKC 8T-264-10 |
| **15m** | 19551583 | E-RKC 8T-264-15 | 19551587 | E-WKC 8T-264-15 |
| **Field Wireable** | 19551588 | CMB 8181-0 | - | - |
| **Custom** | order from Turck | E-RKC 8T-264 | order from Turck | E-WKC 8T-264 |





## Encoders for NORD AC Drives

NORD AC vector drives with encoder inputs are designed to use TTL/RS422 encoders. There are also advantages in using an encoder with the 10-30VDC power supply system. The NORD AC vector drives can use a wide range of pulse counts, however the 1024PPR version provides good performance with minimal interference issues. A 4096 PPR encoder can also be used and will provide increased precision in some application but has some increased concerns with noise interference.

**Recommended encoder:** IG11P – 1024PPR/TTL/10-30VDC
**Alternate encoder:** IG41P – 4096PPR/TTL/10-30VDC

## Absolute Encoder (AG)

Build

Absolute encoders offer a unique value (voltage, binary count, etc.) for each mechanical position. When an absolute encoder is powered up, the position of the encoder is known. Absolute encoders are available in single or multi-turn versions. The encoder is attached under the fan cover with field bus connection outside the fan cover.

Absolute encoders can be provided to meet a variety of specifications:

- Resolution: up to 17 bits of resolution per turn (131,072 steps) with 4096 turns (12 bits of turns)
- Interfaces: Synchronous serial interface (SSI), SSI with incremental track, ProfiBus, DeviceNet, CANopen, CANlift, and other interfaces

# AC Vector Drive
# SK 300E Trio



## NORDAC SK 300E
## Motor Mounted Frequency AC Vector Drive

For select HP ratings, NORD can provide a fully programmable, high performance AC vector drive mounted on the motor. This motor mounted AC vector drives:

- Eliminates the need to separately mount & wire the AC drive
- Insures AC vector drive/motor compatibility
- Has an IP 55 washdown duty enclosure
- Provides Electronic Motor Overload protection
- Insures smooth constant torque operation down to 2 Hz (check motor thermal limitations)
- Features a unique plug-in construction where the program stays with the motor, minimizing return to service time in the event of AC vector drive replacement



### SK 300E AC Vector Drive Ratings

- 200-240 VAC 3 phase 50/60 Hz input, ½ through 3 HP
- 380-480 VAC 3 phase 50/60 Hz input, 3/4 through 5 HP
- Full range of built-in pre-engineered options available
- For dimensions see page 154

### Selection Steps

1) Choose the SK300E-trio AC vector drive based on motor ratings and input line voltage
2) Select the required Trio Interface (TI)
3) Select the braking resistor if required
4) Select additional customer based I/O if required (SK CU2-STD)
5) Select cover mounted technology unit if required
6) If remote wall mounting is required
7) Select any needed programming tools



### Step 1: AC vector drive Selection

| Basic NORD Motor Description | Power Rating HP/kW | P [in] | 240 VAC Input Inverter Type SK 300E | 480 VAC Input Inverter Type SK 300E |
|---|---|---|---|---|
| 63 S/4 | 0.16 / 0.12 | 5.12 | -370-323-B | -550-340-B |
| 63 L/4 | 0.25 / 0.18 | 5.12 | -370-323-B | -550-340-B |
| 71 S/4 | 0.33 / 0.25 | 5.71 | -370-323-B | -550-340-B |
| 71/L/4 | 0.50 / 0.37 | 5.71 | -370-323-B | -550-340-B |
| 80 S/4 | 0.75 / 0.55 | 6.50 | -550-323-B | -550-340-B |
| 80 L/4 | 1.00/ 0.75 | 6.50 | -750-323-B | -750-340-B |
| 90 S/4 | 1.50/ 1.1 | 7.20 | -111-323-B | -111-340-B |
| 90 L/4 | 2.00/ 1.5 | 7.20 | -151-323-B | -151-340-B |
| 100 L/4 | 3.00/ 2.2 | 7.91 | -221-323-B | -221-340-B |
| 100 L/40 | 5.00/ 3.7 | 7.91 | Not Available | -401-340-B |

### AC Vector Drive Ratings

| Type designation SK 300E | -370-323-B | -550-323-B | -750-323-B | -111-323B | -151-323-B | -221-323-B | -550-340-B | -750-340-B | -111-340-B | -151-340-B | -221-340-B | -301-340-B | -401-340-B |
|---|---|---|---|---|---|---|---|---|---|---|---|---|---|
| Supply Voltage | 3 Phase 200-240 VAC +/- 10%, 47-63 Hz | | | | | | 3 Phase 380-480 VAC, -20%/+10%, 47-63 Hz | | | | | | |
| Motor Rating | 1/2 HP | 3/4 | 1 HP | 1 1/2 HP | 2 HP | 3 HP | 3/4 HP | 1 HP | 1 1/2 HP | 2 HP | 3 HP | 4 HP | 5 HP |
| Rated Output Current Amps [RMS] | 2.2 | 3 | 4 | 5.5 | 7 | 9.5 | 1.6 | 2.2 | 3 | 3.7 | 5.5 | 7 | 9.2 |
| Typical Output Current Amps [RMS] | 3.1 | 4.2 | 5.6 | 7.7 | 9.8 | 13.3 | 2.5 | 3.1 | 4.2 | 5.2 | 7.7 | 9.8 | 12.9 |

## Step 2: Selection of Trio Interface (TI)

Following selection of the appropriate SK 300E AC vector drive rating from the preceding chart, an appropriate Trio Interface (TI) must be specified. The Trio Interface (TI) is an adapter that replaces the motor conduit box and contains a circuit board that the SK 300E plugs into.

A typical TI is shown below



### SK 300E Trio Interface (TI) Types

| | |
|---|---|
| **SK TI 0/1** | For standard 380-480 VAC units |
| **SK TI 0/1 - 230** | For standard 200-240 VAC units |
| **SK TI 0/2** | For 380-480 VAC units using Harting connectors |
| **SK TI 0/2 – 230** | 200-240 VAC units using Harting connectors |

### Harding H10E series connector options for side 1(CE1) of SK TI 0/2 (and -230) Interfaces

| | |
|---|---|
| **LE H10E** | Socket for AC supply input |
| **MA H10E** | Plug for motor output |

### Conduit plate options for side 3(CE3) of SK TI 0/2 (and -230) Interfaces

| | |
|---|---|
| **SK DA4** | Plate with 4 x M16 |
| **SK DA2** | Plate with 2 x M20 and 1 x M16<br>(Provided as standard with SK TI 0/2) |
| **SK DA1** | Plate with 1 x M25 and 2 x M16 |
| **SK DA0** | Plate with no entries |

### Added related components for Trio Interfaces

| | |
|---|---|
| **P/N 018524200** | M20 x ½ adapter<br>(Qty 2 provided as standard on assembled trios) |
| **P/N 011015410** | Adapter to mount Trio Interface on 63 & 71 frame motors |
| **P/N 013097000** | Gasket to mount Trio Interface on 63 & 71 frame motors |

## SK 300E Options & Related Information

## Step 3: Braking Resistors

Braking Resistor Options for SK 300E for mounting on Trio Interface

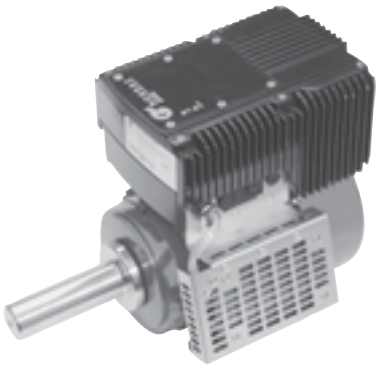

During dynamic braking, energy is delivered from the load through the motor (acting as a generator) to the AC vector drive. The AC vector drive dissipates this energy as heat via the integral brake chopper to the optional external braking resistors.

### For use with SK TI 0/1 adapters

| | |
|---|---|
| **SK BR3-120/100-TI 0/1** | 120 ohm/100 W for all ratings except 5 HP |
| **SK BR3-82/200-TI 0/1** | 82 ohm/200 W for 5 HP only |

### For use with SK TI 0/2 adapters

| | |
|---|---|
| **SK BR3-120/100-TI 0/2** | 120 ohm/100 W for all ratings except 5 HP |
| **SK BR3-82/200-TI 0/2** | 82 ohm/200 W for 5 HP only |



## Step 4: Customer I/O Based Control Interface Option - SK CU2-STD

The standard I/O based control available via the Trio Interface can be expanded via selection of an optional Customer Unit, **SK CU2-STD**, that plugs into the Trio Interface. Interface I/O points are listed on the following chart:




| I/O on standard Trio Interface | Additional I/O on SK CU2-STD Option |
|---|---|
| 1 X programmable digital input | 4 X programmable digital input |
| 5 VDC and 15 VDC power supplies | 2 X single-ended analog inputs |
| RS 485 interface via M-12 connector and terminals | +10 VDC reference supply |
| 1 X programmable relay output | 1 X selectable/programmable analog/digital output |
| | PID control access |

## Step 5: Cover Mounted Technology Unit (TU) Options

A variety of pre-engineered plug in Technology Unit (TU) options can be ordered to replace the standard blank cover of the SK 300E AC vector drive. Only a single TU can be installed on the AC vector drive at a given time. Available units include operator and field bus interfaces:



| Technology Unit (TU) Name | Description |
|---|---|
| **SK TU2-POT** | Analog reference potentiometer box with L/Off/R control switch |
| **SK TU2-CTR** | Digital control/programmer with 4 digit, 7 segment LED display |
| **SK TU2-PBR** | Profibus field bus interface |
| **SK TU2-PBR-24V** | Profibus field bus interface powered by customer 24 VDC supply |
| **SK TU2-PBR-KL** | Profibus field bus interface with clamp on connectors |
| **SK TU2-AS1** | AS (Actuator/Sensor) Interface |
| **SK TU2-CAO** | CANopen field bus interface |
| **SK TU2-DEV** | DeviceNet field bus interface |
| **SK TU2-IBS** | InterBus field bus interface |
| **SK TU2-DECKEL** | Original blank cover for TU slot (in case TU option is removed) |

## Step 6: Wall Mounting Option Kit, SK WMK-DA1

The wall mounting kit enables placing the SK 300E AC vector drive on a nearby wall or the machine instead of directly on the NORD motor or gearmotor. The Trio Interface (TI) is still required and all other options can be used.





## Step 7 : Additional Tools & Related Interface Options

In addition to the cover mounted SK TU2-CTR option, there are several additional options that enable simple programming and control of the SK 300E:

**Handheld Parameter Box (P-Box) with 10 foot cable, SK PAR-2H**

Detachable external add-on unit that can be used to program and display parameters and control the operation of the connected SK 300E. Features multi-line plain text display selectable in six languages. Manages and stores up to five unique AC vector drive programs. Cable plugs into M-12 connector in side of Trio Interface.

**Panel Mount Parameter Box (P-Box), SK PAR-2E**

Panel Mount version of Parameter Box with same functionality as SK PAR-2H. Installs in cut-out in front of customer supplied operator panel. Interface connection is performed by customer with their shielded cable via terminals on SK PAR-2E and SK 300E.



### NORD CON Software – Available free at NORD Website

NORD CON Software is a Windows-based PC program that enables the control and programming of NORDAC AC vector drives. It provides for accessing up to 31 AC vector drives simultaneously via the RS485 interface. It features both off-line and on-line programming and data management modes.

NORD CON allows user to:

- Program AC vector drives and upload/download parameter files
- Control connected AC vector drives for test/troubleshooting
- Monitor connected AC vector drives and examine up to four variables versus time with built-in oscilloscope feature
- Display parameter information in six languages

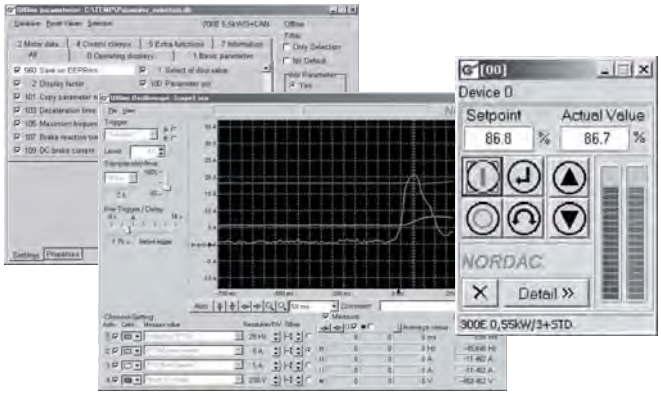


**Optional accessories required to interface user PC to SK 300E via NORD CON are:**

**SK IC1 – RS 485 to RS 232 interface converter**
Enables communication between RS 232 port on computer and RS 485 port on SK 300E

**Cable SK 300E –**
10 foot cable that connects between the 9-Pin D shell connector on the SK IC1 and the M-12 connector on the side of the SK 300E Trio Interface.

### Electromechanical Brake Interface & Coil Voltage Selection

As standard, the SK 300E provides a dedicated high voltage DC power supply and coordination software to directly control an Electromechanical Brake. This is equivalent to using a half wave rectifier, so the brake coil voltage must be specified per the following chart:

| Nominal Inverter AC Input Voltage | Brake Coil Voltage |
|---|---|
| 440 – 480 VAC | 205 VDC |
| 200 – 240 VAC | 105 VDC |
| 380 – 415 VAC | 180 VDC |

The brake gets connected to terminals +Br and –Br on the Trio Interface

### Motor overload protection

Electronic motor overload protection is provided as standard on the SK 300E AC vector drive. If required, more precise protection can be achieved via the use of motor thermostats (TW) or thermistor sensors (TF). These devices can be interfaced to the SK 300E via the programmable digital input to indicate a motor over temperature error.

# Performance Data



## Standard Efficiency

## 230/460V – 60Hz

Inverter duty • TEFC
Synchronous speed 1800rpm @ 60Hz • 4-pole • Three-phase
Voltages: 230/460V – 60Hz • 1.15 Service Factor
Continuous Duty • 40°C Ambient • up to 3300ft Elevation
Class B temperature rise • Class F insulation

| Motor Type | Power Pn | | Nn Full-load | In Full-Load Current 230V | In Full-Load Current 460V | Ia/In | Code Letter | Torque Tn | Ta/Tn | Tk/Tn | pf | Eff. | Jm Inertia |
|---|---|---|---|---|---|---|---|---|---|---|---|---|---|
| | [hp] | [kW] | [rpm] | [A] | [A] | [%] | | [lb-in] | | | | [%] | [lb-ft²] |
| **63S/4** | 0.16 | 0.12 | 1700 | 0.88 | 0.44 | 245 | F | 5.92 | 2.1 | 2.2 | 0.66 | 52 | 0.005 |
| **63L/4** | 0.25 | 0.18 | 1680 | 1.12 | 0.56 | 275 | E | 8.99 | 2.1 | 2.2 | 0.71 | 57 | 0.0067 |
| **71S/4** | 0.33 | 0.25 | 1710 | 1.56 | 0.78 | 310 | G | 12.3 | 2.5 | 2.4 | 0.64 | 63 | 0.017 |
| **71L/4** | 0.5 | 0.37 | 1720 | 1.90 | 0.95 | 355 | F | 18.0 | 2.45 | 2.6 | 0.69 | 71 | 0.0204 |
| **80S/4** | 0.75 | 0.55 | 1710 | 2.70 | 1.35 | 355 | F | 27.0 | 2.2 | 2.2 | 0.71 | 72 | 0.0259 |
| **80L/4** | 1 | 0.75 | 1650 | 3.66 | 1.83 | 390 | G | 38.1 | 2.2 | 2.3 | 0.74 | 70 | 0.0345 |
| **90S/4** | 1.5 | 1.1 | 1660 | 4.84 | 2.42 | 445 | G | 55.6 | 2.7 | 2.6 | 0.78 | 73 | 0.055 |
| **90L/4** | 2 | 1.5 | 1660 | 6.34 | 3.17 | 465 | G | 75.8 | 2.55 | 2.5 | 0.80 | 74 | 0.074 |
| **100L/4** | 3 | 2.2 | 1705 | 9.0 | 4.50 | 490 | G | 108 | 2.3 | 2.6 | 0.81 | 82 | 0.107 |
| **100LA/4** | 5 | 3.7 | 1725 | 15.2 | 7.62 | 510 | G | 180 | 2.7 | 3.1 | 0.75 | 81 | 0.141 |
| **132S/4** | 7.5 | 5.5 | 1735 | 19.8 | 9.9 | 545 | G | 267 | 2.45 | 2.75 | 0.82 | 86 | 0.55 |
| **132M/4** | 10 | 7.5 | 1735 | 25.8 | 12.9 | 645 | H | 363 | 2.9 | 3.2 | 0.84 | 87 | 0.752 |
| **160M/4** | 15 | 11 | 1770 | 38.4 | 19.2 | 665 | H | 522 | 2.45 | 3.0 | 0.82 | 88 | 0.95 |
| **160L/4** | 20 | 15 | 1765 | 49 | 24.5 | 725 | H | 713 | 2.9 | 3.3 | 0.86 | 89.4 | 1.23 |
| **180MX/4** | 25 | 18.5 | 1750 | 60 | 30 | 860 | K | 887 | 2.95 | 3.4 | 0.87 | 89 | 1.35 |
| **180LX/4** | 30 | 22 | 1755 | 71 | 35.5 | 980 | L | 1052 | 3.4 | 3.7 | 0.87 | 89.4 | 1.35 |

**Pn** - Full load power
**Nn** - Full load speed
**In** - Full load current
**Ia** - Locked-rotor current
**Ia/In** - Locked-rotor current ratio (%)
**Tn** - Full-load torque
**Ta** - Locked-rotor torque
**Ta/Tn** - Locked-rotor torque ratio
**Tk** - Break-down torque
**Tk/Tn** - Break-down torque ratio
**pf** - Power factor
**Eff** - Normal efficiency
**Jm** - Motor inertia





## Energy Efficient (EPAct)

# 230/460V – 60Hz / EE

Inverter duty • TEFC
Synchronous speed 1800rpm @ 60Hz • 4-pole • Three-phase
Voltages: 230/460V – 60Hz • 1.15 Service Factor
Continuous Duty • 40°C Ambient • up to 3300ft Elevation
Class B temperature rise • Class F insulation

| Motor Type | Power Pn | | Nn Full-load | In Full-Load Current | | Ia/In | Code Letter | Torque Tn | Ta/Tn | Tk/Tn | pf | Eff. | Jm Inertia |
|---|---|---|---|---|---|---|---|---|---|---|---|---|---|
| | | | | 230V | 460V | | | | | | | | |
| | [hp] | [kW] | [rpm] | [A] | [A] | [%] | | [lb-in] | | | | [%] | [lb-ft²] |
| **80LH/4** | 1 | 0.75 | 1750 | 3.88 | 1.94 | 600 | L | 36.0 | 4.6 | 4.3 | 0.59 | 82.5 | 0.051 |
| **90SH/4** | 1.5 | 1.1 | 1740 | 4.3 | 2.15 | 630 | J | 53.1 | 3.5 | 3.8 | 0.76 | 84.0 | 0.085 |
| **90LH/4** | 2 | 1.5 | 1745 | 6.3 | 3.15 | 670 | K | 72.1 | 4.3 | 4.5 | 0.71 | 84.0 | 0.092 |
| **100LH/4** | 3 | 2.2 | 1765 | 8.6 | 4.3 | 790 | L | 105 | 3.6 | 4.7 | 0.73 | 87.5 | 0.178 |
| **112MH/4** | 5 | 3.7 | 1770 | 14.4 | 7.2 | 810 | L | 176 | 4.0 | 4.8 | 0.76 | 87.5 | 0.304 |
| **132SH/4** | 7.5 | 5.5 | 1780 | 20.9 | 10.5 | 820 | L | 259 | 4.3 | 4.6 | 0.74 | 89.5 | 0.75 |
| **132MH/4** | 10 | 7.5 | 1770 | 27.0 | 13.5 | 735 | J | 356 | 3.2 | 4.0 | 0.78 | 89.5 | 0.84 |
| **160MH/4** | 15 | 11 | 1765 | 35.8 | 17.9 | 810 | J | 527 | 2.6 | 3.2 | 0.85 | 91.0 | 1.23 |
| **160LH/4** | 20 | 15 | 1765 | 49 | 24.5 | 850 | K | 712 | 2.8 | 3.5 | 0.85 | 91.0 | 1.35 |
| **180MH/4** | 25 | 18.5 | 1770 | 61 | 30.5 | 840 | K | 879 | 2.8 | 3.6 | 0.83 | 92.4 | 3.56 |
| **180LH/4** | 30 | 22 | 1770 | 72 | 36 | 880 | K | 1046 | 3.1 | 3.9 | 0.83 | 92.4 | 4.51 |

**Pn** - Full load power
**Nn** - Full load speed
**In** - Full load current
**Ia** - Locked-rotor current
**Ia/In** - Locked-rotor current ratio (%)
**Tn** - Full-load torque
**Ta** - Locked-rotor torque
**Ta/Tn** - Locked-rotor torque ratio
**Tk** - Break-down torque
**Tk/Tn** - Break-down torque ratio
**pf** - Power factor
**Eff** - Normal efficiency
**Jm** - Motor inertia

# Performance Data



## Standard Efficiency

**575V – 60Hz**

Inverter duty • TEFC
Synchronous speed 1800rpm @ 60Hz • 4-pole • Three-phase
Voltages: 332/575V – 60Hz • 1.15 Service Factor
Continuous Duty • 40°C Ambient • up to 3300ft Elevation
Class B temperature rise • Class F insulation

| Motor Type | Power Pn | | Nn Full-load | In Full-Load Current 575V | Ia/In | Code Letter | Torque Tn | Ta/Tn | Tk/Tn | pf | Eff. | Jm Inertia |
|---|---|---|---|---|---|---|---|---|---|---|---|---|
| | [hp] | [kW] | [rpm] | [A] | [%] | | [lb-in] | | | | [%] | [lb-ft²] |
| **63S/4** | 0.16 | 0.12 | 1700 | 0.37 | 245 | F | 5.92 | 2.1 | 2.2 | 0.66 | 52 | 0.005 |
| **63L/4** | 0.25 | 0.18 | 1680 | 0.46 | 275 | E | 8.99 | 2.1 | 2.2 | 0.71 | 57 | 0.0067 |
| **71S/4** | 0.33 | 0.25 | 1710 | 0.66 | 310 | G | 12.3 | 2.5 | 2.4 | 0.64 | 63 | 0.017 |
| **71L/4** | 0.5 | 0.37 | 1720 | 0.8 | 355 | F | 18.0 | 2.45 | 2.6 | 0.69 | 71 | 0.0204 |
| **80S/4** | 0.75 | 0.55 | 1710 | 1.12 | 355 | F | 27.0 | 2.2 | 2.2 | 0.71 | 72 | 0.0259 |
| **80L/4** | 1 | 0.75 | 1650 | 1.46 | 390 | G | 38.1 | 2.2 | 2.3 | 0.74 | 70 | 0.0345 |
| **90S/4** | 1.5 | 1.1 | 1660 | 1.94 | 445 | G | 55.6 | 2.7 | 2.6 | 0.78 | 73 | 0.055 |
| **90L/4** | 2 | 1.5 | 1660 | 2.54 | 465 | G | 75.8 | 2.55 | 2.5 | 0.80 | 74 | 0.074 |
| **100L/4** | 3 | 2.2 | 1705 | 3.6 | 490 | G | 108 | 2.3 | 2.6 | 0.81 | 82 | 0.107 |
| **100LA/4** | 5 | 3.7 | 1725 | 6.1 | 510 | G | 180 | 2.7 | 3.1 | 0.75 | 81 | 0.141 |
| **132S/4** | 7.5 | 5.5 | 1735 | 7.92 | 545 | G | 267 | 2.45 | 2.75 | 0.82 | 86 | 0.55 |
| **132M/4** | 10 | 7.5 | 1735 | 10.3 | 645 | H | 363 | 2.9 | 3.2 | 0.84 | 87 | 0.752 |
| **160M/4** | 15 | 11 | 1770 | 14.7 | 665 | H | 522 | 2.45 | 3.0 | 0.82 | 88 | 0.95 |
| **160L/4** | 20 | 15 | 1765 | 19.5 | 725 | H | 713 | 2.9 | 3.3 | 0.86 | 89.4 | 1.23 |
| **180MX/4** | 25 | 18.5 | 1750 | 24.0 | 860 | K | 887 | 2.95 | 3.4 | 0.87 | 89 | 1.35 |
| **180LX/4** | 30 | 22 | 1755 | 28.4 | 980 | L | 1052 | 3.4 | 3.7 | 0.87 | 89.4 | 1.35 |

**Pn** - **Full load power**
**Nn** - **Full load speed**
**In** - **Full load current**
**Ia** - **Locked-rotor current**
**Ia/In** - **Locked-rotor current ratio (%)**
**Tn** - **Full-load torque**
**Ta** - **Locked-rotor torque**
**Ta/Tn** - **Locked-rotor torque ratio**
**Tk** - **Break-down torque**
**Tk/Tn** - **Break-down torque ratio**
**pf** - **Power factor**
**Eff** - **Normal efficiency**
**Jm** - **Motor inertia**





## Energy Efficient (EPAct)

# 575V – 60Hz / EE

Inverter duty • TEFC
Synchronous speed 1800rpm @ 60Hz • 4-pole • Three-phase
Voltages: 332/575V – 60Hz • 1.15 Service Factor
Continuous Duty • 40°C Ambient • up to 3300ft Elevation
Class B temperature rise • Class F insulation

| Motor Type | Power Pn | | Nn Full-load | In Full-Load Current 575V | Ia/In | Code Letter | Torque Tn | Ta/Tn | Tk/Tn | pf | Eff. | Jm Inertia |
|---|---|---|---|---|---|---|---|---|---|---|---|---|
| | [hp] | [kW] | [rpm] | [A] | [%] | | [lb-in] | | | | [%] | [lb-ft²] |
| **80LH/4** | 1 | 0.75 | 1750 | 1.5 | 600 | L | 36.0 | 4.6 | 4.3 | 0.59 | 82.5 | 0.051 |
| **90SH/4** | 1.5 | 1.1 | 1740 | 1.75 | 630 | J | 53.1 | 3.5 | 3.8 | 0.76 | 84.0 | 0.085 |
| **90LH/4** | 2 | 1.5 | 1745 | 2.45 | 670 | K | 72.1 | 4.3 | 4.5 | 0.71 | 84.0 | 0.092 |
| **100LH/4** | 3 | 2.2 | 1765 | 3.4 | 790 | L | 105 | 3.6 | 4.7 | 0.73 | 87.5 | 0.178 |
| **112MH/4** | 5 | 3.7 | 1770 | 5.6 | 810 | L | 176 | 4.0 | 4.8 | 0.76 | 87.5 | 0.304 |
| **132SH/4** | 7.5 | 5.5 | 1780 | 8.3 | 820 | L | 259 | 4.3 | 4.6 | 0.74 | 89.5 | 0.75 |
| **132MH/4** | 10 | 7.5 | 1770 | 10.8 | 735 | J | 356 | 3.2 | 4.0 | 0.78 | 89.5 | 0.84 |
| **160MH/4** | 15 | 11 | 1765 | 14.3 | 810 | J | 527 | 2.6 | 3.2 | 0.85 | 91.0 | 1.23 |
| **160LH/4** | 20 | 15 | 1765 | 19.6 | 850 | K | 712 | 2.8 | 3.5 | 0.85 | 91.0 | 1.35 |
| **180MH/4** | 25 | 18.5 | 1770 | 24.4 | 840 | K | 879 | 2.8 | 3.6 | 0.83 | 92.4 | 3.56 |
| **180LH/4** | 30 | 22 | 1770 | 28.8 | 880 | K | 1046 | 3.1 | 3.9 | 0.83 | 92.4 | 4.51 |

**Pn** - Full load power
**Nn** - Full load speed
**In** - Full load current
**Ia** - Locked-rotor current
**Ia/In** - Locked-rotor current ratio (%)
**Tn** - Full-load torque
**Ta** - Locked-rotor torque

**Ta/Tn** - Locked-rotor torque ratio
**Tk** - Break-down torque
**Tk/Tn** - Break-down torque ratio
**pf** - Power factor
**Eff** - Normal efficiency
**Jm** - Motor inertia

# Performance Data



## Standard Efficiency

## 200-208V – 60Hz

Inverter duty • Induction motor • TEFC
Synchronous speed 1800rpm @ 60Hz • 4-pole • Three-phase
Voltages: 208V – 60Hz • 1.15 Service Factor
Continuous Duty • 40°C Ambient • up to 3300ft Elevation
Class B temperature rise • Class F insulation

| Motor Type | Power Pn | | Nn Full-load | In 208V | Ia/In | Code Letter | Torque Tn | Ta/Tn | Tk/Tn | pf | Eff. | Jm Inertia |
|---|---|---|---|---|---|---|---|---|---|---|---|---|
| | [hp] | [kW] | [rpm] | [A] | [%] | | [lb-in] | | | | [%] | [lb-ft²] |
| **63S/4** | 0.16 | 0.12 | 1700 | 0.97 | 245 | F | 5.93 | 2.1 | 2.2 | 0.66 | 52 | 0.005 |
| **63L/4** | 0.25 | 0.18 | 1680 | 1.24 | 275 | E | 9.38 | 2.1 | 2.2 | 0.71 | 57 | 0.0067 |
| **71S/4** | 0.33 | 0.25 | 1710 | 1.73 | 310 | G | 12.2 | 2.5 | 2.4 | 0.64 | 63 | 0.015 |
| **71L/4** | 0.5 | 0.37 | 1720 | 2.10 | 355 | F | 18.3 | 2.45 | 2.6 | 0.69 | 71 | 0.0181 |
| **80S/4** | 0.75 | 0.55 | 1710 | 2.99 | 355 | F | 27.6 | 2.2 | 2.2 | 0.71 | 72 | 0.0304 |
| **80L/4** | 1 | 0.75 | 1650 | 4.05 | 390 | G | 38.2 | 2.2 | 2.3 | 0.74 | 70 | 0.0392 |
| **90S/4** | 1.5 | 1.1 | 1660 | 5.35 | 445 | G | 57.0 | 2.7 | 2.6 | 0.78 | 73 | 0.0670 |
| **90L/4** | 2 | 1.5 | 1660 | 7.01 | 465 | G | 75.9 | 2.55 | 2.5 | 0.80 | 74 | 0.0855 |
| **100L/4** | 3 | 2.2 | 1705 | 9.95 | 490 | G | 111 | 2.3 | 2.6 | 0.81 | 82 | 0.107 |
| **100LA/4** | 5 | 3.7 | 1725 | 16.8 | 510 | G | 183 | 2.7 | 3.1 | 0.75 | 81 | 0.162 |
| **132S/4** | 7.5 | 5.5 | 1735 | 21.9 | 545 | G | 272 | 2.45 | 2.75 | 0.82 | 86 | 0.553 |
| **132M/4** | 10 | 7.5 | 1735 | 28.5 | 645 | H | 363 | 2.9 | 3.2 | 0.84 | 87 | 0.753 |

**Pn** - **Full load power**
**Nn** - **Full load speed**
**In** - **Full load current**
**Ia** - **Locked-rotor current**
**Ia/In** - **Locked-rotor current ratio (%)**
**Tn** - **Full-load torque**
**Ta** - **Locked-rotor torque**

**Ta/Tn** - **Locked-rotor torque ratio**
**Tk** - **Break-down torque**
**Tk/Tn** - **Break-down torque ratio**
**pf** - **Power factor**
**Eff** - **Normal efficiency**
**Jm** - **Motor inertia**



Frames 63-132
230 / 460V, 60Hz, 3Ø  200 / 400V, 50Hz, 3Ø
190 / 380V, 60Hz, 3Ø

120094410

WIRING DIAGRAM
3 PHASE MOTOR

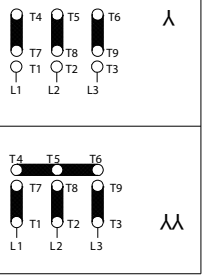


Frames 160 +
230 / 460V, 60Hz, 3Ø  200 / 400V, 50Hz, 3Ø
190 / 380V, 60Hz, 3Ø

120095260

WIRING DIAGRAM
3 PHASE MOTOR

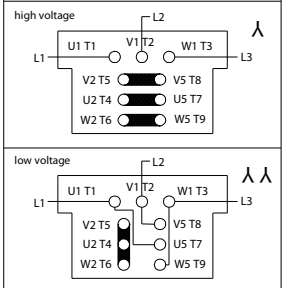


Frames 160 +
230 / 460V, 60Hz, 3Ø  200 / 400V, 50Hz, 3Ø
190 / 380V, 60Hz, 3Ø

120095500 REV 1

WIRING DIAGRAM
3 PHASE MOTOR

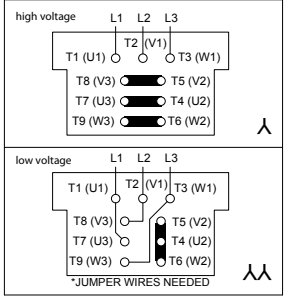


460 / 800V, 60Hz, 3Ø  230 / 400V, 50Hz, 3Ø
208 / 360V, 60Hz, 3Ø  400 / 690V, 50Hz, 3Ø
332 / 575V, 60Hz, 3Ø

120095270

WIRING DIAGRAM
3 PHASE MOTOR

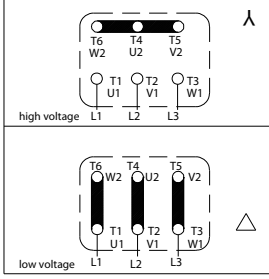


120094440

Normal Brake Reaction Time
(AC - Switching)

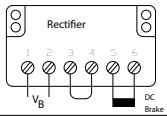


Rapid Brake Reaction Time
(DC - Switching)

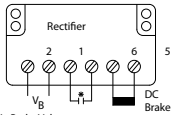


VB Brake Voltage
Terminals 1 & 2
- AC brake power input
Terminals 3 & 4
- DC switching, fast react
Terminals 5 & 6
- Brake coil, DC voltage out
* Customer supplied contact

STANDARD
BRAKE RECTIFIER

120094450

Normal Brake Reaction Time
(AC Switching)

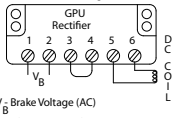


VB Brake Voltage (AC)
Terminals 1 & 2 - AC Brake Power Input
Terminals 3 & 4 - DC Switching, Fast React Terminals
Terminals 5 & 6 - DC Voltage Output to Brake.

Rapid Brake Reaction Time
(DC Switching - Internal)

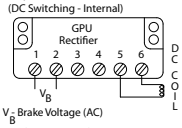


VB Brake Voltage (AC)
Terminals 1 & 2 - AC Brake Power Input
Terminals 3 & 4 - No Jumper Connected
Terminals 5 & 6 - DC Voltage Output to Brake.

GPU BRAKE
RECTIFIER

120094460

Rapid Brake Reaction Time
(DC Switching - External)

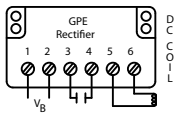


VB Brake Voltage (AC)
Terminals 1 & 2 - AC Brake Power Input
Terminals 3 & 4 - DC Switching, Contactor - IEC AC3
Terminals 5 & 6 -DC Voltage Output to Brake.

GPE BRAKE
RECTIFIER

Use with P/N's 19140230 & 19140240

2 - SPEED MOTORS
SINGLE WINDING (4-2 & 8-4 POLE)

120094400

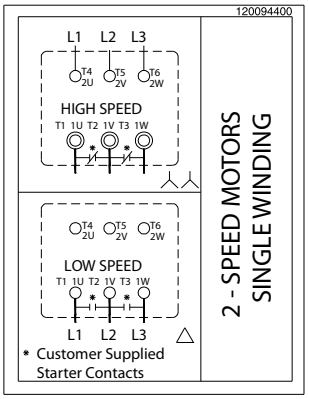


2 - SPEED MOTORS
SINGLE WINDING

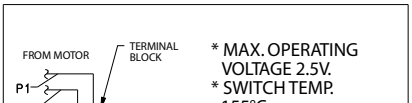


* MAX. OPERATING VOLTAGE 2.5V.
* SWITCH TEMP. 155°C
* RESPONSE TIME < 5 SECONDS

THERMISTOR
"TF" OPTION

120095240

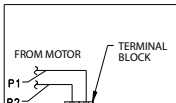


* NC (NORMALLY CLOSED) CONTACTS RATED 1.6A AT 2.50 VAC
* 6-500 VAC WORKING RANGE
* AUTOMATIC RESET AT 30 ± 15°C TEMP. DROP

THERMISTATS
"TW" OPTION

120095230

2 - SPEED MOTORS
DUAL WINDING (8-2 POLE)

120095310

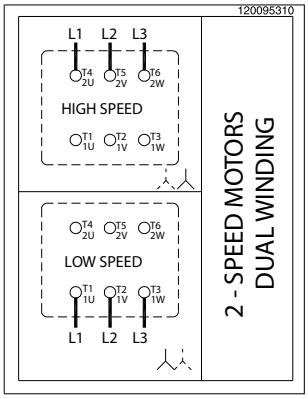


2 - SPEED MOTORS
DUAL WINDING

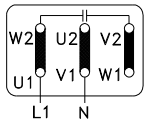


1 PHASE
115V*
50/60 Hz

* CAPACITOR IS SUPPLIED

BLOWER COOLING FAN
"FC" OPTION

120095460

OPTION "F" 1 PH

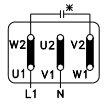


230V
50 / 60 Hz

OPTION "F" 3 PH

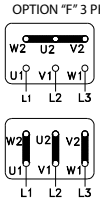


380-575V
50 / 60 Hz

220-332V
50 / 60 Hz

* CAPACITOR IS SUPPLIED

BLOWER COOLING FAN
"F" OPTION

120095250

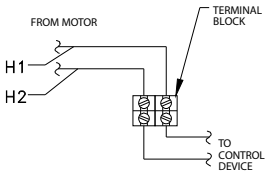


SPACE HEATER
"SH" OPTION

120095220

MOTORS

# Dimensions
# Motor Options



**Standard Motor**

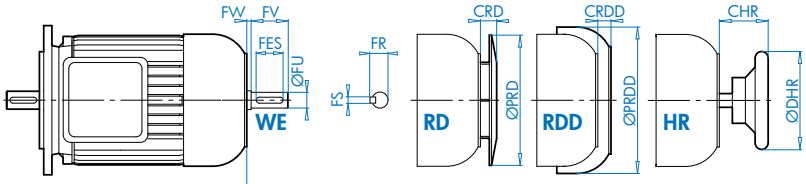


**Option IG**

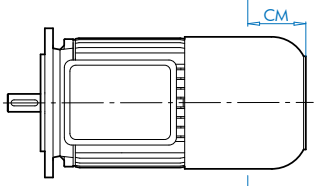


**Option F**

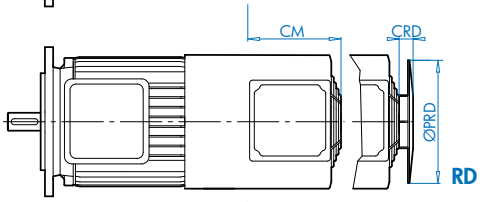


**Option IG F**

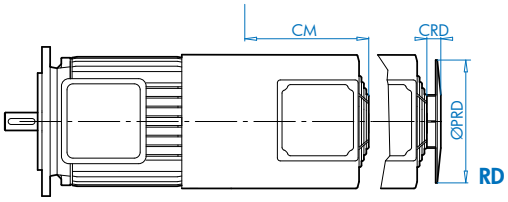


MOTORS

| Motor Type | WE | | | | | | RD | | RDD | | HR | | IG | F | IG F | RD/IG/IGF | |
|---|---|---|---|---|---|---|---|---|---|---|---|---|---|---|---|---|---|
| | FU | FR | FV | FW | FES | FS | PRD | CRD | PRDD | CRDD | DHR | CHR | CM | CM | CM | PRD | CRD |
| | [mm] | | | | | | [in] | | | | | | | | | | |
| **63S/L** | 11 | 12.5 | 23 | 0 | 16 | 4 | 4.84 | 0.47 | 6.02 | 1.06 | 3.94 | 1.54 | 2.20 | 3.46 | 6.22 | 5.24 | 1.46 |
| **71S/L** | 11 | 16.0 | 23 | 1 | 16 | 4 | 5.43 | 0.47 | 6.65 | 0.94 | 3.94 | 1.57 | 2.20 | 3.50 | 5.67 | 5.91 | 1.46 |
| **80S/L** | 14 | 21.5 | 30 | 3 | 20 | 5 | 6.14 | 0.63 | 7.20 | 1.22 | 3.94 | 1.93 | 2.40 | 3.54 | 5.51 | 6.69 | 1.57 |
| **90S/L** | 19 | 27.0 | 40 | 7 | 32 | 6 | 6.93 | 0.63 | 7.91 | 1.22 | 6.30 | 2.64 | 2.83 | 4.09 | 5.87 | 7.40 | 1.18 |
| **100L** | 24 | 31.0 | 50 | 6 | 40 | 8 | 7.64 | 0.63 | 8.86 | 1.10 | 6.30 | 2.95 | 2.71 | 3.74 | 6.10 | 8.27 | 1.10 |
| **112M** | 24 | 31.0 | 50 | 4 | 40 | 8 | 8.58 | 0.63 | 10.43 | 1.50 | 6.30 | 2.91 | 2.67 | 3.90 | 5.87 | 9.80 | 1.30 |
| **132S/M** | 32 | 41.0 | 80 | 18 | 70 | 10 | 10.12 | 0.71 | 12.51 | 1.61 | 7.87 | 4.57 | 2.48 | 4.53 | 6.10 | 11.81 | 0.98 |
| **160M/L** | 38 | 46.0 | 80 | 23 | 90 | 12 | 9.84 | 2.09 | 14.45 | 1.77 | 9.84 | 4.72 | 2.95 | 6.50 | 6.93 | 13.31 | 1.26 |
| **180MX/LX** | * | * | * | * | * | * | 13.39 | 3.15 | 15.87 | 2.76 | * | * | 4.13 | 5.87 | 7.83 | 13.31 | 1.26 |

* **Consult Factory**

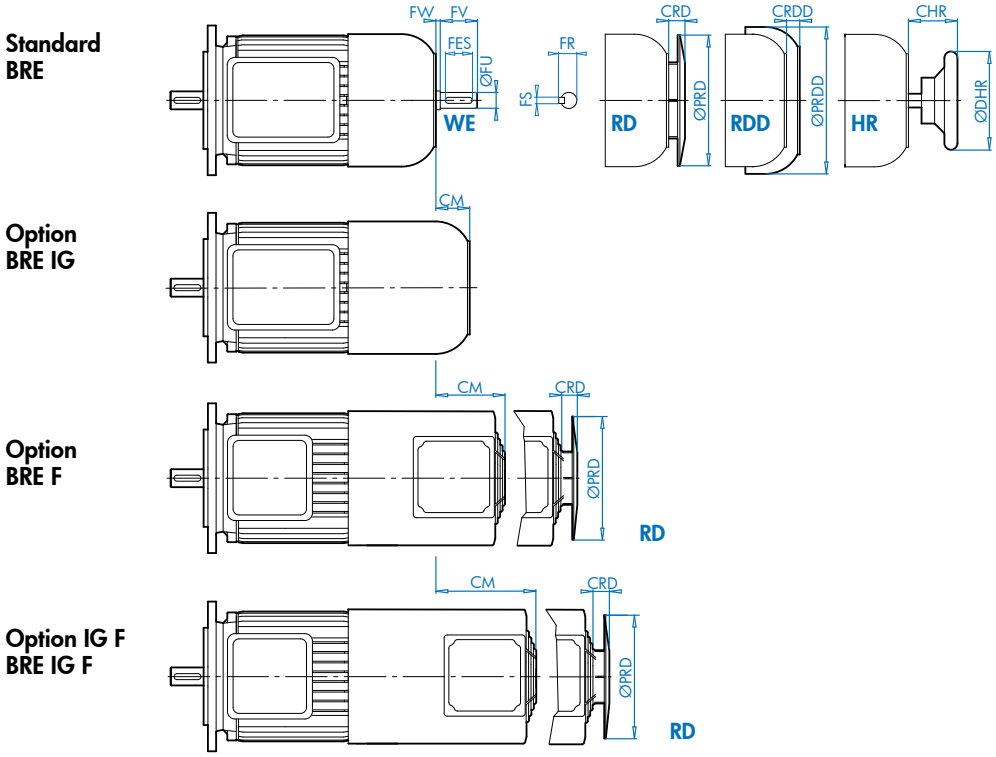


| Motor Type | WE | | | | | | RD | | RDD | | HR | | IG | F | IG F | RD/IG/IGF | |
|---|---|---|---|---|---|---|---|---|---|---|---|---|---|---|---|---|---|
| | FU | FR | FV | FW | FES | FS | PRD | CRD | PRDD | CRDD | DHR | CHR | CM | CM | CM | PRD | CRD |
| | [mm] | | | | | | [in] | | | | | | | | | | |
| **63S/L** | 11 | 12.5 | 23 | 3.5 | 16 | 4 | 4.84 | 0.47 | 6.02 | 1.02 | 0.39 | 1.69 | 2.44 | 3.54 | 4.92 | 5.24 | 1.46 |
| **71S/L** | 11 | 16.0 | 23 | 3.5 | 16 | 4 | 5.43 | 0.47 | 6.65 | 0.94 | 3.94 | 1.69 | 2.91 | 3.70 | 5.47 | 5.91 | 1.46 |
| **80S/L** | 14 | 21.5 | 30 | 4 | 20 | 5 | 6.14 | 0.63 | 7.20 | 1.22 | 3.94 | 1.97 | 2.20 | 3.50 | 5.47 | 6.69 | 1.57 |
| **90S/L** | 14 | 27.0 | 30 | 8 | 32 | 6 | 6.93 | 0.63 | 7.91 | 1.22 | 6.30 | 2.68 | 2.76 | 3.94 | 5.71 | 7.40 | 1.18 |
| **100L** | 24 | 31.0 | 50 | 10 | 40 | 8 | 7.64 | 0.63 | 8.86 | 0.87 | 6.30 | 3.07 | 2.80 | 4.13 | 5.52 | 8.27 | 1.10 |
| **112M** | 24 | 31.0 | 50 | 7 | 40 | 8 | 8.58 | 0.63 | 10.43 | 1.50 | 6.30 | 3.03 | 2.52 | 4.13 | 5.52 | 9.80 | 1.30 |
| **132S/M** | 32 | 41.0 | 80 | 10 | 70 | 10 | 10.12 | 0.71 | 12.60 | 1.61 | 7.87 | 4.25 | 2.56 | 4.92 | 6.10 | 11.81 | 0.98 |
| **160M/L** | 38 | 46.0 | 80 | 19 | 90 | 12 | 12.20 | 0.75 | 14.45 | 1.77 | 9.84 | 4.57 | 1.54 | 5.12 | 6.50 | 13.31 | 1.26 |
| **180MX/LX** | * | * | * | * | * | * | 13.70 | 0.75 | 15.87 | 2.76 | * | * | 1.97 | 5.71 | 8.46 | 13.31 | 1.26 |

*** Consult Factory**

# Dimensions
## Conduit Box & Cable Entry



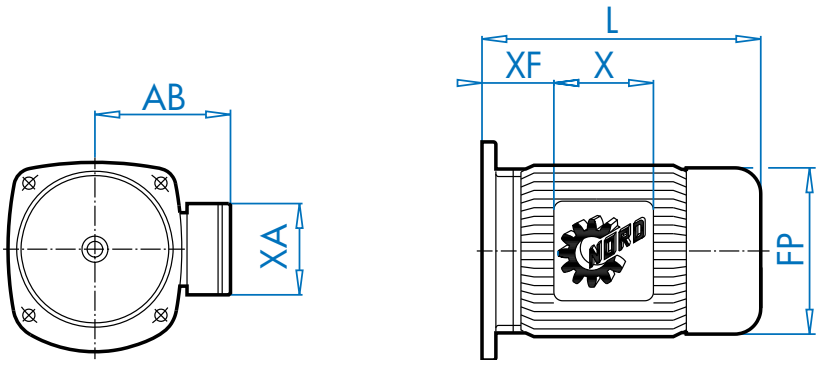


| Type / Flange | Options | Outline dimensions | | | | | | Cable entry | |
|---|---|---|---|---|---|---|---|---|---|
| 63S/L | | FP | AB | XF | X | L | XA | ce | ce-adapter |
| B14 | | 5.12 | 4.53 | 0.47 | 3.94 | 7.56 | 3.94 | 2 × M20×1.5 | 1/2" NPT |
| 160S | | 5.12 | 4.53 | 0.63 | 3.94 | 7.72 | 3.94 | 2 × M20×1.5 | 1/2" NPT |
| B14 | BRE | 5.12 | 4.84 | 0.71 | 5.28 | 9.76 | 3.50 | 2 × M20×1.5 | 1/2" NPT |
| 160S | BRE | 5.12 | 4.84 | 0.87 | 5.28 | 9.92 | 3.50 | 2 × M20×1.5 | 1/2" NPT |
| **71S/L** | | **FP** | **AB** | **XF** | **X** | **L** | **XA** | **ce** | **ce-adapter** |
| B14 | | 5.71 | 4.88 | 0.79 | 3.94 | 8.43 | 3.94 | 2 × M20×1.5 | 1/2" NPT |
| 160S | | 5.71 | 4.88 | 1.65 | 3.94 | 9.29 | 3.94 | 2 × M20×1.5 | 1/2" NPT |
| 250S | | 5.71 | 4.88 | 1.42 | 3.94 | 9.06 | 3.94 | 2 × M20×1.5 | 1/2" NPT |
| B14 | BRE | 5.75 | 5.24 | 1.02 | 5.28 | 10.71 | 3.50 | 2 × M20×1.5 | 1/2" NPT |
| 160S | BRE | 5.75 | 5.24 | 1.89 | 5.28 | 11.57 | 3.50 | 2 × M20×1.5 | 1/2" NPT |
| 250S | BRE | 5.75 | 5.24 | 1.65 | 5.28 | 11.34 | 3.50 | 2 × M20×1.5 | 1/2" NPT |
| **80S/L/LH** | | **FP** | **AB** | **XF** | **X** | **L** | **XA** | **ce** | **ce-adapter** |
| B14 | | 6.50 | 5.59 | 0.87 | 4.49 | 9.29 | 4.49 | 2 × M25×1.5 | 3/4" NPT |
| 160S | | 6.50 | 5.59 | 1.85 | 4.49 | 10.28 | 4.49 | 2 × M25×1.5 | 3/4" NPT |
| 250S | | 6.50 | 5.59 | 1.61 | 4.49 | 10.04 | 4.49 | 2 × M25×1.5 | 3/4" NPT |
| B14 | BRE | 6.50 | 5.59 | 1.02 | 6.02 | 11.81 | 4.25 | 2 × M25×1.5 | 3/4" NPT |
| 160S | BRE | 6.50 | 5.59 | 2.01 | 6.02 | 12.80 | 4.25 | 2 × M25×1.5 | 3/4" NPT |
| 250S | BRE | 6.50 | 5.59 | 1.77 | 6.02 | 12.56 | 4.25 | 2 × M25×1.5 | 3/4" NPT |
| **90S/L/SH/LH** | | **FP** | **AB** | **XF** | **X** | **L** | **XA** | **ce** | **ce-adapter** |
| B14 | | 7.20 | 5.79 | 1.02 | 4.49 | 10.87 | 4.49 | 2 × M25×1.5 | 3/4" NPT |
| 160S | | 7.20 | 5.79 | 2.05 | 4.49 | 11.89 | 4.49 | 2 × M25×1.5 | 3/4" NPT |
| 250S | | 7.20 | 5.79 | 1.81 | 4.49 | 11.65 | 4.49 | 2 × M25×1.5 | 3/4" NPT |
| 300S | | 7.20 | 5.79 | 1.02 | 4.49 | 10.87 | 4.49 | 2 × M25×1.5 | 3/4" NPT |
| B14 | BRE | 7.20 | 5.79 | 1.18 | 6.02 | 13.82 | 4.25 | 2 × M25×1.5 | 3/4" NPT |
| 160S | BRE | 7.20 | 5.79 | 2.20 | 6.02 | 14.84 | 4.25 | 2 × M25×1.5 | 3/4" NPT |
| 250S | BRE | 7.20 | 5.79 | 1.97 | 6.02 | 14.61 | 4.25 | 2 × M25×1.5 | 3/4" NPT |
| 300S | BRE | 7.20 | 5.79 | 1.18 | 6.02 | 13.82 | 4.25 | 2 × M25×1.5 | 3/4" NPT |



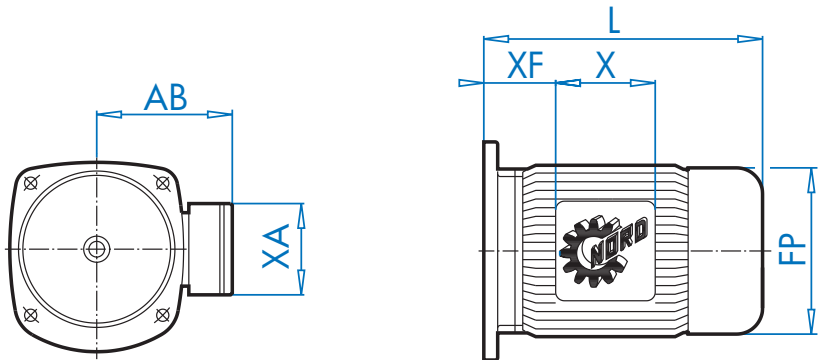


| Type / Flange | Options | Outline dimensions | | | | | | Cable entry | |
|---|---|---|---|---|---|---|---|---|---|
| 100L/L/LA/LH | | FP | AB | XF | X | L | XA | ce | ce-adapter |
| B14 | | 7.91 | 6.65 | 1.26 | 4.49 | 12.05 | 4.49 | 2 × M32×1.5 | 1" NPT |
| 160S | | 7.91 | 6.65 | 2.28 | 4.49 | 13.07 | 4.49 | 2 × M32×1.5 | 1" NPT |
| 250S | | 7.91 | 6.65 | 2.05 | 4.49 | 12.83 | 4.49 | 2 × M32×1.5 | 1" NPT |
| 300S | | 7.91 | 6.65 | 1.26 | 4.49 | 12.05 | 4.49 | 2 × M32×1.5 | 1" NPT |
| Ø 250 | | 7.91 | 6.65 | 1.26 | 4.49 | 12.05 | 4.49 | 2 × M32×1.5 | 1" NPT |
| B14 | BRE | 7.91 | 6.77 | 1.42 | 6.02 | 15.63 | 4.25 | 2 × M25×1.5 | 1" NPT |
| 160S | BRE | 7.91 | 6.77 | 2.44 | 6.02 | 16.65 | 4.25 | 2 × M25×1.5 | 1" NPT |
| 250S | BRE | 7.91 | 6.77 | 2.20 | 6.02 | 16.42 | 4.25 | 2 × M25×1.5 | 1" NPT |
| 300S | BRE | 7.91 | 6.77 | 1.42 | 6.02 | 15.63 | 4.25 | 2 × M25×1.5 | 1" NPT |
| Ø 250 | BRE | 7.91 | 6.77 | 1.42 | 6.02 | 15.63 | 4.25 | 2 × M25×1.5 | 1" NPT |

| 112M/SH/MH | | FP | AB | XF | X | L | XA | ce | ce-adapter |
|---|---|---|---|---|---|---|---|---|---|
| B14 | | 8.98 | 7.05 | 1.77 | 4.49 | 12.83 | 4.49 | 2 × M32×1.5 | 1" NPT |
| 160S | | 8.98 | 7.05 | 2.91 | 4.49 | 13.98 | 4.49 | 2 × M32×1.5 | 1" NPT |
| 250S | | 8.98 | 7.05 | 2.68 | 4.49 | 13.74 | 4.49 | 2 × M32×1.5 | 1" NPT |
| 300S | | 8.98 | 7.05 | 1.89 | 4.49 | 12.95 | 4.49 | 2 × M32×1.5 | 1" NPT |
| Ø 250 | | 8.98 | 7.05 | 1.77 | 4.49 | 12.83 | 4.49 | 2 × M32×1.5 | 1" NPT |
| B14 | BRE | 8.98 | 7.17 | 1.93 | 6.02 | 16.50 | 4.25 | 2 × M25×1.5 | 1" NPT |
| 160S | BRE | 8.98 | 7.17 | 3.07 | 6.02 | 17.64 | 4.25 | 2 × M25×1.5 | 1" NPT |
| 250S | BRE | 8.98 | 7.17 | 2.83 | 6.02 | 17.40 | 4.25 | 2 × M25×1.5 | 1" NPT |
| 300S | BRE | 8.98 | 7.17 | 2.05 | 6.02 | 16.61 | 4.25 | 2 × M25×1.5 | 1" NPT |
| Ø 250 | BRE | 8.98 | 7.17 | 1.93 | 6.02 | 16.50 | 4.25 | 2 × M25×1.5 | 1" NPT |

| 132S/M/SH/MH | | FP | AB | XF | X | L | XA | ce | ce-adapter |
|---|---|---|---|---|---|---|---|---|---|
| B14 | | 10.47 | 8.03 | 2.09 | 4.80 | 16.42 | 4.80 | 2 × M32×1.5 | 1" NPT |
| 250S | | 10.47 | 8.03 | 2.80 | 4.80 | 17.13 | 4.80 | 2 × M32×1.5 | 1" NPT |
| 300S | | 10.47 | 8.03 | 2.01 | 4.80 | 16.34 | 4.80 | 2 × M32×1.5 | 1" NPT |
| Ø 250 | | 10.47 | 8.03 | 2.80 | 4.80 | 17.13 | 4.80 | 2 × M32×1.5 | 1" NPT |
| B14 | BRE | 10.47 | 7.91 | 1.77 | 7.28 | 20.59 | 5.47 | 2 × M25×1.5 | 1" NPT |
| 250S | BRE | 10.47 | 7.91 | 7.28 | 7.28 | 21.34 | 5.47 | 2 × M25×1.5 | 1" NPT |
| 300S | BRE | 10.47 | 7.91 | 1.73 | 7.28 | 20.55 | 5.47 | 2 × M25×1.5 | 1" NPT |
| Ø 250 | BRE | 10.47 | 7.91 | 2.52 | 7.28 | 21.34 | 5.47 | 2 × M25×1.5 | 1" NPT |

# Dimensions
## Conduit Box & Cable Entry



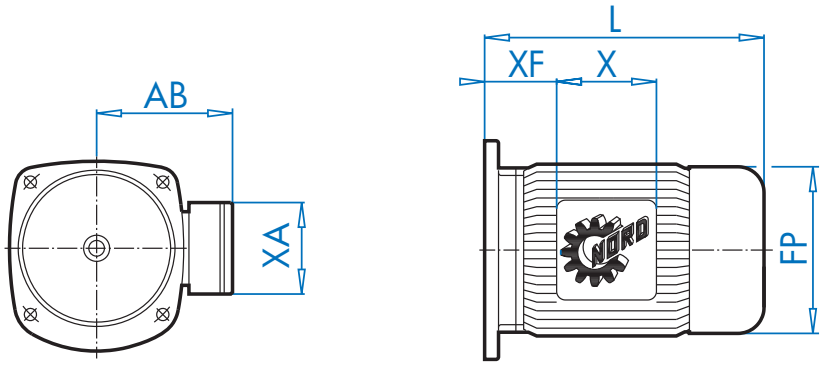


| Type / Flange | Options | Outline dimensions | | | | | | Cable entry | |
|---|---|---|---|---|---|---|---|---|---|
| 160M/L/MH | | FP | AB | XF | X | L | XA | ce | ce-adapter |
| 300S | | 12.60 | 8.90 | 3.07 | 6.50 | 18.82 | 6.50 | 2 × M40×1.5 | 1.0" NPT |
| Ø 300 | | 12.60 | 8.90 | 3.07 | 6.50 | 18.82 | 6.50 | 2 × M40×1.5 | 1.0" NPT |
| Ø 350 | | 12.60 | 8.90 | 3.07 | 6.50 | 18.82 | 6.50 | 2 × M40×1.5 | 1.0" NPT |
| 300S | BRE | 12.60 | 8.90 | 3.07 | 6.50 | 25.39 | 6.50 | 2 × M40×1.5 | 1.0" NPT |
| Ø 300 | BRE | 12.60 | 8.90 | 3.07 | 6.50 | 25.39 | 6.50 | 2 × M40×1.5 | 1.0" NPT |
| Ø 350 | BRE | 12.60 | 8.90 | 3.07 | 6.50 | 25.39 | 6.50 | 2 × M40×1.5 | 1.0" NPT |
| 160LH | | FP | AB | XF | X | L | XA | ce | ce-adapter |
| 300S | | 12.60 | 8.90 | 3.07 | 6.50 | 20.39 | 6.50 | 2 × M40×1.5 | 1.0" NPT |
| Ø 300 | | 12.60 | 8.90 | 3.07 | 6.50 | 20.39 | 6.50 | 2 × M40×1.5 | 1.0" NPT |
| Ø 350 | | 12.60 | 8.90 | 3.07 | 6.50 | 20.39 | 6.50 | 2 × M40×1.5 | 1.0" NPT |
| 300S | BRE | 12.60 | 8.90 | 3.07 | 6.50 | 27.13 | 6.50 | 2 × M40×1.5 | 1.0" NPT |
| Ø 300 | BRE | 12.60 | 8.90 | 3.07 | 6.50 | 27.13 | 6.50 | 2 × M40×1.5 | 1.0" NPT |
| Ø 350 | BRE | 12.60 | 8.90 | 3.07 | 6.50 | 27.13 | 6.50 | 2 × M40×1.5 | 1.0" NPT |
| 180MX/LX | | FP | AB | XF | X | L | XA | ce | ce-adapter |
| 300S | | 12.60 | 8.90 | 3.07 | 6.50 | 20.39 | 6.50 | 2 × M40×1.5 | 1.0" NPT |
| Ø 300 | | 12.60 | 8.90 | 3.07 | 6.50 | 20.39 | 6.50 | 2 × M40×1.5 | 1.0" NPT |
| Ø 350 | | 12.60 | 8.90 | 3.07 | 6.50 | 20.39 | 6.50 | 2 × M40×1.5 | 1.0" NPT |
| 300S | BRE | 12.60 | 8.90 | 3.07 | 6.50 | 27.13 | 6.50 | 2 × M40×1.5 | 1.0" NPT |
| Ø 300 | BRE | 12.60 | 8.90 | 3.07 | 6.50 | 27.13 | 6.50 | 2 × M40×1.5 | 1.0" NPT |
| Ø 350 | BRE | 12.60 | 8.90 | 3.07 | 6.50 | 27.13 | 6.50 | 2 × M40×1.5 | 1.0" NPT |
| 180MH/LH | | FP | AB | XF | X | L | XA | ce | ce-adapter |
| Ø 300 | | 14.09 | 10.20 | 4.45 | 5.20 | 24.49 | 5.98 | 2 × M40×1.5 | 1.0" NPT |
| Ø 350 | | 14.09 | 10.20 | 3.66 | 5.20 | 23.70 | 5.98 | 2 × M40×1.5 | 1.0" NPT |
| Ø 300 | BRE | 14.09 | 10.20 | 3.86 | 6.38 | 28.62 | 6.38 | 2 × M40×1.5 | 1.0" NPT |
| Ø 350 | BRE | 14.09 | 10.20 | 3.07 | 6.38 | 27.83 | 6.38 | 2 × M40×1.5 | 1.0" NPT |

## Motor Dimensions with SK 200E Motor Mounted AC Vector Drive

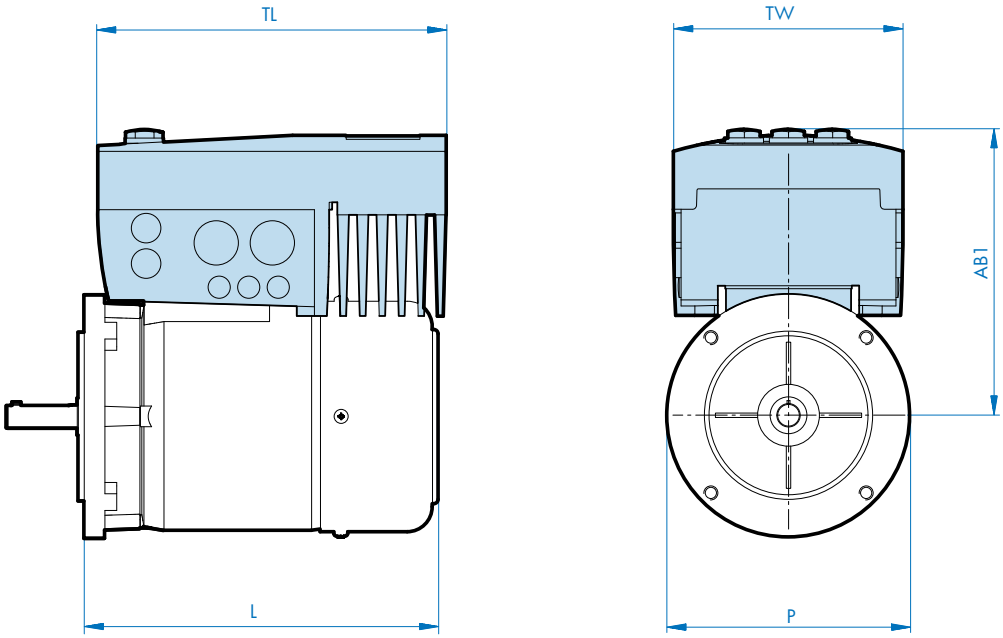


| AC Vector Drive Size | Motor | Width | | Length | | | |
|---|---|---|---|---|---|---|---|
| | | P [in] | TW [in] | L [in] | TL [in] | AB1 [in] | Weight [lbs] |
| Size 1 | 71S/L | 5.71 | 6.14 | 8.43 | 9.29 | 7.91 | 6.61 |
| | 80S/L | 6.50 | | 9.29 | | 7.68 | |
| | 90S/L | 7.20 | | 10.87 | | 7.87 | |
| | 100L/LA | 7.91 | | 12.05 | | 8.23 | |
| Size 2 | 80S/L | 6.50 | 6.93 | 9.29 | 10.47 | 7.95 | 9.04 |
| | 90S/L | 7.20 | | 10.87 | | 8.15 | |
| | 100L/LA | 7.91 | | 12.05 | | 8.58 | |
| | 112M | 8.98 | | 12.83 | | 8.98 | |
| Size 3 | 100L/LA | 7.91 | 8.58 | 12.05 | 12.99 | 9.88 | 15.21 |
| | 112M | 8.98 | | 12.83 | | 10.28 | |
| | 132S/M | 10.47 | | 16.18 | | 10.31 | |
| Size 4 | 132S/M | 10.47 | 12.01 | 16.18 | 18.90 | 12.32 | 37.48 |
| | 160M/L | 12.60 | | 19.37 | | 12.52 | |
| | 180MX/LX | 14.09 | | 24.17 | | 13.19 | |

# Dimensions
# SK 300E Trio AC Vector Drive



## Motor Dimensions with SK 300E Motor Mounted AC Vector Drive

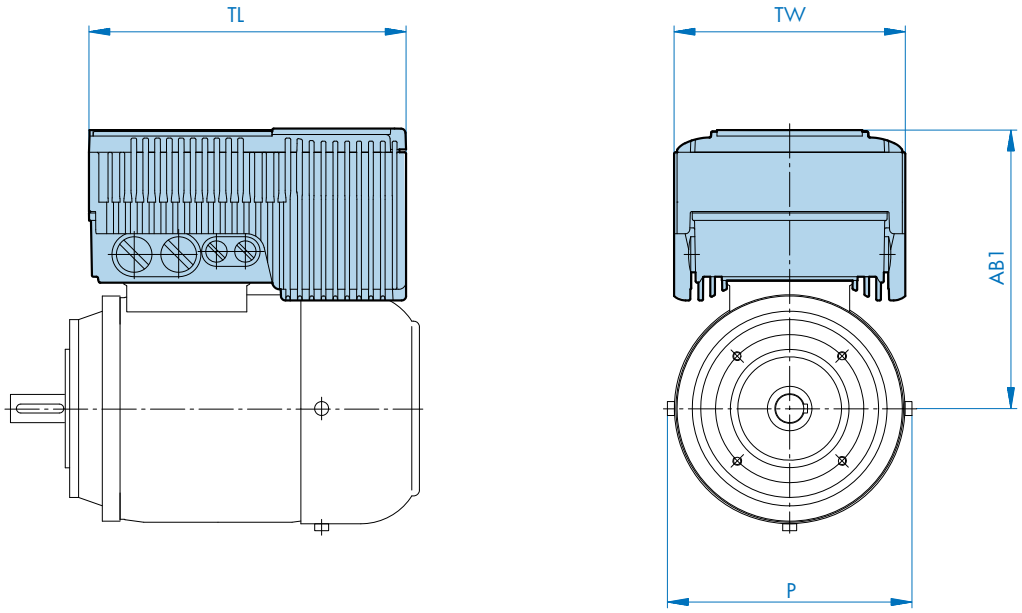


| Basic NORD Motor Description | 240 VAC Input AC Vector Drive | | | 480 VAC Input AC Vector Drive | | |
|---|---|---|---|---|---|---|
| | Type SK 300E | AC Vector Drive Size | AB1 [in] | Type SK 300E | AC Vector Drive Size | AB1 [in] |
| **63S/4** | **-370-323-B** | Size 1 | 7.48 | **-550-340-B** | Size 1 | 7.48 |
| **63L/4** | **-370-323-B** | Size 1 | 7.48 | **-550-340-B** | Size 1 | 7.48 |
| **71S/4** | **-370-323-B** | Size 1 | 7.78 | **-550-340-B** | Size 1 | 7.78 |
| **71L/4** | **-370-323-B** | Size 1 | 7.78 | **-550-340-B** | Size 1 | 7.78 |
| **80S/4** | **-550-323-B** | Size 1 | 7.42 | **-550-340-B** | Size 1 | 7.42 |
| **80L/4** | **-750-323-B** | Size 1 | 7.42 | **-750-340-B** | Size 1 | 7.42 |
| **90S/4** | **-111-323-B** | Size 2 | 8.69 | **-111-340-B** | Size 1 | 7.62 |
| **90L/4** | **-151-323-B** | Size 2 | 8.69 | **-151-340-B** | Size 1 | 7.62 |
| **100L/4** | **-221-323-B** | Size 2 | 9.19 | **-221-340-B** | Size 2 | 9.19 |
| **100LA/4** | **Not Available** | N/A | N/A | **-401-340-B** | Size 2 | 9.19 |

| AC Vector Drive Size | TL [in] | TW [in] | Weight [lbs] |
|---|---|---|---|
| Size 1 | 8.43 | 6.14 | 8.8 |
| Size 2 | 11.14 | 7.72 | 18.5 |

## Contact Information:

- North America
- Global



DRIVESYSTEMS

www.nord.com

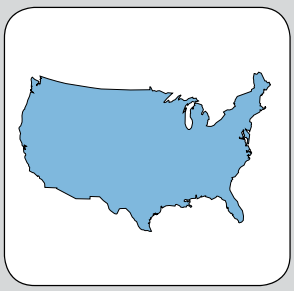





# International
# Contacts - North America

## United States

**NORD Gear Corporation - Midwest Headquarters**
800 Nord Drive, P.O. 367
Waunakee, WI 53597

toll free: 1-888-314-6673
phone: 1-608-849-7300
fax: 1-800-373-6673
eMail: info.us@nord.com

**NORD Gear Corporation - East**
100 Forsyth Hall Drive
Building 100B
Charlotte, NC 28273

toll free: 1-888-314-6673
phone: 1-608-849-0140
fax: 1-888-259-6673
eMail: info.us@nord.com

**NORD Gear Corporation - West**
1137 W. Bradford Circle
Corona, CA 92882

toll free: 1-888-314-6673
phone: 1-608-849-0190
fax: 1-888-408-6673
eMail: info.us@nord.com

**For Sales office or distributors please contact us or see our website at www.nord.com**

## Canada

**NORD Gear Limited**
41 West Drive
Brampton, Ontario L6T 4A1

toll free: 1-800-668-4378
Phone: 1-905-796-3606
fax: 1-905-796-8130
eMail: info.ca@nord.com

**Engrenages NORD Limitée**
1405 Trans-Canada Hwy.
Suite 245
Dorval, Quebec H9P 2V9

toll free: 1-800-668-4378
phone: 1-514-421-1044
fax: 1-514-421-3973
eMail: info.ca@nord.com

**For Sales office or distributors please contact us or see our website at www.nord.com**

## Mexico

**Mexico NORD Drivesystems SA DE CV**
Mexico Regional Office
Av. Ruiz Cortines 831 Ote.
Guadalupe, N.L.
México, C.P. 67110

phone: +52-81-8327-4733
fax: +52-81-8327-4735
eMail: info.mx@nord.com

**For Sales office or distributors please contact us or see our website at www.nord.com**

### Global
**Getriebebau NORD GmbH & Co. KG**
Rudolf-Diesel Str.1
22941 Bargteheide / Hamburg Germany
Phone: +49-4532-401 0 Fax: +49-4532-401 254
Email: info@nord-de.com

### Afghanistan
**Getriebebau NORD GmbH & Co. KG**
Rudolf-Diesel Str.1
22941 Bargteheide / Hamburg Germany
Phone: +49-4532-4010 Fax: +49-4532-401254
Email: info@af.nord.com

### Algeria
**Tunesia S.I.A. Ben Djemaa & CIE**
220 Avenue des Martyrs
TN - 3000 Sfax
Phone: +216-74-408 446 Fax: +216-74-408 065
Email: bendjemaa@planet.tn

### Algeria
**EURL Agence Maghrebine Des Echanges Commerciaux**
35 Avenue 5 Juillet
Borj El Kiffane
Phone: +213-76-288837 Fax: +213-21-201209
Email: bendjemaa@planet.tn

### Angola
**Power Drives a division of Bearing Man Ltd.**
Bearing Man Park, Droste Cresent
Droste Park Ext. 7, Johannesburg 2001
P.O. Box 33431
Jeppestown 2043, South Africa
Phone: +27-11-620 1500 Fax: +27-11-620 1670
Email: powerdrives@bearingman.co.za

### Argentina
**Chilicote S.A.**
Avda. Julio A. Roca 546
1067 Buenos Aires
Phone: +54-11-4343 8469 Fax: +54-11-4331 4278
Email: chilicote@chilicote.com.ar

### Armenia
**Getriebebau NORD GmbH & Co. KG**
Rudolf-Diesel Str.1
22941 Bargteheide / Hamburg Germany
Phone: +49-4532-4010 Fax: +49-4532-401254
Email: info@nord-de.com

### Australia
**CMG Pty Ltd.**
19 Corporate Avenue
Rowville, VIC 3178
PO Box 2340, Rowville, VIC 3178 - Australia
Phone: +61-3-9237 4000 Fax: +61-3-9237 4010
Email: mark.alexander@cmggroup.com.au

### Austria
**Getriebebau NORD GmbH**
Deggendorfstraße 8
A-4030 Linz
Phone: +43-732-31 89 20 Fax: +43-732-31 89 20-85
Email: info@nord-at.com

### Bahrain
**Eight Industries**
P.O. Box 32095
Dubai/U.A.E.
Phone: +971-4-3200 770 Fax: +971-4-3200 771
Email: eight@emirates.net.ae

### Bangladesh
**Getriebebau NORD GmbH & Co. KG**
Rudolf-Diesel Str.1
22941 Bargteheide / Hamburg Germany
Phone: +49-4532-4010 Fax: +49-4532-401254
Email: info@bd.nord.com

### Belarus
**OOO NORD PRIVODY**
P.O. 51
BY-220121 Minsk
Phone: +375-17-205 04 27 Fax: +375-17-205 04 27
Email: info@by.nord.com

### Belgium
**NORD Aandrijvingen België N.V.**
NORD Transmission Belgique S.A.
Boutersemdreef 24
B-2240 Zandhoven
Phone: +32-3-484 59 21 Fax: +32-3-484 59 24
Email: info@nord-be.com

### Bhutan
**Getriebebau NORD GmbH & Co. KG**
Rudolf-Diesel Str.1
22941 Bargteheide / Hamburg Germany
Phone: +49-4532-4010 Fax: +49-4532-401254
Email: info@bt.nord.com

### Bolivia
**Variadores S.A.**
Carrera 50 (Aut. Sur)
No. 2 Sur 271 - A.A. 053811
Medellin, Columbia
Phone: +57-94-2552200 Fax: +57-94-2557450
Email: variadores@variadores.com.co

### Brazil
**NORD Motoredutores do Brasil Ltda**
Rua Dr. Moacyr Antonio de Morais, 700
Parque Santo Agostinho
Guarulhos – São Paulo
CEP 07140-285
Phone: +55-11-6402 8855 Fax: +55-11-6402 8830
Email: info@nord-br.com

# International Contacts

**Bulgaria**
**MELSICON Ltd.**
P.Wolov 47-49
BG-1504 SOFIA
Phone: +359-2-9434150 Fax: +359-2-9434160
Email: melsicon@applet-bg.com

**Burundi**
**Power Drives a division of Bearing Man Ltd.**
Bearing Man Park, Droste Cresent
Droste Park Ext. 7, Johannesburg 2001
P.O. Box 33431 Jeppestown 2043
South Africa
Phone: +27-11-620 1500 Fax: +27-11-620 1670
Email: daver@bearingman.co.za

**Cameroon**
**Getriebebau NORD GmbH & Co. KG**
Rudolf-Diesel Str.1
22941 Bargteheide / Hamburg Germany
Phone: +49-4532-4010 Fax: +49-4532-401254
Email: export2@nord-de.com

**Canada**
**NORD Gear Limited**
41 West Drive
Brampton, Ontario L6T 4A1
Phone: (905) 796-3606 Fax: (905) 796-8130
Email: info.ca@nord.com

**Chile**
**TDC Techno Drive Center S.A.**
Los Leones No. 133-2° Piso
Providencia Santiago de Chile
Chile
Phone: +56-2-234 0084 Fax: +56-2-334 9633
Email: tdc@technodrive.cl

**China**
**NORD (Beijing)**
Power Transmission Co. Ltd.
No. 5, Tangjiacun,
Guangqudonglu, Chaoyangqu
Beijing 100022
Phone: +86-10-67704305 Fax: +86-10-67704330
Email: info@nord-cn.com

**China**
**NORD (Suzhou)**
Power Transmission Co. Ltd.
No.510 Changyang Street
Suzhou Ind. Park
Jiangsu 215021
Phone: +86-512-85180277 Fax: +86-512-85180278
Email: info@nord-cn.com

**Colombia**
**Variadores S.A.**
Carrera 50 (Aut. Sur)
No. 2 Sur 271 - A.A. 053811
Medellin
Phone: +57-4-2552200 Fax: +57-4-2557450
Email: variadores@variadores.com.co

**Costa Rica**
**Variadores S.A.**
Carrera 50 (Aut. Sur)
No. 2 Sur 271 - A.A. 053811
Medellin, Columbia
Phone: +57-94-2552200 Fax: +57-94-2557450
Email: variadores@variadores.com.co

**Croatia**
**NORD-Pogoni d.o.o**
Obrtnicka 9
HR-48260 Krizevci
Phone: +385-48-711 900 Fax: +385-48-270 494
Email: info@nord-hr.com

**Cyprus**
**Getriebebau NORD GmbH & Co. KG**
Rudolf-Diesel Str.1
22941 Bargteheide / Hamburg Germany
Phone: +49-4532-401 441 Fax: +49-4532-401 254
Email: export2@nord-de.com

**Czech Republic**
**NORD-Poháncí technika, s. r. o.**
Palackého 359
500 03 Hradec Králové
Phone: +420 495 580 310 Fax: +420 495 580 312
Email: HZubr@nord-cz.com

**Dem. Rep. Congo**
**Power Drives a division of Bearing Man Ltd.**
Bearing Man Park, Droste Cresent
Droste Park Ext. 7, Johannesburg 2001
P.O. Box 33431 Jeppestown 2043, South Africa
Phone: +27-11-620 1500 Fax: +27-11-620 1670
Email: daver@bearingman.co.za

**Denmark**
**NORD-Gear Danmark A/S**
Kliplev Erhvervspark 28 - Kliplev
DK - 6200 Aabenraa
Phone: +45 73 68 78 00 Fax: +45 73 68 78 10
Email: info@nord-dk.com

**Ecuador**
**Variadores S.A.**
Carrera 50 (Aut. Sur)
No. 2 Sur 271 - A.A. 053811
Medellin, Columbia
Phone: +57-94-2552200 Fax: +57-94-2557450
Email: variadores@variadores.com.co

### Egypt
**IED-International Engineering Development**
4 Abu Gafar El Nahas Street
El Golf, Heliopolis
Cairo
Phone: +20-2-2900475 Fax: +20-2-4185637
Email: ied@thewayout.net

### El Salvador
**Maquinaria E Insumos Industriales, S.A.**
67 Av Sur Edificio #144 Local #3,.
Col Escalon
San Salvador, C.A
Phone: +503-22243059 Fax: +503-22246272
Email: maquinsa@integra.com.sv

### Estonia
**Technobalt Eesti Ltd.**
Läike tee 10
Peetri küla, Rae vald
EE-75301 Harjumaa
Phone: +372-6-684 400 Fax: +372-6-613 165
Email: info@technobalt.ee

### Finland
**NORD Gear Oy**
Aunankorvenkatu 7
FI - 33840 Tampere
Phone: +358-3-254 1800 Fax: +358-3-254 1820
Email: info@nord-fi.com

### France
**NORD Réducteurs**
Bureaux commerciaux
17, Av. Georges Clémenceau
FR-93421 Villepinte Cedex
Phone: +33-1-4963 0189 Fax: +33-1-4963 0811
Email: info@nord-fr.com

### Germany
**Getriebebau NORD GmbH & Co. KG**
Postfach 12 62
Rudolf-Diesel-Strasse 1
D-22941 Bargteheide
Phone: +49-4532-401-0 Fax: +49-4532-401-253
Email: info@nord-de.com

### Ghana
**Getriebebau NORD GmbH & Co. KG**
Rudolf-Diesel Str.1
22941 Bargteheide / Hamburg Germany
Phone: +49-4532-4010 Fax: +49-4532-401254
Email: export2@nord-de.com

### Greece
**Mangrinox S.A.**
14 Grevenon Str.
Votanikos
GR-11855 Athens
Phone: +30-210-3423201-3 Fax: +30-210-3459767, 3459928
Email: magrinox@mail.otenet.gr

### Guatemala
**Maquinaria E Insumos Industriales, S.A.**
19 Avenida 16-56 Zona 10
Empresarial Santa Fe Bodega 4
Guatemala 01010
Phone: +502-23674490 Fax: +502-23674493
Email: maquinsa@inteinet.net.gt

### Guinea
**Getriebebau NORD GmbH & Co. KG**
Rudolf-Diesel Str.1
22941 Bargteheide / Hamburg Germany
Phone: +49-4532-4010 Fax: +49-4532-401254
Email: export2@nord-de.com

### Hungary
**NORD Hajtastechnika Kft.**
Törökkö u. 5-7
HU-1037 Budapest
Phone: +36 1 437 0127 Fax: +36 1 250 5549
Email: info@nord-hu.com

### Iceland
**Varmaverk Ltd.**
Dalshrauni 5
IS-220 Hafnarfiroei
Phone: +354-5651750 Fax: +354-5651951
Email: pall@varmaverk.is

### India
**NORD Drivesystems Pvt. Ltd.**
282/ 2, 283/2, Plot No. 15
Mauje, Village Mann
Tal Mulshi, Adj. Hinjewadi Phase- II
Pune Maharashtra 411 057
Phone: +91-20-39801200 Fax: +91-20-39801216
Email: info@nord-in.com

### Indonesia
**PT. NORD Indonesia**
Jln. Raya Serpong KM7,
Kompleks Rumah Multi Guna Blok D-No. 1
Pakulonan, Serpong 15310 - Tangerang
West Java
Phone: +62-21-5312 2222 Fax: +62-21-5312 2288
Email: info@nord-id.com

# International Contacts

### Iran
**Paralog Engineering Co. Ltd.**
P.O.Box 19395-7366
No. 6, Shangarf Street
Mirdamad Blvd.
Tehran 15489
Phone: +98-21-22905551 / -2 Fax: +98-21-22905550
Email: nord@Paralog.ir

### Ireland
**NORD Gear Limited (UK)**
11 Barton Lane, Abingdon Science Park,
Abingdon,
Oxfordshire OX14 3NB
Phone: +353(0) 87 69 -48 7 11 Fax: +353 (0) 49 85 - 43 7 34
Email: pfinnegan@nord-ie.com

### Israel
**Ringel Bros. Ltd**
Hertzel St. 134
5148 Tel-Aviv
Phone: +972-3-6824027 Fax: +972-3-6822041
Email: mringel@netvision.net.il

### Italy
**NORD-Motoriduttori s.r.l.**
Via Newton 22
IT-40017 San Giovanni in Persiceto (BO)
Phone: +39-051-6870 711 Fax: +39-051-6870 793
Email: info@nord-it.com

### Ivory Coast
**Getriebebau NORD GmbH & Co. KG**
Rudolf-Diesel Str.1
22941 Bargteheide / Hamburg Germany
Phone: +49-4532-4010 Fax: +49-4532-401254
Email: export2@nord-de.com

### Jordan
**Arab Co. For Power Transmissions Technology**
"GearTech Co"
P.O Box 830641
Amman 11183
Phone: +962-6-5692283 Fax: +962-6-5656750
Email: indgroup@wanadoo.jo

### Kazakhstan
**NORD Privody KZ**
Chaykovski str.,
h.131, of.12. KZ - Almaty, 050 000
Phone: +7-3272-61 02 99 Fax: +7-3272-61 02 99
Email: info@kz.nord.com

### Kenya
**Jos. Hansen & Soehne (East Africa) Ltd.**
Baba Dogo Road, Ruaraka
P.O.Box 30196
Nairobi
Phone: +254-2-861 637 Fax: +254-2-861 640
Email: hansenkenya@swiftkenya.com

### Kongo
**Power Drives a division of Bearing Man Ltd.**
Bearing Man Park, Droste Cresent
Droste Park Ext. 7, Johannesburg 2001
P.O. Box 33431 Jeppestown 2043
South Africa
Phone: +27-11-620 1500 Fax: +27-11-620 1670
Email: powerdrives@bearingman.co.za

### Korea
**POWERKING GEAR Co.**
216-8, No-onsa,
Gwangmyung, Gyunggi, 423-080
Phone: +82-2-2615-6044 Fax: +82-2-2060-7044
Email: sales@pkgear.com

### Kuwait
**Eight Industries**
P.O. Box 32095
Dubai/U.A.E.
Phone: +971-4-3200 770 Fax: +971-4-3200 771
Email: eight@emirates.net.ae

### Kyrgyzstand
**Getriebebau NORD GmbH & Co. KG**
Rudolf-Diesel Str.1
22941 Bargteheide / Hamburg Germany
Phone: +49-4532-4010 Fax: +49-4532-401254
Email: info@nord-de.com

### Latvia
**SIA Technobalt**
Skaistkalnes 1
Riga LV - 1004
Phone: +371-7605 046 Fax: +371-7605 062
Email: technobalt@technobalt.lv

### Lebanon
**Hosny Homany**
P.O. Box 102
Ghobery, Beirut
Phone: +961 5 480661/2 Fax: +961 5 480660
Email: hhomany@cyberia.net.lb

### Liberia
**Getriebebau NORD GmbH & Co. KG**
Rudolf-Diesel Str.1
22941 Bargteheide / Hamburg Germany
Phone: +49-4532-4010 Fax: +49-4532-401254
Email: export2@nord-de.com

### Lithuania
**Technobalt Group**
UAB Technobalta
Titnago g.10
LT-02300 Vilnius
Phone: +370-5-260 2503 Fax: +370-5-2653288
Email: lietuva@technobalt.com

### Malaysia
**GTM Sdn Bhd**
No. 19, Jalan Tambur 33/19,
Shah Alam Technology Park, Section 33,
40400, Shah Alam,
Selangor Darul Ehsan
Phone: +60-3-51 24 67 73 Fax: +60-3-51 24 68 10
Email: jenny.multidrive@gmail.com

### Marocco
**Societe Marocaine des Etablissements Moulin**
14 Rue Allal Ben Ahmed AMKIK et 7,
Rue Saint Saens
Belvédère - Casablanca
Phone: +212-22-406777 Fax: +212-22-406782
Email: etsmoulin@wanadoo.net.ma

### Mauritius
**Power Drives a division of Bearing Man Ltd.**
Bearing Man Park, Droste Cresent
Droste Park Ext. 7, Johannesburg 2001
P.O. Box 33431
Jeppestown 2043
South Africa
Phone: +27-11-620 1500 Fax: +27-11-620 1670
Email: powerdrives@bearingman.co.za

### Mexico
**NORD DRIVESYSTEMS SA DE CV**
Av. Lázaro Cárdenas 1007 Pte.
San Pedro Garza Garcia, N.L.
México, C.P. 66266
Phone: +52-81-8220-9165 Fax: +52-81-8220-9044
Email: info.mx@nord.com

### Namibia
**Power Drives a division of Bearing Man Ltd.**
Bearing Man Park, Droste Cresent
Droste Park Ext. 7, Johannesburg 2001
P.O. Box 33431
Jeppestown 2043
South Africa
Phone: +27-11-620 1500 Fax: +27-11-620 1670
Email: powerdrives@bearingman.co.za

### Nepal
**Getriebebau NORD GmbH & Co. KG**
Rudolf-Diesel Str.1
22941 Bargteheide / Hamburg Germany
Phone: +49-4532-4010 Fax: +49-4532-401254
Email: info@np.nord.com

### Netherlands
**NORD Aandrijvingen Nederland B.V.**
Voltstraat 12
NL-2181 HA Hillegom
P.O.Box 136
NL-2180 AC Hillegom
Phone: +31-252 529544 Fax: +31-252 522222
Email: info@nord-nl.com

### New Zealand
**CMG Electric Motors (NZ) Limited**
2 Ross Reid Avenue
East Tamaki, Auckland
Phone: +64-9-273 9162 Fax: +64-9-273 9062
Email: Mark.Alexander@cmggroup.com.au

### Nigeria
**Jos. Hansen & Soehne (Nigeria) Ltd.**
km 16, Ikorodu Road (near Bata)
Ojota
Lagos
Phone: +234-1-4974 304 Fax: +234-1-4976 936
Email: joshansen@linkserve.com

### Norway
**NORD GEAR NORGE A/S**
Solgaard Skog 7,
PB85
N-1501 Moss
Phone: +47-69 20 69 90 Fax: +47-69 20 69 93
Email: MHansen@nord-no.com

### Oman
**Eight Industries**
P.O. Box 32095
Dubai/U.A.E.
Phone: +971-4-3200 770 Fax: +971-4-3200 771
Email: eight@emirates.net.ae

### Pakistan
**OTC**
Flat # 3, 89B/C-II,
Gulberg-III
Lahore 54660
Phone: +92-42-587 2667-9 Fax: +92-42-587 2670
Email: sajjad@otc.com.pk

### Panama
**Variadores S.A.**
Carrera 50 (Aut. Sur)
No. 2 Sur 271 - A.A. 053811
Medellin, Columbia
Phone: +57-94-2552200 Fax: +57-94-2557450
Email: variadores@variadores.com.co

# International Contacts

### Peru
**Delcrosa S.A.**
Av. Argentina 1515
Lima
Phone: +51-1-336 6614 Fax: +51-1-336 8189
Email: viviana@delcrosa.com.pe

### Philippines
**Mheco Mechanical Handling Equipment Company Inc**
Suite 812 Herrera Tower,
Herrera cor. Valero Sts.
Salcedo Village, Makati City
P.O.Box 1004
Makati 1250
Phone: +63-2-844 8901-05 Fax: +63-2-845 1535
Email: mheco@skyinet.net

### Poland
**NORD Napedy sp. z o.o.**
Ul. Grottgera 30
PL-32-020 Wieliczka
S d Rejonowy dla Krakowa Zródmiescia
NIP: 683-17-20-355
Kapital ZakBadowy 770 000, 00 PLN
Phone: +48-0122889900 Fax: +48-0122889911
Email: biuro@nord-pl.com

### Portugal
**NORD Motorreductores**
Apdo de Correos 166,
ES-08200 Sabadell - Spain
Phone: +34-93-723 5322 Fax: +34-93-723 3147
Email: info@nord-es.com

### Qatar
**Eight Industries**
P.O. Box 32095
Dubai/U.A.E.
Phone: +971-4-3200 770 Fax: +971-4-3200 771
Email: eight@emirates.net.ae

### Romania
**S.C.NORD Drivesystems S.R.L.**
Str.Nicolae Iorga,Nr.55/3
RO-550387 SIBIU
Phone: +40/269/232880 Fax: +40/269/232880
Email: UPiringer@ro.nord.com

### Russian Federation
**OOO NORD PRIVODY**
Ul. A. Nevsky 9
RU-191167 St.Petersburg
Phone: +7-812-327 0192 Fax: +7-812-327 0192
Email: info@nord-ru.com

### Rwanda
**Power Drives a division of Bearing Man Ltd.**
Bearing Man Park, Droste Cresent
Droste Park Ext. 7, Johannesburg 2001
P.O. Box 33431 Jeppestown 2043
South Africa
Phone: +27-11-620 1500 Fax: +27-11-620 1670
Email: powerdrives@bearingman.co.za

### Saudi Arabia
**Al-Musairiey Industrial Equipment. Co.**
P.O. Box 40966
Riyadh - 11511
Phone: +966-1-448 3808 Fax: +966-1-446 9244
Email: info@almusairiey.com

### Senegal
**Getriebebau NORD GmbH & Co. KG**
Rudolf-Diesel Str.1
22941 Bargteheide / Hamburg Germany
Phone: +49-4532-4010 Fax: +49-4532-401254
Email: export2@nord-de.com

### Singapore
**NORD GEAR Pte Ltd**
33 Kian Teck Drive
Jurong, Singapore 628850
Phone: +65-6265-9118 Fax: +65-6265-6841
Email: info@nord-sg.com

### Slovakia
**NORD Pohony, s.r.o.**
Juzná Trieda 74
SK - 04001 Kosice
Phone: +421-55-729 9600 Fax: +421-55-729 9599
Email: Info@nord-sk.com

### Slovenia
**Getriebebau NORD GmbH**
Deggendorfstraße 8
A-4030 Linz
Phone: +43-732-31 89 20 Fax: +43-732-31 89 20-85
Email: info@nord-at.com

### South Africa
**Power Drives a division of Bearing Man Ltd.**
6 Tetford Circle,
Millennium Bridge Business Park,
La Lucia Ridge 4320 (Durban)
P.O. Box 25191, Gateway 4321 (Durban)
Phone: +27-11-62 01 61 3 Fax: +27-11-62 01 67 0
Email: powerdrives@bearingman.co.za

### Spain
**NORD Motorreductores S.A.**
Aptdo de Correos 166
ES - 08200 Sabadell
Phone: +34-93-723 5322 Fax: +34-93-723 3147
Email: info@nord-es.com

### Sri Lanka
**Getriebebau NORD GmbH & Co. KG**
Rudolf-Diesel Str.1
22941 Bargteheide / Hamburg Germany
Phone: +49-4532-4010 Fax: +49-4532-401254
Email: info@lk.nord.com

### Sweden
**NORD Drivsystem AB**
Box 2097
Ryttargatan 277
SE-194 02 Upplands Väsby
Phone: +46-8-594 114 00 Fax: +46-8-594 114 14
Email: info@nord-se.com

### Switzerland
**Getriebebau NORD AG**
Bächigenstr.18
CH-9212 Arnegg
Phone: +41-71-38899 11 Fax: +41-71-38899 15
Email: info@nord-ch.com

### Syria
**Elias Brothers Co.**
Al' Kowatly St. 2
P.O. Box 4282
Homs
Phone: +963-31-2771 004 Fax: +963-31-2771 003
Email: eliasbrothersco@mail.sy

### Taiwan
**TACT Trans-Asia Consulting & Trade Co., Ltd.**
1F, No. 157-1, Sec. 1, Beisin Road.,
Sindian City,
Taipei County 231, Taiwan R.O.C.
Phone: + 886-2-29188768 Fax: + 886-2-29185985
Email: TACT@trans-asia.com.tw

### Tanzania
**Jos. Hansen & Soehne (Tanzania) Ltd.**
Holland House, Ohio Street
P.O.Box 9521
Dar es Salaam
Phone: +255-22-211 5746 Fax: +255-22-211 2948
Email: jhs-t@africaonline.co.tz

### Thailand
**Charoen Muang Machinery Co. Ltd.**
164/1 Wisutkasat Rd.
Banpanthom, Pranakorn
Bangkok 10200
Phone: +66-2-281 5331 Fax: +66-2-280 8033-4
Email: info@nord-sg.com

### Tunisia
**Tunesia S.I.A. Ben Djemaa & CIE**
220 Avenue des Martyrs
TN - 3000 Sfax
Phone: +216-74-408 446 Fax: +216-74-408 065
Email: bendjemaa@planet.tn

### Turkey
**NORD-REMAS**
Redüktör Sanayi ve
Ticaret Ltd. Sti.
Tepeören Köyü
34959 - Tuzla - Istanbul
Phone: +90-216-304 13 60 Fax: +90-216-304 13 69
Email: info@nord-tr.com

### Uganda
**Jos. Hansen & Soehne (Uganda) Ltd.**
Workers House Plot 1
Pilkington Road
P.O.Box 2333
Kampala
Phone: +256-41-251 324 Fax: +256-41-251 325
Email: hansenuganda@africaonline.co.ug

### Ukraine
**GETRIEBEBAU NORD GmbH**
Vasilkovskaja, 1
office 306
03040 KIEW
Phone: + 380-44-537 0615 Fax: + 380-44-537 0615
Email: vtsoka@nord-ukr.com

### United Arab Emirates
**Eight Industries**
P.O. Box 32095
Dubai/U.A.E.
Phone: +971-4-3200 770 Fax: +971-4-3200 771
Email: eight@emirates.net.ae

### United Kingdom
**NORD Gear Limited (UK)**
11 Barton Lane, Abingdon Science Park,
Abingdon,
Oxfordshire OX14 3NB
Phone: +44-1235-534404 Fax: +44-1235-534414
Email: info@nord-uk.com

# International Contacts

**United States - Midwest**
**NORD Gear Corporation**
800 Nord Drive, P.O. 367
Waunakee, WI 53597
Phone: 1-888-314-6673 Fax: 1-800-373-6673
Phone: 1-608-849-7300
Email: info.us@nord.com

**United States - West**
**NORD Gear Corporation**
1137 W. Bradford Circle
Corona, CA 92882
Toll free: 1-888-314-6673 Fax: 1-888-408-6673
Phone: 1-608-849-0190
Email: info.us@nord.com

**United States - East**
**NORD Gear Corporation**
100 Forsyth Hall Drive
Building 100B
Charlotte, NC 28273
Toll free: 1-888-314-6673 Fax: 1-888-259-6673
Phone: 1-608-849-0140
Email: info.us@nord.com

**Uzbekistan**
**Getriebebau NORD GmbH & Co. KG**
Rudolf-Diesel Str.1
22941 Bargteheide / Hamburg Germany
Phone: +49-4532-4010 Fax: +49-4532-401254
Email: info@nord-de.com

**Venezuela**
**Getriebebau NORD GmbH & Co. KG**
Rudolf-Diesel Str.1
22941 Bargteheide / Hamburg Germany
Phone: +49-4532-4010 Fax: +49-4532-401254
Email: info@nord-de.com

**Vietnam**
**NORD Gear Pte. Ltd**
Representative office
Unit 401, 4F, An Dinh Building,
18 Nam Quoc Cang Street
Pham Ngu Lao Ward
District 1, Ho Chi Minh City, Vietnam
Phone: +84 8 925 7270 Fax: +84 8 925 7271
Email: info@vn.nord.com

**Zambia**
**PROVIDENT INVESTMENT Ltd**
Mr.Y.M.Mulambya
1st. Floor - Angoni House
Obote Avenenue
Kitwe
Phone: +260-2-22 60 84 Fax: +260-2-22 67 10
Email: provident@zamtel.zm

**Zimbabwe**
**Power Drives a division of Bearing Man Ltd.**
Bearing Man Park, Droste Cresent
P.O. Box 33431 Jeppestown 2043
South Africa
Phone: +27-11-620 1500 Fax: +27-11-620 1670
Email: powerdrives@bearingman.co.za



# SCP
# Ordering Guide

| | Gear Unit | Reducer Options | Motor/Input | Motor Options |
|---|---|---|---|---|
| SK | ❶ | ❷ | ❸ | ❹ |
| | | | see page 19 | see page 128 |

❶

| Gear Unit |
|---|
| 1282 SCP |
| 1382 SCP |
| 2282 SCP |
| 2382 SCP |
| 3282 SCP |
| 3382 SCP |
| 4282 SCP |
| 4382 SCP |
| 5282 SCP |
| 5382 SCP |
| 6282 SCP |
| 6382 SCP |
| Specialty Bevel Product |

❷

| Reducer Options | |
|---|---|
| **ADP -** Additional Drain Plug | **PC -** Grease Purge Seal |
| **LL -** Long Term Storage | **RV -** Drain Valve |
| **MDP -** Magnetic Drain Plug | **SM5 -** Stainless Steel CEMA Shaft |
| **OA -** Oil Expansion Chamber | **VL -** Heavy Duty Bearings |
| **OSG -** Oil Sight Glass | |

❹

| Motor Options | |
|---|---|
| **F & FC -** Blower Cooling Fan | **OL -** Non Ventilated TENV W/Out Fan |
| **RD -** Drip Cover Canopy | **OLH -** Non Ventilated TENV W/Out Fan & Cover |
| **RDD -** Double Drip Cover Canopy | **WE -** Motor Second Shaft Extension |
| **KD -** Condensation Drain Holes | **Z -** High Inertia Motor Fan |
| **KB -** Condensation Drain Holes Plugged | **IG -** Incremental Encoderr |
| **IP66 -** IP66 Motor Enclosure | **TW -** Thermostat |
| **KKV -** Potted Terminal Box | **TF -** Thermistor |
| **MS -** Quick Power Disconnect, Harting Plug | **SH -** Anti-Condensation Space Heaters |

❸

| Input Shaft | NEMA Adapter | IEC Adapter | Integral Motors | Integral Energy Efficent Motors |
|---|---|---|---|---|
| **W** | **N56C** | **IEC 63** | **63S/4** - 0.16hp | **80LH/4** - 1hp |
| | **N140TC** | **IEC 71** | **63L/4** - 0.25hp | **90SH/4** - 1.5hp |
| | **N180TC** | **IEC 80** | **71S/4** - 0.33hp | **90LH/4** - 2hp |
| | **N210TC** | **IEC 90** | **71L/4** - 0.50hp | **100LH/4** - 3hp |
| | **N250TC** | **IEC 100** | **80S/4** - 0.75hp | **112MH/4** - 5hp |
| | **N280TC** | **IEC 112** | **80L/4** - 1hp | **132SH/4** - 7.5hp |
| | | **IEC 132** | **90S/4** - 1.5hp | **132MH/4** - 10hp |
| | | **IEC160** | **90L/4** - 2hp | **160MH/4** - 15hp |
| | | **IEC180** | **100L/4** - 3hp | **160LH/4** - 20hp |
| | | | **100LA/4** - 5hp | **180MH/4** - 25hp |
| | | | **112M/4** - 5.4hp | **180LH/4** - 30hp |
| | | | **132S/4** - 7.5hp | |
| | | | **132M/4** - 10hp | |
| | | | **160M/4** - 15hp | |
| | | | **160L/4** - 20hp | |
| | | | **180MX/4** - 25hp | |
| | | | **180LX/4** - 30hp | |
| | | | Other Speeds Available | Other Speeds Available |

## Product Specifications

**Ratio**

_____ :1

see pages 31 - 62

OR

**Output Speed**

_____ rpm

see pages 31 - 62

**Mounting Position**

- ❍ M1
- ❍ M2
- ❍ M3
- ❍ M4
- ❍ M5
- ❍ M6
- ❍ Special _____

**CEMA Shaft Diameter**

- ❍ 1-1/2″
- ❍ 2″
- ❍ 2-7/16″
- ❍ 3″
- ❍ 3-7/16″

**Paint**

- ❍ Standard Stainless Steel Paint
- ❍ NSD+ (gray)
- ❍ NSD+W (white)
- ❍ NSD-X3 (gray)
- ❍ NSD-X3W (white)
- ❍ Casting Primed
- ❍ Special _____

**Lubricant**

- ❍ Standard
- ❍ Synthetic
- ❍ Food Grade
- ❍ Other _____

CONTACTS

## Gearmotor Only Details

**Voltage & Frequency**

- ❍ 230/460V-60Hz (460V only ≥ 40 hp)
- ❍ 575V-60Hz
- ❍ 208V-60Hz
- ❍ 400V-50Hz
- ❍ Other _____

**Terminal Box Pos.**

- ❍ TB1
- ❍ TB2
- ❍ TB3
- ❍ TB4

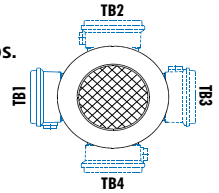


Mtg. Pos. M1 Shown

**Conduit Entry Loc.**

- ❍ CE I *
- ❍ CE II
- ❍ CE III *
- ❍ CE IV

* Brakemotor

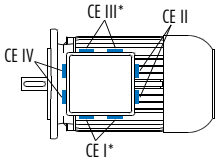


Mtg. Pos. M1 Shown

# Capacity , Ratings & Combinations



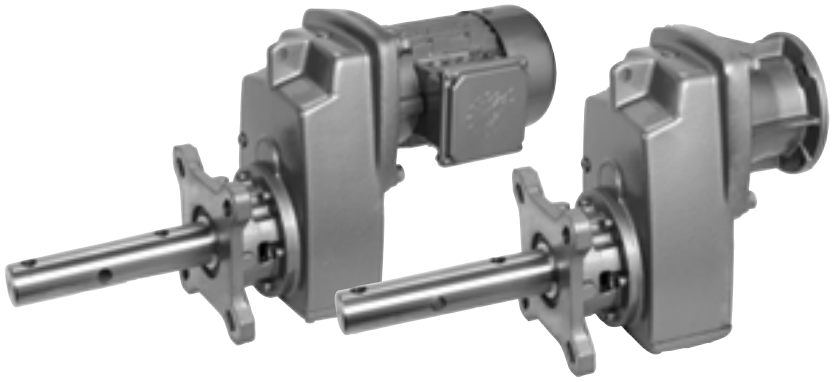

**Capacity & Ratings Overview**

| Model Type | Max Torque [lb-in] | Ratio Range [x:1] | Speed's [rpm] | Max Thrust Load Std Brgs [lb] | Max Thrust Load HD Brgs " VL" [lb] | Gear Stages | Efficiency [%] |
|---|---|---|---|---|---|---|---|
| SK 1282 SCP | 2620 | 4.79-109.5 | 365-16 | 1609 | 1609 | 2 | 97 |
| SK 1382 SCP | 2425 | 87.94-624.45 | 20-2.8 | 1550 | 1609 | 3 | 95 |
| SK 2282 SCP | 4611 | 4.51-127.51 | 388-14 | 2700 | 3375 | 2 | 97 |
| SK 2382 SCP | 4894 | 82.22-763.41 | 21-2.3 | 2700 | 3375 | 3 | 95 |
| SK 3282 SCP | 8363 | 4.48-112.23 | 391-16 | 3263 | 4500 | 2 | 97 |
| SK 3382 SCP | 9195 | 89.60-1022.42 | 20-1.7 | 3263 | 4500 | 3 | 95 |
| SK 4282 SCP | 16089 | 4.7-155.4 | 372-11 | 4950 | 6750 | 2 | 97 |
| SK 4382 SCP | 18381 | 86.83-1585.08 | 20-1.1 | 4950 | 6750 | 3 | 95 |
| SK 5282 SCP | 28630 | 4.32-134.03 | 405-13 | 7200 | 9000 | 2 | 97 |
| SK 5382 SCP | 28320 | 82.72-1367.08 | 21-1.3 | 7200 | 9000 | 3 | 95 |
| SK 6282 SCP | 40135 | 4.39-80.33 | 399-22 | 13219 | 13500 | 2 | 97 |
| SK 6382 SCP | 53100 | 24.42-551.58 | 72-3.2 | 13253 | 13500 | 3 | 95 |

**CEMA Drive Shaft Combinations**

| Model type | 1.5" shaft | 2" shaft | 2-7/16" shaft | 3" shaft | 3-7/16" shaft |
|---|---|---|---|---|---|
| SK 1282 SCP | X | X | X | | |
| SK 1382 SCP | X | X | X | | |
| SK 2282 SCP | X | X | X | | |
| SK 2382 SCP | X | X | X | | |
| SK 3282 SCP | X | X | X | X | |
| SK 3382 SCP | X | X | X | X | |
| SK 4282 SCP | | X | X | X | |
| SK 4382 SCP | | X | X | X | |
| SK 5282 SCP | | X | X | X | X |
| SK 5382 SCP | | X | X | X | X |
| SK 6282 SCP | | | | X | X |
| SK 6382 SCP | | | | X | X |

# NORD GEAR CORPORATION

## Conditions of Sale

**1. CONTRACT**

Any contract between Nord Gear Corporation, hereinafter designated as Seller, and the Buyer is subject to the terms and conditions of sale hereinafter set forth. Any deviation from such terms and conditions must be specifically set forth in writing and consented to by Seller. Accordingly, the Buyer and Seller acknowledge and agree that the terms and conditions set forth below and on the face hereof shall govern Buyer's purchase of the goods described on the face hereof and shall take precedence over and represents the final agreement between Buyer and Seller, notwithstanding any inconsistent, contradictory or other prior or further conditions contained in any oral or written request or purchase order issued by Buyer or any other document furnished by Buyer in connection with its purchase of the Goods, regardless of whether such document or documents are exchanged simultaneously with this Invoice or prior or subsequent thereto. Any additional or different terms or conditions which may appear in any communicaiton, oral or written, from Seller, its officers, employees, agents or representatives, are hereby expressly rejected and shall not be effective or binding upon the Seller, unless specifically hereafter agreed to in writing by Seller and no such additional or different terms or conditions in any document submitted to Seller by Buyer shall become part of the contract between Buyer and Seller, unless such written acceptance by Seller specifically recognizes and assents to their inclusion. Any objection by Buyer to the terms and conditions hereof shall be ineffective unless Seller is advised in writing thereof within two (2) days of the date of this Invoice.

**2. CONFIRMATION**

An order shall be deemed accepted only when duly confirmed by Seller, at Nord Gear Corporation's home office in Waunakee, Wisconsin, and upon such confirmation the order shall become a contract binding upon the parties hereto, their successors and assigns.

**3. PRICES**

Prices shown are list prices and may be subject to applicable discounts. Unless otherwise agreed upon in writing, prices are FOB factory Waunakee, Wisconsin. Prices and discounts are subject to change without notice until order is accepted. Seller's prices do not include cost of any inspection permits required.

**4. LIMITED WARRANTY**

Seller warrants the goods sold hereunder to be free from defects in material and workmanship under normal use and service not arising from misuse, negligence, or accident, including but not limited to the use, installation, and transportation of the goods by the Buyer, its agents, servants, employees, or by carriers. Such obligations under this warranty are limited to remedying any deficiencies in the goods at Waunakee, Wisconsin, or at such place or places in the United States of America as may be designated by Seller. THIS WARRANTY SHALL PERTAIN TO ANY PART OR PARTS OF ANY GOODS TO WHICH BUYER OR ITS ASSIGNS HAS GIVEN WRITTEN NOTICE OF CLAIMED DEFECTS TO SELLER. NORD GEAR CORP. WARRANTS ITS PRODUCTS AGAINST DEFECTS IN MATERIAL AND WORKMANSHIP FOR A PERIOD OF 12 MONTHS FROM DATE OF INSTALLATION OR 18 MONTHS FROM DATE OF SHIPMENT WHICHEVER COMES FIRST ON ALL COMPONENTS. 36 MONTHS FROM DATE OF INVOICE OR 24 MONTHS FROM DATE OF INSTALLATION WHICHEVER COMES FIRST ON GEARS AND HOUSINGS ONLY. PARTS WHICH ARE SUBJECT TO OPERATIONAL WEAR AND TEAR, SUCH AS BELTS & TRACTION DISCS, ARE NOT COVERED BY THE LIMITED WARRANTY. Buyer shall be required to furnish Seller with details of such defects and this warranty shall be effective as to such goods which Seller's examination shall disclose to its satisfaction to have been defective and which at Seller's option shall promptly thereafter be returned to Seller or its nominees. THE LIMITED WARRANTY SET FORTH HEREIN IS IN LIEU OF ALL OTHER WARRANTIES, EXPRESS OR IMPLIED. EXCEPT FOR THE EXPRESS WARRANTIES SET FORTH HEREIN, SELLER HAS MADE AND MAKES NO OTHER WARRANTIES, EXPRESS OR IMPLIED, AS TO THE GOODS SOLD HEREUNDER, INCLUDING, BUT NOT LIMITED TO, THEIR MERCHANTABILITY OR FITNESS FOR ANY PARTICULAR PURPOSE. ANY DESCRIPTION OR MODEL OF THE GOODS IS FOR IDENTIFICATION OR ILLUSTRATIVE PURPOSES ONLY AND SHALL NOT BE DEEMED TO CREATE ANY WARRANTY, EXPRESS OR IMPLIED. SELLER MAKES NO REPRESENTATIONS AS TO THE CAPACITY OR PERFORMANCE OF THE GOODS SOLD HEREUNDER, EXCEPT AS SET FORTH IN THE INVOICE'S SPECIFICATIONS OR OTHER VALID AGREEMENT OR CONDITION AGREED TO BETWEEN THE PARTIES, AND ANY SUCH REPRESENTATIONS ARE EXPRESSLY CONDITIONED UPON THE CORRECTNESS OF THE DATA AND INFORMATION FURNISHED BY THE BUYER AND UPON THE GOODS BEING PROPERLY INSTALLED AND MAINTAINED. THE REMEDIES OF THE BUYER PROVIDED HEREUNDER ARE EXCLUSIVE. In no event shall the Seller be liable to the Buyer or to any other person for any loss or damage, direct or indirect, arising out of or caused by the use or operation of the goods, or for the loss of profits, business, or good will, or for any incidental, special or consequential damages. Seller shall in no event be liable to any person or firm (including any assignee or Buyer) except Buyer and its successors. Unless specifically authorized by Seller in writing, Seller shall not become responsible for any repair work done by Buyer or any other party on any goods sold. Any and all costs of the return to the Seller of such goods and all related costs to remove and re-install such goods, shall be borne by Buyer. Goods sold but not manufactured by the Seller are being warranted as to defects in material and workmanship consistent with the limited warranty policy of the original manufacturer of the goods and if there is not such a limited warranty policy, the warranty shall be limited to the provision of the preceding paragraph of Article 4 herein. Standards for the operating characteristics of the gearboxes and the gearmotors are in conformity with Seller's tests.

**5. SHORTAGE AND NONCONFORMITY**

Any claim of shortage or that the goods do not conform with the specifications of the order or model must be made in writing within ten (10) days after delivery of the goods (as to which such claim is made) to Buyer or its nominees, but in no event shall the claim be later than within the time limit provided by the carrier or insurance company, otherwise such claim shall be deemed waived. Buyer may not return any goods claimed to be in non-conformity without Seller's prior written authorization. Goods returned without permission will not be accepted, including for credit, and will be returned to Buyer, F.O.B. Sellter's plant. Any claim based on the receipt of damaged Goods must be filed with the carrier which delivered the goods. The samples, measurements, dimensions and weights contained in the Seller's catalogs, sales manuals, photographs and drawings constitute only an approximate guide. The Seller reserves the right to make any change which the Seller, in its absolute discretion, considers necessary. While the goods will be delivered principally according to specifications or standards or quantities agreed upon, insignificant deviations or insignificant changes in construction are permissible. The same applies to partial deliveries, In the event that Buyer has a verified claim of shortage or nonconformity of the goods to the specifications of the order or the model, and if such claim has been submitted within the required time limit as set forth above, the Seller shall, at its own expense, make up for the shortage of the goods, or replace or repair the goods, as the case may be, but in no event shall Seller be or become liable to Buyer or to any other person or persons for any loss in damage, direct or indirect, arising out of or caused by such incidents or for the loss of profits, business or good will. The liability of the Seller to Buyer, if any hereunder, for breach of warranty, contract, negligence or otherwise, shall in no event exceed the amount of the purchase price of the goods sold with respect to which any damages are claimed. Shipping dates are estimates unless parties expressly agree on time of the essence.

**6. FORCE MAJEURE**

The obligation of the Seller shall be modified or excused, as the case may be, for reasons of Acts of God, war, governmental law regulations, strikes or lock-outs, fire, breakdown of machinery, whether in its own business enterprise, or if for any other cause beyond Seller's control, the goods cannot be delivered or their delivery becomes delayed in whole or in part. In the above instances time for delivery shall be extended for the period of the delay caused, with the proviso, however, that either party may cancel in writing the undelivered portion of the order or contract if the delay exceeds six (6) months from the delivery date originally confirmed by Seller. In no event shall Seller become liable in the aforesaid instances to Buyer or any third party for consequential damages or business loss.

**7. SHIPMENT AS UNIT**

Each shipment by Seller shall be treated as a separate and distinct unit with respect, but only with respect to forwarding, terms of payment, and the making of claims by the Buyer: provided, however, that if the Buyer defaults in the payment of any obligation to Seller or any installments thereof, under any agreement between Buyer and Seller, or if Buyer refuses to accept any goods when tendered for delivery, the Seller may, on fifteen (15) days written notice to the Buyer, without prejudice to Seller's other lawful remedies, either defer further performance until the defaulted payments are made in full, or make future deliveries for cash in advance only, or treat the entire contract or contracts with Buyer as breached by the Buyer and pursue its remedies for breach.

**8. BUYER'S REFUSAL OF DELIVERY**

If Buyer refuses to accept delivery of any goods tendered for delivery, then Seller, without prejudice to Seller's other lawful remedies, may either store or cause such goods to be stored in a warehouse, for buyer's account and at Buyer's cost, risk and expense, or sell such goods (without notice) to any purchases at public or private sale, and hold the Buyer liable for any difference between (a) the contract price of the goods, and (b) the price at which goods are resold less the costs and expense of such resale including brokerage commissions, or restocking charges.

**9. GOODS IN TRANSIT**

If prior to delivery or while the goods are in transit, Buyer or Seller becomes bankrupt or insolvent, or any petition in bankruptcy or for the reorganization or for a state court receivership is filed against Buyer or Seller, as the case may be, then the other party hereto may forthwith terminate this contract by giving written notice of such termination. Such termination shall not affect any claim for damages available to the Buyer, provided that if Buyer is then indebted to Seller, the amount of any such damage claim shall be abated to the extent that the indebtedness of Buyer to Seller, as actually paid in money, is abated by any order of judgement entered or any plan adopted in any bankruptcy, reorganization, receivership, or similar proceeding. Such termination shall not prejudice the Seller's rights to any amounts then due under the contract. If Buyer becomes bankrupt or insolvent or any petition in bankruptcy or for reorganizing or if a state court receivership is filed against Buyer, then, at its option Seller may take possession of any goods theretofore sold to Buyer, in connection with which the full purchase price has not been paid, analogous to the terms and provisions set forth in Paragraphs 11 and 12 hereinafter.

**10. DELIVERY**

(a) Any indicated dates of delivery are approximate only, but NORD Gear will attempt to meet them whenever possible. (b) NORD Gear will not be liable for any penalty clausess contained in any specifications or order submitted unless agreed to in writing by an authorized officer of NORD Gear Corporation. (c) Unless otherwise agreed, delivery of the goods to any carrier shall constitute delivery to the Buyer, and thereafter the risk of loss or damage to the goods shall be upon the Buyer. (d) If the Buyer does not give delivery instructions to the Seller at least (10) days prior to the delivery date ex factory confirmed by the Seller, the Seller may deliver the goods to a carrier of its own choosing, at Buyer's cost and risk, or, at Seller's option, may store the goods on the pier or any warehouse, at Buyer's cost and risk. Any purchase price in such event becomes due and payable within ten (10) days of such storage.

**11. PAYMENT OF PURCHASE PRICE**

Time of payment is of the essence under the contract. Unless otherwise provided, terms of payment are 30 days net from the date of invoice with a 1% discount if paid within 10 days of date of invoice. Upon default in any of the terms of the contract, or failure to comply with any of the conditions thereof, or upon seizure of the property under execution or other legal process, or if the Buyer becomes bankrupt or insolvent, or any petition for reorganization or for a state court receivership is filed against Buyer, or if the Buyer makes any assignment for the benefit of it's creditors or otherwise sells, encumbers or disposes of the goods, or if for any other reason the Seller should deem itself insecure, the full amount of the purchase price then remaining unpaid shall at once become due and payable at the option of the Seller.

**12. BUYER'S DEFAULT**

Upon the Buyer's default, the Seller may dispose of the merchandise in any manner that it deems fit and, if it desires to resell same, may do so at private or public sale, with or without notice, and with or without the property being at the place of sale, subject, however, to applicable laws. The Seller or its assigns shall have the right to bid at such sale and may become the purchaser of the property. The proceeds of the sale shall first be applied to the expenses incurred in retaking, repairing, storing and selling the goods, reasonable attorney's fees included, and then shall be applied to the payment of the balance due under the contract. Any surplus amount shall be paid to the Buyer. If a deficiency results after the resale, the Buyer agrees to pay such forthwith, together with reasonable attorney's fees, for the recovery of the goods incurred by the Seller. If upon the Buyer's default, the Seller elects not to resell any goods which it may repossess, then the cost of repossession, including reasonable attorney's fees, shall forthwith be due and payable from Buyer to Seller. Buyer agrees to pay all reasonable costs and reasonable attorneys' fees incurred by Seller in enforcing Seller's rights against Buyer, including Seller's right to payment of the purchase price of the goods and Buyer's payment of all other amounts owing to Seller required under this Invoice and Conditions of Sale.

**13. SECURITY INTEREST AND TITLE**

In states and localities which are governed by the Uniform Commercial Code, this contract shall serve as security agreement, reserving in Seller a security interest until full payment of purchase price. The provisions of the Uniform Commercial Code regarding security interest shall have preference and apply if inconsistent with other terms of the conditions of sale. In states and localities where the Uniform Commercial Code does not apply, title to the goods shall remain in the Seller or its assigns until full payment of the purchase price. Buyer agrees to execute forthwith any and all documents in such a way and form as Seller may need for filing or recording the security interest under the Uniform Commercial Code with the proper registers or offices, or for filing or recording the conditional sales contract.

**14. SALES AND USE TAX**

Buyer agrees to bear and pay any sales or use tax in connection with the purchase herein, and to hold the Seller harmless from payment. At the option the Seller, Buyer shall give evidence of payment or of exemption certificate.

**15. INSURANCE**

The Buyer shall keep the goods insured against damage by fire, water or other casualty as required by Seller, with a company acceptable to Seller, with loss payable to Seller for the total purchase price until the Seller is fully paid. Seller, if it so elects, may place said insurance at Buyer's expense; Seller may cancel such insurance at any time and without notice and may receive the return premium, if any.

**16. MODIFICATION BY SELLER**

Any contract may be assigned or transferred by the Seller, or the time for the making of any payment due by Buyer may be extended by Seller without derogation of any of the rights of the Seller or its assigns. Waiver by any party of any default shall not be deemed a waiver of any subsequent default.

**17. RETURNED GOODS**

No goods will be accepted for return unless authorized in writing by Seller. In all cases, transportation and restocking charges will be borne by Buyer.

**18. PACKING**

The Buyer will be charged for export packaging or other special packing desired. Cost for cartage to ship or transfer express will be added to the invoice. No credit will be allowed if no packing is required.

**19. CHANGES/CANCELLATION**

NORD Gear will not accept changes in specifications to a confirmed order unless such changes are requested in writing and confirmed back in writing. In addition, the purchaser must to agree to any additional charges that may arise from the change. Placing orders on hold or cancellation of orders require Seller's written approval, and are subject to cancellation and/or restocking charges.

**20. BUYER'S RESPONSIBILITY AS TO MAINTENANCE**

Buyer shall use and shall require its employees and agents to use all safety devices and guards and shall maintain the same in proper working order. Buyer shall use and require its employees and agents to use safe operation procedures in operating the equipment and shall further obey and have its employees and agents obey safety instructions given by Seller. If Buyer fails to meet the obligations herein, Buyer agrees to defend, indemnify and save Seller harmless from any liability or obligation with regard to any personal injuries or property damages directly or indirectly connected with the operation of the equipment. Buyer further agrees to notify Seller promptly and in any event not later than ten (10) days after notice or knowledge of any accident or malfunction involving Seller's equipment which has caused personal injury or property damages and to cooperate fully with Seller in investigating and determining the causes of such accident and malfunction. In the event that Buyer fails to give such notice to Seller or to cooperate with Seller, Buyer shall be obligated to defend, indemnify and save Seller harmless from any such claims arising from such accident.

**21. MISCELLANEOUS PROVISIONS**

(a) If for any reason a provision of a contract is legally invalid, then in such event the rest of the contract shall remain in full force and affect, except that the parties shall try to replace such invalid provision closest to their original mutual intentions. (b) This Invoice and these Conditions of Sale constitute the entire agreement between the parties regarding the subject matter hereof and supercedes all prior agreements, understandings and statements, whether oral or written, regarding such subject matter. No modification to, change in or departure from, the provisions of this Invoice and Conditions of Sale shall be valid or binding on Seller, unless approved in writing by Seller. No course of dealing or usage of trade shall be applicable unless expressly incorporated into this Invoice and Conditions of Sale. Any amendments to any contract or contracts between the parties shall be valid only upon the written consent of both parties.

**22. NON ASSIGNMENT BY BUYER**

Contract or contracts may not be assigned by the Buyer without prior written consent of the Seller.

**23. APPLICABLE LAW AND VENUE**

All contracts and their interpretation are governed by the applicable, substantive laws of the State of Wisconsin. Any litigation brought by the Buyer regarding this Invoice or goods purchased hereunder may only be brought in the Circuit Court for Dane County, Wisconsin.

# NORD GEAR LIMITED

# Terms and Conditions of Sale

## 1. CONTRACT

Any contract between Nord Gear Limited, hereinafter designated as Seller, and the Buyer is subject to the terms and conditions of sale hereinafter set forth. Any deviation from such terms and conditions must be specifically set forth in writing and consented to by Seller.

## 2. CONFIRMATION

An order shall be deemed accepted only when duly confirmed by Seller, at Nord Gear Limited's home office in Brampton, Ontario, and upon such confirmation the order shall become a contract binding upon the parties hereto, their successors and assigns.

## 3. PRICES

Prices shown are list prices and may be subject to applicable discounts. Unless otherwise agreed upon in writing, prices are FOB factory Braenton, Ontario. Prices and discounts are subject to change without notice until order is accepted. Seller's prices do not include cost of any inspection permits required.

## 4. LIMITED WARRANTY

Seller warrants the goods sold hereunder to be free from defects in material and workmanship under normal use and service not arising from misuse, negligence, or accident, including but not limited to the use, installation, and transportation of the goods by the Buyer, its agents, servants, employees, or by carriers. Such obligations under this warranty are limited to remedying any deficiencies in the goods at Brampton, Ontario, or at such place or places in Canada as may be designated by Seller. This warranty shall pertain to any part or parts of any goods to which Buyer or its assigns has, within one year from date of original factory invoice, given written notice of claimed defects to Seller. Buyer shall be required to furnish Seller with details of such defects and this warranty shall be effective as to such goods which Seller's examination shall disclose to its satisfaction to have been defective and which at Seller's option shall promptly thereafter be returned to Seller or its nominees. EXCEPT FOR THE EXPRESS WARRANTIES SET FORTH ABOVE, SELLER HAS MADE NO WARRANTIES, EXPRESS, IMPLIED OR STATUTORY, AS TO THE GOODS SOLD HEREUNDER, INCLUDING, BUT NOT LIMITED TO THEIR MERCHANTABILITY OR FITNESS FOR ANY PARTICULAR PURPOSE. ANY DESCRIPTION OR MODEL OF THE GOODS IS FOR IDENTIFICATION OR ILLUSTRATIVE PURPOSES ONLY AND SHALL NOT BE DEEMED TO CREATE AN EXPRESS WARRANTY. THE REMEDIES OF THE BUYER SET FORTH IN THIS SECTION ARE EXCLUSIVE. In no event shall the Seller be liable to the Buyer or to any other person for any loss or damage, direct or indirect, arising out of or caused by the use or operation of the goods, or for the loss of profits, business, or good will, or for any incidental, special or consequential damages. Seller shall in no event be liable to any person or firm (including any assignee or Buyer) except Buyer and its successors. Unless specifically authorized by Seller in writing, Seller shall not become responsible for any repair work done by Buyer or any other party on any goods sold. Any costs of the return of such goods to Seller shall be borne by Buyer. Goods sold but not manufactured by the Seller are being warranted as to defects in material and workmanship consistent with the limited warranty policy of the original manufacturer of the goods and if there is not such a limited warranty policy, the warranty shall be limited to the provisions of the preceding paragraph of Article 4 herein. Standards for the operating characteristics of the gearboxes and the gearmotors are in conformity with Seller's test. THIS WARRANTY IS IN LIEU OF ALL OTHER EXPRESS OR IMPLIED WARRANTIES, INCLUDING ANY IMPLIED WARRANTY OF MERCHANTABILITY OR FITNESS FOR ANY PARTICULAR PURPOSE THE SELLER DOES NOT ASSUME, NOR DOES IT AUTHORIZE ANY PERSON TO ASSUME, ON ITS BEHALF, ANY OTHER OBLIGATION OR LIABILITY.

## 5. SHORTAGE AND NONCONFORMITY

Any claim of shortage or that the goods do not conform with the specifications of the order or model must be made in writing within ten (10) days after delivery of the goods (as to which such claim is made) to Buyer or its nominees, but in no event shall the claim be later than within the time limit provided by the carrier or insurance company, otherwise such claim shall be deemed waived. The samples, measurements, dimensions and weights contained in the Seller's catalogs, sales manuals, photographs and drawings constitute only an approximate guide. The Seller reserves the right to make any changes which the Seller, in its absolute discretion, considers necessary. While the goods will be delivered principally according to specifications or standards or quantities agreed upon, insignificant deviations or insignificant changes in construction are permissible. The same applies to partial deliveries. In the event that Buyer has a verified claim of shortage or nonconformity of the goods to the specifications of the order or the model, and if such claim has been submitted within the required time limit as set forth above, the Seller shall, at its own expense, make up for the shortage of the goods, or replace or repair the goods, as the case may be, but in no event shall Seller be or become liable to Buyer or to any other person or persons for any loss in damage, direct or indirect, arising out of or caused by such incidents or for the loss of profits, business or good will. Shipping dates are estimates unless parties expressly agree on time of the essence.

## 6. FORCE MAJEURE

The obligation of the Seller shall be modified or excused, as the case may be, for reasons of Acts of God, war, governmental law regulations, strikes or lock outs, fire, breakdown of machinery, whether in its own business enterprise, or if for any other course beyond Seller's control, the goods cannot be delivered or their delivery becomes delayed in whole or in part. In the above instances time for delivery shall be extended for the period of the delay caused, with the proviso, however, that either party may cancel in writing the undelivered portion of the order or contract if the delay exceeds six (6) months from the delivery date originally confirmed by Seller. In no event shall Seller become liable in the aforesaid instances to Buyer or any third party for consequential damages or business loss.

## 7. SHIPMENT AS UNIT

Each shipment by Seller shall be treated as a separate and distinct unit with respect, but only with respect to forwarding, terms of payment, and the making of claims by the Buyer; provided, however, that if the Buyer defaults in the payment of any obligation to Seller or any installment thereof, under any agreement between Buyer and Seller, or if Buyer refuses to accept any goods when tendered for delivery, the Seller may, on fifteen (15) days' written notice to the Buyer, without prejudice to Seller's other lawful remedies, either defer further performance until the defaulted payments are made in full, or make future deliveries for cash in advance only, or treat the entire contract or contracts with Buyer as breached by the Buyer and pursue its remedies for breach.

## 8. BUYER'S REFUSAL OF DELIVERY

If Buyer refuses to accept delivery of any goods tendered for delivery, then Seller, without prejudice to Seller's other lawful remedies, may either store or cause such goods to be stored in a warehouse, for Buyer's account and at Buyer's cost, risk and expense, or sell such goods (without notice) to any purchaser at public or private sale, and hold Buyer liable for any difference between (a) the contract price of the goods, and (b) the price at which goods are resold less the costs and expense of such resale including brokerage commissions, or restocking charges.

## 9. GOODS IN TRANSIT

If prior to delivery or while the goods are in transit, Buyer or Seller becomes bankrupt or insolvent, or any petition in bankruptcy or for the reorganization or for appointment of a receiver is filed against Buyer or Seller, as the case may be, then the other party hereto may forthwith terminate this contract by giving written notice of such termination. Such termination shall not affect any claim for damages available to the Buyer, provided that if Buyer is then indebted to Seller, the amount of any such damage claim shall be abated to the extent that the indebtedness of Buyer to Seller, as actually paid in money, is abated by any order or judgment entered or any plan adopted in any bankruptcy, reorganization, receivership, or similar proceeding. Such termination shall not prejudice the Seller's rights to any amounts then due under the contract. If Buyer becomes bankrupt or insolvent or any petition in bankruptcy or for reorganization or if a state court receivership is filed against Buyer, then, at its option, Seller may take possession of any goods theretofore sold to Buyer, in connection with which the full purchase price has not been paid, analogous to the terms and provisions set forth in Paragraphs 11 and 12 hereinafter.

## 10. DELIVERY

(a) Unless otherwise agreed, delivery of the goods to any carrier shall constitute delivery to the Buyer, and thereafter the risk of loss or damage to the goods shall be upon the Buyer. (b) If the Buyer does not give delivery instructions to the Seller at least (10) days prior to the delivery date ex factory confirmed by the Seller, the Seller may deliver the goods to a carrier of its own choosing, at Buyer's cost and risk, or, at Seller's option, may store the goods on the pier or on any warehouse, at Buyer's cost and risk. Any purchase price in such event becomes due and payable within ten (10) days of such storage.

## 11. PAYMENT OF PURCHASE PRICE

Time of payment is of the essence under the contract. Upon default in any of the terms of the contract, or failure to comply with any of the conditions thereof, or upon seizure of the property under execution or other legal process, or if the Buyer becomes bankrupt or insolvent, or any petition for reorganization or for appointment of a receiver is filed against Buyer, or if the Buyer makes any assignment for the benefit of its creditors or otherwise sells, encumbers or disposes of the goods, or if for any other reason the Seller should deem itself insecure, the full amount of the purchase price then remaining unpaid shall at once become due and payable at the option of the Seller.

## 12. BUYER'S DEFAULT

Upon the Buyer's default, the Seller may dispose of the merchandise in any manner that it deems fit and, if it desires to resell same, may do so at private or public sale, with or without notice, and with or without the property being at the place of sale, subject, however, to applicable laws. The Seller or its assigns shall have the right to bid at such sale and may become the purchaser of the property. The proceeds of the sale shall first be applied to the expenses incurred in retaking, repairing, storing and selling the goods, reasonable solicitor's fees included, and then shall be applied to the payment of the balance due under the contract. Any surplus amount shall be paid to the Buyer. If a deficiency results after the resale, the Buyer agrees to pay such forthwith, together with reasonable solicitor's fees, for the recovery of the goods incurred by the Seller. If upon the Buyer's default, the Seller elects not to resell any goods which it may repossess, then the cost of repossession, including reasonable solicitor's fees, shall forthwith be due and payable from Buyer to Seller.

## 13. SECURITY INTEREST AND TITLE

In provinces which are governed by a Personal Property Security Act, this contract shall serve as Security Agreement, reserving in Seller a security interest until full payment of purchase price. The provisions of the Personal Property Security Act regarding security interest shall have preference and apply if inconsistent with other terms of the conditions of sale herein. In provinces where a Personal Property Security Act does not apply, title to the goods shall remain in the Seller or its assigns until full payment of the purchase price. Buyer agrees to execute forthwith any and all documents in such a way and form as Seller may need for filing or recording the security interest under a Personal Property Security Act with the proper registers or offices, or for filing or recording the Conditional Sales Contract herein.

## 14. SALES AND USE TAX

The Seller's prices do not include sales, use, excise or other taxes payable to any governmental authority in respect of the sale of Seller's goods. The Buyer shall pay, in addition to the Seller's price the amount of any such taxes or shall reimburse the Seller for the amount thereof that the Seller may be required to pay. At the option of the Seller, Buyer shall give evidence of payment or of exemption certificate.

## 15. INSURANCE

The Buyer shall keep the goods insured against damage by fire, water or other casualty as required by Seller, with a company acceptable to Seller, with loss payable to Seller for the total purchase price until the Seller is fully paid. Seller, if it so elects, may place said insurance at Buyer's expense; Seller may cancel such insurance at any time and without notice and may receive the return premium, if any.

## 16. MODIFICATION BY SELLER

Any contract may be assigned or transferred by the Seller, or the time for the making of any payment due by Buyer may be extended by Seller without derogation of any of the rights of the Seller or its assigns. Waiver by any party of any default shall not be deemed a waiver of any subsequent default.

## 17. RETURNED GOODS

No goods will be accepted for return unless authorized in writing by Seller. In all cases, transportation and restocking charges will be borne by Buyer.

## 18. PACKING

The Seller does not charge for standard packaging for domestic shipment. The Buyer will be charged, however, for export packaging or other special packing desired. Cost for cartage to ship or transfer express will be added to the invoice. No credit will be allowed if no packing is required.

## 19. EXPORT ORDER

Export orders are to be accompanied by a confirmed irrevocable Letter of Credit in Seller's favour, in Canadian currency, with an accredited Canadian bank, subject to Seller's draft, with shipping documents attached.

## 20. CANCELLATION

Placing orders on hold or cancellation of orders require Seller's written approval, and are subject to cancellation and/or restocking charges.

## 21. BUYER'S RESPONSIBILITY AS TO MAINTENANCE

Buyer shall use and shall require its employees and agents to use all safety devices and guards and shall maintain the same in proper working order. Buyer shall use and require its employees and agents to use safe operating procedures in operating the equipment and shall further obey and have its employees and agents obey safety instructions given by Seller. If Buyer fails to meet the obligations herein, Buyer agrees to indemnify and save Seller harmless from any liability or obligation with regard to any personal injuries or property damages directly or indirectly connected with the operation of the equipment. Buyer further agrees to notify Seller promptly and in any event not later than ten (10) days after notice or knowledge of any accident or malfunction involving Seller's equipment which has caused personal injury or property damages and to cooperate fully with Seller in investigating and determining the causes of such accident and malfunction. In the event that Buyer fails to give such notice to Seller or to cooperate with Seller, Buyer shall be obligated to indemnify and save Seller harmless from any such claims arising from such accident.

## 22. MISCELLANEOUS PROVISIONS

(a) If for any reason a provision of a contract is legally invalid, then in such event the rest of the contract shall remain in full force and effect; except that the parties shall try to replace such invalid provision with a provision closest to their original mutual intentions. (b) Any amendments to any contract or contracts require the consent in writing by both parties.

## 23. NON ASSIGNMENT BY BUYER

Contract or contracts may not be assigned by the Buyer without prior written consent of the Seller.

## 24. APPLICABLE LAW

All contracts are governed by the applicable laws of Ontario.

**25.** This instrument sets forth the entire understanding and agreement of the parties hereto in respect of the subject matter hereof, and all prior undertakings between the parties hereto, together with all representations and obligations of such parties in respect of such subject matter, shall be superceded by and merged into this instrument.

**26.** The provisions of this agreement shall bind and ensure to the benefit of the parties hereto and their respective heirs, executors, administrators, successors and (subject to any restrictions or assignment herein above set forth) assigns, as the case may be.

**27.** The parties acknowledge that they have requested this Contract and all notices or other documents relating thereto be drafted in the English language.

Les parties reconnaissent qu'ils ont requis que ce contrat et tous les avis ou autres documents qui s'y rapportent soient rédigés en langue anglaise.

*"Terms and Conditions in French available upon request."*

# Product Overview

## UNICASE™ SPEED REDUCERS



**HELICAL IN-LINE**
- Foot or Flange Mount
- Torque up to 205,000 lb-in
- Gear ratios – 1.82:1 to over 300,000:1



**NORDBLOC®.1 HELICAL IN-LINE**
- Foot or Flange Mount
- Torque up to 26,550 lb-in
- Gear ratios – 1.88:1 to over 370:1



**PARALLEL HELICAL CLINCHER™**
- Shaft, Flange or Foot Mount
- Torque up to 797,000 lb-in
- Gear ratios – 4.26:1 to over 300,000:1

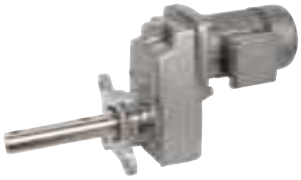

**SCP SCREW CONVEYOR PACKAGE**
- Shaft, or Flange Mount
- Torque up to 53,100 lb-in
- Gear ratios – 4.32:1 to over 1500:1



**RIGHT ANGLE HELICAL-BEVEL 2-STAGE**
- Foot, Flange or Shaft Mount
- Torque up to 5,840 lb-in
- Gear ratios – 4.1:1 to 72:1



**RIGHT ANGLE HELICAL-BEVEL**
- Foot, Flange or Shaft Mount
- Torque up to 283,000 lb-in
- Gear ratios – 8.04:1 to over 300,000:1



**RIGHT ANGLE HELICAL-WORM**
- Foot, Flange or Shaft Mount
- Torque up to 27,585 lb-in
- Gear ratios – 4.40:1 to over 300,000:1

## HIGH PERFORMANCE MOTORS & BRAKEMOTORS



**INVERTER/VECTOR DUTY**
- Standard or Energy Efficient
- Integral, NEMA or Metric IEC
- 1/6 to 250 hp

## UNICASE™ SPEED REDUCERS



**MINICASE™ RIGHT ANGLE WORM**
- Foot, Flange or Shaft Mount
- Torque up to 3,540 lb-in
- Gear ratios – 5:1 to 500:1



**FLEXBLOC™ WORM**
- Modular bolt-on options
- Torque up to 4,683 lb-in
- Gear ratios – 5:1 to 3,000:1



**MAXXDRIVE™ LARGE INDUSTRIAL GEAR UNITS PARALLEL HELICAL**
- Modular bolt-on options
- Torque up to 2,027,000 lb-in
- Gear ratios – 5:1 to 1,600:1



**MAXXDRIVE™ LARGE INDUSTRIAL GEAR UNITS HELICAL-BEVEL**
- Modular bolt-on options
- Torque up to 2,027,000 lb-in
- Gear ratios – 5:1 to 1,600:1

## NORDAC AC VECTOR DRIVES



**SK200E**
- Decentralized, high performance
- 380-480V, 3-phase to 10 hp
- 200-240V, 3-phase to 5 hp
- 200-240V, 1-phase to 1.5 hp
- 100-120V, 1-phase to 1 hp



**SK500/520/530E**
- Compact, high performance
- 380-480V, 3-phase, to 30hp
- 200-240V, 3-phase, to 15hp
- 200-240V, 1-phase, to 3hp
- 110-120V, 1-phase, to 1.5hp



**SK700E**
- Flexible high performance
- 380-460V, 3-phase, to 200hp

NORD DRIVESYSTEMS



DRIVESYSTEMS

**www.nord.com**

## NORD Gear Corporation

National Customer Service Toll-Free: 888.314.6673
info.us@nord.com

## NORD Gear Limited

Toll-Free in Canada: 800.668.4378
info.ca@nord.com

**WEST**
Corona, CA (Los Angeles)
Phone: 608.849.0190

**MIDWEST**
Waunakee, WI (Madison)
Phone: 608.849.7300

**EAST**
Charlotte, NC
Phone: 608.849.0140

**CANADA**
Brampton, ON (Toronto)
Phone: 905.796.3606

1100200076/0410

# SODIUM THIOSULFATE MIXING TANK 65CUV68004

**Workshop drawing :**

- □ Approuved as is
- □ Approuved with correction(s)
- □ Rejected

**Approuved by**

Name : _____

Title : _____

Compagnie : _____

Signature : _____

# 2107-002B RESERVOIR 5075L
# 21716-04

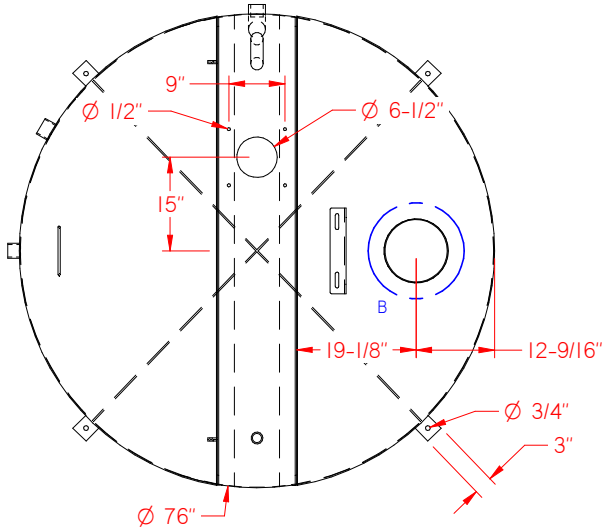


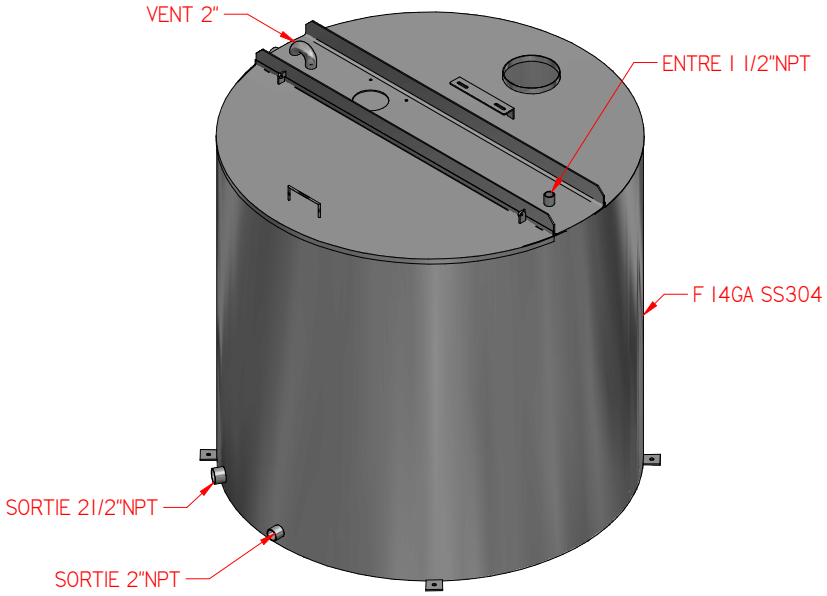


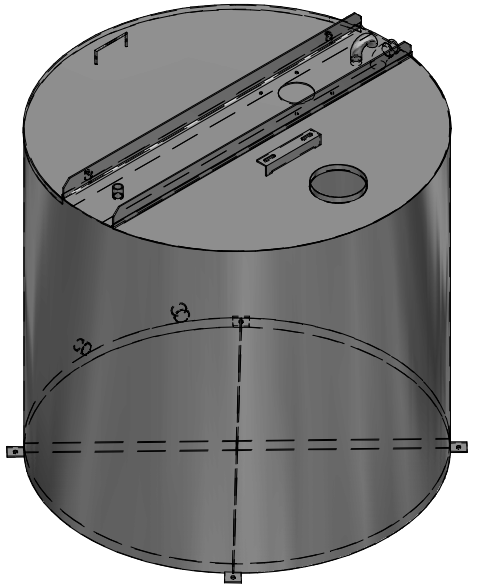

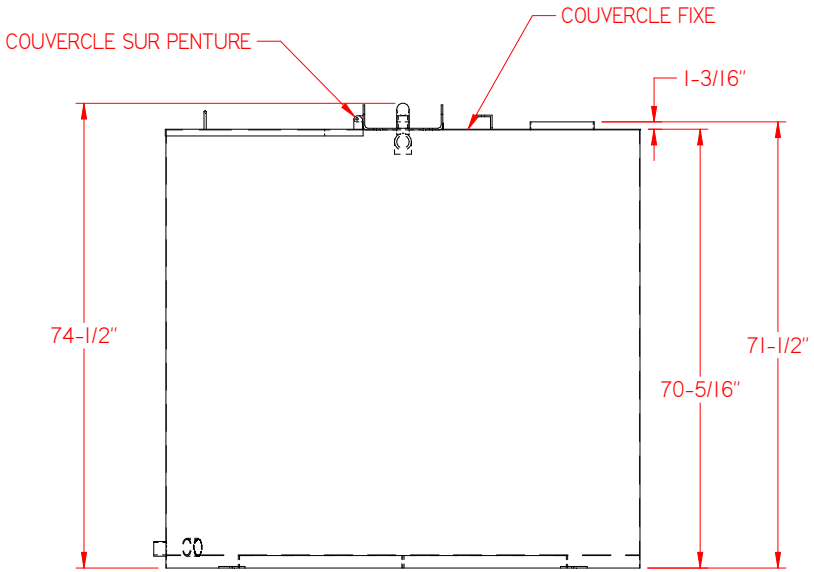


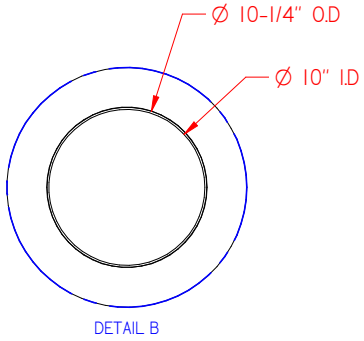


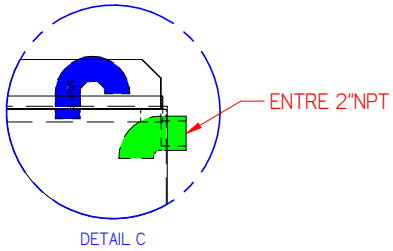


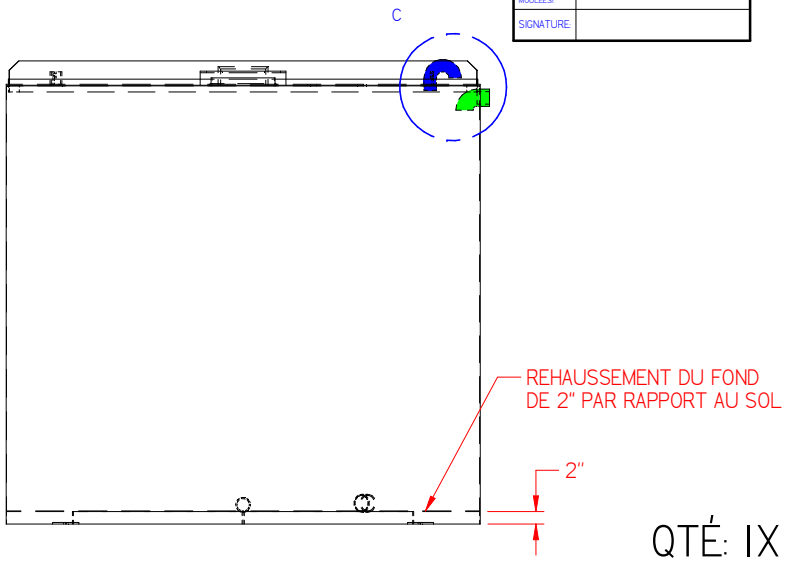


| DESSIN D'APPROBATION | |
|---|---|
| DATE: | |
| APPROUVÉ PAR (LETTRES MOULÉES) | |
| SIGNATURE: | |

QTÉ: IX

Ce document est la propriété de Lacal Technologie Inc. Il ne doit pas être dévoilé, utilisé ou reproduit en tout ou en parties sans l'autorisation écrite de Lacal Technologie Inc.

| Tolérancement (Sauf indications contraires) | |
|---|---|
| Coupe | ± 1/16" |
| Pliage | ± 0.5° |
| Usinage | ± 0.005" |
| Montage | ± 1/16" |

LACAL

| | |
|---|---|
| Projet: | 21716-00 PCP |
| Titre: | RESERVOIR 4300L ET 5075L |
| Dessiné par: | DM |
| Date: | 18-03-2021 |
| Vérifié par: | |
| No dessin: | 21716.00.APPROBATION |

# SODIUM THIOSULFATE MIXING TANK AGITATOR / 65AGI68011

**Workshop drawing :**

- □ Approuved as is
- □ Approuved with correction(s)
- □ Rejected

**Approuved by**

Name : _____

Title : _____

Compagnie : _____

Signature : _____

*3076 A, Bernard-Pilon, St-Mathieu de Beloeil, Qc, J3G 4S5 Tél.: (450) 922-4224 / Fax: (450) 922-4223*

Sharpe Mixers
A Hayward Gordon Company
www.sharpemixers.com
P.O. Box 3906 - Seattle, WA 98124 - (800) 237-8815 (206) 767-5660

# MIXER DATA SHEET



**Customer:**

**Date :** mars 5, 2021
**Sharpe Ref# :**

**Application :**

**Design conditions :** Viscosity(cps): 50 , Sp.Grav: 1,00 Temp.: Ambient Pressure: Atmos.
**Tank dimensions :** 70 " Dia. Tank x 70" overall height from mixer mount to tank floor
M5QP-02012021 Tank Volume = ~1033 Gallons

| | |
|---|---|
| **Equipment :** | **SHARPE FIXED MOUNTED F-SERIES MIXER**<br>Quantity : 1 **Mixer Model #** **FGP-075** 0 |
| **Motor :** | 0,75 Horsepower, @ 1750 RPM, 3PH, 60Hz, 575 VOLTS TEFC<br>56C Frame, Motor Furnished by Sharpe , Mounted by Sharpe |
| **Mixer Drive :** | M5 Single-Reduction Helical Gear Drive , 5:1 Ratio, Rated at 4.8 Horsepower |
| **Mixer mounting :** | 11" sq. plate with vibration mounts |
| | Std Food Grade Viton Lip Seal in Nosecone/Spool |
| **Wetted Parts :** | SS316 NONE (bead blasted) |
| **Shaft :** | 0,75" Dia. x 51" long from mounting base, turning @ 350 RPM |
| **Impellers :** | Quantity: ( 1 ) 14,5" Dia. Hyflo 218 Energy Efficient Hydrofoil<br>1-Piece setscrewed design |

*Shipping Weight,each= 100 lbs*

| | | |
|---|---|---|
| Calculated Flow Generated = | 2988 | gallons per minute |
| Tank Turnovers Per Minute = | 2,89 | |
| Design Torque Load = | 228 | lbs-in |
| Calculated Design Overhung Moment = | 941 | lbs-in |

Prepared by:

***Sharpe Mixers***
*P.O.Box 3906*
*Seattle,WA 98124*

3-5-21 1:54 PM

Drawing not to scale. Drawing is for reference only. Use Certified prints for construction. Dimensions in inches.

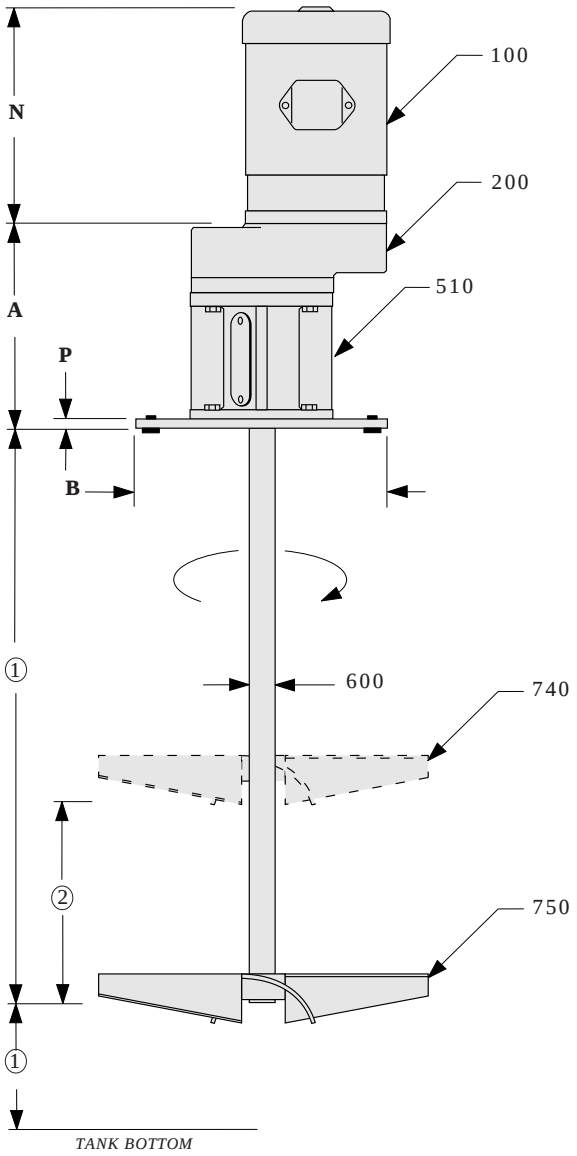


100 - MOTOR①

200 - GEAR REDUCER

510 - BEARING SPOOL①

600 - SHAFT①

740 - UPPER IMPELLER②

750 - LOWER IMPELLER①

①Impeller(s), shaft and other details are dependent on specific application and will be described in the Quotation/Data Sheet.

② Items are optional and will be described in the Quotation/Data Sheet if provided

## MOUNTING DETAIL
(includes vibration pads)

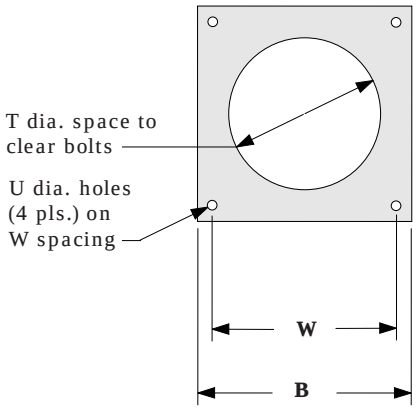


## MOTOR DIM'S

| NEMA FRAME | 'N' |
|---|---|
| 56C | 11 |
| 143TC | 10.25 |
| 145TC | 11.25 |
| 182TC | 11.75 |
| 184TC | 12.75 |

## OVERALL DIMENSIONS

| | 025 | 033 | 050 | 075 | 100 | 150 | 200 | |
|---|---|---|---|---|---|---|---|---|
| **A** | 10 | 10 | 10 | 10 | 10 | 10 | 10 | |
| **B** | 11 | 11 | 11 | 11 | 11 | 11 | 11 | |
| **P** | .38 | .38 | .38 | .38 | .38 | .38 | .38 | |
| **T** | 6.5 | 6.5 | 6.5 | 6.5 | 6.5 | 6.5 | 6.5 | |
| **U** | .47 | .47 | .47 | .47 | .47 | .47 | .47 | |
| **W** | 9 | 9 | 9 | 9 | 9 | 9 | 9 | |

# F - SERIES

*HELICAL GEAR DRIVE* PLATE MOUNT C-FACE MOTOR

DWG NO.: S6009

CADD# FGP-S REV.3 4/03

**SHARPE MIXERS** P.O. BOX 3906 SEATTLE, WA 98124 FAX (206) 767-9170 (206) 767-5660

# SODIUM THIOSULFATE DISTRIBUTION TANK 65TSO68004

**Workshop drawing :**

- □ Approuved as is
- □ Approuved with correction(s)
- □ Rejected

**Approuved by**

Name : _____

Title : _____

Compagnie : _____

Signature : _____

*3076 A, Bernard-Pilon, St-Mathieu de Beloeil, Qc, J3G 4S5 Tél.: (450) 922-4224 / Fax: (450) 922-4223*

# 2107-002A RESERVOIR 5075L
# 21716-03

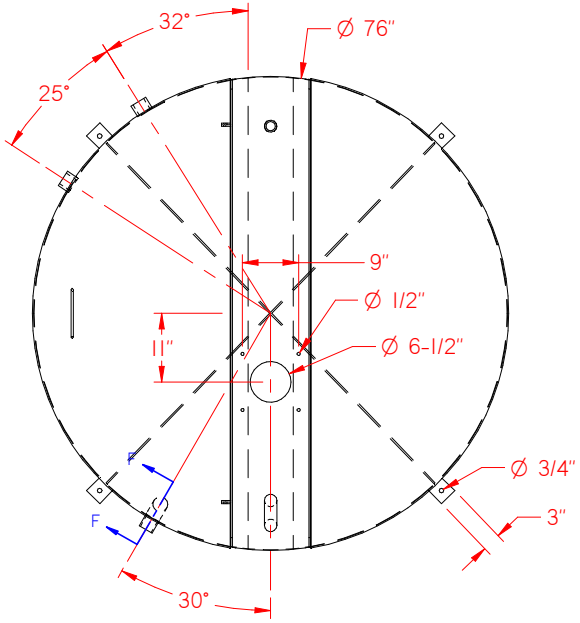


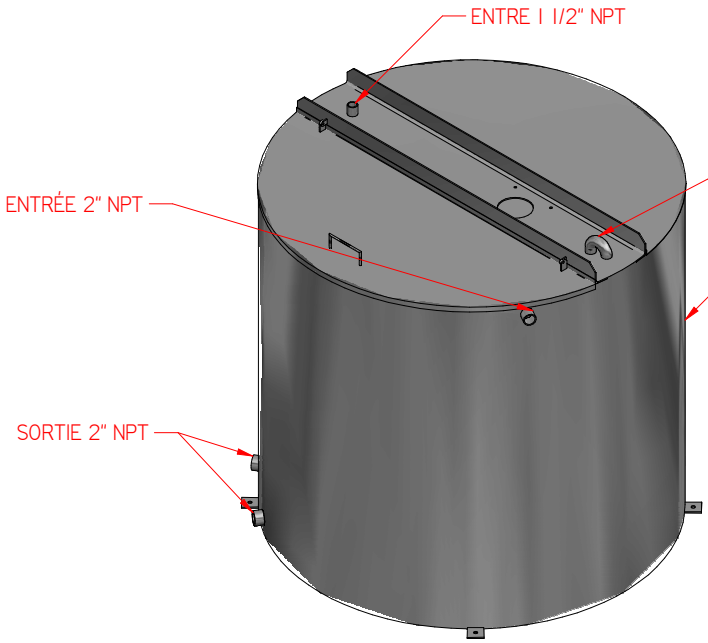


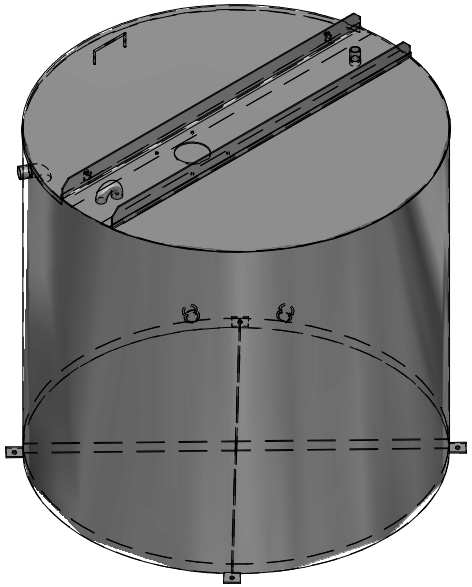

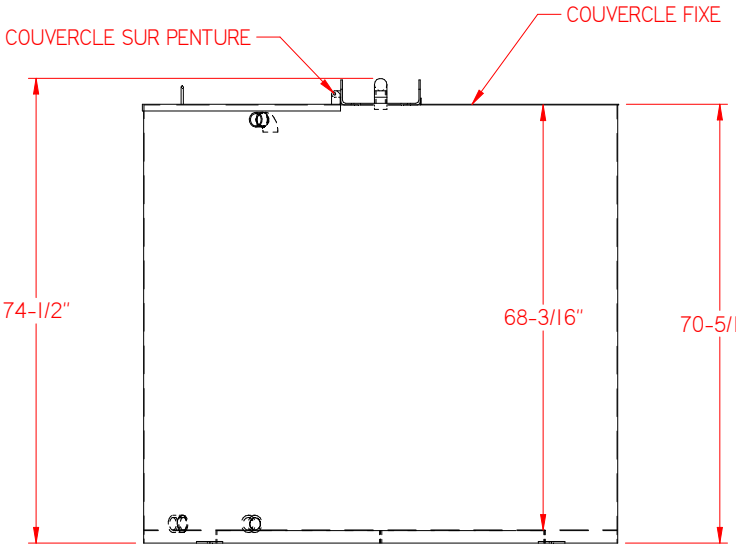


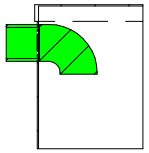

SECTION F-F

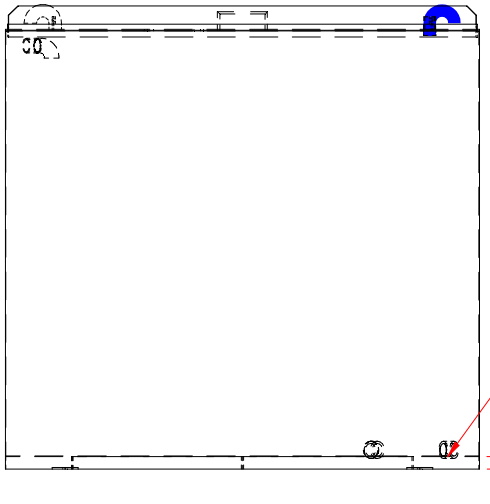


| DESSIN D'APPROBATION | |
|---|---|
| DATE: | |
| APPROUVÉ PAR (LETTRES MOULÉES): | |
| SIGNATURE: | |

QTÉ: IX

Ce document est la propriété de Lacal Technologie Inc. Il ne doit pas être dévoilé, utilisé ou reproduit en tout ou en parties sans l'autorisation écrite de Lacal Technologie Inc.

Tolérancement (Sauf indications contraires)
Coupe: ± 1/16"
Pliage: ± 0.5°
Usinage: ± 0.005"
Montage: ± 1/16"

LACAL

Projet: 21716-00 PCP
Titre: RESERVOIR 4300L ET 5075L
Dessiné par: DM
Date: 18-03-2021
Vérifié par:
No dessin: 21716.00.APPROBATION

# SODIUM THIOSULFATE TRANSFER PUMP
# MODEL FC5010-17
# 1 HP, 575 VOLTS

**Workshop drawing :**

- □ Approuved as is
- □ Approuved with correction(s)
- □ Rejected

**Approuved by**

Name : _____

Title : _____

Compagnie : _____

Signature : _____

*3076 A, Bernard-Pilon, St-Mathieu de Beloeil, Qc, J3G 4S5  Tél.: (450) 922-4224 / Fax: (450) 922-4223*

# TC & FC SERIES CENTRIFUGAL PUMPS

## Pro-Stainless Steel Series Centrifugal Pumps

The **Webtrol Pro-Stainless Steel Series Centrifugal** are designed for dependable performance and rugged continuous duty service.

When you need a corrosion and erosion resistant pump, the Pro-Stainless Steel Centrifugal line of pumps from Webtrol is your logical choice.

These pumps are guaranteed tough, engineered for the professional and built for lasting performance and value.



### Features And Benefits

- **Close Coupled** design saves space and simplifies maintenance and installation.
- **Centerline Discharge** ensures maximum resistance to misalignment and distortion caused by the piping connections.
- **Back Pullout** design allows for maintenance of impeller and mechanical seal without removal of suction/discharge piping.
- **High Operating Efficiencies** over a wide range of capacities which lowers operating cost.
- **Mechanical Seals** and case o-rings are of high quality materials for standard pumping requirements. Optional high temperature and chemical resistant are available.

### Performance

Capacities to 600 GPM
Pressures to 120 PSI

### Typical Services

- Pressure Boosting
- Ultrapure Water Systems
- Deionized Systems
- Distribution Systems
- Pharmaceutical Services
- Water Reclamation
- Sprinkler And Irrigation
- General Pump Applications
- Beverage Processing
- Parts Washers
- Cooling Towers
- Jockey Pump
- Liquid Transfer
- Heat Exchangers
- Car Wash
- Spray systems
- Scrubbers
- Poultry

# TC & FC STAINLESS STEEL CENTRIFUGAL SPECIFICATIONS



## TC Models

| | | |
|---|---|---|
| **Size:** | Suction | TC70 . . . . . .1 1/4" NPT<br>TC120 . . . . . .1 1/4" NPT<br>TC200 . . . . . .1 1/2" NPT |
| | Discharge | All TC Models . . . . . .1" NPT |
| **HP Range:** | | 1/2 HP to 1 1/2 HP - 1750 RPM<br>3/4 HP to 3 HP - 3450 RPM |
| **Performance:** | | Capacity - 5.5 GPM to 90 GPM<br>Discharge - 8 PSI to 63 PSI<br>Liquid - clean water<br>Liquid Temp. - 212°F (250°F opt.)<br>Max. Working Pressure - 125 PSI |
| **Materials:** | | Casing - 304L Stainless<br>Impeller - 304L Stainless<br>Shaft - Stainless<br>Mechanical Seal - Type 21 |
| **Motor:** | | NEMA 56J frame / 60 Hz<br>Built in overload protection<br>(single phase models) |



## FC Models

| | | |
|---|---|---|
| **Size:** | Suction<br>150 lb. ANSI | FC32 . . . . . .2" ANSI<br>FC40 . . . . . .2 1/2" ANSI<br>FC50 . . . . . .2 1/2" ANSI<br>FC65 . . . . . .3" ANSI |
| | Discharge<br>150 lb. ANSI | FC32 . . . . . .1 1/4" ANSI<br>FC40 . . . . . .1 1/2" ANSI<br>FC50 . . . . . .2" ANSI<br>FC65 . . . . . .2 1/2" ANSI |
| **HP Range:** | | 1 HP to 2 HP - 1750 RPM<br>3 HP to 30 HP - 3450 RPM |
| **Performance:** | | Capacity - 13 GPM to 600 GPM<br>Discharge - 6 PSI to 120 PSI<br>Liquid - clean water<br>Liquid Temp. - 212°F (250°F opt.)<br>Max. Working Pressure - 230 PSI |
| **Materials:** | | Casing - 304L Stainless<br>Impeller - 304L Stainless<br>Shaft - Stainless<br>Mechanical Seal - Type 21 |
| **Motor:** | | NEMA JM, TC, TSC frame / 60 Hz |

# FC50 SERIES GROUP CURVES

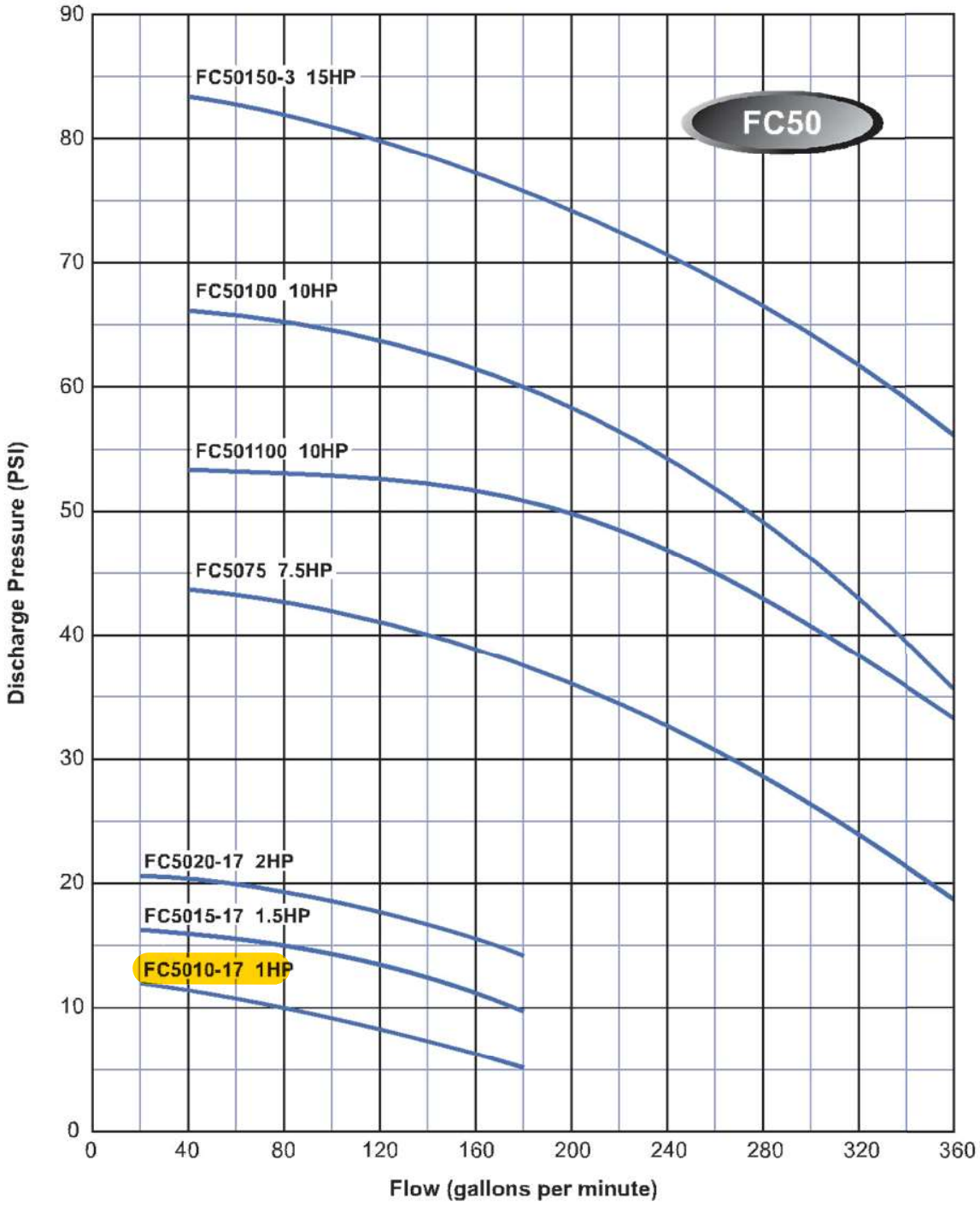

# STAINLESS STEEL CENTRIFUGAL CURVES - FC Series

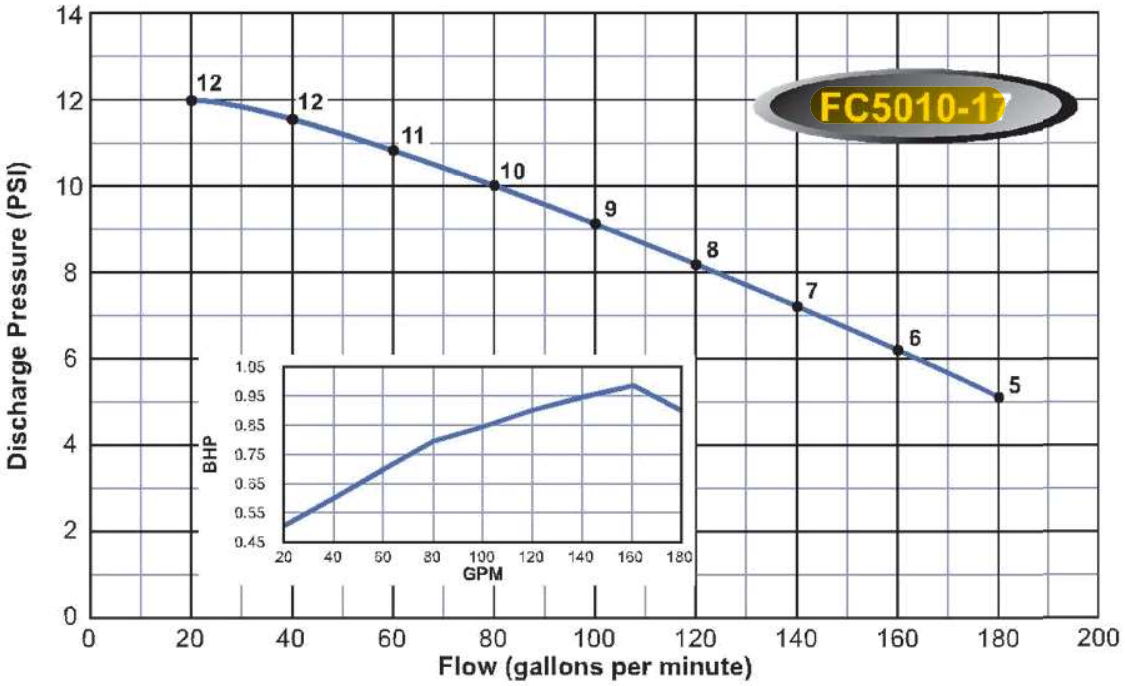


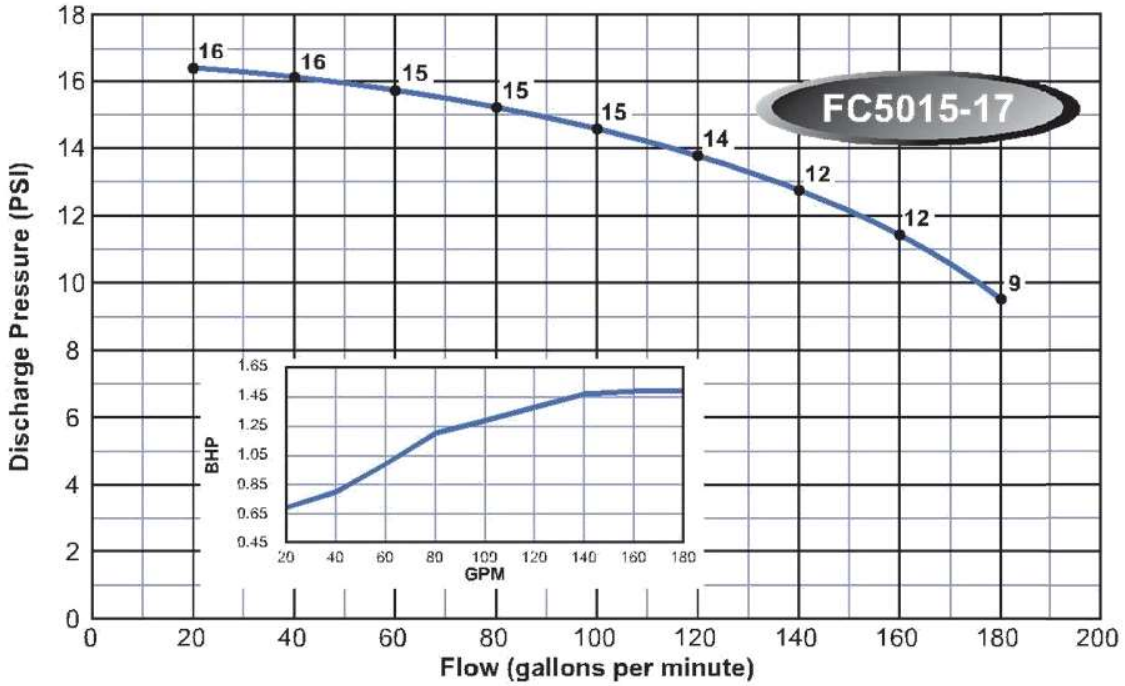


Note:
Curves are based on 60 Hz 3450 rpm motors. 50 Hz 2875 rpm curves are available. These curves are for general guidance only, individual pump curves are available upon request. A certified curve may be requested for an additional cost. Webtrol will build pumps to fit your specific needs, contact factory for pricing.

# STAINLESS STEEL CENTRIFUGAL PUMP
## Dimensions For FC Series - Page 1

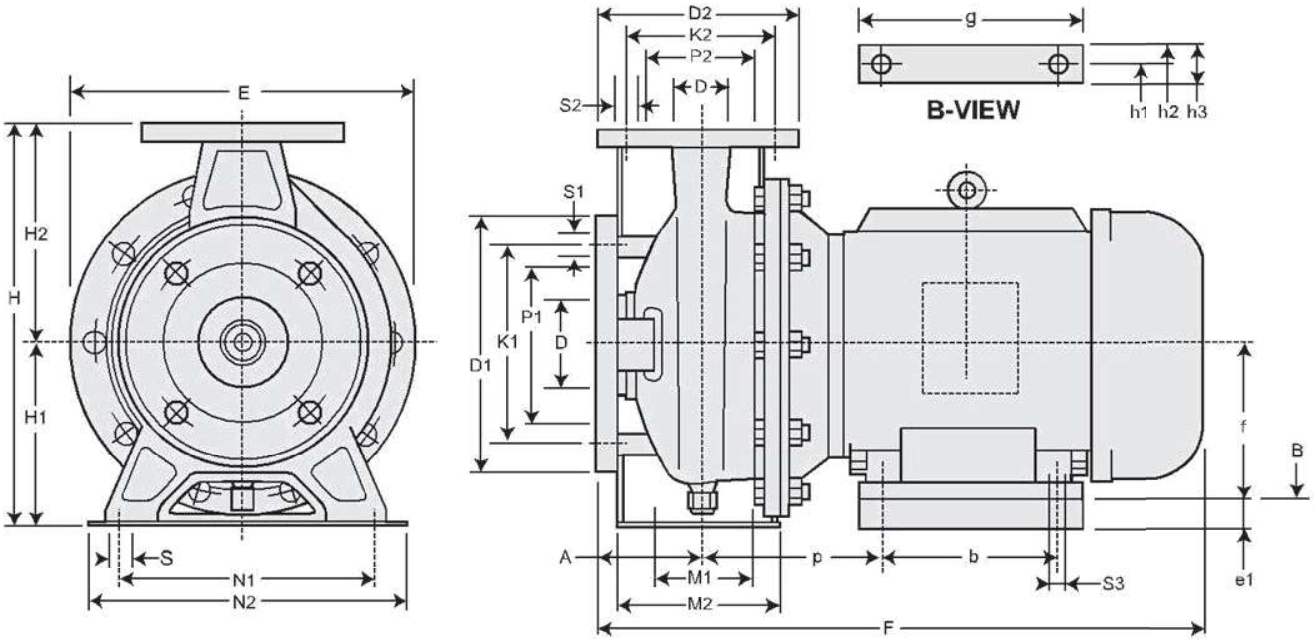


| Model No. | Suction Flange (inches) | | | | | Discharge Flange (inches) | | | | | Pump Dimension (inches) | | | | | | | | | |
|---|---|---|---|---|---|---|---|---|---|---|---|---|---|---|---|---|---|---|---|---|
| | D | P1 | K1 | D1 | S1 | D | P2 | K2 | D2 | S2 | A | E | H | H1 | H2 | M1 | M2 | N1 | N2 | S |
| FC3230 | 2 | 3 3/4 | 4 15/16 | 6 1/2 | 11/16 | 1 1/4 | 2 1/2 | 3 1/2 | 5 1/2 | 5/8 | 3 1/8 | 8 3/8 | 9 15/16 | 4 7/16 | 5 1/2 | 2 3/4 | 4 1/2 | 5 1/2 | 7 1/2 | 9/16 |
| FC32A50 | 2 | 3 3/4 | 4 15/16 | 6 1/2 | 11/16 | 1 1/4 | 2 1/2 | 3 1/2 | 5 1/2 | 5/8 | 3 1/8 | 10 | 11 1/2 | 5 3/16 | 6 5/16 | 2 3/4 | 4 5/8 | 7 1/2 | 9 7/16 | 9/16 |
| FC32B50 | 2 | 3 3/4 | 4 15/16 | 6 1/2 | 11/16 | 1 1/4 | 2 1/2 | 3 1/2 | 5 1/2 | 5/8 | 3 1/8 | 10 | 11 1/2 | 5 3/16 | 6 5/16 | 2 3/4 | 4 5/8 | 7 1/2 | 9 7/16 | 9/16 |
| FC3275 | 2 | 3 3/4 | 4 15/16 | 6 1/2 | 11/16 | 1 1/4 | 2 1/2 | 3 1/2 | 5 1/2 | 5/8 | 3 1/8 | 11 9/16 | 13 3/8 | 6 5/16 | 7 1/16 | 2 3/4 | 4 11/16 | 7 1/2 | 9 7/16 | 9/16 |
| FC32100 | 2 | 3 3/4 | 4 15/16 | 6 1/2 | 11/16 | 1 1/4 | 2 1/2 | 3 1/2 | 5 1/2 | 5/8 | 3 1/8 | 11 9/16 | 13 3/8 | 6 5/16 | 7 1/16 | 2 3/4 | 4 11/16 | 7 1/2 | 9 7/16 | 9/16 |
| FC40A50 | 2 1/2 | 4 9/16 | 5 11/16 | 7 5/16 | 11/16 | 1 1/2 | 2 7/8 | 3 7/8 | 5 7/8 | 5/8 | 3 1/8 | 8 3/8 | 9 15/16 | 4 7/16 | 5 1/2 | 2 3/4 | 4 1/2 | 6 5/16 | 8 1/4 | 9/16 |
| FC40B50 | 2 1/2 | 4 9/16 | 5 11/16 | 7 5/16 | 11/16 | 1 1/2 | 2 7/8 | 3 7/8 | 5 7/8 | 5/8 | 3 1/8 | 8 3/8 | 9 15/16 | 4 7/16 | 5 1/2 | 2 3/4 | 4 1/2 | 6 5/16 | 8 1/4 | 9/16 |
| FC4075 | 2 1/2 | 4 9/16 | 5 11/16 | 7 5/16 | 11/16 | 1 1/2 | 2 7/8 | 3 7/8 | 5 7/8 | 5/8 | 3 1/8 | 10 | 11 1/2 | 5 3/16 | 6 5/16 | 2 3/4 | 4 5/8 | 7 1/2 | 9 7/16 | 9/16 |
| FC40100 | 2 1/2 | 4 9/16 | 5 11/16 | 7 5/16 | 11/16 | 1 1/2 | 2 7/8 | 3 7/8 | 5 7/8 | 5/8 | 3 1/8 | 10 | 11 1/2 | 5 3/16 | 6 5/16 | 2 3/4 | 4 5/8 | 7 1/2 | 9 7/16 | 9/16 |
| FC40A150-3 | 2 1/2 | 4 9/16 | 5 11/16 | 7 5/16 | 11/16 | 1 1/2 | 2 7/8 | 3 7/8 | 5 7/8 | 5/8 | 3 15/16 | 11 9/16 | 13 3/8 | 6 5/16 | 7 1/16 | 2 3/4 | 4 1/2 | 8 3/8 | 10 7/16 | 9/16 |
| FC40B150-3 | 2 1/2 | 4 9/16 | 5 11/16 | 7 5/16 | 11/16 | 1 1/2 | 2 7/8 | 3 7/8 | 5 7/8 | 5/8 | 3 15/16 | 11 9/16 | 13 3/8 | 6 5/16 | 7 1/16 | 2 3/4 | 4 1/2 | 8 3/8 | 10 7/16 | 9/16 |
| FC5075 | 2 1/2 | 4 9/16 | 5 11/16 | 7 5/16 | 11/16 | 2 | 3 3/4 | 4 15/16 | 6 1/2 | 11/16 | 3 15/16 | 10 | 11 1/2 | 5 3/16 | 6 5/16 | 2 3/4 | 4 1/2 | 7 1/2 | 9 7/16 | 9/16 |
| FC50100 | 2 1/2 | 4 9/16 | 5 11/16 | 7 5/16 | 11/16 | 2 | 3 3/4 | 4 15/16 | 6 1/2 | 11/16 | 3 15/16 | 10 | 11 1/2 | 5 3/16 | 6 5/16 | 2 3/4 | 4 1/2 | 7 1/2 | 9 7/16 | 9/16 |
| FC50150-3 | 2 1/2 | 4 9/16 | 5 11/16 | 7 5/16 | 11/16 | 2 | 3 3/4 | 4 15/16 | 6 1/2 | 11/16 | 3 15/16 | 11 11/16 | 13 3/8 | 6 5/16 | 7 1/16 | 2 3/4 | 4 1/2 | 8 3/8 | 10 7/16 | 9/16 |

Note: Motor dimensions on following page.

DRAWING #: 6600-000-I-1211
25 mm

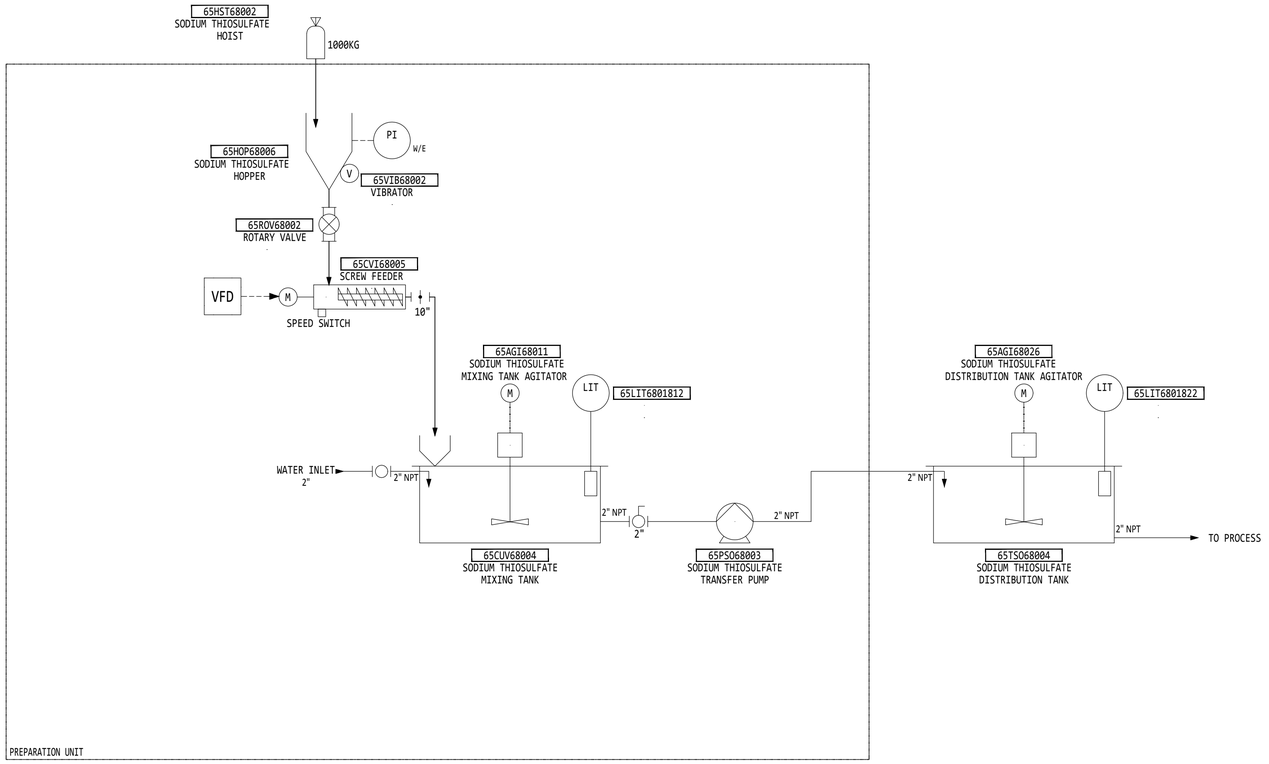


**ASDR**

**FOR TENDER**

DO NOT USE FOR CONSTRUCTION

SEAL & SIGNATURE

| REV. | DATE | DESCRIPTION | BY. | VER. | APP. |
|---|---|---|---|---|---|
| T0 | 2021-04-08 | FOR TENDER | AN | DM/EC | DM/EC |

THE INFORMATION HERE ON IS THE PROPERTY OF ASDR AND MUST BE RETURNED UPON REQUEST. WITHOUT WRITTEN PERMISSION, ANY COPYING TRANSMITTAL TO OTHERS AND ANY USE EXCEPT THAT FOR WHICH IT IS LOANED IS PROHIBITED.

CLIENT

| | |
|---|---|
| INFO CLIENT | - |

**ASDR**

| | | |
|---|---|---|
| DRAWN BY | AMINATA NIASSE, CEP | |
| VERIFIED BY | DAN MISIANO / ETIENNE CLERMONT | |
| APPROVED BY | DAN MISIANO / ETIENNE CLERMONT | |
| CREATION DATE | SCALE | PROJECTION |
| 2021-04-06 | N.TS. | |

DRAWING TITLE

PROCESS WATER TREATEMENT - GENERAL
INSTRUMENTATION
PREPARATION UNIT
SODIUM THIOSULFATE

| PROJECT # | DRAWING # | REV. | SHEET |
|---|---|---|---|
| 01939 | 6600-000-I-1211 | T0 | 1/1 |

SECTOR–LEVEL – DISCIPLINE – SEQUENTIAL #

IMPRIMÉ PAR : Aminata Amary Niasse | DATE D'IMPRESSION : 2021-05-05 | PLUME D'IMPRESSION : ASDR Noir.ctb
FORMAT DE PAPIER : ISO A1 (594 mm x 841 mm [23.4" x 33.1"]) | PRÉSENTATION : ISO 5457

EN

# VFS

*BUTTERFLY VALVES*

1

# TECHNICAL CATALOGUE

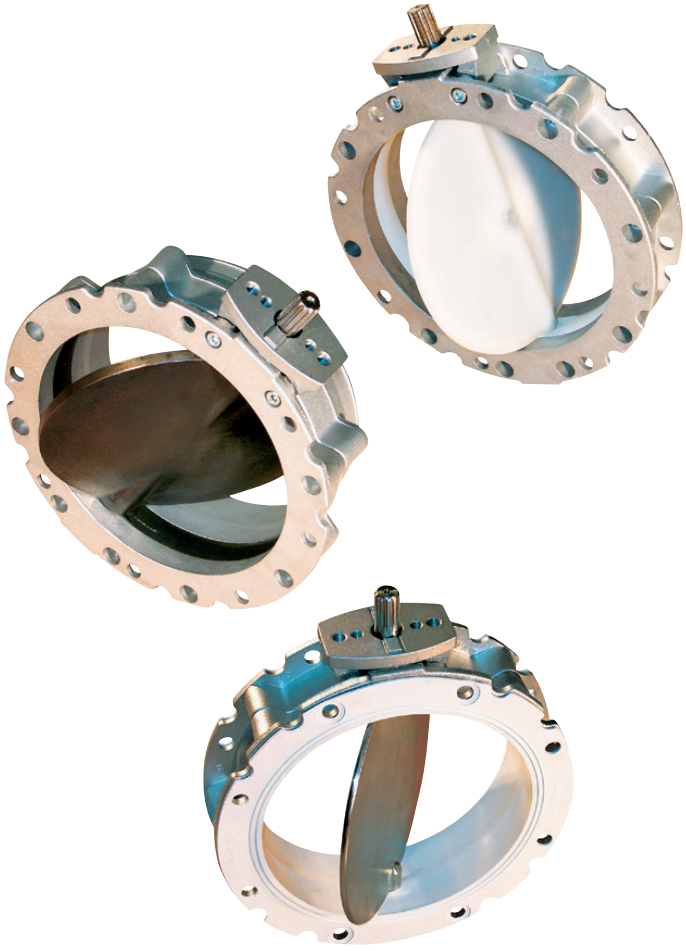


**Manual No. VAL.126.--.T.EN Issue: A1**
**Latest update: January 2015**

**ORIGINAL INSTRUCTIONS IN ENGLISH**



**WAMGROUP S.p.A.**
Via Cavour, 338
41030 Ponte Motta
Cavezzo (MO) - ITALY

☎ + 39 / 0535 / 618111
**fax** + 39 / 0535 / 618226
**e-mail** info@wamgroup.com
**internet** www.wamgroup.com


WAMGROUP®

WAM®

All the products described in this catalogue are manufactured according to **WAMGROUP S.p.A. Quality System procedures**. The Company's Quality System, certified in July 1994 according to International Standards **UNI EN ISO 9002** and extended to the latest release of **UNI EN ISO 9001**, ensures that the entire production process, starting from the processing of the order to the technical service after delivery, is carried out in a controlled manner that guarantees the quality standard of the product.

**This publication cancels and replaces any previous edition and revision.**
**We reserve the right to implement modifications without notice.**
**This catalogue cannot be reproduced, even partially, without prior written consent by the Manufacturer.**

## SUMMARY

**1.0** DESCRIPTION + FUNCTION ..... 1
**2.0** APPLICATIONS ..... 1
**3.0** STANDARD SUPPLY AND OPTIONS ..... 2
**3.1** Description of the standard valve version ..... 2
**3.2** Range ..... 3
**3.3** Options ..... 3
**3.4** Actuators and accessories ..... 4
**3.5** Compatibility (valves only) ..... 5
**4.0** LIMITS OF USE ..... 6
**5.0** DIMENSIONS, WEIGHT, MAINTENANCE AREAS ..... 7
**6.0** TECHNICAL REQUIREMENTS ..... 9
**6.1** Electrical requirements ..... 9
**6.2** Pneumatic requirements ..... 9
**6.3** Mechanical requirements ..... 9
**7.0** CERTIFICATES AND PATENTS ..... 10

## 1.0 DESCRIPTION + FUNCTION

**VFS** Butterfly Valves consist of two high-pressure die-cast semi-bodies manufactured from aluminium alloy, a disc and a seal which is made from materials and shaped to be chosen on the basis of the application type.

**VFS** Butterfly Valves are used in all types of powder and granular material processing plants where interception of gravity-fed or pneumatically conveyed dry materials is required. They are fitted beneath hoppers, bins, silos, screw or other type conveyors, or to intercept pneumatic conveying ducts. Due to their special design and to the engineering materials used, they represent a particularly cost-effective yet most efficient solution

## 2.0 APPLICATIONS

The **VFS** Butterfly Valve it closes hoppers, bins, silos that contain powder or granular material.

What used to be custom-built items for specific applications, have been turned by **WAM®** into a mass-produced industrial product with features that allow extremely versatile use.

## 3.1 Description of the standard valve version

The standard supply of the **VFS** Butterfly Valve is not provided with an actuator.
The **VFS** Butterfly Valve consist of two high-pressure die-cast semi-bodies manufactured from aluminium alloy, a swivel disc made from cast iron or stainless steel and **SINT**® engineering polymer coating and an elastomer seal.
For the food industry a version with stainless steel disc and an FDA-approved integral seal is available.
While V1FS comes with a top flange and a bottom section suitable for the attachment of a flexible sleeve, V2FS has an identical top and bottom flange.

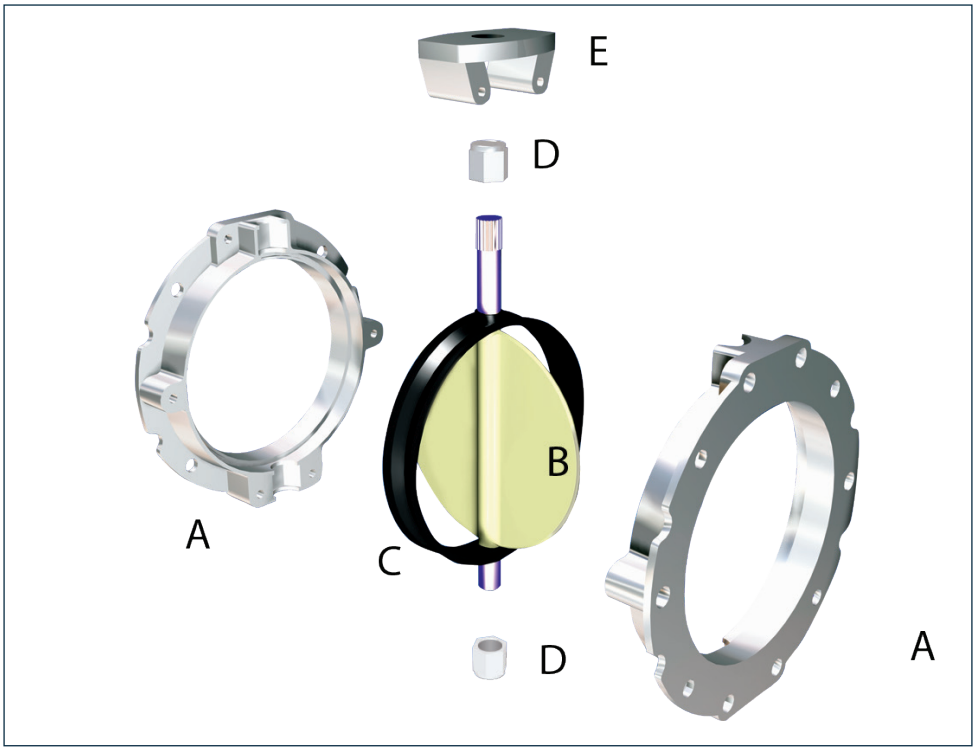


**A)** 2 semi bodies manufactured from aluminium alloy;
**B)** Disc;
**C)** Disc seal;
**D)** 2 antifriction bushes;
**E)** Support bracket.

## 3.2 Range

**Butterfly valve elements:**

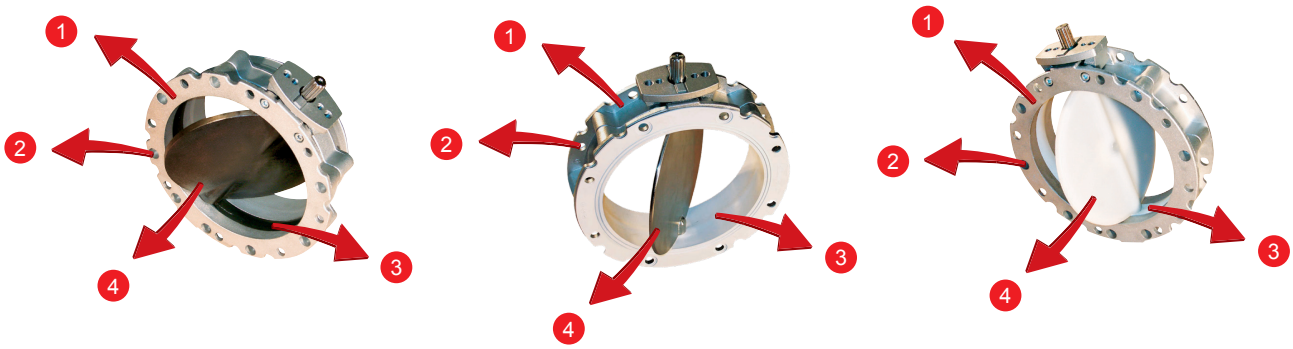


**1)** Aluminium alloy half-bodies
**2)** DN: 100, 150, 200, 250, 300, 350, 400
**3)** NBR seal
**4)** Discs: cast iron (GB), engineering polymer **SINT®** (S), SS 304 (Z)

The standard supply includes: two flanges aluminium alloy butterfly valve, a NBR white seal with an engineering polymer dustproof disc (for gravity flow applications).

## 3.3 Options

| | Version | Ø 100÷300 mm | Ø 350÷400 mm |
|---|---|---|---|
| **Double flange** | V2 | O | O |
| **Single flange** | V1 | O | O |
| **White NBR seal** | B | O | O |
| **Black NBR seal** | N | O | O |
| **Food industry FDA approved White NBR seal** | I | O | |
| **SINT® engineering polymer disc** | S | O | O |
| **SS disc** | Z | O | O |
| **Cast iron disc** | GB | O | O |
| **Pressure-proof seal up to 0.2 bar** | T | O | O |

It is available the version for operation in potentially explosive atmosphere (Directive 94/9/EC) that matches the requirements for the II group, 3D T4 (135°C) category.

## 3.4 Actuators and accessories

On all valves there can be applied several actuators:



1 - Manual actuator **(CM version)**

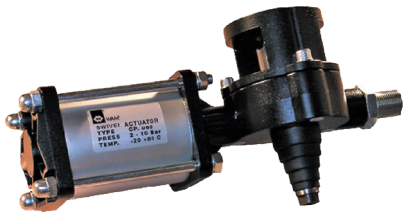

2 - Pneumatic actuator **(CP version)**



3 - Electromechanical actuator **(AE version)**

All these systems are perfectly interchangeable (see cat.040)

The valves don't envisage specific accessories but the actuators do.
The different actuators and accessories are supplied unfitted and separately from the device.

| | Type | Pneumatic | Electromechanical | Manual |
|---|---|---|---|---|
| **Microswitch box** | MIC | O | O | |
| **Mechanical limit switch plate** | LSM0 | O | O | |
| **Inductive limit switch plate** | LSM3 | | | O |
| **Mechanical limit switch** | LSM9 | O | O | |
| **Inductive limit switch** | KXS1 | | | O |
| **Monostable/Bistable solenoid valve** | V5V | O | | |
| **Coils** | BOB | O | | |
| **Safety wheel** | CV | | O | |

## 3.5 Compatibility (valves only)



### WITH MANUAL ACTUATOR

| | |
|---|---|
| 100 | CM2 |
| 150 | CM2 |
| 200 | CM2 |
| 250 | CM2 |
| 300 | CM2 |
| 350 | CM3B |
| 400 | CM3B |



### WITH ELECTROPNEUMATIC ACTUATOR

| | little load | high load |
|---|---|---|
| 100 | CP063 | CP063 |
| 150 | CP063 | CP101 |
| 200 | CP101 | CP101 |
| 250 | CP101 | CP126* |
| 300 | CP101 | CP126* |
| 350 | CP126 | CP126T |
| 400 | CP126 | CP126T |

Actuators accessories

V5V8 (CP063, CP101) + BOB 02450 AC / BOB 04850 AC / BOB 11050 AC / BOB 22050 AC

V5V4 (CP126, CP126T) + BOB 024CC DC / BOB 048CC DC / BOB 110CC DC / BOB 220CC DC

\+ MIC 23 o LSM0+LSM9

* bushing adaptor required

The choice of the actuator type depends on the material type and the application.

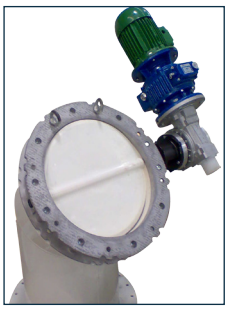

### WITH DRIVE UNIT

| | little load | high load |
|---|---|---|
| 100 | AE040A11 | AE050A11 |
| 150 | AE040A11 | AE051A11 |
| 200 | AE051A11 | AE060A11 |
| 250 | AE051A11 | AE070A1D |
| 300 | AE060A11 | AE070A21 |
| 350 | AE060A21 | AE070A2D |
| 400 | AE070A2D | AE070A2D |

Actuators accessories

\+ MIC 23• o (LSM0+LSM9) •

• Signalling system required

The choice of the actuator type depends on the material type and the application.

- Environmental
  - environment temperature: -20°C/ + 40°C
  - material temperature: according to the disc type chosen +80 °C with a engineering polymer, +110°C with a stainless steel or cast iron disc
  - operation pressure: differential pressure up to 0.2 bar
  - the empty run noise level values is 20 db(A) at 1 m distance; this can vary on the basis of the material handled or of the actuator fitted
  - hazards: for possible chemical and physical compatibility tests between the powder and the material the valve is made from, please contact WAMGROUP®
- Application limits: these valves are specifically designed for dry powders
- ATEX
  - the valve was designed and tested to operate in potentially explosive atmosphere classified as zone 22 and with explosion class powders that doesn't exceed St2 (see chapter 7.0 CERTIFICATES AND PATENTS)

All dimensions are expressed in mm unless otherwise specified.

Dimensions tolerance: ± 3 mm on main dimensions, ± 2 mm on detailed dimensions.

## V1FS, V2FS

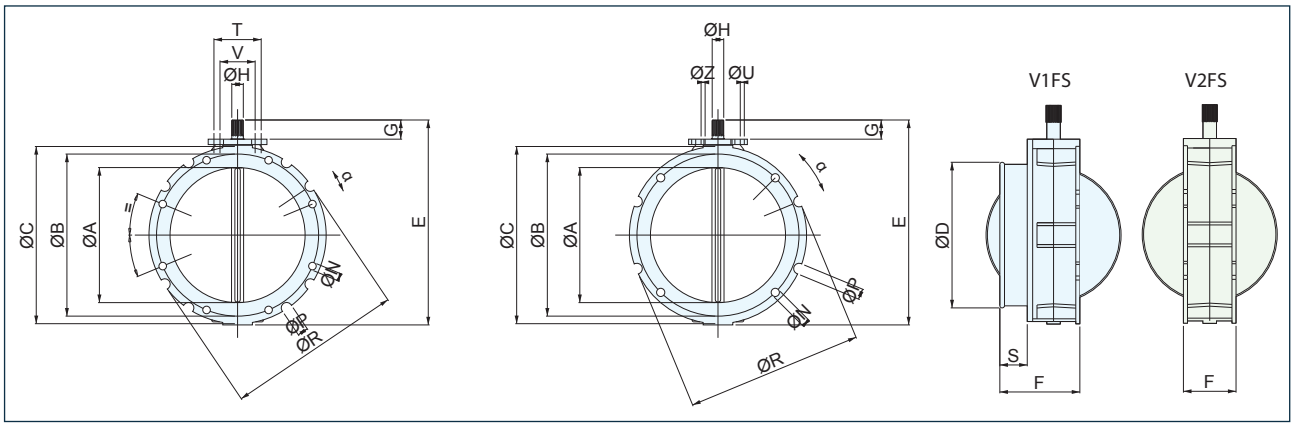


## SINGLE FLANGE BUTTERFLY VALVE FOR SLEEVE CONNECTION

| TYPE | Ø A | Ø B | Ø C | Ø D | E | F | G | ØH DIN 5482 | N Drilling | P External grooves | Ø R | α | S | T | U | V | Z | kg |
|---|---|---|---|---|---|---|---|---|---|---|---|---|---|---|---|---|---|---|
| V1FS 100. | 95 | 180 | 220 | 105 | 250 | 115 | 35 | 22x19 | N°4 x Ø14 | N°4 x Ø20 | 220 | 22°30′ | 40 | 80 | M12 | 50 | M10 | 4 |
| V1FS 150. | 150 | 200 | 228 | 163 | 290 | 115 | 35 | 22x19 | N°4 x Ø14 | N°4 x Ø20 | 228 | 22°30′ | 40 | 80 | M12 | 50 | M10 | 5 |
| V1FS 200. | 200 | 250 | 278 | 213 | 340 | 115 | 35 | 22x19 | N°4 x Ø14 | N°4 x Ø20 | 278 | 22°30′ | 40 | 80 | M12 | 50 | M10 | 6.5 |
| V1FS 250. | 250 | 300 | 328 | 263 | 390 | 115 | 35 | 22x19 | N°8 x Ø14 | N°8 x Ø20 | 325 | 11°15′ | 40 | 80 | M12 | 50 | M10 | 7.5 |
| V1FS 300. | 300 | 350 | 378 | 313 | 440 | 115 | 35 | 22x19 | N°8 x Ø14 | N°16 x Ø20 | 375 | 5°41′ | 40 | 80 | M12 | 50 | M10 | 9 |
| V1FS 350. | 350 | 400 | 440 | 363 | 530 | 123 | 50 | 28x25 | N°8 x Ø14 | N°8 x Ø20 | 440 | 10° | 40 | 80 | M12 | - | - | 16 |
| V1FS 400. | 400 | 470 | 530 | 413 | 580 | 123 | 50 | 28x25 | N°8 x Ø14 | N°16 x Ø20 | 530 | 4°30′ | 40 | 80 | M12 | - | - | 20.5 |

Dimensions in mm

## DOUBLE FLANGE BUTTERFLY VALVE

| TYPE | Ø A | Ø B | Ø C | E | F | G | Ø H DIN 5482 | N Drilling | P External grooves | Ø R | α | T | U | V | Z | kg |
|---|---|---|---|---|---|---|---|---|---|---|---|---|---|---|---|---|
| V2FS 100. | 95 | 180 | 220 | 250 | 77 | 35 | 22x19 | N°4 x Ø14 | N°4 x Ø20 | 220 | 22°30′ | 80 | M12 | 50 | M10 | 4 |
| V2FS 150. | 150 | 200 | 228 | 290 | 77 | 35 | 22x19 | N°4 x Ø14 | N°4 x Ø20 | 228 | 22°30′ | 80 | M12 | 50 | M10 | 5 |
| V2FS 200. | 200 | 250 | 278 | 340 | 77 | 35 | 22x19 | N°4 x Ø14 | N°4 x Ø20 | 278 | 22°30′ | 80 | M12 | 50 | M10 | 6.5 |
| V2FS 250. | 250 | 300 | 328 | 390 | 77 | 35 | 22x19 | N°8 x Ø14 | N°8 x Ø20 | 325 | 11°15′ | 80 | M12 | 50 | M10 | 7.5 |
| V2FS 300. | 300 | 350 | 378 | 440 | 77 | 35 | 22x19 | N°8 x Ø14 | N°16 x Ø20 | 375 | 5°41′ | 80 | M12 | 50 | M10 | 9 |
| V2FS 350. | 350 | 400 | 440 | 530 | 85 | 50 | 28x25 | N°8 x Ø14 | N°8 x Ø20 | 440 | 10° | 80 | M12 | - | - | 16 |
| V2FS 400. | 400 | 470 | 530 | 580 | 85 | 50 | 28x25 | N°8 x Ø14 | N°16 x Ø20 | 530 | 4°30′ | 80 | M12 | - | - | 20.5 |

Dimensions in mm

## V2FS AI

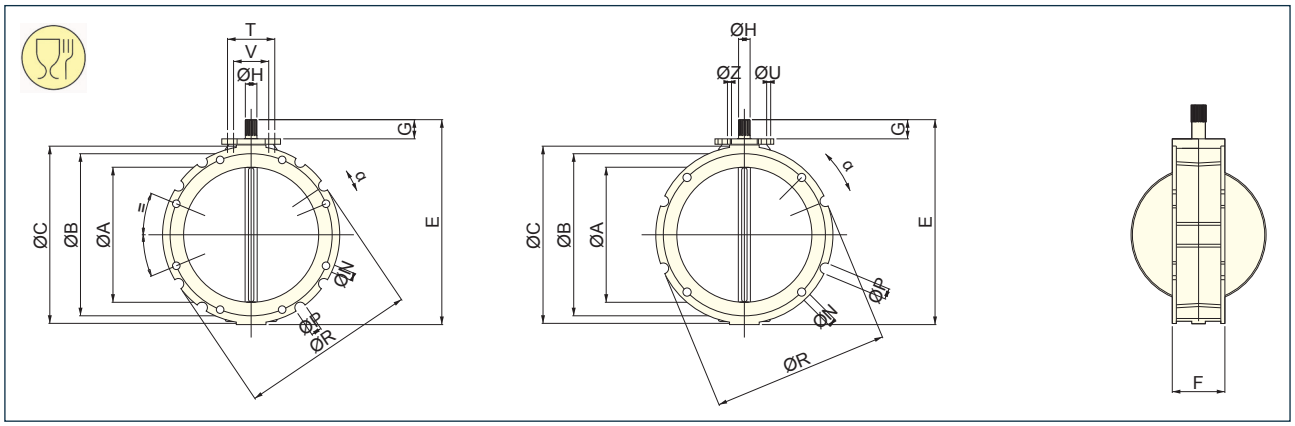


## FOOD-GRADE BUTTERFLY VALVE

| TYPE | Ø A | Ø B | Ø C | E | F | G | Ø H DIN 5482 | N Drilling | P External grooves | Ø R | α | T | U | V | Z | kg |
|---|---|---|---|---|---|---|---|---|---|---|---|---|---|---|---|---|
| V2FS 100. | 90 | 180 | 220 | 250 | 84 | 35 | 22x19 | N°4 x Ø14 | N°4 x Ø20 | 220 | 22°30′ | 80 | M12 | 50 | M10 | 4 |
| V2FS 150. | 145 | 200 | 228 | 290 | 84 | 35 | 22x19 | N°4 x Ø14 | N°4 x Ø20 | 228 | 22°30′ | 80 | M12 | 50 | M10 | 5 |
| V2FS 200. | 195 | 250 | 278 | 340 | 84 | 35 | 22x19 | N°4 x Ø14 | N°4 x Ø20 | 278 | 22°30′ | 80 | M12 | 50 | M10 | 6.5 |
| V2FS 250. | 245 | 300 | 328 | 390 | 84 | 35 | 22x19 | N°8 x Ø14 | N°8 x Ø20 | 325 | 11°15′ | 80 | M12 | 50 | M10 | 7.5 |
| V2FS 300. | 295 | 350 | 378 | 440 | 84 | 35 | 22x19 | N°8 x Ø14 | N°16 x Ø20 | 375 | 5°41′ | 80 | M12 | 50 | M10 | 9 |

Dimensions in mm

## 6.1 Electrical requirements

The standard device doesn't require electrical connections.
For actuators and accessories please refer to the actuator's manual.

## 6.2 Pneumatic requirements

The standard device doesn't require pneumatic connections.
For actuators and accessories please refer to the actuator's manual.

## 6.3 Mechanical requirements

These devices shall not be used as an external support for the machines placed beneath them. It is recommended to fit the valve using screws or stud bolts long enough to ensure a "sandwich" fixing of the valve between the upper and the bottom flanges. Tighten the external screws. The inner screws are used exclusively to secure the valve from the risk of falling in case the conveying machine detaches.
The actuator supplied separately shall be fitted on the valve using screws.

### FLANGE COMPATIBILITY

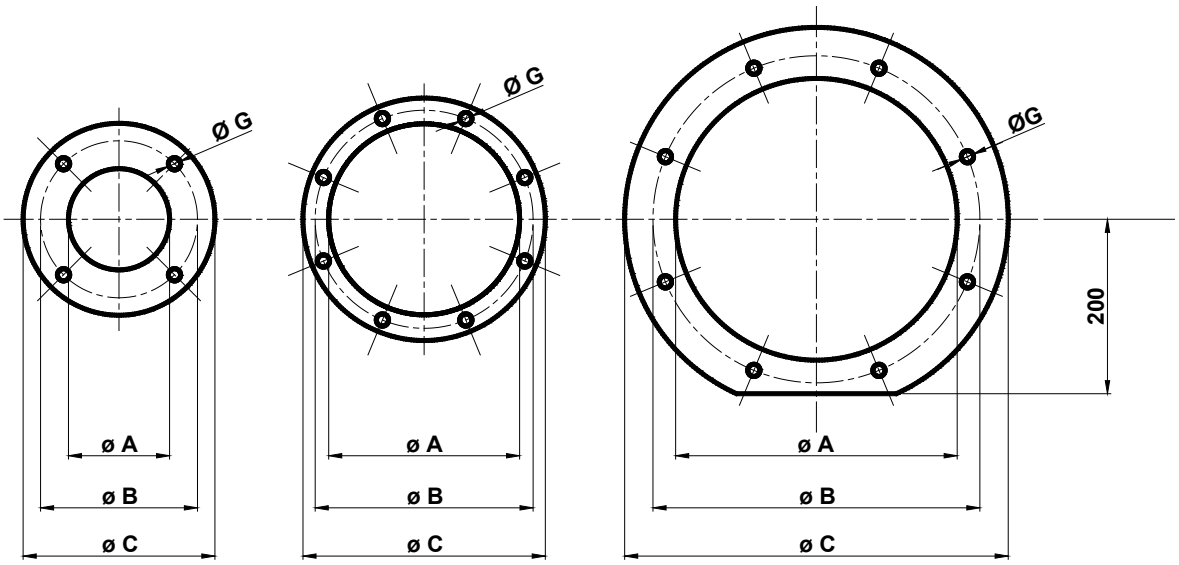

| Fig. | Code | Ø A | Ø B | Ø C | G | | Thickness | VFS | kg |
|---|---|---|---|---|---|---|---|---|---|
| | | | | | N° | Ø | | | |
| 1 | XKF291 | 141 | 180 | 220 | 4 | 13.5 | 6 | 100 | 1 |
| 1 | XKF301 | 118 | 180 | 220 | 4 | 14 | 6 | 100 | 1.5 |
| 1 | XKF311 | 188 | 200 | 228 | 4 | 14 | 6 | 150 | 1.0 |
| 1 | XKF321 | 193 | 250 | 278 | 4 | 14 | 6 | 200 | 1.7 |
| 2 | XKF331 | 219 | 250 | 278 | 8 | 14 | 6 | 200 | 1.3 |
| 2 | XKF341 | 273 | 300 | 328 | 8 | 14 | 6 | 250 | 1.5 |
| 2 | XKF351 | 323 | 350 | 378 | 8 | 14 | 6 | 300 | 1.7 |
| 3 | XKF361 | 323 | 375 | 440 | 8 | 14 | 6 | 300 | 4.0 |
| 2 | XKF371 | 357 | 400 | 440 | 8 | 14 | 6 | 350 | 3.0 |
| 2 | XKF381 | 408 | 470 | 530 | 8 | 14 | 6 | 400 | 5.0 |

## 7.0 CERTIFICATES AND PATENTS

It is available the version for operation in potentially explosive atmosphere (Directive 94/9/EC) that matches the requirements for the II group, 3D T4 (135°C) category.

The valve suits the EN1935/2004 standards.

# FC Series Kit Instructions

12/08 Edition

WEBTROL
Quality Pumps

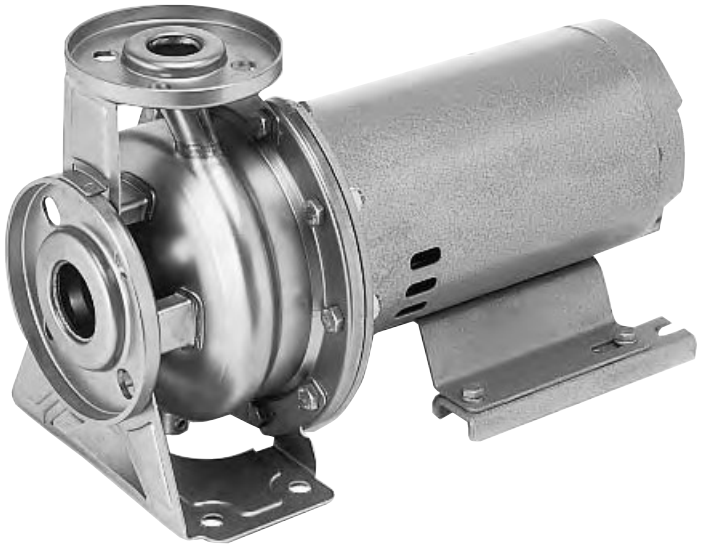

## FC Series
CENTRIFUGAL

## Congratulations On Your Choice In Purchasing This Webtrol Pump

Its Quality is unsurpassed in material and workmanship. If properly installed, it will give many years of trouble free service.

## Kit Inspection And Handling

After receiving your FC Kit, inspect the contents and report to the carrier any items that are damaged or missing. See parts list. Keep all packaging materials until the claim is resolved.



## Parts List

| Description | Qty. |
|---|---|
| Casing with drain plug | 1 |
| Cover | 1 |
| Bracket | 1 |
| Impeller | 1 |
| O-ring | 1 |
| Motor support | 2 |
| Suction seal | 1 |
| Discharge seal | 1 |
| Mechanical seal - (Pt. # 70X118-M purchased separately) | 1 |
| Hardware kit bag | 1 |
| 1) Bolts used to fasten bracket to motor. Size will vary according to pump model. | |
| A) Hex head bolt 3/8" - 16 X 1" | 4 |
| Lock washer external serrated 3/8" | 4 |
| B) Allen head cap screw 3/8" - 16 x 1" | 4 |
| Lock washer external serrated 3/8" | 4 |
| C) Hex head bolt 1/2" - 13 x 1 1/2" | 4 |
| Lock washer external serrated 1/2" | 4 |
| 2) Bolts /nuts used to fasten casing to bracket. Quantity/size will vary according to pump model. | |
| A) Hex head bolt M8 x 30mm (1 3/16") | 8 |
| Hex nut M8 | 8 |
| Lock washer external serrated M8 | 8 |
| B) Hex head bolt M10 x 35mm (1 3/8") | 10/12 |
| Hex nut M10 | 10/12 |
| Lock washer external serrated M10 | 10/12 |
| 3) Bolt used to fasten motor support to pump. Allen head cap screw 3/8" - 16 x 1" | 4 |
| 4) Impeller bolt with teflon gasket 3/8" - 16 x 5/8" | 1 |
| 5) Teflon gasket - see Motor Installation #1 | 1 |
| 6) Black nylon gasket - see mechanical seal installation Installation #6 | 1 |
| 7) Stainless steel shaft sleeve | 1 |
| 8) Key | 1 |

**Additional Parts Required for Assembly:**

Motor - NEMA JM frame / 60Hz / 3450 RPM

Mechanical seal - Pt. # 70X118-M / Type 21, 1 1/8" Ø, 150 PSI

**Lubricants & Sealants Required:**

3-in-1 Oil

Loctite thread locker 242

Silicon Grease

## Motor Installation

Make certain the motor is not connected to a power source. Do not assemble the pump on a motor connected to a power source. Serious injury could occur if the motor starts during pump assembly.

Position the motor on its end with the shaft up. The work surface should be level and capable of supporting the motor.

> **Note:** Prior to installation review Exploded view of FC pump on page 4.

**1.** Position the teflon gasket against the shoulder on the motor shaft. The inside diameter of the teflon gasket will easily slide over the motor shaft.

## Mechanical Seal Installation

**1. A)** For ease of assembly lubricate the driving ring on the mechanical seal with water. Carefully press the rotating seal assembly less spring and cup onto the stainless steel shaft sleeve. Locate as shown.

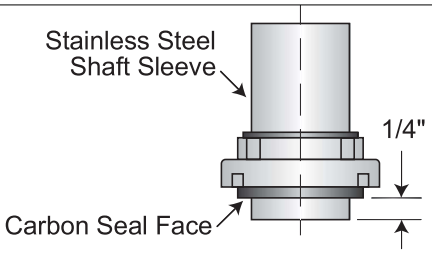


**Rotating Seal Assembly**

**B)** Clean seal cavity in the cover.

**C)** Lubricate the rubber seat ring with mineral oil. Using finger pressure only, press ceramic seat firmly and squarely into the casing cover.

**D)** Clean polished surface of ceramic seal with a soft cloth or tissue to remove all dust and grit.

**2.** Position the bracket over the motor shaft. Fasten the bracket to the motor, tightening the (4) bolts using a cross - tightening pattern. (Tighten the bolts to the factory recommended torque specifications of 3.4 Ft. Lbs.) Overtightening may cause stripping of threads.

**3.** Carefully position the cover containing the ceramic seat over the motor shaft. Be sure the seat face is not damaged during assembly (cracked, scratched, or chipped) or the seal will leak.

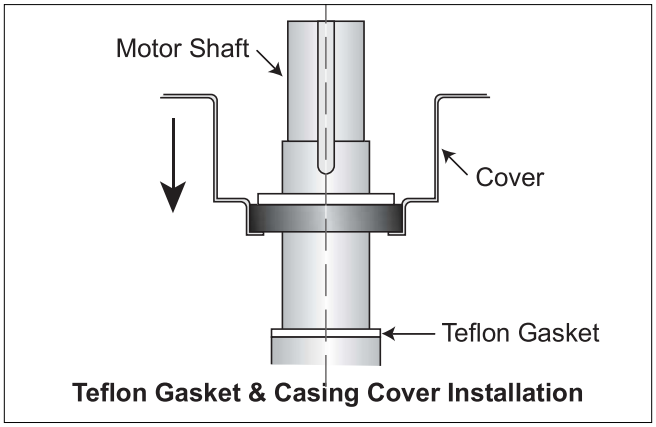


**Teflon Gasket & Casing Cover Installation**

4. To Prevent slip-stick lubricate both the ceramic and carbon seal face with mineral oil.

**Caution:** Do not let oil get on the motor shaft.

**5.** Slide the stainless steel shaft sleeve, with the carbon seal face over the motor shaft until the sleeve contacts the teflon gasket.

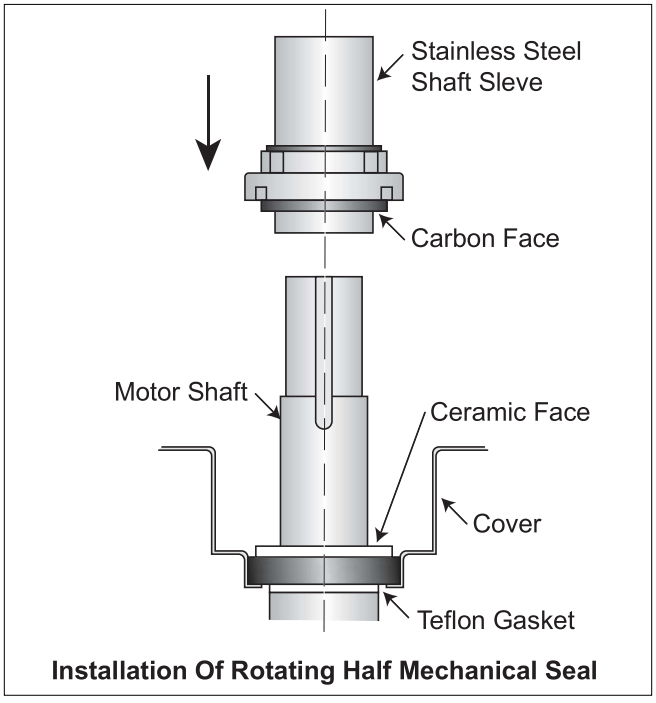


**Installation Of Rotating Half Mechanical Seal**

**6.** Place the spring and spring retainer over the stainless steel shaft sleeve. Then, snap the black nylon gasket into the spring retainer.

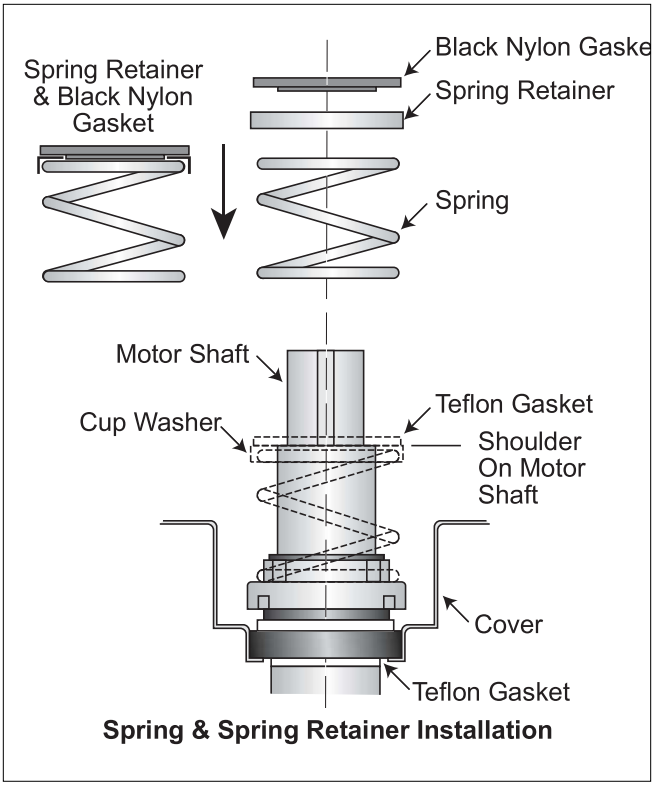


**Spring & Spring Retainer Installation**

**7.** Position the viton o-ring around the cover and lubricate the o-ring with silicon grease. Do not cut, nick, or damage the o-ring during the installation.

## Impeller & Casing Installation

**1.** Install the shaft key in the impeller hub keyway.

**2.** Firmly press the impeller into position by aligning the slot over the shaft key. Press the impeller down the motor shaft until it bottoms and sits squarely against the black nylon gasket and stainless steel shaft sleeve.

**3.** Prior to placing the teflon gasket on the impeller bolt, coat the gasket with silicon grease. This will cause the gasket to stick to the bolt. Install the impeller bolt to secure the impeller to the shaft. Torque bolt to 11 Ft. Lbs. Max. Do not over tighten the bolt, otherwise, the pump may leak. (Use a thread locker - Loctite 242, removable strength, to secure the bolt and prevent it from working loose).

**4.** Install the motor supports, using (4) allen head cap screws.

**5.** Install the casing over the cover. Rotate the casing to align the bolt holes and secure it with bolts, washers, and nuts. Cross tighten the bolts to a maximum torque of 3.4 Ft. Lbs.

## Final Inspection

After assembly, reposition the pump horizontally. Rotate the impeller. If you can turn the impeller with minimum effort and no drag, the pump is operable. If not repeat Impeller and Casing Installation.

## Exploded View

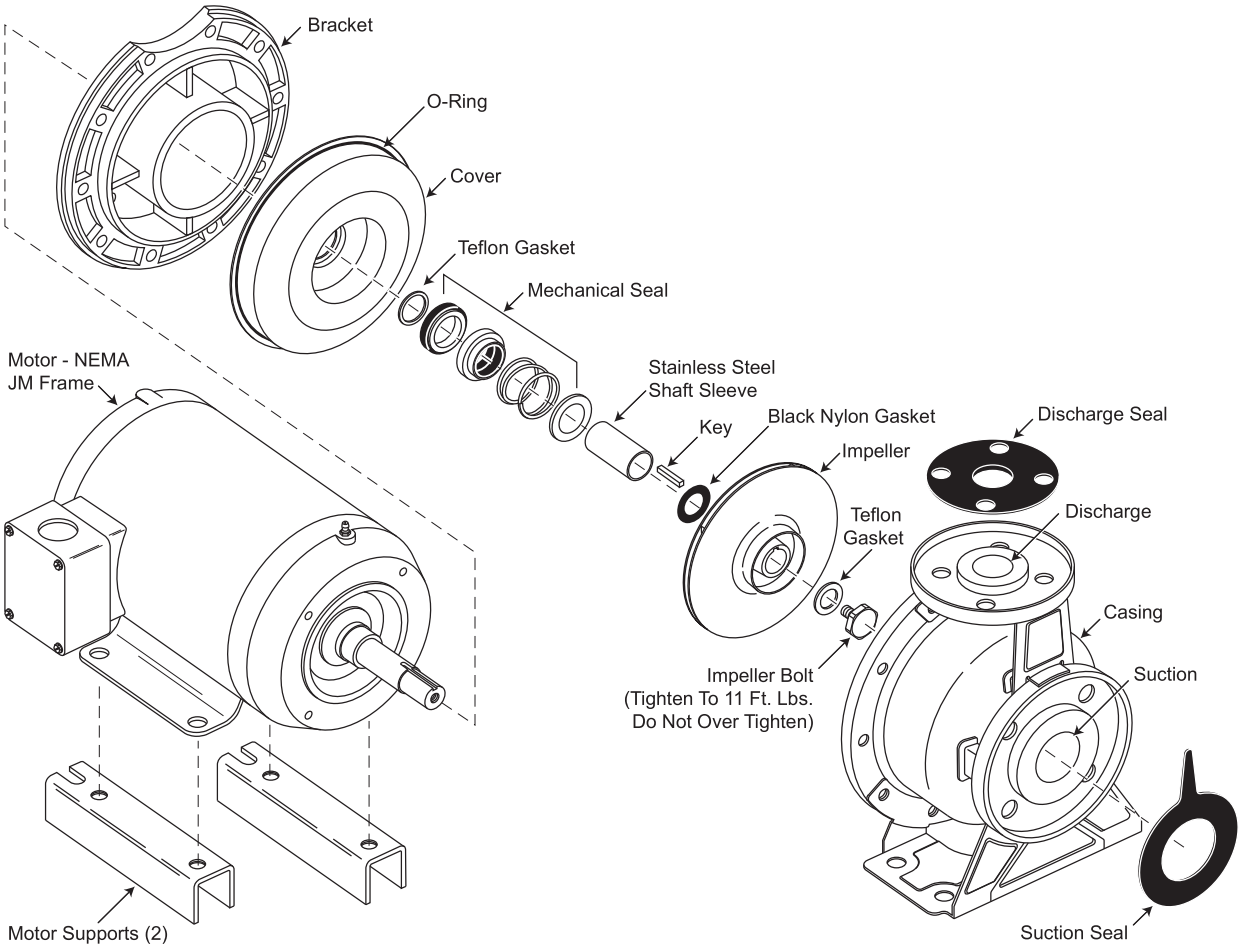


## A Typical Installation

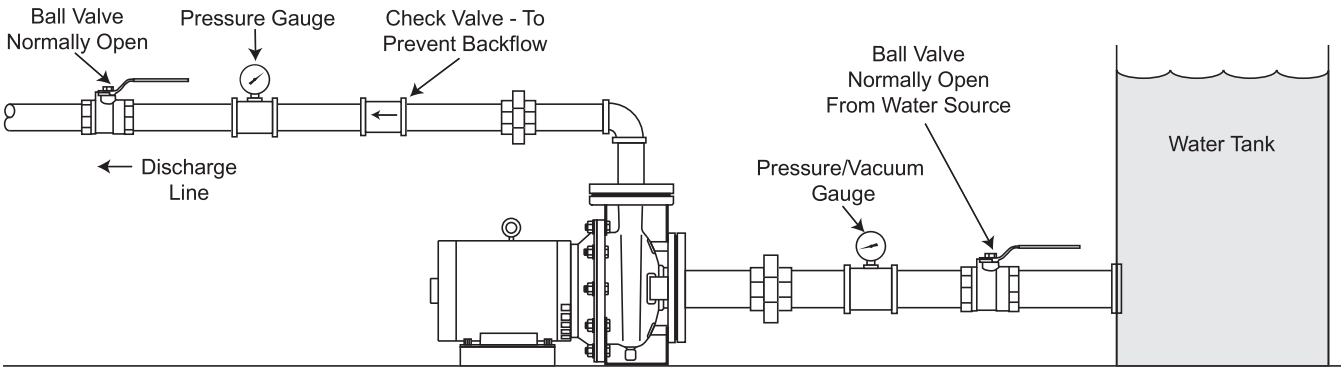


**Weber Industries, Inc. / Manufacturers of Webtrol Products**

8417 New Hampshire Ave. / St. Louis, MO 63123

**Phone:** (314) 631-9200 **Fax:** (314) 631-3738 **E-mail:** comments@webtrol.com

EN

# SBB

*FIBC DISCHARGERS*

1

# TECHNICAL CATALOGUE

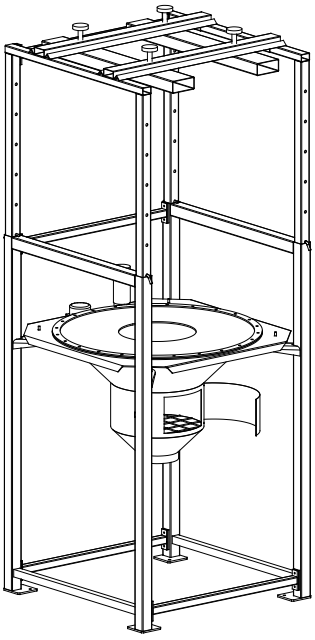

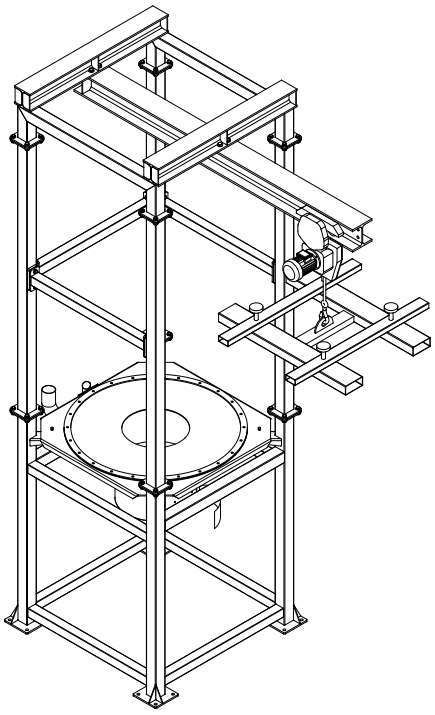


**Manual No. EXT.SBB.--.T.A4.0820.EN Issue: A4**
**Latest Update: August 2020**

**ORIGINAL INSTRUCTIONS IN ENGLISH**



**WAMGROUP S.p.A.**
Via Cavour, 338
41030 Ponte Motta
Cavezzo (MO) - ITALY

☎ + 39 / 0535 / 618111
**fax** + 39 / 0535 / 618226
**e-mail** info@wamgroup.com
**internet** www.wamgroup.com


WAMGROUP®

WAM®

All the products described in this catalogue are manufactured according to **WAMGROUP S.p.A. Quality System procedures**. The Company's Quality System, certified in July 1994 according to International Standards **UNI EN ISO 9002** and extended to the latest release of **UNI EN ISO 9001**, ensures that the entire production process, starting from the processing of the order to the technical service after delivery, is carried out in a controlled manner that guarantees the quality standard of the product.

**This publication cancels and replaces any previous edition and revision.**
**We reserve the right to implement modifications without notice.**
**This catalogue cannot be reproduced, even partially, without prior written consent by the Manufacturer.**

## SUMMARY

**1.0** DESCRIPTION AND TECHNICAL FEATURES ..... 1
**1.1** Description ..... 1
**1.2** Function ..... 1
**2.0** APPLICATION ..... 2
**2.1** Main features ..... 2
**2.2** Indications for use ..... 2
**3.0** STANDARD SUPPLY AND OPTIONS ..... 3
**3.1** Models available ..... 3
**3.2** Basic machine description ..... 5
**3.3** Range - Modular code ..... 9
**3.4** Options ..... 11
**3.5** Applications ..... 33
**4.0** OPERATING LIMITS ..... 36
**5.0** DIMENSIONS AND WEIGHTS ..... 37
**6.0** INFORMATION REQUIRED FOR SIZING THE EQUIPMENT ..... 50

## 1.1 Description

**SBB**-type **FIBC** Dischargers consist of a steel frame complete with a material discharge hopper and an upper mobile cross bar for lifting of the filled up bag by forklift truck into the Discharger.

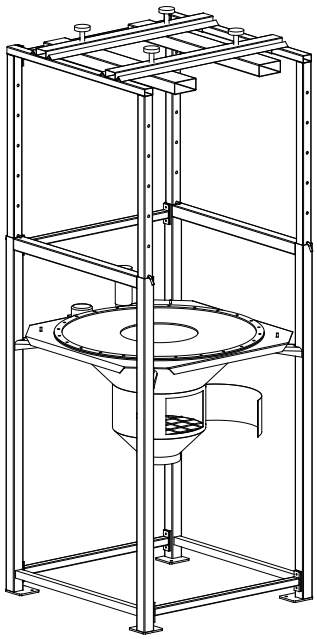

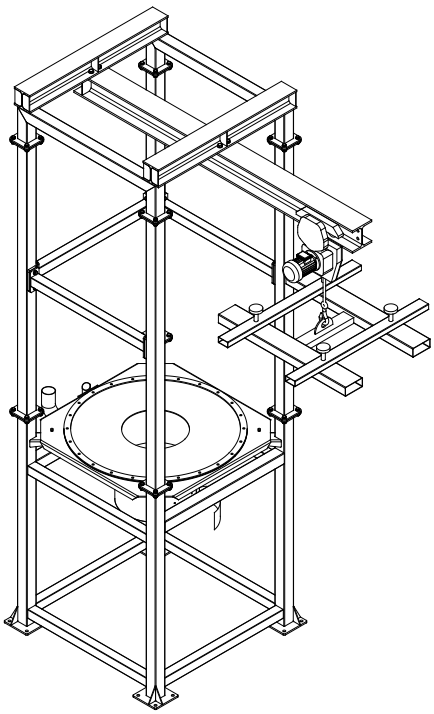

## 1.2 Function

**SBB** is a modular system for discharging **Flexible Intermediate Bulk Containers** (Big Bags) in different configurations depending on the application. Easy introduction of the **FIBC** into the support frame and dust-free discharging along with a variety of options make **SBB** extremely user-friendly.

The four loops of the **FIBC** are attached to the hooks of the detached cross bar that has previously been laid on top of the **FIBC**. The cross bar with the attached **FIBC** is then picked up by a forklift truck and introduced into the frame of the **SBB** Discharger. Once the **FIBC** has settled on the rubber seal of the discharge hopper the outlet closing rope of the **FIBC** can be pulled open through the inspection hatch of the discharge hopper.

## 2.1 Main features

The **FIBC**s, (code **SBB**) are devices suitable for discharging bulk bags of different shapes and sizes.

They are manufactured from shot-blasted, painted carbon steel; on request, they may be supplied in 304 stainless steel, entirely or only the parts in contact (304L SS) with the product to prevent its contamination.

The numerous models and sizes of **SBB** available, together with the complete range of accessories make these machines suitable for use in virtually all applications in various industrial sectors and with different types of **FIBC**s: in fact, the hopper, which can also be supplied alone, is specially designed for optimising the bulk material flow.

**MACHINE CODE**

- **SBB**

**MACHINE TYPE**

- FLEXIBLE INTERMEDIATE BULK CONTAINER UNLOADER

**USE**

- Emptying **FIBC**s of various sizes containing product in powder or granular form.

**ADVANTAGES**

- Equipment which can be assembled according to requirements.
- The model with hoist does not require the use of a forklift truck.
- The removable frame makes it possible to empty **FIBC**s 600 to 1800 mm in height.
- The operator is protected from falling **FIBC**s by the four posts of the frame.
- The **FIBC** valve can be accessed through the hatch.
- The pneumatic activators optimise the emptying of **FIBC**s.
- Product storage capacity in the hopper up to 330 l (model 125 and 510 l model 150).

## 2.2 Indications for use

The **FIBC** discharger is NOT designed for operating in potentially explosive atmospheres or with materials that could be hazardous by contact and/or inhalation, or else dangerous from a bacteriological or viral viewpoint.

**Danger - Warning**

**If the machine has to match similar requirements, please contact the Manufacturer.**

## 3.1 Models available

**MODEL T:**

UNLOADING HOPPER

- **SBB._.125.T**
- **SBB._.150.T**

Supplied separately, in two sizes, it is carefully designed to optimize the flowability of materials.

It comprises:
- seals made of material suitable for the type of use.
- adjustable weight motovibrator.
- vent pipe with filter bag.
- finger mesh.
- inspection hatch with seal.
- damper supports.

**MODEL C:**

HOPPER WITH FEET

- **SBB._.125.C**
- **SBB._.150.C**

Thanks to its structure, there is plenty of space for using different systems for loading the **FIBC**s.

It comprises:
- a unloading hopper.
- supporting frame made of tubular elements having suitable size and thickness to ensure sturdiness and solidity.
- cross with pegs for hooking **FIBC** harness, lifting hooks and tubular elements for lift truck forks. (for frame in Stainless Steel 304, the lifting cross is in Carbon Steel galvanized)

**MODEL S:**

HOPPER WITH REMOVABLE FRAME

- **SBB._.125.S**
- **SBB._.150.S**

Athough it is identical as regards design and use, the difference lies in the size of the **FIBC**s which can be accepted.

These comprise:
- an unloading hopper.
- a supporting tubular frame having size and thickness suitable to ensure sturdiness and solidity.
- a removable frame which makes it possible to adapt the Unloader for use with **FIBC**s of different heights.
- cross with pegs for hooking **FIBC** harness and tubular elements for lift truck forks. (for frame in Stainless Steel 304, the lifting cross is in Carbon Steel galvanized).

**MODEL M:**

FRAME WITH MONORAIL

- **SBB._.125.M**

The special feature of this equipment lies in the fact that it does not require the use of a fork lift truck for external loading of **FIBC**s, as it is designed for use with its own hoist (not supplied) which makes it possible to operate independently during the various phases.

The equipment comprises:

- an unloading hopper.
- a supporting frame made of suitably sized tubular elements thick enough to ensure the required sturdiness and solidity.
- a monorail for the hoist (hoist excluded) with frame in Stainless Steel 304, monorail for the hoist and hoist frame in Carbon Steel galvanized.
- cross with pegs for hooking the **FIBC** harness, lifting hooks and tubular elements for using a lift truck if necessary for handling **FIBC**s. (for frame in Stainless Steel 304, the lifting cross is in Carbon Steel galvanized)

**ACCESSORIES**

- Hopper seal made of food- grade material.
- Pneumatic activators.

Materials featuring poor flowability do not flow out of the **FIBC** easily. It is therefore necessary to use pneumatic activators. These devices act directly at the bottom of the **FIBC**, causing lifting and lowering of the opposite corners to stimulate the flow of material compacted at the bottom.

The gradual movement of the activators makes the **FIBC** assume a “V” shape, to eliminate the deadlock points.

For more information, see Technical Catalogue - Maintenance KSC.

- Cutting device.

It is used for cutting **FIBC**s without valves which cannot be recycled after emptying.

- Hose connector kit available in black or white food- grade rubber.
- Round or square flange for hopper.
- Raised feet for lifting the entire structure.
- Mechanical limit stop for signalling door open status.
- Manual gate valve at outlet.

## 3.2 Basic machine description

**SBB._.125.C** **SBB._.150.C**

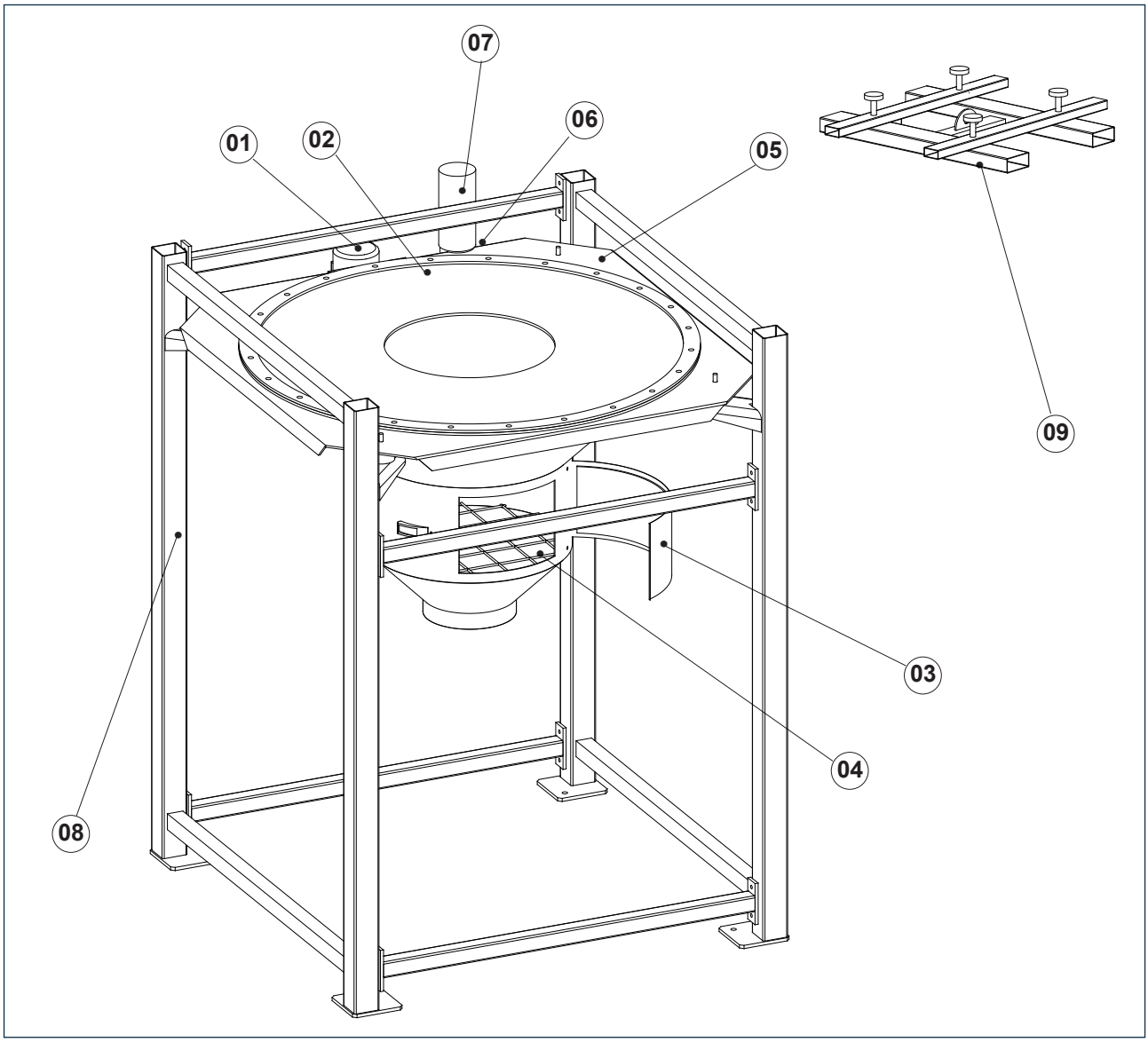


| ITEM POS. | DESCRIPTION | MATERIAL | FINISHING |
|---|---|---|---|
| 1 | Motovibrator | - | RAL 2004 |
| 2 | Seal | SBR | black |
| 3 | Access door | Carbon steel | RAL 7001 |
| 4 | Grille | 304 SS | - |
| 5 | Vibrating hopper | Carbon steel | RAL 7001 |
| 6 | Venting pipe | Carbon steel | RAL 7001 |
| 7 | Filter bag | Felt | - |
| 8 | Frame | Carbon steel | RAL 7001 |
| 9 | Lifting cross | Carbon steel | RAL 7001 |

**SBB._.125.S** **SBB._.150.S**

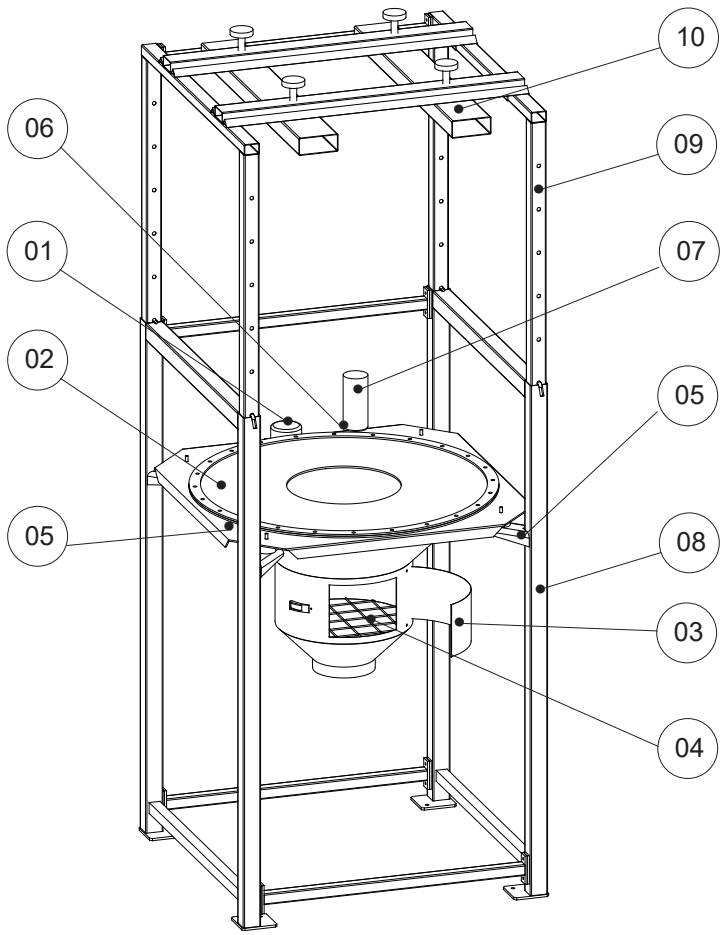


| ITEM POS. | DESCRIPTION | MATERIAL | FINISHING |
|---|---|---|---|
| **1** | Motovibrator | - | RAL 2004 |
| **2** | Seal | SBR | black |
| **3** | Access door | Carbon steel | RAL 7001 |
| **4** | Grille | 304 SS | - |
| **5** | Vibrating hopper | Carbon steel | RAL 7001 |
| **6** | Venting pipe | Carbon steel | RAL 7001 |
| **7** | Filter bag | Felt - *Filz* | - |
| **8** | Frame | Carbon steel | RAL 7001 |
| **9** | Monorail | Carbon steel | RAL 7001 |
| **10** | Lifting cross | Carbon steel | RAL 7001 |

## 125 M

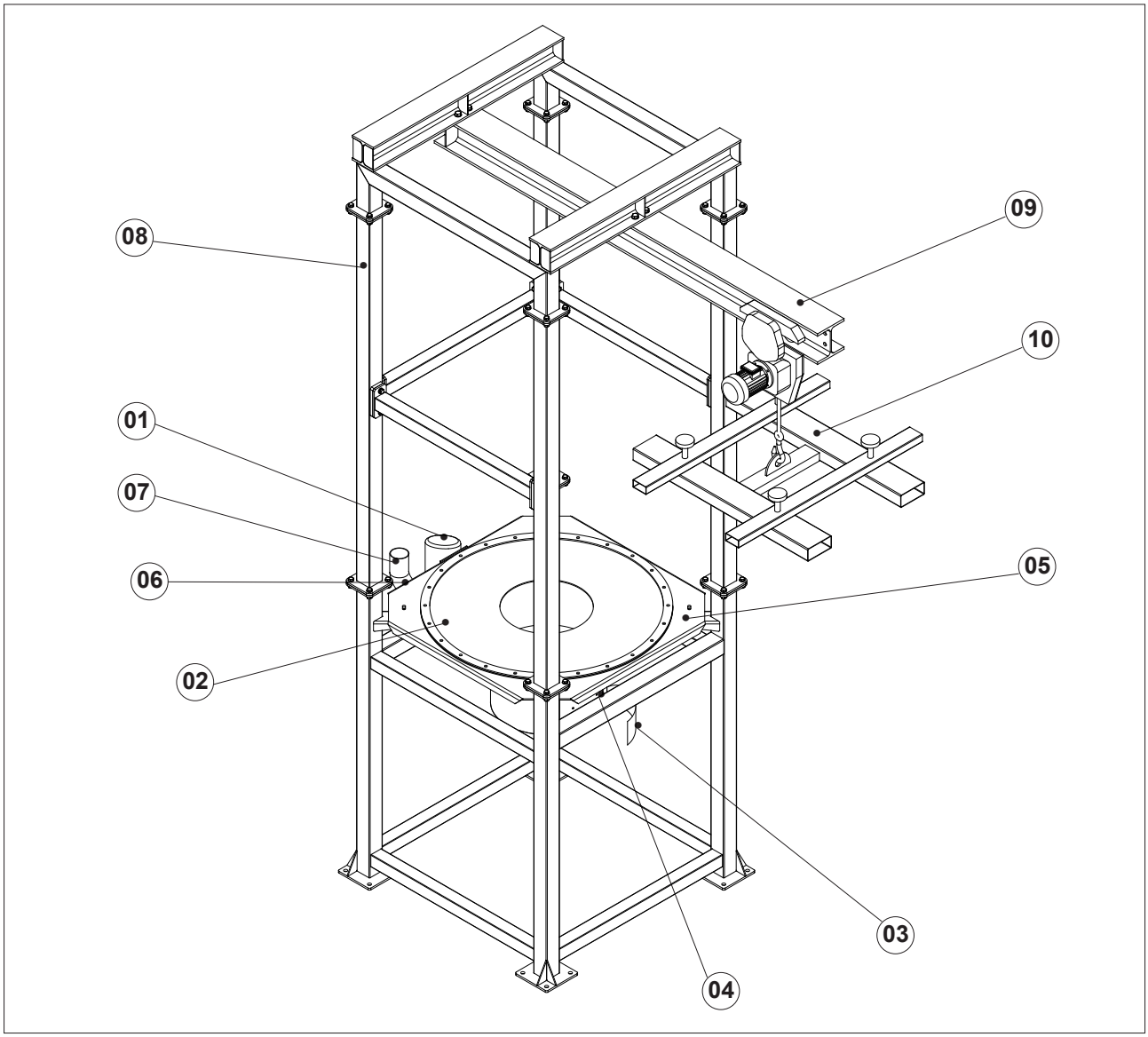


| ITEM POS. | DESCRIPTION | MATERIAL | FINISHING |
|---|---|---|---|
| 1 | Motovibrator | - | RAL 2004 |
| 2 | Seal | SBR | black |
| 3 | Access door | Carbon steel | RAL 7001 |
| 4 | Grille | 304 SS | - |
| 5 | Vibrating hopper | Carbon steel | RAL 7001 |
| 6 | Venting pipe | Carbon steel | RAL 7001 |
| 7 | Filter bag | Felt - *Filz* | - |
| 8 | Frame | Carbon steel | RAL 7001 |
| 9 | Monorail | Carbon steel | RAL 7001 |
| 10 | Lifting cross | Carbon steel | RAL 7001 |

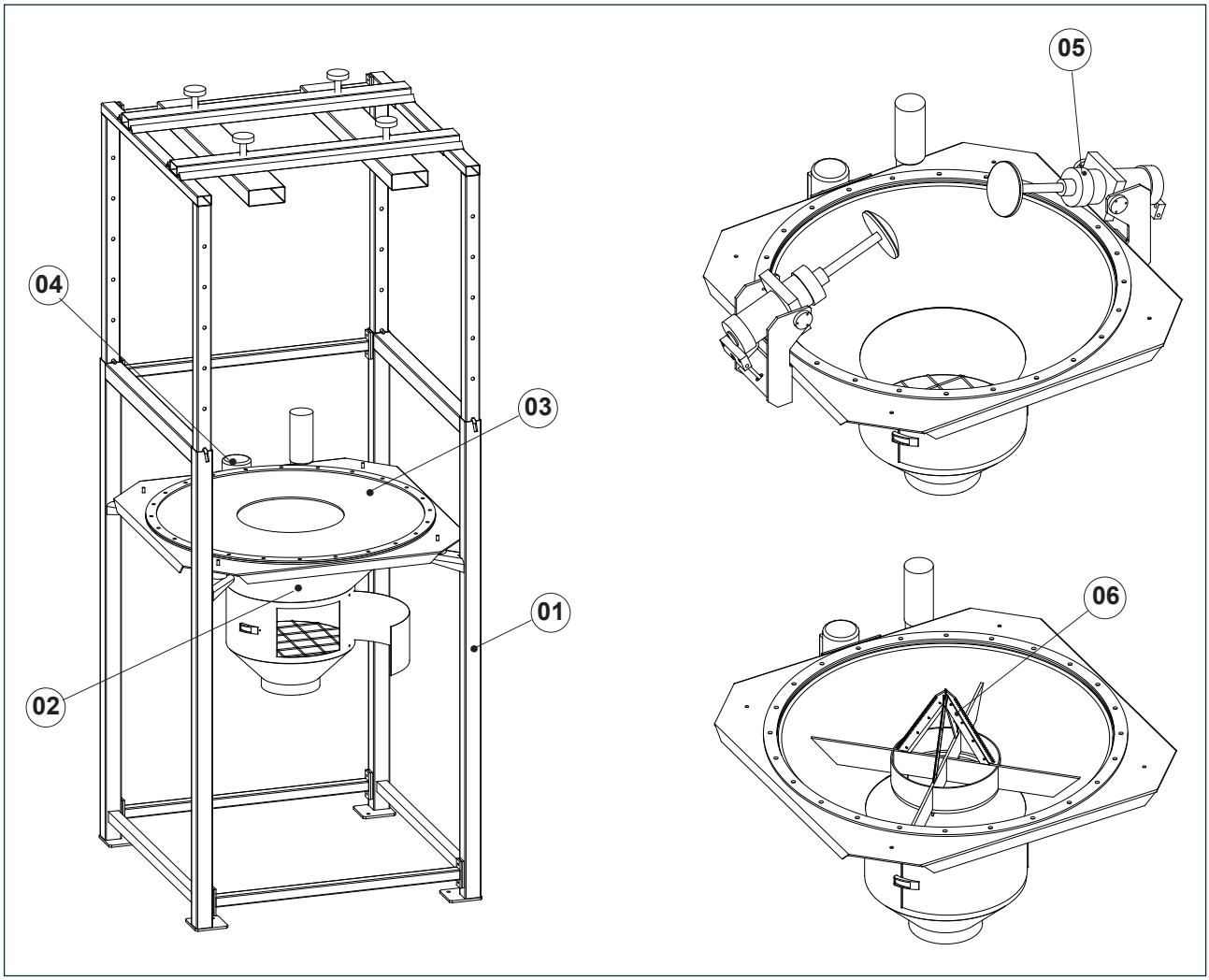


| ITEM POS. | DESCRIPTION | MATERIAL | FINISHING |
|---|---|---|---|
| 1 | Supporting frame | 304L SS. | Mesc buffing |
| 2 | Vibrating hopper | 304L SS. | Mesc buffing |
| 3 | Seal | NBR | white |
| | | food-grade | |
| 4 | Larger vibrator | - | RAL 2004 |
| 5 | Pneumatic activators Kit | Carbon steel | RAL 7001 |
| | | 304L SS | Mesc buffing |
| 6 | Cutting Kit | Carbon steel | RAL 7001 |
| | | 304L SS | Mesc buffing |

*According to UNI-EN 10088 (1997)/AISI (1974) / DIN 17440 (1985)

## 3.3 Range - Modular code

**SBB** 1 2 3 4 5 6 7 8 9 10 11 12

**HOPPER MATERIAL**
**1** = Mild Steel
**2** = 304L Stainless Steel
**3** = 316L Stainless Steel

**FRAME MATERIAL**
**+** = Without
**1** = Mild Steel
**2** = 304 Stainless Steel

**HOPPER DIAMETER**
**125** = 1250 mm
**150** = 1500 mm

**FRAME TYPE**
**T** = Hopper Without Frame
**C** = Short
**S** = Extensible
**M** = Hoist Rail

**HOPPER POSITION**
**A** = Std Level Discharging
**B** = Intermediate Discharging Level
**C** = Floor Level Discharding

**OUTLET TYPE**
**ST** = STD
**SM** = with manual slide gate

**OUTLET DIAMETER (mm)**
**219** = Ø219
**273** = Ø273
**600** = Ø600

**FLANGE**
**+** = Without
**A** = XKF3 Round Flange
**B** = XKF7 Square Flange
**C** = PN10 Flange
**E** = XKFL Flange

**FLEXIBLE SLEEVE**
**+** = Without
**B** = Black Rubber
**W** = White Food Rubber

**SEAL TYPE**
**N** = Black Rubber
**B** = White Food Grade Rubber

**VIBRATOR SIZE**
**++** = None
**10** = 0,10 kW
**18** = 0,18 kW

**VIBRATOR VOLTAGES**
**1** = 220-240/380-415V 50 Hz
**O** = 220-277/380-480V 60 Hz
**+** = None

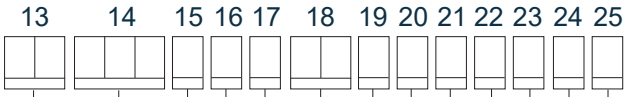


## SBB

**PACKING**
**B** = Base (Pallet)
**P** = Stacking Wood Crate for container

**EXTERNAL COLOR**
**0** = NONE
**B** = RAL1013
**C** = RAL 1015
**D** = RAL 5010
**E** = RAL 5015
**I** = RAL 7001
**H** = RAL 7032
**G** = RAL 7035
**N** = RAL 9010
**V** = Others

**EXTERNAL TREATMENT**
**0** = None
**1** =1 Primer coat (Alkyd)
**3** =1 Primer coat + 1 Paint coat (Alkyd)
**Q** = Silking 240

**INTERNAL COLOR**
**0** = None

**INTERNAL TREATMENT**
**0** = SA 2,5 raw (No primer)
**1** =1 Primer coat (Alkyd)
**9** =1 Primer coat (Food Epoxy)
**Q** = Silking 240

**FINISHING**
**4** = Accurate (Mild Steel)
**A** = Accurate (Stainless Steel)

**SCREW SUPPORT**
**+** = Without
**S** = Included for TX 168

**SUPPORT FEET**
**++** = Without
**10** = 100 mm
**15** = 150 mm
**20** = 200 mm
**25** = 250 mm
**30** = 300 mm

**FIBC CLOSURE VALVE**
**+** = Without
**P** = Predisposition (Valve Excluded)

**DOOR MICROSWITCH**
**+** = Without
**M** = Included

**LEVEL INDICATOR**
**+** = Without
**1** = Predisposition for level indicator 1 1/2”

**PNEUMATIC ACTIVATORS**
**+++** = Without
**KSP** = Predisposition Only
**KSC** = Pneumatic Actuators without control panel
**KSQ** = Pneumatic Actuators with control panel

**CUTTING KIT**
**++** = Without
**KT** = Included

## 3.4 Options

3

***HOPPER DIAMETER***

**125** = 1250 mm

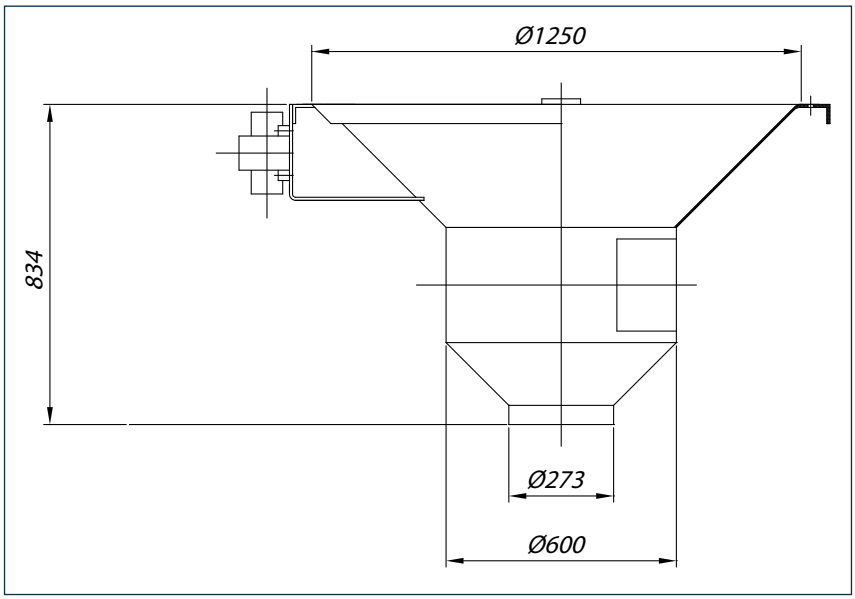


**150** = 1500 mm

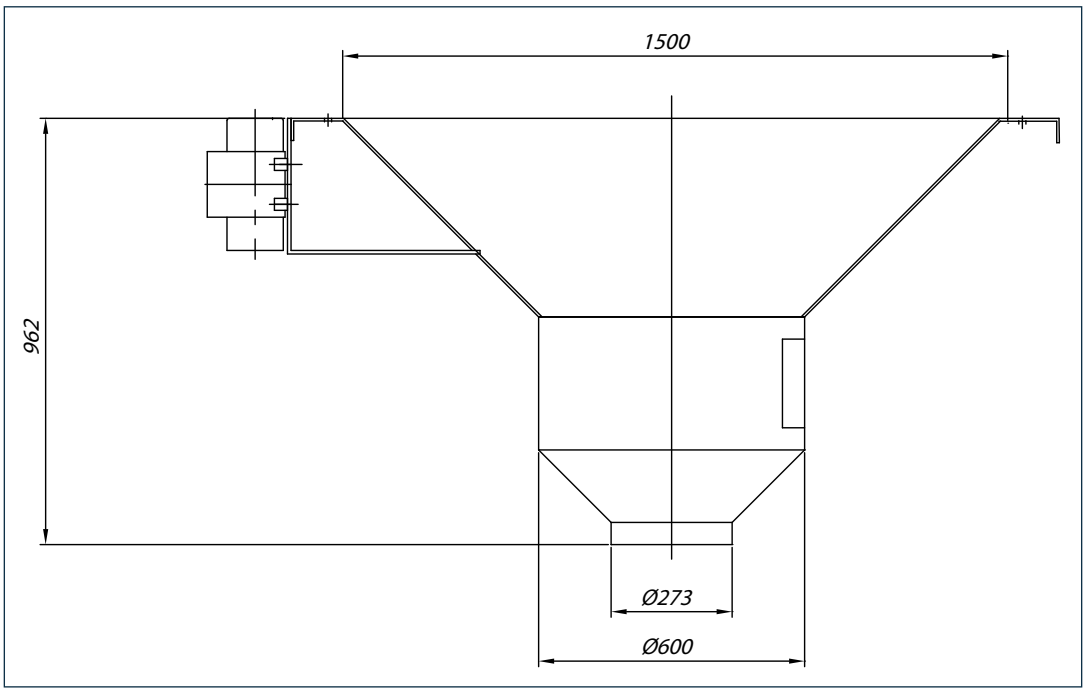

4

***FRAME TYPE***

**T** = Hopper Without Frame

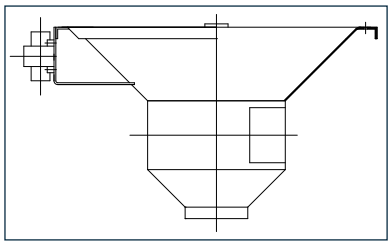

**C** = Short

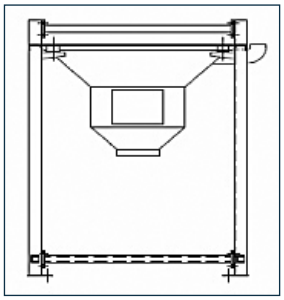

**S** = Extensible

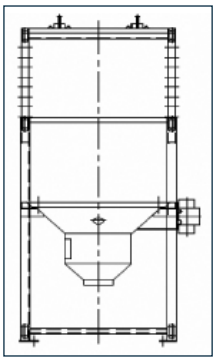

**M** = Hoist Rail

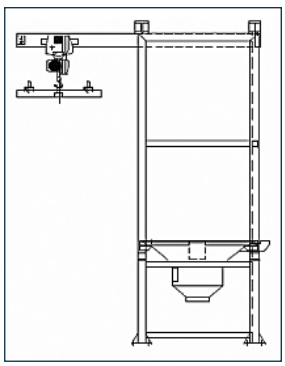

5

***HOPPER POSITION***

**A** = Std Level Discharging (900mm)
**B** = Intermediate Discharging Level (500mm)
**C** = Floor Level Discharding (100mm)

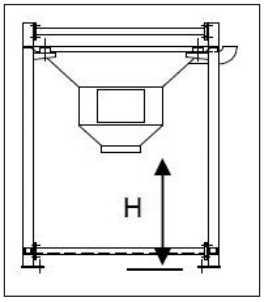

6

## *OUTLET TYPE*

**ST** = STD
**SM** = with Manual Slide Gate

### MANUAL GATE VALVE

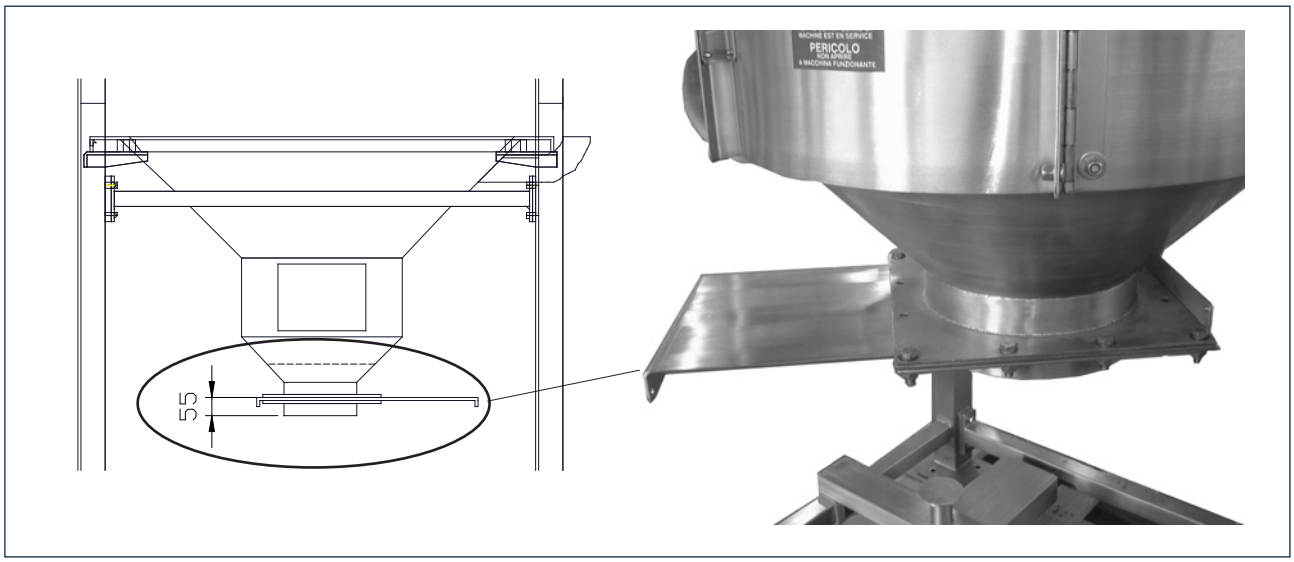


| MATERIAL | Code |
|---|---|
| Carbon steel | **KSMSBB2731A** |
| 304L SS | **KSMSBB2732A** |

7

***OUTLET DIAMETER (mm)***

**219** = Ø219
**273** = Ø273
**600** = Ø600

## REDUCTION SECTION FOR OUTLET SPOUT

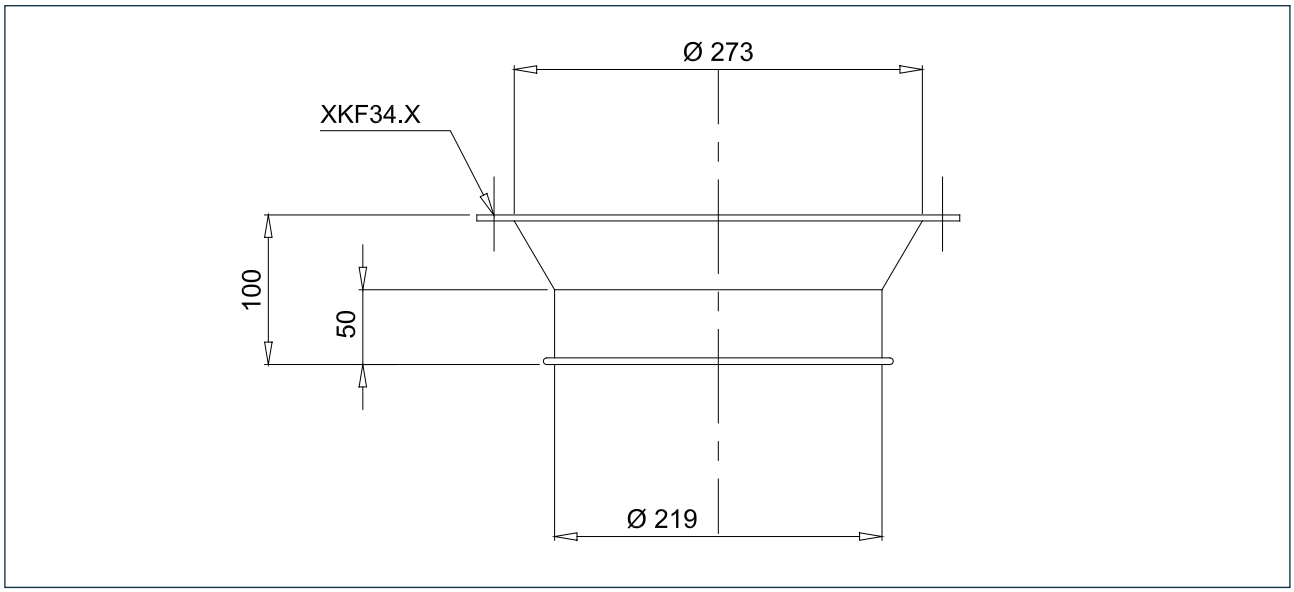


| MATERIAL | Code |
|---|---|
| Carbon steel | KMR2732191001 |
| 304 SS | KMR2732191002 |

8

***FLANGE***

**+** = Without
**A** = XKF3 Round Flange (VFS type)
**B** = XKF7 Square Flange (VIB type)
**C** = PN10 Flange
**E** = XKFL Round Flange (VFP type)

**ROUND FLANGE XKF 34._**

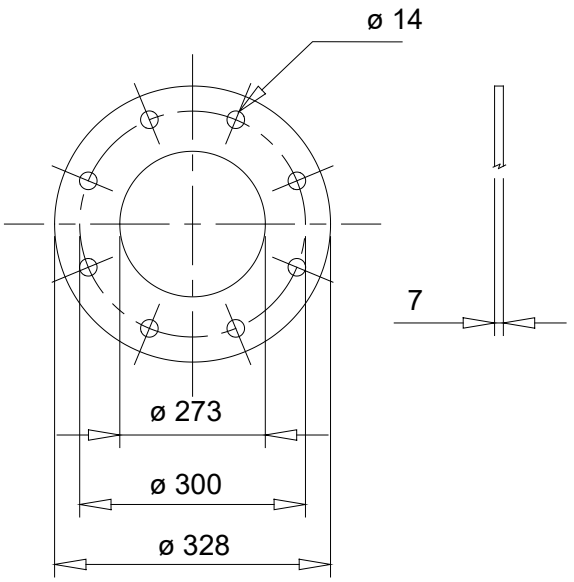


**SQUARE FLANGE XKF 74._**

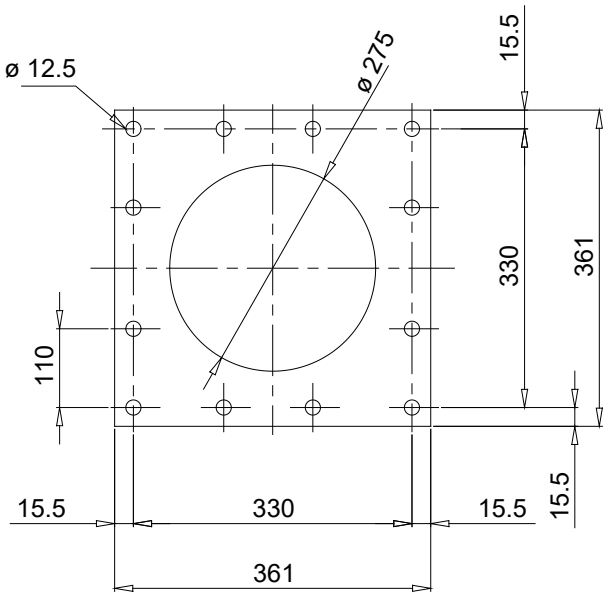


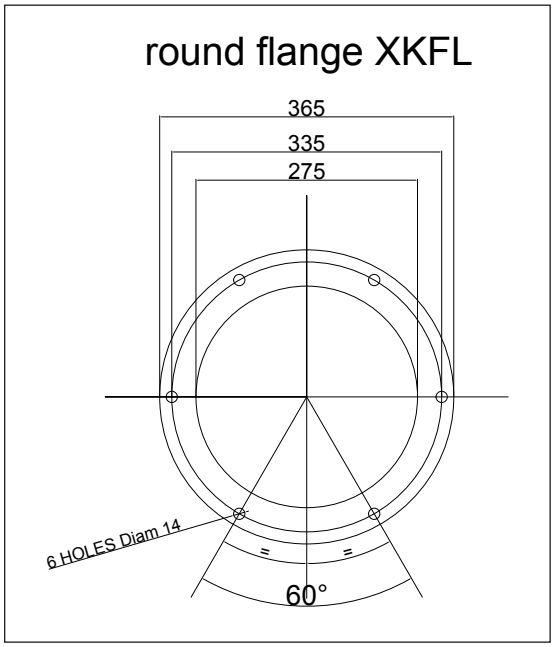

9

## *FLEXIBLE SLEEVE*

**+** = Without
**B** = Black Rubber
**W** = White Food Rubber

### FLEXIBLE ATTACHMENT KIT

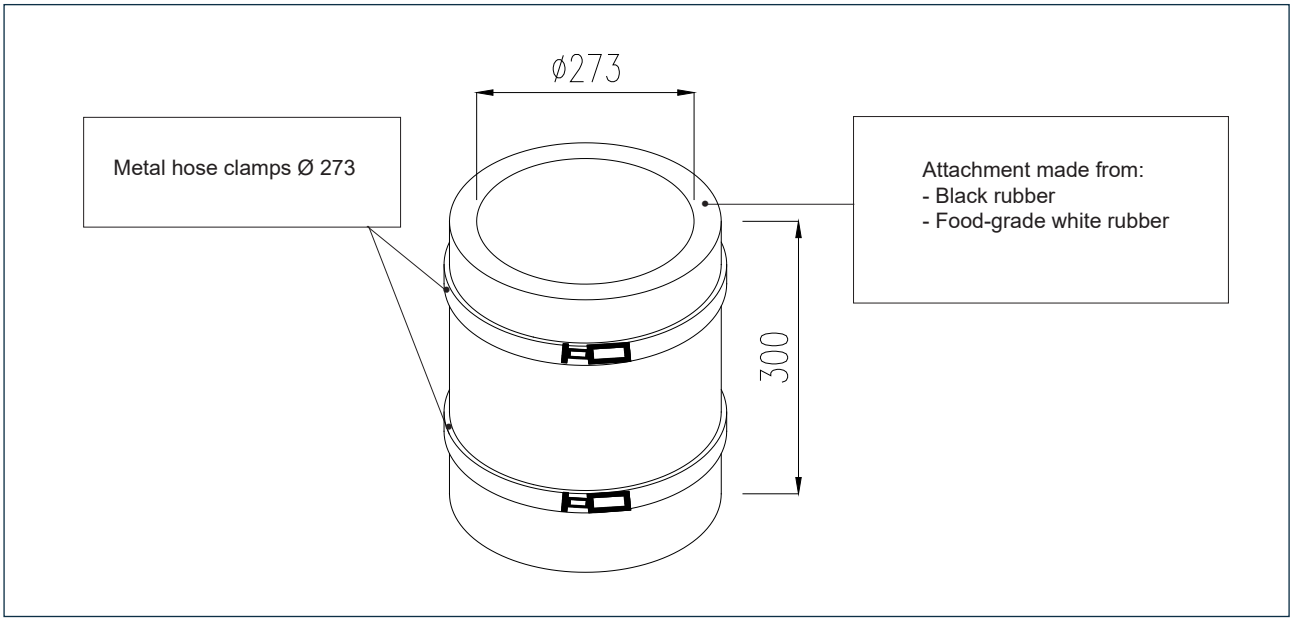


| CODE BLACK RUBBER | CODE WHITE RUBBER | 0 | L |
|---|---|---|---|
| XJN 273236 | XJN 273136 | 273 | 300 |

10

## *SEAL TYPE*

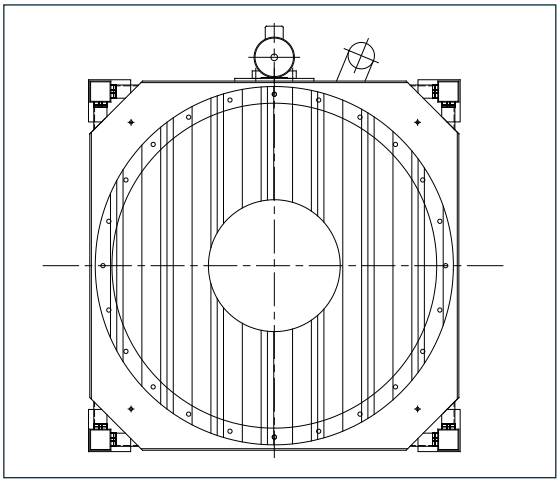

In field 8 of the order code it is possible to select the type of hopper gasket required, depending on the product to be handled; the following options are possible:

N: gasket made of black SBR.

B: gasket made of white NBR for food-grade use.

11

## *ELECTRIC VIBRATOR*

Each **SBB** model is provided with an electric vibrator to activate and facilitate descent of the product; the vibrating mass on each vibrator can be adjusted in a simple manner (see use and maintenance catalogue) to increase or decrease the centrifugal force.

For the **SBB._.125** model it is possible to mount a bigger electrical vibrator, as shown in the Table below.

In field 7 of the order code it is possible to select from the following options:

+ + = without vibrator

10 = electrical vibrator 0.10 kW (std for **SBB 125**)

18 = electrical vibrator 0.18 kW (std for **SBB 150**)

| SBB | TYPE | VIBRATOR MECHANICAL FEATURES | | | | ELECTRICAL FEATURES | | | | | |
|---|---|---|---|---|---|---|---|---|---|---|---|
| | | rpm/min | | CENTRIFUGAL FORCE kg | | kW | | A max. 50 Hz | | A max. 60 Hz | |
| | | 50Hz | 60Hz | 50Hz | 60Hz | 50Hz | 60Hz | 230V | 400V | 267V | 460V |
| 125 | MVE 100/3 | 3000 | 3600 | 99 | 107 | 0.1 | 0.11 | 0.33 | 0.19 | 0.32 | 0.18 |
| 125-150 | MVE 200/3 | 3000 | 3600 | 198 | 190 | 0.18 | 0.21 | 0.6 | 0.35 | 0.62 | 0.35 |

**TECHNICAL DATA:**

- Standard power supply:
  - 230/400 V 50 Hz
  - 264/470 V 60 Hz
- Protection degree IP 65.
- Standard tropicalization.
- Continuous running.
- Operating temperature:
  - from -30° to +40°C
- Standard applicable:
  - IEC 34.1 - CEI 2/3 ; 73/72/CEE - EN 292-89/CCE - EMC 89/336/CE
- Electric vibrators with voltages and frequencies different from the standard production can be supplied on request.

12

## *VIBRATOR VOLTAGES*

In field 9 of the order code it is possible to select the voltage and frequency of the electric electric vibrator from the following options:

+: without vibrator

1: 220-240/380 - 415V 50Hz (STD)

0: 220 - 277/380 - 480V 60Hz

Electric vibrator with special voltages and frequencies are available on request.

**SAFETY CABLE**

Each vibrator is provided with a safety cable, which connects the vibrator to the **FIBC** cone in order to prevent accidental falling in the event of breakage of the fixing feet.

13

## *CUTTING KIT*

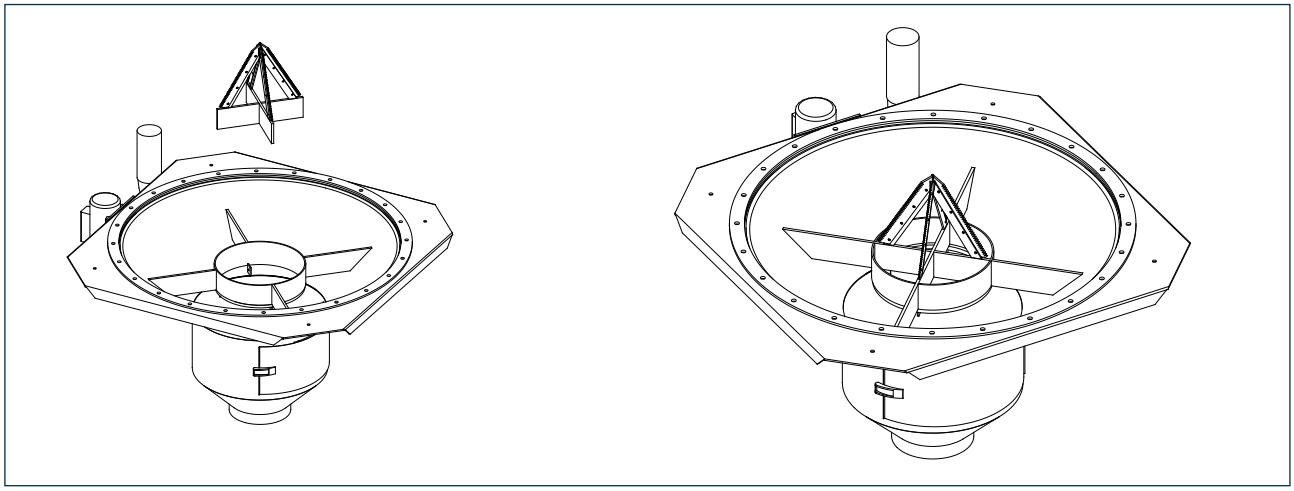

Its function is to cut valveless **FIBC**s which cannot be recycled.

**N.B.**: The blades can be removed so as to enable use also with **FIBC**s having valves.
Accessory applicable on all **SBB** models.The knife blade is always made of AISI 420 stainless steel, while the supporting frame is made of the same material as the **FIBC**.

14

## *KIT PNEUMATIC ACTIVATORS*

Materials featuring poor flowability do not flow out of the **FIBC** easily. It is therefore necessary to use pneumatic activators. These devices act directly at the bottom of the **FIBC**, causing lifting and lowering of the opposite corners to stimulate the flow of material compacted at the bottom. The gradual movement of the activators makes the **FIBC** assume a “V” shape, to eliminate the deadlock points.

In field 6 of the order code, select from the following options:

+ + + = **SBB** without actuators

KSC = Actuators Kit without control panel

KSQ = Actuators Kit with electro-pneumatic control panel

KSP = provision for actuators kit (in the latter case, the activators are not supplied)

**N.B.**: The pneumatic activators can be installed on **SSB** ONLY if provision has been made on the latter during the order phase.The weight of the pneumatic actuators is approximately 80 kg.

ADVANTAGES:

**1)** System functional and easy to install.

**2)** Possibility of adjustment to optimize operation.

EXECUTION:

**1)** Carbon steel

**2)** 304L SS depending on the material used for constructing the **SBB** frame.

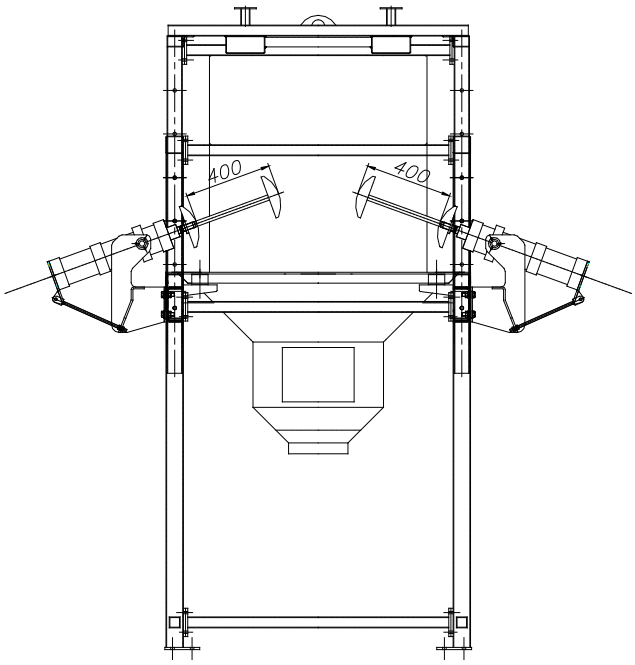


**NOTE:** For more information, see specific Catalogue **KSC**. Accessory applicable on all **SBB** models.

## ELECTRIC CONTROL PANEL

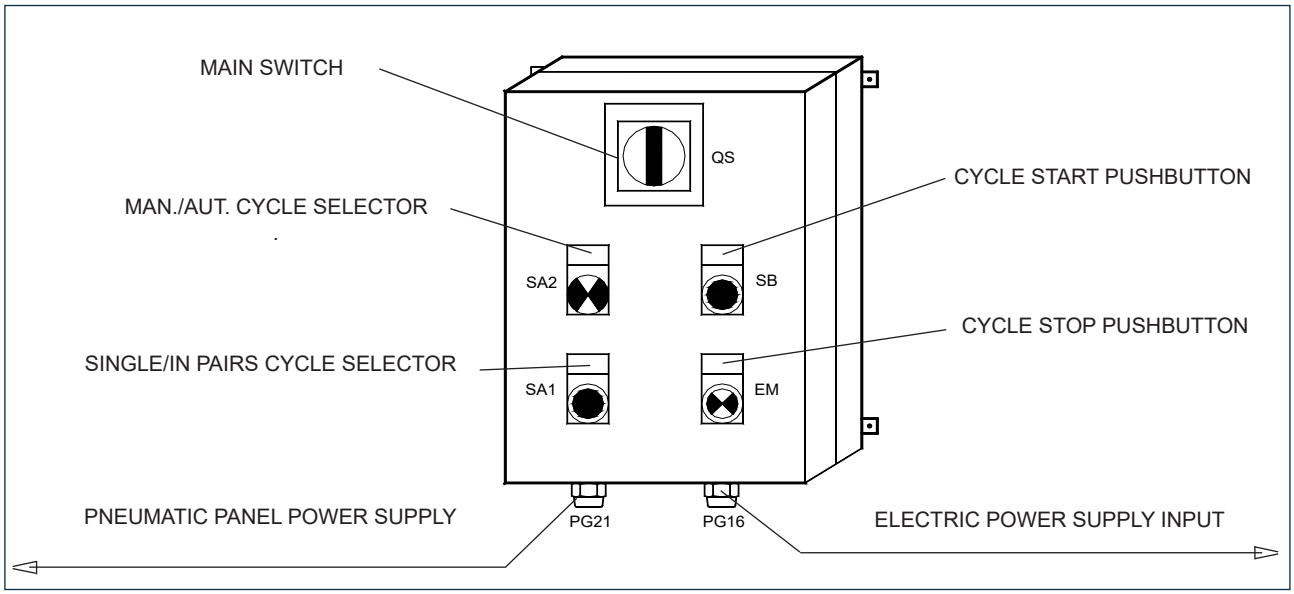


| ITEM | DESCRIPTION | COLOUR |
|---|---|---|
| **QS** | MAIN SWITCH | RED - YELLOW |
| **SB** | CYCLE START PUSHBUTTON | BLACK |
| **EM** | CYCLE STOP PUSHBUTTON | RED |
| **SA1** | SINGLE/IN PAIRS CYCLE SELECTOR | BLACK |
| **SA2** | MAN./AUT. CYCLE SELECTOR | BLACK |

The control board comprises a box with front door on which the controls and operation indicators are fitted.
Description of controls and indicators:
SB/EM = PUSHBUTTONS: controls with single operating mode;
SA = SELECTORS: double-function switches;
QS = SWITCHES: controls with two possible positions.

15

## *LEVEL INDICATOR*

**+** = Without
**1** = Predisposition for level indicator 1 1/2”

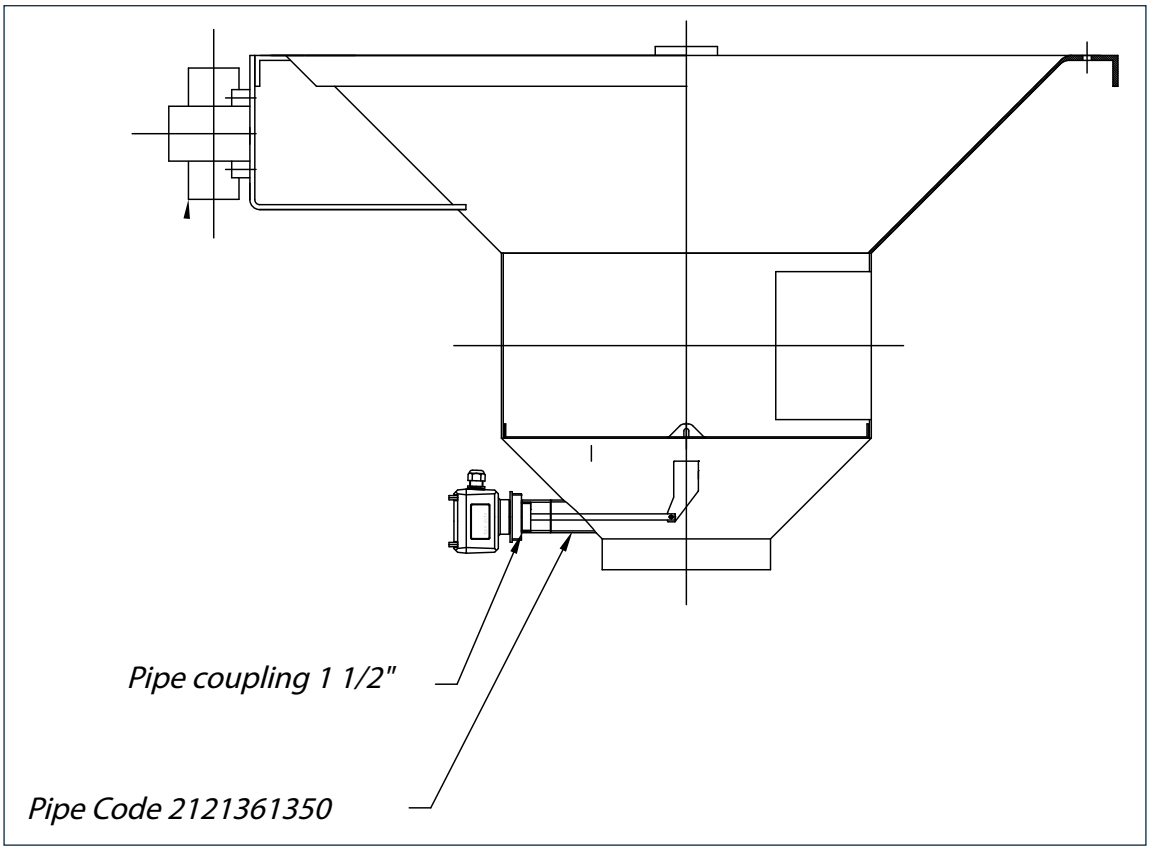

16

## *DOOR MICROSWITCH*

**+** = Without
**M** = Included

### DOOR OPEN MECHANICAL LIMIT STOP

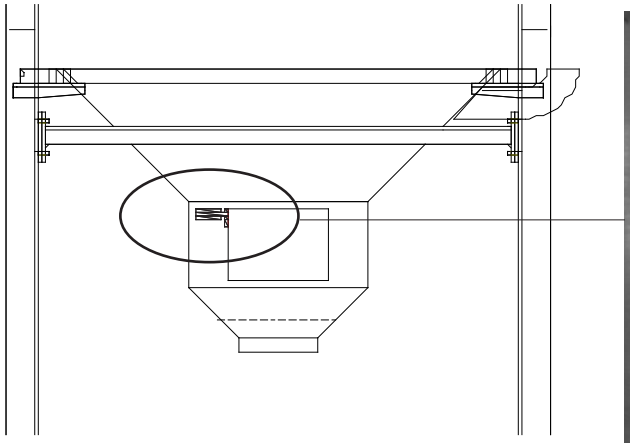



| MATERIAL | Code |
|---|---|
| Carbon steel | **KFMSBB1A** |
| 304L SS | **KFMSBB2A** |

Useful for preventing activation of the vibrator if the valve is not closed correctly.

17

## *FIBC CLOSURE VALVE*

**+** = Without
**P** = Prearranged (Valve Excluded)

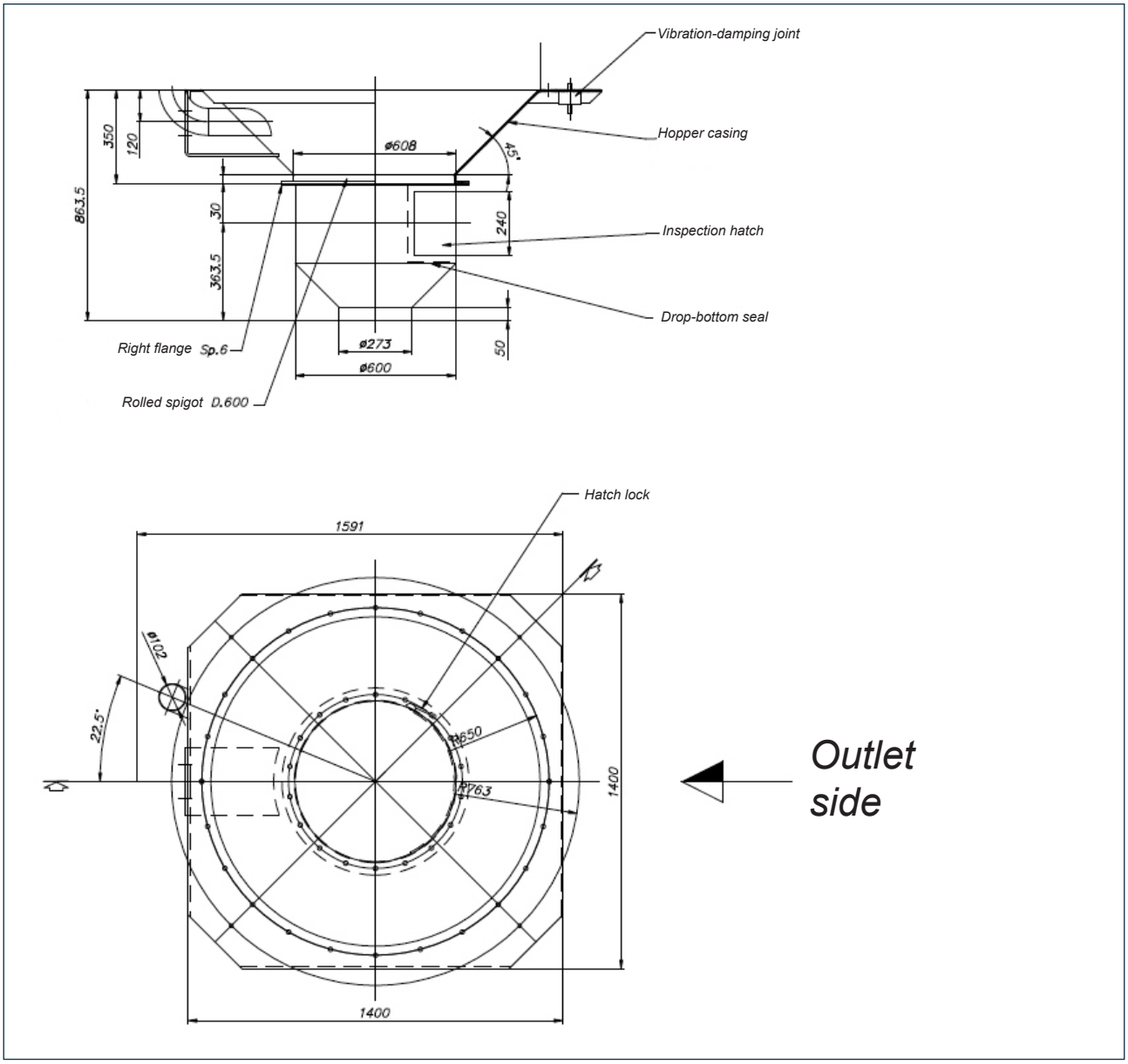

18

## *SUPPORT FEET*

**++** = Without
**10** = 100 mm
**15** = 150 mm
**20** = 200 mm
**25** = 250 mm
**30** = 300 mm

### FEET EXTENSIONS

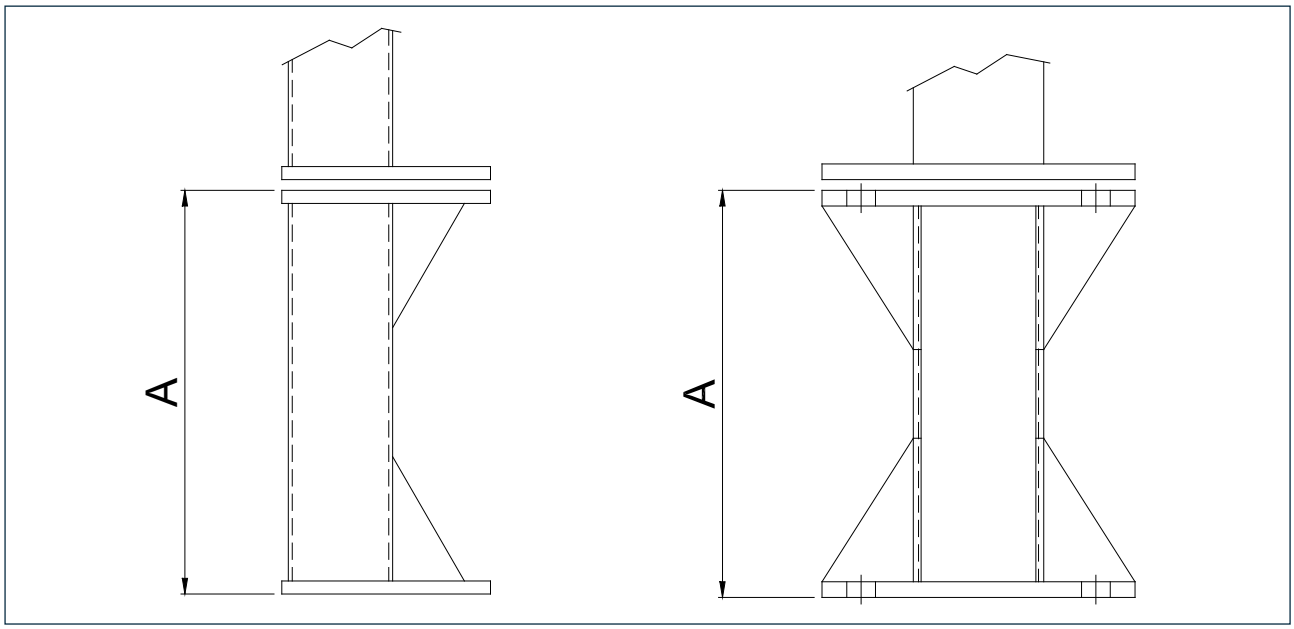


| SBB125C - SBB125S | SBB150C - SBB125M - SBB150S | A mm |
|---|---|---|
| Code | Code | |
| KFSBB**1**125S101**I** / KFSBB**2**125S10**G**0 | KFSBB**1**150S101**I** / KFSBB**2**150S10**G**0 | 100 |
| KFSBB**1**125S151**I** / KFSBB**2**125S15**G**0 | KFSBB**1**150S151**I** / KFSBB**2**150S15**G**0 | 150 |
| KFSBB**1**125S201**I** / KFSBB**2**125S20**G**0 | KFSBB**1**150S201**I** / KFSBB**2**150S20**G**0 | 200 |
| KFSBB**1**125S251**I** / KFSBB**2**125S25**G**0 | KFSBB**1**150S251**I** / KFSBB**2**150S25**G**0 | 250 |
| KFSBB**1**125S301**I** / KFSBB**2**125S10**G**0 | KFSBB**1**150S301**I** / KFSBB**2**150S30**G**0 | 300 |

**NOTE**: The kit comprises four feet.

THE FOUNDATION PLAN REMAINS UNCHANGED

**Materials available:**
- Carbon steel (Material **1**, Paint RAL7001_**I**)
- 304L SS (Material **2**, Glass Blasting _**G**)

19

## *SCREW SUPPORT*

**+** = Without
**S** = Included for TX 168

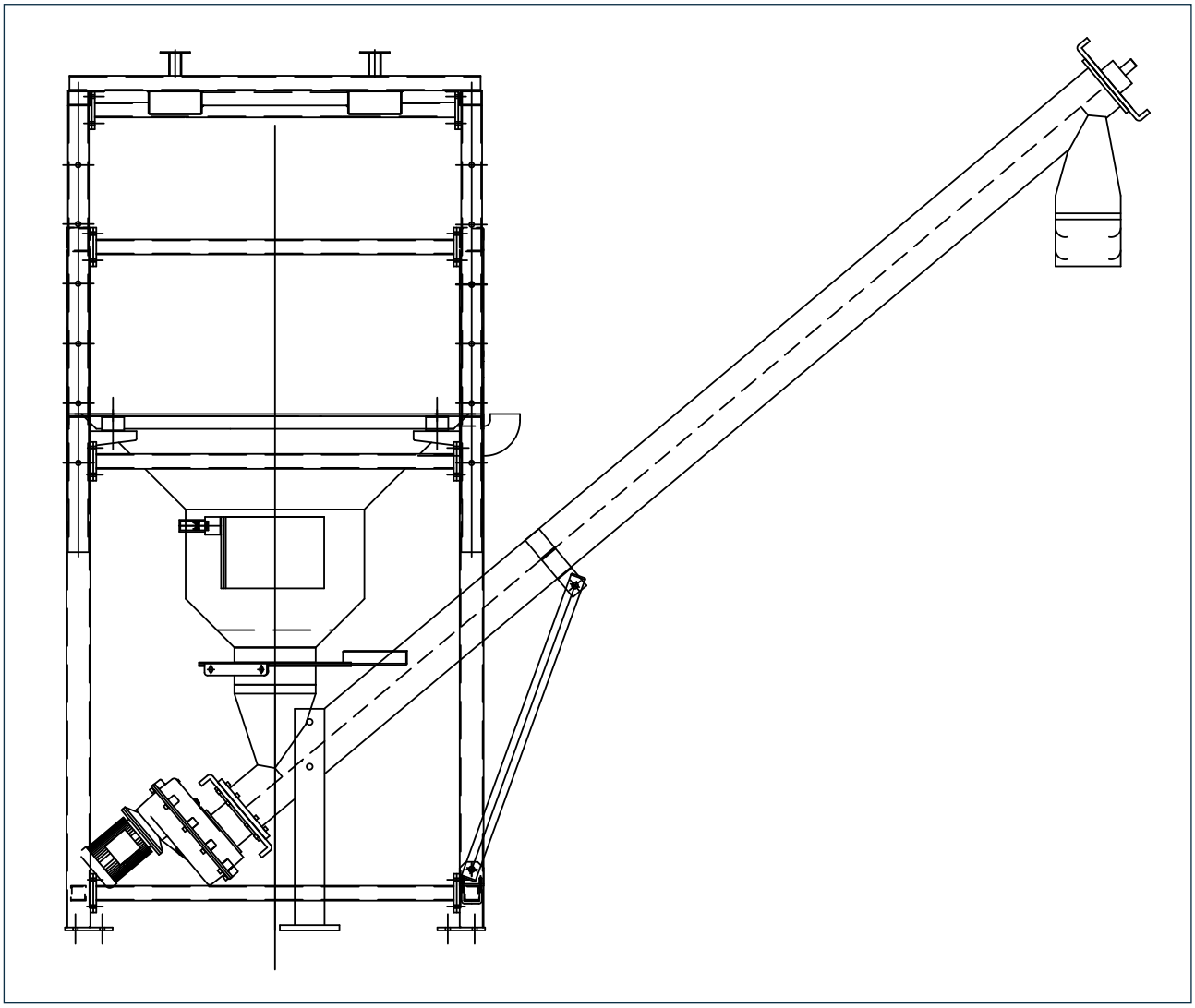

20

## *FINISHING*

*Finishing SSB made from carbon steel*

The term “finishing” includes the sequence and the operations necessary for machining and finishing a material.

The finishing provided for the internal and external surfaces of the feeders is classified as:

**“4” (ACCURATE)**

**“4” FINISHING (ACCURATE)**

| MATERIALS |
|---|
| Plates |

| OPERATION | FEATURES |
|---|---|
| **Plasma/Laser cut** | In normal mode, with attention to linearity and precision |
| **Welding** | Continuous, on all edges, MAG type, with attention to linearity |
| **Trimming** | Removal of rags and sharp edges by grinding and sanding |
| **Cleaning welds** | Mechanical cleaning of welding slag by grinding |
| **Sand blasting** | Internal and external sand blasting to prepare the surfaces for painting;, there must be no ruffles or projections; extreme care to create continuity |
| **Painting** | See treatments and shades of internal and external surfaces page T11 |

*Finishing SSB made from 304L SS*

The term “finishing” includes the sequence and the operations necessary for machining and finishing a material.

The finishing provided for the internal and external surfaces of the feeders is classified as:

**A (ACCURATE)**

| MATERIALS |
|---|
| Plates |

| OPERATION | FEATURES |
|---|---|
| **Plasma/Laser cut** | In normal mode, with attention to linearity and precision |
| **Satin finishing** | Carried out on the inner surface of the cone after turning, using grinder SA80 |
| **Welding** | Continuous, on all edges, type: TIG with facing for BA (040-100), MIG with flux cored wire BA (125-300) |
| **Trimming** | Removal of rags and sharp edges by grinding and sanding |
| **Cleaning welds** | Carried out with micro shot blasting or satin finishing SA240, depending on the selected finish |
| **Micro shoot blasting** | Internal and external micro shot blasting, depending the finish selected, there must be no ruffles or projections; extreme care to create continuity |
| **Satin finishing** | SA240, in successive passes, passing from SA80 to SA240 |

21 ***INTERNAL TREATMENT*** 22 ***INTERNAL COLOUR*** 23 ***EXTERNAL TREATMENT***

*Finishing **SBB** made from carbon steel*

## INTERNAL AND EXTERNAL SURFACE TREATMENT

| STANDARD | 4 | 1 | 0 | 3 | I |
|---|---|---|---|---|---|

| | Finishing |
|---|---|
| 4 | ACCURATE |

| | INTERNAL | |
|---|---|---|
| | Ra | Treatment |
| 0 | | none |
| 1 | 40 µm | Primer Coat C3 M (according ISO 12944) |

| | Paint colour |
|---|---|
| | See Table |

| | EXTERNAL |
|---|---|
| | Treatment |
| 0 | none |
| 1 | Primer Coat C3 M (according ISO 12944) |
| 3 | Top Coat C3 M (according ISO 12944) |

| | Paint colour |
|---|---|
| 0 | See Table |

## PAINT COLOUR INSIDE AND OUTSIDE

24 ***External colour***

| STANDARD | 4 | 1 | 0 | 3 | I |
|---|---|---|---|---|---|

| | RAL | Paint colour |
|---|---|---|
| B | RAL 1013 | pearl white |
| C | RAL 1015 | light ivory |
| D | RAL 5010 | gentian blue |
| E | RAL 5015 | sky blue |
| G | RAL 7035 | light grey |
| H | RAL 7032 | pebble grey |
| I | RAL 7001 | silver grey * |
| N | RAL 9010 | pure white |
| V | - | others |
| 0 | - / RAL 8023 | none / primer “beaver” |

**N.B.**: Finishing electric vibrators RAL 2004

* = standard

21 ***INTERNAL TREATMENT***

22 ***INTERNAL COLOUR***

23 ***EXTERNAL TREATMENT***

***SBB** finishing 304L / 316L SS*

## INTERNAL AND EXTERNAL SURFACE TREATMENT

## HOPPER SURFACE TREATMENT INSIDE AND OUTSIDE

**STANDARD** | A | D | 0 | D | 0 |

| Finishing | |
|---|---|
| A | ACCURATE |

| INTERNAL Treatment | |
|---|---|
| D | Silking SA 60-80 |
| E | Silking SA 120-180 |

| Paint colour | |
|---|---|
| 0 | None |

| EXTERNAL Treatment | |
|---|---|
| D | Silking SA 60-80 |

| Paint colour | |
|---|---|
| 0 | None |

**VERSION WITH CONTACT PARTS IN SS**
FRAME OUTSIDE SURFACE TREATMENT: POWDER (RAL 7001)

**VERSION ENTIRELY IN SS**
FRAME OUTSIDE SURFACE TREATMENT: Glass bead blasted

ELECTRIC VIBRATOR: RAL 2004

25

## *PACKAGING*

In field 10 of the order code it is possible to select the following options:

P = Pallet + shrink wrap (base)

G = WOODEN CRATE / HOLZKISTE

The FIBC is basically supplied on a pallet of suitable dimensions, protected with a heat-shrink polythene cover.

**STANDARD PACKAGING**

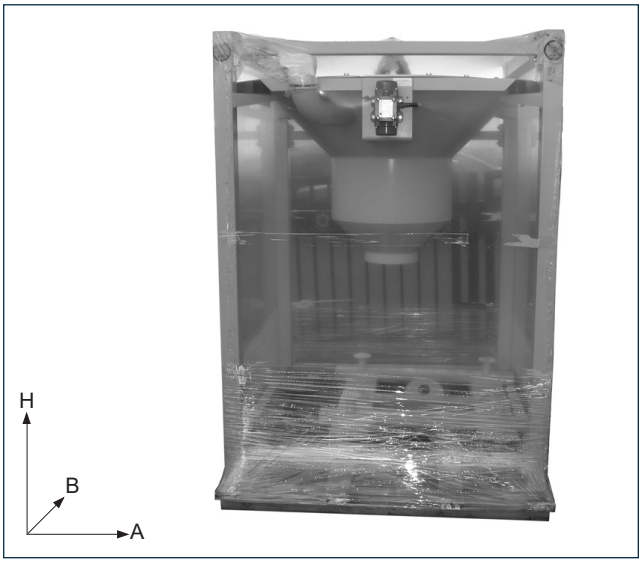


**WOODEN CRATE PACKAGING (FOR T,C,S VERSIONS)**

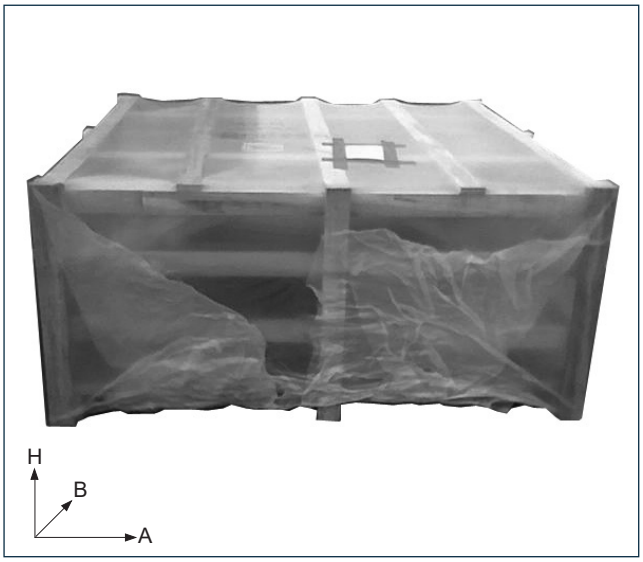


| Packing code | TYPE | A | B | H | Equipment weight kg | Packing weight kg | Total weight kg |
|---|---|---|---|---|---|---|---|
| **IME.SBB.125.T.P00** | SBB.x.125.T | 1684 | 1584 | 1102 | 125 | 53 | 178 |
| **IME.SBB.150.T.P00** | SBB.x.150.T | 1984 | 1834 | 1152 | 214 | 70 | 284 |
| **IME.SBB.125.C.P00** | SBB.x.125.C | 2034 | 1534 | 1102 | 321 | 60 | 381 |
| **IME.SBB.150.C.P00** | SBB.x.150.C | 2134 | 2034 | 1152 | 498 | 82 | 580 |
| **IME.SBB.125.S.P00** | SBB.x.125.S | 1684 | 2394 | 1102 | 400 | 84 | 484 |
| **IME.SBB.150.S.P00** | SBB.x.150.S | 2034 | 2584 | 1152 | 703 | 101 | 804 |
| **IME.SBB.125.M.P00** | SBB.x.125.M | 1684 | 1684 | 552 | 750 | 25 | 775 |

| | | | | | | | |
|---|---|---|---|---|---|---|---|
| **IME.SBB.125.T.G00** | SBB.x.125.T | 1718 | 1568 | 1102 | 125 | 89 | 214 |
| **IME.SBB.150.T.G00** | SBB.x.150.T | 2018 | 1868 | 1152 | 214 | 111 | 325 |
| **IME.SBB.125.C.G00** | SBB.x.125.C | 2068 | 1568 | 1102 | 321 | 98 | 419 |
| **IME.SBB.150.C.G00** | SBB.x.150.C | 2168 | 2068 | 1152 | 498 | 124 | 622 |
| **IME.SBB.125.S.G00** | SBB.x.125.S | 1718 | 2468 | 1102 | 400 | 124 | 524 |
| **IME.SBB.150.S.G00** | SBB.x.150.S | 2068 | 2618 | 1152 | 703 | 146 | 849 |
| **IME.SBB.125.M.G00** | SBB.x.125.M | - | - | - | - | - | - |

## 3.5 Applications

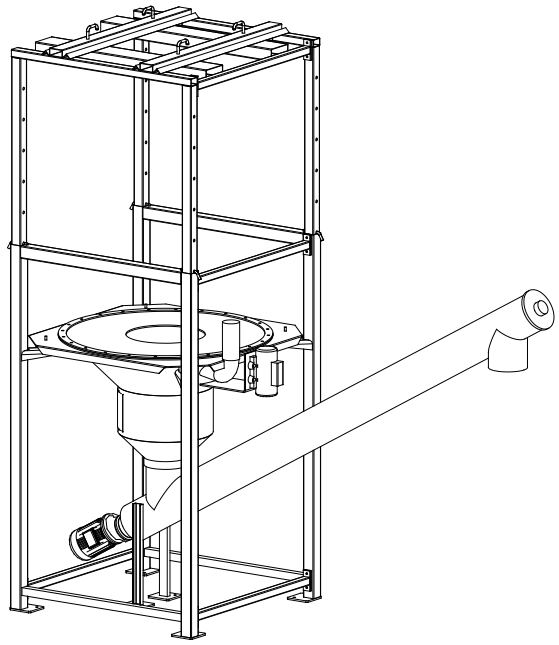

**SBB** + INCLINED SCREW FEEDER

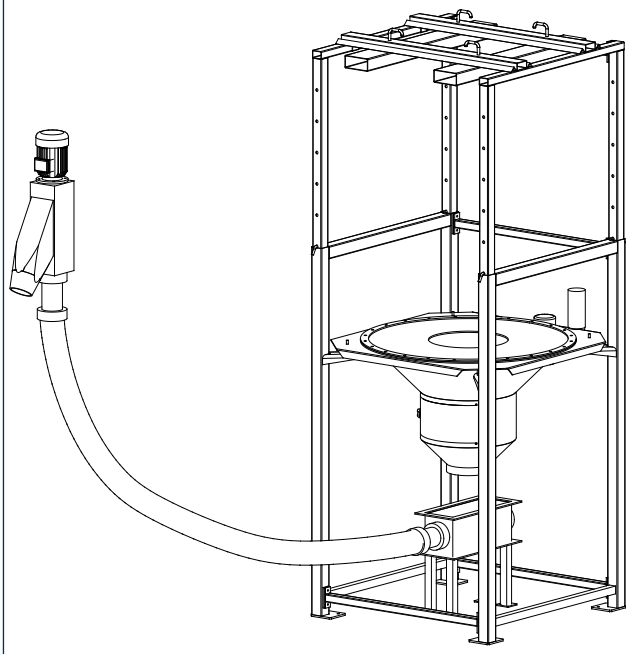

**SBB** + FLEXIBLE HELIX CONVEYOR

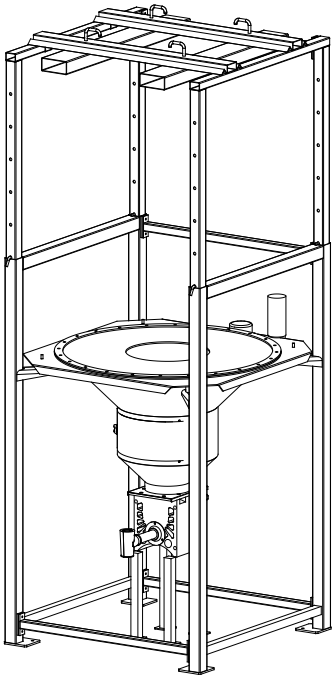

**SBB** + MICRO-BATCH FEEDER

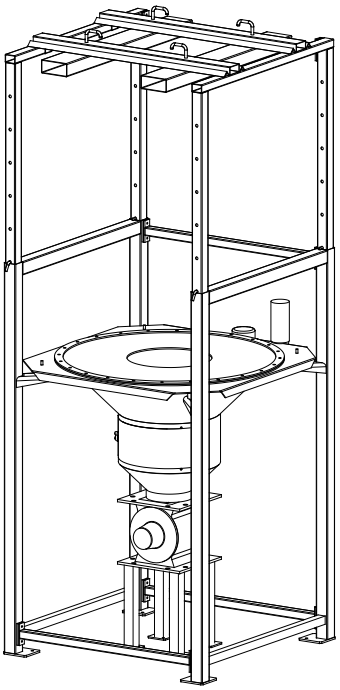

**SBB** + ROTARY VALVE

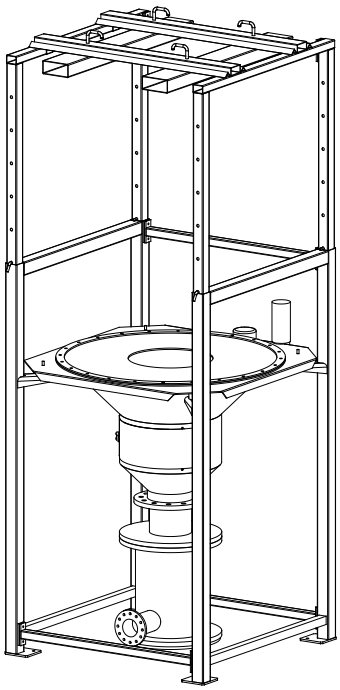

**SBB** + PNEUMATIC CONVEYING

## SBB with Ø 168 tubular screw conveyor

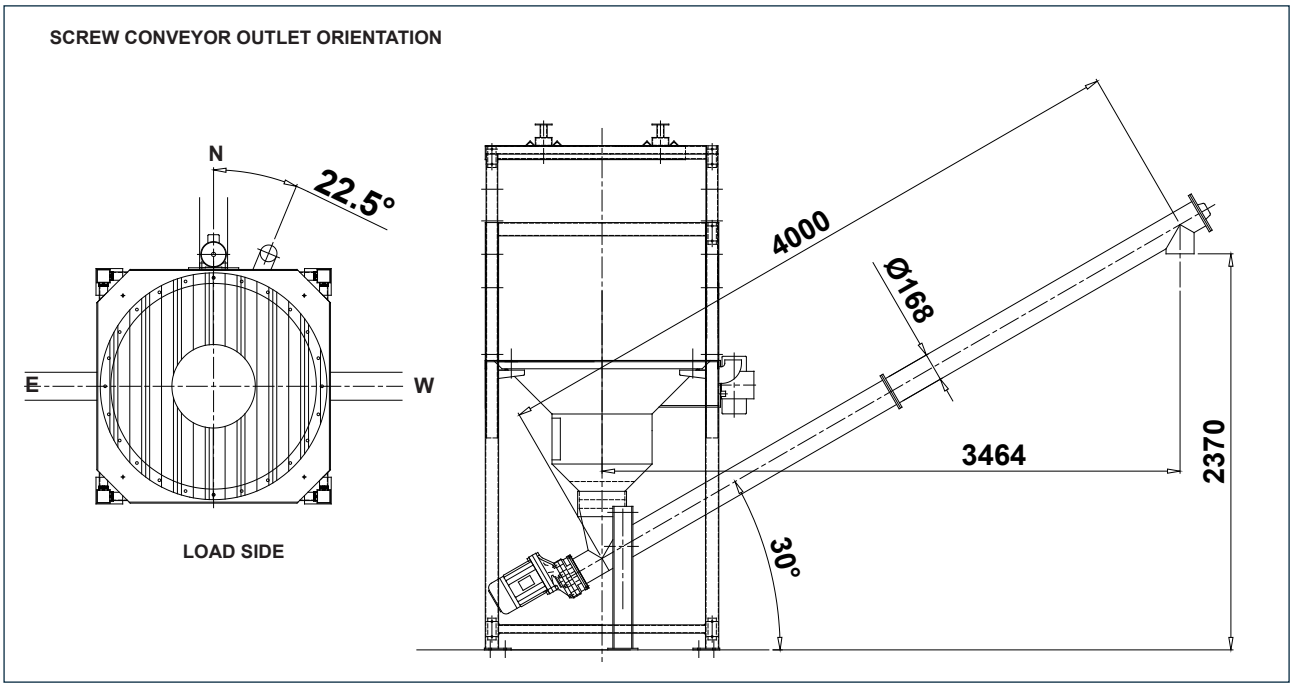


### INCLINED SCREW FEEDER

For this application it is advisable to use:
Ø168 tubular screw conveyor complete with:
- tapered inlet spout Ø168/Ø273.
- drive unit at inlet end.
- supporting base XJP168031.
- Ø273 flexible rubber sleeve 300mm long complete with hose clamp.

The length of the screw conveyor must be defined on the basis of the plant requirements, with maximum inclination angle of 30° (to be specified in the order phase).
The drawing represents an example of a 4000mm long screw conveyor.
However, it is the customer's responsibility to fix the final part of the screw conveyor rigidly.

## SBB with Ø 150 trough screw conveyor

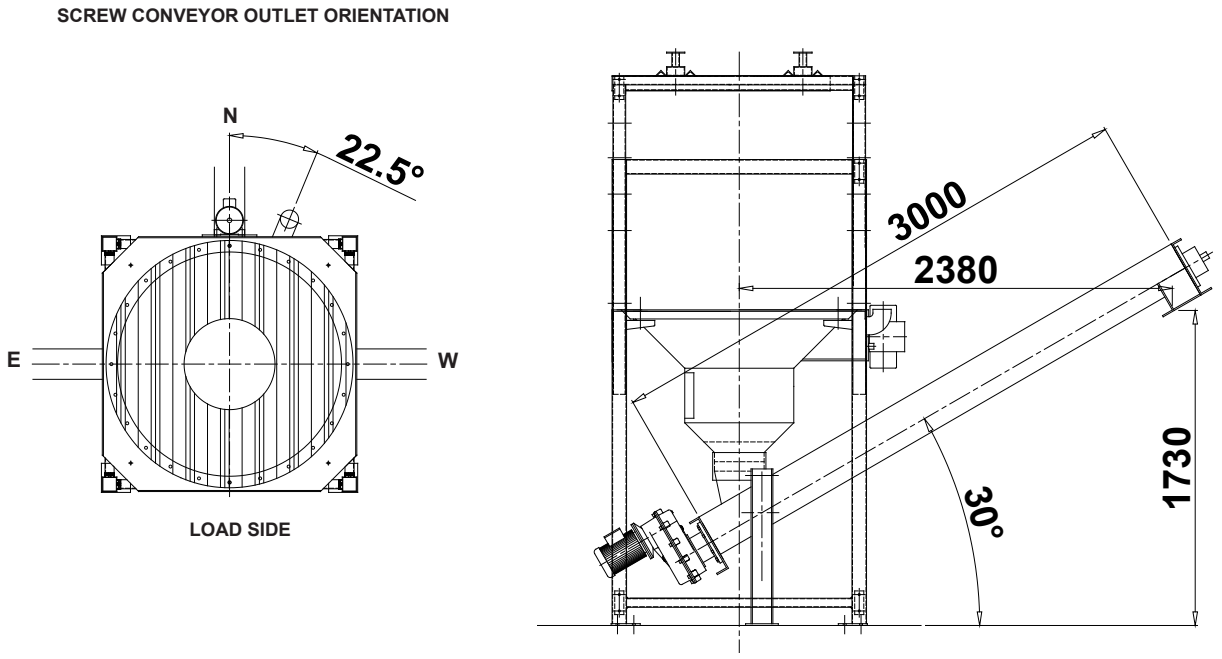


### INCLINED SCREW FEEDER

For this application it is advisable to use:
Ø150 trough screw conveyor complete with:
- tapered inlet spout Ø150/Ø 273.
- drive unit at inlet end.
- supporting base XJP168031.
- Ø 273 flexible rubber sleeve 300 mm long complete with hose clamps.

The length of the screw must be defined on the basis of the plant requirements, with maximum inclination angle of 30° (to be specified in the order phase).
The drawing represents an example of a 3000mm long screw conveyor, with outlet spout.
However, it is the Customer's responsibility to fix the final part of the screw conveyor rigidly.

The **SBB**-type **FIBC**s are designed and constructed for carrying out their function in compliance with the following limits of use:

Maximum operating temperature:

+40°C in continuous mode.

Minimum operating temperature:

- 20°C.

Height of **FIBC**:

- Min. 600mm;
- Max. 1800 mm. (for models S and M)
- Any.(for models T and C)

Hopper maximum capacity:

- **SBB125**: 330 l;
- **SBB150**: 510 l. l

*Operation noise*

The noise levels of the **SBB** with electric vibrator supplied by **WAM®** expressed in dB(A) are obtained by readings in a free field, at maximum performance, at four cardinal points at a distance of 1.5 m from the machine.

The value measured is **75 dB(A).**

The user may obtain values different from those indicated depending on the location.

It shall be the responsibility of the installer to have noise level checkings carried out on the machine applied to a silo filled with material (in operating conditions).

## SBB._.125.T

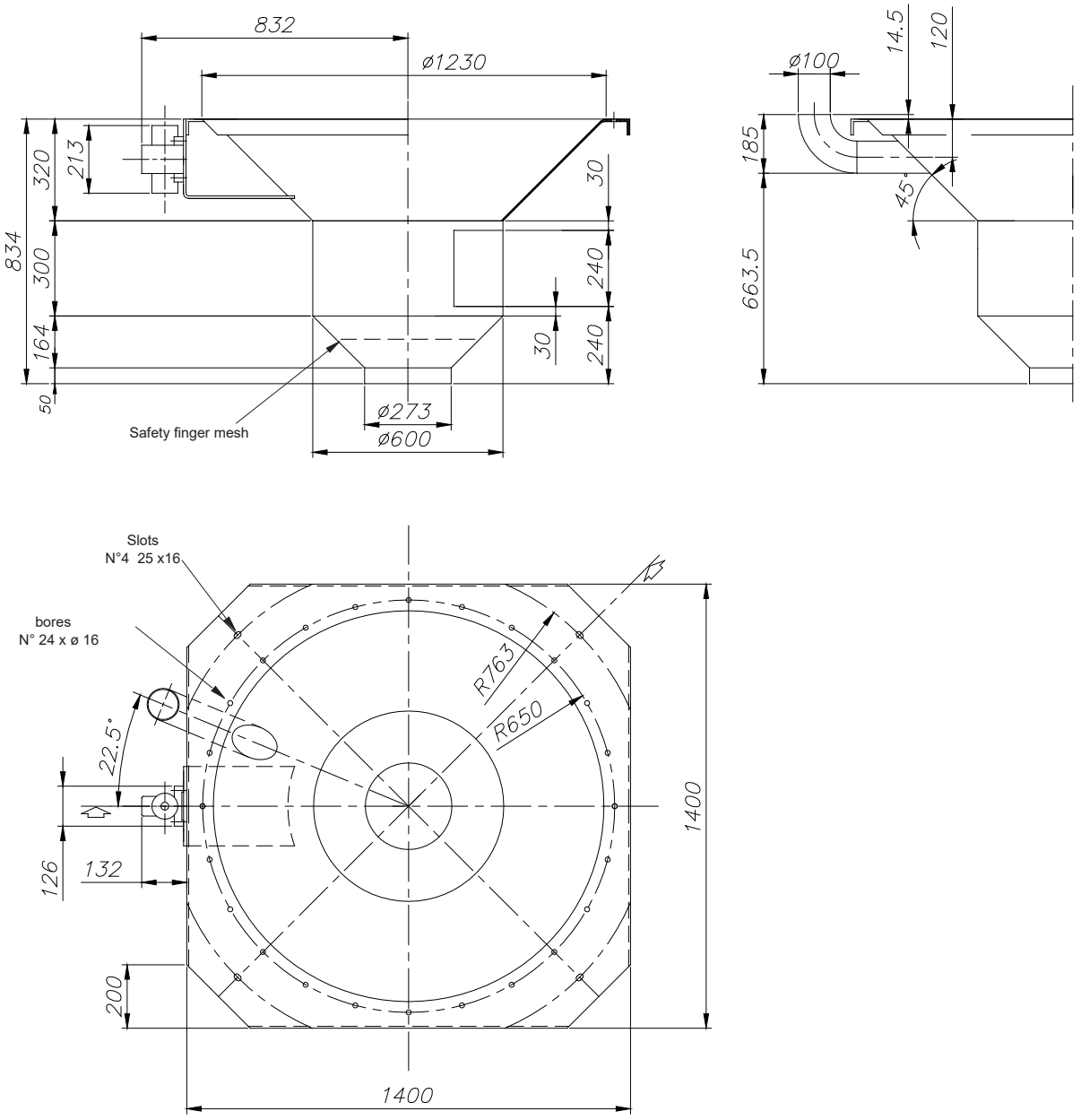
832
ø1230
320
213
834
300
164
50
30
240
30
240
ø273
ø600
Safety finger mesh
ø100
14.5
120
185
45°
663.5
Slots
N°4 25 x16
bores
N° 24 x ø 16
R763
R650
22.5°
126
132
200
1400
1400

## SBB._.150.T

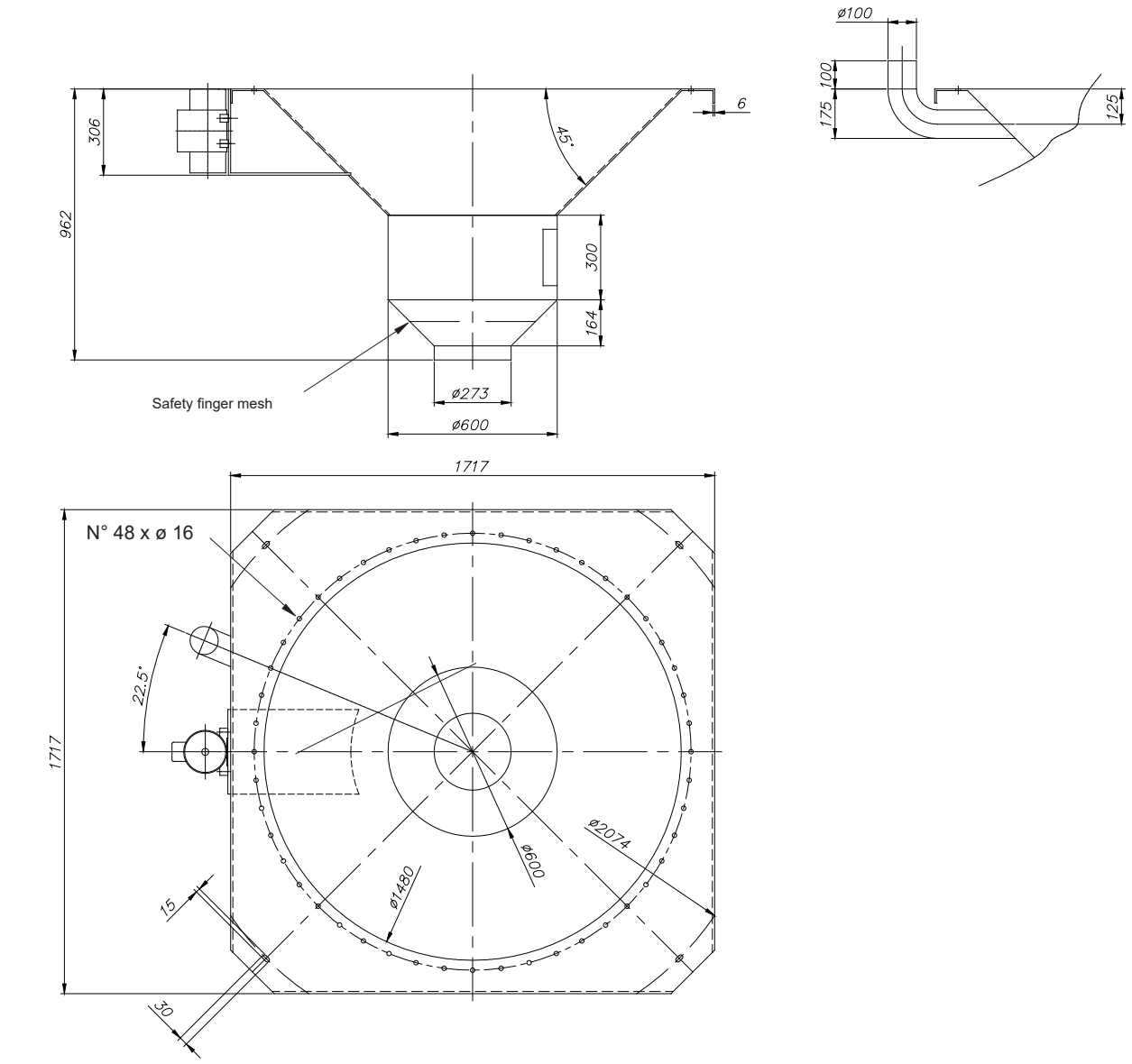


Feed side

## SBB._.125.C

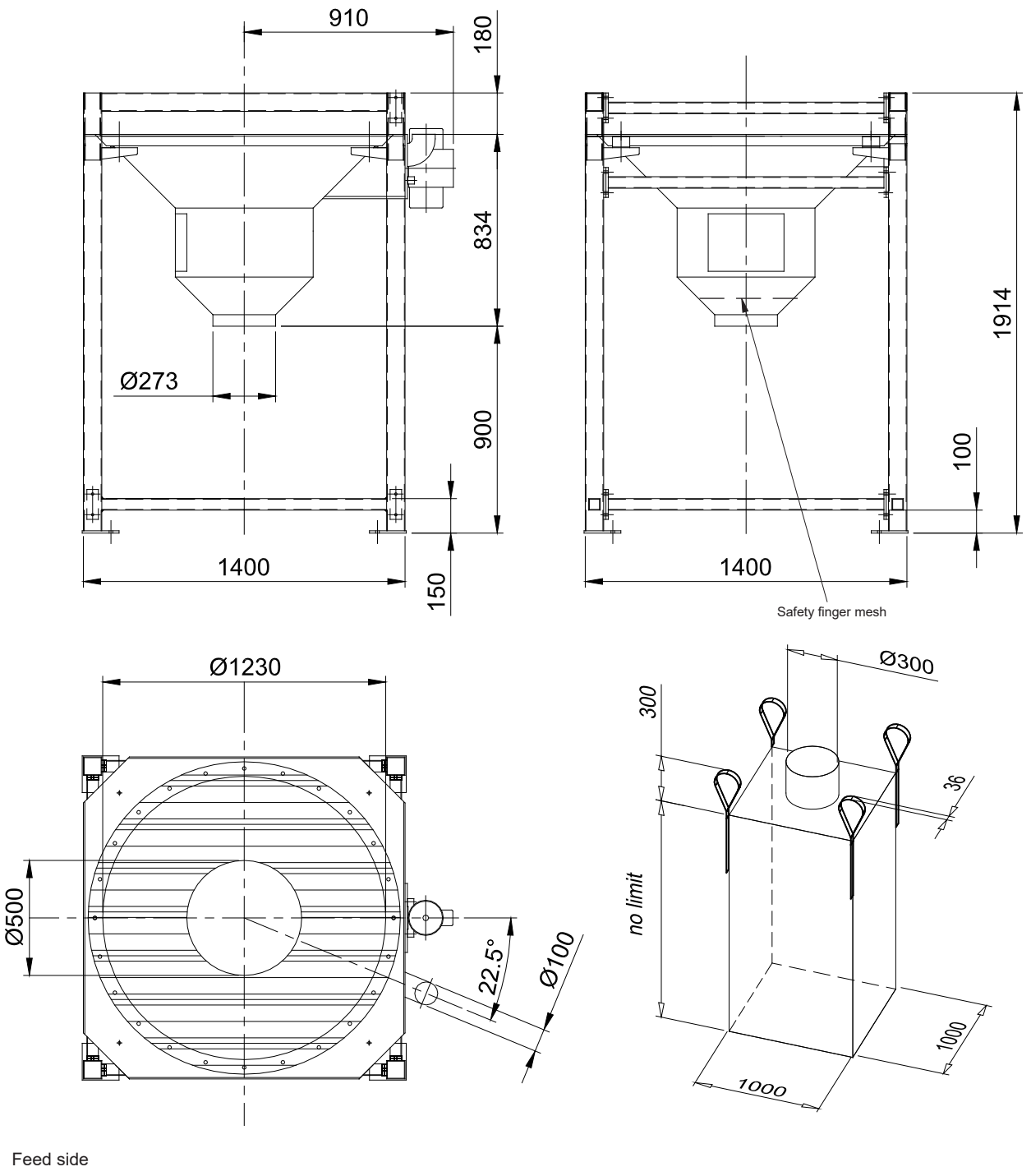
910
180
834
900
150
Ø273
1400
1914
100
1400
Safety finger mesh
Ø1230
Ø500
22.5°
Ø100
Ø300
300
36
no limit
1000
1000
Feed side

## SBB._.150.C

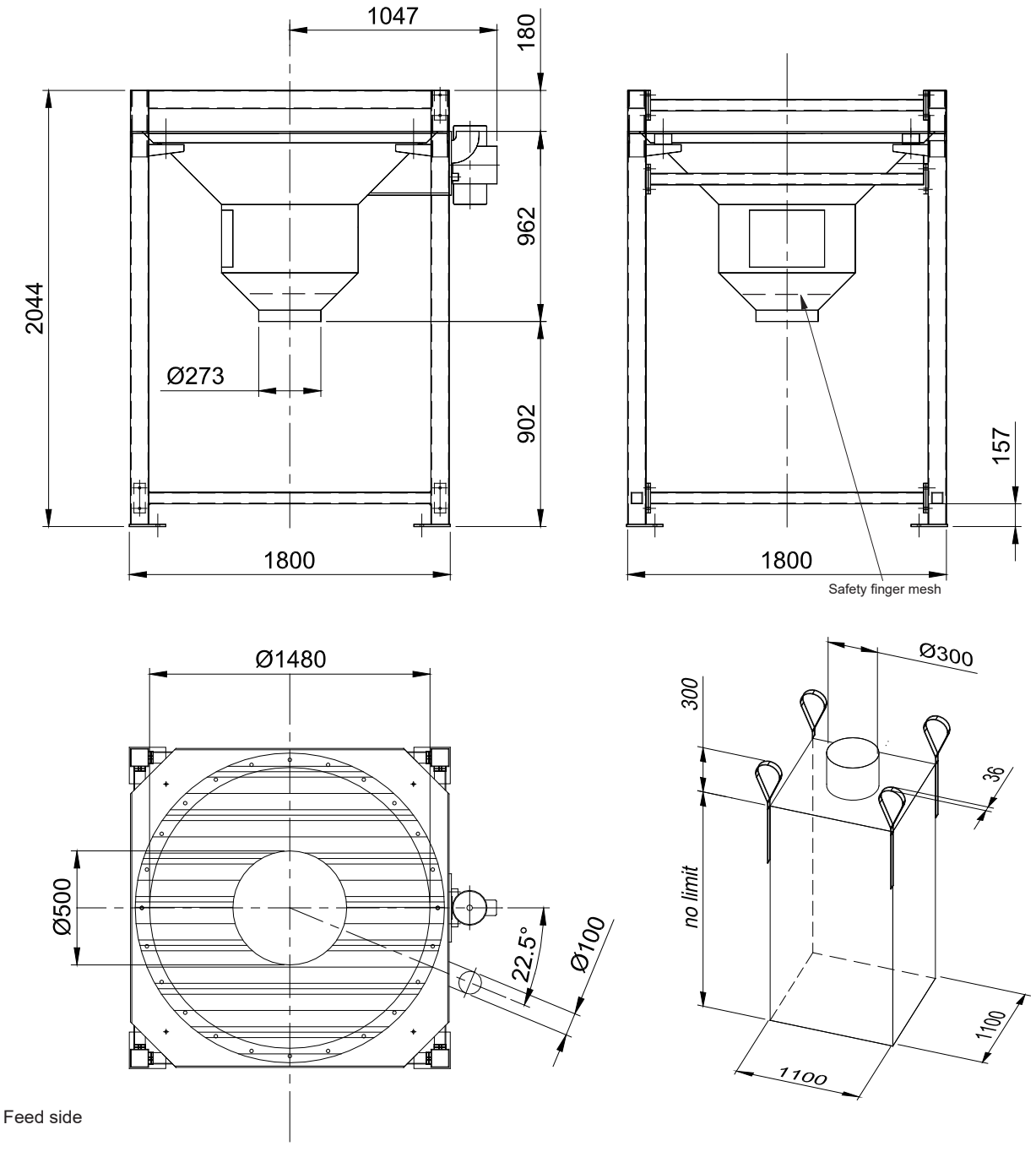
1047
180
962
902
2044
Ø273
1800
157
1800
Safety finger mesh
Ø1480
Ø500
22.5°
Ø100
Feed side
Ø300
300
36
no limit
1100
1100

## SBB._.125.S

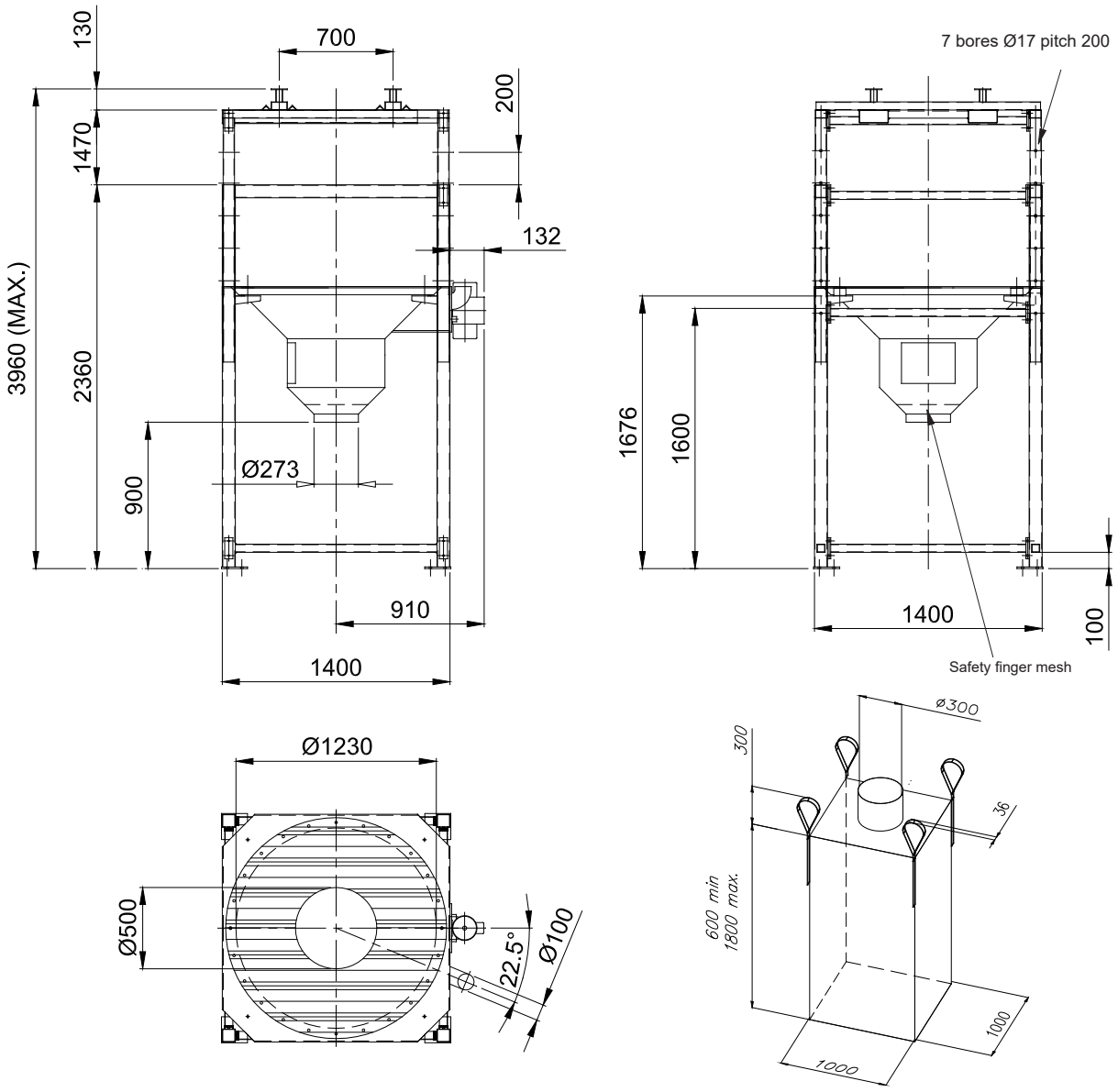


Feed side

**NOTE**: The heights given are theoretical.
They do not take into account deformation of filled **FIBC**s.

## SBB._.150.S

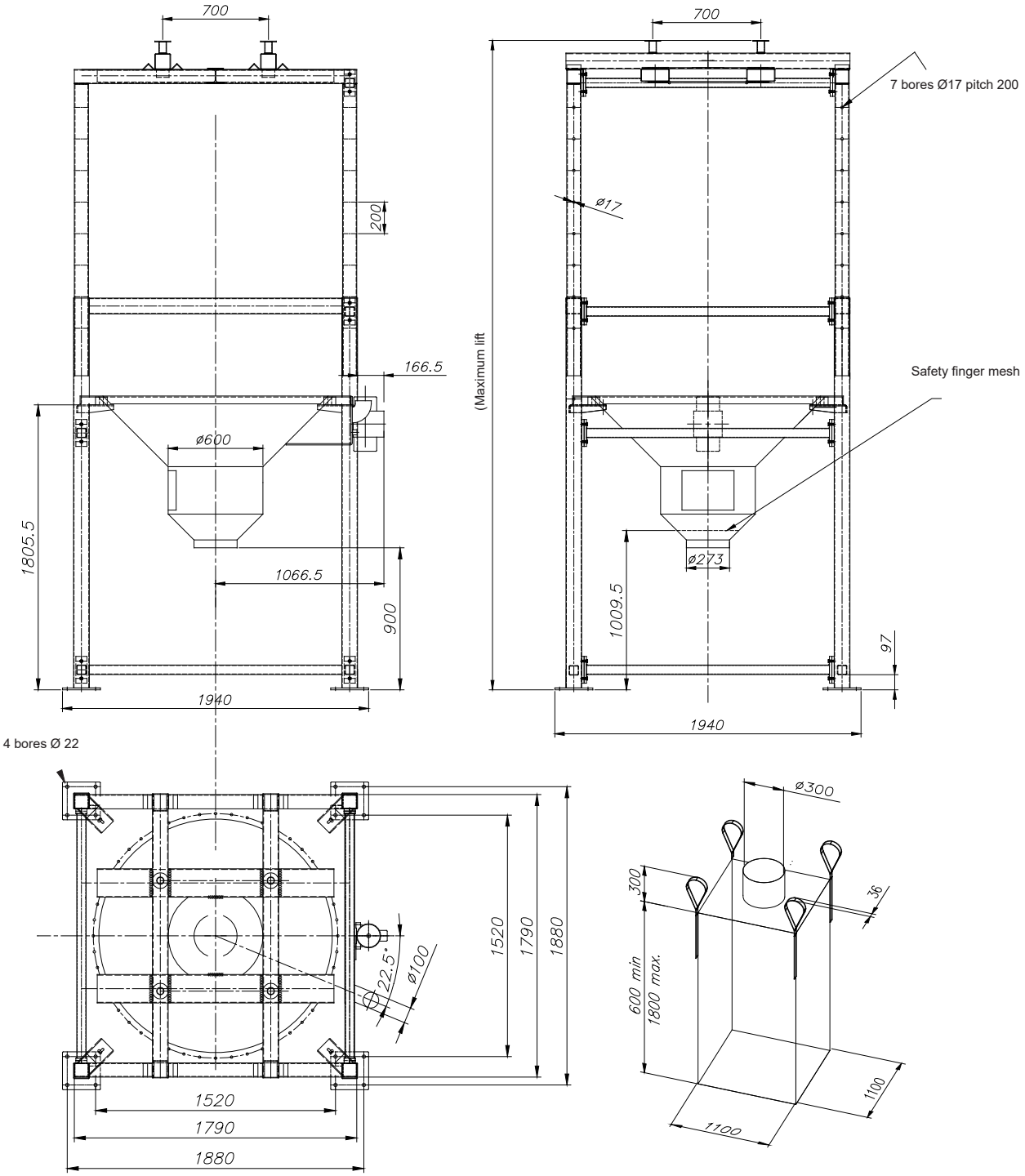


**NOTE**: The heights given are theoretical.
They do not take into account deformation of filled **FIBC**s.

## SBB._.125.M

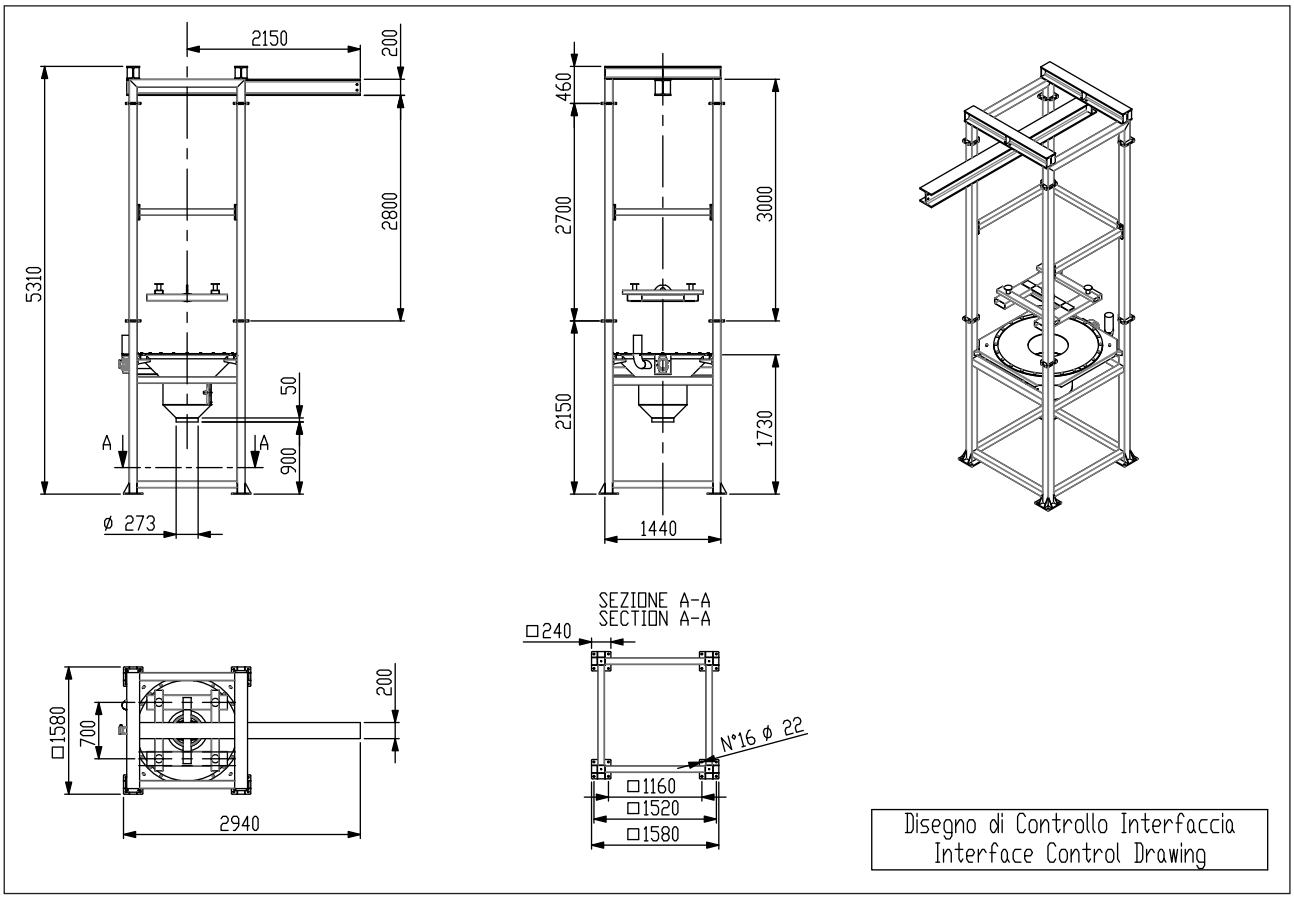
2150
200
2800
5310
50
900
A
A
ø 273
460
2700
3000
2150
1730
1440
SEZIONE A-A
SECTION A-A
□240
N°16 ø 22
□1160
□1520
□1580
200
□1580
700
2940
Disegno di Controllo Interfaccia
Interface Control Drawing

## SBB._.125.S

**MAX. CAPACITY 1600 daN ( CLASS A5 )**

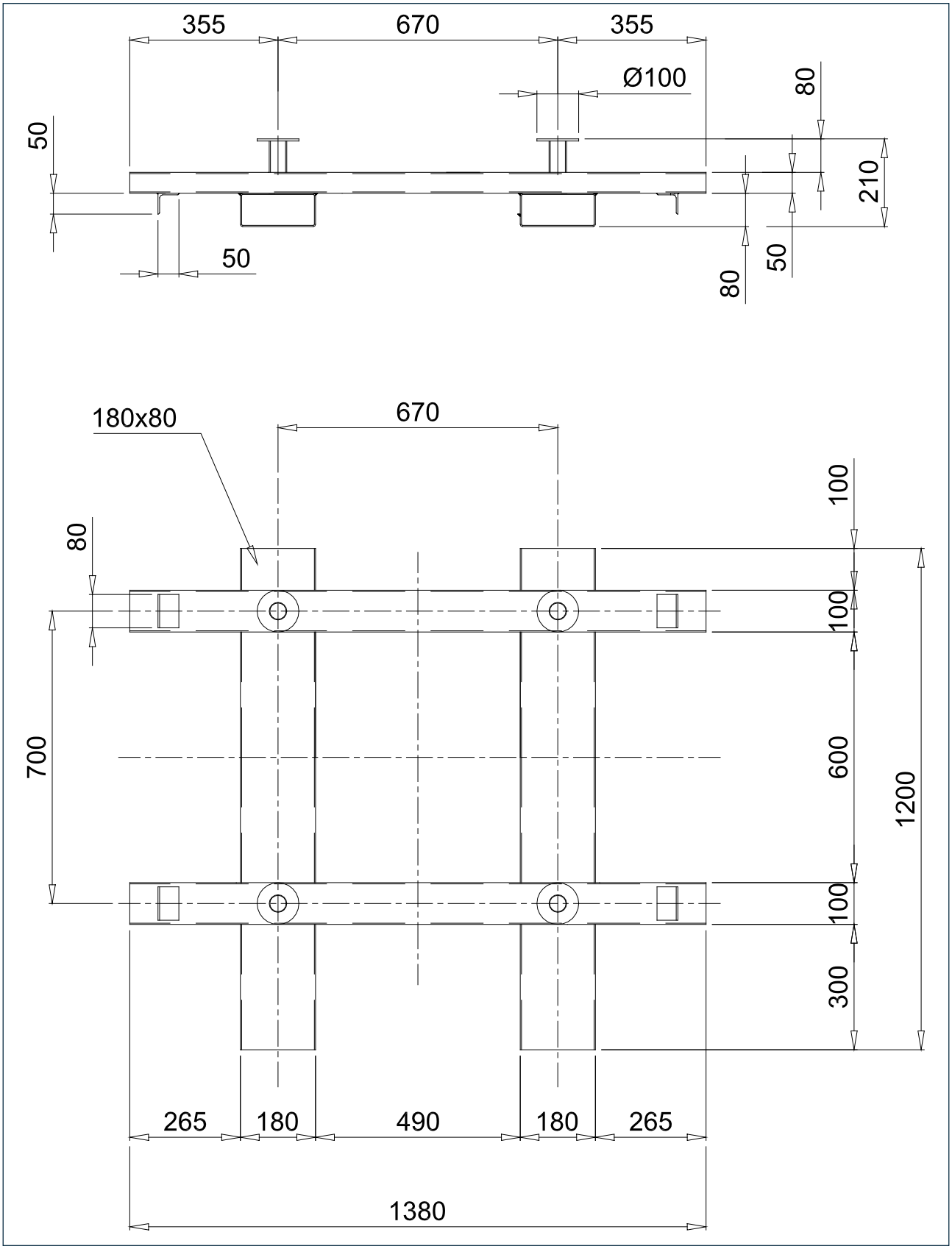

## SBB._.150.S

**MAX. CAPACITY 2500 daN ( CLASS A5 )**

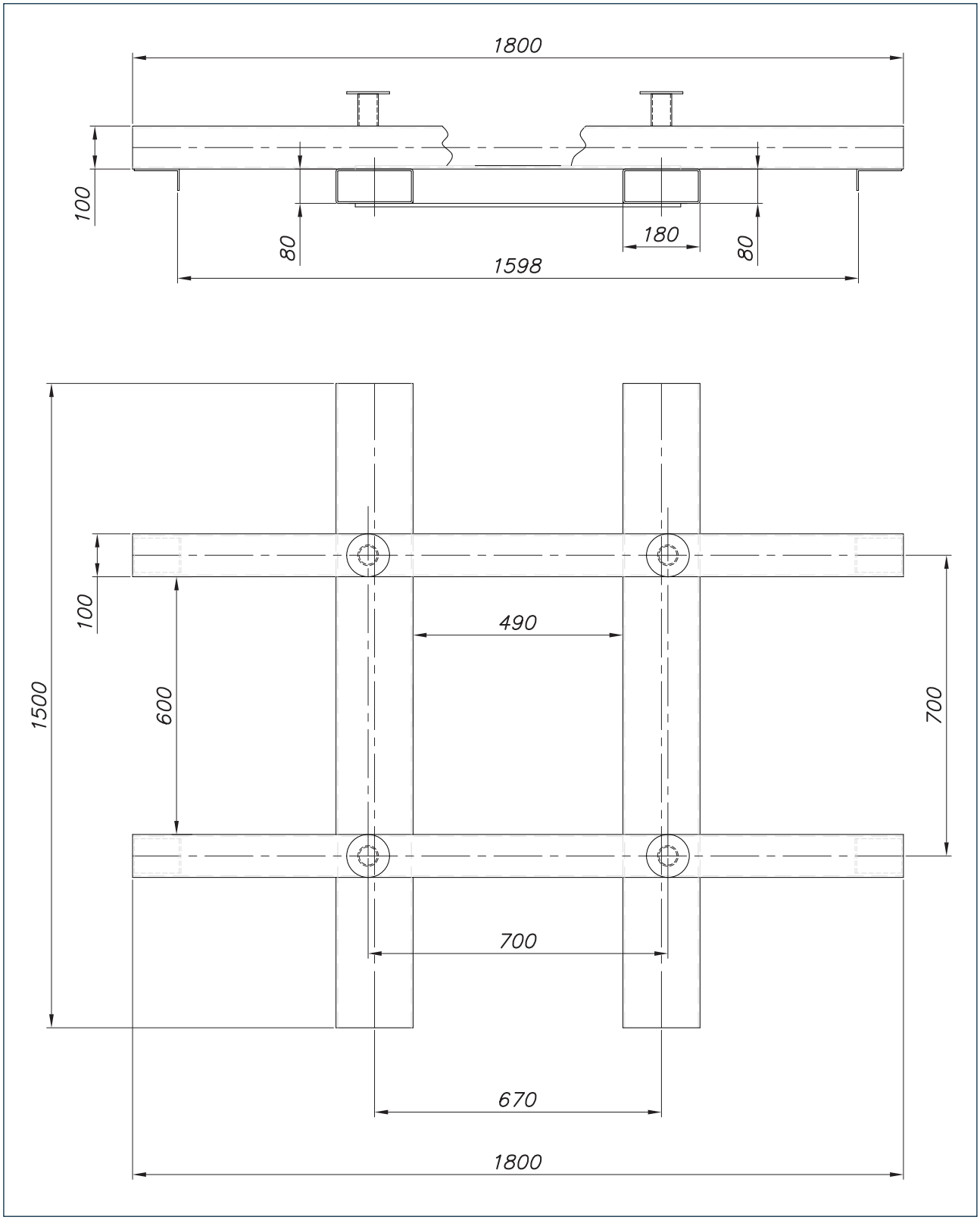

**SBB._.125.C** **SBB._.125.M** **SBB._.150.C**

**MAX. CAPACITY 2000 daN ( CLASS A5 )**

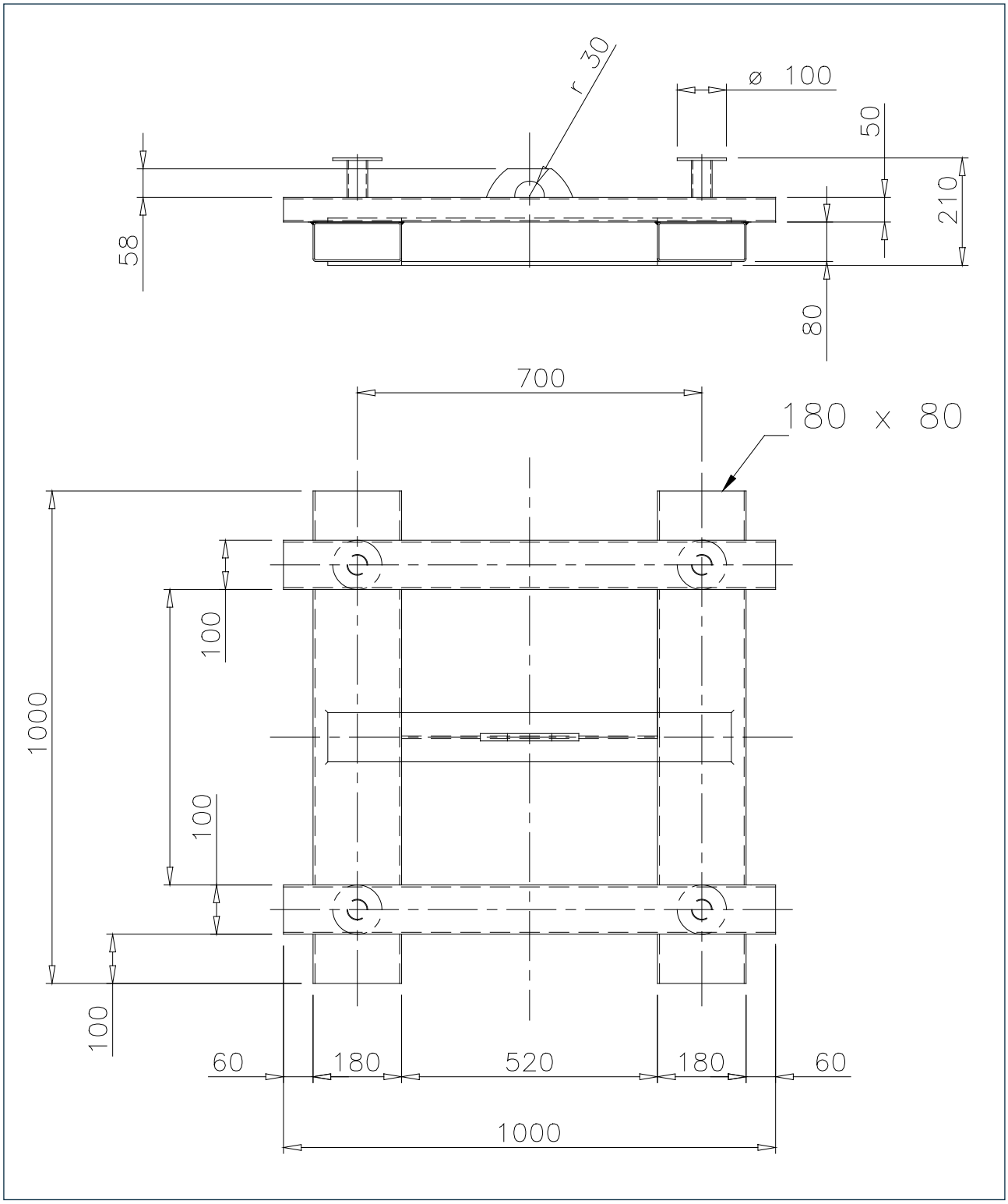

## SBB._.125.C SBB._.125.S

TOTAL DYNAMIC VERTICAL LOAD
**N max. = 2600 daN**

TOTAL TILTING TORQUE
**Mf max. = 358 daN · m**

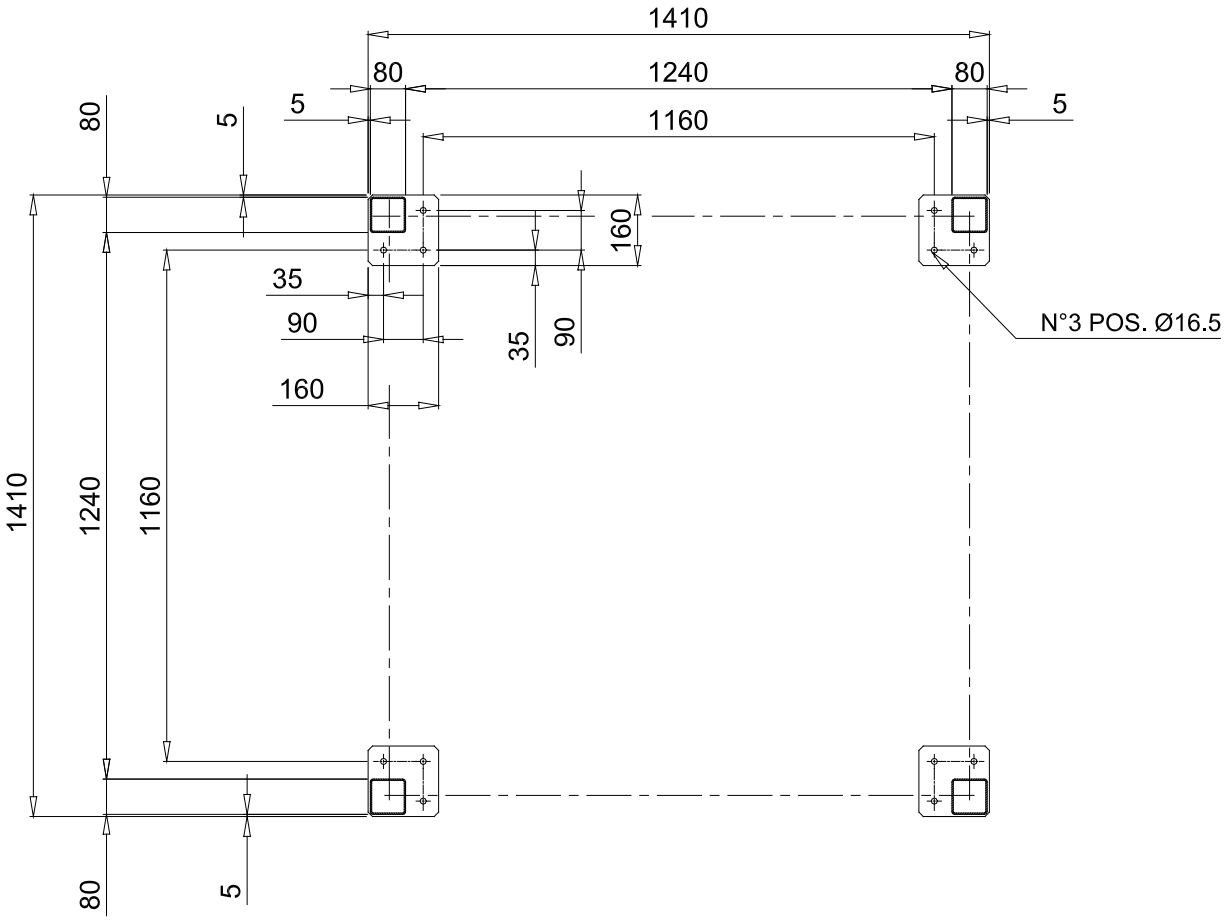


**MAX. CAPACITY 1600 daN (CLASS A5)**

**SBB._.150.C** **SBB._.150.S**

TOTAL DYNAMIC VERTICAL LOAD
**N max. = 4000 daN**

TOTAL TILTING TORQUE
**Mf max. = 1125 daN · m**

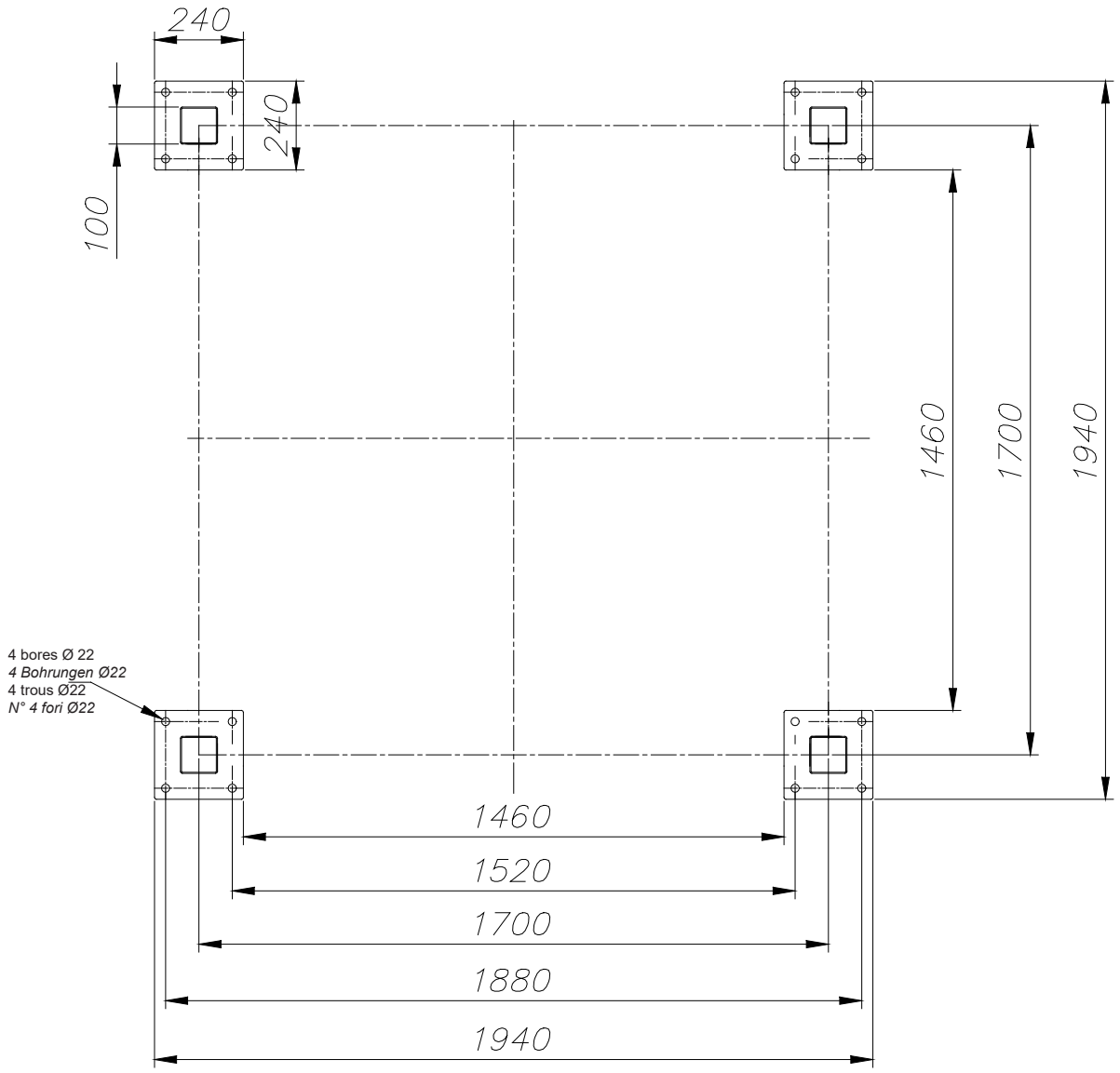


**MAX. CAPACITY 2500 daN (CLASS A5)**

## SBB._.125.M

TOTAL DYNAMIC VERTICAL LOAD
**N max. = 3400 daN**

TOTAL TILTING TORQUE
**Mf max. = 6150 daN · m**

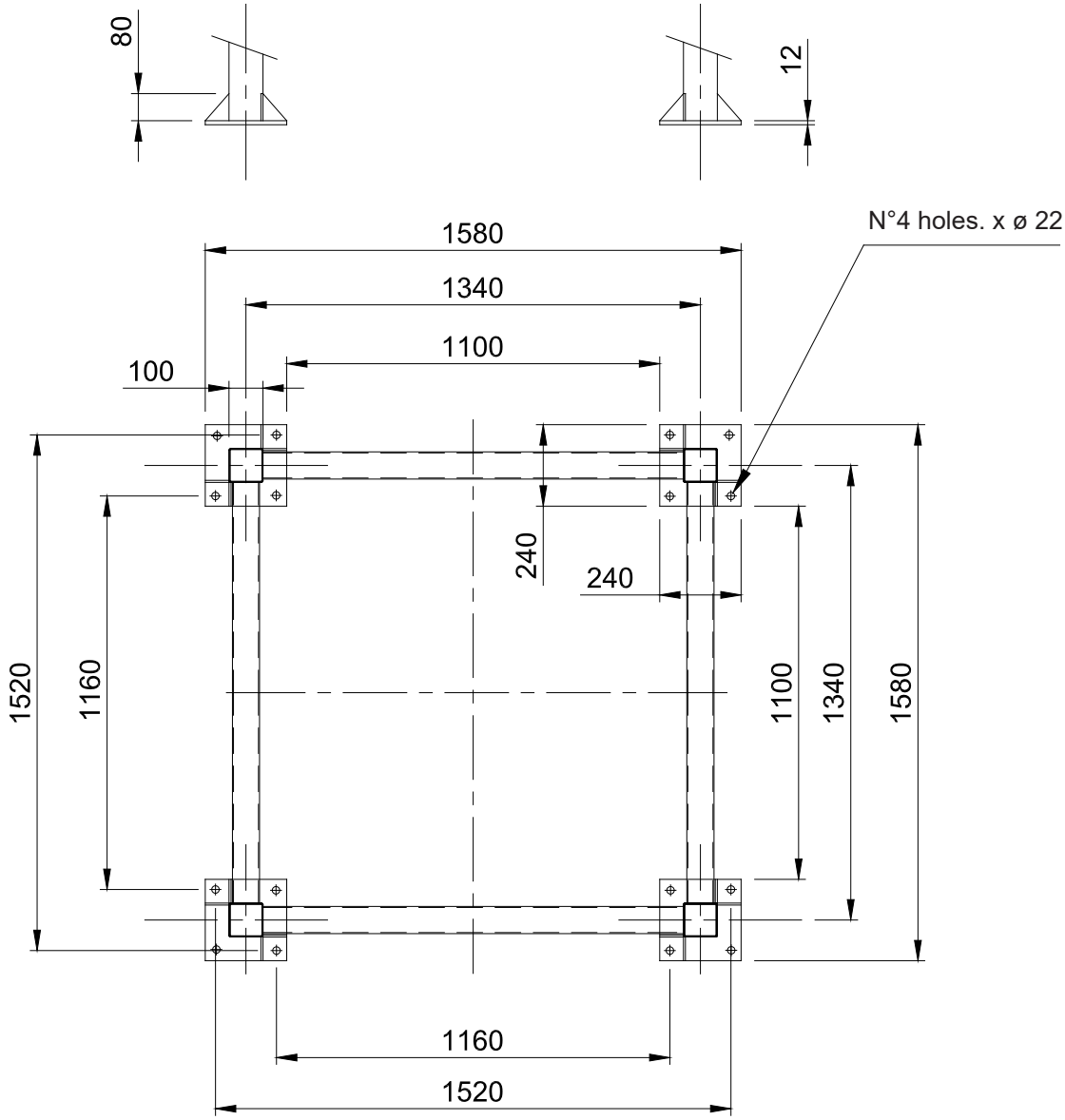


MAX. PULL FOR EACH ANCHORING BOLT: N1 = 1250 daN

**MAX. CAPACITY 2000 daN ( CLASS A5 )**

Refer to the chart below for all information necessary.

## FEATURES OF PRODUCT TO BE FEEDED

Name of products.....

Specific weight..... kg/dm³ or T/m³ **WAM®** Code.....

| PARTICLE SIZE | | | | | | | |
|---|---|---|---|---|---|---|---|
| micron | 0.1 - 0.5 | 0.5 - 1 | 1 - 5 | 5 - 10 | 10 - 50 | 50 - 100 | > 100 |
| % | | | | | | | |

Otherwise provide particle size graph

**Flowability**

highly flowable ☐ flowable ☐ slightly flowable ☐ Not flowable ☐

**Abrasivity**

slightly abrasive ☐ moderat. abrasive ☐ highly abrasive ☐

**Features of products**

| | | |
|---|---|---|
| generates static el. (G) ☐ | explosive (N) ☐ | highly corrosive (T) ☐ |
| alredy decomposes during storage (H) ☐ | hygroscopic (U) ☐ | has oils (W) ☐ |
| inflammable (J) ☐ | viscous (O) ☐ | compacted under pressure (X) ☐ |
| becomes plastic and soft (K) ☐ | contaminant (P) ☐ | very light and soft (Y) ☐ |
| very dusty (L) ☐ | degradable (Q) ☐ | high temperatures (Z) ☐ |
| becomes gas or fluid (M) ☐ | harmful on falling, produces gas, fumes (R) ☐ | |
| moderately corrosive (S) ☐ | becomes granular, twists, agglomerates (V) ☐ | |

**SSB SIZING**

**Flow rate required**.....$m^3/h$

**Construction:** Parts in contact: 304L SS ☐ 316L SS ☐

Completely made from: 304L SS ☐ 316L SS ☐

**FINISH**

☐ Fe **4.10.3I** (RAL 7001 ) ( std)

☐ 304L / 316L SS **AG0.G0** ( std)

☐ 304L / 316L SS **AQ0.G0** ( std) ☐ (on request)

**Internal finishing:**.....RAL:.....

**External finishing:**.....RAL:.....

**Electric vibrator finishing: WAM®** Std: **RAL 2004**

**ELECTRICAL FEATURES**

**Electric vibrator:** Supply voltage:.....V Phases:..... Frequency:.....Hz

**ACCESSORIES**

Flexible attachment kit:..... ☐

Round flange XKF 34._..... ☐

Square flange XKF 74._:..... ☐

Feet extensions..... ☐

Reduction section for outlet spout..... ☐

Manual gate valve:..... ☐

Door open mechanical limit stop:..... ☐

TOREX®

**TOREX® S.p.A.**
Via Canaletto, 139/A
41030 S. Prospero (MO) - ITALY

☎ ++39 / 059 / 8080811
**fax** ++39 / 059 / 908204
**e-mail** torex@torex.it
**internet** www.torex.it

WAMGROUP



# ILT

- **LEVEL INDICATOR**
  OPERATING AND MAINTENANCE
- ***FÜLLSTANDANZEIGER***
  BETRIEBS- UND WARTUNGSANLEITUNG
- **INDICATEURS DE NIVEAU**
  UTILISATION ET ENTRETIEN
- ***INDICATORE DI LIVELLO***
  USO E MANUTENZIONE

**Manual No. TOR.ILT.--.C.A7.0917.4L Issue: A7**
**Latest Update: September 2017**

**ORIGINAL INSTRUCTIONS IN ENGLISH**

*All rights reserved © WAMGROUP S.p.A.*

TOREX®

**ILT** - INDEX
- INHALTSVERZEICHNIS
- INDEX
- INDICE

**TOR.ILT.--.C.A7.0917.4L 2**


| | |
|---|---|
| INTRODUCTION, RULES AND GENERAL PROHIBITIONS | 3 - 5 |
| LIMITS OF USE | 6 |
| INTRODUCTION, RULES AND GENERAL PROHIBITIONS | 7 - 9 |
| GENERAL DIAGRAM | 10 |
| ORDER CODES | 11 |
| OTHER VERSIONS OF THE ILT AND ACCESSORIES | 12 - 13 |
| SAFETY NOCITES | 14 |
| CONNECTIONS | 15 - 16 |
| OPTIONS | 17 |
| VERSION FOR HIGH PROCESS TEMPERATURES | 18 |
| COMMISIONING - TESTING | 19 - 20 |
| MAINTENANCE | 21 |
| DEMOLITION | 22 |
| DECLARATION OF CONFORMITY | 23 - 26 |

| | |
|---|---|
| EINFÜHRUNG, ALLGEMEINE VORSCHRIFTEN GERÄTEBESCHREIBUNG | 3 - 5 |
| EINSATZGRENZEN | 6 |
| EINFÜHRUNG, ALLGEMEINE VORSCHRIFTEN GERÄTEBESCHREIBUNG | 7 - 9 |
| ALLGEMEINES SCHEMA | 10 |
| BESTELLCODES | 11 |
| ANDERE ILT-VERSIONEN UND ZUBEHÖR | 12 - 13 |
| SICHERHEITSHINWEISE | 14 |
| ANSCHLÜSSE | 15 - 16 |
| VARIANTEN | 17 |
| VERSION FÜR HOHE PROZESSTEMPERATUREN | 18 |
| ABNAHME UND INBETRIEBNAHME | 19 - 20 |
| WARTUNG | 21 |
| DEMONTAGE | 22 |
| KONFORMITÄTSERKLÄRUNG | 23 - 26 |

| | |
|---|---|
| INTRODUCTION, PRESCRIPTIONS ET CONSIGNES GENERALES | 3 - 5 |
| LIMITES D'UTILISATION | 6 |
| INTRODUCTION, PRESCRIPTIONS ET CONSIGNES GENERALES | 7 - 9 |
| SCHEMA GENERAL | 10 |
| CODES DE SELECTION | 11 |
| AUTRE VERSIONNES ILT ET ACCESSOIRES | 12 - 13 |
| INDICATIONS DE SÉCURITÉ | 14 |
| RACCORDEMENTS | 15 - 16 |
| OPTIONS | 17 |
| VERSION POUR PROCESSUS HAUTE TEMPÉRATURE | 18 |
| MISE EN SERVICE ET ESSAI DE RECEPTION | 19 - 20 |
| ENTRETIEN | 21 |
| DEMANTELEMENT | 22 |
| DÉCLARATION DE CONFORMITÉ | 23 - 26 |

| | |
|---|---|
| INTRODUZIONE, PRESCRIZIONI E DIVIETI GENERALI | 3 - 5 |
| LIMITI DI IMPIEGO | 6 |
| INTRODUZIONE, PRESCRIZIONI E DIVIETI GENERALI | 7 - 9 |
| SCHEMA GENERALE | 10 |
| CODICI DI SCELTA | 11 |
| ALTRE VERSIONI DELL'ILT ED ACCESSORI | 12 - 13 |
| ISTRUZIONI DI SICUREZZA | 14 |
| CONNESSIONI | 15 - 16 |
| OPZIONI | 17 |
| VERSIONE PER TEMPERATURE DI PROCESSO ALTE | 18 |
| MESSA IN SERVIZIO E COLLAUDO | 19 - 20 |
| MANUTENZIONE | 21 |
| DEMOLIZIONE | 22 |
| DICHIARAZIONE DI CONFORMITÀ | 23 - 26 |

This "OPERATING AND MAINTENANCE MANUAL" is an essential and integral part of the machine and must be readily available to operating and servicing personnel.

The owner, operator and maintenance Manager must be familiar with the contents of this Manual.

The description and illustrations used in thus Manual are not binding on Manufacturer.

While the basic characteristics of the machine remain unchanged as described, Manufacturer reserves the right to make any modifications to assemblies, parts and accessories it deems necessary for product improvement on for fabrication or marketing needs and this without prior notice and without being obliged to update this Manual at the time of modifications.

Die "BETRIEBS- UND WARTUNGSANLEITUNG" gehört zur Maschine und muß an einem Ort aufbewahrt werden, der dem Bedienungs- und Wartungspersonal gut zugänglich ist.

Betreiber, Bediener und Wartungspersonal sind verpflichtet, den Inhalt dieses Handbuchs zu kennen.

Unter Beibehaltung der wesentlichen Merkmale der beschriebenen Maschinen behält sich der Hersteller vor, jederzeit an Geräteteilen und/oder am Zubehör Änderungen im Sinne der Produktverbesserung oder aus technisch oder kaufmännisch notwendigen Gründen vorzunehmen.

La présente notice "UTILISATION ET ENTRETIEN" fait partie intégrante de la machine et elle doit être mise à la disposition du personnel préposé à la conduite et à la maintenance de la machine.
L'utilisateur, le conducteur et le technicien de maintenance ont l'obligation de connaître le contenu de cette notice d'instructions.
Les descriptions et les illustrations contenues dans la présente publication sont données sans engagement de la part du constructeur.

Bien que les caractéristiques principales des machines décrites dans les présentes demeurent inchangées, le constructeur se réserve le droit d'apporter, à tout moment et sans obligation, des modifications eventuelles d'organes, pièces et accessoires retenus nécessaires pour l'amélioration du produit ou pour des exigences de fabrication ainsi que commerciales ; et de mettre immédiatement à jour la présente publication.

Il presente libretto " USO E MANUTENZIONE" costituisce parte integrante della macchina e deve essere, facilmente reperibile dal personale addetto alla conduzione ed alla manutenzione.

L'utente, il conduttore e l'addetto alla manutenzione hanno l'obbligo di conoscere il contenuto dei presente libretto.

Le descrizioni e le illustrazioni contenuti nella presente pubblicazione si intendono non impegnative,

Ferme restando le caratteristiche essenziali delle macchine descritte, la ditta costruttrice si riserva il diritto di apportare, le eventuali modifiche di organi, dettagli e, accessori, che riterrà convenienti per il miglioramento del prodotto o per esigenze di carattere costruttivo o commerciale, in qualunque momento e senza impegnarsi ad aggiornare tempestivamente questa pubblicazione.

## GENERAL PROHIBITIONS AND REGULATIONS

- This machine must not be used even partially by unauthorised personnel.
- The shop foreman or Department Manager is responsible for Machine operator training and for checking training level achieved.
- The machine must not be used for purposes other than those is was designed for.
- Read carefully the warning notices attached to the machine.
- Do not remove the warning notices attached to the machine,
- When the machine is running, do not service, repair, regulate the machine or carry out any other operation not strictly required by the work cycle. ,Before any of the above listed operations, always disconnect the machine for all electric power supply sources.
- DO not remove the guards and the safety devices on the machine,
- DO not start to work with protections opened or do not open them during the work,
- Always wear safety gloves when working on the machine.
- At the end of the work shift, disconnect the machine from the electric supply.
- Any repair, service or maintenance work, whether electrical or otherwise, must be in compliance with CEI standards in force.

## ALLGEMEINE VORSCHRIFTEN

- Jegliche auch teilweise Bedienung der Maschine durch hierzu nicht ausdrücklich autorisiertes Personal ist untersagt.
- Der Betriebsleiter ist dafür verantwortlich, daß das zur Bedienung autorisierte Personal in der Bedienung der Maschine geschult wird.
- Die Maschine darf zu keinem anderen Zweck als zu dem in diesem Handbuch beschriebenen verwendet werden.
- Die Gefahren- und Hinweisschilder an der Maschine müssen beachtet werden.
- Es ist verboten, die Gefahren- und Hinweisschilder an der Maschine zu entfernen.
- Wartungs-, Reparatur-, und/oder vom Hersteller autorisierte Änderungsarbeiten dürfen nicht bei laufender Maschine durchgeführt werden. Vor der Durchführung solcher Arbeiten muß zuerst die Stromversorgung zur Maschine unterbrochen werden.
- Es ist verboten, die an der Maschine angebrachten Schutz- und Sicherheitseinrichtungen zu entfernen.
- Schulzeinrichtungen an der Maschine dürfen bei Kontroll-, Wartungs-, Reparatur- und/oder Anderungsarbeiten weder fehlen noch während dieser Arbeiten entfernt werden.
- Zum Ende der Arbeitsschicht die Stromversorgung der Maschine abschalten.
- Für alle elektrischen und nicht elektrischen Wartungsarbeiten die Vorschriften der geltenden Normen beachten.

## PRESCRIPTIONS ET CONSIGNES GENERALES

- L'utilisation, même partielle, de l'équipement de la part du personnel non autorisé est expressément interdit.
- Le chef d'usine et les chefs d'atelier ont l'obligation d'instruire et de contrôler le personnel préposé à l'utilisation de l'équipement.
- L'utilisation de l'équipement pour des usages différents de ceux pour lesquels ils ont été prévus, sont interdits.
- Lire attentivement les plaques signalétiques et de danger apposées sur l'équipement.
- Il est interdit d'enlever de l'équipement les plaques de signalisation et de danger.
- Il est interdit d'effectuer la maintenance, de réparer, de modifier ou de faire tout ce qui n'est pas strictement nécessaire au cycle de travail quand la machine est en marche.
- Il est interdit de démonter les protections et les sécurités présentes sur la machine.
- Il est interdit de commencer le travail avec les protections ouvertes ou de les ouvrir pendant le travail. Le port des gants de protection est obligatoire pour travailler sur la machine.
- A la fin des périodes de travail débrancher toujours la machine des alimentations électriques.
- Toute maintenance électrique et autres doivent être conformes aux normes en vigueur.

## PRESCRIZIONI E DIVIETI GENERALI

- E' vietato l'uso, anche parziale, dell'attrezzatura da parte del personale non espressamente autorizzato. L'istruzione del personale preposto all'uso è da realizzare e verificare a cura dei capo officina e dei capi reparto.
- E' vietato l'uso dell'attrezzatura per modalità diverse da quelle per cui è stata prevista.
- Leggere con attenzione le targhe di avvertenza e pericolo poste sulla macchina.
- E' vietato rimuovere le targhe di avvertenza e pericolo sulla macchina.
- E' vietato manutenzionare, eseguire riparazioni, modifiche e quanto non strettamente necessario al ciclo di lavoro con la macchina in movimento. Prima di tutto è obbligatorio disinnestare tutte le alimentazioni elettriche alla macchina.
- E' vietato rimuovere le protezioni e le sicurezze presenti sulla macchina.
- E' vietato iniziare il lavoro con le protezioni aperte o aprirle durante il lavoro.
- Operare sulla macchina solo con i guanti di protezione.
- Al termine dei periodi di lavoro scollegare sempre la macchina dalle alimentazioni elettriche.
- Qualsiasi manutenzione elettrica e non elettrica deve attenersi alle norme vigenti.

TOREX®

# ILT
- INTRODUCTION, RULES AND GENERAL PROHIBITIONS
- EINFÜHRUNG, ALLGEMEINE VORSCHRIFTEN GERÄTEBESCHREIBUNG
- INTRODUCTION, PRESCRIPTIONS ET CONSIGNES GENERALES
- INTRODUZIONE, PRESCRIZIONI E DIVIETI GENERALI

**TOR.ILT.--.C.A7.0917.4L 5**

**DESCRIPTION**
**Bin Level Indicator for point level limit detection in bulk materials**

**FUNCTION**
The device is used for level monitoring in all types of containers and silos.
It can be used with all powdery and granular bulk materials that do not show a strong propensity to form crusts or deposits.
When the material level reaches the measuring paddle the rotation is blocked.
The resulting reaction torque activates a limit switch output signal that stops the motor.
As soon as the material level sinks below the paddle radius, the switch returns to the OFF position and the motor is switched on.

**IMPROPER USE**
ILT level indicators are not designed to work in dangerous conditions or with dangerous materials. If the machine has to operate in these conditions, the manufacturer must be informed.

Dangerous materials:
- explosives,
- toxic,
- flammable,
- harmful and similar.

**BESCHREIBUNG**
**Füllstandmelder für Behälter zur punktuellen Füllstandbestimmung bei Schüttgütern**

**FUNKTION**
Das Gerät wird verwendet zur Füllstandüberwachung in Behältern und Silos aller Art.
Es ist einsetzbar für alle pulverförmigen Schüttgüter und Granulate, die nicht zu starker Ansatzbildung neigen.
Erreicht der Füllstand des Schüttgutes das Messpaddel, wird dessen Rotationsbewegung unterbrochen. Das entstehende Drehmoment aktiviert ein Ausgangssignal am Begrenzungsschalter, welches den Motor stoppt.
Sinkt der Füllstand unterhalb des Radius des Paddels, der Schalter kehrt in die AUS-Position zurück und der Motor ist eingeschaltet.

**UNZULÄSSIGE VERWENDUNGSZWECKE**
Die Füllstandanzeiger der Modellreihe ILT sind weder für gefährliche Anwendungen noch zum Handling von gefährlichen Medien geeignet. Sollte der Betreiber eine ILT - Füllstandanzeiger für gefährliche Medien bzw. Anwendungen einsetzen wollen, so muß er unbedingt vorher den Hersteller um Erlaubnis fragen.

Als gefährliche Medien gelten:
- explosive,
- giftige,
- feuergefährliche,
- in irgendeiner Weise schädliche.

**DESCRIPTION**
**Indicateur de niveau pour le contrôle du niveau des matériaux en vrac**

**FONCTION**
L'appareil sert à surveiller le niveau de remplissage dans les réservoirs et silos de types les plus divers.
Il peut être utilisé pour tous produits pulvérulents et granulés n'ayant pas tendance à former de dépôts importants.
Lorsque le niveau du matériau atteint la palette de mesure, la rotation est bloquée.
Le couple de réaction résultant active un signal de sortie de l'interrupteur de fin de course, qui arrête le moteur.
Dès que le niveau du matériau descend en dessous du rayon d'action de la palette, l'interrupteur revient à la position OFF (ARRÊT) et le moteur est remis en marche.

**CONTRE-INDICATION**
Les indicateurs de niveau standards de la classe ILT N'ONT pas été projetés pour travailler dans des conditions ou avec des produits dangereux; par conséquent si la, machine ne répond pas à ces exigences, le constructeur doit obligatoirement en être informé

Les produits suivants sont considérés comme dangereux, si ceux-si sont:
- explosifs,
- toxiques,
- inflammables,
- nocifs et/ou similaires.

**DESCRIZIONE:**
**Indicatore di livello a pala rotativa per il controllo di livello di materiale sfuso**

**FUNZIONE D'USO**
Il dispositivo è utilizzato per il monitoraggio del livello all'interno di container e sili di qualsiasi tipo.
Può essere utilizzato in presenza di polveri e granulati con scarsa tendenza alla formazione di incrostazioni o depositi.
Quando il livello del materiale raggiunge la paletta sensore, la rotazione si blocca.
La coppia risultante attiva un finecorsa che invia un segnale per fermare il motore.
Appena il livello del materiale scende al di sotto del raggio di azione della paletta, il finecorsa si disattiva e fa ripartire il motore.

**CONTROINDICAZIONI**
Gli indicatori di livello standard della ILT NON sono stati progettati per operare in condizioni o con materiali pericolosi pertanto quando la macchina deve assolvere a queste esigenze è d'obbligo informare il costruttore.

Si ritengono materiali pericolosi:
- esplosivi,
- tossici,
- infiammabili,
- nocivi e/o simili.

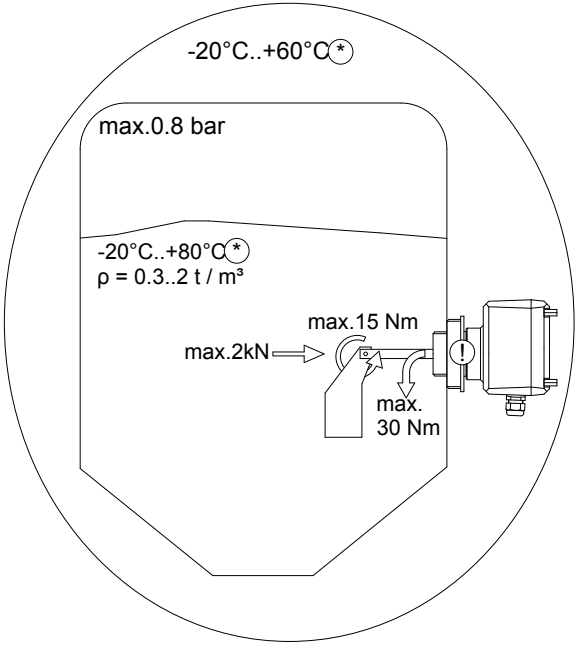


!

Maximum value of impact energy on connecting bush.

*Max. Schlagenenergie auf die Verbindungsbuchse.*

Valeur maximum de l'énergie d'impact sur la bague de connexion.

*Massimo valore dell'energia di impatto sulla boccola di connessione.*

1J

*

Different process and ambient temperatures available as an option.

*Verschiedene Prozess- und Umgebungstemperaturen als Option verfügbar.*

Différentes températures environnementales et de processus disponibles en option.

*Diverse temperatura ambiente e di processo disponibili come opzione.*

**Restrictions**

The bushing is suitable for withstanding sunlight and atmospheric agents. The mechanical features of the material are not guaranteed in case of acidic or basic environments.
These environmental conditions must be checked for each application.
The breaking load of the plastic material gets reduced over a period of time with the following proportions:
- approx. 50% in two years
- approx. 60% in five years

**Einschränkungen**

Die Buchse ist sonnenlicht- und witterungsbeständig. Die mechanischen Werkstoffeigenschaften werden bei saurer und Basischer umgebung nicht gewährleistet.
Die Umgebungsbedingungen müssen für jede Anwendung gesondert geprüft werden.
Die Bruchlast des Kunststoffs verringert sich im Laufe der Zeit im folgenden Verhält-nis:
- ca 50% in zwei Jahren
- ca 60% in fünf Jahren

**Restrictions**

La bague est adaptée pour résister à la lumière solaire et aux agents atmosphériques. Les caractéristiques mécaniques du matériau ne sont pas garanties en milieu acide et basique.
Ces conditions ambiantes doivent être vérifiées pour chaque application.
La charge de rupture de la matière plastique diminue dans le temps dans les proportions suivantes :
- 50% au bout de deux ans
- 60% au bout de cinq ans

**Restrizioni**

La boccola è adatta per resistere alla luce solare ed agenti atmosferici. Non sono garantite le caratteristiche meccaniche del materiale in caso di ambienti acidi e basici.
Tali condizioni ambientali devono essere verificate per ogni applicazione.
Il carico di rottura del materiale plastico si riduce nell'arco del tempo con le seguenti proporzioni:
- circa 50% in due anni
- circa 60% in cinque anni

| MECHANICAL DATA | |
|---|---|
| Enclosure | IP 65 |
| Process connection | Thread G1 1/4", G1 1/2", G2 1/2" |
| Material process-connection | Plastic and aluminium |
| Material vane shaft and measuring | Stainless steel |
| Paddle shaft clutch | Protection of the gearing from impacts on the measuring vane |
| Pickup delay | Approx. 1.3 sec. |
| Sensitivity | Adjustable via reset force of spring in three positions |
| Paddle speed | 1 rpm |

| ELECTRICAL DATA | |
|---|---|
| Supply voltage (!)* | AC: 24V / 48V / 115V / 230V 50/60Hz<br>DC: 12V / 24V (all voltage +/- 10%) |
| Power | 3W |
| Connection terminal | 1 x max. 1.5 mm2 |
| Signal output | Floating microswich max.250V (AC/DC), 2A. |
| Protection class | I |
| Over voltage category | II |

* Power supply voltage must never come directly from the mains but always obtained by a secondary transformation winding.

| MECHANISCHE DATEN | |
|---|---|
| Gehause | IP 65 |
| Prozessanschluss | Gewinde G1 1/4", G1 1/2", G2 1/2" |
| Material des Anschlussgewindes | Kunststoff und Aluminium |
| Material von Welle und Flugel | Rostfreier Stahl |
| Paddelklaue | Schutz der Messwelle vor Stoften auf das Messpaddel |
| Signalverzogerung | c.a 1.3 sec. |
| Empfindlichkeit | Einstellbar durch Ruckholfeder mit drei Stellungen |
| Umdrehungszahl Paddel | 1 Umdrehung/min. |

| ELEKTRISCHE DATEN | |
|---|---|
| Versorgungs-spannung (!)* | AC: 24V / 48V / 115V / 230V 50/60Hz<br>DC: 12V / 24V (alle Spannungen +/- 10%) |
| Leistung | 3W |
| Anschluftklemmen | 1 x max. 1.5 mm2 |
| Ausgangssignal | Potentialfreier mikroschalter max. 250V (AC/DC) 2A |
| Schutzart | I |
| Uberspannung Kategorie | II |

* Die Versorgungsspannung darf nie direkt aus der Netzleitung kommen, sondern muss immer über eine Trafospule geleitet werden.

| CARACTERISTIQUES MECANIQUES | |
|---|---|
| Enveloppe | IP 65 |
| Raccordement processus | Filetage G1 1/4", G1 1/2", G2 1/2" |
| Matiere du filetage de raccord | Plastique et aluminium |
| Matiere de l'arbre et de la palette | Acier inoxydable |
| Embrayage de l'arbre de la palette | Protection de l'engrenage contre les impacts sur la palette de mesure |
| Retard de signal | 1.3 s. environ. |
| Sensibilite | Reglable par le rappel du ressort dans trois positions |
| Vitesse de la palette | 1 tour/min |

| CARACTERISTIQUES ELECTRIQUES | |
|---|---|
| Tension d'alimentation (!) * | AC: 24V / 48V / 115V / 230V 50/60Hz<br>DC: 12V / 24V (toutes les tensions +/- 10%) |
| Energie | 3W |
| Borne | 1 x 1.5 $mm^2$ max. |
| Signal de sortie | Microrupteur flottant max. 250V (AC/DC), 2A |
| Classe de protection | I |
| Categorie de surtension | II |

* La tension d'alimentation ne doit jamais venir directement du réseau, mais toujours obtenue d'un transformateur secondaire.

| DATI MECCANICI | |
|---|---|
| Protezione | IP 65 |
| Connessioni standard | Filettato G1 1/4", G1 1/2", G2 1/2" |
| Materiale del mozzo di collegamento | Plastica e Alluminio |
| Materiale dell' albero e della paletta | Acciaio inossidabile |
| Frizione albero paletta | Protezione degli ingranaggi dagli impatti della paletta sensore |
| Ritardo di segnale | 1.3 sec. circa |
| Sensibilità | Regolabile mediante il tensionamento di una molla su 3 diverse posizioni |
| Velocità paletta | 1 giro/min |

| DATI ELETTRICI | |
|---|---|
| Tensione d'alimentazione (!)* | AC: 24V / 48V / 115V / 230V 50/60Hz<br>DC: 12V / 24V (tutte le tensioni +/- 10%) |
| Assorbimento | 3W |
| Morsetto d'attacco | 1 x 1.5 $mm^2$ max. |
| Segnale di uscita | Microinterruttore flottante max.250V (AC/DC), 2A |
| Classe di protezione | I |
| Categoria di sovratensione | II |

* La tensione di alimentazione non deve provenire direttamente dalla rete, ma dev'essere sempre ottenuta da un avvolgimento secondario.

TOREX®

**ILT**

- GENERAL DIAGRAM
- ALLGEMEINES SCHEMA
- SCHEMA GENERAL
- SCHEMA GENERALE

**TOR.ILT.--.C.A7.0917.4L 10**

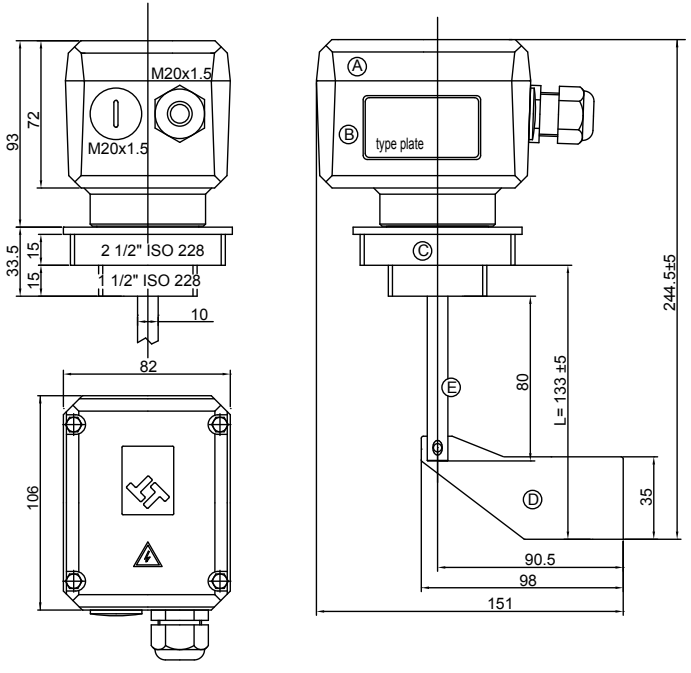


| Item pos. | Description - *Benennung* Designation - *Descrizione* | Quantity - *Stück* Quantitè - *Quantità* |
|---|---|---|
| **A** | Cover - *Deckel* Couvercle - *Coperchio* | 1 |
| **B** | Frame - *Gehäuse* Corps - *Corpo* | 1 |
| **C** | Shaft support *Anschlußgewinde mit Wellenführung* Support arbre *Supporto albero* | 1 |
| **D** | Paddle - *Drehfügel* Palette - *Paletta* | 1 |
| **E** | Shaft - *Welle* Arbre - *Albero* | 1 |

| ILT | A | 0 |
|---|---|---|

| | |
|---|---|
| **0** | 1 + ½“ - 2 + ½“ |
| **2** | 1 + ¼“ NPT cilindrical - *Zylindrisch* - cylindrique - *cilindrico* |

| | |
|---|---|
| **A** | 24/48 VAC - 50/60 Hz |
| **C** | 115/230 VAC - 50/60 Hz |
| **D** | 24 VDC |
| **E** | 12 VDC |
| **R** | 24 VDC - 22..230 VAC with rotation control - *mit Rotationskontrolle* - avec contrôle rotation - *con controllo rotazione* |

Level indicator - *Füllstandsmelder*
Indicateur de niveau - *Indicatore di livello*

| ACCESSORIES - *ZUBEHÖR* - ACCESSOIRES - *ACCESSORI* | |
|---|---|
| Sleeve 1+1/2" - *Manschette 1+1/2"*- Manchon 1+1/2"- *Manicotto 1+1/2"* | 4538020100 |
| Sleeve 2+1/2" - *Manschette 2+1/2"* - Manchon 2+1/2" - *Manicotto 2+1/2"* | 4538020150 |
| Double blade - *Doppelpaddel* - Palette double - *Paletta doppia* | 13N07051A (Pos.3) |
| Green lamp cover M20x1.5 - *Abdeckung der grünen Leuchte M20x1.5* - Couvercle lampe vert M20x1.5 - *Copri lampada verde M20x1.5* | 3848004510 (Pos.5) |
| Red lamp cover M20x1.5 - *Abdeckung der roten Leuchte M20x1.5* - Couvercle lampe rouge M20x1.5 - *Copri lampada verde M20x1.5* | 3848004530 (Pos.5) |
| 24 volt lamp - *Leuchte 24 V* - lampe 24 volt - *Lampada 24 volt* | 3848004050 (Pos.6) |
| 48 volt lamp - *Leuchte 48 V* - lampe 48 volt - *Lampada 48 volt* | 3848004055 (Pos.6) |
| 115 volt lamp - *Leuchte 115 V* - lampe 115 volt - *Lampada 115 volt* | 3848004100 (Pos.6) |
| 230 volt lamp - *Leuchte 230 V* - lampe 230 volt - *Lampada 230 volt* | 3848004150 (Pos.6) |
| 500 mm shaft extension (Carbon steel) - *Wellenzapfen 500 mm (unlegierter Stahl)* - 500 mm Rallonge pour arbre (acier au carbone) - *Prolunga per albero da 500 mm (Acciaio al carbonio)* | 3850001022 (Pos.2) |
| 1000 mm shaft extension (Carbon steel) - *Wellenzapfen 1000 mm (unlegierter Stahl)* - 1000 mm Rallonge pour arbre (acier au carbone) - *Prolunga per albero da 1000 mm (Acciaio al carbonio)* | 3850001038 (Pos.2) |
| 500 mm shaft extension (Stainless steel) - *Wellenzapfen 500 mm (Edelstahl)* - 500 mm Rallonge pour arbre (acier inoxydable) - *Prolunga per albero da 500 mm (Acciaio inossidabile)* | 3850001023 (Pos.2) |
| 1000 mm shaft extension (Stainless steel) - *Wellenzapfen 1000 mm (Edelstahl)* - 1000 mm Rallonge pour arbre (acier inoxydable) - *Prolunga per albero da 1000 mm (Acciaio inossidabile)* | 3850001027 (Pos.2) |
| Pin for shaft extensions - *Stift für Wellenzapfen* - Goupille pour rallonges arbre - *Perno per prolunghe albero* | 3850001039 (Pos.4) |
| Ø4x25 SS 304 DIN 94" - *Ø4x25 1.4301 Edelstahl DIN 94"* - Ø4x25 AISI 304 DIN 94" - *Ø4x25 AISI 304 DIN 94"* | 3024020275 (Pos.1) |

* assembly of the extensions is permitted only vertically and for a maximum of 3 m.
* *Es sind nur Verlängerungen bis zu max. 3 m zulässig, die vertikal zu montieren sind.*
* Le montage des prolonges est permis seulement en vertical et pour un maximum de 3 m.
* *il montaggio delle prolunghe è consentito solo in verticale e per un massimo di 3 m.*

When an extension set is purchased, make sure you include all components shown in the picture at page.13.
*Bei der Anschaffung eines Verlängerung-Bausatzes sicherstellen, dass alle aus der Abbildung von Seite 13 dargestellten Bauteile eingeschlossen sind.*
Lorsque vous achetez une extension, assurez-vous que tous les composants indiqués dans l'image à la page 13 ont été inclus.
*All'acquisto di una prolunga, assicuratevi di aver incluso tutte le componenti indicate nell'immagine alla pagina 13.*

Lamp - *Leuchte*
Lampe - *Lampada*

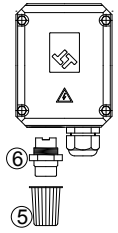


Multiple extension set - *Doppelpaddel mit Federung*
Rallonges en série - *Prolunghe in serie*

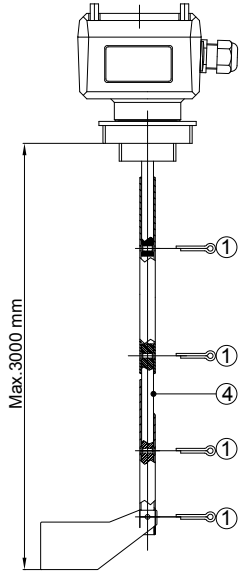


Extension - *Verlängerung*
Rallonge - *Prolunga*

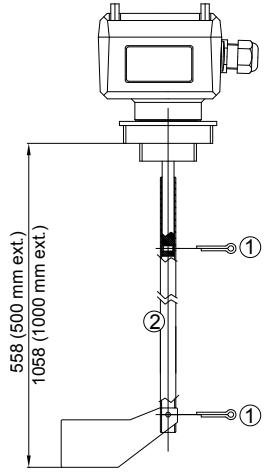


Double spring paddle - *Doppelpaddel mit Federung*
Double palette à ressort - *Pala doppia a molla*

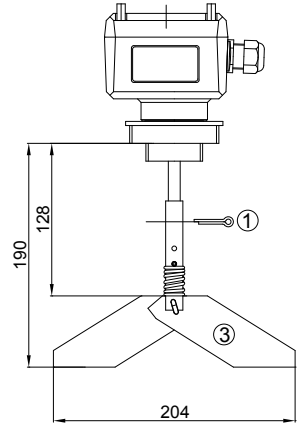

TOREX®

# ILT
- SAFETY NOCITES
- SICHERHEITSHINWEISE
- INDICATIONS DE SÉCURITÉ
- ISTRUZIONI DI SICUREZZA



**WARNING: high voltage!**

- Disconnect from all mains before opening the device.
- Start the device up only when the cover is closed.
- Before opening the lid take care that no dust deposits or whirlings are present.
- Do not allow any dust/water to enter the casing when the lid is open.
- Provide protection for relay contacts and output transistors to protect the device against spikes with inductive loads.
- Make sure that max. 8mm of the pigtails are bared (danger of contact with live parts).
- Make sure that the boots for protecting cable terminations are not longer than 8mm (danger of contact with live parts). Make sure that the screwed cable gland safely seals the cable and that it is tight (danger of water intrusion).
- A voltage-disconnecting switch must be provided near the device.
- In the case of inexpert handling or handling malpractice, the electric safety of the device cannot be guaranteed.
- In the case of a defect, the distribution voltage must automatically be cut off by a RCCB protective switch so as to protect the user of the device from indirect contact with dangerous electric tensions.
- Provide protection for relay contacts to protect the device against spikes, if inductive loads are connected.
- Provide a disconnect switch near the device.
- All field wirings must have insulation suitable for at least 250VAC. The temperature rating must be at least 90°C. (194°F).
- Protect the power of the device by means of a fuse.
- The device body has to be earthed to avoid static charges. This is particularly important in pneumatic conveying applications or with non-metallic containers.

**ACHTUNG: Hochspannung!**

- Vor der Öffnung des Geräts, dieses von allen Stromnetzen trennen.
- Das Gerät in Betrieb nehmen, nur wenn die Abdeckung geschlossen ist.
- Vor der Öffnung des Deckels sicherstellen, dass keine Staubablagerungen oder - aufwirbelungen vorhanden sind.
- Beim geöffneten Deckel darf kein Staub/Wasser innerhalb des Gehäuses gelangen.
- Zum Schutz vor Spannungsspitzen bei induktiven Lasten einen Schutz für Relaiskontakte / Ausgangstransistoren vorsehen.
- Darauf achten, daß die Anschlußlitzen max. 8 mm abisoliert werden (Gefahr der Berührung spannungs- führender Teile).
- Darauf achten, daß die Aderendhülsen der Anschlußkabel max. 8 mm lang sind (Gefahr der Berührung spannungsführender Teile).
- Darauf achten, daß die Kabelverschraubung das Kabel sicher dichtet u. fest angezogen ist (Wassereintritt).
- Es muß in der Nähe des Gerätes ein Schalter als Trennvorrichtung für die Anschlußspannung vorgesehen werden.
- Bei unsachgemäßem Gebrauch des Gerätes ist die elektr. Sicherheit nicht gewährleistet.
- Zum Schutz gegen indirektes Berühren gefährlicher Spannung muß im Fehlerfall ein automatisches Ausschalten (RCCB - Schutzschalter) der Versorgungsspannung gewährleistet sein.
- Für ein geeignetes System zum Schutz der Relaiskontakte sorgen, um die Vorrichtung vor Spannungsspitzen zu schützen, wenn induktive Lasten angelegt werden.
- Einen Trennschalter in der Nähe des Gerätes vorsehen.
- Alle Anschlusskabel müssen für wenigstens 250V AC Betriebsspannung isoliert sein. Die Temperaturbeständigkeit muss mindestens 90°C (194°F) betragen.
- Die Stromversorgung des Gerätes über eine Sicherung absichern.
- Um eine statische Aufladung zu vermeiden, muss das Gerätegehäuse geerdet sein. Dies ist insbesondere wichtig bei pneumatischer Materialförderung und bei nichtmetallischen Gehäusen.

**AVERTISSEMENT: haute tension!**

- Débranchez toutes alimentations électriques avant d'ouvrir le couvercle.
- Démarrer l'équipement seulement quand le couvercle est fermé.
- Avant d'ouvrir le couvercle assurez-vous qu'il n'y a pas de poussière ou des dépôts présents.
- Ne laissez pas la poussière/l'eau entrer dans le boîtier lorsque le couvercle est ouvert.
- Prévoir une protection pour les contacts de relais/les transistors de sortie afin de les protéger contre les pointes de tension en cas de charges inductives.
- Veiller à ce que les torons de raccordement soient dénudés à 8 mm au maximum (danger de contact avec des pièces sous tension).
- Veiller à ce que les cosses d'adhérence des câbles de connexion aient une longueur maximale de 8 mm (danger de contact avec des pièces sous tension).
- Veiller à ce que le presse étoupe ferme le câble hermétiquement et qu'il soit bien serré (arrivée d'eau).
- Prévoir un interrupteur à proximité de l'appareil.
- La garantie ne s'applique pas en cas de utilisation non conforme.
- En cas de défaut, l'alimentation doit être coupée automatiquement: (disjoncteur RCCB) pour protéger l'utilisateur contre toute tension dangereuse.
- Prévoir un dispositif approprié de protection des relais pour protéger l'équipement contre les pics de tension de courte durée, si les charges inductives sont reliées.
- Prévoir un interrupteur près du dispositif.
- Tous les câbles doivent être pourvus d'isolation appropriée d'au moins 250VAC. Le rapport de température doit être au moins 90°C (194°F).
- Protéger l'alimentation du dispositif avec un fusible.
- Le corps du dispositf doit être mis à la terre pour prévenir la formation de charges électrostatiques. Ceci est particulièrement important pour les applications de transport pneumatique ou dans le cas des conteneurs non-métalliques.

**ATTENZIONE: Tensione pericolosa!**

- Scollegare tutte le alimentazioni elettriche al dispositivo prima di aprire il coperchio.
- Avviare il dispositivo solamente con il coperchio del corpo chiuso.
- Prima di aprire il coperchio assicurarsi che non vi siano presenti depositi di polvere.
- Non far entrare la polvere/acqua all'interno della carcassa quando il coperchio viene aperto.
- Fornire una protezione per i contatti dei relè e i transistor d'uscita contro i picchi di tensione con cariche induttive.
- Assicurarsi che la superficie scoperta dei fili connettori non superi gli 8 mm (pericolo di contatto con parti sotto tensione).
- Assicurarsi che le guaine di protezione delle terminazioni dei cavi non superino gli 8 mm di lunghezza (pericolo di contatto con parti sotto tensione).
- Assicurarsi che il pressacavo stringa il cavo in modo sicuro, fissandolo adeguatamente (pericolo di infiltrazione d'acqua).
- Collocare un interruttore di tensione nei pressi del dispositivo.
- Non si garantisce la sicurezza elettrica del dispositivo in caso di impiego improprio o non conforme.
- In caso di guasto, l'alimentazione dovrà essere automaticamente interrotta mediante un interruttore di protezione RCCB al fine di proteggere l'utilizzatore dal contatto indiretto con tensioni elettriche pericolose.
- Predisporre un sistema idoneo di protezione dei contatti relé per proteggere il dispositivo da transitori di breve durata, se sono collegati i carichi induttivi.
- Prevedere un sezionatore vicino al dispositivo.
- Tutti i cavi devono disporre di isolamento idoneo ad almeno 250 VAC. IL rapporto di temperatura deve essere di almeno 90°C. (194°F).
- Proteggere l'alimentazione del dispositivo mediante fusibile.
- Il corpo del dispositivo deve essere collegato a terra per evitare la formazione di cariche elettrostatiche. Questo è particolarmente importante in applicazioni di trasporto pneumatico o con contenitori non metallici.

**ELECTRICAL CONNECTIONS**
The connection has to be carried out on the basis of the voltage indicated on the ID plate and according to the standards in force.
The wiring diagram is indicated on the electronic board (for AC devices) or inside the cover (for DC devices).

**ELEKTRISCHE ANSCHLÜSSE**
Der Anschluss muss aufgrund der auf dem Typenschild angegebenen Spannung und gemäß den geltenden Normen durchgeführt werden.
Das Schaltschema ist auf der elektronischen Karte (mit Wechselstrom betriebene Geräte) oder innerhalb der Abdeckung (mit Gleichstrom betriebene Geräte).

**RACCORDEMENTS ELECTRIQUES**
La connexion doit être effectuée conformément à la tension indiquée sur la plaque signalétique et conformément à la réglementation en vigueur. Le schéma de raccordement est montré sur la carte électronique (dispositifs alimentés en courant alternatif) ou à l'intérieur du couvercle (dispositifs alimentés en courant continu).

**COLLEGAMENTI ELETTRICI**
Il collegamento deve essere eseguito in accordo alla tensione riportata sulla targhetta identificativa ed in accordo alle normative vigenti.
Lo schema di connessione è riportato sulla scheda elettronica (dispositivi alimentati in corrente alternata) o sull'interno del coperchio (dispositivi in corrente continua).

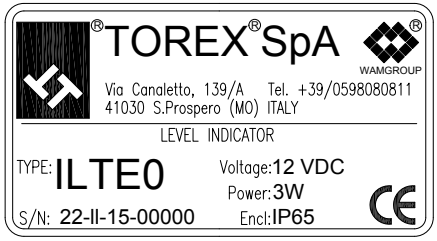


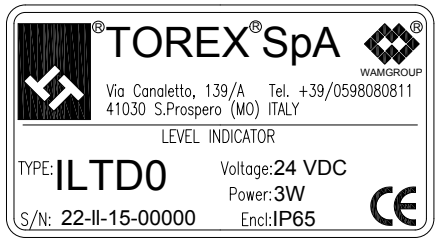


**DC version - *GS-Version* - Version CC - *Versione CC***

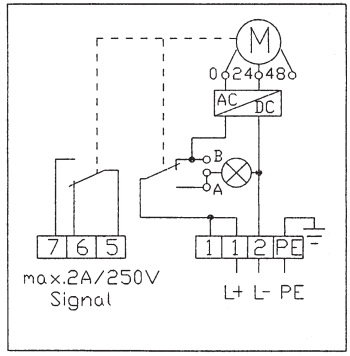

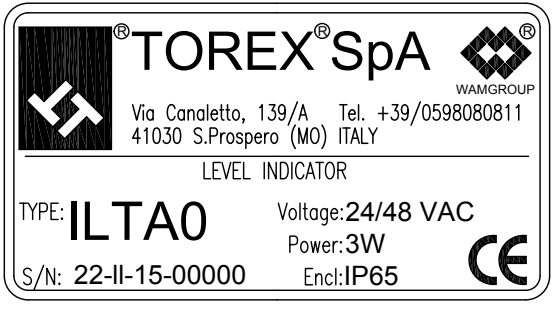


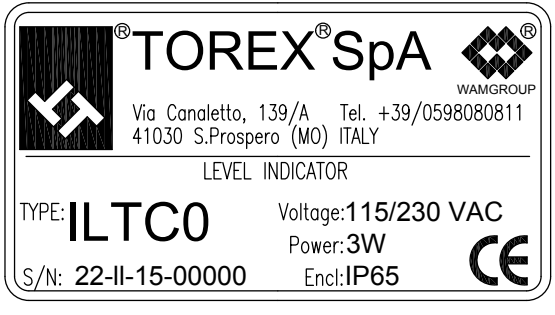


**AC version - *WS-Version* - Version CA - *Versione CA***

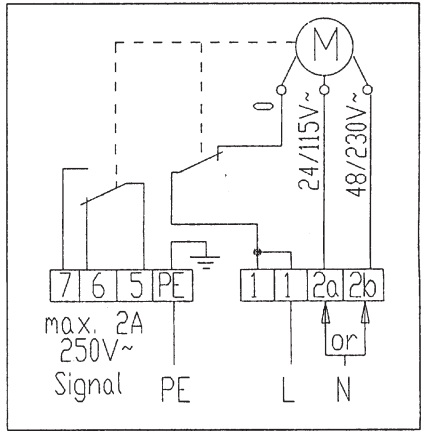

TOREX®

**ILT**
- **OPTIONS**
- **VARIANTEN**
- **OPTIONS**
- **OPZIONI**

# TOR.ILT.--.C.A7.0917.4L 17

Version with rotation control, universal voltage
*Version mit Rotationskontrolle, Universalspannung*
Version avec contrôle rotation, tension universelle
*Versione con controllo rotazione, tensione universale*

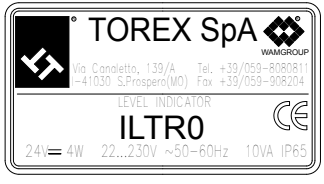


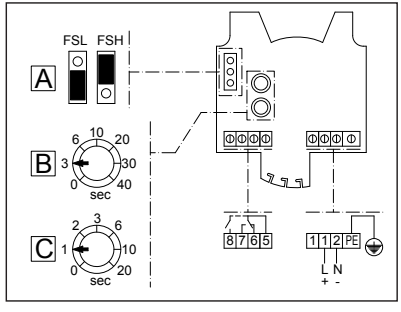


**Checking the rotation**
**Switching mode**
When the unit is switched on and works normally (paddle spinning freely or paddle stopped by material) contact 5-8 is Normally Closed.

In case of:
- missing power supply
- problems on connections
- unit defect

the contact 5-8 will open.

**Rotationsprüfung**
**Einschalt-Modus**
Wenn die Einheit eingeschaltet ist und normal funktioniert (das Paddel dreht sich unbehindert oder ist vom Material gestoppt), ist der Kontakt 5-8 ein Öffner.

Im Fall von:
- fehlender Spannungsversorgung,
- Problemen bei den Anschlüssen,
- Fehler der Einheit,

wird der Kontakt 5-8 öffnen.

**Contrôle de rotation**
**Mode de commutation**
Lorsque l'équipement est mis en marche et fonctionne normalement (avec la palette en rotation libre ou bloquée par le matériau) le contact 5-8 est Normal fermé.

En cas de :
- panne d'électricité
- problèmes de connexion
- appareil défectueux

le contact 5-8 s'ouvre.

**Controllo di rotazione**
**Modalità di commutazione**
Quando l'unità é avviata e funziona normalmente (con la paletta in rotazione libera o bloccata dal materiale) il contatto 5-8 é Normale Chiuso.

In caso di:
- blackout
- problemi di connessione
- unità difettosa

il contatto 5-8 si aprirà.

| | **Function; *Funktion*; Fonction; *Funzione*** | **Range; *Bereich;* Champ; *Campo*** | **Factory setting; *Werkseinstellung;* Réglages usine; *Impostazioni di fabbrica*** |
|---|---|---|---|
| A | Signal type; *Signaltyp;* Type de signal; *Tipo segnale* | FSL - FSH | FSL |
| B | Sensor covered -> free delay; *Verzögerung durch bedeckten Sensor -> frei;* Retard détecteur occupé -> libre; *Ritardo sensore occupato -> libero* | 0-60 s | 3s |
| C | Sensor free -> covered; *Verzögerung durch freien Sensor -> belegt;* Retard détecteur libre -> occupé; *Ritardo sensore libero -> occupato* | 0-20 s | 1s |
| 8-5 | Alarm output; *Alarmausgang;* Sortie alarme; *Uscita allarme* | max.250V - 2A | |
| 5-6-7 | Signal output; *Signalausgang;* Sortie signal; *Uscita segnale* | | |
| 1-2 | Power supply; *Speisung;* Alimentation; *Alimentazione* | 24V DC , max.4W | |
| | | 22..230V AC 50-60 Hz , max.10VA | |

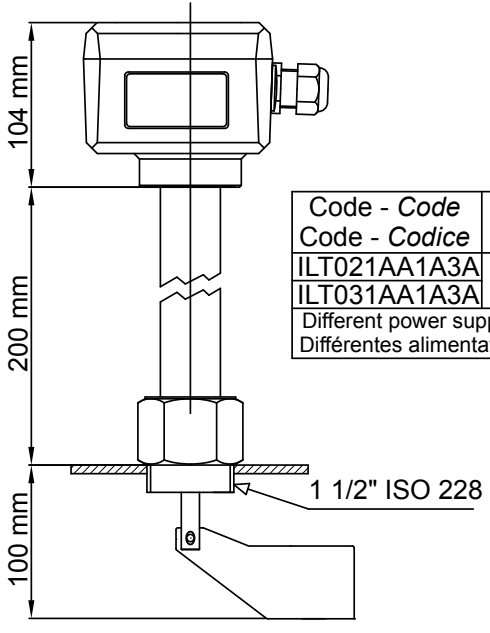


| Code - *Code*<br>Code - *Codice* | Power supply - *Speisung*<br>Alimentation - *Alimentazione* | Process temp. - *Prozesstemp.*<br>Temp. de processus - *Temp.Processo* |
|---|---|---|
| ILT021AA1A3A | 230 V AC 50-60 Hz | 150°C |
| ILT031AA1A3A | | 250°C |
| Different power supply available as an option; *Verschiedene Speisung als Option verfügbar;*<br>Différentes alimentations disponibles en option; *Alimentazioni diverse disponibili su richiesta* | | |

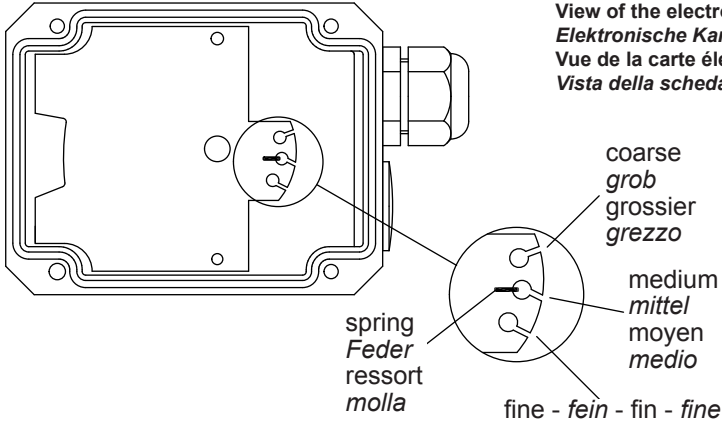


**View of the electronic board**
***Elektronische Karte - Ansicht***
**Vue de la carte électronique**
***Vista della scheda elettronica***

The spring is adjustable in 3 positions. It should be changed only if necessary.
Fine: for light material
Medium: suitable for nearly every material (factory setting)
Coarse: for very sticky material
The sping can be changed via a small plier

Die Feder ist in 3 Positionen einstellbar. Die Position sollte nur geändert werden, wenn dies erforderlich ist
Fein: für leichte Materialien
Mittel: für fast alle Materialien geeignet (Werkseinstellung)
Grob: für sehr klebriges/pappiges Material
Die Feder kann mit einer kleinen Zange gewechselt werden

Le ressort est réglable en 3 positions. Il ne doit être modifié que si cela est nécessaire
Fin : pour matériaux légers
Moyen : adapté pour presque tous les matériaux (réglage d'usine)
Grossier : pour matériaux très collants
Le ressort peut être modifié à l'aide de petites pinces

La molla è regolabile in 3 posizioni. Deve essere cambiata solo se necessario
Fine: per materiali leggeri
Medium: adatto per quasi ogni tipo di materiale (impostazione di fabbrica)
Grezzo: per il materiale molto appiccicoso
La posizione della molla può essere modificata tramite una piccola pinza.

**Switching logic**
***Logischer Umschaltplan***
**Schéma logique de commutation**
***Schema logico di commutazione***

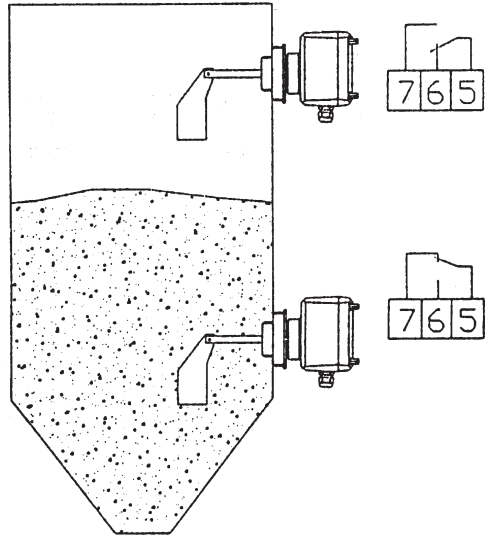

The unit must be mounted with the threaded fitting on the container. It is possible to use a suitable sealing material (teflon tape) to fix and seal the unit: fasten the plastic bush in manually, do not use any tool.
The cable gland must be downwards in order to prevent dust/water from entering the casing.
It is not possible to turn the housing after fastening.
All electrical connections must be made according to the connection diagram: make sure the cable is sealed tightly inside the cable gland.

*Die Einheit muss mit dem Gewindestück auf dem Behälter eingebaut werden. Es ist möglich, eine geeignete Dichtmasse zu verwenden (Band aus Teflon), um die Einheit zu befestigen oder abzudichten: die Buchse aus Kunststoff von Hand festschrauben, kein Werzkeug benutzen.*
*Um das Eintretten von Staub/Wasser innerhalb des Gehäuses zu vermeiden, muss die PG-Verschraubung nach unten zeigen. Es ist nicht möglich, das Gehäuse nach dem Festschrauben zu drehen.*
*Alle elektrischen Anschlüsse müssen gemäß dem Anschlussschema ausgeführt werden: sicherstellen, dass das Kabel innerhalb der PG-Verschraubung abgedichtet ist.*

L'unité doit être installée avec le raccord fileté sur le conteneur. Vous pouvez utiliser un joint d'étanchéité adéquat (téflon) pour la fixation et l'étanchéité de l'unité: serrer la douille en plastique manuellement, n'utilisez pas d'outils. La glande de câble doit être positionnée vers le bas pour empêcher l'entrée d'eau ou de la poussière. ce n'est pas possible de tourner la carcasse après fixation.Toutes les connexions électriques doivent être effectuées selon le schéma de câblage: assurez-vous que le câble est fixé à l'intérieur de la glande de câble.

*L'unità deve essere montata con il raccordo filettato sul contenitore. È possibile utilizzare un sigillante adatto (nastro teflon) per il fissaggio e la tenuta dell'unità: serrare manualmente la boccola di plastica, non utilizzare attrezzi.*
*Il pressacavo deve essere posizionato in basso per impedire l'entrata di acqua/polvere.*
*Non è possibile girare la carcassa dopo il fissaggio.*
*Tutte le connessioni elettriche devono essere eseguite secondo lo schema elettrico: assicurarsi che il cavo sia ben fissato all'interno del pressacavo.*

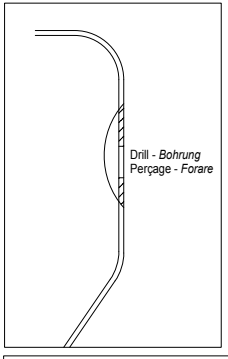


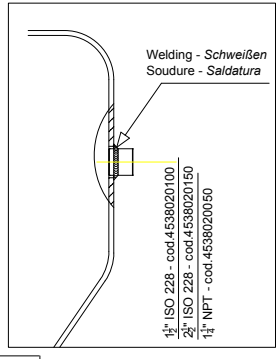


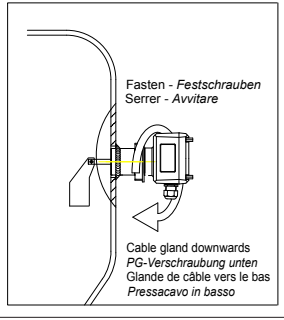

BEFORE CARRYNG OUT ANY TYPE OF WORK ON THE MACHINE STOP IT AND DISCONNECT IT FROM ALL ELECTRIC SUPPLY SOURCES

**N.B.: Failure to observe these instructions can cause problems and make the warranty null and void.**

VOR BEGINN DER WARTUNGSARBEITEN SICHERSTELLEN, DASS DIE MASCHINE UND DER HAUPTSCHALTER AUSGESCHALTET SIND.

**N.B.: Die Nichtbeachtung der oben genannten Vorschriften kann zu Betriebsstörungen und zum Verfall der auf die maschine gewährten Garantie führen.**

AVANT D' EFFECTUER UNE QUELCONQUE OPERATION SUR LA MACHINE, IL FAUT L' ARRETER ET LA DEBRANCHER DE TOUTES LES ALIMENTATIONS ELECTRIQUES.

**N.B.: L' inobservation de ces instructions peut provoquer des problémes et invalider la garantie sur les machines fournies.**

PRIMA DI ESEGUIRE QUALSIASI OPERAZIONE SULLA MACCHINA ARRESTARLA E SCOLLEGARE TUTTE LE ALIMENTAZIONI ELETTRICHE.

**N.B.: Il non attenersi strettamente alle suddette istruzioni può causare dei problemi ed invalidare la garanzia sulle macchine fornite.**

**BUILD REMOVAL - *ANBACKUNGEN ENTFERNEN* - ENLEVER LES INCRUSTATIONS - *RIMOZIONE DELLE INCROSTAZIONI***

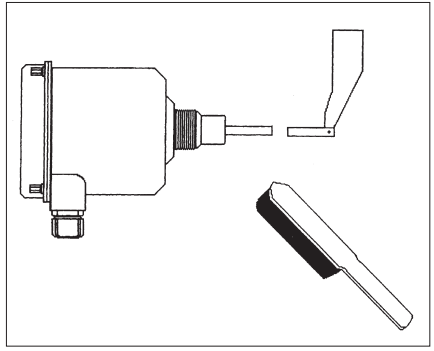

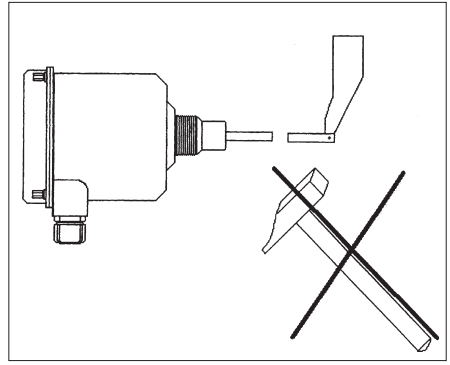

| To scrap: | Verschrottung: | En cas de mise à décharge: | In caso di rottamazione: |
|---|---|---|---|
| When the machine's working life ends, remove the plastic parts (seal rings) and take them to specialised disposal centres. The remaining components can be sent to metal salvage centres. | Nach Ausbau der Maschine, Teile aus Kunststoff (Wellendichtringe) ausbauen und bei der entsprechenden Sammelstelle abgeben. Alle restlichen Teile können als Alteisen verschrottet werden. | A la fin de la vie de la machine; démonter les pièces en matière plastique (anneaux d'étanchéité) et les destiner aux déchetteries spécialisées; les parties restantes sont destinées à la récupération des matériaux ferreux. | A fine vita della macchina, smontare le parti in materiale plastico (anelli di tenuta) e destinarle agli appositi centri di raccolta; le restanti parti sono da destinare al recupero dei materiali ferrosi. |
| When scrapping the machine, bear in mind the different kinds of material used to fabricated it. | Bei der Entsorgung der Maschine muß die unterschiedliche Beschaffenheit der Werkstoffe berücksichtigt werden, | En cas de mise à la décharge il faut tenir compte de la diversification et de la qualité des matériaux. | In caso di demolizione considerare la diversificazione della qualità dei materiali. |

***N.B***. *Rights reserved to modify technical specifications*
***N.B***. *Angaben ohne Gewähr. Änderungen können ohne Vorankündigung vorgenommen werden.*
***N.B***. *Toutes données portées dans le présent catalogue n'engagent pas le fabricant. Elles peuvent être modifiéès à tout moment.*
***N.B***. *Tutti i dati riportati nel presente catalogo non sono impegnativi e possono subire variazioni in qualsiasi momento.*

TOREX®

The manufacturer:

## TOREX S.p.A.

located in
Via Canaletto, 139/A - 41030 S.Prospero Modena - Italy

WAMGROUP

**under its own responsibility declares that:**

the level indicators type ILT

**complies with the requirements imposed by the following directives:**

**Directive 2014/30/EU** of the European Parliament and the Council of 26 February 2014 on the harmonisation of the laws of the Member States relating to electromagnetic compatibility;
Applied standards for evaluation of the unit:
EN 61326-1:2013 (Electrical equipment for measurement, control and laboratory use - EMC requirements - Part 1: General requirements)

**Directive 2014/35/EU** of the European Parliament and the Council of 26 February 2014 on the harmonisation of the laws of the Member States relating to the making available on the market of electrical equipment designed for use within certain voltage limits.
Applied standards for evaluation of the unit:
DIN EN 61010-1:2013 (Safety requirements for electrical equipment for measurement, control and laboratory use - Part.1: General requirements)
EN 60529:1997 (IEC 529) (Degrees of protection provided by enclosures - IP code)

**Directive 2011/65/EU RoHS** of the European Parliament and of the Council of 8 June 2011 on the restriction of the use of certain hazardous substances in electrical and electronic equipment.

The signing company is committed to provide, in response to a reasoned request by national authorities, relevant information on products covered by this declaration, without prejudice to the rights of intellectual property of the manufacturer. The information will be transmitted directly to the national authorities having requested.

Via Canaletto, 139/A - 41030 – S.Prospero Modena - Italy, July 1st 2016

The person authorized to provide the technical documentation:
Nino Ratti

The legal representative:
Nino Ratti

TOREX®

Der Hersteller:

**TOREX S.p.A.**

mit Sitz in

Via Canaletto, 139/A - 41030 S.Prospero Modena - Italien

WAMGROUP

**erklärt unter eigener Verantwortung wie folgt:**

die Füllstandsmelder Typ ILT

**konform ist mit den Anforderungen gemäß den folgenden Richtlinien:**

**Richtlinie 2014/30/EU** des Europäischen Parlaments und des Rates vom 26. Februar 2014 zur Harmonisierung der Rechtsvorschriften der Mitgliedstaaten über die elektromagnetische Verträglichkeit.
Angewendete Normen zur Einstufung des Gerätes:
EN 61326-1:2013 (Elektrische Betriebsmittel für Leittechnik und Laboreinsatz - EMV-Anforderungen - Teil 1: Allgemeine Anforderungen)

**Richtlinie 2014/35/EU** des Europäischen Parlaments und des Rates vom 26. Februar 2014 zur Harmonisierung der Rechtsvorschriften der Mitgliedstaaten über die Bereitstellung elektrischer Betriebsmittel zur Verwendung innerhalb bestimmter Spannungsgrenzen auf dem Markt.
Angewendete Normen zur Einstufung des Gerätes:
DIN EN 61010-1:2013 (Sicherheitsbestimmungen für elektrische Mess-, Steuer-, Regel- und Laborgeräte - Teil 1: Allgemeine Anforderungen)
EN 60529:1997 (IEC 529) (Schutzarten durch Gehäuse - IP kode)

**Richtlinie 2011/65/EU RoHS** des Europäischen Parlaments und des Rates vom 8. Juni 2011 über die Einschränkungen bei der Anwendung bestimmter gefährlicher Substanzen in elektrischen und elektronischen Geräten.

Das ausstellende Unternehmen ist verpflichtet, die technischen Unterlagen für diese Produkte auf begründetes Verlangen den Marktaufsichtsbehörden, unbeschadet der Rechte am geistigen Eigentum des Herstellers, zur Verfügung zu stellen. Die Unterlagen werden direkt an die anfordernde Behörde gesandt.

Via Canaletto, 139/A - 41030 – S.Prospero Modena - Italien, 01/07/2016

Bevollmächtigter für die Zusammenstellung der relevanten Technischen Unterlagen:
Nino Ratti

Für den Hersteller:
Nino Ratti

TOREX®

Le fabricant:

**TOREX S.p.A.**

ayant le siège social à

Via Canaletto, 139/A - 41030 S.Prospero Modena - Italie

WAMGROUP

**déclare sous sa propre responsabilité que**

les indicateurs de niveau type ILT

**est conforme aux exigences imposées par les directives suivantes:**

**Directive 2014/30/UE** du Parlement Européen et du Conseil du 26 février 2014 relative à l'harmonisation des législations des États membres concernant la compatibilité électromagnétique.
Le dispositif a été testé en appliquant les normes suivantes:
EN 61326-1:2013 (Des appareils électriques de mesurage, de régulation et de laboratoire - Exigences de compatibilité électromagnétique - Partie 1: Exigences générales)

**Directive 2014/35/UE** du Parlement Européen et du Conseil du 26 février 2014 relative à l'harmonisation des législations des États membres concernant la mise à disposition sur le marché du matériel électrique destiné à être employé dans certaines limites de tension.
Le dispositif a été testé en appliquant les normes suivantes:
DIN EN 61010-1:2013 (Règles de sécurité pour appareils électriques de mesurage, de régulation et de laboratoire - Partie 1: Exigences générales)
EN 60529:1997 (IEC 529) (Degrés de protection pour boîtiers - IP code)

**Directive 2011/65/UE RoHS** du Parlement Européen et du Conseil du 8 juin 2011 relative à la limitation de l'utilisation de certaines substances dangereuses dans les équipements électriques et électroniques.

La société signataire s'engage à fournir, en réponse à une demande motivée par les autorités nationales, toute information sur les produits couverts par cette déclaration, sans préjudice des droits de propriété intellectuelle du fabricant. Les informations seront transmises directement aux autorités nationales qui les ont demandées.

Via Canaletto, 139/A - 41030 – S.Prospero Modena - Italie, le 1er juillet 2016

La personne autorisée à fournir
la documentation technique:
Nino Ratti

Le représentant légal:
Nino Ratti

TOREX®

Il sottoscritto fabbricante:

**TOREX S.p.A.**

con sede legale in

Via Canaletto, 139/A - 41030 S.Prospero Modena - Italia

WAMGROUP

**dichiara sotto la propria responsabilità che:**

indicatori di livello tipo ILT

**risultano conformi alle esigenze imposte dalle seguenti Direttive:**

**Direttiva 2014/30/UE** del Parlamento Europeo e del Consiglio del 26 febbraio 2014 concernente l'armonizzazione delle legislazioni degli Stati membri relative alla compatibilità elettromagnetica;
Standards applicati per la valutazione dell'unità:
EN 61326-1:2013 (Apparecchi elettrici di misura, controllo e laboratorio - Prescrizioni di compatibilità elettromagnetica - Parte 1: Prescrizioni generali)

**Direttiva 2014/35/UE** del Parlamento Europeo e del Consiglio del 26 febbraio 2014 concernente l'armonizzazione delle legislazioni degli Stati membri relative alla messa a disposizione sul mercato del materiale elettrico destinato a essere adoperato entro taluni limiti di tensione.
Standards applicati per la valutazione dell'unità:
DIN EN 61010-1:2013 (Requisiti di sicurezza degli equipaggiamenti elettrici per la misurazione, il controllo e l'uso in laboratorio - Parte 1: Prescrizioni generali)
EN 60529:1997 (IEC 529) (Gradi di protezione degli involucri - codice IP)

**Direttiva 2011/65/EU RoHS** del Parlamento Europeo e del Consiglio dell'8 giugno 2011, sulla restrizione dell'uso di determinate sostanze pericolose nelle apparecchiature elettriche ed elettroniche.

L'azienda firmataria della presente si impegna a trasmettere, in risposta a una richiesta adeguatamente motivata delle autorità nazionali, informazioni pertinenti sui prodotti oggetto della presente dichiarazione, fatti salvi i diritti di proprietà intellettuale del fabbricante. Le informazioni verranno trasmesse direttamente all'autorità nazionale che le ha richieste.

Via Canaletto, 139/A - 41030 – S.Prospero Modena - Italia, 01/07/2016

La persona autorizzata
a costituire il fascicolo tecnico:
Nino Ratti

Il rappresentante legale:

Nino Ratti



TOREX®

**TOREX® S.p.A.**
Via Canaletto, 139/A
41030 S. Prospero (MO) - ITALY

☎ ++39 / 059 / 8080811
**fax** ++39 / 059 / 908204
**e-mail** torex@torex.it
**internet** www.torex.it

WAMGROUP®

Intelligent Drivesystems

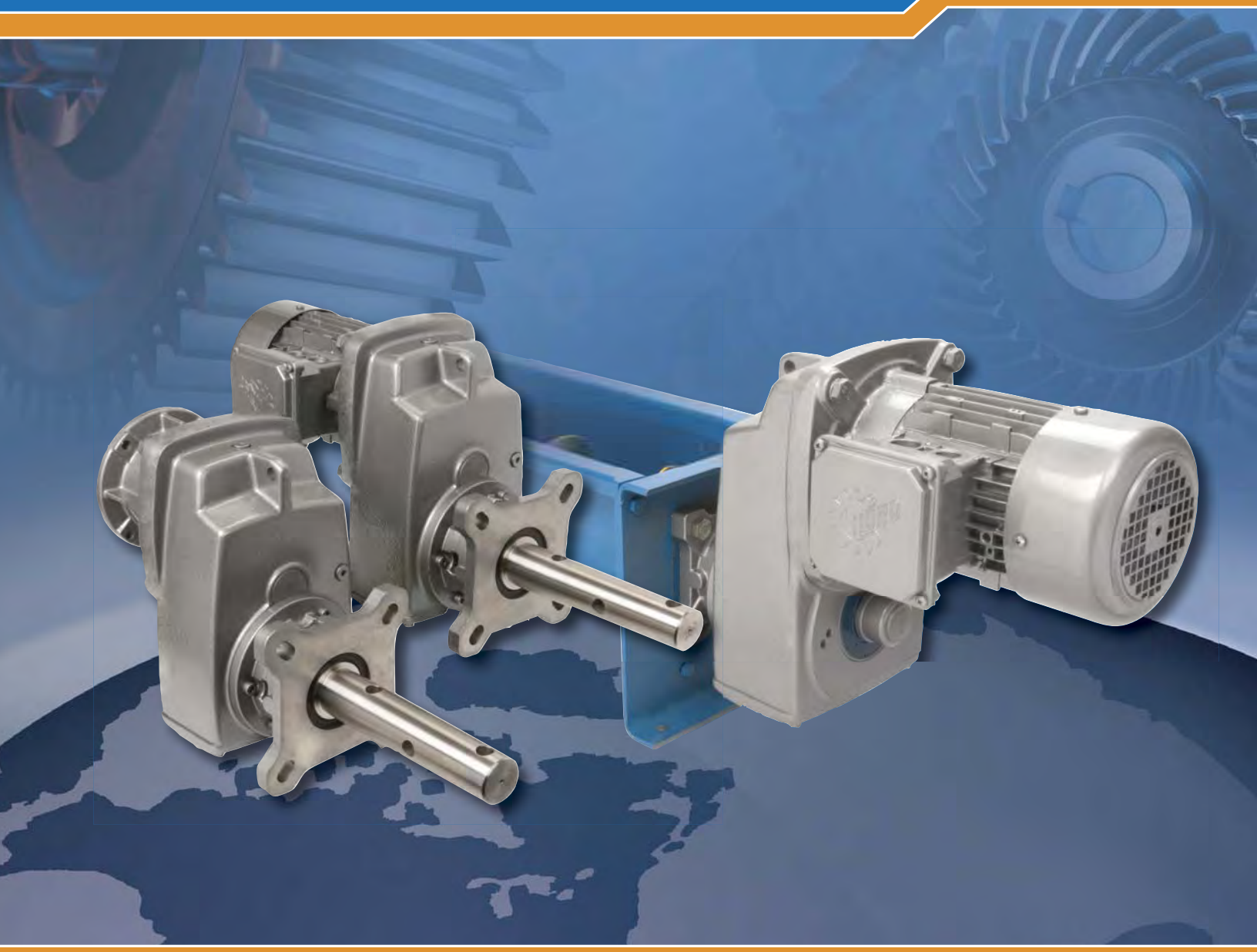

# SCREW CONVEYOR GEARMOTORS & SPEED REDUCERS

## Durable & Premium Efficient Gear Units

G1129

NORD DRIVESYSTEMS

# Screw Conveyor Package
# Innovative Design



## SCP - PRODUCT FEATURES

**OPTIMIZED SEALING SYSTEM**

- Dual Viton lip seals
- Grease impregnated packing seal
- Dual gap seals (excludes particles) – 0.03" gap
- Material evacuation ports
- Shaft material ditch
- Quadrilip™ sealing

**MOUNTING**

- Standard CEMA mounting
- Versatile flange – multiple bolt patterns
- 3-Hole tapered CEMA drive shaft
  - Easy mounting
  - Easy removal (less fretting – due to less material contact)
- Reduced bearing loads – tapered shaft allows for screw pipe misalignment
- Quick external removal feature

**FLANGE**

- Standard CEMA mounting
- High strength class 35 gray cast iron
- Versatile flange – multiple bolt patterns

## HIGH EFFICIENCY

The NORD SCP design is extremely effective due to the direct coupled gearmotor or NEMA C-face input design. Belted input systems have significantly lower total drive performance. You can further increase the overall efficiency by applying the NORD "H" line of energy efficient motors.

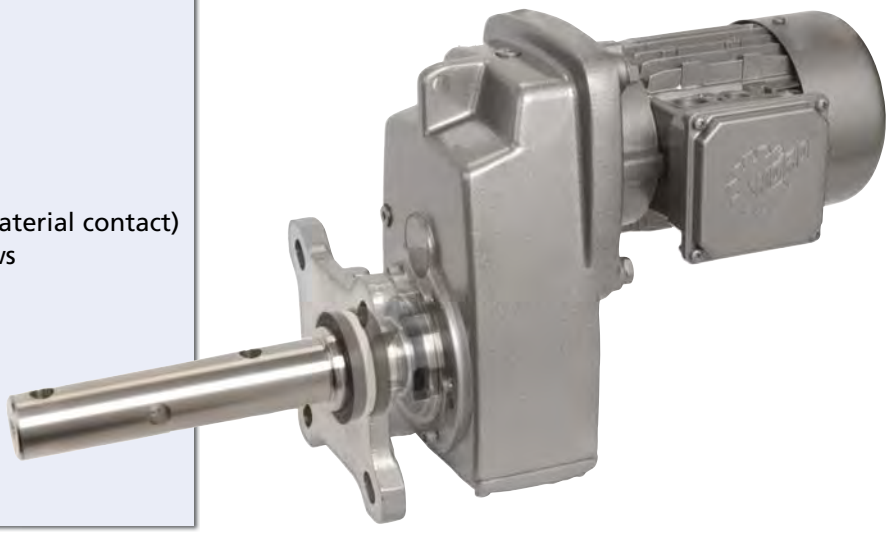

# TABLE OF CONTENTS


**Introduction** ..... 2

**Selections** ..... 29

Gearmotors Ratings Tables ..... 31

Combinations Ratings Tables ..... 65

**Dimensions** ..... 75

SK 1282 SCP ..... 76

SK 2282 SCP ..... 82

SK 3282 SCP ..... 88

SK 4282 SCP ..... 96

SK 5282 SCP ..... 102

SK 6282 SCP ..... 110

Other ..... 114

**Motors** ..... 119

Engineering Info ..... 123

Performance & Ordering Data ..... 142

Options Selections & Ratings ..... 128

**International Contacts** ..... 155

**Terms & Conditions** ..... 167


DRIVESYSTEMS

UNICASE™

www.nord.com





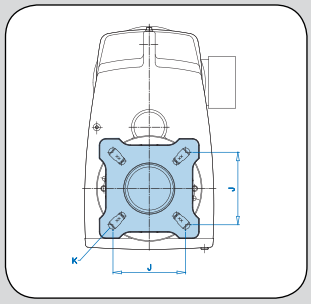





## Company Overview

Since 1965, NORD Gear has grown to global proportions on the strength of product performance, superior customer service, and intelligent solutions to a never ending variety of industrial challenges.

All mechanical and electrical drive components are available from NORD Gear. Our products cover the full range of drive equipment: helical in-line, Clincher™ shaft-mount, helical-bevel, and helical-worm gearboxes, motors and AC drives from 1/6 hp to 250 hp, with torques from 90 lb-in to 900,000 lb-in.

But NORD Gear does far more than manufacture the world's finest drive components. We provide our customers with optimum drive configurations for their specific purposes. NORD provides each and every one of them with truly complete and efficient systems at a price/quality ratio unmatched in today's fast-changing markets.

NORD Gear makes its wide range of products easily available through a global network that provides all customers with prompt delivery and expert support services to consistently exceed customer expectations. We are firmly committed to being totally responsive to the ideas and specifications of every customer, anywhere in the world.

## High-Performance Motors & Brakemotors

NORD motors are designed to run cool for longer service life. Low rotor inertia and high starting torque allow peak performance in the most difficult applications for inverter and vector duty per NEMA MG 1-2006 Section 31.4.4.2 voltage spikes. Our motors are internationally accepted, conforming to North American NEMA MG 1 and international IEC electrical specifications. High performance options include brakes, encoders, and forced cooling fans.



## Short, On-Time Delivery

As a NORD customer, you can rest assured that your order will be delivered on time. Because NORD has both decentralized assembly and manufacturing operations paired with a globally linked network, we have the ability to offer our customers:

- Fast, reliable responses
- Greater product versatility
- Shorter lead times
- Timely shipping
- Rapid delivery

## Quality

Quality is assured at NORD's assembly and manufacturing facilities, based on ISO 9000 standards — from careful inspection of incoming materials to closely monitored machining operations, including gear cutting, turning, hardening & grinding as well as finishing & assembly.

## NORD 911

Trouble? Just call 715-NORD-911 (in Canada, 905-796-3606). Emergency service is available 24 hours a day, 7 days a week. We'll answer your call, ship the parts, or build a unit and have it shipped directly to you to provide what you need, when you need it.



## Manufacturing

NORD continually invests in research, manufacturing and automation technology. This is to ensure the highest possible quality at affordable prices. NORD invests heavily in our North American facilities as well as our factories around the world. Recent examples include expanding our Waunakee factory and adding numerous new large gear unit assembly cells. In our Glinde, Germany gear factory we added a state-of-the-art multi-chamber vacuum carburization system.




## Global Availability

From Shanghai to Charlotte, and everywhere in-between, NORD reaches customers around the world. Deliveries, service, and product support are close at hand, regardless of your location.

## Worldwide Standards

NORD products are designed and manufactured based on the latest North American and global standards.

## Increased North American Presence

NORD covers North America with over 30 district offices and over 500 distributor branches. NORD operates manufacturing and assembly facilities in Waunakee, WI, Charlotte, NC, Corona, CA, Brampton, ON, and Monterrey, Mexico, resulting in an ever-increasing capacity in North America and giving our customers the shortest lead times in the industry.

## Energy Efficiency

Lowering your operating costs is one of our greatest goals! NORD research and development focuses on energy efficiency, with gearboxes, motors, and frequency inverters designed for lower energy consumption. Our fully diverse line of in-line or right-angle units and motors has been developed to suit your needs.

## Modular Design

NORD's modular design philosophy provides you with a competitive edge by allowing you to configure drive systems to exactly fit your applications.

More than 20,000,000 combinations of totally unique gearmotors and speed reducers are possible – assembled in-line or right-angle, mounted by foot or flange, featuring solid or hollow shafts with either metric or inch shaft extensions – to give you complete freedom to specify a drive solution that's perfect for you.

### Benefits

- More output speeds
- More mounting arrangements/Greater flexibility
- Fewer gear stages/Lower cost
- Metric and inch products

NORD engineers stand ready to assist you with your custom applications. Most standard drives can be modified to your purposes, and custom designs can be developed for special applications.

# Key Features



## Standard NORD features

### Modular Design

All NORD products including the SCP units are modular in design and provide extraordinary flexibility.The SCP unit may also be provided with a number of different input components including:

- Integral motor (Gearmotor)
- NEMA C-face motor adapter
- IEC B5 motor adapter
- Solid input shaft
- Custom motor adapter
  (servo, hydraulic motors, and more)

### Large Ratio Per Gear Stage

NORD gear cutting technology allows for the production of gear sets with a higher maximum ratio per stage than many other speed reducer manufacturers. NORD commonly produces gear sets with a maximum ratio of between 9:1 and 10:1 per stage. This allows for double reduction gear units with a maximum ratio between 72:1 and 100:1. Most speed reducer manufacturer's can only produce single-stage reduction of between 5:1 and 6:1. This means a two-stage reducer with a maximum reduction of about 25:1 to 35:1. NORD can often provide a two-stage reducer when most companies must provide three-stage units. The same situation applies to three, four and higher gear stages. This allows NORD to provide superior value and performance in many conditions.

**Benefits**

- Better value
- Higher efficiency
- Quieter operation
- Lower weight
- Longer life

### AUTOVENT™

The AUTOVENT™ prevents bearing damage by blocking entry of foreign material (water, dust, corrosives, etc.) through the breather. A ball and spring check valve opens at approximately 2 psi during operation and closes tightly when the gearbox cools, producing a slightly negative pressure that ensures the valve seals tight. This keeps contaminants out of the oil to maintain proper oil cleanliness reducing contamination, foaming and oxidation. The AUTOVENT™ is perfect for humid conditions, washdown applications, and dusty environments.

**Benefits**

- Cleaner gearbox oil
- Extended lubrication life
- Longer-lasting seals, gears, and bearings

### High-Quality Gearing (Infinite Life Design)

NORD continually invests in state-of-the-art gear production equipment and in gear research. This allows us to produce exceptionally high quality gears.

**Benefits**

- Designed & manufactured up to AGMA CLASS 13
- Infinite design life
- Case-hardened steel
- Exceptional hardness: 58 Rc minimum
- High-speed gears are ground;
  low speed gears are skive hobbed
- 275% momentary overload capacity
- Low noise
- Low maintenance

### Factory Oil Filled

All SCP units are filled at the factory with the proper quantity and type of lubrication. Oil fill before shipping prevents damage from dry start-ups.

**Benefits**

- No need for filling on-site
- Ensures proper oil grade and fill level

### NORD High-Performance Motors & Options

NORD motors are designed to run cool for producing longer service life. Low rotor inertia and high starting torque allow peak performance in the most difficult applications for inverter and vector duty per NEMA MG 1-2006 Section 31.4.4.2 voltage spikes. Our motors are internationally accepted, conforming to North American NEMA MG 1 and international IEC electrical specifications. High performance options include brakes, encoders, and forced cooling fans.



## Screw Conveyor Package Overview

NORD has developed a unique class of high performance right-angle speed reducers. The SCP are available as gearmotors and speed reducers with many mounting options. The SCP units provide high performance right-angle helical-bevel gear units at the cost effectiveness of a single worm system.

**SCP Clincher™ Gear Units** (76 - 113)

| | |
|---|---|
| SK 1282 SCP | SK 1382 SCP |
| SK 2282 SCP | SK 2382 SCP |
| SK 3282 SCP | SK 3382 SCP |
| SK 4282 SCP | SK 4382 SCP |
| SK 5282 SCP | SK 5382 SCP |
| SK 6282 SCP | SK 6382 SCP |

**SCP Bevel Gear Units** (118)

| | |
|---|---|
| SK 9012.1 SCP | SK 9013.1 SCP |
| SK 9022.1 SCP | SK 9023.1 SCP |
| SK 9032.1 SCP | SK 9033.1 SCP |
| SK 9042.1 SCP | SK 9043.1 SCP |
| SK 9052.1 SCP | SK 9053.1 SCP |

Please note that when ordering an SCP unit with a bevel gearbox that the lead times are slightly longer due to the extra manufacturing involved on this specialty product.

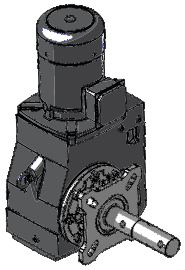

## Customer Benefits

Simplicity - The NORD SCP screw conveyor package eliminates the need for costly separate v-belt drives by directly coupling their motors to the C-face reducer. More space savings is also possible using an integral gearmotor with the SCP package.

- Reduced cost
- Reduced installation time
- No belt maintenance or guarding
- Space savings
- Higher efficiency
- More transferred torque

## UNICASE™ Design

NORD heavy-duty, one-piece housings are precisely machined to meticulous standards. Internal reinforcements further increase strength and rigidity. All bearings and seal seats are contained within the casting, eliminating splits or bolt-on carriers that can weaken the housing and allow oil leakage. Bores and mounting faces are machined in one step, producing extrememly precise tolerances – thus ensuring accurate positioning of gear teeth, bearings and seals, and longer life for all components.

## High-Quality Gearing (Infinite Life Design)

NORD continually invests in state-of-the-art gear production equipment and in gear research. This allows us to produce exceptionally high quality gears.

### Benefits

- Designed and manufactured up to AGMA CLASS 13
- Infinite design life
- Case-hardened steel
- Exceptional hardness: 58 Rc minimum
- High-speed gears are ground; low speed gears are skive hobbed
- 275% momentary overload capacity
- Low noise
- Low maintenance

## QUADRILIP™ Sealing

The QUADRILIP™ system has four components for sealing lubricant inside, and contaminants outside, the speed reducer. The system includes a double lip seal, single lip seal and greasepack barrier (grease lip). Furthermore, the shaft seal area is super-finished.

### Benefits

- Superior protection against leaks
- Long seal life
- Improved protection against contaminants
- Improved speed reducer life
- Reduced maintenance requirements & costs

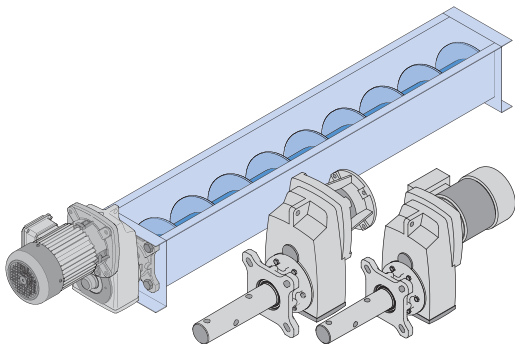

# Key Features



## SCP - Product Features

NORD offers a unique class of high performance screw conveyor drives. The NORD SCP line is based upon the premium efficient CLINCHER™ gear units. The SCP series of screw conveyor drives offers superior durability in the most severe load and service conditions. The SCP system may also be provided as right-angle helical-bevel gear drives.



### Optimized Sealing System

- **❶ Dual Fluropolymer lip seals**
  The SCP mounting flanges contains dual Fluropolymer seals to provide improved sealing. The Fluropolymer seals provide a high degree of chemical and mechanical protection.
- **❷ Dual gap seals (excludes particles) – 0.03" gap**
  The SCP mounting flange and CEMA drive shaft are designed to provide a mechanical sealing device referred to as a gap seal. The flange owns a clearance of 0.03" at two locations on the shaft. This forms a mechanical block to large particles and prevents their entrance into the gear unit.
- **❸ Shaft material ditch**
  Should any material penetrate the fluoropolymer seals, gap seals and greased packing felt seals, the shaft material ditch provides a material gravity break to divert anything that is working its way down the shaft towards the inside of the gearbox.
- **❹ Greased packing felt seal**
  Provides protection for small objects. If materials work their way past the first fluropolymer lip seal and gap seal it will be trapped within the grease felt sealing ring.
- **❺ Material evacuation ports**
  Provides an exit for any foreign material that infiltrates the external sealing system. Also provides a way to clean out the sealing system.
- **❻ QUADRILIP™ sealing**
  Please see page 5 for details

### Mounting

- **Standard CEMA mounting**
  The NORD SCP drives adhere to the CEMA standard mounting dimensions.
- **❼ 3-Hole tapered CEMA drive shaft**
  The NORD SCP CEMA drive shaft is a standard three hole shaft. This allows for mounting to either 2-bolt or 3-bolt connections. The drive shaft is tapered for easier mounting and removal. The taper also reduces shaft loading due to misalignments.
- **Easy mounting**
  The NORD SCP drive is easily mounted into the screw pipe. The taper shaft acts as a guide in assembling the drive shaft into the screw pipe.
- **Easy Removal** -
  There is less fretting due to less material contact.
- **Reduced bearing loads**
  Taper allows for screw pipe misalignment.
- **Quick external removal feature** -
  The SCP drive can be easily removed from the screw pipe in two ways. First is the conventional removal of the complete drive and shaft. Unbolt the mounting flange from the trough and remove the cross bolts from the pipe and shaft. After this is done the drive may be removed. This requires access to inside of the screw pipe which is not always possible.

  The Second way to remove the drive without screw pipe access by unbolting the SCP mounting flange from the drive and removing the drive, leaving the flange and drive shaft attached to the screw pipe.

### Flange

- **Standard CEMA mounting**
  The NORD SCP drives adhere to the CEMA standard mounting dimensions.
- **High strength class 35 gray cast iron**
  The SCP drives and screw conveyor flanges are made form high strength class 35 gray cast iron with a minimum tensile strength of 35,000psi.
- **❽ Versatile flange – multiple bolt patterns**
  The SCP mounting flanges often accommodate more that one CEMA bolt pattern. This allows one drive to be used on different screw sizes simply by switching out the drive shaft.

### High Efficiency

The NORD SCP design is extremely efficient due to the direct coupled gearmotor or NEMA C-face input design. Belted input systems have scientifically lower total drive efficiency. Efficiency may be further increased by using the NORD "H" line of energy efficient motors.

### Options

- Grease purge-able seal (PC) - see page 16
- Stainless steel CEMA drive shaft (SM5) - See page 16

## Screw Conveyor Key Features and Details

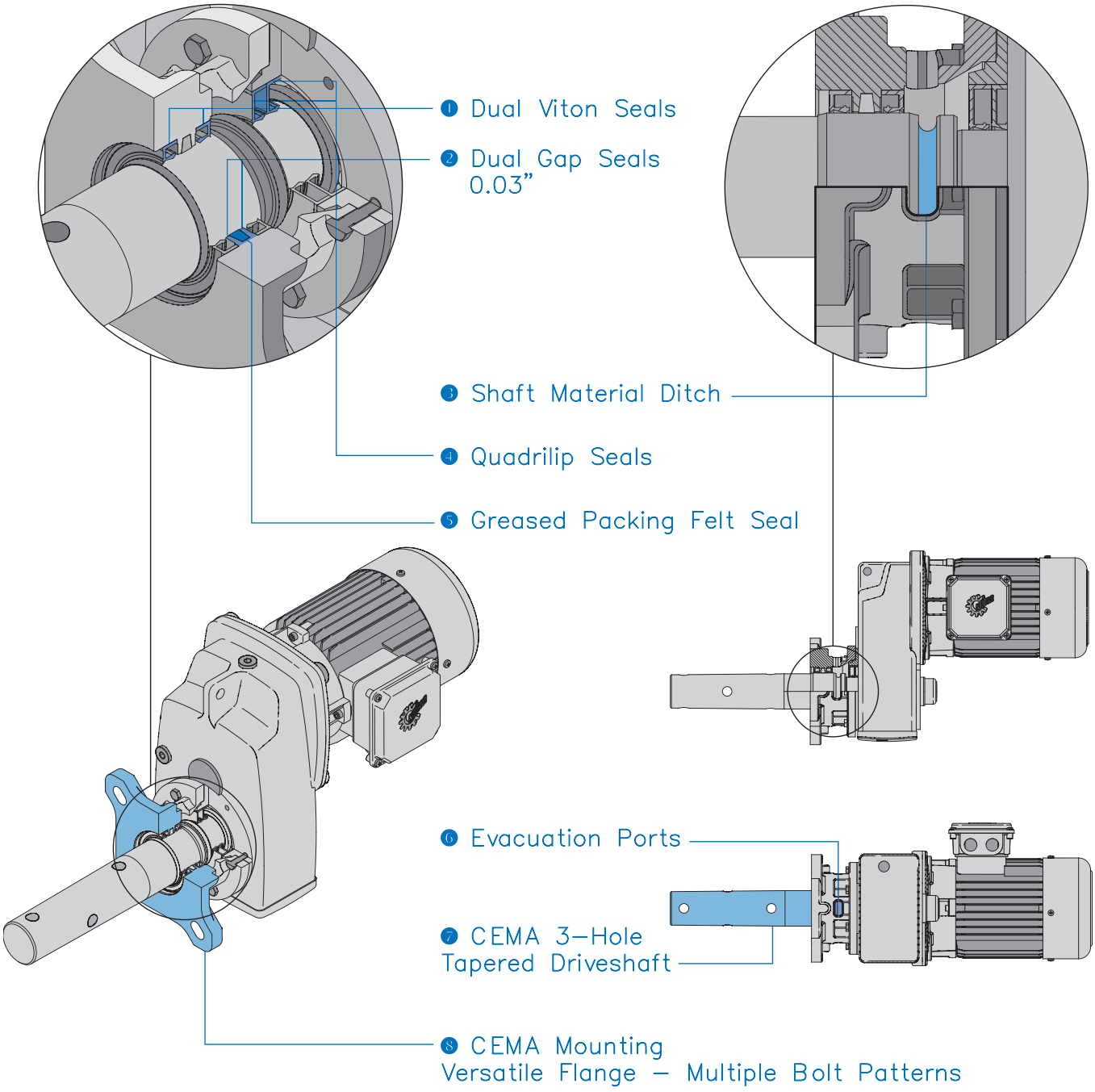

# Capacity , Ratings & Combinations





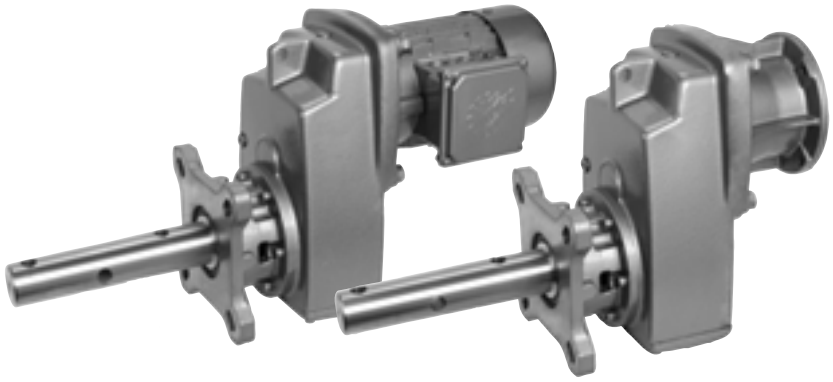

**Capacity & Ratings Overview**

| Model Type | Max Torque [lb-in] | Ratio Range [x:1] | Speed's [rpm] | Max Thrust Load Std Brgs [lb] | Max Thrust Load HD Brgs " VL " [lb] | Gear Stages | Efficiency [%] |
|---|---|---|---|---|---|---|---|
| **SK 1282 SCP** | 2620 | 4.79-109.5 | 365-16 | 1609 | 1609 | 2 | 97 |
| **SK 1382 SCP** | 2425 | 87.94-624.45 | 20-2.8 | 1550 | 1609 | 3 | 95 |
| **SK 2282 SCP** | 4611 | 4.51-127.51 | 388-14 | 2700 | 3375 | 2 | 97 |
| **SK 2382 SCP** | 4894 | 82.22-763.41 | 21-2.3 | 2700 | 3375 | 3 | 95 |
| **SK 3282 SCP** | 8363 | 4.48-112.23 | 391-16 | 3263 | 4500 | 2 | 97 |
| **SK 3382 SCP** | 9195 | 89.60-1022.42 | 20-1.7 | 3263 | 4500 | 3 | 95 |
| **SK 4282 SCP** | 16089 | 4.7-155.4 | 372-11 | 4950 | 6750 | 2 | 97 |
| **SK 4382 SCP** | 18381 | 86.83-1585.08 | 20-1.1 | 4950 | 6750 | 3 | 95 |
| **SK 5282 SCP** | 28630 | 4.32-134.03 | 405-13 | 7200 | 9000 | 2 | 97 |
| **SK 5382 SCP** | 28320 | 82.72-1367.08 | 21-1.3 | 7200 | 9000 | 3 | 95 |
| **SK 6282 SCP** | 40135 | 4.39-80.33 | 399-22 | 13219 | 13500 | 2 | 97 |
| **SK 6382 SCP** | 53100 | 24.42-551.58 | 72-3.2 | 13253 | 13500 | 3 | 95 |

**CEMA Drive Shaft Combinations**

| Model type | 1.5" shaft | 2" shaft | 2-7/16" shaft | 3" shaft | 3-7/16" shaft |
|---|---|---|---|---|---|
| **SK 1282 SCP** | X | X | X | | |
| **SK 1382 SCP** | X | X | X | | |
| **SK 2282 SCP** | X | X | X | | |
| **SK 2382 SCP** | X | X | X | | |
| **SK 3282 SCP** | X | X | X | X | |
| **SK 3382 SCP** | X | X | X | X | |
| **SK 4282 SCP** | | X | X | X | |
| **SK 4382 SCP** | | X | X | X | |
| **SK 5282 SCP** | | X | X | X | X |
| **SK 5382 SCP** | | X | X | X | X |
| **SK 6282 SCP** | | | | X | X |
| **SK 6382 SCP** | | | | X | X |



# SCP
# Ordering Guide

| | Gear Unit | Reducer Options | | Motor/Input | Motor Options |
|---|---|---|---|---|---|
| SK | ❶ | ❷ | ❸ | | ❹ |
| | | | | see page 19 | see page 128 |

❶

| Gear Unit |
|---|
| **1282 SCP** |
| **1382 SCP** |
| **2282 SCP** |
| **2382 SCP** |
| **3282 SCP** |
| **3382 SCP** |
| **4282 SCP** |
| **4382 SCP** |
| **5282 SCP** |
| **5382 SCP** |
| **6282 SCP** |
| **6382 SCP** |
| **Specialty Bevel Product** |

❷

| Reducer Options | |
|---|---|
| **ADP -** Additional Drain Plug | **PC -** Grease Purge Seal |
| **LL -** Long Term Storage | **RV -** Drain Valve |
| **MDP -** Magnetic Drain Plug | **SM5 -** Stainless Steel CEMA Shaft |
| **OA -** Oil Expansion Chamber | **VL -** Heavy Duty Bearings |
| **OSG -** Oil Sight Glass | |

❹

| Motor Options | |
|---|---|
| **F & FC -** Blower Cooling Fan | **OL -** Non Ventilated TENV W/Out Fan |
| **RD -** Drip Cover Canopy | **OLH -** Non Ventilated TENV W/Out Fan & Cover |
| **RDD -** Double Drip Cover Canopy | **WE -** Motor Second Shaft Extension |
| **KD -** Condensation Drain Holes | **Z -** High Inertia Motor Fan |
| **KB -** Condensation Drain Holes Plugged | **IG -** Incremental Encoderr |
| **IP66 -** IP66 Motor Enclosure | **TW -** Thermostat |
| **KKV -** Potted Terminal Box | **TF -** Thermistor |
| **MS -** Quick Power Disconnect, Harting Plug | **SH -** Anti-Condensation Space Heaters |

❸

| Input Shaft | NEMA Adapter | IEC Adapter | Integral Motors | Integral Energy Efficent Motors |
|---|---|---|---|---|
| **W** | **N56C** | **IEC 63** | **63S/4** - 0.16hp | **80LH/4** - 1hp |
| | **N140TC** | **IEC 71** | **63L/4** - 0.25hp | **90SH/4** - 1.5hp |
| | **N180TC** | **IEC 80** | **71S/4** - 0.33hp | **90LH/4** - 2hp |
| | **N210TC** | **IEC 90** | **71L/4** - 0.50hp | **100LH/4** - 3hp |
| | **N250TC** | **IEC 100** | **80S/4** - 0.75hp | **112MH/4** - 5hp |
| | **N280TC** | **IEC 112** | **80L/4** - 1hp | **132SH/4** - 7.5hp |
| | | **IEC 132** | **90S/4** - 1.5hp | **132MH/4** - 10hp |
| | | **IEC160** | **90L/4** - 2hp | **160MH/4** - 15hp |
| | | **IEC180** | **100L/4** - 3hp | **160LH/4** - 20hp |
| | | | **100LA/4** - 5hp | **180MH/4** - 25hp |
| | | | **112M/4** - 5.4hp | **180LH/4** - 30hp |
| | | | **132S/4** - 7.5hp | |
| | | | **132M/4** - 10hp | |
| | | | **160M/4** - 15hp | |
| | | | **160L/4** - 20hp | |
| | | | **180MX/4** - 25hp | |
| | | | **180LX/4** - 30hp | |
| | | | Other Speeds Available | Other Speeds Available |

## Product Specifications

**Ratio**

_____ :1

see pages 31 - 62

OR

**Output Speed**

_____ rpm

see pages 31 - 62

**Mounting Position**

- ❍ M1
- ❍ M2
- ❍ M3
- ❍ M4
- ❍ M5
- ❍ M6
- ❍ Special _____

**CEMA Shaft Diameter**

- ❍ 1-1/2"
- ❍ 2"
- ❍ 2-7/16"
- ❍ 3"
- ❍ 3-7/16"

**Paint**

- ❍ Standard Stainless Steel Paint
- ❍ NSD+ (gray)
- ❍ NSD+W (white)
- ❍ NSD-X3 (gray)
- ❍ NSD-X3W (white)
- ❍ Casting Primed
- ❍ Special _____

**Lubricant**

- ❍ Standard
- ❍ Synthetic
- ❍ Food Grade
- ❍ Other _____

## Gearmotor Only Details

**Voltage & Frequency**

- ❍ 230/460V-60Hz (460V only ≥ 40 hp)
- ❍ 575V-60Hz
- ❍ 208V-60Hz
- ❍ 400V-50Hz
- ❍ Other _____

**Terminal Box Pos.**

- ❍ TB1
- ❍ TB2
- ❍ TB3
- ❍ TB4

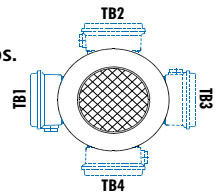


Mtg. Pos. M1 Shown

**Conduit Entry Loc.**

- ❍ CE I *
- ❍ CE II
- ❍ CE III *
- ❍ CE IV

* Brakemotor

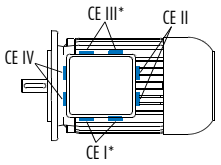


Mtg. Pos. M1 Shown





## Gearbox Selection

A number of factors are considered when selecting a gear unit, including gearbox rating, service factor, speed and speed variation, horsepower, thermal capacity, ratio, physical size, ambient conditions and cost. Below are some guideline steps to help aid in the gear unit selection.

1. Determine the speed and/or gear ratio
2. Determine the required power or torque
3. Determine Service Factor
4. Determine CEMA Shaft Diameter
5. Select the basic gearbox type and input
6. Determine the required mounting position
7. Select options
8. Checks – thrust load, NEMA moto weight, thermal considerations, & other application considerations

### 1. Speed and Gear Ratio

The first step in selecting a gear unit is determining the final output speed or speeds you need. This speed is normally described in revolutions per minute (rpm). This output speed or speeds is determined by the input speed to the gear unit divided by its gear ratio. Their relationship is described by the following formulas.

$$\text{i (gear ratio)} = \frac{\text{Input speed [rpm]}}{\text{Output speed [rpm]}}$$

$$\text{Output speed [rpm]} = \frac{\text{Input speed [rpm]}}{\text{i (gear ratio)}}$$

To specify a gear unit, you can identify either gear ratio needed or the output speed (rpm) if the input speed is known.

### 2. Power and Torque

The second step for selecting a gear unit is the required power or torque needed to power the load. Torque in this catalog is normally expressed in pound-inches [lb-in].

$$\text{Power [hp]} = \frac{\text{Torque [lb-in] x speed [rpm]}}{63025}$$

$$\text{Torque [lb-in]} = \frac{\text{Power [hp] x 63025}}{\text{speed [rpm]}}$$

For a proper selection you must ensure that the motor or other prime mover can produce enough torque or power and that the gear unit has adequate torque or power capacity.

To specify a gear unit you can identify either torque or power.

### 3. Service Factor or Service Class

In addition to power or torque, service factor must also be considered. A service factor is essentially the ratio of extra capacity in a gear unit compared to the power or torque that is needed to run that application. The goal of selecting a gear unit with extra capacity (service factor) is to provide adequate service life in operation.

One reason to apply a larger service factor is if a unit operates more hours per day. If a unit runs 24 hours per day it should normally have a higher service factor than a unit that runs 8 hours per day if you expect the same calendar life.

A second reason for applying a larger service factor is to cope with a more difficult application. Even if it takes the same power and speed to operate a rock crusher as a fan, the rock crusher needs a stronger gearbox (higher service factor) to give the same calendar operating life as the gear unit powering the fan.

The real question is how to determine the proper service factor for a gear unit in an application. Following are four possible methods.

#### Customer or User Specification

Many customers will have their own service factor guidelines or specifications.

#### AGMA Service Factoring

American Gear Manufacturers Association (AGMA) publishes lists of recommended service factors for different applications. These service factor recommendations have been determined from the experience of many gear manufactures and are in AGMA standard 6010.

#### AGMA Service Classes

American Gear Manufactures Association (AGMA) has another method for selecting gear units service factors. AGMA standard 6009 lists many applications by a service class (I, II, III) with class I being the simplest applications and class III being the hardest. These application service classes are associated with a range of service factors by the following table.

| AGMA Service Class | Service Factor |
|---|---|
| I | 1.00 to 1.39 |
| II | 1.40 to 1.99 |
| III | 2.00 and above |

In the gearmotors selection table each unit is also classified by an AGMA service class.



### NORD Mass Acceleration Service Factoring

NORD often uses a calculation based system to properly assign a service factor. This system considers hours of operation per day, the severity of the application and the number of times the equipment is cycled.

### AGMA Class of Service

This table has been developed from the collective experience of gearbox and screw conveyor manufacturers and users of speed reducers in typical applications. Maintaining speed reducer Service Factor (S.F.) provides compensation for non-measurable operating loads and daily length of time in service.

The speed reducer selected should have a service factor greater than or equal to service factor suggested for the particular application. This will result in trouble free operation for a reasonable period of time. Insufficient service factor inevitably ends with premature failure of the speed reducer. Note: Each screw conveyor manufacturer determines the proper "margin of safety" for their type of application and equipment.

| Operating conditions | Service Factor | | |
|---|---|---|---|
| | up to 3 hrs/day | 3-10 hrs/day | 10-24 hrs/day |
| Uniformly loaded or fed | I | I | II |
| Heavy duty | I | II | II |

from AGMA Standard 6009-A00

### 4. CEMA Drive Shaft Size

Available CEMA Shaft Sizes

- 1 - 1/2"
- 2"
- 2 - 7/16"
- 3"
- 3 - 7/16"

### CEMA Drive Shaft Connection Strength

For some selections the torque is limited by the CEMA drive shaft connection. It is important to consider the torque limits following when making a selection.

**Torque limits - CEMA 350-2003 (Table 3-5) excerpts**

| Shaft size [in] | 2-Bolt [lb-in] | 3-Bolt [lb-in] |
|---|---|---|
| 1 - 1/2 | 3,070 | 3,070 |
| 2 | 7,600 | 7,600 |
| 2 - 7/16 | 9,270 | 13,900 |
| 3 | 15,400 | 23,310 |
| 3 - 7/16 | 21,800 | 32,700 |

### 5. Gearbox Input

NORD's modular design allows for a number of different inputs to be added to NORD reducers including:

- Integral motor
- NEMA-C and IEC motor adapter
- Solid input shaft

### 6. Mounting Position

The gearbox mounting position is an important and often overlooked specification. The mounting position determines how much oil the gear reducer requires, in addition to determining the position of the oil drain, oil fill and vent on the gear drive. NORD offers six basic mounting positions. If your application requires a variation from the six basic mounting positions, please contact NORD.

### 7. Options

NORD offers a number of mechanical, protective, paint and lubrication options for gear reducers and motors. Please see page 16 for gear unit options and refer to the motor section for motor options.

### 8. Checks

### Thrust Loads (Axial)

Loads that are directed towards or away from the gearbox along the axis of the shaft are called thrust or axial loads. Output shaft thrust capacity [$F_A$] can be found in the gearmotor rating tables. Thrust load capacities should not exceed the values listed in the tables to ensure long bearing life. Contact NORD for combination loads or a more exact examination of the application.

### NEMA C-face Motor Weight Limits

When mounting a motor to a NORD NEMA C-face motor adapter it is important to consider the motor's weight. Following is a table that includes the maximum motor weight the NEMA adapter can support. If the motor exceeds the listed weight it must be externally supported. When a C-face mounted motor is externally supported care must be taken to ensure that the support system does not impose additional pre-loads on the NEMA motor adapter.

**NEMA Weights**

| Motor FRAME | 56C | 143TC | 145TC | 182TC |
|---|---|---|---|---|
| Max Weight [lb] | 66 | 88 | 110 | 130 |
| **Motor FRAME** | **184TC** | **210TC** | | |
| Max Weight [lb] | 175 | 220 | | |





**⚠ GENERAL WARNINGS & CAUTIONS ⚠**

Applications with risk of personal injury should be reviewed together with NORD. Examples of these are hoist, lifts or other applications where people may be at risk.

### NEMA and IEC Adapters

NEMA/IEC adapter have additional shaft coupling and additional bearing seats compared to integral motors so there are higher no-load losses with NEMA or IEC adapters. We recommend mounting the motor directly, since it offers both technical and cost advantages.

NEMA and IEC adapters used in hoist, lifts and other applications with danger of personal injury should be reviewed together with NORD.

### NEMA C-Face Adapter Capacity

The NEMA adapters are designed to handle the torques produced by the standard NEMA power assignment at 4-pole (1800 rpm) motor speeds. If a larger motor power than the power listed below is used, NORD should be consulted. Also if a NEMA adapter is being used for other than an AC induction motor NORD should be consulted.

| Adapter | Max Power [hp] |
|---|---|
| 56C | 1 |
| 140TC | 2 |
| 180TC | 5 |
| 210TC | 10 |

### External Installation, Tropical Use

Gearboxes installed outside, in damp rooms, or used in the tropics may require special seals and anti-corrosion options. Please contact NORD for application assistance.

### Special conditions

If special environmental or other conditions exist in transit, storage or operation these need to be considered in the unit selection. Special conditions may include (but are not limited to):

- Exposure to aggressive corrosive materials (contaminated air, gasses, acids, bases, salts, etc.)
- Very high relative humidity
- Direct contact between the motor and liquid
- Material build-up on the gear unit or motor (dirt, dust, sand, etc.)
- High atmospheric pressure
- Radiation
- Extreme temperatures, high, low or large temperature changes
- High vibration, acceleration, shocks or impacts
- Other abnormal conditions

### Gear Reducer Ratings

The permissible continuous power limit of gear reducers is limited by both the mechanical rating and the thermal rating. The mechanical rating depends upon the material strength of the gear reducer's gears, bearings, housing, shafts, etc. The mechanical input power limit to the reducer is also a function of the mechanical power rating divided by the relevant reducer service factor.

The thermal rating or thermal limit depends upon the amount of heat generated within the reducer and is influenced by a variety of factors including:

- Churning or splashing losses in the lubricant which depend upon reducer type, ratio, input style, mounting position or oil fill-level, and the circumferential travel velocities of the gear wheels.
- The actual speed and load conditions. These factors determine load-depedent losses in the gear areas and frictional losses in the gear, bearing & seal areas.
- Ambient Conditions:
  - Ambient Temperature.
  - Amount of free air circulation around the drive.
  - Possible near-by heat sources.
  - Heat dissipation or the ability of the reducer to transfer heat through the housing, shafts, and the mating sub-structure or mounting surface.

### Storage Before Installation

The gear units and motors should be stored in a dry area before they are to be installed. Special measures are required for longer storage. Please request long term storage instructions from NORD Gear or see page 17.



## Observing the Reducer's Thermal Limit

### When to Contact NORD

Through computer program analysis NORD can evaluate application conditions and the impact they have on a reducer's thermal capacity.

When applying SCP gear units of case size SK 6282 & larger, consult NORD if any two or more of the following conditions apply:

- Gear ratio, $i_{total} \leq 24:1$
- Input speed, $n_1 > 1800$
- Vertical positioning (mounting position M2 or M4)
- Input configuration: NEMA C-face, IEC, servo adapter or solid-shaft input (Type-W)
- An elevated ambient temperature ≥ 86° F (30 °C)

### Dangers of Reducer Overheating

The following problems may result when the reducer's thermal capacity or maximum oil sump temperatures are exceeded:

- Lubrication oxidation, breakdown & deterioration.
- A decrease in lubrication viscosity & film thickness.
- Loss of critical bearing and gear clearances required for proper lubrication.
- Increased contact pressures and increased operating temperatures in the critical load zones of the gearing and bearings.
- An increased possibility for metal-to-metal contact and premature component wear.
- A significant reduction in the lubricant's ability to prevent scuffing, pitting, and in extreme cases galling or welding.

### Maximum Oil Sump Temperature Limit

To prevent reducer overheating, the reducer's maximum oil sump temperature limit must not be exceeded for prolonged periods of operation (up to 3 hours continuous operation, depending upon reducer size).

| Oil Type | Maximum Oil Temperature Limit | |
|---|---|---|
| | NORD | AGMA 9005-D94 |
| Mineral | 80-85 °C (176-185 °F) | 95 °C (203 °F) |
| Synthetic | 105 °C (220 ° F) | 107 ° C (225 ° F) |

**IMPORTANT NOTE**

***Use caution when specifying gear reducers for high temperature service.*** If there is concern about exceeding the allowable safe operating temperatures, please consult NORD to discuss alternatives.

### Measures to Expand the Application Range

There are a variety of measures that may be taken in order to protect against thermal overload and expand the application range of the gear reducer. Common examples include the following:

- Recommending a change in lubrication viscosity and/or a specific synthetic lubricant type.
- Applying high-temperature seals.
- Increasing air flow around the gear unit.
- Shielding or protecting the reducer from high heat sources.
- Considering an integral motor instead of the bolt-on input assembly covers. In many cases the motor fan will substantially increase air-flow around the gear unit.



## Mounting Positions

The reducer mounting position determines the approximate oil fill level and the appropriate vent location. In some cases the mounting position may dictate possible variation in final reducer assembly. If considering any mounting positions that are not shown as catalog-standard options, it is critical that the customer consult with NORD prior to ordering.



### New Mounting Position System

NORD is in the processes of incorporating a new mounting position systems. Historically the NORD mounting position system was based on international motor standards. NORD is changing in an effort to simplify the system. The new system is based on the six sides of a cube. Below is a cross reference between the old and new mounting position codes.

**Mounting Position Cross Reference Table**

| New | M1 | M2 | M3 | M4 | M5 | M6 |
|---|---|---|---|---|---|---|
| Old | B3, B5 | V3, V6 | B8, B5I | V1, V5 | B5II, B6 | B7, B5III |

## Screw Conveyor Package

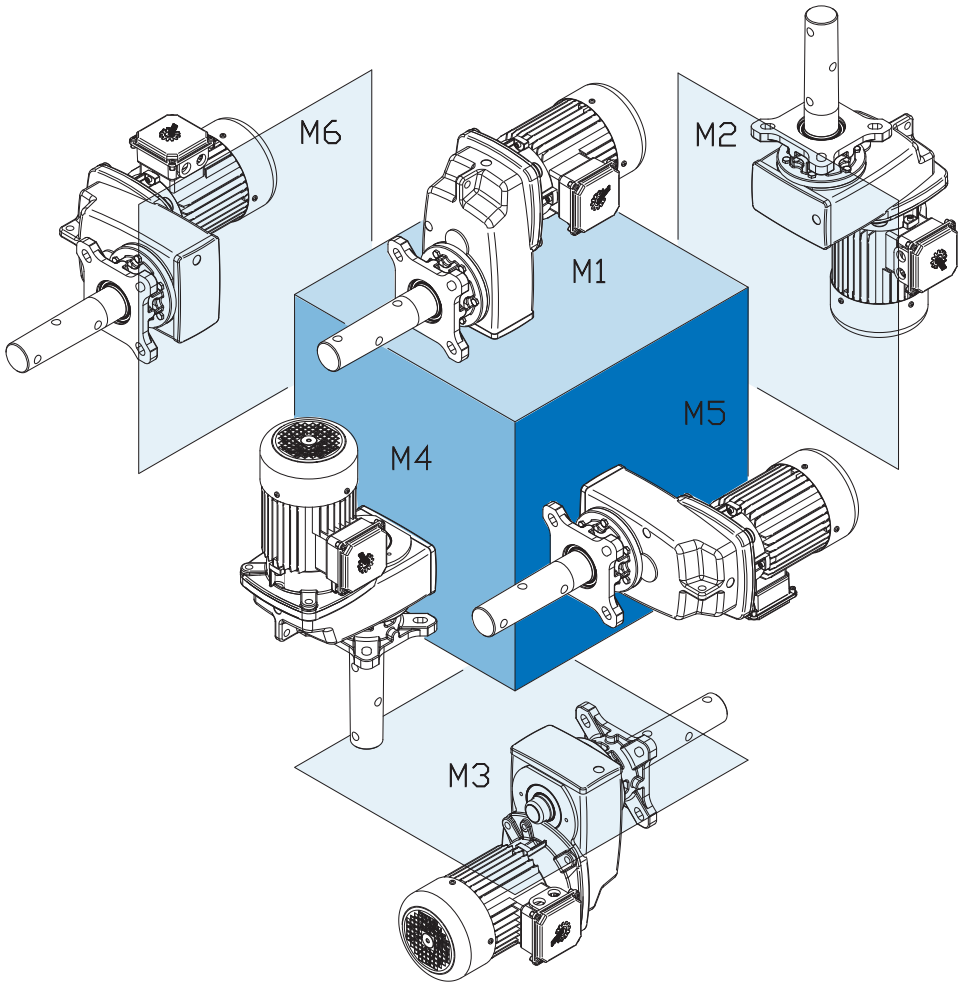



## Screw Conveyor Mounting

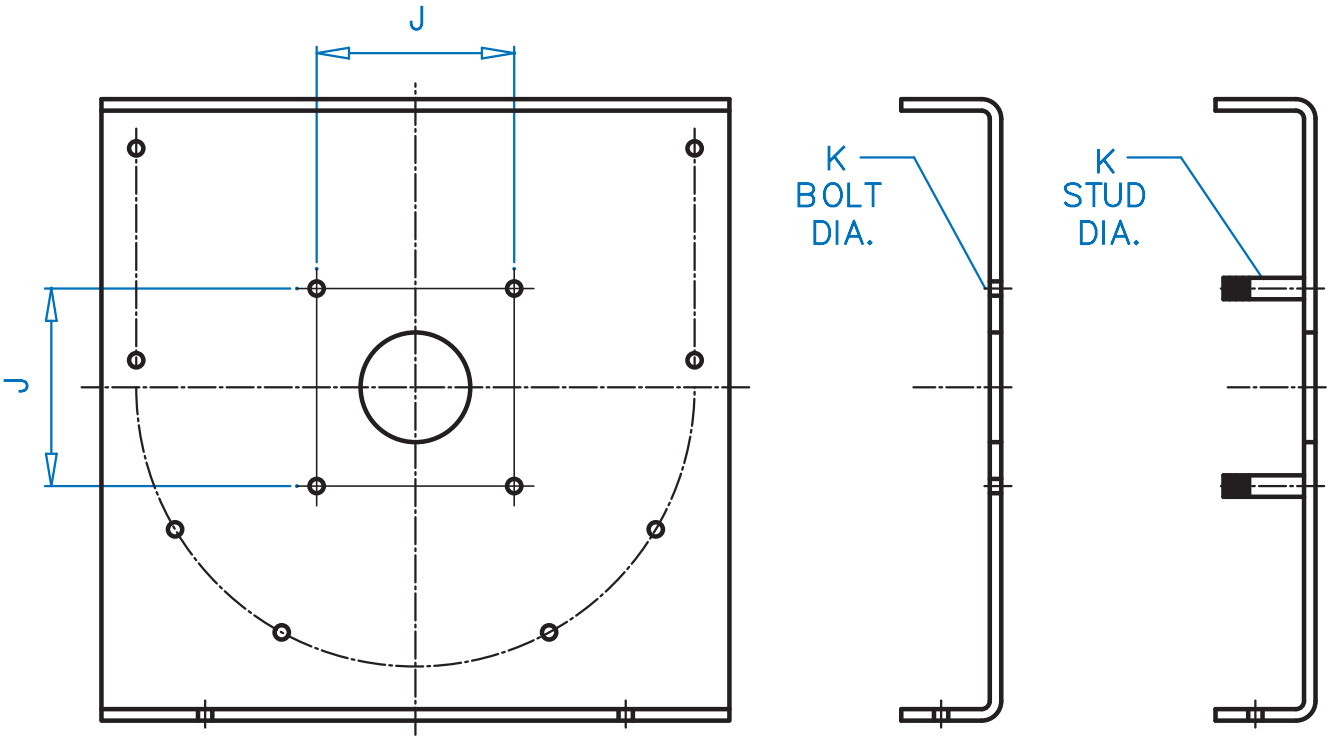




**Screw Conveyor mounting dimensions from CEMA 300-13 excerpts**

| Screw Diameter [in] | CEMA Drive shaft [in] | J Width [in] | K Bolt [in] | K Stud [in] |
|---|---|---|---|---|
| 6 | 1-1/2 | 4 | 1/2 | 7/16 |
| 9 | 1-1/2 | 4 | 1/2 | 7/16 |
| | 2 | 5-1/8 | 5/8 | 9/16 |
| 12 | 2 | 5-1/8 | 5/8 | 9/16 |
| | 2-7/16 | 5-5/8 | 5/8 | 9/16 |
| | 3 | 6 | 3/4 | 3/4 |
| 14 | 2-7/16 | 5-5/8 | 5/8 | 9/16 |
| | 3 | 6 | 3/4 | 3/4 |
| 16 | 3 | 6 | 3/4 | 3/4 |
| 18 | 3 | 6 | 3/4 | 3/4 |
| | 3-7/16 | 6-3/4 | 3/4 | 3/4 |
| 20 | 3 | 6 | 3/4 | 3/4 |
| | 3-7/16 | 6-3/4 | 3/4 | 3/4 |
| 24 | 3-7/16 | 6-3/4 | 3/4 | 3/4 |

# Gear Unit Options





### Screw Conveyor Package Gearbox Options

| Abbreviation | Description | Page |
|---|---|---|
| **ADP** | Additional drain plug | 17 |
| **LL** | Long term storage | 17 |
| **DR** | Autovent | 17 |
| **FV** | Filtered Vent | 17 |
| **MDP** | Magnetic drain plug | 17 |
| **OA** | Oil Expansion Chamber | 16 |
| **OSG** | Oil sight glass | 16 |
| **OV** | Open vent | 17 |
| **PC** | Grease Purge Seal | 16 |
| **SM5** | Stainless steel output shaft | 16 |
| **VL** | Heavy Duty Bearings | 16 |
| **none** | Special Drain Plugs | 17 |
| **none** | Paint coatings | 18 |

## Heavy Duty Output Bearings (VL)

Replacing standard output bearings with heavy-duty versions will increase the external load carrying capacity of the speed reducer. Increased capacity in either or both overhung (radial) or thrust (axial) loading insures that premature bearing failure will not occur due to high stresses in the bearing elements. The increased bearing capacity will also keep the speed reducer as small as possible by not having to select the next larger case size in order to handle the bearing loads. If increased bearing life is desired, larger bearings will reduce the relative stress on the bearings and increase B10 bearing life.

### Standard Bearing

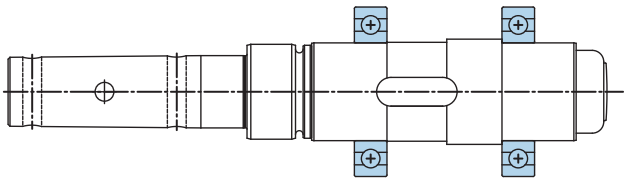

### Heavy Duty Bearings (VL)-option

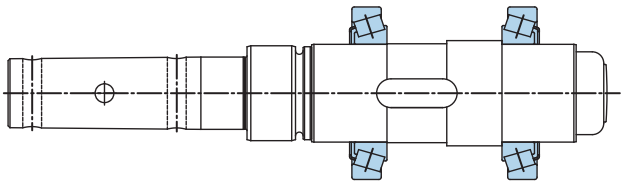

## Grease Purge Seal (PC)

The SCP screw conveyor package has an optional grease purgeable sealing system. The design replaces the greased packed felt packing seal with a grease filled cavity. The system also includes a grease nipple and relief to allow the seal to be flushed with fresh grease.

## Stainless Steel Output Shaft (SM5)

Output shafts made from stainless steel are available and are frequently used in food, pharmaceutical, and washdown applications. In some cases stainless steel solid input shafts may also be provided.

## Oil Expansion Chamber (OA)

Oil expansion chambers are available for most reducers. These chambers allow for expansion of the oil-air mix in the reducer that can occur during operation. This expansion chamber is similar to a car radiator over-flow chamber.

## Oil Sight Glass (OSG)

The oil sight glass provides a visible oil level indication on the reducer. The sight glass replaces the standard steel fill plug and consists of a sealed clear porthole centered in the middle of a brass plug. The sight glass allows for quick oil level and color inspection.



## Autovent™ (DR)

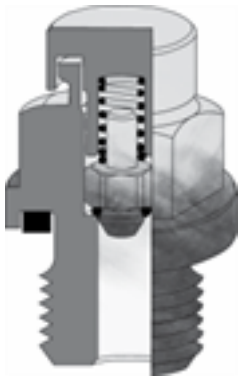

The Autovent™ prevents entry of foreign material, such as water, dust, corrosives, etc… and is perfect for washdown and dusty environments. The Autovent™ is a ball and spring check valve that opens at 2 psi and during operation and closes tightly when the gearbox cools. The Autovent™ is standard on all vented NORD reducers. Some of the benefits are cleaner gearbox oil, extended lubrication life and longer lasting seals, gears, and bearings.

## Open Vent (OV)

An open vent may be optionally supplied on NORD reducers. The open vent allows for air pressure differences between the inner space of the reducer and the atmosphere. This open vent will be closed upon delivery to prevent oil leakage. Before the reducer is put in service the open vent should be activated by removing the sealing plug.

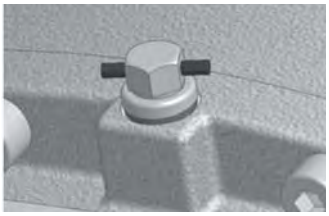

Sealed vent

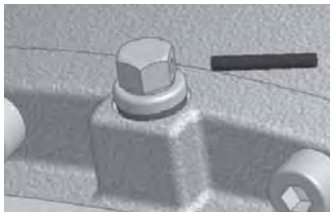

Activated vent

## Filtered Vent (FV)

NORD offers a filtered vent, which allows gases to permeate, but does not allow dust and debris to pass through the vent.

## Magnetic Drain Plug (MDP)

Magnetic drain plugs attract and hold ferrous metal particles that may circulate inside the reducer's lubrication system. These potentially abrasive particles may cause excessive wear in the reducer if they remain circulating. An increase of collected material may be a warning sign of future problems.

## Special Drain Plugs



NORD oil drain valves are offered to make draining the oil from the gearbox clean and easy. The drain hose needs to be supplied by the customer. The hose fittings are offered in either 90° or straight to accommodate the user.



A brass drain valve is threaded into the existing oil drain port of the gearbox. The spring valve is closed using a rubber o-ring. When the hose fitting is threaded into the drain valve, the spring valve is pushed open and allows oil to drain. When the hose fitting is removed, the drain valve closes. A brass, threaded cap is supplied to cover the drain valve when not in use.

## Additional Drain Plug Hole (ADP)

NORD can add an additional drain hole to the reducer housing for a small surcharge if required for special oil plumbing needs.

## Long Term Storage (LL)

Speed reducers are frequently put in storage prior to installation for long periods of time and in some cases exposed to the elements. NORD's long term storage option protects the unit from moisture or corrosion by coating all unpainted surfaces with a dry, transparent, durable waxy film. Once installation is necessary this waxy film can be easily removed with a commercial de-greaser or petroleum solvent. If possible the store room should be vented and dry, with room temperatures between 23°F and 104 °F (-5 °C and 40 °C).





## Paint Coatings

NORD's standard paint coating is a two component, aliphatic polyurethane finish contaning 316 stainless steel material. This gray stainless steel paint has excellent appearance and outstanding physical properties. It is suitable for both indoor and outdoor applications.

Advantages of NORD's stainless steel two component polyurethane:

- Excellent adhesion to cast iron, aluminum, steel, and plastics
- Excellent corrosion resistance
- Excellent chemical resistance
- Excellent gloss and color retention
- Suitable for indoor and outdoor exposure
- Nonporous and excellent abrasion resistance
- USDA compliant

NORD also offers a variety of severe duty paint coatings that provide a high level of protection against water and severe environments both indoors and outdoors. NSD+ (NORD Severe Duty) consists of a primer undercoat and a stainless steel polyurethane topcoat. For the most demanding environments, NORD offers NSD-X3 (NORD Severe Duty triple coated) which consists of a primer undercoat, stainless steel polyurethane coating, and a clear topcoat. Paint coatings are also available in alternate colors as seen in the table below.

| Finish | Color | Coating | Use |
|---|---|---|---|
| Standard (stainless steel paint) | Stainless steel silver (Gray) | 1 x Stainless steel (316) top coat (polyurethane) | Indoor or outdoor moderate environment |
| Alternate color | Black, Blue, Red, Orange | 1 x Color top coat (polyurethane) | Indoor or outdoor protected |
| NSD+ | | | |
| NORD Severe Duty + NSD+ | Stainless steel silver (Gray) | 1 x Primer high solid alkyd system<br>1 x Stainless steel (316) top coat (polyurethane) | Indoor or outdoor moderate environment |
| NORD Severe Duty +W NSD+W | White | 1 x Primer high solid alkyd system<br>1 x White top coat (polyurethane) | Indoor or outdoor moderate environment |
| Alternate color NSD+ | Black, Blue, Red, Orange | 1 x Primer high solid alkyd system<br>1 x Color top coat (polyurethane) | Indoor or outdoor moderate environment |
| NSD X3 | | | |
| NORD Severe Duty Extreme NSD-X3 | Stainless steel silver (Gray) | 1 x Primer high solid alkyd system<br>1 x Stainless steel (316) (polyurethane)<br>1 x Clear top coat (polyurethane) | Indoor or outdoor more severe environment |
| NORD Severe Duty Extreme NSD-X3W | White | 1 x Primer high solid alkyd system<br>1 x White (polyurethane)<br>1 x Clear top coat (polyurethane) | Indoor or outdoor more severe environment |
| Alternate color NSD-X3 | Black, Blue, Red, Orange | 1 x Primer high solid alkyd system<br>1 x Color (polyurethane)<br>1 x Clear top coat (polyurethane) | Indoor or outdoor more severe environment |

Special colors and paints possible please contact NORD with your specific requirements.



## Input

NORD's modular design allows for many different types of inputs to be added to gear reducers. All inputs are bolt on and include machined pilots to ensure simple and accurate assembly. NORD offers the following different input types:

- Integral motor
- NEMA C-face motor adapter
- IEC B5 motor adapter
- Solid input shaft
- Servo motor adapter
- Top mount motor platform
- Custom mounting interface

### Example Nomenclature

**SK3282SCP - W**

- **W** — Solid Input Shaft
- **SK3282SCP** — Gear unit

SCP Gear unit with solid input shaft.

**SK3282SCP -140TC**

- **140TC** — NEMA 140 TC Motor Adaptor
- **SK3282SCP** — Gear unit

SCP Gear unit to recieve standard NEMA C-Face motor adaptor.

**SK3282SCP - IEC80**

- **IEC80** — IEC 80 B5 Motor Adaptor
- **SK3282SCP** — Gear unit

SCP Gear unit to recieve standard metric IEC B5 flange mount motor adaptor.

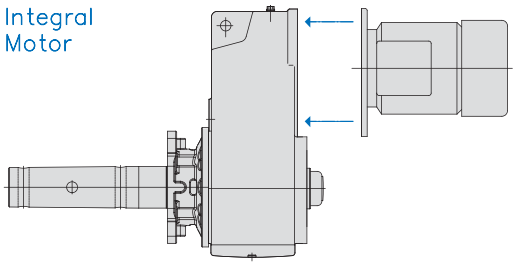


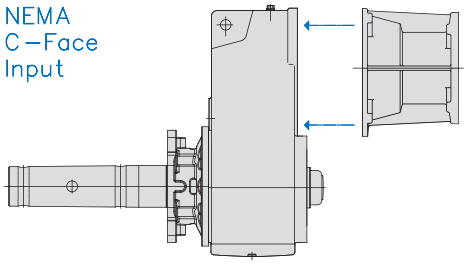


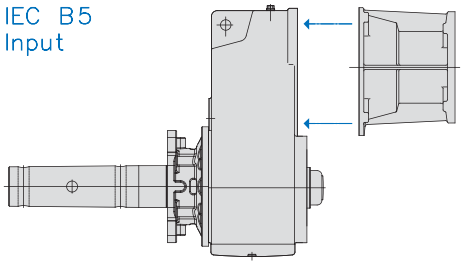


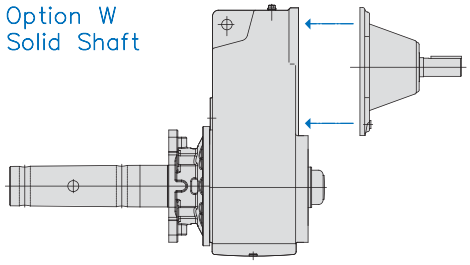


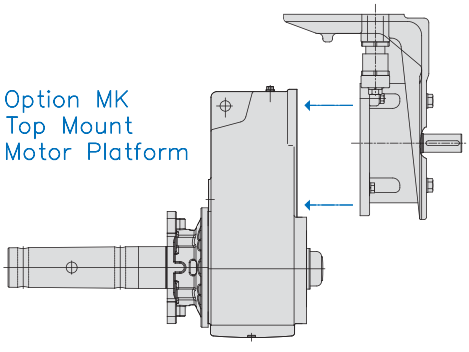





## Integral Motors

NORD provides integral motors that mount directly to the gearbox. Integral motor mounting eliminates the need for costly v-belts or sheaves and directly couples the motor to the reducer. This also results in a dimensionally compact one-piece package.

NORD high performance integral motors are available in many operational voltages, are inverter duty rated, and offer many valuable options including energy efficient motors and power off brakes. For more information on integral motors, see the motor section found on page 119.

## NEMA C-Face Motor Adapter

NEMA C-face motor adapters allow for easy installation and removal of industry standard C-face motors. NEMA C-face motor adapters consist of a coupling and an adapter housing that connects the motor to the gear reducer. Gear units with NEMA C-face adapters are commonly used where applications require specialized motors or the user wants to easily find a replacement motor if failure occurs. NORD also offers high performance NEMA C-face motors and brakemotors, that can be factory installed to the motor adapter.

NORD motor adapters deliver nearly 100% of the torque generated by the motor and can be used from -13°F (-25°C) to 212°F (100°C). Most motor adapters have specially sealed bearings that are lubricated for life.

The maximum input power of a gear unit with a NEMA C-face adapter is generally limited by the power rating of the standard NEMA C-face motor size. The power limit is indicated in the ratings table for a standard 4-pole 1750 rpm motor. In some cases the gearbox limit ($T2_{max}$) will be the limiting capacity. Both the NEMA adapter limit and the gearbox torque limit must be considered. If the speeds required exceed those included in the performance and speed reduction tables please contact NORD.

## IEC Motor Adapter

IEC motor adapters allow for easy installation and removal of industry standard IEC motors according to DIN 42677. The IEC adapter is very similar to the NEMA C-face adapter in construction. The maximum input power is generally limited by the IEC motor size. For ratings and dimensions, please consult NORDS metric catalogs that may be found online at www.nord.com under the document section.

## Solid Input Shaft

Designed to mount couplings, sheaves or sprockets, which transfer torque from the prime mover. The input shaft is made from ANSI 1045 or stronger material and is dimensioned with long keys according to ANSI B17 standards. The maximum gearbox input power rating is indicated in the speed reducer performance tables.

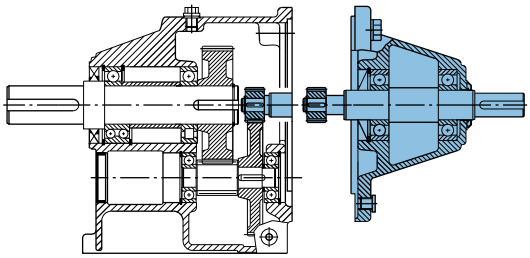

## Servo Motor Adapter

Servo motor adapters are designed to handle the highly dynamic capabilities of servo motors. NORD servo motor adapters have a square mounting flange and are available with either a keyed (SEP) or a key-less (SEK) coupling. They are suitable for speeds up to 3000 rpm and the high torques produced by servo motors. Higher input speeds can be handled for a short duration and the bearings and input shaft are designed to cope with the high torque loads.

## Top Motor Mount Platform

Some applications require the motor to be mounted on top of the reducer with a belt drive connection from the motor to the reducer. MK platforms can be bolted-on to all UNICASE™ gearboxes in any mounting position and offer the following advantages:

- Light, vibration inhibiting aluminum construction
- Corrosion resistant, easily adjustable mechanism for belt tensioning
- Corrosion resistant fasteners
- Available in all mounting positions
- Can be swung 90° to the right or left
- Platform has multiple bolt patterns for various motors

Motor platforms are pre-drilled and tapped to bolt on a standard NEMA footed motor. Each platform has belt tension adjusters. Motor, belts, sheaves and guard are supplied by the customer.



## Custom Mounting Interface

NORD can provide custom input adapters typically consisting of a special adapter plate and special coupling to mount non-standard dimensioned motors or other devices.

When a custom input adapter is required, special attention needs to be given for each application to be sure the customer receives the performance that is necessary. The following information is required:

- Motor Dimensional Drawing
- Motor Weight
- Motor performance specifications, including torque, horsepower and operating speed ranges.

NORD engineers will review the performance requirements and make a unit selection based on given parameters.

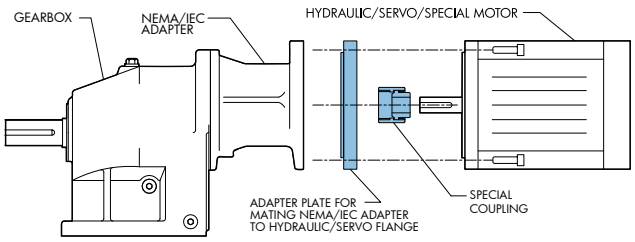


## Vertical Motor Adapter Applications

Gear units with motors frame sizes 250TC (IEC160) and larger, in a vertical up motor mounting position, NORD recommends using an integral gearmotor instead of a NEMA or IEC input adapter. If your application requires this mounting position and a NEMA or IEC input, please consult NORD. In vertical down motor mounted applications it is recommended to shorten the maintenance interval.

## Couplings

Couplings are made with tough abrasion resistant materials, which resist most chemicals and petroleum products. They are electrically isolated (prevent metal to metal contact) and require no lubrication or maintenance. Depending on the size of the C-face input, NORD provides either a gear or jaw type coupling.

## Gear Couplings

Gear couplings are used with 56C to 280TC adapters and provide a compact space saving design. C-face adapter input shafts have a machined male spline that meshes with a molded nylon spline on the coupling. This specially designed molded nylon sleeve that exhibits high torsional stiffness, resulting in minimum fit-up backlash and reduced internal frictional losses. Gear couplings lightweight design yields low inertia and use blind assembly and slip together components to make inspection easy without disassembly.

NORD incorporates two styles of gear couplings, the “J” and “M” styles. The “J” style is one-piece couplings consisting of a nylon sleeve and metal hub that are fused together. The “M” style is a two-piece coupling consisting of a separate nylon sleeve and metal hub.

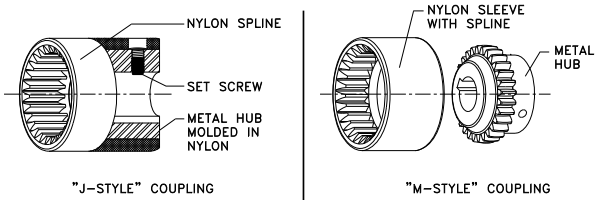


## Jaw Couplings

Jaw couplings are used with 320TC and larger adapters. The cast iron jaw type couplings have a urethane “spider” that provides smooth transmission of the motor torque and has excellent shock and vibration dampening characteristics. A set screw on the coupling prohibits axial movement along the motor shaft.

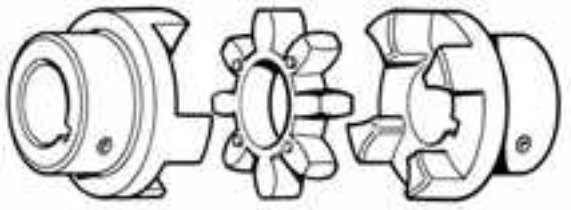





## The Importance of Proper Lubrication

Proper gearbox lubrication is essential in order to reduce friction and component wear, and protect against corrosion and rust. Gear lubricants reduce heat and wear by inserting a load-sharing "protective fluid film" between mating parts and preventing direct metal to metal contact. Properly selected lubricants will operate under various film conditions, improve heat transfer, optimize reducer efficiency, absorb shock loads, reduce noise, inhibit foaming, and separate water readily.

## Design Considerations

Along with many other factors, the gear designer must consider the gear load and speed conditions, and the expected operating oil temperatures. These factors help determine a generally suitable oil category, a desired additive package, preferred base-oil type, and oil viscosity.

It is important that the consumer be aware of these many design factors before making any changes in the critical areas (oil category, base-oil type, viscosity, etc.) One should consult their preferred lubrication supplier or NORD Gear when questions arise.

## Gear Oil Types, Categorized by Base Oil

### *Mineral Oil with an EP Additive (DIN 51517, Type CLP)*

High performance mineral gear oils are carefully engineered and manufactured to improve aging characteristics, minimize friction, offer good wear protection, provide corrosion and oxidation resistance, minimize foam, and separate water. Mineral gear oils are classified as API Group I or II oils, depending upon viscosity.

The standard NORD mineral gear oil has an extreme pressure (EP) additive ISO Viscosity Grade EP220 (AGMA 5 EP) and is generally acceptable for helical gear units. Good quality mineral oil should have the ability to operate at moderate sump temperatures (up to 80-85 °C) without losing viscosity or thickness. A minimum viscosity index (VI) of 93 or higher is suggested. The oil must also have good film strength to handle shock loads, high torque, and start-up conditions. A minimum FZG Scuffing Load Stage 12 is desirable.

**Advantages:**

- Most economical of all the gear oil types.
- Generally offers good compatibility with shaft seals, gaskets, paint finishes, etc.
- Offers good corrosion and oxidation protection.
- Effectively reduces internal friction and wear.

### *When Synthetic Oils Are Used*

Synthetic gear oils are suggested when mineral gear oils have reached their performance limit or when they no longer meet certain application requirements. NORD may recommend synthetic oil for any one of the following conditions:

- Severe duty applications or when gears are exposed to frequent starts and stops, high-load or shock.
- For applications in low or high temperature service.
- To extend oil service interval requirements.
- To eliminate the necessity for seasonal oil changes.
- To extend service life of factory-sealed or maintenance-free gear units.
- To take advantage of performance benefits: shear resistance, low traction coefficient, reduced internal friction, improved lubricity, reduced operating temperatures, improved gear efficiency, etc.

### *Performance Advantages of Synthetic Oil*

Compared to mineral oils, synthetic oils provide a number of performance advantages including:

- Ability to operate at higher temperatures without losing viscosity or thickness, due to a much improved viscosity index.
- Improved low-temperature stability due to a lower pour point
- Increased oil change intervals due to superior oxidative & wear resistance
- Lower tendency to form residues and increased resistance to foaming.
- Other benefits may include: very good shear resistance, low traction coefficient, reduced internal friction, improved lubricity, reduced operating temperatures, improved gear efficiency, extended component life and wear protection.

When application conditions warrant the use of synthetic oil, NORD may suggest a particular type of synthetic oil, depending upon the gear unit type and the application.



***Synthetic Hydrocarbon/Polyalphaolefin (SHC/PAO) Oil (DIN 51517, Type CLP-HC)***

Synthetic Hydrocarbons (SHC) or Polyalphaolefin (PAO) synthetic base oils offer good miscibility with mineral base oils and are very readily available. SHC/PAO oils are classified as API Group IV oils. The can be formulated with or without anti-wear (AW) or extreme pressure (EP) additives. They can also be formulated for acceptance in food-grade applications.

**Advantages:**

- Higher viscosity index and therefore greater high-temperature stability than mineral oil.
- Better low-temperature stability and lower pour point than mineral type gear oils
- High surface tension and lower tendency to foam compared to mineral oil, and water-soluble polyglycol gear oils.
- Compatible (miscible) with mineral oil.
- Better water seperability (demulsibility) than PG oils.

***Polyalkylene Glycol or Polyglycol Synthetic Oil (DIN 51517, Type CLP-PG)***

Polyalkylene glycol or polyglycol (PAG or PG) synthetic gear oils are made readily available through many lubrication suppliers. PG oils are classified as API Group V gear oils. They can also be formulated for acceptance in food-grade applications.

PG gear oils possess extremely low traction coefficients and a viscosity index higher than any of the other synthetics (often greater than 220 VI), resulting in excellent heat resistant, shear stability, and natural anti-wear properties.

Typical PG gear oils are formulated with a 1:1 or higher ratio of ethylene oxide to propylene oxide (50:50 or 60:40 is common); this makes PG gear oils water soluble, providing them with very good corrosion resistance even when water is present in concentrations that are higher then what is normally allowed.

**Advantages:**

- PG oils offer the highest viscosity index of any other synthetic resulting in excellent heat resistant, shear stability, and superior natural anti-wear properties without requiring EP-additives.
- PG gears oils minimize internal friction and often result in improved gear efficiency.
- PG oils have significantly higher film strength than mineral and SHC/PAO oils and out perform these oils at higher operating oil temperatures (approaching 80°C or higher).

***IMPORTANT NOTE***

Polyglycol (PG) oils are not miscible with other oil types and should never be mixed with mineral oil, hydrosynthesized synthetic or PAO synthetic oils.

## Food-Grade Lubricants

Food-grade lubricants should be manufactured in compliance with FDA 212 CFR 178.3570 and should either satisfy the former 1998 USDA Guidelines as an H1 lubricant or currently qualify as a NSF-H1 lubricant. Please consult with lubrication manufacturers for more information or visit www.nsf.org

H1 food grade oil can only contain additives which appear on the FDA "approved list" for food safe compounds. H1 oils are generally absent of common zinc-based AW additives, and sulfur-phosphorus based, EP chemistries, commonly found in many industrial gear oils.

Food manufacturers control risk and liability by following detailed guidelines outlined by the HACCP (Hazard Analysis and Critical Control Point) program, which includes food-grade H1 lubricants.

Food grade H1 lubricants may be formulated as highly refined mineral oils (white oils), SHC/PAO synthetic oils or PG synthetic oils.

The highly refined nature of good-quality food-grade white-oils provides good long-term oxidative stability and in most cases adequate lubrication under high-load (boundary) conditions. So long as food-grade white oils meet the minimum anti-wear requirements of the normally specified non-food grade oil, they are often acceptable.

Both food-grade white oils and PAO's have an inherent "purity" and absence of polar compounds, making them better than the average mineral oil or even PG oil in terms of demulsibility (water seperability).

Compared to food-grade white-oils, food-grade synthetic PAO or PG oils typically provide:

- Better wear and oxidation resistance.
- Improved high-temperature characteristics.
- Better cold-temperature behavior.





## The Importance of Oil Viscosity

Viscosity or the oil's resistance to shear under load, is often considered the single most important property of any gear oil.

NORD Gear Designers have selected the most appropriate ISO viscosity grade of oil, for each type or class of gear reducer. Gear oil viscosity is selected by assuming typical ambient conditions, at rated speed and load conditions.

**Important Considerations:**

- The correct viscosity selection helps provide proper lubrication and assures that a minimum film thickness is maintained between interacting surfaces.
- The degree to which viscosity changes with temperature or the viscosity index, varies from oil to oil, and depends upon the type of lubricant & additive agents used.
- Selecting too low of a viscosity can result in mixed boundary (partial metal-to metal contact) or boundary lubrication (full metal-to-metal contact) conditions, increasing internal friction heat build-up and wear.
- Selecting too high of a viscosity results in increased churning and squeezing losses in the load zone and excessive heat (especially when peripheral gear speeds are high); Ultimately, this causes the oil temperature to rise and the viscosity to go down, decreasing the effectiveness of the lubricant.

## Considering an Oil Viscosity Change

There are three primary reasons to consider a lubrication viscosity change as follows:

1. Low temperature gear oils should be selected so that the pour point is at least 9°F (5°C) lower than the expected minimum ambient temperature. In extreme cases, consider a lower ISO Viscosity rating and test the critical performance of the gear box under cold start-up.

2. High temperature applications may require an increase in the lubricants viscosity to assure proper lubrication conditions in the critical load zones of the gear unit. NORD also recommends switching to synthetic oil if oil sump temperatures exceed 176-185 °F (80-85 °C).

3. In cases of extreme load conditions, gear pairs and antifriction bearings may be more susceptible to scuffing wear. In these operating conditions, it may be beneficial to consider an increased lubrication viscosity and/or lubrication with improved antiwear additive packages.

**IMPORTANT NOTE**

NORD recommends that the user consult with their primary lubrication supplier when considering changes in oil viscosity.

## Maximum Oil Sump Temperature Limit

To prevent reducer overheating, the reducer's maximum oil sump temperature limit must not be exceeded for prolonged periods of operation (up to 3 hours continuous operation, depending upon reducer size).

| Oil Type | Maximum Oil Temperature Limit | |
|---|---|---|
| | NORD | AGMA 9005-D94 |
| Mineral | 80-85 °C (176-185 °F) | 95 °C (203 °F) |
| Synthetic | 105 °C (220 ° F) | 107 ° C (225 ° F) |

**IMPORTANT NOTE**

***Use caution when specifying gear reducers for high temperature service.*** If there is concern about exceeding the allowable safe operating temperatures, please consult NORD to discuss alternatives.



## Ventilation

Most gear reducers are equipped with a vent which helps compensate for air pressure differences between the inner space of the gear unit and the atmosphere.

The spring-pressure vent (Autovent™) is commonly supplied and factory-installed. Normally open vents may also be supplied as an option; normally-open vents are closed upon delivery in order to prevent oil leakage during transport. When normally open vents are supplied, the sealing plugs must be removed prior to commissioning the reducer.

Prior to reducer start-up, it is important to check the maintenance manual to verify that the vent is properly located with respect to mounting position.

## Mounting Position

The reducer mounting position determines the approximate oil fill-level and the appropriate vent location. In some cases mounting position may dictate possible variation in final reducer assembly.

If considering any mounting positions that are not shown as catalog-standard options, it is critical that the customer consult with NORD prior to ordering.

## Oil Fill Quantities

Oil fill quantities shown in the catalog or maintenance instructions are approximate amounts. The actual oil volume varies depending upon the gear ratio. Prior to commissioning the reducer, the oil-fill level should be checked using the reducer's oil-level plug. It may be necessary to drain excess oil or add additional oil.

Unless otherwise specified, NORD supplies most all gear units factory-filled with the standard lubrication type per the specified mounting position.

## Lubrication Replacement

If the gear unit is filled with mineral oil, the lubricant should be replaced at least after every 10,000 operating hours or after every two years. If the gear unit is filled with synthetic oil, the lubricant should be replaced at least after every 20,000 operating hours or after every four years. Often gear reducers are exposed to extreme ambient conditions, hostile environments, wet conditions, or dirty and dusty operating areas. Especially in these situations, it is important to establish a condition-based oil service interval.

## The Importance of Routine Oil Analysis

Routine oil analysis, sound lubrication practices, and good tracking of oil performance trends will help establish proper lubrication maintenance and change-out intervals. To maximize equipment reliability, NORD Gear generally recommends a condition-based lubrication maintenance program. One may take exceptions to this general recommendation on sealed-for-life or maintenance-free gear units or smaller and less costly gear units. In these instances, the replacement cost of the gear unit is often small compared to the costs associated with this type of oil analysis program.

NORD suggests replacing the gear oil if oil analysis indicates any of the following:

- Viscosity has changed by approximately 10% or more.
- Debris particles (silicon, dust, dirt or sand) exceed 25 ppm.
- Iron content exceeds 150-200 ppm.
- Water content is greater than 0.05% (500 ppm).
- The total acid number (TAN) tests indicate a significant level of oxidative break-down of the oil, and a critical reduction in performance; If the TAN number measured changes by more than 5% over the new oil, then an oil change would be recommended.







## Lubrication Types

Proper gearbox lubrication is essential in order to reduce friction, heat, and component wear. Lubricants reduce heat and wear by inserting a protective "fluid boundary" between mating parts and preventing direct metal to metal contact. Lubricants also help prevent corrosion and oxidation, minimize foam, improve heat transfer, optimize reducer efficiency, absorb shock loads and reduce noise.

Mounting position not only determines the proper fill-level but may also have some effect on final reducer assembly. If considering any mounting positions that are not shown as catalog-standard options, it is critical that the customer consult with NORD prior to ordering. Unless otherwise specified, NORD supplies all Screw conveyor gear units factory-filled with the standard mineral lubrication type and the appropriate quantity.

**Standard Oil Lubricants**

| Gear Unit Type | ISO Viscosity | Oil Type | Ambient Temperature Range | Manufacturer Brand/Type | Notes |
|---|---|---|---|---|---|
| Clincher™ SCP | VG220 | MIN-EP | 0 to 40°C (32 to 104°) | Mobilgear 600XP220 | ♦❶ |
| | VG220 | PAO | -35 to 60°C (-31 to 140°F) | Mobil SHC630 | ♦ |
| | VG220 | FG | -5 to 40°C (23 to 104°F) | Fuchs FM220 | ♦ |

**Optional Oil Lubricants**

| Gear Unit Type | ISO Viscosity | Oil Type | Ambient Temperature Range | Manufacturer Brand/Type | Notes |
|---|---|---|---|---|---|
| Clincher™ SCP | VG460 | PAO | -35 to 80°C (-31 to 176°F) | Mobil SHC 634 | - |
| | VG460 | FG-PAO | -35 to 80°C (-31 to 176°F) | Mobil/Cibus SHC460 | - |
| | VG220 | FG-PAO | -35 to 60°C (-31 to 140°F) | Mobil/Cibus SHC220 | - |
| | VG150 | PAO | -35 to 25°C (-31 to 77°F) | Mobil SHC629 | - |

**Standard Bearing Grease Lubricants**

| Grease Type/Thickener | NLGI Grade | Ambient Temperature Range | Manufacturer Brand/Type | Notes |
|---|---|---|---|---|
| Standard (Li-Complex) | NLGI 2 | -30 to 60°C (-22 to 140°F) | Mobil Grease XHP222 | ♦❶ |
| High Temp (Polyurea) | NLGI 2 | -25 to 80°C (-13 to 176°F) | Mobil Polyrex EP 2 | ♦ |
| Food-Grade (AL-Complex) | NLGI 2 | -25 to 40°C (-13 to 104°F) | Mobil Grease FM222 | ♦ |

♦ Stocked Lubricants

❶ Standard product on serviceable gear units

### *IMPORTANT NOTES*

- Food grade lubricants must be in compliance with FDA 212 CFR 178.3570 and qualify as a NSF-H1 lubricant. Please consult with lubrication manufacturer for more information.
- When making a lubrication change, check with the lubrication supplier to assure compatibility and to obtain recommended cleaning or flushing procedures.
- Do not to mix different oils with different additive packages or different base oil formulation types. Polyglycol(PG) oils are not miscible with other oil types and should never be mixed with mineral oil.
- Consult NORD if considering oils of ISO Viscosity VG100 or lower.

**Oil Formulation Codes**

| | |
|---|---|
| MIN-EP | Mineral Oil with EP Additive |
| PAO | Synthetic Polyalphaolefin Oil |
| FG | Food-Grade Oil |
| FG-PAO | Food-Grade, Synthetic Polyalphaolefin Oil |



# SCP Mounting Positions & Oil Fill Quantities



### Screw Conveyor Package lubrication

Unless otherwise noted below, the following NORD Gear reducers are shipped from the factory with a pre-determined oil fill level in accordance to the specified reducer size and mounting position. For additional information, please refer to the "Oil Plug & Vent Locations" documentation for your gear unit.

**STOP** ***HARMFUL SITUATION*** **STOP**

Actual oil volume can vary slightly depending upon the gear case size, mounting and ratio. Prior to commissioning the reducer, check the oil-fill level using the reducer's oil level plug and drain or add additional oil as needed.

For mounting orientations other than shown please consult NORD Gear. Reducer modifications may be required.

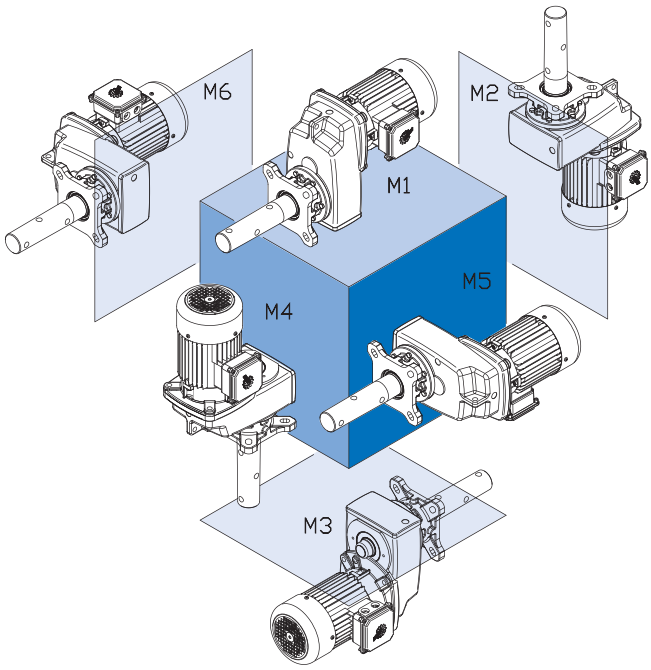


| Unit Type | Mounting Position | | | | | | | | | | | |
|---|---|---|---|---|---|---|---|---|---|---|---|---|
| | M1 | | M2 | | M3 | | M4 | | M5 | | M6 | |
| | Quarts | Liters | Quarts | Liters | Quarts | Liters | Quarts | Liters | Quarts | Liters | Quarts | Liters |
| **SK 1282** | 0.950 | 0.900 | 1.37 | 1.30 | 0.950 | 0.900 | 1.27 | 1.20 | 1.000 | 0.950 | 1.000 | 0.950 |
| **SK 1382** | 1.37 | 1.30 | 2.43 | 2.30 | 1.48 | 1.40 | 2.22 | 2.10 | 2.11 | 2.00 | 2.01 | 1.90 |
| **SK 2282** | 1.74 | 1.65 | 2.54 | 2.40 | 2.01 | 1.90 | 2.11 | 2.00 | 1.90 | 1.80 | 1.90 | 1.80 |
| **SK 2382** | 1.80 | 1.70 | 2.75 | 2.60 | 2.01 | 1.90 | 3.28 | 3.10 | 1.59 | 1.50 | 1.59 | 1.50 |
| **SK 3282** | 3.33 | 3.15 | 4.33 | 4.10 | 3.44 | 3.25 | 4.33 | 4.10 | 3.33 | 3.15 | 3.33 | 3.15 |
| **SK 3382** | 4.33 | 4.10 | 5.18 | 4.90 | 3.49 | 3.30 | 5.92 | 5.60 | 3.49 | 3.30 | 3.49 | 3.30 |
| **SK 4282** | 4.97 | 4.70 | 6.45 | 6.10 | 5.02 | 4.75 | 5.71 | 5.40 | 4.97 | 4.70 | 4.97 | 4.70 |
| **SK 4382** | 6.24 | 5.90 | 7.19 | 6.80 | 5.18 | 4.90 | 8.77 | 8.30 | 5.18 | 4.90 | 5.18 | 4.90 |
| **SK 5282** | 7.93 | 7.50 | 9.30 | 8.80 | 7.93 | 7.50 | 9.30 | 8.80 | 7.61 | 7.20 | 7.61 | 7.20 |
| **SK 5382** | 13.21 | 12.50 | 12.68 | 12.00 | 7.08 | 6.70 | 14.80 | 14.00 | 8.77 | 8.30 | 8.77 | 8.30 |
| **SK 6282** | 17.97 | 17.00 | 14.80 | 14.00 | 12.68 | 12.00 | 18.50 | 17.50 | 10.57 | 10.00 | 14.80 | 14.00 |
| **SK 6382** | 17.44 | 16.50 | 13.74 | 13.00 | 10.15 | 9.60 | 19.03 | 18.00 | 14.80 | 14.00 | 13.21 | 12.50 |

# SCP
# Weights





**Base Weight**

| Input Type | SK 1282 [lb] | SK 2282 [lb] | SK 3282 [lb] | SK 4282 [lb] | SK 5282 [lb] | SK 6282 [lb] |
|---|---|---|---|---|---|---|
| 3rd gear stage "3" | 8 | 8 | 11 | 27 | 35 | |
| 63S/4 | 39 | – | – | – | – | |
| 63L/4 | 40 | – | – | – | – | |
| 71S/4 | 43 | 67 | 100 | – | | |
| 71L/4 | 45 | 69 | 102 | – | – | |
| 80S/4 | 49 | 73 | 106 | – | – | |
| 80L/4 | 51 | 75 | 108 | – | – | |
| 90S/4 | 57 | 82 | 115 | 148 | 227 | |
| 90L/4 | 62 | 86 | 119 | 152 | 232 | |
| 100L/4 | 71 | 95 | 128 | 161 | 240 | |
| 100LA/4 | 77 | 101 | 135 | 168 | 247 | 432 |
| 112M/4 | 97 | 121 | 155 | 188 | 267 | 452 |
| 132S/4 | – | – | 185 | 218 | 298 | 483 |
| 132M/4 | – | – | 209 | 243 | 322 | 507 |
| 160M/4 | – | – | – | 282 | 362 | 547 |
| 160L/4 | – | – | – | 320 | 399 | 584 |
| 180MX/4 | – | – | – | – | 452 | 637 |
| 180LX/4 | – | – | – | – | 452 | 637 |
| 225S/4 | – | – | – | – | – | 867 |
| 225M/4 | – | – | – | – | – | 939 |
| 56C | 51 | 82 | 115 | 154 | 234 | – |
| 140TC | 51 | 82 | 115 | 154 | 234 | – |
| 180TC | 66 | 90 | 124 | 170 | 249 | 448 |
| 210TC | – | – | 143 | 201 | 280 | 476 |
| 250TC | – | – | – | 223 | 302 | 531 |
| 280TC | – | – | – | – | 322 | 531 |
| 320TC | – | – | – | – | – | 562 |
| 360TC | – | – | – | – | – | 562 |
| W | 40 | 77 | 110 | 165 | 245 | 474 |

**SCP Package Additional Weight**

| | 1-1/2" [lbs] | 2" [lbs] | 2-7/16" [lbs] | 3" [lbs] | 3-7/16" [lbs] |
|---|---|---|---|---|---|
| SK 1282 SCP | 15 | 23 | 28 | – | – |
| SK 2282 SCP | 18 | 27 | 31 | – | – |
| SK 3282 SCP | 23 | 35 | 39 | 46 | – |
| SK 4282 SCP | – | 41 | 44 | 51 | – |
| SK 5282 SCP | – | 58 | 60 | 67 | 80 |
| SK 6282 SCP | – | – | – | 76 | 89 |

# SCP Gearmotors & Speed Reducers

## Selection

- 0.16 hp
- 0.25 hp
- 0.5 hp
- 0.75 hp
- 1 hp
- 1.5 hp
- 2 hp
- 3 hp
- 5 hp
- 7.5 hp
- 10 hp
- 15 hp
- 20 hp
- 25 hp
- 30 hp
- 40 hp
- 50 hp

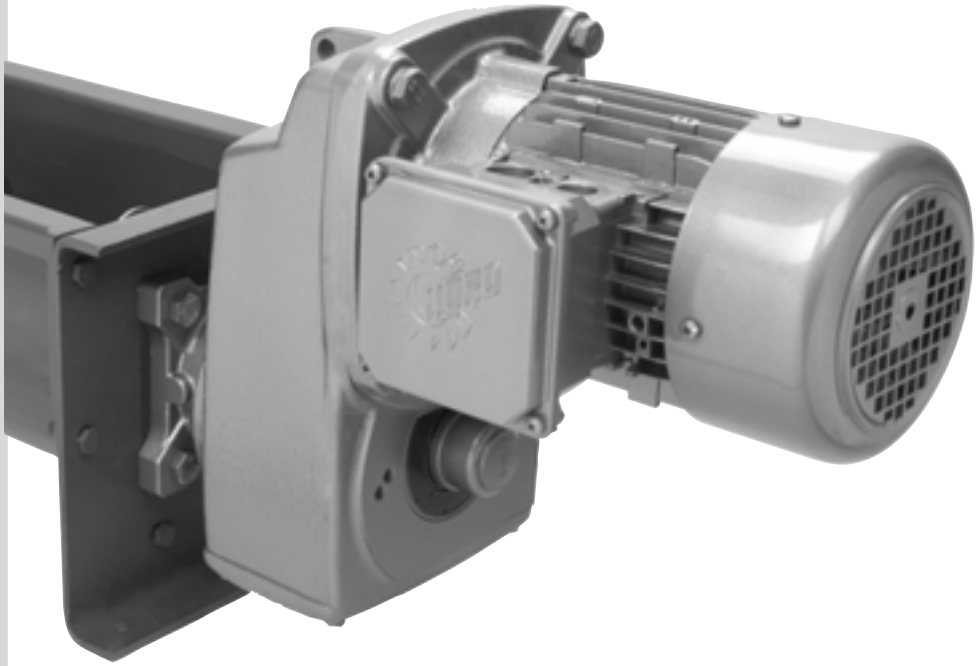

NORD DRIVESYSTEMS

www.nord.com

| Thrust | | Integral Gearmotor | | Reducer |
|---|---|---|---|---|
| Brg [lb] | HD Brg "VL" [lb] | Standard Efficiency Motor | Energy Efficient Motor | C-Face Input |
| 083 | 6750 | SK 4282 SCP - 90L/4 | SK 4282 SCP - 90LH/4 | SK 4282 SCP - 140TC |
| 516 | 6750 | SK 4282 SCP - 90L/4 | SK 4282 SCP - 90LH/4 | SK 4282 SCP - 140TC |
| 056 | 6750 | SK 4282 SCP - 90L/4 | SK 4282 SCP - 90LH/4 | SK 4282 SCP - 140TC |
| 950 | 6750 | SK 4282 SCP - 90L/4 | SK 4282 SCP - 90LH/4 | SK 4282 SCP - 140TC |
| 950 | 6750 | SK 4282 SCP - 90L/4 | SK 4282 SCP - 90LH/4 | SK 4282 SCP - 140TC |
| 950 | 6750 | SK 4282 SCP - 90L/4 | SK 4282 SCP - 90LH/4 | SK 4282 SCP - 140TC |
| 950 | 6750 | SK 4282 SCP - 90L/4 | SK 4282 SCP - 90LH/4 | SK 4282 SCP - 140TC |
| 950 | 6750 | SK 4282 SCP - 90L/4 | SK 4282 SCP - 90LH/4 | SK 4282 SCP - 140TC |
| 950 | 6750 | SK 4282 SCP - 90L/4 | SK 4282 SCP - 90LH/4 | SK 4282 SCP - 140TC |
| 950 | 6750 | SK 4282 SCP - 90L/4 | SK 4282 SCP - 90LH/4 | SK 4282 SCP - 140TC |
| 950 | 6750 | SK 4282 SCP - 90L/4 | SK 4282 SCP - 90LH/4 | SK 4282 SCP - 140TC |
| 50 | 6750 | SK 4282 SCP - 90L/4 | SK 4282 SCP - 90LH/4 | SK 4282 SCP - 140TC |
| | 6750 | SK 4282 SCP - 90L/4 | SK 4282 SCP - 90LH/4 | SK 4282 SCP - |





CLINCHER™



## Explanation of Selection Tables

**OUTPUT SPEED** – Output speed at NORD standard efficiency motor rated speed.

**OUTPUT TORQUE** – Output torque produced by motor.

**SERVICE FACTOR**

**AGMA SERVICE CLASS**

**TOTAL GEAR RATIO**

**NEMA C-FACE INPUT**



| Output Speed | Output Torque | SF | AGMA Class | Gear Ratio | Thrust | | Integral Gearmotor | | Reducer | CEMA DriveShaft | | | | |
|---|---|---|---|---|---|---|---|---|---|---|---|---|---|---|
| $n_2$ | $T_2$ | $f_a$ | | i | Std Brg | H.D. Brg " VL" | Standard Efficiency Motor | Energy Efficient Motor | C-Face Input | 1-1/2" | 2" | 2-7/16" | 3" | 3-7/16" |
| [rpm] | [lb-in] | | | | [lb] | [lb] | | | | | | | | |
| 355 | 29 | 26.1 | III | 4.79 | 1613 | 1609 | SK 1282 SCP - 63S/4 | | SK 1282 SCP - 56C | X | X | X | | |
| 311 | 33 | 25.3 | III | 5.47 | 1676 | 1609 | SK 1282 SCP - 63S/4 | | SK 1282 SCP - 56C | X | X | X | | |
| 264 | 38 | 24.4 | III | 6.43 | 1760 | 1609 | SK 1282 SCP - 63S/4 | | SK 1282 SCP - 56C | X | X | X | | |
| 235 | 43 | 23.5 | III | 7.24 | 1825 | 1609 | SK 1282 SCP - 63S/4 | | SK 1282 SCP - 56C | X | X | X | | |
| 207 | 49 | 26.1 | III | 8.21 | 1895 | 1609 | SK 1282 SCP - 63S/4 | | SK 1282 SCP - 56C | X | X | X | | |

**ENERGY EFFICIENCT MOTOR**

**STANDARD EFFICIENCY MOTOR**

**AXIAL LOAD RATING HEAVY DUTY BEARINGS "VL"**

**AXIAL LOAD RATING STANDARD BEARINGS**

**CEMA DRIVESHAFT AVAILABILITY, X=POSSIBLE COMBINATION**



# 0.16 hp Gearmotors & Speed Reducers

| Output Speed | Output Torque | SF | AGMA Class | Gear Ratio | Thrust | | Integral Gearmotor | | Reducer | CEMA DriveShaft | | | | |
|---|---|---|---|---|---|---|---|---|---|---|---|---|---|---|
| $n_2$ | $T_2$ | $f_a$ | | i | Std Brg | H.D. Brg " VL" | Standard Efficiency Motor | Energy Efficient Motor | C-Face Input | 1-1/2" | 2" | 2-7/16" | 3" | 3-7/16" |
| [rpm] | [lb-in] | | | | [lb] | [lb] | | | | | | | | |
| 355 | 29 | 26.1 | III | 4.79 | 1613 | 1609 | SK 1282 SCP - 63S/4 | | SK 1282 SCP - 56C | X | X | X | | |
| 311 | 33 | 25.3 | III | 5.47 | 1676 | 1609 | SK 1282 SCP - 63S/4 | | SK 1282 SCP - 56C | X | X | X | | |
| 264 | 38 | 24.4 | III | 6.43 | 1760 | 1609 | SK 1282 SCP - 63S/4 | | SK 1282 SCP - 56C | X | X | X | | |
| 235 | 43 | 23.5 | III | 7.24 | 1825 | 1609 | SK 1282 SCP - 63S/4 | | SK 1282 SCP - 56C | X | X | X | | |
| 207 | 49 | 26.1 | III | 8.21 | 1895 | 1609 | SK 1282 SCP - 63S/4 | | SK 1282 SCP - 56C | X | X | X | | |
| 206 | 49 | 22.6 | III | 8.24 | 1897 | 1609 | SK 1282 SCP - 63S/4 | | SK 1282 SCP - 56C | X | X | X | | |
| 185 | 55 | 24.4 | III | 9.18 | 1958 | 1609 | SK 1282 SCP - 63S/4 | | SK 1282 SCP - 56C | X | X | X | | |
| 164 | 62 | 23.5 | III | 10.34 | 2030 | 1609 | SK 1282 SCP - 63S/4 | | SK 1282 SCP - 56C | X | X | X | | |
| 145 | 70 | 22.6 | III | 11.76 | 2108 | 1609 | SK 1282 SCP - 63S/4 | | SK 1282 SCP - 56C | X | X | X | | |
| 120 | 84 | 22.1 | III | 14.11 | 2174 | 1609 | SK 1282 SCP - 63S/4 | | SK 1282 SCP - 56C | X | X | X | | |
| 99 | 103 | 19.3 | III | 17.21 | 2174 | 1609 | SK 1282 SCP - 63S/4 | | SK 1282 SCP - 56C | X | X | X | | |
| 83 | 123 | 16.2 | III | 20.57 | 2174 | 1609 | SK 1282 SCP - 63S/4 | | SK 1282 SCP - 56C | X | X | X | | |
| 67 | 150 | 13.2 | III | 25.22 | 2174 | 1609 | SK 1282 SCP - 63S/4 | | SK 1282 SCP - 56C | X | X | X | | |
| 60 | 169 | 11.8 | III | 28.33 | 2174 | 1609 | SK 1282 SCP - 63S/4 | | SK 1282 SCP - 56C | X | X | X | | |
| 53 | 191 | 10.6 | III | 32.08 | 2174 | 1609 | SK 1282 SCP - 63S/4 | | SK 1282 SCP - 56C | X | X | X | | |
| 37 | 276 | 6.3 | III | 46.19 | 2171 | 1609 | SK 1282 SCP - 63S/4 | | SK 1282 SCP - 56C | X | X | X | | |
| 31 | 330 | 6.3 | III | 55.39 | 2171 | 1609 | SK 1282 SCP - 63S/4 | | SK 1282 SCP - 56C | X | X | X | | |
| 26 | 395 | 6 | III | 66.23 | 2171 | 1609 | SK 1282 SCP - 63S/4 | | SK 1282 SCP - 56C | X | X | X | | |
| 21 | 484 | 5.4 | III | 81.17 | 2169 | 1609 | SK 1282 SCP - 63S/4 | | SK 1282 SCP - 56C | X | X | X | | |
| 18 | 552 | 3.7 | III | 92.48 | 2167 | 1609 | SK 1282 SCP - 63S/4 | | SK 1282 SCP - 56C | X | X | X | | |
| 16 | 653 | 2.8 | III | 109.5 | 2162 | 1609 | SK 1282 SCP - 63S/4 | | SK 1282 SCP - 56C | X | X | X | | |

Output speed and torque ratings are based on the "Standard Efficiency Motor" Power and speed. Performance will vary slightly for other motors.

# 0.25 hp Gearmotors & Speed Reducers



| Output Speed | Output Torque | SF | AGMA Class | Gear Ratio | Thrust | | Integral Gearmotor | | Reducer | CEMA DriveShaft | | | | |
|---|---|---|---|---|---|---|---|---|---|---|---|---|---|---|
| $n_2$ | $T_2$ | $f_a$ | | i | Std Brg | H.D. Brg " VL" | Standard Efficiency Motor | Energy Efficient Motor | C-Face Input | 1-1/2" | 2" | 2-7/16" | 3" | 3-7/16" |
| [rpm] | [lb-in] | | | | [lb] | [lb] | | | | | | | | |
| 351 | 46 | 16.3 | III | 4.79 | 1616 | 1609 | SK 1282 SCP - 63L/4 | | SK 1282 SCP - 56C | X | X | X | | |
| 307 | 52 | 15.8 | III | 5.47 | 1681 | 1609 | SK 1282 SCP - 63L/4 | | SK 1282 SCP - 56C | X | X | X | | |
| 261 | 61 | 15.2 | III | 6.43 | 1764 | 1609 | SK 1282 SCP - 63L/4 | | SK 1282 SCP - 56C | X | X | X | | |
| 232 | 69 | 14.7 | III | 7.24 | 1832 | 1609 | SK 1282 SCP - 63L/4 | | SK 1282 SCP - 56C | X | X | X | | |
| 205 | 78 | 16.3 | III | 8.21 | 1897 | 1609 | SK 1282 SCP - 63L/4 | | SK 1282 SCP - 56C | X | X | X | | |
| 204 | 79 | 14.1 | III | 8.24 | 1899 | 1609 | SK 1282 SCP - 63L/4 | | SK 1282 SCP - 56C | X | X | X | | |
| 183 | 88 | 15.2 | III | 9.18 | 1964 | 1609 | SK 1282 SCP - 63L/4 | | SK 1282 SCP - 56C | X | X | X | | |
| 162 | 99 | 14.7 | III | 10.34 | 2032 | 1609 | SK 1282 SCP - 63L/4 | | SK 1282 SCP - 56C | X | X | X | | |
| 143 | 112 | 14.1 | III | 11.76 | 2108 | 1609 | SK 1282 SCP - 63L/4 | | SK 1282 SCP - 56C | X | X | X | | |
| 119 | 135 | 13.8 | III | 14.11 | 2174 | 1609 | SK 1282 SCP - 63L/4 | | SK 1282 SCP - 56C | X | X | X | | |
| 98 | 165 | 12.1 | III | 17.21 | 2174 | 1609 | SK 1282 SCP - 63L/4 | | SK 1282 SCP - 56C | X | X | X | | |
| 82 | 197 | 10.1 | III | 20.57 | 2174 | 1609 | SK 1282 SCP - 63L/4 | | SK 1282 SCP - 56C | X | X | X | | |
| 67 | 241 | 8.3 | III | 25.22 | 2174 | 1609 | SK 1282 SCP - 63L/4 | | SK 1282 SCP - 56C | X | X | X | | |
| 59 | 271 | 7.4 | III | 28.33 | 2171 | 1609 | SK 1282 SCP - 63L/4 | | SK 1282 SCP - 56C | X | X | X | | |
| 52 | 307 | 6.6 | III | 32.08 | 2171 | 1609 | SK 1282 SCP - 63L/4 | | SK 1282 SCP - 56C | X | X | X | | |
| 36 | 442 | 3.9 | III | 46.19 | 2169 | 1609 | SK 1282 SCP - 63L/4 | | SK 1282 SCP - 56C | X | X | X | | |
| 30 | 529 | 3.9 | III | 55.39 | 2167 | 1609 | SK 1282 SCP - 63L/4 | | SK 1282 SCP - 56C | X | X | X | | |
| 25 | 633 | 3.8 | III | 66.23 | 2165 | 1609 | SK 1282 SCP - 63L/4 | | SK 1282 SCP - 56C | X | X | X | | |
| 21 | 776 | 3.4 | III | 81.17 | 2160 | 1609 | SK 1282 SCP - 63L/4 | | SK 1282 SCP - 56C | X | X | X | | |
| 18 | 884 | 2.3 | III | 92.48 | 2156 | 1609 | SK 1282 SCP - 63L/4 | | SK 1282 SCP - 56C | X | X | X | | |
| 15 | 1047 | 1.8 | II | 109.5 | 2147 | 1609 | SK 1282 SCP - 63L/4 | | SK 1282 SCP - 56C | X | X | X | | |

Output speed and torque ratings are based on the "Standard Efficiency Motor" Power and speed. Performance will vary slightly for other motors.



# 0.33 hp Gearmotors & Speed Reducers

| Output Speed | Output Torque | SF | AGMA Class | Gear Ratio | Thrust | | Integral Gearmotor | | Reducer | CEMA DriveShaft | | | | |
|---|---|---|---|---|---|---|---|---|---|---|---|---|---|---|
| $n_2$ | $T_2$ | $f_a$ | | i | Std Brg | H.D. Brg " VL" | Standard Efficiency Motor | Energy Efficient Motor | C-Face Input | 1-1/2" | 2" | 2-7/16" | 3" | 3-7/16" |
| [rpm] | [lb-in] | | | | [lb] | [lb] | | | | | | | | |
| 357 | 59 | 12.6 | III | 4.79 | 1607 | 1609 | SK 1282 SCP - 71S/4 | | SK 1282 SCP - 56C | X | X | X | | |
| 313 | 68 | 12.2 | III | 5.47 | 1672 | 1609 | SK 1282 SCP - 71S/4 | | SK 1282 SCP - 56C | X | X | X | | |
| 266 | 79 | 11.8 | III | 6.43 | 1751 | 1609 | SK 1282 SCP - 71S/4 | | SK 1282 SCP - 56C | X | X | X | | |
| 236 | 89 | 11.4 | III | 7.24 | 1814 | 1609 | SK 1282 SCP - 71S/4 | | SK 1282 SCP - 56C | X | X | X | | |
| 208 | 101 | 12.6 | III | 8.21 | 1888 | 1609 | SK 1282 SCP - 71S/4 | | SK 1282 SCP - 56C | X | X | X | | |
| 208 | 102 | 10.9 | III | 8.24 | 1888 | 1609 | SK 1282 SCP - 71S/4 | | SK 1282 SCP - 56C | X | X | X | | |
| 186 | 113 | 11.8 | III | 9.18 | 1946 | 1609 | SK 1282 SCP - 71S/4 | | SK 1282 SCP - 56C | X | X | X | | |
| 165 | 128 | 11.4 | III | 10.34 | 2016 | 1609 | SK 1282 SCP - 71S/4 | | SK 1282 SCP - 56C | X | X | X | | |
| 145 | 145 | 10.9 | III | 11.76 | 2095 | 1609 | SK 1282 SCP - 71S/4 | | SK 1282 SCP - 56C | X | X | X | | |
| 121 | 174 | 10.7 | III | 14.11 | 2174 | 1609 | SK 1282 SCP - 71S/4 | | SK 1282 SCP - 56C | X | X | X | | |
| 99 | 213 | 9.3 | III | 17.21 | 2174 | 1609 | SK 1282 SCP - 71S/4 | | SK 1282 SCP - 56C | X | X | X | | |
| 83 | 254 | 7.8 | III | 20.57 | 2174 | 1609 | SK 1282 SCP - 71S/4 | | SK 1282 SCP - 56C | X | X | X | | |
| 68 | 312 | 6.4 | III | 25.22 | 2171 | 1609 | SK 1282 SCP - 71S/4 | | SK 1282 SCP - 56C | X | X | X | | |
| 60 | 350 | 5.7 | III | 28.33 | 2171 | 1609 | SK 1282 SCP - 71S/4 | | SK 1282 SCP - 56C | X | X | X | | |
| 53 | 396 | 5.1 | III | 32.08 | 2171 | 1609 | SK 1282 SCP - 71S/4 | | SK 1282 SCP - 56C | X | X | X | | |
| 37 | 571 | 3 | III | 46.19 | 2167 | 1609 | SK 1282 SCP - 71S/4 | | SK 1282 SCP - 56C | X | X | X | | |
| 31 | 684 | 3 | III | 55.39 | 2162 | 1609 | SK 1282 SCP - 71S/4 | | SK 1282 SCP - 56C | X | X | X | | |
| 26 | 818 | 2.9 | III | 66.23 | 2158 | 1609 | SK 1282 SCP - 71S/4 | | SK 1282 SCP - 56C | X | X | X | | |
| 21 | 1003 | 2.6 | III | 81.17 | 2149 | 1609 | SK 1282 SCP - 71S/4 | | SK 1282 SCP - 56C | X | X | X | | |
| 18 | 1143 | 1.8 | II | 92.48 | 2142 | 1609 | SK 1282 SCP - 71S/4 | | SK 1282 SCP - 56C | X | X | X | | |
| 16 | 1353 | 1.4 | II | 109.5 | 2129 | 1609 | SK 1282 SCP - 71S/4 | | SK 1282 SCP - 56C | X | X | X | | |
| | | | | | | | | | | | | | | |
| 25 | 861 | 4.6 | III | 69.67 | 3155 | 3375 | SK 2282 SCP - 71S/4 | | SK 2282 SCP - 56C | X | X | X | | |
| 21 | 1018 | 4.1 | III | 82.42 | 3152 | 3375 | SK 2282 SCP - 71S/4 | | SK 2282 SCP - 56C | X | X | X | | |
| 17 | 1248 | 3.1 | III | 100.98 | 3146 | 3375 | SK 2282 SCP - 71S/4 | | SK 2282 SCP - 56C | X | X | X | | |
| 16 | 1286 | 2.7 | III | 104.07 | 3143 | 3375 | SK 2282 SCP - 71S/4 | | SK 2282 SCP - 56C | X | X | X | | |
| 13 | 1576 | 2.1 | III | 127.51 | 3132 | 3375 | SK 2282 SCP - 71S/4 | | SK 2282 SCP - 56C | X | X | X | | |
| | | | | | | | | | | | | | | |
| 24 | 872 | 5.7 | III | 70.56 | 5146 | 4500 | SK 3282 SCP - 71S/4 | | SK 3282 SCP - 56C | X | X | X | X | |
| 17 | 1247 | 5.7 | III | 100.88 | 5141 | 4500 | SK 3282 SCP - 71S/4 | | SK 3282 SCP - 56C | X | X | X | X | |
| 15 | 1387 | 4.9 | III | 112.23 | 5139 | 4500 | SK 3282 SCP - 71S/4 | | SK 3282 SCP - 56C | X | X | X | X | |

Output speed and torque ratings are based on the "Standard Efficiency Motor" Power and speed. Performance will vary slightly for other motors.

# 0.50 hp Gearmotors & Speed Reducers



| Output Speed | Output Torque | SF | AGMA Class | Gear Ratio | Thrust | | Integral Gearmotor | | Reducer | CEMA DriveShaft | | | | |
|---|---|---|---|---|---|---|---|---|---|---|---|---|---|---|
| $n_2$ | $T_2$ | $f_a$ | | i | Std Brg | H.D. Brg " VL" | Standard Efficiency Motor | Energy Efficient Motor | C-Face Input | 1-1/2" | 2" | 2-7/16" | 3" | 3-7/16" |
| [rpm] | [lb-in] | | | | [lb] | [lb] | | | | | | | | |
| 359 | 87 | 8.6 | III | 4.79 | 1598 | 1609 | SK 1282 SCP - 71L/4 | | SK 1282 SCP - 56C | X | X | X | | |
| 314 | 99 | 8.3 | III | 5.47 | 1663 | 1609 | SK 1282 SCP - 71L/4 | | SK 1282 SCP - 56C | X | X | X | | |
| 267 | 117 | 8 | III | 6.43 | 1744 | 1609 | SK 1282 SCP - 71L/4 | | SK 1282 SCP - 56C | X | X | X | | |
| 238 | 132 | 7.7 | III | 7.24 | 1805 | 1609 | SK 1282 SCP - 71L/4 | | SK 1282 SCP - 56C | X | X | X | | |
| 210 | 149 | 8.6 | III | 8.21 | 1874 | 1609 | SK 1282 SCP - 71L/4 | | SK 1282 SCP - 56C | X | X | X | | |
| 209 | 150 | 7.4 | III | 8.24 | 1874 | 1609 | SK 1282 SCP - 71L/4 | | SK 1282 SCP - 56C | X | X | X | | |
| 187 | 167 | 8 | III | 9.18 | 1937 | 1609 | SK 1282 SCP - 71L/4 | | SK 1282 SCP - 56C | X | X | X | | |
| 166 | 188 | 7.7 | III | 10.34 | 2005 | 1609 | SK 1282 SCP - 71L/4 | | SK 1282 SCP - 56C | X | X | X | | |
| 146 | 214 | 7.4 | III | 11.76 | 2081 | 1609 | SK 1282 SCP - 71L/4 | | SK 1282 SCP - 56C | X | X | X | | |
| 122 | 257 | 7.2 | III | 14.11 | 2174 | 1609 | SK 1282 SCP - 71L/4 | | SK 1282 SCP - 56C | X | X | X | | |
| 100 | 313 | 6.3 | III | 17.21 | 2171 | 1609 | SK 1282 SCP - 71L/4 | | SK 1282 SCP - 56C | X | X | X | | |
| 84 | 374 | 5.3 | III | 20.57 | 2171 | 1609 | SK 1282 SCP - 71L/4 | | SK 1282 SCP - 56C | X | X | X | | |
| 68 | 459 | 4.3 | III | 25.22 | 2169 | 1609 | SK 1282 SCP - 71L/4 | | SK 1282 SCP - 56C | X | X | X | | |
| 61 | 515 | 3.9 | III | 28.33 | 2167 | 1609 | SK 1282 SCP - 71L/4 | | SK 1282 SCP - 56C | X | X | X | | |
| 54 | 583 | 3.5 | III | 32.08 | 2165 | 1609 | SK 1282 SCP - 71L/4 | | SK 1282 SCP - 56C | X | X | X | | |
| 42 | 747 | 2.6 | III | 41.07 | 2160 | 1609 | SK 1282 SCP - 71L/4 | | SK 1282 SCP - 56C | X | X | X | | |
| 37 | 840 | 2.1 | III | 46.19 | 2156 | 1609 | SK 1282 SCP - 71L/4 | | SK 1282 SCP - 56C | X | X | X | | |
| 35 | 895 | 2.6 | III | 49.25 | 2153 | 1609 | SK 1282 SCP - 71L/4 | | SK 1282 SCP - 56C | X | X | X | | |
| 31 | 1007 | 2.1 | III | 55.39 | 2149 | 1609 | SK 1282 SCP - 71L/4 | | SK 1282 SCP - 56C | X | X | X | | |
| 29 | 1071 | 2.3 | III | 58.89 | 2144 | 1609 | SK 1282 SCP - 71L/4 | | SK 1282 SCP - 56C | X | X | X | | |
| 26 | 1204 | 2 | III | 66.23 | 2138 | 1609 | SK 1282 SCP - 71L/4 | | SK 1282 SCP - 56C | X | X | X | | |
| 24 | 1312 | 2 | III | 72.17 | 2131 | 1609 | SK 1282 SCP - 71L/4 | | SK 1282 SCP - 56C | X | X | X | | |
| 21 | 1476 | 1.8 | II | 81.17 | 2120 | 1609 | SK 1282 SCP - 71L/4 | | SK 1282 SCP - 56C | X | X | X | | |
| 19 | 1681 | 1.2 | I | 92.48 | 2102 | 1609 | SK 1282 SCP - 71L/4 | | SK 1282 SCP - 56C | X | X | X | | |
| 301 | 104 | 8.4 | III | 5.72 | 2203 | 3375 | SK 2282 SCP - 71L/4 | | SK 2282 SCP - 56C | X | X | X | | |
| 267 | 117 | 8.1 | III | 6.43 | 2282 | 3375 | SK 2282 SCP - 71L/4 | | SK 2282 SCP - 56C | X | X | X | | |
| 230 | 136 | 7.8 | III | 7.48 | 2383 | 3375 | SK 2282 SCP - 71L/4 | | SK 2282 SCP - 56C | X | X | X | | |
| 205 | 152 | 7.5 | III | 8.37 | 2464 | 3375 | SK 2282 SCP - 71L/4 | | SK 2282 SCP - 56C | X | X | X | | |
| 190 | 164 | 8.4 | III | 9.03 | 2525 | 3375 | SK 2282 SCP - 71L/4 | | SK 2282 SCP - 56C | X | X | X | | |
| 169 | 185 | 8.1 | III | 10.15 | 2610 | 3375 | SK 2282 SCP - 71L/4 | | SK 2282 SCP - 56C | X | X | X | | |

Output speed and torque ratings are based on the "Standard Efficiency Motor" Power and speed. Performance will vary slightly for other motors.



# 0.50 hp Gearmotors & Speed Reducers

| Output Speed | Output Torque | SF | AGMA Class | Gear Ratio | Thrust | | Integral Gearmotor | | Reducer | CEMA DriveShaft | | | | |
|---|---|---|---|---|---|---|---|---|---|---|---|---|---|---|
| $n_2$ | $T_2$ | $f_a$ | | i | Std Brg | H.D. Brg " VL" | Standard Efficiency Motor | Energy Efficient Motor | C-Face Input | 1-1/2" | 2" | 2-7/16" | 3" | 3-7/16" |
| [rpm] | [lb-in] | | | | [lb] | [lb] | | | | | | | | |
| 146 | 215 | 7.8 | III | 11.81 | 2729 | 3375 | SK 2282 SCP - 71L/4 | | SK 2282 SCP - 56C | X | X | X | | |
| 130 | 241 | 7.5 | III | 13.23 | 2824 | 3375 | SK 2282 SCP - 71L/4 | | SK 2282 SCP - 56C | X | X | X | | |
| 104 | 301 | 7.8 | III | 16.53 | 3015 | 3375 | SK 2282 SCP - 71L/4 | | SK 2282 SCP - 56C | X | X | X | | |
| 93 | 337 | 7.5 | III | 18.51 | 3119 | 3375 | SK 2282 SCP - 71L/4 | | SK 2282 SCP - 56C | X | X | X | | |
| 79 | 398 | 7.5 | III | 21.9 | 3164 | 3375 | SK 2282 SCP - 71L/4 | | SK 2282 SCP - 56C | X | X | X | | |
| 72 | 436 | 7.8 | III | 23.96 | 3164 | 3375 | SK 2282 SCP - 71L/4 | | SK 2282 SCP - 56C | X | X | X | | |
| 69 | 454 | 7.2 | III | 24.97 | 3164 | 3375 | SK 2282 SCP - 71L/4 | | SK 2282 SCP - 56C | X | X | X | | |
| 64 | 488 | 7.5 | III | 26.83 | 3161 | 3375 | SK 2282 SCP - 71L/4 | | SK 2282 SCP - 56C | X | X | X | | |
| 58 | 539 | 6.7 | III | 29.65 | 3161 | 3375 | SK 2282 SCP - 71L/4 | | SK 2282 SCP - 56C | X | X | X | | |
| 46 | 676 | 6 | III | 37.18 | 3159 | 3375 | SK 2282 SCP - 71L/4 | | SK 2282 SCP - 56C | X | X | X | | |
| 25 | 1267 | 3.1 | III | 69.67 | 3143 | 3375 | SK 2282 SCP - 71L/4 | | SK 2282 SCP - 56C | X | X | X | | |
| 21 | 1498 | 2.8 | III | 82.42 | 3134 | 3375 | SK 2282 SCP - 71L/4 | | SK 2282 SCP - 56C | X | X | X | | |
| 17 | 1836 | 2.1 | III | 100.98 | 3121 | 3375 | SK 2282 SCP - 71L/4 | | SK 2282 SCP - 56C | X | X | X | | |
| 17 | 1892 | 1.9 | II | 104.07 | 3119 | 3375 | SK 2282 SCP - 71L/4 | | SK 2282 SCP - 56C | X | X | X | | |
| 13 | 2318 | 1.5 | II | 127.51 | 3094 | 3375 | SK 2282 SCP - 71L/4 | | SK 2282 SCP - 56C | X | X | X | | |
| 207 | 151 | 8.5 | III | 8.31 | 2813 | 4381 | SK 3282 SCP - 71L/4 | | SK 3282 SCP - 56C | X | X | X | X | |
| 122 | 257 | 8.5 | III | 14.11 | 3296 | 4500 | SK 3282 SCP - 71L/4 | | SK 3282 SCP - 56C | X | X | X | X | |
| 103 | 303 | 8.5 | III | 16.67 | 3465 | 4500 | SK 3282 SCP - 71L/4 | | SK 3282 SCP - 56C | X | X | X | X | |
| 85 | 367 | 8.5 | III | 20.18 | 3659 | 4500 | SK 3282 SCP - 71L/4 | | SK 3282 SCP - 56C | X | X | X | X | |
| 80 | 389 | 8 | III | 21.38 | 3724 | 4500 | SK 3282 SCP - 71L/4 | | SK 3282 SCP - 56C | X | X | X | X | |
| 77 | 408 | 8.5 | III | 22.45 | 3778 | 4500 | SK 3282 SCP - 71L/4 | | SK 3282 SCP - 56C | X | X | X | X | |
| 73 | 431 | 7.7 | III | 23.71 | 3839 | 4500 | SK 3282 SCP - 71L/4 | | SK 3282 SCP - 56C | X | X | X | X | |
| 66 | 471 | 8 | III | 25.88 | 3938 | 4500 | SK 3282 SCP - 71L/4 | | SK 3282 SCP - 56C | X | X | X | X | |
| 60 | 522 | 7.7 | III | 28.7 | 4061 | 4500 | SK 3282 SCP - 71L/4 | | SK 3282 SCP - 56C | X | X | X | X | |
| 54 | 581 | 7.7 | III | 31.93 | 4185 | 4500 | SK 3282 SCP - 71L/4 | | SK 3282 SCP - 56C | X | X | X | X | |
| 46 | 687 | 6.9 | III | 37.77 | 4399 | 4500 | SK 3282 SCP - 71L/4 | | SK 3282 SCP - 56C | X | X | X | X | |
| 41 | 764 | 6.9 | III | 42.02 | 4534 | 4500 | SK 3282 SCP - 71L/4 | | SK 3282 SCP - 56C | X | X | X | X | |
| 24 | 1283 | 3.9 | III | 70.56 | 5141 | 4500 | SK 3282 SCP - 71L/4 | | SK 3282 SCP - 56C | X | X | X | X | |
| 17 | 1834 | 3.9 | III | 100.88 | 5132 | 4500 | SK 3282 SCP - 71L/4 | | SK 3282 SCP - 56C | X | X | X | X | |
| 15 | 2040 | 3.3 | III | 112.23 | 5130 | 4500 | SK 3282 SCP - 71L/4 | | SK 3282 SCP - 56C | X | X | X | X | |

Output speed and torque ratings are based on the "Standard Efficiency Motor" Power and speed. Performance will vary slightly for other motors.

# 0.75 hp Gearmotors & Speed Reducers



| Output Speed | Output Torque | SF | AGMA Class | Gear Ratio | Thrust | | Integral Gearmotor | | Reducer | CEMA DriveShaft | | | | |
|---|---|---|---|---|---|---|---|---|---|---|---|---|---|---|
| $n_2$ | $T_2$ | $f_a$ | | i | Std Brg | H.D. Brg " VL" | Standard Efficiency Motor | Energy Efficient Motor | C-Face Input | 1-1/2" | 2" | 2-7/16" | 3" | 3-7/16" |
| [rpm] | [lb-in] | | | | [lb] | [lb] | | | | | | | | |
| 357 | 133 | 5.6 | III | 4.79 | 1595 | 1609 | SK 1282 SCP - 80S/4 | | SK 1282 SCP - 56C | X | X | X | | |
| 313 | 151 | 5.5 | III | 5.47 | 1658 | 1609 | SK 1282 SCP - 80S/4 | | SK 1282 SCP - 56C | X | X | X | | |
| 266 | 178 | 5.3 | III | 6.43 | 1739 | 1609 | SK 1282 SCP - 80S/4 | | SK 1282 SCP - 56C | X | X | X | | |
| 236 | 200 | 5.1 | III | 7.24 | 1798 | 1609 | SK 1282 SCP - 80S/4 | | SK 1282 SCP - 56C | X | X | X | | |
| 208 | 227 | 5.6 | III | 8.21 | 1870 | 1609 | SK 1282 SCP - 80S/4 | | SK 1282 SCP - 56C | X | X | X | | |
| 208 | 228 | 4.9 | III | 8.24 | 1870 | 1609 | SK 1282 SCP - 80S/4 | | SK 1282 SCP - 56C | X | X | X | | |
| 186 | 254 | 5.3 | III | 9.18 | 1928 | 1609 | SK 1282 SCP - 80S/4 | | SK 1282 SCP - 56C | X | X | X | | |
| 165 | 286 | 5.1 | III | 10.34 | 1998 | 1609 | SK 1282 SCP - 80S/4 | | SK 1282 SCP - 56C | X | X | X | | |
| 145 | 325 | 4.9 | III | 11.76 | 2072 | 1609 | SK 1282 SCP - 80S/4 | | SK 1282 SCP - 56C | X | X | X | | |
| 121 | 391 | 4.8 | III | 14.11 | 2171 | 1609 | SK 1282 SCP - 80S/4 | | SK 1282 SCP - 56C | X | X | X | | |
| 99 | 476 | 4.2 | III | 17.21 | 2169 | 1609 | SK 1282 SCP - 80S/4 | | SK 1282 SCP - 56C | X | X | X | | |
| 83 | 569 | 3.5 | III | 20.57 | 2167 | 1609 | SK 1282 SCP - 80S/4 | | SK 1282 SCP - 56C | X | X | X | | |
| 68 | 698 | 2.9 | III | 25.22 | 2162 | 1609 | SK 1282 SCP - 80S/4 | | SK 1282 SCP - 56C | X | X | X | | |
| 60 | 784 | 2.5 | III | 28.33 | 2158 | 1609 | SK 1282 SCP - 80S/4 | | SK 1282 SCP - 56C | X | X | X | | |
| 53 | 888 | 2.3 | III | 32.08 | 2153 | 1609 | SK 1282 SCP - 80S/4 | | SK 1282 SCP - 56C | X | X | X | | |
| 42 | 1137 | 1.7 | II | 41.07 | 2142 | 1609 | SK 1282 SCP - 80S/4 | | SK 1282 SCP - 56C | X | X | X | | |
| 35 | 1363 | 1.7 | II | 49.25 | 2126 | 1609 | SK 1282 SCP - 80S/4 | | SK 1282 SCP - 56C | X | X | X | | |
| 29 | 1630 | 1.5 | II | 58.89 | 2106 | 1609 | SK 1282 SCP - 80S/4 | | SK 1282 SCP - 56C | X | X | X | | |
| 24 | 1998 | 1.3 | I | 72.17 | 2072 | 1609 | SK 1282 SCP - 80S/4 | | SK 1282 SCP - 56C | X | X | X | | |
| 299 | 158 | 5.5 | III | 5.72 | 2198 | 3375 | SK 2282 SCP - 80S/4 | | SK 2282 SCP - 56C | X | X | X | | |
| 266 | 178 | 5.3 | III | 6.43 | 2277 | 3375 | SK 2282 SCP - 80S/4 | | SK 2282 SCP - 56C | X | X | X | | |
| 229 | 207 | 5.1 | III | 7.48 | 2383 | 3375 | SK 2282 SCP - 80S/4 | | SK 2282 SCP - 56C | X | X | X | | |
| 204 | 232 | 4.9 | III | 8.37 | 2459 | 3375 | SK 2282 SCP - 80S/4 | | SK 2282 SCP - 56C | X | X | X | | |
| 189 | 250 | 5.5 | III | 9.03 | 2520 | 3375 | SK 2282 SCP - 80S/4 | | SK 2282 SCP - 56C | X | X | X | | |
| 168 | 281 | 5.3 | III | 10.15 | 2610 | 3375 | SK 2282 SCP - 80S/4 | | SK 2282 SCP - 56C | X | X | X | | |
| 145 | 327 | 5.1 | III | 11.81 | 2725 | 3375 | SK 2282 SCP - 80S/4 | | SK 2282 SCP - 56C | X | X | X | | |
| 129 | 366 | 4.9 | III | 13.23 | 2819 | 3375 | SK 2282 SCP - 80S/4 | | SK 2282 SCP - 56C | X | X | X | | |
| 103 | 458 | 5.1 | III | 16.53 | 3008 | 3375 | SK 2282 SCP - 80S/4 | | SK 2282 SCP - 56C | X | X | X | | |
| 92 | 512 | 4.9 | III | 18.51 | 3107 | 3375 | SK 2282 SCP - 80S/4 | | SK 2282 SCP - 56C | X | X | X | | |
| 78 | 606 | 4.9 | III | 21.9 | 3161 | 3375 | SK 2282 SCP - 80S/4 | | SK 2282 SCP - 56C | X | X | X | | |
| 71 | 663 | 5.1 | III | 23.96 | 3159 | 3375 | SK 2282 SCP - 80S/4 | | SK 2282 SCP - 56C | X | X | X | | |
| 68 | 691 | 4.7 | III | 24.97 | 3159 | 3375 | SK 2282 SCP - 80S/4 | | SK 2282 SCP - 56C | X | X | X | | |

Output speed and torque ratings are based on the "Standard Efficiency Motor" Power and speed. Performance will vary slightly for other motors.



# 0.75 hp Gearmotors & Speed Reducers

| Output Speed | Output Torque | SF | AGMA Class | Gear Ratio | Thrust | | Integral Gearmotor | | Reducer | CEMA DriveShaft | | | | |
|---|---|---|---|---|---|---|---|---|---|---|---|---|---|---|
| $n_2$ | $T_2$ | $f_a$ | | i | Std Brg | H.D. Brg " VL" | Standard Efficiency Motor | Energy Efficient Motor | C-Face Input | 1-1/2" | 2" | 2-7/16" | 3" | 3-7/16" |
| [rpm] | [lb-in] | | | | [lb] | [lb] | | | | | | | | |
| 64 | 743 | 4.9 | III | 26.83 | 3157 | 3375 | SK 2282 SCP - 80S/4 | | SK 2282 SCP - 56C | X | X | X | | |
| 58 | 821 | 4.4 | III | 29.65 | 3157 | 3375 | SK 2282 SCP - 80S/4 | | SK 2282 SCP - 56C | X | X | X | | |
| 46 | 1029 | 4 | III | 37.18 | 3150 | 3375 | SK 2282 SCP - 80S/4 | | SK 2282 SCP - 56C | X | X | X | | |
| 38 | 1249 | 3.2 | III | 45.11 | 3146 | 3375 | SK 2282 SCP - 80S/4 | | SK 2282 SCP - 56C | X | X | X | | |
| 32 | 1494 | 3 | III | 53.96 | 3137 | 3375 | SK 2282 SCP - 80S/4 | | SK 2282 SCP - 56C | X | X | X | | |
| 27 | 1767 | 2.6 | III | 63.83 | 3123 | 3375 | SK 2282 SCP - 80S/4 | | SK 2282 SCP - 56C | X | X | X | | |
| 25 | 1928 | 2 | III | 69.67 | 3116 | 3375 | SK 2282 SCP - 80S/4 | | SK 2282 SCP - 56C | X | X | X | | |
| 21 | 2281 | 1.9 | II | 82.42 | 3096 | 3375 | SK 2282 SCP - 80S/4 | | SK 2282 SCP - 56C | X | X | X | | |
| 17 | 2795 | 1.4 | II | 100.98 | 3060 | 3375 | SK 2282 SCP - 80S/4 | | SK 2282 SCP - 56C | X | X | X | | |
| 16 | 2880 | 1.2 | I | 104.07 | 3053 | 3375 | SK 2282 SCP - 80S/4 | | SK 2282 SCP - 56C | X | X | X | | |
| 13 | 3529 | 1 | I | 127.51 | 2997 | 3375 | SK 2282 SCP - 80S/4 | | SK 2282 SCP - 56C | X | X | X | | |
| 206 | 230 | 5.6 | III | 8.31 | 2813 | 4367 | SK 3282 SCP - 80S/4 | | SK 3282 SCP - 56C | X | X | X | X | |
| 121 | 391 | 5.6 | III | 14.11 | 3285 | 4500 | SK 3282 SCP - 80S/4 | | SK 3282 SCP - 56C | X | X | X | X | |
| 103 | 461 | 5.6 | III | 16.67 | 3454 | 4500 | SK 3282 SCP - 80S/4 | | SK 3282 SCP - 56C | X | X | X | X | |
| 85 | 559 | 5.6 | III | 20.18 | 3652 | 4500 | SK 3282 SCP - 80S/4 | | SK 3282 SCP - 56C | X | X | X | X | |
| 80 | 592 | 5.3 | III | 21.38 | 3710 | 4500 | SK 3282 SCP - 80S/4 | | SK 3282 SCP - 56C | X | X | X | X | |
| 76 | 621 | 5.6 | III | 22.45 | 3764 | 4500 | SK 3282 SCP - 80S/4 | | SK 3282 SCP - 56C | X | X | X | X | |
| 72 | 656 | 5.1 | III | 23.71 | 3825 | 4500 | SK 3282 SCP - 80S/4 | | SK 3282 SCP - 56C | X | X | X | X | |
| 66 | 716 | 5.3 | III | 25.88 | 3924 | 4500 | SK 3282 SCP - 80S/4 | | SK 3282 SCP - 56C | X | X | X | X | |
| 60 | 794 | 5.1 | III | 28.7 | 4039 | 4500 | SK 3282 SCP - 80S/4 | | SK 3282 SCP - 56C | X | X | X | X | |
| 54 | 884 | 5.1 | III | 31.93 | 4172 | 4500 | SK 3282 SCP - 80S/4 | | SK 3282 SCP - 56C | X | X | X | X | |
| 45 | 1045 | 4.6 | III | 37.77 | 4374 | 4500 | SK 3282 SCP - 80S/4 | | SK 3282 SCP - 56C | X | X | X | X | |
| 41 | 1163 | 4.6 | III | 42.02 | 4509 | 4500 | SK 3282 SCP - 80S/4 | | SK 3282 SCP - 56C | X | X | X | X | |
| 36 | 1330 | 3.7 | III | 48.04 | 4676 | 4500 | SK 3282 SCP - 80S/4 | | SK 3282 SCP - 56C | X | X | X | X | |
| 31 | 1544 | 3.7 | III | 55.79 | 4889 | 4500 | SK 3282 SCP - 80S/4 | | SK 3282 SCP - 56C | X | X | X | X | |
| 26 | 1824 | 3.7 | III | 65.89 | 5117 | 4500 | SK 3282 SCP - 80S/4 | | SK 3282 SCP - 56C | X | X | X | X | |
| 24 | 1953 | 2.6 | III | 70.56 | 5130 | 4500 | SK 3282 SCP - 80S/4 | | SK 3282 SCP - 56C | X | X | X | X | |
| 21 | 2208 | 3.4 | III | 79.76 | 5126 | 4500 | SK 3282 SCP - 80S/4 | | SK 3282 SCP - 56C | X | X | X | X | |
| 19 | 2456 | 3.4 | III | 88.74 | 5119 | 4500 | SK 3282 SCP - 80S/4 | | SK 3282 SCP - 56C | X | X | X | X | |
| 17 | 2792 | 2.6 | III | 100.88 | 5112 | 4500 | SK 3282 SCP - 80S/4 | | SK 3282 SCP - 56C | X | X | X | X | |
| 15 | 3106 | 2.2 | III | 112.23 | 5101 | 4500 | SK 3282 SCP - 80S/4 | | SK 3282 SCP - 56C | X | X | X | X | |

Output speed and torque ratings are based on the "Standard Efficiency Motor" Power and speed. Performance will vary slightly for other motors.

# 1 hp Gearmotors & Speed Reducers



| Output Speed | Output Torque | SF | AGMA Class | Gear Ratio | Thrust | | Integral Gearmotor | | Reducer | CEMA DriveShaft | | | | |
|---|---|---|---|---|---|---|---|---|---|---|---|---|---|---|
| $n_2$ | $T_2$ | $f_a$ | | i | Std Brg | H.D. Brg " VL" | Standard Efficiency Motor | Energy Efficient Motor | C-Face Input | 1-1/2" | 2" | 2-7/16" | 3" | 3-7/16" |
| [rpm] | [lb-in] | | | | [lb] | [lb] | | | | | | | | |
| 344 | 184 | 4.1 | III | 4.79 | 1604 | 1609 | SK 1282 SCP - 80L/4 | SK 1282 SCP - 80LH/4 | SK 1282 SCP - 140TC | X | X | X | | |
| 302 | 210 | 3.9 | III | 5.47 | 1670 | 1609 | SK 1282 SCP - 80L/4 | SK 1282 SCP - 80LH/4 | SK 1282 SCP - 140TC | X | X | X | | |
| 257 | 247 | 3.8 | III | 6.43 | 1746 | 1609 | SK 1282 SCP - 80L/4 | SK 1282 SCP - 80LH/4 | SK 1282 SCP - 140TC | X | X | X | | |
| 228 | 278 | 3.7 | III | 7.24 | 1809 | 1609 | SK 1282 SCP - 80L/4 | SK 1282 SCP - 80LH/4 | SK 1282 SCP - 140TC | X | X | X | | |
| 201 | 315 | 4.1 | III | 8.21 | 1879 | 1609 | SK 1282 SCP - 80L/4 | SK 1282 SCP - 80LH/4 | SK 1282 SCP - 140TC | X | X | X | | |
| 200 | 317 | 3.5 | III | 8.24 | 1877 | 1609 | SK 1282 SCP - 80L/4 | SK 1282 SCP - 80LH/4 | SK 1282 SCP - 140TC | X | X | X | | |
| 180 | 353 | 3.8 | III | 9.18 | 1937 | 1609 | SK 1282 SCP - 80L/4 | SK 1282 SCP - 80LH/4 | SK 1282 SCP - 140TC | X | X | X | | |
| 160 | 397 | 3.7 | III | 10.34 | 2003 | 1609 | SK 1282 SCP - 80L/4 | SK 1282 SCP - 80LH/4 | SK 1282 SCP - 140TC | X | X | X | | |
| 140 | 452 | 3.5 | III | 11.76 | 2077 | 1609 | SK 1282 SCP - 80L/4 | SK 1282 SCP - 80LH/4 | SK 1282 SCP - 140TC | X | X | X | | |
| 117 | 542 | 3.4 | III | 14.11 | 2167 | 1609 | SK 1282 SCP - 80L/4 | SK 1282 SCP - 80LH/4 | SK 1282 SCP - 140TC | X | X | X | | |
| 96 | 661 | 3 | III | 17.21 | 2162 | 1609 | SK 1282 SCP - 80L/4 | SK 1282 SCP - 80LH/4 | SK 1282 SCP - 140TC | X | X | X | | |
| 80 | 790 | 2.5 | III | 20.57 | 2158 | 1609 | SK 1282 SCP - 80L/4 | SK 1282 SCP - 80LH/4 | SK 1282 SCP - 140TC | X | X | X | | |
| 65 | 969 | 2.1 | III | 25.22 | 2151 | 1609 | SK 1282 SCP - 80L/4 | SK 1282 SCP - 80LH/4 | SK 1282 SCP - 140TC | X | X | X | | |
| 58 | 1088 | 1.8 | II | 28.33 | 2144 | 1609 | SK 1282 SCP - 80L/4 | SK 1282 SCP - 80LH/4 | SK 1282 SCP - 140TC | X | X | X | | |
| 51 | 1232 | 1.7 | II | 32.08 | 2135 | 1609 | SK 1282 SCP - 80L/4 | SK 1282 SCP - 80LH/4 | SK 1282 SCP - 140TC | X | X | X | | |
| 40 | 1578 | 1.2 | I | 41.07 | 2111 | 1609 | SK 1282 SCP - 80L/4 | SK 1282 SCP - 80LH/4 | SK 1282 SCP - 140TC | X | X | X | | |
| 34 | 1892 | 1.2 | I | 49.25 | 2084 | 1609 | SK 1282 SCP - 80L/4 | SK 1282 SCP - 80LH/4 | SK 1282 SCP - 140TC | X | X | X | | |
| 28 | 2262 | 1.1 | I | 58.89 | 2041 | 1609 | SK 1282 SCP - 80L/4 | SK 1282 SCP - 80LH/4 | SK 1282 SCP - 140TC | X | X | X | | |
| 23 | 2773 | 0.9 | * | 72.17 | 1971 | 1609 | SK 1282 SCP - 80L/4 | SK 1282 SCP - 80LH/4 | SK 1282 SCP - 140TC | X | X | X | | |
| 288 | 220 | 4 | III | 5.72 | 2221 | 3375 | SK 2282 SCP - 80L/4 | SK 2282 SCP - 80LH/4 | SK 2282 SCP - 140TC | X | X | X | | |
| 257 | 247 | 3.8 | III | 6.43 | 2295 | 3375 | SK 2282 SCP - 80L/4 | SK 2282 SCP - 80LH/4 | SK 2282 SCP - 140TC | X | X | X | | |
| 221 | 287 | 3.7 | III | 7.48 | 2396 | 3375 | SK 2282 SCP - 80L/4 | SK 2282 SCP - 80LH/4 | SK 2282 SCP - 140TC | X | X | X | | |
| 197 | 322 | 3.6 | III | 8.37 | 2480 | 3375 | SK 2282 SCP - 80L/4 | SK 2282 SCP - 80LH/4 | SK 2282 SCP - 140TC | X | X | X | | |
| 183 | 347 | 4 | III | 9.03 | 2536 | 3375 | SK 2282 SCP - 80L/4 | SK 2282 SCP - 80LH/4 | SK 2282 SCP - 140TC | X | X | X | | |
| 163 | 390 | 3.8 | III | 10.15 | 2621 | 3375 | SK 2282 SCP - 80L/4 | SK 2282 SCP - 80LH/4 | SK 2282 SCP - 140TC | X | X | X | | |
| 140 | 454 | 3.7 | III | 11.81 | 2745 | 3375 | SK 2282 SCP - 80L/4 | SK 2282 SCP - 80LH/4 | SK 2282 SCP - 140TC | X | X | X | | |
| 125 | 508 | 3.6 | III | 13.23 | 2831 | 3375 | SK 2282 SCP - 80L/4 | SK 2282 SCP - 80LH/4 | SK 2282 SCP - 140TC | X | X | X | | |
| 100 | 635 | 3.7 | III | 16.53 | 3022 | 3375 | SK 2282 SCP - 80L/4 | SK 2282 SCP - 80LH/4 | SK 2282 SCP - 140TC | X | X | X | | |
| 89 | 711 | 3.6 | III | 18.51 | 3128 | 3375 | SK 2282 SCP - 80L/4 | SK 2282 SCP - 80LH/4 | SK 2282 SCP - 140TC | X | X | X | | |
| 75 | 841 | 3.6 | III | 21.9 | 3157 | 3375 | SK 2282 SCP - 80L/4 | SK 2282 SCP - 80LH/4 | SK 2282 SCP - 140TC | X | X | X | | |
| 69 | 920 | 3.7 | III | 23.96 | 3155 | 3375 | SK 2282 SCP - 80L/4 | SK 2282 SCP - 80LH/4 | SK 2282 SCP - 140TC | X | X | X | | |

Output speed and torque ratings are based on the "Standard Efficiency Motor" Power and speed. Performance will vary slightly for other motors.



# 1 hp Gearmotors & Speed Reducers

| Output Speed | Output Torque | SF | AGMA Class | Gear Ratio | Thrust | | Integral Gearmotor | | Reducer | CEMA DriveShaft | | | | |
|---|---|---|---|---|---|---|---|---|---|---|---|---|---|---|
| $n_2$ | $T_2$ | $f_a$ | | i | Std Brg | H.D. Brg " VL" | Standard Efficiency Motor | Energy Efficient Motor | C-Face Input | 1-1/2" | 2" | 2-7/16" | 3" | 3-7/16" |
| [rpm] | [lb-in] | | | | [lb] | [lb] | | | | | | | | |
| 66 | 959 | 3.4 | III | 24.97 | 3152 | 3375 | SK 2282 SCP - 80L/4 | SK 2282 SCP - 80LH/4 | SK 2282 SCP - 140TC | X | X | X | | |
| 61 | 1031 | 3.6 | III | 26.83 | 3150 | 3375 | SK 2282 SCP - 80L/4 | SK 2282 SCP - 80LH/4 | SK 2282 SCP - 140TC | X | X | X | | |
| 56 | 1139 | 3.2 | III | 29.65 | 3148 | 3375 | SK 2282 SCP - 80L/4 | SK 2282 SCP - 80LH/4 | SK 2282 SCP - 140TC | X | X | X | | |
| 44 | 1428 | 2.9 | III | 37.18 | 3139 | 3375 | SK 2282 SCP - 80L/4 | SK 2282 SCP - 80LH/4 | SK 2282 SCP - 140TC | X | X | X | | |
| 37 | 1733 | 2.3 | III | 45.11 | 3125 | 3375 | SK 2282 SCP - 80L/4 | SK 2282 SCP - 80LH/4 | SK 2282 SCP - 140TC | X | X | X | | |
| 31 | 2073 | 2.2 | III | 53.96 | 3107 | 3375 | SK 2282 SCP - 80L/4 | SK 2282 SCP - 80LH/4 | SK 2282 SCP - 140TC | X | X | X | | |
| 26 | 2452 | 1.9 | II | 63.83 | 3085 | 3375 | SK 2282 SCP - 80L/4 | SK 2282 SCP - 80LH/4 | SK 2282 SCP - 140TC | X | X | X | | |
| 24 | 2677 | 1.5 | II | 69.67 | 3069 | 3375 | SK 2282 SCP - 80L/4 | SK 2282 SCP - 80LH/4 | SK 2282 SCP - 140TC | X | X | X | | |
| 20 | 3166 | 1.3 | I | 82.42 | 3031 | 3375 | SK 2282 SCP - 80L/4 | SK 2282 SCP - 80LH/4 | SK 2282 SCP - 140TC | X | X | X | | |
| 16 | 3879 | 1 | I | 100.98 | 2959 | 3375 | SK 2282 SCP - 80L/4 | SK 2282 SCP - 80LH/4 | SK 2282 SCP - 140TC | X | X | X | | |
| | | | | | | | | | | | | | | |
| 199 | 319 | 4 | III | 8.31 | 2831 | 4403 | SK 3282 SCP - 80L/4 | SK 3282 SCP - 80LH/4 | SK 3282 SCP - 140TC | X | X | X | X | |
| 117 | 542 | 4 | III | 14.11 | 3308 | 4500 | SK 3282 SCP - 80L/4 | SK 3282 SCP - 80LH/4 | SK 3282 SCP - 140TC | X | X | X | X | |
| 99 | 640 | 4 | III | 16.67 | 3474 | 4500 | SK 3282 SCP - 80L/4 | SK 3282 SCP - 80LH/4 | SK 3282 SCP - 140TC | X | X | X | X | |
| 82 | 775 | 4 | III | 20.18 | 3670 | 4500 | SK 3282 SCP - 80L/4 | SK 3282 SCP - 80LH/4 | SK 3282 SCP - 140TC | X | X | X | X | |
| 77 | 821 | 3.8 | III | 21.38 | 3735 | 4500 | SK 3282 SCP - 80L/4 | SK 3282 SCP - 80LH/4 | SK 3282 SCP - 140TC | X | X | X | X | |
| 73 | 862 | 4 | III | 22.45 | 3794 | 4500 | SK 3282 SCP - 80L/4 | SK 3282 SCP - 80LH/4 | SK 3282 SCP - 140TC | X | X | X | X | |
| 70 | 911 | 3.7 | III | 23.71 | 3843 | 4500 | SK 3282 SCP - 80L/4 | SK 3282 SCP - 80LH/4 | SK 3282 SCP - 140TC | X | X | X | X | |
| 64 | 994 | 3.8 | III | 25.88 | 3942 | 4500 | SK 3282 SCP - 80L/4 | SK 3282 SCP - 80LH/4 | SK 3282 SCP - 140TC | X | X | X | X | |
| 57 | 1103 | 3.7 | III | 28.7 | 4064 | 4500 | SK 3282 SCP - 80L/4 | SK 3282 SCP - 80LH/4 | SK 3282 SCP - 140TC | X | X | X | X | |
| 52 | 1227 | 3.7 | III | 31.93 | 4187 | 4500 | SK 3282 SCP - 80L/4 | SK 3282 SCP - 80LH/4 | SK 3282 SCP - 140TC | X | X | X | X | |
| 44 | 1451 | 3.3 | III | 37.77 | 4385 | 4500 | SK 3282 SCP - 80L/4 | SK 3282 SCP - 80LH/4 | SK 3282 SCP - 140TC | X | X | X | X | |
| 39 | 1614 | 3.3 | III | 42.02 | 4518 | 4500 | SK 3282 SCP - 80L/4 | SK 3282 SCP - 80LH/4 | SK 3282 SCP - 140TC | X | X | X | X | |
| 34 | 1846 | 2.6 | III | 48.04 | 4685 | 4500 | SK 3282 SCP - 80L/4 | SK 3282 SCP - 80LH/4 | SK 3282 SCP - 140TC | X | X | X | X | |
| 30 | 2143 | 2.7 | III | 55.79 | 4878 | 4500 | SK 3282 SCP - 80L/4 | SK 3282 SCP - 80LH/4 | SK 3282 SCP - 140TC | X | X | X | X | |
| 25 | 2531 | 2.7 | III | 65.89 | 5119 | 4500 | SK 3282 SCP - 80L/4 | SK 3282 SCP - 80LH/4 | SK 3282 SCP - 140TC | X | X | X | X | |
| 23 | 2711 | 1.8 | II | 70.56 | 5114 | 4500 | SK 3282 SCP - 80L/4 | SK 3282 SCP - 80LH/4 | SK 3282 SCP - 140TC | X | X | X | X | |
| 21 | 3064 | 2.5 | III | 79.76 | 5103 | 4500 | SK 3282 SCP - 80L/4 | SK 3282 SCP - 80LH/4 | SK 3282 SCP - 140TC | X | X | X | X | |
| 19 | 3409 | 2.5 | III | 88.74 | 5092 | 4500 | SK 3282 SCP - 80L/4 | SK 3282 SCP - 80LH/4 | SK 3282 SCP - 140TC | X | X | X | X | |
| 16 | 3876 | 1.8 | II | 100.88 | 5076 | 4500 | SK 3282 SCP - 80L/4 | SK 3282 SCP - 80LH/4 | SK 3282 SCP - 140TC | X | X | X | X | |
| 15 | 4312 | 1.6 | II | 112.23 | 5058 | 4500 | SK 3282 SCP - 80L/4 | SK 3282 SCP - 80LH/4 | SK 3282 SCP - 140TC | X | X | X | X | |

Output speed and torque ratings are based on the "Standard Efficiency Motor" Power and speed. Performance will vary slightly for other motors.

# 1.5 hp Gearmotors & Speed Reducers





| Output Speed | Output Torque | SF | AGMA Class | Gear Ratio | Thrust | | Integral Gearmotor | | Reducer | CEMA DriveShaft | | | | |
|---|---|---|---|---|---|---|---|---|---|---|---|---|---|---|
| $n_2$ | $T_2$ | $f_a$ | | i | Std Brg | H.D. Brg " VL" | Standard Efficiency Motor | Energy Efficient Motor | C-Face Input | 1-1/2" | 2" | 2-7/16" | 3" | 3-7/16" |
| [rpm] | [lb-in] | | | | [lb] | [lb] | | | | | | | | |
| 347 | 273 | 4.1 | III | 4.79 | 1591 | 1609 | SK 1282 SCP - 90S/4 | SK 1282 SCP - 90SH/4 | SK 1282 SCP - 140TC | X | X | X | | |
| 303 | 312 | 4.1 | III | 5.47 | 1652 | 1609 | SK 1282 SCP - 90S/4 | SK 1282 SCP - 90SH/4 | SK 1282 SCP - 140TC | X | X | X | | |
| 258 | 367 | 3.9 | III | 6.43 | 1728 | 1609 | SK 1282 SCP - 90S/4 | SK 1282 SCP - 90SH/4 | SK 1282 SCP - 140TC | X | X | X | | |
| 229 | 413 | 3.8 | III | 7.24 | 1791 | 1609 | SK 1282 SCP - 90S/4 | SK 1282 SCP - 90SH/4 | SK 1282 SCP - 140TC | X | X | X | | |
| 202 | 468 | 3 | III | 8.21 | 1856 | 1609 | SK 1282 SCP - 90S/4 | SK 1282 SCP - 90SH/4 | SK 1282 SCP - 140TC | X | X | X | | |
| 201 | 470 | 3.6 | III | 8.24 | 1854 | 1609 | SK 1282 SCP - 90S/4 | SK 1282 SCP - 90SH/4 | SK 1282 SCP - 140TC | X | X | X | | |
| 181 | 523 | 3.2 | III | 9.18 | 1913 | 1609 | SK 1282 SCP - 90S/4 | SK 1282 SCP - 90SH/4 | SK 1282 SCP - 140TC | X | X | X | | |
| 161 | 590 | 2.9 | III | 10.34 | 1976 | 1609 | SK 1282 SCP - 90S/4 | SK 1282 SCP - 90SH/4 | SK 1282 SCP - 140TC | X | X | X | | |
| 141 | 671 | 2.7 | III | 11.76 | 2045 | 1609 | SK 1282 SCP - 90S/4 | SK 1282 SCP - 90SH/4 | SK 1282 SCP - 140TC | X | X | X | | |
| 118 | 805 | 2.3 | III | 14.11 | 2158 | 1609 | SK 1282 SCP - 90S/4 | SK 1282 SCP - 90SH/4 | SK 1282 SCP - 140TC | X | X | X | | |
| 96 | 981 | 2 | III | 17.21 | 2149 | 1609 | SK 1282 SCP - 90S/4 | SK 1282 SCP - 90SH/4 | SK 1282 SCP - 140TC | X | X | X | | |
| 81 | 1173 | 1.7 | II | 20.57 | 2140 | 1609 | SK 1282 SCP - 90S/4 | SK 1282 SCP - 90SH/4 | SK 1282 SCP - 140TC | X | X | X | | |
| 66 | 1438 | 1.4 | II | 25.22 | 2122 | 1609 | SK 1282 SCP - 90S/4 | SK 1282 SCP - 90SH/4 | SK 1282 SCP - 140TC | X | X | X | | |
| 59 | 1615 | 1.2 | I | 28.33 | 2108 | 1609 | SK 1282 SCP - 90S/4 | SK 1282 SCP - 90SH/4 | SK 1282 SCP - 140TC | X | X | X | | |
| 52 | 1829 | 1.1 | I | 32.08 | 2088 | 1609 | SK 1282 SCP - 90S/4 | SK 1282 SCP - 90SH/4 | SK 1282 SCP - 140TC | X | X | X | | |
| 368 | 257 | 4.4 | III | 4.51 | 2054 | 3375 | SK 2282 SCP - 90S/4 | SK 2282 SCP - 90SH/4 | SK 2282 SCP - 140TC | X | X | X | | |
| 290 | 326 | 4.2 | III | 5.72 | 2203 | 3375 | SK 2282 SCP - 90S/4 | SK 2282 SCP - 90SH/4 | SK 2282 SCP - 140TC | X | X | X | | |
| 258 | 367 | 4 | III | 6.43 | 2277 | 3375 | SK 2282 SCP - 90S/4 | SK 2282 SCP - 90SH/4 | SK 2282 SCP - 140TC | X | X | X | | |
| 222 | 427 | 3.8 | III | 7.48 | 2381 | 3375 | SK 2282 SCP - 90S/4 | SK 2282 SCP - 90SH/4 | SK 2282 SCP - 140TC | X | X | X | | |
| 198 | 477 | 3.7 | III | 8.37 | 2455 | 3375 | SK 2282 SCP - 90S/4 | SK 2282 SCP - 90SH/4 | SK 2282 SCP - 140TC | X | X | X | | |
| 184 | 515 | 4.2 | III | 9.03 | 2513 | 3375 | SK 2282 SCP - 90S/4 | SK 2282 SCP - 90SH/4 | SK 2282 SCP - 140TC | X | X | X | | |
| 164 | 579 | 4 | III | 10.15 | 2599 | 3375 | SK 2282 SCP - 90S/4 | SK 2282 SCP - 90SH/4 | SK 2282 SCP - 140TC | X | X | X | | |
| 141 | 673 | 3.8 | III | 11.81 | 2714 | 3375 | SK 2282 SCP - 90S/4 | SK 2282 SCP - 90SH/4 | SK 2282 SCP - 140TC | X | X | X | | |
| 125 | 754 | 3.7 | III | 13.23 | 2804 | 3375 | SK 2282 SCP - 90S/4 | SK 2282 SCP - 90SH/4 | SK 2282 SCP - 140TC | X | X | X | | |
| 100 | 943 | 3.8 | III | 16.53 | 2986 | 3375 | SK 2282 SCP - 90S/4 | SK 2282 SCP - 90SH/4 | SK 2282 SCP - 140TC | X | X | X | | |
| 90 | 1056 | 3.7 | III | 18.51 | 3085 | 3375 | SK 2282 SCP - 90S/4 | SK 2282 SCP - 90SH/4 | SK 2282 SCP - 140TC | X | X | X | | |
| 76 | 1249 | 3.4 | III | 21.9 | 3146 | 3375 | SK 2282 SCP - 90S/4 | SK 2282 SCP - 90SH/4 | SK 2282 SCP - 140TC | X | X | X | | |
| 69 | 1366 | 2.8 | III | 23.96 | 3141 | 3375 | SK 2282 SCP - 90S/4 | SK 2282 SCP - 90SH/4 | SK 2282 SCP - 140TC | X | X | X | | |
| 66 | 1424 | 3 | III | 24.97 | 3139 | 3375 | SK 2282 SCP - 90S/4 | SK 2282 SCP - 90SH/4 | SK 2282 SCP - 140TC | X | X | X | | |
| 62 | 1530 | 2.5 | III | 26.83 | 3134 | 3375 | SK 2282 SCP - 90S/4 | SK 2282 SCP - 90SH/4 | SK 2282 SCP - 140TC | X | X | X | | |
| 56 | 1691 | 2.6 | III | 29.65 | 3128 | 3375 | SK 2282 SCP - 90S/4 | SK 2282 SCP - 90SH/4 | SK 2282 SCP - 140TC | X | X | X | | |
| 53 | 1781 | 2.2 | III | 31.23 | 3123 | 3375 | SK 2282 SCP - 90S/4 | SK 2282 SCP - 90SH/4 | SK 2282 SCP - 140TC | X | X | X | | |
| 45 | 2084 | 2.1 | III | 36.54 | 3107 | 3375 | SK 2282 SCP - 90S/4 | SK 2282 SCP - 90SH/4 | SK 2282 SCP - 140TC | X | X | X | | |
| 45 | 2120 | 1.9 | II | 37.18 | 3105 | 3375 | SK 2282 SCP - 90S/4 | SK 2282 SCP - 90SH/4 | SK 2282 SCP - 140TC | X | X | X | | |
| 38 | 2493 | 2 | III | 43.71 | 3083 | 3375 | SK 2282 SCP - 90S/4 | SK 2282 SCP - 90SH/4 | SK 2282 SCP - 140TC | X | X | X | | |

Output speed and torque ratings are based on the "Standard Efficiency Motor" Power and speed. Performance will vary slightly for other motors.



# 1.5 hp Gearmotors & Speed Reducers

| Output Speed | Output Torque | SF | AGMA Class | Gear Ratio | Thrust | | Integral Gearmotor | | Reducer | CEMA DriveShaft | | | | |
|---|---|---|---|---|---|---|---|---|---|---|---|---|---|---|
| $n_2$ | $T_2$ | $f_a$ | | i | Std Brg | H.D. Brg " VL" | Standard Efficiency Motor | Energy Efficient Motor | C-Face Input | 1-1/2" | 2" | 2-7/16" | 3" | 3-7/16" |
| [rpm] | [lb-in] | | | | [lb] | [lb] | | | | | | | | |
| 37 | 2572 | 1.5 | II | 45.11 | 3076 | 3375 | SK 2282 SCP - 90S/4 | SK 2282 SCP - 90SH/4 | SK 2282 SCP - 140TC | X | X | X | | |
| 32 | 2949 | 1.6 | II | 51.71 | 3049 | 3375 | SK 2282 SCP - 90S/4 | SK 2282 SCP - 90SH/4 | SK 2282 SCP - 140TC | X | X | X | | |
| 31 | 3077 | 1.5 | II | 53.96 | 3038 | 3375 | SK 2282 SCP - 90S/4 | SK 2282 SCP - 90SH/4 | SK 2282 SCP - 140TC | X | X | X | | |
| 26 | 3640 | 1.3 | I | 63.83 | 2986 | 3375 | SK 2282 SCP - 90S/4 | SK 2282 SCP - 90SH/4 | SK 2282 SCP - 140TC | X | X | X | | |
| 24 | 3973 | 1 | I | 69.67 | 2950 | 3375 | SK 2282 SCP - 90S/4 | SK 2282 SCP - 90SH/4 | SK 2282 SCP - 140TC | X | X | X | | |
| 20 | 4700 | 0.9 | * | 82.42 | 2858 | 3375 | SK 2282 SCP - 90S/4 | SK 2282 SCP - 90SH/4 | SK 2282 SCP - 140TC | X | X | X | | |
| 371 | 255 | 4.4 | III | 4.48 | 2351 | 3650 | SK 3282 SCP - 90S/4 | SK 3282 SCP - 90SH/4 | SK 3282 SCP - 140TC | X | X | X | X | |
| 292 | 324 | 4.8 | III | 5.68 | 2518 | 3911 | SK 3282 SCP - 90S/4 | SK 3282 SCP - 90SH/4 | SK 3282 SCP - 140TC | X | X | X | X | |
| 248 | 382 | 4.6 | III | 6.7 | 2642 | 4104 | SK 3282 SCP - 90S/4 | SK 3282 SCP - 90SH/4 | SK 3282 SCP - 140TC | X | X | X | X | |
| 200 | 474 | 4.4 | III | 8.31 | 2813 | 4361 | SK 3282 SCP - 90S/4 | SK 3282 SCP - 90SH/4 | SK 3282 SCP - 140TC | X | X | X | X | |
| 169 | 559 | 4.6 | III | 9.8 | 2952 | 4500 | SK 3282 SCP - 90S/4 | SK 3282 SCP - 90SH/4 | SK 3282 SCP - 140TC | X | X | X | X | |
| 146 | 649 | 4.6 | III | 11.38 | 3080 | 4500 | SK 3282 SCP - 90S/4 | SK 3282 SCP - 90SH/4 | SK 3282 SCP - 140TC | X | X | X | X | |
| 118 | 805 | 4.4 | III | 14.11 | 3278 | 4500 | SK 3282 SCP - 90S/4 | SK 3282 SCP - 90SH/4 | SK 3282 SCP - 140TC | X | X | X | X | |
| 100 | 951 | 4.4 | III | 16.67 | 3440 | 4500 | SK 3282 SCP - 90S/4 | SK 3282 SCP - 90SH/4 | SK 3282 SCP - 140TC | X | X | X | X | |
| 82 | 1151 | 4.4 | III | 20.18 | 3632 | 4500 | SK 3282 SCP - 90S/4 | SK 3282 SCP - 90SH/4 | SK 3282 SCP - 140TC | X | X | X | X | |
| 78 | 1219 | 4 | III | 21.38 | 3690 | 4500 | SK 3282 SCP - 90S/4 | SK 3282 SCP - 90SH/4 | SK 3282 SCP - 140TC | X | X | X | X | |
| 74 | 1280 | 4.4 | III | 22.45 | 3742 | 4500 | SK 3282 SCP - 90S/4 | SK 3282 SCP - 90SH/4 | SK 3282 SCP - 140TC | X | X | X | X | |
| 70 | 1352 | 3.9 | III | 23.71 | 3796 | 4500 | SK 3282 SCP - 90S/4 | SK 3282 SCP - 90SH/4 | SK 3282 SCP - 140TC | X | X | X | X | |
| 64 | 1476 | 4 | III | 25.88 | 3893 | 4500 | SK 3282 SCP - 90S/4 | SK 3282 SCP - 90SH/4 | SK 3282 SCP - 140TC | X | X | X | X | |
| 58 | 1637 | 3.9 | III | 28.7 | 4005 | 4500 | SK 3282 SCP - 90S/4 | SK 3282 SCP - 90SH/4 | SK 3282 SCP - 140TC | X | X | X | X | |
| 52 | 1821 | 3.9 | III | 31.93 | 4127 | 4500 | SK 3282 SCP - 90S/4 | SK 3282 SCP - 90SH/4 | SK 3282 SCP - 140TC | X | X | X | X | |
| 44 | 2154 | 3.4 | III | 37.77 | 4318 | 4500 | SK 3282 SCP - 90S/4 | SK 3282 SCP - 90SH/4 | SK 3282 SCP - 140TC | X | X | X | X | |
| 43 | 2202 | 2.5 | III | 38.62 | 4325 | 4500 | SK 3282 SCP - 90S/4 | SK 3282 SCP - 90SH/4 | SK 3282 SCP - 140TC | X | X | X | X | |
| 40 | 2396 | 3.4 | III | 42.02 | 4448 | 4500 | SK 3282 SCP - 90S/4 | SK 3282 SCP - 90SH/4 | SK 3282 SCP - 140TC | X | X | X | X | |
| 37 | 2558 | 2.6 | III | 44.85 | 4509 | 4500 | SK 3282 SCP - 90S/4 | SK 3282 SCP - 90SH/4 | SK 3282 SCP - 140TC | X | X | X | X | |
| 35 | 2739 | 1.8 | II | 48.04 | 4583 | 4500 | SK 3282 SCP - 90S/4 | SK 3282 SCP - 90SH/4 | SK 3282 SCP - 140TC | X | X | X | X | |
| 31 | 3021 | 2.5 | III | 52.97 | 4712 | 4500 | SK 3282 SCP - 90S/4 | SK 3282 SCP - 90SH/4 | SK 3282 SCP - 140TC | X | X | X | X | |
| 30 | 3181 | 1.8 | II | 55.79 | 4775 | 4500 | SK 3282 SCP - 90S/4 | SK 3282 SCP - 90SH/4 | SK 3282 SCP - 140TC | X | X | X | X | |
| 26 | 3656 | 2.5 | III | 64.12 | 4961 | 4500 | SK 3282 SCP - 90S/4 | SK 3282 SCP - 90SH/4 | SK 3282 SCP - 140TC | X | X | X | X | |
| 25 | 3757 | 1.8 | II | 65.89 | 4984 | 4500 | SK 3282 SCP - 90S/4 | SK 3282 SCP - 90SH/4 | SK 3282 SCP - 140TC | X | X | X | X | |
| 24 | 4024 | 1.2 | I | 70.56 | 5069 | 4500 | SK 3282 SCP - 90S/4 | SK 3282 SCP - 90SH/4 | SK 3282 SCP - 140TC | X | X | X | X | |
| 21 | 4548 | 1.7 | II | 79.76 | 5047 | 4500 | SK 3282 SCP - 90S/4 | SK 3282 SCP - 90SH/4 | SK 3282 SCP - 140TC | X | X | X | X | |
| 19 | 5060 | 1.7 | II | 88.74 | 5022 | 4500 | SK 3282 SCP - 90S/4 | SK 3282 SCP - 90SH/4 | SK 3282 SCP - 140TC | X | X | X | X | |
| 16 | 5753 | 1.2 | I | 100.88 | 4984 | 4500 | SK 3282 SCP - 90S/4 | SK 3282 SCP - 90SH/4 | SK 3282 SCP - 140TC | X | X | X | X | |
| 15 | 6400 | 1.1 | I | 112.23 | 4943 | 4500 | SK 3282 SCP - 90S/4 | SK 3282 SCP - 90SH/4 | SK 3282 SCP - 140TC | X | X | X | X | |

Output speed and torque ratings are based on the "Standard Efficiency Motor" Power and speed. Performance will vary slightly for other motors.

# 1.5 hp Gearmotors & Speed Reducers





| Output Speed | Output Torque | SF | AGMA Class | Gear Ratio | Thrust | | Integral Gearmotor | | Reducer | CEMA DriveShaft | | | | |
|---|---|---|---|---|---|---|---|---|---|---|---|---|---|---|
| $n_2$ | $T_2$ | $f_a$ | | i | Std Brg | H.D. Brg " VL" | Standard Efficiency Motor | Energy Efficient Motor | C-Face Input | 1-1/2" | 2" | 2-7/16" | 3" | 3-7/16" |
| [rpm] | [lb-in] | | | | [lb] | [lb] | | | | | | | | |
| 274 | 346 | 5.4 | III | 6.06 | 3652 | 6203 | SK 4282 SCP - 90S/4 | SK 4282 SCP - 90SH/4 | SK 4282 SCP - 140TC | | X | X | X | |
| 233 | 407 | 4.9 | III | 7.13 | 3832 | 6509 | SK 4282 SCP - 90S/4 | SK 4282 SCP - 90SH/4 | SK 4282 SCP - 140TC | | X | X | X | |
| 199 | 475 | 4.8 | III | 8.33 | 4007 | 6750 | SK 4282 SCP - 90S/4 | SK 4282 SCP - 90SH/4 | SK 4282 SCP - 140TC | | X | X | X | |
| 180 | 526 | 5.4 | III | 9.23 | 4131 | 6750 | SK 4282 SCP - 90S/4 | SK 4282 SCP - 90SH/4 | SK 4282 SCP - 140TC | | X | X | X | |
| 153 | 619 | 4.9 | III | 10.85 | 4340 | 6750 | SK 4282 SCP - 90S/4 | SK 4282 SCP - 90SH/4 | SK 4282 SCP - 140TC | | X | X | X | |
| 131 | 723 | 4.8 | III | 12.68 | 4534 | 6750 | SK 4282 SCP - 90S/4 | SK 4282 SCP - 90SH/4 | SK 4282 SCP - 140TC | | X | X | X | |
| 109 | 867 | 4.8 | III | 15.2 | 4786 | 6750 | SK 4282 SCP - 90S/4 | SK 4282 SCP - 90SH/4 | SK 4282 SCP - 140TC | | X | X | X | |
| 91 | 1037 | 4.8 | III | 18.18 | 5038 | 6750 | SK 4282 SCP - 90S/4 | SK 4282 SCP - 90SH/4 | SK 4282 SCP - 140TC | | X | X | X | |
| 77 | 1223 | 4.8 | III | 21.45 | 5294 | 6750 | SK 4282 SCP - 90S/4 | SK 4282 SCP - 90SH/4 | SK 4282 SCP - 140TC | | X | X | X | |
| 74 | 1277 | 4.6 | III | 22.39 | 5353 | 6750 | SK 4282 SCP - 90S/4 | SK 4282 SCP - 90SH/4 | SK 4282 SCP - 140TC | | X | X | X | |
| 63 | 1497 | 4.8 | III | 26.25 | 5607 | 6750 | SK 4282 SCP - 90S/4 | SK 4282 SCP - 90SH/4 | SK 4282 SCP - 140TC | | X | X | X | |
| 63 | 1507 | 4.6 | III | 26.43 | 5616 | 6750 | SK 4282 SCP - 90S/4 | SK 4282 SCP - 90SH/4 | SK 4282 SCP - 140TC | | X | X | X | |
| 51 | 1844 | 4.6 | III | 32.34 | 5958 | 6750 | SK 4282 SCP - 90S/4 | SK 4282 SCP - 90SH/4 | SK 4282 SCP - 140TC | | X | X | X | |
| 45 | 2099 | 4.1 | III | 36.81 | 6170 | 6750 | SK 4282 SCP - 90S/4 | SK 4282 SCP - 90SH/4 | SK 4282 SCP - 140TC | | X | X | X | |
| 41 | 2323 | 4.2 | III | 40.74 | 6359 | 6750 | SK 4282 SCP - 90S/4 | SK 4282 SCP - 90SH/4 | SK 4282 SCP - 140TC | | X | X | X | |
| 37 | 2569 | 4.1 | III | 45.05 | 6541 | 6750 | SK 4282 SCP - 90S/4 | SK 4282 SCP - 90SH/4 | SK 4282 SCP - 140TC | | X | X | X | |
| 22 | 4374 | 3.2 | III | 76.7 | 6878 | 6750 | SK 4282 SCP - 90S/4 | SK 4282 SCP - 90SH/4 | SK 4282 SCP - 140TC | | X | X | X | |
| 18 | 5162 | 2.7 | III | 90.52 | 6860 | 6750 | SK 4282 SCP - 90S/4 | SK 4282 SCP - 90SH/4 | SK 4282 SCP - 140TC | | X | X | X | |
| 15 | 6317 | 2.2 | III | 110.78 | 6829 | 6750 | SK 4282 SCP - 90S/4 | SK 4282 SCP - 90SH/4 | SK 4282 SCP - 140TC | | X | X | X | |
| 11 | 8862 | 1.3 | I | 155.4 | 6737 | 6750 | SK 4282 SCP - 90S/4 | SK 4282 SCP - 90SH/4 | SK 4282 SCP - 140TC | | X | X | X | |
| 191 | 496 | 5.7 | III | 8.7 | 5639 | 9000 | SK 5282 SCP - 90S/4 | SK 5282 SCP - 90SH/4 | SK 5282 SCP - 140TC | | X | X | X | X |
| 128 | 741 | 5.7 | III | 13 | 6338 | 9000 | SK 5282 SCP - 90S/4 | SK 5282 SCP - 90SH/4 | SK 5282 SCP - 140TC | | X | X | X | X |
| 108 | 877 | 5.7 | III | 15.38 | 6662 | 9000 | SK 5282 SCP - 90S/4 | SK 5282 SCP - 90SH/4 | SK 5282 SCP - 140TC | | X | X | X | X |
| 94 | 1003 | 5.6 | III | 17.59 | 6935 | 9000 | SK 5282 SCP - 90S/4 | SK 5282 SCP - 90SH/4 | SK 5282 SCP - 140TC | | X | X | X | X |
| 88 | 1077 | 5.7 | III | 18.88 | 7081 | 9000 | SK 5282 SCP - 90S/4 | SK 5282 SCP - 90SH/4 | SK 5282 SCP - 140TC | | X | X | X | X |
| 82 | 1161 | 5.6 | III | 20.36 | 7229 | 9000 | SK 5282 SCP - 90S/4 | SK 5282 SCP - 90SH/4 | SK 5282 SCP - 140TC | | X | X | X | X |
| 66 | 1426 | 5.6 | III | 25 | 7682 | 9000 | SK 5282 SCP - 90S/4 | SK 5282 SCP - 90SH/4 | SK 5282 SCP - 140TC | | X | X | X | X |
| 54 | 1739 | 5.5 | III | 30.5 | 8138 | 9000 | SK 5282 SCP - 90S/4 | SK 5282 SCP - 90SH/4 | SK 5282 SCP - 140TC | | X | X | X | X |
| 50 | 1906 | 5.6 | III | 33.43 | 8377 | 9000 | SK 5282 SCP - 90S/4 | SK 5282 SCP - 90SH/4 | SK 5282 SCP - 140TC | | X | X | X | X |
| 41 | 2327 | 5.5 | III | 40.8 | 8856 | 9000 | SK 5282 SCP - 90S/4 | SK 5282 SCP - 90SH/4 | SK 5282 SCP - 140TC | | X | X | X | X |
| 30 | 3168 | 5.3 | III | 55.55 | 9684 | 9000 | SK 5282 SCP - 90S/4 | SK 5282 SCP - 90SH/4 | SK 5282 SCP - 140TC | | X | X | X | X |
| 20 | 4654 | 3.5 | III | 81.61 | 10035 | 9000 | SK 5282 SCP - 90S/4 | SK 5282 SCP - 90SH/4 | SK 5282 SCP - 140TC | | X | X | X | X |
| 17 | 5713 | 3.5 | III | 100.19 | 10022 | 9000 | SK 5282 SCP - 90S/4 | SK 5282 SCP - 90SH/4 | SK 5282 SCP - 140TC | | X | X | X | X |
| 12 | 7643 | 3.1 | III | 134.03 | 9990 | 9000 | SK 5282 SCP - 90S/4 | SK 5282 SCP - 90SH/4 | SK 5282 SCP - 140TC | | X | X | X | X |

Output speed and torque ratings are based on the "Standard Efficiency Motor" Power and speed. Performance will vary slightly for other motors.



# 2 hp Gearmotors & Speed Reducers

| Output Speed | Output Torque | SF | AGMA Class | Gear Ratio | Thrust | | Integral Gearmotor | | Reducer | CEMA DriveShaft | | | | |
|---|---|---|---|---|---|---|---|---|---|---|---|---|---|---|
| $n_2$ | $T_2$ | $f_a$ | | i | Std Brg | H.D. Brg " VL" | Standard Efficiency Motor | Energy Efficient Motor | C-Face Input | 1-1/2" | 2" | 2-7/16" | 3" | 3-7/16" |
| [rpm] | [lb-in] | | | | [lb] | [lb] | | | | | | | | |
| 347 | 363 | 3.1 | III | 4.79 | 1577 | 1609 | SK 1282 SCP - 90L/4 | SK 1282 SCP - 90LH/4 | SK 1282 SCP - 140TC | X | X | X | | |
| 303 | 415 | 3.1 | III | 5.47 | 1636 | 1609 | SK 1282 SCP - 90L/4 | SK 1282 SCP - 90LH/4 | SK 1282 SCP - 140TC | X | X | X | | |
| 258 | 488 | 3 | III | 6.43 | 1712 | 1609 | SK 1282 SCP - 90L/4 | SK 1282 SCP - 90LH/4 | SK 1282 SCP - 140TC | X | X | X | | |
| 229 | 549 | 2.8 | III | 7.24 | 1771 | 1609 | SK 1282 SCP - 90L/4 | SK 1282 SCP - 90LH/4 | SK 1282 SCP - 140TC | X | X | X | | |
| 202 | 623 | 2.3 | III | 8.21 | 1841 | 1609 | SK 1282 SCP - 90L/4 | SK 1282 SCP - 90LH/4 | SK 1282 SCP - 140TC | X | X | X | | |
| 201 | 625 | 2.7 | III | 8.24 | 1829 | 1609 | SK 1282 SCP - 90L/4 | SK 1282 SCP - 90LH/4 | SK 1282 SCP - 140TC | X | X | X | | |
| 181 | 696 | 2.4 | III | 9.18 | 1890 | 1609 | SK 1282 SCP - 90L/4 | SK 1282 SCP - 90LH/4 | SK 1282 SCP - 140TC | X | X | X | | |
| 161 | 784 | 2.2 | III | 10.34 | 1951 | 1609 | SK 1282 SCP - 90L/4 | SK 1282 SCP - 90LH/4 | SK 1282 SCP - 140TC | X | X | X | | |
| 141 | 892 | 2 | III | 11.76 | 2016 | 1609 | SK 1282 SCP - 90L/4 | SK 1282 SCP - 90LH/4 | SK 1282 SCP - 140TC | X | X | X | | |
| 118 | 1070 | 1.7 | II | 14.11 | 2117 | 1609 | SK 1282 SCP - 90L/4 | SK 1282 SCP - 90LH/4 | SK 1282 SCP - 140TC | X | X | X | | |
| 96 | 1306 | 1.5 | II | 17.21 | 2131 | 1609 | SK 1282 SCP - 90L/4 | SK 1282 SCP - 90LH/4 | SK 1282 SCP - 140TC | X | X | X | | |
| 81 | 1560 | 1.3 | I | 20.57 | 2113 | 1609 | SK 1282 SCP - 90L/4 | SK 1282 SCP - 90LH/4 | SK 1282 SCP - 140TC | X | X | X | | |
| 66 | 1913 | 1 | I | 25.22 | 2081 | 1609 | SK 1282 SCP - 90L/4 | SK 1282 SCP - 90LH/4 | SK 1282 SCP - 140TC | X | X | X | | |
| 59 | 2149 | 0.9 | * | 28.33 | 2054 | 1609 | SK 1282 SCP - 90L/4 | SK 1282 SCP - 90LH/4 | SK 1282 SCP - 140TC | X | X | X | | |
| 368 | 342 | 3.3 | III | 4.51 | 2045 | 3375 | SK 2282 SCP - 90L/4 | SK 2282 SCP - 90LH/4 | SK 2282 SCP - 140TC | X | X | X | | |
| 290 | 434 | 3.1 | III | 5.72 | 2194 | 3375 | SK 2282 SCP - 90L/4 | SK 2282 SCP - 90LH/4 | SK 2282 SCP - 140TC | X | X | X | | |
| 258 | 488 | 3 | III | 6.43 | 2266 | 3375 | SK 2282 SCP - 90L/4 | SK 2282 SCP - 90LH/4 | SK 2282 SCP - 140TC | X | X | X | | |
| 222 | 567 | 2.9 | III | 7.48 | 2365 | 3375 | SK 2282 SCP - 90L/4 | SK 2282 SCP - 90LH/4 | SK 2282 SCP - 140TC | X | X | X | | |
| 198 | 635 | 2.8 | III | 8.37 | 2437 | 3375 | SK 2282 SCP - 90L/4 | SK 2282 SCP - 90LH/4 | SK 2282 SCP - 140TC | X | X | X | | |
| 184 | 685 | 3.1 | III | 9.03 | 2504 | 3375 | SK 2282 SCP - 90L/4 | SK 2282 SCP - 90LH/4 | SK 2282 SCP - 140TC | X | X | X | | |
| 164 | 770 | 3 | III | 10.15 | 2579 | 3375 | SK 2282 SCP - 90L/4 | SK 2282 SCP - 90LH/4 | SK 2282 SCP - 140TC | X | X | X | | |
| 141 | 896 | 2.9 | III | 11.81 | 2691 | 3375 | SK 2282 SCP - 90L/4 | SK 2282 SCP - 90LH/4 | SK 2282 SCP - 140TC | X | X | X | | |
| 125 | 1004 | 2.8 | III | 13.23 | 2777 | 3375 | SK 2282 SCP - 90L/4 | SK 2282 SCP - 90LH/4 | SK 2282 SCP - 140TC | X | X | X | | |
| 100 | 1254 | 2.9 | III | 16.53 | 2959 | 3375 | SK 2282 SCP - 90L/4 | SK 2282 SCP - 90LH/4 | SK 2282 SCP - 140TC | X | X | X | | |
| 90 | 1404 | 2.8 | III | 18.51 | 3049 | 3375 | SK 2282 SCP - 90L/4 | SK 2282 SCP - 90LH/4 | SK 2282 SCP - 140TC | X | X | X | | |
| 76 | 1661 | 2.6 | III | 21.9 | 3128 | 3375 | SK 2282 SCP - 90L/4 | SK 2282 SCP - 90LH/4 | SK 2282 SCP - 140TC | X | X | X | | |
| 69 | 1818 | 2.1 | III | 23.96 | 3121 | 3375 | SK 2282 SCP - 90L/4 | SK 2282 SCP - 90LH/4 | SK 2282 SCP - 140TC | X | X | X | | |
| 66 | 1894 | 2.3 | III | 24.97 | 3116 | 3375 | SK 2282 SCP - 90L/4 | SK 2282 SCP - 90LH/4 | SK 2282 SCP - 140TC | X | X | X | | |
| 62 | 2035 | 1.9 | II | 26.83 | 3110 | 3375 | SK 2282 SCP - 90L/4 | SK 2282 SCP - 90LH/4 | SK 2282 SCP - 140TC | X | X | X | | |
| 56 | 2249 | 2 | III | 29.65 | 3098 | 3375 | SK 2282 SCP - 90L/4 | SK 2282 SCP - 90LH/4 | SK 2282 SCP - 140TC | X | X | X | | |
| 53 | 2369 | 1.7 | II | 31.23 | 3089 | 3375 | SK 2282 SCP - 90L/4 | SK 2282 SCP - 90LH/4 | SK 2282 SCP - 140TC | X | X | X | | |
| 45 | 2772 | 1.6 | II | 36.54 | 3062 | 3375 | SK 2282 SCP - 90L/4 | SK 2282 SCP - 90LH/4 | SK 2282 SCP - 140TC | X | X | X | | |
| 45 | 2821 | 1.4 | II | 37.18 | 3058 | 3375 | SK 2282 SCP - 90L/4 | SK 2282 SCP - 90LH/4 | SK 2282 SCP - 140TC | X | X | X | | |
| 38 | 3316 | 1.5 | II | 43.71 | 3017 | 3375 | SK 2282 SCP - 90L/4 | SK 2282 SCP - 90LH/4 | SK 2282 SCP - 140TC | X | X | X | | |
| 37 | 3422 | 1.2 | I | 45.11 | 3006 | 3375 | SK 2282 SCP - 90L/4 | SK 2282 SCP - 90LH/4 | SK 2282 SCP - 140TC | X | X | X | | |
| 32 | 3923 | 1.2 | I | 51.71 | 2954 | 3375 | SK 2282 SCP - 90L/4 | SK 2282 SCP - 90LH/4 | SK 2282 SCP - 140TC | X | X | X | | |
| 31 | 4094 | 1.1 | I | 53.96 | 2936 | 3375 | SK 2282 SCP - 90L/4 | SK 2282 SCP - 90LH/4 | SK 2282 SCP - 140TC | X | X | X | | |
| 26 | 4842 | 1 | I | 63.83 | 2837 | 3375 | SK 2282 SCP - 90L/4 | SK 2282 SCP - 90LH/4 | SK 2282 SCP - 140TC | X | X | X | | |

Output speed and torque ratings are based on the "Standard Efficiency Motor" Power and speed. Performance will vary slightly for other motors.

# 2 hp Gearmotors & Speed Reducers



| Output Speed $n_2$ [rpm] | Output Torque $T_2$ [lb-in] | SF $f_a$ | AGMA Class | Gear Ratio i | Thrust Std Brg [lb] | Thrust H.D. Brg " VL" [lb] | Integral Gearmotor Standard Efficiency Motor | Integral Gearmotor Energy Efficient Motor | Reducer C-Face Input | CEMA DriveShaft 1-1/2" | 2" | 2-7/16" | 3" | 3-7/16" |
|---|---|---|---|---|---|---|---|---|---|---|---|---|---|---|
| 371 | 340 | 3.3 | III | 4.48 | 2340 | 3632 | SK 3282 SCP - 90L/4 | SK 3282 SCP - 90LH/4 | SK 3282 SCP - 140TC | X | X | X | X | |
| 292 | 431 | 3.6 | III | 5.68 | 2507 | 3886 | SK 3282 SCP - 90L/4 | SK 3282 SCP - 90LH/4 | SK 3282 SCP - 140TC | X | X | X | X | |
| 248 | 508 | 3.5 | III | 6.7 | 2633 | 4070 | SK 3282 SCP - 90L/4 | SK 3282 SCP - 90LH/4 | SK 3282 SCP - 140TC | X | X | X | X | |
| 200 | 630 | 3.3 | III | 8.31 | 2799 | 4327 | SK 3282 SCP - 90L/4 | SK 3282 SCP - 90LH/4 | SK 3282 SCP - 140TC | X | X | X | X | |
| 169 | 743 | 3.5 | III | 9.8 | 2936 | 4500 | SK 3282 SCP - 90L/4 | SK 3282 SCP - 90LH/4 | SK 3282 SCP - 140TC | X | X | X | X | |
| 146 | 863 | 3.5 | III | 11.38 | 3065 | 4500 | SK 3282 SCP - 90L/4 | SK 3282 SCP - 90LH/4 | SK 3282 SCP - 140TC | X | X | X | X | |
| 118 | 1070 | 3.3 | III | 14.11 | 3258 | 4500 | SK 3282 SCP - 90L/4 | SK 3282 SCP - 90LH/4 | SK 3282 SCP - 140TC | X | X | X | X | |
| 100 | 1265 | 3.3 | III | 16.67 | 3411 | 4500 | SK 3282 SCP - 90L/4 | SK 3282 SCP - 90LH/4 | SK 3282 SCP - 140TC | X | X | X | X | |
| 82 | 1531 | 3.3 | III | 20.18 | 3605 | 4500 | SK 3282 SCP - 90L/4 | SK 3282 SCP - 90LH/4 | SK 3282 SCP - 140TC | X | X | X | X | |
| 78 | 1622 | 3 | III | 21.38 | 3650 | 4500 | SK 3282 SCP - 90L/4 | SK 3282 SCP - 90LH/4 | SK 3282 SCP - 140TC | X | X | X | X | |
| 74 | 1703 | 3.3 | III | 22.45 | 3715 | 4500 | SK 3282 SCP - 90L/4 | SK 3282 SCP - 90LH/4 | SK 3282 SCP - 140TC | X | X | X | X | |
| 70 | 1799 | 2.9 | III | 23.71 | 3755 | 4500 | SK 3282 SCP - 90L/4 | SK 3282 SCP - 90LH/4 | SK 3282 SCP - 140TC | X | X | X | X | |
| 64 | 1963 | 3 | III | 25.88 | 3850 | 4500 | SK 3282 SCP - 90L/4 | SK 3282 SCP - 90LH/4 | SK 3282 SCP - 140TC | X | X | X | X | |
| 58 | 2177 | 2.9 | III | 28.7 | 3960 | 4500 | SK 3282 SCP - 90L/4 | SK 3282 SCP - 90LH/4 | SK 3282 SCP - 140TC | X | X | X | X | |
| 52 | 2422 | 2.9 | III | 31.93 | 4070 | 4500 | SK 3282 SCP - 90L/4 | SK 3282 SCP - 90LH/4 | SK 3282 SCP - 140TC | X | X | X | X | |
| 44 | 2865 | 2.6 | III | 37.77 | 4255 | 4500 | SK 3282 SCP - 90L/4 | SK 3282 SCP - 90LH/4 | SK 3282 SCP - 140TC | X | X | X | X | |
| 43 | 2930 | 1.9 | II | 38.62 | 4262 | 4500 | SK 3282 SCP - 90L/4 | SK 3282 SCP - 90LH/4 | SK 3282 SCP - 140TC | X | X | X | X | |
| 40 | 3188 | 2.6 | III | 42.02 | 4379 | 4500 | SK 3282 SCP - 90L/4 | SK 3282 SCP - 90LH/4 | SK 3282 SCP - 140TC | X | X | X | X | |
| 37 | 3402 | 1.9 | II | 44.85 | 4428 | 4500 | SK 3282 SCP - 90L/4 | SK 3282 SCP - 90LH/4 | SK 3282 SCP - 140TC | X | X | X | X | |
| 35 | 3644 | 1.3 | I | 48.04 | 4500 | 4500 | SK 3282 SCP - 90L/4 | SK 3282 SCP - 90LH/4 | SK 3282 SCP - 140TC | X | X | X | X | |
| 31 | 4018 | 1.9 | II | 52.97 | 4626 | 4500 | SK 3282 SCP - 90L/4 | SK 3282 SCP - 90LH/4 | SK 3282 SCP - 140TC | X | X | X | X | |
| 30 | 4232 | 1.3 | I | 55.79 | 4671 | 4500 | SK 3282 SCP - 90L/4 | SK 3282 SCP - 90LH/4 | SK 3282 SCP - 140TC | X | X | X | X | |
| 26 | 4864 | 1.8 | II | 64.12 | 4849 | 4500 | SK 3282 SCP - 90L/4 | SK 3282 SCP - 90LH/4 | SK 3282 SCP - 140TC | X | X | X | X | |
| 25 | 4999 | 1.3 | I | 65.89 | 4874 | 4500 | SK 3282 SCP - 90L/4 | SK 3282 SCP - 90LH/4 | SK 3282 SCP - 140TC | X | X | X | X | |
| 21 | 6051 | 1.2 | I | 79.76 | 4966 | 4500 | SK 3282 SCP - 90L/4 | SK 3282 SCP - 90LH/4 | SK 3282 SCP - 140TC | X | X | X | X | |
| 19 | 6732 | 1.2 | I | 88.74 | 4921 | 4500 | SK 3282 SCP - 90L/4 | SK 3282 SCP - 90LH/4 | SK 3282 SCP - 140TC | X | X | X | X | |
| 274 | 460 | 4.1 | III | 6.06 | 3638 | 6194 | SK 4282 SCP - 90L/4 | SK 4282 SCP - 90LH/4 | SK 4282 SCP - 140TC | | X | X | X | |
| 233 | 541 | 3.7 | III | 7.13 | 3818 | 6478 | SK 4282 SCP - 90L/4 | SK 4282 SCP - 90LH/4 | SK 4282 SCP - 140TC | | X | X | X | |
| 199 | 632 | 3.6 | III | 8.33 | 4001 | 6750 | SK 4282 SCP - 90L/4 | SK 4282 SCP - 90LH/4 | SK 4282 SCP - 140TC | | X | X | X | |
| 180 | 700 | 4.1 | III | 9.23 | 4124 | 6750 | SK 4282 SCP - 90L/4 | SK 4282 SCP - 90LH/4 | SK 4282 SCP - 140TC | | X | X | X | |
| 153 | 823 | 3.7 | III | 10.85 | 4320 | 6750 | SK 4282 SCP - 90L/4 | SK 4282 SCP - 90LH/4 | SK 4282 SCP - 140TC | | X | X | X | |

Output speed and torque ratings are based on the "Standard Efficiency Motor" Power and speed. Performance will vary slightly for other motors.



# 2 hp Gearmotors & Speed Reducers

| Output Speed | Output Torque | SF | AGMA Class | Gear Ratio | Thrust | | Integral Gearmotor | | Reducer | CEMA DriveShaft | | | | |
|---|---|---|---|---|---|---|---|---|---|---|---|---|---|---|
| $n_2$ | $T_2$ | $f_a$ | | i | Std Brg | H.D. Brg " VL" | Standard Efficiency Motor | Energy Efficient Motor | C-Face Input | 1-1/2" | 2" | 2-7/16" | 3" | 3-7/16" |
| [rpm] | [lb-in] | | | | [lb] | [lb] | | | | | | | | |
| 131 | 962 | 3.6 | III | 12.68 | 4518 | 6750 | SK 4282 SCP - 90L/4 | SK 4282 SCP - 90LH/4 | SK 4282 SCP - 140TC | | X | X | X | |
| 109 | 1153 | 3.6 | III | 15.2 | 4763 | 6750 | SK 4282 SCP - 90L/4 | SK 4282 SCP - 90LH/4 | SK 4282 SCP - 140TC | | X | X | X | |
| 91 | 1379 | 3.6 | III | 18.18 | 5013 | 6750 | SK 4282 SCP - 90L/4 | SK 4282 SCP - 90LH/4 | SK 4282 SCP - 140TC | | X | X | X | |
| 77 | 1627 | 3.6 | III | 21.45 | 5258 | 6750 | SK 4282 SCP - 90L/4 | SK 4282 SCP - 90LH/4 | SK 4282 SCP - 140TC | | X | X | X | |
| 74 | 1699 | 3.4 | III | 22.39 | 5317 | 6750 | SK 4282 SCP - 90L/4 | SK 4282 SCP - 90LH/4 | SK 4282 SCP - 140TC | | X | X | X | |
| 63 | 1991 | 3.6 | III | 26.25 | 5569 | 6750 | SK 4282 SCP - 90L/4 | SK 4282 SCP - 90LH/4 | SK 4282 SCP - 140TC | | X | X | X | |
| 63 | 2005 | 3.4 | III | 26.43 | 5587 | 6750 | SK 4282 SCP - 90L/4 | SK 4282 SCP - 90LH/4 | SK 4282 SCP - 140TC | | X | X | X | |
| 51 | 2453 | 3.4 | III | 32.34 | 5904 | 6750 | SK 4282 SCP - 90L/4 | SK 4282 SCP - 90LH/4 | SK 4282 SCP - 140TC | | X | X | X | |
| 45 | 2792 | 3.1 | III | 36.81 | 6122 | 6750 | SK 4282 SCP - 90L/4 | SK 4282 SCP - 90LH/4 | SK 4282 SCP - 140TC | | X | X | X | |
| 41 | 3091 | 3.2 | III | 40.74 | 6298 | 6750 | SK 4282 SCP - 90L/4 | SK 4282 SCP - 90LH/4 | SK 4282 SCP - 140TC | | X | X | X | |
| 37 | 3418 | 3.1 | III | 45.05 | 6489 | 6750 | SK 4282 SCP - 90L/4 | SK 4282 SCP - 90LH/4 | SK 4282 SCP - 140TC | | X | X | X | |
| 22 | 5819 | 2.4 | III | 76.7 | 6845 | 6750 | SK 4282 SCP - 90L/4 | SK 4282 SCP - 90LH/4 | SK 4282 SCP - 140TC | | X | X | X | |
| 18 | 6867 | 2.1 | III | 90.52 | 6813 | 6750 | SK 4282 SCP - 90L/4 | SK 4282 SCP - 90LH/4 | SK 4282 SCP - 140TC | | X | X | X | |
| 15 | 8404 | 1.7 | II | 110.78 | 6757 | 6750 | SK 4282 SCP - 90L/4 | SK 4282 SCP - 90LH/4 | SK 4282 SCP - 140TC | | X | X | X | |
| 11 | 11789 | 1 | I | 155.4 | 6590 | 6750 | SK 4282 SCP - 90L/4 | SK 4282 SCP - 90LH/4 | SK 4282 SCP - 140TC | | X | X | X | |
| 191 | 660 | 4.3 | III | 8.7 | 5612 | 9000 | SK 5282 SCP - 90L/4 | SK 5282 SCP - 90LH/4 | SK 5282 SCP - 140TC | | X | X | X | X |
| 128 | 986 | 4.3 | III | 13 | 6318 | 9000 | SK 5282 SCP - 90L/4 | SK 5282 SCP - 90LH/4 | SK 5282 SCP - 140TC | | X | X | X | X |
| 108 | 1167 | 4.3 | III | 15.38 | 6640 | 9000 | SK 5282 SCP - 90L/4 | SK 5282 SCP - 90LH/4 | SK 5282 SCP - 140TC | | X | X | X | X |
| 94 | 1334 | 4.2 | III | 17.59 | 6912 | 9000 | SK 5282 SCP - 90L/4 | SK 5282 SCP - 90LH/4 | SK 5282 SCP - 140TC | | X | X | X | X |
| 88 | 1432 | 4.3 | III | 18.88 | 7056 | 9000 | SK 5282 SCP - 90L/4 | SK 5282 SCP - 90LH/4 | SK 5282 SCP - 140TC | | X | X | X | X |
| 82 | 1545 | 4.2 | III | 20.36 | 7205 | 9000 | SK 5282 SCP - 90L/4 | SK 5282 SCP - 90LH/4 | SK 5282 SCP - 140TC | | X | X | X | X |
| 66 | 1897 | 4.2 | III | 25 | 7657 | 9000 | SK 5282 SCP - 90L/4 | SK 5282 SCP - 90LH/4 | SK 5282 SCP - 140TC | | X | X | X | X |
| 54 | 2314 | 4.1 | III | 30.5 | 8123 | 9000 | SK 5282 SCP - 90L/4 | SK 5282 SCP - 90LH/4 | SK 5282 SCP - 140TC | | X | X | X | X |
| 50 | 2536 | 4.2 | III | 33.43 | 8332 | 9000 | SK 5282 SCP - 90L/4 | SK 5282 SCP - 90LH/4 | SK 5282 SCP - 140TC | | X | X | X | X |
| 41 | 3095 | 4.1 | III | 40.8 | 8811 | 9000 | SK 5282 SCP - 90L/4 | SK 5282 SCP - 90LH/4 | SK 5282 SCP - 140TC | | X | X | X | X |
| 30 | 4214 | 4 | III | 55.55 | 9644 | 9000 | SK 5282 SCP - 90L/4 | SK 5282 SCP - 90LH/4 | SK 5282 SCP - 140TC | | X | X | X | X |
| 20 | 6191 | 2.6 | III | 81.61 | 10015 | 9000 | SK 5282 SCP - 90L/4 | SK 5282 SCP - 90LH/4 | SK 5282 SCP - 140TC | | X | X | X | X |
| 17 | 7601 | 2.6 | III | 100.19 | 9990 | 9000 | SK 5282 SCP - 90L/4 | SK 5282 SCP - 90LH/4 | SK 5282 SCP - 140TC | | X | X | X | X |
| 12 | 10168 | 2.3 | III | 134.03 | 9934 | 9000 | SK 5282 SCP - 90L/4 | SK 5282 SCP - 90LH/4 | SK 5282 SCP - 140TC | | X | X | X | X |

Output speed and torque ratings are based on the "Standard Efficiency Motor" Power and speed. Performance will vary slightly for other motors.

# 3 hp Gearmotors & Speed Reducers



| Output Speed | Output Torque | SF | AGMA Class | Gear Ratio | Thrust | | Integral Gearmotor | | Reducer | CEMA DriveShaft | | | | |
|---|---|---|---|---|---|---|---|---|---|---|---|---|---|---|
| $n_2$ | $T_2$ | $f_a$ | | i | Std Brg | H.D. Brg " VL" | Standard Efficiency Motor | Energy Efficient Motor | C-Face Input | 1-1/2" | 2" | 2-7/16" | 3" | 3-7/16" |
| [rpm] | [lb-in] | | | | [lb] | [lb] | | | | | | | | |
| 356 | 531 | 2.1 | III | 4.79 | 1541 | 1609 | SK 1282 SCP - 100L/4 | SK 1282 SCP - 100LH/4 | SK 1282 SCP - 180TC | X | X | X | | |
| 312 | 607 | 2.5 | III | 5.47 | 1595 | 1609 | SK 1282 SCP - 100L/4 | SK 1282 SCP - 100LH/4 | SK 1282 SCP - 180TC | X | X | X | | |
| 265 | 714 | 2.2 | III | 6.43 | 1667 | 1609 | SK 1282 SCP - 100L/4 | SK 1282 SCP - 100LH/4 | SK 1282 SCP - 180TC | X | X | X | | |
| 235 | 804 | 2.1 | III | 7.24 | 1719 | 1609 | SK 1282 SCP - 100L/4 | SK 1282 SCP - 100LH/4 | SK 1282 SCP - 180TC | X | X | X | | |
| 208 | 912 | 1.6 | II | 8.21 | 1784 | 1609 | SK 1282 SCP - 100L/4 | SK 1282 SCP - 100LH/4 | SK 1282 SCP - 180TC | X | X | X | | |
| 207 | 915 | 1.8 | II | 8.24 | 1775 | 1609 | SK 1282 SCP - 100L/4 | SK 1282 SCP - 100LH/4 | SK 1282 SCP - 180TC | X | X | X | | |
| 186 | 1019 | 1.6 | II | 9.18 | 1832 | 1609 | SK 1282 SCP - 100L/4 | SK 1282 SCP - 100LH/4 | SK 1282 SCP - 180TC | X | X | X | | |
| 165 | 1148 | 1.5 | II | 10.34 | 1886 | 1609 | SK 1282 SCP - 100L/4 | SK 1282 SCP - 100LH/4 | SK 1282 SCP - 180TC | X | X | X | | |
| 145 | 1306 | 1.4 | II | 11.76 | 1944 | 1609 | SK 1282 SCP - 100L/4 | SK 1282 SCP - 100LH/4 | SK 1282 SCP - 180TC | X | X | X | | |
| 121 | 1567 | 1.2 | I | 14.11 | 2039 | 1609 | SK 1282 SCP - 100L/4 | SK 1282 SCP - 100LH/4 | SK 1282 SCP - 180TC | X | X | X | | |
| 99 | 1911 | 1 | I | 17.21 | 2081 | 1609 | SK 1282 SCP - 100L/4 | SK 1282 SCP - 100LH/4 | SK 1282 SCP - 180TC | X | X | X | | |
| 83 | 2284 | 0.9 | * | 20.57 | 2039 | 1609 | SK 1282 SCP - 100L/4 | SK 1282 SCP - 100LH/4 | SK 1282 SCP - 180TC | X | X | X | | |
| 378 | 501 | 3.3 | III | 4.51 | 2012 | 3375 | SK 2282 SCP - 100L/4 | SK 2282 SCP - 100LH/4 | SK 2282 SCP - 180TC | X | X | X | | |
| 298 | 635 | 3 | III | 5.72 | 2151 | 3375 | SK 2282 SCP - 100L/4 | SK 2282 SCP - 100LH/4 | SK 2282 SCP - 180TC | X | X | X | | |
| 265 | 714 | 2.8 | III | 6.43 | 2219 | 3375 | SK 2282 SCP - 100L/4 | SK 2282 SCP - 100LH/4 | SK 2282 SCP - 180TC | X | X | X | | |
| 228 | 831 | 2.6 | III | 7.48 | 2313 | 3375 | SK 2282 SCP - 100L/4 | SK 2282 SCP - 100LH/4 | SK 2282 SCP - 180TC | X | X | X | | |
| 204 | 929 | 2.4 | III | 8.37 | 2385 | 3375 | SK 2282 SCP - 100L/4 | SK 2282 SCP - 100LH/4 | SK 2282 SCP - 180TC | X | X | X | | |
| 189 | 1003 | 3 | III | 9.03 | 2446 | 3375 | SK 2282 SCP - 100L/4 | SK 2282 SCP - 100LH/4 | SK 2282 SCP - 180TC | X | X | X | | |
| 168 | 1127 | 2.8 | III | 10.15 | 2522 | 3375 | SK 2282 SCP - 100L/4 | SK 2282 SCP - 100LH/4 | SK 2282 SCP - 180TC | X | X | X | | |
| 144 | 1311 | 2.6 | III | 11.81 | 2626 | 3375 | SK 2282 SCP - 100L/4 | SK 2282 SCP - 100LH/4 | SK 2282 SCP - 180TC | X | X | X | | |
| 129 | 1469 | 2.4 | III | 13.23 | 2707 | 3375 | SK 2282 SCP - 100L/4 | SK 2282 SCP - 100LH/4 | SK 2282 SCP - 180TC | X | X | X | | |
| 103 | 1835 | 2.3 | III | 16.53 | 2880 | 3375 | SK 2282 SCP - 100L/4 | SK 2282 SCP - 100LH/4 | SK 2282 SCP - 180TC | X | X | X | | |
| 92 | 2055 | 2.1 | III | 18.51 | 2959 | 3375 | SK 2282 SCP - 100L/4 | SK 2282 SCP - 100LH/4 | SK 2282 SCP - 180TC | X | X | X | | |
| 78 | 2432 | 1.7 | II | 21.9 | 3087 | 3375 | SK 2282 SCP - 100L/4 | SK 2282 SCP - 100LH/4 | SK 2282 SCP - 180TC | X | X | X | | |
| 71 | 2660 | 1.4 | II | 23.96 | 3069 | 3375 | SK 2282 SCP - 100L/4 | SK 2282 SCP - 100LH/4 | SK 2282 SCP - 180TC | X | X | X | | |
| 68 | 2773 | 1.6 | II | 24.97 | 3062 | 3375 | SK 2282 SCP - 100L/4 | SK 2282 SCP - 100LH/4 | SK 2282 SCP - 180TC | X | X | X | | |
| 64 | 2979 | 1.3 | I | 26.83 | 3047 | 3375 | SK 2282 SCP - 100L/4 | SK 2282 SCP - 100LH/4 | SK 2282 SCP - 180TC | X | X | X | | |
| 58 | 3292 | 1.3 | I | 29.65 | 3020 | 3375 | SK 2282 SCP - 100L/4 | SK 2282 SCP - 100LH/4 | SK 2282 SCP - 180TC | X | X | X | | |
| 55 | 3468 | 1.1 | I | 31.23 | 3002 | 3375 | SK 2282 SCP - 100L/4 | SK 2282 SCP - 100LH/4 | SK 2282 SCP - 180TC | X | X | X | | |
| 47 | 4057 | 1.1 | I | 36.54 | 2939 | 3375 | SK 2282 SCP - 100L/4 | SK 2282 SCP - 100LH/4 | SK 2282 SCP - 180TC | X | X | X | | |
| 39 | 4853 | 1 | I | 43.71 | 2837 | 3375 | SK 2282 SCP - 100L/4 | SK 2282 SCP - 100LH/4 | SK 2282 SCP - 180TC | X | X | X | | |
| 381 | 497 | 3.7 | III | 4.48 | 2309 | 3569 | SK 3282 SCP - 100L/4 | SK 3282 SCP - 100LH/4 | SK 3282 SCP - 180TC | X | X | X | X | |
| 300 | 631 | 3.6 | III | 5.68 | 2466 | 3818 | SK 3282 SCP - 100L/4 | SK 3282 SCP - 100LH/4 | SK 3282 SCP - 180TC | X | X | X | X | |
| 254 | 744 | 3.4 | III | 6.7 | 2583 | 3992 | SK 3282 SCP - 100L/4 | SK 3282 SCP - 100LH/4 | SK 3282 SCP - 180TC | X | X | X | X | |
| 205 | 923 | 3.1 | III | 8.31 | 2745 | 4230 | SK 3282 SCP - 100L/4 | SK 3282 SCP - 100LH/4 | SK 3282 SCP - 180TC | X | X | X | X | |
| 174 | 1088 | 3.4 | III | 9.8 | 2882 | 4430 | SK 3282 SCP - 100L/4 | SK 3282 SCP - 100LH/4 | SK 3282 SCP - 180TC | X | X | X | X | |
| 150 | 1264 | 3.4 | III | 11.38 | 3004 | 4500 | SK 3282 SCP - 100L/4 | SK 3282 SCP - 100LH/4 | SK 3282 SCP - 180TC | X | X | X | X | |
| 121 | 1567 | 3.1 | III | 14.11 | 3179 | 4500 | SK 3282 SCP - 100L/4 | SK 3282 SCP - 100LH/4 | SK 3282 SCP - 180TC | X | X | X | X | |

Output speed and torque ratings are based on the "Standard Efficiency Motor" Power and speed. Performance will vary slightly for other motors.



# 3 hp Gearmotors & Speed Reducers

| Output Speed | Output Torque | SF | AGMA Class | Gear Ratio | Thrust | | Integral Gearmotor | | Reducer | CEMA DriveShaft | | | | |
|---|---|---|---|---|---|---|---|---|---|---|---|---|---|---|
| $n_2$ | $T_2$ | $f_a$ | | i | Std Brg | H.D. Brg " VL" | Standard Efficiency Motor | Energy Efficient Motor | C-Face Input | 1-1/2" | 2" | 2-7/16" | 3" | 3-7/16" |
| [rpm] | [lb-in] | | | | [lb] | [lb] | | | | | | | | |
| 102 | 1851 | 3.1 | III | 16.67 | 3328 | 4500 | SK 3282 SCP - 100L/4 | SK 3282 SCP - 100LH/4 | SK 3282 SCP - 180TC | X | X | X | X | |
| 84 | 2241 | 3.1 | III | 20.18 | 3503 | 4500 | SK 3282 SCP - 100L/4 | SK 3282 SCP - 100LH/4 | SK 3282 SCP - 180TC | X | X | X | X | |
| 80 | 2374 | 2.7 | III | 21.38 | 3553 | 4500 | SK 3282 SCP - 100L/4 | SK 3282 SCP - 100LH/4 | SK 3282 SCP - 180TC | X | X | X | X | |
| 76 | 2493 | 2.8 | III | 22.45 | 3602 | 4500 | SK 3282 SCP - 100L/4 | SK 3282 SCP - 100LH/4 | SK 3282 SCP - 180TC | X | X | X | X | |
| 72 | 2633 | 2.5 | III | 23.71 | 3647 | 4500 | SK 3282 SCP - 100L/4 | SK 3282 SCP - 100LH/4 | SK 3282 SCP - 180TC | X | X | X | X | |
| 66 | 2874 | 2.6 | III | 25.88 | 3737 | 4500 | SK 3282 SCP - 100L/4 | SK 3282 SCP - 100LH/4 | SK 3282 SCP - 180TC | X | X | X | X | |
| 59 | 3187 | 2.4 | III | 28.7 | 3839 | 4500 | SK 3282 SCP - 100L/4 | SK 3282 SCP - 100LH/4 | SK 3282 SCP - 180TC | X | X | X | X | |
| 53 | 3545 | 2.2 | III | 31.93 | 3935 | 4500 | SK 3282 SCP - 100L/4 | SK 3282 SCP - 100LH/4 | SK 3282 SCP - 180TC | X | X | X | X | |
| 45 | 4194 | 1.8 | II | 37.77 | 4097 | 4500 | SK 3282 SCP - 100L/4 | SK 3282 SCP - 100LH/4 | SK 3282 SCP - 180TC | X | X | X | X | |
| 44 | 4288 | 1.3 | I | 38.62 | 4086 | 4500 | SK 3282 SCP - 100L/4 | SK 3282 SCP - 100LH/4 | SK 3282 SCP - 180TC | X | X | X | X | |
| 41 | 4666 | 1.8 | II | 42.02 | 4205 | 4500 | SK 3282 SCP - 100L/4 | SK 3282 SCP - 100LH/4 | SK 3282 SCP - 180TC | X | X | X | X | |
| 38 | 4980 | 1.3 | I | 44.85 | 4241 | 4500 | SK 3282 SCP - 100L/4 | SK 3282 SCP - 100LH/4 | SK 3282 SCP - 180TC | X | X | X | X | |
| 32 | 5882 | 1.3 | I | 52.97 | 4406 | 4500 | SK 3282 SCP - 100L/4 | SK 3282 SCP - 100LH/4 | SK 3282 SCP - 180TC | X | X | X | X | |
| 27 | 7120 | 1.3 | I | 64.12 | 4604 | 4500 | SK 3282 SCP - 100L/4 | SK 3282 SCP - 100LH/4 | SK 3282 SCP - 180TC | X | X | X | X | |
| 281 | 673 | 4.2 | III | 6.06 | 3593 | 6095 | SK 4282 SCP - 100L/4 | SK 4282 SCP - 100LH/4 | SK 4282 SCP - 180TC | | X | X | X | |
| 239 | 792 | 4 | III | 7.13 | 3764 | 6386 | SK 4282 SCP - 100L/4 | SK 4282 SCP - 100LH/4 | SK 4282 SCP - 180TC | | X | X | X | |
| 205 | 925 | 3.8 | III | 8.33 | 3935 | 6667 | SK 4282 SCP - 100L/4 | SK 4282 SCP - 100LH/4 | SK 4282 SCP - 180TC | | X | X | X | |
| 185 | 1025 | 4.2 | III | 9.23 | 4064 | 6750 | SK 4282 SCP - 100L/4 | SK 4282 SCP - 100LH/4 | SK 4282 SCP - 180TC | | X | X | X | |
| 157 | 1205 | 4 | III | 10.85 | 4250 | 6750 | SK 4282 SCP - 100L/4 | SK 4282 SCP - 100LH/4 | SK 4282 SCP - 180TC | | X | X | X | |
| 134 | 1408 | 3.8 | III | 12.68 | 4444 | 6750 | SK 4282 SCP - 100L/4 | SK 4282 SCP - 100LH/4 | SK 4282 SCP - 180TC | | X | X | X | |
| 112 | 1688 | 3.8 | III | 15.2 | 4685 | 6750 | SK 4282 SCP - 100L/4 | SK 4282 SCP - 100LH/4 | SK 4282 SCP - 180TC | | X | X | X | |
| 94 | 2019 | 3.8 | III | 18.18 | 4921 | 6750 | SK 4282 SCP - 100L/4 | SK 4282 SCP - 100LH/4 | SK 4282 SCP - 180TC | | X | X | X | |
| 79 | 2382 | 3.8 | III | 21.45 | 5162 | 6750 | SK 4282 SCP - 100L/4 | SK 4282 SCP - 100LH/4 | SK 4282 SCP - 180TC | | X | X | X | |
| 76 | 2486 | 3.4 | III | 22.39 | 5218 | 6750 | SK 4282 SCP - 100L/4 | SK 4282 SCP - 100LH/4 | SK 4282 SCP - 180TC | | X | X | X | |
| 65 | 2915 | 3.8 | III | 26.25 | 5472 | 6750 | SK 4282 SCP - 100L/4 | SK 4282 SCP - 100LH/4 | SK 4282 SCP - 180TC | | X | X | X | |
| 65 | 2935 | 3.4 | III | 26.43 | 5472 | 6750 | SK 4282 SCP - 100L/4 | SK 4282 SCP - 100LH/4 | SK 4282 SCP - 180TC | | X | X | X | |
| 53 | 3591 | 3.4 | III | 32.34 | 5778 | 6750 | SK 4282 SCP - 100L/4 | SK 4282 SCP - 100LH/4 | SK 4282 SCP - 180TC | | X | X | X | |
| 47 | 4042 | 3 | III | 36.4 | 5931 | 6750 | SK 4282 SCP - 100L/4 | SK 4282 SCP - 100LH/4 | SK 4282 SCP - 180TC | | X | X | X | |
| 46 | 4087 | 2.9 | III | 36.81 | 5978 | 6750 | SK 4282 SCP - 100L/4 | SK 4282 SCP - 100LH/4 | SK 4282 SCP - 180TC | | X | X | X | |
| 42 | 4524 | 3 | III | 40.74 | 6156 | 6750 | SK 4282 SCP - 100L/4 | SK 4282 SCP - 100LH/4 | SK 4282 SCP - 180TC | | X | X | X | |
| 39 | 4847 | 2.9 | III | 43.65 | 6228 | 6750 | SK 4282 SCP - 100L/4 | SK 4282 SCP - 100LH/4 | SK 4282 SCP - 180TC | | X | X | X | |
| 38 | 5002 | 2.8 | III | 45.05 | 6305 | 6750 | SK 4282 SCP - 100L/4 | SK 4282 SCP - 100LH/4 | SK 4282 SCP - 180TC | | X | X | X | |
| 33 | 5796 | 2.8 | III | 52.2 | 6523 | 6750 | SK 4282 SCP - 100L/4 | SK 4282 SCP - 100LH/4 | SK 4282 SCP - 180TC | | X | X | X | |
| 28 | 6840 | 2.3 | III | 61.6 | 6813 | 6750 | SK 4282 SCP - 100L/4 | SK 4282 SCP - 100LH/4 | SK 4282 SCP - 180TC | | X | X | X | |
| 23 | 8371 | 1.7 | II | 75.39 | 6757 | 6750 | SK 4282 SCP - 100L/4 | SK 4282 SCP - 100LH/4 | SK 4282 SCP - 180TC | | X | X | X | |
| 22 | 8517 | 1.7 | II | 76.7 | 6752 | 6750 | SK 4282 SCP - 100L/4 | SK 4282 SCP - 100LH/4 | SK 4282 SCP - 180TC | | X | X | X | |
| 19 | 10051 | 1.4 | II | 90.52 | 6683 | 6750 | SK 4282 SCP - 100L/4 | SK 4282 SCP - 100LH/4 | SK 4282 SCP - 180TC | | X | X | X | |
| 15 | 12301 | 1.2 | I | 110.78 | 6559 | 6750 | SK 4282 SCP - 100L/4 | SK 4282 SCP - 100LH/4 | SK 4282 SCP - 180TC | | X | X | X | |

Output speed and torque ratings are based on the "Standard Efficiency Motor" Power and speed. Performance will vary slightly for other motors.

# 3 hp Gearmotors & Speed Reducers



| Output Speed | Output Torque | SF | AGMA Class | Gear Ratio | Thrust | | Integral Gearmotor | | Reducer | CEMA DriveShaft | | | | |
|---|---|---|---|---|---|---|---|---|---|---|---|---|---|---|
| $n_2$ | $T_2$ | $f_a$ | | i | Std Brg | H.D. Brg " VL" | Standard Efficiency Motor | Energy Efficient Motor | C-Face Input | 1-1/2" | 2" | 2-7/16" | 3" | 3-7/16" |
| [rpm] | [lb-in] | | | | [lb] | [lb] | | | | | | | | |
| 269 | 703 | 4.7 | III | 6.33 | 5056 | 8498 | SK 5282 SCP - 100L/4 | SK 5282 SCP - 100LH/4 | SK 5282 SCP - 180TC | | X | X | X | X |
| 238 | 796 | 4.8 | III | 7.17 | 5245 | 8831 | SK 5282 SCP - 100L/4 | SK 5282 SCP - 100LH/4 | SK 5282 SCP - 180TC | | X | X | X | X |
| 196 | 966 | 4.4 | III | 8.7 | 5549 | 9000 | SK 5282 SCP - 100L/4 | SK 5282 SCP - 100LH/4 | SK 5282 SCP - 180TC | | X | X | X | X |
| 180 | 1050 | 4.7 | III | 9.46 | 5702 | 9000 | SK 5282 SCP - 100L/4 | SK 5282 SCP - 100LH/4 | SK 5282 SCP - 180TC | | X | X | X | X |
| 159 | 1189 | 4.8 | III | 10.71 | 5897 | 9000 | SK 5282 SCP - 100L/4 | SK 5282 SCP - 100LH/4 | SK 5282 SCP - 180TC | | X | X | X | X |
| 131 | 1443 | 4.4 | III | 13 | 6246 | 9000 | SK 5282 SCP - 100L/4 | SK 5282 SCP - 100LH/4 | SK 5282 SCP - 180TC | | X | X | X | X |
| 111 | 1708 | 4.4 | III | 15.38 | 6566 | 9000 | SK 5282 SCP - 100L/4 | SK 5282 SCP - 100LH/4 | SK 5282 SCP - 180TC | | X | X | X | X |
| 97 | 1953 | 4.2 | III | 17.59 | 6811 | 9000 | SK 5282 SCP - 100L/4 | SK 5282 SCP - 100LH/4 | SK 5282 SCP - 180TC | | X | X | X | X |
| 90 | 2096 | 4.4 | III | 18.88 | 6953 | 9000 | SK 5282 SCP - 100L/4 | SK 5282 SCP - 100LH/4 | SK 5282 SCP - 180TC | | X | X | X | X |
| 84 | 2261 | 4 | III | 20.36 | 7099 | 9000 | SK 5282 SCP - 100L/4 | SK 5282 SCP - 100LH/4 | SK 5282 SCP - 180TC | | X | X | X | X |
| 68 | 2776 | 4 | III | 25 | 7542 | 9000 | SK 5282 SCP - 100L/4 | SK 5282 SCP - 100LH/4 | SK 5282 SCP - 180TC | | X | X | X | X |
| 56 | 3387 | 3.6 | III | 30.5 | 7974 | 9000 | SK 5282 SCP - 100L/4 | SK 5282 SCP - 100LH/4 | SK 5282 SCP - 180TC | | X | X | X | X |
| 51 | 3712 | 4 | III | 33.43 | 8206 | 9000 | SK 5282 SCP - 100L/4 | SK 5282 SCP - 100LH/4 | SK 5282 SCP - 180TC | | X | X | X | X |
| 42 | 4530 | 3.6 | III | 40.8 | 8658 | 9000 | SK 5282 SCP - 100L/4 | SK 5282 SCP - 100LH/4 | SK 5282 SCP - 180TC | | X | X | X | X |
| 36 | 5249 | 4 | III | 47.27 | 8991 | 9000 | SK 5282 SCP - 100L/4 | SK 5282 SCP - 100LH/4 | SK 5282 SCP - 180TC | | X | X | X | X |
| 31 | 6168 | 3.1 | III | 55.55 | 9423 | 9000 | SK 5282 SCP - 100L/4 | SK 5282 SCP - 100LH/4 | SK 5282 SCP - 180TC | | X | X | X | X |
| 31 | 6207 | 3.7 | III | 55.9 | 9421 | 9000 | SK 5282 SCP - 100L/4 | SK 5282 SCP - 100LH/4 | SK 5282 SCP - 180TC | | X | X | X | X |
| 25 | 7621 | 3.4 | III | 68.63 | 9956 | 9000 | SK 5282 SCP - 100L/4 | SK 5282 SCP - 100LH/4 | SK 5282 SCP - 180TC | | X | X | X | X |
| 21 | 9062 | 1.8 | II | 81.61 | 9961 | 9000 | SK 5282 SCP - 100L/4 | SK 5282 SCP - 100LH/4 | SK 5282 SCP - 180TC | | X | X | X | X |
| 19 | 10194 | 2.4 | III | 91.81 | 9934 | 9000 | SK 5282 SCP - 100L/4 | SK 5282 SCP - 100LH/4 | SK 5282 SCP - 180TC | | X | X | X | X |
| 17 | 11125 | 1.8 | II | 100.19 | 9909 | 9000 | SK 5282 SCP - 100L/4 | SK 5282 SCP - 100LH/4 | SK 5282 SCP - 180TC | | X | X | X | X |
| 13 | 14882 | 1.6 | II | 134.03 | 9790 | 9000 | SK 5282 SCP - 100L/4 | SK 5282 SCP - 100LH/4 | SK 5282 SCP - 180TC | | X | X | X | X |
| 253 | 748 | 5.1 | III | 6.74 | 7515 | 10845 | SK 6282 SCP - 100L/4 | SK 6282 SCP - 100LH/4 | SK 6282 SCP - 180TC | | | | X | X |
| 218 | 868 | 4.9 | III | 7.82 | 7835 | 11324 | SK 6282 SCP - 100L/4 | SK 6282 SCP - 100LH/4 | SK 6282 SCP - 180TC | | | | X | X |
| 182 | 1043 | 4.6 | III | 9.39 | 8273 | 11979 | SK 6282 SCP - 100L/4 | SK 6282 SCP - 100LH/4 | SK 6282 SCP - 180TC | | | | X | X |
| 160 | 1181 | 5.1 | III | 10.64 | 8586 | 12409 | SK 6282 SCP - 100L/4 | SK 6282 SCP - 100LH/4 | SK 6282 SCP - 180TC | | | | X | X |
| 138 | 1371 | 4.9 | III | 12.35 | 8964 | 12978 | SK 6282 SCP - 100L/4 | SK 6282 SCP - 100LH/4 | SK 6282 SCP - 180TC | | | | X | X |
| 115 | 1647 | 4.6 | III | 14.83 | 9482 | 13500 | SK 6282 SCP - 100L/4 | SK 6282 SCP - 100LH/4 | SK 6282 SCP - 180TC | | | | X | X |
| 91 | 2076 | 4.6 | III | 18.7 | 10125 | 13500 | SK 6282 SCP - 100L/4 | SK 6282 SCP - 100LH/4 | SK 6282 SCP - 180TC | | | | X | X |
| 74 | 2548 | 4.6 | III | 22.95 | 10760 | 13500 | SK 6282 SCP - 100L/4 | SK 6282 SCP - 100LH/4 | SK 6282 SCP - 180TC | | | | X | X |
| 65 | 2893 | 4.4 | III | 26.05 | 11162 | 13500 | SK 6282 SCP - 100L/4 | SK 6282 SCP - 100LH/4 | SK 6282 SCP - 180TC | | | | X | X |
| 57 | 3320 | 4.2 | III | 29.9 | 11617 | 13500 | SK 6282 SCP - 100L/4 | SK 6282 SCP - 100LH/4 | SK 6282 SCP - 180TC | | | | X | X |
| 26 | 7266 | 4.1 | III | 65.44 | 13219 | 13500 | SK 6282 SCP - 100L/4 | SK 6282 SCP - 100LH/4 | SK 6282 SCP - 180TC | | | | X | X |
| 21 | 8920 | 4.1 | III | 80.33 | 13199 | 13500 | SK 6282 SCP - 100L/4 | SK 6282 SCP - 100LH/4 | SK 6282 SCP - 180TC | | | | X | X |

Output speed and torque ratings are based on the "Standard Efficiency Motor" Power and speed. Performance will vary slightly for other motors.



# 5 hp Gearmotors & Speed Reducers

| Output Speed | Output Torque | SF | AGMA Class | Gear Ratio | Thrust | | Integral Gearmotor | | Reducer | CEMA DriveShaft | | | | |
|---|---|---|---|---|---|---|---|---|---|---|---|---|---|---|
| $n_2$ | $T_2$ | $f_a$ | | i | Std Brg | H.D. Brg " VL" | Standard Efficiency Motor | Energy Efficient Motor | C-Face Input | 1-1/2" | 2" | 2-7/16" | 3" | 3-7/16" |
| [rpm] | [lb-in] | | | | [lb] | [lb] | | | | | | | | |
| 360 | 875 | 1.3 | I | 4.79 | 1487 | 1609 | SK 1282 SCP - 100LA/4 | SK 1282 SCP - 112MH/4 | SK 1282 SCP - 180TC | X | X | X | | |
| 315 | 1000 | 1.5 | II | 5.47 | 1537 | 1609 | SK 1282 SCP - 100LA/4 | SK 1282 SCP - 112MH/4 | SK 1282 SCP - 180TC | X | X | X | | |
| 268 | 1175 | 1.4 | II | 6.43 | 1595 | 1609 | SK 1282 SCP - 100LA/4 | SK 1282 SCP - 112MH/4 | SK 1282 SCP - 180TC | X | X | X | | |
| 238 | 1323 | 1.3 | I | 7.24 | 1638 | 1609 | SK 1282 SCP - 100LA/4 | SK 1282 SCP - 112MH/4 | SK 1282 SCP - 180TC | X | X | X | | |
| 210 | 1500 | 0.9 | * | 8.21 | 1701 | 1609 | SK 1282 SCP - 100LA/4 | SK 1282 SCP - 112MH/4 | SK 1282 SCP - 180TC | X | X | X | | |
| 209 | 1506 | 1.1 | I | 8.24 | 1683 | 1609 | SK 1282 SCP - 100LA/4 | SK 1282 SCP - 112MH/4 | SK 1282 SCP - 180TC | X | X | X | | |
| 188 | 1678 | 1 | I | 9.18 | 1737 | 1609 | SK 1282 SCP - 100LA/4 | SK 1282 SCP - 112MH/4 | SK 1282 SCP - 180TC | X | X | X | | |
| 167 | 1890 | 0.9 | * | 10.34 | 1780 | 1609 | SK 1282 SCP - 100LA/4 | SK 1282 SCP - 112MH/4 | SK 1282 SCP - 180TC | X | X | X | | |
| 382 | 824 | 2 | III | 4.51 | 1969 | 3375 | SK 2282 SCP - 100LA/4 | SK 2282 SCP - 112MH/4 | SK 2282 SCP - 180TC | X | X | X | | |
| 302 | 1045 | 1.8 | II | 5.72 | 2099 | 3375 | SK 2282 SCP - 100LA/4 | SK 2282 SCP - 112MH/4 | SK 2282 SCP - 180TC | X | X | X | | |
| 268 | 1175 | 1.7 | II | 6.43 | 2162 | 3375 | SK 2282 SCP - 100LA/4 | SK 2282 SCP - 112MH/4 | SK 2282 SCP - 180TC | X | X | X | | |
| 231 | 1367 | 1.6 | II | 7.48 | 2246 | 3375 | SK 2282 SCP - 100LA/4 | SK 2282 SCP - 112MH/4 | SK 2282 SCP - 180TC | X | X | X | | |
| 206 | 1530 | 1.5 | II | 8.37 | 2311 | 3375 | SK 2282 SCP - 100LA/4 | SK 2282 SCP - 112MH/4 | SK 2282 SCP - 180TC | X | X | X | | |
| 191 | 1650 | 1.8 | II | 9.03 | 2372 | 3375 | SK 2282 SCP - 100LA/4 | SK 2282 SCP - 112MH/4 | SK 2282 SCP - 180TC | X | X | X | | |
| 170 | 1855 | 1.7 | II | 10.15 | 2437 | 3375 | SK 2282 SCP - 100LA/4 | SK 2282 SCP - 112MH/4 | SK 2282 SCP - 180TC | X | X | X | | |
| 146 | 2158 | 1.6 | II | 11.81 | 2536 | 3375 | SK 2282 SCP - 100LA/4 | SK 2282 SCP - 112MH/4 | SK 2282 SCP - 180TC | X | X | X | | |
| 130 | 2418 | 1.5 | II | 13.23 | 2601 | 3375 | SK 2282 SCP - 100LA/4 | SK 2282 SCP - 112MH/4 | SK 2282 SCP - 180TC | X | X | X | | |
| 104 | 3021 | 1.4 | II | 16.53 | 2750 | 3375 | SK 2282 SCP - 100LA/4 | SK 2282 SCP - 112MH/4 | SK 2282 SCP - 180TC | X | X | X | | |
| 93 | 3383 | 1.3 | I | 18.51 | 2815 | 3375 | SK 2282 SCP - 100LA/4 | SK 2282 SCP - 112MH/4 | SK 2282 SCP - 180TC | X | X | X | | |
| 79 | 4002 | 1.1 | I | 21.9 | 2918 | 3375 | SK 2282 SCP - 100LA/4 | SK 2282 SCP - 112MH/4 | SK 2282 SCP - 180TC | X | X | X | | |
| 72 | 4379 | 0.9 | * | 23.96 | 2900 | 3375 | SK 2282 SCP - 100LA/4 | SK 2282 SCP - 112MH/4 | SK 2282 SCP - 180TC | X | X | X | | |
| 69 | 4563 | 1 | I | 24.97 | 2876 | 3375 | SK 2282 SCP - 100LA/4 | SK 2282 SCP - 112MH/4 | SK 2282 SCP - 180TC | X | X | X | | |
| 385 | 819 | 2.3 | III | 4.48 | 2264 | 3490 | SK 3282 SCP - 100LA/4 | SK 3282 SCP - 112MH/4 | SK 3282 SCP - 180TC | X | X | X | X | |
| 304 | 1038 | 2.2 | III | 5.68 | 2417 | 3715 | SK 3282 SCP - 100LA/4 | SK 3282 SCP - 112MH/4 | SK 3282 SCP - 180TC | X | X | X | X | |
| 257 | 1224 | 2.1 | III | 6.7 | 2527 | 3872 | SK 3282 SCP - 100LA/4 | SK 3282 SCP - 112MH/4 | SK 3282 SCP - 180TC | X | X | X | X | |
| 208 | 1519 | 1.9 | II | 8.31 | 2675 | 4091 | SK 3282 SCP - 100LA/4 | SK 3282 SCP - 112MH/4 | SK 3282 SCP - 180TC | X | X | X | X | |
| 176 | 1791 | 2.1 | III | 9.8 | 2799 | 4277 | SK 3282 SCP - 100LA/4 | SK 3282 SCP - 112MH/4 | SK 3282 SCP - 180TC | X | X | X | X | |
| 152 | 2080 | 2.1 | III | 11.38 | 2912 | 4446 | SK 3282 SCP - 100LA/4 | SK 3282 SCP - 112MH/4 | SK 3282 SCP - 180TC | X | X | X | X | |
| 122 | 2579 | 1.9 | II | 14.11 | 3074 | 4500 | SK 3282 SCP - 100LA/4 | SK 3282 SCP - 112MH/4 | SK 3282 SCP - 180TC | X | X | X | X | |
| 103 | 3047 | 1.9 | II | 16.67 | 3206 | 4500 | SK 3282 SCP - 100LA/4 | SK 3282 SCP - 112MH/4 | SK 3282 SCP - 180TC | X | X | X | X | |
| 85 | 3688 | 1.9 | II | 20.18 | 3359 | 4500 | SK 3282 SCP - 100LA/4 | SK 3282 SCP - 112MH/4 | SK 3282 SCP - 180TC | X | X | X | X | |
| 81 | 3907 | 1.6 | II | 21.38 | 3398 | 4500 | SK 3282 SCP - 100LA/4 | SK 3282 SCP - 112MH/4 | SK 3282 SCP - 180TC | X | X | X | X | |
| 77 | 4103 | 1.7 | II | 22.45 | 3447 | 4500 | SK 3282 SCP - 100LA/4 | SK 3282 SCP - 112MH/4 | SK 3282 SCP - 180TC | X | X | X | X | |
| 73 | 4333 | 1.5 | II | 23.71 | 3474 | 4500 | SK 3282 SCP - 100LA/4 | SK 3282 SCP - 112MH/4 | SK 3282 SCP - 180TC | X | X | X | X | |
| 67 | 4730 | 1.6 | II | 25.88 | 3553 | 4500 | SK 3282 SCP - 100LA/4 | SK 3282 SCP - 112MH/4 | SK 3282 SCP - 180TC | X | X | X | X | |
| 60 | 5245 | 1.5 | II | 28.7 | 3632 | 4500 | SK 3282 SCP - 100LA/4 | SK 3282 SCP - 112MH/4 | SK 3282 SCP - 180TC | X | X | X | X | |
| 54 | 5835 | 1.3 | I | 31.93 | 3713 | 4500 | SK 3282 SCP - 100LA/4 | SK 3282 SCP - 112MH/4 | SK 3282 SCP - 180TC | X | X | X | X | |
| 46 | 6903 | 1.1 | I | 37.77 | 3830 | 4500 | SK 3282 SCP - 100LA/4 | SK 3282 SCP - 112MH/4 | SK 3282 SCP - 180TC | X | X | X | X | |
| 41 | 7679 | 1.1 | I | 42.02 | 3906 | 4500 | SK 3282 SCP - 100LA/4 | SK 3282 SCP - 112MH/4 | SK 3282 SCP - 180TC | X | X | X | X | |

Output speed and torque ratings are based on the "Standard Efficiency Motor" Power and speed. Performance will vary slightly for other motors.

# 5 hp Gearmotors & Speed Reducers



| Output Speed | Output Torque | SF | AGMA Class | Gear Ratio | Thrust | | Integral Gearmotor | | Reducer | CEMA DriveShaft | | | | |
|---|---|---|---|---|---|---|---|---|---|---|---|---|---|---|
| $n_2$ | $T_2$ | $f_a$ | | i | Std Brg | H.D. Brg " VL" | Standard Efficiency Motor | Energy Efficient Motor | C-Face Input | 1-1/2" | 2" | 2-7/16" | 3" | 3-7/16" |
| [rpm] | [lb-in] | | | | [lb] | [lb] | | | | | | | | |
| 285 | 1107 | 2.5 | III | 6.06 | 3542 | 5987 | SK 4282 SCP - 100LA/4 | SK 4282 SCP - 112MH/4 | SK 4282 SCP - 180TC | | X | X | X | |
| 242 | 1303 | 2.4 | III | 7.13 | 3708 | 6264 | SK 4282 SCP - 100LA/4 | SK 4282 SCP - 112MH/4 | SK 4282 SCP - 180TC | | X | X | X | |
| 207 | 1522 | 2.3 | III | 8.33 | 3879 | 6530 | SK 4282 SCP - 100LA/4 | SK 4282 SCP - 112MH/4 | SK 4282 SCP - 180TC | | X | X | X | |
| 187 | 1687 | 2.5 | III | 9.23 | 3998 | 6743 | SK 4282 SCP - 100LA/4 | SK 4282 SCP - 112MH/4 | SK 4282 SCP - 180TC | | X | X | X | |
| 159 | 1983 | 2.4 | III | 10.85 | 4172 | 6750 | SK 4282 SCP - 100LA/4 | SK 4282 SCP - 112MH/4 | SK 4282 SCP - 180TC | | X | X | X | |
| 136 | 2317 | 2.3 | III | 12.68 | 4354 | 6750 | SK 4282 SCP - 100LA/4 | SK 4282 SCP - 112MH/4 | SK 4282 SCP - 180TC | | X | X | X | |
| 113 | 2778 | 2.3 | III | 15.2 | 4581 | 6750 | SK 4282 SCP - 100LA/4 | SK 4282 SCP - 112MH/4 | SK 4282 SCP - 180TC | | X | X | X | |
| 95 | 3322 | 2.3 | III | 18.18 | 4808 | 6750 | SK 4282 SCP - 100LA/4 | SK 4282 SCP - 112MH/4 | SK 4282 SCP - 180TC | | X | X | X | |
| 80 | 3920 | 2.3 | III | 21.45 | 5031 | 6750 | SK 4282 SCP - 100LA/4 | SK 4282 SCP - 112MH/4 | SK 4282 SCP - 180TC | | X | X | X | |
| 77 | 4092 | 2.1 | III | 22.39 | 5076 | 6750 | SK 4282 SCP - 100LA/4 | SK 4282 SCP - 112MH/4 | SK 4282 SCP - 180TC | | X | X | X | |
| 66 | 4797 | 2.3 | III | 26.25 | 5299 | 6750 | SK 4282 SCP - 100LA/4 | SK 4282 SCP - 112MH/4 | SK 4282 SCP - 180TC | | X | X | X | |
| 65 | 4830 | 2.1 | III | 26.43 | 5306 | 6750 | SK 4282 SCP - 100LA/4 | SK 4282 SCP - 112MH/4 | SK 4282 SCP - 180TC | | X | X | X | |
| 53 | 5910 | 2.1 | III | 32.34 | 5589 | 6750 | SK 4282 SCP - 100LA/4 | SK 4282 SCP - 112MH/4 | SK 4282 SCP - 180TC | | X | X | X | |
| 47 | 6652 | 1.8 | II | 36.4 | 5697 | 6750 | SK 4282 SCP - 100LA/4 | SK 4282 SCP - 112MH/4 | SK 4282 SCP - 180TC | | X | X | X | |
| 47 | 6727 | 1.7 | II | 36.81 | 5751 | 6750 | SK 4282 SCP - 100LA/4 | SK 4282 SCP - 112MH/4 | SK 4282 SCP - 180TC | | X | X | X | |
| 42 | 7445 | 1.8 | II | 40.74 | 5900 | 6750 | SK 4282 SCP - 100LA/4 | SK 4282 SCP - 112MH/4 | SK 4282 SCP - 180TC | | X | X | X | |
| 40 | 7977 | 1.8 | II | 43.65 | 5958 | 6750 | SK 4282 SCP - 100LA/4 | SK 4282 SCP - 112MH/4 | SK 4282 SCP - 180TC | | X | X | X | |
| 38 | 8233 | 1.7 | II | 45.05 | 6055 | 6750 | SK 4282 SCP - 100LA/4 | SK 4282 SCP - 112MH/4 | SK 4282 SCP - 180TC | | X | X | X | |
| 33 | 9540 | 1.7 | II | 52.2 | 6210 | 6750 | SK 4282 SCP - 100LA/4 | SK 4282 SCP - 112MH/4 | SK 4282 SCP - 180TC | | X | X | X | |
| 28 | 11258 | 1.4 | II | 61.6 | 6451 | 6750 | SK 4282 SCP - 100LA/4 | SK 4282 SCP - 112MH/4 | SK 4282 SCP - 180TC | | X | X | X | |
| 23 | 13778 | 1 | I | 75.39 | 6464 | 6750 | SK 4282 SCP - 100LA/4 | SK 4282 SCP - 112MH/4 | SK 4282 SCP - 180TC | | X | X | X | |
| 22 | 14017 | 1 | I | 76.7 | 6446 | 6750 | SK 4282 SCP - 100LA/4 | SK 4282 SCP - 112MH/4 | SK 4282 SCP - 180TC | | X | X | X | |
| 19 | 16543 | 0.9 | * | 90.52 | 6251 | 6750 | SK 4282 SCP - 100LA/4 | SK 4282 SCP - 112MH/4 | SK 4282 SCP - 180TC | | X | X | X | |
| 273 | 1157 | 2.9 | III | 6.33 | 5006 | 8417 | SK 5282 SCP - 100LA/4 | SK 5282 SCP - 112MH/4 | SK 5282 SCP - 180TC | | X | X | X | X |
| 241 | 1310 | 2.9 | III | 7.17 | 5186 | 8719 | SK 5282 SCP - 100LA/4 | SK 5282 SCP - 112MH/4 | SK 5282 SCP - 180TC | | X | X | X | X |
| 198 | 1590 | 2.7 | III | 8.7 | 5486 | 9000 | SK 5282 SCP - 100LA/4 | SK 5282 SCP - 112MH/4 | SK 5282 SCP - 180TC | | X | X | X | X |
| 182 | 1729 | 2.9 | III | 9.46 | 5627 | 9000 | SK 5282 SCP - 100LA/4 | SK 5282 SCP - 112MH/4 | SK 5282 SCP - 180TC | | X | X | X | X |
| 161 | 1957 | 2.9 | III | 10.71 | 5830 | 9000 | SK 5282 SCP - 100LA/4 | SK 5282 SCP - 112MH/4 | SK 5282 SCP - 180TC | | X | X | X | X |

Output speed and torque ratings are based on the "Standard Efficiency Motor" Power and speed. Performance will vary slightly for other motors.



# 5 hp Gearmotors & Speed Reducers

| Output Speed | Output Torque | SF | AGMA Class | Gear Ratio | Thrust | | Integral Gearmotor | | Reducer | CEMA DriveShaft | | | | |
|---|---|---|---|---|---|---|---|---|---|---|---|---|---|---|
| $n_2$ | $T_2$ | $f_a$ | | i | Std Brg | H.D. Brg " VL" | Standard Efficiency Motor | Energy Efficient Motor | C-Face Input | 1-1/2" | 2" | 2-7/16" | 3" | 3-7/16" |
| [rpm] | [lb-in] | | | | [lb] | [lb] | | | | | | | | |
| 133 | 2376 | 2.7 | III | 13 | 6154 | 9000 | SK 5282 SCP - 100LA/4 | SK 5282 SCP - 112MH/4 | SK 5282 SCP - 180TC | | X | X | X | X |
| 112 | 2811 | 2.7 | III | 15.38 | 6455 | 9000 | SK 5282 SCP - 100LA/4 | SK 5282 SCP - 112MH/4 | SK 5282 SCP - 180TC | | X | X | X | X |
| 98 | 3215 | 2.5 | III | 17.59 | 6707 | 9000 | SK 5282 SCP - 100LA/4 | SK 5282 SCP - 112MH/4 | SK 5282 SCP - 180TC | | X | X | X | X |
| 91 | 3450 | 2.7 | III | 18.88 | 6847 | 9000 | SK 5282 SCP - 100LA/4 | SK 5282 SCP - 112MH/4 | SK 5282 SCP - 180TC | | X | X | X | X |
| 85 | 3721 | 2.4 | III | 20.36 | 6980 | 9000 | SK 5282 SCP - 100LA/4 | SK 5282 SCP - 112MH/4 | SK 5282 SCP - 180TC | | X | X | X | X |
| 69 | 4569 | 2.4 | III | 25 | 7400 | 9000 | SK 5282 SCP - 100LA/4 | SK 5282 SCP - 112MH/4 | SK 5282 SCP - 180TC | | X | X | X | X |
| 57 | 5574 | 2.2 | III | 30.5 | 7805 | 9000 | SK 5282 SCP - 100LA/4 | SK 5282 SCP - 112MH/4 | SK 5282 SCP - 180TC | | X | X | X | X |
| 52 | 6109 | 2.4 | III | 33.43 | 8015 | 9000 | SK 5282 SCP - 100LA/4 | SK 5282 SCP - 112MH/4 | SK 5282 SCP - 180TC | | X | X | X | X |
| 42 | 7456 | 2.2 | III | 40.8 | 8444 | 9000 | SK 5282 SCP - 100LA/4 | SK 5282 SCP - 112MH/4 | SK 5282 SCP - 180TC | | X | X | X | X |
| 36 | 8639 | 2.5 | III | 47.27 | 8741 | 9000 | SK 5282 SCP - 100LA/4 | SK 5282 SCP - 112MH/4 | SK 5282 SCP - 180TC | | X | X | X | X |
| 31 | 10152 | 1.9 | II | 55.55 | 9140 | 9000 | SK 5282 SCP - 100LA/4 | SK 5282 SCP - 112MH/4 | SK 5282 SCP - 180TC | | X | X | X | X |
| 31 | 10216 | 2.3 | III | 55.9 | 9108 | 9000 | SK 5282 SCP - 100LA/4 | SK 5282 SCP - 112MH/4 | SK 5282 SCP - 180TC | | X | X | X | X |
| 25 | 12542 | 2.1 | III | 68.63 | 9603 | 9000 | SK 5282 SCP - 100LA/4 | SK 5282 SCP - 112MH/4 | SK 5282 SCP - 180TC | | X | X | X | X |
| 21 | 14915 | 1.1 | I | 81.61 | 9788 | 9000 | SK 5282 SCP - 100LA/4 | SK 5282 SCP - 112MH/4 | SK 5282 SCP - 180TC | | X | X | X | X |
| 19 | 16779 | 1.5 | II | 91.81 | 9716 | 9000 | SK 5282 SCP - 100LA/4 | SK 5282 SCP - 112MH/4 | SK 5282 SCP - 180TC | | X | X | X | X |
| 17 | 18310 | 1.1 | I | 100.19 | 9648 | 9000 | SK 5282 SCP - 100LA/4 | SK 5282 SCP - 112MH/4 | SK 5282 SCP - 180TC | | X | X | X | X |
| 13 | 24494 | 1 | I | 134.03 | 9308 | 9000 | SK 5282 SCP - 100LA/4 | SK 5282 SCP - 112MH/4 | SK 5282 SCP - 180TC | | X | X | X | X |
| 256 | 1232 | 3.1 | III | 6.74 | 7432 | 10742 | SK 6282 SCP - 100LA/4 | SK 6282 SCP - 112MH/4 | SK 6282 SCP - 180TC | | | | X | X |
| 221 | 1429 | 3 | III | 7.82 | 7772 | 11216 | SK 6282 SCP - 100LA/4 | SK 6282 SCP - 112MH/4 | SK 6282 SCP - 180TC | | | | X | X |
| 184 | 1716 | 2.8 | III | 9.39 | 8195 | 11846 | SK 6282 SCP - 100LA/4 | SK 6282 SCP - 112MH/4 | SK 6282 SCP - 180TC | | | | X | X |
| 162 | 1945 | 3.1 | III | 10.64 | 8501 | 12290 | SK 6282 SCP - 100LA/4 | SK 6282 SCP - 112MH/4 | SK 6282 SCP - 180TC | | | | X | X |
| 140 | 2257 | 3 | III | 12.35 | 8876 | 12854 | SK 6282 SCP - 100LA/4 | SK 6282 SCP - 112MH/4 | SK 6282 SCP - 180TC | | | | X | X |
| 116 | 2710 | 2.8 | III | 14.83 | 9358 | 13500 | SK 6282 SCP - 100LA/4 | SK 6282 SCP - 112MH/4 | SK 6282 SCP - 180TC | | | | X | X |
| 92 | 3417 | 2.8 | III | 18.7 | 10008 | 13500 | SK 6282 SCP - 100LA/4 | SK 6282 SCP - 112MH/4 | SK 6282 SCP - 180TC | | | | X | X |
| 75 | 4194 | 2.8 | III | 22.95 | 10616 | 13500 | SK 6282 SCP - 100LA/4 | SK 6282 SCP - 112MH/4 | SK 6282 SCP - 180TC | | | | X | X |
| 66 | 4761 | 2.7 | III | 26.05 | 10994 | 13500 | SK 6282 SCP - 100LA/4 | SK 6282 SCP - 112MH/4 | SK 6282 SCP - 180TC | | | | X | X |
| 58 | 5464 | 2.5 | III | 29.9 | 11439 | 13500 | SK 6282 SCP - 100LA/4 | SK 6282 SCP - 112MH/4 | SK 6282 SCP - 180TC | | | | X | X |
| 26 | 11959 | 2.5 | III | 65.44 | 13149 | 13500 | SK 6282 SCP - 100LA/4 | SK 6282 SCP - 112MH/4 | SK 6282 SCP - 180TC | | | | X | X |
| 21 | 14681 | 2.5 | III | 80.33 | 13095 | 13500 | SK 6282 SCP - 100LA/4 | SK 6282 SCP - 112MH/4 | SK 6282 SCP - 180TC | | | | X | X |

Output speed and torque ratings are based on the "Standard Efficiency Motor" Power and speed. Performance will vary slightly for other motors.

# 7.5 hp Gearmotors & Speed Reducers



| Output Speed | Output Torque | SF | AGMA Class | Gear Ratio | Thrust | | Integral Gearmotor | | Reducer | CEMA DriveShaft | | | | |
|---|---|---|---|---|---|---|---|---|---|---|---|---|---|---|
| $n_2$ | $T_2$ | $f_a$ | | i | Std Brg | H.D. Brg " VL" | Standard Efficiency Motor | Energy Efficient Motor | C-Face Input | 1-1/2" | 2" | 2-7/16" | 3" | 3-7/16" |
| [rpm] | [lb-in] | | | | [lb] | [lb] | | | | | | | | |
| 387 | 1221 | 3.3 | III | 4.48 | 2219 | 3402 | SK 3282 SCP - 132S/4 | SK 3282 SCP - 132SH/4 | SK 3282 SCP - 210TC | X | X | X | X | |
| 305 | 1547 | 3.2 | III | 5.68 | 2360 | 3602 | SK 3282 SCP - 132S/4 | SK 3282 SCP - 132SH/4 | SK 3282 SCP - 210TC | X | X | X | X | |
| 259 | 1824 | 2.9 | III | 6.7 | 2459 | 3744 | SK 3282 SCP - 132S/4 | SK 3282 SCP - 132SH/4 | SK 3282 SCP - 210TC | X | X | X | X | |
| 209 | 2263 | 2.6 | III | 8.31 | 2597 | 3935 | SK 3282 SCP - 132S/4 | SK 3282 SCP - 132SH/4 | SK 3282 SCP - 210TC | X | X | X | X | |
| 177 | 2669 | 2.8 | III | 9.8 | 2709 | 4104 | SK 3282 SCP - 132S/4 | SK 3282 SCP - 132SH/4 | SK 3282 SCP - 210TC | X | X | X | X | |
| 152 | 3099 | 2.3 | III | 11.38 | 2810 | 4237 | SK 3282 SCP - 132S/4 | SK 3282 SCP - 132SH/4 | SK 3282 SCP - 210TC | X | X | X | X | |
| 123 | 3842 | 2 | III | 14.11 | 2948 | 4417 | SK 3282 SCP - 132S/4 | SK 3282 SCP - 132SH/4 | SK 3282 SCP - 210TC | X | X | X | X | |
| 104 | 4539 | 1.6 | II | 16.67 | 3060 | 4500 | SK 3282 SCP - 132S/4 | SK 3282 SCP - 132SH/4 | SK 3282 SCP - 210TC | X | X | X | X | |
| 86 | 5495 | 1.3 | I | 20.18 | 3186 | 4500 | SK 3282 SCP - 132S/4 | SK 3282 SCP - 132SH/4 | SK 3282 SCP - 210TC | X | X | X | X | |
| 81 | 5822 | 1.1 | I | 21.38 | 3204 | 4500 | SK 3282 SCP - 132S/4 | SK 3282 SCP - 132SH/4 | SK 3282 SCP - 210TC | X | X | X | X | |
| 77 | 6113 | 1.2 | I | 22.45 | 3254 | 4500 | SK 3282 SCP - 132S/4 | SK 3282 SCP - 132SH/4 | SK 3282 SCP - 210TC | X | X | X | X | |
| 73 | 6456 | 1 | I | 23.71 | 3260 | 4500 | SK 3282 SCP - 132S/4 | SK 3282 SCP - 132SH/4 | SK 3282 SCP - 210TC | X | X | X | X | |
| 67 | 7047 | 1.1 | I | 25.88 | 3335 | 4500 | SK 3282 SCP - 132S/4 | SK 3282 SCP - 132SH/4 | SK 3282 SCP - 210TC | X | X | X | X | |
| 60 | 7815 | 1 | I | 28.7 | 3380 | 4500 | SK 3282 SCP - 132S/4 | SK 3282 SCP - 132SH/4 | SK 3282 SCP - 210TC | X | X | X | X | |
| 54 | 8695 | 0.9 | * | 31.93 | 3445 | 4500 | SK 3282 SCP - 132S/4 | SK 3282 SCP - 132SH/4 | SK 3282 SCP - 210TC | X | X | X | X | |
| 369 | 1280 | 4 | III | 4.7 | 3251 | 5492 | SK 4282 SCP - 132S/4 | SK 4282 SCP - 132SH/4 | SK 4282 SCP - 210TC | | X | X | X | |
| 347 | 1362 | 3.9 | III | 5 | 3310 | 5589 | SK 4282 SCP - 132S/4 | SK 4282 SCP - 132SH/4 | SK 4282 SCP - 210TC | | X | X | X | |
| 320 | 1479 | 3.9 | III | 5.43 | 3384 | 5706 | SK 4282 SCP - 132S/4 | SK 4282 SCP - 132SH/4 | SK 4282 SCP - 210TC | | X | X | X | |
| 286 | 1650 | 3.7 | III | 6.06 | 3488 | 5884 | SK 4282 SCP - 132S/4 | SK 4282 SCP - 132SH/4 | SK 4282 SCP - 210TC | | X | X | X | |
| 243 | 1942 | 3.5 | III | 7.13 | 3647 | 6134 | SK 4282 SCP - 132S/4 | SK 4282 SCP - 132SH/4 | SK 4282 SCP - 210TC | | X | X | X | |
| 208 | 2268 | 3.2 | III | 8.33 | 3800 | 6386 | SK 4282 SCP - 132S/4 | SK 4282 SCP - 132SH/4 | SK 4282 SCP - 210TC | | X | X | X | |
| 188 | 2513 | 3.7 | III | 9.23 | 3917 | 6581 | SK 4282 SCP - 132S/4 | SK 4282 SCP - 132SH/4 | SK 4282 SCP - 210TC | | X | X | X | |
| 160 | 2955 | 3.5 | III | 10.85 | 4086 | 6750 | SK 4282 SCP - 132S/4 | SK 4282 SCP - 132SH/4 | SK 4282 SCP - 210TC | | X | X | X | |
| 137 | 3453 | 3.2 | III | 12.68 | 4255 | 6750 | SK 4282 SCP - 132S/4 | SK 4282 SCP - 132SH/4 | SK 4282 SCP - 210TC | | X | X | X | |
| 114 | 4139 | 3.2 | III | 15.2 | 4464 | 6750 | SK 4282 SCP - 132S/4 | SK 4282 SCP - 132SH/4 | SK 4282 SCP - 210TC | | X | X | X | |
| 95 | 4951 | 3.2 | III | 18.18 | 4673 | 6750 | SK 4282 SCP - 132S/4 | SK 4282 SCP - 132SH/4 | SK 4282 SCP - 210TC | | X | X | X | |
| 81 | 5841 | 2.6 | III | 21.45 | 4871 | 6750 | SK 4282 SCP - 132S/4 | SK 4282 SCP - 132SH/4 | SK 4282 SCP - 210TC | | X | X | X | |
| 77 | 6097 | 2.5 | III | 22.39 | 4905 | 6750 | SK 4282 SCP - 132S/4 | SK 4282 SCP - 132SH/4 | SK 4282 SCP - 210TC | | X | X | X | |
| 66 | 7148 | 2 | III | 26.25 | 5121 | 6750 | SK 4282 SCP - 132S/4 | SK 4282 SCP - 132SH/4 | SK 4282 SCP - 210TC | | X | X | X | |
| 66 | 7197 | 2.2 | III | 26.43 | 5121 | 6750 | SK 4282 SCP - 132S/4 | SK 4282 SCP - 132SH/4 | SK 4282 SCP - 210TC | | X | X | X | |
| 65 | 7276 | 1.9 | II | 26.72 | 5078 | 6750 | SK 4282 SCP - 132S/4 | SK 4282 SCP - 132SH/4 | SK 4282 SCP - 210TC | | X | X | X | |
| 54 | 8725 | 1.8 | II | 32.04 | 5301 | 6750 | SK 4282 SCP - 132S/4 | SK 4282 SCP - 132SH/4 | SK 4282 SCP - 210TC | | X | X | X | |
| 54 | 8806 | 1.6 | II | 32.34 | 5351 | 6750 | SK 4282 SCP - 132S/4 | SK 4282 SCP - 132SH/4 | SK 4282 SCP - 210TC | | X | X | X | |
| 48 | 9912 | 1.2 | I | 36.4 | 5405 | 6750 | SK 4282 SCP - 132S/4 | SK 4282 SCP - 132SH/4 | SK 4282 SCP - 210TC | | X | X | X | |
| 47 | 10024 | 1.2 | I | 36.81 | 5488 | 6750 | SK 4282 SCP - 132S/4 | SK 4282 SCP - 132SH/4 | SK 4282 SCP - 210TC | | X | X | X | |
| 45 | 10432 | 1.7 | II | 38.31 | 5506 | 6750 | SK 4282 SCP - 132S/4 | SK 4282 SCP - 132SH/4 | SK 4282 SCP - 210TC | | X | X | X | |
| 43 | 11094 | 1.2 | I | 40.74 | 5609 | 6750 | SK 4282 SCP - 132S/4 | SK 4282 SCP - 132SH/4 | SK 4282 SCP - 210TC | | X | X | X | |
| 40 | 11886 | 1.2 | I | 43.65 | 5627 | 6750 | SK 4282 SCP - 132S/4 | SK 4282 SCP - 132SH/4 | SK 4282 SCP - 210TC | | X | X | X | |
| 39 | 12267 | 1.1 | I | 45.05 | 5715 | 6750 | SK 4282 SCP - 132S/4 | SK 4282 SCP - 132SH/4 | SK 4282 SCP - 210TC | | X | X | X | |
| 33 | 14214 | 1.1 | I | 52.2 | 5814 | 6750 | SK 4282 SCP - 132S/4 | SK 4282 SCP - 132SH/4 | SK 4282 SCP - 210TC | | X | X | X | |
| 28 | 16774 | 0.9 | * | 61.6 | 5994 | 6750 | SK 4282 SCP - 132S/4 | SK 4282 SCP - 132SH/4 | SK 4282 SCP - 210TC | | X | X | X | |

Output speed and torque ratings are based on the "Standard Efficiency Motor" Power and speed. Performance will vary slightly for other motors.



# 7.5 hp Gearmotors & Speed Reducers

| Output Speed | Output Torque | SF | AGMA Class | Gear Ratio | Thrust | | Integral Gearmotor | | Reducer | CEMA DriveShaft | | | | |
|---|---|---|---|---|---|---|---|---|---|---|---|---|---|---|
| $n_2$ | $T_2$ | $f_a$ | | i | Std Brg | H.D. Brg " VL" | Standard Efficiency Motor | Energy Efficient Motor | C-Face Input | 1-1/2" | 2" | 2-7/16" | 3" | 3-7/16" |
| [rpm] | [lb-in] | | | | [lb] | [lb] | | | | | | | | |
| 274 | 1724 | 4.2 | III | 6.33 | 4959 | 8323 | SK 5282 SCP - 132S/4 | SK 5282 SCP - 132SH/4 | SK 5282 SCP - 210TC | | X | X | X | X |
| 242 | 1952 | 4.1 | III | 7.17 | 5135 | 8622 | SK 5282 SCP - 132S/4 | SK 5282 SCP - 132SH/4 | SK 5282 SCP - 210TC | | X | X | X | X |
| 199 | 2369 | 3.8 | III | 8.7 | 5414 | 9000 | SK 5282 SCP - 132S/4 | SK 5282 SCP - 132SH/4 | SK 5282 SCP - 210TC | | X | X | X | X |
| 183 | 2576 | 4.2 | III | 9.46 | 5553 | 9000 | SK 5282 SCP - 132S/4 | SK 5282 SCP - 132SH/4 | SK 5282 SCP - 210TC | | X | X | X | X |
| 162 | 2916 | 4.1 | III | 10.71 | 5753 | 9000 | SK 5282 SCP - 132S/4 | SK 5282 SCP - 132SH/4 | SK 5282 SCP - 210TC | | X | X | X | X |
| 133 | 3540 | 3.8 | III | 13 | 6062 | 9000 | SK 5282 SCP - 132S/4 | SK 5282 SCP - 132SH/4 | SK 5282 SCP - 210TC | | X | X | X | X |
| 113 | 4188 | 3.8 | III | 15.38 | 6356 | 9000 | SK 5282 SCP - 132S/4 | SK 5282 SCP - 132SH/4 | SK 5282 SCP - 210TC | | X | X | X | X |
| 99 | 4790 | 3.6 | III | 17.59 | 6590 | 9000 | SK 5282 SCP - 132S/4 | SK 5282 SCP - 132SH/4 | SK 5282 SCP - 210TC | | X | X | X | X |
| 92 | 5141 | 3.8 | III | 18.88 | 6728 | 9000 | SK 5282 SCP - 132S/4 | SK 5282 SCP - 132SH/4 | SK 5282 SCP - 210TC | | X | X | X | X |
| 85 | 5544 | 3.4 | III | 20.36 | 6842 | 9000 | SK 5282 SCP - 132S/4 | SK 5282 SCP - 132SH/4 | SK 5282 SCP - 210TC | | X | X | X | X |
| 69 | 6808 | 3.4 | III | 25 | 7236 | 9000 | SK 5282 SCP - 132S/4 | SK 5282 SCP - 132SH/4 | SK 5282 SCP - 210TC | | X | X | X | X |
| 57 | 8305 | 3.1 | III | 30.5 | 7621 | 9000 | SK 5282 SCP - 132S/4 | SK 5282 SCP - 132SH/4 | SK 5282 SCP - 210TC | | X | X | X | X |
| 52 | 9103 | 2.2 | III | 33.43 | 7805 | 9000 | SK 5282 SCP - 132S/4 | SK 5282 SCP - 132SH/4 | SK 5282 SCP - 210TC | | X | X | X | X |
| 49 | 9656 | 2.5 | III | 35.46 | 7884 | 9000 | SK 5282 SCP - 132S/4 | SK 5282 SCP - 132SH/4 | SK 5282 SCP - 210TC | | X | X | X | X |
| 43 | 11110 | 2 | III | 40.8 | 8188 | 9000 | SK 5282 SCP - 132S/4 | SK 5282 SCP - 132SH/4 | SK 5282 SCP - 210TC | | X | X | X | X |
| 41 | 11421 | 2.5 | III | 41.94 | 8208 | 9000 | SK 5282 SCP - 132S/4 | SK 5282 SCP - 132SH/4 | SK 5282 SCP - 210TC | | X | X | X | X |
| 37 | 12872 | 1.7 | II | 47.27 | 8411 | 9000 | SK 5282 SCP - 132S/4 | SK 5282 SCP - 132SH/4 | SK 5282 SCP - 210TC | | X | X | X | X |
| 34 | 14021 | 2 | III | 51.49 | 8638 | 9000 | SK 5282 SCP - 132S/4 | SK 5282 SCP - 132SH/4 | SK 5282 SCP - 210TC | | X | X | X | X |
| 31 | 15127 | 1.3 | I | 55.55 | 8798 | 9000 | SK 5282 SCP - 132S/4 | SK 5282 SCP - 132SH/4 | SK 5282 SCP - 210TC | | X | X | X | X |
| 31 | 15222 | 1.5 | II | 55.9 | 8753 | 9000 | SK 5282 SCP - 132S/4 | SK 5282 SCP - 132SH/4 | SK 5282 SCP - 210TC | | X | X | X | X |
| 25 | 18688 | 1.4 | II | 68.63 | 9191 | 9000 | SK 5282 SCP - 132S/4 | SK 5282 SCP - 132SH/4 | SK 5282 SCP - 210TC | | X | X | X | X |
| 19 | 25001 | 1 | I | 91.81 | 9275 | 9000 | SK 5282 SCP - 132S/4 | SK 5282 SCP - 132SH/4 | SK 5282 SCP - 210TC | | X | X | X | X |
| 257 | 1835 | 4.5 | III | 6.74 | 7382 | 10672 | SK 6282 SCP - 132S/4 | SK 6282 SCP - 132SH/4 | SK 6282 SCP - 210TC | | | | X | X |
| 222 | 2129 | 4.3 | III | 7.82 | 7697 | 11144 | SK 6282 SCP - 132S/4 | SK 6282 SCP - 132SH/4 | SK 6282 SCP - 210TC | | | | X | X |
| 185 | 2557 | 4.1 | III | 9.39 | 8114 | 11732 | SK 6282 SCP - 132S/4 | SK 6282 SCP - 132SH/4 | SK 6282 SCP - 210TC | | | | X | X |
| 163 | 2897 | 4.5 | III | 10.64 | 8431 | 12173 | SK 6282 SCP - 132S/4 | SK 6282 SCP - 132SH/4 | SK 6282 SCP - 210TC | | | | X | X |
| 140 | 3363 | 4.3 | III | 12.35 | 8789 | 12690 | SK 6282 SCP - 132S/4 | SK 6282 SCP - 132SH/4 | SK 6282 SCP - 210TC | | | | X | X |
| 117 | 4038 | 4.1 | III | 14.83 | 9248 | 13381 | SK 6282 SCP - 132S/4 | SK 6282 SCP - 132SH/4 | SK 6282 SCP - 210TC | | | | X | X |
| 93 | 5092 | 4.1 | III | 18.7 | 9873 | 13500 | SK 6282 SCP - 132S/4 | SK 6282 SCP - 132SH/4 | SK 6282 SCP - 210TC | | | | X | X |
| 76 | 6249 | 4.1 | III | 22.95 | 10485 | 13500 | SK 6282 SCP - 132S/4 | SK 6282 SCP - 132SH/4 | SK 6282 SCP - 210TC | | | | X | X |
| 67 | 7094 | 3.9 | III | 26.05 | 10836 | 13500 | SK 6282 SCP - 132S/4 | SK 6282 SCP - 132SH/4 | SK 6282 SCP - 210TC | | | | X | X |
| 58 | 8142 | 3.7 | III | 29.9 | 11252 | 13500 | SK 6282 SCP - 132S/4 | SK 6282 SCP - 132SH/4 | SK 6282 SCP - 210TC | | | | X | X |
| 44 | 10751 | 2.6 | III | 39.48 | 12058 | 13500 | SK 6282 SCP - 132S/4 | SK 6282 SCP - 132SH/4 | SK 6282 SCP - 210TC | | | | X | X |
| 35 | 13547 | 2.6 | III | 49.75 | 12807 | 13500 | SK 6282 SCP - 132S/4 | SK 6282 SCP - 132SH/4 | SK 6282 SCP - 210TC | | | | X | X |
| 28 | 16633 | 2.4 | III | 61.08 | 13048 | 13500 | SK 6282 SCP - 132S/4 | SK 6282 SCP - 132SH/4 | SK 6282 SCP - 210TC | | | | X | X |
| 27 | 17820 | 1.7 | II | 65.44 | 13016 | 13500 | SK 6282 SCP - 132S/4 | SK 6282 SCP - 132SH/4 | SK 6282 SCP - 210TC | | | | X | X |
| 22 | 21874 | 1.7 | II | 80.33 | 12893 | 13500 | SK 6282 SCP - 132S/4 | SK 6282 SCP - 132SH/4 | SK 6282 SCP - 210TC | | | | X | X |

Output speed and torque ratings are based on the "Standard Efficiency Motor" Power and speed. Performance will vary slightly for other motors.

# 10 hp Gearmotors & Speed Reducers



| Output Speed | Output Torque | SF | AGMA Class | Gear Ratio | Thrust | | Integral Gearmotor | | Reducer | CEMA DriveShaft | | | | |
|---|---|---|---|---|---|---|---|---|---|---|---|---|---|---|
| $n_2$ | $T_2$ | $f_a$ | | i | Std Brg | H.D. Brg " VL" | Standard Efficiency Motor | Energy Efficient Motor | C-Face Input | 1-1/2" | 2" | 2-7/16" | 3" | 3-7/16" |
| [rpm] | [lb-in] | | | | [lb] | [lb] | | | | | | | | |
| 387 | 1627 | 2.5 | III | 4.48 | 2178 | 3314 | SK 3282 SCP - 132M/4 | SK 3282 SCP - 132MH/4 | SK 3282 SCP - 210TC | X | X | X | X | |
| 305 | 2064 | 2.4 | III | 5.68 | 2309 | 3494 | SK 3282 SCP - 132M/4 | SK 3282 SCP - 132MH/4 | SK 3282 SCP - 210TC | X | X | X | X | |
| 259 | 2435 | 2.2 | III | 6.7 | 2394 | 3614 | SK 3282 SCP - 132M/4 | SK 3282 SCP - 132MH/4 | SK 3282 SCP - 210TC | X | X | X | X | |
| 209 | 3020 | 2 | III | 8.31 | 2513 | 3769 | SK 3282 SCP - 132M/4 | SK 3282 SCP - 132MH/4 | SK 3282 SCP - 210TC | X | X | X | X | |
| 177 | 3561 | 2.1 | III | 9.8 | 2624 | 3922 | SK 3282 SCP - 132M/4 | SK 3282 SCP - 132MH/4 | SK 3282 SCP - 210TC | X | X | X | X | |
| 152 | 4136 | 1.8 | II | 11.38 | 2709 | 4037 | SK 3282 SCP - 132M/4 | SK 3282 SCP - 132MH/4 | SK 3282 SCP - 210TC | X | X | X | X | |
| 123 | 5128 | 1.5 | II | 14.11 | 2822 | 4169 | SK 3282 SCP - 132M/4 | SK 3282 SCP - 132MH/4 | SK 3282 SCP - 210TC | X | X | X | X | |
| 104 | 6058 | 1.2 | I | 16.67 | 2912 | 4277 | SK 3282 SCP - 132M/4 | SK 3282 SCP - 132MH/4 | SK 3282 SCP - 210TC | X | X | X | X | |
| 86 | 7333 | 1 | I | 20.18 | 3011 | 4388 | SK 3282 SCP - 132M/4 | SK 3282 SCP - 132MH/4 | SK 3282 SCP - 210TC | X | X | X | X | |
| 77 | 8158 | 0.9 | * | 22.45 | 3056 | 4446 | SK 3282 SCP - 132M/4 | SK 3282 SCP - 132MH/4 | SK 3282 SCP - 210TC | X | X | X | X | |
| 369 | 1708 | 3 | III | 4.7 | 3220 | 5423 | SK 4282 SCP - 132M/4 | SK 4282 SCP - 132MH/4 | SK 4282 SCP - 210TC | | X | X | X | |
| 347 | 1817 | 3 | III | 5 | 3272 | 5499 | SK 4282 SCP - 132M/4 | SK 4282 SCP - 132MH/4 | SK 4282 SCP - 210TC | | X | X | X | |
| 320 | 1973 | 2.9 | III | 5.43 | 3344 | 5616 | SK 4282 SCP - 132M/4 | SK 4282 SCP - 132MH/4 | SK 4282 SCP - 210TC | | X | X | X | |
| 286 | 2202 | 2.7 | III | 6.06 | 3440 | 5771 | SK 4282 SCP - 132M/4 | SK 4282 SCP - 132MH/4 | SK 4282 SCP - 210TC | | X | X | X | |
| 243 | 2591 | 2.6 | III | 7.13 | 3584 | 6008 | SK 4282 SCP - 132M/4 | SK 4282 SCP - 132MH/4 | SK 4282 SCP - 210TC | | X | X | X | |
| 208 | 3027 | 2.4 | III | 8.33 | 3728 | 6253 | SK 4282 SCP - 132M/4 | SK 4282 SCP - 132MH/4 | SK 4282 SCP - 210TC | | X | X | X | |
| 188 | 3354 | 2.7 | III | 9.23 | 3854 | 6446 | SK 4282 SCP - 132M/4 | SK 4282 SCP - 132MH/4 | SK 4282 SCP - 210TC | | X | X | X | |
| 160 | 3943 | 2.6 | III | 10.85 | 4005 | 6689 | SK 4282 SCP - 132M/4 | SK 4282 SCP - 132MH/4 | SK 4282 SCP - 210TC | | X | X | X | |
| 137 | 4608 | 2.4 | III | 12.68 | 4160 | 6750 | SK 4282 SCP - 132M/4 | SK 4282 SCP - 132MH/4 | SK 4282 SCP - 210TC | | X | X | X | |
| 114 | 5524 | 2.4 | III | 15.2 | 4352 | 6750 | SK 4282 SCP - 132M/4 | SK 4282 SCP - 132MH/4 | SK 4282 SCP - 210TC | | X | X | X | |
| 95 | 6607 | 2.4 | III | 18.18 | 4545 | 6750 | SK 4282 SCP - 132M/4 | SK 4282 SCP - 132MH/4 | SK 4282 SCP - 210TC | | X | X | X | |
| 81 | 7795 | 1.9 | II | 21.45 | 4718 | 6750 | SK 4282 SCP - 132M/4 | SK 4282 SCP - 132MH/4 | SK 4282 SCP - 210TC | | X | X | X | |
| 77 | 8137 | 1.8 | II | 22.39 | 4748 | 6750 | SK 4282 SCP - 132M/4 | SK 4282 SCP - 132MH/4 | SK 4282 SCP - 210TC | | X | X | X | |
| 66 | 9539 | 1.5 | II | 26.25 | 4930 | 6750 | SK 4282 SCP - 132M/4 | SK 4282 SCP - 132MH/4 | SK 4282 SCP - 210TC | | X | X | X | |
| 66 | 9605 | 1.6 | II | 26.43 | 4919 | 6750 | SK 4282 SCP - 132M/4 | SK 4282 SCP - 132MH/4 | SK 4282 SCP - 210TC | | X | X | X | |
| 65 | 9710 | 1.5 | II | 26.72 | 4869 | 6750 | SK 4282 SCP - 132M/4 | SK 4282 SCP - 132MH/4 | SK 4282 SCP - 210TC | | X | X | X | |
| 54 | 11643 | 1.4 | II | 32.04 | 5072 | 6750 | SK 4282 SCP - 132M/4 | SK 4282 SCP - 132MH/4 | SK 4282 SCP - 210TC | | X | X | X | |
| 54 | 11752 | 1.2 | I | 32.34 | 5126 | 6750 | SK 4282 SCP - 132M/4 | SK 4282 SCP - 132MH/4 | SK 4282 SCP - 210TC | | X | X | X | |
| 47 | 13377 | 0.9 | * | 36.81 | 5218 | 6750 | SK 4282 SCP - 132M/4 | SK 4282 SCP - 132MH/4 | SK 4282 SCP - 210TC | | X | X | X | |
| 45 | 13922 | 1.3 | I | 38.31 | 5213 | 6750 | SK 4282 SCP - 132M/4 | SK 4282 SCP - 132MH/4 | SK 4282 SCP - 210TC | | X | X | X | |
| 43 | 14805 | 0.9 | * | 40.74 | 5321 | 6750 | SK 4282 SCP - 132M/4 | SK 4282 SCP - 132MH/4 | SK 4282 SCP - 210TC | | X | X | X | |
| 39 | 16371 | 0.9 | * | 45.05 | 5387 | 6750 | SK 4282 SCP - 132M/4 | SK 4282 SCP - 132MH/4 | SK 4282 SCP - 210TC | | X | X | X | |

Output speed and torque ratings are based on the "Standard Efficiency Motor" Power and speed. Performance will vary slightly for other motors.



# 10 hp Gearmotors & Speed Reducers

| Output Speed | Output Torque | SF | AGMA Class | Gear Ratio | Thrust | | Integral Gearmotor | | Reducer | CEMA DriveShaft | | | | |
|---|---|---|---|---|---|---|---|---|---|---|---|---|---|---|
| $n_2$ | $T_2$ | $f_a$ | | i | Std Brg | H.D. Brg " VL" | Standard Efficiency Motor | Energy Efficient Motor | C-Face Input | 1-1/2" | 2" | 2-7/16" | 3" | 3-7/16" |
| [rpm] | [lb-in] | | | | [lb] | [lb] | | | | | | | | |
| 274 | 2300 | 3.2 | III | 6.33 | 4910 | 8255 | SK 5282 SCP - 132M/4 | SK 5282 SCP - 132MH/4 | SK 5282 SCP - 210TC | | X | X | X | X |
| 242 | 2606 | 3 | III | 7.17 | 5094 | 8539 | SK 5282 SCP - 132M/4 | SK 5282 SCP - 132MH/4 | SK 5282 SCP - 210TC | | X | X | X | X |
| 199 | 3162 | 2.9 | III | 8.7 | 5360 | 9000 | SK 5282 SCP - 132M/4 | SK 5282 SCP - 132MH/4 | SK 5282 SCP - 210TC | | X | X | X | X |
| 183 | 3438 | 3.2 | III | 9.46 | 5497 | 9000 | SK 5282 SCP - 132M/4 | SK 5282 SCP - 132MH/4 | SK 5282 SCP - 210TC | | X | X | X | X |
| 162 | 3892 | 3 | III | 10.71 | 5693 | 9000 | SK 5282 SCP - 132M/4 | SK 5282 SCP - 132MH/4 | SK 5282 SCP - 210TC | | X | X | X | X |
| 133 | 4724 | 2.9 | III | 13 | 5987 | 9000 | SK 5282 SCP - 132M/4 | SK 5282 SCP - 132MH/4 | SK 5282 SCP - 210TC | | X | X | X | X |
| 113 | 5589 | 2.9 | III | 15.38 | 6264 | 9000 | SK 5282 SCP - 132M/4 | SK 5282 SCP - 132MH/4 | SK 5282 SCP - 210TC | | X | X | X | X |
| 99 | 6392 | 2.7 | III | 17.59 | 6482 | 9000 | SK 5282 SCP - 132M/4 | SK 5282 SCP - 132MH/4 | SK 5282 SCP - 210TC | | X | X | X | X |
| 92 | 6861 | 2.9 | III | 18.88 | 6615 | 9000 | SK 5282 SCP - 132M/4 | SK 5282 SCP - 132MH/4 | SK 5282 SCP - 210TC | | X | X | X | X |
| 85 | 7399 | 2.6 | III | 20.36 | 6725 | 9000 | SK 5282 SCP - 132M/4 | SK 5282 SCP - 132MH/4 | SK 5282 SCP - 210TC | | X | X | X | X |
| 69 | 9085 | 2.6 | III | 25 | 7090 | 9000 | SK 5282 SCP - 132M/4 | SK 5282 SCP - 132MH/4 | SK 5282 SCP - 210TC | | X | X | X | X |
| 57 | 11084 | 2.3 | III | 30.5 | 7439 | 9000 | SK 5282 SCP - 132M/4 | SK 5282 SCP - 132MH/4 | SK 5282 SCP - 210TC | | X | X | X | X |
| 52 | 12148 | 1.7 | II | 33.43 | 7607 | 9000 | SK 5282 SCP - 132M/4 | SK 5282 SCP - 132MH/4 | SK 5282 SCP - 210TC | | X | X | X | X |
| 49 | 12886 | 1.9 | II | 35.46 | 7652 | 9000 | SK 5282 SCP - 132M/4 | SK 5282 SCP - 132MH/4 | SK 5282 SCP - 210TC | | X | X | X | X |
| 43 | 14827 | 1.5 | II | 40.8 | 7949 | 9000 | SK 5282 SCP - 132M/4 | SK 5282 SCP - 132MH/4 | SK 5282 SCP - 210TC | | X | X | X | X |
| 41 | 15241 | 1.9 | II | 41.94 | 7949 | 9000 | SK 5282 SCP - 132M/4 | SK 5282 SCP - 132MH/4 | SK 5282 SCP - 210TC | | X | X | X | X |
| 34 | 18712 | 1.5 | II | 51.49 | 8321 | 9000 | SK 5282 SCP - 132M/4 | SK 5282 SCP - 132MH/4 | SK 5282 SCP - 210TC | | X | X | X | X |
| 31 | 20187 | 0.9 | * | 55.55 | 8474 | 9000 | SK 5282 SCP - 132M/4 | SK 5282 SCP - 132MH/4 | SK 5282 SCP - 210TC | | X | X | X | X |
| | | | | | | | | | | | | | | |
| 257 | 2449 | 3.4 | III | 6.74 | 7335 | 10604 | SK 6282 SCP - 132M/4 | SK 6282 SCP - 132MH/4 | SK 6282 SCP - 210TC | | | | X | X |
| 222 | 2842 | 3.3 | III | 7.82 | 7659 | 11057 | SK 6282 SCP - 132M/4 | SK 6282 SCP - 132MH/4 | SK 6282 SCP - 210TC | | | | X | X |
| 185 | 3412 | 3.1 | III | 9.39 | 8060 | 11619 | SK 6282 SCP - 132M/4 | SK 6282 SCP - 132MH/4 | SK 6282 SCP - 210TC | | | | X | X |
| 163 | 3867 | 3.4 | III | 10.64 | 8361 | 12094 | SK 6282 SCP - 132M/4 | SK 6282 SCP - 132MH/4 | SK 6282 SCP - 210TC | | | | X | X |
| 140 | 4488 | 3.3 | III | 12.35 | 8714 | 12589 | SK 6282 SCP - 132M/4 | SK 6282 SCP - 132MH/4 | SK 6282 SCP - 210TC | | | | X | X |
| 117 | 5389 | 3.1 | III | 14.83 | 9185 | 13253 | SK 6282 SCP - 132M/4 | SK 6282 SCP - 132MH/4 | SK 6282 SCP - 210TC | | | | X | X |
| 93 | 6796 | 3.1 | III | 18.7 | 9767 | 13500 | SK 6282 SCP - 132M/4 | SK 6282 SCP - 132MH/4 | SK 6282 SCP - 210TC | | | | X | X |
| 76 | 8340 | 3.1 | III | 22.95 | 10350 | 13500 | SK 6282 SCP - 132M/4 | SK 6282 SCP - 132MH/4 | SK 6282 SCP - 210TC | | | | X | X |
| 67 | 9467 | 3 | III | 26.05 | 10674 | 13500 | SK 6282 SCP - 132M/4 | SK 6282 SCP - 132MH/4 | SK 6282 SCP - 210TC | | | | X | X |
| 58 | 10866 | 2.8 | III | 29.9 | 11093 | 13500 | SK 6282 SCP - 132M/4 | SK 6282 SCP - 132MH/4 | SK 6282 SCP - 210TC | | | | X | X |
| 44 | 14347 | 2 | III | 39.48 | 11844 | 13500 | SK 6282 SCP - 132M/4 | SK 6282 SCP - 132MH/4 | SK 6282 SCP - 210TC | | | | X | X |
| 35 | 18079 | 2 | III | 49.75 | 12517 | 13500 | SK 6282 SCP - 132M/4 | SK 6282 SCP - 132MH/4 | SK 6282 SCP - 210TC | | | | X | X |
| 28 | 22197 | 1.8 | II | 61.08 | 12881 | 13500 | SK 6282 SCP - 132M/4 | SK 6282 SCP - 132MH/4 | SK 6282 SCP - 210TC | | | | X | X |

Output speed and torque ratings are based on the "Standard Efficiency Motor" Power and speed. Performance will vary slightly for other motors.

# 15 hp Gearmotors & Speed Reducers



| Output Speed | Output Torque | SF | AGMA Class | Gear Ratio | Thrust | | Integral Gearmotor | | Reducer | CEMA DriveShaft | | | | |
|---|---|---|---|---|---|---|---|---|---|---|---|---|---|---|
| $n_2$ | $T_2$ | $f_a$ | | i | Std Brg | H.D. Brg " VL" | Standard Efficiency Motor | Energy Efficient Motor | C-Face Input | 1-1/2" | 2" | 2-7/16" | 3" | 3-7/16" |
| [rpm] | [lb-in] | | | | [lb] | [lb] | | | | | | | | |
| 377 | 2510 | 3.3 | III | 4.7 | 3130 | 5225 | SK 4282 SCP - 160M/4 | SK 4282 SCP - 160MH/4 | SK 4282 SCP - 250TC | | X | X | X | |
| 354 | 2672 | 3.2 | III | 5 | 3173 | 5301 | SK 4282 SCP - 160M/4 | SK 4282 SCP - 160MH/4 | SK 4282 SCP - 250TC | | X | X | X | |
| 326 | 2901 | 3.2 | III | 5.43 | 3238 | 5405 | SK 4282 SCP - 160M/4 | SK 4282 SCP - 160MH/4 | SK 4282 SCP - 250TC | | X | X | X | |
| 292 | 3238 | 3 | III | 6.06 | 3326 | 5544 | SK 4282 SCP - 160M/4 | SK 4282 SCP - 160MH/4 | SK 4282 SCP - 250TC | | X | X | X | |
| 248 | 3810 | 2.8 | III | 7.13 | 3458 | 5744 | SK 4282 SCP - 160M/4 | SK 4282 SCP - 160MH/4 | SK 4282 SCP - 250TC | | X | X | X | |
| 212 | 4451 | 2.5 | III | 8.33 | 3580 | 5940 | SK 4282 SCP - 160M/4 | SK 4282 SCP - 160MH/4 | SK 4282 SCP - 250TC | | X | X | X | |
| 192 | 4932 | 2.9 | III | 9.23 | 3697 | 6125 | SK 4282 SCP - 160M/4 | SK 4282 SCP - 160MH/4 | SK 4282 SCP - 250TC | | X | X | X | |
| 163 | 5797 | 2.6 | III | 10.85 | 3836 | 6314 | SK 4282 SCP - 160M/4 | SK 4282 SCP - 160MH/4 | SK 4282 SCP - 250TC | | X | X | X | |
| 140 | 6775 | 2.3 | III | 12.68 | 3951 | 6509 | SK 4282 SCP - 160M/4 | SK 4282 SCP - 160MH/4 | SK 4282 SCP - 250TC | | X | X | X | |
| 116 | 8122 | 2 | III | 15.2 | 4118 | 6743 | SK 4282 SCP - 160M/4 | SK 4282 SCP - 160MH/4 | SK 4282 SCP - 250TC | | X | X | X | |
| 97 | 9714 | 1.6 | II | 18.18 | 4255 | 6750 | SK 4282 SCP - 160M/4 | SK 4282 SCP - 160MH/4 | SK 4282 SCP - 250TC | | X | X | X | |
| 83 | 11461 | 1.3 | I | 21.45 | 4406 | 6750 | SK 4282 SCP - 160M/4 | SK 4282 SCP - 160MH/4 | SK 4282 SCP - 250TC | | X | X | X | |
| 79 | 11963 | 1.3 | I | 22.39 | 4399 | 6750 | SK 4282 SCP - 160M/4 | SK 4282 SCP - 160MH/4 | SK 4282 SCP - 250TC | | X | X | X | |
| 67 | 14026 | 1 | I | 26.25 | 4545 | 6750 | SK 4282 SCP - 160M/4 | SK 4282 SCP - 160MH/4 | SK 4282 SCP - 250TC | | X | X | X | |
| 67 | 14122 | 1.1 | I | 26.43 | 4525 | 6750 | SK 4282 SCP - 160M/4 | SK 4282 SCP - 160MH/4 | SK 4282 SCP - 250TC | | X | X | X | |
| 410 | 2308 | 4 | III | 4.32 | 4334 | 7286 | SK 5282 SCP - 160M/4 | SK 5282 SCP - 160MH/4 | SK 5282 SCP - 250TC | | X | X | X | X |
| 353 | 2677 | 3.9 | III | 5.01 | 4516 | 7585 | SK 5282 SCP - 160M/4 | SK 5282 SCP - 160MH/4 | SK 5282 SCP - 250TC | | X | X | X | X |
| 335 | 2827 | 3.8 | III | 5.29 | 4581 | 7693 | SK 5282 SCP - 160M/4 | SK 5282 SCP - 160MH/4 | SK 5282 SCP - 250TC | | X | X | X | X |
| 310 | 3051 | 3.7 | III | 5.71 | 4676 | 7844 | SK 5282 SCP - 160M/4 | SK 5282 SCP - 160MH/4 | SK 5282 SCP - 250TC | | X | X | X | X |
| 280 | 3382 | 3.5 | III | 6.33 | 4804 | 8060 | SK 5282 SCP - 160M/4 | SK 5282 SCP - 160MH/4 | SK 5282 SCP - 250TC | | X | X | X | X |
| 247 | 3831 | 3.3 | III | 7.17 | 4968 | 8336 | SK 5282 SCP - 160M/4 | SK 5282 SCP - 160MH/4 | SK 5282 SCP - 250TC | | X | X | X | X |
| 203 | 4649 | 3.1 | III | 8.7 | 5216 | 8762 | SK 5282 SCP - 160M/4 | SK 5282 SCP - 160MH/4 | SK 5282 SCP - 250TC | | X | X | X | X |
| 187 | 5055 | 3.5 | III | 9.46 | 5357 | 8973 | SK 5282 SCP - 160M/4 | SK 5282 SCP - 160MH/4 | SK 5282 SCP - 250TC | | X | X | X | X |
| 165 | 5723 | 3.3 | III | 10.71 | 5528 | 9000 | SK 5282 SCP - 160M/4 | SK 5282 SCP - 160MH/4 | SK 5282 SCP - 250TC | | X | X | X | X |
| 136 | 6946 | 3.1 | III | 13 | 5798 | 9000 | SK 5282 SCP - 160M/4 | SK 5282 SCP - 160MH/4 | SK 5282 SCP - 250TC | | X | X | X | X |
| 115 | 8218 | 2.8 | III | 15.38 | 6050 | 9000 | SK 5282 SCP - 160M/4 | SK 5282 SCP - 160MH/4 | SK 5282 SCP - 250TC | | X | X | X | X |
| 101 | 9399 | 2.6 | III | 17.59 | 6242 | 9000 | SK 5282 SCP - 160M/4 | SK 5282 SCP - 160MH/4 | SK 5282 SCP - 250TC | | X | X | X | X |
| 94 | 10088 | 2.3 | III | 18.88 | 6363 | 9000 | SK 5282 SCP - 160M/4 | SK 5282 SCP - 160MH/4 | SK 5282 SCP - 250TC | | X | X | X | X |
| 87 | 10879 | 2.5 | III | 20.36 | 6442 | 9000 | SK 5282 SCP - 160M/4 | SK 5282 SCP - 160MH/4 | SK 5282 SCP - 250TC | | X | X | X | X |
| 71 | 13358 | 1.9 | II | 25 | 6764 | 9000 | SK 5282 SCP - 160M/4 | SK 5282 SCP - 160MH/4 | SK 5282 SCP - 250TC | | X | X | X | X |
| 58 | 16297 | 1.6 | II | 30.5 | 7040 | 9000 | SK 5282 SCP - 160M/4 | SK 5282 SCP - 160MH/4 | SK 5282 SCP - 250TC | | X | X | X | X |
| 53 | 17862 | 1.1 | I | 33.43 | 7187 | 9000 | SK 5282 SCP - 160M/4 | SK 5282 SCP - 160MH/4 | SK 5282 SCP - 250TC | | X | X | X | X |
| 43 | 21800 | 1 | I | 40.8 | 7434 | 9000 | SK 5282 SCP - 160M/4 | SK 5282 SCP - 160MH/4 | SK 5282 SCP - 250TC | | X | X | X | X |

Output speed and torque ratings are based on the "Standard Efficiency Motor" Power and speed. Performance will vary slightly for other motors.



# 15 hp Gearmotors & Speed Reducers

| Output Speed | Output Torque | SF | AGMA Class | Gear Ratio | Thrust | | Integral Gearmotor | | Reducer | CEMA DriveShaft | | | | |
|---|---|---|---|---|---|---|---|---|---|---|---|---|---|---|
| $n_2$ | $T_2$ | $f_a$ | | i | Std Brg | H.D. Brg " VL" | Standard Efficiency Motor | Energy Efficient Motor | C-Face Input | 1-1/2" | 2" | 2-7/16" | 3" | 3-7/16" |
| [rpm] | [lb-in] | | | | [lb] | [lb] | | | | | | | | |
| 363 | 2607 | 4.1 | III | 4.88 | 6588 | 9509 | SK 6282 SCP - 160M/4 | SK 6282 SCP - 160MH/4 | SK 6282 SCP - 250TC | | | | X | X |
| 322 | 2939 | 4 | III | 5.5 | 6813 | 9835 | SK 6282 SCP - 160M/4 | SK 6282 SCP - 160MH/4 | SK 6282 SCP - 250TC | | | | X | X |
| 306 | 3088 | 3.9 | III | 5.78 | 6923 | 9979 | SK 6282 SCP - 160M/4 | SK 6282 SCP - 160MH/4 | SK 6282 SCP - 250TC | | | | X | X |
| 263 | 3601 | 3.7 | III | 6.74 | 7205 | 10402 | SK 6282 SCP - 160M/4 | SK 6282 SCP - 160MH/4 | SK 6282 SCP - 250TC | | | | X | X |
| 226 | 4178 | 3.6 | III | 7.82 | 7508 | 10827 | SK 6282 SCP - 160M/4 | SK 6282 SCP - 160MH/4 | SK 6282 SCP - 250TC | | | | X | X |
| 188 | 5017 | 3.3 | III | 9.39 | 7889 | 11381 | SK 6282 SCP - 160M/4 | SK 6282 SCP - 160MH/4 | SK 6282 SCP - 250TC | | | | X | X |
| 166 | 5685 | 3.7 | III | 10.64 | 8192 | 11826 | SK 6282 SCP - 160M/4 | SK 6282 SCP - 160MH/4 | SK 6282 SCP - 250TC | | | | X | X |
| 143 | 6599 | 3.6 | III | 12.35 | 8523 | 12290 | SK 6282 SCP - 160M/4 | SK 6282 SCP - 160MH/4 | SK 6282 SCP - 250TC | | | | X | X |
| 119 | 7924 | 3.3 | III | 14.83 | 8933 | 12895 | SK 6282 SCP - 160M/4 | SK 6282 SCP - 160MH/4 | SK 6282 SCP - 250TC | | | | X | X |
| 95 | 9992 | 3.3 | III | 18.7 | 9488 | 13500 | SK 6282 SCP - 160M/4 | SK 6282 SCP - 160MH/4 | SK 6282 SCP - 250TC | | | | X | X |
| 77 | 12263 | 3.3 | III | 22.95 | 10024 | 13500 | SK 6282 SCP - 160M/4 | SK 6282 SCP - 160MH/4 | SK 6282 SCP - 250TC | | | | X | X |
| 68 | 13919 | 2.9 | III | 26.05 | 10325 | 13500 | SK 6282 SCP - 160M/4 | SK 6282 SCP - 160MH/4 | SK 6282 SCP - 250TC | | | | X | X |
| 59 | 15976 | 2.5 | III | 29.9 | 10674 | 13500 | SK 6282 SCP - 160M/4 | SK 6282 SCP - 160MH/4 | SK 6282 SCP - 250TC | | | | X | X |
| 45 | 21095 | 1.3 | I | 39.48 | 11270 | 13500 | SK 6282 SCP - 160M/4 | SK 6282 SCP - 160MH/4 | SK 6282 SCP - 250TC | | | | X | X |
| 36 | 26583 | 1.3 | I | 49.75 | 11867 | 13500 | SK 6282 SCP - 160M/4 | SK 6282 SCP - 160MH/4 | SK 6282 SCP - 250TC | | | | X | X |
| 29 | 32636 | 1.2 | I | 61.08 | 12427 | 13500 | SK 6282 SCP - 160M/4 | SK 6282 SCP - 160MH/4 | SK 6282 SCP - 250TC | | | | X | X |

Output speed and torque ratings are based on the "Standard Efficiency Motor" Power and speed. Performance will vary slightly for other motors.

# 20 hp Gearmotors & Speed Reducers



| Output Speed | Output Torque | SF | AGMA Class | Gear Ratio | Thrust | | Integral Gearmotor | | Reducer | CEMA DriveShaft | | | | |
|---|---|---|---|---|---|---|---|---|---|---|---|---|---|---|
| $n_2$ | $T_2$ | $f_a$ | | i | Std Brg | H.D. Brg " VL" | Standard Efficiency Motor | Energy Efficient Motor | C-Face Input | 1-1/2" | 2" | 2-7/16" | 3" | 3-7/16" |
| [rpm] | [lb-in] | | | | [lb] | [lb] | | | | | | | | |
| 376 | 3357 | 2.5 | III | 4.7 | 3053 | 5076 | SK 4282 SCP - 160L/4 | SK 4282 SCP - 160LH/4 | SK 4282 SCP - 250TC | | X | X | X | |
| 353 | 3570 | 2.4 | III | 5 | 3096 | 5141 | SK 4282 SCP - 160L/4 | SK 4282 SCP - 160LH/4 | SK 4282 SCP - 250TC | | X | X | X | |
| 325 | 3877 | 2.4 | III | 5.43 | 3155 | 5234 | SK 4282 SCP - 160L/4 | SK 4282 SCP - 160LH/4 | SK 4282 SCP - 250TC | | X | X | X | |
| 291 | 4327 | 2.2 | III | 6.06 | 3233 | 5344 | SK 4282 SCP - 160L/4 | SK 4282 SCP - 160LH/4 | SK 4282 SCP - 250TC | | X | X | X | |
| 248 | 5091 | 2.1 | III | 7.13 | 3341 | 5508 | SK 4282 SCP - 160L/4 | SK 4282 SCP - 160LH/4 | SK 4282 SCP - 250TC | | X | X | X | |
| 212 | 5947 | 1.9 | II | 8.33 | 3449 | 5661 | SK 4282 SCP - 160L/4 | SK 4282 SCP - 160LH/4 | SK 4282 SCP - 250TC | | X | X | X | |
| 191 | 6590 | 2.2 | III | 9.23 | 3564 | 5837 | SK 4282 SCP - 160L/4 | SK 4282 SCP - 160LH/4 | SK 4282 SCP - 250TC | | X | X | X | |
| 163 | 7747 | 1.9 | II | 10.85 | 3663 | 5987 | SK 4282 SCP - 160L/4 | SK 4282 SCP - 160LH/4 | SK 4282 SCP - 250TC | | X | X | X | |
| 139 | 9053 | 1.7 | II | 12.68 | 3760 | 6125 | SK 4282 SCP - 160L/4 | SK 4282 SCP - 160LH/4 | SK 4282 SCP - 250TC | | X | X | X | |
| 116 | 10852 | 1.5 | II | 15.2 | 3888 | 6293 | SK 4282 SCP - 160L/4 | SK 4282 SCP - 160LH/4 | SK 4282 SCP - 250TC | | X | X | X | |
| 97 | 12980 | 1.2 | I | 18.18 | 3989 | 6406 | SK 4282 SCP - 160L/4 | SK 4282 SCP - 160LH/4 | SK 4282 SCP - 250TC | | X | X | X | |
| 82 | 15315 | 1 | I | 21.45 | 4086 | 6518 | SK 4282 SCP - 160L/4 | SK 4282 SCP - 160LH/4 | SK 4282 SCP - 250TC | | X | X | X | |
| 79 | 15986 | 0.9 | * | 22.39 | 4070 | 6458 | SK 4282 SCP - 160L/4 | SK 4282 SCP - 160LH/4 | SK 4282 SCP - 250TC | | X | X | X | |
| 409 | 3084 | 3 | III | 4.32 | 4282 | 7193 | SK 5282 SCP - 160L/4 | SK 5282 SCP - 160LH/4 | SK 5282 SCP - 250TC | | X | X | X | X |
| 352 | 3577 | 2.9 | III | 5.01 | 4462 | 7475 | SK 5282 SCP - 160L/4 | SK 5282 SCP - 160LH/4 | SK 5282 SCP - 250TC | | X | X | X | X |
| 334 | 3777 | 2.8 | III | 5.29 | 4511 | 7585 | SK 5282 SCP - 160L/4 | SK 5282 SCP - 160LH/4 | SK 5282 SCP - 250TC | | X | X | X | X |
| 309 | 4077 | 2.8 | III | 5.71 | 4606 | 7745 | SK 5282 SCP - 160L/4 | SK 5282 SCP - 160LH/4 | SK 5282 SCP - 250TC | | X | X | X | X |
| 279 | 4519 | 2.6 | III | 6.33 | 4723 | 7931 | SK 5282 SCP - 160L/4 | SK 5282 SCP - 160LH/4 | SK 5282 SCP - 250TC | | X | X | X | X |
| 246 | 5119 | 2.5 | III | 7.17 | 4883 | 8177 | SK 5282 SCP - 160L/4 | SK 5282 SCP - 160LH/4 | SK 5282 SCP - 250TC | | X | X | X | X |
| 203 | 6212 | 2.3 | III | 8.7 | 5105 | 8566 | SK 5282 SCP - 160L/4 | SK 5282 SCP - 160LH/4 | SK 5282 SCP - 250TC | | X | X | X | X |
| 187 | 6754 | 2.6 | III | 9.46 | 5243 | 8789 | SK 5282 SCP - 160L/4 | SK 5282 SCP - 160LH/4 | SK 5282 SCP - 250TC | | X | X | X | X |
| 165 | 7647 | 2.5 | III | 10.71 | 5398 | 9000 | SK 5282 SCP - 160L/4 | SK 5282 SCP - 160LH/4 | SK 5282 SCP - 250TC | | X | X | X | X |
| 136 | 9282 | 2.3 | III | 13 | 5643 | 9000 | SK 5282 SCP - 160L/4 | SK 5282 SCP - 160LH/4 | SK 5282 SCP - 250TC | | X | X | X | X |
| 115 | 10981 | 2.1 | III | 15.38 | 5868 | 9000 | SK 5282 SCP - 160L/4 | SK 5282 SCP - 160LH/4 | SK 5282 SCP - 250TC | | X | X | X | X |
| 100 | 12559 | 1.9 | II | 17.59 | 6032 | 9000 | SK 5282 SCP - 160L/4 | SK 5282 SCP - 160LH/4 | SK 5282 SCP - 250TC | | X | X | X | X |
| 93 | 13480 | 1.7 | II | 18.88 | 6149 | 9000 | SK 5282 SCP - 160L/4 | SK 5282 SCP - 160LH/4 | SK 5282 SCP - 250TC | | X | X | X | X |
| 87 | 14536 | 1.9 | II | 20.36 | 6206 | 9000 | SK 5282 SCP - 160L/4 | SK 5282 SCP - 160LH/4 | SK 5282 SCP - 250TC | | X | X | X | X |
| 71 | 17849 | 1.4 | II | 25 | 6476 | 9000 | SK 5282 SCP - 160L/4 | SK 5282 SCP - 160LH/4 | SK 5282 SCP - 250TC | | X | X | X | X |
| 58 | 21776 | 1.2 | I | 30.5 | 6687 | 9000 | SK 5282 SCP - 160L/4 | SK 5282 SCP - 160LH/4 | SK 5282 SCP - 250TC | | X | X | X | X |
| 53 | 23868 | 0.9 | * | 33.43 | 6784 | 9000 | SK 5282 SCP - 160L/4 | SK 5282 SCP - 160LH/4 | SK 5282 SCP - 250TC | | X | X | X | X |

Output speed and torque ratings are based on the "Standard Efficiency Motor" Power and speed. Performance will vary slightly for other motors.



# 20 hp Gearmotors & Speed Reducers

| Output Speed | Output Torque | SF | AGMA Class | Gear Ratio | Thrust | | Integral Gearmotor | | Reducer | CEMA DriveShaft | | | | |
|---|---|---|---|---|---|---|---|---|---|---|---|---|---|---|
| $n_2$ | $T_2$ | $f_a$ | | i | Std Brg | H.D. Brg " VL" | Standard Efficiency Motor | Energy Efficient Motor | C-Face Input | 1-1/2" | 2" | 2-7/16" | 3" | 3-7/16" |
| [rpm] | [lb-in] | | | | [lb] | [lb] | | | | | | | | |
| 362 | 3484 | 3.1 | III | 4.88 | 6532 | 9432 | SK 6282 SCP - 160L/4 | SK 6282 SCP - 160LH/4 | SK 6282 SCP - 250TC | | | | X | X |
| 321 | 3927 | 3 | III | 5.5 | 6743 | 9740 | SK 6282 SCP - 160L/4 | SK 6282 SCP - 160LH/4 | SK 6282 SCP - 250TC | | | | X | X |
| 305 | 4127 | 2.9 | III | 5.78 | 6831 | 9866 | SK 6282 SCP - 160L/4 | SK 6282 SCP - 160LH/4 | SK 6282 SCP - 250TC | | | | X | X |
| 262 | 4812 | 2.8 | III | 6.74 | 7130 | 10287 | SK 6282 SCP - 160L/4 | SK 6282 SCP - 160LH/4 | SK 6282 SCP - 250TC | | | | X | X |
| 226 | 5583 | 2.7 | III | 7.82 | 7418 | 10708 | SK 6282 SCP - 160L/4 | SK 6282 SCP - 160LH/4 | SK 6282 SCP - 250TC | | | | X | X |
| 188 | 6704 | 2.5 | III | 9.39 | 7765 | 11198 | SK 6282 SCP - 160L/4 | SK 6282 SCP - 160LH/4 | SK 6282 SCP - 250TC | | | | X | X |
| 166 | 7597 | 2.8 | III | 10.64 | 8064 | 11637 | SK 6282 SCP - 160L/4 | SK 6282 SCP - 160LH/4 | SK 6282 SCP - 250TC | | | | X | X |
| 143 | 8818 | 2.7 | III | 12.35 | 8372 | 12094 | SK 6282 SCP - 160L/4 | SK 6282 SCP - 160LH/4 | SK 6282 SCP - 250TC | | | | X | X |
| 119 | 10588 | 2.5 | III | 14.83 | 8780 | 12629 | SK 6282 SCP - 160L/4 | SK 6282 SCP - 160LH/4 | SK 6282 SCP - 250TC | | | | X | X |
| 94 | 13351 | 2.5 | III | 18.7 | 9297 | 13381 | SK 6282 SCP - 160L/4 | SK 6282 SCP - 160LH/4 | SK 6282 SCP - 250TC | | | | X | X |
| 77 | 16386 | 2.4 | III | 22.95 | 9765 | 13500 | SK 6282 SCP - 160L/4 | SK 6282 SCP - 160LH/4 | SK 6282 SCP - 250TC | | | | X | X |
| 68 | 18599 | 2.2 | III | 26.05 | 10037 | 13500 | SK 6282 SCP - 160L/4 | SK 6282 SCP - 160LH/4 | SK 6282 SCP - 250TC | | | | X | X |
| 59 | 21348 | 1.9 | II | 29.9 | 10330 | 13500 | SK 6282 SCP - 160L/4 | SK 6282 SCP - 160LH/4 | SK 6282 SCP - 250TC | | | | X | X |
| 45 | 28188 | 1 | I | 39.48 | 10787 | 13500 | SK 6282 SCP - 160L/4 | SK 6282 SCP - 160LH/4 | SK 6282 SCP - 250TC | | | | X | X |
| 35 | 35520 | 1 | I | 49.75 | 11268 | 13500 | SK 6282 SCP - 160L/4 | SK 6282 SCP - 160LH/4 | SK 6282 SCP - 250TC | | | | X | X |
| 29 | 43609 | 0.9 | * | 61.08 | 11678 | 13500 | SK 6282 SCP - 160L/4 | SK 6282 SCP - 160LH/4 | SK 6282 SCP - 250TC | | | | X | X |

Output speed and torque ratings are based on the "Standard Efficiency Motor" Power and speed. Performance will vary slightly for other motors.

# 25 hp Gearmotors & Speed Reducers



| Output Speed | Output Torque | SF | AGMA Class | Gear Ratio | Thrust | | Integral Gearmotor | | Reducer | CEMA DriveShaft | | | | |
|---|---|---|---|---|---|---|---|---|---|---|---|---|---|---|
| $n_2$ | $T_2$ | $f_a$ | | i | Std Brg | H.D. Brg " VL" | Standard Efficiency Motor | Energy Efficient Motor | C-Face Input | 1-1/2" | 2" | 2-7/16" | 3" | 3-7/16" |
| [rpm] | [lb-in] | | | | [lb] | [lb] | | | | | | | | |
| 405 | 3890 | 3.5 | III | 4.32 | 4239 | 7101 | SK 5282 SCP - 180MX/4 | SK 5282 SCP - 180MH/4 | SK 5282 SCP - 280TC | | X | X | X | X |
| 349 | 4510 | 3.3 | III | 5.01 | 4394 | 7369 | SK 5282 SCP - 180MX/4 | SK 5282 SCP - 180MH/4 | SK 5282 SCP - 280TC | | X | X | X | X |
| 331 | 4762 | 3.3 | III | 5.29 | 4457 | 7475 | SK 5282 SCP - 180MX/4 | SK 5282 SCP - 180MH/4 | SK 5282 SCP - 280TC | | X | X | X | X |
| 306 | 5140 | 3.1 | III | 5.71 | 4543 | 7607 | SK 5282 SCP - 180MX/4 | SK 5282 SCP - 180MH/4 | SK 5282 SCP - 280TC | | X | X | X | X |
| 276 | 5698 | 3.3 | III | 6.33 | 4649 | 7819 | SK 5282 SCP - 180MX/4 | SK 5282 SCP - 180MH/4 | SK 5282 SCP - 280TC | | X | X | X | X |
| 244 | 6455 | 3 | III | 7.17 | 4788 | 8035 | SK 5282 SCP - 180MX/4 | SK 5282 SCP - 180MH/4 | SK 5282 SCP - 280TC | | X | X | X | X |
| 201 | 7832 | 2.7 | III | 8.7 | 5011 | 8404 | SK 5282 SCP - 180MX/4 | SK 5282 SCP - 180MH/4 | SK 5282 SCP - 280TC | | X | X | X | X |
| 185 | 8516 | 2.4 | III | 9.46 | 5135 | 8593 | SK 5282 SCP - 180MX/4 | SK 5282 SCP - 180MH/4 | SK 5282 SCP - 280TC | | X | X | X | X |
| 163 | 9641 | 2.3 | III | 10.71 | 5272 | 8831 | SK 5282 SCP - 180MX/4 | SK 5282 SCP - 180MH/4 | SK 5282 SCP - 280TC | | X | X | X | X |
| 135 | 11703 | 2 | III | 13 | 5492 | 9000 | SK 5282 SCP - 180MX/4 | SK 5282 SCP - 180MH/4 | SK 5282 SCP - 280TC | | X | X | X | X |
| 114 | 13846 | 1.7 | II | 15.38 | 5688 | 9000 | SK 5282 SCP - 180MX/4 | SK 5282 SCP - 180MH/4 | SK 5282 SCP - 280TC | | X | X | X | X |
| 99 | 15835 | 1.5 | II | 17.59 | 5821 | 9000 | SK 5282 SCP - 180MX/4 | SK 5282 SCP - 180MH/4 | SK 5282 SCP - 280TC | | X | X | X | X |
| 93 | 16996 | 1.4 | II | 18.88 | 5931 | 9000 | SK 5282 SCP - 180MX/4 | SK 5282 SCP - 180MH/4 | SK 5282 SCP - 280TC | | X | X | X | X |
| 86 | 18329 | 1.5 | II | 20.36 | 5963 | 9000 | SK 5282 SCP - 180MX/4 | SK 5282 SCP - 180MH/4 | SK 5282 SCP - 280TC | | X | X | X | X |
| 70 | 22506 | 1.1 | I | 25 | 6185 | 9000 | SK 5282 SCP - 180MX/4 | SK 5282 SCP - 180MH/4 | SK 5282 SCP - 280TC | | X | X | X | X |
| 399 | 3952 | 4.6 | III | 4.39 | 6296 | 9106 | SK 6282 SCP - 180MX/4 | SK 6282 SCP - 180MH/4 | SK 6282 SCP - 280TC | | | | X | X |
| 359 | 4393 | 4.3 | III | 4.88 | 6478 | 9358 | SK 6282 SCP - 180MX/4 | SK 6282 SCP - 180MH/4 | SK 6282 SCP - 280TC | | | | X | X |
| 318 | 4951 | 4.1 | III | 5.5 | 6687 | 9646 | SK 6282 SCP - 180MX/4 | SK 6282 SCP - 180MH/4 | SK 6282 SCP - 280TC | | | | X | X |
| 303 | 5203 | 4 | III | 5.78 | 6773 | 9772 | SK 6282 SCP - 180MX/4 | SK 6282 SCP - 180MH/4 | SK 6282 SCP - 280TC | | | | X | X |
| 292 | 5392 | 3.9 | III | 5.99 | 6849 | 9866 | SK 6282 SCP - 180MX/4 | SK 6282 SCP - 180MH/4 | SK 6282 SCP - 280TC | | | | X | X |
| 260 | 6068 | 4 | III | 6.74 | 7056 | 10172 | SK 6282 SCP - 180MX/4 | SK 6282 SCP - 180MH/4 | SK 6282 SCP - 280TC | | | | X | X |
| 224 | 7040 | 3.4 | III | 7.82 | 7317 | 10553 | SK 6282 SCP - 180MX/4 | SK 6282 SCP - 180MH/4 | SK 6282 SCP - 280TC | | | | X | X |
| 186 | 8453 | 2.9 | III | 9.39 | 7655 | 11039 | SK 6282 SCP - 180MX/4 | SK 6282 SCP - 180MH/4 | SK 6282 SCP - 280TC | | | | X | X |
| 164 | 9578 | 4 | III | 10.64 | 7958 | 11491 | SK 6282 SCP - 180MX/4 | SK 6282 SCP - 180MH/4 | SK 6282 SCP - 280TC | | | | X | X |
| 142 | 11118 | 3.5 | III | 12.35 | 8255 | 11882 | SK 6282 SCP - 180MX/4 | SK 6282 SCP - 180MH/4 | SK 6282 SCP - 280TC | | | | X | X |
| 118 | 13350 | 3 | III | 14.83 | 8593 | 12389 | SK 6282 SCP - 180MX/4 | SK 6282 SCP - 180MH/4 | SK 6282 SCP - 280TC | | | | X | X |
| 94 | 16834 | 2.3 | III | 18.7 | 9079 | 13061 | SK 6282 SCP - 180MX/4 | SK 6282 SCP - 180MH/4 | SK 6282 SCP - 280TC | | | | X | X |
| 76 | 20660 | 1.9 | II | 22.95 | 9536 | 13500 | SK 6282 SCP - 180MX/4 | SK 6282 SCP - 180MH/4 | SK 6282 SCP - 280TC | | | | X | X |
| 67 | 23451 | 1.7 | II | 26.05 | 9758 | 13500 | SK 6282 SCP - 180MX/4 | SK 6282 SCP - 180MH/4 | SK 6282 SCP - 280TC | | | | X | X |
| 59 | 26917 | 1.5 | II | 29.9 | 9999 | 13500 | SK 6282 SCP - 180MX/4 | SK 6282 SCP - 180MH/4 | SK 6282 SCP - 280TC | | | | X | X |

Output speed and torque ratings are based on the "Standard Efficiency Motor" Power and speed. Performance will vary slightly for other motors.



# 30 hp Gearmotors & Speed Reducers

| Output Speed | Output Torque | SF | AGMA Class | Gear Ratio | Thrust | | Integral Gearmotor | | Reducer | CEMA DriveShaft | | | | |
|---|---|---|---|---|---|---|---|---|---|---|---|---|---|---|
| $n_2$ | $T_2$ | $f_a$ | | i | Std Brg | H.D. Brg " VL" | Standard Efficiency Motor | Energy Efficient Motor | C-Face Input | 1-1/2" | 2" | 2-7/16" | 3" | 3-7/16" |
| [rpm] | [lb-in] | | | | [lb] | [lb] | | | | | | | | |
| 406 | 4654 | 2.9 | III | 4.32 | 4174 | 7000 | SK 5282 SCP - 180LX/4 | SK 5282 SCP - 180LH/4 | SK 5282 SCP - 280TC | | X | X | X | X |
| 350 | 5397 | 2.8 | III | 5.01 | 4327 | 7250 | SK 5282 SCP - 180LX/4 | SK 5282 SCP - 180LH/4 | SK 5282 SCP - 280TC | | X | X | X | X |
| 332 | 5699 | 2.7 | III | 5.29 | 4381 | 7355 | SK 5282 SCP - 180LX/4 | SK 5282 SCP - 180LH/4 | SK 5282 SCP - 280TC | | X | X | X | X |
| 307 | 6151 | 2.6 | III | 5.71 | 4464 | 7475 | SK 5282 SCP - 180LX/4 | SK 5282 SCP - 180LH/4 | SK 5282 SCP - 280TC | | X | X | X | X |
| 277 | 6819 | 2.7 | III | 6.33 | 4568 | 7670 | SK 5282 SCP - 180LX/4 | SK 5282 SCP - 180LH/4 | SK 5282 SCP - 280TC | | X | X | X | X |
| 245 | 7724 | 2.5 | III | 7.17 | 4694 | 7855 | SK 5282 SCP - 180LX/4 | SK 5282 SCP - 180LH/4 | SK 5282 SCP - 280TC | | X | X | X | X |
| 202 | 9372 | 2.2 | III | 8.7 | 4892 | 8177 | SK 5282 SCP - 180LX/4 | SK 5282 SCP - 180LH/4 | SK 5282 SCP - 280TC | | X | X | X | X |
| 186 | 10191 | 2 | III | 9.46 | 5009 | 8404 | SK 5282 SCP - 180LX/4 | SK 5282 SCP - 180LH/4 | SK 5282 SCP - 280TC | | X | X | X | X |
| 164 | 11538 | 1.9 | II | 10.71 | 5137 | 8593 | SK 5282 SCP - 180LX/4 | SK 5282 SCP - 180LH/4 | SK 5282 SCP - 280TC | | X | X | X | X |
| 135 | 14005 | 1.7 | II | 13 | 5315 | 8901 | SK 5282 SCP - 180LX/4 | SK 5282 SCP - 180LH/4 | SK 5282 SCP - 280TC | | X | X | X | X |
| 114 | 16569 | 1.4 | II | 15.38 | 5495 | 9000 | SK 5282 SCP - 180LX/4 | SK 5282 SCP - 180LH/4 | SK 5282 SCP - 280TC | | X | X | X | X |
| 100 | 18950 | 1.3 | I | 17.59 | 5603 | 9000 | SK 5282 SCP - 180LX/4 | SK 5282 SCP - 180LH/4 | SK 5282 SCP - 280TC | | X | X | X | X |
| 93 | 20339 | 1.1 | I | 18.88 | 5697 | 9000 | SK 5282 SCP - 180LX/4 | SK 5282 SCP - 180LH/4 | SK 5282 SCP - 280TC | | X | X | X | X |
| 86 | 21934 | 1.3 | I | 20.36 | 5702 | 9000 | SK 5282 SCP - 180LX/4 | SK 5282 SCP - 180LH/4 | SK 5282 SCP - 280TC | | X | X | X | X |
| 70 | 26932 | 1 | I | 25 | 5873 | 9000 | SK 5282 SCP - 180LX/4 | SK 5282 SCP - 180LH/4 | SK 5282 SCP - 280TC | | X | X | X | X |
| 400 | 4729 | 3.8 | III | 4.39 | 6233 | 9005 | SK 6282 SCP - 180LX/4 | SK 6282 SCP - 180LH/4 | SK 6282 SCP - 280TC | | | | X | X |
| 360 | 5257 | 3.6 | III | 4.88 | 6413 | 9252 | SK 6282 SCP - 180LX/4 | SK 6282 SCP - 180LH/4 | SK 6282 SCP - 280TC | | | | X | X |
| 319 | 5925 | 3.4 | III | 5.5 | 6608 | 9540 | SK 6282 SCP - 180LX/4 | SK 6282 SCP - 180LH/4 | SK 6282 SCP - 280TC | | | | X | X |
| 304 | 6227 | 3.3 | III | 5.78 | 6703 | 9646 | SK 6282 SCP - 180LX/4 | SK 6282 SCP - 180LH/4 | SK 6282 SCP - 280TC | | | | X | X |
| 293 | 6453 | 3.3 | III | 5.99 | 6768 | 9740 | SK 6282 SCP - 180LX/4 | SK 6282 SCP - 180LH/4 | SK 6282 SCP - 280TC | | | | X | X |
| 260 | 7261 | 3.3 | III | 6.74 | 6948 | 10026 | SK 6282 SCP - 180LX/4 | SK 6282 SCP - 180LH/4 | SK 6282 SCP - 280TC | | | | X | X |
| 224 | 8424 | 2.8 | III | 7.82 | 7214 | 10402 | SK 6282 SCP - 180LX/4 | SK 6282 SCP - 180LH/4 | SK 6282 SCP - 280TC | | | | X | X |
| 187 | 10116 | 2.4 | III | 9.39 | 7544 | 10845 | SK 6282 SCP - 180LX/4 | SK 6282 SCP - 180LH/4 | SK 6282 SCP - 280TC | | | | X | X |
| 165 | 11462 | 3.3 | III | 10.64 | 7814 | 11270 | SK 6282 SCP - 180LX/4 | SK 6282 SCP - 180LH/4 | SK 6282 SCP - 280TC | | | | X | X |
| 142 | 13305 | 2.9 | III | 12.35 | 8087 | 11657 | SK 6282 SCP - 180LX/4 | SK 6282 SCP - 180LH/4 | SK 6282 SCP - 280TC | | | | X | X |
| 118 | 15976 | 2.5 | III | 14.83 | 8406 | 12114 | SK 6282 SCP - 180LX/4 | SK 6282 SCP - 180LH/4 | SK 6282 SCP - 280TC | | | | X | X |
| 94 | 20145 | 1.9 | II | 18.7 | 8840 | 12731 | SK 6282 SCP - 180LX/4 | SK 6282 SCP - 180LH/4 | SK 6282 SCP - 280TC | | | | X | X |
| 76 | 24724 | 1.6 | II | 22.95 | 9250 | 13295 | SK 6282 SCP - 180LX/4 | SK 6282 SCP - 180LH/4 | SK 6282 SCP - 280TC | | | | X | X |
| 67 | 28064 | 1.4 | II | 26.05 | 9448 | 13500 | SK 6282 SCP - 180LX/4 | SK 6282 SCP - 180LH/4 | SK 6282 SCP - 280TC | | | | X | X |
| 59 | 32211 | 1.2 | I | 29.9 | 9664 | 13500 | SK 6282 SCP - 180LX/4 | SK 6282 SCP - 180LH/4 | SK 6282 SCP - 280TC | | | | X | X |

Output speed and torque ratings are based on the "Standard Efficiency Motor" Power and speed. Performance will vary slightly for other motors.

# 40 hp & 50 hp Gearmotors & Speed Reducers





| Output Speed | Output Torque | SF | AGMA Class | Gear Ratio | Thrust | | Integral Gearmotor | | Reducer | CEMA DriveShaft | | | | |
|---|---|---|---|---|---|---|---|---|---|---|---|---|---|---|
| $n_2$ | $T_2$ | $f_a$ | | i | Std Brg | H.D. Brg " VL" | Standard Efficiency Motor | Energy Efficient Motor | C-Face Input | 1-1/2" | 2" | 2-7/16" | 3" | 3-7/16" |
| [rpm] | [lb-in] | | | | [lb] | [lb] | | | | | | | | |
| 405 | 6217 | 2.9 | III | 4.39 | 6098 | 8791 | SK 6282 SCP - 200L/4 | SK 6282 SCP - 200LH/4 | SK 6282 SCP - 320TC | | | | X | X |
| 365 | 6912 | 2.8 | III | 4.88 | 6253 | 9020 | SK 6282 SCP - 200L/4 | SK 6282 SCP - 200LH/4 | SK 6282 SCP - 320TC | | | | X | X |
| 324 | 7790 | 2.6 | III | 5.5 | 6442 | 9284 | SK 6282 SCP - 200L/4 | SK 6282 SCP - 200LH/4 | SK 6282 SCP - 320TC | | | | X | X |
| 308 | 8187 | 2.5 | III | 5.78 | 6512 | 9389 | SK 6282 SCP - 200L/4 | SK 6282 SCP - 200LH/4 | SK 6282 SCP - 320TC | | | | X | X |
| 297 | 8484 | 2.5 | III | 5.99 | 6572 | 9479 | SK 6282 SCP - 200L/4 | SK 6282 SCP - 200LH/4 | SK 6282 SCP - 320TC | | | | X | X |
| 264 | 9546 | 2.8 | III | 6.74 | 6748 | 9725 | SK 6282 SCP - 200L/4 | SK 6282 SCP - 200LH/4 | SK 6282 SCP - 320TC | | | | X | X |
| 228 | 11076 | 2.1 | III | 7.82 | 6977 | 10076 | SK 6282 SCP - 200L/4 | SK 6282 SCP - 200LH/4 | SK 6282 SCP - 320TC | | | | X | X |
| 190 | 13300 | 1.8 | II | 9.39 | 7252 | 10451 | SK 6282 SCP - 200L/4 | SK 6282 SCP - 200LH/4 | SK 6282 SCP - 320TC | | | | X | X |
| 167 | 15070 | 2.5 | III | 10.64 | 7538 | 10845 | SK 6282 SCP - 200L/4 | SK 6282 SCP - 200LH/4 | SK 6282 SCP - 320TC | | | | X | X |
| 144 | 17492 | 2.2 | III | 12.35 | 7760 | 11162 | SK 6282 SCP - 200L/4 | SK 6282 SCP - 200LH/4 | SK 6282 SCP - 320TC | | | | X | X |
| 120 | 21005 | 1.9 | II | 14.83 | 8026 | 11545 | SK 6282 SCP - 200L/4 | SK 6282 SCP - 200LH/4 | SK 6282 SCP - 320TC | | | | X | X |
| 95 | 26486 | 1.5 | II | 18.7 | 8368 | 12035 | SK 6282 SCP - 200L/4 | SK 6282 SCP - 200LH/4 | SK 6282 SCP - 320TC | | | | X | X |
| 78 | 32506 | 1.2 | I | 22.95 | 8683 | 12490 | SK 6282 SCP - 200L/4 | SK 6282 SCP - 200LH/4 | SK 6282 SCP - 320TC | | | | X | X |
| 402 | 7838 | 2.3 | III | 4.39 | 5994 | 8651 | SK 6282 SCP - 225S/4 | SK 6282 SCP - 225SH/4 | SK 6282 SCP - 320TC | | | | X | X |
| 362 | 8714 | 2.2 | III | 4.88 | 6143 | 8847 | SK 6282 SCP - 225S/4 | SK 6282 SCP - 225SH/4 | SK 6282 SCP - 320TC | | | | X | X |
| 321 | 9821 | 2.1 | III | 5.5 | 6307 | 9106 | SK 6282 SCP - 225S/4 | SK 6282 SCP - 225SH/4 | SK 6282 SCP - 320TC | | | | X | X |
| 305 | 10321 | 2 | III | 5.78 | 6374 | 9194 | SK 6282 SCP - 225S/4 | SK 6282 SCP - 225SH/4 | SK 6282 SCP - 320TC | | | | X | X |
| 295 | 10696 | 2 | III | 5.99 | 6422 | 9252 | SK 6282 SCP - 225S/4 | SK 6282 SCP - 225SH/4 | SK 6282 SCP - 320TC | | | | X | X |
| 262 | 12035 | 2.2 | III | 6.74 | 6599 | 9479 | SK 6282 SCP - 225S/4 | SK 6282 SCP - 225SH/4 | SK 6282 SCP - 320TC | | | | X | X |
| 226 | 13964 | 1.7 | II | 7.82 | 6784 | 9772 | SK 6282 SCP - 225S/4 | SK 6282 SCP - 225SH/4 | SK 6282 SCP - 320TC | | | | X | X |
| 188 | 16767 | 1.5 | II | 9.39 | 7025 | 10091 | SK 6282 SCP - 225S/4 | SK 6282 SCP - 225SH/4 | SK 6282 SCP - 320TC | | | | X | X |
| 166 | 18999 | 2 | III | 10.64 | 7279 | 10487 | SK 6282 SCP - 225S/4 | SK 6282 SCP - 225SH/4 | SK 6282 SCP - 320TC | | | | X | X |
| 143 | 22053 | 1.8 | II | 12.35 | 7459 | 10742 | SK 6282 SCP - 225S/4 | SK 6282 SCP - 225SH/4 | SK 6282 SCP - 320TC | | | | X | X |
| 119 | 26481 | 1.5 | II | 14.83 | 7661 | 11039 | SK 6282 SCP - 225S/4 | SK 6282 SCP - 225SH/4 | SK 6282 SCP - 320TC | | | | X | X |
| 94 | 33391 | 1.2 | I | 18.7 | 7931 | 11399 | SK 6282 SCP - 225S/4 | SK 6282 SCP - 225SH/4 | SK 6282 SCP - 320TC | | | | X | X |
| 77 | 40980 | 1 | I | 22.95 | 8141 | 11732 | SK 6282 SCP - 225S/4 | SK 6282 SCP - 225SH/4 | SK 6282 SCP - 320TC | | | | X | X |

Output speed and torque ratings are based on the "Standard Efficiency Motor" Power and speed. Performance will vary slightly for other motors.

# SCP Ratings & Combinations

## Selection

- SK 1282, 1382 SCP Ratings & Combinations
- SK 2282 & 2382 SCP Ratings & Combinations
- SK 3282 & 3382 SCP Ratings & Combinations
- SK 4282 & 4382 SCP Ratings & Combinations
- SK 5282 & 5382 SCP Ratings & Combinations
- SK 6282 & 6382 SCP Ratings & Combinations



NORD DRIVESYSTEMS

www.nord.com

CLINCHER™

| Thrust | | Integral Gearmotor | | Reducer |
|---|---|---|---|---|
| Brg [lb] | HD Brg "VL" [lb] | Standard Efficiency Motor | Energy Efficient Motor | C-Face Input |
| 083 | 6750 | SK 4282 SCP - 90L/4 | SK 4282 SCP - 90LH/4 | SK 4282 SCP - 140TC |
| 516 | 6750 | SK 4282 SCP - 90L/4 | SK 4282 SCP - 90LH/4 | SK 4282 SCP - 140TC |
| 056 | 6750 | SK 4282 SCP - 90L/4 | SK 4282 SCP - 90LH/4 | SK 4282 SCP - 140TC |
| 950 | 6750 | SK 4282 SCP - 90L/4 | SK 4282 SCP - 90LH/4 | SK 4282 SCP - 140TC |
| 950 | 6750 | SK 4282 SCP - 90L/4 | SK 4282 SCP - 90LH/4 | SK 4282 SCP - 140TC |
| 950 | 6750 | SK 4282 SCP - 90L/4 | SK 4282 SCP - 90LH/4 | SK 4282 SCP - 140TC |
| 950 | 6750 | SK 4282 SCP - 90L/4 | SK 4282 SCP - 90LH/4 | SK 4282 SCP - 140TC |
| 950 | 6750 | SK 4282 SCP - 90L/4 | SK 4282 SCP - 90LH/4 | SK 4282 SCP - 140TC |
| 950 | 6750 | SK 4282 SCP - 90L/4 | SK 4282 SCP - 90LH/4 | SK 4282 SCP - 140TC |
| 950 | 6750 | SK 4282 SCP - 90L/4 | SK 4282 SCP - 90LH/4 | SK 4282 SCP - 140TC |
| 950 | 6750 | SK 4282 SCP - 90L/4 | SK 4282 SCP - 90LH/4 | SK 4282 SCP - 140TC |
| 50 | 6750 | SK 4282 SCP - 90L/4 | SK 4282 SCP - 90LH/4 | SK 4282 SCP - 140TC |
| | 6750 | SK 4282 SCP - 90L/4 | SK 4282 SCP - 90LH/4 | SK 4282 SCP - |





# Screw Conveyor Package Ratings & Combinations



## Explanation of Selection Tables

**GEARBOX TYPE** – Nomenclature for specified gear unit.

**TOTAL GEAR RATIO**

**OUTPUT SPEED** – Based on 1750 rpm input speed

**MAXIMUM TORQUE RATINGS**

**MAX POWER RATING** – Based on 1750 rpm input speed

**NEMA C-FACE INPUT POSSIBLE COMBINATIONS**

**INTEGRAL MOTOR POSSIBLE COMBINATIONS**



| Type | Ratio | Output Speed 1750 rpm input $n_2$ [rpm] | Max Torque $T_{max}$ [lb-in] | Max Power 1750 rpm input $P_{max}$ [hp] | NEMA C-face | | | Integral Motor | | | | | | | | | |
|---|---|---|---|---|---|---|---|---|---|---|---|---|---|---|---|---|---|
| | | | | | 56C 1.0 hp | 140TC 2.0 hp | 180TC 5.0 hp | 63S/4 0.16 hp | 63L/4 0.25 hp | 71S/4 0.33 hp | 71L/4 0.5 hp | 80S/4 0.75 hp | 80L 80LH/4 1.0 hp | 90S 90SH/4 1.5 hp | 90L 90LH/4 2 .0 hp | 100L 100LH/4 3.0 hp | 100LA 112LH/4 5.0 hp |
| SK 1282 SCP | 4.79 | 365 | 1133 | 5.00 | X | X | X | X | X | X | X | X | X | X | X | X | X |
| | 5.47 | 320 | 1522 | 5.00 | X | X | X | X | X | X | X | X | X | X | X | X | X |
| | 6.43 | 272 | 1602 | 5.00 | X | X | X | X | X | X | X | X | X | X | X | X | X |
| | 7.24 | 242 | 1655 | 5.00 | X | X | X | X | X | X | X | X | X | X | X | X | X |

**X =** Available Combination



# SK 1282 SCP & SK 1382 SCP
# Ratings & Combinations

| Type | Ratio | Output Speed 1750 rpm input $n_2$ [rpm] | Max Torque $T_{max}$ [lb-in] | Max ◈ Power 1750 rpm input $P_{max}$ [hp] | NEMA C-face* 56C 1.0 hp | 140TC 2.0 hp | 180TC 5.0 hp | Integral Motor 63S/4 0.16 hp | 63L/4 0.25 hp | 71S/4 0.33 hp | 71L/4 0.5 hp | 80S/4 0.75 hp | 80L/4 80LH/4 1.0 hp | 90S/4 90SH/4 1.5 hp | 90L/4 90LH/4 2 .0 hp | 100L/4 100LH/4 3.0 hp | 100LA/4 112LH/4 5.0 hp |
|---|---|---|---|---|---|---|---|---|---|---|---|---|---|---|---|---|---|
| **SK 1282 SCP** | 4.79 | 365 | 1133 | *5.00* | X | X | X | X | X | X | X | X | X | X | X | X | X |
| | 5.47 | 320 | 1522 | *5.00* | X | X | X | X | X | X | X | X | X | X | X | X | X |
| | 6.43 | 272 | 1602 | *5.00* | X | X | X | X | X | X | X | X | X | X | X | X | X |
| | 7.24 | 242 | 1655 | *5.00* | X | X | X | X | X | X | X | X | X | X | X | X | X |
| | 8.21 | 213 | 1416 | 4.78 | X | X | X | X | X | X | X | X | X | X | X | X | X |
| | 8.24 | 212 | 1690 | 5.00 | X | X | X | X | X | X | X | X | X | X | X | X | X |
| | 9.18 | 191 | 1673 | *5.00* | X | X | X | X | X | X | X | X | X | X | X | X | X |
| | 10.34 | 169 | 1735 | 4.65 | X | X | X | X | X | X | X | X | X | X | X | X | X |
| | 11.76 | 149 | 1805 | 4.27 | X | X | X | X | X | X | X | X | X | X | X | X | X |
| | 14.11 | 124 | 1859 | 3.66 | X | X | X | X | X | X | X | X | X | X | X | X | X |
| | 17.21 | 102 | 1982 | 3.21 | X | X | X | X | X | X | X | X | X | X | X | X | X |
| | 20.57 | 85 | 1991 | 2.68 | X | X | X | X | X | X | X | X | X | X | X | X | X |
| | 25.22 | 69 | 1991 | 2.18 | X | X | X | X | X | X | X | X | X | X | X | X | X |
| | 28.33 | 62 | 1991 | 1.96 | X | X | | X | X | X | X | X | X | X | X | | |
| | 32.08 | 55 | 2036 | 1.78 | X | X | | X | X | X | X | X | X | X | X | | |
| | 41.07 | 43 | 1920 | 1.31 | X | X | | | | | X | X | X | | | | |
| | 46.19 | 38 | 1735 | 1.05 | X | | | X | X | X | X | | | | | | |
| | 49.25 | 36 | 2301 | 1.31 | X | X | | | | | X | X | X | | | | |
| | 55.39 | 32 | 2080 | 1.06 | X | | | X | X | X | X | | | | | | |
| | 58.89 | 30 | 2505 | 1.19 | X | X | | | | | X | X | X | | | | |
| | 66.23 | 26 | 2390 | 0.99 | X | | | X | X | X | X | | | | | | |
| | 72.17 | 24 | 2620 | 1.00 | X | X | | | | | X | X | X | | | | |
| | 81.17 | 22 | 2620 | 0.91 | X | | | X | X | X | X | | | | | | |
| | 92.48 | 19 | 2053 | 0.62 | X | | | X | X | X | X | | | | | | |
| | 109.50 | 16 | 1850 | 0.47 | X | | | X | X | X | | | | | | | |
| **SK 1382 SCP** | 87.94 | 20 | 2425 | 0.77 | X | | | X | X | X | X | | | | | | |
| | 105.11 | 17 | 2390 | 0.63 | X | | | X | X | X | X | | | | | | |
| | 128.82 | 14 | 1991 | 0.43 | X | | | X | X | X | X | | | | | | |
| | 163.93 | 11 | 1991 | 0.34 | X | | | X | X | X | X | | | | | | |
| | 209.87 | 8.3 | 2080 | 0.28 | X | | | X | X | X | X | | | | | | |
| | 251.67 | 7.0 | 2425 | 0.27 | X | | | X | X | X | X | | | | | | |
| | 300.93 | 5.8 | 2390 | 0.22 | X | | | X | X | X | X | | | | | | |
| | 368.79 | 4.8 | 1991 | 0.15 | X | | | X | X | X | X | | | | | | |
| | 414.78 | 4.2 | 1991 | 0.13 | X | | | X | X | X | X | | | | | | |
| | 472.60 | 3.7 | 1991 | 0.12 | X | | | X | X | X | X | | | | | | |
| | 556.83 | 3.1 | 1991 | 0.10 | X | | | X | X | X | | | | | | | |
| | 634.45 | 2.8 | 1965 | 0.09 | X | | | X | X | X | | | | | | | |

◈ The maximum input power limit shown is the largest motor power typically combined with the gear unit. *The Italicized power values shown are not the mechanical limit and often may be increased through discussion with our sales or engineering department.*

* The NEMA C-face power limit must also be considered when selecting a reducer. The C-face Adapter's Maximum Input Power values are displayed under the Available Combinations and based on a 1750 rpm motor.

# SK 2282 SCP & SK 2382 SCP
# Ratings & Combinations





| Type | Ratio | Output Speed 1750 rpm input $n_2$ [rpm] | Max Torque $T_{max}$ [lb-in] | Max ◈ Power 1750 rpm input $P_{max}$ [hp] | NEMA C-face* 56C 1.0 hp | 140TC 2.0 hp | 180TC 5.0 hp | Integral Motor 63S/4 0.16 hp | 63L/4 0.25 hp | 71S/4 0.33 hp | 71L/4 0.5 hp | 80S/4 0.75 hp | 80L/4 80LH/4 1.0 hp | 90S/4 90SH/4 1.5 hp | 90L/4 90LH/4 2 .0 hp | 100L/4 100LH/4 3.0 hp | 100LA/4 112LH/4 5.0 hp |
|---|---|---|---|---|---|---|---|---|---|---|---|---|---|---|---|---|---|
| **SK 2282 SCP** | 4.51 | 388 | 1646 | *5.00* | X | X | X | | | | X | X | X | X | X | X | X |
| | 5.72 | 306 | 1876 | *5.00* | X | X | X | | | | X | X | X | X | X | X | X |
| | 6.43 | 272 | 2000 | *5.00* | X | X | X | | | | X | X | X | X | X | X | X |
| | 7.48 | 234 | 2151 | *5.00* | X | X | X | | | | X | X | X | X | X | X | X |
| | 8.37 | 209 | 2266 | *5.00* | X | X | X | | | | X | X | X | X | X | X | X |
| | 9.03 | 194 | 2965 | *5.00* | X | X | X | | | | X | X | X | X | X | X | X |
| | 10.15 | 172 | 3151 | *5.00* | X | X | X | | | | X | X | X | X | X | X | X |
| | 11.81 | 148 | 3398 | *5.00* | X | X | X | | | | X | X | X | X | X | X | X |
| | 13.23 | 132 | 3584 | *5.00* | X | X | X | | | | X | X | X | X | X | X | X |
| | 16.53 | 106 | 4168 | *5.00* | X | X | X | | | | X | X | X | X | X | X | X |
| | 18.51 | 95 | 4301 | *5.00* | X | X | X | | | | X | X | X | X | X | X | X |
| | 21.90 | 80 | 4248 | *5.00* | X | X | X | | | | X | X | X | X | X | X | X |
| | 23.96 | 73 | 3850 | 4.46 | X | X | X | | | | X | X | X | X | X | X | X |
| | 24.97 | 70 | 4337 | 4.81 | X | X | X | | | | X | X | X | X | X | X | X |
| | 26.83 | 65 | 3885 | 4.01 | X | X | X | | | | X | X | X | X | X | X | X |
| | 29.65 | 59 | 4425 | 4.14 | X | X | X | | | | X | X | X | X | X | X | X |
| | 31.23 | 56 | 3938 | 3.50 | X | X | X | | | | | | | X | X | X | |
| | 36.54 | 48 | 4434 | 3.38 | X | X | X | | | | | | | X | X | X | |
| | 37.18 | 47 | 4071 | 3.03 | X | X | | | | | X | X | X | X | X | | |
| | 43.71 | 40 | 4983 | 3.16 | X | X | X | | | | | | | X | X | X | |
| | 45.11 | 39 | 3983 | 2.46 | X | X | | | | | | X | X | X | X | | |
| | 51.71 | 34 | 4611 | 2.49 | X | X | X | | | | | | | X | X | X | |
| | 53.96 | 32 | 4478 | 2.27 | X | X | | | | | | X | X | X | X | | |
| | 63.83 | 27 | 4611 | 1.97 | X | X | | | | | | X | X | X | X | | |
| | 69.67 | 25 | 3921 | 1.55 | X | X | | | | X | X | X | X | X | | | |
| | 82.42 | 21 | 4221 | 1.41 | X | X | | | | X | X | X | X | X | | | |
| | 100.98 | 17 | 3894 | 1.05 | X | X | | | | X | X | X | X | X | | | |
| | 104.07 | 17 | 3513 | 0.95 | X | X | | | | X | X | X | | | | | |
| | 127.51 | 14 | 3363 | 0.75 | X | X | | | | X | X | X | | | | | |
| **SK 2382 SCP** | 82.22 | 21 | 4965 | 1.50 | X | X | | X | X | X | X | X | X | | | | |
| | 98.35 | 18 | 4983 | 1.42 | X | X | | X | X | X | X | X | X | | | | |
| | 116.35 | 15 | 4611 | 1.10 | X | X | | X | X | X | X | X | X | | | | |
| | 131.86 | 13 | 4611 | 0.95 | X | X | | X | X | X | X | X | X | | | | |
| | 149.96 | 12 | 4611 | 0.88 | X | X | | X | X | X | X | X | X | | | | |
| | 185.11 | 9.5 | 4611 | 0.69 | X | X | | X | X | X | X | X | X | | | | |
| | 236.11 | 7.4 | 4186 | 0.49 | X | | | X | X | X | X | | | | | | |
| | 276.27 | 6.3 | 4894 | 0.49 | X | | | X | X | X | X | | | | | | |
| | 330.45 | 5.3 | 4983 | 0.42 | X | | | X | X | X | X | | | | | | |
| | 390.93 | 4.5 | 4611 | 0.33 | X | | | X | X | X | X | | | | | | |
| | 482.56 | 3.6 | 4611 | 0.26 | X | | | X | X | X | X | | | | | | |
| | 623.10 | 2.8 | 4611 | 0.20 | X | | | X | X | X | X | | | | | | |
| | 763.41 | 2.3 | 3876 | 0.14 | X | | | X | X | X | X | | | | | | |

◈ The maximum input power limit shown is the largest motor power typically combined with the gear unit. *The Italicized power values shown are not the mechanical limit and often may be increased through discussion with our sales or engineering department.*

* The NEMA C-face power limit must also be considered when selecting a reducer. The C-face Adapter's Maximum Input Power values are displayed under the Available Combinations and based on a 1750 rpm motor.



# SK 3282 SCP & SK 3382 SCP
# Ratings & Combinations

| Type | Ratio | Output Speed 1750 rpm input $n_2$ [rpm] | Max Torque $T_{max}$ [lb-in] | Max ◈ Power 1750 rpm input $P_{max}$ [hp] | NEMA C-face* | | | | Integral Motor | | | | | | | | | | | |
|---|---|---|---|---|---|---|---|---|---|---|---|---|---|---|---|---|---|---|---|---|
| | | | | | 56C | 140TC | 180TC | 210TC | 63L/4 | 71S/4 | 71L/4 | 80S/4 | 80L/4 80LH/4 | 90S/4 90SH/4 | 90L/4 90LH/4 | 100L/4 100LH/4 | 100LA/4 112LH/4 | 132S/SH/4 | 132M/MH/4 | |
| | | | | | 1.0 hp | 2.0 hp | 5.0 hp | 10 hp | 0.25 hp | 0.33 hp | 0.5 hp | 0.75 hp | 1.0 hp | 1.5 hp | 2 .0 hp | 3.0 hp | 5.0 hp | 7.5 hp | 10 hp | |
| **SK 3282 SCP** | 4.48 | 391 | 4080 | *10.00* | X | X | X | X | | | | | | X | X | X | X | X | X | |
| | 5.68 | 308 | 4912 | *10.00* | X | X | X | X | | | | | | X | X | X | X | X | X | |
| | 6.70 | 261 | 5372 | *10.00* | X | X | X | X | | | | | | X | X | X | X | X | X | |
| | 8.31 | 211 | 5983 | *10.00* | X | X | X | X | | | | X | X | X | X | X | X | X | X | |
| | 9.80 | 179 | 7425 | *10.00* | X | X | X | X | | | | | | X | X | X | X | X | X | |
| | 11.38 | 154 | 7266 | *10.00* | X | X | X | X | | | | | | X | X | X | X | X | X | |
| | 14.11 | 124 | 7584 | *10.00* | X | X | X | X | | | | X | X | X | X | X | X | X | X | |
| | 16.67 | 105 | 7443 | *10.00* | X | X | X | X | | | | X | X | X | X | X | X | X | X | |
| | 20.18 | 87 | 7275 | *10.00* | X | X | X | X | | | | X | X | X | X | X | X | X | X | |
| | 21.38 | 82 | 6390 | 8.31 | X | X | X | X | | | | X | X | X | X | X | X | X | X | |
| | 22.45 | 78 | 7080 | 8.76 | X | X | X | X | | | | X | X | X | X | X | X | X | X | |
| | 23.71 | 74 | 7124 | 8.36 | X | X | X | X | | | | X | X | X | X | X | X | X | X | |
| | 25.88 | 68 | 7487 | 8.07 | X | X | X | X | | | | X | X | X | X | X | X | X | X | |
| | 28.70 | 61 | 7700 | 7.45 | X | X | X | X | | | | X | X | X | X | X | X | X | X | |
| | 31.93 | 55 | 7761 | 6.77 | X | X | X | X | | | | X | X | X | X | X | X | X | X | |
| | 37.77 | 46 | 7390 | 5.39 | X | X | X | | | | | X | X | X | X | X | | | | |
| | 38.62 | 45 | 5611 | 4.00 | X | X | X | | | | | | | X | X | X | | | | |
| | 42.02 | 42 | 8222 | 5.48 | X | X | X | | | | | X | X | X | X | X | | | | |
| | 44.85 | 39 | 6522 | 4.03 | X | X | X | | | | | | | X | X | X | | | | |
| | 48.04 | 36 | 4885 | 2.79 | X | X | | | | | | X | X | X | X | | | | | |
| | 52.97 | 33 | 7478 | 3.91 | X | X | X | | | | | | | X | X | X | | | | |
| | 55.79 | 31 | 5682 | 2.79 | X | X | | | | | | X | X | X | X | | | | | |
| | 64.12 | 27 | 8983 | 3.85 | X | X | X | | | | | | | X | X | X | | | | |
| | 65.89 | 27 | 6708 | 2.87 | X | X | | | | | | X | X | X | X | | | | | |
| | 70.56 | 25 | 4991 | 1.98 | X | X | | | | X | X | X | X | X | | | | | | |
| | 79.76 | 22 | 7523 | 2.62 | X | X | | | | | | X | X | X | X | | | | | |
| | 88.74 | 20 | 8363 | 2.65 | X | X | | | | | | X | X | X | X | | | | | |
| | 100.88 | 17 | 7142 | 1.93 | X | X | | | | X | X | X | X | X | | | | | | |
| | 112.23 | 16 | 6815 | 1.73 | X | X | | | | X | X | X | X | X | | | | | | |
| **SK 3382 SCP** | 89.60 | 20 | 5496 | 1.50 | X | X | | | X | X | X | X | X | X | X | | | | | |
| | 104.05 | 17 | 6505 | 1.50 | X | X | | | X | X | X | X | X | X | X | | | | | |
| | 126.93 | 14 | 6850 | 1.50 | X | X | | | X | X | X | X | X | X | X | | | | | |
| | 161.46 | 11 | 6974 | 1.22 | X | X | | | X | X | X | X | X | X | X | | | | | |
| | 190.69 | 9.2 | 7664 | 1.12 | X | X | | | X | X | X | X | X | X | X | | | | | |
| | 230.83 | 7.6 | 8850 | 1.07 | X | X | | | X | X | X | X | X | X | X | | | | | |
| | 287.14 | 6.1 | 8301 | 0.80 | X | X | | | X | X | X | X | X | X | X | | | | | |
| | 408.58 | 4.3 | 7045 | 0.48 | X | | | | X | X | X | X | | | | | | | | |
| | 482.56 | 3.6 | 7664 | 0.44 | X | | | | X | X | X | X | | | | | | | | |
| | 584.13 | 3 | 8850 | 0.42 | X | | | | X | X | X | X | | | | | | | | |
| | 726.61 | 2.4 | 8354 | 0.32 | X | | | | X | X | X | X | | | | | | | | |
| | 808.42 | 2.2 | 9195 | 0.32 | X | | | | X | X | X | X | | | | | | | | |
| | 919.00 | 1.9 | 7275 | 0.22 | X | | | | X | X | X | X | | | | | | | | |
| | 1,022.42 | 1.7 | 6965 | 0.19 | X | | | | X | X | X | X | | | | | | | | |

◈ The maximum input power limit shown is the largest motor power typically combined with the gear unit. *The Italicized power values shown are not the mechanical limit and often may be increased through discussion with our sales or engineering department.*

* The NEMA C-face power limit must also be considered when selecting a reducer. The C-face Adapter's Maximum Input Power values are displayed under the Available Combinations and based on a 1750 rpm motor.

# SK 4282 SCP
# Ratings & Combinations



| Type | Ratio | Output Speed 1750 rpm input $n_2$ [rpm] | Max Torque $T_{max}$ [lb-in] | Max ◈ Power 1750 rpm input $P_{max}$ [hp] | NEMA C-face* | | | | | Integral Motor | | | | | | | |
|---|---|---|---|---|---|---|---|---|---|---|---|---|---|---|---|---|---|
| | | | | | 56C 1.0 hp | 140TC 2.0 hp | 180TC 5.0 hp | 210TC 10 hp | 250TC 20 hp | 90S/4 90SH/4 1.5 hp | 90L/4 90LH/4 2 .0 hp | 100L/4 100LH/4 3.0 hp | 100LA/4 112LH/4 5.0 hp | 132S/SH/4 7.5 hp | 132M/MH/4 10 hp | 160M/MH/4 15 hp | 160L/LH/4 20 hp |
| **SK 4282 SCP** | 4.70 | 372 | 9160 | *20.00* | | | X | X | X | | | | | X | X | X | X |
| | 5.00 | 350 | 9160 | *20.00* | | | X | X | X | | | | | X | X | X | X |
| | 5.43 | 322 | 9160 | *20.00* | | | X | X | X | X | X | X | X | X | X | X | X |
| | 6.06 | 289 | 10620 | *20.00* | X | X | X | X | X | X | X | X | X | X | X | X | X |
| | 7.13 | 245 | 10638 | *20.00* | X | X | X | X | X | X | X | X | X | X | X | X | X |
| | 8.33 | 210 | 11257 | *20.00* | X | X | X | X | X | X | X | X | X | X | X | X | X |
| | 9.23 | 190 | 14461 | *20.00* | X | X | X | X | X | X | X | X | X | X | X | X | X |
| | 10.85 | 161 | 15045 | *20.00* | X | X | X | X | X | X | X | X | X | X | X | X | X |
| | 12.68 | 138 | 15488 | *20.00* | X | X | X | X | X | X | X | X | X | X | X | X | X |
| | 15.20 | 115 | 15930 | *20.00* | X | X | X | X | X | X | X | X | X | X | X | X | X |
| | 18.18 | 96 | 15930 | *20.00* | X | X | X | X | X | X | X | X | X | X | X | X | X |
| | 21.45 | 82 | 14921 | 19.41 | X | X | X | X | X | X | X | X | X | X | X | X | X |
| | 22.39 | 78 | 15036 | 18.60 | X | X | X | X | X | X | X | X | X | X | X | X | X |
| | 26.25 | 67 | 14231 | 15.12 | X | X | X | X | X | X | X | X | X | X | X | X | X |
| | 26.43 | 66 | 15815 | 16.55 | X | X | X | X | X | X | X | X | X | X | X | X | X |
| | 26.72 | 65 | 14160 | 14.60 | | | X | X | | | | | | X | X | | |
| | 32.04 | 55 | 15797 | 13.78 | | | X | X | | | | | | X | X | | |
| | 32.34 | 54 | 14337 | 12.28 | X | X | X | X | X | X | X | X | X | X | X | X | X |
| | 36.40 | 48 | 12169 | 9.26 | | | X | X | | | | X | X | X | | | |
| | 36.81 | 48 | 12390 | 9.43 | X | X | X | X | | X | X | X | X | X | X | | |
| | 38.31 | 46 | 17700 | 12.91 | | | X | X | | | | | | X | X | | |
| | 40.74 | 43 | 13771 | 9.39 | X | X | X | X | | X | X | X | X | X | X | | |
| | 43.65 | 40 | 14160 | 8.98 | | | X | X | | | | X | X | X | | | |
| | 45.05 | 39 | 14107 | 8.73 | X | X | X | X | | X | X | X | X | X | X | | |
| | 52.20 | 34 | 16089 | 8.68 | | | X | X | | | | X | X | X | | | |
| | 61.60 | 28 | 15877 | 7.05 | | | X | X | | | | X | X | X | | | |
| | 75.39 | 23 | 14063 | 5.13 | | | X | X | | | | X | X | X | | | |
| | 90.52 | 19 | 14160 | 4.27 | X | X | X | | | X | X | X | X | | | | |
| | 110.78 | 16 | 14160 | 3.59 | X | X | X | | | X | X | X | X | | | | |
| | 155.40 | 11 | 11284 | 1.97 | X | X | | | | X | X | | | | | | |

◈ The maximum input power limit shown is the largest motor power typically combined with the gear unit. *The Italicized power values shown are not the mechanical limit and often may be increased through discussion with our sales or engineering department.*

* The NEMA C-face power limit must also be considered when selecting a reducer. The C-face Adapter's Maximum Input Power values are displayed under the Available Combinations and based on a 1750 rpm motor.



# SK 4382 SCP
# Ratings & Combinations

| Type | Ratio | Output Speed 1750 rpm input $n_2$ [rpm] | Max Torque $T_{max}$ [lb-in] | Max Power 1750 rpm input $P_{max}$ [hp] | NEMA C-face | | | Integral Motor | | | | | | | |
|---|---|---|---|---|---|---|---|---|---|---|---|---|---|---|---|
| | | | | | 56C 1.0 hp | 140TC 2.0 hp | 180TC 5.0 hp | 71S/4 0.33 hp | 71L/4 0.5 hp | 80S/4 0.75 hp | 80L 80LH/4 1.0 hp | 90S 90SH/4 1.5 hp | 90L 90LH/4 2 .0 hp | 100L 100LH/4 3.0 hp | 100LA 112LH/4 5.0 hp |
| **SK 4382 SCP** | 86.83 | 20 | 17523 | 5.00 | X | X | X | | X | X | X | X | X | X | X |
| | 103.82 | 17 | 17700 | 4.77 | X | X | X | | X | X | X | X | X | X | X |
| | 118.38 | 15 | 17700 | 4.21 | X | X | X | | X | X | X | X | X | X | X |
| | 140.60 | 12 | 17700 | 3.37 | X | X | X | | X | X | X | X | X | X | X |
| | 160.20 | 11 | 14664 | 2.56 | X | X | X | | X | X | X | X | X | X | X |
| | 191.57 | 9.1 | 17612 | 2.54 | X | X | X | | X | X | X | X | X | X | X |
| | 211.09 | 8.3 | 14470 | 1.90 | X | X | | | | X | X | X | X | | |
| | 253.12 | 6.9 | 17355 | 1.90 | X | X | | | | X | X | X | X | | |
| | 272.54 | 6.4 | 13912 | 1.41 | X | X | | X | X | X | X | X | | | |
| | 302.65 | 5.8 | 18381 | 1.69 | X | X | | | | X | X | X | X | | |
| | 326.81 | 5.4 | 16727 | 1.43 | X | X | | X | X | X | X | X | | | |
| | 344.84 | 5.1 | 14709 | 1.19 | X | X | | | | X | X | X | X | | |
| | 390.76 | 4.5 | 17700 | 1.26 | X | X | | X | X | X | X | X | | | |
| | 412.38 | 4.2 | 17612 | 1.17 | X | X | | | | X | X | X | X | | |
| | 445.23 | 3.9 | 14744 | 0.91 | X | X | | X | X | X | X | X | | | |
| | 532.44 | 3.3 | 17700 | 0.93 | X | X | | X | X | X | X | X | | | |
| | 605.88 | 2.9 | 13054 | 0.60 | X | X | | | | X | X | X | X | | |
| | 654.27 | 2.7 | 10912 | 0.47 | X | X | | X | X | X | X | X | | | |
| | 782.32 | 2.2 | 13063 | 0.46 | X | X | | X | X | X | X | X | | | |
| | 1,097.48 | 1.6 | 9629 | 0.24 | X | X | | X | X | X | X | X | | | |
| | 1,129.91 | 1.5 | 14160 | 0.34 | X | X | | X | X | X | X | X | | | |
| | 1,585.08 | 1.1 | 12567 | 0.22 | X | X | | X | X | X | X | X | | | |

◈ The maximum input power limit shown is the largest motor power typically combined with the gear unit. *The Italicized power values shown are not the mechanical limit and often may be increased through discussion with our sales or engineering department.*

* The NEMA C-face power limit must also be considered when selecting a reducer. The C-face Adapter's Maximum Input Power values are displayed under the Available Combinations and based on a 1750 rpm motor.

# SK 5282 SCP
# Ratings & Combinations



| Type | Ratio | Output Speed 1750 rpm input $n_2$ [rpm] | Max Torque $T_{max}$ [lb-in] | Max ◈ Power 1750 rpm input $P_{max}$ [hp] | NEMA C-face* | | | | | | Integral Motor | | | | | | | | | |
|---|---|---|---|---|---|---|---|---|---|---|---|---|---|---|---|---|---|---|---|---|
| | | | | | 56C | 140TC | 180TC | 210TC | 250TC | 280TC | 90S/4 90SH/4 | 90S/4 90LH/4 | 90L/4 100LH/4 | 100L/4 112LH/4 | 100LA/4 112LH/4 | 132S/SH/4 | 132M/MH/4 | 160M/MH/4 | 160L/LH/4 | 180MX/MH/4 | 180LX/LH/4 |
| | | | | | 1.0 hp | 2.0 hp | 5.0 hp | 10 hp | 20 hp | 30 hp | 1.5 hp | 2 .0 hp | 3.0 hp | 5.0 hp | 7.5 hp | 10 hp | 15 hp | 20 hp | 25 hp | 30 hp | |
| **SK 5282 SCP** | 4.32 | 405 | 13718 | *30.00* | | | | | X | X | | | | | | | X | X | X | X |
| | 5.01 | 349 | 15045 | *30.00* | | | | | X | X | | | | | | | X | X | X | X |
| | 5.29 | 331 | 15488 | *30.00* | | | | | X | X | | | | | | | X | X | X | X |
| | 5.71 | 306 | 15930 | *30.00* | | | | | X | X | | | | | | | X | X | X | X |
| | 6.33 | 276 | 18709 | *30.00* | | | X | X | X | X | | | X | X | X | X | X | X | X | X |
| | 7.17 | 244 | 19125 | *30.00* | | | X | X | X | X | | | X | X | X | X | X | X | X | X |
| | 8.70 | 201 | 20886 | *30.00* | X | X | X | X | X | X | X | X | X | X | X | X | X | X | X | X |
| | 9.46 | 185 | 20355 | *30.00* | | | X | X | X | X | | | X | X | X | X | X | X | X | X |
| | 10.71 | 163 | 22125 | *30.00* | | | X | X | X | X | | | X | X | X | X | X | X | X | X |
| | 13.00 | 135 | 23267 | *30.00* | X | X | X | X | X | X | X | X | X | X | X | X | X | X | X | X |
| | 15.38 | 114 | 23010 | *30.00* | X | X | X | X | X | X | X | X | X | X | X | X | X | X | X | X |
| | 17.59 | 99 | 24338 | *30.00* | X | X | X | X | X | X | X | X | X | X | X | X | X | X | X | X |
| | 18.88 | 93 | 23010 | *30.00* | X | X | X | X | X | X | X | X | X | X | X | X | X | X | X | X |
| | 20.36 | 86 | 27435 | *30.00* | X | X | X | X | X | X | X | X | X | X | X | X | X | X | X | X |
| | 25.00 | 70 | 25665 | 28.49 | X | X | X | X | X | X | X | X | X | X | X | X | X | X | X | X |
| | 30.50 | 57 | 25665 | 23.20 | X | X | X | X | X | | X | X | X | X | X | X | X | X | | |
| | 33.43 | 52 | 20355 | 16.79 | X | X | X | X | X | X | X | X | X | X | X | X | X | X | X | X |
| | 35.46 | 49 | 23895 | 18.57 | | | X | X | | | | | | | X | X | | | | |
| | 40.80 | 43 | 22125 | 15.09 | X | X | X | X | X | | X | X | X | X | X | X | X | X | | |
| | 41.94 | 42 | 28320 | 18.87 | | | X | X | | | | | | | X | X | | | | |
| | 47.27 | 37 | 21240 | 12.46 | | | X | X | | | | | X | X | X | | | | | |
| | 51.49 | 34 | 28630 | 15.44 | | | X | X | | | | | | | X | X | | | | |
| | 55.55 | 32 | 22125 | 11.23 | X | X | X | X | | | X | X | X | X | X | X | | | | |
| | 55.90 | 31 | 23010 | 11.31 | | | X | X | | | | | X | X | X | | | | | |
| | 68.63 | 25 | 26285 | 10.42 | | | X | X | | | | | X | X | X | | | | | |
| | 81.61 | 21 | 16178 | 5.39 | X | X | X | | | | X | X | X | X | | | | | | |
| | 91.81 | 19 | 24417 | 7.36 | | | X | X | | | | | X | X | X | | | | | |
| | 100.19 | 17 | 19833 | 5.35 | X | X | X | | | | X | X | X | X | | | | | | |
| | 134.03 | 13 | 23488 | 4.84 | X | X | X | | | | X | X | X | X | | | | | | |

◈ The maximum input power limit shown is the largest motor power typically combined with the gear unit. *The Italicized power values shown are not the mechanical limit and often may be increased through discussion with our sales or engineering department.*

* The NEMA C-face power limit must also be considered when selecting a reducer. The C-face Adapter's Maximum Input Power values are displayed under the Available Combinations and based on a 1750 rpm motor.



# SK 5382 SCP
# Ratings & Combinations

| Type | Ratio | Output Speed 1750 rpm input $n_2$ [rpm] | Max Torque $T_{max}$ [lb-in] | Max ◈ Power 1750 rpm input $P_{max}$ [hp] | NEMA C-face* | | | | Integral Motor | | | | | | | | |
|---|---|---|---|---|---|---|---|---|---|---|---|---|---|---|---|---|---|
| | | | | | 56C 1.0 hp | 140TC 2.0 hp | 180TC 5.0 hp | 210TC 10 hp | 71L/4 0.5 hp | 80S/4 0.75 hp | 80L/4 80LH/4 1.0 hp | 90S/4 90SH/4 1.5 hp | 90L/4 90LH/4 2 .0 hp | 100L/4 100LH/4 3.0 hp | 100LA/4 112LH/4 5.0 hp | 132S/SH/4 7.5 hp | 132M/MH/4 10 hp |
| **SK 5382 SCP** | 82.72 | 21 | 24736 | 7.50 | X | X | X | X | X | X | X | X | X | X | X | X | X |
| | 91.71 | 19 | 25665 | 7.50 | X | X | X | X | X | X | X | X | X | X | X | X | X |
| | 117.37 | 15 | 24338 | 5.79 | X | X | X | X | X | X | X | X | X | X | X | X | X |
| | 138.82 | 13 | 28320 | 5.84 | X | X | X | X | X | X | X | X | X | X | X | X | X |
| | 153.92 | 11 | 28320 | 4.94 | X | X | X | X | X | X | X | X | X | X | X | X | X |
| | 171.27 | 10 | 24780 | 3.93 | X | X | X | | X | X | X | X | X | X | X | | |
| | 202.57 | 8.6 | 28320 | 3.86 | X | X | X | | X | X | X | X | X | X | X | | |
| | 248.70 | 7 | 28320 | 3.14 | X | X | X | | X | X | X | X | X | X | X | | |
| | 269.99 | 6.5 | 23895 | 2.46 | X | X | X | | X | X | X | X | X | X | X | | |
| | 331.48 | 5.3 | 28320 | 2.38 | X | X | X | | X | X | X | X | X | X | X | | |
| | 361.69 | 4.8 | 24780 | 1.89 | X | X | | | | X | X | X | X | | | | |
| | 427.79 | 4.1 | 28320 | 1.84 | X | X | | | | X | X | X | X | | | | |
| | 525.20 | 3.3 | 28320 | 1.48 | X | X | | | | X | X | X | X | | | | |
| | 570.18 | 3.1 | 24780 | 1.22 | X | X | | | | X | X | X | X | | | | |
| | 700.03 | 2.5 | 28320 | 1.12 | X | X | | | | X | X | X | X | | | | |
| | 936.45 | 1.9 | 23895 | 0.72 | X | X | | | | X | X | X | X | | | | |
| | 1,367.08 | 1.3 | 23895 | 0.49 | X | X | | | | X | X | X | X | | | | |

◈ The maximum input power limit shown is the largest motor power typically combined with the gear unit. *The Italicized power values shown are not the mechanical limit and often may be increased through discussion with our sales or engineering department.*

* The NEMA C-face power limit must also be considered when selecting a reducer. The C-face Adapter's Maximum Input Power values are displayed under the Available Combinations and based on a 1750 rpm motor.

# SK 6282 SCP
# Ratings & Combinations



| Type | Ratio | Output Speed 1750 rpm input $n_2$ [rpm] | Max Torque $T_{max}$ [lb-in] | Max ◈ Power 1750 rpm input $P_{max}$ [hp] | NEMA C-face* | | | | | | Integral Motor | | | | | | | | | |
|---|---|---|---|---|---|---|---|---|---|---|---|---|---|---|---|---|---|---|---|---|
| | | | | | 180TC 5 hp | 210TC 10 hp | 250TC 20 hp | 280TC 30 hp | 320TC 40 hp | 360TC 50 hp | 100L/4 100LH/4 3.0 hp | 100LA/4 112LH/4 5.0 hp | 132S/SH/4 7.5 hp | 132M/MH/4 10 hp | 160M/MH/4 15 hp | 160L/LH/4 20 hp | 180MX/MH/4 25 hp | 180LX/LH/4 30 hp | 200 l/LH/4 40 hp | 225S/SH/4 225M/MH/4 50 hp |
| **SK 6282 SCP** | 4.39 | 399 | 18001 | *60.00* | | | X | X | X | X | | | | | | | X | X | X | X |
| | 4.88 | 359 | 19081 | *60.00* | X | X | X | X | X | X | | | | X | X | X | X | X | X | X |
| | 5.50 | 318 | 20275 | *60.00* | X | X | X | X | X | X | | | | X | X | X | X | X | X | X |
| | 5.78 | 303 | 20656 | *60.00* | X | X | X | X | X | X | | | | X | X | X | X | X | X | X |
| | 5.99 | 292 | 21169 | *60.00* | | | X | X | X | X | | | | | | | X | X | X | X |
| | 6.74 | 260 | 26462 | *60.00* | X | X | X | X | X | X | X | X | X | X | X | X | X | X | X | X |
| | 7.82 | 224 | 23736 | *60.00* | X | X | X | X | X | X | X | X | X | X | X | X | X | X | X | X |
| | 9.39 | 186 | 24373 | *60.00* | X | X | X | X | X | X | X | X | X | X | X | X | X | X | | |
| | 10.64 | 164 | 38179 | *60.00* | X | X | X | X | X | X | X | X | X | X | X | X | X | X | X | X |
| | 12.35 | 142 | 38843 | *60.00* | X | X | X | X | X | X | X | X | X | X | X | X | X | X | X | X |
| | 14.83 | 118 | 39604 | *60.00* | X | X | X | X | X | X | X | X | X | X | X | X | X | X | | |
| | 18.70 | 94 | 39179 | 58.43 | X | X | X | X | X | X | X | X | X | X | X | X | X | X | | |
| | 22.95 | 76 | 40135 | 48.40 | X | X | X | X | X | X | X | X | X | X | X | X | X | X | | |
| | 26.05 | 67 | 40117 | 42.65 | X | X | X | X | | | X | X | X | X | X | X | X | X | | |
| | 29.90 | 59 | 40152 | 37.59 | X | X | X | X | | | X | X | X | X | X | X | X | X | | |
| | 39.48 | 44 | 28320 | 19.77 | X | X | X | X | | | | | X | X | X | X | | | | |
| | 49.75 | 35 | 35754 | 19.86 | X | X | X | X | | | | | X | X | X | X | | | | |
| | 61.08 | 29 | 40135 | 18.47 | X | X | X | X | | | | | X | X | X | X | | | | |
| | 65.44 | 27 | 29816 | 12.77 | X | X | | | | | X | X | X | | | | | | | |
| | 80.33 | 22 | 36559 | 12.76 | X | X | | | | | X | X | X | | | | | | | |

◈ The maximum input power limit shown is the largest motor power typically combined with the gear unit. *The Italicized power values shown are not the mechanical limit and often may be increased through discussion with our sales or engineering department.*

* The NEMA C-face power limit must also be considered when selecting a reducer. The C-face Adapter's Maximum Input Power values are displayed under the Available Combinations and based on a 1750 rpm motor.

W + NEMA



# SK 6382 SCP
# Ratings & Combinations

| Type | Ratio | Output Speed 1750 rpm input $n_2$ [rpm] | Max Torque $T_{max}$ [lb-in] | Max ◈ Power 1750 rpm input $P_{max}$ [hp] | NEMA C-face* | | | | | | Integral Motor | | | | | | | | | |
|---|---|---|---|---|---|---|---|---|---|---|---|---|---|---|---|---|---|---|---|---|
| | | | | | 56C | 140TC | 180TC | 210TC | 250TC | 280TC | 90S/4 90SH/4 | 90L/4 90LH/4 | 100L/4 100LH/4 | 100LA/4 112LH/4 | 132S/SH/4 | 132M/MH/4 | 160M/MH/4 | 160L/LH/4 | 180MX/MH/4 | 180LX/LH/4 |
| | | | | | 1.0 hp | 2.0 hp | 5.0 hp | 10 hp | 15 hp | 20 hp | 1.5 hp | 2 .0 hp | 3.0 hp | 5.0 hp | 7.5 hp | 10 hp | 15 hp | 20 hp | 25 hp | 30 hp |
| **SK 6382 SCP** | 24.42 | 72 | 41507 | *30.00* | X | X | X | X | X | X | | | X | X | X | X | X | X | X | X |
| | 28.72 | 61 | 40710 | *30.00* | X | X | X | X | X | X | X | X | X | X | X | X | X | X | X | X |
| | 30.91 | 57 | 40268 | *30.00* | X | X | X | X | X | X | | | X | X | X | X | X | X | X | X |
| | 36.34 | 48 | 40268 | *30.00* | X | X | X | X | X | X | X | X | X | X | X | X | X | X | X | X |
| | 42.46 | 41 | 40268 | 26.20 | X | X | X | X | X | X | X | X | X | X | X | X | X | X | X | X |
| | 51.07 | 34 | 44958 | 24.25 | X | X | X | X | X | X | X | X | X | X | X | X | X | X | X | X |
| | 59.66 | 29 | 48675 | 22.40 | X | X | X | X | X | X | X | X | X | X | X | X | X | X | X | X |
| | 73.50 | 24 | 49295 | 18.77 | X | X | X | X | X | | X | X | X | X | X | X | X | X | | |
| | 75.18 | 23 | 53100 | 19.38 | X | X | X | X | X | X | X | X | X | X | X | X | X | X | X | X |
| | 92.63 | 19 | 53100 | 16.01 | X | X | X | X | X | | X | X | X | X | X | X | X | X | | |
| | 114.79 | 15 | 52038 | 12.39 | X | X | X | X | X | | X | X | X | X | X | X | X | X | | |
| | 126.87 | 14 | 40533 | 9.00 | X | X | X | X | | | X | X | X | X | X | X | | | | |
| | 159.88 | 11 | 51065 | 8.91 | X | X | X | X | | | X | X | X | X | X | X | | | | |
| | 171.34 | 10 | 49295 | 7.82 | | | X | X | | | | | X | X | X | X | | | | |
| | 212.33 | 8.2 | 41330 | 5.38 | | | X | X | | | | | X | X | X | X | | | | |
| | 225.79 | 7.8 | 35577 | 4.40 | X | X | X | | | | X | X | X | X | | | | | | |
| | 251.76 | 7.0 | 39648 | 4.40 | X | X | X | | | | X | X | X | X | | | | | | |
| | 267.59 | 6.5 | 52038 | 5.37 | | | X | X | | | | | X | X | X | X | | | | |
| | 317.28 | 5.5 | 49914 | 4.36 | X | X | X | | | | X | X | X | X | | | | | | |
| | 393.19 | 4.5 | 52038 | 3.72 | X | X | X | | | | X | X | X | X | | | | | | |
| | 445.09 | 3.9 | 36905 | 2.28 | X | X | | | | | X | X | | | | | | | | |
| | 551.58 | 3.2 | 45755 | 2.32 | X | X | | | | | X | X | | | | | | | | |

◈ The maximum input power limit shown is the largest motor power typically combined with the gear unit. *The Italicized power values shown are not the mechanical limit and often may be increased through discussion with our sales or engineering department.*

* The NEMA C-face power limit must also be considered when selecting a reducer. The C-face Adapter's Maximum Input Power values are displayed under the Available Combinations and based on a 1750 rpm motor.

# Notes



# Gearmotors & C-Face Reducers

- SK 1282 SCP
- SK 2282 SCP
- SK 3282 SCP
- SK 4282 SCP
- SK 5282 SCP
- SK 6282 SCP
- 3-Stage Gearmotors & Reducers
- NEMA C-Face Motors
- CEMA Drive Shaft Detail
- 3rd Party Shaft Design & Detail

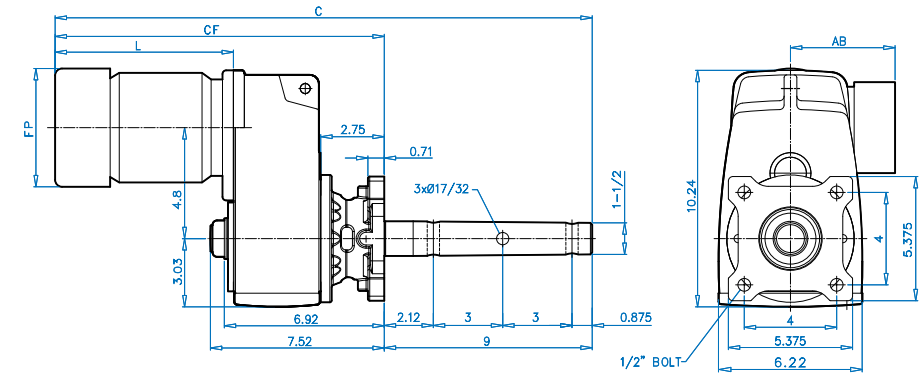


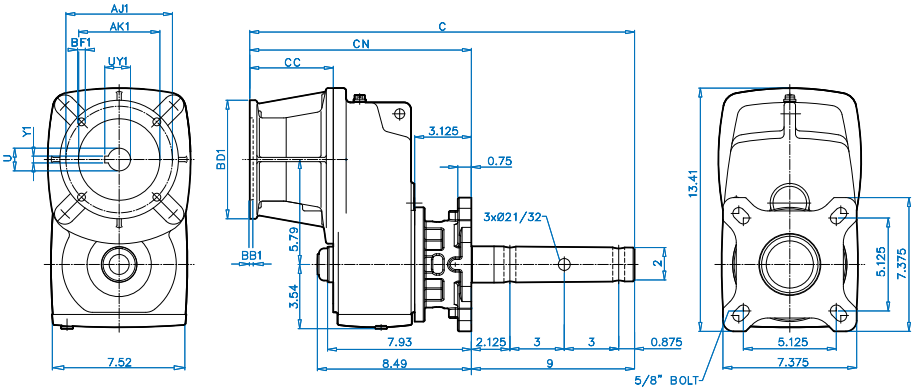


DRIVESYSTEMS

www.nord.com

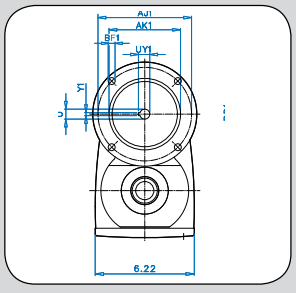


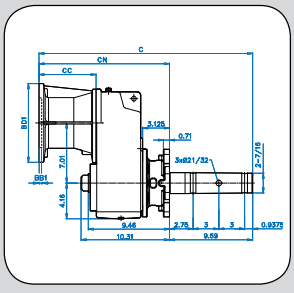


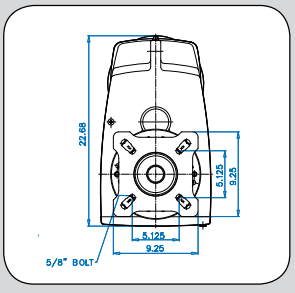


UNICASE™ CLINCHER™

# SK 1282 SCP + Motor
# 1-1/2" CEMA Drive Shaft

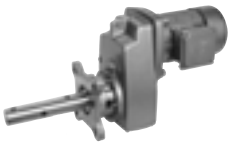

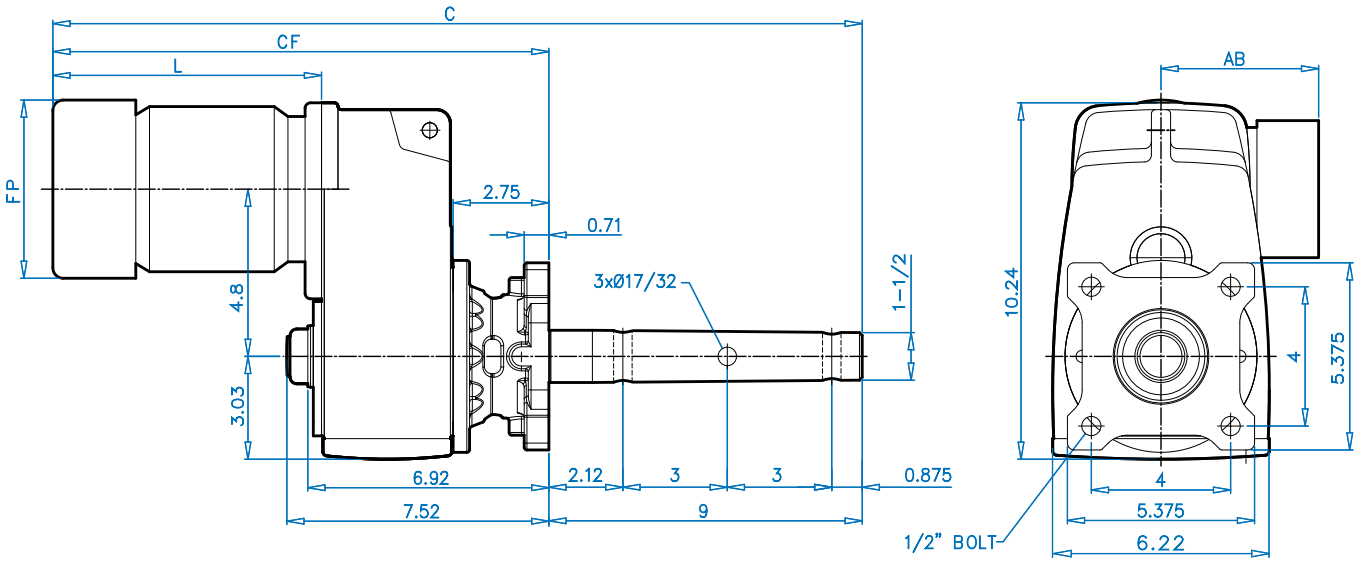


DIMENSIONS

| Motor Type | Overall | | Motor | | |
|---|---|---|---|---|---|
| | C | CF | L | FP | AB |
| 63S/L | 23.38 | 14.38 | 7.73 | 5.08 | 4.51 |
| 71S/L | 24.96 | 15.96 | 9.31 | 5.72 | 4.86 |
| 80S/L/LH | 25.94 | 16.94 | 10.29 | 6.43 | 5.59 |
| 90S/SH/L/LH | 27.52 | 18.28 | 11.87 | 7.19 | 5.79 |
| 100L/LA/LH | 28.74 | 19.74 | 13.09 | 7.90 | 6.65 |
| 112M | 29.61 | 20.61 | 13.96 | 8.87 | 7.05 |
| 112MH | 30.60 | 21.60 | 14.95 | 8.87 | 7.05 |

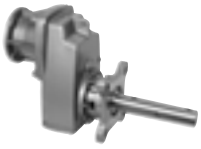

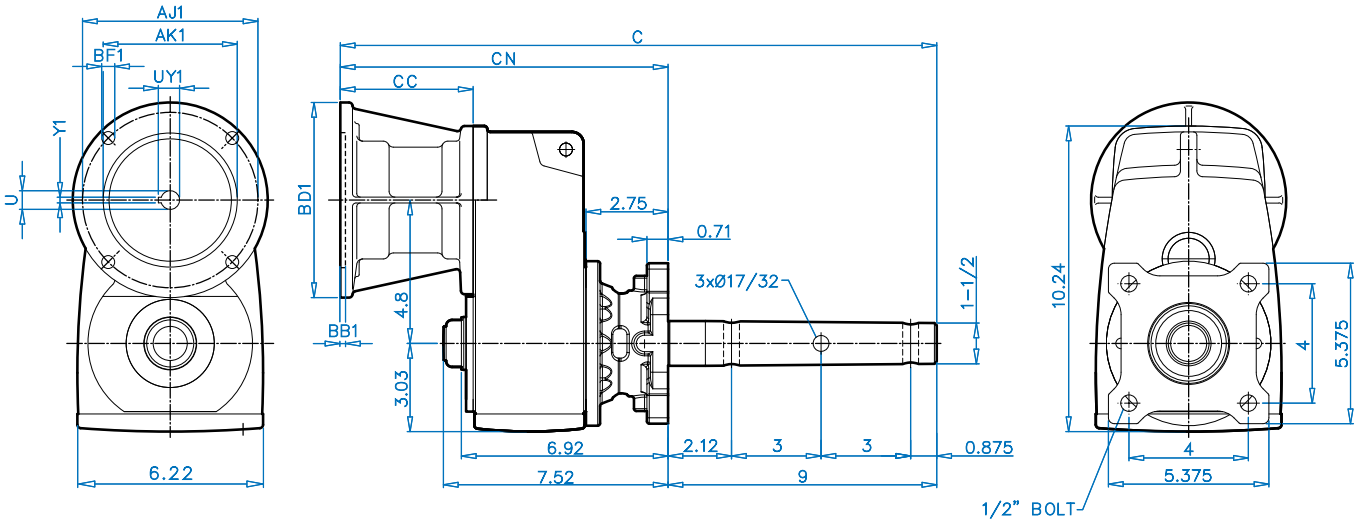




| NEMA | Overall | | NEMA Input | | | | | | Coupling | | |
|---|---|---|---|---|---|---|---|---|---|---|---|
| C-Face Input | C | CN | CC | AJ1 | AK1 | BB1 | BD1 | BF1 | U1 | UY1 | Y1 |
| **56C** | 20.10 | 11.10 | 4.45 | 5.875 | 4.50 | 0.20 | 6.54 | 0.43 | 0.625 | 0.71 | 0.188 |
| **140TC** | 20.10 | 11.10 | 4.45 | 5.875 | 4.50 | 0.20 | 6.54 | 0.43 | 0.875 | 0.96 | 0.188 |
| **180TC** | 21.30 | 12.30 | 5.65 | 7.250 | 8.50 | 0.23 | 9.17 | 0.59 | 1.125 | 1.24 | 0.250 |

# SK 1282 SCP + Motor
# 2” CEMA Drive Shaft

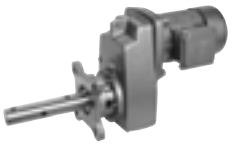



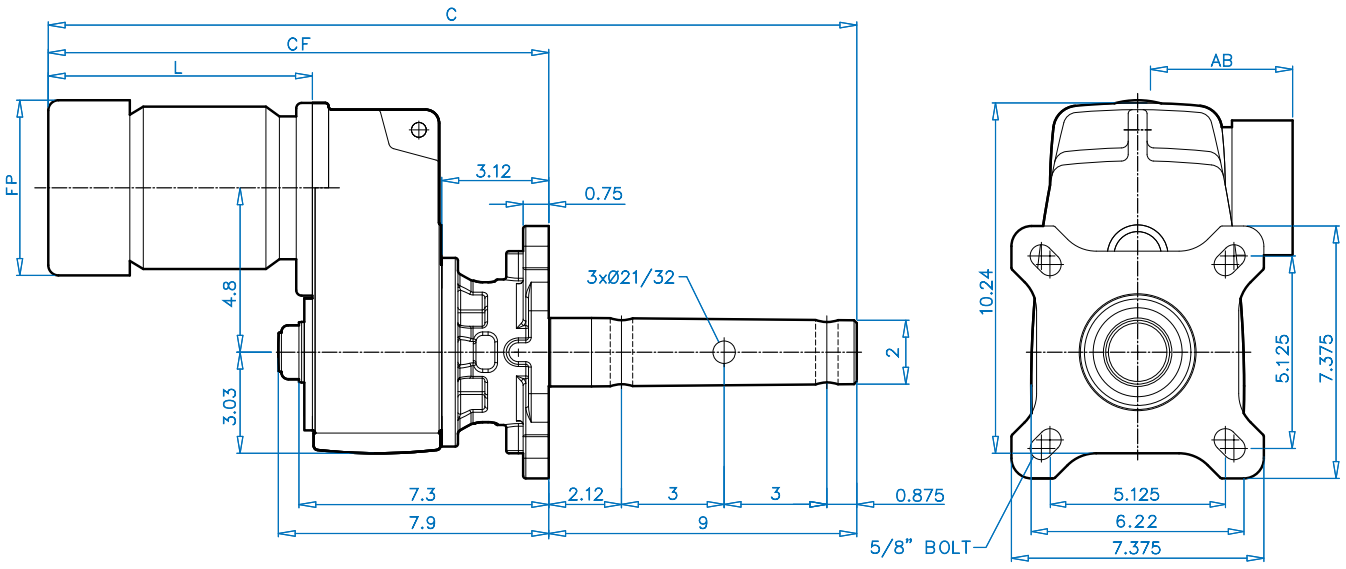


| Motor Type | Overall | | Motor | | |
|---|---|---|---|---|---|
| | C | CF | L | FP | AB |
| 63S/L | 23.76 | 14.76 | 7.73 | 5.08 | 4.51 |
| 71S/L | 25.33 | 16.33 | 9.31 | 5.72 | 4.86 |
| 80S/L/LH | 26.32 | 17.32 | 10.29 | 6.43 | 5.59 |
| 90S/SH/L/LH | 27.89 | 18.65 | 11.87 | 7.19 | 5.79 |
| 100L/LA/LH | 29.11 | 20.11 | 13.09 | 7.90 | 6.65 |
| 112M | 29.98 | 20.98 | 13.96 | 8.87 | 7.05 |
| 112MH | 30.97 | 21.97 | 14.95 | 8.87 | 7.05 |

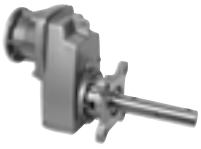

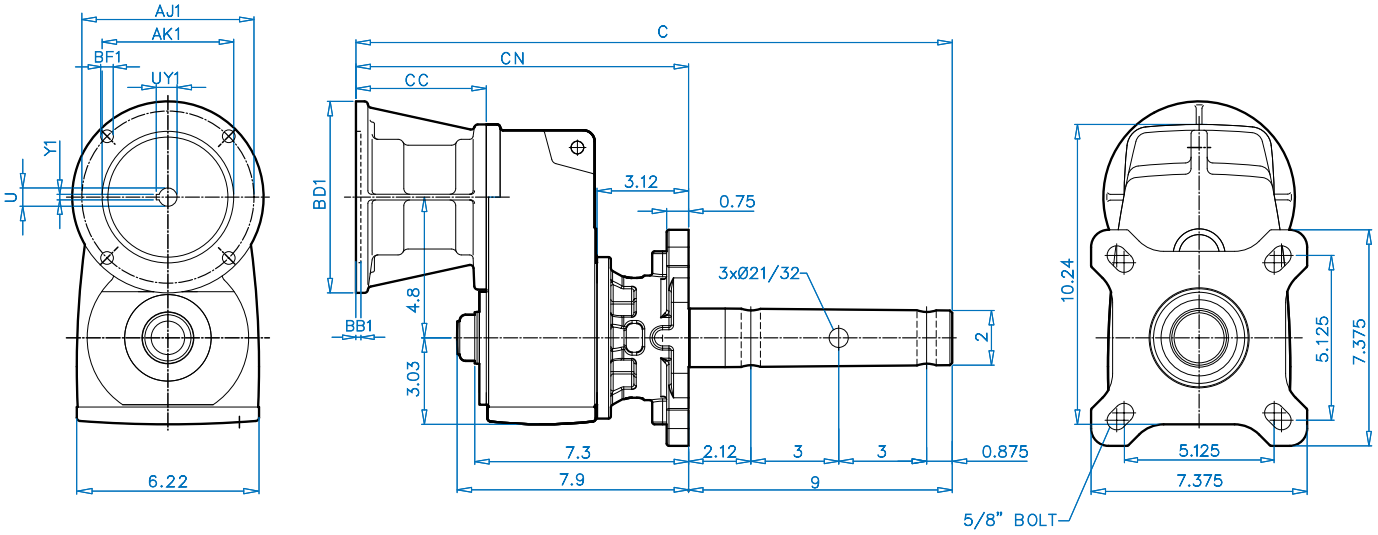


DIMENSIONS

| NEMA | Overall | | NEMA Input | | | | | | Coupling | | |
|---|---|---|---|---|---|---|---|---|---|---|---|
| C-Face Input | C | CN | CC | AJ1 | AK1 | BB1 | BD1 | BF1 | U1 | UY1 | Y1 |
| **56C** | 20.47 | 11.47 | 4.45 | 5.875 | 4.50 | 0.20 | 6.54 | 0.43 | 0.625 | 0.71 | 0.188 |
| **140TC** | 20.47 | 11.47 | 4.45 | 5.875 | 4.50 | 0.20 | 6.54 | 0.43 | 0.875 | 0.96 | 0.188 |
| **180TC** | 21.67 | 12.67 | 5.65 | 7.250 | 8.50 | 0.23 | 9.17 | 0.59 | 1.125 | 1.24 | 0.250 |

# SK 1282 SCP + Motor
# 2-7/16" CEMA Drive Shaft

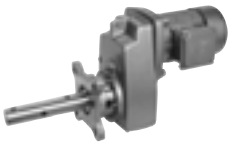

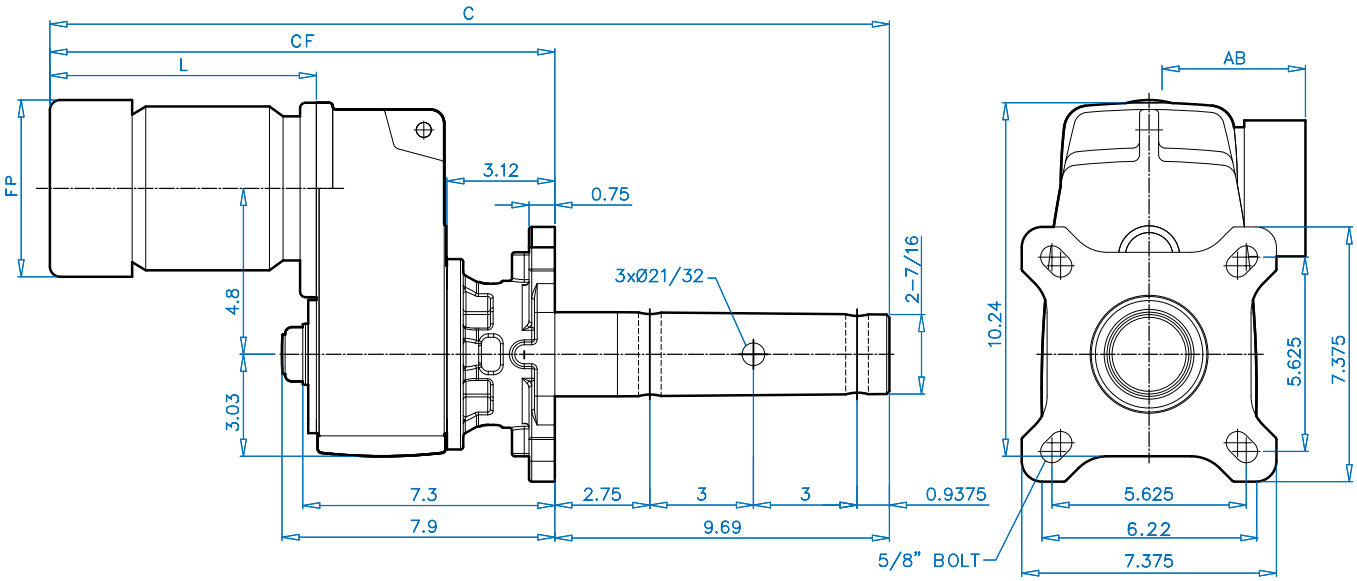


DIMENSIONS

| Motor Type | Overall | | Motor | | |
|---|---|---|---|---|---|
| | C | CF | L | FP | AB |
| 63S/L | 23.76 | 14.76 | 7.73 | 5.08 | 4.51 |
| 71S/L | 25.33 | 16.33 | 9.31 | 5.72 | 4.86 |
| 80S/L/LH | 26.32 | 17.32 | 10.29 | 6.43 | 5.59 |
| 90S/SH/L/LH | 27.89 | 18.65 | 11.87 | 7.19 | 5.79 |
| 100L/LA/LH | 29.11 | 20.11 | 13.09 | 7.90 | 6.65 |
| 112M | 29.98 | 20.98 | 13.96 | 8.87 | 7.05 |
| 112MH | 30.97 | 21.97 | 14.95 | 8.87 | 7.05 |

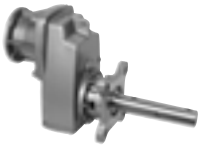

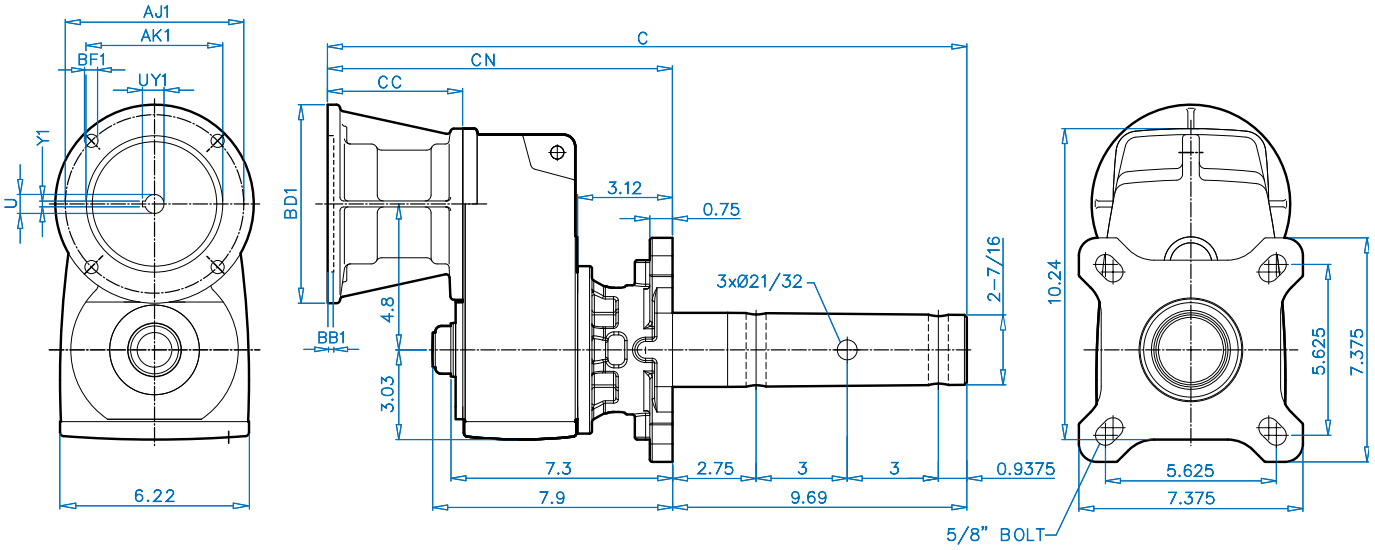


DIMENSIONS

| NEMA C-Face Input | Overall | | NEMA Input | | | | | | Coupling | | |
|---|---|---|---|---|---|---|---|---|---|---|---|
| | C | CN | CC | AJ1 | AK1 | BB1 | BD1 | BF1 | U1 | UY1 | Y1 |
| **56C** | 21.16 | 11.47 | 4.45 | 5.875 | 4.50 | 0.20 | 6.54 | 0.43 | 0.625 | 0.71 | 0.188 |
| **140TC** | 21.16 | 11.47 | 4.45 | 5.875 | 4.50 | 0.20 | 6.54 | 0.43 | 0.875 | 0.96 | 0.188 |
| **180TC** | 22.36 | 12.67 | 5.65 | 7.250 | 8.50 | 0.23 | 9.17 | 0.59 | 1.125 | 1.24 | 0.250 |

# SK 2282 SCP + Motor
# 1-1/2" CEMA Drive Shaft

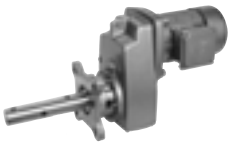

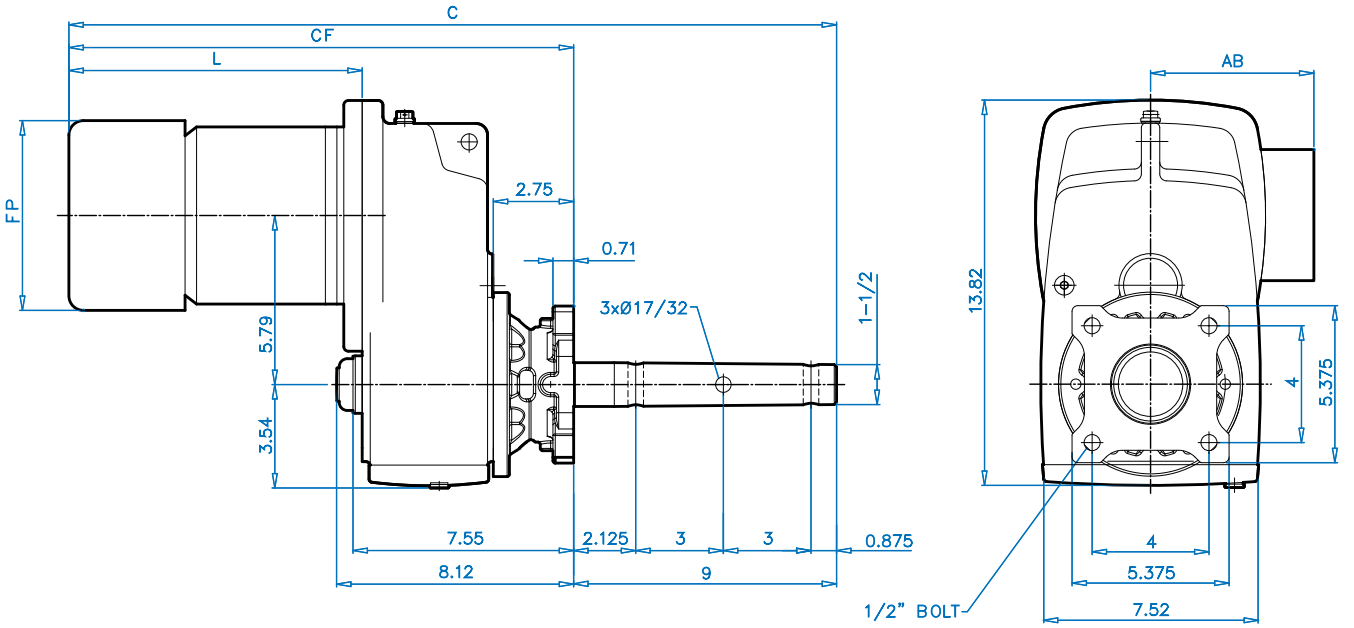


DIMENSIONS

| Motor Type | Overall | | Motor | | |
|---|---|---|---|---|---|
| | C | CF | L | FP | AB |
| **71S/L** | 25.51 | 16.51 | 9.07 | 5.72 | 4.86 |
| **80S/L/LH** | 26.49 | 17.49 | 10.06 | 6.43 | 5.59 |
| **90S/SH/L/LH** | 28.07 | 19.07 | 11.63 | 7.19 | 5.79 |
| **100L/LA/LH** | 29.29 | 20.29 | 12.85 | 7.90 | 6.65 |
| **112M** | 30.16 | 21.16 | 13.72 | 8.87 | 7.05 |
| **112MH** | 31.15 | 22.15 | 14.71 | 8.87 | 7.05 |

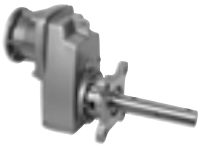

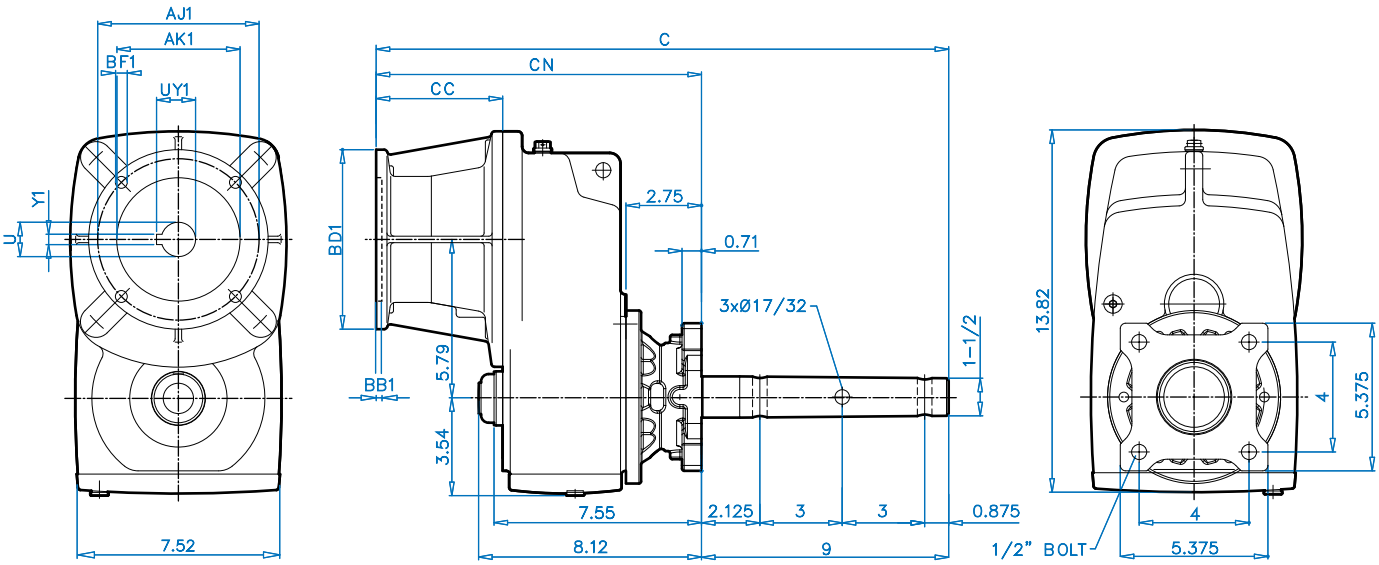




| NEMA | Overall | | NEMA Input | | | | | | Coupling | | |
|---|---|---|---|---|---|---|---|---|---|---|---|
| C-Face Input | C | CN | CC | AJ1 | AK1 | BB1 | BD1 | BF1 | U1 | UY1 | Y1 |
| **56C** | 21.04 | 12.04 | 4.61 | 5.875 | 4.50 | 0.20 | 6.54 | 0.43 | 0.625 | 0.71 | 0.188 |
| **140TC** | 21.04 | 12.04 | 4.61 | 5.875 | 4.50 | 0.20 | 6.54 | 0.43 | 0.875 | 0.96 | 0.188 |
| **180TC** | 23.08 | 14.08 | 6.65 | 7.250 | 8.50 | 0.23 | 9.17 | 0.59 | 1.125 | 1.24 | 0.250 |

# SK 2282 SCP + Motor
# 2” CEMA Drive Shaft

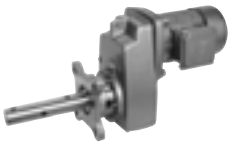



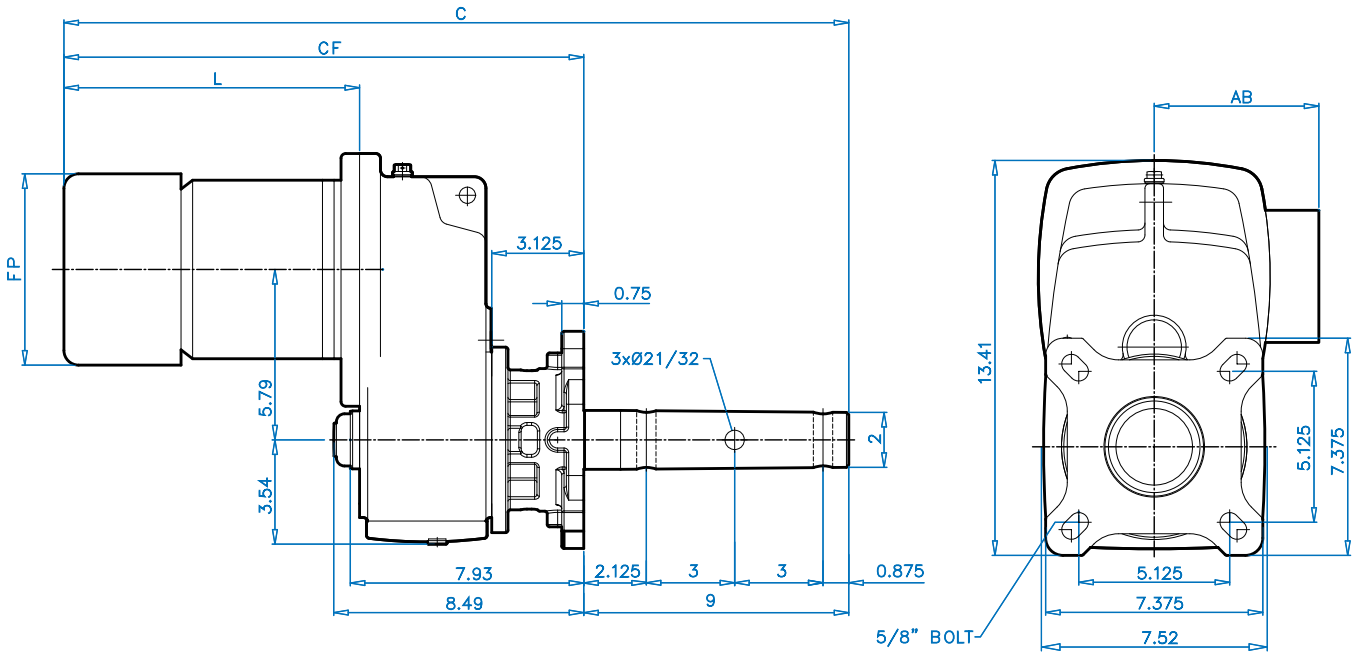


| Motor Type | Overall | | Motor | | |
|---|---|---|---|---|---|
| | C | CF | L | FP | AB |
| **71S/L** | 25.88 | 16.88 | 9.07 | 5.72 | 4.86 |
| **80S/L/LH** | 26.87 | 17.87 | 10.06 | 6.43 | 5.59 |
| **90S/SH/L/LH** | 28.44 | 19.44 | 11.63 | 7.19 | 5.79 |
| **100L/LA/LH** | 29.66 | 20.66 | 12.85 | 7.90 | 6.65 |
| **112M** | 30.53 | 21.53 | 13.72 | 8.87 | 7.05 |
| **112MH** | 31.53 | 22.53 | 14.71 | 8.87 | 7.05 |

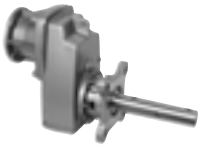

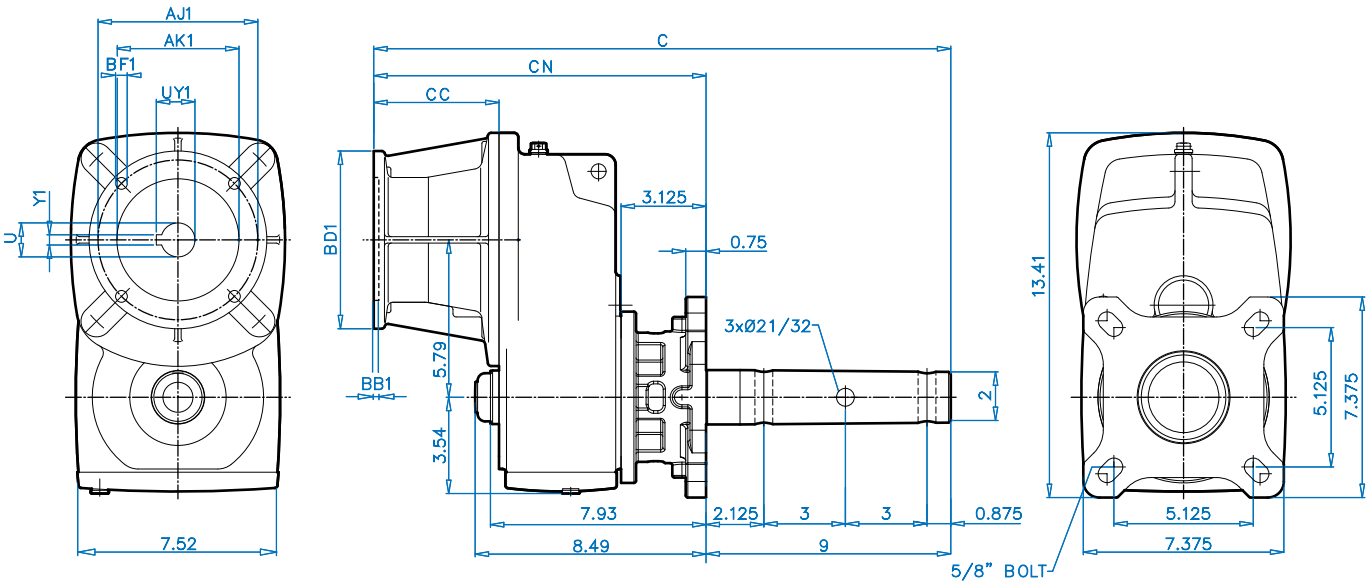




| NEMA | Overall | | NEMA Input | | | | | | Coupling | | |
|---|---|---|---|---|---|---|---|---|---|---|---|
| C-Face Input | C | CN | CC | AJ1 | AK1 | BB1 | BD1 | BF1 | U1 | UY1 | Y1 |
| **56C** | 21.42 | 12.42 | 4.61 | 5.875 | 4.50 | 0.20 | 6.54 | 0.43 | 0.625 | 0.71 | 0.188 |
| **140TC** | 21.42 | 12.42 | 4.61 | 5.875 | 4.50 | 0.20 | 6.54 | 0.43 | 0.875 | 0.96 | 0.188 |
| **180TC** | 23.46 | 14.46 | 6.65 | 7.250 | 8.50 | 0.23 | 9.17 | 0.59 | 1.125 | 1.24 | 0.250 |

# SK 2282 SCP + Motor
# 2-7/16” CEMA Drive Shaft

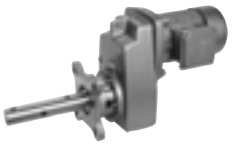

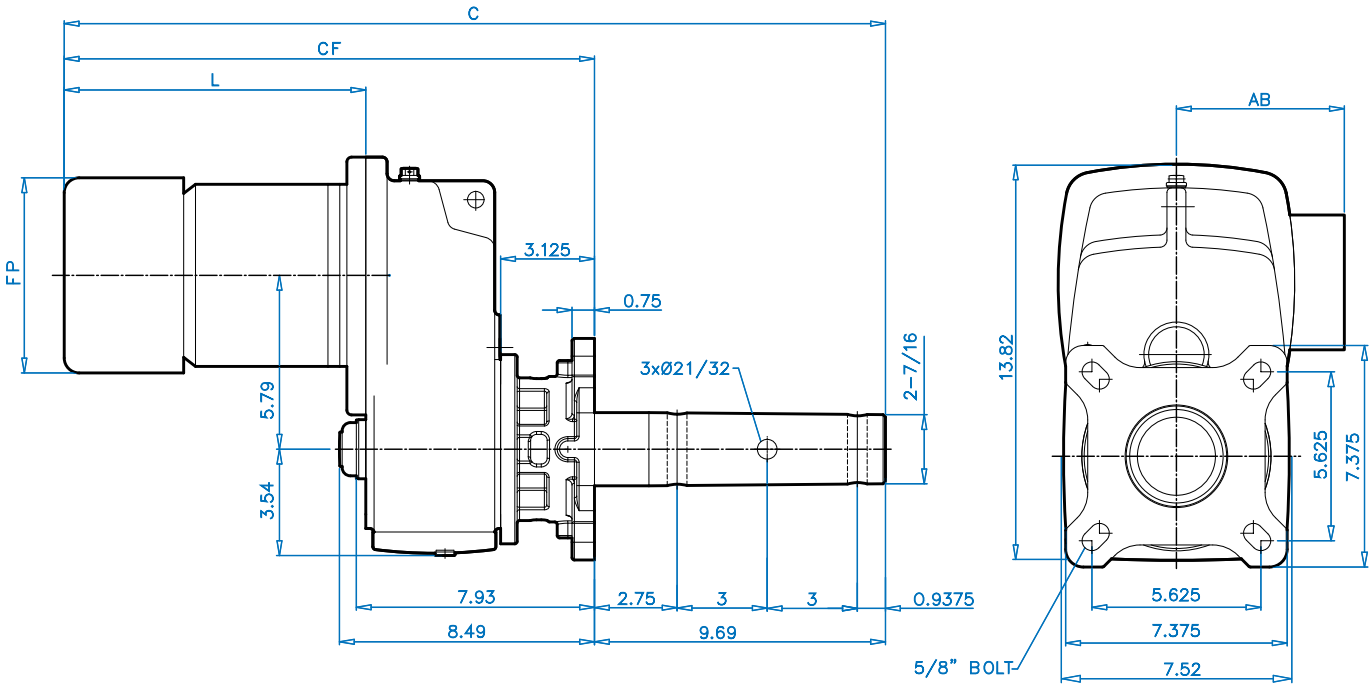


DIMENSIONS

| Motor Type | Overall | | Motor | | |
|---|---|---|---|---|---|
| | C | CF | L | FP | AB |
| **71S/L** | 26.57 | 16.88 | 9.07 | 5.72 | 4.86 |
| **80S/L/LH** | 27.56 | 17.87 | 10.06 | 6.43 | 5.59 |
| **90S/SH/L/LH** | 29.13 | 19.44 | 11.63 | 7.19 | 5.79 |
| **100L/LA/LH** | 30.35 | 20.66 | 12.85 | 7.90 | 6.65 |
| **112M** | 31.22 | 21.53 | 13.72 | 8.87 | 7.05 |
| **112MH** | 32.21 | 22.53 | 14.71 | 8.87 | 7.05 |

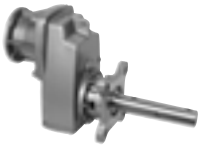

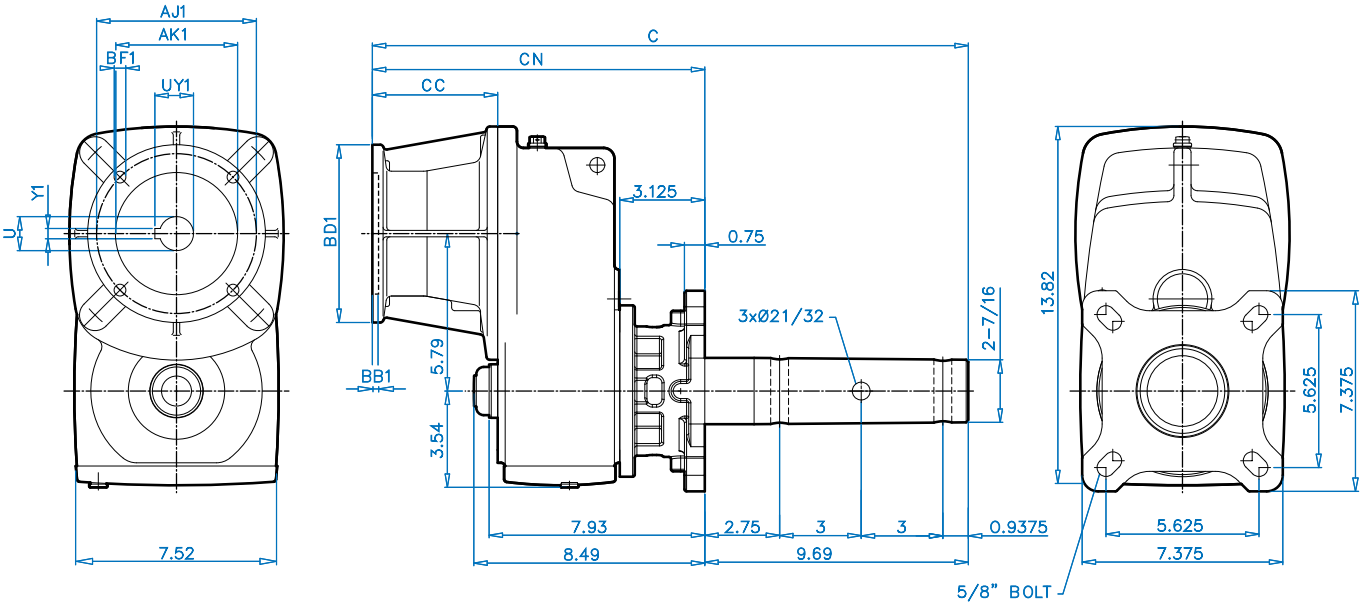


| NEMA | Overall | | NEMA Input | | | | | | Coupling | | |
|---|---|---|---|---|---|---|---|---|---|---|---|
| C-Face Input | C | CN | CC | AJ1 | AK1 | BB1 | BD1 | BF1 | U1 | UY1 | Y1 |
| **56C** | 22.11 | 12.42 | 4.61 | 5.875 | 4.50 | 0.20 | 6.54 | 0.43 | 0.625 | 0.71 | 0.188 |
| **140TC** | 22.11 | 12.42 | 4.61 | 5.875 | 4.50 | 0.20 | 6.54 | 0.43 | 0.875 | 0.96 | 0.188 |
| **180TC** | 24.15 | 14.46 | 6.65 | 7.250 | 8.50 | 0.23 | 9.17 | 0.59 | 1.125 | 1.24 | 0.250 |

# SK 3282 SCP + Motor
# 1-1/2" CEMA Drive Shaft

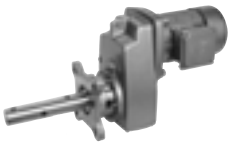

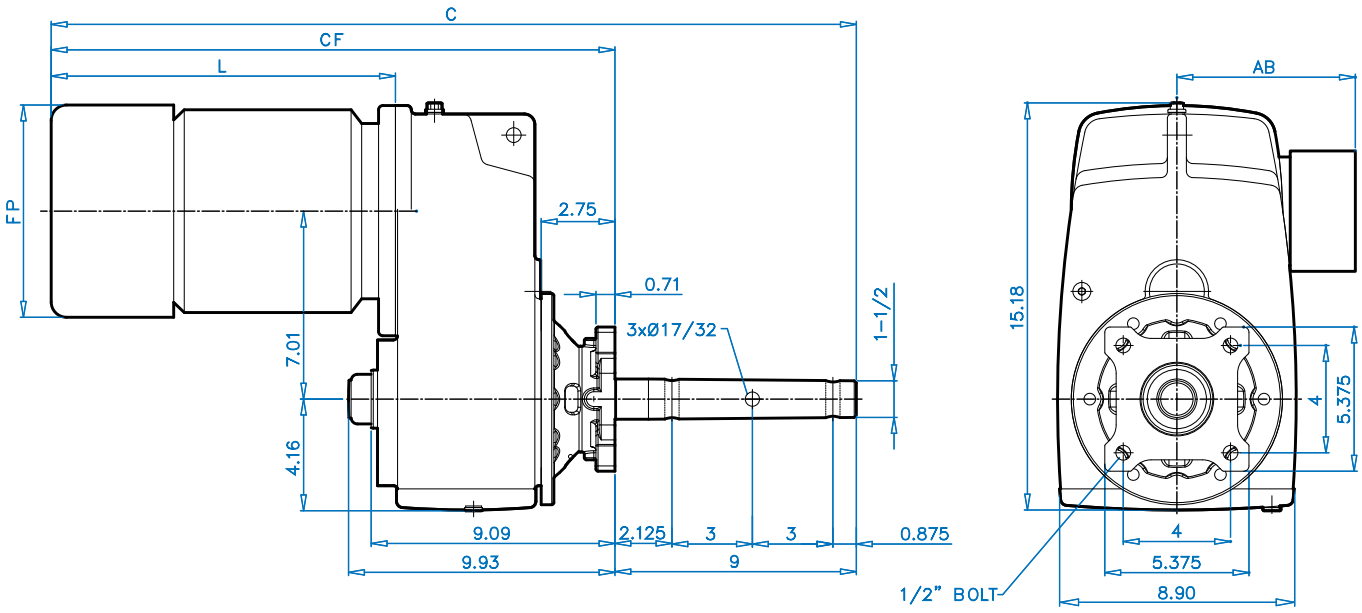


DIMENSIONS

| Motor Type | Overall | | Motor | | |
|---|---|---|---|---|---|
| | C | CF | L | FP | AB |
| **71S/L** | 26.49 | 17.41 | 9.07 | 5.72 | 4.86 |
| **80S/L/LH** | 27.47 | 18.47 | 10.06 | 6.43 | 5.59 |
| **90S/SH/L/LH** | 29.04 | 20.04 | 11.63 | 7.19 | 5.79 |
| **100L/LA/LH** | 30.27 | 21.27 | 12.85 | 7.90 | 6.65 |
| **112M** | 31.14 | 22.14 | 13.72 | 8.87 | 7.05 |
| **112MH** | 32.13 | 23.13 | 14.71 | 8.87 | 7.05 |
| **132S/SH/M/MH** | 34.56 | 25.56 | 17.14 | 10.45 | 8.03 |

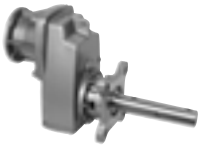

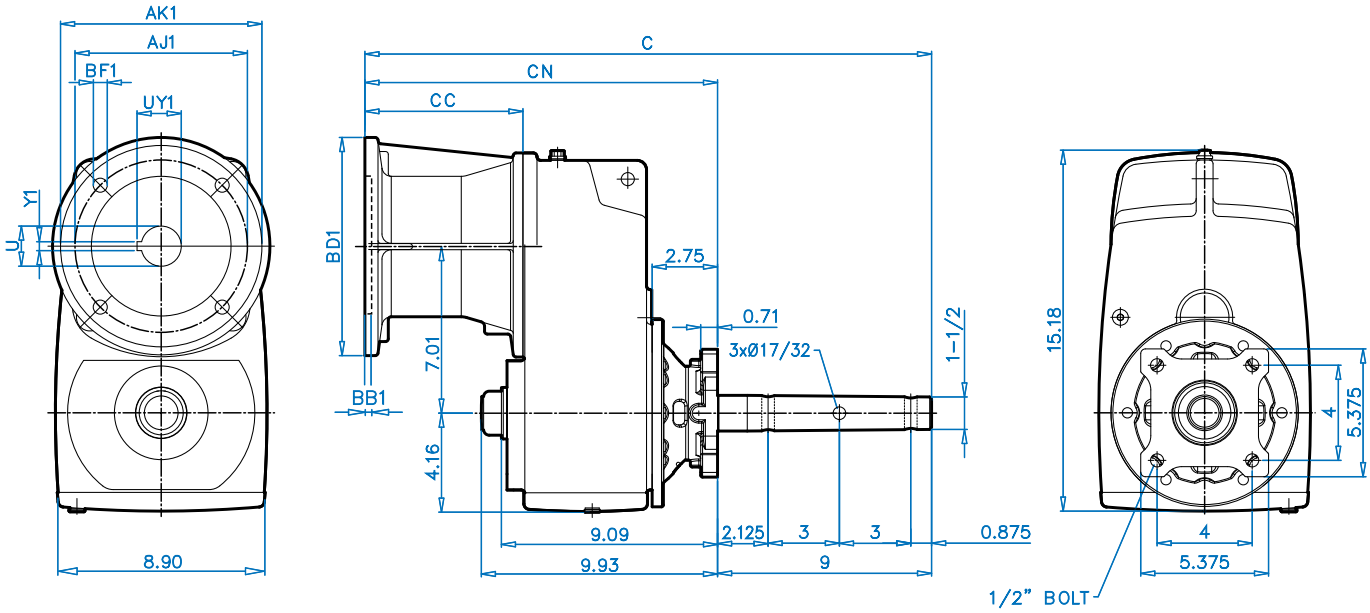




| NEMA | Overall | | NEMA Input | | | | | | Coupling | | |
|---|---|---|---|---|---|---|---|---|---|---|---|
| C-Face Input | C | CN | CC | AJ1 | AK1 | BB1 | BD1 | BF1 | U1 | UY1 | Y1 |
| **56C** | 22.02 | 13.02 | 4.61 | 5.875 | 4.50 | 0.20 | 6.54 | 0.43 | 0.625 | 0.71 | 0.188 |
| **140TC** | 22.02 | 13.02 | 4.61 | 5.875 | 4.50 | 0.20 | 6.54 | 0.43 | 0.875 | 0.96 | 0.188 |
| **180TC** | 24.06 | 15.06 | 6.65 | 7.250 | 8.50 | 0.23 | 9.17 | 0.59 | 1.125 | 1.24 | 0.250 |
| **210TC** | 24.06 | 15.06 | 6.65 | 7.250 | 8.50 | 0.23 | 9.17 | 0.59 | 1.375 | 1.52 | 0.310 |

# SK 3282 SCP + Motor
# 2” CEMA Drive Shaft

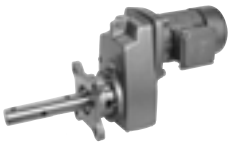

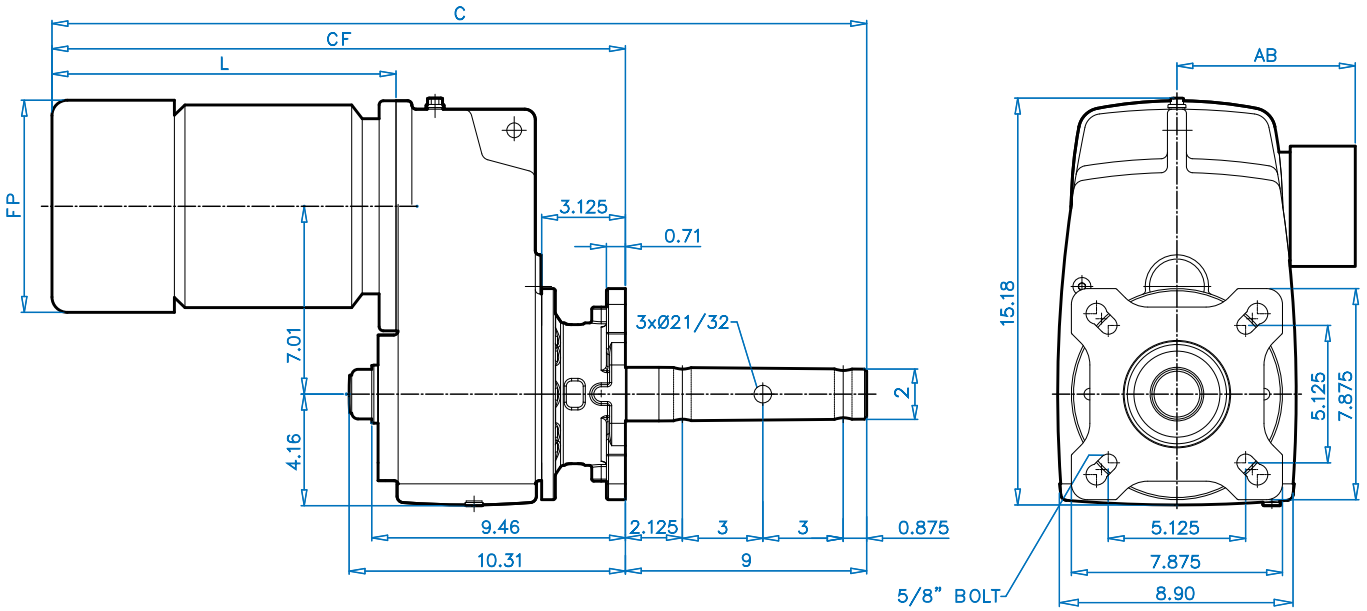


DIMENSIONS

| Motor Type | Overall | | Motor | | |
|---|---|---|---|---|---|
| | C | CF | L | FP | AB |
| **71S/L** | 26.86 | 17.79 | 9.07 | 5.72 | 4.86 |
| **80S/L/LH** | 27.85 | 18.85 | 10.06 | 6.43 | 5.59 |
| **90S/SH/L/LH** | 29.42 | 20.42 | 11.63 | 7.19 | 5.79 |
| **100L/LA/LH** | 30.64 | 21.64 | 12.85 | 7.90 | 6.65 |
| **112M** | 31.51 | 22.51 | 13.72 | 8.87 | 7.05 |
| **112MH** | 32.50 | 23.50 | 14.71 | 8.87 | 7.05 |
| **132S/SH/M/MH** | 34.93 | 25.93 | 17.14 | 10.45 | 8.03 |

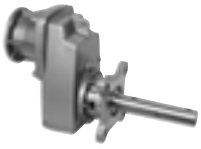

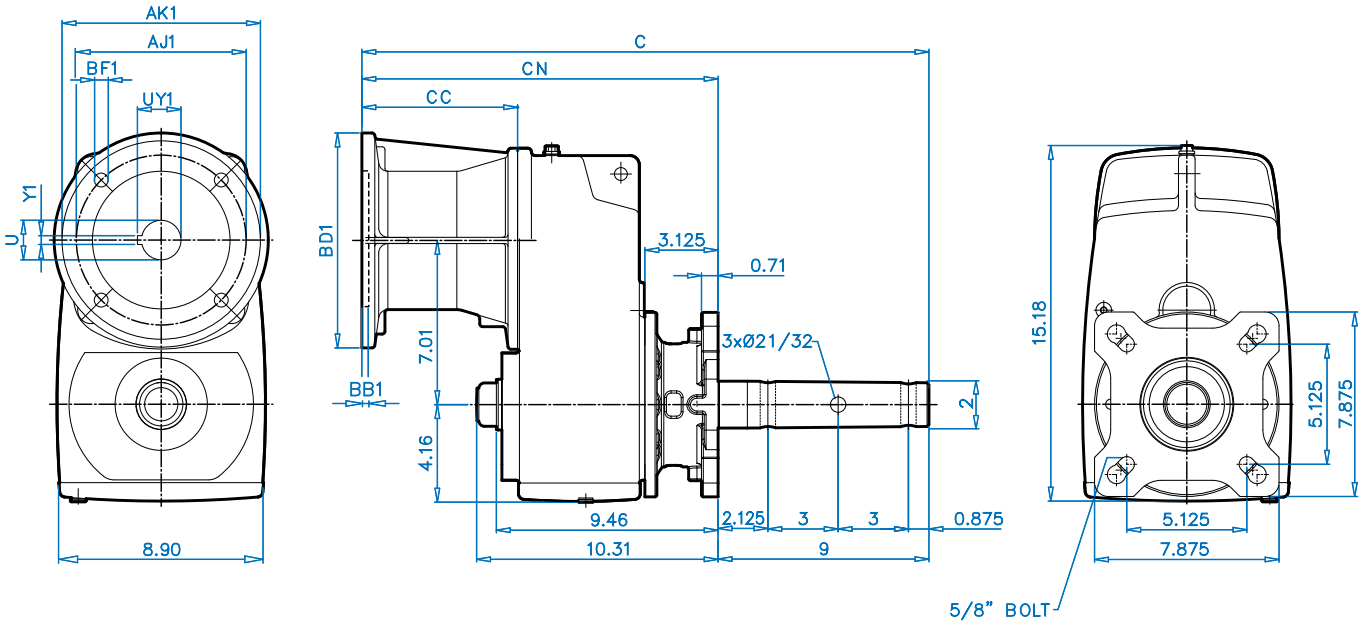


DIMENSIONS

| NEMA | Overall | | NEMA Input | | | | | | Coupling | | |
|---|---|---|---|---|---|---|---|---|---|---|---|
| C-Face Input | C | CN | CC | AJ1 | AK1 | BB1 | BD1 | BF1 | U1 | UY1 | Y1 |
| **56C** | 22.40 | 13.40 | 4.61 | 5.875 | 4.50 | 0.20 | 6.54 | 0.43 | 0.625 | 0.71 | 0.188 |
| **140TC** | 22.40 | 13.40 | 4.61 | 5.875 | 4.50 | 0.20 | 6.54 | 0.43 | 0.875 | 0.96 | 0.188 |
| **180TC** | 24.44 | 15.44 | 6.65 | 7.250 | 8.50 | 0.23 | 9.17 | 0.59 | 1.125 | 1.24 | 0.250 |
| **210TC** | 24.44 | 15.44 | 6.65 | 7.250 | 8.50 | 0.23 | 9.17 | 0.59 | 1.375 | 1.52 | 0.310 |

# SK 3282 SCP + Motor
# 2-7/16" CEMA Drive Shaft

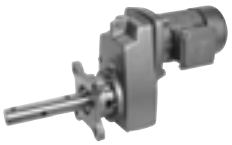

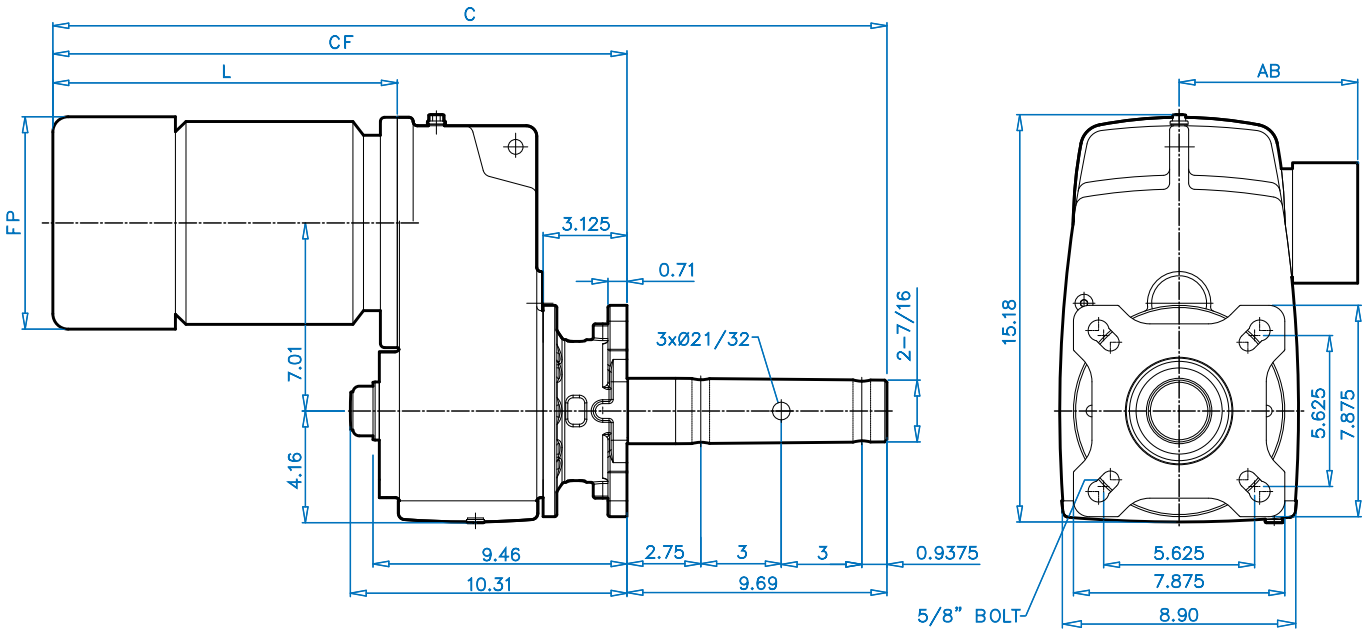


DIMENSIONS

| Motor Type | Overall | | Motor | | |
|---|---|---|---|---|---|
| | C | CF | L | FP | AB |
| **71S/L** | 27.55 | 18.48 | 9.07 | 5.72 | 4.86 |
| **80S/L/LH** | 28.53 | 18.85 | 10.06 | 6.43 | 5.59 |
| **90S/SH/L/LH** | 30.11 | 20.42 | 11.63 | 7.19 | 5.79 |
| **100L/LA/LH** | 31.33 | 21.64 | 12.85 | 7.90 | 6.65 |
| **112M** | 32.20 | 22.51 | 13.72 | 8.87 | 7.05 |
| **112MH** | 33.19 | 23.50 | 14.71 | 8.87 | 7.05 |
| **132S/SH/M/MH** | 35.62 | 25.93 | 17.14 | 10.45 | 8.03 |

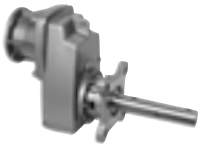

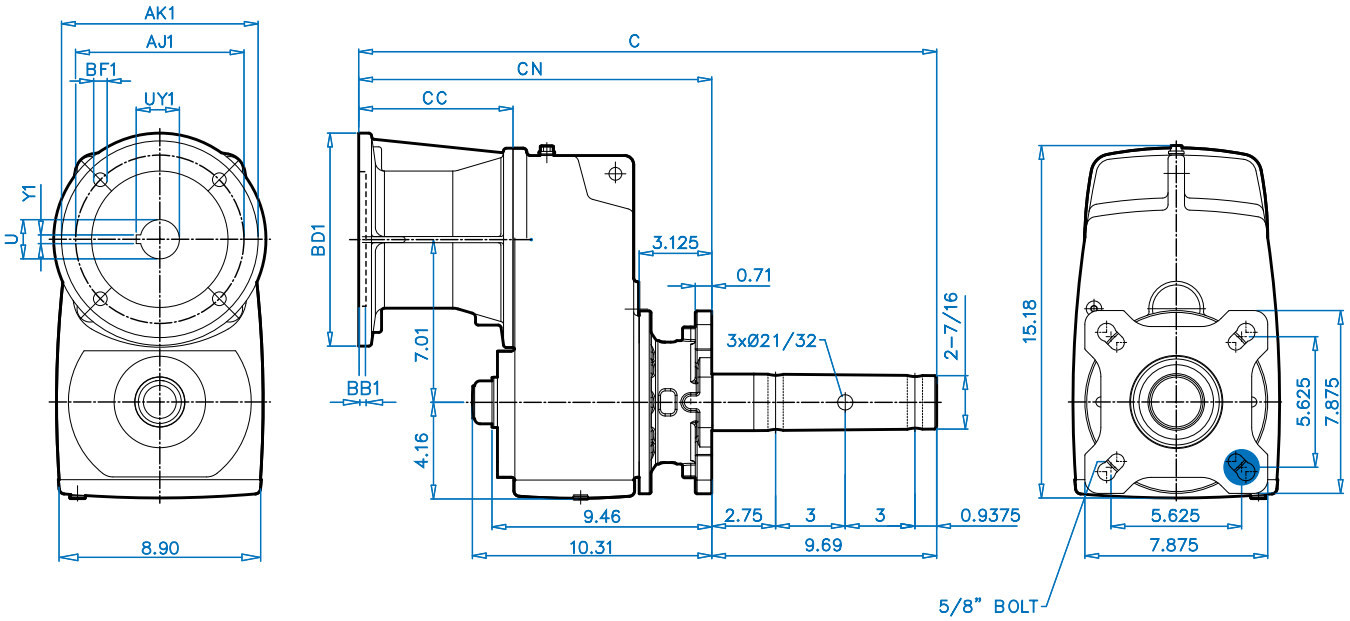


| NEMA | Overall | | NEMA Input | | | | | | Coupling | | |
|---|---|---|---|---|---|---|---|---|---|---|---|
| C-Face Input | C | CN | CC | AJ1 | AK1 | BB1 | BD1 | BF1 | U1 | UY1 | Y1 |
| **56C** | 23.08 | 13.40 | 4.61 | 5.875 | 4.50 | 0.20 | 6.54 | 0.43 | 0.625 | 0.71 | 0.188 |
| **140TC** | 23.08 | 13.40 | 4.61 | 5.875 | 4.50 | 0.20 | 6.54 | 0.43 | 0.875 | 0.96 | 0.188 |
| **180TC** | 25.12 | 15.44 | 6.65 | 7.250 | 8.50 | 0.23 | 9.17 | 0.59 | 1.125 | 1.24 | 0.250 |
| **210TC** | 25.12 | 15.44 | 6.65 | 7.250 | 8.50 | 0.23 | 9.17 | 0.59 | 1.375 | 1.52 | 0.310 |

# SK 3282 SCP + Motor
# 3” CEMA Drive Shaft

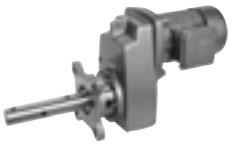

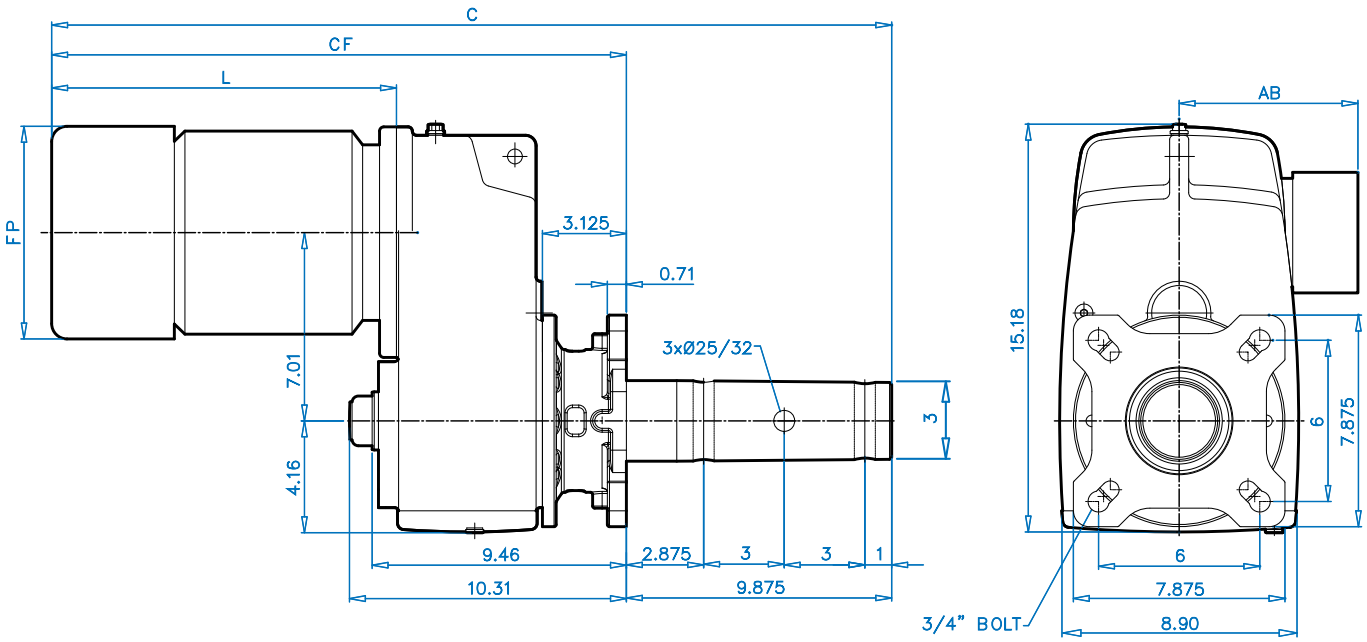


DIMENSIONS

| Motor Type | Overall | | Motor | | |
|---|---|---|---|---|---|
| | C | CF | L | FP | AB |
| **71S/L** | 27.74 | 18.66 | 9.07 | 5.72 | 4.86 |
| **80S/L/LH** | 28.72 | 18.85 | 10.06 | 6.43 | 5.59 |
| **90S/SH/L/LH** | 30.29 | 20.42 | 11.63 | 7.19 | 5.79 |
| **100L/LA/LH** | 31.52 | 21.64 | 12.85 | 7.90 | 6.65 |
| **112M** | 32.39 | 22.51 | 13.72 | 8.87 | 7.05 |
| **112MH** | 33.38 | 23.50 | 14.71 | 8.87 | 7.05 |
| **132S/SH/M/MH** | 35.81 | 25.93 | 17.14 | 10.45 | 8.03 |

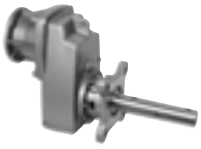

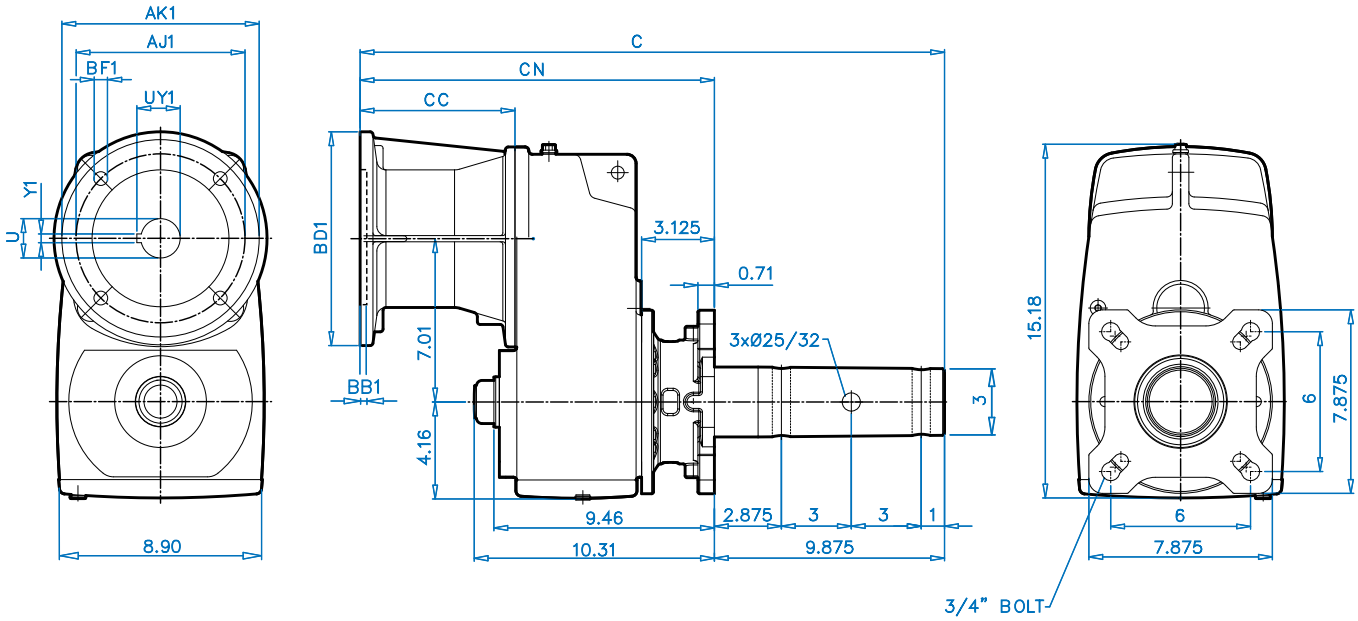




| NEMA | Overall | | NEMA Input | | | | | | Coupling | | |
|---|---|---|---|---|---|---|---|---|---|---|---|
| C-Face Input | C | CN | CC | AJ1 | AK1 | BB1 | BD1 | BF1 | U1 | UY1 | Y1 |
| **56C** | 23.27 | 13.40 | 4.61 | 5.875 | 4.50 | 0.20 | 6.54 | 0.43 | 0.625 | 0.71 | 0.188 |
| **140TC** | 23.27 | 13.40 | 4.61 | 5.875 | 4.50 | 0.20 | 6.54 | 0.43 | 0.875 | 0.96 | 0.188 |
| **180TC** | 25.31 | 15.44 | 6.65 | 7.250 | 8.50 | 0.23 | 9.17 | 0.59 | 1.125 | 1.24 | 0.250 |
| **210TC** | 25.31 | 15.44 | 6.65 | 7.250 | 8.50 | 0.23 | 9.17 | 0.59 | 1.375 | 1.52 | 0.310 |

# SK 4282 SCP + Motor
# 2” CEMA Drive Shaft

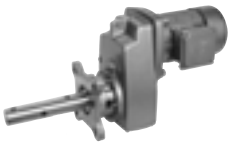

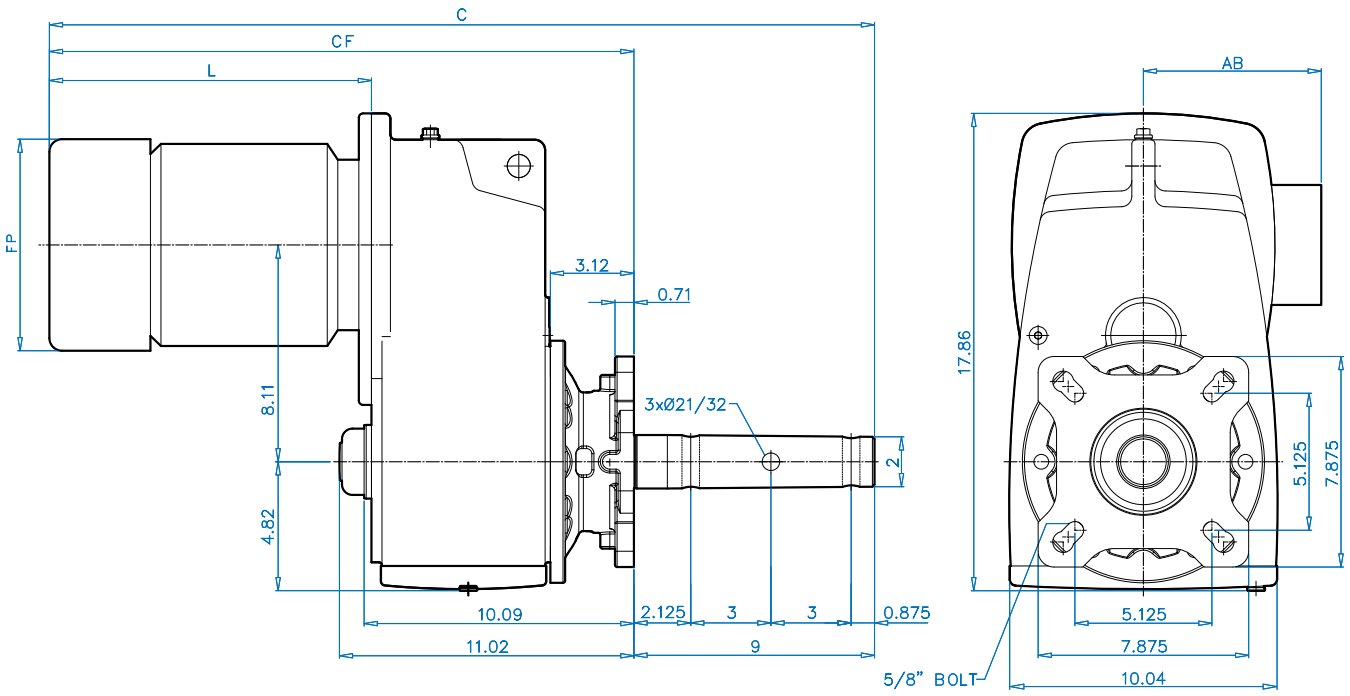


DIMENSIONS

| Motor Type | Overall | | Motor | | |
|---|---|---|---|---|---|
| | C | CF | L | FP | AB |
| 90S/SH/L/LH | 29.94 | 20.94 | 10.84 | 7.19 | 5.79 |
| 100L/LA/LH | 31.16 | 22.16 | 12.06 | 7.90 | 6.65 |
| 112M | 32.03 | 23.03 | 12.93 | 8.87 | 7.05 |
| 112MH | 33.02 | 24.02 | 13.93 | 8.87 | 7.05 |
| 132S/SH/M/MH | 35.45 | 26.45 | 16.35 | 10.45 | 8.03 |
| 160M/L | 38.51 | 29.51 | 19.41 | 12.56 | 9.53 |

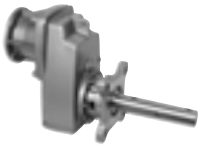

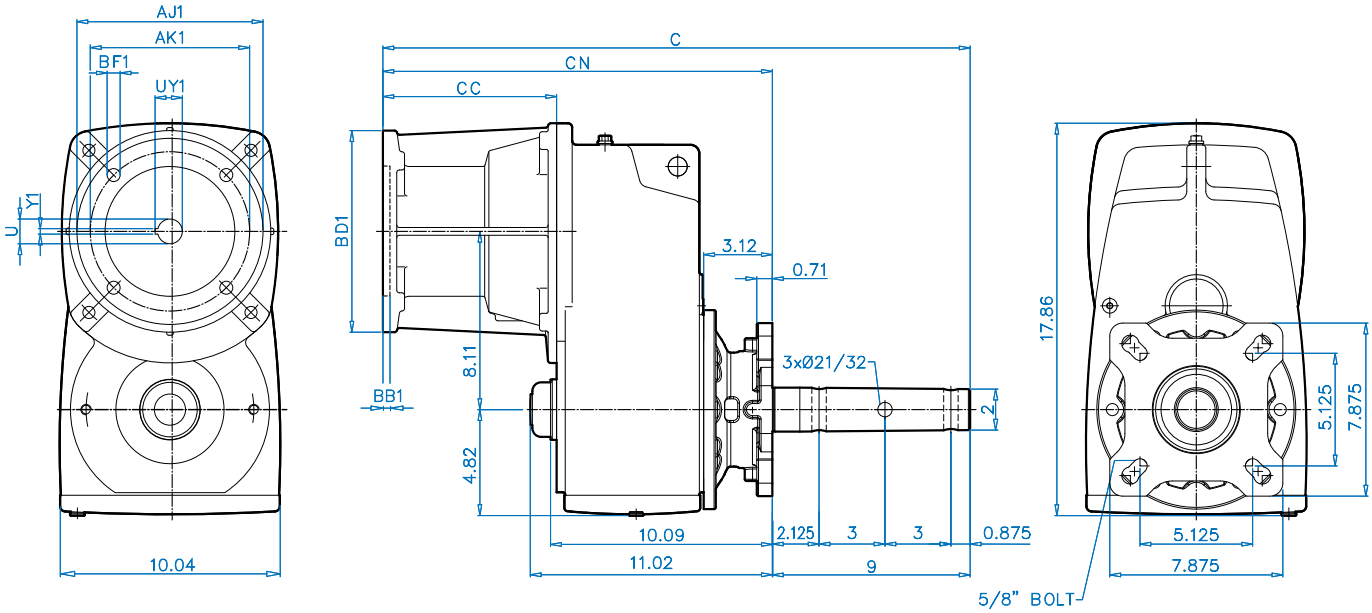




| NEMA | Overall | | NEMA Input | | | | | | Coupling | | |
|---|---|---|---|---|---|---|---|---|---|---|---|
| C-Face Input | C | CN | CC | AJ1 | AK1 | BB1 | BD1 | BF1 | U1 | UY1 | Y1 |
| **56C** | 23.43 | 14.43 | 4.33 | 5.875 | 4.50 | 0.20 | 6.54 | 0.43 | 0.625 | 0.71 | 0.188 |
| **140TC** | 23.43 | 14.43 | 4.33 | 5.875 | 4.50 | 0.20 | 6.54 | 0.43 | 0.875 | 0.96 | 0.188 |
| **180TC** | 27.17 | 18.17 | 8.07 | 7.250 | 8.50 | 0.23 | 9.17 | 0.59 | 1.125 | 1.24 | 0.250 |
| **210TC** | 27.17 | 18.17 | 8.07 | 7.250 | 8.50 | 0.23 | 9.17 | 0.59 | 1.375 | 1.52 | 0.312 |
| **250TC** | 27.01 | 18.01 | 7.91 | 7.250 | 8.50 | 0.23 | 9.17 | 0.59 | 1.625 | 1.80 | 0.375 |

# SK 4282 SCP + Motor
# 2-7/16” CEMA Drive Shaft

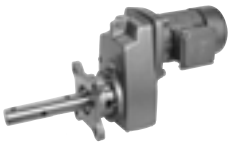



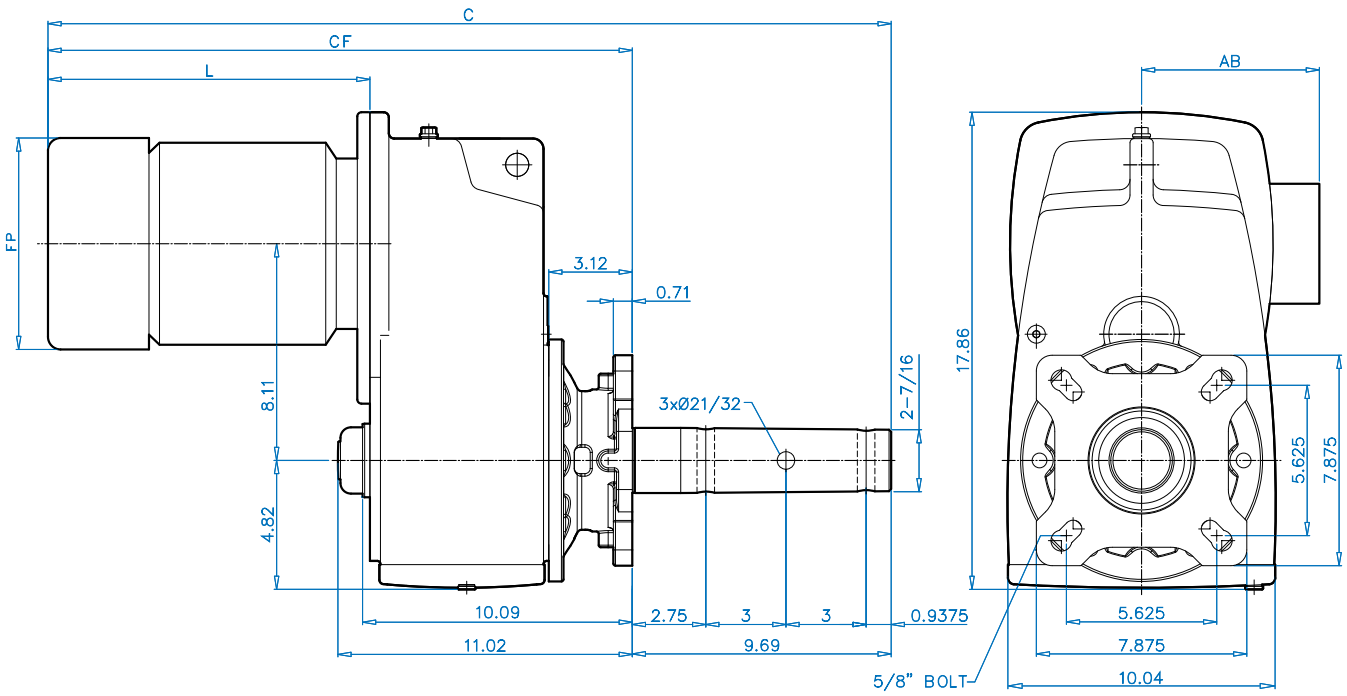


| Motor Type | Overall | | Motor | | |
|---|---|---|---|---|---|
| | C | CF | L | FP | AB |
| 90S/SH/L/LH | 30.63 | 20.94 | 10.84 | 7.19 | 5.79 |
| 100L/LA/LH | 31.85 | 22.16 | 12.06 | 7.90 | 6.65 |
| 112M | 32.72 | 23.03 | 12.93 | 8.87 | 7.05 |
| 112MH | 33.71 | 24.02 | 13.93 | 8.87 | 7.05 |
| 132S/SH/M/MH | 36.14 | 26.45 | 16.35 | 10.45 | 8.03 |
| 160M/L | 39.19 | 29.51 | 19.41 | 12.56 | 9.53 |

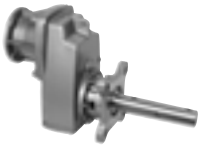

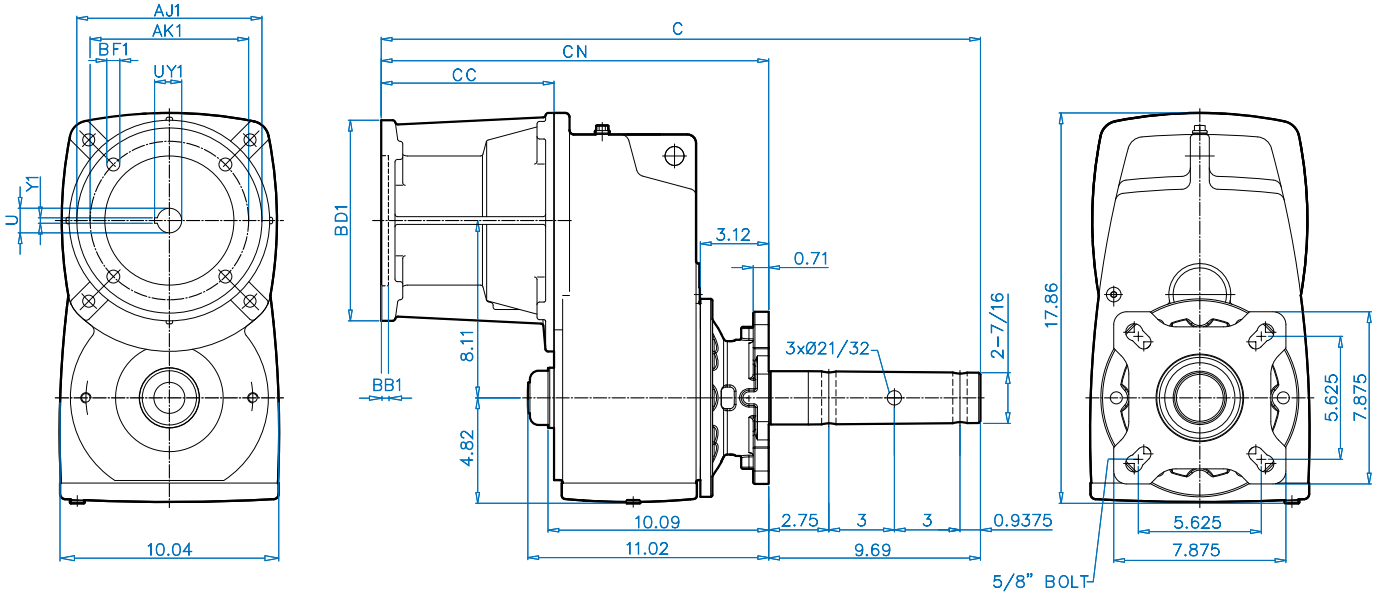


| NEMA | Overall | | NEMA Input | | | | | | Coupling | | |
|---|---|---|---|---|---|---|---|---|---|---|---|
| C-Face Input | C | CN | CC | AJ1 | AK1 | BB1 | BD1 | BF1 | U1 | UY1 | Y1 |
| **56C** | 24.11 | 14.43 | 4.33 | 5.875 | 4.50 | 0.20 | 6.54 | 0.43 | 0.625 | 0.71 | 0.188 |
| **140TC** | 24.11 | 14.43 | 4.33 | 5.875 | 4.50 | 0.20 | 6.54 | 0.43 | 0.875 | 0.96 | 0.188 |
| **180TC** | 27.85 | 18.17 | 8.07 | 7.250 | 8.50 | 0.23 | 9.17 | 0.59 | 1.125 | 1.24 | 0.250 |
| **210TC** | 27.85 | 18.17 | 8.07 | 7.250 | 8.50 | 0.23 | 9.17 | 0.59 | 1.375 | 1.52 | 0.312 |
| **250TC** | 27.70 | 18.01 | 7.91 | 7.250 | 8.50 | 0.23 | 9.17 | 0.59 | 1.625 | 1.80 | 0.375 |

# SK 4282 SCP + Motor
# 3” CEMA Drive Shaft

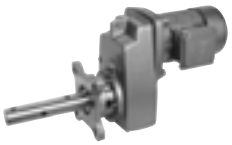



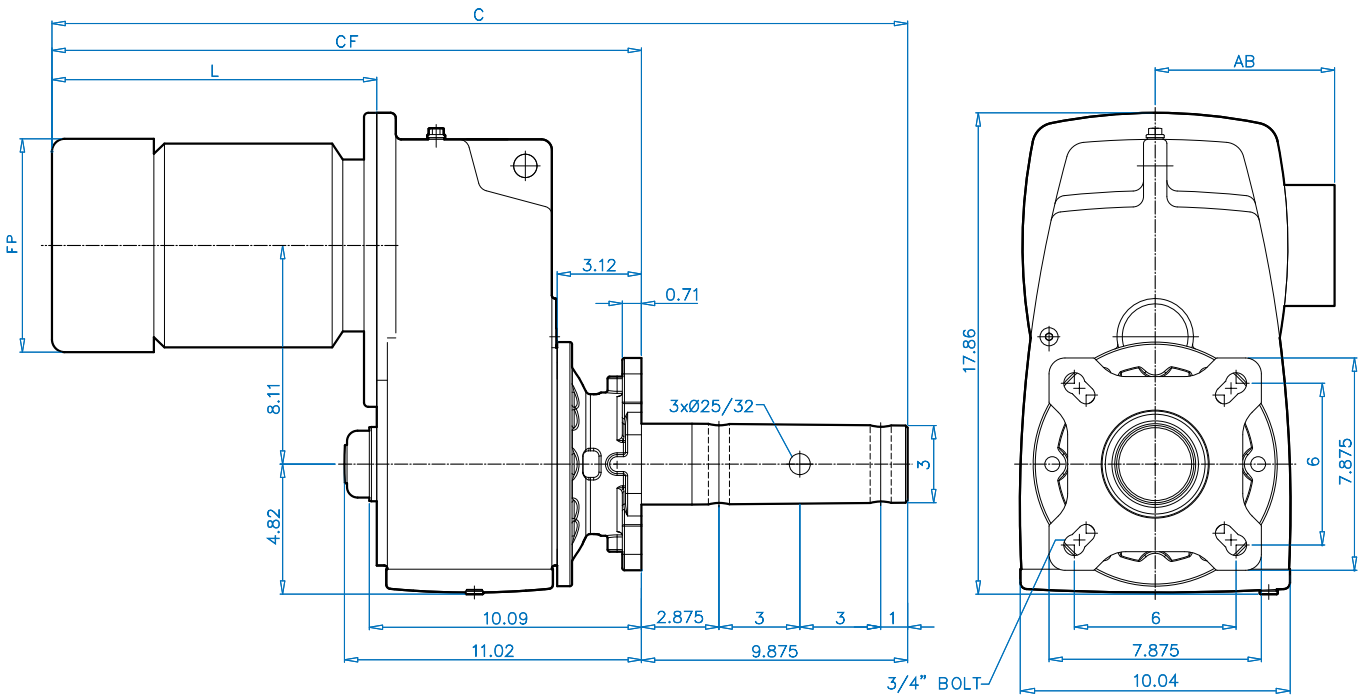


| Motor Type | Overall | | Motor | | |
|---|---|---|---|---|---|
| | C | CF | L | FP | AB |
| 90S/SH/L/LH | 30.81 | 20.94 | 10.84 | 7.19 | 5.79 |
| 100L/LA/LH | 32.03 | 22.16 | 12.06 | 7.90 | 6.65 |
| 112M | 32.90 | 23.03 | 12.93 | 8.87 | 7.05 |
| 112MH | 33.90 | 24.02 | 13.93 | 8.87 | 7.05 |
| 132S/SH/M/MH | 36.33 | 26.45 | 16.35 | 10.45 | 8.03 |
| 160M/L | 39.38 | 29.51 | 19.41 | 12.56 | 9.53 |

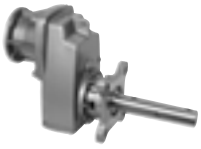

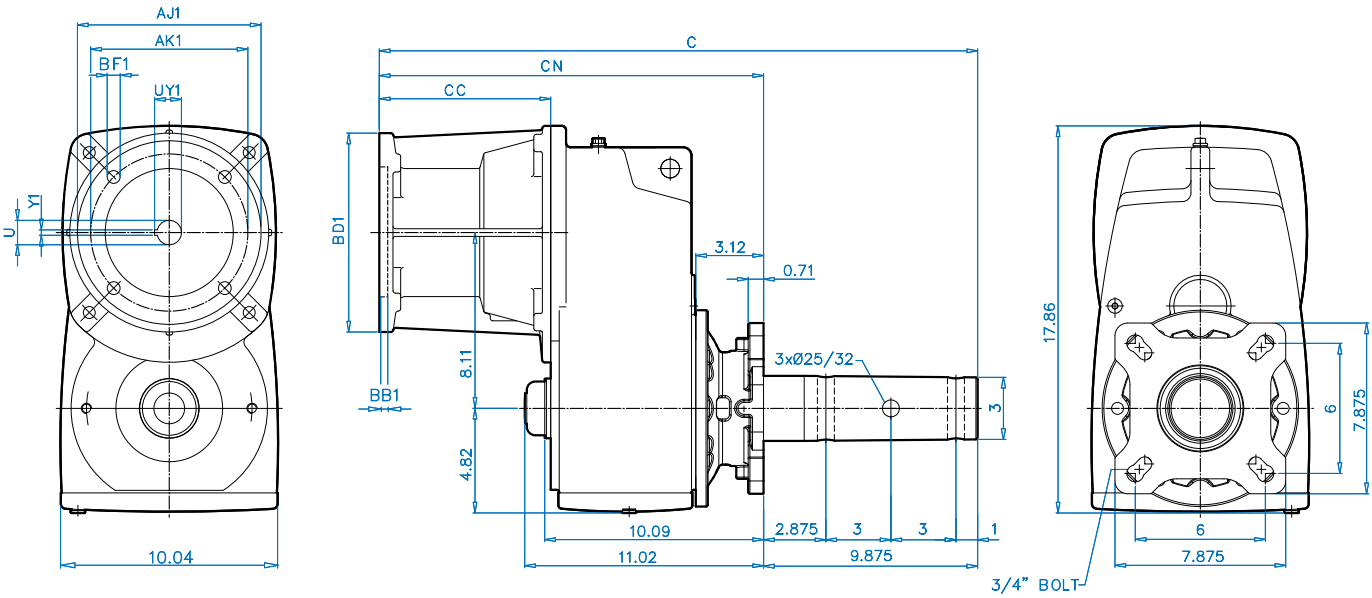


DIMENSIONS

| NEMA C-Face Input | Overall C | Overall CN | NEMA Input CC | AJ1 | AK1 | BB1 | BD1 | BF1 | Coupling U1 | UY1 | Y1 |
|---|---|---|---|---|---|---|---|---|---|---|---|
| **56C** | 24.30 | 14.43 | 4.33 | 5.875 | 4.50 | 0.20 | 6.54 | 0.43 | 0.625 | 0.71 | 0.188 |
| **140TC** | 24.30 | 14.43 | 4.33 | 5.875 | 4.50 | 0.20 | 6.54 | 0.43 | 0.875 | 0.96 | 0.188 |
| **180TC** | 28.04 | 18.17 | 8.07 | 7.250 | 8.50 | 0.23 | 9.17 | 0.59 | 1.125 | 1.24 | 0.250 |
| **210TC** | 28.04 | 18.17 | 8.07 | 7.250 | 8.50 | 0.23 | 9.17 | 0.59 | 1.375 | 1.52 | 0.312 |
| **250TC** | 27.88 | 18.01 | 7.91 | 7.250 | 8.50 | 0.23 | 9.17 | 0.59 | 1.625 | 1.80 | 0.375 |

# SK 5282 SCP + Motor
# 2” CEMA Drive Shaft

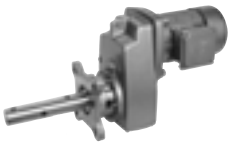

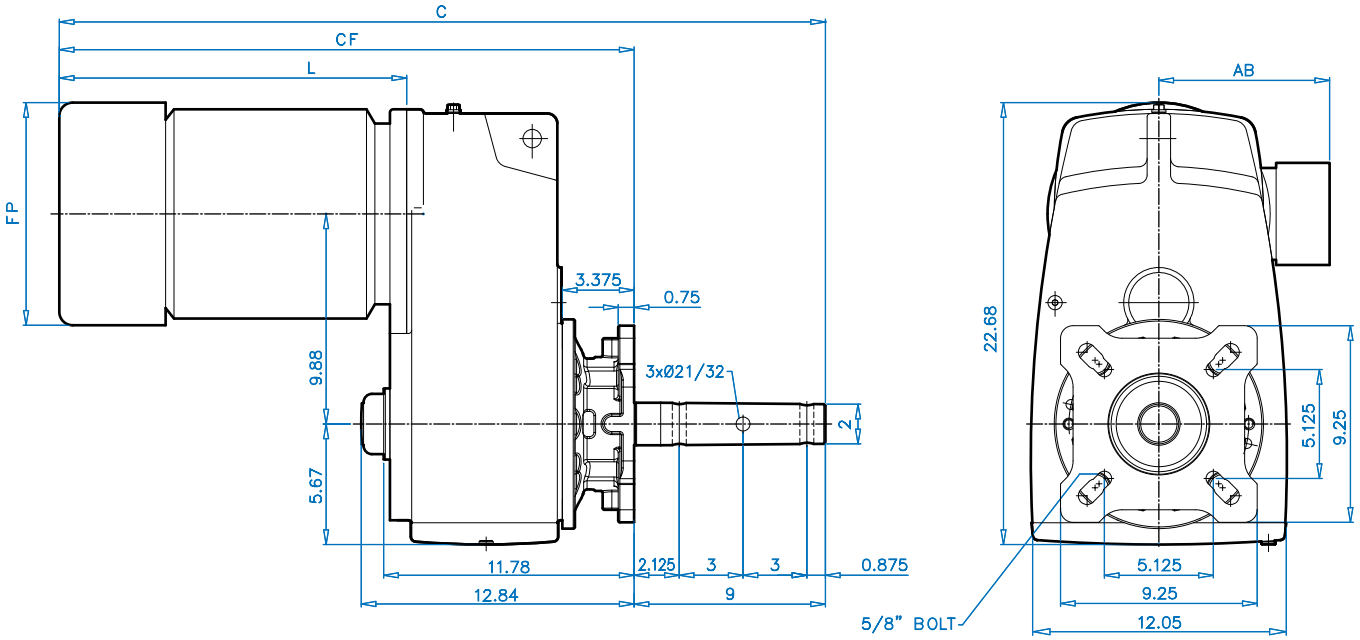


DIMENSIONS

| Motor Type | Overall | | Motor | | |
|---|---|---|---|---|---|
| | C | CF | L | FP | AB |
| 90S/SH/L/LH | 30.84 | 21.84 | 10.84 | 7.19 | 5.79 |
| 100L/LA/LH | 32.06 | 23.06 | 12.06 | 7.90 | 6.65 |
| 112M | 32.93 | 23.93 | 12.93 | 8.87 | 7.05 |
| 112MH | 33.92 | 24.92 | 13.93 | 8.87 | 7.05 |
| 132S/SH/M/MH | 36.35 | 27.35 | 16.35 | 10.45 | 8.03 |
| 160M/L | 39.41 | 30.41 | 19.41 | 12.56 | 9.53 |
| 180MX/LX | 39.41 | 30.41 | 19.41 | 12.56 | 9.53 |

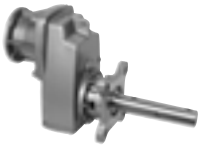

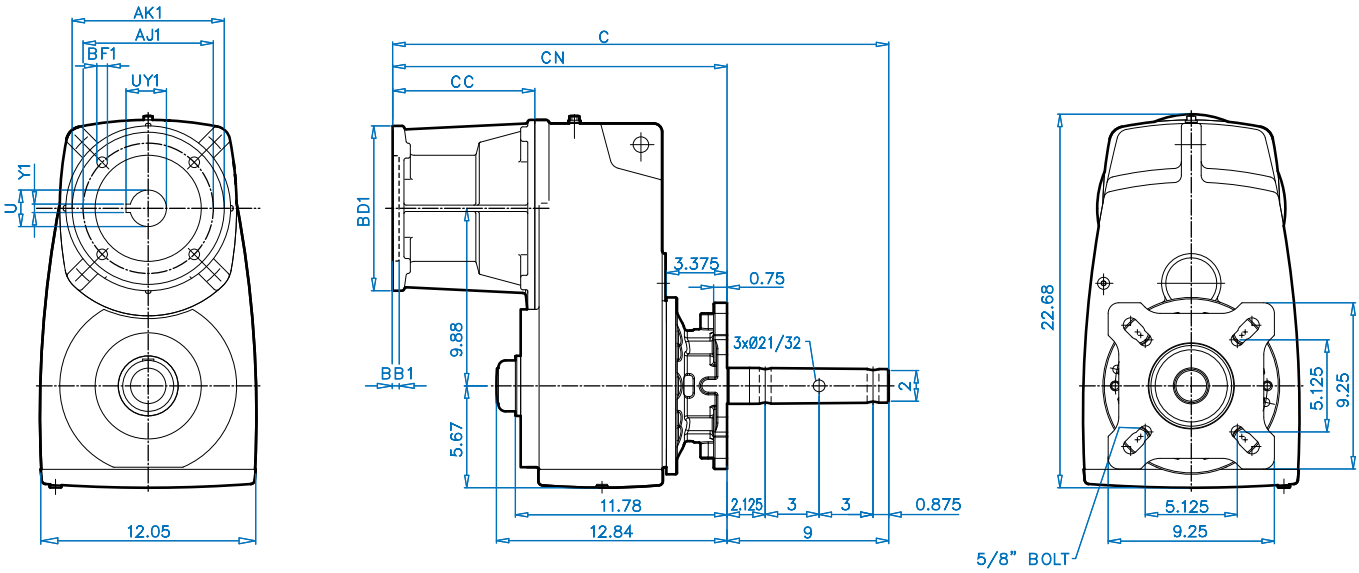




| NEMA | Overall | | NEMA Input | | | | | | Coupling | | |
|---|---|---|---|---|---|---|---|---|---|---|---|
| C-Face Input | C | CN | CC | AJ1 | AK1 | BB1 | BD1 | BF1 | U1 | UY1 | Y1 |
| 56C | 24.33 | 15.33 | 4.33 | 5.875 | 4.50 | 0.20 | 6.54 | 0.43 | 0.625 | 0.71 | 0.188 |
| 140TC | 24.33 | 15.33 | 4.33 | 5.875 | 4.50 | 0.20 | 6.54 | 0.43 | 0.875 | 0.96 | 0.188 |
| 180TC | 28.07 | 19.07 | 8.07 | 7.250 | 8.50 | 0.23 | 9.17 | 0.59 | 1.125 | 1.24 | 0.250 |
| 210TC | 28.07 | 19.07 | 8.07 | 7.250 | 8.50 | 0.23 | 9.17 | 0.59 | 1.375 | 1.52 | 0.312 |
| 250TC | 27.91 | 18.91 | 7.91 | 7.250 | 8.50 | 0.23 | 9.17 | 0.59 | 1.625 | 1.80 | 0.375 |
| 280TC | 28.54 | 19.54 | 8.54 | 9.000 | 10.50 | 0.23 | 13.78 | 0.55 | 1.875 | 2.10 | 0.500 |

# SK 5282 SCP + Motor
# 2-7/16" CEMA Drive Shaft

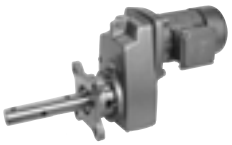



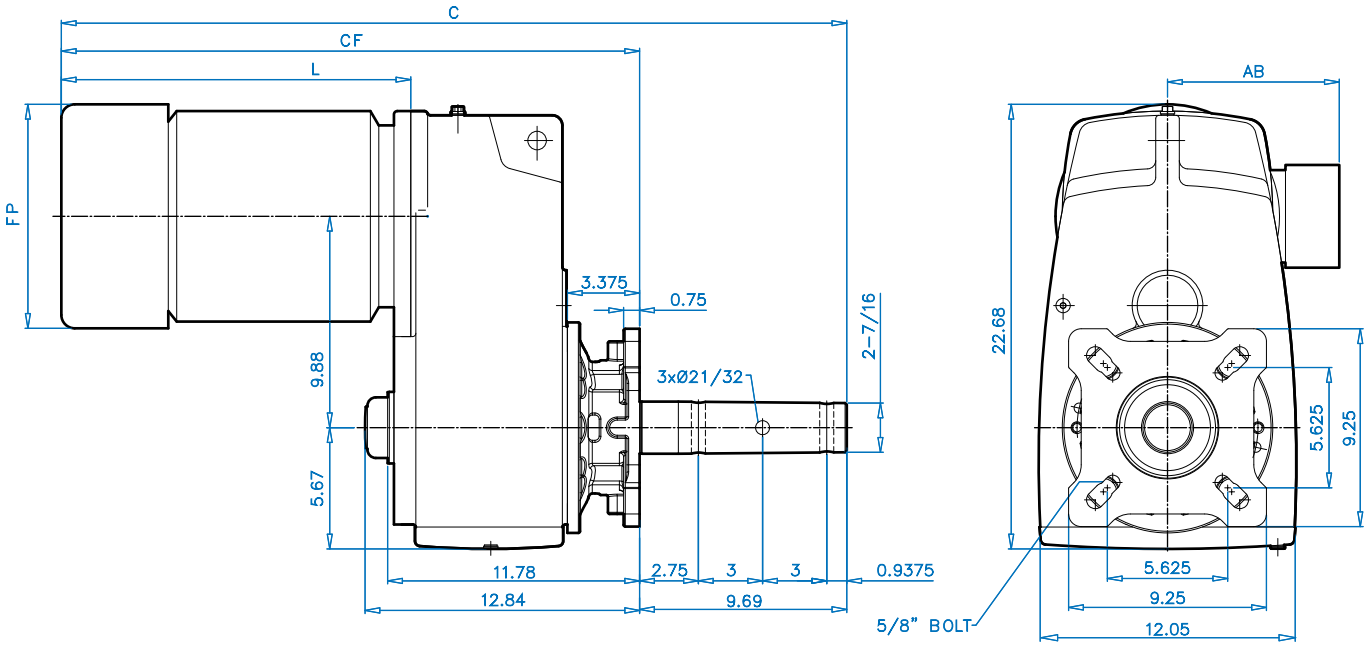


| Motor Type | Overall | | Motor | | |
|---|---|---|---|---|---|
| | C | CF | L | FP | AB |
| **90S/SH/L/LH** | 31.53 | 21.84 | 10.84 | 7.19 | 5.79 |
| **100L/LA/LH** | 32.75 | 23.06 | 12.06 | 7.90 | 6.65 |
| **112M** | 33.62 | 23.93 | 12.93 | 8.87 | 7.05 |
| **112MH** | 34.61 | 24.92 | 13.93 | 8.87 | 7.05 |
| **132S/SH/M/MH** | 37.04 | 27.35 | 16.35 | 10.45 | 8.03 |
| **160M/L** | 40.09 | 30.41 | 19.41 | 12.56 | 9.53 |
| **180MX/LX** | 40.09 | 30.41 | 19.41 | 12.56 | 9.53 |

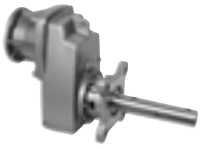

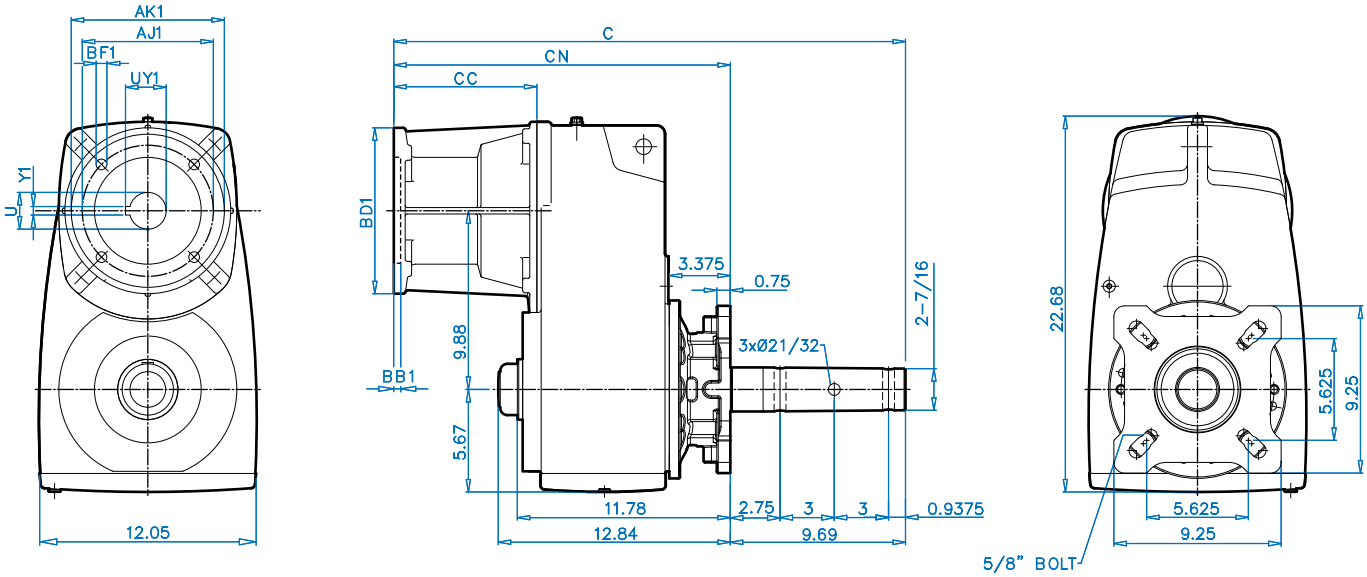


DIMENSIONS

| NEMA | Overall | | NEMA Input | | | | | | Coupling | | |
|---|---|---|---|---|---|---|---|---|---|---|---|
| C-Face Input | C | CN | CC | AJ1 | AK1 | BB1 | BD1 | BF1 | U1 | UY1 | Y1 |
| **56C** | 25.02 | 15.33 | 4.33 | 5.875 | 4.50 | 0.20 | 6.54 | 0.43 | 0.625 | 0.71 | 0.188 |
| **140TC** | 25.02 | 15.33 | 4.33 | 5.875 | 4.50 | 0.20 | 6.54 | 0.43 | 0.875 | 0.96 | 0.188 |
| **180TC** | 28.76 | 19.07 | 8.07 | 7.250 | 8.50 | 0.23 | 9.17 | 0.59 | 1.125 | 1.24 | 0.250 |
| **210TC** | 28.76 | 19.07 | 8.07 | 7.250 | 8.50 | 0.23 | 9.17 | 0.59 | 1.375 | 1.52 | 0.312 |
| **250TC** | 28.60 | 18.91 | 7.91 | 7.250 | 8.50 | 0.23 | 9.17 | 0.59 | 1.625 | 1.80 | 0.375 |
| **280TC** | 29.23 | 19.54 | 8.54 | 9.000 | 10.50 | 0.23 | 13.78 | 0.55 | 1.875 | 2.10 | 0.500 |

# SK 5282 SCP + Motor
# 3” CEMA Drive Shaft

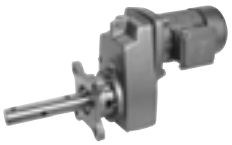

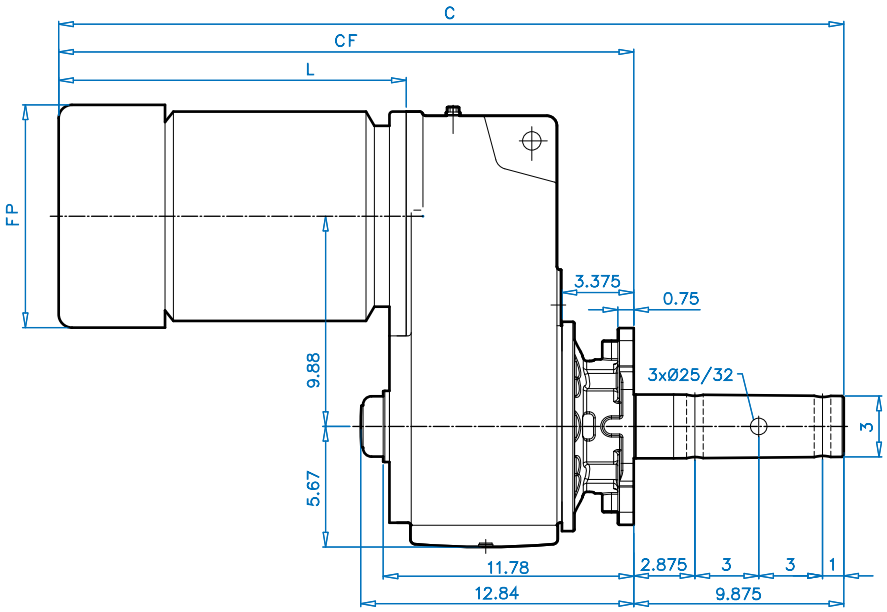


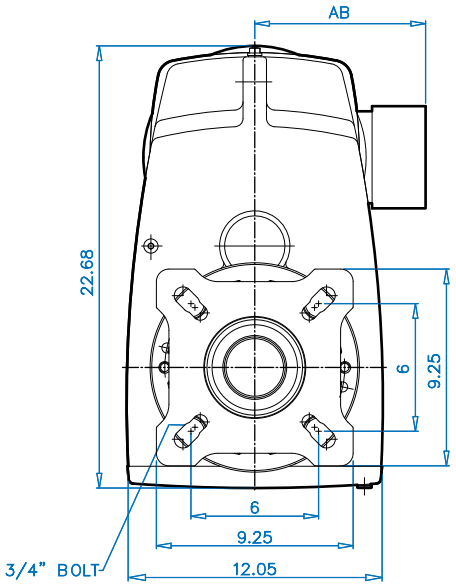


DIMENSIONS

| Motor Type | Overall | | Motor | | |
|---|---|---|---|---|---|
| | C | CF | L | FP | AB |
| 90S/SH/L/LH | 31.71 | 21.84 | 10.84 | 7.19 | 5.79 |
| 100L/LA/LH | 32.94 | 23.06 | 12.06 | 7.90 | 6.65 |
| 112M | 33.81 | 23.93 | 12.93 | 8.87 | 7.05 |
| 112MH | 34.80 | 24.92 | 13.93 | 8.87 | 7.05 |
| 132S/SH/M/MH | 37.23 | 27.35 | 16.35 | 10.45 | 8.03 |
| 160M/L | 40.28 | 30.41 | 19.41 | 12.56 | 9.53 |
| 180MX/LX | 40.28 | 30.41 | 19.41 | 12.56 | 9.53 |

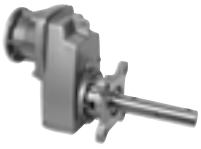

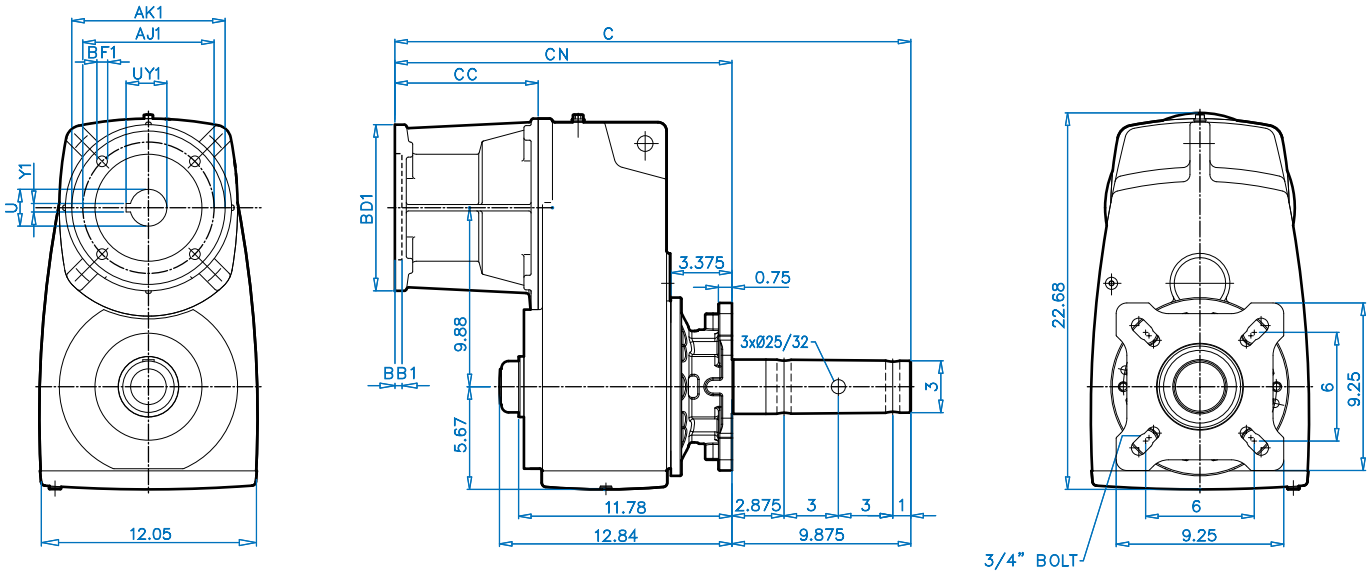




| NEMA | Overall | | NEMA Input | | | | | | Coupling | | |
|---|---|---|---|---|---|---|---|---|---|---|---|
| C-Face Input | C | CN | CC | AJ1 | AK1 | BB1 | BD1 | BF1 | U1 | UY1 | Y1 |
| **56C** | 25.20 | 15.33 | 4.33 | 5.875 | 4.50 | 0.20 | 6.54 | 0.43 | 0.625 | 0.71 | 0.188 |
| **140TC** | 25.20 | 15.33 | 4.33 | 5.875 | 4.50 | 0.20 | 6.54 | 0.43 | 0.875 | 0.96 | 0.188 |
| **180TC** | 28.94 | 19.07 | 8.07 | 7.250 | 8.50 | 0.23 | 9.17 | 0.59 | 1.125 | 1.24 | 0.250 |
| **210TC** | 28.94 | 19.07 | 8.07 | 7.250 | 8.50 | 0.23 | 9.17 | 0.59 | 1.375 | 1.52 | 0.312 |
| **250TC** | 28.79 | 18.91 | 7.91 | 7.250 | 8.50 | 0.23 | 9.17 | 0.59 | 1.625 | 1.80 | 0.375 |
| **280TC** | 29.42 | 19.54 | 8.54 | 9.000 | 10.50 | 0.23 | 13.78 | 0.55 | 1.875 | 2.10 | 0.500 |

# SK 5282 SCP + Motor
# 3-7/16"CEMA Drive Shaft

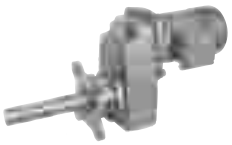



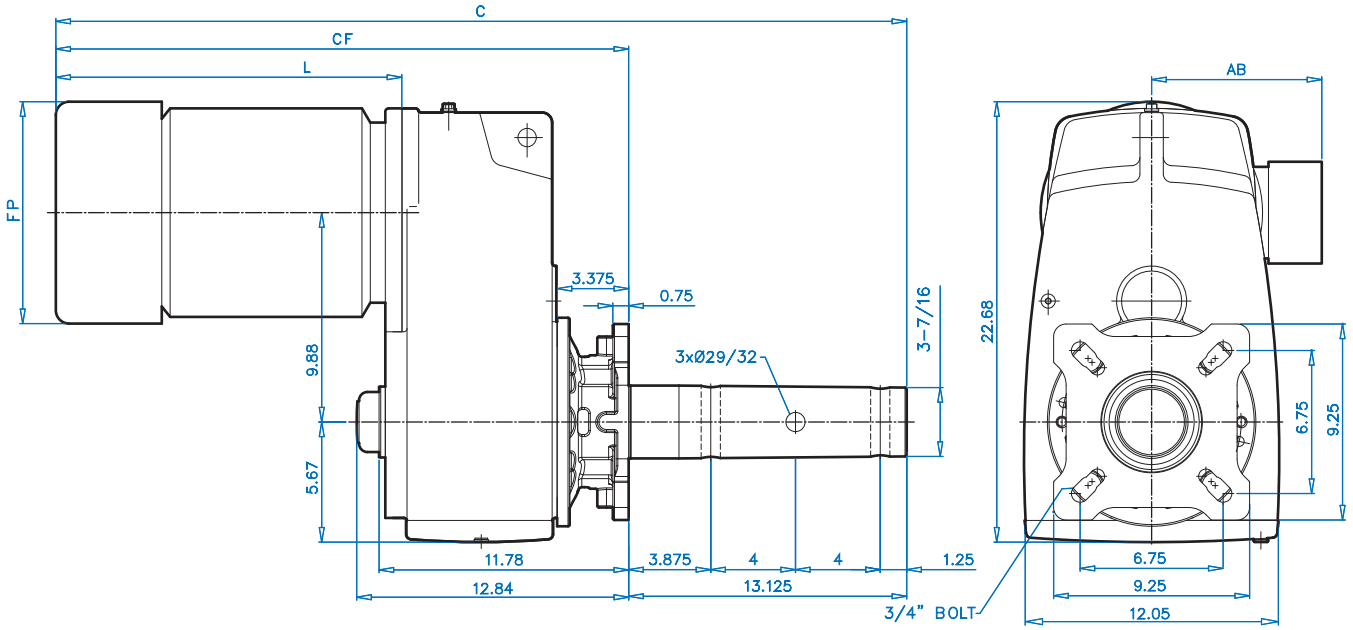


| Motor Type | Overall | | Motor | | |
|---|---|---|---|---|---|
| | C | CF | L | FP | AB |
| 90S/SH/L/LH | 34.96 | 21.84 | 10.84 | 7.19 | 5.79 |
| 100L/LA/LH | 35.87 | 22.75 | 12.06 | 7.90 | 6.65 |
| 112M | 37.06 | 23.93 | 12.93 | 8.87 | 7.05 |
| 112MH | 38.05 | 24.92 | 13.93 | 8.87 | 7.05 |
| 132S/SH/M/MH | 40.48 | 27.35 | 16.35 | 10.45 | 8.03 |
| 160M/L | 43.53 | 30.41 | 19.41 | 12.56 | 9.53 |
| 180MX/LX | 43.53 | 30.41 | 19.41 | 12.56 | 9.53 |

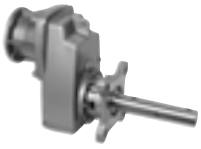

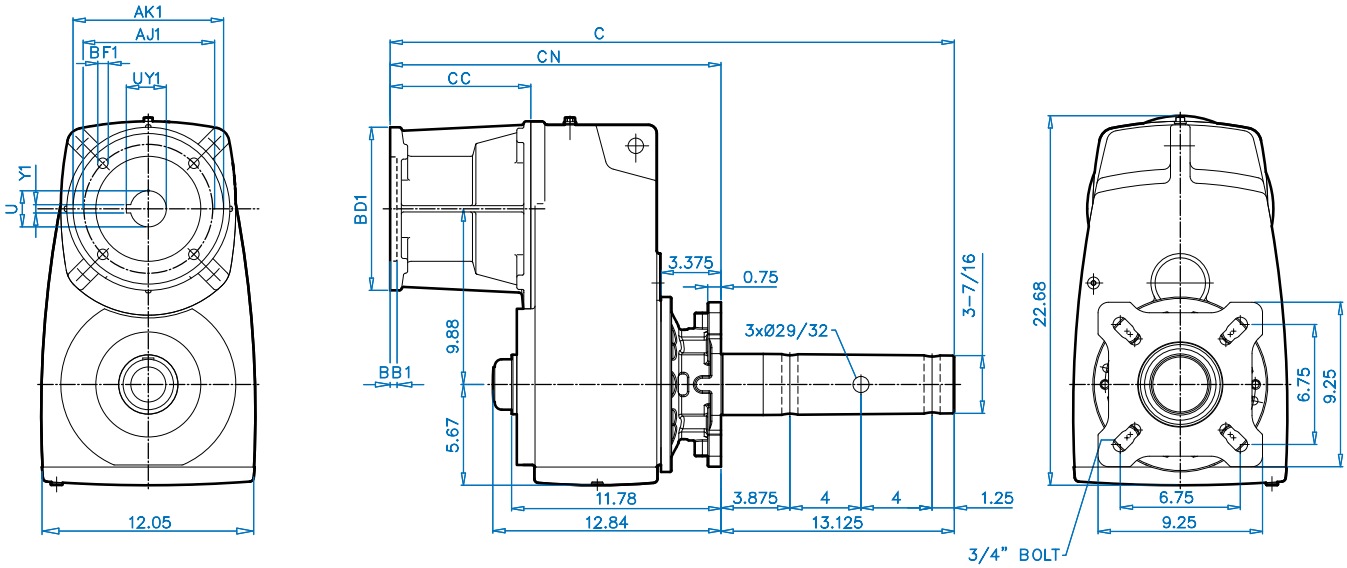


DIMENSIONS

| NEMA | Overall | | | NEMA Input | | | | | Coupling | | |
|---|---|---|---|---|---|---|---|---|---|---|---|
| C-Face Input | C | CN | CC | AJ1 | AK1 | BB1 | BD1 | BF1 | U1 | UY1 | Y1 |
| **56C** | 28.45 | 15.33 | 4.33 | 5.875 | 4.50 | 0.20 | 6.54 | 0.43 | 0.625 | 0.71 | 0.188 |
| **140TC** | 28.45 | 15.33 | 4.33 | 5.875 | 4.50 | 0.20 | 6.54 | 0.43 | 0.875 | 0.96 | 0.188 |
| **180TC** | 32.19 | 19.07 | 8.07 | 7.250 | 8.50 | 0.23 | 9.17 | 0.59 | 1.125 | 1.24 | 0.250 |
| **210TC** | 32.19 | 19.07 | 8.07 | 7.250 | 8.50 | 0.23 | 9.17 | 0.59 | 1.375 | 1.52 | 0.312 |
| **250TC** | 32.04 | 18.91 | 7.91 | 7.250 | 8.50 | 0.23 | 9.17 | 0.59 | 1.625 | 1.80 | 0.375 |
| **280TC** | 32.67 | 19.54 | 8.54 | 9.000 | 10.50 | 0.23 | 13.78 | 0.55 | 1.875 | 2.10 | 0.500 |

# SK 6282 SCP + Motor
# 3” CEMA Drive Shaft

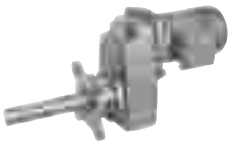

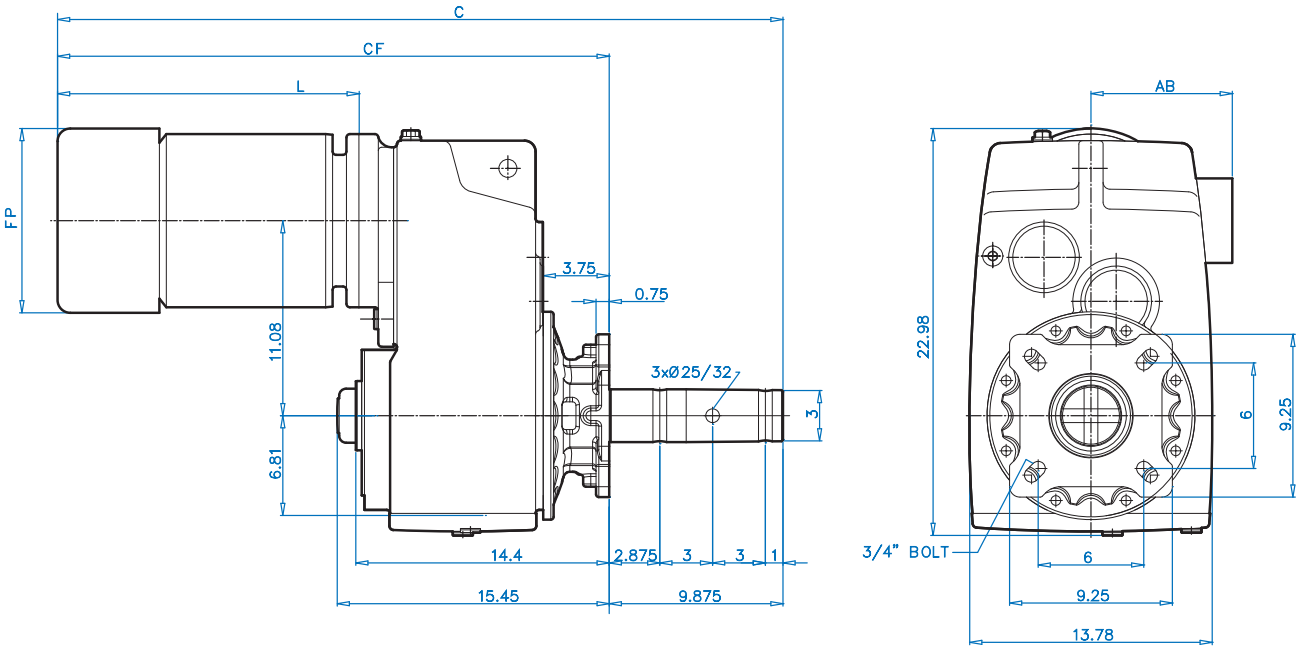


DIMENSIONS

| Motor Type | Overall | | Motor | | |
|---|---|---|---|---|---|
| | C | CF | L | FP | AB |
| 100L/LA/LH | 36.50 | 26.62 | 12.06 | 7.90 | 6.65 |
| 112M | 37.25 | 27.38 | 12.81 | 8.87 | 7.05 |
| 112MH | 38.24 | 28.37 | 13.81 | 8.87 | 7.05 |
| 132S/SH/M/MH | 41.58 | 31.70 | 17.14 | 10.45 | 8.03 |
| 160M/L | 43.84 | 33.97 | 19.41 | 12.56 | 9.53 |
| 180MX/LX | 43.84 | 33.97 | 19.41 | 12.56 | 9.53 |
| 200L | 51.52 | 41.65 | 27.09 | 15.83 | 12.01 |
| 225S/M | 51.52 | 41.65 | 27.09 | 15.83 | 12.01 |

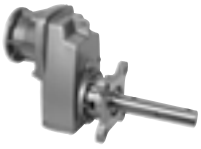

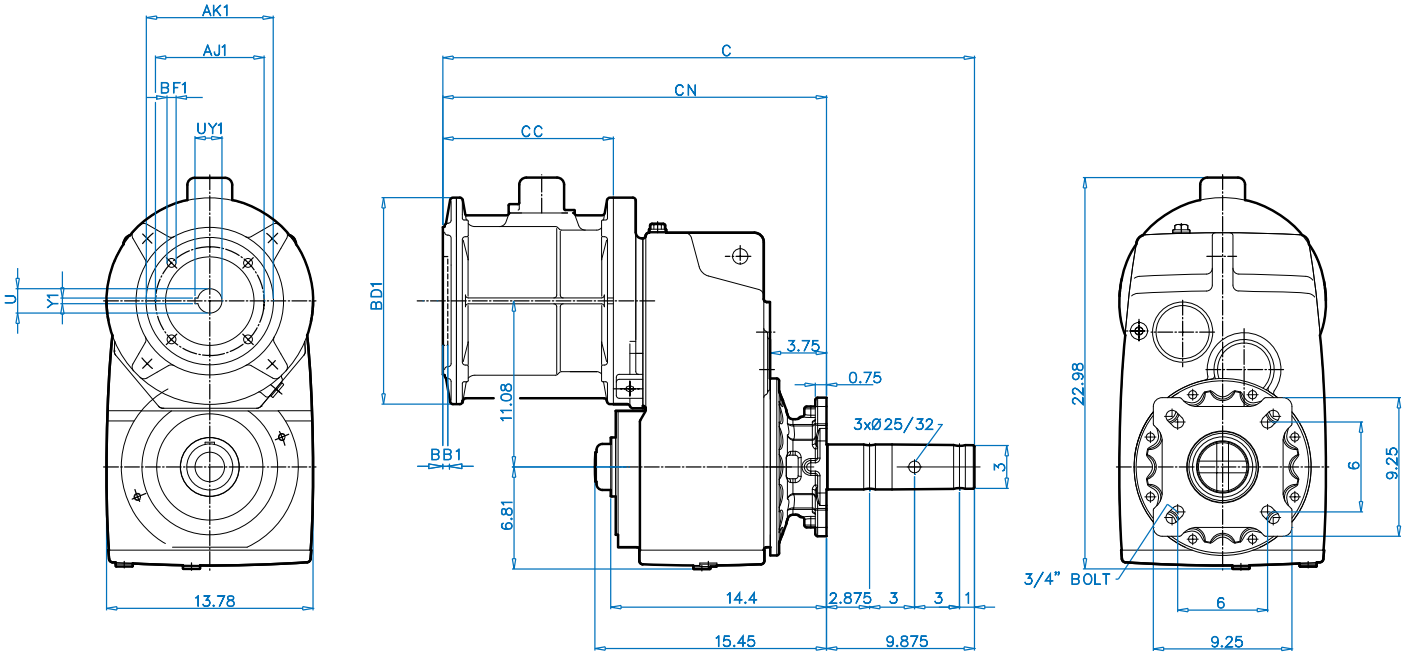


DIMENSIONS

| NEMA | Overall | | NEMA Input | | | | | | Coupling | | |
|---|---|---|---|---|---|---|---|---|---|---|---|
| C-Face Input | C | CN | CC | AJ1 | AK1 | BB1 | BD1 | BF1 | U1 | UY1 | Y1 |
| 180TC | 31.95 | 22.08 | 7.52 | 7.250 | 8.50 | 0.23 | 9.17 | 0.59 | 1.125 | 1.24 | 0.250 |
| 210TC | 31.95 | 22.08 | 7.52 | 7.250 | 8.50 | 0.23 | 9.17 | 0.59 | 1.375 | 1.52 | 0.312 |
| 250TC | 35.81 | 25.94 | 11.38 | 7.250 | 8.50 | 0.23 | 9.17 | 0.59 | 1.625 | 1.80 | 0.375 |
| 280TC | 35.81 | 25.94 | 11.38 | 9.000 | 10.50 | 0.23 | 13.78 | 0.55 | 1.875 | 2.10 | 0.500 |
| 320TC | 34.79 | 24.91 | 10.35 | 11.000 | 12.50 | 0.23 | 15.75 | 0.71 | 2.125 | 2.35 | 0.500 |
| 360 TC | 37.70 | 27.83 | 13.27 | 11.000 | 12.50 | 0.16 | 17.72 | 0.71 | 2.375 | 2.65 | 0.625 |

# SK 6282 SCP + Motor
# 3-7/16" CEMA Drive Shaft

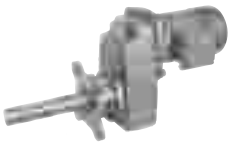



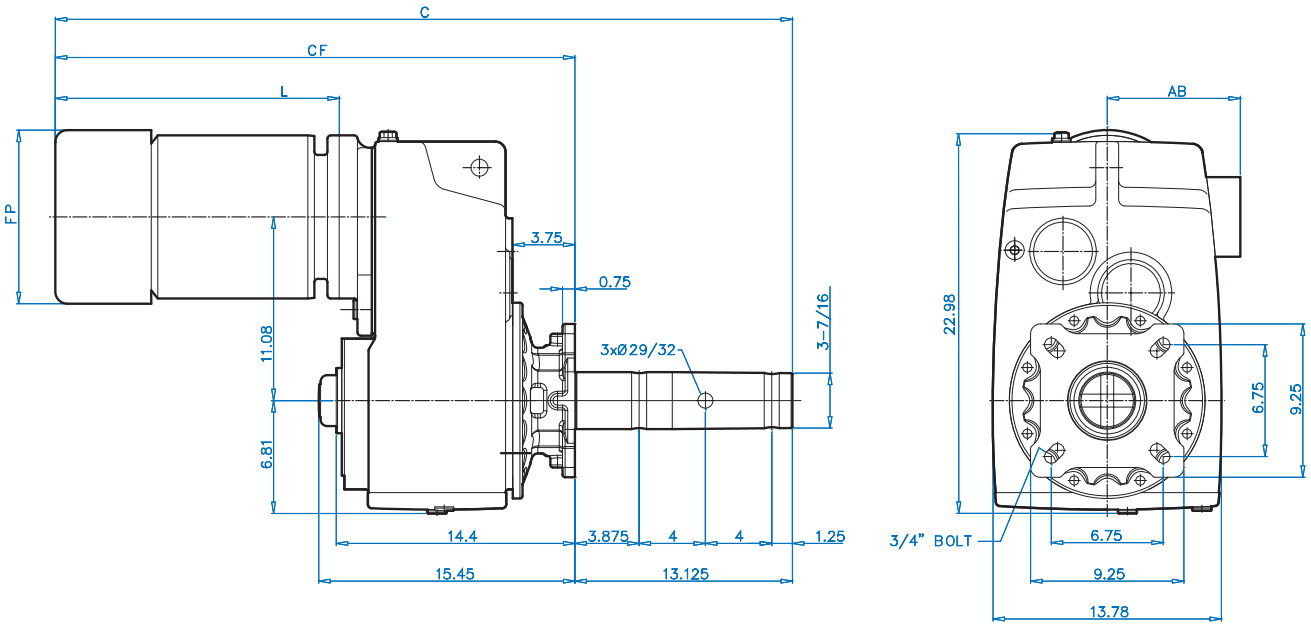


| Motor Type | Overall | | Motor | | |
|---|---|---|---|---|---|
| | C | CF | L | FP | AB |
| **100L/LA/LH** | 39.75 | 26.62 | 12.06 | 7.90 | 6.65 |
| **112M** | 40.50 | 27.38 | 12.81 | 8.87 | 7.05 |
| **112MH** | 41.49 | 28.37 | 13.81 | 8.87 | 7.05 |
| **132S/SH/M/MH** | 49.04 | 31.70 | 17.14 | 10.45 | 8.03 |
| **160M/L** | 47.09 | 33.97 | 19.41 | 12.56 | 9.53 |
| **180MX/LX** | 47.09 | 33.97 | 19.41 | 12.56 | 9.53 |
| **200L** | 54.77 | 41.65 | 27.09 | 15.83 | 12.01 |
| **225S/M** | 54.77 | 41.65 | 27.09 | 15.83 | 12.01 |

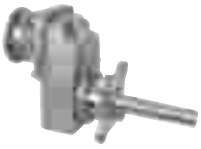

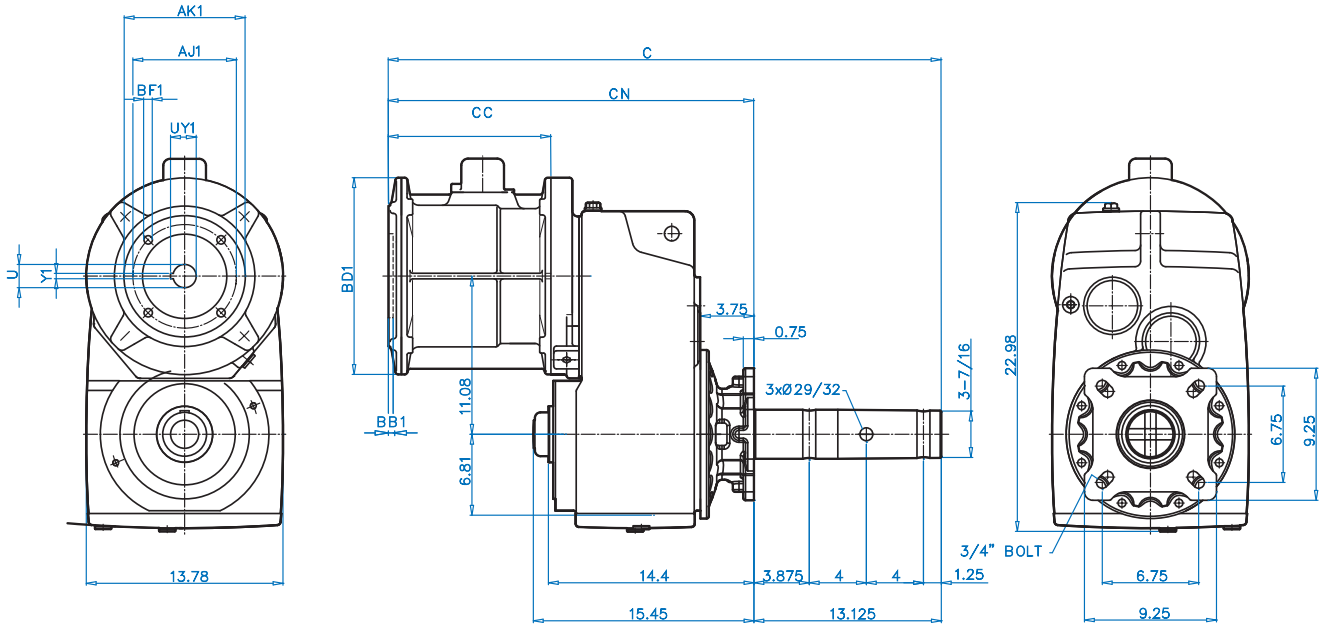


DIMENSIONS

| NEMA | Overall | | NEMA Input | | | | | | Coupling | | |
|---|---|---|---|---|---|---|---|---|---|---|---|
| C-Face Input | C | CN | CC | AJ1 | AK1 | BB1 | BD1 | BF1 | U1 | UY1 | Y1 |
| 180TC | 35.20 | 22.08 | 7.52 | 7.250 | 8.50 | 0.23 | 9.17 | 0.59 | 1.125 | 1.24 | 0.250 |
| 210TC | 35.20 | 22.08 | 7.52 | 7.250 | 8.50 | 0.23 | 9.17 | 0.59 | 1.375 | 1.52 | 0.312 |
| 250TC | 39.06 | 25.94 | 11.38 | 7.250 | 8.50 | 0.23 | 9.17 | 0.59 | 1.625 | 1.80 | 0.375 |
| 280TC | 38.95 | 25.82 | 11.26 | 9.000 | 10.50 | 0.23 | 13.78 | 0.55 | 1.875 | 2.10 | 0.500 |
| 320TC | 38.04 | 24.91 | 10.35 | 11.000 | 12.50 | 0.23 | 15.75 | 0.71 | 2.125 | 2.35 | 0.500 |
| 360 TC | 40.95 | 27.83 | 13.27 | 11.000 | 12.50 | 0.16 | 17.72 | 0.71 | 2.375 | 2.65 | 0.625 |

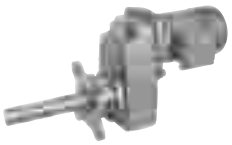

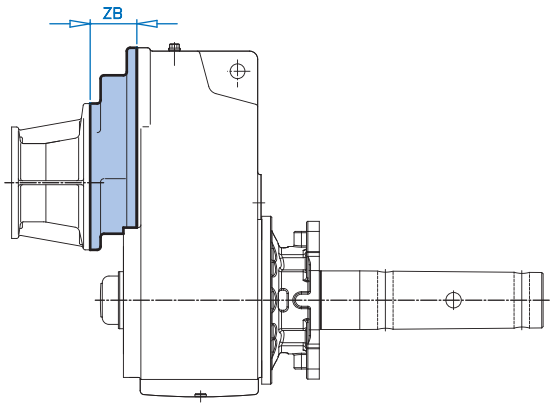


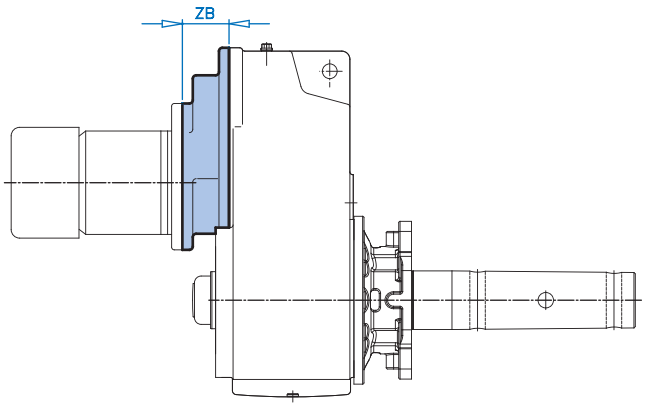




| Model Type | ZB |
|---|---|
| SK 1382 SCP | 2.28 |
| SK 2382 SCP | 2.36 |
| SK 3382 SCP | 2.36 |
| SK 4382 SCP | 2.72 |
| SK 5382 SCP | 2.72 |
| SK 6382 SCP | 0.00 |

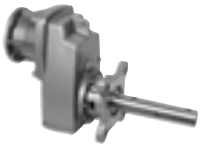

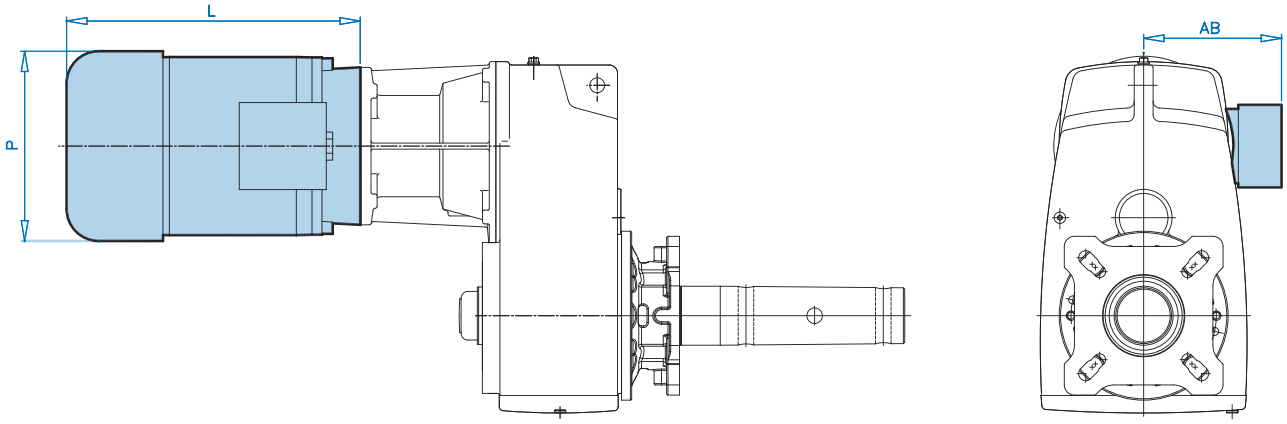




| Motor Type | AB | P | L |
|---|---|---|---|
| 63S-56C | 4.53 | 5.12 | 7.56 |
| 63L-56C | 4.53 | 5.12 | 7.56 |
| 71S-56C | 4.88 | 5.71 | 7.64 |
| 71L-56C | 4.88 | 5.71 | 7.64 |
| 80S-56C | 5.59 | 6.50 | 9.45 |
| 80L-143TC | 5.59 | 6.50 | 9.45 |
| 90S-145TC | 5.79 | 7.20 | 10.04 |
| 90L-145TC | 5.79 | 7.20 | 11.02 |
| 100L-182TC | 6.65 | 7.91 | 12.20 |
| 100L-184TC | 6.65 | 7.91 | 12.20 |
| 112M-184TC | 7.05 | 8.98 | 12.83 |
| 132S-213TC | 8.03 | 10.47 | 14.96 |
| 132M-215TC | 8.03 | 10.47 | 16.46 |

# SK SCP + Motor
# CEMA Drive Shaft

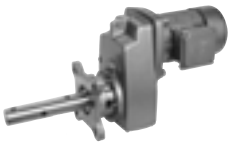



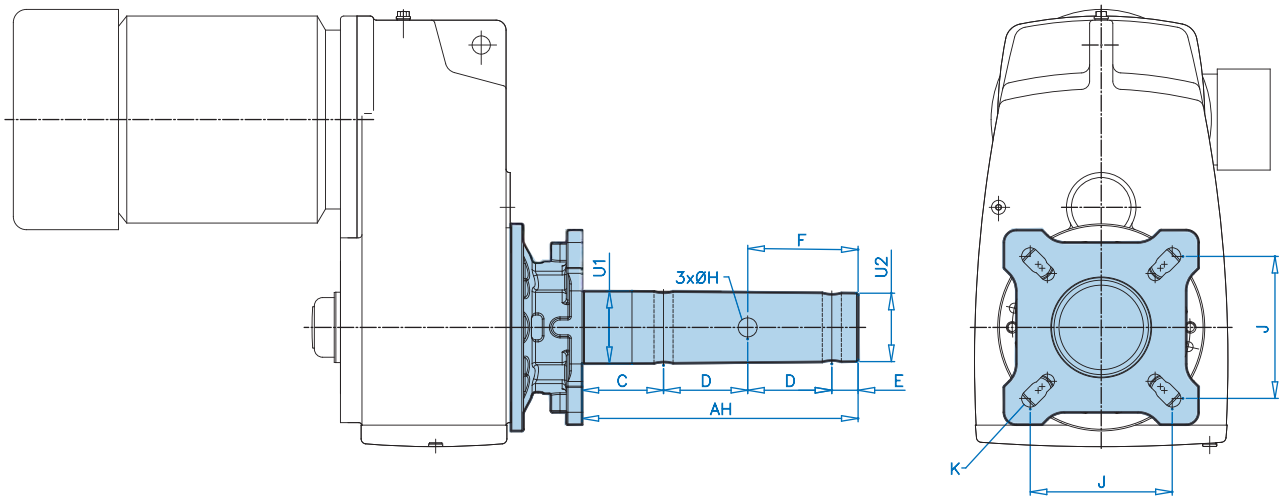


| Shaft Size | Shaft | | | | | | | | Flange | |
|---|---|---|---|---|---|---|---|---|---|---|
| | U1 | U2 | AH | C | D | E | F | H | J | K |
| **1-1/2** | 1.5 | 1.41 | 9.00 | 2.125 | 3.0 | 0.875 | 5 3/8 | 17/32 | 4 | 9/16 |
| **2** | 2.0 | 1.91 | 9.00 | 2.125 | 3.0 | 0.875 | 5 3/8 | 21/32 | 5-1/8 | 11/16 |
| **2-7/16** | 2.4375 | 2.34 | 9.6875 | 2.75 | 3.0 | 0.9375 | 5 7/16 | 21/32 | 5-5/8 | 11/16 |
| **3** | 3.0 | 2.91 | 9.875 | 2.875 | 3.0 | 1.00 | 5 1/2 | 25/32 | 6 | 13/16 |
| **3-7/16** | 3.4375 | 3.31 | 13.125 | 3.875 | 4.0 | 1.25 | 7 1/4 | 29/32 | 6-3/4 | 13/16 |

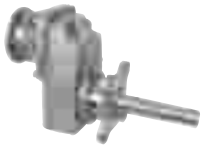

# CLINCHER™ SCP + NEMA CEMA Drive Shaft

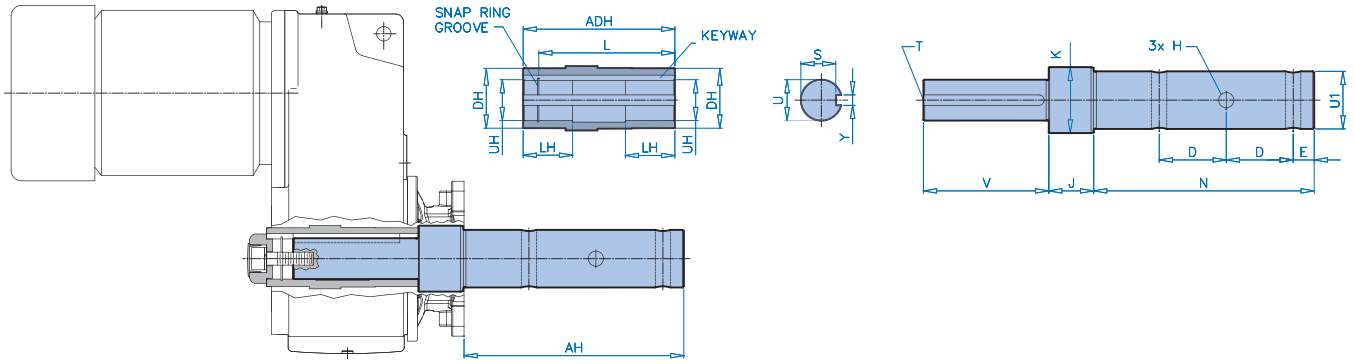




| Gear Unit Size | Hollow Shaft | | | | |
|---|---|---|---|---|---|
| | UH | ADH | L | LH | DH |
| SK 1282 SCP | 1-3/16 + 0.0008 | 4.80 | 3.85 | 1.57 | 1.77 |
| SK 2282 SCP | 1-7/16 + 0.0010 | 5.47 | 4.80 | 1.97 | 1.97 |
| SK 3282 SCP | 1-5/8 + 0.0010 | 6.85 | 6.14 | 2.28 | 2.17 |
| SK 4282 SCP | 2-1/16 + 0.0010 | 7.68 | 6.42 | 2.56 | 2.76 |
| SK 5282 SCP | 2-7/16 + 0.0012 | 9.06 | 7.58 | 2.95 | 3.35 |
| SK 6282 SCP | 2-3/4 + 0.0012 | 11.41 | 9.92 | 3.54 | 3.93 |

| | Shaft | | | | | | | | | | | | | | |
|---|---|---|---|---|---|---|---|---|---|---|---|---|---|---|---|
| | Shaft Size | U1 | AH | D | E | H | N | J | K | U | V | S | Y | T | Key |
| SK 1282 | 1-1/2 | 1-1/2 | 9 | 3 | 7/8 | 17/32 | 9.04 | 2.04 | 2.165 | 1.18752-0.0006 | 3.74 | 1.049 | 0.25 | 7/16-14 x 1 | 1/4 x 1/4 |
| | 2 | 2 | 9 | 3 | 7/8 | 21/32 | 9.04 | 2.41 | 2.559 | 1.18752-0.0006 | 3.74 | 1.049 | 0.25 | 7/16-14 x 1 | 1/4 x 1/4 |
| | 2-7/16 | 2-7/16 | 9-11/16 | 3 | 15/16 | 21/32 | 9.73 | 2.41 | 2.559 | 1.18752-0.0006 | 3.74 | 1.049 | 0.25 | 7/16-14 x 1 | 1/4 x 1/4 |
| SK 2282 | 1-1/2 | 1-1/2 | 9 | 3 | 7/8 | 17/32 | 9.04 | 2.04 | 2.165 | 1.43752-0.0006 | 4.65 | 1.225 | 0.375 | 5/8-11 x 1.5 | 3/8 x 3/8 |
| | 2 | 2 | 9 | 3 | 7/8 | 21/32 | 9.04 | 2.04 | 2.559 | 1.43752-0.0006 | 4.65 | 1.225 | 0.375 | 5/8-11 x 1.5 | 3/8 x 3/8 |
| | 2-7/16 | 2-7/16 | 9-11/16 | 3 | 15/16 | 21/32 | 9.73 | 2.41 | 2.559 | 1.43752-0.0006 | 4.65 | 1.225 | 0.375 | 5/8-11 x 1.5 | 3/8 x 3/8 |
| SK 3282 | 1-1/2 | 1-1/2 | 9 | 3 | 7/8 | 17/32 | 9.04 | 2.20 | 2.165 | 1.625-0.0006 | 5.91 | 1.478 | 0.375 | 5/8-11 x 1.5 | 3/8 x 1/4 |
| | 2 | 2 | 9 | 3 | 7/8 | 21/32 | 9.04 | 2.57 | 3.150 | 1.625-0.0006 | 5.91 | 1.478 | 0.375 | 5/8-11 x 1.5 | 3/8 x 1/4 |
| | 2-7/16 | 2-7/16 | 9-11/16 | 3 | 15/16 | 21/32 | 9.73 | 2.57 | 3.150 | 1.625-0.0006 | 5.91 | 1.478 | 0.375 | 5/8-11 x 1.5 | 3/8 x 1/4 |
| | 3 | 3 | 9-7/8 | 3 | 1 | 25/32 | 9.91 | 2.57 | 3.150 | 1.625-0.0006 | 5.91 | 1.478 | 0.375 | 5/8-11 x 1.5 | 3/8 x 1/4 |
| SK 4282 | 2 | 2 | 9 | 3 | 7/8 | 21/32 | 9.04 | 2.37 | 3.150 | 2.06252-0.0007 | 6.42 | 1.844 | 0.5 | 5/8-11 x 1.5 | 1/2 x 3/8 |
| | 2-7/16 | 2-7/16 | 9-11/16 | 3 | 15/16 | 21/32 | 9.73 | 2.37 | 3.150 | 2.06252-0.0007 | 6.42 | 1.844 | 0.5 | 5/8-11 x 1.5 | 1/2 x 3/8 |
| | 3 | 3 | 9-7/8 | 3 | 1 | 25/32 | 9.91 | 2.37 | 3.150 | 2.06252-0.0007 | 6.42 | 1.844 | 0.5 | 5/8-11 x 1.5 | 1/2 x 3/8 |
| SK 5282 | 2 | 2 | 9 | 3 | 7/8 | 21/32 | 9.04 | 2.68 | 3.937 | 2.43752-0.0007 | 7.48 | 2.084 | 0.625 | 3/4-10 x 2 | 5/8 x 5/8 |
| | 2-7/16 | 2-7/16 | 9-11/16 | 3 | 15/16 | 21/32 | 9.73 | 2.68 | 3.937 | 2.43752-0.0007 | 7.48 | 2.084 | 0.625 | 3/4-10 x 2 | 5/8 x 5/8 |
| | 3 | 3 | 9-7/8 | 3 | 1 | 25/32 | 9.91 | 2.68 | 3.937 | 2.43752-0.0007 | 7.48 | 2.084 | 0.625 | 3/4-10 x 2 | 5/8 x 5/8 |
| | 3-7/16 | 3-7/16 | 13-1/8 | 4 | 1-1/4 | 29/32 | 13.16 | 2.68 | 3.937 | 2.43752-0.0007 | 7.48 | 2.084 | 0.625 | 3/4-10 x 2 | 5/8 x 5/8 |
| SK 6282 | 3 | 3 | 9-7/8 | 3 | 1 | 25/32 | 9.91 | 2.94 | 3.937 | 2.750 - 0.0007 | 10.55 | 2.402 | 0.625 | 3/4-10 x 2 | 5/8 x 5/8 |
| | 3-7/16 | 3-7/16 | 13-1/8 | 4 | 1-1/4 | 29/32 | 13.16 | 2.94 | 3.937 | 2.750 - 0.0007 | 10.55 | 2.402 | 0.625 | 3/4-10 x 2 | 5/8 x 5/8 |

# SK 9012.1 - SK9053.1
# SCP Dimensions

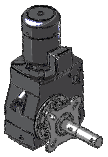

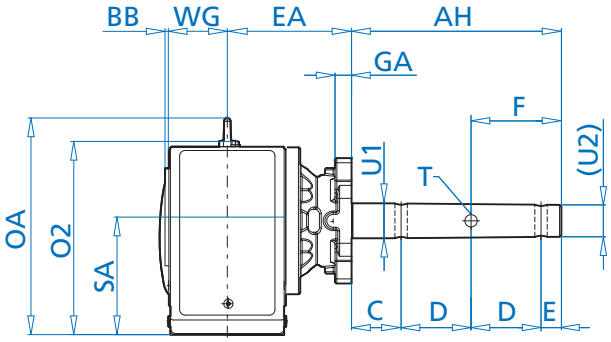


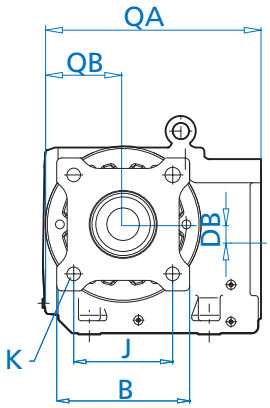


Standard Housing

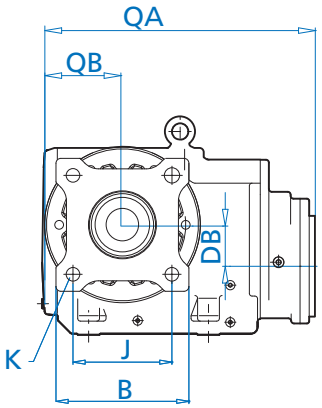


3rd Reduction Housing

## Bevel SCP Dimensions

| Unit | Shaft Dimensions | | | | | | | | Flange Dimensions | | | | Housing Dimensions | | | | | | | | |
|---|---|---|---|---|---|---|---|---|---|---|---|---|---|---|---|---|---|---|---|---|---|
| | U1 | U2 | AH | C | D | E | F | T | B | GA | J | K | BB | DB | EA | OA | O2 | SA | WG | QA | QB |
| SK 9012.1 | 1.500 | 1.41 | 9.00 | 2.125 | 3.00 | 0.875 | 3.875 | 3x17/32 | 5.375 | 0.71 | 4.000 | 0.5625 | 0.12 | 0.39 | 5.55 | 9.09 | 7.76 | 4.41 | 2.80 | 9.90 | 3.32 |
| | 2.000 | 1.91 | 9.00 | 2.125 | 3.00 | 0.875 | 3.875 | 3x21/32 | 7.375 | 0.75 | 5.125 | 0.6875 | 0.12 | 0.39 | 5.925 | 9.09 | 7.76 | 4.41 | 2.80 | 9.90 | 3.32 |
| | 2.4375 | 2.31 | 9.6875 | 2.750 | 3.00 | 0.9375 | 3.9375 | 3x21/32 | 7.375 | 0.75 | 5.625 | 0.6875 | 0.12 | 0.39 | 5.925 | 9.09 | 7.76 | 4.41 | 2.80 | 9.90 | 3.32 |
| SK 9013.1 | 1.500 | 1.41 | 9.00 | 2.125 | 3.00 | 0.875 | 3.875 | 3x17/32 | 5.375 | 0.71 | 4.000 | 0.5625 | 0.12 | 1.57 | 5.55 | 9.09 | 7.76 | 4.41 | 2.80 | 12.18 | 3.32 |
| | 2.000 | 1.91 | 9.00 | 2.125 | 3.00 | 0.875 | 3.875 | 3x21/32 | 7.375 | 0.75 | 5.125 | 0.6875 | 0.12 | 1.57 | 5.925 | 9.09 | 7.76 | 4.41 | 2.80 | 12.18 | 3.32 |
| | 2.4375 | 2.31 | 9.6875 | 2.750 | 3.00 | 0.9375 | 3.9375 | 3x21/32 | 7.375 | 0.75 | 5.625 | 0.6875 | 0.12 | 1.57 | 5.925 | 9.09 | 7.76 | 4.41 | 2.80 | 12.18 | 3.32 |
| SK 9022.1 | 1.500 | 1.41 | 9.00 | 2.125 | 3.00 | 0.875 | 3.875 | 3x17/32 | 5.375 | 0.71 | 4.000 | 0.5625 | 0.16 | 0.55 | 6.14 | 11.00 | 9.65 | 5.63 | 3.39 | 11.47 | 4.03 |
| | 2.000 | 1.91 | 9.00 | 2.125 | 3.00 | 0.875 | 3.875 | 3x21/32 | 7.375 | 0.75 | 5.125 | 0.6875 | 0.16 | 0.55 | 6.515 | 11.00 | 9.65 | 5.63 | 3.39 | 11.47 | 4.03 |
| | 2.4375 | 2.31 | 9.6875 | 2.750 | 3.00 | 0.9375 | 3.9375 | 3x21/32 | 7.375 | 0.75 | 5.625 | 0.6875 | 0.16 | 0.55 | 6.515 | 11.00 | 9.65 | 5.63 | 3.39 | 11.47 | 4.03 |
| SK 9023.1 | 1.500 | 1.41 | 9.00 | 2.125 | 3.00 | 0.875 | 3.875 | 3x17/32 | 5.375 | 0.71 | 4.000 | 0.5625 | 0.16 | 1.73 | 6.14 | 11.00 | 9.65 | 5.63 | 3.39 | 13.75 | 4.03 |
| | 2.000 | 1.91 | 9.00 | 2.125 | 3.00 | 0.875 | 3.875 | 3x21/32 | 7.375 | 0.75 | 5.125 | 0.6875 | 0.16 | 1.73 | 6.515 | 11.00 | 9.65 | 5.63 | 3.39 | 13.75 | 4.03 |
| | 2.4375 | 2.31 | 9.6875 | 2.750 | 3.00 | 0.9375 | 3.9375 | 3x21/32 | 7.375 | 0.75 | 5.625 | 0.6875 | 0.16 | 1.73 | 6.515 | 11.00 | 9.65 | 5.63 | 3.39 | 13.75 | 4.03 |
| SK 9032.1 | 1.500 | 1.41 | 9.00 | 2.125 | 3.00 | 0.875 | 3.875 | 3x17/32 | 5.375 | 0.71 | 4.000 | 0.5625 | 0.20 | 0.94 | 6.69 | 13.15 | 11.75 | 7.24 | 3.94 | 13.11 | 4.96 |
| | 2.000 | 1.91 | 9.00 | 2.125 | 3.00 | 0.875 | 3.875 | 3x21/32 | 7.875 | 0.71 | 5.125 | 0.6875 | 0.20 | 0.94 | 7.065 | 13.15 | 11.75 | 7.24 | 3.94 | 13.11 | 4.96 |
| | 2.4375 | 2.31 | 9.6875 | 2.750 | 3.00 | 0.9375 | 3.9375 | 3x21/32 | 7.875 | 0.71 | 5.625 | 0.6875 | 0.20 | 0.94 | 7.065 | 13.15 | 11.75 | 7.24 | 3.94 | 13.11 | 4.96 |
| | 3.000 | 2.91 | 9.875 | 2.875 | 3.00 | 1.000 | 4.000 | 3x25/32 | 7.875 | 0.71 | 6.000 | 0.8125 | 0.20 | 0.94 | 7.065 | 13.15 | 11.75 | 7.24 | 3.94 | 13.11 | 4.96 |
| SK 9033.1 | 1.500 | 1.41 | 9.00 | 2.125 | 3.00 | 0.875 | 3.875 | 3x17/32 | 5.375 | 0.71 | 4.000 | 0.5625 | 0.20 | 2.91 | 6.69 | 13.15 | 11.75 | 7.24 | 3.94 | 15.49 | 4.96 |
| | 2.000 | 1.91 | 9.00 | 2.125 | 3.00 | 0.875 | 3.875 | 3x21/32 | 7.875 | 0.71 | 5.125 | 0.6875 | 0.20 | 2.91 | 7.065 | 13.15 | 11.75 | 7.24 | 3.94 | 15.49 | 4.96 |
| | 2.4375 | 2.31 | 9.6875 | 2.750 | 3.00 | 0.9375 | 3.9375 | 3x21/32 | 7.875 | 0.71 | 5.625 | 0.6875 | 0.20 | 2.91 | 7.065 | 13.15 | 11.75 | 7.24 | 3.94 | 15.49 | 4.96 |
| | 3.000 | 2.91 | 9.875 | 2.875 | 3.00 | 1.000 | 4.000 | 3x25/32 | 7.875 | 0.71 | 6.000 | 0.8125 | 0.20 | 2.91 | 7.065 | 13.15 | 11.75 | 7.24 | 3.94 | 15.49 | 4.96 |
| SK 9042.1 | 2.000 | 1.91 | 9.00 | 2.125 | 3.00 | 0.875 | 3.875 | 3x21/32 | 9.250 | 0.75 | 5.125 | 0.6875 | 0.20 | 1.42 | 7.905 | 15.71 | 13.97 | 8.54 | 4.53 | 15.81 | 6.06 |
| | 2.4375 | 2.31 | 9.6875 | 2.750 | 3.00 | 0.9375 | 3.9375 | 3x21/32 | 9.250 | 0.75 | 5.625 | 0.6875 | 0.20 | 1.42 | 7.905 | 15.71 | 13.97 | 8.54 | 4.53 | 15.81 | 6.06 |
| | 3.000 | 2.91 | 9.875 | 2.875 | 3.00 | 1.000 | 4.000 | 3x25/32 | 9.250 | 0.75 | 6.000 | 0.8125 | 0.20 | 1.42 | 7.905 | 15.71 | 13.97 | 8.54 | 4.53 | 15.81 | 6.06 |
| | 3.4375 | 3.31 | 13.125 | 3.875 | 4.00 | 1.250 | 5.125 | 3x29/32 | 9.250 | 0.75 | 6.750 | 0.8125 | 0.20 | 1.42 | 7.905 | 15.71 | 13.97 | 8.54 | 4.53 | 15.81 | 6.06 |
| SK 9043.1 | 2.000 | 1.91 | 9.00 | 2.125 | 3.00 | 0.875 | 3.875 | 3x21/32 | 9.250 | 0.75 | 5.125 | 0.6875 | 0.20 | 3.82 | 7.905 | 15.71 | 13.97 | 8.54 | 4.53 | 18.55 | 6.06 |
| | 2.4375 | 2.31 | 9.6875 | 2.750 | 3.00 | 0.9375 | 3.9375 | 3x21/32 | 9.250 | 0.75 | 5.625 | 0.6875 | 0.20 | 3.82 | 7.905 | 15.71 | 13.97 | 8.54 | 4.53 | 18.55 | 6.06 |
| | 3.000 | 2.91 | 9.875 | 2.875 | 3.00 | 1.000 | 4.000 | 3x25/32 | 9.250 | 0.75 | 6.000 | 0.8125 | 0.20 | 3.82 | 7.905 | 15.71 | 13.97 | 8.54 | 4.53 | 18.55 | 6.06 |
| | 3.4375 | 3.31 | 13.125 | 3.875 | 4.00 | 1.250 | 5.125 | 3x29/32 | 9.250 | 0.75 | 6.750 | 0.8125 | 0.20 | 3.82 | 7.905 | 15.71 | 13.97 | 8.54 | 4.53 | 18.55 | 6.06 |
| SK 9052.1 | 3.000 | 2.91 | 9.875 | 2.875 | 3.00 | 1.000 | 4.000 | 3x25/32 | 9.250 | 0.75 | 6.000 | 0.8125 | 0.20 | 1.61 | 9.085 | 18.82 | 16.79 | 10.31 | 5.71 | 19.15 | 7.32 |
| | 3.4375 | 3.31 | 13.125 | 3.875 | 4.00 | 1.250 | 5.125 | 3x29/32 | 9.250 | 0.75 | 6.750 | 0.8125 | 0.20 | 1.61 | 9.085 | 18.82 | 16.79 | 10.31 | 5.71 | 19.15 | 7.32 |
| SK 9053.1 | 3.000 | 2.91 | 9.875 | 2.875 | 3.00 | 1.000 | 4.000 | 3x25/32 | 9.250 | 0.75 | 6.000 | 0.8125 | 0.20 | 4.61 | 9.085 | 18.82 | 16.79 | 10.31 | 5.71 | 21.89 | 7.32 |
| | 3.4375 | 3.31 | 13.125 | 3.875 | 4.00 | 1.250 | 5.125 | 3x29/32 | 9.250 | 0.75 | 6.750 | 0.8125 | 0.20 | 4.61 | 9.085 | 18.82 | 16.79 | 10.31 | 5.71 | 21.89 | 7.32 |

## Motors


- Order Form
- NEMA C-Face Motors
- Engineering Information
- Options
- Environmental Options
- AC Vector Drive Options
- SK 300E Trio AC Vector Drive
- Additional Options
- Ratings Tables
- Dimensions
- Connection Diagrams




NORD DRIVESYSTEMS

www.nord.com

INVERTER DUTY MOTOR



| Motor Type | Power Pn | | Nn Full-load | In Full-Load Current 230V[a] | In Full-Load Current 460V[a] |
|---|---|---|---|---|---|
| | [hp] | [kW] | [rpm] | [A] | [A] |
| 63S/4 | 0.16 | 0.12 | 1700 | 0.88 | 0.44 |
| 63L/4 | 0.25 | 0.18 | 1680 | 1.12 | 0.56 |
| 71S/4 | 0.33 | 0.25 | 1710 | 1.56 | 0.78 |
| 71L/4 | 0.5 | 0.37 | 1720 | 1.90 | 0.95 |
| 80S/4 | 0.75 | 0.55 | 1710 | 2.70 | 1.35 |
| 80L/4 | 1 | 0.75 | 1650 | 3.66 | 1.83 |
| 90S/4 | 1.5 | 1.1 | 1660 | 4.84 | 2.42 |
| 90L/4 | 2 | 1.5 | 1660 | 6.34 | 3.17 |
| 100L/4 | 3 | 2.2 | 1705 | 9.0 | 4.50 |
| 100LA/4 | 5 | 3.7 | 1725 | 15.2 | 7.62 |
| 132S/4 | 7.5 | 5.5 | 1735 | 19.8 | 9.9 |
| 132M/4 | 10 | 7.5 | 1735 | 25.8 | 12.9 |
| 160M/4 | 15 | 11 | 1770 | 38.4 | 19.2 |



# Motor Order Form



| | Frame | Size | Poles | Motor Options | Brake Size | Brake Options |
|---|---|---|---|---|---|---|
| **SK** | | | | | | |

| Frame | Size | Poles |
|---|---|---|
| 63 | S | 4 |
| 71 | SH | 2 |
| 80 | M | 6 |
| 90 | MH | 4-2 |
| 100 | MX | 8-2 |
| 112 | L | 8-4 |
| 132 | LA | 12-2 |
| | LH | Other |
| | LX | |

**Paint**

- ❍ Unpainted Aluminum Alloy
- ❍ Stainless Steel Paint
- ❍ NSD+ (gray)
- ❍ NSD+W (white)
- ❍ NSD-X3 (gray)
- ❍ NSD-X3W (white)
- ❍ Special _____

**Electrical Motor Options**

- ❒ **H** - Energy Efficient Motor
- ❒ **TW** - Thermostat
- ❒ **TF** - Thermistor
- ❒ **SH** - Space Heater (select voltage)
  - ❍ 110 Volt ❍ 230 Volt ❍ 460 Volt
- ❒ **ISO** H - Class H insulation
- ❒ **WU** - High Resistance Rotor
- ❒ **4-2** - 2-Speed, 4/2 Pole, 1800/3600rpm
- ❒ **8-2** - 2-Speed, 8/2 Pole, 900/3600rpm
- ❒ **ECR** - Single Phase Motor

**Environmental Options**

- ❒ **NSD+** - Nord Severe Duty Paint
- ❒ **NSDx3** - Nord Extreme Duty Paint
- ❒ **RD** - Canopy Drip Cover
- ❒ **RDD** - Double Fan Cover
- ❒ **KB** - Condensation Drain Holes (plugged)
- ❒ **KBO** - Condensation Drain Holes (open)
- ❒ **IP66** - IP66 Enclosure Protection
- ❒ **KKV** - Terminal Box Sealed with Resin
- ❒ **AICM** - Additional Insulation
- ❒ **EP** - Epoxy Dipped Windings

**AC Vector Drive Related Options**

- ❒ **F** - Blower Fan (200-575V 1 & 3 Phase)
- ❒ **FC** - Blower Cooling Fan (115V, 1 Phase)
- ❒ **IG__** - Incremental Encoder
- ❒ **IG__P** - Incremental Encoder with Plug
- ❒ **AG** - Absolute Encoder

**Additional Motor Options**

- ❒ **OL** - Totally Enclosed Non-Ventilated (TENV)
- ❒ **OL/H** - (TENV) Without Fan Cover
- ❒ **WE** - Second Shaft Extension (Fan Side)
- ❒ **HR** - Hand Wheel
- ❒ **Z** - High Inertia Cast Iron Fan
- ❒ **RLS** - Motor Backstop (rotation viewing fan)
  - ❍ Clockwise ❍ Counter-Clockwise
- ❒ **EKK** - Small Terminal Box (not UL approved)
- ❒ **MS** - Quick Power Plug Connector

| Brake Size |
|---|
| BRE 5 |
| BRE 10 |
| BRE 20 |
| BRE 40 |
| BRE 60 |
| BRE 100 |
| BRE 150 |

- ❒ **HL** - Hand Release Lever
- ❒ **FHL** - Locking Hand Release Lever
- ❒ **HLH** - Hand Release Lever with Hole
- ❒ **RG** - Corrosion Protected Brake
- ❒ **SR** - Dust and Corrosion Protected Brake
- ❒ **ADJ_____Nm** - Adjust Brake Torque
- ❒ **BIP66** - IP66 Brake Enclosure
- ❒ **MIK** - Micro-switch
- ❒ **BSH** - Brake Heating/Bifilar Coil
- ❒ **NRB1** - Quiet Brake Release
- ❒ **NRB2** - Quiet Brake Motor Operation
- ❒ **FBR** - Brass Foil
- ❒ **DBR** - Double Brake
- ❒ **G...P** - High Performance Rectifier
- ❒ **G...V** - Sealed Rectifier
- ❒ **IR** - Current Sensing Relay

**Rectifier Selection**

**Rectifier Wiring**

- ❍ Across the line (from motor terminal box)
- ❍ Separate power source (frequency AC vector drive, soft starter)

**Brake Supply Voltage**

- ❍ 24 VDC
- ❍ 115 VAC
- ❍ 200 VAC
- ❍ 230 VAC
- ❍ 400 VAC
- ❍ 460 VAC
- ❍ 500 VAC
- ❍ 575 VAC
- ❍ Other _____

**Braking Method**

- ❍ Method 10
- ❍ Method 15
- ❍ Method 20
- ❍ Method 25
- ❍ Method 30
- ❍ Method 35
- ❍ Method 40
- ❍ Method 45
- ❍ Method 50
- ❍ Method 55

**Hand Release Position**

- ❍ HL1
- ❍ HL2
- ❍ HL3
- ❍ HL4

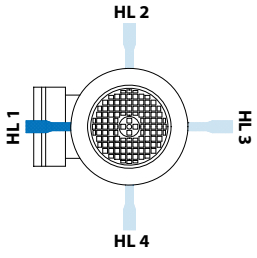


**Mounting**

- ❍ Integral to gearbox
- ❍ NEMA C-Face
- ❍ IEC B5 Mount

**Voltage & Frequency**

- ❍ 230/460V-60Hz
- ❍ 575V-60Hz
- ❍ 208V-60Hz
- ❍ 400V-50Hz
- ❍ 115/230V, 60Hz-1-ph.
- ❍ Other

**Terminal Box Pos.**

- ❍ TB1
- ❍ TB2
- ❍ TB3
- ❍ TB4

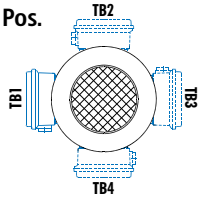


Mtg. Pos. M1 Shown

**Conduit Entry Loc.**

- ❍ CE I *
- ❍ CE II
- ❍ CE III *
- ❍ CE IV

*Brakemotor

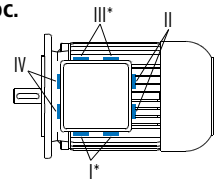


Mtg. Pos. M1 Shown

MOTORS



## Motor Options & Construction

NORD motors are stocked in one of two ways. The first method is to stock a complete motor that is ready to be assembled to a gear reducer or shipped as a stand alone motor. The second method, the motor is assembled from component parts. The Mod next to a motor option designates that the option can be added to a complete motor by simple modification. The Build next to a motor option indicates that the motor will need to be built from component parts in order to incorporate the motor option.

**Motor Options**

| Abbreviation | Description | Mod | Build | Page |
|---|---|---|---|---|
| **AG** | Absolute Encoder | | ✓ | 137 |
| **AICM** | Additional Insulation | | ✓ | 131 |
| **ECR** | Single Phase Motors, 60Hz | | ✓ | 130 |
| **EKK** | Small Terminal Box | ✓ | | 134 |
| **EP** | Epoxy Dipped Windings | | ✓ | 131 |
| **F** | Blower Cooling Fan | ✓ | | 135 |
| **FC** | Blower Cooling Fan | ✓ | | 135 |
| **HR** | Hand Wheel | | ✓ | 132 |
| **IG...P** | Incremental Encoder | | ✓ | 136 |
| **ISO H** | Class H Insulation | | ✓ | 130 |
| **KB** | Plugged Condensation Drain Holes | | ✓ | 131 |
| **KBO** | Open Condensation Drain Holes | | ✓ | 131 |
| **KKV** | Terminal Box Sealed with Resin | ✓ | | 131 |
| **MS** | Quick Power Plug Connector | ✓ | | 134 |
| **OL** | Totally Enclosed Non-Ventilated | ✓ | | 132 |
| **OL/H** | Totally Enclosed Non Ventilated without Fan Cover | | ✓ | 132 |
| **RD** | Canopy Drip Cover | ✓ | | 131 |
| **RDD** | Double Fan Cover | ✓ | | 131 |
| **RLS** | Motor Backstop | | ✓ | 133 |
| **SH** | Space Heater | | ✓ | 130 |
| **TF** | Thermistor | | ✓ | 129 |
| **TW** | Thermostat | | ✓ | 129 |
| **WE** | 2nd Shaft Extension on Fan Side | | ✓ | 132 |
| **WU** | High Resistance Rotor | | ✓ | 130 |
| **Z** | High Inertia Cast Iron Fan | | ✓ | 133 |
| **-** | IP65 Enclosure Protection | ✓ | | 131 |
| **-** | IP66 Enclosure Protection | ✓ | | 131 |
| **-** | Paint Coatings | ✓ | | 18 |

# Stocked NEMA C-Face Motors



## NEMA C-Face Motors

The National Electrical Manufacturers Association (NEMA) provides standardization of electrical equipment, enabling customers to select from a range of safe, effective and compatible products. A NEMA C-face motor has a machined face with a pilot and threaded holes for direct mounting onto a NORD reducer or other industrial equipment. NORD offers NEMA C-face motors stocked as finished goods and will also assemble NEMA C-face motors to your specifications. For ratings, see page 142.

## Stocked NEMA C-Face Motors

Stocked NEMA C-face motors are offered in standard efficiency, energy efficient and in a brakemotor design. They are available in 230/460V-60Hz and 575V-60Hz up to 10 hp. Part numbers for stocked NEMA C-face motors are in the table below.

## Assembled per Order NEMA C-Face Motors

NORD will assemble a NEMA C-face motor to your specifications based upon the available motor options from this catalog.

| Motor Type | Power | Part Number 230/460V-60Hz | Part Number 575V-60Hz | Weight [lb] |
|---|---|---|---|---|
| **High Performance Motors** | | | | |
| 63S/4-56C | 1/6 hp | 31110012 | 31110013 | 7.9 |
| 63L/4-56C | 1/4 hp | 31610012 | 31610013 | 9.3 |
| 71S/4-56C | 1/3 hp | 32110012 | 32110013 | 11.9 |
| 71L/4-56C | 1/2 hp | 32610012 | 32610013 | 13.9 |
| 80S/4-56C | 3/4 hp | 33110012 | 33110013 | 17.6 |
| 80L/4-56C | 1 hp | 33610022 | n/a | 19.8 |
| 80L/4-143TC | 1 hp | 33610012 | n/a | 19.8 |
| 90S/4-145TC | 1.5 hp | 34110012 | n/a | 26.5 |
| 90L/4-145TC | 2 hp | 34610012 | n/a | 30.9 |
| 100L/4-182TC | 3 hp | 35110012 | n/a | 39.7 |
| 100LA/4-184TC | 5 hp | 35610012 | n/a | 46.3 |
| 132S/4-213TC | 7.5 hp | 36410012 | n/a | 97.0 |
| 132M/4-215TC | 10 hp | 36710012 | n/a | 121.3 |
| 160M/4-254TC TW | 15 hp | 37310012 | n/a | 160.9 |
| 160L/4-256TC TW | 20 hp | 37510012 | n/a | 178.6 |
| 180MX/4-284TC TW | 25hp | 37610012 | n/a | 276.3 |
| 180LX/4-286TC TW | 30hp | 37810012 | n/a | 307.2 |
| **Energy Efficient Motors** | | | | |
| 80LH/4-56C | 1 hp | 33610094 | 33610095 | 19.8 |
| 80LH/4-143TC | 1 hp | 33610092 | 33610093 | 19.8 |
| 90SH/4-145TC | 1.5 hp | 34110092 | 34110093 | 26.5 |
| 90LH/4-145TC | 2 hp | 34610092 | 34610093 | 30.9 |
| 100LH/4-182TC | 3 hp | 35610092 | 35610093 | 39.7 |
| 112MH/4-184TC | 5 hp | 36110082 | 36110083 | 83.6 |
| 132SH/4-213TC | 7.5 hp | 36410092 | 36410093 | 97.0 |
| 132MH/4-215TC | 10 hp | 36710092 | 36710093 | 121.3 |
| 160MH/4-254TC TW | 15 hp | 37310092 | 37310093 | 160.9 |
| 160LH/4-256TC TW | 20 hp | 37510092 | 37510093 | 198.4 |



## Standards

All motors are in accordance with existing standards and regulations:

### NEMA MG 1 - Motors and Generators:

- Electrical performance
- Motors for operation on variable AC vector drive

### UL 1004 – Electric Motors

### CSA C22.2 No. 100-04 - Motors and Generators:

### Industrial Products
### IEC 60034 parts 1, 5, 6, 8, 9, 11 and 14.

- Part 1 – General rules
- Part 5 – Types of enclosures
- Part 6 – Types of cooling
- Part 8 – Terminal lead designations and sense of rotation
- Part 9 – Noise limits
- Part 11 – Integrated thermal protection
- Part 14 – Mechanical vibration

### IEC 60038 – Standard voltages

| | |
|---|---|
| CE | NORD motors carry the CE mark in accordance with the Low Voltage Directive and, if installed properly, the Electromagnetic Compatibility Directive (EMC). The CE mark is required for installation in European Union (EU) states. |
| ® | Many NORD motors from frame size 63 to 315 are an Underwriters Laboratories Recognized component per UL standard 1004.<br>Frames 63-132 File number E191510<br>Frames 160+ File number E227215 |
| C SP® US | The Canadian Standards Association CUS mark indicates that CSA has tested and approved NORD motors according to both US and Canadian standards. It is equivalent to the Underwriters Laboratories RU recognition mark (UL standard 1004) and the CSA mark according to CSA Standard C22.2 No. 100-04<br>Frames 63-132 File number LR112560<br>Frame 160+ File number LR13494 |
| ee | NORD Energy Efficient motors up to frame 160 have been evaluated by the United States Department of Energy and recieved a Certificate of Compliance to certify the efficiency ratings. The certificate of compliance is CC 092B. |
| CSA E | NORD energy efficient motors carry the CSA energy efficiency verification mark. This mark ensures that CSA has verified that NORD motors are designed and manufactured to meet energy efficiency requirements number EEV112560. |

## EPAct – US Energy Efficiency

The Energy Policy Act of 1992 (EPAct) covers efficiency levels of general purpose industrial electric motors and became effective October 24, 1997. The basic goal of the law is to promote energy conservation. This law mandated energy efficiency requirements for many devices including some types of industrial electric motors. The efficiency levels are defined in NEMA MG-1 table 12-10. The regulations to implement this law have been developed by the Department of Energy (DOE).

The law covers minimum efficiency levels for general purpose motors including:

- Single-speed, polyphase NEMA T frame (and IEC equivalents)
- 1 to 200 hp (0.75 to 150 kW)
- 1200, 1800 or 3600 rpm
- NEMA design A and B
- Continuous rated
- Foot-mounted
- 230/460V-60Hz

The law excludes the following motor types from minimum efficiency levels:

- Integral gearmotors
- Brake motors

The NORD "H" line of energy efficient motors are designed to meet the efficiency levels defined by EPAct. NORD offers these motors as an option in combination with our high efficiency gear units for superior energy savings.

Efficiency levels for enclosed 4-pole motors per EPAct and NEMA MG 1 - in percent efficiency [%]

### Efficiency for EPACT & NEMA MG1 4-Pole Motors

| hp | 1 | 1.5 | 2 | 3 | 5 | 7.5 | 10 |
|---|---|---|---|---|---|---|---|
| kW | 0.75 | 1.1 | 1.5 | 2.2 | 3.7 | 5.5 | 7.5 |
| Eff% | 82.5 | 84.0 | 84.0 | 87.5 | 87.5 | 89.5 | 89.5 |

| hp | 15 | 20 | 25 | 30 | 40 | 50 | 60 |
|---|---|---|---|---|---|---|---|
| kW | 11 | 15 | 18.5 | 22 | 30 | 37 | 45 |
| Eff% | 91.0 | 91.0 | 92.4 | 92.4 | 93.0 | 93.0 | 93.6 |

| hp | 75 | 100 | 125 | 150 | 200 |
|---|---|---|---|---|---|
| kW | 55 | 75 | 90 | 110 | 150 |
| Eff% | 94.1 | 94.5 | 94.5 | 95.0 | 95.0 |



## Canadian Energy Efficiency

The Energy Efficiency Act and the Energy Efficiency Regulations establish minimum energy performance levels for electric motors from 1 to 200 HP (0.75 to 150 kW) for sale or lease in Canada. The Energy Efficiency Regulations were developed by Natural Resources Canada (NRCan).

Certain National Electrical Manufacturers Association (NEMA) motors have been regulated since Feb. 3,1995. Effective Nov. 27, 1997, the Energy Efficiency Regulations were amended to include International Electrotechnical Commission (IEC) motors. This amendment also increased the minimum energy performance levels that motors must meet. For explosion-proof motors and motors contained within an integral gear assembly, the effective date of the Regulations is Nov. 27, 1999.

The regulations mandate that motors carry an energy efficiency verification mark that is authorized by Standards Council of Canada (SCC) accredited certification organization such as Canadian Standards Association (CSA).

## CEMEP Agreement
## European Efficiency Categories

CEMEP, the association of European Electric Motor Manufacturers, has reached an agreement with the European Commission's General Directorate for Energy so that in the future all 2 and 4-pole low voltage motors from 1 to 100kW will be categorized on the basis of their efficiency. The classification will be displayed on the nameplate and in catalogs. The following categories will be used: EFF1, EFF2 and EFF3.

| | |
|---|---|
| EFF 1 | EFF1-indicates a high efficiency factor. |
| EFF 2 | EFF2-indicates an improved efficiency factor. |
| EFF 3 | EFF3-Indicates a standard efficiency motor. |

NORD supplies both motors of EFF1 and EFF2 categories in its 4-pole motors. The category EFF2 motors are the standard efficiency motors and the EFF1 motors are the "H" line of energy efficient motors.

In the future NORD will mark all of its 50-Hz motor with the CEMEP efficiency symbols.

| kW | 1.1 | 1.5 | 2.2 | 3 | 4 | 5.5 |
|---|---|---|---|---|---|---|
| hp | 1.5 | 2 | 3 | 4 | 5.4 | 7.5 |
| EFF1 [%] | 83.3 | 85.0 | 86.4 | 87.4 | 88.3 | 89.2 |
| EFF2 [%] | 76.2 | 78.5 | 81.0 | 82.6 | 84.2 | 85.7 |
| EFF3 [%] | <76.2 | <78.5 | <81.0 | <82.6 | <84.2 | <85.7 |

| kW | 7.5 | 11 | 15 | 18.5 | 22 | 30 |
|---|---|---|---|---|---|---|
| hp | 10 | 15 | 20 | 25 | 30 | 40 |
| EFF1 [%] | 90.1 | 91.0 | 91.8 | 92.2 | 92.6 | 93.2 |
| EFF2 [%] | 87.0 | 88.4 | 89.4 | 90.0 | 90.5 | 91.4 |
| EFF3 [%] | <87.0 | <88.4 | <89.4 | <90.0 | <90.5 | <91.4 |

| kW | 37 | 45 | 55 | 75 | 90 |
|---|---|---|---|---|---|
| hp | 50 | 60 | 75 | 100 | 120 |
| EFF1 [%] | 93.6 | 93.9 | 94.2 | 94.7 | 95.0 |
| EFF2 [%] | 92.0 | 92.5 | 93.0 | 93.6 | 93.9 |
| EFF3 [%] | <92.0 | <92.5 | <93.0 | <93.6 | <93.9 |

INVERTER DUTY MOTOR

## Inverter/Vector Duty

NORD single–speed motors are Inverter/Vector Duty. The construction of the NORD motors insulating system takes into account the non-sinusoidal wave forms produced by variable frequency drives. NORD uses high grade insulating components and extra first turn protection as well as double coated wire to ensure long service life when connected to AC vector drives. NORD motors can produce full torque at zero speed if properly sized, selected and controlled.



## Voltage and Frequency

NORD motors are available in a wide range of voltages and frequencies for use in North America and around the world. For a more detailed list of choices see page 128.

NORD motors designed for North American voltages (208V, 230V, 460V and 575V) conform to the voltage and frequency tolerances in NEMA MG-1. The voltage tolerance is +/-10%, the frequency tolerance is +/- 5% or a combined voltage and frequency tolerance of +/-10%.

## Low Inertia

The motor inertia in all NORD motors is extremely low which allows for a much more dynamic motor control capability. Low motor inertia is a significant advantage when using NORD motors with AC vector drives or vector controllers. NORD motors can cycle more frequently and require less mechanical energy to start than standard NEMA frame motors. This leaves more energy to start the load.

## High Torque

The NORD motors produce higher starting torque than required by NEMA standards. This is achieved through improved motor winding, rotor design and construction.

## Non-Sparking Fan

The standard NORD motor fan is a non-sparking design. The fan will also provide proper airflow in either direction of rotation.

## Terminal Block

Each NORD motor uses a terminal block, which is a superior method of wire termination when compared to pigtail leads. A terminal block ensures long-term reliability of the power connections.

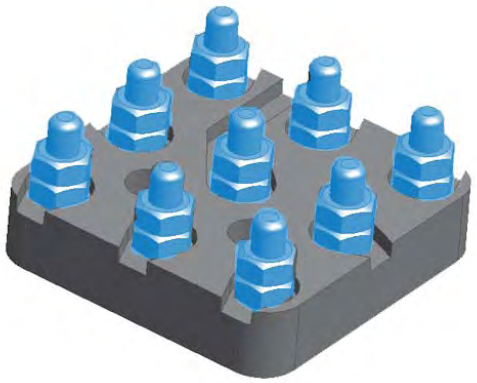

## Tropical Protection (Anti-fungal)

As a standard the NORD motor insulation system is tropically protected. The insulating and construction components are inorganic materials that resist fungal growth.

## Insulation Class

NORD motors are constructed with a thermal class F insulating system. The motors are also designed for a class B temperature rise (80°C). The use of class F insulation with a class B temperature rise provides increased operating life. Motors constructed with class H insulation are also available as an option.

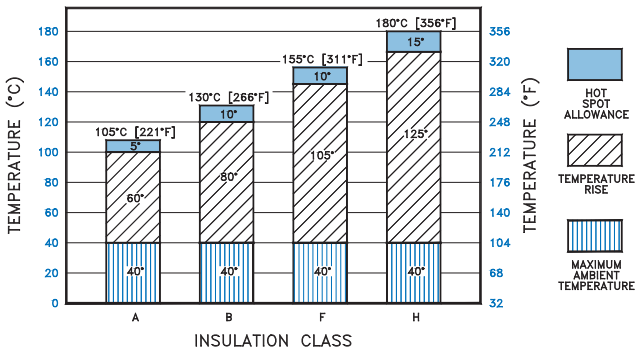


## Insulation System

NORD motor insulation system is designed to provide a superior degree of protection. NORD utilizes the following insulation components:

- Magnet wire – double coated insulation
- Varnish dip impregnation
- Slot liners
- Phase paper
- Phase separators
- Top sticks
- Connecting wire sleeves

Other motor manufacturers eliminate some of these insulating components for cost reduction.

## Inverter/Vector Duty – Voltage Spikes

All NORD motors are constructed with an insulating system designed to withstand the repeated voltage spikes generated by modern AC vector drives. The insulation system withstands the ratings in conformance with NEMA MG 1-2006 Section 31.4.4.2 Voltage Spikes.

$V_{peak} = 3.1 \times V_{rated}$ with a Rise time ≤ 0.1µs.



## Ambient Temperature

NORD motors are designed to operate with a maximum ambient temperature of 40°C (104°F). If the motor's operating environment exceeds 40°C, the motor's nominal power $P_n$ either needs to be de-rated (see table below) or use upgraded insulation.

| Ambient temp [°F] | 113 | 122 | 131 | 140 |
|---|---|---|---|---|
| Ambient temp [°C] | 45 | 50 | 55 | 60 |
| De-rate factor | 0.96 | 0.92 | 0.87 | 0.82 |

**Motor Rated Power = [$P_n$ x De-rate factor]**

## Elevation

NORD motors are designed to operate at an elevation of up to 3300 ft (1000 m) above sea level. At higher elevations the air is thinner resulting in less cooling capacity. If the motor's nominal power $P_n$ installation elevation exceeds 3300 ft (1000 m), the motor either needs to be de-rated (see table below) or requires upgraded insulation.

| Altitude [ft] | 5000 | 6500 | 8200 | 10000 | 11500 | 13000 |
|---|---|---|---|---|---|---|
| Altitude [m] | 1500 | 2000 | 2500 | 3000 | 3500 | 4000 |
| De-rate Factor | 0.97 | 0.94 | 0.90 | 0.86 | 0.83 | 0.80 |

**Motor Rated Power = [$P_n$ x De-rate factor]**

## Service Factor

Motors rated 230/460V-60Hz and 332/575V-60Hz have a service factor of 1.15. Almost all other motors have a service factor of 1.1 or 1.0.

## Duty Classes

The following duty types are defined in IEC 60034-1.

| Duty Type | Explanation Excerpts |
|---|---|
| S1 | Continuous operation at a constant load, the motor reaches thermal equilibrium |
| S2 | Short-time operation at a constant load for a given time followed by a time of rest until the motor is completely cooled down to ambient temperature.<br>Example: S2-10 minutes<br>Recommended values for determination: 10, 30 min. |
| S3 | Intermittent operation sequential, identical run and rest cycles with constant load. Temperature equilibrium is never reached. Starting current has little effect on temperature rise. The cyclic duration factor (cdf) indicates the portion of operation time in relation to a complete duty cycle. The typical duty cycle time is 10 minutes, unless otherwise specified.<br>Example: S3-40%<br>Recommended values for determination: 25, 40, 60% |
| S6 | Continuous operation with intermittent load sequential, identical cycles of running with constant load and running with no load. No rest periods.<br>Example: S6-40%<br>Recommended values for determination: 25, 40, 60% |

## Power Increasing Factor for Short-term & Intermittent Operation

Motor ratings in this catalog are based on continuous duty operation (S1). If a motor is designed for S1 duty, but is to be operated for short-time or intermittent operation it can be subjected to higher loads. The available motor power can be raised above the motor rated power by the "increasing factor" in the table below.

| Duty Type | | | Increasing factor |
|---|---|---|---|
| S2 | Operating time | 10 min | 1.40 |
| | | 30 min | 1.15 |
| S3 | Cyclic duration factor (cdf) | 25% | 1.33 |
| | | 40% | 1.18 |
| | | 60% | 1.08 |
| S6 | Cyclic duration factor (cdf) | 25% | 1.45 |
| | | 40% | 1.35 |
| | | 60% | 1.15 |

**Motor Rated Power = [$P_n$ x Increasing factor]**



## Enclosure

The NORD standard motors are provided with Totally Enclosed Fan-Cooled (TEFC) with an IP55 enclosure rating. Other enclosures are available, including Totally Enclosed Non-Ventilated (TENV), Totally Enclosed Blower-Cooled (TEBC), and IP66.

The motor integral cooling fan provides proper air flow in either direction of rotation. The IEC cooling classification is IC 411 according to IEC 60034-6.

## IP Enclosures per IEC 60034-5 - Simplified

| | 1st digit Foreign body protection | | 2nd digit Water protection |
|---|---|---|---|
| 0 | No protection | 0 | No Protection |
| 1 | Protected against solid objects 50mm (2 in) in diameter and larger | 1 | Protected against dripping water |
| 2 | Protected against solid objects 12 mm (1/2 in) in diameter and larger | 2 | Protected against dripping water up to a 15 degree angle |
| 3 | Protected against solid objects 2.5 mm (0.1 in) in diameter and larger | 3 | Protection against sprayed water |
| 4 | Protected against solid objects 1 mm (0.04 in) in diameter and larger | 4 | Protection against splashed water |
| 5 | Protected against dust | 5 | Protection against water jets |
| 6 | Dust tight | 6 | Protection against high pressure water jets |
| 7 | -- | 7 | Protection against intermittent submersion in water |
| 8 | -- | 8 | Protection against continuous submersion in water |

## Protective Features

All NORD Motors and Speed Reducers are constructed to provide a high degree of protection against wet and severe environments. NORD Motors and Speed Reducers are extremely well sealed against moisture ingress and use corrosion and moisture resistant components. NORD has recently made many enhancements in the motor and gear units standard construction to provide improved environmental protection. Many of the standard protection features of the NORD units are only available at an additional cost from other motor and gear drive suppliers. NORD designs all gearmotors, speed reducers and motors for installation in harsh industrial, commercial and municipal installation environments.

## Standard Construction

- Shaft lip seals on both ends of the motor shafts
- Stator to endbell connections sealed to exclude moisture
- Double coated magnetic wire insulation
- Inverter/vector duty insulation system conforms to NEMA MG1-1998, section 31.4.4.2 voltage spikes
- Moisture resistant varnish dipped windings improved varnish materials
- Inorganic insulating components for tropical protection
- Moisture resistant motor windings
- Conduit box sealed with gaskets
- Corrosion resistant alloy materials
- Threaded cable entry holes

### Motors for Indoor Operation - Option Codes

| | Dry Conditions | Wet or Humid Conditions |
|---|---|---|
| **Ambient Temperature Fluctuation** | – | KB, SH |
| **Paint** | – | NSD+ |
| **Vertical Motor Mount** 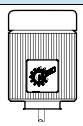 | RD | RDD |

### Motors for Outdoor Operation - Option Codes

| | Sheltered from the Elements | Exposed to the Elements |
|---|---|---|
| **Ambient Temperature Fluctuation** | KB, SH | KB, SH, KKV |
| **Paint** | NSD+ | NSDx3 |
| **Vertical Motor Mount** 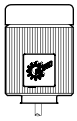 | RD | RDD |

### Option Code Key

| | | |
|---|---|---|
| KB | Condensation Drain Holes - Plugged | Page 131 |
| SH | Space Heater | Page 130 |
| KKV | Terminal Box Sealed with Resin | Page 131 |
| NSD+ | Nord Severe Duty Paint | Page 18 |
| NSDx3 | Nord Severe Extreme Duty X3 Paint | Page 18 |
| RD | Canopy Drip Cover | Page 131 |
| RDD | Double Fan Cover | Page 131 |

# General Options



## Voltage and Frequency

NORD motors are available in a number of voltages and frequencies. The standard voltages are commonly available. Optional voltages can be provided, but may include an increase in price and additional lead time. It also may be possible to provide motors with special voltages and frequency operation points.

### Standard Voltages

| Single speed motors | Two speed motors |
|---|---|
| 230/460V-60Hz (up to 30 hp) | 460V-60Hz |
| 460V-60Hz (40 hp and larger) | 230V-60Hz |
| 575V-60Hz | 575V-60Hz |
| 400V-50Hz | 400V-50Hz |

### Optional Voltages

| Single speed motors | Two speed motors |
|---|---|
| 208V-60Hz<br>(up to 10 hp, not available in energy efficient design) | Other voltages & frequencies available upon request |
| 380V-50Hz | |
| 415V-50Hz | |
| 380V-60Hz | |
| Other voltages & frequencies available upon request | |

## Poles / speeds

NORD offers a variety of single speed and two speed motors in addition to the standard 4 pole motor. NORD single speed motors are inverter/vector duty rated, however, it is not recommended to run a NORD two speed motor with an AC vector drive.

| Number of Poles | Synchronous Speed at 60Hz | Synchronous Speed at 50Hz | Notes: |
|---|---|---|---|
| **Single Speed Motors** | | | |
| **4** | 1800 rpm | 1500 rpm | – |
| **2** | 3600 rpm | 3000 rpm | – |
| **6** | 1200 rpm | 1000 rpm | – |
| **Two Speed Motors** | | | |
| **4-2** | 1800/3600 rpm | 1500/3000 rpm | Single winding |
| **8-2** | 900/3600 rpm | 750/3000 rpm | Two winding |
| **8-4** | 900/1800 rpm | 750/1500 rpm | Single winding |

Other speeds available upon request.

## US Canadian Standard (CUS)

CUS motor construction defines that NORD motors are constructed in accordance to UL 1004 (electric motors) and CSA C22.2 No. 100-04 (motors and generators) guidelines. This option is standard for 208, 230, 460, and 575 Volt operation at 60 Hz.

Motors nameplated with the CUS option will be marked and indicating that the Underwriters Laboratories and CSA have tested and approved NORD motors according to both US and Canadian standards.



## Motor Protection

Selecting the appropriate motor protective system is a key factor in reliable motor operation. There are two common classes of motor protection; current based and motor temperature based. Electrical installation codes require at least two types of protection in the motors circuit, both of which are normally current based. First is short-circuit protection normally accomplished by fuses or circuit breakers. Second is "motor overload protection" this is normally a device called a "motor overload" or a "heater." Current based protection is effective in some conditions. NORD can provide two different types of motor temperature based protection, a PTC thermistor (TF) or a bi-metallic thermostat (TW). Temperature based protection is more effective motor protection in many situations, see the table below.

| ⬆ = Good protection<br>⬌= Limited protection<br>⬇ = No protection | Fuses | Motor Overloads | PTC Thermistor (TF) | Bi-metallic Switch (TW) |
|---|---|---|---|---|
| Over current up to 200% | ⬇ | ⬆ | ⬆ | ⬆ |
| High inertia starting | ⬇ | ⬌ | ⬆ | ⬌ |
| Frequent motor starts | ⬇ | ⬌ | ⬆ | ⬆ |
| Stalling | ⬌ | ⬌ | ⬌ | ⬌ |
| Single phasing | ⬇ | ⬌ | ⬆ | ⬆ |
| Supply voltage deviations | ⬇ | ⬆ | ⬆ | ⬆ |
| Supply frequency deviations | ⬇ | ⬆ | ⬆ | ⬆ |
| Inadequate motor cooling | ⬇ | ⬇ | ⬆ | ⬆ |
| Bearing Damage | ⬇ | ⬇ | ⬆ | ⬆ |

## Thermostat (TW)

Build

Three bimetallic switches are connected in series in the motor windings, one per motor phase. Upon reaching the limit temperature, this device automatically opens circuits. The installer is responsible to wire the thermostat into the motor control circuit. After the temperature has fallen below the trip limit, the thermostat switch re-sets automatically. The auto resetting property must be considered when designing the safety aspects of the control scheme.

| TW Ratings | |
|---|---|
| NC (Normally Closed) | auto resetting |
| Voltage | 6 to 500VAC |
| Current | 1.6 A |
| Resistance | less than 50 mΩ |

## Thermistor (TF)

Build

Three positive temperature coefficient (PTC) thermistors are connected in series in the motor windings, one per motor phase. Thermistors require an external tripping device. Upon reaching the limit temperature, the thermistors change their resistance suddenly. In connection with a tripping device, this property is employed to monitor the motor temperature. The relay built into the tripping device has a make-and-break-contact, which is used in the control wiring. NORD does not provide the external tripping device with the TF thermistor option. You must request a thermistor tripping device separately. Many AC vecotor drives and PLCs include a built in PTC thermistor evaluation input.

| TF Ratings | |
|---|---|
| Transition Temperature | 150 °C +/- 5°C |
| Resistance < Transition | 20 ... 500 . Ω |
| Resistance > Transition | > 4k Ω. |
| Reed Voltage | < 7,5 V |
| Rated Current | < 1 mA |
| Motor Ambient Temp. | 40°C |

# General Options



## Space Heater (SH)

Build

Motors subjected to extreme temperature fluctuations or severe climatic conditions can be damaged by the formation of condensation. NORD can provide motor anti-condensation space heaters inside the motor to heat up the windings when the motor is not operating. This will prevent moisture from condensing inside the motor. The space heaters must not be switched on while the motor is running.

**Space Heater Voltage Must be specified**

| Voltages available |
|---|
| ❍ 115V – 50/60Hz |
| ❍ 230V – 50/60Hz |
| ❍ 460V – 50/60Hz |
| ❍ other voltages available on request |

## Class H Insulation (ISO H)

Build

NORD motors can be manufactured with class H insulation system. Standard NORD motors include double coated magnetic wire windings. When these windings are paired with a class H insulation it provides extra temperature capacity for the motor and will lengthen the motor's life. Class H insulation rated motors are also an advantage in some severe applications:

- Increased ambient temperature installations above 40°C (104°F)
- Increased elevation installations – above 3300 ft (1000 m)
- Applications with a high number of starts per hour.
- Meets class H insulation motor specifications
- Lower operating frequency when used with AC vector drive systems
- For additional information on insulation class see page 125.

## High Resistance Rotor (WU)

Build

Using Silumin rotor material, NORD offers a high resistance rotor to soften the motors operation and allow higher overload torques.

## Single Phase Motors, 60Hz (ECR)

Build

The ECR series of single phase motors is intended for demanding operation at 60Hz with a supply voltage of 115V or 230V. The permissible voltage range is 115/230V +/- 10%. The ECR motors have a 1.15 service factor and are available from 0.16 - 2 hp.



## Paint Coatings

Mod

NORD's standard paint coating is a two component, aliphatic polyurethane finish contaning 316 stainless steel material. This gray stainless steel paint has excellent appearance and outstanding physical properties. It is suitable for both indoor and outdoor applications. For more information and an explanation of all of our paint options please see page 18

## Condensation Drain Holes

NORD motors can be equipped with condensation drain holes. These drain holes are placed in the motor endbells at the lowest possible point. The drain holes are closed at the factory with plastic snap in plugs. They allow for condensation accumulation in the motor to drain after the closing plugs are removed.

The motor drain holes can be provided by NORD either open (KBO) or sealed with a closing plug (KB).

*IMPORTANT NOTE*

The motor must be installed in the mounting orientation specified on the nameplate or the drain holes will not function properly and may result with the motor filling with water.

## Condensation Drain Holes, Plugged (KB)

Build

KB drain holes are plugged for shipment. In order for the holes to effectively drain moisture, the plugs must be removed before using the motor.

## Condensation Drain Holes, Open (KBO)

Build

KBO drain holes are shipped open (not plugged).

## IP65 Enclosure Protection

Mod

NORD motors can be provided with an IP65 enclosure protection. IP65 protection is suitable for wet, low-pressure wash down and extremely dusty environments.

| IP | 1st digit Foreign body protection | IP | 2nd digit Water protection |
|---|---|---|---|
| 6 | Dust tight | 5 | Protection against water jets |

## IP66 Enclosure Protection

Mod

NORD motors can be provided with an IP66 enclosure protection. IP66 protection is suitable for wet, high-pressure wash down and extremely dusty environments, and includes all requirements included in IP65 enclosure protection.

| IP | 1st digit Foreign body protection | IP | 2nd digit Water protection |
|---|---|---|---|
| 6 | Dust tight | 6 | Protection against high pressure water jets |

## Terminal Box Sealed with Resin (KKV)

Mod

Terminal boxes can be sealed with a flexible, electrically safe resin to ensure that contaminants, water, and moisture cannot pass through the terminal box into the stator body. This option is helpful in extremely dusty, wet and humid environments. Another environment where this option is helpful is in installations that have frequent large temperature swings where condensation may form.

## Additional Insulation (AICM)

Build

NORD can provide additional insulation inside the motor to provide additional electrical protection in extremely wet or corrosive environments. An electrically safe insulating material is coated internally in the stator windings and on the rotor body

## Epoxy Dipped Windings (EP)

Build

In extremely wet environments, the motor windings are dipped in epoxy for improved moisture protection. The motor can also be treated with the standard NORD Severe Duty + (NSD+) package for an even higher degree of protection.

## Canopy Drip Cover (RD)

Mod



For wet or dirty installations where the fan end of the motor is mounted up, thus allowing water or debris to fall into the motor's fan guard, NORD offers a canopy drip cover to block this falling water or debris.

## Double Fan Cover (RDD)

Mod



For wet or dirty installations where the fan end of the motor is mounted up, the NORD Double Fan Cover provides protection against falling or wind blown water, snow, dirt or debris from entering the back of the motor.

# Additional Options



## Totally Enclosed Non-Ventilated (OL) Mod

NORD can provide totally enclosed non-ventilated (TENV) motor enclosure. TENV motors provide benefits in certain operating environments; such as extremely dusty or dirty applications, where cooling fans may have material accumulation, which can be detrimental to the motor and the application. The OL series of motors are the standard fan cooled motor construction including the fan cover, but provided without the fan. TENV motors can also be used to reduce cooling fan noise on a standard motor.

A TENV motor's frame size is larger then a totally enclosed fan cooled (TEFC) motor. For intermittent operation, a TENV motor can be operated at a 50% duty cycle at full rated power.

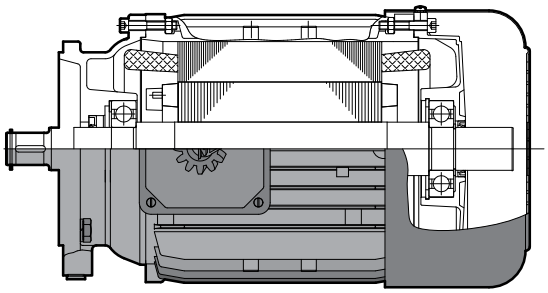

## Totally Enclosed Non-Ventilated, without Fan Cover (OL/H) Build

The OL/H series of TENV motors are more compact in space than the OL series. They do not include the rotor shaft extension through the back bearing end bell or the fan cover.

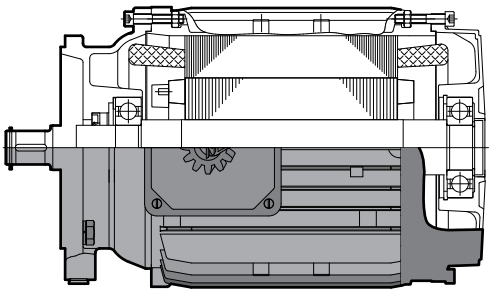

## 2nd Shaft Extension on Fan Side (WE) Build

NORD can provide a second shaft extension on the fan side of the motor that protrudes through the fan cover. This extension can be used as a power take-off or to mount customer supplied devices such as encoders and tachometers.

The shaft extension can be provided on both motors with and without brakes. The shaft extension can not be used on motors with blower fans (F) or (FC). For dimensions see pages 148 - 152.

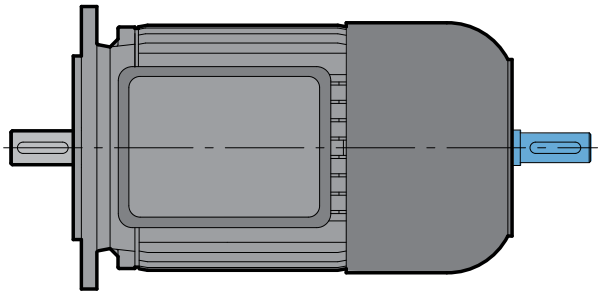

## Hand Wheel (HR) Build

Motors can be supplied with a hand wheel provided on the second shaft extension. The hand wheel can be used for manual operation during power outages, or for machine positioning setup. For dimensions see pages 148 - 152.

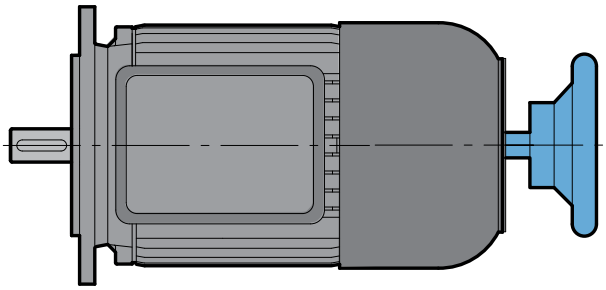

**WARNING**

The customer is required to provide appropriate safety guarding of the rotating hand wheel.

## High Inertia Cast Iron Fan (Z)

Build

An optional cast iron motor cooling fan is available. This fan is used as a mechanical soft start and/or soft stop. This fan adds inertia to the motor. The high inertia fan can also be used for a flywheel effect to store mechanical energy. This can be helpful in smoothing rapid load changes. The cast iron fan replaces the standard plastic motor fan. The motor length is the same as a brakemotor.



| Motor Frame | Fan Inertia $J_z$[lb-ft²] |
|---|---|
| 71 | 0.0475 |
| 80 | 0.1140 |
| 90 | 0.2375 |
| 100 | 0.2684 |
| 112 | 0.5653 |
| 132 | 0.9500 |

## Motor Backstop (RLS)

Build

NORD can provide backstops on many motor frames. A backstop will prevent the motor from rotating in one direction. A common use is to prevent a motor from allowing a load to move backwards when power is removed. A motor brake can also be used for this same purpose. A backstop adds length to the motor. For the motor length extension, see the table below.

**The allowable direction of rotation must be specified in the order.**

| Allowable Shaft Rotation |
|---|
| ❍ Clockwise - Back of Motor |
| ❍ Counter Clockwise - Back of Motor |

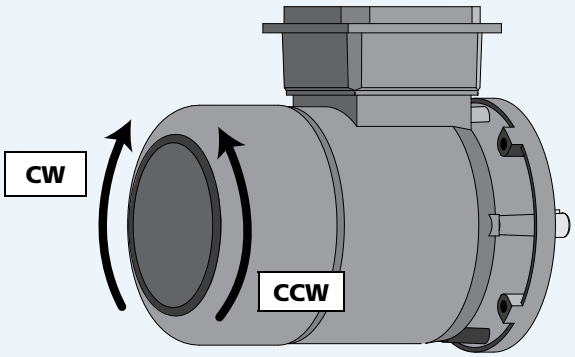


| Motor Size | Backstop Torque [lb-in] | Minimum Speed [rpm] | Motor Extension [in] |
|---|---|---|---|
| 80S/L | 1150 | 860 | 2.52 |
| 90S/L | 1150 | 860 | 2.95 |
| 100L | 1150 | 860 | 3.58 |
| 112M | 3270 | 750 | 3.66 |
| 132S/M | 3270 | 750 | 4.21 |
| 160M/L | 7880 | 670 | 6.57 |
| 180MX/LX | 7880 | 670 | 6.73 |
| 200L | 9120 | 630 | 6.57 |
| 225S/M | 9120 | 630 | 6.57 |
| 250M | 22130 | 400 | 9.84 |
| 280S/M | 51330 | 320 | 11.02 |

# Additional Options



## Quick Power Plug Connector (MS)

Mod

The quick power plug connector (MS) is a simple and fast way to connect and disconnect a motor or brake motor. The MS connector is available on NORD three-phase motors from frame size 63 to 132. The motor connections are made by a modular power plug manfacturer by Harting. After the first installation, the motor can be quickly changed by simply plugging and unplugging the electrical connections. This will ensure the new motor is properly wired. This is a significant advantage to equipment builders who fabricate machinery on site and then ship to another location. The motor with the MS connector can simply be plugged in during final installation.

NORD supplies the male connector half mounted on the motor conduit box. The customer must supply the female connector half mounted on the power wiring. NORD supplies a protective plastic cover on the motor male connector half to protect from dirt and damage prior to installation.





### Advantages:

- Simple motor wiring
- Accurate wiring of motor at final job site
- Fast motor replacement
- Accurate wiring of replacement motor
- Ideal for portable equipment
- Reduces the required personnel for motor replacement
- Faster motor changes reduce down time

## Plug ratings:

| | |
|---|---|
| **Manufacturer** | Harting |
| **Connector** | HAN 10 ES/HAN 10ESS<br>Cage Clamp Connectors |
| **Number of Pins** | 10-Male |
| **Voltage** | 600VAC per UL/CSA |
| **Current** | 16A - Continuous |

## Motor Power Plug Kits:

Includes conduit box, mounting hardware & Male Harting Motor Plug

| P/N | Motor size |
|---|---|
| 11035350 | 63 + 71 |
| 13035350 | 80 + 90 + 100 |
| 16035350 | 112 |
| 16335350 | 132 |

### Power Plug Positions

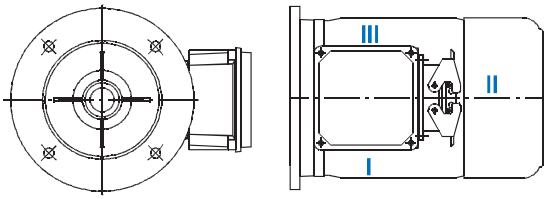


**Power plug position must be specified**

| Power Plug Position | | |
|---|---|---|
| ❍ I | ❍ II | ❍ III |

## Small Terminal Box (EKK)

Mod

The motor terminal box can be provided as a smaller, one-piece terminal design. This option is valid for standard motors 0.16 - 10 hp and is not available for Brakemotors.

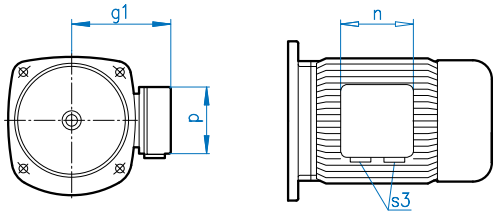


| EKK Dimensions | | | | |
|---|---|---|---|---|
| **Motor Frame** | **g1** | **n** | **p** | **S3** |
| **63** | 3.94 | 2.95 | 2.95 | 2x M16 x 1.5 |
| **71** | 4.29 | 2.95 | 2.95 | 2x M16 x 1.5 |
| **80** | 4.88 | 3.62 | 3.62 | 2x M20 x 1.5 |
| **90** | 5.08 | 3.62 | 3.62 | 2x M20 x 1.5 |
| **100** | 5.51 | 3.62 | 3.62 | 2x M20 x 1.5 |
| **112** | 5.91 | 3.62 | 3.62 | 2x M20 x 1.5 |
| **132** | 6.85 | 4.13 | 4.13 | 2x M25 x 1.5 |

## Blower Cooling Fan (F & FC)

Mod

NORD offers continuous running motor mounted cooling fans that provide motor cooling at low motor speeds. When a motor is operated on an AC vector drive at low frequency, standard rotor fans do not provide adequate airflow for cooling. NORD's separate powered motor cooling fans provide that necessary airflow. These separately powered fans replace the standard motor fan cover and fan.

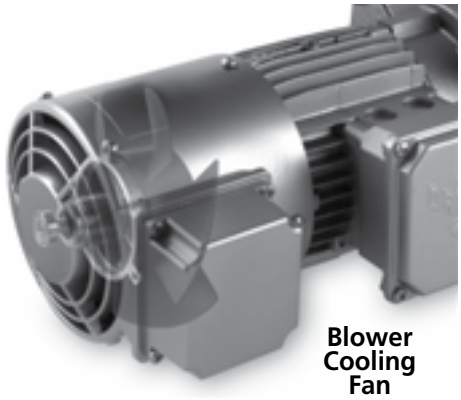

Blower Cooling Fan

### Option F – 3ph & 1ph 220-575V 50/60Hz

| Motor Frame | 60Hz Ratings | | | 50Hz Ratings | | |
|---|---|---|---|---|---|---|
| | Voltage [V] | Current [A] | Power [W] | Voltage [V] | Current [A] | Power [W] |
| Single phase connection - ⊥ (Delta) | | | | | | |
| 63 | 230 – 277 | 0.11 | 38 | 230 – 277 | 0.10 | 27 |
| 71 | 230 – 277 | 0.12 | 41 | 230 – 277 | 0.10 | 28 |
| 80 | 230 – 277 | 0.13 | 44 | 230 – 277 | 0.11 | 29 |
| 90 | 230 – 277 | 0.25 | 88 | 230 – 277 | 0.26 | 72 |
| 100 | 230 – 277 | 0.28 | 88 | 230 – 277 | 0.26 | 70 |
| 112 | 230 – 277 | 0.31 | 107 | 230 – 277 | 0.26 | 73 |
| 132 | 230 – 277 | 0.27 | 89 | 230 – 277 | 0.29 | 82 |
| 160 - 225 | 230 – 277 | 0.41 | 140 | 230 – 277 | 0.45 | 128 |
| Three phase low-voltage connection - ⊥ (Delta) | | | | | | |
| 63 | 220 – 332 | 0.08 | 23 | 220 – 290 | 0.10 | 27 |
| 71 | 220 – 332 | 0.08 | 24 | 220 – 290 | 0.10 | 30 |
| 80 | 220 – 332 | 0.08 | 25 | 220 – 290 | 0.01 | 29 |
| 90 | 220 – 332 | 0.21 | 64 | 220 – 290 | 0.28 | 86 |
| 100 | 220 – 332 | 0.21 | 66 | 220 – 290 | 0.27 | 86 |
| 112 | 220 – 332 | 0.23 | 70 | 220 – 290 | 0.27 | 85 |
| 132 | 220 – 332 | 0.25 | 74 | 220 – 290 | 0.32 | 96 |
| 160 - 225 | 220 – 322 | 0.49 | 165 | 220 – 290 | 0.52 | 155 |
| Three phase high-voltage connection - (Y) | | | | | | |
| 63 | 380 – 575 | 0.04 | 23 | 380 – 500 | 0.05 | 29 |
| 71 | 380 – 575 | 0.04 | 25 | 380 – 500 | 0.05 | 30 |
| 80 | 380 – 575 | 0.04 | 26 | 380 – 500 | 0.05 | 29 |
| 90 | 380 – 575 | 0.12 | 62 | 380 – 500 | 0.16 | 82 |
| 100 | 380 – 575 | 0.12 | 66 | 380 – 500 | 0.16 | 83 |
| 112 | 380 – 575 | 0.13 | 70 | 380 – 500 | 0.16 | 82 |
| 132 | 380 – 575 | 0.14 | 75 | 380 – 500 | 0.18 | 96 |
| 160 - 225 | 380 – 575 | 0.28 | 165 | 380 – 500 | 0.29 | 155 |

### Option FC – 115V 50/60Hz 1ph

| Motor Frame | 60Hz Ratings | | | 50Hz Ratings | | |
|---|---|---|---|---|---|---|
| | Voltage [V] | Current [A] | Power [W] | Voltage [V] | Current [A] | Power [W] |
| Single Phase Connection - ⊥ (Delta) | | | | | | |
| 63 | 100 – 135 | 0.23 | 42 | 100 – 135 | 0.30 | 42 |
| 71 | 100 – 135 | 0.23 | 47 | 100 – 135 | 0.30 | 44 |
| 80 | 100 – 135 | 0.27 | 57 | 100 – 135 | 0.30 | 43 |
| 90 | 100 – 135 | 0.46 | 102 | 100 – 135 | 0.57 | 78 |
| 100 | 100 – 135 | 0.53 | 105 | 100 – 135 | 0.54 | 78 |
| 112 | 100 – 135 | 0.60 | 115 | 100 – 135 | 0.55 | 80 |

# AC Vector Drive
# Related Options



## Incremental Encoder (IG..P)

Build

NORD can provide an incremental encoder mounted on the back of a motor or brake motor. Commonly encoders are used as speed or position feedback devices for use with AC drives, motion controllers or PLC's. Below are standard encoders; however, others can be supplied on request.

**?** **Encoder nomenclature must be specified.**

**Encoder nomenclature**

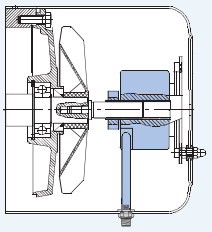

**Standard Motor with Encoder**

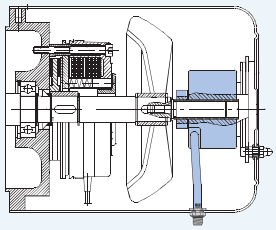

**Encoder with Brake Option**

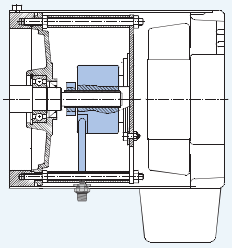

**Encoder with F Type Blower Fan**

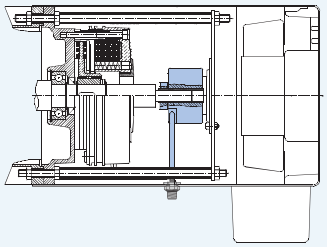

**Brake Option, Blower Fan with Encoder**



**Encoder Type: Quadrature Differential Marker pulse**

**M12 Connector Interface**

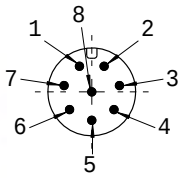


**Wiring Diagram**

| Pin | Conn | Cord |
|---|---|---|
| 1 | 0V | WH |
| 2 | +V | BN |
| 3 | A | GN |
| 4 | A\ | YE |
| 5 | B | GY |
| 6 | B\ | PK |
| 7 | Z | BU |
| 8 | Z\ | RD |
| Nut | Gnd | Open |

| | IG1 P | IG4 P | IG11 P | IG41 P | IG12 P | IG42 P | IG13 P | IG43 P |
|---|---|---|---|---|---|---|---|---|
| **Interface** | TTL/RS422 (26C31) | | TTL/RS422 (26C31) | | HTL/Push-pull (IC-WE) | | Line Driver (7272) | |
| **Logic [VDC]** | 5 | | 5 | | 10-30 | | 5-30 | |
| **Pulse Count [PPR]** | 1024 | 4096 | 1024 | 4096 | 1024 | 4096 | 1024 | 4096 |
| **Power Supply [VDC]** | 4-6 | 4-6 | 10-30 | 10-30 | 10-30 | 10-30 | 5-30 | 5-30 |
| **Part Number** | 19551500 | 19551520 | 19551502 | 19551522 | 19551501 | 19551521 | 19551503 | 19551523 |
| **Max Current Draw [mA]** | 100 | | | | 150 | | | |
| **Max Frequency [kHz]** | 300 | | | | | | | |
| **Ambient Temperature [°F]** | -4 to185 | | | | | | | |
| **Enclosure** | IP66 | | | | | | | |
| **Cable** | M12 8-pin male plug | | | | | | | |

## Pre-fabricated Encoder Cables



NORD can provide Turck pre-fabricated encoder molded cordsets (M12, 8-pin, shielded, twisted pair)

| Length | In-line | | Right-angle | |
|---|---|---|---|---|
| | NORD P/N | Turck P/N | NORD P/N | Turck P/N |
| **2m** | 19551580 | E-RKC 8T-264-2 | 19551584 | E-WKC 8T-264-2 |
| **5m** | 19551581 | E-RKC 8T-264-5 | 19551585 | E-WKC 8T-264-5 |
| **10m** | 19551582 | E-RKC 8T-264-10 | 19551586 | E-WKC 8T-264-10 |
| **15m** | 19551583 | E-RKC 8T-264-15 | 19551587 | E-WKC 8T-264-15 |
| **Field Wireable** | 19551588 | CMB 8181-0 | - | - |
| **Custom** | order from Turck | E-RKC 8T-264 | order from Turck | E-WKC 8T-264 |





## Encoders for NORD AC Drives

NORD AC vector drives with encoder inputs are designed to use TTL/RS422 encoders. There are also advantages in using an encoder with the 10-30VDC power supply system. The NORD AC vector drives can use a wide range of pulse counts, however the 1024PPR version provides good performance with minimal interference issues. A 4096 PPR encoder can also be used and will provide increased precision in some application but has some increased concerns with noise interference.

**Recommended encoder:** IG11P – 1024PPR/TTL/10-30VDC
**Alternate encoder:** IG41P – 4096PPR/TTL/10-30VDC

## Absolute Encoder (AG)

Build

Absolute encoders offer a unique value (voltage, binary count, etc.) for each mechanical position. When an absolute encoder is powered up, the position of the encoder is known. Absolute encoders are available in single or multi-turn versions. The encoder is attached under the fan cover with field bus connection outside the fan cover.

Absolute encoders can be provided to meet a variety of specifications:

- Resolution: up to 17 bits of resolution per turn (131,072 steps) with 4096 turns (12 bits of turns)
- Interfaces: Synchronous serial interface (SSI), SSI with incremental track, ProfiBus, DeviceNet, CANopen, CANlift, and other interfaces

# AC Vector Drive
# SK 300E Trio



## NORDAC SK 300E
## Motor Mounted Frequency AC Vector Drive

For select HP ratings, NORD can provide a fully programmable, high performance AC vector drive mounted on the motor. This motor mounted AC vector drives:

- Eliminates the need to separately mount & wire the AC drive
- Insures AC vector drive/motor compatibility
- Has an IP 55 washdown duty enclosure
- Provides Electronic Motor Overload protection
- Insures smooth constant torque operation down to 2 Hz (check motor thermal limitations)
- Features a unique plug-in construction where the program stays with the motor, minimizing return to service time in the event of AC vector drive replacement



### SK 300E AC Vector Drive Ratings

- 200-240 VAC 3 phase 50/60 Hz input, ½ through 3 HP
- 380-480 VAC 3 phase 50/60 Hz input, 3/4 through 5 HP
- Full range of built-in pre-engineered options available
- For dimensions see page 154

### Selection Steps

1) Choose the SK300E-trio AC vector drive based on motor ratings and input line voltage
2) Select the required Trio Interface (TI)
3) Select the braking resistor if required
4) Select additional customer based I/O if required (SK CU2-STD)
5) Select cover mounted technology unit if required
6) If remote wall mounting is required
7) Select any needed programming tools



### Step 1: AC vector drive Selection

| Basic NORD Motor Description | Power Rating HP/kW | P [in] | 240 VAC Input Inverter Type SK 300E | 480 VAC Input Inverter Type SK 300E |
|---|---|---|---|---|
| 63 S/4 | 0.16 / 0.12 | 5.12 | -370-323-B | -550-340-B |
| 63 L/4 | 0.25 / 0.18 | 5.12 | -370-323-B | -550-340-B |
| 71 S/4 | 0.33 / 0.25 | 5.71 | -370-323-B | -550-340-B |
| 71/L/4 | 0.50 / 0.37 | 5.71 | -370-323-B | -550-340-B |
| 80 S/4 | 0.75 / 0.55 | 6.50 | -550-323-B | -550-340-B |
| 80 L/4 | 1.00/ 0.75 | 6.50 | -750-323-B | -750-340-B |
| 90 S/4 | 1.50/ 1.1 | 7.20 | -111-323-B | -111-340-B |
| 90 L/4 | 2.00/ 1.5 | 7.20 | -151-323-B | -151-340-B |
| 100 L/4 | 3.00/ 2.2 | 7.91 | -221-323-B | -221-340-B |
| 100 L/40 | 5.00/ 3.7 | 7.91 | Not Available | -401-340-B |

### AC Vector Drive Ratings

| Type designation SK 300E | -370-323-B | -550-323-B | -750-323-B | -111-323B | -151-323-B | -221-323-B | -550-340-B | -750-340-B | -111-340-B | -151-340-B | -221-340-B | -301-340-B | -401-340-B |
|---|---|---|---|---|---|---|---|---|---|---|---|---|---|
| Supply Voltage | 3 Phase 200-240 VAC +/- 10%, 47-63 Hz | | | | | | 3 Phase 380-480 VAC, -20%/+10%, 47-63 Hz | | | | | | |
| Motor Rating | 1/2 HP | 3/4 | 1 HP | 1 1/2 HP | 2 HP | 3 HP | 3/4 HP | 1 HP | 1 1/2 HP | 2 HP | 3 HP | 4 HP | 5 HP |
| Rated Output Current Amps [RMS] | 2.2 | 3 | 4 | 5.5 | 7 | 9.5 | 1.6 | 2.2 | 3 | 3.7 | 5.5 | 7 | 9.2 |
| Typical Output Current Amps [RMS] | 3.1 | 4.2 | 5.6 | 7.7 | 9.8 | 13.3 | 2.5 | 3.1 | 4.2 | 5.2 | 7.7 | 9.8 | 12.9 |

## Step 2: Selection of Trio Interface (TI)

Following selection of the appropriate SK 300E AC vector drive rating from the preceding chart, an appropriate Trio Interface (TI) must be specified. The Trio Interface (TI) is an adapter that replaces the motor conduit box and contains a circuit board that the SK 300E plugs into.

A typical TI is shown below



### SK 300E Trio Interface (TI) Types

| | |
|---|---|
| **SK TI 0/1** | For standard 380-480 VAC units |
| **SK TI 0/1 - 230** | For standard 200-240 VAC units |
| **SK TI 0/2** | For 380-480 VAC units using Harting connectors |
| **SK TI 0/2 – 230** | 200-240 VAC units using Harting connectors |

### Harding H10E series connector options for side 1(CE1) of SK TI 0/2 (and -230) Interfaces

| | |
|---|---|
| **LE H10E** | Socket for AC supply input |
| **MA H10E** | Plug for motor output |

### Conduit plate options for side 3(CE3) of SK TI 0/2 (and -230) Interfaces

| | |
|---|---|
| **SK DA4** | Plate with 4 x M16 |
| **SK DA2** | Plate with 2 x M20 and 1 x M16<br>(Provided as standard with SK TI 0/2) |
| **SK DA1** | Plate with 1 x M25 and 2 x M16 |
| **SK DA0** | Plate with no entries |

### Added related components for Trio Interfaces

| | |
|---|---|
| **P/N 018524200** | M20 x ½ adapter<br>(Qty 2 provided as standard on assembled trios) |
| **P/N 011015410** | Adapter to mount Trio Interface on 63 & 71 frame motors |
| **P/N 013097000** | Gasket to mount Trio Interface on 63 & 71 frame motors |

## SK 300E Options & Related Information

## Step 3: Braking Resistors

Braking Resistor Options for SK 300E for mounting on Trio Interface

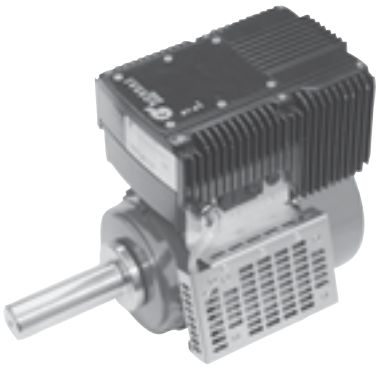

During dynamic braking, energy is delivered from the load through the motor (acting as a generator) to the AC vector drive. The AC vector drive dissipates this energy as heat via the integral brake chopper to the optional external braking resistors.

### For use with SK TI 0/1 adapters

| | |
|---|---|
| **SK BR3-120/100-TI 0/1** | 120 ohm/100 W for all ratings except 5 HP |
| **SK BR3-82/200-TI 0/1** | 82 ohm/200 W for 5 HP only |

### For use with SK TI 0/2 adapters

| | |
|---|---|
| **SK BR3-120/100-TI 0/2** | 120 ohm/100 W for all ratings except 5 HP |
| **SK BR3-82/200-TI 0/2** | 82 ohm/200 W for 5 HP only |



## Step 4: Customer I/O Based Control Interface Option - SK CU2-STD

The standard I/O based control available via the Trio Interface can be expanded via selection of an optional Customer Unit, **SK CU2-STD**, that plugs into the Trio Interface. Interface I/O points are listed on the following chart:




| I/O on standard Trio Interface | Additional I/O on SK CU2-STD Option |
|---|---|
| 1 X programmable digital input | 4 X programmable digital input |
| 5 VDC and 15 VDC power supplies | 2 X single-ended analog inputs |
| RS 485 interface via M-12 connector and terminals | +10 VDC reference supply |
| 1 X programmable relay output | 1 X selectable/programmable analog/digital output |
| | PID control access |

## Step 5: Cover Mounted Technology Unit (TU) Options

A variety of pre-engineered plug in Technology Unit (TU) options can be ordered to replace the standard blank cover of the SK 300E AC vector drive. Only a single TU can be installed on the AC vector drive at a given time. Available units include operator and field bus interfaces:



| Technology Unit (TU) Name | Description |
|---|---|
| **SK TU2-POT** | Analog reference potentiometer box with L/Off/R control switch |
| **SK TU2-CTR** | Digital control/programmer with 4 digit, 7 segment LED display |
| **SK TU2-PBR** | Profibus field bus interface |
| **SK TU2-PBR-24V** | Profibus field bus interface powered by customer 24 VDC supply |
| **SK TU2-PBR-KL** | Profibus field bus interface with clamp on connectors |
| **SK TU2-AS1** | AS (Actuator/Sensor) Interface |
| **SK TU2-CAO** | CANopen field bus interface |
| **SK TU2-DEV** | DeviceNet field bus interface |
| **SK TU2-IBS** | InterBus field bus interface |
| **SK TU2-DECKEL** | Original blank cover for TU slot (in case TU option is removed) |

## Step 6: Wall Mounting Option Kit, SK WMK-DA1

The wall mounting kit enables placing the SK 300E AC vector drive on a nearby wall or the machine instead of directly on the NORD motor or gearmotor. The Trio Interface (TI) is still required and all other options can be used.





## Step 7 : Additional Tools & Related Interface Options

In addition to the cover mounted SK TU2-CTR option, there are several additional options that enable simple programming and control of the SK 300E:

**Handheld Parameter Box (P-Box) with 10 foot cable, SK PAR-2H**

Detachable external add-on unit that can be used to program and display parameters and control the operation of the connected SK 300E. Features multi-line plain text display selectable in six languages. Manages and stores up to five unique AC vector drive programs. Cable plugs into M-12 connector in side of Trio Interface.

**Panel Mount Parameter Box (P-Box), SK PAR-2E**

Panel Mount version of Parameter Box with same functionality as SK PAR-2H. Installs in cut-out in front of customer supplied operator panel. Interface connection is performed by customer with their shielded cable via terminals on SK PAR-2E and SK 300E.



### NORD CON Software – Available free at NORD Website

NORD CON Software is a Windows-based PC program that enables the control and programming of NORDAC AC vector drives. It provides for accessing up to 31 AC vector drives simultaneously via the RS485 interface. It features both off-line and on-line programming and data management modes.

NORD CON allows user to:

- Program AC vector drives and upload/download parameter files
- Control connected AC vector drives for test/troubleshooting
- Monitor connected AC vector drives and examine up to four variables versus time with built-in oscilloscope feature
- Display parameter information in six languages

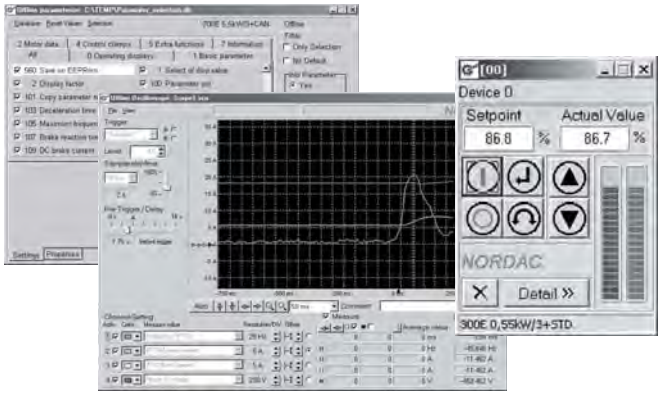


**Optional accessories required to interface user PC to SK 300E via NORD CON are:**

**SK IC1 – RS 485 to RS 232 interface converter**
Enables communication between RS 232 port on computer and RS 485 port on SK 300E

**Cable SK 300E –**
10 foot cable that connects between the 9-Pin D shell connector on the SK IC1 and the M-12 connector on the side of the SK 300E Trio Interface.

### Electromechanical Brake Interface & Coil Voltage Selection

As standard, the SK 300E provides a dedicated high voltage DC power supply and coordination software to directly control an Electromechanical Brake. This is equivalent to using a half wave rectifier, so the brake coil voltage must be specified per the following chart:

| Nominal Inverter AC Input Voltage | Brake Coil Voltage |
|---|---|
| 440 – 480 VAC | 205 VDC |
| 200 – 240 VAC | 105 VDC |
| 380 – 415 VAC | 180 VDC |

The brake gets connected to terminals +Br and –Br on the Trio Interface

### Motor overload protection

Electronic motor overload protection is provided as standard on the SK 300E AC vector drive. If required, more precise protection can be achieved via the use of motor thermostats (TW) or thermistor sensors (TF). These devices can be interfaced to the SK 300E via the programmable digital input to indicate a motor over temperature error.

# Performance Data



## Standard Efficiency

## 230/460V – 60Hz

Inverter duty • TEFC
Synchronous speed 1800rpm @ 60Hz • 4-pole • Three-phase
Voltages: 230/460V – 60Hz • 1.15 Service Factor
Continuous Duty • 40°C Ambient • up to 3300ft Elevation
Class B temperature rise • Class F insulation

| Motor Type | Power Pn | | Nn Full-load | In Full-Load Current 230V | In Full-Load Current 460V | Ia/In | Code Letter | Torque Tn | Ta/Tn | Tk/Tn | pf | Eff. | Jm Inertia |
|---|---|---|---|---|---|---|---|---|---|---|---|---|---|
| | [hp] | [kW] | [rpm] | [A] | [A] | [%] | | [lb-in] | | | | [%] | [lb-ft²] |
| **63S/4** | 0.16 | 0.12 | 1700 | 0.88 | 0.44 | 245 | F | 5.92 | 2.1 | 2.2 | 0.66 | 52 | 0.005 |
| **63L/4** | 0.25 | 0.18 | 1680 | 1.12 | 0.56 | 275 | E | 8.99 | 2.1 | 2.2 | 0.71 | 57 | 0.0067 |
| **71S/4** | 0.33 | 0.25 | 1710 | 1.56 | 0.78 | 310 | G | 12.3 | 2.5 | 2.4 | 0.64 | 63 | 0.017 |
| **71L/4** | 0.5 | 0.37 | 1720 | 1.90 | 0.95 | 355 | F | 18.0 | 2.45 | 2.6 | 0.69 | 71 | 0.0204 |
| **80S/4** | 0.75 | 0.55 | 1710 | 2.70 | 1.35 | 355 | F | 27.0 | 2.2 | 2.2 | 0.71 | 72 | 0.0259 |
| **80L/4** | 1 | 0.75 | 1650 | 3.66 | 1.83 | 390 | G | 38.1 | 2.2 | 2.3 | 0.74 | 70 | 0.0345 |
| **90S/4** | 1.5 | 1.1 | 1660 | 4.84 | 2.42 | 445 | G | 55.6 | 2.7 | 2.6 | 0.78 | 73 | 0.055 |
| **90L/4** | 2 | 1.5 | 1660 | 6.34 | 3.17 | 465 | G | 75.8 | 2.55 | 2.5 | 0.80 | 74 | 0.074 |
| **100L/4** | 3 | 2.2 | 1705 | 9.0 | 4.50 | 490 | G | 108 | 2.3 | 2.6 | 0.81 | 82 | 0.107 |
| **100LA/4** | 5 | 3.7 | 1725 | 15.2 | 7.62 | 510 | G | 180 | 2.7 | 3.1 | 0.75 | 81 | 0.141 |
| **132S/4** | 7.5 | 5.5 | 1735 | 19.8 | 9.9 | 545 | G | 267 | 2.45 | 2.75 | 0.82 | 86 | 0.55 |
| **132M/4** | 10 | 7.5 | 1735 | 25.8 | 12.9 | 645 | H | 363 | 2.9 | 3.2 | 0.84 | 87 | 0.752 |
| **160M/4** | 15 | 11 | 1770 | 38.4 | 19.2 | 665 | H | 522 | 2.45 | 3.0 | 0.82 | 88 | 0.95 |
| **160L/4** | 20 | 15 | 1765 | 49 | 24.5 | 725 | H | 713 | 2.9 | 3.3 | 0.86 | 89.4 | 1.23 |
| **180MX/4** | 25 | 18.5 | 1750 | 60 | 30 | 860 | K | 887 | 2.95 | 3.4 | 0.87 | 89 | 1.35 |
| **180LX/4** | 30 | 22 | 1755 | 71 | 35.5 | 980 | L | 1052 | 3.4 | 3.7 | 0.87 | 89.4 | 1.35 |

**Pn** - Full load power
**Nn** - Full load speed
**In** - Full load current
**Ia** - Locked-rotor current
**Ia/In** - Locked-rotor current ratio (%)
**Tn** - Full-load torque
**Ta** - Locked-rotor torque
**Ta/Tn** - Locked-rotor torque ratio
**Tk** - Break-down torque
**Tk/Tn** - Break-down torque ratio
**pf** - Power factor
**Eff** - Normal efficiency
**Jm** - Motor inertia





## Energy Efficient (EPAct)

# 230/460V – 60Hz / EE

Inverter duty • TEFC
Synchronous speed 1800rpm @ 60Hz • 4-pole • Three-phase
Voltages: 230/460V – 60Hz • 1.15 Service Factor
Continuous Duty • 40°C Ambient • up to 3300ft Elevation
Class B temperature rise • Class F insulation

| Motor Type | Power Pn | | Nn Full-load | In Full-Load Current | | Ia/In | Code Letter | Torque Tn | Ta/Tn | Tk/Tn | pf | Eff. | Jm Inertia |
|---|---|---|---|---|---|---|---|---|---|---|---|---|---|
| | | | | 230V | 460V | | | | | | | | |
| | [hp] | [kW] | [rpm] | [A] | [A] | [%] | | [lb-in] | | | | [%] | [lb-ft²] |
| **80LH/4** | 1 | 0.75 | 1750 | 3.88 | 1.94 | 600 | L | 36.0 | 4.6 | 4.3 | 0.59 | 82.5 | 0.051 |
| **90SH/4** | 1.5 | 1.1 | 1740 | 4.3 | 2.15 | 630 | J | 53.1 | 3.5 | 3.8 | 0.76 | 84.0 | 0.085 |
| **90LH/4** | 2 | 1.5 | 1745 | 6.3 | 3.15 | 670 | K | 72.1 | 4.3 | 4.5 | 0.71 | 84.0 | 0.092 |
| **100LH/4** | 3 | 2.2 | 1765 | 8.6 | 4.3 | 790 | L | 105 | 3.6 | 4.7 | 0.73 | 87.5 | 0.178 |
| **112MH/4** | 5 | 3.7 | 1770 | 14.4 | 7.2 | 810 | L | 176 | 4.0 | 4.8 | 0.76 | 87.5 | 0.304 |
| **132SH/4** | 7.5 | 5.5 | 1780 | 20.9 | 10.5 | 820 | L | 259 | 4.3 | 4.6 | 0.74 | 89.5 | 0.75 |
| **132MH/4** | 10 | 7.5 | 1770 | 27.0 | 13.5 | 735 | J | 356 | 3.2 | 4.0 | 0.78 | 89.5 | 0.84 |
| **160MH/4** | 15 | 11 | 1765 | 35.8 | 17.9 | 810 | J | 527 | 2.6 | 3.2 | 0.85 | 91.0 | 1.23 |
| **160LH/4** | 20 | 15 | 1765 | 49 | 24.5 | 850 | K | 712 | 2.8 | 3.5 | 0.85 | 91.0 | 1.35 |
| **180MH/4** | 25 | 18.5 | 1770 | 61 | 30.5 | 840 | K | 879 | 2.8 | 3.6 | 0.83 | 92.4 | 3.56 |
| **180LH/4** | 30 | 22 | 1770 | 72 | 36 | 880 | K | 1046 | 3.1 | 3.9 | 0.83 | 92.4 | 4.51 |

**Pn** - Full load power
**Nn** - Full load speed
**In** - Full load current
**Ia** - Locked-rotor current
**Ia/In** - Locked-rotor current ratio (%)
**Tn** - Full-load torque
**Ta** - Locked-rotor torque
**Ta/Tn** - Locked-rotor torque ratio
**Tk** - Break-down torque
**Tk/Tn** - Break-down torque ratio
**pf** - Power factor
**Eff** - Normal efficiency
**Jm** - Motor inertia

# Performance Data



## Standard Efficiency

**575V – 60Hz**

Inverter duty • TEFC
Synchronous speed 1800rpm @ 60Hz • 4-pole • Three-phase
Voltages: 332/575V – 60Hz • 1.15 Service Factor
Continuous Duty • 40°C Ambient • up to 3300ft Elevation
Class B temperature rise • Class F insulation

| Motor Type | Power Pn | | Nn Full-load | In Full-Load Current 575V | Ia/In | Code Letter | Torque Tn | Ta/Tn | Tk/Tn | pf | Eff. | Jm Inertia |
|---|---|---|---|---|---|---|---|---|---|---|---|---|
| | [hp] | [kW] | [rpm] | [A] | [%] | | [lb-in] | | | | [%] | [lb-ft²] |
| **63S/4** | 0.16 | 0.12 | 1700 | 0.37 | 245 | F | 5.92 | 2.1 | 2.2 | 0.66 | 52 | 0.005 |
| **63L/4** | 0.25 | 0.18 | 1680 | 0.46 | 275 | E | 8.99 | 2.1 | 2.2 | 0.71 | 57 | 0.0067 |
| **71S/4** | 0.33 | 0.25 | 1710 | 0.66 | 310 | G | 12.3 | 2.5 | 2.4 | 0.64 | 63 | 0.017 |
| **71L/4** | 0.5 | 0.37 | 1720 | 0.8 | 355 | F | 18.0 | 2.45 | 2.6 | 0.69 | 71 | 0.0204 |
| **80S/4** | 0.75 | 0.55 | 1710 | 1.12 | 355 | F | 27.0 | 2.2 | 2.2 | 0.71 | 72 | 0.0259 |
| **80L/4** | 1 | 0.75 | 1650 | 1.46 | 390 | G | 38.1 | 2.2 | 2.3 | 0.74 | 70 | 0.0345 |
| **90S/4** | 1.5 | 1.1 | 1660 | 1.94 | 445 | G | 55.6 | 2.7 | 2.6 | 0.78 | 73 | 0.055 |
| **90L/4** | 2 | 1.5 | 1660 | 2.54 | 465 | G | 75.8 | 2.55 | 2.5 | 0.80 | 74 | 0.074 |
| **100L/4** | 3 | 2.2 | 1705 | 3.6 | 490 | G | 108 | 2.3 | 2.6 | 0.81 | 82 | 0.107 |
| **100LA/4** | 5 | 3.7 | 1725 | 6.1 | 510 | G | 180 | 2.7 | 3.1 | 0.75 | 81 | 0.141 |
| **132S/4** | 7.5 | 5.5 | 1735 | 7.92 | 545 | G | 267 | 2.45 | 2.75 | 0.82 | 86 | 0.55 |
| **132M/4** | 10 | 7.5 | 1735 | 10.3 | 645 | H | 363 | 2.9 | 3.2 | 0.84 | 87 | 0.752 |
| **160M/4** | 15 | 11 | 1770 | 14.7 | 665 | H | 522 | 2.45 | 3.0 | 0.82 | 88 | 0.95 |
| **160L/4** | 20 | 15 | 1765 | 19.5 | 725 | H | 713 | 2.9 | 3.3 | 0.86 | 89.4 | 1.23 |
| **180MX/4** | 25 | 18.5 | 1750 | 24.0 | 860 | K | 887 | 2.95 | 3.4 | 0.87 | 89 | 1.35 |
| **180LX/4** | 30 | 22 | 1755 | 28.4 | 980 | L | 1052 | 3.4 | 3.7 | 0.87 | 89.4 | 1.35 |

**Pn** - **Full load power**
**Nn** - **Full load speed**
**In** - **Full load current**
**Ia** - **Locked-rotor current**
**Ia/In** - **Locked-rotor current ratio (%)**
**Tn** - **Full-load torque**
**Ta** - **Locked-rotor torque**
**Ta/Tn** - **Locked-rotor torque ratio**
**Tk** - **Break-down torque**
**Tk/Tn** - **Break-down torque ratio**
**pf** - **Power factor**
**Eff** - **Normal efficiency**
**Jm** - **Motor inertia**





## Energy Efficient (EPAct)

# 575V – 60Hz / EE

Inverter duty • TEFC
Synchronous speed 1800rpm @ 60Hz • 4-pole • Three-phase
Voltages: 332/575V – 60Hz • 1.15 Service Factor
Continuous Duty • 40°C Ambient • up to 3300ft Elevation
Class B temperature rise • Class F insulation

| Motor Type | Power Pn | | Nn Full-load | In Full-Load Current 575V | Ia/In | Code Letter | Torque Tn | Ta/Tn | Tk/Tn | pf | Eff. | Jm Inertia |
|---|---|---|---|---|---|---|---|---|---|---|---|---|
| | [hp] | [kW] | [rpm] | [A] | [%] | | [lb-in] | | | | [%] | [lb-ft²] |
| **80LH/4** | 1 | 0.75 | 1750 | 1.5 | 600 | L | 36.0 | 4.6 | 4.3 | 0.59 | 82.5 | 0.051 |
| **90SH/4** | 1.5 | 1.1 | 1740 | 1.75 | 630 | J | 53.1 | 3.5 | 3.8 | 0.76 | 84.0 | 0.085 |
| **90LH/4** | 2 | 1.5 | 1745 | 2.45 | 670 | K | 72.1 | 4.3 | 4.5 | 0.71 | 84.0 | 0.092 |
| **100LH/4** | 3 | 2.2 | 1765 | 3.4 | 790 | L | 105 | 3.6 | 4.7 | 0.73 | 87.5 | 0.178 |
| **112MH/4** | 5 | 3.7 | 1770 | 5.6 | 810 | L | 176 | 4.0 | 4.8 | 0.76 | 87.5 | 0.304 |
| **132SH/4** | 7.5 | 5.5 | 1780 | 8.3 | 820 | L | 259 | 4.3 | 4.6 | 0.74 | 89.5 | 0.75 |
| **132MH/4** | 10 | 7.5 | 1770 | 10.8 | 735 | J | 356 | 3.2 | 4.0 | 0.78 | 89.5 | 0.84 |
| **160MH/4** | 15 | 11 | 1765 | 14.3 | 810 | J | 527 | 2.6 | 3.2 | 0.85 | 91.0 | 1.23 |
| **160LH/4** | 20 | 15 | 1765 | 19.6 | 850 | K | 712 | 2.8 | 3.5 | 0.85 | 91.0 | 1.35 |
| **180MH/4** | 25 | 18.5 | 1770 | 24.4 | 840 | K | 879 | 2.8 | 3.6 | 0.83 | 92.4 | 3.56 |
| **180LH/4** | 30 | 22 | 1770 | 28.8 | 880 | K | 1046 | 3.1 | 3.9 | 0.83 | 92.4 | 4.51 |

**Pn** - Full load power
**Nn** - Full load speed
**In** - Full load current
**Ia** - Locked-rotor current
**Ia/In** - Locked-rotor current ratio (%)
**Tn** - Full-load torque
**Ta** - Locked-rotor torque

**Ta/Tn** - Locked-rotor torque ratio
**Tk** - Break-down torque
**Tk/Tn** - Break-down torque ratio
**pf** - Power factor
**Eff** - Normal efficiency
**Jm** - Motor inertia

# Performance Data



## Standard Efficiency

## 200-208V – 60Hz

Inverter duty • Induction motor • TEFC
Synchronous speed 1800rpm @ 60Hz • 4-pole • Three-phase
Voltages: 208V – 60Hz • 1.15 Service Factor
Continuous Duty • 40°C Ambient • up to 3300ft Elevation
Class B temperature rise • Class F insulation

| Motor Type | Power Pn | | Nn Full-load | In 208V | Ia/In | Code Letter | Torque Tn | Ta/Tn | Tk/Tn | pf | Eff. | Jm Inertia |
|---|---|---|---|---|---|---|---|---|---|---|---|---|
| | [hp] | [kW] | [rpm] | [A] | [%] | | [lb-in] | | | | [%] | [lb-ft²] |
| **63S/4** | 0.16 | 0.12 | 1700 | 0.97 | 245 | F | 5.93 | 2.1 | 2.2 | 0.66 | 52 | 0.005 |
| **63L/4** | 0.25 | 0.18 | 1680 | 1.24 | 275 | E | 9.38 | 2.1 | 2.2 | 0.71 | 57 | 0.0067 |
| **71S/4** | 0.33 | 0.25 | 1710 | 1.73 | 310 | G | 12.2 | 2.5 | 2.4 | 0.64 | 63 | 0.015 |
| **71L/4** | 0.5 | 0.37 | 1720 | 2.10 | 355 | F | 18.3 | 2.45 | 2.6 | 0.69 | 71 | 0.0181 |
| **80S/4** | 0.75 | 0.55 | 1710 | 2.99 | 355 | F | 27.6 | 2.2 | 2.2 | 0.71 | 72 | 0.0304 |
| **80L/4** | 1 | 0.75 | 1650 | 4.05 | 390 | G | 38.2 | 2.2 | 2.3 | 0.74 | 70 | 0.0392 |
| **90S/4** | 1.5 | 1.1 | 1660 | 5.35 | 445 | G | 57.0 | 2.7 | 2.6 | 0.78 | 73 | 0.0670 |
| **90L/4** | 2 | 1.5 | 1660 | 7.01 | 465 | G | 75.9 | 2.55 | 2.5 | 0.80 | 74 | 0.0855 |
| **100L/4** | 3 | 2.2 | 1705 | 9.95 | 490 | G | 111 | 2.3 | 2.6 | 0.81 | 82 | 0.107 |
| **100LA/4** | 5 | 3.7 | 1725 | 16.8 | 510 | G | 183 | 2.7 | 3.1 | 0.75 | 81 | 0.162 |
| **132S/4** | 7.5 | 5.5 | 1735 | 21.9 | 545 | G | 272 | 2.45 | 2.75 | 0.82 | 86 | 0.553 |
| **132M/4** | 10 | 7.5 | 1735 | 28.5 | 645 | H | 363 | 2.9 | 3.2 | 0.84 | 87 | 0.753 |

**Pn** - **Full load power**
**Nn** - **Full load speed**
**In** - **Full load current**
**Ia** - **Locked-rotor current**
**Ia/In** - **Locked-rotor current ratio (%)**
**Tn** - **Full-load torque**
**Ta** - **Locked-rotor torque**

**Ta/Tn** - **Locked-rotor torque ratio**
**Tk** - **Break-down torque**
**Tk/Tn** - **Break-down torque ratio**
**pf** - **Power factor**
**Eff** - **Normal efficiency**
**Jm** - **Motor inertia**



Frames 63-132
230 / 460V, 60Hz, 3Ø  200 / 400V, 50Hz, 3Ø
190 / 380V, 60Hz, 3Ø

120094410

WIRING DIAGRAM
3 PHASE MOTOR

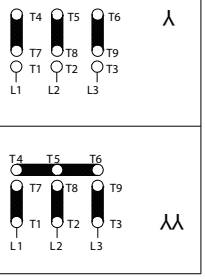


Frames 160 +
230 / 460V, 60Hz, 3Ø  200 / 400V, 50Hz, 3Ø
190 / 380V, 60Hz, 3Ø

120095260

WIRING DIAGRAM
3 PHASE MOTOR

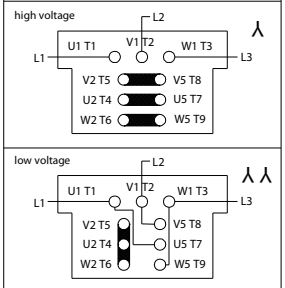


Frames 160 +
230 / 460V, 60Hz, 3Ø  200 / 400V, 50Hz, 3Ø
190 / 380V, 60Hz, 3Ø

120095500 REV 1

WIRING DIAGRAM
3 PHASE MOTOR

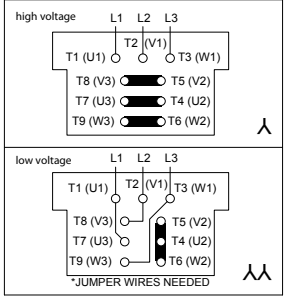


460 / 800V, 60Hz, 3Ø  230 / 400V, 50Hz, 3Ø
208 / 360V, 60Hz, 3Ø  400 / 690V, 50Hz, 3Ø
332 / 575V, 60Hz, 3Ø

120095270

WIRING DIAGRAM
3 PHASE MOTOR

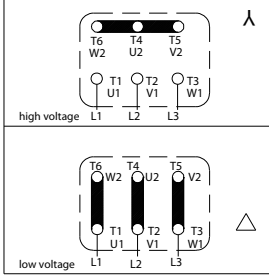


120094440

Normal Brake Reaction Time
(AC - Switching)

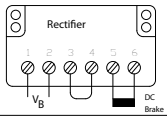


Rapid Brake Reaction Time
(DC - Switching)

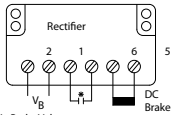


VB Brake Voltage
Terminals 1 & 2
- AC brake power input
Terminals 3 & 4
- DC switching, fast react
Terminals 5 & 6
- Brake coil, DC voltage out
* Customer supplied contact

STANDARD
BRAKE RECTIFIER

120094450

Normal Brake Reaction Time
(AC Switching)

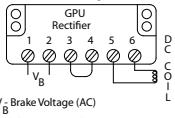


VB Brake Voltage (AC)
Terminals 1 & 2 - AC Brake Power Input
Terminals 3 & 4 - DC Switching, Fast React Terminals
Terminals 5 & 6 - DC Voltage Output to Brake.

Rapid Brake Reaction Time
(DC Switching - Internal)

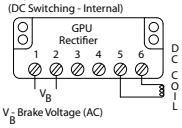


VB Brake Voltage (AC)
Terminals 1 & 2 - AC Brake Power Input
Terminals 3 & 4 - No Jumper Connected
Terminals 5 & 6 - DC Voltage Output to Brake.

GPU BRAKE
RECTIFIER

120094460

Rapid Brake Reaction Time
(DC Switching - External)

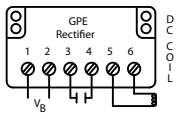


VB Brake Voltage (AC)
Terminals 1 & 2 - AC Brake Power Input
Terminals 3 & 4 - DC Switching, Contactor - IEC AC3
Terminals 5 & 6 -DC Voltage Output to Brake.

GPE BRAKE
RECTIFIER

Use with P/N's 19140230 & 19140240

2 - SPEED MOTORS
SINGLE WINDING (4-2 & 8-4 POLE)

120094400

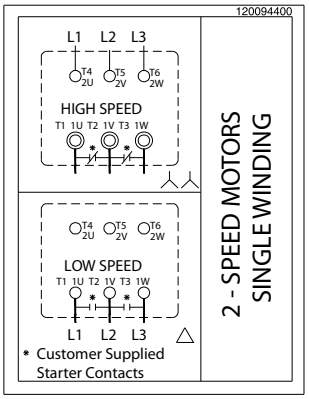


2 - SPEED MOTORS
SINGLE WINDING

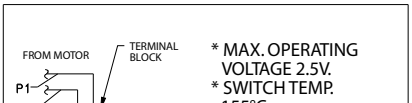


* MAX. OPERATING VOLTAGE 2.5V.
* SWITCH TEMP. 155°C
* RESPONSE TIME < 5 SECONDS

THERMISTOR
"TF" OPTION

120095240

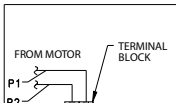


* NC (NORMALLY CLOSED) CONTACTS RATED 1.6A AT 2.50 VAC
* 6-500 VAC WORKING RANGE
* AUTOMATIC RESET AT 30 ± 15°C TEMP. DROP

THERMISTATS
"TW" OPTION

120095230

2 - SPEED MOTORS
DUAL WINDING (8-2 POLE)

120095310

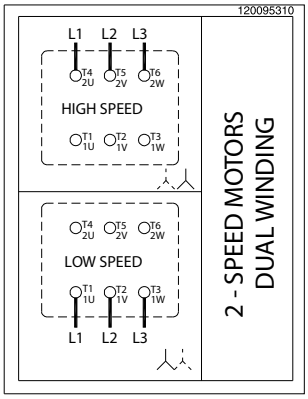


2 - SPEED MOTORS
DUAL WINDING

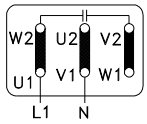


1 PHASE
115V*
50/60 Hz

* CAPACITOR IS SUPPLIED

BLOWER COOLING FAN
"FC" OPTION

120095460

OPTION "F" 1 PH

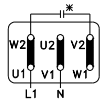


230V
50 / 60 Hz

OPTION "F" 3 PH

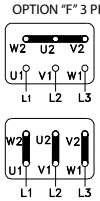


380-575V
50 / 60 Hz

220-332V
50 / 60 Hz

* CAPACITOR IS SUPPLIED

BLOWER COOLING FAN
"F" OPTION

120095250

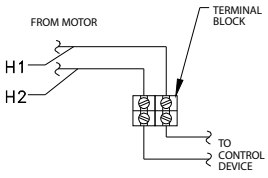


SPACE HEATER
"SH" OPTION

120095220

MOTORS

# Dimensions
# Motor Options



**Standard Motor**

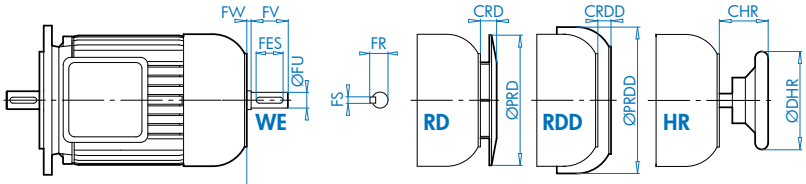


**Option IG**

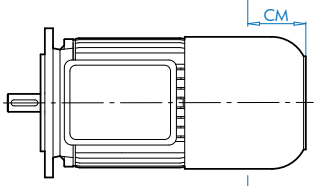


**Option F**

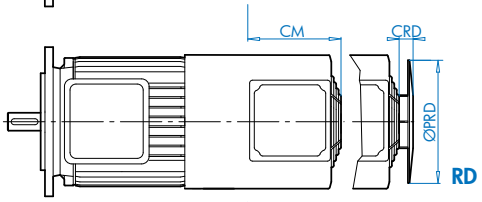


**Option IG F**

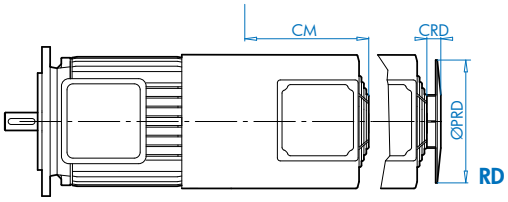


MOTORS

| Motor Type | WE | | | | | | RD | | RDD | | HR | | IG | F | IG F | RD/IG/IGF | |
|---|---|---|---|---|---|---|---|---|---|---|---|---|---|---|---|---|---|
| | FU | FR | FV | FW | FES | FS | PRD | CRD | PRDD | CRDD | DHR | CHR | CM | CM | CM | PRD | CRD |
| | [mm] | | | | | | [in] | | | | | | | | | | |
| **63S/L** | 11 | 12.5 | 23 | 0 | 16 | 4 | 4.84 | 0.47 | 6.02 | 1.06 | 3.94 | 1.54 | 2.20 | 3.46 | 6.22 | 5.24 | 1.46 |
| **71S/L** | 11 | 16.0 | 23 | 1 | 16 | 4 | 5.43 | 0.47 | 6.65 | 0.94 | 3.94 | 1.57 | 2.20 | 3.50 | 5.67 | 5.91 | 1.46 |
| **80S/L** | 14 | 21.5 | 30 | 3 | 20 | 5 | 6.14 | 0.63 | 7.20 | 1.22 | 3.94 | 1.93 | 2.40 | 3.54 | 5.51 | 6.69 | 1.57 |
| **90S/L** | 19 | 27.0 | 40 | 7 | 32 | 6 | 6.93 | 0.63 | 7.91 | 1.22 | 6.30 | 2.64 | 2.83 | 4.09 | 5.87 | 7.40 | 1.18 |
| **100L** | 24 | 31.0 | 50 | 6 | 40 | 8 | 7.64 | 0.63 | 8.86 | 1.10 | 6.30 | 2.95 | 2.71 | 3.74 | 6.10 | 8.27 | 1.10 |
| **112M** | 24 | 31.0 | 50 | 4 | 40 | 8 | 8.58 | 0.63 | 10.43 | 1.50 | 6.30 | 2.91 | 2.67 | 3.90 | 5.87 | 9.80 | 1.30 |
| **132S/M** | 32 | 41.0 | 80 | 18 | 70 | 10 | 10.12 | 0.71 | 12.51 | 1.61 | 7.87 | 4.57 | 2.48 | 4.53 | 6.10 | 11.81 | 0.98 |
| **160M/L** | 38 | 46.0 | 80 | 23 | 90 | 12 | 9.84 | 2.09 | 14.45 | 1.77 | 9.84 | 4.72 | 2.95 | 6.50 | 6.93 | 13.31 | 1.26 |
| **180MX/LX** | * | * | * | * | * | * | 13.39 | 3.15 | 15.87 | 2.76 | * | * | 4.13 | 5.87 | 7.83 | 13.31 | 1.26 |

* **Consult Factory**

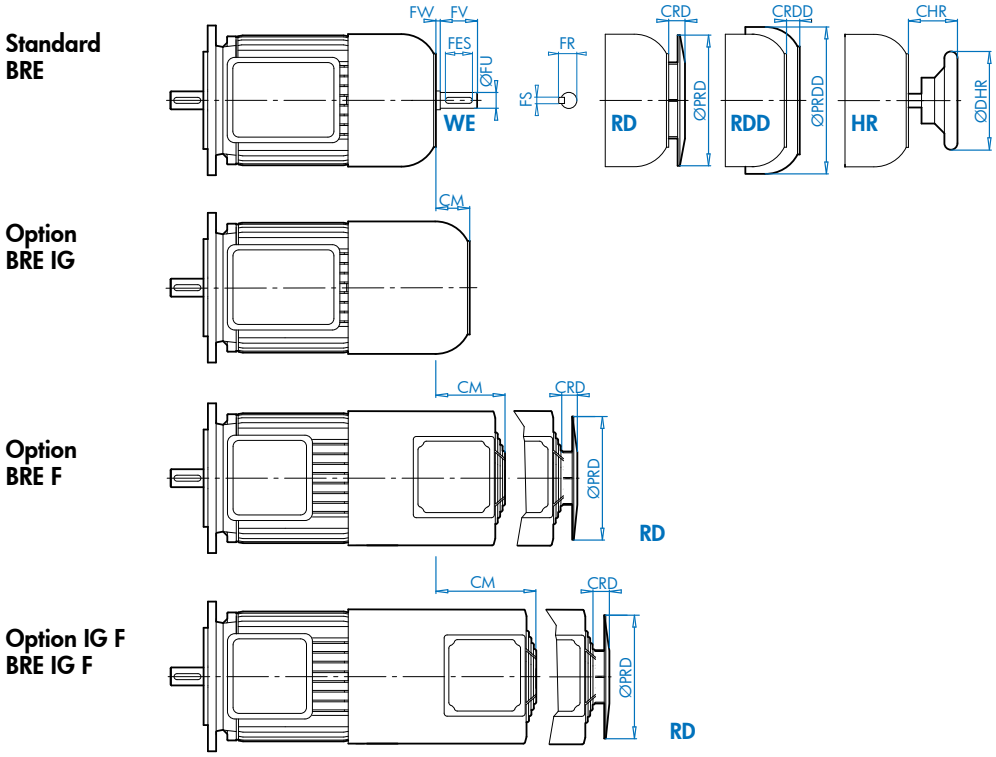


| Motor Type | WE | | | | | | RD | | RDD | | HR | | IG | F | IG F | RD/IG/IGF | |
|---|---|---|---|---|---|---|---|---|---|---|---|---|---|---|---|---|---|
| | FU | FR | FV | FW | FES | FS | PRD | CRD | PRDD | CRDD | DHR | CHR | CM | CM | CM | PRD | CRD |
| | [mm] | | | | | | [in] | | | | | | | | | | |
| **63S/L** | 11 | 12.5 | 23 | 3.5 | 16 | 4 | 4.84 | 0.47 | 6.02 | 1.02 | 0.39 | 1.69 | 2.44 | 3.54 | 4.92 | 5.24 | 1.46 |
| **71S/L** | 11 | 16.0 | 23 | 3.5 | 16 | 4 | 5.43 | 0.47 | 6.65 | 0.94 | 3.94 | 1.69 | 2.91 | 3.70 | 5.47 | 5.91 | 1.46 |
| **80S/L** | 14 | 21.5 | 30 | 4 | 20 | 5 | 6.14 | 0.63 | 7.20 | 1.22 | 3.94 | 1.97 | 2.20 | 3.50 | 5.47 | 6.69 | 1.57 |
| **90S/L** | 14 | 27.0 | 30 | 8 | 32 | 6 | 6.93 | 0.63 | 7.91 | 1.22 | 6.30 | 2.68 | 2.76 | 3.94 | 5.71 | 7.40 | 1.18 |
| **100L** | 24 | 31.0 | 50 | 10 | 40 | 8 | 7.64 | 0.63 | 8.86 | 0.87 | 6.30 | 3.07 | 2.80 | 4.13 | 5.52 | 8.27 | 1.10 |
| **112M** | 24 | 31.0 | 50 | 7 | 40 | 8 | 8.58 | 0.63 | 10.43 | 1.50 | 6.30 | 3.03 | 2.52 | 4.13 | 5.52 | 9.80 | 1.30 |
| **132S/M** | 32 | 41.0 | 80 | 10 | 70 | 10 | 10.12 | 0.71 | 12.60 | 1.61 | 7.87 | 4.25 | 2.56 | 4.92 | 6.10 | 11.81 | 0.98 |
| **160M/L** | 38 | 46.0 | 80 | 19 | 90 | 12 | 12.20 | 0.75 | 14.45 | 1.77 | 9.84 | 4.57 | 1.54 | 5.12 | 6.50 | 13.31 | 1.26 |
| **180MX/LX** | * | * | * | * | * | * | 13.70 | 0.75 | 15.87 | 2.76 | * | * | 1.97 | 5.71 | 8.46 | 13.31 | 1.26 |

*** Consult Factory**

# Dimensions
## Conduit Box & Cable Entry



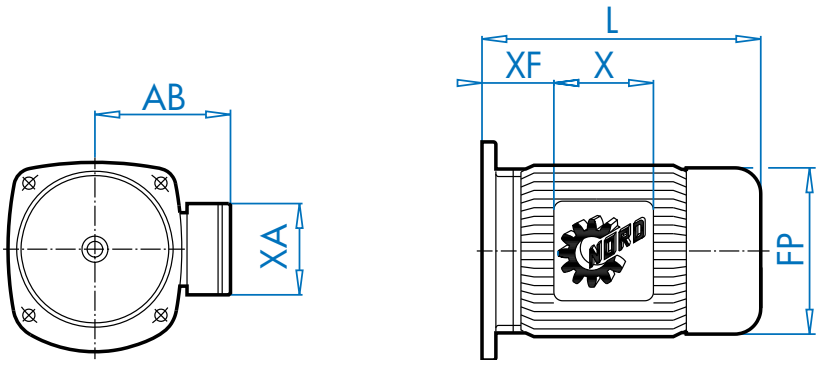


| Type / Flange | Options | Outline dimensions | | | | | | Cable entry | |
|---|---|---|---|---|---|---|---|---|---|
| 63S/L | | FP | AB | XF | X | L | XA | ce | ce-adapter |
| B14 | | 5.12 | 4.53 | 0.47 | 3.94 | 7.56 | 3.94 | 2 × M20×1.5 | 1/2" NPT |
| 160S | | 5.12 | 4.53 | 0.63 | 3.94 | 7.72 | 3.94 | 2 × M20×1.5 | 1/2" NPT |
| B14 | BRE | 5.12 | 4.84 | 0.71 | 5.28 | 9.76 | 3.50 | 2 × M20×1.5 | 1/2" NPT |
| 160S | BRE | 5.12 | 4.84 | 0.87 | 5.28 | 9.92 | 3.50 | 2 × M20×1.5 | 1/2" NPT |
| **71S/L** | | **FP** | **AB** | **XF** | **X** | **L** | **XA** | **ce** | **ce-adapter** |
| B14 | | 5.71 | 4.88 | 0.79 | 3.94 | 8.43 | 3.94 | 2 × M20×1.5 | 1/2" NPT |
| 160S | | 5.71 | 4.88 | 1.65 | 3.94 | 9.29 | 3.94 | 2 × M20×1.5 | 1/2" NPT |
| 250S | | 5.71 | 4.88 | 1.42 | 3.94 | 9.06 | 3.94 | 2 × M20×1.5 | 1/2" NPT |
| B14 | BRE | 5.75 | 5.24 | 1.02 | 5.28 | 10.71 | 3.50 | 2 × M20×1.5 | 1/2" NPT |
| 160S | BRE | 5.75 | 5.24 | 1.89 | 5.28 | 11.57 | 3.50 | 2 × M20×1.5 | 1/2" NPT |
| 250S | BRE | 5.75 | 5.24 | 1.65 | 5.28 | 11.34 | 3.50 | 2 × M20×1.5 | 1/2" NPT |
| **80S/L/LH** | | **FP** | **AB** | **XF** | **X** | **L** | **XA** | **ce** | **ce-adapter** |
| B14 | | 6.50 | 5.59 | 0.87 | 4.49 | 9.29 | 4.49 | 2 × M25×1.5 | 3/4" NPT |
| 160S | | 6.50 | 5.59 | 1.85 | 4.49 | 10.28 | 4.49 | 2 × M25×1.5 | 3/4" NPT |
| 250S | | 6.50 | 5.59 | 1.61 | 4.49 | 10.04 | 4.49 | 2 × M25×1.5 | 3/4" NPT |
| B14 | BRE | 6.50 | 5.59 | 1.02 | 6.02 | 11.81 | 4.25 | 2 × M25×1.5 | 3/4" NPT |
| 160S | BRE | 6.50 | 5.59 | 2.01 | 6.02 | 12.80 | 4.25 | 2 × M25×1.5 | 3/4" NPT |
| 250S | BRE | 6.50 | 5.59 | 1.77 | 6.02 | 12.56 | 4.25 | 2 × M25×1.5 | 3/4" NPT |
| **90S/L/SH/LH** | | **FP** | **AB** | **XF** | **X** | **L** | **XA** | **ce** | **ce-adapter** |
| B14 | | 7.20 | 5.79 | 1.02 | 4.49 | 10.87 | 4.49 | 2 × M25×1.5 | 3/4" NPT |
| 160S | | 7.20 | 5.79 | 2.05 | 4.49 | 11.89 | 4.49 | 2 × M25×1.5 | 3/4" NPT |
| 250S | | 7.20 | 5.79 | 1.81 | 4.49 | 11.65 | 4.49 | 2 × M25×1.5 | 3/4" NPT |
| 300S | | 7.20 | 5.79 | 1.02 | 4.49 | 10.87 | 4.49 | 2 × M25×1.5 | 3/4" NPT |
| B14 | BRE | 7.20 | 5.79 | 1.18 | 6.02 | 13.82 | 4.25 | 2 × M25×1.5 | 3/4" NPT |
| 160S | BRE | 7.20 | 5.79 | 2.20 | 6.02 | 14.84 | 4.25 | 2 × M25×1.5 | 3/4" NPT |
| 250S | BRE | 7.20 | 5.79 | 1.97 | 6.02 | 14.61 | 4.25 | 2 × M25×1.5 | 3/4" NPT |
| 300S | BRE | 7.20 | 5.79 | 1.18 | 6.02 | 13.82 | 4.25 | 2 × M25×1.5 | 3/4" NPT |



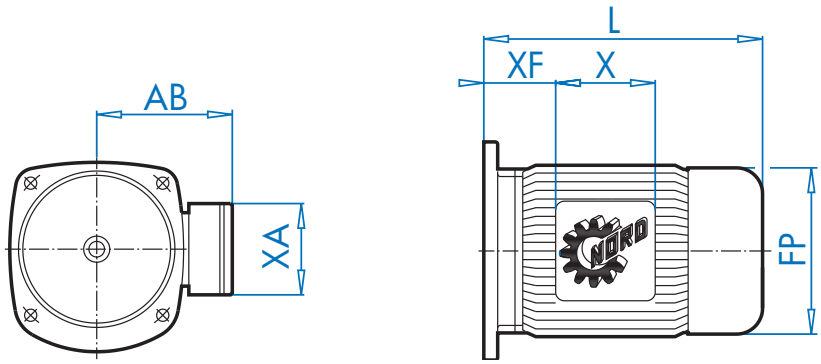


| Type / Flange | Options | Outline dimensions | | | | | | Cable entry | |
|---|---|---|---|---|---|---|---|---|---|
| 100L/L/LA/LH | | FP | AB | XF | X | L | XA | ce | ce-adapter |
| B14 | | 7.91 | 6.65 | 1.26 | 4.49 | 12.05 | 4.49 | 2 × M32×1.5 | 1" NPT |
| 160S | | 7.91 | 6.65 | 2.28 | 4.49 | 13.07 | 4.49 | 2 × M32×1.5 | 1" NPT |
| 250S | | 7.91 | 6.65 | 2.05 | 4.49 | 12.83 | 4.49 | 2 × M32×1.5 | 1" NPT |
| 300S | | 7.91 | 6.65 | 1.26 | 4.49 | 12.05 | 4.49 | 2 × M32×1.5 | 1" NPT |
| Ø 250 | | 7.91 | 6.65 | 1.26 | 4.49 | 12.05 | 4.49 | 2 × M32×1.5 | 1" NPT |
| B14 | BRE | 7.91 | 6.77 | 1.42 | 6.02 | 15.63 | 4.25 | 2 × M25×1.5 | 1" NPT |
| 160S | BRE | 7.91 | 6.77 | 2.44 | 6.02 | 16.65 | 4.25 | 2 × M25×1.5 | 1" NPT |
| 250S | BRE | 7.91 | 6.77 | 2.20 | 6.02 | 16.42 | 4.25 | 2 × M25×1.5 | 1" NPT |
| 300S | BRE | 7.91 | 6.77 | 1.42 | 6.02 | 15.63 | 4.25 | 2 × M25×1.5 | 1" NPT |
| Ø 250 | BRE | 7.91 | 6.77 | 1.42 | 6.02 | 15.63 | 4.25 | 2 × M25×1.5 | 1" NPT |

| 112M/SH/MH | | FP | AB | XF | X | L | XA | ce | ce-adapter |
|---|---|---|---|---|---|---|---|---|---|
| B14 | | 8.98 | 7.05 | 1.77 | 4.49 | 12.83 | 4.49 | 2 × M32×1.5 | 1" NPT |
| 160S | | 8.98 | 7.05 | 2.91 | 4.49 | 13.98 | 4.49 | 2 × M32×1.5 | 1" NPT |
| 250S | | 8.98 | 7.05 | 2.68 | 4.49 | 13.74 | 4.49 | 2 × M32×1.5 | 1" NPT |
| 300S | | 8.98 | 7.05 | 1.89 | 4.49 | 12.95 | 4.49 | 2 × M32×1.5 | 1" NPT |
| Ø 250 | | 8.98 | 7.05 | 1.77 | 4.49 | 12.83 | 4.49 | 2 × M32×1.5 | 1" NPT |
| B14 | BRE | 8.98 | 7.17 | 1.93 | 6.02 | 16.50 | 4.25 | 2 × M25×1.5 | 1" NPT |
| 160S | BRE | 8.98 | 7.17 | 3.07 | 6.02 | 17.64 | 4.25 | 2 × M25×1.5 | 1" NPT |
| 250S | BRE | 8.98 | 7.17 | 2.83 | 6.02 | 17.40 | 4.25 | 2 × M25×1.5 | 1" NPT |
| 300S | BRE | 8.98 | 7.17 | 2.05 | 6.02 | 16.61 | 4.25 | 2 × M25×1.5 | 1" NPT |
| Ø 250 | BRE | 8.98 | 7.17 | 1.93 | 6.02 | 16.50 | 4.25 | 2 × M25×1.5 | 1" NPT |

| 132S/M/SH/MH | | FP | AB | XF | X | L | XA | ce | ce-adapter |
|---|---|---|---|---|---|---|---|---|---|
| B14 | | 10.47 | 8.03 | 2.09 | 4.80 | 16.42 | 4.80 | 2 × M32×1.5 | 1" NPT |
| 250S | | 10.47 | 8.03 | 2.80 | 4.80 | 17.13 | 4.80 | 2 × M32×1.5 | 1" NPT |
| 300S | | 10.47 | 8.03 | 2.01 | 4.80 | 16.34 | 4.80 | 2 × M32×1.5 | 1" NPT |
| Ø 250 | | 10.47 | 8.03 | 2.80 | 4.80 | 17.13 | 4.80 | 2 × M32×1.5 | 1" NPT |
| B14 | BRE | 10.47 | 7.91 | 1.77 | 7.28 | 20.59 | 5.47 | 2 × M25×1.5 | 1" NPT |
| 250S | BRE | 10.47 | 7.91 | 7.28 | 7.28 | 21.34 | 5.47 | 2 × M25×1.5 | 1" NPT |
| 300S | BRE | 10.47 | 7.91 | 1.73 | 7.28 | 20.55 | 5.47 | 2 × M25×1.5 | 1" NPT |
| Ø 250 | BRE | 10.47 | 7.91 | 2.52 | 7.28 | 21.34 | 5.47 | 2 × M25×1.5 | 1" NPT |

# Dimensions
## Conduit Box & Cable Entry



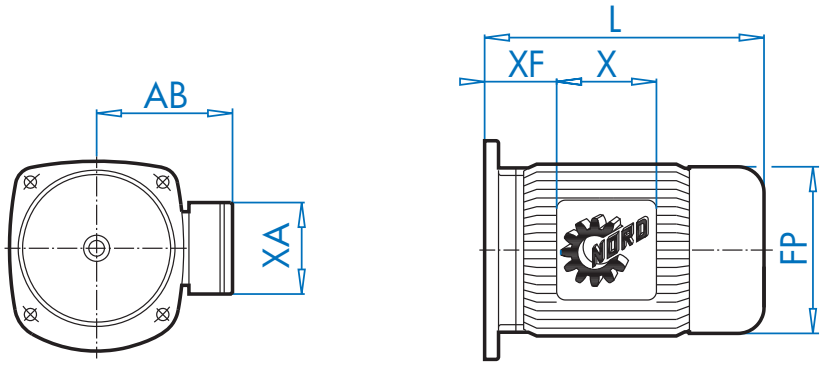


| Type / Flange | Options | Outline dimensions | | | | | | Cable entry | |
|---|---|---|---|---|---|---|---|---|---|
| 160M/L/MH | | FP | AB | XF | X | L | XA | ce | ce-adapter |
| 300S | | 12.60 | 8.90 | 3.07 | 6.50 | 18.82 | 6.50 | 2 × M40×1.5 | 1.0" NPT |
| Ø 300 | | 12.60 | 8.90 | 3.07 | 6.50 | 18.82 | 6.50 | 2 × M40×1.5 | 1.0" NPT |
| Ø 350 | | 12.60 | 8.90 | 3.07 | 6.50 | 18.82 | 6.50 | 2 × M40×1.5 | 1.0" NPT |
| 300S | BRE | 12.60 | 8.90 | 3.07 | 6.50 | 25.39 | 6.50 | 2 × M40×1.5 | 1.0" NPT |
| Ø 300 | BRE | 12.60 | 8.90 | 3.07 | 6.50 | 25.39 | 6.50 | 2 × M40×1.5 | 1.0" NPT |
| Ø 350 | BRE | 12.60 | 8.90 | 3.07 | 6.50 | 25.39 | 6.50 | 2 × M40×1.5 | 1.0" NPT |
| 160LH | | FP | AB | XF | X | L | XA | ce | ce-adapter |
| 300S | | 12.60 | 8.90 | 3.07 | 6.50 | 20.39 | 6.50 | 2 × M40×1.5 | 1.0" NPT |
| Ø 300 | | 12.60 | 8.90 | 3.07 | 6.50 | 20.39 | 6.50 | 2 × M40×1.5 | 1.0" NPT |
| Ø 350 | | 12.60 | 8.90 | 3.07 | 6.50 | 20.39 | 6.50 | 2 × M40×1.5 | 1.0" NPT |
| 300S | BRE | 12.60 | 8.90 | 3.07 | 6.50 | 27.13 | 6.50 | 2 × M40×1.5 | 1.0" NPT |
| Ø 300 | BRE | 12.60 | 8.90 | 3.07 | 6.50 | 27.13 | 6.50 | 2 × M40×1.5 | 1.0" NPT |
| Ø 350 | BRE | 12.60 | 8.90 | 3.07 | 6.50 | 27.13 | 6.50 | 2 × M40×1.5 | 1.0" NPT |
| 180MX/LX | | FP | AB | XF | X | L | XA | ce | ce-adapter |
| 300S | | 12.60 | 8.90 | 3.07 | 6.50 | 20.39 | 6.50 | 2 × M40×1.5 | 1.0" NPT |
| Ø 300 | | 12.60 | 8.90 | 3.07 | 6.50 | 20.39 | 6.50 | 2 × M40×1.5 | 1.0" NPT |
| Ø 350 | | 12.60 | 8.90 | 3.07 | 6.50 | 20.39 | 6.50 | 2 × M40×1.5 | 1.0" NPT |
| 300S | BRE | 12.60 | 8.90 | 3.07 | 6.50 | 27.13 | 6.50 | 2 × M40×1.5 | 1.0" NPT |
| Ø 300 | BRE | 12.60 | 8.90 | 3.07 | 6.50 | 27.13 | 6.50 | 2 × M40×1.5 | 1.0" NPT |
| Ø 350 | BRE | 12.60 | 8.90 | 3.07 | 6.50 | 27.13 | 6.50 | 2 × M40×1.5 | 1.0" NPT |
| 180MH/LH | | FP | AB | XF | X | L | XA | ce | ce-adapter |
| Ø 300 | | 14.09 | 10.20 | 4.45 | 5.20 | 24.49 | 5.98 | 2 × M40×1.5 | 1.0" NPT |
| Ø 350 | | 14.09 | 10.20 | 3.66 | 5.20 | 23.70 | 5.98 | 2 × M40×1.5 | 1.0" NPT |
| Ø 300 | BRE | 14.09 | 10.20 | 3.86 | 6.38 | 28.62 | 6.38 | 2 × M40×1.5 | 1.0" NPT |
| Ø 350 | BRE | 14.09 | 10.20 | 3.07 | 6.38 | 27.83 | 6.38 | 2 × M40×1.5 | 1.0" NPT |

## Motor Dimensions with SK 200E Motor Mounted AC Vector Drive

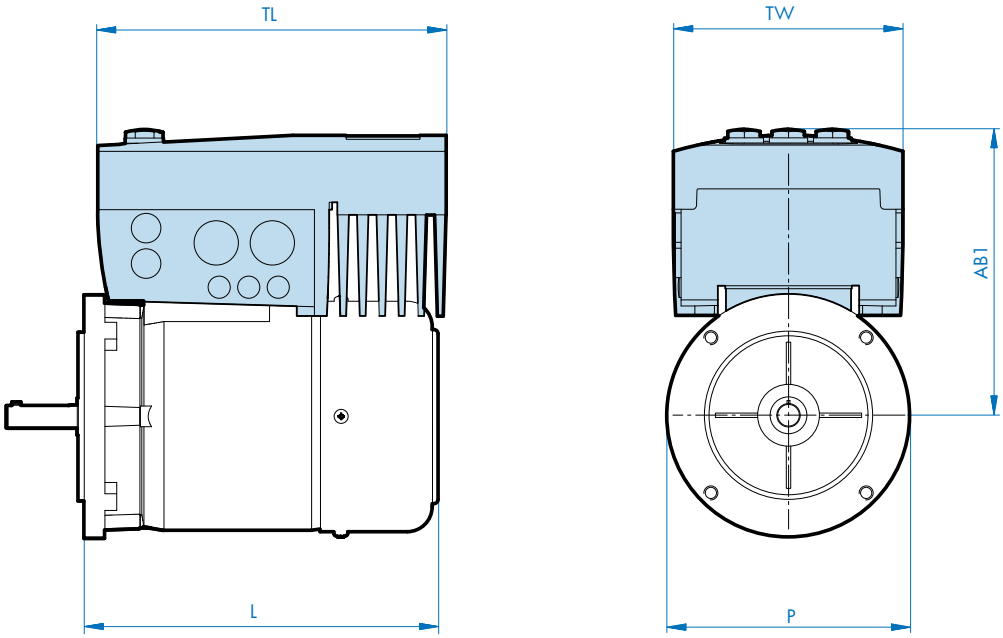


| AC Vector Drive Size | Motor | Width | | Length | | | |
|---|---|---|---|---|---|---|---|
| | | P [in] | TW [in] | L [in] | TL [in] | AB1 [in] | Weight [lbs] |
| Size 1 | 71S/L | 5.71 | 6.14 | 8.43 | 9.29 | 7.91 | 6.61 |
| | 80S/L | 6.50 | | 9.29 | | 7.68 | |
| | 90S/L | 7.20 | | 10.87 | | 7.87 | |
| | 100L/LA | 7.91 | | 12.05 | | 8.23 | |
| Size 2 | 80S/L | 6.50 | 6.93 | 9.29 | 10.47 | 7.95 | 9.04 |
| | 90S/L | 7.20 | | 10.87 | | 8.15 | |
| | 100L/LA | 7.91 | | 12.05 | | 8.58 | |
| | 112M | 8.98 | | 12.83 | | 8.98 | |
| Size 3 | 100L/LA | 7.91 | 8.58 | 12.05 | 12.99 | 9.88 | 15.21 |
| | 112M | 8.98 | | 12.83 | | 10.28 | |
| | 132S/M | 10.47 | | 16.18 | | 10.31 | |
| Size 4 | 132S/M | 10.47 | 12.01 | 16.18 | 18.90 | 12.32 | 37.48 |
| | 160M/L | 12.60 | | 19.37 | | 12.52 | |
| | 180MX/LX | 14.09 | | 24.17 | | 13.19 | |

# Dimensions
# SK 300E Trio AC Vector Drive



## Motor Dimensions with SK 300E Motor Mounted AC Vector Drive

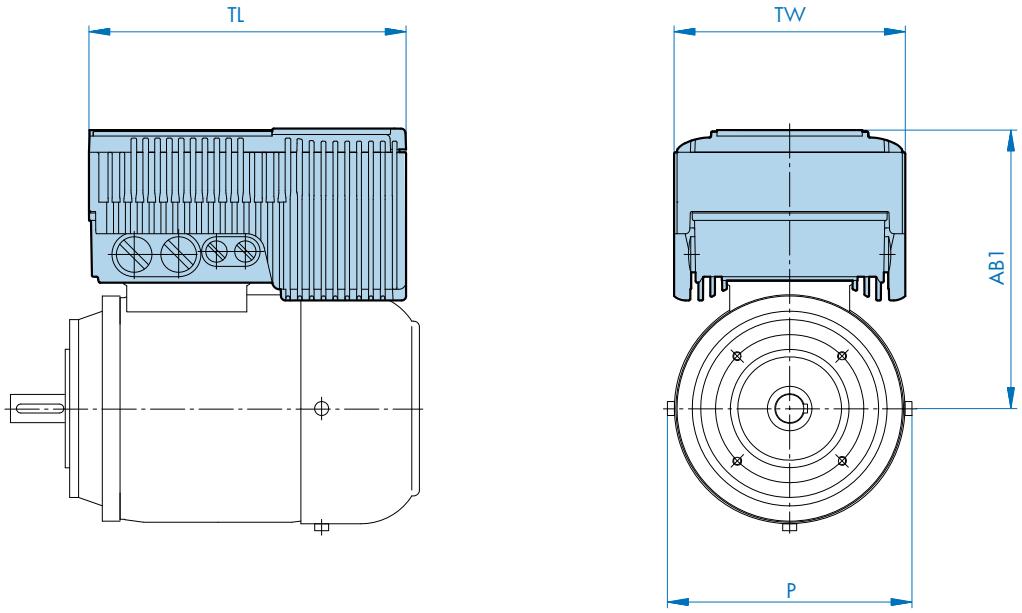


| Basic NORD Motor Description | 240 VAC Input AC Vector Drive | | | 480 VAC Input AC Vector Drive | | |
|---|---|---|---|---|---|---|
| | Type SK 300E | AC Vector Drive Size | AB1 [in] | Type SK 300E | AC Vector Drive Size | AB1 [in] |
| **63S/4** | **-370-323-B** | Size 1 | 7.48 | **-550-340-B** | Size 1 | 7.48 |
| **63L/4** | **-370-323-B** | Size 1 | 7.48 | **-550-340-B** | Size 1 | 7.48 |
| **71S/4** | **-370-323-B** | Size 1 | 7.78 | **-550-340-B** | Size 1 | 7.78 |
| **71L/4** | **-370-323-B** | Size 1 | 7.78 | **-550-340-B** | Size 1 | 7.78 |
| **80S/4** | **-550-323-B** | Size 1 | 7.42 | **-550-340-B** | Size 1 | 7.42 |
| **80L/4** | **-750-323-B** | Size 1 | 7.42 | **-750-340-B** | Size 1 | 7.42 |
| **90S/4** | **-111-323-B** | Size 2 | 8.69 | **-111-340-B** | Size 1 | 7.62 |
| **90L/4** | **-151-323-B** | Size 2 | 8.69 | **-151-340-B** | Size 1 | 7.62 |
| **100L/4** | **-221-323-B** | Size 2 | 9.19 | **-221-340-B** | Size 2 | 9.19 |
| **100LA/4** | **Not Available** | N/A | N/A | **-401-340-B** | Size 2 | 9.19 |

| AC Vector Drive Size | TL [in] | TW [in] | Weight [lbs] |
|---|---|---|---|
| Size 1 | 8.43 | 6.14 | 8.8 |
| Size 2 | 11.14 | 7.72 | 18.5 |

## Contact Information:

- North America
- Global



DRIVESYSTEMS

www.nord.com

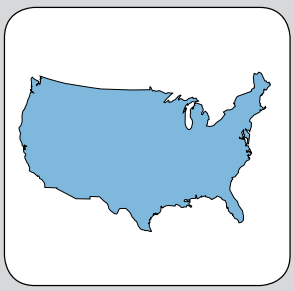





# International
# Contacts - North America

## United States

**NORD Gear Corporation - Midwest Headquarters**
800 Nord Drive, P.O. 367
Waunakee, WI 53597

toll free: 1-888-314-6673
phone: 1-608-849-7300
fax: 1-800-373-6673
eMail: info.us@nord.com

**NORD Gear Corporation - East**
100 Forsyth Hall Drive
Building 100B
Charlotte, NC 28273

toll free: 1-888-314-6673
phone: 1-608-849-0140
fax: 1-888-259-6673
eMail: info.us@nord.com

**NORD Gear Corporation - West**
1137 W. Bradford Circle
Corona, CA 92882

toll free: 1-888-314-6673
phone: 1-608-849-0190
fax: 1-888-408-6673
eMail: info.us@nord.com

**For Sales office or distributors please contact us or see our website at www.nord.com**

## Canada

**NORD Gear Limited**
41 West Drive
Brampton, Ontario L6T 4A1

toll free: 1-800-668-4378
Phone: 1-905-796-3606
fax: 1-905-796-8130
eMail: info.ca@nord.com

**Engrenages NORD Limitée**
1405 Trans-Canada Hwy.
Suite 245
Dorval, Quebec H9P 2V9

toll free: 1-800-668-4378
phone: 1-514-421-1044
fax: 1-514-421-3973
eMail: info.ca@nord.com

**For Sales office or distributors please contact us or see our website at www.nord.com**

## Mexico

**Mexico NORD Drivesystems SA DE CV**
Mexico Regional Office
Av. Ruiz Cortines 831 Ote.
Guadalupe, N.L.
México, C.P. 67110

phone: +52-81-8327-4733
fax: +52-81-8327-4735
eMail: info.mx@nord.com

**For Sales office or distributors please contact us or see our website at www.nord.com**

### Global
**Getriebebau NORD GmbH & Co. KG**
Rudolf-Diesel Str.1
22941 Bargteheide / Hamburg Germany
Phone: +49-4532-401 0 Fax: +49-4532-401 254
Email: info@nord-de.com

### Afghanistan
**Getriebebau NORD GmbH & Co. KG**
Rudolf-Diesel Str.1
22941 Bargteheide / Hamburg Germany
Phone: +49-4532-4010 Fax: +49-4532-401254
Email: info@af.nord.com

### Algeria
**Tunesia S.I.A. Ben Djemaa & CIE**
220 Avenue des Martyrs
TN - 3000 Sfax
Phone: +216-74-408 446 Fax: +216-74-408 065
Email: bendjemaa@planet.tn

### Algeria
**EURL Agence Maghrebine Des Echanges Commerciaux**
35 Avenue 5 Juillet
Borj El Kiffane
Phone: +213-76-288837 Fax: +213-21-201209
Email: bendjemaa@planet.tn

### Angola
**Power Drives a division of Bearing Man Ltd.**
Bearing Man Park, Droste Cresent
Droste Park Ext. 7, Johannesburg 2001
P.O. Box 33431
Jeppestown 2043, South Africa
Phone: +27-11-620 1500 Fax: +27-11-620 1670
Email: powerdrives@bearingman.co.za

### Argentina
**Chilicote S.A.**
Avda. Julio A. Roca 546
1067 Buenos Aires
Phone: +54-11-4343 8469 Fax: +54-11-4331 4278
Email: chilicote@chilicote.com.ar

### Armenia
**Getriebebau NORD GmbH & Co. KG**
Rudolf-Diesel Str.1
22941 Bargteheide / Hamburg Germany
Phone: +49-4532-4010 Fax: +49-4532-401254
Email: info@nord-de.com

### Australia
**CMG Pty Ltd.**
19 Corporate Avenue
Rowville, VIC 3178
PO Box 2340, Rowville, VIC 3178 - Australia
Phone: +61-3-9237 4000 Fax: +61-3-9237 4010
Email: mark.alexander@cmggroup.com.au

### Austria
**Getriebebau NORD GmbH**
Deggendorfstraße 8
A-4030 Linz
Phone: +43-732-31 89 20 Fax: +43-732-31 89 20-85
Email: info@nord-at.com

### Bahrain
**Eight Industries**
P.O. Box 32095
Dubai/U.A.E.
Phone: +971-4-3200 770 Fax: +971-4-3200 771
Email: eight@emirates.net.ae

### Bangladesh
**Getriebebau NORD GmbH & Co. KG**
Rudolf-Diesel Str.1
22941 Bargteheide / Hamburg Germany
Phone: +49-4532-4010 Fax: +49-4532-401254
Email: info@bd.nord.com

### Belarus
**OOO NORD PRIVODY**
P.O. 51
BY-220121 Minsk
Phone: +375-17-205 04 27 Fax: +375-17-205 04 27
Email: info@by.nord.com

### Belgium
**NORD Aandrijvingen België N.V.**
NORD Transmission Belgique S.A.
Boutersemdreef 24
B-2240 Zandhoven
Phone: +32-3-484 59 21 Fax: +32-3-484 59 24
Email: info@nord-be.com

### Bhutan
**Getriebebau NORD GmbH & Co. KG**
Rudolf-Diesel Str.1
22941 Bargteheide / Hamburg Germany
Phone: +49-4532-4010 Fax: +49-4532-401254
Email: info@bt.nord.com

### Bolivia
**Variadores S.A.**
Carrera 50 (Aut. Sur)
No. 2 Sur 271 - A.A. 053811
Medellin, Columbia
Phone: +57-94-2552200 Fax: +57-94-2557450
Email: variadores@variadores.com.co

### Brazil
**NORD Motoredutores do Brasil Ltda**
Rua Dr. Moacyr Antonio de Morais, 700
Parque Santo Agostinho
Guarulhos – São Paulo
CEP 07140-285
Phone: +55-11-6402 8855 Fax: +55-11-6402 8830
Email: info@nord-br.com

# International Contacts

**Bulgaria**
**MELSICON Ltd.**
P.Wolov 47-49
BG-1504 SOFIA
Phone: +359-2-9434150 Fax: +359-2-9434160
Email: melsicon@applet-bg.com

**Burundi**
**Power Drives a division of Bearing Man Ltd.**
Bearing Man Park, Droste Cresent
Droste Park Ext. 7, Johannesburg 2001
P.O. Box 33431 Jeppestown 2043
South Africa
Phone: +27-11-620 1500 Fax: +27-11-620 1670
Email: daver@bearingman.co.za

**Cameroon**
**Getriebebau NORD GmbH & Co. KG**
Rudolf-Diesel Str.1
22941 Bargteheide / Hamburg Germany
Phone: +49-4532-4010 Fax: +49-4532-401254
Email: export2@nord-de.com

**Canada**
**NORD Gear Limited**
41 West Drive
Brampton, Ontario L6T 4A1
Phone: (905) 796-3606 Fax: (905) 796-8130
Email: info.ca@nord.com

**Chile**
**TDC Techno Drive Center S.A.**
Los Leones No. 133-2° Piso
Providencia Santiago de Chile
Chile
Phone: +56-2-234 0084 Fax: +56-2-334 9633
Email: tdc@technodrive.cl

**China**
**NORD (Beijing)**
Power Transmission Co. Ltd.
No. 5, Tangjiacun,
Guangqudonglu, Chaoyangqu
Beijing 100022
Phone: +86-10-67704305 Fax: +86-10-67704330
Email: info@nord-cn.com

**China**
**NORD (Suzhou)**
Power Transmission Co. Ltd.
No.510 Changyang Street
Suzhou Ind. Park
Jiangsu 215021
Phone: +86-512-85180277 Fax: +86-512-85180278
Email: info@nord-cn.com

**Colombia**
**Variadores S.A.**
Carrera 50 (Aut. Sur)
No. 2 Sur 271 - A.A. 053811
Medellin
Phone: +57-4-2552200 Fax: +57-4-2557450
Email: variadores@variadores.com.co

**Costa Rica**
**Variadores S.A.**
Carrera 50 (Aut. Sur)
No. 2 Sur 271 - A.A. 053811
Medellin, Columbia
Phone: +57-94-2552200 Fax: +57-94-2557450
Email: variadores@variadores.com.co

**Croatia**
**NORD-Pogoni d.o.o**
Obrtnicka 9
HR-48260 Krizevci
Phone: +385-48-711 900 Fax: +385-48-270 494
Email: info@nord-hr.com

**Cyprus**
**Getriebebau NORD GmbH & Co. KG**
Rudolf-Diesel Str.1
22941 Bargteheide / Hamburg Germany
Phone: +49-4532-401 441 Fax: +49-4532-401 254
Email: export2@nord-de.com

**Czech Republic**
**NORD-Poháncí technika, s. r. o.**
Palackého 359
500 03 Hradec Králové
Phone: +420 495 580 310 Fax: +420 495 580 312
Email: HZubr@nord-cz.com

**Dem. Rep. Congo**
**Power Drives a division of Bearing Man Ltd.**
Bearing Man Park, Droste Cresent
Droste Park Ext. 7, Johannesburg 2001
P.O. Box 33431 Jeppestown 2043, South Africa
Phone: +27-11-620 1500 Fax: +27-11-620 1670
Email: daver@bearingman.co.za

**Denmark**
**NORD-Gear Danmark A/S**
Kliplev Erhvervspark 28 - Kliplev
DK - 6200 Aabenraa
Phone: +45 73 68 78 00 Fax: +45 73 68 78 10
Email: info@nord-dk.com

**Ecuador**
**Variadores S.A.**
Carrera 50 (Aut. Sur)
No. 2 Sur 271 - A.A. 053811
Medellin, Columbia
Phone: +57-94-2552200 Fax: +57-94-2557450
Email: variadores@variadores.com.co

### Egypt
**IED-International Engineering Development**
4 Abu Gafar El Nahas Street
El Golf, Heliopolis
Cairo
Phone: +20-2-2900475 Fax: +20-2-4185637
Email: ied@thewayout.net

### El Salvador
**Maquinaria E Insumos Industriales, S.A.**
67 Av Sur Edificio #144 Local #3,.
Col Escalon
San Salvador, C.A
Phone: +503-22243059 Fax: +503-22246272
Email: maquinsa@integra.com.sv

### Estonia
**Technobalt Eesti Ltd.**
Läike tee 10
Peetri küla, Rae vald
EE-75301 Harjumaa
Phone: +372-6-684 400 Fax: +372-6-613 165
Email: info@technobalt.ee

### Finland
**NORD Gear Oy**
Aunankorvenkatu 7
FI - 33840 Tampere
Phone: +358-3-254 1800 Fax: +358-3-254 1820
Email: info@nord-fi.com

### France
**NORD Réducteurs**
Bureaux commerciaux
17, Av. Georges Clémenceau
FR-93421 Villepinte Cedex
Phone: +33-1-4963 0189 Fax: +33-1-4963 0811
Email: info@nord-fr.com

### Germany
**Getriebebau NORD GmbH & Co. KG**
Postfach 12 62
Rudolf-Diesel-Strasse 1
D-22941 Bargteheide
Phone: +49-4532-401-0 Fax: +49-4532-401-253
Email: info@nord-de.com

### Ghana
**Getriebebau NORD GmbH & Co. KG**
Rudolf-Diesel Str.1
22941 Bargteheide / Hamburg Germany
Phone: +49-4532-4010 Fax: +49-4532-401254
Email: export2@nord-de.com

### Greece
**Mangrinox S.A.**
14 Grevenon Str.
Votanikos
GR-11855 Athens
Phone: +30-210-3423201-3 Fax: +30-210-3459767, 3459928
Email: magrinox@mail.otenet.gr

### Guatemala
**Maquinaria E Insumos Industriales, S.A.**
19 Avenida 16-56 Zona 10
Empresarial Santa Fe Bodega 4
Guatemala 01010
Phone: +502-23674490 Fax: +502-23674493
Email: maquinsa@inteinet.net.gt

### Guinea
**Getriebebau NORD GmbH & Co. KG**
Rudolf-Diesel Str.1
22941 Bargteheide / Hamburg Germany
Phone: +49-4532-4010 Fax: +49-4532-401254
Email: export2@nord-de.com

### Hungary
**NORD Hajtastechnika Kft.**
Törökkö u. 5-7
HU-1037 Budapest
Phone: +36 1 437 0127 Fax: +36 1 250 5549
Email: info@nord-hu.com

### Iceland
**Varmaverk Ltd.**
Dalshrauni 5
IS-220 Hafnarfiroei
Phone: +354-5651750 Fax: +354-5651951
Email: pall@varmaverk.is

### India
**NORD Drivesystems Pvt. Ltd.**
282/ 2, 283/2, Plot No. 15
Mauje, Village Mann
Tal Mulshi, Adj. Hinjewadi Phase- II
Pune Maharashtra 411 057
Phone: +91-20-39801200 Fax: +91-20-39801216
Email: info@nord-in.com

### Indonesia
**PT. NORD Indonesia**
Jln. Raya Serpong KM7,
Kompleks Rumah Multi Guna Blok D-No. 1
Pakulonan, Serpong 15310 - Tangerang
West Java
Phone: +62-21-5312 2222 Fax: +62-21-5312 2288
Email: info@nord-id.com

# International Contacts

### Iran
**Paralog Engineering Co. Ltd.**
P.O.Box 19395-7366
No. 6, Shangarf Street
Mirdamad Blvd.
Tehran 15489
Phone: +98-21-22905551 / -2 Fax: +98-21-22905550
Email: nord@Paralog.ir

### Ireland
**NORD Gear Limited (UK)**
11 Barton Lane, Abingdon Science Park,
Abingdon,
Oxfordshire OX14 3NB
Phone: +353(0) 87 69 -48 7 11 Fax: +353 (0) 49 85 - 43 7 34
Email: pfinnegan@nord-ie.com

### Israel
**Ringel Bros. Ltd**
Hertzel St. 134
5148 Tel-Aviv
Phone: +972-3-6824027 Fax: +972-3-6822041
Email: mringel@netvision.net.il

### Italy
**NORD-Motoriduttori s.r.l.**
Via Newton 22
IT-40017 San Giovanni in Persiceto (BO)
Phone: +39-051-6870 711 Fax: +39-051-6870 793
Email: info@nord-it.com

### Ivory Coast
**Getriebebau NORD GmbH & Co. KG**
Rudolf-Diesel Str.1
22941 Bargteheide / Hamburg Germany
Phone: +49-4532-4010 Fax: +49-4532-401254
Email: export2@nord-de.com

### Jordan
**Arab Co. For Power Transmissions Technology**
"GearTech Co"
P.O Box 830641
Amman 11183
Phone: +962-6-5692283 Fax: +962-6-5656750
Email: indgroup@wanadoo.jo

### Kazakhstan
**NORD Privody KZ**
Chaykovski str.,
h.131, of.12. KZ - Almaty, 050 000
Phone: +7-3272-61 02 99 Fax: +7-3272-61 02 99
Email: info@kz.nord.com

### Kenya
**Jos. Hansen & Soehne (East Africa) Ltd.**
Baba Dogo Road, Ruaraka
P.O.Box 30196
Nairobi
Phone: +254-2-861 637 Fax: +254-2-861 640
Email: hansenkenya@swiftkenya.com

### Kongo
**Power Drives a division of Bearing Man Ltd.**
Bearing Man Park, Droste Cresent
Droste Park Ext. 7, Johannesburg 2001
P.O. Box 33431 Jeppestown 2043
South Africa
Phone: +27-11-620 1500 Fax: +27-11-620 1670
Email: powerdrives@bearingman.co.za

### Korea
**POWERKING GEAR Co.**
216-8, No-onsa,
Gwangmyung, Gyunggi, 423-080
Phone: +82-2-2615-6044 Fax: +82-2-2060-7044
Email: sales@pkgear.com

### Kuwait
**Eight Industries**
P.O. Box 32095
Dubai/U.A.E.
Phone: +971-4-3200 770 Fax: +971-4-3200 771
Email: eight@emirates.net.ae

### Kyrgyzstand
**Getriebebau NORD GmbH & Co. KG**
Rudolf-Diesel Str.1
22941 Bargteheide / Hamburg Germany
Phone: +49-4532-4010 Fax: +49-4532-401254
Email: info@nord-de.com

### Latvia
**SIA Technobalt**
Skaistkalnes 1
Riga LV - 1004
Phone: +371-7605 046 Fax: +371-7605 062
Email: technobalt@technobalt.lv

### Lebanon
**Hosny Homany**
P.O. Box 102
Ghobery, Beirut
Phone: +961 5 480661/2 Fax: +961 5 480660
Email: hhomany@cyberia.net.lb

### Liberia
**Getriebebau NORD GmbH & Co. KG**
Rudolf-Diesel Str.1
22941 Bargteheide / Hamburg Germany
Phone: +49-4532-4010 Fax: +49-4532-401254
Email: export2@nord-de.com

### Lithuania
**Technobalt Group**
UAB Technobalta
Titnago g.10
LT-02300 Vilnius
Phone: +370-5-260 2503 Fax: +370-5-2653288
Email: lietuva@technobalt.com

### Malaysia
**GTM Sdn Bhd**
No. 19, Jalan Tambur 33/19,
Shah Alam Technology Park, Section 33,
40400, Shah Alam,
Selangor Darul Ehsan
Phone: +60-3-51 24 67 73 Fax: +60-3-51 24 68 10
Email: jenny.multidrive@gmail.com

### Marocco
**Societe Marocaine des Etablissements Moulin**
14 Rue Allal Ben Ahmed AMKIK et 7,
Rue Saint Saens
Belvédère - Casablanca
Phone: +212-22-406777 Fax: +212-22-406782
Email: etsmoulin@wanadoo.net.ma

### Mauritius
**Power Drives a division of Bearing Man Ltd.**
Bearing Man Park, Droste Cresent
Droste Park Ext. 7, Johannesburg 2001
P.O. Box 33431
Jeppestown 2043
South Africa
Phone: +27-11-620 1500 Fax: +27-11-620 1670
Email: powerdrives@bearingman.co.za

### Mexico
**NORD DRIVESYSTEMS SA DE CV**
Av. Lázaro Cárdenas 1007 Pte.
San Pedro Garza Garcia, N.L.
México, C.P. 66266
Phone: +52-81-8220-9165 Fax: +52-81-8220-9044
Email: info.mx@nord.com

### Namibia
**Power Drives a division of Bearing Man Ltd.**
Bearing Man Park, Droste Cresent
Droste Park Ext. 7, Johannesburg 2001
P.O. Box 33431
Jeppestown 2043
South Africa
Phone: +27-11-620 1500 Fax: +27-11-620 1670
Email: powerdrives@bearingman.co.za

### Nepal
**Getriebebau NORD GmbH & Co. KG**
Rudolf-Diesel Str.1
22941 Bargteheide / Hamburg Germany
Phone: +49-4532-4010 Fax: +49-4532-401254
Email: info@np.nord.com

### Netherlands
**NORD Aandrijvingen Nederland B.V.**
Voltstraat 12
NL-2181 HA Hillegom
P.O.Box 136
NL-2180 AC Hillegom
Phone: +31-252 529544 Fax: +31-252 522222
Email: info@nord-nl.com

### New Zealand
**CMG Electric Motors (NZ) Limited**
2 Ross Reid Avenue
East Tamaki, Auckland
Phone: +64-9-273 9162 Fax: +64-9-273 9062
Email: Mark.Alexander@cmggroup.com.au

### Nigeria
**Jos. Hansen & Soehne (Nigeria) Ltd.**
km 16, Ikorodu Road (near Bata)
Ojota
Lagos
Phone: +234-1-4974 304 Fax: +234-1-4976 936
Email: joshansen@linkserve.com

### Norway
**NORD GEAR NORGE A/S**
Solgaard Skog 7,
PB85
N-1501 Moss
Phone: +47-69 20 69 90 Fax: +47-69 20 69 93
Email: MHansen@nord-no.com

### Oman
**Eight Industries**
P.O. Box 32095
Dubai/U.A.E.
Phone: +971-4-3200 770 Fax: +971-4-3200 771
Email: eight@emirates.net.ae

### Pakistan
**OTC**
Flat # 3, 89B/C-II,
Gulberg-III
Lahore 54660
Phone: +92-42-587 2667-9 Fax: +92-42-587 2670
Email: sajjad@otc.com.pk

### Panama
**Variadores S.A.**
Carrera 50 (Aut. Sur)
No. 2 Sur 271 - A.A. 053811
Medellin, Columbia
Phone: +57-94-2552200 Fax: +57-94-2557450
Email: variadores@variadores.com.co

# International Contacts

### Peru
**Delcrosa S.A.**
Av. Argentina 1515
Lima
Phone: +51-1-336 6614 Fax: +51-1-336 8189
Email: viviana@delcrosa.com.pe

### Philippines
**Mheco Mechanical Handling Equipment Company Inc**
Suite 812 Herrera Tower,
Herrera cor. Valero Sts.
Salcedo Village, Makati City
P.O.Box 1004
Makati 1250
Phone: +63-2-844 8901-05 Fax: +63-2-845 1535
Email: mheco@skyinet.net

### Poland
**NORD Napedy sp. z o.o.**
Ul. Grottgera 30
PL-32-020 Wieliczka
S d Rejonowy dla Krakowa Zródmiescia
NIP: 683-17-20-355
Kapital ZakBadowy 770 000, 00 PLN
Phone: +48-0122889900 Fax: +48-0122889911
Email: biuro@nord-pl.com

### Portugal
**NORD Motorreductores**
Apdo de Correos 166,
ES-08200 Sabadell - Spain
Phone: +34-93-723 5322 Fax: +34-93-723 3147
Email: info@nord-es.com

### Qatar
**Eight Industries**
P.O. Box 32095
Dubai/U.A.E.
Phone: +971-4-3200 770 Fax: +971-4-3200 771
Email: eight@emirates.net.ae

### Romania
**S.C.NORD Drivesystems S.R.L.**
Str.Nicolae Iorga,Nr.55/3
RO-550387 SIBIU
Phone: +40/269/232880 Fax: +40/269/232880
Email: UPiringer@ro.nord.com

### Russian Federation
**OOO NORD PRIVODY**
Ul. A. Nevsky 9
RU-191167 St.Petersburg
Phone: +7-812-327 0192 Fax: +7-812-327 0192
Email: info@nord-ru.com

### Rwanda
**Power Drives a division of Bearing Man Ltd.**
Bearing Man Park, Droste Cresent
Droste Park Ext. 7, Johannesburg 2001
P.O. Box 33431 Jeppestown 2043
South Africa
Phone: +27-11-620 1500 Fax: +27-11-620 1670
Email: powerdrives@bearingman.co.za

### Saudi Arabia
**Al-Musairiey Industrial Equipment. Co.**
P.O. Box 40966
Riyadh - 11511
Phone: +966-1-448 3808 Fax: +966-1-446 9244
Email: info@almusairiey.com

### Senegal
**Getriebebau NORD GmbH & Co. KG**
Rudolf-Diesel Str.1
22941 Bargteheide / Hamburg Germany
Phone: +49-4532-4010 Fax: +49-4532-401254
Email: export2@nord-de.com

### Singapore
**NORD GEAR Pte Ltd**
33 Kian Teck Drive
Jurong, Singapore 628850
Phone: +65-6265-9118 Fax: +65-6265-6841
Email: info@nord-sg.com

### Slovakia
**NORD Pohony, s.r.o.**
Juzná Trieda 74
SK - 04001 Kosice
Phone: +421-55-729 9600 Fax: +421-55-729 9599
Email: Info@nord-sk.com

### Slovenia
**Getriebebau NORD GmbH**
Deggendorfstraße 8
A-4030 Linz
Phone: +43-732-31 89 20 Fax: +43-732-31 89 20-85
Email: info@nord-at.com

### South Africa
**Power Drives a division of Bearing Man Ltd.**
6 Tetford Circle,
Millennium Bridge Business Park,
La Lucia Ridge 4320 (Durban)
P.O. Box 25191, Gateway 4321 (Durban)
Phone: +27-11-62 01 61 3 Fax: +27-11-62 01 67 0
Email: powerdrives@bearingman.co.za

### Spain
**NORD Motorreductores S.A.**
Aptdo de Correos 166
ES - 08200 Sabadell
Phone: +34-93-723 5322 Fax: +34-93-723 3147
Email: info@nord-es.com

### Sri Lanka
**Getriebebau NORD GmbH & Co. KG**
Rudolf-Diesel Str.1
22941 Bargteheide / Hamburg Germany
Phone: +49-4532-4010 Fax: +49-4532-401254
Email: info@lk.nord.com

### Sweden
**NORD Drivsystem AB**
Box 2097
Ryttargatan 277
SE-194 02 Upplands Väsby
Phone: +46-8-594 114 00 Fax: +46-8-594 114 14
Email: info@nord-se.com

### Switzerland
**Getriebebau NORD AG**
Bächigenstr.18
CH-9212 Arnegg
Phone: +41-71-38899 11 Fax: +41-71-38899 15
Email: info@nord-ch.com

### Syria
**Elias Brothers Co.**
Al' Kowatly St. 2
P.O. Box 4282
Homs
Phone: +963-31-2771 004 Fax: +963-31-2771 003
Email: eliasbrothersco@mail.sy

### Taiwan
**TACT Trans-Asia Consulting & Trade Co., Ltd.**
1F, No. 157-1, Sec. 1, Beisin Road.,
Sindian City,
Taipei County 231, Taiwan R.O.C.
Phone: + 886-2-29188768 Fax: + 886-2-29185985
Email: TACT@trans-asia.com.tw

### Tanzania
**Jos. Hansen & Soehne (Tanzania) Ltd.**
Holland House, Ohio Street
P.O.Box 9521
Dar es Salaam
Phone: +255-22-211 5746 Fax: +255-22-211 2948
Email: jhs-t@africaonline.co.tz

### Thailand
**Charoen Muang Machinery Co. Ltd.**
164/1 Wisutkasat Rd.
Banpanthom, Pranakorn
Bangkok 10200
Phone: +66-2-281 5331 Fax: +66-2-280 8033-4
Email: info@nord-sg.com

### Tunisia
**Tunesia S.I.A. Ben Djemaa & CIE**
220 Avenue des Martyrs
TN - 3000 Sfax
Phone: +216-74-408 446 Fax: +216-74-408 065
Email: bendjemaa@planet.tn

### Turkey
**NORD-REMAS**
Redüktör Sanayi ve
Ticaret Ltd. Sti.
Tepeören Köyü
34959 - Tuzla - Istanbul
Phone: +90-216-304 13 60 Fax: +90-216-304 13 69
Email: info@nord-tr.com

### Uganda
**Jos. Hansen & Soehne (Uganda) Ltd.**
Workers House Plot 1
Pilkington Road
P.O.Box 2333
Kampala
Phone: +256-41-251 324 Fax: +256-41-251 325
Email: hansenuganda@africaonline.co.ug

### Ukraine
**GETRIEBEBAU NORD GmbH**
Vasilkovskaja, 1
office 306
03040 KIEW
Phone: + 380-44-537 0615 Fax: + 380-44-537 0615
Email: vtsoka@nord-ukr.com

### United Arab Emirates
**Eight Industries**
P.O. Box 32095
Dubai/U.A.E.
Phone: +971-4-3200 770 Fax: +971-4-3200 771
Email: eight@emirates.net.ae

### United Kingdom
**NORD Gear Limited (UK)**
11 Barton Lane, Abingdon Science Park,
Abingdon,
Oxfordshire OX14 3NB
Phone: +44-1235-534404 Fax: +44-1235-534414
Email: info@nord-uk.com

# International Contacts

**United States - Midwest**
**NORD Gear Corporation**
800 Nord Drive, P.O. 367
Waunakee, WI 53597
Phone: 1-888-314-6673 Fax: 1-800-373-6673
Phone: 1-608-849-7300
Email: info.us@nord.com

**United States - West**
**NORD Gear Corporation**
1137 W. Bradford Circle
Corona, CA 92882
Toll free: 1-888-314-6673 Fax: 1-888-408-6673
Phone: 1-608-849-0190
Email: info.us@nord.com

**United States - East**
**NORD Gear Corporation**
100 Forsyth Hall Drive
Building 100B
Charlotte, NC 28273
Toll free: 1-888-314-6673 Fax: 1-888-259-6673
Phone: 1-608-849-0140
Email: info.us@nord.com

**Uzbekistan**
**Getriebebau NORD GmbH & Co. KG**
Rudolf-Diesel Str.1
22941 Bargteheide / Hamburg Germany
Phone: +49-4532-4010 Fax: +49-4532-401254
Email: info@nord-de.com

**Venezuela**
**Getriebebau NORD GmbH & Co. KG**
Rudolf-Diesel Str.1
22941 Bargteheide / Hamburg Germany
Phone: +49-4532-4010 Fax: +49-4532-401254
Email: info@nord-de.com

**Vietnam**
**NORD Gear Pte. Ltd**
Representative office
Unit 401, 4F, An Dinh Building,
18 Nam Quoc Cang Street
Pham Ngu Lao Ward
District 1, Ho Chi Minh City, Vietnam
Phone: +84 8 925 7270 Fax: +84 8 925 7271
Email: info@vn.nord.com

**Zambia**
**PROVIDENT INVESTMENT Ltd**
Mr.Y.M.Mulambya
1st. Floor - Angoni House
Obote Avenenue
Kitwe
Phone: +260-2-22 60 84 Fax: +260-2-22 67 10
Email: provident@zamtel.zm

**Zimbabwe**
**Power Drives a division of Bearing Man Ltd.**
Bearing Man Park, Droste Cresent
P.O. Box 33431 Jeppestown 2043
South Africa
Phone: +27-11-620 1500 Fax: +27-11-620 1670
Email: powerdrives@bearingman.co.za



# SCP
# Ordering Guide

| | Gear Unit | Reducer Options | Motor/Input | Motor Options |
|---|---|---|---|---|
| SK | ❶ | ❷ | ❸ | ❹ |
| | | | see page 19 | see page 128 |

❶

| Gear Unit |
|---|
| 1282 SCP |
| 1382 SCP |
| 2282 SCP |
| 2382 SCP |
| 3282 SCP |
| 3382 SCP |
| 4282 SCP |
| 4382 SCP |
| 5282 SCP |
| 5382 SCP |
| 6282 SCP |
| 6382 SCP |
| Specialty Bevel Product |

❷

| Reducer Options | |
|---|---|
| **ADP -** Additional Drain Plug | **PC -** Grease Purge Seal |
| **LL -** Long Term Storage | **RV -** Drain Valve |
| **MDP -** Magnetic Drain Plug | **SM5 -** Stainless Steel CEMA Shaft |
| **OA -** Oil Expansion Chamber | **VL -** Heavy Duty Bearings |
| **OSG -** Oil Sight Glass | |

❹

| Motor Options | |
|---|---|
| **F & FC -** Blower Cooling Fan | **OL -** Non Ventilated TENV W/Out Fan |
| **RD -** Drip Cover Canopy | **OLH -** Non Ventilated TENV W/Out Fan & Cover |
| **RDD -** Double Drip Cover Canopy | **WE -** Motor Second Shaft Extension |
| **KD -** Condensation Drain Holes | **Z -** High Inertia Motor Fan |
| **KB -** Condensation Drain Holes Plugged | **IG -** Incremental Encoderr |
| **IP66 -** IP66 Motor Enclosure | **TW -** Thermostat |
| **KKV -** Potted Terminal Box | **TF -** Thermistor |
| **MS -** Quick Power Disconnect, Harting Plug | **SH -** Anti-Condensation Space Heaters |

❸

| Input Shaft | NEMA Adapter | IEC Adapter | Integral Motors | Integral Energy Efficent Motors |
|---|---|---|---|---|
| **W** | **N56C** | **IEC 63** | **63S/4** - 0.16hp | **80LH/4** - 1hp |
| | **N140TC** | **IEC 71** | **63L/4** - 0.25hp | **90SH/4** - 1.5hp |
| | **N180TC** | **IEC 80** | **71S/4** - 0.33hp | **90LH/4** - 2hp |
| | **N210TC** | **IEC 90** | **71L/4** - 0.50hp | **100LH/4** - 3hp |
| | **N250TC** | **IEC 100** | **80S/4** - 0.75hp | **112MH/4** - 5hp |
| | **N280TC** | **IEC 112** | **80L/4** - 1hp | **132SH/4** - 7.5hp |
| | | **IEC 132** | **90S/4** - 1.5hp | **132MH/4** - 10hp |
| | | **IEC160** | **90L/4** - 2hp | **160MH/4** - 15hp |
| | | **IEC180** | **100L/4** - 3hp | **160LH/4** - 20hp |
| | | | **100LA/4** - 5hp | **180MH/4** - 25hp |
| | | | **112M/4** - 5.4hp | **180LH/4** - 30hp |
| | | | **132S/4** - 7.5hp | |
| | | | **132M/4** - 10hp | |
| | | | **160M/4** - 15hp | |
| | | | **160L/4** - 20hp | |
| | | | **180MX/4** - 25hp | |
| | | | **180LX/4** - 30hp | |
| | | | Other Speeds Available | Other Speeds Available |

## Product Specifications

**Ratio**

_____ :1

see pages 31 - 62

OR

**Output Speed**

_____ rpm

see pages 31 - 62

**Mounting Position**

- ❍ M1
- ❍ M2
- ❍ M3
- ❍ M4
- ❍ M5
- ❍ M6
- ❍ Special _____

**CEMA Shaft Diameter**

- ❍ 1-1/2″
- ❍ 2″
- ❍ 2-7/16″
- ❍ 3″
- ❍ 3-7/16″

**Paint**

- ❍ Standard Stainless Steel Paint
- ❍ NSD+ (gray)
- ❍ NSD+W (white)
- ❍ NSD-X3 (gray)
- ❍ NSD-X3W (white)
- ❍ Casting Primed
- ❍ Special _____

**Lubricant**

- ❍ Standard
- ❍ Synthetic
- ❍ Food Grade
- ❍ Other _____

CONTACTS

## Gearmotor Only Details

**Voltage & Frequency**

- ❍ 230/460V-60Hz (460V only ≥ 40 hp)
- ❍ 575V-60Hz
- ❍ 208V-60Hz
- ❍ 400V-50Hz
- ❍ Other _____

**Terminal Box Pos.**

- ❍ TB1
- ❍ TB2
- ❍ TB3
- ❍ TB4

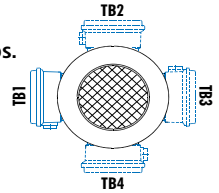


Mtg. Pos. M1 Shown

**Conduit Entry Loc.**

- ❍ CE I *
- ❍ CE II
- ❍ CE III *
- ❍ CE IV

* Brakemotor

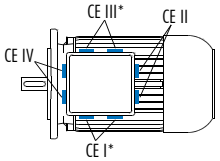


Mtg. Pos. M1 Shown

# Capacity , Ratings & Combinations



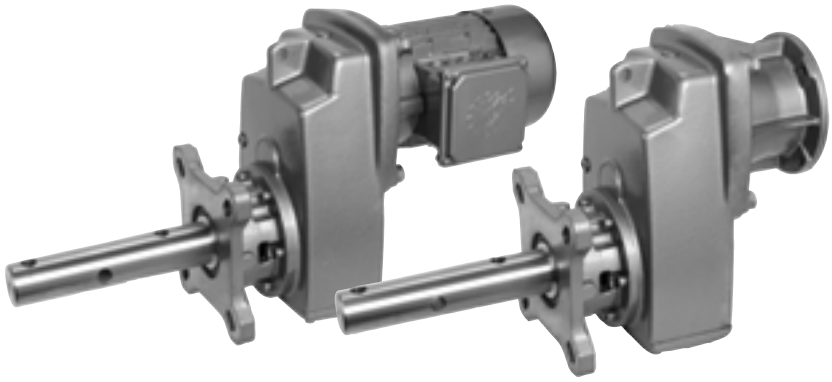

**Capacity & Ratings Overview**

| Model Type | Max Torque [lb-in] | Ratio Range [x:1] | Speed's [rpm] | Max Thrust Load Std Brgs [lb] | Max Thrust Load HD Brgs " VL" [lb] | Gear Stages | Efficiency [%] |
|---|---|---|---|---|---|---|---|
| SK 1282 SCP | 2620 | 4.79-109.5 | 365-16 | 1609 | 1609 | 2 | 97 |
| SK 1382 SCP | 2425 | 87.94-624.45 | 20-2.8 | 1550 | 1609 | 3 | 95 |
| SK 2282 SCP | 4611 | 4.51-127.51 | 388-14 | 2700 | 3375 | 2 | 97 |
| SK 2382 SCP | 4894 | 82.22-763.41 | 21-2.3 | 2700 | 3375 | 3 | 95 |
| SK 3282 SCP | 8363 | 4.48-112.23 | 391-16 | 3263 | 4500 | 2 | 97 |
| SK 3382 SCP | 9195 | 89.60-1022.42 | 20-1.7 | 3263 | 4500 | 3 | 95 |
| SK 4282 SCP | 16089 | 4.7-155.4 | 372-11 | 4950 | 6750 | 2 | 97 |
| SK 4382 SCP | 18381 | 86.83-1585.08 | 20-1.1 | 4950 | 6750 | 3 | 95 |
| SK 5282 SCP | 28630 | 4.32-134.03 | 405-13 | 7200 | 9000 | 2 | 97 |
| SK 5382 SCP | 28320 | 82.72-1367.08 | 21-1.3 | 7200 | 9000 | 3 | 95 |
| SK 6282 SCP | 40135 | 4.39-80.33 | 399-22 | 13219 | 13500 | 2 | 97 |
| SK 6382 SCP | 53100 | 24.42-551.58 | 72-3.2 | 13253 | 13500 | 3 | 95 |

**CEMA Drive Shaft Combinations**

| Model type | 1.5" shaft | 2" shaft | 2-7/16" shaft | 3" shaft | 3-7/16" shaft |
|---|---|---|---|---|---|
| SK 1282 SCP | X | X | X | | |
| SK 1382 SCP | X | X | X | | |
| SK 2282 SCP | X | X | X | | |
| SK 2382 SCP | X | X | X | | |
| SK 3282 SCP | X | X | X | X | |
| SK 3382 SCP | X | X | X | X | |
| SK 4282 SCP | | X | X | X | |
| SK 4382 SCP | | X | X | X | |
| SK 5282 SCP | | X | X | X | X |
| SK 5382 SCP | | X | X | X | X |
| SK 6282 SCP | | | | X | X |
| SK 6382 SCP | | | | X | X |

# NORD GEAR CORPORATION

## Conditions of Sale

**1. CONTRACT**

Any contract between Nord Gear Corporation, hereinafter designated as Seller, and the Buyer is subject to the terms and conditions of sale hereinafter set forth. Any deviation from such terms and conditions must be specifically set forth in writing and consented to by Seller. Accordingly, the Buyer and Seller acknowledge and agree that the terms and conditions set forth below and on the face hereof shall govern Buyer's purchase of the goods described on the face hereof and shall take precedence over and represents the final agreement between Buyer and Seller, notwithstanding any inconsistent, contradictory or other prior or further conditions contained in any oral or written request or purchase order issued by Buyer or any other document furnished by Buyer in connection with its purchase of the Goods, regardless of whether such document or documents are exchanged simultaneously with this Invoice or prior or subsequent thereto. Any additional or different terms or conditions which may appear in any communicaiton, oral or written, from Seller, its officers, employees, agents or representatives, are hereby expressly rejected and shall not be effective or binding upon the Seller, unless specifically hereafter agreed to in writing by Seller and no such additional or different terms or conditions in any document submitted to Seller by Buyer shall become part of the contract between Buyer and Seller, unless such written acceptance by Seller specifically recognizes and assents to their inclusion. Any objection by Buyer to the terms and conditions hereof shall be ineffective unless Seller is advised in writing thereof within two (2) days of the date of this Invoice.

**2. CONFIRMATION**

An order shall be deemed accepted only when duly confirmed by Seller, at Nord Gear Corporation's home office in Waunakee, Wisconsin, and upon such confirmation the order shall become a contract binding upon the parties hereto, their successors and assigns.

**3. PRICES**

Prices shown are list prices and may be subject to applicable discounts. Unless otherwise agreed upon in writing, prices are FOB factory Waunakee, Wisconsin. Prices and discounts are subject to change without notice until order is accepted. Seller's prices do not include cost of any inspection permits required.

**4. LIMITED WARRANTY**

Seller warrants the goods sold hereunder to be free from defects in material and workmanship under normal use and service not arising from misuse, negligence, or accident, including but not limited to the use, installation, and transportation of the goods by the Buyer, its agents, servants, employees, or by carriers. Such obligations under this warranty are limited to remedying any deficiencies in the goods at Waunakee, Wisconsin, or at such place or places in the United States of America as may be designated by Seller. THIS WARRANTY SHALL PERTAIN TO ANY PART OR PARTS OF ANY GOODS TO WHICH BUYER OR ITS ASSIGNS HAS GIVEN WRITTEN NOTICE OF CLAIMED DEFECTS TO SELLER. NORD GEAR CORP. WARRANTS ITS PRODUCTS AGAINST DEFECTS IN MATERIAL AND WORKMANSHIP FOR A PERIOD OF 12 MONTHS FROM DATE OF INSTALLATION OR 18 MONTHS FROM DATE OF SHIPMENT WHICHEVER COMES FIRST ON ALL COMPONENTS. 36 MONTHS FROM DATE OF INVOICE OR 24 MONTHS FROM DATE OF INSTALLATION WHICHEVER COMES FIRST ON GEARS AND HOUSINGS ONLY. PARTS WHICH ARE SUBJECT TO OPERATIONAL WEAR AND TEAR, SUCH AS BELTS & TRACTION DISCS, ARE NOT COVERED BY THE LIMITED WARRANTY. Buyer shall be required to furnish Seller with details of such defects and this warranty shall be effective as to such goods which Seller's examination shall disclose to its satisfaction to have been defective and which at Seller's option shall promptly thereafter be returned to Seller or its nominees. THE LIMITED WARRANTY SET FORTH HEREIN IS IN LIEU OF ALL OTHER WARRANTIES, EXPRESS OR IMPLIED. EXCEPT FOR THE EXPRESS WARRANTIES SET FORTH HEREIN, SELLER HAS MADE AND MAKES NO OTHER WARRANTIES, EXPRESS OR IMPLIED, AS TO THE GOODS SOLD HEREUNDER, INCLUDING, BUT NOT LIMITED TO, THEIR MERCHANTABILITY OR FITNESS FOR ANY PARTICULAR PURPOSE. ANY DESCRIPTION OR MODEL OF THE GOODS IS FOR IDENTIFICATION OR ILLUSTRATIVE PURPOSES ONLY AND SHALL NOT BE DEEMED TO CREATE ANY WARRANTY, EXPRESS OR IMPLIED. SELLER MAKES NO REPRESENTATIONS AS TO THE CAPACITY OR PERFORMANCE OF THE GOODS SOLD HEREUNDER, EXCEPT AS SET FORTH IN THE INVOICE'S SPECIFICATIONS OR OTHER VALID AGREEMENT OR CONDITION AGREED TO BETWEEN THE PARTIES, AND ANY SUCH REPRESENTATIONS ARE EXPRESSLY CONDITIONED UPON THE CORRECTNESS OF THE DATA AND INFORMATION FURNISHED BY THE BUYER AND UPON THE GOODS BEING PROPERLY INSTALLED AND MAINTAINED. THE REMEDIES OF THE BUYER PROVIDED HEREUNDER ARE EXCLUSIVE. In no event shall the Seller be liable to the Buyer or to any other person for any loss or damage, direct or indirect, arising out of or caused by the use or operation of the goods, or for the loss of profits, business, or good will, or for any incidental, special or consequential damages. Seller shall in no event be liable to any person or firm (including any assignee or Buyer) except Buyer and its successors. Unless specifically authorized by Seller in writing, Seller shall not become responsible for any repair work done by Buyer or any other party on any goods sold. Any and all costs of the return to the Seller of such goods and all related costs to remove and re-install such goods, shall be borne by Buyer. Goods sold but not manufactured by the Seller are being warranted as to defects in material and workmanship consistent with the limited warranty policy of the original manufacturer of the goods and if there is not such a limited warranty policy, the warranty shall be limited to the provision of the preceding paragraph of Article 4 herein. Standards for the operating characteristics of the gearboxes and the gearmotors are in conformity with Seller's tests.

**5. SHORTAGE AND NONCONFORMITY**

Any claim of shortage or that the goods do not conform with the specifications of the order or model must be made in writing within ten (10) days after delivery of the goods (as to which such claim is made) to Buyer or its nominees, but in no event shall the claim be later than within the time limit provided by the carrier or insurance company, otherwise such claim shall be deemed waived. Buyer may not return any goods claimed to be in non-conformity without Seller's prior written authorization. Goods returned without permission will not be accepted, including for credit, and will be returned to Buyer, F.O.B. Sellter's plant. Any claim based on the receipt of damaged Goods must be filed with the carrier which delivered the goods. The samples, measurements, dimensions and weights contained in the Seller's catalogs, sales manuals, photographs and drawings constitute only an approximate guide. The Seller reserves the right to make any change which the Seller, in its absolute discretion, considers necessary. While the goods will be delivered principally according to specifications or standards or quantities agreed upon, insignificant deviations or insignificant changes in construction are permissible. The same applies to partial deliveries, In the event that Buyer has a verified claim of shortage or nonconformity of the goods to the specifications of the order or the model, and if such claim has been submitted within the required time limit as set forth above, the Seller shall, at its own expense, make up for the shortage of the goods, or replace or repair the goods, as the case may be, but in no event shall Seller be or become liable to Buyer or to any other person or persons for any loss in damage, direct or indirect, arising out of or caused by such incidents or for the loss of profits, business or good will. The liability of the Seller to Buyer, if any hereunder, for breach of warranty, contract, negligence or otherwise, shall in no event exceed the amount of the purchase price of the goods sold with respect to which any damages are claimed. Shipping dates are estimates unless parties expressly agree on time of the essence.

**6. FORCE MAJEURE**

The obligation of the Seller shall be modified or excused, as the case may be, for reasons of Acts of God, war, governmental law regulations, strikes or lock-outs, fire, breakdown of machinery, whether in its own business enterprise, or if for any other cause beyond Seller's control, the goods cannot be delivered or their delivery becomes delayed in whole or in part. In the above instances time for delivery shall be extended for the period of the delay caused, with the proviso, however, that either party may cancel in writing the undelivered portion of the order or contract if the delay exceeds six (6) months from the delivery date originally confirmed by Seller. In no event shall Seller become liable in the aforesaid instances to Buyer or any third party for consequential damages or business loss.

**7. SHIPMENT AS UNIT**

Each shipment by Seller shall be treated as a separate and distinct unit with respect, but only with respect to forwarding, terms of payment, and the making of claims by the Buyer: provided, however, that if the Buyer defaults in the payment of any obligation to Seller or any installments thereof, under any agreement between Buyer and Seller, or if Buyer refuses to accept any goods when tendered for delivery, the Seller may, on fifteen (15) days written notice to the Buyer, without prejudice to Seller's other lawful remedies, either defer further performance until the defaulted payments are made in full, or make future deliveries for cash in advance only, or treat the entire contract or contracts with Buyer as breached by the Buyer and pursue its remedies for breach.

**8. BUYER'S REFUSAL OF DELIVERY**

If Buyer refuses to accept delivery of any goods tendered for delivery, then Seller, without prejudice to Seller's other lawful remedies, may either store or cause such goods to be stored in a warehouse, for buyer's account and at Buyer's cost, risk and expense, or sell such goods (without notice) to any purchases at public or private sale, and hold the Buyer liable for any difference between (a) the contract price of the goods, and (b) the price at which goods are resold less the costs and expense of such resale including brokerage commissions, or restocking charges.

**9. GOODS IN TRANSIT**

If prior to delivery or while the goods are in transit, Buyer or Seller becomes bankrupt or insolvent, or any petition in bankruptcy or for the reorganization or for a state court receivership is filed against Buyer or Seller, as the case may be, then the other party hereto may forthwith terminate this contract by giving written notice of such termination. Such termination shall not affect any claim for damages available to the Buyer, provided that if Buyer is then indebted to Seller, the amount of any such damage claim shall be abated to the extent that the indebtedness of Buyer to Seller, as actually paid in money, is abated by any order of judgement entered or any plan adopted in any bankruptcy, reorganization, receivership, or similar proceeding. Such termination shall not prejudice the Seller's rights to any amounts then due under the contract. If Buyer becomes bankrupt or insolvent or any petition in bankruptcy or for reorganizing or if a state court receivership is filed against Buyer, then, at its option Seller may take possession of any goods theretofore sold to Buyer, in connection with which the full purchase price has not been paid, analogous to the terms and provisions set forth in Paragraphs 11 and 12 hereinafter.

**10. DELIVERY**

(a) Any indicated dates of delivery are approximate only, but NORD Gear will attempt to meet them whenever possible. (b) NORD Gear will not be liable for any penalty clausess contained in any specifications or order submitted unless agreed to in writing by an authorized officer of NORD Gear Corporation. (c) Unless otherwise agreed, delivery of the goods to any carrier shall constitute delivery to the Buyer, and thereafter the risk of loss or damage to the goods shall be upon the Buyer. (d) If the Buyer does not give delivery instructions to the Seller at least (10) days prior to the delivery date ex factory confirmed by the Seller, the Seller may deliver the goods to a carrier of its own choosing, at Buyer's cost and risk, or, at Seller's option, may store the goods on the pier or any warehouse, at Buyer's cost and risk. Any purchase price in such event becomes due and payable within ten (10) days of such storage.

**11. PAYMENT OF PURCHASE PRICE**

Time of payment is of the essence under the contract. Unless otherwise provided, terms of payment are 30 days net from the date of invoice with a 1% discount if paid within 10 days of date of invoice. Upon default in any of the terms of the contract, or failure to comply with any of the conditions thereof, or upon seizure of the property under execution or other legal process, or if the Buyer becomes bankrupt or insolvent, or any petition for reorganization or for a state court receivership is filed against Buyer, or if the Buyer makes any assignment for the benefit of it's creditors or otherwise sells, encumbers or disposes of the goods, or if for any other reason the Seller should deem itself insecure, the full amount of the purchase price then remaining unpaid shall at once become due and payable at the option of the Seller.

**12. BUYER'S DEFAULT**

Upon the Buyer's default, the Seller may dispose of the merchandise in any manner that it deems fit and, if it desires to resell same, may do so at private or public sale, with or without notice, and with or without the property being at the place of sale, subject, however, to applicable laws. The Seller or its assigns shall have the right to bid at such sale and may become the purchaser of the property. The proceeds of the sale shall first be applied to the expenses incurred in retaking, repairing, storing and selling the goods, reasonable attorney's fees included, and then shall be applied to the payment of the balance due under the contract. Any surplus amount shall be paid to the Buyer. If a deficiency results after the resale, the Buyer agrees to pay such forthwith, together with reasonable attorney's fees, for the recovery of the goods incurred by the Seller. If upon the Buyer's default, the Seller elects not to resell any goods which it may repossess, then the cost of repossession, including reasonable attorney's fees, shall forthwith be due and payable from Buyer to Seller. Buyer agrees to pay all reasonable costs and reasonable attorneys' fees incurred by Seller in enforcing Seller's rights against Buyer, including Seller's right to payment of the purchase price of the goods and Buyer's payment of all other amounts owing to Seller required under this Invoice and Conditions of Sale.

**13. SECURITY INTEREST AND TITLE**

In states and localities which are governed by the Uniform Commercial Code, this contract shall serve as security agreement, reserving in Seller a security interest until full payment of purchase price. The provisions of the Uniform Commercial Code regarding security interest shall have preference and apply if inconsistent with other terms of the conditions of sale. In states and localities where the Uniform Commercial Code does not apply, title to the goods shall remain in the Seller or its assigns until full payment of the purchase price. Buyer agrees to execute forthwith any and all documents in such a way and form as Seller may need for filing or recording the security interest under the Uniform Commercial Code with the proper registers or offices, or for filing or recording the conditional sales contract.

**14. SALES AND USE TAX**

Buyer agrees to bear and pay any sales or use tax in connection with the purchase herein, and to hold the Seller harmless from payment. At the option the Seller, Buyer shall give evidence of payment or of exemption certificate.

**15. INSURANCE**

The Buyer shall keep the goods insured against damage by fire, water or other casualty as required by Seller, with a company acceptable to Seller, with loss payable to Seller for the total purchase price until the Seller is fully paid. Seller, if it so elects, may place said insurance at Buyer's expense; Seller may cancel such insurance at any time and without notice and may receive the return premium, if any.

**16. MODIFICATION BY SELLER**

Any contract may be assigned or transferred by the Seller, or the time for the making of any payment due by Buyer may be extended by Seller without derogation of any of the rights of the Seller or its assigns. Waiver by any party of any default shall not be deemed a waiver of any subsequent default.

**17. RETURNED GOODS**

No goods will be accepted for return unless authorized in writing by Seller. In all cases, transportation and restocking charges will be borne by Buyer.

**18. PACKING**

The Buyer will be charged for export packaging or other special packing desired. Cost for cartage to ship or transfer express will be added to the invoice. No credit will be allowed if no packing is required.

**19. CHANGES/CANCELLATION**

NORD Gear will not accept changes in specifications to a confirmed order unless such changes are requested in writing and confirmed back in writing. In addition, the purchaser must to agree to any additional charges that may arise from the change. Placing orders on hold or cancellation of orders require Seller's written approval, and are subject to cancellation and/or restocking charges.

**20. BUYER'S RESPONSIBILITY AS TO MAINTENANCE**

Buyer shall use and shall require its employees and agents to use all safety devices and guards and shall maintain the same in proper working order. Buyer shall use and require its employees and agents to use safe operation procedures in operating the equipment and shall further obey and have its employees and agents obey safety instructions given by Seller. If Buyer fails to meet the obligations herein, Buyer agrees to defend, indemnify and save Seller harmless from any liability or obligation with regard to any personal injuries or property damages directly or indirectly connected with the operation of the equipment. Buyer further agrees to notify Seller promptly and in any event not later than ten (10) days after notice or knowledge of any accident or malfunction involving Seller's equipment which has caused personal injury or property damages and to cooperate fully with Seller in investigating and determining the causes of such accident and malfunction. In the event that Buyer fails to give such notice to Seller or to cooperate with Seller, Buyer shall be obligated to defend, indemnify and save Seller harmless from any such claims arising from such accident.

**21. MISCELLANEOUS PROVISIONS**

(a) If for any reason a provision of a contract is legally invalid, then in such event the rest of the contract shall remain in full force and affect, except that the parties shall try to replace such invalid provision closest to their original mutual intentions. (b) This Invoice and these Conditions of Sale constitute the entire agreement between the parties regarding the subject matter hereof and supercedes all prior agreements, understandings and statements, whether oral or written, regarding such subject matter. No modification to, change in or departure from, the provisions of this Invoice and Conditions of Sale shall be valid or binding on Seller, unless approved in writing by Seller. No course of dealing or usage of trade shall be applicable unless expressly incorporated into this Invoice and Conditions of Sale. Any amendments to any contract or contracts between the parties shall be valid only upon the written consent of both parties.

**22. NON ASSIGNMENT BY BUYER**

Contract or contracts may not be assigned by the Buyer without prior written consent of the Seller.

**23. APPLICABLE LAW AND VENUE**

All contracts and their interpretation are governed by the applicable, substantive laws of the State of Wisconsin. Any litigation brought by the Buyer regarding this Invoice or goods purchased hereunder may only be brought in the Circuit Court for Dane County, Wisconsin.

# NORD GEAR LIMITED

# Terms and Conditions of Sale

## 1. CONTRACT

Any contract between Nord Gear Limited, hereinafter designated as Seller, and the Buyer is subject to the terms and conditions of sale hereinafter set forth. Any deviation from such terms and conditions must be specifically set forth in writing and consented to by Seller.

## 2. CONFIRMATION

An order shall be deemed accepted only when duly confirmed by Seller, at Nord Gear Limited's home office in Brampton, Ontario, and upon such confirmation the order shall become a contract binding upon the parties hereto, their successors and assigns.

## 3. PRICES

Prices shown are list prices and may be subject to applicable discounts. Unless otherwise agreed upon in writing, prices are FOB factory Braenton, Ontario. Prices and discounts are subject to change without notice until order is accepted. Seller's prices do not include cost of any inspection permits required.

## 4. LIMITED WARRANTY

Seller warrants the goods sold hereunder to be free from defects in material and workmanship under normal use and service not arising from misuse, negligence, or accident, including but not limited to the use, installation, and transportation of the goods by the Buyer, its agents, servants, employees, or by carriers. Such obligations under this warranty are limited to remedying any deficiencies in the goods at Brampton, Ontario, or at such place or places in Canada as may be designated by Seller. This warranty shall pertain to any part or parts of any goods to which Buyer or its assigns has, within one year from date of original factory invoice, given written notice of claimed defects to Seller. Buyer shall be required to furnish Seller with details of such defects and this warranty shall be effective as to such goods which Seller's examination shall disclose to its satisfaction to have been defective and which at Seller's option shall promptly thereafter be returned to Seller or its nominees. EXCEPT FOR THE EXPRESS WARRANTIES SET FORTH ABOVE, SELLER HAS MADE NO WARRANTIES, EXPRESS, IMPLIED OR STATUTORY, AS TO THE GOODS SOLD HEREUNDER, INCLUDING, BUT NOT LIMITED TO THEIR MERCHANTABILITY OR FITNESS FOR ANY PARTICULAR PURPOSE. ANY DESCRIPTION OR MODEL OF THE GOODS IS FOR IDENTIFICATION OR ILLUSTRATIVE PURPOSES ONLY AND SHALL NOT BE DEEMED TO CREATE AN EXPRESS WARRANTY. THE REMEDIES OF THE BUYER SET FORTH IN THIS SECTION ARE EXCLUSIVE. In no event shall the Seller be liable to the Buyer or to any other person for any loss or damage, direct or indirect, arising out of or caused by the use or operation of the goods, or for the loss of profits, business, or good will, or for any incidental, special or consequential damages. Seller shall in no event be liable to any person or firm (including any assignee or Buyer) except Buyer and its successors. Unless specifically authorized by Seller in writing, Seller shall not become responsible for any repair work done by Buyer or any other party on any goods sold. Any costs of the return of such goods to Seller shall be borne by Buyer. Goods sold but not manufactured by the Seller are being warranted as to defects in material and workmanship consistent with the limited warranty policy of the original manufacturer of the goods and if there is not such a limited warranty policy, the warranty shall be limited to the provisions of the preceding paragraph of Article 4 herein. Standards for the operating characteristics of the gearboxes and the gearmotors are in conformity with Seller's test. THIS WARRANTY IS IN LIEU OF ALL OTHER EXPRESS OR IMPLIED WARRANTIES, INCLUDING ANY IMPLIED WARRANTY OF MERCHANTABILITY OR FITNESS FOR ANY PARTICULAR PURPOSE THE SELLER DOES NOT ASSUME, NOR DOES IT AUTHORIZE ANY PERSON TO ASSUME, ON ITS BEHALF, ANY OTHER OBLIGATION OR LIABILITY.

## 5. SHORTAGE AND NONCONFORMITY

Any claim of shortage or that the goods do not conform with the specifications of the order or model must be made in writing within ten (10) days after delivery of the goods (as to which such claim is made) to Buyer or its nominees, but in no event shall the claim be later than within the time limit provided by the carrier or insurance company, otherwise such claim shall be deemed waived. The samples, measurements, dimensions and weights contained in the Seller's catalogs, sales manuals, photographs and drawings constitute only an approximate guide. The Seller reserves the right to make any changes which the Seller, in its absolute discretion, considers necessary. While the goods will be delivered principally according to specifications or standards or quantities agreed upon, insignificant deviations or insignificant changes in construction are permissible. The same applies to partial deliveries. In the event that Buyer has a verified claim of shortage or nonconformity of the goods to the specifications of the order or the model, and if such claim has been submitted within the required time limit as set forth above, the Seller shall, at its own expense, make up for the shortage of the goods, or replace or repair the goods, as the case may be, but in no event shall Seller be or become liable to Buyer or to any other person or persons for any loss in damage, direct or indirect, arising out of or caused by such incidents or for the loss of profits, business or good will. Shipping dates are estimates unless parties expressly agree on time of the essence.

## 6. FORCE MAJEURE

The obligation of the Seller shall be modified or excused, as the case may be, for reasons of Acts of God, war, governmental law regulations, strikes or lock outs, fire, breakdown of machinery, whether in its own business enterprise, or if for any other course beyond Seller's control, the goods cannot be delivered or their delivery becomes delayed in whole or in part. In the above instances time for delivery shall be extended for the period of the delay caused, with the proviso, however, that either party may cancel in writing the undelivered portion of the order or contract if the delay exceeds six (6) months from the delivery date originally confirmed by Seller. In no event shall Seller become liable in the aforesaid instances to Buyer or any third party for consequential damages or business loss.

## 7. SHIPMENT AS UNIT

Each shipment by Seller shall be treated as a separate and distinct unit with respect, but only with respect to forwarding, terms of payment, and the making of claims by the Buyer; provided, however, that if the Buyer defaults in the payment of any obligation to Seller or any installment thereof, under any agreement between Buyer and Seller, or if Buyer refuses to accept any goods when tendered for delivery, the Seller may, on fifteen (15) days' written notice to the Buyer, without prejudice to Seller's other lawful remedies, either defer further performance until the defaulted payments are made in full, or make future deliveries for cash in advance only, or treat the entire contract or contracts with Buyer as breached by the Buyer and pursue its remedies for breach.

## 8. BUYER'S REFUSAL OF DELIVERY

If Buyer refuses to accept delivery of any goods tendered for delivery, then Seller, without prejudice to Seller's other lawful remedies, may either store or cause such goods to be stored in a warehouse, for Buyer's account and at Buyer's cost, risk and expense, or sell such goods (without notice) to any purchaser at public or private sale, and hold Buyer liable for any difference between (a) the contract price of the goods, and (b) the price at which goods are resold less the costs and expense of such resale including brokerage commissions, or restocking charges.

## 9. GOODS IN TRANSIT

If prior to delivery or while the goods are in transit, Buyer or Seller becomes bankrupt or insolvent, or any petition in bankruptcy or for the reorganization or for appointment of a receiver is filed against Buyer or Seller, as the case may be, then the other party hereto may forthwith terminate this contract by giving written notice of such termination. Such termination shall not affect any claim for damages available to the Buyer, provided that if Buyer is then indebted to Seller, the amount of any such damage claim shall be abated to the extent that the indebtedness of Buyer to Seller, as actually paid in money, is abated by any order or judgment entered or any plan adopted in any bankruptcy, reorganization, receivership, or similar proceeding. Such termination shall not prejudice the Seller's rights to any amounts then due under the contract. If Buyer becomes bankrupt or insolvent or any petition in bankruptcy or for reorganization or if a state court receivership is filed against Buyer, then, at its option, Seller may take possession of any goods theretofore sold to Buyer, in connection with which the full purchase price has not been paid, analogous to the terms and provisions set forth in Paragraphs 11 and 12 hereinafter.

## 10. DELIVERY

(a) Unless otherwise agreed, delivery of the goods to any carrier shall constitute delivery to the Buyer, and thereafter the risk of loss or damage to the goods shall be upon the Buyer. (b) If the Buyer does not give delivery instructions to the Seller at least (10) days prior to the delivery date ex factory confirmed by the Seller, the Seller may deliver the goods to a carrier of its own choosing, at Buyer's cost and risk, or, at Seller's option, may store the goods on the pier or on any warehouse, at Buyer's cost and risk. Any purchase price in such event becomes due and payable within ten (10) days of such storage.

## 11. PAYMENT OF PURCHASE PRICE

Time of payment is of the essence under the contract. Upon default in any of the terms of the contract, or failure to comply with any of the conditions thereof, or upon seizure of the property under execution or other legal process, or if the Buyer becomes bankrupt or insolvent, or any petition for reorganization or for appointment of a receiver is filed against Buyer, or if the Buyer makes any assignment for the benefit of its creditors or otherwise sells, encumbers or disposes of the goods, or if for any other reason the Seller should deem itself insecure, the full amount of the purchase price then remaining unpaid shall at once become due and payable at the option of the Seller.

## 12. BUYER'S DEFAULT

Upon the Buyer's default, the Seller may dispose of the merchandise in any manner that it deems fit and, if it desires to resell same, may do so at private or public sale, with or without notice, and with or without the property being at the place of sale, subject, however, to applicable laws. The Seller or its assigns shall have the right to bid at such sale and may become the purchaser of the property. The proceeds of the sale shall first be applied to the expenses incurred in retaking, repairing, storing and selling the goods, reasonable solicitor's fees included, and then shall be applied to the payment of the balance due under the contract. Any surplus amount shall be paid to the Buyer. If a deficiency results after the resale, the Buyer agrees to pay such forthwith, together with reasonable solicitor's fees, for the recovery of the goods incurred by the Seller. If upon the Buyer's default, the Seller elects not to resell any goods which it may repossess, then the cost of repossession, including reasonable solicitor's fees, shall forthwith be due and payable from Buyer to Seller.

## 13. SECURITY INTEREST AND TITLE

In provinces which are governed by a Personal Property Security Act, this contract shall serve as Security Agreement, reserving in Seller a security interest until full payment of purchase price. The provisions of the Personal Property Security Act regarding security interest shall have preference and apply if inconsistent with other terms of the conditions of sale herein. In provinces where a Personal Property Security Act does not apply, title to the goods shall remain in the Seller or its assigns until full payment of the purchase price. Buyer agrees to execute forthwith any and all documents in such a way and form as Seller may need for filing or recording the security interest under a Personal Property Security Act with the proper registers or offices, or for filing or recording the Conditional Sales Contract herein.

## 14. SALES AND USE TAX

The Seller's prices do not include sales, use, excise or other taxes payable to any governmental authority in respect of the sale of Seller's goods. The Buyer shall pay, in addition to the Seller's price the amount of any such taxes or shall reimburse the Seller for the amount thereof that the Seller may be required to pay. At the option of the Seller, Buyer shall give evidence of payment or of exemption certificate.

## 15. INSURANCE

The Buyer shall keep the goods insured against damage by fire, water or other casualty as required by Seller, with a company acceptable to Seller, with loss payable to Seller for the total purchase price until the Seller is fully paid. Seller, if it so elects, may place said insurance at Buyer's expense; Seller may cancel such insurance at any time and without notice and may receive the return premium, if any.

## 16. MODIFICATION BY SELLER

Any contract may be assigned or transferred by the Seller, or the time for the making of any payment due by Buyer may be extended by Seller without derogation of any of the rights of the Seller or its assigns. Waiver by any party of any default shall not be deemed a waiver of any subsequent default.

## 17. RETURNED GOODS

No goods will be accepted for return unless authorized in writing by Seller. In all cases, transportation and restocking charges will be borne by Buyer.

## 18. PACKING

The Seller does not charge for standard packaging for domestic shipment. The Buyer will be charged, however, for export packaging or other special packing desired. Cost for cartage to ship or transfer express will be added to the invoice. No credit will be allowed if no packing is required.

## 19. EXPORT ORDER

Export orders are to be accompanied by a confirmed irrevocable Letter of Credit in Seller's favour, in Canadian currency, with an accredited Canadian bank, subject to Seller's draft, with shipping documents attached.

## 20. CANCELLATION

Placing orders on hold or cancellation of orders require Seller's written approval, and are subject to cancellation and/or restocking charges.

## 21. BUYER'S RESPONSIBILITY AS TO MAINTENANCE

Buyer shall use and shall require its employees and agents to use all safety devices and guards and shall maintain the same in proper working order. Buyer shall use and require its employees and agents to use safe operating procedures in operating the equipment and shall further obey and have its employees and agents obey safety instructions given by Seller. If Buyer fails to meet the obligations herein, Buyer agrees to indemnify and save Seller harmless from any liability or obligation with regard to any personal injuries or property damages directly or indirectly connected with the operation of the equipment. Buyer further agrees to notify Seller promptly and in any event not later than ten (10) days after notice or knowledge of any accident or malfunction involving Seller's equipment which has caused personal injury or property damages and to cooperate fully with Seller in investigating and determining the causes of such accident and malfunction. In the event that Buyer fails to give such notice to Seller or to cooperate with Seller, Buyer shall be obligated to indemnify and save Seller harmless from any such claims arising from such accident.

## 22. MISCELLANEOUS PROVISIONS

(a) If for any reason a provision of a contract is legally invalid, then in such event the rest of the contract shall remain in full force and effect; except that the parties shall try to replace such invalid provision with a provision closest to their original mutual intentions. (b) Any amendments to any contract or contracts require the consent in writing by both parties.

## 23. NON ASSIGNMENT BY BUYER

Contract or contracts may not be assigned by the Buyer without prior written consent of the Seller.

## 24. APPLICABLE LAW

All contracts are governed by the applicable laws of Ontario.

**25.** This instrument sets forth the entire understanding and agreement of the parties hereto in respect of the subject matter hereof, and all prior undertakings between the parties hereto, together with all representations and obligations of such parties in respect of such subject matter, shall be superceded by and merged into this instrument.

**26.** The provisions of this agreement shall bind and ensure to the benefit of the parties hereto and their respective heirs, executors, administrators, successors and (subject to any restrictions or assignment herein above set forth) assigns, as the case may be.

**27.** The parties acknowledge that they have requested this Contract and all notices or other documents relating thereto be drafted in the English language.

Les parties reconnaissent qu'ils ont requis que ce contrat et tous les avis ou autres documents qui s'y rapportent soient rédigés en langue anglaise.

*"Terms and Conditions in French available upon request."*

# Product Overview

## UNICASE™ SPEED REDUCERS



**HELICAL IN-LINE**
- Foot or Flange Mount
- Torque up to 205,000 lb-in
- Gear ratios – 1.82:1 to over 300,000:1



**NORDBLOC®.1 HELICAL IN-LINE**
- Foot or Flange Mount
- Torque up to 26,550 lb-in
- Gear ratios – 1.88:1 to over 370:1



**PARALLEL HELICAL CLINCHER™**
- Shaft, Flange or Foot Mount
- Torque up to 797,000 lb-in
- Gear ratios – 4.26:1 to over 300,000:1

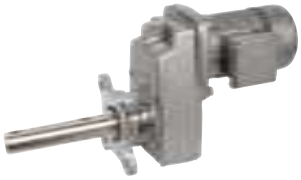

**SCP SCREW CONVEYOR PACKAGE**
- Shaft, or Flange Mount
- Torque up to 53,100 lb-in
- Gear ratios – 4.32:1 to over 1500:1



**RIGHT ANGLE HELICAL-BEVEL 2-STAGE**
- Foot, Flange or Shaft Mount
- Torque up to 5,840 lb-in
- Gear ratios – 4.1:1 to 72:1



**RIGHT ANGLE HELICAL-BEVEL**
- Foot, Flange or Shaft Mount
- Torque up to 283,000 lb-in
- Gear ratios – 8.04:1 to over 300,000:1



**RIGHT ANGLE HELICAL-WORM**
- Foot, Flange or Shaft Mount
- Torque up to 27,585 lb-in
- Gear ratios – 4.40:1 to over 300,000:1

## HIGH PERFORMANCE MOTORS & BRAKEMOTORS



**INVERTER/VECTOR DUTY**
- Standard or Energy Efficient
- Integral, NEMA or Metric IEC
- 1/6 to 250 hp

## UNICASE™ SPEED REDUCERS



**MINICASE™ RIGHT ANGLE WORM**
- Foot, Flange or Shaft Mount
- Torque up to 3,540 lb-in
- Gear ratios – 5:1 to 500:1



**FLEXBLOC™ WORM**
- Modular bolt-on options
- Torque up to 4,683 lb-in
- Gear ratios – 5:1 to 3,000:1



**MAXXDRIVE™ LARGE INDUSTRIAL GEAR UNITS PARALLEL HELICAL**
- Modular bolt-on options
- Torque up to 2,027,000 lb-in
- Gear ratios – 5:1 to 1,600:1



**MAXXDRIVE™ LARGE INDUSTRIAL GEAR UNITS HELICAL-BEVEL**
- Modular bolt-on options
- Torque up to 2,027,000 lb-in
- Gear ratios – 5:1 to 1,600:1

## NORDAC AC VECTOR DRIVES



**SK200E**
- Decentralized, high performance
- 380-480V, 3-phase to 10 hp
- 200-240V, 3-phase to 5 hp
- 200-240V, 1-phase to 1.5 hp
- 100-120V, 1-phase to 1 hp



**SK500/520/530E**
- Compact, high performance
- 380-480V, 3-phase, to 30hp
- 200-240V, 3-phase, to 15hp
- 200-240V, 1-phase, to 3hp
- 110-120V, 1-phase, to 1.5hp



**SK700E**
- Flexible high performance
- 380-460V, 3-phase, to 200hp

NORD DRIVESYSTEMS



DRIVESYSTEMS

**www.nord.com**

## NORD Gear Corporation

National Customer Service Toll-Free: 888.314.6673
info.us@nord.com

## NORD Gear Limited

Toll-Free in Canada: 800.668.4378
info.ca@nord.com

**WEST**
Corona, CA (Los Angeles)
Phone: 608.849.0190

**MIDWEST**
Waunakee, WI (Madison)
Phone: 608.849.7300

**EAST**
Charlotte, NC
Phone: 608.849.0140

**CANADA**
Brampton, ON (Toronto)
Phone: 905.796.3606

1100200076/0410

# Motion Sensors

## SITRANS WM100

Operating Instructions · 05/2010



SITRANS

SIEMENS

**Safety Guidelines:** Warning notices must be observed to ensure personal safety as well as that of others, and to protect the product and the connected equipment. These warning notices are accompanied by a clarification of the level of caution to be observed.

**Qualified Personnel:** This device/system may only be set up and operated in conjunction with this manual. Qualified personnel are only authorized to install and operate this equipment in accordance with established safety practices and standards.

**Unit Repair and Excluded Liability:**

- The user is responsible for all changes and repairs made to the device by the user or the user's agent.
- All new components are to be provided by Siemens Milltronics Process Instruments Inc.
- Restrict repair to faulty components only.
- Do not reuse faulty components.

**Warning:** Cardboard shipping package provides limited humidity and moisture protection. This product can only function properly and safely if it is correctly transported, stored, installed, set up, operated, and maintained.
**This product is intended for use in industrial areas. Operation of this equipment in a residential area may cause interference to several frequency based communications.**

**Note:** Always use product in accordance with specifications.


| **Copyright Siemens Milltronics Process Instruments Inc. 2010. All Rights Reserved** | **Disclaimer of Liability** |
|---|---|
| This document is available in bound version and in electronic version. We encourage users to purchase authorized bound manuals, or to view electronic versions as designed and authored by Siemens Milltronics Process Instruments Inc. Siemens Milltronics Process Instruments Inc. will not be responsible for the contents of partial or whole reproductions of either bound or electronic versions. | While we have verified the contents of this manual for agreement with the instrumentation described, variations remain possible. Thus we cannot guarantee full agreement. The contents of this manual are regularly reviewed and corrections are included in subsequent editions. Please check the website shown below for the latest manual revisions.<br>We welcome all suggestions for improvement.<br><br>Technical data subject to change. |


MILLTRONICS® is a registered trademark of Siemens Milltronics Process Instruments Inc.


**Contact SMPI Technical Publications at the following address:**
Technical Publications
Siemens Milltronics Process Instruments Inc.
1954 Technology Drive, P.O. Box 4225
Peterborough, Ontario, Canada, K9J 7B1
Email: **techpubs.smpi@siemens.com**

**European Authorized Representative**

Siemens AG
Industry Sector
76181 Karlsruhe
Deutschland


- For a selection of Siemens Milltronics level measurement manuals, go to: **www. siemens.com/level**. Choose **Support**, and then **Manuals / Operating Instructions.**
- For a selection of Siemens Milltronics weighing manuals, go to: **www. siemens.com/weighing**. Choose **Support**, and then **Manuals / Operating Instructions**.

© Siemens Milltronics Process Instruments Inc. 2010

# Table of Contents

**SITRANS WM100 Motion Sensing Switch** ..... **1**
Safety Notes ..... 1
Safety marking symbols ..... 1
The Manual ..... 2
**Specifications** ..... **3**
**Installation** ..... **4**
Environment ..... 4
**WM100 Circuit Card** ..... **5**
**WM100 Connection** ..... **6**
**WM100 Typical Wiring** ..... **7**
**Operation** ..... **8**
Typical Performance ..... 8
Performance Examples ..... 9
**Dimensions** ..... **10**
**Maintenance** ..... **10**

# SITRANS WM100 Motion Sensing Switch

SITRANS WM100 motion sensing switch is a heavy-duty zero speed alarm. It is used to detect the absence or presence of motion of rotating, reciprocating, or conveying equipment. The WM100 has a circuit card and a magnetic assembly potted in the probe body. The WM100 is powered from the line voltage and provides a set of dry relay contacts to indicate motion when the ferrous targets of the machinery being monitored pass in front of the probe.

## Safety Notes

Special attention must be paid to warnings and notes highlighted from the rest of the text by grey boxes.



**WARNING: relates to a caution symbol on the product, and means that failure to observe the necessary precautions can result in death, serious injury, and/or considerable material damage.**



**WARNING[1]: means that failure to observe the necessary precautions can result in death, serious injury, and/or considerable material damage.**

**CAUTION: means that failure to observe the necessary precautions can result in considerable material damage.**

**Note:** means important information about the product or that part of the operating manual.

## Safety marking symbols

| In manual | On Product | Description |
|---|---|---|
|  |  | Caution: refer to accompanying documents (manual) for details. |
|  |  | Protective Conductor Terminal |

1. This symbol is used when there is no corresponding caution symbol on the product.

# The Manual

**Notes:**

- The SITRANS WM100 product is to be used only in the manner outlined in this instruction manual.
- This product is intended for use in industrial areas. Operation of this equipment in a residential area may cause interference to several frequency based communications.

This instruction manual covers the installation, operation and maintenance of the SITRANS WM100. It is essential that this manual be referred to for proper installation and operation of your unit. Adhering to the installation and operating procedures will ensure a quick, trouble free installation and allow for the maximum accuracy and reliability of your motion sensing probe.

If you have any questions, comments, or suggestions about the manual contents, please email us at techpubs.smpi@siemens.com.

For the complete library of Siemens manuals, go to www.siemens.com/processautomation.

# Specifications

## Power

- 115 V AC, 50/60 Hz, 7 VA
  or
- 230 V AC, 50/60 Hz, 7 VA
- ±10% of rated voltage

## Output

- 1 form C (SPDT) dry relay contacts, rated 5 A at 250 V AC non-inductive, fail-safe operation
- time delay :
  - start up : 10 to 14 seconds (or 5 to 7 seconds with 5 sec/12 PPM jumper installed)
  - zero speed : 5 seconds ±1 (minimum speed 10 to 15 ppm)[1] or 10 seconds ±2 (minimum speed 5 to 7.5 ppm)[1]
  - LED indicates detection of changes in magnetic field (resets zero speed timer)

## Operating Temperature

- – 40 to +60 °C (– 40 to +140 °F)

## Environmental

- location: indoor/outdoor
- altitude: 2000 m (6562 ft.) max.
- ambient temperature: -40 to +60 °C (-40 to +140 °F)
- relative humidity: suitable for outdoor (Type 4 / NEMA 4, Type 4X / NEMA 4X, Type 6 / NEMA 6, IP67)
- installation category: II
- pollution degree: 4

## Dynamic Range

- minimum 6 or 12 pulses per minute[1]
- maximum 3000 pulses per minute

## Shipping Weight

- 2 kg (4.4 lbs)

## Approvals

- $CSA_{US/C}$, CE, C-TICK

1. Selected via a common jumper. Refer to Operation.

# Installation

**WARNING: The probe face is magnetic. Keep it away from magnetosensitive materials such as computer discs and audio or video tapes.**

**WARNING: All field wiring must have insulation suitable for at least 250 V and the maximum ambient temperature of +60°C (+140 °F).**

**Notes:**

- The Protective Earth Terminal indicated by (⏚) must be connected to reliable ground.
- All wiring must be done by qualified personnel in accordance with all governing regulations.
- The equipment must be protected by a 15 A fuse or circuit breaker in the building installation.
- A circuit breaker or switch in the building installation, marked as a disconnect switch, shall be in close proximity to the equipment and within easy reach of the operator.
- Relay contact terminals are for use with equipment which has no accessible live parts and wiring which has insulation suitable for at least 250 V.

# Environment

The WM100 must be mounted in an area that is non-hazardous, within the ambient temperature range and non-corrosive to the materials of construction. Refer to Dimensions for materials of construction.

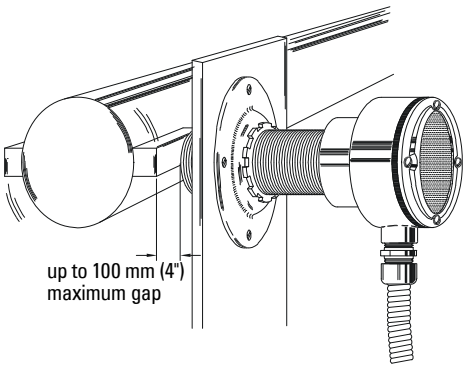


The probe should be mounted using the supplied mounting flange, onto a vibration free structure. The gap between the probe and the target should be sufficient such that there is no danger of the target damaging the probe. The maximum allowable gap ranges from 20 mm to over 100 mm from the face of the target to the face of the probe. The range is dependent on the target type and range of speed expected. See typical performance graphs on page 9 for examples.

The WM100 is sensitive to lateral disturbances to its magnetic field. If the WM100 is responding to motion from an interfering target, move the WM100 or install a ferrous plate (steel ) as a shield between the WM100 and the interfering target.

Where possible, the probe should be mounted so the conduit entry is pointing down to avoid accumulation of condensation in the casing. Connection of the probe should be made via flexible conduit for easier removal or adjustment of the probe.

**Note:** In climates where direct sunlight may cause the SITRANS WM100 temperature to rise above the specified limit, shade the unit by installing a sun shield.

# WM100 Circuit Card

⚠ **WARNING: Disconnect power before opening top cover.**

**Note:** Check nameplate for proper operation voltage (115 V AC or 230 V AC).

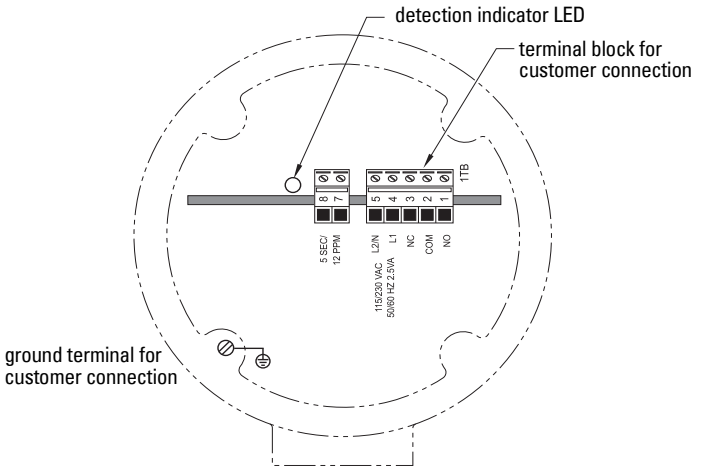

# WM100 Connection

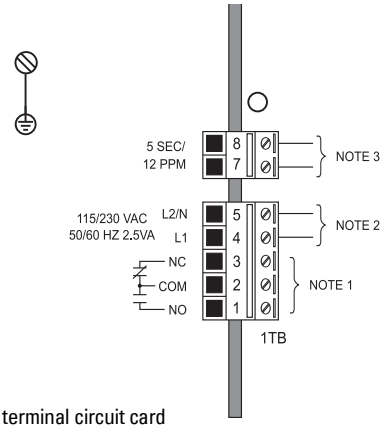


terminal circuit card

**Notes:**

1. Dry contacts shown in de-energized (alarm or shelf) state.
2. WM100 is manufactured for either 115 or 230 V AC operation. Check WM100 nameplate for applicable voltage. Correct voltage must be supplied. Voltages lower than specified will result in an inoperative condition. Voltages higher than specified will severely damage unit.
3. For 5 second time delay and minimum 12 ppm range, connect jumper across terminals 7 and 8. Without a jumper, the default is 10 second time delay and minimum 6 ppm range.

# WM100 Typical Wiring

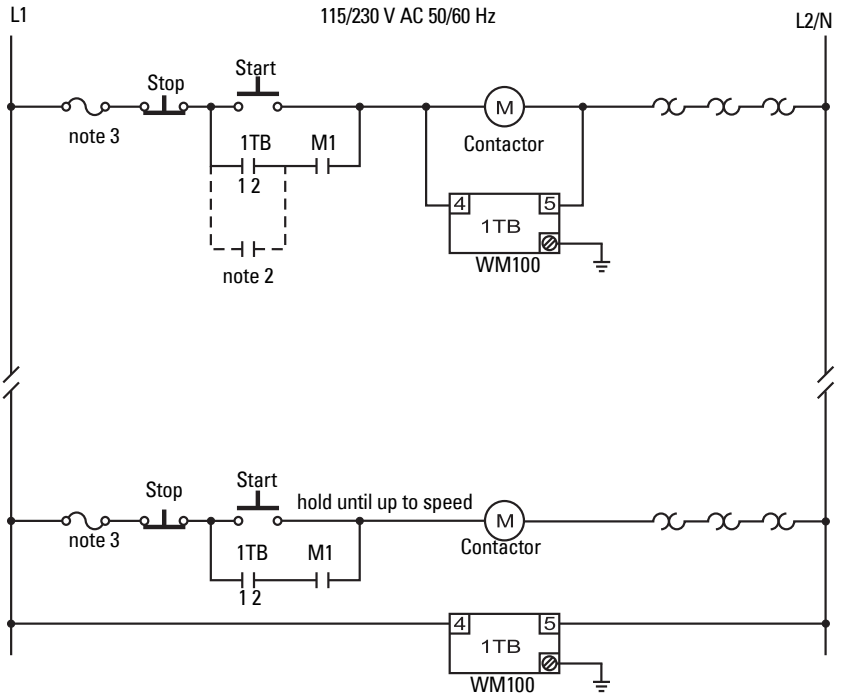


Should the time delay feature on start up not be required, power should be applied continuously from a separate source. Typically this would be desirable for automatic up-stream start up of conveying devices after down stream drive has reached its operation speed.

**Notes:**

1. Interlocks and safety pull switches are not shown.
2. If 'START' is initiated by programmable logic controller, closure time may be of insufficient duration to allow WM100 contact to latch. In such a case, program a timer contact into circuit.
3. CSA requires a 3 A or less fuse to protect contacts. For 240 V AC, protect contacts with a 1500 VA transformer as well.

# Operation

When power is initially applied to the WM100, the alarm relay is energized and held artificially by the timing circuit. This will simulate the normal operation of the WM100 for a start up delay of >10 seconds (or >5 seconds if a jumper is wired across terminals 7 and 8).

As a ferromagnetic object passes through the probe's permanent magnet field, the distortion of the flux is sensed by the magnetic detection circuit. If the distortion is of suitable magnitude, a short pulse is generated to reset the timing circuit, visible to the user by the LED shown in the lid window. This action keeps the alarm relay energized providing fail-safe operation of the contacts.

If no change in flux (target motion) is sensed for a period of 10 seconds (or 5 seconds if a jumper is wired across terminals 7 and 8), the timing circuit will not be reset. This will cause the alarm relay to de-energize and the contacts to change state.

Thus the WM100 cannot detect the motion of uniform ferromagnetic masses such as a rotating pulley or a keyless shaft.

When adjusting the WM100 mounting position, it may take up to 10 seconds for the detection circuit to adjust to the new ambient magnetic environment. During this adjustment period, the LED may fail to flash for an otherwise normally detectable moving target.

## Typical Performance

The maximum air gap for which the WM100 will reliably detect the moving ferrous target varies according to the target's size, shape, orientation and direction of motion, as well as the material to which the target is attached.

An example shown below compares typical results from steel blocks used as targets on a wheel (either ferrous or non-ferrous). As shown, a larger detection range can typically be achieved when there is a ferrous object behind the target. The WM100 provides excellent detection of a relatively small target, such as a 3/16" (~5 mm) shaft key installed in a 5/8" (~16 mm) motor shaft with < 0.125" (~3 mm) of the key protruding beyond the shaft envelope.

To ensure proper operation in any setup, use the LED indicator to confirm consistent detection of the target over the full range of expected operational speeds. Note that detection range may vary slightly with voltage supply and temperature, so it is recommended to use the minimum air gap that is physically safe to implement.

# Performance Examples

## Wheel Driven Examples

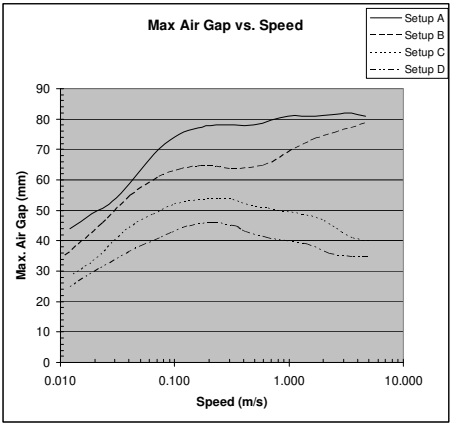


Setup A: WM100 with two 1"x2"x2" steel targets mounted on steel wheel

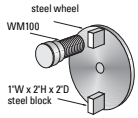


Setup B: WM100 with two 1"x2"x1" steel targets mounted on steel wheel

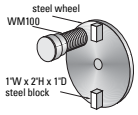


Setup C: WM100 with two 1"x2"x2" steel targets mounted on non-ferrous wheel

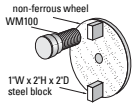


Setup D: WM100 with two 1"x2"x1" steel targets mounted on non-ferrous wheel

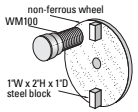


Setup E: DC motor with 5/8" drive shaft and 3/16" square key

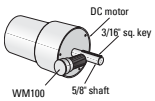


## Shaft Driven Example

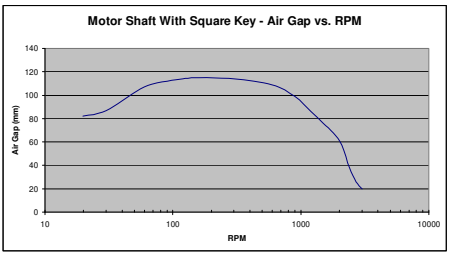


Note: 1 m/s ~ 200 ft/min; 25 mm ~ 1.0"

# Dimensions

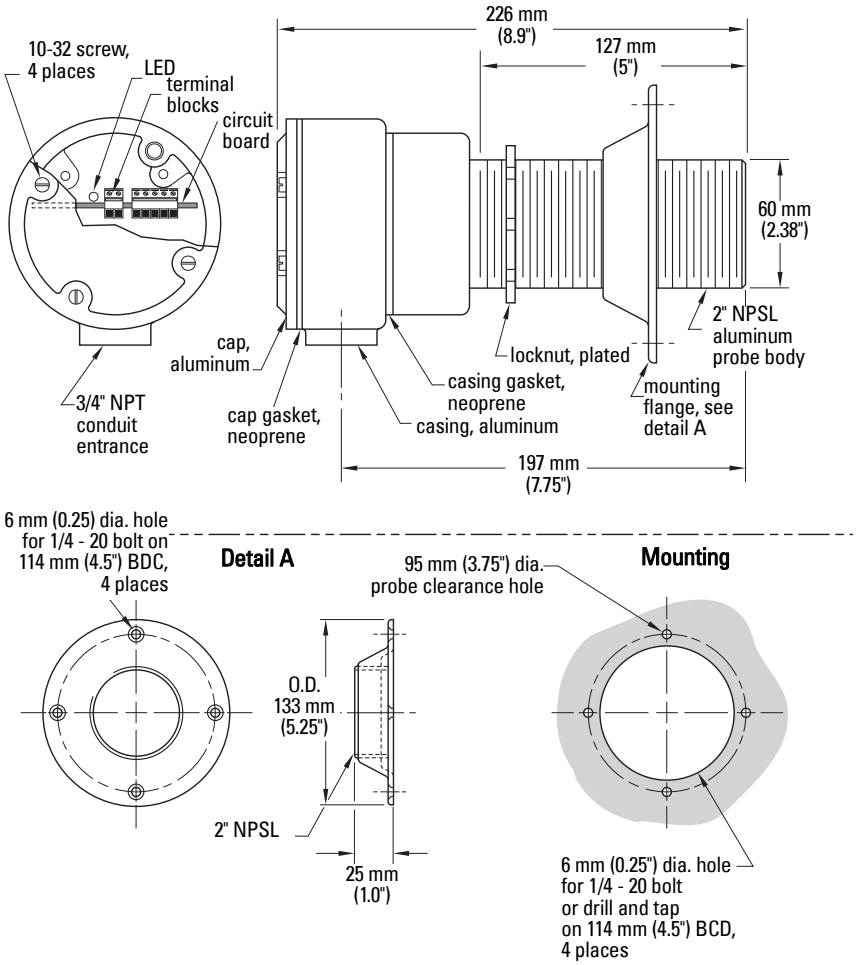


# Maintenance

The WM100 can be cleaned by wiping the enclosure exterior with a damp cloth. No further maintenance is required for the device.

## For more information

**www.siemens.com/level**

**www.siemens.com/continuous-weighing**

Siemens Milltronics Process Instruments Inc.
Industry Automation (IA)
1954 Technology Drive
P.O. Box 4225
Peterborough, ON
Canada K9J 7B1

email: techpubs.smpi@siemens.com

**www.siemens.com/processautomation**

Subject to change without prior notice
Rev. 1.0

© Siemens Milltronics Process Instruments Inc. 2010

7ML19985WM01
Printed in Canada

WAM Texas Division

x 2

**Assembly Department**
**Quality Checklist**

Order Number 14715 Customer Name Pompes + Equipment (PCP)

Item No. 14715 Date Received 5-28-21

**Materials of Construction:**
☐ Carbon Steel ✓Stainless Steel ☐ Other _____

**Dimensional Checks:**
Trough Straightness – To be within ¼-inch in both horizontal and vertical directions

Overall length 212 5/8" Height 30 3/4"

Width 13 3/4"

Screw to Trough Clearance ✓Per Order or Drawing 1/2"

Overall Length of Conveyor ✓Per Order or Drawing 212 5/8"

Inlet to Discharge Centerline Locations ✓Per Order or Drawing 164"

Inlet Size ☐ Per Order or Drawing 10"

Discharge Size ✓Per Order or Drawing 10"

Inlet and Discharge Hole Patterns & Diameter ✓Per Order or Drawing _____

Screw Pitch ☐ ½ ☐ 2/3 ☐ FULL ✓VARIABLE _____

**Visual Checks:**

| | | | | |
|---|---|---|---|---|
| Screw Welding | ✓STD | | ☐ CW1 | ☐ CW2 |
| Screw(1) Rotation(s) | ✓R/H | ☐ L/H | ✓CW | ☐ CCW |
| Screw(2) Rotation(s) | ☐ R/H | ☐ L/H | ☐ CW | ☐ CCW |
| Screw(3) Rotation(s) | ☐ R/H | ☐ L/H | ☐ CW | ☐ CCW |
| Screw(4) Rotation(s) | ☐ R/H | ☐ L/H | ☐ CW | ☐ CCW |

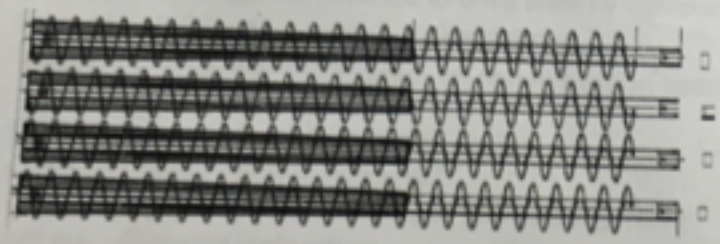

Bare Pipe of Screw Located Over Discharge ✓YES ☐ NO

Variable Pitch Located at Inlet End ☐ YES ✓NO

Inlet and Discharge Welding ☐ CONTINUOUS INSIDE ☐ SKIP WELDED INSIDE ✓continuous outside

Inlet and Discharge Flange Straightness

Drive Location ☐ INLET END ✓DISCHARGE END

Drive Position ✓12:00 ☐ 3:00 ☐ 6:00 ☐ 9:00

Motor Size and Type HP 3HP ✓TEFC ✓PREMIUM EFFICIENT

☐ EXPLOSION PROOF ☐ OTHER _____

QC Assembly

**Fit and Measure Checks:**

Accessory Components ☐ SPEED SWITCHES ☐ LIMIT SWITCHES
☐ SAFETY PULL SWITCHES ☐ OTHER _____

**Inspection Hold Points:**

Assembler and Leadman to check the following prior to Run Test:

Type of Assembly Bolts Required - Stainless steel ✓ Zinc plated ____

All assembly bolts in place and tightened to the proper torque value ☑ YES ☐ NO

Bolts marked with a paint marker on both the nut and the threaded end of the bolt to assure that all bolts have been tightening properly ☑ YES ☐ NO

Hold-downs properly located and adjusted ☐ YES ☑ NO

Coupling shafts in place and bolts tightened to proper value ☐ YES ☑ NO

Hangers and hanger bearings in location and properly secured ☐ YES ☑ NO

Shaft Seals are located in proper location and securely fastened ☑ YES ☐ NO

**Pillow Block Bearings:**

Expansion bearing must be located at the non-drive end. Internal locking ring must be removed to allow for expansion.

Non-expansion or fixed bearing must be located at the drive end. Internal locking ring must be in place to prevent expansion.

Bearings assembled per manufacturers instructions ☐ YES ☑ NO

Expansion bearing located on non-drive end ☐ YES ☑ NO

Non-expansion bearing located on drive end ☐ YES ☑ NO

Non-expansion bearing fastened to drive shaft by tightening locking collar ☐ YES ☑ NO

Locking collar secured in place by keeper ring ☐ YES ☑ NO

Snap rings in appropriate location on non-expansion bearing ☐ YES ☑ NO

**Drive and Drive Shaft Alignment:**

Drive shaft keys installed correctly ☑ YES ☐ NO

Drive couplings installed with proper gap and alignment per manufacturers instructions ☑ YES ☐ NO

Drive coupling setscrew tightened to proper value ☑ YES ☐ NO

Guards in specified location and securely fastened ☑ YES ☐ NO

**Assembler Signature** Jose Rodriguez **Date** 5-28-21

**Assembly Leadman Signature** Jose Rodriguez **Date** 5-28-21

**Quality Manager Signature:** S Wolfe **Date** 5/28/21

**Run Testing:**

Direction of Rotation ☑ CLOCKWISE ☐ COUNTER CLOCK WISE

Motor Current Draw 1.60 AMPS ☐ HAND TURNED

Drive Movement ☑ NO VISUAL MOVEMENT ☐ ACCEPTABLE ☐ UNACCEPTABLE

**Carbon Steel Surface Finish:**

☐ HAND TOOL CLEAN - SSPC-SP2 ☐ POWER TOOL CLEAN - SSPC-SP3

☑ COMMERCIAL BLAST - SSPC-SP6 ☐ NEAR WHITE BLAST - SSPC-SP10

**Carbon Steel Painting:**

Prime Coat ☐ WAM GRAY ENAMEL ☐ OTHER _____

Finish Coat ☐ WAM GRAY ENAMEL ☐ WAM HIGH TEMP SILVER

☐ OTHER Commercial Blast

**Surface Finish:**

| | | | | |
|---|---|---|---|---|
| Internal Surfaces | | | | |
| Screws - | | | | |
| Pipe | ☑ MILL FINISH | ☐ 150 GRIT | ☐ BEAD BLAST | ☐ OTHER |
| Flights | ☑ MILL FINISH | ☐ 150 GRIT | ☐ BEAD BLAST | ☐ OTHER |
| Welds | ☑ MILL FINISH | ☐ 150 GRIT | ☐ BEAD BLAST | ☐ OTHER |
| Troughs - | ☑ MILL FINISH | ☐ 150 GRIT | ☑ BEAD BLAST | ☐ OTHER |
| External Surfaces | | | | |
| Troughs - | ☐ MILL FINISH | ☐ 150 GRIT | ☑ BEAD BLAST | ☐ OTHER |
| Covers - | ☐ MILL FINISH | ☐ 150 GRIT | ☑ BEAD BLAST | ☐ OTHER |

**Comments:**

**Approvals:**

**Assembler Signature:** _____ **Date** 5-28-21

**Assembly Leadman Signature:** _____ **Date** 5-28-21

**Assembly Supervisor Signature:** _____ **Date** _____

**Sales Person or Project Manager Signature:** _____ **Date** _____

**Quality Manager Signature:** _____ **Date** 5/28/21

## LOOSE PARTS LIST

JOB # 14715

| PART # | DESCRIPTION | QTY | PACKED BY | DATE |
|---|---|---|---|---|
| 14715-4 | Flange feet + Hardware | 2 | | |
| 14715-18 | WM100 Alarm Switch | 2 | | |
| | | | | |
| | | | | |
| | | | | |
| | | | | |
| | | | | |
| | | | | |
| | | | | |
| | | | | |
| | | | | |
| | | | | |
| | | | | |
| | | | | |
| | | | | |
| | | | | |
| | | | | |
| | | | | |
| | | | | |
| | | | | |
| | | | | |
| | | | | |
| | | | | |
| | | | | |
| | | | | |
| | | | | |

WAM Texas Division

Screw Department
Quality Checklist

Order Number 14715 Ship Date _____

Date Received 05-25-21 Date Complete _____ Total Time: _____

Type of Screw(s): Helicoid _____ Sectional ✓ Ribbon _____ Paddle _____

Diameter (OD): 9" Actual: _____ OAL: 178" Bare Pipe: 9"

Pitch 1: 6" Pitch OAL: 12" Actual: _____ Thickness: 3/16" R H ✓ L H ___

Pitch 2: 9" Pitch OAL: 157" Actual: _____ Thickness: 3/16" R H ✓ L H ___

Pitch 3: _____ Pitch OAL: _____ Actual: _____ Thickness: _____ R H ___ L H ___

Taper: Small Diameter: _____ Large Diameter: _____ Length of Taper: _____

Material: Mild Steel _____ AR235 _____ AR400 _____ T-304SS: _____ T-316SS: ✓

Pipe Size: 3" Schedule: 40 Bushing ID: 2" Drilling: 2 OD Caps _____

Weld Type: STD Stitch (Skip): ✓ Special Stitch _____ CW1 _____ CW2 _____

Weld Finish (Clean Up): #2 ✓ #3 _____ # 4 _____ # 5 _____

Hard Surface: YES: _____ NO: _____

Hard Surface Area: Width: _____ Carrying Side: _____ Back Side: _____ OD: _____ Pipe: _____

Special Instructions or Information: _____

Welder: PEDRO CHAVEZ

Straightner: [signature]

Leadsman: Gilbert Sosa

QC: [signature] - 5/26/21

WAM Texas Division

Screw Department
Quality Checklist

Order Number 14715 [redacted] Ship Date _____

Date Received 05-25-21 Date Complete _____ Total Time: _____

Type of Screw(s): Helicoid _____ Sectional ✓ Ribbon _____ Paddle _____

Diameter (OD): 9" Actual: _____ OAL: 178" Bare Pipe: 9"

Pitch 1: 6" Pitch OAL: 12" Actual: _____ Thickness: 3/16" R H ✓ L H ___

Pitch 2: 9" Pitch OAL: 157" Actual: _____ Thickness: 3/16" R H ✓ L H ___

Pitch 3: _____ Pitch OAL: _____ Actual: _____ Thickness: _____ R H ___ L H ___

Taper: Small Diameter: _____ Large Diameter: _____ Length of Taper: _____

Material: Mild Steel _____ AR235 _____ AR400 _____ T-304SS: _____ T-316SS: ✓

Pipe Size: 3" Schedule: 40 Bushing ID: 2" Drilling: 2 QD Caps _____

Weld Type: STD Stitch (Skip): ✓ Special Stitch _____ CW1 _____ CW2 _____

Weld Finish (Clean Up): #2 ✓ #3 _____ # 4 _____ # 5 _____

Hard Surface: YES: _____ NO: _____

Hard Surface Area: Width: _____ Carrying Side: _____ Back Side: _____ OD: _____ Pipe: _____

Special Instructions or Information: _____

Welder: PEDRO CHAVEZ

Straightner: [signature]

Leadsman: Gilbert Soto

QC: [signature] 5/26/21

# INSTALLATION, OPERATION & MAINTENANCE MANUAL

## 9” DIA X 15’ -0”
## LONG 30 DEG.
## INCLINED SCREW
## FEEDER

## POMPES & EQUIPMENT

## PO #C14-204979R2

## WAM JOB #30014715


**WAM INC. TEXAS DIVISION**

**1300 TRIAD BLVD.**

**FORT WORTH, TX 76131**

**TEL: 817-232-2678 FAX: 817-232-2676**


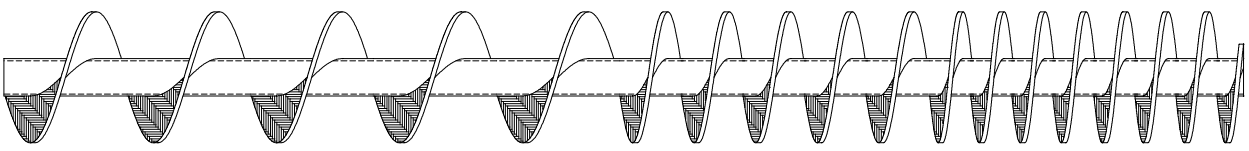

# TABLE OF CONTENTS

**SECTION I** – BILL OF MATERIALS

**SECTION II** – CEMA INSTALLATION

AND MAINTENANCE MANUAL

**SECTION III** – COMPONENT CUT SHEETS

**SECTION IV** – ASSEMBLY DRAWINGS

# SECTION I

## BILL OF MATERIALS

| ITEM NO. | QTY. EACH | PART NUMBER | MAT'L | DESCRIPTION |
|---|---|---|---|---|
| 1 | 1 | 14715-A1 | 316SS | 9TO10-F, SPLIT TUBULAR TROUGH HALF, 9" DIA X .135 THK X 60" LONG |
| 2 | 1 | 14715-A2 | 316SS | 9TO10-F, SPLIT TUBULAR TROUGH HALF, 9" DIA X .135 THK X 60" LONG |
| 3 | 1 | 14715-A3 | 316SS | 9TO10-F, SPLIT TUBULAR TROUGH HALF, 9" DIA X .135 THK X 120" LONG |
| 4 | 1 | 14715-A4 | 316SS | 9TO10-F, SPLIT TUBULAR TROUGH HALF, 9" DIA X .135 THK X 120" LONG |
| 5 | 8 | 14715-A5 | 316SS | 9FO-F-GA, END FLANGE, SPLIT TUBULAR TROUGH, 9" DIA X .250 THK |
| 6 | 1 | 14715-A6 | 316SS | INCLINED ROUND DISCHARGE, FLANGE TO MATE WITH V1FS250 BUTTERFLY VALVE |
| 7 | 2 | 14715-A7 | 316SS | 9EF4-O-BB, TROUGH END, TUBULAR, WITH FOOT, 9" SIZE X .250 THK., 2" SHAFT, DRILLED FOR BALL BEARING |
| 8 | 1 | 14715-A8 | 316SS | 9S412, SECTIONAL SCREW, 9" DIA X 178" LG, 3/16" THK. RH VARIABLE PITCH WITH 9" BARE PIPE, MOUNTED ON A 3" SCH. 40 PIPE, BUSHED AND DRILLED ON BOTH ENDS FOR 2", 2 BOLT SHAFT, FLIGHTING: FIRST 12" TO BE 6" PITCH, REMAINDER FULL PITCH |
| 9 | 1 | 14715-A9 | 316SS | 4ES-B, END SHAFT, 2" DIA X 10 3/8" LG FOR BALL BEARING AND SEAL, CEMA 2 BOLT DRILLED |
| 10 | 4 | 14715-A10 | 316SS | 4CB, COUPLING BOLT WITH LOCK NUT, 5/8 - 11 UNC X 3 5/8" LG WITH A 2 7/8" LG SHANK, FOR 2 1/2" (2.875 OD) PIPE |
| 11 | 1 | 14715-A11 | | SE.4CP, WAM-SHIELD SEAL, 2" SHAFT, NON SPLIT |
| 12 | 1 | 14715-A12 | | 4BF-B, BALL BEARING, FLANGED, 2 SHAFT |
| 13 | 1 | 14715-A13 | 316SS | INCLINED ROUND INLET STUB WITH PORT FOR ILT LEVEL INDICATOR |
| 14 | 2 | 14715-A14 | 316SS | 9FF, FLANGE FEET, 9" SIZE, .188 THK., INCLINED |
| 15 | 1 | 14715-A15 | 316SS | 9SL10, SADDLE MOUNT, FOR 9 SIZE X 0.135 THK TROUGH, .250 THK |
| 16 | 1 | 14715-A16 | | NORD SK4282SCP/VL-180TC SCREW CONVEYOR DRIVE, 52.2:1 RATIO, 180TC NEMA ADAPTER, M1 MOUNTING POSITION, 2" CEMA DRIVE SHAFT |
| 17 | 1 | 14715-A17 | | NORD 100LP/4, 3 HP PREM. EFF., 1770 RPM, TEFC, NEMA 182TC C FACE MTR, 3/60/332-575V |
| 18 | 1 | 14715-A18 | | SITRANS WM100 ZERO-SPEED ALARM SWITCH |
| 19 | 1 | 14715-A19 | 316SS | SENSOR MOUNTING BRACKET, FITTED TO TROUGH, .188 THK SHEET / PLATE |
| 20 | 36 | - | 18-8SS | HEX HEAD BOLT, 3/8-16 X 1.5 LG X 1.5 THREAD LG |
| 21 | 6 | - | 18-8SS | HEX HEAD BOLT, 3/8-16 X 1.75 LG X 1.75 THREAD LG |
| 22 | 4 | - | 18-8SS | HEX HEAD BOLT, 5/8-11 X 4 LG X 4 THREAD LG |
| 23 | 42 | - | 18-8SS | HEX NUT, 3/8-16 |
| 24 | 4 | - | 18-8SS | HEX NUT, 5/8-11 |
| 25 | 84 | - | 18-8SS | FLAT WASHER, 3/8 |

| | | | | |
|---|---|---|---|---|
| 26 | 8 | - | 18-8SS | FLAT WASHER, 5/8 |
| 27 | 42 | - | 18-8SS | SPRING LOCK WASHER, 3/8 |
| 28 | 4 | - | 18-8SS | SPRING LOCK WASHER, 5/8 |

WAM® Inc.

WAMGROUP®

# SECTION II

## CEMA INSTALLATION AND MAINTANENCE MANUAL

**CEMA STANDARD NO: 352-2012**
**Approved: September 19, 2012**
Copyright 2012

# SCREW CONVEYOR SAFETY OPERATION AND MAINTENANCE MANUAL

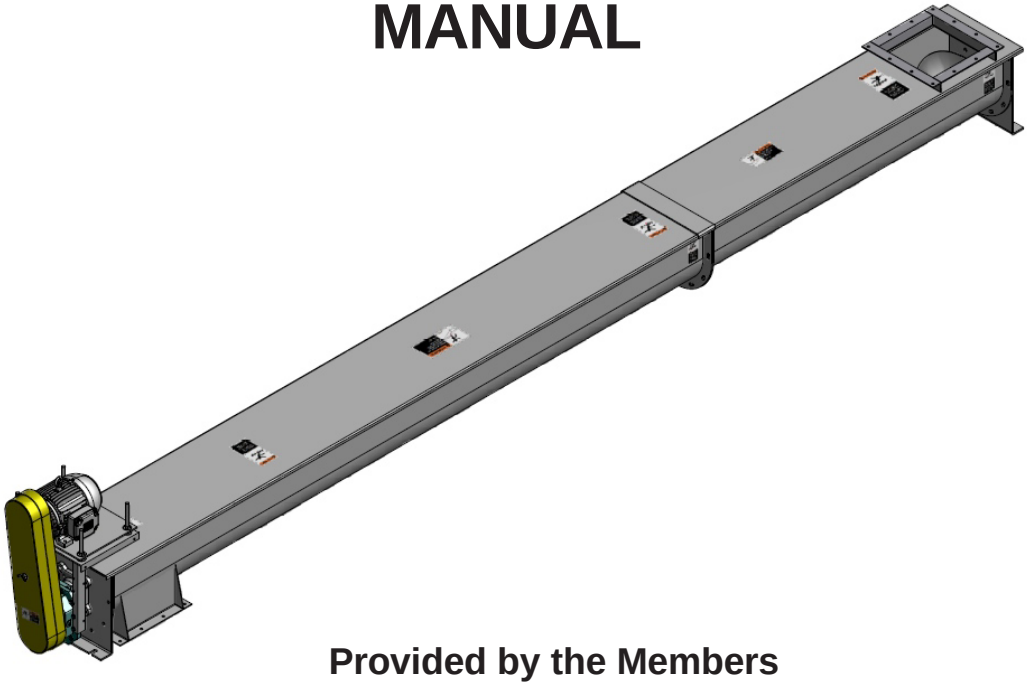

**Provided by the Members**
**of the**
**Screw Conveyor and Bucket Elevator Section**
**of the**
**Conveyor Equipment Manufacturers Association**
**as a service to the industry**

ISBN: 978-1-891171-43-7

# DISCLAIMER

The information provided herein is advisory only.

These recommendations provided by CEMA are general in nature and are not intended as a substitute for professional advice. Users should seek the advice, supervision and/or consultation of qualified engineers, safety consultants, and other qualified professionals.

Any use of this publication, or any information contained herein, or any other CEMA publication is made with the agreement and understanding that the user and the user's company assume full responsibility for the designs, safety, specifications, suitability and adequacy of any conveyor system, system component, mechanical or electrical device designed or manufactured using this information.

The user and the user's company understand and agree that CEMA, its member companies, its officers, agents and employees are not and shall not be liable in any manner under any theory of liability to anyone for reliance on or use of these recommendations. The user and the user's companies agree to release, hold harmless and indemnify and defend CEMA, its member companies, successors, assigns, officers, agents and employees from any and all claims of liability, costs, fees (including attorney's fees), or damages arising in any way out of the use of this information.

CEMA and its member companies, successors, assigns, officers, agents and employees make no representations or warranties whatsoever, either expressed or implied, about the information contained herein, including, but not limited to, representations or warranties that the information and recommendations contained herein conform to any federal, state or local laws, regulations, guidelines or ordinances.

**Conveyor Equipment Manufacturers Association**
5672 Strand Court, Suite 2
Naples, Florida 34110-3314
www.cemanet.org
CEMA Screw Conveyor Safety, Operation & Maintenance Manual
Copyright - September 2012

# TABLE OF CONTENTS


| | | | |
|---|---|---|---|
| **SECTION A - SAFETY** | | **Page 1** | **PDF Page 5** |
| **SECTION B - INSTALLATION** | | **Page 4** | **PDF Page 8** |
| **SECTION C - OPERATION** | | **Page 10** | **PDF Page 14** |
| **SECTION D - MAINTENANCE** | | **Page 11** | **PDF Page 15** |
| **SECTION E - SHUTDOWN AND STORAGE** | | **Page 12** | **PDF Page 16** |
| **SECTION F - TROUBLESHOOTING** | | **Page 15** | **PDF Page 17** |
| **Bolt Torque Guide** | | **Page 16** | **PDF Page 19** |

# INTRODUCTION

The Screw Conveyor and Bucket Elevator Engineering Committee of the CEMA (Conveyor Equipment Manufacturers Association) Engineering Conference was assigned the task of bringing together, under one cover, the accumulated experience of many individuals and their companies in an effort to provide a common basis for the safety, operation and maintenance of screw conveyors.

The CEMA Safety, Operation & Maintenance Manual contains instructions for the safe installation, operation and maintenance of screw conveyors. The reliability and service life depend on the proper care taken while installing and preparing the equipment for its intended use.

Read **ALL** instructions in this manual and manufacturer's manuals **BEFORE** installing, operating and maintaining the equipment.

# SECTION A - SAFETY

Screw conveyor safety begins with a plan that considers every possible danger and potential hazard. Operation and maintenance personnel must be thoroughly trained in safe operating procedures, recognition of possible hazards, and maintenance of a safe area around screw conveyors.

CEMA has a comprehensive safety program that includes:

- Warning and Safety Reminder for Screw Conveyors, Drag Conveyors and Bucket Elevators - (CEMA Document: SC2004-01)
- CEMA Safety Label Brochure - (CEMA Document: 201)
- CEMA Safety Label Placement Guidelines:
  - Screw Conveyor - (CEMA Document: SC-2)
  - Vertical Screw Conveyor - (CEMA Document: SC-3)
- Screw Conveyor Safety Poster - (CEMA Screw Conveyor Safety Poster)
- Screw Conveyor, Drag Conveyor and Bucket Elevator Safety Video - (CEMA Document: AV6) This video describes key safety practices that personnel must follow when operating and maintaining screw conveyors, drag conveyors and bucket elevators.

Screw conveyor accidents can be avoided by implementation and enforcement of an in-plant safety program. A number of safety precautions are included in this manual. Carefully study and follow the safety precautions. Remember - accidents are usually caused by negligence or carelessness.

*CEMA Document: SC 2004-01*

# WARNING AND SAFETY REMINDERS FOR SCREW , DRAG , AND BUCKET ELEVATOR CONVEYORS

*APPROVED FOR DISTRIBUTION BY THE SCREW CONVEYOR SECTION OF THE CONVEYOR EQUIPMENT MANUFACTURERS ASSOCIATION (CEMA)*

It is the responsibility of the contractor, installer, owner and user to install, maintain and operate the conveyor, components and, conveyor assemblies in such a manner as to comply with the Occupational Safety and Health Act and with all state and local laws and ordinances and the American National Standards Institute (ANSI) B20.1 Safety Code.

In order to avoid an unsafe or hazardous condition, the assemblies or parts must be installed and operated in accordance with the following minimum provisions.

1. Conveyors shall not be operated unless all covers and/or guards for the conveyor and drive unit are in place. If the conveyor is to be opened for inspection cleaning, maintenance or observation, the electric power to the motor driving the conveyor must be LOCKED OUT in such a manner that the conveyor cannot be restarted by anyone; however remote from the area, until conveyor cover or guards and drive guards have been properly replaced.

2. If the conveyor must have an open housing as a condition of its use and application, the entire conveyor is then to be guarded by a railing or fence in accordance with ANSI standard B20.1.(Request current edition and addenda)

3. Feed openings for shovel, front loaders or other manual or mechanical equipment shall be constructed in such a way that the conveyor opening is covered by a grating. If the nature of the material is such that a grating cannot be used, then the exposed section of the conveyor is to be guarded by a railing or fence and there shall be a warning sign posted.

4. Do not attempt any maintenance or repairs of the conveyor until power has been LOCKED OUT.

5. Always operate conveyor in accordance with these instructions and those contained on the caution labels affixed to the equipment.

6. Do not place hands, feet, or any part of your body, in the conveyor.

7. Never walk on conveyor covers, grating or guards.

8. Do not use conveyor for any purpose other than that for which it was intended.

9. Do not poke or prod material into the conveyor with a bar or stick inserted through the openings.

10. Keep area around conveyor drive and control station free of debris and obstacles.

11. Eliminate all sources of stored energy (materials or devices that could cause conveyor components to move without power applied) before opening the conveyor

12. Do not attempt to clear a jammed conveyor until power has been LOCKED OUT.

13. Do not attempt field modification of conveyor or components.

14. Conveyors are not normally manufactured or designed to handle materials that are hazardous to personnel. These materials which are hazardous include those that are explosive, flammable, toxic or otherwise dangerous to personnel. Conveyors may be designed to handle these materials. Conveyors are not manufactured or designed to comply with local, state or federal codes for unfired pressure vessels. If hazardous materials are to be conveyed or if the conveyor is to be subjected to internal or external pressure, manufacturer should be consulted prior to any modifications.

CEMA insists that disconnecting and locking out the power to the motor driving the unit provides the only real protection against injury. Secondary safety devices are available; however, the decision as to their need and the type required must be made by the owner-assembler as we have no information regarding plant wiring, plant environment, the interlocking of the screw conveyor with other equipment, extent of plant automation, etc. Other devices should not be used as a substitute for locking out the power prior to removing guards or covers. We caution that use of the secondary devices may cause employees to develop a false sense of security and fail to lock out power before removing covers or guards. This could result in a serious injury should the secondary device fail or malfunction.

There are many kinds of electrical devices for interlocking of conveyors and conveyor systems such that if one conveyor in a system or process is stopped other equipment feeding it, or following it can also be automatically stopped.

Electrical controls, machinery guards, railings, walkways, arrangement of installation, training of personnel, etc., are necessary ingredients for a safe working place. It is the responsibility of the contractor, installer, owner and user to supplement the materials and services furnished with these necessary items to make the conveyor installation comply with the law and accepted standards.

Conveyor inlet and discharge openings are designed to connect to other equipment or machinery so that the flow of material into and out of the conveyor is completely enclosed.

One or more warning labels should be visible on conveyor housings, conveyor covers and elevator housings. If the labels attached to the equipment become illegible, please order replacement warning labels from the OEM or CEMA.

The Conveyor Equipment Manufacturers Association (CEMA) has produced an audio-visual presentation entitled “Safe Operation of Screw Conveyors, Drag Conveyors, and Bucket Elevators.” CEMA encourages acquisition and use of this source of safety information to supplement your safety program.

**SEE NEXT PAGE FOR SAFETY LABELS**

## CEMA Safety Labels

*CEMA Document: SC 2004-01*

The CEMA safety labels shown below should be used on screw conveyors, drag conveyors, and bucket elevators. Safety labels should be placed on inlets, discharges, troughs, covers, inspection doors & drive guards. See CEMA Safety Label Placement Guidelines on CEMA Web Site: http://www.cemanet.org

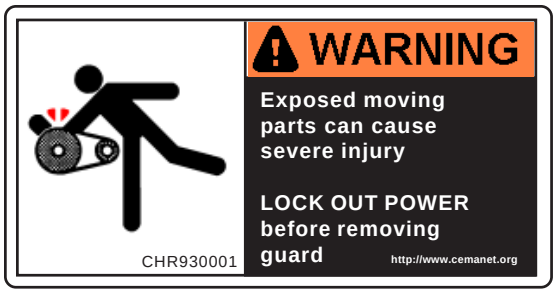





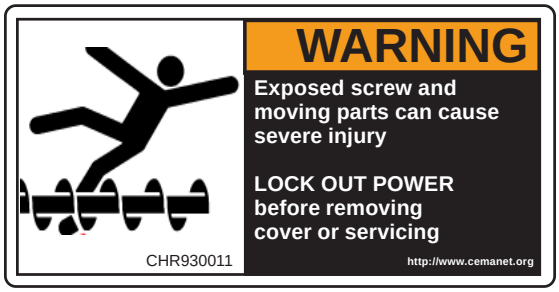





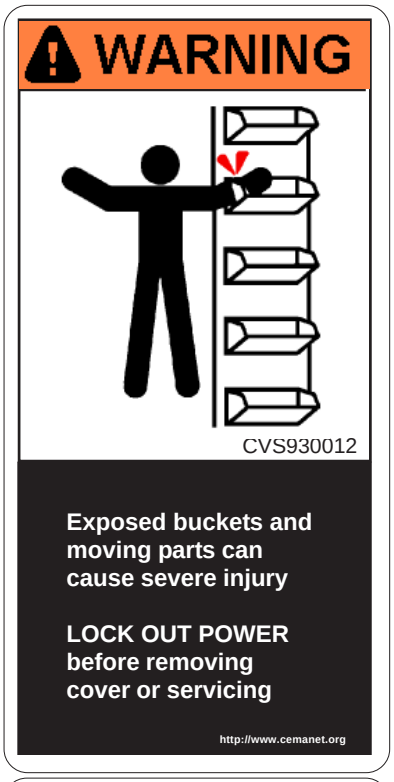


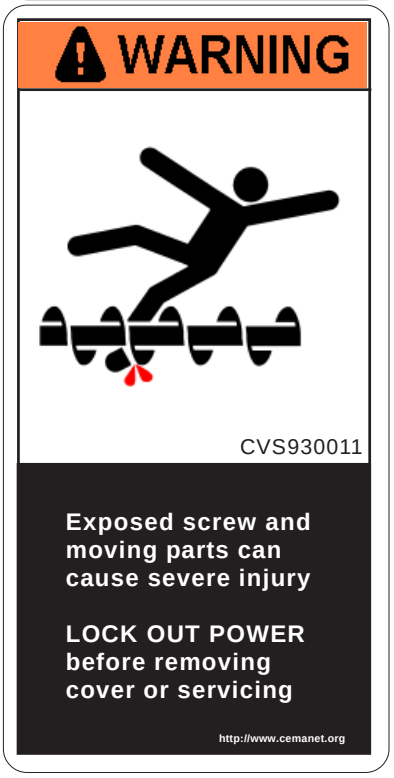


***PROMINENTLY DISPLAY THESE SAFETY LABELS ON INSTALLED EQUIPMENT***

***SEE PREVIOUS PAGE FOR SAFETY REMINDERS***

***Note: Labels alone do not substitute for a thorough in-plant safety training program centered on the hazards associated with operating your installed equipment.***

***Contact CEMA or Your Equipment Manufacturer for Replacement Labels***

**CONVEYOR EQUIPMENT MANUFACTURERS ASSOCIATION**
5624 Strand Court, Suite 2., Naples, Florida 34110
239-514-3441
http://www.cemanet.org

## CEMA Safety Labels — *Placement Guidelines*

## Product: Bulk Handling Equipment

### Equipment: Screw Conveyor

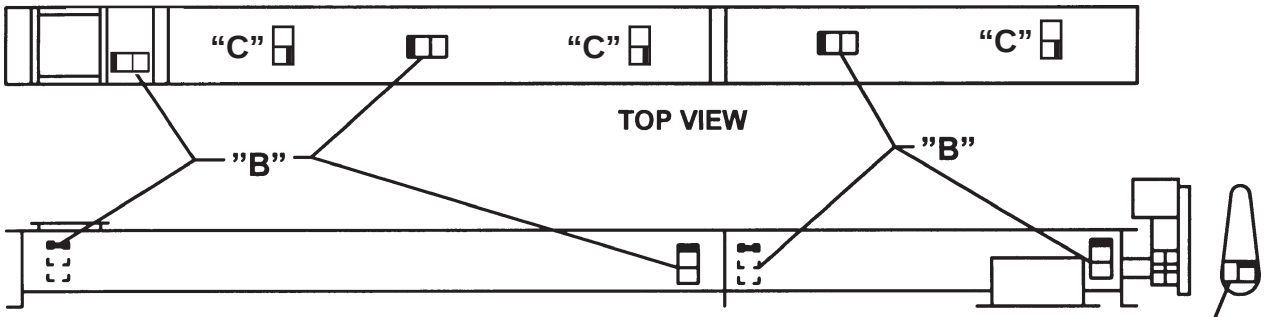


SIDE VIEW




"B"

To be placed on inlets and discharges, troughs, covers, and inspection doors of screw conveyors to provide warning against exposed moving parts while in operation.




"A"




"C"

To be placed on removable guards to warn that operation of the machinery with guards removed would expose chains, belts, gears, shafts, pulleys, couplings, etc. which create hazards

NEAR SIDE

FAR SIDE

USE LABEL "A" ON BELT GUARD
USE LABEL "B" ON ENDS OF TROUGH, MIDDLE OF COVERS AND AT INLET OPENING.
USE LABEL "C: ON TOP OF COVERS

SC-2

## CEMA Safety Labels — *Placement Guidelines*

## Product: Bulk Handling Equipment

**Equipment: Vertical Screw Conveyor**

USE LABEL "A" ON BELT GUARD

USE LABEL "B" ON ENDS OF TROUGH,
ON INTAKE INSPECTION DOOR,
AND
BOTH SIDES OF DISCHARGE SPOUT

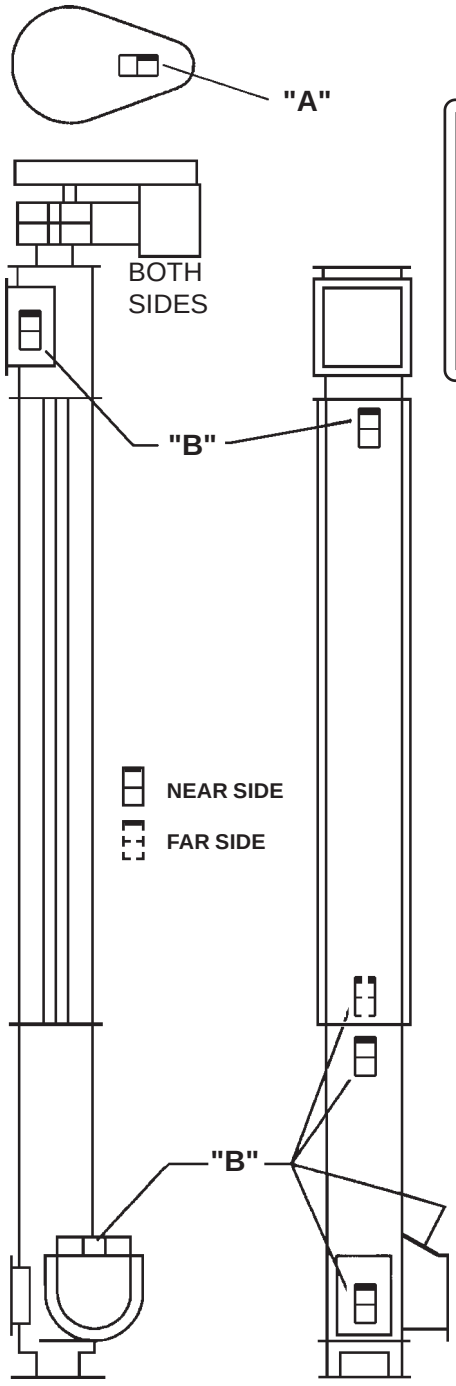


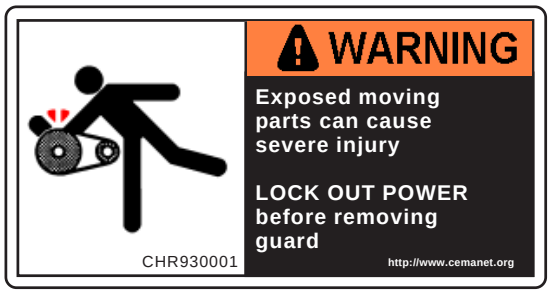


"A"

To be placed on removable guards to warn that operation of the machinery with guards removed would expose chains, belts, gears, shafts, pulleys, couplings, etc. which create hazards




"B"

To be placed on inlets and discharges, troughs, covers, and inspection doors of screw conveyors to provide warning against exposed moving parts while in operation.

SC-3

# Screw Conveyor Safety




| | | |
|---|---|---|
|  Do Not Climb, Sit, Stand or Walk, On Conveyor At Any Time |  Do Not Perform Maintenance on Conveyor Until Electrical, Air, Hudraulic and Gravity Energy Sources Have Been Locked Out and Blocked | 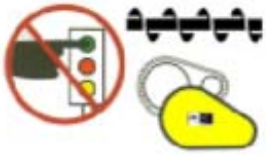 Operate Equipment Only With All Approved Covers and Guards in Place |
|  LOCK OUT ALL Power and Block Gravity Loads Before Servicing |  Ensure That All Personnel Are Clear of Equipment Before Starting |  Allow Only Authorized And Trained Personnel To Operate or Maintain Conveyors and Accessories |
|  Keep Clothing, Body Parts, and Hair Away from Conveyors | 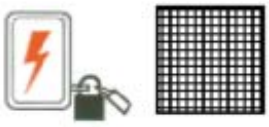 Clean Up Spillage Near Moving Parts ONLY When the Power Is Locked Out AND Guards Are In Place |  DO NOT Modify Conveyor Controls |
| 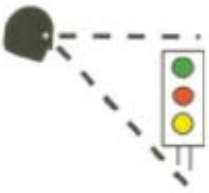 Ensure That All Controls are Visible and Accessible |  Operate Equipment Only With All Approved Covers, Guards, and Safety Labels In Place |  Report All Unsafe Conditions |

**POST IN PROMINENT AREA**

# SCREW CONVEYOR COMPONENTS

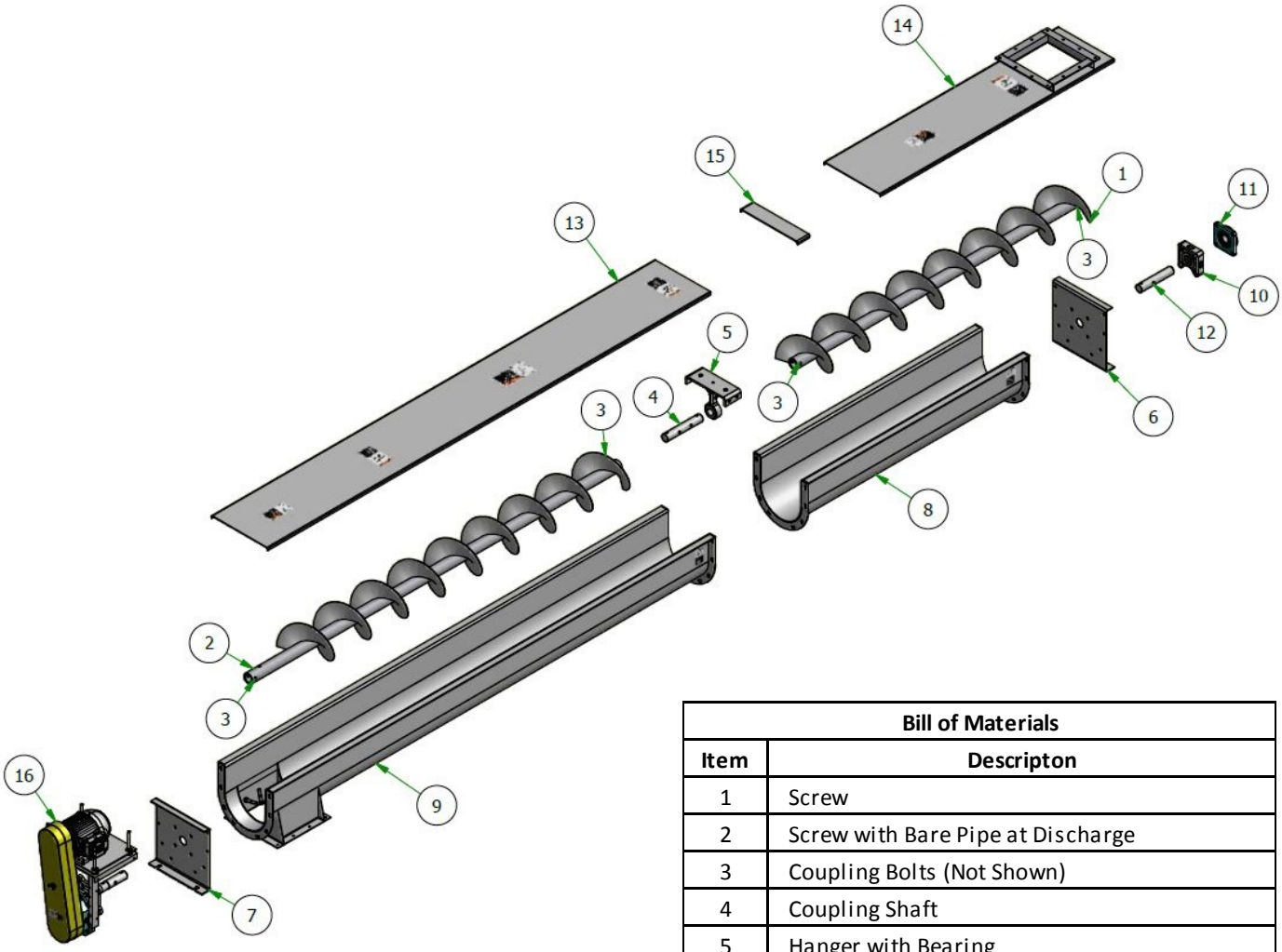


| Bill of Materials | |
|---|---|
| **Item** | **Descripton** |
| 1 | Screw |
| 2 | Screw with Bare Pipe at Discharge |
| 3 | Coupling Bolts (Not Shown) |
| 4 | Coupling Shaft |
| 5 | Hanger with Bearing |
| 6 | Tail End Trough End |
| 7 | Trough End for Screw Conveyor Drive |
| 8 | Trough End for Screw Conveyor Drive |
| 9 | Trough with Discharge Spout |
| 10 | Seal |
| 11 | Bearing |
| 12 | Tail Shaft |
| 13 | Flanged Cover |
| 14 | Flanged Cover with Inlet |
| 15 | Buttstrap |
| 16 | Screw Conveyor Drive Unit with Motor Mount, V-Belt Drive, and Guard |

## SECTION B - INSTALLATION

### RECEIVING

1. Screw conveyors may be ordered as individual components with all the assembly operations performed in the field, or assembled completely by the manufacturer, with drawings and bill of materials.
2. Immediately upon receipt all items in the shipment should be checked against shipping papers for shortages and inspected for damage.
3. Items to be inspected include troughs, screws, covers and drive units.
4. DO NOT ATTEMPT TO INSTALL DAMAGED COMPONENTS OR ASSEMBLIES.

### LIFTING AND MOVING

1. Extreme care must be taken to prevent damage when moving assembled conveyors or components.
2. Spreader bars with slings are the recommended support method for lifting.
3. Unsupported span should be no greater than 12 feet.
4. NEVER LIFT A CONVEYOR WITH ONLY ONE SUPPORT POINT.
5. Unusually heavy items such as drives or gates shall be considered when choosing support points because of load balance and their bending effect.
6. Shop assembled conveyors are typically match marked and shipped in the longest sections for practical shipment.

### ASSEMBLY

1. The mounting surface for supporting the conveyor must be level and true.
2. Screw conveyor troughs must be assembled straight and true with no distortion.
3. Place troughs in proper sequence with discharge spout properly located.
4. Connect the joints loosely. DO NOT TIGHTEN BOLTS.
5. Assemble each trough end to proper end of conveyor.
6. Attach piano wire full length of conveyor at centerline. Make sure piano wire is pulled tight. Refer to Figure 1 at the end of this section.
7. Tighten trough flange bolts keeping the trough assembly true to piano wire. Alignment must be checked in both horizontal and vertical directions. Maximum deviation in either direction at any point along the length of the conveyor is 1/8". Torque bolts to proper torque rating per Chart A.
8. Anchor trough assembly to mounting surface. Make sure entire length of trough is straight and true. CEMA recommends supporting trough assemblies every 10 to 12 feet. Saddles and feet may be required.
9. Mount drive or thrust unit on correct trough end. Drive or thrust units are normally located at discharge end of conveyor. Make sure drive or thrust unit is centered in seal and trough end openings. Torque bolts to proper torque rating per Chart A.
10. Place the first screw section in the trough starting at the drive or thrust end. Install screw so end lugs are opposite carrying side of flight.
11. Insert screw onto drive shaft and install coupling bolts. DO NOT TIGHTEN COUPLING BOLTS.
12. Insert coupling shaft into opposite end of screw and install coupling bolts. DO NOT TIGHTEN COUPLING BOLTS.
13. Pull screw section away from drive or thrust unit to seat thrust connection.
14. Insert hanger onto coupling shaft.
15. Raise hanger and screw section until hanger top bar is flush with top of trough. Make sure correct clearance exist between outside diameter of screw and inside of trough. Match mark and drill troughs to mount hanger assembly. Insert hanger assembly bolts and hand tighten.
16. Assemble screw sections, couplings and hangers until all are installed by repeating steps 10 through 15. Install screw sections so flighting is 180-degrees from end of flighting of previous screw section.

17. Center hanger bearings between screw sections. Torque hanger assembly bolts to proper torque rating per Chart A.
18. Assemble seal and bearing to opposite trough end. Make sure end shaft is centered in seal and trough end openings. Torque bolts to proper torque rating per Chart A.
19. Insert end shaft through end bearing and into last screw section and install coupling bolts. DO NOT TIGHTEN COUPLING BOLTS.
20. Rotate entire screw assembly to check alignment and adjust hanger assemblies as required.
21. Torque ALL coupling bolts to proper torque rating. Over tightening of coupling bolts could result in failure in tension. CEMA recommends tightening coupling bolts to 75-percent of the values given in the Bolt Torque Guide to eliminate over tightening of coupling bolts.
22. Adjust seals as required.
23. Remove all debris from conveyor.
24. Install covers in proper sequence starting at inlet end and attach with provided fasteners.
25. Lubricate drive and all bearings in accordance with manufacturer's instructions. DRIVES GENERALLY SHIPPED WITHOUT OIL.
26. MAKE SURE ALL CEMA SAFETY LABELS ARE IN PROPER LOCATIONS.

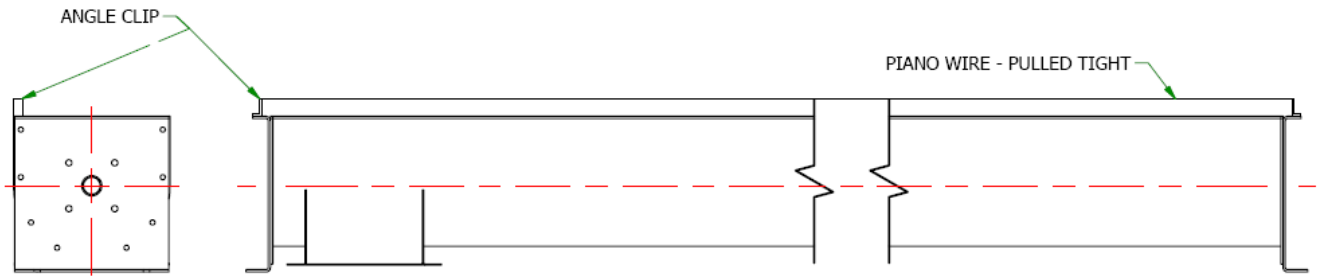


*CEMA COMMONLY USED PIANO WIRE SETUP*

PIANO WIRE ATTACHED TO TOP OF CONVEYOR ON SIDE

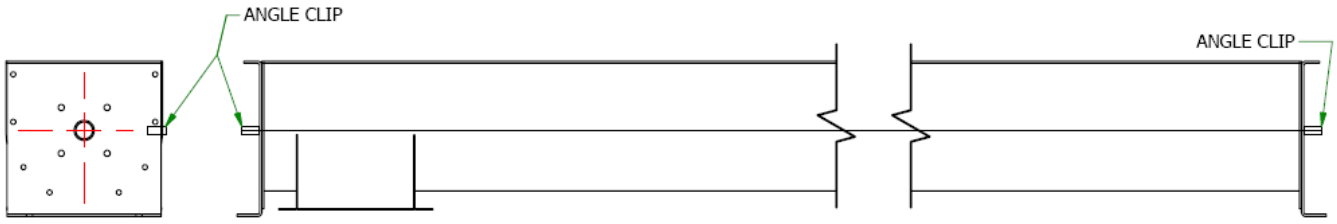


*OPTIONAL PIANO WIRE SETUP*

PIANO WIRE ATTACHED TO CENTERLINE OF CONVEYOR ON SIDE

**Figure 1 - Piano Wire Setup Diagrams**

## SECTION C - OPERATION

BEFORE INITIAL START-UP:

1. LOCKOUT/TAGOUT ALL POWER.
2. Lubricate all bearings in accordance with manufacturer's instructions.
3. Lubricate all gear reducers in accordance with manufacturer's instructions. Gear reducers are normally shipped without lubrication.
4. Check conveyor to ensure all tools and foreign materials have been removed.
5. Turn drive unit by hand to check for alignment and obstructions.
6. Check conveyor to ensure all covers, guards and safety devices are installed and operating properly.
7. Attach gates to inlet and discharge chutes, where applicable.

INITIAL START-UP (WITHOUT MATERIAL):

1. Reenergize power to conveyor.
2. Start conveyor momentarily to check for proper conveyor rotation. If conveyor rotation is NOT correct, quickly shutdown and have qualified electrician change wiring.
3. Operate conveyor without material for several hours as a break in period. Observe for excessive bearing temperature, unusual noise or drive misalignment. If these conditions occur refer to Troubleshooting Section of this document.
4. Stop the conveyor and LOCKOUT/TAGOUT ALL POWER.
5. Remove covers and check tightness of coupling bolts. Torque bolts to proper torque rating. Over tightening of coupling bolts could result in failure in tension. CEMA recommends tightening coupling bolts to 75-percent of the values given in the Bolt Torque Guide to eliminate over tightening of coupling bolts. Replace covers.
6. Check all assembly and mounting bolts. Torque bolts to proper torque rating.
7. Check conveyor discharge. Discharge must be clear to ensure that material flow out of conveyor will not be impeded.

INITIAL START-UP (WITH MATERIAL):

1. Reenergize power to conveyor.
2. Start conveyor and operate without material for several minutes.
3. Feed material gradually until design capacity is reached.
4. DO NOT EXCEED CONVEYOR SPEED, CAPACITY AND MATERIAL DENSITY.
5. Start and stop conveyor several times. Operate conveyor for several hours with material.
6. Check motor amperage when conveying at design capacity and compare to full load amperage of motor. Problems may exist if amperage is excessive. Check voltage to ensure that it is within normal operating limits.
7. Stop the conveyor and LOCKOUT/TAGOUT ALL POWER.
8. Remove covers and check tightness of coupling bolts. Torque bolts to proper torque rating. Over tightening of coupling bolts could result in failure in tension. CEMA recommends tightening coupling bolts to 75-percent of the values given in the Bolt Torque Guide to eliminate over tightening of coupling bolts.
9. Check hanger bearings and realign if necessary.
10. Replace covers.
11. Check all assembly and mounting bolts. Torque bolts to proper torque rating per Chart A.

## SECTION D – MAINTENANCE

Practice good housekeeping. Keep area around conveyor clean and free of obstacles to provide easy access and to avoid interference with the function of the conveyor.

Establish routine periodic inspection of the entire conveyor to ensure continuous maximum operating performance. LOCKOUT/TAGOUT ALL POWER BEFORE INSPECTION OF CONVEYORS. Periodic inspections should be made of the following:

- Bearings – Check for proper lubrication. Lubricate all bearings in accordance with manufacturer's instructions. Check hanger bearings for proper alignment and excessive wear. Replace hanger bearings when wear exceeds 1/8 inch.
- Gear Reducers – Check for proper lubrication. Lubricate all gear reducers in accordance with manufacturer's instructions.
- Drives – Check for wear on belts and proper tension. Check for lubrication on chains and proper tension. Replace belts or chains as necessary.
- Screws – Check for damage, excessive wear and material buildup. Replace screw sections as necessary.
- Troughs – Check for damage, excessive wear and material buildup. Check trough alignment using piano wire as described in Assembly Section of this document. Replace trough sections as necessary.
- Shafts – Check for bolt hole elongation and wear. Check for run-out. Replace shafts when wear exceeds 1/8 inch.
- Seals – Check for leakage. Adjust seal or replace packing as necessary.
- Coupling Bolts – Check for wear. Replace worn coupling bolts as necessary. It is recommended to replace coupling bolts and lock nuts when replacing screw sections. Torque ALL coupling bolts to proper torque rating. Over tightening of coupling bolts could result in failure in tension. CEMA recommends tightening coupling bolts to 75-percent of the values given in the Bolt Torque Guide to eliminate over tightening of coupling bolts.
- Assembly Bolts – Check for tightness. Torque ALL assembly bolts to proper torque rating per **Chart A**.
- Guards – Check for clearance and bolt tightness. Check oil level on oil-tight guards.

**REPLACING SCREW CONVEYOR COMPONENTS:**

1. LOCKOUT/TAGOUT ALL POWER
2. Removal of a screw section must proceed from the end opposite the drive or thrust unit.
3. Remove trough end, screw sections, coupling shafts and hangers until the damaged screw section is reached and removed.
4. Reassemble conveyor components in accordance with the Assembly Section of this document.

**NOTE:** Quick disconnect screws can be removed at intermediate locations without first removing adjacent sections.

## SECTION E – SHUTDOWN AND STORAGE

**EMERGENCY SHUTDOWN**

An emergency shutdown may be necessary to clear obstructions or to replace damaged or worn components.

1. LOCKOUT/TAGOUT ALL POWER.
2. Remove all covers.
3. Remove all obstructions and product from conveyor.
4. Inspect all components for damage or wear. Check conveyor components in accordance with the Maintenance Section of this document.
5. Replace all damaged or worn components. Replace conveyor components in accordance with the Assembly Section of this document.
6. Turn drive unit by hand to check for alignment and obstructions.
7. Replace all covers and guards.
8. Restart conveyor in accordance with the Operation Section of this document.

**EXTENDED SHUTDOWN**

An extended shutdown may be necessary if the conveyor is not in operation for a long period of time.

1. Operate conveyor until all product is removed.
2. LOCKOUT/TAGOUT ALL POWER.
3. Remove all covers.
4. Remove all obstructions and product from conveyor.
5. Inspect all components for damage or wear. Check conveyor components in accordance with the Maintenance Section of this document.
6. Replace all damaged or worn components. Replace conveyor components in accordance with the Assembly Section of this document.
7. Lubricate drive and all bearings in accordance with manufacturer's instructions.
8. Coat all exposed metal surfaces with rust preventative.
9. Rotate screws by hand every week. Screws may sag and permanently deform if not rotated.

**NOTE:** When operation is to resume, restart conveyor in accordance with the Operation Section of this document.

**STORAGE**

1. Protect conveyor from weather, moisture and extreme temperatures. DO NOT use coverings that promote condensation.
2. Coat all exposed metal surfaces with rust preventative.
3. Rotate screws by hand every week. Screws may sag and permanently deform if not rotated.

**NOTE:** When operation is to resume, restart conveyor in accordance with the Operation Section of this document.

## SECTION F – TROUBLESHOOTING GUIDE

| PROBLEM | CAUSE | REMEDY |
|---|---|---|
| **1. ACCELERATED FLIGHT WEAR** | FLIGHT THICKNESS TOO LIGHT | INCREASE FLIGHT THICKNESS. USE ABRASION RESISTANT METERIALS OR HARDFACING |
| | RPM TOO HIGH OR TROUGH LOADING TOO HIGH | REDUCE SPEED. CONSULT CEMA 350 BOOK TO DETERMINE RECOMMENDED SPEED AND TROUGH LOADING. |
| **2. HANGER BEARING FAILURE** | INCORRECT ALIGNMENT | REALIGN TROUGH ASSEMBLY AND HANGERS IN ACCORDANCE WITH ASSEMBLY SECTION OF THIS DOCUMENT. |
| | IMPROPER SPEED AND TROUGH LOADING | CONSULT CEMA 350 BOOK TO DETERMINE RECOMMENDED SPEED AND TROUGH LOADING. |
| | IMPROPER HANGER BEARING MATERIAL | CONSULT CEMA 350 BOOK TO DETERMINE RECOMMENDED BEARING MATERIAL. |
| | EXCESSIVE BEARING WEAR | REPLACE HANGER BEARING. |
| **3. PREMATURE TROUGH FAILURE** | TROUGH THICKNESS TOO LIGHT | INCREASE TROUGH THICKNESS.<br>USE ABRASION RESISTANT MATERIAL.<br>CONSULT CEMA 350 BOOK TO DETERMINE RECOMMENDED TROUGH THICKNESS. |
| | SCREW DEFLECTION | CONSULT CEMA 350 BOOK TO DETERMINE PROPER PIPE SIZE AND SCRW LENGTH. |
| | BENT SCREW | STRAIGHTEN OR REPLACE SCREW. |
| **4. SHAFT HOLE ELONGATION** | INSUFFICIENT NUMBER OF COUPLING BOLTS | INCREASE NUMBER OF COUPLING BOLTS |
| | CONVEYOR SUBJECT TO FREQUENT STOP/START | CEASE FREQUENT STOP/START. INCREASE BEARING CAPACITY OF SHAFT AND/OR INCREASE NUMBER OF COUPLING BOLTS |
| | FREQUENT OVERLOADS | |
| **5. DRIVE SHAFT BREAKAGE** | EXCESSIVE TORQUE | CONSULT CEMA 350 BOOK TO DETERMINE PROPER TORQUE RATING. |

## SECTION F – TROUBLESHOOTING GUIDE - Continued

| PROBLEM | CAUSE | REMEDY |
|---|---|---|
| **6. MOTOR OVERLOAD** | MOTOR UNDERSIZED | CONSULT CEMA 350 BOOK TO DETERMINE PROPER HORSEPOWER REQUIREMENTS. |
| | UPSET LOADING CONDITION | EMPTY TROUGH, CONTROL FEED AND OPERATE UNDER DESIGN SPECIFICATIONS. |
| **7. TROUGH END BEARING FAILURE** | BEARING CONTAMINATION | UPGRADE OR REPLACE SEAL. CHANGE TO OUTBOARD BEARING. |
| | INSUFFICIENT LUBRICATION | LUBRICATE IN ACCORDANCE WITH MAINTENANCE SECTION OF THIS DOCUMENT. |
| | IMPROPER SHAFT RUNOUT | CHECK SCREW STRAIGHTNESS AND REPLACE AS NECESSARY. |
| **8. COUPLING SHAFT BREAKAGE** | EXCESSIVE TORQUE | CONSULT CEMA 350 BOOK TO DETERMINE PROPER TORQUE RATING. |
| | INCORRECT ALIGNMENT | REALIGN TROUGH ASSEMBLY AND HANGERS IN ACCORDANCE WITH ASSEMBLY SECTION OF THIS DOCUMENT. |
| | EXCESSIVE SHAFT WEAR | REPLACE COUPLING SHAFT. |

# CHART A - BOLT TORQUE GUIDE

## GENERAL BOLT TIGHTENING TORQUE (Ft. lbs.)

| Bolt Dia. (inches) | Threads Per Inch (UNC) | SAE 2 | SAE 5 | SAE 8 | 18-8 & 316 Stainless Steel |
|---|---|---|---|---|---|
| **1/4** | **20** | 5 | 9 | 12 | 6 |
| **5/16** | **18** | 11 | 18 | 25 | 11 |
| **3/8** | **16** | 18 | 31 | 44 | 20 |
| **7/16** | **14** | 28 | 49 | 69 | 29 |
| **1/2** | **13** | 44 | 73 | 105 | 40 |
| **9/16** | **12** | 63 | 108 | 149 | 52 |
| **5/8** | **11** | 96 | 147 | 212 | 86 |
| **3/4** | **10** | 158 | 252 | 351 | 115 |
| **7/8** | **9** | 219 | 389 | 552 | 180 |
| **1** | **8** | 316 | 589 | 784 | 240 |

All bolted applications should be evaluated to determine optimum tightening torque.
K factor in the formula below is considered an estimate.
The most commonly used K factor is 0.20 for plain finished bolts.

Formula: T= K x D x P

- T Target tighten torque (the result of this formula is in inch pounds, dividing by 12 yields foot pounds)
- K Coefficient of friction (nut factor), always an estimation in this formula
- D Bolts nominal diameter in inches
- P Bolt's desired tensile load in pounds (generally 75% of yield strength)
  [P(lbs) = (75%) Yield Strength * Tensile Stress Area]

Bolt Torque Guide is for fasteners used to assemble screw conveyors and does not include coupling bolts. Over tightening of coupling bolts could result in failure in tension.
CEMA recommends tightening coupling bolts to 75-percent of the values given in the Bolt Torque Guide to eliminate over tightening of coupling bolts

END OF DOCUMENT



# CONVEYOR EQUIPMENT MANUFACTURERS ASSOCIATION

**5672 Strand Court, Suite 2**
**Naples, Florida 34110-3314**

**Tel: 239-514-3441**

**http://www.cemanet.org**

# Control of Hazardous Energy (Lockout/Tagout) 29 CFR 1910.147



# What Is Lockout/Tagout?

- Referred to as LOTO
- Blocks flow of energy from power source to the equipment
- Provides means of warning (tag)



# Regulatory Requirements

- 29 CFR 1910.147–Control of Hazardous Energy
- Covers operators and service personnel
- Requires training of employees



# Types of Lockout Devices

- Locks
- Blocks
- Chains
- Multilock hasps
- Wheel valve covers
- Ball valve covers



# Requirements For Lockout/Tagout Devices

They must be:

- Durable
- Standardized
- Substantial
- Identifiable



# Energy Sources

- Electricity
- Hydraulic
- Pneumatic
- Steam
- Thermal
- Chemical
- Gravity



# Typical Equipment Requiring LOTO

- Presses
- Saws
- Conveyors
- Pumps
- Production Equipment
- Trash Compactors
- Ovens



# When Must LOTO Be Used?

When servicing or maintaining equipment where:

- Hazardous energy exists
- Unexpected start-up could occur
- Either of these could harm an employee



# LOTO Shall Be Used When:

- Employees are required to remove or bypass a safety device
- Employees are required to place any part of their body in harm's way
- Employees are exposed to hazardous energy



# LOTO Exceptions

- Work where hazardous energy does not exist
- Activities performed during routine production processes
- Work on cord-controlled devices
- Hot tap operations where shutdown is not feasible



# Typical LOTO Procedures

- Performing a shutdown
- Isolating equipment
- Applying and removing lockout devices
- Safely releasing stored energy



# Affected Employees

Employees who

- Operate
- Work around
- Occasionally adjust equipment that is subject to LOTO



# Authorized Employee

- Maintains equipment
- Services equipment
- Is trained to use LOTO



# Company Responsibilities

- Ensure de-energization of equipment
- Ensure employee awareness
- Provide appropriate levels of training
- Review program effectiveness
- Maintain and revise program
- Administer appropriate disciplinary actions



# Maintenance Responsibilities

- Lockout/Tagout prior to service or repair
- Remove or cut locks off isolation devices
- Ensure proper training of authorized employees



# Affected Employee Responsibilities

- Notify maintenance, etc., when equipment needs repair or adjustment
- Leave all LOTO devices in place
- Verify equipment is safe to operate following LOTO
- Follow all safety rules while operating the equipment



# Authorized Employee Responsibilities

- Repair or service equipment as needed
- Ensure that all energy sources are locked out
- Test equipment to verify residual energy is dissipated
- Place a “Danger—Do Not Operate” tag on equipment



# Authorized Employee Responsibilities (cont.)

- Obtain assistance when necessary
- Remove locks and/or tags following LOTO
- Coordinate multi-shift repair



# Training Requirements

- Authorized employees—initially and at least annually
- Affected employees—at least initially
- Authorized and affected—whenever changes are made to jobs or procedures
- Authorized and affected—when program deficiencies are noted

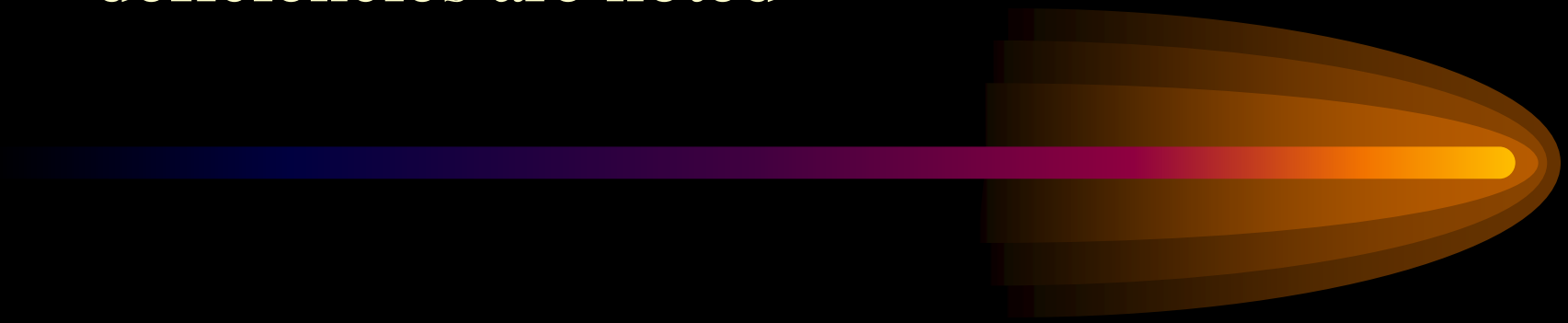

# How to Perform LOTO Safely

- Follow company safety procedures for LOTO
- Refer to procedures on how to lockout specific equipment
- Keep everyone informed when equipment is repaired or serviced
- Stay alert
- Use common sense



# Quiz

1. The LOTO standard is designed to block the flow of energy to a piece of equipment. True or False
2. Types of LOTO devices include _____, _____, and _____.
3. It is not required that a company have written procedures for proper lockout/tagout. True or False
4. An authorized employee is one who _____ or _____ the equipment.
5. If a safety device is removed from a piece of equipment, LOTO is not required. True or False

# Quiz (cont.)

6. Typical energy sources found on equipment include: _____, _____, and _____.
7. Affected employees are those who operate or work around a piece of equipment. True or False
8. As long as an employee has had training on LOTO, the employer or company has no additional responsibilities under 1910.147. True or False
9. Training for authorized employees must be conducted _____ and at least _____.
10. Locks should always stay on the equipment during a shift change. True or False

# Quiz Answers

1. True. It should block the flow of energy and provide a means of warning.
2. Types of LOTO devices include locks, blocks, chains, hasps, wheel valve covers and ball valve covers.
3. False. If lockout is required, a company must have a written program and procedures.
4. An authorized employee is one who services or maintains the equipment.
5. False. LOTO is required when a safety device is removed, an employee is in harms way or when employees are exposed to hazardous energy.

# Quiz Answers (cont.)

6. Typical energy sources include: electricity, hydraulics, pneumatics, steam, thermal, chemical and gravity.
7. True. Affected employees are those who operate or work around the equipment.
8. False. Training is just one of the responsibilities of a company.
9. Training for authorized employees must be conducted initially and at least annually.
10. False. Locks should be removed during shift change and the shift coming on duty should place their locks on the equipment.

# SECTION III

## COMPONENT CUT SHEETS

# FEATURES/BENEFITS



## Setscrew Ball Bearings

For over 70 years, DODGE has been talking to mounted bearing users and listening to their needs. This experience lead to the design of the optimum mounted ball bearing. A state-of-the-art facility was built in Rogersville, Tennessee, to manufacture the new DODGE design.

The result is the DODGE SC/SCM VSC/SL line. it is the most current design setscrew mounted ball bearing on the market and provides the user unmatched quality and true total value.

- Light Duty Narrow Inner Ring (SL)
- Intermediate Duty Narrow Inner Ring (VSC)
- Normal Duty Wide Inner Ring (SC)
- Medium Duty Wide Inner Ring (SCM)
- Wide Variety of Housing Configurations
- Available in 1/2 to 3-1/2 (17 to 90mm) Bore Sizes
- Seal Options:
  - Flingers on SC/SCM (flingers are standard on E-Z KLEEN® nickel plated and Screw Conveyor Hanger Bearings)
  - Low friction labyrinth on SC/SCM
- Other Options:
  - Corrosion resistant inserts for SC/SCM, E-Z KLEEN and nickel plate
  - FDA/USDA lubricant and other special lubricants
  - High temperature SC/SCM designed for temperatures from 225ºF to 400ºF. Factory assembled to order.

For application assistance, contact DODGE Engineering

Phone 864-281-2195
Fax 864-281-2317

**DODGE End Covers**
Available from stock to fit SC, SCM and VSC mounted units, these end covers are designed for added protection from contaminants as well as for OSHA requirements. Covers are OSHA yellow.




### Superior Locking Forces



The DODGE SC/SCM/VSC/SL line uses 65˚ design which offers an optimum balance between locking force and inner ring stress.





## Setscrew Ball Bearings

### The DODGE PROGUARD™ Seal

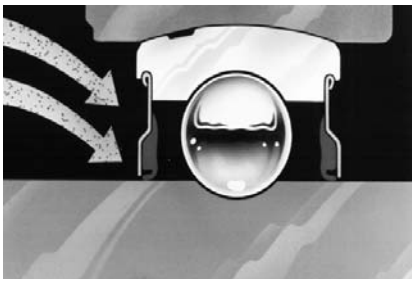

PROGUARD positive contact, low drag rubber seal

DODGE SC/SCM/SSC/SL mounted ball bearings use the field proven PROGUARD land-riding contact seal with steel shield protection. This highly effective positive seal design assures uniform lip contact with the inner ring to seal out contaminants and seal in lubricants.

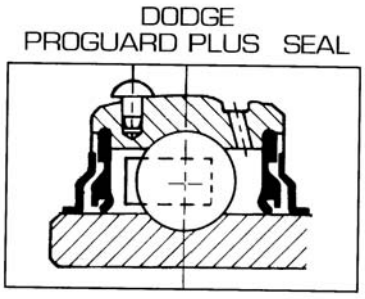


On SC/SCM optional flingers can be added to form a tight labyrinth with the PROGUARD seal and provide additional seal protection against contaminants and trash.

### Stronger, More Flexible Cage

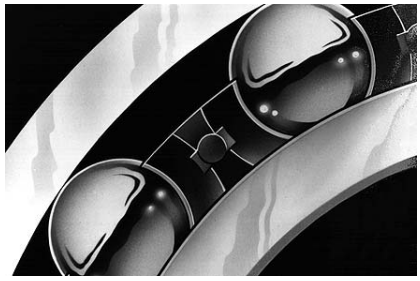

Reinforced, stabilized nylon cage

The ball cage is made of heat stabilized nylon with 33% fill short fiberglass reinforcement for added strength. The nylon material provides a natural lubricity for longer life. Fiberglass reinforcement allows higher operating temperatures than plain nylon, yet is more resistant to fatigue than metallic cages. Short fiberglass allows greater flexibility than steel or normal fiberglass, especially under misalignment. That means longer life in mounted bearings where some degree of misalignment is unavoidably encountered.

### Anti-Rotation Pin (SC/SCM)

An anti-rotation pin prevents rotation of the outer race within the housing. Simple and effective, it makes system inserts easier to replace. There is no need to remove and replace grease fittings, location pins or other devices.



Simplified Anti-rotation device

### DODGE E-Z KLEEN Ball Bearings

Available with Polymer and stainless steel housing, with corrosion resistant bearing inserts. These features make the SC ball bearing uniquely suited for the food, chemical and processing industries.



# HOW TO ORDER/ NOMENCLATURE



## Setscrew Ball Bearings

### HOW TO ORDER

There are two ways to specify DODGE Bearings. Most of the product offering have part numbers with listings shown throughout this catalog. Use of part numbers ensures accurate ordering processing.

When part numbers are not shown, the product may be specified by description or part name. This method is used when ordering units that include modifications or options. To order by description, use the nomenclature key shown below and add any special instructions to the end of the description for options not covered by the nomenclature.

### NOMENCLATURE

**P2B - SC - 104S - NL**

Modification or Feature
- CR = Corrosion Resistant Insert
- E = Expansion
- FF = ProGard Plus seals (with Flingers)
- HT = High Temperature option (400º F maximum)
- LL = Low torque labyrinth seal
- MOD = Modified
- NL = No Lube (sealed for life)
- RL = Relube (used with SL flanges)

Shaft Size

Inches:
- First digit = Number of inches
- Second & third digits = Number of sixteenths of an inch
  - 104 = Indicates 1-4/16 or 1-1/4
- S = Next smaller ring size. E.g. 1-1/4 206 would be written as 104S
- L = Next larger ring size. E.g. 1/2 204 would be written as 008L

Metric:
- First two digits = number of millimeters
- M = Metric

Bearing Type:
- CC = Wide inner ring, normal duty, setscrew locking (for Fan & Blower pillow blocks)
- SC = Wide inner ring, normal duty, 65º setscrew locking
- SCM = Wide inner ring, medium duty, 65º setscrew locking
- SL = Narrow inner ring, light duty, stamped steel housing, 65o setscrew locking
- VSC = Narrow inner ring, intermediate duty, 65º setscrew locking"

Suffixes to the above:
- AH = Air handling
- B = Low backing height pillow block
- H = High backing height (used with non-expansion and expansion units)
- U = Higher back pillow block (for interchangeability with competitor pillow blocks)

Housing:
- CYL = Cylindrical Unit
- F2B = 2 bolt flange
- F2BZ = 2 bolt flange with pilot machined on the back side (used with metric <D> Lok bearings)
- F3B = 3 bolt flange
- F4B = 4 bolt flange
- FB = Flange bracket
- FC = Flanged cartridge (piloted flange)
- F&B = Fan and blower pillow block
- HNG = Hanger bearing
- LF = 3 bolt light duty flange
- LFT = 2 bolt light duty flange
- NSTU = Narrow slot take-up
- P2B = 2 bolt base pillow block
- SCHB = Screw conveyor hanger bearing
- TB = Tapped base pillow block
- TP = Top angle take-up
- WSTU = Wide slot take-up



## Setscrew Ball Bearings

DODGE mounted ball bearings are primarily designed for radial loading. However, they have the capacity to carry thrust loads and combined radial/thrust loads. The maximum recommended load which can be applied is limited by various components in the system, such as bearing, housing, shaft attachments, speed and life requirements. DODGE mounted ball bearings have been applied successfully when these limits have been exceeded under controlled operating conditions. Contact DODGE Engineering for applications which exceed these recommendations.

Select a bearing from the Selection Chart that has a radial load rating at the operating speed equal to or greater than the calculated Equivalent Radial load for a desired $L_{10}$ life. This simple method is all that is required for the majority of general applications and provides for occasional average shock loads.

**$L_{10}$ Hours Life**-is the life which may be expected for at least 90% of a given group of bearings operating under identical conditions. For an $L_{10}$ hours life other than those listed in the Selection Chart, multiply the equivalent Radial load by one of the following factors. For 50,000 $L_{10}$ hours life, use a factor of 1.18 and for 80,000, use 1.39. Then select a bearing from the bold face (30,000) $L_{10}$ ratings only in the Selection Chart that has a rating equal to or greater than this value.

**Heavy Service**-For heavy shock loads, frequent shock loads or severe vibrations, add up to 50% (according to severity of conditions) to the Equivalent Radial Load to obtain a Modified Equivalent Radial Load. Consult Application Engineering for additional selection assistance.

A thrust load value of C/10 is recommended as a guide for general applications and will give adequate $L_{10}$ life. Where substantial radial load pulls the housing away from the mounting base, both the hold-down bolts and housing must be of adequate strength. Auxiliary load carrying devices, such as sheer bars, are advisable for side or end-loading of pillow blocks and radial loads for flange units.

To determine the $L_{10}$ hours life for loads and RPM's not listed use the following equation:

$$L_{10} = \left(\frac{C}{P}\right)^3 \times \frac{16667}{RPM}$$

Where:
$L_{10}$ = Life, hours
C = Dynamic Capacity, lbs. or N
P = Equivalent Radial Load, lbs. or N

When the load on a ball bearing is solely a radial load with no thrust (axial) load, the Equivalent Radial Load (P) is equal to the actual radial load. However, when a thrust (axial) load is applied, the radial and thrust loads applied must be converted into an Equivalent Radial Load. The use of the X (radial factor) and Y (thrust factor) from Table 1 convert the actual applied thrust and radial loads to an Equivalent Radial Load which has the same effect on the life of a bearing as a radial load of this magnitude.

$P = (X \times F_R) + (Y \times F_A)$

Where:
P = Equivalent Radial Load, lbs.
$F_R$ = Radial load, lbs.
$F_A$ = Thrust load, lbs.
e = Thrust load to radial load factor (Table 1)
X = Radial load factor (Table 1)
Y = Thrust Factor (Table 1)
$C_O$ = Basic static capacity

To find X and Y, first calculate $F_A/C_O$ to determine e. Calculate $F_A/F_R$ and compare to e to determine the X and Y factors to use from Table 1.

Substitute all known values into the Equivalent Radial Load equation. The Equivalent Radial loads (P) thus determined can be used in the $L_{10}$ life formula or compared to the allowable Equivalent Radial Load rating desired in the expanded rating chart to select a bearing (Table 2).

If calculated value of P is less than $F_R$, use $P=F_R$.

| $\frac{F_A}{C_0}$ | e | Radial/Thrust Factors | | | |
|---|---|---|---|---|---|
| | | If $F_A/F_R$ is equal to or less than e | | If $F_A/F_R$ is greater than e | |
| | | $F_A/F_R \le e$ | | $F_A/F_R > e$ | |
| | | X | Y | X | Y |
| .014 | .19 | 1 | 0 | 0.56 | 2.30 |
| .021 | .21 | 1 | 0 | 0.56 | 2.15 |
| .028 | .22 | 1 | 0 | 0.56 | 1.99 |
| .042 | .24 | 1 | 0 | 0.56 | 1.85 |
| .056 | .26 | 1 | 0 | 0.56 | 1.71 |
| .070 | .27 | 1 | 0 | 0.56 | 1.63 |
| .084 | .28 | 1 | 0 | 0.56 | 1.55 |
| .110 | .30 | 1 | 0 | 0.56 | 1.45 |
| .170 | .34 | 1 | 0 | 0.56 | 1.31 |
| .280 | .38 | 1 | 0 | 0.56 | 1.15 |
| .420 | .42 | 1 | 0 | 0.56 | 1.04 |
| .560 | .44 | 1 | 0 | 0.56 | 1.00 |

**Lubrication**-DODGE Ball Bearings are lubricated at the factory and are ready to run. The bearings are initially lubricated with Shell Alvania #2 and should be relubricated with the same or some equivalent. For high speeds, high loads, extreme temperatures and other abnormal operating conditions, special greases may be required. Contact DODGE Application Engineering for recommendations on these types of applications.

**Misalignment**-DODGE Ball Bearings are designed to allow a maximum of ± 2° static misalignment. These bearings are not suitable for dynamic misalignment. To ensure good alignment, mounting surfaces must be checked for flatness and must lie in the same plane. When tightening base bolts, each bolt should be alternately tightened in incremental torque values until full torque is achieved to prevent the angular shifting of the pillow block that occurs when one bolt is tightened to its full torque. Shimming may be required to minimize misalignment.

| Shaft Tolerances | | |
|---|---|---|
| Normal Shaft Size Inches | Commercial Shaft Tolerances Inches | Recommended Shaft Tolerances Set Screw Ball Bearings Inches |
| Up to 1-1/2" | +0.000 -0.002 | +0.0000 -0.0005 |
| Over 1-1/2" to 2-1/2" | +0.000 -0.003 | +0.0000 -0.0010 |
| Over 2-1/2" to 4" | +0.000 -0.004 | +0.0000 -0.0010 |


| FEATURES/BENEFITS PAGE B3-2 | NOMENCLATURE PAGE B3-6 | SELECTION/DIMENSIONS PAGE B3-10 | MODIFICATION/ACCESSORIES PAGE B3-132 |
|---|---|---|---|

# SELECTION/DIMENSIONS



## Setscrew Ball Bearings

### SCM MEDIUM DUTY 4-BOLT FLANGE BEARINGS

**Lube Fitting Thread Size:**
203 - 204 series - 1/4-28 tapered thread
207 - 207 series - 1/8-27 NPT

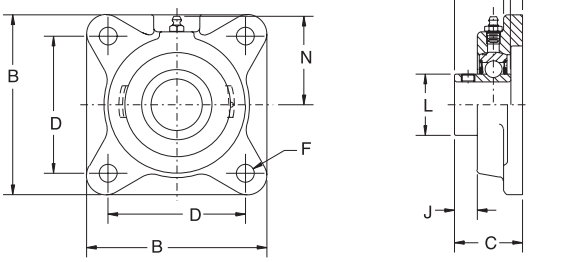


| Series | Shaft Size | Standard | | No-Lube/Sealed for Life (-NL) | | With Flingers | |
|---|---|---|---|---|---|---|---|
| | | Part No. | Description | Part No. | Description | Part No. | Description |
| 206 | 1 | **126226** | F4B-SCM-100 | **052017** | F4B-SCM-100-NL | @ | F4B-SCM-100-FF |
| | *25mm* | ***125965*** | *F4B-SCM-25M* | @ | *F4B-SCM-25M-NL* | @ | *F4B-SCM-25M-FF* |
| 207 | 1-3/16 | **126227** | F4B-SCM-103 | @ | F4B-SCM-103-NL | **064681** | F4B-SCM-103-FF |
| | 1-1/4 | **124206** | F4B-SC-104 | **126528** | F4B-SC-104-NL | **052508** | F4B-SC-104-FF |
| | *30mm* | ***125966*** | *F4B-SCM-30M* | @ | *F4B-SCM-30M-NL* | @ | *F4B-SCM-30M-FF* |
| 208 | 1-7/16 | **126187** | F4B-SCM-107 | @ | F4B-SCM-107-NL | **053197** | F4B-SCM-107-FF |
| | *35mm* | ***125967*** | *F4B-SCM-35M* | @ | *F4B-SCM-35M-NL* | @ | *F4B-SCM-35M-FF* |
| 209 | 1-1/2 | **126188** | F4B-SCM-108 | **062897** | F4B-SCM-108-NL | **054856** | F4B-SCM-108-FF |
| | 1-5/8 | **125170** | F4B-SC-110L | @ | F4B-SC-110L-NL | @ | F4B-SC-110L-FF |
| | *40mm* | ***125968*** | *F4B-SCM-40M* | @ | *F4B-SCM-40M-NL* | @ | *F4B-SCM-40M-FF* |
| 210 | 1-11/16 | **126189** | F4B-SCM-111 | **065576** | F4B-SCM-111-NL | **050137** | F4B-SCM-111-FF |
| | 1-3/4 | **126190** | F4B-SCM-112 | @ | F4B-SCM-112-NL | **126274** | F4B-SCM-112-FF |
| | *45mm* | ***125969*** | *F4B-SCM-45M* | @ | *F4B-SCM-45M-NL* | @ | *F4B-SCM-45M-FF* |
| 211 | 1-15/16 | **126191** | F4B-SCM-115 | **052302** | F4B-SCM-115-NL | **126115** | F4B-SCM-115-FF |
| | 2 | **126192** | F4B-SCM-200 | **052004** | F4B-SCM-200-NL | **126132** | F4B-SCM-200-FF |
| | *50mm* | ***125970*** | *F4B-SCM-50M* | @ | *F4B-SCM-50M-NL* | @ | *F4B-SCM-50M-FF* |
| 212 | 2-3/16 | **126193** | F4B-SCM-203 | **052003** | F4B-SCM-203-NL | **050276** | F4B-SCM-203-FF |
| | 2-1/4 | **126283** | F4B-SCM-204 | **126537** | F4B-SCM-204-NL | **054482** | F4B-SCM-204-FF |
| | *55mm* | ***125971*** | *F4B-SCM-55M* | @ | *F4B-SCM-55M-NL* | @ | *F4B-SCM-55M-FF* |
| 214 | 2-7/16 | **126194** | F4B-SCM-207 | **052002** | F4B-SCM-207-NL | **126116** | F4B-SCM-207-FF |
| | 2-1/2 | **126195** | F4B-SCM-208 | **065653** | F4B-SCM-208-NL | **126326** | F4B-SCM-208-FF |
| | *65mm* | ***125972*** | *F4B-SCM-65M* | @ | *F4B-SCM-65M-NL* | @ | *F4B-SCM-65M-FF* |
| 215 | 2-11/16 | **126186** | F4B-SCM-211 | @ | F4B-SCM-211-NL | **064715** | F4B-SCM-211-FF |
| | *70mm* | ***125973*** | *F4B-SCM-70M* | @ | *F4B-SCM-70M-NL* | @ | *F4B-SCM-70M-FF* |
| 216 | 2-15/16 | **126196** | F4B-SCM-215 | **126538** | F4B-SCM-215-NL | **051599** | F4B-SCM-215-FF |
| | 3 | **126197** | F4B-SCM-300 | **126539** | F4B-SCM-300-NL | **126781** | F4B-SCM-300-FF |
| | *75mm* | ***125974*** | *F4B-SCM-75M* | @ | *F4B-SCM-75M-NL* | @ | *F4B-SCM-75M-FF* |
| 218 | 3-7/16 | **126198** | F4B-SCM-307 | **126540** | F4B-SCM-307-NL | **126271** | F4B-SCM-307-FF |
| | 3-1/2 | **126199** | F4B-SCM-308 | **126541** | F4B-SCM-308-NL | **056713** | F4B-SCM-308-FF |
| | *85mm* | ***125975*** | *F4B-SCM-85M* | @ | *F4B-SCM-85M-NL* | @ | *F4B-SCM-85M-FF* |

@ Assembled to order

FEATURES/BENEFITS PAGE B3-2 | NOMENCLATURE PAGE B3-4 | SELECTION PAGE B3-5 | RELATED PRODUCTS PAGE B3-133



## Setscrew Ball Bearings
### SCM MEDIUM DUTY 4-BOLT FLANGE BEARINGS

| Series | Shaft Size | Weight lbs. *kgs.* | A | B | C | D | F Bolt Dia. | H | J | L | N |
|---|---|---|---|---|---|---|---|---|---|---|---|
| 206 | 1<br>*25mm* | 3.0<br>*1.3* | 1-25/64<br>*35.3* | 4-1/4<br>*108.0* | 1-17/32<br>*38.9* | 3-1/4<br>*82.6* | 7/16<br>*M10* | 1/2<br>*12.7* | 15/32<br>*11.9* | 1-37/64<br>*40.1* | 2-3/16<br>*55.6* |
| 207 | 1-3/16<br>1-1/4<br>*30mm* | 4.1<br>4.0<br>*1.4* | 1-17/32<br>*38.9* | 4-3/4<br>*120.7* | 1-3/4<br>*44.5* | 3-5/8<br>*92.1* | 1/2<br>*M12* | 9/16<br>*14.3* | 17/32<br>*13.5* | 1-27/32<br>*46.8* | 2-7/16<br>*61.9* |
| 208 | 1-7/16<br>*35mm* | 5.0<br>*2.1* | 1-11/16<br>*42.9* | 5-1/8<br>*130.2* | 1-7/8<br>*47.6* | 4<br>*101.6* | 1/2<br>*M12* | 9/16<br>*14.3* | 17/32<br>*13.5* | 2-3/64<br>*52.0* | 2-3/8<br>*60.3* |
| 209 | 1-1/2<br>1-5/8<br>*40mm* | 6.1<br>6.1<br>*2.7* | 1-23/32<br>*43.7* | 5-3/8<br>*136.5* | 1-15/16<br>*49.2* | 4-1/8<br>*104.8* | 1/2<br>*M14* | 5/8<br>*15.9* | 17/32<br>*13.5* | 2-7/32<br>*56.4* | 2-3/4<br>*69.9* |
| 210 | 1-11/16<br>1-3/4<br>*45mm* | 7.1<br>6.9<br>*3.0* | 1-3/4<br>*44.5* | 5-5/8<br>*142.9* | 2<br>*50.8* | 4-3/8<br>*111.1* | 1/2<br>*M16* | 5/8<br>*15.9* | 17/32<br>*13.5* | 2-7/16<br>*61.9* | 2-7/8<br>*73.0* |
| 211 | 1-15/16<br>2<br>*50mm* | 9.5<br>9.3<br>*4.1* | 1-27/32<br>*46.8* | 6-1/2<br>*165.1* | 2-5/32<br>*54.8* | 5-1/8<br>*130.2* | 5/8<br>*M16* | 11/16<br>*17.5* | 9/16<br>*14.3* | 2-23/32<br>*69.1* | 3-1/4<br>*82.6* |
| 212 | 2-3/16<br>2-1/4<br>*55mm* | 11.3<br>11.1<br>*6.0* | 1-63/64<br>*50.4* | 6-7/8<br>*174.6* | 2-9/32<br>*57.9* | 5-5/8<br>*142.9* | 5/8<br>*M16* | 11/16<br>*17.5* | 9/16<br>*14.3* | 2-31/32<br>*75.4* | 3-1/2<br>*88.9* |
| 214 | 2-7/16<br>2-1/2<br>*65mm* | 16.2<br>16.0<br>*7.3* | 2-15/64<br>*56.8* | 7-3/8<br>*187.3* | 2-3/4<br>*69.9* | 5-7/8<br>*149.2* | 5/8<br>*M16* | 11/16<br>*17.5* | 9/16<br>*14.3* | 3-5/16<br>*84.1* | 3-11/16<br>*93.7* |
| 215 | 2-11/16<br>*70mm* | 18.3<br>*8.0* | 2-9/32<br>*57.9* | 7-3/4<br>*196.9* | 2-57/64<br>*73.4* | 6.0<br>*152.4* | 3/4<br>*M18* | 1<br>*25.4* | 41/64<br>*16.3* | 3-5/8<br>*92.1* | 3-7/8<br>*98.4* |
| 216 | 2-15/16<br>3<br>*75mm* | 21.5<br>21.2<br>*9.4* | 2-11/32<br>*59.5* | 7-3/4<br>*196.9* | 3-3/32<br>*78.6* | 6<br>*152.4* | 3/4<br>*M18* | 7/8<br>*22.2* | 19/32<br>*15.1* | 3-53/64<br>*97.2* | 4-3/32<br>*104.0* |
| 218 | 3-7/16<br>3-1/2<br>*85mm* | 28.0<br>27.4<br>*12.2* | 2-31/64<br>*63.1* | 8-7/16<br>*214.3* | 3-11/32<br>*84.9* | 6-3/4<br>*171.5* | 3/4<br>*M18* | 1<br>*25.4* | 9/16<br>*14.3* | 4-23/64<br>*110.7* | 4-5/8<br>*117.5* |


| FEATURES/BENEFITS PAGE B3-2 | NOMENCLATURE PAGE B3-4 | SELECTION PAGE B3-5 | RELATED PRODUCTS PAGE B3-133 |
|---|---|---|---|

# MODIFICATIONS/ ACCESSORIES



## Setscrew Ball Bearings

### LUBRICANTS
DODGE ball bearings are factory lubricated with Shell Alvania #2 lubricant. For applications where extreme ambient temperatures or speeds are anticipated or environmental considerations require a different lubricant, DODGE has a wide variety of lubricants available. Special lubricant options usually require set-up charges and premiums
.

### SEALS
The PROGUARD PLUS seal is a highly effective positive contact, land riding seal with flingers pressed on to each side of the inner ring offering added protection from wash down or extreme contamination. For high speeds or where seal drag would be an impediment, an all metallic labyrinth seal is available.

### HIGH TEMPERATURE
DODGE high temperature bearings are designed to operate in temperatures from 225°F (108°C) to 400°F (205° C). The bearings have adjusted internal clearances, metallic labyrinth seals, high temperature retainers, heat stabilized outer rings, and lubricants to meet the temperature needs of the application. To insure proper replacement, the bearing is identified by a six digit part number etched on a stainless steel nameplate riveted to the housing. The part number identifies the specific feature of the bearing. High temperature bearings are factory assembled to order and are available at extra cost. Consult Dodge Engineering for application assistance at (864)297-4800 or fax (864)281-2317.

### AIR HANDLING
Industrial fans and blowers generally operate at high speeds with bearing requirements of long life and quiet operation. Dodge stocks SC, and SCM Air Handling Pillow Blocks and flange bearings that are specifically designed to meet the requirements of the air handling industry. These bearings are 100% noise tested, and have an air handling fit for long life and quiet operation. These bearings are recommended for fan and blower applications. Sizes and housing configurations not listed can be supplied on a made to order basis.

### HOUSING MATERIAL
For extra corrosion resistance, a variety of housing finishes are available. Special materials include stainless steel or polymer housing, as an option. These coatings conform to U.S.D.A. and F.D.A. requirements. SC and SCM inserts can be supplied with a corrosion resistant coating on the inner and outer rings, stainless steel balls and set-screws, and nickel plated flingers as well as F.D.A. lubricant.

### OTHER MODIFICATIONS
For applications requiring modifications not listed, we encourage you to contact our Customer Order Engineering Department at (864)284-5700 or fax (864)281-2317.

## Mounted Bearings Life Adjustment Factor

**1.1 GENERAL.** For certain applications, it is desirable to specify life for reliability other than 90%. In such cases a life adjustment factor for reliability may be applied to the RATING LIFE. Section 1.2 discusses life adjustment factors for reliability.

Some bearing steels; e.g., vacuum-melted steels, and improved processing techniques, permit manufacture of bearings which offer endurance greater than that calculated by the RATING LIFE formula. Section 1.3 recommends methods to incorporate life adjustment factors for bearing materials into the life formula.

Bearing life calculated according to the RATING LIFE formula assumes proper application conditions. If lubrication is not adequate, loading unusual, or temperatures extreme, the ability of the bearing to attain or exceed the RATING LIFE is seriously impaired. Section 1.4 contains some basic recommendations concerning the effect of unusual application conditions on bearing life.

**1.2 LIFE ADJUSTMENT FACTOR FOR RELIABILITY.** Bearing life estimated in accordance with this standard is RATING LIFE; i.e., the life associated With 90% reliability or the life which 90% of a group of apparently identical bearings in a given application under similar conditions of load and speed will complete or exceed. While RATING LIFE has proven useful over a period of years as a criterion of performance, some applications require definition of life at reliabilities greater than 90%.

To determine bearing life with reliabilities other than 90% (as previously calculated from the Selection Procedure) the L10 must be adjusted by a factor a1, such that $L_n = a_1 \times L10$.

The life adjustment factors for reliability of Table 11 are recommended.

**Table 11: Life Adjustment Factors For Reliability**

| Reliability % | $L_n$ | Life Adjustment Factor for Reliability $a_1$ |
|---|---|---|
| 90 | $L_{10}$ | 1 |
| 95 | $L_5$ | 0.62 |
| 96 | $L_4$ (Rating Life) | 0.53 |
| 97 | $L_3$ | 0.44 |
| 98 | $L_2$ | 0.33 |
| 99 | $L_1$ | 0.21 |

**1.3 LIFE ADJUSTMENT FACTOR FOR MATERIAL**. For bearings, which incorporate improved materials and processing, the $L_{10}$ (as previously calculated in Selection Procedure) must be adjusted by a factor $a_2$. Factor $a_2$ depends upon steel analysis, metallurgical processing, forming methods, heat treatment and manufacturing methods in general.

Bearings fabricated from consumable vacuum remelted steels and certain other special analysis steels have demonstrated extraordinarily long endurance. These steels are of exceptionally high quality, and bearings fabricated from these are usually considered special manufacture. As such, $a_2$ values will not be specified for such steels in this discussion. Generally, $a_2$ values for such steels can be obtained from the bearing manufacturer.

**1.4 LIFE ADJUSTMENT FACTOR FOR APPLICATION CONDITIONS.** Application conditions which affect bearing life include:

1. Lubrication.
2. Load distribution (including effects of clearance, misalignment, housing, and shaft stiffness, type of loading and thermal gradients).
3. Temperature.

Consideration of (1.2) and (1.3) above requires analytical and experimental techniques beyond the scope of this discussion, therefore, the user should consult the bearing manufacturer for evaluations and recommendations.

In most bearing applications, lubrication serves to separate the rolling surfaces; i.e., rolling elements and raceways; to reduce retainer-rolling elements and retainer-land friction and sometimes to act as a coolant to remove frictional heat generated by the bearing.

If all limitations and qualifications specified by this discussion are observed, then the life adjustment application factor for bearings which are adequately lubricated is 1; i.e., $a_3$=1.

Operating conditions where $a_3$ might be less than 1 include:

a. exceptionally low values of Ndm (rpm times bore diameter in mm); e.g., Ndm 1000.
b. Lubricant viscosity less than 20.4 centistokes (100 SSU) at operating temperature.
c. Excessively high operating temperatures.

When a3 is less than 1, it may not be assumed that the deficiency in lubrication can be overcome by using an improved steel.

**1.5 FACTOR COMBINATIONS.** A fatigue life formula embodying the foregoing life adjustment factors is:

For Ball Bearings:

$$L_n = a_1 \times a_2 \times a_3 \left(\frac{C^*}{P}\right)^3 \times \frac{(16{,}667)}{RPM}$$

For Tapered Roller Bearings:

$$L_n = a_1 \times a_2 \times a_3 \left(\frac{C90^*}{P}\right)^{10/3} \times \frac{(1{,}5000{,}000)}{RPM}$$

For Spherical Roller Bearings:

$$L_n = a_1 \times a_2 \times a_3 \left(\frac{C^*}{P}\right)^{10/3} \times \frac{(16{,}667)}{RPM}$$

Indiscriminate application of the life adjustment factors in this formula may lead to serious over-estimation of bearing endurance, since fatigue life is only one criterion for bearing selection.

Care must be exercised to select bearings which are of sufficient size for the application. Undersizing of shaft and housing structures by using bearings which appear adequate from a life standpoint could lead to misalignment and fitting problems which could invalidate the formulas in this discussion.

* C = Basic Load Rating computed in accordance with ABMA-ANSI Standards.
C90 = C x.259

# INSTRUCTION MANUAL FOR DODGE® SETSCREW, ECCENTRIC COLLAR, D-LOK, H, H-E SERIES & EZ-KLEEN MOUNTED BALL BEARINGS

## INSTALLATION

**WARNING**

To ensure that drive is not unexpectedly started, turn off and lock out or tag power source before proceeding. Failure to observe these precautions could result in bodily injury.

**Under certain operating conditions it is possible for a static electric charge to build-up on E-Z KLEEN® Polymer Housings. Do not operate these bearings in any environment where a sudden static discharge may cause either an operating hazard or personnel discomfort.**

1. Clean shaft and bearing bore thoroughly. Measure and confirm shaft size and tolerance. File flats on shaft at setscrew locations to permit easy removal of bearing.
2. Slip bearing into position. Be sure that bearing is not on a worn section of the shaft. For tighter fits, tap inner ring face only with soft driver. DO NOT HAMMER ON HOUSING.
3. The bearing outer ring OD is spherical and swivels in the housing to accommodate misalignment. Snug hold-down bolts and use shaft to swivel each bearing until its final position is in the center of free movement top to bottom as well as side to side. Pass shaft through both bearings without forcing. This will prevent preloading of the bearings. Housing slippage depends on the mounting hold-down bolt tightening torque, number of bolts and friction characteristics between mounting surfaces. Auxiliary load carrying devices such as shear bars are advisable for side or end loading of pillow blocks and radial loads for flange units where normal to heavy loading or shock loading is encountered.
   **NOTE:** On coated and non-metallic housings, hold-down bolts should be tightened carefully with flat washers to prevent damage to the coating. Coated housings have reduced friction characteristics, so auxiliary load carrying devices are even more important in those applications.
4. Tighten hold-down bolts to proper torque (Table 1). Turn shaft by hand. Resistance to turning should be the same as before full tightening of hold-down bolts.
5. For setscrew mounted bearings: **After final alignment of the shaft, tighten both setscrews hand tight**, then the setscrews should be tightened alternately and in small increments to the torque specified in Table 1. After 24 hours operation, the setscrews should be retightened to the torque in Table 1 to assure full locking of the inner race to the shaft. Care should be taken that the socket key or driver is in good condition with no rounded corners and the key is fully engaged in the setscrew and held square with the setscrew to prevent rounding out of the setscrew socket when applying maximum torque. Do not drill through the setscrew holes for spot drilling of the shaft. (Some inner rings have tempered setscrew threads and can be damaged by a drill.) If spot drilling is required, locate bearings on the shaft and center punch through the setscrew hole. Remove bearing and spot drill the shaft, then reassemble over the spot drilled position and assemble as above. Milled or filed flats are preferable to spot drilling.
   **NOTE: On all SC Product the setscrews can be re-torqued many times without damage to the bearing system. To achieve maximum shaft holding power it is highly recommended that setscrews be replaced with new hardware after any disassembly operation.**
6. For eccentric collar mounted bearings, slide collar against cam end of inner race. Use a punch in the hole provided in the collar, tap collar smartly in the direction of shaft rotation. Tighten setscrews to proper torque (Table 1). To remove bearings, loosen setscrew and tap collar in the direction opposite of shaft rotation.
7. For D-LOK mounted bearings, be sure collar is square and tight against shoulder on inner ring. Tighten cap screw to recommended torque shown in Table 1.
8. For expansion bearings (H-E Series), locate inner unit in housing to allow expansion in the desired direction before locking to the shaft.

**WARNING:** Because of the possible danger to persons(s) or property from accidents which may result from the improper use of products, it is important that correct procedures be followed: Products must be used in accordance with the engineering information specified in the catalog. Proper installation, maintenance and operation procedures must be observed. The instructions in the instruction manuals must be followed. Inspections should be made as necessary to assure safe operation under prevailing conditions. Proper guards and other suitable safety devices or procedures as may be desirable or as may be specified in safety codes should be provided, and are neither provided by Rockwell Automation nor are the responsibility of Rockwell Automation. This unit and its associated equipment must be installed, adjusted and maintained by qualified personnel who are familiar with the construction and operation of all equipment in the system and the potential hazards involved. When risk to persons or property may be involved, a holding device or shear bars must be an integral part of the driven equipment.

| SETSCREWS | | | | | D-LOK | | | MOUNTING BOLTS | | | | | |
|---|---|---|---|---|---|---|---|---|---|---|---|---|---|
| | | Recommended Torque | | | | | | Metal Housings | | EZ-KLEEN Housed Bearings | | | |
| Setscrew Size | Key Hex Across Flats | Standard Ball Bearing Insert | | Corrosion Resistant-Stainless Steel | Cap Screw Size | Recom-mended Torque | E-Z Kleen Recom-mended Torque | Bolt Size | Recom-mended Dry Torque (Grade 2) | 2-Bolt PB, 2 & 4-Bolt Fig. And Fig. Brackets | | Tapped-Base PB | |
| | | Min | Max | | | | | | | Bolt Size | Torque* | Bolt Size | Torque** |
| (in.) | (in.) | (in-lbs.) | (in-lbs.) | (in-lbs.) | (in.) | (in-lbs.) | (in-lbs.) | (in.) | (in-lbs.) | (in.) | (in-lbs.) | (in.) | (in-lbs.) |
| #10 | 3/32 | 28 | 33 | 25 | #8-32 | 58 | 46 | 3/8-16 | 240 | 3/8-16 | 225 | 3/8-16 | 175 |
| 1/4 | 1/8 | 66 | 80 | 60 | #10-32 | 90 | 72 | 7/16-14 | 384 | 7/16-14 | 350 | 7/16-14 | 350 |
| 5/16 | 5/32 | 126 | 156 | 117 | 1/4-28 | 180 | 144 | 1/2-13 | 600 | 1/2-13 | 500 | 1/2-13 | 400 |
| 3/8 | 3/16 | 228 | 275 | 206 | 5/16-24 | 400 | 320 | 5/8-11 | 1200 | 9/16-12 | 650 | | |
| 7/16 | 7/32 | 342 | 428 | 321 | 3/8-24 | 750 | 600 | 3/4-10 | 1950 | 5/8-11 | 1000 | | |
| | | | | | | | | 7/8-9 | 2890 | | | | |
| (mm) | (mm) | (N-m) | (N-m) | (N-m) | (mm) | (N-m) | (N-m) | (mm) | (N-m) | (mm) | (N-m) | *Torque for Austenitic (18-8) Stainless<br>**Max. torque values published. Do not exceed. | |
| M5 | 2.5 | 3.2 | 3.7 | 2.8 | M4 | 5.85 | 4.68 | M10 | 29 | M8 | 15 | | |
| M6 | 3 | 6.2 | 7.7 | 5.8 | M5 | 10.75 | 8.6 | M12 | 50 | M10 | 25 | | |
| M8 | 4 | 14.2 | 17.8 | 13.4 | M6 | 20.5 | 16.4 | M16 | 124 | M12 | 50 | | |
| M10 | 5 | 26 | 31 | 23 | M8 | 45 | 36 | M20 | 238 | M14 | 75 | | |
| M12 | 6 | 46 | 57 | 43 | | | | M22 | 322 | M16 | 125 | | |

## LUBRICATION

High Speed Operation — In the higher speed ranges, too much grease will cause over-heating. The amount of grease that the bearing will take for a particular high speed application can only be determined by experience. If excess grease in the bearing causes overheating, it will be necessary to remove grease fitting to permit excess grease to escape. The bearing has been greased at the factory and is ready to run. When establishing a relubrication schedule, note that a small amount of grease at frequent intervals is preferable to a large amount at infrequent intervals.

### Lubrication Guide

**Use a No. 2 Lithium complex base grease or equivalent.***

| Hours Run per Day | Suggested Lubrication Period in Weeks | | | | | | | |
|---|---|---|---|---|---|---|---|---|
| | 1 to 250 RPM | 251 to 500 RPM | 501 to 750 RPM | 751 to 1000 RPM | 1001 to 1500 RPM | 1501 to 2000 RPM | 2001 to 2500 RPM | 2501 to 3000 RPM |
| 8 | 12 | 12 | 10 | 7 | 5 | 4 | 3 | 2 |
| 16 | 12 | 7 | 5 | 4 | 2 | 2 | 1 | 1 |
| 24 | 10 | 5 | 3 | 2 | 1 | 1 | 1 | 1 |

* For H and H-E series bearings, use Exxon Unirex N3 or equivalent suitable to 300° F.

Lubrication recommendations are intended for standard products applied in general operating conditions. For modified products, high temperature applications, and other anomalous applications contact product engineering at 864-284-5700

**www.rockwellautomation.com** **www.ptplace.com** **www.dodge-pt.com** **www.reliance.com** **www.ptplace.ca**

**Corporate Headquarters**
Rockwell Automation, 777 East Wisconsin Avenue, Suite 1400, Milwaukee, WI, 53202-5302 USA, Tel: (1) 414.212.5200, Fax: (1) 414.212.5201

**Headquarters for Dodge and Reliance Electric Products**
Americas: Rockwell Automation, 6040 Ponders Court, Greenville, SC 29615-4617 USA, Tel: (1) 864.297.4800, Fax: (1) 864.281.2433
Europe/Middle East/Africa: Rockwell Automation, Brühlstraße 22, D-74834 Elztal-Dallau, Germany, Tel: (49) 6261 9410, Fax: (49) 6261 17741
Asia Pacific: Rockwell Automation, 55 Newton Road, #11-01/02 Revenue House, Singapore 307987, Tel: (65) 6356-9077, Fax: (65) 6356-9011

**Headquarters for Allen-Bradley Products, Rockwell Software Products and Global Manufacturing Solutions**
Americas: Rockwell Automation, 1201 South Second Street, Milwaukee, WI 53204-2496 USA, Tel: (1) 414.382.2000, Fax: (1) 414.382.4444
Europe/Middle East/Africa: Rockwell Automation SA/NV, Vorstlaan/Boulevard du Souverain 36, 1170 Brussels, Belgium, Tel: (32) 2 663 0600, Fax: (32) 2 663 0640
Asia Pacific: Rockwell Automation, 27/F Citicorp Centre, 18 Whitfield Road, Causeway Bay, Hong Kong, Tel: (852) 2887 4788, Fax: (852) 2508 1846

2/05

Copyright © 2004 Rockwell Automation. All rights reserved. Printed in USA.
DODGE, D-LOK and EZ-KLEEN are trademarks of Rockwell Automation.

IM 499498

WAM Inc.

# New CinchPack CEMA CinchSeal

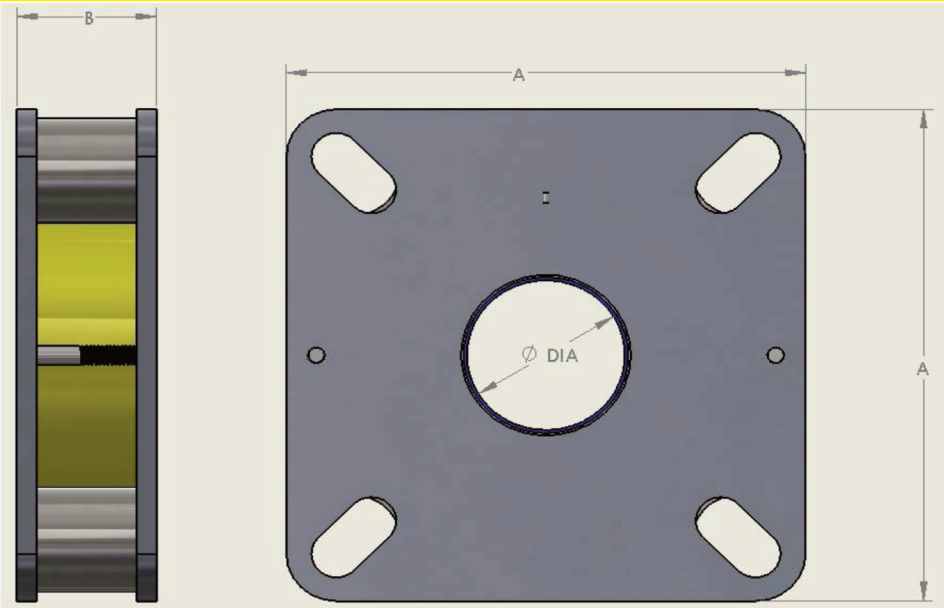





| Shaft Size | Part Number | A | B |
|---|---|---|---|
| 1.50″ | SE.3C | 5 3/8 | 1 3/4 |
| 2.00″ | SE.4C | 6 1/2 | 1 3/4 |
| 2.43″ | SE.5C | 7 3/8 | 1 3/4 |
| 3.00″ | SE.6C | 7 3/4 | 1 3/4 |
| 3.43″ | SE.7C | 9 1/4 | 1 3/4 |

- Designed for C.E.M.A screw conveyors to replace lip seals and waste packs
- Doesn't score rotating shafts
- Designed to handle 1/4" total shaft misalignment
- Purge with air, 5 to 8 psi above vessel pressure. Each seal should have its own dedicated airline. Sharing a single airline between multiple seals is not permitted. Use separate air regulators for each seal.
- Zero maintenance due to unique self adjusting design
  Maximum Operating temperature is 425F
- Torque Setting for seal mounting 25 ft-lbs
- Field repairable
- FDA Approved
- Standard Housing Material is 6061 aluminum alloy
- Standard Elastomer Material is silicone based, FDA approved Elastomer
- Maximum shaft speed is 400 FPM, air purged

**WAM Inc - Texas Division, 1300 Triad Blvd., Fort Worth, TX 76131**
**817-232-2678, www.waminc.com**

# MOTORS - AC INDUCTION, SINGLE & POLYPHASE

## 1. Overview

This user manual applies to NORD Motor products and it provides general information for motor operation, installation, maintenance, inspection, repair, and trouble shooting, which is relevant to most of the motor products shipped by NORD. Information and instructions provided in this manual, safety and commissioning information and all other manuals applicable to any items supplied by NORD must be observed.

This instruction manual is not intended to include comprehensive details and information related to all possible design variations or accessories options available with NORD motors. If there is any uncertainty about specific procedures, instructions or motor details, then please refer these questions to NORD for additional information or clarification.

Before installing, operating, or performing maintenance on any electrical motor become familiar with the following:

- The detailed operating instructions and wiring diagrams.
- All applicable national, local and system-specific regulations, codes and practices.
- The national / regional regulations governing safety and accident prevention.
- The proper use of any tools, transportation or hoisting equipment, and safety equipment needed to complete the installation.
- To avoid serious injury or possible damage to the equipment or machine, compliance with all safety and information notes is mandatory!

**⚠ *WARNING* ⚠**

All work involved in the transport, connection, commissioning and maintenance of any NORD product must be carried out by qualified and responsible technicians. All applicable national, regional, and local work regulations and safety requirements must also be complied with. NORD assumes no liability for personal injury, accidental death, or equipment damage and malfunctions resulting from failure to comply with installation or operating instructions, safety notes, or any work regulations and laws!

**⚠ *WARNING* ⚠**

To avoid electrocution, injury or death, make certain the motor is properly grounded, completely de-energized and brought to a no-voltage condition prior to working on any electrical connections.

## 2. Motor Types

NORD AC electric induction motors described in this manual generally include the following types:

- Single speed or two-speed design.
- Three phase alternating current or single phase design.
- Enclosure types: TEFC, TENV, and TEBC.

## 3. Enclosure Types

**Totally enclosed fan cooled (TEFC).**

TEFC motor designs rely on fan that is mounted on the motor's rotor shaft so the cooling capacity can vary based upon the motor's operating speed.

**Totally enclosed, non-ventilated (TENV)**

The TENV motor designs rely purely on convection cooling and they have no fan. Often TENV designs are labeled for intermittent or periodic duty or at a lower power rating than is typical for the given motor frame size.

**Totally enclosed, blower cooled (TEBC)**

The TEBC design uses separate blower or ventilator fan, with its own low wattage motor and a separate power supply, to provide continuous airflow and cooling. The blower can be used to extend the speed range of the motor and allow extreme slow speed operation without causing a concern for overheating. Blower data is provided in Table 6, page 11.

## 4. Voltage and Frequency Variation

Voltage and frequency variations are based upon the assumption that the nameplate horsepower will not be exceeded and that the motor temperature may increase. Standard allowable deviations are based upon the type of motor labeling.

**NEMA and CSA Labeled Motors**

Variations are based upon the nominal utilization voltage, and not the service (supply) voltage as per ANSI C84.1.

| Service Voltages | Utilization Voltages |
|---|---|
| 120V, 208V, 240V, 480V, 600V | 115V, 200V, 230V, 460V, 575V |

- Voltage variation at rated frequency = ±10%.
- Frequency variations at rated voltage = ±5%.
- Combined voltage/frequency variation = ±5%.

### CE Labeled Motors

Per IEC 60038, allowable service voltage variations on in the current system, compared to the previous system, are as indicated.

| Previous Service Voltages | Current Service Voltages |
|---|---|
| 220V, 380V, 660V | 230V, 400V, 690V +6/-10% |
| 240V, 415V | 230V, 400V +10/-6% |

- Per EN 60034-1 a ±5% voltage variation and a ±2% frequency variation can be tolerated.
- The allowed variations are based upon the voltage (or voltage range) indicated on the motor nameplate.

# MOTORS - AC INDUCTION, SINGLE & POLYPHASE

## 5. Motor Nameplate Information

The motor nameplate and the display of technical information may vary slightly depending upon the global standard/s that the motor conforms to and the efficiency level. Please reference the examples below.

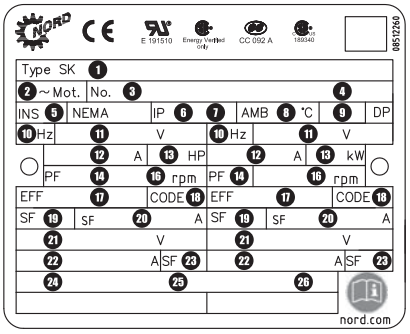


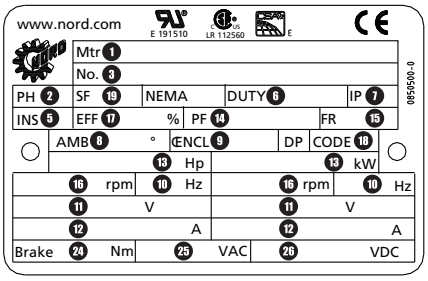


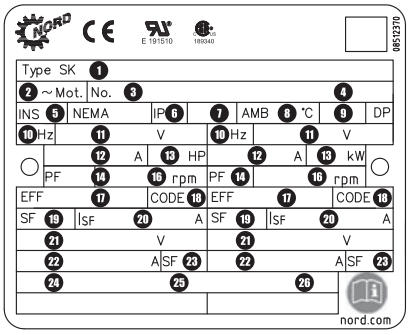


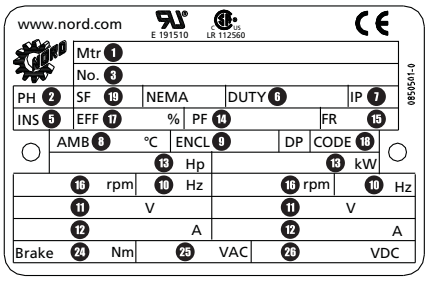


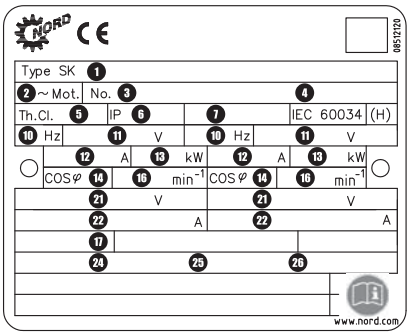


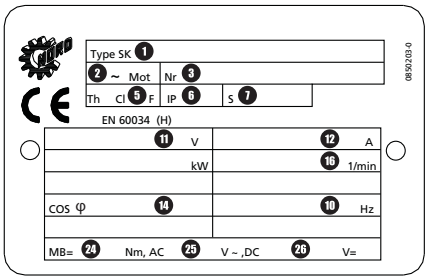


**Table 1. Nameplate Data**

| Field | Definition |
|---|---|
| 1 | Model / Type |
| 2 | Number of Phases |
| 3 | Order Number |
| 4 | Serial Number |
| 5 | Insulation Class |
| 6 | IP (Ingress Protection) Enclosure Rating |
| 7 | Duty Cycle |
| 8 | Ambient Temperature Rating (°C) |
| 9 | Enclosure Type |
| 10 | Motor Frequency (Hz) |
| 11 | Voltage Rating (V) |
| 12 | Current Rating (A) |
| 13 | Rated Power (HP or kW) |

| Field | Definition |
|---|---|
| 14 | Power Factor |
| 15 | Motor Frame Size |
| 16 | Full Load Speed (rpm or 1/min$^2$) |
| 17 | Efficiency |
| 18 | NEMA Code Letter |
| 19 | Service Factor |
| 20 | Current Rating (If Service Factor ≥ 1.15) |
| 21 | Operating Voltage Rage (A) |
| 22 | Current Rating at Operating Voltage Range (A) |
| 23 | Service Factor at Operating Voltage Range (A) |
| 24 | Brake Rating (Nm) |
| 25 | Brake Supply Voltage (VAC) |
| 26 | Brake Coil Voltage (VDC) |

## 6. Motor Options And Nomenclature

NORD offers many options for its motors. The option code will be shown in the motor nomenclature. Below are commonly used options.

| Code | Description |
|---|---|
| **AICM** | Additional Internal Insulation Coating Applied |
| **BRE** | With Brake |
| **EAR** | Single Phase, Start Cap/Run Cap |
| **ECR** | Single Phase, Start Cap/Run Cap Increased SF |
| **EHB** | Single Phase, Run Capacitor Only |
| **EP** | Epoxy Dipped Windings |
| **F** | Blower Cooling Fan - 3ph & 1ph |
| **FC** | Blower Cooling Fan - 1ph |
| **FHL** | Brake – Lockable Manual Release |
| **H** | Energy Efficient |
| **HL** | Brake – Manual Hand Release |
| **IG** | Incremental Encoder |
| **IP66** | IP66 Environmental Protection |
| **IR** | Brake – Current Sensing Relay |
| **KB** | Condensation Holes - Removable Plugs |
| **KD** | Condensation Holes - Open |
| **MIK** | Brake – Microswitch |
| **MS** | Power Plug Connector |

| Code | Description |
|---|---|
| **OL** | TENV Motor – Without Fan / With Cover |
| **OL/H** | TENV Motor - Without Fan & Cover |
| **P** | Premium Efficient Motors |
| **RD** | Canopy Cover |
| **RDD** | Double Canopy Cover |
| **RG** | Brake – Corrosion Protected |
| **RLS** | Backstop |
| **SH** | Motor Space Heater |
| **SR** | Brake – Dust Protected |
| **TF** | Thermistor |
| **TW** | Thermostat |
| **VN** | 10:1 Constant Torque Rated Motor |
| **VR** | 5:1 Constant Torque Rated Motor |
| **VW** | 20:1 Constant Torque Rated Motor |
| **VZ-F** | 1000+:1 Constant Torque Rated Motor |
| **WE** | 2nd Motor Shaft End |
| **WU** | High Slip Rotor |
| **Z** | High Inertia Motor Fan |

### Motor Nomenclature

**100L / 4 BRE 40 ...**

- ... — Other Options
- 40 — Brake Size Nm
- BRE — Brake
- 4 — Number of Poles
- 100L — Frame Size

### Ordering Examples

**100L 4 BRE 100 HL RG**

- RG — Corrosion Protection
- HL — Hand Release Lever
- 100 — 100 Nm Brake Torque
- BRE — Brake
- 4 — 4 Poles
- 100L — Motor Frame Size

100 Frame Motor with 4 poles, Brake, 100 Nm with a hand release lever, corrosion protected brake, and a current sensing relay.

**160L 2 BRE 40 FHL SR**

- SR — Dust & Corrosion Prot.
- FHL — Locking Hand Release Lever
- 40 — 40 Nm Brake Torque
- BRE — Brake
- 2 — 2 Poles
- 160L — Motor Frame Size

63 Frame Energy efficient motor with 4 poles, Brake, 40 Nm with a locking hand release lever and dust & corrosion protection.

## 7. Application Conditions

Standard NORD motors are designed to operate in dusty or moist environments and have anti-fungal, thermal class F insulation.

- Enclosure Protection Rating = IP55 (minimum).
- Maximum Installation Height = 3300 ft (1000 m).
- Ambient Temperature = -4 to 104°F (-20 to 40 °C).
- Tropical-proof, Thermal Class F insulation.

The protection level and maximum ambient temperature are stated on the motor nameplate.

*IMPORTANT NOTE*

NORD can provide motors for an expanded range of applications and service conditions including higher protection levels, extreme ambient conditions and, higher altitudes.

*WARNING*

Consult NORD for recommendations if motors are operated under extreme loading conditions, exposed to high inertia loads, or need to operate under unusually high cycling conditions with high starting and stopping frequency.

*WARNING*

Special design and assembly considerations are needed if NORD motors are subject to any of the following conditions:

- Outdoor installation with motor in a vertical position.
- Direct contact with aggressive or corrosive materials (acids, bases, salts, certain gases, etc.).
- Exposure to extreme high or low temperatures, high relative humidity, condensation moisture or very wet environments.
- Subject to extreme material build-up on the unit (dirt, dust, sand, etc.).
- Hazardous Locations (risk of fire or explosion).

## 8. Transportation

During transportation observe the following:

- Make sure that all eyebolts and lifting lugs are tight and firmly against their supporting surface.
- Use all the lifting eyes that are intentionally supplied with the motor.
- Lift only at designed points.
- Protect the mounting surface from possible damage during transportation.
- Always use sufficiently rated handling equipment, lift mechanisms and lifting straps.
- With heavier objects or unbalanced loads, it may be appropriate to use more than one lifting point or an additional strap or sling to assure safe transportation of the assembly. This is especially true of assembled gearmotors and motorized reducers.
- Once the NORD motor or assembly is properly installed, remove the transportation fixtures completely or make certain they are properly re-secured and tightened.

*WARNING*

**Transportation – Use of Lifting Devices**

To avoid death, serious injury or equipment damage…

- Hoisting lugs or lifting eyes attached to the motor are designed for the weight of the motor only! Do not attach any additional loads!
- The motor must only be transported and lifted using the lifting eyes, in a position that is appropriate for its type of construction. Otherwise, it could fall over or slip in the lifting tackle.
- During suspended transport, two straps must be able to carry the entire load weight safely.
- When required use additional, suitable means of support for transportation, installation or removal.
- Always secure the support equipment to prevent it from slipping.

## 9. Storage

If the motor is not in service, store it according to the following conditions:

- Store the motor in a clean, dry, dirt-free, vibration free area.
- Storage temperatures of 10°C (50°F) to 50°C (120°F) must be maintained.
- Relative humidity must not exceed 60%.
- If vibration in the area exceeds 0.002 inch (0.05 mm) at 60 hertz, then vibration isolation pads are suggested to prevent brinelling of the bearings.
- Treat the unprotected shaft end and mating flange surfaces with a corrosion inhibitor that can be cleaned off prior to commissioning.
- Before placing the motor into service, visually inspect the motor exterior for evidence of deterioration during storage. Turn the motor shaft by hand to make sure the shaft turns freely.
- Motor space heaters, when provided, are to be connected and energized whenever there is a possibility that the storage ambient conditions will reach the dew point. Space heaters are optional. Remove motor from the storage container when the heater is energized.
- If the motor needs to be stored for extended periods, or if it is stored in less than favorable conditions, it is recommend that the winding insulation resistance be checked prior to commissioning (page 7).
- Even if stored in favorable conditions, the antifriction motor bearings and motor shaft seals may need to be replaced if the storage period is more than 4 years.

## 10. Safety Considerations

When installing, servicing or replacing electric motors it is important to be working in a “voltage-free” state. Observe the following safety rules.

**Five Safety Rules**

1. Disconnect the system. Disconnect the auxiliary circuits (brakes, space heaters, etc.).
2. Prevent reconnection (follow safe lock-out/tag-out practices).
3. Make sure that the equipment is at zero voltage.
4. Make certain the equipment is properly grounded and short-circuited.
5. Cover or isolate nearby components that are still electrically live.

To energize the system, apply the measures in reverse order.

**Qualified Personnel**

All work involved in the transport, connection, commissioning and maintenance of any NORD product must be carried out by qualified and responsible technicians.

For the purpose of this documentation, a qualified personnel is taken to mean a person or people who fulfill the following requirements:

- Through appropriate training and experience, they are able to recognize and avoid risks and potential dangers in their particular field of activity.
- They have been instructed to carry out work on the machine by the appropriate person responsible.
- They are responsible for knowing and complying with all applicable national, regional, and local work regulations and safety requirements.

**10. Safety Considerations Ctd.**

**General Warnings and Cautions**

⚠ *WARNING* ⚠

To avoid electrocution, injury or death, make certain all electrical devices (motors, brakes, variable frequency drives, etc.) are properly grounded, completely de-energized, and brought to a no-voltage condition prior to working on any electrical connections. Remember that most of these devices carry potentially dangerous energy levels for a period of time after power is removed. Always follow proper lock-out/tag-out procedures.

⚠ *WARNING* ⚠

Electrical machines contain dangerous voltage levels, electrically live parts, rotating surfaces and hot surfaces. To prevent injury, death or possible equipment damage always observe the following:

- Keep all safety covers and guards in place during operation. Remove and replace covers in compliance with the applicable safety regulations.
- Allow the machine to cool down before starting any work on it.
- Operate the machines properly.
- Perform regular maintenance on the machine.
- Secure and guard free-standing shaft extensions.

⚠ *WARNING* ⚠

**Electrically Live Parts**

Electrical machines contain electrically live parts. Fatal or severe injuries and substantial material damage can occur if the required covers are removed or if the machines are not handled, operated, or maintained properly.

⚠ *WARNING* ⚠

**Rotating Parts**

Electrical machines contain dangerous rotating parts. Fatal or severe injuries and substantial material damage can occur if the required covers are removed or if the machines are not handled, operated, or maintained properly.

⚠ *WARNING* ⚠

**Hot Surfaces**

Electrical machines have hot surfaces. Fatal or severe injuries and substantial material damage can occur if the required covers are removed or if the machines are not handled, operated, or maintained properly. Allow the machine to cool down before starting any work on it.

⚠ *WARNING* ⚠

**Maintain Proper Cooling**

Operating the motor without the intended cooling fan may cause overheating and result in very hot surfaces, personal injury and material damage. Never commission a motor intended to be fan cooled when it is missing the shaft-driven fan or external blower assembly.

⚠ *WARNING* ⚠

**Condensation Drain Holes (Optional)**

Inserting objects into the condensation drain holes can damage the winding and can result in death, serious injury and damage to property!

- Before opening sealed drain holes, make sure the motor is in a no-voltage condition. Close the condensation drain holes before re-commissioning.
- Exercise caution around drain holes that are intended to be left open, especially when the motor is energized.

STOP *HARMFUL SITUATION* STOP

Before start-up check the following:

- All electrical connections are secure, well grounded and properly made.
- The motor is rotating in the correct direction (when de-coupled from the driven load).
- There are no temperature-sensitive parts (cables etc.), in contact with motor enclosure.
- Condensation drain holes are always located at the lowest point of the motor.

## 11. Checking the Insulation

Before putting the motor into operation for the first time, after a lengthy period of storage or standstill (approx. 6 months), the insulation resistance of the winding should be checked.

**⚠ WARNING ⚠**

During and directly after measurement the motor connection terminals carry hazardous voltages.

### A. Control

The insulation resistance of new, cleaned, or repaired motor windings against the grounded housing and against one another should be > 200 Mega-Ohms.

### B. Measurement

Using a Mega-Ohm meter apply a DC voltage of 500 VDC to the motor winding for a period of 60 seconds and record the winding insulation resistance compared to ground.

- The 500 VDC test voltage is applicable to low voltage motors up to 1000 VAC.
- When performing this test the temperature of the windings should be 25°C ± 15°C (77°F ± 27°F).

### C. Verification

- If the insulation resistance of the winding is less than 50 Mega-Ohms, the cause may be moisture. The windings should be dried and the test should be repeated.
- After any lengthy period of operation the insulation resistance may drop. So long as the measured value does not fall below the critical value of 50 Mega-Ohm, the motor may continue to be operated.
- If the measured value falls below the critical 50 Mega-Ohm level, the cause must be established and the windings or winding sections must be cleaned, dried, repaired, or replaced as needed.

## 12. Bearing Lubrication

NORD motor frame sizes 63 up to and including 225 are normally supplied with internally grease lubricated bearings and require no lubrication during normal operation.

NORD motor frame sizes 250 and larger are supplied with grease fittings for re-greasing the motor bearings.

**IMPORTANT NOTE**

Motors with grease fittings are normally supplied with a label indicating the grease type used, the suggested re-lubrication interval, and the amount of new grease to be applied. General bearing maintence guidelines are listed in Table 3.

Typical motor bearing grease is an NLGI No. 2 consistency, high grade product with a polyurea base thickener, synthetic or blended mineral/synthetic oil, and stabilizing agents to protect against heat and oxidation.

**Table 3 – Motor Bearing Maintence Guidelines**

| Frame Size | Power | Poles | Re-greasing Interval |
|---|---|---|---|
| 63-225 | 0.16-60 HP (0.12-45 kW) | All | Maintence Free |
| 250 to 280 | 75-125 HP (55-75 kW) | 2 | 4000 h |
| | | 4 to 8 | 8000 h |
| 315 | 150-250 HP (132-200 kW) | 2 | 3000 h |
| | | 4 to 8 | 6000 h |

**STOP HARMFUL SITUATION STOP**

When re-greasing motor bearings do not to mix different greases without verifying the compatibility with a reputable grease lubrication supplier. Mixing incompatible products can lead to bearing failure.

## 13. Mechanical Installation

Integral motors, NEMA C-face motors, and IEC flange mounted motors must be rigidly secured to their mating connection surface using all fastening screws tightened to the proper bolt torque. It is good practice to apply a medium strength thread- locking agent (Loctite® 242) to the mounting screws.

Foot mounted motors must be securely installed to a rigid and level foundation or mounting surface to minimize vibration and maintain alignment between the motor and shaft load. All mounting hole locations must be utilized. Tighten all hold down screws or bolts to the proper bolt torque.

**STOP HARMFUL SITUATION STOP**

Failure to provide a proper mounting surface may cause vibration, misalignment and bearing damage.

Accurate alignment and proper balancing of output devices (couplings, belts, pulleys, etc.) is required to assure quite, low vibration, trouble free operation. When the motor is directly coupled to a gear drive or a driven machine make sure that the motor shaft and driven machine shaft are aligned with one another axially.

**STOP HARMFUL SITUATION STOP**

Inaccurate alignment may lead to bearing damage, excessive vibrations and shaft breakage.

**IMPORTANT NOTE**

For motor replacement guidelines see section 20 on page 15 and section 21 on page 16.

## 14. Electrical Connections

**⚠ WARNING ⚠**

To avoid electrocution, injury or death, make certain all electrical devices (motors, brakes, variable frequency drives, etc.) are properly grounded, completely de-energized, and brought to a no-voltage condition prior to working on any electrical connections. Remember that most of these devices potentially dangerous energy levels for a period of time after power is removed. Always follow proper lock-out/tag-out procedures.

**IMPORTANT NOTE**

External motor brakes have their own connection requirements as indicated in the appropriate brake instruction manuals.

**⚠ WARNING ⚠**

If the motor has an integral brake, make certain there is no load connected to the driven equipment before releasing the brake. Otherwise serious injury, death, or damage to the equipment may result.

- The supply voltage and frequency must agree with the motor nameplate data.
- Always feed the connecting leads into the terminal box using appropriate mating cable glands. The mating connection cables and cable glands should be suitable for temperatures ≥ 194°F (90°C).
- Provide the ends of the connecting leads and ground lead with cable lugs or curved ring eyelets before connecting them to the terminal board.
- Make certain that the wiring connections and arrangement of the terminal board jumpers conform to the appropriate wiring diagram as provided in the motor terminal box and/or page 9 of this manual.
- Tighten the terminal board screw connections on the on the main terminal board per the table below.

**Table 4 – Tightening Torque: Terminal Board and Grounding Screws**

| Thread Size | Nut Size [mm] | Tightening Torque [lb-ft] | Tightening Torque [N-m] |
|---|---|---|---|
| M4 | 7 | 0.6-0.9 | 0.8-1.2 |
| M5 | 8 | 1.3-1.8 | 1.8-2.5 |
| M6 | 10 | 2.0-3.0 | 2.7-4 |
| M8 | 13 | 4.0-5.9 | 5.5-8 |
| M10 | 17 | 6.6-9.6 | 9-13 |
| M12 | 19 | 11.8-14.8 | 16-20 |

- Upon final assembly, the terminal box cover must be sealed so that it is dust-tight and water-tight.

**Table 5 – Tightening Torque: Terminal Box Cover Screws**

| Thread Size | Tightening Torque [lb-ft] | Tightening Torque [N-m] |
|---|---|---|
| M4 | 0.6-0.9 | 0.8-1.2 |
| M5 | 0.9-1.3 | 1.2-1.8 |
| M6 | 1.1-1.8 | 1.5-2.5 |
| M8 | 2.2-3.7 | 3.0-5.0 |

# MOTORS - AC INDUCTION, SINGLE & POLYPHASE

## 15. Wiring Diagrams

Frames 63-132
230 / 460V, 60Hz, 3Ø | 200 / 400V, 50Hz, 3Ø
190 / 380V, 60Hz, 3Ø

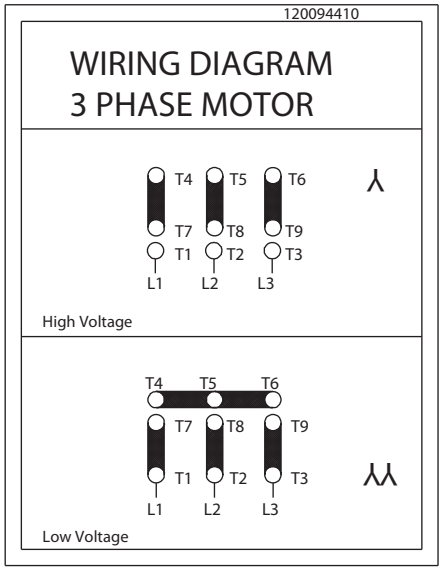


Frames 160 +
230 / 460V, 60Hz, 3Ø | 200 / 400V, 50Hz, 3Ø
190 / 380V, 60Hz, 3Ø

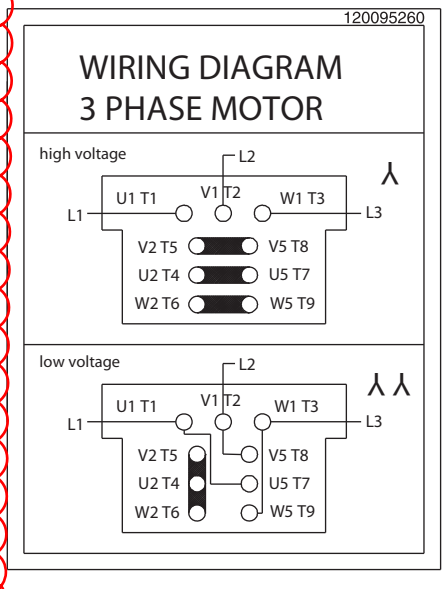


Frames 160 +
230 / 460V, 60Hz, 3Ø | 200 / 400V, 50Hz, 3Ø
190 / 380V, 60Hz, 3Ø

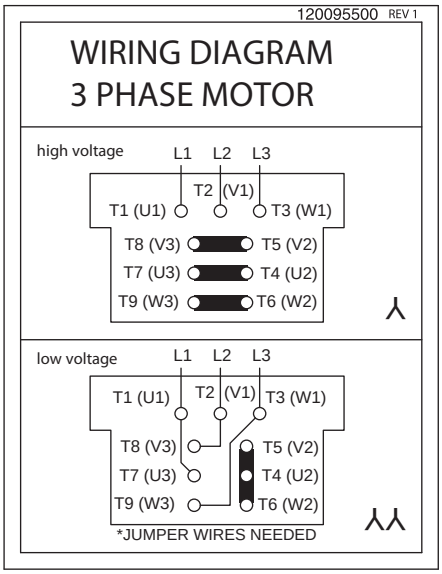


460 / 800V, 60Hz, 3Ø | 230 / 400V, 50Hz, 3Ø
208 / 360V, 60Hz, 3Ø | 400 / 690V, 50Hz, 3Ø
332 / 575V, 60Hz, 3Ø

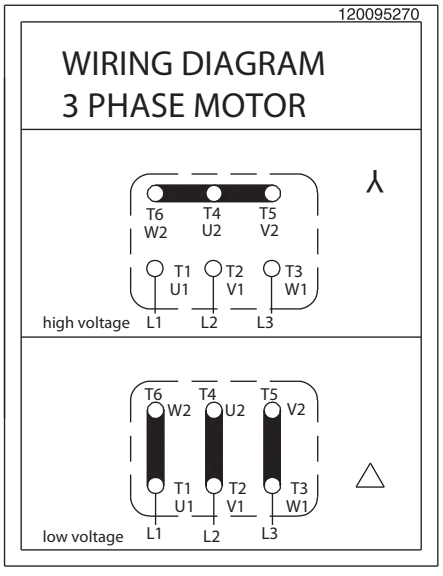


2 - SPEED MOTORS
SINGLE WINDING (4-2 & 8-4 POLE)

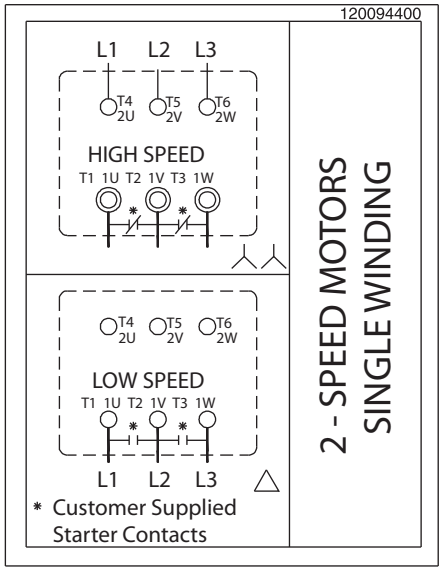


2 - SPEED MOTORS
DUAL WINDING (8-2 POLE)

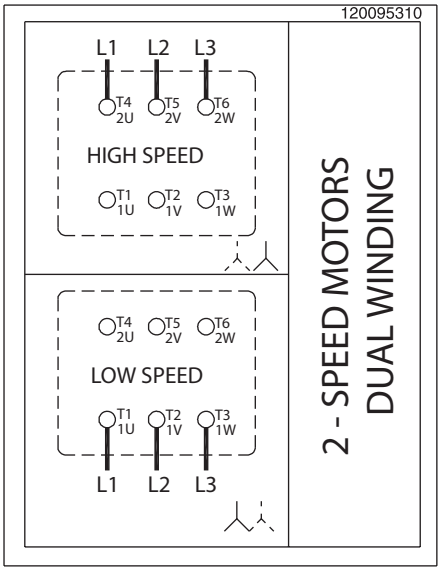

**15. Wiring Diagrams Ctd.**

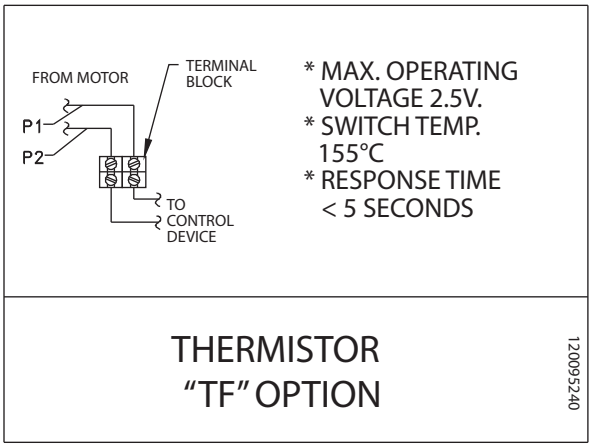


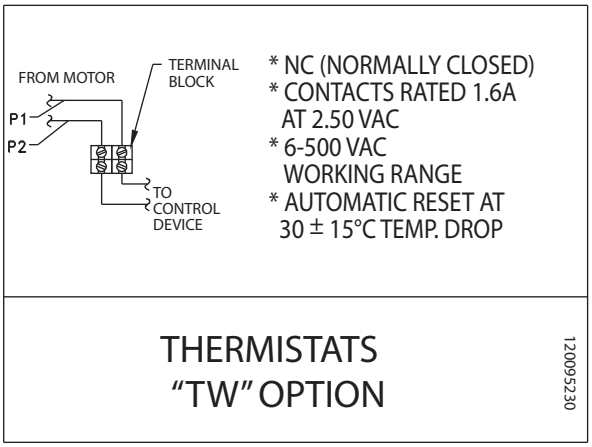


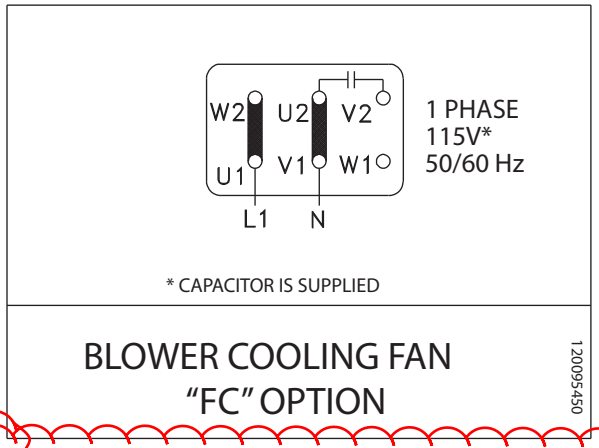


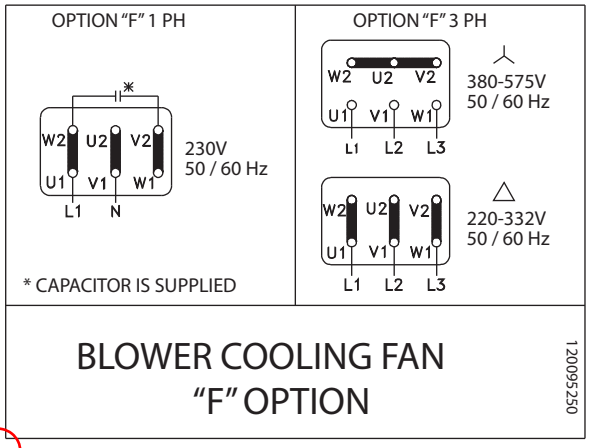


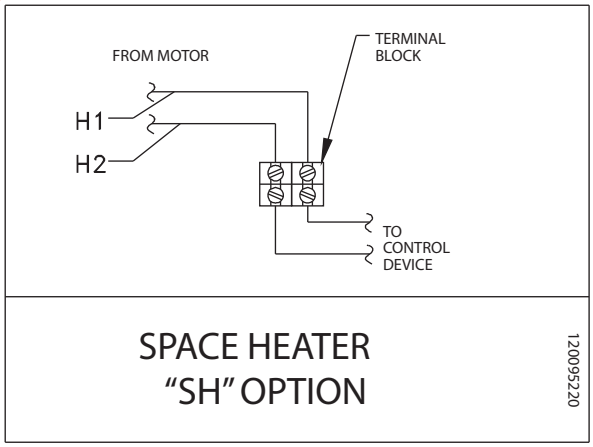

## 16. Motor Accessories

### Blower Cooling Fan (Option F & FC)

- Connection Diagram Shown on page 10
- Option FC is 1-phase, 115V
- Option F has capability of 1 phase by connecting a supplied capacitor

### Option F – 3ph & 1ph 220-575V 50/60Hz

| Motor Frame | 60Hz Ratings | | | 50Hz Ratings | | |
|---|---|---|---|---|---|---|
| | Voltage [V] | Current [A] | Power [W] | Voltage [V] | Current [A] | Power [W] |
| **Single phase connection - ⊥ (Delta)** | | | | | | |
| **63** | 230 – 277 | 0.11 | 38 | 230 – 277 | 0.10 | 27 |
| **71** | 230 – 277 | 0.12 | 41 | 230 – 277 | 0.10 | 28 |
| **80** | 230 – 277 | 0.13 | 44 | 230 – 277 | 0.11 | 29 |
| **90** | 230 – 277 | 0.25 | 88 | 230 – 277 | 0.26 | 72 |
| **100** | 230 – 277 | 0.28 | 88 | 230 – 277 | 0.26 | 70 |
| **112** | 230 – 277 | 0.31 | 107 | 230 – 277 | 0.26 | 73 |
| **132** | 230 – 277 | 0.27 | 89 | 230 – 277 | 0.29 | 82 |
| **160 - 225** | 230 – 277 | 0.41 | 140 | 230 – 277 | 0.45 | 128 |
| **Three phase low-voltage connection - (Delta)** | | | | | | |
| **63** | 220 – 332 | 0.08 | 23 | 220 – 290 | 0.10 | 27 |
| **71** | 220 – 332 | 0.08 | 24 | 220 – 290 | 0.10 | 30 |
| **80** | 220 – 332 | 0.08 | 25 | 220 – 290 | 0.01 | 29 |
| **90** | 220 – 332 | 0.21 | 64 | 220 – 290 | 0.28 | 86 |
| **100** | 220 – 332 | 0.21 | 66 | 220 – 290 | 0.27 | 86 |
| **112** | 220 – 332 | 0.23 | 70 | 220 – 290 | 0.27 | 85 |
| **132** | 220 – 332 | 0.25 | 74 | 220 – 290 | 0.32 | 96 |
| **160 - 225** | 220 – 322 | 0.49 | 165 | 220 – 290 | 0.52 | 155 |
| **Three phase high-voltage connection - (Y)** | | | | | | |
| **63** | 380 – 575 | 0.04 | 23 | 380 – 500 | 0.05 | 29 |
| **71** | 380 – 575 | 0.04 | 25 | 380 – 500 | 0.05 | 30 |
| **80** | 380 – 575 | 0.04 | 26 | 380 – 500 | 0.05 | 29 |
| **90** | 380 – 575 | 0.12 | 62 | 380 – 500 | 0.16 | 82 |
| **100** | 380 – 575 | 0.12 | 66 | 380 – 500 | 0.16 | 83 |
| **112** | 380 – 575 | 0.13 | 70 | 380 – 500 | 0.16 | 82 |
| **132** | 380 – 575 | 0.14 | 75 | 380 – 500 | 0.18 | 96 |
| **160 - 225** | 380 – 575 | 0.28 | 165 | 380 – 500 | 0.29 | 155 |

### Option FC – 115V 50/60Hz 1ph

| Motor Frame | 60Hz Ratings | | | 50Hz Ratings | | |
|---|---|---|---|---|---|---|
| | Voltage [V] | Current [A] | Power [W] | Voltage [V] | Current [A] | Power [W] |
| **Single Phase Connection - ⊥ (Delta)** | | | | | | |
| **63** | 100 – 135 | 0.23 | 42 | 100 – 135 | 0.30 | 42 |
| **71** | 100 – 135 | 0.23 | 47 | 100 – 135 | 0.30 | 44 |
| **80** | 100 – 135 | 0.27 | 57 | 100 – 135 | 0.30 | 43 |
| **90** | 100 – 135 | 0.46 | 102 | 100 – 135 | 0.57 | 78 |
| **100** | 100 – 135 | 0.53 | 105 | 100 – 135 | 0.54 | 78 |
| **112** | 100 – 135 | 0.60 | 115 | 100 – 135 | 0.55 | 80 |

**Table 6 – Option F & FC**

## 16. Motor Accessories Ctd.

### Thermostats (Option TW and Option 2TW)

| | |
|---|---|
| **Standard connection** | Series connected, one per phase |
| **Contact** | NC (Normally Closed)/ Auto Re-setting |
| **Response Temperature (Option TW)** | 311 °F (155 °C) Shut-Off Device |
| **Response Temperature (Option 2TW)** | 311 °F (155 °C) Shut-Off Device<br>+ 266°F (130 °C) Alarm Device |
| **Nominal Current** | 1.6 Amp at 250 V |
| **Resistance** | < 50 mΩ |
| **Switch Rebound** | < 1ms |
| **Insulation Rating** | 2000 VAC |
| **Cycles** | 10,000 max |
| **Lead Identification (inside terminal box)** | P1 and P2 or<br>TB1 and TB2 / 2TB1 and 2TB2 |

Motor thermostats or bi-metallic switches can be wired directly into the control circuit without a separate control module or tripping device. Thermostats operate on a relatively high control voltage so they are much less sensitive to voltage interference from the main power supply. Often one can run thermostat leads and motor power leads next to each other when using the appropriate shielded cable. The installer is responsible to wire the thermostats into the motor control circuit. The leads may be labeled in a variety of ways as indicated.

### Thermistors (Option TF)

| | |
|---|---|
| **Standard Connection** | Three devices, series connected, one per phase |
| **Type** | Positive temperature coefficient (PTC) |
| **Transition Temperature** | 150°C±5 °C |
| **Resistance** | 20… 500Ω (below transition)<br>> 4 kΩ (above transition) |
| **Reed Current** | < 1mA |
| **Max Voltage** | 30V |
| **Lead Identification (inside terminal box)** | P1 and P2 or<br>TP1 and TP2 |

With a separate control module or tripping device (ex. Kirwan INT69) thermistors are used to sense motor overload/ over temperature conditions by converting the critical operating temperature limit into large internal resistance change. Due to their small size, heat sink construction, and high change in resistance value, minor resistance variations caused by relatively long lead runs can be tolerated. This feature also allows for one controller to be used for several temperature sensing locations. Many variable frequency drives come with on-board thermistor inputs. NORD does not supply the thermistor control module.

**⚠ WARNING ⚠**

Thermostats and Thermistors will automatically reset.

**⚠ WARNING ⚠**

All wiring must be completed by qualified personal and adhere to all local codes.

### Space Heaters (Option SH)

- Connection Diagram shown on Page 9
- Space Heaters are mounted directly on the motor winding
- The leads are brought into the terminal box and labeled H1 and H2
- They require a separate voltage supply and must not be energized when the motor is energized
- The heaters will keep the winding of the motor approximately 5°C above the surrounding ambient

**Table 5. Space Heater Data**

| Frame Size | Wattage | Voltages | Heater Strips/MTR |
|---|---|---|---|
| **63 & 71** | 18W | 110V | 1 |
| | | 230V | |
| | | 460V | |
| **80** | 25W | 110V | 1 |
| | | 230V | |
| | | 460V | |
| **90 – 112** | 50W | 110V | 2 |
| | | 230V | |
| | | 460V | |
| **132-180** | 100W | 110V | 2 |
| | | 230V | |
| | | 460V | |
| **200 & 225** | 120W | 110V | 2 |
| | | 230V | |
| | | 460V | |

### Encoder (Option IG)

- Most standard encoders will be enclosed inside the fan cover
- Incremental, Quadrature, Differential, Marker Channel
- IP66 Protection
- IG1 = 1024PPR, IG2 = 2048PPR, IG4 = 4096PPR
- TTL/RS422, HTL/Push-Pull, Line Driver.
- 5V or 10-30V available.
- Absolute encoders also available.
- Seperate encoder wiring instructions are provided by NORD.

## 17. Inspection

Inspect the motor after every 500 operating hours.

⚠ *WARNING* ⚠

If it is necessary to clean the motor exterior, do not use shop air. Shop air can force contaminents into the motor and may cause parts damage or result in blowing debris causing injury.

**Table 8 - Inspection Guidelines**

| Inspect | Check | Action |
|---|---|---|
| **Motor Exterior** | Check the external surfaces for contamination. Accumulation of dirt and fibrous deposits must be removed. | Clean the motor external surfaces using clean, lint-free cloths. |
| | | Clean deposits from between cooling fins using a vacuum cleaner and a stiff-bristled nylon brush. |
| | Check the external surfaces for oil film and greasy deposits. | Clean the oil film and greasy deposits from the motor surface using clean, lint-free cloths. |
| | | If necessary, moisten the cloth with an approved non-flammable, residue-free solvent. Do not pour solvent on the motor. |
| | Check for evidence of damage or overheating. | If the motor has physical damage, replace the motor. |
| **Motor Mountings** | Make sure the mounting hardware is secure. | If the mounting hardware is not secure, check the motor/gearbox alignment, and tighten the mounting hardware. |
| **Motor Electrical Connections** | Check that all electrical connections are secure. | If the electrical connections are not secure, tighten them. |
| | Check the electrical connections for evidence of arcing. | Loose electrical connections can cause arcing, which is evident by discoloration and charring. If you find evidence of arcing, replace the damaged connections. |
| **Insulation Resistance** | Using an ohmmeter, check and record the resistance of motor winding insulation. | Compare the current resistance reading to previous readings. If the resistance drops significantly, perform an internal inspection for insulation damage or deterioration. |
| **Motor Brake** | On motors that have a brake, use a feeler gauge to check the air gap in between the brake pad and the rotor according to the appropriate user manual. | If the air gap exceeds the maximum allowed for that brake configuration provided in the manual, adjust the air gap or replace the brake pad according to user manual U35000. |

## 18. Parts List

If you are ordering a part, provide the model and order number (table 1, page 2) of your motor. This will determine the specific part number you need.

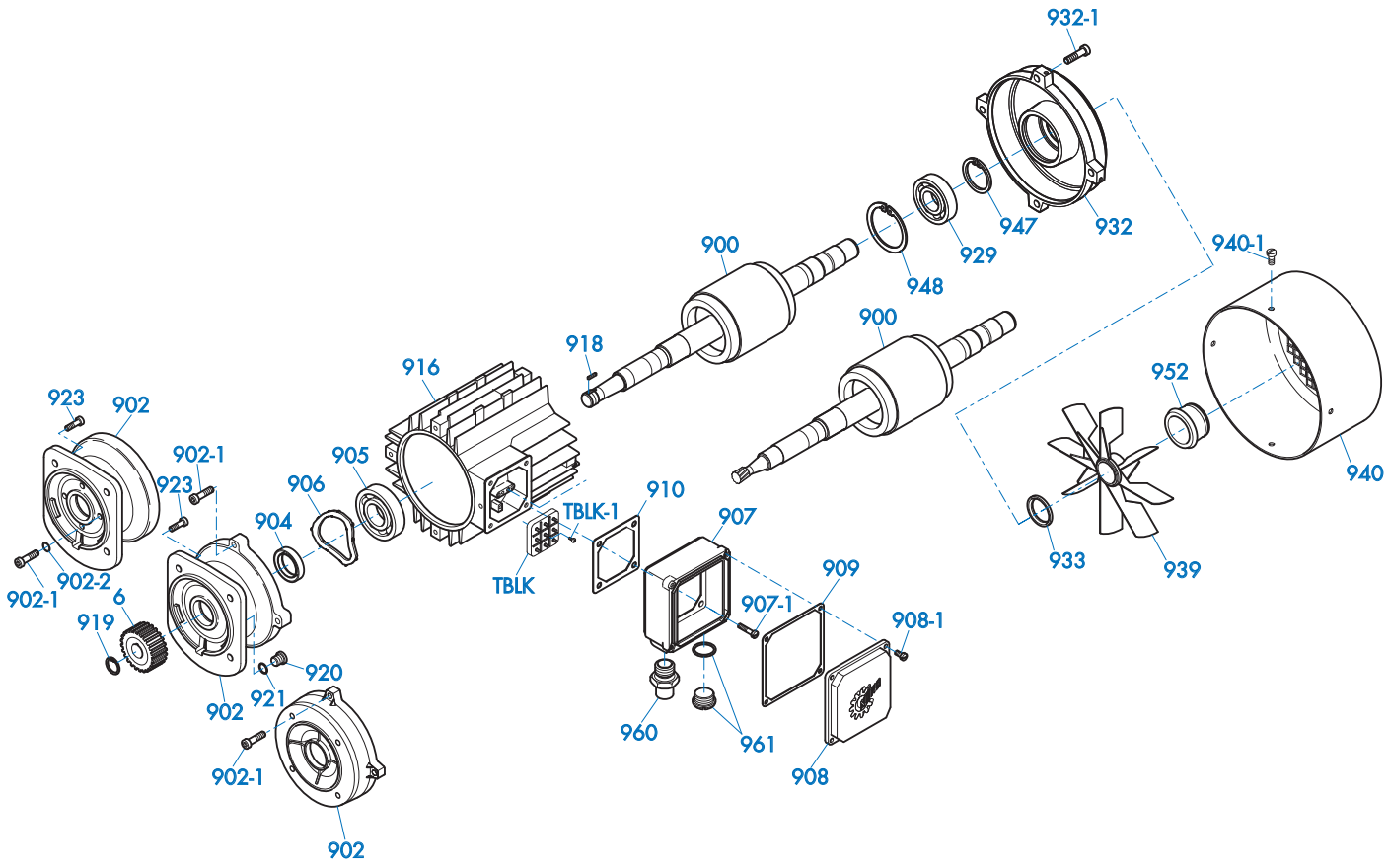


| Part Number | Part Description | Qty per Assembly |
|---|---|---|
| 6 | Input Pinion | 1 |
| 900 | Rotor Assembly | 1 |
| 902 | A-Endbell | 1 |
| 902-1 | Screw | 4 |
| 902-2 | Dubo Seal | 4 |
| 904 | Oil Seal | 1 |
| 905 | Bearing | 1 |
| 906 | Preload Spring | 1 |
| 907 | Terminal Box Frame | 1 |
| 907-1 | Screw | 4 |
| 908 | Terminal Box Cover | 1 |
| 908-1 | Screw | 4 |
| 909 | Gasket - Terminal Box Frame | 1 |
| 910 | Gasket - Terminal Box Cover | 1 |
| 916 | Stator | 1 |
| 918 | Key | 1 |
| 919 | Retaining Ring | 1 |
| 920 | Oil Plug | 1 |

| Part Number | Part Description | Qty per Assembly |
|---|---|---|
| 921 | Gasket | 1 |
| 923 | Screw | 4 |
| 929 | Bearing | 1 |
| 932 | B-Endbell | 1 |
| 932-1 | Screw | 4 |
| 933 | Oil Seal | 1 |
| 939 | Fan | 1 |
| 940 | Fan Cover | 1 |
| 940-1 | Screw | 4 |
| 947 | Retaining Ring | 1 |
| 948 | Retaining Ring | 1 |
| 952 | Fan Clip | 1 |
| 960 | NPT Thread Adapter | 1 |
| 961 | Plug (includes O-ring) | 1 |
| TBLK | Terminal Block | 1 |
| TBLK-1 | Screw, Terminal Block Mounting | 2 |
| | Jumper Bar (not illustrated) | AR |

### 19. Repair

Reference the parts list drawing on page 14 for clarification.

A. Disassemble the motor according to the general exploded view in PARTS INFORMATION. Disassemble only as far as necessary to replace the failed parts.

B. Whenever the motor is disassembled, clean all dust and contamination from the motor interior using a vacuum cleaner and a soft-bristled nylon brush.

C. The following parts must be replaced if they are removed:

- Oil seal (904), Oil seal (933)
- Gasket (909), Gasket (910), Gasket (921)
- Gasket on plug (961) • Self-locking screws (907-1, 908-1, 923, 932-1, 940-1)
- Dubo Seals (902-2)

D. If the following parts are removed, inspect them, and replace them if they are deformed or damaged:

- Retaining ring (919), Retaining ring (947), Retaining ring (948)
- Fan clip (952)

### 20. Removing and Replacing Integral Motors

Reference the parts list on Page 14 for clarification.

A. Disconnect the power to the electric motor. Make certain the motor is properly grounded, de-energized and secured with a lock-out/tag-out device.

B. Drain the oil from the mating gearbox, or rotate the motor/gearbox assembly so that the motor is up, to prevent oil from spilling from the gearbox when the motor is removed.

C. Support the motor and prepare it for removal. Steady the motor and support it. For larger motors, use of mechanical lifting or support devices to may be appropriate.

D. Remove the fastening screws that hold the motor to the reducer input.

**IMPORTANT NOTE**

Most integral motor installations have mounting bolts accessible from the motor exterior. If the bolts are not clearly visible, unbolt the input flange from the gearbox. Remove the bolts securing the motor to the reducer input flange, and discard the old DUBO sealing rings that were under the screw heads.

E. Maintain motor shaft alignment and move the motor directly away from its mounting surface until the motor shaft and mating input gear clear both the internal gear mesh and reducer input.

F. Remove and discard the old flange gasket.

G. Clean the gasket faces on the motor and gearbox, making sure no cleaning debris enters the gearbox.

H. Check the replacement motor to make sure the motor flange, motor shaft, and motor pinion are identical to the motor that was removed.

I. Place a new gasket between the gearbox and new motor.

J. Position the motor on the gearbox, making sure the input pinion meshes with the input gear. Rotate the motor as necessary to align the bolt holes and seat the motor flange. Make sure the gasket remains properly aligned and seated

K. Apply a medium strength thread locking compound to the bolt threads. Install the bolts and tighten them to the appropriate torque.

**IMPORTANT NOTE**

If the motor/gearbox installation uses an input flange, first mount the input flange to the motor using the four mounting bolts and NEW DUBO sealing rings under the head of each fastening screw. Make sure the fastening screws are clean and apply new thread sealant if necessary.

L. Check the gearbox oil level in accordance with the appropriate User Manual/s. If necessary fill or add oil to the gearbox.

**HARMFUL SITUATION**

Do not mix different types of oil!

M. Re-establish the electrical connection to the motor.

N. Observe the subsequent start-up closely to make certain the equipment is operating properly and there are no seal or gasket leaks.

### 21. Removing and Replacing NEMA C-Face or IEC Fange-Mounted Motors

For further clarification of these instructions, reference the parts list on Page 14 of this manual.

A. Disconnect the power to the electric motor. Make certain the motor is properly grounded, de-energized and secured with a lock-out/tag-out device.

B. Support the motor and prepare it for removal. Steady the motor and support it. For larger motors, use of mechanical lifting or support devices to may be appropriate.

C. Remove the fastening screws that hold the motor to the C-face or IEC mounting flange.

D. Maintain motor shaft alignment, and move the motor directly away from its mounting surface until the motor shaft and mating coupling clear the mounting flange surface of the driven equipment.

E. Measure and record the proper placement of the motor shaft coupling prior to removing it from the old motor.

F. Make sure the new motor shaft, key and key slot are free of all nicks, burrs, and lubrication or grease.

G. Install the new shaft key on the new motor. If the shaft key is not captured or if an open-ended key slot is utilized it is good practice to secure the key into the key slot with a medium strength thread locking agent or alternatively one may stake the key in place.

H. Re-install the coupling on the new motor shaft, making sure the placement of the coupling is in the same location as it was on the old motor (See Step E).

I. Clean all old gasket material, sealants, contamination, and corrosion from the flange surface on the driven equipment.

J. If the motor is utilized in a wet or wash down environment apply a sealing gasket or gasket eliminating compound to the mating flange surface, as would seem most appropriate for the application.

K. Support the new motor and mount it flush against the mating flange surface of the driven equipment.

L. Apply a medium strength thread locking agent to the bolt threads.

M. Install the bolts and tighten them to the appropriate torque.

N. Re-establish the electrical connection to the motor.

O. Observe the subsequent start-up closely to make certain the equipment is operating properly.

### 22. Testing

*IMPORTANT NOTE*

NORD electric motors do not require periodic testing. However, if a motor is removed from its installation, NORD recommends that the motor be checked according to the following static and dynamic testing procedures before it is reinstalled. Finding a condition that will require future repair before the motor is reinstalled decreases the overall maintenance time.

This section provides general test information and functional checks for the types of motors covered by this manual. Read and understand the tests and checks before performing them on your motor.

Record and date all measurements taken.

If the motor fails any of the test procedures provided below, use the troubleshooting guide to determine the motor problem.

**Static Testing**

A. The motor can only be static tested if it is disconnected from the component it drives and securely mounted on a fixture or mounting plate. These tests are usually conducted when a motor has been removed for any reason other than failure

B. Turn the motor shaft slowly by hand. Feel and listen for evidence of a failed bearing, which is indicated by a rough feel as the shaft rotates, and by noise.

C. Check for smooth rotation, with no evidence of binding or catching. If the shaft does not rotate smoothly, or binds or catches, the bearings are worn or failing, lack lubrication, or are contaminated.

D. Check the motor shaft for side play by applying pressure at right angles to the shaft in several places around the circumference. If the shaft moves perceptibly, the front bearing may be worn.

**Dynamic Testing**

A. Find the motor voltage and rated load current values as listed on the motor nameplate.

B. Using a volt-ohmmeter, verify that the motor power supply is in the correct range.

C. Run the motor with no load. As the motor is operating, listen for unusual motor noise and check for excessive vibration. Vibration and motor noise are indications of bearing contamination, lack of lubrication, damage, or failure.

D. Use an ammeter to measure the no-load current. Record the no-load current for comparison with previous readings, and for reference during future testing.

E. If the motor passes the no-load test, operate the motor at rated load and check and record the current.

F. Check the motor operating temperature at rated load. If the motor operates at a higher than normal temperature, the motor may be damaged, overloaded or failing.

## 23. Troubleshooting

| Fault | Likely Cause | Corrective Action |
|---|---|---|
| **Motor fails to start.** | • Motor is mis-wired<br>• Brake is may not be releasing.<br>• Fan guard damaged and contacting fan.<br>• Motor protection device has tripped or does not switch<br>• 1-Ph Capacitor or start switch has failed. | • Verify and correct motor wiring.<br>• Troubleshoot brake per User Manual U35000.<br>• Replace damaged fan guard.<br>• Check motor protection device for correct setting and correct error.<br>• Discharge capacitor and use a volt-ohm meter to check the capacitor for an open circuit - replace if needed. Inspect switch and connections. Replace if contacts look burned or pitted. |
| **Fuses blow or motor protection faults immediately.** | • Short circuit in line.<br>• Lines connected incorrectly.<br>• Fuse or circuit breaker tripped.<br>• Motor is overloaded or equipment jammed.<br>• Stator is shorted or went to ground. | • Rectify short circuit.<br>• Check circuit diagram and make corrections.<br>• Replace fuse or circuit breaker.<br>• Make sure load is free. Verify motor amp draw compared to nameplate rating.<br>• A damaged or blown stator will show a burn mark. Stator must be repaired or replaced. |
| **Motor hums and has high current consumption** | • Brake may not be releasing.<br>• Rotor may be rubbing stator.<br>• Defective or incorrect stator winding. | • Troubleshoot brake per User Manual U35000.<br>• Send motor to a repair specialist. |
| **Severe speed loss under load or excessive acceleration time.** | • Overload.<br>• Excessive voltage drop.<br>• Damaged or failing motor bearings.<br>• Damaged or worn gear unit.<br>• 1-Ph Capacitor or start switch has failed. | • Check load conditions and make certain system is unobstructed. Reduce load or consider a larger motor.<br>• Verify service voltage is within specification. Check if nearby equipment is affecting incoming power. Make sure connection harness and wiring is adequate.<br>• Replace motor bearings.<br>• Replace or repair damaged gear unit.<br>• See instructions under "Motor fails to start". |
| **Motor runs the incorrect direction.** | • Incorrect wiring. | • Rewire motor according to system schematic and/or switch two incoming motor phases. |
| **Motor heats up excessively or thermal overload protection trips** | • Overload.<br>• Ambient temperature is too high.<br>• Inadequate cooling.<br>• Operation is outside the allowed duty cycle.<br>• Motor protection device may be defective.<br>• Excessive supply voltage.<br>• System short or damaged stator. | • Make sure load is free. Verify motor amp draw compared to nameplate rating. Reduce load or consider a larger motor.<br>• Do not operate above the rated conditions.<br>• Correct cooling air supply. Open and clear cooling air passages. Retrofit with forced ventilator fan if needed.<br>• Adjust operating duty cycle or contact a specialist to select a suitable motor or drive.<br>• Replace motor protection device.<br>• Adapt motor supply voltage.<br>• Check for loose, cut or damaged wires. Check stator winding for defects or burn damage. |
| **Excessive Noise or Vibration** | • Motor bearings contaminated or damaged.<br>• Excessive motor shaft end play.<br>• Misaligned or imbalanced load. | • Test motor by itself. If bearings are bad noise may be heard or roughness detected. Replace bearings. Add lubrication if bearings have grease fittings.<br>• Check shaft endplay with motor and system power disconnected. If shaft movement is excessive replace motor shaft bearings.<br>• Check all mating shaft connections for proper alignment and correct all imbalanced load conditions. |
| **1 Ph Start Capacitor Failures** | • Motor is not coming up to speed quickly enough.<br>• Motor is being cycled frequently<br>• Start switch is defective or damaged. | • Verify motor size to load conditions. Motor should come up to speed in no more than 2-3 seconds.<br>• Verify duty cycle and consult specialist for recommendations.<br>• Replace start switch. |
| **1 Ph Run Capacitor Failures** | • Possible power surge to motor caused by transient voltage or lightening.<br>• Excessive ambient temperature. | • Install proper surge protection.<br>• Verify ambient conditions do not exceed nameplate value. |

# HIGH PERFORMANCE
# MOTOR RATINGS

| Motor Type | $P_n$ Full Load Power | | $n_n$ Full-Load Speed | $I_n$ Full-Load Current | | | $I_a/I_n$ Locked Rotor Current Ratio | NEMA Code Letter | $T_n$ Full-Load Torque | $T_a/T_n$ Locked Rotor Torque Ratio | $T_k/T_n$ Break Down Torque Ratio | pf Power Factor | η Full Load Efficiency | $J_m$ Rotor Inertia | Duty Cycle |
|---|---|---|---|---|---|---|---|---|---|---|---|---|---|---|---|
| | | | | 230V | 460V | 575V | | | | | | | | | |
| | [hp] | [kW] | [rpm] | [A] | [A] | [A] | [%] | | [lb-in] | | | | [%] | [lb-ft²] | |
| **High Performance Motors** | | | | | | | | | | | | | | | |
| **63 S/4** | 0.16 | 0.12 | 1700 | 0.88 | 0.44 | 0.37 | 250% | F | 5.93 | 2.7 | 3.5 | 0.66 | 52.0% | 0.0050 | S1 cont |
| **63 L/4** | 0.25 | 0.18 | 1680 | 1.12 | 0.56 | 0.46 | 270% | E | 9.38 | 2.3 | 2.5 | 0.71 | 57.0% | 0.0066 | S1 cont. |
| **71 S/4** | 0.33 | 0.25 | 1710 | 1.56 | 0.78 | 0.66 | 310% | G | 12.2 | 2.4 | 2.7 | 0.64 | 63.0% | 0.017 | S1 cont. |
| **80 L/4** | 1 | 0.75 | 1650 | 3.66 | 1.83 | 1.46 | 390% | G | 38.2 | 2.2 | 2.3 | 0.74 | 70.0% | 0.034 | 60 min |
| **90 S/4** | 1.5 | 1.1 | 1660 | 4.84 | 2.42 | 1.94 | 490% | G | 57.0 | 2.5 | 2.8 | 0.78 | 73.0% | 0.056 | 60 min |
| **90 L/4** | 2 | 1.5 | 1660 | 6.34 | 3.17 | 2.54 | 510% | H | 75.9 | 2.5 | 2.8 | 0.80 | 74.0% | 0.074 | 60 min |
| **100 L/4** | 3 | 2.2 | 1705 | 9.00 | 4.50 | 3.63 | 490% | G | 111 | 2.3 | 2.6 | 0.81 | 76.0% | 0.107 | 60 min |
| **100 LA/4** | 5 | 3.7 | 1725 | 15.2 | 7.60 | 6.10 | 510% | G | 183 | 2.7 | 3.1 | 0.75 | 81.0% | 0.142 | 60 min |
| **132 S/4** | 7.5 | 5.5 | 1735 | 19.8 | 9.90 | 7.92 | 540% | G | 272 | 2.4 | 2.7 | 0.82 | 85.0% | 0.570 | 60 min |
| **132 M/4** | 10 | 7.5 | 1735 | 25.8 | 12.9 | 10.3 | 630% | H | 363 | 2.9 | 3.2 | 0.84 | 87.0% | 0.759 | 60 min |
| **160 M/4** | 15 | 11 | 1770 | 35.8 | 17.9 | 14.5 | 820% | J | 534 | 2.9 | 3.8 | 0.85 | 90.7% | 1.19 | 60 min |
| **160 L/4** | 20 | 15 | 1760 | 48.4 | 24.2 | 19.3 | 850% | K | 716 | 2.9 | 3.9 | 0.87 | 89.4% | 1.59 | 60 min |
| **180 MX/4** | 25 | 18.5 | 1760 | 59.0 | 29.5 | 23.6 | 880% | K | 895 | 3.4 | 4.3 | 0.87 | 90.5% | 1.90 | 60 min |
| **180 LX/4** | 30 | 22 | 1765 | 74.4 | 37.2 | 29.8 | 890% | K | 1071 | 3.6 | 4.4 | 0.80 | 92.8% | 2.18 | 60 min |
| **200 LX/4** | 40 | 30 | 1770 | 98.6 | 49.3 | 39.4 | 690% | H | 1424 | 3.2 | 3.6 | 0.83 | 92.1% | 3.80 | 60 min |
| **Premium Efficient Motors** | | | | | | | | | | | | | | | |
| **80 LP/4** | 1 | 0.75 | 1730 | 3.14 | 1.57 | 1.26 | 650 | K | 36.4 | 3.5 | 3.8 | 0.70 | 86.1 | 0.045 | S1 cont. |
| **90 SP/4** | 1.5 | 1.1 | 1740 | 4.20 | 2.10 | 1.68 | 840 | L | 54.3 | 4.2 | 4.9 | 0.76 | 86.9 | 0.081 | S1 cont. |
| **90 LP/4** | 2 | 1.5 | 1730 | 5.60 | 2.80 | 2.24 | 760 | K | 72.9 | 3.9 | 4.3 | 0.78 | 87.0 | 0.093 | S1 cont. |
| **100 LP/4** | 3 | 2.2 | 1770 | 7.68 | 3.84 | 3.07 | 920 | L | 107 | 3.0 | 4.5 | 0.79 | 90.0 | 0.192 | S1 cont. |
| **112 MP/4** | 5 | 3.7 | 1755 | 13.0 | 6.50 | 5.20 | 950 | L | 180 | 4.1 | 4.6 | 0.80 | 90.3 | 0.332 | S1 cont. |
| **132 SP/4** | 7.5 | 5.5 | 1770 | 19.5 | 9.75 | 7.80 | 1020 | M | 267 | 4.7 | 5.0 | 0.77 | 91.7 | 0.759 | S1 cont. |
| **132 MP/4** | 10 | 7.5 | 1765 | 26.7 | 13.4 | 10.7 | 960 | M | 357 | 4.7 | 5.0 | 0.77 | 91.7 | 0.831 | S1 cont. |
| **160 MP/4** | 15 | 11 | 1770 | 35.6 | 17.8 | 14.2 | 880 | K | 534 | 3.2 | 3.8 | 0.84 | 92.5 | 1.59 | S1 cont. |
| **160 LP/4** | 20 | 15 | 1775 | 47.6 | 23.8 | 19.0 | 1080 | M | 710 | 4.3 | 4.7 | 0.85 | 93.0 | 2.18 | S1 cont. |
| **180 MP/4** | 25 | 18.5 | 1780 | 60.6 | 30.3 | 24.2 | 1010 | L | 885 | 3.9 | 4.0 | 0.82 | 93.6 | 3.80 | S1 cont. |
| **180 LP/4** | 30 | 22 | 1780 | 69.6 | 34.8 | 27.8 | 880 | K | 1062 | 3.3 | 3.4 | 0.85 | 93.6 | 3.80 | S1 cont. |
| **225 RP/4** | 40 | 30 | 1785 | - | 49.5 | 39.6 | 890% | K | 1420 | 3.4 | 3.8 | 0.81 | 94.5% | 11.63 | S1 cont. |
| **225 SP/4** | 50 | 37 | 1785 | - | 59.7 | 47.8 | 880% | K | 1752 | 3.0 | 3.7 | 0.82 | 94.6% | 12.81 | S1 cont. |
| **225 MP/4** | 60 | 45 | 1785 | - | 72.0 | 57.6 | 910% | K | 2131 | 3.3 | 3.6 | 0.83 | 95.2% | 15.90 | S1 cont. |
| **250 WP/4** | 75 | 55 | 1785 | - | 84.4 | 67.5 | 920% | J | 2604 | 2.9 | 3.2 | 0.86 | 95.4% | 19.46 | S1 cont. |

With energy efficient gearing, inverter-duty motors, and AC variable frequency drives, NORD provides an intelligent energy saving product portfolio. NORD can be your partner in selecting motors to match each application for ideal performance and maximum energy savings. In keeping with this concept, NORD offers a variety of high performance motors including:

- NORD ***continuous duty, premium efficient motors (1–75 HP)*** satisfy global energy efficiency mandates, NORD's premium efficient motors provide maximum energy savings, offer low rotor inertia, provide quick starts & stops, & handle high cycle rates in dynamic applications.
- NORD ***60 minute duty motors (1 - 40 HP)*** motors are labeled "60 MIN" duty & are perfectly suited for intermittent or time limited applications. These motors offer higher cycling capacity, lower motor rotor inertia, & lower energy consumption while starting or stopping, as comparedto the NORD Premium Efficient motors. NORD can also provide motors that satisfy other periodic duty or intermittent duty ratings.
- NORD ***continuous duty, standard efficient motors (0.16 – 0.75 HP)*** satisfy global energy efficiency mandates. They are exempt from the June 1, 2016 mandate requiring NEMA Premium Efficiency Levels ( D.O.E. 10 CFR Part 431). Like 60 minute duty motors, these motors offer higher cycling capacity, lower motor rotor inertia, and lower energy consumption while starting or stopping, as compared to the NORD Premium Efficient motors.

Effective June 1, 2016, most general purpose, 1- 500 Hp, continuous duty motors sold in the U.S., must meet NEMA Premium Efficiency Levels (D.O.E. 10 CFR Part 431). Intermittent-rated motors (60 Min. Duty) and fractional horsepower/totally-enclosed motors are exempt from this latest U.S. efficiency mandate; properly applied, these motors often lead to less energy consumption, especially during starts and stops.

# CONSTANT SPEED DRIVES







## SIMPLE RELIABLE EFFICIENT

UNICASE™

NORD DRIVESYSTEMS

DRIVESYSTEMS





# Clincher™ Ordering Guide

| | Gear Unit | Shaft/Mounting | Reducer Options | | Motor/Input | Motor Options |
|---|---|---|---|---|---|---|
| **SK** | ❶ | ❷ | ❸ | – | ❹ | |
| | | | | | see page 690 | see page 690 |

❶

| Gear Unit | | | |
|---|---|---|---|
| 0182NB | 1382NB | 1282/02 | 6382/22 |
| 0282NB | 2382 | 2282/02 | 6382/32 |
| 1282 | 3382 | 3282/12 | 7382/22 |
| 2282 | 4382 | 4282/12 | 7382/32 |
| 3282 | 5382 | 5282/12 | 8382/22 |
| 4282 | 6382 | | 8382/32 |
| 5282 | 7382 | | 9382/42 |
| 6282 | 8382 | | 9382/52 |
| 7282 | 9382 | | 10382/52 |
| 8282 | 10382 | | 11382/52 |
| 9282 | 11382 | | |
| 10282 | 12382 | | |
| 11282 | | | |

❷

| Shaft/Mounting | | |
|---|---|---|
| **VZ -** Solid Shaft/B14 Flange | **VX -** Solid Shaft/Foot | **AZ** - Hollow Shaft/B14 Flange |
| **VF -** Solid Shaft/B5 Flange | **LX -** Double Solid Shaft/Foot | **AF** - Hollow Shaft/B5 Flange |
| **SCP -** Screw Conveyor Package | | **AX** - Hollow Shaft/Foot |

❸

| Reducer Options | | |
|---|---|---|
| ❒ **B -** Fixing Element Kit | ❒ **VL -** Heavy Duty Output Bearings | ❒ **VI -** Fluoro-rubber Seals |
| ❒ **G -** Rubber Buffers | ❒ **VL2 -** Spread Bearing Design | ❒ **OSG -** Oil Sight Glass |
| ❒ **VG -** Heavy Duty Rubber Buffers | ❒ **VL3 -** Oil Safe Spread Bearing Design | ❒ **OA -** Oil Expansion Chamber |
| ❒ **H -** Hollow Shaft Cover | ❒ **VL4-** Drywell Drop Bearing Design | ❒ **OC -** Oil Cooler |
| ❒ **H66 -** IP66 Hollow Shaft Cover | ❒ **LX-** Double Solid Shaft | ❒ **WC -** Water Cooling Cover |
| ❒ **SH -** Shrink Disc & Cover | ❒ **SM5 -** Stainless Steel Output Shaft | ❒ **OT -** Oil Reservoir Tank |
| ❒ **VSH -** Heavy Duty Shrink Disc & Cover | ❒ **SWA -** Special Hollow Shaft | ❒ **MDP -** Magnetic Drain Plug |
| ❒ **PR -** Flange Pilot Removal | ❒ **SWV -** Special Solid Shaft | ❒ **ADP -** Additional Drain Plug |
| ❒ **LL -** Long Term Storage | ❒ Cross Drilled Shaft | |

❹

| Input Shaft | NEMA Adapter | IEC | Integral Motors | | Integral Energy Efficent Motors | | Scoop | Motor Platform | Servo Adapter (Keyed) |
|---|---|---|---|---|---|---|---|---|---|
| W | N56C | IEC 63 | **63S/4** - 0.16hp | **160L/4** - 20hp | **80LH/4** - 1hp | **200LH/4** - 40hp | S56 | MKN056 | SEP 100 |
| | N140TC | IEC 71 | **63L/4** - 0.25hp | **180MX/4** - 25hp | **90SH/4** - 1.5hp | **225SH/4** - 50hp | S140T | MKN140 | SEP 130 |
| | N180TC | IEC 80 | **71S/4** - 0.33hp | **180LX/4** - 30hp | **90LH/4** - 2hp | **225MH/4** - 60hp | S180T | MKN180 | SEP 165 |
| | N210TC | IEC 90 | **71L/4** - 0.50hp | **200L/4** - 40hp | **100LH/4** - 3hp | **250MH/4** - 75hp | S210T | MKN210 | SEP 215 |
| | N250TC | IEC 100 | **80S/4** - 0.75hp | **225S/4** - 50hp | **112MH/4** - 5hp | **280SH/4** - 100hp | S250T | MKN250 | SEP 300 |
| | N280TC | IEC 112 | **80L/4** - 1hp | **225M/4** - 60hp | **132SH/4** - 7.5hp | **280MH/4** - 125hp | S280T | MKN280 | Servo Adapter (Clamp) |
| | N320TC | IEC 132 | **90S/4** - 1.5hp | **250M/4** - 75hp | **132MH/4** - 10hp | **315SH/4** - 150hp | S320T | MKN320 | |
| | N360TC | IEC 160 | **90L/4** - 2hp | **280S/4** - 100hp | **160MH/4** - 15hp | **315MH/4** - 175hp | S360T | MKN360 | SEK 100 |
| | N400TC | IEC 180 | **100L/4** - 3hp | **280M/4** - 125hp | **160LH/4** - 20hp | **315MAH/4** - 200hp | S400T | MKN400 | SEK 130 |
| | | IEC 200 | **100LA/4** - 5hp | **315S/4** - 150hp | **180MH/4** - 25hp | **315LH/4** - 250hp | | | SEK 165 |
| | | IEC 225 | **112M/4** - 5.4hp | **315M/4** - 175hp | **180LH/4** - 30hp | | | | SEK 215 |
| | | IEC 250 | **132S/4** - 7.5hp | **315MA/4** - 200hp | | | | | SEK 300 |
| | | IEC 280 | **132M/4** - 10hp | **315L/4** - 250hp | | | | | |
| | | IEC 315 | **160M/4** - 15hp | Other Speeds Available | | Other Speeds Available | | | |

## Product Specifications

**Ratio**

_____ :1

see pages 244 - 288

— OR —

**Output Speed**

_____ rpm

see pages 244 - 288

**Mounting Position**

- ❍ M1
- ❍ M2
- ❍ M3
- ❍ M4
- ❍ M5
- ❍ M6
- ❍ Special _____

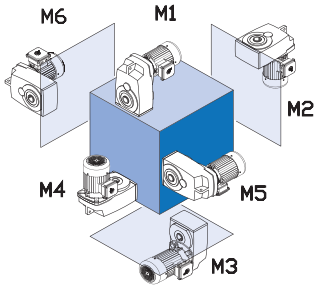


**Paint**

- ❍ Standard Stainles Steel Paint
- ❍ NSD+ (gray)
- ❍ NSD+W (white)
- ❍ NSD-X3 (gray)
- ❍ NSD-X3W (white)
- ❍ Casting Primed
- ❍ Special _____

**Lubricant**

- ❍ Standard
- ❍ Synthetic
- ❍ Food Grade
- ❍ Other _____

**Hollow Shaft Diameter** (If required)

_____

see pages 388 - 393

**B5 Flange Diameter** (If required)

_____

**SCP Drive Shaft Diameter** (If required)

_____

see page 29

## Gearmotor Only Details

**Voltage & Frequency**

- ❍ 230/460V-60Hz (460V only ≥ 40 hp)
- ❍ 575V-60Hz
- ❍ 208V-60Hz
- ❍ 400V-50Hz
- ❍ 115/230V-60Hz, 1 ph.
- ❍ Other _____

**Terminal Box Pos.**

- ❍ TB1
- ❍ TB2
- ❍ TB3
- ❍ TB4

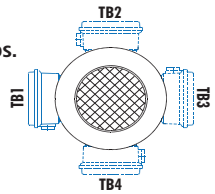


Mtg. Pos. M1 Shown

**Conduit Entry Loc.**

- ❍ CE I *
- ❍ CE II
- ❍ CE III *
- ❍ CE IV

* Brakemotor

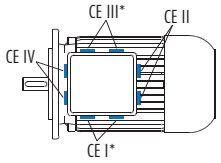


Mtg. Pos. M1 Shown

## 1. Importance of the operating instructions

These operating instructions are intended to provide general information and safety guidelines. It is the responsibility of the buyer, machine builder, installer and user of the NORD product to make sure that all the proper safetynotes and operating instructions have been reviewed and understood. If the contents of this instruction or any applicable operating instructions are not understood, please consult NORD.

**⚠ *WARNING* ⚠**

Electric motors, gearmotors, electrical brakes, variable frequency drives, and gear reducers contain potentially dangerous high-voltage, rotating-components and surfaces that may become hot during operation. All work involved in the transport, connection, commissioning and maintenance of any NORD product must be carried out by qualified and responsible technicians.

## 2. Inspect incoming freight

Before accepting shipment from the freight company, thoroughly inspect the NORD equipment for any shipping and handling damage. If any goods called for in the bill of lading or express receipt are damaged, or if the quantity is short, do not accept until the freight express agent makes an appropriate notation on your freight bill or express receipt. If any concealed loss or damage is discovered later, notify your freight carrier or express agent at once, and request a formal review of your claim.

Claims for loss or damage in shipment must not be deducted from the NORD invoice, nor should payment of the NORD invoice be withheld awaiting adjustment of such claims, as the carrier guarantees safe delivery. NORD will try to assist in collecting claims for loss or damage during shipment; however, this willingness on our part does not remove the transportation company's responsibility in reimbursing you for collection of claims or replacement of material.

## 3. Obtaining detailed operating instructions

One can receive the detailed installation and maintenance instructions by entering a serial number (or NORD order number) at the appropriate location on the NORD web site.

i. Record the serial number from your gearmotor, gear reducer, or motor nameplate, or record the serial number found on your order confirmation.

ii. Go to **www.nord.com/docs** to download the appropriate operating instructions.

**EXAMPLE: www.nord.com/docs**

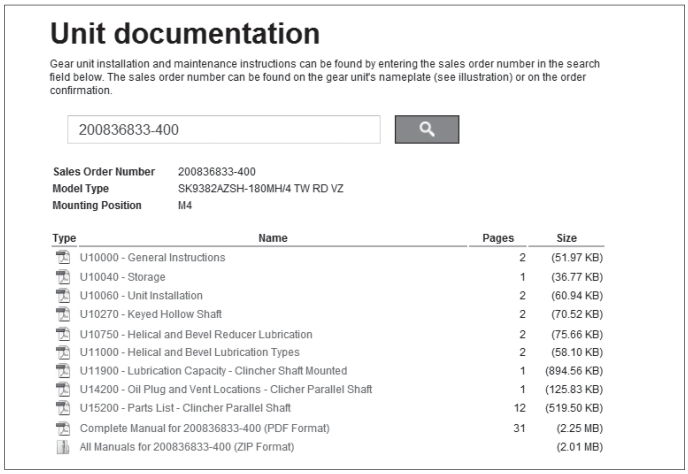

### Unit documentation

Gear unit installation and maintenance instructions can be found by entering the sales order number in the search field below. The sales order number can be found on the gear unit's nameplate (see illustration) or on the order confirmation.

200836833-400

| | |
|---|---|
| **Sales Order Number** | 200836833-400 |
| **Model Type** | SK9382AZSH-180MH/4 TW RD VZ |
| **Mounting Position** | M4 |

| Type | Name | Pages | Size |
|---|---|---|---|
| | U10000 - General Instructions | 2 | (51.97 KB) |
| | U10040 - Storage | 1 | (36.77 KB) |
| | U10060 - Unit Installation | 2 | (60.94 KB) |
| | U10270 - Keyed Hollow Shaft | 2 | (70.52 KB) |
| | U10750 - Helical and Bevel Reducer Lubrication | 2 | (75.66 KB) |
| | U11000 - Helical and Bevel Lubrication Types | 2 | (58.10 KB) |
| | U11900 - Lubrication Capacity - Clincher Shaft Mounted | 1 | (894.56 KB) |
| | U14200 - Oil Plug and Vent Locations - Clicher Parallel Shaft | 1 | (125.83 KB) |
| | U15200 - Parts List - Clincher Parallel Shaft | 12 | (519.50 KB) |
| | Complete Manual for 200836833-400 (PDF Format) | 31 | (2.25 MB) |
| | All Manuals for 200836833-400 (ZIP Format) | | (2.01 MB) |

## 4. Intended use

NORD is a supplier of electric motors, gearmotors, reducers, electromechanical brakes, mechanical variators, and electrical variable frequency drives that are intended for commercial installations on larger systems and machines.

**⚠ *WARNING* ⚠**

NORD does not accept any liability for damage or injury caused by:

- Inappropriate use, operation or adaptation of the drive system.
- Unauthorized removal of housing covers, safety and inspection covers, guarding, etc.
- Unauthorized modifications to the drive system.
- Improper servicing or repair work on the drive system.
- Damage caused during shipment or transportation.
- Disregard of the important Safety Notes or Operating Instructions.

### 5. Notes concerning warranty and liability

All units are supplied according to the terms described in our standard "Conditions of Sale." The unit limited warranty is also defined in our "Conditions of Sale" and is located in the back of our product catalogs as well as the back of your order invoice.

All NORD Safety Notes and all related NORD Operating instructions shall be considered up-to-date at the time in which they were compiled by the buyer, machine builder, installer or user. NORD reserves the right to incorporate technical modifications and information updates to any safety/operating instructions that are within the scope of providing additional knowledge or clarification, communicating design changes, or product enhancements. Information updates may include any NORD product, or subsequent products purchased and supplied by NORD; No specific claims can be derived from the information or illustrations and descriptions contained in the safety notes or related operating instructions.

⚠ *WARNING* ⚠

NORD assumes no liability for personal injury, equipment damage or malfunctions resulting from failure to comply with any installation safety notes. The applicable national, regional, and local work regulations and safety requirements must also be complied with. Failure to comply with any safety notes or regulations may result in serious injury, damage to property, or even death.

### 6. Checklist for installation and operation

- ☑ Verify that the purchased NORD product has been supplied with the expected accessories & options. Check the received goods and packing slip to make sure items are properly received.
- ☑ Make sure that you have all of the required Operating Instructions for your NORD electric motor, gearmotor, reducer, electromechanical brake, mechanical variable speed drives, or electrical variable frequency drives.
- ☑ Consult NORD if you feel you are missing any documentation or if you have questions.

# SAFETY NOTES

## 1. Safety & information symbols

**All work** including transportation, storage, installation, electrical connection, commissioning, servicing, maintenance and repair must be performed **only by qualified specialists or personnel**. It is recommended that repairs to NORD Products are carried out by the NORD Service Department. Instructions related to operational safety will be emphasized as shown.

| Symbol | Meaning |
|---|---|
| ⚠ | **General Warning or Hazard -** Severe risk or danger of personal injury or death by working around dangerously high electrical voltage or moving machinery. Proper safety precautions must be taken. |
| STOP | **Possible Harmful Situation -** Care must be taken to avoid the possibility of damaging the drive unit, driven machine, or the environment. |
| ℹ | **Important Note -** Useful note or tip to help assure trouble-free operation. |
| ♻ | **Material Disposal Note -** Important note concerning suggested material disposal. |

## 2. Safety warnings

### ⚠ GENERAL WARNINGS ⚠

- All work involved in the transport, connection, commissioning and maintenance of any NORD product must be carried out by qualified and responsible technicians. All applicable national, regional, and local work regulations and safety requirements must also be complied with. **NORD assumes no liability for personal injury, accidental death, or equipment damage and malfunctions resulting from failure to comply with installation or operating instructions, safety notes, or any work regulations and laws!**
- Gear unit installation and maintenance work may only be performed when no power is available to the prime mover or motor. Electric motors, electrical brakes, and variable frequency drives, contain potentially dangerous high-voltage. Prior to installation or maintenance, shut down the power at the circuit breaker or power switch. **While working on the drive, make sure the power from the prime mover is isolated or secured on "lock-out" to prevent accidental start-up and to safeguard against injury!**
- Surfaces of motors and gear units may become hot during operation or shortly after start-up. In some instances additional protection against accidental contact may be necessary. **Use caution to avoid burns or serious injury!**

## 3. Observe published performance range & nameplate data

### STOP HARMFUL SITUATION STOP

Observe the data on all reducer nameplates and verify published ratings for the NORD item/s in question. Do not operate any NORD equipment outside the published performance range. Failure to comply may result in damage to the drive unit, driven machine, or the environment.

**U.S. Nameplate**

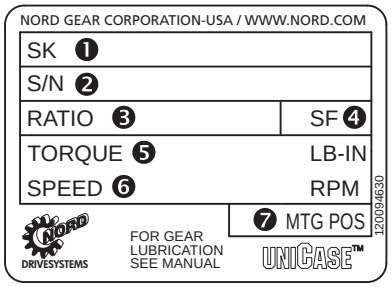


❶ Model/Type
❷ Serial Number
❸ Gear Ratio
❹ Service Factor
❺ Torque Rating
❻ Output Speed RPM
❼ Mounting Position

**European Nameplate**

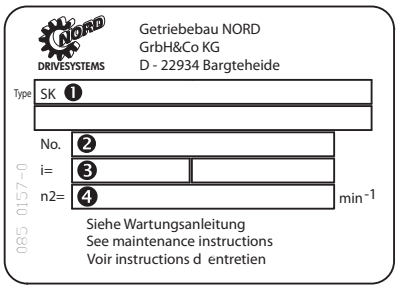


❶ Model/Type
❷ Serial Number
❸ Gear Ratio
❹ Speed

## 4. Transportation and handling

Make sure that all eyebolts and lifting lugs are tight and lift only at designed points. Protect the mounting surface from possible damage during transportation.

### ⚠ WARNING ⚠

Do not attach other machinery or loads to the NORD assembly, since the supplied lifting bolts are not designed for this purpose.

If the gearmotor or assembly is equipped with two suspension eye bolts, then both locations should be used for transportation and placement of the unit; in this case the tension force of the slings must not exceed a 45° angle.

In some instances it may be appropriate to use additional lifting straps or slings in order to assure safe transportation of the assembly. Always use sufficiently rated handling equipment and ensure that adequate safety measures are taken to protect personnel from injury during transportation. Once the NORD assembly is properly installed, remove the transportation fixtures.

## 7. DISPOSAL

### MATERIAL DISPOSAL

Properly dispose of all used gear units and internal parts in accordance with all local regulations. In particular, all lubricants must be properly collected and disposed.

For confirmation of specific materials used in a specific reducer or gearmotor assembly, please consult NORD with the appropriate unit identification or serial number.

| Components | Material |
|---|---|
| Gear wheels, shafts, rolling bearings, parallel keys, snap rings, spacers, shims, etc. | Steel |
| Gear housing and housing components | Cast iron or Aluminum (depending on type and size) |
| Worm gears | Bronze alloy |
| Radial seals, sealing caps, and rubber components | Elastomers with some steel |
| Coupling components | Plastic or Elastomer with Steel |
| Housing gaskets and flat oil seals | Asbestos-free sealing or gasket material (various types used) |
| Gear Oil | Mineral, SHC-Synthetic or PG-Synthetic (can vary) |

## 1. Installation site

Drives must be properly installed if they are to produce the rated torque. Improper installation may lead to oil leaks, reduced life, or even catastrophic failure. NORD gear drives and motors are intended to be installed at a suitable mounting site under the following conditions:

- Unimpeded airflow to and around the units.
- Accessibility to oil drain, level and breather plugs.
- On brakemotors, allow adequate space for removing the fan guard and replacing and adjusting the brake.
- Mounting surfaces must be flat, torsionally rigid, and dampened against vibration.
- Unless special measures are taken, the immediate vicinity around the gear drive or motor should not be exposed to any aggressive or corrosive substances, contaminated air, ozone, gases, solvents, acids, alkalis, salts, radioactivity, etc.

## 2. Mounting position

Reducer mounting position charts illustrate the standard mounting positions for horizontal and vertical mounting. All gear units are assembled with the oil fill-level, oil-drain and vent plugs installed in their proper locations, **according to the customer-specified mounting position**. For mounting orientations other than shown consult NORD Gear.

STOP *HARMFUL SITUATION* STOP

The gear reducer may not receive proper lubrication if the unit is not mounted in the position for which it is designed. Observe the mounting position designated on the reducer nameplate, or specified in the order acknowledgement. Consult NORD prior to changing mounting position in the field. While it is often possible to simply relocate the oil fill-level and vent locations, and adjust the oil fill amount, in some cases, different mounting positions may lend themselves to different internal construction features.

## 3. Reducer mounting

- The support foundation must be straight, level and flat. Whether the gear unit is foot-mounted or flange-mounted, NORD recommends that the straightness and flatness of the customer-supplied support foundation follow **Table 1**.
- The gear unit must be properly aligned with the driven shaft of the machine in order to prevent additional stress or load forces from being imposed upon the gear unit.
- To facilitate oil drainage it may be desirable to elevate the gear box foundation above the surrounding support structure.
- All bolting surfaces must be clean and free from contamination and corrosion.

**Table 1: Recommended Straightness and Flatness of Customer-Supplied Support Foundation**

| Above (in) | To & Including (in) | General Tolerance on Straigtness & Flatness ISO 2768-2, Tolerance Class K |
|---|---|---|
| 0.00 | 0.39 | +/- 0.002 in |
| 0.39 | 1.18 | +/- 0.004 in |
| 1.18 | 3.9 | +/- 0.008 in |
| 3.9 | 11.8 | +/- 0.016 in |
| 11.8 | 39 | +/- 0.024 in |
| 39 | 118 | +/- 0.031 in |

| Above (mm) | To & Including (mm) | General Tolerance on Straigtness & Flatness ISO 2768-2, Tolerance Class K |
|---|---|---|
| 0 | 10 | +/- 0.05 mm |
| 10 | 30 | +/- 0.1 mm |
| 30 | 100 | +/- 0.2 mm |
| 100 | 300 | +/- 0.4 mm |
| 300 | 1000 | +/- 0.6 mm |
| 1000 | 3000 | +/- 0.8 mm |

**Straightness: Based upon the length of the corresponding line.**

**Flatness: Based upon the longer lateral surface or the diameter of the circular surface.**

STOP *HARMFUL SITUATION* STOP

The responsibility for the design and construction of the support foundation is with the user. The foundation must be adequate to withstand normal operating loads and possible overloads while maintaining alignment to attached system components under such loads. ***Motors and drive components mounted on prefabricated base plates can become misaligned during shipment. Always check alignment after installation.***

## 4. Steel foundation

An engineered structural steel foundation should be designed to provide adequate rigidity and prevent loads from distorting the housing or causing misalignment of internal gears and shafts. When foot-mounting the gear reducer, a base plate or sole plate with suitable thickness (generally equal or greater than the thickness of the drive feet) should be securely bolted to steel supports and extend under the entire gear drive assembly. When flange-mounting the gear unit, the bulk head plate must be engineered to minimize buckling distortions and support the cantilevered weight of the gear unit or gear motor.

STOP *HARMFUL SITUATION* STOP

Do not weld on the gear unit or use the gear unit as an earth or ground connection for any welding procedure as this may cause permanent damage to the bearings and gears.

## 5. Concrete foundation

If a concrete foundation is used, allow the concrete to set firmly before bolting down the gear drive. Grout structural steel mounting pads and bolts of sufficient size into the concrete, to adequately distribute the load stress onto the concrete foundation.

**Figure 1: Concrete Foundation**

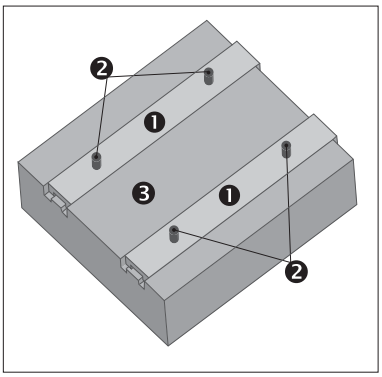


❶ Grouted Structural Steel Mounting Pads
❷ Mounting Bolts
❸ Concrete Foundation

## 6. Bolt connections for footed & flange mounted units

NORD footed reducers and flange-mount reducers (with B5 flange) have clearance designed into the mounting holes to allow for some minor adjustments in alignment. Bolt size, strength and quantity should be verified to insure proper torque reaction capacity whatever the mounting arrangement. Tightening torque for gear reducer mounting bolts, and recommended fastener grades, are provided in Table 2.

**Table 2A: Tightening Torque for Inch Reducer Mounting Bolts**

| Thread Size | Grade SAE 5 / ASTM A449 | | Grade SAE 8 | |
|---|---|---|---|---|
| (in) | (lb-ft) | (Nm) | (lb-ft) | (Nm) |
| 1/4-20 | 7.1 | 9.6 | 10.0 | 13.6 |
| 5/16-18 | 16 | 21 | 22 | 30 |
| 3/8-16 | 28 | 37 | 39 | 53 |
| 1/2-13 | 69 | 93 | 98 | 132 |
| 5/8-11 | 138 | 188 | 195 | 264 |
| 3/4-10 | 247 | 334 | 348 | 472 |
| 7/8-9 | 396 | 537 | 558 | 757 |
| 1-8 | 592 | 802 | 833 | 1,130 |
| 1 1/8-7 | - | - | 1,233 | 1,672 |
| 1 1/4-7 | - | - | 1,717 | 2,327 |
| 1 3/8-6 | - | - | 2,267 | 3,073 |
| 1 1/2-6 | - | - | 2,983 | 4,045 |
| 1 3/4-5 | - | - | 4,458 | 6,045 |

- Calculated tightening torques are based a conventional 60°, clean and dry (un-lubricated) thread, with thread-friction and head-friction equal to 0.15.
- When using inch-fasteners, NORD recommends a minimum Grade SAE 5 (ASTM A-449) for sizes up to 1-8 UNC, and Grade SAE 8 for all larger sizes.

**Table 2B: Tightening Torque for Metric Reducer Mounting Bolts**

| Above | ISO Grade 8.8 | | ISO Grade 10.9 | | ISO Grade 12.9 | |
|---|---|---|---|---|---|---|
| (mm) | (lb-ft) | (Nm) | (lb-ft) | (Nm) | (lb-ft) | (Nm) |
| M4 | 2.4 | 3.2 | 3.5 | 4.7 | 4.1 | 5.5 |
| M5 | 4.7 | 6.4 | 6.9 | 9.3 | 8.1 | 11 |
| M6 | 8 | 11 | 12 | 16 | 14 | 19 |
| M8 | 20 | 27 | 29 | 39 | 34 | 46 |
| M10 | 39 | 53 | 58 | 78 | 67 | 91 |
| M12 | 68 | 92 | 100 | 135 | 110 | 155 |
| M14 | 107 | 145 | 159 | 215 | 180 | 250 |
| M16 | 170 | 230 | 247 | 335 | 290 | 390 |
| M18 | 240 | 325 | 343 | 465 | 400 | 540 |
| M20 | 339 | 460 | 487 | 660 | 570 | 770 |
| M22 | 465 | 630 | 664 | 900 | 770 | 1,050 |
| M24 | 583 | 790 | 848 | 1,150 | 960 | 1,300 |
| M27 | 848 | 1,150 | 1,217 | 1,650 | 1,440 | 1,950 |
| M30 | 1,180 | 1,600 | 1,660 | 2,250 | 1,950 | 2,650 |
| M36 | 2,050 | 2,780 | 2,884 | 3,910 | 3,470 | 4,710 |
| M42 | 3,297 | 4,470 | 4,639 | 6,290 | 5,560 | 7,540 |
| M48 | 4,940 | 6,700 | 7,010 | 9,500 | 8,260 | 11,200 |

- Calculated tightening torques are based on a conventional 60°, clean and dry (un-lubricated) thread, with thread-friction and head-friction equal to 0.15.
- When using metric-fasteners, NORD recommends a minimum ISO Grade 8.8 bolt.

## 7. Mounting the prime mover

When the motor is not flange mounted or integrally mounted to the gearbox, it is important to properly secure and align the gear drive with respect to the driven machine before attempting to align the prime mover or motor.

A. After the main gear drive is properly aligned and bolted in place, align the prime mover with respect to the reducer input shaft.

B. Use shims under the feet of the prime mover as needed, and secure in place with the proper mounting bolts. Dowel pins may be field-installed to help prevent misalignment and ensure proper realignment if removed for service.

*IMPORTANT NOTE*

When using a high speed coupling connection between the prime mover and the reducer, check alignment per the coupling manufacturers recommendations. If the coupling is misaligned, the reducer alignment or shimming is incorrect. Re-align the gear reducer and re-check the high-speed coupling alignment before re-aligning the motor.

# STORAGE & COMMISSIONING

## 1. Storage

**IMPORTANT NOTE**

For storage periods longer than 9 months, or for storage in less than desirable conditions, please consult NORD for recommendations.

Storage for up to 9 months is possible, so long as the following conditions are observed:

- Store the gear unit in its actual mounting position in accordance with the specified oil fill-level, in a clean and dry temperature controlled area. Avoid temperature fluctuations within the range of 0°C and 40°C (32°F to 104°F) and avoid relative humidity conditions in excess of 60%.
- Protect all exposed or unpainted shaft and flange surfaces with an anti-corrosion agent or grease.
- Store in a location free from shock and vibration, to avoid false brinelling of bearing elements and raceways.
- Whenever possible, rotate the shafts periodically, by hand if necessary, to help prevent brinelling (bearing damage) and to help keep the shaft seals pliable.
- Avoid direct exposure to the sun or UV light and aggressive or corrosive materials in the environment (ozone, gases, solvents, acids, caustic solutions, salts, radioactivity, etc.

## 2. Commissioning

Prior to gear unit start-up, complete the following:

- Check the lubricant and be sure the gear unit is filled with the proper oil type, to the proper level, as determined by the mounting position.

**IMPORTANT NOTE**

Some smaller gear units are supplied as maintenance free/ lubricated for life gear units. Oil level may not be checked on some of these units.

- Check the condition of all shaft seals and all assembled flange gasket areas. If any change is detected in the shape, color, hardness or permeability, or if any leaks are detected, the corresponding shaft seals and/or gaskets must be replaced.
- Remove all anti-corrosive metal protectant from otherwise bare metal surfaces. Follow product manufacturers directions and warnings during surface protection removal.
- Check the resistance of all motor and brake windings to verify the integrity of the winding insulation and inspect all terminal box openings and wire connection areas to verify that all components are dry and free of corrosion.

## 3. Long-Term Storage

By taking special precautions, problems such as seal leakage and reducer failure due to the lack of lubrication, improper lubrication quantity, or contamination can be avoided. The following precautions will protect gear reducers during periods of extended storage:

- Store the gear unit in its actual mounting position in accordance with the specified oil fill-level, in a clean and dry temperature controlled area. Avoid temperature fluctuations within the range of 0°C and 40°C (32°F to 104°F) and avoid relative humidity conditions in excess of 60%.
- Fill the reducer full with oil that is compatible with the product normally used or recommended during service.
- Apply grease to all unpainted or unprotected shafts, bores, keyways, flange surfaces, tapped holes, and to the exterior of all oil seals.
- Store in a location free from shock and vibration, to avoid false brinelling of bearing elements and raceways.
- Once every few months rotate the input shaft approximately 10-20 revolutions to redistribute the weight of gears and shafts and to prevent brinnelling of the bearings and drying of the seal track.
- Avoid direct exposure to the sun or UV light and aggressive or corrosive materials in the environment (ozone, gases, solvents, acids, caustic solutions, salts, radioactivity, etc.)

## 4. Commissioning After Long-Term Storage

- Remove all anti-corrosive metal protectant from otherwise bare metal surfaces. Follow product manufacturers directions and warnings during surface protection removal.
- Drain the reducer and refill it with the proper type and amount of lubricant.
- Observe start-up and initial operation to make sure there are no seal or gasket leaks, or unusual sounds, vibration or heat rise during operation.
- Check the resistance of all motor and brake windings to verify the integrity of the winding insulation and inspect all terminal box openings and wire connection areas to verify that all components are dry and free of corrosion.

# HELICAL & BEVEL REDUCER LUBRICATION

## 1. Importance of proper lubrication

Proper gearbox lubrication is essential in order to reduce friction, heat, and component wear. Lubricants reduce heat and wear by inserting a protective "fluid boundary" between mating parts and preventing direct metal to metal contact. Lubricants also help prevent corrosion and oxidation, minimize foam, improve heat transfer, optimize reducer efficiency, absorb shock loads and reduce noise.

Most NORD reducers are shipped from the factory with a pre-determined oil fill level in accordance to the specified reducer size and mounting position.

## 2. Standard oil type

The following tables indicate the standard oil fill type used. Please see user manual U11000 for more specific information and for optional helical and bevel gear lubricants:

| Serviceable Gear Units | |
|---|---|
| Helical In-line | Standard Oil Fill: ISO VG 220, Mineral Oil |
| Clincher Parallel-Shaft | |
| Right-Angle Bevel | |
| NORDBLOC® Series In-line | |
| NORDBLOC®.1 Series In-line | |
| Standard Series In-line | |

*IMPORTANT NOTE*

For shipping purposes, the following large Clincher™ gear units are supplied without oil:
• Clincher™ Sizes SK11282, SK11382 and SK12382

| Maintenance-free / Lubricated For Life Gear Units | |
|---|---|
| Clincher™ sizes SK0182NB, SK0282NB & SK1382NB | Standard Oil Fill: ISO VG220 SHC/PAO Synthetic Oil |
| NORDBLOC® Sizes SK172, SK272, SK371F, SK372, SK373, SK320 | |

*IMPORTANT NOTE*

Maintenance-free units are supplied as sealed units with no vent-plug. Consult NORD prior to ordering if interested in ordering any of the above sizes as serviceable gear units.

*IMPORTANT NOTE*

Consult the sticker adjacent to the fill plug to determine the type of lubricant installed at the factory. Some units have special lubricants designed to operate in certain environments or intended to extend the service life or service temperature range of the lubricant. If in doubt about which lubricant is needed for a certain application, please contact NORD Gear.

## 3. Lubrication replacement

If the gear unit is filled with mineral oil, the lubricant should be replaced at least after every 10,000 operating hours or after every two years. If the gear unit is filled with synthetic oil, the lubricant should be replaced at least after every 20,000 operating hours or after every four years. Often gear reducers are exposed to extreme ambient conditions, hostile environments, wet conditions, or dirty and dusty operating areas. Especially in these situations, it is important to establish a condition-based oil service interval.

## 4. Oil viscosity

Viscosity, or the oil's resistance to shear under load, is often considered the single most important property of any gear oil.

- Often one will consider making a viscosity correction to the oil to improve the performance when operating the gear unit at low temperature or high temperature.
- In cases of extreme load conditions, gear pairs and antifriction bearings may be more susceptible to sliding or scuffing wear. In these operating conditions, it may also be beneficial to consider an increased lubrication viscosity and/or a lubrication with improved antiwear additive packages.

*IMPORTANT NOTE*

The user should consult with their primary lubrication supplier before considering changes in oil type or viscosity.

## 5. Maximum oil sump temperature limit

To prevent reducer overheating, the reducer's maximum oil sump temperature limit must not be exceeded for prolonged periods of operation (up to 3 hours continuous operation depending upon reducer size).

| Oil Type | Maximum Oil Temperature Limit | |
|---|---|---|
| | NORD | AGMA 9005-D94 |
| Mineral | 80-85°C (176-185°F) | 95°C (203°F) |
| Synthetic | 105°C (220°F) | 107°C (225°F) |

*IMPORTANT NOTE*

***Use caution when specifying gear reducers for high temperature service.*** If there is concern about exceeding the allowable safe operating temperatures, please consult NORD to discuss alternatives.

# HELICAL & BEVEL REDUCER LUBRICATION

### 6. The importance of routine oil analysis

Routine oil analysis, sound lubrication practices, and good tracking of oil performance trends will help establish proper lubrication maintenance and change-out intervals. To maximize equipment reliability, NORD Gear generally recommends a condition-based lubrication maintenance program. One may take exceptions to this general recommendation on sealed-for-life or maintenance-free gear units or smaller and less costly gear units. In these instances, the replacement cost of the gear unit is often small compared to the costs associated with this type of oil analysis program.

**STOP** *HARMFUL SITUATION* **STOP**

NORD suggests replacing the gear oil if oil analysis indicates any of the following:

- Viscosity has changed by approximately 10% or more.
- Debris particles (silicon, dust, dirt or sand) exceed 25 ppm.
- Iron content exceeds 150-200 ppm.
- Water content is greater than 0.05% (500 ppm).
- The total acid number (TAN) tests indicate a significant level of oxidative break-down of the oil, and a critical reduction in performance; If the TAN number measured changes by more than 5% over the new oil, then an oil change would be recommended.

### 7. Mounting position and oil fill quantity

All NORD Gear reducers are shipped from the factory with a pre-determined oil fill level in accordance to the specified reducer size and mounting position. ***For additional information, please see the seperate mounting position diagrams and the corresponding oil fill quantity tables for the specified gear unit.***

The gearbox nametag will indicate the mounting position that was provided. ***For mounting orientations other than shown in the mounting position charts, please consult NORD Gear.***

**STOP** *HARMFUL SITUATION* **STOP**

Actual oil volume can vary slightly depending upon the gear case size, mounting and ratio. Prior to commissioning the reducer, check the oil-fill level using the reducer's oil-level plug and drain or add additional oil as needed. The minimum acceptable oil level is 0.15 in (4mm) below the oil level hole.

### 8. Oil plug locations

All gear units are assembled with the oil fill-level, oil-drain and vent plugs installed in their proper locations, according to the specified mounting position. All standard plugs are metric and utilize sealing gaskets between the head of the plug and the reducer housing.

### 9. Drain and fill-level plugs

All reducer drain plugs are metric socket head cap screws. For easier identification, it is NORD's standard practice to provide a hex-head screw for the fill-level plug. For ease of draining the used oil from the gear reducer, use the socket head screw located at the lowest part of the gearbox.



Drain Plug

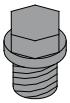

Fill Level Plug

### 10. Vent plug locations

Reducer venting allows for air pressure differences that occur during operation, between the inner space of the reducer and the atmosphere, while ensuring leak-free operation. The AUTOVENT™ is standard for all vented gear units, unless otherwise noted.

**AUTOVENT™** - The AUTOVENT™ helps prevent bearing and gear damage by behaving like a check valve to block the entry of foreign material (water, dust, corrosives, etc.). The breather opens at approximately 2-3 psi during operation and closes tightly as the gearbox cools. This option is perfect for humid conditions and wash-down environments, helping to maintain proper oil cleanliness, and reducing foaming and oxidation. NORD may choose to offer one of two style options as shown in Figure 1. The Type 2 AUTOVENT™ comes closed upon delivery with a transportation sealing plug (see Warning).

**Figure 1 AUTOVENT™ Types**



Type 1

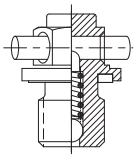



Type 2 with transportation plug

**Open Vent** - An optional open vent can be supplied by NORD. The open vent comes closed upon delivery with a transportation sealing plug (see Warning).

⚠ *WARNING* ⚠

To prevent build-up of excessive pressure, sealed vents must be activated as shown prior to gear unit start up.

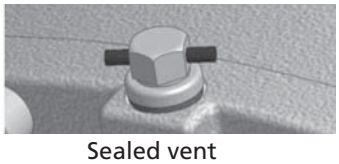

Sealed vent

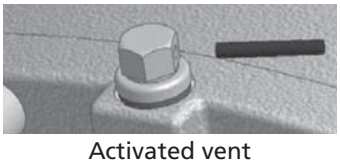

Activated vent

**Filtered Vent** - NORD may offer an optional filtered vent, which allows gases to permeate, but does not allow dust and debris to pass through the vent.

# HELICAL & BEVEL REDUCER LUBRICATION TYPES



## Lubrication Tables – Helical and Bevel Gear Units

**Standard Oil Lubricants**

| ISO Viscosity | Oil Type | Ambient Temperature Range | Manufacturer Brand/Type | Notes |
|---|---|---|---|---|
| VG220 | MIN-EP | 0 to 40°C (32 to 104°) | Mobilgear 600XP220 | ♦❶ |
| | PAO | -35 to 60°C (-31 to 140°F) | Mobil SHC630 | ♦❷ |
| | FG | -5 to 40°C (23 to 104°F) | Fuchs FM220 | ♦ |

**Optional Oil Lubricants**

| ISO Viscosity | Oil Type | Ambient Temperature Range | Manufacturer Brand/Type | Notes |
|---|---|---|---|---|
| VG460 | PAO | -35 to 80°C (-31 to 176°F) | Mobil SHC 634 | - |
| | FG-PAO | -35 to 80°C (-31 to 176°F) | Mobil SHC Cibus 460 | - |
| VG220 | FG-PAO | -35 to 60°C (-31 to 140°F) | Mobil SHC Cibus 220 | - |
| VG150 | PAO | -35 to 25°C (-31 to 77°F) | Mobil SHC629 | - |

**Grease Options (applied to greased bearings and seal cavities)**

| NLGI Grade | Grease Type/Thickener | Ambient Temperature Range | Manufacturer Brand/Type | Notes |
|---|---|---|---|---|
| NLGI 2 | Standard (Li-Complex) | -30 to 60°C (-22 to 140°F) | Mobil Grease XHP222 | ♦❶ |
| | High Temp (Polyurea) | -40 to 80°C (-40 to 176°F) | Mobil / Polyrex EP 2 | ♦❷ |
| | Food-Grade (Polyurea) | -30 to 40°C (-22 to 104°F) | Mobil SHC Polyrex 222 | ♦ |

♦ Stocked Lubricants

❶ Standard product on serviceable gear units

❷ Standard product on maintenance free gear units

### *IMPORTANT NOTES*

- The "Ambient Temperature" is intended to be an operation guideline based upon the typical properties of all the lubricant. The viscosity and other properties of the lubricant change based upon load, speed, ambient conditions, and reducer operating temperatures. The user should consult with their lubrication supplier & NORD gear before considering changes in oil type or viscosity.
- To prevent reducer overheating, observe the maximum operating oil temperature limits:
  Mineral Oil: 80-85 °C (176 – 180 °F).
  Synthetic Oil: 105 °C (225 °F).
- In the following instances, please consult NORD for specific recommendations:
  - √ Gear units will operate in high ambient temperature conditions exceeding 40 °C (104 °F).
  - √ Gear units will operate in cold ambient temperature conditions approaching 0 °C (32 °F) or lower.
  - √ Lower than an ISO VG100 viscosity oil is being considered for a cold-temperature service.
  - √ Fluid grease is required for lubricating the gear unit.
- Observe the general lubrication guidelines outlined in user manual U10750.

**Oil Formulation Codes**

MIN-EP - Mineral Oil with EP Additive
PAO-EP - Synthetic Polyalphaolefin Oil with EP Additive
PAO - Synthetic Polyalphaolefin Oil
PG - Synthetic Polyglycol Oil
FG - Food-Grade Oil
FG-PAO - Food-Grade, Synthetic Poyalphaolefin Oil
FG-PG - Food-Grade, Synthetic Polyglycol Oil

**Lubrication Notes**

- Avoid using (EP) gear oils in worm gears that contain sulfur-phosphorous chemistries, as these additives can react adversely with bronze worm gears and accelerate wear.
- Food grade lubricants must be in compliance with FDA 212 CFR 178.3570 and qualify as a NSF-H1 lubricant. Please consult with lubrication manufacturer for more information.
- When making a lubrication change, check with the lubrication supplier to assure compatibility and to obtain recommended cleaning or flushing procedures.
- Do not to mix different oils with different additive packages or different base oil formulation types. Polyglycol (PG) oils are not miscible with other oil types and should never be mixed with mineral oil or polyalphaolefin (PAO) synthetic oil.

# HELICAL & BEVEL REDUCER LUBRICATION TYPES

**Oil Cross-reference Chart**

| ISO Viscosity | Oil Type | Ambient Temperature Range | Mobil | Shell | Castrol | FUCHS | KLÜBER LUBRICATION |
|---|---|---|---|---|---|---|---|
| VG150 | MIN-EP | 0 to 25°C (32 to 77°F) | Mobilgear 600XP150 | Omala 150 | Alpha SP150 | Renolin EP150 | Klüberoil GEM 1-150N |
| | PAO-EP | -30 to 25 °C (-22 to 77 °F) | Mobilgear SHC150 | Omala HD 150 | Alphasyn EP150 | Gearmaster SYN150/NA | Klübersynth EG 4-150 |
| | PAO | -30 to 25°C (-22 to 77°F) | Mobil SHC629 | Omala RL 150 | Alphasyn T150 | N/A | Klübersynth GEM 4-150N |
| | PG | -25 to 25°C (-13 to 77°F) | Mobil Glygoyle 150 | Tivela S150 | Alphasyn PG150 | Renolin PG150 | Klübersynth GH 6-150 |
| | FG | 0 to 25°C (32 to 77°F) | Mobil DTE FM 150 | N/A | N/A | N/A | N/A |
| | FG-PAO | -15 to 25°C (5 to 77°F) | Mobil SHC Cibus 150 | N/A | N/A | Cassida GL150 | Klüberoil 4 UH 1-150N |
| | FG-PG | -25 to 25°C (-13 to 77°F) | Mobil Glygoyle 150 | N/A | N/A | N/A | Klübersynth UH1 6-150 |
| VG220 | MIN-EP | 0 to 40°C (32 to 104°) | Mobilgear 600XP220 | Omala 220 | Alpha SP220 | Renolin EP220 | Klüberoil GEM 1-220N |
| | PAO-EP | -30 to 60 °C (-22 to 140 °F) | Mobilgear SHC220 | Omala HD220 | Alphasyn EP220 | Gearmaster SYN220/NA | Klübersynth EG 4-220 |
| | PAO | -30 to 60°C (-22 to 140°F) | Mobil SHC630 | Omala RL220 | Alphasyn T220 | N/A | Klübersynth GEM 4-220N |
| | PG | -25 to 60°C (-13 to 140°F) | Mobil Glygoyle 220 | Tivela S220 | Alphasyn PG220 | Renolin PG220 | Klübersynth GH 6-220 |
| | FG | 0 to 40°C (32 to 104°F) | Mobil DTE FM 220 | N/A | N/A | Fuchs FM220 | N/A |
| | FG-PAO | -25 to 60°C (-13 to 140°F) | Mobil SHC Cibus 220 | N/A | N/A | Cassida GL220 | Klüberoil 4 UH 1-220N |
| | FG-PG | -25 to 60°C (-13 to 140°F) | Mobil Glygoyle 220 | N/A | N/A | Cassida WG220 | Klübersynth UH1 6-220 |
| VG460 | MIN-EP | 0 to 40°C (32 to 104°F) | Mobilgear 600XP460 | Omala 460 | Alpha SP460 | Renolin EP460 | Klüberoil GEM 1-460N |
| | PAO-EP | -20 to 80°C (-4 to 176°F) | Mobilgear SHC460 | Omala HD460 | Alphasyn EP460 | Gearmaster SYN460/NA | Klübersynth EG 4-460 |
| | PAO | -20 to 80°C (-4 to 176°F) | Mobil SHC 634 | Omala RL460 | Alphasyn T460 | N/A | Klübersynth GEM 4-460N |
| | PG | -20 to 80°C (-4 to 176°F) | Mobil Glygoyle 460 | Tivela S460 | Alphasyn PG460 | N/A | Klübersynth GH 6-460 |
| | FG | 0 to 40°C (32 to 104°F) | Mobil DTE FM460 | N/A | N/A | Fuchs FM460 | N/A |
| | FG-PAO | -20 to 80°C (-4 to 176°F) | Mobil SHC Cibus 460 | N/A | N/A | Cassida GL460 | Klüberoil 4 UH 1-460N |
| | FG-PG | -20 to 80°C (-4 to 176°F) | Mobil Glygoyle 460 | N/A | N/A | Cassida WG460 | Klübersynth UH1 6-460 |

Low-end service temperature limit may vary for a specific lubricant; Please also see the important notes on Page 1.

# CLINCHER™ OIL FILL QUANTITIES



## CLINCHER™ lubrication

Unless otherwise noted below, the following NORD Gear reducers are shipped from the factory with a pre-determined oil fill level in accordance to the specified reducer size and mounting position. For additional information, please refer to the "Oil Plug & Vent Locations" documentation for your gear unit.

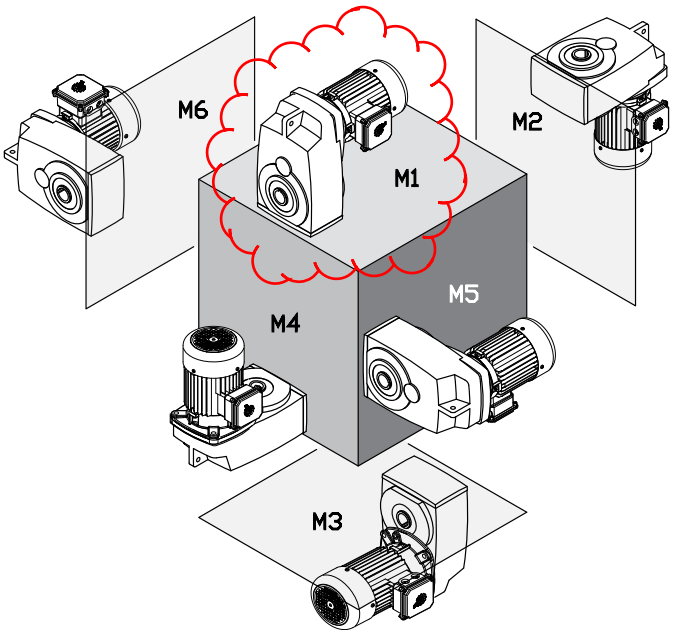


### HARMFUL SITUATION

Actual oil volume can vary slightly depending upon the gear case size, mounting and ratio. Prior to commissioning the reducer, check the oil-fill level using the reducer's oil level plug and drain or add addition oil as needed. The minimum acceptable oil level is 0.15 in (4mm) below the oil level hole.

For mounting orientations other than shown please consult NORD Gear. Reducer modifications may be required.

| Type | M1 | | M2 | | M3 | | M4 | | M5 | | M6 | |
|---|---|---|---|---|---|---|---|---|---|---|---|---|
| | Quarts | Liters | Quarts | Liters | Quarts | Liters | Quarts | Liters | Quarts | Liters | Quarts | Liters |
| SK 0182NB | 0.42 | 0.40 | 0.58 | 0.55 | 0.58 | 0.55 | 0.42 | 0.40 | 0.42 | 0.40 | 0.42 | 0.40 |
| SK 0282NB | 0.74 | 0.70 | 1.16 | 1.10 | 0.85 | 0.80 | 1.16 | 1.10 | 0.95 | 0.90 | 0.95 | 0.90 |
| SK 1282 | 1.00 | 0.95 | 1.37 | 1.30 | 0.95 | 0.90 | 1.37 | 1.30 | 1.06 | 1.00 | 1.06 | 1.00 |
| SK 1382NB | 1.48 | 1.40 | 2.43 | 2.30 | 2.32 | 2.20 | 2.32 | 2.20 | 2.11 | 2.00 | 2.11 | 2.00 |
| SK 1382 | 1.53 | 1.45 | 1.69 | 1.60 | 1.22 | 1.15 | 1.80 | 1.70 | 1.16 | 1.10 | 1.16 | 1.10 |
| SK 2282 | 1.80 | 1.70 | 2.43 | 2.30 | 1.80 | 1.70 | 2.32 | 2.20 | 2.01 | 1.90 | 2.01 | 1.90 |
| SK 2382 | 2.43 | 2.30 | 2.85 | 2.70 | 2.22 | 2.10 | 3.38 | 3.20 | 2.11 | 2.00 | 2.11 | 2.00 |
| SK 3282 | 2.96 | 2.80 | 4.23 | 4.00 | 3.49 | 3.30 | 4.02 | 3.80 | 3.17 | 3.00 | 3.17 | 3.00 |
| SK 3382 | 4.02 | 3.80 | 4.54 | 4.30 | 3.17 | 3.00 | 5.81 | 5.50 | 3.17 | 3.00 | 3.17 | 3.00 |
| SK 4282 | 4.44 | 4.20 | 5.71 | 5.40 | 4.65 | 4.40 | 5.28 | 5.00 | 4.44 | 4.20 | 4.44 | 4.20 |
| SK 4382 | 6.45 | 6.10 | 7.29 | 6.90 | 5.18 | 4.90 | 8.88 | 8.40 | 5.28 | 5.00 | 5.28 | 5.00 |
| SK 5282 | 7.93 | 7.50 | 9.30 | 8.80 | 7.93 | 7.50 | 9.30 | 8.80 | 7.61 | 7.20 | 7.61 | 7.20 |
| SK 5382 | 13.2 | 12.5 | 12.7 | 12.0 | 7.08 | 6.70 | 14.8 | 14.0 | 8.77 | 8.30 | 8.77 | 8.30 |
| SK 6282 | 18.0 | 17.0 | 16.4 | 15.5 | 13.2 | 12.5 | 18.5 | 17.5 | 11.6 | 11.0 | 14.8 | 14.0 |
| SK 6382 | 16.9 | 16.0 | 13.7 | 13.0 | 10.6 | 10.0 | 19.0 | 18.0 | 14.8 | 14.0 | 13.2 | 12.5 |
| SK 7282 | 26.9 | 25.5 | 22.2 | 21.0 | 21.7 | 20.5 | 28.5 | 27.0 | 16.9 | 16.0 | 22.2 | 21.0 |
| SK 7382 | 23.2 | 22.0 | 22.2 | 21.0 | 16.9 | 16.0 | 26.4 | 25.0 | 24.3 | 23.0 | 23.2 | 22.0 |
| SK 8282 | 39.6 | 37.5 | 34.9 | 33.0 | 32.2 | 30.5 | 46.5 | 44.0 | 32.8 | 31.0 | 32.8 | 31.0 |
| SK 8382 | 36.5 | 34.5 | 34.3 | 32.5 | 26.4 | 25.0 | 40.2 | 38.0 | 37.0 | 35.0 | 31.7 | 30.0 |
| SK 9282 | 79.0 | 75.0 | 74.0 | 70.0 | 59.0 | 56.0 | 85.0 † | 80.0 † | 69.0 | 65.0 | 62.0 | 59.0 |
| SK 9382 | 78.0 | 74.0 | 74.0 | 70.0 | 45.4 | 43.0 | 79.0 † | 75.0 † | 69.0 | 65.0 | 63.0 | 60.0 |
| SK 10282 | 95.0 | 90.0 | 95.0 | 90.0 | 42.3 | 40.0 | 95.0 † | 90.0 † | 63.0 | 60.0 | 87.0 | 82.0 |
| SK 10382 | 90.0 | 85.0 | 95.0 | 90.0 | 77.0 | 73.0 | 106 † | 100 † | 85 | 80.0 | 85.0 | 80.0 |
| SK 11282* | 174 | 165 | 169 | 160 | 153 | 145 | 206 † | 195 † | 106 | 100 | 148 | 140 |
| SK 11382* | 169 | 160 | 164 | 155 | 148 | 140 | 222 † | 210 † | 164 | 155 | 143 | 135 |
| SK 12382* | 169 | 160 | 164 | 155 | 148 | 140 | 222 † | 210 † | 164 | 155 | 143 | 135 |

*** For shipping purposes the larger Clincher™ gear units are supplied without oil.**

**† Oil quantities shown are for the gearbox only. When the OT (oil tank) option is used, the oil must be filled to the level shown on the dipstick which is located inside of the oil tank. Even when the gear unit is filled by NORD, the user MUST add more oil untill the oil is filled to the proper level.**

# SK 4282 SCP + Motor
# 2” CEMA Drive Shaft

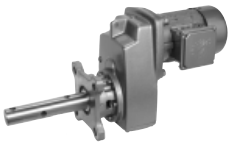

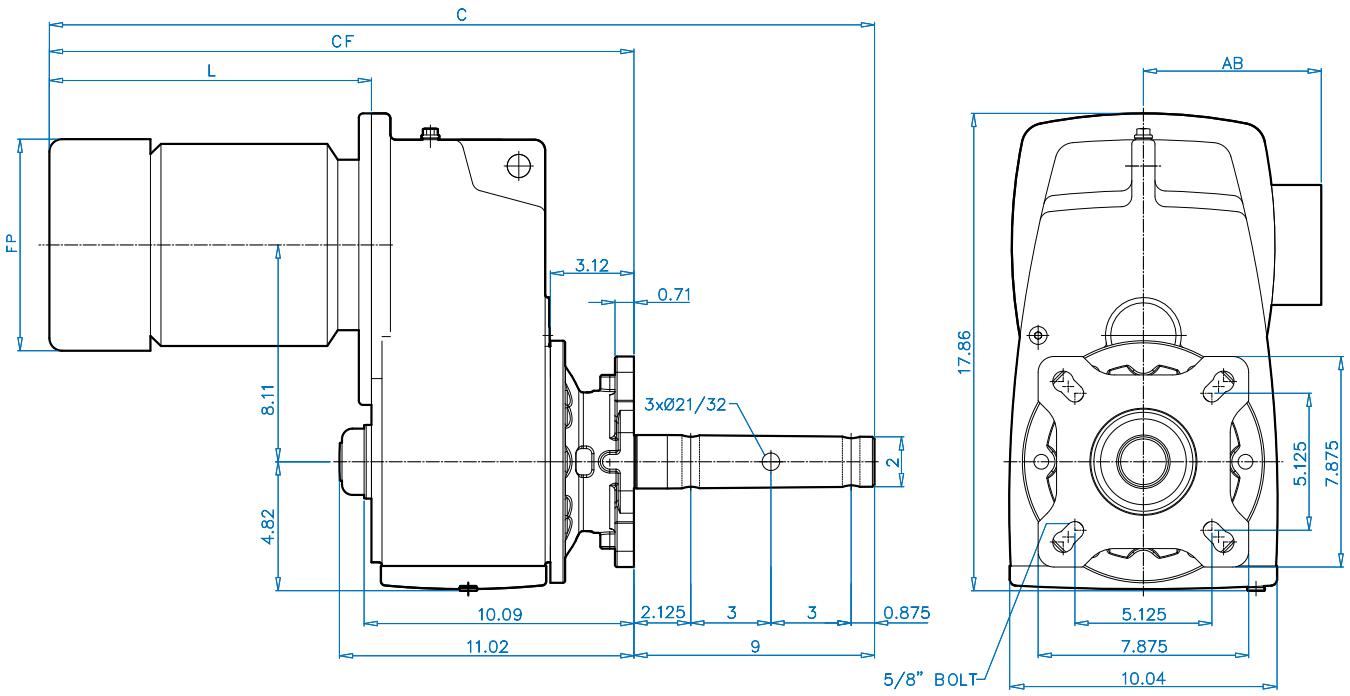


DIMENSIONS

| Motor Type | Overall | | Motor | | |
|---|---|---|---|---|---|
| | C | CF | L | FP | AB |
| 90S/SH/L/LH | 29.94 | 20.94 | 10.84 | 7.19 | 5.79 |
| 100L/LA/LH | 31.16 | 22.16 | 12.06 | 7.90 | 6.65 |
| 112M | 32.03 | 23.03 | 12.93 | 8.87 | 7.05 |
| 112MH | 33.02 | 24.02 | 13.93 | 8.87 | 7.05 |
| 132S/SH/M/MH | 35.45 | 26.45 | 16.35 | 10.45 | 8.03 |
| 160M/L | 38.51 | 29.51 | 19.41 | 12.56 | 9.53 |

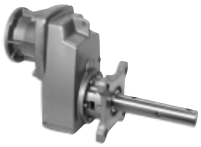

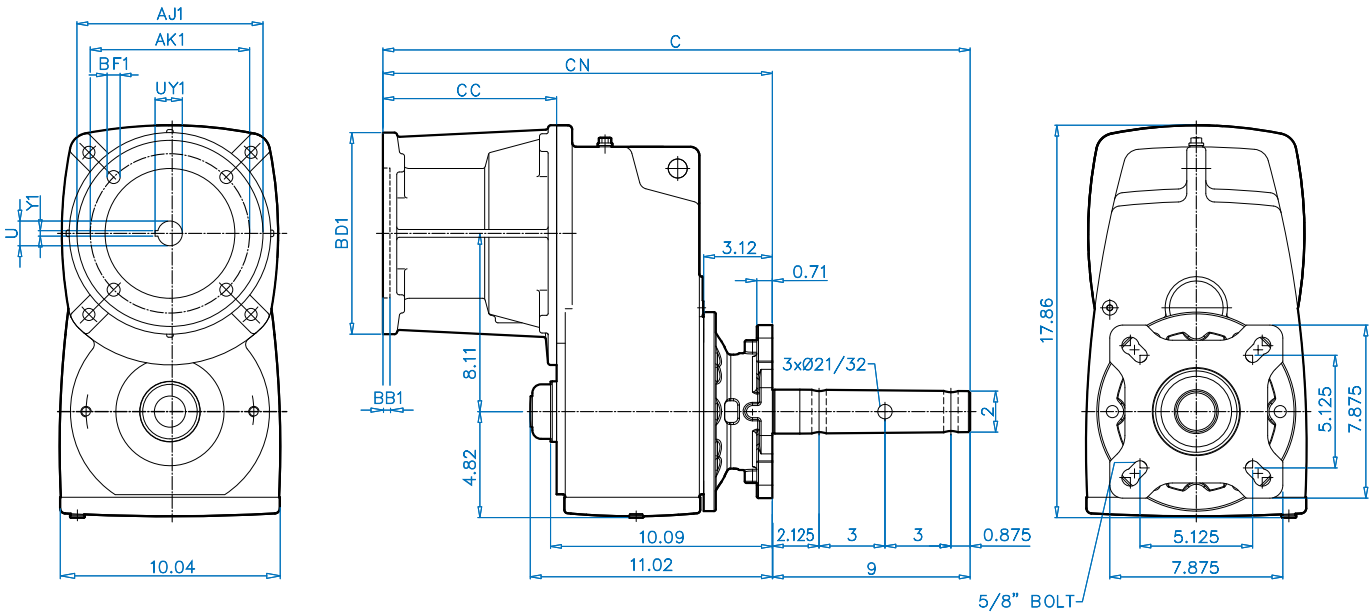




| NEMA | Overall | | NEMA Input | | | | | | Coupling | | |
|---|---|---|---|---|---|---|---|---|---|---|---|
| C-Face Input | C | CN | CC | AJ1 | AK1 | BB1 | BD1 | BF1 | U1 | UY1 | Y1 |
| **56C** | 23.43 | 14.43 | 4.33 | 5.875 | 4.50 | 0.20 | 6.54 | 0.43 | 0.625 | 0.71 | 0.188 |
| **140TC** | 23.43 | 14.43 | 4.33 | 5.875 | 4.50 | 0.20 | 6.54 | 0.43 | 0.875 | 0.96 | 0.188 |
| **180TC** | 27.17 | 18.17 | 8.07 | 7.250 | 8.50 | 0.23 | 9.17 | 0.59 | 1.125 | 1.24 | 0.250 |
| **210TC** | 27.17 | 18.17 | 8.07 | 7.250 | 8.50 | 0.23 | 9.17 | 0.59 | 1.375 | 1.52 | 0.312 |
| **250TC** | 27.01 | 18.01 | 7.91 | 7.250 | 8.50 | 0.23 | 9.17 | 0.59 | 1.625 | 1.80 | 0.375 |

# Fixing Element Kit

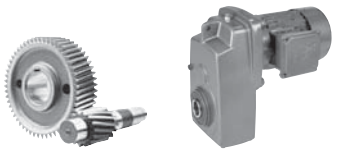





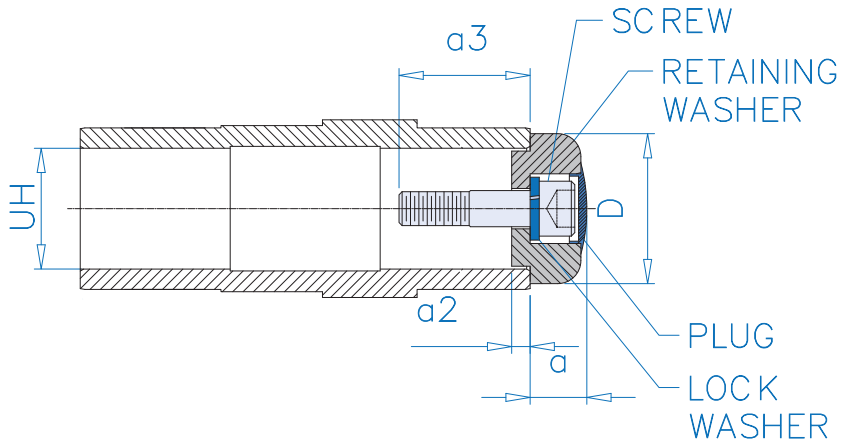


**Inch Shaft Hollow Bore (in)**

| UH | D | a | a2 | Screw ❶ | a3 ❶ | Screw ❷ | a3 ❷ | Screw ❸ | a3 ❸ |
|---|---|---|---|---|---|---|---|---|---|
| 0.5000 | 0.984 | 0.565 | 0.110 | 10 - 32 x 5/8 | 0.499 | - | - | - | - |
| 0.7500 | 1.181 | 0.557 | 0.118 | 1/4 - 20 x 3/4 | 0.652 | 1/4 - 20 x 1 | 0.902 | - | - |
| 1.0000 | 1.496 | 0.767 | 0.150 | 3/8 - 16 x 3/4 | 0.624 | 3/8 - 16 x 1-1/4 | 1.124 | - | - |
| 1.1875 | 1.575 | 0.769 | 0.150 | 7/16 - 14 x 2-1/16 | 2.016 | - | - | - | - |
| 1.2500 | 1.575 | 0.769 | 0.150 | 7/16 - 14 x 2-1/16 | 2.016 | - | - | - | - |
| 1.3750 | 1.772 | 0.946 | 0.197 | 5/8 - 11 x 1-1/2 | 1.461 | 5/8 - 11 x 2-1/4 | 2.211 | 5/8 - 11 x 1 | 0.961 |
| 1.4375 | 1.772 | 0.946 | 0.197 | 5/8 - 11 x 1-1/2 | 1.461 | 5/8 - 11 x 2-1/4 | 2.211 | 5/8 - 11 x 1 | 0.961 |
| 1.5000 | 1.772 | 0.946 | 0.197 | 5/8 - 11 x 1-1/2 | 1.461 | 5/8 - 11 x 2-1/4 | 2.211 | 5/8 - 11 x 1 | 0.961 |
| 1.6250 | 2.165 | 0.927 | 0.315 | 5/8 - 11 x 2 | 2.000 | 5/8 - 11 x 1-1/2 | 1.500 | - | - |
| 1.6875 | 2.165 | 0.927 | 0.315 | 5/8 - 11 x 2 | 2.000 | 5/8 - 11 x 1-1/2 | 1.500 | - | - |
| 1.9375 | 2.362 | 0.966 | 0.315 | 5/8 - 11 x 2-1/4 | 2.000 | - | - | - | - |
| 2.0000 | 2.559 | 0.971 | 0.315 | 5/8 - 11 x 2-1/4 | 2.250 | - | - | - | - |
| 2.0625 | 2.559 | 0.971 | 0.315 | 5/8 - 11 x 2-1/4 | 2.250 | - | - | - | - |
| 2.1875 | 2.559 | 0.971 | 0.315 | 5/8 - 11 x 2-1/4 | 2.250 | - | - | - | - |
| 2.3750 | 2.953 | 1.129 | 0.354 | 3/4 - 10 x 2-1/2 | 2.500 | - | - | - | - |
| 2.4375 | 2.953 | 1.129 | 0.354 | 3/4 - 10 x 2-1/2 | 2.500 | - | - | - | - |
| 2.7500 | 3.740 | 1.132 | 0.354 | 3/4 - 10 x 2-1/2 | 2.500 | - | - | - | - |
| 2.9375 | 3.740 | 1.132 | 0.354 | 3/4 - 10 x 2-1/2 | 2.500 | - | - | - | - |
| 3.1875 | 3.740 | 1.132 | 0.354 | 3/4 - 10 x 2-1/2 | 2.500 | - | - | - | - |
| 3.2500 | 4.106 | 1.132 | 0.354 | 3/4 - 10 x 2-1/2 | 2.500 | - | - | - | - |
| 3.4375 | 4.106 | 1.132 | 0.354 | 3/4 - 10 x 2-1/2 | 2.500 | - | - | - | - |
| 3.9375 | 4.724 | 1.299 | 0.394 | 7/8 - 9 x 3-1/2 | 3.500 | - | - | - | - |
| 4.0000 | 4.724 | 1.299 | 0.394 | 7/8 - 9 x 3-1/2 | 3.500 | - | - | - | - |
| 4.0625 | 4.724 | 1.299 | 0.394 | 7/8 - 9 x 3-1/2 | 3.500 | - | - | - | - |
| 4.4375 | 5.315 | 1.299 | 0.386 | 7/8 - 9 x 3-1/2 | 3.500 | - | - | - | - |
| 4.7500 | 5.906 | 1.299 | 0.394 | 7/8 - 9 x 3-1/2 | 3.500 | - | - | - | - |
| 4.9375 | 5.906 | 1.299 | 0.394 | 7/8 - 9 x 3-1/2 | 3.500 | - | - | - | - |

Standard snap ring groove is machined into input (motor) side of hollow shaft.
Fixing element can be installed into opposite side but requires a special shaft. Consult NORD.

**Metric Hollow Bore (mm)**

| UH | D | a | a2 | Screw ❶ | a3 ❶ | Screw ❷ | a3 ❷ |
|---|---|---|---|---|---|---|---|
| 25 | 38 | 19 | 3.8 | M10 x 45 | 41.8 | M10 x 30 | 26.8 |
| 30 | 40 | 19 | 3.8 | M10 x 45 | 43.8 | M10 x 30 | 28.8 |
| 35 | 45 | 23.5 | 5 | M12 x 55 | 54 | M12 x 35 | 34 |
| 40 | 55 | 23.7 | 8 | M16 x 70 | 70 | M16 x 45 | 45 |
| 50 | 65 | 24.7 | 8 | M16 x 70 | 70 | M16 x 45 | 45 |
| 60 | 75 | 29 | 9 | M20 x 90 | 90 | M20 x 55 | 55 |
| 70 | 95 | 29.3 | 9 | M20 x 90 | 90 | M20 x 55 | 55 |
| 80 | 102 | 29 | 9 | M20 x 100 | 100 | M20 x 55 | 55 |
| 100 | 120 | 34.5 | 10 | M24 x 110 | 110 | M24 x 65 | 65 |
| 120 | 150 | 34.5 | 10 | M24 x 110 | 110 | M24 x 65 | 65 |

❶, ❷, ❸ - Each fixing element kit may contain up to 3 different kinds of screws

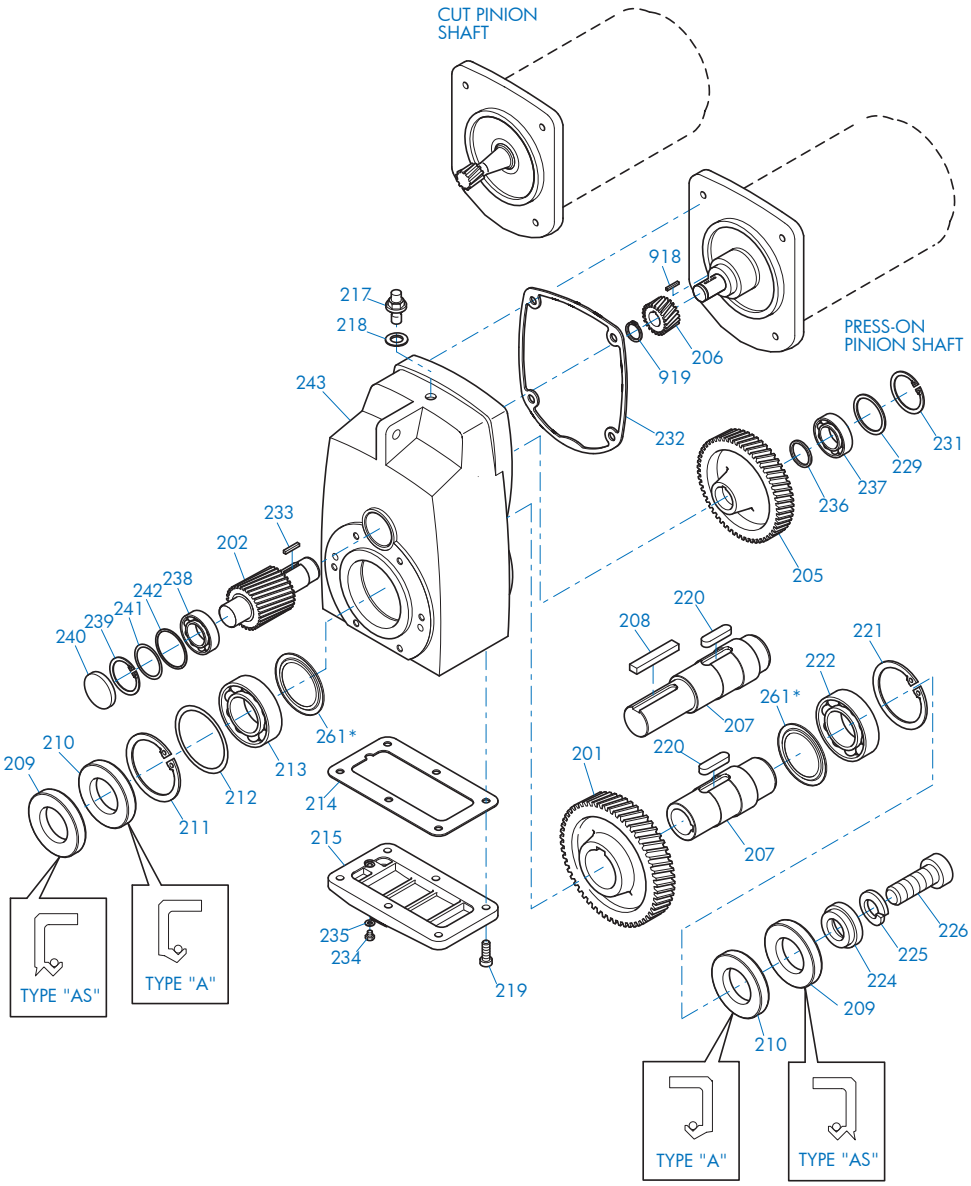


## SK 0182NB - SK 5282

| | | |
|---|---|---|
| 201 Gear | 217 Vent Plug | 234 Drain Plug |
| 202 Pinion Shaft | 218 Gasket | 235 Gasket |
| 205 Gear | 219 Bolt | 236 Thrust Washer |
| 206 Pinion | 220 Key | 237 Anti-Friction Bearing |
| 207 Output Shaft | 221 Snap Ring | 238 Anti-Friction Bearing |
| 208 Key | 222 Anti-Friction Bearing | 239 Snap Ring |
| 209 Oil Seal | 224 Retaining Washer | 240 Bore Plug |
| 210 Oil Seal | 225 Lock Washer | 241 Shim |
| 211 Snap Ring | 226 Bolt | 242 Thrust Washer |
| 212 Shim | 229 Thrust Washer | 243 Gearcase |
| 213 Anti-Friction Bearing | 231 Snap Ring | 261 Nilos Ring* |
| 214 Gasket | 232 Gasket | 918 Key |
| 215 Inspection Cover | 233 Key | 919 Snap Ring |

* Conditionally used part

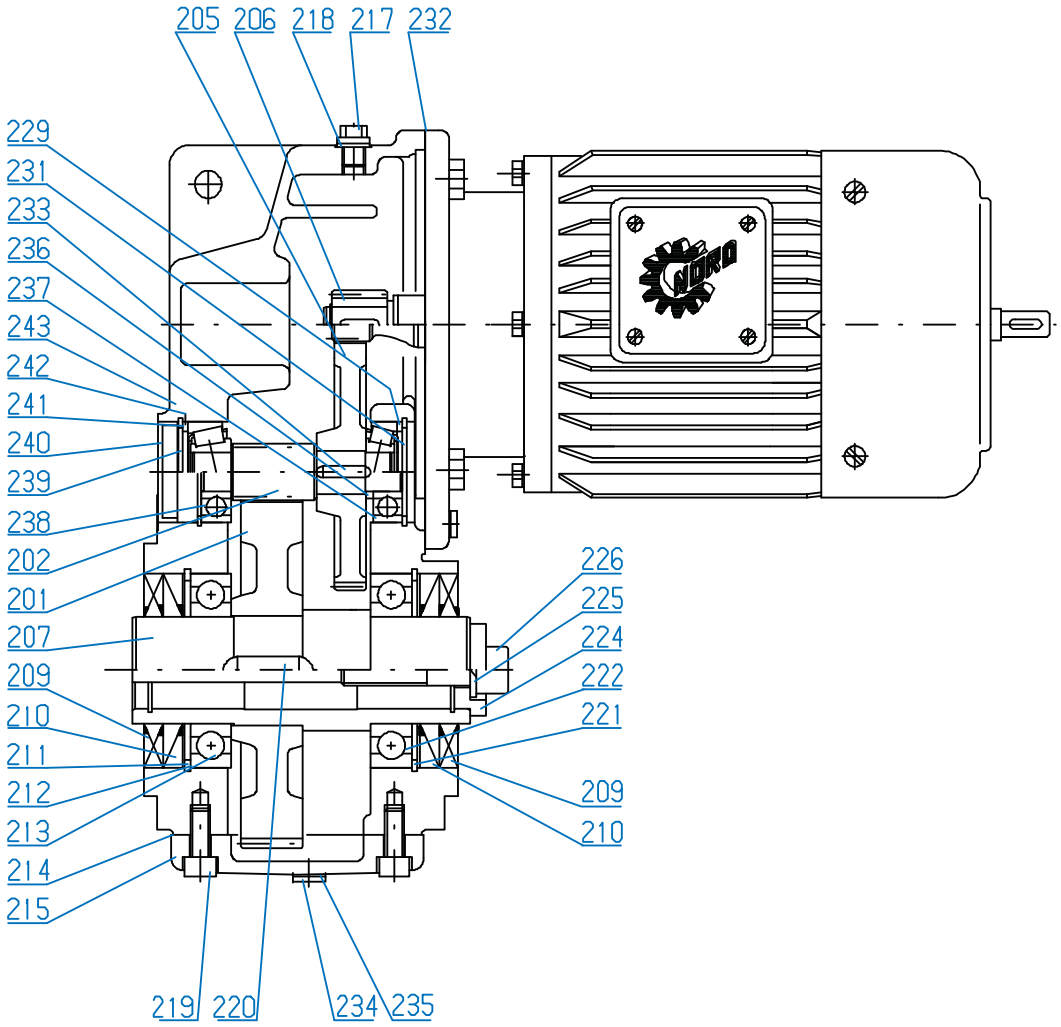


## SK 0182NB - SK 5282

| | | |
|---|---|---|
| 201 Gear | 217 Vent Plug | 233 Key |
| 202 Pinion Shaft | 218 Gasket | 234 Drain Plug |
| 205 Gear | 219 Bolt | 235 Gasket |
| 206 Pinion | 220 Key | 236 Thrust Washer |
| 207 Output Shaft | 221 Snap Ring | 237 Anti-Friction Bearing |
| 209 Oil Seal | 222 Anti-Friction Bearing | 238 Anti-Friction Bearing |
| 210 Oil Seal | 224 Retaining Washer | 239 Snap Ring |
| 211 Snap Ring | 225 Lock Washer | 240 Bore Plug |
| 212 Shim | 226 Bolt | 241 Shim |
| 213 Anti-Friction Bearing | 229 Thrust Washer | 242 Thrust Washer |
| 214 Gasket | 231 Snap Ring | 243 Gearcase |
| 215 Inspection Cover | 232 Gasket | 261 Nilos Ring* |

* Conditionally used part

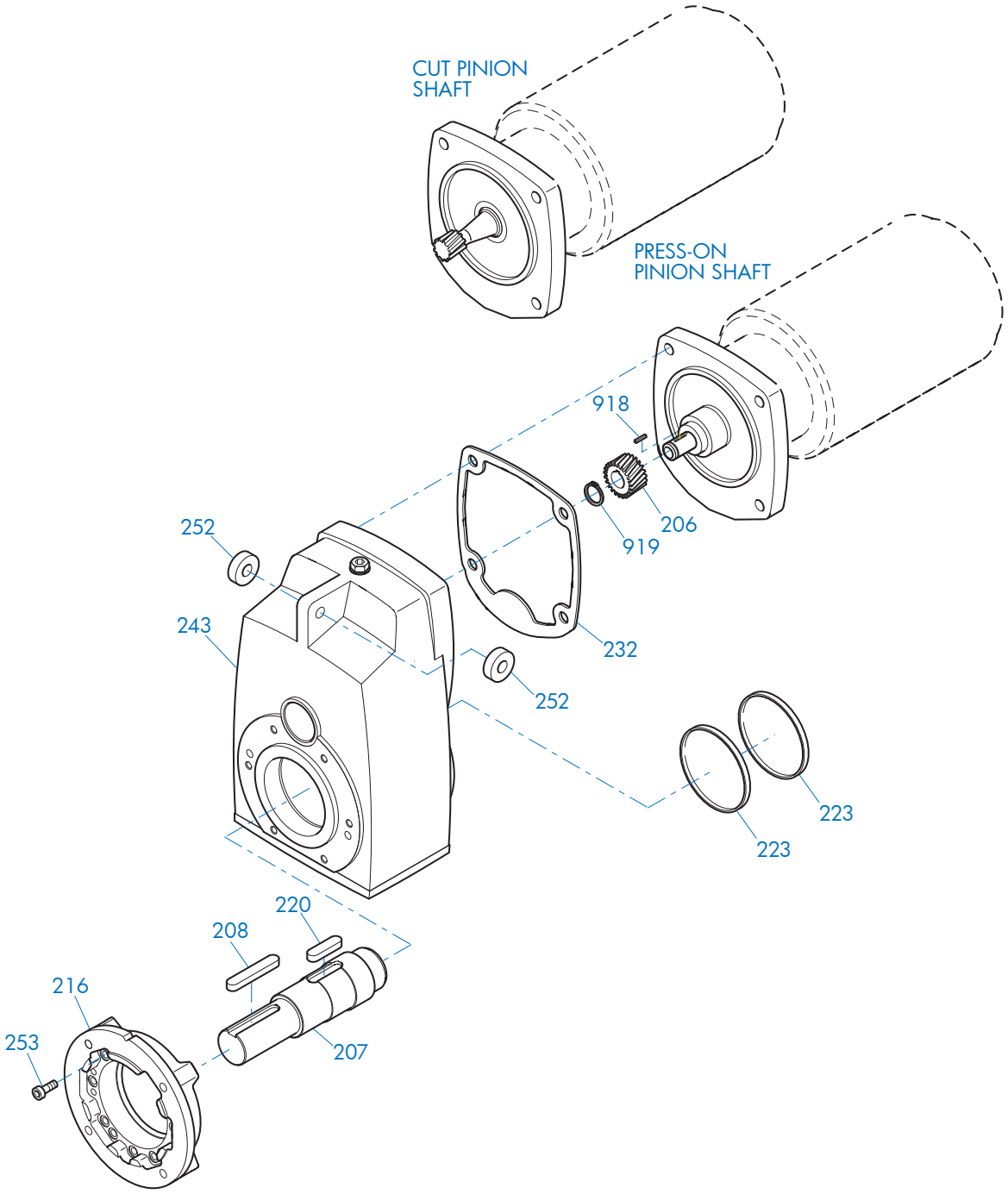


## SK 0182NB - SK 11282 & SK 1382 - SK 11382

| | | |
|---|---|---|
| 206 Pinion | 220 Key | 252 Rubber Buffer |
| 207 Output Shaft | 223 Bore Plug | 253 Bolt |
| 208 Key | 232 Gasket | 918 Key |
| 216 Flange | 243 Gearcase | 919 Snap Ring |

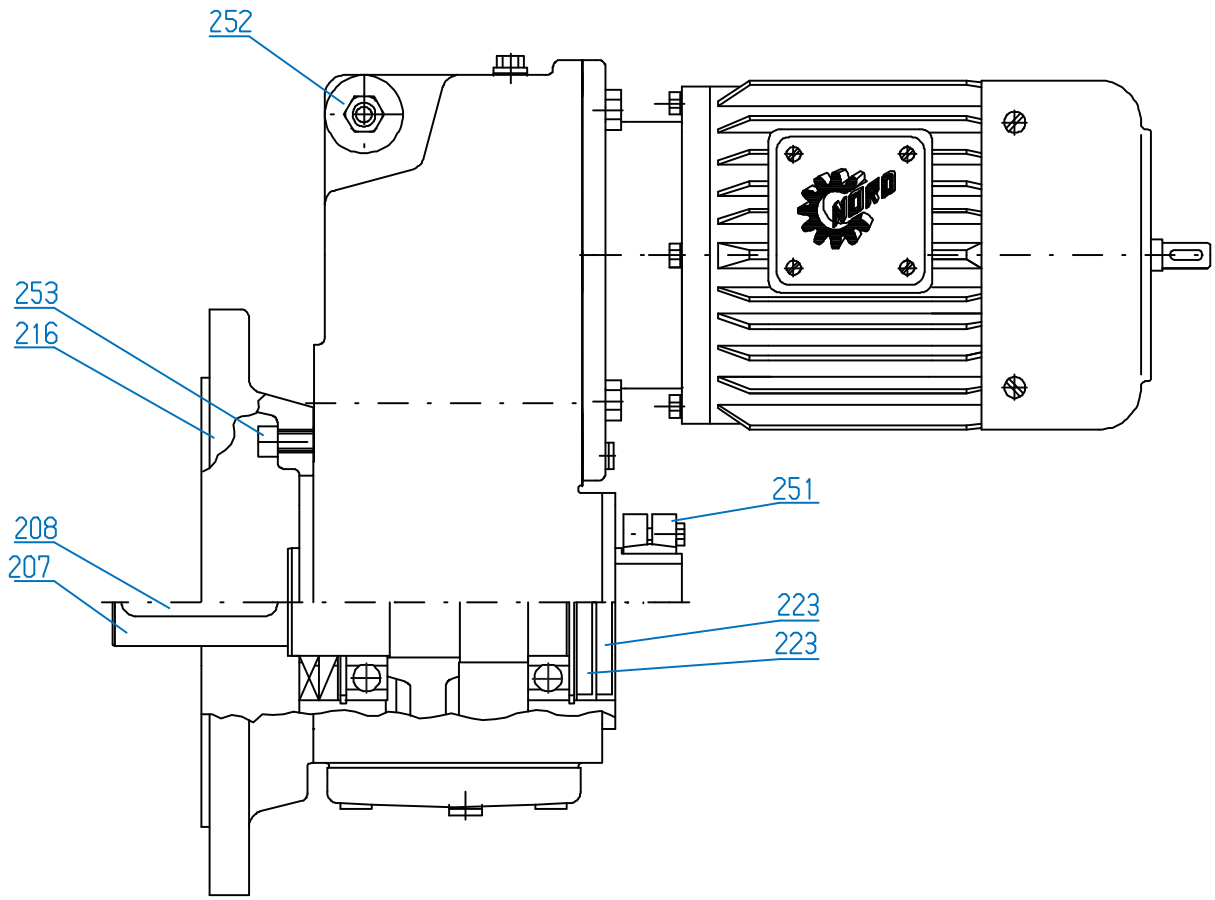


## SK 0182NB - SK 11282 & SK 1382 - SK 11382

| | | |
|---|---|---|
| 207 Output Shaft | 223 Bore Plug | 253 Bolt |
| 208 Key | 251 Shrink Disc | |
| 216 Flange | 252 Rubber Buffer | |

# SK SCP + Motor
# CEMA Drive Shaft

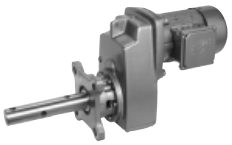



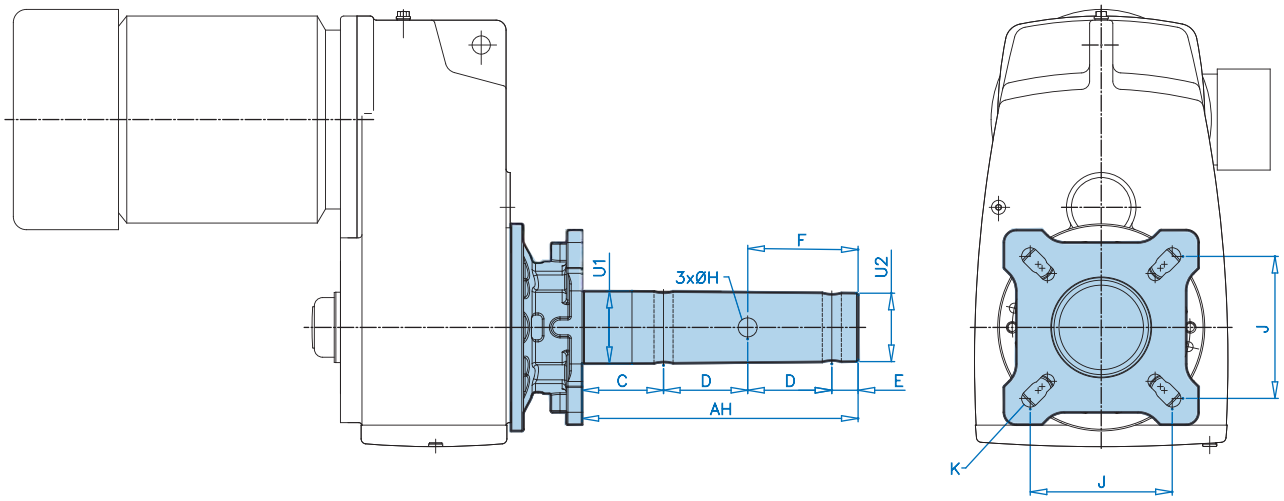


| Shaft Size | Shaft | | | | | | | | Flange | |
|---|---|---|---|---|---|---|---|---|---|---|
| | U1 | U2 | AH | C | D | E | F | H | J | K |
| **1-1/2** | 1.5 | 1.41 | 9.00 | 2.125 | 3.0 | 0.875 | 5 3/8 | 17/32 | 4 | 9/16 |
| **2** | 2.0 | 1.91 | 9.00 | 2.125 | 3.0 | 0.875 | 5 3/8 | 21/32 | 5-1/8 | 11/16 |
| **2-7/16** | 2.4375 | 2.34 | 9.6875 | 2.75 | 3.0 | 0.9375 | 5 7/16 | 21/32 | 5-5/8 | 11/16 |
| **3** | 3.0 | 2.91 | 9.875 | 2.875 | 3.0 | 1.00 | 5 1/2 | 25/32 | 6 | 13/16 |
| **3-7/16** | 3.4375 | 3.31 | 13.125 | 3.875 | 4.0 | 1.25 | 7 1/4 | 29/32 | 6-3/4 | 13/16 |

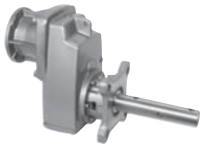

# CLINCHER™ SCP + NEMA CEMA Drive Shaft

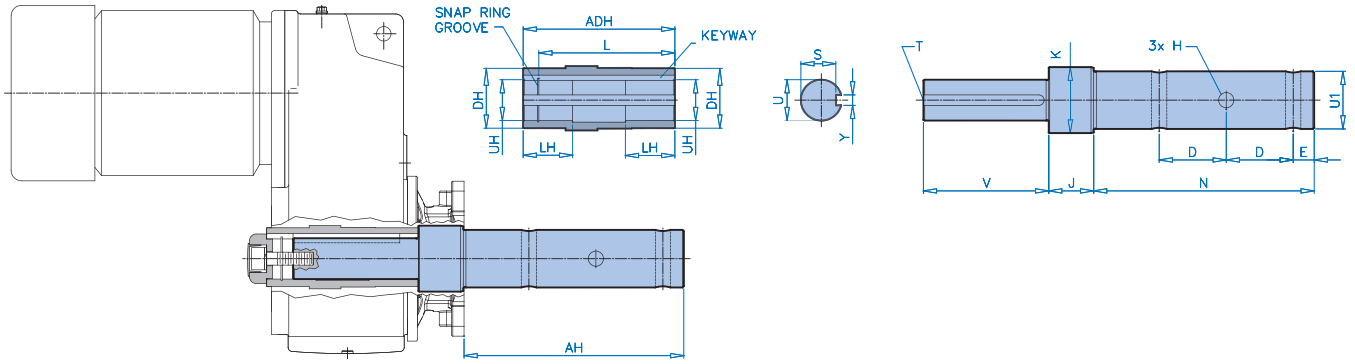




| Gear Unit Size | Hollow Shaft | | | | |
|---|---|---|---|---|---|
| | UH | ADH | L | LH | DH |
| SK 1282 SCP | 1-3/16 + 0.0008 | 4.80 | 3.85 | 1.57 | 1.77 |
| SK 2282 SCP | 1-7/16 + 0.0010 | 5.47 | 4.80 | 1.97 | 1.97 |
| SK 3282 SCP | 1-5/8 + 0.0010 | 6.85 | 6.14 | 2.28 | 2.17 |
| SK 4282 SCP | 2-1/16 + 0.0010 | 7.68 | 6.42 | 2.56 | 2.76 |
| SK 5282 SCP | 2-7/16 + 0.0012 | 9.06 | 7.58 | 2.95 | 3.35 |
| SK 6282 SCP | 2-3/4 + 0.0012 | 11.41 | 9.92 | 3.54 | 3.93 |

| | Shaft | | | | | | | | | | | | | | |
|---|---|---|---|---|---|---|---|---|---|---|---|---|---|---|---|
| | Shaft Size | U1 | AH | D | E | H | N | J | K | U | V | S | Y | T | Key |
| SK 1282 | 1-1/2 | 1-1/2 | 9 | 3 | 7/8 | 17/32 | 9.04 | 2.04 | 2.165 | 1.18752-0.0006 | 3.74 | 1.049 | 0.25 | 7/16-14 x 1 | 1/4 x 1/4 |
| | 2 | 2 | 9 | 3 | 7/8 | 21/32 | 9.04 | 2.41 | 2.559 | 1.18752-0.0006 | 3.74 | 1.049 | 0.25 | 7/16-14 x 1 | 1/4 x 1/4 |
| | 2-7/16 | 2-7/16 | 9-11/16 | 3 | 15/16 | 21/32 | 9.73 | 2.41 | 2.559 | 1.18752-0.0006 | 3.74 | 1.049 | 0.25 | 7/16-14 x 1 | 1/4 x 1/4 |
| SK 2282 | 1-1/2 | 1-1/2 | 9 | 3 | 7/8 | 17/32 | 9.04 | 2.04 | 2.165 | 1.43752-0.0006 | 4.65 | 1.225 | 0.375 | 5/8-11 x 1.5 | 3/8 x 3/8 |
| | 2 | 2 | 9 | 3 | 7/8 | 21/32 | 9.04 | 2.04 | 2.559 | 1.43752-0.0006 | 4.65 | 1.225 | 0.375 | 5/8-11 x 1.5 | 3/8 x 3/8 |
| | 2-7/16 | 2-7/16 | 9-11/16 | 3 | 15/16 | 21/32 | 9.73 | 2.41 | 2.559 | 1.43752-0.0006 | 4.65 | 1.225 | 0.375 | 5/8-11 x 1.5 | 3/8 x 3/8 |
| SK 3282 | 1-1/2 | 1-1/2 | 9 | 3 | 7/8 | 17/32 | 9.04 | 2.20 | 2.165 | 1.625-0.0006 | 5.91 | 1.478 | 0.375 | 5/8-11 x 1.5 | 3/8 x 1/4 |
| | 2 | 2 | 9 | 3 | 7/8 | 21/32 | 9.04 | 2.57 | 3.150 | 1.625-0.0006 | 5.91 | 1.478 | 0.375 | 5/8-11 x 1.5 | 3/8 x 1/4 |
| | 2-7/16 | 2-7/16 | 9-11/16 | 3 | 15/16 | 21/32 | 9.73 | 2.57 | 3.150 | 1.625-0.0006 | 5.91 | 1.478 | 0.375 | 5/8-11 x 1.5 | 3/8 x 1/4 |
| | 3 | 3 | 9-7/8 | 3 | 1 | 25/32 | 9.91 | 2.57 | 3.150 | 1.625-0.0006 | 5.91 | 1.478 | 0.375 | 5/8-11 x 1.5 | 3/8 x 1/4 |
| SK 4282 | 2 | 2 | 9 | 3 | 7/8 | 21/32 | 9.04 | 2.37 | 3.150 | 2.06252-0.0007 | 6.42 | 1.844 | 0.5 | 5/8-11 x 1.5 | 1/2 x 3/8 |
| | 2-7/16 | 2-7/16 | 9-11/16 | 3 | 15/16 | 21/32 | 9.73 | 2.37 | 3.150 | 2.06252-0.0007 | 6.42 | 1.844 | 0.5 | 5/8-11 x 1.5 | 1/2 x 3/8 |
| | 3 | 3 | 9-7/8 | 3 | 1 | 25/32 | 9.91 | 2.37 | 3.150 | 2.06252-0.0007 | 6.42 | 1.844 | 0.5 | 5/8-11 x 1.5 | 1/2 x 3/8 |
| SK 5282 | 2 | 2 | 9 | 3 | 7/8 | 21/32 | 9.04 | 2.68 | 3.937 | 2.43752-0.0007 | 7.48 | 2.084 | 0.625 | 3/4-10 x 2 | 5/8 x 5/8 |
| | 2-7/16 | 2-7/16 | 9-11/16 | 3 | 15/16 | 21/32 | 9.73 | 2.68 | 3.937 | 2.43752-0.0007 | 7.48 | 2.084 | 0.625 | 3/4-10 x 2 | 5/8 x 5/8 |
| | 3 | 3 | 9-7/8 | 3 | 1 | 25/32 | 9.91 | 2.68 | 3.937 | 2.43752-0.0007 | 7.48 | 2.084 | 0.625 | 3/4-10 x 2 | 5/8 x 5/8 |
| | 3-7/16 | 3-7/16 | 13-1/8 | 4 | 1-1/4 | 29/32 | 13.16 | 2.68 | 3.937 | 2.43752-0.0007 | 7.48 | 2.084 | 0.625 | 3/4-10 x 2 | 5/8 x 5/8 |
| SK 6282 | 3 | 3 | 9-7/8 | 3 | 1 | 25/32 | 9.91 | 2.94 | 3.937 | 2.750 - 0.0007 | 10.55 | 2.402 | 0.625 | 3/4-10 x 2 | 5/8 x 5/8 |
| | 3-7/16 | 3-7/16 | 13-1/8 | 4 | 1-1/4 | 29/32 | 13.16 | 2.94 | 3.937 | 2.750 - 0.0007 | 10.55 | 2.402 | 0.625 | 3/4-10 x 2 | 5/8 x 5/8 |

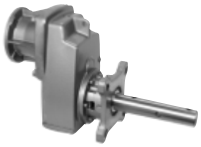

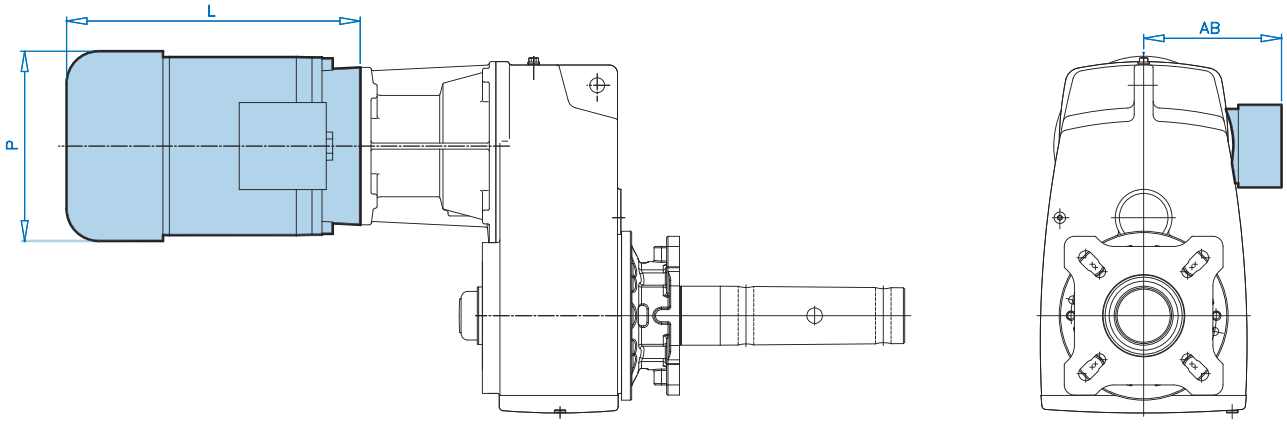




| Motor Type | AB | P | L |
|---|---|---|---|
| 63S-56C | 4.53 | 5.12 | 7.56 |
| 63L-56C | 4.53 | 5.12 | 7.56 |
| 71S-56C | 4.88 | 5.71 | 7.64 |
| 71L-56C | 4.88 | 5.71 | 7.64 |
| 80S-56C | 5.59 | 6.50 | 9.45 |
| 80L-143TC | 5.59 | 6.50 | 9.45 |
| 90S-145TC | 5.79 | 7.20 | 10.04 |
| 90L-145TC | 5.79 | 7.20 | 11.02 |
| 100L-182TC | 6.65 | 7.91 | 12.20 |
| 100L-184TC | 6.65 | 7.91 | 12.20 |
| 112M-184TC | 7.05 | 8.98 | 12.83 |
| 132S-213TC | 8.03 | 10.47 | 14.96 |
| 132M-215TC | 8.03 | 10.47 | 16.46 |

## Input NEMA

**56C**
**140TC**
**180TC**

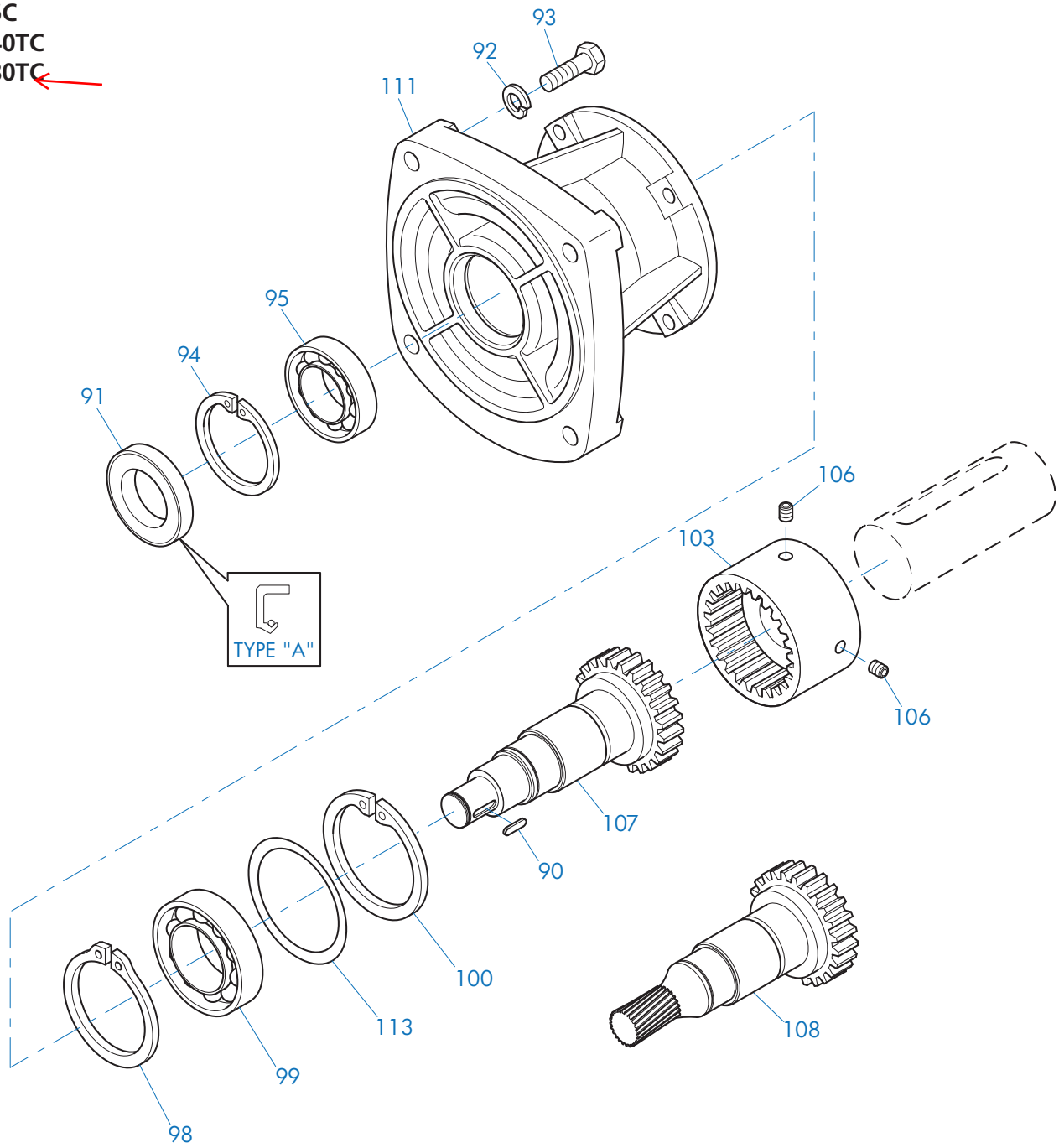


| | | | | | |
|---|---|---|---|---|---|
| 90 | Key | 95 | Anti-Friction Bearing | 106 | Set Screw |
| 91 | Oil Seal | 98 | Snap Ring | 107 | Input Shaft, Plain |
| 92 | Lock Washer | 99 | Anti-Friction Bearing | 108 | Input Shaft, Gearcut |
| 93 | Bolt | 100 | Snap Ring | 111 | NEMA Adapter |
| 94 | Snap Ring | 103 | Coupling | 113 | Shim |

## Input NEMA

**180TC**
**210TC**
**250TC**
**280TC**

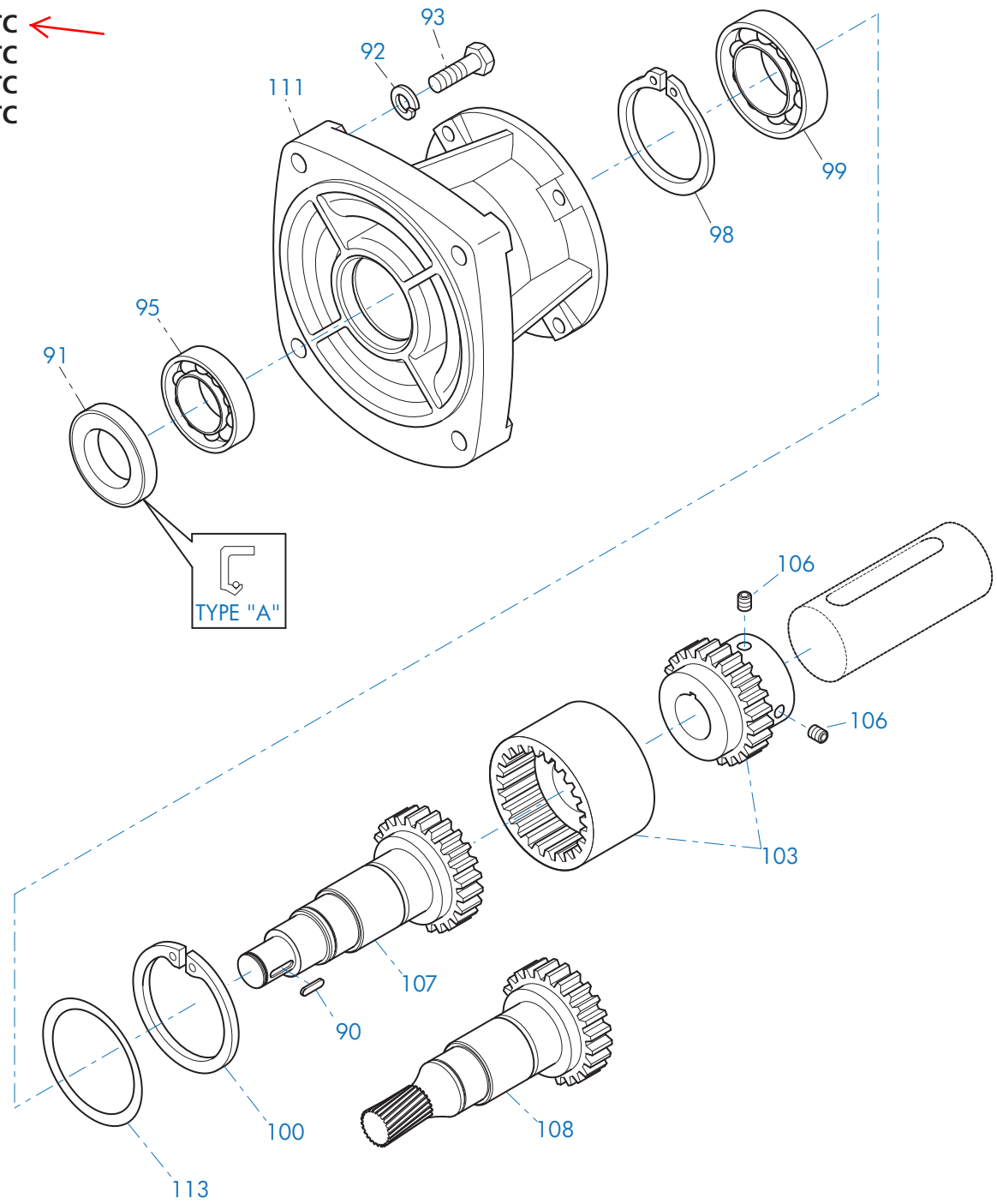


| | | | | | |
|---|---|---|---|---|---|
| 90 | Key | 98 | Snap Ring | 107 | Input Shaft, Plain |
| 91 | Oil Seal | 99 | Anti-Friction Bearing | 108 | Input Shaft, Gearcut |
| 92 | Lock Washer | 100 | Snap Ring | 111 | NEMA Adapter |
| 93 | Bolt | 103 | Coupling | 113 | Shim |
| 95 | Anti-Friction Bearing | 106 | Set screw | | |

# NORD Gearbox Inputs
# Installation and Maintenance Instructions

**BIM 1009**

**USA**

**CDN**

## Retain These Safety Instructions For Future Use

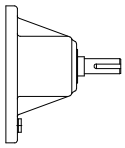

**W-STYLE**

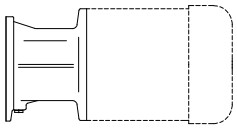

**NEMA/IEC**

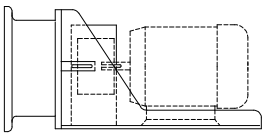

**SUGAR SCOOP**

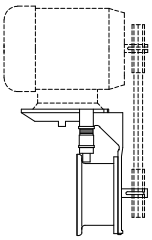

**MOTOR MOUNT PLATFORM**

**⚠ WARNING:**
**LOCK OUT POWER before any maintenance is performed. Make absolutely sure that no voltage is applied while work is being done on the gearbox.**

## NEMA/ IEC Motor Adapters

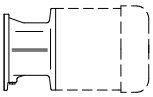

NORD Gear supplies a coupling that is to be mounted onto the motor shaft. It is important that the coupling is properly positioned. For **NEMA Input Adapters**, follow the Motor Installation Instructions below to insure full coupling engagement onto the input shaft. For **IEC Input Adapters**, the supplied coupling will mount directly against the motor shaft shoulder. No locating measurements need to be taken. *NOTE: Some of the larger IEC inputs will have a coupling spacer included to help locate the coupling. Slide the spacer against the motor shaft shoulder, slide the coupling against the spacer and tighten set screw(s).*

For the larger motor adapters (IEC160 / N250TC and larger), an **Automatic Lubricator** is supplied. **This will need to be activated at the time of startup.** For operation and activation instructions, refer to the "*Automatic Lubricator*" section.

NORD supplies three different types of couplings depending on the size of input: "J" style, "M" style and "Jaw" style coupling. Following are instructions on how to properly mount each type of coupling onto the motor. First, identify which coupling has been supplied to you by referring to the "*Couplings for the NEMA and IEC Adapters*" section on the next page. Make sure the motor flange and shaft are cleaned and verify that the proper key is in the motor shaft.

### "J" Style Coupling
### NEMA C-face Motor Installation Instructions

1. Measure the distance from the face of the input adapter to the face of the splined shaft and record that measurement.
2. Subtract 0.08" (~2mm) from the distance. ***This needs to be done so that the coupling will not be preloaded after installation!***
3. Use that measurement to locate the coupling from the face of the motor onto the shaft.
4. Once in place, tighten the set screw to lock the coupling in place. It is recommended that the key is staked or bonded (Loctite) in place to prohibit the key from vibrating out.
5. Mount the motor onto the input adapter with customer supplied bolts. Make sure that the coupling from the adapter and the motor engage securely. Use lock washers or Loctite to prohibit bolts from becoming loose from vibration.

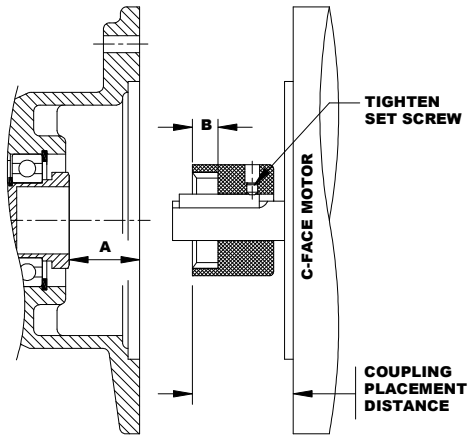


### "M" Style Coupling
### NEMA C-face Motor Installation Instructions

1. Measure the distance from the face of the input adapter to the face of the splined shaft and record that measurement.
2. Subtract 0.31" (~8mm) from the distance. ***This needs to be done so that the coupling will not be preloaded after installation!***
3. Use that measurement to locate the coupling from the face of the motor onto the shaft.
4. Once in place, tighten the set screw to lock the coupling in place. It is recommended that the key is staked or bonded (Loctite) in place to prohibit the key from vibrating out.
5. Mount the motor onto the input adapter with customer supplied bolts. Make sure that the coupling from the adapter and the motor engage securely. Use lock washers or Loctite to prohibit bolts from becoming loose from vibration.

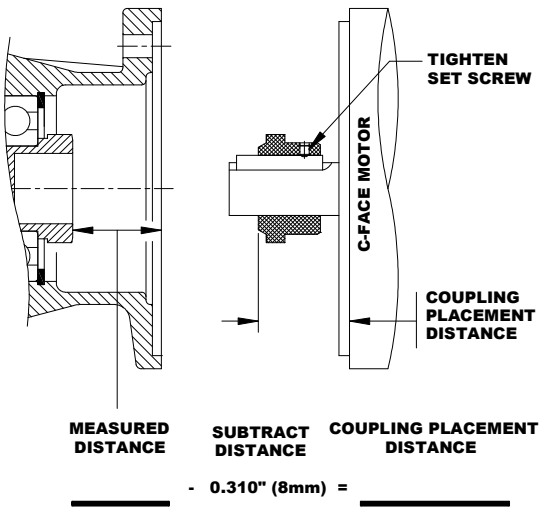

## Couplings for the NEMA and IEC Adapters

Depending on the size of the input adapter to the gearbox, NORD Gear supplies two styles of couplings - BoWex® (gear tooth) and Rotex® (jaw) couplings.

### BoWex® Couplings

NORD C-face adapter input shafts have a machined spline on the end. NORD incorporates two styles of BoWex® couplings, the "J" and "M" styles. The "J" style is a one-piece coupling with a metal hub and nylon spline. The "M" style is a two-piece coupling – the metal hub and a nylon sleeve. Nylon and steel components allow them to operate in high ambient temperatures without lubrication or maintenance.

- Nylon sleeves resist dirt, moisture, most chemicals and petroleum products
- No lubrication required
- Operating Conditions: -22°F - 195°F (-30°C - 90°C)
- Higher temperature coupling sleeve available up to 250°F (120°C)
- Special bore available

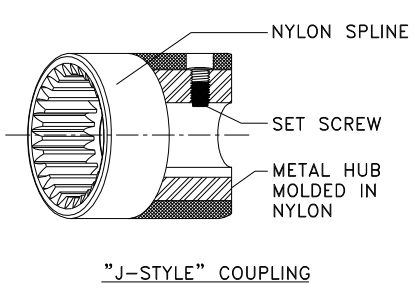


"J–STYLE" COUPLING

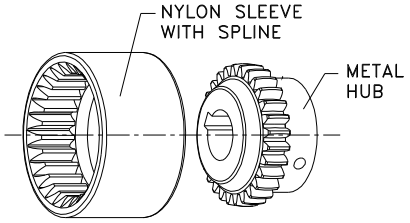


"M–STYLE" COUPLING

### BoWex® Mechanical Ratings

**"J" Style**

| Coupling Type | Available Bore Sizes | Cont. / Peak Torque | Input |
|---|---|---|---|
| J14 | 11, 14 mm<br>5/8 in. | 10 / 20 Nm<br>89 / 177 lb-in | IEC 63, 71<br>NEMA 56C |
| J24 | 19, 24 mm<br>5/8, 7/8 in | 20 / 40 Nm<br>177 / 354 lb-in | IEC 80, 90<br>NEMA 56C,140TC |
| J28 | 28mm<br>1-1/8 in | 45 / 90 Nm<br>399 / 797 lb-in | IEC 100, 112<br>NEMA 180TC |

**"M" Style**

| Coupling Type | Available Bore Sizes | Cont. / Peak Torque | Input |
|---|---|---|---|
| M14/M24/M28 | Same as "J" style | Same as "J" style | Same as "J" style |
| M38 | 38 mm<br>1-1/8, 1-3/8 in. | 80 / 160 Nm<br>708 / 1,416 lb-in | IEC 132<br>NEMA 180TC, 210TC |
| M42 | 42 mm<br>1-5/8 in | 100 / 200 Nm<br>885 / 1,770 lb-in | IEC 160<br>NEMA 250TC |
| M48 | 48 mm<br>1-7/8 in | 140 / 280 Nm<br>1240 / 2,478 lb-in | IEC 180<br>NEMA 280TC |

## Rotex® Couplings

The cast iron jaw type couplings have an integral urethane "spider" that provides smooth transmission of the motor torque. A set screw on the coupling prohibits axial movement along the motor shaft.

- Excellent shock and vibration dampening
- Excellent resistance to oils and most chemicals
- No metal-to-metal contact
- Operating Conditions: -40°F - 195°F (-40°C - 90°C)
- Higher temperature material (Hytrel) spider available up to 230°F (110°C)
- Special bores available

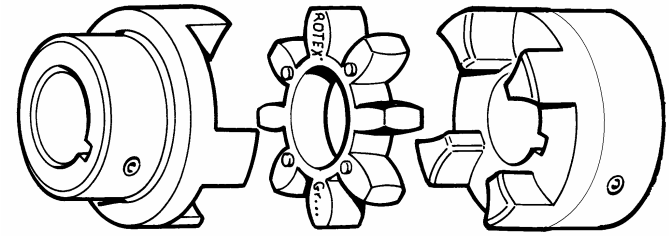


**Hub Design 1** **Spider** **Hub Design 1a**

### Rotex® Mechanical Ratings

| Coupling Type | Available Bore Sizes | Continuous / Peak Torque | Inputs Used With | Spider |
|---|---|---|---|---|
| R19 | 14, 19 mm | 17 / 34 Nm<br>150 / 300 lb-in | SEK/SEP 100 | Urethane<br>98 Shore A Hardness<br>Color: Red |
| R24 | 19, 24 mm | 60 / 120 Nm<br>530 / 1,060 lb-in | SEK/SEP 100, 130 | |
| R28 | 32, 38 mm | 95 / 190 Nm<br>840 / 1,680 lb-in | SEK/SEP 165, 215 | Urethane<br>92 Shore A Hardness<br>Color: Yellow |
| R38 | 1.89" (48mm)<br>Max Bore | 190 / 382 Nm<br>1,680 / 3,380 lb-in | - | |
| R42 | 2.44" (62mm)<br>Max Bore | 310 / 620 Nm<br>2,740 / 5,480 lb-in | - | |
| R48 | 42, 48 mm<br>1-5/8, 1-7/8 in | 310 / 620 Nm<br>2,740 / 5,485 lb-in | IEC 160, 180<br>NEMA 250T, 280T<br>SEK/SEP 300, 215 | |
| R65 | 60 mm<br>2-1/8, 2-3/8 in | 625 / 1,250 Nm<br>5,530 / 11,060 lb-in | IEC 225<br>NEMA 320T, 360T | |
| R90 | 65, 75, 80 mm<br>2-1/8, 2-3/8 in | 2,400 / 4,800 Nm<br>21,240 / 42,480 lb-in | IEC 250, 280, 315<br>NEMA 360T, 400TS, 440TS | |

**Jaw" Style Coupling**
**NEMA C-face Installation Instructions**

1. Measure the distance from the face of the input adapter to the face of the coupling as shown and record that measurement.
2. Subtract the "X" dimension from the measured distance. ***This needs to be done so that the coupling will not be preloaded after installation!***
3. Use that measurement to locate the coupling from the face of the motor onto the shaft.
4. The metal portion of the coupling should be heated up prior to assembly, generally 250°F to 300°F (120°C to 150°C). ***DO NOT HEAT THE URETHANE SPIDER.**
5. Once in place, tighten the setscrew to lock coupling in place. Let the coupling cool down before placing the spider into the jaws. It is recommended that the key is staked or bonded (Loctite) in place to prohibit the key from vibrating out.
6. Mount the motor onto the input adapter with customer supplied bolts. Make sure that the coupling from the adapter and the motor engage securely. Use lock washers or Loctite to prohibit bolts from becoming loose from vibration.

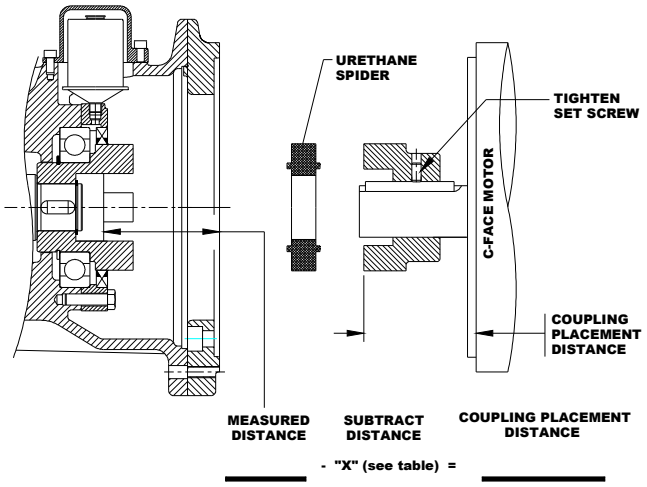


| Coupling Size | "X" *(Subtract this value from measured distance)* |
|---|---|
| R14 | 0.06" (1.5mm) |
| R19 & R24 | 0.08" (2.0mm) |
| R28 | 0.10" (2.5mm) |
| R38/42 | 0.12" (3.0mm) |
| R48 | 0.14" (3.5mm) |
| R65 | 0.18" (4.5mm) |
| R90 | 0.22" (5.5mm) |

## Automatic Lubricator

NORD Gear supplies the larger C-face motor adapters with an Automatic Lubricator. This will provide additional grease lubrication to the outboard bearing. As the pressure from the lubricator canistor pushes the new grease into the bearing, the old grease will flow into the cavity towards the gearbox. When the cavity is filled with the "used" grease, the pressure from the new grease pushes the used grease into the gear box thru the input seal. The old grease mixes with the oil but will not cause harm to the gearing or bearings. Regular oil changes with the gearbox will remove the old grease which has been pushed into the gearbox. Refer to the PARTS LISTS for inputs equipped with the Automatic Lubricator.




**Principle of Operation**

After tightening the plastic activating screw, the Zinc-Molybdenum pellet drops into the Citric Acid electrolyte. The chemical reaction builds up pressure that causes the piston to move forward. The lubricant is continuously injected into the lubrication point. At the end of the lubrication period, the discharge indicator cap becomes clearly visible indicating the lubricant has been fully discharged. The lubrication period is determined and defined by the color of the activating screw.

For the bearings used in NORD Gear products, a 12-month lubrication period is standard, indicated by a **gray activating screw**. This applies for an average operating time of 8 hours/day. For longer operating times, the replacement interval decreases to 6 months. Lubrication canisters are also available for cold temperature applications. Contact NORD Gear for more information.

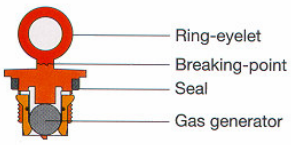


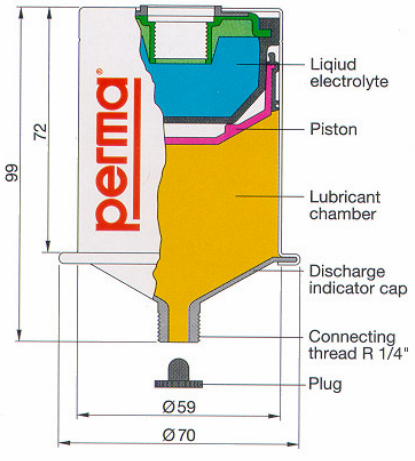


**Assembly Instructions**

1. Remove the plug from the male connecting thread.
2. Screw male fitting into bearing housing within Input Adapter.
3. Insert activating screw into end of canister. Tighten until the ring-eyelet breaks off.
4. Replace every twelve months.

**Perma Classic Specifications**

| | |
|---|---|
| Standard Lubricant | Klüber Petamo GHY 133 (synthetic) |
| NORD Part Number | 28301000 |
| Lubricant Volume | 120 mL (4 oz.) |
| Operating Temperature Range★ | -30°C to 150°C (-22°F to 302°F) |
| Discharge Time | 12 months at 25°C (77°F) |
| Operating Position | Independent of mounting position, operates even under water. |
| Male Connecting Thread | 1/4" NPT |

★ *The temperature range shown is for the Perma Classic Lubricator only and does not apply to other components and/or lubricants within the gear reducer.*

**MK Motor Mount Platform**

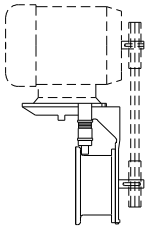

For proper installation of the belt drive, consult the V-belts manufacturer. NORD MK motor mounts are adjustable in two ways. Slotted holes are provided at the input cylinder for the initial height adjustment. There are two fine adjustments at the Yolk to increase/decrease tension. Two Spanner head wrenches will be needed to tighten/loosen the fine adjustments. The four bolts holding the motor platform to the input cylinder must be loosened in order to use the fine adjustments.

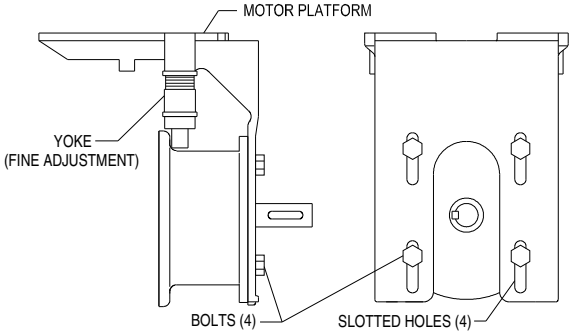


The motor mounting platform has tapped holes to accept the foot pattern of the standard footed NEMA or IEC motor. All MK mounting input shaft diameters are metric.

Align the sheaves or sprockets square and parallel by placing a straight edge across their faces. Alignment of bushed sheaves and sprockets should be checked after bushings have been tightened. Check horizontal shaft alignment by placing a level vertically against the face of the sheave or sprocket. Adjust belt or chain tension per the manufacturer's specified procedure. After a period of operation, recheck alignment and adjust as required.

**WARNING:**

**NORD Gear does not furnish the safety guards for the traction mechanism. It is the responsibility of the customer to install a safety guard to conform to OSHA standards.**

**Solid Shaft (W-Type)**

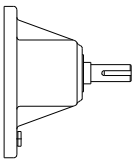

The shaft will be inch or metric, depending on how the unit was ordered. Measure and verify the shaft before mounting anything on the shaft. Below are the tolerances used for the solid shafts.

All solid input shafts have a tapped hole on the end for customer use. The chart below indicated the tap size for each shaft. Keys are also supplied with solid shaft.

Outboard pinion and sprocket fits should be as recommended by the manufacturer. The components should be heated according to the manufacturer's recommendations, generally 250°F to 300°F, (120°C to 150°C) before assembling to the shaft. The coupling hub or sprocket should be mounted per Figure 1.

On larger gearboxes (SK62, SK6282, SK9062.1), there is grease fitting on the W-Type inputs to grease the outboard bearing. About 0.75 ounce (20 - 25g) of synthetic grease should be added every 4,000 service hours. There is a sticker adjacent to the grease fitting detailing which grease should be used. **USE ONLY SYNTHETIC GREASE – NOT MINERAL.**

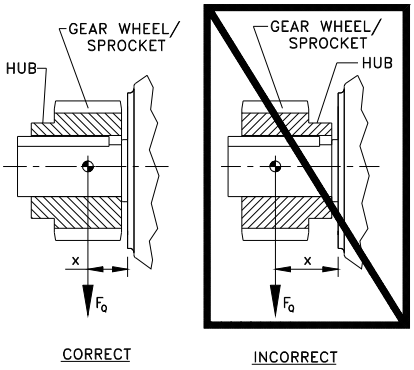


**Figure 1.** Mounting a coupling or a sprocket on a shaft.

**Output and Input Shaft Diameter Tolerance**

Metric (mm)

≤ ∅ 18 = +0.012/+0.001
> ∅ 18 ≤ ∅ 30 = +0.015/+0.002
> ∅ 30 ≤ ∅ 50 = +0.018/+0.002
> ∅ 50 ≤ ∅ 80 = +0.030/+0.011
> ∅ 80 ≤ ∅ 120 = +0.035/+0.013
> ∅ 120 ≤ ∅ 180 = +0.040/+0.015

Inch

≤ ∅ 1.750 = +0.0000/-0.0005
> ∅ 1.750 = +0.0000/-0.0010

**Solid Shaft Drill and Tap Shaft End**

Metric (mm)

≤ ∅ 16 = M5
> ∅ 16 ≤ ∅ 21 = M6
> ∅ 21 ≤ ∅ 24 = M8
> ∅ 24 ≤ ∅ 30 = M10
> ∅ 30 ≤ ∅ 38 = M12
> ∅ 38 ≤ ∅ 50 = M16
> ∅ 50 ≤ ∅ 85 = M20
> ∅ 85 ≤ ∅ 130 = M24

Inch

≤ ∅ 0.500 = #10-24 x 0.4 deep
> ∅ 0.500 ≤ ∅ 0.875 = ¼-20 x 0.6 deep
> ∅ 0.875 ≤ ∅ 0.938 = 5/16-18 x 0.7 deep
> ∅ 0.938 ≤ ∅ 1.100 = 3/8-16 x 0.9 deep
> ∅ 1.100 ≤ ∅ 1.300 = 1/2-13 x 1.1 deep
> ∅ 1.300 ≤ ∅ 1.875 = 5/8-11 x 1.4 deep
> ∅ 1.875 ≤ ∅ 3.500 = 3/4-10 x 1.7 deep
> ∅ 3.500 = 1-8 x 2.2 deep

**Sugar Scoop**

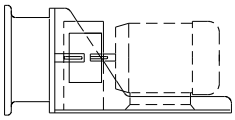

Each sugar scoop includes the coupling for the motor and the coupling guard. The coupling guard must be mounted when the machine is in use. NORD's standard supplied coupling is the jaw type. Make sure the set screw is tighten after coupling is in place. The coupling hub or sprocket should be mounted per Figure 2.

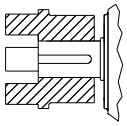

**Figure 2.** Place coupling flush with end of motor shaft and tighten setscrew.

Motor Installation Instructions

1. Make sure that the motor shaft is clean
2. Mount the coupling onto the motor. Place the coupling so that the inside face is flush with the end of the motor shaft (see Figure 2). The coupling should be heated prior to assembly, generally 250°F to 300°F (120°C to 150°C). ***DO NOT HEAT THE URETHANE SPIDER.** Once in place, tighten the setscrew into the motor shaft to lock coupling in place.
3. Let the coupling cool down before mounting the spider into the jaws. The spider should not be under axial compression when installed.
4. Place the motor onto the scoop and engage the couplings together. The scoop has slotted holes for axial alignment.

****The motor and input shaft must be aligned in all directions to assure proper operation of the system.**

5. Before tightening the motor feet down, check the coupling alignment with a straight edge or a level. Maximum parallel misalignment should not exceed 0.015" and angular misalignment should be held to 1.5°. Shim the motor feet to align the couplings. Careful alignment extends the life of not only the coupling but all the components of the drive train.
6. Once aligned, tighten the bolts on the feet to the scoop. Check the coupling alignment again due to compression of the shims.
7. Mount the supplied coupling guard to the scoop.
8. After a period of operation, recheck alignment and adjust as required.

NOTES

## PARTS LIST
## C-FACE INPUTS FOR "UNICASE" GEARBOXES

**NEMA 56C - 180TC**
**IEC 63 – IEC 112**

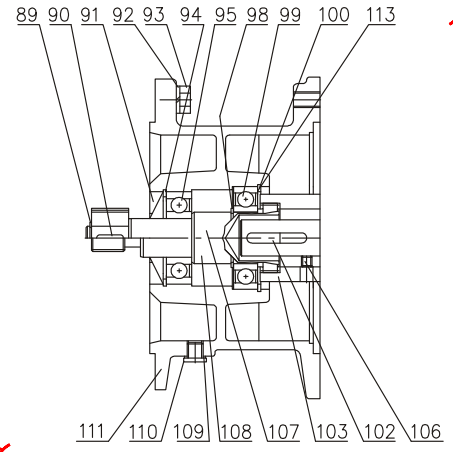


**NEMA 210TC - 280TC**
**IEC 132 – IEC 180**

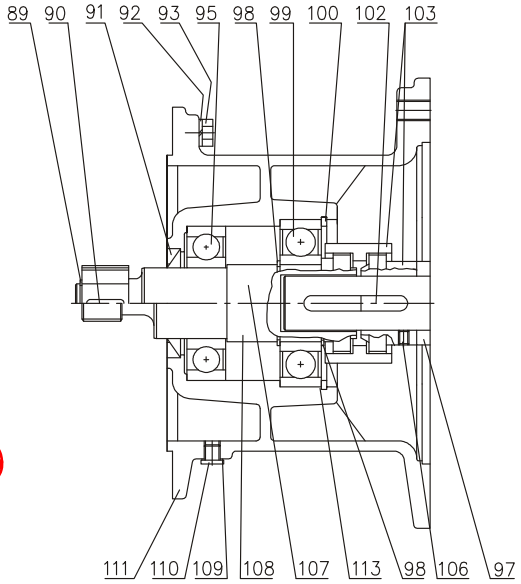


| | |
|---|---|
| 89 | Circlip |
| 90 | Key |
| 91 | Shaft seal |
| 92 | Washer |
| 93 | Hexagon screw |
| 94 | Circlip |
| 95 | Clutch shaft bearing |
| 97 | Spacer |
| 98 | Circlip |
| 99 | Clutch shaft bearing |
| 100 | Circlip |
| 101 | Key |
| 102 | Key |
| 103 | Coupling |
| 104 | Coupling |
| 105 | Coupling |
| 106 | Set screw |
| 107 | Clutch shaft |
| 108 | Clutch pinion shaft |
| 109 | Seal |
| 110 | Oil-plug |
| 111 | NEMA / IEC Adapter |
| 112 | Oil flinger |
| 113 | Shim |
| 140 | Shim |
| 141 | Shim |
| 142 | Shim |
| 143 | Socket head screw |
| 144 | Cover |
| 145 | Automatic lubricator |
| 146 | Adapter |
| 147 | Bearing cover |
| 148 | Hexagon screw |
| 149 | Washer |
| 150 | Shaft seal |

**NEMA 250TC – 400TC**
**IEC 160 – IEC 315**

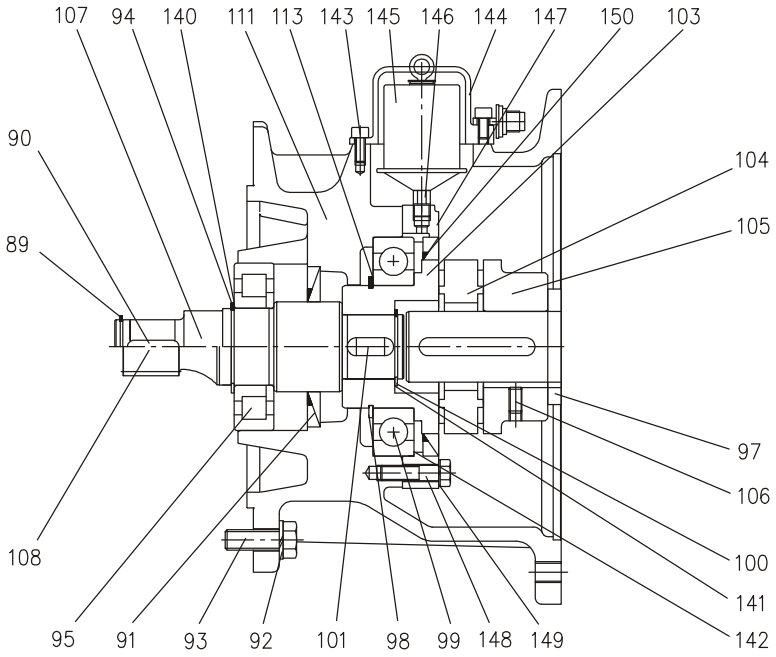


### RECOMMENDED SPARE PARTS

Bearings – *all* Gaskets – *all* Shims – *all*
Seals – *all* Seal Plugs – *all*

**IMPORTANT!**

When ordering parts, it is necessary to have the ***NORD SERIAL NUMBER*** from the unit the parts are for. The serial number will dictate the correct parts for that particular unit. The gearbox nameplate will have the serial number on it.

# TROUBLESHOOTING

## Troubleshooting

This section identifies some of the most common issues involved with NORD Gear speed reducers , and provides recommendations to assist you in defining and answering your questions as you work with our products. You may also contact our Engineering/Application departments if your questions are not answered in the table below.

| Problem With the Reducer | | Possible Causes | Suggested Remedy |
|---|---|---|---|
| **Runs Hot** | Overloading | Load exceeds the capacity of the reducer | Check rated capacity of reducer, replace with unit of sufficient capacity or reduce the load. |
| | Improper lubrication | Insufficient lubrication | Check lubricant level and adjust up to recommended levels |
| | | Excessive lubrication | Check lubricant level and adjust down to recommended levels. |
| | | Wrong lubrication | Flush out and refill with correct lubricant as recommended |
| **Runs Noisy** | Loose foundation bolts | Weak mounting structure | Inspect mounting of reducer. Tighten loose bolts and/or reinforce mounting and structure. |
| | | Loose hold down bolts | Tighten bolts |
| | Failure of bearings | May be due to lack of lubricant | Replace bearing. Clean and flush reducer and fill with recommended lubricant. |
| | | Overload | Check rated capacity of reducer. |
| | Insufficient lubricant | Level of lubricant in reducer not properly maintained. | Check lubricant level and adjust to factory recommended level. |
| **Output shaft does not turn** | Internal parts are broken or missing | Overloading of reducer can cause damage | Replace broken parts. Check rated capacity of reducer. |
| | | Key missing or sheared off on input shaft. | Replace key. |
| | | Coupling loose or disconnected | Properly allign reducer and coupling. Tighten coupling. |
| **Oil Leakage** | Worn seals | Caused by dirt or grit entering seal. | Replace seals. Autovent may be clogged. Replace or clean. |
| | Unit runs hot or leaks | Overfilled reducer | Check lubricant level and adjust to recommended level. |
| | | Vent clogged. | Clean or replace, being sure to prevent any dirt from falling into the reducer. |
| | Incorrect fill level | Improper mounting position, such as wall or ceiling mount of horizontal reducer. | Check mounting position on the name tag & verify with mounting chart in manual. |

© Siemens AG 2012



## SITRANS WM100

### Overview



SITRANS WM100 is a heavy-duty zero-speed alarm switch. This non-contacting unit provides cost-effective equipment protection even in the harshest conditions.

### Benefits

- Up to 100 mm (4 inch) gap between SITRANS WM100 and targets
- Rugged, low maintenance suitable for tough environments
- 1 SPDT Form C relay contact
- Provides cost-effective protection
- Visual indication of target triggered pulse

### Application

This rugged unit is impervious to dust, dirt, build-up and moisture and is ideal for such primary industries as mining, aggregate, and cement. Operating where other systems are prone to failure, the non-contacting design eliminates the need for lubricating, cleaning and part replacement. Downtime and clean-up expenses associated with conveying equipment failure are reduced by the SITRANS WM100. It alarms to minimize spillage, prevent extensive damage or even fire caused by belt slippage at the head pulley and warn against conveyor malfunction.

The SITRANS WM100 has built-in selectable start delays and 1 Form C relay contact. With an aluminum body, it operates from -40 to +60 °C (-40 to +140 °F).

- Key Applications: tail pulleys, driven pulleys, motor shaft sensing, screw conveyor flights, bucket elevators

### Design

***Mounting***

The WM100 probe should be mounted, using the supplied mounting flange, onto a vibration-free structure. The gap between the probe and the target should be sufficient such that there is no danger of the target damaging the probe. The maximum allowable gap is 100 mm (4 inch) from the face of the target to the face of the probe for 4.5 x 4.5 mm (3/16 x 3/16 inch) keyway. The WM100 is sensitive to lateral disturbances to its magnetic field. If the WM100 is responding to motion from an interfering target, move the WM100 or install a ferrous plate (steel) as a shield between the WM100 and the interfering target. Where possible, the probe should be mounted such that the cable inlet is pointing downward to avoid accumulation of condensation in the casing. Connection of the probe should be made via flexible conduit for easier removal or adjustment of the probe.

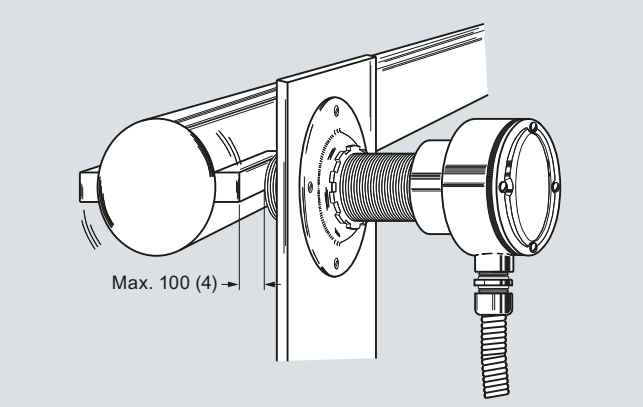


SITRANS WM100 mounting, dimensions in mm (inch)

### Technical specifications

| | |
|---|---|
| **Mode of operation** | |
| Measuring principle | Disruption of magnetic field by ferrous target |
| Typical application | Monitors absence or presence of motion in harsh conditions |
| **Output** | |
| Contact | 1 SPDT Form C dry relay contact, rated 5 A at 250 V AC, fail-safe operation |
| Time delay | Start up: 10 ... 14 seconds (5 ... 7 seconds with 12 ppm jumper installed) |
| Zero Speed (selected via a common jumper) | • 5 seconds ± 1 (minimum speed 10 ... 15 ppm) or<br>• 10 seconds ± 2 (minimum speed 5 ... 7.5 ppm) |
| **Rated operating conditions** | |
| Operating temperature | -40 ... +60 °C (-40 ... +140 °F) |
| **Design** | |
| Probe body | Aluminum |
| Process mounting | 2" NPSL |
| Connection box | Aluminum, ¾" NPT conduit entrance, 5 screw terminals plus grounding terminal for electrical connection, max. 12 AWG (3.30 $mm^2$) wire size |
| Gasketing | Neoprene |
| Display | Red LED for verification of pulses |
| Enclosure rating | Type NEMA 4x, 6, IP67 |
| **Dynamic range** | Minimum 6 or 12 pulses per minute<br>Maximum 3 000 pulses per minute |
| **Shipping weight** | 2 kg (4.4 lb) |
| **Power supply** | • 115 V AC/50 ... 60 Hz, 7 VA<br>• 230 V AC/50 ... 60 Hz, 7 VA<br>• ± 10 % of rated voltage |
| **Certificates and approvals** | $CSA_{US/C}$, CE, C-TICK |

© Siemens AG 2012



| Selection and Ordering data | Order No. |
|---|---|
| **SITRANS WM100** | **7MH7158 -** |
| A heavy-duty zero-speed alarm switch that does not require a controller. | **0 ■ A 0 0** |
| **Model** | |
| 115 V AC | **A** |
| 230 V AC | **B** |

| Selection and Ordering data | Order code |
|---|---|
| ***Further designs*** | |
| Please add **"-Z"** to Order No. and specify Order code(s). | |
| Manufacturer's Test Certificate: According to EN 10204-2.2 | **C11** |
| Acrylic coated, stainless steel tag [13 x 45 mm (0.5 x 1.75 inch)]: Measuring-point number/identification (max. 16 characters), specify in plain text | **Y17** |
| ***Operating Instructions*** | Order No. |
| SITRANS WM100, English | **7ML1998-5MW01** |
| SITRANS WM100, German | **7ML1998-5MW31** |
| Note: The operating instructions should be ordered as a separate item on the order. This device is shipped with the Siemens Milltronics manual CD containing the complete operating instructions library. | |
| Locknut, for WM100 and Millpulse 600 | **7MH7723-1CR** |
| Mounting flange, for WM100 and Millpulse 600 | **7MH7723-1CS** |
| Motion cable gland adaptor kit | **7MH7723-1JN** |

## Dimensional drawings

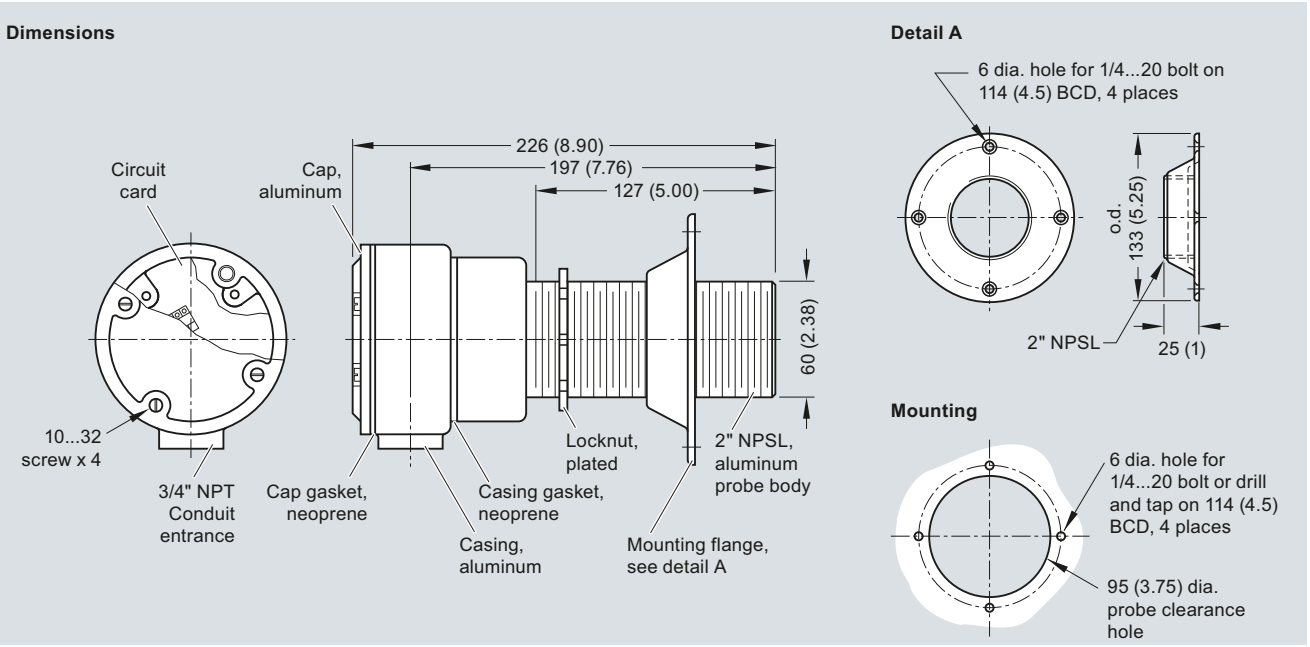


SITRANS WM100 mounting, dimensions in mm (inch)

6

© Siemens AG 2012



## SITRANS WM100

### Schematics

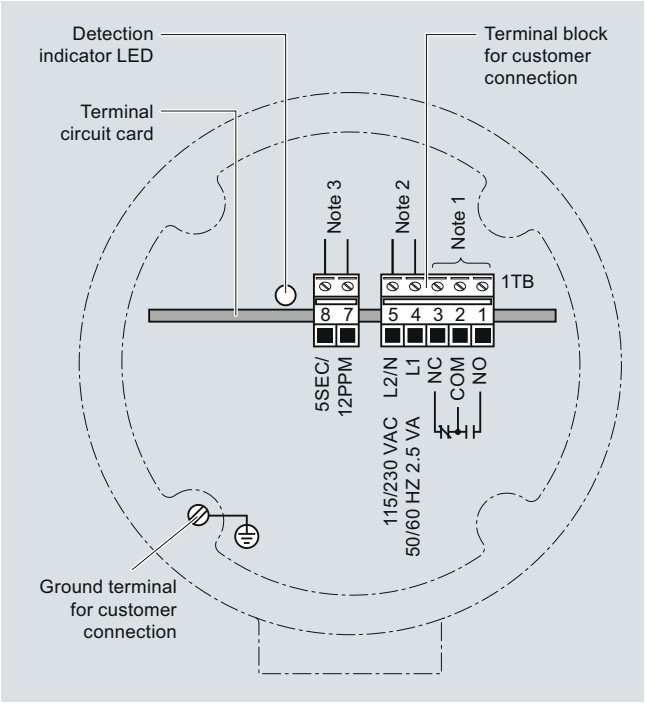


SITRANS WM100 wiring

Notes:

1. Dry contacts shown in de-energized (alarm or shelf) state.
2. SITRANS WM100 is manufactured for either 115 or 230 V AC operation. Check WM100 nameplate for applicable voltage. Correct voltage must be supplied. Voltages lower than specified will result in an inoperative condition. Voltages higher than specified will severely damage unit.
3. For 5 second time delay and a minimum 12 ppm range, connect jumper across terminals 7 and 8. Without a jumper, the default is a 10 second time delay and a minimum 6 ppm range.

# SECTION IV

## ASSEMBLY DRAWINGS

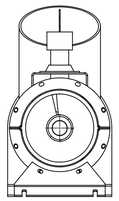

SECTION A-A

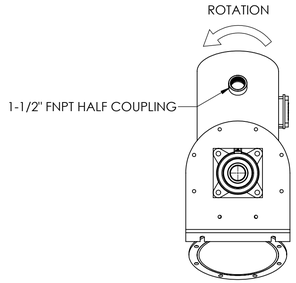


INLET END

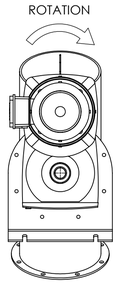


DISCHARGE / DRIVE END

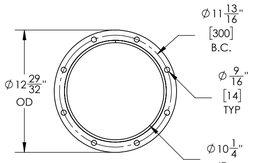


DISCHARGE FLANGE
SCALE 1 : 8

SPECIFICATIONS:
QTY: TWO (2), 9" DIA X 15'-0" LONG 30 DEG. INCLINED SCREW FEEDER WITH A 3 HP @ 34 RPM DRIVE UNIT TO CONVEY 221 CFH, OF A FLOOD FED CAUSTIC SODA AND SODIUM THIOSULPHATE @ 60 TO 75 LB/FT$^3$, SHOP ASSEMBLED AND CONSISTING OF:

NOTES:
- ALL 316SS CONSTRUCTION UNLESS NOTED
- INTERIOR (PRODUCT CONTACT) FINISH EXCL. SCREW: CEMA II WELDS, SURFACE FINISH AS-IS
- SCREW FINISH: CEMA II STD. SKIP WELDING, SURFACES AS-IS
- EXTERIOR FINISH: CEMA II WELDS, SURFACES TO BE SSPC-SP6 COMMERCIAL BLAST CLEAN
- ALL FABRICATED GUARDS TO BE PAINTED SAFETY YELLOW
- ALL PURCHASED ITEMS TO HAVE MANUFACTURERS STD. FINISH
- 18-8 SS ASSEMBLY BOLTS
- 1/8" THK CLOSED CELL NEOPRENE COVER GASKETS
- SILICONE CAULK TROUGH FLANGE GASKETS
- CEMA SAFETY LABELS
- SERIAL NUMBER(S): 30014715-01 THRU 02

| ITEM NO. | QTY. EACH | MAT'L | DESCRIPTION |
|---|---|---|---|
| 1 | 2 | 316SS | 9TO10-F, SPLIT TUBULAR TROUGH HALF, 9" DIA X .135 THK X 60" LONG |
| 2 | 2 | 316SS | 9TO10-F, SPLIT TUBULAR TROUGH HALF, 9" DIA X .135 THK X 120" LONG |
| 3 | 8 | 316SS | 9FO-F-GA, END FLANGE, SPLIT TUBULAR TROUGH, 9" DIA X .250 THK |
| 4 | 1 | 316SS | INCLINED ROUND DISCHARGE, FLANGE TO MATE WITH V1FS250 BUTTERFLY VALVE |
| 5 | 2 | 316SS | 9EF4-O-BB, TROUGH END, TUBULAR, WITH FOOT, 9" SIZE X .250 THK., 2" SHAFT, DRILLED FOR BALL BEARING |
| 6 | 1 | 316SS | 9S412, SECTIONAL SCREW, 9" DIA X 178" LG, 3/16" THK, RH VARIABLE PITCH WITH 9" BARE PIPE, MOUNTED ON A 3" SCH. 40 PIPE, BUSHED AND DRILLED ON BOTH ENDS FOR 2", 2 BOLT SHAFT, FLIGHTING: FIRST 12" TO BE 6" PITCH, REMAINDER FULL PITCH |
| 7 | 1 | 316SS | 4ES-B, END SHAFT, 2" DIA X 10 3/8" LG FOR BALL BEARING AND SEAL, CEMA 2 BOLT DRILLED |
| 8 | 4 | 316SS | 4CB, COUPLING BOLT WITH LOCK NUT, 5/8 - 11 UNC X 3 5/8" LG WITH A 2 7/8" LG SHANK, FOR 2 1/2" (2.875 OD) PIPE |
| 9 | 1 | | SE.4CP, WAM-SHIELD SEAL, 2" SHAFT, NON SPLIT |
| 10 | 1 | | 4BF-B, BALL BEARING, FLANGED, 2 SHAFT |
| 11 | 1 | 316SS | INCLINED ROUND INLET STUB WITH PORT FOR ILT LEVEL INDICATOR |
| 12 | 2 | 316SS | 9FF, FLANGE FEET, 9" SIZE, .188 THK., INCLINED |
| 13 | 1 | 316SS | 9SL10, SADDLE MOUNT, FOR 9" SIZE X .135 THK TROUGH, .250 THK |
| 14 | 1 | | NORD SK4282SCP/VL-180TC SCREW CONVEYOR DRIVE, 52.2:1 RATIO, 180TC NEMA ADAPTER, M1 MOUNTING POSITION, 2" CEMA DRIVE SHAFT |
| 15 | 1 | | NORD 100LP/4, 3 HP PREM. EFF., 1770 RPM, TEFC, NEMA 182TC C FACE MTR, 3/60/332-575V |
| 16 | 1 | | SITRANS WM100 ZERO-SPEED ALARM SWITCH |
| 17 | 1 | 316SS | SENSOR MOUNTING BRACKET, FITTED TO TROUGH, .188 THK SHEET / PLATE |

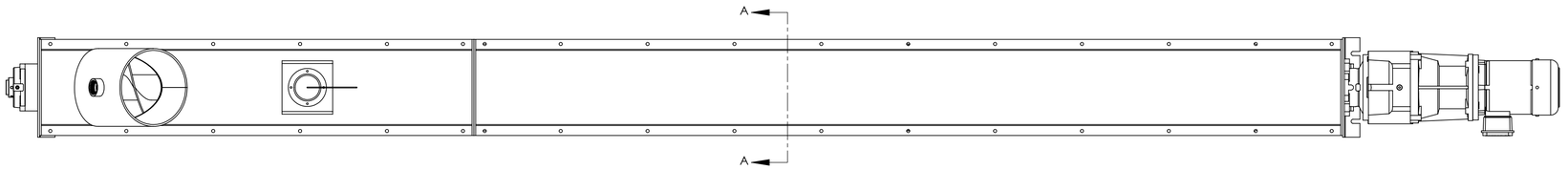


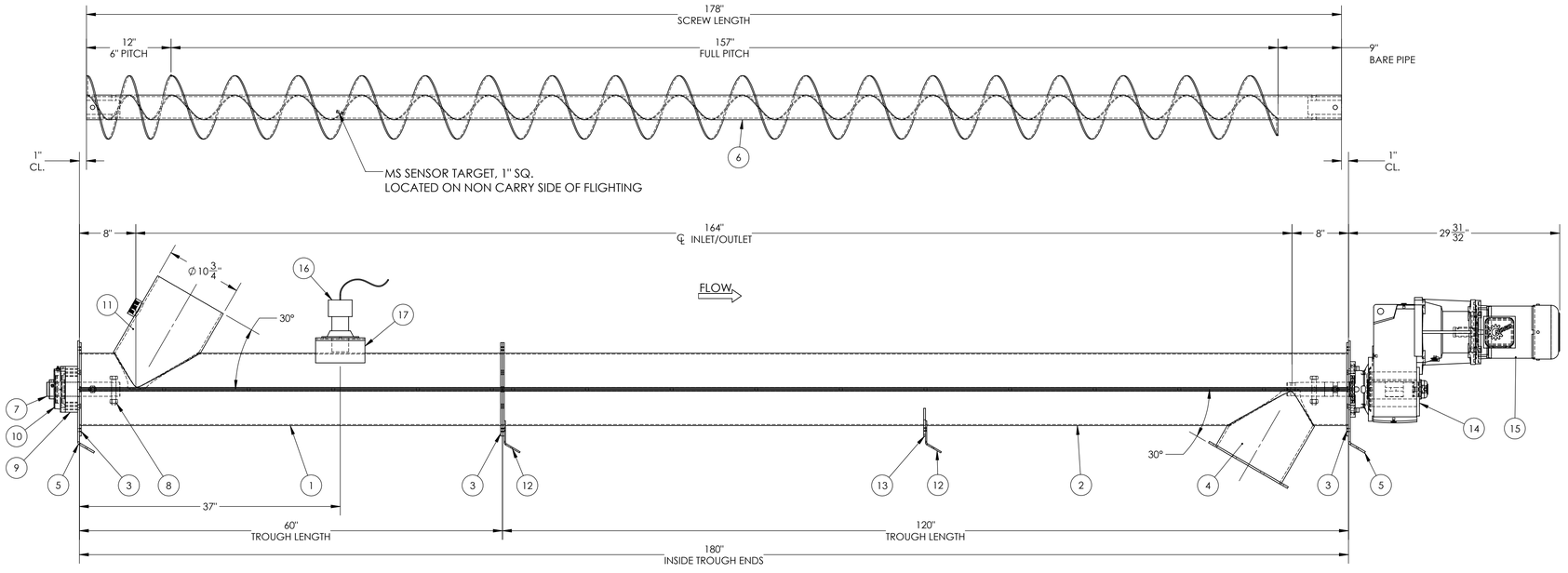


CERTIFIED DRAWING

DATE: 3/26/2021

| REVISIONS | | | |
|---|---|---|---|
| REV. | BY | DESCRIPTION | DATE |
| 1 | JAH | ADDED SPEED SWITH AND BRACKET, CHANGED MOTOR VOLTAGE | 3/26/2021 |

UNLESS OTHERWISE SPECIFIED:
ALL DIMENSIONS ARE IN INCHES

ALL ITEMS MANUFACUTRED PER CEMA 300 TOLERANCES WHEN APPLICABLE

FOR ALL REMAINING ITEMS, GENERAL TOLERANCES ARE AS FOLLOWS:
FRACTIONS = ±1/16
X.XX = ±0.01
X.XXX = ±0.005
ANGLES = ±2°

CUSTOMER:
POMPES & EQUIPMENT (PCP)
3076 A, RUE BERNARD-PILON
ST-MATHIEU-DE-BELOEIL, QC J3G 4S5

SHIP TO:
POMPES & EQUIPMENT (PCP)
3076 A, RUE BERNARD-PILON
ST-MATHIEU-DE-BELOEIL, QC J3G 4S5

QUOTE:
Y010821A-SYS-B

CUSTOMER PO:
C14-204979R2

CONFIDENTIALITY NOTE: THIS DRAWING AND ALL DESIGNS, DETAILS, INVENTIONS AND/OR DEVELOPMENTS COVERED ARE CONFIDENTIAL AND THE EXCLUSIVE PROPERTY OF WAM INC., WHICH RESERVES ALL PATENT AND OTHER RIGHTS. IT IS NOT TO BE PRINTED, PHOTOGRAPHED, COPIED, LOANED OR USED WITHOUT PERMISSION. IT MUST BE RETURNED ON REQUEST AND USED SUBJECT TO THE ABOVE CONDITIONS AND ONLY ON WORK AUTHORIZED BY WAM INC.

WAM® USA INC.
1300 TRIAD BLVD., FORT WORTH, TX 76131
PH. #817-232-2678, FAX #817-232-2676

DESCRIPTION:
9" DIA X 15'-0" LONG 30 DEG. INCLINED SCREW FEEDER WITH A 3 HP @ 34 RPM DRIVE UNIT

SHEET 1 OF 1
SIZE D
REV 1

| DRAWN | CHKD. | DATE | SCALE | DRAWING NO. |
|---|---|---|---|---|
| JAH | | 3/12/21 | 1:10 | 30014715 |

WEBTROL

*There when you need us most*

# FC Series TC Series

## Stainless Steel Centrifugal Pumps

# Installation & Operating Manual



**Congratulations on Your Choice in Purchasing this Webtrol Pump!**

Its Quality is unsurpassed in material and workmanship and has been factory tested.
If properly installed, it will give many years of trouble free service.

FC/TC Series
10/20 Edition

# Table Of Contents


**Introduction** ..... **2**

**Performance / Specifications** ..... **3**

**Pump Inspection And Handling** ..... **3**

**Exploded View** ..... **4**

**Pre-Installation** ..... **5**

**Installation** ..... **5-6**
- Location
- Mounting
- Piping

**Electrical Connections** ..... **8-15**

**Start-up Procedure** ..... **16**
- Shaft Rotation
- Valves
- Priming
- Starting
- Final Inspection

**Lubrication** ..... **17**

**Chemical Compatibility Chart** ..... **18**

**Trouble Shooting** ..... **19**


# Introduction

This manual was prepared to assist the installer and/or operator in understanding the proper method of installing, operating and maintaining the SS series centrifugal pump. We recommend that you thoroughly understand the proper installation and start-up procedures, prior to starting the pump. If these procedures are followed, you will have years of trouble-free service.

# WARNING

## Rules For Safe Installation And Operation

1. Read these rules and instructions carefully. Failure to follow them could cause serious bodily injury and/or property damage.
2. Check your local codes before installing.
3. For maximum safety, this product should be connected to a grounded circuit equipped with a ground fault interrupter device.
4. Before installing this product, have the electrical circuit checked by an electrician to make sure it is properly grounded.
5. Before installing or servicing your pump, BE CERTAIN pump power source is disconnected.
6. Make sure the line voltage and frequency of the electrical current supply agree with the motor wiring. If motor is dual voltage type, BE SURE it is wired correctly for your power supply.
7. Complete pump and piping system MUST be protected against below freezing temperature. Failure to do so could cause severe damage and voids the Warranty.
8. Do not run the pump dry. If it is, there will be damage to the pump seal.
9. Do not operate the pump in flammable and / or explosive atmosphere.

# Performance And Specifications

## TC Models

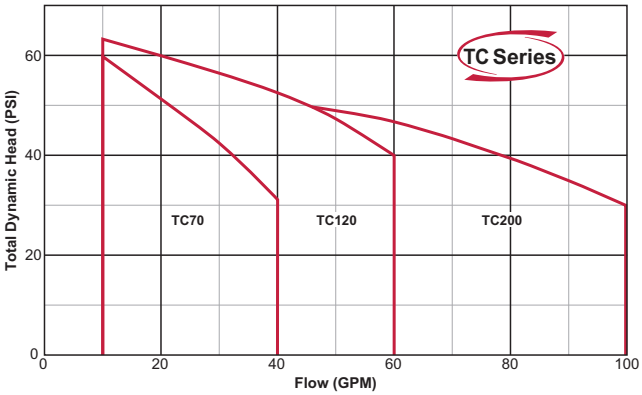


**Size:** Suction TC70 1-1/4" NPT
TC120 1-1/4" NPT
TC200 1-1/2" NPT

Discharge All TC Models 1" NPT

**HP Range:** 1/3 HP to 1-1/2 HP - 1750 RPM
3/4 HP to 3 HP - 3450 RPM

**Performance:** Capacity - 5.5 GPM to 100 GPM
Head - 23 to 144 feet
Liquid - clean water
Liquid Temp. - 212° F
(250°F opt.)
Working Pressure - 125 PSI

**Materials:** Casing - 304 Stainless
Impeller - 304 Stainless
Shaft - Stainless
Mechanical Seal - Carbon/Ceramic
Viton

**Motor:** Nema 56J frame / 60 Hz
Built in overload protection
(single phase models)

## FC Models

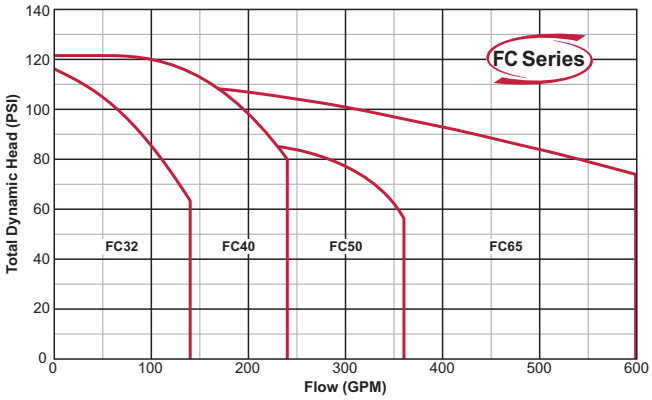


**Size:** Suction 150 lb. ANSI FC32 2" ANSI
FC40 2-1/2" ANSI
FC50 2-1/2" ANSI

Discharge 150 lb. ANSI FC32 1-1/4" ANSI
FC40 1-1/2" ANSI
FC50 2" ANSI

**HP Range:** 1 HP to 2 HP - 1750 RPM
3 HP to 30 HP - 3450 RPM

**Performance:** Capacity - 13 GPM to 600 GPM
Head - 33 to 285 feet
Liquid Temp. - 212° F
(250°F opt.)
Working Pressure - 230 PSI

**Materials:** Casing - 304 Stainless
Impeller - 304 Stainless
Shaft - Stainless
Mechanical Seal - Carbon/Ceramic
Viton

**Motor:** Nema JM frame / 60 Hz

# Pump Inspection and Handling

When receiving your pump, check to see if the shipment has been damaged in any way or if any parts seem to be missing. If so, note the damage or shortage on the bill of lading and the freight bill. Make any claims to the transportation company immediately. Keep all packaging materials until the claim is resolved.

The Webtrol Stainless Steel Centrifugal pump should remain in the shipping carton until it is ready to be installed.

Do not drop or mishandle the pump prior to installation.

# Exploded Views

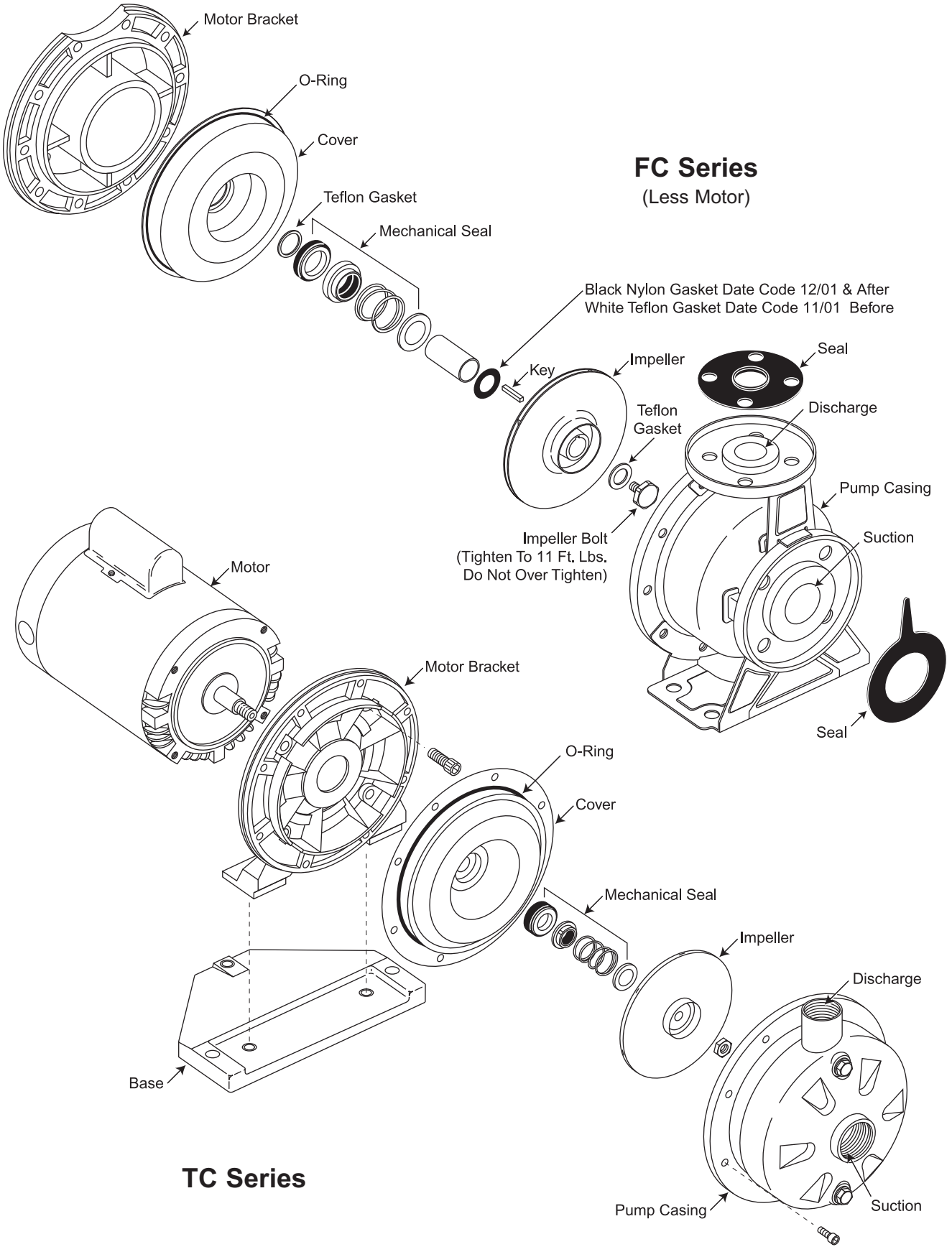

## Pre-Installation

Pump is non-submersible. Keep motor dry at all times. Do not wash or immerse the motor.

**Warning:** Never run the pump dry. The internal running surfaces of the pump and mechanical seal require water lubrication for consistent operation. Allowing the pump to run dry will severely damage pump and mechanical seal.

Do not pump chemicals or corrosive liquids with the pump unless they are compatible with the pump component materials. Consult the chemical compatibility chart on page 15 of this manual or call Webtrol at (314) 631-9200 for verification. Use with nonflammable liquids.

To avoid internal damage to the pump, do not operate with the water temperature above 212° F.

Pump must be full of liquid before operating. Do not pump dirty water or abrasive liquids. To do so, will cause the carbon seal face, and elastomers in the mechanical seal to wear and leak. Mechanical seal materials, compatible with liquids containing abrasives, are available upon request.

Avoid air pockets in suction piping or air will accumulate at the high points, making priming difficult.

Do not allow the pump or any system component to freeze. To do so may damage the pump and void the warranty.

## Installation

**Locate** the pump as close to the liquid source as possible, so that a short, direct suction pipe may be used. Place the unit so that it is readily accessible for service, maintenance and allows air to circulate freely around the motor.

**Mount** pump in a dry location, on a secure base or foundation. This will prevent noise and vibration.

**Piping** should be stainless steel, rigid plastic or other suitable pipe that will not collapse or burst when exposed to suction and discharge pressure. The piping should be as free from turns and bends as possible, as elbows and fittings greatly increase friction losses.

Pipes must line up and not be forced into position by unions. The suction pipe should be at least one size larger than the suction inlet tapping, and have a minimum number of elbows and fittings to reduce friction losses. Also, the discharge piping should never be smaller than the pump tapping and should preferably be one size larger.

Piping should be independently supported near the pump so that no strain will be placed on the pump casing. Where any noise is objectionable, the pump should be insulated from the piping with rubber connections.

Figure 1 - The normal position of the TC Series discharge is top vertical.

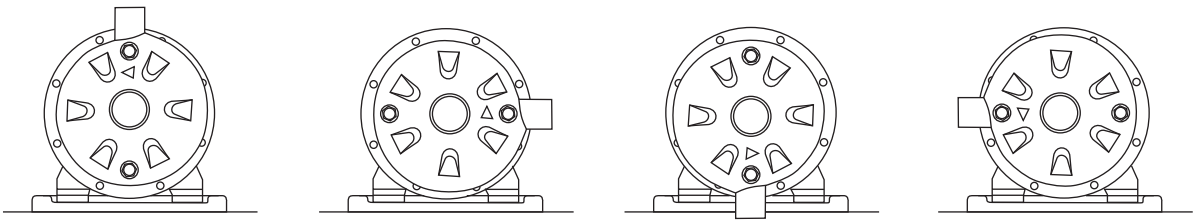

Normal Position of Discharge | Discharge Rotated 90° Clockwise | Discharge Rotated 180° Clockwise | Discharge Rotated 270° Clockwise

**Figure 1**

**Note:** The FC Series discharge can only be used in the normal position.

Figure 2 - Connection to a water tank which provides a gravity flow - flooded suction.

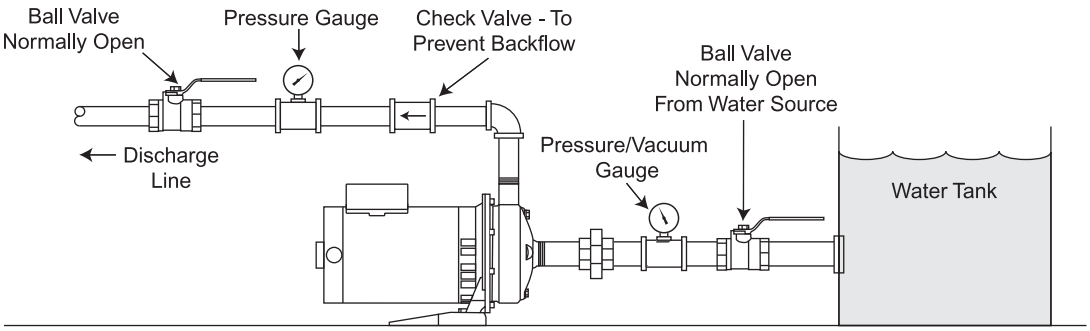


**Figure 2**

Figure 3 - Connection to a pressurized water system.

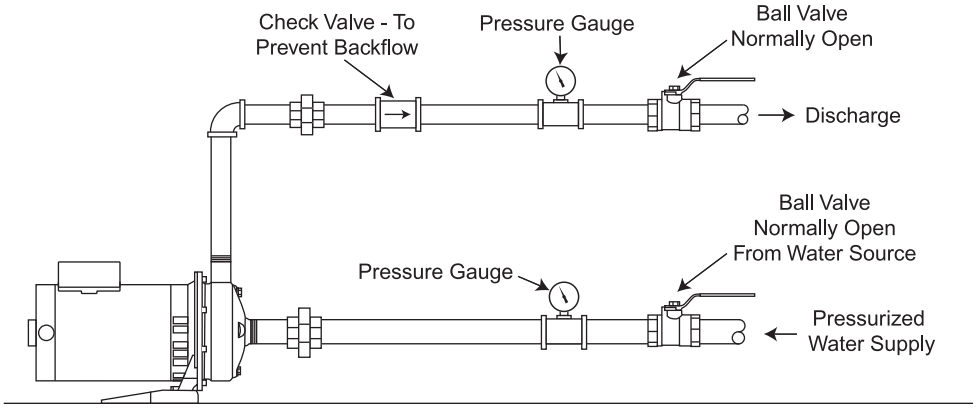


**Figure 3**

Figure 4 - Pump used on a suction lift application from a pond, cistern or container.

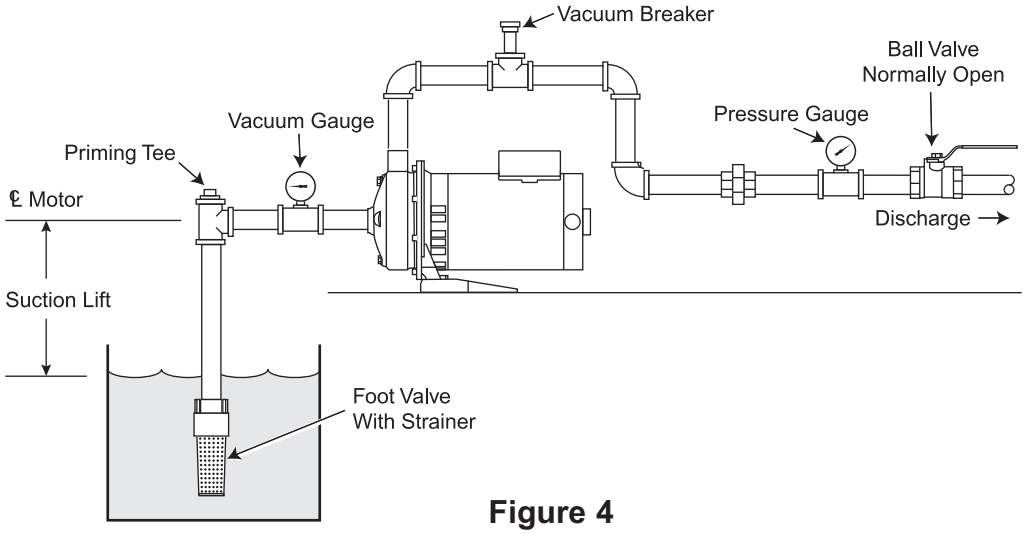


**Figure 4**

1. Install a service tee with a pipe plug, at the highest point in the suction line for initial priming
2. Install a foot valve at the end of the suction line.
3. Install a vacuum gauge in the suction line.
4. To retain water in the pump after turning the pump off, install a vacuum breaker in the discharge line. The horizontal run of pipe containing the vacuum breaker should be above the horizontal run of pipe containing the vacuum gauge.

# Electrical Connections - **TC Pump**

**TC Series**



Before wiring the pump to the power source, verify that the voltage of the motor matches the voltage of the power supply. See motor nameplate. The supply voltage must be within ± 10% of nameplate voltage. Incorrect voltage can cause fire or seriously damage the motor and voids the warranty.

Wire motor according to the diagram shown on the motor nameplate. If the nameplate diagram differs from the wiring diagrams shown in this manual, follow the nameplate diagram.

Install ground wire and maintain this pump in compliance with the National Electrical Code (NEC) or the Canadian Electrical Code (CEC) and with all local codes and ordinances that apply. Consult your local building inspector for local code information.

The motors used on the TC Model pumps are commonly manufactured by Emerson, Baldor, or Bluffton. The motors used on the FC Models are manufactured by Baldor, U.S. Motor.

Both, 1 phase and 3 phase **TC pump motors are factory wired for 230 volts.** Motor frame is Nema 56J. If the supply voltage for a 1 phase motor is 115 volts, refer to the motor wiring connections shown below to properly rewire the motor.

| U.S. Motors 1 Phase ODP Motor | | |
|---|---|---|
| **Catalog Number** | **See Figure** | **HP** |
| EU0502 | 5 | 1/2 |
| EU0752 | 5 | 3/4 |
| EU1002 | 5 | 1 |
| EU1502 | 5 | 1-1/2 |
| EU2002 | 5 | 2 |
| EU3002 | 6 | 3* |

| U.S. Motors 3 Phase ODP Motor | | |
|---|---|---|
| **Catalog Number** | **See Figure** | **HP** |
| EE155 | 7 | 1/2 |
| EE446 | 7 | 3/4 |
| EE506 | 7 | 1 |
| EE607 | 7 | 1-1/2 |
| EE733 | 7 | 2 |
| EE734 | 7 | 3 |

*The 3 HP - 1 Phase motor is dual voltage (208/230v) and cannot be connected to 115v.

U.S. Motors -
TC Pump Connection Diagrams

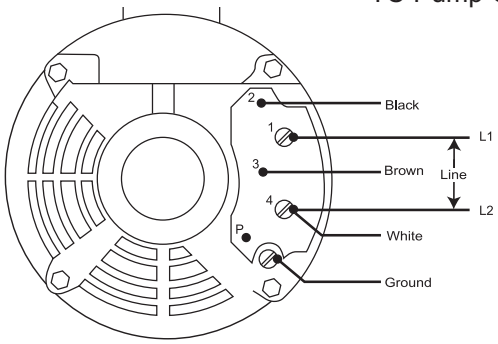


1 Phase, 1/2 - 2 HP
Wired 115v

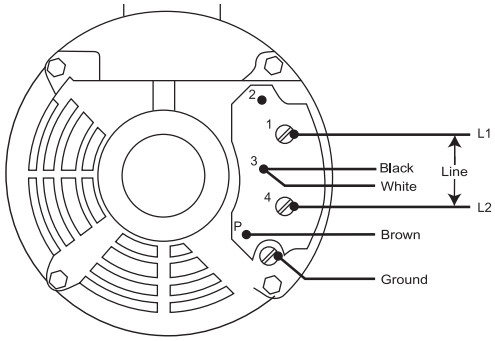


1 Phase, 1/2 - 2 HP
Factory Wired 208/230v

**Figure 5**

U.S. Motors -
TC Pump Connection Diagram

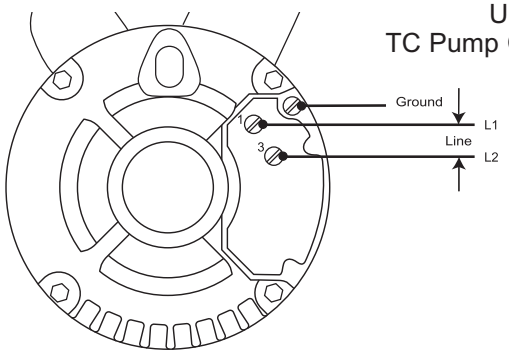


1 Phase, 3 - 10 HP
Factory Wired 208/230v

**Figure 6**

U.S. Motors -
TC Pump Connection Diagrams

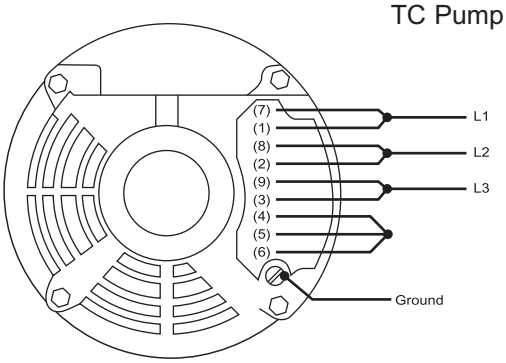


3 Phase, 1 - 30 HP
Factory Wired 208/230v

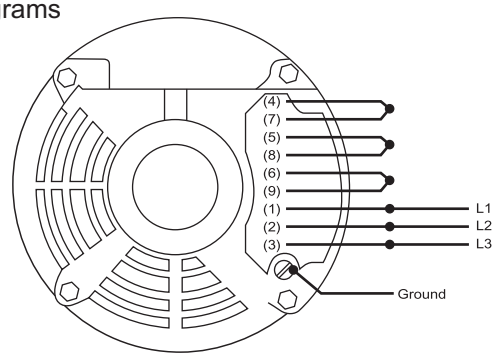


3 Phase, 1 - 30 HP
Wired 460v

**Figure 7**

| Baldor 1 Phase ODP Motor | | |
|---|---|---|
| **Catalog Number** | **See Figure** | **HP** |
| JL1303A | 8 | 1/2 |
| JL1306A | 8 | 3/4 |
| JL1309A | 8 | 1 |
| JL1313A | 8 | 1-1/2 |
| JL1317A | 8 | 2 |
| JL1323A | 9 | 3* |
| 36J685-0190G1 | 9 | 5* |

| Baldor 3 Phase ODP Motor | | |
|---|---|---|
| **Catalog Number** | **See Figure** | **HP** |
| JM3107 | 10 | 1/2 |
| JM3111 | 10 | 3/4 |
| JM3115 | 10 | 1 |
| JM3120 | 10 | 1-1/2 |
| JM3155 | 10 | 2 |
| JM3158 | 10 | 3 |
| 36J642W243G1 | 10 | 5 |

*The 3 & 5 HP 1 Phase motor is single voltage (230v) and cannot be connected to 115v.

Baldor Motors - TC Pump Connection Diagrams

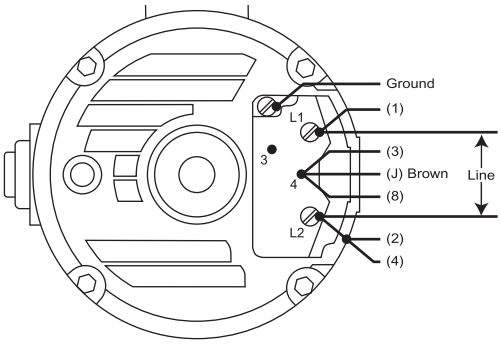


1 Phase, 1/2 - 2 HP
Wired 115v

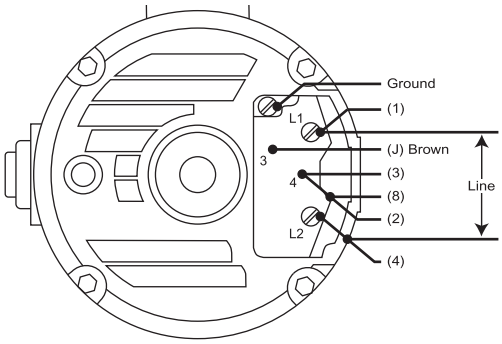


1 Phase, 1/2 - 2 HP
Factory Wired 230v

**Figure 8**

Baldor Motors - TC Pump Connection Diagrams

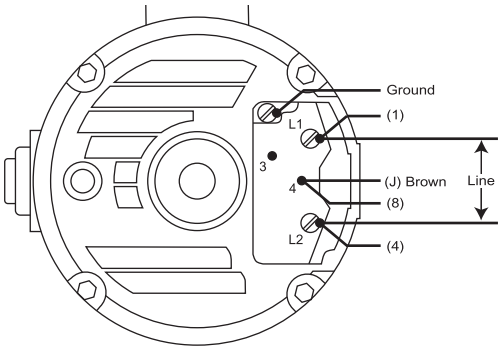


1 Phase, 3 HP
Factory Wired 230v

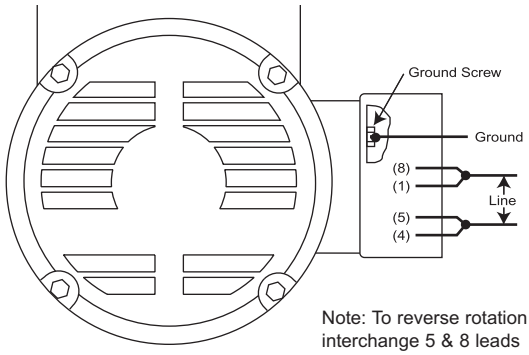


Note: To reverse rotation
interchange 5 & 8 leads

1 Phase, 5 HP
Factory Wired 230v

**Figure 9**

Baldor Motors - TC Pump Connection Diagrams

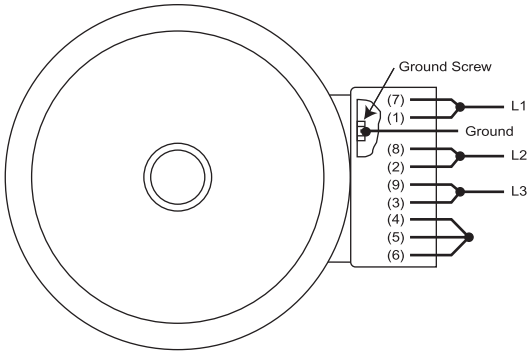


3 Phase, 1/2 - 5 HP
Factory Wired 230v

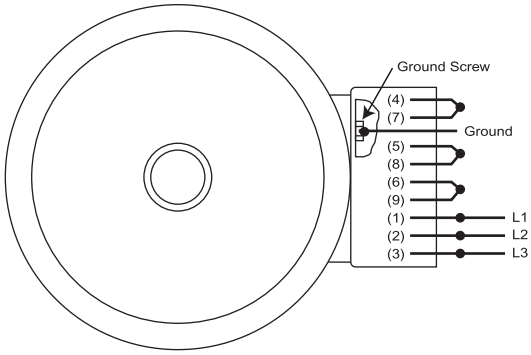


3 Phase, 1/2 - 5 HP
Wired 460v

**Figure 10**

If the supply voltage for a 1 phase motor is 115 volts, refer to the motor wiring connections shown below to properly rewire the motor.

| Century Electric 1 Phase ODP Motor | | |
|---|---|---|
| **Stock Number** | **See Figure** | **HP** |
| T1052 | 11 | 1/2 |
| T1072 | 11 | 3/4 |
| T1102 | 11 | 1 |
| T1152 | 11 | 1-1/2 |
| T1202 | 11 | 2 |
| ST1302VI | 12 | 3 |

| Century Electric 3 Phase ODP Motor | | |
|---|---|---|
| **Stock Number** | **See Figure** | **HP** |
| T3052 | 13 | 1/2 |
| T3072 | 13 | 3/4 |
| T3102 | 13 | 1 |
| T3152 | 13 | 1-1/2 |
| T3202 | 13 | 2 |
| H741 | 13 | 3 |

Century Motors - TC Pump Connection Diagrams

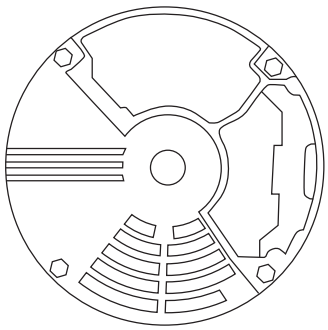

1 Phase, 1/2 - 2 HP
Wired 115v

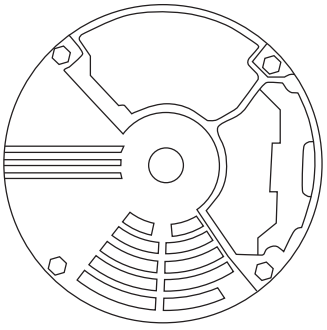

1 Phase, 1/2 - 2 HP
Factory Wired 230v

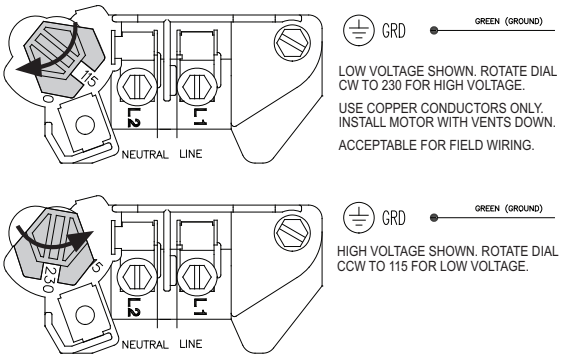


**Figure 11**

Century Motors - TC Pump Connection Diagrams

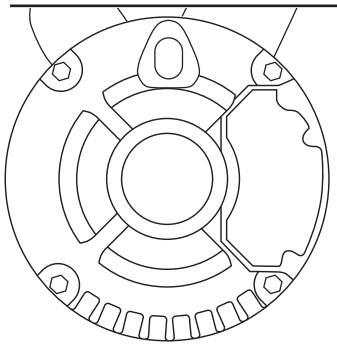

1 Phase, 3 HP
Factory Wired
208/230v

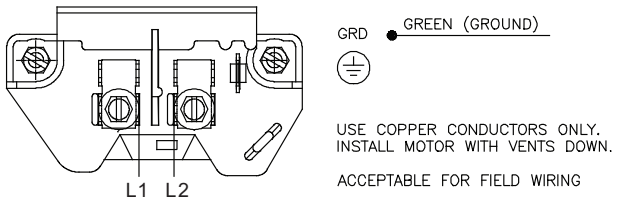


**Figure 12**

Century Motors - TC Pump Connection Diagrams

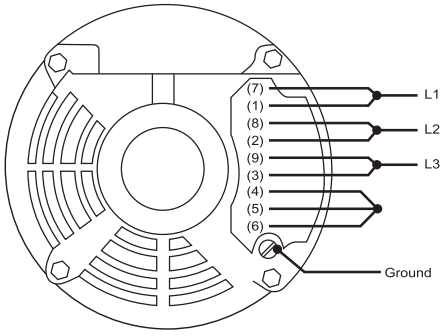


3 Phase,
1/2 - 3 HP
Factory Wired
208/230v

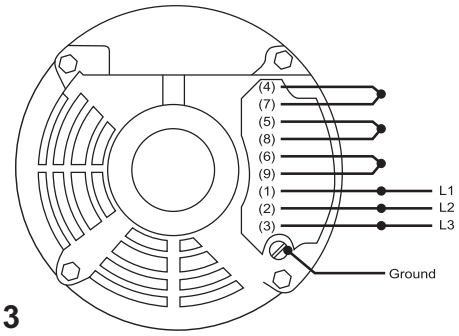


3 Phase,
1/2 - 3 HP
Wired 460v

**Figure 13**

If the supply voltage is 460 volts, refer to the motor wiring diagram show in (Figure 5) to properly rewire the motor.

**Motor shaft rotation - 3 phase motors**

1. Turn the power off.
2. Remove the circular end cap located on the back of the motor. This will expose the motor shaft.
3. Momentarily start pump. If the connection is correct, the shaft will rotate clockwise. If not reverse any two incoming lines (Power Leads).

| WEG 1 Phase ODP Motor | | |
|---|---|---|
| **Catalog Number** | **See Figure** | **HP** |
| .5036OS1BJPRW56J-S | 14 | 1/2 |
| .7536OS1BJPRW56J-S | 14 | 3/4 |
| 00136OS1BJPR56J-S | 14 | 1 |
| 00156OS1BJPR56J-S | 14 | 1 1/2 |
| 00236OS1BJPR56J-S | 14 | 2 |
| 00336OS1DJPR56J | 15 | 3* |

| WEG 3 Phase ODP Motor | | |
|---|---|---|
| **Catalog Number** | **See Figure** | **HP** |
| .5036OS3EJPR56J-S | 16 | 1/2 |
| .7536OS3EJPR56J-S | 16 | 3/4 |
| 00136OS3EJPR56J-S | 16 | 1 |
| 00156OS3EJPR56J-S | 16 | 1 1/2 |
| 00236OS3EJPR56J-S | 16 | 2 |
| 00336OS3EJPR56J-S | 16 | 3 |

*The 3 HP - 1 Phase motor is single voltage (230v) and cannot be connected to 115v.
Please check motor nameplate before wiring.

WEG Motors - TC Pump Connection Diagrams

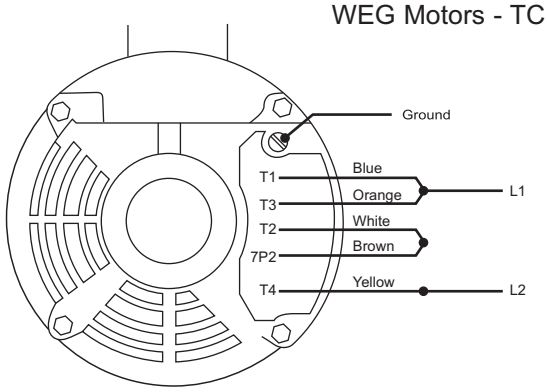


1 Phase, 2 HP
Wired 115v

**Figure 14**

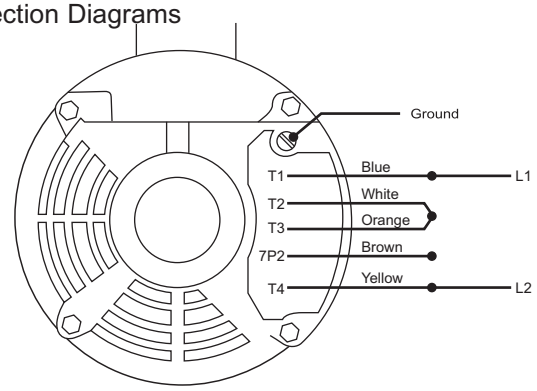


1 Phase, 2 HP
Factory Wired 208/230v

WEG Motors - TC Pump Connection Diagrams

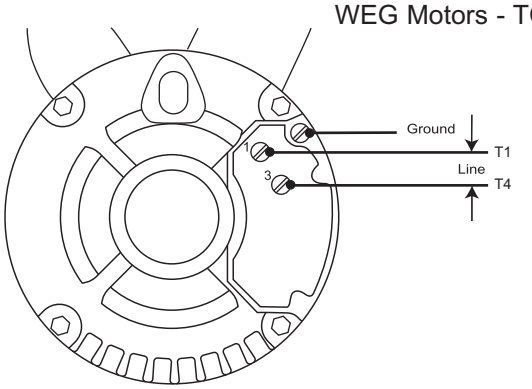


1 Phase, 3 - 10 HP
Factory Wired 208/230v

**Figure 15**

WEG Motors - TC Pump Connection Diagrams

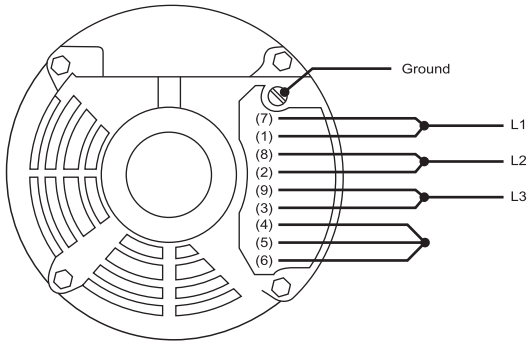


3 Phase, 1 - 30 HP
Factory Wired 208/230v

**Figure 16**

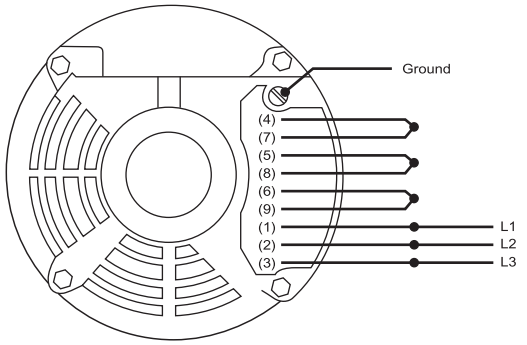


3 Phase, 1 - 30 HP
Wired 460v

# Electrical Connections - **FC Pump**

**FC Series**



FC Pump motors are factory wired for 230 volts. Motor is Nema JM frame. If the supply voltage for a 1 phase motor is 115 volts refer to the wiring diagrams shown below to properly rewire the motor.

**Note:** For 1 phase motors, Baldor has a wiring diagram on the motor for standard rotation. Standard rotation is counter clockwise facing the end opposite the shaft extension.

However, the **shaft must rotate clockwise for proper operation of the pump**. Instructions are shown on the wiring diagram for opposite standard rotation (clockwise facing end opposite shaft extension).

**Since the pump has been factory tested, the motor is wired correctly for 230 volts.** If the voltage is 115 volts, rewire the motor accordingly.

The information stated above also applies to the U.S. Motors.

| U.S. Motors 1 Phase ODP Motor | | |
|---|---|---|
| **Catalog Number** | **See Figure** | **HP** |
| JML1406T | 17 | 3 |
| JML1409T | 17 | 5 |
| JML1509T | 17 | 7-1/2 |
| JML1511T | 17 | 10 |

*The 3 HP - 1 Phase motor is dual voltage (208/230v) and cannot be connected to 115v.

| U.S. Motors 3 Phase ODP Motor | | |
|---|---|---|
| **Catalog Number** | **See Figure** | **HP** |
| EJMM3155T | 18 | 2 |
| EJMM3158T | 18 | 3 |
| EJMM3212T | 18 | 5 |
| EJMM3219T | 18 | 7-1/2 |
| EJMM3312T | 18 | 10 |
| EJMM3314T | 18 | 15 |
| EJMM2514T | 18 | 20 |
| EJMM2516T | 18 | 25 |
| EJMM2534T | 18 | 30 |

U.S. Motors -
FC Pump Connection Diagram

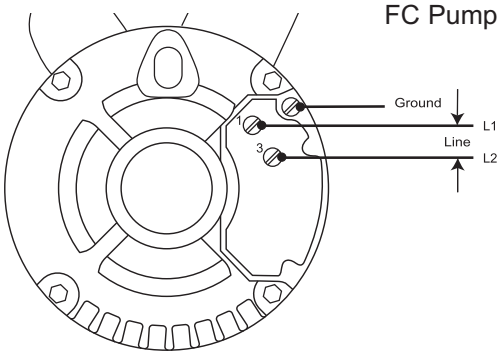


1 Phase, 3 -10 HP
Factory Wired 208/230v

**Figure 17**

U.S. Motors -
FC Pump Connection Diagrams

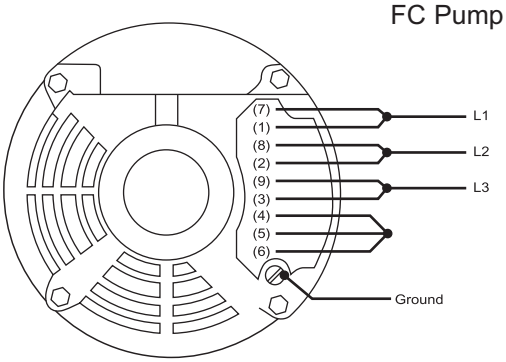


3 Phase, 1 - 30 HP
Factory Wired 208/230v

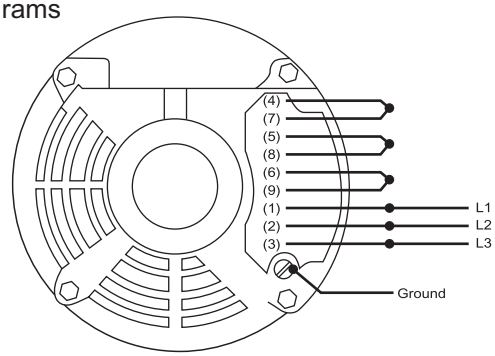


3 Phase, 1 - 30 HP
Wired 460v

**Figure 18**

| Baldor 1 Phase ODP FC Motor | | |
|---|---|---|
| **Catalog Number** | **See Figure** | **HP** |
| JML3606T | 19 | 3 |
| JML3608T | 20 | 5 |
| JML1509T | 20 | 7.5 |
| JML1511T | 20 | 10 |

*Motor rated for 230v and cannot be connected to 115v.

| Baldor 3 Phase ODP FC Motor | | |
|---|---|---|
| **Catalog Number** | **See Figure** | **HP** |
| EJMM3555T | 21 | 2 |
| EJMM3610T | 21 | 3 |
| EJMM3613T | 21 | 5 |
| EJMM3709T | 21 | 7.5 |
| EJMM3711T | 21 | 10 |
| EJMM2394T | 21 | 15 |
| EJMM2514T | 21 | 20 |
| EJMM2516T | 21 | 25 |
| EJMM2534T | 21 | 30 |

Baldor Motors - FC Pump 1 Phase Connection Diagram

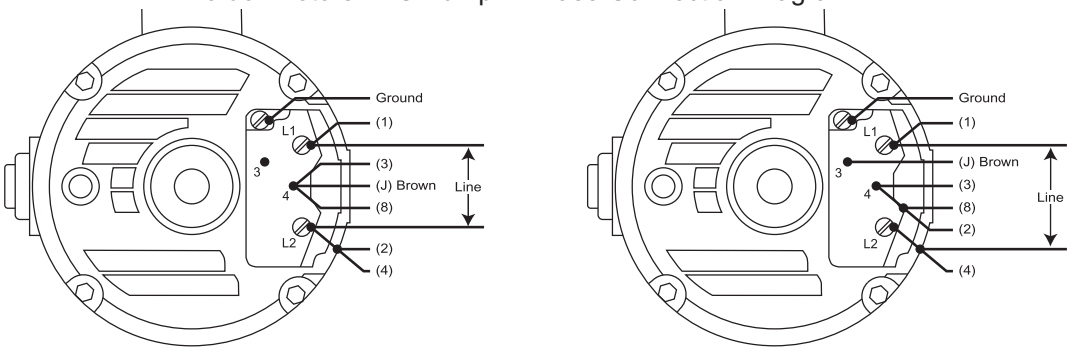


1 Phase, 2 HP
Wired 115v

1 Phase, 2 HP
Factory Wired 230v

**Figure 19**

Baldor Motors - FC Pump 1 Phase Connection Diagram

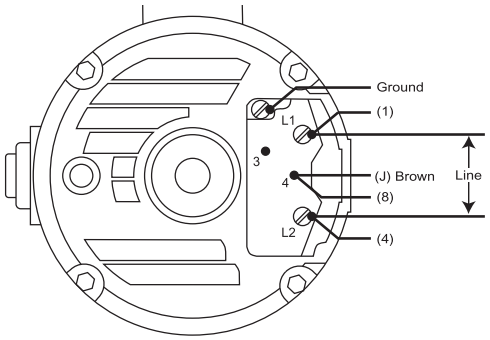


1 Phase, 3 - 10 HP
Factory Wired 230v

**Figure 20**

Baldor Motors - FC Pump 3 Phase Connection Diagrams

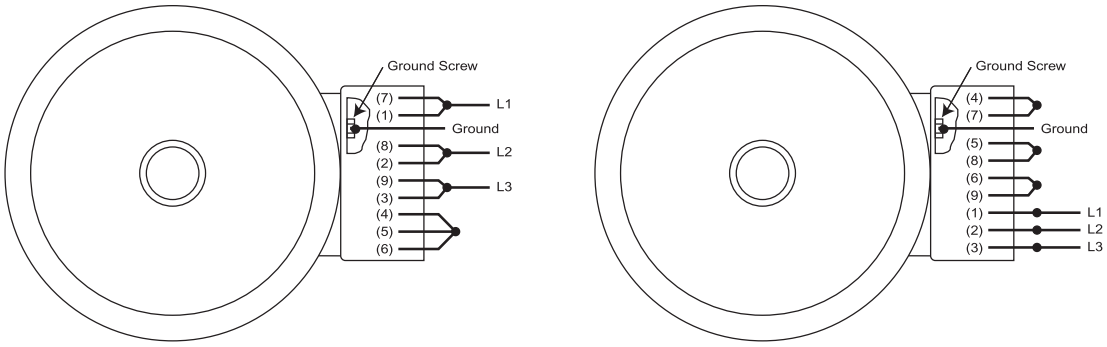


3 Phase, 2 - 30 HP
Factory Wired 230v

**Figure 21**

3 Phase, 2 - 30 HP
Wired 460v

| WEG 1 Phase TEFC Motor | | |
|---|---|---|
| **Catalog Number** | **See Figure** | **HP** |
| 00336ES1E145JM-W22 | 22 | 3 |
| 00536ES1E184JM-W22 | 22 | 5 |
| 00736ES1E213JM-W22 | 22 | 7 1/2 |
| 01036ES1E215JM-W22 | 22 | 10 |

*The 3 HP - 1 Phase motor is single voltage (230v) and cannot be connected to 115v.
Please check motor nameplate before wiring.

| WEG 3 Phase TEFC Motor | | |
|---|---|---|
| **Catalog Number** | **See Figure** | **HP** |
| 00236ET3E145JM-S | 23 | 2 |
| 00336ET3E182JM-S | 23 | 3 |
| 00536ET3E184JM-S | 23 | 5 |
| 00736ET3E213JM-S | 23 | 7 1/2 |
| 01036ET3E215JM-S | 23 | 10 |
| 01536ET3E254JM-S | 23 | 15 |
| 02036OT3E254JM-S | 23 | 20 |
| 02536OT3E256JM-S | 23 | 25 |
| 03036OT3E284JM | 23 | 30 |

WEG Motors - FC Pump Connection Diagrams

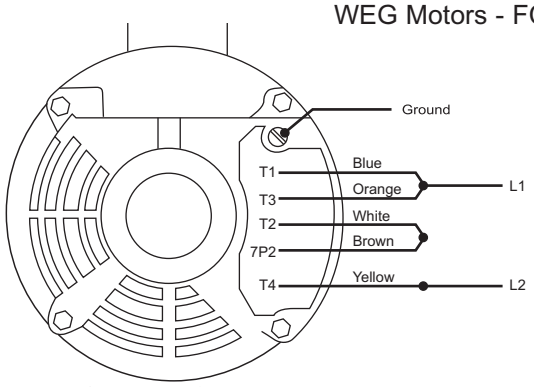


1 Phase, 2 HP
Wired 115v

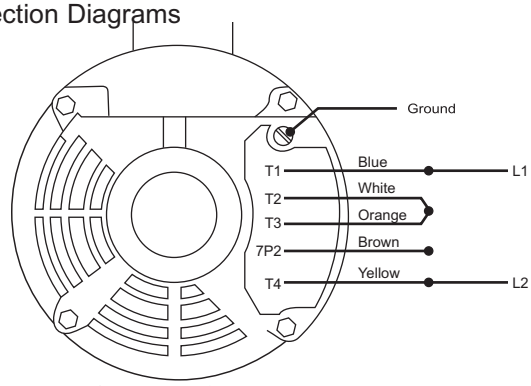


1 Phase, 2 HP
Factory Wired 208/230v

WEG Motors - FC Pump Connection Diagram

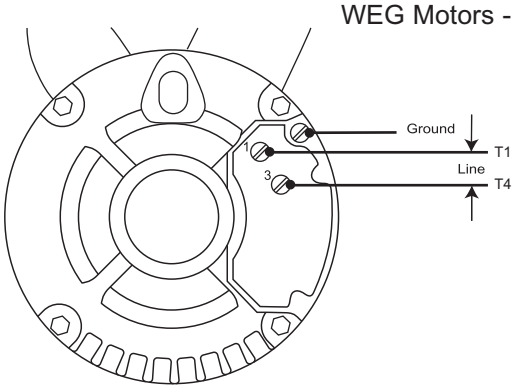


1 Phase, 3 - 10 HP
Factory Wired 208/230v

**Figure 22**

WEG Motors - FC Pump Connection Diagrams

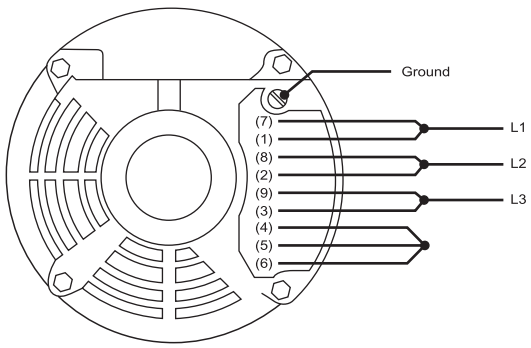


3 Phase, 1 - 30 HP
Factory Wired 208/230v

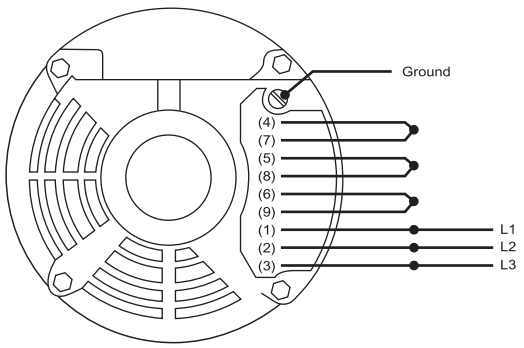


3 Phase, 1 - 30 HP
Wired 460v

**Figure 23**

# Start-Up Procedures

To check for a free turning pump turn the power off and rotate the pump shaft. On pumps (TC models) that use a 56J frame motor (3/4 - 3 HP), this can be done by removing the motor end cap located on the back of the motor. Rotate the motor shaft in a clockwise direction. *(See Warning 1)*

For FC pumps, use a 30mm deep well socket to rotate the impeller bolt clockwise when viewed from the pump end looking into the suction. Access to the bolt head is thru the suction inlet.

**Shaft Rotation - 3 Phase Motors (3/4 - 3 HP) -** After the preceding instructions have been completed, turn the motor on for 1 second. If the connection is correct, the shaft will rotate clockwise, when viewed from the end opposite the motor shaft extension. If the rotation is not correct, switch connections L1 and L2. The rotation will now be correct.

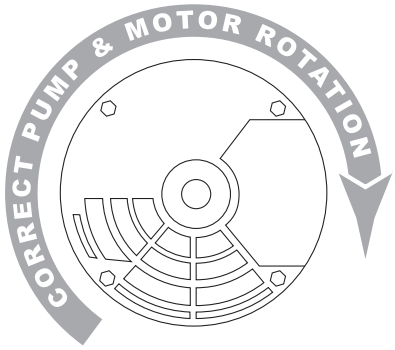


View facing end
opposite shaft extension

**Warning:** 1. Do not start the pump if the motor shaft cannot be rotated.

2. During operation, a minimum reading of 2 PSI is required at all times on the pressure gauge installed in the inlet line.

**Valves -** The suction inlet valve should be fully open and the discharge valve should be partially open. This will allow the pump to develop back pressure when it is started.

**Priming -** The pump must be primed before starting. The pump casing and suction piping must be filled with water before starting the motor. On TC models, remove the vent plug in the top of the casing while pouring in priming water. When water is poured into the pump to prime, remove all the air before starting the motor.

The pump will automatically fill with water when the pump is connected to a city main or hydrant. To relieve the trapped air inside the pump, allow the water supply to run a minimum of 1 minute before starting the pump. After filling the pump and inlet pipe with water, turn the motor on and off several times. Repeat this priming sequence several times to be sure that all the air has been removed from the pump.

Once the preceding instructions have been completed, the pump can be started. The pump should be pumping water and rapidly build pressure. If not repeat the priming instructions. During operation, a minimum reading of 2 PSI is required at all times on the pressure gauge installed in the inlet line.

**Final Inspection -** Once the proceeding instructions have been completed, the pump can be started. During the first few hours of operation, inspect the pump, piping and auxiliary equipment, used in conjunction with the pump. Check for leaks, vibration or noises.

If a problem arises, consult a Webtrol representative or call Webtrol at (314) 631-9200 for assistance.

# Lubrication

On the TC SS Series Centrifugal, it is not necessary to lubricate the pump or motor. The motor is designed with sealed ball bearings.

The motors used on the FC SS Series Centrifugal pumps require periodic lubrication. Good results can be obtained if the following recommendations are used in your maintenance program.

A high grade ball or roller bearing grease should be used.

| Recommended Greases | |
|---|---|
| **Name** | **Manufacturer** |
| SR1 (Factory Installed) | Chevron |
| Rykon Premium #2 | American Oil Co. |
| Shell Dolium R | Shell Oil Co. |

| Amount of Grease | | | |
|---|---|---|---|
| **By Weight** | | **By Volume** | |
| **Ounce** | **Grams** | **$In^3$** | **Teaspoon** |
| 0.30 | 8.4 | 0.6 | 2 |

| Service Conditions | | | |
|---|---|---|---|
| **Severity Of Service** | **Ambient Temperature** | **Atmospheric Contamination** | **Regreasing Interval** |
| Standard | 104° F | Clean, Little Corrosion | 5500 Hours |
| Severe | 130° F | Moderate Dirt, Corrosion | 2750 Hours |

## Lubrication Procedure

1. Stop motor
2. Clean grease fitting or remove outlet plug (See Photo)
3. Add the recommended amount of grease while motor is warm
4. Reinstall grease outlet plug

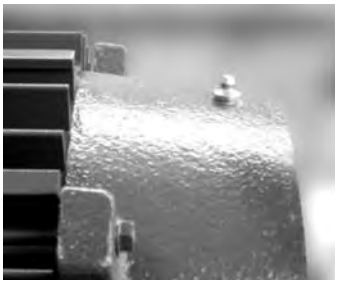

Grease Fitting

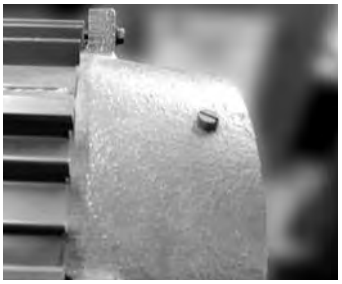

Outlet Plug

# Chemical Compatibility Chart

| Item No. | Pumpage Type | Conc. % | Temp. °F | Code Level |
|---|---|---|---|---|
| 1 | Acetic acid | 10 | 68 | B |
| 2 | Ammonium bicarbonate | 10 | 68 | B |
| 3 | Ammonium carbonate | | 140 | C |
| 4 | Ammonium chloride | 10 | 68 | C |
| 5 | Ammonium hydroxide | 10 | <175 | C |
| 6 | Ammonium nitrate | 5 | | C |
| 7 | Beer | | | A |
| 8 | Benzilic acid | 10 | 68 | B |
| 9 | Boric acid | 5 | 68 | A |
| 10 | Boric acid | 5 | 175 | B |
| 11 | Brine | | | B |
| 12 | Butyric acid | Wat. Sol. | | B |
| 13 | Calcium chloride | | 68 | C |
| 14 | Calcium nitrate | 10 | | B |
| 15 | Calcium phosphate | 10 | ≤212 | B |
| 16 | Citric acid | 5 | 68 | B |
| 17 | Coffee | | | A |
| 18 | Copper sulfate | 5 | 68 | B |
| 19 | Ethylene glycol | | | A |
| 20 | Fluosilicic acid | 20 | 68 | NR |
| 21 | Fruit juices | | | A |
| 22 | Hydrocyanic acid | | 68 | B |
| 23 | Hydrogen peroxide | | 68 | B |
| 24 | Lactic acid | 5 | ≤150 | C |
| 25 | Lactic acid | 10 | 68 | B |
| 26 | Magnesium chloride | | | C |
| 27 | Magnesium sulfate | | 68 | B |
| 28 | Maleic acid | 10 | 68 | C |
| 29 | Milk | | | A |
| 30 | Nitric acid | 20 | 68 | NR |
| 31 | Nitric acid | 20 | 155 | NR |
| 32 | Oleic acid | 20 | 68 | C |
| 33 | Oxalic acid | ≤10 | ≤68 | B |
| 34 | Oxalic acid | 10 | 155 | NR |
| 35 | Phoshoric acid | | ≤175 | C |
| 36 | Phthalic acid | | 68 | B |
| 37 | Potassium bicarbonate | 30 | 68 | A |
| 38 | Potassium carbonate | 40 | 68 | A |
| 39 | Potassium chloride | 10 | 68 | B |
| 40 | Potassium hydroxide | 10 | <175 | B |
| 41 | Potassium permanganate | | 68 | B |
| 42 | Potassium phosphate | 10 | 175 | C |
| 43 | Potassium sulfate | | | B |
| 44 | Propionic acid | 20 | 68 | B |
| 45 | Propylene glycol | 60 | 68 | C |
| 46 | Salicyclic acid | | 68 | B |
| 47 | Sodium bicarbonate | 10 | 68 | A |
| 48 | Sodium carbonate | | <140 | A |
| 49 | Sodium chloride | | | C |
| 50 | Sodium hydroxide | <10 | 140 | B |
| 51 | Sodium nitrate | 10 | | B |
| 52 | Sodium phosphate | | ≤212 | A |
| 53 | Sodium sulfate | 5 | <140 | B |
| 54 | Sulfuric acid | 10 | 68 | NR |
| 55 | Sulfurous acid | Sat | 68 | C |
| 56 | Sulfurous acid | 10 | 68 | B |
| 57 | Tannic acid | 10 | 68 | A |
| 58 | Tartaric acid | 10 | 68 | B |
| 59 | Tea | | | A |
| 60 | Vinegar | | ≤140 | A |
| 61 | Water | | ≤230 | A |
| 62 | Water, condensation | | | A |
| 63 | Water, de-cationized | | | C |
| 64 | Water, demineralized | | | A |
| 65 | Water, distilled | | | A |
| 66 | Water, mine | | | A |
| 67 | Water, sea | | | C |
| 68 | Water, thermal | | | A |
| 69 | Wine-Whiskey | | | A |

**Code Key: A = Good B = Fair C = Poor**
**NR = Not Recommended**

Important-Pumpages coded C “poor” may result in reduced or unsatisfactory service life.

Where hot and aggressive liquids are to be pumped, in addition to checking the chemical compatibility, any deviations in temperature, density and viscosity from the reference data would bring about variations in terms of power input, hydraulic performance and suction capacity. Make sure, in all cases, that the power input is not higher than the rated power and the suction lift does not exceed the permissible values.

## Motor Fails To Start Or Run At Full Speed

| Possible Cause Of Trouble | Corrective Action |
|---|---|
| Start capacitor failed - 1 phase motor (motor hums) | Replace start capacitor |
| Power Loss | Replace bad fuse or reset circuit breaker (check for correct fuse/breaker size) |
| Incorrect voltage - voltage must be within ± 10% of motor rated voltage.<br>Example: Rated voltage 230 volts Range: 207 - 253 volts | 1. check incoming voltage, contact power company<br>2. Verify that the voltage of the motor matches the power supply voltage<br>3. Check wire size from main switch to motor. |
| Defective wire or connections | Replace defective wires, tighten and clean connections. |
| Grounded motor | Have motor rewound with new winding or replace motor. |

## Pump Leaks

| Possible Cause Of Trouble | Corrective Action |
|---|---|
| Worn mechanical seal due to abrasive liquid/corrosion | 1. Replace seal with materials compatible with liquid pumped.<br>2. Install filter on inlet line. |
| Lack of water - carbon seal on mechanical seal face overheats and wears rapidly | 1. Replace seal<br>2. Verify inlet pressure, minimum pressure on inlet gauge is 2 PSIG |
| Inlet pressure to high | Reduce inlet pressure |
| Misalignment | Check for a bent motor shaft |
| Worn “O” ring seal | Replace O-ring seal |
| Teflon gasket leaks “bowed” | For FC Series only. Tighten bolt shown In exploded view sheet to 11 Ft. Lbs. |

## Pump Operates, But Delivers Little Or No Water

| Possible Cause Of Trouble | Corrective Action |
|---|---|
| Incorrect rotation on 3 phase motor | Interchange any two incoming power leads to the motor. |
| Low line voltage | (See motor trouble shooting section above) |
| Air Locked Pump | Fill pump & inlet pipe with water - jog motor on and off several times. Refill with water. Repeat procedure several times to remove all air |
| Worn or plugged impeller | 1. Replace impeller<br>2. Clean clogged impeller, install filter on Inlet |
| Inadequate inlet pressure | Minimum pressure on the inlet side of pump is 2 PSIG |
| Diameter of suction/discharge pipe is to small | 1. Size of inlet pipe should be at least equal to the threaded inlet size in the pipe inlet housing<br>2. Calculate friction losses for the discharge pipe. Replace undersized piping. For assistance call Webtrol (314) 631-9200 |
| Broken Shaft | If motor shaft is broken replace motor |

## Excessive Noise While Pump Is Operating

| Possible Cause Of Trouble | Corrective Action |
|---|---|
| Cavitation (noise like gravel in pump) | 1. Increase size of inlet line<br>2. Reduce flow rate - GPM<br>3. Too viscous (liquid is too thick) maximum viscosity is 80 centipoise (CPS) |
| Pump not secured to firm foundation | Bolt down to secure and rigid base |
| Noisy motor | 1. Ensure that motor fan is clear<br>2. Remove motor from pump. If noise persists check for smooth bearing operation. Replace bad bearings/or motor |

## Thank You for Purchasing a Stainless Steel Centrifugal Pump

We at Webtrol are constantly working on new products to make your job easier, while making your systems more efficient, reliable and affordable.

Your opinion means a lot to us, so please let us know what you think about our FC or TC Series Pump.

WEBTROL

*There when you need us most*

8417 New Hampshire Ave. | St. Louis, MO 63123
**Phone:** (314) 631-9200 **Fax:** (314) 631-3738 **E-mail:** comments@webtrol.com

VULCAN
HOIST - PALAN

# OPERATOR'S MANUAL

## ELECTRIC CHAIN HOISTS
## ¼ TON TO 10 TON CAPACITY

**WARNING**

DO NOT INSTALL, OPERATE OR PERFORM MAINTENANCE ON THIS EQUIPMENT BEFORE READING ALL THE CONTENT OF THIS MANUAL. FAILURE TO READ AND COMPLY WITH THE CONTENTS OF THIS MANUAL CAN RESULT IN SERIOUS BODILY INJURY OR DEATH AND/OR PROPERTY DAMAGE.

VER 2020-11-17

**The Vulcan Hoist Company Ltd.**
3435 Cremazie East, Montreal (Quebec)  H1Z 2J2

514 728-4527  |  vulcanhoist.com

# Table of contents


**1 Important information and warnings** ..... 5

**2 Technical information** ..... 9
2.1 Product identification
2.2 Nomenclature
2.3 Product specifications
2.4 Hook dimensions
2.5 Hoist applicable standards

**3 Unpacking and installation** ..... 11
3.1 Unpacking
3.2 Chain container installation
3.3 Mounting the hoist
3.4 Chain
3.5 Electrical connection
3.6 Functional verification and trial operation

**4 Operation** ..... 19
4.1 Introduction
4.2 Instruction for operation
4.3 Daily or prestart inspection
4.4 Hoist control

**5 Inspection** ..... 24
5.1 General
5.2 Inspection classification
5.3 Frequent inspection
5.4 Periodic inspection
5.5 Occasionally used hoists
5.6 Inspection records
5.7 Inspection methods and criteria

**6 Maintenance** ..... 31
6.1 Maintenance schedule and records
6.2 Lubrication - load chain, hooks, and suspension
6.3 Lubrication - transmission
6.4 Load chain
6.5 Adjusting your Vulcan limit switches
6.6 Disc brake adjustment
6.7 Storage
6.8 Outdoor installation
6.9 Operational environment

**7 Troubleshooting** ..... 37

**8 Parts list** ..... 39

**9 Warranty** ..... 40

**Appendix** ..... 41

# 1. Important information and warning

THIS MANUAL CONTAINS IMPORTANT SAFETY, INSTALLATION, OPERATION AND MAINTENANCE INFORMATION. MAKE THIS MANUAL AVAILABLE TO ALL PERSONS RESPONSIBLE FOR THE OPERATION, INSTALLATION AND MAINTENANCE OF THESE PRODUCTS. UNLESS OTHERWISE NOTED, TONS IN THIS MANUAL ARE US TONS; (2,000 LBS).

## Danger, Warning, Caution and Notice

Throughout this manual, there are steps and procedures which, if not followed, may result in an injury, death, or substantial property damage if the warning is ignored.




Indicates an imminently hazardous situation which, if not avoided, will result in death or serious injury.




Indicates a potentially hazardous situation, which, if not avoided, could result in death or serious injury.




Indicates a potentially hazardous situation, which, if not avoided, could result in minor or moderate injury or property damage.

**NOTICE**

Indicates information or a company policy that relates directly or indirectly to the safety of personnel or protection of property.

## For any questions or comments:

Phone: 514 728-4527
E-mail: info@vulcanhoist.com

## WARNING

**Equipment described herein is not designed for and must not be used for lifting, supporting, or transporting people or for lifting or supporting loads over people.**

Equipment described herein should not be used in conjunction with other equipment unless necessary applicable and/or required safety devices relevant to the system, crane, or application have been properly installed by the system designer, system manufacturer, crane manufacturer, installer or user.

Modifications to upgrade, rerate, or otherwise alter this equipment shall be authorized only by the original equipment manufacturer.

Equipment described herein may be used in the design and manufacture of larger machines like cranes or monorails. In those cases, additional equipment or devices may be required for the crane and monorail to comply with applicable design and safety standards. The crane designer, crane manufacturer, or user is responsible for furnishing said equipment. Refer to AISI/ASME B30.17, "Overhead and Gantry Cranes (Top Running Bridge, Single Girder, Underhung Hoist)"; AISI/ASME B30.2 "Overhead and Gantry Cranes (Top Running Bridge, Single or Multiple Girder, Top Running Trolley Hoist)"; and AISI/ASME B30.11 "Monorails and Underhung Cranes".

If a below the hook lifting device or a sling is used with the hoist, the user is responsible for their proper use and maintenance and should refer to ANSI/ASME B30.9 "Slings" or ANSI/ASME B30.20 "Below-The-Hook Lifting Devices".

Hoists and cranes used to handle molten material may require additional equipment or devices. Refer to ANSI Z241.2, "Safety Requirements for Melting and pouring of Metals in the Metal Casting Industry".

Electrical equipment described herein is designed and built in compliance with Vulcan Hoist's interpretation of ANSI/NFPA 70,"National Electric Code" and CSA C22.1, "Canadian Electric Code". The system designer, system manufacturer, crane designer, crane manufacturer, installer or user is responsible to ensure that the installation and associated wiring of these electrical components is in compliance with and all applicable Federal, State, Provincial and Local Codes.

FAILURE TO COMPLY WITH ANY ONE OF THE LIMITATIONS NOTED HEREIN CAN RESULT IN SERIOUS BODILY INJURY OR DEATH, AND/OR PROPERTY DAMAGE.

## DANGER

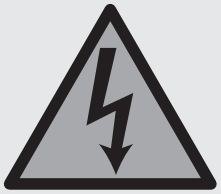

**Hazardous voltages are present in the electrical components and connections between these components.**

Before performing ANY mechanical or electrical maintenance on the equipment, disconnect the main switch supplying power to the equipment and lock and tag the main switch in the position.

Refer to ANSI Z244.1, "Personal Protection — Lockout/Tag out of Energy Sources".

Only trained and competent qualified personnel should inspect and repair this equipment.

## NOTICE

It is the responsibility of the owner/user to install, inspect, test, maintain, and operate a hoist in accordance with ANSI/ASME B30.16, "Overhead Hoists (Underhung)". If the hoist is installed as part of a larger lifting system, such as an overhead crane or monorail, it is also the responsibility of the owner/user to comply with the applicable ANSI/ASME B30 volumes that address that type of equipment.

It is the responsibility of the owner/user to have all personnel involved with the installation, inspection, testing, maintenance and operation of a hoist read the content of this manual and applicable portions of ANSI/ASME B30.16, "Overhead Hoists (Underhung)". If the hoist is installed as part of a larger lifting system, such as an overhead crane or monorail the applicable ANSI/ASME B30 volumes that address that type of equipment must also be read by all personnel involved.

If the hoist owner/user requires additional information, or if any information in the manual is not clear, contact Vulcan Hoist. Do not install, inspect, test, maintain, or operate this hoist unless this information is fully understood.

Inspection of the hoist must be performed on a regular basis in accordance with the ANSI/ASME B30.16 standard by a qualified individual. The owner/user is responsible for maintaining a record of all inspections performed on the hoist. A regular schedule of inspection of the hoist in accordance with the requirements of ANSI/ASME B30.16 should be established and records maintained.

## Warning labels

The warning label illustrated below is supplied with each hoist shipped from the factory. If the label is not on your hoist, order a label from the factory or the distributor and install it.

Read and follow all warnings attached to this hoist.

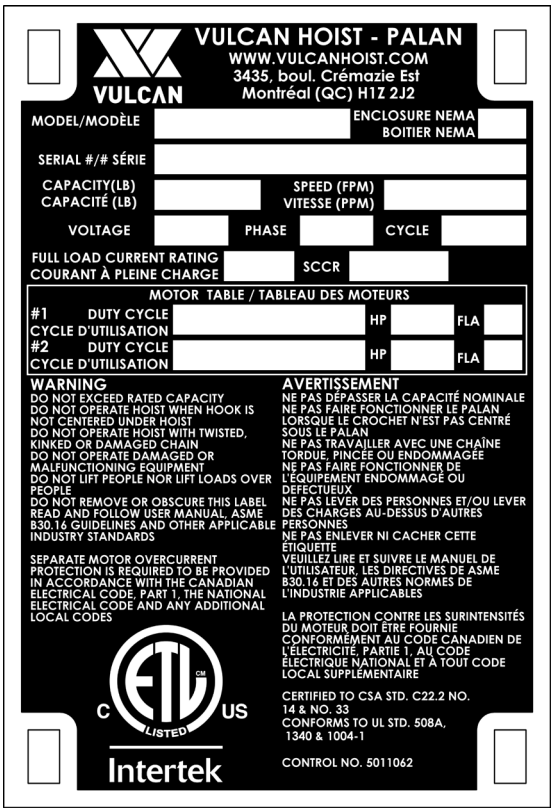


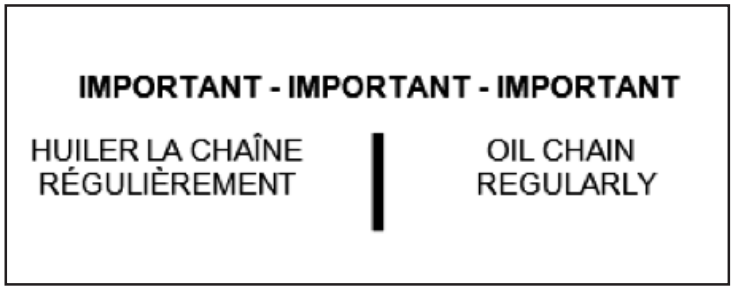


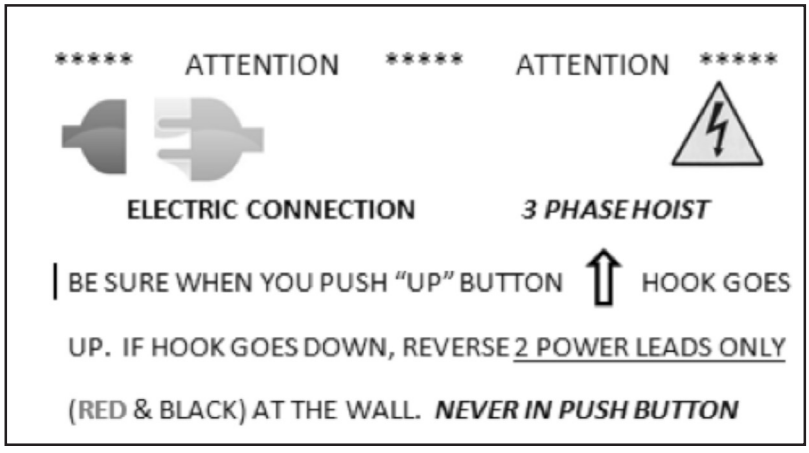

# 2. Technical Information

## 2.1 Product Identification

### Model number

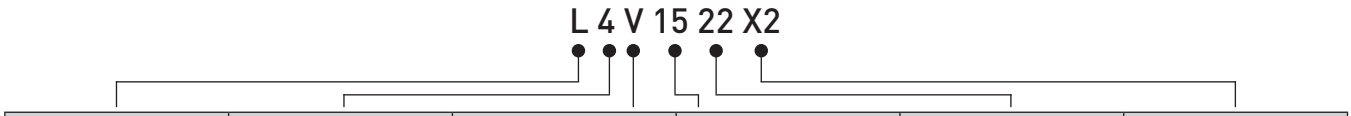


| Type of chain | Capacity | Voltage | Lifting speed | Gear ratio | Number of speed |
|---|---|---|---|---|---|
| L= Link chain<br>R= Roller chain | 0.5= ¼ ton<br>1= ½ ton<br>2= 1 ton<br>3= 1.5 tons<br>4= 2 tons<br>6= 3 tons<br>10= 5 tons<br>20= 10 tons | A= 115 V. 1 Ph.<br>F= 230 V. 1 Ph.<br>H= 230 V. 3 Ph.<br>T= 460 V. 3 Ph.<br>V= 575 V. 3 Ph. | 3 ft/min<br>to<br>50 ft/min | Primary:<br>1 to 6<br>Secondary:<br>blank or 2 | Blank : 1 Speed<br>X2 : 2 Speeds |

### Serial number

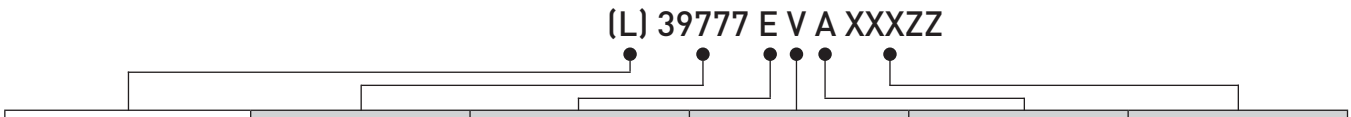


| | | Motor Brand | Brake Brand | Limit Switch | Date |
|---|---|---|---|---|---|
| Blank = Std. hook<br>L = Low headroom | **Sequential Number** | E = Emerson<br>D = Doerr<br>N = Nidec<br>A = AGI | V = Vulcan<br>S = Supplier | Blank =<br>Mechanical<br>A = Adjustable | XXX = Year<br>ZZ = Month |

### Operating Conditions and Environment

| | |
|---|---|
| **Temperature range** | - 20˚ C to 40˚C |
| **Humidity** | 85% or less |
| **Enclosure Rating** | Optional NEMA 4 Hoist and pendant |
| **Duty rating** | HST - 1 |

# 2.2 Hoist applicable standards

a. All Vulcan hoists are manufactured in compliance with Vulcan Hoist's interpretation of the applicable sections of ANSI/ASME B30.16 "Overhead Hoists (Underhung)" standard.

b. The user is responsible for installing the equipment in accordance with all provincial/state and local regulations applicable to the location where the equipment will be used.

c. Hoists accompanied by this manual meet ANSI/ASME HST - 1M "Performance Standard for Electric Chain Hoists" hoist duty class ratings.

d. Vulcan Hoist hoists meet the following standards according to Intertek approval:
   - CSA C22.2 no. 33 Electrical safety requirements for cranes and hoists
   - UL 1340 Standard for Hoists
   - UL 1004-1 Standard for Rotating Electrical Machines - General Requirements

e. In addition, Vulcan Hoist is part of Intertek's control panel manufacturer program, which covers the hoist control.
   - CSA C22.2 no 14 Industrial control equipment
   - UL508A Industrial Control Panels

# 3. Unpacking and installation

## 3.1 Unpacking

After opening the box, carefully remove the cardboard tray and set the control cables to the side of the box. Using an external lifting device, use the upper hook of the hoist to raise it until it is completely out of the box. It may be necessary to hold the box down.

Once the hoist is out of the box, carefully break off the packaging foam from the hoist. Do not use tools like a hammer or an axe to remove foam as this could damage and/or break the hoist.

Ensure that all parts of the hoist, including the chain, are free of any debris or packaging material. Inspect hoist for any scratches, dents or other damage that may have occurred during transport. When hoist is used without a chain container, the loose end of chain must be attached to the hoist as shown below.

**Figure 3 - 1**

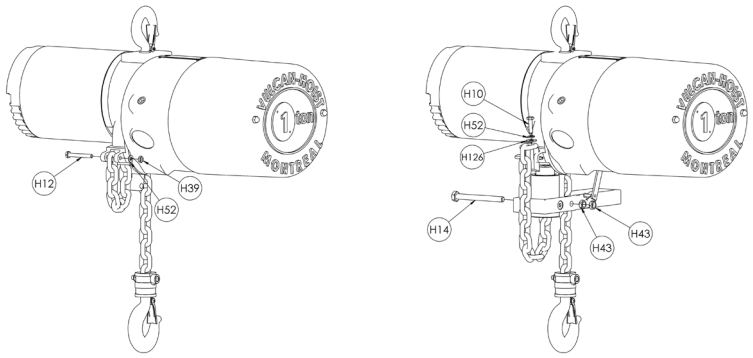


## 3.2 Chain container installation

**DANGER**

Improper installation of chain container could result in chain and hoist damage leading to a potentially hazardous situation, which, if not avoided, could result in death or serious injury.

Follow installation instructions below.

### 3.2.1 Without chain guide

1. Run the load hook down, so that there are 2 feet of chain left on the unloaded side.
2. Shut off and lockout/tag out the main power source to the hoist.
3. Bolt chain container to the link on the bottom of the hoist casting. Pass bolt H14 through the chain container and the link with one 116A bushing on each side of the link. Tighten the two H43 nuts: see Figure 3-2 below.

4. Remove bolt H12 & nut H39. Place load chain end in chain container. Connect chain from chain container to hoist with bolt H12 & nut H39.

5. Re - connect the power.

6. Verify if load chain is rubbing on chain container; this would cause premature chain container wear. If chain is rubbing on container, adjust chain on chain container by one link.

7. A) Run hoist **WITHOUT** load and verify that chain falls properly in chain container.
   B) Run hoist **WITH** load, verifying that chain falls properly in chain container.

8. Ensure load is not hitting the chain container. A load that is hitting the chain container may cause chain to knot or break and/or cause serious injury to operator and others. Adjust limit switch to stop load before it comes in contact with chain container.

9. Install supporting chain to the side of the hoist body.

10. Once the chain container is securely in place, feed the free end of the load chain gradually into the chain container to prevent the chain from bundling.

11. When using a Vulcan steel chain container, refer to the instructions provided with the container for correct assembly and attachment.

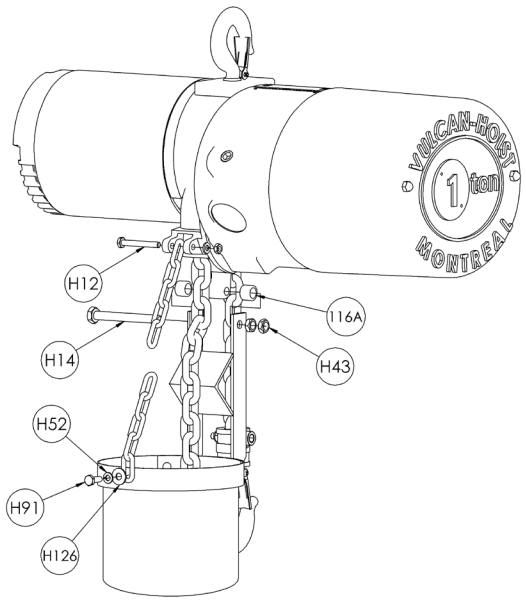


**Figure 3 - 2**

### 3.2.2 With chain guide

1. Run the load hook down, so that there are 2 feet of chain left on the slack side.

2. Disconnect the power.

3. Remove bolt H14 from limit lever # 25, install chain container arms on outside of limit lever # 25. Install bolt H14 through chain container arms and limit lever # 25. Install 2 nuts H43 lock nuts together (do not tighten to limit lever # 25). (See Figure 3-3 below.)

4. Install end of chain attached to chain container into designated hole on # 45 casting with bolt H91 and washers H52 & h16.

5. Manually verify if limit lever # 25 moves freely. This is your safety limit switch control.

6. Adjust chain container level.
7. Connect the power.
8. A) Run hoist **WITHOUT** load; verify that chain falls in chain container.
   B) Run hoist **WITH** load; verify that chain falls in chain container.
9. Ensure load is not hitting the chain container. A load that is hitting the chain container may cause chain to knot or break and/or cause serious injury to operator and others. Adjust limit switch to stop load before it comes in contact with chain container.
10. Install supporting chain to the side of the hoist body.
11. Once the chain container is securely in place, feed the free end of the load chain gradually into the chain container to prevent the chain from bundling.
12. When using a Vulcan steel chain container, refer to the instructions provided with the container for correct assembly and attachment.

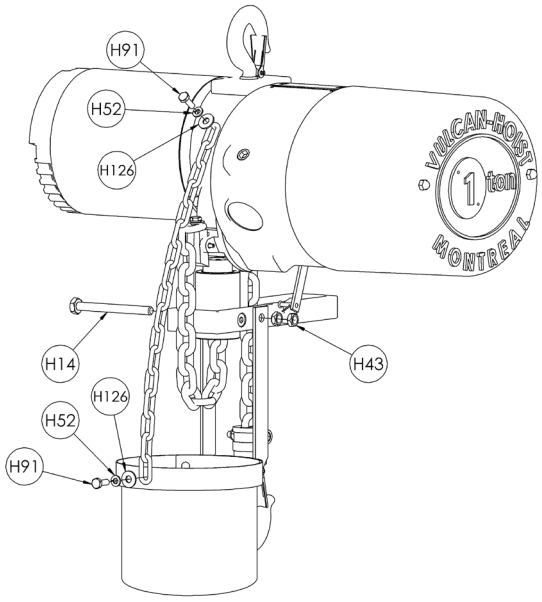


**Figure 3 - 3**

**WARNING**

DO NOT modify or install a homemade chain container. Use only the Vulcan Hoist chain container.

NEVER knot chain or attach foreign objects to the chain to act as limits or chain holders. This could cause serious injury and/or serious damage to chain and hoist.

# 3.3 Mounting the hoist

**Manual trolley —** Follow the instructions in the operator's Manual provided with the trolley.

**Motorized trolley —** Follow the instructions in the operator's Manual provided with the trolley.

**Hook mounted to a fixed location —** Attach the hoist's top hook to the fixed suspension point.

**WARNING**

Ensure the fixed suspension point rests on the center of the hook's saddle and that the hook's safety latch is engaged.







# 3.4 Chain

The number of chain links depends on the hoist model, capacity and options. Never operate the hoist with incorrect, missing, or damaged chain links. Refer to figure below to identify components.

**1 chain fall**



**2 chain falls**



**3 chain falls**



When the hoist is used without a chain container, the free end of the chain is attached to the hoist body. Make sure it remains free of twists before operating the hoist.

**WARNING**

Verify that the load chain is not twisted or tangled prior to operating the hoist. Make sure bottom hook on 2 and 3 fall models (2 ton and over) is not capsized. Always ensure that the welds on the chain links are properly oriented. Correct all chain irregularities before operating hoist.



# 3.5 Electrical connection

**WARNING**

**If motor rotation is incorrect (power phases have been reversed), the limit switch will not function properly, which may cause serious damage to the hoist and/or serious injury to the operator and others.**

**All electrical wiring of the hoist should be performed by a qualified electrician. Verify current draw of hoist and distance to electrical inlet when hoist is at the FURTHEST POSITION from the inlet. Inadequate wiring may cause the motor to burn, EVEN IF THERE IS NO LOAD ON THE HOIST.**

The hoist should be connected to a branch circuit which complies with the requirements of the National Electrical Code and applicable local codes.

### 3.5.1 Wiring of hoist to local power source

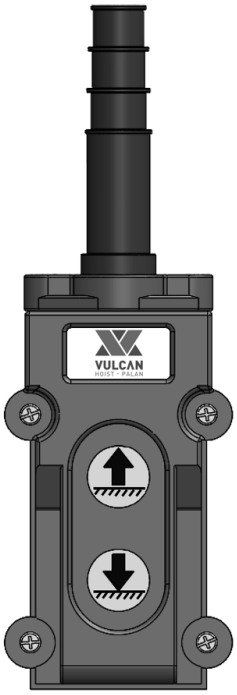


**Figure 3 - 4**

The hoist must be connected to the power source such that its direction of operation corresponds to the up-and-down commands issued from the pendant control, i.e. pushing the UP button moves the load chain up and pushing the DOWN button moves the load chain down. Please follow the steps below to wire the hoist:

1. Make a temporary connection at the power supply and make sure supply to the hoist can be quickly disconnected in case of a problem.
2. Push the up button momentarily and observe movement of the hook:
   a. If hook rises up, connections are correct and can be made permanent.
   b. If hook lowers down, the motor phasing must be changed. To do so, turn the power off and:
      i. If your model uses a 3-phase motor (208, 230, 380, 460, or 575 volts), switch the position of any two of the three phases **at the power source**.
      ii. If your model uses a 1-phase motor (115 or 230 volts), please contact Vulcan for additional details.

The hoist is equipped with upper and lower limit switches whose proper operation is dependent on the correct motor phasing, rotation and pendant signal:

- Limit switches are factory preconfigured – when required, always reverse phasing at the power source, never in the pendant.
- If the phasing is incorrect, the limit switches will not function properly which could result in serious damage to the hoist and/or serious injury to the operator and others.

**NOTICE**

115 V motors: do not plug the hoist into a standard household outlet. Although some models will work with these outlets, they may draw more current and exceed the capacity of the electrical circuit, or interfere with other devices on the same circuit. Always do the connections in a junction box. Always consult a qualified electrician when you wired one or more hoists to the electrical network.



### 3.5.2 Checking for adequate voltage at hoist

The hoist must be supplied with adequate electrical power in order to operate properly.
For proper operation, the voltage (measured at the hoist end of the standard power cord with the hoist operating in the up direction with full load) must be within 5 % of nominal voltage.

## SIGNS OF INADEQUATE ELECTRICAL POWER (LOW VOLTAGE) ARE:

- Noisy hoist operations due to brake and/or contactor chattering.
- Dimming of lights or slowing of motors connected to the same circuit.
- Heating of the hoist motor and other internal components as well as heating of the wires and connectors in the circuit feeding the hoists.
- Failure of the hoist to lift the load due to motor stalling.

| COPPER CONDUCTOR SIZES FOR 2% DROP IN POTENTIAL ON 110-120 VOLTS 2 CONDUCTORS | | | | | | | | | | | | | | | | | | |
|---|---|---|---|---|---|---|---|---|---|---|---|---|---|---|---|---|---|---|
| CURRENT AMPERES | Aproximate Distance in Feet to Center of Distribution | | | | | | | | | | | | | | | | | |
| | 20 | 30 | 40 | 50 | 60 | 70 | 80 | 90 | 100 | 120 | 140 | 160 | 180 | 200 | 240 | 280 | 320 | 360 |
| | Copper Conductor Sizes in AWG. Calculated for Conductor Temperature of 60C and Ambient 30C | | | | | | | | | | | | | | | | | |
| 1 | - | - | - | - | - | - | - | - | - | - | - | - | - | - | 16 | - | - | - |
| 1,5 | - | - | - | - | - | - | - | - | - | - | - | 16 | - | - | - | 14 | - | - |
| 2 | - | - | - | - | - | - | - | - | - | 16 | - | - | - | 14 | - | - | 12 | - |
| 3 | - | - | - | - | - | - | 16 | - | - | - | 14 | - | - | 12 | - | - | - | 10 |
| 4 | - | - | - | - | 16 | - | - | - | 14 | - | - | 12 | - | - | 10 | - | - | - |
| 5 | - | - | - | 16 | - | - | 14 | - | - | 12 | - | - | - | 10 | - | - | 8 | - |
| 6 | - | - | 16 | - | - | 14 | - | - | 12 | - | - | - | 10 | - | - | 8 | - | - |
| 7 | - | - | - | - | 14 | - | - | 12 | - | - | 10 | - | - | - | 8 | - | - | 6 |
| 8 | - | 16 | - | 14 | - | - | 12 | - | - | - | - | - | - | 8 | - | - | 6 | - |
| 9 | - | - | - | - | - | 12 | - | - | - | 10 | - | - | 8 | - | - | 6 | - | - |
| 10 | - | - | 14 | - | 12 | - | - | - | 10 | - | - | 8 | - | - | 6 | - | 5 | - |
| 12 | 16 | - | - | 12 | - | - | 10 | - | - | - | 8 | - | - | 6 | - | 5 | - | 4 |
| 14 | - | 14 | - | - | - | 10 | - | - | - | 8 | - | - | 6 | - | 5 | 4 | - | 3 |
| 16 | - | - | 12 | - | 10 | - | - | - | 8 | - | - | 6 | - | 5 | - | - | 3 | - |
| 18 | - | - | - | - | - | - | - | 8 | - | - | 6 | - | 5 | - | 4 | 3 | - | 2 |
| 20 | 14 | 12 | - | 10 | - | - | 8 | - | - | 6 | - | 5 | - | 4 | 3 | - | 2 | - |
| 25 | - | - | 10 | - | 8 | - | - | - | 6 | - | 5 | 4 | - | 3 | 2 | - | 1 | - |
| 30 | 12 | - | - | 8 | - | - | - | 6 | 5 | - | 4 | - | 3 | 2 | - | 1 | 1/0 | - |
| 35 | - | 10 | - | - | - | 6 | - | 5 | - | 4 | 3 | - | 2 | | 1 | 1/0 | - | 2/0 |
| 40 | - | - | 8 | - | - | - | 5 | - | 4 | - | - | 2 | - | 1 | 1/0 | - | 2/0 | - |
| 45 | - | - | - | - | 6 | 5 | - | 4 | - | 3 | 2 | - | 1 | - | - | 2/0 | - | 3/0 |
| 50 | - | 8 | - | 6 | 5 | - | - | - | 3 | 2 | - | 1 | | 1/0 | 2/0 | - | 3/0 | - |
| 60 | - | - | 6 | 5 | - | 4 | - | 3 | 2 | - | 1 | - | 1/0 | 2/0 | - | 3/0 | - | 4/0 |
| 70 | - | - | - | - | 4 | 3 | - | 2 | - | 1 | 1/0 | - | 2/0 | - | 3/0 | 4/0 | | |
| 80 | - | 6 | 5 | 4 | - | - | - | - | 1 | - | - | 2/0 | - | 3/0 | | | | |
| 90 | - | - | - | - | 3 | 2 | - | 1 | - | 1/0 | 2/0 | - | 3/0 | - | 4/0 | | | |
| 100 | - | 5 | - | 3 | 2 | - | 1 | - | 1/0 | 2/0 | - | 3/0 | - | 4/0 | | | | |
| 125 | - | - | - | 2 | 1 | - | 1/0 | - | 2/0 | 3/0 | - | 4/0 | | | | | | |
| 150 | - | - | - | 1 | - | 1/0 | 2/0 | - | 3/0 | - | 4/0 | | | | | | | |
| 175 | - | - | - | - | 1/0 | 2/0 | - | 3/0 | - | 4/0 | | | | | | | | |
| 200 | - | - | - | - | 2/0 | | | | | | | | | | | | | |
| 250 | - | - | - | - | - | 3/0 | 4/0 | | | | | | | | | | | |
| 300 | - | - | - | - | - | 4/0 | | | | | | | | | | | | |

1. This Table is calculated for wire sizes No. 16 to No. 4/0 AWG and gives for each size specified, the approximate maximum distance in feet of the distribution center for a 2% drop in potential at a given current. Inductive reactance has not been included since it is a function of conductor size and spacing.

2. This Table is based on conductor resistance at 60C. For conductor temperatures above 60C, multiply distances in feet in the column headings by a factor as follows to retain 2% drop in potential.

| Conductor Temperature | Distance Correction Factor |
|---|---|
| 75C | 0.94 |
| 85-90C | 0.9 |
| 110C | 0.83 |
| 125C | 0.79 |
| 200C | 0.64 |

3. For 220-240 volts, multiply the distance in feet in the column headings by two, for the same percentage drop.

4. Example on use of Table:
   Consider a 2-conductor circuit carrying 10 amperes at 110-120 volts. From the Table opposite "10 amperes", it will be found that a No. 14 AWG circuit can be run 40 feet from the distribution center to the load without exceeding a 2% drop. Beyond this distance, a larger size of conductor is required (i.e. No. 12 AWG beyond 40 feet up to and including 60 feet).

- Blowing of fuses or tripping of circuit breakers.

# 3.6 Functional verification and trial operations

**3.6.1** Confirm the adequacy of the rated capacity for all slings, chains, wire ropes and all other lifting attachments before use. Inspect all load suspension members for damage prior to use and replace or repair all damaged parts.

**3.6.2** Verify and correct all chain irregularities prior to operating the hoist. Refer to Section 3.4.

**3.6.3** Measure and record the "k" dimension of all hooks on back cover of this manual. See Table 5 - 4 under Section 5, "Inspection".

**3.6.4** Record the hoist's model and Serial Number (from the name plate on the hoist, see page 9) in the space provided on the cover of this manual.

**3.6.5** Ensure that the hoist is properly installed to either a fixed point or trolley, whichever applies.

**3.6.6** If hoist is installed on a trolley, ensure that:

- The trolley is properly installed on the beam.
- Drop Stop for the trolley are correctly positioned and securely installed on the beam.

**3.6.7** Ensure that all nuts, bolts, and split pins (cotter pins) are sufficiently fastened.

**3.6.8** Pull down on the pendant and ensure that the Cord Strain Relief Cable takes the force, not the Pendant Cord.

**3.6.9** Check supply voltage before everyday use. If the voltage is lower than 5% below nominal voltage for the motor, do not operate the hoist.

**3.6.10** Confirm proper operation:

- Before operating, read and become familiar with Section 4 – Operation.
- Before operating, ensure that the hoist (and trolley) meets the Inspection, Testing and Maintenance requirements and ANSI/ASME B30.16.
- Before operating, ensure that nothing will interfere with the full range of the hoist's (and trolley's) operation.

**3.6.11** The hoist must be connected to the power source such that its direction of operation corresponds to the up-and-down commands issued from the pendant control, i.e. pushing the UP button moves the load chain up and pushing the DOWN button moves the load chain down. If the hoist does not operate correctly, refer to section 3.5 for proper wiring of the motor. Failure to do so could result in serious damage to the equipment and/or serious injury to the operator and others.

**3.6.12** After hoist is connected, ALWAYS test limit switches by raising the hook until it stops about 4 - 6" from the hoist body. Then lower the hook until it stops, leaving about 12" of loose chain on the unloaded side.

# 4. Operation

## 4.1 Introduction

The operation of an overhead hoist involves more than activating the hoist's controls. As per the ANSI/ASME B30 standards, the use of an overhead hoist is subject to certain hazards that cannot be mitigated by engineered features, but only by the exercise of intelligence, care, common sense, and experience in anticipating the effects and results of activating the hoist's controls. Use this guidance in conjunction with other warnings, cautions, and notices in this manual to govern the operation and use of your overhead hoist.

**WARNING**

Hoist operators shall be required to read the operation section of this manual, the warnings contained in this manual and warning labels on the hoist or lifting system, and the operation section of ANSI/ASME B30.16 and ANSI/ASME B30.10. The operator shall also be required to be familiar with the hoist and hoist controls before being authorized to operate the hoist or lifting system.

Hoist operators should be trained in proper procedures for the attachment of loads to the hoist hook.

Hoist operators should be trained to be aware of potential malfunctions of the equipment that require adjustment or repair, and to be instructed to stop operations if such malfunctions occur, and to immediately advise their supervisor so corrective actions can be taken.

Hoist operators should have adequate depth perception, field of vision, reaction time, manual dexterity, and coordination.

Hoist operators should not have a history of or be prone to seizures, loss of physical control, emotional instability or operate under the influence of alcohol, drugs or medication.

Overhead hoists are intended only for vertical lifting service of freely suspended unguided loads. Do not use hoist for loads that are not lifted vertically, loads that are not freely suspended, or loads that are guided.

# 4.2 Instructions for operation

**Taking precedence over any specific rule, however, is the most important rule of all: "USE COMMON SENSE".**

It is the responsibility of the hoist owner/user to establish programs to:

1. Train and designate hoist operators.
2. Train and designate hoist inspection and maintenance personnel.

The words **shall** and **should** are used throughout this manual in accordance with definitions in the ANSI/ASME B30 standards as follows:

**shall** this word indicates that a rule is mandatory and must be followed.

**should** this word indicates that a rule is a recommendation, the advisability of which depends on the facts in each situation.

Hoist operator and hoist inspection and maintenance personnel training programs should be based on requirements in accordance with the latest edition of ANSI/ASME B30.16, "Overhead Hoists (Underhung)".

**WARNING**

Improper operation of a hoist can create a potentially hazardous situation which, if not avoided, could result in death, serious injury or substantial property damage. To avoid such a potentially hazardous situation, the operator must be familiar with the instructions listed in this section.

## THE OPERATOR SHALL:

1. **NOT** operate a damaged, malfunctioning or abnormally performing hoist.
2. **NOT** operate a hoist until he has thoroughly read and understood Manufacturer's Operating and Maintenance Instructions or Manuals.
3. **NOT** operate a hoist that has been modified without the manufacturer's approval or without certification that it is in conformity with ANSI/ASME B30 volumes.
4. **NOT** lift more than the rated load for the hoist.
5. **NOT** use hoist with twisted, kinked, damaged, or worn load chain.
6. **NOT** use the hoist to lift, support, or transport people.
7. **NOT** lift loads over people.
8. **NOT** operate a hoist unless all persons are and remain clear of the supported load.
9. **NOT** operate unless load is centered under hoist.
10. **NOT** attempt to lengthen the load chain or repair a damaged load chain.

11. **NOT** operate hoist when it is restricted from forming a straight line from hook to support in the direction of loading.
12. **NOT** use load chain as a sling or wrap load chain around load.
13. **NOT** apply the load to the tip of the hook or to the hook latch.
14. **NOT** apply load unless the load chain is properly seated in it grooves.
15. **NOT** lift any load if the weight of the load is not evenly distributed across all the chain falls.
16. **NOT** operate beyond the limits of the load chain travel.
17. **NOT** allow the load chain or hook to be used as an electrical or welding ground.
18. **NOT** allow the load chain or hook to be touched by a live welding electrode.
19. **NOT** remove or obscure the warning label on the hoist.
20. **NOT** operate a hoist on which the safety plates or decals are missing or illegible.
21. **NOT** use the hoist in such a way that could result in shock or impact loads being applied to the hoist.
22. **NOT** use the hoist load limiting or warning device to measure load.
23. **NOT** use limit switches as routine operating stops. They are emergency devices only.
24. **NOT** allow the hoist to be subjected to sharp contact with other hoists, structures, or objects through misuse.
25. **NOT** adjust or repair the hoist unless qualified to perform such adjustments or repairs.
26. **NOT** "jerk" the hoist in position to tighten the grip on the load or to facilitate the unloading process.

## THE OPERATOR SHALL:

1. Protect the hoist's load chain from weld splatter or other damaging contaminants.
2. Be familiar with operating controls, procedures, and warnings.
3. Take up slack carefully – make sure load is balanced and load-holding action is secure before continuing.
4. Shut down a hoist that malfunctions or performs abnormally and report such malfunction.
5. Make sure hoist limit switches function properly.
6. Warn personnel before lifting or moving a load.
7. Warn personnel of an approaching load.
8. Maintain firm footing when operating the hoist.
9. Check brake function by tensioning the hoist prior to each lift operation.
10. Use hook latches. Latches are to retain slings chains, etc. under slack conditions only.
11. Make sure the load is free to move and will clear all obstructions.

12. Make sure hook travel is in the same direction as shown on controls.
13. Inspect the hoist regularly, replace damaged or worn parts, and keep appropriate records of maintenance.
14. Use the hoist manufacturer's recommended parts when repairing the unit.
15. Lubricate the load chain as per Vulcan's recommendations.
16. Make sure the hook latches are closed and not supporting any parts of the load.
17. Avoid swinging the load or hook.

# 4.3 Daily or prestart inspection

In accordance with the requirements of ANSI/ASME B30.16, the hoist operator should perform daily (prestart) inspections at the start of each shift or at the time of the hoist's first use during each shift. The daily inspection is a visual and audible examination of the hoist. Records of the daily inspection are not required except as required by the hoist owner/user. Daily inspection items that should be performed include the following:

TABLE 4 - 1: HOIST DAILY INSPECTION

| Inspection item | Description of inspection |
|---|---|
| **Tagged Hoist** | Check that hoist is not tagged with an out-of-order sign. |
| **Control Devices** | Check that all travel motions agree with control device markings. When checking hoist travel motion, always use the lifting or up control first. |
| **Brakes** | Check that all travel motions do not have excessive drift and that stopping distances are normal. |
| **Hook** | Check for damage, cracks, nicks, gouges, deformation of the throat opening, wear on saddle or load bearing point, and twist. |
| **Hook Latch** | Check that hook latch is not missing and that it operates properly. |
| **Load Chain** | Check for nicks, gouges, and any type of deformation or damage to the chain. Check for lubrication of load chain. |
| **Reeving** | Check that load chain is properly reeved, that load chain is not kinked or twisted, and that load chain parts are not twisted about each other. |
| **Limit Devices** | Check that the primary upper limit device stops lifting motion of the hoist load block at the upper limit of travel. Then, check that the lower limit device stops lowering motion of the hoist load back at the lower limit of travel. |
| **Oil Leakage** | Check for any sign of oil leakage on the hoist and on the floor area beneath the hoist. |
| **Unusual Sounds** | Check for any unusual sounds from the hoist and hoist mechanism while operating the hoist. |
| **Warning Labels** | Check that warning and other safety labels are not missing and that they are legible. |

# 4.4 Hoist control

**4.4.1** For hoists mounted to motorized trolleys follow the control instruction included in the trolley's Owner's Manual.

**4.4.2** Single Speed Pendant Control – When using the pendant control depress the UP button to raise the hoist load chain/hook or the DOWN button to lower the hoist load chain/hook as shown in Figure 4 - 2. To stop motion release the buttons.

**4.4.3** Dual Speed Control – Pendant controls supplied with dual speed hoists have two step control buttons. For low speed depress the button to the first step and for high speed, depress the
button fully to the second step. Use the UP button to raise the hoist load chain/hook or the DOWN button to lower the hoist load chain/hook as shown in Figure 4 - 2. To stop motion,
release the buttons.




**Figure 4 - 2**

**4.4.4** **OPTIONAL** Emergency Stop Button – Press the Emergency Stop Button to perform an emergency stop and lock-out of hoist motion controls. Turn the Emergency Stop Button clockwise to unlock the controls and allow hoist operation.

**CAUTION!** Make sure the hoist completely stops before reversing direction.

# 5.0 Inspection

## 5.1 General

**5.1.1** The inspection procedure and the following definitions are based on the ANSI/ASME B30.16 standard and pertain to the inspection procedure below:

- **Designated Person** – a person selected or assigned as being able to perform the specific duties to which he/she is assigned.
- **Qualified Person -** a person who, by possession of a recognized degree or certified professional standing, or who by extensive knowledge, training, and experience, has successfully demonstrated the ability to solve or resolve problems relating to the subject matter and work.
- **Normal Service** – service that involves operation with randomly distributed loads within the rated load limit or uniform loads less than 65% of rated load for not more than 25% of the time.
- **Heavy Service** – service which involves operation within the rated load limit which exceeds normal service.
- **Severe Service** – service which involves normal or heavy service with abnormal operating conditions.

## 5.2 Inspection classification

**5.2.1** **Initial Inspection** – prior to initial use, all new, altered, or modified hoists shall be inspected by a designated person to ensure compliance with the applicable provisions of this manual.

**5.2.2** **Inspection Classification** – the inspection procedure for hoists in regular service is divided into two general classifications based upon the intervals at which inspection should be performed. The intervals in turn are dependent upon the nature of the critical components of the hoist and the degree of their exposure to wear, deterioration, or malfunction. The two general classifications are herein designated as FREQUENT and PERIODIC, with respective intervals between inspections as defined below.

**5.2.3** **FREQUENT Inspection** – visual examinations by the operator or other designated personnel with intervals as per the following criteria:

- Normal service – monthly
- Heavy service – weekly to monthly
- Severe service – daily to weekly
- Special or infrequent service – as recommended by a qualified person before and after each occurrence.

**5.2.4** **PERIODIC Inspection** – visual inspection by designated person with intervals as per the following criteria:

- Normal service : yearly
- Heavy service : semi-annually
- Severe service : quarterly

- Special or infrequent service : as recommended by qualified person before the first such occurrence and as directed by the qualified person for any subsequent occurrences.

# 5.3 Frequent inspection

**5.3.1** Inspections should be made on a FREQUENT basis in accordance with Table 5 - 1, "Frequent Inspection". Included in these Inspections are observations made during operation for any defects or damage that might appear between Periodic Inspections. Evaluation and resolution of the results of FREQUENT Inspections shall be made by a designated person such that the hoist is maintained in safe working condition.

| TABLE 5 - 1 FREQUENT INSPECTION |
|---|
| All functional operating mechanisms for maladjustment and unusual sounds. |
| Operation of limit switches and associated components. |
| Hoist braking system for proper operation. |
| Hooks are compliant with Section 5.7.3 and ANSI/ASME B30.10. |
| Hook latch operation . |
| Load chain is compliant with Section 5.7.2. |
| Idle sprocket does not show signs of excessive wear. |
| Check for any loose parts or fasteners on the hoist structure. |

# 5.4 Periodic inspection

**5.4.1** Inspections should be made on a PERIODIC basis in accordance with Table 5 - 2, "Periodic Inspection." Evaluation and resolution of the results of PERIODIC Inspections shall be made by a designated person such that the hoist is maintained in a safe working condition.

**5.4.2** For inspections where load suspension parts of the hoist are disassembled, a load test as per ANSI / ASME B30.16 must be performed on the hoist after it is re - assembled and prior to its return to service.

| TABLE 5 - 2 PERIODIC INSPECTION |
|---|
| Requirements of frequent inspection (see Table 5-1). |
| Evidence of loose bolts, nuts or rivets. |
| Evidence of worn, corroded, cracked or distorted parts such as load blocks, suspension housing, chain attachments, clevises, yokes, suspension bolts, shafts, gears, bearings, pins and rollers. |
| Evidence of damage or excessive wear of load and idler sprocket. |
| Evidence of excessive wear on brake. |
| Electrical contactors for signs of pitting or any deterioration of visible controller contact. |
| Evidence of damage of supporting structure or trolley, if used. |
| Legible function labels on pendant control stations. |
| Legible warning label properly attached to the hoist |
| End connections of load chain. |

# 5.5 Occasionally used hoists

- Hoist Idle More Than 1 Month, Less Than 1 Year: Inspect following FREQUENT Inspection criteria in Section 5.3.
- Hoist Idle More Than 1 Year: Inspect following PERIODIC Inspection criteria in Section 5.4.

# 5.6 Inspection records

**5.6.1** Dated inspection reports and records should be maintained at time intervals corresponding to those that apply for the hoist's PERIODIC intervals as per Section 5.4. These records should be stored where they are available to personnel involved with the inspection, maintenance or operation of the hoist.

**5.6.2** A long-term chain inspection program should be established and should include records of examination of chains removed from service so a relationship can be established between visual observation and actual condition of the chain.

# 5.7 Inspection methods and criteria

**5.7.1** This section covers the inspection of specific items. The list of items in this section is based on those listed in ANSI/ASME B30.16 for the Frequent and Periodic Inspections. In accordance with ANSI / ASME B30.16, these inspections are not intended to involve disassembly of the hoist. Disassembly for further inspection would be required if frequent or periodic inspection results indicate so. Such disassembly and further inspection should be performed by a Vulcan Hoist qualified technician.

TABLE 5-3: HOIST INSPECTION METHODS AND CRITERIA

| Item | Method | Criteria | Action |
|---|---|---|---|
| Functional operating mechanisms | Visual Auditory | Mechanisms should be properly adjusted and should not produce unusual sounds when operated. | Repair or replace as required. |
| Limit Switches (Upper and lower) | Function | Proper operation. Actuation of limit switch should stop hoist. | Adjust or replace as required. |
| Braking System Operation | Function | Should stop the load without significant travel after motor is turned off. | Adjust or replace. |
| Hooks – Fretting wear | Measure | Excessive wear of original hook dimensions resulting in reduction of the load bearing cross section area of 10% or more. Refer to section 5.7.3 for details. | Replace |
| Hooks – Stretch | Measure | Any distortion resulting in throat opening larger than 5% of the original dimension. For additional details, refer to section 5.7.3. | Replace |
| Hooks – Bent Shank or Neck | Visual | Shank and neck portions of hook should be free of deformations. | Replace |

| | | | |
|---|---|---|---|
| Hooks – Swivel Bearing | Visual<br>Function | Bearing parts and surfaces should not show significant wear, and should be free of dirt, grime and deformations. Hook should rotate freely with no roughness. | Clean/lubricate, or replace as required. |
| Hooks – Yoke Assembly | Visual | Should be free of significant rust, weld splatter, nicks, and gouges. Holes should not be elongated. | Measure, tighten, or replace as required. |
| Hooks – Idle Sprocket and Bearings (Bottom Hook on 2 & 3 Fall Hoist) | Visual<br>Function | Pockets of Idle Sprocket should be free of significant wear. Idle Sprocket surfaces should be free of nicks, gouges, dirt, and grime. Bearing parts and surfaces of Idle Sprocket should not show significant wear. Idle Sprocket should rotate freely with no roughness or significant free play. | Clean/lubricate, or replace as required. |
| Hooks – Hook Latches | Visual<br>Function | Latch should not be deformed. Attachment of latch to hook should not be loose. Latch spring should not be missing and should not be weak, latch movement should not be stiff – when depressed and released latch should snap quickly to its closed position. | Replace |
| Load Chain –<br>Surface Condition | Visual | Should be free of rust, nicks, gouges, dents and weld splatter. Links should not be deformed, and should not show signs of abrasion. Surfaces where links touch should be free of significant wear. | Replace |
| Load Chain –<br>Pitch and Wire Diameter | Measure | The "P" dimension should not be greater than maximum value listed in section 5.7.2. The "d" dimension should not be less than minimum value listed in section 5.7.2. | Replace. Inspect Load Sprocket (and Idle Sprocket for 2 & 3 fall hoist). |
| Load Chain – Lubrication | Visual<br>Auditory | Entire surface of each chain link should be coated with lubricant and should be free of dirt and grime. Chain should not emit cracking noise when hoisting a load. | Clean/lubricate (see Section 6.2). |
| Load Chain – Reeving | Visual | Chain should be reeved properly through Load Sprocket (and Idle Sprocket for 2 & 3 fall hoist). | Reeve/Install chain properly (refer to section 6.4). |
| Load chain – Connection Yoke Chain Pin (2 & 3 Fall Hoists Only) | Measure | The Connection Yoke Chain Pin should not have any apparent deformation. The "d" dimension should not be less than the discard value listed at the bottom of Section 5.7.2. | Replace |
| Chain Container | Visual | Container should not be damaged. Brackets should not be deformed or missing. | Replace |
| Bolts, Nuts, and Rivets | Visual | Bolts, nuts, and rivets should not be loose. | Tighten or replace as required. |

| | | | |
|---|---|---|---|
| Electromagnetic Brake Assembly | Measure Visual | The electromagnetic motor brake gap is directly related to brake disk wear. As the disk wears, the brake gap will increase. The brake gap/wear dimension should not be more than 0.050". Bolts and screws should not be loose. | Section 6.6 for disc brake adjustment. |
| Contactors | Visual | Contact should be free of significant pitting or deterioration. | Replace |
| Load Sprocket | Visual | Pockets of Load Sprocket should be free of excessive wear. | Replace |
| Pendant – Housing | Visual | Pendant housing should be free of cracks and mating surfaces of parts should seal without gaps. | Replace |
| Pendant – Wiring | Visual | Wire connections to switches in pendant should not be loose or damaged. | Replace |
| Pendant – Switches | Function | Depressing and releasing push-button should make and break contact in switch contact block and result in corresponding electrical continuity or open circuit. Push-buttons should be interlocked either mechanically or electrically to prevent simultaneous energization of circuits for opposing motions. (up and down). | Replace |
| Pendant –Cable | Visual Electrical Continuity | Surface of cable should be free from nicks, gouges, and abrasions. Each conductor in cord should have 100% electrical continuity even when cord is flexed back-and forth. | Replace |
| Pendant - Cable Strain Relief Cable | Visual Functional | Pendant Cable Strain Relief Cable should absorb the entire load associated with forces applied to the pendant. | Replace |
| Pendant - Labels | Visual | Labels denoting functions should be legible. | Replace |
| Warning Labels | Visual | Warning Labels should be affixed to the hoist (see Section 1) and they should be legible. | Replace |
| Hoist Capacity Tag | Visual | The tag that indicates the capacity of the hoist should be legible and securely attached to the hoist cover. | Replace |
| Nameplates | Visual | The nameplates that indicate the hoist model, speed and motor data should be legible and securely attached to the hoist. | Replace |

### 5.7.2 Load Chain Discard Criteria

The load chain used on VULCAN HOISTS is heat treated. No link or links can be added or welded after leaving factory. **DO NOT USE** hoist, even if there is only one (1) link worn out or elongated beyond the permissible dimensions listed below:

| Capacity | Diameter | Length of 11 Links | |
|---|---|---|---|
| | | Nominal | Permissible |
| ALL | 7.9 mm | 9.961" (253 mm) | 10.157" (258 mm) |

The sketch below shows the method of measuring the pitch in eleven (11) links.

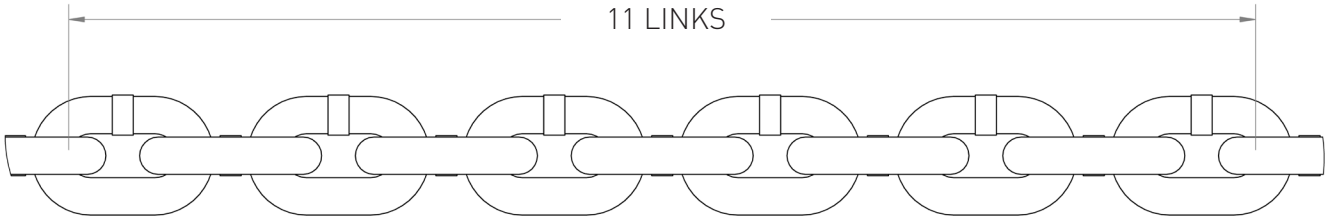

### 5.7.3 Hook Measurements and Discard Criteria

As per the ASME B30.10 guidelines, Vulcan recommends changing any hook that exhibits the following signs of wear:

1. Missing or illegible hook identification and/or working load limit.
2. Excessive pitting, corrosion, cracks, nicks, or gouges on the hook body or retaining pin.
3. Any signs of welding or heat damage on the hook body or retaining pin.
4. Any wear, resulting in dimension change of more than 10% the original value on the hook body or retaining pin.
5. Permanent deformation resulting in throat opening exceeding the original value by 5%.

Note: if there is excessive throat opening, DO NOT attempt to repair by closing the hook. The strength of the hook will not be the same as the original.

The user is responsible for measuring the exact initial dimensions of the hook for future maintenance purposes. The following table can be used as a reference; please note that the dimensions provided are nominal and the actual hook dimensions may vary.

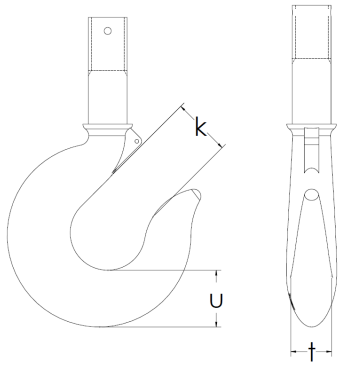


TABLE 5-4: HOOK DEFORMATION

| Hook Capacity | k | | t | | u | |
|---|---|---|---|---|---|---|
| | Initial | Discard | Initial | Discard | Initial | Discard |
| 1/4T - 1T | 1.29 | ≥ 1.35 | 0.79 | ≤ 0.71<br>≥ 0.87 | 0.96 | ≤ 0.86<br>≥ 1.06 |
| 1/4T - 1 1/2T | 1.10 | ≥ 1.16 | 0.87 | ≤ 0.78<br>≥ 0.96 | 1.11 | ≤ 1.00<br>≥ 1.22 |
| 2T, 3T and 5T | 1.28 | ≥ 1.34 | 1.15 | ≤ 1.04<br>≥ 1.27 | 1.45 | ≤ 1.31<br>≥ 1.60 |

* All dimensions are in inches.

# 6.0 Maintenance

## 6.1 Maintenance schedule and records

Maintenance schedule should be based on inspection results and any maintenance procedure should be recorded in a log book for future reference.

## 6.2 Lubrication — load chain, hooks, and suspension

### 6.2.1 Load Chain

- For longer life, the load chain should be lubricated.
- The load chain lubrication should be accomplished after cleaning the load chain with an acid-free cleaning solution.
- Machine or gear oil (grade ISO VG 46 or 68 or equivalent) may be used as an alternative lubricant but must be applied more frequently.
- The chain should be lubricated every 3 months (more frequently for heavier usage or severe conditions).
- For dusty environments, it is acceptable to use a dry lubricant.

### 6.2.2 Hooks and Suspension Components:

- Hooks - Bearings should be cleaned and lubricated at least once per year for normal usage. Clean and lubricate more frequently for heavier usage or severe conditions.
- Suspension Pins – Lubricate at least twice per year for normal usage; more frequently for heavier usage or severe conditions.

## 6.3 Lubrication — transmission

**6.3.1** **Oil level** – The oil level should be just below the hole when the hoist is leveled.

**6.3.2** **Replacing oil** – Change gear oil once after the first 6 months of purchase and once every 2 years afterwards. The oil should be changed more frequently depending on the hoist's usage and operating environment. Follow the procedure below for replacing the gearbox oil for your hoist:

- To drain the current oil from the hoist, remove the "Oil Plug" on top of the hoist and the "Oil Drain Plug" on the bottom of the hoist. Allow the old oil to drain completely.
- NOTICE: Dispose of the used oil in accordance with local regulations.
- Refill the reducer with Meropa 320 (regular), Meropa EP 220 (synthetic) or equivalent oil until the oil level is just below the hole when the hoist is leveled.
- Warning! Using the incorrect type, grade and/or volume of oil and/or mixing different types of oil may cause serious damage to the reducer gearing.

# 6.4 Load chain

**6.4.1 Lubrication and Cleaning** – see Section 6.2.1.

**6.4.2 Load Chain Replacement:**

**DANGER**

The hoist must be properly powered and operational in order to perform the following procedures.

Be certain that the replacement chain is obtained from Vulcan Hoist Co. Ltd. and is the exact size, grade and construction as the original chain. The new load chain must have an odd number of links so that both its end links have the same orientation. If the load chain is being replaced due to damage or wear, destroy the old chain to prevent its reuse.

When replacing load chain, check for wear on mating parts, i.e. Load Sprocket, Chain Guides and Idle Sprocket, and replace parts if necessary.

1. Remove all chain components including the Bottom Hook Set Assembly and Stoppers from the chain for reuse on new chain. Inspect and replace any damaged or worn parts.
2. Activate the down button until there is approximately 12" of chain on the no load side.
3. Using a C-link, attach the new chain to the end link of the old chain on the no-load side. The end link of the new load chain should be connected so that the welded portions of the load chain's standing links are oriented to the outside as they pass over the sprocket.
4. Operate the hoist down to move the chain though the hoist body. Stop when a sufficient amount of new chain is accumulated on the load side.
5. Single fall hoists – Attach the components (step 4 above) to the chain. See sections 3.2, 3.3, and 3.4 for the proper locations.
6. 2 & 3 falls– Feed the end link on the load side of the new chain through the required chain components (step 4 above) and the bottom hook's idle Sprocket. Attach the remaining chain components to the chain referring to the sections 3.2, 3.3, and 3.4 for the proper locations. Connect the end link to the top connection yoke with the chain pin, slotted nut, and cotter pin. Ensure that chain remains free of twists. Refer to Section 3.4.
7. After installation has been completed, perform steps outlined in Section 3.6, "Functional verification and trial operations".

# 6.5 Adjusting your Vulcan limit switches

**WARNING**

DO NOT suspend a load on the hook when adjusting the limit switches.

1. Remove the bolts holding the plastic cover in place.
2. Remove the plastic cover, revealing the limit switch assembly.

**Lower limit adjustment**

To make your hoist stop at a certain height when lowering the hook:

3. Bring the hook to the desired height using the pendant control.
4. Loosen the two screws (9) on the limit switch without removing them.
5. Pull back the adjustment bar (10) so that the adjustment wheels can turn freely.
6. Turn on the lower limit adjustment wheel (7) towards the micro limit switch (12) until it clicks (see Figure 6-1 below).
7. Put back the adjustment bar (10) in place and tighten both screws (9).
8. Test the lower limit a few times until the hoist stops at the desired height. If not, repeat steps 3 to 8 for finer tuning. Test the lower limit a few times until the hoist stops at the desired height.

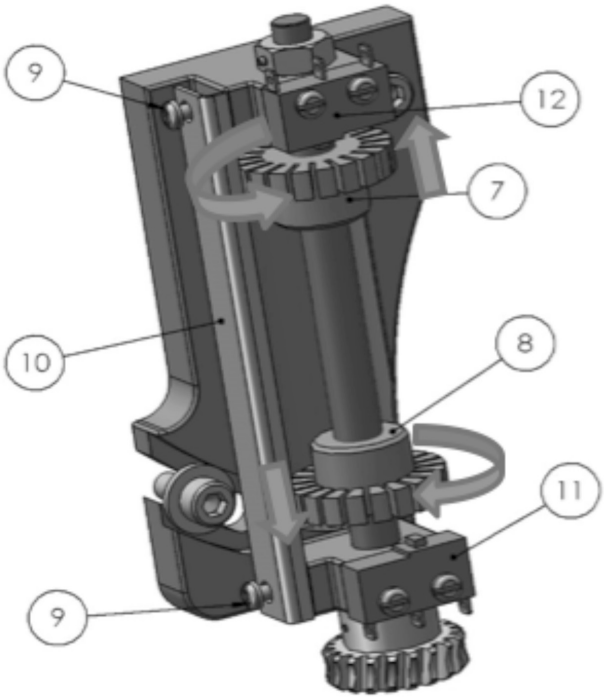


**Figure 6-1**

**Upper limit adjustment**

To make your hoist stop at a certain height when raising the hook:

10. Bring the hook to the desired height using the pendant control.
11. Loosen the two screws (9) on the limit switch without removing them.
12. Pull back the adjustment bar (10) so that the adjustment wheels can turn freely.
13. Turn on the upper limit adjustment wheel (8) towards the micro limit switch (11) until it clicks (see Figure 6-1 above).
14. Put back the adjustment bar (10) in place and tighten both screws (9).
15. Test the upper limit a few times until the hoist stops at the desired height. If not, repeat steps 10 to 15 for finer tuning.

**Note:** 2 to 3 teeth on the adjustment wheel represent approximately 1 foot of chain. Putting the adjustment wheel (7) closer to the micro switch (12) will reduce (restrain) the lower limit. Putting it further will increase it.

**NOTICE**

The limit switch is not 100% accurate, which means that the height calibrated for either upper or lower limit WILL vary up to 6 inches every time. Keep that in mind while adjusting your limit switch and make sure you test it a few times before operating the hoist.

**WARNING**

When adjusting the lower limit, always make sure that there is no tension in the free end of the chain. Failure to adjust the lower limit properly will damage your hoist and /or your chain.

When adjusting the upper limit, always make sure that you have a safe distance between the hook and the hoist body. Failure to adjust the upper limit properly will damage your hoist and or your chain.

# 6.6 Disc brake adjustment

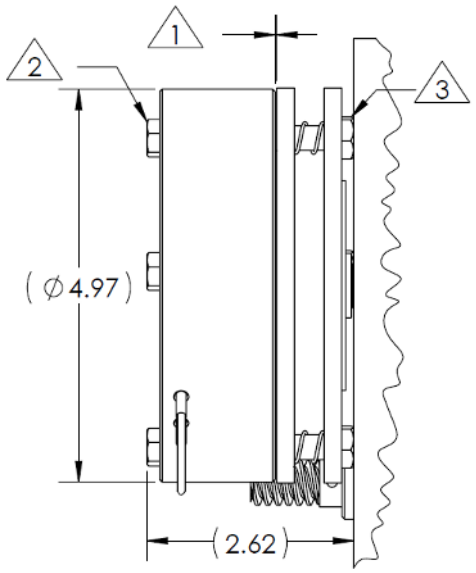


| ADJUSTMENT PROCEDURE | |
|---|---|
| 1 | Tighten all three mounting bolts (2) to snug, 3-4 N-m / 2.2-3.0 ft-lb |
| 2 | Adjust the gap (1) to .010 in by tightening or loosening the three bolts (3). Use a thickness gauge to check the gap at all three bolts (3) |
| 3 | Tighten all three mounting bolts (2) to 5-6 N-m / 3.7-4.4 ft-lb |
| 4 | Recheck the gap (1) with a thickness gauge. Repeat steps 2, 3 and 4 until the gap is adjusted to .010 in |

**CAUTION**

Check the brake gap regularly and/or during the periodic maintenance of the equipment hoist. **Readjust the brake if the gap is larger than .030 in.**

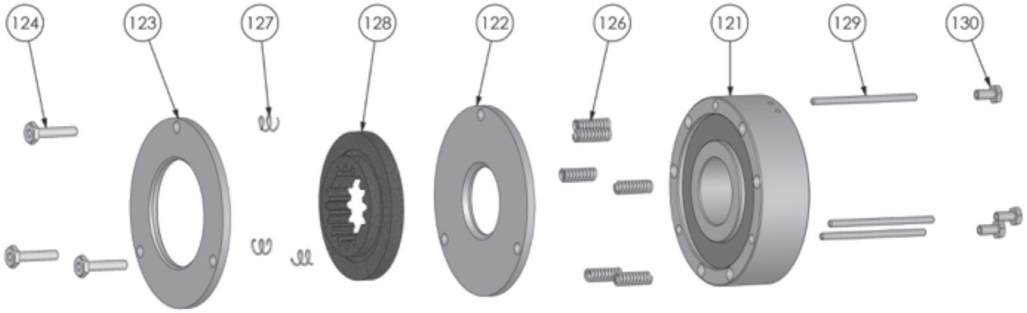


**Figure 6-2**

# 6.7 Storage

**6.7.1** All hoists equipped with a vented oil cap should be stored with the cap oriented upwards to prevent oil leakage.

**6.7.2** The storage location should be clean and dry.

# 6.8 Outdoor installation

**6.8.1** For hoist installations that are outdoors, the hoist MUST BE covered and protected from the weather at all times.

**6.8.2** Possibility of corrosion on components of the hoist increases for installation where salt air and high humidity are present. The hoist may require more frequent lubrication. Make frequent and regular inspections of the unit's condition and operation.

**6.8.3** For hoist installations where temperature variations introduce condensation into the hoist additional inspection and more frequent lubrication may be required.

**6.8.4** Refer to for allowable environmental conditions.

# 6.9 Operational environment

Unless otherwise specified, the hoist does not conform to the following operational environments and should therefore not be used for any such applications:

- Explosive gases or vapor.
- Organic solvents or volatile power.
- Excessive amounts of powder and dust of general substances.
- Excessive amount of acids or salts.

# 7.0 Troubleshooting

**WARNING**

**Hazardous voltages are present in the hoist and in connections between components.**

De-energize equipment before performing ANY maintenance. Refer to ANSIZ244.1, "Personnel Protection – Lockout/Tag out of Energy Sources".

To avoid a shock hazard, DO NOT perform ANY mechanical or electrical maintenance on the dual-speed (or VFD control) hoist within 5 minutes of de-energizing (disconnecting) the trolley or hoist.

Only trained and qualified personnel should inspect and repair this equipment.

TABLE 7-1: TROUBLESHOOTING GUIDE

| Symptom | Cause | Remedy |
|---|---|---|
| **Hoist moving in wrong direction** | Power supply reversed phased | Switch 2 of the 3 power supply cords wired at the power source. (see Section 3.5 for instructions on how to check for correct power supply phase connections). |
| | Improper electrical connections | Refer to wiring diagram and check all connections. |
| **Hoist will not operate** | Loss of power | Check circuit breakers, switches, fuses, and connections on power lines/cable. |
| | Low voltage in hoist's power supply | Determine cause of low voltage and bring to within plus or minus 10% of the voltage specified on the motor nameplate. The voltage should be measured at the hoist contactor. |
| | Wrong voltage or frequency | Check voltage and frequency of power supply against the rating on the nameplate of the motor. |
| | Hoist overloaded | Reduce load to within rated capacity of hoist. |
| | Motor overheated and thermal overload protector has tripped | See Troubleshooting Problem "Motor or brake overheating". |
| | Improper, loose, or broken wire in hoist electrical system | Shut off power supply, check wiring connection on hoist control panel and inside push - button pendant. |
| | Brake does not release | Check motor brake coil for continuity. Replace brake if needed. |
| | Faulty magnetic contractor | Check coil for open or short circuit. Check all connections in the control circuit. Check for open contactors. Replace as needed. |
| | Emergency Stop Depressed on Push Button Pendant Control | Turn the Emergency Stop Button Clockwise to unlock the control and allow hoist operation. |
| | Defect in control transformer | Check transformer coil for signs of overheating. Disconnect transformer and check for open winding. |

| TABLE 7-1 TROUBLESHOOTING GUIDE (CONT'D) | | |
|---|---|---|
| **Symptom** | **Cause** | **Remedy** |
| **Hoist Will not Operate** | Motor burned out | Replace motor frame/stator, shaft/rotor, and any other damaged parts. |
| | Down circuit open | Check circuit for loose connections. Check down side of limit switch for malfunction. |
| | Broken conductor in pendant cord | Check the continuity for each conductor in the cable. If one is broken, replace entire cable. |
| | Faulty magnetic contactors | Check coils for open or short circuit. Check all connections on motor circuit. Check for burned contact. Replace as needed. |
| **Hoist lifts but will not lower** | Faulty switch in pendant | Check electrical continuity. Check electrical connections. Replace or repair as needed. |
| | Hoist overloaded | Reduce load within rated capacity. |
| | Up circuit | Check circuit for loose connections. Check up side of limit switch for malfunction. |
| | Broken conductor in pendant cord | Check the continuity of each conductor in the cable. If one is broken, replace entire cable. |
| **Hoist lowers but will not lift** | Faulty magnetic contactor | Check coils for open or short circuit. Check all connections on motor circuit. Check for burned contacts. Replace as needed. |
| | Faulty switch in pendant | Check electrical continuity. Check electrical connections. Repair or replace as needed. |
| **Hoist will not lift rated load or does not have the proper lifting speed** | Hoist overloaded | Reduce load to within rated capacity. |
| | Low voltage in hoist's power supply. | Determine cause of low voltage and bring to within plus or minus 5% of voltage specified on the motor nameplate. The voltage should be measured at the hoist contactor. |
| **Load drifts excessively when hoist is stopped** | Motor brake not holding | Check brake for proper "Brake Gap" dimension (section 6.6). Replace if needed. |
| **Motor or brake overheating** | Excessive load | Reduce load to within rated capacity of hoist. |
| | Excessive duty cycle | Reduce frequency of lifts. |
| | Wrong voltage or frequency | Check voltage and frequency of power supply against the rating on the nameplate on the motor. |
| | Extreme external heating | Above an ambient temperature of 40°C, the frequency of hoist operation must be reduced to avoid overheating of the motor. Special provisions should be made to ventilate the hoist or otherwise shield it from the heat. |
| **Hoist operates intermittently** | Connectors making poor contact | Check movement of spring loaded arm, weak spring, connections and shoe. Replace as needed. |
| | Contactor contacts arcing | Check for burned contacts. Replace as needed. |
| | Loose connection in circuit | Check all wires and terminals for bad connections. Replace as needed. |
| | Broken conductor in Pendant Cord | Check for intermittent continuity in each conductor in the Pendant Cord. Replace entire Pendant Cord if continuity is not constant. |

# 8.0 Part list

Please consult our website vulcanhoist.com for the complete parts list.

# 9.0 Warranty

## Warranty explanation and terms

All product sold by the Vulcan Hoist Company Ltd. (hereinafter referred to as, Vulcan) are warranted to be free from defects in material and workmanship from date of shipment by Vulcan for the following periods:

**Vulcan Manual products – 2 years**

**Nova Manual products – 1 year**

**Electric Hoists & Trolleys– 2 years**

**Spare / Replacement Parts – 1 year**

The product must be used in accordance with manufacturer's recommendations and must not have been subject to abuse, lack of maintenance, misuse, negligence, or unauthorized repairs or alterations.

Should any defect in material or workmanship occur during the above time period in any product as determined by Vulcan's inspection of the product, Vulcan agrees, at its discretion, either to replace (not including installation) or repair the part or product free of charge and deliver said item F.O.B. Vulcan place of business to customer.

Customer must obtain a Return Good Authorization as directed by Vulcan prior to shipping the product for warranty evaluation. An explanation of the complaint must accompany the product. Product must be returned freight prepaid. Upon repair, the product will be covered for the remainder of the original warranty period. If it is determined there is no defect, or that the defect resulted from causes not within the scope of Vulcan's warranty, the customer will be responsible for the costs of returning the product.

Vulcan disclaims any and all other warranties of any kind expressed or implied as to the product's merchantability or fitness for a particular application. Vulcan will not be liable for any deaths or injuries to people, any property damages, or any additional expenses resulting from failure to follow the guidelines (intentionally or due to negligence) for safe installation, use, maintenance and inspection described in this manual and all applicable standards.

# APPENDIX

## DEFINITIONS OF VARIOUS HOIST TERMS

**Abnormal operating conditions -** Environmental conditions that are unfavorable, harmful, or detrimental to or for the operation of a hoist, such as excessively high or low ambient temperatures, exposure to weather, corrosive fumes, dust laden or moisture laden atmospheres, and hazardous locations.

**Below - the - hook lifting devices -** Devices that are not normally reeved onto the hoist chain, such as hook - on buckets, magnets, grabs, and other supplemental devices used for ease of handling certain types of loads. The weight of these devices is to be considered part of the load to be lifted.

**Block loads -** An action that facilitates the removal of slings or other lifting devices from under the load, accomplished by bringing the load to rest on wood, metal, or other spacers between the floor and load.

**Brake, holding -** A friction brake for a hoist that is automatically applied and prevents motion when power to the brake is removed.

**Chain, load -** Welded ling chain rated for lifting.

**Chain, roller -** A series of alternately assembled roller links and pin links in which the pins articulate inside the bushings and the rollers are free to tum on the bushings. Pins and bushings are press fit in their respective link plates.

**Chain, welded link -** A chain consisting of a series of interwoven links formed and welded.

**Designated person -** A person selected or assigned by the employer or the employer's representative as being competent to perform specific duties.

**Guide, chain -** A means to guide the load chain at the load sprocket.

**Hoist -** A machinery unit that is used for lifting or lowering a freely suspended (unguided) load.

**Lifting devices -** Devices that are not normally reeved onto the hoist chain, such as hook - on buckets, magnets, grabs, and other supplemental devices used for ease of handling certain types of loads. The weight of these devices is to be considered part of the load to be lifted.

**Limit device -** A device that is operated by some part or motion of a power driven hoist to limit motion.

**Limit device, primary upper -** See primary upper - limit device.

**Load -** The total superimposed weight on the load block or hook.

**Load, rated -** The maximum load for which a hoist is designated by the manufacturer or a qualified person.

**Load block -** The assembly of hook, swivel, bearing, sprockets, pins, and frame suspended by the hoisting load chain. This shall include any appurtenances reeved in the hoisting load chain.

**Load chain -** See chain, load.

**Load suspension parts -** The load suspension parts of the hoist are the means of suspending the hoist structure and load such as hooks, lugs, load blocks, drum and rope/cable, or sprocket and chain.

**Normal operating conditions -** Conditions during which a hoist is performing functions within the scope of the original design.

**Overload -** Any load greater than the rated load.

**Over travel restraint -** A device used to prevent the slack load chain from inadvertently being lowered out of the load sprocket.

**Parts (lines) -** Number of lines of chain supporting the load blocks or hook.

**Pendant station -** Controls suspended from the hoist for operating the unit from the floor.

**Power transmission parts -** The machinery components including the gears, shafts, clutches, couplings, bearings, motors, and brakes.

**Primary upper - limit device -** The primary upper - limit device is the first limit device that will be activated to control the upper limit of travel of the load block when a hoist is equipped with more than one upper - limit device.

**Qualified person -** A person who, by possession of a recognized degree in an applicable field or a certificate of professional standing, or who by extensive knowledge, training, and experience, has successfully demonstrated the ability to solve or resolve problems relating to the subject matter and work.

**Rated load -** See load, rated.

**Reeving -** A system in which a chain travels around sprockets, roller chain - See chain, roller.

**Sheave -** A grooved wheel or sprocket used with a chain to change direction and point of application of a pulling force.

**Sprocket, idler -** A freely rotating device that changes the direction of the load chain.

**Sprocket, load -** A hoist component that transmits motion to the load chain. This component is sometimes called load wheel, load sheave, pocket wheel, or chain wheel.

**Switch -** A device for making, breaking, or changing the connections in an electric or pneumatic circuit (valve).

**Trolley -** A machine unit that travels on a monorail track or crane bridge girder.

**Trolley hoist -** A hoist and trolley unit consisting of a hoist suspended from or mounted to a trolley, or a hoist with an integral trolley.

**Welded link chain -** See chain, welded link.

# Nomenclature

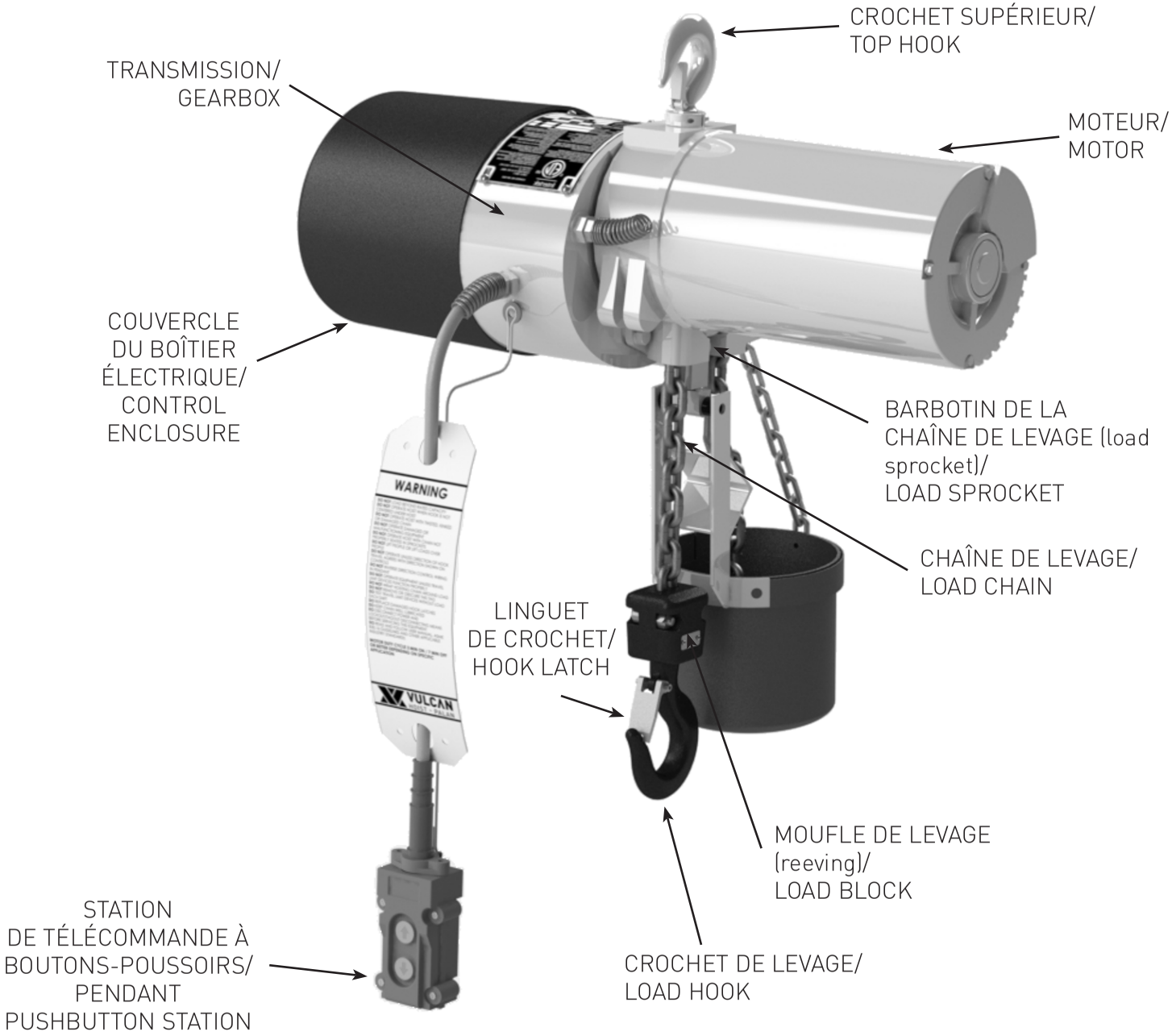

# Spécifications des produits / Product specifications

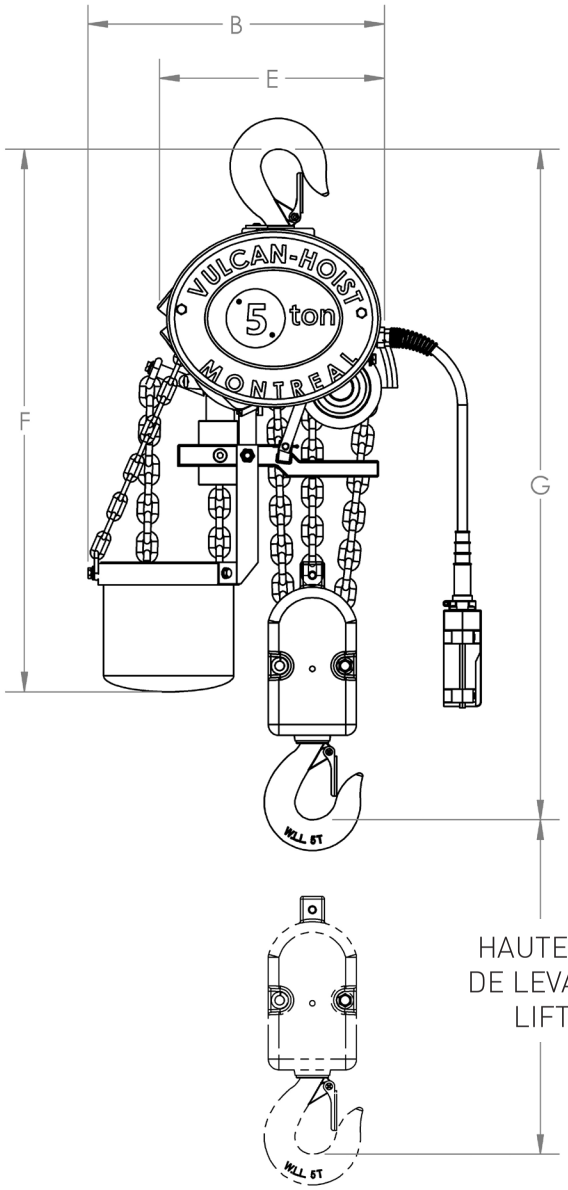


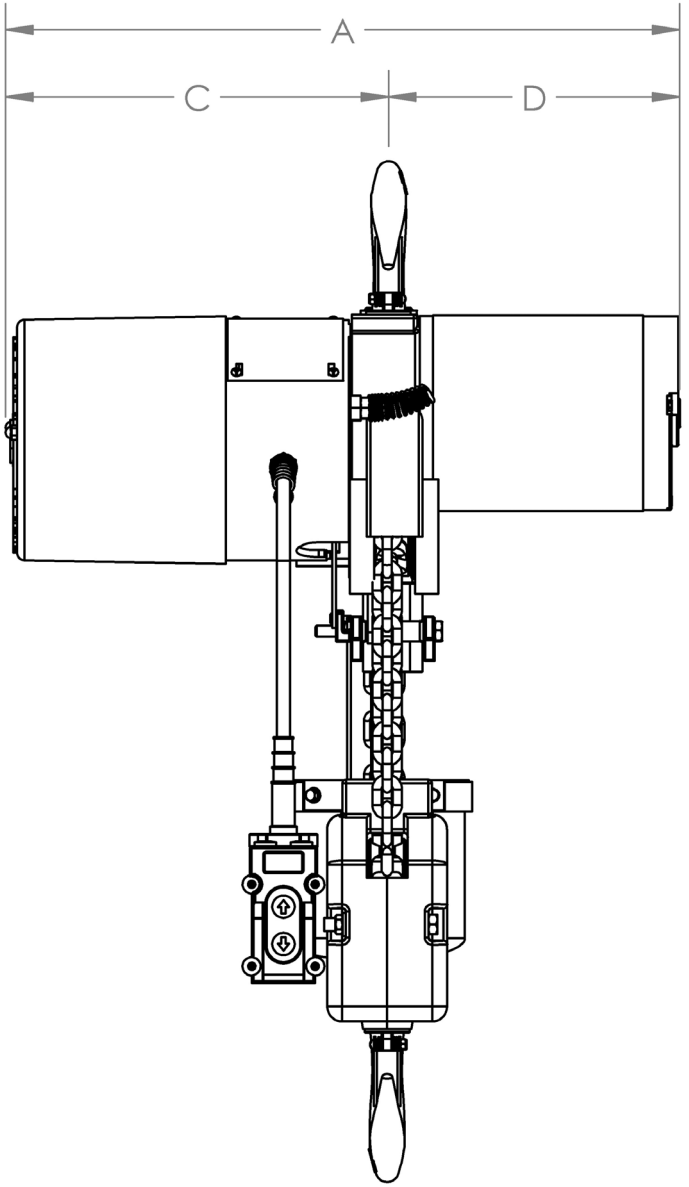

| TABLEAU 2 - 1: MODÈLES À UNE VITESSE / TABLE 2 - 1: SINGLE SPEED MODELS | | | | | | | | | | | | | | |
|---|---|---|---|---|---|---|---|---|---|---|---|---|---|---|
| **Capacité Capacity** | **Volt** | **Phase** | **Modèle Model** | **Vitesse de levage (ppm) Lifting speed (fpm)** | **Hp** | **Retom-bée(s) Chain fall(s)** | **Poids (lbs) incluant crochets et 10' de chaine Weight (lbs) including hooks and chain for 10ft lift** | **Dimensions en pouces (in) Dimensions in inches (in)** | | | | | | |
| | | | | | | | | **A** | **B** | **C** | **D** | **E** | **F** | **G** |
| **MODÈLES À UNE VITESSE / SINGLE SPEED MODELS** | | | | | | | | | | | | | | |
| 1/4 TONNE / TON | 115 | 1 | L05A08 | 8 | 3/4 | 1 | 100 | 23 1/4 | 13 1/2 | 12 7/8 | 10 3/8 | 10 | 23 7/8 | 18 7/8 |
| | | | L05A14 | 14 | 3/4 | 1 | 100 | 23 1/4 | 13 1/2 | 12 7/8 | 10 3/8 | 10 | 23 7/8 | 18 7/8 |
| | | | L05A20 | 20 | 1 1/2 | 1 | 105 | 24 1/4 | 13 1/2 | 12 7/8 | 11 3/8 | 10 | 23 7/8 | 18 7/8 |
| | | | L05A26 | 26 | 1 1/2 | 1 | 105 | 24 1/4 | 13 1/2 | 12 7/8 | 11 3/8 | 10 | 23 7/8 | 18 7/8 |
| | | | L05A33 | 33 | 1 1/2 | 1 | 105 | 24 1/4 | 13 1/2 | 12 7/8 | 11 3/8 | 10 | 23 7/8 | 21 7/8 |
| | | | L05A40 | 40 | 1 1/2 | 1 | 105 | 24 1/4 | 13 1/2 | 12 7/8 | 11 3/8 | 10 | 23 7/8 | 21 7/8 |
| | | | L05A52 | 52 | 1 1/2 | 1 | 105 | 24 1/4 | 13 1/2 | 12 7/8 | 11 3/8 | 10 | 23 7/8 | 21 7/8 |
| | 230 | 1 | L05F10 | 10 | 3/4 | 1 | 100 | 23 1/4 | 13 1/2 | 12 7/8 | 10 3/8 | 10 | 23 7/8 | 18 7/8 |
| | | | L05F16 | 16 | 3/4 | 1 | 100 | 23 1/4 | 13 1/2 | 12 7/8 | 10 3/8 | 10 | 23 7/8 | 18 7/8 |
| | | | L05F20 | 20 | 1 1/2 | 1 | 105 | 24 1/4 | 13 1/2 | 12 7/8 | 11 3/8 | 10 | 23 7/8 | 18 7/8 |
| | | | L05F26 | 26 | 1 1/2 | 1 | 105 | 24 1/4 | 13 1/2 | 12 7/8 | 11 3/8 | 10 | 23 7/8 | 18 7/8 |
| | | | L05F33 | 33 | 1 1/2 | 1 | 105 | 24 1/4 | 13 1/2 | 12 7/8 | 11 3/8 | 10 | 23 7/8 | 21 7/8 |
| | | | L05F40 | 40 | 1 1/2 | 1 | 105 | 24 1/4 | 13 1/2 | 12 7/8 | 11 3/8 | 10 | 23 7/8 | 21 7/8 |
| | | | L05F52 | 52 | 1 1/2 | 1 | 105 | 24 1/4 | 13 1/2 | 12 7/8 | 11 3/8 | 10 | 23 7/8 | 21 7/8 |
| | 230 | 3 | L05H16 | 16 | 1 | 1 | 103 | 23 1/4 | 13 1/2 | 12 7/8 | 10 3/8 | 10 | 23 7/8 | 18 7/8 |
| | | | L05H20 | 20 | 2 | 1 | 103 | 24 1/4 | 13 1/2 | 12 7/8 | 11 3/8 | 10 | 23 7/8 | 18 7/8 |
| | | | L05H28 | 28 | 2 | 1 | 103 | 24 1/4 | 13 1/2 | 12 7/8 | 11 3/8 | 10 | 23 7/8 | 18 7/8 |
| | | | L05H33 | 33 | 2 | 1 | 103 | 24 1/4 | 13 1/2 | 12 7/8 | 11 3/8 | 10 | 23 7/8 | 21 7/8 |
| | | | L05H40 | 40 | 2 | 1 | 103 | 24 1/4 | 13 1/2 | 12 7/8 | 11 3/8 | 10 | 23 7/8 | 21 7/8 |
| | | | L05H52 | 52 | 2 | 1 | 103 | 24 1/4 | 13 1/2 | 12 7/8 | 11 3/8 | 10 | 23 7/8 | 21 7/8 |

| | | | | | | | | | | | | | |
|---|---|---|---|---|---|---|---|---|---|---|---|---|---|
| 1/4 TONNE / TON | 460 | 3 | L05T16 | 16 | 1 | 1 | 94 | 22 3/4 | 13 1/2 | 12 7/8 | 9 7/8 | 10 | 23 7/8 | 18 7/8 |
| | | | L05T20 | 20 | 2 | 1 | 103 | 24 1/4 | 13 1/2 | 12 7/8 | 11 3/8 | 10 | 23 7/8 | 18 7/8 |
| | | | L05T28 | 28 | 2 | 1 | 103 | 24 1/4 | 13 1/2 | 12 7/8 | 11 3/8 | 10 | 23 7/8 | 18 7/8 |
| | | | L05T33 | 33 | 2 | 1 | 103 | 24 1/4 | 13 1/2 | 12 7/8 | 11 3/8 | 10 | 23 7/8 | 21 7/8 |
| | | | L05T40 | 40 | 2 | 1 | 103 | 24 1/4 | 13 1/2 | 12 7/8 | 11 3/8 | 10 | 23 7/8 | 21 7/8 |
| | | | L05T52 | 52 | 2 | 1 | 103 | 24 1/4 | 13 1/2 | 12 7/8 | 11 3/8 | 10 | 23 7/8 | 21 7/8 |
| | 575 | 3 | L05V10 | 10 | 1 | 1 | 94 | 22 3/4 | 13 1/2 | 11 3/8 | 9 7/8 | 10 | 23 7/8 | 18 7/8 |
| | | | L05V16 | 16 | 1 | 1 | 94 | 22 3/4 | 13 1/2 | 11 3/8 | 9 7/8 | 10 | 23 7/8 | 18 7/8 |
| | | | L05V20 | 20 | 2 | 1 | 103 | 24 1/4 | 13 1/2 | 11 3/8 | 11 3/8 | 10 | 23 7/8 | 18 7/8 |
| | | | L05V28 | 28 | 2 | 1 | 103 | 24 1/4 | 13 1/2 | 11 3/8 | 11 3/8 | 10 | 23 7/8 | 18 7/8 |
| | | | L05V33 | 33 | 2 | 1 | 103 | 24 1/4 | 13 1/2 | 11 3/8 | 11 3/8 | 10 | 23 7/8 | 21 7/8 |
| | | | L05V40 | 40 | 2 | 1 | 103 | 24 1/4 | 13 1/2 | 11 3/8 | 11 3/8 | 10 | 23 7/8 | 21 7/8 |
| | | | L05V52 | 52 | 2 | 1 | 103 | 24 1/4 | 13 1/2 | 11 3/8 | 11 3/8 | 10 | 23 7/8 | 21 7/8 |
| 1/2 TONNE / TON | 115 | 1 | L1A08 | 8 | 3/4 | 1 | 100 | 23 1/4 | 13 1/2 | 11 3/8 | 10 3/8 | 10 | 23 7/8 | 18 7/8 |
| | | | L1A14 | 14 | 3/4 | 1 | 100 | 23 1/4 | 13 1/2 | 11 3/8 | 10 3/8 | 10 | 23 7/8 | 18 7/8 |
| | | | L1A20 | 20 | 1 1/2 | 1 | 105 | 24 1/4 | 13 1/2 | 11 3/8 | 11 3/8 | 10 | 23 7/8 | 18 7/8 |
| | | | L1A26 | 26 | 1 1/2 | 1 | 105 | 24 1/4 | 13 1/2 | 11 3/8 | 11 3/8 | 10 | 23 7/8 | 18 7/8 |
| | | | L1A33 | 33 | 1 1/2 | 1 | 105 | 24 1/4 | 13 1/2 | 11 3/8 | 11 3/8 | 10 | 23 7/8 | 21 7/8 |
| | 230 | 1 | L1F10 | 10 | 3/4 | 1 | 100 | 23 1/4 | 13 1/2 | 11 3/8 | 10 3/8 | 10 | 23 7/8 | 18 7/8 |
| | | | L1F16 | 16 | 3/4 | 1 | 100 | 23 1/4 | 13 1/2 | 11 3/8 | 10 3/8 | 10 | 23 7/8 | 18 7/8 |
| | | | L1F20 | 20 | 1 1/2 | 1 | 105 | 24 1/4 | 13 1/2 | 11 3/8 | 11 3/8 | 10 | 23 7/8 | 18 7/8 |
| | | | L1F26 | 26 | 1 1/2 | 1 | 105 | 24 1/4 | 13 1/2 | 11 3/8 | 11 3/8 | 10 | 23 7/8 | 18 7/8 |
| | | | L1F33 | 33 | 1 1/2 | 1 | 105 | 24 1/4 | 13 1/2 | 11 3/8 | 11 3/8 | 10 | 23 7/8 | 21 7/8 |
| | | | L1F40 | 40 | 2 | 1 | 111 | 24 1/4 | 13 1/2 | 11 3/8 | 11 3/8 | 10 | 23 7/8 | 21 7/8 |
| | 230 | 3 | L1H10 | 10 | 1 | 1 | 94 | 22 3/4 | 13 1/2 | 11 3/8 | 9 7/8 | 10 | 23 7/8 | 18 7/8 |
| | | | L1H13 | 13 | 1 | 1 | 94 | 22 3/4 | 13 1/2 | 11 3/8 | 9 7/8 | 10 | 23 7/8 | 18 7/8 |
| | | | L1H16 | 16 | 1 | 1 | 94 | 22 3/4 | 13 1/2 | 11 3/8 | 9 7/8 | 10 | 23 7/8 | 18 7/8 |
| | | | L1H20 | 20 | 2 | 1 | 103 | 24 1/4 | 13 1/2 | 11 3/8 | 11 | 10 | 23 7/8 | 18 7/8 |
| | | | L1H28 | 28 | 2 | 1 | 103 | 24 1/4 | 13 1/2 | 11 3/8 | 11 3/8 | 10 | 23 7/8 | 18 7/8 |
| | | | L1H33 | 33 | 2 | 1 | 103 | 24 1/4 | 13 1/2 | 11 3/8 | 11 3/8 | 10 | 23 7/8 | 21 7/8 |
| | | | L1H40 | 40 | 2 | 1 | 103 | 24 1/4 | 13 1/2 | 11 3/8 | 11 3/8 | 10 | 23 7/8 | 21 7/8 |
| | | | L1H52 | 52 | 2 | 1 | 103 | 24 1/4 | 13 1/2 | 11 3/8 | 11 3/8 | 10 | 23 7/8 | 21 7/8 |

## TABLEAU 2 - 1: MODÈLES À UNE VITESSE / TABLE 2 - 1: SINGLE SPEED MODELS

| Capacité Capacity | Volt | Phase | Modèle Model | Vitesse de levage (ppm) Lifting speed (fpm) | Hp | Retom-bée(s) Chain fall(s) | Poids (lbs) incluant crochets et 10' de chaine Weight (lbs) including hooks and chain for 10ft lift | Dimensions en pouces (in) Dimensions in inches (in) | | | | | | |
|---|---|---|---|---|---|---|---|---|---|---|---|---|---|---|
| | | | | | | | | A | B | C | D | E | F | G |
| **MODÈLE À UNE VITESSE / SINGLE SPEED MODELS** | | | | | | | | | | | | | | |
| 1/2 TONNE / TON | 460 | 3 | L1T10 | 10 | 1 | 1 | 94 | 24 1/4 | 13 1/2 | 11 3/8 | 9 7/8 | 10 | 23 7/8 | 18 7/8 |
| | | | L1T13 | 13 | 1 | 1 | 94 | 24 1/4 | 13 1/2 | 11 3/8 | 9 7/8 | 10 | 23 7/8 | 18 7/8 |
| | | | L1T16 | 16 | 1 | 1 | 94 | 24 1/4 | 13 1/2 | 11 3/8 | 9 7/8 | 10 | 23 7/8 | 18 7/8 |
| | | | L1T20 | 20 | 2 | 1 | 103 | 24 1/4 | 13 1/2 | 11 3/8 | 11 3/8 | 10 | 23 7/8 | 18 7/8 |
| | | | L1T28 | 28 | 2 | 1 | 103 | 24 1/4 | 13 1/2 | 11 3/8 | 11 3/8 | 10 | 23 7/8 | 18 7/8 |
| | | | L1T33 | 33 | 2 | 1 | 103 | 24 1/4 | 13 1/2 | 11 3/8 | 11 3/8 | 10 | 23 7/8 | 21 7/8 |
| | | | L1T40 | 40 | 2 | 1 | 103 | 24 1/4 | 13 1/2 | 11 3/8 | 11 3/8 | 10 | 23 7/8 | 21 7/8 |
| | | | L1T52 | 52 | 2 | 1 | 103 | 24 1/4 | 13 1/2 | 11 3/8 | 11 3/8 | 10 | 23 7/8 | 21 7/8 |
| | 575 | 3 | L1V10 | 10 | 1 | 1 | 94 | 22 3/4 | 13 1/2 | 12 7/8 | 9 7/8 | 10 | 23 7/8 | 18 7/8 |
| | | | L1V13 | 13 | 1 | 1 | 94 | 22 3/4 | 13 1/2 | 12 7/8 | 9 7/8 | 10 | 23 7/8 | 18 7/8 |
| | | | L1V16 | 16 | 1 | 1 | 94 | 22 3/4 | 13 1/2 | 12 7/8 | 9 7/8 | 10 | 23 7/8 | 18 7/8 |
| | | | L1V20 | 20 | 2 | 1 | 103 | 24 1/4 | 13 1/2 | 12 7/8 | 11 3/8 | 10 | 23 7/8 | 18 7/8 |
| | | | L1V28 | 28 | 2 | 1 | 103 | 24 1/4 | 13 1/2 | 12 7/8 | 11 3/8 | 10 | 23 7/8 | 18 7/8 |
| | | | L1V33 | 33 | 2 | 1 | 103 | 24 1/4 | 13 1/2 | 12 7/8 | 11 3/8 | 10 | 23 7/8 | 21 7/8 |
| | | | L1V40 | 40 | 2 | 1 | 103 | 24 1/4 | 13 1/2 | 12 7/8 | 11 3/8 | 10 | 23 7/8 | 21 7/8 |
| | | | L1V52 | 52 | 2 | 1 | 103 | 24 1/4 | 13 1/2 | 12 7/8 | 11 3/8 | 10 | 23 7/8 | 21 7/8 |
| 1 TONNE / TON | 115 | 1 | L2A07 | 7 | 3/4 | 1 | H100 | 23 1/4 | 13 1/2 | 12 7/8 | 10 3/8 | 10 | 23 7/8 | 18 7/8 |
| | 230 | 1 | L2F07 | 7 | 3/4 | 1 | 100 | 23 1/4 | 13 1/2 | 12 7/8 | 10 3/8 | 10 | 23 7/8 | 18 7/8 |
| | | | L2F14 | 14 | 1 1/2 | 1 | 105 | 24 1/4 | 13 1/2 | 12 7/8 | 11 3/8 | 10 | 23 7/8 | 18 7/8 |
| | | | L2F20 | 20 | 2 | 1 | 111 | 24 1/4 | 13 1/2 | 12 7/8 | 11 3/8 | 10 | 23 7/8 | 18 7/8 |
| | 230 | 3 | L2H10 | 10 | 2 | 1 | 103 | 24 1/4 | 13 1/2 | 12 7/8 | 11 3/8 | 10 | 23 7/8 | 18 7/8 |
| | | | L2H14 | 14 | 2 | 1 | 103 | 24 1/4 | 13 1/2 | 12 7/8 | 11 3/8 | 10 | 23 7/8 | 18 7/8 |
| | | | L2H20 | 20 | 2 | 1 | 103 | 24 1/4 | 13 1/2 | 12 7/8 | 11 3/8 | 10 | 23 7/8 | 18 7/8 |
| | | | L2H33 | 33 | 4 1/2 | 1 | 114 | 24 7/8 | 13 1/2 | 12 7/8 | 12 | 10 | 23 7/8 | 21 7/8 |

| | | | | | | | | | | | | | | |
|---|---|---|---|---|---|---|---|---|---|---|---|---|---|---|
| 1 TONNE / TON | 230 | 3 | L2H40 | 40 | 4 1/2 | 1 | 114 | 24 7/8 | 13 1/2 | 12 7/8 | 12 | 10 | 23 7/8 | 21 7/8 |
| | | | L2H52 | 52 | 4 1/2 | 1 | 114 | 24 7/8 | 13 1/2 | 12 7/8 | 12 | 10 | 23 7/8 | 21 7/8 |
| | 460 | 3 | L2T10 | 10 | 1 | 1 | 94 | 22 3/4 | 13 1/2 | 12 7/8 | 9 7/8 | 10 | 23 7/8 | 18 7/8 |
| | | | L2T14 | 14 | 1 | 1 | 94 | 22 3/4 | 13 1/2 | 12 7/8 | 9 7/8 | 10 | 23 7/8 | 18 7/8 |
| | | | L2T33 | 33 | 4 1/2 | 1 | 114 | 24 7/8 | 13 1/2 | 12 7/8 | 12 | 10 | 23 7/8 | 21 7/8 |
| | | | L2T40 | 40 | 4 1/2 | 1 | 114 | 24 7/8 | 13 1/2 | 12 7/8 | 12 | 10 | 23 7/8 | 21 7/8 |
| | | | L2T52 | 52 | 4 1/2 | 1 | 114 | 24 7/8 | 13 1/2 | 12 7/8 | 12 | 10 | 23 7/8 | 21 7/8 |
| | 575 | 3 | L2V14 | 14 | 2 | 1 | 103 | 24 1/4 | 13 1/2 | 12 7/8 | 11 3/8 | 10 | 23 7/8 | 18 7/8 |
| | | | L2V20 | 20 | 2 | 1 | 103 | 24 1/4 | 13 1/2 | 12 7/8 | 11 3/8 | 10 | 23 7/8 | 18 7/8 |
| | | | L2V26 | 26 | 2 | 1 | 103 | 24 1/4 | 13 1/2 | 12 7/8 | 11 3/8 | 10 | 23 7/8 | 18 7/8 |
| | | | L2V33 | 33 | 3 | 1 | 107 | 24 1/4 | 13 1/2 | 12 7/8 | 11 3/8 | 10 | 23 7/8 | 21 7/8 |
| | | | L2V40 | 40 | 3 | 1 | 107 | 24 1/4 | 13 1/2 | 12 7/8 | 11 3/8 | 10 | 23 7/8 | 21 7/8 |
| | | | L2V52 | 52 | 4 1/2 | 1 | 114 | 24 7/8 | 13 1/2 | 12 7/8 | 12 | 10 | 24 3/8 | 24 1/2 |
| 1 1/2 TONNE / TON | 230 | 1 | L3F07 | 7 | 1 1/2 | 1 | 105 | 24 1/4 | 13 1/2 | 12 7/8 | 11 3/8 | 10 | 24 3/8 | 21 1/ |
| | | | L3F13 | 13 | 2 | 1 | 111 | 24 1/4 | 13 1/2 | 12 7/8 | 11 3/8 | 10 | 24 3/8 | 21 1/2 |
| | 230 | 3 | L3H13 | 13 | 2 | 1 | 103 | 24 1/4 | 13 1/2 | 12 7/8 | 11 3/8 | 10 | 24 3/8 | 21 1/2 |
| | | | L3H20 | 20 | 4 1/2 | 1 | 114 | 24 7/8 | 13 1/2 | 12 7/8 | 12 | 10 | 24 3/8 | 21 1/2 |
| | | | L3H26 | 26 | 4 1/2 | 1 | 114 | 24 7/8 | 13 1/2 | 12 7/8 | 12 | 10 | 24 3/8 | 21 1/2 |
| | | | L3H33 | 33 | 4 1/2 | 1 | 114 | 24 7/8 | 13 1/2 | 12 7/8 | 12 | 10 | 24 3/8 | 24 1/2 |
| | 460 | 3 | L3T20 | 20 | 4 1/2 | 1 | 114 | 24 7/8 | 13 1/2 | 12 7/8 | 12 | 10 | 24 3/8 | 21 1/2 |
| | | | L3T26 | 26 | 4 1/2 | 1 | 114 | 24 7/8 | 13 1/2 | 12 7/8 | 12 | 10 | 24 3/8 | 21 1/2 |
| | | | L3T33 | 33 | 4 1/2 | 1 | 114 | 24 7/8 | 13 1/2 | 12 7/8 | 12 | 10 | 24 3/8 | 24 1/2 |
| | 575 | 3 | L3V20 | 20 | 3 | 1 | 107 | 24 1/4 | 13 1/2 | 12 7/8 | 11 3/8 | 10 | 24 3/8 | 21 1/2 |
| | | | L3V26 | 26 | 4 1/2 | 1 | 114 | 24 7/8 | 13 1/2 | 12 7/8 | 12 | 10 | 24 3/8 | 21 1/2 |
| | | | L3V33 | 33 | 4 1/2 | 1 | 114 | 24 7/8 | 13 1/2 | 12 7/8 | 12 | 10 | 24 3/8 | 24 1/2 |

TABLEAU 2 - 1: MODÈLES À UNE VITESSE / TABLE 2 - 1: SINGLE SPEED MODELS

| Capacité Capacity | Volt | Phase | Modèle Model | Vitesse de levage (ppm) Lifting speed (fpm) | Hp | Retom-bée(s) Chain fall(s) | Poids (lbs) incluant crochets et 10' de chaine Weight (lbs) including hooks and chain for 10ft lift | Dimensions en pouces (in) Dimensions in inches (in) | | | | | | |
|---|---|---|---|---|---|---|---|---|---|---|---|---|---|---|
| | | | | | | | | A | B | C | D | E | F | G |
| **MODÈLES À UNE VITESSE / SINGLE SPEED MODELS** | | | | | | | | | | | | | | |
| 2 TONNES / TONS | 115 | 1 | L4A04 | 4 | 3/4 | 2 | 122 | 23 1/4 | 13 1/2 | 12 7/8 | 10 3/8 | 10 | 31 3/8 | 25 1/4 |
| | 230 | 1 | L4F04 | 4 | 3/4 | 2 | 128 | 23 1/4 | 13 1/2 | 12 7/8 | 10 3/8 | 10 | 31 3/8 | 25 1/4 |
| | | | L4F10 | 10 | 2 | 2 | 133 | 24 1/4 | 13 1/2 | 12 7/8 | 11 3/8 | 10 | 31 3/8 | 25 1/4 |
| | | | L4F13 | 13 | 2 | 2 | 133 | 24 1/4 | 13 1/2 | 12 7/8 | 11 3/8 | 10 | 31 3/8 | 25 1/4 |
| | 230 | 3 | L4H06 | 6 | 2 | 2 | 126 | 24 1/4 | 13 1/2 | 12 7/8 | 11 3/8 | 10 | 31 3/8 | 25 1/4 |
| | | | L4H10 | 10 | 2 | 2 | 126 | 24 1/4 | 13 1/2 | 12 7/8 | 11 3/8 | 10 | 31 3/8 | 25 1/4 |
| | | | L4H15 | 15 | 2 | 2 | 126 | 24 1/4 | 13 1/2 | 12 7/8 | 11 3/8 | 10 | 31 3/8 | 25 1/4 |
| | | | L4H20 | 20 | 4 1/2 | 2 | 137 | 24 7/8 | 13 1/2 | 12 7/8 | 12 | 10 | 31 3/8 | 28 1/4 |
| | | | L4H26 | 26 | 4 1/2 | 2 | 137 | 24 7/8 | 13 1/2 | 12 7/8 | 12 | 10 | 31 3/8 | 28 1/4 |
| | 460 | 3 | L4T06 | 6 | 2 | 2 | 126 | 24 1/4 | 13 1/2 | 12 7/8 | 11 3/8 | 10 | 31 3/8 | 25 1/4 |
| | | | L4T20 | 20 | 4 1/2 | 2 | 137 | 24 7/8 | 13 1/2 | 12 7/8 | 12 | 10 | 31 3/8 | 28 1/4 |
| | | | L4T26 | 26 | 4 1/2 | 2 | 137 | 24 7/8 | 13 1/2 | 12 7/8 | 12 | 10 | 31 3/8 | 28 1/4 |
| | 575 | 3 | L4V06 | 6 | 2 | 2 | 126 | 24 1/4 | 13 1/2 | 12 7/8 | 11 3/8 | 10 | 31 3/8 | 25 1/4 |
| | | | L4V10 | 10 | 2 | 2 | 126 | 24 1/4 | 13 1/2 | 12 7/8 | 11 3/8 | 10 | 31 3/8 | 25 1/4 |
| | | | L4V15 | 15 | 2 | 2 | 126 | 24 1/4 | 13 1/2 | 12 7/8 | 11 3/8 | 10 | 31 3/8 | 25 1/4 |
| | | | L4V20 | 20 | 3 | 2 | 130 | 24 1/4 | 13 1/2 | 12 7/8 | 11 3/8 | 10 | 31 3/8 | 28 1/4 |
| | | | L4V26 | 26 | 4 1/2 | 2 | 137 | 24 7/8 | 13 1/2 | 12 7/8 | 12 | 10 | 31 3/8 | 28 1/4 |

| | | | | | | | | | | | | | |
|---|---|---|---|---|---|---|---|---|---|---|---|---|---|
| 3 TONNES / TONS | 230 | 1 | L6F04 | 4 | 2 | 2 | 131 | 24 1/4 | 13 1/2 | 12 7/8 | 11 3/8 | 10 | 31 3/8 | 25 1/4 |
| | | | L6F07 | 7 | 2 | 2 | 137 | 24 1/4 | 14 3/8 | 11 3/8 | 10 7/8 | 10 | 37 3/8 | 30 1/2 |
| | 230 | 3 | L6H05 | 5 | 2 | 2 | 129 | 24 1/4 | 13 1/2 | 12 7/8 | 11 3/8 | 10 | 31 3/8 | 25 1/4 |
| | | | L6H09 | 9 | 4 1/2 | 2 | 140 | 24 7/8 | 13 1/2 | 12 7/8 | 12 | 10 | 31 3/8 | 25 1/4 |
| | | | L6H15 | 15 | 4 1/2 | 2 | 140 | 24 7/8 | 13 1/2 | 12 7/8 | 12 | 10 | 31 3/8 | 25 1/4 |
| | | | L6H20 | 20 | 4 1/2 | 2 | 140 | 24 7/8 | 13 1/2 | 12 7/8 | 12 | 10 | 31 3/8 | 28 1/4 |
| | 460 | 3 | L6T05 | 5 | 2 | 2 | 129 | 24 1/4 | 13 1/2 | 12 7/8 | 11 3/8 | 10 | 31 3/8 | 25 1/4 |
| | | | L6T09 | 9 | 4 1/2 | 2 | 140 | 24 7/8 | 13 1/2 | 12 7/8 | 12 | 10 | 31 3/8 | 25 1/4 |
| | | | L6T15 | 15 | 4 1/2 | 2 | 140 | 24 7/8 | 13 1/2 | 12 7/8 | 12 | 10 | 31 3/8 | 25 1/4 |
| | | | L6T20 | 20 | 4 1/2 | 2 | 140 | 24 7/8 | 13 1/2 | 12 7/8 | 12 | 10 | 31 3/8 | 28 1/4 |
| | 575 | 3 | L6V05 | 5 | 2 | 2 | 129 | 24 1/4 | 13 1/2 | 12 7/8 | 11 3/8 | 10 | 31 3/8 | 25 1/4 |
| | | | L6V09 | 9 | 4 1/2 | 2 | 140 | 24 7/8 | 13 1/2 | 12 7/8 | 12 | 10 | 31 3/8 | 28 1/4 |
| | | | L6V15 | 15 | 4 1/2 | 2 | 140 | 24 7/8 | 13 1/2 | 12 7/8 | 12 | 10 | 31 3/8 | 28 1/4 |
| | | | L6V20 | 20 | 4 1/2 | 2 | 140 | 24 7/8 | 13 1/2 | 12 7/8 | 12 | 10 | 31 3/8 | 28 1/4 |
| 5 TONNES / TONS | 115 | 1 | L10A02 | 2 | 1 1/2 | 3 | 165 | 24 1/4 | 14 3/8 | 12 7/8 | 11 3/8 | 10 7/8 | 37 3/8 | 30 1/2 |
| | 230 | 1 | L10F02 | 2 | 1 1/2 | 3 | 165 | 24 1/4 | 14 3/8 | 12 7/8 | 11 3/8 | 10 7/8 | 37 3/8 | 30 1/2 |
| | | | L10F04 | 4 | 2 | 3 | 170 | 24 1/4 | 14 3/8 | 12 7/8 | 11 3/8 | 10 7/8 | 37 3/8 | 30 1/2 |
| | 230 | 3 | L10H05 | 5 | 4 1/2 | 3 | 173 | 24 7/8 | 14 3/8 | 12 7/8 | 12 | 10 7/8 | 37 3/8 | 30 1/2 |
| | | | L10H10 | 10 | 4 1/2 | 3 | 173 | 24 7/8 | 14 3/8 | 12 7/8 | 12 | 10 7/8 | 37 3/8 | 30 1/2 |
| | | | L10H13 | 13 | 4 1/2 | 3 | 173 | 24 7/8 | 14 3/8 | 12 7/8 | 12 | 10 7/8 | 37 3/8 | 30 1/2 |
| | 460 | 3 | L10T05 | 5 | 4 1/2 | 3 | 173 | 24 7/8 | 14 3/8 | 12 7/8 | 12 | 10 7/8 | 37 3/8 | 30 1/2 |
| | | | L10T10 | 10 | 4 1/2 | 3 | 173 | 24 7/8 | 14 3/8 | 12 7/8 | 12 | 10 7/8 | 37 3/8 | 30 1/2 |
| | | | L10T13 | 13 | 4 1/2 | 3 | 173 | 24 7/8 | 14 3/8 | 12 7/8 | 12 | 10 7/8 | 37 3/8 | 30 1/2 |
| | 575 | 3 | L10V05 | 5 | 3 | 3 | 167 | 24 1/4 | 14 3/8 | 12 7/8 | 11 3/8 | 10 7/8 | 37 3/8 | 30 1/2 |
| | | | L10V10 | 10 | 4 1/2 | 3 | 173 | 24 7/8 | 14 3/8 | 12 7/8 | 12 | 10 7/8 | 37 3/8 | 30 1/2 |
| | | | L10V13 | 13 | 4 1/2 | 3 | 173 | 24 7/8 | 14 3/8 | 12 7/8 | 12 | 10 7/8 | 37 3/8 | 30 1/2 |

| TABLEAU 2 - 2: MODÈLES À DEUX VITESSES / TABLE 2 - 1: SINGLE SPEED MODELS | | | | | | | | | | | | | | | |
|---|---|---|---|---|---|---|---|---|---|---|---|---|---|---|---|
| **Capacité Capacity** | **Volt** | **Phase** | **Modèle Model** | **Vitesse de levage (ppm) Lifting speed (fpm)** | **Hp** | **Retom-bée(s) Chain fall(s)** | **Poids (lbs) incluant crochets et 10' de chaine Weight (lbs) including hooks and chain for 10ft lift** | **Dimensions en pouces (in) Dimensions in inches (in)** | | | | | | |
| | | | | | | | | **A** | **B** | **C** | **D** | **E** | **F** | **G** |
| **MODÈLES À DEUX VITESSES / DUAL SPEED MODELS** | | | | | | | | | | | | | | |
| 1/4 TONNE / TON | 230 | 3 | L05H13X2 | 13 | 4.3 | 1 | 114 | 24 7/8 | 13 1/2 | 12 7/8 | 12 | 10 | 23 7/8 | 18 7/8 |
| | | | L05H20X2 | 20 | 6.7 | 1 | 114 | 24 7/8 | 13 1/2 | 12 7/8 | 12 | 10 | 23 7/8 | 18 7/8 |
| | | | L05H26X2 | 26 | 8.7 | 1 | 114 | 24 7/8 | 13 1/2 | 12 7/8 | 12 | 10 | 23 7/8 | 18 7/8 |
| | | | L05H33X2 | 33 | 11.0 | 1 | 114 | 24 7/8 | 13 1/2 | 12 7/8 | 12 | 10 | 23 7/8 | 21 7/8 |
| | | | L05H40X2 | 40 | 13.3 | 1 | 114 | 24 7/8 | 13 1/2 | 12 7/8 | 12 | 10 | 23 7/8 | 21 7/8 |
| | | | L05H52X2 | 52 | 17.3 | 1 | 114 | 24 7/8 | 13 1/2 | 12 7/8 | 12 | 10 | 23 7/8 | 21 7/8 |
| | 460 | 3 | L05T13X2 | 13 | 4.3 | 1 | 114 | 24 7/8 | 13 1/2 | 12 7/8 | 12 | 10 | 23 7/8 | 18 7/8 |
| | | | L05T20X2 | 20 | 6.7 | 1 | 114 | 24 7/8 | 13 1/2 | 12 7/8 | 12 | 10 | 23 7/8 | 18 7/8 |
| | | | L05T26X2 | 26 | 8.7 | 1 | 114 | 24 7/8 | 13 1/2 | 12 7/8 | 12 | 10 | 23 7/8 | 18 7/8 |
| | | | L05T26X2 | 33 | 11.0 | 1 | 114 | 24 7/8 | 13 1/2 | 12 7/8 | 12 | 10 | 23 7/8 | 21 7/8 |
| | | | L05T40X2 | 40 | 13.3 | 1 | 114 | 24 7/8 | 13 1/2 | 12 7/8 | 12 | 10 | 23 7/8 | 21 7/8 |
| | | | L05T52X2 | 52 | 17.3 | 1 | 114 | 24 7/8 | 13 1/2 | 12 7/8 | 12 | 10 | 23 7/8 | 21 7/8 |
| | 575 | 3 | L05V13X2 | 13 | 4.3 | 1 | 114 | 24 7/8 | 13 1/2 | 12 7/8 | 12 | 10 | 23 7/8 | 18 7/8 |
| | | | L05V20X2 | 20 | 6.7 | 1 | 114 | 24 7/8 | 13 1/2 | 12 7/8 | 12 | 10 | 23 7/8 | 18 7/8 |
| | | | L05V26X2 | 26 | 8.7 | 1 | 114 | 24 7/8 | 13 1/2 | 12 7/8 | 12 | 10 | 23 7/8 | 18 7/8 |
| | | | L05V33X2 | 33 | 11.0 | 1 | 114 | 24 7/8 | 13 1/2 | 12 7/8 | 12 | 10 | 23 7/8 | 21 7/8 |
| | | | L05V40X2 | 40 | 13.3 | 1 | 114 | 24 7/8 | 13 1/2 | 12 7/8 | 12 | 10 | 23 7/8 | 21 7/8 |
| | | | L05V52X2 | 52 | 17.3 | 1 | 114 | 24 7/8 | 13 1/2 | 12 7/8 | 12 | 10 | 23 7/8 | 21 7/8 |
| 1/2 TONNE / TON | 230 | 3 | L1T07X2 | 7 | 2.3 | 1 | 114 | 24 7/8 | 13 1/2 | 12 7/8 | 12 | 10 | 23 7/8 | 18 7/8 |
| | | | L1H13X2 | 13 | 4.3 | 1 | 114 | 24 7/8 | 13 1/2 | 12 7/8 | 12 | 10 | 23 7/8 | 18 7/8 |
| | | | L1H20X2 | 20 | 6.7 | 1 | 114 | 24 7/8 | 13 1/2 | 12 7/8 | 12 | 10 | 23 7/8 | 18 7/8 |
| | | | L1H26X2 | 26 | 8.7 | 1 | 114 | 24 7/8 | 13 1/2 | 12 7/8 | 12 | 10 | 23 7/8 | 18 7/8 |
| | | | L1H33X2 | 33 | 11.0 | 1 | 114 | 24 7/8 | 13 1/2 | 12 7/8 | 12 | 10 | 23 7/8 | 21 7/8 |
| | | | L1H40X2 | 40 | 13.3 | 1 | 114 | 24 7/8 | 13 1/2 | 12 7/8 | 12 | 10 | 23 7/8 | 21 7/8 |
| | | | L1H52X2 | 52 | 17.3 | 1 | 114 | 24 7/8 | 13 1/2 | 12 7/8 | 12 | 10 | 23 7/8 | 21 7/8 |

| | | | | | | | | | | | | | | |
|---|---|---|---|---|---|---|---|---|---|---|---|---|---|---|
| 1/2 TONNE / TON | 460 | 3 | L1T07X2 | 7 | 2.3 | 1 | 114 | 24 7/8 | 13 1/2 | 12 7/8 | 12 | 10 | 23 7/8 | 18 7/8 |
| | | | L1T13X2 | 13 | 4.3 | 1 | 114 | 24 7/8 | 13 1/2 | 12 7/8 | 12 | 10 | 23 7/8 | 18 7/8 |
| | | | L1T20X2 | 20 | 6.7 | 1 | 114 | 24 7/8 | 13 1/2 | 12 7/8 | 12 | 10 | 23 7/8 | 18 7/8 |
| | | | L1T26X2 | 26 | 8.7 | 1 | 114 | 24 7/8 | 13 1/2 | 12 7/8 | 12 | 10 | 23 7/8 | 18 7/8 |
| | | | L1T33X2 | 33 | 11.0 | 1 | 114 | 24 7/8 | 13 1/2 | 12 7/8 | 12 | 10 | 23 7/8 | 21 7/8 |
| | | | L1T40X2 | 40 | 13.3 | 1 | 114 | 24 7/8 | 13 1/2 | 12 7/8 | 12 | 10 | 23 7/8 | 21 7/8 |
| | | | L1T52X2 | 52 | 17.3 | 1 | 114 | 24 7/8 | 13 1/2 | 12 7/8 | 12 | 10 | 23 7/8 | 21 7/8 |
| | 575 | 3 | L1V07X2 | 7 | 2.3 | 1 | 114 | 24 7/8 | 13 1/2 | 12 7/8 | 12 | 10 | 23 7/8 | 18 7/8 |
| | | | L1V13X2 | 13 | 4.3 | 1 | 114 | 24 7/8 | 13 1/2 | 12 7/8 | 12 | 10 | 23 7/8 | 18 7/8 |
| | | | L1V20X2 | 20 | 6.7 | 1 | 114 | 24 7/8 | 13 1/2 | 12 7/8 | 12 | 10 | 23 7/8 | 18 7/8 |
| | | | L1V26X2 | 26 | 8.7 | 1 | 114 | 24 7/8 | 13 1/2 | 12 7/8 | 12 | 10 | 23 7/8 | 18 7/8 |
| | | | L1V33X2 | 33 | 11.0 | 1 | 114 | 24 7/8 | 13 1/2 | 12 7/8 | 12 | 10 | 23 7/8 | 21 7/8 |
| | | | L1V40X2 | 40 | 13.3 | 1 | 114 | 24 7/8 | 13 1/2 | 12 7/8 | 12 | 10 | 23 7/8 | 21 7/8 |
| | | | L1V52X2 | 52 | 17.3 | 1 | 114 | 24 7/8 | 13 1/2 | 12 7/8 | 12 | 10 | 23 7/8 | 21 7/8 |
| 1 TONN / TON | 230 | 3 | L2H07X2 | 7 | 2.3 | 1 | 114 | 24 7/8 | 13 1/2 | 12 7/8 | 12 | 10 | 23 7/8 | 18 7/8 |
| | | | L2H13X2 | 13 | 4.3 | 1 | 114 | 24 7/8 | 13 1/2 | 12 7/8 | 12 | 10 | 23 7/8 | 18 7/8 |
| | | | L2H20X2 | 20 | 6.7 | 1 | 114 | 24 7/8 | 13 1/2 | 12 7/8 | 12 | 10 | 23 7/8 | 18 7/8 |
| | | | L2H26X2 | 26 | 8.7 | 1 | 114 | 24 7/8 | 13 1/2 | 12 7/8 | 12 | 10 | 23 7/8 | 18 7/8 |
| | 460 | 3 | L2T07X2 | 7 | 2.3 | 1 | 114 | 24 7/8 | 13 1/2 | 12 7/8 | 12 | 10 | 23 7/8 | 18 7/8 |
| | | | L2T13X2 | 3 | 4.3 | 1 | 114 | 24 7/8 | 13 1/2 | 12 7/8 | 12 | 10 | 23 7/8 | 18 7/8 |
| | | | L2T20X2 | 20 | 6.7 | 1 | 114 | 24 7/8 | 13 1/2 | 12 7/8 | 12 | 10 | 23 7/8 | 18 7/8 |
| | | | L2T26X2 | 26 | 8.7 | 1 | 114 | 24 7/8 | 13 1/2 | 12 7/8 | 12 | 10 | 23 7/8 | 18 7/8 |
| | 575 | 3 | L2V07X2 | 7 | 2.3 | 1 | 114 | 24 7/8 | 13 1/2 | 12 7/8 | 12 | 10 | 23 7/8 | 18 7/8 |
| | | | L2V13X2 | 3 | 4.3 | 1 | 114 | 24 7/8 | 13 1/2 | 12 7/8 | 12 | 10 | 23 7/8 | 18 7/8 |
| | | | L2V20X2 | 20 | 6.7 | 1 | 114 | 24 7/8 | 13 1/2 | 12 7/8 | 12 | 10 | 23 7/8 | 18 7/8 |
| | | | L2V26X2 | 26 | 8.7 | 1 | 114 | 24 7/8 | 13 1/2 | 12 7/8 | 12 | 10 | 23 7/8 | 18 7/8 |
| 1/2 TONNE / TONS | 230 | 3 | L3H13X2 | 13 | 4.3 | 1 | 114 | 24 7/8 | 13 1/2 | 12 7/8 | 12 | 10 | 24 3/8 | 21 1/2 |
| | 460 | 3 | L3T13X2 | 13 | 4.3 | 1 | 114 | 24 7/8 | 13 1/2 | 12 7/8 | 12 | 10 | 24 3/8 | 21 1/2 |

| TABLEAU 2 - 2: MODÈLES À DEUX VITESSES / TABLE 2 - 1: SINGLE SPEED MODELS | | | | | | | | | | | | | | |
|---|---|---|---|---|---|---|---|---|---|---|---|---|---|---|
| **Capacité Capacity** | **Volt** | **Phase** | **Modèle Model** | **Vitesse de levage (ppm) Lifting speed (fpm)** | **Hp** | **Retom-bée(s) Chain fall(s)** | **Poids (lbs) incluant crochets et 10' de chaine Weight (lbs) including hooks and chain for 10ft lift** | **Dimensions en pouces (in) Dimensions in inches (in)** | | | | | | |
| | | | | | | | | **A** | **B** | **C** | **D** | **E** | **F** | **G** |
| **MODÈLES À DEUX VITESSES** | | | | | | | | | | | | | | |
| 1 1/2 TONNE / TON | 575 | 3 | L3V13X2 | 13 | 4.3 | 1 | 114 | 24 7/8 | 13 1/2 | 12 7/8 | 12 | 10 | 24 3/8 | 21 1/2 |
| 2 TONNES / TONS | 230 | 3 | L4H10X2 | 10 | 3.3 | 2 | 137 | 24 7/8 | 13 1/2 | 12 7/8 | 12 | 10 | 31 3/8 | 25 1/4 |
| | | | L4H13X2 | 13 | 4.3 | 2 | 137 | 24 7/8 | 13 1/2 | 12 7/8 | 12 | 10 | 31 3/8 | 25 1/4 |
| | 460 | 3 | L4T10X2 | 10 | 3.3 | 2 | 137 | 24 7/8 | 13 1/2 | 12 7/8 | 12 | 10 | 31 3/8 | 25 1/4 |
| | | | L4T13X2 | 3 | 4.3 | 2 | 137 | 24 7/8 | 13 1/2 | 12 7/8 | 12 | 10 | 31 3/8 | 25 1/4 |
| | 575 | 3 | L4V10X2 | 10 | 3.3 | 2 | 137 | 24 7/8 | 13 1/2 | 12 7/8 | 12 | 10 | 31 3/8 | 25 1/4 |
| | | | L4V13X2 | 13 | 4.3 | 2 | 137 | 24 7/8 | 13 1/2 | 12 7/8 | 12 | 10 | 31 3/8 | 25 1/4 |
| 3 TONNES / TONS | 230 | 3 | L6H07X2 | 7 | 2.3 | 2 | 140 | 24 7/8 | 13 1/2 | 12 7/8 | 12 | 10 | 31 3/8 | 25 1/4 |
| | 460 | 3 | L6T07X2 | 7 | 2.3 | 2 | 140 | 24 7/8 | 13 1/2 | 12 7/8 | 12 | 10 | 31 3/8 | 25 1/4 |
| | 575 | 3 | L6V07X2 | 7 | 2.3 | 2 | 140 | 24 7/8 | 13 1/2 | 12 7/8 | 12 | 10 | 31 3/8 | 25 1/4 |

# Dimensions des crochets / Hook dimensions

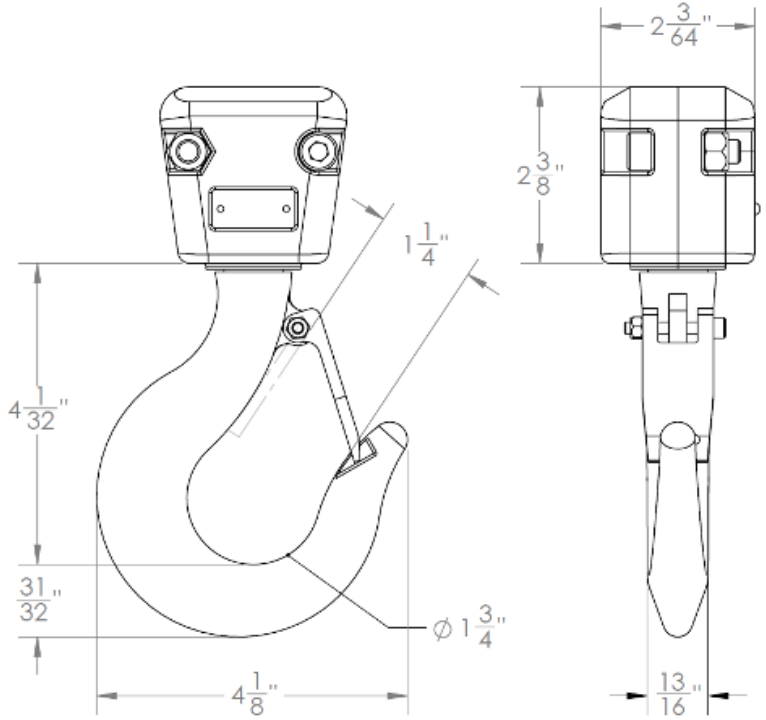


**Une retombée (1/4T - 1T)**
**1 chain fall (1/4T - 1T)**

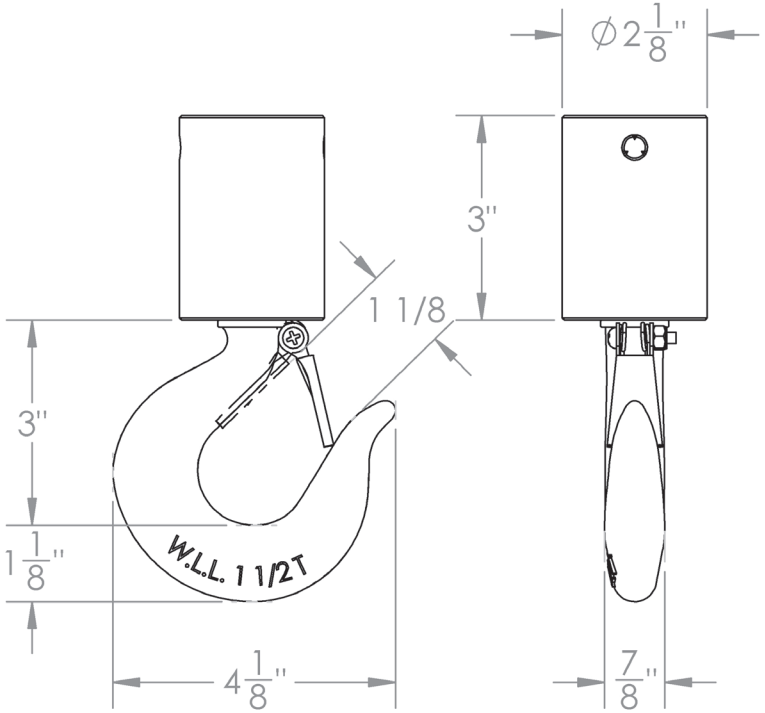


**Une retombée (1/4T - 1 1/2 T)**
**1 chain fall (1/4T - 1 1/2 T)**

# Dimensions des crochets / Hook dimensions

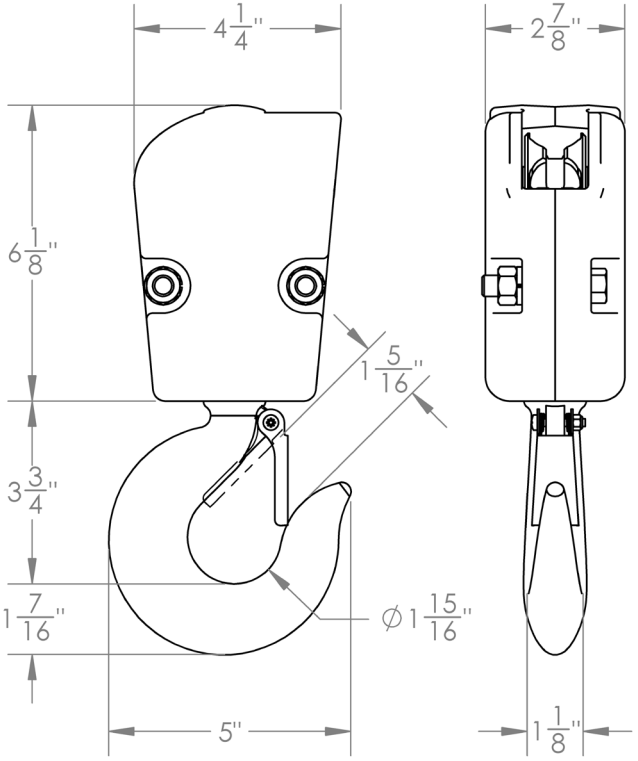


**2 retombées (2T - 3T)**
**2 chain falls (2T - 3T)**

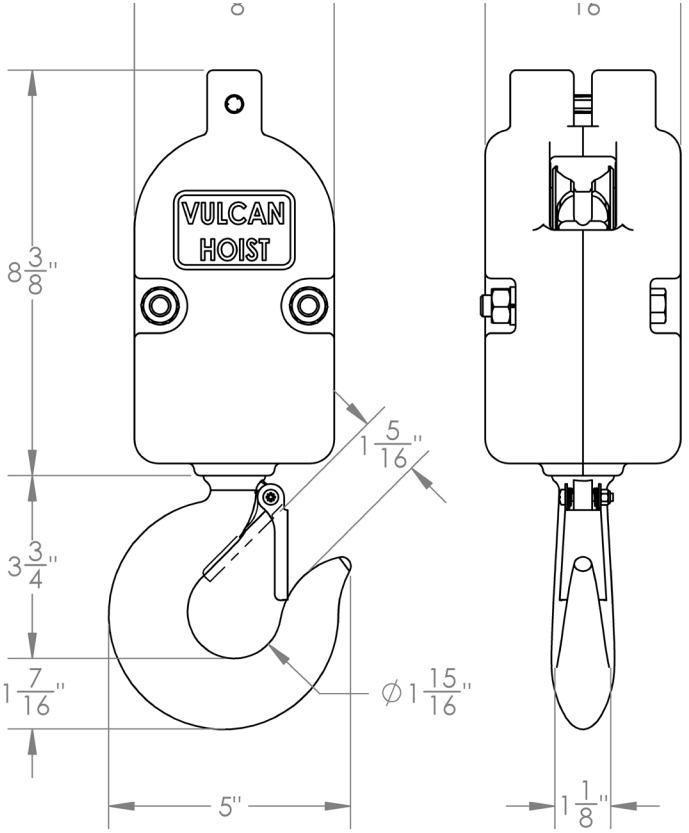


**3 retombées (3T et 5T)**
**3 chain falls (3T and 5T)**

# Caractéristiques techniques du palan / Hoist specifications

NUMÉRO DE COMMANDE / ORDER NUMBER: _____

NUMÉRO DE MODÈLE / MODEL NUMBER: _____

NUMÉRO DE SÉRIE / SERIAL NUMBER: _____

DATE D'ACHAT / PURCHASE DATE : _____

TENSION / VOLTAGE: _____

CHARGE NOMINALE / RATED LOAD : _____

HAUTEUR DE LEVAGE / LIFT HEIGHT : _____

TAILLE DU PANIER DE CHAÎNE / CHAIN CONTAINER SIZE: _____

TRAITEMENT DE LA CHAÎNE (AUCUN OU ZINC) / CHAIN TREATMENT (BARE OR ZINC) : _____

## IMPORTANT

AVANT D'UTILISER LE PALAN, MESURER LES TROIS DIMENSIONS INDIQUÉES
CI-DESSOUS ET PRENEZ-LES EN NOTE : /
BEFORE USING, TAKE AND RECORD THE FOLLWING 3 DIMENSIONS AS SHOWN BELOW:

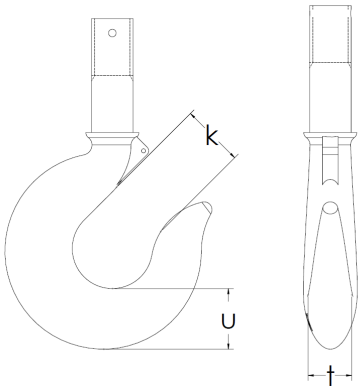


| | |
|---|---|
| k | |
| t | |
| u | |

**LISTE DE PIECES ET**
**MANUEL D'OPÉRATION**

**CHARIOT ÉLECTRIQUE VULCAN**

**PARTS LIST AND**
**OPERATING INSTRUCTIONS**

**VULCAN ELECTRIC TROLLEY**

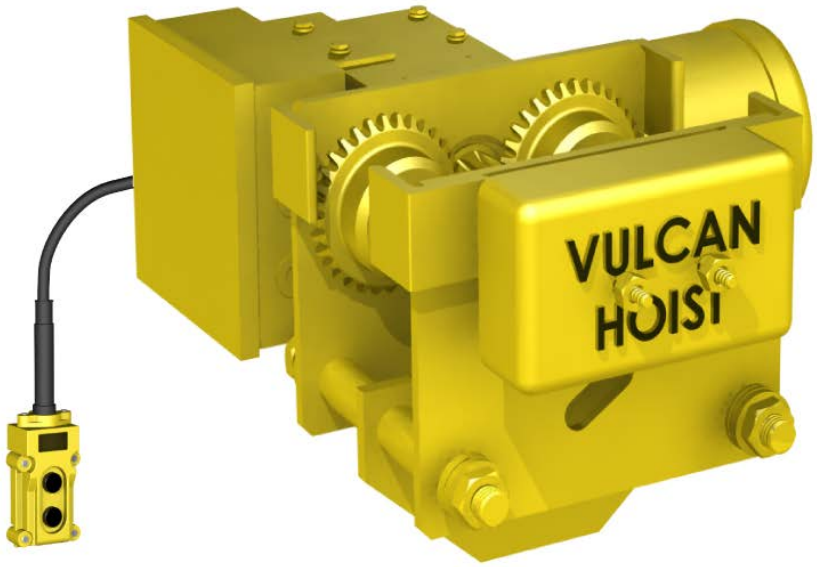







C SA US

VULCAN
HOIST - PALAN

Vulcan Cie de Palans Ltée / The Vulcan Hoist Company Ltd.
3435, Crémazie est, Montréal (Québec) Canada, H1Z 2J2
Tél. : 514 728.4527 Fax : 514 374.4231

MARCHE À SUIVRE POUR L'INSTALLATION ET L'UTILISATION DE VOTRE
**CHARIOT ÉLECTRIQUE VULCAN**

1. Votre CHARIOT ELECTRIQUE VULCAN est l'un des plus sécuritaires qu'il y ait sur le marché
   Il a été conçu pour vous donner des années de service, tout en étant économique
   Avant d'expédier un chariot, il est testé pour s'assurer qu'il soit sécuritaire et que tous les contrôles fonctionnent comme ils se doivent
   Un test électrique et mécanique avec pleine charge est aussi effectué.
2. L'huile dans ce chariot est de l'huile à engrenage de grade 320
   Pour utilisation extérieure ou condition extrême : huile synthétique à engrenage de grade 220.
3. *CYCLE DE TRAVAIL*: continuel
   2 vitesses avec ratio autre que 2/1 , cycle de travail est
   1 minute en marche - 3 minutes arrêt pour **basse vitesse seulement.**
4. Après avoir déballé votre chariot, assurez-vous:
   A. qu'il n'ait pas été endommagé lors du transport
   B. que la capacité soit adéquate à vos besoins
   C. que le voltage, phase et cycle soient selon ce que vous avez commandé et disponibles sur les lieux
   D. que l'ajustement des boulons d'ancrage soit bien de la même largeur que votre poutre
   E. que votre poutre soit bien pour des roues de type I ou de type H.
5. RACCORDEMENTS ÉLECTRIQUES: votre chariot est muni d'un dispositif contre une surcharge électrique. Il est très important que vous installiez un fusible selon les indications de la plaque signalétique de votre chariot / palan
   En démarrant, votre chariot / palan prendront de 3 à 4 fois l'ampérage normal **sur 1 phase.**
6. INSTALLATION
   A. Enlever l'arrêt à l'une des extrémités de la poutre et insérer le chariot par le côté (p.8, FIG.1)
   B. S'il n'y a pas d'accès par l'extrémité de la poutre, enlever les noix des boulons d'ancrage d'un côté du chariot, placer une paire de roues sur un côté de la poutre, ensuite , placer l'autre paire de roues sur l'autre côté de la poutre, et réinstaller les boulons d'ancrage et les noix. (p.8, FIG.2)
   C. IMPORTANT: assurez-vous que toutes les entretoises (spacers), rondelles et noix soient aux bons endroits, (p.8, FIG.2)
      Il ne doit pas y avoir plus que 3/16" d'espace entre les roues et la poutre
   D. Les chariots **1 TONNE** équipés d'un arrêt d'urgence et d'une alarme dans le panneau de raccordements, sont munis d'une roue d'ajustement pour prévenir un débalancement du chariot. La roue est montée sur une rainure conique. Lorsque le chariot est installé, vérifier pour qu'il soit au niveau, ensuite pousser la roue d'ajustement en montant, jusque sous la base de la poutre et resserrer les noix . (p.8, FIG.3)

OPERATING AND INSTALLATION INSTRUCTIONS FOR
**VULCAN ELECTRIC TROLLEY**

1. Your **VULCAN ELECTRIC TROLLEY** is one of the safest yet, the simplest on the market.
   It has been engineered to give you years of economic service
   Each and every electric trolley is factory tested for safety and to insure that all electrical controls are working.
2. There is oil in this trolley : gear oil grade 320
   outdoor or extreme conditions : synthetic gear oil grade 220
3. *:Duty cycle:* continuous
   2 speed trolley with ratio's more than 2 to 1 , duty cycle is
   1 minute on - 3 minutes off on **low speed only**
4. After removing your Vulcan Trolley from the box:
   A. verify if damaged in transport
   B. verify if capacity meets your needs
   C. verify if voltage, phase and cycle are correct and available on site
   D. verify if the flange width is adjusted to the proper width of your beam
   E. verify if beam matches wheels I or H beam.
5. ELECTRICAL CONNECTIONS: your trolley is equipped with an electric overload.
   So, it is important that you fuse your trolley / hoist according to name plate
   Remember, **on single phase** your trolley / hoist will surge 3 to 4 times amperage when starting.
6. INSTALLATION
   A. Remove stopper at one end of the beam and push the trolley on the beam (p.8, FIG.1)
   B. If you do not have access to the beam from the ends, remove nuts from stay bolts on one side of trolley. Place one set of wheels on beam flange, then, place other set of wheels on the other side of beam, and then, reinstall nuts on stay bolts (p.8, FIG.2)
   C. IMPORTANT: verify if all spacers, lock washers & nuts are in the correct places, (p.8, fig.2)
      There should be no more than 3/16" gap between wheels & beam
   D. On **1 TON** Vulcan electric trolleys with stop and alarm in control panel, there is an under running wheel on trolley: this is to prevent trolley from being out of balance. The wheel is mounted on a tapered slot. When the trolley is installed, check if trolley is levelled, then push the under running wheel up to the under side of beam flange and tighten the nuts
      (p.8, FIG. 3)
   E. Install hoist on trolley
   F. Install cable from hoist into trolley connections, connect numbered leads to the same number on terminal block. **Do not change any internal connection.**

E. Installer le palan sur le chariot

F. Raccorder les fils du palan dans le bornier du chariot, raccorder les fils numérotés aux fils de mêmes numéros ou au bornier. **Ne changer aucun raccordement interne.**

7. RACCORDEMENT du courant simple phase 115 ou 230 volts

   Il n'y a pas de raccordement spécial. Pour vous assurer que le fil soit du bon calibre VULCAN HOIST recommande de faire vérifier par un électricien. Lorsque le chariot est à L'EXTRÉMITÉ de la poutre, vérifiez l'ampérage du palan: figurez la longueur de votre poutre et ajoutez la distance de l'entrée de l'HYDRO.

   A. Un fil trop petit créera un bas voltage et fera brûler le moteur, **même s'il n'y a aucune charge sur le chariot / palan**

   B. Pour un meilleur rendement en simple phase , il est toujours recommandé de raccorder le chariot au 230V. Un moteur raccordé à 230V. prend 50% moins d'ampérage qu'à 115V. et la grosseur du fil n'est pas aussi importante que pour 115V
   Le 230V. est disponible dans TOUS les systèmes desservis par HYDRO

   C. 115 volts: il est déconseillé de raccorder le chariot / palan dans une prise murale. Certains modèles de palans 1/2 H.P. opéreront dans une prise murale, **mais pas** lorsqu'il y a une baisse de voltage. Tous les palans avec moteur 1.5 HP (20 amps approx. ) sont conçus pour être raccordés **à l'entrée** de l'Hydro et avec la grosseur de fil adéquate
   Les chariots sont munis d'un moteur ½ HP minimum. **Voir page #32 du manuel palan électrique.**

8. RACCORDEMENT du courant triphasé 208/230/380/460/575

   A. Direction droite ou gauche: pas de différence à moins qu'il y ait des interrupteurs de fin de course fournis avec le chariot, auquel cas, des directives spéciales seront fournies avec le chariot

   B. Toujours vérifier les directives d'opération du palan pour vous assurer qu'il soit raccordé au bon voltage et phase et que les interrupteurs de fin de course fonctionnent adéquatement.

9. CONSEILS DE SÉCURITÉ

   Votre chariot VULCAN est maintenant installé et raccordé

   A. La capacité a été vérifiée

   B. Voltage, phase et cycle ont été raccordés

   C. Les interrupteurs de fin de course du palan ont été vérifiés, ainsi que ceux du chariot, si applicable

   D. Vérifier la longueur du fil du bouton poussoir: s'il est trop long, le raccourcir à la longueur requise

   E. Les dimensions de la poutre ont été vérifiées

7. SINGLE PHASE power connection instructions 115 or 230 volts

   There is no special connection. VULCAN HOIST CO. LTD recommends that a qualified electrician verifies to insure that your wiring is adequate. Verify amperage of trolley and hoist and distance to HYDRO inlet , when trolley and hoist are at the FAR END of beam.

   A. Inadequate wiring will cause low voltage and motor burn out, **even if there is no load on trolley / hoist**

   B. It is always recommended that you connect your trolley on 230 volts for best single-phase service. Advantages over 115 volts: motor draws 50% less amperage and wire size is not as critical as on 115 volts

      230v. is available in ALL systems serviced by Hydro

   C. 115 volts: it is not recommended that you plug your trolley into household type outlets. Some 1/2 H.P. models will operate in normal household plugs, **but not** where low voltage occurs.

      All hoists with 1 ½ H.P. motor (approx. 20 amps) are designed and engineered to be connected with correct wire size to your Hydro **outlet**

      Trolleys are equipped with ½ H.P motor, minimum

      **See page #32 electric hoist catalogue.**

8. THREE PHASE power connection instructions 208/230/380/460/575

   A. Trolley direction left or right makes no difference unless supplied with limits.

      If there are limits, special instructions will come with trolley

   B. Always check operation instructions for hoist to be sure it is phased correctly and limits are working.

9. OPERATION SAFETY

   Now your VULCAN trolley has been installed and connected

   A. Capacity has been verified
   B. Voltage, phase and cycle have been connected
   C. Limits have been verified on hoist and trolley, if applicable
   D. Verify if push button cable is at proper length,if too long, shorten cable to required length
   E. Beam dimensions have been checked
   F. Verify if nuts are tight against the stay bolts
   G. Always lift straight up, not sideways
   H. NEVER pull or lift people with hoist / trolley
   I. NEVER pull or lift load over people
   J. Always operate complete travel of trolley, hoist and crane to ensure that motors or electric components cannot come in contact with foreign objects.

F. Vérifier si les noix sont bien serrées sur les boulons d'ancrage
G. Toujours lever une charge tout droit, pas de coté
H. Ne JAMAIS tirer ou lever de personne avec un chariot / palan
I. Ne JAMAIS tirer ou lever de charge au-dessus d'une personne
J. Toujours faire un trajet complet du chariot, du palan et du pont roulant, pour s'assurer qu'aucune de ces machines ou composantes ne viennent en contact avec rien d'autre.

10. GARANTIE:

Votre chariot VULCAN est GARANTI POUR DEUX (2) ANS contre tout défaut de matériel et/ou de fabrication et ce, à compter de la date d'achat

A. Avant de commencer une réparation ou une modification, VULCAN HOIST doit donner son approbation pour valider la garantie
B. Aucun crédit ne sera émis pour pièces défectueuses. Vulcan enverra seulement des pièces de rechange, sujettes à inspection de garantie
C. Le coût de la main-d'œuvre sera accordé à un taux prédéterminé, selon la nature de la réparation
D. Pour des réparations majeures: transmission ou composantes d'entraînement, le chariot doit être retourné PRÉPAYÉ chez Vulcan Hoist, pour inspection et / ou réparation.
Si la réparation est faite sous garantie, le chariot sera retourné prépayé.

11. ENTRETIEN À FAIRE À TOUS LES 3 MOIS

A. Vérifier s'il n'y a pas de fuite d'huile provenant de la transmission. Le niveau d'huile doit être maintenu afin d'éviter l'usure prématurée de l'engrenage
B. Vérifier l'ajustement du frein. (si applicable)
C. Vérifier les disjoncteurs de tension # 11 afin que les fils d'alimentation et des boutons soient raccordés comme ils se doivent
D. Vérifier si la plaque de suspension est usée
E. Afin de prévenir un bris du bouton et du fil du bouton, vérifier si le tendeur de fil # 8C n'est pas endommagé
F. Visuellement, vérifier si les roues et l'arbre du pinion ne sont pas usés, ensuite les graisser
G. Vérifier si les interrupteurs de fin de course fonctionnent :les faire fonctionner manuellement si applicable
H. Vérifier si les noix #ET57 sont bien serrées sur les boulons d'ancrage # ET54
I. Changer l'huile de la transmission et la vidanger une fois l'an. Ceci prolongera la vie de la transmission
J. Les coussinets des roues et le coussinet de l'arbre du pinion sont lubrifiés à vie.

10. WARRANTY

    Your Vulcan trolley is guaranteed against defects in materials & workmanship **FOR 2 YEARS** from the date of purchase

    A. VULCAN HOIST must approve all guarantees, **before starting** any repairs or alterations
    B. No credit will be issued for defective part; **Vulcan** will ship **only** replacement parts, subject to warranty inspection
    C. Labour will be paid on a pre-set rate according to problem
    D. For major problems, transmission or drive components, trolley must be returned, PREPAID, to Vulcan Hoist for inspection and repair. If trolley is repaired on guarantee, it will be returned prepaid.

11. MAINTENANCE INSTRUCTIONS TO PERFORM EVERY 3 MONTHS

    A. Verify transmission for oil leaks

       Oil level must be maintained to prevent premature gear wear
    B. Verify brake adjustment (if applicable)
    C. Verify the power and push button strain relievers #11 to insure proper electrical connections
    D. Verify if suspension plate is worn
    E. Verify push button and strain reliever wire # 8C for damage

       This will prevent damage to push button or push button cable
    F. Visually, verify wheels and pinion shaft for wear; grease wheels & pinion shaft
    G. Verify if limits are working, by manually operating limit switches (if applicable)
    H. Verify if nuts #ET57 are tight on stay bolts #ET54
    I. Change oil and flush transmission yearly to prolong transmission life
    J. Wheel ball bearings and pinion shaft ball bearing are life time lubricated.

When ordering parts, always specify model & serial # on trolley name plate (not motor)

## INSTALLATION

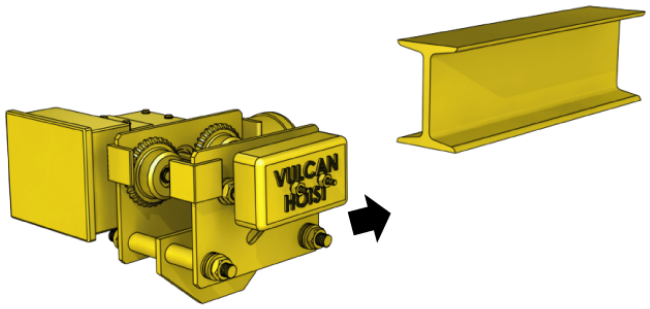


fig. 1

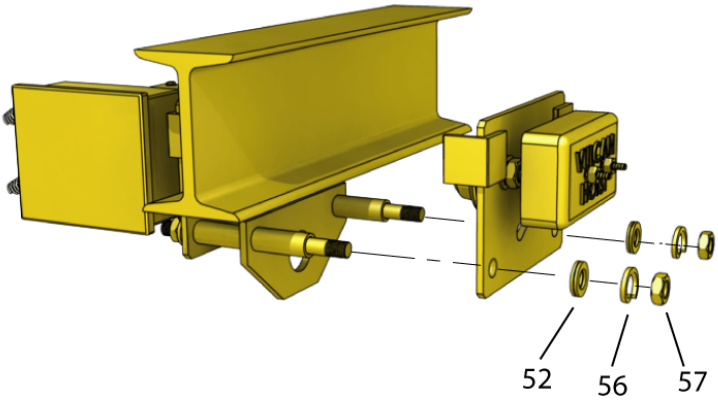


fig. 2

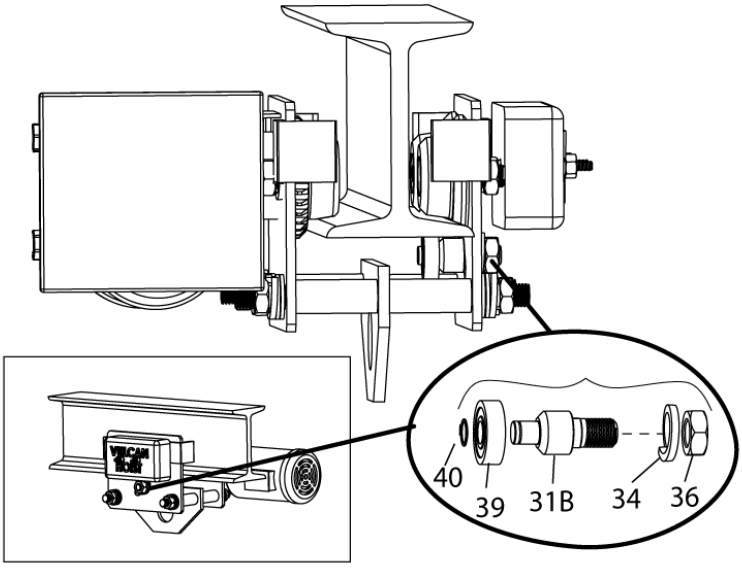


fig. 3

#31B on 1 ton only

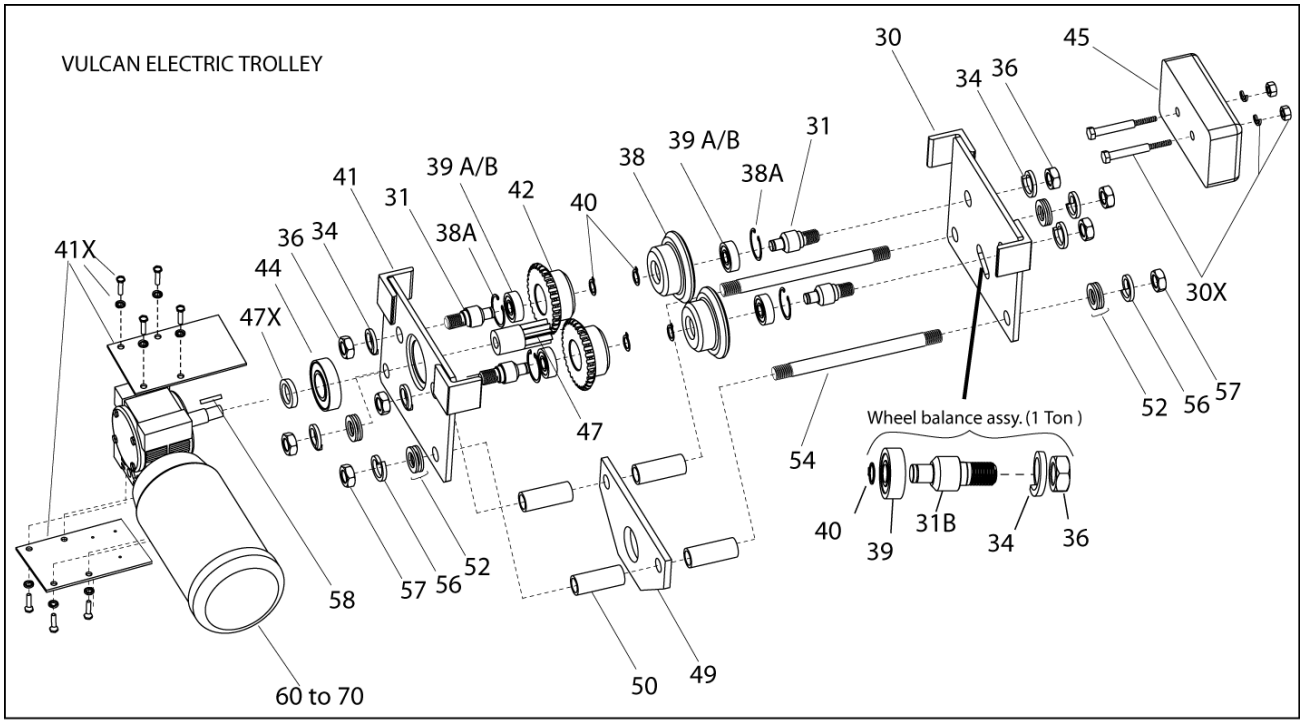


| # | TROLLEY PARTS | QTY |
|---|---|---|
| ET 30 | Plain side plate, including #30X | 1 |
| ET 30 **X** | Mounting bolts for #45 + nuts & lock washers | 2 sets |
| ET 31 | Wheel pins | 4 |
| ET 31B | Wheel pin for balance (on 1 Ton only) see pages 2/3, 6D | 1 |
| ET 33 | Name plate with 3 rivets | 1 |
| ET 34 | Lock washers | 4 |
| ET 36 | Hexagon nuts | 4 |
| ET 38 | Plain wheels | 2 |
| ET 38A | Snap rings for wheels | 4 |
| ET 39A | Ball Bearings (1 to 3T) | 4 |
| ET 39B | Ball Bearings (5T. and over) | 8 |
| ET 40 | Snap rings for #31 | 4 |
| ET 41 | Gear side plate includes #41X | 1 |
| ET 41 **X** | Gear box mounting plates with bolts & lock washers | 2 sets |
| ET 42 | Gear wheels | 2 |
| ET 44 | Pinion bearing | 1 |
| ET 45 | Counterweight | 1 |
| ET 47 | Pinion, including #47X | 1 |
| ET 47 **X** | shim for pinion | 1 |
| ET 49 | Suspension plate | 1 |
| ET 50 | Stay pipe adjustment collars | 4 |
| ET 52 | Adjustment washers | variable |
| ET 54 | Stay bolts, short or long | 2 |
| ET 56 | Lock washers | 4 |
| ET 57 | Hexagon nuts | 4 |
| ET 58 | Key for pinion | 1 |
| ET 59 | Key for motor ( not illustrated ) | 1 |
| | **MOTOR ½ HP** | |
| ET 60 | 1800 RPM ODP All voltages & phases | 1 |
| ET 62 | 1800 RPM TEFC All voltages & phases | 1 |
| ET 66 | 3600 RPM All voltages & phases | 1 |
| ET 68 | 2 Speeds 1800-900 RPM All voltages, 3 phase | 1 |
| ET 70 | 2 Speeds All voltages, 3 phase | 1 |

**X**=WELDING REQUIRED

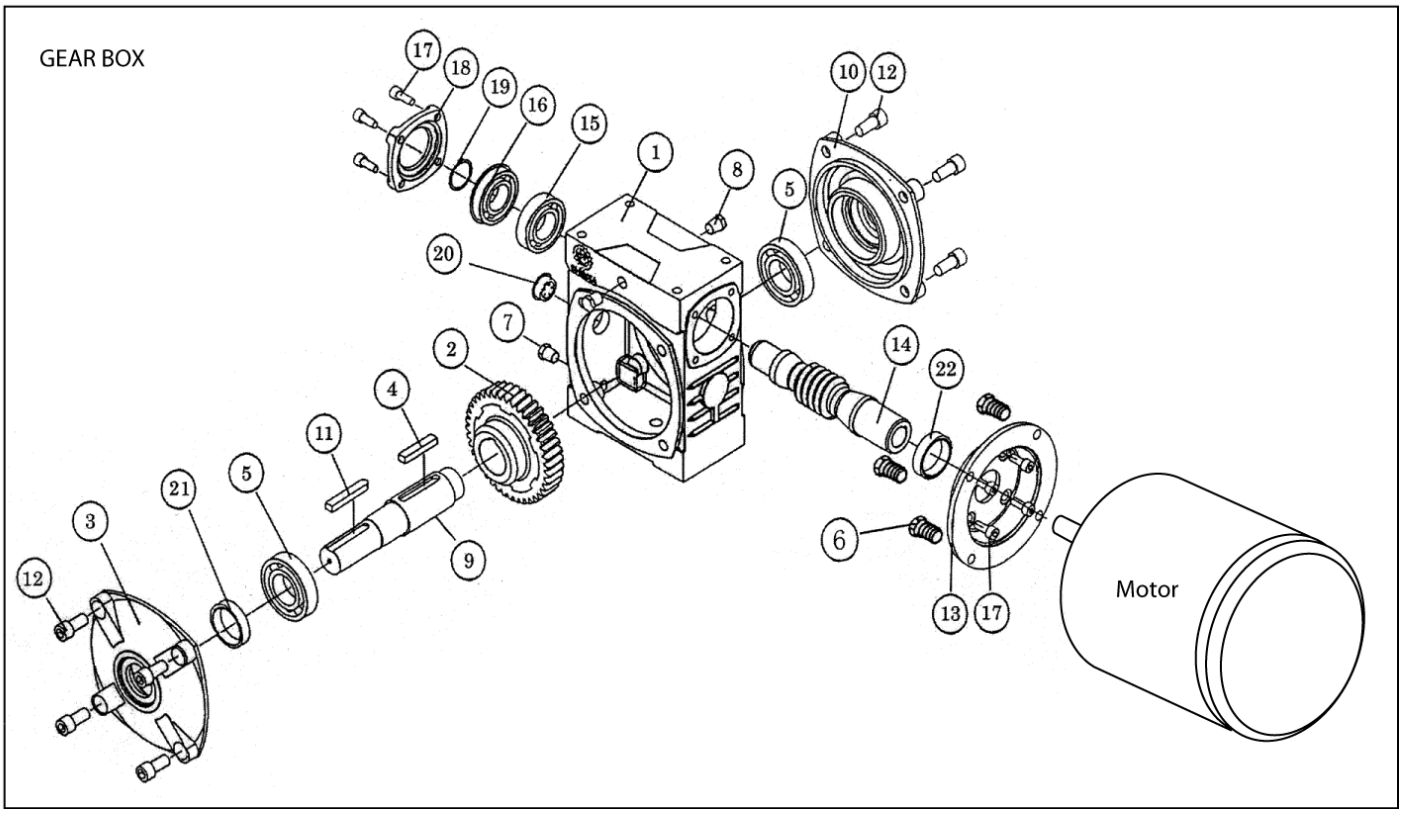


| # | GEAR BOX PARTS | QTY | COMMENTS |
|---|---|---|---|
| ET 1 | Housing | 1 | |
| ET 2 | Worm gear | 1 | |
| ET 3 | Output cover for shaft end | 1 | |
| ET 4 | Key | 1 | Specify length & diameter |
| ET 5 | Bearing | 2 | |
| ET 6 | Mounting bolts for motor | 4 | |
| ET 7 | Plug | 1 | |
| ET 8 | Plug | 3 | |
| ET 9 | Output shaft | 1 | Specify complete dimension or sample |
| ET 10 | Output cover not shaft end | 1 | |
| ET 11 | Key | 1 | |
| ET 12 | Socket head cap screw | 8 | |
| ET 13 | Motor adaptor flange | 1 | |
| ET 14 | Input shaft (worm shaft) | 1 | |
| ET 15 | Bearing | 1 | |
| ET 16 | Bearing | 1 | |
| ET 17 | Socket head cap screw | 8 | |
| ET 18 | Input cover | 1 | |
| ET 19 | Snap ring | 1 | |
| ET 20 | Oil gauge | 1 | Comes with #1 |
| ET 21 | Output seal for pinion | 1 | |
| ET 22 | Input seal | 1 | In #1 or in #13 new style |
| ET 23 | Oil | 7oz | |
| ET 24 | Synthetic oil | 7oz | |
| ET 25 | **Complete gear box ( # 1 TO # 23 )** | 1 | Specify reduction , 5 10 15 20 40 50 to 1 |

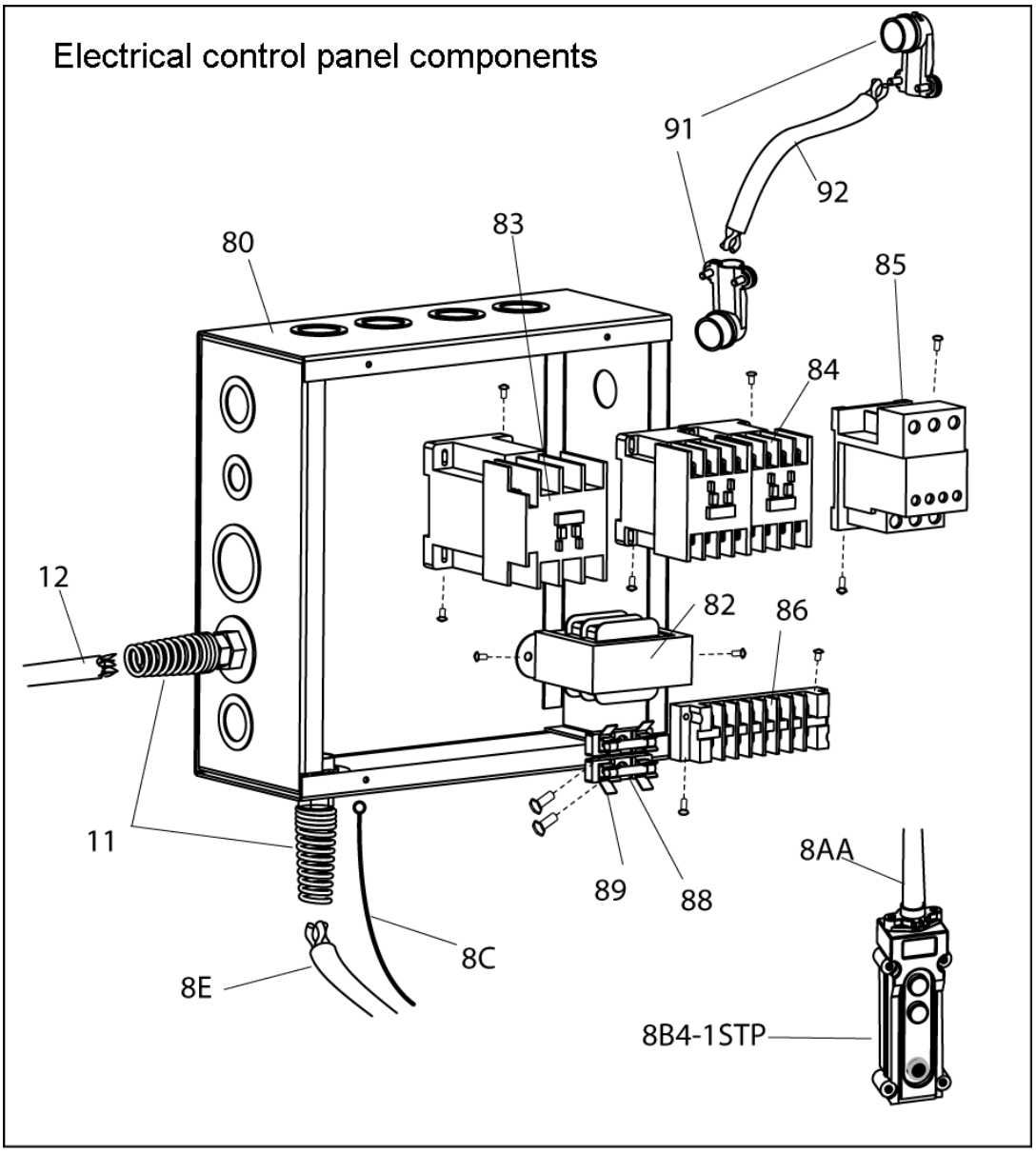


| # | ELECTRICAL COMPONENTS | QTY |
|---|---|---|
| 8AA | Grummet ( rubber ) | 1 |
| 8B4-1STP | Pendant control-specify how many buttons & functions | 1 |
| 8C | Strain reliever wire w/2 oval sleeves-specify length | 1 |
| 8E | Push button cable-specify length | 1 |
| 11 | Strain reliever for push button & power cable | 2 |
| 12 | Power cable | 1 |
| ET 80 | Control panel | 1 |
| ET 81 | Nema 4 control panel ( not illustrated ) | 1 |
| ET 82 | Transformer w/bolt & lock washer-specify voltage & phase | 1 |
| ET 83 | Main line contactor w/2bolts & 2 lock washers | 1 |
| ET 84 | Contactor w/2bolts & 2 lock washers | 1 |
| ET 85 | Overload relay w/2bolts & 2 lock washers | 1 |
| ET 86 | Terminal block w/2bolts & 2 lock washers | 1 |
| ET 88 | Fuse | 2 |
| ET 89 | Fuse holder w/2bolts & 2 lock washers | 2 |
| ET 91 | 90° connector for motor | 2 |
| ET 92 | Cable for motor | 2 ft |

## ÉGALEMENT DISPONIBLE – ALSO AVAILABLE

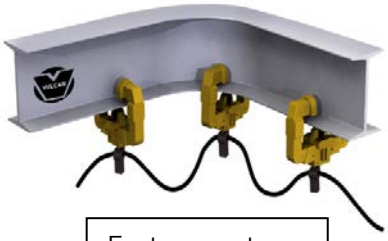

Festoon system



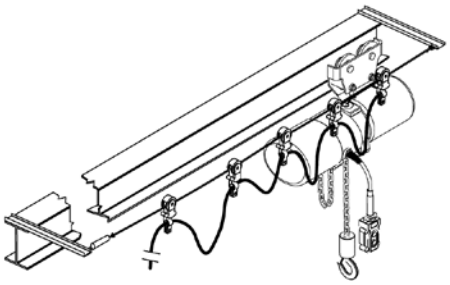




***NOUVEAU - NEW***



Plate clamp –
Pince pour plaque









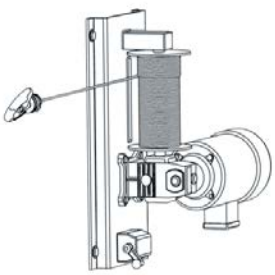

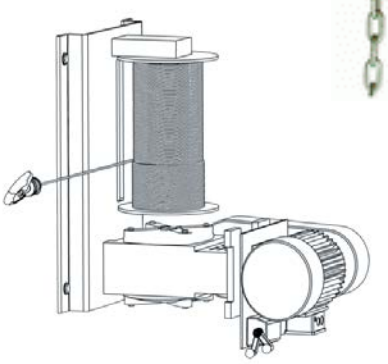



# ULTRASONIC SENSOR SODIUM HYDROXIDE AND SODIUM THIOSULFATE FMU30-CAHGAARGF

**Workshop drawing :**

- ☐ Approuved as is
- ☐ Approuved with correction(s)
- ☐ Rejected

**Approuved by**

Name : _____

Title : _____

Compagnie : _____

Signature : _____

AGNICO EAGLE

**Vendor Document Status**

1 ☐ Proceed to next submission and status.

2 ☐ Proceed with exceptions as noted to next submission and status.

3 ☐ Do not proceed.
Revise as noted and resubmit next submission and status.

4 ☑ Complete, no further submission required.

By: Sébastien Perron
Instrumentation Date: 2021-03-18

Review and authorization to fabricate are only for general conformance with the design concept of the Project as expressed in the Contract Documents. Sole responsibility for the accuracy and completeness of this document, including but not limited to dimensions and quantities, remains with the Supplier/Contractor. Agnico Eagle does not warrant the accuracy or completeness of any of the information contained herein, nor does Agnico Eagle authorize or approve any construction means, methods, techniques, sequences or any safety precautions or procedures.

Agnico Eagle No. 3.02 6526-S265-605B-135_SENSOR THIOSULFATE_FMU30-CAHGAARGF_EDS R: SENSOR THIOSULFATE_FMU30-CA

**DOCUMENT FOR INFORMATION**

*3076 A, Bernard-Pilon, St-Mathieu de Beloeil, Qc, J3G 4S5 Tél.: (450) 922-4122 Fax: (450) 922-4223*

Level | Pressure | Flow | Temperature | Liquid Analysis | Registration | Systems Components | Services | Solutions

Technical Information

# Prosonic T FMU30

## Ultrasonic Level Measurement
## Compact transmitters for non-contact level measurement of fluids, pastes and coarse bulk materials





### Application

- Continuous, non-contact level measurement in fluids, pastes, sullages and coarse bulk materials
- System integration via 4 to 20 mA
- Maximum measuring range:
  - 1½" sensor: 5 m (16 ft) in fluids
    2 m (6 ft) in bulk materials
  - 2" sensor: 8 m (26 ft) in fluids
    3.5 m (11 ft) in bulk materials

### Features and benefits

- Quick and simple commissioning via menu-guided on-site operation with four-line plain text display; 7 languages selectable
- Envelope curves on the on-site display for simple diagnosis
- Linearization function (up to 32 points) for conversion of the measured value into any unit of length, volume or flow rate
- Non-contact measurement method minimizes service requirements
- Installation possible from thread G 1½“ or NPT 1½“ upwards
- Integrated temperature sensor for automatic correction of the temperature dependent sound velocity

TI00440F/00/EN/15.14
71225633

Endress+Hauser
People for Process Automation

# Function and system design

**Measuring principle**

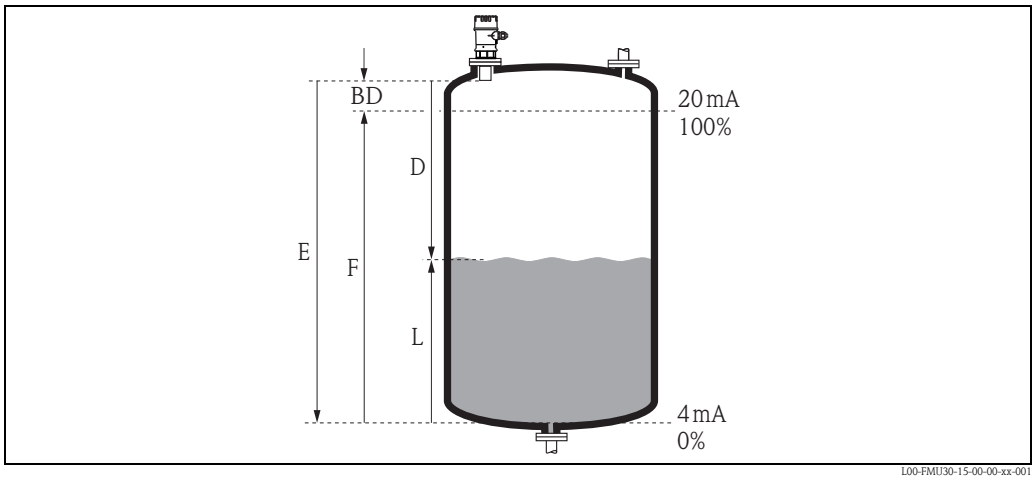


*BD* *Blocking distance*
*D* *Distance from sensor membrane – product surface*
*E* *Empty distance*
*F* *Span (full distance)*
*L* *Level*

| Sensor | BD | Max. range fluids | Max. range bulk materials |
|---|---|---|---|
| 1½" | 0.25 m (0.8 ft) | 5 m (16 ft) | 2 m (6.6 ft) |
| 2" | 0.35 m (1.1 ft) | 8 m (26 ft) | 3.5 m (11 ft) |

### Time-of-flight method

The sensor of the instrument transmits ultrasonic pulses in the direction of the product surface. There, they are reflected back and received by the sensor. The instrument measures the time t between pulse transmission and reception. The instrument uses the time t (and the velocity of sound c) to calculate the distance D between the sensor membrane and the product surface:

$D = c \cdot t/2$

As the device knows the empty distance E from a user entry, it can calculate the level as follows:

$L = E - D$

An integrated temperature sensor (NTC) compensates for changes in the velocity of sound caused by temperature changes.

### Interference echo suppression

The interference echo suppression feature on the instrument ensures that interference echos (e.g. from edges, welded joints and installations) are not interpreted as a level echo.

### Calibration

Enter the empty distance E and the span F to calibrate the device.

### Blocking distance

Span F may not extend into the blocking distance BD. Level echos within the blocking distance cannot be evaluated due to the transient characteristics of the sensor.

| | |
|---|---|
| **Supply voltage** | 14-35 V |
| **Terminals** | Cable cross-section: 0.25 to 2.5 mm2 (24 to 14 AWG) |
| **Cable entry** | G ½" or ½" NPT |
| **Cable gland** | M20x1.5 (recommended cable diameter 6 to 10 mm (0.24 to 0.39 in)) |
| **Power consumption** | 51 mW to 800 mW |
| **Current consumption** | 3.6 to 22 mA |

# Performance characteristics

| | |
|---|---|
| **Reaction time** | The reaction time depends on the parameter settings. The minimum value is: min. 2 s |
| **Reference operating conditions** | ■ Temperature = +20 °C (+68 °F)<br>■ Pressure = 1013 mbar abs. (15 psi abs.)<br>■ Humidity = 50 %<br>■ Ideal reflective surface (e.g. calm, smooth fluid surface)<br>■ No interference reflections within signal beam<br>■ Set application parameters:<br>– Tank shape = dome ceiling<br>– Medium property = liquid<br>– process conditions = standard liquid |
| **Measured value resolution** | 1 mm (0.04 in) |
| **Pulse frequency** | max. 0.5 Hz<br>The exact values are dependent on the type of device and the parameter settings. |
| **Maximum measuring error[1) 2)]** | ±0.2 % of the maximum span of the sensor |
| **Typical measuring error[2)]** | Include linearity, repeatability, and hysteresis<br>Better than: ±3 mm (±0.12 in) or 0.2 % of measuring distance*<br><br>* whichever is greater |
| **Influence of the vapor pressure** | The vapor pressure at 20 °C (68 °F) gives a hint on the accuracy of the ultrasonic level measurement. If the vapor pressure at 20 °C (68 °F) is below 50 mbar (1 psi), ultrasonic level measurement is possible with a very high accuracy. This is valid for water, aqueous solutions, water-solid-solutions, dilute acids (hydrochloric acid, sulfuric acid, ...), dilute bases (caustic soda, ...), oils, greases, slurries, pastes, ...<br>High vapor pressures or outgassing media (ethanol, acetone, ammonia, ...) can influence the accuracy. If conditions like these are present, please contact your Endress+Hauser sales representative. |

1) according to EN 61298-2
2) with reference operating conditions

# Ordering information

**FMU30**

Versions that mutually exclude one another are not marked.

| 010 | Approval: |
|---|---|
| | AA Non-hazardous area |
| | BB ATEX II 1/2G Ex ia IIC T5 |
| | CA CSA C/US General Purpose |
| | CB CSA C/US IS CI.I Div.1 Gr.A-D |
| | IB IEC Ex zone 0/1, Ex ia IIC T5 Ga/Gb |
| | NB NEPSI zone 0/1, Ex ia IIC T5 Ga/Gb |
| | 99 Special version |

| 020 | Display; Operating: |
|---|---|
| | G W/o; via spare part display FMU30 |
| | H Envelope curve display on site; push button |
| | Y Special version |

| 030 | Electrical Connection: |
|---|---|
| | E Gland M20, IP68 |
| | F Thread G1/2, IP68 |
| | G Thread NPT1/2, IP68 |
| | Y Special version |

| 040 | Sensor; Max Range; Blocking Distance: |
|---|---|
| | AA 1-1/2"; 5m liquid/2m solid; 0.25m |
| | AB 2"; 8m liquid/3.5m solid; 0.35m |
| | YY Special version |

| 050 | Process Connection: |
|---|---|
| | GGF Thread ISO228 G1-1/2, PP |
| | GHF Thread ISO228 G2, PP |
| | RGF Thread ANSI MNPT1-1/2, PP |
| | RHF Thread ANSI MNPT2, PP |
| | YYY Special version |

| 620 | Accessory Enclosed: |
|---|---|
| | RA UNI flange 2"/DN50/50, PP max 4bar abs/58psia, suitable for 2" 150lbs/DN50 PN16/10K 50 |
| | RB UNI flange 2"/DN50/50, PVDF max 4bar abs/58psia, suitable for 2" 150lbs/DN50 PN16/10K 50 |
| | RC UNI flange 2"/DN50/50, 316L max 4bar abs/58psia, suitable for 2" 150lbs/DN50 PN16/10K 50 |
| | RD UNI flange 3"/DN80/80, PP max 4bar abs/58psia, suitable for 3" 150lbs/DN80 PN16/10K 80 |
| | RE UNI flange 3"/DN80/80, PVDF max 4bar abs/58psia, suitable for 3" 150lbs/DN80 PN16/10K 80 |
| | RF UNI flange 3"/DN80/80, 316L max 4bar abs/58psia, suitable for 3" 150lbs/DN80 PN16/10K 80 |
| | RG UNI flange 4"/DN100/100, PP max 4bar abs/58psia, suitable for 4" 150lbs/DN100 PN16/10K 100 |
| | RH UNI flange 4"/DN100/100, PVDF max 4bar abs/58psia, suitable for 4" 150lbs/DN100 PN16/10K 100 |
| | RI UNI flange 4"/DN100/100, 316L max 4bar abs/58psia, suitable for 4" 150lbs/DN100 PN16/10K 100 |
| | R9 Special version |

| 895 | Marking: |
|---|---|
| | Z1 Tagging (TAG), see additional spec. |

You can enter the versions for the specific feature in the following table. The versions entered make up the complete order code. Options which are mutually exclucive are not marked.

| | 010 | 020 | 030 | 040 | 050 | 620 | 895 |
|---|---|---|---|---|---|---|---|
| FMU30 - | | | | | | | |

Endress+Hauser supplies DIN/EN flanges made of stainless steel AISI 316L with the material number 1.4404 or 1.4435. With regard to their temperature stability properties, the materials 1.4404 and 1.4435 are grouped under 13E0 in EN 1092-1 Tab. 18. The chemical composition of the two materials can be identical.

# MIXER- TANK SODIUM THIOSULFATE
# 65AGI68011

**Workshop drawing :**

- □ Approuved as is
- □ Approuved with correction(s)
- □ Rejected

**Approuved by**

Name : _____

Title : _____

Compagnie : _____

Signature : _____

AGNICO EAGLE

**Vendor Document Status**

| | |
|---|---|
| 1 ☐ | **Proceed to next submission and status.** |
| 2 ☐ | **Proceed with exceptions as noted to next submission and status.** |
| 3 ☐ | **Do not proceed. Revise as noted and resubmit next submission and status.** |
| 4 ☑ | **Complete, no further submission required.** |

**By:** Sébastien Perron Instrumentation **Date:** 2021-03-24

**Review and authorization to fabricate are only for general conformance with the design concept of the Project as expressed in the Contract Documents. Sole responsibility for the accuracy and completeness of this document, including but not limited to dimensions and quantities, remains with the Supplier/Contractor. Agnico Eagle does not warrant the accuracy or completeness of any of the information contained herein, nor does Agnico Eagle authorize or approve any construction means, methods, techniques, sequences or safety precautions or procedures.**

**Agnico Eagle No.** 3.02 6526-S265-605B-135_MIXER_65AGI68011_ EDS **R:** MIXER_65AGI68011_ EDS_S4

**DOCUMENT FOR INFORMATION**

*3076 A, Bernard Pilon, St-Mathieu de Beloeil, Qc, J3G 4S5 Tél.: (450) 922-4224 / Fax: (450) 922-4223*

Sharpe Mixers
A Hayward Gordon Company
www.sharpemixers.com
P.O. Box 3906 - Seattle, WA 98124 - (800) 237-8815 (206) 767-5660

# MIXER DATA SHEET



**Customer:**

**Date :** mars 5, 2021
**Sharpe Ref# :**

**Application :**

**Design conditions :** Viscosity(cps): 50 , Sp.Grav: 1,00 Temp.: Ambient Pressure: Atmos.
**Tank dimensions :** 70 " Dia. Tank x 70" overall height from mixer mount to tank floor
M5QP-02012021 Tank Volume = ~1033 Gallons

| | |
|---|---|
| **Equipment :** | **SHARPE FIXED MOUNTED F-SERIES MIXER**<br>Quantity : 1 **Mixer Model #** **FGP-075** 0 |
| **Motor :** | 0,75 Horsepower, @ 1750 RPM, 3PH, 60Hz, 575 VOLTS TEFC<br>56C Frame, Motor Furnished by Sharpe , Mounted by Sharpe |
| **Mixer Drive :** | M5 Single-Reduction Helical Gear Drive , 5:1 Ratio, Rated at 4.8 Horsepower |
| **Mixer mounting :** | 11" sq. plate with vibration mounts |
| | Std Food Grade Viton Lip Seal in Nosecone/Spool |
| **Wetted Parts :** | SS316 NONE (bead blasted) |
| **Shaft :** | 0,75" Dia. x 51" long from mounting base, turning @ 350 RPM |
| **Impellers :** | Quantity: ( 1 ) 14,5" Dia. Hyflo 218 Energy Efficient Hydrofoil<br>1-Piece setscrewed design |

*Shipping Weight,each= 100 lbs*

| | | |
|---|---|---|
| Calculated Flow Generated = | 2988 | gallons per minute |
| Tank Turnovers Per Minute = | 2,89 | |
| Design Torque Load = | 228 | lbs-in |
| Calculated Design Overhung Moment = | 941 | lbs-in |

Prepared by:

***Sharpe Mixers***
*P.O.Box 3906*
*Seattle,WA 98124*

3-5-21 1:54 PM

# MIXER- TANK SODIUM THIOSULFATE
# 65AGI68011

**Workshop drawing :**

- □ Approuved as is
- □ Approuved with correction(s)
- □ Rejected

**Approuved by**

Name : _____

Title : _____

Compagnie : _____

Signature : _____

*3076 A, Bernard-Pilon, St-Mathieu de Beloeil, Qc, J3G 4S5 Tél.: (450) 922-4224 / Fax: (450) 922-4223*

Sharpe Mixers
A Hayward Gordon Company
www.sharpemixers.com
P.O. Box 3906 - Seattle, WA 98124 - (800) 237-8815 (206) 767-5660

# MIXER DATA SHEET



**Customer:**

**Date :** mars 5, 2021
**Sharpe Ref# :**

**Application :**

**Design conditions :** Viscosity(cps): 50 , Sp.Grav: 1,00 Temp.: Ambient Pressure: Atmos.
**Tank dimensions :** 70 " Dia. Tank x 70" overall height from mixer mount to tank floor
M5QP-02012021 Tank Volume = ~1033 Gallons

| | |
|---|---|
| **Equipment :** | **SHARPE FIXED MOUNTED F-SERIES MIXER**<br>Quantity : 1 **Mixer Model #** **FGP-075** 0 |
| **Motor :** | 0,75 Horsepower, @ 1750 RPM, 3PH, 60Hz, 575 VOLTS TEFC<br>56C Frame, Motor Furnished by Sharpe , Mounted by Sharpe |
| **Mixer Drive :** | M5 Single-Reduction Helical Gear Drive , 5:1 Ratio, Rated at 4.8 Horsepower |
| **Mixer mounting :** | 11" sq. plate with vibration mounts |
| | Std Food Grade Viton Lip Seal in Nosecone/Spool |
| **Wetted Parts :** | SS316 NONE (bead blasted) |
| **Shaft :** | 0,75" Dia. x 51" long from mounting base, turning @ 350 RPM |
| **Impellers :** | Quantity: ( 1 ) 14,5" Dia. Hyflo 218 Energy Efficient Hydrofoil<br>1-Piece setscrewed design |

*Shipping Weight,each= 100 lbs*

| | | |
|---|---|---|
| Calculated Flow Generated = | 2988 | gallons per minute |
| Tank Turnovers Per Minute = | 2,89 | |
| Design Torque Load = | 228 | lbs-in |
| Calculated Design Overhung Moment = | 941 | lbs-in |

Prepared by:

***Sharpe Mixers***
*P.O.Box 3906*
*Seattle,WA 98124*

3-5-21 1:54 PM

PCP
Pompes & équipements

# DUPLEX SODIUM THIOSULFATE
# 251-PVC-750

AGNICO EAGLE

**Vendor Document Status**

| | |
|---|---|
| 1 ☐ | Proceed to next submission and status. |
| 2 ☐ | Proceed with exceptions as noted to next submission and status. |
| 3 ☐ | Do not proceed.<br>Revise as noted and resubmit next submission and status. |
| 4 ☑ | Complete, no further submission required. |

By: Sébastien Perron, Instrumentation Date: 2021-04-07

Review and authorization to fabricate are only for general conformance with the design concept of the Project as expressed in the Contract Documents. Sole responsibility for the accuracy and completeness of this document, including but not limited to dimensions and quantities, remains with the Supplier/Contractor. Agnico Eagle does not warrant the accuracy or completeness of any of the information contained herein, nor does Agnico Eagle authorize or approve any construction means, methods, techniques, sequences or any safety precautions or procedures.

Agnico Eagle No. 6526-S265-605B-135_TRIPLEX SULFURIC ACID 351-CPVC-250_ WD_R1 R: TRIPLEX SULFURIC ACID 351-CPV

**DOCUMENT FOR INFORMATION**

**Workshop drawing :**

- ☐ Approved as is
- ☐ Approved with correction(s)
- ☐ Rejected

**Approved by**

Name : _____

Title : _____

Compagnie : _____

Signature : _____

Skid manual valves arrangement to be validated with P&ID drawing.

| | |
|---|---|
| Skid Material: | HDPE |
| dimension L xP xH: | 54" H x 52" W x 24" D |
| Pump model: | RF410.2-570e |
| Pumps L/Hours: | 684 L/H |
| Head material: | PVC |
| Pressure: | 6 BARS |

**COMPONENT MATERIAL**

| | |
|---|---|
| Plumbing & size: | 1.5" and 1" |
| Ball valve O ring: | EPDM |
| Relief Valve: | TVBP10-PVC |
| Back-Pressure valv: | TVBP10-PVC |
| Calibration Cylinder: | PV#2-15000 |
| Gauge Pressure: | 0-160 PSI |
| Tubing pump connec.: | LDPE |

**DOORS**

| | |
|---|---|
| Door product: | Polycarbonate 3/8" |
| | Stainless steel |
| Bolt & washer: | Stainless steel |

**Pump Identification:**

Pump #1: 65PME68007A
Pump #2: 65PME68007B

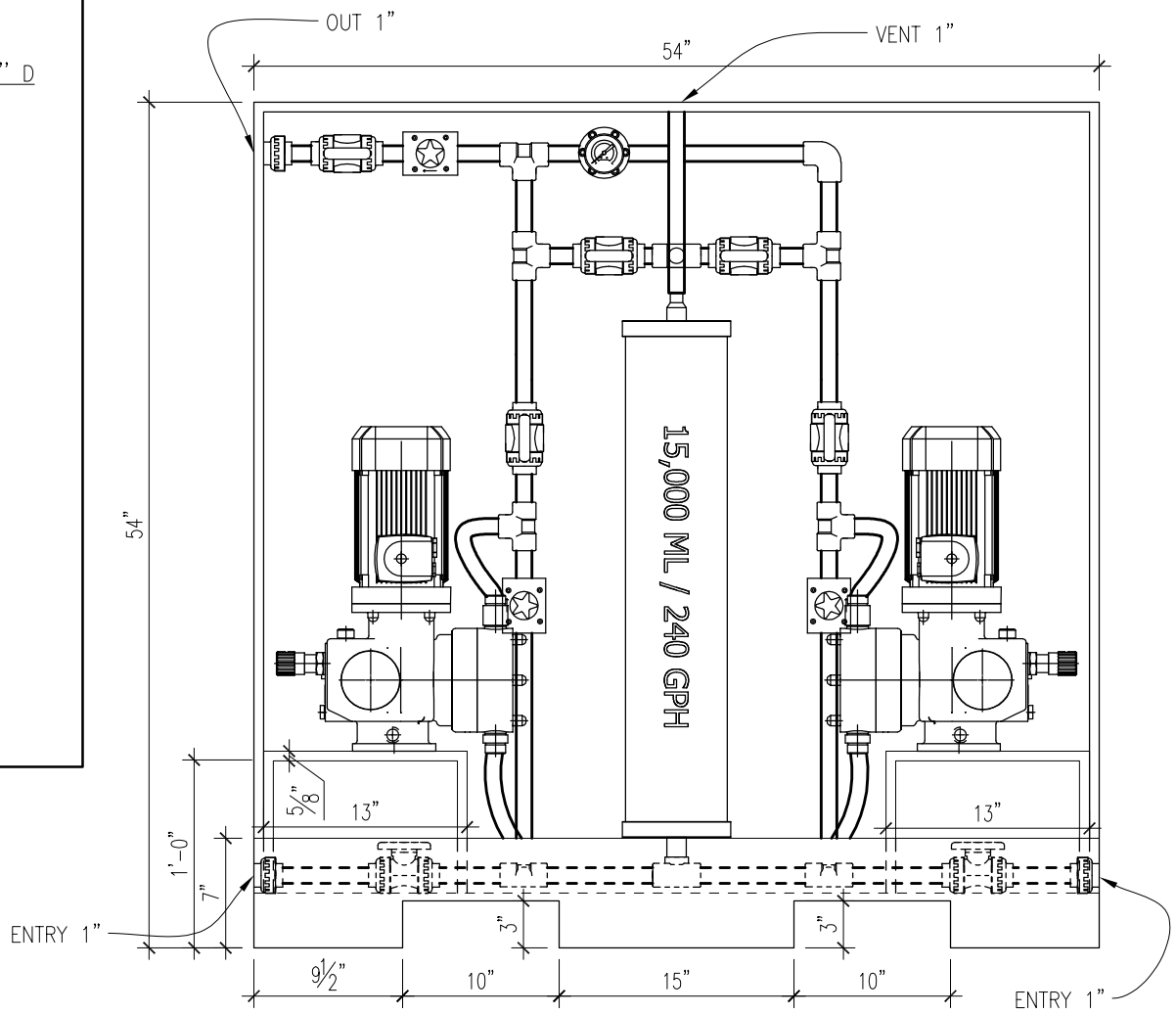


FRONT VIEW

**Notes :**
1. DIMENSIONS ARE IN INCHES
2. DO NOT MEASURE THE DRAWING

PCP
Pompes & équipements

| | | | | | | | |
|---|---|---|---|---|---|---|---|
| DREW BY: V. BLUTEAU | TITRE: DUPLEX SODIUM THIOSULFATE 251-PVC-750 | REV: | DATE: | MODIF.: | APP.: | DATE: 2021-03-03 | |
| PURCHASE ORDER: | | | | | | # DESSIN: | |
| APP. BY: E. CLERMONT | PROJET: 0193970501 | | | | | 1 DE 2 | |

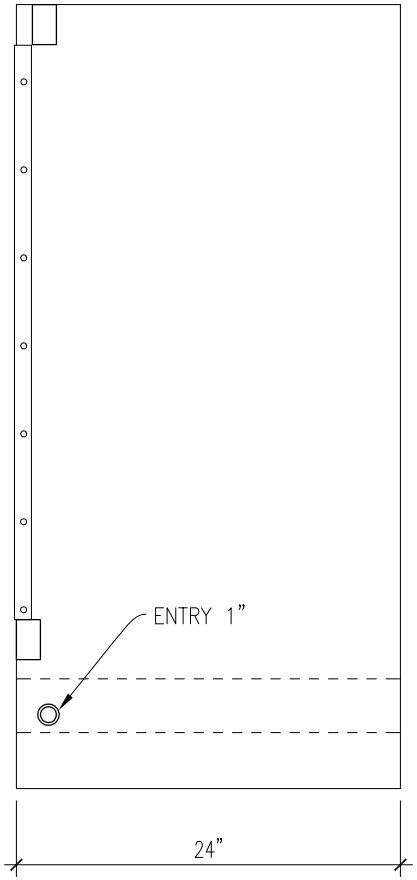


SIDE VIEW

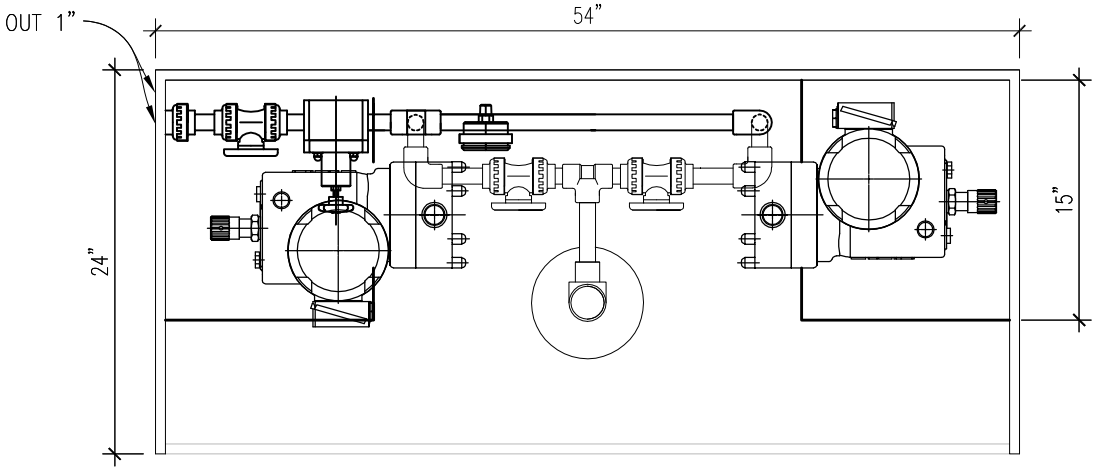


PLAN VIEW

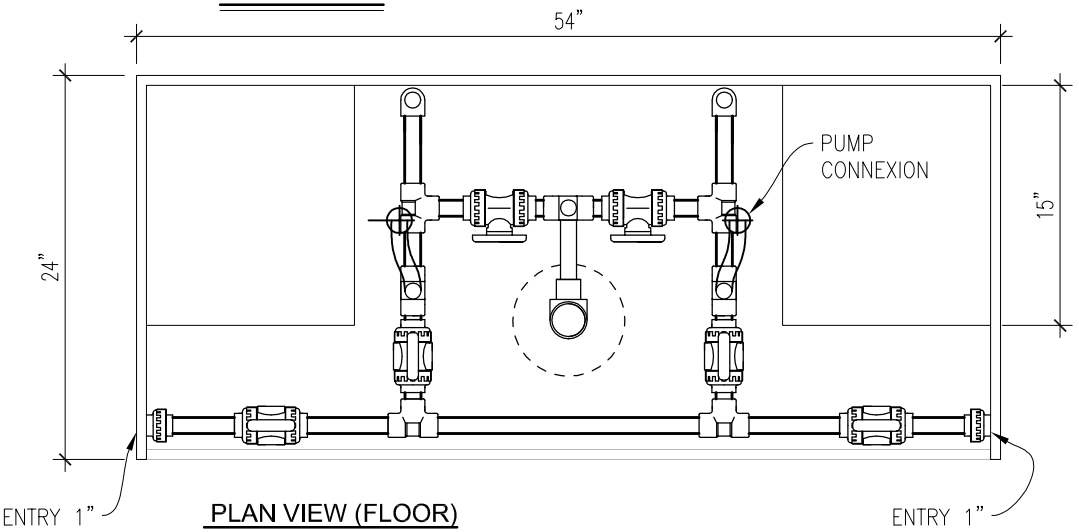


PLAN VIEW (FLOOR)

**Notes :**
1. DIMENSIONS ARE IN INCHES
2. DO NOT MEASURE THE DRAWING

PCP
Pompes & équipements

| | | | | | | | |
|---|---|---|---|---|---|---|---|
| DREW BY: V. BLUTEAU | TITRE: DUPLEX SODIUM THIOSULFATE 251-PVC-750 | REV: | DATE: | MODIF.: | APP.: | DATE: 2021-03-03 |
| PURCHASE ORDER: | | | | | | # DESSIN: |
| APP. BY: E. CLERMONT | PROJET: 0193970501 | | | | | 1 DE 2 |

# PUMP MODEL: RF410.2-570E

## PUMP #1: 65PME68007A
## PUMP #2: 65PME68007B

**Workshop drawing :**

- □ Approuved as is
- □ Approuved with correction(s)
- □ Rejected

**Approuved by**

Name : _____

Title : _____

Compagnie : _____

Signature : _____

*3076 A, Bernard-Pilon, St-Mathieu de Beloeil, Qc, J3G 4S5 Tél.: (450) 922-4224 / Fax: (450) 922-4223*

Single diaphragm pump : RF410.2-570e

Nominal capacity (QN) : 1 x 0 - 684 l/h at 60Hz

Suction height : 5mWC

Counter pressure (p2max) : 6bar

Nominal stroke frequency (nN) : 116 per minute at 60Hz

Pump body : PVC-U

Single valves : PVC-U

Valve balls : PTFE

Valve seals : EPDM

Working diaphragm : PTFE faced

Connections : G1

Drive : 3-phase motor

- 0,86kW, 575V, 60Hz
- IP55, insul.cl. F
- for converter operation 5 to 60Hz
- thermistors
- electrical by UL/CSA

Capacity adjustment : manual stroke length adjustment

PRODUCT INFORMATION

# SERIES 4
# DIAPHRAGM PUMPS




INSPIRED. SOLUTIONS. FOR CUSTOMERS.

# DIAPHRAGM PUMPS - ALLROUNDERS

**sera** diaphragm pumps are oscillating displacement pumps for dosing liquids. The medium to be pumped is separated from the drive by a diaphragm. This is thus protected from damaging influences of the medium.

They are used everywhere where leak-free and exact dosing is important, such as for aggressive, odorous, abrasive, radioactive, flammable, viscous or toxic media.

Delivery rate adjustment by means of stroke frequency adjustment using external frequency converter and manual stroke length adjustment for optimal adaptation to every requirement.

## APPLICATIONS

- Beverage industry
- Food industry
- Manufacture of paints and varnishes
- Power plants
- Water treatment
- Shipbuilding
- Electroplating
- Textile industry
- Waste water treatment

## AUTOMATIC DELIVERY RATE ADJUSTMENT

- Three-phase motors suitable for frequency converter operation for stroke frequency change using an external frequency converter
- Actuators with position controllers for automatic stroke length change

## OVERVIEW OF ADVANTAGES

- High dosing accuracy
- Long diaphragm service lives
- Linear control characteristics
- Leak-free
- Low-maintenance
- ATEX-compliant versions are available (not in stock)
- Unlimited dry running safety

## OPTIONAL VERSIONS

- Diaphragm monitoring
- Suction height 8 mWC
- Controllable variant (C version)





# VERSIONS

## MATERIALS
The high quality of the materials guarantees reliable continuous operation. The optimum material is available for every requirement.

## PUMP BODY AND VALVES
PVC, PP, PVDF, PP-GFP, PVDF-GFP, 1.4571

## VALVE BALLS
PTFE, 1.4401

## VALVE SEALS
EPDM, FPM, FEP-coated

## DRIVE DIAPHRAGMS
PTFE-coated

## MANUAL VENTILATION VALVE (2,4e)
PP-GFP, PVDF-GFP

## DRIVE
The drive unit in each case consists of a proven motor make, coupled with stroke gearing in a robust case.
**sera** cases are also suitable for the harshest operating conditions. Material thickness and surface treatment even resist chemical attacks.

The flow rate is constant or continuously adjustable. This is done manually by changing the stroke length for the controllable version. The delivery rate can be adjusted automatically using the following options:

- Three-phase motors suitable for frequency converter operation for stroke frequency change using an external frequency converter
- Actuators with position controllers for automatic stroke length change

## SPECIAL VERSIONS
We provide the individual solution for special dosing tasks:
Among other things, pump bodies with special nominal diameters, heating equipment, valves as double valves, with spring loading, with elastic ball seats, rinsing equipment for interval or final rinsing for prevention of deposits in the pump body, attachment of stroke counter, diaphragm rupture monitoring, special materials such as titanium or Hastelloy, design that can be cleaned.

## ACCESSORIES
All necessary accessory parts for the optimal installation of dosing pumps such as pressure relief valves, pressure-maintaining valves, pulsation dampers, dosing valves, dosing tanks, flow monitors etc. can be ordered from us.

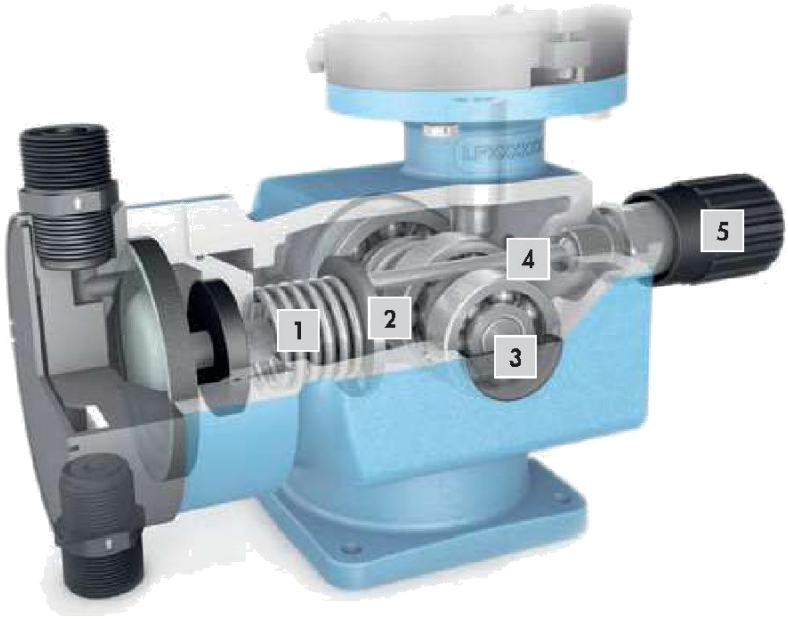


| | |
|---|---|
| 1 | Return spring |
| 2 | Push rod plate |
| 3 | Eccentric shaft |
| 4 | Adjusting spindle |
| 5 | Adjusting wheel |

# TECHNICAL DATA
# DIAPHRAGM PUMP RF410.2

| PUMP DATA | | | RF 410.2-... | | | |
|---|---|---|---|---|---|---|
| | | | 280e | 570e | 900e | 1450e |
| Permissible pressure $p_{2max.}$ at the pump outlet | bar | | 8 | 6 | 5 | 5 * |
| Nominal capacity QN at $p_{2max.}$ | l/h | 50 Hz | 0-280 | 0-570 | 0-900 | 0-1.450 |
| | | 60 Hz | 0-336 | 0-684 | 0-1.080 | 0-1.740 |
| Quantity per stroke | ml/stroke | (100%) | 46 | 98 | 155 | 245 |
| Max. suction height | mWC | | 5 | 5 | 3 | 3 |
| Min./max. permissible pressure at the pump inlet | bar | $p_{1min/max}$ | -0,5/0 | -0,5/0 | -0,3/0 | -0,3/0 |
| Recommended nominal diameter DN of the connecting pipes | mm | | 15 | 15 | 20 | 25 |
| Nominal stroke frequency | 1/min | 50 Hz | 97 | 97 | 97 | 97 |
| | | 60 Hz | 116 | 116 | 116 | – |
| Weight approx. | kg | plastic | 35 | 35 | 37 | 41 |
| | | stainless steel | 42 | 42 | 52 | 59 |

* at 60 Hz is the permissible pressure 3,5 bar

| ELECTRICAL DATA | | RF 410.2-... | | | |
|---|---|---|---|---|---|
| | | 280e | 570e | 900e | 1450e |
| Power consumption | kW | **0,75** | **0,75** | **1,1** | **1,5** |
| Voltage | V | **230/400V 50Hz, 460V 60Hz, 575V 60Hz** | | | |
| Frequency | Hz | **50/60** | | | |
| Insulation class | ISO | F | | | |
| Enclosure | IP | 55 | | | |

# CALIBRATION CYLINDERS
# PV#2-15000

**Workshop drawing :**

- □ Approuved as is
- □ Approuved with correction(s)
- □ Rejected

**Approuved by**

Name : _____

Title : _____

Compagnie : _____

Signature : _____

# ACCUDRAW® Calibration Cylinders

***"For Accuracy That Counts"***

***For complete product information visit our website: primaryfluid.com***



Flanged: Glass, PVC



Flanged: PVC

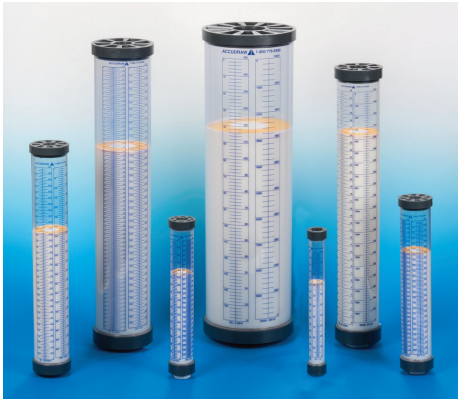

PV#4

## Sizing and Ordering Information:

**ACCUDRAW Standard Materials of Construction**

AC = All polypropylene construction (see below for options)
PV = All polyvinylchloride construction (see below for options)
ACS = Glass*

***Note: Cylinders are NOT pressure vessels***

**Example: AC#1-1000B**

AC = PP (polypropylene)
#1 = Bottom threaded connection only
1000 = 1000 ml
B = BSP Thread

**e.g. Part # AC #1 - 1000 B**

**Type:**
AC = Polypropylene
PV = PVC
ACS = Glass

**Style:**
1 = Bottom threaded conn. only
2 = Top and Bottom threaded conn.
3 = Bottom threaded conn. c/w removable vented dust cap
4 = Top/Bottom threaded conn. c/w removable "O" ring sealed top and float ring level indicator
** **Glass calibration cylinders available in Style 2 only***

**Graduation Scale:**
PP - ml only
PVC - ml and GPH
Glass - ml only

**Std. connection is NPT thread**
**Optional: add suffix as follows**
S = Socket weld connection (PVC only)
GTV = Glass/TFE construction
GKV = Glass/PVDF construction
GCV = Glass/CPVC construction
GSV = Glass/SS construction
B = BSP Thread
F = Flanged

Substitute **E** for **V** for **EPDM** wetted "O" ring seal

| Size: | | | Material | Conn. |
|---|---|---|---|---|
| 100 | = 100 ml | (1.6 GPH) | PP, PVC, Glass | ½" |
| 250 | = 250 ml | (4 GPH) | PP, PVC, Glass | ½" |
| 500 | = 500 ml | (8 GPH) | PP, PVC, Glass | ½" |
| 1000 | = 1000 ml | (16 GPH) | PP, PVC, Glass | ½" |
| 2000 | = 2000 ml | (32 GPH) | PP, PVC, Glass | 1" |
| 4000 | = 4000 ml | (64 GPH) | PP, PVC, Glass | 1" |
| 6000 | = 6000 ml | | Glass only | 2" |
| 8000 | = 8000 ml | | Glass only | 2" |
| 10000 | = 10000 ml | (160 GPH) | PVC, Glass | 2" |
| 15000 | = 15000 ml | (240 GPH) | PVC only | 2" |
| 20000 | = 20000 ml | (320 GPH) | PVC, Glass | 2" |

***Custom sizes and materials available.***

# RELIEF VALV and BACK-PRESSURE VALV
# TVBP10-PVC

**Workshop drawing :**

- □ Approuved as is
- □ Approuved with correction(s)
- □ Rejected

**Approuved by**

Name : _____

Title : _____

Compagnie : _____

Signature : _____

# TOP VALVE *PAT

For detailed product information visit our website:
primaryfluid.com

## Back Pressure/Anti-Siphon and Pressure Relief Valves

### Description

This line of diaphragm style, back pressure/anti-siphon and pressure relief valves features a completely adjustable pressure range to 350 PSIG and a built-in air release to reduce priming difficulties. The valves are available in sizes from 1/4" through 2", eight materials of construction, offer a three year warranty and are available with socket weld, flanged or special threaded connections. High temperature to (300°F/149°C) valves are available. *CRN certification available. Please contact factory.*

### Ordering Information

**e.g. Part # TVBP50-S/S-V-S**

**TV - B - P - 50 - S/S - V - S**

**TOP VALVE**

**Valve Type:**
- B = Backpressure
- P = Pressure Relief (3 port)
- P2 = Pressure Relief (2 port)

**Valve Style or Connection:**

| | |
|---|---|
| P | = Backpressure, FNPT thread |
| R | = Pressure Relief, FNPT thr'd (3 port) |
| FW | = Welded Flange |
| FT | = Thread Companion Flanged |
| F | = Flanged Non-Metallic |
| S | = Socket |
| B | = BSP thread |
| T | = High Temperature (300°F/149°C) |
| H | = High Pressure (to 350 psig) Metallic Bodies |
| M | = Mid-Range Pressure (to 230 psig) Thermoplastic Bodies |
| U | = Union Type Connection |

**Valve Port Connection Size:**

| | |
|---|---|
| 25 = 1/4" | 10 = 1" |
| 45 = 1/4" X 1/2" | 15 = 1 1/2" |
| 50 = 1/2" | 20 = 2" |
| 75 = 3/4" | |

**Top Options:**
- C = CPVC Top (standard)
- A = Aluminum Top
- S = 316L S/S Top
- XXX = Custom spring range

**Miscellaneous Options:**
- E = EPDM Diaphragm
- P = PVC Diaphragm
- V = Viton Diaphragm
- G = Gauge Port

**Body Material of Construction:**

| | |
|---|---|
| PVC | = polyvinylchloride |
| CPVC | = Corzan |
| PP | = polypropylene |
| TFE | = 24% glass filled PTFE |
| PVDF | = polyvinylfluoride |
| S/S | = 316L Stainless Steel |
| ALL20 | = Alloy 20 |
| Hast | = Hastelloy C 276 |

### Flow Rates

Flow capacity through TOP VALVE back pressure/anti-siphon and pressure relief valves under continuous flow conditions **@ 50 PSIG** with ambient temperature water.

| Size | 1/4" | 1/4" / 1/2" | 1/2" | 3/4" | 1" | 1 1/2" | 2" |
|---|---|---|---|---|---|---|---|
| Flow rate USGPM | 4 | 4 | 6 | 8 | 14 | 25 | 40 |

**Note:** Capacities will increase with pressure. If pressure is doubled, flow rate wll approximately double. For capacities of valves with pulsating flow, use approximately 1/3 of the given flow rates.

### Typical Installations

The installations below are typical installation examples only. Consult your engineering department for the appropriate installation of your application or call Primary Fluid Systems Inc. for advice.

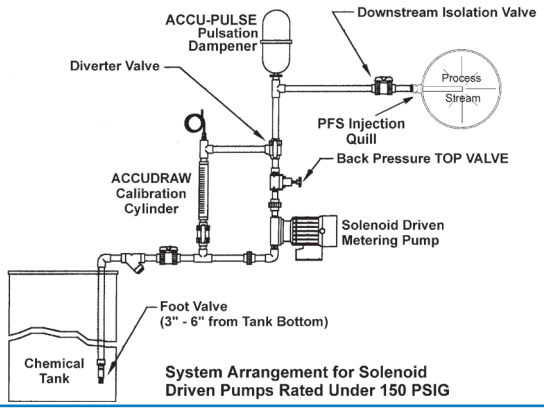


System Arrangement for Solenoid Driven Pumps Rated Under 150 PSIG

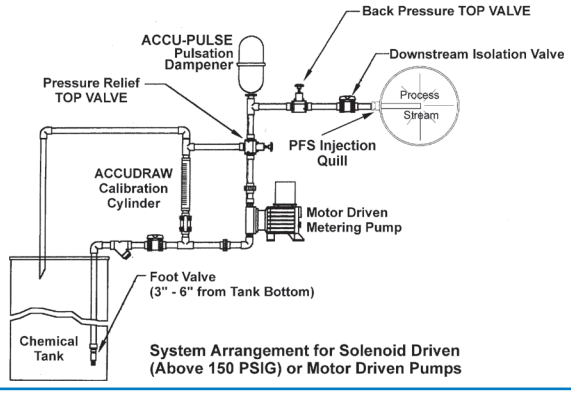


System Arrangement for Solenoid Driven (Above 150 PSIG) or Motor Driven Pumps

**Distributed By:**

PRIMARY FLUID SYSTEMS INC.

**Distribution Territories Available**


**Call Toll Free 1-800-776-6580**
Tel: (905) 333-8743
Fax: (905) 333-8746

*E-mail: primary@primaryfluid.com*
*www.primaryfluid.com*



® Registered Trade Mark of Primary Fluid Systems
*PAT 5,857,486/5,944,050

# PRESSURE GAUGES GI2.5-160 CB AND AG25A50AMT-PVC

**Workshop drawing :**

- □ Approuved as is
- □ Approuved with correction(s)
- □ Rejected

**Approuved by**

Name : _____

Title : _____

Compagnie : _____

Signature : _____

# ACCUGUARD GAUGES

ACCUGUARD Pressure Gauges are designed to enhance the performance of chemical feed systems. Adding a pressure gauge to any system will help to ensure that optimal pressures are monitored and maintained.




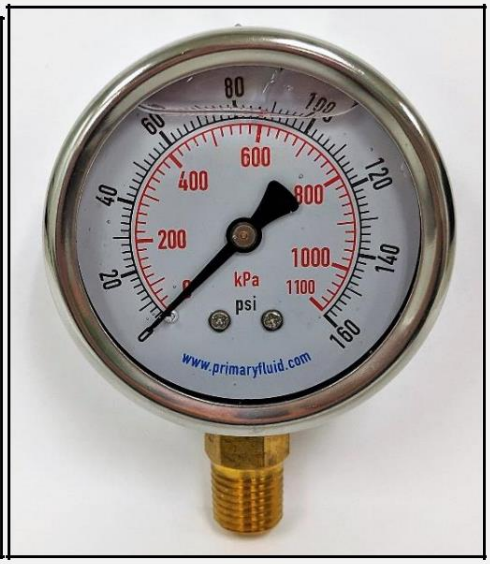


## Series Information

| Series | Gauge Diameter | Gauge Connection Size and Type | Gauge Housing | Gauge Internals | Liquid Filled | *Accuracy Rating |
|---|---|---|---|---|---|---|
| **Economy** | 2" / 2.5" | 1/4" NPT | Steel Case | Brass | No | ± 2.5% |
| **Intermediate** | 2.5" / 4" | 1/4" NPT | 304 S/S | Brass | Yes | ± 1.6% |
| **Premium** | 2.5" / 4" | 1/4" NPT | 304S/S | 316L S/S | Yes | ± 1.6% |

*Accuracy Rating = Full Scale Range

### HOW TO ORDER - AccuGuard Gauges

*Example Part Number: GE2-160-CB*

**G E 2 - 160 - CB**

**AccuGuard Gauge**

**Gauge Series**
- E = Economy
- I = Intermediate
- P = Premium

**Gauge Diameter**
- 2 = 2 Inches
- 2.5 = 2-1/2 Inches
- 4 = 4 Inches

**Gauge Mounting Orientation**
- CB = Center Back
- BM = Bottom Mount

**Gauge Indication**
- 60 = 0-60 PSIG / 0-400 KPA
- 160 = 0-160 PSIG / 0-1100 KPA
- 200 = 0-200 PSIG / 0-1400 KPA
- 300 = 0-300 PSIG / 0-2000 KPA
- 400 = 0-400 PSIG / 0-2800 KPA

*4" Gauge Diameter Available in Bottom Mount Orientation Only*

*For Price & Availability of Other Pressures - Call Factory*

Primary Fluid Systems Inc. | 1050 Cooke Blvd. | Burlington | Ontario | L7T 4A8 | Canada
www.primaryfluid.com | primary@primaryfluid.com | North American Toll Free: 1-800-776-6580

# ACCUGUARD Diaphragm Seals

Without proper protection, process fluids can contaminate and damage in-line instrumentation. ACCUGUARD Diaphragm Seals are designed to protect and isolate pressure gauges and expensive instrumentation from corrosive, high temperature, or viscous, process media.



## Features

- Transfers process pressure accurately without direct contact with process fluids
- Removes the need for expensive instrumentation
- Easily installed and available in five chemically resistant Materials of Construction
- Optional Diaphragm Materials
- Available with ¼" & ½" Bottom Connection Sizes in FNPT & BSPT Female Connection Types
- Thermoplastic Units Rated to 240 PSIG (16 BARG) @ 21°C (70°F)
- 316L S/S Units Rated to 5800 PSIG (400 BARG) @ 21°C (70°F)
- Approved – 316 S/S Diaphragm Seals with CRN (Canadian Registration Number)

## HOW TO ORDER - AccuGuard

*Example Part Number: AG25A25A-PVC-V-M-[Optional Gauge]*

**AG 25 A 25 A - PVC - V - M - [Optional Gauge]**

*See Gauge List*

**AccuGuard Diaphragm Seal**

**Connection Size (Top)**
- 25 = 1/4"

**Connection Type (Top)**
- A = FNPT

**Connection Size (Bottom)**
- 25 = 1/4"
- 50 = 1/2"

**Connection Type (Bottom)**
- A = FNPT
- B = BSPT

**Options**
- M = Mounted Gauge/Glycerin Filled

**Diaphram Materials**
- V = Viton (Thermoplastic Body Only)
- E = EPDM (Thermoplastic Body Only)
- T = PTFE (Thermoplastic Body Only)
- S/S = 316 S/S (S/S & S/SV Body Only)

**Body Materials**
- PVC = Polyvinylchloride
- CPVC = CPVC Corzan
- PP = Polypropylene (Not Available with PTFE Diaphragm)
- PVDF = Polyvinyldene Fluoride (PTFE Diaphragm Only)
- S/S = 316L Stainless Steel
- S/SV = Vented 316L Stainless Steel

*- Optional Gauge Appears as Separate Line Item When Ordered*

*- Diaphragm Seals With Gauges = Glycerin Filled As Standard*

*- 1/4" & 1/2" MNPT Nipples Available - Call Factory for Details*

Primary Fluid Systems Inc. | 1050 Cooke Blvd. | Burlington | Ontario | L7T 4A8 | Canada
www.primaryfluid.com | primary@primaryfluid.com | North American Toll Free: 1-800-776-6580

25 mm
DRAWING #: 6600-000-I-1213

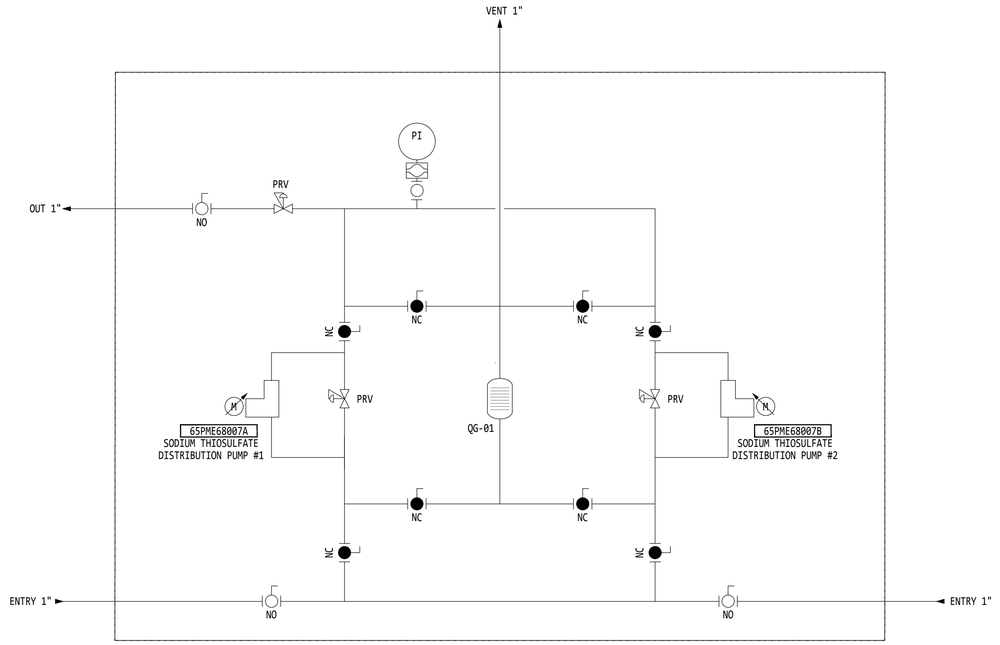


65PME68007A/B
DOSING PUMPS
CAPACITY: 684 L/HOUR

QG-01
CYLINDER 15000mL / 240GPH

NOTE:
ALL CONNECTIONS ARE NPT TYPE

ASDR
**FOR TENDER**
DO NOT USE FOR CONSTRUCTION

SEAL & SIGNATURE

| REV. | DATE | DESCRIPTION | BY | VER. | APP. |
|---|---|---|---|---|---|
| T0 | 2021-04-08 | FOR TENDER | AN | DM/EC | DM/EC |

THE INFORMATION HERE ON IS THE PROPERTY OF ASDR AND MUST BE RETURNED UPON REQUEST. WITHOUT WRITTEN PERMISSION, ANY COPYING TRANSMITTAL TO OTHERS AND ANY USE EXCEPT THAT FOR WHICH IT IS LOANED IS PROHIBITED.

CLIENT

| | |
|---|---|
| INFO CLIENT | - |

ASDR

| | |
|---|---|
| DRAWN BY | AMINATA NIASSE, CEP |
| VERIFIED BY | DAN MISIANO / ETIENNE CLERMONT |
| APPROVED BY | DAN MISIANO / ETIENNE CLERMONT |

| CREATION DATE | SCALE | PROJECTION |
|---|---|---|
| 2021-04-06 | N.TS. | |

DRAWING TITLE

PROCESS WATER TREATEMENT - GENERAL
INSTRUMENTATION
DUPLEX DISTRIBUTION UNIT
SODIUM THIOSULFATE

| PROJECT # | DRAWING # | REV. | SHEET |
|---|---|---|---|
| 01939 | 6600-000-I-1213<br>SECTOR-LEVEL – DISCIPLINE – SEQUENTIAL # | T0 | 1/1 |

IMPRIMÉ PAR : Aminata Amary Niasse | DATE D'IMPRESSION : 2021-05-05 | PLUME D'IMPRESSION : ASDR Noir.ctb
FORMAT DE PAPIER : ISO A1 (594 mm x 841 mm [23.4" x 33.1"]) | PRÉSENTATION : ISO 5457

# TOP VALVE

Pat. #5,857,486 & 5,944,050

## Back Pressure and Pressure Relief Valves

## Instruction Manual

**PLEASE NOTE:**
**This instruction manual provides detailed information and instructions that must be read, understood and followed to ensure that the equipment is installed, operated and serviced in an appropriate manner. Failure to do so before using may result in hazardous consequences and/or improper operation.**

10/2020

**TEMPERATURE LIMIT NOTATION:**
**If the application in which this valve is to be installed has a temperature greater than 73°F (23°C) including radiant heat, refer to page 11 for temperature correction vs. pressure limits.**

Rev. 8

**NOTE:**
**See Gauge Installation Instructions before removal of gauge plug to avoid thread damage. (Gauge port is optional)**

Manufactured by:



**PRIMARY FLUID SYSTEMS INC.**
1050 COOKE BLVD., BURLINGTON, ON. CANADA L7T 4A8
TEL :(905)333-8743 FAX:(905)333-8746
1-800-776-6580
primary@primaryfluid.com

# I N D E X


**INTRODUCTION** ..... **3**

**Special Features of TOP VALVE** ..... **3**

**Back Pressure Valve** ..... **3**

**Back Pressure Valves: Reason for Selection and Use** ..... **4**

**Pressure Relief Valves** ..... **4**

**Pressure Relief Valves: Reason for Selection and Use** ..... **4**

**Installation and Maintenance of Back Pressure Valves** ..... **4**

**Installation and Maintenance of Pressure Relief Valves** ..... **5**

**Gauge Installation Instructions: (When ordered with valve only)** ..... **5**

**Manual Air Release** ..... **6**

**Typical Installations** ..... **7**

**ALL New Clamping Device for TOP VALVE, Back Pressure and Pressure Relief Valves** ..... **8**

***Exploded Parts View – Back Pressure & Pressure Relief Valve*** ..... ***9***

**Dimensions – Top Valve – Back Pressure** ..... **10**

**Dimensions – Top Valve – Pressure Relief** ..... **10**

**Flow Rates** ..... **11**

**Temperature Correction Factors: Thermoplastics** ..... **11**

**LIMITED WARRANTY** ..... **12**

## INTRODUCTION

The following instructions are to provide information on the Installation, operation and maintenance of TOP VALVE, 150# rated diaphragm style Back Pressure and Pressure Relief Valves, manufactured by Primary Fluid Systems Inc. The valves are designed to improve the performance and safe operation of most pumps used for metering applications.

Various materials of construction are available dependent on the requirements of the application and the type of fluids being transferred.

The valve(s) are factory set at 50 PSIG with a field adjustment range of 15-150 PSIG*. Other factory set pressure ranges (within the range of the valve) are available upon request.

## Special Features of TOP VALVE

- PVC, PP, TFE, CPVC, PVDF, Hastelloy C, Alloy 20 or 316 S/S wetted construction
- PTFE laminated to EPDM backer diaphragm
- Turn down handle limits pressure to 150 PSIG
- Handle shaped for ease of adjustment
- Color-coded handles indicate size at a glance
- (Optional) Built-in matching material gauge port plug is easily removed for gauge option
- Rectangular shape for ease of installation
- Specially designed spring provides consistent pressure adjustments through the range (15-150 PSIG*)
- Valve top specially designed for mounting clamp to help reduce pipeline stress when required
- Built-in downstream manual air release, for ease of pump priming
- Built-in anti-siphon

***Pressures under 15 PSIG require rubber elastomeric diaphragm.**

## Back Pressure Valve

Diaphragm Back Pressure Valves serve two primary functions. The first is to provide a constant discharge pressure on the pump, which improves the performance, efficiency and consistency of the delivered volume. Secondly, the valve performs as an anti-siphon mechanism against positive or negative pressures in the downstream line. The valve is designed to allow for the venting of air into the downstream pipeline. This provides for easier priming of metering pumps that function under a suction lift. This is accomplished by a simple adjustment of the handle.

The valve is available with an optional gauge port, pre-plugged at the factory or can be ordered complete with gauge to suit application. This eliminates the need to install extra fittings in the line to accommodate the addition of a gauge for the purpose of reading and setting of pressure.

**CAUTION:**
**The gauge port is solely for the installation of the gauge and must not be used for the bleeding or venting of the system. Improper operation of the valve and/or hazardous consequences could result.** ***(see gauge installation instructions)***

## Back Pressure Valves: Reason for Selection and Use

Metering pumps having an atmospheric discharge system pressure of less than 20 psi and will benefit from the installation of a back pressure control valve. Metering pumps in general require downstream back pressure to ensure smoother function of the discharge check assemblies, which enhances the accuracy of the discharge flow.

## Pressure Relief Valves

Diaphragm Pressure Relief Valves are designed to relieve excess line pressure that exceeds the set pressure of the valve. This protects the system piping from overpressure that could result in hazardous leakage and/or damage to the pump and other system components.

The Pressure Relief Valves are normally recommended to be set between 5 and 10 PSIG above the system operating pressure.

The valve is of an in-line flow through design with bottom NPT relief port for piping back to supply tank or feed side of pump.

The valve is available with an optional gauge port, pre-plugged at the factory or can be ordered complete with gauge to suit application. This eliminates the need to install extra fittings in the line to accommodate the addition of a gauge for the purpose of reading and setting of pressure.

**CAUTION:**
**The gauge port is solely for the installation of the gauge and cannot be used for the bleeding or venting of the system. Improper operation and/or hazardous consequences could result.** ***(see gauge installation instructions)***

## Pressure Relief Valves: Reason for Selection and Use

When using motor driven metering pumps, a pressure relief valve should always be installed on the downstream side of the pump to protect the system from over pressure which can cause pipe leakage and/or rupture.

## Installation and Maintenance of Back Pressure Valves

Back pressure control valves are installed on the discharge line of the pump. The valve should be located within a 2 (two)-foot distance of the pump discharge to ensure check valve seating. When pumping to a process line without an injection valve, the back pressure valve should be installed as close as possible to the injection point to prevent siphoning.

When used in conjunction with a pressure relief valve, always locate the back pressure valve on the downstream side of the relief valve.

The valve is supplied from the factory pre-set at 50 psig. To increase the pressure setting, back off the lock nut located beneath the colour coded handle. Turn the handle clockwise to increase pressure setting or counter clockwise to reduce pressure setting. Approximately one (1) full turn of the handle is equal to 10 psig.

*If maintenance is required on the valve:*

1. Ensure that the valve is properly isolated from the line, not under pressure and properly flushed of chemical before proceeding to disassembly.
2. Turn knob on the top of valve, counterclockwise until all spring pressure is released **before** proceeding to undo retaining nuts, to remove top of valve for diaphragm replacement.
3. All working components ie. diaphragm, spring can be accessed by removing the four retaining nuts located on the top of the valve (item # 9 of parts breakdown). For ¼" and ¼" x ½" Top Valves, use 5/32" Allen Key / #4 Hex Key. For ½" sizes and up, use a 3/16" Allen Key / #5 Hex key.
4. When replacing the diaphragm, ensure the PTFE coated side of the diaphragm is facing down when viewed from the top of the valve. The installed diaphragm also functions as the body seal. (Torque nuts to 55 inch pounds when reassembling.)

**Set Pressure Safety Feature**

The valve adjustment handle/bolt length is designed to prevent operators from engaging the spring to a coil binding situation that would cause serious function and safety concerns.

In order to achieve max pressures within the top 10% of the valve range, the lock nut on the adjustment handle/bolt must be removed prior to setting the pressure. Ensure that all system pressure has been released before removing the lock nut and re-installing the approved valve handle/bolt.

The valve handle/bolt is the only approved adjustment component to be used on our valves. Deviation from this will void manufacturer warranty and liability.

**Installation and Maintenance of Pressure Relief Valves**

Pressure relief valves are installed on the discharge line of a pump and should be located as close as possible to the metering pump. The valve is of an in-line flow through design with a bottom NPT relief port for piping back to the supply tank or feed side of the pump.

Never install shut-off/isolation valves between pump discharge and in-line pressure relief valves. When using in conjunction with a back pressure control valve, always install back pressure valve downstream of pressure relief valve. The relief port on the pressure relief valve should be piped back to the feed tank or suction side of the pump (see typical installation schematics).

**CAUTION:**
**The plastic valve bodies have standard NPT threads, which are tapered. When installing pipe into the body, hand tighten only to avoid cracking**.

## Gauge Installation Instructions: (When ordered with valve only)

For the convenience of pressure setting and reading, there is an optional plugged gauge port provided, if the valve has not been ordered complete with gauge. **Important:** use a ***TORX style # T-45*** wrench or screwdriver **only** to remove plug from plastic valves. Any other tool will strip the body of the plug and require an extractor to remove the threaded plug.

**CAUTION:**
**Before removing the gauge port plug to install a gauge, ensure that the discharge line is not under pressure and lines are flushed with water prior to proceeding. Ensure that the gauge you are using is chemical resistant to the fluid before installing.**

## Manual Air Release for Back Pressure Valve Only

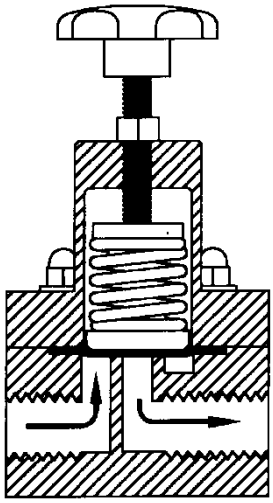

DIAPHRAGM POSITION AT
50 PSI BACK PRESSURE

**The valve is shipped with a factory set pressure of 50 psig. The diagram to the left shows a cut-away view of the position of the diaphragm on the seat.**

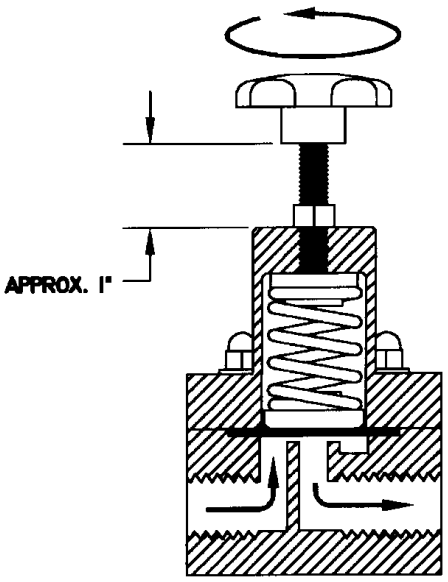


AIR RELEASE POSITION WITH
HANDLE BACKED OFF

**To adjust the valve to relieve air or gas downstream:**

**1. Back off lock nut located beneath the colour coded handle.**

**2. Turn handle counter clockwise until approximately 1 inch of thread is exposed.**

**3. At this adjustment, the spring has relieved all tension from the diaphragm allowing air or gas to be vented downstream.**

---

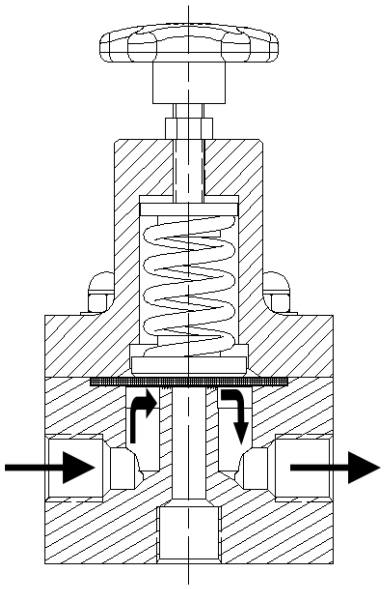

**Flow through design Pressure Relief Valve**

**The bottom port relieves over pressure.**



www.primaryfluid.com Toll Free 1-800-776-6580 email: primary@primaryfluid.com

# Typical Installations

The installations below are typical installation examples only. Consult your Engineering Department for the appropriate installation for your application or call the factory for advice.

**EXAMPLE A: SOLENOID DRIVEN PUMPS RATED UNDER 150 PSIG**

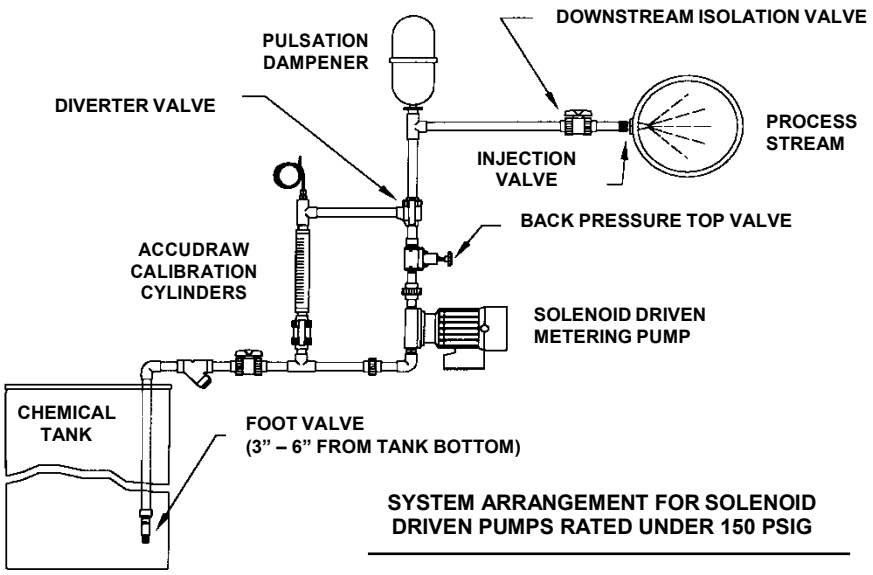


SYSTEM ARRANGEMENT FOR SOLENOID DRIVEN PUMPS RATED UNDER 150 PSIG

---

**EXAMPLE B: SYSTEM ARRANGEMENT FOR SOLENOID DRIVEN (ABOVE 150 PSIG) OR MOTOR DRIVEN PUMPS.**

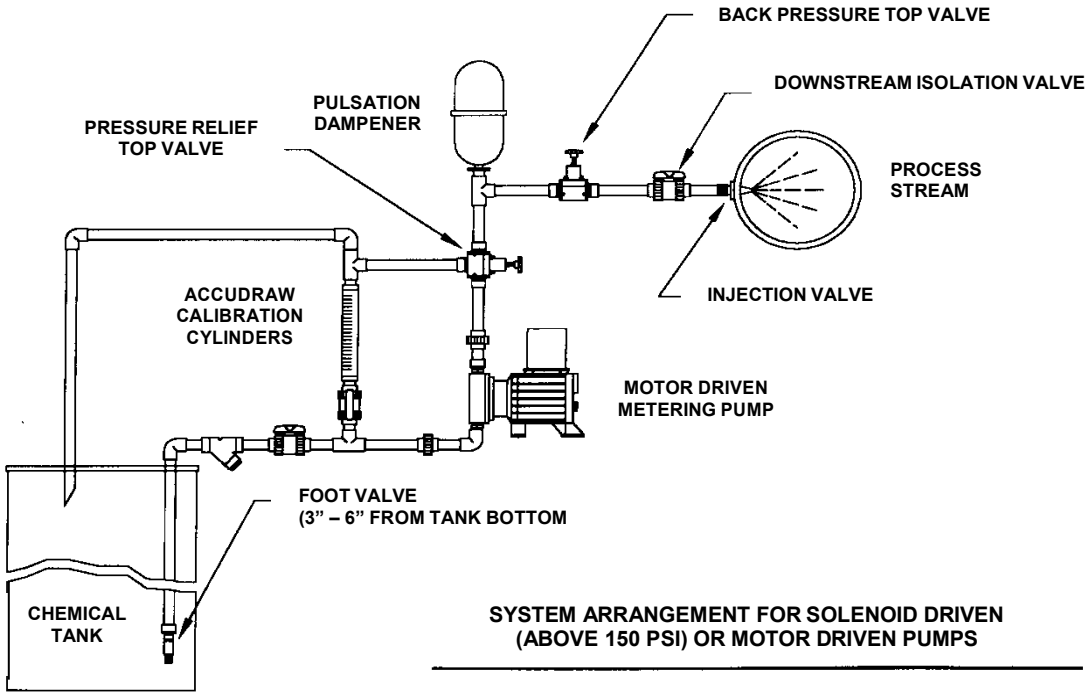


SYSTEM ARRANGEMENT FOR SOLENOID DRIVEN (ABOVE 150 PSI) OR MOTOR DRIVEN PUMPS



www.primaryfluid.com Toll Free 1-800-776-6580 email: primary@primaryfluid.com

# Exploded Parts View- Back Pressure & Pressure Relief Valve

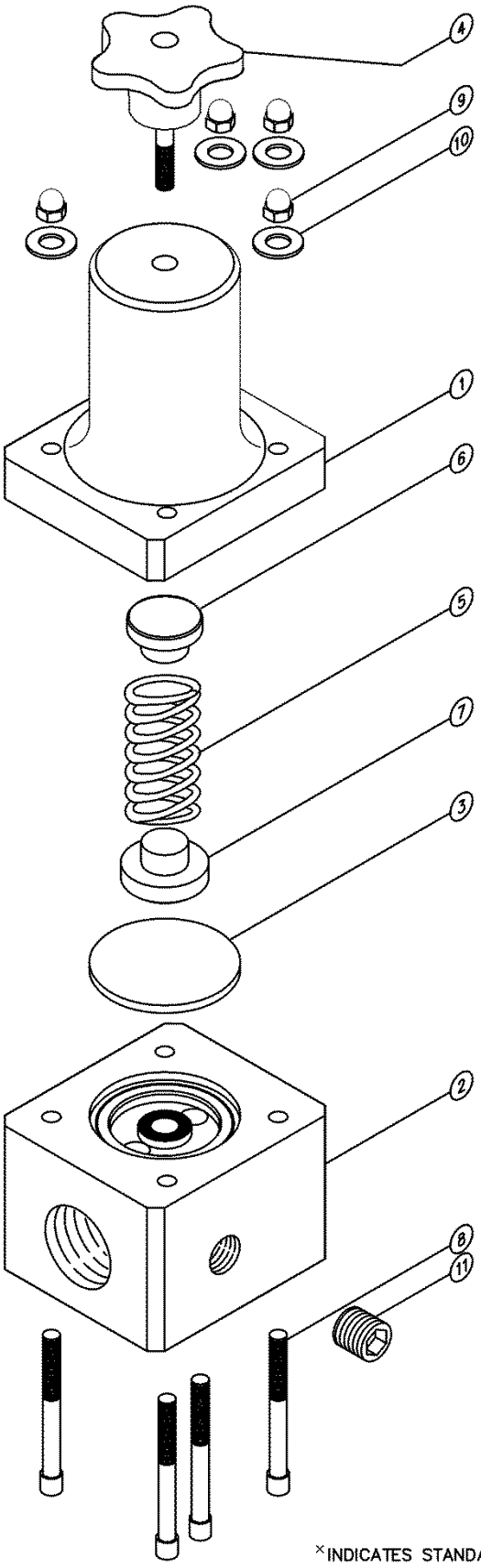


MATERIAL/SIZE CODING

X = PVC = (TYPE 1 PVC)×
X = CPVC = (CPVC CORZAN)
X = S6 = (316 STAINLESS STEEL)
X = A = (ALUMINUM )
X = P = (POLYCARBONATE)

** = 25 = 1/4" & 1/4/1/2" VALVES
** = 57 = 1/2" & 3/4" VALVES
** = 10 = 1" VALVES
** = 15 = 1-1/2" VALVES
** = 20 = 2" VALVES

Ω = B = BACK PRESSURE
Ω = P =PRESSURE RELIEF

∅ = "BLANK" = STD PTFE LAM. EPDM×
∅ = V = OPTIONAL VITON
∅ = E = OPTIONAL EPDM
∅ = P = OPTIONAL PVC

Φ = 25 = 1/4" VALVES
Φ = 45 = 1/4/1/2" VALVES
Φ = 50 = 1/2" VALVES
Φ = 75 = 3/4" VALVES
Φ = 10 = 1" VALVES
Φ = 15 = 1-1/2" VALVES
Φ = 20 = 2" VALVES

^ = PVC = (PVC TYPE 1)
^ = CPVC = (CPVC CORZAN)
^ = PP= (POLYPROPYLENE)
^ = PTFE = (PTFE)
^ = PVDF = (POLYVINYLIDENE FLUORIDE KYNAR)
^ = S/S = (316 STAINLESS STEEL)
^ = HASTC = (HASTELLOY C276)
^ = ALL20 = (ALLOY20)

⊗ = G = GREEN = 1/4" VALVES
⊗ = O = ORANGE = 1/4/1/2" VALVES
⊗ = Y = YELLOW = 1/2" VALVES
⊗ = R = RED = 3/4" VALVES
⊗ = B = BLUE = 1" VALVES
⊗ = BK = BLACK = 1-1/2" VALVES
⊗ = W = WHITE = 2" VALVES

⊕ = 25 = 1/4" & 1/4"/1/2" VALVES
⊕ = 51 = 1/2" THRU 2" VALVES

| ITEM# | QTY | DESCRIPTION | PART# |
|---|---|---|---|
| 1 | 1 | TOP | TVT-1 X - ** |
| 2 | 1 | BODY | TVΩ-2 ^ -Φ |
| 3 | 1 | DIAPHRAGM | TVD-3- ** -∅ |
| 4 | 1 | KNOB | TV⊗K-4 |
| 5 | 1 | SPRING | TVS-5-⊕ |
| 6 | 1 | TOP DISC | TVTD-6-⊕ |
| 7 | 1 | BOTTOM DISC | TVBD-7-⊕ |
| 8 | 4 | BOLTS* | TVΩB-8 -** |
| 9 | 4 | NUTS | TVN-9-⊕ |
| 10 | 4 | WASHERS | TVW-10-⊕ |
| 11 | 1 | GAUGE PLUG (OPTIONAL) | TVP-11- ^ |

_UNDERLINED ITEMS REQUIRE CODES FROM ABOVE CHART
*1-1/2" PRESSURE RELIEF VALVES USE TVBB-8-15
*2" PRESSURE RELIEF VALVES USE TVBB-8-20

×INDICATES STANDARD CONSTRUCTION

DO NOT COPY WITHOUT PRIOR WRITTEN APPROVAL FROM PRIMARY FLUID SYSTEMS INC.

**PRIMARY FLUID SYSTEMS INC.**
1050 Cooke Blvd., Burlington, Ontario L7T 4A8

BACK PRESSURE & PRESSURE RELIEF VALVE EXPLODED PARTS VIEW

| | | |
|---|---|---|
| DATE ISSUED: 19-OCT-11 | SCALE: NTS | SHEET: 1 OF 1 |
| PROJECT: TOP VALVE | | DRAWN BY: BRB |
| APPROVED BY: | DWG NO.: TV-PA-257520STD-XPL | REV.#: 5 |

## Dimensions – Top Valve – Back Pressure

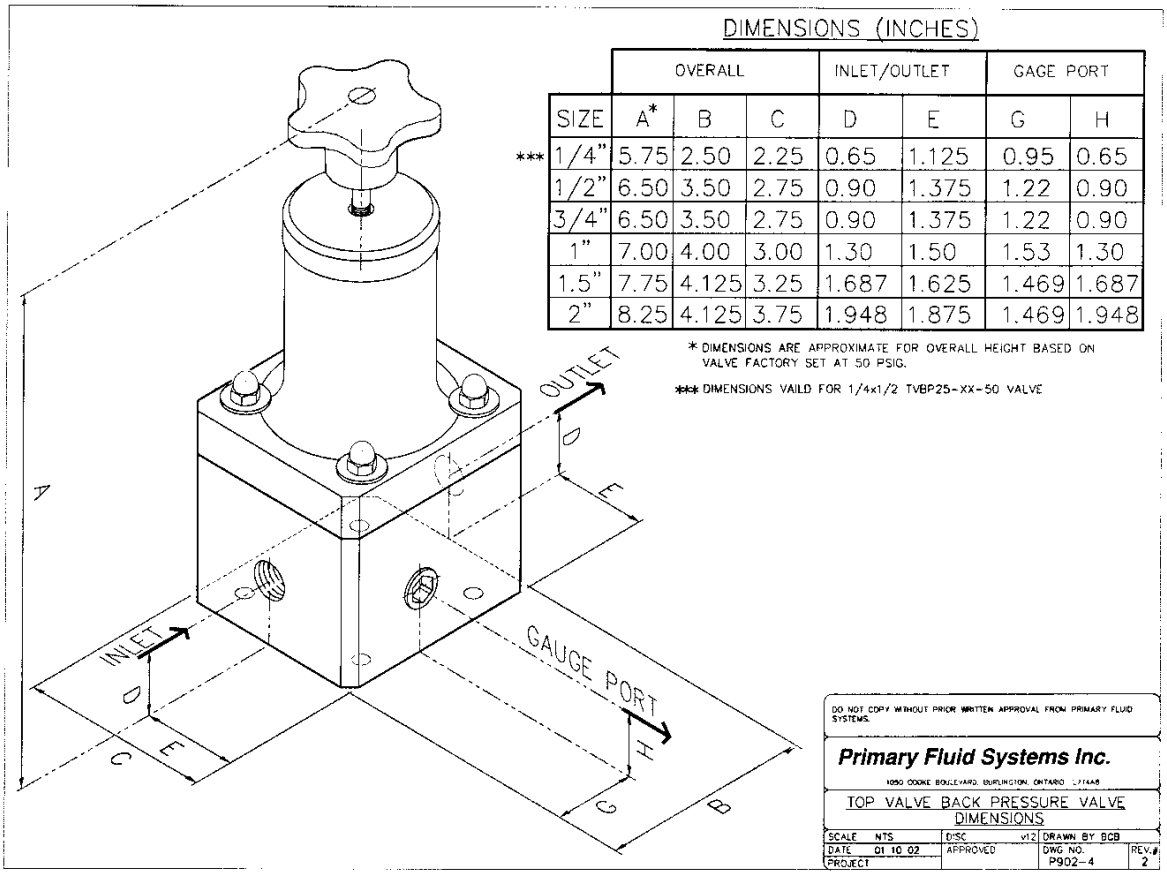


DIMENSIONS (INCHES)

| | | OVERALL | | | INLET/OUTLET | | GAGE PORT | |
|---|---|---|---|---|---|---|---|---|
| | SIZE | A* | B | C | D | E | G | H |
| *** | 1/4" | 5.75 | 2.50 | 2.25 | 0.65 | 1.125 | 0.95 | 0.65 |
| | 1/2" | 6.50 | 3.50 | 2.75 | 0.90 | 1.375 | 1.22 | 0.90 |
| | 3/4" | 6.50 | 3.50 | 2.75 | 0.90 | 1.375 | 1.22 | 0.90 |
| | 1" | 7.00 | 4.00 | 3.00 | 1.30 | 1.50 | 1.53 | 1.30 |
| | 1.5" | 7.75 | 4.125 | 3.25 | 1.687 | 1.625 | 1.469 | 1.687 |
| | 2" | 8.25 | 4.125 | 3.75 | 1.948 | 1.875 | 1.469 | 1.948 |

* DIMENSIONS ARE APPROXIMATE FOR OVERALL HEIGHT BASED ON VALVE FACTORY SET AT 50 PSIG.

*** DIMENSIONS VAILD FOR 1/4x1/2 TVBP25-XX-50 VALVE

DO NOT COPY WITHOUT PRIOR WRITTEN APPROVAL FROM PRIMARY FLUID SYSTEMS.

**Primary Fluid Systems Inc.**

1050 COOKE BOULEVARD, BURLINGTON, ONTARIO L7T4A8

TOP VALVE BACK PRESSURE VALVE DIMENSIONS

| | | | |
|---|---|---|---|
| SCALE NTS | DISC v12 | DRAWN BY BCB | |
| DATE 01 10 02 | APPROVED | DWG NO. P902-4 | REV.# 2 |
| PROJECT | | | |

## Dimensions – Top Valve – Pressure Relief

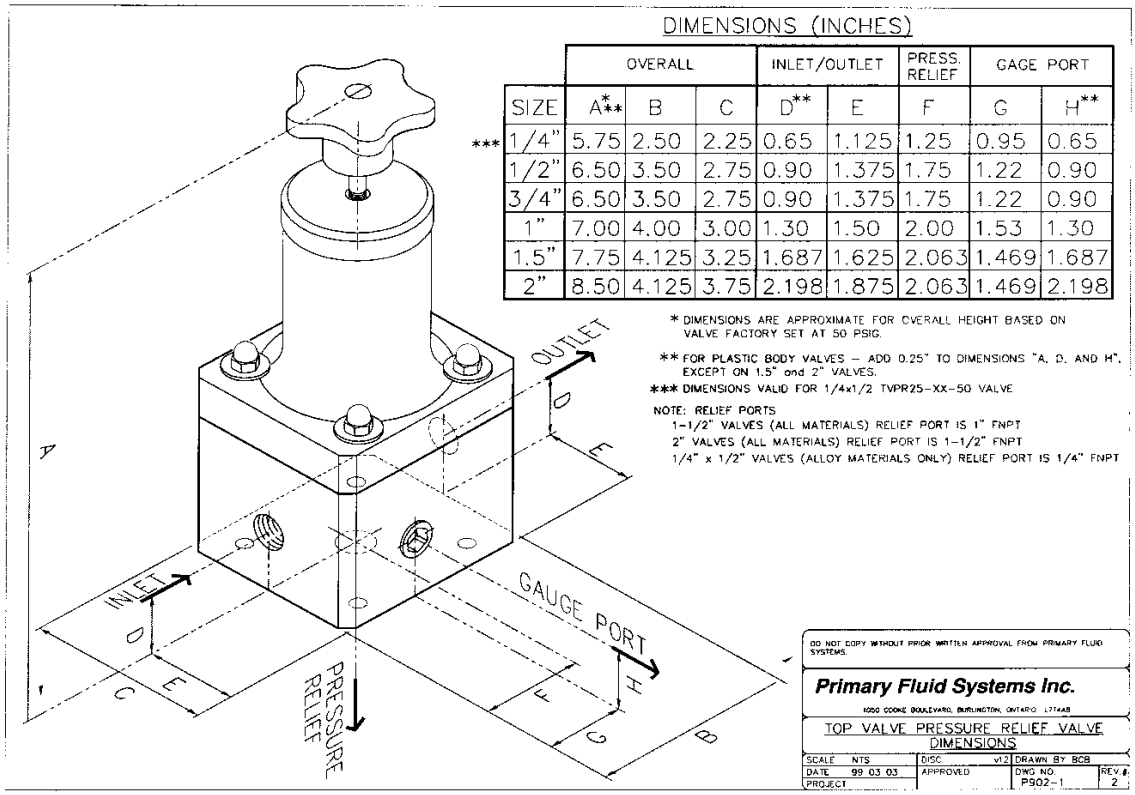


DIMENSIONS (INCHES)

| | | OVERALL | | | INLET/OUTLET | | PRESS. RELIEF | GAGE PORT | |
|---|---|---|---|---|---|---|---|---|---|
| | SIZE | A*** | B | C | D** | E | F | G | H** |
| *** | 1/4" | 5.75 | 2.50 | 2.25 | 0.65 | 1.125 | 1.25 | 0.95 | 0.65 |
| | 1/2" | 6.50 | 3.50 | 2.75 | 0.90 | 1.375 | 1.75 | 1.22 | 0.90 |
| | 3/4" | 6.50 | 3.50 | 2.75 | 0.90 | 1.375 | 1.75 | 1.22 | 0.90 |
| | 1" | 7.00 | 4.00 | 3.00 | 1.30 | 1.50 | 2.00 | 1.53 | 1.30 |
| | 1.5" | 7.75 | 4.125 | 3.25 | 1.687 | 1.625 | 2.063 | 1.469 | 1.687 |
| | 2" | 8.50 | 4.125 | 3.75 | 2.198 | 1.875 | 2.063 | 1.469 | 2.198 |

* DIMENSIONS ARE APPROXIMATE FOR OVERALL HEIGHT BASED ON VALVE FACTORY SET AT 50 PSIG.

** FOR PLASTIC BODY VALVES – ADD 0.25" TO DIMENSIONS "A, D, AND H", EXCEPT ON 1.5" and 2" VALVES.

*** DIMENSIONS VALID FOR 1/4x1/2 TVPR25-XX-50 VALVE

NOTE: RELIEF PORTS
1-1/2" VALVES (ALL MATERIALS) RELIEF PORT IS 1" FNPT
2" VALVES (ALL MATERIALS) RELIEF PORT IS 1-1/2" FNPT
1/4" x 1/2" VALVES (ALLOY MATERIALS ONLY) RELIEF PORT IS 1/4" FNPT

DO NOT COPY WITHOUT PRIOR WRITTEN APPROVAL FROM PRIMARY FLUID SYSTEMS.

**Primary Fluid Systems Inc.**

1050 COOKE BOULEVARD, BURLINGTON, ONTARIO L7T4A8

TOP VALVE PRESSURE RELIEF VALVE DIMENSIONS

| | | | |
|---|---|---|---|
| SCALE NTS | DISC v12 | DRAWN BY BCB | |
| DATE 99 03 03 | APPROVED | DWG NO. P902-1 | REV.# 2 |
| PROJECT | | | |

**ALL New Clamping Device for TOP VALVE, Back Pressure and Pressure Relief Valves**

This new polypropylene-clamping device now makes it even easier than ever to support TOP VALVE, back pressure or pressure relief valves in service, to help eliminate pipe strain and the need for expensive mounting brackets.

It's simple to install, economical to purchase and we've reworked the top of the valve body now available on all new valves, to assist with the support.

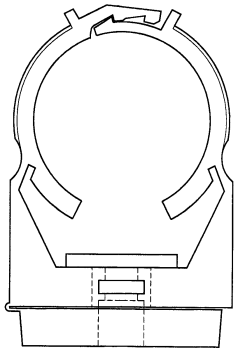

**TV-_ _ -CLAMP**

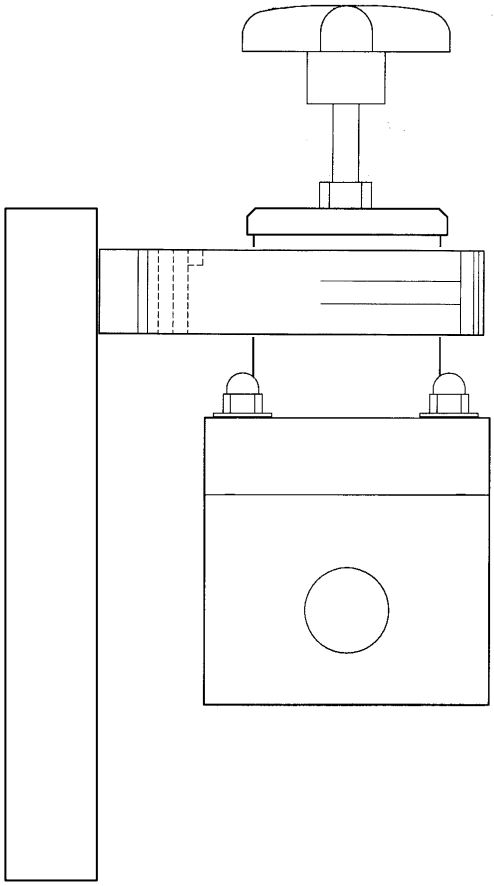

**Sample Installation**

**Part #**

TV-25-CLAMP to fit ¼" Valves and ¼ - ½" Valves

TV-51-CLAMP to fit ½" through 2" Valves

## Flow Rates

Subject: Flow capacity through TOP VALVE, back pressure and pressure relief valves. Under continuous flow conditions: @ **50 PSI** with ambient temperature water

| | | |
|---|---|---|
| ¼" valve | 4 | USGPM |
| ¼"/½" valve | 4 | USGPM |
| ½" valve | 6 | USGPM |
| ¾" valve | 8 | USGPM |
| 1" valve | 14 | USGPM |
| 1½"valve | 25 | USGPM |
| 2" valve | 40 | USGPM |

Note: Capacities will increase with pressure. (If pressure is doubled, flow rate will approximately double.) For capacities of valves with pulsating flow use approximately ⅓ of the above given flow values.

## Temperature Correction Factors: Thermoplastics

**Temperature Effects:** Thermoplastics and thermosets will decrease in tensile strength as the temperature increases: therefore, the working pressure must be reduced accordingly. The following factors will apply:

| Operating Temperatures | | {Factors} | | | |
|---|---|---|---|---|---|
| ***F*** | ***C*** | ***PVC*** | ***CPVC*** | ***PP*** | ***PVDF*** |
| 70 | 21 | 1.00 | 1.00 | 1.00 | 1.00 |
| 80 | 27 | 1.00 | 1.00 | 1.00 | 1.00 |
| 90 | 32 | 1.00 | 1.00 | 1.00 | 1.00 |
| 100 | 38 | .90 | 1.00 | 1.00 | 1.00 |
| 110 | 43 | .83 | 1.00 | .91 | 1.00 |
| 115 | 46 | .75 | 1.00 | .87 | 1.00 |
| 120 | 49 | .66 | 1.00 | .83 | 1.00 |
| 125 | 52 | .58 | .97 | .79 | 1.00 |
| 130 | 54 | .50 | .95 | .75 | 1.00 |
| 140 | 60 | .33 | .90 | .66 | 1.00 |
| 150 | 66 | NR | .80 | .60 | .97 |
| 160 | 71 | NR | .70 | .53 | .93 |
| 170 | 77 | NR | .60 | .43 | .86 |
| 180 | 82 | NR | .50 | .33 | .80 |
| 200 | 93 | NR | .33 | NR | .66 |
| 210 | 99 | NR | NR | NR | .60 |
| 240 | 116 | NR | NR | NR | .40 |
| 280 | 138 | NR | NR | NR | .16 |

**Example:**
Maximum Pressure for PVDF valve at 280°F (138°C)
Factor = 0.16 x 150psig = 24psig max. pressure
Factor = 0.16 x 1034kPa = 165.44kPa max. pressure

The maximum pressure rating for valves regardless of size is 150 PSIG (1034 kPa) at 73° F (22°C)

**NR** = not recommended

Primary Fluid Systems, Inc. takes no responsibility for the enclosed data.

**NOTE**: If the material of the valve you have chosen is rated below the working pressure of your system than you must reconsider your choice. The standard valve top material of construction is PVC and should be taken into temperature consideration. (Other materials of construction are available, consult price list or factory)

**NOTE: When considering working temperature, include ambient and potential collective surface temperature (Radiant Heat).**

# LIMITED WARRANTY

Primary Fluid Systems Inc. (Primary) warrants its products against defects in workmanship or materials for one (1) year under normal use. Three-(3) year available when application card is completed and returned to factory. Application card can be obtained by emailing request to sales@primaryfluid.com

Primary's obligations and liabilities under this warranty shall be limited to replacement of the product, or a refund of an amount not to exceed the purchase price of the product(s) to which such warranty claim is made. Repairs or replacements are made subject to our inspection of the returned product(s). Primary's decision of one of these alternatives shall be the buyer's exclusive remedy.

This warranty does not extend to damage by corrosion or other decomposition by chemical action. Primary does not warrant damages caused by (a) improper use of the product, (b) unauthorized modification or attachment to product, (c) misuse, abuse, accident or negligent handling or installation of product, or (d) alterations or repairs made by purchaser.

The materials of construction offered are recommendations only, subject in all cases to acceptance by purchaser. These recommendations do not constitute any guarantee against corrosion or decomposition, but are based on previous experience and best available information of the industry.

Statements and instructions set forth herein are based on the best information and practices known to Primary, but it should not be assumed that every acceptable safety procedure is contained herein. Of necessity Primary cannot guarantee that actions in accordance with such statements and instructions will result in the complete elimination of hazards and it assumes no liability for accidents that may occur.

Except as specifically provided herein, Primary makes no warranty, representations, promise or guarantee, either express or implied, statutory or otherwise, with respect to the product and technical information provided, including the products' quality, performance, merchantability, or fitness for a particular purpose.

In no event will Primary be liable for indirect, special, incidental, economic, covert or consequential damages arising out of the use or inability to use the product, including without limitation, damages or costs relating to the loss of profits, business and good will even if advised of the possibility of such damages. In no event shall Primary's liability exceed the amount paid by you for the product.

The warranty and remedies set forth herein are exclusive and in lieu of all others, oral or written, express or implied. No Primary dealer, distributor, agent or employee is authorized to make any modification or addition to this warranty. This warranty gives you specific legal rights and you may also have other rights which vary from state to state.

**VISIT OUR WEBSITE**
**@**
**primaryfluid.com**

TECHNICAL MANUAL

# DIAPHRAGM PUMP 409.2...e / 410.2...e




TRANSLATION OF THE ORIGINAL TECHNICAL MANUAL! EN

## PUMP TYPE

| | | | |
|---|---|---|---|
| RF/R/MF/M 409.2 - 1,6e | C 409.2 - 1,6e Pro+ | RF/R/MF/M 410.2 - 280e | C 410.2 - 280e |
| RF/R/MF/M 409.2 - 2,4e | C 409.2 - 2,4e Pro+ | RF/R/MF/M 410.2 - 570e | C 410.2 - 570e |
| RF/R/MF/M 409.2 - 7,0e | C 409.2 - 7,0e Pro+ | RF/R/MF/M 410.2 - 900e | C 410.2 - 900e |
| RF/R/MF/M 409.2 - 12e | C 409.2 - 12e Pro+ | RF/R/MF/M 410.2 - 1450e | C 410.2 - 1450e |
| RF/R/MF/M 409.2 - 18e | C 409.2 - 18e Pro+ | | |
| RF/R/MF/M 409.2 - 25e | C 409.2 - 25e Pro+ | | |
| RF/R/MF/M 409.2 - 50e | C 409.2 - 50e Pro+ | | |
| RF/R/MF/M 409.2 - 75e | C 409.2 - 75e Pro+ | | |
| RF/R/MF/M 409.2 - 90e | C 409.2 - 90e Pro+ | | |
| RF/R/MF/M 409.2 - 115e | C 409.2 - 115e Pro+ | | |
| RF/R/MF/M 409.2 - 140e | C 409.2 - 140e Pro+ | | |
| RF/R/MF/M 409.2 - 180e | C 409.2 - 180e Pro+ | | |
| RF/R/MF/M 409.2 - 250e | C 409.2 - 250e Pro+ | | |
| RF/R/MF/M 409.2 - 350e | C 409.2 - 350e Pro+ | | |

**NOTE**

Record the exact type and serial number here ► can be read off the type plate on the pump.
These data are important in the case of queries or for ordering spare and/or wear parts and must always be stated.

TYPE:

SERIAL NO:

**NOTE**

Keep the operating manual for future use!

**ATTENTION**

Subject to technical modifications!

### Quality notes

The **sera** quality management and quality assurance system is certified in accordance with DIN EN ISO 9001:2015.
The **sera** product complies with the applicable safety requirements and accident prevention regulations.

## About this instructions

Special notes in these instructions are marked with text and danger symbols.

**NOTE**

Notes or instructions that faciliate work and ensure a safe operation.

**ATTENTION**

The non-observance of these safety instructions can result in malfunctions or material damages.

**WARNING**

The non-observance of these safety instructions can lead to material damages and personal injuries.




Note on the additional instructions „SAFETY INSTRUCTIONS“.

These technical manual is divided into the following main parts:


| | |
|---|---|
| TRANSPORT & STORAGE | page 6 |
| PRODUCT DESCRIPTION | page 7 |
| TECHNICAL DATA | page 24 |
| ASSEMBLY / INSTALLATION | page 44 |
| OPERATION / EXPLOSION-HAZARDOUS AREAS | page 51 |
| START-UP | page 53 |
| ELECTRICAL CONNECTION | page 54 |
| MAINTENANCE | page 55 |
| FAULT ANALYSIS / CORRECTIVE ACTION | page 65 |
| SHUT-DOWN / DISPOSAL | page 67 |
| CLEARANCE CERTIFICATE | page 68 |


Depending on the pump type (see order confirmation) the following additional instructions are included:

| | |
|---|---|
| Control PRO+ | TM04 |
| INTERFACE MODULE PROFIBUS | TM05 |
| Control C410.2 | TM10 |
| Control PROFIBUS C410.2 | TM13 |
| Motor ATEX | supplier documentation |
| AC motor | supplier documentation |
| Electrical actuator | supplier documentation |
| Electrical actuator ATEX | supplier documentation |
| Pneumatic actuator | supplier documentation |
| Frequency converter | supplier documentation |
| Special construction | **sera** drawing |

TRANSPORT & STORAGE ..... 6
General ..... 6
Storage ..... 6
PRODUCT DESCRIPTION ..... 7
Type key ..... 7
Type plate ..... 8
Notes attached to the product ..... 8
Materials ..... 8
Components ...409.2 ..... 9
Components of C409.2 ..... 10
Components ...410.2 ..... 11
Components of C410.2 ..... 12
ELECTRICAL DATA ..... 23
ELECTRICAL DATA ..... 23
TECHNICAL DATA ..... 24
NOISE MEASUREMENT ..... 24
VISCOSITY, PUMPED MEDIUM ..... 24
TEMPERATURE DATA ..... 24
AMBIENT CONDITIONS ..... 24
Characteristics ..... 25
Dimensions RF409.2 standard ..... 28
Dimensions ...409.2 options ..... 30
Dimensions C409.2 standard ..... 32
Dimensions C409.2 options ..... 34
Dimensions RF410.2 standard ..... 36
Dimensions ...410.2 options ..... 38
Dimensions C410.2 standard ..... 40
Dimensions C410.2 options ..... 42
ASSEMBLY / INSTALLATION ..... 44
OPERATION / EXPLOSION-HAZARDOUS AREAS ..... 51
Operation in Ex-zone C409.2 / C410.2 ..... 51
Operation in Ex-zone R/M 409.2 / R/M 410.2 ..... 51
START-UP ..... 53
ELECTRICAL CONNECTIONS ..... 54
MAINTENANCE ..... 55
Drive motor ..... 55
Oil change ..... 56
Overview of the tightening torques ..... 57
Changing the Diaphragm ..... 58
Spare and wearing parts ..... 62
FAULT ANALYSIS / CORRECTIVE ACTION ..... 65
SHUT-DOWN / DISPOSAL ..... 67
Shut-down ..... 67
Disposal ..... 67
CLEARANCE CERTIFICATE ..... 68

## TRANSPORT & STORAGE

**WARNING**

Observe and follow the safety instructions by all means.
See the additional instructions „SAFETY INSTRUCTIONS".
Man, machine and environment are endangered if the safety instructions are not observed.




### General

**sera** products are checked for perfect condition and function previous to shipment.
Check for transport damage immediately after arrival of goods. If damage is found, this is to be reported immediately to the responsible carrier and the manufacturer.

### Storage

An undamaged packaging protects the unit during storage and should only be opened when the product is installed.
Proper storage increases the service life of the product and includes prevention of negative influences such as heat, moisture, dust, chemicals etc.

The following storage specifications are to be obsered:

- Storage place: cool, dry, dustfree and slightly ventilated
- Storage temperature and relative air humidity see Chapter „TECHNICAL DATA".
- The maximum storage time for the standard packaging is 12 months.

If these values are exceeded, metal products should be sealed in foil and protected from condensation water with a suitable desiccant.

Do not store solvents, fuels, lubricants, chemicals, acids, disinfectants and similar in the storage room.

## Type key

**1** — Type of drive (combinations possible)

| | |
|---|---|
| C | controllable |
| M | not adjustable |
| R | adjustable |
| F | Motor suitable for frequency converter operation |
| i | Frequency converter, mounted on the motor |
| K | Stroke mechanism with side drive shaft and connected to the drive via a clutch |
| Z | twin design |
| X | Stroke mechanism with two opposite pump heads, combined suction and pressure side |
| Y | Stroke mechanism with two opposite pump heads |

**2** — Series

| | |
|---|---|
| 204 | (solenoid driven pumps) |
| 409 | (motor driven pumps) |
| 410 | (motor driven pumps) |
| 509 | (motor driven pumps) |

**3** — Revision index

**4** — max. Nominal capacity (litre/hour (each pump head))

**5** — Displacer (type of construction)

| | |
|---|---|
| e | Single diap hragm |
| ML | Multy-layer diaphragm |
| KM | Piston daphragm |
| K | Piston |

**6** — Type of control

Pro+

| 1 | 2 | | 3 | | 4 | 5 | 6 | |
|---|---|---|---|---|---|---|---|---|
| C | 409 | . | 2 | - | 50 | e | Pro+ | *(example)* |

## Type plate

Each **sera** pump is factory provided with a type plate. The following information can be found on this type plate.

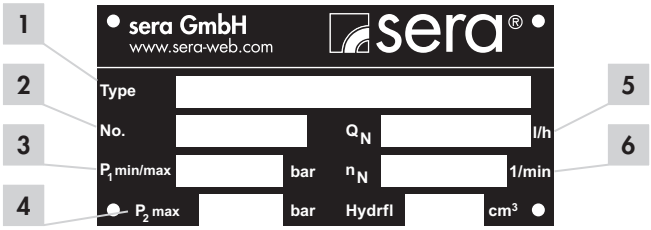


| No. | Designation |
|---|---|
| 1 | Pump type |
| 2 | Serial number of the pump |
| 3 | Minimum/maximum permissible pressure in the pump inlet<br>Minimum/maximum permissible pressure in the inlet cross section which the pump can be used for.<br>Please consider that pressure depends on rotation speed, delivery rate, temperature and static pressure at the inlet. |
| 4 | Maximum permissible pressure in the pump outlet<br>Maximum permissible pressure in the outlet cross section which the pump can be used for. Please consider that pressure depends on rotation speed, delivery rate, temperature and static pressure at the outlet. |
| 5 | Nominal delivery rate<br>Delivery rate which the pump was ordered for, based on the nominal rotation speed nN, the nominal delivery height p2max. and the delivery medium stated in the supply contract. |
| 6 | Nominal stroke frequency |

## Notes attached to the product

Symbols which are directly attached to the pump, e.g. arrows for direction of rotation or symbols for fluid connections are to be observed and kept in legible condition.

## Materials

The materials used are stated in the order confirmation and the product description.

**sera** dosing pumps are run-dry safe oscillating displacement pumps that are characterised by high tightness of the dosing head. The fluid is conveyed by a deformable diaphragm.

## Components ...409.2

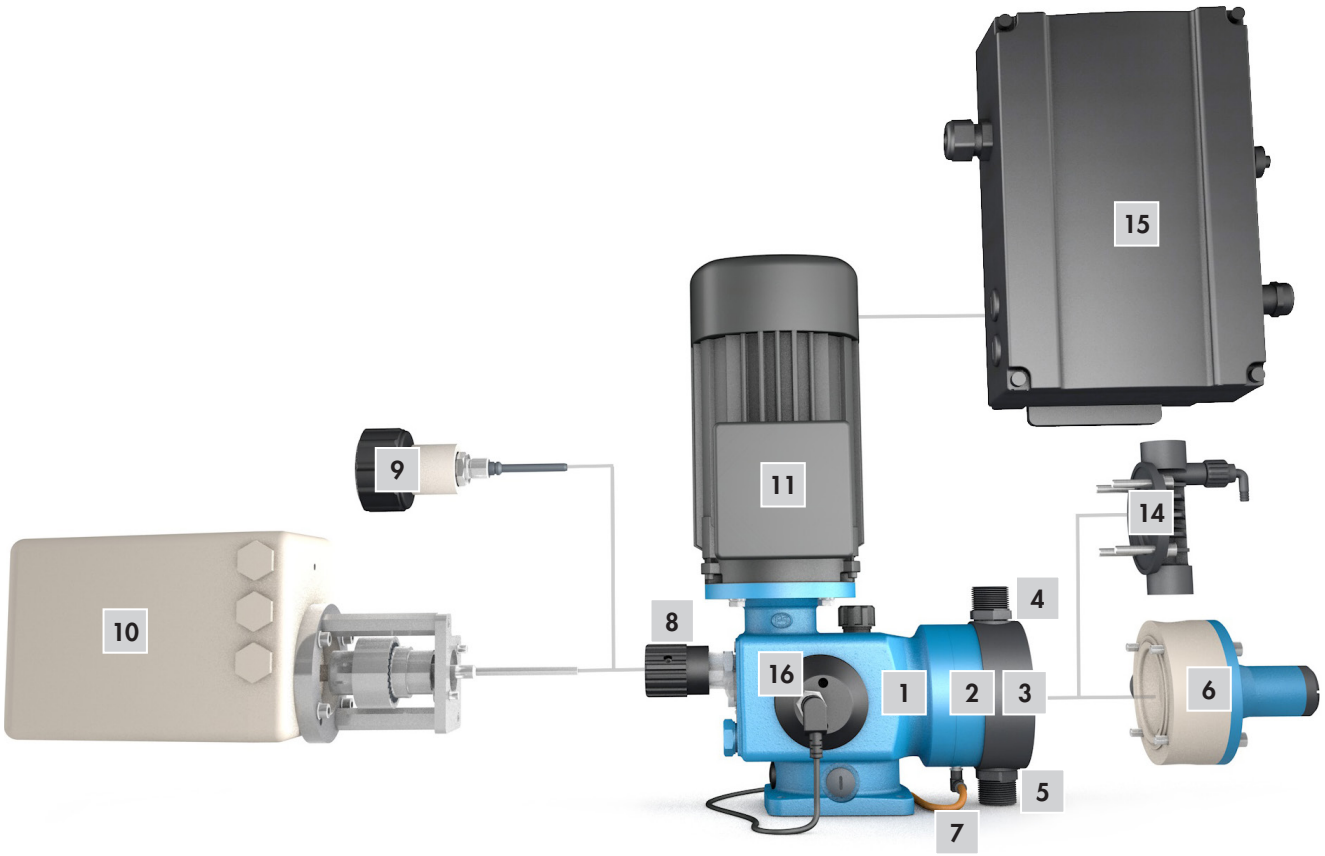


| No. | Designation | Remark |
|---|---|---|
| 1 | Stroke mechanism | |
| 2 | Assembly pump | |
| 3 | Pump body | |
| 4 | Pressure valve | |
| 5 | Suction valve | |
| 6 | Pump body with integrated overflow valve | |
| 7 | Diaphragm rupture monitoring device | option |
| 8 | Manual stroke length adjustment | |
| 9 | Manual stroke length adjustment with position indicator | option |
| 10 | Stroke length adjustment with actuator | option |
| 11 | Motor | |
| 14 | Pump body with manual vent valve | ...409.2-1,6e; -2,4e |
| 15 | Frequency converter * | option |
| 16 | Stroke frequency transmitter | option |
| not illustrated | Blind plug | option (M-design) |
| not illustrated | Motor for Ex-area * | option (R-design) |
| not illustrated | Actuator for Ex-area * | option |
| not illustrated | Pneumatic actuator * | option |

* see enclosed documentation

## Components of C409.2




| No. | Designation | Remark |
|---|---|---|
| **1** | Stroke mechanism | |
| **2** | Assembly pump | |
| **3** | Pump body | |
| **4** | Pressure valve | |
| **5** | Suction valve | |
| **6** | Pump body with integrated overflow valve | |
| **7** | Diaphragm rupture monitoring device | |
| **8** | Manual stroke length adjustment | |
| **9** | Manual stroke length adjustment with position indicator | option |
| **10** | Stroke length adjustment with actuator | option |
| **11** | Motor | |
| **12** | Control Pro+ with removable control element | |
| **13** | INTERFACE MODULE | accessories |
| **14** | Pump body with manual vent valve | ...409.2-1,6, -2,4e |
| not illustrated | Suction lances connection | accessories |

## Components ...410.2

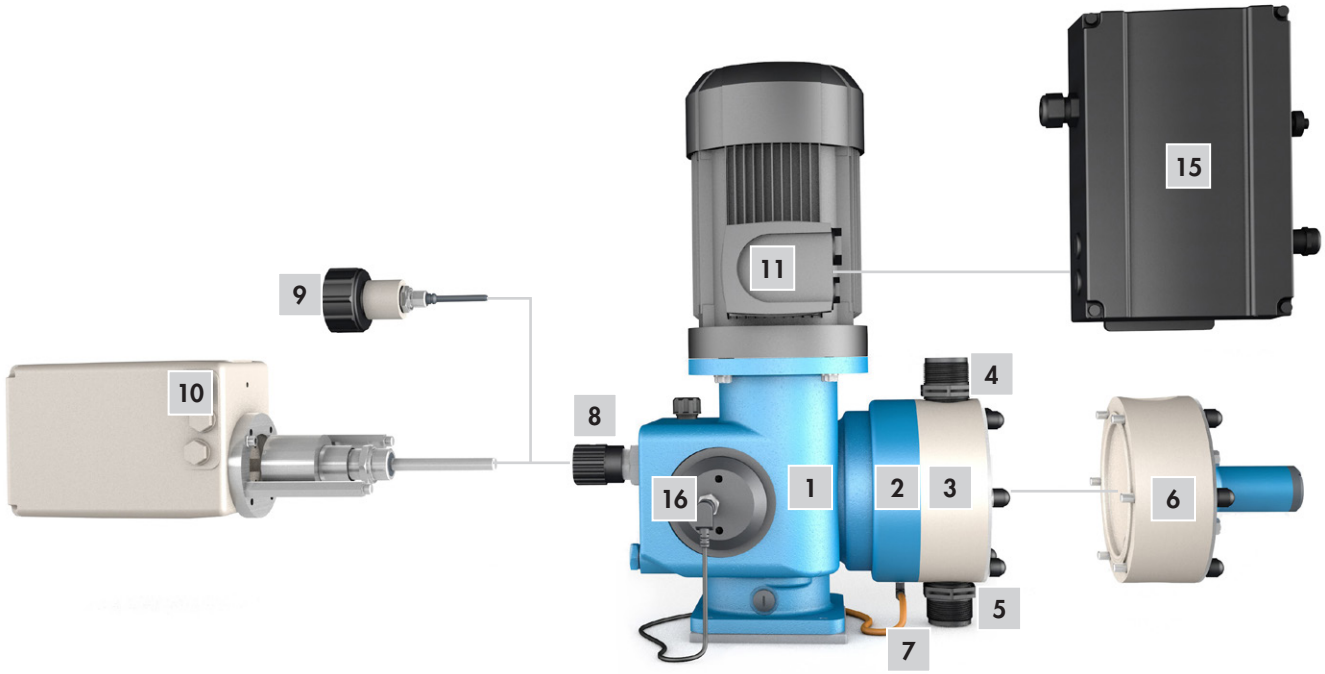


| No. | Designation | Remark |
|---|---|---|
| 1 | Stroke mechanism | |
| 2 | Assembly pump | |
| 3 | Pump body | |
| 4 | Pressure valve | |
| 5 | Suction valve | |
| 6 | Pump body with integrated overflow valve | |
| 7 | Diaphragm rupture monitoring device | option |
| 8 | Manual stroke length adjustment | |
| 9 | Manual stroke length adjustment with position indicator | option |
| 10 | Stroke length adjustment with actuator | option |
| 11 | Motor | |
| 15 | Frequency converter * | option |
| 16 | Stroke frequency transmitter | option |
| not illustrated | Blind plug | option (M-design) |
| not illustrated | Motor for Ex-area * | option (R-design) |
| not illustrated | Actuator for Ex-area * | option |
| not illustrated | Pneumatic actuator * | option |

* see enclosed documentation

## Components of C410.2




| No. | Designation | Remark |
|---|---|---|
| 1 | Stroke mechanism | |
| 2 | Assembly pump | |
| 3 | Pump body | |
| 4 | Pressure valve | |
| 5 | Suction valve | |
| 6 | Pump body with integrated overflow valve | |
| 7 | Diaphragm rupture monitoring device | |
| 8 | Manual stroke length adjustment | |
| 9 | Manual stroke length adjustment with position indicator | option |
| 10 | Stroke length adjustment with actuator | option |
| 11 | Motor | |
| 12 | Control C410.2 | |
| not illustrated | Suction lances connection | accessories |

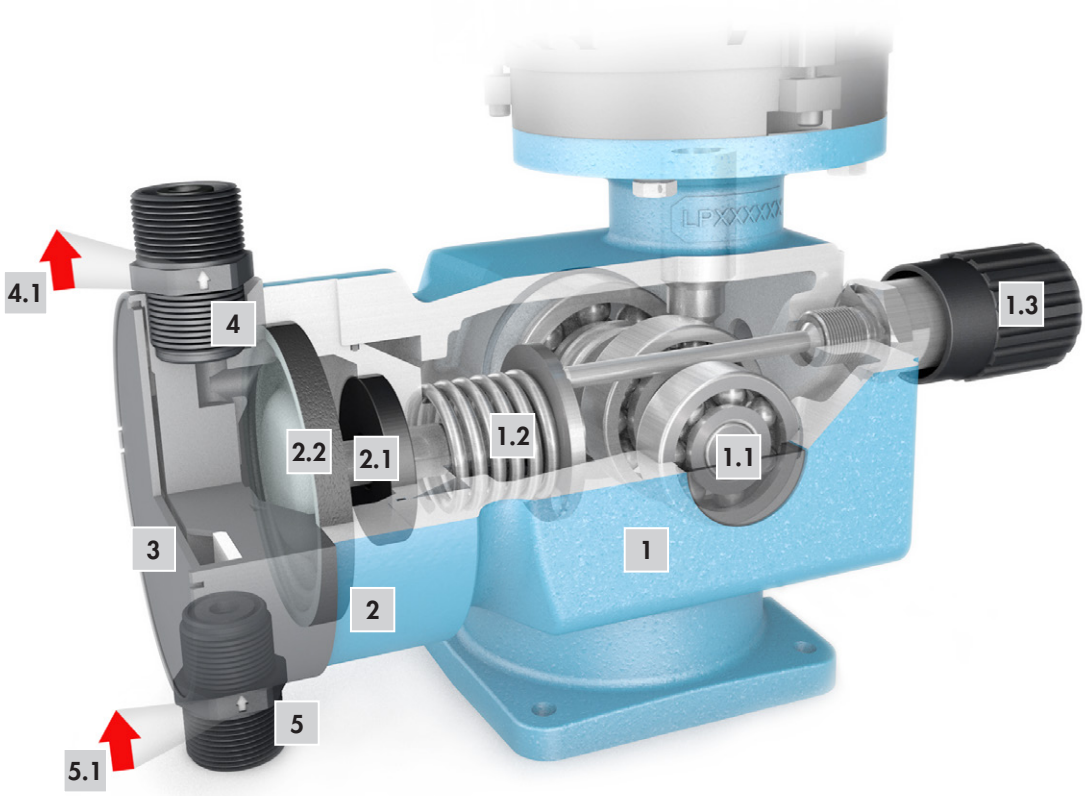


## Stroke mechanism (1)

Piston diaphragm pumps of this type series use a rotary cam drive to transmit the rotation of the drive motor to the displacement body.
In case of the rotary cam drive, the eccentric (**1.1**) provides the pressure stroke while the suction stroke is performed by a pressure spring (return spring) (**1.2**).
The effective stroke length can be changed by means of an adjustable scale knob (**1.3**) which prevents the connecting rod from following the rotary cam up to the rear dead centre during suction stroke (see stroke length adjustment).

## Assembly pump (2)

The drive diaphragm (**2.2**) connected to the drive via the connecting rod (**2.1**) transmits the stroke movement directly to the pumped medium.

## Pump body (3)

Depending on the applied backpressure, movements of the plastic pump body in elastic materials are possible.
This does not affect the pumps's service life or operational reliability.

## Pressure valve / Suction valve (4/5)

The pump valves are ball valves that only work properly in a vertical position. The condition of the valves has a deciding effect on the operating capability of the pump. Valves must be exchanged as complete units. When replacing the valves it is important to check the flow direction (**4.1/5.1**) .

**ATTENTION**

Pressure valve above, suction valve below!

## Pump body with integrated overflow valve (6)

The integrated diaphragm overflow valve protects the pump from unacceptable overpressure at closed pressure line. Pipes and fittings, however, are not protected and have to be protected separately, if necessary. It can be used for liquid media without solid matters according to the manufacturer specifications.
Pump bodies with integrated overflow valve are equipped with an additional relief channel (**6.1**) through which the pumped medium is drained in case of an unacceptable overpressure.
The relief channel is closed by the mechanically prestressed diaphragm (**6.2**) of the overflow valve.
The mechanical prestress which is executed by a pressure spring (**6.3**) can be adjusted with a set screw (**6.4**). If the pressure of the pumped medium on the diaphragm exceeds the set pressure, the diaphragm is lifted and the pumped medium flows into the relief channel.
When the pressure in the pump body falls below the pressure set the diaphragm closes the inlet channel again.

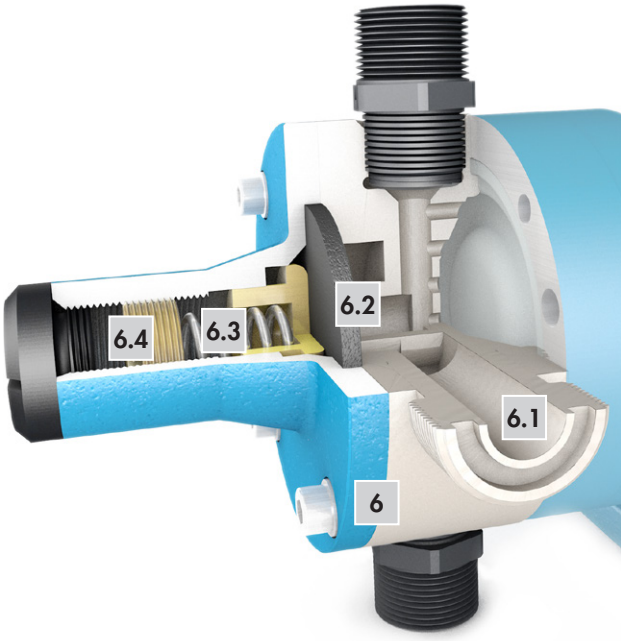


## Pump body with manual vent valve (14) (409.2-1,6e; -2,4e)

The vent valve is used to release the manual pressure in the pump body (**15**) during commissioning. Open vent valve when pump primes first time.
When vent valve is opened gas including medium escapes into the feedback line. The vent valve must be closed again as soon as only medium without gas constituent escapes. The pump now feeds the medium into the pressure line.
Open again for another ventilation. The vent valve consists of a vent screw (**15.1**) with integrated hose nozzle Ø 6,5 (**15.2**), which must be fitted with a hose (**15.3**) (inside diameter 6 mm) as feedback line. The leaking medium incl. the gas admixtures must be disposed off properly.
The vent screw is inserted during normal operation.

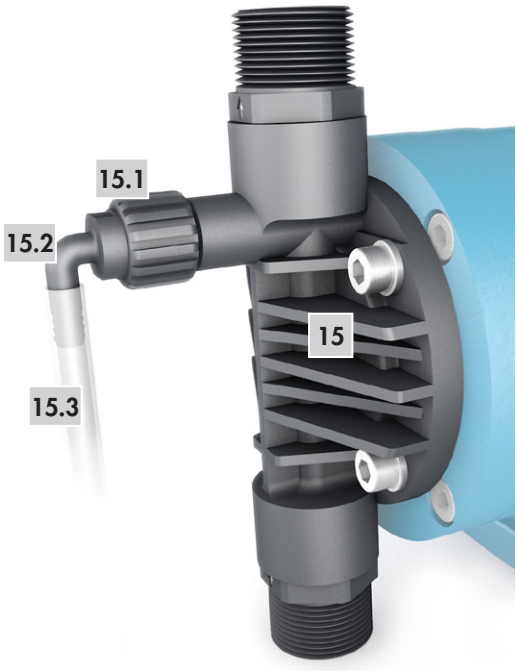


**ATTENTION**

Open vent screw with great caution and perform max. 1 turn. Take care that the tightness of the thread is still guaranteed.

**ATTENTION**

The vent screw must always be closed during the driving process.

## Diaphragm rupture monitoring device (7)

### C409.2 /C410.2 (standard)

**sera** - pumps of the C409.2 series are equipped with a conductive diaphragm rupture monitoring device.

**NOTE**

The sensitivity of the diaphragm rupture electrode can be adapted to the conductivity of the medium via the electronics (see the technical manual of the control). Preset ex works to 50% approx. 10 µS/cm.

### ...409.2 / ...410.2 (option)

**sera** pumps of the R(F)/M(F)409.2 /R(F)/M(F)410.2 series can be equipped with a conductive diaphragm rupture monitoring device as option.

**ATTENTION**

The pumped medium must have a minimum conductivity of at least 5 µS/cm!

An electrode together with an approprate evaluation unit (option, e.g. **sera** diaphragm rupture relay, type ER-104 (or ER-142 for Ex-areas respectively) is used for monitoring. The diaphragm rupture electrode is mounted directly to the pump, the evaluation unit inside the switch cabinet.
The diaphragm rupture electrode type MBE-02 is not mounted by sera due to transport. We put the MBE-02 electrode onto the cable and fix it to the pump in a separate bag.
Put the diaphragm rupture electrode is in the base ring (**2**) of the pump from below (see pig. „Components ...").

## Stroke length adjustment

The delivery rate of the pump is set by changing the stroke length. The stroke length is infinitely variable between 0% and 100%..

**NOTE**

A linear dosing behaviour is achieved with stroke length adjustments between 20% and 100%.

## Manual stroke length adjustment (standard) (8)

The effective stroke length of the connecting rod is changed by turning the scale knob.
The stroke length should be adjusted during operation of the pump.
The set stroke length can be read off a scale, e.g. 75%.
With the 20-steps adjustment on the scale knob, the stroke length can be set individually with a tolerance of 0.5%..

A protecting cap can be provided for the protection of the stroke length adjustment against unintentional adjustment.

...409.2

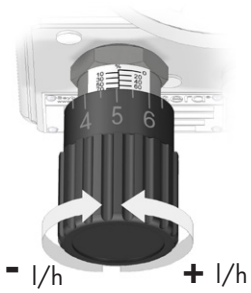


...410.2-280e ... 900e

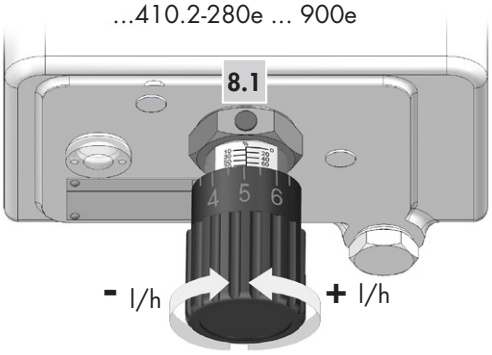


...410.2-1450e

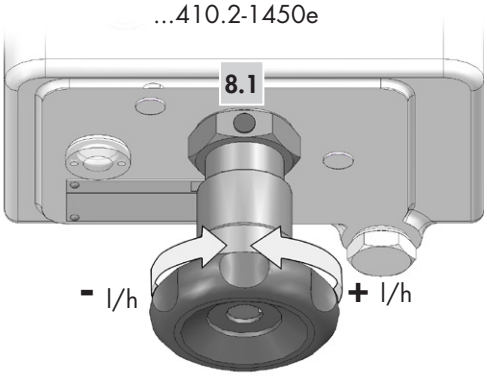


**ACHTUNG**

The locking (**8.1**) is to be released (us-ing a spanner SW3) before the stroke length is changed. Then the locking must be tightened again. This ensures that the set stroke length does not change during opera-tion.

## Manual stroke length adjustment by a dial scale with indication of percent (option) (9)

The stroke length is adjusted by turning the hand wheel.
The stroke length shuold be adjusted during operation of the pump.
The set stroke length can be read off the percent scale (the example shows a set stroke length of 65%).
In delivery state, the stroke length adjustment is factory set to 50%.

**ATTENTION**

The dial scale with indication of percent may become misadjusted during transport.
If the indicator does not match the 50% setting, then the percent scale must be re-adjusted during operation (!) of the pump!

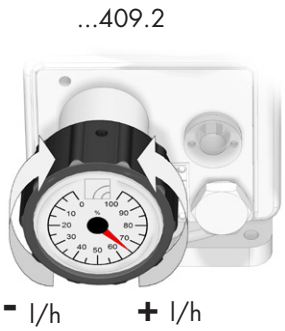


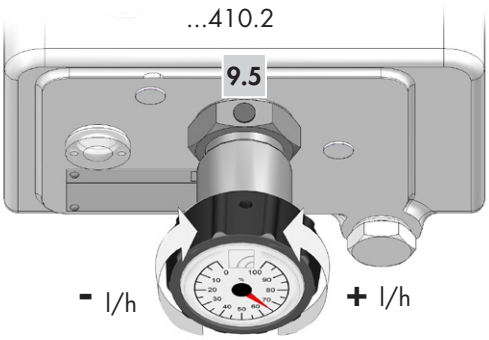


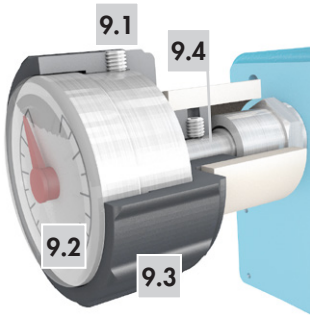


**Adjusting the percent scale:**

- Switch on the pump.
- Loosen setscrew (**9.1**).
- Remove percent scale (**9.2**) from the hand wheel (**9.3**).
- Manually turn the percent scale to 0% setting.
- Loosen the locking (**9.5**) ► bei ...410.2.
- Use the hand wheel to set the stroke length to 0%.
- Turn hand wheel clockwise until there is no further stroke movement (connecting rod does no longer hit the adjusting spindle (**9.4**)).
- Insert percent scale again.
- Use the setscrew to secure the percent scale to the hand wheel.
- Adjust desired stroke length.
- Tighten the locking (**9.5**) ► bei ...410.2.

## Automatic stroke length adjustment by means of an electrical actuator (10)

The electrical actuator is directly mounted to the stroke mechanism (**1**) of the pump. A clutch transmits the rotary motion of the actuator drive shaft to the adjusting spindle. The axial displacement is compensated in the clutch.
In case of dosing pumps with electrical actuator, a manual adjustment of the stroke length on the pump is no longer possible. (Exception: actuator with hand wheel)
The actuator is equipped with two integrated limit switches as well as a position potentiometer for position feedback as standard. Both limit switches are factory set so that the drive will switch off at a stroke length of 0% and 100%, even if a control voltage is applied.
This guarantees that adjustments can only be made within the permissible range. The position potentiometer is driven by a safety clutch which prevents damage caused by incorrectly adjusted limit switches.
Activation is performed by appropriate control units (see **sera** - accessories).
The set stroke length can be read off on the pump (percent scale).
Information on the electrical connection is given inside the cover of the actuator.

**ATTENTION**

The adjustment is only possible when the pump is running!

## Automatic stroke length adjustment by means of an electrical actuator with integrated positioner

same as Chapter „Automatic stroke length adjustment by means of an electrical actuator (10)", additionally:

This positioner which is integrated in the actuator enables an actuator setting from 0…100% that is proportional to the connected input signal.
As an option, the actuator can also be provided with a collective interference signal. Information on the electrical connection is given inside the cover of the actuator.

## Drive motor C409.2 / C410.2

A **sera** motor pump of series C409.2 is driven by a threephase-motor controlled by the electronics.

A protective motor switch is not necessary due to the fact that a thermic overload protection is integrated in the pump for the protection of the motor.

## Drive motor ...409.2 / ...410.2

**sera** motor pumps R(F)/M(F)409.2 /R(F)/M(F)410.2 are driven either by a three-phase motor.
Standard: three-phase motor (with PTC thermistor; suitable for operation with frequency converter).

## Motor connection

**In case of a three-phase motor**

The motor connection depends on the voltage indication on the type plate and the applied supply voltage.

*Example:*

| | |
|---|---|
| Indication on the type plate: | Δ 230V/ Y400V 50Hz |
| Three-phase power system on sit: | Y400V 50 Hz |
| Correct motor connection: | Star connection (Y) |

Δ Delta connection

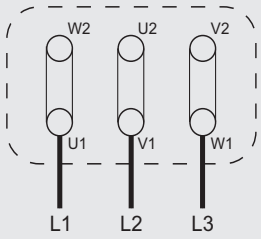


Y Star connection

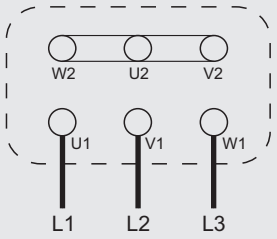


**In case of an AC motor**

The AC motor has a main and an auxiliary winding. The running capacitor is switched in series to the auxiliary phase.

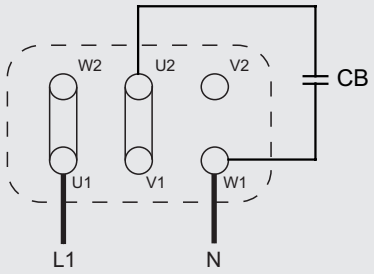


## Direction of rotation

The direction of rotation of the drive motor is arbitrary.

## Terminal box

Before closing the terminal box, please check that:

- All terminal connections are tightly fitted.
- The interior is clean and free of foreign bodies.
- Unused cable entries are closed and screw plugs are tightened.
- The sealing is correctly inserted in the cover of the terminal box; check proper condition of all sealing surfaces so that the demands of the protection category are fulfilled.

## Motor protection

Provide for adequate motor protective equipment in order to protect the motor from overload (e.g. motor protection switch with thermal overcurrent release).
Connect the ground wire to the marked earth screw in accordance with VDE 0100.

**ATTENTION**

Fuses do not protect the motor!

## Conrol C409.2 Pro+/ C410.2 (12)

Among other things, the control enable the proportional dosing via analogue signals 4 … 20 mA or contact signals with the possibility of pulse division or pulse multiplication.
The graphical display shows information about the current status of the pump.
A connection for flow monitoring or flow rate measurement and an „empty" signal with pre-alarm and dry run alarm are available as standard.

## INTERFACE MODULE (13) (accessories C409.2)

The INTERFACE MODULE provides level input and PROFIBUS connectivity (see TM05).

## Stroke frequency transmitter (16) (option RF409.2 / RF410.2)

**sera** pumps R(F)/M(F)409.2 /R(F)/M(F)410.2 are oscillating displacement pumps with an exactly defined stroke volume per each pump stroke.
If these dosing pumps should be used for automatic filling processes or charge dosing, then the single pump strokes must be determined and converted into electrical signals.
For this purpose, a stroke frequency transmitter (inductive contactor) is added to the pump (the option cannot mounted additionally) and reports each single pump stroke to the evaluation unit (e.g. preselection counter, SPC-control unit, etc.).

| Technical data | |
|---|---|
| Rated voltage | 10 - 60 V DC |
| Constant current | < 200 mA |
| Short circuit-proof: | |
| Connection mode | plug connector with 2 m cable |
| LED (green) | indicates supply voltage |
| LED (yellow) | indicates switching status |

Wiring diagram

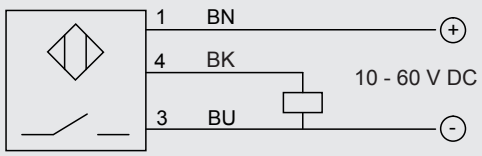


**ATTENTION**

When switching inductive loads (protectors, relays, etc.), surge protectors (varistors) must be fitted owing to the high self-induction voltage!

**ATTENTION**

When the pump is deployed in exlosion-hazardous areas a NAMUR type stoke frequency transmitter (II2G EExia IICT6, acc. to. ATEX95) is to be provided!

## TECHNICAL DATA

| PUMP DATA (* 8mWS = performance losses of nominal capacity QN of 20-25%) | | | RF 409.2-... | | | | | |
|---|---|---|---|---|---|---|---|---|
| | | | 1,6e | 2,4e | 7,0e | 12e | 18e | 25e |
| Permissible pressure $p_{2max.}$ at the pump outlet | bar | | 10 | 10 | 10 | 10 | 10 | 10 |
| Nominal capacity QN at $p_{2max.}$ | l/h | 50 Hz | 0-1,6 | 0-2,4 | 0-7,0 | 0-12 | 0-18 | 0-25 |
| | | 60 Hz | 0-1,9 | 0-2,9 | 0-8,4 | 0-14,4 | 0-21,5 | 0-30 |
| Quantity per stroke | ml/stroke | (100%) | 0,27 | 0,27 | 0,78 | 2,0 | 3,0 | 2,8 |
| Max. suction height | mWC | | 3 | | | | | 3 ( 8* ) |
| Min./max. permissible pressure at the pump inlet | bar | $p_{1min/max}$ | -0,3/0 | | | | | -0,3/0 ( -0,8/0* ) |
| Recomm. nominal diameter DN of the connecting pipes | mm | | 5 | 5 | 5 | 10 | 10 | 10 |
| Nominal stroke frequency | 1/min | 50 Hz | 100 | 150 | 150 | 100 | 100 | 150 |
| | | 60 Hz | 120 | 180 | 180 | 120 | 120 | 180 |
| Weight approx. | kg | plastic | 9 | 9 | 9 | 9 | 9 | 9 |
| | | stainless steel | 10 | 10 | 10 | 10 | 10 | 10 |

| PUMP DATA (* 8mWS = performance losses of nominal capacity QN of 20-25%) | | | RF 409.2-... | | | | | | | |
|---|---|---|---|---|---|---|---|---|---|---|
| | | | 50e | 75e | 90e | 115e | 140e | 180e | 250e | 350e |
| Permissible pressure $p_{2max.}$ at the pump outlet | bar | | 10 | 10 | 8 | 4 | 8 | 4 | 3 | 3 |
| Nominal capacity QN at $p_{2max.}$ | l/h | 50 Hz | 0-50 | 0-75 | 0-90 | 0-115 | 0-140 | 0-180 | 0-250 | 0-350 |
| | | 60 Hz | 0-60 | 0-90 | 0-108 | 0-138 | 0-168 | 0-216 | 0-300 | - |
| Quantity per stroke | ml/stroke | (100%) | 8,3 | 8,3 | 15,0 | 19,2 | 15,6 | 20,0 | 41,7 | 38,9 |
| Max. suction height | mWC | | 3 (8 *) | | | | | | 3 | |
| Min./max. permissible pressure at the pump inlet | bar | $p_{1min/max}$ | -0,3/0 (-0,8/0) | | | | | | -0,3/0 | |
| Recomm. nominal diameter DN of the connecting pipes | mm | | 10 | 15 | 15 | 15 | 15 | 15 | 15 | 15 |
| Nominal stroke frequency | 1/min | 50 Hz | 100 | 150 | 100 | 100 | 150 | 150 | 100 | 150 |
| | | 60 Hz | 120 | 180 | 120 | 120 | 180 | 180 | 120 | – |
| Weight approx. | kg | plastic | 9 | 9 | 11 | 10 | 11 | 10 | 13 | 13 |
| | | stainless steel | 10 | 10 | 13 | 13 | 13 | 13 | 21 | 21 |

Linear dosing range at a stroke length between 20% and 100%.
Linear dosing range at a stroke length between 30% and 100% ► RF409.2-1,6, -2,4e (50Hz), RF409.2-7,0e, -12e (60Hz).
The nominal data refer to water, 20°C and nominal pressure. With lower counterpressure it can come to be soaked off achievements.

| PUMP DATA | | | C 409.2-... Pro+ | | | | | |
|---|---|---|---|---|---|---|---|---|
| | | | 1,6e | 2,4e | 7,0e | 12e | 18e | 25e |
| Permissible pressure $p_{2max.}$ at the pump outlet | bar | | 10 | 10 | 10 | 10 | 10 | 10 |
| Nominal capacity QN at $p_{2max.}$ | l/h | 50/60 H | 0-1,6 | 0-2,4 | 0-7 | 0-12 | 0-18 | 0-25 |
| Quantity per stroke | ml/stroke | (100%) | 0,27 | 0,27 | 0,78 | 3,0 | 3,0 | 3,0 |
| Max. suction height | mWC | | 3 | | | | | |
| Min./max. permissible pressure at the pump inlet | bar | $p_{1min/max}$ | -0,3/0 | | | | | |
| Recomm. nominal diameter DN of the connecting pipes | mm | | 10 | 10 | 10 | 10 | 10 | 10 |
| Nominal stroke frequency | 1/min | 50/60 Hz | 100 | 150 | 150 | 67 | 100 | 150 |
| Weight approx. | kg | plastic | 11 | 11 | 11 | 11 | 11 | 8,5 |
| | | stainless st. | | | | | | |

| PUMP DATA (* 8mWS = performance losses of nominal capacity QN of 20-25%) | | | C 409.2-... Pro+ | | | | | | | |
|---|---|---|---|---|---|---|---|---|---|---|
| | | | 50e | 75e | 90e | 115e | 140e | 180e | 250e | 350e |
| Permissible pressure $p_{2max.}$ at the pump outlet | bar | | 10 | 10 | 8 | 4 | 8 | 4 | 3 | 3 |
| Nominal capacity QN at $p_{2max.}$ | l/h | 50/60 Hz | 0-50 | 0-75 | 0-90 | 0-115 | 0-140 | 0-180 | 0-250 | 0-350 |
| Quantity per stroke | ml/stroke | (100%) | 8,3 | 8,3 | 15,0 | 19,2 | 15,6 | 20,0 | 41,7 | 38,9 |
| Max. suction height | mWC | | 3 | | | (8*) | | | 3 | |
| Min./max. permissible pressure at the pump inlet | bar | $p_{1min/max}$ | -0,3/0 | | | (-0,8/0*) | | | -0,3/0 | |
| Recomm. nominal diameter DN of the connecting pipes | mm | | 15 | 15 | 15 | 15 | 15 | 15 | 15 | 15 |
| Nominal stroke frequency | 1/min | 50/60 H | 150 | 150 | 100 | 100 | 150 | 150 | 100 | 150 |
| Weight approx. | kg | plastic | 8,5 | 8,5 | 10,5 | 9,0 | 10,5 | 9,0 | 13,0 | 13,0 |
| | | stainless st. | | | | | | | | |

Linear dosing range at a stroke length between 20% and 100% and at a stroke frequency between 5 and 100%.
The nominal data refer to water, 20°C and nominal pressure. With lower counterpressure it can come to be soaked off achievements.

## TECHNICAL DATA

| PUMP DATA | | | RF 410.2-... | | | |
|---|---|---|---|---|---|---|
| | | | 280e | 570e | 900e | 1450e |
| Permissible pressure $p_{2max.}$ at the pump outlet | bar | | 8 | 6 | 5 | 5 * |
| Nominal capacity QN at $p_{2max.}$ | l/h | 50 Hz | 0-280 | 0-570 | 0-900 | 0-1.450 |
| | | 60 Hz | 0-336 | 0-684 | 0-1.080 | 0-1.740 |
| Quantity per stroke | ml/stroke | (100%) | 46 | 98 | 155 | 245 |
| Max. suction height | mWC | | 5 | 5 | 3 | 3 |
| Min./max. permissible pressure at the pump inlet | bar | $p_{1min/max}$ | -0,5/0 | -0,5/0 | -0,3/0 | -0,3/0 |
| Recommended nominal diameter DN of the connecting pipes | mm | | 15 | 15 | 20 | 25 |
| Nominal stroke frequency | 1/min | 50 Hz | 97 | 97 | 97 | 97 |
| | | 60 Hz | 116 | 116 | 116 | --- |
| Weight approx. | kg | plastic | 35 | 35 | 37 | 41 |
| | | stainless steel | 42 | 42 | 52 | 59 |

| PUMP DATA | | | C 410.2-... | | | |
|---|---|---|---|---|---|---|
| | | | 280e | 570e | 900e | 1450e |
| Permissible pressure $p_{2max.}$ at the pump outlet | bar | | 8 | 6 | 5 | 5 |
| Nominal capacity QN at $p_{2max.}$ | l/h | 50/60 Hz | 0-280 | 0-570 | 0-900 | 0-1.450 |
| Quantity per stroke | ml/stroke | (100%) | 46 | 98 | 155 | 245 |
| Max. suction height | mWC | | 5 | 5 | 3 | 3 |
| Min./max. permissible pressure at the pump inlet | bar | $p_{1min/max}$ | -0,5/0 | -0,5/0 | -0,3/0 | -0,3/0 |
| Recommended nominal diameter DN of the connecting pipes | mm | | 15 | 15 | 20 | 25 |
| Nominal stroke frequency | 1/min | 50 Hz | 97 | 97 | 97 | 97 |
| Weight approx. | kg | plastic | 38 | 38 | 49 | 49 |
| | | stainless steel | 45 | 45 | 64 | 64 |

* at 60 Hz is the permissible pressure 3,5 bar

Linear dosing range at a stroke length between 20% and 100%.
The nominal data refer to water, 20°C and nominal pressure. With lower counterpressure it can come to be soaked off achievements.

| ELECTRICAL DATA | | RF409.2-1,6e ... RF409.2-25e |
|---|---|---|
| Power consumption | kW | 0,18 |
| Voltage | V | 230/400V 50Hz, 460V 60Hz |
| Frequency | Hz | 50/60 |
| Insulation class | ISO | F |
| Enclosure | IP | 55 |

| ELECTRICAL DATA | | RF409.2-50e ... RF409.2-350e |
|---|---|---|
| Power consumption | kW | 0,37 |
| Voltage | V | 230/400V 50Hz, 460V 60Hz |
| Frequency | Hz | 50/60 |
| Insulation class | ISO | F |
| Enclosure | IP | 55 |

| ELECTRICAL DATA | | C 409.2-1,6e Pro+ ... C 409.2-25e Pro+ | |
|---|---|---|---|
| | | 230 V, 50/60 Hz | 115 V, 50/60 Hz |
| Power consumption | kW | 0,18 | |
| Voltage | V | 210 - 250 | 100 - 125 |
| Frequency | Hz | 50/60 | |
| Inlet voltage, control input | V DC | 5...30 | |
| Minimum contact signal time | ms | 55 | |
| Analogue input resistance | Ω | 39 | |
| Digital output internal/external supply | | PNP max. 24V DC, 30mA /max. 30V DC, 30mA | |
| Recommended fuse | (circuit breaker) | C6A | C10A |
| Insulation class | ISO | F | |
| Enclosure | IP | 55 | |

| ELECTRICAL DATA | | C 409.2-50e Pro+ ... C 409.2-350e Pro+ | |
|---|---|---|---|
| | | 230 V, 50/60 Hz | 115 V, 50/60 Hz |
| Power consumption | kW | (...-50e = 0,18 kW) | 0,37 |
| Voltage | V | 210 - 250 | 100 - 125 |
| Frequency | Hz | 50/60 | |
| Inlet voltage, control input | V DC | 5...30 | |
| Minimum contact signal time | ms | 55 | |
| Analogue input resistance | Ω | 39 | |
| Digital output internal/external supply | | PNP max. 24V DC, 30mA /max. 30V DC, 30mA | |
| Recommended fuse | (circuit breaker) | C6A | C10A |
| Insulation class | ISO | F | |
| Enclosure | IP | 55 | |

## TECHNICAL DATA

| ELECTRICAL DATA | | RF 410.2-... | | | |
|---|---|---|---|---|---|
| | | 280e | 570e | 900e | 1450e |
| Power consumption | kW | 0,75 | 0,75 | 1,1 | 1,5 |
| Voltage | V | 230/400V 50Hz, 460V 60Hz | | | |
| Frequency | Hz | 50/60 | | | |
| Insulation class | ISO | F | | | |
| Enclosure | IP | 55 | | | |

| ELECTRICAL DATA | | C 410.2-... | | | |
|---|---|---|---|---|---|
| | | 280e | 570e | 900e | 1450e |
| Power consumption | kW | 0,75 | 0,75 | 1,5 | 1,5 |
| Voltage | V | 380-420 | | | |
| Frequency | Hz | 50/60 | | | |
| Inlet voltage, control input | V DC | 5...30 | | | |
| Minimum contact signal time | ms | 55 | | | |
| Analogue input resistance | Ω | 100 | | | |
| Digital output internal/external supply | | PNP max. 15V DC, 50mA /max. 30V DC, 350mA | | | |
| Recommended fuse | (circuit breaker) | C10A | | | |
| Insulation class | ISO | F | | | |
| Enclosure | IP | 55 | | | |

### NOTE

The motor data can be read off the type plate on the drive motor of the respective pump!

| NOISE MEASUREMENT | |
|---|---|
| Max. sound pressure at max. burden | 50 - 65 dB(A) |

| VISCOSITY, PUMPED MEDIUM | |
|---|---|
| Max. viscosity with non-spring-loaded valves | 100 mPas (=cP) |

| TEMPERATURE DATA | |
|---|---|
| Max. liquid temperature | 60 °C |
| Min. liquid temperature | 10 °C |
| Max. operating temperature | 40 °C |
| Min. operating temperature | 0 °C |
| Max. storage temperature | 40 °C |
| Min. storage temperature | 0 °C |

| AMBIENT CONDITIONS | |
|---|---|
| Max. installation altitude above sea level | 1000 m |
| Max. relative air humidity | < 90% |

## Characteristics

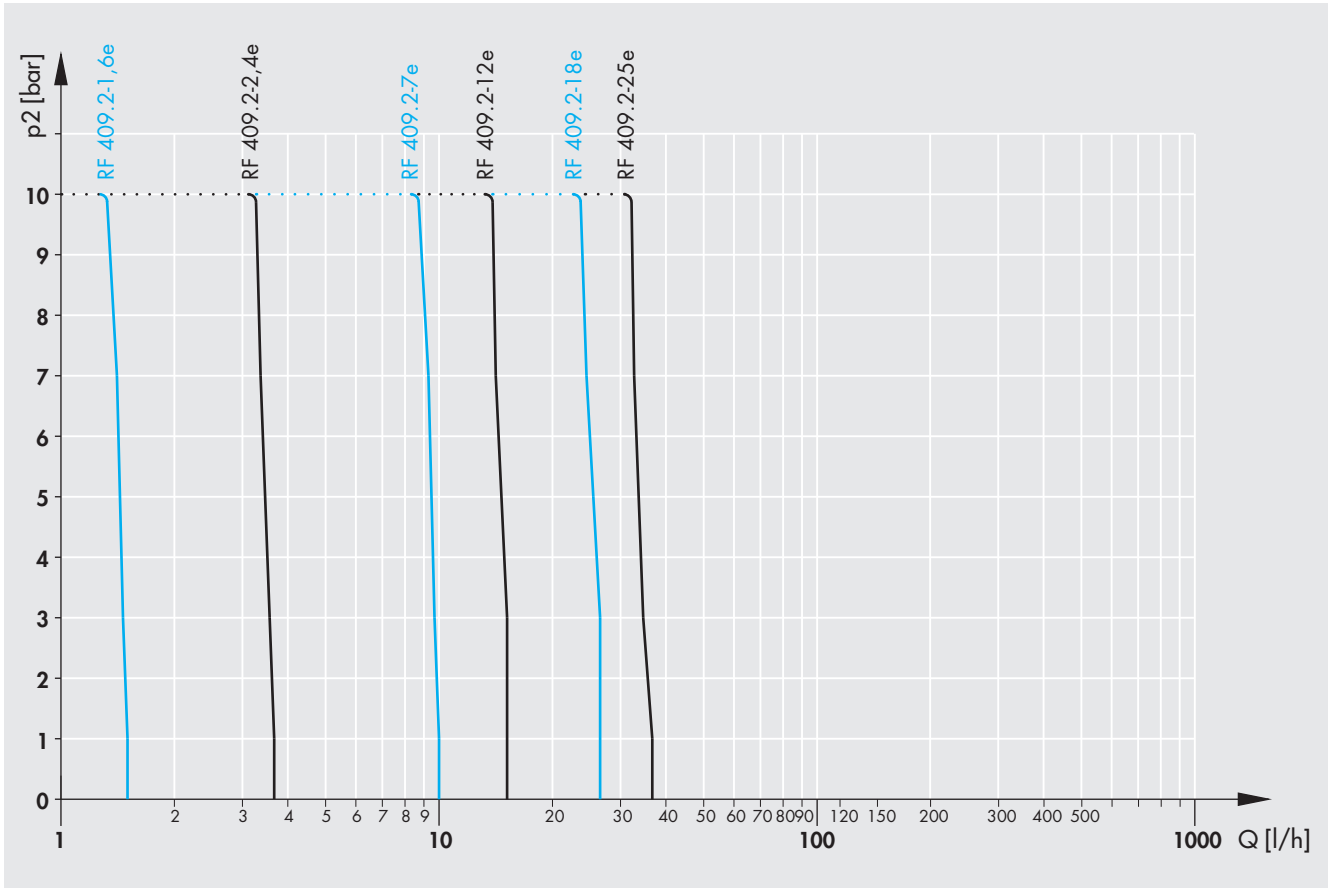


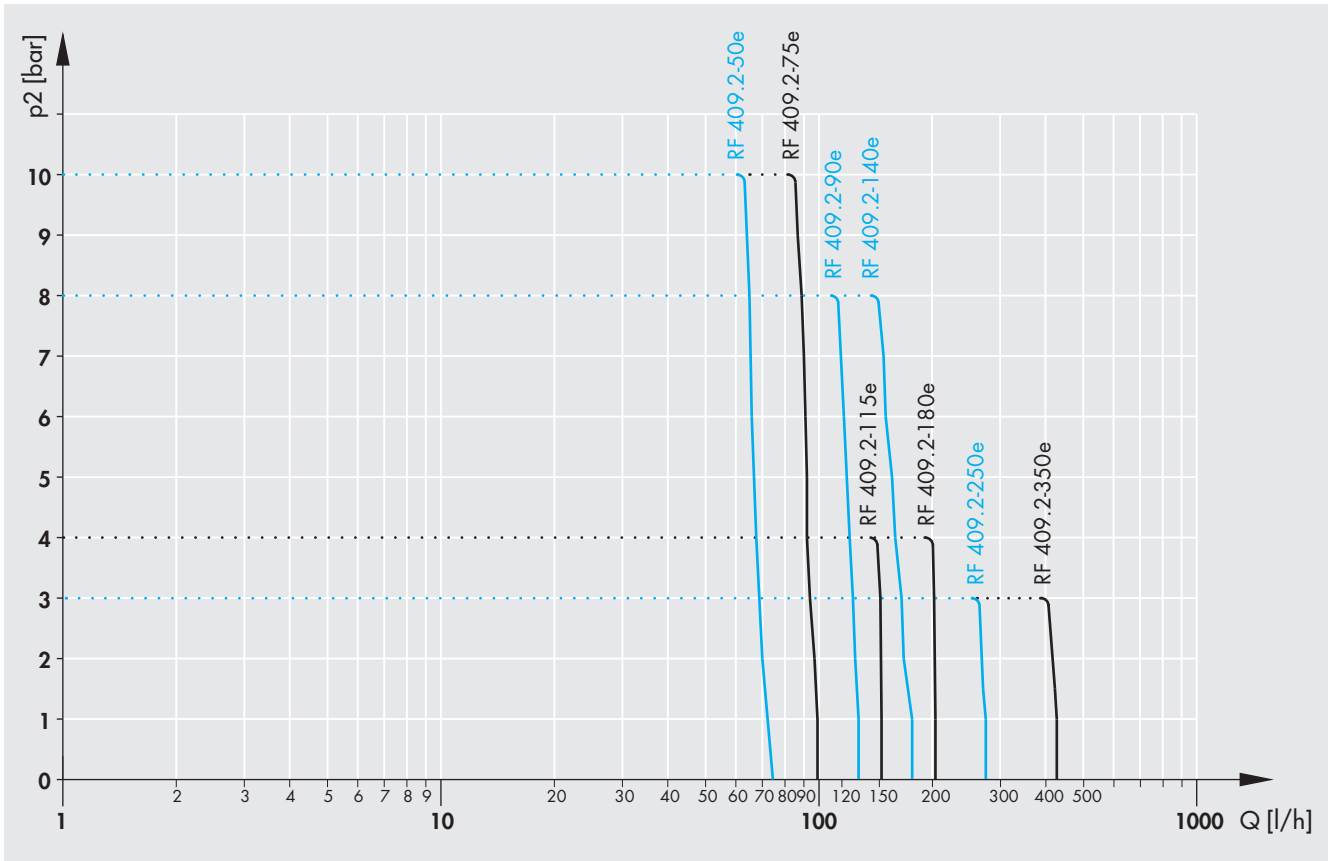

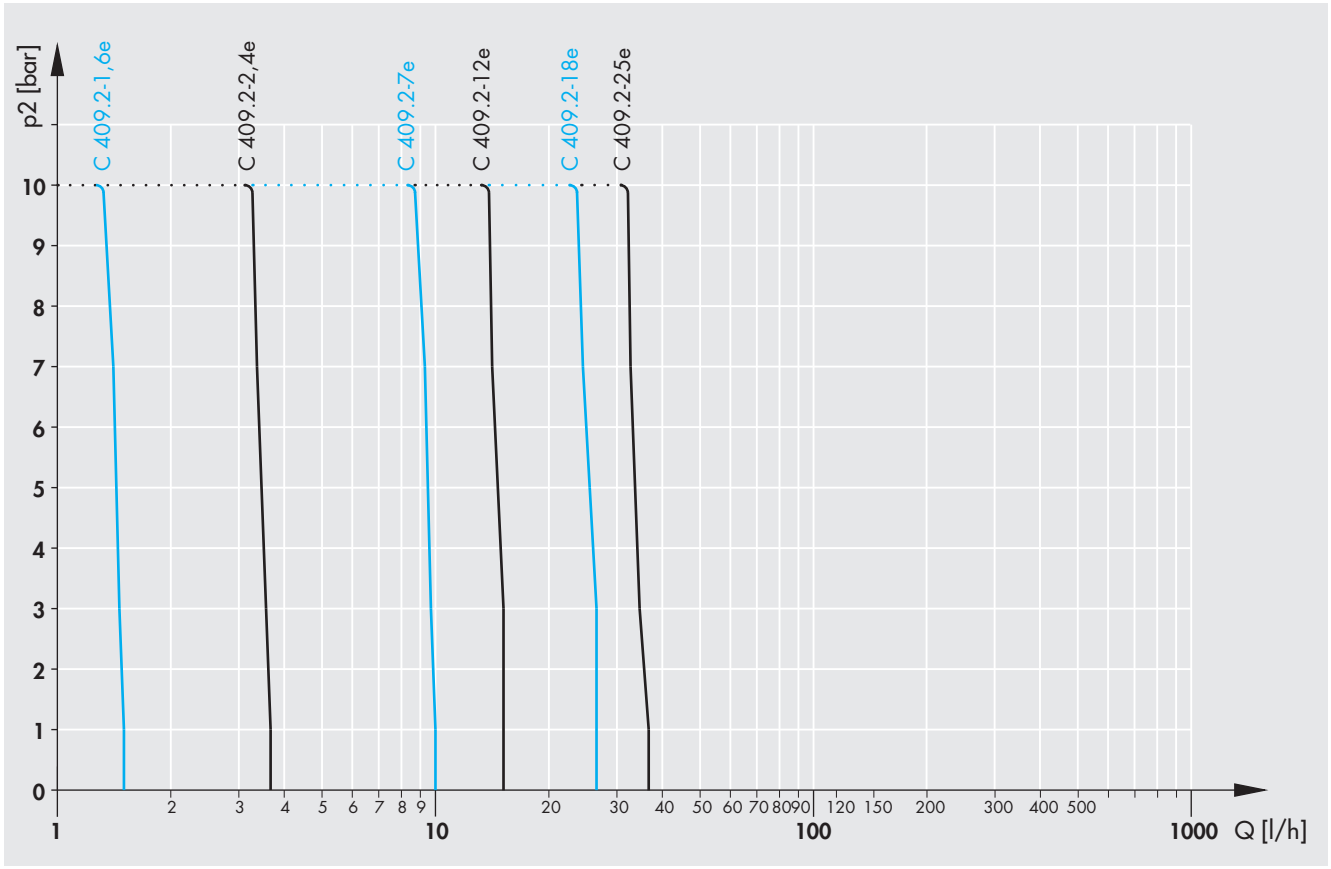
p2 [bar]
C 409.2-1,6e
C 409.2-2,4e
C 409.2-7e
C 409.2-12e
C 409.2-18e
C 409.2-25e
0 1 2 3 4 5 6 7 8 9 10
1 2 3 4 5 6 7 8 9 10 20 30 40 50 60 70 80 90 100 120 150 200 300 400 500 1000
Q [l/h]

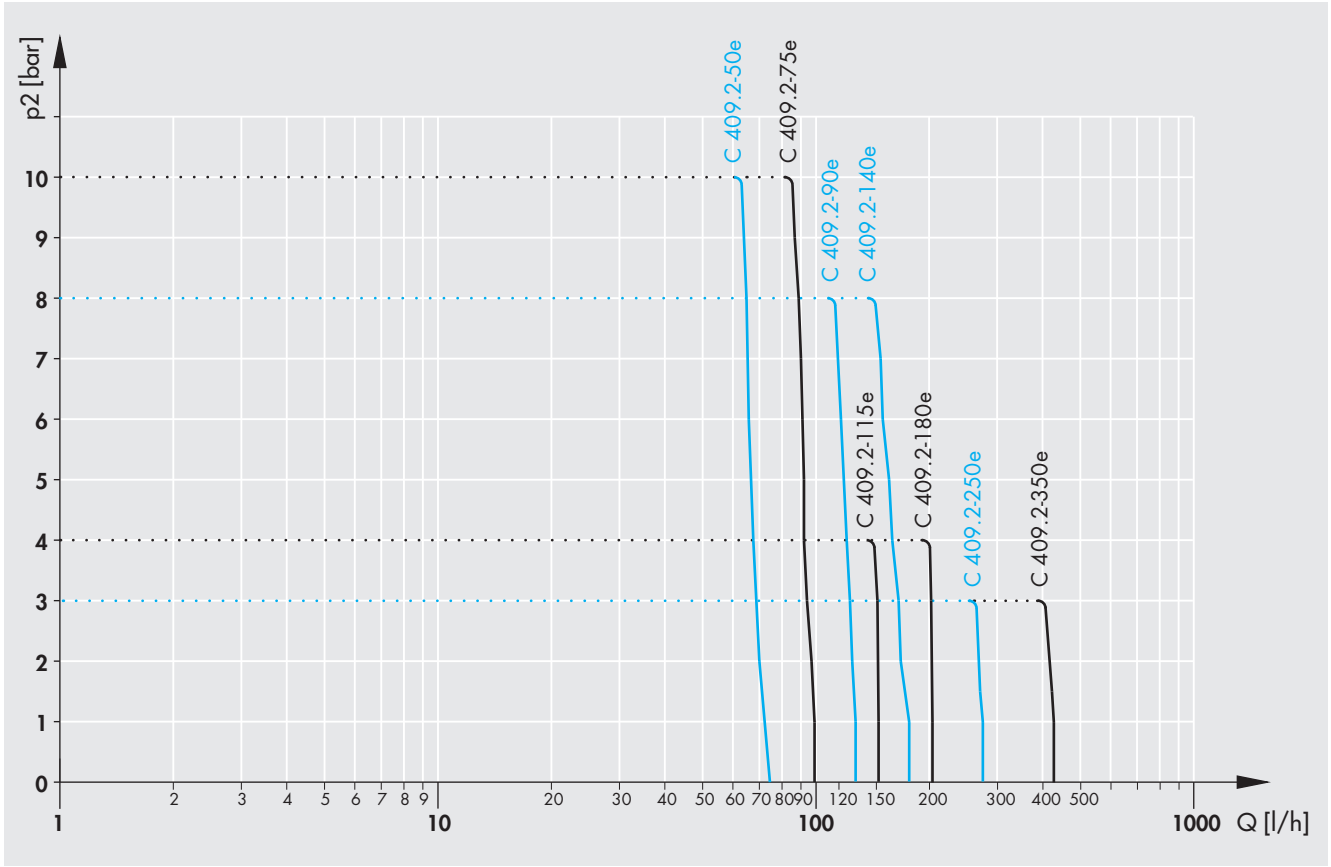
p2 [bar]
C 409.2-50e
C 409.2-75e
C 409.2-90e
C 409.2-140e
C 409.2-115e
C 409.2-180e
C 409.2-250e
C 409.2-350e
0 1 2 3 4 5 6 7 8 9 10
1 2 3 4 5 6 7 8 9 10 20 30 40 50 60 70 80 90 100 120 150 200 300 400 500 1000
Q [l/h]

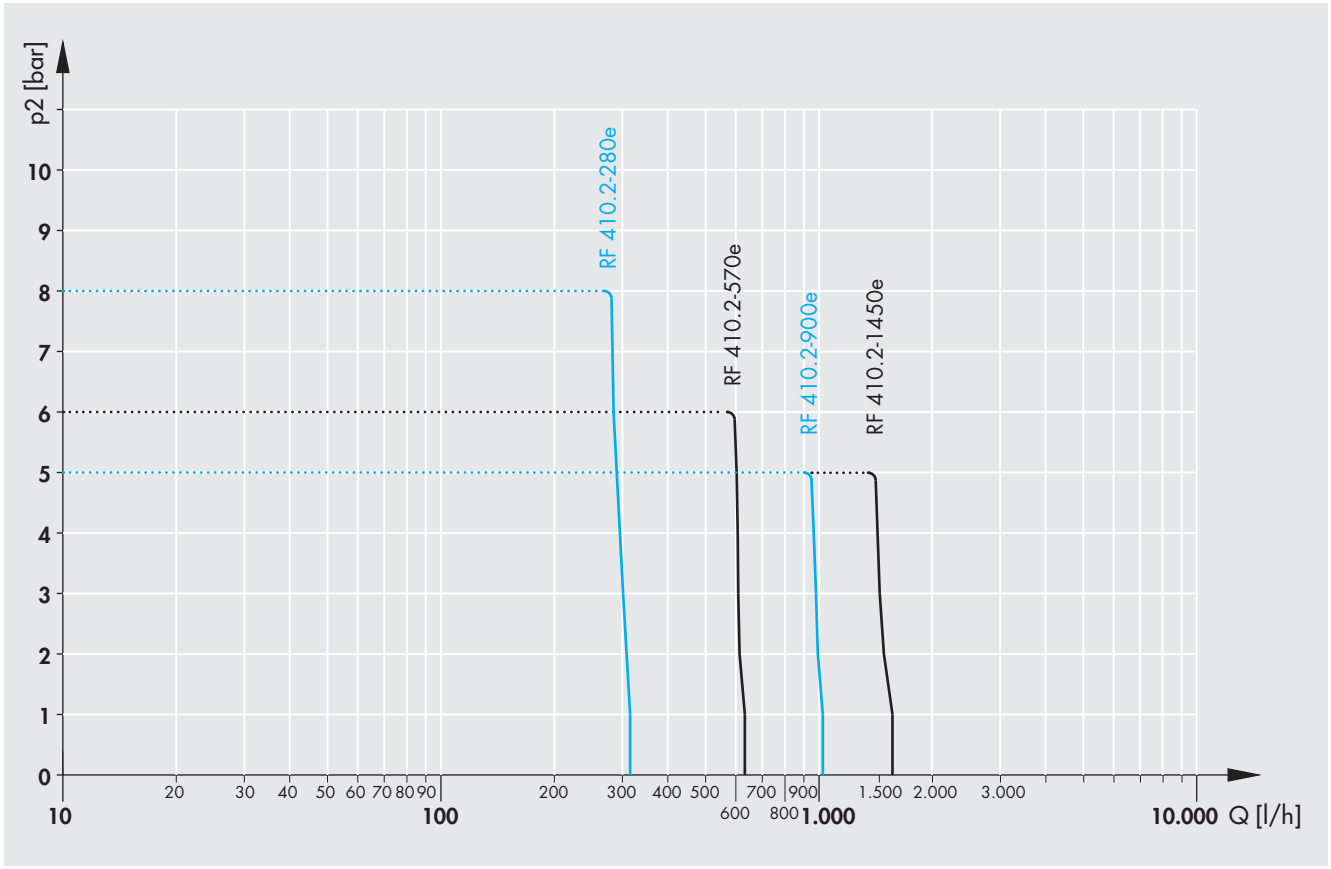
p2 [bar]
10
9
8
7
6
5
4
3
2
1
0
RF 410.2-280e
RF 410.2-570e
RF 410.2-900e
RF 410.2-1450e
20
30
40
50
60
70
80
90
100
200
300
400
500
600
700
800
900
1.000
1.500
2.000
3.000
10.000
Q [l/h]

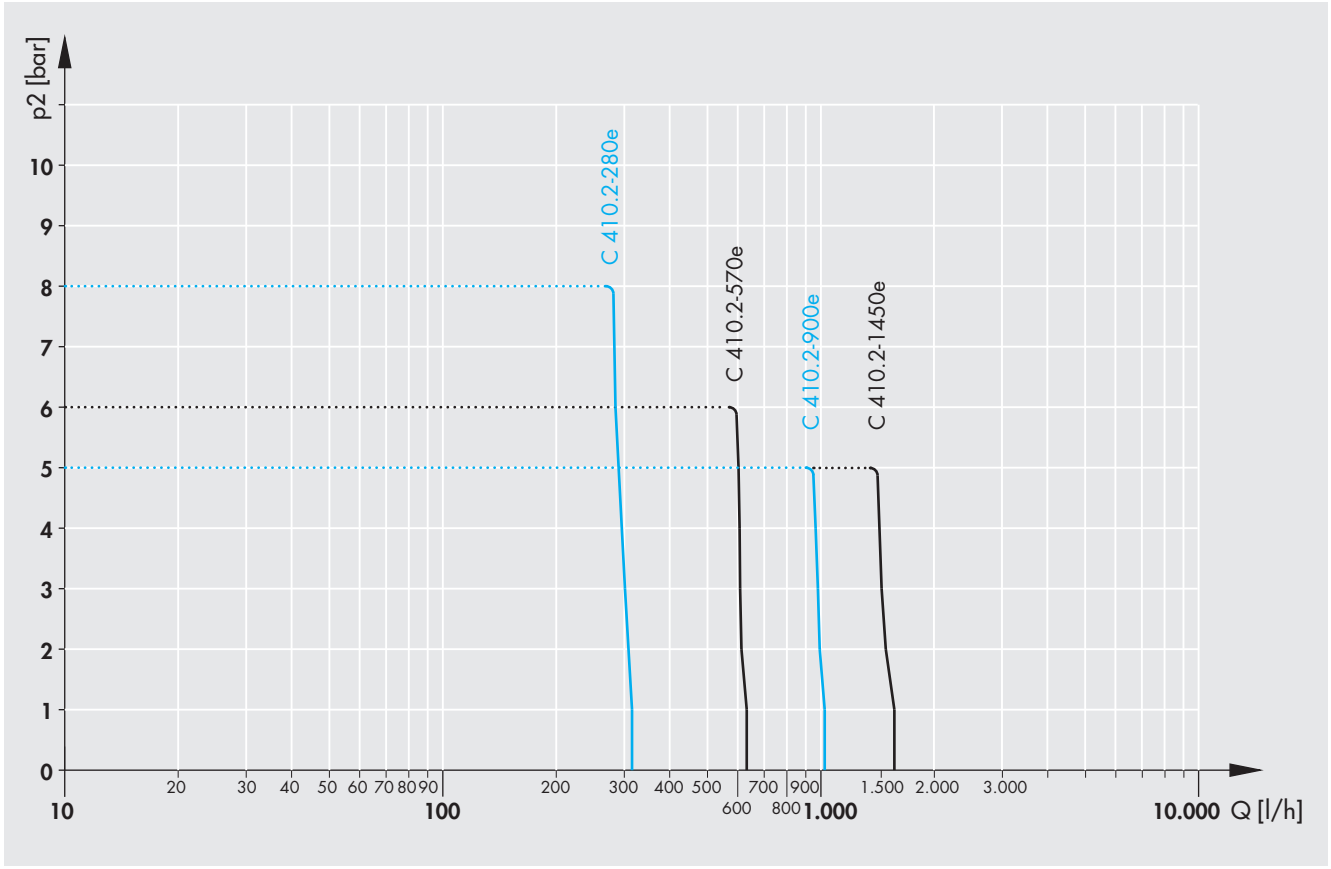
p2 [bar]
10
9
8
7
6
5
4
3
2
1
0
C 410.2-280e
C 410.2-570e
C 410.2-900e
C 410.2-1450e
20
30
40
50
60
70
80
90
100
200
300
400
500
600
700
800
900
1.000
1.500
2.000
3.000
10.000
Q [l/h]

## Dimensions RF409.2 standard

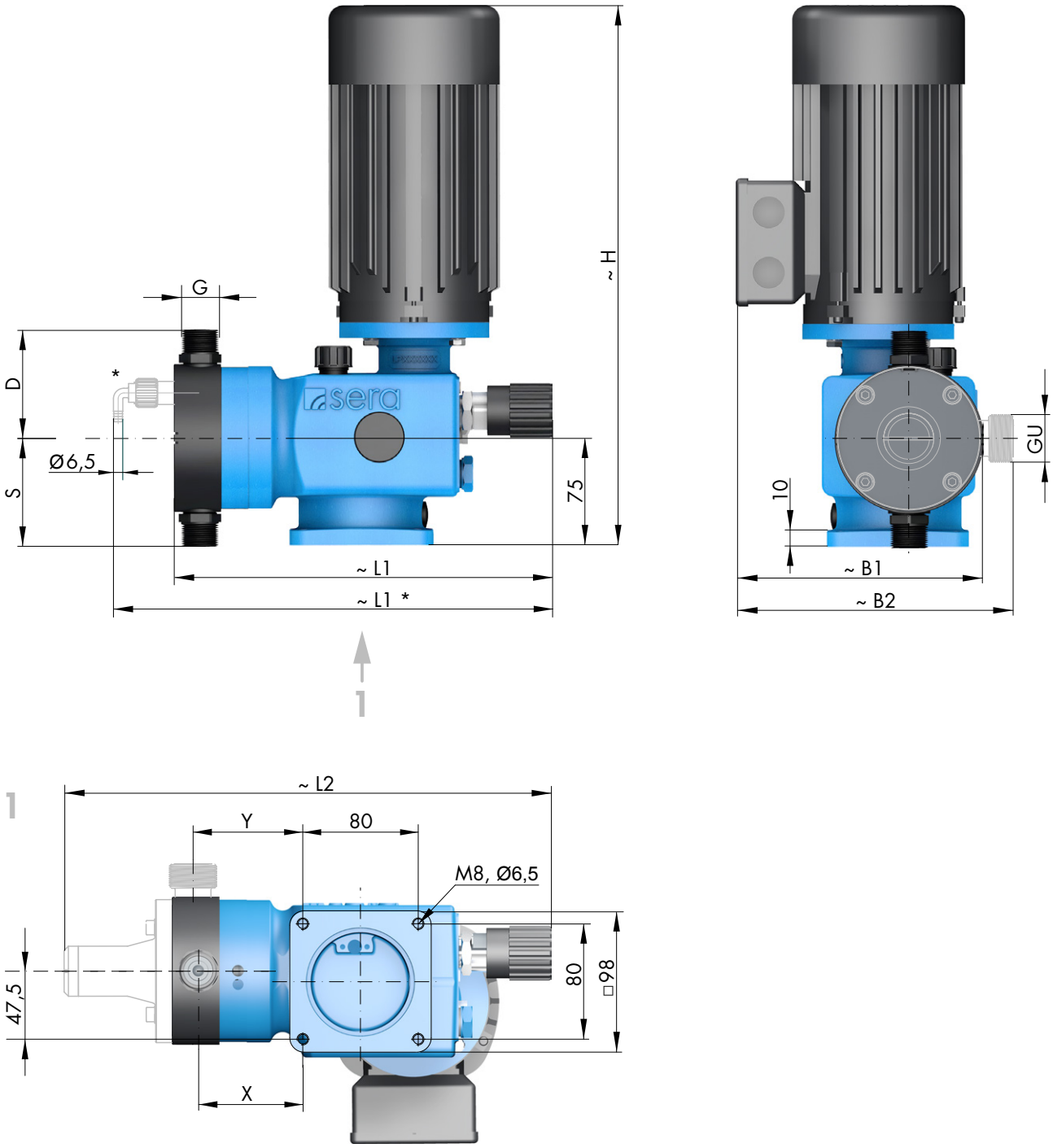


* Pump body with manual vent valve RF/MF409.2-1,6, -2,4e PP-FRP, PVDF-FRP

| | | RF 409.2-... | | | | | | | | | | | | | |
|---|---|---|---|---|---|---|---|---|---|---|---|---|---|---|---|
| **SUCTION VALVES** | | ...-1,6e | ...-2,4e | ...-7,0e | ...-12e | ...-18e | ...-25e | ...-50e | ...-75e | ...-90e | ...-115e | ...-140e | ...-180e | ...-250e | ...-350e |
| **DN** | Nominal width | 5 | 5 | 5 | 5 | 8 | 8 | 8 | 8 | 8 | 8 | 8 | 8 | 20[1] | 20[1] |
| **G** | Connection thread | G¾ | G¾ | G¾ | G¾ | G¾ | G¾ | G¾ | G¾ | G¾ | G¾ | G¾ | G¾ | G1¼[1] | G1¼[1] |
| **S** | PP-FRP / PVDF-FRP | 80 | 80 | 56 | 56 | 56 | 56 | 69 | 69 | 76 | 76 | 76 | 76 | 122 | 122 |
| **S** | PP-FRP / PVDF-FRP [2] | – | – | 57 | 60 | 60 | 60 | 67 | 67 | 76 | 76 | 76 | 76 | 122 | 122 |
| **S** | PVC-U | 70 | 70 | 62 | 65 | 63 | 63 | 70 | 70 | 78 | 78 | 78 | 78 | 119 | 119 |
| **S** | PVC-U [2] | – | – | 52 | 52 | 63 | 63 | 70 | 70 | 78 | 78 | 78 | 78 | 119 | 119 |
| **S** | 1.4571 | 70 | 70 | 57 | 61 | 61 | 61 | 68 | 68 | 76 | 76 | 76 | 76 | 122 | 122 |
| **S** | 1.4571[2] | – | – | 57 | 61 | 61 | 61 | 68 | 68 | 76 | 76 | 76 | 76 | 122 | 122 |
| **PRESSURE VALVES** | | | | | | | | | | | | | | | |
| **DN** | Nominal width | 5 | 5 | 5 | 5 | 8 | 8 | 8 | 8 | 8 | 8 | 8 | 8 | 20[1] | 20[1] |
| **G** | Connection thread | G¾ | G¾ | G¾ | G¾ | G¾ | G¾ | G¾ | G¾ | G¾ | G¾ | G¾ | G¾ | G1¼[1] | G1¼[1] |
| **D** | PP-FRP / PVDF-FRP | 80 | 80 | 64 | 64 | 64 | 64 | 69 | 69 | 76 | 76 | 76 | 76 | 122 | 122 |
| **D** | PP-FRP / PVDF-FRP [2] | – | – | 57 | 60 | 60 | 60 | 67 | 67 | 76 | 76 | 76 | 76 | 122 | 122 |
| **D** | PVC-U | 70 | 70 | 62 | 65 | 70 | 70 | 77 | 77 | 85 | 85 | 85 | 85 | 138 | 138 |
| **D** | PVC-U [2] | – | – | 65 | 65 | 70 | 70 | 77 | 77 | 85 | 85 | 85 | 85 | 138 | 138 |
| **D** | 1.4571 | 70 | 70 | 57 | 61 | 61 | 61 | 68 | 68 | 76 | 76 | 76 | 76 | 122 | 122 |
| **D** | 1.4571[2] | – | – | 57 | 61 | 61 | 61 | 68 | 68 | 76 | 76 | 76 | 76 | 122 | 122 |
| **MAX. TOTAL HEIGHT** | | | | | | | | | | | | | | | |
| **H** | | 330 | 330 | 330 | 330 | 330 | 330 | 370 | 370 | 370 | 370 | 370 | 370 | 370 | 370 |
| **MAX. TOTAL WIDTH** | | | | | | | | | | | | | | | |
| **B1** | | 175 | 175 | 175 | 175 | 175 | 175 | 185 | 185 | 185 | 185 | 185 | 185 | 220 | 220 |
| **B2** | (with relief valve) | – | – | 175 | 175 | 175 | 175 | 185 | 185 | 210 | 210 | 210 | 210 | 245 | 245 |
| **MAX. TOTAL LENGTH** | | | | | | | | | | | | | | | |
| **L1** | | 310 | 310 | 285 | 285 | 285 | 285 | 295 | 295 | 300 | 300 | 300 | 300 | 355 | 355 |
| **L2** | (with relief valve) | – | – | 345 | 345 | 345 | 345 | 360 | 360 | 370 | 370 | 370 | 370 | 435 | 435 |
| **RELIEF VALVE CONNECTION** | | | | | | | | | | | | | | | |
| **GU** | | – | – | G¾ | G¾ | G¾ | G¾ | G¾ | G¾ | G1 | G1 | G1 | G1 | G1¼[1] | G1¼[1] |
| **CONNECTION DIMENSIONS** | | | | | | | | | | | | | | | |
| **X** | | 72 | 72 | 66 | 67 | 67 | 67 | 69 | 69 | 73 | 73 | 73 | 73 | 101 | 101 |
| **Y** | | – | – | 71 | 69 | 69 | 69 | 69 | 69 | 78 | 78 | 78 | 78 | 101 | 101 |

(Measurements in mm)

[1] DN15 / G1 at valves of PVC-U
[2] Pump body with relief valve

## Dimensions ...409.2 options

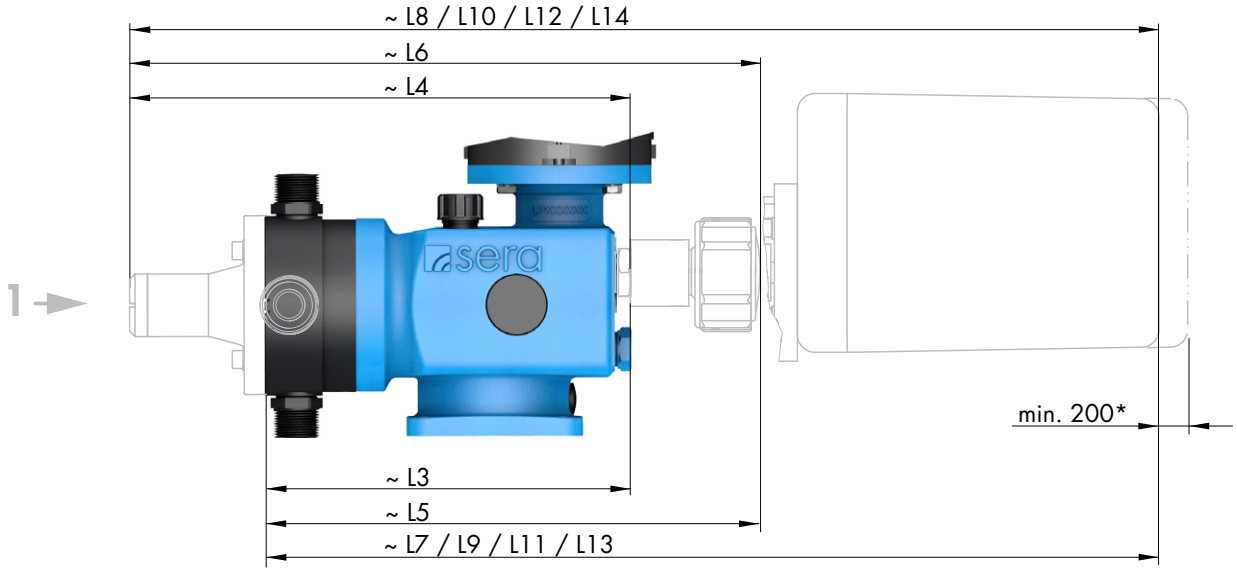


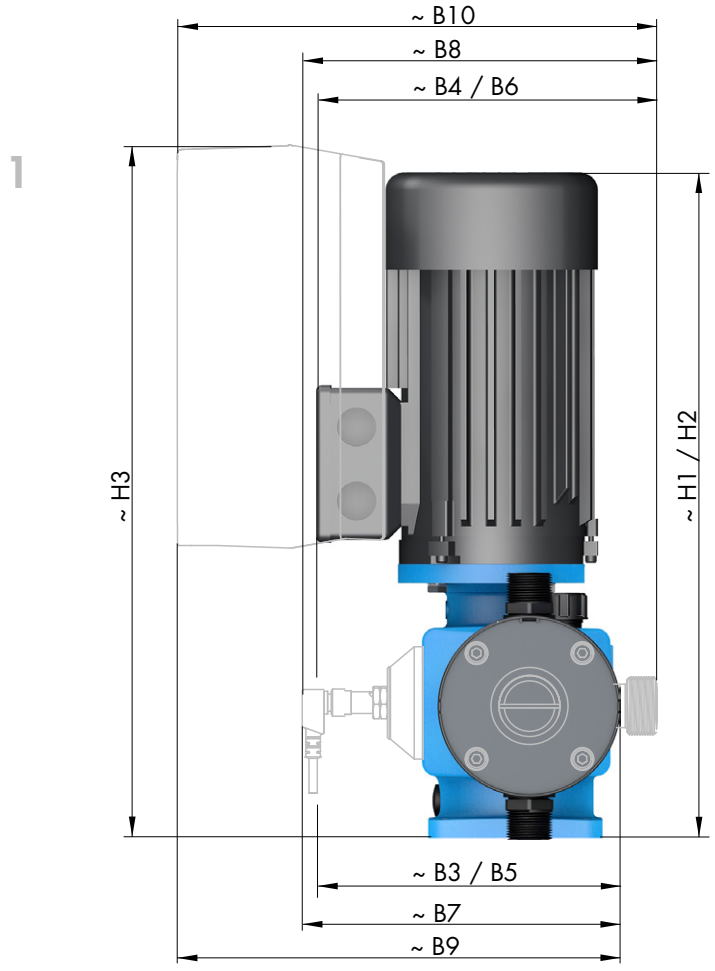


* for removing the actuar cover

| OPTIONS | | ... 409.2-... | | | | | | | | | | | | | |
|---|---|---|---|---|---|---|---|---|---|---|---|---|---|---|---|
| MAX. TOTAL HEIGHT | | ...-1,6e | ...-2,4e | ...-7,0e | ...-12e | ...-18e | ...-25e | ...-50e | ...-75e | ...-90e | ...-115e | ...-140e | ...-180e | ...-250e | ...-350e |
| **H1** | with AC motor | 335 | 335 | 335 | 335 | 335 | 335 | 370 | 375 | 375 | 375 | 375 | 375 | 375 | 375 |
| **H2** | with motor ATEX | 305 | 305 | 305 | 305 | 305 | 305 | 335 | 335 | 335 | 335 | 335 | 335 | 335 | 335 |
| **H3** | with frequency converter | 410 | 410 | 410 | 410 | 410 | 410 | 410 | 410 | 410 | 410 | 410 | 410 | 410 | 410 |
| **MAX. TOTAL WIDTH** | | | | | | | | | | | | | | | |
| **B3** | with AC motor | 180 | 180 | 180 | 180 | 180 | 180 | 190 | 190 | 190 | 190 | 190 | 190 | 190 | 190 |
| **B4** | with AC motor | – | – | 180 | 180 | 180 | 180 | 195 | 195 | 210 | 210 | 210 | 210 | 245 | 245 |
| **B5** | with motor ATEX | 185 | 185 | 185 | 185 | 185 | 185 | 195 | 195 | 195 | 195 | 195 | 195 | 195 | 195 |
| **B6** | with motor ATEX | – | – | 190 | 190 | 190 | 190 | 205 | 205 | 220 | 220 | 220 | 220 | 255 | 255 |
| **B7** | with stroke freq. transmitter | 175 | 175 | 175 | 175 | 175 | 175 | 175 | 175 | 175 | 175 | 175 | 175 | 175 | 175 |
| **B8** | with stroke freq. transmitter | – | – | 180 | 180 | 180 | 180 | 190 | 190 | 205 | 205 | 205 | 205 | 235 | 235 |
| **B9** | with frequency converter | 260 | 260 | 260 | 260 | 260 | 260 | 270 | 270 | 270 | 270 | 270 | 270 | 305 | 305 |
| **B10** | with frequency converter | – | – | 260 | 260 | 260 | 260 | 270 | 270 | 295 | 295 | 295 | 295 | 330 | 330 |
| **MAX. TOTAL LENGTH** | | | | | | | | | | | | | | | |
| **L3** | mit blind plug (M(F)...) | 250 | 250 | 215 | 210 | 190 | 190 | 190 | 190 | 190 | 190 | 190 | 190 | 220 | 220 |
| **L4** | mit blind plug (M(F)...) | – | – | 270 | 270 | 270 | 270 | 270 | 270 | 285 | 285 | 285 | 285 | 350 | 350 |
| **L5** | HLV with position indicator | 450 | 450 | 315 | 310 | 290 | 290 | 290 | 290 | 295 | 295 | 295 | 295 | 320 | 320 |
| **L6** | HLV with position indicator | – | – | 375 | 370 | 370 | 370 | 375 | 375 | 390 | 390 | 390 | 390 | 450 | 450 |
| **L7** | HLV with actuator | 480 | 480 | 445 | 440 | 420 | 420 | 420 | 420 | 425 | 425 | 425 | 425 | 450 | 450 |
| **L8** | HLV with actuator | – | – | 505 | 500 | 500 | 500 | 505 | 505 | 520 | 520 | 520 | 520 | 580 | 580 |
| **L9** | HLV with actuator with integrated positioner | 560 | 560 | 525 | 520 | 500 | 500 | 500 | 500 | 505 | 505 | 505 | 505 | 530 | 530 |
| **L10** | HLV with actuator with integrated positioner | – | – | 585 | 580 | 580 | 580 | 585 | 585 | 600 | 600 | 600 | 600 | 660 | 660 |
| **L11** | HLV with actuator ATEX | 655 | 655 | 620 | 615 | 595 | 595 | 595 | 595 | 595 | 595 | 595 | 595 | 625 | 625 |
| **L12** | HLV with actuator ATEX | – | – | 675 | 675 | 675 | 675 | 680 | 680 | 690 | 690 | 690 | 690 | 755 | 755 |
| **L13** | HLV with pneumatic actuator | – | – | 590 | 590 | 590 | 590 | 600 | 600 | 605 | 605 | 605 | 605 | 660 | 660 |
| **L14** | HLV with pneumatic actuator | – | – | 650 | 650 | 650 | 650 | 665 | 665 | 675 | 675 | 675 | 675 | 740 | 740 |

HLV ► Manual stroke length adjustment
(Measurements in mm)

## Dimensions C409.2 standard

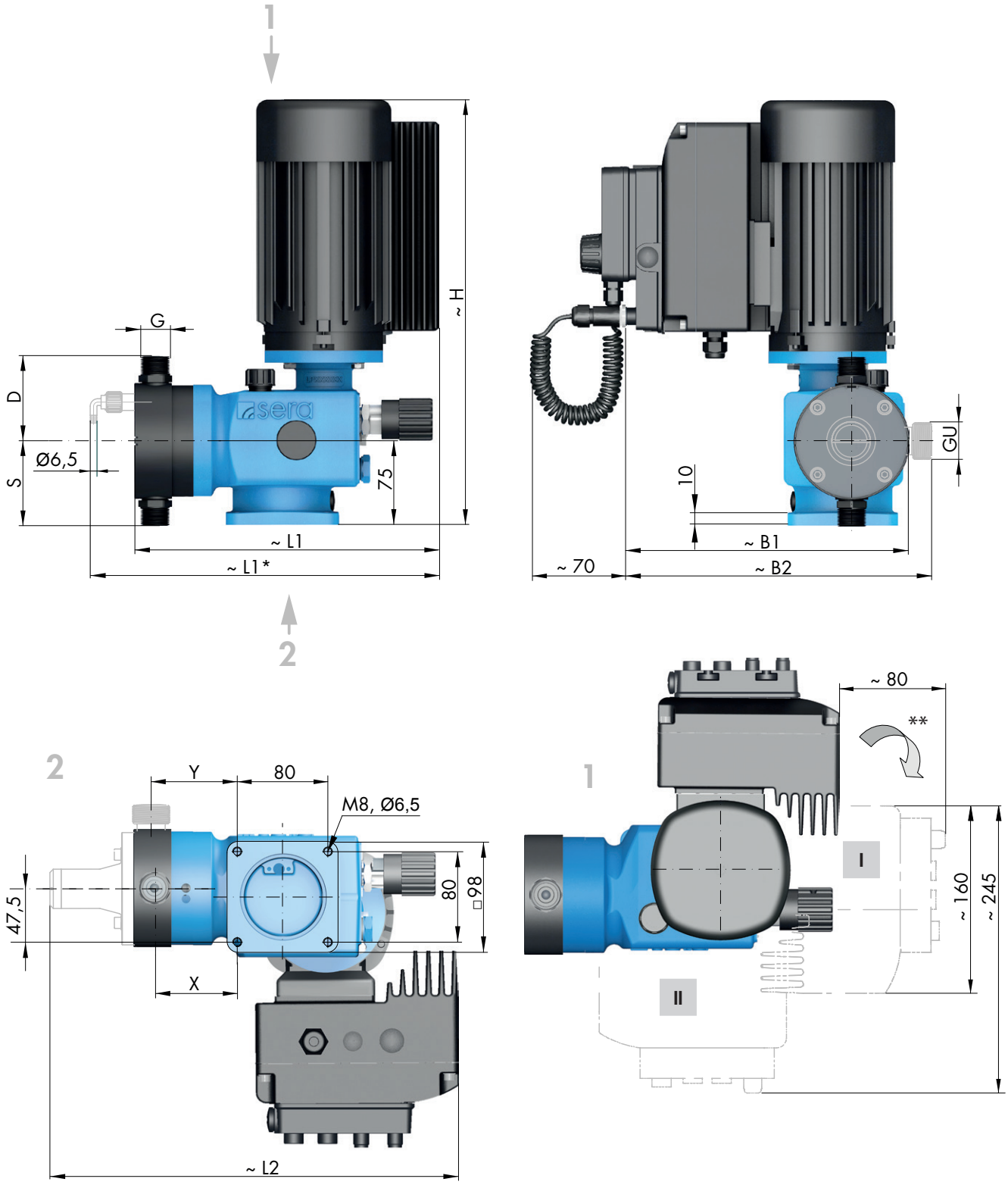


* Pump body with manual vent valve RF/MF409.2-1,6, -2,4e PP-FRP, PVDF-FRP
** Drive with electronics can be rotated throughout 90° each and can be put to the positions I and II.
(release the motor fastening screws, put the motor carefully to the desired position and fasten with screws again).

| STANDARD | | C 409.2-... | | | | | | | | | | | | | |
|---|---|---|---|---|---|---|---|---|---|---|---|---|---|---|---|
| SUCTION VALVES | | ...-1,6e | ...-2,4e | ...-7,0e | ...-12e | ...-18e | ...-25e | ...-50e | ...-75e | ...-90e | ...-115e | ...-140e | ...-180e | ...-250e | ...-350e |
| **DN** | Nominal width | 5 | 5 | 5 | 5 | 8 | 8 | 8 | 8 | 8 | 8 | 8 | 8 | 20[1] | 20[1] |
| **G** | Connection thread | G¾ | G¾ | G¾ | G¾ | G¾ | G¾ | G¾ | G¾ | G¾ | G¾ | G¾ | G¾ | G1¼[1] | G1¼[1] |
| **S** | PP-FRP / PVDF-FRP | 80 | 80 | 56 | 56 | 56 | 56 | 69 | 69 | 76 | 76 | 76 | 76 | 122 | 122 |
| **S** | PP-FRP / PVDF-FRP [2] | – | – | 57 | 60 | 60 | 60 | 67 | 67 | 76 | 76 | 76 | 76 | 122 | 122 |
| **S** | PVC-U | 70 | 70 | 62 | 65 | 63 | 63 | 70 | 70 | 78 | 78 | 78 | 78 | 119 | 119 |
| **S** | PVC-U [2] | – | – | 52 | 52 | 63 | 63 | 70 | 70 | 78 | 78 | 78 | 78 | 119 | 119 |
| **S** | 1.4571 | 70 | 70 | 57 | 61 | 61 | 61 | 68 | 68 | 76 | 76 | 76 | 76 | 122 | 122 |
| **S** | 1.4571 [2] | – | – | 57 | 61 | 61 | 61 | 68 | 68 | 76 | 76 | 76 | 76 | 122 | 122 |
| **PRESSURE VALVES** | | | | | | | | | | | | | | | |
| **DN** | Nominal width | 5 | 5 | 5 | 5 | 8 | 8 | 8 | 8 | 8 | 8 | 8 | 8 | 20[1] | 20[1] |
| **G** | Connection thread | G¾ | G¾ | G¾ | G¾ | G¾ | G¾ | G¾ | G¾ | G¾ | G¾ | G¾ | G¾ | G1¼[1] | G1¼[1] |
| **D** | PP-FRP / PVDF-FRP | 80 | 80 | 64 | 64 | 64 | 64 | 69 | 69 | 76 | 76 | 76 | 76 | 122 | 122 |
| **D** | PP-FRP / PVDF-FRP [2] | – | – | 57 | 60 | 60 | 60 | 67 | 67 | 76 | 76 | 76 | 76 | 122 | 122 |
| **D** | PVC-U | 70 | 70 | 62 | 65 | 70 | 70 | 77 | 77 | 85 | 85 | 85 | 85 | 138 | 138 |
| **D** | PVC-U [2] | – | – | 65 | 65 | 70 | 70 | 77 | 77 | 85 | 85 | 85 | 85 | 138 | 138 |
| **D** | 1.4571 | 70 | 70 | 57 | 61 | 61 | 61 | 68 | 68 | 76 | 76 | 76 | 76 | 122 | 122 |
| **D** | 1.4571 [2] | – | – | 57 | 61 | 61 | 61 | 68 | 68 | 76 | 76 | 76 | 76 | 122 | 122 |
| **MAX. TOTAL HEIGHT** | | | | | | | | | | | | | | | |
| **H** | | 330 | 330 | 330 | 330 | 330 | 330 | 330 | 370 | 370 | 370 | 370 | 370 | 370 | 370 |
| **MAX. TOTAL WIDTH** | | | | | | | | | | | | | | | |
| **B1** | | 240 | 240 | 240 | 240 | 240 | 240 | 240 | 250 | 250 | 250 | 250 | 250 | 285 | 285 |
| **B2** | (with relief valve) | – | – | 250 | 250 | 250 | 250 | 250 | 255 | 275 | 275 | 275 | 275 | 300 | 300 |
| **MAX. TOTAL LENGTH** | | | | | | | | | | | | | | | |
| **L1** | | 310 | 310 | 285 | 285 | 285 | 285 | 295 | 295 | 300 | 300 | 300 | 300 | 355 | 355 |
| **L2** | (with relief valve) | – | – | 345 | 345 | 345 | 345 | 360 | 360 | 370 | 370 | 370 | 370 | 435 | 435 |
| **RELIEF VALVE CONNECTION** | | | | | | | | | | | | | | | |
| **GU** | | – | – | G¾ | G¾ | G¾ | G¾ | G¾ | G¾ | G1 | G1 | G1 | G1 | G1¼[1] | G1¼[1] |
| **CONNECTION DIMENSIONS** | | | | | | | | | | | | | | | |
| **X** | | 72 | 72 | 66 | 67 | 67 | 67 | 69 | 69 | 73 | 73 | 73 | 73 | 101 | 101 |
| **Y** | | – | – | 71 | 69 | 69 | 69 | 69 | 69 | 78 | 78 | 78 | 78 | 101 | 101 |

(Measurements in mm)

[1] DN15 / G1 at valves of PVC-U
[2] Pump body with relief valve

## Dimensions C409.2 options

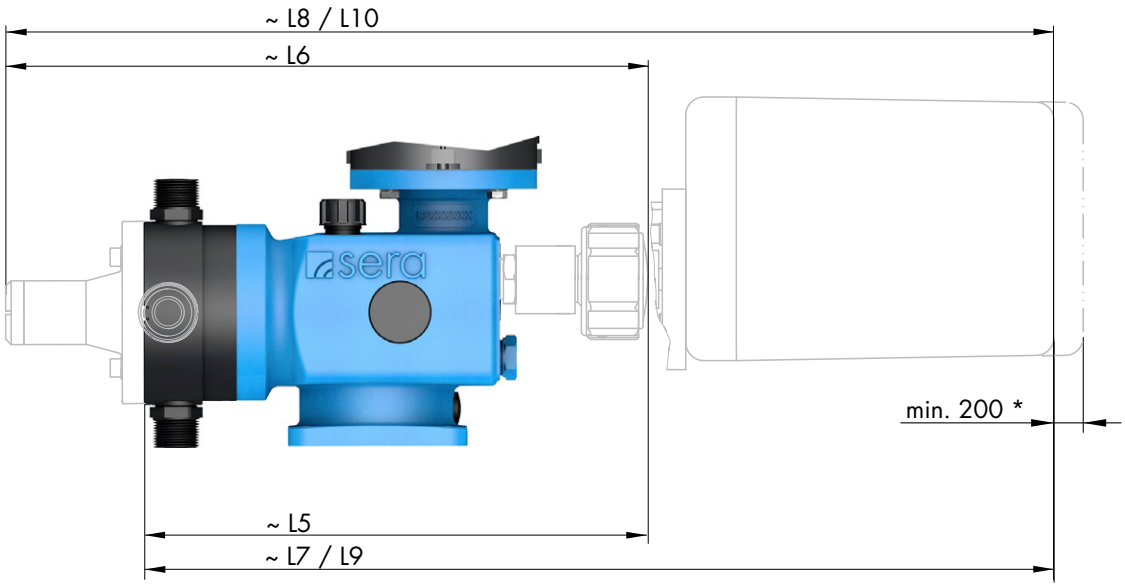


* for removing the actuar cover

| OPTIONS | | C 409.2-... | | | | | | | | | | | | | |
|---|---|---|---|---|---|---|---|---|---|---|---|---|---|---|---|
| MAX. TOTAL LENGTH | | ...-1,6e | ...-2,4e | ...-7,0e | ...-12e | ...-18e | ...-25e | ...-50e | ...-75e | ...-90e | ...-115e | ...-140e | ...-180e | ...-250e | ...-350e |
| **L5** | HLV with position indicator | 450 | 450 | 315 | 310 | 290 | 290 | 290 | 290 | 295 | 295 | 295 | 295 | 320 | 320 |
| **L6** | HLV with position indicator | – | – | 375 | 370 | 370 | 370 | 375 | 375 | 390 | 390 | 390 | 390 | 450 | 450 |
| **L7** | HLV with actuator | 480 | 480 | 445 | 440 | 420 | 420 | 420 | 420 | 425 | 425 | 425 | 425 | 450 | 450 |
| **L8** | HLV with actuator | – | – | 505 | 500 | 500 | 500 | 505 | 505 | 520 | 520 | 520 | 520 | 580 | 580 |
| **L9** | HLV with actuator with integrated positioner | 560 | 560 | 525 | 520 | 500 | 500 | 500 | 500 | 505 | 505 | 505 | 505 | 530 | 530 |
| **L10** | HLV with actuator with integrated positioner | – | – | 585 | 580 | 580 | 580 | 585 | 585 | 600 | 600 | 600 | 600 | 660 | 660 |

HLV ► Manual stroke length adjustment
(Measurements in mm)

## Dimensions RF410.2 standard

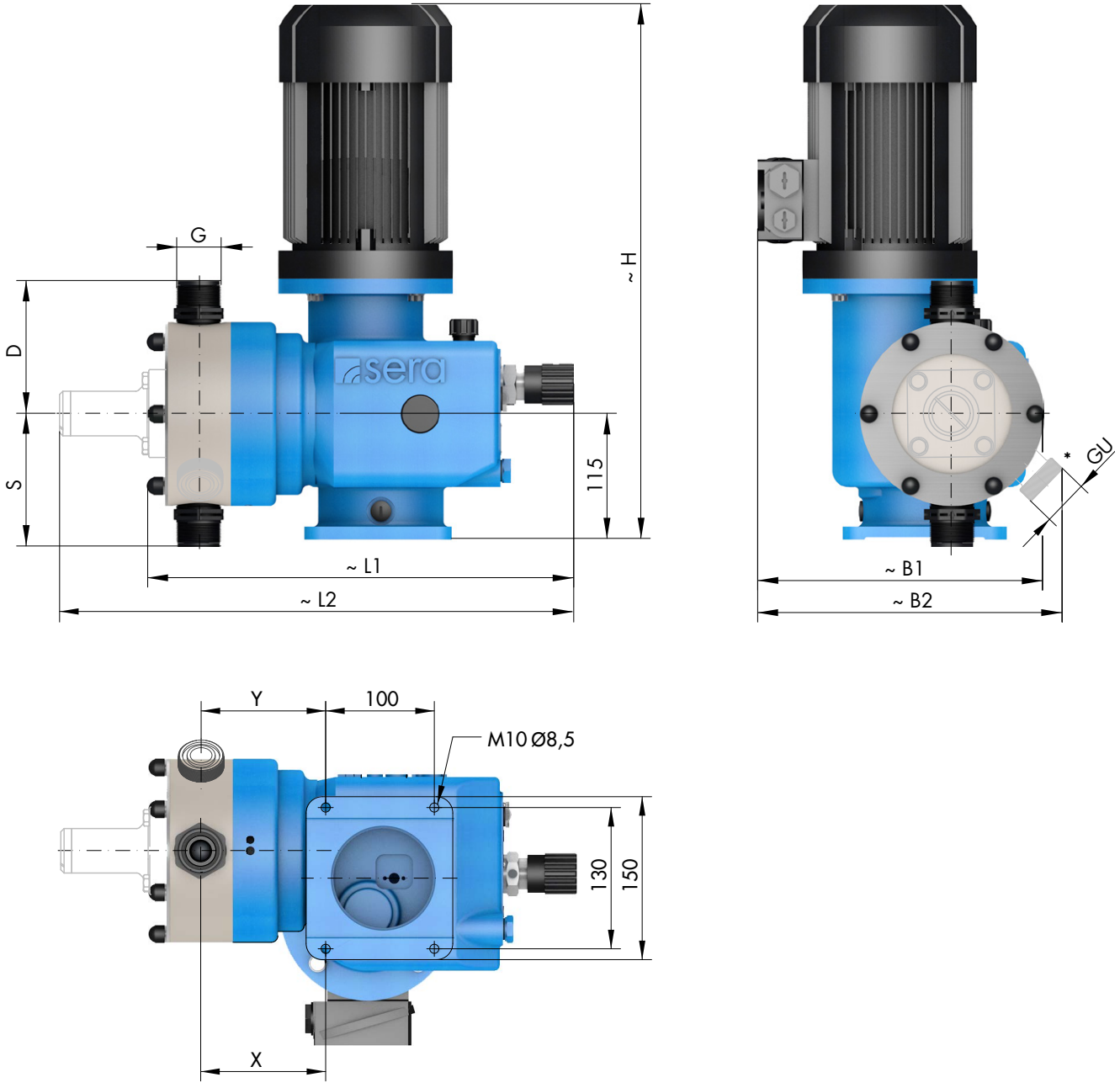


* Angle 45° - socket overflow valve

| | | RF 410.2-... | | | |
|---|---|---|---|---|---|
| **SUCTION VALVES** | | **...280e** | **...570e** | **...900e** | **...1450e** |
| **DN** | Nominal width | 20 [1] | 20 [1] | 20 | 20 |
| **G** | Connection thread | G1¼ [1] | G1¼ [1] | G1¼ | G1¼ |
| **S** | PP-FRP / PVDF-FRP | 122 | 122 | 148 | 148 |
| **S** | PVC-U | 119 | 119 | 150 | 150 |
| **S** | 1.4571 | 122 | 122 | 148 | 148 |
| **PRESSURE VALVES** | | | | | |
| **DN** | Nominal width | 20 [1] | 20 [1] | 20 | 20 |
| **G** | Connection thread | G1¼ [1] | G1¼ [1] | G1¼ | G1¼ |
| **D** | PP-FRP / PVDF-FRP | 122 | 122 | 148 | 148 |
| **D** | PVC-U | 138 | 138 | 170 | 170 |
| **D** | 1.4571 | 122 | 122 | 148 | 148 |
| **MAX. TOTAL HEIGHT** | | | | | |
| **H** | | 500 | 500 | 500 | 540 |
| **MAX. TOTAL WIDTH** | | | | | |
| **B1** | | 265 | 265 | 295 | 295 |
| **B2** | (with relief valve) | 280 | 280 | – | – |
| **MAX. TOTAL LENGTH** | | | | | |
| **L1** | | 430 | 430 | 460 | 460 |
| **L2** | (with relief valve) | 535 | 535 | – | – |
| **RELIEF VALVE CONNECTION** | | | | | |
| **GU** | | G1¼ [1] | G1¼ [1] | – | – |
| **CONNECTION DIMENSIONS** | | | | | |
| **X** | | 115 | 115 | 138 | 138 |
| **Y** | | 115 | 115 | – | – |

(Measurements in mm)

[1] DN15 / G1 at valves of PVC-U

## Dimensions ...410.2 options

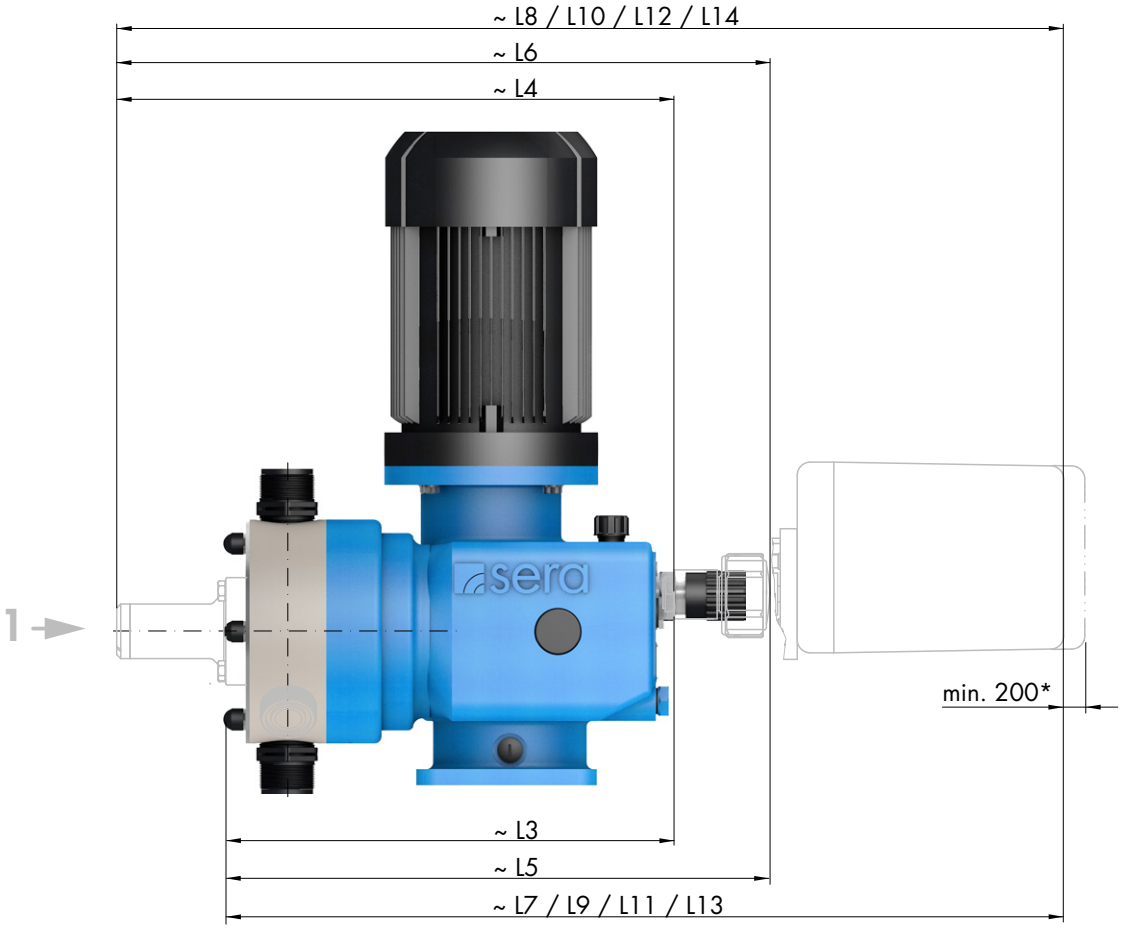


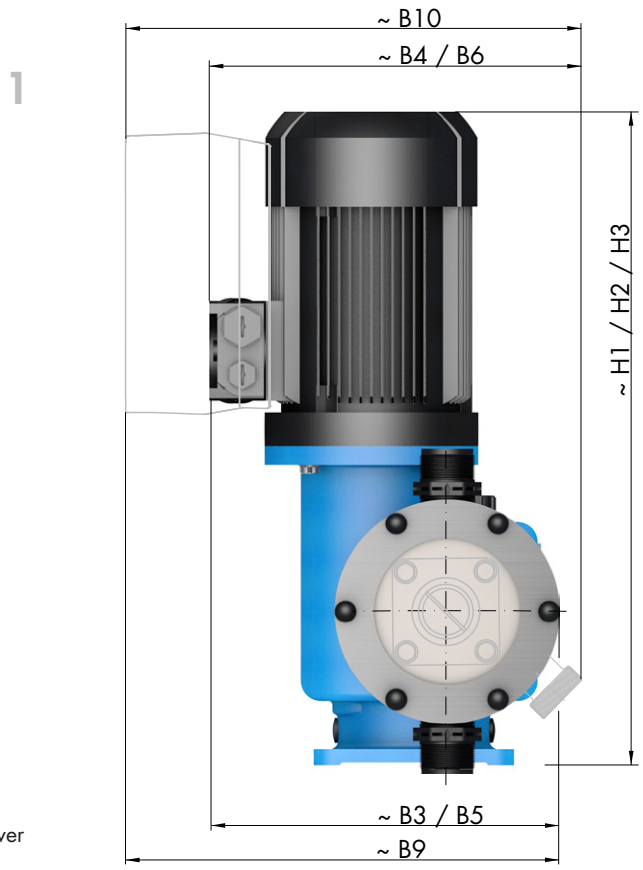


* for removing the actuar cover

| OPTIONS | | ...410.2-.... | | | |
|---|---|---|---|---|---|
| MAX. TOTAL HEIGHT | | ...280e | ...570e | ...900e | ...1450e |
| **H1** | with AC motor | 500 | 500 | 500 | 585 |
| **H2** | with motor ATEX | 450 | 450 | 490 | 490 |
| **H3** | with frequency converter | 500 | 500 | 500 | 540 |
| MAX. TOTAL WIDTH | | | | | |
| **B3** | with AC motor | 265 | 265 | 290 | 295 |
| **B4** | with AC motor | 290 | 290 | – | – |
| **B5** | with motor ATEX | 285 | 285 | 310 | 310 |
| **B6** | with motor ATEX | 255 | 255 | – | – |
| **B9** | with frequency converter | 340 | 340 | 365 | 370 |
| **B10** | with frequency converter | 365 | 365 | – | – |
| MAX. TOTAL LENGTH | | | | | |
| **L3** | mit blind plug (M(F)...) | 365 | 365 | 395 | 395 |
| **L4** | mit blind plug (M(F)...) | 470 | 470 | – | – |
| **L5** | HLV with position indicator | 465 | 465 | 495 | 495 |
| **L6** | HLV with position indicator | 570 | 570 | – | – |
| **L7** | HLV with actuator | 615 | 615 | 645 | 645 |
| **L8** | HLV with actuator | 715 | 715 | – | – |
| **L9** | HLV with actuator with integrated positioner | 690 | 690 | 720 | 720 |
| **L10** | HLV with actuator with integrated positioner | 795 | 795 | – | – |
| **L11** | HLV with actuator ATEX | 780 | 780 | 810 | 810 |
| **L12** | HLV with actuator ATEX | 885 | 885 | – | – |
| **L13** | HLV with pneumatic actuator | 790 | 790 | 820 | 820 |
| **L14** | HLV with pneumatic actuator | 895 | 895 | – | – |

HLV ► Manual stroke length adjustment
(Measurements in mm)

## Dimensions C410.2 standard

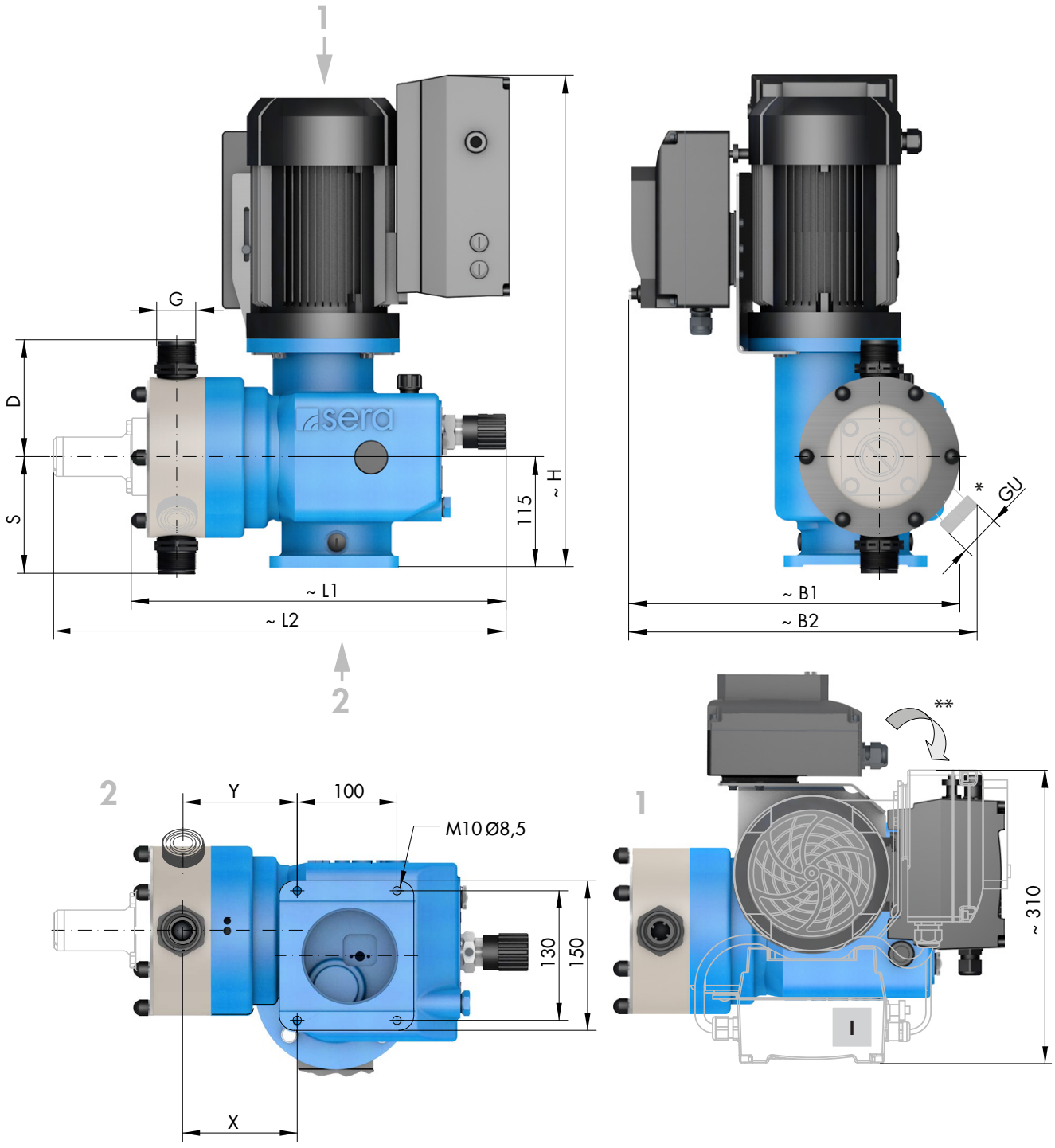


* Angle 45° - socket overflow valve
** Drive with electronics can be rotated throughout 90° each and can be put to the positions I.
(release the motor fastening screws, put the motor carefully to the desired position and fasten with screws again).

| | | C 410.2-... | | | |
|---|---|---|---|---|---|
| **SUCTION VALVES** | | **...280e** | **...570e** | **...900e** | **...1450e** |
| **DN** | Nominal width | 20 [1] | 20 [1] | 20 | 20 |
| **G** | Connection thread | G1¼ [1] | G1¼ [1] | G1¼ | G1¼ |
| **S** | PP-FRP / PVDF-FRP | 122 | 122 | 148 | 148 |
| **S** | PVC-U | 119 | 119 | 150 | 150 |
| **S** | 1.4571 | 122 | 122 | 148 | 148 |
| **PRESSURE VALVES** | | | | | |
| **DN** | Nominal width | 20 [1] | 20 [1] | 20 | 20 |
| **G** | Connection thread | G1¼ [1] | G1¼ [1] | G1¼ | G1¼ |
| **D** | PP-FRP / PVDF-FRP | 122 | 122 | 148 | 148 |
| **D** | PVC-U | 138 | 138 | 170 | 170 |
| **D** | 1.4571 | 122 | 122 | 148 | 148 |
| **MAX. TOTAL HEIGHT** | | | | | |
| **H** | | 520 | 520 | 520 | 560 |
| **MAX. TOTAL WIDTH** | | | | | |
| **B1** | | 350 | 350 | 375 | 375 |
| **B2** | (with relief valve) | 375 | 375 | – | – |
| **MAX. TOTAL LENGTH** | | | | | |
| **L1** | | 430 | 430 | 460 | 460 |
| **L2** | (with relief valve) | 535 | 535 | – | – |
| **RELIEF VALVE CONNECTION** | | | | | |
| **GU** | | G1¼ [1] | G1¼ [1] | – | – |
| **CONNECTION DIMENSIONS** | | | | | |
| **X** | | 115 | 115 | 138 | 138 |
| **Y** | | 115 | 115 | – | – |

(Measurements in mm)

[1] DN15 / G1 at valves of PVC-U

## Dimensions C410.2 options

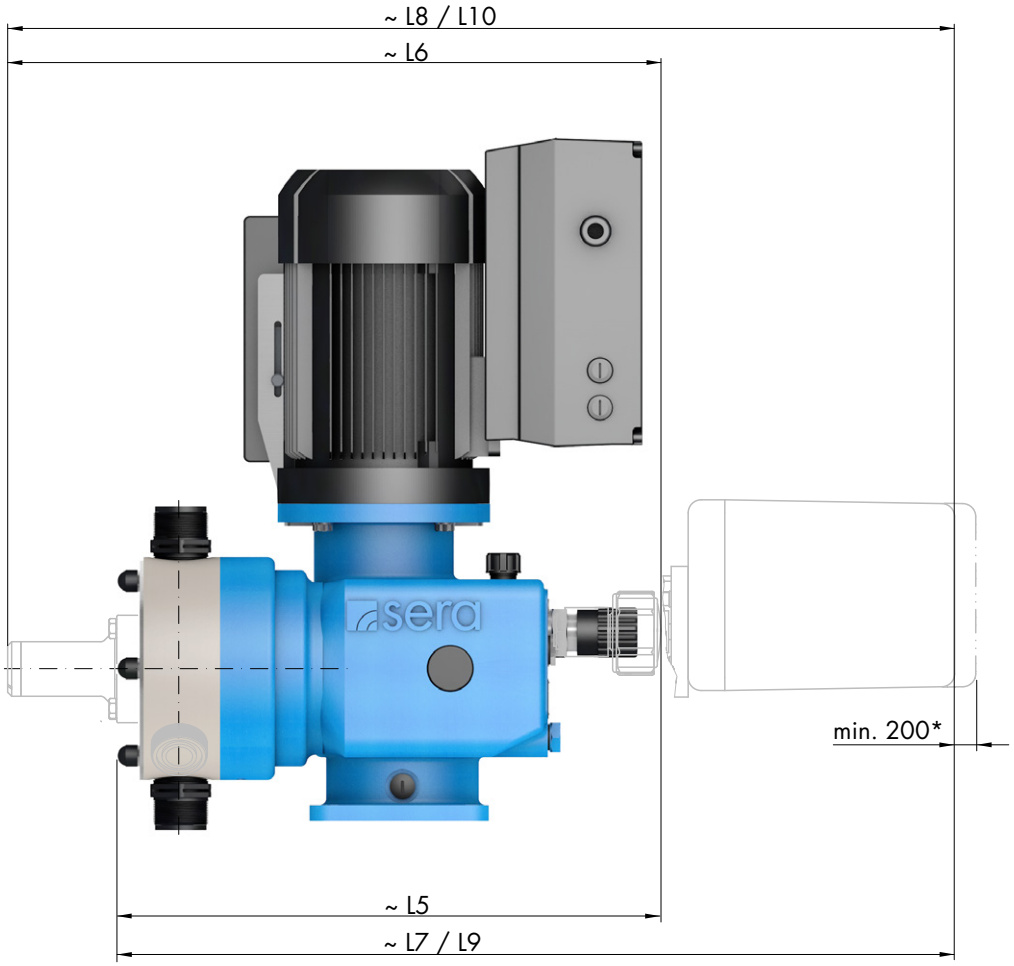


* for removing the actuar cover

| OPTIONS | | C 410.2-.... | | | |
|---|---|---|---|---|---|
| MAX. TOTAL LENGTH | | ...280e | ...570e | ...900e | ...1450e |
| **L5** | HLV with position indicator | 465 | 465 | 495 | 495 |
| **L6** | HLV with position indicator | 570 | 570 | – | – |
| **L7** | HLV with actuator | 615 | 615 | 645 | 645 |
| **L8** | HLV with actuator | 715 | 715 | – | – |
| **L9** | HLV with actuator with integrated positioner | 690 | 690 | 720 | 720 |
| **L10** | HLV with actuator with integrated positioner | 795 | 795 | – | – |

HLV ► Manual stroke length adjustment
(Measurements in mm)

## WARNING

Observe and follow the safety instructions by all means.
See the additional instructions „SAFETY INSTRUCTIONS".
Man, machine and environment are endangered if the safety instructions are not observed.




## NOTE

Pump design data for dosing and its temperature can be found in the order confirmation.

## NOTE

Operating conditions:
Ambient temperature, relative air humidity and max. installation altitude ► see chapter „Technical data".

- The standard model of the pump is only approved for installation in dry areas in a non-aggressive atmosphere.
- Protect the pump from heat sources, direct sunlight and UV light.
- See "Dimensions" chapter for dimensions of the pump connections and fixing holes.
- Fixing the pump with at least four bolts above the pump base is required for safe operation.
- Install the pump so that there is no vibration and no tension and that it is aligned precisely.
- Install the pump at the optimum possible operating height. Mount the pump so that the valves are vertical.
- Ensure that there is sufficient space around the pump body and the suction and pressure valve so that these parts can be easily dismantled if required.
- Design the nominal diameters of the downstream piping and the valves installed in the system to be the same size or larger than the nominal inlet and outlet diameters of the pump.
- To check the pressure ratios in the piping system, it is recommended to provide connections for pressure measurement fittings (e.g. manometers) near the suction and pressure ports.
- Drain valves must be provided.
- Before connecting the pipes, remove the plastic caps on the suction and pressure ports of the pump.
- Check the fastening bolts for the pump body for tightness and tighten if necessary, see chapter "Overview of the tightening torques".
- Connect pipes to the pump so that there are no forces acting on the pump, such as e.g. misalignment, weight or strain of the pipe.
- Keep the suction pipes as short as possible.
- Use pressure and medium resistant hoses / pipes.
- All pipes and containers connected to the pump must comply with the regulations and must be cleaned, tension-free and intact.
- Display devices must be easily accessible and readable.

In order to avoid cavitation, overload or excessive delivery, the following points should be noted:

- Avoid high suction heights.
- Keep pipes as short as possible.
- Select sufficiently large nominal diameters.
- Avoid unnecessary choke points.
- Install a pulsation damper.
- Install overpressure protection.
- Install a pressure-sustaining valve, if necessary
- Provide feed line for outgassing media.

## WARNING

The pump with a control is only designed for operation outside Ex-zonest!

## SUCTION SIDE (1)

The following fittings can be used on the suction side:

**1.1** Line strainer



**1.2** Suction aid
Siphon vessel



**1.3** Suction lance

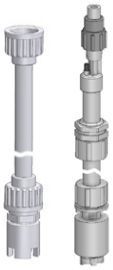

**1.4** Multifunction device



**1.5** Foot valve



**1.6** Shut-off valve








## PRESSURE SIDE (2)

The following fittings can be used on the pressure side:

**2.1** Vent valve



**2.2** Injection fitting

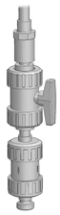

**2.3** Dosing valve



**2.4** Pulsation damper



**2.5** Diaphragm pressure keeping valve



**2.6** Diaphragm relief valve



**2.7** Multifunction valve



**2.8** Flow meter [1]

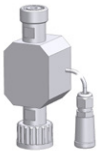

**2.9** Flow monitor [1]



**2.10** Shut-off valve



[1] only for diaphragm pumps with a control






## SUCTION SIDE (1)

### Line strainer (1.1)

Connect suction line slightly above the bottom of the tank and install a line strainer (0.1 – 0.5 mm mesh size – depending on valve nominal diameter of the pump).

**ATTENTION**

If impurities are not removed, this results in malfunctions of the pump and the system.

### Suction aid / siphon vessel (1.2)

For high tanks without connection on the bottom of the tank ► install suction aid / siphon vessel.
Thereby, pay attention to accelerating pressures which may be generated in a long suction pipe.

### Suction lance (1.3)

Install a suction lance for removal of chemicals from tanks and barrels.
The integrated foot valve prevents the backflow of the suctioned medium.
The suction lances are equipped with a level switch for „empty“ signal.

### Multifunction device (1.4)

The multifunction device is installed in the suction side piping of the pump and is used for determination of the delivery rate of pumps under real operating conditions.
The device can be filled either using a pending tank volume (communicating container) or using a hand vacuum pump.

### Foot valve (1.5)

To prevent running dry of the suction line ► install foot valve (check valve) at the end of the suction line.

## PRESSURE SIDE (2)

### Vent valve (2.1)

If air can be drawn in due to falling liquid level in the suction tank and at the same time delivered to a pressurised line or against a pressure-sustaining valve ► install vent valve in the pressure line.

**NOTE**

The delivery flow can be interrupted if there is air in the suction line!

### Injection fitting (2.2)

Install an injection fitting that routes into a main line to prevent the backflow of the pumped medium in the dosing line.

**WARNING**

Unwanted mixing in the dosing line occurs if any possible backflow from the main line is not prevented.

### Dosing valve (2.3)

Installation of the dosing valve prevents the liquid from the system to be treated being able to penetrate into the dosing line.

### Pulsation damper (2.4)

Damping of the pulsation by installation of pulsation dampers if:

- a low-pulsation delivery flow is desired for process reasons,
- acceleration forces caused by the piping geometry must be removed.

Install pulsation damper as close as possible to the pump head.
If both pulsation damper and pressure-sustaining valve should be integrated, install the pressure-sustaining valve between pump and pulsation damper.

**WARNING**

Undamped acceleration forces can result in the following faults / damage:

- flow rate fluctuations
- dosing errors
- pressure surges
- valve shocks
- increased wear on the suction and pressure sides of the pump
- mechanical destruction of the pump
- leaks and valve shocks if the permissible maximum pressure on the pump pressure
- side is exceeded
- damage to the piping and its installed fittings

### Diaphragm pressure-keeping valve (2.5)

If dosing into a main line with negative pressure ► install pressure-keeping valve in the dosing line.

**ATTENTION**

It must be ensured during the installation that excess delivery (due to positive pressure difference (≥ > 1 bar) between pressure and suction sides) is avoided.

### Diaphragm relief valve (2.6)

If the permissible pressure in the system can be exceeded by closing any shut-off valve or by clogging of the line ► install diaphragm relief valve.

When using an external overflow valve, the following is applicable for the return line:

- Route the return line sloping downward into the storage tank which is under atmospheric pressure or into an open drainage channel.
- Or connect directly to the pump suction line, but only if there is no check valve in the suction line (e.g. foot valve of a suction lance).

**ATTENTION**

Shut-off valves must not be closed when the pump is running!

**WARNING**

An overpressure protection device (e.g. relief valve) must generally be provided if the permissible operating pressure can be exceeded.

**ATTENTION**

If the permissible operating pressure is exceeded and the pump is not equipped with overpressure protection, the pump will be damaged.

**WARNING**

The pumped medium can spray out if the pump is damaged.

### Multifunction valve (2.7)

The multifunction valve provides the following functions:

- pressure-keeping valve function,
- overflow valve function,
- pressure relief function,
- venting.

The multifunction valve is mounted directly on the pump pressure port.

### Flow meter (2.8)

For measurement and monitoring of the flow rate ► install flow meter.
The application range is restricted to media that are similar to water.
The flow meter is screwed upright on the pressure port of the pump and connected to the pump electronics via the input for flow monitoring.

### Flow monitor (2.9)

To record the flow rate of the pump ► install flow monitor.
The application range is restricted to media that are similar to water.
The flow monitor is screwed upright on the suction port of the pump and connected to the pump electronics via the input for flow monitoring.

## Operation in Ex-zone C409.2 / C410.2

**WARNING**

The pump with a control is only designed for operation outside Ex-zonest!

## Operation in Ex-zone R/M 409.2 / R/M 410.2

**WARNING**

The prerequisite for the use in explosion-hazardous areas is an appropriate design of the pump.

The product supplied by **sera** meets the requirements of directive 2014/34/EU if it is correspondingly marked. This guarantees safe operation in explosion-hazardous areas.

**WARNING**

It is the operator's task to define the field of application and to check whether the pump is suited for this application. He/she must clearly define the zone, the device category, the explosion group and the temperature class.

**WARNING**

Avoid build up electrostatic conditions!

**WARNING**

To avoid contamination of the valves strainers in the suction line have to be installed!

### Identification

The pump has a label stating the zone/device category /explosion group/temperature class in compliance with directive 2014/34/EU.

**Ex II2G c IIBT4** bzw.
**Ex II2G c IICT4**
(note special specifications in the confirmation of order.)

### Installation

The intended operating conditions in explosion-hazardous areas according to directive 2014/34/EU are stated in the confirmation of order or the product description. The indicated limit values should not be fallen below or exceeded. Installation regulations given in the operating instructions must be adhered to.

**WARNING**

Use only suitable tools for performing assembly and maintenance work on machines or plants in explosion-hazardous areas. Directive 99/92/EC must be observed.

## Potential equalization

After mounting the pump the proper connection to the site potential equalization is to be ensured. The max. bleed resistor (1MΩ) has to be checked and documented.

## Start-up

After installation, the pump must immediately be used for the suction of fluids, i.e. the pump must immediately be started after the tank has been installed and filled.

## Operation

The intended operating conditions in explosion-hazardous areas according to directive 2014/34/EU are stated in the confirmation of order or the product description. The indicated limit values should not be fallen below or exceeded. Details about explosion zone, device category, explosion group and temperature class can be seen from the Declaration of Conformity.

**Degassing of the pumped medium:**

- Never let the pump run dry.
- Check the liquid level in the tank during operation of the pump.
- Make sure that the pump is switched off when the liquid level in the tank falls below the minimum level required (explosive atmosphere may be carried over)..

Vapour bubbles from the pumped medium are harmless as they have no explosive potential.

**WARNING**

Formation of an explosive gas mixture must be prevented.

## Temperature indications

Permissible ambient temperature: -10°C ≤ Ta ≤ +40°C

## Maintenance

The maintenance notes listed in Chapter 10 are generally applicable. **Exception:**

**ATTENTION**

The oil level in the stroke mechanism of the pump must be checked once a week!

**WARNING**

Observe and follow the safety instructions by all means.
See the additional instructions „SAFETY INSTRUCTIONS“.
Man, machine and environment are endangered if the safety instructions are not observed.




Adequate fastening at the pump foot and compliance with the operating parameters specified in the technical data are required for the operation of the pump.

Checks before every start-up:

- Check all connections for tightness.
- Tighten fixing bolts of the pump body with the specified tightening torques (see „Overview of the tightening torques“ chapter).
- Check of the electrical connections.
- Check of the mains voltage on the rating plate with the local conditions.

## Driving motor

**Preconditions:**

- Make sure that voltage and frequency correspond with the indications on the type plate of the motor. Permissible voltage tolerance (DIN VDE 0530).
- For rated voltage ► + 10 %
- For rated voltage range ► ± 5 %
- The connecting cable must be dimensioned according to the motor characteristics.
- Secure connecting cable with a strain relief.
- The nominal motor power refers to an ambient temperature and an installation site ► see chapter „TECHNICAL DATA“ . Motor output will be reduced if these values are exceeded (see VDE 0530).
- Adapted for “moderate” groupe of climates according to IEC 721-2-1.

## NOTE

Operating voltage range see chapter „TECHNICAL DATA“.

## NOTE

**Pump without control:**
Motor connection see chapter „Drive motor“ in the PRODUCT DESCRIPTION.

## NOTE

**Pump with a control:**
Electrical iterfaces see the additional operation instructions for the CONTROL.

## ATTENTION

**Pump with a control:**
The pump restarts in the selected operating mode with the specified parameters after switching on again or after restoration of the power supply following a power failure.

**WARNING**

Observe and follow the safety instructions by all means.
See the additional instructions „SAFETY INSTRUCTIONS“.
Man, machine and environment are endangered if the safety instructions are not observed.




Check the following at regular intervals:

- Tight fit of piping.
- Tight fit of pressure and suction valve.
- Proper condition of the electrical connections.
- Tight fit of the screws for fastening the pump body (check this at least every three months).
- For the tightening torques of the mounting screws, please see Chapter „Overview of the tightening torques“.
- Additionally with motor pumps: Check oil level regularly (oil eye).

## Drive motor

The electric motor should always be kept clean so that neither dust, dirt, oil nor other contaminates may affect the correct operation.

In addition, we recommend to ensure that:

- The motor does not produce strong vibrations
- Suction and blowing openings for the supply of cooling air are not closed or restricted (may lead to unnecessary high temperatures in the windings)

The ball bearings inserted in the motor are lubricated for life.

## Oil change

Check oil level at regular intervals (oil sight glass (**1**))

Perform an oil change once a year.
To do so, proceed as follows:

- Unscrew the venting screw (**5**).
- Prepare an appropriate container (**2**).
- Open the screw plug (**3**) and drain off oil.
- Close hole with screw plug (pay attention to the sealing ring (**4**)!).
- Fill oil in threaded hole of the venting screw.
- Screw in venting screw (**5**).

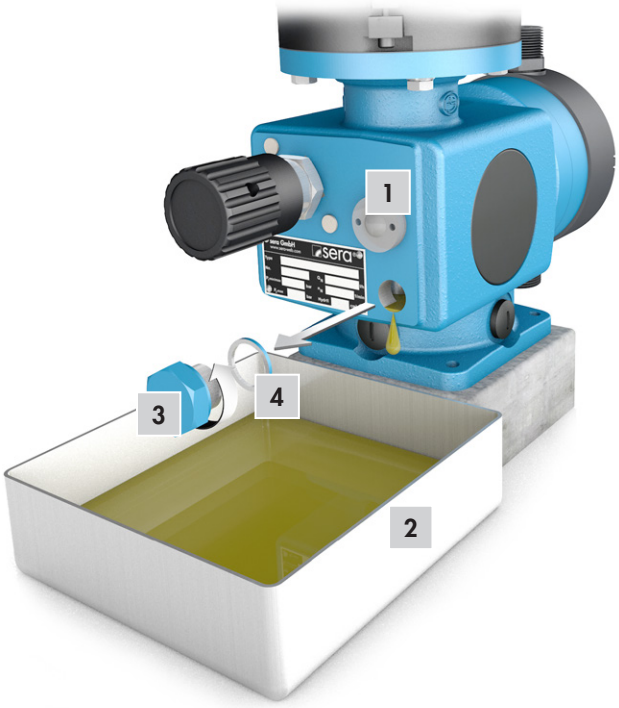





| Gear oil | | | |
|---|---|---|---|
| Pump type | Specification | sera use | Quantity (litres) |
| ...409.2 | CLP VG220 DIN51517-3 | ARAL Degol BG220 | 0,3 |
| ...410.2 | CLP VG220 DIN51517-3 | ARAL Degol BG220 | 1,25 |

## Overview of the tightening torques

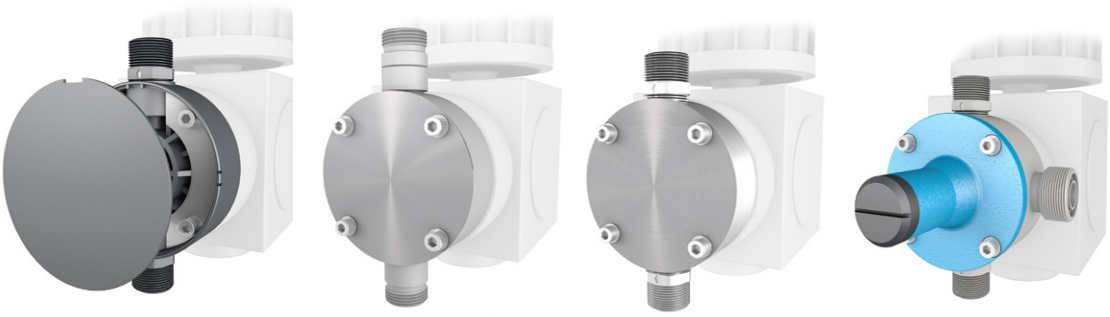

| | Pump body PP-FRP, PVDF-FRP | Pump body PVC | Pump body 1.4571 | Pump body with integrated overflow valve |
|---|---|---|---|---|
| | | Nm | | |
| ...409.2-1,6e | 5,0 | 4,5 | 5,0 | – |
| ...409.2-2,4e | 5,0 | 4,5 | 5,0 | – |
| ...409.2-7,0e | 4,0 | 4,0 | 4,0 | 4,5 |
| ...409.2-12e | 4,0 | 4,0 | 4,0 | 4,5 |
| ...409.2-18e | 4,0 | 4,0 | 4,0 | 4,5 |
| ...409.2-25e | 4,0 | 4,0 | 4,0 | 4,5 |
| ...409.2-50e | 7,0 | 8,0 | 7,0 | 8,0 |
| ...409.2-75e | 7,0 | 8,0 | 7,0 | 8,0 |
| ...409.2-90e | 7,0 | 8,0 | 7,0 | 8,0 |
| ...409.2-115e | 7,0 | 8,0 | 7,0 | 8,0 |
| ...409.2-140e | 7,0 | 8,0 | 7,0 | 8,0 |
| ...409.2-180e | 7,0 | 8,0 | 7,0 | 8,0 |
| ...409.2-250e * | 15,0 | 15,0 | 15,0 | 15,0 |
| ...409.2-350e * | 15,0 | 15,0 | 15,0 | 15,0 |

* Pump body PP/PVDF

| | Pump body PP, PVDF | Pump body PVC | Pump body 1.4571 | Pump body with integrated overflow valve |
|---|---|---|---|---|
| | | Nm | | |
| ...410.2-280e | 15,0 | 15,0 | 15,0 | 15,0 |
| ...410.2-570e | 15,0 | 15,0 | 15,0 | 15,0 |
| ...410.2-900e | 15,0 | 15,0 | 15,0 | – |
| ...410.2-1450e | 15,0 | 15,0 | 15,0 | – |

## Changing the Diaphragm

In order to ensure a correct function of the diaphragm pump and to fulfil the required safety and protective provisions it is absolutely necessary to check and replace the diaphragms at regular intervals.

After 3000 operating hours or at the latest after one year, a service message requiring diaphragm replacement is shown on the graphical display of the pump with a control (see additional instructions of the control). An earlier diaphragm replacement can be necessary depending on the medium and the application area.

**WARNING**

**Pump with a control:**
Observe the instructions on the graphical display for the replacement of wear parts!

- Set the stroke length adjustment to a stroke length of 0% (front position).
- Remove cover plate (**1**) of the pump body (FRP design, ...409.2).

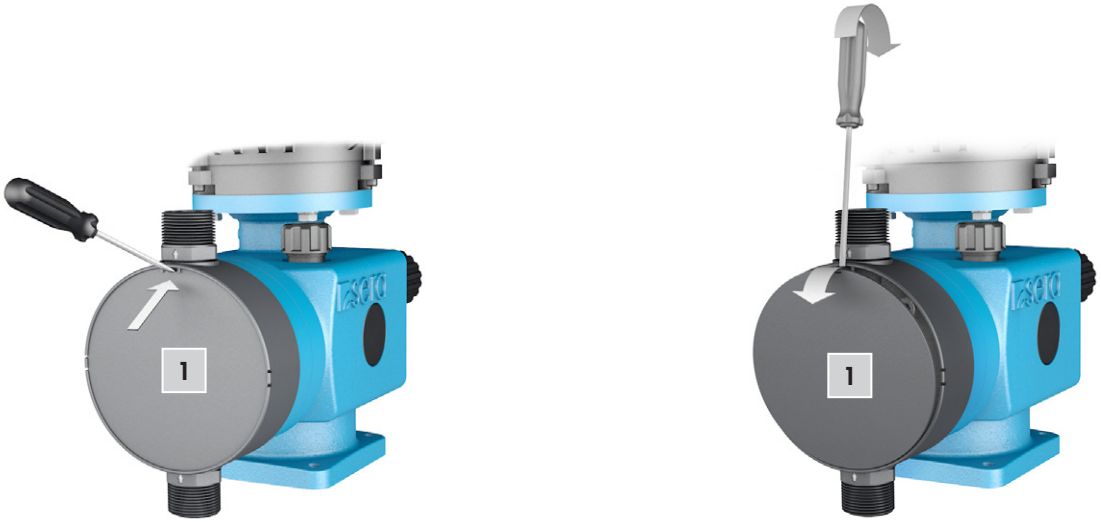


- Loosen fixing bolts (**2**) on the pump body.
- Remove pump body (3), front plate (**4**) (PVC design) or insertion plates (**5**) (FRP design, ...409.2) to the front.

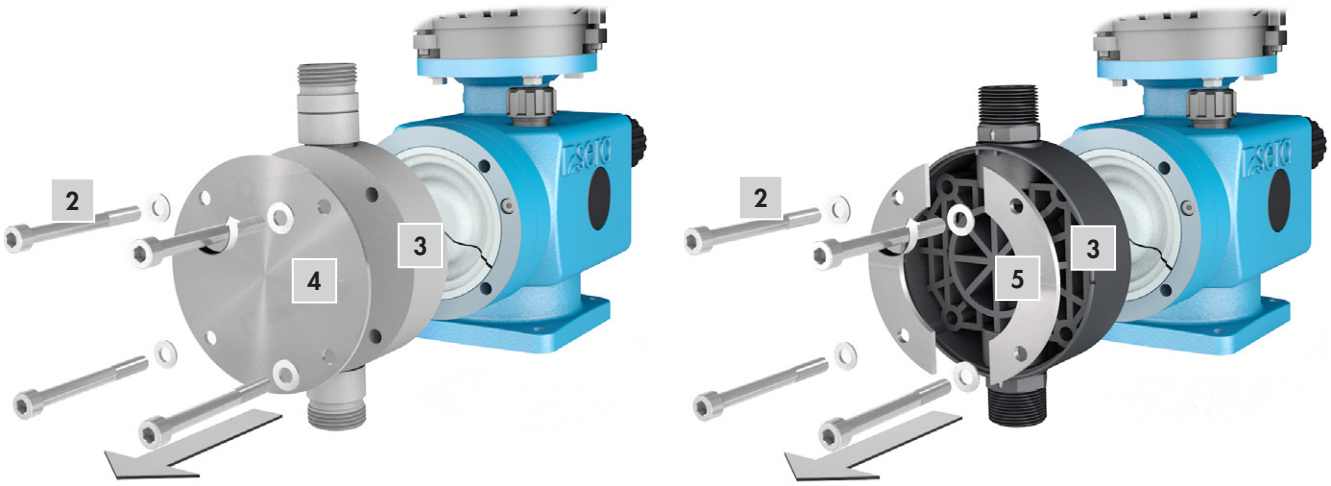

- Unscrew defective drive diaphragm (**6**) from the push rod (**7**).
- Unscrew pressure plate (**8**) from the set screw of the dia-phragm (with EPDM, FPM drive diaphragm).




- Clean pressure plate and screw plate on the new diaphragm.

**Assemble the pump in reversed order:**

- Screw on new diaphragm hand-tight – the diaphragm must be in the middle position.
- Set the stroke length to 50%.
- If the pump is not equipped with a stroke length adjustment (M-design), move the diaphragm to the middle position by turning the fan blade of the drive motor.
- Observe tightening torques of the fixing bolts (**2**); see chapter „Overview of the tightening torques“.
- When assembling the pump body, please note:suction valve below, pressure valve above!

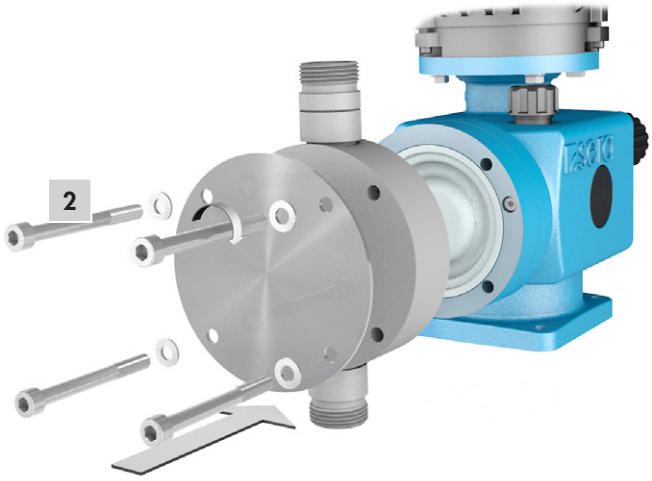


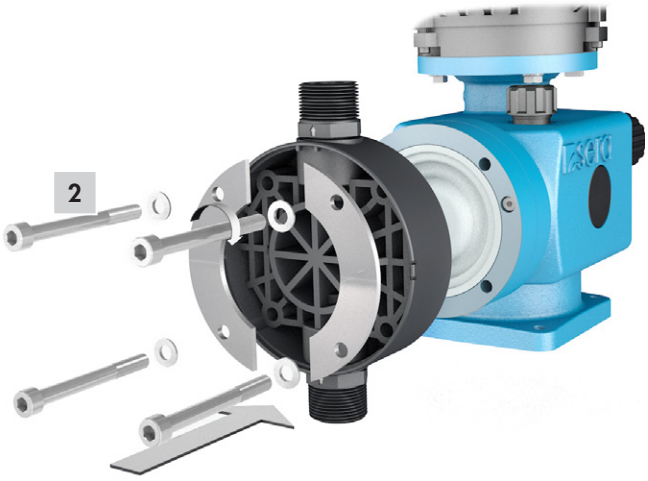


Add the suction and pressure line and connect pump to the power supply. The diaphragm pump is then again ready for operation.

## Overflow valve

Proceed as follows to change the diaphragm of the overflow valve (only pumps with integrated overflow valve).

**NOTE**

All diaphragms should be replaced completely.

- Loosen and unscrew the lid (**1**) of the overflow valve.

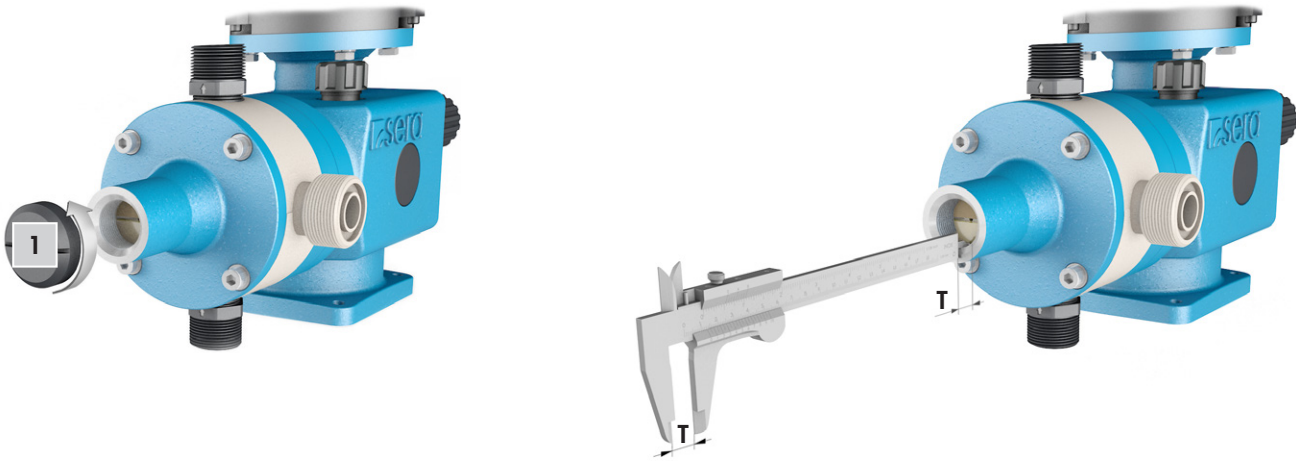


**NOTE**

Before the set screw is unscrewed the dimension **T** (dis-tance between top edge of the cover and the set screw) is to be determined and documented.
This ensures that the overflow valve can be reset to the same pressure NOTE! during subsequent assembly.

- Unscrew the set screw (**3**).
- Remove pressure spring (**2**).
- Loosen and unscrew fixing screws (**5**).
- Remove cover (**7**) and pump body (**8**) to the front.
- Remove pressure disk (**4**) and diaphragm (**6**).
- Check overflow valve for damage and contamination.

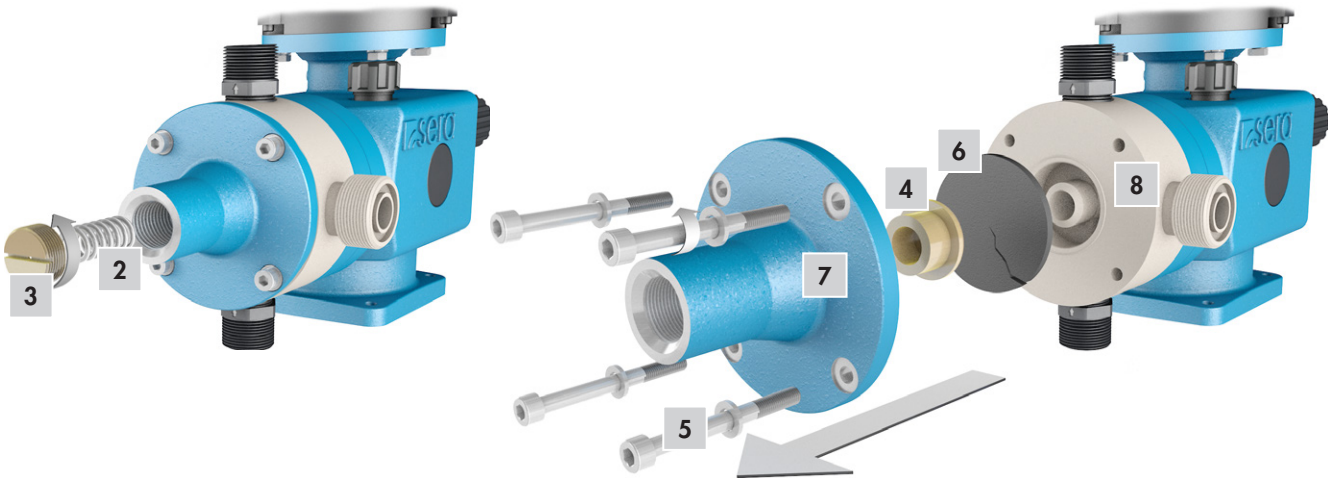


- Insert a new diaphragm. In case of PTFE-laminated diaphragms the PTFE-coated side must point towards the pump body.

Assemble the pump in reversed order.

**NOTE**

The individual components should be cleaned thoroughly before assembly!!

**NOTE**

When the set nut is screwed in the dimension "**T**" which was determined beforehand is of great importance.

The initial opening pressure of the overflow valve is only reached when the NOTE! set screw is screwed in exactly according to dimension "**T**"!

**ATTENTION**

The screw-in depth of the set screw must not exceed the initial value. If the set pressure is increased, **sera** has to be consulted beforehand!

**ATTENTION**

Never screw in the set screw to a depth so that the pressure spring is compressed to solid length!

## Spare and wearing parts

**The following parts are considered as wearing parts of the pump:**

- Drive diaphragm (diaphragm kit)
- Diaphragm (diaphragm kit) ► diaphragm of the integrated overflow valve
- Diaphragm rupture electrode (diaphragm kit)
- Valve kit (including O-ring kit)
- O-ring kit

Depending on their use and period of use, wearing parts must be replaced at regular intervals in order to ensure a safe function of the diaphragm pump.

We recommend to replace the wearing parts after 3000 operating hours or at least once a year.

In case of a premature diaphragm rupture caused by hard operating conditions, switch off the diaphragm pump and replace the diaphragms (see chapter „Changing the diaphragm").

**The following parts are considered as spare parts of the pump:**

- Pump body kit (including mounting kit)
- Mounting kit
- Cover kit ► pump with integrated overflow valve
- Setting kit ► pump with integrated overflow valve

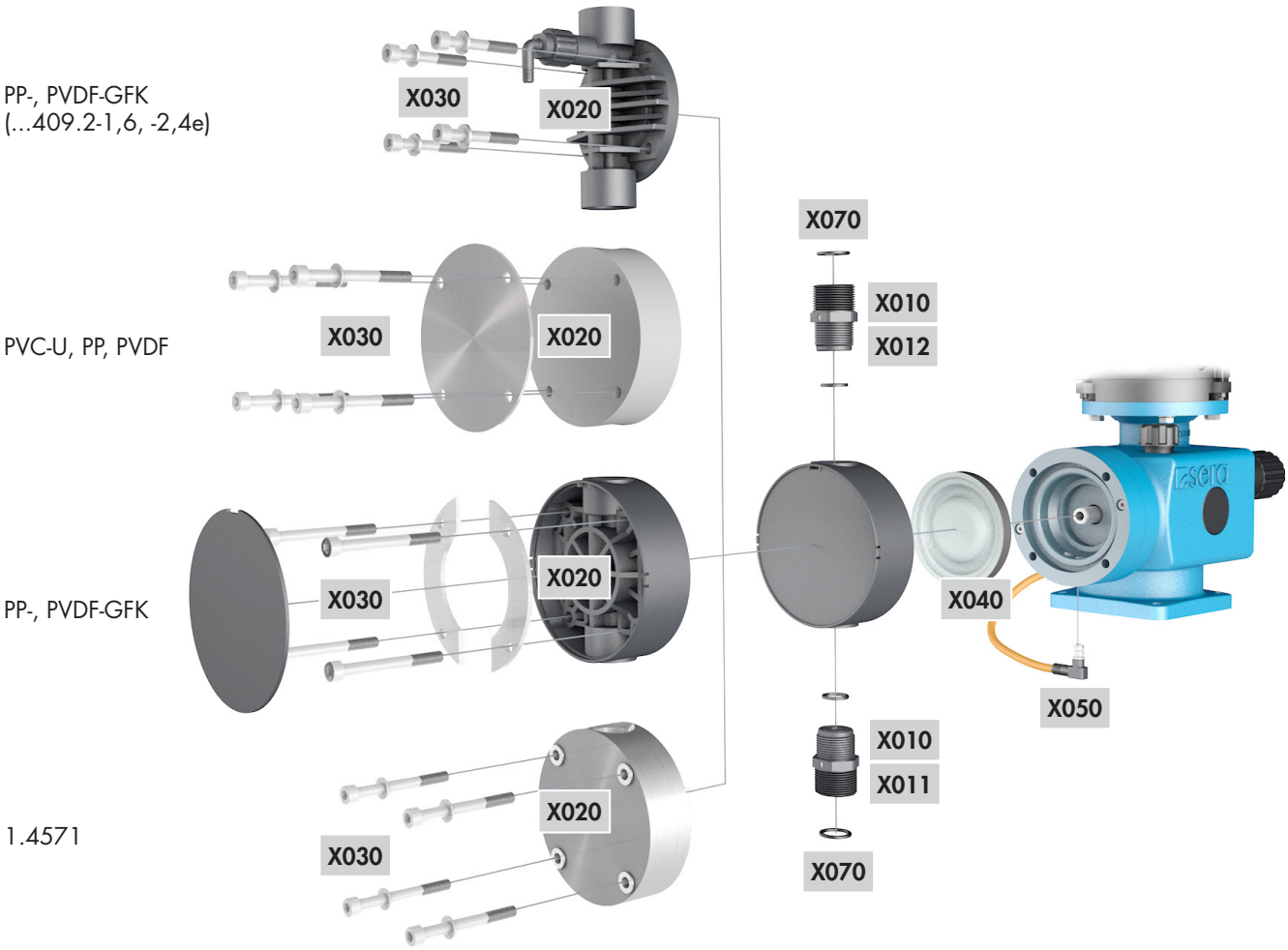


| Pos. | Kit | Materials | consisting of |
|---|---|---|---|
| X010 | Valves | PVC-U<br>PP-FRP<br>PVDF-FRP | Suction valve<br>Pressure valve<br>O-ring kit |
| X011 | Suction valve | 1.4571 | Suction valve<br>O-ring kit |
| X012 | Pressure valve | 1.4571 | Pressure valve<br>O-ring kit |
| X020 | Pump body | PVC-U<br>PP<br>PVDF | Pump body<br>Front plate<br>Mounting kit |
| X020 | Pump body | PP-FRP<br>PVDF-FRP | Pump body<br>Cover plate<br>Insertion plates<br>Mounting kit |
| X020 | Pump body | 1.4571 | Pump body<br>Mounting kit |
| X030 | Mounting | | Screws, complete |
| X040 | Diaphragm | | Drive diaphragm<br>Pressure plate (FPM-, EPDM-diaphragm)<br>Diaphragm rupture electrode ► C409.2 / C410.2 |
| X050 | Diaphragm rupture electrode | | Diaphragm rupture electrode ► ...409.2 / ...410.2 |
| X070 | O-rings | | |

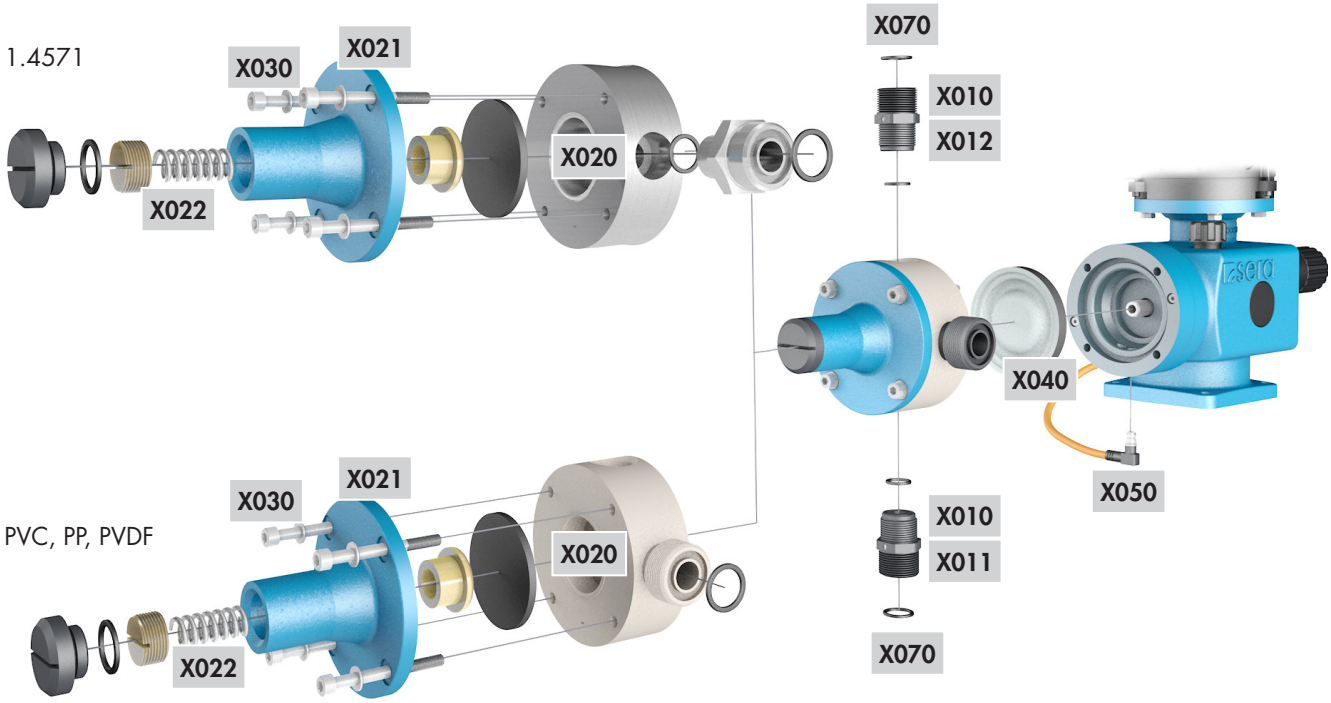


| Pos. | Kit | Materials | consisting of |
|---|---|---|---|
| X010 | Valves | PVC-U<br>PP-FRP<br>PVDF-FRP | Suction valve<br>Pressure valve<br>O-ring kit |
| X011 | Suction valve | 1.4571 | Suction valve<br>O-ring kit |
| X012 | Pressure valve | 1.4571 | Pressure valve<br>O-ring kit |
| X020 | Pump body | PVC<br>PP<br>PVDF | Pump body<br>Mounting kit<br>O-ring |
| X020 | Pump body | 1.4571 | Pump body<br>Mounting kit<br>Socket<br>O-rings |
| X021 | Cover | | Cover<br>Lid<br>O-ring |
| X022 | Setting kit | | Set screw<br>Pressure spring<br>Pressure disk |
| X030 | Mounting | | Screws, complete |
| X040 | Diaphragm | | Drive diaphragm<br>Pressure plate (FPM-, EPDM-diaphragm)<br>Diaphragm<br>Diaphragm rupture electrode ► C409.2 / C410.2 |
| X050 | Diaphragm rupture electrode | | Diaphragm rupture electrode ► ...409.2 / ...410.2 |
| X070 | O-rings | | |

**sera** products are sophisticated technical products which are only shipped after having been thoroughly tested and checked at our factory.
Should there be any faults, these can be detected and rectified easily and quickly based the instructions in the tables.

## NOTE

Analysis of the error messages in the display for the pumps with a control ► see the operation instructions of the control!

| Fault type | | | | | | | | | | | | | | | Possible cause | Corrective action |
|---|---|---|---|---|---|---|---|---|---|---|---|---|---|---|---|---|
| Corrective action! | Display, LED not lit! ▲ Pump with control | Motor does not start! ▲ diaphragm pump | Damage to stroke mechanism / drive! | Pump does not draw in! | Pump does not deliver! | Flow rate is not reached! | Delivery head is not reached! | Flow rate fluctuates! | Maximum permissible flow rate exceeded! | Pipe oscillates heavily! | Too high noise development! | Service life of the drive diaphragm too low! | Drive is overloaded (periodically occurring noises)! | Leakage on pump head! | | |
| | | | | ■ | ■ | ■ | | | | | | | | | Suction height too high. | Reduce suction height or suction resistance. |
| | | | | ■ | ■ | ■ | | ■ | | | | | | | Suction pipe leaking. | Check seals, tighten pipe connections. |
| | | | | ■ | ■ | | | | | | | ■ | ■ | ■ | Shut-off valves in piping closed. | Open shut-off valves or check opening state ► check pump for possible damage. |
| | | | | ■ | ■ | ■ | | | | | | | | | No pumped medium in storage tank. | Fill storage tank. |
| | | | | ■ | ■ | ■ | ■ | ■ | | | | | | | Pump valves leaking. | Remove and clean valves. |
| | | | | ■ | ■ | | ■ | ■ | | | | | | | Pump valves (ball seats) damaged. | Remove and clean valves, check function; replace valves if necessary. |
| | | | | ■ | ■ | | | | | | | | | | Pump valves incorrectly mounted or valve balls missing. | Check installation position and completeness ► replace missing parts or install correctly. |
| | | | | ■ | ■ | ■ | | ■ | | | | | | | Filter in suction line clogged. | Clean filter. |
| | | | | ■ | ■ | ■ | ■ | ■ | | | | | ■ | | Electrical data of the pump do not match mains data. | Check order data.<br>Check electrical installation.<br>Adjust motor to the network on site (for diaphragm pumps). |
| | | | | | ■ | ■ | ■ | ■ | | ■ | | ■ | ■ | ■ | Backpressure too high. | Measure pressure with manometer directly above pressure valve if possible and compare with permissible backpressure. |
| | | | | ■ | ■ | ■ | ■ | ■ | | | | | | | Foreign matter in the pump valves. | Remove and clean valves. |
| | | | | | | | | ■ | ■ | | | | | | Pressure on suction side higher than at the end of the pressure pipe. | Check geodetic conditions, install float valve or pressure keeping valve if necessary. |
| | | | | | | ■ | ■ | ■ | | ■ | ■ | ■ | ■ | ■ | Acceleration height too high due to pipe geometry. | Check acceleration height on suction and pressure sides with manometer and compare with design data ► install a pulsation damper if necessary. |
| | | | | | | | | | | | | ■ | | ■ | Materials coming into contact with the medium not suitable for the pumped medium. | Check whether the pumped medium matches the design data and select other materials if necessary. |

# FAULT ANALYSIS / CORRECTIVE ACTION

| Fault type | | | | | | | | | | | | | | | Possible cause | Corrective action |
|---|---|---|---|---|---|---|---|---|---|---|---|---|---|---|---|---|
| Corrective action! | Display, LED not lit! ▲ Pump with control | Motor does not start! ▲ diaphragm pump | Damage to stroke mechanism / drive! | Pump does not draw in! | Pump does not deliver! | Flow rate is not reached! | Delivery head is not reached! | Flow rate fluctuates! | Maximum permissible flow rate exceeded! | Pipe oscillates heavily! | Too high noise development! | Service life of the drive diaphragm too low! | Drive is overloaded (periodically occurring noises)! | Leakage on pump head! | | |
| | | | | ■ | | ■ | ■ | ■ | | | | | | | Viscosity of the pumped medium too high. | Check viscosity of the pumped medium and compare with design data ► reduce concentration or increase temperature if necessary. |
| | | | | | ■ | ■ | | ■ | | | | | | | Pumped medium is outgassing in the suction pipe and/or the pump body. | Check geodetic conditions and compare with data of the pumped medium. Operate pump with suction side supply, reduce temperature of the pumped medium. |
| | | | | ■ | | | | | | | | | | | Air in suction line while pressure is present on the pressure side. | Vent pressure side. |
| | ■ | | | | | | | | | | | | | | Power supply failed / switched off. | Restore power supply. |
| | | | | ■ | ■ | ■ | ■ | ■ | | | | | | | Pipe connections leaking. | Tighten connections according to type of material. Be careful with plastic ► risk of fracture!! |
| | | | | ■ | ■ | | | | | | | | | | Pumped medium frozen in pipe. | PRemove pump and check for possible damage - increase temperature of the pumped medium. |
| ■ | ■ | | | | ■ | | | | | | | | | | No mains power connection. | Connect mains power supply. |
| | | | | ■ | | | | | | | | | | | Pump valves dry. | Moisten pump body and valves.<br>Open vent valve. |
| | | | | ■ | ■ | ■ | | | | | | | | ■ | Temperature too low. | Check flowability of the dosing medium. Temperature of the medium see „Technical data“. |
| | | | | ■ | ■ | ■ | ■ | ■ | | | | ■ | | ■ | Diaphragm rupture. | Replace the diaphragm according to the descriptions in Chapter „Replacing the diaphragm“. |
| ■ | | | | | | | | | | | | | | | Reversible thermal fuse of the pump has tripped. | Let temperature of the pump cool down.<br>Check ambient temperature. |
| | ■ | | | | | | | | | | | | | | Fuse in electronics blown. ► Pump with control | Return pump for repair. |
| | | | | ■ | ■ | ■ | ■ | | | | | | | | Compensating valve not adjusted to operating conditions. ► diaphragm pump KM | Set compensating valve according to operating conditions. ► diaphragm pump KM |

**WARNING**

Observe and follow the safety instructions by all means.
See the additional instructions „SAFETY INSTRUCTIONS“.
Man, machine and environment are endangered if the safety instructions are not observed.




## Shut-down

- Switch off piston diaphragm pump.
- Rinse pump head and remove pumped medium; make sure that the rinsing agent is suitable for pumped medium and pump head.

## Disposal

- Shut-down system. Please see “Shut-down“.

## Dismantling and transport

- Shut-down system. Please see “Shut-down“.
- Remove all fluid residues from pump body, clean thoroughly, neutralize and decontaminate.
- Package unit and ship.

**NOTE**

A clearance certificate must be filled in when systems are returned to the manufacturer.
Acceptance will be rejected if this clearance certificate is not attached.

## Complete disposal

- Remove all fluid residues from unit.
- Drain off lubricants and dispose of according to regulations!
- Dismount materials and send them to a suitable waste disposal company!

**NOTE**

Inspection / repair of machines and machine parts is only carried out after the opposite clearance certificate was filled in correctly and completely by authorized and qualified personnel.

**NOTE**

Acceptance will be refused if parts are returned to the manufacturer without a proper clearance certificate.

All industrial companies are obligated by the legal provisions for occupational health, e.g. the workplaces ordinances, the Ordinance on Hazardous Substances, the regulations for prevention of accidents and the environmental protection regulations such as the Waste Management Act and the German Household Water Act to protect their employees or man and the environment from detrimental effects when handling hazardous substances.

Should special safety precautions be necessary despite careful draining and cleaning of the product the necessary information are to be provided.

Machines which are operated with radioactive media shall only be inspected and/or repaired in the safety area of the owner by a **sera** specialized fitter.

The clearance certificate is part of the inspection-/repair order.
**sera** reserves the right to refuse acceptance of the order for other reasons.

**NOTE**

Please make a copy and leave the original with the operating instructions!
(can also be downloaded from: www.sera-web.com)

# Clearance Certificate

## Product

Type _____ Serial-No. _____

**the product was carefully emptied before shipping / delivery, and cleaned inside and outside.** ☐ **YES**

## Conveying medium

Designation _____ Concentration _____ %

### Properties

Please tick!

If either of the listed properties, then enclose the appropriate safety and handling instructions.

☐ Harmless

☐ Toxic ☐ Corrosive ☐ Flammable ☐ Oxidising ☐ Unhealthy

☐ Explosive ☐ Dangerous for the environment ☐ Irritant ☐ Bio-hazardous ☐ Radioactive

The product was used with health or water-polluting substances and came up with labeling requirements and pollution prone media in contact. ☐ **YES** ☐ **NO**

Special security arrangements with respect to health or water-hazardous media are in the further handling ☐ **not required** ☐ **required**

The following safety precautions regarding rinsing, residual liquids and waste disposal are required:

## Process data

The product was used with the following operating conditions described conveying medium:

Temperature _____ °C Pressure _____ bar

## Sender

Company: _____ Telephone: _____

Contact person: _____ FAX: _____

Address: _____ E-mail: _____

Zip code, City: _____ Your order No: _____

**We confirm that we have the information in this safety certificate (Clearance Certificate) have been correctly and completely and that the returned parts were carefully cleaned.**

**The parts are sent free of residues of dangerous amount.**

Place, Date _____ Department _____ Signature (and company stamp) _____

QSF 469-01 en / 11.2014 / PM

FOLLOW US

EXCELLENCE IN FLUID TECHNOLOGY

**sera ProDos GmbH**
sera-Str. 1
34376 Immenhausen
Germany
Tel. +49 5673 999 02
Fax +49 5673 999 03
info-prodos@sera-web.com
www.sera-web.com

TM01-03 EN 190110 **sera**® is a registered trademark of **sera** GmbH.
Technical details subject to change. **sera** shall not accept any liability for errors or omissions or for printing errors.

# ACCUGUARD Diaphragm Seals

Without proper protection, process fluids can contaminate and damage in-line instrumentation. ACCUGUARD Diaphragm Seals are designed to protect and isolate pressure gauges and expensive instrumentation from corrosive, high temperature, or viscous, process media.



## Features

- Transfers process pressure accurately without direct contact with process fluids
- Removes the need for expensive instrumentation
- Easily installed and available in five chemically resistant Materials of Construction
- Optional Diaphragm Materials
- Available with ¼" & ½" Bottom Connection Sizes in FNPT & BSPT Female Connection Types
- Thermoplastic Units Rated to 240 PSIG (16 BARG) @ 21°C (70°F)
- 316L S/S Units Rated to 5800 PSIG (400 BARG) @ 21°C (70°F)
- Approved – 316 S/S Diaphragm Seals with CRN (Canadian Registration Number)

## HOW TO ORDER - AccuGuard

*Example Part Number: AG25A25A-PVC-V-M-[Optional Gauge]*

**AG 25 A 25 A - PVC - V - M - [Optional Gauge]**

*See Gauge List*

**AccuGuard Diaphragm Seal**

**Connection Size (Top)**
25 = 1/4"

**Connection Type (Top)**
A = FNPT

**Connection Size (Bottom)**
25 = 1/4"
50 = 1/2"

**Connection Type (Bottom)**
A = FNPT
B = BSPT

**Options**
M = Mounted Gauge/Glycerin Filled

**Diaphram Materials**
V = Viton (Thermoplastic Body Only)
E = EPDM (Thermoplastic Body Only)
T = PTFE (Thermoplastic Body Only)
S/S = 316 S/S (S/S & S/SV Body Only)

**Body Materials**
PVC = Polyvinylchloride
CPVC = CPVC Corzan
PP = Polypropylene (Not Available with PTFE Diaphragm)
PVDF = Polyvinyldene Fluoride (PTFE Diaphragm Only)
S/S = 316L Stainless Steel
S/SV = Vented 316L Stainless Steel

*- Optional Gauge Appears as Separate Line Item When Ordered*
*- Diaphragm Seals With Gauges = Glycerin Filled As Standard*
*- 1/4" & 1/2" MNPT Nipples Available - Call Factory for Details*

Primary Fluid Systems Inc. | 1050 Cooke Blvd. | Burlington | Ontario | L7T 4A8 | Canada
www.primaryfluid.com | primary@primaryfluid.com | North American Toll Free: 1-800-776-6580

# ACCUGUARD Diaphragm Seals

## Technical Information

### Temperature Correction Factors: Thermoplastics Temperature Effects:

Thermoplastics and thermosets will decrease in tensile strength as the temperature increases: therefore, the working pressure must be reduced accordingly. For additional Information, please visit: www.eco-valve.com.

### Canadian Registration Number:

Approved - 316L S/S ACCUGUARD Diaphragm Seals with CRN (Canadian Registration Number) Certification for all of Canada.

## Dimensions & Parts

### Thermoplastic Diaphragm Seals

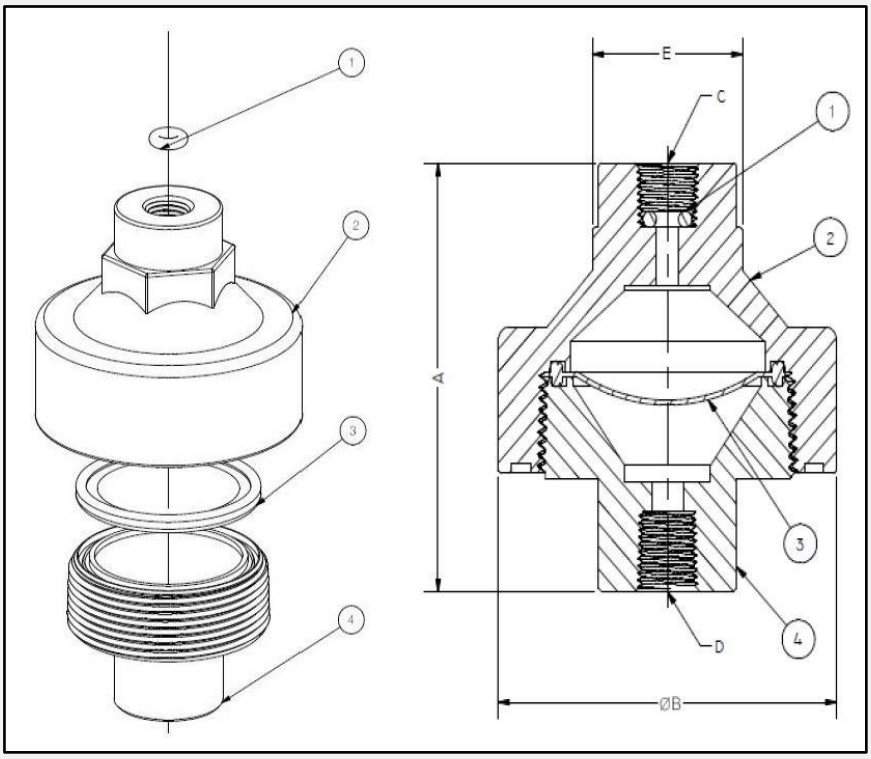


### Alloy Diaphragm Seals

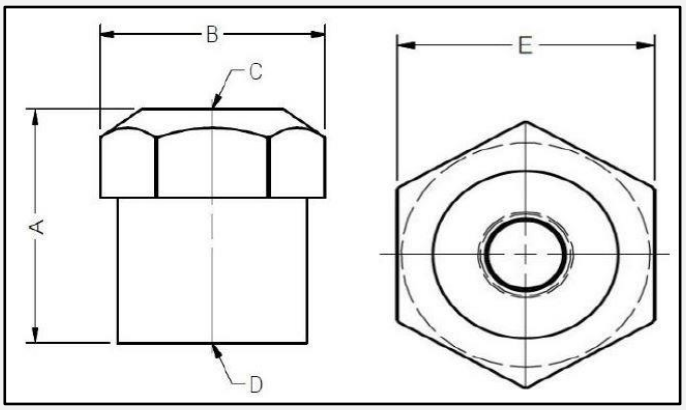


### Vented Alloy Diaphragm Seals

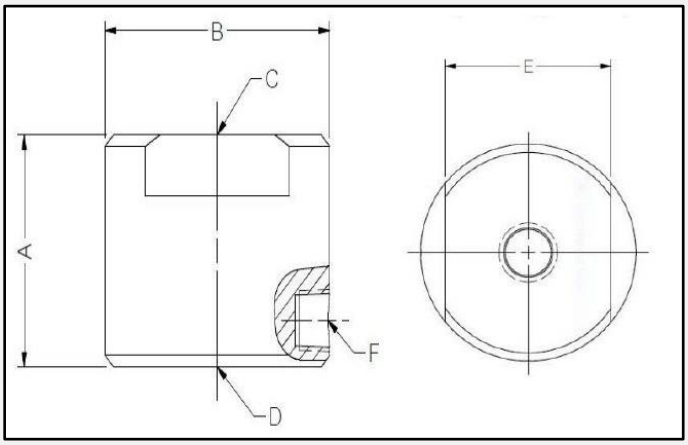


**Dimensional Information**

| Dimension | Thermoplastic | Alloy | Vented Alloy |
|---|---|---|---|
| A | 3.3" [84.68mm] | 1.5" [38.61mm] | 1.57" [40.00mm] |
| B | 3.1" [78.49mm] | 1.7" [43.43mm] | 2.05" [52.00mm] |
| C | *See "How to Order"* | *See "How to Order"* | *See "How to Order"* |
| D | *See "How to Order"* | *See "How to Order"* | *See "How to Order"* |
| E | 1.4" [35.00mm] | 1.5" [38.10mm] | 1.57" [40.00mm] |
| F | N/A | N/A | 1/8" FNPT |

**Thermoplastic Diaphragm Seal Parts & Materials**

| Item Number | Description | Material of Construction |
|---|---|---|
| 1 | O-Ring | EPDM |
| 2 | Upper Housing | Polypropylene (PVC, CPVC, & PP Lower Housings) Or PVDF (PVDF Lower Housing Only) |
| 3 | Diaphragm | *See "How to Order"* |
| 4 | Lower Housing | *See "How to Order" (Body Materials)* |

- *Alloy Units = Sealed – No Parts Available*

Primary Fluid Systems Inc. | 1050 Cooke Blvd. | Burlington | Ontario | L7T 4A8 | Canada
www.primaryfluid.com | primary@primaryfluid.com | North American Toll Free: 1-800-776-6580

# ACCUGUARD GAUGES

ACCUGUARD Pressure Gauges are designed to enhance the performance of chemical feed systems. Adding a pressure gauge to any system will help to ensure that optimal pressures are monitored and maintained.







## Series Information

| Series | Gauge Diameter | Gauge Connection Size and Type | Gauge Housing | Gauge Internals | Liquid Filled | *Accuracy Rating |
|---|---|---|---|---|---|---|
| **Economy** | 2" / 2.5" | 1/4" NPT | Steel Case | Brass | No | ± 2.5% |
| **Intermediate** | 2.5" / 4" | 1/4" NPT | 304 S/S | Brass | Yes | ± 1.6% |
| **Premium** | 2.5" / 4" | 1/4" NPT | 304S/S | 316L S/S | Yes | ± 1.6% |

*Accuracy Rating = Full Scale Range

### HOW TO ORDER - AccuGuard Gauges

*Example Part Number: GE2-160-CB*

**G E 2 - 160 - CB**

**AccuGuard Gauge**

**Gauge Series**
- E = Economy
- I = Intermediate
- P = Premium

**Gauge Diameter**
- 2 = 2 Inches
- 2.5 = 2-1/2 Inches
- 4 = 4 Inches

**Gauge Mounting Orientation**
- CB = Center Back
- BM = Bottom Mount

**Gauge Indication**
- 60 = 0-60 PSIG / 0-400 KPA
- 160 = 0-160 PSIG / 0-1100 KPA
- 200 = 0-200 PSIG / 0-1400 KPA
- 300 = 0-300 PSIG / 0-2000 KPA
- 400 = 0-400 PSIG / 0-2800 KPA

*4" Gauge Diameter Available in Bottom Mount Orientation Only*

*For Price & Availability of Other Pressures - Call Factory*

Primary Fluid Systems Inc. | 1050 Cooke Blvd. | Burlington | Ontario | L7T 4A8 | Canada
www.primaryfluid.com | primary@primaryfluid.com | North American Toll Free: 1-800-776-6580

# ACCUDRAW® PVC Calibration Instructions

***Note: Before starting either of the calibration procedures below, ensure that the pump is primed and void of any trapped air.***

**Using the USGPH scale:** (scale is based on **time**, in one (1) minute volume discharge)

1. Fill the calibration to the top "0" mark on the USGPH scale.
2. Close isolation valve (#2) from supply tank, open isolation valve (#1) below cylinder and start the pump.
3. Use a stopwatch to measure the time of one (1) minute (60 seconds) and record the volume dispensed by the metering pump, using the draw down scale.
4. Adjust the pump volume control higher or lower to meet with your desired output.
5. Repeat above steps 1 through 4, until the desired output is met.
6. Divide the measured USGPH number by 60 to determine the **USGPM volume**, if required.

If you wish to shorten the time of dispensing for calibration by one half (1/2) or one quarter (1/4), you must multiply the measured volume by the same number used to divide the time by.

e.g. 10 USGPH in 1 minute equals
5 USGPH X 2 in 30 seconds or
2.5 USGPH X 4 in 15 seconds

**Using the ml scale:** (scale is based on **volume** pumped, over any given time)

1. Fill the calibration cylinder to the top "0" mark on the ml scale.
2. Close isolation valve (#2) from supply tank, open isolation valve (#1) below cylinder and start the pump.
3. Use a stopwatch to measure the time it takes to pump down a given volume (ml) in 60 seconds.
4. Multiply the volume by 60 to determine the **ml per hour** volume, if required.
5. Adjust the pump volume control higher or lower to meet with your desired output.
6. Repeat above steps 1 through 5, until the desired output is met.

If you wish to shorten the time of dispensing for calibration by one half (1/2) or one quarter (1/4), you must multiply the volume by the same number used to divide the time by to determine ml per minute or hour.

e.g. 100 ml in 60 seconds equals
50 ml X 2 in 30 seconds or
25 ml X 4 in 15 seconds

## Typical Installations ("A" and "B")

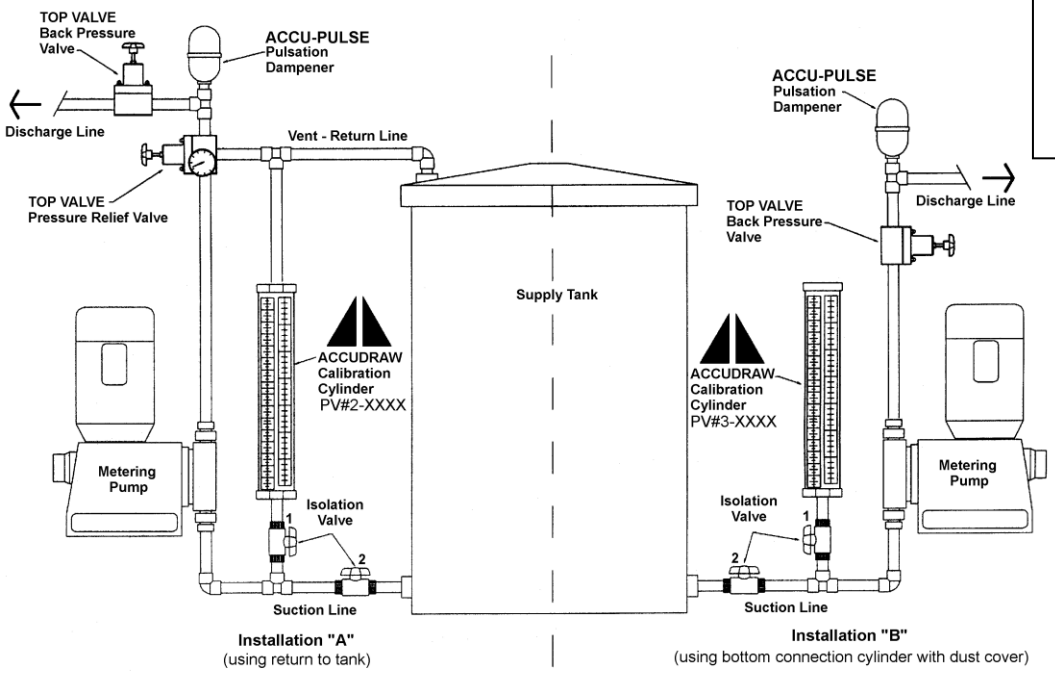


**Conversion Factors**
1ml = 1 cc
1000 ml – 1 liter
ml/sec x 60 = ml/min
1 US gal/min x 0.063 = liters/sec
1 US gal = 3.786 liters

**Caution:**
Do not use as a Pressure Vessel.


**PRIMARY FLUID SYSTEMS INC.**

**Call Toll Free 1-800-776-6580**
**Tel: (905) 333-8743 Fax: (905) 333-8746**

***E-Mail: primary@ primaryfluid.com***
***www.primaryfluid.com***


***® Registered Trade Mark of Primary Fluid Systems Inc.***

# Metering Pump Accessories Save $$$$

## *Prevent unsafe and inefficient systems by design.*

### **ACCUDRAW** Calibration Cylinders

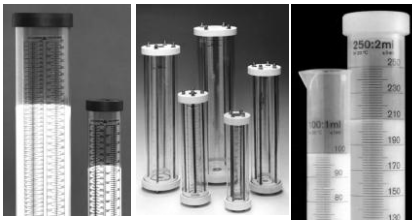

**PVC** **Glass** **Poly**

- *PVC, glass, polypropylene*
- *translucent, chemical resistant*
- *coloured graduations and lettering*
- *threaded or socket connections*
- *standard sizes 100 ml to 20,000 ml*

***Custom built in other sizes and materials.***

### **TOP VALVE** Back Pressure/Pressure Relief



- *long life diaphragm*
- *range of 0 – 150 PSIG*
- *air release, optional gauge port*
- *PVC, CPVC, PVDF, PTFE, polypropylene, stainless, Alloy 20 and Hastelloy C*
- *7 sizes ¼" – 2" NPT*
- *colour coded handles indicate size*

***Designed to enhance the <u>accuracy</u> and <u>safety</u> of your metering pumps.***

### **ACCU-PULSE**
Pulsation Dampeners



***Designed to remove pulsating flows from positive displacement pumps.***

- *increase system efficiency and pump life*
- *decrease maintenance and costs*
- *protect pipes, meters, valves and instrumentation from pulsation and vibration*
- *ensure meter accuracy, longevity and repeatability*
- *prevent foaming and splashing*
- *extensive range of materials and sizes*
- *lightweight, compact design*

### Typical Metering Pump System

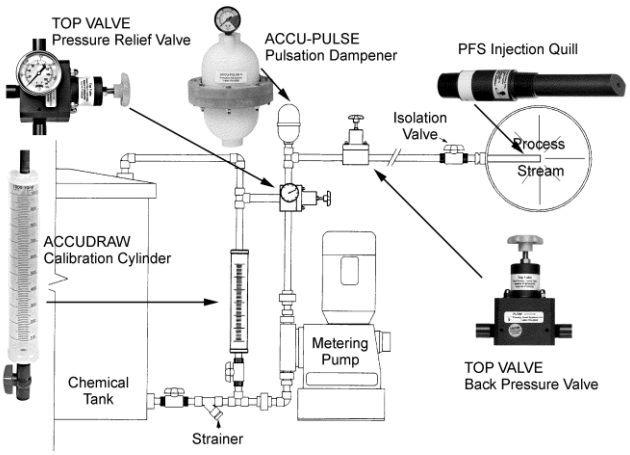


***AutoCad drawings available from our web site.***
***Visit www.primaryfluid.com***

### PFS Injection Quills



***Designed to inject chemical into the center stream of process.***

- *provides for a more homogenous mix in the pipeline*
- *built-in checks to prevent back siphoning*
- *2 sizes 6" and 8" length*
- *½" or ¾" NPT, BPST, or Flg'd Conn.*
- *PVC, CPVC, PVDF, polypropylene, Stainless, Hastelloy C & Titanium*
- *pressure to 3000 PSIG*
- *temperature to 260°C (500°F)*

***Custom built in other sizes and materials.***

### Accu-Vent

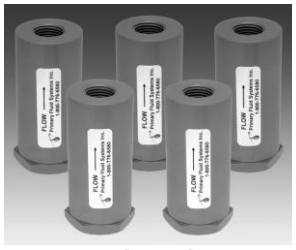

***Designed to automatically vent gases and vapours.***

- *vents gases and vapors released from Sodium Hypochlorite, Sulfuric Acid & Hydrogen Peroxide*
- *CPVC (Corzan) and Viton corrosion resistant wetted materials of construction*
- *specially designed float material automatically vents built up gases on system start up and under working pressure*
- *standard 1/2" or 3/4" NPT threaded connections or optional socket weld*
- *available in other materials*

### PFS Corporation Stops



***Designed to inject chemical into the center stream of process.***

- *isolation valve allows for ease of maintenance*
- *available in 6 materials of construction*
- *wetted components have comparable or greater chemical resistance than quill construction material*
- *standard and custom lengths available*
- *connection in NPT, metric or flanged*

***Custom built in other sizes & materials.***

**Call Toll Free 1-800-776-6580**
**Tel: (905) 333-8743 Fax: (905) 333-8746**

# *Technical Sheet*

***WWW.POMPESCP.COM***

| | | | |
|---|---|---|---|
| ***Client:*** | ***ASDR*** | ***Assembly serial number:*** | ***0191*** |
| ***Quotation:*** | ***PP-204196*** | ***Drawing number :*** | ***251-PVC-750*** |
| Mounting type: box ☒ wall ☐ | | Pump model: **RF410.2-570e** | |
| With door ☒ Without door ☐ | | S/N pump 1: WP387223 S/N pump 2: WP387224 | |
| Simplex ☐ Duplex ☒ Triplex ☐ Quadruplex ☐ | | S/N pump 3: S/N pump 4: | |
| Skid Material: HDPE ☒ SS ☐ | | Pump capacity L/H : 684 | |
| Skid dimension: 54'' X 52'' X 24'' | | Maximum pressure (PSI): 87.02 | |
| O-ring: Viton ☐ EPDM ☒ Teflon ☐ | | Pump head material: PVC | |
| Relief valve model: TVBP10-PVC | | Valve material: PVC | |
| Back pressure valve model: TVBP10-PVC | | Valve: simple ☒ double ☐ | |
| Valve material: PVC | | Ball type: PTFE | |
| Calibration cylinder model: PV#2-15000 | | O-ring: EPDM | |
| Pressure gauge model: GI2.5-160 CB | | Diaphragm: AG25A50A-PVC-T-M | |
| Piping : PVC ☒ SS ☐ PVDF ☐ CPVC ☐ | | | |
| Piping dimension: ½'' ☐ ¾'' ☐ 1'' ☒ 1 ¼'' ☐ 1 ½'' ☒ 2'' ☐ | | | |

| ***Pressure test and tightness*** | | ***Adjusting valves*** | |
|---|---|---|---|
| Pressure test period, min: | 10 | Release valve, PSI: | 50 |
| Pressure test, PSI: | 60 | Back pressure valve, PSI: | 50 |

***Signature : _____*** ***Date : _June 03 2021_____***

***3076A, rue Bernard-Pilon, St-Mathieu-de-Beloeil (Qc) J3G 4S5***
***Tél : 450-922-4224 Fax : 450-922-4223***

# QUADRUPLEX COAGULANT
# 461-PVC-250

AGNICO EAGLE

**Vendor Document Status**

1 ☐ Proceed to next submission and status.

2 ☐ Proceed with exceptions as noted to next submission and status.

3 ☐ Do not proceed.
Revise as noted and resubmit next submission and status.

4 ☑ Complete, no further submission required.

By: Sébastien Perron Instrumentation Date: 2021-04-07

Review and authorization to fabricate are only for general conformance with the design concept of the Project as expressed in the Contract Documents. Sole responsibility for the accuracy and completeness of this document, including but not limited to dimensions and quantities, remains with the Supplier/Contractor. Agnico Eagle does not warrant the accuracy or completeness of any of the information contained herein, nor does Agnico Eagle authorize or approve any construction means, methods, techniques, sequences or any safety precautions or procedures.

Agnico Eagle No. 6526-S265-605B-135_TRIPLEX SULFURIC ACID 351-CPVC-250_ WD_R1 R: TRIPLEX SULFURIC ACID 351-CPVC

**DOCUMENT FOR INFORMATION**

**Workshop drawing :**

- ☐ Approuved as is
- ☐ Approuved with correction(s)
- ☐ Rejected

**Approved by**

Name : _____

Title : _____

Compagnie : _____

Signature : _____

Skid manual valves arrangement to be validated with P&ID drawing.

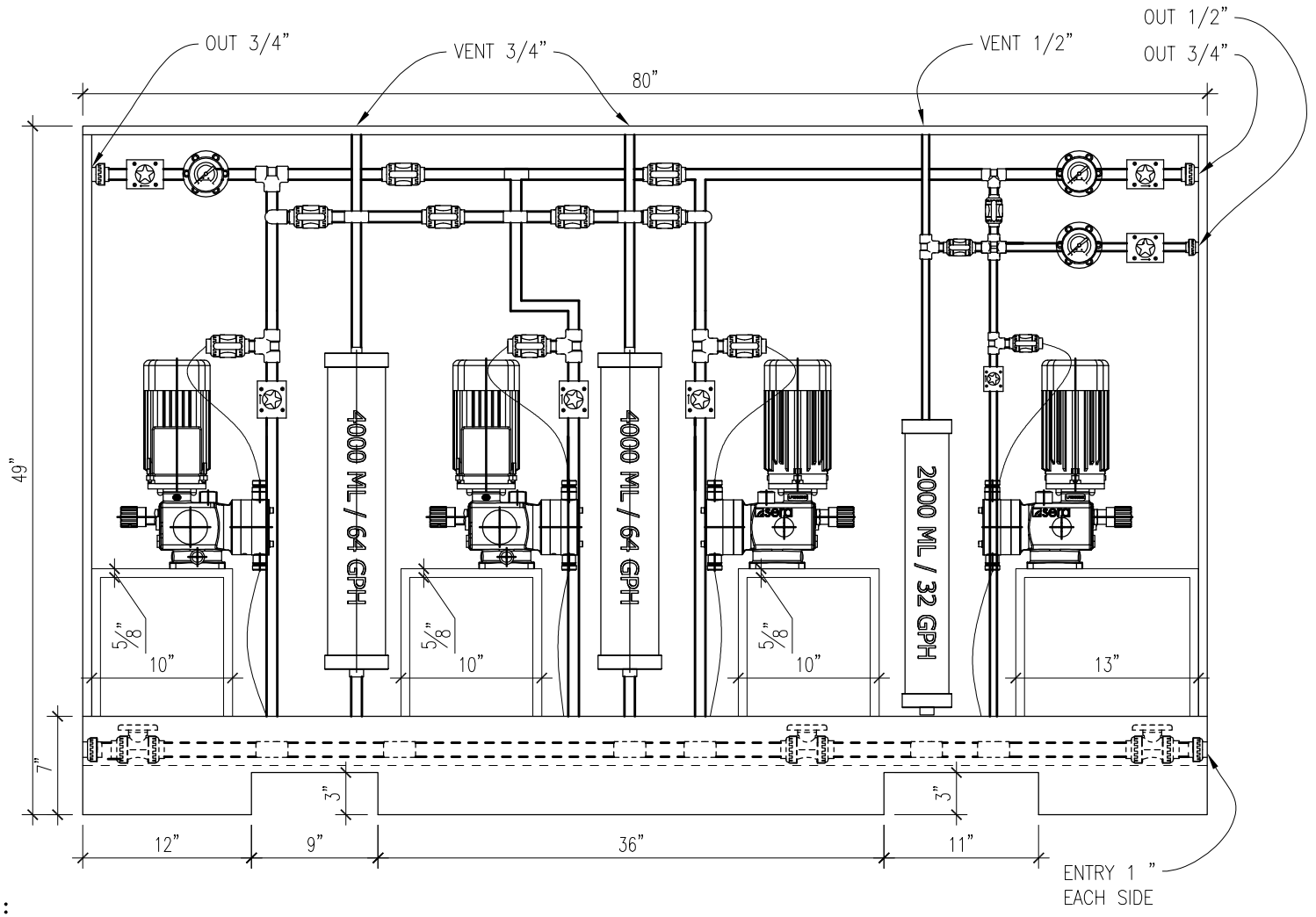


Notes :
1. DIMENSIONS ARE IN INCHES
2. DO NOT MEASURE THE DRAWING

## FRONT VIEW

| | | | | | | | |
|---|---|---|---|---|---|---|---|
| DREW BY: V. BLUTEAU | TITRE: QUADRUPLEX COAGULANT 461-PVC-250 | REV: | DATE: | MODIF.: | APP.: | DATE: 2021-03-03 |
| PURCHASE ORDER: BC21-14244 | | | | | | # DESSIN: |
| APP. BY: E. CLERMONT | PROJET: 0193970501 | | | | | 2 DE 3 |

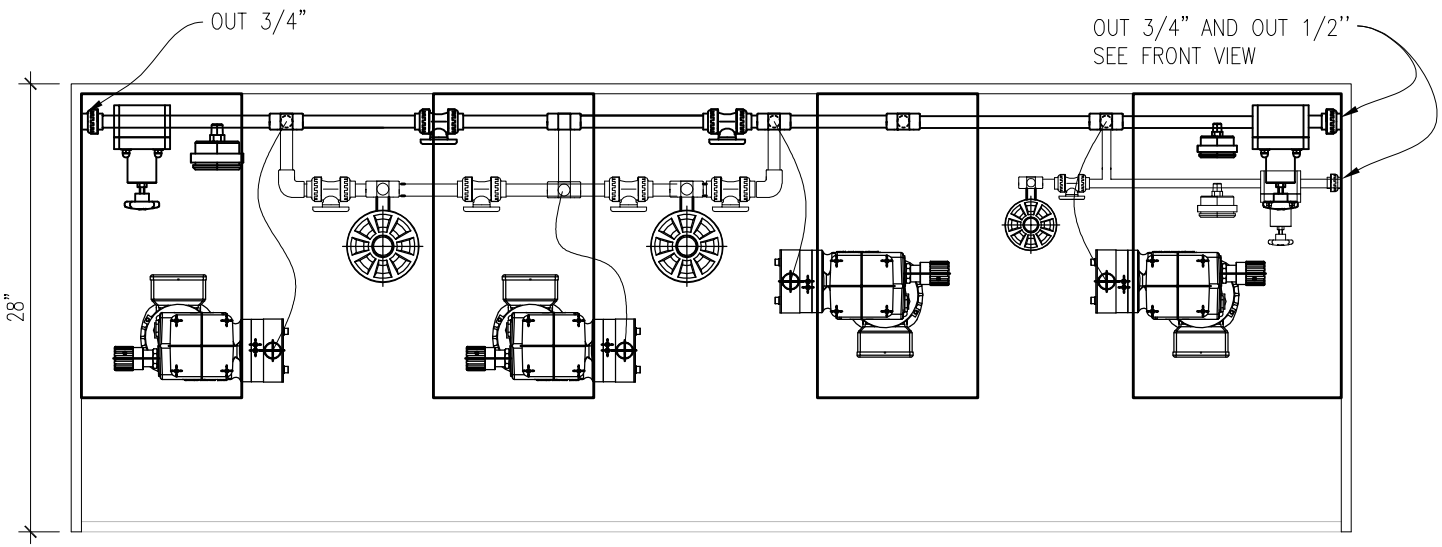


PLAN VIEW

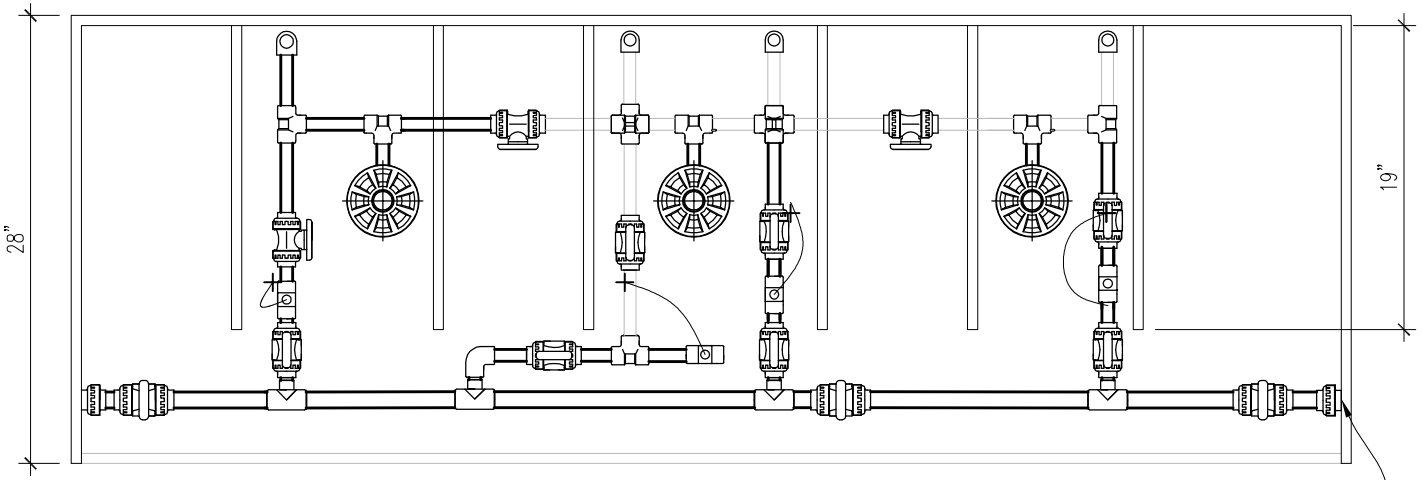


PLAN VIEW (FLOOR)

PCP
Pompes & équipements

| | | | | | | |
|---|---|---|---|---|---|---|
| DREW BY: V. BLUTEAU | TITRE: QUADRUPLEX COAGULANT 461-PVC-250 | REV: | DATE: | MODIF.: | APP.: | DATE: 2021-03-03 |
| PURCHASE ORDER: BC21-14244 | | | | | | # DESSIN: |
| APP. BY: E. CLERMONT | PROJET: 0193970501 | | | | | 3 DE 3 |

| | |
|---|---|
| Skid Material: | HDPE |
| dimension L xP xH: | 49" x 80" x 24" |
| Pump model: | 3 x RF410.2-180e |
| Pumps L/Hours: | 216 L/hour |
| Head material: | PVC |
| Pressure: | 4 BARS |
| Pump model: | 1 x RF410.2-115e |
| Pumps L/Hours: | 138 L/hour |
| Head material: | PVC |
| Pressure: | 4 BARS |

**COMPONENT MATERIAL**

| | |
|---|---|
| Plumbing & size: | -Entry 1 1/2" NPT<br>- 2 x 3/4" NPT<br>-Dosing 1/2" NPT |
| Ball valve O ring: | EPDM |
| Relief Valve: | 3 x TVBP75-PVC<br>1 x TVBP50-PVC |
| Calibration Cylinder: | 1 x PV#2-20000<br>2 x PV#2-40000 |
| Gauge Pressure: | 0-160 PSI |
| Tubing pump connec.: | LDPE |

**DOORS**

| | |
|---|---|
| Door product: | Polycarbonate 3/8"<br>Stainless steel |
| Bolt & washer: | Stainless steel |

**Pump Identification:**

Pump #1: 65PME68008A
Pump #2: 65PME68008B
Pump #3: 65PME68008C
Pump #4: 65PME68008D

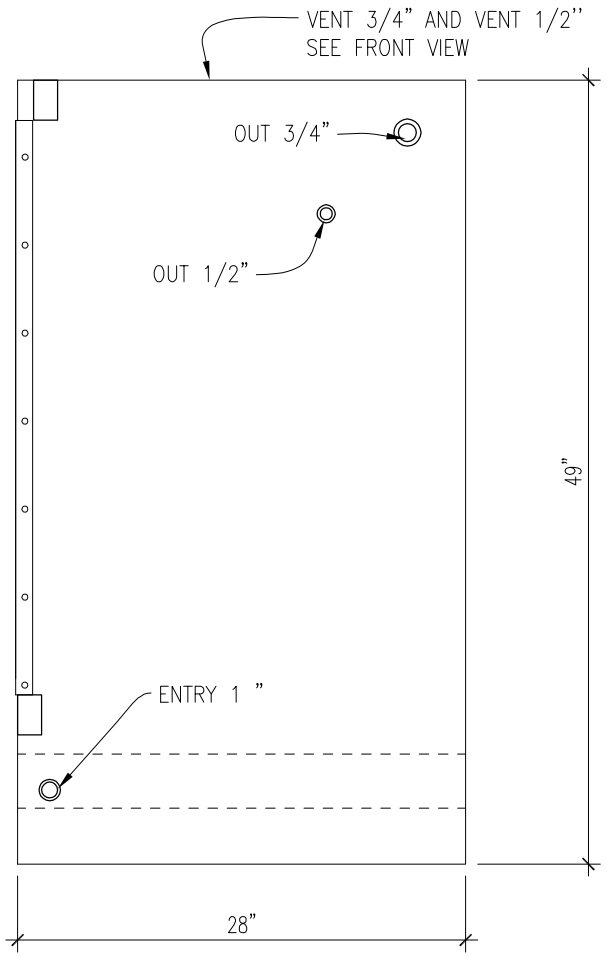


SIDE VIEW

**Notes :**
1. DIMENSIONS ARE IN INCHES
2. DO NOT MEASURE THE DRAWING

| | | | | | | | |
|---|---|---|---|---|---|---|---|
| DREW BY: V. BLUTEAU | TITRE: QUADRUPLEX COAGULANT 461-PVC-250 | REV: | DATE: | MODIF.: | APP.: | DATE: 2021-03-03 | |
| PURCHASE ORDER: BC21-14244 | | | | | | # DESSIN: | |
| APP. BY: E. CLERMONT | PROJET: 0193970501 | | | | | 1 DE 3 | |

# PUMP MODEL RF409.2-180E

## PUMP#1: 65PME68008A
## PUMP#2: 65PME68008B
## PUMP#3: 65PME68008C

**Workshop drawing :**

- □ Approuved as is
- □ Approuved with correction(s)
- □ Rejected

**Approuved by**

Name : _____

Title : _____

Compagnie : _____

Signature : _____

Single diaphragm pump : RF409.2-180e
Nominal capacity (QN) : 1 x 0 - 216 l/h at 60HZ
Suction height : 3mWc
Counter pressure (p2max) : 4bar
Nominal stroke frequency (nN) :180 per minute at 60Hz
Pump body : PVC-U
Double valves : PVC-U
Valve balls : PTFE
Valve seals : EPDM
Working diaphragm : EPDM
Connections : G3/4
Drive : 3-phase motor

- 0,43kW, 575V, 60Hz
- IP55, insul.cl. F
- for converter operation 5 to 60HZ
- thermistors
- electrical by UL/CSA

Capacity adjustment : manual stroke length adjustment

PRODUCT INFORMATION

# SERIES 4
# DIAPHRAGM PUMPS




INSPIRED. SOLUTIONS. FOR CUSTOMERS.

# DIAPHRAGM PUMPS - ALLROUNDERS

**sera** diaphragm pumps are oscillating displacement pumps for dosing liquids. The medium to be pumped is separated from the drive by a diaphragm. This is thus protected from damaging influences of the medium.

They are used everywhere where leak-free and exact dosing is important, such as for aggressive, odorous, abrasive, radioactive, flammable, viscous or toxic media.

Delivery rate adjustment by means of stroke frequency adjustment using external frequency converter and manual stroke length adjustment for optimal adaptation to every requirement.

## APPLICATIONS

- Beverage industry
- Food industry
- Manufacture of paints and varnishes
- Power plants
- Water treatment
- Shipbuilding
- Electroplating
- Textile industry
- Waste water treatment

## AUTOMATIC DELIVERY RATE ADJUSTMENT

- Three-phase motors suitable for frequency converter operation for stroke frequency change using an external frequency converter
- Actuators with position controllers for automatic stroke length change

## OVERVIEW OF ADVANTAGES

- High dosing accuracy
- Long diaphragm service lives
- Linear control characteristics
- Leak-free
- Low-maintenance
- ATEX-compliant versions are available (not in stock)
- Unlimited dry running safety

## OPTIONAL VERSIONS

- Diaphragm monitoring
- Suction height 8 mWC
- Controllable variant (C version)





# VERSIONS

## MATERIALS
The high quality of the materials guarantees reliable continuous operation. The optimum material is available for every requirement.

## PUMP BODY AND VALVES
PVC, PP, PVDF, PP-GFP, PVDF-GFP, 1.4571

## VALVE BALLS
PTFE, 1.4401

## VALVE SEALS
EPDM, FPM, FEP-coated

## DRIVE DIAPHRAGMS
PTFE-coated

## MANUAL VENTILATION VALVE (2,4e)
PP-GFP, PVDF-GFP

## DRIVE
The drive unit in each case consists of a proven motor make, coupled with stroke gearing in a robust case.
**sera** cases are also suitable for the harshest operating conditions. Material thickness and surface treatment even resist chemical attacks.

The flow rate is constant or continuously adjustable. This is done manually by changing the stroke length for the controllable version. The delivery rate can be adjusted automatically using the following options:

- Three-phase motors suitable for frequency converter operation for stroke frequency change using an external frequency converter
- Actuators with position controllers for automatic stroke length change

## SPECIAL VERSIONS
We provide the individual solution for special dosing tasks:
Among other things, pump bodies with special nominal diameters, heating equipment, valves as double valves, with spring loading, with elastic ball seats, rinsing equipment for interval or final rinsing for prevention of deposits in the pump body, attachment of stroke counter, diaphragm rupture monitoring, special materials such as titanium or Hastelloy, design that can be cleaned.

## ACCESSORIES
All necessary accessory parts for the optimal installation of dosing pumps such as pressure relief valves, pressure-maintaining valves, pulsation dampers, dosing valves, dosing tanks, flow monitors etc. can be ordered from us.

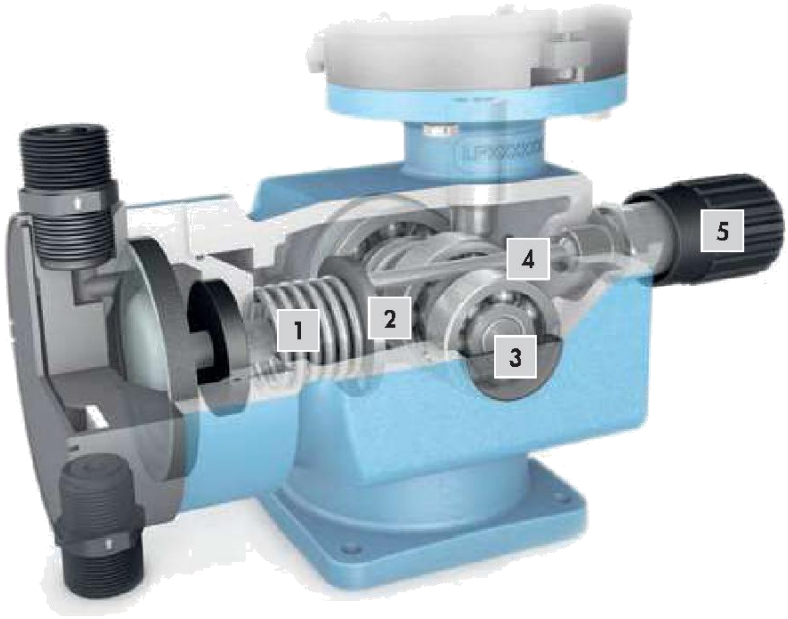


| | |
|---|---|
| 1 | Return spring |
| 2 | Push rod plate |
| 3 | Eccentric shaft |
| 4 | Adjusting spindle |
| 5 | Adjusting wheel |

# TECHNICAL DATA
# DIAPHRAGM PUMP RF409.2 (>50 L/H)

| PUMP DATA (* 8mWS = performance losses of nominal capacity QN of 20-25%) | | | RF 409.2-... | | | | | | | |
|---|---|---|---|---|---|---|---|---|---|---|
| | | | 50e | 75e | 90e | 115e | 140e | 180e | 250e | 350e |
| Permissible pressure $p_{2max.}$ at the pump outlet | bar | | 10 | 10 | 8 | 4 | 8 | 4 | 3 | 3 |
| Nominal capacity QN at $p_{2max.}$ | l/h | 50 Hz | 0-50 | 0-75 | 0-90 | 0-115 | 0-140 | 0-180 | 0-250 | 0-350 |
| | | 60 Hz | 0-60 | 0-90 | 0-108 | 0-138 | 0-168 | 0-216 | 0-300 | – |
| Quantity per stroke | ml/stroke (100%) | | 8,3 | 8,3 | 15,0 | 19,2 | 15,6 | 20,0 | 41,7 | 38,9 |
| Max. suction height | mWC | | 3 (8 *) | | | | | | 3 | |
| Min./max. permissible pressure at the pump inlet | bar | $p_{1min/max}$ | -0,3/0 (-0,8/0) | | | | | | -0,3/0 | |
| Recomm. nominal diameter DN of the connecting pipes | mm | | 10 | 15 | 15 | 15 | 15 | 15 | 15 | 15 |
| **Nominal stroke frequency** | 1/min | 50 Hz | 100 | 150 | 100 | 100 | 150 | 150 | 100 | 150 |
| | | 60 Hz | 120 | 180 | 120 | 120 | 180 | 180 | 120 | – |
| Weight approx. | kg | plastic | 9 | 9 | 11 | 10 | 11 | 10 | 13 | 13 |
| | | stainless steel | 10 | 10 | 13 | 13 | 13 | 13 | 21 | 21 |

| ELECTRICAL DATA | | RF409.2-50e ... RF409.2-350e |
|---|---|---|
| Power consumption | kW | 0,37 |
| Voltage | V | **230/400V 50Hz, 460V 60Hz, 575V60Hz** |
| Frequency | Hz | 50/60 |
| Insulation class | ISO | F |
| Enclosure | IP | 55 |

# PUMP MODEL RF409.2-115E

## PUMP#4: 65PME68008D

**Workshop drawing :**

- □ Approuved as is
- □ Approuved with correction(s)
- □ Rejected

**Approuved by**

Name : _____

Title : _____

Compagnie : _____

Signature : _____

*3076 A, Bernard-Pilon, St-Mathieu de Beloeil, Qc, J3G 4S5 Tél.: (450) 922-4224 / Fax: (450) 922-4223*

Single diaphragm pump : RF409.2-115e
Nominal capacity (QN) : 1 x 0 - 138 l/h at 60HZ
Suction height : 3mWc
Counter pressure (p2max) : 4bar
Nominal stroke frequency (nN) :120 per minute at 60Hz
Pump body : PVC-U
Double valves : PVC-U
Valve balls : PTFE
Valve seals : EPDM
Working diaphragm : EPDM
Connections : G3/4
Drive : 3-phase motor

- 0,43kW, 575V, 60Hz
- IP55, insul.cl. F
- for converter operation 5 to 60HZ
- thermistors
- electrical by UL/CSA

Capacity adjustment : manual stroke length adjustment

PRODUCT INFORMATION

# SERIES 4
# DIAPHRAGM PUMPS




INSPIRED. SOLUTIONS. FOR CUSTOMERS.

# DIAPHRAGM PUMPS - ALLROUNDERS

**sera** diaphragm pumps are oscillating displacement pumps for dosing liquids. The medium to be pumped is separated from the drive by a diaphragm. This is thus protected from damaging influences of the medium.

They are used everywhere where leak-free and exact dosing is important, such as for aggressive, odorous, abrasive, radioactive, flammable, viscous or toxic media.

Delivery rate adjustment by means of stroke frequency adjustment using external frequency converter and manual stroke length adjustment for optimal adaptation to every requirement.

## APPLICATIONS

- Beverage industry
- Food industry
- Manufacture of paints and varnishes
- Power plants
- Water treatment
- Shipbuilding
- Electroplating
- Textile industry
- Waste water treatment

## AUTOMATIC DELIVERY RATE ADJUSTMENT

- Three-phase motors suitable for frequency converter operation for stroke frequency change using an external frequency converter
- Actuators with position controllers for automatic stroke length change

## OVERVIEW OF ADVANTAGES

- High dosing accuracy
- Long diaphragm service lives
- Linear control characteristics
- Leak-free
- Low-maintenance
- ATEX-compliant versions are available (not in stock)
- Unlimited dry running safety

## OPTIONAL VERSIONS

- Diaphragm monitoring
- Suction height 8 mWC
- Controllable variant (C version)





# VERSIONS

## MATERIALS
The high quality of the materials guarantees reliable continuous operation. The optimum material is available for every requirement.

## PUMP BODY AND VALVES
PVC, PP, PVDF, PP-GFP, PVDF-GFP, 1.4571

## VALVE BALLS
PTFE, 1.4401

## VALVE SEALS
EPDM, FPM, FEP-coated

## DRIVE DIAPHRAGMS
PTFE-coated

## MANUAL VENTILATION VALVE (2,4e)
PP-GFP, PVDF-GFP

## DRIVE
The drive unit in each case consists of a proven motor make, coupled with stroke gearing in a robust case.
**sera** cases are also suitable for the harshest operating conditions. Material thickness and surface treatment even resist chemical attacks.

The flow rate is constant or continuously adjustable. This is done manually by changing the stroke length for the controllable version. The delivery rate can be adjusted automatically using the following options:

- Three-phase motors suitable for frequency converter operation for stroke frequency change using an external frequency converter
- Actuators with position controllers for automatic stroke length change

## SPECIAL VERSIONS
We provide the individual solution for special dosing tasks:
Among other things, pump bodies with special nominal diameters, heating equipment, valves as double valves, with spring loading, with elastic ball seats, rinsing equipment for interval or final rinsing for prevention of deposits in the pump body, attachment of stroke counter, diaphragm rupture monitoring, special materials such as titanium or Hastelloy, design that can be cleaned.

## ACCESSORIES
All necessary accessory parts for the optimal installation of dosing pumps such as pressure relief valves, pressure-maintaining valves, pulsation dampers, dosing valves, dosing tanks, flow monitors etc. can be ordered from us.

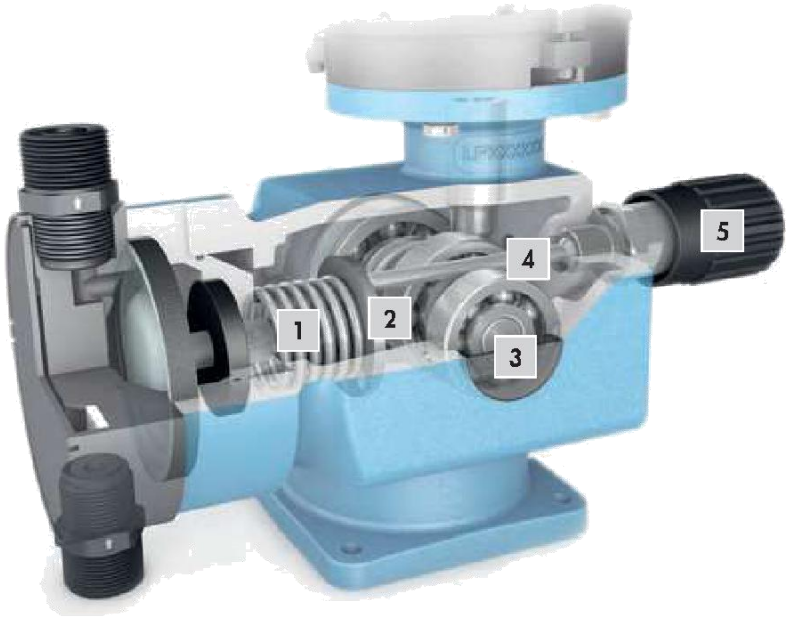


| | |
|---|---|
| 1 | Return spring |
| 2 | Push rod plate |
| 3 | Eccentric shaft |
| 4 | Adjusting spindle |
| 5 | Adjusting wheel |

# TECHNICAL DATA
# DIAPHRAGM PUMP RF409.2 (>50 L/H)

| PUMP DATA (* 8mWS = performance losses of nominal capacity QN of 20-25%) | | | RF 409.2-... | | | | | | | |
|---|---|---|---|---|---|---|---|---|---|---|
| | | | 50e | 75e | 90e | 115e | 140e | 180e | 250e | 350e |
| Permissible pressure $p_{2max.}$ at the pump outlet | bar | | 10 | 10 | 8 | 4 | 8 | 4 | 3 | 3 |
| Nominal capacity QN at $p_{2max.}$ | l/h | 50 Hz | 0-50 | 0-75 | 0-90 | 0-115 | 0-140 | 0-180 | 0-250 | 0-350 |
| | | 60 Hz | 0-60 | 0-90 | 0-108 | 0-138 | 0-168 | 0-216 | 0-300 | – |
| Quantity per stroke | ml/stroke (100%) | | 8,3 | 8,3 | 15,0 | 19,2 | 15,6 | 20,0 | 41,7 | 38,9 |
| Max. suction height | mWC | | 3 (8 *) | | | | | | 3 | |
| Min./max. permissible pressure at the pump inlet | bar | $p_{1min/max}$ | -0,3/0 (-0,8/0) | | | | | | -0,3/0 | |
| Recomm. nominal diameter DN of the connecting pipes | mm | | 10 | 15 | 15 | 15 | 15 | 15 | 15 | 15 |
| **Nominal stroke frequency** | 1/min | 50 Hz | 100 | 150 | 100 | 100 | 150 | 150 | 100 | 150 |
| | | 60 Hz | 120 | 180 | 120 | 120 | 180 | 180 | 120 | – |
| Weight approx. | kg | plastic | 9 | 9 | 11 | 10 | 11 | 10 | 13 | 13 |
| | | stainless steel | 10 | 10 | 13 | 13 | 13 | 13 | 21 | 21 |

| ELECTRICAL DATA | | RF409.2-50e ... RF409.2-350e |
|---|---|---|
| Power consumption | kW | 0,37 |
| Voltage | V | **230/400V 50Hz, 460V 60Hz, 575V60Hz** |
| Frequency | Hz | 50/60 |
| Insulation class | ISO | F |
| Enclosure | IP | 55 |

# CALIBRATION CYLINDERS
# PV#2-4000

**Workshop drawing :**

- □ Approuved as is
- □ Approuved with correction(s)
- □ Rejected

**Approuved by**

Name : _____

Title : _____

Compagnie : _____

Signature : _____

*3076 A, Bernard-Pilon, St-Mathieu de Beloeil, Qc, J3G 4S5 Tél.: (450) 922-4224 / Fax: (450) 922-4223*

# ACCUDRAW® Calibration Cylinders

***"For Accuracy That Counts"***

***For complete product information visit our website: primaryfluid.com***



Flanged: Glass, PVC



Flanged: PVC

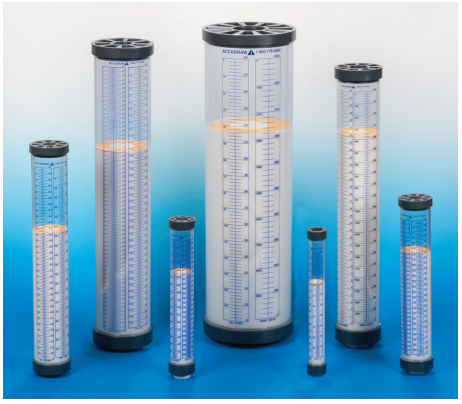

PV#4

## Sizing and Ordering Information:

**ACCUDRAW Standard Materials of Construction**

AC = All polypropylene construction (see below for options)
PV = All polyvinylchloride construction (see below for options)
ACS = Glass*

***Note: Cylinders are NOT pressure vessels***

**Example: AC#1-1000B**

AC = PP (polypropylene)
#1 = Bottom threaded connection only
1000 = 1000 ml
B = BSP Thread

**e.g. Part # AC #1 - 1000 B**

**Type:**
AC = Polypropylene
PV = PVC
ACS = Glass

**Style:**
1 = Bottom threaded conn. only
2 = Top and Bottom threaded conn.
3 = Bottom threaded conn. c/w removable vented dust cap
4 = Top/Bottom threaded conn. c/w removable "O" ring sealed top and float ring level indicator
** **Glass calibration cylinders available in Style 2 only***

**Graduation Scale:**
PP - ml only
PVC - ml and GPH
Glass - ml only

**Std. connection is NPT thread**
**Optional: add suffix as follows**
S = Socket weld connection (PVC only)
GTV = Glass/TFE construction
GKV = Glass/PVDF construction
GCV = Glass/CPVC construction
GSV = Glass/SS construction
B = BSP Thread
F = Flanged

Substitute **E** for **V** for **EPDM** wetted "O" ring seal

| Size: | | | Material | Conn. |
|---|---|---|---|---|
| 100 | = 100 ml | (1.6 GPH) | PP, PVC, Glass | ½" |
| 250 | = 250 ml | (4 GPH) | PP, PVC, Glass | ½" |
| 500 | = 500 ml | (8 GPH) | PP, PVC, Glass | ½" |
| 1000 | = 1000 ml | (16 GPH) | PP, PVC, Glass | ½" |
| 2000 | = 2000 ml | (32 GPH) | PP, PVC, Glass | 1" |
| 4000 | = 4000 ml | (64 GPH) | PP, PVC, Glass | 1" |
| 6000 | = 6000 ml | | Glass only | 2" |
| 8000 | = 8000 ml | | Glass only | 2" |
| 10000 | = 10000 ml | (160 GPH) | PVC, Glass | 2" |
| 15000 | = 15000 ml | (240 GPH) | PVC only | 2" |
| 20000 | = 20000 ml | (320 GPH) | PVC, Glass | 2" |

***Custom sizes and materials available.***

# CALIBRATION CYLINDERS
# PV#2-2000

**Workshop drawing :**

- □ Approuved as is
- □ Approuved with correction(s)
- □ Rejected

**Approuved by**

Name : _____

Title : _____

Compagnie : _____

Signature : _____

# ACCUDRAW® Calibration Cylinders

***"For Accuracy That Counts"***

***For complete product information visit our website: primaryfluid.com***



Flanged: Glass, PVC



Flanged: PVC

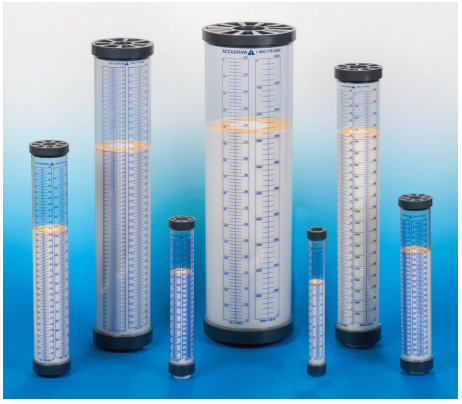

PV#4

## Sizing and Ordering Information:

**ACCUDRAW Standard Materials of Construction**

AC = All polypropylene construction (see below for options)
PV = All polyvinylchloride construction (see below for options)
ACS = Glass*

***Note: Cylinders are NOT pressure vessels***

**Example: AC#1-1000B**

AC = PP (polypropylene)
#1 = Bottom threaded connection only
1000 = 1000 ml
B = BSP Thread

**e.g. Part # AC #1 - 1000 B**

**Type:**
AC = Polypropylene
PV = PVC
ACS = Glass

**Style:**
1 = Bottom threaded conn. only
2 = Top and Bottom threaded conn.
3 = Bottom threaded conn. c/w removable vented dust cap
4 = Top/Bottom threaded conn. c/w removable "O" ring sealed top and float ring level indicator
** **Glass calibration cylinders available in Style 2 only***

**Graduation Scale:**
PP - ml only
PVC - ml and GPH
Glass - ml only

**Std. connection is NPT thread**
**Optional: add suffix as follows**
S = Socket weld connection (PVC only)
GTV = Glass/TFE construction
GKV = Glass/PVDF construction
GCV = Glass/CPVC construction
GSV = Glass/SS construction
B = BSP Thread
F = Flanged

Substitute **E** for **V** for **EPDM** wetted "O" ring seal

| Size: | | | Material | Conn. |
|---|---|---|---|---|
| 100 | = 100 ml | (1.6 GPH) | PP, PVC, Glass | ½" |
| 250 | = 250 ml | (4 GPH) | PP, PVC, Glass | ½" |
| 500 | = 500 ml | (8 GPH) | PP, PVC, Glass | ½" |
| 1000 | = 1000 ml | (16 GPH) | PP, PVC, Glass | ½" |
| 2000 | = 2000 ml | (32 GPH) | PP, PVC, Glass | 1" |
| 4000 | = 4000 ml | (64 GPH) | PP, PVC, Glass | 1" |
| 6000 | = 6000 ml | | Glass only | 2" |
| 8000 | = 8000 ml | | Glass only | 2" |
| 10000 | = 10000 ml | (160 GPH) | PVC, Glass | 2" |
| 15000 | = 15000 ml | (240 GPH) | PVC only | 2" |
| 20000 | = 20000 ml | (320 GPH) | PVC, Glass | 2" |

***Custom sizes and materials available.***

# RELIEF VALV AND BACK-PRESSURE VALV TVBP75-PVC

**Workshop drawing :**

- □ Approuved as is
- □ Approuved with correction(s)
- □ Rejected

**Approuved by**

Name : _____

Title : _____

Compagnie : _____

Signature : _____

*3076 A, Bernard-Pilon, St-Mathieu de Beloeil, Qc, J3G 4S5 Tél.: (450) 922-4224 / Fax: (450) 922-4223*

# TOP VALVE *PAT

For detailed product information visit our website:
primaryfluid.com

## *Back Pressure/Anti-Siphon and Pressure Relief Valves*

### Description

This line of diaphragm style, back pressure/anti-siphon and pressure relief valves features a completely adjustable pressure range to 350 PSIG and a built-in air release to reduce priming difficulties. The valves are available in sizes from 1/4" through 2", eight materials of construction, offer a three year warranty and are available with socket weld, flanged or special threaded connections. High temperature to (300°F/149°C) valves are available. *CRN certification available. Please contact factory.*

### Ordering Information

**e.g. Part # TVBP50-S/S-V-S**

**TV - B - P - 50 - S/S - V - S**

**TOP VALVE**

**Valve Type:**
B = Backpressure
P = Pressure Relief (3 port)
P2 = Pressure Relief (2 port)

**Valve Style or Connection:**

| | |
|---|---|
| P | = Backpressure, FNPT thread |
| R | = Pressure Relief, FNPT thr'd (3 port) |
| FW | = Welded Flange |
| FT | = Thread Companion Flanged |
| F | = Flanged Non-Metallic |
| S | = Socket |
| B | = BSP thread |
| T | = High Temperature (300°F/149°C) |
| H | = High Pressure (to 350 psig) Metallic Bodies |
| M | = Mid-Range Pressure (to 230 psig) Thermoplastic Bodies |
| U | = Union Type Connection |

**Valve Port Connection Size:**

| | |
|---|---|
| 25 = 1/4" | 10 = 1" |
| 45 = 1/4" X 1/2" | 15 = 1 1/2" |
| 50 = 1/2" | 20 = 2" |
| 75 = 3/4" | |

**Top Options:**
C = CPVC Top (standard)
A = Aluminum Top
S = 316L S/S Top

XXX = Custom spring range

**Miscellaneous Options:**
E = EPDM Diaphragm
P = PVC Diaphragm
V = Viton Diaphragm
G = Gauge Port

**Body Material of Construction:**

| | |
|---|---|
| PVC | = polyvinylchloride |
| CPVC | = Corzan |
| PP | = polypropylene |
| TFE | = 24% glass filled PTFE |
| PVDF | = polyvinylfluoride |
| S/S | = 316L Stainless Steel |
| ALL20 | = Alloy 20 |
| Hast | = Hastelloy C 276 |

### Flow Rates

Flow capacity through TOP VALVE back pressure/anti-siphon and pressure relief valves under continuous flow conditions **@ 50 PSIG** with ambient temperature water.

| Size | 1/4" | 1/4" / 1/2" | 1/2" | 3/4" | 1" | 1 1/2" | 2" |
|---|---|---|---|---|---|---|---|
| Flow rate USGPM | 4 | 4 | 6 | 8 | 14 | 25 | 40 |

**Note:** Capacities will increase with pressure. If pressure is doubled, flow rate wll approximately double. For capacities of valves with pulsating flow, use approximately 1/3 of the given flow rates.

### Typical Installations

The installations below are typical installation examples only. Consult your engineering department for the appropriate installation of your application or call Primary Fluid Systems Inc. for advice.

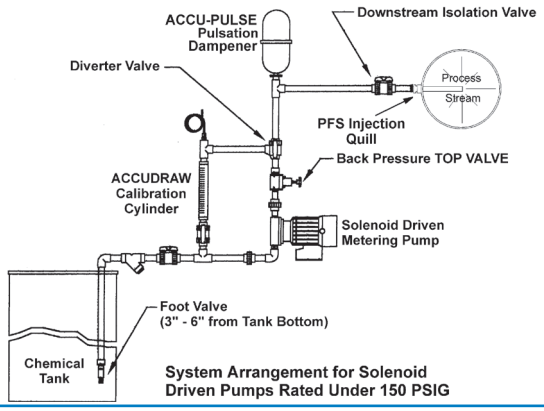


System Arrangement for Solenoid Driven Pumps Rated Under 150 PSIG

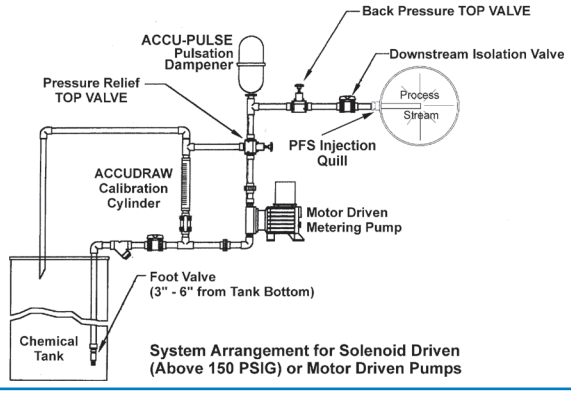


System Arrangement for Solenoid Driven (Above 150 PSIG) or Motor Driven Pumps

**Distributed By:**

PRIMARY FLUID SYSTEMS INC.

**Distribution Territories Available**


**Call Toll Free 1-800-776-6580**
Tel: (905) 333-8743
Fax: (905) 333-8746

*E-mail: primary@primaryfluid.com*
*www.primaryfluid.com*



® Registered Trade Mark of Primary Fluid Systems
*PAT 5,857,486/5,944,050

# RELIEF VALV AND BACK-PRESSURE VALV TVBP50-PVC

**Workshop drawing :**

- □ Approuved as is
- □ Approuved with correction(s)
- □ Rejected

**Approuved by**

Name : _____

Title : _____

Compagnie : _____

Signature : _____

*3076 A, Bernard-Pilon, St-Mathieu de Beloeil, Qc, J3G 4S5  Tél.: (450) 922-4224 /  Fax: (450) 922-4223*

# TOP VALVE *PAT

For detailed product information visit our website:
primaryfluid.com

## *Back Pressure/Anti-Siphon and Pressure Relief Valves*

### Description

This line of diaphragm style, back pressure/anti-siphon and pressure relief valves features a completely adjustable pressure range to 350 PSIG and a built-in air release to reduce priming difficulties. The valves are available in sizes from 1/4" through 2", eight materials of construction, offer a three year warranty and are available with socket weld, flanged or special threaded connections. High temperature to (300°F/149°C) valves are available. *CRN certification available. Please contact factory.*

### Ordering Information

**e.g. Part # TVBP50-S/S-V-S**

**TV - B - P - 50 - S/S - V - S**

**TOP VALVE**

**Valve Type:**
B = Backpressure
P = Pressure Relief (3 port)
P2 = Pressure Relief (2 port)

**Valve Style or Connection:**

| | |
|---|---|
| P | = Backpressure, FNPT thread |
| R | = Pressure Relief, FNPT thr'd (3 port) |
| FW | = Welded Flange |
| FT | = Thread Companion Flanged |
| F | = Flanged Non-Metallic |
| S | = Socket |
| B | = BSP thread |
| T | = High Temperature (300°F/149°C) |
| H | = High Pressure (to 350 psig) Metallic Bodies |
| M | = Mid-Range Pressure (to 230 psig) Thermoplastic Bodies |
| U | = Union Type Connection |

**Valve Port Connection Size:**

| | |
|---|---|
| 25 = 1/4" | 10 = 1" |
| 45 = 1/4" X 1/2" | 15 = 1 1/2" |
| 50 = 1/2" | 20 = 2" |
| 75 = 3/4" | |

**Top Options:**
C = CPVC Top (standard)
A = Aluminum Top
S = 316L S/S Top

XXX = Custom spring range

**Miscellaneous Options:**
E = EPDM Diaphragm
P = PVC Diaphragm
V = Viton Diaphragm
G = Gauge Port

**Body Material of Construction:**

| | |
|---|---|
| PVC | = polyvinylchloride |
| CPVC | = Corzan |
| PP | = polypropylene |
| TFE | = 24% glass filled PTFE |
| PVDF | = polyvinylfluoride |
| S/S | = 316L Stainless Steel |
| ALL20 | = Alloy 20 |
| Hast | = Hastelloy C 276 |

### Flow Rates

Flow capacity through TOP VALVE back pressure/anti-siphon and pressure relief valves under continuous flow conditions **@ 50 PSIG** with ambient temperature water.

| Size | 1/4" | 1/4" / 1/2" | 1/2" | 3/4" | 1" | 1 1/2" | 2" |
|---|---|---|---|---|---|---|---|
| Flow rate USGPM | 4 | 4 | 6 | 8 | 14 | 25 | 40 |

**Note:** Capacities will increase with pressure. If pressure is doubled, flow rate wll approximately double. For capacities of valves with pulsating flow, use approximately 1/3 of the given flow rates.

### Typical Installations

The installations below are typical installation examples only. Consult your engineering department for the appropriate installation of your application or call Primary Fluid Systems Inc. for advice.

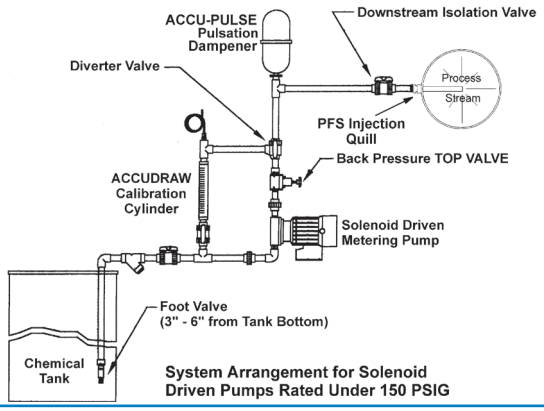


System Arrangement for Solenoid Driven Pumps Rated Under 150 PSIG

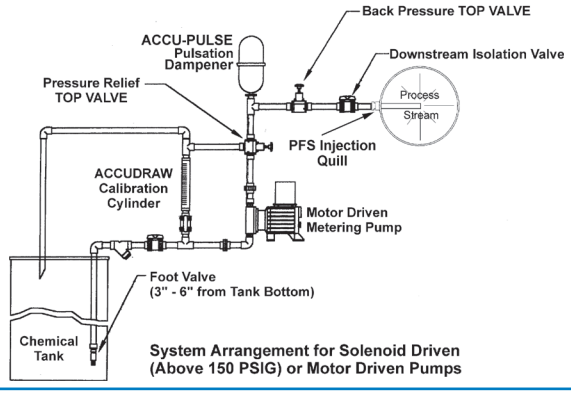


System Arrangement for Solenoid Driven (Above 150 PSIG) or Motor Driven Pumps

**Distributed By:**


PRIMARY FLUID SYSTEMS INC.

**Call Toll Free 1-800-776-6580**
Tel: (905) 333-8743
Fax: (905) 333-8746

*E-mail: primary@primaryfluid.com*
*www.primaryfluid.com*


**Distribution Territories Available**


® Registered Trade Mark of Primary Fluid Systems
*PAT 5,857,486/5,944,050

# PRESSURE GAUGES GI2.5 160 CB AND AG25A50AMT-PVC

**Workshop drawing :**

- □ Approuved as is
- □ Approuved with correction(s)
- □ Rejected

**Approuved by**

Name : _____

Title : _____

Compagnie : _____

Signature : _____

# ACCUGUARD GAUGES

ACCUGUARD Pressure Gauges are designed to enhance the performance of chemical feed systems. Adding a pressure gauge to any system will help to ensure that optimal pressures are monitored and maintained.







## Series Information

| Series | Gauge Diameter | Gauge Connection Size and Type | Gauge Housing | Gauge Internals | Liquid Filled | *Accuracy Rating |
|---|---|---|---|---|---|---|
| **Economy** | 2" / 2.5" | 1/4" NPT | Steel Case | Brass | No | ± 2.5% |
| **Intermediate** | 2.5" / 4" | 1/4" NPT | 304 S/S | Brass | Yes | ± 1.6% |
| **Premium** | 2.5" / 4" | 1/4" NPT | 304S/S | 316L S/S | Yes | ± 1.6% |

*Accuracy Rating = Full Scale Range

### HOW TO ORDER - AccuGuard Gauges

*Example Part Number: GE2-160-CB*

**G E 2 - 160 - CB**

**AccuGuard Gauge**

**Gauge Series**
- E = Economy
- I = Intermediate
- P = Premium

**Gauge Diameter**
- 2 = 2 Inches
- 2.5 = 2-1/2 Inches
- 4 = 4 Inches

**Gauge Mounting Orientation**
- CB = Center Back
- BM = Bottom Mount

**Gauge Indication**
- 60 = 0-60 PSIG / 0-400 KPA
- 160 = 0-160 PSIG / 0-1100 KPA
- 200 = 0-200 PSIG / 0-1400 KPA
- 300 = 0-300 PSIG / 0-2000 KPA
- 400 = 0-400 PSIG / 0-2800 KPA

*4" Gauge Diameter Available in Bottom Mount Orientation Only*

*For Price & Availability of Other Pressures - Call Factory*

Primary Fluid Systems Inc. | 1050 Cooke Blvd. | Burlington | Ontario | L7T 4A8 | Canada
www.primaryfluid.com | primary@primaryfluid.com | North American Toll Free: 1-800-776-6580

# ACCUGUARD Diaphragm Seals

Without proper protection, process fluids can contaminate and damage in-line instrumentation. ACCUGUARD Diaphragm Seals are designed to protect and isolate pressure gauges and expensive instrumentation from corrosive, high temperature, or viscous, process media.



## Features

- Transfers process pressure accurately without direct contact with process fluids
- Removes the need for expensive instrumentation
- Easily installed and available in five chemically resistant Materials of Construction
- Optional Diaphragm Materials
- Available with ¼" & ½" Bottom Connection Sizes in FNPT & BSPT Female Connection Types
- Thermoplastic Units Rated to 240 PSIG (16 BARG) @ 21°C (70°F)
- 316L S/S Units Rated to 5800 PSIG (400 BARG) @ 21°C (70°F)
- Approved – 316 S/S Diaphragm Seals with CRN (Canadian Registration Number)

## HOW TO ORDER - AccuGuard

*Example Part Number: AG25A25A-PVC-V-M-[Optional Gauge]*

**AG 25 A 25 A - PVC - V - M - [Optional Gauge]**

*See Gauge List*

**AccuGuard Diaphragm Seal**

**Connection Size (Top)**
- 25 = 1/4"

**Connection Type (Top)**
- A = FNPT

**Connection Size (Bottom)**
- 25 = 1/4"
- 50 = 1/2"

**Connection Type (Bottom)**
- A = FNPT
- B = BSPT

**Options**
- M = Mounted Gauge/Glycerin Filled

**Diaphram Materials**
- V = Viton (Thermoplastic Body Only)
- E = EPDM (Thermoplastic Body Only)
- T = PTFE (Thermoplastic Body Only)
- S/S = 316 S/S (S/S & S/SV Body Only)

**Body Materials**
- PVC = Polyvinylchloride
- CPVC = CPVC Corzan
- PP = Polypropylene (Not Available with PTFE Diaphragm)
- PVDF = Polyvinyldene Fluoride (PTFE Diaphragm Only)
- S/S = 316L Stainless Steel
- S/SV = Vented 316L Stainless Steel

*- Optional Gauge Appears as Separate Line Item When Ordered*

*- Diaphragm Seals With Gauges = Glycerin Filled As Standard*

*- 1/4" & 1/2" MNPT Nipples Available - Call Factory for Details*

Primary Fluid Systems Inc. | 1050 Cooke Blvd. | Burlington | Ontario | L7T 4A8 | Canada
www.primaryfluid.com | primary@primaryfluid.com | North American Toll Free: 1-800-776-6580

DRAWING #: 6600-000-I-1214

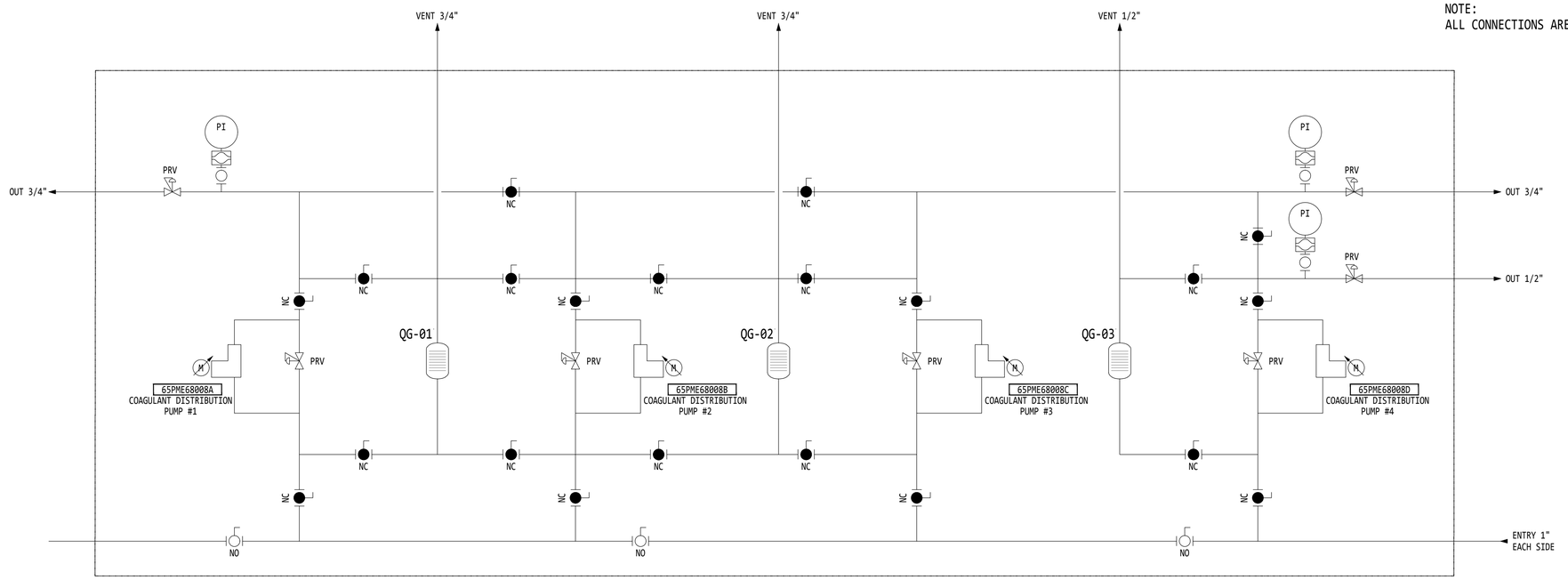


NOTE:
ALL CONNECTIONS ARE NPT TYPE

**65PME68008A/B/C/D**
DOSING PUMPS
CAPACITY: 216 L/HOUR

**QG-01/02**
CYLINDER 4000mL / 64GPH

**QG-03**
CYLINDER 2000mL / 32GPH

ASDR
**FOR TENDER**
DO NOT USE FOR CONSTRUCTION

SEAL & SIGNATURE

| REV. | DATE | DESCRIPTION | BY | VER. | APP. |
|---|---|---|---|---|---|
| T0 | 2021-04-08 | FOR TENDER | AN | DM/EC | DM/EC |

THE INFORMATION HERE ON IS THE PROPERTY OF ASDR AND MUST BE RETURNED UPON REQUEST. WITHOUT WRITTEN PERMISSION, ANY COPYING TRANSMITTAL TO OTHERS AND ANY USE EXCEPT THAT FOR WHICH IT IS LOANED IS PROHIBITED.

CLIENT

INFO CLIENT: -

ASDR

| | |
|---|---|
| DRAWN BY | AMINATA NIASSE, CEP |
| VERIFIED BY | DAN MISIANO / ETIENNE CLERMONT |
| APPROVED BY | DAN MISIANO / ETIENNE CLERMONT |

| CREATION DATE | SCALE | PROJECTION |
|---|---|---|
| 2021-04-06 | N.TS. | |

DRAWING TITLE
PROCESS WATER TREATEMENT - GENERAL
INSTRUMENTATION
QUADRUPLEX DISTRIBUTION UNIT
COAGULANT

| PROJECT # | DRAWING # | REV. | SHEET |
|---|---|---|---|
| 01939 | 6600-000-I-1214 | T0 | 1/1 |

SECTOR-LEVEL – DISCIPLINE – SEQUENTIAL #

IMPRIMÉ PAR : Aminata Amary Niasse | DATE D'IMPRESSION : 2021-05-06 | PLUME D'IMPRESSION : ASDR Noir.ctb
FORMAT DE PAPIER : ISO A1 (594 mm x 841 mm [23.4" x 33.1"]) | PRÉSENTATION : ISO 5457

# TOP VALVE

Pat. #5,857,486 & 5,944,050

## Back Pressure and Pressure Relief Valves

## Instruction Manual

**PLEASE NOTE:**
**This instruction manual provides detailed information and instructions that must be read, understood and followed to ensure that the equipment is installed, operated and serviced in an appropriate manner. Failure to do so before using may result in hazardous consequences and/or improper operation.**

10/2020

**TEMPERATURE LIMIT NOTATION:**
**If the application in which this valve is to be installed has a temperature greater than 73°F (23°C) including radiant heat, refer to page 11 for temperature correction vs. pressure limits.**

Rev. 8

**NOTE:**
**See Gauge Installation Instructions before removal of gauge plug to avoid thread damage. (Gauge port is optional)**

Manufactured by:



**PRIMARY FLUID SYSTEMS INC.**
1050 COOKE BLVD., BURLINGTON, ON. CANADA L7T 4A8
TEL :(905)333-8743 FAX:(905)333-8746
1-800-776-6580
primary@primaryfluid.com

# I N D E X


**INTRODUCTION** ..... **3**

**Special Features of TOP VALVE** ..... **3**

**Back Pressure Valve** ..... **3**

**Back Pressure Valves: Reason for Selection and Use** ..... **4**

**Pressure Relief Valves** ..... **4**

**Pressure Relief Valves: Reason for Selection and Use** ..... **4**

**Installation and Maintenance of Back Pressure Valves** ..... **4**

**Installation and Maintenance of Pressure Relief Valves** ..... **5**

**Gauge Installation Instructions: (When ordered with valve only)** ..... **5**

**Manual Air Release** ..... **6**

**Typical Installations** ..... **7**

**ALL New Clamping Device for TOP VALVE, Back Pressure and Pressure Relief Valves** ..... **8**

***Exploded Parts View – Back Pressure & Pressure Relief Valve*** ..... ***9***

**Dimensions – Top Valve – Back Pressure** ..... **10**

**Dimensions – Top Valve – Pressure Relief** ..... **10**

**Flow Rates** ..... **11**

**Temperature Correction Factors: Thermoplastics** ..... **11**

**LIMITED WARRANTY** ..... **12**

## INTRODUCTION

The following instructions are to provide information on the Installation, operation and maintenance of TOP VALVE, 150# rated diaphragm style Back Pressure and Pressure Relief Valves, manufactured by Primary Fluid Systems Inc. The valves are designed to improve the performance and safe operation of most pumps used for metering applications.

Various materials of construction are available dependent on the requirements of the application and the type of fluids being transferred.

The valve(s) are factory set at 50 PSIG with a field adjustment range of 15-150 PSIG*. Other factory set pressure ranges (within the range of the valve) are available upon request.

## Special Features of TOP VALVE

- PVC, PP, TFE, CPVC, PVDF, Hastelloy C, Alloy 20 or 316 S/S wetted construction
- PTFE laminated to EPDM backer diaphragm
- Turn down handle limits pressure to 150 PSIG
- Handle shaped for ease of adjustment
- Color-coded handles indicate size at a glance
- (Optional) Built-in matching material gauge port plug is easily removed for gauge option
- Rectangular shape for ease of installation
- Specially designed spring provides consistent pressure adjustments through the range (15-150 PSIG*)
- Valve top specially designed for mounting clamp to help reduce pipeline stress when required
- Built-in downstream manual air release, for ease of pump priming
- Built-in anti-siphon

***Pressures under 15 PSIG require rubber elastomeric diaphragm.**

## Back Pressure Valve

Diaphragm Back Pressure Valves serve two primary functions. The first is to provide a constant discharge pressure on the pump, which improves the performance, efficiency and consistency of the delivered volume. Secondly, the valve performs as an anti-siphon mechanism against positive or negative pressures in the downstream line. The valve is designed to allow for the venting of air into the downstream pipeline. This provides for easier priming of metering pumps that function under a suction lift. This is accomplished by a simple adjustment of the handle.

The valve is available with an optional gauge port, pre-plugged at the factory or can be ordered complete with gauge to suit application. This eliminates the need to install extra fittings in the line to accommodate the addition of a gauge for the purpose of reading and setting of pressure.

**CAUTION:**
**The gauge port is solely for the installation of the gauge and must not be used for the bleeding or venting of the system. Improper operation of the valve and/or hazardous consequences could result.** ***(see gauge installation instructions)***

## Back Pressure Valves: Reason for Selection and Use

Metering pumps having an atmospheric discharge system pressure of less than 20 psi and will benefit from the installation of a back pressure control valve. Metering pumps in general require downstream back pressure to ensure smoother function of the discharge check assemblies, which enhances the accuracy of the discharge flow.

## Pressure Relief Valves

Diaphragm Pressure Relief Valves are designed to relieve excess line pressure that exceeds the set pressure of the valve. This protects the system piping from overpressure that could result in hazardous leakage and/or damage to the pump and other system components.

The Pressure Relief Valves are normally recommended to be set between 5 and 10 PSIG above the system operating pressure.

The valve is of an in-line flow through design with bottom NPT relief port for piping back to supply tank or feed side of pump.

The valve is available with an optional gauge port, pre-plugged at the factory or can be ordered complete with gauge to suit application. This eliminates the need to install extra fittings in the line to accommodate the addition of a gauge for the purpose of reading and setting of pressure.

**CAUTION:**
**The gauge port is solely for the installation of the gauge and cannot be used for the bleeding or venting of the system. Improper operation and/or hazardous consequences could result.** ***(see gauge installation instructions)***

## Pressure Relief Valves: Reason for Selection and Use

When using motor driven metering pumps, a pressure relief valve should always be installed on the downstream side of the pump to protect the system from over pressure which can cause pipe leakage and/or rupture.

## Installation and Maintenance of Back Pressure Valves

Back pressure control valves are installed on the discharge line of the pump. The valve should be located within a 2 (two)-foot distance of the pump discharge to ensure check valve seating. When pumping to a process line without an injection valve, the back pressure valve should be installed as close as possible to the injection point to prevent siphoning.

When used in conjunction with a pressure relief valve, always locate the back pressure valve on the downstream side of the relief valve.

The valve is supplied from the factory pre-set at 50 psig. To increase the pressure setting, back off the lock nut located beneath the colour coded handle. Turn the handle clockwise to increase pressure setting or counter clockwise to reduce pressure setting. Approximately one (1) full turn of the handle is equal to 10 psig.

*If maintenance is required on the valve:*

1. Ensure that the valve is properly isolated from the line, not under pressure and properly flushed of chemical before proceeding to disassembly.
2. Turn knob on the top of valve, counterclockwise until all spring pressure is released **before** proceeding to undo retaining nuts, to remove top of valve for diaphragm replacement.
3. All working components ie. diaphragm, spring can be accessed by removing the four retaining nuts located on the top of the valve (item # 9 of parts breakdown). For ¼" and ¼" x ½" Top Valves, use 5/32" Allen Key / #4 Hex Key. For ½" sizes and up, use a 3/16" Allen Key / #5 Hex key.
4. When replacing the diaphragm, ensure the PTFE coated side of the diaphragm is facing down when viewed from the top of the valve. The installed diaphragm also functions as the body seal. (Torque nuts to 55 inch pounds when reassembling.)

**Set Pressure Safety Feature**

The valve adjustment handle/bolt length is designed to prevent operators from engaging the spring to a coil binding situation that would cause serious function and safety concerns.

In order to achieve max pressures within the top 10% of the valve range, the lock nut on the adjustment handle/bolt must be removed prior to setting the pressure. Ensure that all system pressure has been released before removing the lock nut and re-installing the approved valve handle/bolt.

The valve handle/bolt is the only approved adjustment component to be used on our valves. Deviation from this will void manufacturer warranty and liability.

**Installation and Maintenance of Pressure Relief Valves**

Pressure relief valves are installed on the discharge line of a pump and should be located as close as possible to the metering pump. The valve is of an in-line flow through design with a bottom NPT relief port for piping back to the supply tank or feed side of the pump.

Never install shut-off/isolation valves between pump discharge and in-line pressure relief valves. When using in conjunction with a back pressure control valve, always install back pressure valve downstream of pressure relief valve. The relief port on the pressure relief valve should be piped back to the feed tank or suction side of the pump (see typical installation schematics).

**CAUTION:**
**The plastic valve bodies have standard NPT threads, which are tapered. When installing pipe into the body, hand tighten only to avoid cracking**.

## Gauge Installation Instructions: (When ordered with valve only)

For the convenience of pressure setting and reading, there is an optional plugged gauge port provided, if the valve has not been ordered complete with gauge. **Important:** use a ***TORX style # T-45*** wrench or screwdriver **only** to remove plug from plastic valves. Any other tool will strip the body of the plug and require an extractor to remove the threaded plug.

**CAUTION:**
**Before removing the gauge port plug to install a gauge, ensure that the discharge line is not under pressure and lines are flushed with water prior to proceeding. Ensure that the gauge you are using is chemical resistant to the fluid before installing.**

## Manual Air Release for Back Pressure Valve Only

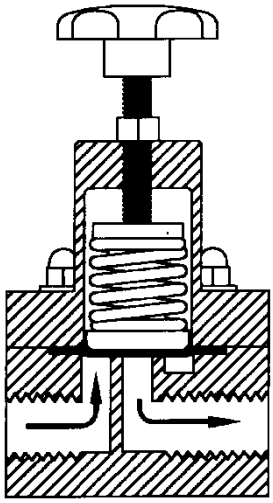

DIAPHRAGM POSITION AT
50 PSI BACK PRESSURE

**The valve is shipped with a factory set pressure of 50 psig. The diagram to the left shows a cut-away view of the position of the diaphragm on the seat.**

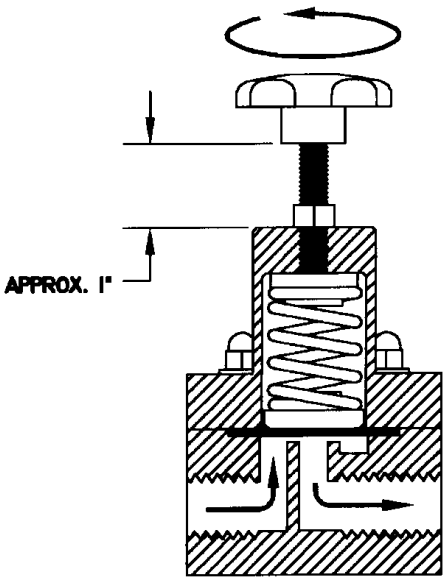


AIR RELEASE POSITION WITH
HANDLE BACKED OFF

**To adjust the valve to relieve air or gas downstream:**

**1. Back off lock nut located beneath the colour coded handle.**

**2. Turn handle counter clockwise until approximately 1 inch of thread is exposed.**

**3. At this adjustment, the spring has relieved all tension from the diaphragm allowing air or gas to be vented downstream.**

---

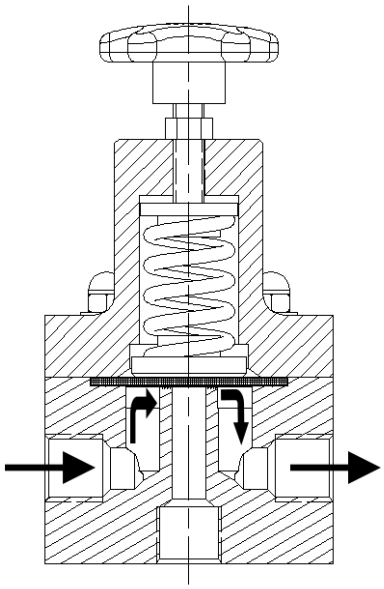

**Flow through design Pressure Relief Valve**

**The bottom port relieves over pressure.**



www.primaryfluid.com Toll Free 1-800-776-6580 email: primary@primaryfluid.com

# Typical Installations

The installations below are typical installation examples only. Consult your Engineering Department for the appropriate installation for your application or call the factory for advice.

**EXAMPLE A: SOLENOID DRIVEN PUMPS RATED UNDER 150 PSIG**

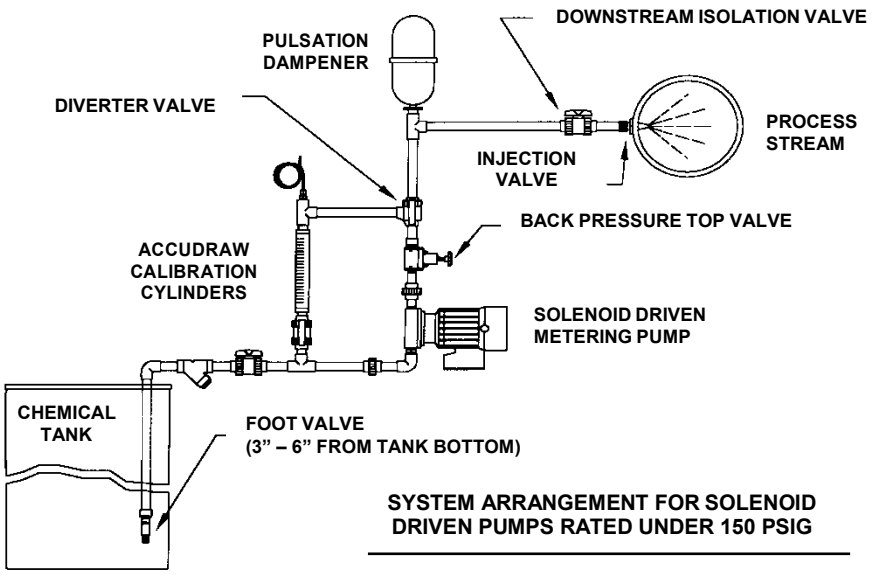


SYSTEM ARRANGEMENT FOR SOLENOID DRIVEN PUMPS RATED UNDER 150 PSIG

---

**EXAMPLE B: SYSTEM ARRANGEMENT FOR SOLENOID DRIVEN (ABOVE 150 PSIG) OR MOTOR DRIVEN PUMPS.**

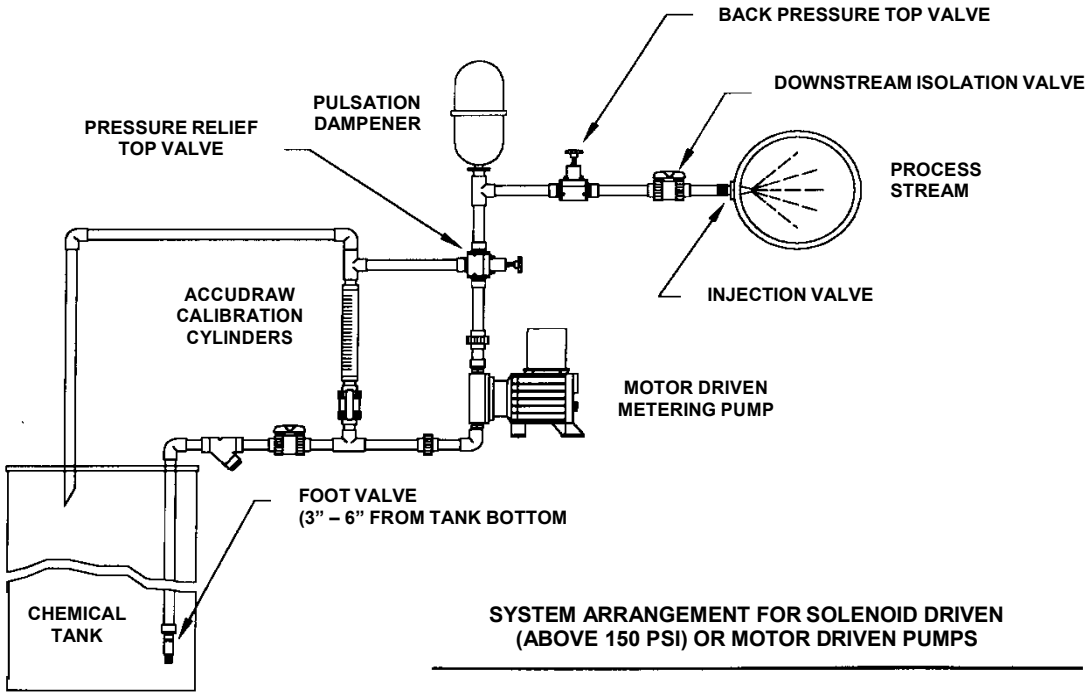


SYSTEM ARRANGEMENT FOR SOLENOID DRIVEN (ABOVE 150 PSI) OR MOTOR DRIVEN PUMPS



www.primaryfluid.com Toll Free 1-800-776-6580 email: primary@primaryfluid.com

# Exploded Parts View- Back Pressure & Pressure Relief Valve

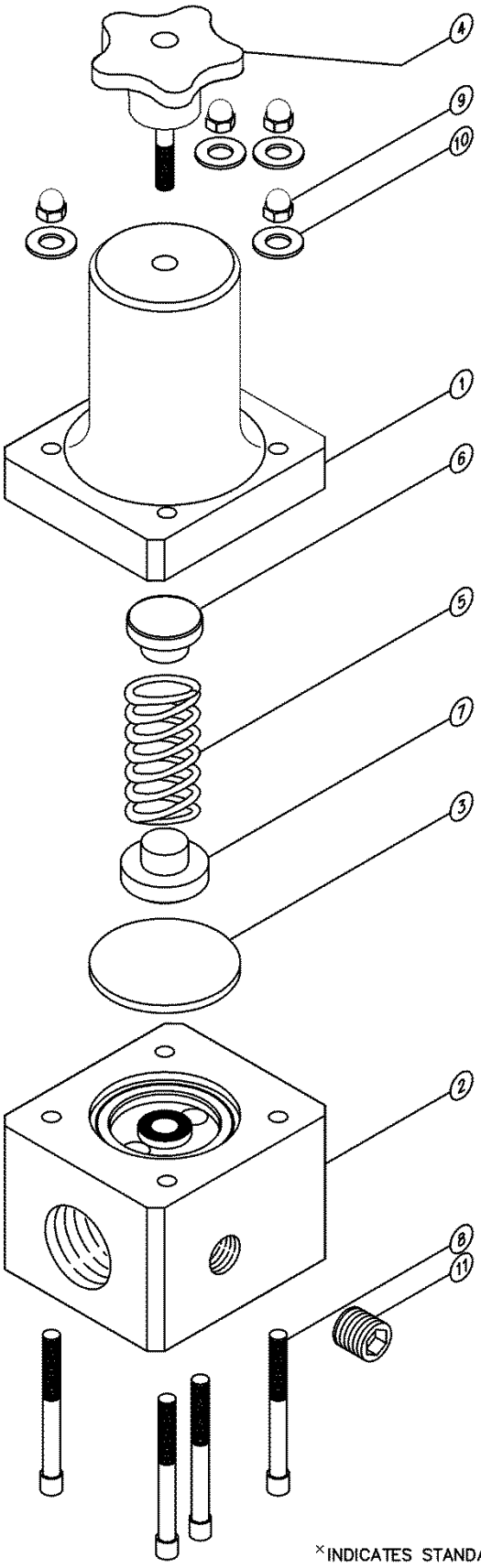


MATERIAL/SIZE CODING

X = PVC = (TYPE 1 PVC)×
X = CPVC = (CPVC CORZAN)
X = S6 = (316 STAINLESS STEEL)
X = A = (ALUMINUM )
X = P = (POLYCARBONATE)

** = 25 = 1/4" & 1/4/1/2" VALVES
** = 57 = 1/2" & 3/4" VALVES
** = 10 = 1" VALVES
** = 15 = 1-1/2" VALVES
** = 20 = 2" VALVES

Ω = B = BACK PRESSURE
Ω = P =PRESSURE RELIEF

∅ = "BLANK" = STD PTFE LAM. EPDM×
∅ = V = OPTIONAL VITON
∅ = E = OPTIONAL EPDM
∅ = P = OPTIONAL PVC

Φ = 25 = 1/4" VALVES
Φ = 45 = 1/4/1/2" VALVES
Φ = 50 = 1/2" VALVES
Φ = 75 = 3/4" VALVES
Φ = 10 = 1" VALVES
Φ = 15 = 1-1/2" VALVES
Φ = 20 = 2" VALVES

^ = PVC = (PVC TYPE 1)
^ = CPVC = (CPVC CORZAN)
^ = PP= (POLYPROPYLENE)
^ = PTFE = (PTFE)
^ = PVDF = (POLYVINYLIDENE FLUORIDE KYNAR)
^ = S/S = (316 STAINLESS STEEL)
^ = HASTC = (HASTELLOY C276)
^ = ALL20 = (ALLOY20)

⊗ = G = GREEN = 1/4" VALVES
⊗ = O = ORANGE = 1/4/1/2" VALVES
⊗ = Y = YELLOW = 1/2" VALVES
⊗ = R = RED = 3/4" VALVES
⊗ = B = BLUE = 1" VALVES
⊗ = BK = BLACK = 1-1/2" VALVES
⊗ = W = WHITE = 2" VALVES

⊕ = 25 = 1/4" & 1/4"/1/2" VALVES
⊕ = 51 = 1/2" THRU 2" VALVES

| ITEM# | QTY | DESCRIPTION | PART# |
|---|---|---|---|
| 1 | 1 | TOP | TVT-1 X - ** |
| 2 | 1 | BODY | TVΩ-2 ^ -Φ |
| 3 | 1 | DIAPHRAGM | TVD-3- ** -∅ |
| 4 | 1 | KNOB | TV⊗K-4 |
| 5 | 1 | SPRING | TVS-5-⊕ |
| 6 | 1 | TOP DISC | TVTD-6-⊕ |
| 7 | 1 | BOTTOM DISC | TVBD-7-⊕ |
| 8 | 4 | BOLTS* | TVΩB-8 -** |
| 9 | 4 | NUTS | TVN-9-⊕ |
| 10 | 4 | WASHERS | TVW-10-⊕ |
| 11 | 1 | GAUGE PLUG (OPTIONAL) | TVP-11- ^ |

_UNDERLINED ITEMS REQUIRE CODES FROM ABOVE CHART
*1-1/2" PRESSURE RELIEF VALVES USE TVBB-8-15
*2" PRESSURE RELIEF VALVES USE TVBB-8-20

×INDICATES STANDARD CONSTRUCTION

DO NOT COPY WITHOUT PRIOR WRITTEN APPROVAL FROM PRIMARY FLUID SYSTEMS INC.

**PRIMARY FLUID SYSTEMS INC.**
1050 Cooke Blvd., Burlington, Ontario L7T 4A8

BACK PRESSURE & PRESSURE RELIEF VALVE EXPLODED PARTS VIEW

| | | |
|---|---|---|
| DATE ISSUED: 19-OCT-11 | SCALE: NTS | SHEET: 1 OF 1 |
| PROJECT: TOP VALVE | | DRAWN BY: BRB |
| APPROVED BY: | DWG NO.: TV-PA-257520STD-XPL | REV.#: 5 |

## Dimensions – Top Valve – Back Pressure

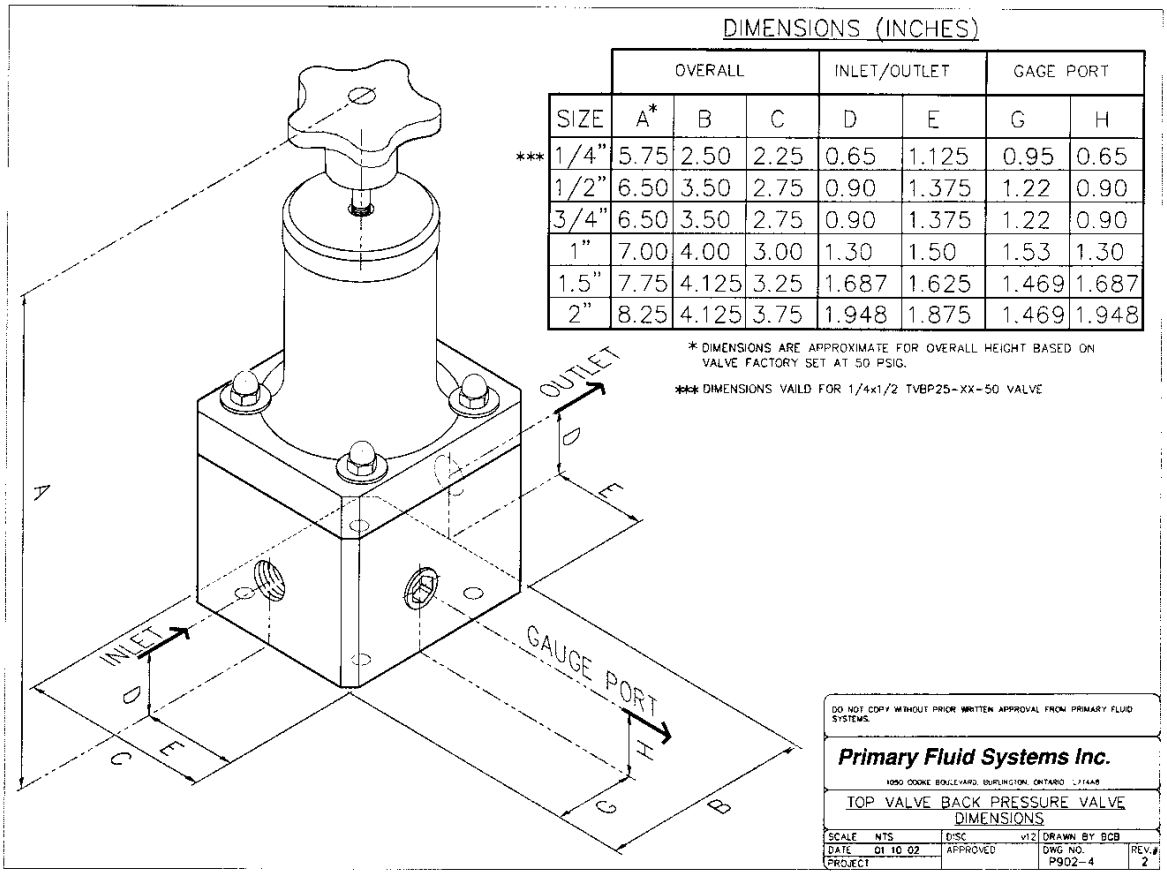


DIMENSIONS (INCHES)

| | | OVERALL | | | INLET/OUTLET | | GAGE PORT | |
|---|---|---|---|---|---|---|---|---|
| | SIZE | A* | B | C | D | E | G | H |
| *** | 1/4" | 5.75 | 2.50 | 2.25 | 0.65 | 1.125 | 0.95 | 0.65 |
| | 1/2" | 6.50 | 3.50 | 2.75 | 0.90 | 1.375 | 1.22 | 0.90 |
| | 3/4" | 6.50 | 3.50 | 2.75 | 0.90 | 1.375 | 1.22 | 0.90 |
| | 1" | 7.00 | 4.00 | 3.00 | 1.30 | 1.50 | 1.53 | 1.30 |
| | 1.5" | 7.75 | 4.125 | 3.25 | 1.687 | 1.625 | 1.469 | 1.687 |
| | 2" | 8.25 | 4.125 | 3.75 | 1.948 | 1.875 | 1.469 | 1.948 |

* DIMENSIONS ARE APPROXIMATE FOR OVERALL HEIGHT BASED ON VALVE FACTORY SET AT 50 PSIG.

*** DIMENSIONS VAILD FOR 1/4x1/2 TVBP25-XX-50 VALVE

DO NOT COPY WITHOUT PRIOR WRITTEN APPROVAL FROM PRIMARY FLUID SYSTEMS.

**Primary Fluid Systems Inc.**

1050 COOKE BOULEVARD, BURLINGTON, ONTARIO L7T4A8

TOP VALVE BACK PRESSURE VALVE DIMENSIONS

| | | | |
|---|---|---|---|
| SCALE NTS | DISC v12 | DRAWN BY BCB | |
| DATE 01 10 02 | APPROVED | DWG NO. P902-4 | REV.# 2 |
| PROJECT | | | |

## Dimensions – Top Valve – Pressure Relief

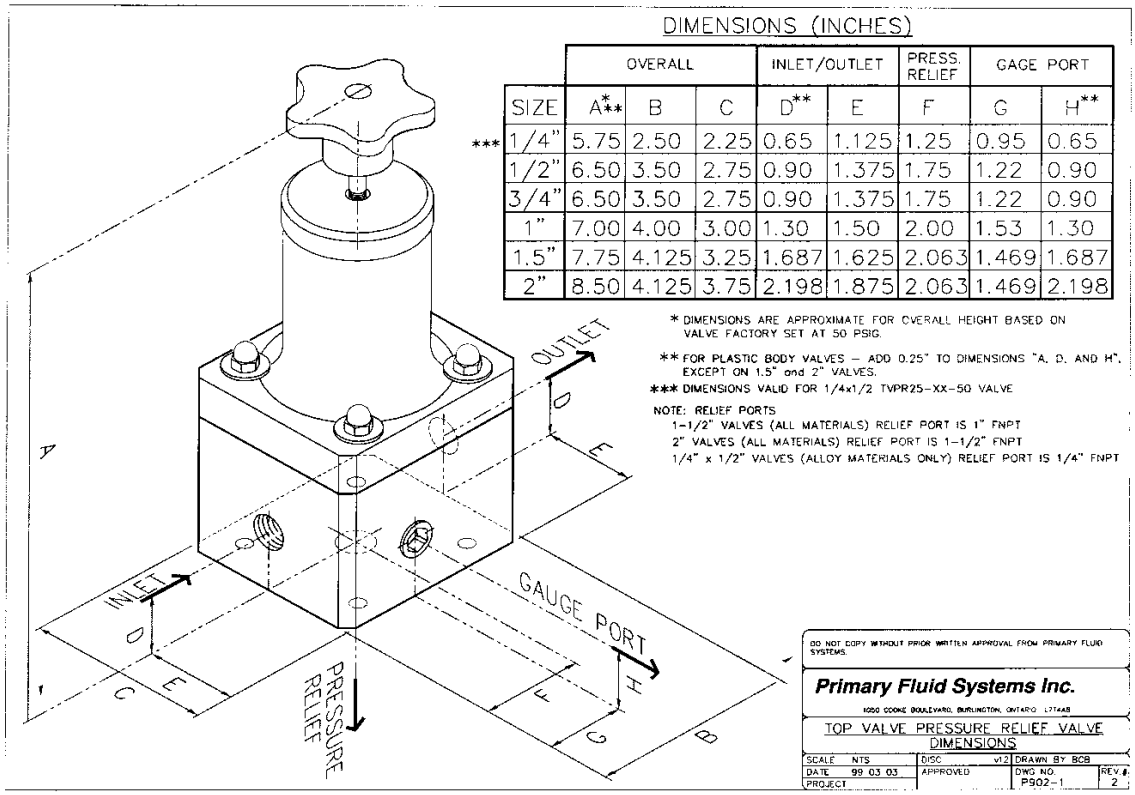


DIMENSIONS (INCHES)

| | | OVERALL | | | INLET/OUTLET | | PRESS. RELIEF | GAGE PORT | |
|---|---|---|---|---|---|---|---|---|---|
| | SIZE | A*** | B | C | D** | E | F | G | H** |
| *** | 1/4" | 5.75 | 2.50 | 2.25 | 0.65 | 1.125 | 1.25 | 0.95 | 0.65 |
| | 1/2" | 6.50 | 3.50 | 2.75 | 0.90 | 1.375 | 1.75 | 1.22 | 0.90 |
| | 3/4" | 6.50 | 3.50 | 2.75 | 0.90 | 1.375 | 1.75 | 1.22 | 0.90 |
| | 1" | 7.00 | 4.00 | 3.00 | 1.30 | 1.50 | 2.00 | 1.53 | 1.30 |
| | 1.5" | 7.75 | 4.125 | 3.25 | 1.687 | 1.625 | 2.063 | 1.469 | 1.687 |
| | 2" | 8.50 | 4.125 | 3.75 | 2.198 | 1.875 | 2.063 | 1.469 | 2.198 |

* DIMENSIONS ARE APPROXIMATE FOR OVERALL HEIGHT BASED ON VALVE FACTORY SET AT 50 PSIG.

** FOR PLASTIC BODY VALVES – ADD 0.25" TO DIMENSIONS "A, D, AND H", EXCEPT ON 1.5" and 2" VALVES.

*** DIMENSIONS VALID FOR 1/4x1/2 TVPR25-XX-50 VALVE

NOTE: RELIEF PORTS
1-1/2" VALVES (ALL MATERIALS) RELIEF PORT IS 1" FNPT
2" VALVES (ALL MATERIALS) RELIEF PORT IS 1-1/2" FNPT
1/4" x 1/2" VALVES (ALLOY MATERIALS ONLY) RELIEF PORT IS 1/4" FNPT

DO NOT COPY WITHOUT PRIOR WRITTEN APPROVAL FROM PRIMARY FLUID SYSTEMS.

**Primary Fluid Systems Inc.**

1050 COOKE BOULEVARD, BURLINGTON, ONTARIO L7T4A8

TOP VALVE PRESSURE RELIEF VALVE DIMENSIONS

| | | | |
|---|---|---|---|
| SCALE NTS | DISC v12 | DRAWN BY BCB | |
| DATE 99 03 03 | APPROVED | DWG NO. P902-1 | REV.# 2 |
| PROJECT | | | |

**ALL New Clamping Device for TOP VALVE, Back Pressure and Pressure Relief Valves**

This new polypropylene-clamping device now makes it even easier than ever to support TOP VALVE, back pressure or pressure relief valves in service, to help eliminate pipe strain and the need for expensive mounting brackets.

It's simple to install, economical to purchase and we've reworked the top of the valve body now available on all new valves, to assist with the support.

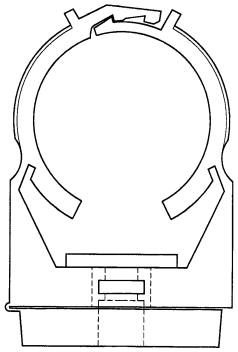

**TV-_ _ -CLAMP**

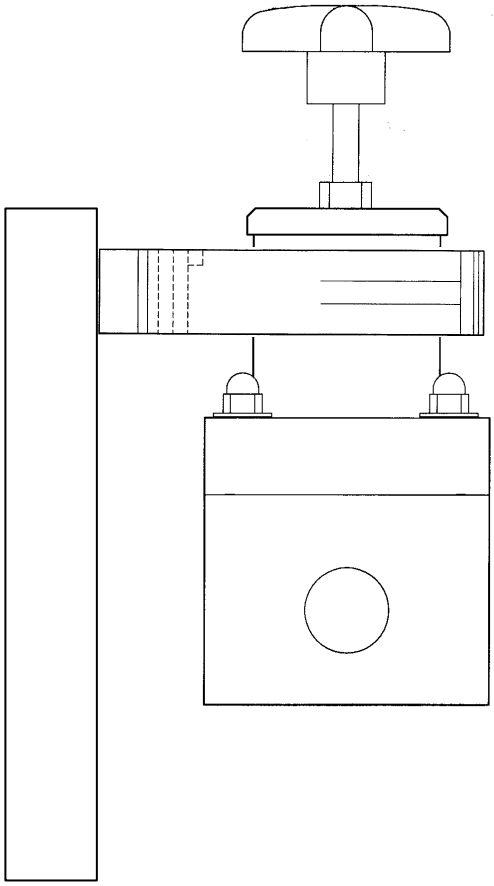

**Sample Installation**

**Part #**

TV-25-CLAMP to fit ¼" Valves and ¼ - ½" Valves

TV-51-CLAMP to fit ½" through 2" Valves

## Flow Rates

Subject: Flow capacity through TOP VALVE, back pressure and pressure relief valves. Under continuous flow conditions: @ **50 PSI** with ambient temperature water

| | | |
|---|---|---|
| ¼" valve | 4 | USGPM |
| ¼"/½" valve | 4 | USGPM |
| ½" valve | 6 | USGPM |
| ¾" valve | 8 | USGPM |
| 1" valve | 14 | USGPM |
| 1½"valve | 25 | USGPM |
| 2" valve | 40 | USGPM |

Note: Capacities will increase with pressure. (If pressure is doubled, flow rate will approximately double.) For capacities of valves with pulsating flow use approximately ⅓ of the above given flow values.

## Temperature Correction Factors: Thermoplastics

**Temperature Effects:** Thermoplastics and thermosets will decrease in tensile strength as the temperature increases: therefore, the working pressure must be reduced accordingly. The following factors will apply:

| Operating Temperatures | | {Factors} | | | |
|---|---|---|---|---|---|
| ***F*** | ***C*** | ***PVC*** | ***CPVC*** | ***PP*** | ***PVDF*** |
| 70 | 21 | 1.00 | 1.00 | 1.00 | 1.00 |
| 80 | 27 | 1.00 | 1.00 | 1.00 | 1.00 |
| 90 | 32 | 1.00 | 1.00 | 1.00 | 1.00 |
| 100 | 38 | .90 | 1.00 | 1.00 | 1.00 |
| 110 | 43 | .83 | 1.00 | .91 | 1.00 |
| 115 | 46 | .75 | 1.00 | .87 | 1.00 |
| 120 | 49 | .66 | 1.00 | .83 | 1.00 |
| 125 | 52 | .58 | .97 | .79 | 1.00 |
| 130 | 54 | .50 | .95 | .75 | 1.00 |
| 140 | 60 | .33 | .90 | .66 | 1.00 |
| 150 | 66 | NR | .80 | .60 | .97 |
| 160 | 71 | NR | .70 | .53 | .93 |
| 170 | 77 | NR | .60 | .43 | .86 |
| 180 | 82 | NR | .50 | .33 | .80 |
| 200 | 93 | NR | .33 | NR | .66 |
| 210 | 99 | NR | NR | NR | .60 |
| 240 | 116 | NR | NR | NR | .40 |
| 280 | 138 | NR | NR | NR | .16 |

**Example:**
Maximum Pressure for PVDF valve at 280°F (138°C)
Factor = 0.16 x 150psig = 24psig max. pressure
Factor = 0.16 x 1034kPa = 165.44kPa max. pressure

The maximum pressure rating for valves regardless of size is 150 PSIG (1034 kPa) at 73° F (22°C)

**NR** = not recommended

Primary Fluid Systems, Inc. takes no responsibility for the enclosed data.

**NOTE**: If the material of the valve you have chosen is rated below the working pressure of your system than you must reconsider your choice. The standard valve top material of construction is PVC and should be taken into temperature consideration. (Other materials of construction are available, consult price list or factory)

**NOTE: When considering working temperature, include ambient and potential collective surface temperature (Radiant Heat).**

# LIMITED WARRANTY

Primary Fluid Systems Inc. (Primary) warrants its products against defects in workmanship or materials for one (1) year under normal use. Three-(3) year available when application card is completed and returned to factory. Application card can be obtained by emailing request to sales@primaryfluid.com

Primary's obligations and liabilities under this warranty shall be limited to replacement of the product, or a refund of an amount not to exceed the purchase price of the product(s) to which such warranty claim is made. Repairs or replacements are made subject to our inspection of the returned product(s). Primary's decision of one of these alternatives shall be the buyer's exclusive remedy.

This warranty does not extend to damage by corrosion or other decomposition by chemical action. Primary does not warrant damages caused by (a) improper use of the product, (b) unauthorized modification or attachment to product, (c) misuse, abuse, accident or negligent handling or installation of product, or (d) alterations or repairs made by purchaser.

The materials of construction offered are recommendations only, subject in all cases to acceptance by purchaser. These recommendations do not constitute any guarantee against corrosion or decomposition, but are based on previous experience and best available information of the industry.

Statements and instructions set forth herein are based on the best information and practices known to Primary, but it should not be assumed that every acceptable safety procedure is contained herein. Of necessity Primary cannot guarantee that actions in accordance with such statements and instructions will result in the complete elimination of hazards and it assumes no liability for accidents that may occur.

Except as specifically provided herein, Primary makes no warranty, representations, promise or guarantee, either express or implied, statutory or otherwise, with respect to the product and technical information provided, including the products' quality, performance, merchantability, or fitness for a particular purpose.

In no event will Primary be liable for indirect, special, incidental, economic, covert or consequential damages arising out of the use or inability to use the product, including without limitation, damages or costs relating to the loss of profits, business and good will even if advised of the possibility of such damages. In no event shall Primary's liability exceed the amount paid by you for the product.

The warranty and remedies set forth herein are exclusive and in lieu of all others, oral or written, express or implied. No Primary dealer, distributor, agent or employee is authorized to make any modification or addition to this warranty. This warranty gives you specific legal rights and you may also have other rights which vary from state to state.

**VISIT OUR WEBSITE**
**@**
**primaryfluid.com**

TECHNICAL MANUAL

# DIAPHRAGM PUMP 409.2...e / 410.2...e




TRANSLATION OF THE ORIGINAL TECHNICAL MANUAL! EN

## PUMP TYPE

| | | | |
|---|---|---|---|
| RF/R/MF/M 409.2 - 1,6e | C 409.2 - 1,6e Pro+ | RF/R/MF/M 410.2 - 280e | C 410.2 - 280e |
| RF/R/MF/M 409.2 - 2,4e | C 409.2 - 2,4e Pro+ | RF/R/MF/M 410.2 - 570e | C 410.2 - 570e |
| RF/R/MF/M 409.2 - 7,0e | C 409.2 - 7,0e Pro+ | RF/R/MF/M 410.2 - 900e | C 410.2 - 900e |
| RF/R/MF/M 409.2 - 12e | C 409.2 - 12e Pro+ | RF/R/MF/M 410.2 - 1450e | C 410.2 - 1450e |
| RF/R/MF/M 409.2 - 18e | C 409.2 - 18e Pro+ | | |
| RF/R/MF/M 409.2 - 25e | C 409.2 - 25e Pro+ | | |
| RF/R/MF/M 409.2 - 50e | C 409.2 - 50e Pro+ | | |
| RF/R/MF/M 409.2 - 75e | C 409.2 - 75e Pro+ | | |
| RF/R/MF/M 409.2 - 90e | C 409.2 - 90e Pro+ | | |
| RF/R/MF/M 409.2 - 115e | C 409.2 - 115e Pro+ | | |
| RF/R/MF/M 409.2 - 140e | C 409.2 - 140e Pro+ | | |
| RF/R/MF/M 409.2 - 180e | C 409.2 - 180e Pro+ | | |
| RF/R/MF/M 409.2 - 250e | C 409.2 - 250e Pro+ | | |
| RF/R/MF/M 409.2 - 350e | C 409.2 - 350e Pro+ | | |

**NOTE**

Record the exact type and serial number here ► can be read off the type plate on the pump.
These data are important in the case of queries or for ordering spare and/or wear parts and must always be stated.

TYPE:

SERIAL NO:

**NOTE**

Keep the operating manual for future use!

**ATTENTION**

Subject to technical modifications!

### Quality notes

The **sera** quality management and quality assurance system is certified in accordance with DIN EN ISO 9001:2015.
The **sera** product complies with the applicable safety requirements and accident prevention regulations.

## About this instructions

Special notes in these instructions are marked with text and danger symbols.

**NOTE**

Notes or instructions that faciliate work and ensure a safe operation.

**ATTENTION**

The non-observance of these safety instructions can result in malfunctions or material damages.

**WARNING**

The non-observance of these safety instructions can lead to material damages and personal injuries.




Note on the additional instructions „SAFETY INSTRUCTIONS“.

These technical manual is divided into the following main parts:


| | |
|---|---|
| TRANSPORT & STORAGE | page 6 |
| PRODUCT DESCRIPTION | page 7 |
| TECHNICAL DATA | page 24 |
| ASSEMBLY / INSTALLATION | page 44 |
| OPERATION / EXPLOSION-HAZARDOUS AREAS | page 51 |
| START-UP | page 53 |
| ELECTRICAL CONNECTION | page 54 |
| MAINTENANCE | page 55 |
| FAULT ANALYSIS / CORRECTIVE ACTION | page 65 |
| SHUT-DOWN / DISPOSAL | page 67 |
| CLEARANCE CERTIFICATE | page 68 |


Depending on the pump type (see order confirmation) the following additional instructions are included:

| | |
|---|---|
| Control PRO+ | TM04 |
| INTERFACE MODULE PROFIBUS | TM05 |
| Control C410.2 | TM10 |
| Control PROFIBUS C410.2 | TM13 |
| Motor ATEX | supplier documentation |
| AC motor | supplier documentation |
| Electrical actuator | supplier documentation |
| Electrical actuator ATEX | supplier documentation |
| Pneumatic actuator | supplier documentation |
| Frequency converter | supplier documentation |
| Special construction | **sera** drawing |

TRANSPORT & STORAGE ..... 6
General ..... 6
Storage ..... 6
PRODUCT DESCRIPTION ..... 7
Type key ..... 7
Type plate ..... 8
Notes attached to the product ..... 8
Materials ..... 8
Components ...409.2 ..... 9
Components of C409.2 ..... 10
Components ...410.2 ..... 11
Components of C410.2 ..... 12
ELECTRICAL DATA ..... 23
ELECTRICAL DATA ..... 23
TECHNICAL DATA ..... 24
NOISE MEASUREMENT ..... 24
VISCOSITY, PUMPED MEDIUM ..... 24
TEMPERATURE DATA ..... 24
AMBIENT CONDITIONS ..... 24
Characteristics ..... 25
Dimensions RF409.2 standard ..... 28
Dimensions ...409.2 options ..... 30
Dimensions C409.2 standard ..... 32
Dimensions C409.2 options ..... 34
Dimensions RF410.2 standard ..... 36
Dimensions ...410.2 options ..... 38
Dimensions C410.2 standard ..... 40
Dimensions C410.2 options ..... 42
ASSEMBLY / INSTALLATION ..... 44
OPERATION / EXPLOSION-HAZARDOUS AREAS ..... 51
Operation in Ex-zone C409.2 / C410.2 ..... 51
Operation in Ex-zone R/M 409.2 / R/M 410.2 ..... 51
START-UP ..... 53
ELECTRICAL CONNECTIONS ..... 54
MAINTENANCE ..... 55
Drive motor ..... 55
Oil change ..... 56
Overview of the tightening torques ..... 57
Changing the Diaphragm ..... 58
Spare and wearing parts ..... 62
FAULT ANALYSIS / CORRECTIVE ACTION ..... 65
SHUT-DOWN / DISPOSAL ..... 67
Shut-down ..... 67
Disposal ..... 67
CLEARANCE CERTIFICATE ..... 68

## TRANSPORT & STORAGE

**WARNING**

Observe and follow the safety instructions by all means.
See the additional instructions „SAFETY INSTRUCTIONS".
Man, machine and environment are endangered if the safety instructions are not observed.




### General

**sera** products are checked for perfect condition and function previous to shipment.
Check for transport damage immediately after arrival of goods. If damage is found, this is to be reported immediately to the responsible carrier and the manufacturer.

### Storage

An undamaged packaging protects the unit during storage and should only be opened when the product is installed.
Proper storage increases the service life of the product and includes prevention of negative influences such as heat, moisture, dust, chemicals etc.

The following storage specifications are to be obsered:

- Storage place: cool, dry, dustfree and slightly ventilated
- Storage temperature and relative air humidity see Chapter „TECHNICAL DATA".
- The maximum storage time for the standard packaging is 12 months.

If these values are exceeded, metal products should be sealed in foil and protected from condensation water with a suitable desiccant.

Do not store solvents, fuels, lubricants, chemicals, acids, disinfectants and similar in the storage room.

## Type key

**1** — Type of drive (combinations possible)

| | |
|---|---|
| C | controllable |
| M | not adjustable |
| R | adjustable |
| F | Motor suitable for frequency converter operation |
| i | Frequency converter, mounted on the motor |
| K | Stroke mechanism with side drive shaft and connected to the drive via a clutch |
| Z | twin design |
| X | Stroke mechanism with two opposite pump heads, combined suction and pressure side |
| Y | Stroke mechanism with two opposite pump heads |

**2** — Series

| | |
|---|---|
| 204 | (solenoid driven pumps) |
| 409 | (motor driven pumps) |
| 410 | (motor driven pumps) |
| 509 | (motor driven pumps) |

**3** — Revision index

**4** — max. Nominal capacity (litre/hour (each pump head))

**5** — Displacer (type of construction)

| | |
|---|---|
| e | Single diap hragm |
| ML | Multy-layer diaphragm |
| KM | Piston daphragm |
| K | Piston |

**6** — Type of control

Pro+

| 1 | 2 | | 3 | | 4 | 5 | 6 | |
|---|---|---|---|---|---|---|---|---|
| C | 409 | . | 2 | - | 50 | e | Pro+ | *(example)* |

## Type plate

Each **sera** pump is factory provided with a type plate. The following information can be found on this type plate.

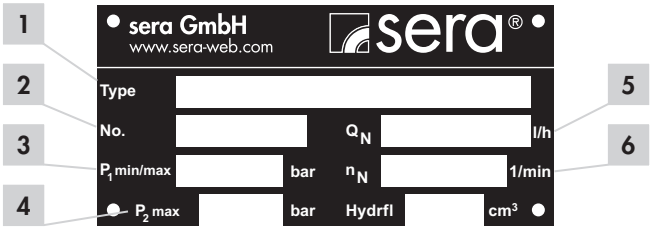


| No. | Designation |
|---|---|
| 1 | Pump type |
| 2 | Serial number of the pump |
| 3 | Minimum/maximum permissible pressure in the pump inlet<br>Minimum/maximum permissible pressure in the inlet cross section which the pump can be used for.<br>Please consider that pressure depends on rotation speed, delivery rate, temperature and static pressure at the inlet. |
| 4 | Maximum permissible pressure in the pump outlet<br>Maximum permissible pressure in the outlet cross section which the pump can be used for. Please consider that pressure depends on rotation speed, delivery rate, temperature and static pressure at the outlet. |
| 5 | Nominal delivery rate<br>Delivery rate which the pump was ordered for, based on the nominal rotation speed nN, the nominal delivery height p2max. and the delivery medium stated in the supply contract. |
| 6 | Nominal stroke frequency |

## Notes attached to the product

Symbols which are directly attached to the pump, e.g. arrows for direction of rotation or symbols for fluid connections are to be observed and kept in legible condition.

## Materials

The materials used are stated in the order confirmation and the product description.

**sera** dosing pumps are run-dry safe oscillating displacement pumps that are characterised by high tightness of the dosing head. The fluid is conveyed by a deformable diaphragm.

## Components ...409.2

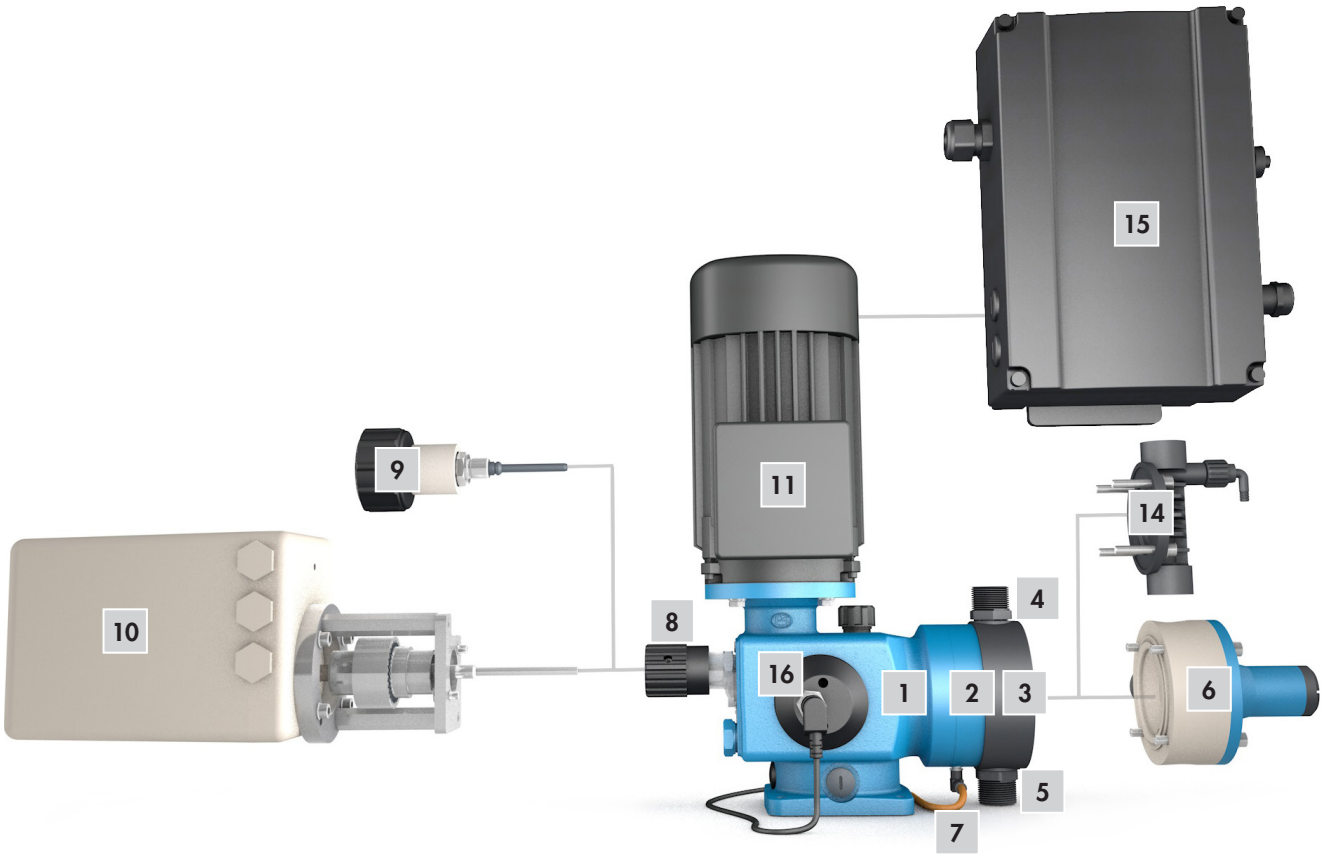


| No. | Designation | Remark |
|---|---|---|
| 1 | Stroke mechanism | |
| 2 | Assembly pump | |
| 3 | Pump body | |
| 4 | Pressure valve | |
| 5 | Suction valve | |
| 6 | Pump body with integrated overflow valve | |
| 7 | Diaphragm rupture monitoring device | option |
| 8 | Manual stroke length adjustment | |
| 9 | Manual stroke length adjustment with position indicator | option |
| 10 | Stroke length adjustment with actuator | option |
| 11 | Motor | |
| 14 | Pump body with manual vent valve | ...409.2-1,6e; -2,4e |
| 15 | Frequency converter * | option |
| 16 | Stroke frequency transmitter | option |
| not illustrated | Blind plug | option (M-design) |
| not illustrated | Motor for Ex-area * | option (R-design) |
| not illustrated | Actuator for Ex-area * | option |
| not illustrated | Pneumatic actuator * | option |

* see enclosed documentation

## Components of C409.2




| No. | Designation | Remark |
|---|---|---|
| **1** | Stroke mechanism | |
| **2** | Assembly pump | |
| **3** | Pump body | |
| **4** | Pressure valve | |
| **5** | Suction valve | |
| **6** | Pump body with integrated overflow valve | |
| **7** | Diaphragm rupture monitoring device | |
| **8** | Manual stroke length adjustment | |
| **9** | Manual stroke length adjustment with position indicator | option |
| **10** | Stroke length adjustment with actuator | option |
| **11** | Motor | |
| **12** | Control Pro+ with removable control element | |
| **13** | INTERFACE MODULE | accessories |
| **14** | Pump body with manual vent valve | ...409.2-1,6, -2,4e |
| not illustrated | Suction lances connection | accessories |

## Components ...410.2

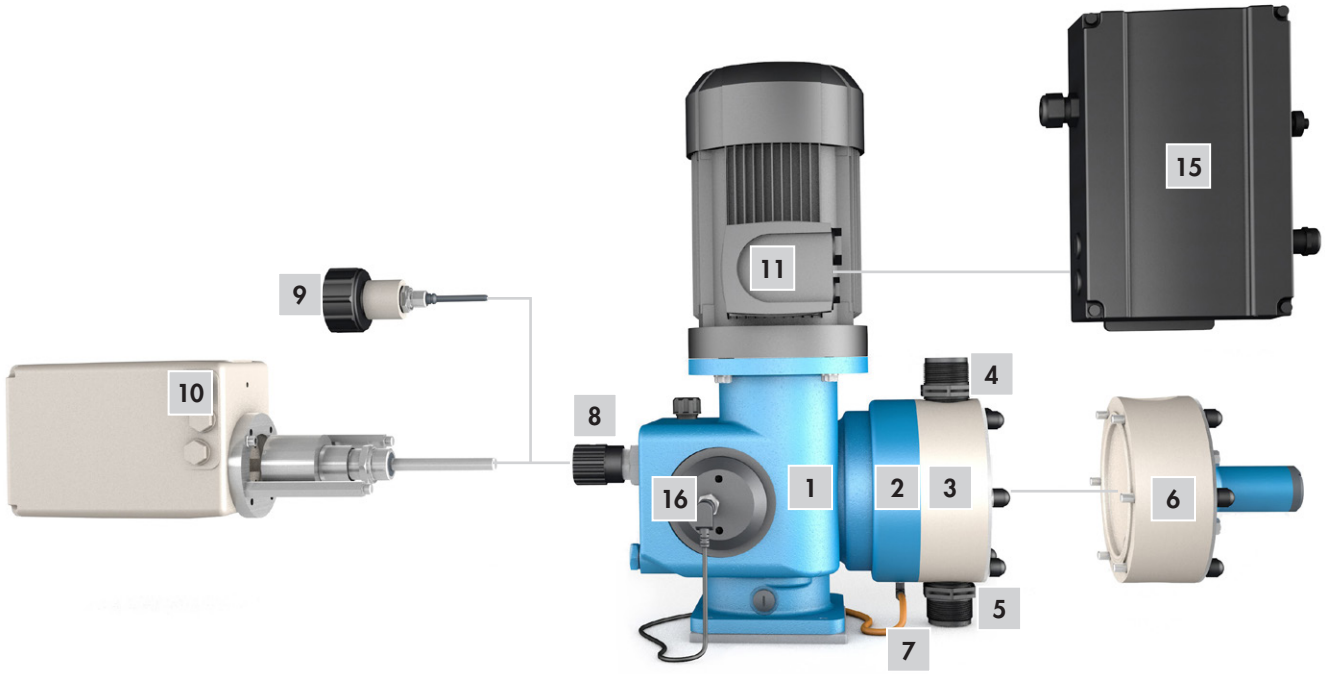


| No. | Designation | Remark |
|---|---|---|
| 1 | Stroke mechanism | |
| 2 | Assembly pump | |
| 3 | Pump body | |
| 4 | Pressure valve | |
| 5 | Suction valve | |
| 6 | Pump body with integrated overflow valve | |
| 7 | Diaphragm rupture monitoring device | option |
| 8 | Manual stroke length adjustment | |
| 9 | Manual stroke length adjustment with position indicator | option |
| 10 | Stroke length adjustment with actuator | option |
| 11 | Motor | |
| 15 | Frequency converter * | option |
| 16 | Stroke frequency transmitter | option |
| not illustrated | Blind plug | option (M-design) |
| not illustrated | Motor for Ex-area * | option (R-design) |
| not illustrated | Actuator for Ex-area * | option |
| not illustrated | Pneumatic actuator * | option |

* see enclosed documentation

## Components of C410.2




| No. | Designation | Remark |
|---|---|---|
| 1 | Stroke mechanism | |
| 2 | Assembly pump | |
| 3 | Pump body | |
| 4 | Pressure valve | |
| 5 | Suction valve | |
| 6 | Pump body with integrated overflow valve | |
| 7 | Diaphragm rupture monitoring device | |
| 8 | Manual stroke length adjustment | |
| 9 | Manual stroke length adjustment with position indicator | option |
| 10 | Stroke length adjustment with actuator | option |
| 11 | Motor | |
| 12 | Control C410.2 | |
| not illustrated | Suction lances connection | accessories |

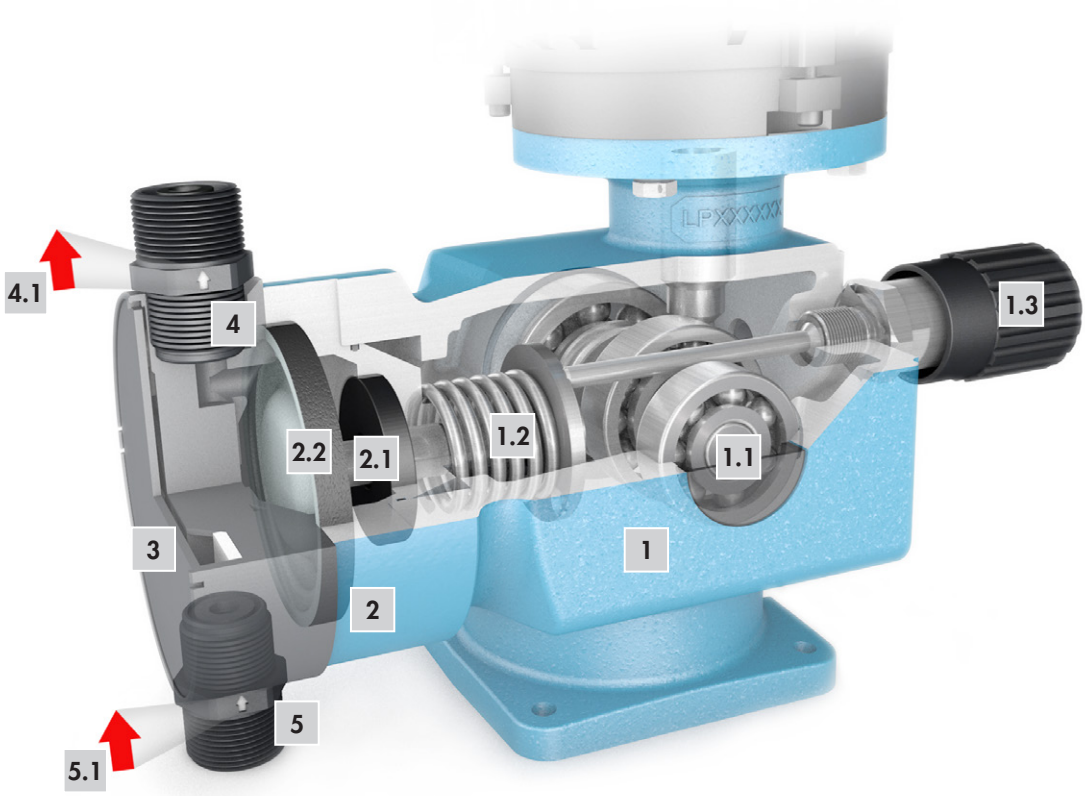


## Stroke mechanism (1)

Piston diaphragm pumps of this type series use a rotary cam drive to transmit the rotation of the drive motor to the displacement body.
In case of the rotary cam drive, the eccentric (**1.1**) provides the pressure stroke while the suction stroke is performed by a pressure spring (return spring) (**1.2**).
The effective stroke length can be changed by means of an adjustable scale knob (**1.3**) which prevents the connecting rod from following the rotary cam up to the rear dead centre during suction stroke (see stroke length adjustment).

## Assembly pump (2)

The drive diaphragm (**2.2**) connected to the drive via the connecting rod (**2.1**) transmits the stroke movement directly to the pumped medium.

## Pump body (3)

Depending on the applied backpressure, movements of the plastic pump body in elastic materials are possible.
This does not affect the pumps's service life or operational reliability.

## Pressure valve / Suction valve (4/5)

The pump valves are ball valves that only work properly in a vertical position. The condition of the valves has a deciding effect on the operating capability of the pump. Valves must be exchanged as complete units. When replacing the valves it is important to check the flow direction (**4.1/5.1**) .

**ATTENTION**

Pressure valve above, suction valve below!

## Pump body with integrated overflow valve (6)

The integrated diaphragm overflow valve protects the pump from unacceptable overpressure at closed pressure line. Pipes and fittings, however, are not protected and have to be protected separately, if necessary. It can be used for liquid media without solid matters according to the manufacturer specifications.
Pump bodies with integrated overflow valve are equipped with an additional relief channel (**6.1**) through which the pumped medium is drained in case of an unacceptable overpressure.
The relief channel is closed by the mechanically prestressed diaphragm (**6.2**) of the overflow valve.
The mechanical prestress which is executed by a pressure spring (**6.3**) can be adjusted with a set screw (**6.4**). If the pressure of the pumped medium on the diaphragm exceeds the set pressure, the diaphragm is lifted and the pumped medium flows into the relief channel.
When the pressure in the pump body falls below the pressure set the diaphragm closes the inlet channel again.

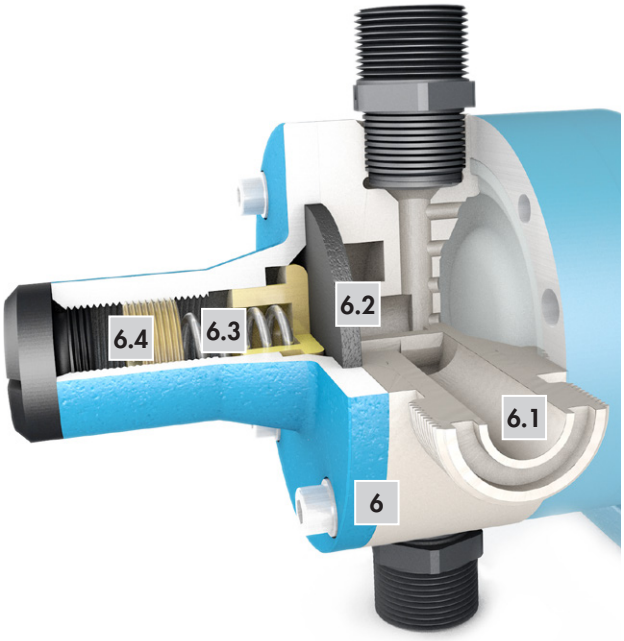


## Pump body with manual vent valve (14) (409.2-1,6e; -2,4e)

The vent valve is used to release the manual pressure in the pump body (**15**) during commissioning. Open vent valve when pump primes first time.
When vent valve is opened gas including medium escapes into the feedback line. The vent valve must be closed again as soon as only medium without gas constituent escapes. The pump now feeds the medium into the pressure line.
Open again for another ventilation. The vent valve consists of a vent screw (**15.1**) with integrated hose nozzle Ø 6,5 (**15.2**), which must be fitted with a hose (**15.3**) (inside diameter 6 mm) as feedback line. The leaking medium incl. the gas admixtures must be disposed off properly.
The vent screw is inserted during normal operation.

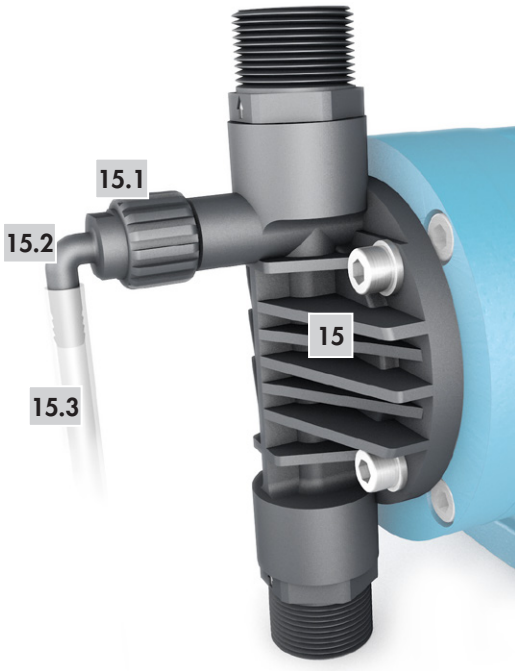


**ATTENTION**

Open vent screw with great caution and perform max. 1 turn. Take care that the tightness of the thread is still guaranteed.

**ATTENTION**

The vent screw must always be closed during the driving process.

## Diaphragm rupture monitoring device (7)

### C409.2 /C410.2 (standard)

**sera** - pumps of the C409.2 series are equipped with a conductive diaphragm rupture monitoring device.

**NOTE**

The sensitivity of the diaphragm rupture electrode can be adapted to the conductivity of the medium via the electronics (see the technical manual of the control). Preset ex works to 50% approx. 10 µS/cm.

### ...409.2 / ...410.2 (option)

**sera** pumps of the R(F)/M(F)409.2 /R(F)/M(F)410.2 series can be equipped with a conductive diaphragm rupture monitoring device as option.

**ATTENTION**

The pumped medium must have a minimum conductivity of at least 5 µS/cm!

An electrode together with an approprate evaluation unit (option, e.g. **sera** diaphragm rupture relay, type ER-104 (or ER-142 for Ex-areas respectively) is used for monitoring. The diaphragm rupture electrode is mounted directly to the pump, the evaluation unit inside the switch cabinet.
The diaphragm rupture electrode type MBE-02 is not mounted by sera due to transport. We put the MBE-02 electrode onto the cable and fix it to the pump in a separate bag.
Put the diaphragm rupture electrode is in the base ring (**2**) of the pump from below (see pig. „Components ...").

## Stroke length adjustment

The delivery rate of the pump is set by changing the stroke length. The stroke length is infinitely variable between 0% and 100%..

**NOTE**

A linear dosing behaviour is achieved with stroke length adjustments between 20% and 100%.

## Manual stroke length adjustment (standard) (8)

The effective stroke length of the connecting rod is changed by turning the scale knob.
The stroke length should be adjusted during operation of the pump.
The set stroke length can be read off a scale, e.g. 75%.
With the 20-steps adjustment on the scale knob, the stroke length can be set individually with a tolerance of 0.5%..

A protecting cap can be provided for the protection of the stroke length adjustment against unintentional adjustment.

...409.2

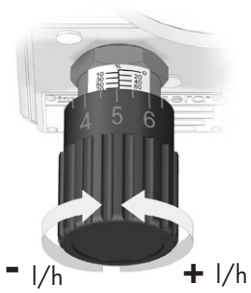


...410.2-280e ... 900e

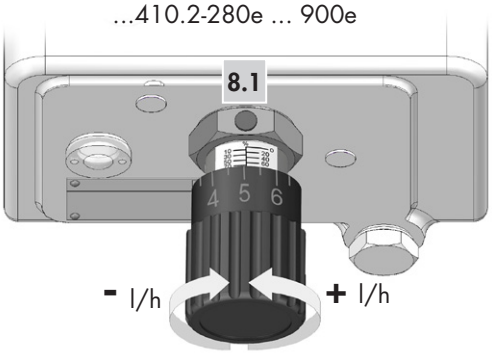


...410.2-1450e

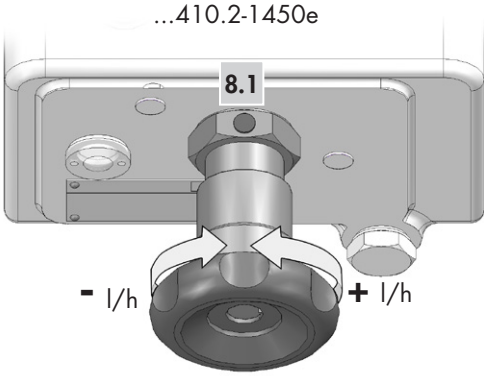


**ACHTUNG**

The locking (**8.1**) is to be released (us-ing a spanner SW3) before the stroke length is changed. Then the locking must be tightened again. This ensures that the set stroke length does not change during opera-tion.

## Manual stroke length adjustment by a dial scale with indication of percent (option) (9)

The stroke length is adjusted by turning the hand wheel.
The stroke length shuold be adjusted during operation of the pump.
The set stroke length can be read off the percent scale (the example shows a set stroke length of 65%).
In delivery state, the stroke length adjustment is factory set to 50%.

**ATTENTION**

The dial scale with indication of percent may become misadjusted during transport.
If the indicator does not match the 50% setting, then the percent scale must be re-adjusted during operation (!) of the pump!

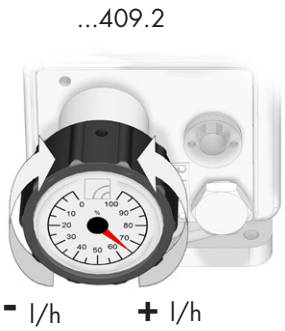


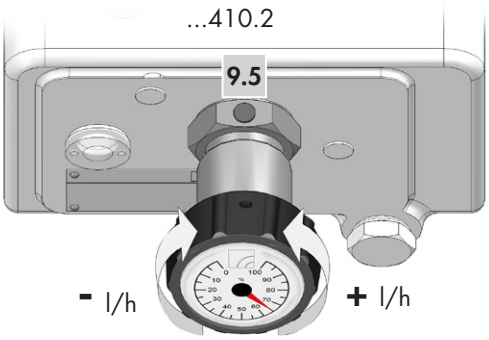


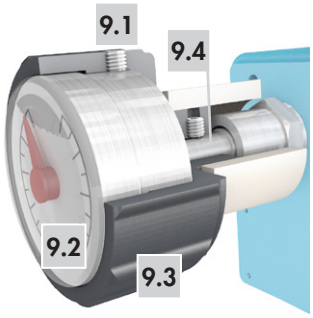


**Adjusting the percent scale:**

- Switch on the pump.
- Loosen setscrew (**9.1**).
- Remove percent scale (**9.2**) from the hand wheel (**9.3**).
- Manually turn the percent scale to 0% setting.
- Loosen the locking (**9.5**) ► bei ...410.2.
- Use the hand wheel to set the stroke length to 0%.
- Turn hand wheel clockwise until there is no further stroke movement (connecting rod does no longer hit the adjusting spindle (**9.4**)).
- Insert percent scale again.
- Use the setscrew to secure the percent scale to the hand wheel.
- Adjust desired stroke length.
- Tighten the locking (**9.5**) ► bei ...410.2.

## Automatic stroke length adjustment by means of an electrical actuator (10)

The electrical actuator is directly mounted to the stroke mechanism (**1**) of the pump. A clutch transmits the rotary motion of the actuator drive shaft to the adjusting spindle. The axial displacement is compensated in the clutch.
In case of dosing pumps with electrical actuator, a manual adjustment of the stroke length on the pump is no longer possible. (Exception: actuator with hand wheel)
The actuator is equipped with two integrated limit switches as well as a position potentiometer for position feedback as standard. Both limit switches are factory set so that the drive will switch off at a stroke length of 0% and 100%, even if a control voltage is applied.
This guarantees that adjustments can only be made within the permissible range. The position potentiometer is driven by a safety clutch which prevents damage caused by incorrectly adjusted limit switches.
Activation is performed by appropriate control units (see **sera** - accessories).
The set stroke length can be read off on the pump (percent scale).
Information on the electrical connection is given inside the cover of the actuator.

**ATTENTION**

The adjustment is only possible when the pump is running!

## Automatic stroke length adjustment by means of an electrical actuator with integrated positioner

same as Chapter „Automatic stroke length adjustment by means of an electrical actuator (10)", additionally:

This positioner which is integrated in the actuator enables an actuator setting from 0…100% that is proportional to the connected input signal.
As an option, the actuator can also be provided with a collective interference signal. Information on the electrical connection is given inside the cover of the actuator.

## Drive motor C409.2 / C410.2

A **sera** motor pump of series C409.2 is driven by a threephase-motor controlled by the electronics.

A protective motor switch is not necessary due to the fact that a thermic overload protection is integrated in the pump for the protection of the motor.

## Drive motor ...409.2 / ...410.2

**sera** motor pumps R(F)/M(F)409.2 /R(F)/M(F)410.2 are driven either by a three-phase motor.
Standard: three-phase motor (with PTC thermistor; suitable for operation with frequency converter).

## Motor connection

**In case of a three-phase motor**

The motor connection depends on the voltage indication on the type plate and the applied supply voltage.

*Example:*

| | |
|---|---|
| Indication on the type plate: | Δ 230V/ Y400V 50Hz |
| Three-phase power system on sit: | Y400V 50 Hz |
| Correct motor connection: | Star connection (Y) |

Δ Delta connection

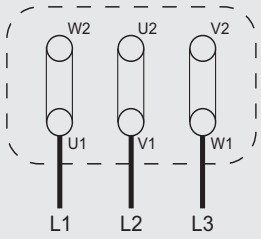


Y Star connection

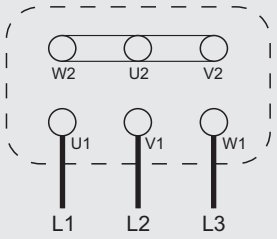


**In case of an AC motor**

The AC motor has a main and an auxiliary winding. The running capacitor is switched in series to the auxiliary phase.

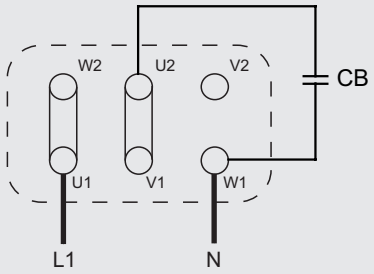


## Direction of rotation

The direction of rotation of the drive motor is arbitrary.

## Terminal box

Before closing the terminal box, please check that:

- All terminal connections are tightly fitted.
- The interior is clean and free of foreign bodies.
- Unused cable entries are closed and screw plugs are tightened.
- The sealing is correctly inserted in the cover of the terminal box; check proper condition of all sealing surfaces so that the demands of the protection category are fulfilled.

## Motor protection

Provide for adequate motor protective equipment in order to protect the motor from overload (e.g. motor protection switch with thermal overcurrent release).
Connect the ground wire to the marked earth screw in accordance with VDE 0100.

**ATTENTION**

Fuses do not protect the motor!

## Conrol C409.2 Pro+/ C410.2 (12)

Among other things, the control enable the proportional dosing via analogue signals 4 … 20 mA or contact signals with the possibility of pulse division or pulse multiplication.
The graphical display shows information about the current status of the pump.
A connection for flow monitoring or flow rate measurement and an „empty" signal with pre-alarm and dry run alarm are available as standard.

## INTERFACE MODULE (13) (accessories C409.2)

The INTERFACE MODULE provides level input and PROFIBUS connectivity (see TM05).

## Stroke frequency transmitter (16) (option RF409.2 / RF410.2)

**sera** pumps R(F)/M(F)409.2 /R(F)/M(F)410.2 are oscillating displacement pumps with an exactly defined stroke volume per each pump stroke.
If these dosing pumps should be used for automatic filling processes or charge dosing, then the single pump strokes must be determined and converted into electrical signals.
For this purpose, a stroke frequency transmitter (inductive contactor) is added to the pump (the option cannot mounted additionally) and reports each single pump stroke to the evaluation unit (e.g. preselection counter, SPC-control unit, etc.).

| Technical data | |
|---|---|
| Rated voltage | 10 - 60 V DC |
| Constant current | < 200 mA |
| Short circuit-proof: | |
| Connection mode | plug connector with 2 m cable |
| LED (green) | indicates supply voltage |
| LED (yellow) | indicates switching status |

Wiring diagram

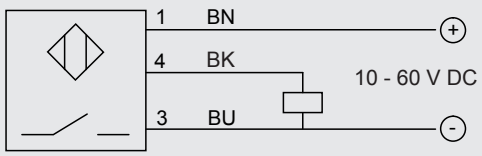


**ATTENTION**

When switching inductive loads (protectors, relays, etc.), surge protectors (varistors) must be fitted owing to the high self-induction voltage!

**ATTENTION**

When the pump is deployed in exlosion-hazardous areas a NAMUR type stoke frequency transmitter (II2G EExia IICT6, acc. to. ATEX95) is to be provided!

## TECHNICAL DATA

| PUMP DATA (* 8mWS = performance losses of nominal capacity QN of 20-25%) | | | RF 409.2-... | | | | | |
|---|---|---|---|---|---|---|---|---|
| | | | 1,6e | 2,4e | 7,0e | 12e | 18e | 25e |
| Permissible pressure $p_{2max.}$ at the pump outlet | bar | | 10 | 10 | 10 | 10 | 10 | 10 |
| Nominal capacity QN at $p_{2max.}$ | l/h | 50 Hz | 0-1,6 | 0-2,4 | 0-7,0 | 0-12 | 0-18 | 0-25 |
| | | 60 Hz | 0-1,9 | 0-2,9 | 0-8,4 | 0-14,4 | 0-21,5 | 0-30 |
| Quantity per stroke | ml/stroke | (100%) | 0,27 | 0,27 | 0,78 | 2,0 | 3,0 | 2,8 |
| Max. suction height | mWC | | 3 | | | | | 3 ( 8* ) |
| Min./max. permissible pressure at the pump inlet | bar | $p_{1min/max}$ | -0,3/0 | | | | | -0,3/0 ( -0,8/0* ) |
| Recomm. nominal diameter DN of the connecting pipes | mm | | 5 | 5 | 5 | 10 | 10 | 10 |
| Nominal stroke frequency | 1/min | 50 Hz | 100 | 150 | 150 | 100 | 100 | 150 |
| | | 60 Hz | 120 | 180 | 180 | 120 | 120 | 180 |
| Weight approx. | kg | plastic | 9 | 9 | 9 | 9 | 9 | 9 |
| | | stainless steel | 10 | 10 | 10 | 10 | 10 | 10 |

| PUMP DATA (* 8mWS = performance losses of nominal capacity QN of 20-25%) | | | RF 409.2-... | | | | | | | |
|---|---|---|---|---|---|---|---|---|---|---|
| | | | 50e | 75e | 90e | 115e | 140e | 180e | 250e | 350e |
| Permissible pressure $p_{2max.}$ at the pump outlet | bar | | 10 | 10 | 8 | 4 | 8 | 4 | 3 | 3 |
| Nominal capacity QN at $p_{2max.}$ | l/h | 50 Hz | 0-50 | 0-75 | 0-90 | 0-115 | 0-140 | 0-180 | 0-250 | 0-350 |
| | | 60 Hz | 0-60 | 0-90 | 0-108 | 0-138 | 0-168 | 0-216 | 0-300 | - |
| Quantity per stroke | ml/stroke | (100%) | 8,3 | 8,3 | 15,0 | 19,2 | 15,6 | 20,0 | 41,7 | 38,9 |
| Max. suction height | mWC | | 3 (8 *) | | | | | | 3 | |
| Min./max. permissible pressure at the pump inlet | bar | $p_{1min/max}$ | -0,3/0 (-0,8/0) | | | | | | -0,3/0 | |
| Recomm. nominal diameter DN of the connecting pipes | mm | | 10 | 15 | 15 | 15 | 15 | 15 | 15 | 15 |
| Nominal stroke frequency | 1/min | 50 Hz | 100 | 150 | 100 | 100 | 150 | 150 | 100 | 150 |
| | | 60 Hz | 120 | 180 | 120 | 120 | 180 | 180 | 120 | – |
| Weight approx. | kg | plastic | 9 | 9 | 11 | 10 | 11 | 10 | 13 | 13 |
| | | stainless steel | 10 | 10 | 13 | 13 | 13 | 13 | 21 | 21 |

Linear dosing range at a stroke length between 20% and 100%.
Linear dosing range at a stroke length between 30% and 100% ► RF409.2-1,6, -2,4e (50Hz), RF409.2-7,0e, -12e (60Hz).
The nominal data refer to water, 20°C and nominal pressure. With lower counterpressure it can come to be soaked off achievements.

| PUMP DATA | | | C 409.2-... Pro+ | | | | | |
|---|---|---|---|---|---|---|---|---|
| | | | 1,6e | 2,4e | 7,0e | 12e | 18e | 25e |
| Permissible pressure $p_{2max.}$ at the pump outlet | bar | | 10 | 10 | 10 | 10 | 10 | 10 |
| Nominal capacity QN at $p_{2max.}$ | l/h | 50/60 H | 0-1,6 | 0-2,4 | 0-7 | 0-12 | 0-18 | 0-25 |
| Quantity per stroke | ml/stroke | (100%) | 0,27 | 0,27 | 0,78 | 3,0 | 3,0 | 3,0 |
| Max. suction height | mWC | | 3 | | | | | |
| Min./max. permissible pressure at the pump inlet | bar | $p_{1min/max}$ | -0,3/0 | | | | | |
| Recomm. nominal diameter DN of the connecting pipes | mm | | 10 | 10 | 10 | 10 | 10 | 10 |
| Nominal stroke frequency | 1/min | 50/60 Hz | 100 | 150 | 150 | 67 | 100 | 150 |
| Weight approx. | kg | plastic | 11 | 11 | 11 | 11 | 11 | 8,5 |
| | | stainless st. | | | | | | |

| PUMP DATA (* 8mWS = performance losses of nominal capacity QN of 20-25%) | | | C 409.2-... Pro+ | | | | | | | |
|---|---|---|---|---|---|---|---|---|---|---|
| | | | 50e | 75e | 90e | 115e | 140e | 180e | 250e | 350e |
| Permissible pressure $p_{2max.}$ at the pump outlet | bar | | 10 | 10 | 8 | 4 | 8 | 4 | 3 | 3 |
| Nominal capacity QN at $p_{2max.}$ | l/h | 50/60 Hz | 0-50 | 0-75 | 0-90 | 0-115 | 0-140 | 0-180 | 0-250 | 0-350 |
| Quantity per stroke | ml/stroke | (100%) | 8,3 | 8,3 | 15,0 | 19,2 | 15,6 | 20,0 | 41,7 | 38,9 |
| Max. suction height | mWC | | 3 | | | (8*) | | | 3 | |
| Min./max. permissible pressure at the pump inlet | bar | $p_{1min/max}$ | -0,3/0 | | | (-0,8/0*) | | | -0,3/0 | |
| Recomm. nominal diameter DN of the connecting pipes | mm | | 15 | 15 | 15 | 15 | 15 | 15 | 15 | 15 |
| Nominal stroke frequency | 1/min | 50/60 H | 150 | 150 | 100 | 100 | 150 | 150 | 100 | 150 |
| Weight approx. | kg | plastic | 8,5 | 8,5 | 10,5 | 9,0 | 10,5 | 9,0 | 13,0 | 13,0 |
| | | stainless st. | | | | | | | | |

Linear dosing range at a stroke length between 20% and 100% and at a stroke frequency between 5 and 100%.
The nominal data refer to water, 20°C and nominal pressure. With lower counterpressure it can come to be soaked off achievements.

## TECHNICAL DATA

| PUMP DATA | | | RF 410.2-... | | | |
|---|---|---|---|---|---|---|
| | | | 280e | 570e | 900e | 1450e |
| Permissible pressure $p_{2max.}$ at the pump outlet | bar | | 8 | 6 | 5 | 5 * |
| Nominal capacity QN at $p_{2max.}$ | l/h | 50 Hz | 0-280 | 0-570 | 0-900 | 0-1.450 |
| | | 60 Hz | 0-336 | 0-684 | 0-1.080 | 0-1.740 |
| Quantity per stroke | ml/stroke | (100%) | 46 | 98 | 155 | 245 |
| Max. suction height | mWC | | 5 | 5 | 3 | 3 |
| Min./max. permissible pressure at the pump inlet | bar | $p_{1min/max}$ | -0,5/0 | -0,5/0 | -0,3/0 | -0,3/0 |
| Recommended nominal diameter DN of the connecting pipes | mm | | 15 | 15 | 20 | 25 |
| Nominal stroke frequency | 1/min | 50 Hz | 97 | 97 | 97 | 97 |
| | | 60 Hz | 116 | 116 | 116 | --- |
| Weight approx. | kg | plastic | 35 | 35 | 37 | 41 |
| | | stainless steel | 42 | 42 | 52 | 59 |

| PUMP DATA | | | C 410.2-... | | | |
|---|---|---|---|---|---|---|
| | | | 280e | 570e | 900e | 1450e |
| Permissible pressure $p_{2max.}$ at the pump outlet | bar | | 8 | 6 | 5 | 5 |
| Nominal capacity QN at $p_{2max.}$ | l/h | 50/60 Hz | 0-280 | 0-570 | 0-900 | 0-1.450 |
| Quantity per stroke | ml/stroke | (100%) | 46 | 98 | 155 | 245 |
| Max. suction height | mWC | | 5 | 5 | 3 | 3 |
| Min./max. permissible pressure at the pump inlet | bar | $p_{1min/max}$ | -0,5/0 | -0,5/0 | -0,3/0 | -0,3/0 |
| Recommended nominal diameter DN of the connecting pipes | mm | | 15 | 15 | 20 | 25 |
| Nominal stroke frequency | 1/min | 50 Hz | 97 | 97 | 97 | 97 |
| Weight approx. | kg | plastic | 38 | 38 | 49 | 49 |
| | | stainless steel | 45 | 45 | 64 | 64 |

* at 60 Hz is the permissible pressure 3,5 bar

Linear dosing range at a stroke length between 20% and 100%.
The nominal data refer to water, 20°C and nominal pressure. With lower counterpressure it can come to be soaked off achievements.

| ELECTRICAL DATA | | RF409.2-1,6e ... RF409.2-25e |
|---|---|---|
| Power consumption | kW | 0,18 |
| Voltage | V | 230/400V 50Hz, 460V 60Hz |
| Frequency | Hz | 50/60 |
| Insulation class | ISO | F |
| Enclosure | IP | 55 |

| ELECTRICAL DATA | | RF409.2-50e ... RF409.2-350e |
|---|---|---|
| Power consumption | kW | 0,37 |
| Voltage | V | 230/400V 50Hz, 460V 60Hz |
| Frequency | Hz | 50/60 |
| Insulation class | ISO | F |
| Enclosure | IP | 55 |

| ELECTRICAL DATA | | C 409.2-1,6e Pro+ ... C 409.2-25e Pro+ | |
|---|---|---|---|
| | | 230 V, 50/60 Hz | 115 V, 50/60 Hz |
| Power consumption | kW | 0,18 | |
| Voltage | V | 210 - 250 | 100 - 125 |
| Frequency | Hz | 50/60 | |
| Inlet voltage, control input | V DC | 5...30 | |
| Minimum contact signal time | ms | 55 | |
| Analogue input resistance | Ω | 39 | |
| Digital output internal/external supply | | PNP max. 24V DC, 30mA /max. 30V DC, 30mA | |
| Recommended fuse | (circuit breaker) | C6A | C10A |
| Insulation class | ISO | F | |
| Enclosure | IP | 55 | |

| ELECTRICAL DATA | | C 409.2-50e Pro+ ... C 409.2-350e Pro+ | |
|---|---|---|---|
| | | 230 V, 50/60 Hz | 115 V, 50/60 Hz |
| Power consumption | kW | (...-50e = 0,18 kW) | 0,37 |
| Voltage | V | 210 - 250 | 100 - 125 |
| Frequency | Hz | 50/60 | |
| Inlet voltage, control input | V DC | 5...30 | |
| Minimum contact signal time | ms | 55 | |
| Analogue input resistance | Ω | 39 | |
| Digital output internal/external supply | | PNP max. 24V DC, 30mA /max. 30V DC, 30mA | |
| Recommended fuse | (circuit breaker) | C6A | C10A |
| Insulation class | ISO | F | |
| Enclosure | IP | 55 | |

## TECHNICAL DATA

| ELECTRICAL DATA | | RF 410.2-... | | | |
|---|---|---|---|---|---|
| | | 280e | 570e | 900e | 1450e |
| Power consumption | kW | 0,75 | 0,75 | 1,1 | 1,5 |
| Voltage | V | 230/400V 50Hz, 460V 60Hz | | | |
| Frequency | Hz | 50/60 | | | |
| Insulation class | ISO | F | | | |
| Enclosure | IP | 55 | | | |

| ELECTRICAL DATA | | C 410.2-... | | | |
|---|---|---|---|---|---|
| | | 280e | 570e | 900e | 1450e |
| Power consumption | kW | 0,75 | 0,75 | 1,5 | 1,5 |
| Voltage | V | 380-420 | | | |
| Frequency | Hz | 50/60 | | | |
| Inlet voltage, control input | V DC | 5...30 | | | |
| Minimum contact signal time | ms | 55 | | | |
| Analogue input resistance | Ω | 100 | | | |
| Digital output internal/external supply | | PNP max. 15V DC, 50mA /max. 30V DC, 350mA | | | |
| Recommended fuse | (circuit breaker) | C10A | | | |
| Insulation class | ISO | F | | | |
| Enclosure | IP | 55 | | | |

### NOTE

The motor data can be read off the type plate on the drive motor of the respective pump!

| NOISE MEASUREMENT | |
|---|---|
| Max. sound pressure at max. burden | 50 - 65 dB(A) |

| VISCOSITY, PUMPED MEDIUM | |
|---|---|
| Max. viscosity with non-spring-loaded valves | 100 mPas (=cP) |

| TEMPERATURE DATA | |
|---|---|
| Max. liquid temperature | 60 °C |
| Min. liquid temperature | 10 °C |
| Max. operating temperature | 40 °C |
| Min. operating temperature | 0 °C |
| Max. storage temperature | 40 °C |
| Min. storage temperature | 0 °C |

| AMBIENT CONDITIONS | |
|---|---|
| Max. installation altitude above sea level | 1000 m |
| Max. relative air humidity | < 90% |

## Characteristics

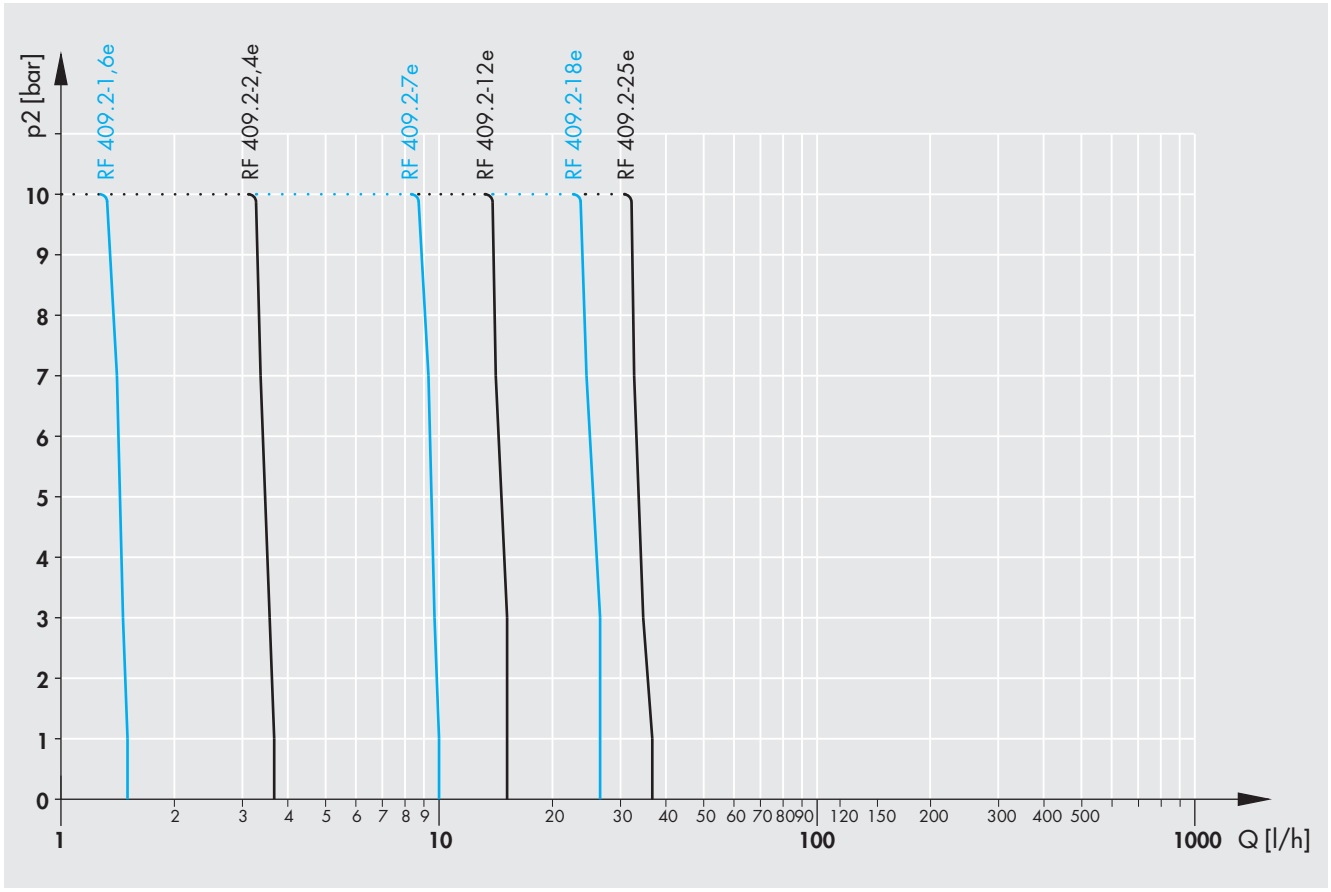


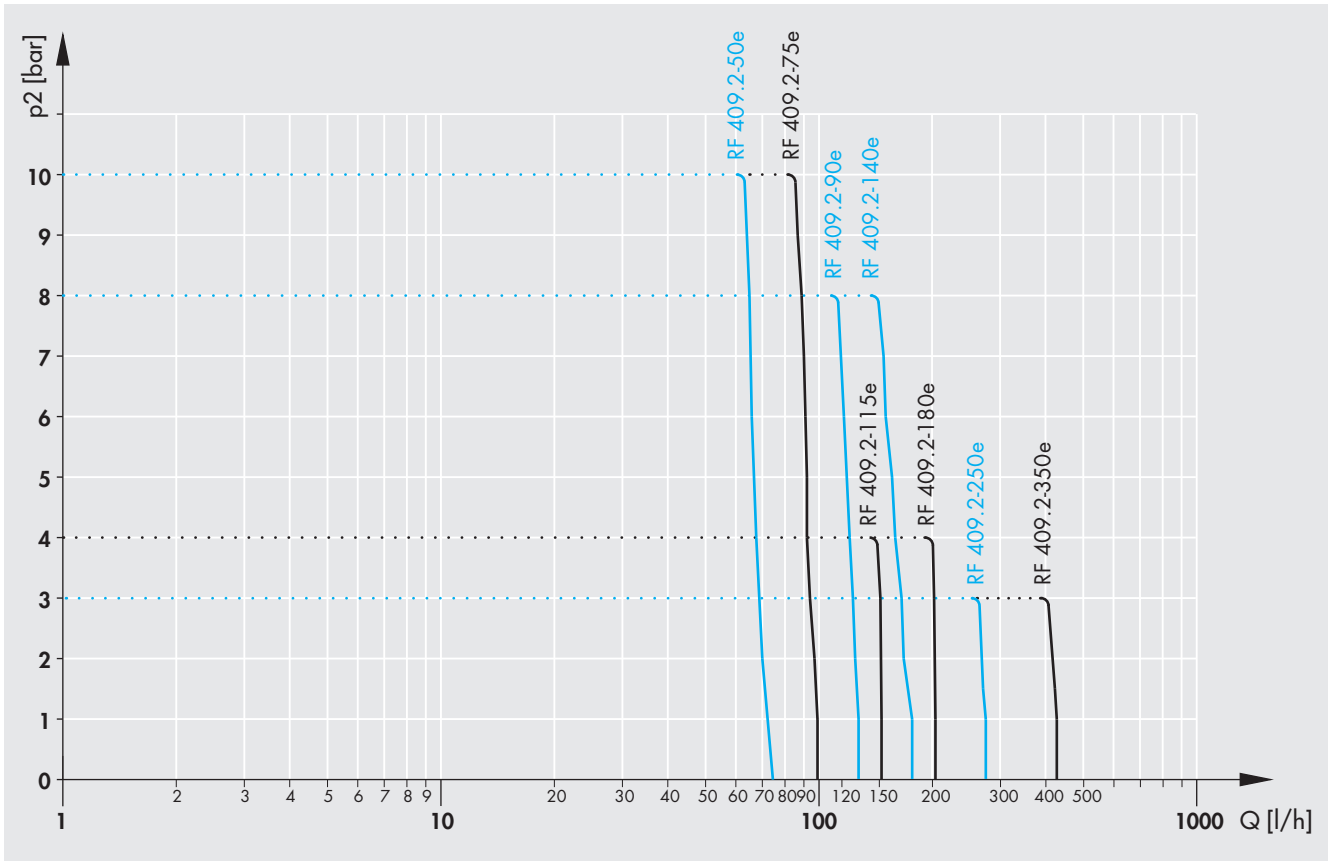

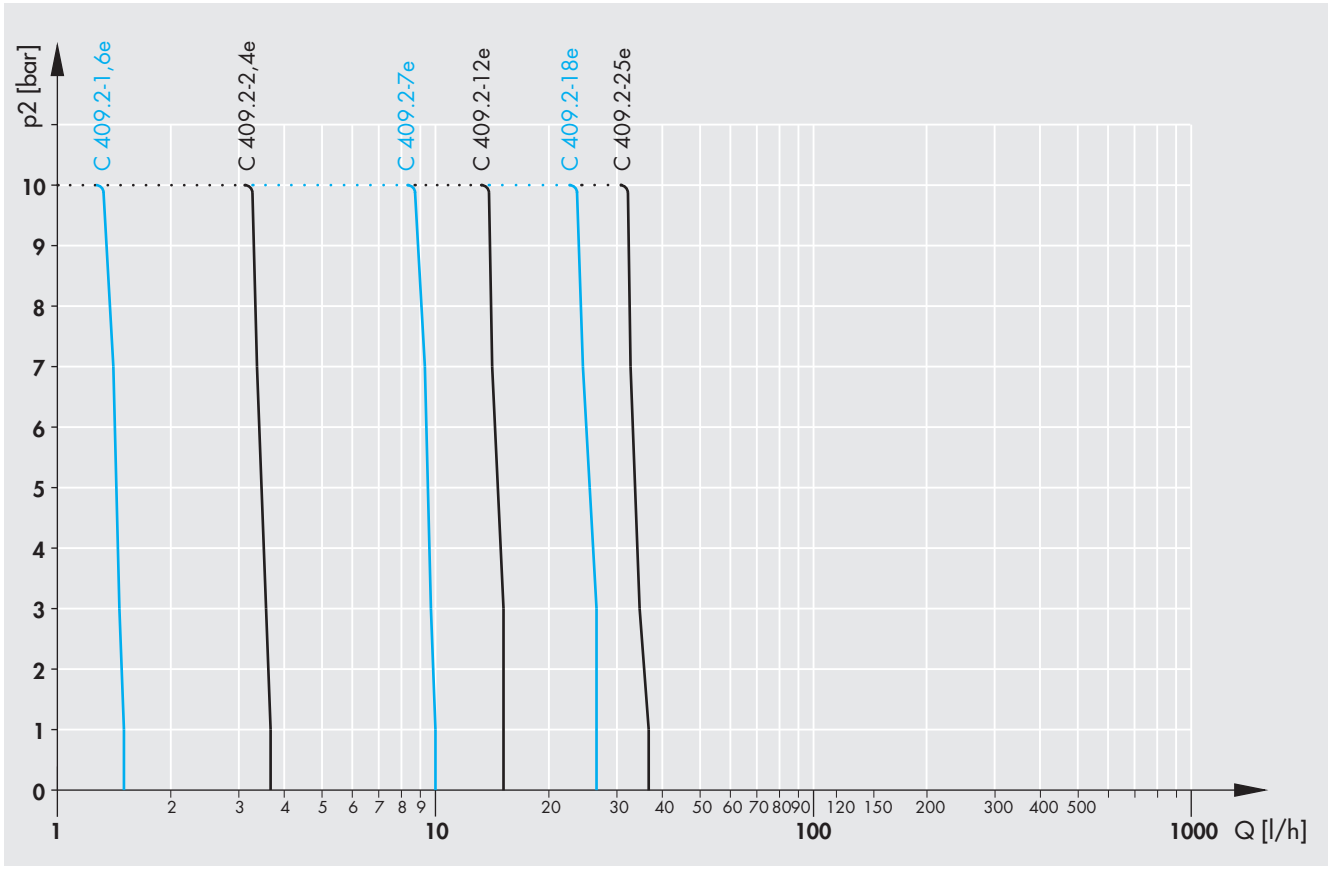
p2 [bar]
C 409.2-1,6e
C 409.2-2,4e
C 409.2-7e
C 409.2-12e
C 409.2-18e
C 409.2-25e
0 1 2 3 4 5 6 7 8 9 10
1 2 3 4 5 6 7 8 9 10 20 30 40 50 60 70 80 90 100 120 150 200 300 400 500 1000
Q [l/h]

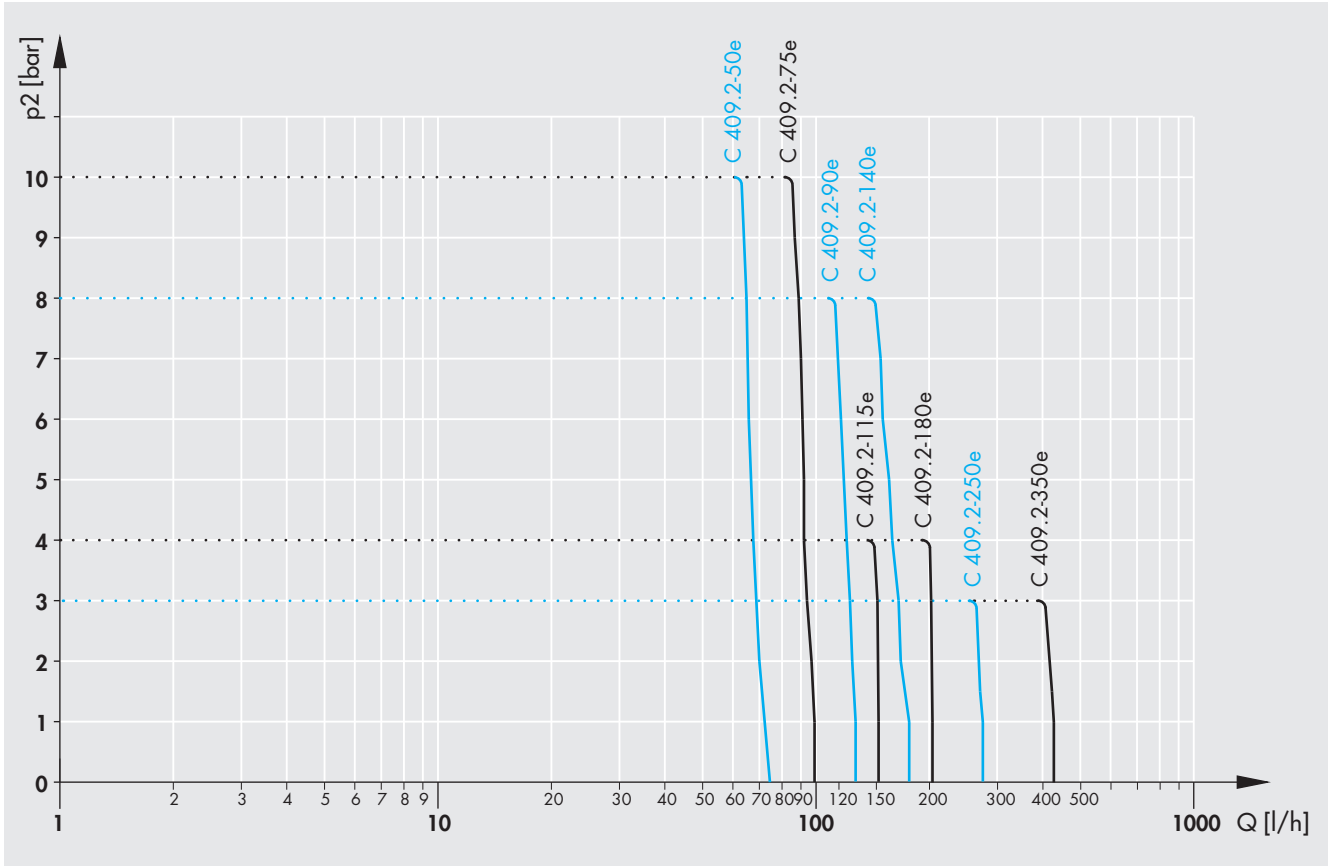
p2 [bar]
C 409.2-50e
C 409.2-75e
C 409.2-90e
C 409.2-140e
C 409.2-115e
C 409.2-180e
C 409.2-250e
C 409.2-350e
0 1 2 3 4 5 6 7 8 9 10
1 2 3 4 5 6 7 8 9 10 20 30 40 50 60 70 80 90 100 120 150 200 300 400 500 1000
Q [l/h]

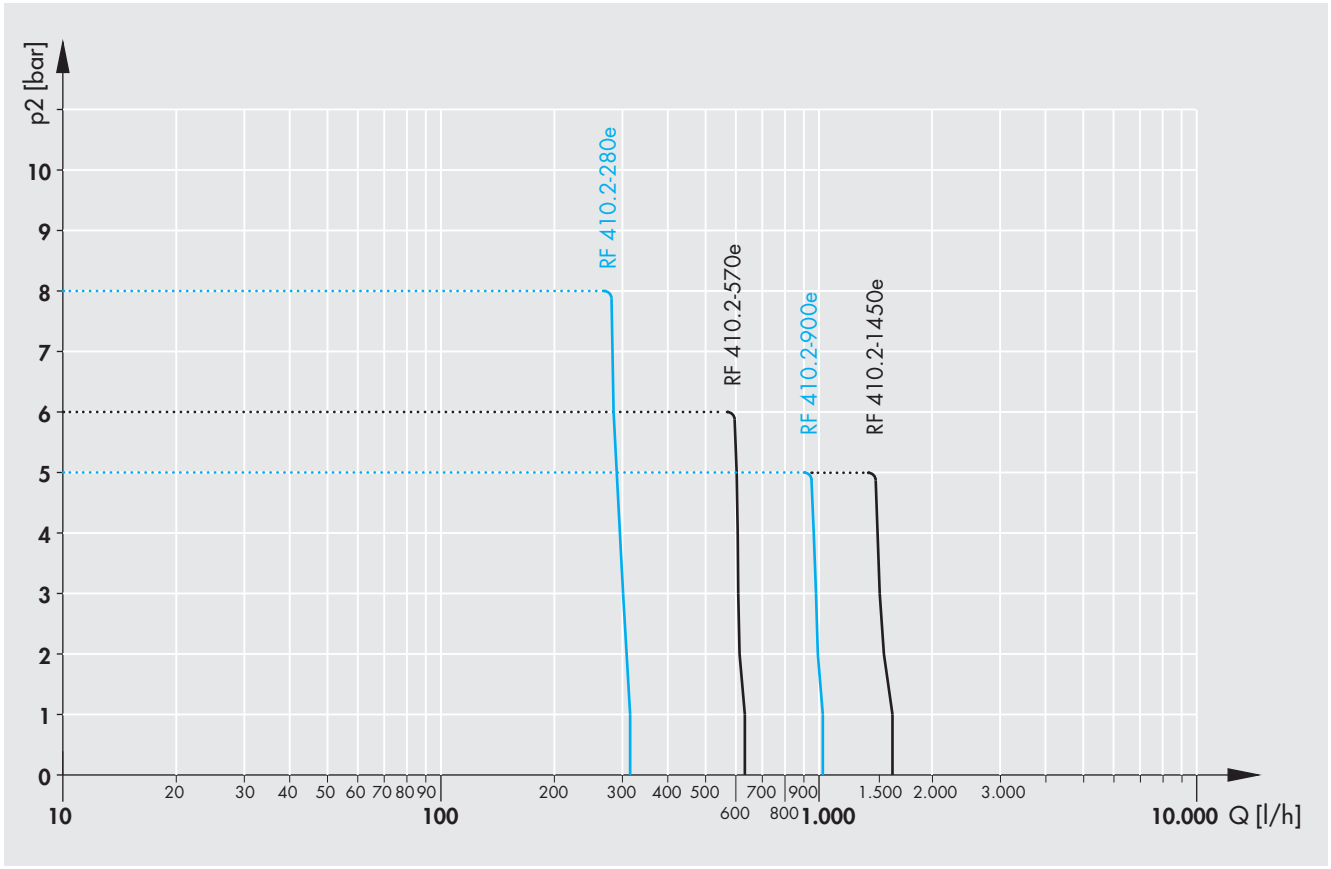
p2 [bar]
10
9
8
7
6
5
4
3
2
1
0
RF 410.2-280e
RF 410.2-570e
RF 410.2-900e
RF 410.2-1450e
20
30
40
50
60
70
80
90
100
200
300
400
500
600
700
800
900
1.000
1.500
2.000
3.000
10.000
Q [l/h]

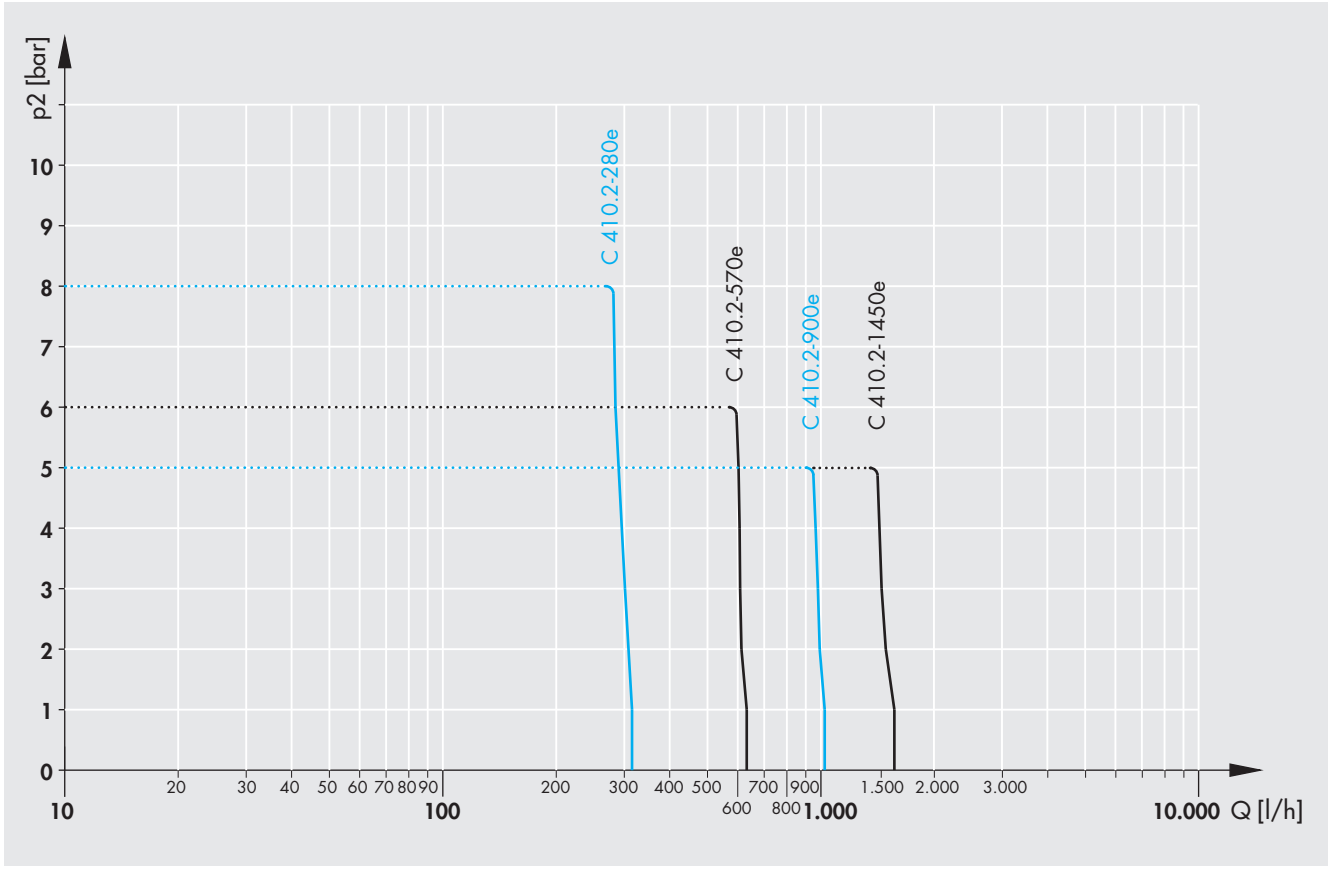
p2 [bar]
10
9
8
7
6
5
4
3
2
1
0
C 410.2-280e
C 410.2-570e
C 410.2-900e
C 410.2-1450e
20
30
40
50
60
70
80
90
100
200
300
400
500
600
700
800
900
1.000
1.500
2.000
3.000
10.000
Q [l/h]

## Dimensions RF409.2 standard

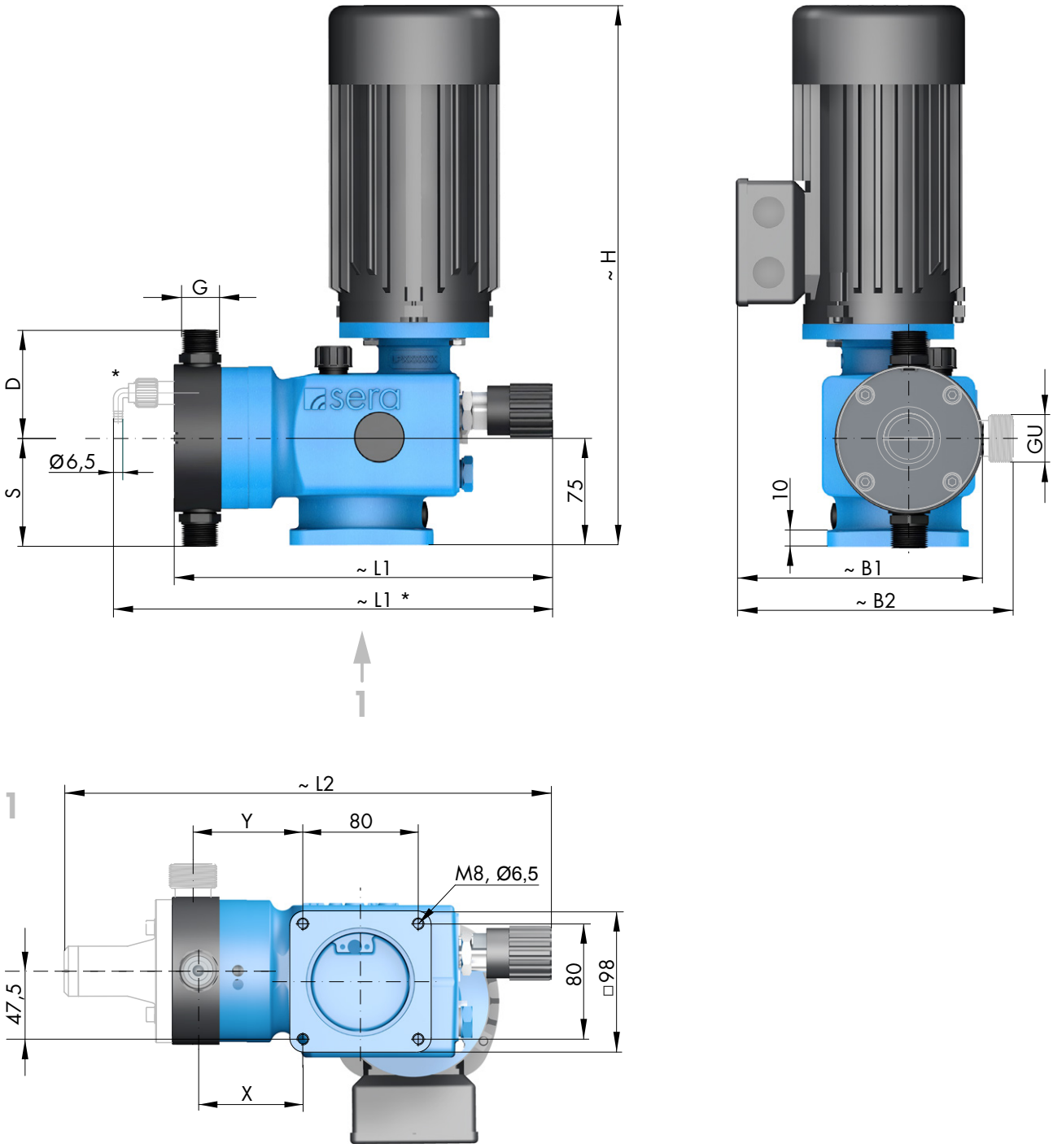


* Pump body with manual vent valve RF/MF409.2-1,6, -2,4e PP-FRP, PVDF-FRP

| | | RF 409.2-... | | | | | | | | | | | | | |
|---|---|---|---|---|---|---|---|---|---|---|---|---|---|---|---|
| **SUCTION VALVES** | | ...-1,6e | ...-2,4e | ...-7,0e | ...-12e | ...-18e | ...-25e | ...-50e | ...-75e | ...-90e | ...-115e | ...-140e | ...-180e | ...-250e | ...-350e |
| **DN** | Nominal width | 5 | 5 | 5 | 5 | 8 | 8 | 8 | 8 | 8 | 8 | 8 | 8 | 20[1] | 20[1] |
| **G** | Connection thread | G¾ | G¾ | G¾ | G¾ | G¾ | G¾ | G¾ | G¾ | G¾ | G¾ | G¾ | G¾ | G1¼[1] | G1¼[1] |
| **S** | PP-FRP / PVDF-FRP | 80 | 80 | 56 | 56 | 56 | 56 | 69 | 69 | 76 | 76 | 76 | 76 | 122 | 122 |
| **S** | PP-FRP / PVDF-FRP [2] | – | – | 57 | 60 | 60 | 60 | 67 | 67 | 76 | 76 | 76 | 76 | 122 | 122 |
| **S** | PVC-U | 70 | 70 | 62 | 65 | 63 | 63 | 70 | 70 | 78 | 78 | 78 | 78 | 119 | 119 |
| **S** | PVC-U [2] | – | – | 52 | 52 | 63 | 63 | 70 | 70 | 78 | 78 | 78 | 78 | 119 | 119 |
| **S** | 1.4571 | 70 | 70 | 57 | 61 | 61 | 61 | 68 | 68 | 76 | 76 | 76 | 76 | 122 | 122 |
| **S** | 1.4571[2] | – | – | 57 | 61 | 61 | 61 | 68 | 68 | 76 | 76 | 76 | 76 | 122 | 122 |
| **PRESSURE VALVES** | | | | | | | | | | | | | | | |
| **DN** | Nominal width | 5 | 5 | 5 | 5 | 8 | 8 | 8 | 8 | 8 | 8 | 8 | 8 | 20[1] | 20[1] |
| **G** | Connection thread | G¾ | G¾ | G¾ | G¾ | G¾ | G¾ | G¾ | G¾ | G¾ | G¾ | G¾ | G¾ | G1¼[1] | G1¼[1] |
| **D** | PP-FRP / PVDF-FRP | 80 | 80 | 64 | 64 | 64 | 64 | 69 | 69 | 76 | 76 | 76 | 76 | 122 | 122 |
| **D** | PP-FRP / PVDF-FRP [2] | – | – | 57 | 60 | 60 | 60 | 67 | 67 | 76 | 76 | 76 | 76 | 122 | 122 |
| **D** | PVC-U | 70 | 70 | 62 | 65 | 70 | 70 | 77 | 77 | 85 | 85 | 85 | 85 | 138 | 138 |
| **D** | PVC-U [2] | – | – | 65 | 65 | 70 | 70 | 77 | 77 | 85 | 85 | 85 | 85 | 138 | 138 |
| **D** | 1.4571 | 70 | 70 | 57 | 61 | 61 | 61 | 68 | 68 | 76 | 76 | 76 | 76 | 122 | 122 |
| **D** | 1.4571[2] | – | – | 57 | 61 | 61 | 61 | 68 | 68 | 76 | 76 | 76 | 76 | 122 | 122 |
| **MAX. TOTAL HEIGHT** | | | | | | | | | | | | | | | |
| **H** | | 330 | 330 | 330 | 330 | 330 | 330 | 370 | 370 | 370 | 370 | 370 | 370 | 370 | 370 |
| **MAX. TOTAL WIDTH** | | | | | | | | | | | | | | | |
| **B1** | | 175 | 175 | 175 | 175 | 175 | 175 | 185 | 185 | 185 | 185 | 185 | 185 | 220 | 220 |
| **B2** | (with relief valve) | – | – | 175 | 175 | 175 | 175 | 185 | 185 | 210 | 210 | 210 | 210 | 245 | 245 |
| **MAX. TOTAL LENGTH** | | | | | | | | | | | | | | | |
| **L1** | | 310 | 310 | 285 | 285 | 285 | 285 | 295 | 295 | 300 | 300 | 300 | 300 | 355 | 355 |
| **L2** | (with relief valve) | – | – | 345 | 345 | 345 | 345 | 360 | 360 | 370 | 370 | 370 | 370 | 435 | 435 |
| **RELIEF VALVE CONNECTION** | | | | | | | | | | | | | | | |
| **GU** | | – | – | G¾ | G¾ | G¾ | G¾ | G¾ | G¾ | G1 | G1 | G1 | G1 | G1¼[1] | G1¼[1] |
| **CONNECTION DIMENSIONS** | | | | | | | | | | | | | | | |
| **X** | | 72 | 72 | 66 | 67 | 67 | 67 | 69 | 69 | 73 | 73 | 73 | 73 | 101 | 101 |
| **Y** | | – | – | 71 | 69 | 69 | 69 | 69 | 69 | 78 | 78 | 78 | 78 | 101 | 101 |

(Measurements in mm)

[1] DN15 / G1 at valves of PVC-U
[2] Pump body with relief valve

## Dimensions ...409.2 options

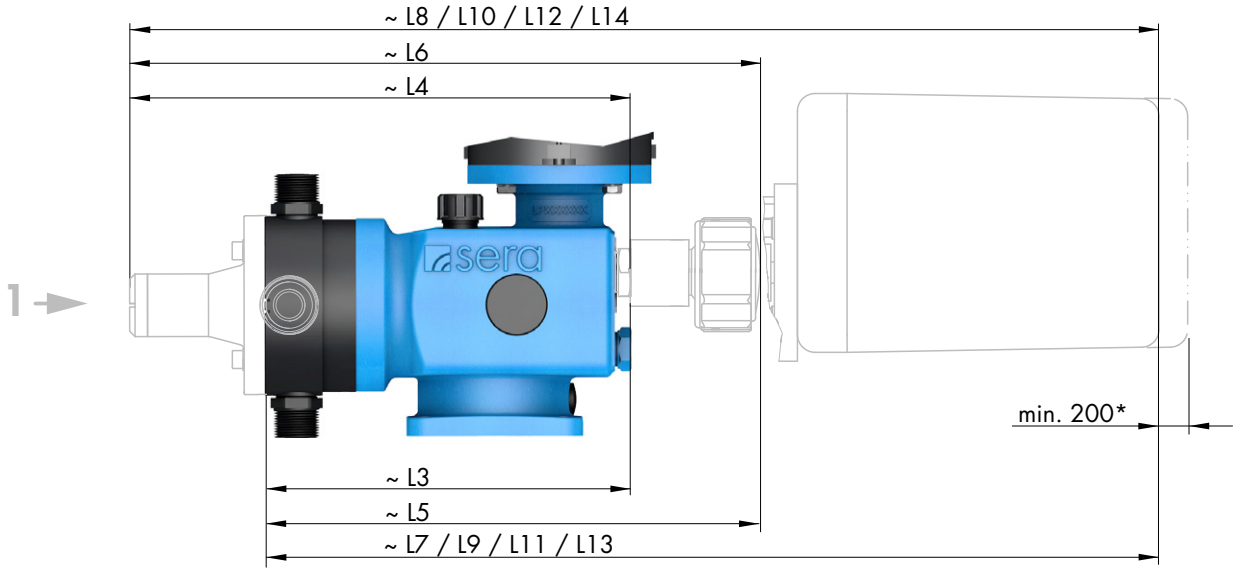


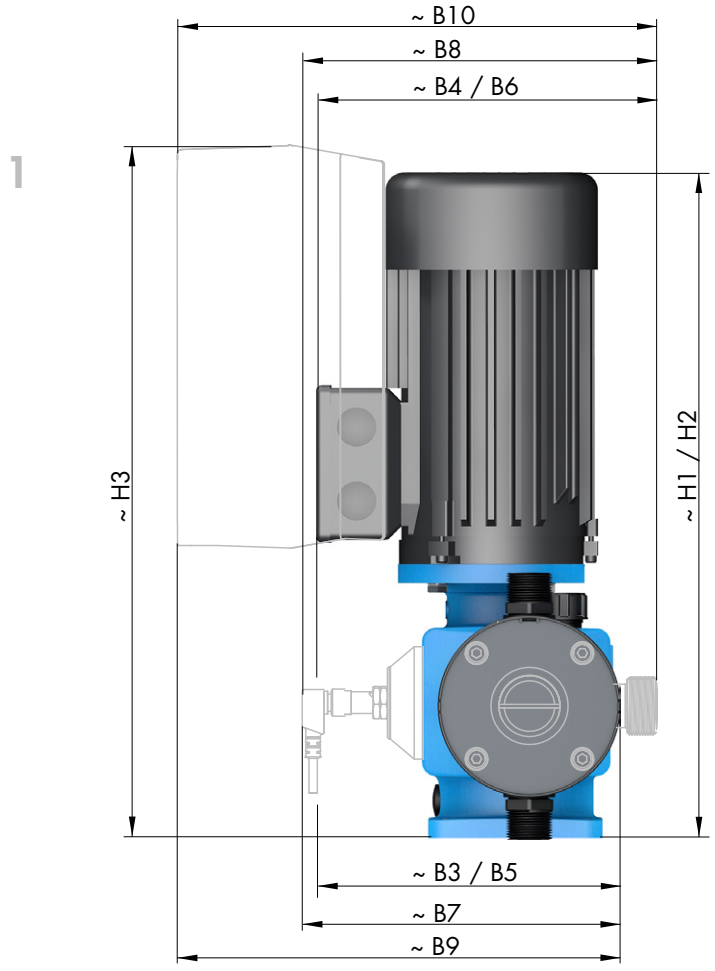


* for removing the actuar cover

| OPTIONS | | ... 409.2-... | | | | | | | | | | | | | |
|---|---|---|---|---|---|---|---|---|---|---|---|---|---|---|---|
| MAX. TOTAL HEIGHT | | ...-1,6e | ...-2,4e | ...-7,0e | ...-12e | ...-18e | ...-25e | ...-50e | ...-75e | ...-90e | ...-115e | ...-140e | ...-180e | ...-250e | ...-350e |
| **H1** | with AC motor | 335 | 335 | 335 | 335 | 335 | 335 | 370 | 375 | 375 | 375 | 375 | 375 | 375 | 375 |
| **H2** | with motor ATEX | 305 | 305 | 305 | 305 | 305 | 305 | 335 | 335 | 335 | 335 | 335 | 335 | 335 | 335 |
| **H3** | with frequency converter | 410 | 410 | 410 | 410 | 410 | 410 | 410 | 410 | 410 | 410 | 410 | 410 | 410 | 410 |
| **MAX. TOTAL WIDTH** | | | | | | | | | | | | | | | |
| **B3** | with AC motor | 180 | 180 | 180 | 180 | 180 | 180 | 190 | 190 | 190 | 190 | 190 | 190 | 190 | 190 |
| **B4** | with AC motor | – | – | 180 | 180 | 180 | 180 | 195 | 195 | 210 | 210 | 210 | 210 | 245 | 245 |
| **B5** | with motor ATEX | 185 | 185 | 185 | 185 | 185 | 185 | 195 | 195 | 195 | 195 | 195 | 195 | 195 | 195 |
| **B6** | with motor ATEX | – | – | 190 | 190 | 190 | 190 | 205 | 205 | 220 | 220 | 220 | 220 | 255 | 255 |
| **B7** | with stroke freq. transmitter | 175 | 175 | 175 | 175 | 175 | 175 | 175 | 175 | 175 | 175 | 175 | 175 | 175 | 175 |
| **B8** | with stroke freq. transmitter | – | – | 180 | 180 | 180 | 180 | 190 | 190 | 205 | 205 | 205 | 205 | 235 | 235 |
| **B9** | with frequency converter | 260 | 260 | 260 | 260 | 260 | 260 | 270 | 270 | 270 | 270 | 270 | 270 | 305 | 305 |
| **B10** | with frequency converter | – | – | 260 | 260 | 260 | 260 | 270 | 270 | 295 | 295 | 295 | 295 | 330 | 330 |
| **MAX. TOTAL LENGTH** | | | | | | | | | | | | | | | |
| **L3** | mit blind plug (M(F)...) | 250 | 250 | 215 | 210 | 190 | 190 | 190 | 190 | 190 | 190 | 190 | 190 | 220 | 220 |
| **L4** | mit blind plug (M(F)...) | – | – | 270 | 270 | 270 | 270 | 270 | 270 | 285 | 285 | 285 | 285 | 350 | 350 |
| **L5** | HLV with position indicator | 450 | 450 | 315 | 310 | 290 | 290 | 290 | 290 | 295 | 295 | 295 | 295 | 320 | 320 |
| **L6** | HLV with position indicator | – | – | 375 | 370 | 370 | 370 | 375 | 375 | 390 | 390 | 390 | 390 | 450 | 450 |
| **L7** | HLV with actuator | 480 | 480 | 445 | 440 | 420 | 420 | 420 | 420 | 425 | 425 | 425 | 425 | 450 | 450 |
| **L8** | HLV with actuator | – | – | 505 | 500 | 500 | 500 | 505 | 505 | 520 | 520 | 520 | 520 | 580 | 580 |
| **L9** | HLV with actuator with integrated positioner | 560 | 560 | 525 | 520 | 500 | 500 | 500 | 500 | 505 | 505 | 505 | 505 | 530 | 530 |
| **L10** | HLV with actuator with integrated positioner | – | – | 585 | 580 | 580 | 580 | 585 | 585 | 600 | 600 | 600 | 600 | 660 | 660 |
| **L11** | HLV with actuator ATEX | 655 | 655 | 620 | 615 | 595 | 595 | 595 | 595 | 595 | 595 | 595 | 595 | 625 | 625 |
| **L12** | HLV with actuator ATEX | – | – | 675 | 675 | 675 | 675 | 680 | 680 | 690 | 690 | 690 | 690 | 755 | 755 |
| **L13** | HLV with pneumatic actuator | – | – | 590 | 590 | 590 | 590 | 600 | 600 | 605 | 605 | 605 | 605 | 660 | 660 |
| **L14** | HLV with pneumatic actuator | – | – | 650 | 650 | 650 | 650 | 665 | 665 | 675 | 675 | 675 | 675 | 740 | 740 |

HLV ► Manual stroke length adjustment
(Measurements in mm)

## Dimensions C409.2 standard

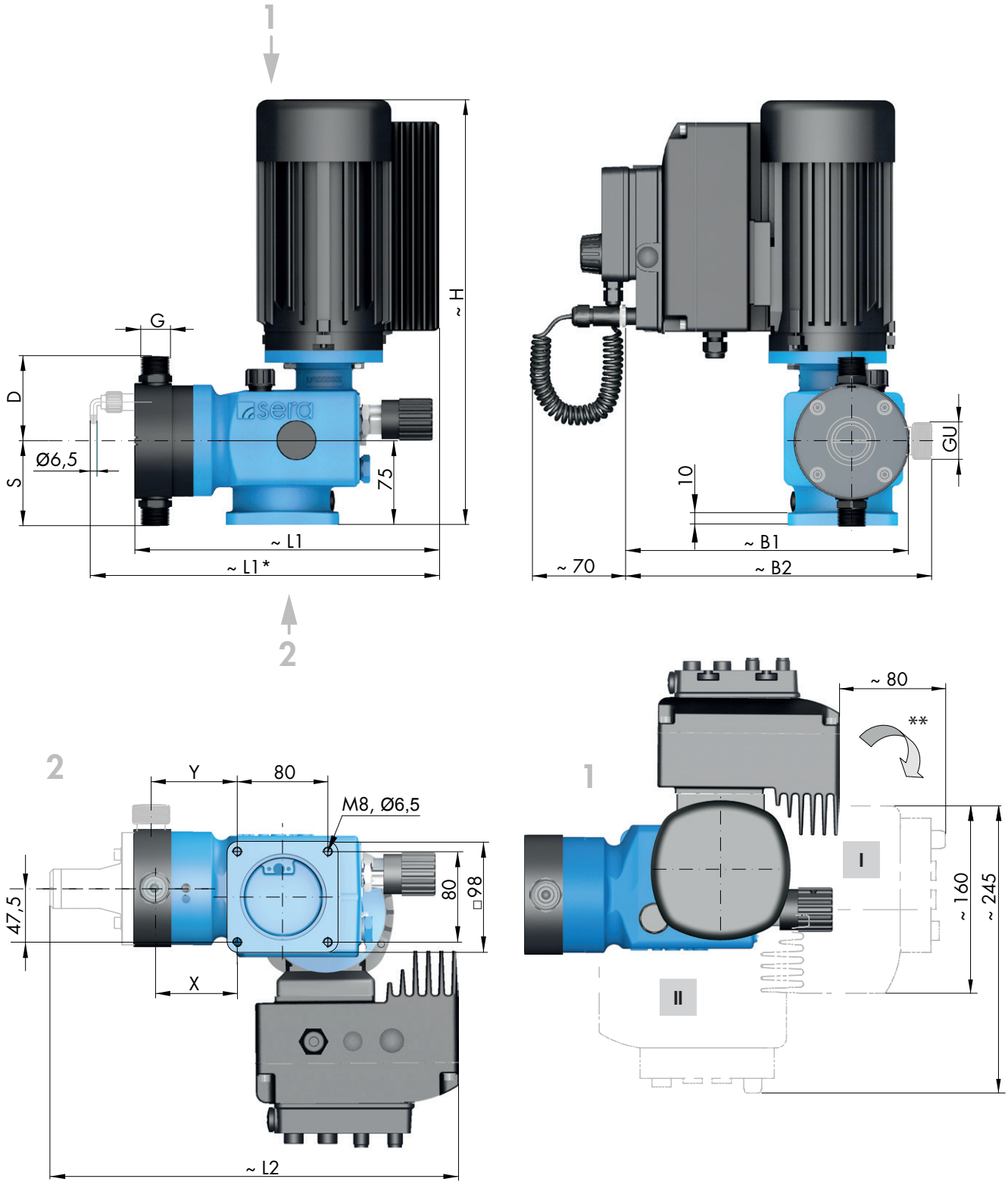


* Pump body with manual vent valve RF/MF409.2-1,6, -2,4e PP-FRP, PVDF-FRP
** Drive with electronics can be rotated throughout 90° each and can be put to the positions I and II.
(release the motor fastening screws, put the motor carefully to the desired position and fasten with screws again).

| STANDARD | | C 409.2-... | | | | | | | | | | | | | |
|---|---|---|---|---|---|---|---|---|---|---|---|---|---|---|---|
| SUCTION VALVES | | ...-1,6e | ...-2,4e | ...-7,0e | ...-12e | ...-18e | ...-25e | ...-50e | ...-75e | ...-90e | ...-115e | ...-140e | ...-180e | ...-250e | ...-350e |
| **DN** | Nominal width | 5 | 5 | 5 | 5 | 8 | 8 | 8 | 8 | 8 | 8 | 8 | 8 | 20[1] | 20[1] |
| **G** | Connection thread | G¾ | G¾ | G¾ | G¾ | G¾ | G¾ | G¾ | G¾ | G¾ | G¾ | G¾ | G¾ | G1¼[1] | G1¼[1] |
| **S** | PP-FRP / PVDF-FRP | 80 | 80 | 56 | 56 | 56 | 56 | 69 | 69 | 76 | 76 | 76 | 76 | 122 | 122 |
| **S** | PP-FRP / PVDF-FRP [2] | – | – | 57 | 60 | 60 | 60 | 67 | 67 | 76 | 76 | 76 | 76 | 122 | 122 |
| **S** | PVC-U | 70 | 70 | 62 | 65 | 63 | 63 | 70 | 70 | 78 | 78 | 78 | 78 | 119 | 119 |
| **S** | PVC-U [2] | – | – | 52 | 52 | 63 | 63 | 70 | 70 | 78 | 78 | 78 | 78 | 119 | 119 |
| **S** | 1.4571 | 70 | 70 | 57 | 61 | 61 | 61 | 68 | 68 | 76 | 76 | 76 | 76 | 122 | 122 |
| **S** | 1.4571 [2] | – | – | 57 | 61 | 61 | 61 | 68 | 68 | 76 | 76 | 76 | 76 | 122 | 122 |
| **PRESSURE VALVES** | | | | | | | | | | | | | | | |
| **DN** | Nominal width | 5 | 5 | 5 | 5 | 8 | 8 | 8 | 8 | 8 | 8 | 8 | 8 | 20[1] | 20[1] |
| **G** | Connection thread | G¾ | G¾ | G¾ | G¾ | G¾ | G¾ | G¾ | G¾ | G¾ | G¾ | G¾ | G¾ | G1¼[1] | G1¼[1] |
| **D** | PP-FRP / PVDF-FRP | 80 | 80 | 64 | 64 | 64 | 64 | 69 | 69 | 76 | 76 | 76 | 76 | 122 | 122 |
| **D** | PP-FRP / PVDF-FRP [2] | – | – | 57 | 60 | 60 | 60 | 67 | 67 | 76 | 76 | 76 | 76 | 122 | 122 |
| **D** | PVC-U | 70 | 70 | 62 | 65 | 70 | 70 | 77 | 77 | 85 | 85 | 85 | 85 | 138 | 138 |
| **D** | PVC-U [2] | – | – | 65 | 65 | 70 | 70 | 77 | 77 | 85 | 85 | 85 | 85 | 138 | 138 |
| **D** | 1.4571 | 70 | 70 | 57 | 61 | 61 | 61 | 68 | 68 | 76 | 76 | 76 | 76 | 122 | 122 |
| **D** | 1.4571 [2] | – | – | 57 | 61 | 61 | 61 | 68 | 68 | 76 | 76 | 76 | 76 | 122 | 122 |
| **MAX. TOTAL HEIGHT** | | | | | | | | | | | | | | | |
| **H** | | 330 | 330 | 330 | 330 | 330 | 330 | 330 | 370 | 370 | 370 | 370 | 370 | 370 | 370 |
| **MAX. TOTAL WIDTH** | | | | | | | | | | | | | | | |
| **B1** | | 240 | 240 | 240 | 240 | 240 | 240 | 240 | 250 | 250 | 250 | 250 | 250 | 285 | 285 |
| **B2** | (with relief valve) | – | – | 250 | 250 | 250 | 250 | 250 | 255 | 275 | 275 | 275 | 275 | 300 | 300 |
| **MAX. TOTAL LENGTH** | | | | | | | | | | | | | | | |
| **L1** | | 310 | 310 | 285 | 285 | 285 | 285 | 295 | 295 | 300 | 300 | 300 | 300 | 355 | 355 |
| **L2** | (with relief valve) | – | – | 345 | 345 | 345 | 345 | 360 | 360 | 370 | 370 | 370 | 370 | 435 | 435 |
| **RELIEF VALVE CONNECTION** | | | | | | | | | | | | | | | |
| **GU** | | – | – | G¾ | G¾ | G¾ | G¾ | G¾ | G¾ | G1 | G1 | G1 | G1 | G1¼[1] | G1¼[1] |
| **CONNECTION DIMENSIONS** | | | | | | | | | | | | | | | |
| **X** | | 72 | 72 | 66 | 67 | 67 | 67 | 69 | 69 | 73 | 73 | 73 | 73 | 101 | 101 |
| **Y** | | – | – | 71 | 69 | 69 | 69 | 69 | 69 | 78 | 78 | 78 | 78 | 101 | 101 |

(Measurements in mm)

[1] DN15 / G1 at valves of PVC-U
[2] Pump body with relief valve

## Dimensions C409.2 options

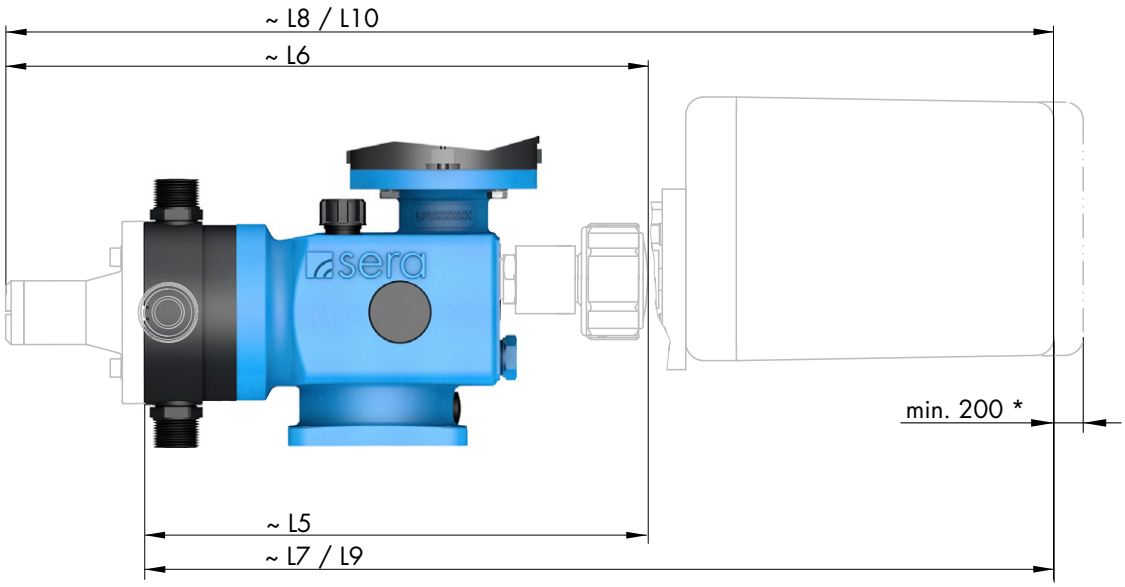


* for removing the actuar cover

| OPTIONS | | C 409.2-... | | | | | | | | | | | | | |
|---|---|---|---|---|---|---|---|---|---|---|---|---|---|---|---|
| MAX. TOTAL LENGTH | | ...-1,6e | ...-2,4e | ...-7,0e | ...-12e | ...-18e | ...-25e | ...-50e | ...-75e | ...-90e | ...-115e | ...-140e | ...-180e | ...-250e | ...-350e |
| **L5** | HLV with position indicator | 450 | 450 | 315 | 310 | 290 | 290 | 290 | 290 | 295 | 295 | 295 | 295 | 320 | 320 |
| **L6** | HLV with position indicator | – | – | 375 | 370 | 370 | 370 | 375 | 375 | 390 | 390 | 390 | 390 | 450 | 450 |
| **L7** | HLV with actuator | 480 | 480 | 445 | 440 | 420 | 420 | 420 | 420 | 425 | 425 | 425 | 425 | 450 | 450 |
| **L8** | HLV with actuator | – | – | 505 | 500 | 500 | 500 | 505 | 505 | 520 | 520 | 520 | 520 | 580 | 580 |
| **L9** | HLV with actuator with integrated positioner | 560 | 560 | 525 | 520 | 500 | 500 | 500 | 500 | 505 | 505 | 505 | 505 | 530 | 530 |
| **L10** | HLV with actuator with integrated positioner | – | – | 585 | 580 | 580 | 580 | 585 | 585 | 600 | 600 | 600 | 600 | 660 | 660 |

HLV ► Manual stroke length adjustment
(Measurements in mm)

## Dimensions RF410.2 standard

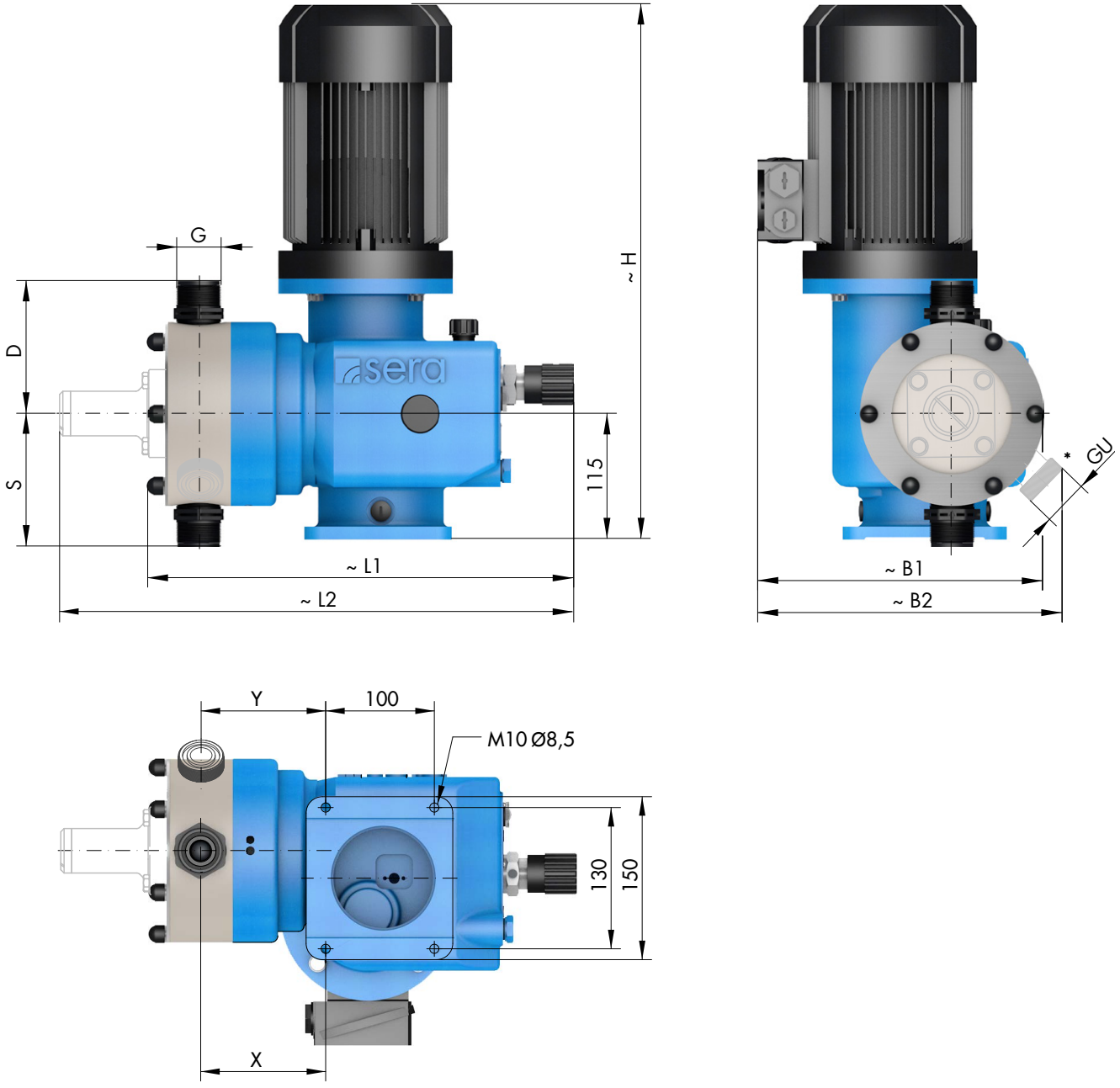


* Angle 45° - socket overflow valve

| | | RF 410.2-... | | | |
|---|---|---|---|---|---|
| **SUCTION VALVES** | | **...280e** | **...570e** | **...900e** | **...1450e** |
| **DN** | Nominal width | 20 [1] | 20 [1] | 20 | 20 |
| **G** | Connection thread | G1¼ [1] | G1¼ [1] | G1¼ | G1¼ |
| **S** | PP-FRP / PVDF-FRP | 122 | 122 | 148 | 148 |
| **S** | PVC-U | 119 | 119 | 150 | 150 |
| **S** | 1.4571 | 122 | 122 | 148 | 148 |
| **PRESSURE VALVES** | | | | | |
| **DN** | Nominal width | 20 [1] | 20 [1] | 20 | 20 |
| **G** | Connection thread | G1¼ [1] | G1¼ [1] | G1¼ | G1¼ |
| **D** | PP-FRP / PVDF-FRP | 122 | 122 | 148 | 148 |
| **D** | PVC-U | 138 | 138 | 170 | 170 |
| **D** | 1.4571 | 122 | 122 | 148 | 148 |
| **MAX. TOTAL HEIGHT** | | | | | |
| **H** | | 500 | 500 | 500 | 540 |
| **MAX. TOTAL WIDTH** | | | | | |
| **B1** | | 265 | 265 | 295 | 295 |
| **B2** | (with relief valve) | 280 | 280 | – | – |
| **MAX. TOTAL LENGTH** | | | | | |
| **L1** | | 430 | 430 | 460 | 460 |
| **L2** | (with relief valve) | 535 | 535 | – | – |
| **RELIEF VALVE CONNECTION** | | | | | |
| **GU** | | G1¼ [1] | G1¼ [1] | – | – |
| **CONNECTION DIMENSIONS** | | | | | |
| **X** | | 115 | 115 | 138 | 138 |
| **Y** | | 115 | 115 | – | – |

(Measurements in mm)

[1] DN15 / G1 at valves of PVC-U

## Dimensions ...410.2 options

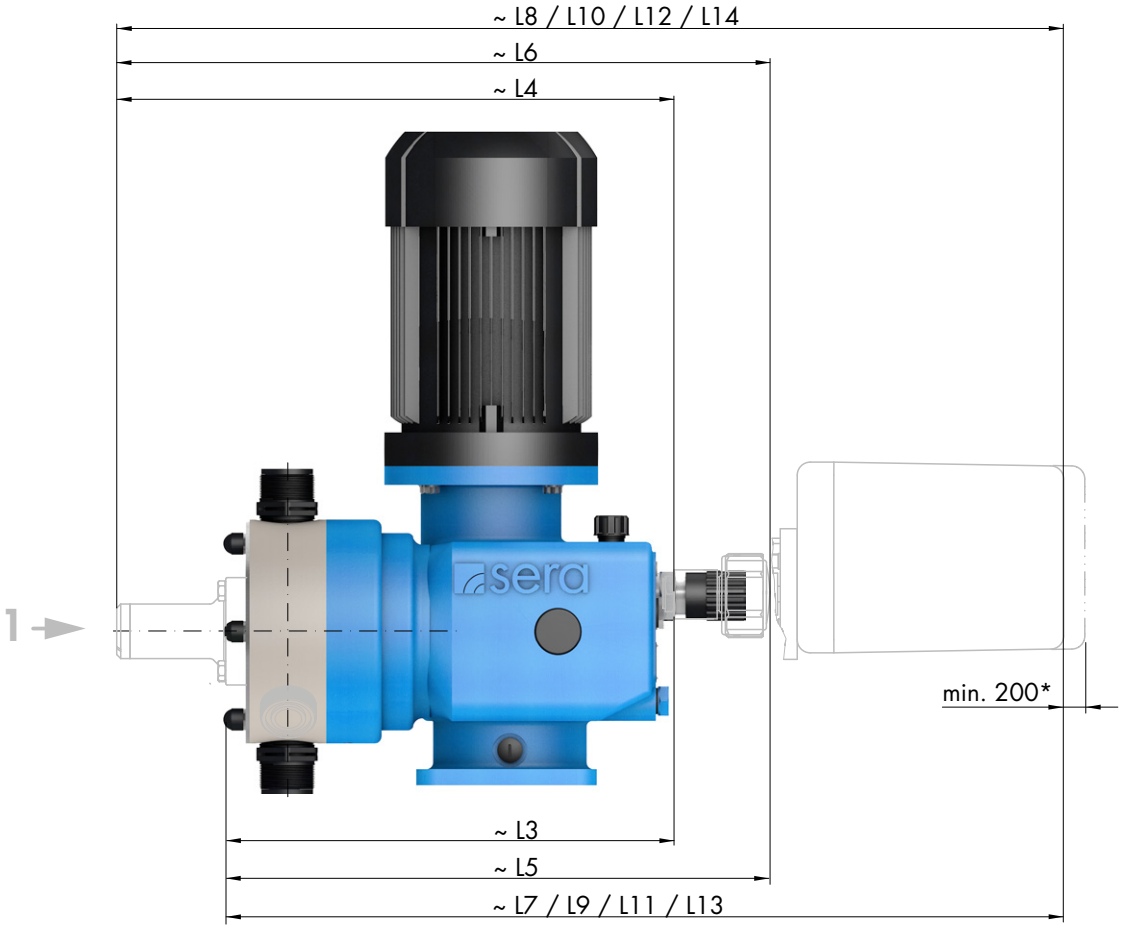


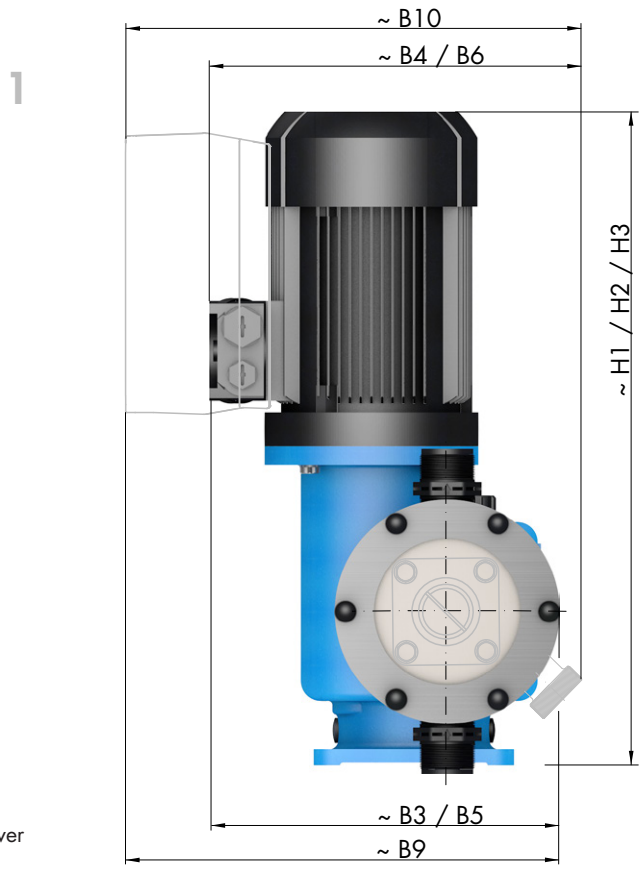


* for removing the actuar cover

| OPTIONS | | ...410.2-.... | | | |
|---|---|---|---|---|---|
| MAX. TOTAL HEIGHT | | ...280e | ...570e | ...900e | ...1450e |
| **H1** | with AC motor | 500 | 500 | 500 | 585 |
| **H2** | with motor ATEX | 450 | 450 | 490 | 490 |
| **H3** | with frequency converter | 500 | 500 | 500 | 540 |
| MAX. TOTAL WIDTH | | | | | |
| **B3** | with AC motor | 265 | 265 | 290 | 295 |
| **B4** | with AC motor | 290 | 290 | – | – |
| **B5** | with motor ATEX | 285 | 285 | 310 | 310 |
| **B6** | with motor ATEX | 255 | 255 | – | – |
| **B9** | with frequency converter | 340 | 340 | 365 | 370 |
| **B10** | with frequency converter | 365 | 365 | – | – |
| MAX. TOTAL LENGTH | | | | | |
| **L3** | mit blind plug (M(F)...) | 365 | 365 | 395 | 395 |
| **L4** | mit blind plug (M(F)...) | 470 | 470 | – | – |
| **L5** | HLV with position indicator | 465 | 465 | 495 | 495 |
| **L6** | HLV with position indicator | 570 | 570 | – | – |
| **L7** | HLV with actuator | 615 | 615 | 645 | 645 |
| **L8** | HLV with actuator | 715 | 715 | – | – |
| **L9** | HLV with actuator with integrated positioner | 690 | 690 | 720 | 720 |
| **L10** | HLV with actuator with integrated positioner | 795 | 795 | – | – |
| **L11** | HLV with actuator ATEX | 780 | 780 | 810 | 810 |
| **L12** | HLV with actuator ATEX | 885 | 885 | – | – |
| **L13** | HLV with pneumatic actuator | 790 | 790 | 820 | 820 |
| **L14** | HLV with pneumatic actuator | 895 | 895 | – | – |

HLV ► Manual stroke length adjustment
(Measurements in mm)

## Dimensions C410.2 standard

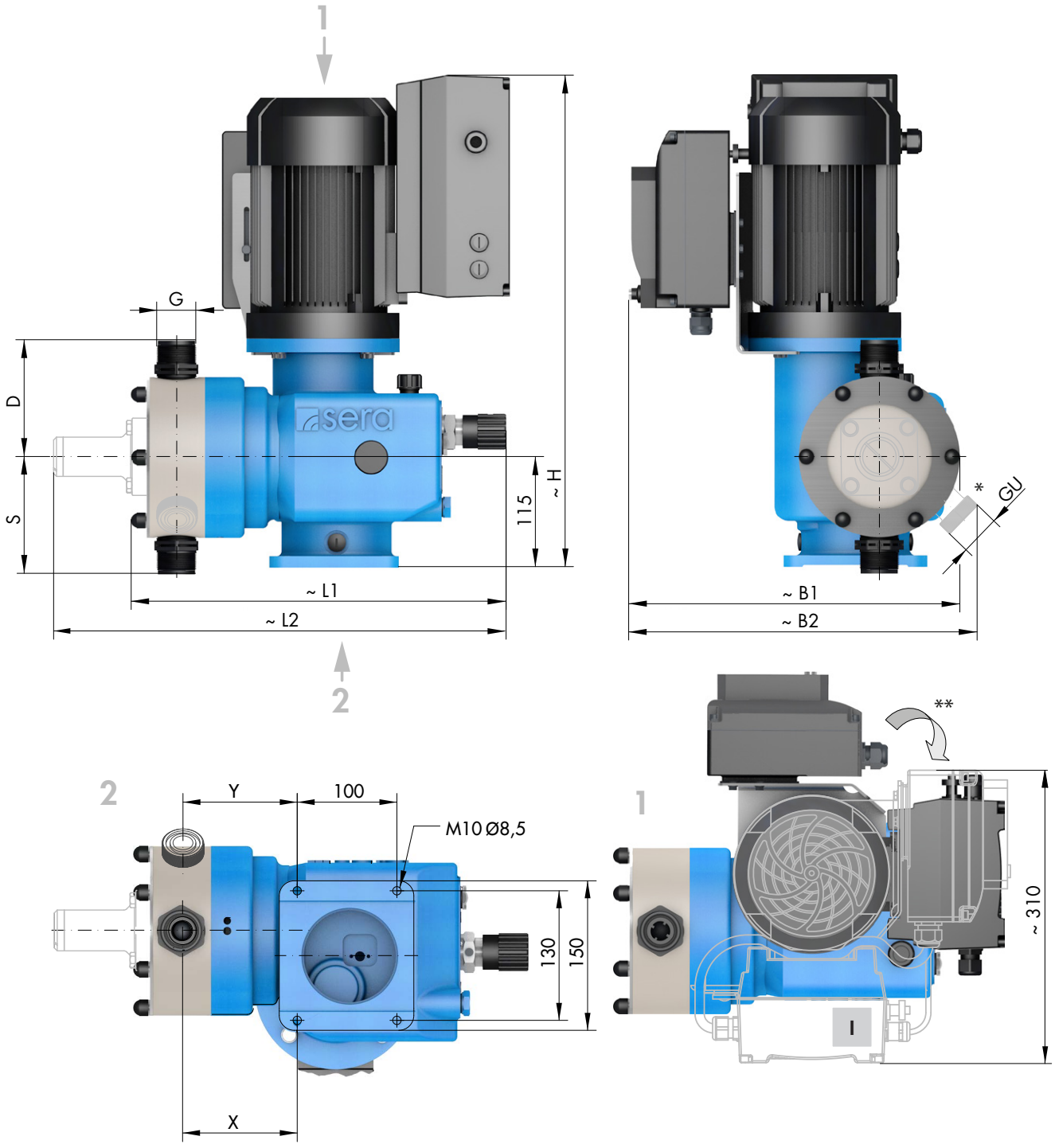


* Angle 45° - socket overflow valve
** Drive with electronics can be rotated throughout 90° each and can be put to the positions I.
(release the motor fastening screws, put the motor carefully to the desired position and fasten with screws again).

| | | C 410.2-... | | | |
|---|---|---|---|---|---|
| **SUCTION VALVES** | | **...280e** | **...570e** | **...900e** | **...1450e** |
| **DN** | Nominal width | 20 [1] | 20 [1] | 20 | 20 |
| **G** | Connection thread | G1¼ [1] | G1¼ [1] | G1¼ | G1¼ |
| **S** | PP-FRP / PVDF-FRP | 122 | 122 | 148 | 148 |
| **S** | PVC-U | 119 | 119 | 150 | 150 |
| **S** | 1.4571 | 122 | 122 | 148 | 148 |
| **PRESSURE VALVES** | | | | | |
| **DN** | Nominal width | 20 [1] | 20 [1] | 20 | 20 |
| **G** | Connection thread | G1¼ [1] | G1¼ [1] | G1¼ | G1¼ |
| **D** | PP-FRP / PVDF-FRP | 122 | 122 | 148 | 148 |
| **D** | PVC-U | 138 | 138 | 170 | 170 |
| **D** | 1.4571 | 122 | 122 | 148 | 148 |
| **MAX. TOTAL HEIGHT** | | | | | |
| **H** | | 520 | 520 | 520 | 560 |
| **MAX. TOTAL WIDTH** | | | | | |
| **B1** | | 350 | 350 | 375 | 375 |
| **B2** | (with relief valve) | 375 | 375 | – | – |
| **MAX. TOTAL LENGTH** | | | | | |
| **L1** | | 430 | 430 | 460 | 460 |
| **L2** | (with relief valve) | 535 | 535 | – | – |
| **RELIEF VALVE CONNECTION** | | | | | |
| **GU** | | G1¼ [1] | G1¼ [1] | – | – |
| **CONNECTION DIMENSIONS** | | | | | |
| **X** | | 115 | 115 | 138 | 138 |
| **Y** | | 115 | 115 | – | – |

(Measurements in mm)

[1] DN15 / G1 at valves of PVC-U

## Dimensions C410.2 options

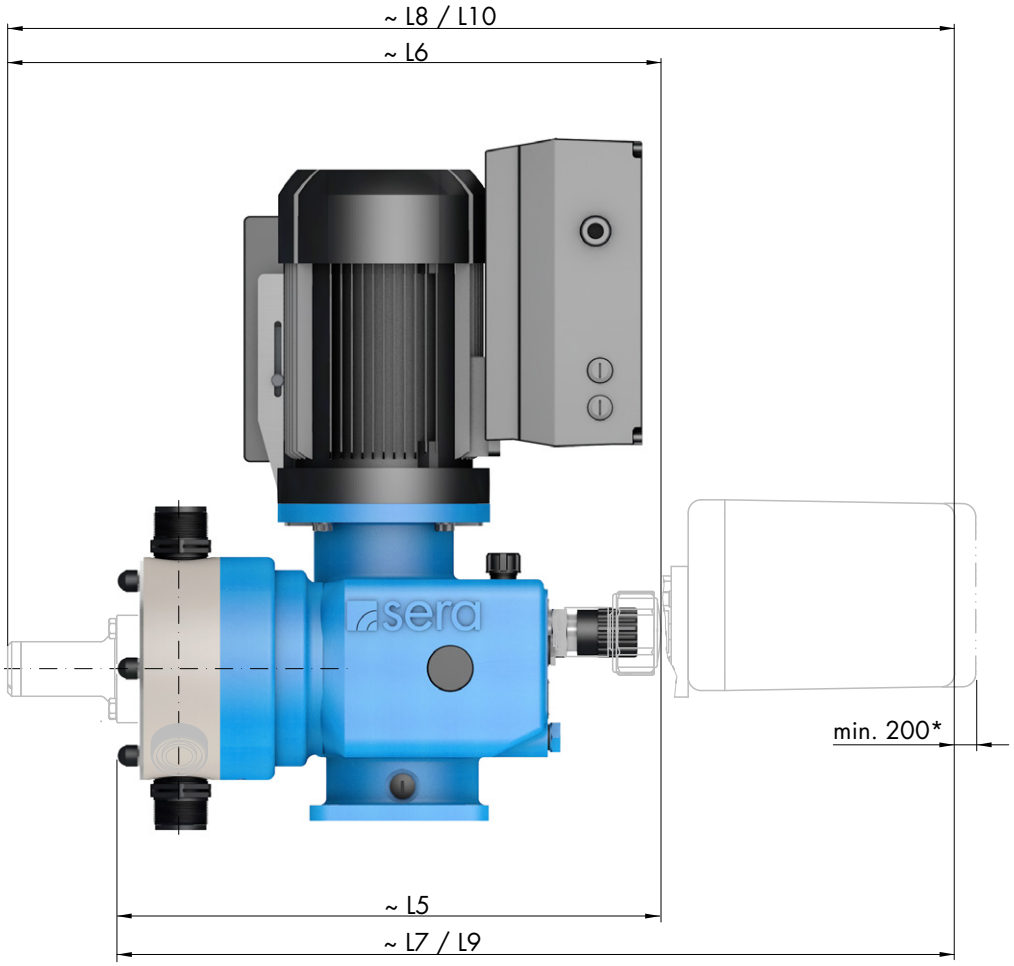


* for removing the actuar cover

| OPTIONS | | C 410.2-.... | | | |
|---|---|---|---|---|---|
| MAX. TOTAL LENGTH | | ...280e | ...570e | ...900e | ...1450e |
| **L5** | HLV with position indicator | 465 | 465 | 495 | 495 |
| **L6** | HLV with position indicator | 570 | 570 | – | – |
| **L7** | HLV with actuator | 615 | 615 | 645 | 645 |
| **L8** | HLV with actuator | 715 | 715 | – | – |
| **L9** | HLV with actuator with integrated positioner | 690 | 690 | 720 | 720 |
| **L10** | HLV with actuator with integrated positioner | 795 | 795 | – | – |

HLV ► Manual stroke length adjustment
(Measurements in mm)

## WARNING

Observe and follow the safety instructions by all means.
See the additional instructions „SAFETY INSTRUCTIONS".
Man, machine and environment are endangered if the safety instructions are not observed.




## NOTE

Pump design data for dosing and its temperature can be found in the order confirmation.

## NOTE

Operating conditions:
Ambient temperature, relative air humidity and max. installation altitude ► see chapter „Technical data".

- The standard model of the pump is only approved for installation in dry areas in a non-aggressive atmosphere.
- Protect the pump from heat sources, direct sunlight and UV light.
- See "Dimensions" chapter for dimensions of the pump connections and fixing holes.
- Fixing the pump with at least four bolts above the pump base is required for safe operation.
- Install the pump so that there is no vibration and no tension and that it is aligned precisely.
- Install the pump at the optimum possible operating height. Mount the pump so that the valves are vertical.
- Ensure that there is sufficient space around the pump body and the suction and pressure valve so that these parts can be easily dismantled if required.
- Design the nominal diameters of the downstream piping and the valves installed in the system to be the same size or larger than the nominal inlet and outlet diameters of the pump.
- To check the pressure ratios in the piping system, it is recommended to provide connections for pressure measurement fittings (e.g. manometers) near the suction and pressure ports.
- Drain valves must be provided.
- Before connecting the pipes, remove the plastic caps on the suction and pressure ports of the pump.
- Check the fastening bolts for the pump body for tightness and tighten if necessary, see chapter "Overview of the tightening torques".
- Connect pipes to the pump so that there are no forces acting on the pump, such as e.g. misalignment, weight or strain of the pipe.
- Keep the suction pipes as short as possible.
- Use pressure and medium resistant hoses / pipes.
- All pipes and containers connected to the pump must comply with the regulations and must be cleaned, tension-free and intact.
- Display devices must be easily accessible and readable.

In order to avoid cavitation, overload or excessive delivery, the following points should be noted:

- Avoid high suction heights.
- Keep pipes as short as possible.
- Select sufficiently large nominal diameters.
- Avoid unnecessary choke points.
- Install a pulsation damper.
- Install overpressure protection.
- Install a pressure-sustaining valve, if necessary
- Provide feed line for outgassing media.

## WARNING

The pump with a control is only designed for operation outside Ex-zonest!

## SUCTION SIDE (1)

The following fittings can be used on the suction side:

**1.1** Line strainer



**1.2** Suction aid
Siphon vessel



**1.3** Suction lance

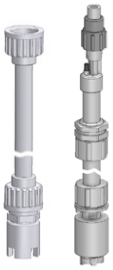

**1.4** Multifunction device



**1.5** Foot valve



**1.6** Shut-off valve








## PRESSURE SIDE (2)

The following fittings can be used on the pressure side:

**2.1** Vent valve



**2.2** Injection fitting

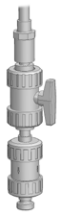

**2.3** Dosing valve



**2.4** Pulsation damper



**2.5** Diaphragm pressure keeping valve



**2.6** Diaphragm relief valve



**2.7** Multifunction valve



**2.8** Flow meter [1]

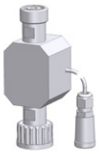

**2.9** Flow monitor [1]



**2.10** Shut-off valve



[1] only for diaphragm pumps with a control






## SUCTION SIDE (1)

### Line strainer (1.1)

Connect suction line slightly above the bottom of the tank and install a line strainer (0.1 – 0.5 mm mesh size – depending on valve nominal diameter of the pump).

**ATTENTION**

If impurities are not removed, this results in malfunctions of the pump and the system.

### Suction aid / siphon vessel (1.2)

For high tanks without connection on the bottom of the tank ► install suction aid / siphon vessel.
Thereby, pay attention to accelerating pressures which may be generated in a long suction pipe.

### Suction lance (1.3)

Install a suction lance for removal of chemicals from tanks and barrels.
The integrated foot valve prevents the backflow of the suctioned medium.
The suction lances are equipped with a level switch for „empty“ signal.

### Multifunction device (1.4)

The multifunction device is installed in the suction side piping of the pump and is used for determination of the delivery rate of pumps under real operating conditions.
The device can be filled either using a pending tank volume (communicating container) or using a hand vacuum pump.

### Foot valve (1.5)

To prevent running dry of the suction line ► install foot valve (check valve) at the end of the suction line.

## PRESSURE SIDE (2)

### Vent valve (2.1)

If air can be drawn in due to falling liquid level in the suction tank and at the same time delivered to a pressurised line or against a pressure-sustaining valve ► install vent valve in the pressure line.

**NOTE**

The delivery flow can be interrupted if there is air in the suction line!

### Injection fitting (2.2)

Install an injection fitting that routes into a main line to prevent the backflow of the pumped medium in the dosing line.

**WARNING**

Unwanted mixing in the dosing line occurs if any possible backflow from the main line is not prevented.

### Dosing valve (2.3)

Installation of the dosing valve prevents the liquid from the system to be treated being able to penetrate into the dosing line.

### Pulsation damper (2.4)

Damping of the pulsation by installation of pulsation dampers if:

- a low-pulsation delivery flow is desired for process reasons,
- acceleration forces caused by the piping geometry must be removed.

Install pulsation damper as close as possible to the pump head.
If both pulsation damper and pressure-sustaining valve should be integrated, install the pressure-sustaining valve between pump and pulsation damper.

**WARNING**

Undamped acceleration forces can result in the following faults / damage:

- flow rate fluctuations
- dosing errors
- pressure surges
- valve shocks
- increased wear on the suction and pressure sides of the pump
- mechanical destruction of the pump
- leaks and valve shocks if the permissible maximum pressure on the pump pressure
- side is exceeded
- damage to the piping and its installed fittings

### Diaphragm pressure-keeping valve (2.5)

If dosing into a main line with negative pressure ► install pressure-keeping valve in the dosing line.

**ATTENTION**

It must be ensured during the installation that excess delivery (due to positive pressure difference (≥ > 1 bar) between pressure and suction sides) is avoided.

### Diaphragm relief valve (2.6)

If the permissible pressure in the system can be exceeded by closing any shut-off valve or by clogging of the line ► install diaphragm relief valve.

When using an external overflow valve, the following is applicable for the return line:

- Route the return line sloping downward into the storage tank which is under atmospheric pressure or into an open drainage channel.
- Or connect directly to the pump suction line, but only if there is no check valve in the suction line (e.g. foot valve of a suction lance).

**ATTENTION**

Shut-off valves must not be closed when the pump is running!

**WARNING**

An overpressure protection device (e.g. relief valve) must generally be provided if the permissible operating pressure can be exceeded.

**ATTENTION**

If the permissible operating pressure is exceeded and the pump is not equipped with overpressure protection, the pump will be damaged.

**WARNING**

The pumped medium can spray out if the pump is damaged.

### Multifunction valve (2.7)

The multifunction valve provides the following functions:

- pressure-keeping valve function,
- overflow valve function,
- pressure relief function,
- venting.

The multifunction valve is mounted directly on the pump pressure port.

### Flow meter (2.8)

For measurement and monitoring of the flow rate ► install flow meter.
The application range is restricted to media that are similar to water.
The flow meter is screwed upright on the pressure port of the pump and connected to the pump electronics via the input for flow monitoring.

### Flow monitor (2.9)

To record the flow rate of the pump ► install flow monitor.
The application range is restricted to media that are similar to water.
The flow monitor is screwed upright on the suction port of the pump and connected to the pump electronics via the input for flow monitoring.

## Operation in Ex-zone C409.2 / C410.2

**WARNING**

The pump with a control is only designed for operation outside Ex-zonest!

## Operation in Ex-zone R/M 409.2 / R/M 410.2

**WARNING**

The prerequisite for the use in explosion-hazardous areas is an appropriate design of the pump.

The product supplied by **sera** meets the requirements of directive 2014/34/EU if it is correspondingly marked. This guarantees safe operation in explosion-hazardous areas.

**WARNING**

It is the operator's task to define the field of application and to check whether the pump is suited for this application. He/she must clearly define the zone, the device category, the explosion group and the temperature class.

**WARNING**

Avoid build up electrostatic conditions!

**WARNING**

To avoid contamination of the valves strainers in the suction line have to be installed!

### Identification

The pump has a label stating the zone/device category /explosion group/temperature class in compliance with directive 2014/34/EU.

**Ex II2G c IIBT4** bzw.
**Ex II2G c IICT4**
(note special specifications in the confirmation of order.)

### Installation

The intended operating conditions in explosion-hazardous areas according to directive 2014/34/EU are stated in the confirmation of order or the product description. The indicated limit values should not be fallen below or exceeded. Installation regulations given in the operating instructions must be adhered to.

**WARNING**

Use only suitable tools for performing assembly and maintenance work on machines or plants in explosion-hazardous areas. Directive 99/92/EC must be observed.

## Potential equalization

After mounting the pump the proper connection to the site potential equalization is to be ensured. The max. bleed resistor (1MΩ) has to be checked and documented.

## Start-up

After installation, the pump must immediately be used for the suction of fluids, i.e. the pump must immediately be started after the tank has been installed and filled.

## Operation

The intended operating conditions in explosion-hazardous areas according to directive 2014/34/EU are stated in the confirmation of order or the product description. The indicated limit values should not be fallen below or exceeded. Details about explosion zone, device category, explosion group and temperature class can be seen from the Declaration of Conformity.

**Degassing of the pumped medium:**

- Never let the pump run dry.
- Check the liquid level in the tank during operation of the pump.
- Make sure that the pump is switched off when the liquid level in the tank falls below the minimum level required (explosive atmosphere may be carried over)..

Vapour bubbles from the pumped medium are harmless as they have no explosive potential.

**WARNING**

Formation of an explosive gas mixture must be prevented.

## Temperature indications

Permissible ambient temperature: -10°C ≤ Ta ≤ +40°C

## Maintenance

The maintenance notes listed in Chapter 10 are generally applicable. **Exception:**

**ATTENTION**

The oil level in the stroke mechanism of the pump must be checked once a week!

**WARNING**

Observe and follow the safety instructions by all means.
See the additional instructions „SAFETY INSTRUCTIONS“.
Man, machine and environment are endangered if the safety instructions are not observed.




Adequate fastening at the pump foot and compliance with the operating parameters specified in the technical data are required for the operation of the pump.

Checks before every start-up:

- Check all connections for tightness.
- Tighten fixing bolts of the pump body with the specified tightening torques (see „Overview of the tightening torques“ chapter).
- Check of the electrical connections.
- Check of the mains voltage on the rating plate with the local conditions.

## Driving motor

**Preconditions:**

- Make sure that voltage and frequency correspond with the indications on the type plate of the motor. Permissible voltage tolerance (DIN VDE 0530).
- For rated voltage ► + 10 %
- For rated voltage range ► ± 5 %
- The connecting cable must be dimensioned according to the motor characteristics.
- Secure connecting cable with a strain relief.
- The nominal motor power refers to an ambient temperature and an installation site ► see chapter „TECHNICAL DATA“ . Motor output will be reduced if these values are exceeded (see VDE 0530).
- Adapted for “moderate” groupe of climates according to IEC 721-2-1.

## NOTE

Operating voltage range see chapter „TECHNICAL DATA“.

## NOTE

**Pump without control:**
Motor connection see chapter „Drive motor“ in the PRODUCT DESCRIPTION.

## NOTE

**Pump with a control:**
Electrical iterfaces see the additional operation instructions for the CONTROL.

## ATTENTION

**Pump with a control:**
The pump restarts in the selected operating mode with the specified parameters after switching on again or after restoration of the power supply following a power failure.

**WARNING**

Observe and follow the safety instructions by all means.
See the additional instructions „SAFETY INSTRUCTIONS“.
Man, machine and environment are endangered if the safety instructions are not observed.




Check the following at regular intervals:

- Tight fit of piping.
- Tight fit of pressure and suction valve.
- Proper condition of the electrical connections.
- Tight fit of the screws for fastening the pump body (check this at least every three months).
- For the tightening torques of the mounting screws, please see Chapter „Overview of the tightening torques“.
- Additionally with motor pumps: Check oil level regularly (oil eye).

## Drive motor

The electric motor should always be kept clean so that neither dust, dirt, oil nor other contaminates may affect the correct operation.

In addition, we recommend to ensure that:

- The motor does not produce strong vibrations
- Suction and blowing openings for the supply of cooling air are not closed or restricted (may lead to unnecessary high temperatures in the windings)

The ball bearings inserted in the motor are lubricated for life.

## Oil change

Check oil level at regular intervals (oil sight glass (**1**))

Perform an oil change once a year.
To do so, proceed as follows:

- Unscrew the venting screw (**5**).
- Prepare an appropriate container (**2**).
- Open the screw plug (**3**) and drain off oil.
- Close hole with screw plug (pay attention to the sealing ring (**4**)!).
- Fill oil in threaded hole of the venting screw.
- Screw in venting screw (**5**).

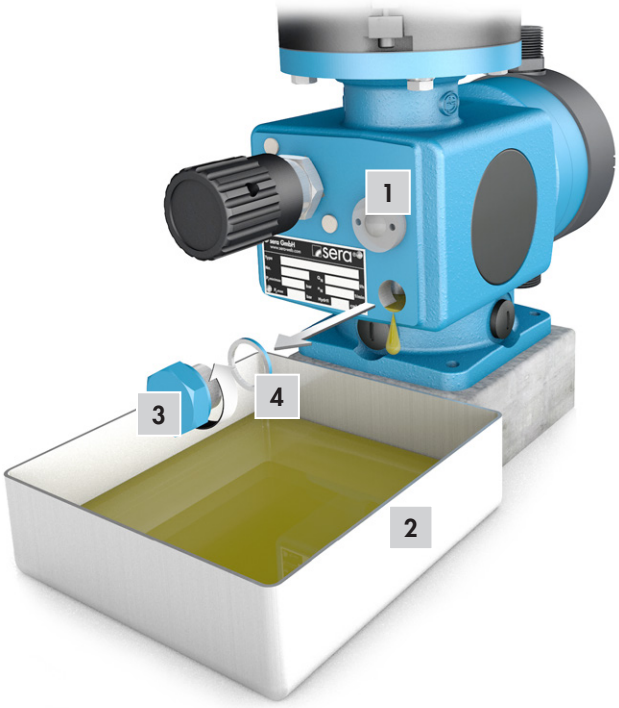





| Gear oil | | | |
|---|---|---|---|
| Pump type | Specification | sera use | Quantity (litres) |
| ...409.2 | CLP VG220 DIN51517-3 | ARAL Degol BG220 | 0,3 |
| ...410.2 | CLP VG220 DIN51517-3 | ARAL Degol BG220 | 1,25 |

## Overview of the tightening torques

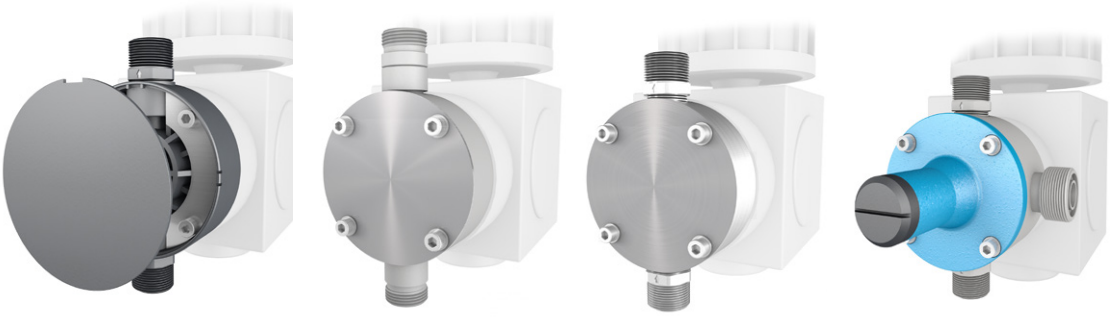

| | Pump body PP-FRP, PVDF-FRP | Pump body PVC | Pump body 1.4571 | Pump body with integrated overflow valve |
|---|---|---|---|---|
| | | Nm | | |
| ...409.2-1,6e | 5,0 | 4,5 | 5,0 | – |
| ...409.2-2,4e | 5,0 | 4,5 | 5,0 | – |
| ...409.2-7,0e | 4,0 | 4,0 | 4,0 | 4,5 |
| ...409.2-12e | 4,0 | 4,0 | 4,0 | 4,5 |
| ...409.2-18e | 4,0 | 4,0 | 4,0 | 4,5 |
| ...409.2-25e | 4,0 | 4,0 | 4,0 | 4,5 |
| ...409.2-50e | 7,0 | 8,0 | 7,0 | 8,0 |
| ...409.2-75e | 7,0 | 8,0 | 7,0 | 8,0 |
| ...409.2-90e | 7,0 | 8,0 | 7,0 | 8,0 |
| ...409.2-115e | 7,0 | 8,0 | 7,0 | 8,0 |
| ...409.2-140e | 7,0 | 8,0 | 7,0 | 8,0 |
| ...409.2-180e | 7,0 | 8,0 | 7,0 | 8,0 |
| ...409.2-250e * | 15,0 | 15,0 | 15,0 | 15,0 |
| ...409.2-350e * | 15,0 | 15,0 | 15,0 | 15,0 |

* Pump body PP/PVDF

| | Pump body PP, PVDF | Pump body PVC | Pump body 1.4571 | Pump body with integrated overflow valve |
|---|---|---|---|---|
| | | Nm | | |
| ...410.2-280e | 15,0 | 15,0 | 15,0 | 15,0 |
| ...410.2-570e | 15,0 | 15,0 | 15,0 | 15,0 |
| ...410.2-900e | 15,0 | 15,0 | 15,0 | – |
| ...410.2-1450e | 15,0 | 15,0 | 15,0 | – |

## Changing the Diaphragm

In order to ensure a correct function of the diaphragm pump and to fulfil the required safety and protective provisions it is absolutely necessary to check and replace the diaphragms at regular intervals.

After 3000 operating hours or at the latest after one year, a service message requiring diaphragm replacement is shown on the graphical display of the pump with a control (see additional instructions of the control). An earlier diaphragm replacement can be necessary depending on the medium and the application area.

**WARNING**

**Pump with a control:**
Observe the instructions on the graphical display for the replacement of wear parts!

- Set the stroke length adjustment to a stroke length of 0% (front position).
- Remove cover plate (**1**) of the pump body (FRP design, ...409.2).

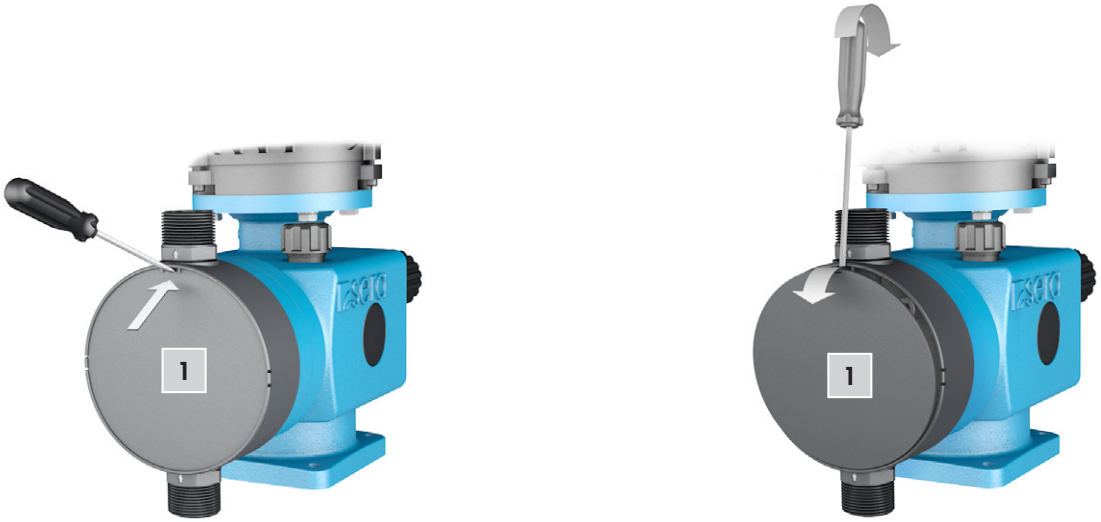


- Loosen fixing bolts (**2**) on the pump body.
- Remove pump body (3), front plate (**4**) (PVC design) or insertion plates (**5**) (FRP design, ...409.2) to the front.

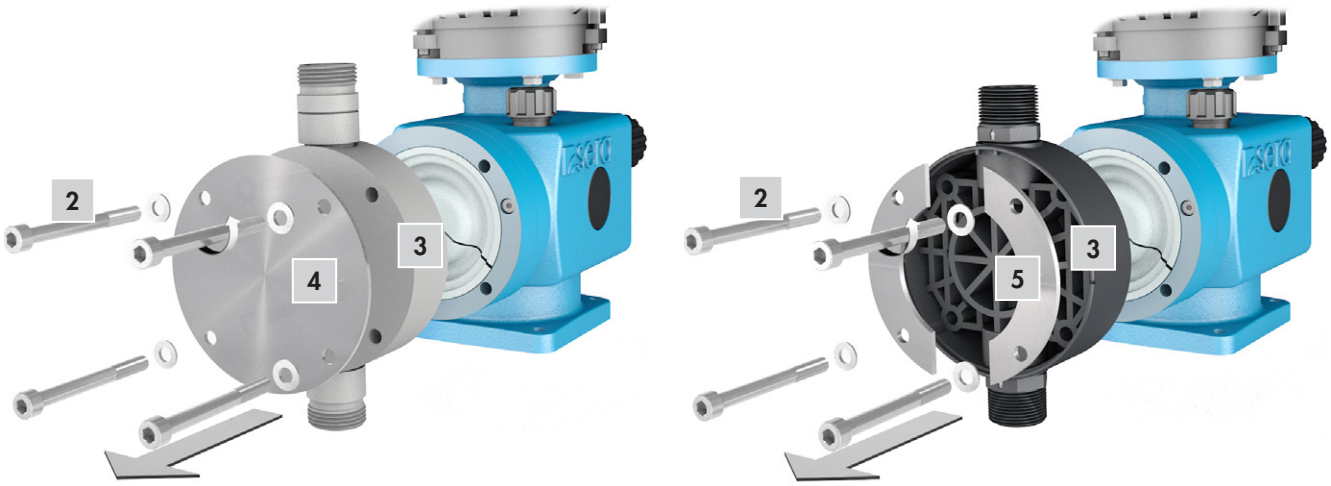

- Unscrew defective drive diaphragm (**6**) from the push rod (**7**).
- Unscrew pressure plate (**8**) from the set screw of the dia-phragm (with EPDM, FPM drive diaphragm).




- Clean pressure plate and screw plate on the new diaphragm.

**Assemble the pump in reversed order:**

- Screw on new diaphragm hand-tight – the diaphragm must be in the middle position.
- Set the stroke length to 50%.
- If the pump is not equipped with a stroke length adjustment (M-design), move the diaphragm to the middle position by turning the fan blade of the drive motor.
- Observe tightening torques of the fixing bolts (**2**); see chapter „Overview of the tightening torques“.
- When assembling the pump body, please note:suction valve below, pressure valve above!

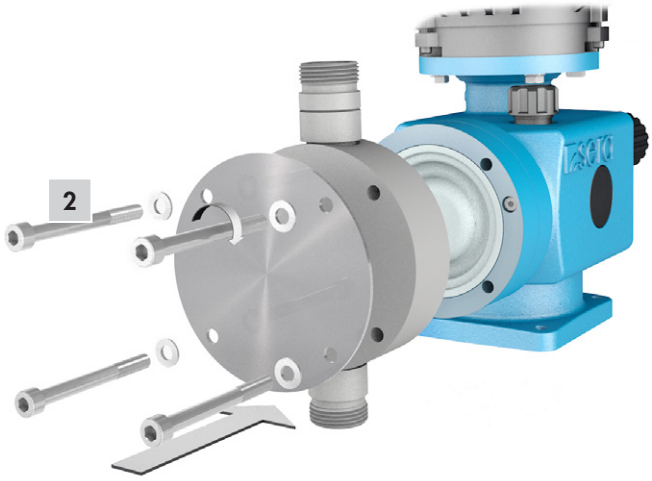


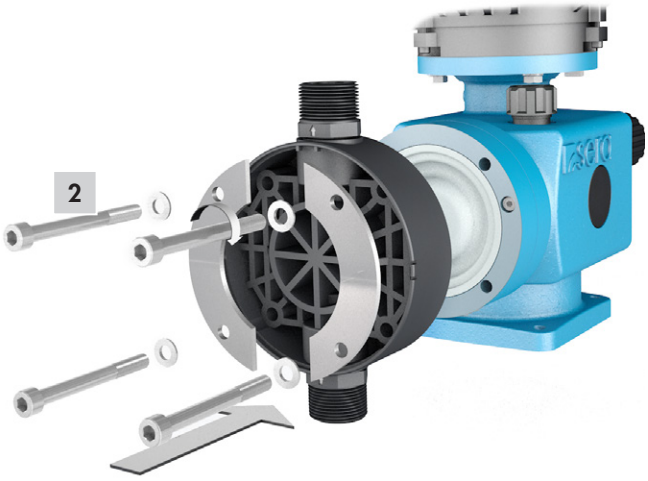


Add the suction and pressure line and connect pump to the power supply. The diaphragm pump is then again ready for operation.

## Overflow valve

Proceed as follows to change the diaphragm of the overflow valve (only pumps with integrated overflow valve).

**NOTE**

All diaphragms should be replaced completely.

- Loosen and unscrew the lid (**1**) of the overflow valve.

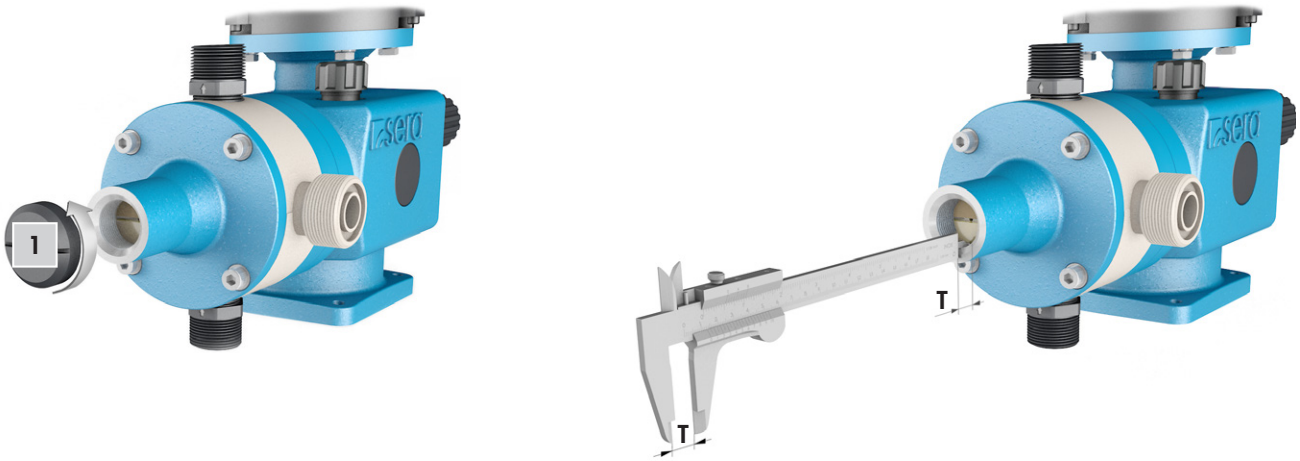


**NOTE**

Before the set screw is unscrewed the dimension **T** (dis-tance between top edge of the cover and the set screw) is to be determined and documented.
This ensures that the overflow valve can be reset to the same pressure NOTE! during subsequent assembly.

- Unscrew the set screw (**3**).
- Remove pressure spring (**2**).
- Loosen and unscrew fixing screws (**5**).
- Remove cover (**7**) and pump body (**8**) to the front.
- Remove pressure disk (**4**) and diaphragm (**6**).
- Check overflow valve for damage and contamination.

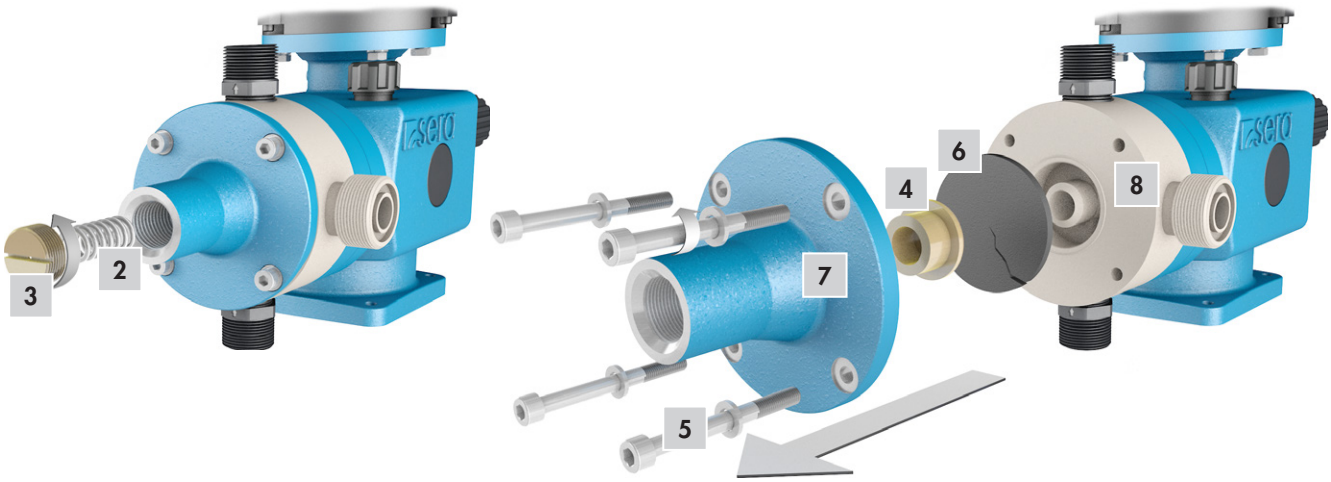


- Insert a new diaphragm. In case of PTFE-laminated diaphragms the PTFE-coated side must point towards the pump body.

Assemble the pump in reversed order.

**NOTE**

The individual components should be cleaned thoroughly before assembly!!

**NOTE**

When the set nut is screwed in the dimension "**T**" which was determined beforehand is of great importance.

The initial opening pressure of the overflow valve is only reached when the NOTE! set screw is screwed in exactly according to dimension "**T**"!

**ATTENTION**

The screw-in depth of the set screw must not exceed the initial value. If the set pressure is increased, **sera** has to be consulted beforehand!

**ATTENTION**

Never screw in the set screw to a depth so that the pressure spring is compressed to solid length!

## Spare and wearing parts

**The following parts are considered as wearing parts of the pump:**

- Drive diaphragm (diaphragm kit)
- Diaphragm (diaphragm kit) ► diaphragm of the integrated overflow valve
- Diaphragm rupture electrode (diaphragm kit)
- Valve kit (including O-ring kit)
- O-ring kit

Depending on their use and period of use, wearing parts must be replaced at regular intervals in order to ensure a safe function of the diaphragm pump.

We recommend to replace the wearing parts after 3000 operating hours or at least once a year.

In case of a premature diaphragm rupture caused by hard operating conditions, switch off the diaphragm pump and replace the diaphragms (see chapter „Changing the diaphragm").

**The following parts are considered as spare parts of the pump:**

- Pump body kit (including mounting kit)
- Mounting kit
- Cover kit ► pump with integrated overflow valve
- Setting kit ► pump with integrated overflow valve

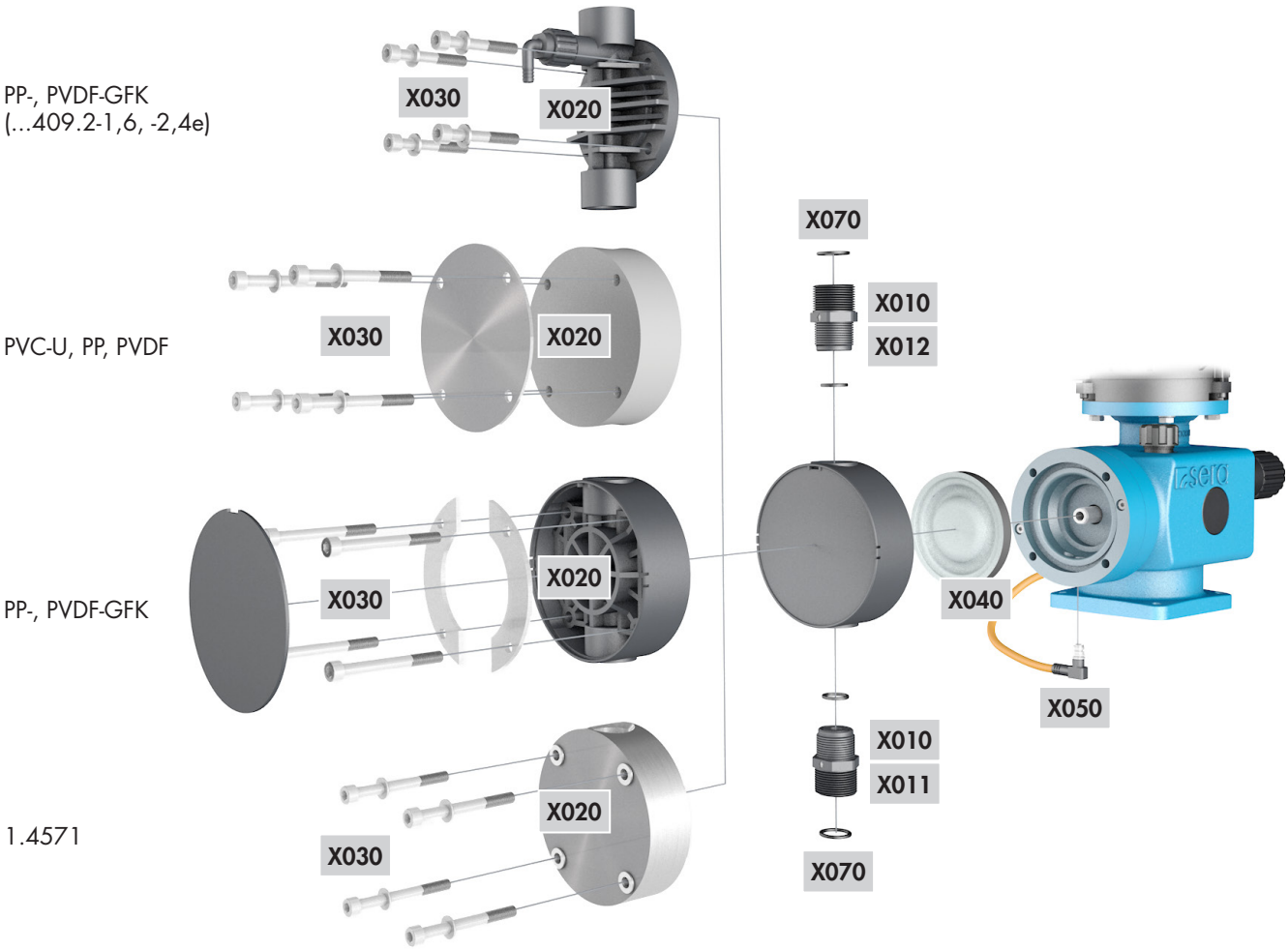


| Pos. | Kit | Materials | consisting of |
|---|---|---|---|
| X010 | Valves | PVC-U<br>PP-FRP<br>PVDF-FRP | Suction valve<br>Pressure valve<br>O-ring kit |
| X011 | Suction valve | 1.4571 | Suction valve<br>O-ring kit |
| X012 | Pressure valve | 1.4571 | Pressure valve<br>O-ring kit |
| X020 | Pump body | PVC-U<br>PP<br>PVDF | Pump body<br>Front plate<br>Mounting kit |
| X020 | Pump body | PP-FRP<br>PVDF-FRP | Pump body<br>Cover plate<br>Insertion plates<br>Mounting kit |
| X020 | Pump body | 1.4571 | Pump body<br>Mounting kit |
| X030 | Mounting | | Screws, complete |
| X040 | Diaphragm | | Drive diaphragm<br>Pressure plate (FPM-, EPDM-diaphragm)<br>Diaphragm rupture electrode ► C409.2 / C410.2 |
| X050 | Diaphragm rupture electrode | | Diaphragm rupture electrode ► ...409.2 / ...410.2 |
| X070 | O-rings | | |

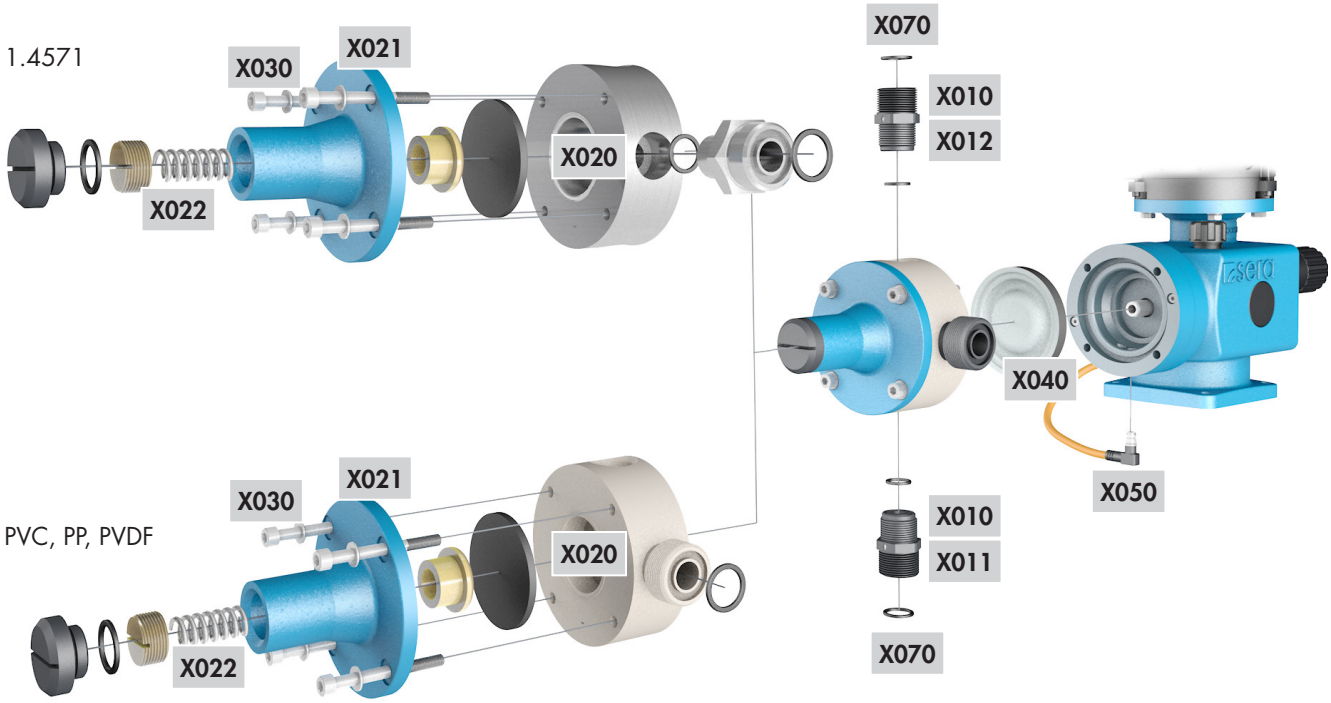


| Pos. | Kit | Materials | consisting of |
|---|---|---|---|
| X010 | Valves | PVC-U<br>PP-FRP<br>PVDF-FRP | Suction valve<br>Pressure valve<br>O-ring kit |
| X011 | Suction valve | 1.4571 | Suction valve<br>O-ring kit |
| X012 | Pressure valve | 1.4571 | Pressure valve<br>O-ring kit |
| X020 | Pump body | PVC<br>PP<br>PVDF | Pump body<br>Mounting kit<br>O-ring |
| X020 | Pump body | 1.4571 | Pump body<br>Mounting kit<br>Socket<br>O-rings |
| X021 | Cover | | Cover<br>Lid<br>O-ring |
| X022 | Setting kit | | Set screw<br>Pressure spring<br>Pressure disk |
| X030 | Mounting | | Screws, complete |
| X040 | Diaphragm | | Drive diaphragm<br>Pressure plate (FPM-, EPDM-diaphragm)<br>Diaphragm<br>Diaphragm rupture electrode ► C409.2 / C410.2 |
| X050 | Diaphragm rupture electrode | | Diaphragm rupture electrode ► ...409.2 / ...410.2 |
| X070 | O-rings | | |

**sera** products are sophisticated technical products which are only shipped after having been thoroughly tested and checked at our factory.
Should there be any faults, these can be detected and rectified easily and quickly based the instructions in the tables.

## NOTE

Analysis of the error messages in the display for the pumps with a control ► see the operation instructions of the control!

| Fault type | | | | | | | | | | | | | | | Possible cause | Corrective action |
|---|---|---|---|---|---|---|---|---|---|---|---|---|---|---|---|---|
| Corrective action! | Display, LED not lit! ▲ Pump with control | Motor does not start! ▲ diaphragm pump | Damage to stroke mechanism / drive! | Pump does not draw in! | Pump does not deliver! | Flow rate is not reached! | Delivery head is not reached! | Flow rate fluctuates! | Maximum permissible flow rate exceeded! | Pipe oscillates heavily! | Too high noise development! | Service life of the drive diaphragm too low! | Drive is overloaded (periodically occurring noises)! | Leakage on pump head! | | |
| | | | | ■ | ■ | ■ | | | | | | | | | Suction height too high. | Reduce suction height or suction resistance. |
| | | | | ■ | ■ | ■ | | ■ | | | | | | | Suction pipe leaking. | Check seals, tighten pipe connections. |
| | | | | ■ | ■ | | | | | | | ■ | ■ | ■ | Shut-off valves in piping closed. | Open shut-off valves or check opening state ► check pump for possible damage. |
| | | | | ■ | ■ | ■ | | | | | | | | | No pumped medium in storage tank. | Fill storage tank. |
| | | | | ■ | ■ | ■ | ■ | ■ | | | | | | | Pump valves leaking. | Remove and clean valves. |
| | | | | ■ | ■ | | ■ | ■ | | | | | | | Pump valves (ball seats) damaged. | Remove and clean valves, check function; replace valves if necessary. |
| | | | | ■ | ■ | | | | | | | | | | Pump valves incorrectly mounted or valve balls missing. | Check installation position and completeness ► replace missing parts or install correctly. |
| | | | | ■ | ■ | ■ | | ■ | | | | | | | Filter in suction line clogged. | Clean filter. |
| | | | | ■ | ■ | ■ | ■ | ■ | | | | | ■ | | Electrical data of the pump do not match mains data. | Check order data.<br>Check electrical installation.<br>Adjust motor to the network on site (for diaphragm pumps). |
| | | | | | ■ | ■ | ■ | ■ | | ■ | | ■ | ■ | ■ | Backpressure too high. | Measure pressure with manometer directly above pressure valve if possible and compare with permissible backpressure. |
| | | | | ■ | ■ | ■ | ■ | ■ | | | | | | | Foreign matter in the pump valves. | Remove and clean valves. |
| | | | | | | | | ■ | ■ | | | | | | Pressure on suction side higher than at the end of the pressure pipe. | Check geodetic conditions, install float valve or pressure keeping valve if necessary. |
| | | | | | | ■ | ■ | ■ | | ■ | ■ | ■ | ■ | ■ | Acceleration height too high due to pipe geometry. | Check acceleration height on suction and pressure sides with manometer and compare with design data ► install a pulsation damper if necessary. |
| | | | | | | | | | | | | ■ | | ■ | Materials coming into contact with the medium not suitable for the pumped medium. | Check whether the pumped medium matches the design data and select other materials if necessary. |

# FAULT ANALYSIS / CORRECTIVE ACTION

| Fault type | | | | | | | | | | | | | | | Possible cause | Corrective action |
|---|---|---|---|---|---|---|---|---|---|---|---|---|---|---|---|---|
| Corrective action! | Display, LED not lit! ▲ Pump with control | Motor does not start! ▲ diaphragm pump | Damage to stroke mechanism / drive! | Pump does not draw in! | Pump does not deliver! | Flow rate is not reached! | Delivery head is not reached! | Flow rate fluctuates! | Maximum permissible flow rate exceeded! | Pipe oscillates heavily! | Too high noise development! | Service life of the drive diaphragm too low! | Drive is overloaded (periodically occurring noises)! | Leakage on pump head! | | |
| | | | | ■ | | ■ | ■ | ■ | | | | | | | Viscosity of the pumped medium too high. | Check viscosity of the pumped medium and compare with design data ► reduce concentration or increase temperature if necessary. |
| | | | | | ■ | ■ | | ■ | | | | | | | Pumped medium is outgassing in the suction pipe and/or the pump body. | Check geodetic conditions and compare with data of the pumped medium. Operate pump with suction side supply, reduce temperature of the pumped medium. |
| | | | | ■ | | | | | | | | | | | Air in suction line while pressure is present on the pressure side. | Vent pressure side. |
| | ■ | | | | | | | | | | | | | | Power supply failed / switched off. | Restore power supply. |
| | | | | ■ | ■ | ■ | ■ | ■ | | | | | | | Pipe connections leaking. | Tighten connections according to type of material. Be careful with plastic ► risk of fracture!! |
| | | | | ■ | ■ | | | | | | | | | | Pumped medium frozen in pipe. | PRemove pump and check for possible damage - increase temperature of the pumped medium. |
| ■ | ■ | | | | ■ | | | | | | | | | | No mains power connection. | Connect mains power supply. |
| | | | | ■ | | | | | | | | | | | Pump valves dry. | Moisten pump body and valves.<br>Open vent valve. |
| | | | | ■ | ■ | ■ | | | | | | | | ■ | Temperature too low. | Check flowability of the dosing medium. Temperature of the medium see „Technical data“. |
| | | | | ■ | ■ | ■ | ■ | ■ | | | | ■ | | ■ | Diaphragm rupture. | Replace the diaphragm according to the descriptions in Chapter „Replacing the diaphragm“. |
| ■ | | | | | | | | | | | | | | | Reversible thermal fuse of the pump has tripped. | Let temperature of the pump cool down.<br>Check ambient temperature. |
| | ■ | | | | | | | | | | | | | | Fuse in electronics blown. ► Pump with control | Return pump for repair. |
| | | | | ■ | ■ | ■ | ■ | | | | | | | | Compensating valve not adjusted to operating conditions. ► diaphragm pump KM | Set compensating valve according to operating conditions. ► diaphragm pump KM |

**WARNING**

Observe and follow the safety instructions by all means.
See the additional instructions „SAFETY INSTRUCTIONS“.
Man, machine and environment are endangered if the safety instructions are not observed.




## Shut-down

- Switch off piston diaphragm pump.
- Rinse pump head and remove pumped medium; make sure that the rinsing agent is suitable for pumped medium and pump head.

## Disposal

- Shut-down system. Please see “Shut-down“.

## Dismantling and transport

- Shut-down system. Please see “Shut-down“.
- Remove all fluid residues from pump body, clean thoroughly, neutralize and decontaminate.
- Package unit and ship.

**NOTE**

A clearance certificate must be filled in when systems are returned to the manufacturer.
Acceptance will be rejected if this clearance certificate is not attached.

## Complete disposal

- Remove all fluid residues from unit.
- Drain off lubricants and dispose of according to regulations!
- Dismount materials and send them to a suitable waste disposal company!

**NOTE**

Inspection / repair of machines and machine parts is only carried out after the opposite clearance certificate was filled in correctly and completely by authorized and qualified personnel.

**NOTE**

Acceptance will be refused if parts are returned to the manufacturer without a proper clearance certificate.

All industrial companies are obligated by the legal provisions for occupational health, e.g. the workplaces ordinances, the Ordinance on Hazardous Substances, the regulations for prevention of accidents and the environmental protection regulations such as the Waste Management Act and the German Household Water Act to protect their employees or man and the environment from detrimental effects when handling hazardous substances.

Should special safety precautions be necessary despite careful draining and cleaning of the product the necessary information are to be provided.

Machines which are operated with radioactive media shall only be inspected and/or repaired in the safety area of the owner by a **sera** specialized fitter.

The clearance certificate is part of the inspection-/repair order.
**sera** reserves the right to refuse acceptance of the order for other reasons.

**NOTE**

Please make a copy and leave the original with the operating instructions!
(can also be downloaded from: www.sera-web.com)

# Clearance Certificate

## Product

Type _____ Serial-No. _____

**the product was carefully emptied before shipping / delivery, and cleaned inside and outside.** ☐ **YES**

## Conveying medium

Designation _____ Concentration _____ %

### Properties

Please tick!

If either of the listed properties, then enclose the appropriate safety and handling instructions.

☐ Harmless

☐ Toxic ☐ Corrosive ☐ Flammable ☐ Oxidising ☐ Unhealthy

☐ Explosive ☐ Dangerous for the environment ☐ Irritant ☐ Bio-hazardous ☐ Radioactive

The product was used with health or water-polluting substances and came up with labeling requirements and pollution prone media in contact. ☐ **YES** ☐ **NO**

Special security arrangements with respect to health or water-hazardous media are in the further handling ☐ **not required** ☐ **required**

The following safety precautions regarding rinsing, residual liquids and waste disposal are required:

## Process data

The product was used with the following operating conditions described conveying medium:

Temperature _____ °C Pressure _____ bar

## Sender

Company: _____ Telephone: _____

Contact person: _____ FAX: _____

Address: _____ E-mail: _____

Zip code, City: _____ Your order No: _____

**We confirm that we have the information in this safety certificate (Clearance Certificate) have been correctly and completely and that the returned parts were carefully cleaned.**

**The parts are sent free of residues of dangerous amount.**

Place, Date _____ Department _____ Signature (and company stamp) _____

QSF 469-01 en / 11.2014 / PM

FOLLOW US

EXCELLENCE IN FLUID TECHNOLOGY

**sera ProDos GmbH**
sera-Str. 1
34376 Immenhausen
Germany
Tel. +49 5673 999 02
Fax +49 5673 999 03
info-prodos@sera-web.com
www.sera-web.com

TM01-03 EN 190110 **sera**® is a registered trademark of **sera** GmbH.
Technical details subject to change. **sera** shall not accept any liability for errors or omissions or for printing errors.

# ACCUGUARD Diaphragm Seals

Without proper protection, process fluids can contaminate and damage in-line instrumentation. ACCUGUARD Diaphragm Seals are designed to protect and isolate pressure gauges and expensive instrumentation from corrosive, high temperature, or viscous, process media.



## Features

- Transfers process pressure accurately without direct contact with process fluids
- Removes the need for expensive instrumentation
- Easily installed and available in five chemically resistant Materials of Construction
- Optional Diaphragm Materials
- Available with ¼" & ½" Bottom Connection Sizes in FNPT & BSPT Female Connection Types
- Thermoplastic Units Rated to 240 PSIG (16 BARG) @ 21°C (70°F)
- 316L S/S Units Rated to 5800 PSIG (400 BARG) @ 21°C (70°F)
- Approved – 316 S/S Diaphragm Seals with CRN (Canadian Registration Number)

## HOW TO ORDER - AccuGuard

*Example Part Number: AG25A25A-PVC-V-M-[Optional Gauge]*

**AG 25 A 25 A - PVC - V - M - [Optional Gauge]**

*See Gauge List*

**AccuGuard Diaphragm Seal**

**Connection Size (Top)**
25 = 1/4"

**Connection Type (Top)**
A = FNPT

**Connection Size (Bottom)**
25 = 1/4"
50 = 1/2"

**Connection Type (Bottom)**
A = FNPT
B = BSPT

**Options**
M = Mounted Gauge/Glycerin Filled

**Diaphram Materials**
V = Viton (Thermoplastic Body Only)
E = EPDM (Thermoplastic Body Only)
T = PTFE (Thermoplastic Body Only)
S/S = 316 S/S (S/S & S/SV Body Only)

**Body Materials**
PVC = Polyvinylchloride
CPVC = CPVC Corzan
PP = Polypropylene (Not Available with PTFE Diaphragm)
PVDF = Polyvinyldene Fluoride (PTFE Diaphragm Only)
S/S = 316L Stainless Steel
S/SV = Vented 316L Stainless Steel

*- Optional Gauge Appears as Separate Line Item When Ordered*
*- Diaphragm Seals With Gauges = Glycerin Filled As Standard*
*- 1/4" & 1/2" MNPT Nipples Available - Call Factory for Details*

Primary Fluid Systems Inc. | 1050 Cooke Blvd. | Burlington | Ontario | L7T 4A8 | Canada
www.primaryfluid.com | primary@primaryfluid.com | North American Toll Free: 1-800-776-6580

# ACCUGUARD Diaphragm Seals

## Technical Information

### Temperature Correction Factors: Thermoplastics Temperature Effects:

Thermoplastics and thermosets will decrease in tensile strength as the temperature increases: therefore, the working pressure must be reduced accordingly. For additional Information, please visit: www.eco-valve.com.

### Canadian Registration Number:

Approved - 316L S/S ACCUGUARD Diaphragm Seals with CRN (Canadian Registration Number) Certification for all of Canada.

## Dimensions & Parts

### Thermoplastic Diaphragm Seals

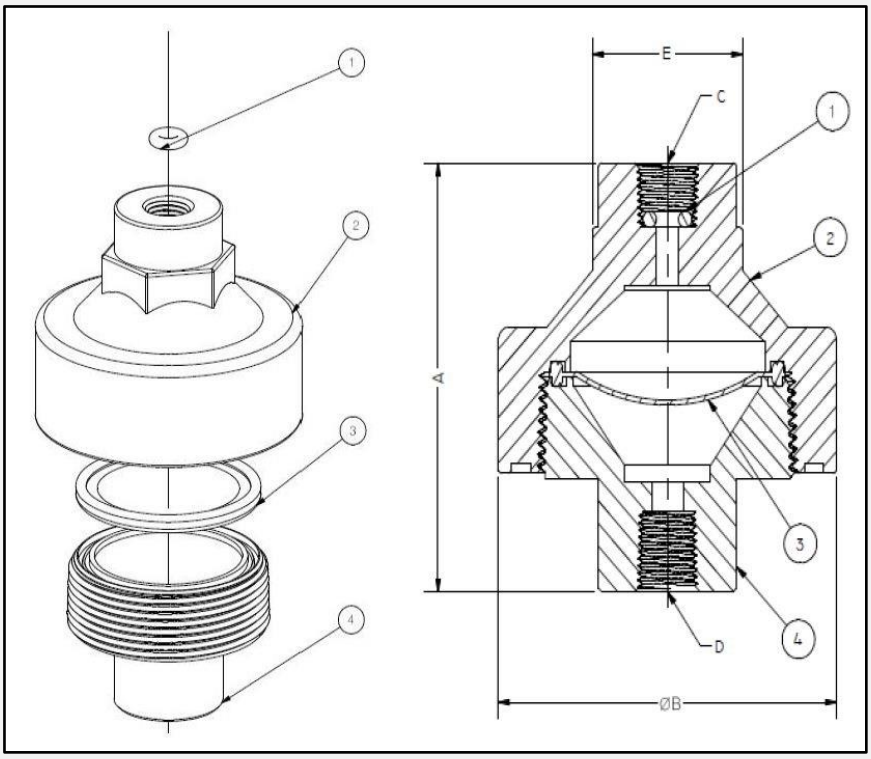


### Alloy Diaphragm Seals

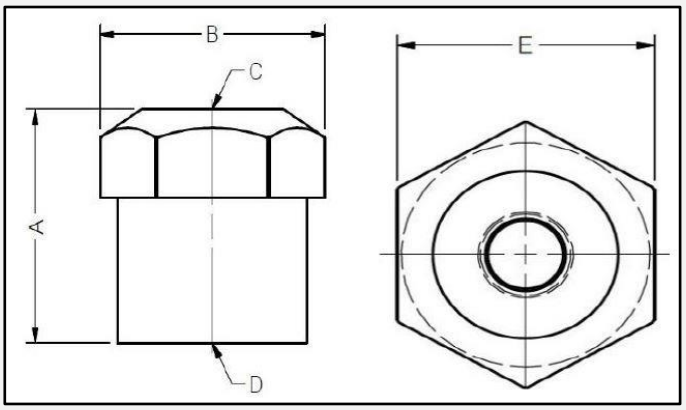


### Vented Alloy Diaphragm Seals

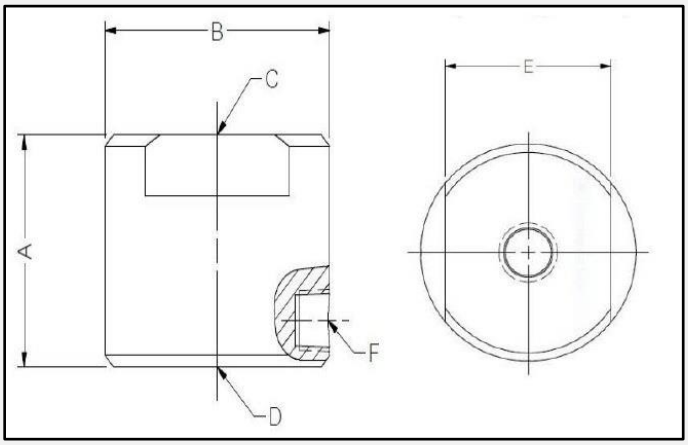


**Dimensional Information**

| Dimension | Thermoplastic | Alloy | Vented Alloy |
|---|---|---|---|
| A | 3.3" [84.68mm] | 1.5" [38.61mm] | 1.57" [40.00mm] |
| B | 3.1" [78.49mm] | 1.7" [43.43mm] | 2.05" [52.00mm] |
| C | *See "How to Order"* | *See "How to Order"* | *See "How to Order"* |
| D | *See "How to Order"* | *See "How to Order"* | *See "How to Order"* |
| E | 1.4" [35.00mm] | 1.5" [38.10mm] | 1.57" [40.00mm] |
| F | N/A | N/A | 1/8" FNPT |

**Thermoplastic Diaphragm Seal Parts & Materials**

| Item Number | Description | Material of Construction |
|---|---|---|
| 1 | O-Ring | EPDM |
| 2 | Upper Housing | Polypropylene (PVC, CPVC, & PP Lower Housings) Or PVDF (PVDF Lower Housing Only) |
| 3 | Diaphragm | *See "How to Order"* |
| 4 | Lower Housing | *See "How to Order" (Body Materials)* |

- *Alloy Units = Sealed – No Parts Available*

Primary Fluid Systems Inc. | 1050 Cooke Blvd. | Burlington | Ontario | L7T 4A8 | Canada
www.primaryfluid.com | primary@primaryfluid.com | North American Toll Free: 1-800-776-6580

# ACCUGUARD GAUGES

ACCUGUARD Pressure Gauges are designed to enhance the performance of chemical feed systems. Adding a pressure gauge to any system will help to ensure that optimal pressures are monitored and maintained.







## Series Information

| Series | Gauge Diameter | Gauge Connection Size and Type | Gauge Housing | Gauge Internals | Liquid Filled | *Accuracy Rating |
|---|---|---|---|---|---|---|
| **Economy** | 2" / 2.5" | 1/4" NPT | Steel Case | Brass | No | ± 2.5% |
| **Intermediate** | 2.5" / 4" | 1/4" NPT | 304 S/S | Brass | Yes | ± 1.6% |
| **Premium** | 2.5" / 4" | 1/4" NPT | 304S/S | 316L S/S | Yes | ± 1.6% |

*Accuracy Rating = Full Scale Range

### HOW TO ORDER - AccuGuard Gauges

*Example Part Number: GE2-160-CB*

**G E 2 - 160 - CB**

**AccuGuard Gauge**

**Gauge Series**
- E = Economy
- I = Intermediate
- P = Premium

**Gauge Diameter**
- 2 = 2 Inches
- 2.5 = 2-1/2 Inches
- 4 = 4 Inches

**Gauge Mounting Orientation**
- CB = Center Back
- BM = Bottom Mount

**Gauge Indication**
- 60 = 0-60 PSIG / 0-400 KPA
- 160 = 0-160 PSIG / 0-1100 KPA
- 200 = 0-200 PSIG / 0-1400 KPA
- 300 = 0-300 PSIG / 0-2000 KPA
- 400 = 0-400 PSIG / 0-2800 KPA

*4" Gauge Diameter Available in Bottom Mount Orientation Only*

*For Price & Availability of Other Pressures - Call Factory*

Primary Fluid Systems Inc. | 1050 Cooke Blvd. | Burlington | Ontario | L7T 4A8 | Canada
www.primaryfluid.com | primary@primaryfluid.com | North American Toll Free: 1-800-776-6580

# ACCUDRAW® PVC Calibration Instructions

***Note: Before starting either of the calibration procedures below, ensure that the pump is primed and void of any trapped air.***

**Using the USGPH scale:** (scale is based on **time**, in one (1) minute volume discharge)

1. Fill the calibration to the top "0" mark on the USGPH scale.
2. Close isolation valve (#2) from supply tank, open isolation valve (#1) below cylinder and start the pump.
3. Use a stopwatch to measure the time of one (1) minute (60 seconds) and record the volume dispensed by the metering pump, using the draw down scale.
4. Adjust the pump volume control higher or lower to meet with your desired output.
5. Repeat above steps 1 through 4, until the desired output is met.
6. Divide the measured USGPH number by 60 to determine the **USGPM volume**, if required.

If you wish to shorten the time of dispensing for calibration by one half (1/2) or one quarter (1/4), you must multiply the measured volume by the same number used to divide the time by.

e.g. 10 USGPH in 1 minute equals
5 USGPH X 2 in 30 seconds or
2.5 USGPH X 4 in 15 seconds

**Using the ml scale:** (scale is based on **volume** pumped, over any given time)

1. Fill the calibration cylinder to the top "0" mark on the ml scale.
2. Close isolation valve (#2) from supply tank, open isolation valve (#1) below cylinder and start the pump.
3. Use a stopwatch to measure the time it takes to pump down a given volume (ml) in 60 seconds.
4. Multiply the volume by 60 to determine the **ml per hour** volume, if required.
5. Adjust the pump volume control higher or lower to meet with your desired output.
6. Repeat above steps 1 through 5, until the desired output is met.

If you wish to shorten the time of dispensing for calibration by one half (1/2) or one quarter (1/4), you must multiply the volume by the same number used to divide the time by to determine ml per minute or hour.

e.g. 100 ml in 60 seconds equals
50 ml X 2 in 30 seconds or
25 ml X 4 in 15 seconds

## Typical Installations ("A" and "B")

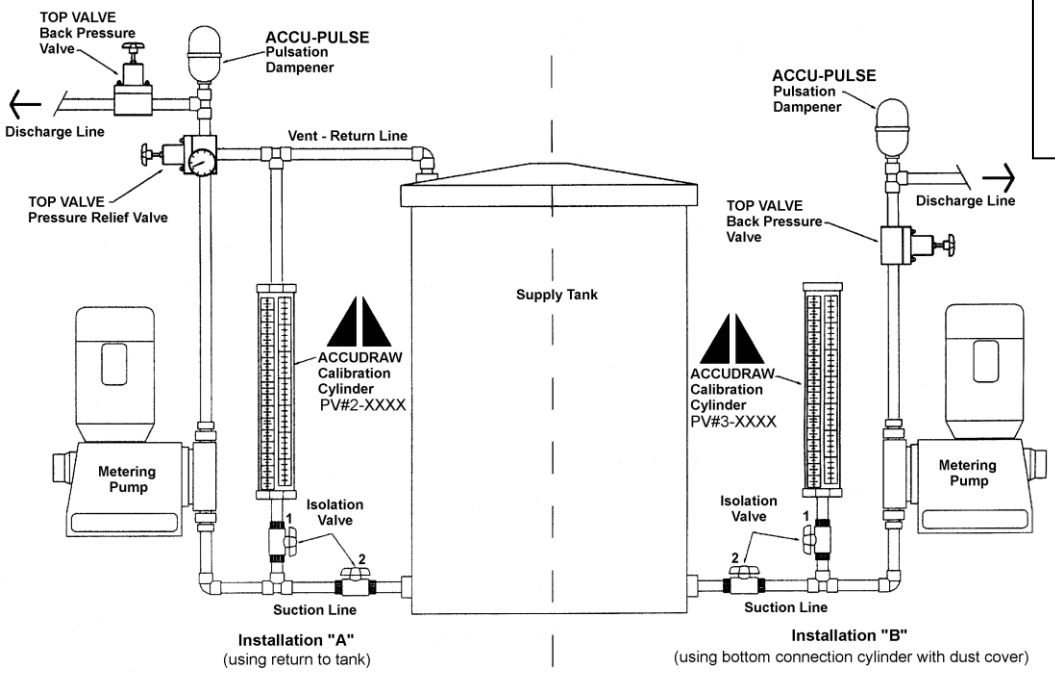


**Conversion Factors**
1ml = 1 cc
1000 ml – 1 liter
ml/sec x 60 = ml/min
1 US gal/min x 0.063 = liters/sec
1 US gal = 3.786 liters

**Caution:**
Do not use as a Pressure Vessel.


**PRIMARY FLUID SYSTEMS INC.**

**Call Toll Free 1-800-776-6580**
**Tel: (905) 333-8743 Fax: (905) 333-8746**

***E-Mail: primary@ primaryfluid.com***
***www.primaryfluid.com***


***® Registered Trade Mark of Primary Fluid Systems Inc.***

# Metering Pump Accessories Save $$$$

## *Prevent unsafe and inefficient systems by design.*

### **ACCUDRAW** Calibration Cylinders

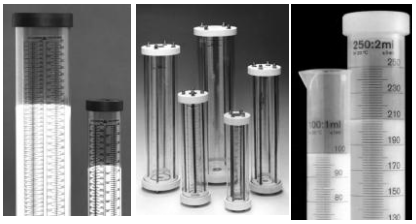

**PVC** **Glass** **Poly**

- *PVC, glass, polypropylene*
- *translucent, chemical resistant*
- *coloured graduations and lettering*
- *threaded or socket connections*
- *standard sizes 100 ml to 20,000 ml*

***Custom built in other sizes and materials.***

### **TOP VALVE** Back Pressure/Pressure Relief



- *long life diaphragm*
- *range of 0 – 150 PSIG*
- *air release, optional gauge port*
- *PVC, CPVC, PVDF, PTFE, polypropylene, stainless, Alloy 20 and Hastelloy C*
- *7 sizes ¼" – 2" NPT*
- *colour coded handles indicate size*

***Designed to enhance the <u>accuracy</u> and <u>safety</u> of your metering pumps.***

### **ACCU-PULSE**
Pulsation Dampeners



***Designed to remove pulsating flows from positive displacement pumps.***

- *increase system efficiency and pump life*
- *decrease maintenance and costs*
- *protect pipes, meters, valves and instrumentation from pulsation and vibration*
- *ensure meter accuracy, longevity and repeatability*
- *prevent foaming and splashing*
- *extensive range of materials and sizes*
- *lightweight, compact design*

### Typical Metering Pump System

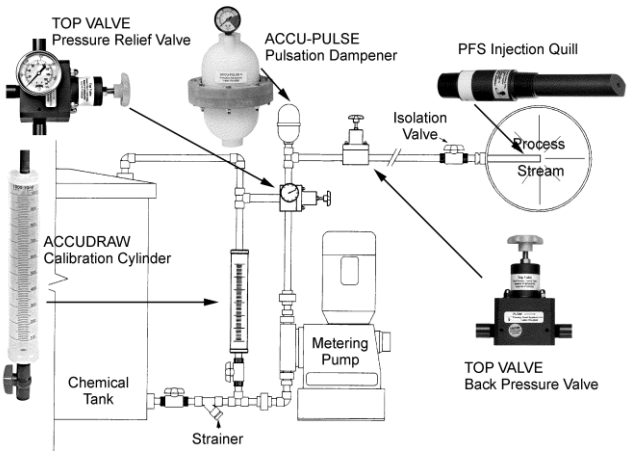


***AutoCad drawings available from our web site.***
***Visit www.primaryfluid.com***

### PFS Injection Quills



***Designed to inject chemical into the center stream of process.***

- *provides for a more homogenous mix in the pipeline*
- *built-in checks to prevent back siphoning*
- *2 sizes 6" and 8" length*
- *½" or ¾" NPT, BPST, or Flg'd Conn.*
- *PVC, CPVC, PVDF, polypropylene, Stainless, Hastelloy C & Titanium*
- *pressure to 3000 PSIG*
- *temperature to 260°C (500°F)*

***Custom built in other sizes and materials.***

### Accu-Vent

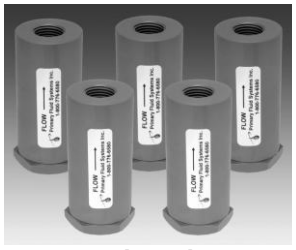

***Designed to automatically vent gases and vapours.***

- *vents gases and vapors released from Sodium Hypochlorite, Sulfuric Acid & Hydrogen Peroxide*
- *CPVC (Corzan) and Viton corrosion resistant wetted materials of construction*
- *specially designed float material automatically vents built up gases on system start up and under working pressure*
- *standard 1/2" or 3/4" NPT threaded connections or optional socket weld*
- *available in other materials*

### PFS Corporation Stops



***Designed to inject chemical into the center stream of process.***

- *isolation valve allows for ease of maintenance*
- *available in 6 materials of construction*
- *wetted components have comparable or greater chemical resistance than quill construction material*
- *standard and custom lengths available*
- *connection in NPT, metric or flanged*

***Custom built in other sizes & materials.***

**Call Toll Free 1-800-776-6580**
**Tel: (905) 333-8743 Fax: (905) 333-8746**

# *Technical Sheet*

***WWW.POMPESCP.COM***

| | | | |
|---|---|---|---|
| ***Client:*** | ***ASDR*** | ***Assembly serial number:*** | ***0195*** |
| ***Quotation:*** | ***PP-204196*** | ***Drawing number :*** | ***461-PVC-250*** |
| Mounting type: box ☒ wall ☐ | | Pump model: **(RF409.2-180e)x3 , RF409.2-115e** | |
| With door ☒ Without door ☐ | | S/N pump 1:WP387480 | S/N pump 2: WP387481 |
| Simplex ☐ Duplex ☐ Triplex ☐ Quadruplex ☒ | | S/N pump 3: WP387482 | S/N pump 4: WP387479 |
| Skid Material: HDPE ☒ SS ☐ | | Pump capacity L/H : 216 / 138 | |
| Skid dimension: 49'' X 80'' X 24'' | | Maximum pressure (PSI): 58.01 / 58.01 | |
| O-ring: Viton ☐ EPDM ☒ Teflon ☐ | | Pump head material: PVDF / PVDF | |
| Relief valve model: (TVBP75-PVC)X3 / (TVBP50-PVC)X1 | | Valve material: PVC | |
| Back pressure valve model: | | Valve: simple ☒ double ☐ | |
| Valve material: PVC | | Ball type: PTFE | |
| Calibration cylinder model: (PV#2-2000)X1, (PV#2-4000)X2 | | O-ring: EPDM | |
| Pressure gauge model: GI2.5-160 CB | | Diaphragm: AG25A50A-PVC-T-M | |
| Piping : PVC ☒ SS ☐ PVDF ☐ CPVC ☐ | | | |
| Piping dimension: ½'' ☒ ¾'' ☒ 1'' ☐ 1 ¼'' ☐ 1 ½'' ☒ 2'' ☐ | | | |

| ***Pressure test and tightness*** | | ***Adjusting valves*** | |
|---|---|---|---|
| Pressure test period, min.: | 10 | Release valve, PSI: | 50 |
| Pressure test, PSI: | 60 | Back pressure valve, PSI: | 50 |

***Signature : _____*** ***Date : _June 03 2021_____***

***3076A, rue Bernard-Pilon, St-Mathieu-de-Beloeil (Qc) J3G 4S5***
***Tél : 450-922-4224 Fax : 450-922-4223***

# TRIPLEX POLYMER
# 341-PVC-1450

AGNICO EAGLE

**Vendor Document Status**

| | |
|---|---|
| 1 | ☐ Proceed to next submission and status. |
| 2 | ☐ Proceed with exceptions as noted to next submission and status. |
| 3 | ☐ Do not proceed.<br>Revise as noted and resubmit next submission and status. |
| 4 | ☑ Complete, no further submission required. |

By: Sébastien Perron, Instrumentation Date: 2021-04-07

Review and authorization to fabricate are only for general conformance with the design concept of the Project as expressed in the Contract Documents. Sole responsibility for the accuracy and completeness of this document, including but not limited to dimensions and quantities, remains with the Supplier/Contractor. Agnico Eagle does not warrant the accuracy or completeness of any of the information contained herein, nor does Agnico Eagle authorize or approve any construction means, methods, techniques, sequences or any safety precautions or procedures.

Agnico Eagle No. 6526-S265-605B-135_TRIPLEX SULFURIC ACID 351-CPVC-250_ WD_R1 R: TRIPLEX SULFURIC ACID 35...CPV

**DOCUMENT FOR INFORMATION**

**Workshop drawing :**

- ☐ Approuved as is
- ☐ Approuved with correction(s)
- ☐ Rejected

**Approuved by**

Name : _____

Title : _____

Compagnie : _____

Signature : _____

Skid manual valves arrangement to be validated with P&ID drawing.

| | |
|---|---|
| Skid Material: | HDPE |
| dimension L xP xH: | 60" H x 64" W x 36" |
| Pump model: | PCM 1M6F |
| Pumps L/Hours: | 1 440 L/H |
| Stator: | NBR |
| Pressure: | 4 Bars |

**COMPONENT MATERIAL**

| | |
|---|---|
| Plumbing & size: | -Entry 1 1/2" EDPM<br>-Dosing 1" EDPM |
| Ball valve O ring: | EPDM |
| Relief Valve: | TVBP10-PVC |
| Calibration Cylinder: | PV#2-20000 |
| Gauge Pressure: | 0-100 PSI |
| Tubing pump connec.: | LDPE |
| Dry running protection: | AMS |

**DOORS**

| | |
|---|---|
| Door product: | Polycarbonate 3/8"<br>Stainless steel |
| Bolt & washer: | Stainless steel |

**Pump Identification:**

Pump #1: 65PME68009A
Pump #2: 65PME68009B
Pump #3: 65PME68009C

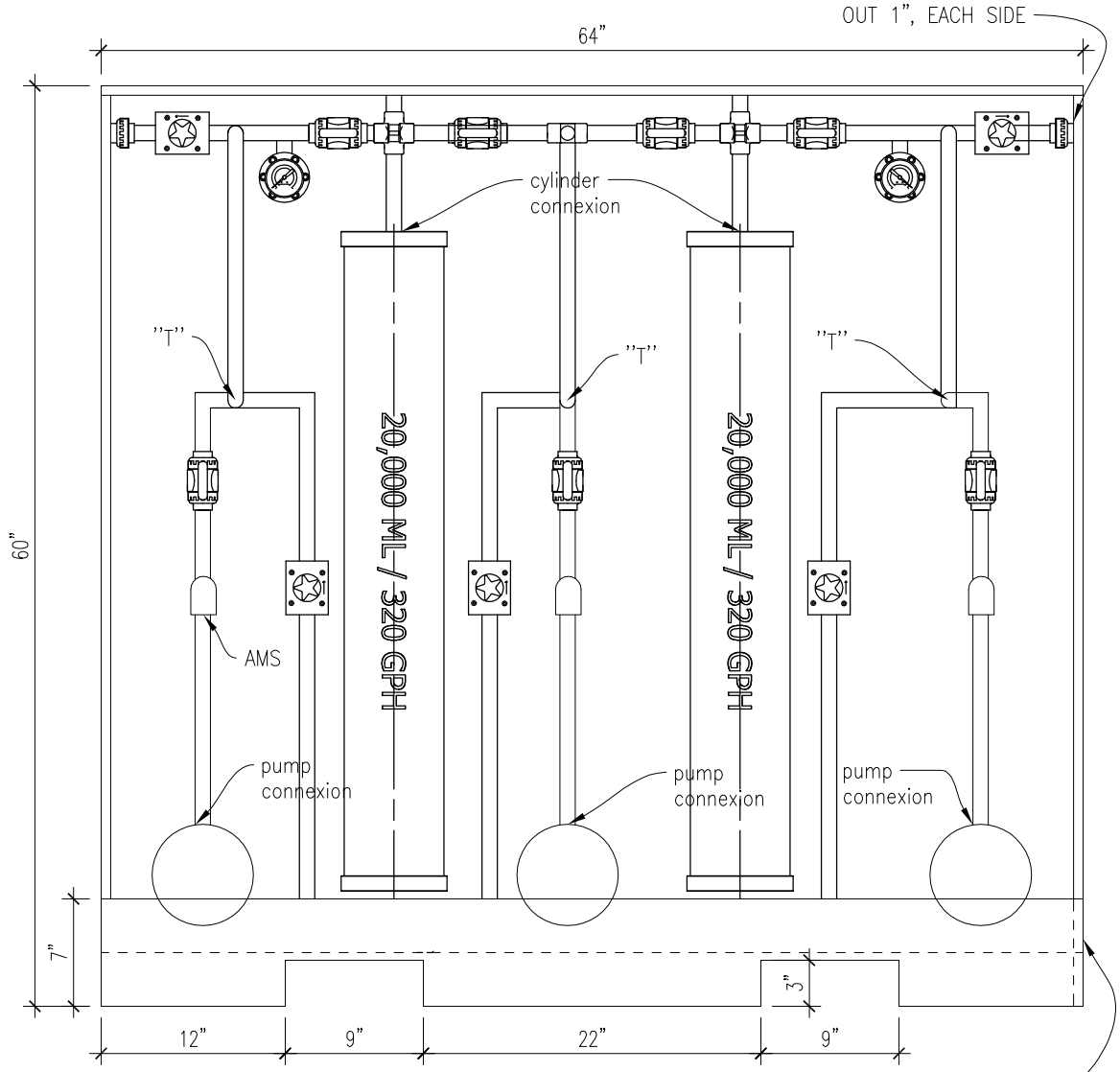


FRONT VIEW

**Notes :**
1. DIMENSIONS ARE IN INCHES
2. DO NOT MEASURE THE DRAWING

PCP Pompes & équipements

| | | | | | | | |
|---|---|---|---|---|---|---|---|
| DREW BY: V.BLUTEAU | TITRE: TRIPLEX POLYMER 341-PVC-1450 | REV: | DATE: | MODIF.: | APP.: | DATE: 2021/03/14 | |
| PURCHASE ORDER: BC21-14244 | | -- | --- | --- | --- | # DESSIN: | |
| APP. BY: E. CLERMONT | PROJET: 0193970501 | -- | --- | --- | --- | 1-2 | |

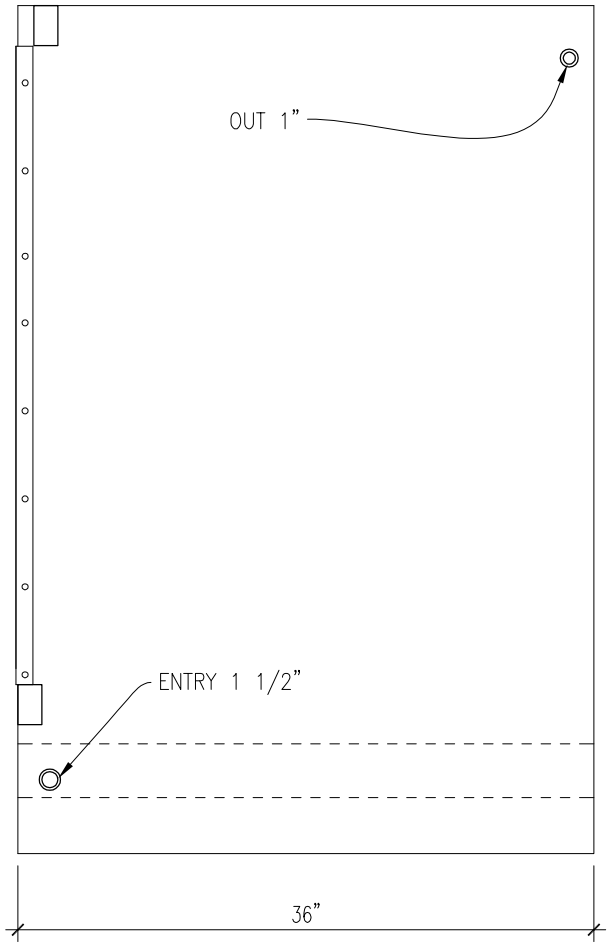


SIDE VIEW

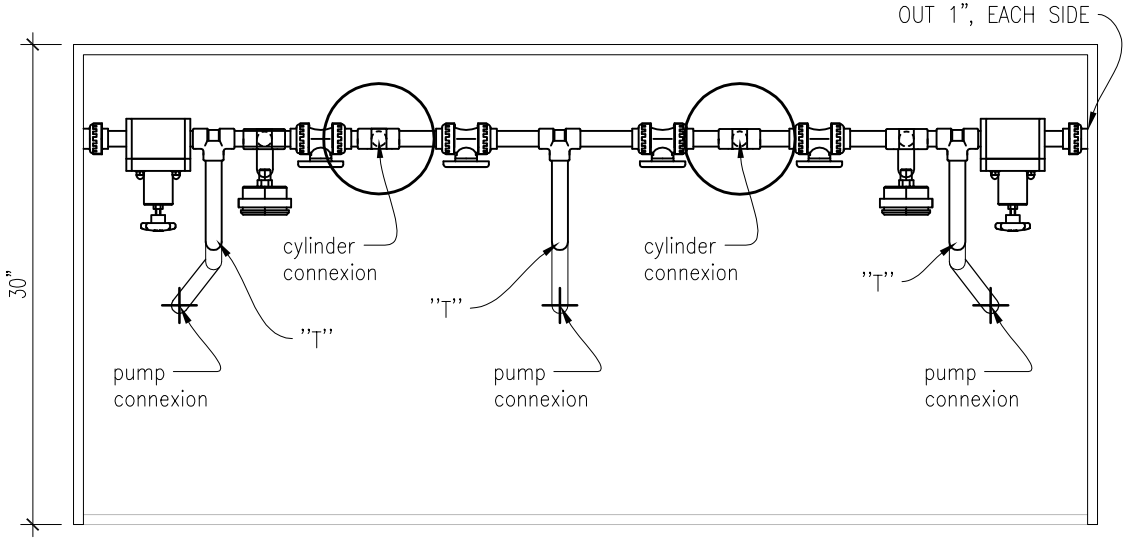


PLAN VIEW

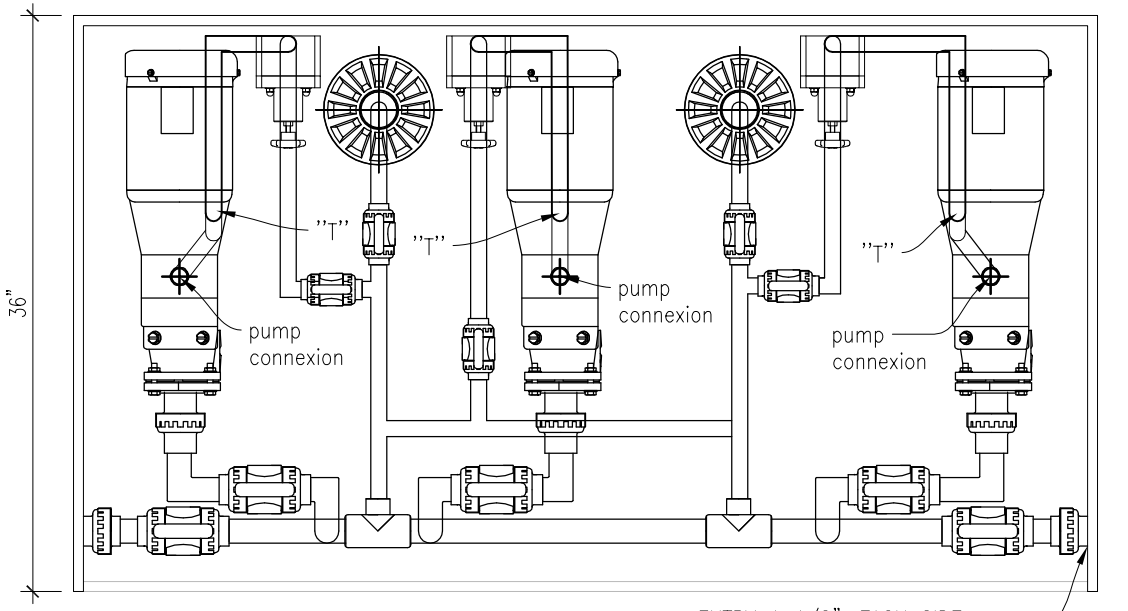


PLAN VIEW (FLOOR)

Notes :
1. DIMENSIONS ARE IN INCHES
2. DO NOT MEASURE THE DRAWING

PCP
Pompes & équipements

| | | | | | | | |
|---|---|---|---|---|---|---|---|
| DREW BY: V.BLUTEAU | TITRE: TRIPLEX POLYMER 341-PVC-1450 | REV: | DATE: | MODIF.: | APP.: | DATE: 2021/03/14 | |
| PURCHASE ORDER: BC21-14244 | | -- | --- | --- | --- | # DESSIN: | |
| APP. BY: E. CLERMONT | PROJET: 0193970501 | -- | --- | --- | --- | 2-2 | |

# PUMP MODEL1M6F

## PUMP#1: 65PME68009A
## PUMP#2: 65PME68009B
## PUMP#3: 65PME38009C

**Workshop drawing :**

- □ Approuved as is
- □ Approuved with correction(s)
- □ Rejected

**Approuved by**

Name : _____

Title : _____

Compagnie : _____

Signature : _____

*3076 A, Bernard-Pilon, St-Mathieu de Beloeil, Qc, J3G 4S5 Tél.: (450) 922-4224 / Fax: (450) 922-4223*

| | |
|---|---|
| **Pump :** | PCM EcoMoineau™ M1 progressing cavity pump type 1M6F. Horizontal mounting. |
| **Housing :** | Cast iron body with 1"NPT (suction) and 3/4"NPT (discharge) |
| **Rotor :** | AISI 420 stainless steel rotor. Elastic coupling in NBR. |
| **Stator :** | Stator in NBR 0-60°C |
| **Sealing :** | Single carbide/carbide/FKM mechanical seal |
| **Motor :** | Flange mounted motor, Nord type SK80SP/4 CUS, 0.75 HP, 1800 rpm, 332/575V 3-Phase 60Hz - IP55/F. 56C frame, 10:1 constant torque turndown ratio |

# INSTRUCTION MANUAL

*PLEASE KEEP FOR FUTURE REFERENCE*

## *PCM - MOINEAU*

*Series* **M**
*Type* 011M6F – 075M6F – 1M6F – 2M6F – 3M6F
M1 – Monobloc installation
*Serial No.*
*Year of manufacture*

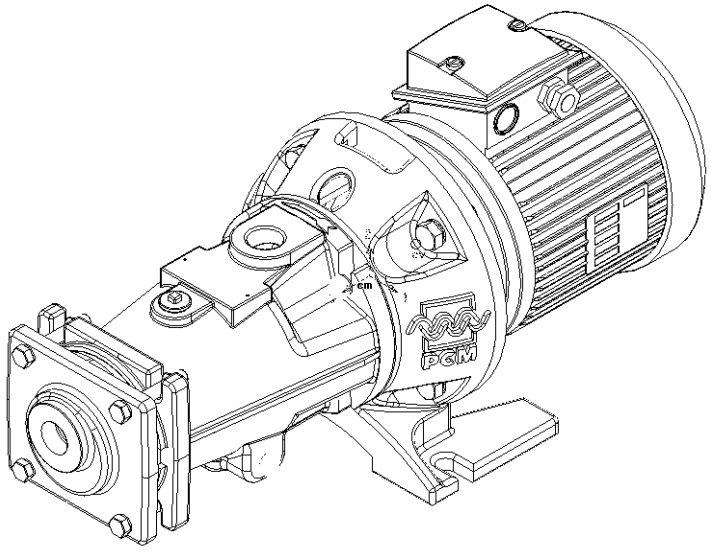

| *Document No.:* | **NIPMM1F03A** | *Date approved: December 2005* |
|---|---|---|

*Issue date: MARCH 07*

# 1. CHARACTERISTICS AND INSTALLATION

## 1.1 Operating Principle

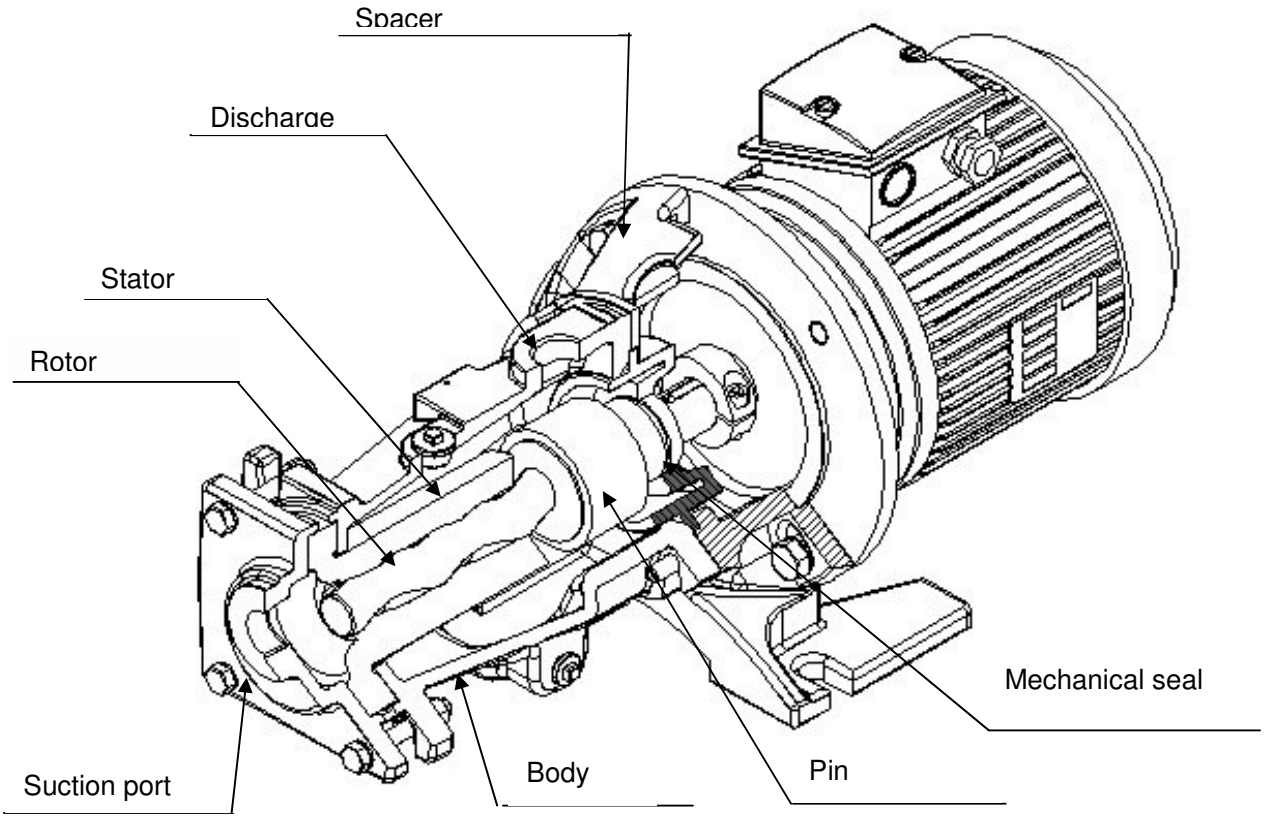


The PCM Moineau progressive cavity pump (or eccentric screw pump) essentially consists of two internal helical gears, which both have the following features:

- The stator, which is the external element, has one more tooth than the rotor, which is the internal element.

- In any given cross-section, each section of the rotor is in contact with the stator.

- The pitches of the helices of the two elements are in a ratio according to the number of teeth.

The rotation generates an axial displacement, from the suction to the discharge, of the closed cavities bounded by the rotor and stator.

The PCM MOINEAU pump is a volumetric pump whose capacity is equal to the volume of a cavity.

The stator of pumps is said to be 'floating', meaning that it has one free end. This principle, associated with an elastic coupling, simplifies the transmission of the rotational movement between the drive and the rotor.

Mounting the stator in this floating configuration provides the following advantages:

**Direction of rotation (Note: This pump is not reversible!)**

The pump's direction of rotation is shown on the upper part of the pump body.

The pump is designed to be used in one directly of rotation only. It is up to the installer to check the revolving field of the electrical installation to ensure that the pump is running in the correct direction of rotation.

## 1.2 Characteristics

### 1.2.1 Build Properties

Defined in the table below

| Component | 011M6F | 075M6F | 1M6F | 2M6F | 3M6F |
|---|---|---|---|---|---|
| Stator | NBR / CSM / FKM / CR | | | | |
| Plot | NBR / CSM / FKM / CR | | | | |
| Single mechanical seal | Carbon/Silicon carbide | | | | |
| Rotor | X30Cr13 | | | | |
| Body/Port/ Spacer | EN-GJL250 | | | | |

The material descriptions comply with the AFNOR standard.

NOTE: By default, our pumps are protected by a particular paint. The procedure and details of the application of this paint are defined in the technical description.

### 1.2.1.1 Overall Dimensions

**Motor-driven pumps 011M6F / 075M6F / 1M6F / 2M6F**

Z = 120 mm

**Fig.1**

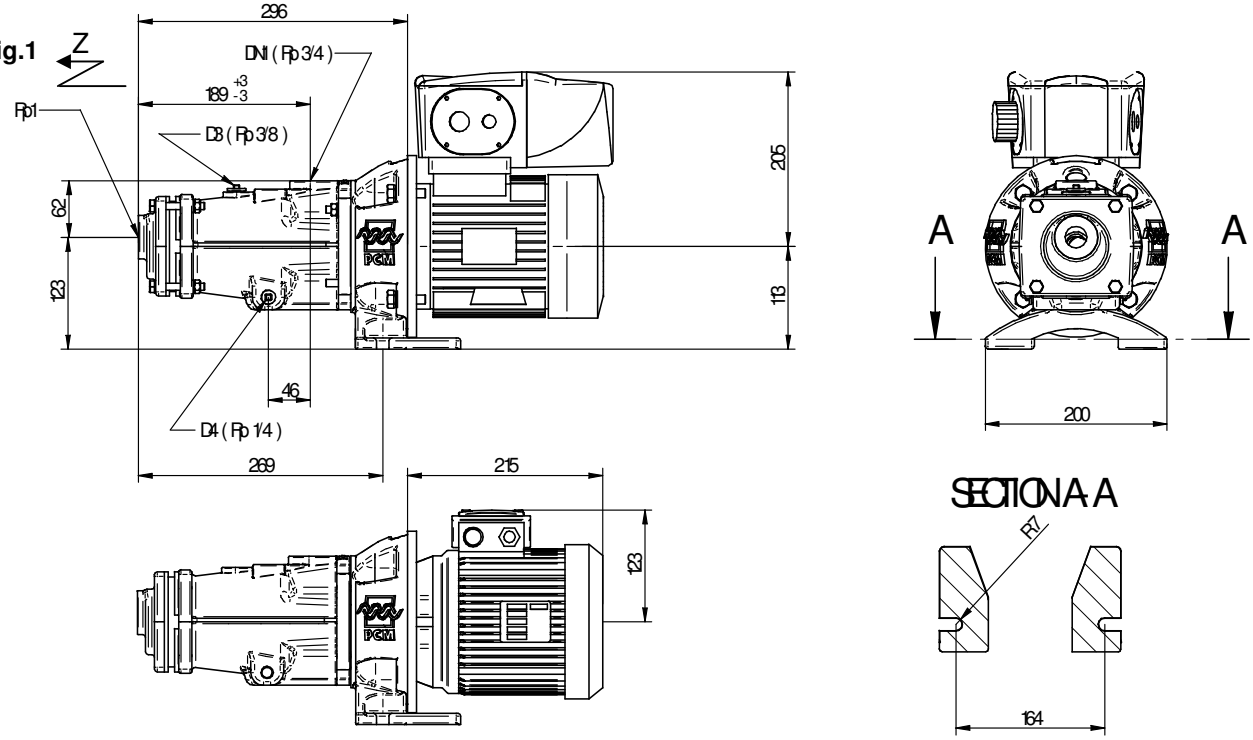


## 3M6F

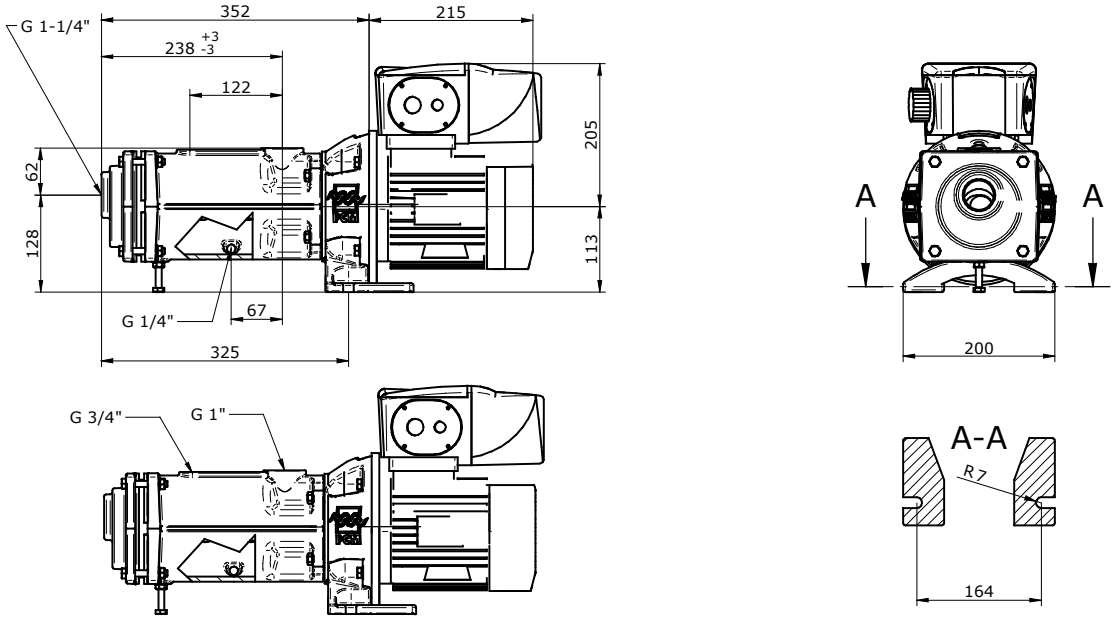

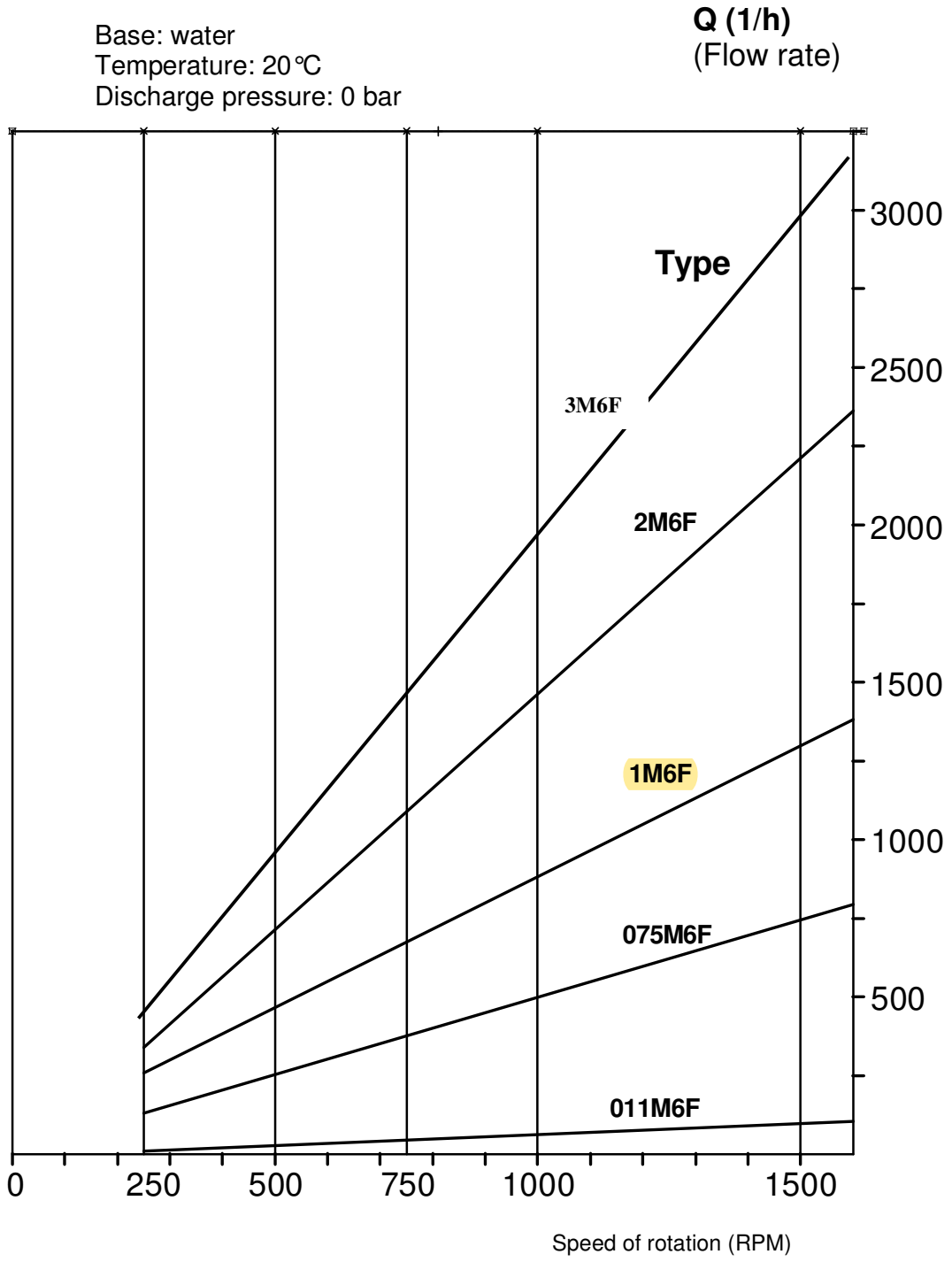


For more precise details, look at the curve for your pump, or ask **PCM Services** to send you this information.

# STATOR SECURITY SYSTEM
# AMS
# C12038A000

**Workshop drawing :**

- □ Approuved as is
- □ Approuved with correction(s)
- □ Rejected

**Approuved by**

Name : _____

Title : _____

Compagnie : _____

Signature : _____

*3076 A, Bernard-Pilon, St-Mathieu de Beloeil, Qc, J3G 4S5 Tél.: (450) 922-4224 / Fax: (450) 922-4223*

PCM

Pumps to process

# INSTRUCTION MANUAL

TO BE KEPT FOR FUTURE REFERENCE

## *PCM – EQUIPMENT*

Series **PCM EQUIPMENT**

Type **Stator Security System**

| Reference: | **NIPEAMS04A** | Date Approved: September 2003 |
|---|---|---|

Date Issued: September 2003

PCM POMPES-17 RUE ERNEST LAVAL-BP 35-92173 VANVES CEDEX FRANCE
TEL: (33) 01 41 08 15 15 - FAX: (33) 01 41 08 15 00 - TELEX: 634129 F – E-mail : pcm@pcmpompes.com

## 3.2 Characteristics

### 3.2.1 Electrical Characteristics

24VDC power supply:
Trip-out power: 2A / 250VAC or 2A / 60VDC

To simplify the handling of untimely errors, time lag has been integrated into this system.

Relay output signals correspond to the following time-charts:

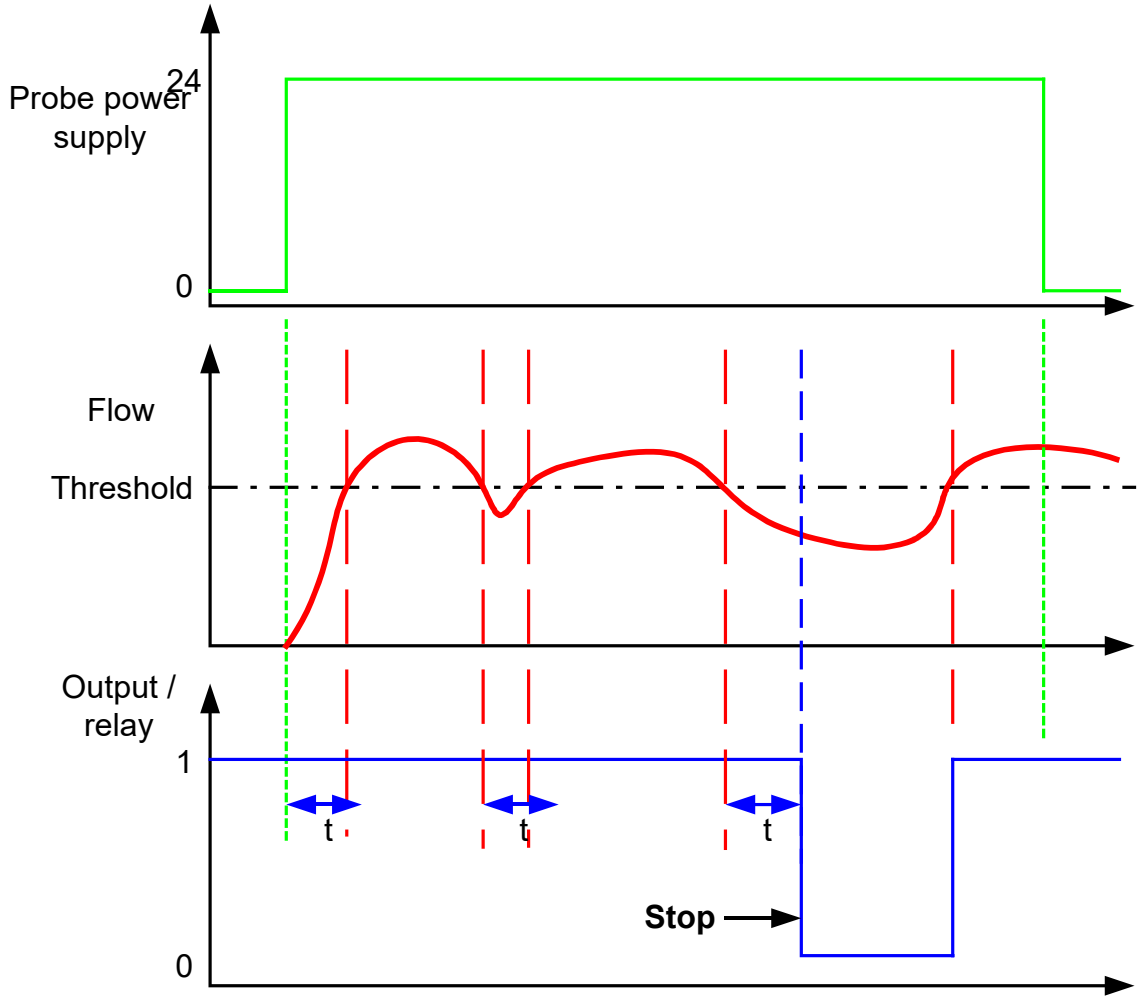




☎: (33) 01 41 08 15 15

# 5 APPENDIXES

## 5.1 Dimensions

### 5.1.1 Standard Version

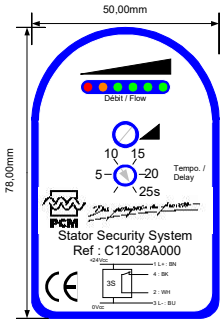


DIN Version
Ref : C12038A000

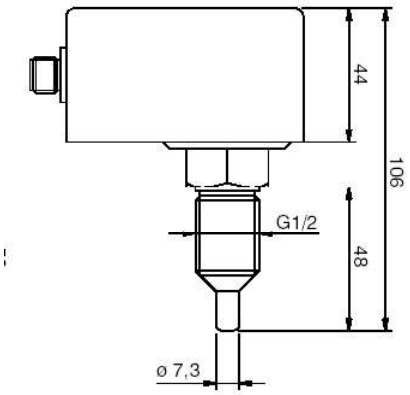


### 5.1.2 Food Versions

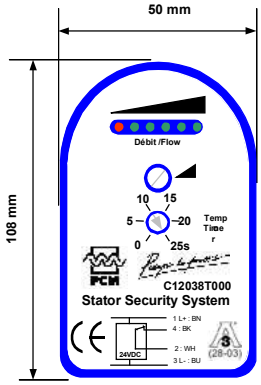


#### 5.1.2.1 DN 25

Tri-Clamp Version
Ref : C12038C000

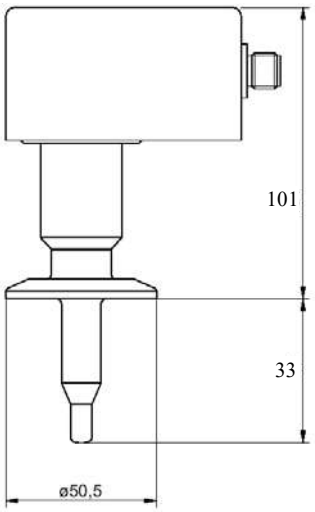


SMS Version
Ref : C12038S000

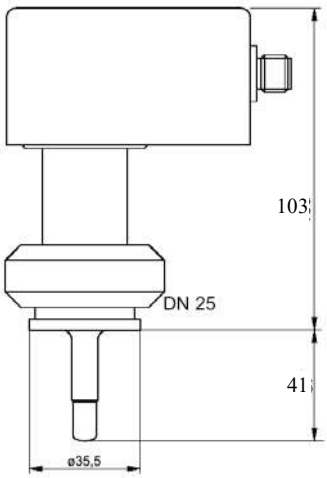


DIN Version
Ref : C12038D000

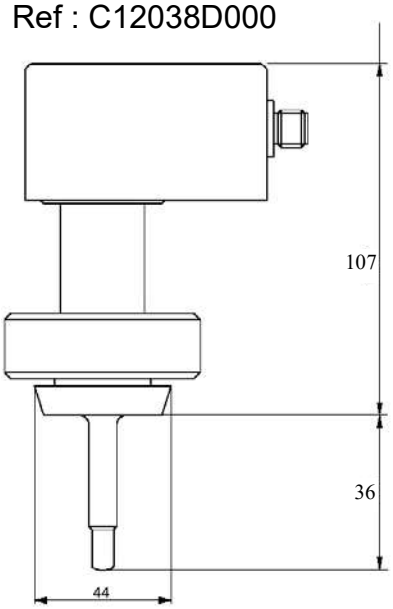




☎: (33) 01 41 08 15 15

## 5.2 Technical description

| | |
|---|---|
| Power supply | 24VDC ±20% |
| Electric consumption | <70mA |
| Output, dry contact, NC | Relay |
| Maximum switchable voltage | 250VAC 60VDC |
| Maximum switchable current | 2AAC 2ADC |
| Flow detection range | |
| Water | 1 to 150 cm/s |
| Oil | 3 to 300 cm/s |
| Pre-set (MPM & ENV versions) | 10cm/s |
| Ambient temperature | -20 … +70°C |
| Fluid temperature | -20 … +80°C |
| Fluid temperature (food versions) | -20 … +80<br>95°C for 3h<br>120°C for 2h |
| Temperature gradient | 250°C/min |
| Time lag and default | 't' adjustable from 0 to 25s |
| Acceptable pressure | depending on connector |
| Probe material | 316L stainless steel |
| Box material | PBT plastic |
| Protection index | IP67 |
| Connector | M12 – 4 conductors |



☎: (33) 01 41 08 15 15

## 5.3 Cabling diagram

### 5.3.1 General principle

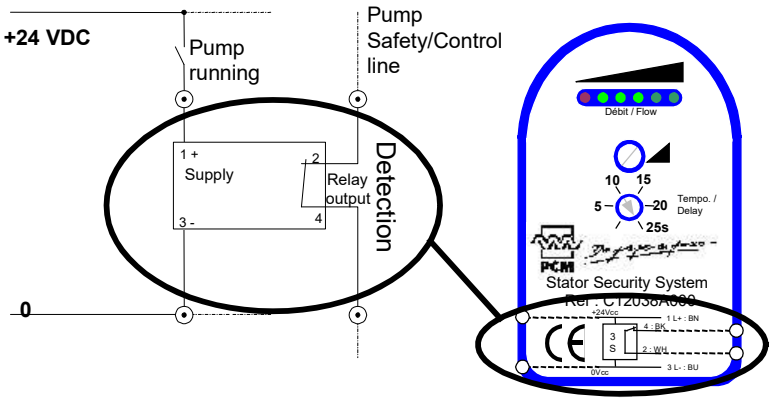


### 5.3.2 Auto-hold with indicator lamp and acknowledgement

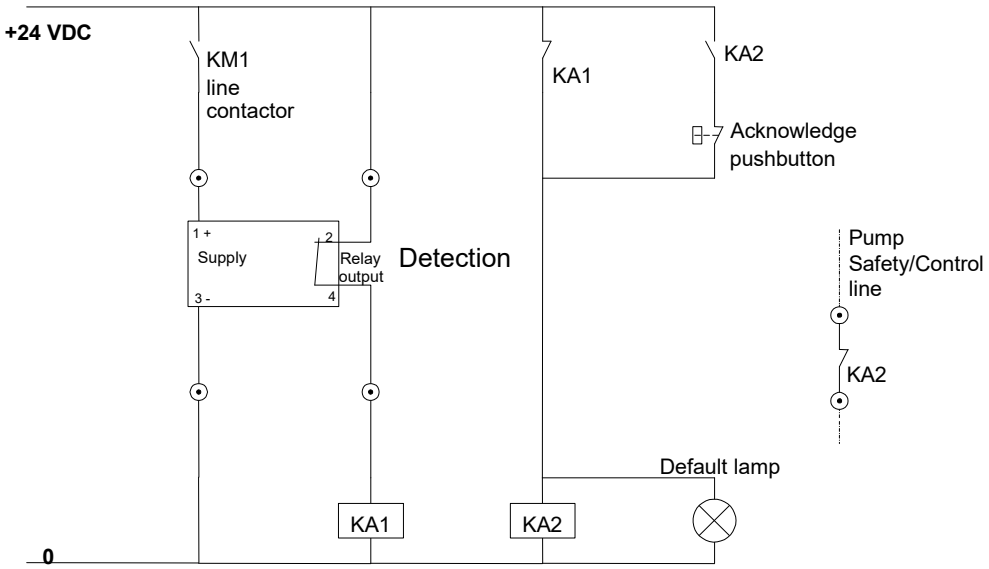




☎: (33) 01 41 08 15 15

### 5.3.3 Cabling for remote frequency converter

The time lag for the integrated probe and relay version protects the pump by controlling the power-supply frequency converter:

#### 5.3.3.1 Power less than or equal to 4kW

Example of a SCHNEIDER ELECTRIC frequency converter.
See the remote frequency converter instruction documentation:

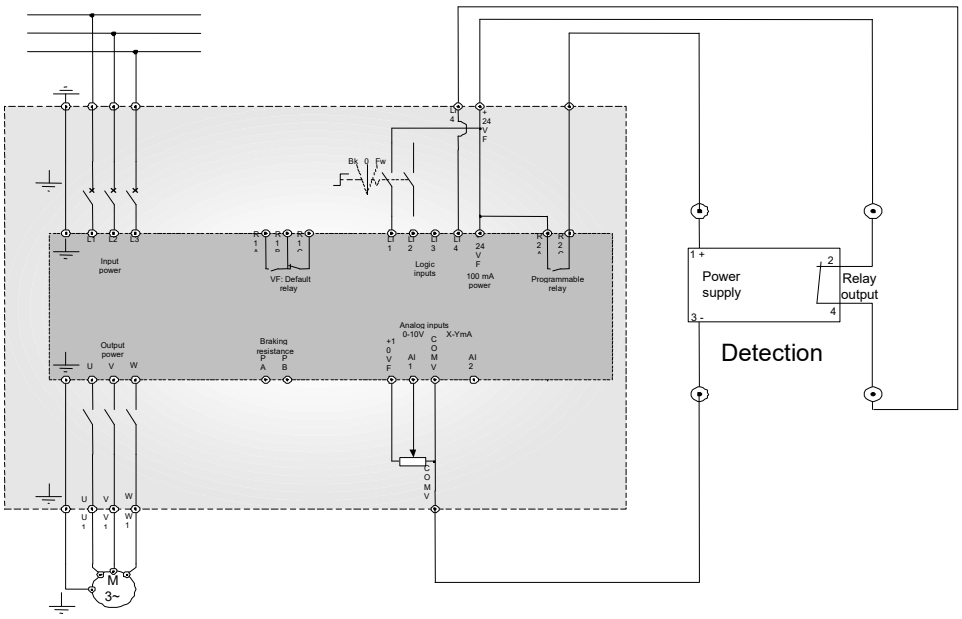


* The R2 output must be configured to ‘SrA’ with the ‘Ftd’ value at minimum

* The LI4 input must be configured to ‘FSt’

#### 5.3.3.2 Power great than or equal to 5.5kW, version IP55

Example of SCHNEIDER ELECTRIC frequency converter.
See the remote frequency converter instruction documentation:

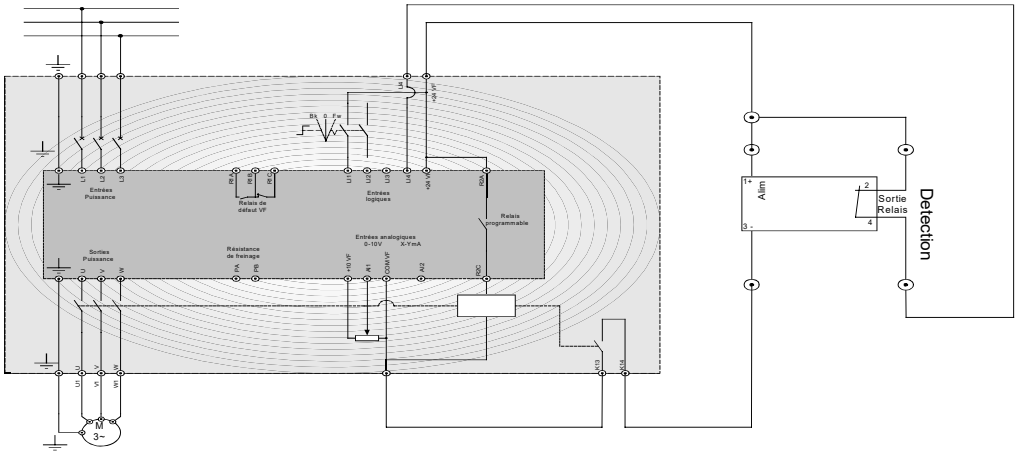


* The R2 output is to be configured to ‘OCC‘
* The LI4 input is to be configure to ‘FSt’



☎: (33) 01 41 08 15 15

# CALIBRATION CYLINDERS
# PV#2-20000

**Workshop drawing :**

- □ Approuved as is
- □ Approuved with correction(s)
- □ Rejected

**Approuved by**

Name : _____

Title : _____

Compagnie : _____

Signature : _____

*3076 A, Bernard-Pilon, St-Mathieu de Beloeil, Qc, J3G 4S5 Tél.: (450) 922-4224 / Fax: (450) 922-4223*

# ACCUDRAW® Calibration Cylinders

***"For Accuracy That Counts"***

***For complete product information visit our website: primaryfluid.com***



Flanged: Glass, PVC



Flanged: PVC

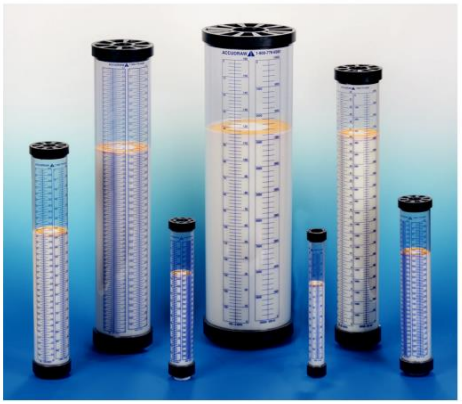

PV#4

## Sizing and Ordering Information:

**ACCUDRAW Standard Materials of Construction**

AC = All polypropylene construction (see below for options)
PV = All polyvinylchloride construction (see below for options)
ACS = Glass*

***Note: Cylinders are NOT pressure vessels***

**Example: AC#1-1000B**

AC = PP (polypropylene)
#1 = Bottom threaded connection only
1000 = 1000 ml
B = BSP Thread

**e.g. Part # AC #1 - 1000 B**

**Type:**
AC = Polypropylene
PV = PVC
ACS = Glass

**Style:**
1 = Bottom threaded conn. only
2 = Top and Bottom threaded conn.
3 = Bottom threaded conn. c/w removable vented dust cap
4 = Top/Bottom threaded conn. c/w removable "O" ring sealed top and float ring level indicator
* ***Glass calibration cylinders available in Style 2 only***

**Graduation Scale:**
PP - ml only
PVC - ml and GPH
Glass - ml only

**Std. connection is NPT thread**
**Optional: add suffix as follows**
S = Socket weld connection (PVC only)
GTV = Glass/TFE construction
GKV = Glass/PVDF construction
GCV = Glass/CPVC construction
GSV = Glass/SS construction
B = BSP Thread
F= Flanged

Substitute **E** for **V**
for **EPDM** wetted "O" ring seal

| Size: | | | Material | Conn. |
|---|---|---|---|---|
| 100 | = 100 ml | (1.6 GPH) | PP, PVC, Glass | ½" |
| 250 | = 250 ml | (4 GPH) | PP, PVC, Glass | ½" |
| 500 | = 500 ml | (8 GPH) | PP, PVC, Glass | ½" |
| 1000 | = 1000 ml | (16 GPH) | PP, PVC, Glass | ½" |
| 2000 | = 2000 ml | (32 GPH) | PP, PVC, Glass | 1" |
| 4000 | = 4000 ml | (64 GPH) | PP, PVC, Glass | 1" |
| 6000 | = 6000 ml | | Glass only | 2" |
| 8000 | = 8000 ml | | Glass only | 2" |
| 10000 | = 10000 ml | (160 GPH) | PVC, Glass | 2" |
| 15000 | = 15000 ml | (240 GPH) | PVC only | 2" |
| 20000 | = 20000 ml | (320 GPH) | PVC, Glass | 2" |

***Custom sizes and materials available.***

# RELIEF VALV and BACK-PRESSURE VALV
# TVBP10-PVC

**Workshop drawing :**

- □ Approuved as is
- □ Approuved with correction(s)
- □ Rejected

**Approuved by**

Name : _____

Title : _____

Compagnie : _____

Signature : _____

*3076 A, Bernard-Pilon, St-Mathieu de Beloeil, Qc, J3G 4S5 Tél.: (450) 922-4224 / Fax: (450) 922-4223*

# TOP VALVE *PAT

For detailed product information visit our website:
primaryfluid.com

## Back Pressure/Anti-Siphon and Pressure Relief Valves

### Description

This line of diaphragm style, back pressure/anti-siphon and pressure relief valves features a completely adjustable pressure range to 350 PSIG and a built-in air release to reduce priming difficulties. The valves are available in sizes from 1/4" through 2", eight materials of construction, offer a three year warranty and are available with socket weld, flanged or special threaded connections. High temperature to (300°F/149°C) valves are available. *CRN certification available. Please contact factory.*

### Ordering Information

**e.g. Part # TVBP50-S/S-V-S**

**TV - B - P - 50 - S/S - V - S**

**TOP VALVE**

**Valve Type:**
- B = Backpressure
- P = Pressure Relief (3 port)
- P2 = Pressure Relief (2 port)

**Valve Style or Connection:**

| | |
|---|---|
| P | = Backpressure, FNPT thread |
| R | = Pressure Relief, FNPT thr'd (3 port) |
| FW | = Welded Flange |
| FT | = Thread Companion Flanged |
| F | = Flanged Non-Metallic |
| S | = Socket |
| B | = BSP thread |
| T | = High Temperature (300°F/149°C) |
| H | = High Pressure (to 350 psig) Metallic Bodies |
| M | = Mid-Range Pressure (to 230 psig) Thermoplastic Bodies |
| U | = Union Type Connection |

**Valve Port Connection Size:**

| | |
|---|---|
| 25 = 1/4" | 10 = 1" |
| 45 = 1/4" X 1/2" | 15 = 1 1/2" |
| 50 = 1/2" | 20 = 2" |
| 75 = 3/4" | |

**Top Options:**
- C = CPVC Top (standard)
- A = Aluminum Top
- S = 316L S/S Top
- XXX = Custom spring range

**Miscellaneous Options:**
- E = EPDM Diaphragm
- P = PVC Diaphragm
- V = Viton Diaphragm
- G = Gauge Port

**Body Material of Construction:**

| | |
|---|---|
| PVC | = polyvinylchloride |
| CPVC | = Corzan |
| PP | = polypropylene |
| TFE | = 24% glass filled PTFE |
| PVDF | = polyvinylfluoride |
| S/S | = 316L Stainless Steel |
| ALL20 | = Alloy 20 |
| Hast | = Hastelloy C 276 |

### Flow Rates

Flow capacity through TOP VALVE back pressure/anti-siphon and pressure relief valves under continuous flow conditions **@ 50 PSIG** with ambient temperature water.

| Size | 1/4" | 1/4" / 1/2" | 1/2" | 3/4" | 1" | 1 1/2" | 2" |
|---|---|---|---|---|---|---|---|
| Flow rate USGPM | 4 | 4 | 6 | 8 | 14 | 25 | 40 |

**Note:** Capacities will increase with pressure. If pressure is doubled, flow rate wll approximately double. For capacities of valves with pulsating flow, use approximately 1/3 of the given flow rates.

### Typical Installations

The installations below are typical installation examples only. Consult your engineering department for the appropriate installation of your application or call Primary Fluid Systems Inc. for advice.

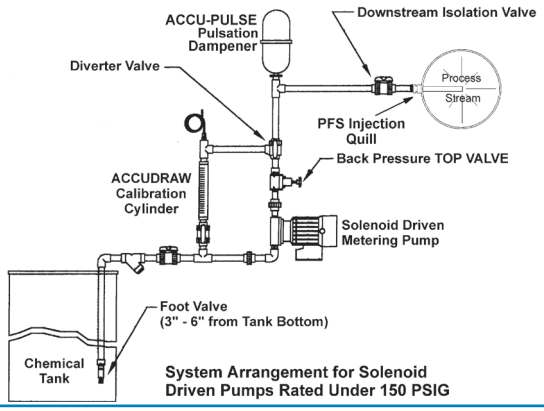


System Arrangement for Solenoid Driven Pumps Rated Under 150 PSIG

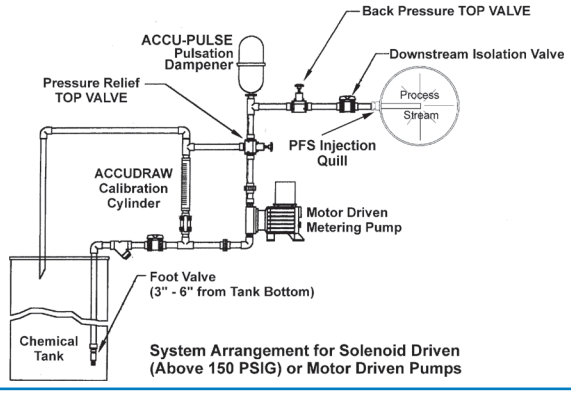


System Arrangement for Solenoid Driven (Above 150 PSIG) or Motor Driven Pumps

**Distributed By:**

PRIMARY FLUID SYSTEMS INC.

**Distribution Territories Available**


**Call Toll Free 1-800-776-6580**
Tel: (905) 333-8743
Fax: (905) 333-8746

*E-mail: primary@primaryfluid.com*
*www.primaryfluid.com*



® Registered Trade Mark of Primary Fluid Systems
*PAT 5,857,486/5,944,050

# PRESSURE GAUGES GI2.5-160 CB AND AG25A50AMT-PVC

**Workshop drawing :**

- □ Approuved as is
- □ Approuved with correction(s)
- □ Rejected

**Approuved by**

Name : _____

Title : _____

Compagnie : _____

Signature : _____

# ACCUGUARD GAUGES

ACCUGUARD Pressure Gauges are designed to enhance the performance of chemical feed systems. Adding a pressure gauge to any system will help to ensure that optimal pressures are monitored and maintained.




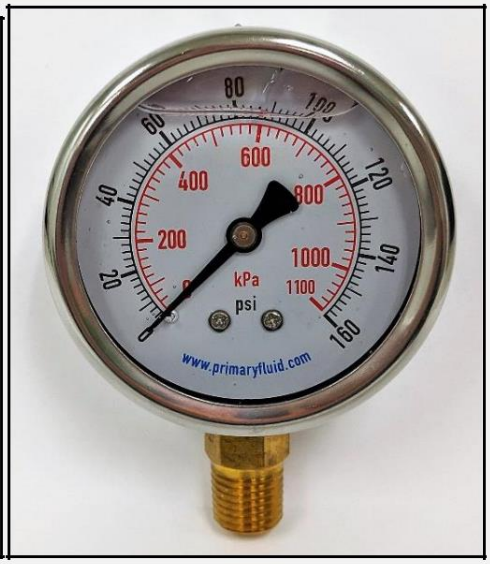


## Series Information

| Series | Gauge Diameter | Gauge Connection Size and Type | Gauge Housing | Gauge Internals | Liquid Filled | *Accuracy Rating |
|---|---|---|---|---|---|---|
| **Economy** | 2" / 2.5" | 1/4" NPT | Steel Case | Brass | No | ± 2.5% |
| **Intermediate** | 2.5" / 4" | 1/4" NPT | 304 S/S | Brass | Yes | ± 1.6% |
| **Premium** | 2.5" / 4" | 1/4" NPT | 304S/S | 316L S/S | Yes | ± 1.6% |

*Accuracy Rating = Full Scale Range

### HOW TO ORDER - AccuGuard Gauges

*Example Part Number: GE2-160-CB*

**G E 2 - 160 - CB**

**AccuGuard Gauge**

**Gauge Series**
- E = Economy
- I = Intermediate
- P = Premium

**Gauge Diameter**
- 2 = 2 Inches
- 2.5 = 2-1/2 Inches
- 4 = 4 Inches

**Gauge Mounting Orientation**
- CB = Center Back
- BM = Bottom Mount

**Gauge Indication**
- 60 = 0-60 PSIG / 0-400 KPA
- 160 = 0-160 PSIG / 0-1100 KPA
- 200 = 0-200 PSIG / 0-1400 KPA
- 300 = 0-300 PSIG / 0-2000 KPA
- 400 = 0-400 PSIG / 0-2800 KPA

*4" Gauge Diameter Available in Bottom Mount Orientation Only*

*For Price & Availability of Other Pressures - Call Factory*

Primary Fluid Systems Inc. | 1050 Cooke Blvd. | Burlington | Ontario | L7T 4A8 | Canada
www.primaryfluid.com | primary@primaryfluid.com | North American Toll Free: 1-800-776-6580

# ACCUGUARD Diaphragm Seals

Without proper protection, process fluids can contaminate and damage in-line instrumentation. ACCUGUARD Diaphragm Seals are designed to protect and isolate pressure gauges and expensive instrumentation from corrosive, high temperature, or viscous, process media.



## Features

- Transfers process pressure accurately without direct contact with process fluids
- Removes the need for expensive instrumentation
- Easily installed and available in five chemically resistant Materials of Construction
- Optional Diaphragm Materials
- Available with ¼" & ½" Bottom Connection Sizes in FNPT & BSPT Female Connection Types
- Thermoplastic Units Rated to 240 PSIG (16 BARG) @ 21°C (70°F)
- 316L S/S Units Rated to 5800 PSIG (400 BARG) @ 21°C (70°F)
- Approved – 316 S/S Diaphragm Seals with CRN (Canadian Registration Number)

## HOW TO ORDER - AccuGuard

*Example Part Number: AG25A25A-PVC-V-M-[Optional Gauge]*

**AG 25 A 25 A - PVC - V - M - [Optional Gauge]**

*See Gauge List*

**AccuGuard Diaphragm Seal**

**Connection Size (Top)**
- 25 = 1/4"

**Connection Type (Top)**
- A = FNPT

**Connection Size (Bottom)**
- 25 = 1/4"
- 50 = 1/2"

**Connection Type (Bottom)**
- A = FNPT
- B = BSPT

**Options**
- M = Mounted Gauge/Glycerin Filled

**Diaphram Materials**
- V = Viton (Thermoplastic Body Only)
- E = EPDM (Thermoplastic Body Only)
- T = PTFE (Thermoplastic Body Only)
- S/S = 316 S/S (S/S & S/SV Body Only)

**Body Materials**
- PVC = Polyvinylchloride
- CPVC = CPVC Corzan
- PP = Polypropylene (Not Available with PTFE Diaphragm)
- PVDF = Polyvinyldene Fluoride (PTFE Diaphragm Only)
- S/S = 316L Stainless Steel
- S/SV = Vented 316L Stainless Steel

*- Optional Gauge Appears as Separate Line Item When Ordered*

*- Diaphragm Seals With Gauges = Glycerin Filled As Standard*

*- 1/4" & 1/2" MNPT Nipples Available - Call Factory for Details*

Primary Fluid Systems Inc. | 1050 Cooke Blvd. | Burlington | Ontario | L7T 4A8 | Canada
www.primaryfluid.com | primary@primaryfluid.com | North American Toll Free: 1-800-776-6580

DRAWING #: 6600-000-I-1215
25 mm

NOTE:
ALL CONNECTIONS ARE NPT TYPE

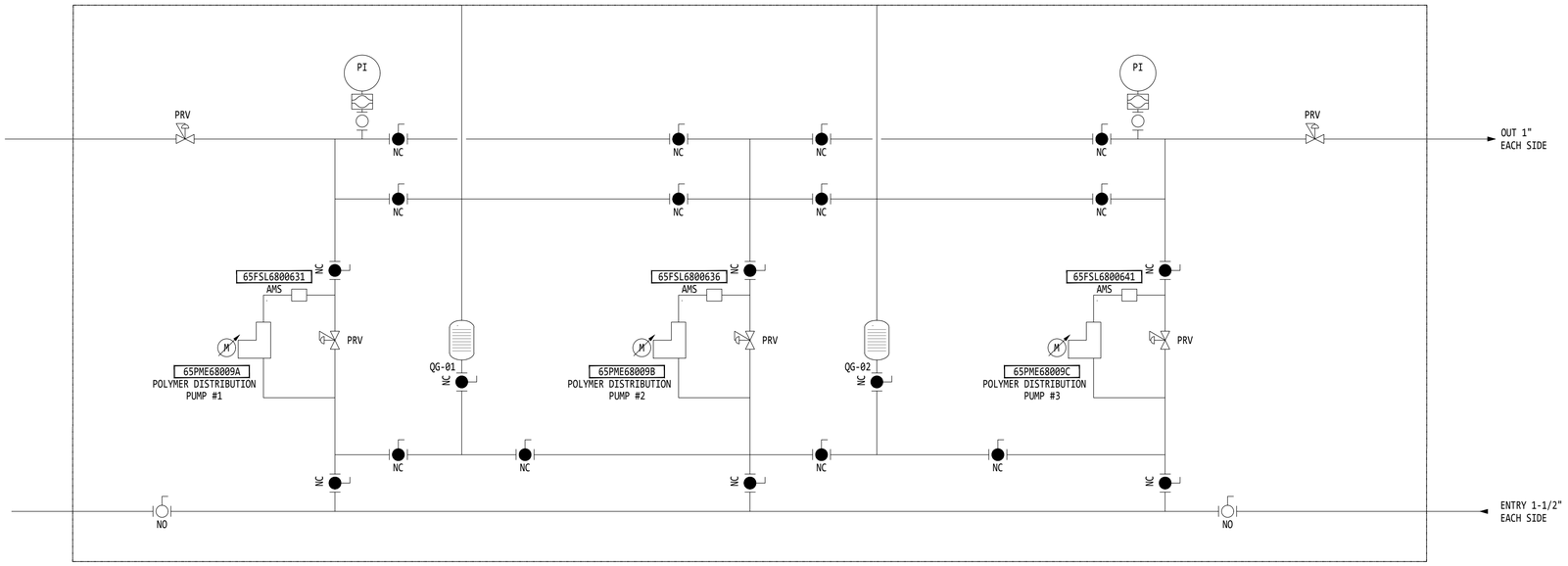


**AMS**
"ANTI-MARCHE À SEC"
STATOR SECURITY SYSTEM
24VDC

**65PME68009A/B/C**
DOSING PUMPS
CAPACITY: 1440 L/HOUR

**QG-01/02**
CYLINDER 20000mL / 320GPH

FOR TENDER
DO NOT USE FOR CONSTRUCTION

SEAL & SIGNATURE

| REV. | DATE | DESCRIPTION | BY | VER. | APP. |
|---|---|---|---|---|---|
| T0 | 2021-04-08 | FOR TENDER | AN | DM/EC | - |

THE INFORMATION HERE ON IS THE PROPERTY OF ASDR AND MUST BE RETURNED UPON REQUEST. WITHOUT WRITTEN PERMISSION, ANY COPYING TRANSMITTAL TO OTHERS AND ANY USE EXCEPT THAT FOR WHICH IT IS LOANED IS PROHIBITED.

CLIENT

INFO CLIENT: -

| | |
|---|---|
| DRAWN BY | AMINATA NIASSE, CEP |
| VERIFIED BY | DAN MISIANO / ETIENNE CLERMONT |
| APPROVED BY | DAN MISIANO / ETIENNE CLERMONT |

| CREATION DATE | SCALE | PROJECTION |
|---|---|---|
| 2021-04-06 | N.TS. | |

DRAWING TITLE
PROCESS WATER TREATEMENT - GENERAL
INSTRUMENTATION
TRIPLEX DISTRIBUTION UNIT
POLYMER

| PROJECT # | DRAWING # | REV. | SHEET |
|---|---|---|---|
| 01939 | 6600-000-I-1215 | T0 | 1/1 |

SECTOR–LEVEL – DISCIPLINE – SEQUENTIAL #

IMPRIMÉ PAR : Aminata Amary Niasse | DATE D'IMPRESSION : 2021-05-05 | PLUME D'IMPRESSION : ASDR Noir.ctb
FORMAT DE PAPIER : ISO A1 (594 mm x 841 mm [23.4" x 33.1"]) | PRÉSENTATION : ISO 5457

# TOP VALVE

Pat. #5,857,486 & 5,944,050

## Back Pressure and Pressure Relief Valves

## Instruction Manual

**PLEASE NOTE:**
**This instruction manual provides detailed information and instructions that must be read, understood and followed to ensure that the equipment is installed, operated and serviced in an appropriate manner. Failure to do so before using may result in hazardous consequences and/or improper operation.**

10/2020

**TEMPERATURE LIMIT NOTATION:**
**If the application in which this valve is to be installed has a temperature greater than 73°F (23°C) including radiant heat, refer to page 11 for temperature correction vs. pressure limits.**

Rev. 8

**NOTE:**
**See Gauge Installation Instructions before removal of gauge plug to avoid thread damage. (Gauge port is optional)**

Manufactured by:



**PRIMARY FLUID SYSTEMS INC.**
1050 COOKE BLVD., BURLINGTON, ON. CANADA L7T 4A8
TEL :(905)333-8743 FAX:(905)333-8746
1-800-776-6580
primary@primaryfluid.com

# I N D E X


**INTRODUCTION** ..... **3**

**Special Features of TOP VALVE** ..... **3**

**Back Pressure Valve** ..... **3**

**Back Pressure Valves: Reason for Selection and Use** ..... **4**

**Pressure Relief Valves** ..... **4**

**Pressure Relief Valves: Reason for Selection and Use** ..... **4**

**Installation and Maintenance of Back Pressure Valves** ..... **4**

**Installation and Maintenance of Pressure Relief Valves** ..... **5**

**Gauge Installation Instructions: (When ordered with valve only)** ..... **5**

**Manual Air Release** ..... **6**

**Typical Installations** ..... **7**

**ALL New Clamping Device for TOP VALVE, Back Pressure and Pressure Relief Valves** ..... **8**

***Exploded Parts View – Back Pressure & Pressure Relief Valve*** ..... ***9***

**Dimensions – Top Valve – Back Pressure** ..... **10**

**Dimensions – Top Valve – Pressure Relief** ..... **10**

**Flow Rates** ..... **11**

**Temperature Correction Factors: Thermoplastics** ..... **11**

**LIMITED WARRANTY** ..... **12**

## INTRODUCTION

The following instructions are to provide information on the Installation, operation and maintenance of TOP VALVE, 150# rated diaphragm style Back Pressure and Pressure Relief Valves, manufactured by Primary Fluid Systems Inc. The valves are designed to improve the performance and safe operation of most pumps used for metering applications.

Various materials of construction are available dependent on the requirements of the application and the type of fluids being transferred.

The valve(s) are factory set at 50 PSIG with a field adjustment range of 15-150 PSIG*. Other factory set pressure ranges (within the range of the valve) are available upon request.

## Special Features of TOP VALVE

- PVC, PP, TFE, CPVC, PVDF, Hastelloy C, Alloy 20 or 316 S/S wetted construction
- PTFE laminated to EPDM backer diaphragm
- Turn down handle limits pressure to 150 PSIG
- Handle shaped for ease of adjustment
- Color-coded handles indicate size at a glance
- (Optional) Built-in matching material gauge port plug is easily removed for gauge option
- Rectangular shape for ease of installation
- Specially designed spring provides consistent pressure adjustments through the range (15-150 PSIG*)
- Valve top specially designed for mounting clamp to help reduce pipeline stress when required
- Built-in downstream manual air release, for ease of pump priming
- Built-in anti-siphon

***Pressures under 15 PSIG require rubber elastomeric diaphragm.**

## Back Pressure Valve

Diaphragm Back Pressure Valves serve two primary functions. The first is to provide a constant discharge pressure on the pump, which improves the performance, efficiency and consistency of the delivered volume. Secondly, the valve performs as an anti-siphon mechanism against positive or negative pressures in the downstream line. The valve is designed to allow for the venting of air into the downstream pipeline. This provides for easier priming of metering pumps that function under a suction lift. This is accomplished by a simple adjustment of the handle.

The valve is available with an optional gauge port, pre-plugged at the factory or can be ordered complete with gauge to suit application. This eliminates the need to install extra fittings in the line to accommodate the addition of a gauge for the purpose of reading and setting of pressure.

**CAUTION:**
**The gauge port is solely for the installation of the gauge and must not be used for the bleeding or venting of the system. Improper operation of the valve and/or hazardous consequences could result.** ***(see gauge installation instructions)***

## Back Pressure Valves: Reason for Selection and Use

Metering pumps having an atmospheric discharge system pressure of less than 20 psi and will benefit from the installation of a back pressure control valve. Metering pumps in general require downstream back pressure to ensure smoother function of the discharge check assemblies, which enhances the accuracy of the discharge flow.

## Pressure Relief Valves

Diaphragm Pressure Relief Valves are designed to relieve excess line pressure that exceeds the set pressure of the valve. This protects the system piping from overpressure that could result in hazardous leakage and/or damage to the pump and other system components.

The Pressure Relief Valves are normally recommended to be set between 5 and 10 PSIG above the system operating pressure.

The valve is of an in-line flow through design with bottom NPT relief port for piping back to supply tank or feed side of pump.

The valve is available with an optional gauge port, pre-plugged at the factory or can be ordered complete with gauge to suit application. This eliminates the need to install extra fittings in the line to accommodate the addition of a gauge for the purpose of reading and setting of pressure.

**CAUTION:**
**The gauge port is solely for the installation of the gauge and cannot be used for the bleeding or venting of the system. Improper operation and/or hazardous consequences could result.** ***(see gauge installation instructions)***

## Pressure Relief Valves: Reason for Selection and Use

When using motor driven metering pumps, a pressure relief valve should always be installed on the downstream side of the pump to protect the system from over pressure which can cause pipe leakage and/or rupture.

## Installation and Maintenance of Back Pressure Valves

Back pressure control valves are installed on the discharge line of the pump. The valve should be located within a 2 (two)-foot distance of the pump discharge to ensure check valve seating. When pumping to a process line without an injection valve, the back pressure valve should be installed as close as possible to the injection point to prevent siphoning.

When used in conjunction with a pressure relief valve, always locate the back pressure valve on the downstream side of the relief valve.

The valve is supplied from the factory pre-set at 50 psig. To increase the pressure setting, back off the lock nut located beneath the colour coded handle. Turn the handle clockwise to increase pressure setting or counter clockwise to reduce pressure setting. Approximately one (1) full turn of the handle is equal to 10 psig.

*If maintenance is required on the valve:*

1. Ensure that the valve is properly isolated from the line, not under pressure and properly flushed of chemical before proceeding to disassembly.
2. Turn knob on the top of valve, counterclockwise until all spring pressure is released **before** proceeding to undo retaining nuts, to remove top of valve for diaphragm replacement.
3. All working components ie. diaphragm, spring can be accessed by removing the four retaining nuts located on the top of the valve (item # 9 of parts breakdown). For ¼" and ¼" x ½" Top Valves, use 5/32" Allen Key / #4 Hex Key. For ½" sizes and up, use a 3/16" Allen Key / #5 Hex key.
4. When replacing the diaphragm, ensure the PTFE coated side of the diaphragm is facing down when viewed from the top of the valve. The installed diaphragm also functions as the body seal. (Torque nuts to 55 inch pounds when reassembling.)

**Set Pressure Safety Feature**

The valve adjustment handle/bolt length is designed to prevent operators from engaging the spring to a coil binding situation that would cause serious function and safety concerns.

In order to achieve max pressures within the top 10% of the valve range, the lock nut on the adjustment handle/bolt must be removed prior to setting the pressure. Ensure that all system pressure has been released before removing the lock nut and re-installing the approved valve handle/bolt.

The valve handle/bolt is the only approved adjustment component to be used on our valves. Deviation from this will void manufacturer warranty and liability.

**Installation and Maintenance of Pressure Relief Valves**

Pressure relief valves are installed on the discharge line of a pump and should be located as close as possible to the metering pump. The valve is of an in-line flow through design with a bottom NPT relief port for piping back to the supply tank or feed side of the pump.

Never install shut-off/isolation valves between pump discharge and in-line pressure relief valves. When using in conjunction with a back pressure control valve, always install back pressure valve downstream of pressure relief valve. The relief port on the pressure relief valve should be piped back to the feed tank or suction side of the pump (see typical installation schematics).

**CAUTION:**
**The plastic valve bodies have standard NPT threads, which are tapered. When installing pipe into the body, hand tighten only to avoid cracking**.

## Gauge Installation Instructions: (When ordered with valve only)

For the convenience of pressure setting and reading, there is an optional plugged gauge port provided, if the valve has not been ordered complete with gauge. **Important:** use a ***TORX style # T-45*** wrench or screwdriver **only** to remove plug from plastic valves. Any other tool will strip the body of the plug and require an extractor to remove the threaded plug.

**CAUTION:**
**Before removing the gauge port plug to install a gauge, ensure that the discharge line is not under pressure and lines are flushed with water prior to proceeding. Ensure that the gauge you are using is chemical resistant to the fluid before installing.**

## Manual Air Release for Back Pressure Valve Only

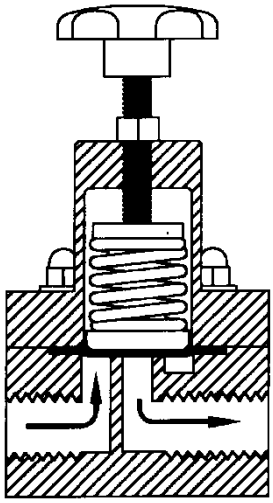

DIAPHRAGM POSITION AT
50 PSI BACK PRESSURE

**The valve is shipped with a factory set pressure of 50 psig. The diagram to the left shows a cut-away view of the position of the diaphragm on the seat.**

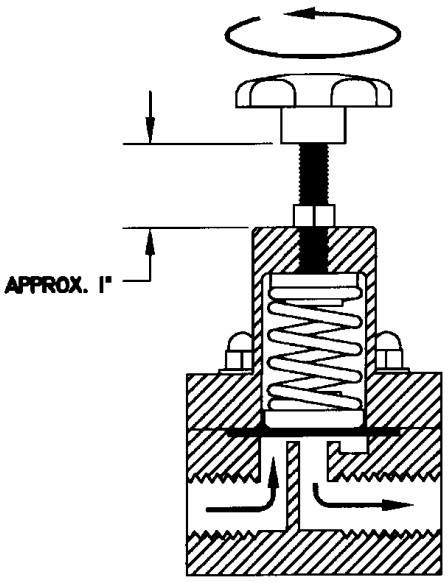


AIR RELEASE POSITION WITH
HANDLE BACKED OFF

**To adjust the valve to relieve air or gas downstream:**

**1. Back off lock nut located beneath the colour coded handle.**

**2. Turn handle counter clockwise until approximately 1 inch of thread is exposed.**

**3. At this adjustment, the spring has relieved all tension from the diaphragm allowing air or gas to be vented downstream.**

---

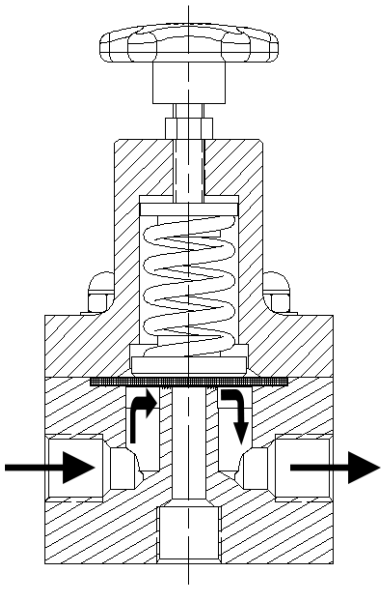

**Flow through design Pressure Relief Valve**

**The bottom port relieves over pressure.**



www.primaryfluid.com Toll Free 1-800-776-6580 email: primary@primaryfluid.com

# Typical Installations

The installations below are typical installation examples only. Consult your Engineering Department for the appropriate installation for your application or call the factory for advice.

**EXAMPLE A: SOLENOID DRIVEN PUMPS RATED UNDER 150 PSIG**

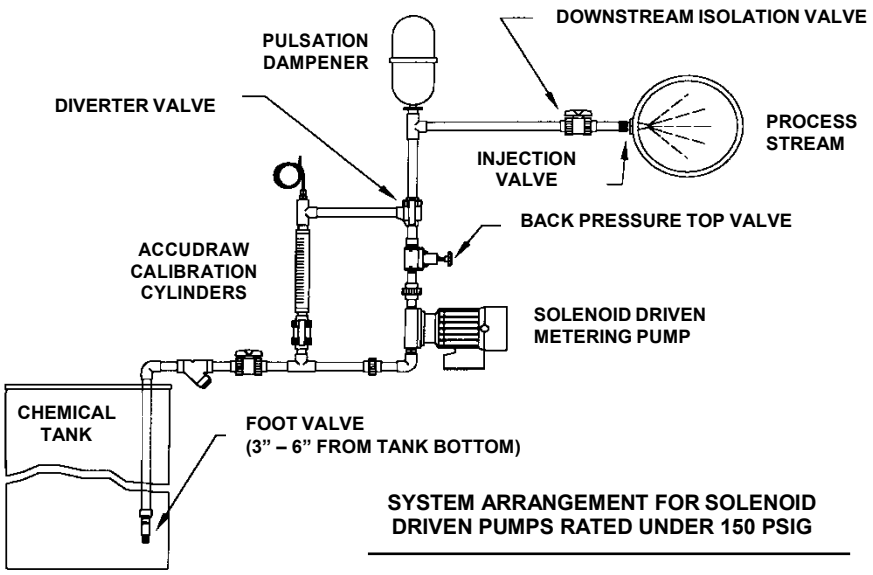


SYSTEM ARRANGEMENT FOR SOLENOID DRIVEN PUMPS RATED UNDER 150 PSIG

---

**EXAMPLE B: SYSTEM ARRANGEMENT FOR SOLENOID DRIVEN (ABOVE 150 PSIG) OR MOTOR DRIVEN PUMPS.**

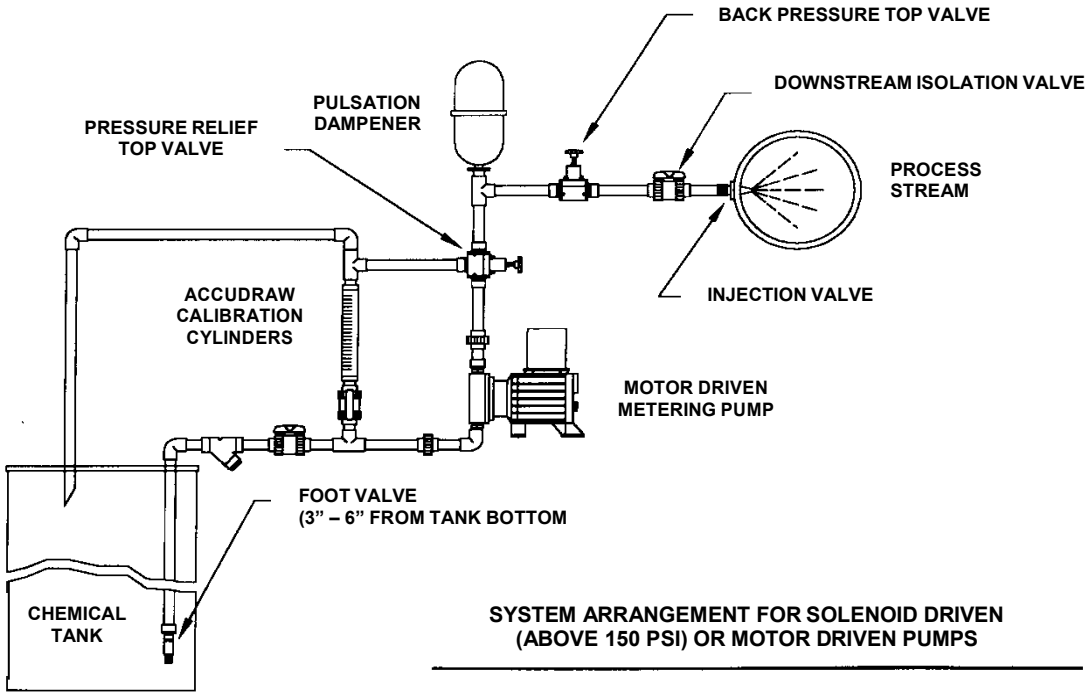


SYSTEM ARRANGEMENT FOR SOLENOID DRIVEN (ABOVE 150 PSI) OR MOTOR DRIVEN PUMPS



www.primaryfluid.com Toll Free 1-800-776-6580 email: primary@primaryfluid.com

# Exploded Parts View- Back Pressure & Pressure Relief Valve

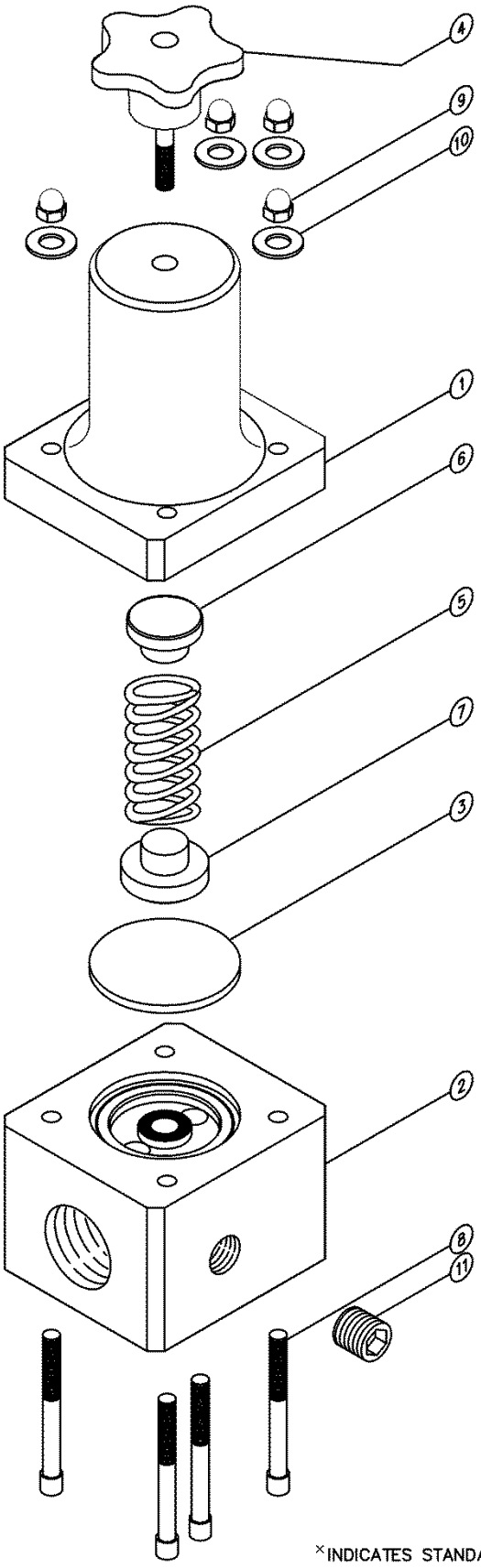


MATERIAL/SIZE CODING

X = PVC = (TYPE 1 PVC)×
X = CPVC = (CPVC CORZAN)
X = S6 = (316 STAINLESS STEEL)
X = A = (ALUMINUM )
X = P = (POLYCARBONATE)

** = 25 = 1/4" & 1/4/1/2" VALVES
** = 57 = 1/2" & 3/4" VALVES
** = 10 = 1" VALVES
** = 15 = 1-1/2" VALVES
** = 20 = 2" VALVES

Ω = B = BACK PRESSURE
Ω = P =PRESSURE RELIEF

∅ = "BLANK" = STD PTFE LAM. EPDM×
∅ = V = OPTIONAL VITON
∅ = E = OPTIONAL EPDM
∅ = P = OPTIONAL PVC

Φ = 25 = 1/4" VALVES
Φ = 45 = 1/4/1/2" VALVES
Φ = 50 = 1/2" VALVES
Φ = 75 = 3/4" VALVES
Φ = 10 = 1" VALVES
Φ = 15 = 1-1/2" VALVES
Φ = 20 = 2" VALVES

^ = PVC = (PVC TYPE 1)
^ = CPVC = (CPVC CORZAN)
^ = PP= (POLYPROPYLENE)
^ = PTFE = (PTFE)
^ = PVDF = (POLYVINYLIDENE FLUORIDE KYNAR)
^ = S/S = (316 STAINLESS STEEL)
^ = HASTC = (HASTELLOY C276)
^ = ALL20 = (ALLOY20)

⊗ = G = GREEN = 1/4" VALVES
⊗ = O = ORANGE = 1/4/1/2" VALVES
⊗ = Y = YELLOW = 1/2" VALVES
⊗ = R = RED = 3/4" VALVES
⊗ = B = BLUE = 1" VALVES
⊗ = BK = BLACK = 1-1/2" VALVES
⊗ = W = WHITE = 2" VALVES

⊕ = 25 = 1/4" & 1/4"/1/2" VALVES
⊕ = 51 = 1/2" THRU 2" VALVES

| ITEM# | QTY | DESCRIPTION | PART# |
|---|---|---|---|
| 1 | 1 | TOP | TVT-1 X - ** |
| 2 | 1 | BODY | TVΩ-2 ^ -Φ |
| 3 | 1 | DIAPHRAGM | TVD-3- ** -∅ |
| 4 | 1 | KNOB | TV⊗K-4 |
| 5 | 1 | SPRING | TVS-5-⊕ |
| 6 | 1 | TOP DISC | TVTD-6-⊕ |
| 7 | 1 | BOTTOM DISC | TVBD-7-⊕ |
| 8 | 4 | BOLTS* | TVΩB-8 -** |
| 9 | 4 | NUTS | TVN-9-⊕ |
| 10 | 4 | WASHERS | TVW-10-⊕ |
| 11 | 1 | GAUGE PLUG (OPTIONAL) | TVP-11- ^ |

_UNDERLINED ITEMS REQUIRE CODES FROM ABOVE CHART
*1-1/2" PRESSURE RELIEF VALVES USE TVBB-8-15
*2" PRESSURE RELIEF VALVES USE TVBB-8-20

×INDICATES STANDARD CONSTRUCTION

DO NOT COPY WITHOUT PRIOR WRITTEN APPROVAL FROM PRIMARY FLUID SYSTEMS INC.

**PRIMARY FLUID SYSTEMS INC.**
1050 Cooke Blvd., Burlington, Ontario L7T 4A8

BACK PRESSURE & PRESSURE RELIEF VALVE EXPLODED PARTS VIEW

| | | |
|---|---|---|
| DATE ISSUED: 19-OCT-11 | SCALE: NTS | SHEET: 1 OF 1 |
| PROJECT: TOP VALVE | | DRAWN BY: BRB |
| APPROVED BY: | DWG NO.: TV-PA-257520STD-XPL | REV.#: 5 |

## Dimensions – Top Valve – Back Pressure

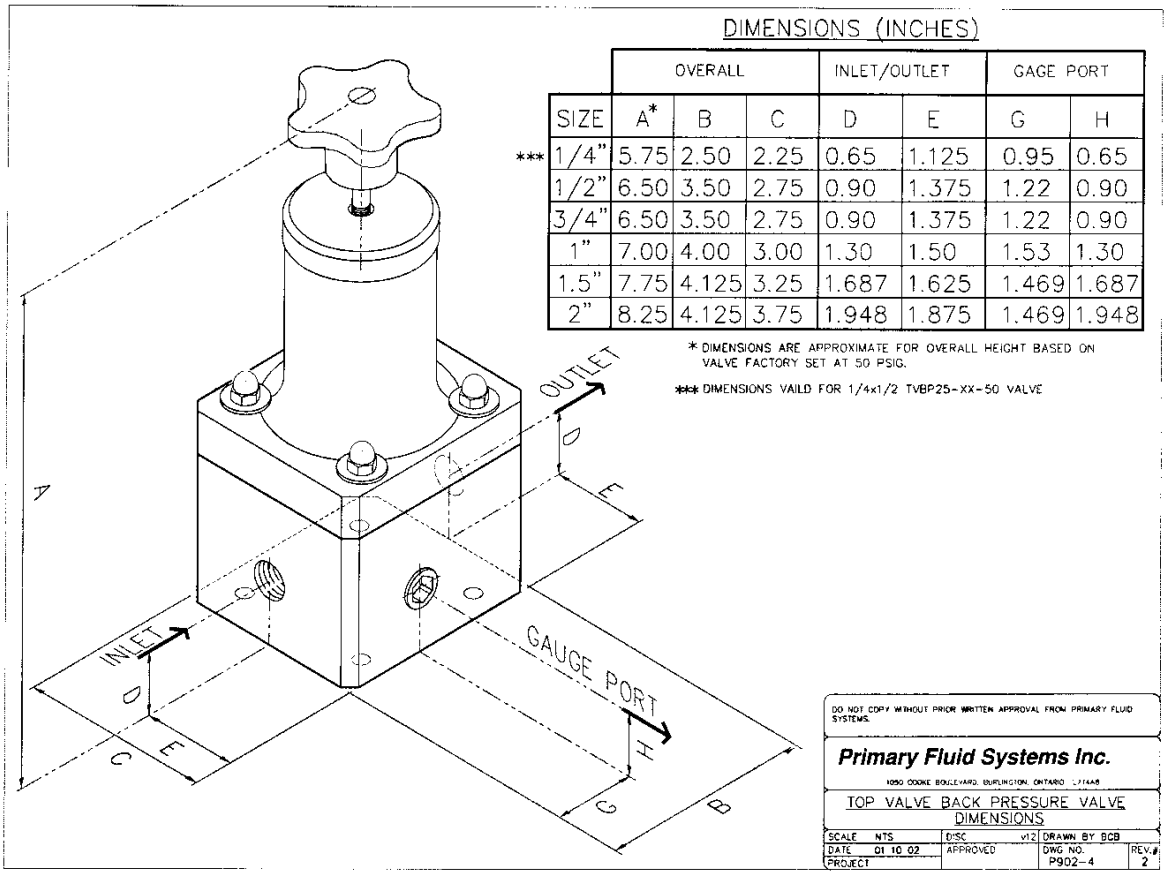


DIMENSIONS (INCHES)

| | | OVERALL | | | INLET/OUTLET | | GAGE PORT | |
|---|---|---|---|---|---|---|---|---|
| | SIZE | A* | B | C | D | E | G | H |
| *** | 1/4" | 5.75 | 2.50 | 2.25 | 0.65 | 1.125 | 0.95 | 0.65 |
| | 1/2" | 6.50 | 3.50 | 2.75 | 0.90 | 1.375 | 1.22 | 0.90 |
| | 3/4" | 6.50 | 3.50 | 2.75 | 0.90 | 1.375 | 1.22 | 0.90 |
| | 1" | 7.00 | 4.00 | 3.00 | 1.30 | 1.50 | 1.53 | 1.30 |
| | 1.5" | 7.75 | 4.125 | 3.25 | 1.687 | 1.625 | 1.469 | 1.687 |
| | 2" | 8.25 | 4.125 | 3.75 | 1.948 | 1.875 | 1.469 | 1.948 |

* DIMENSIONS ARE APPROXIMATE FOR OVERALL HEIGHT BASED ON VALVE FACTORY SET AT 50 PSIG.

*** DIMENSIONS VAILD FOR 1/4x1/2 TVBP25-XX-50 VALVE

DO NOT COPY WITHOUT PRIOR WRITTEN APPROVAL FROM PRIMARY FLUID SYSTEMS.

**Primary Fluid Systems Inc.**

1050 COOKE BOULEVARD, BURLINGTON, ONTARIO L7T4A8

TOP VALVE BACK PRESSURE VALVE DIMENSIONS

| | | | |
|---|---|---|---|
| SCALE NTS | DISC v12 | DRAWN BY BCB | |
| DATE 01 10 02 | APPROVED | DWG NO. P902-4 | REV.# 2 |
| PROJECT | | | |

## Dimensions – Top Valve – Pressure Relief

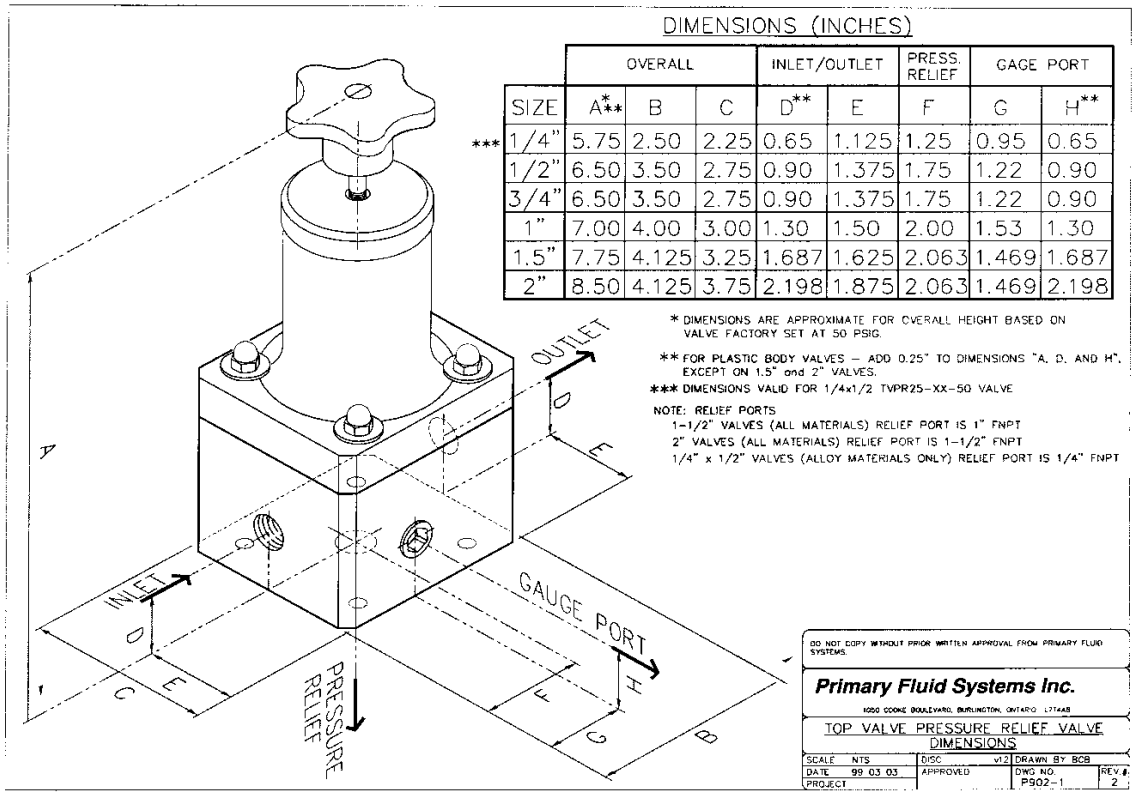


DIMENSIONS (INCHES)

| | | OVERALL | | | INLET/OUTLET | | PRESS. RELIEF | GAGE PORT | |
|---|---|---|---|---|---|---|---|---|---|
| | SIZE | A*** | B | C | D** | E | F | G | H** |
| *** | 1/4" | 5.75 | 2.50 | 2.25 | 0.65 | 1.125 | 1.25 | 0.95 | 0.65 |
| | 1/2" | 6.50 | 3.50 | 2.75 | 0.90 | 1.375 | 1.75 | 1.22 | 0.90 |
| | 3/4" | 6.50 | 3.50 | 2.75 | 0.90 | 1.375 | 1.75 | 1.22 | 0.90 |
| | 1" | 7.00 | 4.00 | 3.00 | 1.30 | 1.50 | 2.00 | 1.53 | 1.30 |
| | 1.5" | 7.75 | 4.125 | 3.25 | 1.687 | 1.625 | 2.063 | 1.469 | 1.687 |
| | 2" | 8.50 | 4.125 | 3.75 | 2.198 | 1.875 | 2.063 | 1.469 | 2.198 |

* DIMENSIONS ARE APPROXIMATE FOR OVERALL HEIGHT BASED ON VALVE FACTORY SET AT 50 PSIG.

** FOR PLASTIC BODY VALVES – ADD 0.25" TO DIMENSIONS "A, D, AND H", EXCEPT ON 1.5" and 2" VALVES.

*** DIMENSIONS VALID FOR 1/4x1/2 TVPR25-XX-50 VALVE

NOTE: RELIEF PORTS
1-1/2" VALVES (ALL MATERIALS) RELIEF PORT IS 1" FNPT
2" VALVES (ALL MATERIALS) RELIEF PORT IS 1-1/2" FNPT
1/4" x 1/2" VALVES (ALLOY MATERIALS ONLY) RELIEF PORT IS 1/4" FNPT

DO NOT COPY WITHOUT PRIOR WRITTEN APPROVAL FROM PRIMARY FLUID SYSTEMS.

**Primary Fluid Systems Inc.**

1050 COOKE BOULEVARD, BURLINGTON, ONTARIO L7T4A8

TOP VALVE PRESSURE RELIEF VALVE DIMENSIONS

| | | | |
|---|---|---|---|
| SCALE NTS | DISC v12 | DRAWN BY BCB | |
| DATE 99 03 03 | APPROVED | DWG NO. P902-1 | REV.# 2 |
| PROJECT | | | |

**ALL New Clamping Device for TOP VALVE, Back Pressure and Pressure Relief Valves**

This new polypropylene-clamping device now makes it even easier than ever to support TOP VALVE, back pressure or pressure relief valves in service, to help eliminate pipe strain and the need for expensive mounting brackets.

It's simple to install, economical to purchase and we've reworked the top of the valve body now available on all new valves, to assist with the support.

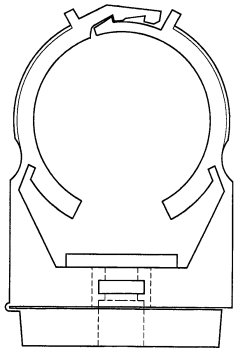

**TV-_ _ -CLAMP**

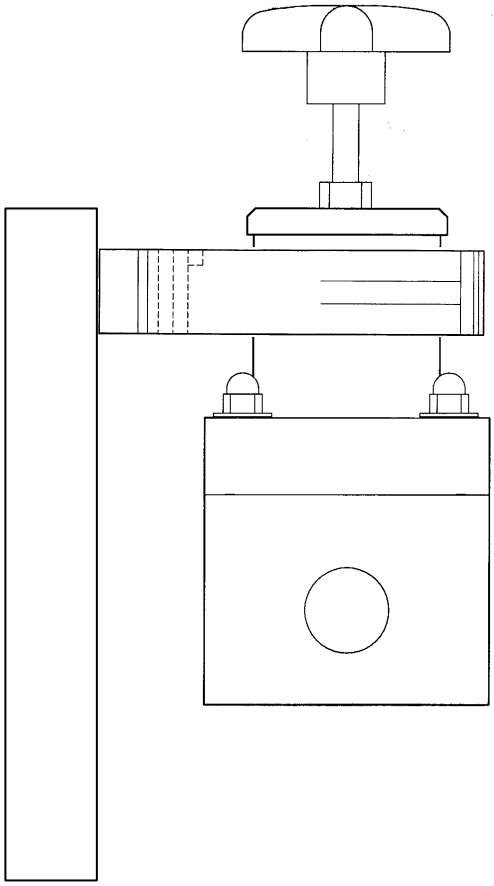

**Sample Installation**

**Part #**

TV-25-CLAMP to fit ¼" Valves and ¼ - ½" Valves

TV-51-CLAMP to fit ½" through 2" Valves

## Flow Rates

Subject: Flow capacity through TOP VALVE, back pressure and pressure relief valves. Under continuous flow conditions: @ **50 PSI** with ambient temperature water

| | | |
|---|---|---|
| ¼" valve | 4 | USGPM |
| ¼"/½" valve | 4 | USGPM |
| ½" valve | 6 | USGPM |
| ¾" valve | 8 | USGPM |
| 1" valve | 14 | USGPM |
| 1½"valve | 25 | USGPM |
| 2" valve | 40 | USGPM |

Note: Capacities will increase with pressure. (If pressure is doubled, flow rate will approximately double.) For capacities of valves with pulsating flow use approximately ⅓ of the above given flow values.

## Temperature Correction Factors: Thermoplastics

**Temperature Effects:** Thermoplastics and thermosets will decrease in tensile strength as the temperature increases: therefore, the working pressure must be reduced accordingly. The following factors will apply:

| Operating Temperatures | | {Factors} | | | |
|---|---|---|---|---|---|
| ***F*** | ***C*** | ***PVC*** | ***CPVC*** | ***PP*** | ***PVDF*** |
| 70 | 21 | 1.00 | 1.00 | 1.00 | 1.00 |
| 80 | 27 | 1.00 | 1.00 | 1.00 | 1.00 |
| 90 | 32 | 1.00 | 1.00 | 1.00 | 1.00 |
| 100 | 38 | .90 | 1.00 | 1.00 | 1.00 |
| 110 | 43 | .83 | 1.00 | .91 | 1.00 |
| 115 | 46 | .75 | 1.00 | .87 | 1.00 |
| 120 | 49 | .66 | 1.00 | .83 | 1.00 |
| 125 | 52 | .58 | .97 | .79 | 1.00 |
| 130 | 54 | .50 | .95 | .75 | 1.00 |
| 140 | 60 | .33 | .90 | .66 | 1.00 |
| 150 | 66 | NR | .80 | .60 | .97 |
| 160 | 71 | NR | .70 | .53 | .93 |
| 170 | 77 | NR | .60 | .43 | .86 |
| 180 | 82 | NR | .50 | .33 | .80 |
| 200 | 93 | NR | .33 | NR | .66 |
| 210 | 99 | NR | NR | NR | .60 |
| 240 | 116 | NR | NR | NR | .40 |
| 280 | 138 | NR | NR | NR | .16 |

**Example:**
Maximum Pressure for PVDF valve at 280°F (138°C)
Factor = 0.16 x 150psig = 24psig max. pressure
Factor = 0.16 x 1034kPa = 165.44kPa max. pressure

The maximum pressure rating for valves regardless of size is 150 PSIG (1034 kPa) at 73° F (22°C)

**NR** = not recommended

Primary Fluid Systems, Inc. takes no responsibility for the enclosed data.

**NOTE**: If the material of the valve you have chosen is rated below the working pressure of your system than you must reconsider your choice. The standard valve top material of construction is PVC and should be taken into temperature consideration. (Other materials of construction are available, consult price list or factory)

**NOTE: When considering working temperature, include ambient and potential collective surface temperature (Radiant Heat).**

# LIMITED WARRANTY

Primary Fluid Systems Inc. (Primary) warrants its products against defects in workmanship or materials for one (1) year under normal use. Three-(3) year available when application card is completed and returned to factory. Application card can be obtained by emailing request to sales@primaryfluid.com

Primary's obligations and liabilities under this warranty shall be limited to replacement of the product, or a refund of an amount not to exceed the purchase price of the product(s) to which such warranty claim is made. Repairs or replacements are made subject to our inspection of the returned product(s). Primary's decision of one of these alternatives shall be the buyer's exclusive remedy.

This warranty does not extend to damage by corrosion or other decomposition by chemical action. Primary does not warrant damages caused by (a) improper use of the product, (b) unauthorized modification or attachment to product, (c) misuse, abuse, accident or negligent handling or installation of product, or (d) alterations or repairs made by purchaser.

The materials of construction offered are recommendations only, subject in all cases to acceptance by purchaser. These recommendations do not constitute any guarantee against corrosion or decomposition, but are based on previous experience and best available information of the industry.

Statements and instructions set forth herein are based on the best information and practices known to Primary, but it should not be assumed that every acceptable safety procedure is contained herein. Of necessity Primary cannot guarantee that actions in accordance with such statements and instructions will result in the complete elimination of hazards and it assumes no liability for accidents that may occur.

Except as specifically provided herein, Primary makes no warranty, representations, promise or guarantee, either express or implied, statutory or otherwise, with respect to the product and technical information provided, including the products' quality, performance, merchantability, or fitness for a particular purpose.

In no event will Primary be liable for indirect, special, incidental, economic, covert or consequential damages arising out of the use or inability to use the product, including without limitation, damages or costs relating to the loss of profits, business and good will even if advised of the possibility of such damages. In no event shall Primary's liability exceed the amount paid by you for the product.

The warranty and remedies set forth herein are exclusive and in lieu of all others, oral or written, express or implied. No Primary dealer, distributor, agent or employee is authorized to make any modification or addition to this warranty. This warranty gives you specific legal rights and you may also have other rights which vary from state to state.

**VISIT OUR WEBSITE**
**@**
**primaryfluid.com**

# ACCUGUARD Diaphragm Seals

Without proper protection, process fluids can contaminate and damage in-line instrumentation. ACCUGUARD Diaphragm Seals are designed to protect and isolate pressure gauges and expensive instrumentation from corrosive, high temperature, or viscous, process media.



## Features

- Transfers process pressure accurately without direct contact with process fluids
- Removes the need for expensive instrumentation
- Easily installed and available in five chemically resistant Materials of Construction
- Optional Diaphragm Materials
- Available with ¼" & ½" Bottom Connection Sizes in FNPT & BSPT Female Connection Types
- Thermoplastic Units Rated to 240 PSIG (16 BARG) @ 21°C (70°F)
- 316L S/S Units Rated to 5800 PSIG (400 BARG) @ 21°C (70°F)
- Approved – 316 S/S Diaphragm Seals with CRN (Canadian Registration Number)

## HOW TO ORDER - AccuGuard

*Example Part Number: AG25A25A-PVC-V-M-[Optional Gauge]*

**AG 25 A 25 A - PVC - V - M - [Optional Gauge]**

*See Gauge List*

**AccuGuard Diaphragm Seal**

**Connection Size (Top)**
25 = 1/4"

**Connection Type (Top)**
A = FNPT

**Connection Size (Bottom)**
25 = 1/4"
50 = 1/2"

**Connection Type (Bottom)**
A = FNPT
B = BSPT

**Options**
M = Mounted Gauge/Glycerin Filled

**Diaphram Materials**
V = Viton (Thermoplastic Body Only)
E = EPDM (Thermoplastic Body Only)
T = PTFE (Thermoplastic Body Only)
S/S = 316 S/S (S/S & S/SV Body Only)

**Body Materials**
PVC = Polyvinylchloride
CPVC = CPVC Corzan
PP = Polypropylene (Not Available with PTFE Diaphragm)
PVDF = Polyvinyldene Fluoride (PTFE Diaphragm Only)
S/S = 316L Stainless Steel
S/SV = Vented 316L Stainless Steel

*- Optional Gauge Appears as Separate Line Item When Ordered*
*- Diaphragm Seals With Gauges = Glycerin Filled As Standard*
*- 1/4" & 1/2" MNPT Nipples Available - Call Factory for Details*

Primary Fluid Systems Inc. | 1050 Cooke Blvd. | Burlington | Ontario | L7T 4A8 | Canada
www.primaryfluid.com | primary@primaryfluid.com | North American Toll Free: 1-800-776-6580

# ACCUGUARD Diaphragm Seals

## Technical Information

### Temperature Correction Factors: Thermoplastics Temperature Effects:

Thermoplastics and thermosets will decrease in tensile strength as the temperature increases: therefore, the working pressure must be reduced accordingly. For additional Information, please visit: www.eco-valve.com.

### Canadian Registration Number:

Approved - 316L S/S ACCUGUARD Diaphragm Seals with CRN (Canadian Registration Number) Certification for all of Canada.

## Dimensions & Parts

### Thermoplastic Diaphragm Seals

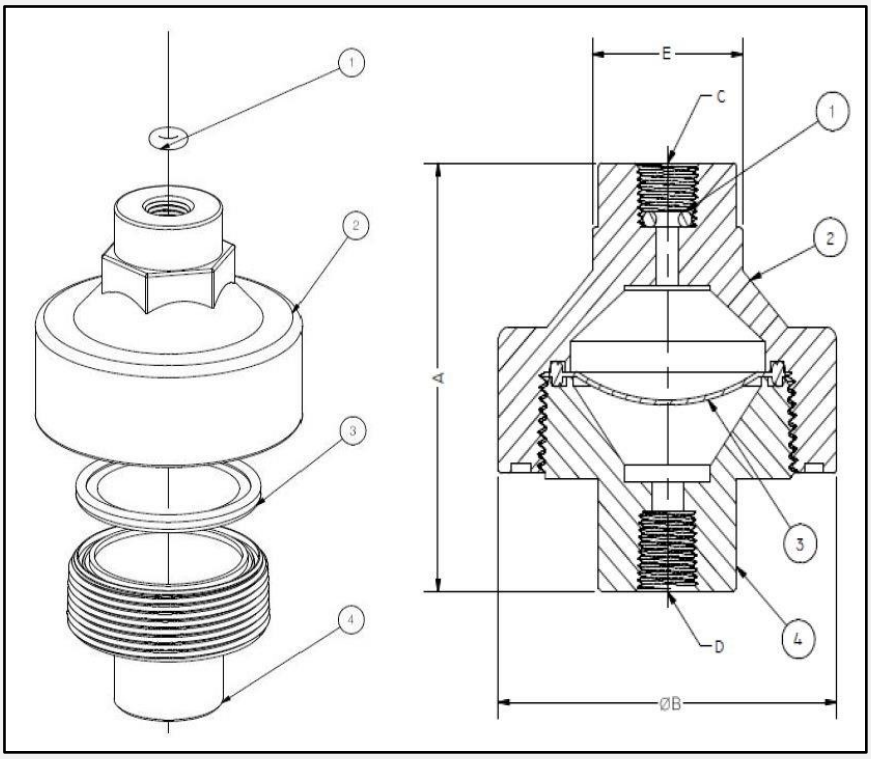


### Alloy Diaphragm Seals

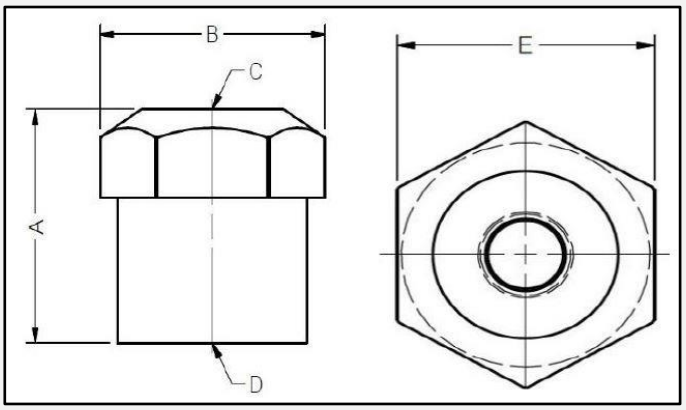


### Vented Alloy Diaphragm Seals

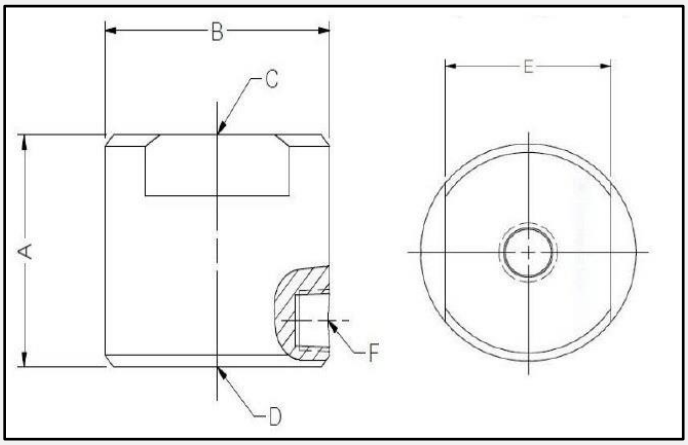


**Dimensional Information**

| Dimension | Thermoplastic | Alloy | Vented Alloy |
|---|---|---|---|
| A | 3.3" [84.68mm] | 1.5" [38.61mm] | 1.57" [40.00mm] |
| B | 3.1" [78.49mm] | 1.7" [43.43mm] | 2.05" [52.00mm] |
| C | *See "How to Order"* | *See "How to Order"* | *See "How to Order"* |
| D | *See "How to Order"* | *See "How to Order"* | *See "How to Order"* |
| E | 1.4" [35.00mm] | 1.5" [38.10mm] | 1.57" [40.00mm] |
| F | N/A | N/A | 1/8" FNPT |

**Thermoplastic Diaphragm Seal Parts & Materials**

| Item Number | Description | Material of Construction |
|---|---|---|
| 1 | O-Ring | EPDM |
| 2 | Upper Housing | Polypropylene (PVC, CPVC, & PP Lower Housings) Or PVDF (PVDF Lower Housing Only) |
| 3 | Diaphragm | *See "How to Order"* |
| 4 | Lower Housing | *See "How to Order" (Body Materials)* |

- *Alloy Units = Sealed – No Parts Available*

Primary Fluid Systems Inc. | 1050 Cooke Blvd. | Burlington | Ontario | L7T 4A8 | Canada
www.primaryfluid.com | primary@primaryfluid.com | North American Toll Free: 1-800-776-6580

# ACCUGUARD GAUGES

ACCUGUARD Pressure Gauges are designed to enhance the performance of chemical feed systems. Adding a pressure gauge to any system will help to ensure that optimal pressures are monitored and maintained.







## Series Information

| Series | Gauge Diameter | Gauge Connection Size and Type | Gauge Housing | Gauge Internals | Liquid Filled | *Accuracy Rating |
|---|---|---|---|---|---|---|
| **Economy** | 2" / 2.5" | 1/4" NPT | Steel Case | Brass | No | ± 2.5% |
| **Intermediate** | 2.5" / 4" | 1/4" NPT | 304 S/S | Brass | Yes | ± 1.6% |
| **Premium** | 2.5" / 4" | 1/4" NPT | 304S/S | 316L S/S | Yes | ± 1.6% |

*Accuracy Rating = Full Scale Range

### HOW TO ORDER - AccuGuard Gauges

*Example Part Number: GE2-160-CB*

**G E 2 - 160 - CB**

**AccuGuard Gauge**

**Gauge Series**
- E = Economy
- I = Intermediate
- P = Premium

**Gauge Diameter**
- 2 = 2 Inches
- 2.5 = 2-1/2 Inches
- 4 = 4 Inches

**Gauge Mounting Orientation**
- CB = Center Back
- BM = Bottom Mount

**Gauge Indication**
- 60 = 0-60 PSIG / 0-400 KPA
- 160 = 0-160 PSIG / 0-1100 KPA
- 200 = 0-200 PSIG / 0-1400 KPA
- 300 = 0-300 PSIG / 0-2000 KPA
- 400 = 0-400 PSIG / 0-2800 KPA

*4" Gauge Diameter Available in Bottom Mount Orientation Only*

*For Price & Availability of Other Pressures - Call Factory*

Primary Fluid Systems Inc. | 1050 Cooke Blvd. | Burlington | Ontario | L7T 4A8 | Canada
www.primaryfluid.com | primary@primaryfluid.com | North American Toll Free: 1-800-776-6580

# INSTRUCTION MANUAL

*PLEASE KEEP FOR FUTURE REFERENCE*

## *PCM - MOINEAU*

*Series* **M Eco**

*Type* 011M6F – 075M6F – 1M6F – 2M6F – 3M6F

M1 – Monobloc installation

*Serial No.*

*Year of manufacture*

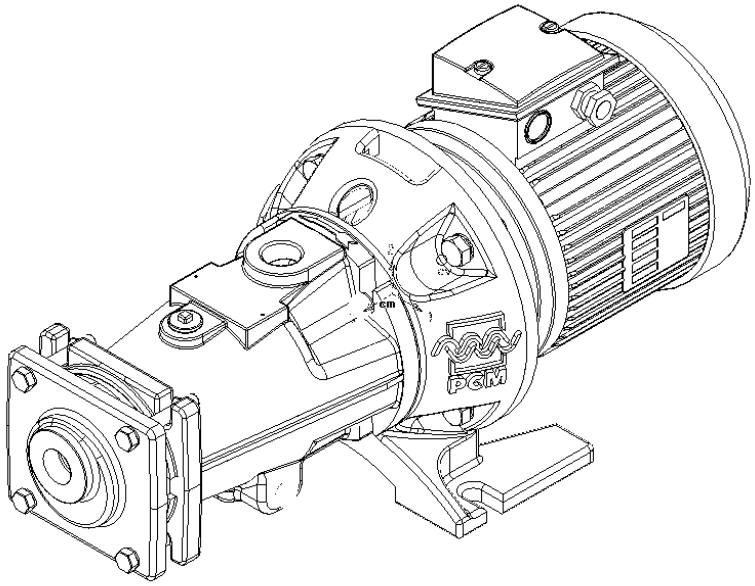

| *Document No.:* | **NIPMM1F03A** | *Date approved: December 2005* |
|---|---|---|

*Issue date: MARCH 07*

PCM -17 RUE ERNEST LAVAL-BP 35-92173 VANVES CEDEX France

☎: +33 (0)1 41 08 15 15 🖷 : +33 (0)1 41 08 15 00 💻 : www.pcm.eu

# DECLARATION OF INCORPORATION

**We declare that the subassembly described in the technical description cannot be put into service until the machine in which it is to be incorporated has been declared compliant with the provisions of machine directive 98/37/CE modified 98/79/CE and with the related national legislation.**

**The subassembly complies with harmonised standards EN ISO 12100.**

**Vanves, 28/07/2005**

**For company – NAME and FUNCTION** **Innovation Director**

**Luc Chatelain**



☎: +33 (0)1 41 08 15 15 🖷 : +33 (0)1 41 08 15 00 💻 : www.pcm.eu

# CONTENTS


| | | |
|---|---|---|
| **0.** | **INTRODUCTION** | **5** |
| 0.1 | General Information | 5 |
| 0.2 | Limits of Guarantee | 5 |
| 0.3 | Safety and Environment | 6 |
| **1.** | **CHARACTERISTICS AND INSTALLATION** | **7** |
| 1.1 | Operating Principle | 7 |
| 1.2 | Characteristics | 8 |
| 1.2.1 | Build Properties | 8 |
| 1.2.2 | Operating Characteristics | 10 |
| 1.3 | Installation | 12 |
| 1.3.1 | Installation Precautions | 12 |
| 1.3.2 | Connecting the Pipes | 13 |
| 1.3.3 | Anchoring | 13 |
| 1.3.4 | Connecting the Motor Unit | 13 |
| **2.** | **OPERATION** | **14** |
| 2.1 | Commissioning | 14 |
| 2.1.1 | Before Start-up | 14 |
| 2.1.2 | Start-up | 14 |
| 2.2 | Normal Operating Procedure | 15 |
| 2.2.1 | Start-up Procedure | 15 |
| 2.2.2 | General Operating Instructions | 15 |
| 2.2.3 | Cleaning | 15 |
| 2.2.4 | Shutdown Procedure | 15 |
| 2.3 | Operating procedure in the event of an incident | 15 |
| 2.4 | Automation | 16 |
| **3.** | **MAINTENANCE** | **17** |
| 3.1 | List of spare parts | 17 |
| 3.2 | Handling Equipment and Procedure | 20 |
| 3.3 | Storage Conditions | 21 |

3.4 Preventive Maintenance 21
3.4.1 Periodic Inspection 21
3.4.2 Lubrication 21
3.4.3 Torque 22
3.4.4 Specialist Tools 22

3.5 Corrective Maintenance 23
3.5.1 Troubleshooting 23
3.5.2 Pump Disassembly (see diagram in Section 3: Maintenance) 25
3.5.3 Pump Reassembly (see diagram in Section 3: Maintenance) 29

3.6 Storing the Equipment when not in Use 33
3.6.1 Preserving the Rubber Components 33

3.7 Accessories 33

**4. APPENDICES 34**

# 0. INTRODUCTION

## 0.1 General Information

The pump you have just acquired was manufactured and inspected with the greatest of care.

This manual aims to help you keep your pump in good working order.

The information contained in this manual may not be copied or published in any form whatsoever, whether by printing, photography, recording on microfilm or any other means (electronic or mechanical) without the prior written consent of *PCM Pompes SA*.

The information given in this document is subject to change without notice. PCM Pompes SA or its representatives decline all responsibility in the event of damage resulting from the use of this manual. This exemption from responsibility applies to damage of all types, including (without any limit) compensatory damages, whether direct or indirect, loss of data, profits or return of capital, loss or damage caused to the property of others, and third-party claims. PCM Pompes SA or its representatives accept no responsibility and do not guarantee the accuracy, completeness, or up-to-date nature of the information contained in this manual.

### Markings

Information shown on the pump motor unit or on an identification plate attached to the pump:

**a)** Manufacturer name and address.
**b)** Serial number.
**c)** Maximum allowable flow rate at 0 bar or rotation rate of pump motor unit.
**d)** Maximum allowable pump pressure, according to its motor.
**e)** Customer reference (optional).
This information is essential when ordering spare parts (contact **PCM Services**).



**Pump characteristics (e.g. flow rate, pressure, speed of rotation, construction, direction of rotation of pump, etc.) must not be modified without written permission from PCM Services.**

## 0.2 Limits of Guarantee



**Before performing any servicing on the pump, please check that all necessary precautions have been taken: pump switched off, upstream and downstream valves closed, pipework cleaned and purged, electrical power supply disconnected, and all the usual steps to be applied according to the personnel safety regulations in force.**

On receiving the pump, examine it immediately to check that it shows no obvious sign of damage. If it is visibly damaged, write a clear annotation on the carrier's documents stating that the merchandise was received damaged and briefly describing the nature of the damage. If you decide to accept such equipment, send a registered letter with return receipt, to reach the carrier within forty-eight hours, with a copy to **PCM Services**.


☎: +33 (0)1 41 08 15 15 🖷 : +33 (0)1 41 08 15 00 💻 : www.pcm.eu

Storage and handling conditions are given in detail in Section 3, Para. 3.2 and 3.3.

To avoid all risk of accident or damage (in particular, when hazardous products are being pumped), it is essential to refrain from using this equipment for an application other than the one originally intended (refer to technical description in Appendix).



**To maintain the original qualities of the pump and to preserve the PCM guarantee on the equipment as well as compliance with the machines directive, it is essential to use PCM parts only.**

## 0.3 Safety and Environment

PCM is committed to an environmental protection initiative in accordance with the recommendations of the ISO 14001 standard.

PCM has set up a system through which its customers can ask PCM to handle the disposal of waste material (used pumps and spare parts). This system is especially useful for the disposal of parts containing elastomers, such as the stators of Moineau pumps or tubes from peristaltic pumps.

All returns must be sent to the PCM factory, carriage paid. The equipment must be clean, with the pump and drive completely emptied of products, and must arrive with the sheet entitled: **risk prevention** (see Section 4: Appendices).

All items returned for this purpose must be legibly marked with the words '**Equipment to be recycled'**.

Send to :

**PCM**
**Rue René Moineau**
**49123 CHAMPTOCE SUR LOIRE**
**FRANCE**



☎: +33 (0)1 41 08 15 15 🖷 : +33 (0)1 41 08 15 00 💻 : www.pcm.eu

# 1. CHARACTERISTICS AND INSTALLATION

## 1.1 Operating Principle

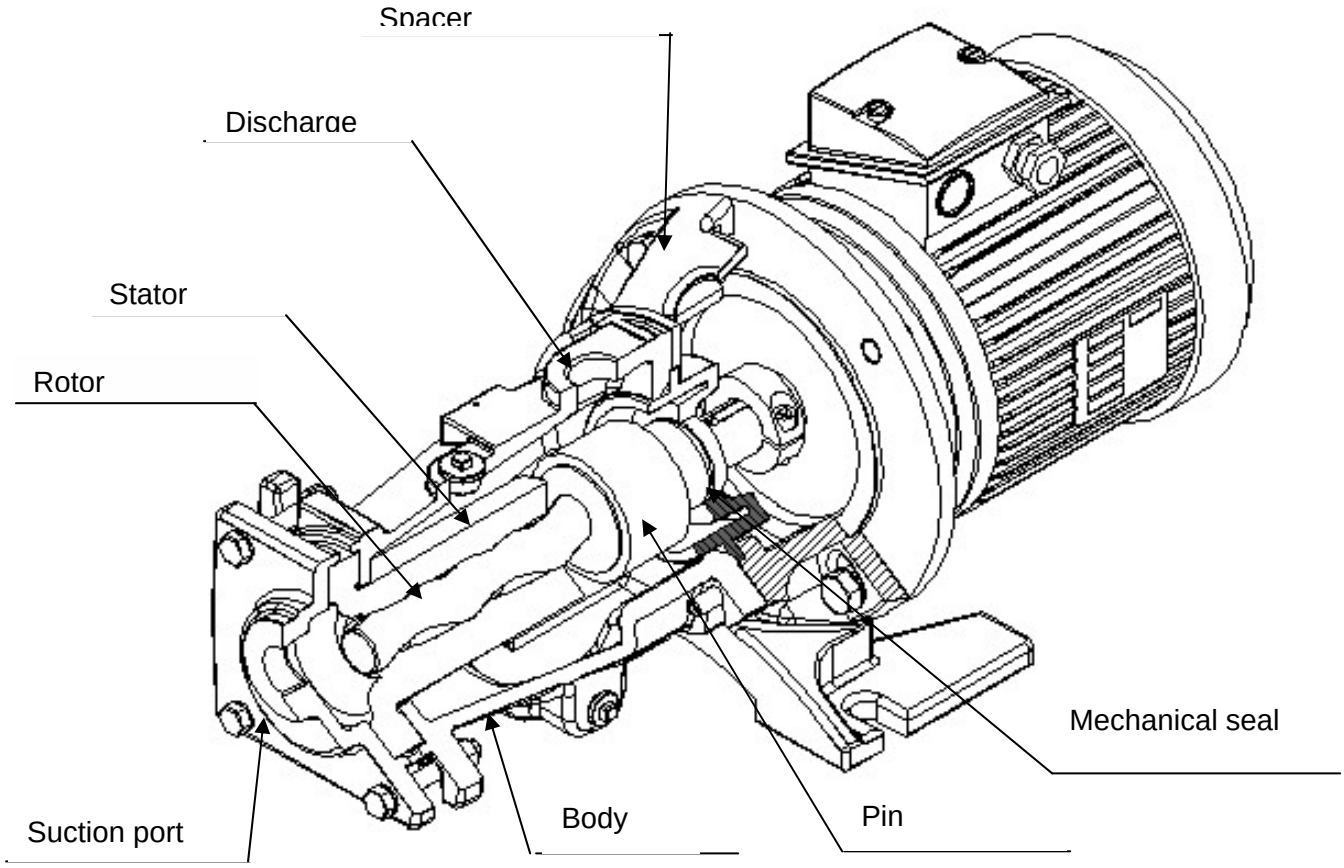


The PCM Moineau progressive cavity pump (or eccentric screw pump) essentially consists of two internal helical gears, which both have the following features:

- The stator, which is the external element, has one more tooth than the rotor, which is the internal element.

- In any given cross-section, each section of the rotor is in contact with the stator.

- The pitches of the helices of the two elements are in a ratio according to the number of teeth.

The rotation generates an axial displacement, from the suction to the discharge, of the closed cavities bounded by the rotor and stator.

The PCM MOINEAU pump is a volumetric pump whose capacity is equal to the volume of a cavity.

The stator of pumps is said to be 'floating', meaning that it has one free end. This principle, associated with an elastic coupling, simplifies the transmission of the rotational movement between the drive and the rotor.

Mounting the stator in this floating configuration provides the following advantages:


☎: +33 (0)1 41 08 15 15 🖷 : +33 (0)1 41 08 15 00 💻 : www.pcm.eu

### Direction of rotation (Note: This pump is not reversible!)

The pump's direction of rotation is shown on the upper part of the pump body.

The pump is designed to be used in one directly of rotation only. It is up to the installer to check the revolving field of the electrical installation to ensure that the pump is running in the correct direction of rotation.

## 1.2 Characteristics

### 1.2.1 Build Properties

Defined in the table below

| Component | 011M6F | 075M6F | 1M6F | 2M6F | 3M6F |
|---|---|---|---|---|---|
| **Stator** | NBR / CSM / FKM / CR | | | | |
| **Plot** | NBR / CSM / FKM / CR | | | | |
| **Single mechanical seal** | Carbon/Silicon carbide | | | | |
| **Rotor** | X30Cr13 | | | | |
| **Body/Port/ Spacer** | EN-GJL250 | | | | |

The material descriptions comply with the AFNOR standard.

NOTE: By default, our pumps are protected by a particular paint. The procedure and details of the application of this paint are defined in the technical description.



☎: +33 (0)1 41 08 15 15 🖷 : +33 (0)1 41 08 15 00 💻 : www.pcm.eu

## 1.2.1.1 Overall Dimensions

**Motor-driven pumps 011M6F / 075M6F / 1M6F / 2M6F**

Z = 120 mm

**Fig.1**

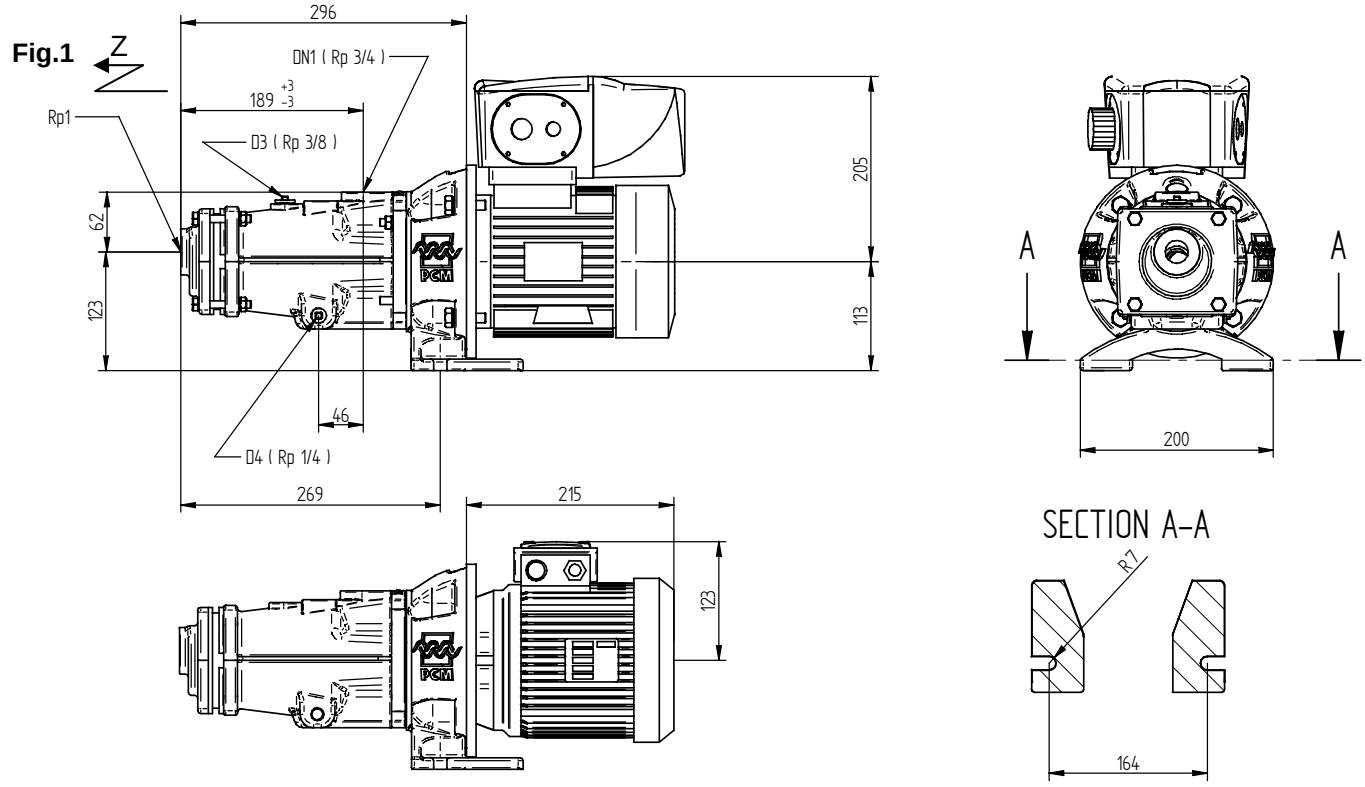


## 3M6F

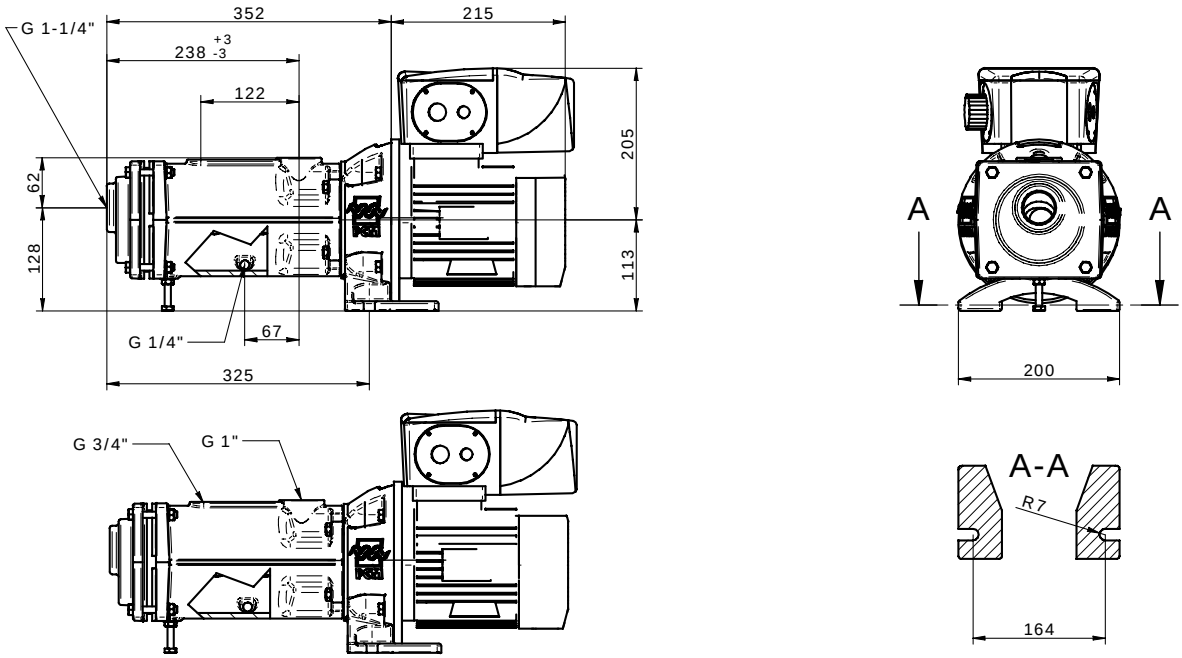




☎: +33 (0)1 41 08 15 15 🖷 : +33 (0)1 41 08 15 00 💻 : www.pcm.eu

### 1.2.2 Operating Characteristics

**Pump characteristics (e.g. flow rate, pressure, speed of rotation, construction, etc.) must not be modified without written permission from PCM Services.**

They are indicated in the technical description of the equipment delivered. The A-weighted equivalent acoustic pressure level of pumps manufactured by PCM Pompes is below 80 dB(A), in compliance with the European directive in force concerning noise from motor-driven equipment.

M Series floating stator Moineau pumps are used in the following industries: starch industry, construction, ceramics, sanitation & environmental, oil production, petrochemical industry, petroleum, soap manufacture, etc.

With their robust design, MF Series Moineau pumps are used to convey a variety of liquids: clear, viscous, abrasive, heterogeneous, charged, fragile, or emulsifying.

IMPORTANT NOTE

The maximum temperature for use is determined by the stator material and the specifications given in the technical description provided in Appendix.

The maximum speeds are given by the curves on the following page.

**Do not use the pump under conditions other than those described in this document without first obtaining authorisation from PCM Services.**

#### Pump performance curves

The rotational speeds and pressures shown on the following curves represent performance characteristics obtained with water at 20°C. When operating conditions differ from this standard, the performance characteristics must be adjusted according to:

- Product characteristics (viscosity, fragility, abrasion).

- The characteristics of the application (operating speed, discharge pressure, available NPSH).

The following curves were generated under the following conditions:

- Based on water at 20°C
- Discharge pressure = 0 bar



☎: +33 (0)1 41 08 15 15 🖷 : +33 (0)1 41 08 15 00 💻 : www.pcm.eu

Base: water
Temperature: 20°C
Discharge pressure: 0 bar

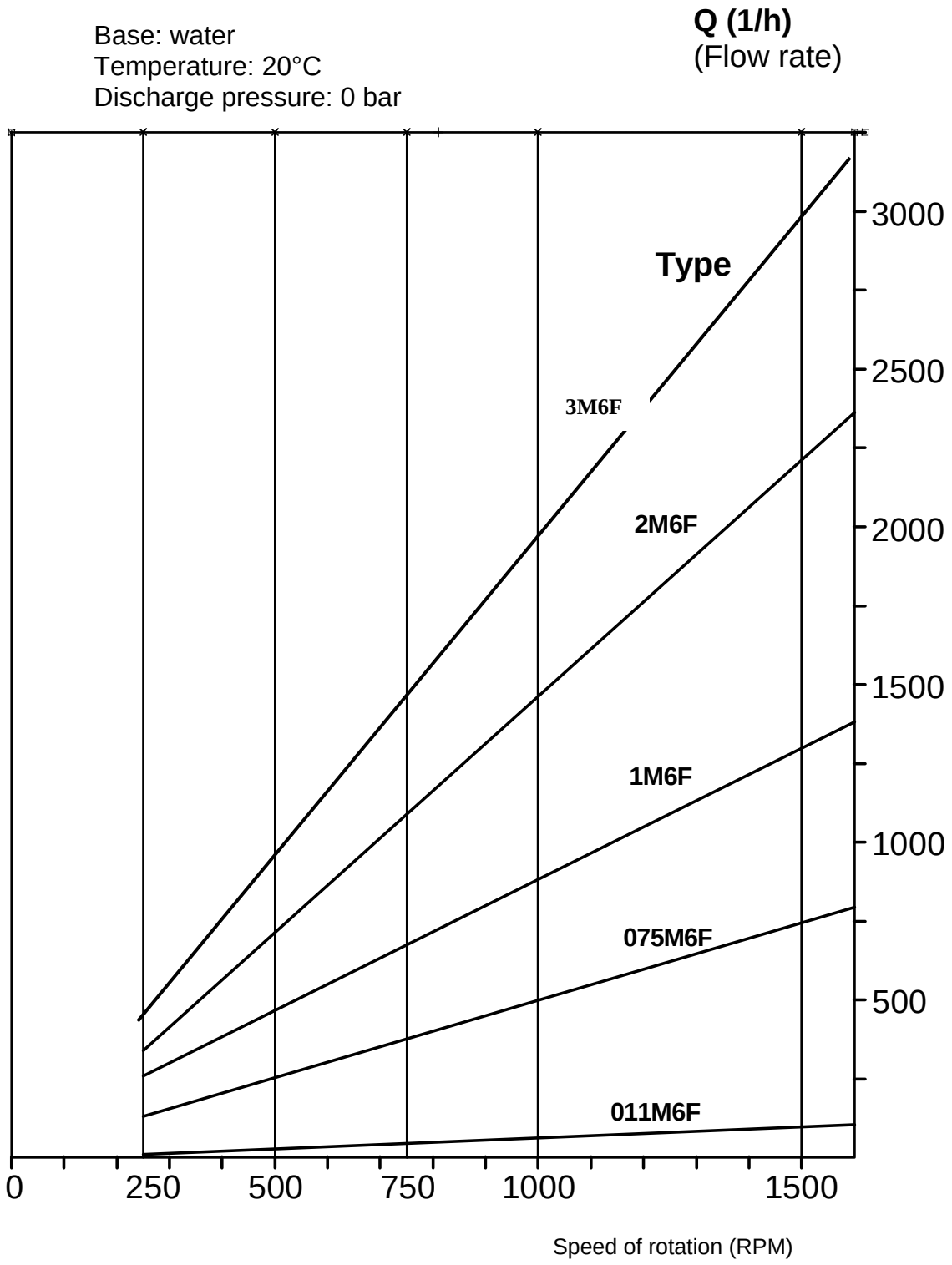


For more precise details, look at the curve for your pump, or ask **PCM Services** to send you this information.


☎: +33 (0)1 41 08 15 15 🖷 : +33 (0)1 41 08 15 00 💻 : www.pcm.eu

## 1.3 Installation

All Moineau pumps are inspected in our workshop before dispatch.

### 1.3.1 Installation Precautions

It is important to leave enough space around the pump to allow access for maintenance and adjustments. Avoid installing the pump in a location where the ambient temperature might not be within the operating temperature limits of the pump (refer to the technical description in Appendix). For an outdoor installation, it is recommended that you provide a protective covering above the equipment and a freeze protection system.

**Caution! It is essential to install the pump horizontally, because in a vertical installation, the mechanical seal can be damaged unless precautions are taken.**

It is also recommended that you install a removable fitting for ease of servicing the entire pump motor unit. The pump must not support the weight of the pipework.
A safety valve or pressure-sensitive switch and a pressure gauge are located at the discharge for the purposes of protection and to allow the pump's operating characteristics to be monitored. A dry running protection probe protects the pump when there is a shortage of the product to be pumped. Please ask PCM about its wide selection of accessories to suit your requirements.

### Tips for Optimum Pump Operation

**a)** Preferably the pump is in floaded suction condition.all
**b)** Place the pump as close as possible to the suction point.
**c)** If a valve is present in the circuit, it is **ESSENTIAL** to provide a safety valve or pressure-sensitive switch.

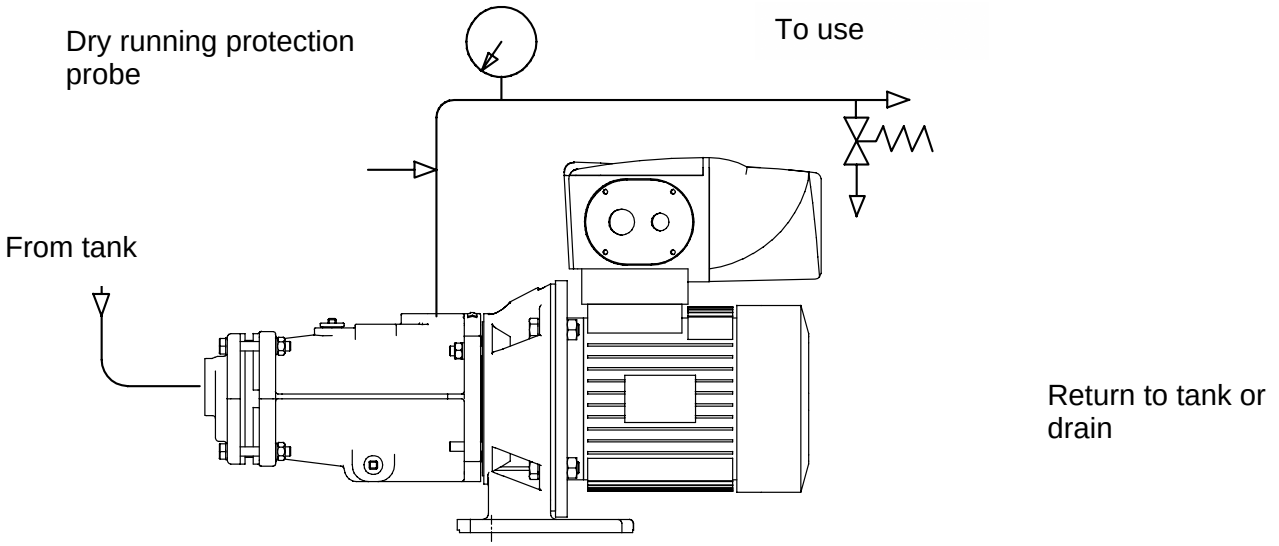


NOTE: Without protection on the circuit, a valve at the discharge is often the cause of operating errors leading to damage to the pump or pipework.


☎: +33 (0)1 41 08 15 15 🖷 : +33 (0)1 41 08 15 00 💻 : www.pcm.eu

### 1.3.2 Connecting the Pipes

An easily removable component should be installed on the stator end side. This allows the stator and the rotor to be removed easily (see dimension Z, Para. 1.2.1.1), without removing the whole pump from its mounting site. The weights of the pipes must not be supported by the pump. The allowable torques and forces on the fittings are given in Para. 1.2.1.

### 1.3.3 Anchoring

The pump and its drive mechanism must be secured to an adequately sized concrete block using screws and rawl plugs or foundation bolts. The unit shall be placed on a flat surface so that the spacer is maintained on the installation plane. If necessary, wedge the assembly to ensure that the unit is stable (refer to overall dimensions, Para. 1.2.1.1).

### 1.3.4 Connecting the Motor Unit



**Caution! All procedures must be performed by qualified personnel. PCM Pompes declines all responsibility if this requirement is not fulfilled. Before performing any connections, ensure that the electrical power supply has the characteristics listed on the motor plate. There is also a connection diagram in the motor terminal box (instructions in Appendix).**

For thermal protection: the setting is the current indicated on the motor plate.

When all connections have been made, the motor should be run at low speed for **a few seconds** (if possible using a mechanical or frequency variator) and you should check the direction of rotation of the motor as compared to the arrow marked on it.



**Caution! Pumps do not tolerate dry running.**



☎: +33 (0)1 41 08 15 15 🖷 : +33 (0)1 41 08 15 00 💻 : www.pcm.eu

# 2. OPERATION

## 2.1 Commissioning

### 2.1.1 Before Start-up

Ensure that:

_ Electrical connections are compliant.
_ The reduction gear has been filled with lubricant or the level is adequate.
_ The venting plug on the reduction gear is present and its protection has been removed.
_ The direction of shaft rotation corresponds to the specified direction of circulation.
_ The product to be pumped is present in the tank and the pump body.
_ The mechanical seal is lubricated if the pump is equipped with a self-lubricating seal.
_ All valves installed upstream and downstream from the pump are open.
_ The variator end stops are properly adjusted.
_ The temperature and type of product to be pumped are compliant.

### 2.1.2 Start-up



**NEVER ALLOW THE PUMP TO RUN DRY!**

To guard against this possibility, PCM may recommend a dry running protection system.

If the pump is not charged, you are advised to fill the pump body by hand. If the pump is temporarily not primed, the small amount of liquid remaining in the pump is enough to lubricate the stator until the next priming. During the first few minutes of operation, check for the following:

_ The liquid being pumped reaches the end of the discharge pipe.
_ The pump does not vibrate.
_ No unusual noise.
_ Sealing system functions well (refer to the specialist documentation in the appended instructions, according to the sealing system).
_ Check that the pressure stabilises, if a pressure gauge is installed.
_ No abnormal heating in the following areas:

- Stator
- Sealing system.

Check that the following parameters match the design parameters of the pump:

_ Speed, flow rate, pressure, viscosity, and temperature.



**If the values are not those indicated, consult PCM Services.**



☎: +33 (0)1 41 08 15 15 🖷 : +33 (0)1 41 08 15 00 💻 : www.pcm.eu

## 2.2 Normal Operating Procedure

### 2.2.1 Start-up Procedure

Check the following points before each start-up:

_ Presence of the product to be pumped.

_ Suction and discharge pipe valves are open.

_ Correct temperature of the product to be pumped.

### 2.2.2 General Operating Instructions

During operation, ensure that:

_ The pump is continuously supplied with the product and with its source of energy.

_ The discharge pressure remains stable and below the maximum capacity of the pump.

_ The temperature of the product being pumped remains within the operating limits.

_ The operating instructions in force on the production site are observed.

### 2.2.3 Cleaning

#### External Cleaning

Any soiling likely to damage the paint and corrode the pump must be removed from the equipment.

#### Internal Cleaning

Cleaning procedures and frequency of cleaning depend on the specific use of the pump and on the product being pumped. The basic procedure, however, is described below.

With the pump in operation, supply it at the suction with a cleaning product that is compatible with the product to be pumped and with the materials of which the pump is made. The cleaning time will be defined by the process using the pump. At the end of this time, shut down the pump in accordance with Para. 2.2.4.

### 2.2.4 Shutdown Procedure

The shutdown procedure depends on the type of product being pumped. Refer to the specific characteristics located in the technical description in the Appendix.

The shutdown procedure is therefore defined by the process.

The minimum procedure, however, is to switch off the pump and then to close the suction and discharge valves.



**Caution! If the product decants, the pump must be cleaned so that it can then be re-started without damage.**

## 2.3 Operating procedure in the event of an incident

In the event of operating malfunctions such as the following:

_ Pump does not start up.

_ Pump does not prime itself.

_ Flow rate is too low or irregular.

_ Pump stops running.



☎: +33 (0)1 41 08 15 15 🖷 : +33 (0)1 41 08 15 00 💻 : www.pcm.eu

_ Pump does not deliver.
_ Pump is unusually noisy.

Proceed as follows:

_ Shut down the pump in accordance with the shutdown procedure described in Para. 2.2.4.
_ Hydraulically isolate the pump (suction and discharge).
_ Refer to Para. 3.5.1 - Troubleshooting.

## 2.4 Automation

The use of devices that automatically enable or disable pump operation is recommended.

Examples: pressure-sensitive switch, valves with electrical position contact, dry running protection probe (capacitance probe).


☎: +33 (0)1 41 08 15 15 🖷 : +33 (0)1 41 08 15 00 💻 : www.pcm.eu

# 3. MAINTENANCE

## 3.1 List of spare parts

For the list of spare parts for your pump, contact **PCM Services** giving the serial number of your equipment. This number is shown on the manufacturer identification plate (see Para. 0.1).

You can ask us to overhaul your pump. Within three days of receiving it, we will supply a quotation showing the cost of the overhaul and how long it will take to do. Contact **PCM Services.**

PCM Services address:

**PCM**

**Centre de services**

**Rue René Moineau**

**49123 CHAMPTOCE SUR LOIRE**

**Tel: 0892.460.333 ***

*: (0.34 € incl. tax/min)



☎: +33 (0)1 41 08 15 15 🖷 : +33 (0)1 41 08 15 00 💻 : www.pcm.eu

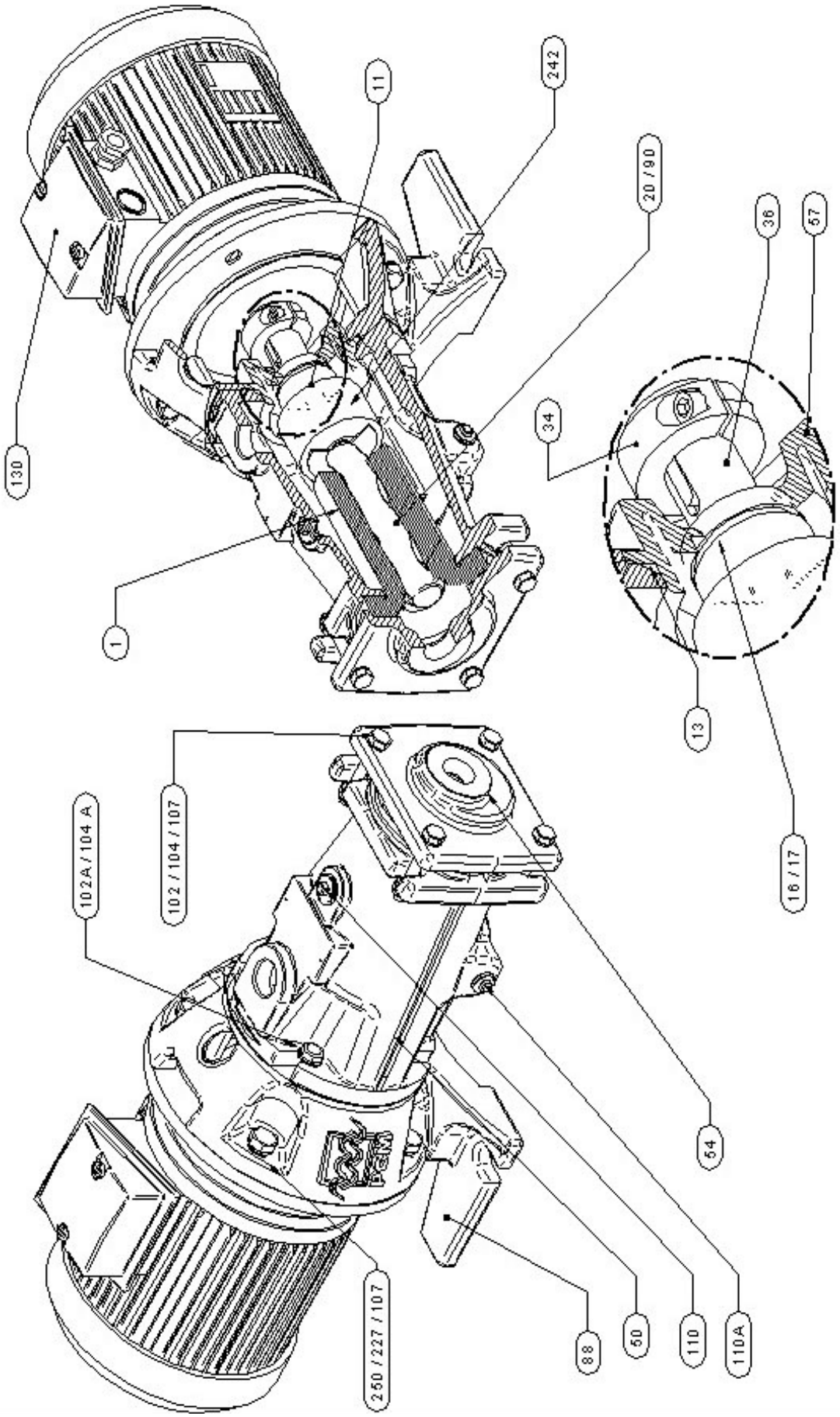




☎: +33 (0)1 41 08 15 15 🖷 : +33 (0)1 41 08 15 00 💻 : www.pcm.eu

| ITEM | DESCRIPTION | Q | 011M6F N° | 075M6F N° | 1M6F N° | 2M6F N° | 3M6F N |
|---|---|---|---|---|---|---|---|
| 1 | STATOR PCM  | 1 | 56 248 | 15 123 | 15 121 | 27 466 | ##### |
| 11 | PIN  | 1 | 14 574 160 | | | | |
| 13 | SEAL  | 1 | 40 700 160 | | | | |
| 16/17 | GASKET  | 1 | C09056D186 | | | | |
| 20 | ROTOR  | 1 | 56 250 001 | 14 762 001 | 14 442 001 | T200148001 | T200 |
| 34 | SHAFT RING  | 1 | C06111A000 | | | | |
| 36 | CTRL SHAFT  | 1 | T360082001 | | | | |
| 50 | BODY  | 1 | 14 595 051 | | | | |
| 54 | PORT  | 1 | 14 598 051 | | | | |
| 57 | MS SUPPORT  | 1 | T570017014 | | | | |
| 88 | SPACER  | 1 | T880056051 | | | | |
| 90 | SEAL  | 2 | 15 074 160 | | | | |
| 102 | WASHER  | 4 | 40040 046J | | | | |
| 102A | WASHER  | 4 | 40041 046J | | | | |
| 104 | SCREW  | 4 | 40319 046J | | | | |
| 104A | SCREW  | 4 | 40041 046J | | | | |
| 107 | NUT  | 8 | 40306 046J | | | | |
| 110 | PLUG  | 1 | 40 498 062 | | | | |
| 110A | PLUG  | 1 | 40 500 062 | | | | |
| 111 | PLUG SEAL  | 1 | 40 700 160 | | | | |
| 227 | WASHER  | 4 | 93505.009 | | | | |
| 242 | WASHER  | 2 | 14 741 015 | | | | |
| 250 | SCREW  | 4 | 40030 046J | | | | |



☎: +33 (0)1 41 08 15 15 🖷 : +33 (0)1 41 08 15 00 💻 : www.pcm.eu

## 3.2 Handling Equipment and Procedure



**To handle the complete pump, refer to the procedure in force and comply with legislation concerning the safety of personnel. Slinging must be performed by trained, qualified personnel in accordance with the instructions given in this manual. Any failure to observe this rule releases PCM from all responsibility.**

Before lifting the pump, ensure that all its components are securely fastened to each other. For small pumps, slinging has not been provided for.



☎: +33 (0)1 41 08 15 15 🖷 : +33 (0)1 41 08 15 00 💻 : www.pcm.eu

## 3.3 Storage Conditions

**A)** In standard PCM packaging

. Pumps and pump parts must be stored in their original packaging, in a stable position, protected from impact, and in a dry location.

**B)** After unwrapping

. Protect the equipment from impact and from dust.

**C)** Packaged according to S.E.I. 4c

Every six months,

. Replace the desiccant pouches,

. Check the machined surfaces and grease them if necessary.

NOTE: Once a month, run the pump 4 or 5 revolutions with the motor fan.

## 3.4 Preventive Maintenance



**All maintenance procedures must be performed by trained, qualified personnel in compliance with the instructions given in this manual.**

**Any failure to observe this rule releases PCM from all responsibility.**

**Before performing any servicing on the pump, please check that all necessary precautions have been taken: pump switched off, upstream and downstream valves closed, pipes cleaned and purged, electrical power supply disconnected and made inaccessible. All the usual precautions must be taken, in accordance with the texts in force regarding the safety of personnel.**

### 3.4.1 Periodic Inspection

For operation eight hours per day, five days per week:

_ Complete leaktightness of the pump: Once a week.

_ Tightness of the assembly mounting hardware (port, stator, body, spacer, drive): Once a month.

_ Level of lubricant in the drive, if applicable: Once a month.

_ Anchoring: Once a year.

_ Motor current and cleanliness of drive ventilation grille: Once a month.

_ Condition of power supply electrical cable sheaths: Once a year.

### 3.4.2 Lubrication

The pump drive is supplied with oil. Check the oil level before putting the pump in service.

Consult the manufacturer documentation supplied in Appendix for the precautions to be taken when lubricating the drive, where applicable.



☎: +33 (0)1 41 08 15 15 🖷 : +33 (0)1 41 08 15 00 💻 : www.pcm.eu

The following table indicates the recommended lubricants to be used when servicing the pump:

| Component to be lubricated | Recommended lubricants | Supplier |
|---|---|---|
| Connection between reduction gear/Control shaft (36) | GERALYN 2 grease | FUCHS LUBRITECH |
| Stator Item 1 (for assembly) | GLYCERINE | |

### 3.4.3 Torque

The general torque values for the mounting hardware are given in the following table:

| Diameter of mounting hardware | Min. torque | Max. torque |
|---|---|---|
| M4 | 0.9 Nm | 1.6 Nm |
| M5 | 1.8 Nm | 3.3 Nm |
| M6 | 3.1 Nm | 5.6 Nm |
| M8 | 7.4 Nm | 13 Nm |
| M10 | 15 Nm | 27 Nm |
| M12 | 30 Nm | 45 Nm |
| M14 | 52 Nm | 74 Nm |
| M16 | 61 Nm | 110 Nm |

### 3.4.4 Specialist Tools

No specialist tools.


☎: +33 (0)1 41 08 15 15 🖷 : +33 (0)1 41 08 15 00 🖳 : www.pcm.eu

## 3.5 Corrective Maintenance

### 3.5.1 Troubleshooting

| | Incident | | | | | | | | | | | | | |
|---|---|---|---|---|---|---|---|---|---|---|---|---|---|---|
| **Causes** | The pump does not start. | Pump no longer delivers | Pump does not prime itself. | Pump stops running. | Flow rate too low | Insufficient discharge pressure | Drive is overloaded | Pump is noisy or vibrates | Leak in shaft seal | Premature stator wear | Premature rotor wear | Flow rate is not constant | Joints deteriorate quickly | Solutions (see paragraph 3.5.1.1) |
| The stator is swollen. | x | | | x | | | x | | | x | | | x | **1** |
| Rotor drive system is broken. | x | x | x | x | | | | | | | | | | **2** |
| Product temperature is too high. | x | | x | x | x | x | x | x | | x | x | | x | **3** |
| Sedimentation or precipitation of the fluid in the pump body | x | x | x | x | | | x | x | | x | x | | x | **4** |
| The solid bodies contained in the liquid are too voluminous. | x | x | | x | | | x | | | x | x | | x | **5** |
| The electrical installation is not compliant. | x | | | x | x | x | x | | | | | x | | **6** |
| The devices driving the pump are worn or broken. | x | x | x | x | x | x | | x | | | | x | | **7** |
| Pump is blocked by a foreign body. | x | x | | x | | | x | | | x | x | | x | **8** |
| The stator has become hard and brittle. | | x | x | | x | x | x | x | | x | x | | x | **9** |
| The stator is sectioned at its rim. | | | x | | x | x | | | | | | | | **10** |
| The stator is worn. | | x | x | | x | x | | x | | x | | | | **11** |
| The rotor is worn. | | x | x | | x | x | | x | | x | | | | **12** |
| Leak in mechanical seal. | | | x | | | | | | x | | | | | **13** |
| Incorrect direction of rotation. | | | x | | | x | | | | | | | | **14** |
| Product temperature is lower than expected. | | x | x | | x | x | | | | | | | | **15** |
| Net positive suction head is too low NPSHd<NPSHr | | x | | | x | x | | x | | x | x | x | x | **16** |
| The pump suction is aspirating air. | | x | | | x | x | | | | x | | x | | **17** |
| Speed of rotation is too low. | | x | | | x | x | | | | | | | | **18** |
| Pump installation location, pipework and accessories should all be checked. | x | x | | x | x | | x | x | | x | | x | x | **19** |
| The pump is running dry. | | x | x | | | | | x | | x | | | | **20** |
| Viscosity of the pumped product is higher than expected. | | x | | x | x | | x | | | | | | | **21** |
| Pressure at discharge is too high. | x | x | | x | x | | x | x | | x | x | | x | **22** |
| Speed of rotation is too high. | | | | | | | x | x | | x | x | | x | **23** |
| For a new pump or new stator: excessive static tightening. | x | | | | | | x | | | | | | | **24** |
| Shaft is damaged (according to model). | | x | x | | x | x | | | x | | | x | | **25** |
| The roller bearings are worn (according to model). | | | | | | | | x | x | | | | | **26** |
| Stability of pump motor unit (according to model). | | | | | | | | x | | | | | | **27** |



☎: +33 (0)1 41 08 15 15 🖷 : +33 (0)1 41 08 15 00 💻 : www.pcm.eu

### 3.5.1.1 Solutions

1) The stator material swells when in contact with the product being pumped. Check that the material and the product are those specified in the order. If necessary, contact **PCM Services.**

2) Determine the cause of failure by checking points 1, 3, 4, 5, 8, 22, and 23, and then replace the damaged parts.

3) The operating temperature limit is defined according to the stator material.

4) Clean the pump body and rinse the pump after each use.

5) Remove these bodies using a strainer, or consult **PCM Services** about obtaining another pump.

6) Check the network voltage, motor connections, circuit breaker calibration, and number of phases.

7) Replace defective parts and check the load on the drive.

8) Disassemble the pump, clean it, and replace any defective components.

9) Check that the temperature is not higher than initially planned and that the product being pumped is the intended product. For any change of parameters, consult **PCM Services** to determine a different pump construction.

10) This type of damage is typically caused by an overpressure. Consult **PCM Services.**

11) Replace the stator and check the condition of the rotor.

12) Determine the cause of the wear: abrasion, corrosion, cavitation; consult **PCM Services** to define a new rotor material if necessary, and install the new part.

13) Remove the mechanical seal and replace it with a new one.

14) Change the electrical connections.

15) Contact **PCM Services**, who will recommend a tighter stator.

16) Reduce head loss in the suction pipe, lower the temperature, and raise the suction level.

17) Check the installation for leaks.

18) Consult **PCM Services** to determine the best way to increase the speed.

19) Check all pipes for obstruction by a foreign body, for a defective valve, for a continuous leak: improperly sealed valve, leaky poppet, etc.

20) Re-arrange the overall layout of the installation, or provide a dry running protection system.

21) For any viscosity change, consult **PCM Services** who will re-calculate the parameters.

22) Measure the pressure using a pressure gauge, and compare it to the pressure stated in the technical description.

23) Consult **PCM Services** to determine the best way to decrease the speed.

24) Fill the pump, and rotate the motor screw about ten revolutions by hand.

25) Replace the shaft and the mechanical seal.

26) Remove the bearing or reduction gear, and replace the roller bearings and seals.

27) Adjust the feet or check the mountings.



☎: +33 (0)1 41 08 15 15 🖷 : +33 (0)1 41 08 15 00 💻 : www.pcm.eu

### 3.5.2 Pump Disassembly (see diagram in Section 3: Maintenance)

**Before performing any servicing on the pump, please check that all necessary precautions have been taken: upstream and downstream valves closed, pipework cleaned and purged, electrical power supply disconnected, and all the usual steps to be applied according to the personnel safety regulations in force.**

## DISASSEMBLY CHART

### 3.5.2.1 Disassembling the Pump on the Operating Site

Obey the instructions given in Para. 3.5.2.
Drain the pump by removing the plug, Item 110 A.
Remove the pump from the installation and isolate it from the electrical circuit whilst identifying the motor connections (to obtain the correct direction of rotation after reassembly).

### 3.5.2.2 Removing the Stator Item 1

Drain the pump by removing the plug, Item 110 A.
Withdraw the removable component of the pipework on the stator port side, Item 54.
Disconnect the screws, nuts, and washer, Items 102/104/107.
Remove the port, Item 54, from the stator, Item 1.
Remove the motor cowl.
Extract the stator, Item 1, by using a spanner to rotate the drive shaft.

**Check the condition of the stator.**



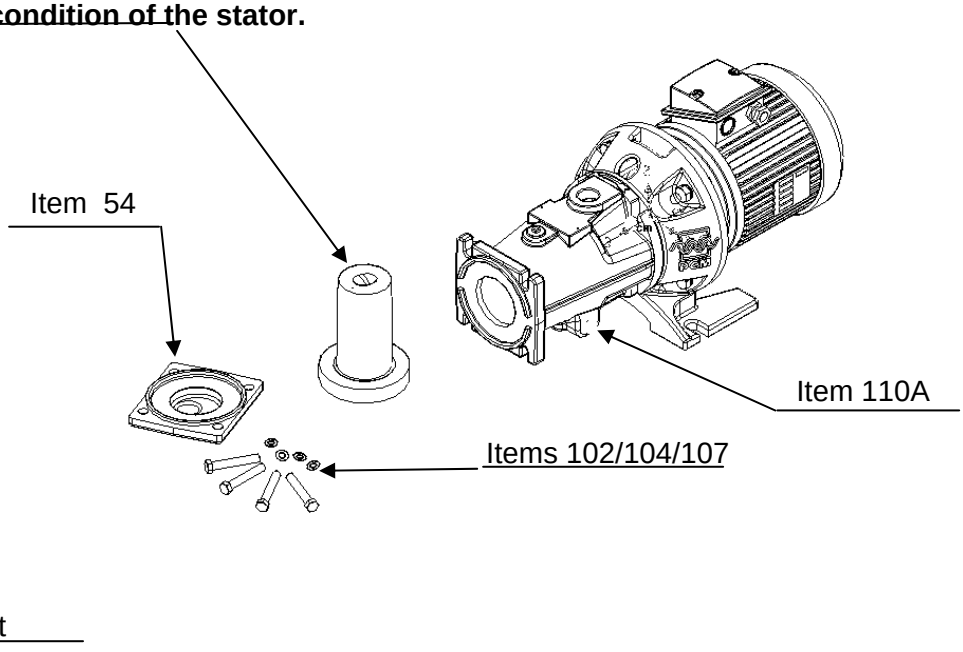



☎: +33 (0)1 41 08 15 15 🖷 : +33 (0)1 41 08 15 00 💻 : www.pcm.eu

### 3.5.2.3 Disassembling the Shafting, Item 20/11

Perform the steps listed in Para. 3.5.2.2.
Use appropriate means to support the motor unit.
Remove the four screws and washers, Item 102A/104A, securing the spacer Item 88 to the body Item 50.
Remove the body, Item 50.

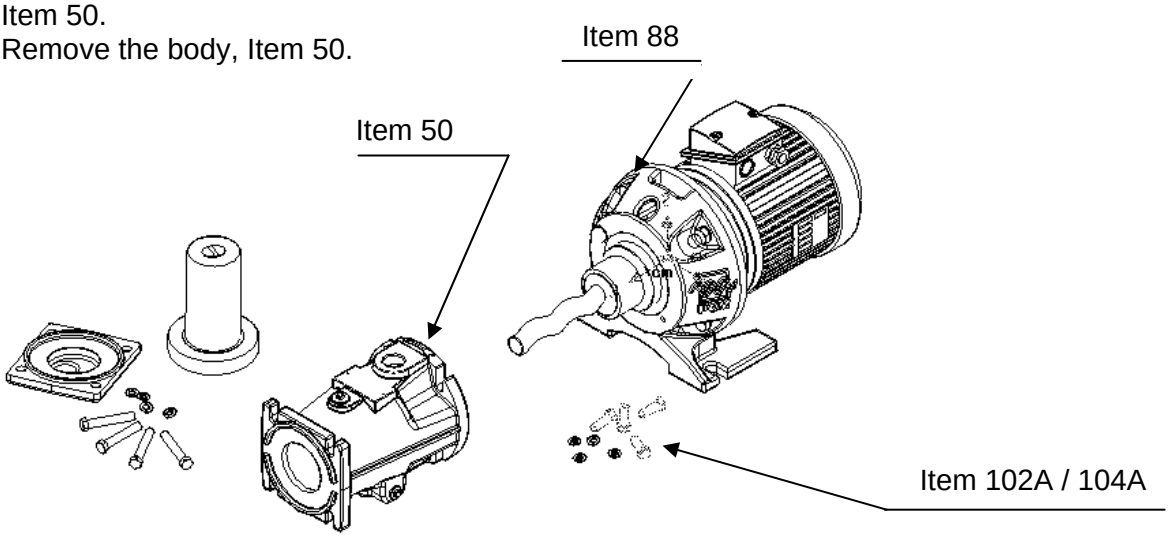


Use a strap wrench to turn the pin, Item 11, whilst immobilising the drive shaft in order to free the shafting, Item 20/11, from the reduction gear outlet shaft.
Isolate the shafting, Item 20/11, and place it in a safe location, protected from impacts.
It is recommended that you check the condition of the seals, Items 13 and 90, and if necessary replace them during reassembly.

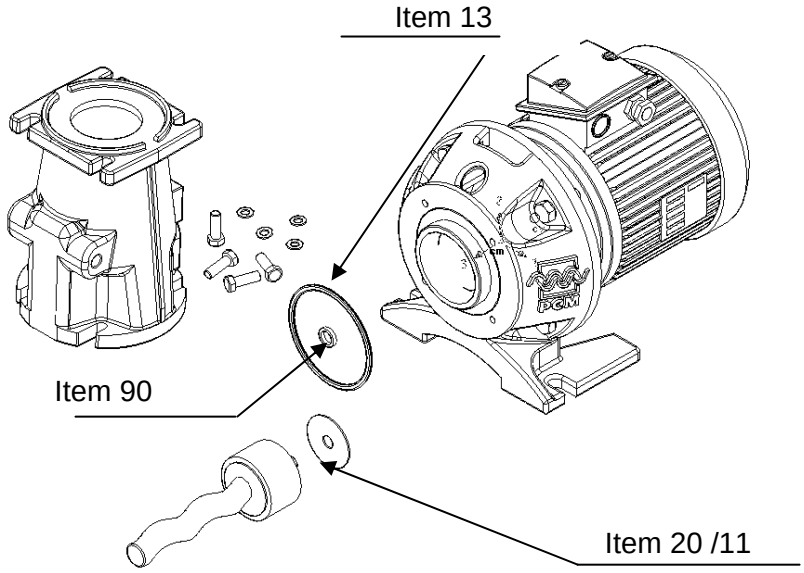



☎: +33 (0)1 41 08 15 15 🖷 : +33 (0)1 41 08 15 00 🖳 : www.pcm.eu

**Caution! During reassembly, coat the bore of the control shaft that receives the reduction gear output shaft with grease before reinstalling the collet.**

### 3.5.2.4 Removal of Rotor Assembly Item 20 and Pin Item 11

Perform the steps listed in Para. 3.5.2.2.
Perform the steps listed in Para. 3.5.2.3.

Using the plats at the end of the rotor, loosen the pin Item 11 with the strap wrench.
It is recommended that you check the condition of the seal, Item 90, and if necessary replace it during reassembly.

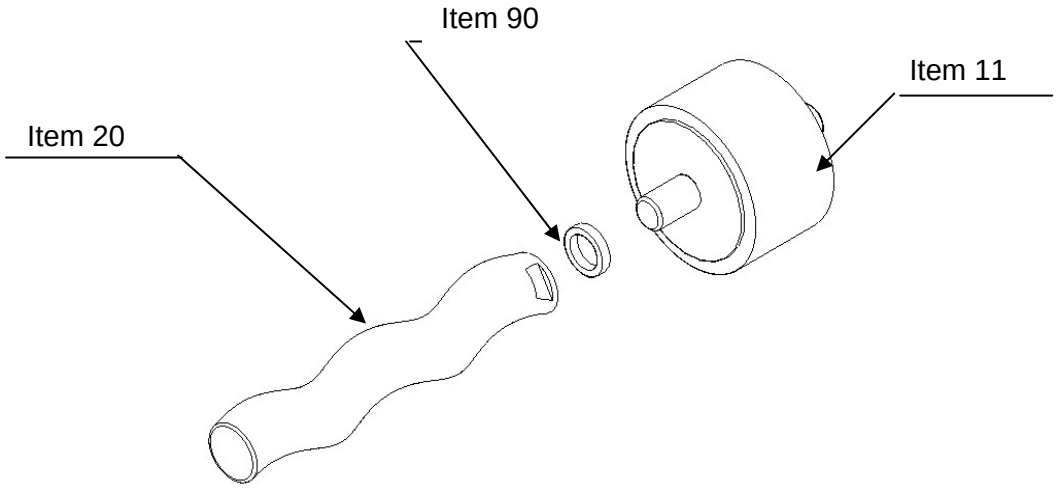


### 3.5.2.5 Disassembly of Mechanical Seal, Item 16/17

Perform the steps listed in Para. 3.5.2.2.
Perform the steps listed in Para. 3.5.2.3.
Slide the rotating part, Item 16, of the mechanical seal on the control shaft,
Item 36, by handling the bellows and the spring only.
Remove the seal support, Item 57, from the spacer, Item 88.
Press on the rear face of the counter-bearing, Item 17, and extract it from the seal support, Item 57.

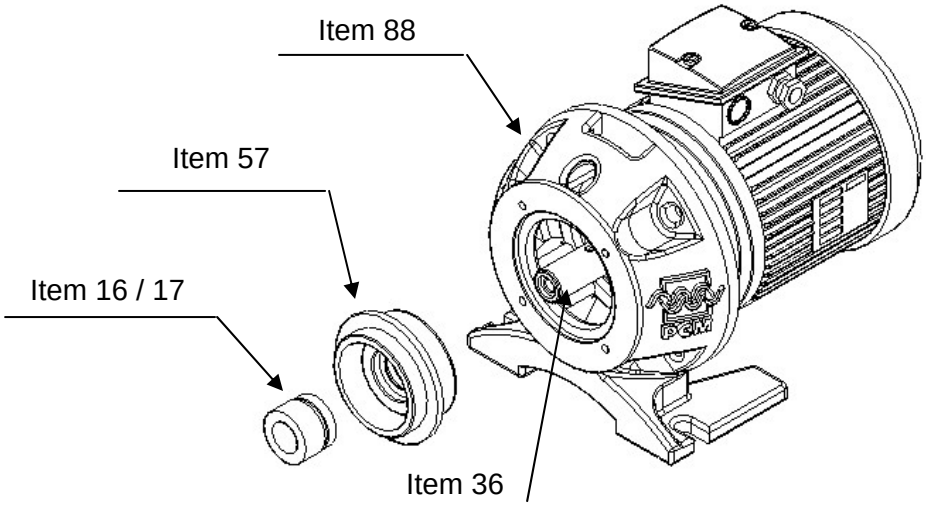



☎: +33 (0)1 41 08 15 15 🖷 : +33 (0)1 41 08 15 00 💻 : www.pcm.eu

### 3.5.2.6 Removing the Shaft

First, de-couple the spacer, Item 88, from the drive system by removing the screws, washers, and nuts Items 250/227/107.

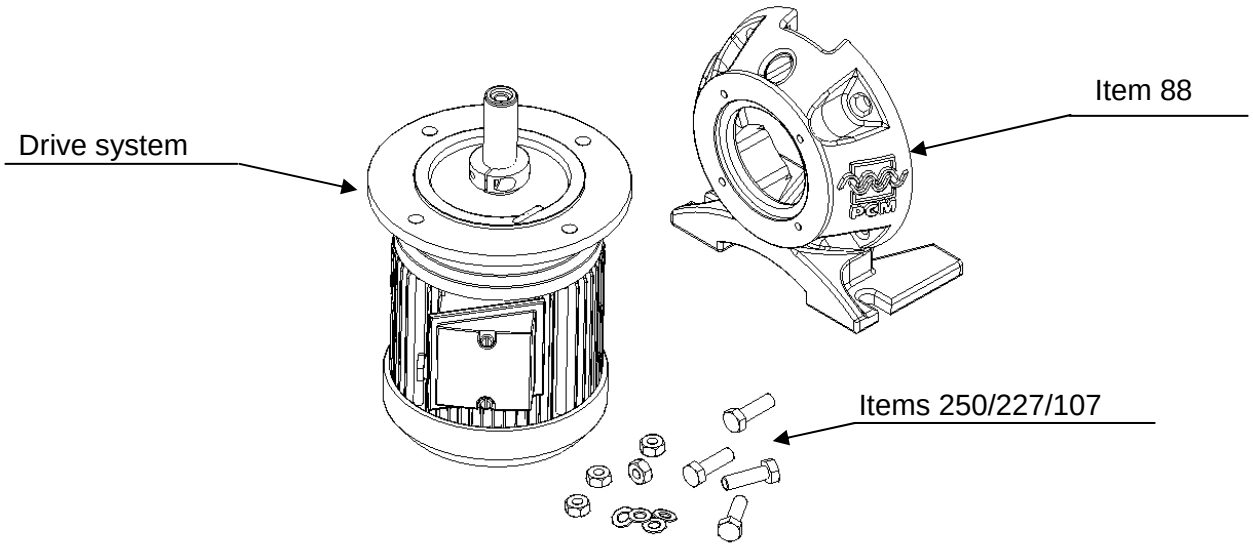


Next, loosen the shaft ring, Item 34, and slide the control shaft, Item 36.

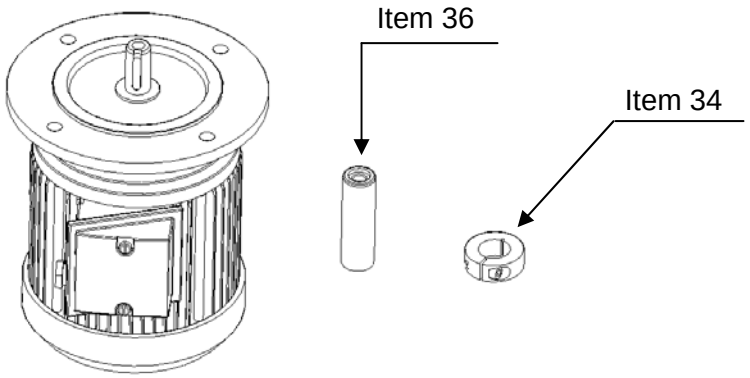



☎: +33 (0)1 41 08 15 15 🖷 : +33 (0)1 41 08 15 00 💻 : www.pcm.eu

### 3.5.3 Pump Reassembly (see diagram in Section 3: Maintenance)

**To preserve optimum operating characteristics for the pump, it is essential to use original PCM parts only. Pump maintenance must be performed by qualified personnel only, in compliance with the recommendations in force.**

## REASSEMBLY

#### 3.5.3.1 Reinstalling the Shaft, Item 36, and Collet, Item 34

**Caution! During reassembly, coat the bore of the shaft, Item 36, that receives the motor output shaft with grease before reinstalling the collet, Item 34 (see Para. 3.4.2).**

Slide the shaft, Item 36, on the drive shaft.

Tighten the screw of the collet, Item 34 (see Para. 3.4.3).

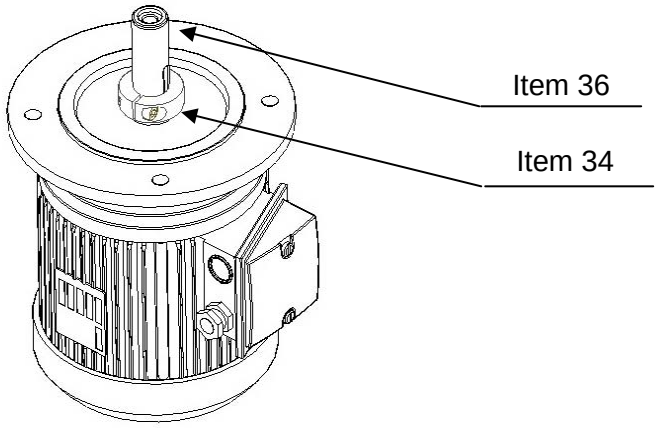



☎: +33 (0)1 41 08 15 15 🖷 : +33 (0)1 41 08 15 00 💻 : www.pcm.eu

### 3.5.3.2 Reinstalling the Spacer

Perform the steps listed in Para. 3.5.3.1.
Install the spacer, Item 88, using fasteners, Items 250/227/107.
Centre the spacer, Item 88, on the reduction gear flange, and position the opening at the bottom.
Tighten to the appropriate torque (see Para. 3.4.3).

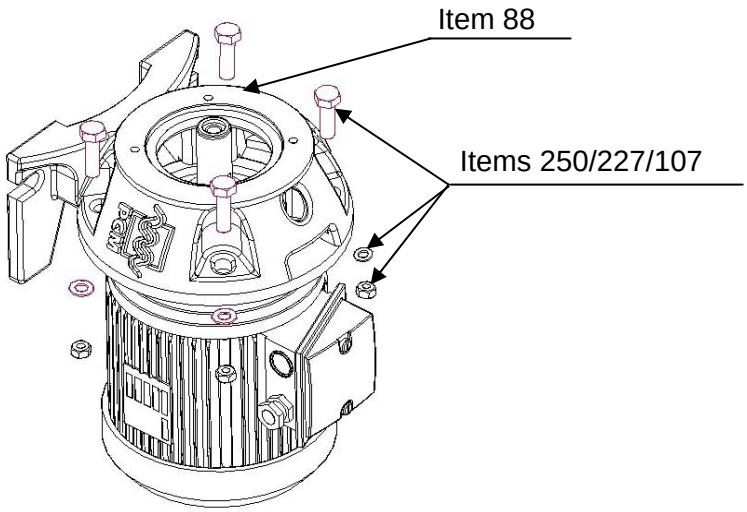


### 3.5.3.3 Reassembly of Mechanical Seal, Item 16/17

Perform the steps listed in Para. 3.5.3.1.
Perform the steps listed in Para. 3.5.3.2.

**The parts that receive the mechanical seal must be clean and free of defects.**

**During storage, never place the bearing and counter-bearing on the bearing surface without a protective foil.**

**Ensure that installation is performed under conditions of strict cleanliness.**

**During assembly, never force a part into position.**

**Never use oil or grease during assembly.**


☎: +33 (0)1 41 08 15 15 🖷 : +33 (0)1 41 08 15 00 💻 : www.pcm.eu

Slowly and steadily push the counter-bearing Item 17 into the housing of its support Item 57.
Place the rotating unit (spring unit) Item 16 on the control shaft Item 36 by turning it slightly clockwise. To reduce friction during assembly, the elastomer bellows and the output shaft must be moistened using low surface tension water (i.e. water with a rinsing agent added), or with a rinsing agent alone.
Eliminate scratches from the bearing surfaces using ethyl alcohol and cellulose cloths (no fabrics, no rags!).
After that, do not touch the bearing surfaces with your bare fingers.

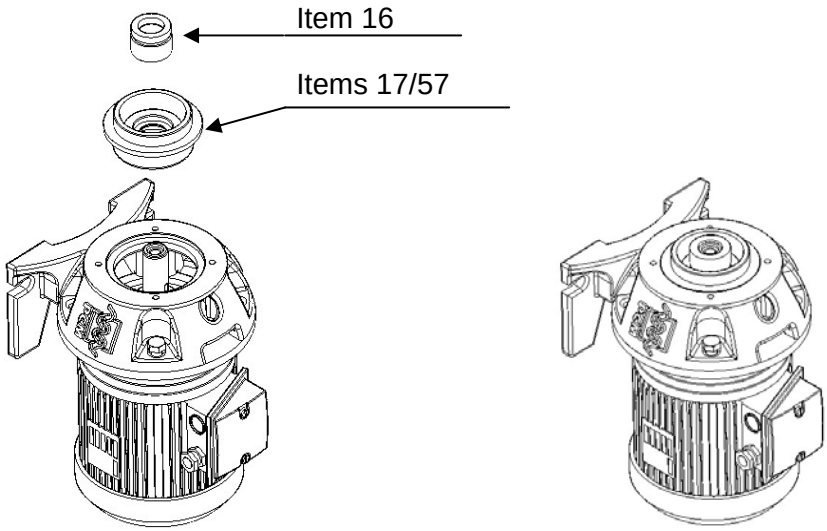


### 3.5.3.4 Reassembling the Shafting, Item 20/11

Perform the steps listed in Para. 3.5.3.1.
Perform the steps listed in Para. 3.5.3.2.
Perform the steps listed in Para. 3.5.3.3.
Ensure that the seal, Item 90, is located on the shaft, Item 36.
Tighten the pin, Item 11, coated with Freinfilet® thread locking compound (see Para. 3.4.2) with the washer, Item 242, on
the shaft, Item 36.

Tighten to the appropriate torque (see Para. 3.4.3).

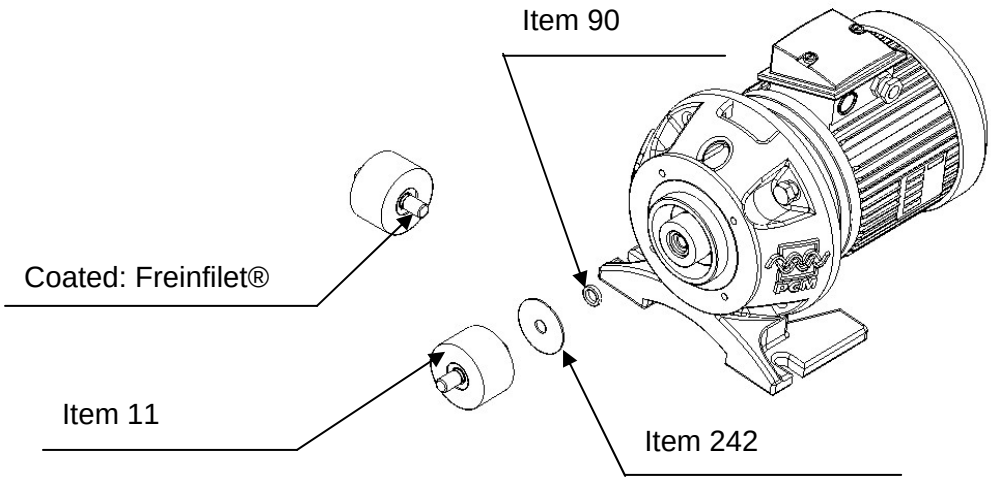



☎: +33 (0)1 41 08 15 15 🖷 : +33 (0)1 41 08 15 00 💻 : www.pcm.eu

### 3.5.3.5 Reinstalling the Rotor

Perform the steps listed in Para. 3.5.3.1.
Perform the steps listed in Para. 3.5.3.2.
Perform the steps listed in Para. 3.5.3.3.
Perform the steps listed in Para. 3.5.3.4.
Check that the seal, Item 90, is present.
Tighten the rotor, Item 20, coated with Freinfilet® (see Para. 3.4.2) with the washer, Item 242, on the pin, Item 11, whilst immobilising the drive shaft.



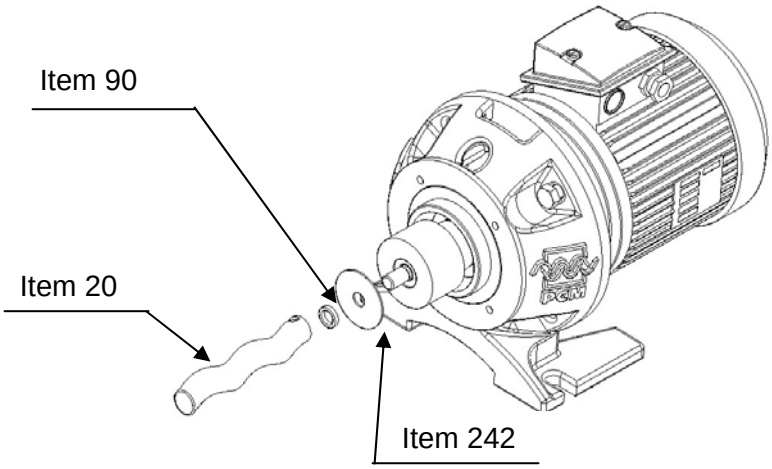


**Tighten to the appropriate torque (see Para. 3.4.3).**

### 3.5.3.6 Reinstalling the Body Item 50 and Stator Item 1

Perform the steps listed in Para. 3.5.3.1.
Perform the steps listed in Para. 3.5.3.2.
Perform the steps listed in Para. 3.5.3.3.
Perform the steps listed in Para. 3.5.3.4.
Perform the steps listed in Para. 3.5.3.5.
Reinstall the body using the fasteners.

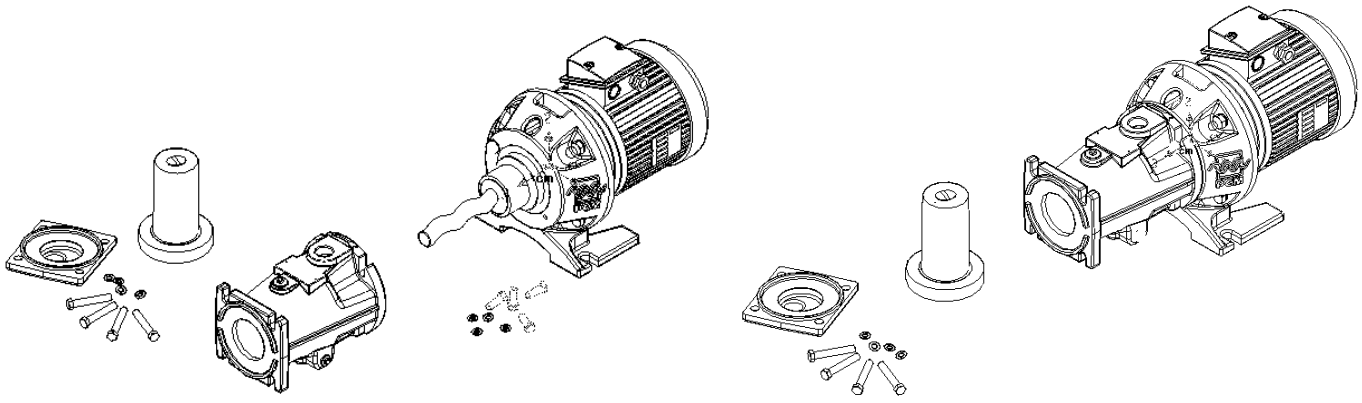

Lubricate the stator (see Para. 3.4.2).
Install the stator.
Position the port, Item 54, at the end of the stator, Item 1.
Lock the assembly using the screws, nuts, and washers.

**Tighten to the appropriate torque (see Para. 3.4.3).**

Reinstall the motor cowl.


☎: +33 (0)1 41 08 15 15 🖷 : +33 (0)1 41 08 15 00 💻 : www.pcm.eu

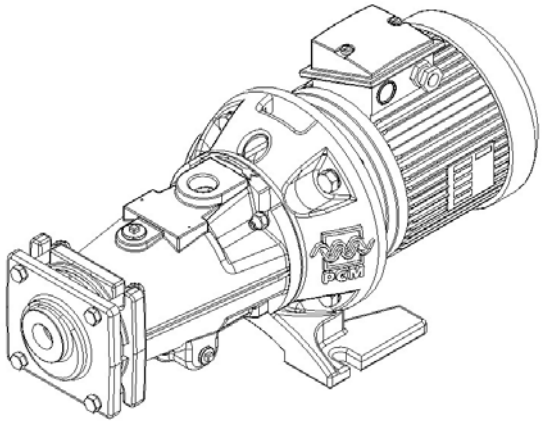

### 3.5.3.7 Reinstalling the Pump on the Operating Site

Place the pump in position, seal the connectors according to type, and connect the motor (refer to all of Section 1.3).
Familiarise yourself with the characteristics of the product in order to take all necessary precautions concerning the safety of personnel.
Apply the start-up instructions (see Para. 2.1.1, and then 2.1.2 and 2.2.1).

## 3.6 Storing the Equipment when not in Use

Proceed as follows:

– Release the suction and discharge pressures.

– Drain the pipework and the pump.

– Clean the pipework and pump using a product that is compatible with the product to be pumped and the pump materials.

– For a better cleaning result, run the pump.

– Shut down the pump.

– Isolate the pump from the rest of the circuit.

### 3.6.1 Preserving the Rubber Components

We recommend that you store all rubber parts in a cool location, away from light to avoid damage by UV rays.

## 3.7 Accessories

Special instructions supplied in Appendix.



☎: +33 (0)1 41 08 15 15 🖷 : +33 (0)1 41 08 15 00 💻 : www.pcm.eu

# 4. APPENDICES

Technical description
Accessories (optional)
Automatic control (optional)
Risk prevention.


☎: +33 (0)1 41 08 15 15 🖷 : +33 (0)1 41 08 15 00 💻 : www.pcm.eu

# RISK PREVENTION
## PCM EQUIPMENT RETURN

**COMPANY USING THE EQUIPMENT**
**……..**
**……**
**……**

**ACTIVITY ……..……**

**Equipment Part No. …….**

**Is the equipment liable to present any particular risks by being used?** **yes ☐** **no ☐**

CHEMICAL RISKS yes ☐ no ☐

| Product or Substance | Mode of Contamination | Prevention |
|---|---|---|
| | | |

BIOLOGICAL RISKS yes ☐ no ☐

| Biological Agents | Mode of Contamination | Prevention |
|---|---|---|
| | | |


☎: +33 (0)1 41 08 15 15 🖷 : +33 (0)1 41 08 15 00 💻 : www.pcm.eu

# ACCUDRAW® PVC Calibration Instructions

***Note: Before starting either of the calibration procedures below, ensure that the pump is primed and void of any trapped air.***

**Using the USGPH scale:** (scale is based on **time**, in one (1) minute volume discharge)

1. Fill the calibration to the top "0" mark on the USGPH scale.
2. Close isolation valve (#2) from supply tank, open isolation valve (#1) below cylinder and start the pump.
3. Use a stopwatch to measure the time of one (1) minute (60 seconds) and record the volume dispensed by the metering pump, using the draw down scale.
4. Adjust the pump volume control higher or lower to meet with your desired output.
5. Repeat above steps 1 through 4, until the desired output is met.
6. Divide the measured USGPH number by 60 to determine the **USGPM volume**, if required.

If you wish to shorten the time of dispensing for calibration by one half (1/2) or one quarter (1/4), you must multiply the measured volume by the same number used to divide the time by.

e.g. 10 USGPH in 1 minute equals
5 USGPH X 2 in 30 seconds or
2.5 USGPH X 4 in 15 seconds

**Using the ml scale:** (scale is based on **volume** pumped, over any given time)

1. Fill the calibration cylinder to the top "0" mark on the ml scale.
2. Close isolation valve (#2) from supply tank, open isolation valve (#1) below cylinder and start the pump.
3. Use a stopwatch to measure the time it takes to pump down a given volume (ml) in 60 seconds.
4. Multiply the volume by 60 to determine the **ml per hour** volume, if required.
5. Adjust the pump volume control higher or lower to meet with your desired output.
6. Repeat above steps 1 through 5, until the desired output is met.

If you wish to shorten the time of dispensing for calibration by one half (1/2) or one quarter (1/4), you must multiply the volume by the same number used to divide the time by to determine ml per minute or hour.

e.g. 100 ml in 60 seconds equals
50 ml X 2 in 30 seconds or
25 ml X 4 in 15 seconds

## Typical Installations ("A" and "B")

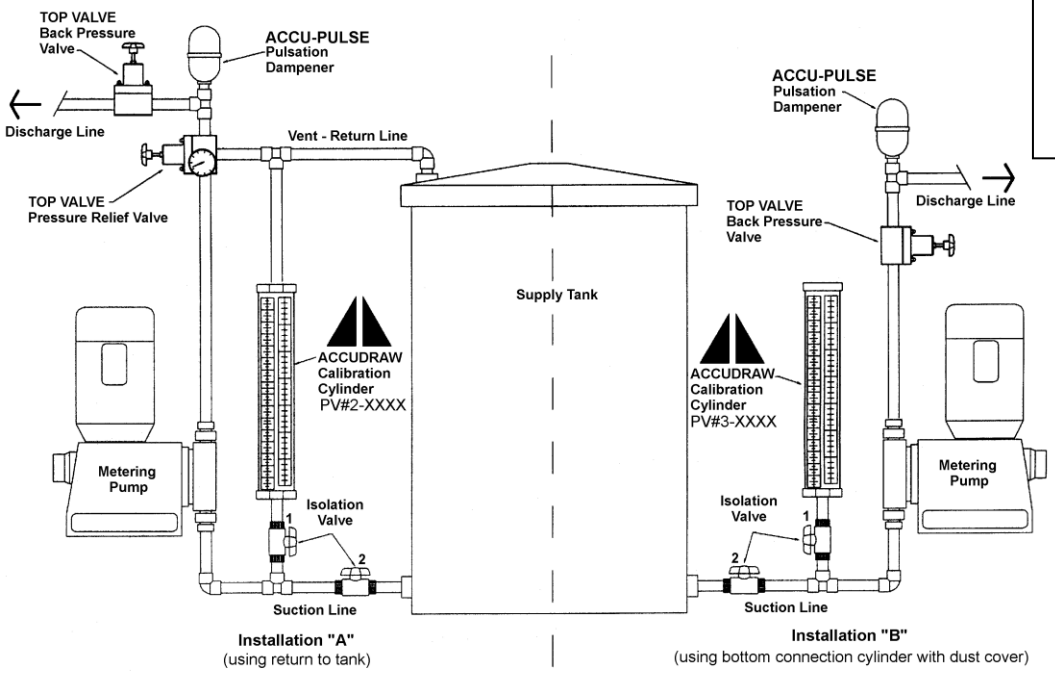


**Conversion Factors**
1ml = 1 cc
1000 ml – 1 liter
ml/sec x 60 = ml/min
1 US gal/min x 0.063 = liters/sec
1 US gal = 3.786 liters

**Caution:**
Do not use as a Pressure Vessel.


**PRIMARY FLUID SYSTEMS INC.**

**Call Toll Free 1-800-776-6580**
**Tel: (905) 333-8743 Fax: (905) 333-8746**

***E-Mail: primary@ primaryfluid.com***
***www.primaryfluid.com***


***® Registered Trade Mark of Primary Fluid Systems Inc.***

# Metering Pump Accessories Save $$$$

## *Prevent unsafe and inefficient systems by design.*

### **ACCUDRAW** Calibration Cylinders

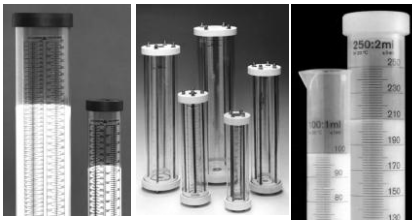

**PVC** **Glass** **Poly**

- *PVC, glass, polypropylene*
- *translucent, chemical resistant*
- *coloured graduations and lettering*
- *threaded or socket connections*
- *standard sizes 100 ml to 20,000 ml*

***Custom built in other sizes and materials.***

### **TOP VALVE** Back Pressure/Pressure Relief



- *long life diaphragm*
- *range of 0 – 150 PSIG*
- *air release, optional gauge port*
- *PVC, CPVC, PVDF, PTFE, polypropylene, stainless, Alloy 20 and Hastelloy C*
- *7 sizes ¼" – 2" NPT*
- *colour coded handles indicate size*

***Designed to enhance the <u>accuracy</u> and <u>safety</u> of your metering pumps.***

### **ACCU-PULSE**
Pulsation Dampeners



***Designed to remove pulsating flows from positive displacement pumps.***

- *increase system efficiency and pump life*
- *decrease maintenance and costs*
- *protect pipes, meters, valves and instrumentation from pulsation and vibration*
- *ensure meter accuracy, longevity and repeatability*
- *prevent foaming and splashing*
- *extensive range of materials and sizes*
- *lightweight, compact design*

### Typical Metering Pump System

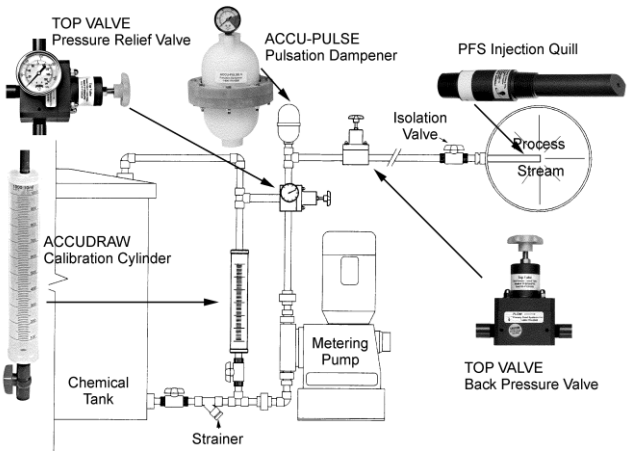


***AutoCad drawings available from our web site.***
***Visit www.primaryfluid.com***

### PFS Injection Quills



***Designed to inject chemical into the center stream of process.***

- *provides for a more homogenous mix in the pipeline*
- *built-in checks to prevent back siphoning*
- *2 sizes 6" and 8" length*
- *½" or ¾" NPT, BPST, or Flg'd Conn.*
- *PVC, CPVC, PVDF, polypropylene, Stainless, Hastelloy C & Titanium*
- *pressure to 3000 PSIG*
- *temperature to 260°C (500°F)*

***Custom built in other sizes and materials.***

### Accu-Vent

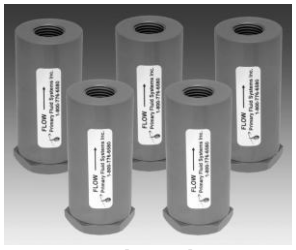

***Designed to automatically vent gases and vapours.***

- *vents gases and vapors released from Sodium Hypochlorite, Sulfuric Acid & Hydrogen Peroxide*
- *CPVC (Corzan) and Viton corrosion resistant wetted materials of construction*
- *specially designed float material automatically vents built up gases on system start up and under working pressure*
- *standard 1/2" or 3/4" NPT threaded connections or optional socket weld*
- *available in other materials*

### PFS Corporation Stops



***Designed to inject chemical into the center stream of process.***

- *isolation valve allows for ease of maintenance*
- *available in 6 materials of construction*
- *wetted components have comparable or greater chemical resistance than quill construction material*
- *standard and custom lengths available*
- *connection in NPT, metric or flanged*

***Custom built in other sizes & materials.***

**Call Toll Free 1-800-776-6580**
**Tel: (905) 333-8743 Fax: (905) 333-8746**

# *Technical Sheet*

***WWW.POMPESCP.COM***

| | | | |
|---|---|---|---|
| ***Client:*** | ***ASDR*** | ***Assembly serial number:*** | ***0193*** |
| ***Quotation:*** | ***PP-204196*** | ***Drawing number :*** | ***341-PVC-1450*** |
| Mounting type: box ☒ wall ☐ | | Pump model: **PCM 1M6F** | |
| With door ☒ Without door ☐ | | S/N pump 1: H00P450 S/N pump 2: H00P451 | |
| Simplex ☐ Duplex ☐ Triplex ☒ Quadruplex ☐ | | S/N pump 3: H00P452 S/N pump 4: | |
| Skid Material: HDPE ☒ SS ☐ | | Pump capacity L/H : 1440 | |
| Skid dimension: 60'' X 64'' X 36'' | | Maximum pressure (PSI): 58.01 | |
| O-ring: Viton ☐ EPDM ☒ Teflon ☐ | | Pump head material: Cast Iron | |
| Relief valve model: TVBP10-PVC | | Valve material: PVC | |
| Back pressure valve model: | | Valve: simple ☒ double ☐ | |
| Valve material: PVC | | Ball type: PTFE | |
| Calibration cylinder model: (PV#2-20000) X 2 | | O-ring: EPDM | |
| Pressure gauge model: GI2.5-160 | | Diaphragm:AG25A50A-PVC-T-M | |
| Piping : PVC ☒ SS ☐ PVDF ☐ CPVC ☐ | | | |
| Piping dimension: ½'' ☐ ¾'' ☐ 1'' ☒ 1 ¼'' ☐ 1 ½'' ☒ 2'' ☐ | | | |

| ***Pressure test and tightness*** | | ***Adjusting valves*** | |
|---|---|---|---|
| Pressure test period, min.: | 10 | Release valve, PSI: | 50 |
| Pressure test, PSI: | 60 | Back pressure valve, PSI: | 50 |

***Signature : _____*** ***Date : _June 03 2021_____***

***3076A, rue Bernard-Pilon, St-Mathieu-de-Beloeil (Qc) J3G 4S5***
***Tél : 450-922-4224 Fax : 450-922-4223***

# TRIPLEX SULFURIC ACID
# 351-CPVC-250

AGNICO EAGLE

**Vendor Document Status**

1 ☐ Proceed to next submission and status.

2 ☐ Proceed with exceptions as noted to next submission and status.

3 ☐ Do not proceed.
Revise as noted and resubmit next submission and status.

4 ☑ Complete, no further submission required.

By: Sébastien Perron, Instrumentation Date: 2021-04-07

Review and authorization to fabricate are only for general conformance with the design concept of the Project as expressed in the Contract Documents. Sole responsibility for the accuracy and completeness of this document, including but not limited to dimensions and quantities, remains with the Supplier/Contractor. Agnico Eagle does not warrant the accuracy or completeness of any of the information contained herein, nor does Agnico Eagle authorize or approve any construction means, methods, techniques, sequences or any safety precautions or procedures.

Agnico Eagle No. 6526-S265-605B-135_TRIPLEX SULFURIC ACID 351-CPVC-250_ WD_R1 R: TRIPLEX SULFURIC ACID 351-CPVC

**DOCUMENT FOR INFORMATION**

**Workshop drawing :**

- ☐ Approuved as is
- ☐ Approuved with correction(s)
- ☐ Rejected

**Approuved by**

Name : _____

Title : _____

Compagnie : _____

Signature : _____

Skid manual valves arrangement to be validated with P&ID drawing.

| | |
|---|---|
| Skid Material: | HDPE |
| dimension L xP xH: | 48" H x 64" W x 24" D |
| Pump model: | RF409-2-180e |
| Pumps L/Hours: | 216 L/H |
| Head material: | PVDF |
| Pressure: | 4 Bars |

**COMPONENT MATERIAL**

| | |
|---|---|
| Plumbing & size: | -Entry CPVC 1" NPT |
| | -Dosing CPVC ¾" NPT |
| Ball valve O ring: | FKM |
| Relief Valve: | TVBP75-CPVC |
| Backpressure valv: | TVBP75-CPVC |
| Calibration Cylinder: | 2x ACS2-4000 |
| Pulsation Dampener: | OPTIONAL |
| Gauge Pressure: | 0-160 PSI |
| Tubing pump connec.: | PTFE |

**DOORS**

| | |
|---|---|
| Door product: | Polycarbonate ⅜" |
| | Stainless steel |
| Bolt & washer: | Stainless steel |

**Pump Identification:**

Pump #1: 65PME68010A
Pump #2: 65PME68010B
Pump #3: 65PME68010C

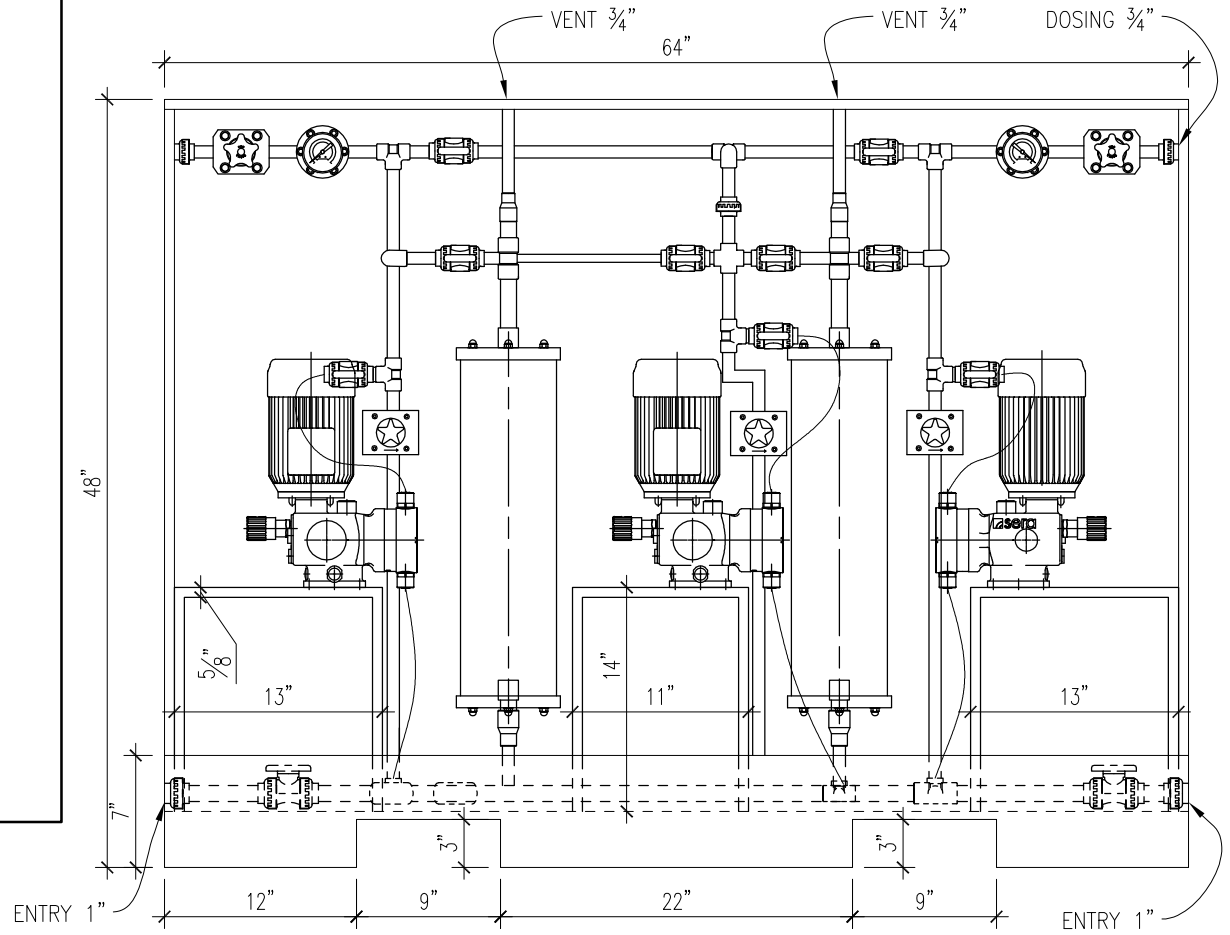


FRONT VIEW

**Notes :**
1. DIMENSIONS ARE IN INCHES
2. DO NOT MEASURE THE DRAWING

PCP Pompes & équipements

| | | | | | | | |
|---|---|---|---|---|---|---|---|
| DREW BY: V.BLUTEAU | TITRE: TRIPLEX SULFURIC ACID 351-CPVC-250 | REV: | DATE: | MODIF.: | APP.: | DATE: 2021/03/11 |
| PURCHASE ORDER: BC21-14244 | | -- | --- | --- | --- | # DESSIN: |
| APP. BY: E. CLERMONT | PROJET: 0193970501 | -- | --- | --- | --- | 1-2 |

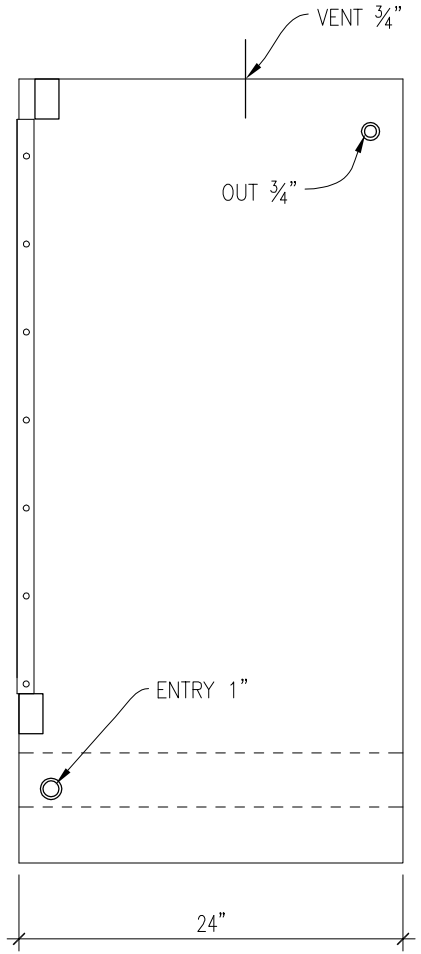


SIDE VIEW

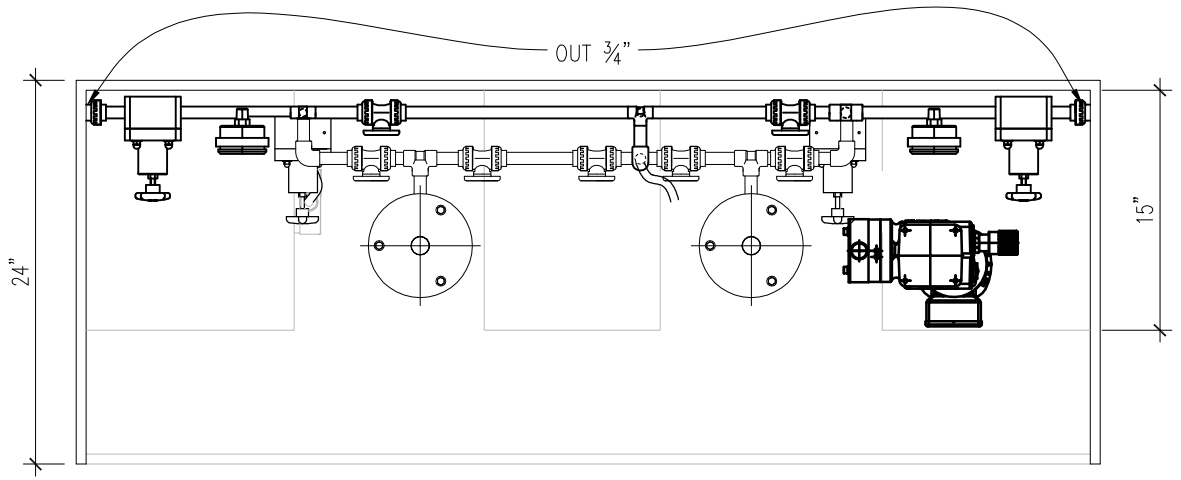


PLAN VIEW

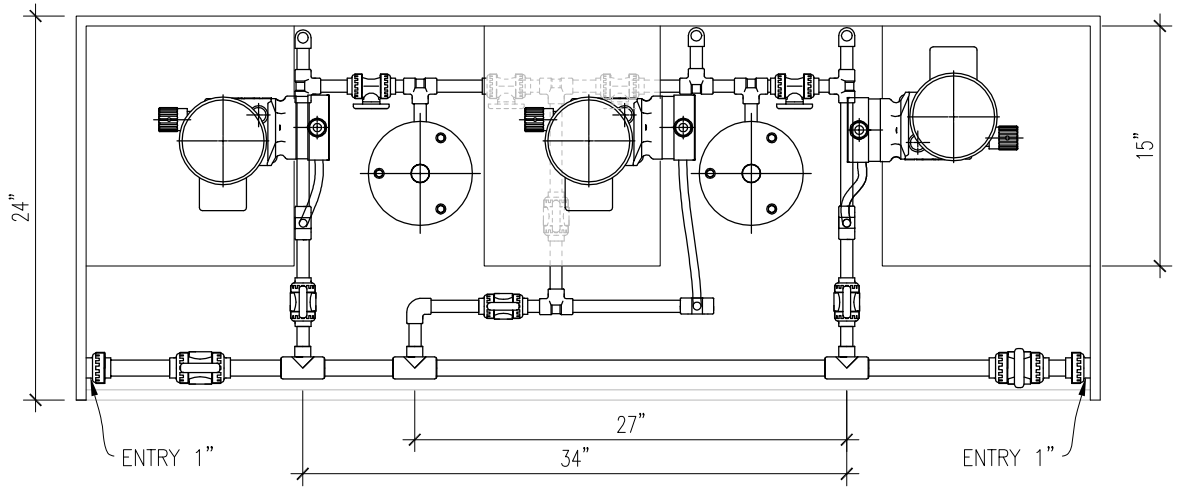


PLAN VIEW (FLOOR)

Notes :
1. DIMENSIONS ARE IN INCHES
2. DO NOT MEASURE THE DRAWING

PCP
Pompes & équipements

| | | | | | | |
|---|---|---|---|---|---|---|
| DREW BY: V.BLUTEAU | TITRE: TRIPLEX SULFURIC ACID 351-CPVC-250 | REV: | DATE: | MODIF.: | APP.: | DATE: 2021/03/11 |
| PURCHASE ORDER: BC21-14244 | | -- | --- | --- | --- | # DESSIN: |
| APP. BY: E. CLERMONT | PROJET: 0193970501 | -- | --- | --- | --- | 2-2 |

# PUMP MODEL RF409-2-180E

## PUMP #1: 65PME68010A
## PUMP #2: 65PME68010B
## PUMP #3: 65PME68010C

**Workshop drawing :**

- □ Approuved as is
- □ Approuved with correction(s)
- □ Rejected

**Approved by**

Name : _____

Title : _____

Compagnie : _____

Signature : _____

Single diaphragm pump : RF409.2-180e
Nominal capacity (QN) : 1 x 0 - 216 l/h at 60Hz
Suction height : 3mWC
Counter pressure (p2max) : 4bar
Nominal stroke frequency (nN) :180 per minute at 60Hz
Pump body : PVDF
Double valves : PVDF
Valve balls : PTFE
Valve seals : FEP covered
Working diaphragm : PTFE
Connections : G3/4
Drive : 3-phase motor
0,43kW, 575V, 60Hz
IP55, insul.cl. F
for converter operation 5 to 60Hz
thermistors
electrical by UL/CSA
Capacity adjustment : manual stroke length adjustment
Painting : sera-standard surface protection

PRODUCT INFORMATION

# SERIES 4
# DIAPHRAGM PUMPS




INSPIRED. SOLUTIONS. FOR CUSTOMERS.

# DIAPHRAGM PUMPS - ALLROUNDERS

**sera** diaphragm pumps are oscillating displacement pumps for dosing liquids. The medium to be pumped is separated from the drive by a diaphragm. This is thus protected from damaging influences of the medium.

They are used everywhere where leak-free and exact dosing is important, such as for aggressive, odorous, abrasive, radioactive, flammable, viscous or toxic media.

Delivery rate adjustment by means of stroke frequency adjustment using external frequency converter and manual stroke length adjustment for optimal adaptation to every requirement.

## APPLICATIONS

- Beverage industry
- Food industry
- Manufacture of paints and varnishes
- Power plants
- Water treatment
- Shipbuilding
- Electroplating
- Textile industry
- Waste water treatment

## AUTOMATIC DELIVERY RATE ADJUSTMENT

- Three-phase motors suitable for frequency converter operation for stroke frequency change using an external frequency converter
- Actuators with position controllers for automatic stroke length change

## OVERVIEW OF ADVANTAGES

- High dosing accuracy
- Long diaphragm service lives
- Linear control characteristics
- Leak-free
- Low-maintenance
- ATEX-compliant versions are available (not in stock)
- Unlimited dry running safety

## OPTIONAL VERSIONS

- Diaphragm monitoring
- Suction height 8 mWC
- Controllable variant (C version)





# VERSIONS

## MATERIALS
The high quality of the materials guarantees reliable continuous operation. The optimum material is available for every requirement.

## PUMP BODY AND VALVES
PVC, PP, PVDF, PP-GFP, PVDF-GFP, 1.4571

## VALVE BALLS
PTFE, 1.4401

## VALVE SEALS
EPDM, FPM, FEP-coated

## DRIVE DIAPHRAGMS
PTFE-coated

## MANUAL VENTILATION VALVE (2,4e)
PP-GFP, PVDF-GFP

## DRIVE
The drive unit in each case consists of a proven motor make, coupled with stroke gearing in a robust case.
**sera** cases are also suitable for the harshest operating conditions. Material thickness and surface treatment even resist chemical attacks.

The flow rate is constant or continuously adjustable. This is done manually by changing the stroke length for the controllable version. The delivery rate can be adjusted automatically using the following options:

- Three-phase motors suitable for frequency converter operation for stroke frequency change using an external frequency converter
- Actuators with position controllers for automatic stroke length change

## SPECIAL VERSIONS
We provide the individual solution for special dosing tasks:
Among other things, pump bodies with special nominal diameters, heating equipment, valves as double valves, with spring loading, with elastic ball seats, rinsing equipment for interval or final rinsing for prevention of deposits in the pump body, attachment of stroke counter, diaphragm rupture monitoring, special materials such as titanium or Hastelloy, design that can be cleaned.

## ACCESSORIES
All necessary accessory parts for the optimal installation of dosing pumps such as pressure relief valves, pressure-maintaining valves, pulsation dampers, dosing valves, dosing tanks, flow monitors etc. can be ordered from us.

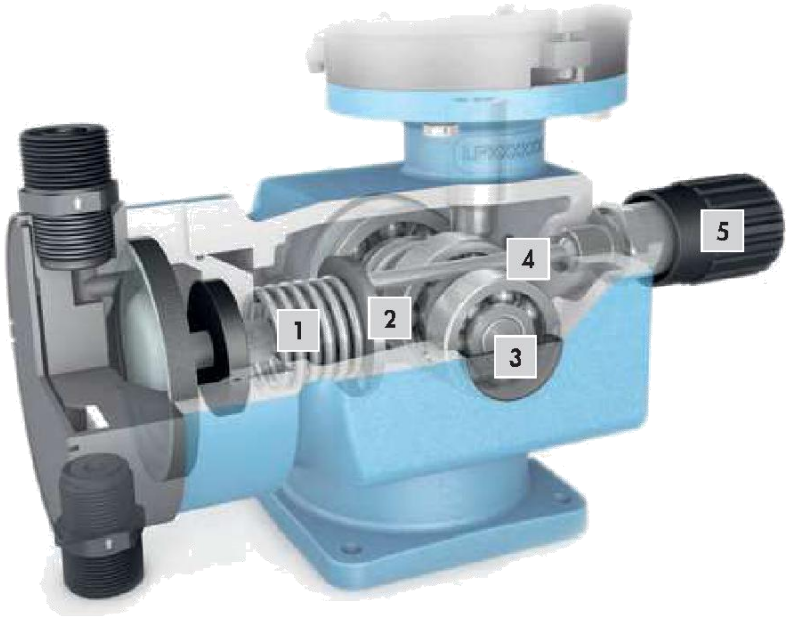


| | |
|---|---|
| 1 | Return spring |
| 2 | Push rod plate |
| 3 | Eccentric shaft |
| 4 | Adjusting spindle |
| 5 | Adjusting wheel |

# TECHNICAL DATA
# DIAPHRAGM PUMP RF409.2 (>50 L/H)

| PUMP DATA (* 8mWS = performance losses of nominal capacity QN of 20-25%) | | | RF 409.2-... | | | | | | | |
|---|---|---|---|---|---|---|---|---|---|---|
| | | | 50e | 75e | 90e | 115e | 140e | 180e | 250e | 350e |
| Permissible pressure $p_{2max.}$ at the pump outlet | bar | | 10 | 10 | 8 | 4 | 8 | 4 | 3 | 3 |
| Nominal capacity QN at $p_{2max.}$ | l/h | 50 Hz | 0-50 | 0-75 | 0-90 | 0-115 | 0-140 | 0-180 | 0-250 | 0-350 |
| | | 60 Hz | 0-60 | 0-90 | 0-108 | 0-138 | 0-168 | 0-216 | 0-300 | – |
| Quantity per stroke | ml/stroke (100%) | | 8,3 | 8,3 | 15,0 | 19,2 | 15,6 | 20,0 | 41,7 | 38,9 |
| Max. suction height | mWC | | 3 (8 *) | | | | | | 3 | |
| Min./max. permissible pressure at the pump inlet | bar | $p_{1min/max}$ | -0,3/0 (-0,8/0) | | | | | | -0,3/0 | |
| Recomm. nominal diameter DN of the connecting pipes | mm | | 10 | 15 | 15 | 15 | 15 | 15 | 15 | 15 |
| **Nominal stroke frequency** | 1/min | 50 Hz | 100 | 150 | 100 | 100 | 150 | 150 | 100 | 150 |
| | | 60 Hz | 120 | 180 | 120 | 120 | 180 | 180 | 120 | – |
| Weight approx. | kg | plastic | 9 | 9 | 11 | 10 | 11 | 10 | 13 | 13 |
| | | stainless steel | 10 | 10 | 13 | 13 | 13 | 13 | 21 | 21 |

| ELECTRICAL DATA | | RF409.2-50e ... RF409.2-350e |
|---|---|---|
| Power consumption | kW | 0,37 |
| Voltage | V | **230/400V 50Hz, 460V 60Hz, 575V60Hz** |
| Frequency | Hz | 50/60 |
| Insulation class | ISO | F |
| Enclosure | IP | 55 |

# CALIBRATION CYLINDERS
# ACS2-4000

**Workshop drawing :**

- □ Approuved as is
- □ Approuved with correction(s)
- □ Rejected

**Approuved by**

Name : _____

Title : _____

Compagnie : _____

Signature : _____

*3076 A, Bernard-Pilon, St-Mathieu de Beloeil, Qc, J3G 4S5  Tél.: (450) 922-4224 /  Fax: (450) 922-4223*

# ACCUDRAW® Calibration Cylinders

***"For Accuracy That Counts"***

***For complete product information visit our website: primaryfluid.com***



Flanged: Glass, PVC



Flanged: PVC

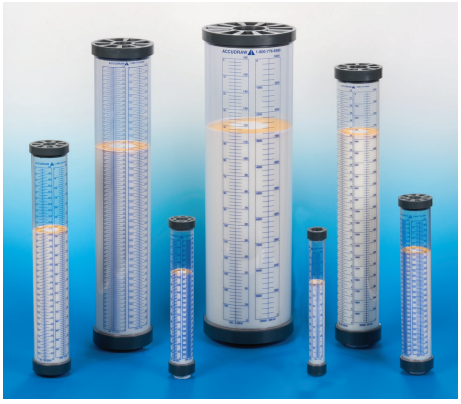

PV#4

## Sizing and Ordering Information:

**ACCUDRAW Standard Materials of Construction**

AC = All polypropylene construction (see below for options)
PV = All polyvinylchloride construction (see below for options)
ACS = Glass*

***Note: Cylinders are NOT pressure vessels***

**Example: AC#1-1000B**

AC = PP (polypropylene)
#1 = Bottom threaded connection only
1000 = 1000 ml
B = BSP Thread

**e.g. Part # AC #1 - 1000 B**

**Type:**
AC = Polypropylene
PV = PVC
ACS = Glass

**Style:**
1 = Bottom threaded conn. only
2 = Top and Bottom threaded conn.
3 = Bottom threaded conn. c/w removable vented dust cap
4 = Top/Bottom threaded conn. c/w removable "O" ring sealed top and float ring level indicator
** **Glass calibration cylinders available in Style 2 only***

**Graduation Scale:**
PP - ml only
PVC - ml and GPH
Glass - ml only

**Std. connection is NPT thread**
**Optional: add suffix as follows**
S = Socket weld connection (PVC only)
GTV = Glass/TFE construction
GKV = Glass/PVDF construction
GCV = Glass/CPVC construction
GSV = Glass/SS construction
B = BSP Thread
F = Flanged

Substitute **E** for **V** for **EPDM** wetted "O" ring seal

| Size: | | | Material | Conn. |
|---|---|---|---|---|
| 100 | = 100 ml | (1.6 GPH) | PP, PVC, Glass | ½" |
| 250 | = 250 ml | (4 GPH) | PP, PVC, Glass | ½" |
| 500 | = 500 ml | (8 GPH) | PP, PVC, Glass | ½" |
| 1000 | = 1000 ml | (16 GPH) | PP, PVC, Glass | ½" |
| 2000 | = 2000 ml | (32 GPH) | PP, PVC, Glass | 1" |
| 4000 | = 4000 ml | (64 GPH) | PP, PVC, Glass | 1" |
| 6000 | = 6000 ml | | Glass only | 2" |
| 8000 | = 8000 ml | | Glass only | 2" |
| 10000 | = 10000 ml | (160 GPH) | PVC, Glass | 2" |
| 15000 | = 15000 ml | (240 GPH) | PVC only | 2" |
| 20000 | = 20000 ml | (320 GPH) | PVC, Glass | 2" |

***Custom sizes and materials available.***

PCP
Pompes & équipements

# RELIEF VALV AND BACK-PRESSURE TVBP75-CPVC

**Workshop drawing :**

- □ Approuved as is
- □ Approuved with correction(s)
- □ Rejected

**Approuved by**

Name : _____

Title : _____

Compagnie : _____

Signature : _____

*3076 A, Bernard-Pilon, St-Mathieu de Beloeil, Qc, J3G 4S5 Tél.: (450) 922-4224 / Fax: (450) 922-4223*

# TOP VALVE *PAT

For detailed product information visit our website: primaryfluid.com

## Back Pressure/Anti-Siphon and Pressure Relief Valves

### Description

This line of diaphragm style, back pressure/anti-siphon and pressure relief valves features a completely adjustable pressure range to 350 PSIG and a built-in air release to reduce priming difficulties. The valves are available in sizes from 1/4" through 2", eight materials of construction, offer a three year warranty and are available with socket weld, flanged or special threaded connections. High temperature to (300°F/149°C) valves are available. *CRN certification available. Please contact factory.*

### Ordering Information

**e.g. Part # TVBP50-S/S-V-S**

**TV - B - P - 50 - S/S - V - S**

**TOP VALVE**

**Valve Type:**
- B = Backpressure
- P = Pressure Relief
- P2 = Pressure Relief (2 port)

**Valve Style or Connection:**

| | |
|---|---|
| P | = Backpressure, FNPT thr'd |
| R | = Pressure Relief, FNPT thr'd |
| FW | = Welded Flange |
| FT | = Thr'd Companion Flanged |
| F | = Flanged Non-Metallic |
| S | = Socket |
| B | = BSP thread |
| T | = High Temperature (300°F/149°C) |
| H | = High Pressure (to 350 psig) Metallic Bodies |
| M | = Mid-Range Pressure (to 230 psig) Thermoplastic Bodies |

**Valve Port Connection Size:**

| | |
|---|---|
| 25 = 1/4" | 10 = 1" |
| 45 = 1/4" X 1/2" | 15 = 1 1/2" |
| 50 = 1/2" | 20 = 2" |
| 75 = 3/4" | |

**Standard Top: PVC/CPVC**

**Top Options:**
- A = Aluminum Top
- S = 316L S/S Top
- C = CPVC Top
- XXX = Custom spring range

**Miscellaneous Options:**
- E = EPDM Diaphragm
- P = PVC Diaphragm
- V = Viton Diaphragm
- G = Gauge Port

**Body Material of Construction:**

| | |
|---|---|
| PVC | = polyvinylchloride |
| CPVC | = Corzan |
| PP | = polypropylene |
| TFE | = 24% glass filled PTFE |
| PVDF | = polyvinylfluoride |
| S/S | = 316L Stainless Steel |
| ALL20 | = Alloy 20 |
| Hast | = Hastelloy C 276 |

### Flow Rates

Flow capacity through TOP VALVE back pressure/anti-siphon and pressure relief valves under continuous flow conditions **@ 50 PSIG** with ambient temperature water.

| Size | 1/4" | 1/4" / 1/2" | 1/2" | 3/4" | 1" | 1 1/2" | 2" |
|---|---|---|---|---|---|---|---|
| Flow rate USGPM | 4 | 4 | 6 | 8 | 14 | 25 | 40 |

**Note:** Capacities will increase with pressure. If pressure is doubled, flow rate wll approximately double. For capacities of valves with pulsating flow, use approximately 1/3 of the given flow rates.

### Typical Installations

The installations below are typical installation examples only. Consult your engineering department for the appropriate installation of your application or call Primary Fluid Systems Inc. for advice.

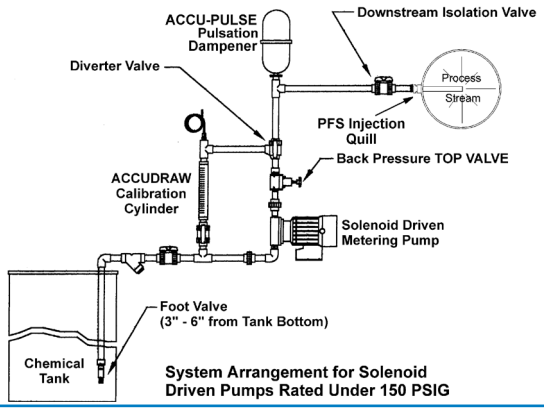


System Arrangement for Solenoid Driven Pumps Rated Under 150 PSIG

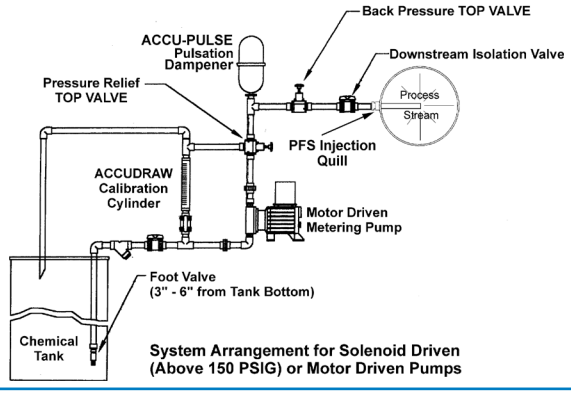


System Arrangement for Solenoid Driven (Above 150 PSIG) or Motor Driven Pumps

**Distributed By:**


PRIMARY FLUID SYSTEMS INC.

**Call Toll Free 1-800-776-6580**
Tel: (905) 333-8743
Fax: (905) 333-8746

*E-mail: primary@primaryfluid.com*
*www.primaryfluid.com*


**Distribution Territories Available**


® Registered Trade Mark of Primary Fluid Systems
*PAT 5,857,486/5,944,050

# PRESSURE GAUGES 0-160 PSI
# GI2.5 160 CB-AG25A50ACPVCTM

**Workshop drawing :**

- □ Approuved as is
- □ Approuved with correction(s)
- □ Rejected

**Approuved by**

Name : _____

Title : _____

Compagnie : _____

Signature : _____

# ACCUGUARD GAUGES

ACCUGUARD Pressure Gauges are designed to enhance the performance of chemical feed systems. Adding a pressure gauge to any system will help to ensure that optimal pressures are monitored and maintained.




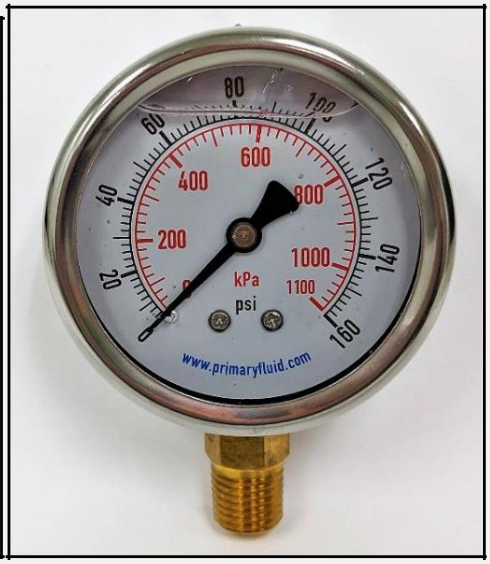


## Series Information

| Series | Gauge Diameter | Gauge Connection Size and Type | Gauge Housing | Gauge Internals | Liquid Filled | *Accuracy Rating |
|---|---|---|---|---|---|---|
| **Economy** | 2" / 2.5" | 1/4" NPT | Steel Case | Brass | No | ± 2.5% |
| **Intermediate** | 2.5" / 4" | 1/4" NPT | 304 S/S | Brass | Yes | ± 1.6% |
| **Premium** | 2.5" / 4" | 1/4" NPT | 304S/S | 316L S/S | Yes | ± 1.6% |

*Accuracy Rating = Full Scale Range

### HOW TO ORDER - AccuGuard Gauges

*Example Part Number: GE2-160-CB*

**G E 2 - 160 - CB**

**AccuGuard Gauge**

**Gauge Series**
- E = Economy
- I = Intermediate
- P = Premium

**Gauge Diameter**
- 2 = 2 Inches
- 2.5 = 2-1/2 Inches
- 4 = 4 Inches

**Gauge Mounting Orientation**
- CB = Center Back
- BM = Bottom Mount

**Gauge Indication**
- 60 = 0-60 PSIG / 0-400 KPA
- 160 = 0-160 PSIG / 0-1100 KPA
- 200 = 0-200 PSIG / 0-1400 KPA
- 300 = 0-300 PSIG / 0-2000 KPA
- 400 = 0-400 PSIG / 0-2800 KPA

*4" Gauge Diameter Available in Bottom Mount Orientation Only*

*For Price & Availability of Other Pressures - Call Factory*

Primary Fluid Systems Inc. | 1050 Cooke Blvd. | Burlington | Ontario | L7T 4A8 | Canada
www.primaryfluid.com | primary@primaryfluid.com | North American Toll Free: 1-800-776-6580

# ACCUGUARD Diaphragm Seals

Without proper protection, process fluids can contaminate and damage in-line instrumentation. ACCUGUARD Diaphragm Seals are designed to protect and isolate pressure gauges and expensive instrumentation from corrosive, high temperature, or viscous, process media.



## Features

- Transfers process pressure accurately without direct contact with process fluids
- Removes the need for expensive instrumentation
- Easily installed and available in five chemically resistant Materials of Construction
- Optional Diaphragm Materials
- Available with ¼" & ½" Bottom Connection Sizes in FNPT & BSPT Female Connection Types
- Thermoplastic Units Rated to 240 PSIG (16 BARG) @ 21°C (70°F)
- 316L S/S Units Rated to 5800 PSIG (400 BARG) @ 21°C (70°F)
- Approved – 316 S/S Diaphragm Seals with CRN (Canadian Registration Number)

## HOW TO ORDER - AccuGuard

*Example Part Number: AG25A25A-PVC-V-M-[Optional Gauge]*

**AG 25 A 25 A - PVC - V - M - [Optional Gauge]**

*See Gauge List*

**AccuGuard Diaphragm Seal**

**Connection Size (Top)**
- 25 = 1/4"

**Connection Type (Top)**
- A = FNPT

**Connection Size (Bottom)**
- 25 = 1/4"
- 50 = 1/2"

**Connection Type (Bottom)**
- A = FNPT
- B = BSPT

**Options**
- M = Mounted Gauge/Glycerin Filled

**Diaphram Materials**
- V = Viton (Thermoplastic Body Only)
- E = EPDM (Thermoplastic Body Only)
- T = PTFE (Thermoplastic Body Only)
- S/S = 316 S/S (S/S & S/SV Body Only)

**Body Materials**
- PVC = Polyvinylchloride
- CPVC = CPVC Corzan
- PP = Polypropylene (Not Available with PTFE Diaphragm)
- PVDF = Polyvinyldene Fluoride (PTFE Diaphragm Only)
- S/S = 316L Stainless Steel
- S/SV = Vented 316L Stainless Steel

*- Optional Gauge Appears as Separate Line Item When Ordered*

*- Diaphragm Seals With Gauges = Glycerin Filled As Standard*

*- 1/4" & 1/2" MNPT Nipples Available - Call Factory for Details*

Primary Fluid Systems Inc. | 1050 Cooke Blvd. | Burlington | Ontario | L7T 4A8 | Canada
www.primaryfluid.com | primary@primaryfluid.com | North American Toll Free: 1-800-776-6580

DRAWING #: 6600-000-I-1216

NOTE:
ALL CONNECTIONS ARE NPT TYPE

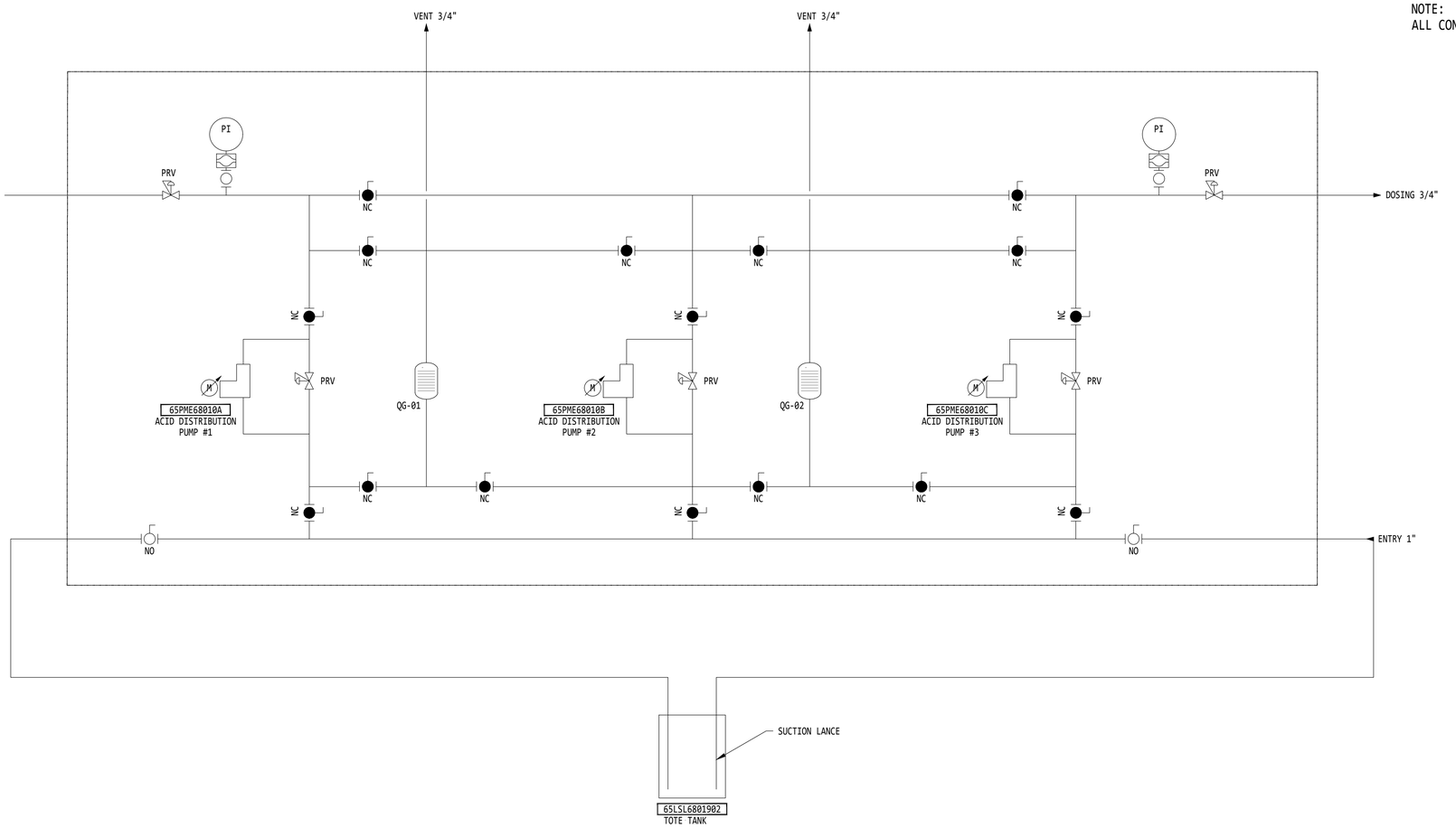


**65PME68010A/B/C**
DOSING PUMPS
CAPACITY: 216 L/HOUR

**QG-01/02**
CYLINDER 4000mL / 64GPH

FOR TENDER
DO NOT USE FOR CONSTRUCTION

SEAL & SIGNATURE

| REV. | DATE | DESCRIPTION | BY | VER. | APP. |
|---|---|---|---|---|---|
| T0 | 2021-04-08 | FOR TENDER | AN | DM/EC | DM/EC |

THE INFORMATION HERE ON IS THE PROPERTY OF ASDR AND MUST BE RETURNED UPON REQUEST. WITHOUT WRITTEN PERMISSION, ANY COPYING TRANSMITTAL TO OTHERS AND ANY USE EXCEPT THAT FOR WHICH IT IS LOANED IS PROHIBITED.

CLIENT

| | |
|---|---|
| INFO CLIENT | - |

| | |
|---|---|
| DRAWN BY | AMINATA NIASSE, CEP |
| VERIFIED BY | DAN MISIANO / ETIENNE CLERMONT |
| APPROVED BY | DAN MISIANO / ETIENNE CLERMONT |

| CREATION DATE | SCALE | PROJECTION |
|---|---|---|
| 2021-04-06 | N.T.S. | |

DRAWING TITLE
PROCESS WATER TREATEMENT - GENERAL
INSTRUMENTATION
TRIPLEX DISTRIBUTION UNIT
SULFURIC ACID

| PROJECT # | DRAWING # | REV. | SHEET |
|---|---|---|---|
| 01939 | 6600-000-I-1216 | T0 | 1/1 |

SECTOR–LEVEL – DISCIPLINE – SEQUENTIAL #

IMPRIMÉ PAR : Aminata Amary Niasse | DATE D'IMPRESSION : 2021-05-05 | PLUME D'IMPRESSION : ASDR Noir.ctb
FORMAT DE PAPIER : ISO A1 (594 mm x 841 mm [23.4" x 33.1"]) | PRÉSENTATION : ISO 5457

# TOP VALVE

Pat. #5,857,486 & 5,944,050

## Back Pressure and Pressure Relief Valves

## Instruction Manual

**PLEASE NOTE:**
**This instruction manual provides detailed information and instructions that must be read, understood and followed to ensure that the equipment is installed, operated and serviced in an appropriate manner. Failure to do so before using may result in hazardous consequences and/or improper operation.**

10/2020

**TEMPERATURE LIMIT NOTATION:**
**If the application in which this valve is to be installed has a temperature greater than 73°F (23°C) including radiant heat, refer to page 11 for temperature correction vs. pressure limits.**

Rev. 8

**NOTE:**
**See Gauge Installation Instructions before removal of gauge plug to avoid thread damage. (Gauge port is optional)**

Manufactured by:



**PRIMARY FLUID SYSTEMS INC.**
1050 COOKE BLVD., BURLINGTON, ON. CANADA L7T 4A8
TEL :(905)333-8743 FAX:(905)333-8746
1-800-776-6580
primary@primaryfluid.com

# I N D E X


**INTRODUCTION** ..... **3**

**Special Features of TOP VALVE** ..... **3**

**Back Pressure Valve** ..... **3**

**Back Pressure Valves: Reason for Selection and Use** ..... **4**

**Pressure Relief Valves** ..... **4**

**Pressure Relief Valves: Reason for Selection and Use** ..... **4**

**Installation and Maintenance of Back Pressure Valves** ..... **4**

**Installation and Maintenance of Pressure Relief Valves** ..... **5**

**Gauge Installation Instructions: (When ordered with valve only)** ..... **5**

**Manual Air Release** ..... **6**

**Typical Installations** ..... **7**

**ALL New Clamping Device for TOP VALVE, Back Pressure and Pressure Relief Valves** ..... **8**

***Exploded Parts View – Back Pressure & Pressure Relief Valve*** ..... ***9***

**Dimensions – Top Valve – Back Pressure** ..... **10**

**Dimensions – Top Valve – Pressure Relief** ..... **10**

**Flow Rates** ..... **11**

**Temperature Correction Factors: Thermoplastics** ..... **11**

**LIMITED WARRANTY** ..... **12**

## INTRODUCTION

The following instructions are to provide information on the Installation, operation and maintenance of TOP VALVE, 150# rated diaphragm style Back Pressure and Pressure Relief Valves, manufactured by Primary Fluid Systems Inc. The valves are designed to improve the performance and safe operation of most pumps used for metering applications.

Various materials of construction are available dependent on the requirements of the application and the type of fluids being transferred.

The valve(s) are factory set at 50 PSIG with a field adjustment range of 15-150 PSIG*. Other factory set pressure ranges (within the range of the valve) are available upon request.

## Special Features of TOP VALVE

- PVC, PP, TFE, CPVC, PVDF, Hastelloy C, Alloy 20 or 316 S/S wetted construction
- PTFE laminated to EPDM backer diaphragm
- Turn down handle limits pressure to 150 PSIG
- Handle shaped for ease of adjustment
- Color-coded handles indicate size at a glance
- (Optional) Built-in matching material gauge port plug is easily removed for gauge option
- Rectangular shape for ease of installation
- Specially designed spring provides consistent pressure adjustments through the range (15-150 PSIG*)
- Valve top specially designed for mounting clamp to help reduce pipeline stress when required
- Built-in downstream manual air release, for ease of pump priming
- Built-in anti-siphon

***Pressures under 15 PSIG require rubber elastomeric diaphragm.**

## Back Pressure Valve

Diaphragm Back Pressure Valves serve two primary functions. The first is to provide a constant discharge pressure on the pump, which improves the performance, efficiency and consistency of the delivered volume. Secondly, the valve performs as an anti-siphon mechanism against positive or negative pressures in the downstream line. The valve is designed to allow for the venting of air into the downstream pipeline. This provides for easier priming of metering pumps that function under a suction lift. This is accomplished by a simple adjustment of the handle.

The valve is available with an optional gauge port, pre-plugged at the factory or can be ordered complete with gauge to suit application. This eliminates the need to install extra fittings in the line to accommodate the addition of a gauge for the purpose of reading and setting of pressure.

**CAUTION:**
**The gauge port is solely for the installation of the gauge and must not be used for the bleeding or venting of the system. Improper operation of the valve and/or hazardous consequences could result.** ***(see gauge installation instructions)***

## Back Pressure Valves: Reason for Selection and Use

Metering pumps having an atmospheric discharge system pressure of less than 20 psi and will benefit from the installation of a back pressure control valve. Metering pumps in general require downstream back pressure to ensure smoother function of the discharge check assemblies, which enhances the accuracy of the discharge flow.

## Pressure Relief Valves

Diaphragm Pressure Relief Valves are designed to relieve excess line pressure that exceeds the set pressure of the valve. This protects the system piping from overpressure that could result in hazardous leakage and/or damage to the pump and other system components.

The Pressure Relief Valves are normally recommended to be set between 5 and 10 PSIG above the system operating pressure.

The valve is of an in-line flow through design with bottom NPT relief port for piping back to supply tank or feed side of pump.

The valve is available with an optional gauge port, pre-plugged at the factory or can be ordered complete with gauge to suit application. This eliminates the need to install extra fittings in the line to accommodate the addition of a gauge for the purpose of reading and setting of pressure.

**CAUTION:**
**The gauge port is solely for the installation of the gauge and cannot be used for the bleeding or venting of the system. Improper operation and/or hazardous consequences could result.** ***(see gauge installation instructions)***

## Pressure Relief Valves: Reason for Selection and Use

When using motor driven metering pumps, a pressure relief valve should always be installed on the downstream side of the pump to protect the system from over pressure which can cause pipe leakage and/or rupture.

## Installation and Maintenance of Back Pressure Valves

Back pressure control valves are installed on the discharge line of the pump. The valve should be located within a 2 (two)-foot distance of the pump discharge to ensure check valve seating. When pumping to a process line without an injection valve, the back pressure valve should be installed as close as possible to the injection point to prevent siphoning.

When used in conjunction with a pressure relief valve, always locate the back pressure valve on the downstream side of the relief valve.

The valve is supplied from the factory pre-set at 50 psig. To increase the pressure setting, back off the lock nut located beneath the colour coded handle. Turn the handle clockwise to increase pressure setting or counter clockwise to reduce pressure setting. Approximately one (1) full turn of the handle is equal to 10 psig.

*If maintenance is required on the valve:*

1. Ensure that the valve is properly isolated from the line, not under pressure and properly flushed of chemical before proceeding to disassembly.
2. Turn knob on the top of valve, counterclockwise until all spring pressure is released **before** proceeding to undo retaining nuts, to remove top of valve for diaphragm replacement.
3. All working components ie. diaphragm, spring can be accessed by removing the four retaining nuts located on the top of the valve (item # 9 of parts breakdown). For ¼" and ¼" x ½" Top Valves, use 5/32" Allen Key / #4 Hex Key. For ½" sizes and up, use a 3/16" Allen Key / #5 Hex key.
4. When replacing the diaphragm, ensure the PTFE coated side of the diaphragm is facing down when viewed from the top of the valve. The installed diaphragm also functions as the body seal. (Torque nuts to 55 inch pounds when reassembling.)

**Set Pressure Safety Feature**

The valve adjustment handle/bolt length is designed to prevent operators from engaging the spring to a coil binding situation that would cause serious function and safety concerns.

In order to achieve max pressures within the top 10% of the valve range, the lock nut on the adjustment handle/bolt must be removed prior to setting the pressure. Ensure that all system pressure has been released before removing the lock nut and re-installing the approved valve handle/bolt.

The valve handle/bolt is the only approved adjustment component to be used on our valves. Deviation from this will void manufacturer warranty and liability.

**Installation and Maintenance of Pressure Relief Valves**

Pressure relief valves are installed on the discharge line of a pump and should be located as close as possible to the metering pump. The valve is of an in-line flow through design with a bottom NPT relief port for piping back to the supply tank or feed side of the pump.

Never install shut-off/isolation valves between pump discharge and in-line pressure relief valves. When using in conjunction with a back pressure control valve, always install back pressure valve downstream of pressure relief valve. The relief port on the pressure relief valve should be piped back to the feed tank or suction side of the pump (see typical installation schematics).

**CAUTION:**
**The plastic valve bodies have standard NPT threads, which are tapered. When installing pipe into the body, hand tighten only to avoid cracking**.

## Gauge Installation Instructions: (When ordered with valve only)

For the convenience of pressure setting and reading, there is an optional plugged gauge port provided, if the valve has not been ordered complete with gauge. **Important:** use a ***TORX style # T-45*** wrench or screwdriver **only** to remove plug from plastic valves. Any other tool will strip the body of the plug and require an extractor to remove the threaded plug.

**CAUTION:**
**Before removing the gauge port plug to install a gauge, ensure that the discharge line is not under pressure and lines are flushed with water prior to proceeding. Ensure that the gauge you are using is chemical resistant to the fluid before installing.**

## Manual Air Release for Back Pressure Valve Only

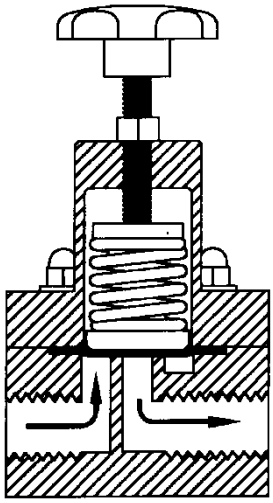

DIAPHRAGM POSITION AT
50 PSI BACK PRESSURE

**The valve is shipped with a factory set pressure of 50 psig. The diagram to the left shows a cut-away view of the position of the diaphragm on the seat.**

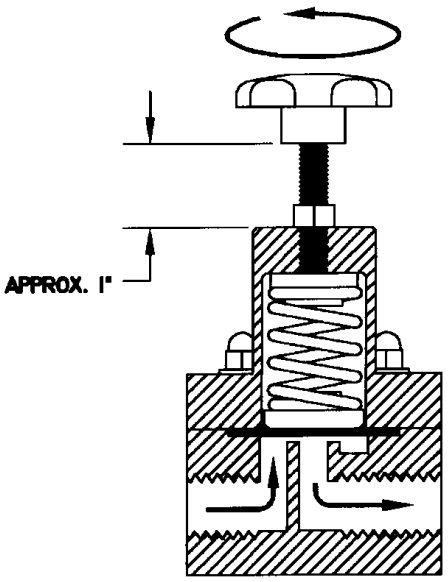


AIR RELEASE POSITION WITH
HANDLE BACKED OFF

**To adjust the valve to relieve air or gas downstream:**

**1. Back off lock nut located beneath the colour coded handle.**

**2. Turn handle counter clockwise until approximately 1 inch of thread is exposed.**

**3. At this adjustment, the spring has relieved all tension from the diaphragm allowing air or gas to be vented downstream.**

---

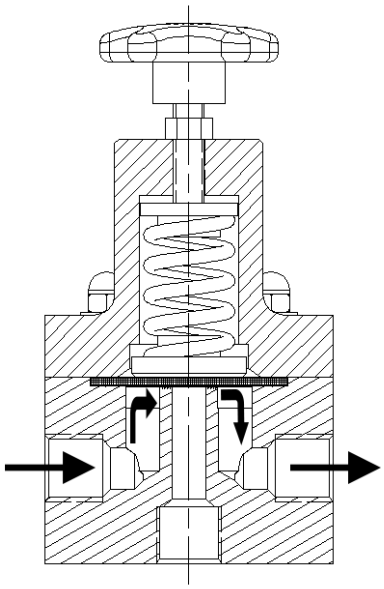

**Flow through design Pressure Relief Valve**

**The bottom port relieves over pressure.**



www.primaryfluid.com Toll Free 1-800-776-6580 email: primary@primaryfluid.com

# Typical Installations

The installations below are typical installation examples only. Consult your Engineering Department for the appropriate installation for your application or call the factory for advice.

**EXAMPLE A: SOLENOID DRIVEN PUMPS RATED UNDER 150 PSIG**

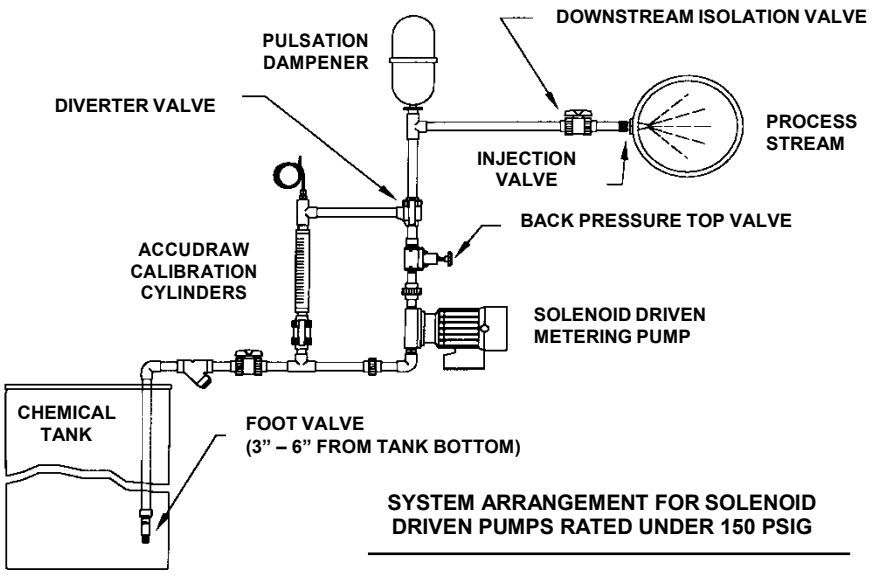


SYSTEM ARRANGEMENT FOR SOLENOID DRIVEN PUMPS RATED UNDER 150 PSIG

---

**EXAMPLE B: SYSTEM ARRANGEMENT FOR SOLENOID DRIVEN (ABOVE 150 PSIG) OR MOTOR DRIVEN PUMPS.**

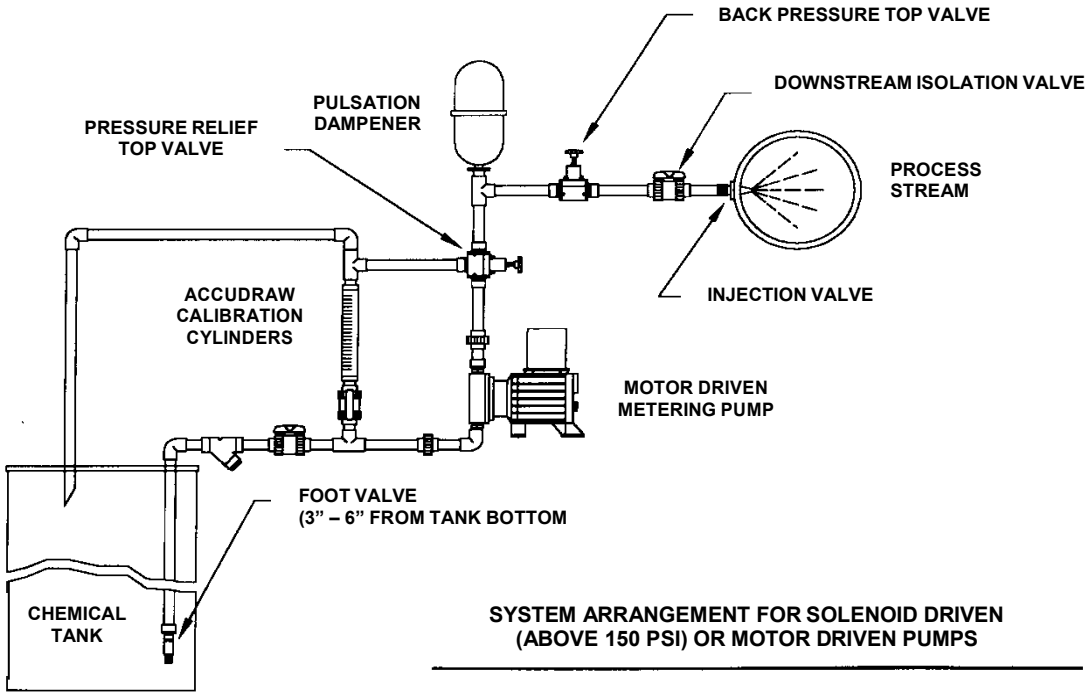


SYSTEM ARRANGEMENT FOR SOLENOID DRIVEN (ABOVE 150 PSI) OR MOTOR DRIVEN PUMPS



www.primaryfluid.com Toll Free 1-800-776-6580 email: primary@primaryfluid.com

# Exploded Parts View- Back Pressure & Pressure Relief Valve

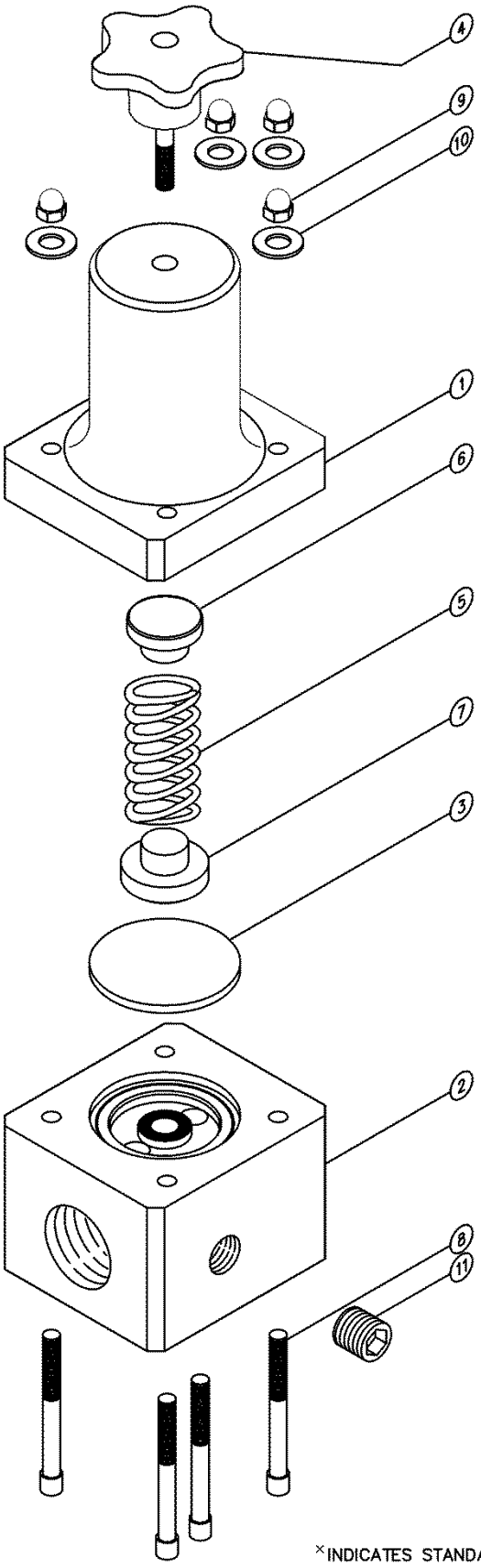


MATERIAL/SIZE CODING

X = PVC = (TYPE 1 PVC)×
X = CPVC = (CPVC CORZAN)
X = S6 = (316 STAINLESS STEEL)
X = A = (ALUMINUM )
X = P = (POLYCARBONATE)

** = 25 = 1/4" & 1/4/1/2" VALVES
** = 57 = 1/2" & 3/4" VALVES
** = 10 = 1" VALVES
** = 15 = 1-1/2" VALVES
** = 20 = 2" VALVES

Ω = B = BACK PRESSURE
Ω = P =PRESSURE RELIEF

∅ = "BLANK" = STD PTFE LAM. EPDM×
∅ = V = OPTIONAL VITON
∅ = E = OPTIONAL EPDM
∅ = P = OPTIONAL PVC

Φ = 25 = 1/4" VALVES
Φ = 45 = 1/4/1/2" VALVES
Φ = 50 = 1/2" VALVES
Φ = 75 = 3/4" VALVES
Φ = 10 = 1" VALVES
Φ = 15 = 1-1/2" VALVES
Φ = 20 = 2" VALVES

^ = PVC = (PVC TYPE 1)
^ = CPVC = (CPVC CORZAN)
^ = PP= (POLYPROPYLENE)
^ = PTFE = (PTFE)
^ = PVDF = (POLYVINYLIDENE FLUORIDE KYNAR)
^ = S/S = (316 STAINLESS STEEL)
^ = HASTC = (HASTELLOY C276)
^ = ALL20 = (ALLOY20)

⊗ = G = GREEN = 1/4" VALVES
⊗ = O = ORANGE = 1/4/1/2" VALVES
⊗ = Y = YELLOW = 1/2" VALVES
⊗ = R = RED = 3/4" VALVES
⊗ = B = BLUE = 1" VALVES
⊗ = BK = BLACK = 1-1/2" VALVES
⊗ = W = WHITE = 2" VALVES

⊕ = 25 = 1/4" & 1/4"/1/2" VALVES
⊕ = 51 = 1/2" THRU 2" VALVES

| ITEM# | QTY | DESCRIPTION | PART# |
|---|---|---|---|
| 1 | 1 | TOP | TVT-1 X - ** |
| 2 | 1 | BODY | TVΩ-2 ^ -Φ |
| 3 | 1 | DIAPHRAGM | TVD-3- ** -∅ |
| 4 | 1 | KNOB | TV⊗K-4 |
| 5 | 1 | SPRING | TVS-5-⊕ |
| 6 | 1 | TOP DISC | TVTD-6-⊕ |
| 7 | 1 | BOTTOM DISC | TVBD-7-⊕ |
| 8 | 4 | BOLTS* | TVΩB-8 -** |
| 9 | 4 | NUTS | TVN-9-⊕ |
| 10 | 4 | WASHERS | TVW-10-⊕ |
| 11 | 1 | GAUGE PLUG (OPTIONAL) | TVP-11- ^ |

_UNDERLINED ITEMS REQUIRE CODES FROM ABOVE CHART
*1-1/2" PRESSURE RELIEF VALVES USE TVBB-8-15
*2" PRESSURE RELIEF VALVES USE TVBB-8-20

×INDICATES STANDARD CONSTRUCTION

DO NOT COPY WITHOUT PRIOR WRITTEN APPROVAL FROM PRIMARY FLUID SYSTEMS INC.

**PRIMARY FLUID SYSTEMS INC.**
1050 Cooke Blvd., Burlington, Ontario L7T 4A8

BACK PRESSURE & PRESSURE RELIEF VALVE EXPLODED PARTS VIEW

| | | |
|---|---|---|
| DATE ISSUED: 19-OCT-11 | SCALE: NTS | SHEET: 1 OF 1 |
| PROJECT: TOP VALVE | | DRAWN BY: BRB |
| APPROVED BY: | DWG NO.: TV-PA-257520STD-XPL | REV.#: 5 |

## Dimensions – Top Valve – Back Pressure

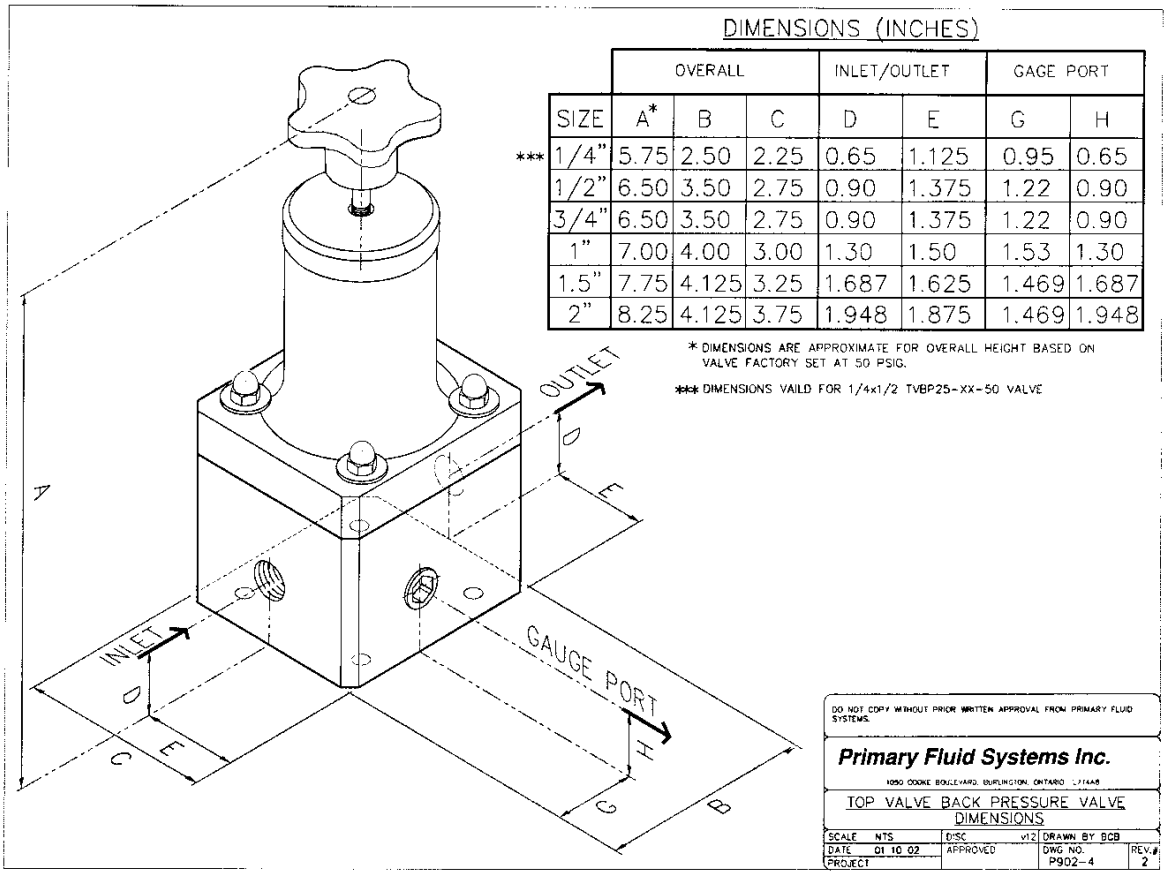


DIMENSIONS (INCHES)

| | | OVERALL | | | INLET/OUTLET | | GAGE PORT | |
|---|---|---|---|---|---|---|---|---|
| | SIZE | A* | B | C | D | E | G | H |
| *** | 1/4" | 5.75 | 2.50 | 2.25 | 0.65 | 1.125 | 0.95 | 0.65 |
| | 1/2" | 6.50 | 3.50 | 2.75 | 0.90 | 1.375 | 1.22 | 0.90 |
| | 3/4" | 6.50 | 3.50 | 2.75 | 0.90 | 1.375 | 1.22 | 0.90 |
| | 1" | 7.00 | 4.00 | 3.00 | 1.30 | 1.50 | 1.53 | 1.30 |
| | 1.5" | 7.75 | 4.125 | 3.25 | 1.687 | 1.625 | 1.469 | 1.687 |
| | 2" | 8.25 | 4.125 | 3.75 | 1.948 | 1.875 | 1.469 | 1.948 |

* DIMENSIONS ARE APPROXIMATE FOR OVERALL HEIGHT BASED ON VALVE FACTORY SET AT 50 PSIG.

*** DIMENSIONS VAILD FOR 1/4x1/2 TVBP25-XX-50 VALVE

DO NOT COPY WITHOUT PRIOR WRITTEN APPROVAL FROM PRIMARY FLUID SYSTEMS.

**Primary Fluid Systems Inc.**

1050 COOKE BOULEVARD, BURLINGTON, ONTARIO L7T4A8

TOP VALVE BACK PRESSURE VALVE DIMENSIONS

| | | | |
|---|---|---|---|
| SCALE NTS | DISC v12 | DRAWN BY BCB | |
| DATE 01 10 02 | APPROVED | DWG NO. P902-4 | REV.# 2 |
| PROJECT | | | |

## Dimensions – Top Valve – Pressure Relief

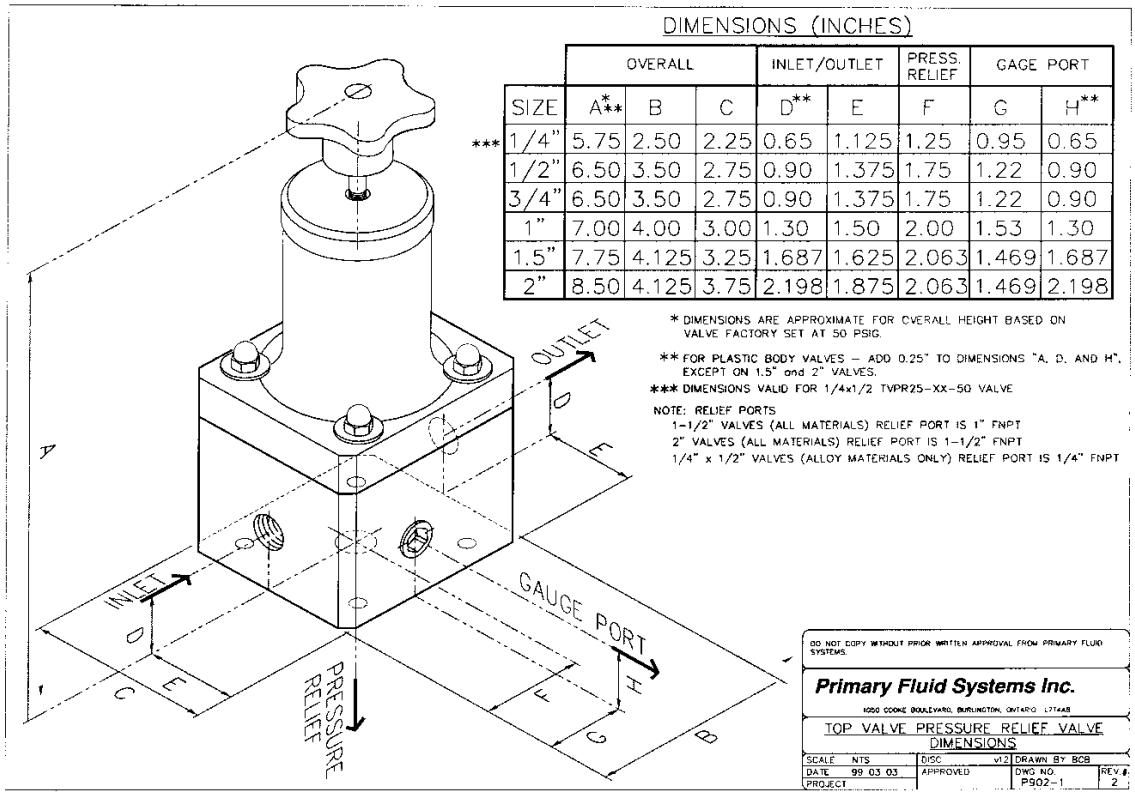


DIMENSIONS (INCHES)

| | | OVERALL | | | INLET/OUTLET | | PRESS. RELIEF | GAGE PORT | |
|---|---|---|---|---|---|---|---|---|---|
| | SIZE | A*** | B | C | D** | E | F | G | H** |
| *** | 1/4" | 5.75 | 2.50 | 2.25 | 0.65 | 1.125 | 1.25 | 0.95 | 0.65 |
| | 1/2" | 6.50 | 3.50 | 2.75 | 0.90 | 1.375 | 1.75 | 1.22 | 0.90 |
| | 3/4" | 6.50 | 3.50 | 2.75 | 0.90 | 1.375 | 1.75 | 1.22 | 0.90 |
| | 1" | 7.00 | 4.00 | 3.00 | 1.30 | 1.50 | 2.00 | 1.53 | 1.30 |
| | 1.5" | 7.75 | 4.125 | 3.25 | 1.687 | 1.625 | 2.063 | 1.469 | 1.687 |
| | 2" | 8.50 | 4.125 | 3.75 | 2.198 | 1.875 | 2.063 | 1.469 | 2.198 |

* DIMENSIONS ARE APPROXIMATE FOR OVERALL HEIGHT BASED ON VALVE FACTORY SET AT 50 PSIG.

** FOR PLASTIC BODY VALVES – ADD 0.25" TO DIMENSIONS "A, D, AND H", EXCEPT ON 1.5" and 2" VALVES.

*** DIMENSIONS VALID FOR 1/4x1/2 TVPR25-XX-50 VALVE

NOTE: RELIEF PORTS
1-1/2" VALVES (ALL MATERIALS) RELIEF PORT IS 1" FNPT
2" VALVES (ALL MATERIALS) RELIEF PORT IS 1-1/2" FNPT
1/4" x 1/2" VALVES (ALLOY MATERIALS ONLY) RELIEF PORT IS 1/4" FNPT

DO NOT COPY WITHOUT PRIOR WRITTEN APPROVAL FROM PRIMARY FLUID SYSTEMS.

**Primary Fluid Systems Inc.**

1050 COOKE BOULEVARD, BURLINGTON, ONTARIO L7T4A8

TOP VALVE PRESSURE RELIEF VALVE DIMENSIONS

| | | | |
|---|---|---|---|
| SCALE NTS | DISC v12 | DRAWN BY BCB | |
| DATE 99 03 03 | APPROVED | DWG NO. P902-1 | REV.# 2 |
| PROJECT | | | |

**ALL New Clamping Device for TOP VALVE, Back Pressure and Pressure Relief Valves**

This new polypropylene-clamping device now makes it even easier than ever to support TOP VALVE, back pressure or pressure relief valves in service, to help eliminate pipe strain and the need for expensive mounting brackets.

It's simple to install, economical to purchase and we've reworked the top of the valve body now available on all new valves, to assist with the support.

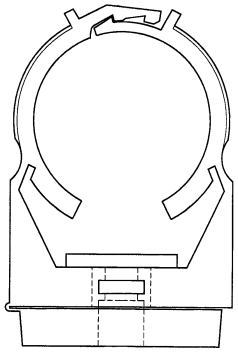

**TV-_ _ -CLAMP**

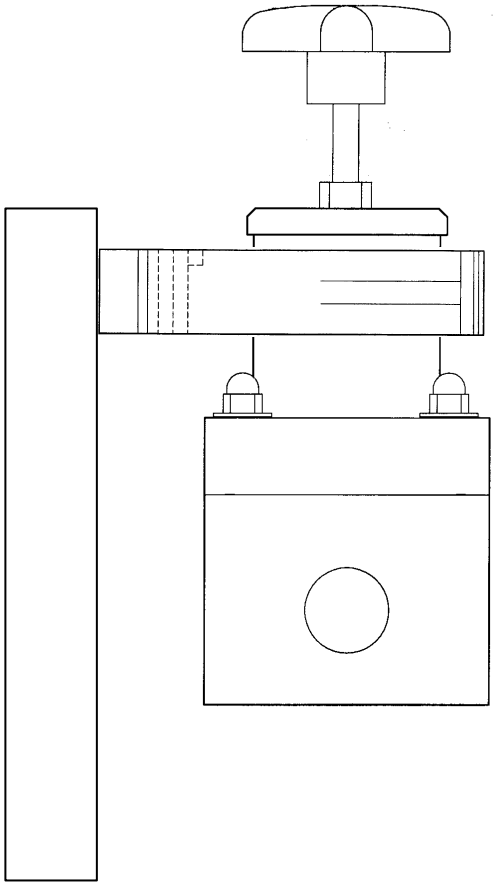

**Sample Installation**

**Part #**

TV-25-CLAMP to fit ¼" Valves and ¼ - ½" Valves

TV-51-CLAMP to fit ½" through 2" Valves

## Flow Rates

Subject: Flow capacity through TOP VALVE, back pressure and pressure relief valves. Under continuous flow conditions: @ **50 PSI** with ambient temperature water

| | | |
|---|---|---|
| ¼" valve | 4 | USGPM |
| ¼"/½" valve | 4 | USGPM |
| ½" valve | 6 | USGPM |
| ¾" valve | 8 | USGPM |
| 1" valve | 14 | USGPM |
| 1½"valve | 25 | USGPM |
| 2" valve | 40 | USGPM |

Note: Capacities will increase with pressure. (If pressure is doubled, flow rate will approximately double.) For capacities of valves with pulsating flow use approximately ⅓ of the above given flow values.

## Temperature Correction Factors: Thermoplastics

**Temperature Effects:** Thermoplastics and thermosets will decrease in tensile strength as the temperature increases: therefore, the working pressure must be reduced accordingly. The following factors will apply:

| Operating Temperatures | | {Factors} | | | |
|---|---|---|---|---|---|
| ***F*** | ***C*** | ***PVC*** | ***CPVC*** | ***PP*** | ***PVDF*** |
| 70 | 21 | 1.00 | 1.00 | 1.00 | 1.00 |
| 80 | 27 | 1.00 | 1.00 | 1.00 | 1.00 |
| 90 | 32 | 1.00 | 1.00 | 1.00 | 1.00 |
| 100 | 38 | .90 | 1.00 | 1.00 | 1.00 |
| 110 | 43 | .83 | 1.00 | .91 | 1.00 |
| 115 | 46 | .75 | 1.00 | .87 | 1.00 |
| 120 | 49 | .66 | 1.00 | .83 | 1.00 |
| 125 | 52 | .58 | .97 | .79 | 1.00 |
| 130 | 54 | .50 | .95 | .75 | 1.00 |
| 140 | 60 | .33 | .90 | .66 | 1.00 |
| 150 | 66 | NR | .80 | .60 | .97 |
| 160 | 71 | NR | .70 | .53 | .93 |
| 170 | 77 | NR | .60 | .43 | .86 |
| 180 | 82 | NR | .50 | .33 | .80 |
| 200 | 93 | NR | .33 | NR | .66 |
| 210 | 99 | NR | NR | NR | .60 |
| 240 | 116 | NR | NR | NR | .40 |
| 280 | 138 | NR | NR | NR | .16 |

**Example:**
Maximum Pressure for PVDF valve at 280°F (138°C)
Factor = 0.16 x 150psig = 24psig max. pressure
Factor = 0.16 x 1034kPa = 165.44kPa max. pressure

The maximum pressure rating for valves regardless of size is 150 PSIG (1034 kPa) at 73° F (22°C)

**NR** = not recommended

Primary Fluid Systems, Inc. takes no responsibility for the enclosed data.

**NOTE**: If the material of the valve you have chosen is rated below the working pressure of your system than you must reconsider your choice. The standard valve top material of construction is PVC and should be taken into temperature consideration. (Other materials of construction are available, consult price list or factory)

**NOTE: When considering working temperature, include ambient and potential collective surface temperature (Radiant Heat).**

# LIMITED WARRANTY

Primary Fluid Systems Inc. (Primary) warrants its products against defects in workmanship or materials for one (1) year under normal use. Three-(3) year available when application card is completed and returned to factory. Application card can be obtained by emailing request to sales@primaryfluid.com

Primary's obligations and liabilities under this warranty shall be limited to replacement of the product, or a refund of an amount not to exceed the purchase price of the product(s) to which such warranty claim is made. Repairs or replacements are made subject to our inspection of the returned product(s). Primary's decision of one of these alternatives shall be the buyer's exclusive remedy.

This warranty does not extend to damage by corrosion or other decomposition by chemical action. Primary does not warrant damages caused by (a) improper use of the product, (b) unauthorized modification or attachment to product, (c) misuse, abuse, accident or negligent handling or installation of product, or (d) alterations or repairs made by purchaser.

The materials of construction offered are recommendations only, subject in all cases to acceptance by purchaser. These recommendations do not constitute any guarantee against corrosion or decomposition, but are based on previous experience and best available information of the industry.

Statements and instructions set forth herein are based on the best information and practices known to Primary, but it should not be assumed that every acceptable safety procedure is contained herein. Of necessity Primary cannot guarantee that actions in accordance with such statements and instructions will result in the complete elimination of hazards and it assumes no liability for accidents that may occur.

Except as specifically provided herein, Primary makes no warranty, representations, promise or guarantee, either express or implied, statutory or otherwise, with respect to the product and technical information provided, including the products' quality, performance, merchantability, or fitness for a particular purpose.

In no event will Primary be liable for indirect, special, incidental, economic, covert or consequential damages arising out of the use or inability to use the product, including without limitation, damages or costs relating to the loss of profits, business and good will even if advised of the possibility of such damages. In no event shall Primary's liability exceed the amount paid by you for the product.

The warranty and remedies set forth herein are exclusive and in lieu of all others, oral or written, express or implied. No Primary dealer, distributor, agent or employee is authorized to make any modification or addition to this warranty. This warranty gives you specific legal rights and you may also have other rights which vary from state to state.

**VISIT OUR WEBSITE**
**@**
**primaryfluid.com**

TECHNICAL MANUAL

# DIAPHRAGM PUMP 409.2...e / 410.2...e




TRANSLATION OF THE ORIGINAL TECHNICAL MANUAL! EN

## PUMP TYPE

| | | | |
|---|---|---|---|
| RF/R/MF/M 409.2 - 1,6e | C 409.2 - 1,6e Pro+ | RF/R/MF/M 410.2 - 280e | C 410.2 - 280e |
| RF/R/MF/M 409.2 - 2,4e | C 409.2 - 2,4e Pro+ | RF/R/MF/M 410.2 - 570e | C 410.2 - 570e |
| RF/R/MF/M 409.2 - 7,0e | C 409.2 - 7,0e Pro+ | RF/R/MF/M 410.2 - 900e | C 410.2 - 900e |
| RF/R/MF/M 409.2 - 12e | C 409.2 - 12e Pro+ | RF/R/MF/M 410.2 - 1450e | C 410.2 - 1450e |
| RF/R/MF/M 409.2 - 18e | C 409.2 - 18e Pro+ | | |
| RF/R/MF/M 409.2 - 25e | C 409.2 - 25e Pro+ | | |
| RF/R/MF/M 409.2 - 50e | C 409.2 - 50e Pro+ | | |
| RF/R/MF/M 409.2 - 75e | C 409.2 - 75e Pro+ | | |
| RF/R/MF/M 409.2 - 90e | C 409.2 - 90e Pro+ | | |
| RF/R/MF/M 409.2 - 115e | C 409.2 - 115e Pro+ | | |
| RF/R/MF/M 409.2 - 140e | C 409.2 - 140e Pro+ | | |
| RF/R/MF/M 409.2 - 180e | C 409.2 - 180e Pro+ | | |
| RF/R/MF/M 409.2 - 250e | C 409.2 - 250e Pro+ | | |
| RF/R/MF/M 409.2 - 350e | C 409.2 - 350e Pro+ | | |

**NOTE**

Record the exact type and serial number here ► can be read off the type plate on the pump.
These data are important in the case of queries or for ordering spare and/or wear parts and must always be stated.

TYPE:

SERIAL NO:

**NOTE**

Keep the operating manual for future use!

**ATTENTION**

Subject to technical modifications!

### Quality notes

The **sera** quality management and quality assurance system is certified in accordance with DIN EN ISO 9001:2015.
The **sera** product complies with the applicable safety requirements and accident prevention regulations.

## About this instructions

Special notes in these instructions are marked with text and danger symbols.

**NOTE**

Notes or instructions that faciliate work and ensure a safe operation.

**ATTENTION**

The non-observance of these safety instructions can result in malfunctions or material damages.

**WARNING**

The non-observance of these safety instructions can lead to material damages and personal injuries.




Note on the additional instructions „SAFETY INSTRUCTIONS“.

These technical manual is divided into the following main parts:


| | |
|---|---|
| TRANSPORT & STORAGE | page 6 |
| PRODUCT DESCRIPTION | page 7 |
| TECHNICAL DATA | page 24 |
| ASSEMBLY / INSTALLATION | page 44 |
| OPERATION / EXPLOSION-HAZARDOUS AREAS | page 51 |
| START-UP | page 53 |
| ELECTRICAL CONNECTION | page 54 |
| MAINTENANCE | page 55 |
| FAULT ANALYSIS / CORRECTIVE ACTION | page 65 |
| SHUT-DOWN / DISPOSAL | page 67 |
| CLEARANCE CERTIFICATE | page 68 |


Depending on the pump type (see order confirmation) the following additional instructions are included:

| | |
|---|---|
| Control PRO+ | TM04 |
| INTERFACE MODULE PROFIBUS | TM05 |
| Control C410.2 | TM10 |
| Control PROFIBUS C410.2 | TM13 |
| Motor ATEX | supplier documentation |
| AC motor | supplier documentation |
| Electrical actuator | supplier documentation |
| Electrical actuator ATEX | supplier documentation |
| Pneumatic actuator | supplier documentation |
| Frequency converter | supplier documentation |
| Special construction | **sera** drawing |

TRANSPORT & STORAGE ..... 6
General ..... 6
Storage ..... 6
PRODUCT DESCRIPTION ..... 7
Type key ..... 7
Type plate ..... 8
Notes attached to the product ..... 8
Materials ..... 8
Components ...409.2 ..... 9
Components of C409.2 ..... 10
Components ...410.2 ..... 11
Components of C410.2 ..... 12
ELECTRICAL DATA ..... 23
ELECTRICAL DATA ..... 23
TECHNICAL DATA ..... 24
NOISE MEASUREMENT ..... 24
VISCOSITY, PUMPED MEDIUM ..... 24
TEMPERATURE DATA ..... 24
AMBIENT CONDITIONS ..... 24
Characteristics ..... 25
Dimensions RF409.2 standard ..... 28
Dimensions ...409.2 options ..... 30
Dimensions C409.2 standard ..... 32
Dimensions C409.2 options ..... 34
Dimensions RF410.2 standard ..... 36
Dimensions ...410.2 options ..... 38
Dimensions C410.2 standard ..... 40
Dimensions C410.2 options ..... 42
ASSEMBLY / INSTALLATION ..... 44
OPERATION / EXPLOSION-HAZARDOUS AREAS ..... 51
Operation in Ex-zone C409.2 / C410.2 ..... 51
Operation in Ex-zone R/M 409.2 / R/M 410.2 ..... 51
START-UP ..... 53
ELECTRICAL CONNECTIONS ..... 54
MAINTENANCE ..... 55
Drive motor ..... 55
Oil change ..... 56
Overview of the tightening torques ..... 57
Changing the Diaphragm ..... 58
Spare and wearing parts ..... 62
FAULT ANALYSIS / CORRECTIVE ACTION ..... 65
SHUT-DOWN / DISPOSAL ..... 67
Shut-down ..... 67
Disposal ..... 67
CLEARANCE CERTIFICATE ..... 68

## TRANSPORT & STORAGE

**WARNING**

Observe and follow the safety instructions by all means.
See the additional instructions „SAFETY INSTRUCTIONS".
Man, machine and environment are endangered if the safety instructions are not observed.




### General

**sera** products are checked for perfect condition and function previous to shipment.
Check for transport damage immediately after arrival of goods. If damage is found, this is to be reported immediately to the responsible carrier and the manufacturer.

### Storage

An undamaged packaging protects the unit during storage and should only be opened when the product is installed.
Proper storage increases the service life of the product and includes prevention of negative influences such as heat, moisture, dust, chemicals etc.

The following storage specifications are to be obsered:

- Storage place: cool, dry, dustfree and slightly ventilated
- Storage temperature and relative air humidity see Chapter „TECHNICAL DATA".
- The maximum storage time for the standard packaging is 12 months.

If these values are exceeded, metal products should be sealed in foil and protected from condensation water with a suitable desiccant.

Do not store solvents, fuels, lubricants, chemicals, acids, disinfectants and similar in the storage room.

## Type key

**1** — Type of drive (combinations possible)

| | |
|---|---|
| C | controllable |
| M | not adjustable |
| R | adjustable |
| F | Motor suitable for frequency converter operation |
| i | Frequency converter, mounted on the motor |
| K | Stroke mechanism with side drive shaft and connected to the drive via a clutch |
| Z | twin design |
| X | Stroke mechanism with two opposite pump heads, combined suction and pressure side |
| Y | Stroke mechanism with two opposite pump heads |

**2** — Series

| | |
|---|---|
| 204 | (solenoid driven pumps) |
| 409 | (motor driven pumps) |
| 410 | (motor driven pumps) |
| 509 | (motor driven pumps) |

**3** — Revision index

**4** — max. Nominal capacity (litre/hour (each pump head))

**5** — Displacer (type of construction)

| | |
|---|---|
| e | Single diap hragm |
| ML | Multy-layer diaphragm |
| KM | Piston daphragm |
| K | Piston |

**6** — Type of control

Pro+

| 1 | 2 | | 3 | | 4 | 5 | 6 | |
|---|---|---|---|---|---|---|---|---|
| C | 409 | . | 2 | - | 50 | e | Pro+ | *(example)* |

## Type plate

Each **sera** pump is factory provided with a type plate. The following information can be found on this type plate.

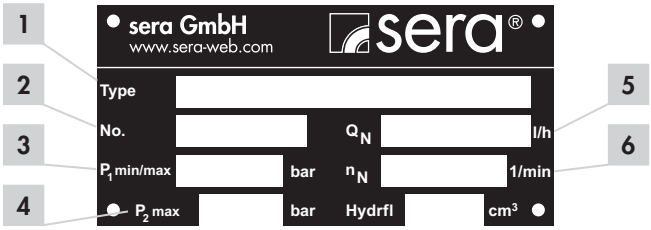


| No. | Designation |
|---|---|
| 1 | Pump type |
| 2 | Serial number of the pump |
| 3 | Minimum/maximum permissible pressure in the pump inlet<br>Minimum/maximum permissible pressure in the inlet cross section which the pump can be used for.<br>Please consider that pressure depends on rotation speed, delivery rate, temperature and static pressure at the inlet. |
| 4 | Maximum permissible pressure in the pump outlet<br>Maximum permissible pressure in the outlet cross section which the pump can be used for. Please consider that pressure depends on rotation speed, delivery rate, temperature and static pressure at the outlet. |
| 5 | Nominal delivery rate<br>Delivery rate which the pump was ordered for, based on the nominal rotation speed nN, the nominal delivery height p2max. and the delivery medium stated in the supply contract. |
| 6 | Nominal stroke frequency |

## Notes attached to the product

Symbols which are directly attached to the pump, e.g. arrows for direction of rotation or symbols for fluid connections are to be observed and kept in legible condition.

## Materials

The materials used are stated in the order confirmation and the product description.

**sera** dosing pumps are run-dry safe oscillating displacement pumps that are characterised by high tightness of the dosing head. The fluid is conveyed by a deformable diaphragm.

## Components ...409.2

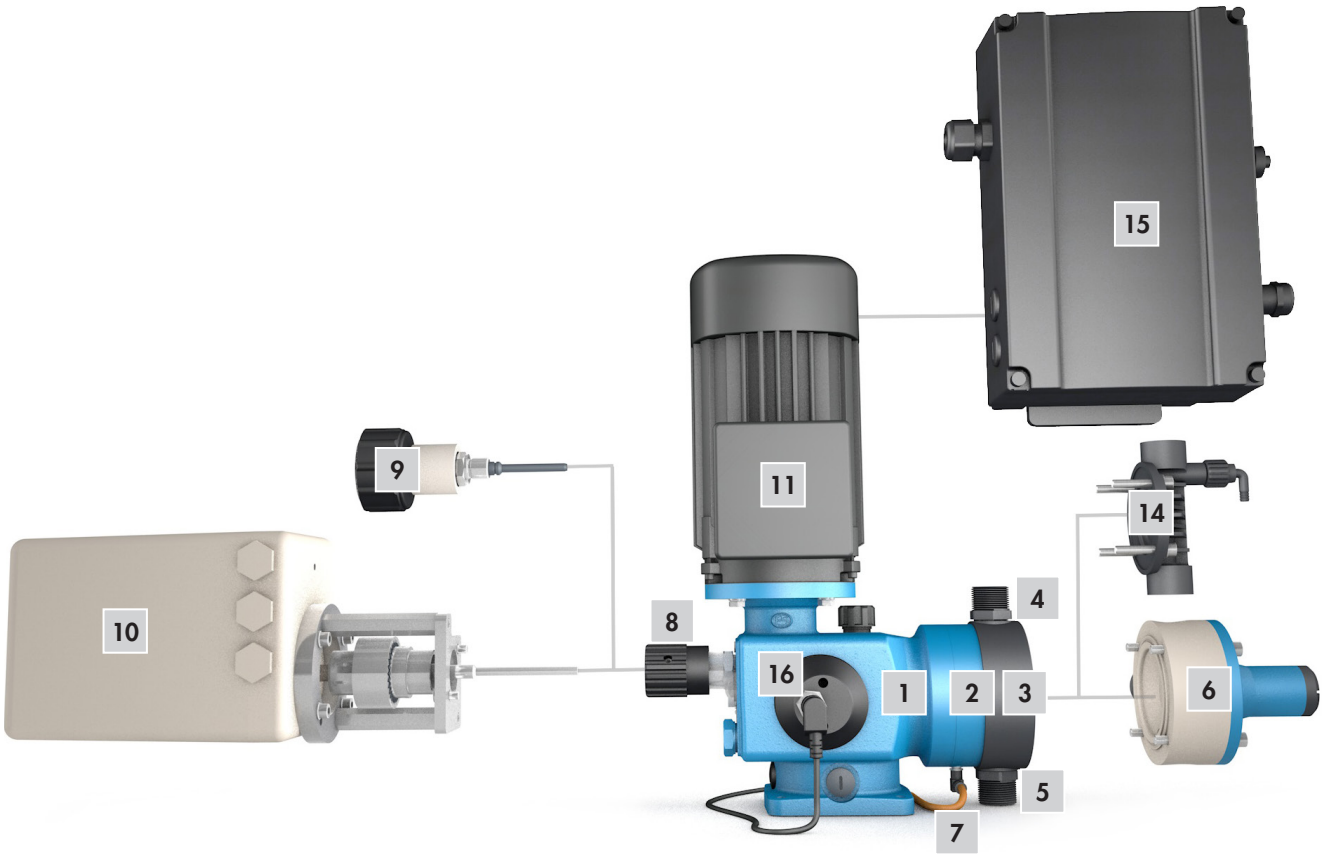


| No. | Designation | Remark |
|---|---|---|
| 1 | Stroke mechanism | |
| 2 | Assembly pump | |
| 3 | Pump body | |
| 4 | Pressure valve | |
| 5 | Suction valve | |
| 6 | Pump body with integrated overflow valve | |
| 7 | Diaphragm rupture monitoring device | option |
| 8 | Manual stroke length adjustment | |
| 9 | Manual stroke length adjustment with position indicator | option |
| 10 | Stroke length adjustment with actuator | option |
| 11 | Motor | |
| 14 | Pump body with manual vent valve | ...409.2-1,6e; -2,4e |
| 15 | Frequency converter * | option |
| 16 | Stroke frequency transmitter | option |
| not illustrated | Blind plug | option (M-design) |
| not illustrated | Motor for Ex-area * | option (R-design) |
| not illustrated | Actuator for Ex-area * | option |
| not illustrated | Pneumatic actuator * | option |

* see enclosed documentation

## Components of C409.2




| No. | Designation | Remark |
|---|---|---|
| **1** | Stroke mechanism | |
| **2** | Assembly pump | |
| **3** | Pump body | |
| **4** | Pressure valve | |
| **5** | Suction valve | |
| **6** | Pump body with integrated overflow valve | |
| **7** | Diaphragm rupture monitoring device | |
| **8** | Manual stroke length adjustment | |
| **9** | Manual stroke length adjustment with position indicator | option |
| **10** | Stroke length adjustment with actuator | option |
| **11** | Motor | |
| **12** | Control Pro+ with removable control element | |
| **13** | INTERFACE MODULE | accessories |
| **14** | Pump body with manual vent valve | ...409.2-1,6, -2,4e |
| not illustrated | Suction lances connection | accessories |

## Components ...410.2

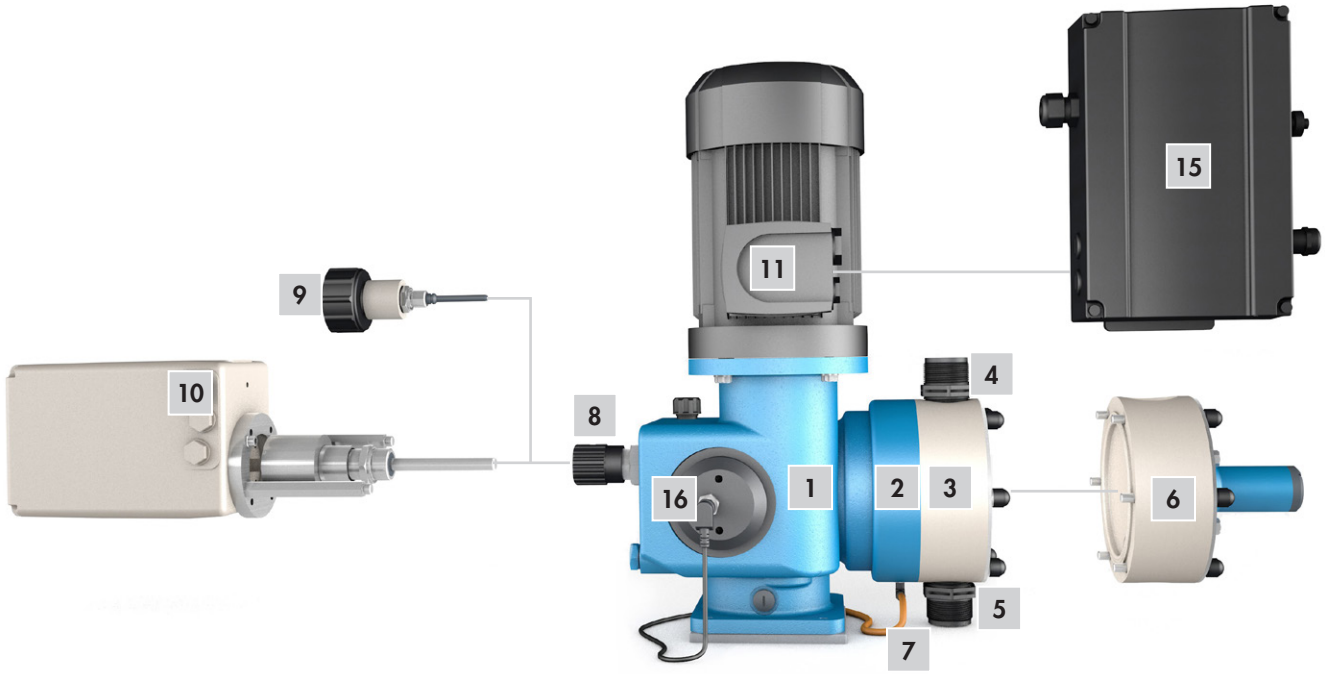


| No. | Designation | Remark |
|---|---|---|
| 1 | Stroke mechanism | |
| 2 | Assembly pump | |
| 3 | Pump body | |
| 4 | Pressure valve | |
| 5 | Suction valve | |
| 6 | Pump body with integrated overflow valve | |
| 7 | Diaphragm rupture monitoring device | option |
| 8 | Manual stroke length adjustment | |
| 9 | Manual stroke length adjustment with position indicator | option |
| 10 | Stroke length adjustment with actuator | option |
| 11 | Motor | |
| 15 | Frequency converter * | option |
| 16 | Stroke frequency transmitter | option |
| not illustrated | Blind plug | option (M-design) |
| not illustrated | Motor for Ex-area * | option (R-design) |
| not illustrated | Actuator for Ex-area * | option |
| not illustrated | Pneumatic actuator * | option |

* see enclosed documentation

## Components of C410.2




| No. | Designation | Remark |
|---|---|---|
| 1 | Stroke mechanism | |
| 2 | Assembly pump | |
| 3 | Pump body | |
| 4 | Pressure valve | |
| 5 | Suction valve | |
| 6 | Pump body with integrated overflow valve | |
| 7 | Diaphragm rupture monitoring device | |
| 8 | Manual stroke length adjustment | |
| 9 | Manual stroke length adjustment with position indicator | option |
| 10 | Stroke length adjustment with actuator | option |
| 11 | Motor | |
| 12 | Control C410.2 | |
| not illustrated | Suction lances connection | accessories |

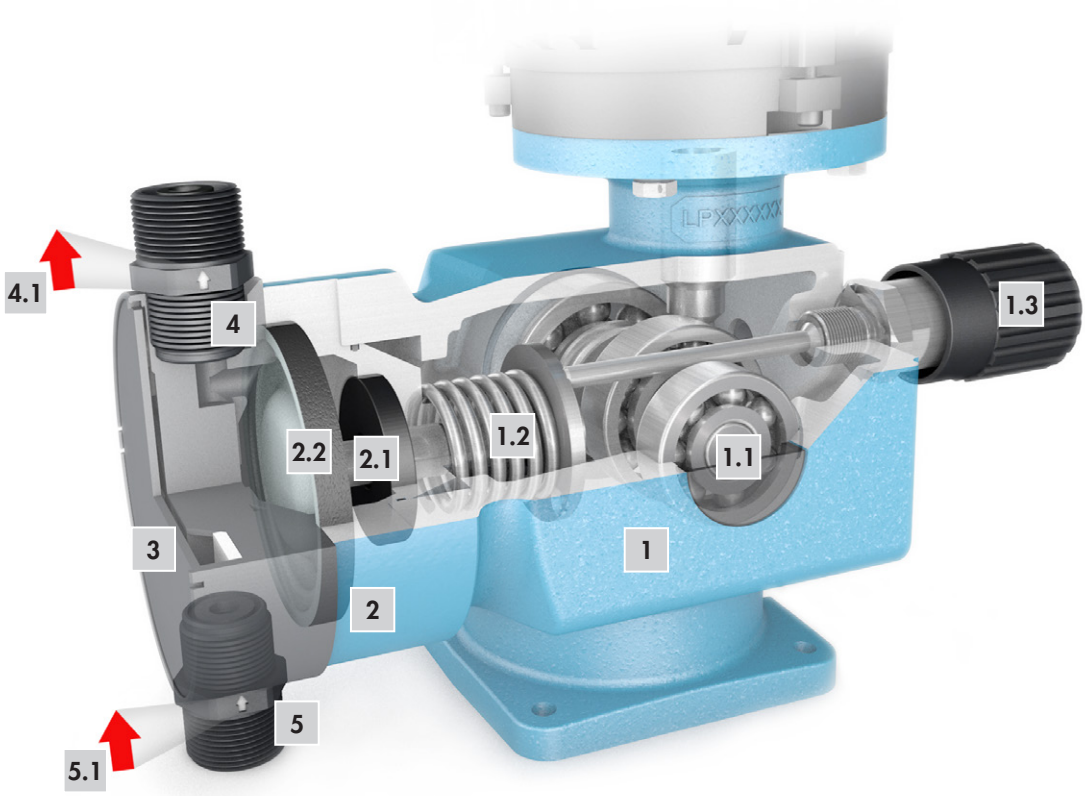


## Stroke mechanism (1)

Piston diaphragm pumps of this type series use a rotary cam drive to transmit the rotation of the drive motor to the displacement body.
In case of the rotary cam drive, the eccentric (**1.1**) provides the pressure stroke while the suction stroke is performed by a pressure spring (return spring) (**1.2**).
The effective stroke length can be changed by means of an adjustable scale knob (**1.3**) which prevents the connecting rod from following the rotary cam up to the rear dead centre during suction stroke (see stroke length adjustment).

## Assembly pump (2)

The drive diaphragm (**2.2**) connected to the drive via the connecting rod (**2.1**) transmits the stroke movement directly to the pumped medium.

## Pump body (3)

Depending on the applied backpressure, movements of the plastic pump body in elastic materials are possible.
This does not affect the pumps's service life or operational reliability.

## Pressure valve / Suction valve (4/5)

The pump valves are ball valves that only work properly in a vertical position. The condition of the valves has a deciding effect on the operating capability of the pump. Valves must be exchanged as complete units. When replacing the valves it is important to check the flow direction (**4.1/5.1**) .

**ATTENTION**

Pressure valve above, suction valve below!

## Pump body with integrated overflow valve (6)

The integrated diaphragm overflow valve protects the pump from unacceptable overpressure at closed pressure line. Pipes and fittings, however, are not protected and have to be protected separately, if necessary. It can be used for liquid media without solid matters according to the manufacturer specifications.
Pump bodies with integrated overflow valve are equipped with an additional relief channel (**6.1**) through which the pumped medium is drained in case of an unacceptable overpressure.
The relief channel is closed by the mechanically prestressed diaphragm (**6.2**) of the overflow valve.
The mechanical prestress which is executed by a pressure spring (**6.3**) can be adjusted with a set screw (**6.4**). If the pressure of the pumped medium on the diaphragm exceeds the set pressure, the diaphragm is lifted and the pumped medium flows into the relief channel.
When the pressure in the pump body falls below the pressure set the diaphragm closes the inlet channel again.

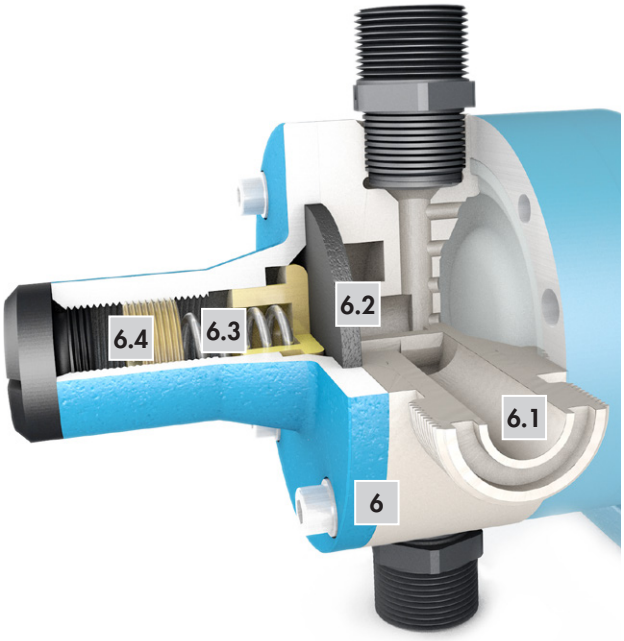


## Pump body with manual vent valve (14) (409.2-1,6e; -2,4e)

The vent valve is used to release the manual pressure in the pump body (**15**) during commissioning. Open vent valve when pump primes first time.
When vent valve is opened gas including medium escapes into the feedback line. The vent valve must be closed again as soon as only medium without gas constituent escapes. The pump now feeds the medium into the pressure line.
Open again for another ventilation. The vent valve consists of a vent screw (**15.1**) with integrated hose nozzle Ø 6,5 (**15.2**), which must be fitted with a hose (**15.3**) (inside diameter 6 mm) as feedback line. The leaking medium incl. the gas admixtures must be disposed off properly.
The vent screw is inserted during normal operation.

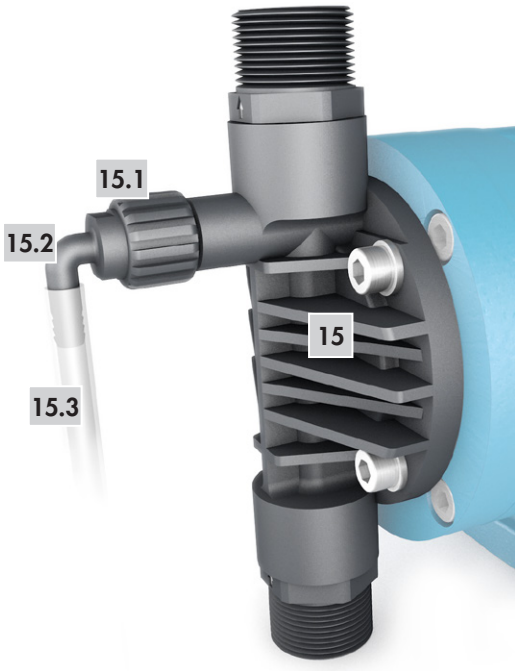


**ATTENTION**

Open vent screw with great caution and perform max. 1 turn. Take care that the tightness of the thread is still guaranteed.

**ATTENTION**

The vent screw must always be closed during the driving process.

## Diaphragm rupture monitoring device (7)

### C409.2 /C410.2 (standard)

**sera** - pumps of the C409.2 series are equipped with a conductive diaphragm rupture monitoring device.

**NOTE**

The sensitivity of the diaphragm rupture electrode can be adapted to the conductivity of the medium via the electronics (see the technical manual of the control). Preset ex works to 50% approx. 10 µS/cm.

### ...409.2 / ...410.2 (option)

**sera** pumps of the R(F)/M(F)409.2 /R(F)/M(F)410.2 series can be equipped with a conductive diaphragm rupture monitoring device as option.

**ATTENTION**

The pumped medium must have a minimum conductivity of at least 5 µS/cm!

An electrode together with an approprate evaluation unit (option, e.g. **sera** diaphragm rupture relay, type ER-104 (or ER-142 for Ex-areas respectively) is used for monitoring. The diaphragm rupture electrode is mounted directly to the pump, the evaluation unit inside the switch cabinet.
The diaphragm rupture electrode type MBE-02 is not mounted by sera due to transport. We put the MBE-02 electrode onto the cable and fix it to the pump in a separate bag.
Put the diaphragm rupture electrode is in the base ring (**2**) of the pump from below (see pig. „Components ...").

## Stroke length adjustment

The delivery rate of the pump is set by changing the stroke length. The stroke length is infinitely variable between 0% and 100%..

**NOTE**

A linear dosing behaviour is achieved with stroke length adjustments between 20% and 100%.

## Manual stroke length adjustment (standard) (8)

The effective stroke length of the connecting rod is changed by turning the scale knob.
The stroke length should be adjusted during operation of the pump.
The set stroke length can be read off a scale, e.g. 75%.
With the 20-steps adjustment on the scale knob, the stroke length can be set individually with a tolerance of 0.5%..

A protecting cap can be provided for the protection of the stroke length adjustment against unintentional adjustment.

...409.2

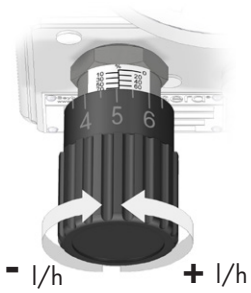


...410.2-280e ... 900e

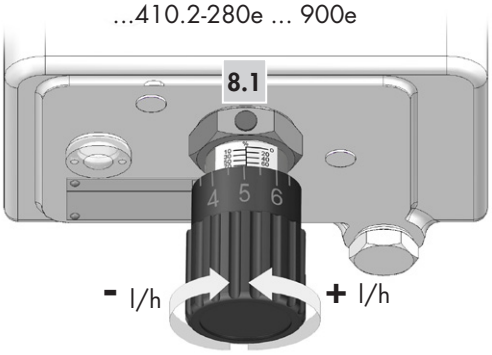


...410.2-1450e

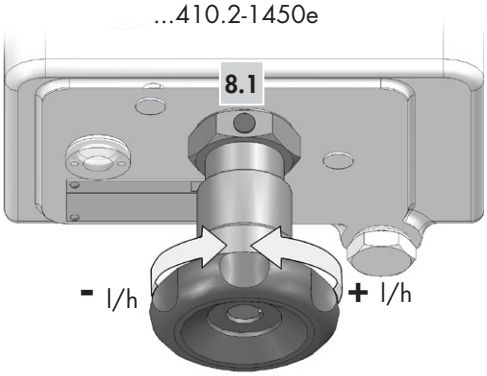


**ACHTUNG**

The locking (**8.1**) is to be released (us-ing a spanner SW3) before the stroke length is changed. Then the locking must be tightened again. This ensures that the set stroke length does not change during opera-tion.

## Manual stroke length adjustment by a dial scale with indication of percent (option) (9)

The stroke length is adjusted by turning the hand wheel.
The stroke length shuold be adjusted during operation of the pump.
The set stroke length can be read off the percent scale (the example shows a set stroke length of 65%).
In delivery state, the stroke length adjustment is factory set to 50%.

**ATTENTION**

The dial scale with indication of percent may become misadjusted during transport.
If the indicator does not match the 50% setting, then the percent scale must be re-adjusted during operation (!) of the pump!

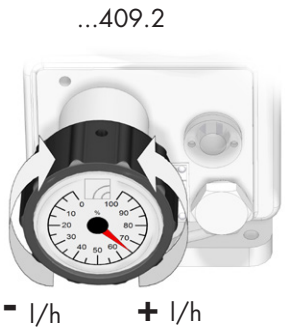


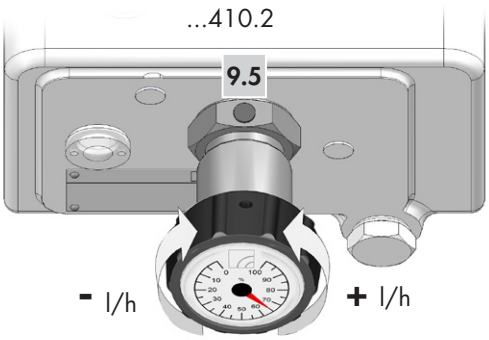


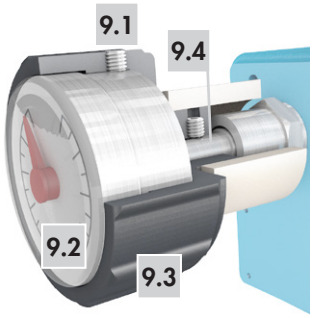


**Adjusting the percent scale:**

- Switch on the pump.
- Loosen setscrew (**9.1**).
- Remove percent scale (**9.2**) from the hand wheel (**9.3**).
- Manually turn the percent scale to 0% setting.
- Loosen the locking (**9.5**) ► bei ...410.2.
- Use the hand wheel to set the stroke length to 0%.
- Turn hand wheel clockwise until there is no further stroke movement (connecting rod does no longer hit the adjusting spindle (**9.4**)).
- Insert percent scale again.
- Use the setscrew to secure the percent scale to the hand wheel.
- Adjust desired stroke length.
- Tighten the locking (**9.5**) ► bei ...410.2.

## Automatic stroke length adjustment by means of an electrical actuator (10)

The electrical actuator is directly mounted to the stroke mechanism (**1**) of the pump. A clutch transmits the rotary motion of the actuator drive shaft to the adjusting spindle. The axial displacement is compensated in the clutch.
In case of dosing pumps with electrical actuator, a manual adjustment of the stroke length on the pump is no longer possible. (Exception: actuator with hand wheel)
The actuator is equipped with two integrated limit switches as well as a position potentiometer for position feedback as standard. Both limit switches are factory set so that the drive will switch off at a stroke length of 0% and 100%, even if a control voltage is applied.
This guarantees that adjustments can only be made within the permissible range. The position potentiometer is driven by a safety clutch which prevents damage caused by incorrectly adjusted limit switches.
Activation is performed by appropriate control units (see **sera** - accessories).
The set stroke length can be read off on the pump (percent scale).
Information on the electrical connection is given inside the cover of the actuator.

**ATTENTION**

The adjustment is only possible when the pump is running!

## Automatic stroke length adjustment by means of an electrical actuator with integrated positioner

same as Chapter „Automatic stroke length adjustment by means of an electrical actuator (10)", additionally:

This positioner which is integrated in the actuator enables an actuator setting from 0…100% that is proportional to the connected input signal.
As an option, the actuator can also be provided with a collective interference signal. Information on the electrical connection is given inside the cover of the actuator.

## Drive motor C409.2 / C410.2

A **sera** motor pump of series C409.2 is driven by a threephase-motor controlled by the electronics.

A protective motor switch is not necessary due to the fact that a thermic overload protection is integrated in the pump for the protection of the motor.

## Drive motor ...409.2 / ...410.2

**sera** motor pumps R(F)/M(F)409.2 /R(F)/M(F)410.2 are driven either by a three-phase motor.
Standard: three-phase motor (with PTC thermistor; suitable for operation with frequency converter).

## Motor connection

**In case of a three-phase motor**

The motor connection depends on the voltage indication on the type plate and the applied supply voltage.

*Example:*

| | |
|---|---|
| Indication on the type plate: | Δ 230V/ Y400V 50Hz |
| Three-phase power system on sit: | Y400V 50 Hz |
| Correct motor connection: | Star connection (Y) |

Δ Delta connection

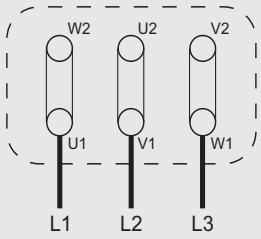


Y Star connection

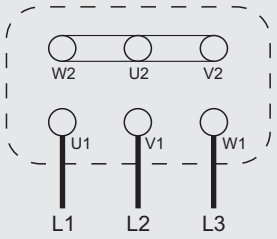


**In case of an AC motor**

The AC motor has a main and an auxiliary winding. The running capacitor is switched in series to the auxiliary phase.

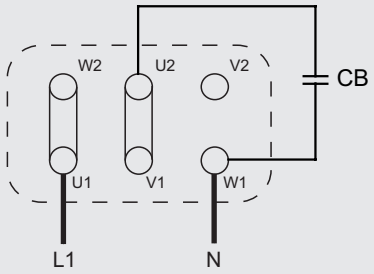


## Direction of rotation

The direction of rotation of the drive motor is arbitrary.

## Terminal box

Before closing the terminal box, please check that:

- All terminal connections are tightly fitted.
- The interior is clean and free of foreign bodies.
- Unused cable entries are closed and screw plugs are tightened.
- The sealing is correctly inserted in the cover of the terminal box; check proper condition of all sealing surfaces so that the demands of the protection category are fulfilled.

## Motor protection

Provide for adequate motor protective equipment in order to protect the motor from overload (e.g. motor protection switch with thermal overcurrent release).
Connect the ground wire to the marked earth screw in accordance with VDE 0100.

**ATTENTION**

Fuses do not protect the motor!

## Conrol C409.2 Pro+/ C410.2 (12)

Among other things, the control enable the proportional dosing via analogue signals 4 … 20 mA or contact signals with the possibility of pulse division or pulse multiplication.
The graphical display shows information about the current status of the pump.
A connection for flow monitoring or flow rate measurement and an „empty" signal with pre-alarm and dry run alarm are available as standard.

## INTERFACE MODULE (13) (accessories C409.2)

The INTERFACE MODULE provides level input and PROFIBUS connectivity (see TM05).

## Stroke frequency transmitter (16) (option RF409.2 / RF410.2)

**sera** pumps R(F)/M(F)409.2 /R(F)/M(F)410.2 are oscillating displacement pumps with an exactly defined stroke volume per each pump stroke.
If these dosing pumps should be used for automatic filling processes or charge dosing, then the single pump strokes must be determined and converted into electrical signals.
For this purpose, a stroke frequency transmitter (inductive contactor) is added to the pump (the option cannot mounted additionally) and reports each single pump stroke to the evaluation unit (e.g. preselection counter, SPC-control unit, etc.).

| Technical data | |
|---|---|
| Rated voltage | 10 - 60 V DC |
| Constant current | < 200 mA |
| Short circuit-proof: | |
| Connection mode | plug connector with 2 m cable |
| LED (green) | indicates supply voltage |
| LED (yellow) | indicates switching status |

Wiring diagram

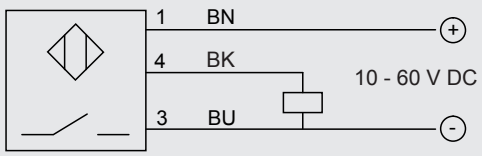


**ATTENTION**

When switching inductive loads (protectors, relays, etc.), surge protectors (varistors) must be fitted owing to the high self-induction voltage!

**ATTENTION**

When the pump is deployed in exlosion-hazardous areas a NAMUR type stoke frequency transmitter (II2G EExia IICT6, acc. to. ATEX95) is to be provided!

## TECHNICAL DATA

| PUMP DATA (* 8mWS = performance losses of nominal capacity QN of 20-25%) | | | RF 409.2-... | | | | | |
|---|---|---|---|---|---|---|---|---|
| | | | 1,6e | 2,4e | 7,0e | 12e | 18e | 25e |
| Permissible pressure $p_{2max.}$ at the pump outlet | bar | | 10 | 10 | 10 | 10 | 10 | 10 |
| Nominal capacity QN at $p_{2max.}$ | l/h | 50 Hz | 0-1,6 | 0-2,4 | 0-7,0 | 0-12 | 0-18 | 0-25 |
| | | 60 Hz | 0-1,9 | 0-2,9 | 0-8,4 | 0-14,4 | 0-21,5 | 0-30 |
| Quantity per stroke | ml/stroke | (100%) | 0,27 | 0,27 | 0,78 | 2,0 | 3,0 | 2,8 |
| Max. suction height | mWC | | 3 | | | | | 3 ( 8* ) |
| Min./max. permissible pressure at the pump inlet | bar | $p_{1min/max}$ | -0,3/0 | | | | | -0,3/0 ( -0,8/0* ) |
| Recomm. nominal diameter DN of the connecting pipes | mm | | 5 | 5 | 5 | 10 | 10 | 10 |
| Nominal stroke frequency | 1/min | 50 Hz | 100 | 150 | 150 | 100 | 100 | 150 |
| | | 60 Hz | 120 | 180 | 180 | 120 | 120 | 180 |
| Weight approx. | kg | plastic | 9 | 9 | 9 | 9 | 9 | 9 |
| | | stainless steel | 10 | 10 | 10 | 10 | 10 | 10 |

| PUMP DATA (* 8mWS = performance losses of nominal capacity QN of 20-25%) | | | RF 409.2-... | | | | | | | |
|---|---|---|---|---|---|---|---|---|---|---|
| | | | 50e | 75e | 90e | 115e | 140e | 180e | 250e | 350e |
| Permissible pressure $p_{2max.}$ at the pump outlet | bar | | 10 | 10 | 8 | 4 | 8 | 4 | 3 | 3 |
| Nominal capacity QN at $p_{2max.}$ | l/h | 50 Hz | 0-50 | 0-75 | 0-90 | 0-115 | 0-140 | 0-180 | 0-250 | 0-350 |
| | | 60 Hz | 0-60 | 0-90 | 0-108 | 0-138 | 0-168 | 0-216 | 0-300 | - |
| Quantity per stroke | ml/stroke | (100%) | 8,3 | 8,3 | 15,0 | 19,2 | 15,6 | 20,0 | 41,7 | 38,9 |
| Max. suction height | mWC | | 3 (8 *) | | | | | | 3 | |
| Min./max. permissible pressure at the pump inlet | bar | $p_{1min/max}$ | -0,3/0 (-0,8/0) | | | | | | -0,3/0 | |
| Recomm. nominal diameter DN of the connecting pipes | mm | | 10 | 15 | 15 | 15 | 15 | 15 | 15 | 15 |
| Nominal stroke frequency | 1/min | 50 Hz | 100 | 150 | 100 | 100 | 150 | 150 | 100 | 150 |
| | | 60 Hz | 120 | 180 | 120 | 120 | 180 | 180 | 120 | – |
| Weight approx. | kg | plastic | 9 | 9 | 11 | 10 | 11 | 10 | 13 | 13 |
| | | stainless steel | 10 | 10 | 13 | 13 | 13 | 13 | 21 | 21 |

Linear dosing range at a stroke length between 20% and 100%.
Linear dosing range at a stroke length between 30% and 100% ► RF409.2-1,6, -2,4e (50Hz), RF409.2-7,0e, -12e (60Hz).
The nominal data refer to water, 20°C and nominal pressure. With lower counterpressure it can come to be soaked off achievements.

| PUMP DATA | | | C 409.2-... Pro+ | | | | | |
|---|---|---|---|---|---|---|---|---|
| | | | 1,6e | 2,4e | 7,0e | 12e | 18e | 25e |
| Permissible pressure $p_{2max.}$ at the pump outlet | bar | | 10 | 10 | 10 | 10 | 10 | 10 |
| Nominal capacity QN at $p_{2max.}$ | l/h | 50/60 H | 0-1,6 | 0-2,4 | 0-7 | 0-12 | 0-18 | 0-25 |
| Quantity per stroke | ml/stroke | (100%) | 0,27 | 0,27 | 0,78 | 3,0 | 3,0 | 3,0 |
| Max. suction height | mWC | | 3 | | | | | |
| Min./max. permissible pressure at the pump inlet | bar | $p_{1min/max}$ | -0,3/0 | | | | | |
| Recomm. nominal diameter DN of the connecting pipes | mm | | 10 | 10 | 10 | 10 | 10 | 10 |
| Nominal stroke frequency | 1/min | 50/60 Hz | 100 | 150 | 150 | 67 | 100 | 150 |
| Weight approx. | kg | plastic | 11 | 11 | 11 | 11 | 11 | 8,5 |
| | | stainless st. | | | | | | |

| PUMP DATA (* 8mWS = performance losses of nominal capacity QN of 20-25%) | | | C 409.2-... Pro+ | | | | | | | |
|---|---|---|---|---|---|---|---|---|---|---|
| | | | 50e | 75e | 90e | 115e | 140e | 180e | 250e | 350e |
| Permissible pressure $p_{2max.}$ at the pump outlet | bar | | 10 | 10 | 8 | 4 | 8 | 4 | 3 | 3 |
| Nominal capacity QN at $p_{2max.}$ | l/h | 50/60 Hz | 0-50 | 0-75 | 0-90 | 0-115 | 0-140 | 0-180 | 0-250 | 0-350 |
| Quantity per stroke | ml/stroke | (100%) | 8,3 | 8,3 | 15,0 | 19,2 | 15,6 | 20,0 | 41,7 | 38,9 |
| Max. suction height | mWC | | 3 | | | (8*) | | | 3 | |
| Min./max. permissible pressure at the pump inlet | bar | $p_{1min/max}$ | -0,3/0 | | | (-0,8/0*) | | | -0,3/0 | |
| Recomm. nominal diameter DN of the connecting pipes | mm | | 15 | 15 | 15 | 15 | 15 | 15 | 15 | 15 |
| Nominal stroke frequency | 1/min | 50/60 H | 150 | 150 | 100 | 100 | 150 | 150 | 100 | 150 |
| Weight approx. | kg | plastic | 8,5 | 8,5 | 10,5 | 9,0 | 10,5 | 9,0 | 13,0 | 13,0 |
| | | stainless st. | | | | | | | | |

Linear dosing range at a stroke length between 20% and 100% and at a stroke frequency between 5 and 100%.
The nominal data refer to water, 20°C and nominal pressure. With lower counterpressure it can come to be soaked off achievements.

## TECHNICAL DATA

| PUMP DATA | | | RF 410.2-... | | | |
|---|---|---|---|---|---|---|
| | | | 280e | 570e | 900e | 1450e |
| Permissible pressure $p_{2max.}$ at the pump outlet | bar | | 8 | 6 | 5 | 5 * |
| Nominal capacity QN at $p_{2max.}$ | l/h | 50 Hz | 0-280 | 0-570 | 0-900 | 0-1.450 |
| | | 60 Hz | 0-336 | 0-684 | 0-1.080 | 0-1.740 |
| Quantity per stroke | ml/stroke | (100%) | 46 | 98 | 155 | 245 |
| Max. suction height | mWC | | 5 | 5 | 3 | 3 |
| Min./max. permissible pressure at the pump inlet | bar | $p_{1min/max}$ | -0,5/0 | -0,5/0 | -0,3/0 | -0,3/0 |
| Recommended nominal diameter DN of the connecting pipes | mm | | 15 | 15 | 20 | 25 |
| Nominal stroke frequency | 1/min | 50 Hz | 97 | 97 | 97 | 97 |
| | | 60 Hz | 116 | 116 | 116 | --- |
| Weight approx. | kg | plastic | 35 | 35 | 37 | 41 |
| | | stainless steel | 42 | 42 | 52 | 59 |

| PUMP DATA | | | C 410.2-... | | | |
|---|---|---|---|---|---|---|
| | | | 280e | 570e | 900e | 1450e |
| Permissible pressure $p_{2max.}$ at the pump outlet | bar | | 8 | 6 | 5 | 5 |
| Nominal capacity QN at $p_{2max.}$ | l/h | 50/60 Hz | 0-280 | 0-570 | 0-900 | 0-1.450 |
| Quantity per stroke | ml/stroke | (100%) | 46 | 98 | 155 | 245 |
| Max. suction height | mWC | | 5 | 5 | 3 | 3 |
| Min./max. permissible pressure at the pump inlet | bar | $p_{1min/max}$ | -0,5/0 | -0,5/0 | -0,3/0 | -0,3/0 |
| Recommended nominal diameter DN of the connecting pipes | mm | | 15 | 15 | 20 | 25 |
| Nominal stroke frequency | 1/min | 50 Hz | 97 | 97 | 97 | 97 |
| Weight approx. | kg | plastic | 38 | 38 | 49 | 49 |
| | | stainless steel | 45 | 45 | 64 | 64 |

* at 60 Hz is the permissible pressure 3,5 bar

Linear dosing range at a stroke length between 20% and 100%.
The nominal data refer to water, 20°C and nominal pressure. With lower counterpressure it can come to be soaked off achievements.

| ELECTRICAL DATA | | RF409.2-1,6e ... RF409.2-25e |
|---|---|---|
| Power consumption | kW | 0,18 |
| Voltage | V | 230/400V 50Hz, 460V 60Hz |
| Frequency | Hz | 50/60 |
| Insulation class | ISO | F |
| Enclosure | IP | 55 |

| ELECTRICAL DATA | | RF409.2-50e ... RF409.2-350e |
|---|---|---|
| Power consumption | kW | 0,37 |
| Voltage | V | 230/400V 50Hz, 460V 60Hz |
| Frequency | Hz | 50/60 |
| Insulation class | ISO | F |
| Enclosure | IP | 55 |

| ELECTRICAL DATA | | C 409.2-1,6e Pro+ ... C 409.2-25e Pro+ | |
|---|---|---|---|
| | | 230 V, 50/60 Hz | 115 V, 50/60 Hz |
| Power consumption | kW | 0,18 | |
| Voltage | V | 210 - 250 | 100 - 125 |
| Frequency | Hz | 50/60 | |
| Inlet voltage, control input | V DC | 5...30 | |
| Minimum contact signal time | ms | 55 | |
| Analogue input resistance | Ω | 39 | |
| Digital output internal/external supply | | PNP max. 24V DC, 30mA /max. 30V DC, 30mA | |
| Recommended fuse | (circuit breaker) | C6A | C10A |
| Insulation class | ISO | F | |
| Enclosure | IP | 55 | |

| ELECTRICAL DATA | | C 409.2-50e Pro+ ... C 409.2-350e Pro+ | |
|---|---|---|---|
| | | 230 V, 50/60 Hz | 115 V, 50/60 Hz |
| Power consumption | kW | (...-50e = 0,18 kW) | 0,37 |
| Voltage | V | 210 - 250 | 100 - 125 |
| Frequency | Hz | 50/60 | |
| Inlet voltage, control input | V DC | 5...30 | |
| Minimum contact signal time | ms | 55 | |
| Analogue input resistance | Ω | 39 | |
| Digital output internal/external supply | | PNP max. 24V DC, 30mA /max. 30V DC, 30mA | |
| Recommended fuse | (circuit breaker) | C6A | C10A |
| Insulation class | ISO | F | |
| Enclosure | IP | 55 | |

## TECHNICAL DATA

| ELECTRICAL DATA | | RF 410.2-... | | | |
|---|---|---|---|---|---|
| | | 280e | 570e | 900e | 1450e |
| Power consumption | kW | 0,75 | 0,75 | 1,1 | 1,5 |
| Voltage | V | 230/400V 50Hz, 460V 60Hz | | | |
| Frequency | Hz | 50/60 | | | |
| Insulation class | ISO | F | | | |
| Enclosure | IP | 55 | | | |

| ELECTRICAL DATA | | C 410.2-... | | | |
|---|---|---|---|---|---|
| | | 280e | 570e | 900e | 1450e |
| Power consumption | kW | 0,75 | 0,75 | 1,5 | 1,5 |
| Voltage | V | 380-420 | | | |
| Frequency | Hz | 50/60 | | | |
| Inlet voltage, control input | V DC | 5...30 | | | |
| Minimum contact signal time | ms | 55 | | | |
| Analogue input resistance | Ω | 100 | | | |
| Digital output internal/external supply | | PNP max. 15V DC, 50mA /max. 30V DC, 350mA | | | |
| Recommended fuse | (circuit breaker) | C10A | | | |
| Insulation class | ISO | F | | | |
| Enclosure | IP | 55 | | | |

### NOTE

The motor data can be read off the type plate on the drive motor of the respective pump!

| NOISE MEASUREMENT | |
|---|---|
| Max. sound pressure at max. burden | 50 - 65 dB(A) |

| VISCOSITY, PUMPED MEDIUM | |
|---|---|
| Max. viscosity with non-spring-loaded valves | 100 mPas (=cP) |

| TEMPERATURE DATA | |
|---|---|
| Max. liquid temperature | 60 °C |
| Min. liquid temperature | 10 °C |
| Max. operating temperature | 40 °C |
| Min. operating temperature | 0 °C |
| Max. storage temperature | 40 °C |
| Min. storage temperature | 0 °C |

| AMBIENT CONDITIONS | |
|---|---|
| Max. installation altitude above sea level | 1000 m |
| Max. relative air humidity | < 90% |

## Characteristics

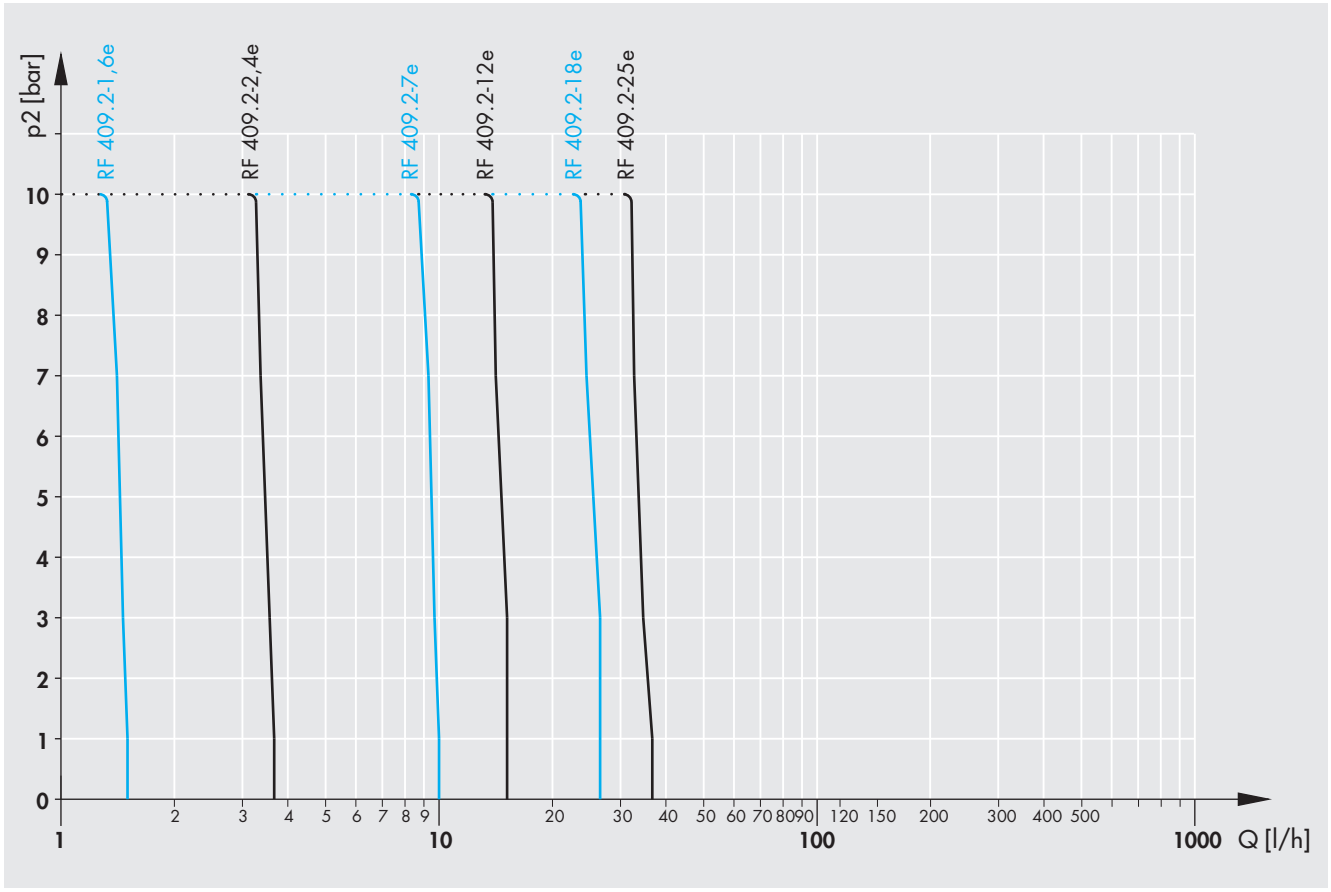


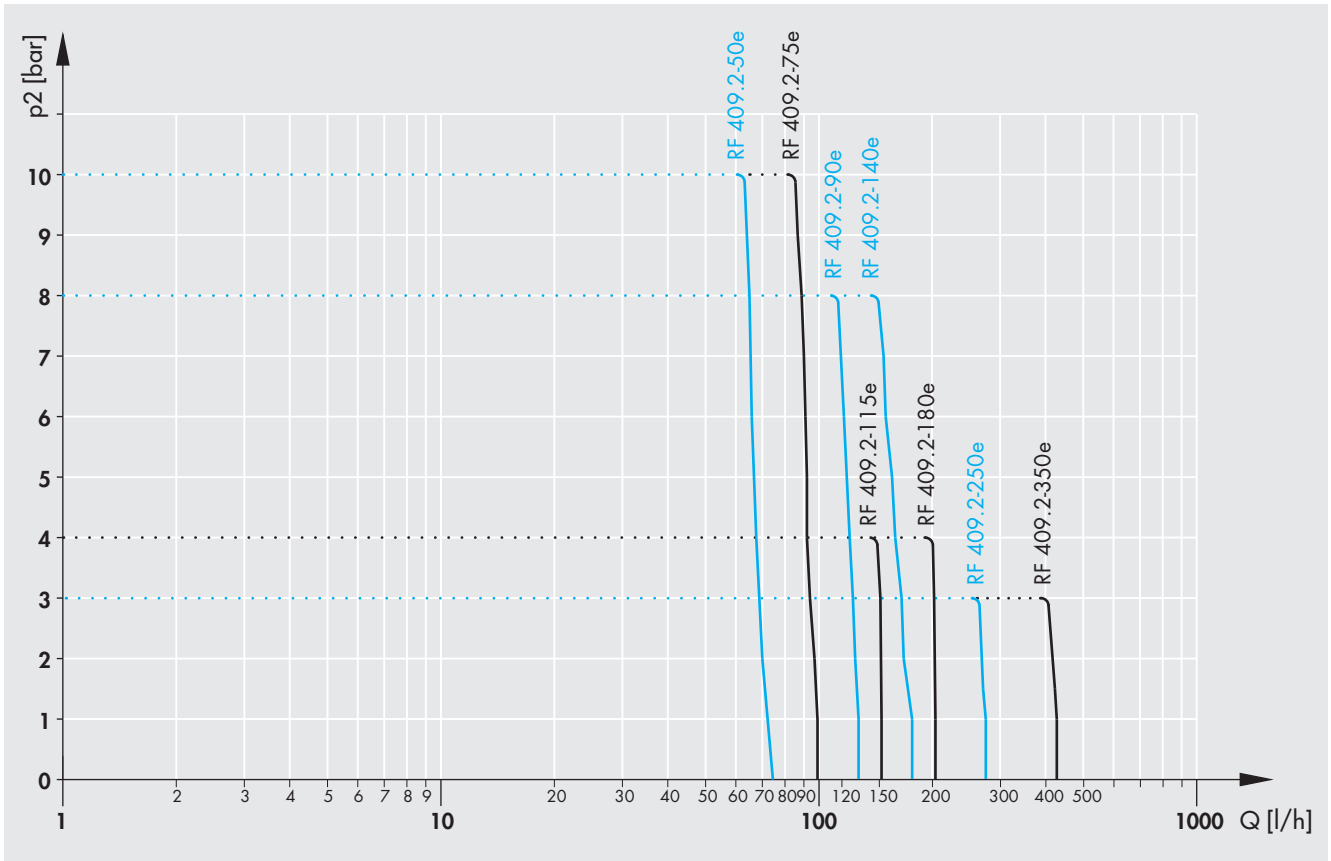

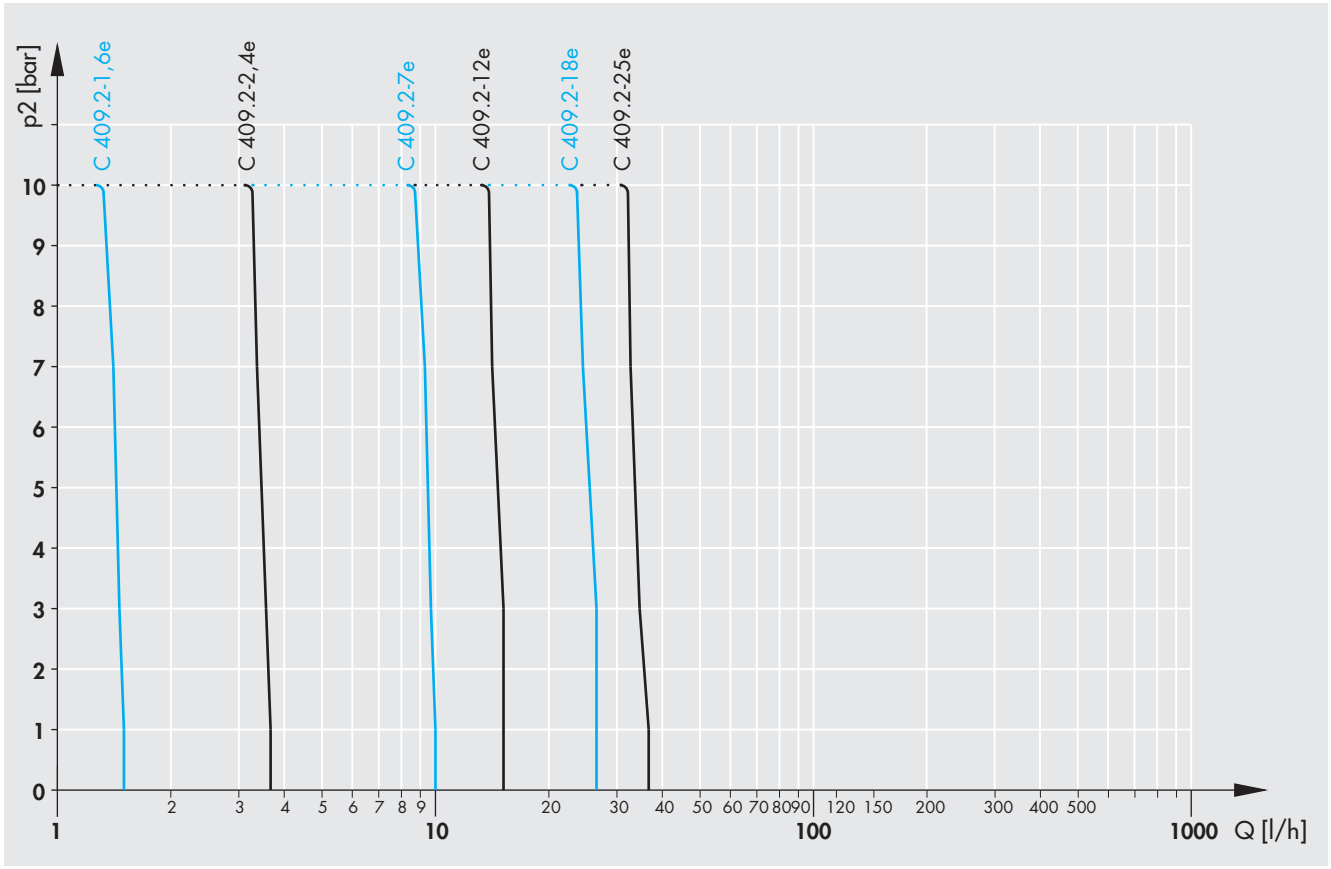
p2 [bar]
C 409.2-1,6e
C 409.2-2,4e
C 409.2-7e
C 409.2-12e
C 409.2-18e
C 409.2-25e
0 1 2 3 4 5 6 7 8 9 10
1 2 3 4 5 6 7 8 9 10 20 30 40 50 60 70 80 90 100 120 150 200 300 400 500 1000
Q [l/h]

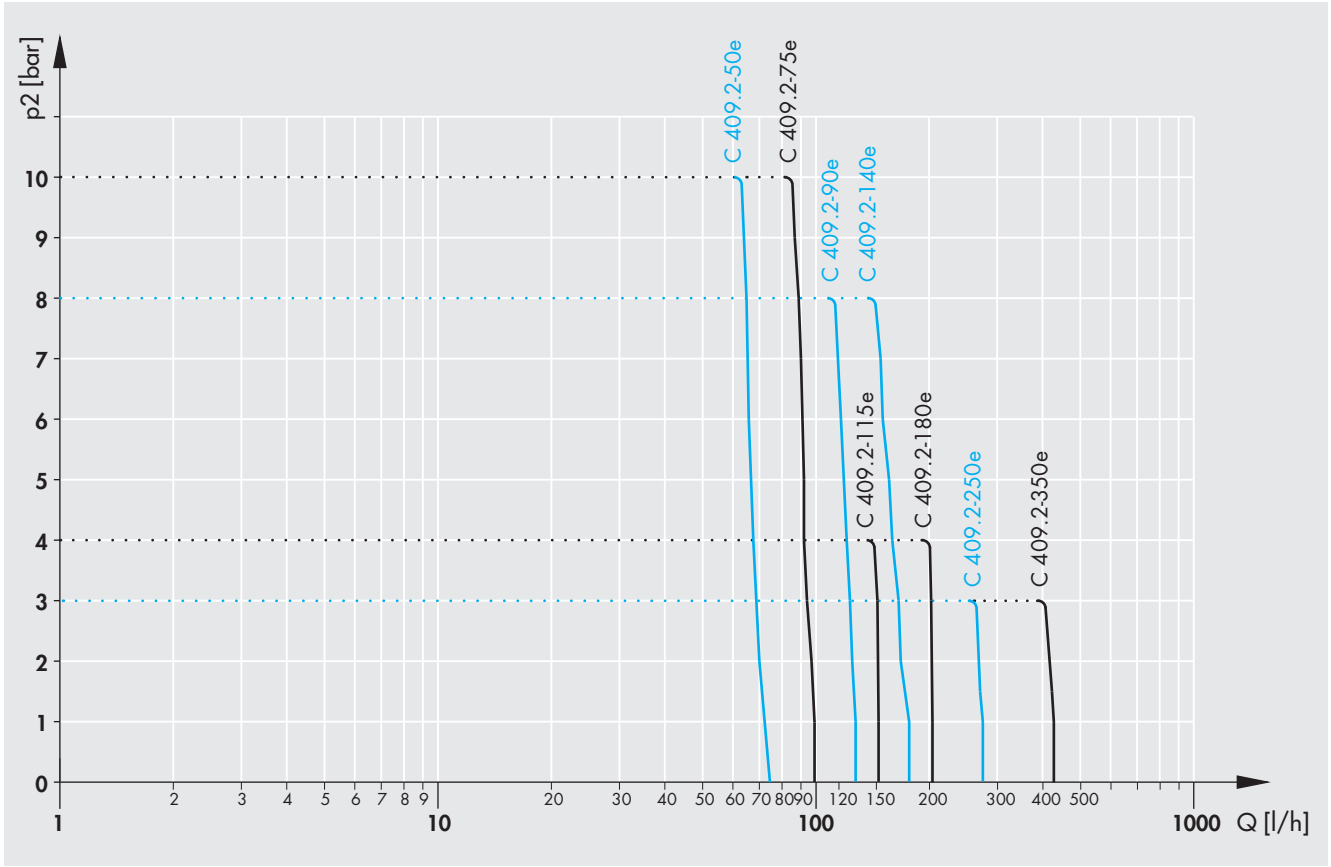
p2 [bar]
C 409.2-50e
C 409.2-75e
C 409.2-90e
C 409.2-140e
C 409.2-115e
C 409.2-180e
C 409.2-250e
C 409.2-350e
0 1 2 3 4 5 6 7 8 9 10
1 2 3 4 5 6 7 8 9 10 20 30 40 50 60 70 80 90 100 120 150 200 300 400 500 1000
Q [l/h]

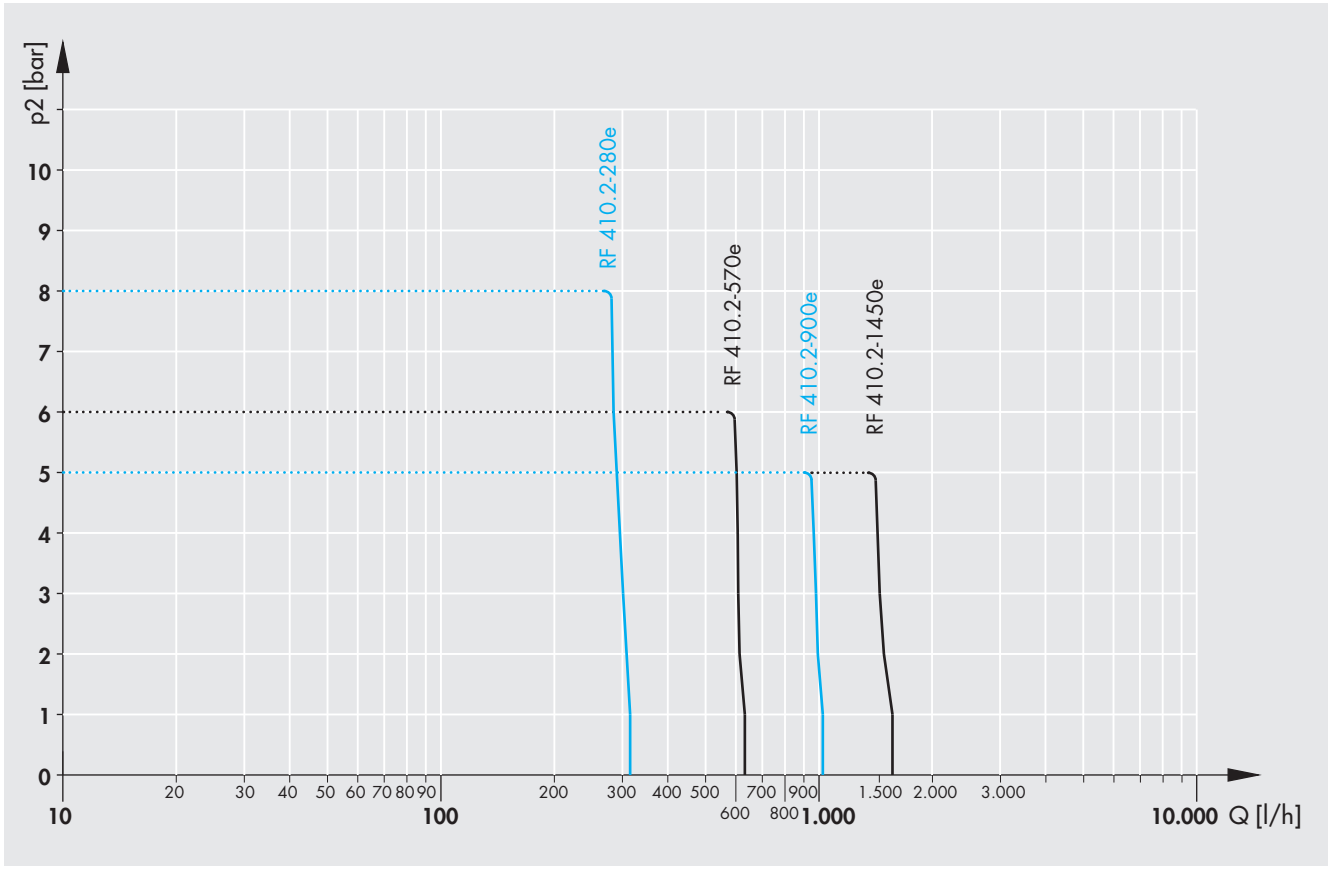
p2 [bar]
10
9
8
7
6
5
4
3
2
1
0
RF 410.2-280e
RF 410.2-570e
RF 410.2-900e
RF 410.2-1450e
20
30
40
50
60
70
80
90
100
200
300
400
500
600
700
800
900
1.000
1.500
2.000
3.000
10.000
Q [l/h]

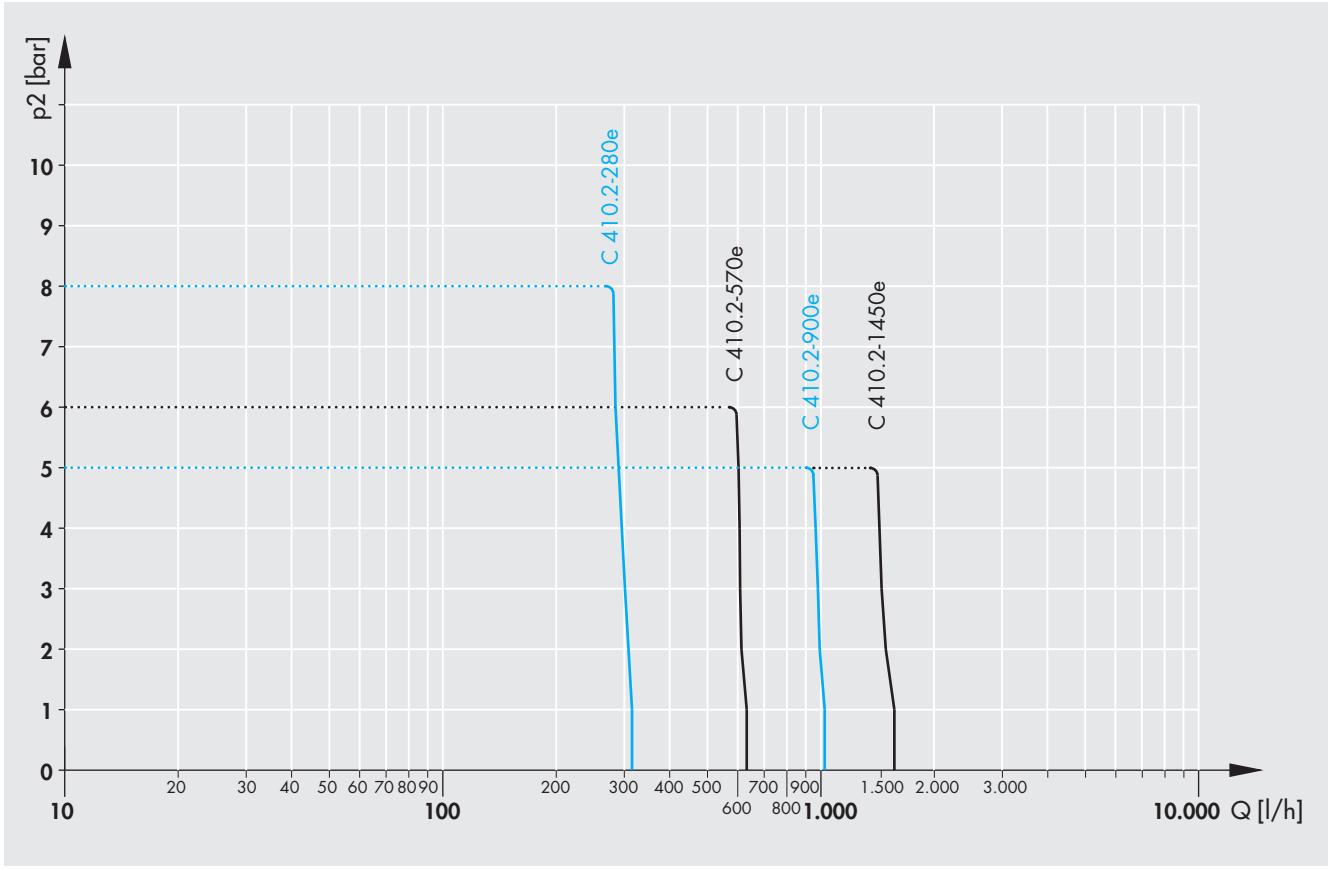
p2 [bar]
10
9
8
7
6
5
4
3
2
1
0
C 410.2-280e
C 410.2-570e
C 410.2-900e
C 410.2-1450e
20
30
40
50
60
70
80
90
100
200
300
400
500
600
700
800
900
1.000
1.500
2.000
3.000
10.000
Q [l/h]

## Dimensions RF409.2 standard

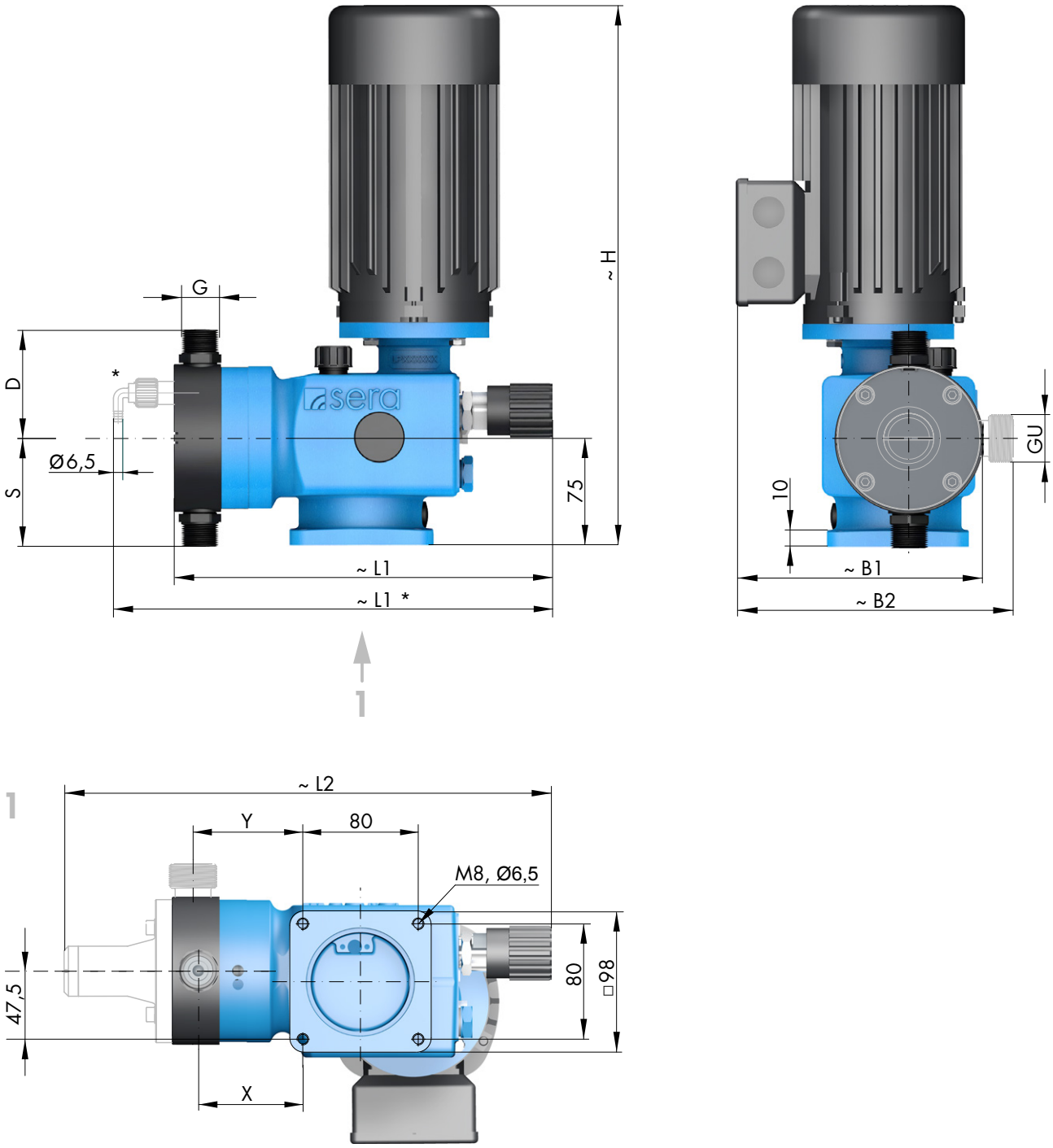


* Pump body with manual vent valve RF/MF409.2-1,6, -2,4e PP-FRP, PVDF-FRP

| | | RF 409.2-... | | | | | | | | | | | | | |
|---|---|---|---|---|---|---|---|---|---|---|---|---|---|---|---|
| **SUCTION VALVES** | | ...-1,6e | ...-2,4e | ...-7,0e | ...-12e | ...-18e | ...-25e | ...-50e | ...-75e | ...-90e | ...-115e | ...-140e | ...-180e | ...-250e | ...-350e |
| **DN** | Nominal width | 5 | 5 | 5 | 5 | 8 | 8 | 8 | 8 | 8 | 8 | 8 | 8 | 20[1] | 20[1] |
| **G** | Connection thread | G¾ | G¾ | G¾ | G¾ | G¾ | G¾ | G¾ | G¾ | G¾ | G¾ | G¾ | G¾ | G1¼[1] | G1¼[1] |
| **S** | PP-FRP / PVDF-FRP | 80 | 80 | 56 | 56 | 56 | 56 | 69 | 69 | 76 | 76 | 76 | 76 | 122 | 122 |
| **S** | PP-FRP / PVDF-FRP [2] | – | – | 57 | 60 | 60 | 60 | 67 | 67 | 76 | 76 | 76 | 76 | 122 | 122 |
| **S** | PVC-U | 70 | 70 | 62 | 65 | 63 | 63 | 70 | 70 | 78 | 78 | 78 | 78 | 119 | 119 |
| **S** | PVC-U [2] | – | – | 52 | 52 | 63 | 63 | 70 | 70 | 78 | 78 | 78 | 78 | 119 | 119 |
| **S** | 1.4571 | 70 | 70 | 57 | 61 | 61 | 61 | 68 | 68 | 76 | 76 | 76 | 76 | 122 | 122 |
| **S** | 1.4571[2] | – | – | 57 | 61 | 61 | 61 | 68 | 68 | 76 | 76 | 76 | 76 | 122 | 122 |
| **PRESSURE VALVES** | | | | | | | | | | | | | | | |
| **DN** | Nominal width | 5 | 5 | 5 | 5 | 8 | 8 | 8 | 8 | 8 | 8 | 8 | 8 | 20[1] | 20[1] |
| **G** | Connection thread | G¾ | G¾ | G¾ | G¾ | G¾ | G¾ | G¾ | G¾ | G¾ | G¾ | G¾ | G¾ | G1¼[1] | G1¼[1] |
| **D** | PP-FRP / PVDF-FRP | 80 | 80 | 64 | 64 | 64 | 64 | 69 | 69 | 76 | 76 | 76 | 76 | 122 | 122 |
| **D** | PP-FRP / PVDF-FRP [2] | – | – | 57 | 60 | 60 | 60 | 67 | 67 | 76 | 76 | 76 | 76 | 122 | 122 |
| **D** | PVC-U | 70 | 70 | 62 | 65 | 70 | 70 | 77 | 77 | 85 | 85 | 85 | 85 | 138 | 138 |
| **D** | PVC-U [2] | – | – | 65 | 65 | 70 | 70 | 77 | 77 | 85 | 85 | 85 | 85 | 138 | 138 |
| **D** | 1.4571 | 70 | 70 | 57 | 61 | 61 | 61 | 68 | 68 | 76 | 76 | 76 | 76 | 122 | 122 |
| **D** | 1.4571[2] | – | – | 57 | 61 | 61 | 61 | 68 | 68 | 76 | 76 | 76 | 76 | 122 | 122 |
| **MAX. TOTAL HEIGHT** | | | | | | | | | | | | | | | |
| **H** | | 330 | 330 | 330 | 330 | 330 | 330 | 370 | 370 | 370 | 370 | 370 | 370 | 370 | 370 |
| **MAX. TOTAL WIDTH** | | | | | | | | | | | | | | | |
| **B1** | | 175 | 175 | 175 | 175 | 175 | 175 | 185 | 185 | 185 | 185 | 185 | 185 | 220 | 220 |
| **B2** | (with relief valve) | – | – | 175 | 175 | 175 | 175 | 185 | 185 | 210 | 210 | 210 | 210 | 245 | 245 |
| **MAX. TOTAL LENGTH** | | | | | | | | | | | | | | | |
| **L1** | | 310 | 310 | 285 | 285 | 285 | 285 | 295 | 295 | 300 | 300 | 300 | 300 | 355 | 355 |
| **L2** | (with relief valve) | – | – | 345 | 345 | 345 | 345 | 360 | 360 | 370 | 370 | 370 | 370 | 435 | 435 |
| **RELIEF VALVE CONNECTION** | | | | | | | | | | | | | | | |
| **GU** | | – | – | G¾ | G¾ | G¾ | G¾ | G¾ | G¾ | G1 | G1 | G1 | G1 | G1¼[1] | G1¼[1] |
| **CONNECTION DIMENSIONS** | | | | | | | | | | | | | | | |
| **X** | | 72 | 72 | 66 | 67 | 67 | 67 | 69 | 69 | 73 | 73 | 73 | 73 | 101 | 101 |
| **Y** | | – | – | 71 | 69 | 69 | 69 | 69 | 69 | 78 | 78 | 78 | 78 | 101 | 101 |

(Measurements in mm)

[1] DN15 / G1 at valves of PVC-U
[2] Pump body with relief valve

## Dimensions ...409.2 options

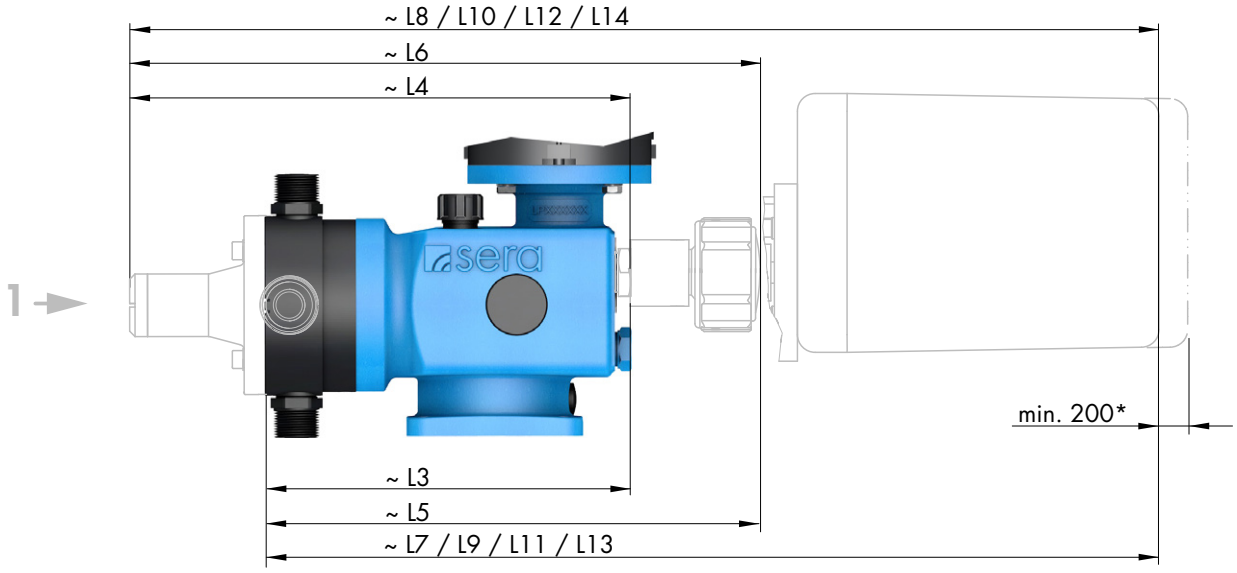


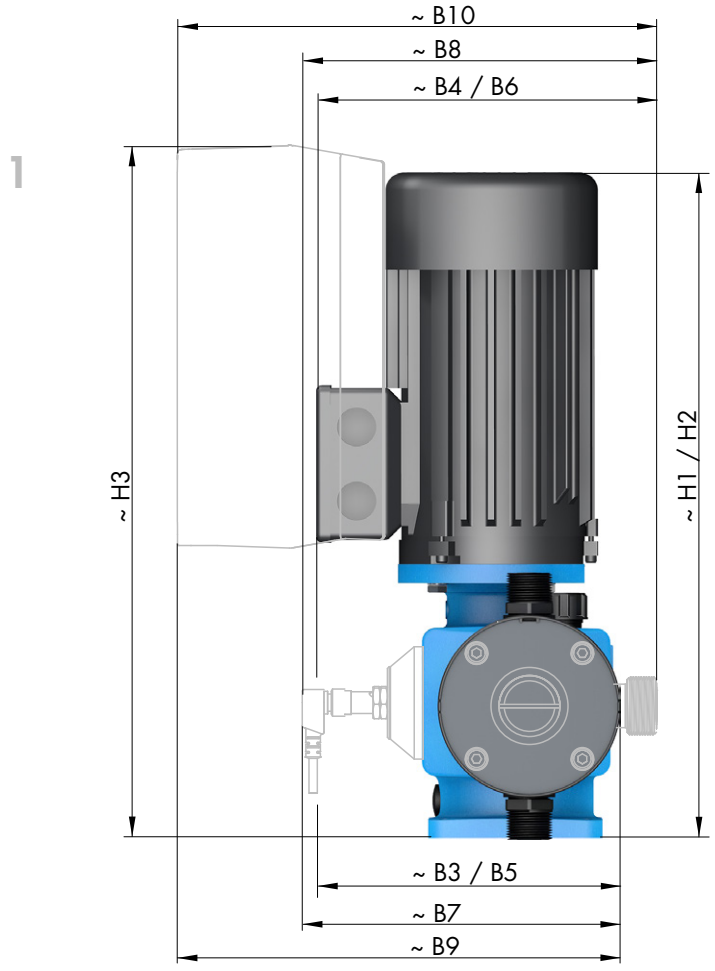


* for removing the actuar cover

| OPTIONS | | ... 409.2-... | | | | | | | | | | | | | |
|---|---|---|---|---|---|---|---|---|---|---|---|---|---|---|---|
| MAX. TOTAL HEIGHT | | ...-1,6e | ...-2,4e | ...-7,0e | ...-12e | ...-18e | ...-25e | ...-50e | ...-75e | ...-90e | ...-115e | ...-140e | ...-180e | ...-250e | ...-350e |
| **H1** | with AC motor | 335 | 335 | 335 | 335 | 335 | 335 | 370 | 375 | 375 | 375 | 375 | 375 | 375 | 375 |
| **H2** | with motor ATEX | 305 | 305 | 305 | 305 | 305 | 305 | 335 | 335 | 335 | 335 | 335 | 335 | 335 | 335 |
| **H3** | with frequency converter | 410 | 410 | 410 | 410 | 410 | 410 | 410 | 410 | 410 | 410 | 410 | 410 | 410 | 410 |
| **MAX. TOTAL WIDTH** | | | | | | | | | | | | | | | |
| **B3** | with AC motor | 180 | 180 | 180 | 180 | 180 | 180 | 190 | 190 | 190 | 190 | 190 | 190 | 190 | 190 |
| **B4** | with AC motor | – | – | 180 | 180 | 180 | 180 | 195 | 195 | 210 | 210 | 210 | 210 | 245 | 245 |
| **B5** | with motor ATEX | 185 | 185 | 185 | 185 | 185 | 185 | 195 | 195 | 195 | 195 | 195 | 195 | 195 | 195 |
| **B6** | with motor ATEX | – | – | 190 | 190 | 190 | 190 | 205 | 205 | 220 | 220 | 220 | 220 | 255 | 255 |
| **B7** | with stroke freq. transmitter | 175 | 175 | 175 | 175 | 175 | 175 | 175 | 175 | 175 | 175 | 175 | 175 | 175 | 175 |
| **B8** | with stroke freq. transmitter | – | – | 180 | 180 | 180 | 180 | 190 | 190 | 205 | 205 | 205 | 205 | 235 | 235 |
| **B9** | with frequency converter | 260 | 260 | 260 | 260 | 260 | 260 | 270 | 270 | 270 | 270 | 270 | 270 | 305 | 305 |
| **B10** | with frequency converter | – | – | 260 | 260 | 260 | 260 | 270 | 270 | 295 | 295 | 295 | 295 | 330 | 330 |
| **MAX. TOTAL LENGTH** | | | | | | | | | | | | | | | |
| **L3** | mit blind plug (M(F)...) | 250 | 250 | 215 | 210 | 190 | 190 | 190 | 190 | 190 | 190 | 190 | 190 | 220 | 220 |
| **L4** | mit blind plug (M(F)...) | – | – | 270 | 270 | 270 | 270 | 270 | 270 | 285 | 285 | 285 | 285 | 350 | 350 |
| **L5** | HLV with position indicator | 450 | 450 | 315 | 310 | 290 | 290 | 290 | 290 | 295 | 295 | 295 | 295 | 320 | 320 |
| **L6** | HLV with position indicator | – | – | 375 | 370 | 370 | 370 | 375 | 375 | 390 | 390 | 390 | 390 | 450 | 450 |
| **L7** | HLV with actuator | 480 | 480 | 445 | 440 | 420 | 420 | 420 | 420 | 425 | 425 | 425 | 425 | 450 | 450 |
| **L8** | HLV with actuator | – | – | 505 | 500 | 500 | 500 | 505 | 505 | 520 | 520 | 520 | 520 | 580 | 580 |
| **L9** | HLV with actuator with integrated positioner | 560 | 560 | 525 | 520 | 500 | 500 | 500 | 500 | 505 | 505 | 505 | 505 | 530 | 530 |
| **L10** | HLV with actuator with integrated positioner | – | – | 585 | 580 | 580 | 580 | 585 | 585 | 600 | 600 | 600 | 600 | 660 | 660 |
| **L11** | HLV with actuator ATEX | 655 | 655 | 620 | 615 | 595 | 595 | 595 | 595 | 595 | 595 | 595 | 595 | 625 | 625 |
| **L12** | HLV with actuator ATEX | – | – | 675 | 675 | 675 | 675 | 680 | 680 | 690 | 690 | 690 | 690 | 755 | 755 |
| **L13** | HLV with pneumatic actuator | – | – | 590 | 590 | 590 | 590 | 600 | 600 | 605 | 605 | 605 | 605 | 660 | 660 |
| **L14** | HLV with pneumatic actuator | – | – | 650 | 650 | 650 | 650 | 665 | 665 | 675 | 675 | 675 | 675 | 740 | 740 |

HLV ► Manual stroke length adjustment
(Measurements in mm)

## Dimensions C409.2 standard

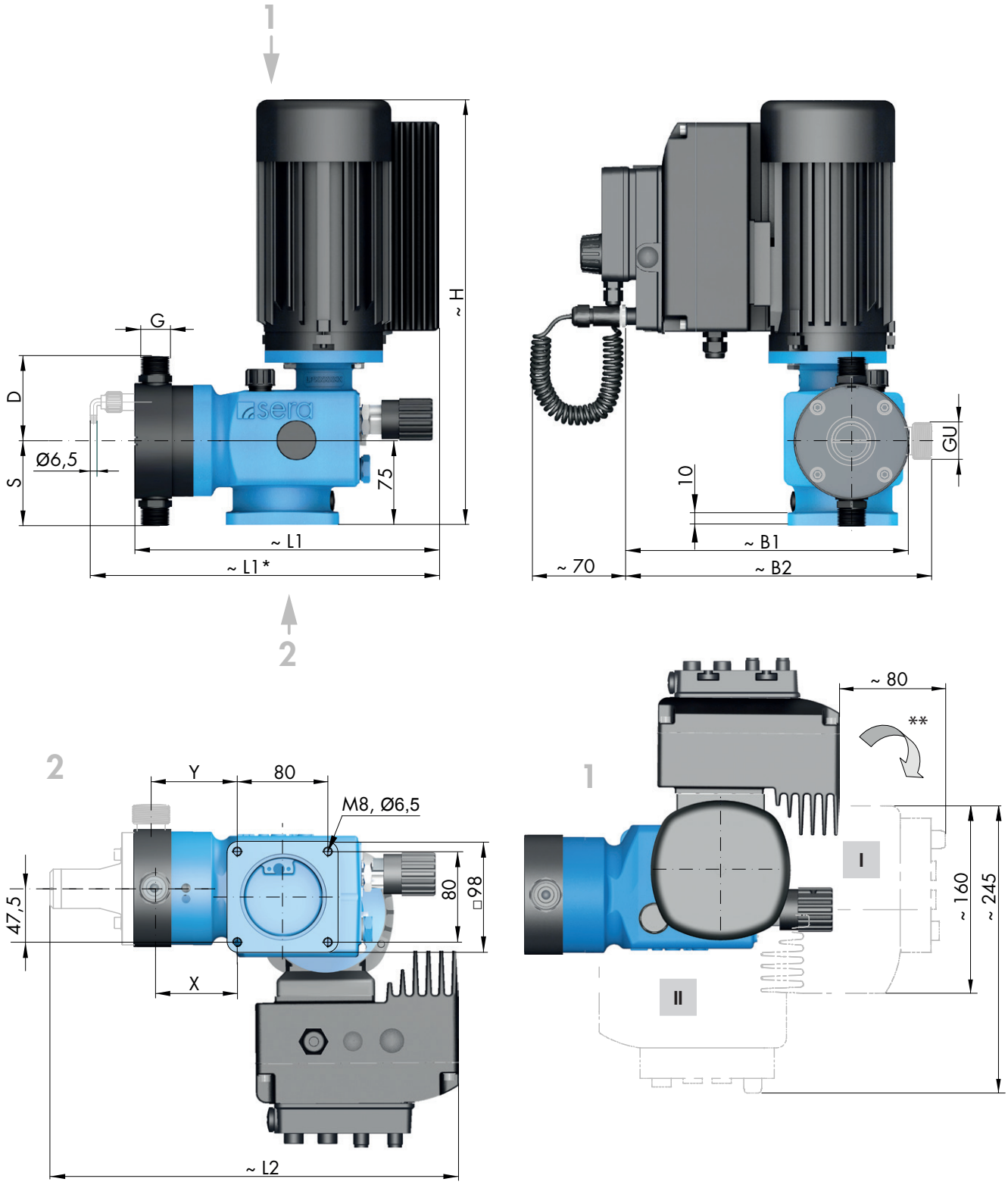


* Pump body with manual vent valve RF/MF409.2-1,6, -2,4e PP-FRP, PVDF-FRP
** Drive with electronics can be rotated throughout 90° each and can be put to the positions I and II.
(release the motor fastening screws, put the motor carefully to the desired position and fasten with screws again).

| STANDARD | | C 409.2-... | | | | | | | | | | | | | |
|---|---|---|---|---|---|---|---|---|---|---|---|---|---|---|---|
| SUCTION VALVES | | ...-1,6e | ...-2,4e | ...-7,0e | ...-12e | ...-18e | ...-25e | ...-50e | ...-75e | ...-90e | ...-115e | ...-140e | ...-180e | ...-250e | ...-350e |
| **DN** | Nominal width | 5 | 5 | 5 | 5 | 8 | 8 | 8 | 8 | 8 | 8 | 8 | 8 | 20[1] | 20[1] |
| **G** | Connection thread | G¾ | G¾ | G¾ | G¾ | G¾ | G¾ | G¾ | G¾ | G¾ | G¾ | G¾ | G¾ | G1¼[1] | G1¼[1] |
| **S** | PP-FRP / PVDF-FRP | 80 | 80 | 56 | 56 | 56 | 56 | 69 | 69 | 76 | 76 | 76 | 76 | 122 | 122 |
| **S** | PP-FRP / PVDF-FRP [2] | – | – | 57 | 60 | 60 | 60 | 67 | 67 | 76 | 76 | 76 | 76 | 122 | 122 |
| **S** | PVC-U | 70 | 70 | 62 | 65 | 63 | 63 | 70 | 70 | 78 | 78 | 78 | 78 | 119 | 119 |
| **S** | PVC-U [2] | – | – | 52 | 52 | 63 | 63 | 70 | 70 | 78 | 78 | 78 | 78 | 119 | 119 |
| **S** | 1.4571 | 70 | 70 | 57 | 61 | 61 | 61 | 68 | 68 | 76 | 76 | 76 | 76 | 122 | 122 |
| **S** | 1.4571 [2] | – | – | 57 | 61 | 61 | 61 | 68 | 68 | 76 | 76 | 76 | 76 | 122 | 122 |
| **PRESSURE VALVES** | | | | | | | | | | | | | | | |
| **DN** | Nominal width | 5 | 5 | 5 | 5 | 8 | 8 | 8 | 8 | 8 | 8 | 8 | 8 | 20[1] | 20[1] |
| **G** | Connection thread | G¾ | G¾ | G¾ | G¾ | G¾ | G¾ | G¾ | G¾ | G¾ | G¾ | G¾ | G¾ | G1¼[1] | G1¼[1] |
| **D** | PP-FRP / PVDF-FRP | 80 | 80 | 64 | 64 | 64 | 64 | 69 | 69 | 76 | 76 | 76 | 76 | 122 | 122 |
| **D** | PP-FRP / PVDF-FRP [2] | – | – | 57 | 60 | 60 | 60 | 67 | 67 | 76 | 76 | 76 | 76 | 122 | 122 |
| **D** | PVC-U | 70 | 70 | 62 | 65 | 70 | 70 | 77 | 77 | 85 | 85 | 85 | 85 | 138 | 138 |
| **D** | PVC-U [2] | – | – | 65 | 65 | 70 | 70 | 77 | 77 | 85 | 85 | 85 | 85 | 138 | 138 |
| **D** | 1.4571 | 70 | 70 | 57 | 61 | 61 | 61 | 68 | 68 | 76 | 76 | 76 | 76 | 122 | 122 |
| **D** | 1.4571 [2] | – | – | 57 | 61 | 61 | 61 | 68 | 68 | 76 | 76 | 76 | 76 | 122 | 122 |
| **MAX. TOTAL HEIGHT** | | | | | | | | | | | | | | | |
| **H** | | 330 | 330 | 330 | 330 | 330 | 330 | 330 | 370 | 370 | 370 | 370 | 370 | 370 | 370 |
| **MAX. TOTAL WIDTH** | | | | | | | | | | | | | | | |
| **B1** | | 240 | 240 | 240 | 240 | 240 | 240 | 240 | 250 | 250 | 250 | 250 | 250 | 285 | 285 |
| **B2** | (with relief valve) | – | – | 250 | 250 | 250 | 250 | 250 | 255 | 275 | 275 | 275 | 275 | 300 | 300 |
| **MAX. TOTAL LENGTH** | | | | | | | | | | | | | | | |
| **L1** | | 310 | 310 | 285 | 285 | 285 | 285 | 295 | 295 | 300 | 300 | 300 | 300 | 355 | 355 |
| **L2** | (with relief valve) | – | – | 345 | 345 | 345 | 345 | 360 | 360 | 370 | 370 | 370 | 370 | 435 | 435 |
| **RELIEF VALVE CONNECTION** | | | | | | | | | | | | | | | |
| **GU** | | – | – | G¾ | G¾ | G¾ | G¾ | G¾ | G¾ | G1 | G1 | G1 | G1 | G1¼[1] | G1¼[1] |
| **CONNECTION DIMENSIONS** | | | | | | | | | | | | | | | |
| **X** | | 72 | 72 | 66 | 67 | 67 | 67 | 69 | 69 | 73 | 73 | 73 | 73 | 101 | 101 |
| **Y** | | – | – | 71 | 69 | 69 | 69 | 69 | 69 | 78 | 78 | 78 | 78 | 101 | 101 |

(Measurements in mm)

[1] DN15 / G1 at valves of PVC-U
[2] Pump body with relief valve

## Dimensions C409.2 options

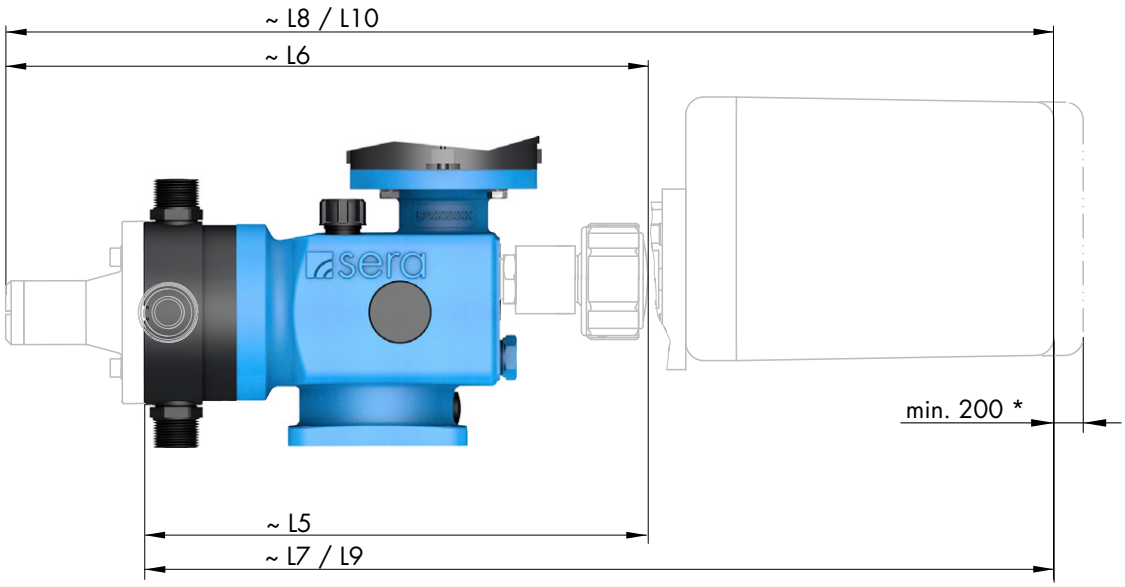


* for removing the actuar cover

| OPTIONS | | C 409.2-... | | | | | | | | | | | | | |
|---|---|---|---|---|---|---|---|---|---|---|---|---|---|---|---|
| MAX. TOTAL LENGTH | | ...-1,6e | ...-2,4e | ...-7,0e | ...-12e | ...-18e | ...-25e | ...-50e | ...-75e | ...-90e | ...-115e | ...-140e | ...-180e | ...-250e | ...-350e |
| **L5** | HLV with position indicator | 450 | 450 | 315 | 310 | 290 | 290 | 290 | 290 | 295 | 295 | 295 | 295 | 320 | 320 |
| **L6** | HLV with position indicator | – | – | 375 | 370 | 370 | 370 | 375 | 375 | 390 | 390 | 390 | 390 | 450 | 450 |
| **L7** | HLV with actuator | 480 | 480 | 445 | 440 | 420 | 420 | 420 | 420 | 425 | 425 | 425 | 425 | 450 | 450 |
| **L8** | HLV with actuator | – | – | 505 | 500 | 500 | 500 | 505 | 505 | 520 | 520 | 520 | 520 | 580 | 580 |
| **L9** | HLV with actuator with integrated positioner | 560 | 560 | 525 | 520 | 500 | 500 | 500 | 500 | 505 | 505 | 505 | 505 | 530 | 530 |
| **L10** | HLV with actuator with integrated positioner | – | – | 585 | 580 | 580 | 580 | 585 | 585 | 600 | 600 | 600 | 600 | 660 | 660 |

HLV ► Manual stroke length adjustment
(Measurements in mm)

## Dimensions RF410.2 standard

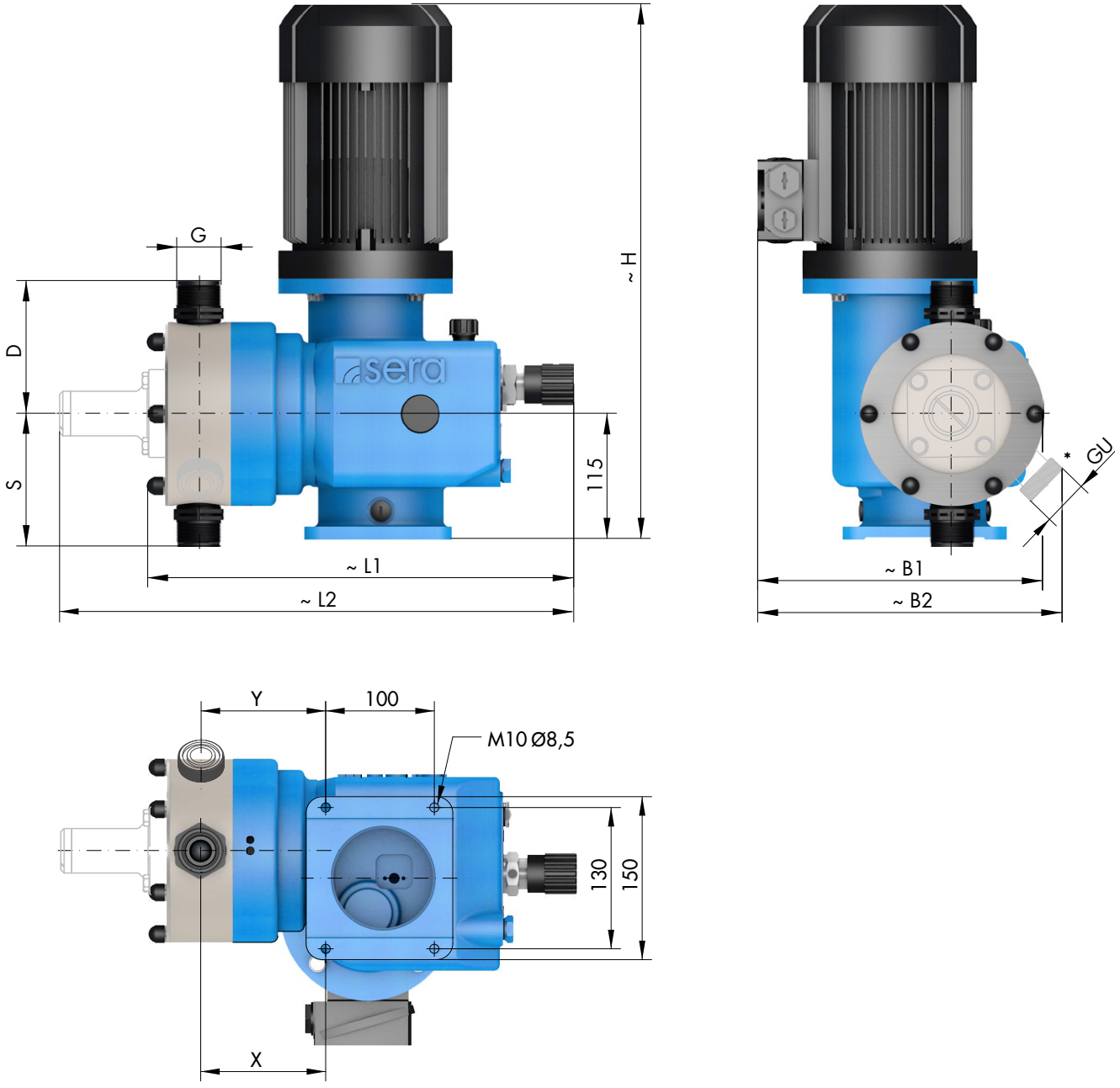


* Angle 45° - socket overflow valve

| | | RF 410.2-... | | | |
|---|---|---|---|---|---|
| **SUCTION VALVES** | | **...280e** | **...570e** | **...900e** | **...1450e** |
| **DN** | Nominal width | 20 [1] | 20 [1] | 20 | 20 |
| **G** | Connection thread | G1¼ [1] | G1¼ [1] | G1¼ | G1¼ |
| **S** | PP-FRP / PVDF-FRP | 122 | 122 | 148 | 148 |
| **S** | PVC-U | 119 | 119 | 150 | 150 |
| **S** | 1.4571 | 122 | 122 | 148 | 148 |
| **PRESSURE VALVES** | | | | | |
| **DN** | Nominal width | 20 [1] | 20 [1] | 20 | 20 |
| **G** | Connection thread | G1¼ [1] | G1¼ [1] | G1¼ | G1¼ |
| **D** | PP-FRP / PVDF-FRP | 122 | 122 | 148 | 148 |
| **D** | PVC-U | 138 | 138 | 170 | 170 |
| **D** | 1.4571 | 122 | 122 | 148 | 148 |
| **MAX. TOTAL HEIGHT** | | | | | |
| **H** | | 500 | 500 | 500 | 540 |
| **MAX. TOTAL WIDTH** | | | | | |
| **B1** | | 265 | 265 | 295 | 295 |
| **B2** | (with relief valve) | 280 | 280 | – | – |
| **MAX. TOTAL LENGTH** | | | | | |
| **L1** | | 430 | 430 | 460 | 460 |
| **L2** | (with relief valve) | 535 | 535 | – | – |
| **RELIEF VALVE CONNECTION** | | | | | |
| **GU** | | G1¼ [1] | G1¼ [1] | – | – |
| **CONNECTION DIMENSIONS** | | | | | |
| **X** | | 115 | 115 | 138 | 138 |
| **Y** | | 115 | 115 | – | – |

(Measurements in mm)

[1] DN15 / G1 at valves of PVC-U

## Dimensions ...410.2 options

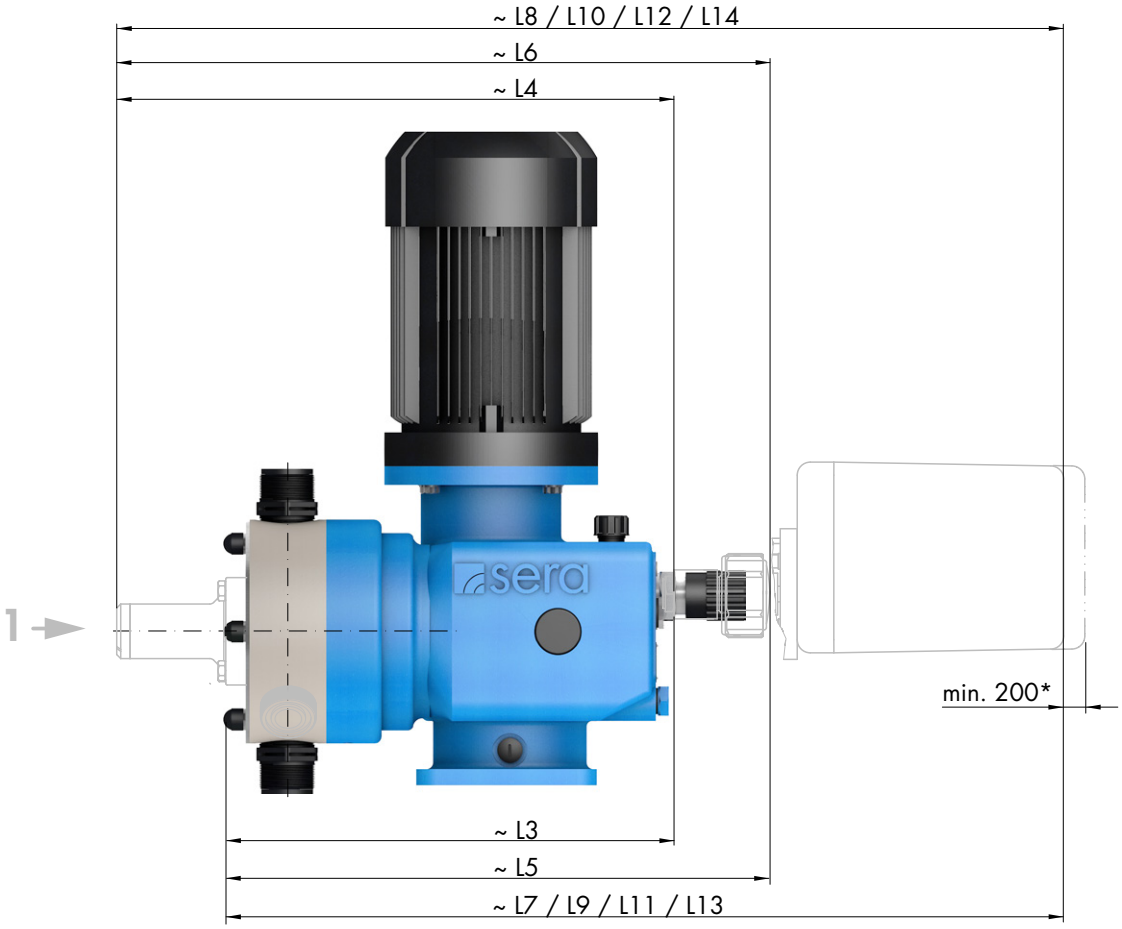


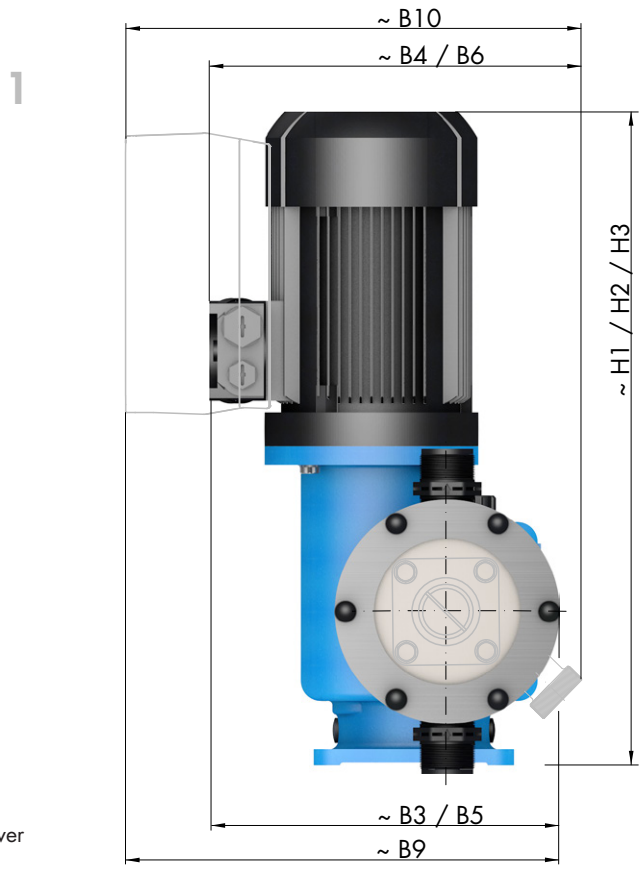


* for removing the actuar cover

| OPTIONS | | ...410.2-.... | | | |
|---|---|---|---|---|---|
| MAX. TOTAL HEIGHT | | ...280e | ...570e | ...900e | ...1450e |
| **H1** | with AC motor | 500 | 500 | 500 | 585 |
| **H2** | with motor ATEX | 450 | 450 | 490 | 490 |
| **H3** | with frequency converter | 500 | 500 | 500 | 540 |
| MAX. TOTAL WIDTH | | | | | |
| **B3** | with AC motor | 265 | 265 | 290 | 295 |
| **B4** | with AC motor | 290 | 290 | – | – |
| **B5** | with motor ATEX | 285 | 285 | 310 | 310 |
| **B6** | with motor ATEX | 255 | 255 | – | – |
| **B9** | with frequency converter | 340 | 340 | 365 | 370 |
| **B10** | with frequency converter | 365 | 365 | – | – |
| MAX. TOTAL LENGTH | | | | | |
| **L3** | mit blind plug (M(F)...) | 365 | 365 | 395 | 395 |
| **L4** | mit blind plug (M(F)...) | 470 | 470 | – | – |
| **L5** | HLV with position indicator | 465 | 465 | 495 | 495 |
| **L6** | HLV with position indicator | 570 | 570 | – | – |
| **L7** | HLV with actuator | 615 | 615 | 645 | 645 |
| **L8** | HLV with actuator | 715 | 715 | – | – |
| **L9** | HLV with actuator with integrated positioner | 690 | 690 | 720 | 720 |
| **L10** | HLV with actuator with integrated positioner | 795 | 795 | – | – |
| **L11** | HLV with actuator ATEX | 780 | 780 | 810 | 810 |
| **L12** | HLV with actuator ATEX | 885 | 885 | – | – |
| **L13** | HLV with pneumatic actuator | 790 | 790 | 820 | 820 |
| **L14** | HLV with pneumatic actuator | 895 | 895 | – | – |

HLV ► Manual stroke length adjustment
(Measurements in mm)

## Dimensions C410.2 standard

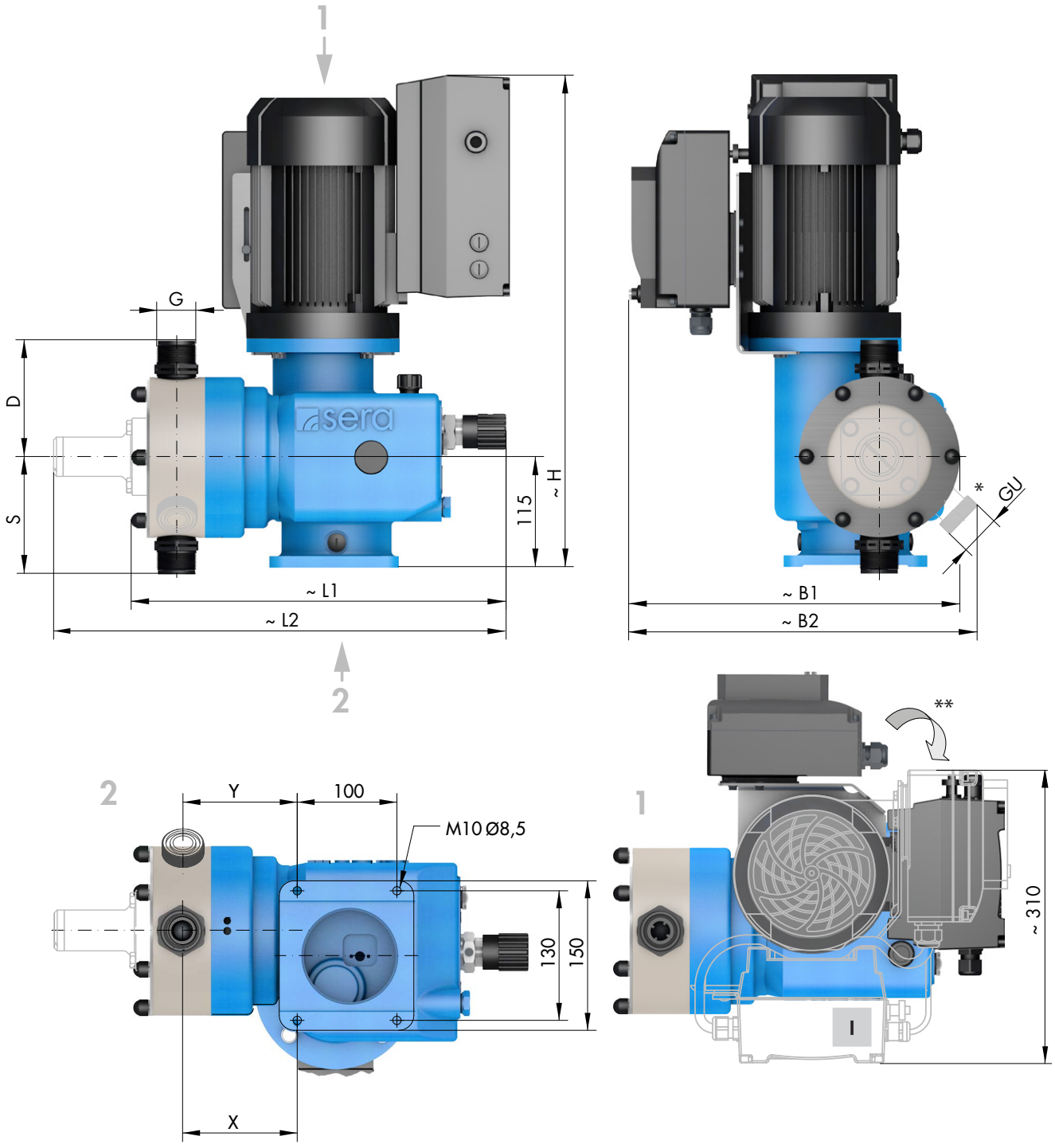


* Angle 45° - socket overflow valve
** Drive with electronics can be rotated throughout 90° each and can be put to the positions I.
(release the motor fastening screws, put the motor carefully to the desired position and fasten with screws again).

| | | C 410.2-... | | | |
|---|---|---|---|---|---|
| **SUCTION VALVES** | | **...280e** | **...570e** | **...900e** | **...1450e** |
| **DN** | Nominal width | 20 [1] | 20 [1] | 20 | 20 |
| **G** | Connection thread | G1¼ [1] | G1¼ [1] | G1¼ | G1¼ |
| **S** | PP-FRP / PVDF-FRP | 122 | 122 | 148 | 148 |
| **S** | PVC-U | 119 | 119 | 150 | 150 |
| **S** | 1.4571 | 122 | 122 | 148 | 148 |
| **PRESSURE VALVES** | | | | | |
| **DN** | Nominal width | 20 [1] | 20 [1] | 20 | 20 |
| **G** | Connection thread | G1¼ [1] | G1¼ [1] | G1¼ | G1¼ |
| **D** | PP-FRP / PVDF-FRP | 122 | 122 | 148 | 148 |
| **D** | PVC-U | 138 | 138 | 170 | 170 |
| **D** | 1.4571 | 122 | 122 | 148 | 148 |
| **MAX. TOTAL HEIGHT** | | | | | |
| **H** | | 520 | 520 | 520 | 560 |
| **MAX. TOTAL WIDTH** | | | | | |
| **B1** | | 350 | 350 | 375 | 375 |
| **B2** | (with relief valve) | 375 | 375 | – | – |
| **MAX. TOTAL LENGTH** | | | | | |
| **L1** | | 430 | 430 | 460 | 460 |
| **L2** | (with relief valve) | 535 | 535 | – | – |
| **RELIEF VALVE CONNECTION** | | | | | |
| **GU** | | G1¼ [1] | G1¼ [1] | – | – |
| **CONNECTION DIMENSIONS** | | | | | |
| **X** | | 115 | 115 | 138 | 138 |
| **Y** | | 115 | 115 | – | – |

(Measurements in mm)

[1] DN15 / G1 at valves of PVC-U

## Dimensions C410.2 options

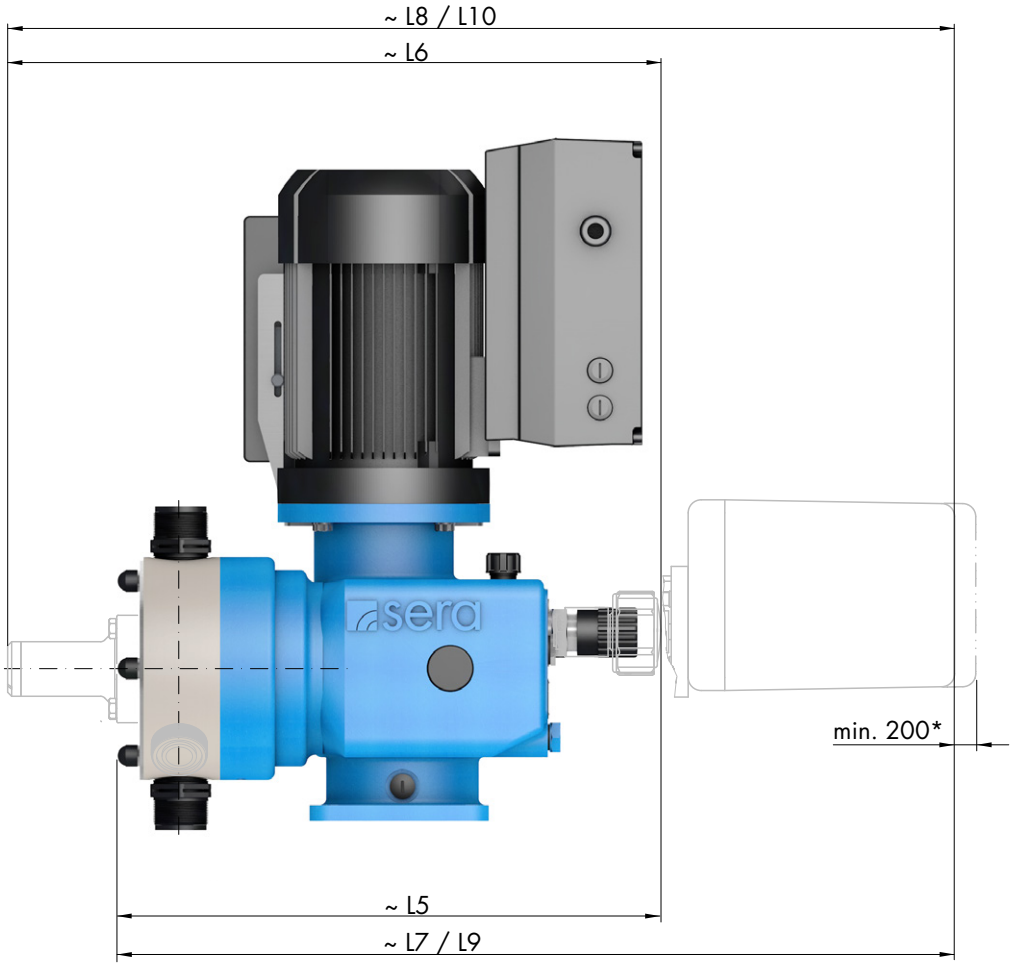


* for removing the actuar cover

| OPTIONS | | C 410.2-.... | | | |
|---|---|---|---|---|---|
| MAX. TOTAL LENGTH | | ...280e | ...570e | ...900e | ...1450e |
| **L5** | HLV with position indicator | 465 | 465 | 495 | 495 |
| **L6** | HLV with position indicator | 570 | 570 | – | – |
| **L7** | HLV with actuator | 615 | 615 | 645 | 645 |
| **L8** | HLV with actuator | 715 | 715 | – | – |
| **L9** | HLV with actuator with integrated positioner | 690 | 690 | 720 | 720 |
| **L10** | HLV with actuator with integrated positioner | 795 | 795 | – | – |

HLV ► Manual stroke length adjustment
(Measurements in mm)

## WARNING

Observe and follow the safety instructions by all means.
See the additional instructions „SAFETY INSTRUCTIONS".
Man, machine and environment are endangered if the safety instructions are not observed.




## NOTE

Pump design data for dosing and its temperature can be found in the order confirmation.

## NOTE

Operating conditions:
Ambient temperature, relative air humidity and max. installation altitude ► see chapter „Technical data".

- The standard model of the pump is only approved for installation in dry areas in a non-aggressive atmosphere.
- Protect the pump from heat sources, direct sunlight and UV light.
- See "Dimensions" chapter for dimensions of the pump connections and fixing holes.
- Fixing the pump with at least four bolts above the pump base is required for safe operation.
- Install the pump so that there is no vibration and no tension and that it is aligned precisely.
- Install the pump at the optimum possible operating height. Mount the pump so that the valves are vertical.
- Ensure that there is sufficient space around the pump body and the suction and pressure valve so that these parts can be easily dismantled if required.
- Design the nominal diameters of the downstream piping and the valves installed in the system to be the same size or larger than the nominal inlet and outlet diameters of the pump.
- To check the pressure ratios in the piping system, it is recommended to provide connections for pressure measurement fittings (e.g. manometers) near the suction and pressure ports.
- Drain valves must be provided.
- Before connecting the pipes, remove the plastic caps on the suction and pressure ports of the pump.
- Check the fastening bolts for the pump body for tightness and tighten if necessary, see chapter "Overview of the tightening torques".
- Connect pipes to the pump so that there are no forces acting on the pump, such as e.g. misalignment, weight or strain of the pipe.
- Keep the suction pipes as short as possible.
- Use pressure and medium resistant hoses / pipes.
- All pipes and containers connected to the pump must comply with the regulations and must be cleaned, tension-free and intact.
- Display devices must be easily accessible and readable.

In order to avoid cavitation, overload or excessive delivery, the following points should be noted:

- Avoid high suction heights.
- Keep pipes as short as possible.
- Select sufficiently large nominal diameters.
- Avoid unnecessary choke points.
- Install a pulsation damper.
- Install overpressure protection.
- Install a pressure-sustaining valve, if necessary
- Provide feed line for outgassing media.

## WARNING

The pump with a control is only designed for operation outside Ex-zonest!

## SUCTION SIDE (1)

The following fittings can be used on the suction side:

**1.1** Line strainer



**1.2** Suction aid
Siphon vessel



**1.3** Suction lance

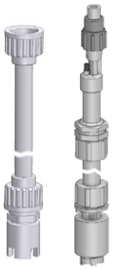

**1.4** Multifunction device



**1.5** Foot valve



**1.6** Shut-off valve








## PRESSURE SIDE (2)

The following fittings can be used on the pressure side:

**2.1** Vent valve



**2.2** Injection fitting

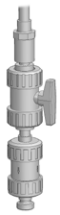

**2.3** Dosing valve



**2.4** Pulsation damper



**2.5** Diaphragm pressure keeping valve



**2.6** Diaphragm relief valve



**2.7** Multifunction valve



**2.8** Flow meter [1]

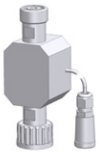

**2.9** Flow monitor [1]



**2.10** Shut-off valve



[1] only for diaphragm pumps with a control






## SUCTION SIDE (1)

### Line strainer (1.1)

Connect suction line slightly above the bottom of the tank and install a line strainer (0.1 – 0.5 mm mesh size – depending on valve nominal diameter of the pump).

**ATTENTION**

If impurities are not removed, this results in malfunctions of the pump and the system.

### Suction aid / siphon vessel (1.2)

For high tanks without connection on the bottom of the tank ► install suction aid / siphon vessel.
Thereby, pay attention to accelerating pressures which may be generated in a long suction pipe.

### Suction lance (1.3)

Install a suction lance for removal of chemicals from tanks and barrels.
The integrated foot valve prevents the backflow of the suctioned medium.
The suction lances are equipped with a level switch for „empty“ signal.

### Multifunction device (1.4)

The multifunction device is installed in the suction side piping of the pump and is used for determination of the delivery rate of pumps under real operating conditions.
The device can be filled either using a pending tank volume (communicating container) or using a hand vacuum pump.

### Foot valve (1.5)

To prevent running dry of the suction line ► install foot valve (check valve) at the end of the suction line.

## PRESSURE SIDE (2)

### Vent valve (2.1)

If air can be drawn in due to falling liquid level in the suction tank and at the same time delivered to a pressurised line or against a pressure-sustaining valve ► install vent valve in the pressure line.

**NOTE**

The delivery flow can be interrupted if there is air in the suction line!

### Injection fitting (2.2)

Install an injection fitting that routes into a main line to prevent the backflow of the pumped medium in the dosing line.

**WARNING**

Unwanted mixing in the dosing line occurs if any possible backflow from the main line is not prevented.

### Dosing valve (2.3)

Installation of the dosing valve prevents the liquid from the system to be treated being able to penetrate into the dosing line.

### Pulsation damper (2.4)

Damping of the pulsation by installation of pulsation dampers if:

- a low-pulsation delivery flow is desired for process reasons,
- acceleration forces caused by the piping geometry must be removed.

Install pulsation damper as close as possible to the pump head.
If both pulsation damper and pressure-sustaining valve should be integrated, install the pressure-sustaining valve between pump and pulsation damper.

**WARNING**

Undamped acceleration forces can result in the following faults / damage:

- flow rate fluctuations
- dosing errors
- pressure surges
- valve shocks
- increased wear on the suction and pressure sides of the pump
- mechanical destruction of the pump
- leaks and valve shocks if the permissible maximum pressure on the pump pressure
- side is exceeded
- damage to the piping and its installed fittings

### Diaphragm pressure-keeping valve (2.5)

If dosing into a main line with negative pressure ► install pressure-keeping valve in the dosing line.

**ATTENTION**

It must be ensured during the installation that excess delivery (due to positive pressure difference (≥ > 1 bar) between pressure and suction sides) is avoided.

### Diaphragm relief valve (2.6)

If the permissible pressure in the system can be exceeded by closing any shut-off valve or by clogging of the line ► install diaphragm relief valve.

When using an external overflow valve, the following is applicable for the return line:

- Route the return line sloping downward into the storage tank which is under atmospheric pressure or into an open drainage channel.
- Or connect directly to the pump suction line, but only if there is no check valve in the suction line (e.g. foot valve of a suction lance).

**ATTENTION**

Shut-off valves must not be closed when the pump is running!

**WARNING**

An overpressure protection device (e.g. relief valve) must generally be provided if the permissible operating pressure can be exceeded.

**ATTENTION**

If the permissible operating pressure is exceeded and the pump is not equipped with overpressure protection, the pump will be damaged.

**WARNING**

The pumped medium can spray out if the pump is damaged.

### Multifunction valve (2.7)

The multifunction valve provides the following functions:

- pressure-keeping valve function,
- overflow valve function,
- pressure relief function,
- venting.

The multifunction valve is mounted directly on the pump pressure port.

### Flow meter (2.8)

For measurement and monitoring of the flow rate ► install flow meter.
The application range is restricted to media that are similar to water.
The flow meter is screwed upright on the pressure port of the pump and connected to the pump electronics via the input for flow monitoring.

### Flow monitor (2.9)

To record the flow rate of the pump ► install flow monitor.
The application range is restricted to media that are similar to water.
The flow monitor is screwed upright on the suction port of the pump and connected to the pump electronics via the input for flow monitoring.

## Operation in Ex-zone C409.2 / C410.2

**WARNING**

The pump with a control is only designed for operation outside Ex-zonest!

## Operation in Ex-zone R/M 409.2 / R/M 410.2

**WARNING**

The prerequisite for the use in explosion-hazardous areas is an appropriate design of the pump.

The product supplied by **sera** meets the requirements of directive 2014/34/EU if it is correspondingly marked. This guarantees safe operation in explosion-hazardous areas.

**WARNING**

It is the operator's task to define the field of application and to check whether the pump is suited for this application. He/she must clearly define the zone, the device category, the explosion group and the temperature class.

**WARNING**

Avoid build up electrostatic conditions!

**WARNING**

To avoid contamination of the valves strainers in the suction line have to be installed!

### Identification

The pump has a label stating the zone/device category /explosion group/temperature class in compliance with directive 2014/34/EU.

**Ex II2G c IIBT4** bzw.
**Ex II2G c IICT4**
(note special specifications in the confirmation of order.)

### Installation

The intended operating conditions in explosion-hazardous areas according to directive 2014/34/EU are stated in the confirmation of order or the product description. The indicated limit values should not be fallen below or exceeded. Installation regulations given in the operating instructions must be adhered to.

**WARNING**

Use only suitable tools for performing assembly and maintenance work on machines or plants in explosion-hazardous areas. Directive 99/92/EC must be observed.

## Potential equalization

After mounting the pump the proper connection to the site potential equalization is to be ensured. The max. bleed resistor (1MΩ) has to be checked and documented.

## Start-up

After installation, the pump must immediately be used for the suction of fluids, i.e. the pump must immediately be started after the tank has been installed and filled.

## Operation

The intended operating conditions in explosion-hazardous areas according to directive 2014/34/EU are stated in the confirmation of order or the product description. The indicated limit values should not be fallen below or exceeded. Details about explosion zone, device category, explosion group and temperature class can be seen from the Declaration of Conformity.

**Degassing of the pumped medium:**

- Never let the pump run dry.
- Check the liquid level in the tank during operation of the pump.
- Make sure that the pump is switched off when the liquid level in the tank falls below the minimum level required (explosive atmosphere may be carried over)..

Vapour bubbles from the pumped medium are harmless as they have no explosive potential.

**WARNING**

Formation of an explosive gas mixture must be prevented.

## Temperature indications

Permissible ambient temperature: -10°C ≤ Ta ≤ +40°C

## Maintenance

The maintenance notes listed in Chapter 10 are generally applicable. **Exception:**

**ATTENTION**

The oil level in the stroke mechanism of the pump must be checked once a week!

**WARNING**

Observe and follow the safety instructions by all means.
See the additional instructions „SAFETY INSTRUCTIONS“.
Man, machine and environment are endangered if the safety instructions are not observed.




Adequate fastening at the pump foot and compliance with the operating parameters specified in the technical data are required for the operation of the pump.

Checks before every start-up:

- Check all connections for tightness.
- Tighten fixing bolts of the pump body with the specified tightening torques (see „Overview of the tightening torques“ chapter).
- Check of the electrical connections.
- Check of the mains voltage on the rating plate with the local conditions.

## Driving motor

**Preconditions:**

- Make sure that voltage and frequency correspond with the indications on the type plate of the motor. Permissible voltage tolerance (DIN VDE 0530).
- For rated voltage ► + 10 %
- For rated voltage range ► ± 5 %
- The connecting cable must be dimensioned according to the motor characteristics.
- Secure connecting cable with a strain relief.
- The nominal motor power refers to an ambient temperature and an installation site ► see chapter „TECHNICAL DATA“ . Motor output will be reduced if these values are exceeded (see VDE 0530).
- Adapted for “moderate” groupe of climates according to IEC 721-2-1.

## NOTE

Operating voltage range see chapter „TECHNICAL DATA“.

## NOTE

**Pump without control:**
Motor connection see chapter „Drive motor“ in the PRODUCT DESCRIPTION.

## NOTE

**Pump with a control:**
Electrical iterfaces see the additional operation instructions for the CONTROL.

## ATTENTION

**Pump with a control:**
The pump restarts in the selected operating mode with the specified parameters after switching on again or after restoration of the power supply following a power failure.

**WARNING**

Observe and follow the safety instructions by all means.
See the additional instructions „SAFETY INSTRUCTIONS“.
Man, machine and environment are endangered if the safety instructions are not observed.




Check the following at regular intervals:

- Tight fit of piping.
- Tight fit of pressure and suction valve.
- Proper condition of the electrical connections.
- Tight fit of the screws for fastening the pump body (check this at least every three months).
- For the tightening torques of the mounting screws, please see Chapter „Overview of the tightening torques“.
- Additionally with motor pumps: Check oil level regularly (oil eye).

## Drive motor

The electric motor should always be kept clean so that neither dust, dirt, oil nor other contaminates may affect the correct operation.

In addition, we recommend to ensure that:

- The motor does not produce strong vibrations
- Suction and blowing openings for the supply of cooling air are not closed or restricted (may lead to unnecessary high temperatures in the windings)

The ball bearings inserted in the motor are lubricated for life.

## Oil change

Check oil level at regular intervals (oil sight glass (**1**))

Perform an oil change once a year.
To do so, proceed as follows:

- Unscrew the venting screw (**5**).
- Prepare an appropriate container (**2**).
- Open the screw plug (**3**) and drain off oil.
- Close hole with screw plug (pay attention to the sealing ring (**4**)!).
- Fill oil in threaded hole of the venting screw.
- Screw in venting screw (**5**).

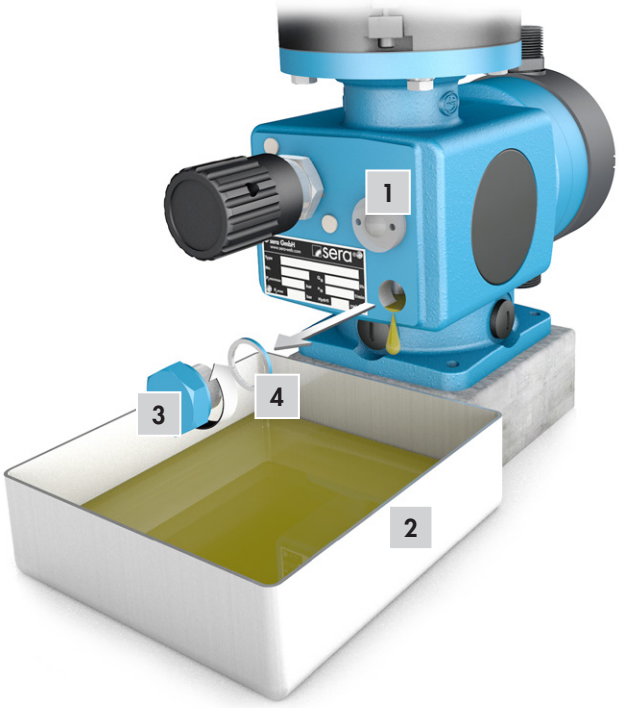





| Gear oil | | | |
|---|---|---|---|
| Pump type | Specification | sera use | Quantity (litres) |
| ...409.2 | CLP VG220 DIN51517-3 | ARAL Degol BG220 | 0,3 |
| ...410.2 | CLP VG220 DIN51517-3 | ARAL Degol BG220 | 1,25 |

## Overview of the tightening torques

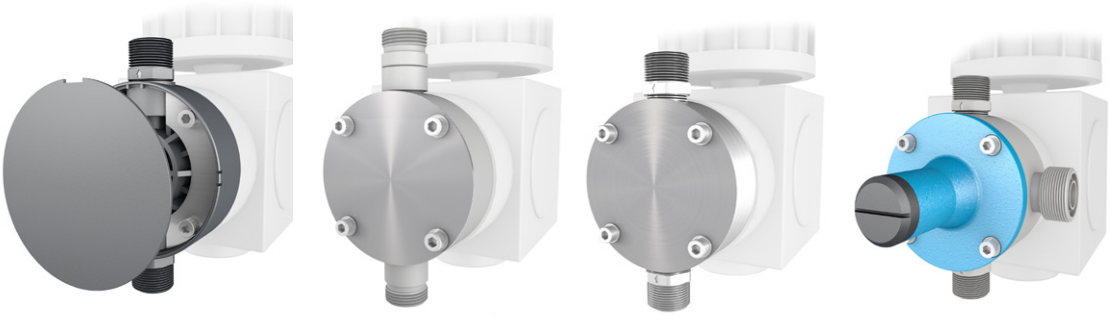

| | Pump body PP-FRP, PVDF-FRP | Pump body PVC | Pump body 1.4571 | Pump body with integrated overflow valve |
|---|---|---|---|---|
| | | Nm | | |
| ...409.2-1,6e | 5,0 | 4,5 | 5,0 | – |
| ...409.2-2,4e | 5,0 | 4,5 | 5,0 | – |
| ...409.2-7,0e | 4,0 | 4,0 | 4,0 | 4,5 |
| ...409.2-12e | 4,0 | 4,0 | 4,0 | 4,5 |
| ...409.2-18e | 4,0 | 4,0 | 4,0 | 4,5 |
| ...409.2-25e | 4,0 | 4,0 | 4,0 | 4,5 |
| ...409.2-50e | 7,0 | 8,0 | 7,0 | 8,0 |
| ...409.2-75e | 7,0 | 8,0 | 7,0 | 8,0 |
| ...409.2-90e | 7,0 | 8,0 | 7,0 | 8,0 |
| ...409.2-115e | 7,0 | 8,0 | 7,0 | 8,0 |
| ...409.2-140e | 7,0 | 8,0 | 7,0 | 8,0 |
| ...409.2-180e | 7,0 | 8,0 | 7,0 | 8,0 |
| ...409.2-250e * | 15,0 | 15,0 | 15,0 | 15,0 |
| ...409.2-350e * | 15,0 | 15,0 | 15,0 | 15,0 |

* Pump body PP/PVDF

| | Pump body PP, PVDF | Pump body PVC | Pump body 1.4571 | Pump body with integrated overflow valve |
|---|---|---|---|---|
| | | Nm | | |
| ...410.2-280e | 15,0 | 15,0 | 15,0 | 15,0 |
| ...410.2-570e | 15,0 | 15,0 | 15,0 | 15,0 |
| ...410.2-900e | 15,0 | 15,0 | 15,0 | – |
| ...410.2-1450e | 15,0 | 15,0 | 15,0 | – |

## Changing the Diaphragm

In order to ensure a correct function of the diaphragm pump and to fulfil the required safety and protective provisions it is absolutely necessary to check and replace the diaphragms at regular intervals.

After 3000 operating hours or at the latest after one year, a service message requiring diaphragm replacement is shown on the graphical display of the pump with a control (see additional instructions of the control). An earlier diaphragm replacement can be necessary depending on the medium and the application area.

**WARNING**

**Pump with a control:**
Observe the instructions on the graphical display for the replacement of wear parts!

- Set the stroke length adjustment to a stroke length of 0% (front position).
- Remove cover plate (**1**) of the pump body (FRP design, ...409.2).

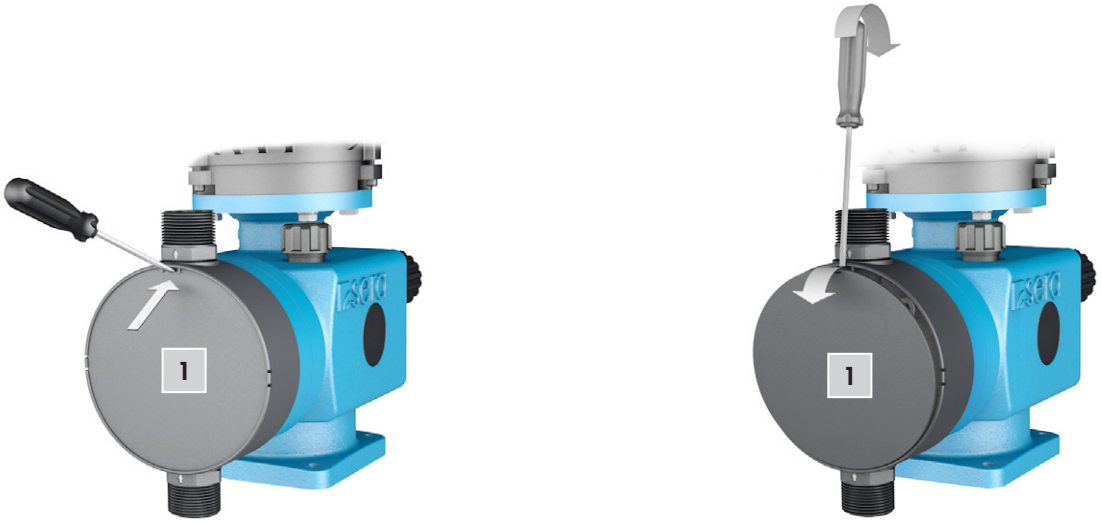


- Loosen fixing bolts (**2**) on the pump body.
- Remove pump body (3), front plate (**4**) (PVC design) or insertion plates (**5**) (FRP design, ...409.2) to the front.

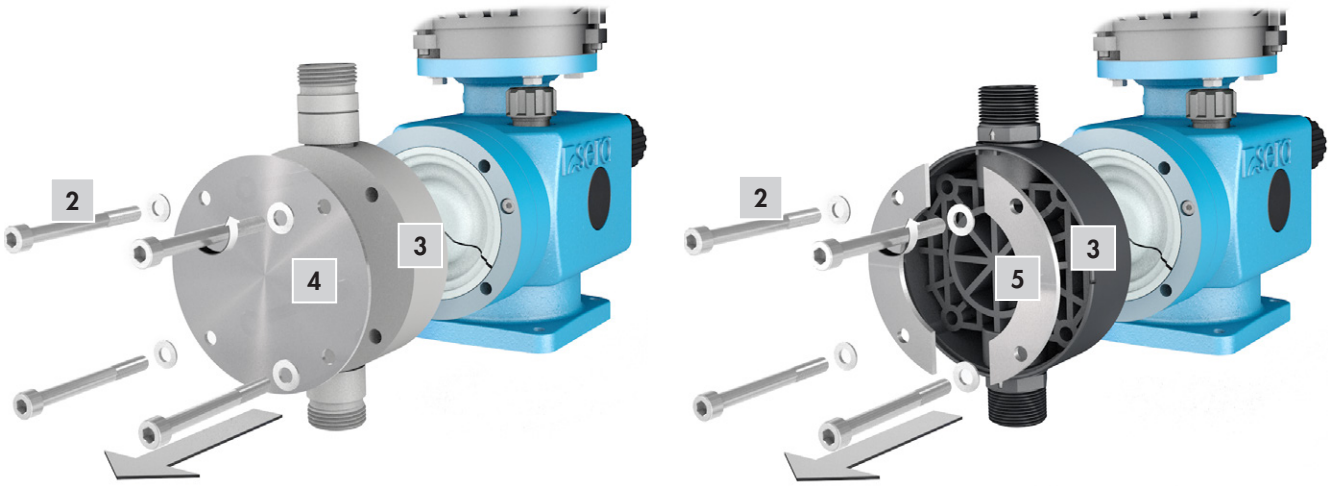

- Unscrew defective drive diaphragm (**6**) from the push rod (**7**).
- Unscrew pressure plate (**8**) from the set screw of the dia-phragm (with EPDM, FPM drive diaphragm).




- Clean pressure plate and screw plate on the new diaphragm.

**Assemble the pump in reversed order:**

- Screw on new diaphragm hand-tight – the diaphragm must be in the middle position.
- Set the stroke length to 50%.
- If the pump is not equipped with a stroke length adjustment (M-design), move the diaphragm to the middle position by turning the fan blade of the drive motor.
- Observe tightening torques of the fixing bolts (**2**); see chapter „Overview of the tightening torques“.
- When assembling the pump body, please note:suction valve below, pressure valve above!

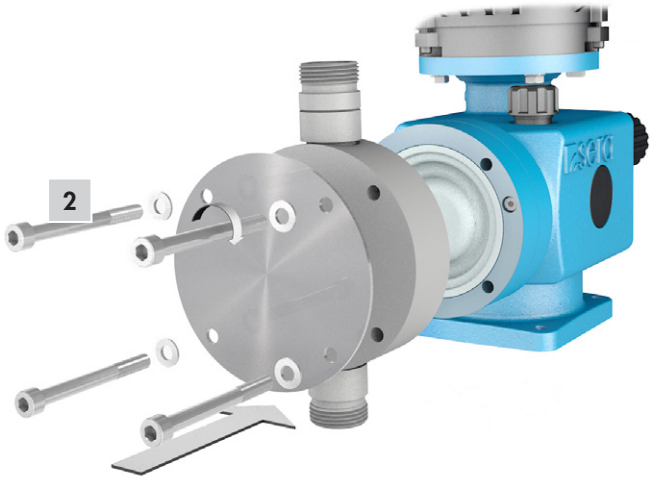


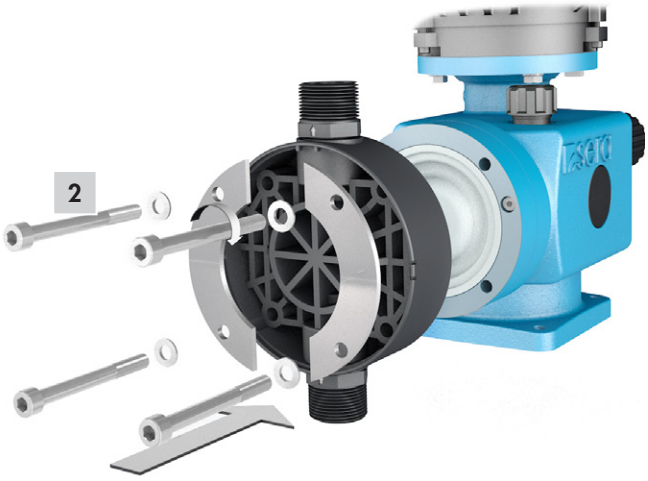


Add the suction and pressure line and connect pump to the power supply. The diaphragm pump is then again ready for operation.

## Overflow valve

Proceed as follows to change the diaphragm of the overflow valve (only pumps with integrated overflow valve).

**NOTE**

All diaphragms should be replaced completely.

- Loosen and unscrew the lid (**1**) of the overflow valve.

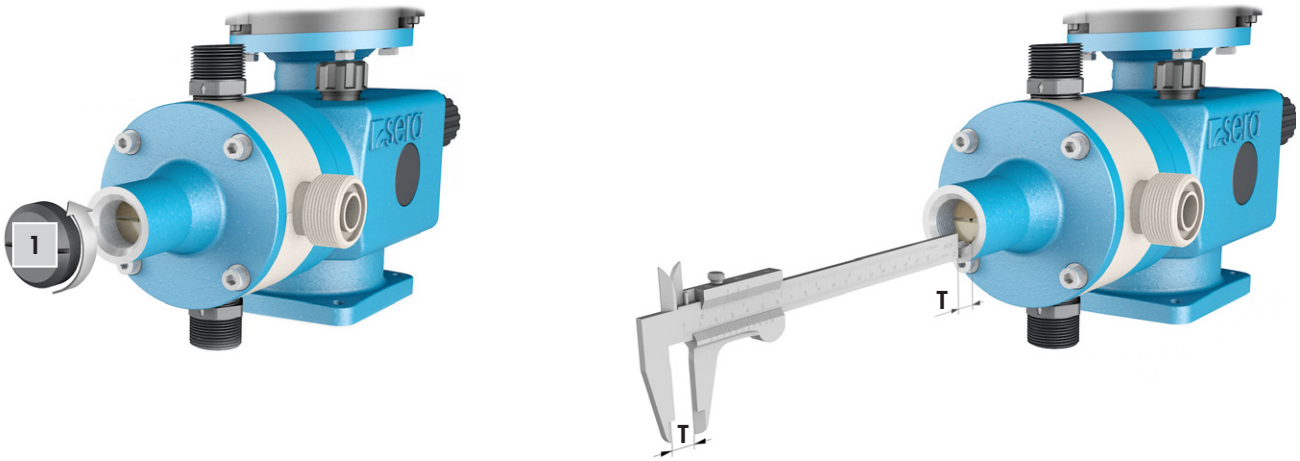


**NOTE**

Before the set screw is unscrewed the dimension **T** (dis-tance between top edge of the cover and the set screw) is to be determined and documented.
This ensures that the overflow valve can be reset to the same pressure NOTE! during subsequent assembly.

- Unscrew the set screw (**3**).
- Remove pressure spring (**2**).
- Loosen and unscrew fixing screws (**5**).
- Remove cover (**7**) and pump body (**8**) to the front.
- Remove pressure disk (**4**) and diaphragm (**6**).
- Check overflow valve for damage and contamination.

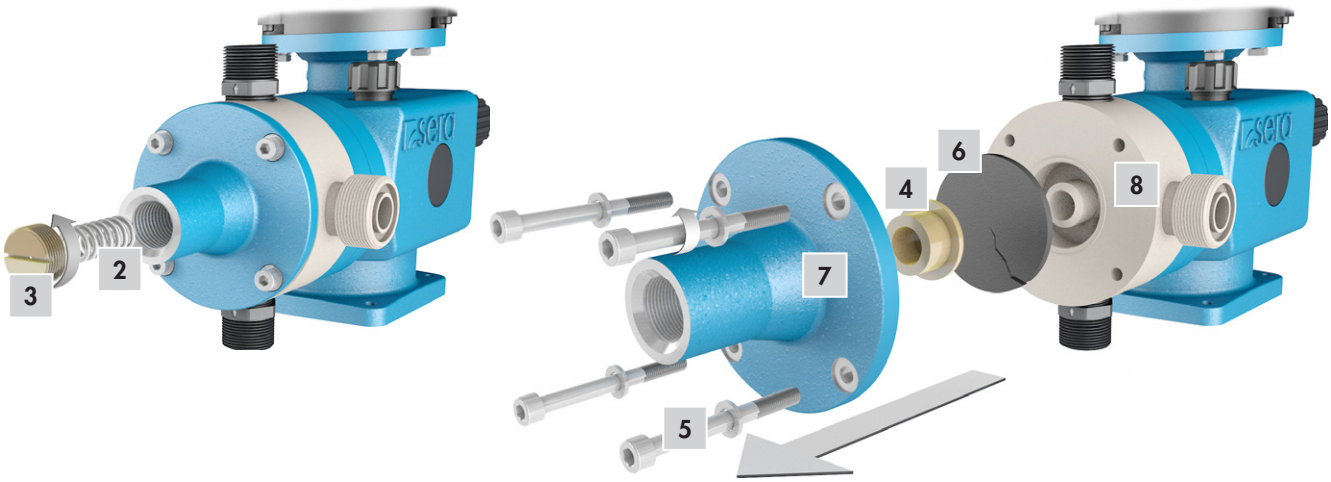


- Insert a new diaphragm. In case of PTFE-laminated diaphragms the PTFE-coated side must point towards the pump body.

Assemble the pump in reversed order.

**NOTE**

The individual components should be cleaned thoroughly before assembly!!

**NOTE**

When the set nut is screwed in the dimension "**T**" which was determined beforehand is of great importance.

The initial opening pressure of the overflow valve is only reached when the NOTE! set screw is screwed in exactly according to dimension "**T**"!

**ATTENTION**

The screw-in depth of the set screw must not exceed the initial value. If the set pressure is increased, **sera** has to be consulted beforehand!

**ATTENTION**

Never screw in the set screw to a depth so that the pressure spring is compressed to solid length!

## Spare and wearing parts

**The following parts are considered as wearing parts of the pump:**

- Drive diaphragm (diaphragm kit)
- Diaphragm (diaphragm kit) ► diaphragm of the integrated overflow valve
- Diaphragm rupture electrode (diaphragm kit)
- Valve kit (including O-ring kit)
- O-ring kit

Depending on their use and period of use, wearing parts must be replaced at regular intervals in order to ensure a safe function of the diaphragm pump.

We recommend to replace the wearing parts after 3000 operating hours or at least once a year.

In case of a premature diaphragm rupture caused by hard operating conditions, switch off the diaphragm pump and replace the diaphragms (see chapter „Changing the diaphragm").

**The following parts are considered as spare parts of the pump:**

- Pump body kit (including mounting kit)
- Mounting kit
- Cover kit ► pump with integrated overflow valve
- Setting kit ► pump with integrated overflow valve

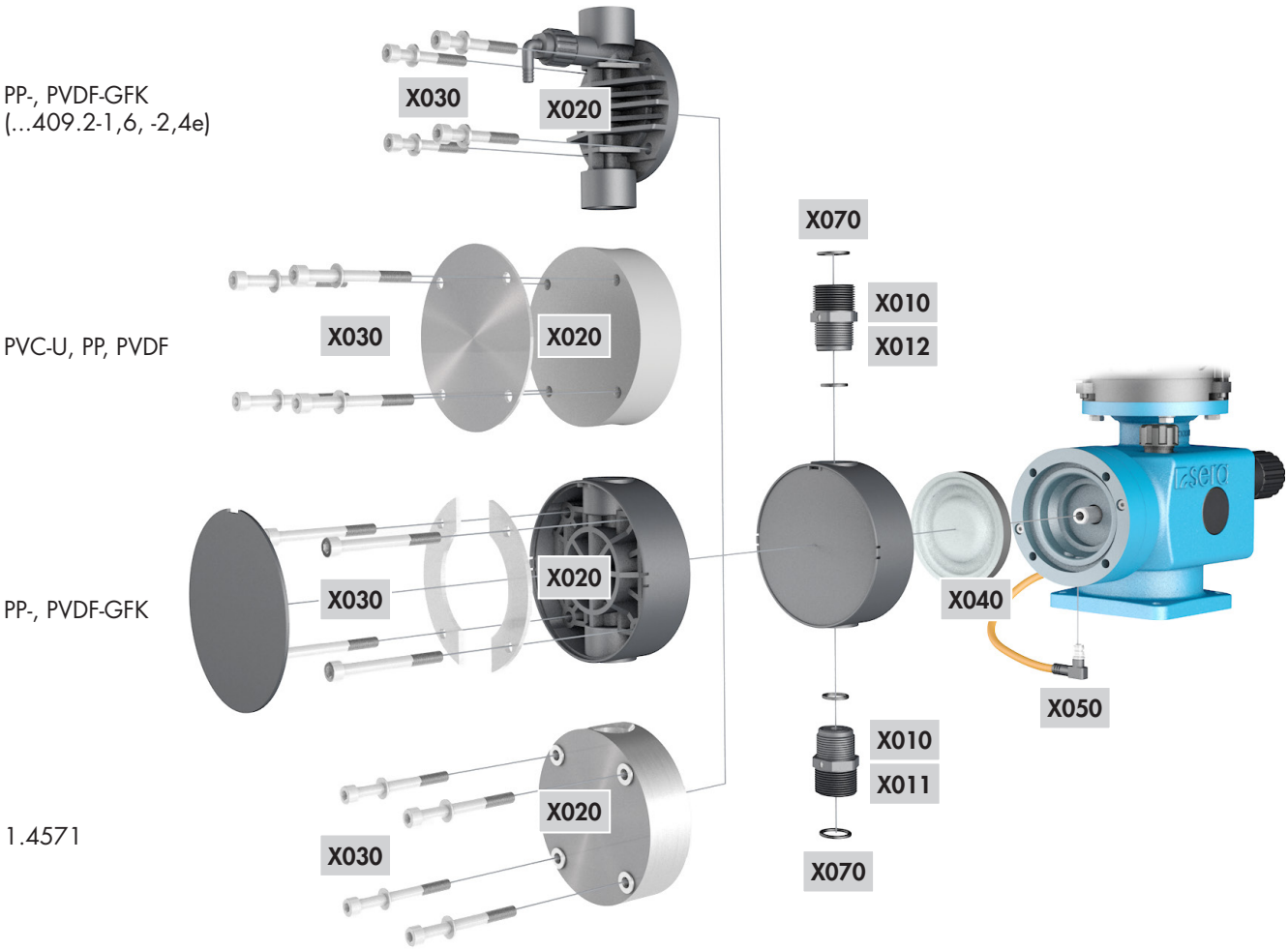


| Pos. | Kit | Materials | consisting of |
|---|---|---|---|
| X010 | Valves | PVC-U<br>PP-FRP<br>PVDF-FRP | Suction valve<br>Pressure valve<br>O-ring kit |
| X011 | Suction valve | 1.4571 | Suction valve<br>O-ring kit |
| X012 | Pressure valve | 1.4571 | Pressure valve<br>O-ring kit |
| X020 | Pump body | PVC-U<br>PP<br>PVDF | Pump body<br>Front plate<br>Mounting kit |
| X020 | Pump body | PP-FRP<br>PVDF-FRP | Pump body<br>Cover plate<br>Insertion plates<br>Mounting kit |
| X020 | Pump body | 1.4571 | Pump body<br>Mounting kit |
| X030 | Mounting | | Screws, complete |
| X040 | Diaphragm | | Drive diaphragm<br>Pressure plate (FPM-, EPDM-diaphragm)<br>Diaphragm rupture electrode ► C409.2 / C410.2 |
| X050 | Diaphragm rupture electrode | | Diaphragm rupture electrode ► ...409.2 / ...410.2 |
| X070 | O-rings | | |

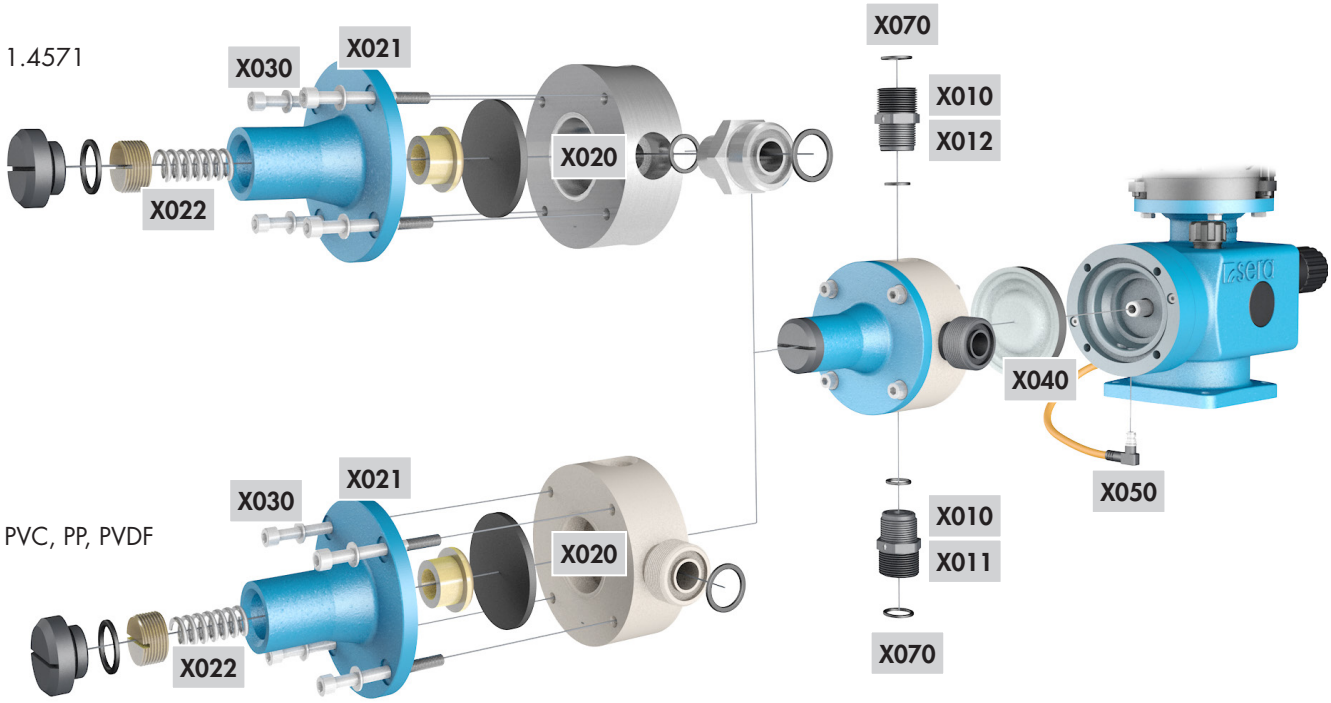


| Pos. | Kit | Materials | consisting of |
|---|---|---|---|
| X010 | Valves | PVC-U<br>PP-FRP<br>PVDF-FRP | Suction valve<br>Pressure valve<br>O-ring kit |
| X011 | Suction valve | 1.4571 | Suction valve<br>O-ring kit |
| X012 | Pressure valve | 1.4571 | Pressure valve<br>O-ring kit |
| X020 | Pump body | PVC<br>PP<br>PVDF | Pump body<br>Mounting kit<br>O-ring |
| X020 | Pump body | 1.4571 | Pump body<br>Mounting kit<br>Socket<br>O-rings |
| X021 | Cover | | Cover<br>Lid<br>O-ring |
| X022 | Setting kit | | Set screw<br>Pressure spring<br>Pressure disk |
| X030 | Mounting | | Screws, complete |
| X040 | Diaphragm | | Drive diaphragm<br>Pressure plate (FPM-, EPDM-diaphragm)<br>Diaphragm<br>Diaphragm rupture electrode ► C409.2 / C410.2 |
| X050 | Diaphragm rupture electrode | | Diaphragm rupture electrode ► ...409.2 / ...410.2 |
| X070 | O-rings | | |

**sera** products are sophisticated technical products which are only shipped after having been thoroughly tested and checked at our factory.
Should there be any faults, these can be detected and rectified easily and quickly based the instructions in the tables.

## NOTE

Analysis of the error messages in the display for the pumps with a control ► see the operation instructions of the control!

| Fault type | | | | | | | | | | | | | | | Possible cause | Corrective action |
|---|---|---|---|---|---|---|---|---|---|---|---|---|---|---|---|---|
| Corrective action! | Display, LED not lit! ▲ Pump with control | Motor does not start! ▲ diaphragm pump | Damage to stroke mechanism / drive! | Pump does not draw in! | Pump does not deliver! | Flow rate is not reached! | Delivery head is not reached! | Flow rate fluctuates! | Maximum permissible flow rate exceeded! | Pipe oscillates heavily! | Too high noise development! | Service life of the drive diaphragm too low! | Drive is overloaded (periodically occurring noises)! | Leakage on pump head! | | |
| | | | | ■ | ■ | ■ | | | | | | | | | Suction height too high. | Reduce suction height or suction resistance. |
| | | | | ■ | ■ | ■ | | ■ | | | | | | | Suction pipe leaking. | Check seals, tighten pipe connections. |
| | | | | ■ | ■ | | | | | | | ■ | ■ | ■ | Shut-off valves in piping closed. | Open shut-off valves or check opening state ► check pump for possible damage. |
| | | | | ■ | ■ | ■ | | | | | | | | | No pumped medium in storage tank. | Fill storage tank. |
| | | | | ■ | ■ | ■ | ■ | ■ | | | | | | | Pump valves leaking. | Remove and clean valves. |
| | | | | ■ | ■ | | ■ | ■ | | | | | | | Pump valves (ball seats) damaged. | Remove and clean valves, check function; replace valves if necessary. |
| | | | | ■ | ■ | | | | | | | | | | Pump valves incorrectly mounted or valve balls missing. | Check installation position and completeness ► replace missing parts or install correctly. |
| | | | | ■ | ■ | ■ | | ■ | | | | | | | Filter in suction line clogged. | Clean filter. |
| | | | | ■ | ■ | ■ | ■ | ■ | | | | | ■ | | Electrical data of the pump do not match mains data. | Check order data.<br>Check electrical installation.<br>Adjust motor to the network on site (for diaphragm pumps). |
| | | | | | ■ | ■ | ■ | ■ | | ■ | | ■ | ■ | ■ | Backpressure too high. | Measure pressure with manometer directly above pressure valve if possible and compare with permissible backpressure. |
| | | | | ■ | ■ | ■ | ■ | ■ | | | | | | | Foreign matter in the pump valves. | Remove and clean valves. |
| | | | | | | | | ■ | ■ | | | | | | Pressure on suction side higher than at the end of the pressure pipe. | Check geodetic conditions, install float valve or pressure keeping valve if necessary. |
| | | | | | | ■ | ■ | ■ | | ■ | ■ | ■ | ■ | ■ | Acceleration height too high due to pipe geometry. | Check acceleration height on suction and pressure sides with manometer and compare with design data ► install a pulsation damper if necessary. |
| | | | | | | | | | | | | ■ | | ■ | Materials coming into contact with the medium not suitable for the pumped medium. | Check whether the pumped medium matches the design data and select other materials if necessary. |

# FAULT ANALYSIS / CORRECTIVE ACTION

| Fault type | | | | | | | | | | | | | | | Possible cause | Corrective action |
|---|---|---|---|---|---|---|---|---|---|---|---|---|---|---|---|---|
| Corrective action! | Display, LED not lit! ▲ Pump with control | Motor does not start! ▲ diaphragm pump | Damage to stroke mechanism / drive! | Pump does not draw in! | Pump does not deliver! | Flow rate is not reached! | Delivery head is not reached! | Flow rate fluctuates! | Maximum permissible flow rate exceeded! | Pipe oscillates heavily! | Too high noise development! | Service life of the drive diaphragm too low! | Drive is overloaded (periodically occurring noises)! | Leakage on pump head! | | |
| | | | | ■ | | ■ | ■ | ■ | | | | | | | Viscosity of the pumped medium too high. | Check viscosity of the pumped medium and compare with design data ► reduce concentration or increase temperature if necessary. |
| | | | | | ■ | ■ | | ■ | | | | | | | Pumped medium is outgassing in the suction pipe and/or the pump body. | Check geodetic conditions and compare with data of the pumped medium. Operate pump with suction side supply, reduce temperature of the pumped medium. |
| | | | | ■ | | | | | | | | | | | Air in suction line while pressure is present on the pressure side. | Vent pressure side. |
| | ■ | | | | | | | | | | | | | | Power supply failed / switched off. | Restore power supply. |
| | | | | ■ | ■ | ■ | ■ | ■ | | | | | | | Pipe connections leaking. | Tighten connections according to type of material. Be careful with plastic ► risk of fracture!! |
| | | | | ■ | ■ | | | | | | | | | | Pumped medium frozen in pipe. | PRemove pump and check for possible damage - increase temperature of the pumped medium. |
| ■ | ■ | | | | ■ | | | | | | | | | | No mains power connection. | Connect mains power supply. |
| | | | | ■ | | | | | | | | | | | Pump valves dry. | Moisten pump body and valves.<br>Open vent valve. |
| | | | | ■ | ■ | ■ | | | | | | | | ■ | Temperature too low. | Check flowability of the dosing medium. Temperature of the medium see „Technical data“. |
| | | | | ■ | ■ | ■ | ■ | ■ | | | | ■ | | ■ | Diaphragm rupture. | Replace the diaphragm according to the descriptions in Chapter „Replacing the diaphragm“. |
| ■ | | | | | | | | | | | | | | | Reversible thermal fuse of the pump has tripped. | Let temperature of the pump cool down.<br>Check ambient temperature. |
| | ■ | | | | | | | | | | | | | | Fuse in electronics blown. ► Pump with control | Return pump for repair. |
| | | | | ■ | ■ | ■ | ■ | | | | | | | | Compensating valve not adjusted to operating conditions. ► diaphragm pump KM | Set compensating valve according to operating conditions. ► diaphragm pump KM |

**WARNING**

Observe and follow the safety instructions by all means.
See the additional instructions „SAFETY INSTRUCTIONS“.
Man, machine and environment are endangered if the safety instructions are not observed.




## Shut-down

- Switch off piston diaphragm pump.
- Rinse pump head and remove pumped medium; make sure that the rinsing agent is suitable for pumped medium and pump head.

## Disposal

- Shut-down system. Please see “Shut-down“.

## Dismantling and transport

- Shut-down system. Please see “Shut-down“.
- Remove all fluid residues from pump body, clean thoroughly, neutralize and decontaminate.
- Package unit and ship.

**NOTE**

A clearance certificate must be filled in when systems are returned to the manufacturer.
Acceptance will be rejected if this clearance certificate is not attached.

## Complete disposal

- Remove all fluid residues from unit.
- Drain off lubricants and dispose of according to regulations!
- Dismount materials and send them to a suitable waste disposal company!

**NOTE**

Inspection / repair of machines and machine parts is only carried out after the opposite clearance certificate was filled in correctly and completely by authorized and qualified personnel.

**NOTE**

Acceptance will be refused if parts are returned to the manufacturer without a proper clearance certificate.

All industrial companies are obligated by the legal provisions for occupational health, e.g. the workplaces ordinances, the Ordinance on Hazardous Substances, the regulations for prevention of accidents and the environmental protection regulations such as the Waste Management Act and the German Household Water Act to protect their employees or man and the environment from detrimental effects when handling hazardous substances.

Should special safety precautions be necessary despite careful draining and cleaning of the product the necessary information are to be provided.

Machines which are operated with radioactive media shall only be inspected and/or repaired in the safety area of the owner by a **sera** specialized fitter.

The clearance certificate is part of the inspection-/repair order.
**sera** reserves the right to refuse acceptance of the order for other reasons.

**NOTE**

Please make a copy and leave the original with the operating instructions!
(can also be downloaded from: www.sera-web.com)

# Clearance Certificate

## Product

Type _____ Serial-No. _____

**the product was carefully emptied before shipping / delivery, and cleaned inside and outside.** ☐ **YES**

## Conveying medium

Designation _____ Concentration _____ %

### Properties

Please tick!

If either of the listed properties, then enclose the appropriate safety and handling instructions.

☐ Harmless

☐ Toxic ☐ Corrosive ☐ Flammable ☐ Oxidising ☐ Unhealthy

☐ Explosive ☐ Dangerous for the environment ☐ Irritant ☐ Bio-hazardous ☐ Radioactive

The product was used with health or water-polluting substances and came up with labeling requirements and pollution prone media in contact. ☐ **YES** ☐ **NO**

Special security arrangements with respect to health or water-hazardous media are in the further handling ☐ **not required** ☐ **required**

The following safety precautions regarding rinsing, residual liquids and waste disposal are required:

## Process data

The product was used with the following operating conditions described conveying medium:

Temperature _____ °C Pressure _____ bar

## Sender

Company: _____ Telephone: _____

Contact person: _____ FAX: _____

Address: _____ E-mail: _____

Zip code, City: _____ Your order No: _____

**We confirm that we have the information in this safety certificate (Clearance Certificate) have been correctly and completely and that the returned parts were carefully cleaned.**

**The parts are sent free of residues of dangerous amount.**

Place, Date _____ Department _____ Signature (and company stamp) _____

QSF 469-01 en / 11.2014 / PM

FOLLOW US

EXCELLENCE IN FLUID TECHNOLOGY

**sera ProDos GmbH**
sera-Str. 1
34376 Immenhausen
Germany
Tel. +49 5673 999 02
Fax +49 5673 999 03
info-prodos@sera-web.com
www.sera-web.com

TM01-03 EN 190110 **sera**® is a registered trademark of **sera** GmbH.
Technical details subject to change. **sera** shall not accept any liability for errors or omissions or for printing errors.

# ACCUGUARD Diaphragm Seals

Without proper protection, process fluids can contaminate and damage in-line instrumentation. ACCUGUARD Diaphragm Seals are designed to protect and isolate pressure gauges and expensive instrumentation from corrosive, high temperature, or viscous, process media.



## Features

- Transfers process pressure accurately without direct contact with process fluids
- Removes the need for expensive instrumentation
- Easily installed and available in five chemically resistant Materials of Construction
- Optional Diaphragm Materials
- Available with ¼" & ½" Bottom Connection Sizes in FNPT & BSPT Female Connection Types
- Thermoplastic Units Rated to 240 PSIG (16 BARG) @ 21°C (70°F)
- 316L S/S Units Rated to 5800 PSIG (400 BARG) @ 21°C (70°F)
- Approved – 316 S/S Diaphragm Seals with CRN (Canadian Registration Number)

## HOW TO ORDER - AccuGuard

*Example Part Number: AG25A25A-PVC-V-M-[Optional Gauge]*

**AG 25 A 25 A - PVC - V - M - [Optional Gauge]**

*See Gauge List*

**AccuGuard Diaphragm Seal**

**Connection Size (Top)**
25 = 1/4"

**Connection Type (Top)**
A = FNPT

**Connection Size (Bottom)**
25 = 1/4"
50 = 1/2"

**Connection Type (Bottom)**
A = FNPT
B = BSPT

**Options**
M = Mounted Gauge/Glycerin Filled

**Diaphram Materials**
V = Viton (Thermoplastic Body Only)
E = EPDM (Thermoplastic Body Only)
T = PTFE (Thermoplastic Body Only)
S/S = 316 S/S (S/S & S/SV Body Only)

**Body Materials**
PVC = Polyvinylchloride
CPVC = CPVC Corzan
PP = Polypropylene (Not Available with PTFE Diaphragm)
PVDF = Polyvinyldene Fluoride (PTFE Diaphragm Only)
S/S = 316L Stainless Steel
S/SV = Vented 316L Stainless Steel

*- Optional Gauge Appears as Separate Line Item When Ordered*
*- Diaphragm Seals With Gauges = Glycerin Filled As Standard*
*- 1/4" & 1/2" MNPT Nipples Available - Call Factory for Details*

Primary Fluid Systems Inc. | 1050 Cooke Blvd. | Burlington | Ontario | L7T 4A8 | Canada
www.primaryfluid.com | primary@primaryfluid.com | North American Toll Free: 1-800-776-6580

# ACCUGUARD Diaphragm Seals

## Technical Information

### Temperature Correction Factors: Thermoplastics Temperature Effects:

Thermoplastics and thermosets will decrease in tensile strength as the temperature increases: therefore, the working pressure must be reduced accordingly. For additional Information, please visit: www.eco-valve.com.

### Canadian Registration Number:

Approved - 316L S/S ACCUGUARD Diaphragm Seals with CRN (Canadian Registration Number) Certification for all of Canada.

## Dimensions & Parts

### Thermoplastic Diaphragm Seals

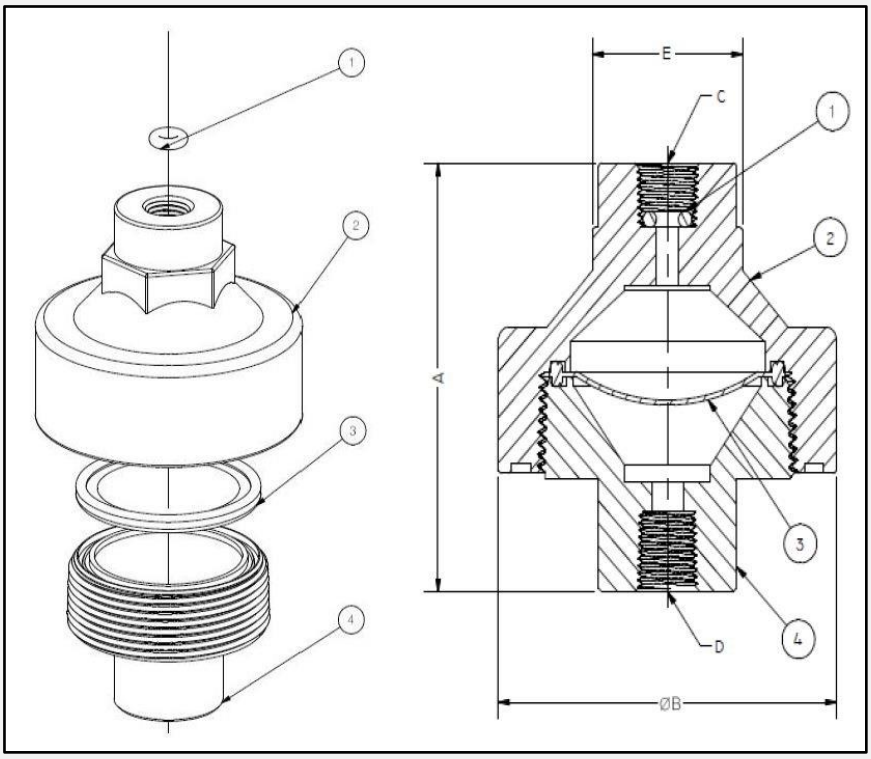


### Alloy Diaphragm Seals

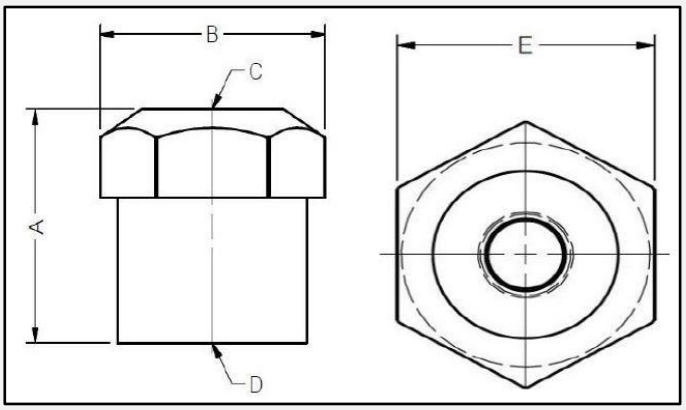


### Vented Alloy Diaphragm Seals

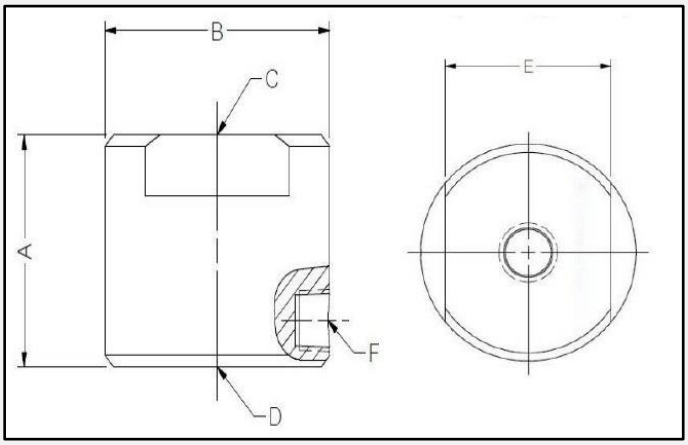


**Dimensional Information**

| Dimension | Thermoplastic | Alloy | Vented Alloy |
|---|---|---|---|
| A | 3.3" [84.68mm] | 1.5" [38.61mm] | 1.57" [40.00mm] |
| B | 3.1" [78.49mm] | 1.7" [43.43mm] | 2.05" [52.00mm] |
| C | *See "How to Order"* | *See "How to Order"* | *See "How to Order"* |
| D | *See "How to Order"* | *See "How to Order"* | *See "How to Order"* |
| E | 1.4" [35.00mm] | 1.5" [38.10mm] | 1.57" [40.00mm] |
| F | N/A | N/A | 1/8" FNPT |

**Thermoplastic Diaphragm Seal Parts & Materials**

| Item Number | Description | Material of Construction |
|---|---|---|
| 1 | O-Ring | EPDM |
| 2 | Upper Housing | Polypropylene (PVC, CPVC, & PP Lower Housings) Or PVDF (PVDF Lower Housing Only) |
| 3 | Diaphragm | *See "How to Order"* |
| 4 | Lower Housing | *See "How to Order" (Body Materials)* |

- *Alloy Units = Sealed – No Parts Available*

Primary Fluid Systems Inc. | 1050 Cooke Blvd. | Burlington | Ontario | L7T 4A8 | Canada
www.primaryfluid.com | primary@primaryfluid.com | North American Toll Free: 1-800-776-6580

# ACCUGUARD GAUGES

ACCUGUARD Pressure Gauges are designed to enhance the performance of chemical feed systems. Adding a pressure gauge to any system will help to ensure that optimal pressures are monitored and maintained.







## Series Information

| Series | Gauge Diameter | Gauge Connection Size and Type | Gauge Housing | Gauge Internals | Liquid Filled | *Accuracy Rating |
|---|---|---|---|---|---|---|
| **Economy** | 2" / 2.5" | 1/4" NPT | Steel Case | Brass | No | ± 2.5% |
| **Intermediate** | 2.5" / 4" | 1/4" NPT | 304 S/S | Brass | Yes | ± 1.6% |
| **Premium** | 2.5" / 4" | 1/4" NPT | 304S/S | 316L S/S | Yes | ± 1.6% |

*Accuracy Rating = Full Scale Range

### HOW TO ORDER - AccuGuard Gauges

*Example Part Number: GE2-160-CB*

**G E 2 - 160 - CB**

**AccuGuard Gauge**

**Gauge Series**
- E = Economy
- I = Intermediate
- P = Premium

**Gauge Diameter**
- 2 = 2 Inches
- 2.5 = 2-1/2 Inches
- 4 = 4 Inches

**Gauge Mounting Orientation**
- CB = Center Back
- BM = Bottom Mount

**Gauge Indication**
- 60 = 0-60 PSIG / 0-400 KPA
- 160 = 0-160 PSIG / 0-1100 KPA
- 200 = 0-200 PSIG / 0-1400 KPA
- 300 = 0-300 PSIG / 0-2000 KPA
- 400 = 0-400 PSIG / 0-2800 KPA

*4" Gauge Diameter Available in Bottom Mount Orientation Only*

*For Price & Availability of Other Pressures - Call Factory*

Primary Fluid Systems Inc. | 1050 Cooke Blvd. | Burlington | Ontario | L7T 4A8 | Canada
www.primaryfluid.com | primary@primaryfluid.com | North American Toll Free: 1-800-776-6580

# ACCUDRAW®

# Glass Cylinder Calibration Instructions

***Note: Before starting the calibration procedure below, ensure that the pump is primed and void of any trapped air.***

**Using the ml scale:** (scale is based on **volume** pumped, over any given time)

1. Fill the calibration cylinder to the top mark with the liquid to be dispensed. This can be accomplished by manually filling the cylinder, or, if the feed tank level is higher than the cylinder, by opening the isolation valve below the cylinder and back filling the cylinder.

***Caution: Never leave unattended when back filling the cylinder.***

2. With the calibration cylinder full of the liquid to be dispensed, start the metering pump and operate at 100% output until all air is removed from both suction lines and pump head.
3. Shut pump "OFF".
4. With calibration cylinder full, close isolation Valve (#2) from supply tank, and open isolation valve (#1) below cylinder.
5. Start the pump.
6. Using a stop watch, measure the volume dispensed in 60 seconds.
7. Multiply the measured volume by 60 to find your **ml per hour** volume.
8. Adjust the pump volume control, higher or lower to meet with your desired output.
9. Repeat above steps 4 through 8 until your desired output is met.

If you wish to shorten the time of dispensing for calibration by one half (1/2) or one quarter (1/4), you must multiply the volume by the same number used to divide the time by to determine ml per minute or hour.

e.g. 100 ml in 60 seconds equals
50 ml X 2 in 30 seconds or
25 ml X 4 in 15 seconds

## Typical Installations ("A" and "B")

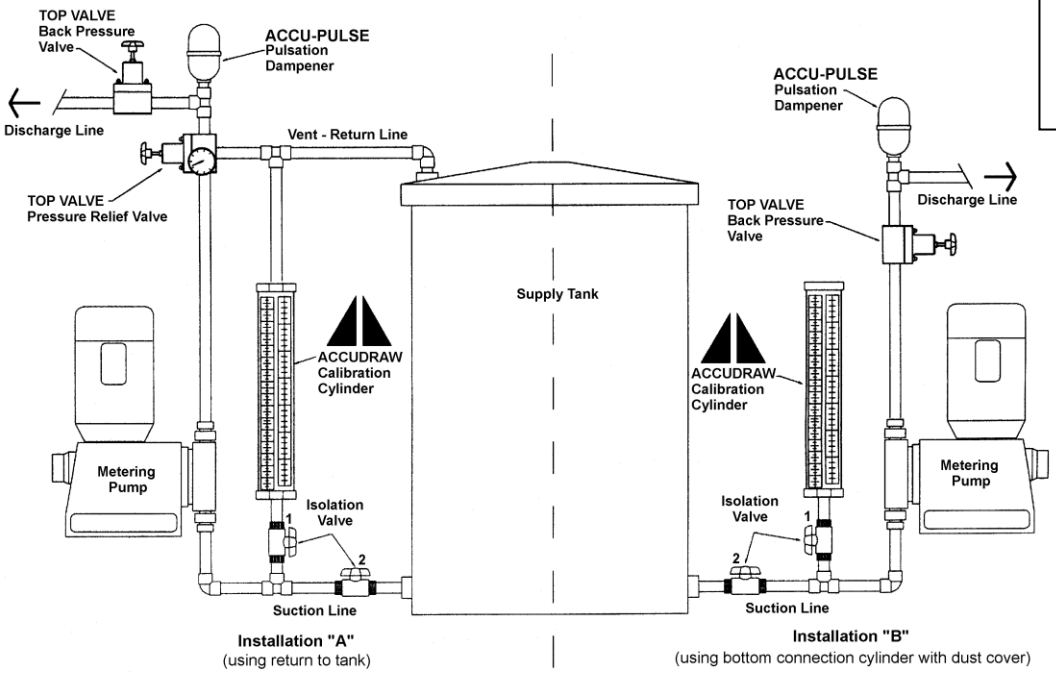


**Conversion Factors**
1ml = 1 cc
1000 ml – 1 liter
ml/sec x 60 = ml/min
1 US gal/min x 0.063 = liters/sec
1 US gal = 3.786 liters

**Caution:**
Do not use as a Pressure Vessel


**PRIMARY FLUID SYSTEMS INC.**

**Call Toll Free 1-800-776-6580**
**Tel: (905) 333-8743 Fax: (905) 333-8746**

***E-Mail: primary@ primaryfluid.com***
***www.primaryfluid.com***



***® Registered Trade Mark of Primary Fluid Systems Inc.***

# Metering Pump Accessories Save $$$$
## *Prevent unsafe and inefficient systems by design.*

### **ACCUDRAW** Calibration Cylinders

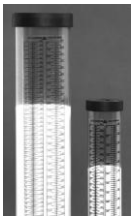



**PVC** **Glass** **Poly**

- *PVC, glass, polypropylene*
- *translucent, chemical resistant*
- *coloured graduations and lettering*
- *threaded or socket connections*
- *standard sizes 100 ml to 20,000 ml*

***Custom built in other sizes and materials.***

### **TOP VALVE** Back Pressure/Pressure Relief



- *long life diaphragm*
- *range of 0 – 150 PSIG*
- *air release, optional gauge port*
- *PVC, CPVC, PVDF, PTFE, polypropylene, stainless, Alloy 20 and Hastelloy C*
- *7 sizes ¼" – 2" NPT*
- *colour coded handles indicate size*

***Designed to enhance the <u>accuracy</u> and <u>safety</u> of your metering pumps.***

### **ACCU-PULSE**
Pulsation Dampeners



***Designed to remove pulsating flows from positive displacement pumps.***

- *increase system efficiency and pump life*
- *decrease maintenance and costs*
- *protect pipes, meters, valves and instrumentation from pulsation and vibration*
- *ensure meter accuracy, longevity and repeatability*
- *prevent foaming and splashing*
- *extensive range of materials and sizes*
- *lightweight, compact design*

### Typical Metering Pump System

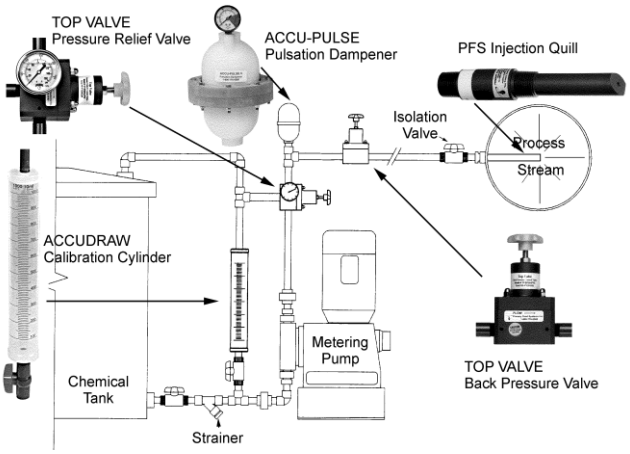


***AutoCad drawings available from our web site.***
***Visit www.primaryfluid.com***

### PFS Injection Quills



***Designed to inject chemical into the center stream of process.***

- *provides for a more homogenous mix in the pipeline*
- *built-in checks to prevent back siphoning*
- *2 sizes 6" and 8" length*
- *½" or ¾" NPT, BPST, or Flg'd Conn.*
- *PVC, CPVC, PVDF, polypropylene, Stainless, Hastelloy C & Titanium*
- *pressure to 3000 PSIG*
- *temperature to 260°C (500°F)*

***Custom built in other sizes and materials.***

### Accu-Vent



***Designed to automatically vent gases and vapours.***

- *vents gases and vapors released from Sodium Hypochlorite, Sulfuric Acid & Hydrogen Peroxide*
- *CPVC (Corzan) and Viton corrosion resistant wetted materials of construction*
- *specially designed float material automatically vents built up gases on system start up and under working pressure*
- *standard 1/2" or 3/4" NPT threaded connections or optional socket weld*
- *available in other materials*

### PFS Corporation Stops

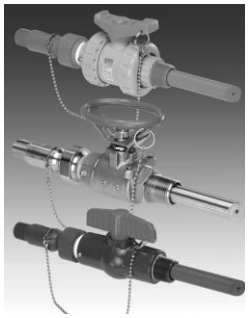

***Designed to inject chemical into the center stream of process.***

- *isolation valve allows for ease of maintenance*
- *available in 6 materials of construction*
- *wetted components have comparable or greater chemical resistance than quill construction material*
- *standard and custom lengths available*
- *connection in NPT, metric or flanged*

***Custom built in other sizes & materials.***

**Call Toll Free 1-800-776-6580**
**Tel: (905) 333-8743 Fax: (905) 333-8746**

# *Technical Sheet*

***WWW.POMPESCP.COM***

| | | | |
|---|---|---|---|
| ***Client:*** | ***ASDR*** | ***Assembly serial number:*** | ***0194*** |
| ***Quotation:*** | ***PP-204196*** | ***Drawing number :*** | ***351-CPVC-250*** |
| Mounting type: box ☒ wall ☐ | | Pump model: **RF409.2-180e** | |
| With door ☒ Without door ☐ | | S/N pump 1: WP387558 S/N pump 2: WP387559 | |
| Simplex ☐ Duplex ☐ Triplex ☒ Quadruplex ☐ | | S/N pump 3: WP387560 S/N pump 4: | |
| Skid Material: HDPE ☒ SS ☐ | | Pump capacity L/H : 216 | |
| Skid dimension: _____48___X____64___X_____24___ | | Maximum pressure (PSI): 58.01 | |
| O-ring: Viton ☒ EPDM ☐ Teflon ☐ | | Pump head material: PVDF | |
| Relief valve model: TVBPP75-CPVC | | Valve material: CPVC | |
| Back pressure valve model: TVBPP75-CPVC | | Valve: simple ☒ double ☐ | |
| Valve material: CPVC | | Ball type: FKM | |
| Calibration cylinder model: (ACS2-4000)X2 | | O-ring: Viton | |
| Pressure gauge model:GI2.5-160CB | | Diaphragm:AG25A50A-CPVC-T-M | |
| Piping : PVC ☐ SS ☐ PVDF ☐ CPVC ☒ | | | |
| Piping dimension: ½'' ☐ ¾'' ☒ 1'' ☒ 1 ¼'' ☐ 1 ½'' ☐ 2'' ☐ | | | |

| ***Pressure test and tightness*** | | ***Adjusting valves*** | |
|---|---|---|---|
| Pressure test period, min.: | 10 | Release valve, PSI: | 50 |
| Pressure test, PSI: | 60 | Back pressure valve, PSI: | 50 |

***Signature : _____*** ***Date : __June 03 2021_____***

***3076A, rue Bernard-Pilon, St-Mathieu-de-Beloeil (Qc) J3G 4S5***
***Tél : 450-922-4224 Fax : 450-922-4223***

AGNICO EAGLE

| 6526-S-265-605 |
|---|
| TSS & Ammonia WTC - Reagents |
| 6526-S-265-605-MCL-002 |

| By | Revision | Date |
|---|---|---|
| Sebastien Perron | R1 | 21-02-23 |
| Dan Misiano | R2 | 21-03-05 |
| Dan Misiano | R3 | 21-03-16 |
| Dan Misiano | R4 | 2021-03-19 |
| Dan Misiano | R5 | 2021-03-31 |

List mainly used to identify equipment with AEM numbers
AEM numbers to be used in other vendor's documents
Does not replace vendor's equipment/instrument/valve lists

| ITEM | TAG Number | | DWG Number | | Type Equipment/Valve/Instrument | Description | Make | Model | Kilowatts | Voltage | Weight (kg) | Volume (m3) | Comment | Revision | By |
|---|---|---|---|---|---|---|---|---|---|---|---|---|---|---|---|
| | AEM | Vendor | AEM | Vendor | | | | | | | | | | | |
| 1 | 65AGI68010 | MAKE DOWN SODIUM HYDROXIDE UNIT WAM/PCP/SH | | 6526-S265-605B-135_MIXER_65AGI68010_ EDS | MIXER | CAUSTIC MIXING TANK AGITATOR | Sharpe Mixers | fgp-075 | | 575 | 45 | N/A | | R5 | D.M. |
| 2 | 65AGI68011 | MAKE DOWN SODIUM THIOSULFATE UNIT WAM/PCP/ST | | 6526-S265-605B-135_MIXER_65AGI68011_ EDS | MIXER | SODIUM THIOSULFATE MIXING TANK AGITATOR | Sharpe Mixers | fgp-075 | | 575 | 45 | N/A | | R5 | D.M. |
| 3 | 65CUV68003 | MAKE DOWN SODIUM HYDROXIDE UNIT WAM/PCP/SH | | 6526-S265-605B-135_MAKEDOWN SODIUM HYDROXIDE UNIT WAMPCPST _DOC | TANK | CAUSTIC MIXING TANK | LACAL | 2107-001B | | - | | | | R5 | D.M. |
| 4 | 65CUV68004 | MAKE DOWN SODIUM THIOSULFATE UNIT WAM/PCP/ST | | 6526-S265-605B-135_MAKEDOWN ThIOSULFATE UNIT WAM/PCP/ST _DOC | TANK | SODIUM THIOSULFATE MIXING TANK | LACAL | 2107-002B | | - | | 5075 | | R5 | D.M. |
| 5 | 65HOP68005 | MAKE DOWN SODIUM HYDROXIDE UNIT WAM/PCP/SH | | 6526-S265-605B-135_MAKEDOWN SODIUM HYDROXIDE UNIT WAMPCPST _DOC | HOPPER | CAUSTIC HOPPER | WAM | SBB BULK BAG UNLOADER | | 575 | | | | R5 | D.M. |
| 6 | 65HOP68006 | MAKE DOWN SODIUM THIOSULFATE UNIT WAM/PCP/ST | | 6526-S265-605B-135_MAKEDOWN ThIOSULFATE UNIT WAM/PCP/ST _DOC | HOPPER | SODIUM THIOSULFATE HOPPER | WAM | SBB BULK BAG UNLOADER | | 575 | | | | R5 | D.M. |
| 7 | 65HST68001 | MAKE DOWN SODIUM HYDROXIDE UNIT WAM/PCP/SH | | 6526-S265-605B-135_MAKEDOWN SODIUM HYDROXIDE UNIT WAMPCPST _DOC | HOIST | CAUSTIC HOIST | VULCAN | N /A | | 575 | | | | R5 | D.M. |
| 8 | 65HST68002 | MAKE DOWN SODIUM THIOSULFATE UNIT WAM/PCP/ST | | 6526-S265-605B-135_MAKEDOWN ThIOSULFATE UNIT WAM/PCP/ST _DOC | HOIST | SODIUM THIOSULFATE HOIST | VULCAN | N /A | | 575 | | | | R5 | D.M. |
| 9 | 65PME68006A | TRIPLEX SODIUM HYDROXIDE 351-PVC-1800 | | 6526-S265-605B-135_TRIPLEX SODIUM HYDROXIDE 351-PVC-1800_DOC | PUMP | CAUSTIC DISTRIBUTION PUMP #1 | PCP INC. | TRIPLEX SODIUM HYDROXIDE 351-PVC-1800 | 1.75 | 575 | | N/A | | R5 | D.M. |
| 10 | 65PME68006B | TRIPLEX SODIUM HYDROXIDE 351-PVC-1800 | | 6526-S265-605B-135_TRIPLEX SODIUM HYDROXIDE 351-PVC-1800_DOC | PUMP | CAUSTIC DISTRIBUTION PUMP #2 | PCP INC. | TRIPLEX SODIUM HYDROXIDE 351-PVC-1800 | 1.75 | 575 | | N/A | | R5 | D.M. |
| 11 | 65PME68006C | TRIPLEX SODIUM HYDROXIDE 351-PVC-1800 | | 6526-S265-605B-135_TRIPLEX SODIUM HYDROXIDE 351-PVC-1800_DOC | PUMP | CAUSTIC DISTRIBUTION PUMP #3 | PCP INC. | TRIPLEX SODIUM HYDROXIDE 351-PVC-1800 | 1.75 | 575 | | N/A | | R5 | D.M. |
| 12 | 65PME68007A | DUPLEX SODIUM THIOSULFATE 251-PVC-750 | | 6526-S265-605B-135_DUPLEX SODIUM THIOSULFATE 251-PVC-750_DOC | PUMP | SODIUM THIOSULFATE DISTRIBUTION PUMP #1 | PCP INC. | DUPLEX SODIUM THIOSULFATE 251-PVC-750 | 0.86 | 575 | | N/A | | R5 | D.M. |
| 13 | 65PME68007B | DUPLEX SODIUM THIOSULFATE 251-PVC-750 | | 6526-S265-605B-135_DUPLEX SODIUM THIOSULFATE 251-PVC-750_DOC | PUMP | SODIUM THIOSULFATE DISTRIBUTION PUMP #2 | PCP INC. | DUPLEX SODIUM THIOSULFATE 251-PVC-750 | 0.86 | 575 | | N/A | | R5 | D.M. |
| 14 | 65PME68008A | QUADRUPLEX COAGULANT 461-PVC-250 | | 6526-S265-605B-135_QUADRUPLEX COAGULANT 461-PVC-250_DOC | PUMP | COAGULANT DISTRIBUTION PUMP #1 | PCP INC. | QUADRUPLEX COAGULANT 461-PVC-250 | 0.43 | 575 | | N/A | | R5 | D.M. |
| 15 | 65PME68008B | QUADRUPLEX COAGULANT 461-PVC-250 | | 6526-S265-605B-135_QUADRUPLEX COAGULANT 461-PVC-250_DOC | PUMP | COAGULANT DISTRIBUTION PUMP #2 | PCP INC. | QUADRUPLEX COAGULANT 461-PVC-251 | 0.43 | 575 | | N/A | | R5 | D.M. |
| 16 | 65PME68008C | QUADRUPLEX COAGULANT 461-PVC-250 | | 6526-S265-605B-135_QUADRUPLEX COAGULANT 461-PVC-250_DOC | PUMP | COAGULANT DISTRIBUTION PUMP #3 | PCP INC. | QUADRUPLEX COAGULANT 461-PVC-252 | 0.43 | 575 | | N/A | | R5 | D.M. |
| 17 | 65PME68008D | QUADRUPLEX COAGULANT 461-PVC-250 | | 6526-S265-605B-135_QUADRUPLEX COAGULANT 461-PVC-250_DOC | PUMP | COAGULANT DISTRIBUTION PUMP #4 | PCP INC. | QUADRUPLEX COAGULANT 461-PVC-253 | 0.43 | 575 | | N/A | | R5 | D.M. |
| 18 | 65PME68009A | TRIPLEX POLYMER 341-PVC-1450 | | 6526-S265-605B-135_TRIPLEX POLYMER 341-PVC-1450_ DOC | PUMP | POLYMER DISTRIBUTION PUMP #1 | PCP INC. | TRIPLEX POLYMER 341-PVC-1450 | | 332/575 | | N/A | | R5 | D.M. |
| 19 | 65PME68009B | TRIPLEX POLYMER 341-PVC-1450 | | 6526-S265-605B-135_TRIPLEX POLYMER 341-PVC-1450_ DOC | PUMP | POLYMER DISTRIBUTION PUMP #2 | PCP INC. | TRIPLEX POLYMER 341-PVC-1450 | | 332/575 | | N/A | | R5 | D.M. |
| 20 | 65PME68009C | TRIPLEX POLYMER 341-PVC-1450 | | 6526-S265-605B-135_TRIPLEX POLYMER 341-PVC-1450_ DOC | PUMP | POLYMER DISTRIBUTION PUMP #3 | PCP INC. | TRIPLEX POLYMER 341-PVC-1450 | | 332/575 | | N/A | | R5 | D.M. |
| 21 | 65PME68010A | TRIPLEX SULFURIC ACID 351-CPVC-250 | | 6526-S265-605B-135_TRIPLEX SULFURIC ACID 351-CPVC-250_ DOC | PUMP | ACID DISTRIBUTION PUMP #1 | PCP INC. | TRIPLEX SULFURIC ACID 351-CPVC-250 | 0.43 | 575 | | N/A | | R5 | D.M. |
| 22 | 65PME68010B | TRIPLEX SULFURIC ACID 351-CPVC-250 | | 6526-S265-605B-135_TRIPLEX SULFURIC ACID 351-CPVC-250_ DOC | PUMP | ACID DISTRIBUTION PUMP #2 | PCP INC. | TRIPLEX SULFURIC ACID 351-CPVC-250 | 0.43 | 575 | | N/A | | R5 | D.M. |
| 23 | 65PME68010C | TRIPLEX SULFURIC ACID 351-CPVC-250 | | 6526-S265-605B-135_TRIPLEX SULFURIC ACID 351-CPVC-250_ DOC | PUMP | ACID DISTRIBUTION PUMP #3 | PCP INC. | TRIPLEX SULFURIC ACID 351-CPVC-250 | 0.43 | 575 | | N/A | | R5 | D.M. |
| 24 | 65TNK68021 | N/A | | | TANK | ACID TANK (TOTE) | | | | | | | | R5 | D.M. |
| 25 | 65TSO68003 | MAKE DOWN SODIUM HYDROXIDE UNIT WAM/PCP/SH | | 6526-S265-605B-135_MAKEDOWN SODIUM HYDROXIDE UNIT WAMPCPST _DOC | TANK | CAUSTIC DISTRIBUTION TANK | LACAL | 2107-001A | | - | | | | R5 | D.M. |
| 26 | 65TSO68004 | MAKE DOWN SODIUM THIOSULFATE UNIT WAM/PCP/ST | | 6526-S265-605B-135_MAKEDOWN ThIOSULFATE UNIT WAM/PCP/ST _DOC | TANK | SODIUM THIOSULFATE DISTRIBUTION TANK | LACAL | 2107-002A | | - | | 5075 | | R5 | D.M. |
| 27 | | FMU30-CAHGAARGF | | 6526-S265-605B-135_SENSOR CAUSTIC_FMU30-CAHGAARGF_ EDS | SENSOR | ULTRASONIC SENSOR CAUSTIC | PROSONIC | FMU30 | | 14-35 | 2 | N/A | | R5 | D.M. |
| 28 | | FMU30-CAHGAARGF | | 6526-S265-605B-135_SENSOR THIOSULFATE_FMU30-CAHGAARGF_ EDS | SENSOR | ULTRASONIC SENSOR THIOSULFATE | PROSONIC | FMU30 | | 14-35 | 2 | N/A | | R5 | D.M. |
| 3 | 65CUV68003 | MAKE DOWN SODIUM HYDROXIDE UNIT WAM/PCP/SH | | 6526-S265-605B-135_MAKEDOWN SODIUM HYDROXIDE UNIT WAMPCPST _1 | | DWG - General | | | | | | | | R5 | D.M. |
| 3 | 65CUV68003 | MAKE DOWN SODIUM HYDROXIDE UNIT WAM/PCP/SH | | 6526-S265-605B-135_MAKEDOWN SODIUM HYDROXIDE UNIT WAMPCPST _2 | | DWG - General | | | | | | | | R5 | D.M. |
| 3 | 65CUV68003 | MAKE DOWN SODIUM HYDROXIDE UNIT WAM/PCP/SH | | 6526-S265-605B-135_MAKEDOWN SODIUM HYDROXIDE UNIT WAMPCPST _3 | | DWG - General | | | | | | | | R5 | D.M. |
| 3 | 65CUV68003 | MAKE DOWN SODIUM HYDROXIDE UNIT WAM/PCP/SH | | 6526-S265-605B-135_MAKEDOWN SODIUM HYDROXIDE UNIT WAMPCPST _4 | | DWG - General | | | | | | | | R5 | D.M. |
| 3 | 65CUV68003 | MAKE DOWN SODIUM HYDROXIDE UNIT WAM/PCP/SH | | 6526-S265-605B-135_MAKEDOWN SODIUM HYDROXIDE UNIT WAMPCPST _5 | | DWG - General | | | | | | | | R5 | D.M. |
| 3 | 65CUV68003 | MAKE DOWN SODIUM HYDROXIDE UNIT WAM/PCP/SH | | 6526-S265-605B-135_MAKEDOWN SODIUM HYDROXIDE UNIT WAMPCPST _6 | | DWG - General | | | | | | | | R5 | D.M. |
| 3 | 65CUV68003 | MAKE DOWN SODIUM HYDROXIDE UNIT WAM/PCP/SH | | 6526-S265-605B-135_MAKEDOWN SODIUM HYDROXIDE UNIT WAMPCPST _7 | | DWG - General | | | | | | | | R5 | D.M. |
| 9 | 65PME68006A | TRIPLEX SODIUM HYDROXIDE 351-PVC-1800 | | 6526-S265-605B-135_TRIPLEX SODIUM HYDROXIDE 351-PVC-1800_1_ | PUMP | DWG - General | PCP INC. | TRIPLEX SODIUM HYDROXIDE 351-PVC-1800 | 1.75 | 575 | | N/A | | R5 | D.M. |
| 6 | 65HOP68006 | MAKE DOWN SODIUM THIOSULFATE UNIT WAM/PCP/ST | | 6526-S265-605B-135_MAKEDOWN THIOSULFATE UNIT WAMPCPST _1 | | DWG - General | | | | | | | | R5 | D.M. |
| 6 | 65HOP68006 | MAKE DOWN SODIUM THIOSULFATE UNIT WAM/PCP/ST | | 6526-S265-605B-135_MAKEDOWN THIOSULFATE UNIT WAMPCPST _2 | | DWG - General | | | | | | | | R5 | D.M. |
| 6 | 65HOP68006 | MAKE DOWN SODIUM THIOSULFATE UNIT WAM/PCP/ST | | 6526-S265-605B-135_MAKEDOWN THIOSULFATE UNIT WAMPCPST _3 | | DWG - General | | | | | | | | R5 | D.M. |
| 6 | 65HOP68006 | MAKE DOWN SODIUM THIOSULFATE UNIT WAM/PCP/ST | | 6526-S265-605B-135_MAKEDOWN THIOSULFATE UNIT WAMPCPST _4 | | DWG - General | | | | | | | | R5 | D.M. |
| 6 | 65HOP68006 | MAKE DOWN SODIUM THIOSULFATE UNIT WAM/PCP/ST | | 6526-S265-605B-135_MAKEDOWN THIOSULFATE UNIT WAMPCPST _5 | | DWG - General | | | | | | | | R5 | D.M. |
| 6 | 65HOP68006 | MAKE DOWN SODIUM THIOSULFATE UNIT WAM/PCP/ST | | 6526-S265-605B-135_MAKEDOWN THIOSULFATE UNIT WAMPCPST _6 | | DWG - General | | | | | | | | R5 | D.M. |
| 6 | 65HOP68006 | MAKE DOWN SODIUM THIOSULFATE UNIT WAM/PCP/ST | | 6526-S265-605B-135_MAKEDOWN THIOSULFATE UNIT WAMPCPST _7 | | DWG - General | | | | | | | | R5 | D.M. |
| 13 | 65PME68007B | DUPLEX SODIUM THIOSULFATE 251-PVC-750 | | 6526-S265-605B-135_DUPLEX SODIUM THIOSULFATE 251-PVC-750_1 | PUMP | DWG - General | PCP INC. | DUPLEX SODIUM THIOSULFATE 251-PVC-750 | 0.86 | 575 | | N/A | | R5 | D.M. |
| 17 | 65PME68008D | QUADRUPLEX COAGULANT 461-PVC-250 | | 6526-S265-605B-135_QUADRUPLEX COAGULANT 461-PVC-250_1 | PUMP | DWG - General | PCP INC. | QUADRUPLEX COAGULANT 461-PVC-253 | 0.43 | 575 | | N/A | | R5 | D.M. |
| 18 | 65PME68009A | TRIPLEX POLYMER 341-PVC-1450 | | 6526-S265-605B-135_TRIPLEX POLYMER 341-PVC-1450_ 1 | PUMP | DWG - General | PCP INC. | TRIPLEX POLYMER 341-PVC-1450 | | 332/575 | | N/A | | R5 | D.M. |
| 23 | 65PME68010C | TRIPLEX SULFURIC ACID 351-CPVC-250 | | 6526-S265-605B-135_TRIPLEX SULFURIC ACID 351-CPVC-250_ 1 | PUMP | DWG - General | PCP INC. | TRIPLEX SULFURIC ACID 351-CPVC-250 | 0.43 | 575 | | N/A | | R5 | D.M. |
| 30 | | | | | | | | | | | | | | | |
| 31 | | | | | | | | | | | | | | | |
| 32 | | | | | | | | | | | | | | | |
| 33 | | | | | | | | | | | | | | | |
| 34 | | | | | | | | | | | | | | | |

ASDR

Project #: 6526-S-265-605B
Client: Agnico-Eagle Mines (Meliadine)
Project: AMMONIA & TSS WATER

Prépared by: Dan Misiano
Revision: R0
Revision date: 2021-05-14

## 6526-S-265-605B-135-Spare Parts List

| Item Description | Qty | Modèle/compagnie | Supplier | Client tag# | Material | Comments: |
|---|---|---|---|---|---|---|
| **1.0 SODIUM HYDROXIDE MAKE DOWN SYSTEM : (#65CVI68004)** | | | | | | |
| CPLG bolts W/ LOCKNUTS 18-8SS | 1 | C.0625.04.375-S 5CB 5/8" x 4-3/8" / OAL CEMA | ASDR | 65DVI68004 | SS | |
| Sectional screw x 14' - 10" LG | 1 | 9S412 / OAL CEMA | ASDR | 65DVI68004 | SS | screw stober. H. & mtd. On 3" sch.40 pipe variable pitch, cema 2-bolt drilled, screw to be 2/3 pitch first 12", balance to be full pitch |
| 3 HP @ 34 RPM Class II drive | 1 | - / oal cema | ASDR | 65DVI68004 | - | consisting of:<br>• (1) 3 HP 1750 RPM PREMIUM EFF., TEFC, MTR;<br>• (1) NORD SK4282100LP/4 SCREW CONVEYOR DRIVE W/ ADAPTER & ADJUSTABLE PACKING KIT<br>• 2-0" DRIVE SHAFT & MOTOR MOUNT. |
| 2"DIA.WAM-SHIELD SEAL | 1 | SE.4CP / WAM | ASDR | 65DVI68004 | - | |
| single flange butterfly valve 10" DIA., | 1 | WAM V1FS250.ZB / WAM | ASDR | 65R0V68001 | 304SS | cast aluminum body, 304SS DISC |
| Electromechanical rotary actuator AE7022X19 | 1 | WAM AE070A1D / WAM | ASDR | 65R0V68001 | - | 575V 60HZ 0.75KW for VFS |
| Position limit switch | 1 | WAM MIC23 / WAM | ASDR | 65DVI68004 | - | |
| Seal for VFS0250 & assembly | 1 | WAM 20.99.480.1/D / WAM | ASDR | 65DVI68004 | - | |
| Sealing block for SBB125,53"ODX20"IDX51" | 1 | WAM361002300 / WAM | ASDR | 65DVI68004 | Neoprene | Bolt circle, 24 holes of 1" DIA, black neoprene, 1/4" THK. |
| Electric vibrator, | 1 | - / WAM | ASDR | 65VIB68001 | - | 0.18KW, 575V 60 HZ (SBB) |
| Transfer Centrifugal Pump | 1 | FC5010-17 / WEBTROL | ASDR | 65PSO68002 | - | Motor 1 HP, 145JM frame |
| Mixer | 1 | FGP-075 / SHARPE MIXERS | ASDR | 65AGI68010<br>65AGI68025 | - | 575V |
| Mixer Fixer kit 3/4" | 1 | / SHARPE MIXERS | ASDR | 65AGI68010<br>65AGI68025 | - | includes items:<br>• A10797 - Motor gasket<br>• PG10333 - Pinion gear kit model M5 gearbox<br>• 5L104012 - Split coupling<br>• 1220965-1 - Nosecone seal (food grade Viton) ¾''<br>• A2975 - Brass tipped set screw (2 req'd)<br>• RB-12 - Nosecone bearing kit ¾''<br>• N06 - Gear nut<br>• W06 - Star washer<br>• A10712 - Gearbox gasket (G/M5)<br>• 12545 - Gearbox seal<br>• 6206-RS1/C3 - Gearbox bearing<br>• DG10334 - Helical gear with key model M5 gearbox |
| Nosecone assembly | 1 | CNA075 / SHARPE MIXERS | ASDR | 65AGI68010<br>65AGI68025 | - | includes items:<br>• RB-12 - Nosecone bearing kit ¾''<br>• 1220965-1 - Nosecone seal (food grade Viton) ¾''<br>• A2975 - Brass tipped set screw (2 req'd) |
| Rotary level indicator | 1 | WAM ILT .C.2 / WAM | ASDR | N/A | - | 110/220V AC 50/60HZ |
| Speed switch | 1 | WAMM.WM100 / WAM | ASDR | 65CVI68004 | - | |
| rubber flexible connection | 1 | WAMXJN.273.236 / WAM | ASDR | 65CVI68004 | Neoprene | - 10" DIA X 12" LG X 1/8" THK. |

| | | | | | | |
|---|---|---|---|---|---|---|
| Ultrasonic sensor | 1 | FMU30-CAHGAARGF / Endress+Hauser | ASDR | 65LIT6801712 | - | |
| | | | | | | |
| **2.0 SODIUM THIOSULFATE MAKE DOWN SYSTEM : (#65CVI68004)** | | | | | | |
| CPLG bolts W/ LOCKNUTS 18-8SS | 1 | C.0625.04.375-S 5CB 5/8" x 4-3/8" / OAL CEMA | ASDR | 65CVI68004 | SS | |
| Sectional screw x 14' - 10" LG | 1 | 9S412 / OAL CEMA | ASDR | 65CVI68005 | SS | screw stober. H. & mtd. On 3" sch.40 pipe variable pitch, cema 2-bolt drilled, screw to be 2/3 pitch first 12", balance to be full pitch |
| 3 HP @ 34 RPM Class II drive | 1 | - / oal cema | ASDR | 65CVI68005 | - | consisting of:<br>• (1) 3 HP 1750 RPM PREMIUM EFF., TEFC, MTR;<br>• (1) NORD SK4282100LP/4 SCREW CONVEYOR DRIVE W/ ADAPTER & ADJUSTABLE PACKING KIT<br>• 2-0" DRIVE SHAFT & MOTOR MOUNT. |
| 2"DIA.WAM-SHIELD SEAL | 1 | SE.4CP / WAM | ASDR | 65CVI68005 | - | |
| single flange butterfly valve 10" DIA., | 1 | WAM V1FS250.ZB / WAM | ASDR | 65ROV68002 | 304SS | cast aluminum body, 304SS DISC |
| Electromechanical rotary actuator AE7022X19 | 1 | WAM AE070A1D / WAM | ASDR | 65ROV68002 | - | 575V 60HZ 0.75KW for VFS |
| Position limit switch | 1 | WAM MIC23 / WAM | ASDR | 65CVI68005 | - | |
| Seal for VFS0250 & assembly | 1 | WAM 20.99.480.1/D / WAM | ASDR | 65CVI68005 | - | |
| Sealing block for SBB125,53"ODX20"IDX51" | 1 | WAM361002300 / WAM | ASDR | 65CVI68005 | Neoprene | Bolt circle, 24 holes of 1" DIA, black neoprene, 1/4" THK. |
| Electric vibrator, | 1 | - / WAM | ASDR | 65VIB68002 | - | 0.18KW, 575V 60 HZ (SBB) |
| Transfer Centrifugal Pump | 1 | FC5010-17 / WEBTROL | ASDR | 65PSO68003 | SS | Motor 1 HP, 145JM frame |
| Mixer | 1 | FGP-075 / SHARPE MIXERS | ASDR | 65AGI68011<br>65AGI68026 | - | 575V |
| Mixer Fixer kit 3/4'' | 1 | / SHARPE MIXERS | ASDR | 65AGI68011<br>65AGI68026 | - | includes items:<br>• A10797 - Motor gasket<br>• PG10333 - Pinion gear kit model M5 gearbox<br>• 5L104012 - Split coupling<br>• 1220965-1 - Nosecone seal (food grade Viton) ¾''<br>• A2975 - Brass tipped set screw (2 req'd)<br>• RB-12 - Nosecone bearing kit ¾''<br>• N06 - Gear nut<br>• W06 - Star washer<br>• A10712 - Gearbox gasket (G/M5)<br>• 12545 - Gearbox seal<br>• 6206-RS1/C3 - Gearbox bearing<br>• DG10334 - Helical gear with key model M5 gearbox |
| Nosecone assembly | 1 | CNA075 / SHARPE MIXERS | ASDR | 65AGI68011<br>65AGI68026 | - | includes items:<br>• RB-12 - Nosecone bearing kit ¾''<br>• 1220965-1 - Nosecone seal (food grade Viton) ¾''<br>• A2975 - Brass tipped set screw (2 req'd) |
| Rotary level indicator | 1 | WAM ILT .C.2 / WAM | ASDR | N/A | - | 110/220V AC 50/60HZ |
| Speed switch | 1 | WAMM.WM100 / WAM | ASDR | 65CVI68005 | - | |
| rubber flexible connection | 1 | WAMXJN.273.236 / WAM | ASDR | 65CVI68005 | Neoprene | - 10" DIA X 12" LG X 1/8" THK. |
| Ultrasonic sensor | 1 | FMU30-CAHGAARGF / Endress+Hauser | ASDR | 65LIT6801812 | - | |

| | | | | | | |
|---|---|---|---|---|---|---|
| **3.0 - TRIPLEX SODIUM HYDROXIDE 351-PVC-1800 DISTRIBUTION SYSTEM (65PME68006A / B / C)** | | | | | | |
| Metering Pump | 1 | RF410.2-1450E / SERA | ASDR | 65PME68006A<br>65PME68006B<br>65PME68006C | N/A | Nominal capacity (QN): 1 x 0 – 1740 l/h at 60HZ |
| Valve set | 3 | 90037165 / SERA | ASDR | 65PME68006A<br>65PME68006B<br>65PME68006C | N/A | |
| Fxing set | 3 | 90037203 / SERA | ASDR | 65PME68006A<br>65PME68006B<br>65PME68006C | N/A | |
| Working diaphragm | 3 | 90011434 / SERA | ASDR | 65PME68006A<br>65PME68006B<br>65PME68006C | N/A | |
| O-ring set | 3 | 90038528 / SERA | ASDR | 65PME68006A<br>65PME68006B<br>65PME68006C | N/A | |
| Calibration Cylinder | 1 | PV#2-20000 / ACCUDRAW | ASDR | - | PVC | Calibration Cylinder 20000 ml/320gph |
| Relief valve and back-pressure valve | 3 | TVBP10-PVC / TOP VALVE | ASDR | - | PVC | |
| Pressure Gauge | 2 | GI2.5-160 CB / Primary fluid | ASDR | - | PVC | Pressure gauges with Diaphragm Seals |
| | | | | | | |
| **4.0 - DUPLEX SODIUM THIOSULFATE 251-PVC-750 DISTRIBUTION SYSTEM (65PME68007A / B)** | | | | | | |
| Metering Pump | 1 | RF410.2-570E / SERA | ASDR | 65PME68007A<br>65PME68007B | N/A | Nominal capacity (QN): 1 x 0 - 684 l/h at 60Hz |
| Valve set | 2 | 90037120 / SERA | ASDR | 65PME68007A<br>65PME68007B | N/A | |
| Fxing set | 2 | 90036918 / SERA | ASDR | 65PME68007A<br>65PME68007B | N/A | |
| Working diaphragm | 2 | 90011436 / SERA | ASDR | 65PME68007A<br>65PME68007B | N/A | |
| O-ring set | 2 | 90038523 / SERA | ASDR | 65PME68007A<br>65PME68007B | N/A | |
| Calibration Cylinder | 1 | PV#2-15000 / ACCUDRAW | ASDR | - | PVC | Calibration Cylinder 15000 ml/240gph |
| Relief valve and back-pressure valve | 2 | TVBP10-PVC / TOP VALVE | ASDR | - | PVC | |
| Pressure Gauge | 1 | GI2.5-160 CB / Primary fluid | ASDR | - | PVC | Pressure gauges with Diaphragm Seals |
| | | | | | | |
| **5.0 - QUADRUPLEX COAGULANT 461-PVC-250 DISTRIBUTION SYSTEM (65PME68008A/ B/ C)** | | | | | | |
| Metering Pump | 1 | RF409.2-180E / SERA | ASDR | 65PME68008A<br>65PME68008B<br>65PME68008C | N/A | |
| Valve set | 3 | 90036640 / SERA | ASDR | 65PME68008A<br>65PME68008B<br>65PME68008C | N/A | |
| Fxing set | 3 | 90036920 / SERA | ASDR | 65PME68008A<br>65PME68008B<br>65PME68008C | N/A | |
| Working diaphragm | 3 | 90023998 / SERA | ASDR | 65PME68008A<br>65PME68008B<br>65PME68008C | N/A | |
| O-ring set | 3 | 90038531 / SERA | ASDR | 65PME68008A<br>65PME68008B<br>65PME68008C | N/A | |
| Metering Pump | 1 | RF409.2-115E / SERA | ASDR | 65PME68008D | N/A | |
| Valve set | 2 | 90037123 / SERA | ASDR | 65PME68008D | N/A | |

| | | | | | | |
|---|---|---|---|---|---|---|
| Fxing set | 2 | 90036918 / SERA | ASDR | 65PME68008D | N/A | |
| Working diaphragm | 2 | 90011436 / SERA | ASDR | 65PME68008D | N/A | |
| O-ring set | 2 | 90038523 / SERA | ASDR | 65PME68008D | N/A | |
| Calibration Cylinder | 1 | PV#2-4000 / ACCUDRAW | ASDR | - | PVC | Calibration Cylinder 4000 ml/64gph |
| Calibration Cylinder | 1 | PV#2-1000 / ACCUDRAW | ASDR | - | PVC | Calibration Cylinder 2000 ml/32gph |
| Relief valve and back-pressure valve | 1 | VBP75-PVC 1 / TOP VALVE | ASDR | - | PVC | |
| Relief valve and back-pressure valve | 1 | TVBP50-PVC / TOP VALVE | ASDR | - | PVC | |
| Pressure Gauge | 1 | GI2.5-160 CB / Primary fluid | ASDR | - | PVC | |
| | | | | | | |
| **6.0 - TRIPLEX POLYMER 341-PVC-1450 DISTRIBUTION SYSTEM (65PME68009A / B / C)** | | | | | | |
| Polymer Pump (Progressive capacity pump) | 1 | IM6F / PCM | ASDR | 65PME68009A<br>65PME68009B<br>65PME68009C | - | Nominal capacity (QN): 1 x 0 – 1,440 l/h at 60Hz |
| Stator | 1 | 15121-167 / PCM | ASDR | 65PME68009A<br>65PME68009B<br>65PME68009C | NBR | Stator 1 NBR BL R1 P1 |
| Rotor | 1 | 14442001 / PCM | ASDR | 65PME68009A<br>65PME68009B<br>65PME68009C | SS420 | Rotor 1-1 SS420 R1 P20 |
| O-Ring | 1 | 40700160 / PCM | ASDR | 65PME68009A<br>65PME68009B<br>65PME68009C | NBR | O-RING NBR P13 |
| Joint | 1 | 15074160 / PCM | ASDR | 65PME68009A<br>65PME68009B<br>65PME68009C | - | JOINTD17.6*D12.9 EP 3.5 |
| Mechanical Seal | 1 | C09071D160 / PCM | ASDR | 65PME68009A<br>65PME68009B<br>65PME68009C | - | |
| Dry running protection | 1 | P-ENSAMSINO-PD / PCM | ASDR | 65PME68009A<br>65PME68009B<br>65PME68009C | - | |
| Calibration Cylinder | 1 | PV#2-20000 / ACCUDRAW | ASDR | - | PVC | Calibration Cylinder 20000 ml/320gph |
| Relief valve and back-pressure valve | 2 | TVBP10-PVC / TOP VALVE | ASDR | - | PVC | |
| Pressure Gauge | 1 | GI2.5-160 CB / Primary fluid | ASDR | - | PVC | Pressure gauges with Diaphragm Seals |
| | | | | | | |
| **7.0 - TRIPLEX SULFURIC ACID 351-CPVC-250 DISTRIBUTION SYSTEM (65PME68010A/ B / C)** | | | | | | |
| Metering Pump | 1 | RF409.2-180E / SERA | ASDR | 65PME68010A<br>65PME68010B<br>65PME68010C | N/A | Nominal capacity (QN): 1 x 0 - 684 l/h at 60Hz |
| Valve set | 2 | 90036650 / SERA | ASDR | 65PME68010A<br>65PME68010B<br>65PME68010C | N/A | |
| Fxing set | 2 | 90036926 / SERA | ASDR | 65PME68010A<br>65PME68010B<br>65PME68010C | N/A | |
| Working diaphragm | 2 | 90024529 / SERA | ASDR | 65PME68010A<br>65PME68010B<br>65PME68010C | N/A | |
| O-ring set | 2 | 90038550 / SERA | ASDR | 65PME68010A<br>65PME68010B<br>65PME68010C | N/A | |
| Calibration Cylinder | 1 | PV#2-4000 / ACCUDRAW | ASDR | - | PVC | Calibration Cylinder 4000 ml/64gph |

| | | | | | | |
|---|---|---|---|---|---|---|
| Relief valve and back-pressure valve | 1 | VBP75-PVC 1 / TOP VALVE | ASDR | - | PVC | |
| Pressure Gauge | 1 | GI2.5-160 CB / Primary fluid | ASDR | - | PVC | Pressure gauges with Diaphragm Seals |

# Hypochlorite Handling

# CALCIUM HYPOCHLORITE SOLID HANDLING SYSTEM
## PACKAGE NUMBER: 6526-S-265-605C

**Workshop drawing :**

- □ Approuved as is
- □ Approuved with correction(s)
- □ Rejected

**Approuved by**

Name : _____

Title : _____

Compagnie : _____

Signature : _____

*3076 A, Bernard-Pilon, St-Mathieu de Beloeil, Qc, J3G 4S5 Tél.: (450) 922-4224 / Fax: (450) 922-4223*

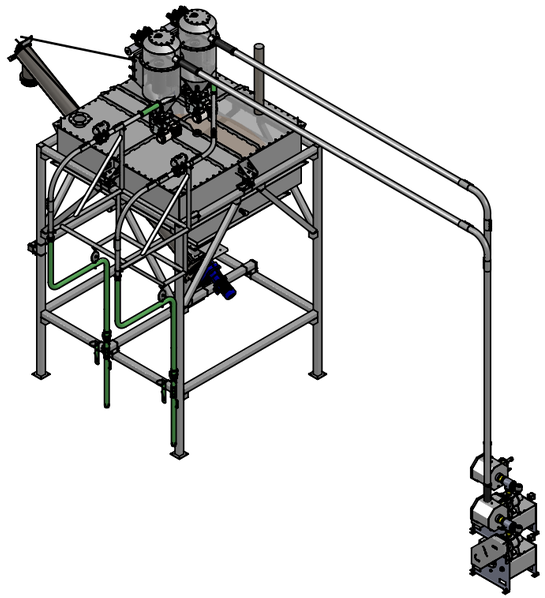

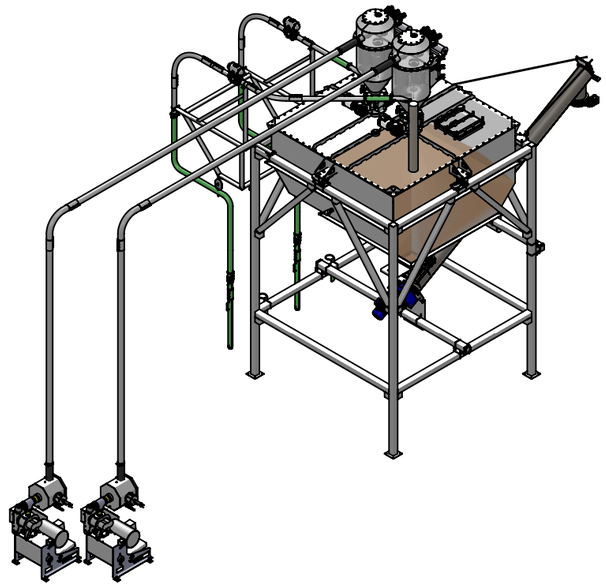

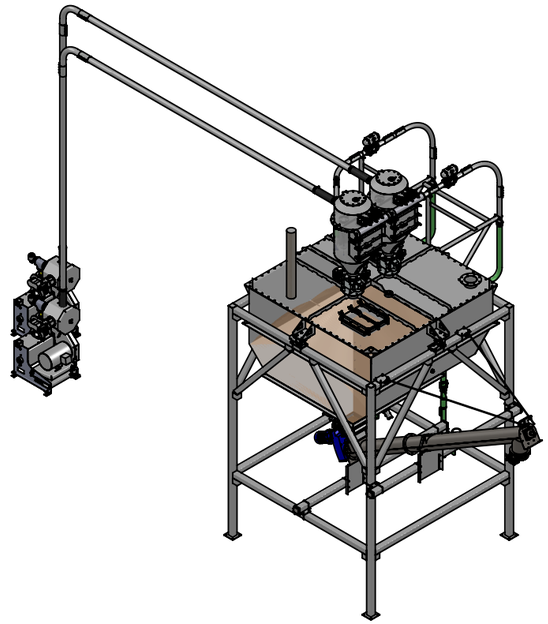

GROUPE SINOX
L'ingénierie de l'acier inoxydable

**Propriété et confidentialité**

Ce dessin est strictement confidentiel et demeure la propriété de Groupe Sinox. Il ne peut être reproduit en tout ou en partie, sans l'autorisation écrite de Groupe Sinox

TOLERANCES GENERALES

TOLÉRANCES SAUF SI SPÉCIFIÉES
DÉCIMALES : .XXX" ± 0.005"
FRACTIONS : 0 @ 72" ± 1/32" 72" @ PLUS ± 1/16"

ANGLE ± 1/2°

PROJECTION :

| MATERIEL: | | GAMME: | QTE TOTALE: | # MATERIEL : |
|---|---|---|---|---|
| | | ASS | 1 | |

| DESCRIPTION: | JOB : |
|---|---|
| Equipement for calcium hypochlorite dosing | P2274 |

| CLIENT: | NO. DE DESSIN: | PROJET : |
|---|---|---|
| PCP - POMPES CLERMONT PELLETIER | P2274.000.000_vue -ensemble | P2274 |

| DESSINATEUR: | FORMAT: | ECHELLE: | PAGE: | | REVISION: |
|---|---|---|---|---|---|
| S. ALEXANDRE | B | 1:96 | 1 de 1 | 2021-06-07 | 0 |

H:\CLIENTS\PCP - POMPES CLERMONT PELLETIER\PROJETS 2021\P2274-Equipement for calcium hypochlorite dosing\P2274-MANAGEMENT & LAYOUT\P2274-DRAWINGS\

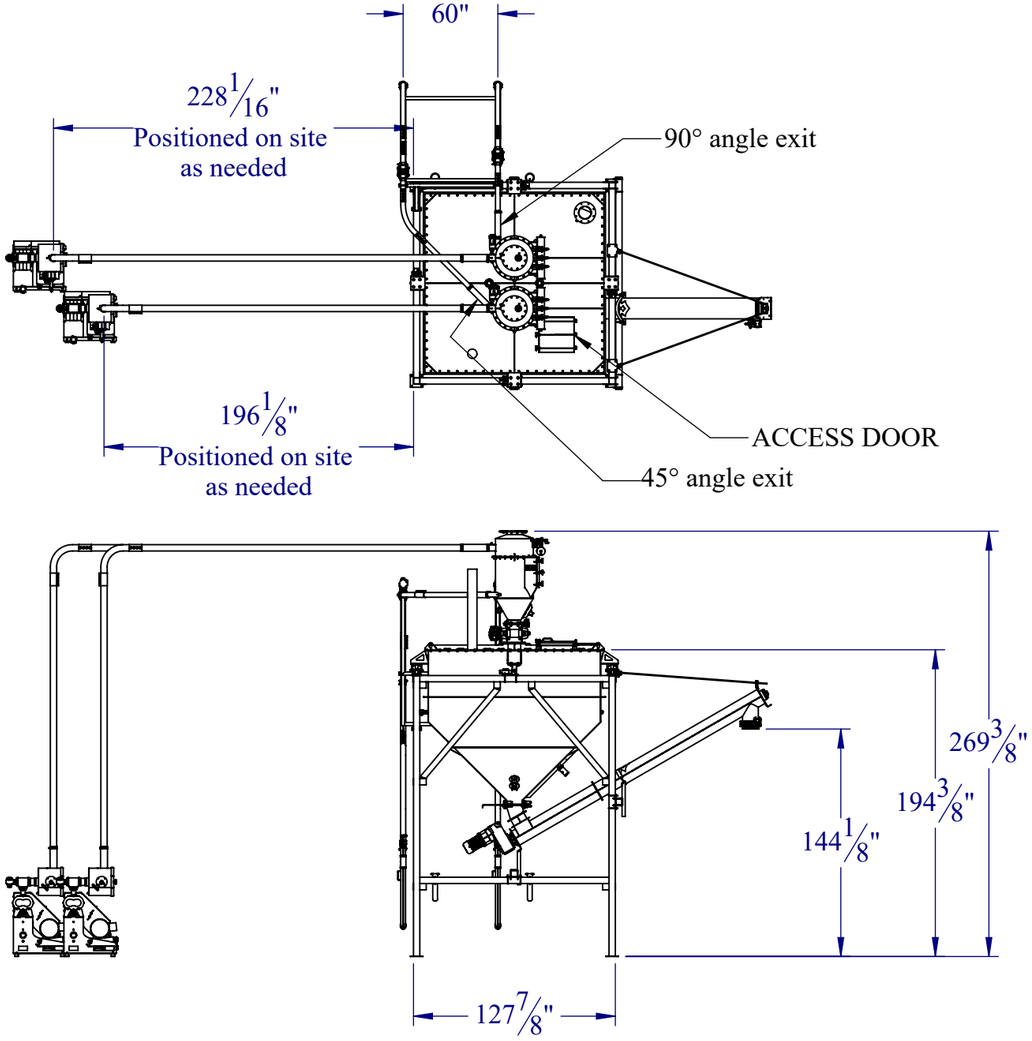





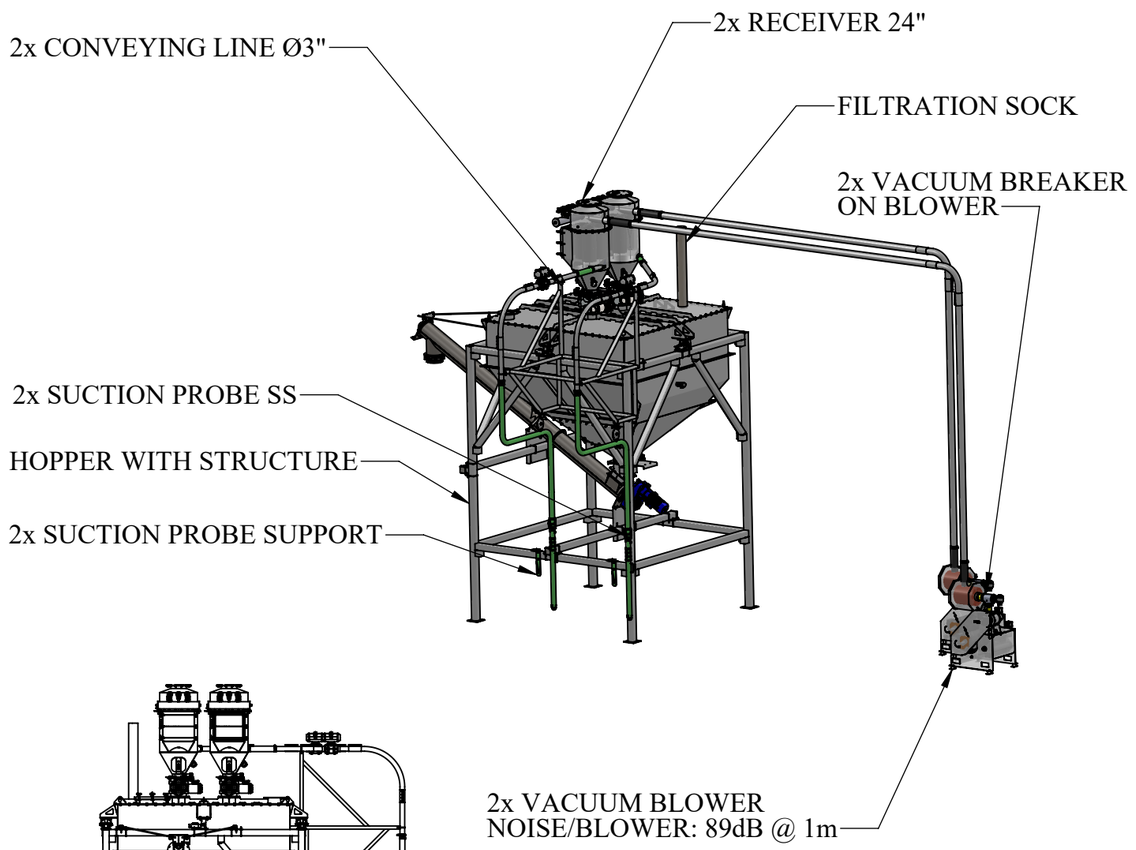


## APPROVAL FOR CONSTRUCTION

Project : _____ Date : _____

Maintenance : _____ Date : _____

Sanitation : _____ Date : _____

Note: Only one signature required. Sinox recommand all departement approval.

Delivery after approval : X weeks

GROUPE SINOX
L'ingénierie de l'acier inoxydable

**Propriété et confidentialité**

Ce dessin est strictement confidentiel et demeure la propriété de Groupe Sinox. Il ne peut être reproduit en tout ou en partie, sans l'autorisation écrite de Groupe Sinox

TOLERANCES GENERALES
TOLÉRANCES SAUF SI SPÉCIFIÉES
DÉCIMALES : .XXX" ± 0.005"
FRACTIONS : 0 @ 72" ± 1/32" 72" @ PLUS ± 1/16"
ANGLE ± 1/2"
PROJECTION :

| MATERIEL: | GAMME: | QTE TOTALE: | # MATERIEL : |
|---|---|---|---|
| | ASS | 1 | |

| DESCRIPTION: | JOB : |
|---|---|
| Equipement for calcium hypochlorite dosing | P2274 |

| CLIENT: | NO. DE DESSIN: | PROJET : |
|---|---|---|
| PCP - POMPES CLERMONT PELLETIER | P2274.000.000_AP | P2274 |

| DESSINATEUR: | FORMAT: | ECHELLE: | PAGE: | DATE : | REVISION: |
|---|---|---|---|---|---|
| S. ALEXANDRE | B | 1:96 | 1 de 2 | 2021-06-09 | 0 |

H:\CLIENTS\PCP - POMPES CLERMONT PELLETIER\PROJETS 2021\P2274-Equipement for calcium hypochlorite dosing\P2274-MANAGEMENT & LAYOUT\P2274-DRAWINGS\

## APPROVAL FOR CONSTRUCTION

Project : _____ Date :_____

Maintenance : _____ Date :_____

Sanitation : _____ Date :_____

Note: Only one signature required. Sinox recommand all departement approval.

Delivery after approval : X weeks

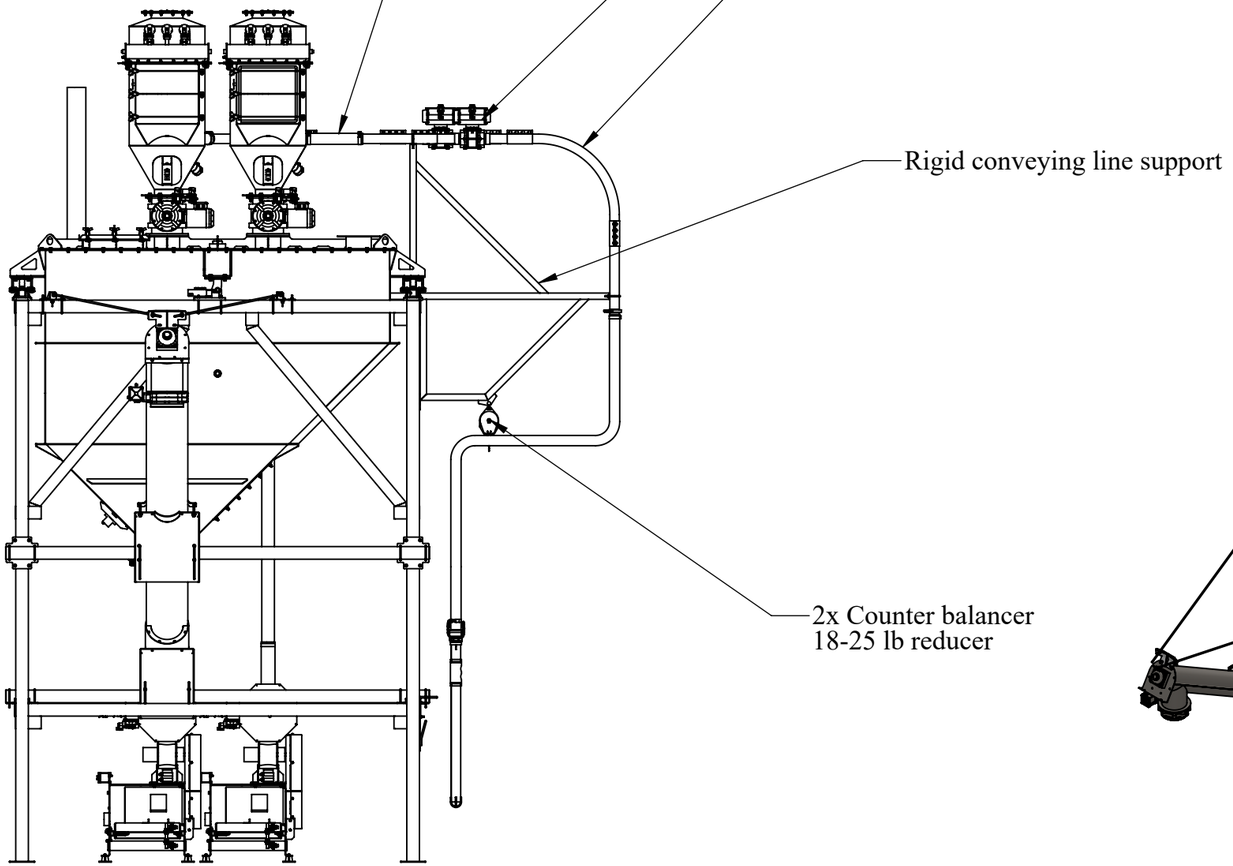


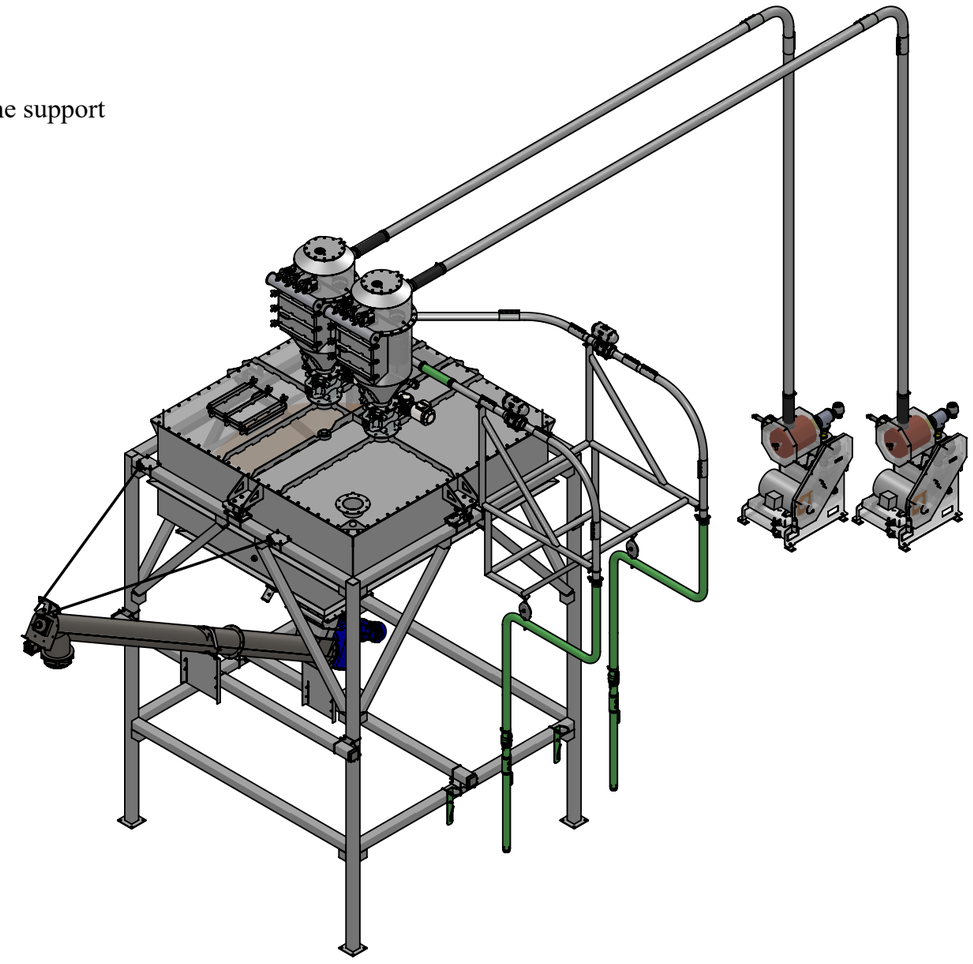

GROUPE SINOX
L'ingénierie de l'acier inoxydable

**Propriété et confidentialité**

Ce dessin est strictement confidentiel et demeure la propriété de Groupe Sinox. Il ne peut être reproduit en tout ou en partie, sans l'autorisation écrite de Groupe Sinox

TOLERANCES GENERALES

TOLÉRANCES SAUF SI SPÉCIFIÉES
DÉCIMALES :
.XXX" ± 0.005"
FRACTIONS :
0 @ 72" ± 1/32"
72" @ PLUS ± 1/16"

ANGLE ± 1/2"

PROJECTION :

| | | | | | | |
|---|---|---|---|---|---|---|
| *MATERIEL:* | | | *GAMME:* ASS | *QTE TOTALE:* 1 | *# MATERIEL :* | |
| *DESCRIPTION:* Equipement for calcium hypochlorite dosing | | | | | | *JOB :* P2274 |
| *CLIENT:* PCP - POMPES CLERMONT PELLETIER | | | *NO. DE DESSIN:* P2274.000.000_AP | | | *PROJET :* P2274 |
| *DESSINATEUR:* S. ALEXANDRE | *FORMAT:* B | *ECHELLE:* 1:48 | *PAGE:* 2 de 2 | *DATE :* 2021-06-09 | | *REVISION:* 0 |

H:\CLIENTS\PCP - POMPES CLERMONT PELLETIER\PROJETS 2021\P2274-Equipement for calcium hypochlorite dosing\P2274-MANAGEMENT & LAYOUT\P2274-DRAWINGS\

# CALCIUM HYPOCHLORITE HOPPER

## 65HOP68009

**Workshop drawing :**

- □ Approuved as is
- □ Approuved with correction(s)
- □ Rejected

**Approuved by**

Name : _____

Title : _____

Compagnie : _____

Signature : _____

*3076 A, Bernard-Pilon, St-Mathieu de Beloeil, Qc, J3G 4S5 Tél.: (450) 922-4224 / Fax: (450) 922-4223*

| Weight and Capacity | |
|---|---|
| Hopper weight @ full capacity | 16 618 lb |
| Empty hopper weight | 3 118 lb |
| Product weight @ full capacity | 13 500 lb |
| Usable space | 263 ft³ |
| Type | Gravity |
| Structure weight | 1 975 lb |
| Construction material | |
| Hopper | Stainless steel 304 |
| Structure | Carbon steel |
| Paint | |
| Structure | Gray powder coat |
| Weld and surface finish | |
| Inside of the hopper | TIG, discoloured 2B |
| Outside of the hopper | TIG, discoloured 2B |
| Structure | MIG, painted |

## APPROVAL FOR CONSTRUCTION

Project : _____ Date : _____

Maintenance : _____ Date : _____

Sanitation : _____ Date : _____

Note: Only one signature required. Sinox recommand all departement approval.

Delivery after approval : X weeks

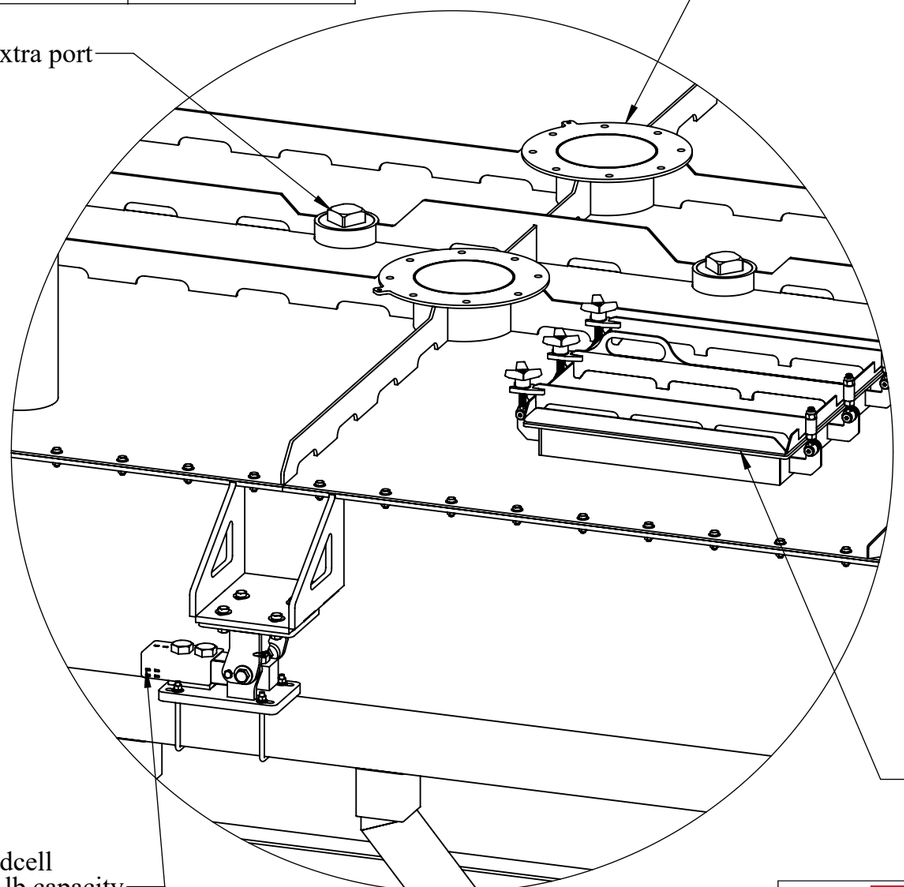


DÉTAIL 1.1
ECHELLE 1 : 12

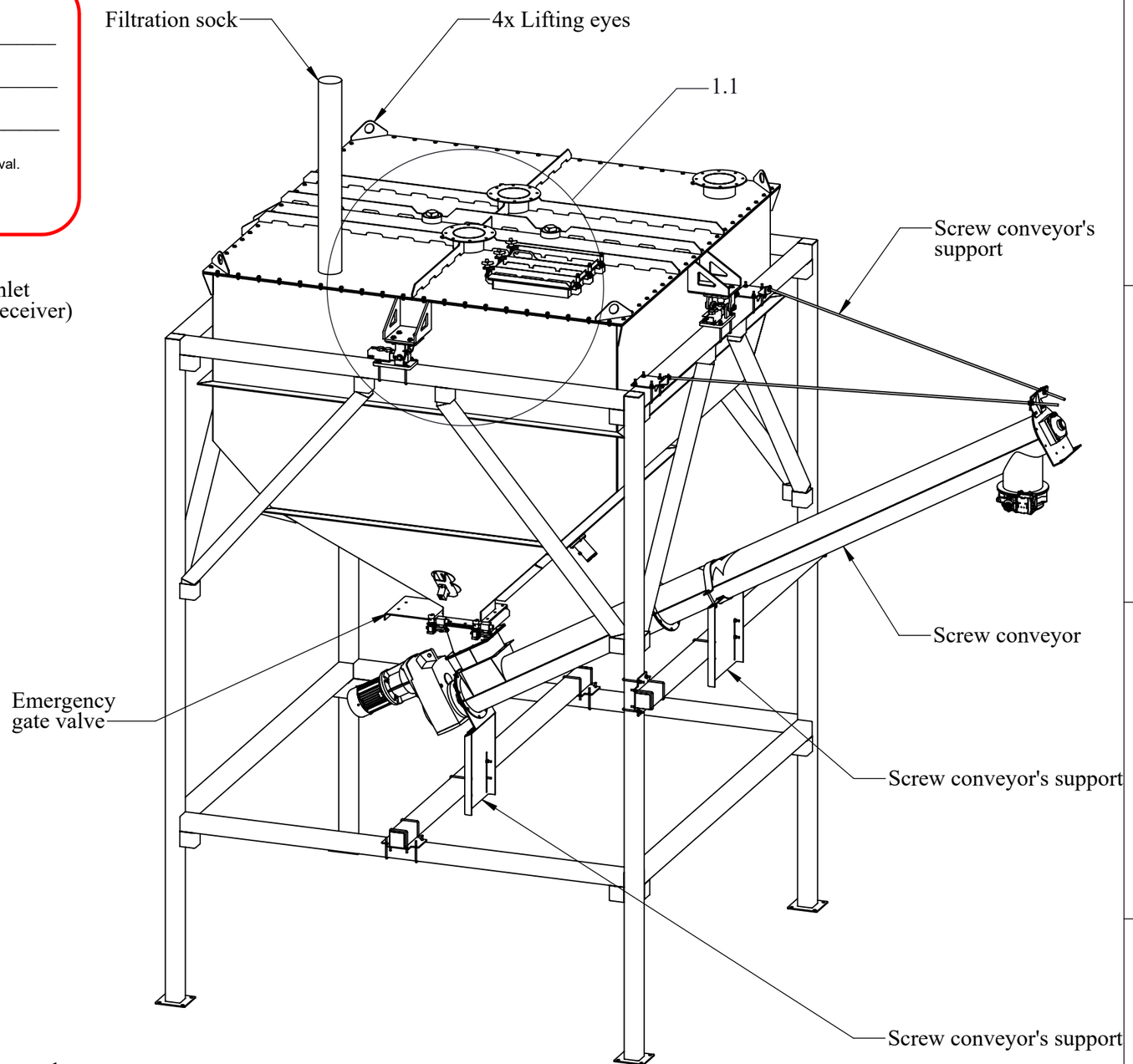


GROUPE SINOX
L'ingénierie de l'acier inoxydable

**Propriété et confidentialité**
Ce dessin est strictement confidentiel et demeure la propriété de Groupe Sinox. Il ne peut être reproduit en tout ou en partie, sans l'autorisation écrite de Groupe Sinox

TOLERANCES GENERALES
TOLÉRANCES SAUF SI SPÉCIFIÉES
DÉCIMALES : XXX" ± 0.005"
FRACTIONS : 0 @ 72" ± 1/32" 72" @ PLUS ± 1/16"
ANGLE ± 1/2"
PROJECTION :

| | | | | | | |
|---|---|---|---|---|---|---|
| MATERIEL: | | GAMME: ASS | QTE TOTALE: 1 | # MATERIEL : | | |
| DESCRIPTION: HOPPER | | | | | JOB : 49733 | |
| CLIENT: PCP | | NO. DE DESSIN: 49733.000.000_AP | | | PROJET : P-22 | |
| DESSINATEUR: S. ALEXANDRE | FORMAT: B | ECHELLE: 1:32 | PAGE: 1 de 4 | DATE : 2021-06-03 | REVISION: 0 | |

H:\CLIENTS\PCP - POMPES CLERMONT PELLETIER\PROJETS 2021\P2274-Equipement for calcium hypochlorite dosing\C-13388-J-49733-Trémie\49733-DRAWINGS\

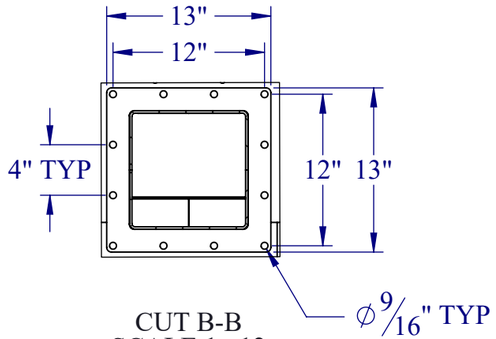


CUT B-B
SCALE 1 : 12
VIEW ON CONNECTION FLANGE

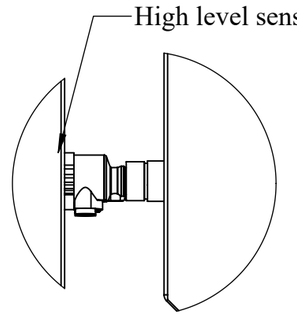


DETAIL 2.1
SCALE 1 : 8

## APPROVAL FOR CONSTRUCTION

Project : _____ Date : _____

Maintenance : _____ Date : _____

Sanitation : _____ Date : _____

Note: Only one signature required. Sinox recommand all departement approval.

Delivery after approval : X weeks

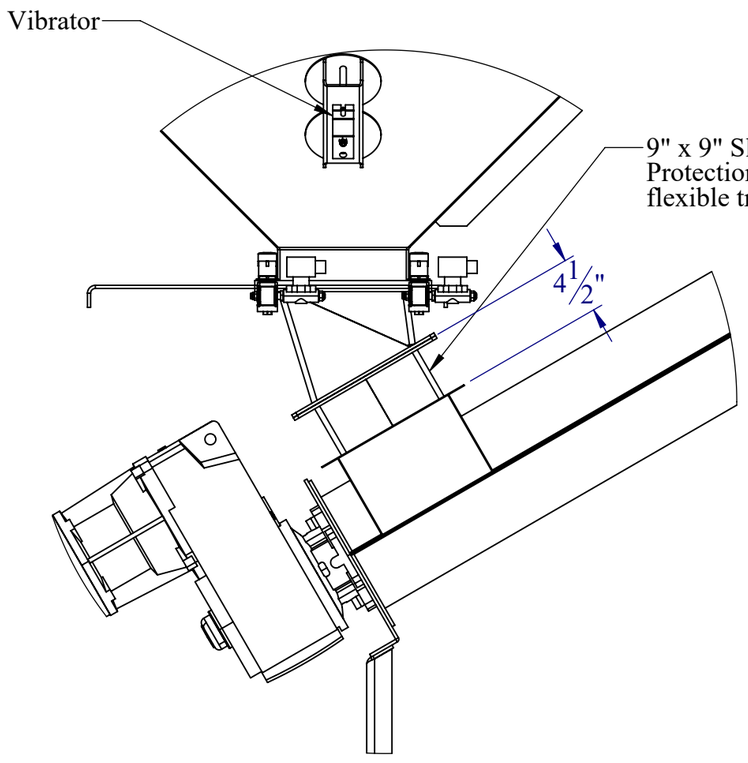


DETAIL 2.2
SCALE 1 : 12

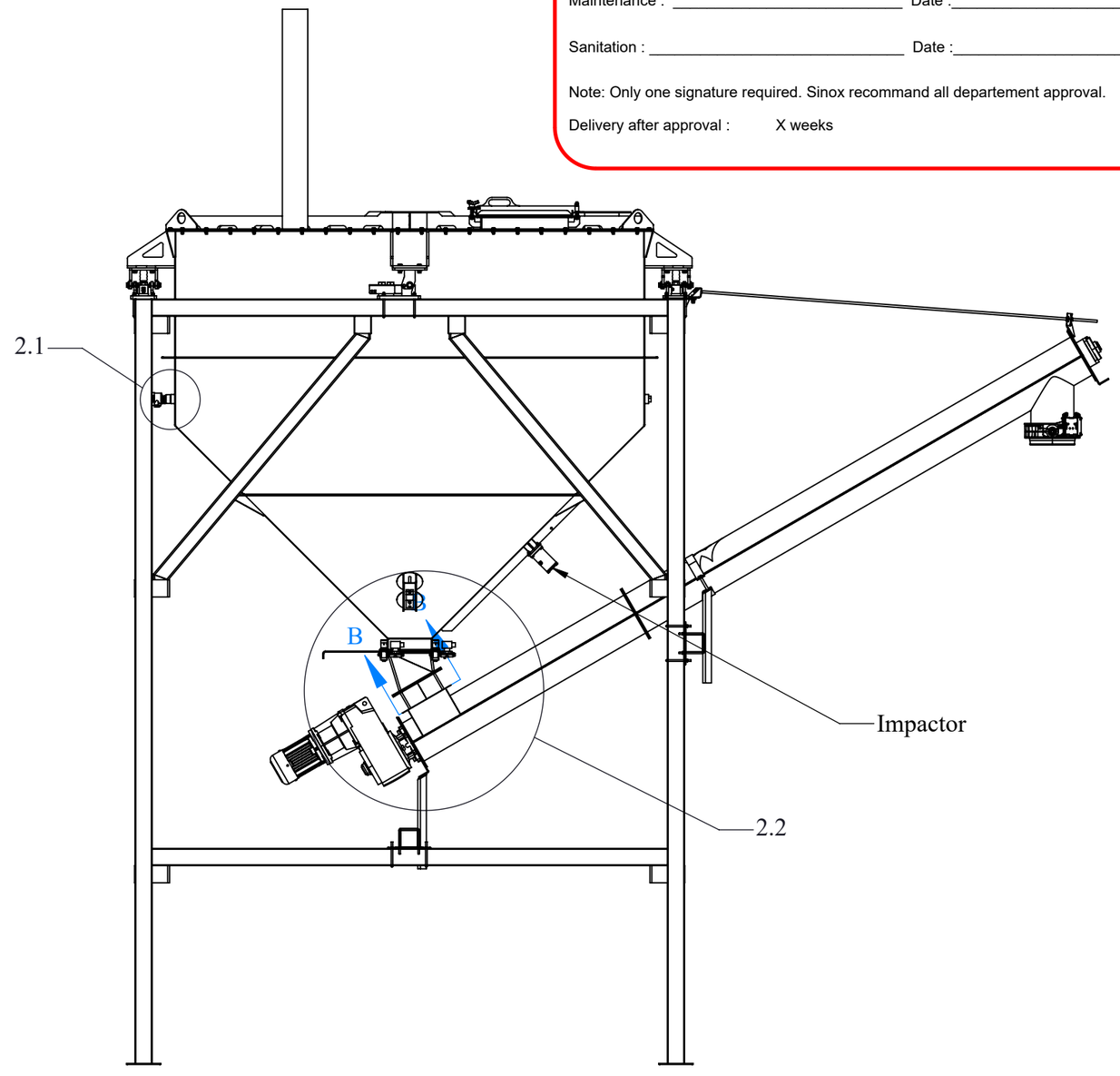


GROUPE SINOX
L'ingénierie de l'acier inoxydable

**Propriété et confidentialité**
Ce dessin est strictement confidentiel et demeure la propriété de Groupe Sinox. Il ne peut être reproduit en tout ou en partie, sans l'autorisation écrite de Groupe Sinox

TOLERANCES GENERALES
TOLÉRANCES SAUF SI SPÉCIFIÉES
DÉCIMALES : .XXX" ± 0.005"
FRACTIONS : 0 @ 72" ± 1/32" 72" @ PLUS ± 1/16"
ANGLE ± 1/2"
PROJECTION :

| | | | | | | |
|---|---|---|---|---|---|---|
| MATERIEL: | | GAMME: ASS | QTE TOTALE: 1 | # MATERIEL : | | |
| DESCRIPTION: HOPPER | | | | | JOB : 49733 | |
| CLIENT: PCP | | | NO. DE DESSIN: 49733.000.000_AP | | PROJET : | |
| DESSINATEUR: S. ALEXANDRE | FORMAT: B | ECHELLE: 1:32 | PAGE: 2 de 4 | DATE : 2021-06-03 | REVISION: 0 | |

H:\CLIENTS\PCP - POMPES CLERMONT PELLETIER\PROJETS 2021\P2274-Equipement for calcium hypochlorite dosing\C-13388-J-49733-Trémie\49733-DRAWINGS\

## APPROVAL FOR CONSTRUCTION

Project : _____ Date : _____

Maintenance : _____ Date : _____

Sanitation : _____ Date : _____

Note: Only one signature required. Sinox recommand all departement approval.

Delivery after approval : X weeks

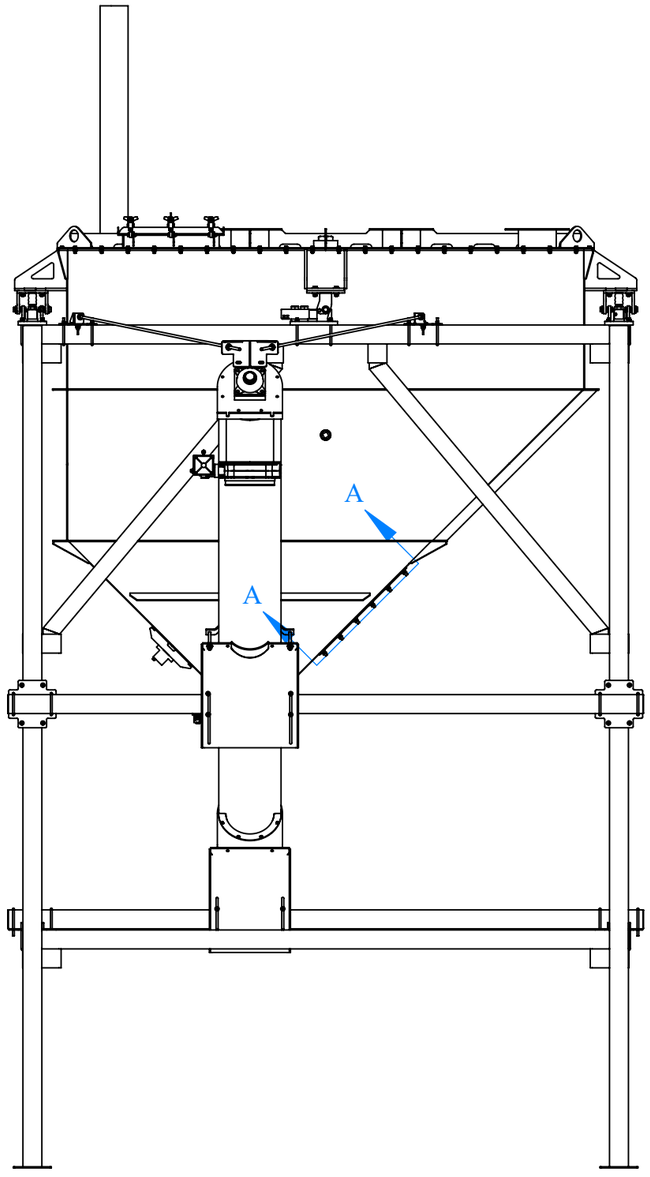


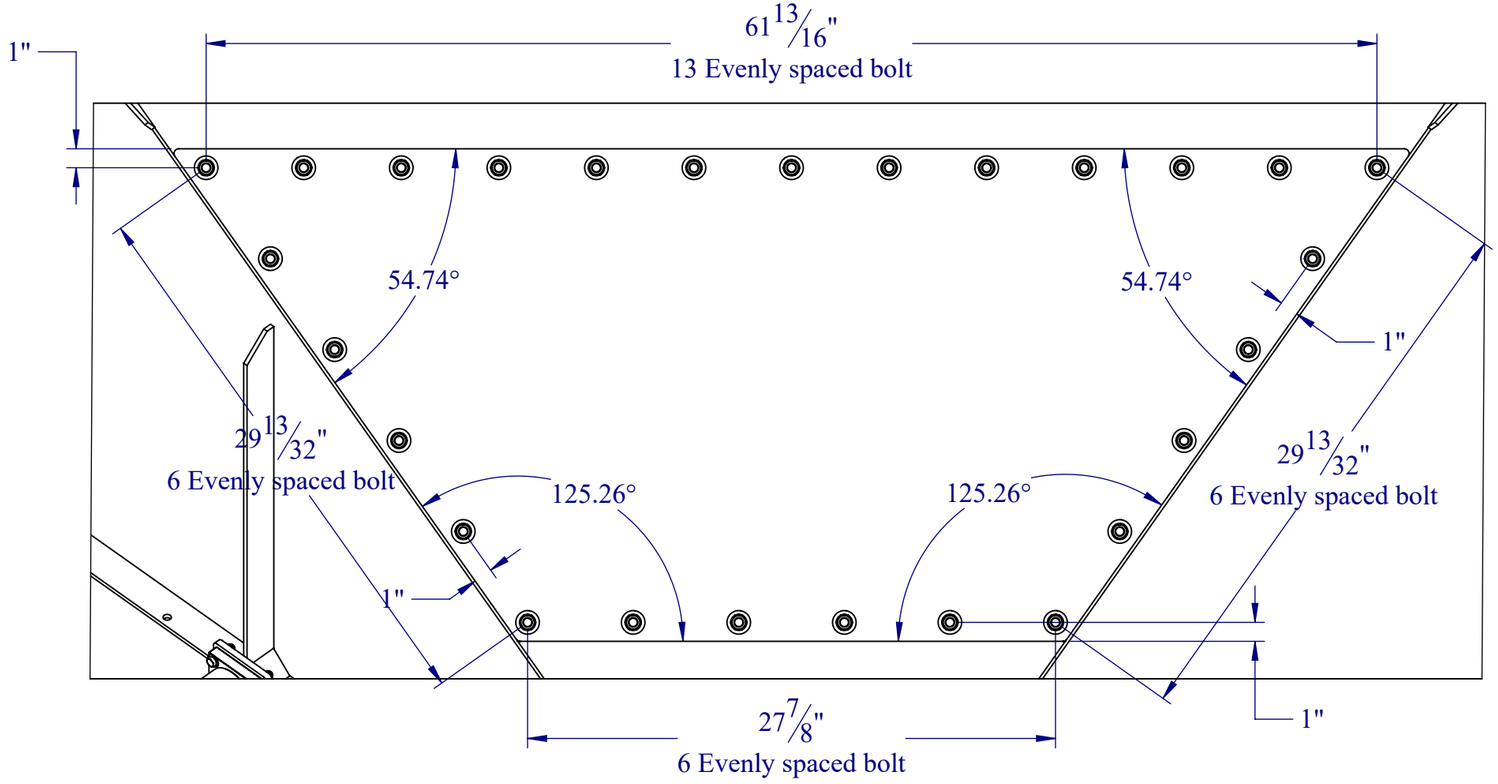


CUT A-A
VIEW ON EXTENSION PANEL

| | | | | | |
|---|---|---|---|---|---|
| MATERIEL: | | | GAMME: ASS | QTE TOTALE: 1 | # MATERIEL : |
| DESCRIPTION: HOPPER | | | | | JOB : 49733 |
| CLIENT: PCP | | | NO. DE DESSIN: 49733.000.000_AP | | PROJET : |
| DESSINATEUR: S. ALEXANDRE | FORMAT: B | ECHELLE: 1:32 | PAGE: 3 de 4 | DATE : 2021-06-03 | REVISION: 0 |

GROUPE SINOX
L'ingénierie de l'acier inoxydable

**Propriété et confidentialité**

Ce dessin est strictement confidentiel et demeure la propriété de Groupe Sinox. Il ne peut être reproduit en tout ou en partie, sans l'autorisation écrite de Groupe Sinox

TOLERANCES GENERALES
TOLÉRANCES SAUF SI SPÉCIFIÉES
DÉCIMALES : .XXX" ± 0.005"
FRACTIONS : 0 @ 72" ± 1/32" 72" @ PLUS ± 1/16"
ANGLE ± 1/2°
PROJECTION :

P_B2

H:\CLIENTS\PCP - POMPES CLERMONT PELLETIER\PROJETS 2021\P2274-Equipement for calcium hypochlorite dosing\C-13388-J-49733-Trémie\49733-DRAWINGS\

## APPROVAL FOR CONSTRUCTION

Project : _____ Date :_____

Maintenance : _____ Date :_____

Sanitation : _____ Date :_____

Note: Only one signature required. Sinox recommand all departement approval.

Delivery after approval : X weeks

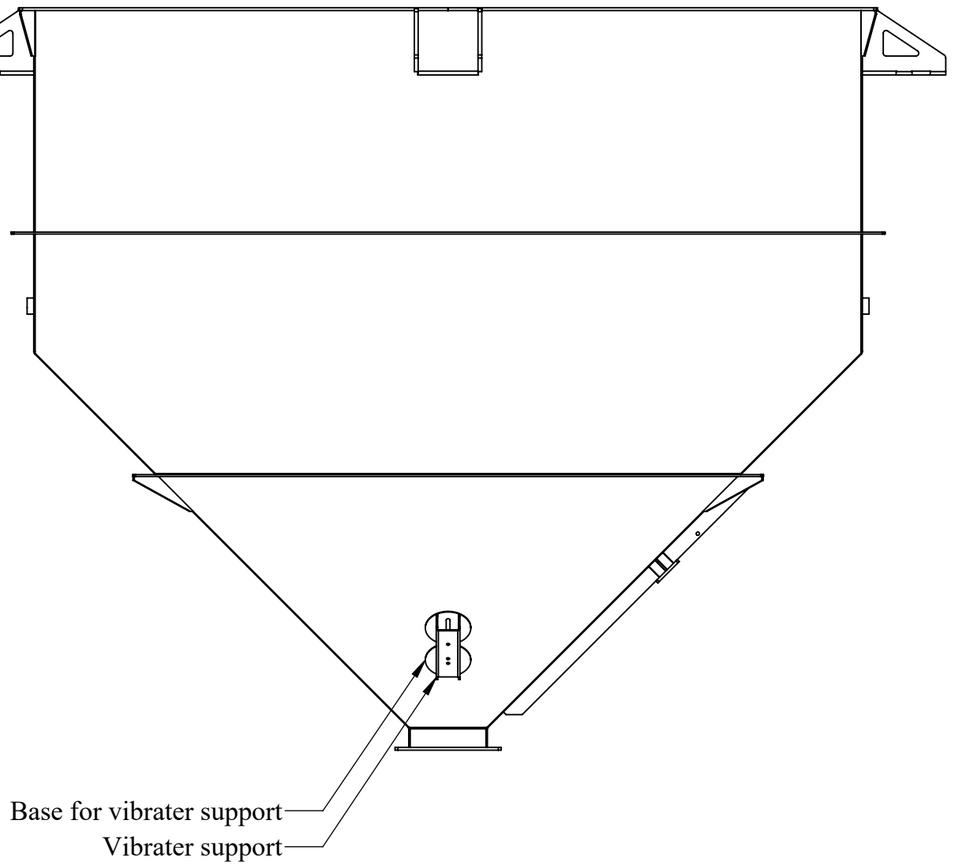


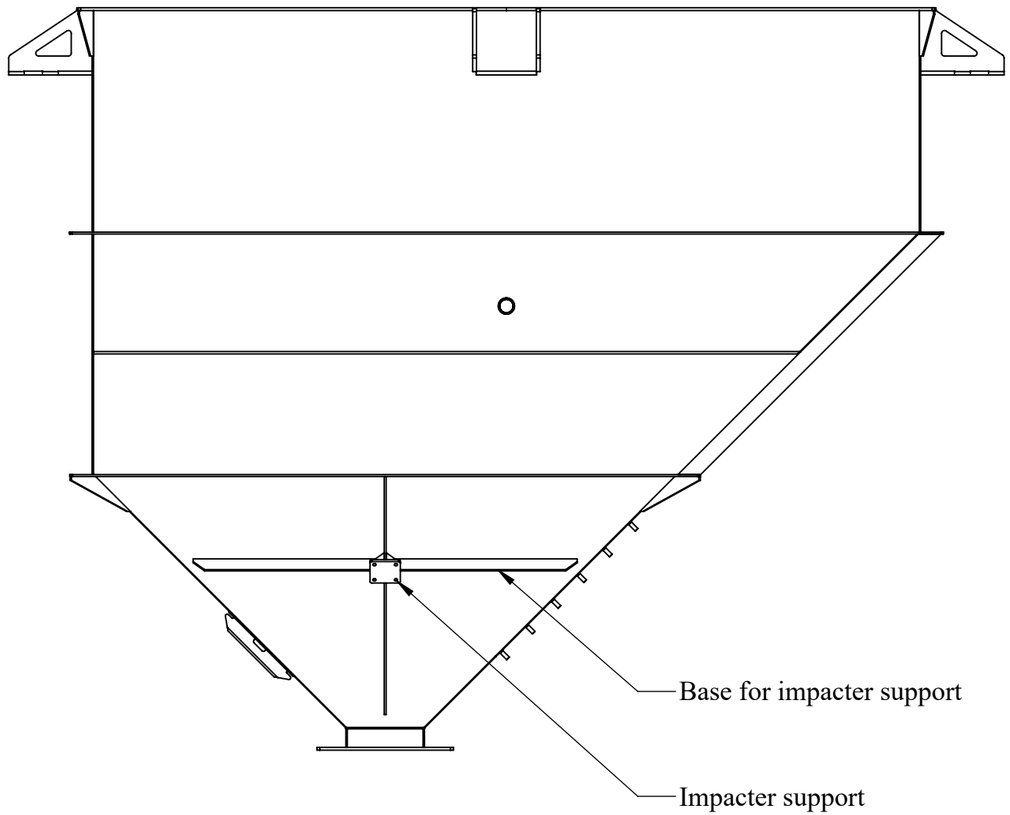


GROUPE SINOX
L'ingénierie de l'acier inoxydable

**Propriété et confidentialité**

Ce dessin est strictement confidentiel et demeure la propriété de Groupe Sinox. Il ne peut être reproduit en tout ou en partie, sans l'autorisation écrite de Groupe Sinox

TOLERANCES GENERALES
TOLÉRANCES SAUF SI SPÉCIFIÉES
DÉCIMALES : .XXX" ± 0.005"
FRACTIONS : 0 @ 72" ± 1/32" 72" @ PLUS ± 1/16"
ANGLE ± 1/2°
PROJECTION :

| | | | | | |
|---|---|---|---|---|---|
| *MATERIEL:* | | *GAMME:* ASS | *QTE TOTALE:* 1 | *# MATERIEL :* | |
| *DESCRIPTION:* HOPPER | | | | | *JOB :* 49733 |
| *CLIENT:* PCP | | | *NO. DE DESSIN:* 49733.000.000_AP | | *PROJET :* |
| *DESSINATEUR:* S. ALEXANDRE | *FORMAT:* B | *ECHELLE:* 1:20 | *PAGE:* 4 de 4 | *DATE :* 2021-06-03 | *REVISION:* 0 |

H:\CLIENTS\PCP - POMPES CLERMONT PELLETIER\PROJETS 2021\P2274-Equipement for calcium hypochlorite dosing\C-13388-J-49733-Trémie\49733-DRAWINGS\

# CALCIUM HYPOCHLORITE SCREW CONVEYOR

## 65CVI68004

**Workshop drawing :**

- □ Approuved as is
- □ Approuved with correction(s)
- □ Rejected

**Approuved by**

Name : _____

Title : _____

Compagnie : _____

Signature : _____

*3076 A, Bernard-Pilon, St-Mathieu de Beloeil, Qc, J3G 4S5 Tél.: (450) 922-4224 / Fax: (450) 922-4223*

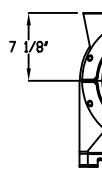


SECTION A-A

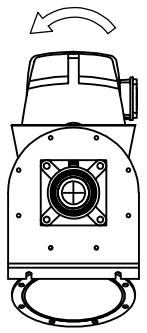


DISCHARGE

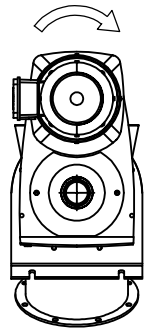


INLET END / DRIVE END

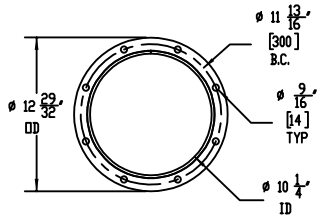


DISCHARGE FLANGE
SCALE 1 : 8

SPECIFICATIONS:
QTY: ONE (1), 9" DIA X 15'-0" LONG 30 DEG. INCLINED SCREW FEEDER WITH A 3 HP @ 18 RPM DRIVE UNIT TO CONVEY 75 CFH. OF A FLOOD FED DRY CALCIUM HYPOCHLORITE @ 146 LB/FT$^3$, SHOP ASSEMBLED AND CONSISTING OF:

NOTES:
* ALL 304SS CONSTRUCTION UNLESS NOTED
* INTERIOR (PRODUCT CONTACT) FINISH EXCL. SCREW: CEMA II WELDS, SURFACE FINISH AS-IS
* SCREW FINISH: CEMA II STD. SKIP WELDING, SURFACES AS-IS
* EXTERIOR FINISH: CEMA II WELDS, SURFACES TO BE SSPC-SP6 COMMERCIAL BLAST CLEAN
* ALL FABRICATED GUARDS TO BE PAINTED SAFETY YELLOW
* ALL PURCHASED ITEMS TO HAVE MANUFACTURERS STD. FINISH
* 18-8 SS ASSEMBLY BOLTS
* 1/8" THK CLOSED CELL NEOPRENE COVER GASKETS
* SILICONE CAULK TROUGH FLANGE GASKETS
* CEMA SAFETY LABELS
* SERIAL NUMBER(S): _____

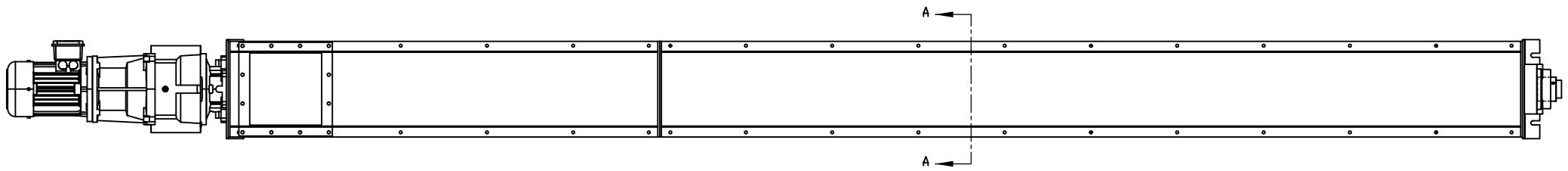


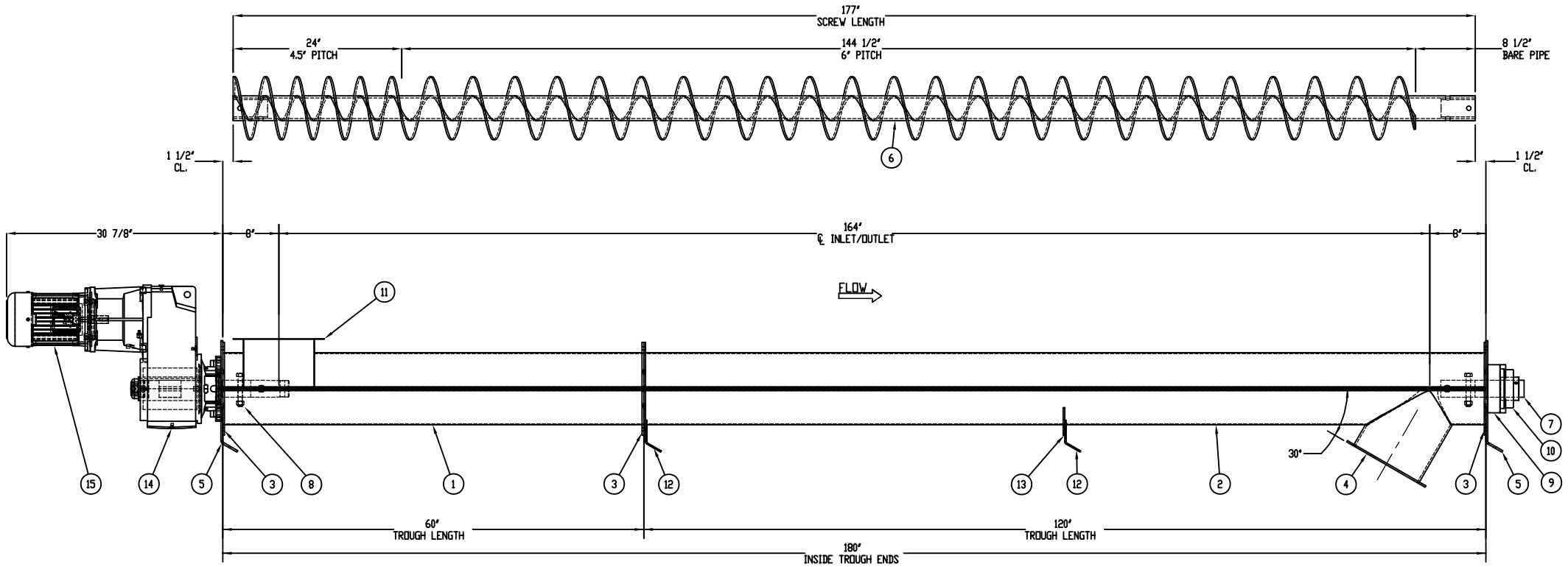


| ITEM NO. | QTY. EACH | MAT'L | DESCRIPTION |
|---|---|---|---|
| 1 | 2 | 304SS | 9TD10-F, SPLIT TUBULAR TROUGH HALF, 9" DIA X .135 THK X 60" LONG |
| 2 | 2 | 304SS | 9TD10-F, SPLIT TUBULAR TROUGH HALF, 9" DIA X .135 THK X 120" LONG |
| 3 | 8 | 304SS | 9FD-F-GA, END FLANGE, SPLIT TUBULAR TROUGH, 9" DIA X .250 THK |
| 4 | 1 | 304SS | INCLINED ROUND DISCHARGE, FLANGE TO MATE WITH V1FS250 BUTTERFLY VALVE |
| 5 | 2 | 304SS | 9EF5-D-BB, TROUGH END, TUBULAR, WITH FOOT, 9" SIZE X .250 THK., 2-7/16" SHAFT, DRILLED FOR BALL BEARING |
| 6 | 1 | 304SS | 9SS16, SECTIONAL SCREW, 9" DIA X 178" LG, 3/16" THK, RH VARIABLE PITCH WITH 9" BARE PIPE, MOUNTED ON A 3" SCH. 80 PIPE, BUSHED AND DRILLED ON BOTH ENDS FOR 2-7/16" 2 BOLT SHAFT, FLIGHTING: FIRST 12" TO BE 6" PITCH, REMAINDER, FULL PITCH |
| 7 | 1 | 304SS | 5ES-B, END SHAFT, 2-7/16" DIA X 11 7/8" LG FOR BALL BEARING AND SEAL, CEMA 2-7/16", BOLT DRILLED |
| 8 | 4 | 304SS | 5CB, COUPLING BOLT WITH LOCK NUT, 5/8 - 11 UNC X 4 3/8" LG WITH A _____" LG SHANK, FOR 3" (3.500 OD) PIPE |
| 9 | 1 | | SE.5CP, WAM-SHIELD SEAL, 2-7/16" SHAFT, NON SPLIT |
| 10 | 1 | | 5BF-B, BALL BEARING, FLANGED, 2-7/16" SHAFT |
| 11 | 1 | 304SS | SPCL 10" X 10" X 10ga. FLGD INLET, FITTED, CEMA STD. |
| 12 | 2 | 304SS | 9FF, FLANGE FEET, 9" SIZE, .188 THK., INCLINED |
| 13 | 1 | 304SS | 9SL10, SADDLE MOUNT, FOR 9" SIZE X .135 THK TROUGH, .250 THK |
| 14 | 1 | | NORD SK5282SCP/VL-180TC SCREW CONVEYOR DRIVE, 98.31 RATIO, 180TC NEMA ADAPTER, M1 MOUNTING POSITION, 2-7/16" CEMA DRIVE SHAFT |
| 15 | 1 | | NORD 100LP/4, 3 HP PREM. EFF., 1770 RPM, TEFC, NEMA 180TC C FACE MTR, 3/60/332-575V |

| REVISIONS | | | |
|---|---|---|---|
| REV. | BY | DESCRIPTION | DATE |
| 0 | PD | ISSUED FOR APPROVAL | 5/28/2021 |

UNLESS OTHERWISE SPECIFIED:
ALL DIMENSIONS ARE IN INCHES

ALL ITEMS MANUFACUTRED PER CEMA 300 TOLERANCES WHEN APPLICABLE

FOR ALL REMAINING ITEMS, GENERAL TOLERANCES ARE AS FOLLOWS:
FRACTIONS = ±1/16
X.XX = ±0.01
X.XXX = ±0.005
ANGLES = ±2°

CUSTOMER:
PCP Inc.
3076 A, RUE BERNARD-PILON
ST-MATHIEU-DE-BELOEIL, QC J3G4S5

SHIP TO:
PCP Inc.
3076 A, RUE BERNARD-PILON
ST-MATHIEU-DE-BELOEIL, QC J3G4S5

QUOTE:
G030221A-SF-A

CUSTOMER PO:
C14-20205025

CONFIDENTIALITY NOTE: THIS DRAWING AND ALL DESIGNS, DETAILS, ENGINEERING AND/OR DEVELOPMENTS CONTAINED ARE CONFIDENTIAL AND THE EXCLUSIVE PROPERTY OF WAM INC. WHICH RESERVES ALL PATENT AND OTHER RIGHTS. IT IS NOT TO BE PRINTED, PHOTOGRAPHED, COPIED, LOANED OR USED WITHOUT PERMISSION. IT MUST BE RETURNED ON REQUEST AND USED SUBJECT TO THE ABOVE CONDITIONS AND ONLY AS WAM AUTHORIZED BY WAM INC.

WAM' USA INC.
1300 TRIAD BLVD., FORT WORTH, TX 76131
PH. #817-232-2678, FAX #817-232-2676

DESCRIPTION:
9" DIA X 15'-0" LONG 30 DEG. INCLINED SCREW FEEDER WITH A 3 HP @ 18 RPM DRIVE UNIT

SHEET 1 OF 1
SIZE D
REV 0

| DRAWN | CHKD. | DATE | SCALE | DRAWING NO. |
|---|---|---|---|---|
| PD | | 5/28/21 | 1:10 | 30015026 |

# CALCIUM HYPOCHLORITE VACUUM

## 65VAC68001
## 65VAC68002

**Workshop drawing :**

- □ Approuved as is
- □ Approuved with correction(s)
- □ Rejected

**Approuved by**

Name : _____

Title : _____

Compagnie : _____

Signature : _____

*3076 A, Bernard-Pilon, St-Mathieu de Beloeil, Qc, J3G 4S5 Tél.: (450) 922-4224 / Fax: (450) 922-4223*

| Weight and capacity | |
|---|---|
| Empty receiver weight (receiver + rotary valve) | 700 lb |
| Full receiver weight | 790 lb |
| Useful volume | 1.75 ft.cu. |
| Total volume | 6.12 ft.cu. |
| Type | Vacuum |
| Structure weight | N/A |
| Anti-explosion reference | |
| Pred | N/A |
| Pstat pression | N/A |
| Pstat vacuum | N/A |
| Construction materials | |
| Body | Stainless steel 304 |
| Head | Stainless steel 304 |
| Structure | N/A |
| Paint | |
| Inside / outside head | N/A |
| Structure | N/A |
| Welding and surface finish | |
| Inner body | TIG, discolored 2B |
| Outside body | TIG, discolored 2B |
| Inside / outside head | TIG, discolored 2B |
| Structure | N/A |

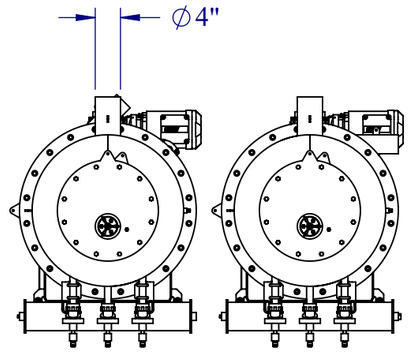


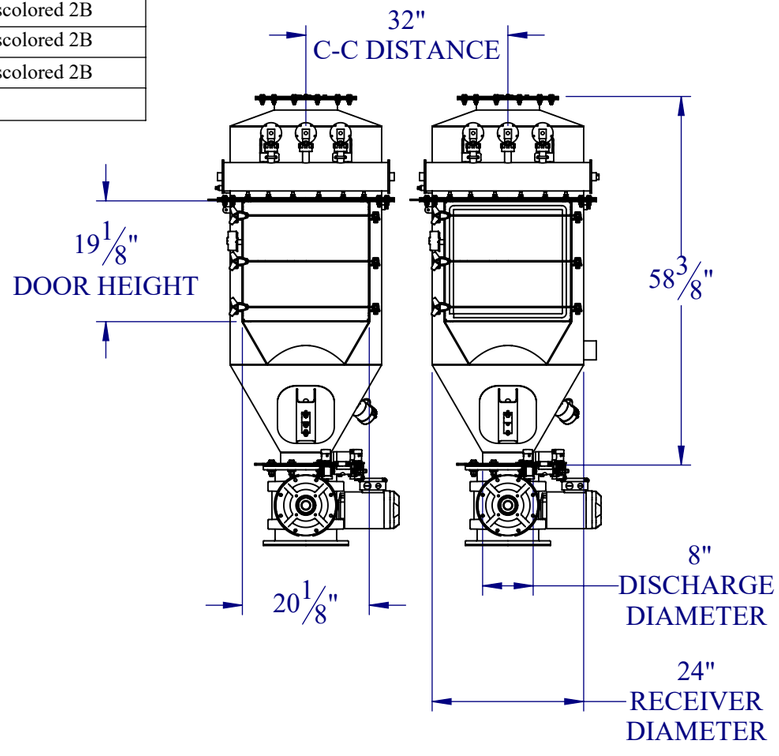


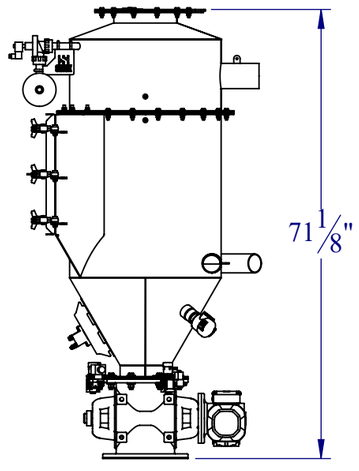


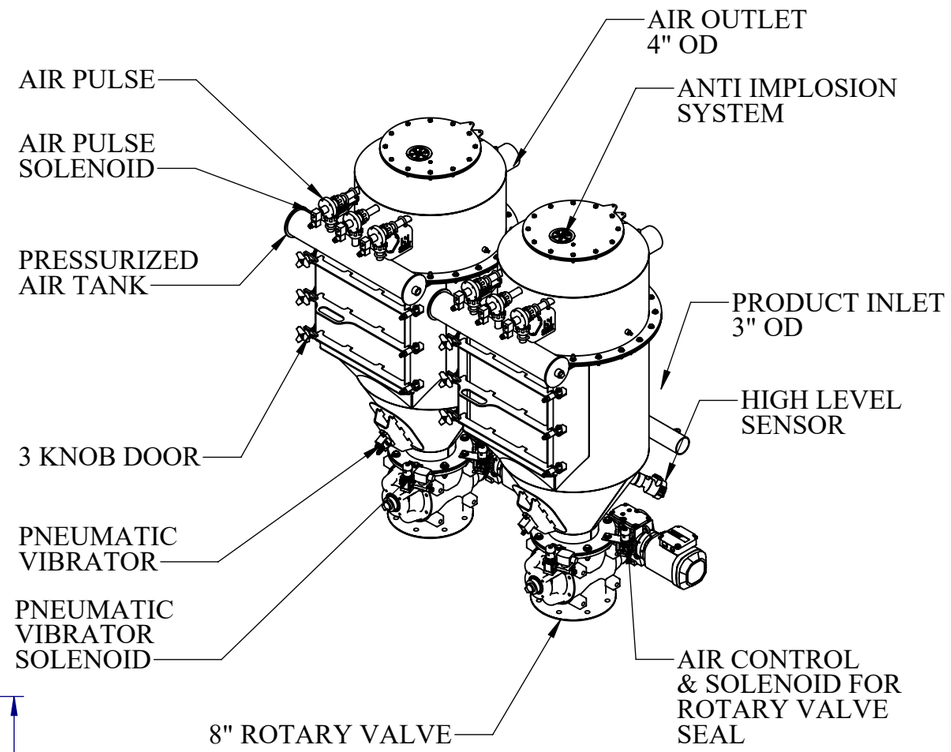


## APPROVAL FOR CONSTRUCTION

Project : _____ Date : _____

Maintenance : _____ Date : _____

Sanitation : _____ Date : _____

Note: Only one signature required. Sinox recommand all departement approval.

Delivery after approval : X weeks

GROUPE SINOX
L'ingénierie de l'acier inoxydable

**Propriété et confidentialité**

Ce dessin est strictement confidentiel et demeure la propriété de Groupe Sinox. Il ne peut être reproduit en tout ou en partie, sans l'autorisation écrite de Groupe Sinox

TOLERANCES GENERALES
TOLÉRANCES SAUF SI SPÉCIFIÉES
DÉCIMALES : .XXX" ± 0.005"
FRACTIONS : 0 @ 72" ± 1/32" 72" @ PLUS ± 1/16"
ANGLE ± 1/2°
PROJECTION :

| | | | | | |
|---|---|---|---|---|---|
| MATERIEL: | | GAMME: ASS | QTE TOTALE: 1 | # MATERIEL : | |
| DESCRIPTION: Filter receiver 24in | | | | JOB : 49729 | |
| CLIENT: PCP | | NO. DE DESSIN: 49729.000.000_AP | | PROJET : | |
| DESSINATEUR: S. ALEXANDRE | FORMAT: B | ECHELLE: 1:24 | PAGE: 1 de 1 | DATE : 2021-06-03 | REVISION: 0 |

H:\CLIENTS\PCP - POMPES CLERMONT PELLETIER\PROJETS 2021\P2274-Equipement for calcium hypochlorite dosing\C-13388-J-49729-Récepteur filtre 24po\49729-DRAWINGS\

| Weight and part | |
|---|---|
| Total weight | 835 Lbs each |
| Motor | 15hp254TC 575/3/60 1765rpm |
| Blower model (Tuthill) | 4005-A7L2CV1-A |
| Filter cartrige | 12OD x 14 Lg |
| Vacuum relief | Set to 15" Hg |
| Material and paint | |
| Frame | Carbon steel and gray powder coat |
| Filter cage | Carbon steel and gray powder coat |
| Security garde | Carbon steel and yellow powder coat |
| Specification | |
| Blower speed | 3180 rpm |
| Sound intensity (approx) | 89 dB@ 1m |
| Débit | 220 scfm |

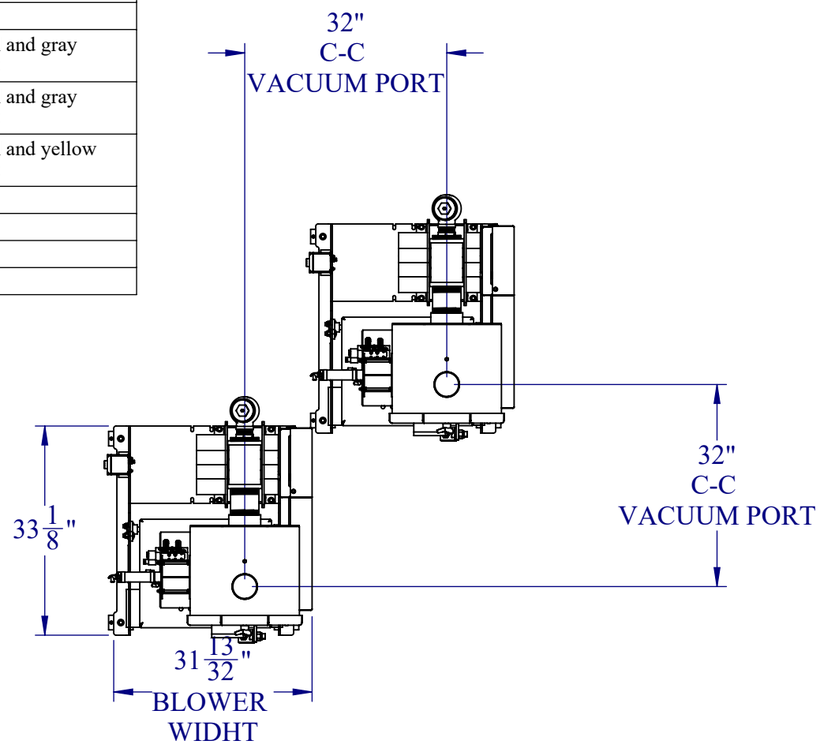


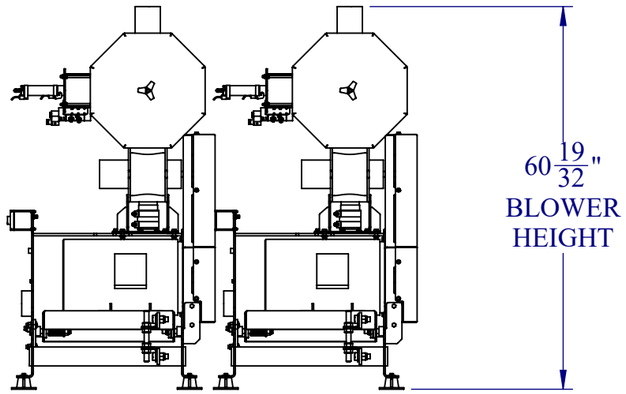


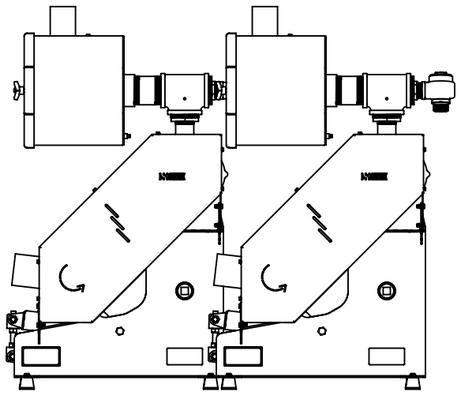

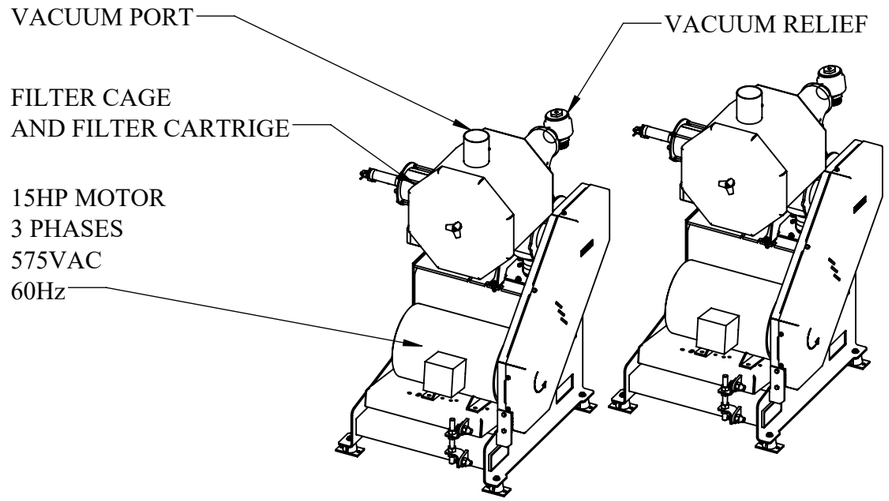


## APPROVAL FOR CONSTRUCTION

Project : _____ Date : _____

Maintenance : _____ Date : _____

Sanitation : _____ Date : _____

Note: Only one signature required. Sinox recommand all departement approval.

Delivery after approval : X weeks

GROUPE SINOX
L'ingénierie de l'acier inoxydable

**Propriété et confidentialité**

Ce dessin est strictement confidentiel et demeure la propriété de Groupe Sinox. Il ne peut être reproduit en tout ou en partie, sans l'autorisation écrite de Groupe Sinox

TOLERANCES GENERALES
TOLÉRANCES SAUF SI SPÉCIFIÉES
DÉCIMALES : .XXX" ± 0.005"
FRACTIONS : 0 @ 72" ± 1/32" 72" @ PLUS ± 1/16"
ANGLE ± 1/2"
PROJECTION :

| | | | | | |
|---|---|---|---|---|---|
| MATERIEL: | | GAMME: ASS | QTE TOTALE: 1 | # MATERIEL : | |
| DESCRIPTION: BLOWER | | | | JOB : 49730 | |
| CLIENT: PCP - POMPES CLERMONT PELLETIER | | NO. DE DESSIN: 49730.000.000_AP | | PROJET : P2274 | |
| DESSINATEUR: S. ALEXANDRE | FORMAT: B | ECHELLE: 1:24 | PAGE: 1 de 1 | DATE : 2021-06-09 | REVISION: 0 |

H:\CLIENTS\PCP - POMPES CLERMONT PELLETIER\PROJETS 2021\P2274-Equipement for calcium hypochlorite dosing\C-13388-J-49730-Surpresseur\49730-DRAWINGS\

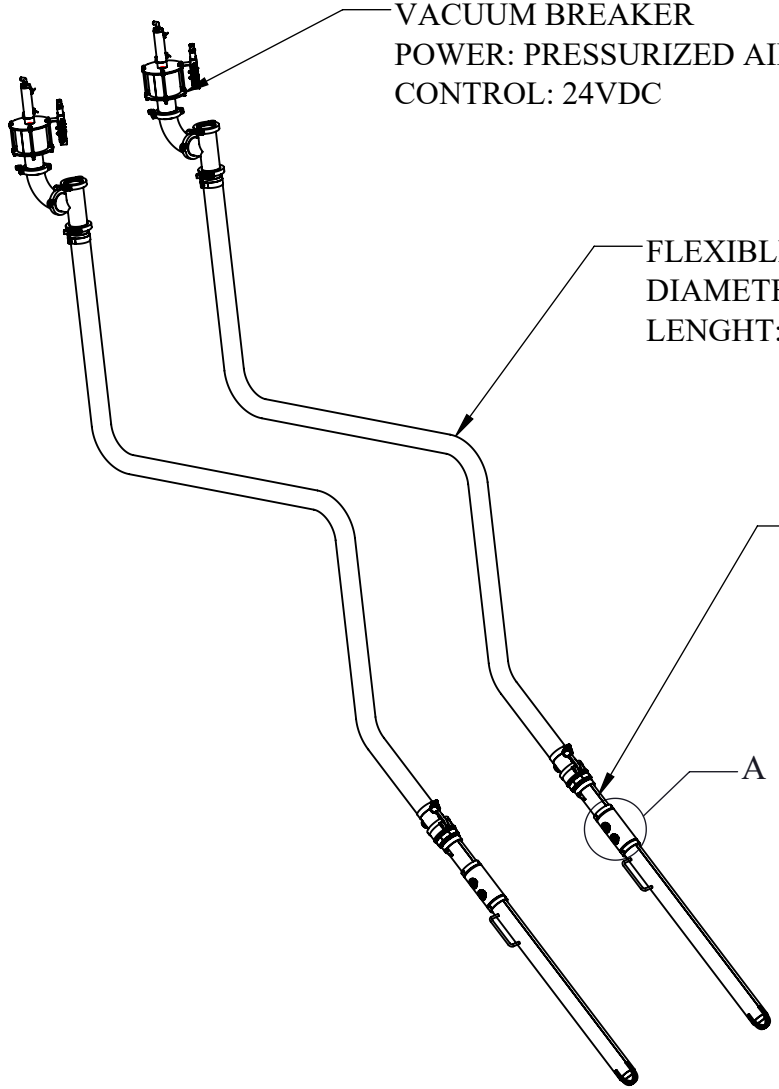


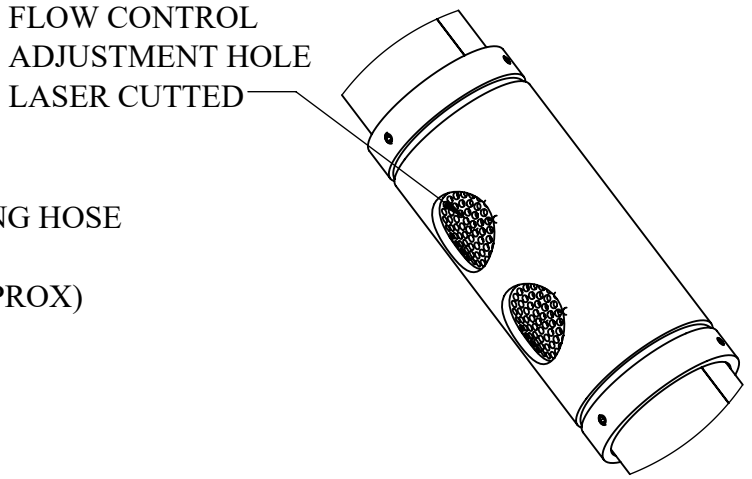


DÉTAIL A
ECHELLE 1 : 4

## APPROVAL FOR CONSTRUCTION

Project : _____ Date : _____

Maintenance : _____ Date : _____

Sanitation : _____ Date : _____

Note: Only one signature required. Sinox recommand all departement approval.

Delivery after approval : X weeks

| MATERIEL: | GAMME: | QTE TOTALE: | # MATERIEL : |
|---|---|---|---|
| | ASS | 1 | |

| DESCRIPTION: | JOB : |
|---|---|
| PROBE KIT | 49728 |

| CLIENT: | NO. DE DESSIN: | PROJET : |
|---|---|---|
| PCP | 49728.000.000_APP | |

| DESSINATEUR: | FORMAT: | ECHELLE: | PAGE: | DATE : | REVISION: |
|---|---|---|---|---|---|
| S. ALEXANDRE | A | 1:32 | 1 de 1 | 2021-05-05 | 0 |

GROUPE SINOX
L'ingénierie de l'acier inoxydable

**Propriété et confidentialité**

Ce dessin est strictement confidentiel et demeure la propriété de Groupe Sinox. Il ne peut être reproduit en tout ou en partie, sans l'autorisation écrite de Groupe Sinox

TOLERANCES GENERALES

TOLÉRANCES SAUF SI SPÉCIFIÉES
DÉCIMALES : .XXX" ± 0.005"
FRACTIONS : 0 @ 72" ± 1/32" 72" @ PLUS ± 1/16"
ANGLE ± 1/2°
PROJECTION :

H:\CLIENTS\PCP - POMPES CLERMONT PELLETIER\PROJETS 2021\P2274-Equipement for calcium hypochlorite dosing\C-13388-J-49728-Probe kit\49728-DRAWINGS\

DISCUSSION PURPOSES ONLY
INTERNAL USE, NOT FOR CONSTRUCTION

Patrick Ouellet
CONFIDENTIAL

DRAFT

65BRK680--
VACUUM BREAKER #2

65BRK680--
VACUUM BREAKER #1

65IMP680--
RECEPTOR #1
PULSES

65VIB680--
RECEPTOR #1
VIBRATOR

65FRE680--
RECEPTOR #1

65ROV680--
RECEPTOR #1
ROTARY VALVE

65FRE680--
RECEPTOR #2

65IMP680--
RECEPTOR #2
PULSES

65VIB680--
RECEPTOR #2
VIBRATOR

65ROV680--
RECEPTOR #2
ROTARY VALVE

AIR PURGE SEAL A/S

65HOP68009
CALCIUM HYPOCHLOR.
STORAGE HOPPER

65IMP680--
STORAGE HOPPER
IMPACTOR

65VIB680--
STORAGE HOPPER
VIBRATOR

65SLG680--
STORAGE HOPPER
EMERGENCY GATE VALVE

65CVI68004
CALCIUM HYPOCHLORITE
SCREW FEEDER

65BLO680--
VACUUM BLOWER #1

65BLO680--
VACUUM BLOWER #2

20KG
PAIL

20KG
PAIL

SEE ROTARY VALVE MOTOR

DIAPHRAGM
SOLENOID LEGEND

STORAGE HOPPER WEIGHING SYSTEM

SERVICE WATER PUMPS
65PWA69302A/B

65-680-205-018

80 - WPR - PC1 - 1017

65AGI68025
CALCIUM HYPOCHLORITE
MIXING TANK AGITATOR

65CUV68007
CALCIUM HYPOCHLORITE
MIXING TANK

50-BA17-2116

100-BA17-2102

100 - CCH - PC1 - 1043

100-BA17-2103

100 - CCH - PC1 - 1034

15-BA17-2104

65PSO68004
CALCIUM HYPOCHLORITE
TRANSFER PUMP #1

100-BA17-2105

100 - CCH - PC1 - 1044

100 - CCH - PC1 - 1045

15-BA17-2101

65PSO68005
CALCIUM HYPOCHLORITE
TRANSFER PUMP #2

100-BA17-2106

65AGI68026
CALCIUM HYPOCHLORITE
DISTRIBUTION TANK AGITATOR

65CUV68008
CALCIUM HYPOCHLORITE
DISTRIBUTION TANK

50-BA17-2115

100-BA17-2108

100 - CCH - PC1 - 1028

100-BA17-2109

15-BA17-2110

65PSO68006
CALCIUM HYPOCHLORITE
DISTRIBUTION PUMP #1

80-BA17-2109

100-BA17-2111

100 - CCH - PC1 - 1022

15-BA17-2113

65PSO68007
CALCIUM HYPOCHLORITE
DISTRIBUTION PUMP #2

80-BA17-2112

CHLORINATION REACTOR
65-680-205-011

80 - CCH - PC1 - 1003

80 - CCH - PC1 - 1035

15-BA17-2114

SEAL & SIGNATURE

| REV. | DATE | DESCRIPTION | BY | VER. | APP. |
|---|---|---|---|---|---|
| -- | 2021-10-26 | AS BUILT (PENDING APPROVAL) | PO | | |

THE INFORMATION HERE ON IS THE PROPERTY OF ASDR AND MUST BE RETURNED UPON REQUEST. WITHOUT WRITTEN PERMISSION, ANY COPYING TRANSMITTAL TO OTHERS AND ANY USE EXCEPT THAT FOR WHICH IT IS LOANED IS PROHIBITED.

CLIENT

INFO CLIENT -

ASDR

| | |
|---|---|
| DRAWN BY | PATRICK OUELLET |
| VERIFIED BY | |
| APPROVED BY | |
| CREATION DATE | 2021-10-26 |
| SCALE | N.TS. |
| PROJECTION | |

DRAWING TITLE
PROCESS WATER TREATEMENT - GENERAL
INSTRUMENTATION
PREPARATION UNIT
CALCIUM HYPOCHLORITE

| PROJECT # | DRAWING # | REV. | SHEET |
|---|---|---|---|
| 00000 | 0000-000-X-0000 | -- | 1/1 |

SECTOR–LEVEL – DISCIPLINE – SEQUENTIAL #

DRAWING #: 0000-000-X-0000
IMPRIMÉ PAR : Patrick Ouellet | DATE D'IMPRESSION : 2021-10-26 | PLUME D'IMPRESSION : monochrome.ctb
FORMAT DE PAPIER : ISO A1 (594 mm x 841 mm [23.4" x 33.1"]) | PRÉSENTATION : ISO 5457

CONTAINER SYSTEMS
*A division of Rotoplast Inc.*

# Certificate of Compliance

September 24, 2021

**PCP POMPES CLERMONT PELLETIER INC**
**3076 rue BERNARD-PILON**
**BUREAU A**
**SAINT-MATHIEU de BELOEIL QC J3G4S5**

Attn: Quality Control Department

Re: Purchase Order No.: C12-205018
ACO No.: 78337
Project No.: NA

This document is to certify that the rotationally molded polyethylene containers i.e., one CT-7340- PE 1.9sg Closed Tank (142"D x 146"T, 33200L) & one CT-8740 PE 1.9sg Closed Tank (142"D x 169"T, 39600L) with Serial numbers 2108289356 & 2108289346 respectively; manufactured for the above referenced purchase order as well as all required parts were manufactured and tested (including the Hydrostatic /Leak Test) in accordance to your purchase order, ACO Container Systems' ISO 9001:2015 quality standards and ACO Container Systems' packing slip.

We trust this will meet your satisfaction and appreciate the opportunity to be of service to you and your valued client.

Thank you for your business,

Tasneem Alam
Manager Quality & Continuous Improvement
ACO Container Systems
794 McKay Road
Pickering, ON L1W 2Y4
Tel: 800-542-9942
Fax: 800-542-2969

WAM Texas Division

**Assembly Department**
**Quality Checklist**

Order Number 15026 Customer Name PCP INC

Item No. 15026 Date Received 7/27/21

**Materials of Construction:**
☐ Carbon Steel ☑ Stainless Steel ☐ Other _____

**Dimensional Checks:**
Trough Straightness – To be within ¼-inch in both horizontal and vertical directions

Overall length 216 1/4" Height 30 1/2"

Width 13 1/8"

Screw to Trough Clearance ☐ Per Order or Drawing 1/2"

Overall Length of Conveyor ☐ Per Order or Drawing 216 1/4"

Inlet to Discharge Centerline Locations ☐ Per Order or Drawing 164"

Inlet Size ☐ Per Order or Drawing 10" 2

Discharge Size ☐ Per Order or Drawing Ø 10" ID

Inlet and Discharge Hole Patterns & Diameter ☐ Per Order or Drawing _____

Screw Pitch ☐ ½ ☐ 2/3 ☐ FULL ☑ VARIABLE _____

**Visual Checks:**

| | | | | |
|---|---|---|---|---|
| Screw Welding | ☑ STD | | ☐ CW1 | ☐ CW2 |
| Screw(1) Rotation(s) | ☐ R/H | ☐ L/H | ☐ CW | ☑ CCW |
| Screw(2) Rotation(s) | ☐ R/H | ☐ L/H | ☐ CW | ☐ CCW |
| Screw(3) Rotation(s) | ☐ R/H | ☐ L/H | ☐ CW | ☐ CCW |
| Screw(4) Rotation(s) | ☐ R/H | ☐ L/H | ☐ CW | ☐ CCW |

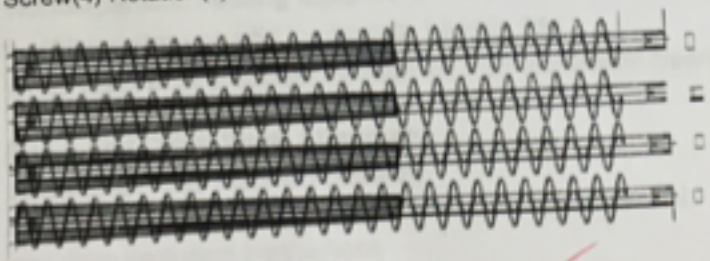

Bare Pipe of Screw Located Over Discharge ☑ YES ☐ NO

Variable Pitch Located at Inlet End ☑ YES ☐ NO

Inlet and Discharge Welding ☐ CONTINUOUS INSIDE ☐ SKIP WELDED INSIDE continuous outside

Inlet and Discharge Flange Straightness

Drive Location ☑ INLET END ☐ DISCHARGE END

Drive Position ☑ 12:00 ☐ 3:00 ☐ 6:00 ☐ 9:00

Motor Size and Type HP 3 ☑ TEFC ☐ PREMIUM EFFICIENT

☐ EXPLOSION PROOF ☐ OTHER _____

**Fit and Measure Checks:**

Accessory Components ☐ SPEED SWITCHES ☐ LIMIT SWITCHES
☐ SAFETY PULL SWITCHES ☐ OTHER _____

**Inspection Hold Points:**

Assembler and Leadman to check the following prior to Run Test:

Type of Assembly Bolts Required - Stainless steel ✓ Zinc plated____

All assembly bolts in place and tightened to the proper torque value ☑ YES ☐ NO

Bolts marked with a paint marker on both the nut and the threaded end of the bolt to assure that all bolts have been tightening properly ☑ YES ☐ NO

Hold-downs properly located and adjusted ☐ YES ☑ NO

Coupling shafts in place and bolts tightened to proper value ☐ YES ☑ NO

Hangers and hanger bearings in location and properly secured ☐ YES ☑ NO

Shaft Seals are located in proper location and securely fastened ☑ YES ☐ NO

**Pillow Block Bearings:**

Expansion bearing must be located at the non-drive end. Internal locking ring must be removed to allow for expansion.
Non-expansion or fixed bearing must be located at the drive end. Internal locking ring must be in place to prevent expansion.

Bearings assembled per manufacturers instructions ☐ YES ☑ NO
Expansion bearing located on non-drive end ☐ YES ☑ NO
Non-expansion bearing located on drive end ☐ YES ☑ NO
Non-expansion bearing fastened to drive shaft by tightening locking collar ☐ YES ☑ NO
Locking collar secured in place by keeper ring ☐ YES ☑ NO
Snap rings in appropriate location on non-expansion bearing ☐ YES ☑ NO

**Drive and Drive Shaft Alignment:**

Drive shaft keys installed correctly ☑ YES ☐ NO
Drive couplings installed with proper gap and alignment per manufacturers instructions ☑ YES ☐ NO
Drive coupling setscrew tightened to proper value ☑ YES ☐ NO
Guards in specified location and securely fastened ☑ YES ☐ NO

**Assembler Signature** _____ **Date** 7/27/21

**Assembly Leadman Signature** _____ **Date** 7/27/21

**Quality Manager Signature:** _____ **Date** 7/27/21

**Run Testing:**

Direction of Rotation ☐ CLOCKWISE ☑ COUNTER CLOCK WISE

Motor Current Draw 2.30 AMPS ☐ HAND TURNED

Drive Movement ☑ NO VISUAL MOVEMENT ☐ ACCEPTABLE ☐ UNACCEPTABLE

**Carbon Steel Surface Finish:**

☐ HAND TOOL CLEAN - SSPC-SP2 ☐ POWER TOOL CLEAN - SSPC-SP3

☑ COMMERCIAL BLAST - SSPC-SP6 ☐ NEAR WHITE BLAST - SSPC-SP10

**Carbon Steel Painting:**

Prime Coat ☐ WAM GRAY ENAMEL ☐ OTHER _____

Finish Coat ☐ WAM GRAY ENAMEL ☐ WAM HIGH TEMP SILVER

☐ OTHER _____

**Surface Finish:**

| | | | | |
|---|---|---|---|---|
| Internal Surfaces | | | | |
| Screws - | | | | |
| Pipe | ☑ MILL FINISH | ☐ 150 GRIT | ☐ BEAD BLAST | ☐ OTHER |
| Flights | ☑ MILL FINISH | ☐ 150 GRIT | ☐ BEAD BLAST | ☐ OTHER |
| Welds | ☐ MILL FINISH | ☐ 150 GRIT | ☐ BEAD BLAST | ☑ OTHER |
| Troughs - | ☐ MILL FINISH | ☐ 150 GRIT | ☑ BEAD BLAST | ☐ OTHER |
| External Surfaces | | | | |
| Troughs - | ☐ MILL FINISH | ☐ 150 GRIT | ☑ BEAD BLAST | ☐ OTHER |
| Covers - | ☐ MILL FINISH | ☐ 150 GRIT | ☑ BEAD BLAST | ☐ OTHER |

**Comments:**

_____

_____

_____

_____

**Approvals:**

**Assembler Signature:** _____ **Date** 7/27/21

**Assembly Leadman Signature:** _____ **Date** 7/27/21

**Assembly Supervisor Signature:** _____ **Date** _____

**Sales Person or Project Manager Signature:** _____ **Date** _____

**Quality Manager Signature:** _____ **Date** 7/27/21

WAM Texas Division

Screw Department
Quality Checklist

Order Number 15026 - 01 Ship Date _____

Date Received 07-14-21 Date Complete _____ Total Time: _____

Type of Screw(s): Helicoid _____ Sectional ✓ Ribbon _____ Paddle _____

Diameter (OD): 9" Actual: _____ OAL: 177" Bare Pipe: 9"

Pitch 1: 4 1/2" Pitch OAL: 24" Actual: _____ Thickness: 1/4" R H ✓ L H ___

Pitch 2: 9" Pitch OAL: 144" Actual: _____ Thickness: 1/4" R H ✓ L H ___

Pitch 3: _____ Pitch OAL: _____ Actual: _____ Thickness: _____ R H ___ L H ___

Taper: Small Diameter: _____ Large Diameter: _____ Length of Taper: _____

Material: Mild Steel _____ AR235 _____ AR400 _____ T-304SS: ✓ T-316SS: _____

Pipe Size: 3" Schedule: 80 Bushing ID: 2 7/16" Drilling: 3 QD Caps _____

Weld Type: STD Stitch (Skip): ✓ Special Stitch _____ CW1 _____ CW2 _____

Weld Finish (Clean Up): #2 ✓ #3 _____ # 4 _____ # 5 _____

Hard Surface: YES: _____ NO: _____

Hard Surface Area: Width: _____ Carrying Side: _____ Back Side: _____ OD: _____ Pipe: _____

Special Instructions or Information: _____

Welder: PEDRO CHAVEL

Straightner: [signature]

Leadsman: [signature]

QC: S Mar[signature]

GROUPE SINOX

# Approbation avant livraison

# job : 49732 Date : 18-08-2021

Tuyauterie air

1. Nettoyage des soudures : ✓
2. Nettoyage de l'équipement / dégraissage : ✓
   - (Fini moustaché)
3. Qualité des soudures : ✓
   - Tâches noires
   - Porosités
4. Ébavurage : ✓
5. Projections de la découpe laser : ✓
6. Validation dimensionnelle : ✓

   (Hors tout versus l'assemblage principal)
7. Gauchissement des pièces : ✓
8. Protection des composantes critiques : ✓
   - Roues - plexiglass
9. Fini de surface respecté : ✓
   - Fini 2B - # 4
   - Présence d'égratignures majeures
10. Prises de photos pour le dossier : ✓
11. Étiquette verte apposée : ✓

Approuvé par : [signature] Concepteur/Chargé de projets

Approuvé par : [signature] Opération

FOR24 Rev 0 (12-2016)

GROUPE SINOX

# Approbation avant livraison

# job : 49731 Date : 18-08-2021

Tuyauterie Convoyage

1. Nettoyage des soudures : ✓
2. Nettoyage de l'équipement / dégraissage : ✓
   - (Fini moustaché)
3. Qualité des soudures : ✓
   - Tâches noires
   - Porosités
4. Ébavurage : ✓
5. Projections de la découpe laser : ✓
6. Validation dimensionnelle : ✓

   (Hors tout versus l'assemblage principal)
7. Gauchissement des pièces : ✓
8. Protection des composantes critiques : ✓
   - Roues - plexiglass
9. Fini de surface respecté : ✓
   - Fini 2B - # 4
   - Présence d'égratignures majeures
10. Prises de photos pour le dossier : ✓
11. Étiquette verte apposée : ✓

Approuvé par : [signature] Concepteur/Chargé de projets

Approuvé par : [signature] Opération

FOR24 Rev 0 (12-2016)

GROUPE SINOX

# Approbation avant livraison

# job : 49729 Date : 18-08-2021

Filter Receiver 2490

1. Nettoyage des soudures : ☑
2. Nettoyage de l'équipement / dégraissage : ☑
   - (Fini moustaché)
3. Qualité des soudures : ☑
   - Tâches noires
   - Porosités
4. Ébavurage : ☑
5. Projections de la découpe laser : ☑
6. Validation dimensionnelle : ☑

   (Hors tout versus l'assemblage principal)
7. Gauchissement des pièces : ☑
8. Protection des composantes critiques : ☑
   - Roues - plexiglass
9. Fini de surface respecté : ☑
   - Fini 2B - # 4
   - Présence d'égratignures majeures
10. Prises de photos pour le dossier : ☑
11. Étiquette verte apposée : ☑

Approuvé par : _____ Concepteur/Chargé de projets

Approuvé par : _____ Opération

GROUPE SINOX

# Approbation avant livraison

# job : 49733 Date : 18-08-2021

Trémie

1. Nettoyage des soudures : ✓
2. Nettoyage de l'équipement / dégraissage : ✓
   - (Fini moustaché)
3. Qualité des soudures : ✓
   - Tâches noires
   - Porosités
4. Ébavurage : ✓
5. Projections de la découpe laser : ✓
6. Validation dimensionnelle : ✓

   (Hors tout versus l'assemblage principal)
7. Gauchissement des pièces : ✓
8. Protection des composantes critiques : ✓
   - Roues - plexiglass
9. Fini de surface respecté : ✓
   - Fini 2B - # 4
   - Présence d'égratignures majeures
10. Prises de photos pour le dossier : ✓
11. Étiquette verte apposée : ✓

Approuvé par : [signature] Concepteur/Chargé de projets

Approuvé par : [signature] Opération

FOR24 Rev 0 (12-2016)

GROUPE SINOX

# Approbation avant livraison

# job : 49728 Date : 18-08-2021

Probe Kit.

1. Nettoyage des soudures : ✓
2. Nettoyage de l'équipement / dégraissage : ✓
   - (Fini moustaché)
3. Qualité des soudures : ✓
   - Tâches noires
   - Porosités
4. Ébavurage : ✓
5. Projections de la découpe laser : ✓
6. Validation dimensionnelle : ✓

   (Hors tout versus l'assemblage principal)
7. Gauchissement des pièces : ✓
8. Protection des composantes critiques : ✓
   - Roues - plexiglass
9. Fini de surface respecté : ✓
   - Fini 2B - # 4
   - Présence d'égratignures majeures
10. Prises de photos pour le dossier : ✓
11. Étiquette verte apposée : ✓

Approuvé par : [signature] Concepteur/Chargé de projets

Approuvé par : [signature] Opération

FOR24 Rev 0 (12-2016)

GROUPE SINOX

# Approbation avant livraison

# job : 49730 Date : 18-08-2021

Surpresseur.

1. Nettoyage des soudures : ☑
2. Nettoyage de l'équipement / dégraissage : ☑
   - (Fini moustaché)
3. Qualité des soudures : ☑
   - Tâches noires
   - Porosités
4. Ébavurage : ☑
5. Projections de la découpe laser : ☑
6. Validation dimensionnelle : ☑

   (Hors tout versus l'assemblage principal)
7. Gauchissement des pièces : ☑
8. Protection des composantes critiques : ☑
   - Roues - plexiglass
9. Fini de surface respecté : ☑
   - Fini 2B - # 4
   - Présence d'égratignures majeures
10. Prises de photos pour le dossier : ☑
11. Étiquette verte apposée : ☑

Approuvé par : _____ Concepteur/Chargé de projets

Approuvé par : _____ Opération

GROUPE SINOX
L'ingénierie de l'acier inoxydable | The Engineering of stainless steel
GROUPESINOX.COM
T. 418 893-8276 1 888 440-8276
16, rue Turgeon, Saint-Anselme (QC) G0R 2N0

# Ensemble de surpresseur

| | | | |
|---|---|---|---|
| **Job :** | **49730-2** | | |
| **Client :** | **PCP** | | |
| **Type** | **Vacuum** | | |
| **Débit / Pression** | **227 SCFM** | | |
| **Frame** | **3** | | |
| **Surpresseur** | **4005 - 2 lobes** | Si autre, spécifiez | |
| **Transmetteur de pression** | **GS22301.300.000** | Si autre, spécifiez | |
| **Puissance moteur** | **15 HP, frame 254T** | | |
| **Voltage moteur** | **575VAC, 3 phases, 60Hz** | | |
| **Valve sureté** | **KUNKLE VACCUM RELIEF #1362-615 SET AT 15 IN.HG** | | |
| **Pression ajustement valve sureté** | **15" Hg** | | |
| **Cartouche de filtration** | **CARTOUCHE FILT. PAPER BLOWER WIX42957 (CH) # 3028** | | |
| **Poulie moteur** | **2B80** | | |
| **Hub moteur** | **SK 1-5/8"** | | |
| **Poulie surpresseur** | **2B42** | | |
| **Hub surpresseur** | **SDS 7/8** SH 7/8" | | |
| **Courroies** | **BX61** | | |
| **Vitesse surpresseur** | **3182 RPM** | | |
| **Intensité sonore approximative** | **91dB** | | |
| **Option brise vide** | ~~NON~~ → OUI | | |
| **Diamètre entré boîte à filtre** | **4"OD** | | |
| **Diamètre sortie d'air base** | | | |
| **Autre option** | | | |

## Contrôle qualité

| | | |
|---|---|---|
| **Test d'ampérage à vide** | **Phase 1 :** | 07.05 |
| | **Phase 2 :** | 07.60 |
| | **Phase 3 :** | 08.13 |
| **Test d'ampérage à pression max.** | **Phase 1 :** | 15.15 |
| | **Phase 2 :** | 15.75 |
| | **Phase 3 :** | 17.60 |
| **Test d'ouverture de la vanne de sureté** | **Ouvre à :** | 15" HG |
| **Numéro de série surpresseur** | | 4012062106 |
| **Numéro de série moteur** | | Z2105171372 |

ANNÉE: 2021

**Validé par :** PAUL

**Date :** 07/07/2021



GROUPE SINOX
L'ingénierie de l'acier inoxydable | The Engineering of stainless steel
GROUPESINOX.COM
T 418 885-8276 1 888 440-8276
16, rue Turgeon, Saint-Anselme (QC) G0R 2N0

# Ensemble de surpresseur

| | | | |
|---|---|---|---|
| **Job :** | **49730-1** | | |
| **Client :** | **PCP** | | |
| **Type** | **Vacuum** | | |
| **Débit / Pression** | **227 SCFM** | | |
| **Frame** | **3** | | |
| **Surpresseur** | **4005 - 2 lobes** | **Si autre, spécifiez** | |
| **Transmetteur de pression** | **GS22301.300.000** | **Si autre, spécifiez** | |
| **Puissance moteur** | **15 HP, frame 254T** | | |
| **Voltage moteur** | **575VAC, 3 phases, 60Hz** | | |
| **Valve sureté** | **KUNKLE VACCUM RELIEF #1362-615 SET AT 15 IN.HG** | | |
| **Pression ajustement valve sureté** | **15" Hg** | | |
| **Cartouche de filtration** | **CARTOUCHE FILT. PAPER BLOWER WIX42957 (CH) # 3028** | | |
| **Poulie moteur** | **2B80** | | |
| **Hub moteur** | **SK 1-5/8"** | | |
| **Poulie surpresseur** | **2B42** | | |
| **Hub surpresseur** | **SDS 7/8** SH 7/8" | | |
| **Courroies** | **BX61** | | |
| **Vitesse surpresseur** | **3182 RPM** | | |
| **Intensité sonore approximative** | **91dB** | | |
| **Option brise vide** | ~~NON~~ → OUI | | |
| **Diamètre entré boîte à filtre** | **4"OD** | | |
| **Diamètre sortie d'air base** | | | |
| **Autre option** | | | |

## Contrôle qualité

| | | |
|---|---|---|
| **Test d'ampérage à vide** | **Phase 1 :** | 07.90 |
| | **Phase 2 :** | 06.95 |
| | **Phase 3 :** | 07.95 |
| **Test d'ampérage à pression max.** | **Phase 1 :** | 15.50 |
| | **Phase 2 :** | 14.90 |
| | **Phase 3 :** | 15.60 |
| **Test d'ouverture de la vanne de sureté** | **Ouvre à :** | 15" Hg |
| **Numéro de série surpresseur** | | 401205 |
| **Numéro de série moteur** | | Z2105171397 |

ANNÉE: 2021

**Validé par :** Paul

**Date :** 10/7/2021



# SAFETY DATA SHEET

## 1. Identification

| | |
|---|---|
| **Product identifier** | **HYDREX 9578** |
| **Other means of identification** | None. |
| **Recommended use** | Disinfectants for drinking water.<br>PROFESSIONAL USE ONLY |
| **Recommended restrictions** | No other uses are advised. |
| **Manufacturer/Importer/Supplier/Distributor information** | |
| **Supplier** | Veolia Water Technologies Canada Inc. |
| **Address** | 2000 Argentia Road, Plaza IV, Suite 430<br>Mississauga, ON L5N 1W1<br>Canada |
| **Contact Person** | Hydrex Product Specialist |
| **Telephone** | (905) 286-4846 |
| **Fax** | (905) 286-0488 |
| **e-mail** | vwtcanada-hydrex@veolia.com |
| **24-Hour Emergency telephone** | 24 Hour Number: +1-760-476-3962 (Code:333239) |
| **Supplier** | Not available. |

## 2. Hazard identification

| | | |
|---|---|---|
| **Physical hazards** | Oxidizing solids | Category 2 |
| **Health hazards** | Acute toxicity, oral | Category 4 |
| | Skin corrosion/irritation | Category 1B |
| | Serious eye damage/eye irritation | Category 1 |
| **Environmental hazards** | Hazardous to the aquatic environment, acute hazard | Category 1 |

**Label elements**



| | |
|---|---|
| **Signal word** | Danger |
| **Hazard statement** | May intensify fire; oxidizer. Harmful if swallowed. Causes severe skin burns and eye damage. Very toxic to aquatic life. |
| **Precautionary statement** | |
| **Prevention** | Keep away from heat, hot surfaces, sparks, open flames and other ignition sources. No smoking. Keep away from clothing and other combustible materials. Wash thoroughly after handling. Do not eat, drink or smoke when using this product. Avoid release to the environment. Wear protective gloves/protective clothing/eye protection/face protection. |
| **Response** | IF SWALLOWED: Rinse mouth. Do NOT induce vomiting. IF ON SKIN (or hair): Take off immediately all contaminated clothing. Rinse skin with water. IF INHALED: Remove person to fresh air and keep comfortable for breathing. IF IN EYES: Rinse cautiously with water for several minutes. Remove contact lenses, if present and easy to do. Continue rinsing. Immediately call a POISON CENTER/doctor. Wash contaminated clothing before reuse. In case of fire: Use appropriate media to extinguish. Collect spillage. |
| **Storage** | Store locked up. |
| **Disposal** | Dispose of contents/container in accordance with local/regional/national/international regulations. |
| **Other hazards** | None known. |
| **Supplemental information** | None. |

## 3. Composition/information on ingredients

**Mixtures**

| Chemical name | Common name and synonyms | CAS number | % |
|---|---|---|---|
| Calcium hypochlorite | CALCIUM HYPOCHLORITE MIXTURE, DRY<br>HYPOCHLOROUS ACID, CALCIUM SALT (AS TOTAL AVAILABLE CHLORINE)<br>HTH<br>Lime chloride | 7778-54-3 | 60 - 80 |
| Hydrated Lime | Hydrated lime<br>LIME WATER<br>MILK OF LIME<br>SLAKED LIME | 1305-62-0 | 5 -15 |
| Non-hazardous ingredients | | | 5 - 10 |

All concentrations are in percent by weight unless ingredient is a gas. Gas concentrations are in percent by volume.

## 4. First-aid measures

**Inhalation** Move to fresh air. Call a physician if symptoms develop or persist.

**Skin contact** If on clothing: Rinse immediately contaminated clothing and skin with plenty of water before removing clothes. Rinse skin with water/shower. Call a physician or poison control center immediately. Chemical burns must be treated by a physician. Wash contaminated clothing before reuse.

**Eye contact** Immediately flush eyes with plenty of water for at least 15 minutes. Remove contact lenses, if present and easy to do. Continue rinsing. Call a physician or poison control center immediately.

**Ingestion** Call a physician or poison control center immediately. Rinse mouth. Do not induce vomiting. If vomiting occurs, keep head low so that stomach content doesn't get into the lungs.

**Most important symptoms/effects, acute and delayed** Burning pain and severe corrosive skin damage. Causes serious eye damage. Symptoms may include stinging, tearing, redness, swelling, and blurred vision. Permanent eye damage including blindness could result.

**Indication of immediate medical attention and special treatment needed** Provide general supportive measures and treat symptomatically. Chemical burns: Flush with water immediately. While flushing, remove clothes which do not adhere to affected area. Call an ambulance. Continue flushing during transport to hospital. Keep victim warm. Keep victim under observation. Symptoms may be delayed.

**General information** Take off all contaminated clothing immediately. Contact with combustible material may cause fire. Ensure that medical personnel are aware of the material(s) involved, and take precautions to protect themselves. Show this safety data sheet to the doctor in attendance. Wash contaminated clothing before reuse.

## 5. Fire-fighting measures

**Suitable extinguishing media** Water fog. Foam. Dry chemical powder. Carbon dioxide (CO2).

**Unsuitable extinguishing media** An explosion can occur if either a carbon tetrachloride or a dry ammonium compound fire extinguisher is used to extinguish a fire involving calcium hypochlorite.

**Specific hazards arising from the chemical** Greatly increases the burning rate of combustible materials. Containers may explode when heated. During fire, gases hazardous to health may be formed.

**Special protective equipment and precautions for firefighters** Self-contained breathing apparatus and full protective clothing must be worn in case of fire.

**Fire fighting equipment/instructions** In case of fire and/or explosion do not breathe fumes. Move containers from fire area if you can do so without risk. Use water spray to cool unopened containers.

**Specific methods** Cool containers exposed to flames with water until well after the fire is out.

**General fire hazards** May intensify fire; oxidizer. Contact with combustible material may cause fire.

## 6. Accidental release measures

**Personal precautions, protective equipment and emergency procedures** Keep unnecessary personnel away. Keep people away from and upwind of spill/leak. Keep away from clothing and other combustible materials. Wear appropriate protective equipment and clothing during clean-up. Do not touch damaged containers or spilled material unless wearing appropriate protective clothing. Ensure adequate ventilation. Local authorities should be advised if significant spillages cannot be contained. For personal protection, see section 8 of the SDS.

**Methods and materials for containment and cleaning up**

Eliminate all ignition sources (no smoking, flares, sparks, or flames in immediate area). Keep combustibles (wood, paper, oil, etc.) away from spilled material. Ventilate the contaminated area. Minimize dust generation and accumulation. Wear appropriate protective equipment and clothing during clean-up. Prevent product from entering drains.

Large Spills: Seek advice of a specialist. Following product recovery, flush area with water.

Small Spills: Transfer to a container that contains water. Carefully destroy the hypochlorite by adding hydrogen peroxide. Hydrogen peroxide reacts with calcium hypochlorite to form calcium chloride and oxygen gas. Do not close container. Other chemicals that can be used are sodium sulfite and sodium bisulfite. Once calcium hypochlorite is reduced, the remaining solution should be neutralized cautiously with dilute hydrochloric acid or sulfuric acid to near neutral pH level. Clean surface thoroughly to remove residual contamination.

Never return spills to original containers for re-use. For waste disposal, see section 13 of the SDS.

**Environmental precautions**

Avoid release to the environment. Inform appropriate managerial or supervisory personnel of all environmental releases. Prevent further leakage or spillage if safe to do so. Avoid discharge into drains, water courses or onto the ground.

## 7. Handling and storage

**Precautions for safe handling**

Minimize dust generation and accumulation. Routine housekeeping should be instituted to ensure that dusts do not accumulate on surfaces. Keep away from heat. Take any precaution to avoid mixing with combustibles. Keep away from clothing and other combustible materials. Do not get in eyes, on skin, or on clothing. Do not taste or swallow. When using, do not eat, drink or smoke. Provide adequate ventilation. Wear appropriate personal protective equipment. Wash hands thoroughly after handling. Avoid release to the environment. Observe good industrial hygiene practices.

**Conditions for safe storage, including any incompatibilities**

Store locked up. Keep away from heat. Store in a cool, dry place out of direct sunlight. Store in tightly closed container. Store in a well-ventilated place. Do not store near combustible materials. Store away from incompatible materials (see Section 10 of the SDS). Store in cool, dry place. To maintain good product quality and a shelf life of 12 months, store between 5°C (41°F) and 30°C (86°F). Keep from contact with oxidizing materials, highly oxygenated or halogenated solvents, organic compounds containing reducible functional groups, or aqueous ammonia. Charcoal (activated or not). Urea. Organic sulfur compounds.

## 8. Exposure controls/personal protection

**Occupational exposure limits**

**US. ACGIH Threshold Limit Values**

| Components | Type | Value |
|---|---|---|
| HYDRATED LIME (CAS 1305-62-0) | TWA | 5 mg/m3 |

**Canada. Alberta OELs (Occupational Health & Safety Code, Schedule 1, Table 2)**

| Components | Type | Value |
|---|---|---|
| HYDRATED LIME (CAS 1305-62-0) | TWA | 5 mg/m3 |

**Canada. British Columbia OELs. (Occupational Exposure Limits for Chemical Substances, Occupational Health and Safety Regulation 296/97, as amended)**

| Components | Type | Value |
|---|---|---|
| HYDRATED LIME (CAS 1305-62-0) | TWA | 5 mg/m3 |

**Canada. Manitoba OELs (Reg. 217/2006, The Workplace Safety And Health Act)**

| Components | Type | Value |
|---|---|---|
| HYDRATED LIME (CAS 1305-62-0) | TWA | 5 mg/m3 |

**Canada. Ontario OELs. (Control of Exposure to Biological or Chemical Agents)**

| Components | Type | Value |
|---|---|---|
| HYDRATED LIME (CAS 1305-62-0) | TWA | 5 mg/m3 |

**Canada. Quebec OELs. (Ministry of Labor - Regulation respecting occupational health and safety)**

| Components | Type | Value |
|---|---|---|
| HYDRATED LIME (CAS 1305-62-0) | TWA | 5 mg/m3 |

**Biological limit values** No biological exposure limits noted for the ingredient(s).

**Appropriate engineering controls** Good general ventilation should be used. Ventilation rates should be matched to conditions. If applicable, use process enclosures, local exhaust ventilation, or other engineering controls to maintain airborne levels below recommended exposure limits. If exposure limits have not been established, maintain airborne levels to an acceptable level. Eye wash facilities and emergency shower must be available when handling this product.

**Individual protection measures, such as personal protective equipment**

**Eye/face protection** Avoid contact with eyes. Wear chemical goggles. Provide an emergency eye wash fountain and quick drench shower in the immediate work area.

**Skin protection**

**Hand protection** Wear protective gloves. PVC or rubber gloves are recommended.

**Other** Wear appropriate chemical resistant clothing. Use of an impervious apron is recommended.

**Respiratory protection** In case of insufficient ventilation, wear suitable respiratory equipment. NIOSH RECOMMENDATIONS FOR CHLORINE CONCENTRATIONS IN AIR: Up to 5 ppm: (APF = 10) Chemical cartridge respirator; SAR. Up to 10 ppm: (APF = 25) SAR operated in a continuous-flow mode; Powered, air-purifying respirator with cartridge(s).

**Thermal hazards** Not applicable.

**General hygiene considerations** Keep from contact with clothing and other combustible materials. Remove and wash contaminated clothing promptly. Keep away from food and drink. Always observe good personal hygiene measures, such as washing after handling the material and before eating, drinking, and/or smoking. Routinely wash work clothing and protective equipment to remove contaminants.

## *9. Physical and chemical properties*

**Appearance**

**Physical state** Solid.

**Form** Powder. or Granular.

**Color** White. or Light grey.

**Odor** Slight Chlorine.

**Odor threshold** Not available.

**pH** Not available.

**Melting point/freezing point** Not available.

**Initial boiling point and boiling range** Not available.

**Flash point** Not available.

**Evaporation rate** Not available.

**Flammability (solid, gas)** Not available.

**Upper/lower flammability or explosive limits**

**Flammability limit - lower (%)** Not available.

**Flammability limit - upper (%)** Not available.

**Explosive limit - lower (%)** Not available.

**Explosive limit - upper (%)** Not available.

**Vapor pressure** Not available.

**Vapor density** 6.9

**Relative density** Not available.

**Solubility(ies)**

**Solubility (water)** > 200 g/l

| | |
|---|---|
| **Partition coefficient (n-octanol/water)** | -2.46 |
| **Auto-ignition temperature** | Not available. |
| **Decomposition temperature** | 212 °F (100 °C) |
| **Viscosity** | Not available. |
| **Other information** | |
| **Explosive properties** | Not explosive. |
| **Oxidizing properties** | May intensify fire; oxidizer. |
| **Specific gravity** | 2.35 |
| **pH of 1% Solution** | 12 - 12.5 |

## *10. Stability and reactivity*

| | |
|---|---|
| **Reactivity** | Greatly increases the burning rate of combustible materials. |
| **Chemical stability** | Material is stable under normal conditions. |
| **Possibility of hazardous reactions** | Hazardous polymerization does not occur. |
| **Conditions to avoid** | Keep away from heat, hot surfaces, sparks, open flames and other ignition sources. Avoid temperatures exceeding the decomposition temperature. Contact with incompatible materials. |
| **Incompatible materials** | Water, moisture. Acids. Oxidizing agents. Combustible material. Reducing agents. Maleic anhydride. Nitroethane. Nitromethane. Nitroparaffins. Nitropropane. Phosphorus. Cyanides. Ethanol. Metals. Sulfur compounds. |
| **Hazardous decomposition products** | Hydrogen chloride. Oxygen. Chlorine compounds. |

## *11. Toxicological information*

**Information on likely routes of exposure**

| | |
|---|---|
| **Inhalation** | May cause irritation to the respiratory system. |
| **Skin contact** | Causes severe skin burns. |
| **Eye contact** | Causes serious eye damage. |
| **Ingestion** | Causes digestive tract burns. Harmful if swallowed. |
| **Symptoms related to the physical, chemical and toxicological characteristics** | Burning pain and severe corrosive skin damage. Causes serious eye damage. Symptoms may include stinging, tearing, redness, swelling, and blurred vision. Permanent eye damage including blindness could result. |

**Information on toxicological effects**

**Acute toxicity** Harmful if swallowed.

| Components | Species | Test Results |
|---|---|---|
| Calcium hypochlorite (CAS 7778-54-3) | | |
| **Acute** | | |
| **Dermal** | | |
| *Solid* | | |
| LD50 | Rat | 2200 mg/kg |
| **Inhalation** | | |
| *Dust* | | |
| LC50 | Rat | 480 mg/m3 |
| **Oral** | | |
| LD50 | Rat | 850 mg/kg |
| Hydrated Lime (CAS 1305-62-0) | | |
| **Acute** | | |
| **Oral** | | |
| LD50 | Rat | 7300 mg/kg |

| | |
|---|---|
| **Skin corrosion/irritation** | Causes severe skin burns and eye damage. |
| **Serious eye damage/eye irritation** | Causes serious eye damage. |

**Respiratory or skin sensitization**

**Canada - Alberta OELs: Irritant**

| | |
|---|---|
| Hydrated Lime (CAS 1305-62-0) | Irritant |

**Respiratory sensitization** Not a respiratory sensitizer.

**Skin sensitization** This product is not expected to cause skin sensitization.

**Germ cell mutagenicity** No data available to indicate product or any components present at greater than 0.1% are mutagenic or genotoxic.

**Carcinogenicity**

**IARC Monographs. Overall Evaluation of Carcinogenicity**

| | |
|---|---|
| Calcium hypochlorite (CAS 7778-54-3) | 3 Not classifiable as to carcinogenicity to humans. |

**Reproductive toxicity** This product is not expected to cause reproductive or developmental effects.

**Specific target organ toxicity - single exposure** May cause respiratory irritation.

**Specific target organ toxicity - repeated exposure** Not classified.

**Aspiration hazard** Not an aspiration hazard.

## *12. Ecological information*

**Ecotoxicity** Very toxic to aquatic life.

| Product | | Species | Test Results |
|---|---|---|---|
| HYDREX 9578 | | | |
| **Aquatic** | | | |
| Crustacea | EC50 | Daphnia | 1.16 mg/l, 48 hours estimated |
| Fish | LC50 | Fish | 0.26 mg/l, 96 hours estimated |
| **Components** | | **Species** | **Test Results** |
| Calcium hypochlorite (CAS 7778-54-3) | | | |
| **Aquatic** | | | |
| Crustacea | EC50 | Rotifer (Philodina acuticornis) | 0.07 mg/l, 48 hours |
| Fish | LC50 | Atlantic silverside (Menidia menidia) | 0.04 mg/l, 96 hours |
| Hydrated Lime (CAS 1305-62-0) | | | |
| *Acute* | | | |
| Other | EC50 | Pseudokirchnerella subcapitata | 184.57 mg/l, 72 hours |
| | LD50 | Bird | 111 mg/kg |
| **Aquatic** | | | |
| *Acute* | | | |
| Crustacea | LC50 | Crustacea | 50 - 500 mg/l, 96 hours |
| Fish | LC50 | Threespine stickleback (Gasterosteus aculeatus) | 262 - 785 mg/l, 96 hours |
| | | Western mosquitofish (Gambusia affinis) | 220 mg/l, 48 hours |
| | | Zambezi barbel (Clarias gariepinus) | 33.88 mg/l, 96 hours |

**Persistence and degradability** No data is available on the degradability of any ingredients in the mixture.

**Bioaccumulative potential** No data available.

**Partition coefficient n-octanol / water (log Kow)**

| | |
|---|---|
| HYDREX 9578 | -2.46 |

**Mobility in soil** No data available.

**Other adverse effects** No other adverse environmental effects (e.g. ozone depletion, photochemical ozone creation potential, endocrine disruption, global warming potential) are expected from this component.

## 13. Disposal considerations

| | |
|---|---|
| **Disposal instructions** | Collect and reclaim or dispose in sealed containers at licensed waste disposal site. Do not allow this material to drain into sewers/water supplies. Do not contaminate ponds, waterways or ditches with chemical or used container. Dispose of contents/container in accordance with local/regional/national/international regulations. |
| **Local disposal regulations** | Dispose in accordance with all applicable regulations. |
| **Hazardous waste code** | The waste code should be assigned in discussion between the user, the producer and the waste disposal company. |
| **Waste from residues / unused products** | Dispose of in accordance with local regulations. Empty containers or liners may retain some product residues. This material and its container must be disposed of in a safe manner (see: Disposal instructions). |
| **Contaminated packaging** | Since emptied containers may retain product residue, follow label warnings even after container is emptied. Empty containers should be taken to an approved waste handling site for recycling or disposal. |

## 14. Transport information

**TDG**

| | |
|---|---|
| **UN number** | UN2880 |
| **UN proper shipping name** | CALCIUM HYPOCHLORITE, HYDRATED, with not less than 5.5% but not more than 16% water |
| **Transport hazard class(es)** | |
| **Class** | 5.1 |
| **Subsidiary risk** | - |
| **Packing group** | II |
| **Environmental hazards** | Not available. |
| **Special precautions for user** | Read safety instructions, SDS and emergency procedures before handling. |

**IATA**

| | |
|---|---|
| **UN number** | UN2880 |
| **UN proper shipping name** | Calcium hypochlorite, hydrated with >= 5.5% but <= 16% water |
| **Transport hazard class(es)** | |
| **Class** | 5.1 |
| **Subsidiary risk** | - |
| **Packing group** | II |
| **Environmental hazards** | No. |
| **ERG Code** | 5L |
| **Special precautions for user** | Read safety instructions, SDS and emergency procedures before handling. |
| **Other information** | |
| **Passenger and cargo aircraft** | Allowed with restrictions. |
| **Cargo aircraft only** | Allowed with restrictions. |

**IMDG**

| | |
|---|---|
| **UN number** | UN2880 |
| **UN proper shipping name** | CALCIUM HYPOCHLORITE, HYDRATED or CALCIUM HYPOCHLORITE, HYDRATED MIXTURE with not less than 5.5% but not more than 16% water |
| **Transport hazard class(es)** | |
| **Class** | 5.1 |
| **Subsidiary risk** | - |
| **Packing group** | II |
| **Environmental hazards** | |
| **Marine pollutant** | No. |
| **EmS** | F-H, S-Q |
| **Special precautions for user** | Read safety instructions, SDS and emergency procedures before handling. |

**Transport in bulk according to Annex II of MARPOL 73/78 and the IBC Code** Not applicable.

**IATA; IMDG; TDG**




## 15. Regulatory information

**Canadian regulations** This product has been classified in accordance with the hazard criteria of the HPR and the SDS contains all the information required by the HPR.

**Controlled Drugs and Substances Act**

Not regulated.

**Export Control List (CEPA 1999, Schedule 3)**

Not listed.

**Greenhouse Gases**

Not listed.

**Precursor Control Regulations**

Not regulated.

**International regulations**

**Stockholm Convention**

Not applicable.

**Rotterdam Convention**

Not applicable.

**Kyoto protocol**

Not applicable.

**Montreal Protocol**

Not applicable.

**Basel Convention**

Not applicable.

**International Inventories**

| Country(s) or region | Inventory name | On inventory (yes/no)* |
|---|---|---|
| Australia | Australian Inventory of Chemical Substances (AICS) | Yes |
| Canada | Domestic Substances List (DSL) | Yes |
| Canada | Non-Domestic Substances List (NDSL) | No |
| China | Inventory of Existing Chemical Substances in China (IECSC) | Yes |
| Europe | European Inventory of Existing Commercial Chemical Substances (EINECS) | Yes |
| Europe | European List of Notified Chemical Substances (ELINCS) | No |
| Japan | Inventory of Existing and New Chemical Substances (ENCS) | Yes |
| Korea | Existing Chemicals List (ECL) | Yes |
| New Zealand | New Zealand Inventory | Yes |
| Philippines | Philippine Inventory of Chemicals and Chemical Substances (PICCS) | Yes |
| Taiwan | Taiwan Chemical Substance Inventory (TCSI) | No |
| United States & Puerto Rico | Toxic Substances Control Act (TSCA) Inventory | Yes |

*A "Yes" indicates that all components of this product comply with the inventory requirements administered by the governing country(s)
A "No" indicates that one or more components of the product are not listed or exempt from listing on the inventory administered by the governing country(s).

## 16. Other information

**Issue date** 10-30-2020

| | |
|---|---|
| **Version #** | 01 |
| **Disclaimer** | Veolia Water Technologies is not able to anticipate all conditions under which this information and its product, or the products of other manufacturers in combination with its product, may be used. It is the user's responsibility to ensure safe conditions for handling, storage and disposal of the product, and to assume liability for loss, injury, damage or expense due to improper use and or non respect of Veolia Water Technologies' requirement. |

Table of contents

FILTER RECEIVER ..... 1
GERERAL INFORMATIONS ..... 3
Warnings ..... 4
OPERATION ..... 5
Filtering system ..... 5
Filter's Cleaning System ..... 5
BEFORE OPERATION ..... 6
CLEANING AND MAINTENANCE ..... 7
Emptying rejects tank ..... 8
Filter's cleaning system adjustments and options ..... 9
Installing and replacing the filters ..... 9
TECHNICAL INFORMATION ..... 10
Filter-receiver 49729 (each) ..... 10
DRAWINGS ..... 11
TROUBLESHOOTING ..... 12
Reduced product flow ..... 12
Solenoid valve not responding ..... 13
Pulse not working properly ..... 13
Filtering cartridge life shortened ..... 14
Improper filtration ..... 14
STANDARD EQUIPMENT TECHNICAL DATA ..... 15
HIGH LEVEL SENSOR ..... 16
VIBRATOR'S SOLENOID VALVE ..... 17
PULSE CLEANING VALVE ..... 18
FILTRATION CARTRIDGE ..... 19
PNEUMATIC VIBRATOR ..... 20
DISCHARGE ROTARY VALVE ..... 21

# GERERAL INFORMATIONS

- The owner is responsible for making sure that the installed equipment is safe and does not compromise the health of the people working with or near the machine.

- The owner is responsible to make sure that the equipment does meet the environmental standards of the country where the equipment is installed.

- The owner has the responsibility to correctly train everybody working near or with the machine and to make sure that they are familiar with the potential risks.

- The owner is responsible for getting the proper authorizations from his insurer.

- The owner is responsible for the proper cleaning and maintenance of the equipment in order to get its best performance and reliability.

- Even though the pieces of equipment are installed by qualified Groupe Sinox employees, the owner is responsible for cleaning out the machine before its first start-up and to make sure there is no risk of food contamination.

- The owner is not authorized to alter or modify the equipment. The client might make minor changes or tuning with only the approbation of Groupe Sinox.

- Make sure every piece of equipment not energized and properly locked-out, tagged-out, tried-out before working on the system. Not doing so may result in severe injuries or death.

# Warnings

This machine may have one or more moving or rotating parts, protected or not, and pressurized systems. Different energy sources like hydraulic or pneumatic systems, heavy moving parts and electrical circuits may be part of the machine.

The safe use of the machine, the supervision and proper training of the workers is the owner's responsibilities. The employer must guarantee that the machine is safe for his employees. Not using the machine as prescribed in this manual or using it in an unsafe way may result in serious injuries or death.

Groupe Sinox will do its best to deliver a safe equipment and give the assistance needed to make the system safe but cannot guarantee that every information contained in this manual will result in a complete elimination of all hazards.

# OPERATION

## Filtering system

During the operation, the air filled with the product's dust, enters in the dust collector. The heavier particles will fall down in the base of the collector while the lighter ones are going towards the filters. These particles will be separated from the air when the dust passes through the filters. The cleaned air will be evacuated from the dust collector and the particles will fall to the base when a filter's cleaning cycle occurs.

## Filter's Cleaning System

The filter's cleaning system is basically a pressurized air pulse going from the inside of the filter to the outside. The pulse cleans the filters, pushes the particles back in the collector and prevent the filter from clogging. The air pulses are liberated one filter at a time from one to the other. This sequence is defined in the program. By doing this, one filter is cleaned while all the others are continuing to filter the air.

An electric signal from the PLC is sent to each pilot valve and let the pilot air out, opening the pulse valve. This then creates the desired pulse.

The pilot valves are installed directly on the pulse valves making one unique assembly.

# BEFORE OPERATION

- Make sure every part is well placed and secured.
- Make sure the workers are well trained and informed of the potential hazards.
- Make sure every steps of the start-up are done.
- Make sure the machine is plugged and that the energy sources are as designed.
- Make sure that the compressed air is free of any contaminant and water.
- If components are installed outside, make sure to have the right air dryer.
- Make sure every mechanical part is lubricated as required.
- Make sure every protection device is correctly installed.
- Make sure the machine is clean.
- Do not stay in front or close to moving and pressurized parts as particles can be projected in the air.
- Make sure every rotating part turns the correct direction.
- **WARNING:** Some parts can break if the rotation occurs in the wrong direction.
- Trigger manually every sensor to make they are functioning properly.
- If it is possible, put all adjustment speed at their slowest set point.
- Introduce products gradually in the system.
- Make sure the system meets all requirements.
- Make sure you are familiar with every aspect of the control operation before introducing new equipment in your system.

# CLEANING AND MAINTENANCE

We recommend checking and cleaning the equipment periodically to assure the best efficiency.

Pneumatic conveying systems must be stopped when opening access traps and doors. Not doing so may result in a production shutdown, a higher risk of component breakage or injuries.

IMPORTANT: Make sure that all energy sources are shut down and that locking procedures are respected before doing any maintenance on the equipment.

Refer to the manufacturer's standard equipment manuals included in this document for any details about operations and maintenance on these items.

We recommend following this procedure before proceeding to maintenance jobs:

- Unplug every electric source
- Unplug the control wire
- Close and unplug the compressed air source
- Purge every air tank
- Proceed to visual inspections frequently to detect possible product leaks on different parts of the system.
- Proceed to check the interior by opening of the top of the collector. Make sure there is no product accumulation. If it is the case, check every component of the system to make sure they work properly.
- Make sure the rotary valve is working properly.
- We recommend checking the filters monthly or as needed.
- Filter clogging may affect conveying efficiency.
- We recommend filter cleaning or replacements 2 times a year.

## Emptying rejects tank

- Emptying the rejects tank can be done while the dust collector is in operation.
- If emptying the tank while operating, close the discharge valve before doing so.
- Release the clamp upon the tank, empty the tank and put it back in place.
- Make sure the seal and the clamps are correctly installed.
- Don’t use tools to tighten the clamps.

## Filter's cleaning system adjustments and options

- Pulse time and in-between pulse delay are modifiable by programming only. No adjustments can be done by the operator.
- Standard settings are:

  Pulse time: 0.10 second

  In-between pulse delay: 15 to 20 seconds
- The filter's cleaning system is supposed to be working while the fan is turning.

## Installing and replacing the filters

- Shut down and lock out the system and close compressed air alimentation.
- Make sure to keep in mind the risk related to your product.
- Wear safety equipment as needed. Wear a harness if there's a risk of falling into the dust collector.
- The dust collector might be considered as a confined space. Please follow the procedures related to confined spaces.
- Untighten the handles under the filters and remove the cartridges. Warning: the filters may be heavier than usual due to the product stuck in the cartridge.
- Clean the filters or dispose properly.
- Clean the contact surfaces on the filters and on the equipment.
- Install the filters and make sure they are correctly centred. Hand tighten the handles. Never use tools to tighten the filters.

# TECHNICAL INFORMATION

## Filter-receiver 49729 (each)

| | |
|---|---|
| **Sinox number:** | **49729.000.000** |
| **Conception :** | Vacuum |
| **Total Volume :** | 6.12 cubic feet |
| **Usable Volume :** | 1.75 cubic feet |
| **Product inlet diameter :** | 3'' OD |
| **Air outlet diameter :** | 4'' OD |
| **Unloading outlet diameter** : | 8'' OD |
| **Filtering cartridge quantity:** | 3 |
| **Filtering cartridge model:** | PNE-00009 |
| **Pulse valve quantity :** | 2 |
| **Pulse valve model :** | 49729.999.004 |
| **Unloading valve type:** | Butterfly valve 8'' wafer type |

**Accessories:**

Pneumatic vibrator : Oli Vibrator , # MEC-00001

High level sensor : Endress & Hausser # ELE-00002

## DRAWINGS

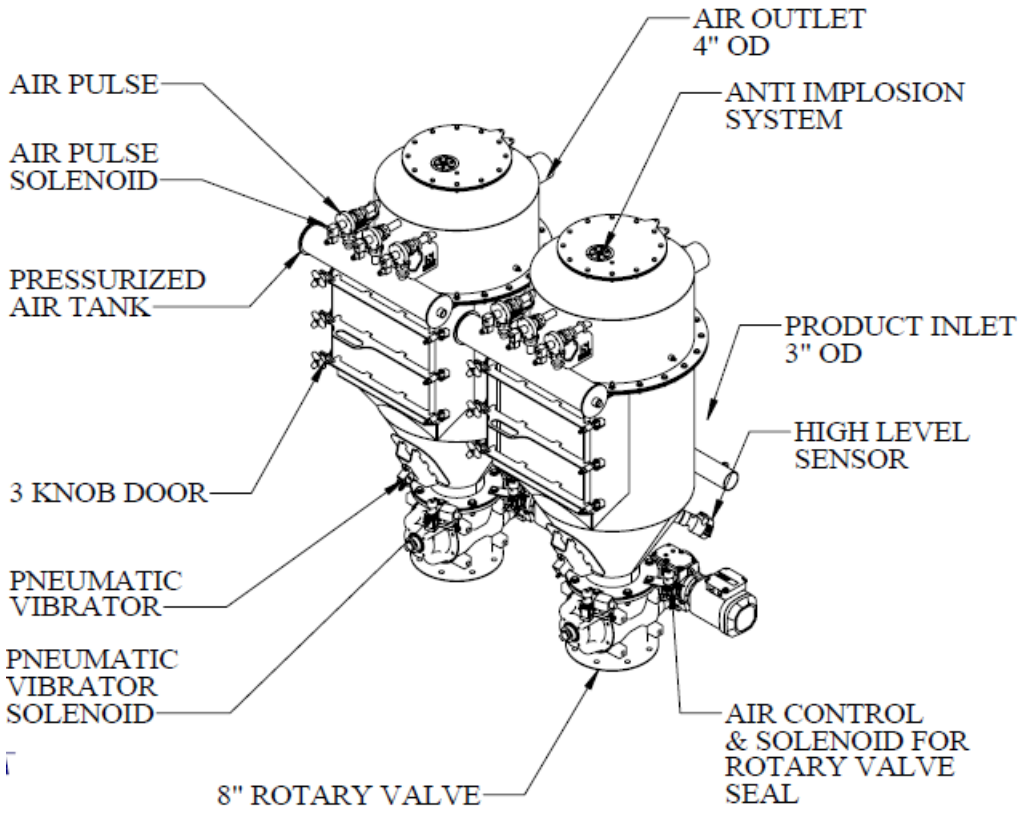
AIR OUTLET
4" OD
AIR PULSE
ANTI IMPLOSION
SYSTEM
AIR PULSE
SOLENOID
PRESSURIZED
AIR TANK
PRODUCT INLET
3" OD
HIGH LEVEL
SENSOR
3 KNOB DOOR
PNEUMATIC
VIBRATOR
PNEUMATIC
VIBRATOR
SOLENOID
AIR CONTROL
& SOLENOID FOR
ROTARY VALVE
SEAL
8" ROTARY VALVE

# TROUBLESHOOTING

## Reduced product flow

- Check the dosing equipment: Rotating valves speed.
- Check the blower's belt tension.
- Check the blower's power supply
- Check pressure sensors adjustments and settings.
- Inspect your system for leaks in pipe sections or on the access doors.
- Check if rotary valve vents clear from products.
- Check the rotary valve conditions. Product stuck in-between the cells may impact efficiency.
- Look out for humidity in the product. If so, find out the main cause.
- Check blower filter. If it is dirty, find out the main cause.
- Check and clean receptors' filters.

## Solenoid valve not responding

- You should hear a ‘’CLIC’’ when the valve port move.
- If no sound is produced when activating the solenoid valve, proceed to disassembly and clean moving parts.
- Check that the electrical signal goes to the solenoid valve and that it is the correct type (24VDC or 110VAC).
- Check the pneumatic pressure in the valve’s inlet. Some valve needs a minimum pressure to open. This information is contained in the manufacturer technical data sheets. Adjust pressure regulator as needed.

## Pulse not working properly

- Check compressed air source.
- Look for leaks in the system.
- Make sure that the pulse time is not too long. This inhibits the pressure from building in the air tank.
- Look for worn or dirty parts on solenoid valves and clean/replace as needed.
- Make sure that the control panel is connected and working properly.

## Filtering cartridge life shortened

- Make sure that the compressed air used to clean the filtering cartridge is dry and clean. Humidity can reduce efficiency and shorten the filter's life.
- Make sure there's no oil in the compressed air as well and that the air pressure is good. The pressure in the tank must be at least 80 PSI.
- Do not fill the collector up to the filters. This will reduce filtering efficiency and reduce filter life.
- Make sure every pulse valve is working properly
- Make sure to use the dust collector as designed for.

## Improper filtration

- Check for any hole in the filtering cartridge.
- Look for leaks between the filter and the flange. To check this, inspect the clean side of the filters.
- Replace filter if required.
- Make sure the filters are completely dry.
- Make sure the filter installed are designed for your application.

# STANDARD EQUIPMENT TECHNICAL DATA

# HIGH LEVEL SENSOR

| | |
|---|---|
| **# Sinox:** | ELE-00002 |
| **Manufacturer :** | Endress & Hauser |
| **Model :** | FTM20-CN46A |
| **Connection :** | 1 1/2 NPT |
| **Voltage :** | 120VAC/24VDC |
| **Quantity per receiver:** | 1x |

# Operating Instructions
# **Soliphant T FTM20, FTM21**

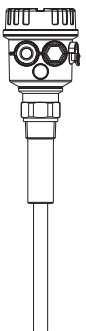

**DE-** Grenzschalter
**EN-** Point Level Switch
**FR -** Détecteur de niveau
**ES -** Detector de nivel
**IT -** Interruttore di livello
**NL-** Niveauschakelaar

Endress+Hauser
People for Process Automation

**de - Inhalt**


| | |
|---|---|
| Sicherheitshinweise | 4 |
| Behandlung | 6 |
| Geräte-Identifikation | 8 |
| Verwendung | 12 |
| Messeinrichtung | 13 |
| Einbau | 14 |
| Einstellungen | 18 |
| Lichtsignale | 20 |
| Anschluss | 21 |
| Wartung | 26 |
| Außenreinigung | 27 |
| Technische Daten | 28 |
| Schiebemuffen | 29 |
| Fehlersuche | 31 |
| Ersatzteile | 37 |
| Ergänzende Dokumentation | 38 |


**en - Contents**


| | |
|---|---|
| Notes on Safety | 4 |
| Handling | 6 |
| Device Identification | 8 |
| Application | 12 |
| Measuring system | 13 |
| Installation | 14 |
| Setting- up | 18 |
| Light signals | 20 |
| Connections | 21 |
| Maintenance | 26 |
| External cleaning | 27 |
| Technical Data | 28 |
| Sliding sleeves | 29 |
| Trouble-shooting | 32 |
| Spare parts | 37 |
| Supplementary Documentation | 38 |


**fr - Sommaire**


| | |
|---|---|
| Conseils de sécurité | 4 |
| Manipulation | 6 |
| Dénomination | 8 |
| Utilisation | 12 |
| Ensemble de détection de niveau | 13 |
| Montage | 14 |
| Réglage | 18 |
| Signaux lumineux | 20 |
| Raccordement | 21 |
| Maintenance | 26 |
| Nettoyage extérieur | 27 |
| Caractéristiques techniques | 28 |
| Manchons coulissants | 29 |
| Recherche de défauts | 33 |
| Pièces de rechange | 37 |
| Documentation complémentaire | 38 |




**Achtung!**
= verboten;
führt zu fehlerhaftem Betrieb oder Zerstörung.



**Caution!**
= forbidden;
leads to incorrect operation or destruction.



**Attention!**
= interdit; peut provoquer des dysfonctionnements ou la destruction.

**es - Indice**


| | |
|---|---|
| Notas sobre seguridad | 5 |
| Modo de empleo | 6 |
| Identificación del equipo | 8 |
| Aplicación | 12 |
| Sistema de medida | 13 |
| Montaje | 14 |
| Ajuste | 18 |
| Señales luminosas | 20 |
| Conexiones | 21 |
| Mantenimiento | 26 |
| Limpieza exterior | 27 |
| Datos técnicos | 28 |
| Manguitos deslizantes | 29 |
| Identificación de fallos | 34 |
| Repuestos | 37 |
| Documentación suplementaria | 38 |


**it - Indice**


| | |
|---|---|
| Note sulla sicurezza | 5 |
| Accorgimenti | 6 |
| Identificazione dello strumento | 8 |
| Applicazione | 12 |
| Sistema di misura | 13 |
| Montaggio | 14 |
| Messa in servizio | 18 |
| Segnali luminosi | 20 |
| Collegamenti elettrici | 21 |
| Manutenzione | 26 |
| Pulizia esterna | 27 |
| Dati tecnici | 27 |
| Manicotto scorrevole | 29 |
| Individuazione e eliminazione delle anomalie | 35 |
| Ricambi | 37 |
| Documentazione supplementare | 38 |


**nl - Inhoud**


| | |
|---|---|
| Veiligheidsinstructies | 5 |
| Behandeling | 6 |
| Instrument-identificatie | 8 |
| Toepassing | 12 |
| Meetopstelling | 13 |
| Inbouw | 14 |
| Instellingen | 18 |
| LED signalen | 20 |
| Aansluiting | 21 |
| Onderhoud | 26 |
| Uitwendige reiniging | 27 |
| Technische gegevens | 28 |
| Schuifmof | 29 |
| Fout zoeken | 36 |
| Reserve-onderdelen | 37 |
| Aanvullende documentatie | 38 |




**Atención!**
= Prohibido; peligro de mal funcionamiento o de destrucción.



**Attenzione!**
= Vietato; pericolo di malfunzionamento o di distruzione.



**Opgelet!**
= verboden; leidt tot foutieve werking of storing.

**de - Sicherheitshinweise**

Der Soliphant T FTM20, FTM21 ist ein Füllstandgrenzschalter für fein- bis grobkörnige Schüttgüter. Bei unsachgemäßem Einsatz können Gefahren von ihm ausgehen.

Das Gerät darf **nur von qualifiziertem und autorisiertem Fachpersonal** unter strenger Beachtung dieser Betriebsanleitung, der einschlägigen Normen, der gesetzlichen Vorschriften und der Zertifikate (je nach Anwendung) eingebaut, angeschlossen, in Betrieb genommen und gewartet werden.

In der Gebäudeinstallation ist ein Netzschalter für das Gerät leicht erreichbar in dessen Nähe zu installieren.

Er ist als Trennvorrichtung für das Gerät zu kennzeichnen.

Nur isoliertes Werkzeug verwenden!
Nur Originalteile verwenden!

**en - Notes on Safety**

The Soliphant T FTM20, FTM21 is a point level switch for fine to coarse-grained bulk solids.

If used incorrectly it is possible that application-related dangers may arise.

The level limit switch may be installed, connected, commissioned, operated and maintained **by qualified and authorised personnel only**, under strict observance of these operating instructions, any relevant standards, legal requirements, and, where appropriate, the certificate.

Install an easily accessible power switch in the proximity of the device.

Mark the power switch as a disconnector for the device.

Use only insulated tools!
Use only original parts!

**fr - Conseils de sécurité**

Le Soliphant T FTM20, FTM21 est un détecteur de niveau pour produits solides en vrac de faible à grosse granulométrie.

Il peut être source de danger en cas d'utilisation non conforme aux prescriptions.

L'appareil ne doit être installé, raccordé, mis en service et entretenu **que par un personnel qualifié et autorisé**, qui tiendra compte des indications contenues dans la présente mise en service, des normes en vigueur et des certificats disponibles (selon l'application).

Installer un commutateur réseau à proximité immédiate de l'appareil, en veillant à ce qu'il soit facilement accessible.

Marquer ce commutateur comme prise de coupure de l'appareil.

Utilisez uniquement des outils isolés!
Utilisez uniquement des pièces d'origine!

**es - Notas sobre seguridad**

El Soliphant T FTM20, FTM21 sólo se puede usar como detector de nivel límite con sólidos finos y sólidos granulados.
Su empleo inapropiado puede resultar peligroso.
El equipo deberá ser montado, conectado, instalado y mantenido **única y exclusivamente por personal cualificado y autorizado**, bajo rigurosa observación de las presentes instrucciones de servicio, de las normativas y legislaciones vigentes, así como de los certificados (dependiendo de la aplicación).
Instalar un interruptor de fácil acceso en las proximidades del equipo.
Identificar el interruptor como desconectador del equipo.

Utilice solamente herramientas aisladas!
Use sólo las piezas originales!

**it - Note sulla sicurezza**

Il sensore Soliphant T FTM20, FTM21 può essere usato solamente come interruttore di livello per materiali solidi di grandezza da medio fine a grezza.
Un'installazione non corretta può determinare pericolo.
Lo strumento può essere montato **solamente da personale qualificato ed autorizzato**.
La messa in esercizio e la manutenzione devono rispettare le indicazioni di collegamento, le norme e i certificati di seguito riportati.
Installare un interruttore per l'alimentazione in prossimità del dispositivo.
Marcare l'interuttore come disconnessione del dispositivo.

Utilizzare solo strumenti isolati!
Utilizzare solo parti originali!

**nl - Veiligheidsinstructies**

De Soliphant T FTM20, FTM21 mag alleen gebruikt worden als niveauschakelaar voor poeders tot grofkorrelig stortgoed.
Indien niet correct gebruikt kunnen gevaarlijke situaties ontstaan.
Het instrument **alleen door gekwalificeerd en geautoriseerd personeel** laten inbouwen, aansluiten, in bedrijf nemen en onderhouden.
Neem de instructies in deze Inbedrijfstellingsvoorschriften, de desbetreffende normen, de wettelijke voorschriften en eventuele certificaten in acht.
Installeer een makkelijk bereikbare voedingschakelaar in de nabijheid van het instrument.
Kenmerk de voedingschakelaar specifiek voor het instrument.

Gebruik uitsluitend geïsoleerd gereedschap!
Gebruik alleen originele onderdelen!

**de - Behandlung**
Am Gehäuse, Flansch oder Verlängerungsrohr anfassen.

**en - Handling**
Hold by housing, flange or extension tube.

**fr - Manipulation**
Tenir par le boîtier, la bride ou le tube prolongateur.

**es - Modo de empleo**
Coger por el cabezal, brida o tubo de extensión.

**it - Accorgimenti**
Afferrare la custodia, per la flangia o per il tubo di estensione.

**nl - Behandeling**
Vastpakken via behuizing, flens of verlengbuis.

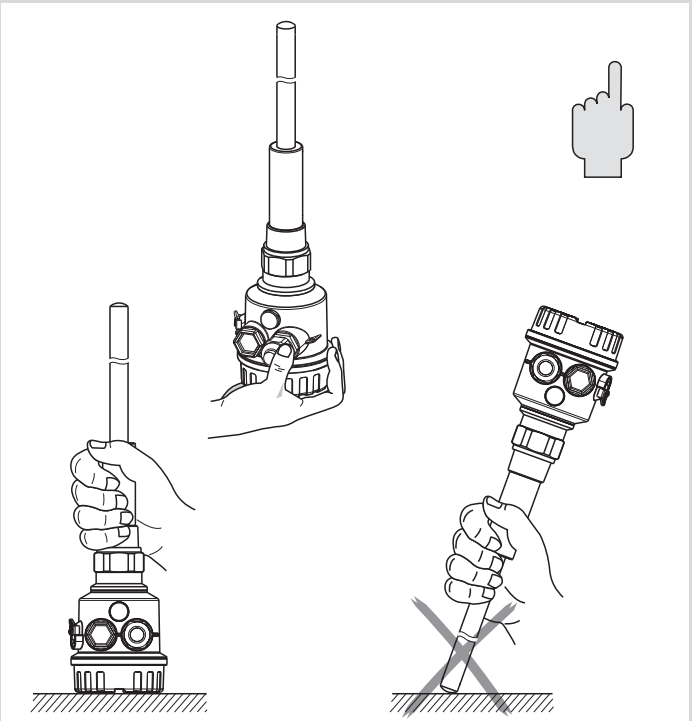

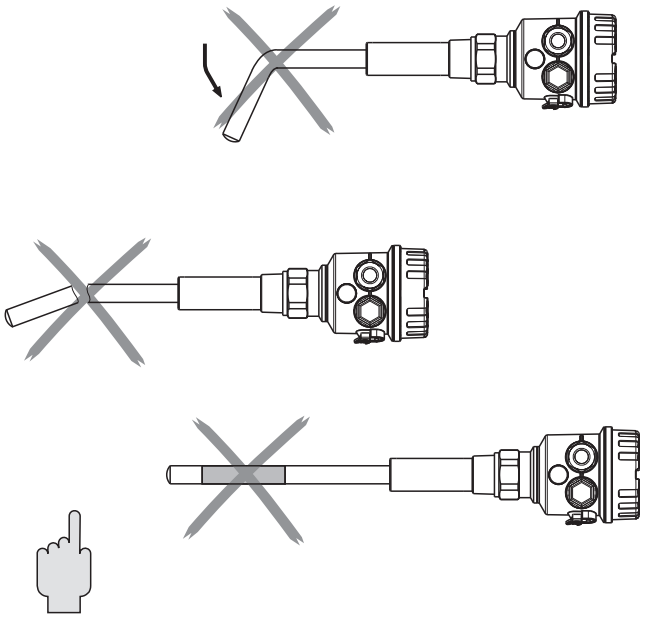

**de** – **Nicht** verbiegen
**Nicht** kürzen
**Nicht** verlängern

**en** – Do **not** bend
Do **not** shorten
Do **not** lengthen

**fr** – **Ne pas** déformer
**Ne pas** raccourcir
**Ne pas** rallonger

**es** – **No** torcer
**No** acortar
**No** alargar

**it** – **Non** stringere o allargare
**Non** accorciare o allungare
**Non** piegare

**nl** – **Niet** verbuigen
**Niet** inkorten
**Niet** verlengen

**de** - Geräte-Identifikation
**en** - Device Identification
**fr** - Dénomination
**es** - Identificación del equipo
**it** - Identificazione dello strumento
**nl** - Instrument-identificatie

ENDRESS+HAUSER
Soliphant T

Order Code

FTM20– # # # # #

| | | |
|---|---|---|
| A | *[1] | |
| C | CSA General Purpose, CSA C US | |
| D | CSA DIP+FM, DIP | |
| G | IEC Ex t IIIC | |
| N | NEPSI DIP A20/A22 | |
| V | EAC Ex t IIIC | |
| Y | *[2] | |
| 4 | ATEX II 1/3 D | |

| | | | |
|---|---|---|---|
| A | DIN 2999 | R 1 | 316L |
| G | DIN 2999 | R 1½ | 316L |
| M | ANSI | NPT 1¼ | 316L |
| N | ANSI | NPT 1½ | 316L |
| Y | *[2] | | |

| | |
|---|---|
| 2 | FEM22; PNP, 10... 45 V DC |
| 4 | FEM24; DPDT, 19...253 V AC/55 V DC |
| 9 | *[2] |

| | |
|---|---|
| 1 | F16, IP66/67; NEMA4X;<br>Stecker M12 / M12 plug<br>Connecteur M12 / M12 conector<br>Connettore M12 / M12 Conector |
| 2 | F16, IP66/67; NEMA4X; M20 |
| 3 | F16, IP66/67; NEMA4x; NPT ½ |
| 4 | F16, IP66/67; NEMA4X; G ½ |
| 5 | F18, IP66/67; NEMA4X; M20 |
| 6 | F18, IP66/67; NEMA4X; NPT ¾ |
| 7 | F18, IP66/67; NEMA4X; G ½ |
| 8 | F18, IP66/67; NEMA4X;<br>Stecker M12 / M12 plug<br>Connecteur M12 / M12 conector<br>Connettore M12 / M12 Conector |
| 9 | *2 |

F16
PBT



F18
Alu



| | |
|---|---|
| A | Grundausführung / Basic version / Version de base / Equipo estándar / Equipaggiamento basico / Basisversie |
| Y | *2 |

*1 ohne / without / sans / sin / senza / zonder

*2 andere / others / autres / otros / altri / andere

ENDRESS+HAUSER
Soliphant T

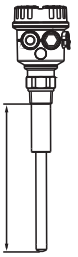


Order Code

FTM21– ######

| | | | |
|---|---|---|---|
| A | *1 | | |
| C | CSA General Purpose, CSA C US | | |
| D | CSA DIP+FM, DIP | | |
| G | IEC Ex t IIIC | | |
| N | NEPSI DIP A20/A22 | | |
| V | EAC Ex t IIIC | | |
| Y | *2 | | |
| 4 | ATEX II 1/3 D | | |

| | | | |
|---|---|---|---|
| A | DIN 2999 | R 1 | 316L |
| G | DIN 2999 | R 1½ | 316L |
| M | ANSI | NPT 1¼ | 316L |
| N | ANSI | NPT 1½ | 316L |
| Y | *2 | | |

| | |
|---|---|
| 2 | 500 mm |
| 3 | 1000 mm |
| 4 | 1500 mm |
| 6 | 20 inch |
| 7 | 40 inch |
| 8 | 60 inch |
| 9 | *2 |

| | |
|---|---|
| 2 | FEM 22; PNP, 10... 45 V DC |
| 4 | FEM 24; DPDT, 19...253 V AC/55 V DC |
| 9 | *[2] |

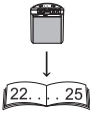


| | |
|---|---|
| 1 | F16, IP66/67; NEMA4X;<br>Stecker M12 / M12 plug<br>Connecteur M12 / M12 conector<br>Connettore M12 / M12 Conector |
| 2 | F16, IP66/67; NEMA4X; M20 |
| 3 | F16, IP66/67; NEMA4X; NPT ½ |
| 4 | F16, IP66/67; NEMA4X; G ½ |
| 5 | F18, IP66/67; NEMA4X; M20 |
| 6 | F18, IP66/67; NEMA4X; NPT ¾ |
| 7 | F18, IP66/67; NEMA4X; G ½ |
| 8 | F18, IP66/67; NEMA4X;<br>Stecker M12 / M12 plug<br>Connecteur M12 / M12 conector<br>Connetore M12 / M12 Conector |
| 9 | *[2] |

F16
PBT



F18
Alu



| | |
|---|---|
| A | Grundausführung / Basic version / Version de base / Equipo estándar / Equipaggiamento basico / Basisversie |
| Y | *[2] |

*[1] ohne / without / sans / sin / senza / zonder

*[2] andere / others / autres / otros / altri / andere

**de - Verwendung**
Grenzstanddetektion in Schüttgütern

**en - Application**
Level limit detection in solids

**fr - Utilisation**
Détection de niveau dans les solides

**es - Aplicación**
Detección de nivel en sólidos

**it - Applicazione**
Controllo livello nei solidi

**nl - Toepassing**
Niveaudetectie in vaste stoffen

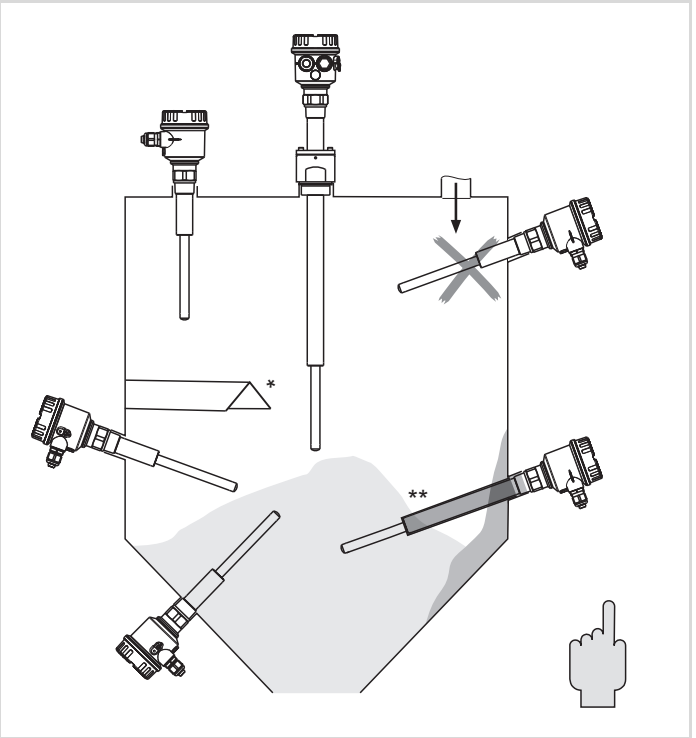


*

Schutzdach/protective roof/
auvent de protection/tejado protector/
tettuccio protettivo/beschermdakje

oder / or / ou / o / o / of

**

Schutzrohr/protective pipe/
tube de protection/tubo protector/
tubo protettivo/beschermbuis

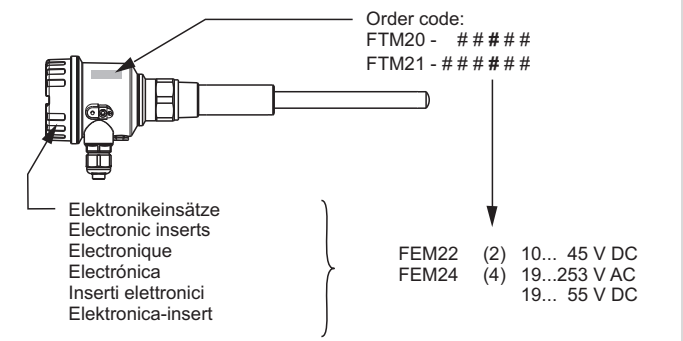


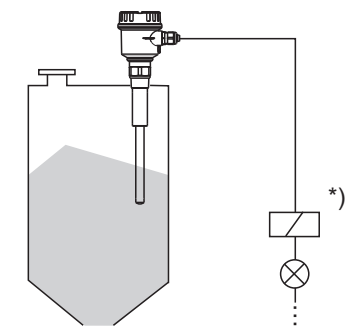


*) Externe Last
External load
Charge externe
Carga externa
Carico esterno
Externe belasting

**de - Messeinrichtung**
für direkten Anschluss

**en - Measuring system**
for direct connection

**fr - Ensemble de détection de niveau**
pour raccordement direct

**es - Sistema de medida**
para conexión directa

**it - Sistema di misura**
per connessione diretta

**nl - Meetopstelling**
voor directe aansluiting

**de - Einbau**
Einbauort in Abhängigkeit vom Schüttgutkegel/Medium

**en - Installation**
Place of installation depends on the cone of the bulk solids and the medium

**fr - Montage**
Lieu de montage en fonction de l'angle de talutage/du produit

**es - Montaje**
El montaje depende del cono que forma el sólido/producto

**it - Montaggio**
Montaggio in funzione della forma del cono del materiale solido e del mezzo

**nl - Inbouw**
Inbouw afhankelijk van storthoek/ medium

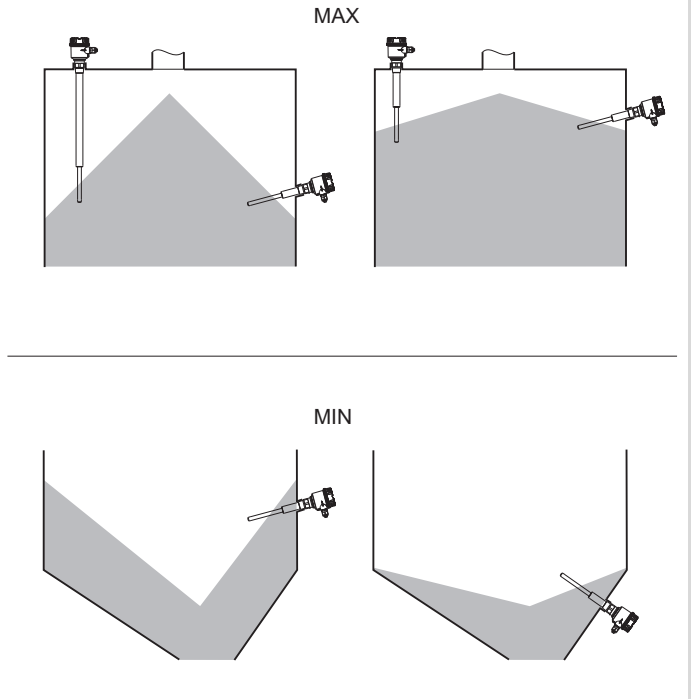

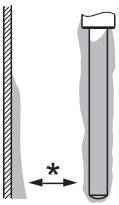

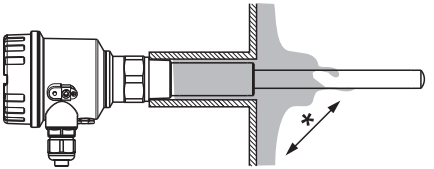

* Abstand! / Distance! / Distance! / ¡Distancia! / Distanza! / Afstand!

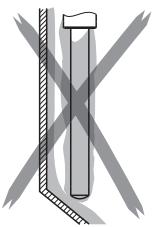

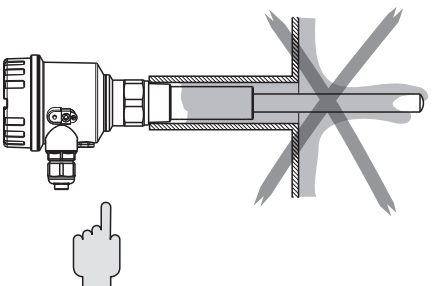

**de** – Ansatzbildung berücksichtigen.
**en** – Consider build-up.
**fr** – Tenir compte du colmatage.
**es** – Tener en cuenta las adherencias.
**it** – Tenere conto dei depositi.
**nl** – Rekening houden met aangroei.

**de** – Soliphant einschrauben.
**Nicht** am Gehäuse drehen!

**en** – Screw Soliphant into process connection.
**Don't** use housing to turn!

**fr** – Visser le Soliphant.
Ne pas se servir du boîtier!

**es** – Roscar el Soliphant a la conexión a proceso.
**No** girar el cabezal!

**it** – Avvitare il Soliphant all'attacco al processo.
Allo scopo **non** utilizzare la custodia.

**nl** – Schroef de Soliphant in de procesaansluiting.
Draai hierbij **niet** aan de behuizing!

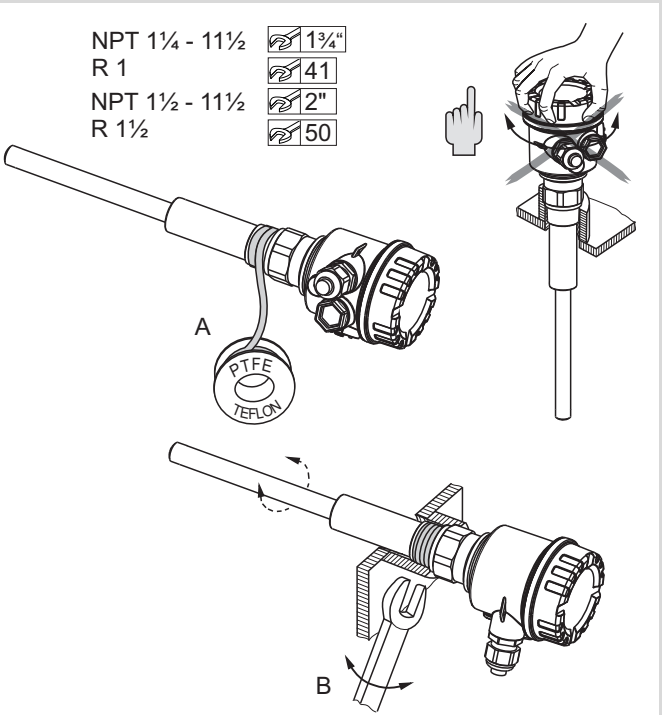

F16 (Polyester)

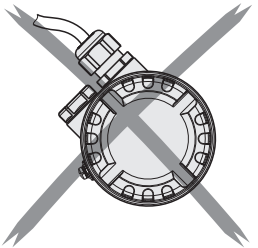

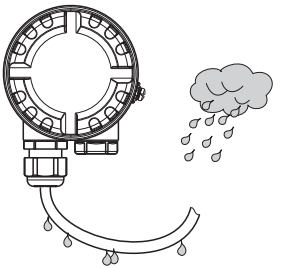

F18 (Aluminium)

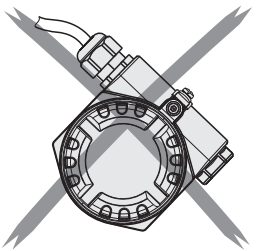

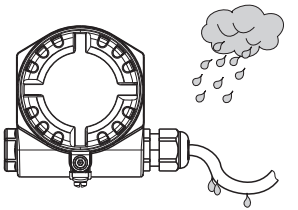

**de** – Kabeleinführung ausrichten
**en** – Cable gland orientation
**fr** – Orientation de l'entrée de câble
**es** – Ajuste del prensaestopa
**it** – Posizionamento del passacavo
**nl** – Kabelinvoer uitrichten

**de - Einstellungen**
Minimum-/Maximum-Sicherheitsschaltung

**en - Setting-up**
Minimum/maximum fail-safe mode

**fr - Réglage**
Sécurité minimum/maximum

**es - Ajuste**
Conmutador de seguridad mín./máx.

**it - Messa in servizio**
Selezione della modalità di sicurezza min./max.

**nl - Instellingen**
Minimum/maximum veiligheidsschakeling

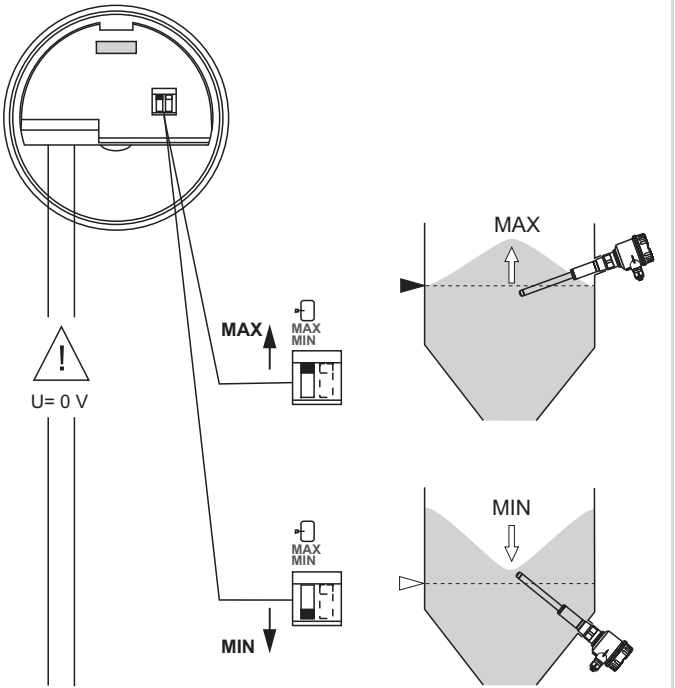

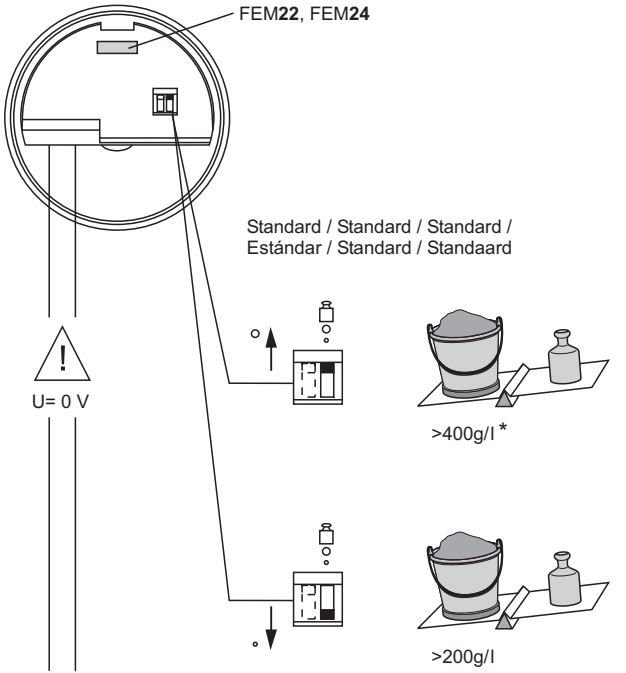


**de** - Dichte des Schüttgutes.
Schüttgewicht gemessen in g/l.

**en** - Density of the bulk solids.
Piled weight measured in g/l.

**fr** - Densité du produit.
Densité mesurée en g/l.

**es** - Densidad del sólido.
Unidad de medida en g/l.

**it** - Densità del materiale solido.
Peso misurata in g/l.

**nl** - Dichtheid van het stortgoed.
Stortgoed gemeten in g/l.

*
unempfindlicher gegen Ansatz /
less sensitive to build-up /
moins sensible aux dépôts /
Menos sensibilidad a las adherencias /
meno sensibile ai depositi /
ongevoelig voor aangroei

**de - Lichtsignale**
**en - Light signals**
**fr - Signaux lumineux**
**es - Señales luminosas**
**it - Segnali luminosi**
**nl - LED signalen**

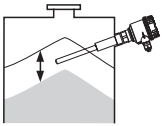

Füllstand variieren
Vary level
Varier le niveau
Nivel variable
Variare livello
Niveau variëren

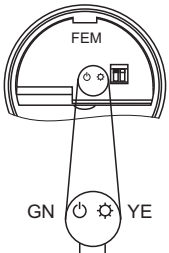


Leuchtdioden / LEDs / DEL / LEDs / LED / LED's

Betrieb / Stand-by / Fonctionnement /
Reposo / Attesa / stand-by

Schaltzustand / Switching status / Etat de commutation /
Estado conexión / Stato di commutazione / schakelstand

leuchtet / on / allumée / iluminado / on / aan

aus / off / éteinte / apagado / off / uit

Ausgangssignal / Output signal / Signal de sortie /
Señal de salida / Segnale uscita / uitgangssignaal

Nationale Normen und Vorschriften beachten!
Note national regulations!
Respecter les normes et directives nationales en vigueur!
Considere reglamentaciones nacionales
Osservare le norme nazionali!
Nationale voorschriften in acht nemen!

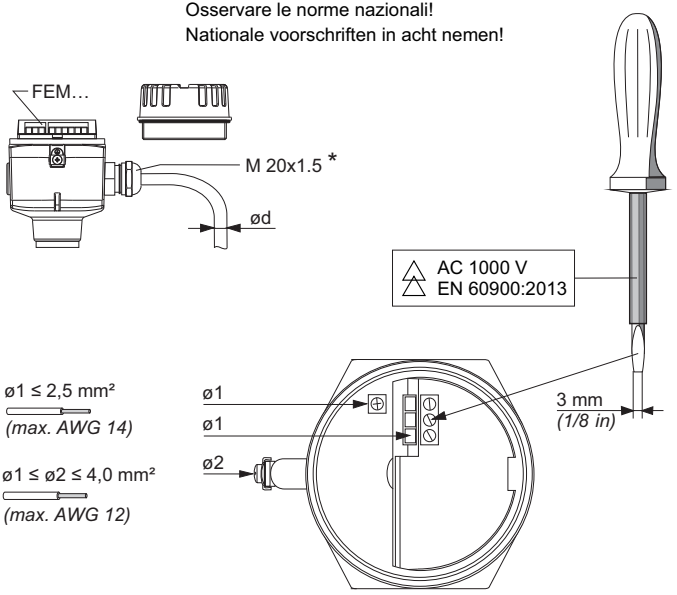


**de - Anschluss**
**en - Connections**
**fr - Raccordement**
**es - Conexiones**
**it - Collegamenti elettrici**
**nl - Aansluiting**

***Cable entry**
Nickel-plated brass:
∅ d = 7...10,5 mm (0,28...0,41 in)
Plastic:
∅ d = 5...10 mm (0,2...0,38 in)
Stainless steel:
∅ d = 7...12 mm (0,28...0,47 in)

**de** – Anschluss FEM22
A: Kabeleinführung
B: M12 Stecker

**en** – Connections FEM22
A: Cable gland
B: M12 Plug

**fr** – Raccordement FEM22
A: L'entrée de câble
B: Connecteur M12

**es** – Conexiones FEM22
A: Prensaestopa
B: M12 Conector

**it** – Collegamenti elettrici FEM22
A: Passacavo
B: Connettore M12

**nl** – Aansluiting FEM22
A: Kabelinvoer
B: M12 connector

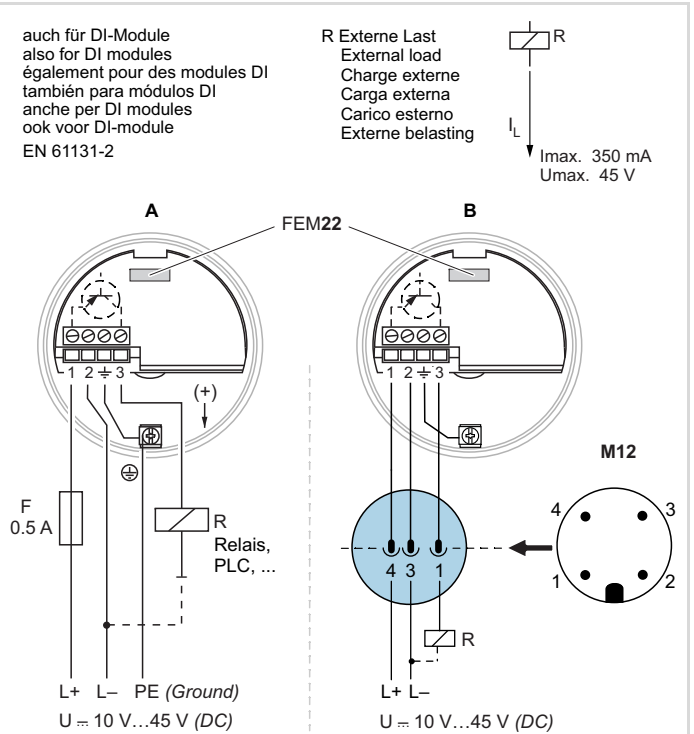

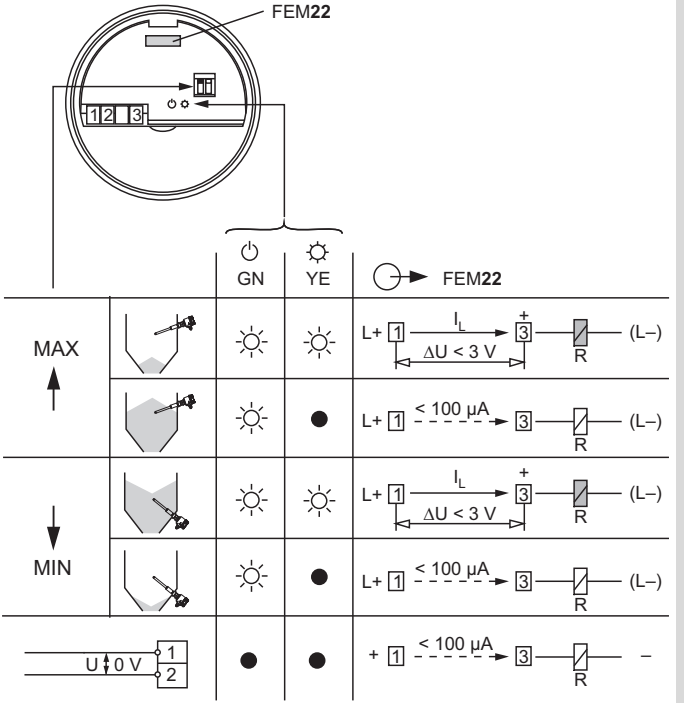


**de** – Funktion FEM22
**en** – Function FEM22
**fr** – Fonction FEM22
**es** – Funcionamiento FEM22
**it** – Funzione FEM22
**nl** – Functie FEM22

**de** – Anschluss FEM24
Allstromanschluss
Relaisausgang

**en** – Connections FEM24
Universal connection
Relay output

**fr** – Raccordement FEM24
Tous courants
Sortie relais

**es** – Conexiones FEM24
Conexión universal
Salida por relé

**it** – Collegamenti elettrici FEM24
Collegamento corrente universale
Uscita relè

**nl** – Aansluiting FEM24
Universele spanningsaansluiting
Relaisuitgang

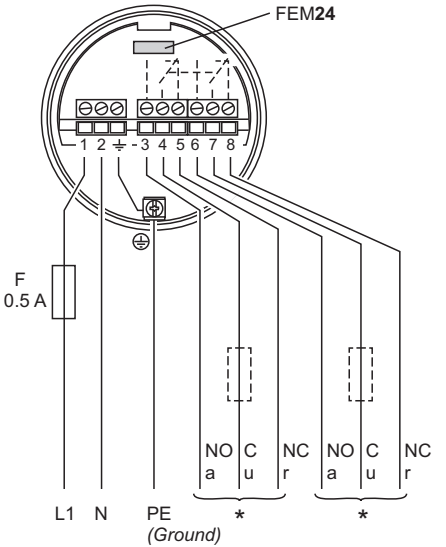


U~ 19…253 V *(AC)*

L+ L–
U⎓ 19… 55 V *(DC)*

* U~ max. 253 V, I~ max. 6 A
P~ max. 1500 VA, cos φ = 1
P~ max. 750 VA, cos φ > 0.7
I⎓ max. 6 A, U⎓ < 30 V
I⎓ max. 0.2 A, U⎓ < 125 V

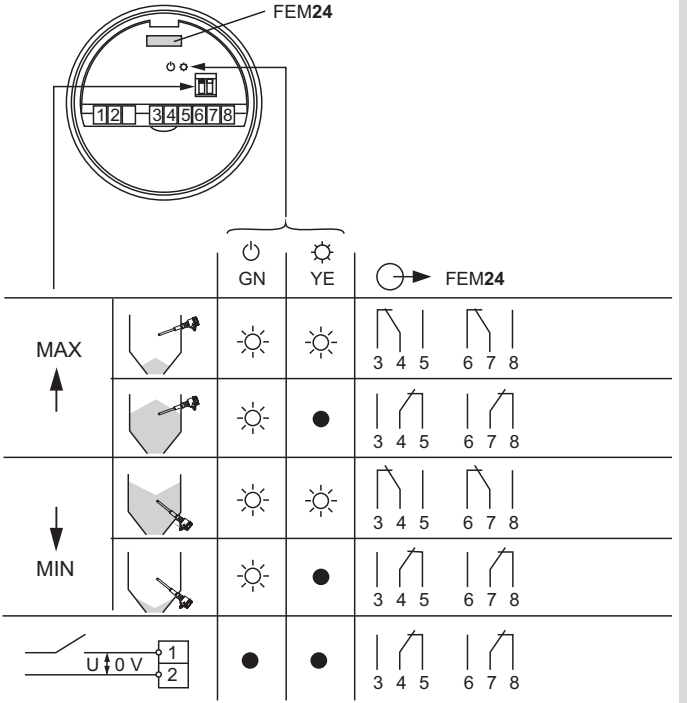


**de** – Funktion FEM24
**en** – Function FEM24
**fr** – Fonction FEM24
**es** – Funcionamiento FEM24
**it** – Funzione FEM24
**nl** – Functie FEM24

**de - Wartung**
Dicke Krusten entfernen!

**en - Maintenance**
Removal of thick encrustation!

**fr - Maintenance**
Enlever les dépôts et incrustations!

**es - Mantenimiento**
Eliminación de adherencias!

**it - Manutenzione**
Rimozione di depositi consistenti!

**nl - Onderhoud**
Aangroei verwijderen!

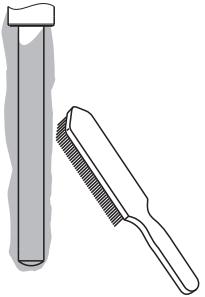

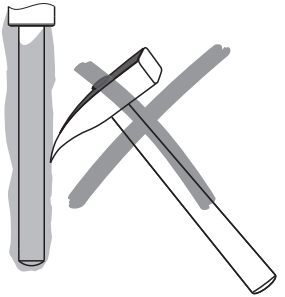

**Nicht** besteigen!
**Don't** use as a step!
**Ne pas** marcher
sur les lames vibrantes!
**No** usar como peldaño!
**Non** usare come scalino!
**Niet** op staan!

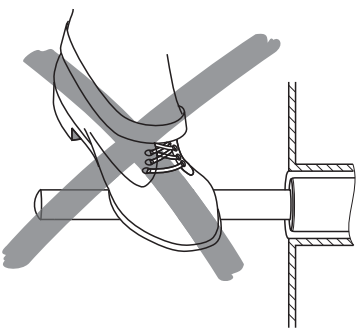

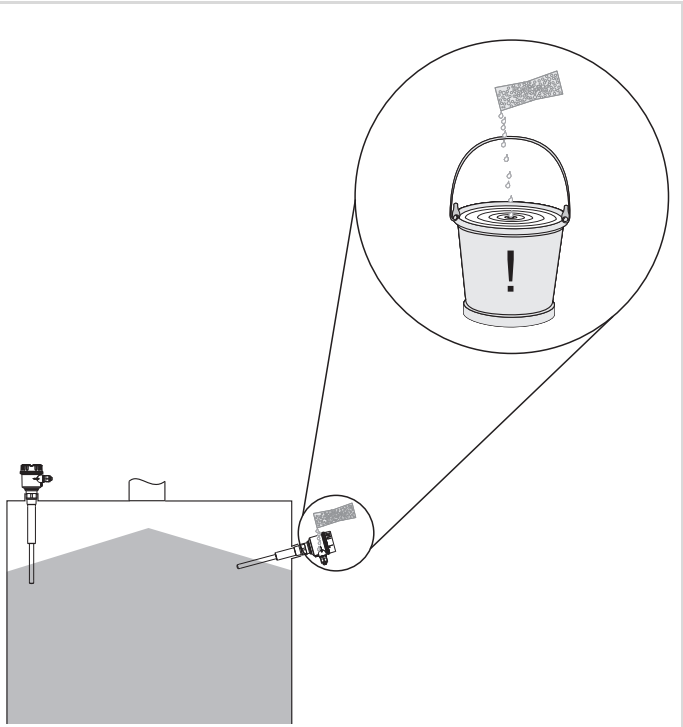


**de - Außenreinigung**
Das verwendete Reinigungsmittel darf die Oberflächen und Dichtungen nicht angreifen.

**en - External cleaning**
The cleaning agent used must not have a corrosive effect on the surfaces and seals.

**fr - Nettoyage extérieur**
Le détergent utilisé ne doit pas attaquer les surfaces et joints.

**es - Limpieza exterior**
El agente de limpieza utilizado no debe dañar las superficies ni las juntas.

**it - Pulizia esterna**
Non utilizzare un detergente aggressivo per le superfici e le guarnizioni.

**nl - Uitwendige reiniging**
Het gebruikte reinigingsmiddel mag de oppervlakken en afdichtingen niet aantasten.

**de - Technische Daten**
Umgebungstemperatur $T_1$
Betriebstemperatur $T_2$

**en - Technical Data**
Ambient temperature $T_1$
Process temperature $T_2$

**fr - Caractéristiques techniques**
Température ambiante $T_1$
Température de process $T_2$

**es - Datos técnicos**
Temperatura ambiente $T_1$
Temperatura de proceso $T_2$

**it - Dati tecnici**
Temperatura ambiente $T_1$
Temperatura di servizio $T_2$

**nl - Technische gegevens**
Omgevingstemperatuur $T_1$
Procestemperatuur $T_2$

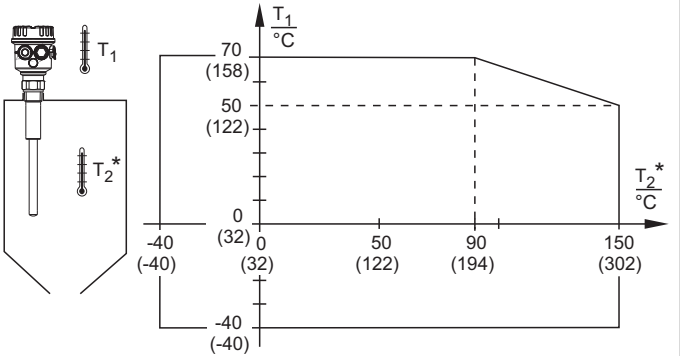


Betriebsdruck
Process pressure
Pression de process
Presión de proceso
Pressione di servizio
Procesdruk

$p_e$ = max. 25 bar *(363 psi)* *

* $p_e$
* $T_2$

Prozessanschluss / Zubehör
Process connection / accessories
Raccord process / accessoires
Conexión a proceso / accesorios
Connessione al processo / accessori
Procesaansluiting / accessoires

Schüttgewicht
Solids density
Densité apparente
Densidad de las mercancías
Densità dei solidi
Stortgewicht

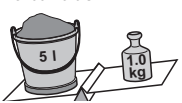


min. 200 g/l

Korngröße
Grain size
Granulométrie
Tamaño del grano
Granulometria grossa
Korrelgrootte

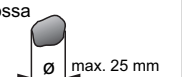

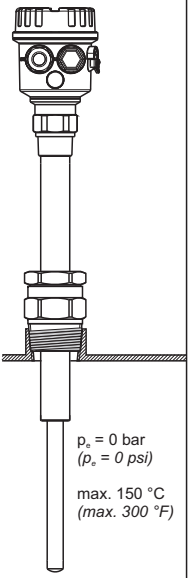


**52023313:** R 1½
DIN 2999
AISI 316L

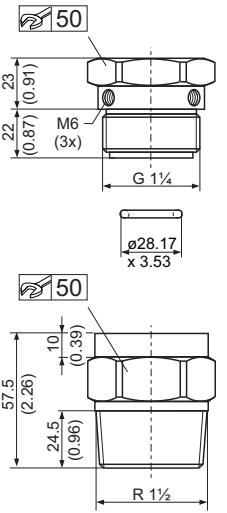


**52024578:** 1½ - 11½ NPT
ANSI B 1.20.1
AISI 316L

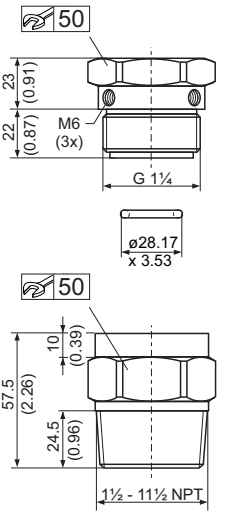


**de - Schiebemuffe**
für drucklosen Betrieb, IP65

**en - Sliding sleeve**
for unpressurised operation, IP65

**fr - Manchon coulissant**
pour applications sans pression, IP65

**es - Manguito deslizante**
para operación sin presión, IP65

**it - Manicotto scorrevole**
per impieghi privi di pressione, IP65

**nl - Schuifmof**
voor drukloze toepassing, IP65

mm (in)

**de** – Schiebemuffe,
druckbeaufschlagt

**en** – Sliding sleeve,
pressurised

**fr** – Manchon coulissant,
pressurisé

**es** – Manguito deslizante,
depósitos con presión

**it** – Manicotto scorrevole,
per impieghi in pressione

**nl** – Schuifmof,
drukbestendig

mm (in)

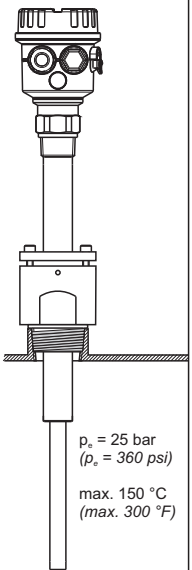


**52023312:** R 1½
DIN 2999
AISI 316L

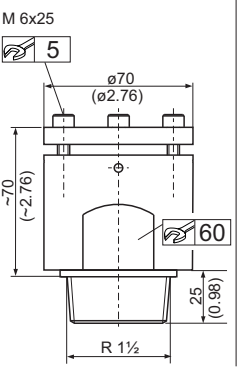


**52025090:** 1½ - 11½ NPT
ANSI B 1.20.1
AISI 316L

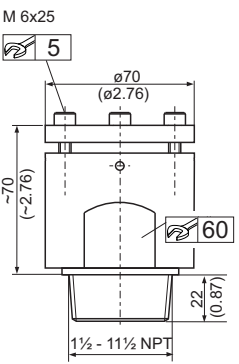

| Fehlfunktion | Ursache | Maßnahme |
|---|---|---|
| Schaltet nicht | Versorgungsspannung fehlt | Versorgung prüfen |
| | Signalleitung defekt | Signalleitung prüfen |
| | Elektronikeinsatz defekt | Austauschen |
| | Dichte des Schüttgutes zu gering | Am Elektronikeinsatz Dichte auf >200 g/l einstellen; siehe Seite 19 |
| | Stab verkrustet | Stab säubern |
| | FEM24:<br>Kontakte verschweißt<br>(nach einem Kurzschluss) | FEM24 austauschen;<br>Sicherung in den Kontaktstromkreis |
| Schaltet falsch | Minimum-/Maximum-Sicherheitsschaltung vertauscht | Am Elektronikeinsatz Sicherheitsschaltung richtig einstellen |
| Fehlschaltung, sporadisch | Extreme Funkstörung | Verbindungskabel abschirmen |
| | Extreme Vibrationen | Sensor mechanisch entkoppeln, Schwingstab um 90° drehen |
| | Wasser im Gehäuse | Entleeren;<br>Deckel und Kabeldurchführungen festzuschrauben |
| | FEM22: Ausgang überlastet | Last, (Leitungs-) Kapazität verringern |

| Fault | Reason | Remedy |
|---|---|---|
| Does not switch | No power | Check power |
| | Faulty signal line | Check signal line |
| | Faulty electronic insert | Exchange |
| | Density of bulk solids too low | Set density to >200 g/l at electronic insert; see page 19 |
| | Rod encrusted | Clean rod |
| | FEM24:<br>Contacts welded together (after short-circuit) | Exchange FEM24;<br>put fuse in contact circuit |
| Switches incorrectly | Min-/Max-fail-safe mode set wrongly | Set correct mode at electronic insert |
| Sporadic faulty switching | Extreme RFI | Use screened cable |
| | Extreme vibration | Decouple sensor mechanically, turn oscillating rod 90° |
| | Water in housing | Drain;<br>Screw cover and cable bushings tight |
| | FEM22: Output overloaded | Reduce load, (cable) capacitance |

| Défaut | Cause | Mesure |
|---|---|---|
| Ne commute pas | Tension d'alimentation manquante | Vérifier la tension d'alimentation |
| | Câble de signal défectueux | Vérifier le câble de signal |
| | Electronique défectueuse | Remplacer |
| | Densité du produit trop faible | Régler la densité sur >200 g/l sur l'électronique; voir page 19 |
| | Lames vibrantes encrassées | Nettoyer les lames vibrantes |
| | FEM24:<br>contacts soudés (après un court-circuit) | Remplacer FEM24;<br>fusible dans le circuit courant |
| Mauvaise commutation | Sécurité min/max inversée | Régler correctement le circuit de sécurité sur l'électronique |
| Mauvaise commutation, sporadique | Parasites puissants | Blinder le câble de liaison |
| | Vibrations importantes | Découpler le capteur mécaniquement,<br>tourner la fourche de 90° |
| | Eau dans le boîtier | Vidanger;<br>Visser fermement le couvercle et les entrées de câble |
| | FEM22: surcharge de la sortie | Réduire la charge et la capacité (de ligne) |

| Fallo | Causa | Solución |
|---|---|---|
| No conmuta | No hay alimentación | Comprobar alimentación |
| | Señal defectuosa | Comprobar cable de señal |
| | Electrónica defectuosa | Cambio |
| | Densidad del producto demasiado baja | Fijar densidad a >200 g/l en la electrónica; ver pág. 19 |
| | Sonda con adherencias | Limpiar la varilla |
| | FEM24:<br>Contactos soldados juntos (después del corto circuito) | Cambiar FEM24;<br>poner fusible en el circuito de contacto |
| Conmuta incorrectamente | El modo de fallo mín. / máx. está mal ajustado | Ajustar el modo correcto en la electrónica |
| Fallos de conmutación esporádicos | RFI extremo | Utilizar cable apantallado |
| | Vibraciones extremas | Desacoplar el instrumento mecánicamente,<br>girar las horquillas 90° |
| | Agua en el cabezal | Drenaje;<br>Roscar la cubierta y el prensaestopas firmemente |
| | FEM22: Salida con sobretensión | Reducir carga, capacidad (cable) |

| Guasto | Motivo | Rimedio |
|---|---|---|
| Non commuta | Mancanza alimentazione | Controllare l'alimentazione |
| | Linea segnale guasta | Controllare segnale linea |
| | Inserto elettronico guasto | Sostituire |
| | Densità del materiale solido troppo bassa | Impostare la densità a >200 g/l sull'inserto elettronico; vds. pag. 19 |
| | Asta incrostata | Pulire l'asta |
| | FEM24:<br>contatti saldati insieme<br>(dopo il corto circuito) | Sostituire FEM24;<br>mettere il fusibile nel circuito di contatto |
| Commuta non correttamente | Modalità di sicurezza<br>min-/max-impostata in modo errato | Impostare la modalità corretta nell'inserto elettronico |
| Commutazione sporadicamente difettosa | RFI forte | Usare cavo schermato |
| | Forte vibrazione | Il sensore meccanicamente disaccoppiare,<br>ruotare l'asta di 90° |
| | Acqua nella custodia | Vuotare;<br>Avvitare correttamente il coperchioe il passacavi |
| | FEM22: Uscita sovraccaricata | Ridurre il carico, capacità (cavo) |

| Fout | Oorzaak | Maatregel |
|---|---|---|
| Schakelt niet | Voeding ontbreekt | Voeding kontroleren |
| | Signaalleiding defect | Signaalleiding kontroleren |
| | Insert defect | Vervangen |
| | Dichtheid van het stortgoed te gering | Op elektronica-insert dichtheid op >200 g/l instellen; zie pag 19 |
| | Trilstaaf te veel vervuild | Trilstaaf reinigen |
| | FEM24:<br>Contacten verkleeft (na een kortsluiting) | FEM24 vervangen;<br>zekering in circuit aanbrengen |
| Schakelt foutief | Minimum-/Maximum-fail-safe instelling verwisseld | FEM fail-safe keuze correct instellen |
| Sporadische foutschakeling | Extreme RFI invloed | Verbindingskabel afschermen |
| | Extreme vibraties | Sensor mechanisch ontkoppelen, trilstaaf 90° draaien |
| | Water in de behuizing | Drogen;<br>Deksel en wartels vast aandraaien |
| | FEM22: uitgang overbelast | Schakelbelasting verminderen |

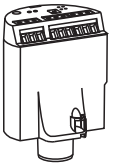

52025688 (FEM22)
52025691 (FEM24)

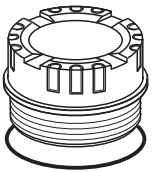

Alu (F18) 52005910

* EPDM

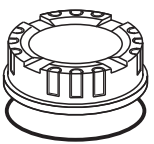

PA (F16) 52025790

* EPDM

* Mit Silikonfett oder Graphit schmieren
Lubricate with silicone grease or graphite
Lubrifier avec de la graisse silicone ou du graphite
Lubricar con grasa de silicona o grafito
Lubrificare con olio di silicone o grafite
Met siliconenvet of grafietvet insmeren

**de - Ersatzteile**
Elektronikeinsätze,
Gehäusedeckel und Dichtungen

**en - Spare Parts**
Electronic inserts,
housing covers and seals

**fr - Pièces de rechange**
Electroniques,
couvercles de boîtier et joints

**es - Repuestos**
Electrónicas,
cubiertas del cabezal y juntas

**it - Ricambi**
Inserti elettronici,
coperture custodia y guarnizioni

**nl - Reserve-onderdelen**
Elektronica-unit,
behuizing deksels en dichtingen

**de - Ergänzende Dokumentation**

**en - Supplementary Documentation**

**fr - Documentation complémentaire**

**es - Documentación suplementaria**

**it - Documentazione supplementare**

**nl - Aanvullende documentatie**

Technische Information/Technical Information/Information technique/
Información técnica/Informazioni tecniche/Technische Informatie

TI00389F Soliphant T FTM20, FTM21

Sicherheitshinweise/Notes on Safety/Conseils de sécurité/
Notas sobre seguridad/Note sulla sicurezza/Veiligheidsinstructies

| | | | |
|---|---|---|---|
| ATEX II | Ex t | 1/3D | XA00300F |
| IECEx | Ex t | Ga/Gc | XA00424F |
| NEPSI | Ex t | ta/tb | XA00434F |



71391028

www.endress.com/worldwide

Endress+Hauser

People for Process Automation

# VIBRATOR'S SOLENOID VALVE

| | |
|---|---|
| **# Sinox:** | PNE-00066 |
| **Manufacturer:** | AIRTAC |
| **Voltage:** | 110VDC, 7 WATT AVEC DIN |
| **Pneumatic connexion**: | 1/8 NPT |
| **Operating pressure:** | 150 PSI MAX. |
| **Quantity per receiver:** | 1x |

# Fluid control valve(2/2way)

## 2V Series





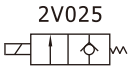


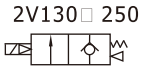


## Ordering code

**Ordering code of valves**

| 2V | 025 | 08 | A | □ | T |
|---|---|---|---|---|---|
| ① | ② | ③ | ④ | ⑤ | ⑥ |

| ①Model | ②Orifice size | ③Port size | ④Voltage | ⑤Electrical entry | ⑥Thread type |
|---|---|---|---|---|---|
| 2V: 2 port 2 position solenoid valve | 025: Φ2.5mm | 06: 1/8"<br>08: 1/4" | A: AC220V<br>B: DC24V<br>C: AC110V<br>E: AC24V<br>F: DC12V | Blank: Terminal<br>I: Grommet | Blank: PT<br>G: G<br>T: NPT |
| | 130: Φ13mm | 10: 3/8"<br>15: 1/2" | | | |
| | 250: Φ25mm | 20: 3/4"<br>25: 1" | | | |

## Specification

| Model | 2V025-06 | 2V025-08 | 2V130-10 | 2V130-15 | 2V250-20 | 2V250-25 |
|---|---|---|---|---|---|---|
| Fluid | Air. Water. Oil | | | | | |
| Acting | Direct acting | | Internally piloted acting | | | |
| Initial state | Normally closed | | | | | |
| Orifice size [Note] | 2.5 | 2.5 | 13.0 | 13.0 | 25.0 | 25.0 |
| Cv | 0.23 | 0.25 | 6.20 | 6.20 | 13.00 | 13.00 |
| Port size | 1/8" | 1/4" | 3/8" | 1/2" | 3/4" | 1" |
| Viscosity limit | Under 20CST | | | | | |
| Pressure range | 0~145psi(0~1.0MPa) | | 7~145psi(0.05~1.0MPa) | | | |
| Proof pressure | 215psi(1.5MPa) | | | | | |
| Material body | Brass with zinc plated | | Brass | | | |
| Seal material | VITON | | NBR | | | |
| Activating time | 0.05 sec and below | | | | | |

[Note1] NPT thread is available.

## Specification of coil

| Valve type | Power type | Frequency(Hz) | Voltage range | Electrical entry | Power Consumption | Insulation | Temp.rise(℃) |
|---|---|---|---|---|---|---|---|
| 2V025<br>2V130<br>2V250 | AC | 50 | ±15% | Terminal<br>Grommet | 7.0VA | Class B | 35 |
| | | 60 | | | | | |
| | DC | – | ±10% | | 7.0W | | 45 |

# 2V Series

## Product feature

**2V025 series**

1. Direct acting and normally closed type 2/2 way solenoid valve. Its high sensitivity allows it to change direction quickly.
2. The structure is small and compact.
3. The valve body is made of brass which is heat resistance and the coil conforms to Class B classification. The seals are made of fluorine rubber (VITON) which is suitable for several types of working medium.

**2V130 and 250 series**

1.This 2/2 way diaphragm piloted solenoid valve has low energy consumption and large air flow .
2. The starting pressure is low and the operational differential pressureis < 0.05MPa.
3. The valve body is made of brass which is heat resistance and the coil conforms to Class B classification . The seals are made of NBR.

## Flow chart

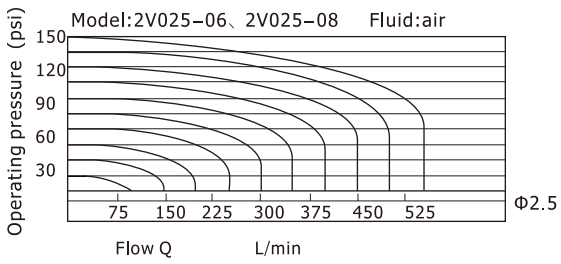


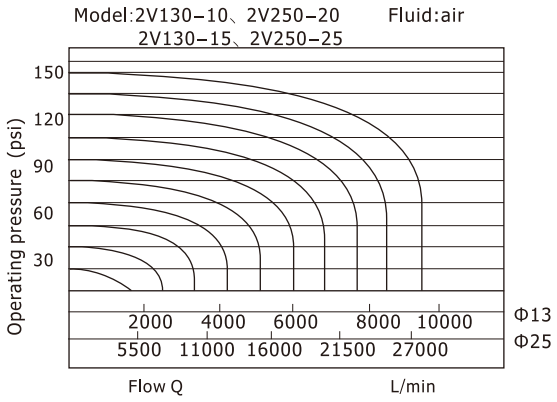


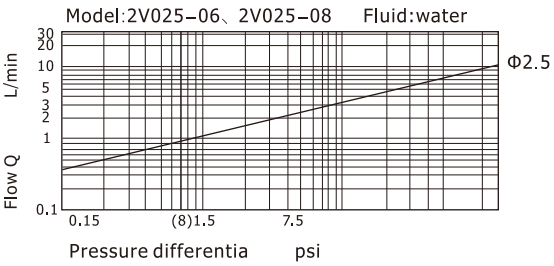


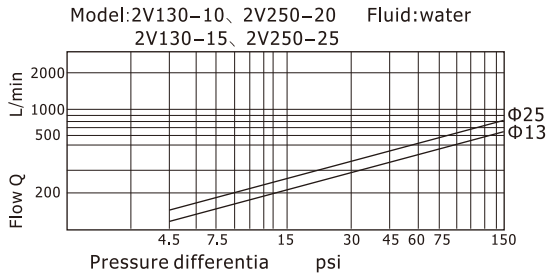


## Usable fluid

| Seal material\Fluid | Water | Dry air | Acetone* | ISOVG32 oil | Glycol* | Nitrogen | Heavy oil |
|---|---|---|---|---|---|---|---|
| NBR | ○ | ◎ | △ | ◎ | ○ | ◎ | ○ |

| Seal material\Fluid | JIS# oil | JIS#3 oil | Vegetable Oil | Inorganic Oil | Start Oil | Silicagel Oil | $CO_2$ | Argon |
|---|---|---|---|---|---|---|---|---|
| NBR | ◎ | ○ | ◎ | ◎ | ○ | ◎ | ◎ | ◎ |

Note 1: ◎= Excellent(nearly without affect). ○= Good(workable though some affect). △= Poor(large affect).

Note 2: "*"means inflammable and explosive dangerous fluid. Please use the relative explosion proof coil.

Note 3: Please consult the technical department before using fluid that has not been shown in the above table.

# 2V Series

## Dimensions

### 2V025 (Terminal)

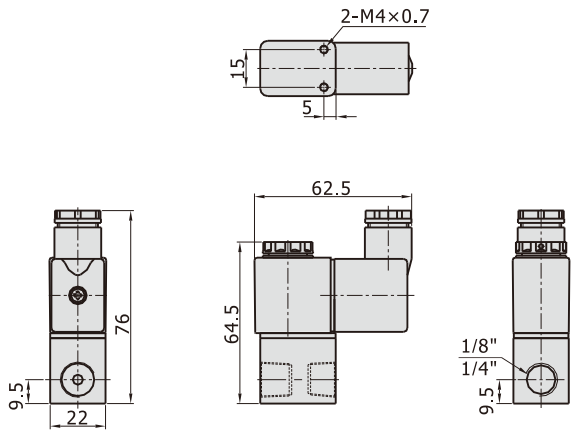


### 2V025(Grommet)

[Unit: mm]

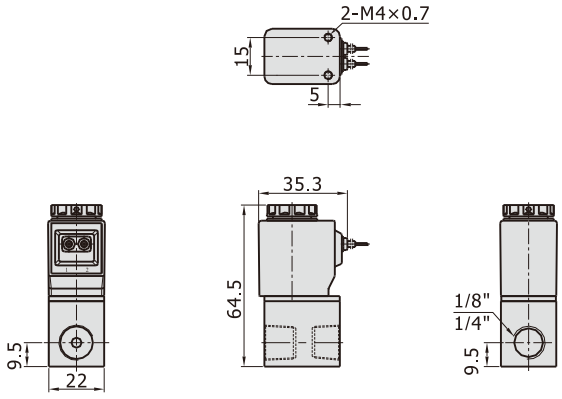


### 2V130\250 (Terminal)

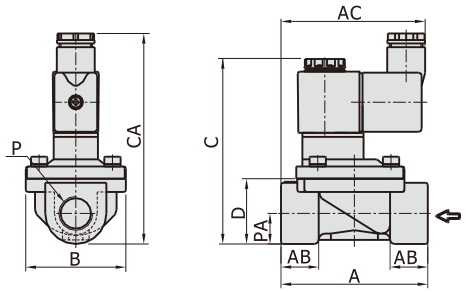


### 2V130\250(Grommet)

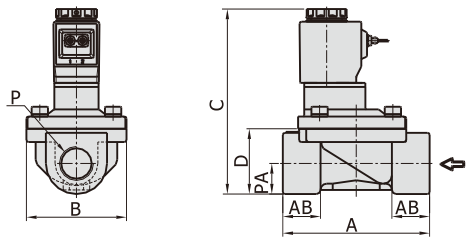


| Model\Item | A | AB | AC | B | C | CA | D | P | PA |
|---|---|---|---|---|---|---|---|---|---|
| 2V130-10 | 72 | 18.5 | 71 | 49 | 91 | 103 | 32 | 3/8" | 15 |
| 2V130-15 | 72 | 18.5 | 71 | 49 | 91 | 103 | 32 | 1/2" | 15 |
| 2V250-20 | 102 | 23 | 74 | 77.5 | 107.5 | 120 | 45 | 3/4" | 21 |
| 2V250-25 | 102 | 23 | 74 | 77.5 | 107.5 | 120 | 45 | 1" | 21 |

# PULSE CLEANING VALVE

| | |
|---|---|
| **# Sinox:** | PNE-00021 |
| **Manufacturer:** | Goyen FAMCO, RCAC20DD4002 + RCA3DM-301, V-PULSE GOYEN 3/4"DD 17CV 30-125PSI + PILOTE GOYEN POUR RCAC NBR 0-125PSI |
| **Model:** | DD17CV |
| **Connection:** | 3/4’’ Coupling |
| **Pressure range:** | 30 - 125 PSI |
| **Quantity per receiver:** | 3x |

PENTAIR GOYEN

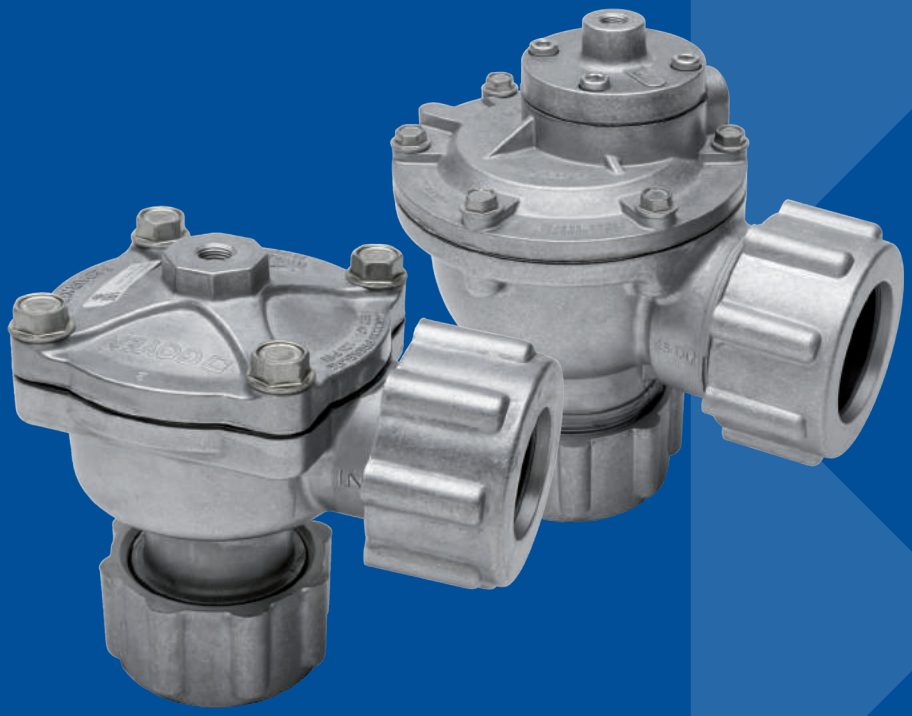

# DRESSER NUT VALVES

CLEAN AIR SOLUTIONS | PRODUCT LEAFLET

# GOYEN
## DRESSER NUT VALVES

PRODUCT LEAFLET



DD Series

## DESCRIPTION

High performance diaphragm valve with dresser nut ports. Available with integral pilot or as remotely piloted valve. Outlet at 90° to inlet.

## SUITABLE FOR

Dust collector applications, in particular for reverse pulse jet filter cleaning and its variations, including bag filters, cartridge filters and envelope filters, ceramic filters and sintered metal fibre filters.

## CONSTRUCTION

**Body and Dresser Nuts:** Aluminium (diecast)
**Ferrule:** 305 SS
**Armature:** 430FR SS
**Seals:** Nitrile or Viton
**Spring:** 304 SS
**Screws:** 302 or 304 SS
**Dresser Nut Seals:** Nitrile or Viton
**Diaphragm Seat:** PA-66 (standard), Viton coated mild steel or High Density PE

Refer to Q Series Solenoid product data sheet for solenoid construction details.

## OPERATION

**Recommended on-time range:** 50–500 ms
**Recommended time between pulses:** 1 minute or greater

## MAINTENANCE

Before conducting any maintenance activity on the system ensure that components are fully isolated from pressure and power supplies. Pressure and power should not be reapplied until the valve has been fully assembled. Diaphragm and pilot inspection should be conducted annually.

## APPROVALS

- ATEX II 3 GD (RCA/RCAC only)
- CSA (C, US) [C22.2 No 139–10 and UL 429:2009] (CA & RCA)
- C-Tick (CA)
- EMC 2004/108/EC (CA)
- Low Voltage Directive 2006/95/EC (CA)

## INSTALLATION

For your safety do not pressurise system until all valves and pipes are fully secured.

Do not attempt to remove a fitted valve while system is under pressure.

1. Prepare supply and blowtube pipes* to suit valve specification. Avoid installing valves underneath the tank.
2. Ensure tank and pipes are free from dirt, rust or other particulate.
3. Ensure supply air is clean and dry.
4. Mount valve to inlet pipes and blowtube to valve, tighten dresser nuts.
5. Tanks and pipes must be independently supported from valve.
6. Make electrical connections to solenoid or connect RCA pilot port to pilot valve (RCA valves only).
7. Apply moderate pressure to system and check for installation leaks.
8. Fully pressurise system.
9. Test fire and listen for proper actuation and crisp pulse noise.

**Valve is not a structural component. Do not rely on valve to retain tanks or pipe.**

* OD as shown below.

| SIZE | OD MM | OD INCHES |
|---|---|---|
| 1.5" | 48.3 | 1.900 |

## WEIGHTS

| SIZE | INTEGRAL PILOT (CA) KG (LB) | REMOTE PILOT (RCA) KG (LB) |
|---|---|---|
| 45 | 2.28 (5.03) | 2.11 (4.65) |

## MAINTENANCE KITS

| MODEL | NITRILE | VITON | LOW TEMPERATURE –60°C (–76°F) MIN. | INCLUDES |
|---|---|---|---|---|
| DIAPHRAGM KIT | | | | |
| CA/RCA45DD | K4502 | K4503 | K4522 | Diaphragm kits include main and secondary diaphragms and all springs |
| DRESSER SEAL KIT | | | | |
| CA/RCA45DD | K4510 | K4511 | NA | 2 dresser seals, 2 dresser nuts, 2 seal retainers |
| Pilot repair kit (suits all CA valves) | K0380 | K0384 | NA | o-ring, armature assembly, armature spring, ferrule |

# GOYEN
## DRESSER NUT VALVES

PRODUCT LEAFLET

## PRODUCT CHARACTERISTICS AND PERFORMANCE

| NOM. SIZE | PORT SIZE | | NUMBER OF DIAPHRAGMS | FLOW | | PRESSURE RANGE | TEMPERATURE RANGE °C °(F) | |
|---|---|---|---|---|---|---|---|---|
| | MM | INCH | | KV | CV | KPA (PSI) | NITRILE SEALS | VITON SEALS |
| 45 | 40 | 1.5 | 2 | 44 | 51 | 30(5)–860(125) | –40(–40) to 82(179.6) | –29(–20.2) to 232(449.6) |

## ORDER CODE

**RCA 45 DD 0 1 0 - 301**

**Pilot type**
RCA=remotely piloted
CA=integral pilot

**Valve size**
45 mm

**Pilot size**
0=1/8" or CA
1=1/4"

**Solenoid type**
Coil type for CA only.
See the RCA3 Solenoid Pilot Valves brochure for coil options.

**Diaphragm material**
0=Nitrile
1=Viton

**Pilot thread type (RCA), Exhaust thread type (CA)**
0=NPT
1=RC

## EXAMPLES

CA45DD010-300
1.5″ dresser nut port valve with nitrile seals and 220/240 V AC integral pilot with DIN socket terminals.

RCA45DD001
1.5″ dresser nut port valve with 1 8″ NPT remote pilot port and viton seals.

## DIMENSIONS IN MM (AND INCHES)

**CA/RCA45DD**

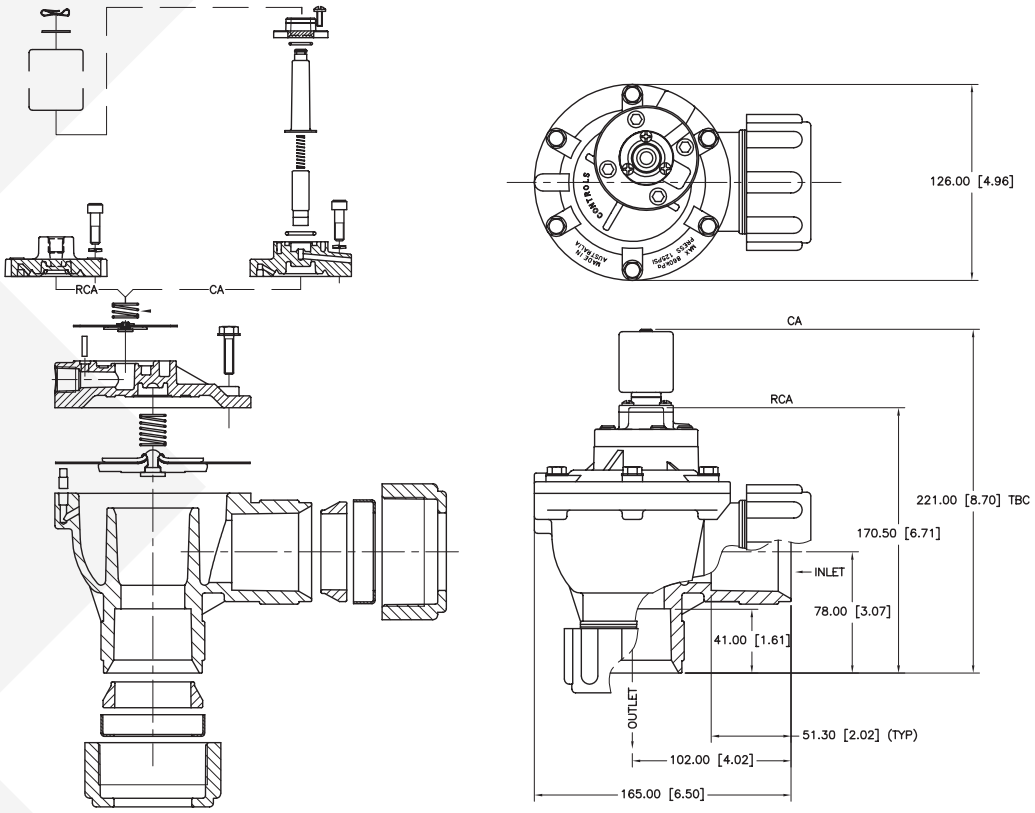

# GOYEN
## DRESSER NUT VALVES

PRODUCT LEAFLET

## RCAC20DD4 - REVERSE PULSE JET VALVES



## DIMENSIONS IN MM (AND INCHES)

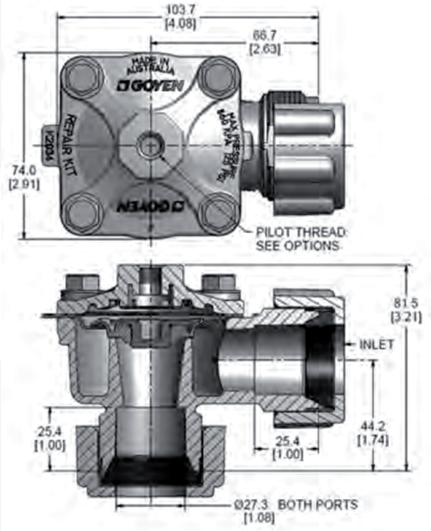


## DESCRIPTION

High-performance diaphragm valve with dresser nut ports. Equipped with 'Shockwave' springless diaphragm. The 4 series valves are available as remote pilot valves and may be converted to an integral pilot using either the RCA3DM or RCA3PV screw-in pilots. Outlet is at 90° to inlet.

## SUITABLE FOR

Dust collector applications, in particular for reverse pulse jet filter cleaning and its variations, including bag filters, cartridge filters and envelope filters, ceramic filters and sintered metal fibre filters.

## CONSTRUCTION

**Body and Dresser Nuts:** Aluminium (diecast)

**Screws:** 304 Stainless steel

**Dresser Nut Seals:** Nitrile or Viton

**Diaphragm:** Proprietary highperformance engineering thermoplastic Elastomer or Viton

## OPERATION

**Recommended on-time range:** 50 to 500 ms
**Recommended time between pulses:**
1 minute or greater

**Please Note:** We recommend using Schedule 40 pipe. Thickness OD is as shown below.

| SIZE | OD MM | OD INCHES |
|---|---|---|
| 3/4" | 26.67 | 1.05 |

## WEIGHTS

| VALVE | KG (LB) |
|---|---|
| RCAC20DD4 | 0.52 (1.14) |

## MAINTENANCE

Before conducting any maintenance activity on the system ensure that components are fully isolated from pressure and power supplies. Pressure and power should not be reapplied until the valve has been fully assembled.

Diaphragm and pilot inspection should be conducted annually.

## APPROVALS

The RCAC20DD4 meets the requirements of the European Low Voltage Directive 2006/95/EC, when fitted with the RCA3PV pilot.

## MAINTENANCE KITS

| MODEL | SHOCKWAVE | VITON |
|---|---|---|
| DIAPHRAGM KIT | | |
| RCAC20DD4 | K2034 | K2033 |
| DRESSER SEAL KIT | | |
| RCAC20DD4 | K2008 | K2009 |

## PRODUCT CHARACTERISTICS AND PERFORMANCE

| NOMINAL PORT SIZE MM (INCH) | NUMBER OF DIAPHRAGMS | FLOW | | PRESSURE RANGE KPA (PSI) | TEMPERATURE RANGE °C °(F) | |
|---|---|---|---|---|---|---|
| | | KV | CV | | SHOCKWAVE | VITON |
| 20 (3/4) | 1 | 14 | 17 | 30(5) to 860(125) | –40(–40) to 82(179.6) | –29(–20.2) to 232(449.6) |

## EXAMPLES

RCAC20DD4012
3/4″ dresser nut valve with 1/8″ RC pilot port thread, Shockwave diaphragm.

**Note:**
1/8 Pilot available in NPT, RC and G Thread.
1/4 Pilot is only available in G Thread.

## ORDER CODE

**RCAC20DD4 0 1 2**

**Pilot size**
0=1/8"
1=1/4"

**Diaphragm material**
1=Viton
2=Shockwave

**Thread type**
0=NPT
1=RC
2=G

# GOYEN
## DRESSER NUT VALVES

PRODUCT LEAFLET

## RCAC25DD4 - REVERSE PULSE JET VALVES



## DIMENSIONS IN MM (AND INCHES)

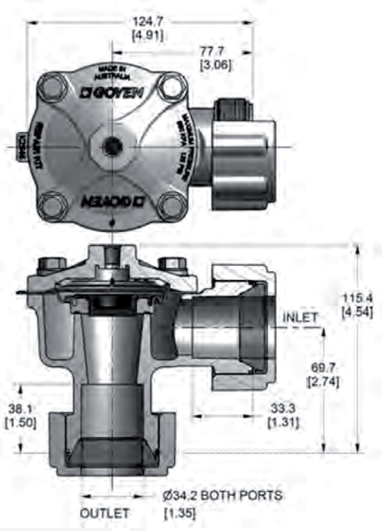


## DESCRIPTION

High-performance diaphragm valve with dresser nut ports. Equipped with 'Shockwave' springless diaphragm. The 4 series valves are available as remote pilot valves and may be converted to integral pilot using either the RCA3DM or RCA3PV screw-in pilots. Outlet is at 90° to inlet.

## SUITABLE FOR

Dust collector applications, in particular for reverse pulse jet filter cleaning and its variations, including bag filters, cartridge filters and envelope filters, ceramic filters and sintered metal fibre filters.

## CONSTRUCTION

**Body and Dresser Nuts:** Aluminium (diecast)

**Screws:** 304 Stainless steel

**Dresser Nut Seals:** Nitrile or Viton

**Diaphragm:** High-performance engineering thermoplastic Elastomer or Viton

## OPERATION

**Recommended on-time range:** 50 to 500 ms
**Recommended time between pulses:**
1 minute or greater

**Please Note:** We recommend using Schedule 40 pipe. Thickness OD is as shown below.

| SIZE | OD MM | OD INCHES |
|---|---|---|
| 1 | 33.4 | 1.315 |

## WEIGHTS

| VALVE | KG (LB) |
|---|---|
| RCAC25DD4 | 0.96 (2.12) |

## MAINTENANCE

Before conducting any maintenance activity on the system ensure that components are fully isolated from pressure and power supplies. Pressure and power should not be reapplied until the valve has been fully assembled.

Diaphragm and pilot inspection should be conducted annually.

## APPROVALS

The RCAC25DD4 meets the requirements of the European Low Voltage Directive 2006/95/EC, when fitted with the RCA3PV pilot.

## MAINTENANCE KITS

| MODEL | SHOCKWAVE | VITON |
|---|---|---|
| DIAPHRAGM KIT | | |
| RCAC25DD4 | K2546 | K2551 |
| DRESSER SEAL KIT | | |
| RCA25DD | K2508 | K2507 |

## PRODUCT CHARACTERISTICS AND PERFORMANCE

| NOMINAL PORT SIZE MM (INCH) | NUMBER OF DIAPHRAGMS | FLOW | | PRESSURE RANGE KPA (PSI) | TEMPERATURE RANGE °C °(F) | |
|---|---|---|---|---|---|---|
| | | KV | CV | | SHOCKWAVE | VITON |
| 25 (1) | 1 | 22.5 | 26.0 | 30(5) to 860(125) | -40(-40) to 82(179.6) | -29(-20.2) to 232(449.6) |

## EXAMPLES

RCAC25DD4012
1″ dresser nut valve with 1/8″ RC pilot port thread, Shockwave diaphragm.

**Note:**
1/8 Pilot available in NPT, RC and G Thread.
1/4 Pilot is only available in G Thread.

## ORDER CODE

**RCAC25DD4 0 1 2**

**Pilot size**
0=1/8"
1=1/4"

**Diaphragm material**
1=Viton
2=Shockwave

**Thread type**
0=NPT
1=RC
2=G

## DIAPHRAGM SERVICE KITS FOR DELETED VALVES

**Maintenance kits**

| MODEL | NITRILE | VITON | LOW TEMPERATURE –60°C (–76°F) MIN. | INCLUDES |
|---|---|---|---|---|
| CA/RCA20DD | K2000 | K2007 | NA | Diaphragm kits include main and secondary diaphragms (where required) and all springs. |
| CA/RCA25DD | K2501 | K2503 | K2504 | |

**GOYEN CONTROLS PTY LIMITED**
268 MILPERRA ROAD, MILPERRA NSW 2214, AUSTRALIA  WWW.GOYENMECAIR.PENTAIR.COM

Note: The information and data contained in this document are based on our general experience and are believed to be correct. They are given in good faith and are intended to provide a guideline for the selection and use of our products. Since the conditions under which our products may be used are beyond our control, this information does not imply any guarantee of final product performance and we cannot accept any liability with respect to the use of our products. The quality of our products is guaranteed under our conditions of sale. Existing industrial property rights must be observed.
PL PENTAIR GOYEN DRESSER NUT VALVES 3517 © 2017 Pentair. All Rights Reserved.

# FILTRATION CARTRIDGE

| | |
|---|---|
| **# Sinox:** | PNE-00009 |
| **Media :** | Spunbond polyester |
| **Dimension :** | 9.2” OD x 20” Lg, |
| **Quantity per receiver:** | 3x |

www.fabtexfilters.com
4380 Harvester Rd., Unit #1 Burlington, ON L7L 4X2
Tel. (905) 335-1012 Fax. (905) 335-9415 info@fabtexfilters.com

# FILTER CARTRIDGE SPECIFICATION SHEET

| | |
|---|---|
| **FAB-TEX PART #** | **CH201I739-SS-FG** |
| **Top Cap** | **9.215" OD x 4.765" ID, Open Cap, Flanged (10.145" OD) 304 SS Metal** |
| **Bottom Cap** | **9.205" OD x 4.84" ID, Closed Cap, ½" BH, 304 SS Metal** |
| **Gasket** | **½" sq. Gsk, Food Grade, White** |
| **Inner Core** | **304 SS Perforated Metal** |
| **Outer Core** | **1 Outer Support Band (Polyester)** |
| **Length** | **20"** |
| **Potting Compound** | **Food Grade Epoxy** |
| **Filter Media** | **100% SB Polyester** |
| **Sq. Footage** | **44.4 sq. ft.** |
| **MERV Rating** | **10** |
| **Efiiciency** | **0.3 - 1 um – 46%, 1.0 - 3.0 um – 61%, 3.0 - 10.0 um – 95%** |
| **Operating Temp.** | **200 Deg F.** |

# PNEUMATIC VIBRATOR

| | |
|---|---|
| **# Sinox:** | MEC-00001 |
| **Manufacturer :** | Oli |
| **Model :** | OT16 |
| **Quantity per receiver:** | 1x |

OLI®

WAMGROUP

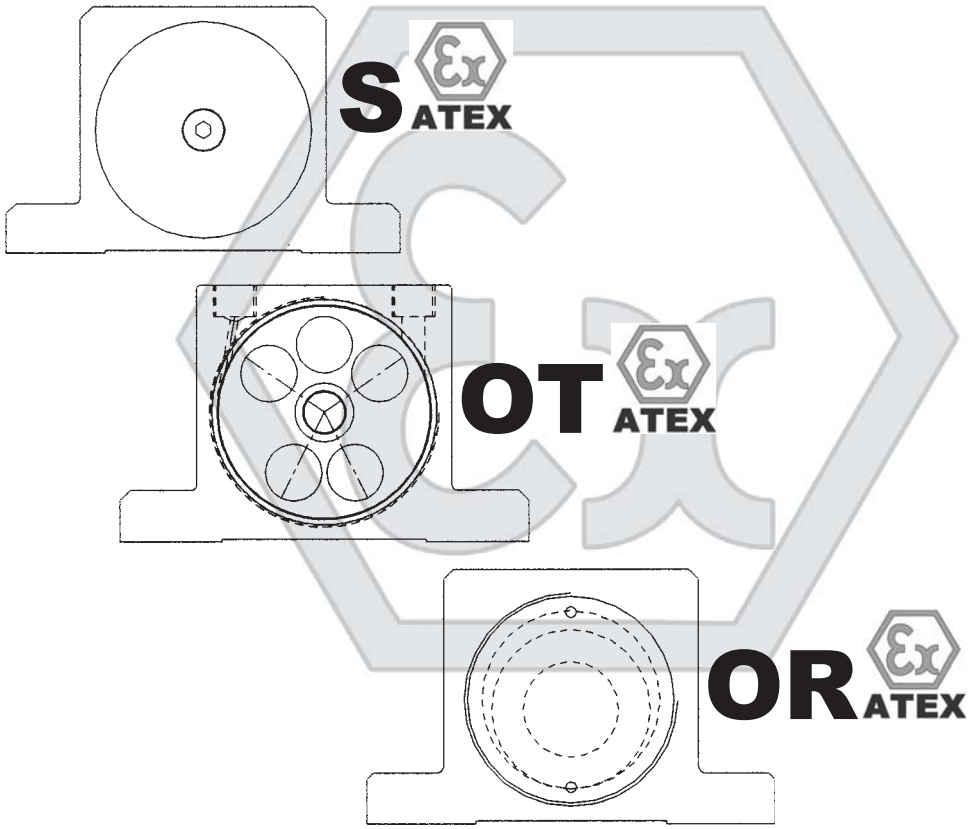


- **EXTERNAL PNEUMATIC VIBRATORS**
- ***DRUCKLUFTAUSSENVIBRATOREN***
- **VIBRATEURS EXTERNES PNEUMATIQUES**
- ***VIBRATORI PNEUMATICI ESTERNI***

*All rights reserved © WAMGROUP*

| CATALOGUE No. | **OL.2000 EX** | | CREATION DATE |
|---|---|---|---|
| ISSUE<br>**A** | CIRCULATION<br>**100** | DATE OF LATEST UPDATE | **06 - 2004** |

## 2 MAINTENANCE CATALOGUE — WARTUNGS-KATALOG


| | | |
|---|---|---|
| DESCRIPTION | BESCHREIBUNG | **M.3** |
| PNEUMATIC BALL VIBRATORS S | DRUCKLUFT - KUGELVIBRATOREN S | **.4** |
| PNEUMATIC TURBINE VIBRATORS T | PNEUMATISCHE DRUCKLUFT - TURBINEN VIBRATOREN T | **.5→.6** |
| PNEUMATIC ROLL VIBRATORS R | DRUCKLUFT - ROLLEN VIBRATOREN R | **.7** |
| MANUFACTURING DATA | KONSTRUKTIONSDATEN | **.8** |
| SCOPE AND IMPORTANCE OF THE MANUAL | ZWEK UND BEDEUTUNG DES HANDBUCHS | **.9** |
| CERTIFICATE OF CONFORMITY | KONFORMITÄTSBESCEINIGUNG | **.11→.13** |
| WARNINGS | HINWEISE | **.14** |
| INDICATIONS FOR USE | ANGABEN ZUM GEBRAUCH | **.15 →.17** |
| OPERATING CONDITIONS | EINSATZEINSCHRÄNKUNGEN | **.18** |
| WARRANTY CONDITIONS | GARANTIEBEDINGUNGEN | **.19** |
| TRANSPORT AND PACKING | TRANSPORT UND PACKUNG | **.20** |
| STORAGE | LAGERHALTUNG | **.21** |
| INSTALLATION | EINBAU | **.22 →.25** |
| MAINTENANCE | WARTUNG | **.26 →.28** |
| RESIDUAL RISKS | RESTRISIKEN | **.29 →.30** |
| FAULT FINDING | BETRIEBSSTÖRUNGEN UND ABHILFE | **.31** |
| SCRAPPING - RETURNING THE COMPONENT | VERSCHROTTUNG - RÜCKGABE BEAUTEIL | **.32** |


## 2 CATALOGUE D'ENTRETIEN — CATALOGO DI MANUTENZIONE


| | | |
|---|---|---|
| DESCRIPTION | DESCRIZIONE | **M.3** |
| VIBRATEUR PNEUMATIQUES A BILLE S | VIBRATORI PNEUMATICI A SFERA TIPO S | **.4** |
| VIBRATEURS PNEUMATIQUES A TURBINE T | VIBRATORI PNEUMATICI A TURBINA T | **.5→.6** |
| VIBRATEURS PNEUMATIQUES A ROULEX R | VIBRATORI PNEUMATICI A RULLI R | **.7** |
| DONNÉES CONSTRUCTIVES | DATI COSTRUZIONE | **.8** |
| BUT ET IMPORTANCE DU MANUEL | SCOPO E IMPORTANZA DEL MANUALE | **.9** |
| CERTIFICAT DE CONFORMITÉ | ATTESTATO DI CONFORMITA' | **.11→.13** |
| RECOMMANDATIONS | AVVERTENZE | **.14** |
| INDICATIONS POUR L'UTILISATION | INDICAZIONI PER L'USO | **.15 →.17** |
| LIMITES DE EMPLOI | LIMITI DI IMPIEGO | **.18** |
| CONDITIONS DE GARANTIE | CONDIZIONI DI GARANZIA | **.19** |
| TRANSPORT EMBALLAGE | TRASPORTO IMBALLO | **.20** |
| EMMAGASINAGE | IMMAGAZZINAGGIO | **.21** |
| INSTALLATION | INSTALLAZIONE | **.22 →.25** |
| ENTRETIEN | MANUTENZIONE | **.26 →.28** |
| RISQUES RESIDUELS | RISCHI RESIDUI | **.29 →.30** |
| INCONVENIENTS ET SOLUTIONS | INCONVENIENTI E SOLUZIONI | **.31** |
| DEMANTELEMENT - RESTITUTION COMPOSANT | ROTTAMAZIONE - RESO COMPONENTE | **.32** |

**GENERAL NOTES**
The vibrators are made in accordance with the EC machine regulation 89/392/E1EC. The standards EN 292, part 1 and part 2 have been particularly observed.
The vibrators produce non-directed vibrations. They are used to keep a constant flow in hoppers and silo's, to drive chutes and are also used in screens and vibrating tables. Generally for loosening, conveying and separating of bulk materials and for the reduction of friction.
The vibrators are ideal for use in the food industry, explosive atmosphere's, wet environment's and outside. The frequency and the centrifugal force are determined by the operating pressure.

**NOTE**
For extraordinary maintenance, if necessary, contact:

**ALLGEMEINES**
Die Vibratoren der Serie **S**, **OR** und **OT** entsprechen der EU-Maschinenrichtlinie 89/392/EWG und insbesondere den Normen EN 292, Teil 1 und 2.
Dieser Vibratortyp erzeugt ungerichtete Schwingungen.
Sie werden zur Behälterentleerung, als Antriebe für Rinnen, Siebe und Vibrationstische eingesetzt und im allgemeinen zum Lösen, Fördern, Verdichten und Trennen von Schüttgütern und zur Reduzierung von Reibung.
Unter Beachtung der Bedienungsvorschriften des Betreibers können diese Vibratoren auch für die Nahrungsmittelherstellung sowie in EX- und Naßbereichen eingesetzt werden.
Ein Einsatz der Vibratoren im Freien ist möglich.
Frequenz und die davon abhängige Zentrifugalkraft werden durch den Betriebsdruck bestimmt.

**HINWEIS**
Für etwaige außerordentliche Wartungsarbeiten wenden Sie sich bitte ausschließlich an:

**REMARQUES GÉNÉRALES**
Les vibrateurs **S**, **OT** et **OR** correspondent à la directive Machines 89/392/C.E.E. Il a été tenu compte des normes EN 292, l' et 1-2 parties. Ces vibrateurs génèrent des vibrations multidirectionnelles. Ils sont utilisés pour le vidage de silos, l'entraînement de goulottes l'activation de couloirs vibrants, de tamis et de tables vibrantes et, d'une façcon generale en général, pour ,décolmater, transporter, compacter, et séparer les matières en vrac et réduire les frictions. Si les prescriptions d'emploi élaborées par l'utilisateur sont respectées, ils peuvent être mis en oeuvre pour la fabrication de denrées alimentaires ainsi qu'en milieu explosif ou humide. Les vibrateurs peuvent aussi fonctionner à l'extérieur. La fréquence et la force centrifuge sont déterminées par la pression de service.

**REMARQUE**
Pour les entretiens extraordinaires s'adresser exclusivement à :

**NOTE GENERALI**
I vibratori sono costruiti in conformità alla norma 89/392/CE sui macchinari. Si è in particolare tenuto conto di quanto stabilito dalle norme EN 292, parte 1 e parte 2.
I vibratori producono vibrazioni multidirezionali. Sono impiegati per mantenere un flusso costante nelle tramogge e nei sili, per attivare dosatori, vagli e tavole vibranti e in generale per distaccare, trasportare, compattare e separare materiale sfuso e per ridurre l'attrito.
I vibratori sono perfettamente indicati per l'impiego nell'industria alimentare, in atmosfera esplosiva, in ambienti umidi e all'esterno. La frequenza delle vibrazioni e la forza centrifuga sono determinati dalla pressione d'esercizio.

**NOTA**
Per eventuali manutenzioni straordinarie rivlgersi esclusivamente a:

**OLI** SRL
Via Canalazzo, 35
41036 Medolla (MO)
ITALY

Tel.: + 39.0535 - 46400
Fax: + 39.0535 - 46350

**General indications**
- Ball vibrators "S" consist of an anodized aluminium body inside which a tempered steel ball rotates on an anti-wear tempered steel seating. Vibrator "S" generates vibrations of small amplitudes.

**Examples of application**
- Separation, transport, compacting of materials.
- Gushing of material from of silos, hoppers, screens, etc.
- Cleaning filters.
- On conveyor chains (for examples cans, bottles, etc.) they facilitate the flow and eliminate problems of blockage.

**Maximum operating temperature**:
- 20°C / +200°C

**Allgemeine Angaben**
- Die Kugelvibratoren Serie „S" bestehen aus einem Gehäuse aus eloxiertem Aluminium, innerhalb dessen sich eine Kugel aus gehärtetem Stahl in einem Sitz aus gehärtetem verschleißfestem Stahl dreht. Der Vibrator „S" erzeugt Schwingungen kleinern Ausmaßes.

**Anwendungsbeispiele**
- Materialien abscheiden, befördern, verdichten.
- Silos, Trichtern, Sieben, etc. freimachen.
- Filter reinigen.
- Auf Förderketten (z.B. Dosen, Flaschen, etc.) vereinfachen sie den Materialfluss und beseitigen Probleme mit etwaigen Blockierungen.

**Max. Betriebstemperatur**
-20°C / +200°C

**Indications générales**
- Les vibrateurs à bille de la série "S" sont constitués d'un corps en aluminium anodisé dans lequel tourne une bille en acier trempé sur un siège en acier trempé anti-usure. Le vibrateur "S" produit des vibrations de petite amplitude.

**Exemples d'application**
- Séparation, transport, compactage de produits
- Débourrage de silos, trémie, tamis, etc.
- Nettoyage des filtres.
- Sur les chaînes de transport (par ex. boîtes, bouteilles, etc.) ils facilitent l'écoulement et éliminent les problèmes de blocage.

**Température maximum de service**
-20°C / +200°C

**Indicazioni generali**
- I vibratori a sfera serie "S" sono costituiti da un corpo in alluminio anodizzato all'interno del quale ruota una sfera in acciaio temprato su una sede di acciaio temprato antiusura. Il vibratore "S" genera vibrazioni di piccola ampiezza di spostamento.

**Esempi di applicazione**
- Separazione, trasporto, compattazione materiali.
- Sgorgo di sili, tramogge, vagli, ecc.
- Pulizia filtri.
- Su catene di trasporto (per es. barattoli, bottiglie, ecc.) facilitano il deflusso ed eliminano i problemi di bloccaggio.

**Temperatura massima d'esercizio**
- 20°C / +200°C

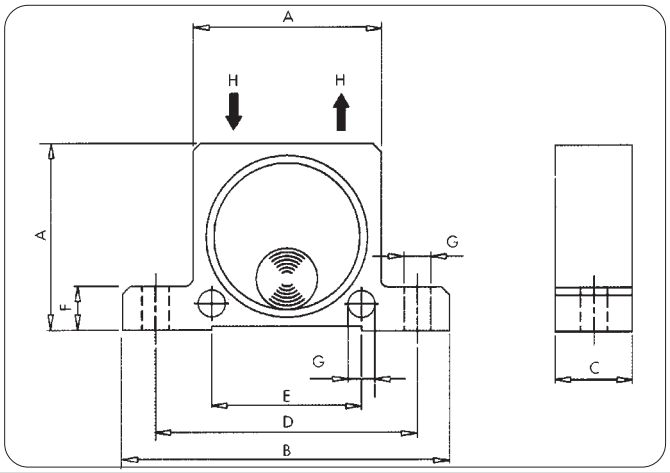


**DIMENSIONS - *ABMESSUNGEN* - DIMENSIONS - *DIMENSIONI***

| Type | A | | B | | C | | D | | E | | F | | G | | H | Weights - *Gewichte* Poids - *Pesi* | |
|---|---|---|---|---|---|---|---|---|---|---|---|---|---|---|---|---|---|
| | mm | in | mm | in | mm | in | mm | in | mm | in | mm | in | mm | in | | kg | lbs |
| **S 8**<br>**S 10** | 50 | 1.97 | 86 | 3.38 | 20 | 0.79 | 68 | 2.68 | 4 | 1.57 | 12 | 0.47 | 7 | 0.27 | 1/4" | 0.13 | 0.29 |
| **S 13**<br>**S 16** | 65 | 2.56 | 113 | 4.45 | 24<br>27 | 1.91<br>1.06 | 90 | 3.54 | 50 | 1.97 | 16 | 0.63 | 9 | 0.35 | 1/4" | 0.26<br>0.30 | 0.57<br>0.66 |
| **S 20**<br>**S 25** | 80 | 3.15 | 128 | 5.04 | 33<br>38 | 1.30<br>1.50 | 104 | 4.09 | 60 | 2.36 | 16 | 0.63 | 9 | 0.35 | 1/4" | 0.53<br>0.63 | 1.17<br>1.39 |
| **S 30**<br>**S 36** | 100 | 3.94 | 160 | 6.30 | 44<br>50 | 1.73<br>1.97 | 130 | 5.12 | 80 | 3.15 | 20 | 0.79 | 11 | 0.43 | 3/8" | 1.13<br>1.34 | 2.49<br>2.95 |

**PERFORMANCE DATA - *LEISTUNGSDATEN*- PERFORMANCE - *PRESTAZIONI***

| Type | Vibrations - *Schwingungen* *Vibrations - Vibrazioni* min $^{-1}$ | | | Fc max. kg | | | | | | Air consumption - *Lufterverbrauch* Consommation d'air - *Consumo d'aria* l/min | | | | | |
|---|---|---|---|---|---|---|---|---|---|---|---|---|---|---|---|
| | 2 bar= 29 psi | 4 bar= 58 psi | 6 bar= 87 psi | 2 bar= 29 psi | | 4 bar= 58 psi | | 6 bar= 87 psi | | 2 bar= 29 psi | | 4 bar= 58 psi | | 6 bar= 87 psi | |
| | | | | kg | lbs | kg | lbs | kg | lbs | $dm^3$ | cf | $dm^3$ | cf | $dm^3$ | cf |
| **S 8**<br>**S 10** | 25,500<br>22,500 | 31,000<br>28,000 | 35,000<br>34,000 | 13<br>25 | 29<br>56 | 26<br>47 | 58<br>106 | 36<br>71 | 81<br>160 | 83<br>92 | 2.6<br>3.2 | 145<br>150 | 5.1<br>5.3 | 195<br>200 | 6.9<br>7.1 |
| **S 13**<br>**S 16** | 15,000<br>13,000 | 18,500<br>17,000 | 22,500<br>19,500 | 32<br>45 | 72<br>101 | 55<br>80 | 124<br>180 | 87<br>110 | 196<br>248 | 94<br>122 | 3.3<br>4.3 | 158<br>200 | 5.6<br>7.1 | 225<br>280 | 7.9<br>9.9 |
| **S 20**<br>**S 25** | 10,500<br>9,200 | 14,500<br>12,200 | 16,500<br>14,000 | 72<br>93 | 162<br>209 | 122<br>157 | 275<br>353 | 172<br>205 | 387<br>461 | 130<br>160 | 4.6<br>5.6 | 230<br>290 | 8.1<br>10.2 | 340<br>425 | 12.0<br>15.0 |
| **S 30**<br>**S 36** | 7,800<br>7,300 | 9,700<br>9,000 | 12,500<br>10,000 | 151<br>206 | 340<br>464 | 247<br>315 | 556<br>709 | 321<br>405 | 722<br>911 | 215<br>260 | 7.6<br>9.2 | 375<br>475 | 13.2<br>16.8 | 570<br>675 | 20.0<br>24.0 |

**General indications**
- Vibration is generated by a strongly unbalanced turbine which rotates on two high-speed ball bearings.
- OT vibrators develop a high work moment and a high vibration frequency.
- Vibrations present a large amplitude even with low operating pressure.

**Examples of application**
- Food and Pharmacentical industries.
- Bins and hoppers.
- Goreens.

**Maximum operating temperature**:
- 20°C / +120°C

**Allgemeines**
- Die Vibration wird durch eine exzentrisch angeordnete Turbine erzeugt, die sich mit hoher Geschwindigkeit auf 2 Kugellagern dreht.
- Zwei überdimensionierte, für den Dauereinsatz bei hohen Drehzahlen geeignete Lager garantieren einen hohen Wirkungsgrad und ermöglichen den Einsatz ungeölter Druckluft.
- OT Vibratoren sind vollkommen wartungsfrei und zeichnen sich aus durch hohe Drehzahlen bei gleichzeitig geringem Luftverbrauch.

**Anwendungsbeispiele**
- Nahrungsmittel und Pharmaindustrie.
- Trichter und Behälterbau.
- Siebanlagen.

**Max. Betriebstemperatur**
-20°C / +120°C

**Indications générales**
- la vibration est engendrée par une turbine déséquilibrée montée sur 2 roulements à bille à haute vitesse.
- Les vibrateur à turbine OT engendrent un couple élevé et une haute fréquence de vibration.
- Les vibrations ont une amplitude de considérable même à basse pression d'exercice.

**Exemple d'application**
- Industries alimentaire et pharmaceutique
- Trémies et d'autres récipients.
- Tamis.

**Température maximum de service**
-20°C / +120°C

**Indicazioni generali**
- La vibrazione è generata da una turbina sbilanciata che gira su 2 cuscinetti a sfera ad alta velocità.
- I vibratori a turbina OT generano un elevato momento di lavoro ed una alta frequenza di vibrazione.
- Le vibrazioni hanno una notevole ampiezza anche a basse pressioni di esercizio.

**Esempi di applicazione**
- Industria alimentare e farmaceutica.
- Sili e tramogge.
- Vagli.

**Temperatura massima d'esercizio**
- 20°C / +120°C

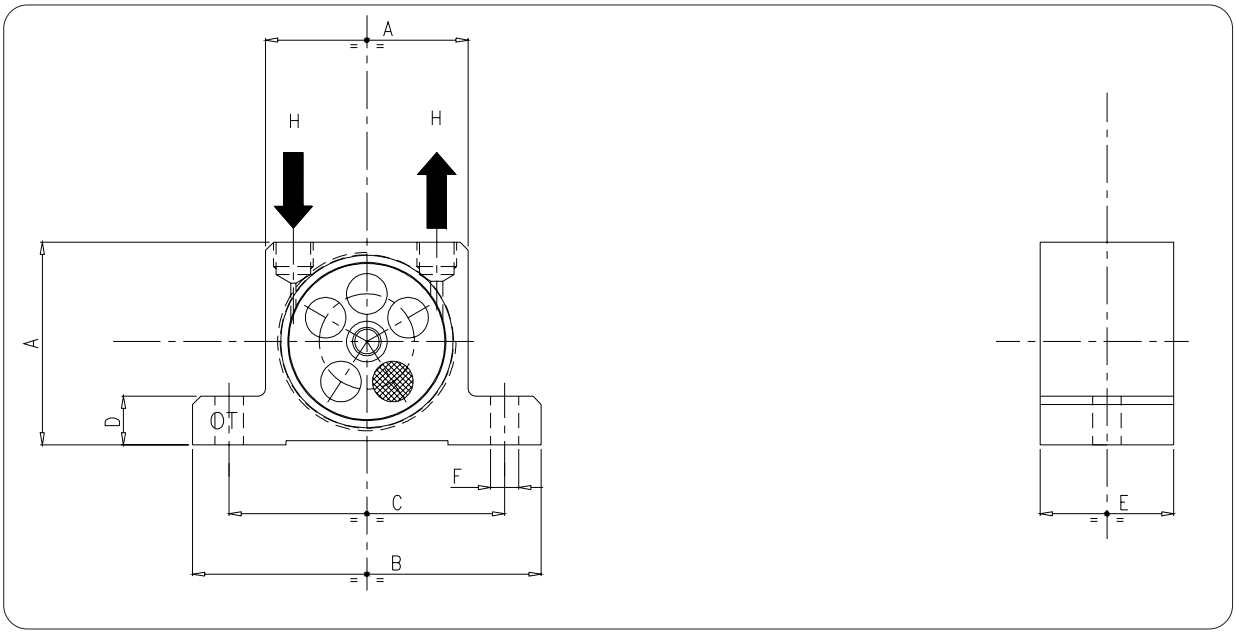


**DIMENSIONS - *ABMESSUNGEN* - DIMENSIONS - *DIMENSIONI***

| Type | A | | B | | C | | D | | E | | F | | x-y | Weights - *Gewichte* - Poids - *Pesi* | |
|---|---|---|---|---|---|---|---|---|---|---|---|---|---|---|---|
| | mm | in | mm | in | mm | in | mm | in | mm | in | mm | in | | kg | lbs |
| **OT 8** | | | | | | | | | | | | | | .250 | .55 |
| **OT 10** | 50 | 1.97 | 86 | 3.38 | 68 | 2.68 | 12 | 0.47 | 33 | 1.30 | 7 | 0.27 | 1/8" | .255 | .56 |
| **OT 10-S** | | | | | | | | | | | | | | .263 | .58 |
| **OT 13** | | | | | | | | | | | | | | .565 | 1.24 |
| **OT 16** | 65 | 2.56 | 113 | 4.45 | 90 | 3.54 | 16 | 0.63 | 42 | 1.65 | 9 | 0.53 | 1/4" | .580 | 1.28 |
| **OT 16-S** | | | | | | | | | | | | | | .614 | 1.35 |
| **OT 20** | | | | | | | | | | | | | | 1.090 | 2.40 |
| **OT 25** | 80 | 3.15 | 128 | 5.04 | 104 | 4.09 | 16 | 0.63 | 56 | 2.20 | 9 | 0.35 | 1/4" | 1.120 | 2.46 |
| **OT 25-S** | | | | | | | | | | | | | | 1.200 | 2.64 |
| **OT 30** | | | | | | | | | | | | | | 2.200 | 4.85 |
| **OT 36** | 100 | 3.94 | 160 | 6.30 | 130 | 5.12 | 20 | 0.79 | 73 | 2.87 | 11 | 0.43 | 3/8" | 2.300 | 5.10 |
| **OT 36-S** | | | | | | | | | | | | | | 2.530 | 5.57 |

**PERFORMANCE DATA - *LEISTUNGSDATEN*- PERFORMANCE - *PRESTAZIONI***

| Type | Vibrations - *Schwingungen* *Vibrations - Vibrazioni* vpm | | | Fc max. | | | | | | Air consumption - *Lufterverbrauch* Consommation d'air - *Consumo d'aria* | | | | | |
|---|---|---|---|---|---|---|---|---|---|---|---|---|---|---|---|
| | 2 bar= 29 psi | 4 bar= 58 psi | 6 bar= 87 psi | 2 bar= 29 psi | | 4 bar= 58 psi | | 6 bar= 87 psi | | 2 bar= 29 psi | | 4 bar= 58 psi | | 6 bar= 87 psi | |
| | | | | kg | lbs | kg | lbs | kg | lbs | $dm^3$ | cf | $dm^3$ | cf | $dm^3$ | cf |
| **OT 8** | 34000 | 38000 | 42000 | 110 | 242 | 205 | 451 | 292 | 641 | 45 | 1.6 | 81 | 2.9 | 110 | 3.9 |
| **OT 10** | 26000 | 33000 | 38000 | 105 | 231 | 171 | 377 | 252 | 554 | 45 | 1.6 | 81 | 2.9 | 110 | 3.9 |
| **OT 10-S** | 17200 | 23400 | 26000 | 72 | 159 | 147 | 323 | 187 | 410 | 45 | 1.6 | 81 | 2.9 | 110 | 3.9 |
| **OT 13** | 24500 | 28500 | 31000 | 202 | 444 | 263 | 579 | 300 | 659 | 122 | 4.3 | 204 | 7.2 | 285 | 10.1 |
| **OT 16** | 18000 | 20000 | 21000 | 194 | 427 | 239 | 527 | 264 | 581 | 122 | 4.3 | 204 | 7.2 | 285 | 10.1 |
| **OT 16-S** | 11500 | 15000 | 17500 | 129 | 285 | 196 | 431 | 234 | 516 | 122 | 4.3 | 204 | 7.2 | 285 | 10.1 |
| **OT 20** | 14500 | 19000 | 23000 | 251 | 552 | 404 | 888 | 526 | 1157 | 184 | 6.5 | 318 | 11.2 | 452 | 16.0 |
| **OT 25** | 13200 | 15500 | 17000 | 244 | 537 | 336 | 740 | 508 | 1117 | 184 | 6.5 | 318 | 11.2 | 452 | 16.0 |
| **OT 25-S** | 9000 | 11000 | 13500 | 214 | 471 | 335 | 738 | 483 | 1063 | 184 | 6.5 | 318 | 11.2 | 452 | 16.0 |
| **OT 30** | 11000 | 12500 | 14500 | 351 | 771 | 721 | 1586 | 781 | 1718 | 322 | 11.4 | 542 | 19.1 | 749 | 26.5 |
| **OT 36** | 8500 | 11500 | 12000 | 341 | 751 | 698 | 1536 | 749 | 1648 | 322 | 11.4 | 542 | 19.1 | 749 | 26.5 |
| **OT 36-S** | 6000 | 7000 | 8500 | 406 | 893 | 706 | 1554 | 754 | 1660 | 322 | 11.4 | 542 | 19.1 | 749 | 26.5 |

N.B.: data abtained from a vibrating table supported by springs that perfectly simulates the major part of the applications possible. Frequency and centrifugla force increase when the vibrator is applied to more rigid structures.

**For activation a 2/2 way electrovalve and filtered compressed air are required.**

N.B.: daten wurden auf einem gefederten Rütteltisch ermittelt, aud dem die Mehrzahl der möglichen Anwendungen perfekt simuliert wurde. Frequenz und Zentrifugalkraft nehmen bei einer Befestigung des Vibrators auf weniger elastischen Unterlagen zu.

**Zur Betätigung ist ein 2/2 Wege-Ventil und gefilter Druckluft erforderlich**

N.B.: les données ont été relevées sur un banc vibrant à ressorts, de manière à simuler parfaitement la plupart des applications possibles. La frequence et la force centrifuge seront plus grandes où le vibrateur est appliqué sur une structure plus rigide.

**Pour l'actionnement on a besoin d'une èlectrovanne à 2/2 voies et d'air filtré**

N.B.: dati rilevati utilizzando un banco vibrante a molle, in modo da simulare perfettamente la maggior parte delle possibili applicazioni. Frequenza e forza centriga saranno maggiori applicando il vibratore su strutture più rigide.

**Per l'azionamento occorrono una elettrovalvola a 2/2 vie ed aria filtrata.**

**General indications**
- The roller vibrators series "R" are formed by an anodized aluminium body inside which a hardened steel roller wheels an a cast iron race.
- Vibration is generated by a rotor which describes an epicycloidal movement inside a steel race.
- The OR vibrators generate a very high frequency with low consumption as compared to the force given.

**Examples of application**
- Bins and hoppers
- Moulding dies
- Compacting
- Separation

**Maximum operating temperature**
0°C / +200°C

**Allgemeines**
- Die Rollen „R" Rüttler bestehen aus einemm Körper aus eloxiertem Aluminium, innerhalb mit einer Rolle aus gehärtetem Stahl, die auf Gusseisen Laufbahn rotiert.
- Die Vibration wird durch eine Rolle erzeugt, die innerhalb eines speziell gehärteten Stahlringes eine epizyklische Bewegung beschreibt.
- OR Vibratoren entwickeln hohe Fliehkräfte und laufen in jeder Einbaulage sicher an.

**Anwendungsbeispiele**
- Trichter und Behälter
- Gussformen
- Verdichter
- Klassierer

**Max. Betriebstemperatur**
0°C / +200°C

**Indications générales**
- Les vibrateurs à rouleaux, série "R", comprennent un corps en aluminium anodisé avec un rouleau en acier trempé sur piste en fonte roulant à l'interieur.
- La vibration est engendrée par un rouleau qui accomplit un mouvement épicycloïdal à l'intérieur d'une piste en acier.
- Les vibrateurs à rouleau OR, engendrent une fréquence trés élevée avec une consommation d'air réduite par rapport à la force développée.

**Exemple d'application**
- Trémies et d'autres récipients
- Moules
- Compactage
- Séparation

**Température maximum de service**
0°C / +200°C

**Indicazioni generali**
- I vibratori a rulli serie "R" sono costituiti da un corpo in alluminio anodizzato all'interno del quale ruota un rullo in acciaio temprato su pista in ghisa.
- La vibrazione è generata da un rotore che compie un movimento epicicloidale all'interno di una pista di acciaio.
- I vibratori a rullo OR generano una frequenza molto elevata con un consumo ridotto, in relazione alla forza resa.

**Esempi di applicazione**
- Sili e tramogge
- Forme
- Compattazione
- Separazione

**Temperatura massima d'esercizio**
0°C / +200°C

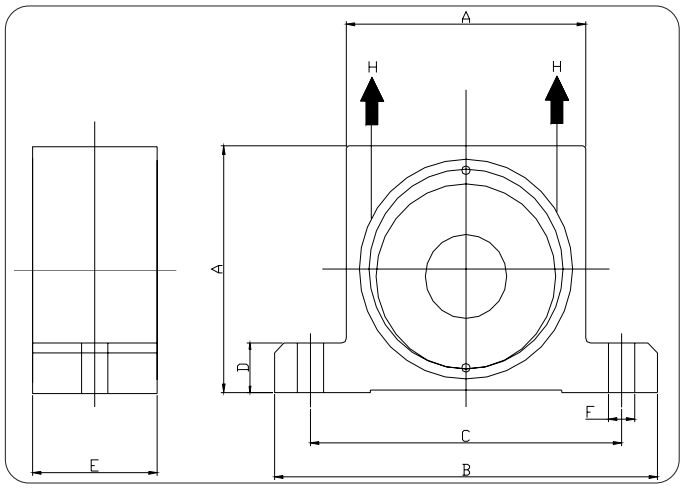


**DIMENSIONS - *ABMESSUNGEN* - DIMENSIONS - *DIMENSIONI***

| Type | A | | B | | C | | D | | E | | F | | H | Weights - *Gewichte* - Poids - *Pesi* | |
|---|---|---|---|---|---|---|---|---|---|---|---|---|---|---|---|
| | mm | in | mm | in | mm | in | mm | in | mm | in | mm | in | | kg | lbs |
| **OR 50** | 50 | 1.97 | 86 | 3.38 | 68 | 2.68 | 12 | 0.47 | 30 | 1.18 | 7 | 0.27 | 1/8" | 0.370 | 0.82 |
| **OR 65** | 65 | 2.56 | 113 | 4.45 | 90 | 3.54 | 16 | 0.63 | 36 | 1.42 | 9 | 0.35 | 1/4" | 0.760 | 1.68 |
| **OR 80** | 80 | 3.15 | 128 | 5.04 | 104 | 4.09 | 16 | 0.63 | 40 | 1.57 | 9 | 0.35 | 1/4" | 1.270 | 2.80 |
| **OR 100** | 100 | 3.94 | 160 | 6.30 | 130 | 5.12 | 20 | 0.79 | 52 | 2.05 | 11 | 0.43 | 3/8" | 2.600 | 5.73 |

**PERFORMANCE DATA - *LEISTUNGSDATEN*- PERFORMANCE - *PRESTAZIONI***

| Type | Vibrations - *Schwingungen* *Vibrations - Vibrazioni* vpm | | | Fc max. | | | | | | Air consumption - *Lufterverbrauch* Consommation d'air - *Consumo d'aria* | | | | | |
|---|---|---|---|---|---|---|---|---|---|---|---|---|---|---|---|
| | 2 bar= 29 psi | 4 bar= 58 psi | 6 bar= 87 psi | 2 bar= 29 psi | | 4 bar= 58 psi | | 6 bar= 87 psi | | 2 bar= 29 psi | | 4 bar= 58 psi | | 6 bar= 87 psi | |
| | | | | kg | lbs | kg | lbs | kg | lbs | $dm^3$ | cf | $dm^3$ | cf | $dm^3$ | cf |
| **OR 50** | 21000 | 25000 | 29500 | 1840 | 413 | 2760 | 620 | 3480 | 782 | 78 | 2.7 | 144 | 5.0 | 204 | 7.2 |
| **OR 65** | 19000 | 22000 | 26000 | 2303 | 518 | 4306 | 968 | 5420 | 1218 | 100 | 3.5 | 198 | 6.9 | 296 | 10.4 |
| **OR 80** | 14000 | 16000 | 21500 | 3354 | 754 | 5762 | 1295 | 6124 | 1377 | 122 | 4.3 | 255 | 9.0 | 378 | 13.3 |
| **OR 100** | 6750 | 9750 | 11000 | 2839 | 638 | 5924 | 1332 | 7678 | 1726 | 132 | 4.6 | 284 | 10.0 | 412 | 14.5 |

N.B.: data abtained from a vibrating table supported by springs that perfectly simulates the major part of the applications possible. Frequency and centrifugla force increase when the vibrator is applied to more rigid structures.

**For activation a 2/2 way electrovalve and filtered compressed air are required.**

N.B.: daten wurden auf einem gefederten Rütteltisch ermittelt, aud dem die Mehrzahl der möglichen Anwendungen perfekt simuliert wurde. Frequenz und Zentrifugalkraft nehmen bei einer Befestigung des Vibrators auf weniger elastischen Unterlagen zu.

**Zur Betätigung ist ein 2/2 Wege-Ventil und gefilter Druckluft erforderlich**

N.B.: les données ont été relevées sur un banc vibrant à ressorts, de manière à simuler parfaitement la plupart des applications possibles. La frequence et la force centrifuge seront plus grandes où le vibrateur est appliqué sur une structure plus rigide.

**Pour l'actionnement on a besoin d'une èlectrovanne à 2/2 voies et d'air filtré**

N.B.: dati rilevati utilizzando un banco vibrante a molle, in modo da simulare perfettamente la maggior parte delle possibili applicazioni. Frequenza e forza centriga saranno maggiori applicando il vibratore su strutture più rigide.

**Per l'azionamento occorrono una elettrovalvola a 2/2 vie ed aria filtrata.**

**Rating plate for S or OR vibrator - *Schild für Vibrator S oder OR***
**Plaque pour vibrateur S ou OR - *Targhetta per vibratore S e OR***

**B) IDENTIFICATION OF COMPONENT**
For correct identification of the component, refer to the code on the rating plate.

**NOTE: The pneumatic vibrator must not be CE marked since it is a component.**

**B) IDENTIFIKATION DES BAUTEILS**
Zur korrekten Identifikation des Bauteils Bezug auf den Code nehmen, der auf dem Schild steht.

**Anm.: Der pneumatische Vibrator darf nicht mit der CE-Kennzeichnung versehen werden, da es sich um ein Bauteil handelt.**

**IDENTIFICATION DU COMPOSANT**
Pour identifier correctement le composant, faire référence au code qui se trouve sur la plaque signalétique.

**N.B. : En tant que composant le vibrateur pneumatique ne porte pas le marquage CE.**

**IDENTIFICAZIONE DELCOMPONENTE**
Per una corretta identificazione del componente, bisogna fare riferimento al codice che si trova sulla targhetta.

**N.B.: il vibratore pneumatico non deve essere marcato CE in quanto componente.**

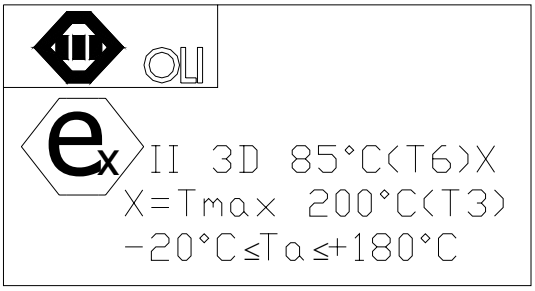


1) Machine code
2) Machine serial number
3) Assembly operator code
4) Year of construction
5) Group and category
6) Surface Tmax with T amb. -20 °C / +180°C

1) Maschinencode
2) Serien-Nr. Maschine
3) Monteur-Code
4) Baujahr der Maschine
5) Gruppe und Kategorie
6) Tmax Oberfläche mit T amb. -20 °C / +180°C

1) Code machine
2) Matricule de la machine
3) Code opérateur assembleur
4) Année de fabrication machine
5) Groupe et catégorie
6) Tmax superficiel avec T amb. -20 °C / +180°C

1) Codice macchina
2) Numero matricola
3) Codice operatore assemblatore
4) Anno di costruzione macchina
5) Gruppo e categoria
6) Tmax superficiale con T amb. -20 °C / +180°C

**Rating plate for OT vibrator- *Schild für Vibrator OT***
**Plaque pour vibrateur OT - *Targhetta per vibratore* OT**

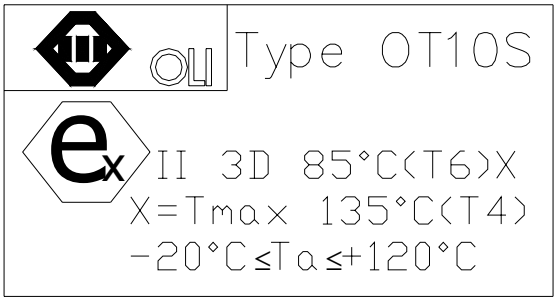


1) Machine code
2) Machine serial number
3) Assembly operator code
4) Year of construction
5) Group and category
6) Surface Tmax with T amb. -20 °C / +120°C

1) Maschinencode
2) Serien-Nr. Maschine
3) Monteur-Code
4) Baujahr der Maschine
5) Gruppe und Kategorie
6) Tmax Oberfläche mit T amb. -20 °C / +120°C

1) Code machine
2) Matricule de la machine
3) Code opérateur assembleur
4) Année de fabrication machine
5) Groupe et catégorie
6) Tmax superficiel avec T amb. -20 °C / +120°C

1) Codice macchina
2) Numero matricola
3) Codice operatore assemblatore
4) Anno di costruzione macchina
5) Gruppo e categoria
6) Tmax superficiale con T amb. -20 °C / +120°C

This manual, prepared by the manufacturer, forms an integral part of the pneumatic vibrator S/OR/OT supply. It must therefore accompany the filter right up to its final scrapping, and must be available ready at hand for quick consultation by the operators concerned and those in charge of operations at the work site. If the machine changes hands, this manual must be handed over to the new owner. Before carrying out any operation on or using the pneumatic vibrator, the personnel concerned must have read this manual carefully and completely. If the manual is lost, or in such a condition as to make it illegible, download a new copy from the OLI s.r.l internet site, and check the date of the last revision. This manual provides warnings and indications concerning the safety regulations for preventing accidents at the work site. However, the operators MUST scrupulously follow the safety regulations meant for them according to the existing legislation. Modifications to the safety regulations made over time must be integrated and implemented.

With the basic features of the machines as described, the Manufacturer reserves every right to make modifications to parts, details and accessories considered to be necessary for improving the product for design or commercial reasons, at any time without any obligation to update the publication imme-diately.
The latest version of the present catalogue is available under **www.olivibra.it**

Dieses Handbuch, das vom Hersteller erstellt wurde, ist integrierender Teil des Druckluft Vibrator S/OR/OT. Daher muss es unbedingt dem Filter folgen, bis er demontiert wird, und leicht zu finden sein, wenn der Bediener oder die Baustellenleitung in ihm nachschlagen wollen. Bei einem Besitzerwechsel des Gerätes muss das Handbuch dem neuen Besitzer ausgehändigt wer-den. Bevor das Betriebspersonal irgendwelche Arbeiten an oder mit Druckluft Vibrator ausführt, muss es dieses Handbuch unbedingt mit großer Aufmerksamkeit durchgelesen haben. Falls das Handbuch verloren geht oder unleserlich wird, kann man sich eine neue Kopie von den Internetseiten des Herstellers OLI s.r.l herunterladen, um dann das Datum der letzten Aktualisierung des Handbuchs zu prüfen. Dieses Handbuch liefert Hinweise und Angaben zu den Sicherheits- und Unfallverhütungsbestimmungen am Arbeitsplatz. Die Sicherheitsbestimmungen, die laut der geltenden Bestimmungen vom Bedienungspersonal zu beachten sind, müssen auf jeden Fall immer beachtet werden.
Etwaige Änderungen der Sicherheitsbestimmungen, die im Laufe der Zeit vorgenommen werden, sind immer zu erfassen und umzusetzen.

Der Hersteller behält sich das Recht vor, unter Beibehaltung der wesentlichen Eigenschaften der beschriebenen Geräte etwaige Änderungen an Organen, Teilen und Zubehör vorzunehmen, die im Zuge der Produktverbesserung erforderlich sind oder aus konstruktiven oder kommerziellen Erfordernissen heraus ausgeführt werden. Solche Änderungen können jederzeit vorgenommen werden und verpflichten den Hersteller nicht, diese Veröffentlichung gleichzeitig auf den neuesten Stand zu bringen.
Die letzte Version dieses Katalogs steht im Internet unter **www.olivibra.it**

Le présent Manuel, rédigé par le constructeur, fait partie intégrante de la fourniture du vibrateur pneumatique S/OR/OT; comme tel il doit absolument suivre le filtre jusqu'à son démantèlement et être à portée de la main pour une consultation rapide de la part des opérateurs concernés et par la direction des travaux du chantier. En cas de changement de propriété de la machine, le manuel doit être remis au nouveau propriétaire. Avant d'effectuer une quelconque opération avec ou sur le vibrateur pneumatique, le personnel concerné doit absolument et obligatoirement avoir lu très attentivement le présent manuel. Si le manuel est égaré ou abîmé de manière à ne plus être lisible, une copie doit être téléchargée à partir du site internet de OLI s.r.l en vérifiant la date de la dernière mise à jour. Le présent manuel fournit les recommandations et les indications concernant les consignes de sécurité pour la prévention contre les accidents du travail. Dans tous les cas les consignes de sécurité conformément aux normes en vigueur doivent être observées avec la plus grande attention par les différents opérateurs.
Les modifications éventuelles des consignes de sécurité devront être adoptées et mises en oeuvre.

Les caractéristiques essen tielles des machines décrites étant entendues, le constru cteur se réserve le droit d'ap porter à tout moment et sans engagement de mettre à jour en temps utile cette publication, des modifications aux organes, pièces et accessoires qu'il retiendra avantageuses pour l'amélioration du produit ou pour des exigences de fabrication ou de commer cialisation.
La version toujours mise à jour de ce catalogue est dis-ponible sul le site internet **www.olivibra.it**

Il presente manuale, redatto dal costruttore, è parte integrante del vibratore pneumatico S/OR/OT; come tale deve assolutamente seguire il filtro fino al suo smantellamento ed essere facilmente reperibile per una rapida consultazione da parte degli operatori interessati e della direzione lavori del cantiere. In caso di cambio di proprietà della macchina il manuale deve essere consegnato alla nuova proprietà. Prima di eseguire qualsiasi operazione con, o sul vibratore pneumatico ; il personale interessato deve assolutamente ed obbligatoriamente aver letto con la massima attenzione il presente manuale. Qualora il manuale venga smarrito, sgualcito e tale da non essere completamente leggibile, si deve scaricare una nuova copia dal sito internet della OLI s.r.l e verificarne la data dell'ultimo aggiornamento. Il presente manuale fornisce avvertenze ed indicazioni relative alle norme di sicurezza per la prevenzione degli infortuni sul lavoro. Vanno comunque, ed in ogni caso, osservate con il massimo scrupolo da parte dei vari operatori le norme di sicurezza poste a loro carico dalle vigenti normative.
Eventuali modifiche delle norme di sicurezza che nel tempo dovessero aver luogo dovranno essere recepite ed attuate.

Ferme restando le caratteristiche essenziali delle macchine descritte, il costruttore si riserva il diritto di apportare le eventuali modifiche di organi, dettagli ed accessori che riterrà convenienti per il miglioramento del prodotto, o per esigenze di carattere costruttivo o commerciale, in qualunque momento e senza impegnarsi ad aggiornare tempestivamente questa pubblicazione.
La versione sempre aggiornata del presente catalogo è reperibile sul sito internet **www.olivibra.it**

**CERTIFICATE OF CONFORMITY**

The equipment is accompanied by a declaration of conformity to existing regulations, but, since it is a component to be integrated into a system or plant, its safety is connected to compliance with all the directives applicable in final assembly of the machine.
Improper use of the pneumatic vibrator without following the instructions in this manual frees the Manufacturer of all responsibility for poor working of the pneumatic vibrator.
As this is a subject in the process of significant technical and normative evolution, the Manufacturer reserves the right to upgrade its products as fast as possible with all the technological know-how and official standards applicable (EN, UNI) which are available at the time.

**KONFORMITÄTSERKLÄRUNG**

Das Gerät wird von einer den geltenden Richtlinien entsprechenden Konformitäts-erklärung begleitet, aber als Bestandteil einer kompletten Anlage ist seine Betriebs-sicherheit mit der Beachtung aller Richtlinien verbunden, die nach dem Einbau in die Anlage oder Maschine anwendbar sind.
Jede bestimmungswidrige Benutzung des Druckluft Vibrator ohne Befolgung der Angaben dieses Handbuchs entbindet den Hersteller von jeglicher Haftung hinsichtlich der fehlerhaften Funktion des Druckluft Vibrator.
Da es sich um Produkte handelt, die einer schnellen technischen Entwicklung unterliegen, behält es sich der Hersteller vor, die eigenen Erzeugnisse so schnell wie möglich an alle technologischen Erkenntnisse und die anwendbaren offiziellen Normen (EN, UNI) anzupassen, die von Fall zu Fall erforderlich sind.

**CERTIFICAT DE CONFORMITÉ**

L'appareillage est accompagné d'une déclaration de conformité aux directives en vigueur, mais en tant que composant devant s'intégrer dans une installation complète, sa sécurité est étro itement lié au respect de toutes les directives applicables dans l'assemblage de la machine finale.
Toute utilisation impropre du vibrateur pneumatique sans suivre les indications du présent manuel dégage le constructeur de toutes responsabilités ayant trait à un mauvais fonctionnement du vibrateur pneumatique lui-même.
Etant donnée qu'il s'agit d'une matière en forte évolution technique et réglementaire, le constructeur se réserve d'adapter avec rapidité ses propres produits manufacturés à toutes les connaissances techno logiques et les normes of ficielles applicables (EN, UNI) au fur et à mesure de leur parution.

**ATTESTATO DI CONFORMITA'**

L'apparecchiatura è accompagnata da una dichiarazione di conformità alle direttive vigenti, ma, in quanto componente da integrarsi in un impianto completo, la sua sicurezza è legata al rispetto di tutte le direttive applicabili nell'assemblamento della macchina finale.
Ogni utilizzo improprio del vibratore pneumatico senza seguire le indicazioni del presente manuale solleverà il costruttore da ogni responsabilità inerenti ad un cattivo funzionamento del vibratore pneumatico stesso.
Trattandosi di materia in forte evoluzione tecnica e normativa, il costruttore si riserva di adeguare con la massima celerità i propri manufatti a tutte le conoscenze tecnologiche e le norme ufficiali applicabili (EN, UNI) che di volta in volta si rendessero disponibili.

# OLI S.r.l.

Via Canalazzo, 35 – I - Medolla (MO)
ITALY

## CERTIFICATE OF CONFORMITY
## with the Directives of the European Union

The OLI percussion guns model
**S/OR/OT....ATEX** (Code: SX....)
are manufactured in conformity with the following directives:

- Directive "Machines" **98/37/CE** of 22nd June, 1998
- Directive "ATEX" **94/9/CE** of 23rd March, 1994

The conformity has been verified according to the conditions included in the following standard documents:

- **EN 1127-1**
- **EN 13463-1**
- **EN 292-1-2**
- **EN 1050**

**Serie S, OR, OT ⟨Ex⟩ II 3 D 85°C (T6) X**

Serie S, OR, X Tmax.=200°C (T3) Tamb. -20°C +180°C
Serie OT, X Tmax.=135°C (T4) Tamb. -20°C +120°C

This equipment must never be put into operation before the machine or plant into which it has been integrated has been declared in conformity with the Directives in force.

Medolla, 1st November, 2003
OLI S.r.l.

Adriano Marchesini
(General Manager)

# OLI S.r.l.

Via Canalazzo, 35 – I - Medolla (MO)
ITALY

## BESCHEINIGUNG DER KONFORMITÄT mit den Richtlinien der Europäischen Union

Die Familie der pneumatischen Vibratoren OLI
Modell **S/OR/OT....ATEX** (Code: SX....) wurde
konstruiert und wird gefertigt in Konformität mit den folgenden Direktiven:

- Direktive "Maschinen" **98/37/CE** vom 22. Juni 1998
- Direktive "ATEX" **94/9/CE** vom 23. März 1994

Die Konformität wurde gemäß den in den folgenden Normendokumenten enthaltenen Bedingungen verifiziert:

- **EN 1127-1**
- **EN 292-1-2**
- **EN 13463-1**
- **EN 1050**

## Serie S, OR, OT ⟨Ex⟩II 3 D 85°C (T6) X

Serie S, OR, X Tmax.=200°C (T3) Tamb. -20°C +180°C
Serie OT, X Tmax.=135°C (T4) Tamb. -20°C +120°C

Dieses Bauteil darf niemals in Betrieb genommen werden, bevor die Maschine/Anlage, in welche es eingebaut wurde, mit den Bestimmungen der geltenden Richtlinien für konform erklärt wurde.

Medolla, den 1. November 2003
OLI S.r.l.

Adriano Marchesini
(Geschäftsführer)

# OLI S.r.l.

Via Canalazzo, 35 – I - Medolla (MO)
ITALY

## CERTIFICAT DE CONFORMITE
## aux Directives de l'Union Européenne

La famille des percuteurs pneumatiques OLI
Modèle **S/OR/OT....ATEX** (Code: SX....)
a été projetée et produite en conformité aux directives suivantes:

- Directive "Machines" **98/37/CE** du 22 Juin 1998
- Directive "ATEX" **94/9/CE** du 23 Mars 1994

La conformité a été vérifiée sur la base des conditins requises par les normes ou les documents normatifs reportés de suite:

- **EN 1127-1**
- **EN 13463-1**
- **EN 292-1-2**
- **EN 1050**

**Serie S, OR, OT ⟨Ex⟩ II 3 D 85°C (T6) X**

Serie S, OR, X Tmax.=200°C (T3) Tamb. -20°C +180°C
Serie OT, X Tmax.=135°C (T4) Tamb. -20°C +120°C

Ce composant ne doit pas être mis en service tant que la machine dans laquelle il a été incorporé n'a pas été déclarée conforme aux dispositions des directives en vigueur.

Medolla, le 1 novembre 2003
OLI S.r.l.

Adriano Marchesini
(Directeur Général)

# OLI S.r.l.

Via Canalazzo, 35 – I - Medolla (MO)
ITALY

## ATTESTATO DI CONFORMITA'
## alle Direttive Della Comunità Europea

La famiglia dei vibratori pneumatici **OLI**
modello **S/OR/OT....ATEX** (Code: SX....)
è stata progettata e costruita in conformità alle direttive:

- Direttiva "Macchine" **98/37/CE** del 22 giugno 1998
- Direttiva "ATEX" **94/9/CE** del 23 marzo 1994

La conformità è stata verificata sulla base dei requisiti delle norme o dei documenti normativi riportati di seguito:

- **EN 1127-1**
- **EN 292-1-2**
- **EN 13463-1**
- **EN 1050**

**Serie S, OR, OT ⟨Ex⟩II 3 D 85°C (T6) X**

Serie S, OR, X Tmax.=200°C (T3) Tamb. -20°C +180°C
Serie OT, X Tmax.=135°C (T4) Tamb. -20°C +120°C

Il presente componente non deve essere messo in servizio prima che la macchina all'interno della quale sia stata incorporata non sia stata dichiarata conforme alle disposizioni delle Direttive vigenti.

Medolla, 1 Novembre 2003
OLI S.r.l.

Adriano Marchesini
(General Manager)

**SAFETY**
Whilst carrying out any work on the **S**, **OT** or **OR** Pneumatic Vibrators Make sure that the compressed air is shut off on any supply lines. All pipes must be tightly connected.
A pipe coming loose under pressure may cause injury. Vibrations can cause loosening of bolted connections and equipment. This may cause damage to persons and machines.
**Take note of the enclosed drawings.**

**Alterations to the unit may change the characteristics of the vibrator or even damage the unit and will cause the rejection of any warranty claims.**

**SICHERHEIT**
Sicherstellen, daß während des Einbaus oder bei Arbeiten am Vibrator und an den Zuleitungen, die Druckluft abgestellt ist. Die Schlauchleitungen müssen fest verbunden sein.
Ein unter Druck stehender, sich lösender Schlauch, kann Verletzungen verursachen. Des weiteren können Vibrationen ein Lösen der Schraubverbindungen und Geräte verursachen. Personen- und Materialschäden können die Folge sein.
**Die beiliegenden Zeichnungen sind zu beachten.**

**Veränderungen am Gerät können dessen Eigenschaften verändern bzw. dasselbe beschädigen, was zum Erlöschen aller Garantieansprüche führen kann.**

**SÉCURITÉ**
Assurez-vous, lors du montage ou de tous autres travaux effectués sur le vibrateur ou les conduites d'amenée, que l'alimentation en air comprimé est interrompue. Les flexibles doivent être solidement raccordés. Un flexible sous pression qui se détache peut provoquer des blessures. Les raccords vissés et les appareils peuvent se desserrer sous l'effet des vibrations, ce qui risque de provoquer des dommages corporels et matériels.
**Tenez compte des croquis, ci-joint.**

**Toute modification du vibrateur est susceptible d'en altérer les propriétés ou de le détruire et rend caduque tous recours en garantie entraîne l'extinction des droits de garantie.**

**SICUREZZA**
Durante l'installazione o in caso di interventi ai vibratori pneumatici **S**, **OR** o **OT**, assicurarsi di avere interrotto l'alimentazione d'aria compressa su tutte le linee. Tutti i tubi devono essere saldamente collegati.
Il distacco di un tubo sotto pressione può provocare lesioni. Le vibrazioni possono allentare i raccordi a vite e gli apparecchi, con rischio di danni a persone e macchinari.
**Prendere visione dei disegni inclusi.**

**Eventuali modifiche apportate all'unità possono variare le caratteristiche del vibratore, se non addirittura danneggiare l'unità stessa, con conseguente annullamento di qualsiasi diritto di garanzia.**

**Air Compressor**
The Air Compressor needs to be kept clean and filtered (filter <50pm). Compressed air or nitrogen of 2 to 6 bar (30 to 90 PSI) is required. **The vibrators are designed for lubrication-free operation. The life time of the S and OR vibrator will be extended with lubrication. Non-filtered air will damage the vibrators.**

**Antriebsmittel**
Saubere, gefilterte (Filter < 50µm) Druckluft oder Stickstoff (2 bis 6 bar). **Die Verwendung nicht gefilterter Luft führt zum Ausfall der Vibratoren. Alle Vibratoren können ölfrei betrieben werden, ein Nebelöler verlängert die Lebensdauer von S und OR.**

**Fluide d'entraînement**
Le fluide d'entraînement est l'air comprimé exempt d'impuretés et filtré (filtre < 50 µm), ou l'azote, sous une pression de 2 à 6 bars (30 à 90 PSI). **Les vibrateurs sont conçus pour fonctionner sans huile, un graisseur prolongera la durée de vie des S et OR.**
**L'utilisation d'air non filtré entraîne la défaillance des vibrateurs.**

**Compressore pneumatico**
Il compressore pneumatico va tenuto pulito e l'aria filtrata (filtro < 60 mm). Si richiede azoto o aria compressa alla pressione compresa tra 2 e 6 bar (da 30 a 90 PSI). **I vibratori sono progettati per l'uso esente da lubrificante. La lubrificazione prolunga la durata dei vibratori S e OR. L'impiego di aria non filtrata danneggia il vibratore.**

**Maximum operating pressure**

The maximum operating pressure must not exceed 6 bar (90 PSI).

**Max. Betriebsdruck**

Der max. Betriebsdruck darf 6 bar (90PSI) nicht überschreiten.

**Pression maximale de service**

La pression maximale de service ne doit pas dépasser 6 bars (90 PSI).

**Pressione massima d'esercizio**

La pressione massima d'esercizio non deve superare i 6 bar (90 PSI).

The **pneumatic vibrators** described in this Manual are designed and tested for use in potentially explosive areas classified as zone 22 cat. II 3 D according to directive 94/9/CE.
The powders handled must have explosiveness index St1 or St2 and this must be notified to OLI s.r.l. at the time of placing the order to allow correct selection of the component.

The user must make sure the plant in which the **pneumatic vibrator** is installed has been set in safety condition from the point of view of explosion risk before being started up, and that the "document on protection against explosions" has also been prepared as specified by Directive ATEX 99/92/CE. (This only applies to the European market).

Die **pneumatischen Vibratoren**, die in diesem Handbuch beschrieben werden, sind für den Einsatz in explosionsgefährdeter Bereichen ausgelegt und konstruiert worden, die als Zone 22 Kat. II 3 D gemäß der Richtlinie 94/9/EG klassifiziert worden sind. Die aufbereiteten Stäube müssen Staubexplosionsklasse St1 oder St2 haben und müssen der Firma OLI s.r.l. bei der Bestellung angegeben werden, um eine korrekte Auslegung des Bauteils zu ermöglichen.

Der Anwender muss sicherstellen, dass die Anlage, in welcher der **pneumatische Vibrator** installiert werden soll, hinsichtlich der Explosionsgefahr auf ausreichende Weise in einen sicheren Zustand gebracht worden ist, bevor sie in Betrieb genommen wird, und dass zudem das „Explosionsschutzdokument" verfasst worden ist, so wie es die ATEX-Richtlinie 99/92/EG vorsieht (Dies gilt nur für den europäischen Markt).

**Les vibrateurs pneumatiques** décrits dans ce manuel ont été conçus et testés pour être utilisé dans les environnement explosibles classés comme zone 22 cat. II 3 D d'après la directive 94/9/CE. Les poussières traitées doivent avoir des indices d'explosivité St1 ou St2 ; pour un choix correct du composant celles-ci doivent être indiquées à OLI s.r.l. au moment de la commande.

L'utilisateur doit contrôler, avant la mise en marche, que l'installation dans laquelle est monté le **vibrateur pneumatique** a été mise en sécurité en ce qui concerne le risque d'explosion. Il faut aussi que le "document sur la protection contre les explosions" ait été rédigé conformément à la Directive ATEX 99/92/CE (Ceci n'est valable que pour le marché européen).

**I vibratori pneumatici** descritti in questo manuale sono stati progettati e testati per un utilizzo in zone potenzialmente esplosive classificate come zona 22 cat. II 3 D secondo la direttiva 94/9/CE. Le polveri trattate dovranno avere indici di esplosività St1 o St2 e devono essere comunicate alla OLI s.r.l. al momento dell'ordine per una scelta corretta del componente.

L'utilizzatore dovrà assicurarsi che l'impianto all'interno del quale verrà installato il **vibratore pneumatico** sia stato adeguatamente messo in sicurezza da un punto di vista di rischio esplosione prima di essere avviato e che inoltre sia stato redatto il "documento sulla protezione contro le esplosioni" come previsto dalla Direttiva ATEX 99/92/CE. (Questo vale unicamente per il mercato europeo).

The caracteristic of the dusts must be communicated to OLI to allow correct sizing of the machine and safety devices.

Der behandelte Staub sollen bei der Bestellung OLI bekanz gegeben, damit das Filter und die Sicherheitsvorrichtungen korrekt ausgelegt werden können.

Les poudres traitées doivent être communiquées à la Sté OLI au moment de la commande pour dimensionner correctement la machine et les dispositifs de sécurité.

Le caratteristiche delle polveri devono essere comunicate a OLI per un corretto dimensionamento della macchina e dei dispositivi di sicurezza.

| ***POWDER* - STAUB - POUSSIÈRE - *POLVERE*** | | | | | |
|---|---|---|---|---|---|
| **Parameter - *Parameter*<br>Paramètre - *Parametro*** | | **Design value - *Auslegungswer*<br>Valeur de conception<br>*Valore di progetto*** | **Operating data - *Betriebsdaten*<br>Données de fonctionnement<br>*Valore operativo*** | | |
| | | | **min.** | **nominal** | **max.** |
| Description - *Bezeichnung* - Description - *Descrizione* | - | | | | |
| Particle size (Median, D50) - *Partikelgröße (Median, D50)*<br>Dimension particulaire (Median, D50) - *Granulometria (Median, D50)* | $_{\mu}$m | | | | |
| Kst | bar m/s | | | | |
| 5 mm layer ignition (GT) - 5 Millimeter Schichtzündung (GT)<br>5 mm d'allumage de couche (GT)<br>*Temperatura minima di ignizione di uno strato di polvere di 5 mm (GT)* | °C | | | | |
| Min. ignition temperature of dust suspension (IT)<br>*Min. Zündungtemperatur der Staubaufhebung (IT)*<br>La température d'inflammation minimale de la suspension de la poussière (IT)<br>*Temperatura minima di ignizione di polvere sospesa (IT)* | °C | | | | |
| Min. explosible concentration (LEL)<br>*Min. explosible Konzentration (LEL)*<br>Concentration explosible minimale (LEL)<br>Concentrazione minima di esplosione (LEL) | g/m$^3$ | | | | |
| Min. ignition energy (MIE) - *Min. Zündungenergie (MIE)*<br>Énergie minimale d'allumage (MIE)<br>*Energia minima di ignizione (MIE)* | mJ | | | | |
| Max. explosion pressure ($P_{max}$)<br>*Max. Explosiondruck ($P_{max}$)*<br>Pression maximale d'explosion ($P_{max}$)<br>*Pressione massima di esplosione ($P_{max}$)* | bar | | | | |
| Limiting oxygen concentration (LOC)<br>*Begrenzen von von Sauerstoffkonzentration (LOC)*<br>Limitation de la concentration d'oxygène (LOC)<br>*Concentrazione limite di ossigeno (LOC)* | % by volum | | | | |
| Specific Resistance of Product<br>*Spezifischer Widerstand des Produktes*<br>Résistance spécifique de produit *Resistenza specifica del prodotto* | GOhm*m | | | | |
| Dust Classification - *Staub-Klassifikation*<br>Classification De la Poussière - *Classificazione della polvere* | St 1 | St 2 | | St 3 | |

| **ATEX PARAMETERS - *ATEX PARAMETERS* - ATEX PARAMÈTERS - *PARAMETRI ATEX*** | | | |
|---|---|---|---|
| **Ex zone - *Ex Zone* - Ex zone - *Ex zona*** | | **Inside number - *Nummer für Innenbereich*<br>Nombre intérieur - *Numero interno*** | **Outside number<br>Nummer für Aussenbereich<br>Nombre extérieur<br>*Numero esterno*** |
| Atex category - *Atex Kategorie* - ATEX catégorie - *Categoria ATEX* | | | |
| Reduced pressure ($Pr_{ed}$) - Reduzierter Explosionsüberdruck $Pr_{ed}$)<br>*Pression réduite ($P_{red}$) - Pressione ridotta ($P_{red}$)* | bar | | |

| **GENERAL DATA - *GENERAL DATA* - DONNEES GENERALES - *DATI GENERALI*** | | | | | |
|---|---|---|---|---|---|
| **Parameter - *Parameter*<br>Paramètre - *Parametro*** | | **Design value - *Auslegungswer*<br>Valeur de conception<br>*Valore di progetto*** | **Operating data - *Betriebsdaten*<br>Données de fonctionnement<br>*Valore operativo*** | | |
| | | | **min.** | **nominal** | **max.** |
| Volumetric flow rate - *Volumenstrom - Dèbit volumétrique - Portata d'aria* | m$^3$/h | | | | |
| Bulk density - *Schüttdichte* - Densité - *Peso specifico* | kg/m$^3$ | | | | |
| Dry content - *Trockengehalt* - Humidité - Umidità | % | | | | |
| Temperature - *Temperatur* - Température - *Temperatura* | °C | | | | |
| Corrosive constituente - *Korrosive bastandteile*<br>Constituants corrosifs - *Componenti corrosivi* | - | | | | |
| pH | - | | | | |

**N.B.** in accordance with standard 94/9/CE, VDI 3673 and VDI 2263. - *gemäß Richtlinie 94/9/EG, VDI 3673 and VDI 2263.*
conformément aux normes 94/9/CE, VDI 3673 and VDI 2263 - *secondo le norme 94/9/CE, VDI 3673 and VDI 2263.*

In accordance with the Directive ATEX 94/9/CE, the manufacturer defines the outside of the pneumatic vibrator as:

**CAT. II 3 D**

**IMPORTANT: specify that the non ATEX versions must not be used in potentially explosive environments**.

The **pneumatic vibrators** are designed and constructed in such a manner as to avoid unusual overheating during operation. To operate in safe conditions, **check to make sure the powders handled have a minimum ignition temperature higher than the temperature value indicated on the code plate**.

- The **pneumatic vibrators** must be installed with sufficient clearance around to allow assembly/disassembly operations, cleaning and maintenance.

**Before carrying out any operation on the component, make sure it is in safe condition**.

**IMPORTANT**: In this Manual "**setting the component in safety condition**" will include the following operations:

- **Make sure the component is disconnected from all electric supply sources.**
- **Make sure the component is disconnected from all compressed air supply sources.**
- **The area around the component must be suitably lighted (operators can be provided with electric lights suitable for zone 22 cat. II 3 D).**

For carrying out operations on the components (maintenance and cleaning), the operators must use suitable personal protection devices (PPD):

- **Antistatic safety footwear (certified)**
- Antistatic protective clothing (certified)
- Helmet
- Antistatic cut proof gloves
- **Protective masks**

It is also necessary to use all the safety devices specified in the safety sheet of the product handled.

**NOTE: All the electrical equipment used for maintenance or cleaning operations on the outside of the component must be ATEX certified for zone 22 cat. II 3 D.**

Im Sinne der ATEX-Richtlinie 94/9/EG definiert der Hersteller die Außenumgebung des pneumatischen Klopfers als:

**KAT. II 3 D**

**WICHTIG: Die Versionen, die nicht ATEX sind, dürfen nicht in explosionsgefährdeten Bereichen arbeiten.**

**Die pneumatischen Vibratoren** sind so entwickelt und konstruiert worden, dass es während ihres Betriebs nicht zu Überhitzungen kommt. Um unter sicheren Voraussetzungen arbeiten zu können, **ist sicherzustellen, dass die aufbereiteten Stäube eine Mindestzündtemperatur haben, die unterhalb des Temperaturwerts liegt, der auf dem Typenschild steht.**

- **Die pneumatischen Vibratoren** müssen so installiert werden, dass ringsum genügend Raum zur Verfügung steht, um die normalen Arbeiten für Ein- und Ausbau, Reinigung und Wartung vornehmen zu können.

**Bevor man irgendeinen Eingriff an dem Bauteil vornimmt, ist sicherzustellen, dass es sich in einem sicheren Zustand befindet.**

**WICHTIG:** Auf den weiteren Seiten dieses Handbuchs werden wir die Ausdrucksweise „**den Bauteil in einen sicheren Zustand versetzen"** benutzen, um folgende Vorgänge anzugeben:

- **Sicherstellen, dass der Bauteil von allen elektrischen Versorgungsquellen abgetrennt ist.**
- **Sicherstellen, dass der Bauteil von allen pneumatischen Versorgungsquellen abgetrennt ist.**
- **Dafür sorgen, dass der Bereich rings um den Bauteil korrekt ausgeleuchtet wird (indem die Arbeitnehmer eventuell mit elektrischen Lampen ausgestattet werden, die für die Zone 22 Kat. II 3 D geeignet sind).**

Für jeden Eingriff, der auf dem Bauteil vorzunehmen ist (Wartungen und Reinigungen), müssen die Arbeitnehmer mit angemessenen persönlichen Schutzausrüstungen (PSA) versehen sein:

- **antistatisches unfallsicheres Schuhwerk (zertifiziert)**
- **antistatische Schutzkleidung (zertifiziert)**
- **Schutzhelm**
- **antistatische Schnittschutzhandschuhe**
- **Schutzmasken**

Außerdem sind alle Schutzvorrichtungen zu verwenden, die von dem Sicherheitsdatenblatt des behandelten Produkts vorgesehen sind.

**Anm.: Alle elektrische Ausrüstungen, die eventuell für die Wartungseingriffe und die Reinigung außerhalb des Bauteils benutzt werden, müssen für Zone 22 Kat. II 3 D nach ATEX zertifiziert sein.**

Le constructeur, aux termes de la directive ATEX 94/9/CE, définit l'extérieur du vibrateur pneumatique comme:

**CAT. II 3 D**

**IMPORTANT: Spécifier que les versions non ATEX ne doivent pas travailler dans des atmosphères explosibles.**

**Les vibrateurs pneumatiques** ont été conçus et construits de manière à ne pas provoquer d'échauffements anormaux pendant le fonctionnement. Pour travailler en condition de sécurité **il faut vérifier que les poussières traitées on une température d'inflammation minimale supérieure à la valeur de température indiqué sur la plaque signalétique**.

- **Les vibrateurs pneumatiques** doivent être installés avec autour un espace suffisant pour effectuer les opérations ordinaires de montage/démontage, nettoyage et maintenance.

**Avant d'effectuer toute intervention sur le composant vérifier que celui-ci a été mis en sécurité.**

**IMPORTANT**: Dans le présent manuel nous indiquons par "**mettre en sécurité le composant"** les opérations suivantes:

- **Contrôler si le composant est débranché de toutes les alimentations électriques.**
- **Contrôler si le composant est débranché de toutes les alimentations pneumatiques.**
- **Eclairer correctement la zone qui entoure le composant (en dotant éventuellement les opérateurs de lampes électriques appropriées pour zone 22 cat. II 3 D).**

Pour toute opération à effectuer sur le composant (entretien et nettoyage), les opérateurs doivent être munis des équipements de protection individuelle (EPI):

- **Chaussures de protection antistatiques (certifiées)**
- **Vêtements de protection antistatiques (certifiés)**
- **Casque**
- **Gants anti-coupure antistatiques**
- **Masques de protection**

Il faut aussi utiliser tous les dispositifs de protection prévus par la fiche de sécurité du produit traité.

**N.B.: Tous les appareillages électriques, utilisés pour les interventions de maintenance et de nettoyage réalisées à l'extérieur du composant doivent être certifiés ATEX pour zone 22 cat. II 3 D.**

Il costruttore, ai sensi della direttiva ATEX 94/9/CE, definisce l'esterno del vibratore pneumatico come:

**CAT. II 3 D**

**IMPORTANTE: Specificare che le versioni non ATEX non devono operare in atmosfere potenzialmente esplosive.**

**I vibratori pneumatici** sono stati progettati e costruiti in modo tale da non provocare surriscaldamenti anomali durante il funzionamento. Per poter operare in condizioni di sicurezza **occorre verificare che le polveri trattate abbiano una minima temperatura di ignizione superiore al valore di temperatura indicato sulla targhetta.**

- **I vibratori pneumatici** dovranno essere installati con uno spazio circostante sufficiente per effettuare le normali operazioni di montaggio/smontaggio, pulitura e manutenzione.

**Prima di effettuare un qualsiasi intervento sul componente assicurarsi che questa sia messa in sicurezza.**

**IMPORTANTE:** In seguito nel presente manuale indicheremo con la dicitura **"mettere in sicurezza il componente"** le seguenti operazioni:

- **Accertarsi che il componente sia scollegata da tutte le alimentazioni elettriche.**
- **Accertarsi che il componente sia scollegata da tutte le alimentazioni pneumatiche.**
- **Provvedere a illuminare correttamente la zona circostante al componente (eventualmente dotando gli operatori di lampade elettriche idonee per zona 22 cat. II 3 D.**

Per qualsiasi operazione da effettuarsi sul componente (manutenzioni e pulizia), gli operatori dovranno essere muniti degli appositi dispositivi di protezione individuale (DPI):

- **Scarpe antinfortunistiche antistatiche (certificate)**
- **Indumenti protettivi antistatici (certificati)**
- **Casco**
- **Guanti antitaglio antistatici**
- **Mascherine protettive**

Inoltre occorre utilizzare tutti i dispositivi di protezione previsti dalla scheda di sicurezza del prodotto trattato.

**N.B. Tutte le apparecchiature elettriche eventualmente utilizzate per interventi manutentivi o di pulizia eseguiti all'esterno componente devono essere certificate ATEX per zona 22 cat. II 3 D.**

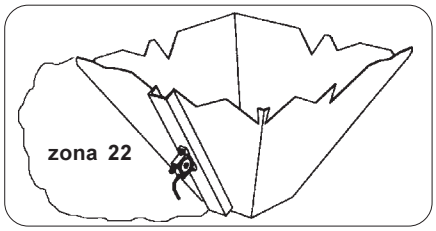

**Noise level**
Depending on the type of vibrator and air pressure the noise level is 75-85 dB(A) (with silencer). If the air pressure is lower, the noise level is also lower. We recommend in order to avoid unnecessary noise for the environment, the vibrators should not be operated without a silencer.

NOTE
- The employer must take the necessary measures in the work area to reduce to the minimum the risk deriving from daily exposure to noise.

**Betriebsgeräusche**
Je nach Typ (mit Schalldämpfer) und 6 bar Luftdruck bei 75 - 85 dB(A), bei geringerem Luftdruck weniger. Ein Betrieb ohne Schalldämpfer ist nicht empfehlenswert, um die Lärm-Umweltbelastung so gering wie möglich zu halten.

ANM.:
- Der Arbeitgeber muss im Betrieb alle technischen Maßnahmen durchführen, um Gefahren, die sich aus der täglichen Lärmexposition ergeben, auf ein Minimum zu reduzieren.

**Niveau de bruit**
En fonction du type de vibrateur (avec silencieux) et pour une pression de 6 bars,( 90 PSI) le niveau de bruit est compris entre 75 et 85 dB(A). Il est plus faible quand la pression est moindre. Ne pas faire fonctionner le vibrateur sans silencieux pour ne pas provoquer des nuisances sonores inutiles.

REMARQUE:
- L'employeur doit mettre en oeuvre, dans le milieu de travail, les mesures techniques appropriées pour limiter au minimum les risques dérivants de l'exposition journalière au bruit.

**Rumorosità**
A seconda del tipo di vibratore e della pressione dell'aria, il livello di rumorosità sarà pari a 75-85 dB(A) (con silenziatore). In caso di pressione dell'aria inferiore, anche la rumorosità risulterà ridotta. Al fine di evitare rumori inutili nell'ambiente, si raccomanda di azionare sempre il vibratore provvisto di silenziatore.

NOTA
- Il datore di lavoro dorà attuare, nell'ambiente di lavoro, le misure tecniche adeguate per ridurre al minimo i rischi derivanti dall'esposizione giornaliera al rumore.

**Permissible operating conditions**
Permissible temperature range:
S/OR -20°C to +200°C
OT -20°C to +120°C

**S** and **OR** require heat resistant hose nipples and silencers for temperatures above 120°C (272°F)
**OT Vibrators may be operated inside liquids if the exhaust air is piped into the atmosphere.**

**Zulässige Betriebsbedingungen**
Betriebstemperaturen
S / OR -20°C bis 200°C
OT -20°C bis 120°C.

**S**-und **OR**-Vibratoren Betriebstemperaturen über 120°C erfordern den Einsatz von Anschlußtüllen und Schalldämpfern in temperaturbeständiger Ausführung. Sofern vorhanden, den Nebelöler einstellen (2-5 Tropfen/h).
**OT-Vibratoren**
**Der Betrieb in Flüssigkeiten erfordert die Abführung der Druckluft an die Atmosphäre.**

**Conditions de service admissibles**
Températures admissibles:
S/OR -20° C à 200° C
OT -20° C à 120° C

Pendant le fonctionnement la plage de température admissible de -20°C à +120°C ne doit pas être dépassé. Des températures d'utilisation entre 120°C et 200°C nécessitent des raccords et des silencieux appropriés.
**Pour l'utilisation des OT sous l'eau l'échappement doit se faire a l'air libre**

**Condizioni d'esercizio ammesse**
Range di temperatura ammesso:
S/OR da -20°C a +200°C
OT da -20°C a +120°C

In caso di temperature superiori a 120°C (272°F), i vibratori **S** e **OR** dovranno essere dotati di silenziatori e raccordi per flessibili resistenti al calore.
**I vibratori OT possono essere azionati all'interno di liquidi purché l'aria di scarico sia convogliata nell'atmosfera.**

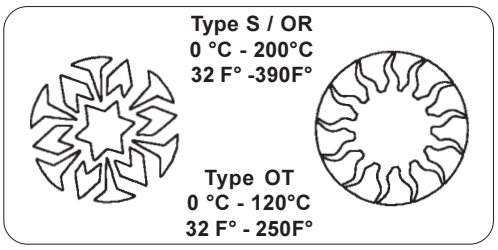





**Features of powders - *Eigenschaften der stäube*- Caracteristiques des poussières - *Caratteristiche delle polveri***

| | Powders - *Staub* Poussières - *Polveri* St 1 | Powders - *Staub* Poussières - *Polveri* St 2 |
|---|---|---|
| **MINIMUM IGNITION ENERGY (mj) WITHOUT INDUCTANCE** *ZÜNDENERGIE* **(mj)** *OHNE INDUKTANZ* **ENERGIE D'INFLAMMATION MINIMUM (mj) SANS INDUCTANCE** *MINIMA ENERGIA DI IGNIZIONE* **(mj)** *SENZA INDUTTANZA* | > 3 | > 3 |
| **MINIMUM IGNITION TEMPERATURE (°C) MIT** *TIEFSTE ZÜNDTEMPERATUR (°C) MIT* **TEMPERATURE MINIMUM D'INFLAMMABILITE' (°C) MIT** *MINIMA TEMPERATURA DI IGNIZIONE (°C) MIT* | ≥ 200 | ≥ 200 |
| **IGNITION TEMPERATURE OF POWDER LAYER DEPOSITED (°C) L.I.T.** *ZÜNDTEMPERATUR DER ABGELAGERTEN STAUBSCHICHT (°C) L.I.T.* **TEMP. D'INFLAMMATION DE LA COUCHE DE POUSSIÈRE DÉPOSÉE (°C) L.I.T.** *TEMPERAURA DI IGNIZIONE DELLO STRATO D POLVERE DEPOSITATO (°C) L.I.T.* | ≥ 200 | ≥ 200 |
| **MAXIMUM EXPLOSION PRESSURE (bar)** *HÖCHSTER EXPLOSIONSDRUCK (bar)* **PRESSION MAXIMUM D'EXPLOSION (bar)** *MASSIMA PRESSIONE DI ESPLOSIONE (bar)* | ≤ 9 | ≤ 9 |
| **REACTIVITY PARAMETER KST (bar m/s)** *REAKTIVITÄTSPARAMETER KST (bar m/s)* **PARAMÉTRE DE RÉACTIVITÉ KST (bar m/s)** *PARAMETRO DI REATTIVITA' KST (bar m/s)* | < 300 | < 300 |
| **SURFACE RESISTIVITY (Ω m)** *OBERFLÄCHENWIDERSTAND* **(Ω m)** **RÉSISTIVITÉ SUPERFICIELLE (Ω m)** *RESISTIVITA' SUPERFICIALE* **(Ω m)** | $< 1 \times 10^{12}$ | $< 1 \times 10^{12}$ |

OLI S.r.l provides a 12-month warranty on their products. This period starts from the date of the consignment note.
The warranty is not applicable for breakage and/or defects caused by incorrect installation or use, or incorrect maintenance, or modifications not authorized by the Manufacturer.
The warranty does not extend to parts that wear out following normal use and electrical components.
The warranty elapses if the pneumatic vibrator:
- has been tampered with or modified,
- has not been used correctly,
- has been used without respecting the limits indicated in this manual and/or has been subjected to excessive mecha nical stress,
- has not been subjected to the necessary maintenance or these operations have been carried out partly and/or incorrectly,
- has been damaged due to carelessness during transport, installation and use,
- has been fitted with spare parts that are not original.

On receiving the product, the user must check these for defects deriving from transport and/or incomplete supply.
Defects, damage or incom pleteness of the supply must be immediately communicated to the Manufacturer in writing and countersigned by the haulage transporter.

OLI S.r.l. gewährt auf ihre Erzeugnisse eine Garantie von 12 Monaten. Die Garantiezeit beginnt mit dem Datum des Lieferscheins.
Die Garantie ist nicht anwendbar, wenn es sich um Schäden und/oder Defekte handelt, die auf falschem Einbau oder Gebrauch, nicht korrekter Wartung oder Änderungen beruhen, die ohne die Genehmigung des Herstellers ausgeführt wurden.
Die Garantie deckt keine Teile ab, die infolge des normalen Gebrauchs verschleißen, und auch keine elektrischen Teile.
Genauer geagt verfällt die Garantie in folgenden Fällen:
- Das Druckluft Vibratoren wurde manipuliert oder abgeändert;
- wurde nicht angewandt;
- bei seinem Gebrauch wurden die in diesem Handbuch genannten Einsatzbeschränkungen nicht beachtet und/oder es wurde zu starken mechanischen Belastun gen ausgesetzt;
- er wurde nicht der erforderlichen Wartung unterzogen oder diese wurde nur teilweise und/oder nicht korrekt ausgeführt;
- es wurde beschädigt, weil Transport, Einbau oder Gebrauch ohne die erforderliche Sorgfalt vorgenommen wurden;
- es wurden keine Original-Ersatzteile verwendet.

Beim Empfang der Ware hat der Empfänger sicherzustellen, dass die Ware keine durch den Transport verursachten Schäden oder Defekte aufweist, und/ oder dass der Lieferumfang vollstän-dig ist.
Etwaige Defekte, Schäden oder Fehlmengen sind mittels schriftlicher und vom Frachtführer gegengezeichneter Mitteilung sofort dem Hersteller zu melden.

La Société OLI S.r.l reconnaît une période de 12 mois de garantie sur les produits de sa fabrication. La période prend effet à compter de la date indiquée sur le bon de livraison.
La garantie ne s'applique pas à la suite de ruptures et/ou de défauts provoqués par un montage et une utilisation impropre, des entretiens qui ne sont réalisés correctement ou des modifications apportées sans autorisation du constructeur.
La garantie s'étend aux pièces qui s'usent à la suite d'une utilisation normale et aux parties électriques.
Plus précisément la garantie est sans effet si le vibrateurs pneumatique :
- a été manipulé ou modifié,
- a été utilisé de manière incor recte,
- a été utilisé sans respecter les limites indiquées dans la présen te notice et/ou qu'il a été soumis à des contraintes mécaniques excessives
- il n'a pas été soumis aux entretiens nécessaires ou que ces opérations ont été effectuées partiellement, de manière incom plète ou incorrecte
- a subit des dommages par négligence pendant le transport, la mise en place et l'utilisation,
- a été réparé avec des pièces qui ne sont pas d'origine.

Dès réception de la marchan dise, le destinataire doit vérifier que celle-ci n'a pas de défauts ou subit de dégâts dus au tran sport et que la fourniture n'est pas incomplète.
Tout défaut, dommage ou four niture incomplète doit immédia tement être signalée au construc teur par communication écrite et contresignée par le tran sporteur.

La OLI S.r.l riconosce un periodo di 12 mesi di garanzia sui prodotti di propria costruzione. Il periodo decorre dalla data della bolla di consegna.
La garanzia non è applicabile a seguito di rotture e/o difetti causati da errata installazione o utilizzo, oppure da manutenzioni non corrette o modifiche apportate senza autorizzazione del costruttore.
La garanzia non si estende alle parti che si logorano in seguito al normale uso e alle parti elettriche.
A miglior precisazione la garanzia decade nei casi in cui il vibratore pneumatico:
- sia stato manomesso o modificato,
- sia stato utilizzato non correttamente,
- sia stato utilizzato non rispettando i limiti indicati nel presente manuale e/o sia stato sottoposto ad eccessive sollecitazioni meccaniche,
- non sia stato sottoposto alle necessarie manutenzioni o queste siano state eseguite solo in parte e/o non correttamente,
- abbia subito danni per incuria durante il trasporto, l'installazione e l'utilizzo,
- siano state inserite parti di ricambio non originali.

Al ricevimento del prodotto, il destinatario deve verificare che lo stesso non presenti difetti o danni derivanti dal trasporto e/o incompletezza della fornitura.
Eventuali difetti, danni o incompletezza vanno immediatamente segnalati al costruttore mediante comunicazione scritta e controfirmata dal vettore.

**TRANSPORT**

When the filter is delivered, make sure that the type and quantity of the materials consigned comply with the information on the order confirmation.
Immediately inform the haulage contractor in writing if damage is discovered, using the relative space on the consignment form.
The driver is obliged to accept the complaint and to issue you with a copy. If the filter has been supplied carriage forward, either sent your complaint to us or straight to the haulage contractor. Damages will only be reimbursed if you have notified the matter on receipt of the goods.
Prevent all type of damage during the unloading and handling operations.
Always bear in mind you are dealing with mechanical equipment which must be treated with care.

**TRANSPORT**

Bei Erhalt der Ware sicherstellen, ob Typ und Menge mit den Daten auf der Bestellung übereinstimmen.
Etwaige Transportschäden sind sofort auf dem Schriftwege zu melden, und zwar durch Eintragen auf dem Lieferschein.
Der Fahrer ist verpflichtet, diese Reklamation anzunehmen und Ihnen eine Kopie davon auszuhändigen. Wenn die Lieferung frei Haus erfolgt, senden Sie Ihre Reklamation an uns, andernfalls direkt an den Frachtführer. Die Entschädigung erfolgt nur, wenn der Schaden gleich bei Empfang der Ware gemeldet wird.
Vermeiden Sie jede Art der Beschädigung beim Abladen und Bewegen.
Immer berücksichtigen, daß es sich um mechanische Elemente handelt, die mit Vorsicht zu behandeln sind.

**TRANSPORT**

Au moment où vous recevez la machine, vérifiez si la typologie et la quantité correspondent bien aux données qui se trouvent sur la confirmation de la commande.
Si vous constatez des dommages, vous devez immédiatement le déclarer en l'écrivant dans l'emplacement réservé à cet effet sur la lettre de voiture.
Le chauffeur est obligé d'accepter votre réclamation et de vous en laisser une copie. Si la fourniture a été livrée franco destination, envoyez-nous votre réclamation, sinon envoyez-la directement au transporteur.
Vous ne pourrez être remboursé des dommages et intérêts que si vous avez déclaré le dommage au moment où vous avez reçu la machine. Faites bien attention à ne pas abîmer la machine durant son déchargement et sa manutention.
Rappelez-vous qu'il s'agit de matériel mécanique qui doit être déplacé avec le plus grand soin.

**TRASPORTO**

Al ricevimento della merce controllare se la tipologia e la quantità corrispondono con i dati della conferma d'ordine.
Eventuali danni devono essere fatti presenti immediatamente per iscritto nell'apposito spazio della lettera di vettura.
L'autista è obbligato ad accettare un tale reclamo e lasciarne una copia a Voi. Se la fornitura è franco destino, inviate il vs. reclamo e noi, altrimenti direttamente allo spedizioniere. Il risarcimento avviene soltanto se avete fatto presente il danno all'atto del ricevimento.
Evitate ogni tipo di danneggiamento durante lo scarico e le movimentazioni.
Tenete conto che si tratta di materiale meccanico che deve essere movimentato con cura.

**PACKING**

NOTE:
It is the installer's responsibility to dispose off the packaging in a suitable manner, in compliance with existing legislation.

**PACKUNG**

N.B.:
Der Anlagenaufsteller ist dafür verantwortlich, das Verpackungsmaterial auf angemessene Art und in Übereinstimmung mit den einschlägigen, geltenden Gesetzen zu entsorgen.

**EMBALLAGE**

N.B.:
L'installateur doit, à ses frais, éliminer les emballages de manière adéquate et conformément aux lois en vigueur en la matière.

**IMBALLO**

N.B.:
è a cura dell'installatore smaltire gli imballi in modo adeguato e secondo le leggi vigenti in materia.

**1)STORAGE PRIOR TO INSTALLATION**
- Avoid damp, salty environments, if possible.
- Place the component on wooden platforms and store it protected from unfavourable weather conditions.

**2)PROLONGED MACHINE SHUTDOWNS AFTER ASSEMBLY**
- Before starting up the component, set it in safety status.
- Before starting up the component, check the condition of the electric and pneumatic system and all parts for which long shutdowns may affect working.

**3) POSSIBLE REUSE AFTER PERIODS OF INACTIVITY**
- During component halts, avoid-damp, salty environments.
- Place the component on wooden platforms and store it protected from unfavourable weather conditions.
- Set the component in safety status before starting it up.
- Before starting up the component, check the condition of the electric and pneumatic systems and all parts for which long shutdowns may affect working.
- Before starting up the component, clean it thoroughly by following the indications on the powder safety sheet.
- If the component operates in conditions and with materials different from the previous application, check the compatibility of this use according to the indications in the INDICATIONS FOR USE section.

**1) EINLAGERUNG VOR DEM EINBAU**
- Feuchte und salzhaltige Luft für die Einlagerung vermeiden.
- Den Bauteil auf einer Holzpalette setzen und vor Witterung schützen.

**2) LÄNGERE BETRIEBSRUHE NACH DEM EINBAU**
- Vor der Inbetriebnahme ist der Bauteil in einen sicheren Zustand zu bringen.
- Vor der Inbetriebnahme des Bauteils die elektrische und pneumatische Anlage und alle Teile, deren Funktionstüchtigkeit die bei einem längeren Stillstand in Frage gestellt werden könnte, prüfen.

**3) MÖGLICHE WIEDERVERWENDUNG NACH EINEM LÄNGEREN STILLSTAND**
- Während des Stillstands des Bauteils Räume mit feuchter und salzhaltiger Luft vermeiden.
- Den Bauteil auf eine Holzpalette setzen und vor Witterung schützen.
- Vor der Inbetriebnahme ist der Bauteil in einen sicheren Zustand zu bringen.
- Vor der Inbetriebnahme des Bauteils die elektrische und pneumatische Anlage und alle Teile, deren Funktionstüchtigkeit die bei einem längeren Stillstand in Frage gestellt werden könnte, prüfen.
- Vor der Inbetriebnahme des Bauteils ist ein vollständiger Abreinigungszyklus vorzunehmen, wobei das zu beachten ist, was auf dem Sicherheits-Datenblatt des entsprechenden Erzeugnisses steht.
- Wenn der Bauteil unter Bedingungen oder mit Material betrieben wird, das vom vorherigen Einsatz abweicht, ist die Verträglichkeit für den neuen Einsatz mit den BEDIENSUNGSANLEITUNG zu vergleichen.

**1) EMMAGASINAGE AVANT LA MISE EN PLACE**
- Si possible éviter les locaux humides et les saumâtres
- Placer le composant sur des palettes en bois et les ranger à l'abri des intempéries.

**2) ARRÊT MACHINE PROLONGÉ APRÈS LE MONTAGE**
- Avant la mise en service mettre le composant en sécurité.
- Avant la mise en service du composant contrôler l'intégrité de l'équipement électrique et de toutes les parties pour lesquelles un arrêt prolongé pourrait compromettre le fonctionnement.

**3) RÉ-UTILISATION APRÈS UNE PÉRIODE D'INACTIVITÉ**
- Pendant la période d'inactivité du composant éviter les locaux humides et saumâtres
- Placer le composant sur des palettes en bois et les ranger à l'abri des intempéries.
- Avant la mise en service mettre le composant en sécurité
- Avant la mise en service du composant contrôler l'intégrité de l'équipement électrique et de toutes les parties pour lesquelles un arrêt prolongé pourrait compromettre le fonctionnement.
- Avant la mise en service du composant effectuer un cycle complet de nettoyage en respectant ce qui est indiqué sur la fiche de sécurité de la poussière.
- Si le composant travaille dans des conditions et avec des matières différentes de l'application précédente, vérifier la compatibilité de cette utilisation d'après ce qui est indiqué dans la section MODE D'EMPLOI.

**1) IMMAGAZZINAGGIO PRIMA DELL'INSTALLAZIONE**
- Evitare possibilmente ambienti umidi e salmastri.
- Sistemare il componente su pedane di legno e locarle al riparo dalle intemperie.

**2) FERMO COMPONENTE PROLUNGATO DOPO IL MONTAGGIO**
- Prima della messa in servizio mettere in sicurezza il componente.
- Prima della messa in servizio del componente controllare l'integrità dell'impianto elettrico, pneumatico, e di tutte le parti per le quali un prolungato arresto potrebbe compromettere la funzionalità.

**3)POSSIBILE REIMPIEGO DOPO PERIODO DI INATTIVITA'**
- Durante il fermo componente evitare ambienti umidi e salmastri.
- Sistemare il componente su pedane di legno e locarle al riparo dalle intemperie.
- Prima della messa in servizio mettere in sicurezza il componente.
- Prima della messa in servizio del componente controllare l'integrità dell'impianto elettrico, pneumatico, e delle parti per le quali un prolungato arresto potrebbe compromettere la funzionalità.
- Prima della messa in servizio del componente eseguire un ciclo completo di pulizia rispettando quanto riportato sulla scheda di sicurezza della polvere.
- Se il componente opera in condizioni e con materiali diversi dall'applicazione precedente, verificare la compatibilità di tale utilizzo secondo quanto riportato nel sezione INDICAZIONE PER L'USO.

NOTE
The pneumatic vibrator must be positioned in such a manner that:
- the area around the pneumatic vibrator must be made safe as per Directive ATEX 94/9/CE.

By safe place is meant an outside area in which suitable warning notices are present during the working of the pneumatic vibrator, see Sect. 26 residual risks, and where there are no plant parts that can get damaged or inflammable material deposit.

**INSTALLATION**
The unit must be fastened to a clean and level surface with two fastening screws (for screw size and tightening torque see table).
Use self-locking screw retention washers (no spring washers).
Use self-locking nuts or e.g. Loctite 270 against loosening.

**It is highly recommended to use a reinforcement section (U-section) as substructure. This reinforcement section should be welded to the object. This allows optimal transfer of the vibration energy - and saves any direct damage to the object.**

**ASSEMBLY INSTRUCTIONS:**
The frame on which the pneumatic vibrator is mounted must be in equipotential.
The vibrator must be fixed to the frame by means of bolts and washers; the toothed washer (UNI8842) must be fitted in contact with the body.
The wire terminal must be connected to an earth wire.
**Checklist for Assembly and Commissioning:**
1) Install the unit carefully. Secure the fastening screws.
2) Install service unit (filter, regulator), valve and supply line.
3) If necessary install lubricator and adjust oil flow (2 to 5 drops an hour) .
4) Check: Are fastening screws secured?
   Have notes on hose length and nominal width been observed?

ANM
Der pneumatische Vibrator muss so angeordnet werden, dass:
- der Bereich rings um den pneumatischen Vibrator gemäß der Richtlinie ATEX 94/9/EG sicher gestaltet ist.

Unter einem sicheren Ort versteht man einen Außenbereich, in dem während des Betriebs des pneumatischen Klopfers eine entsprechende Beschilderung angebracht ist. Siehe Teil 26 Restrisiken. Außerdem dürfen keine Anlagenteile vorhanden sein, die beschädigt werden könnten, oder Lager mit entflammbaren Materialien.
**EINBAU**
Der Einbau erfolgt mittels zweier Befestigungsschrauben. Die Oberfläche muß sauber und eben sein (Schraubengröße und Anzugsmomente: siehe Tabelle).
Selbstsichernde Unterlegscheiben, jedoch keine Federringe verwenden.
Selbstsichernde Muttern gegen Lösen oder aber z.B. Loctite 270 verwenden.

**Besonders zu empfehlen ist ein Versteifungsprofil (U-Stahl) als Unterbau. Das Versteifungsprofil muß an das zu vibrierende Objekt angeschweißt werden. Dadurch wird die Vibrationsenergie optimal übertragen.**

**MONTAGEANLEITUNGEN:**
Die Struktur, auf welcher der pneumatische Vibrator installiert ist, muss Potentialausgleich haben.
Der Vibrator muss mit den dafür bestimmten Schrauben und Unterlegscheiben an der Struktur befestigt werden. Die Zahnscheibe (UNI8842) muss im Kontakt mit dem Gehäuse montiert werden. Die Kabelöse muss an einem Erdungskabel angeschlossen werden.
**Checkliste für Montage und Inbetriebnahme**
1) Geräte sorgfältig montieren. Befestigungsschrauben sichern.
2) Wartungseinheit (Filter, Regler), Ventil, Zuleitung einbauen.
3) Ggfls. Nebelöler einstellen (2-5 Tropfen/h) und Abluft ableiten.
4) Prüfen, ob Befestigungsschrauben gesichert sind und Angaben über Schlauchlänge und Nennweite beachtet wurden.

REMARQUE
Le vibrateur pneumatique doit être mis en place en respectant les règles suivantes :
- la zone tout autour du vibrateur pneumatique doit être mise en sécurité conformément à la directive ATEX 94/4/CE.

Par lieu sûr on entend une zone extérieure dans laquelle, pendant le fonctionnement du vibrateur pneumatique, sont apposés des panneaux de signalisation appropriés (voir sect. 26 risques résiduels). En outre il ne doit pas y avoir de parties d'installation endommageables ou des dépôts de matières inflammables.
**MONTAGE**
Le montage est réalisé par deux vis de fixation sur une surface propre et plane (taille des vis et couple de serrage, voir tableau) et avec des rondelles d'arrêt autobloquantes (pas de rondelles ressorts). Contre le desserrage, utilisez des écrous indesserrables ou un agent liquide antidesserrage, par ex. Loctite 270.

**Nous recommandons de prévoir comme support un profilé de raidissement (fer U) soudé sur l'objet à vibrer, ce qui permet une transmission optimale de l'énergie de vibration.**

**INSTRUCTIONS DE MONTAGE:**
La structure sur laquelle est monté le vibrateur pneumatique doit être en équipotentialité.
Le vibrateur doit être fixé à la structure au moyen de vis et de rondelles; la rondelle crantée (UNI8842) doit être montée en contact avec le corps. La cosse doit être branchée à un câble de mise à la terre.
**Check-list de montage et de mise en service** :
1) Monter soigneusement l'appareil, serrer et bloquer les vis de fixation.
2) Monter l'unité de conditionnement (filtre, régulateur), la vanne, la conduite d'amenée.
3) En cas de nécessité, régler le graisseur.
4) Vérification: Les vis de fixation sont-elles freinées ?
   La longueur des flexibles et leur diamètre nominal ont-elles été respectées ?

NOTA
Il vibratore pneumatico, deve essere posizionato in modo che:
- la zona circostante al vibratore pneumatico deve essere resa sicura come da direttiva ATEX 94/9/CE.

Per luogo sicuro s'intende una zona esterna nella quale durante il funzionamento vibratore pneumatico, sia apposta l'adeguata cartellonistica, vedi sez.26 rischi residui, inoltre non siano presenti parti d'impianto danneggiabili o depositi di materiali infiammabili.

**INSTALLAZIONE**
- Fissare l'unità ad una superficie piana e pulita utilizzando due viti di serraggio (per la misura delle viti e la coppia di serraggio si veda la tabella).
- Utilizzare rondelle d'arresto autobloccanti (non utilizzare rondelle elastiche). Per evitare che le rondelle si allentino, utilizzare dadi antobloccanti o Loctite 270.

**Si raccomanda di impiegare come sottostruttura un profilato di rinforzo (sezione a U), da saldare all'oggetto in lavorazione. Ciò consente il trasferimento ottimale dell'energia vibrante, preservando l'oggetto da eventuali danneggiamenti.**

**ISTRUZIONI PER IL MONTAGGIO :**
La struttura su cui è montato il vibratore pneumatico deve essere in equipotenzialità.
Il vibratore deve essere fissato alla struttura mediante le apposite viti e rondelle; la rondella dentata (UNI8842) deve essere montata a contatto con il corpo.
Il capicorda deve essere collegato ad un cavo per la messa a terra.
**Checklist per montaggio e messa in funzione**:
1) Installare l'unità con precauzione. Serrare le viti di fissaggio.
2) Installare l'unità di servizio (filtro, regolatore), la valvola e la linea di alimentazione.
3) Se necessario, installare il lubrificatore e regolare il flusso d'olio (da 2 a 5 gocce all'ora).
4) Controllare: Le viti di fissaggio sono serrate?
   Sono state rispettare le indicazioni relative alla lunghezza del tubo e allo spessore nominale?

| Type | Thread<br>*Gewinde*<br>Filetage<br>*Filetto* | Tightening torque<br>*Anzugsmoment*<br>Couple de serrage<br>*Coppia di serraggio* | Supply line thread<br>*Anschlußgewinde*<br>Filetage<br>*Filettatura ingresso aria* | Supply line diameter<br>*Zuleitung*<br>Conduite d'amenée<br>*ø Nominale tubo alimentazione* |
|---|---|---|---|---|
| **S8 - S10** | M 6 | 10.4 Nm | 1/8" | DN 6 |
| **S13 - S16 - S20 - S25** | M 8 | 25.0 Nm | 1/4" | DN 10 |
| **S30 - S36** | M 10 | 51.0 Nm | 3/8" | DN 12 |
| **OR50** | M 6 | 10.4 Nm | 1/8" | DN 6 |
| **OR65** | M 8 | 25.0 Nm | 1/4" | DN 10 |
| **OR80** | M 10 | 51.0 Nm | 1/4" | DN 12 |
| **OR100** | M 12 | 85.0 Nm | 3/8" | DN 12 |
| **OT8 - OT10 - OT105** | M 6 | 10.4 Nm | 1/8" | DN 6 |
| **OT13 - OT16 - OT165** | M 8 | 25.0 Nm | 1/4" | DN 8 |
| **OT20 - OT25 - OT255** | M 8 | 25.0 Nm | 1/4" | DN 10 |
| **OT30 - OT36 - OT365** | M 10 | 51.0 Nm | 3/8" | DN 12 |

- The user is entirely responsible if the pneumatic vibrator is installed in any way other than that indicated above.
- The component does not require special lighting; the component installer is however responsible for ensuring uniform lighting in the area on the basis of the indications of the relevant regulation.
- It is the installer's responsibility to check the suitability of the site for plant installation.
- Depending on the assembly height, the necessary Personal Protection Devices (PPD) must be provided.

- Positionierungen des pneumatischen Vibrators, die von denen abweichen als oben angegeben sind, führen dazu, dass die gesamte Verantwortlichkeit auf den Anwender übergeht.
- Der Bauteil braucht keine besondere Beleuchtung. Der Monteur des Bauteils ist auf jeden Fall dazu angehalten, das Vorhandensein einer gleichmäßigen Ausleuchtung des Bereichs zu gewährleisten, so wie es die geltenden Bestimmungen angeben.
- Der Monteur ist dafür verantwortlich, die Eignung des Raums zu prüfen, in dem die Anlage aufgestellt wird.
- Je nach der Einbauhöhe sind angemessene PSA (persönliche Schutzausrüstungen) bereitzustellen.

- Tout positionnement différent du vibrateur pneumatique rend l'utilisateur entièrement responsable.
- Le composant n'exige pas un éclairage particulier; l'installateur du composant doit assurer la présence d'un éclairage approprié dans la zone sur la base des indications de la réglementation concernée.
- L'installateur doit vérifier la conformité du site qui accueille l'installation.
- En fonction de la hauteur de montage prévoir les DPI (dispositifs de protection individuelle) nécessaires.

- Posizionamenti del vibratore pneumatico diversi da quanto sopra indicato determinano la totale assunzione di responsabilità da parte dell'utilizzatore.
- Il componente non necessita di un'illuminazione particolare; l'installatore del componente è comunque tenuto ad assicurare la presenza di un'omogenea illuminazione nell'area in base alle indicazioni della normativa pertinente.
- E' a carico dell'installatore verificare l'idoneità del sito che ospiterà l'impianto.
- In funzione dell'altezza di montaggio predisporre i DPI (dispositivi di protezione individuali) necessari".

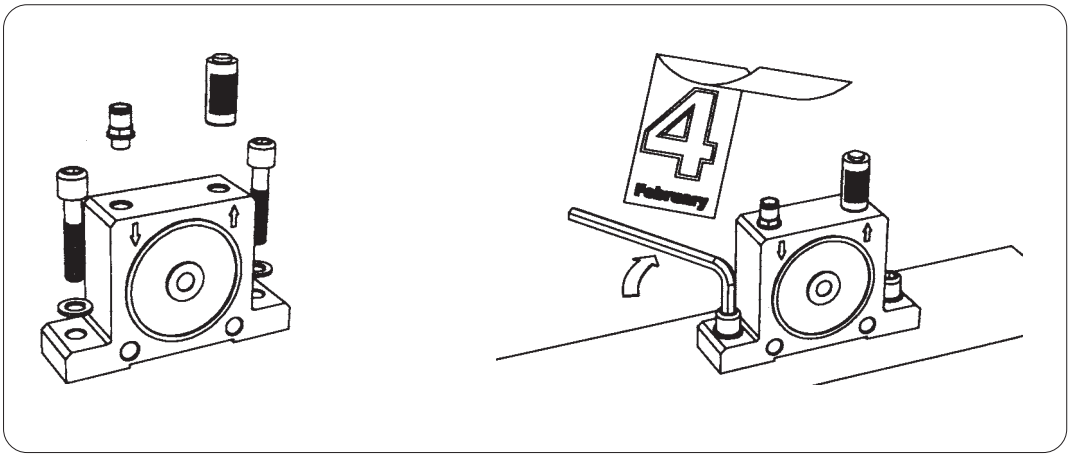


| NOTE | ANM.: | REMARQUE | NOTA |
|---|---|---|---|
| Check the earth connection. | Die Erdung prüfen. | Vérifier la mise à la terre. | Verificare la messa a terra. |

**COMPRESSED AIR REQUISITES**
The compressed air supplied to the various utilities must have certain special features:
1) **clean**: free of scale which could damage the solenoid valves present on the pneumatic actuator.
2) **dehumidified**: use of a condensate trap is advisable.
3) **lubricated**: Specify the models that require lubrication and those that do not (Tables Data)

**Attention**: before connecting the compressed air to the pneumatic actuator utilities, empty the pipes

**ANFORDERUNGEN AN DIE DRUCKLUFT**
Die Druckluft, die verschiedene Verbraucher versorgen muss, muss folgende Eigenschaften haben:
1) **rein:** sie darf keine Teilchen enthalten, mit denen die Magnetventile des pneumatischen Antriebs beschädigt werden könnten.
2) **trocken:** Die Verwendung eines Kondensatabscheiders ist empfehlenswert.
3) **geschmiert:** Die Modelle benutzen, die Schmierung brauchen bzw. nicht (Daten der Tabellen).

**Achtung.** Vor dem Anschließen der Druckluft an die Verbraucher des pneumatischen Antriebs sind die Leitungen zu entleeren.

**AIR COMPRIMÉ REQUIS**
L'air comprimé qui doit alimenter les différentes utilisations doit avoir les requis suivants :
1) **Propre**: sans impuretés pouvant endommager les électrovannes présentes sur le percuteur pneumatique.
2) **Déshumidifié**: il convient de prévoir l'utilisation d'un séparateur d'eau de condensation.
3) **Lubrifié**.

**Attention**: avant de brancher l'air comprimé aux utilisations du vibrateur pneumatique vider les tuyauterie

s.

**REQUISITI ARIA COMPRESSA**
L'aria compressa che deve alimentare le varie utenze ha bisogno di particolari caratteristiche:
**1) pulita:** esente da scorie che potrebbero danneggiare le elettrovalvole presenti sull'attuatore pneumatico.
**2) deumidificata:** è opportuno prevedere l'utilizzo di un separatore di condensa.
**3) lubrificata:** Inserire i modelli che richiedono lubrificazione e quali no. (Dati tabelle)

**Attenzione:** prima di collegare l'aria compressa alle utenze dell'attuatore pneumatico vuotare le tubazioni.

**PNEUMATIC CONNECTION**
**Supply line**
The air resistance increases with the length of the pipe. For pipe lengths of up to 3m then the minimum length is required for the following cross section. For longer supply lines it is recommended to use bigger cross sections.
**Air discharge**
If the air flowing out is discharged and the vibrator is at full power, the discharge pipe must have a bigger nominal width than the supply pipe.

**PNEUMATISCHE ANSCHLÜSSE**
**Zuleitung**
Der Luftwiderstand steigt mit der Schlauchlänge. Bei Schlauchlängen bis max. 3 m bis zum nächstgrößeren Leitungsquerschnitt sind die in der Tabelle angegebenen Mindestquerschnitte zu empfehlen.
Für längere Zuleitungen sollten die Querschnitte größer sein.
**Ableitung**
Wenn die austretende Luft abgeführt wird und der Vibrator die volle Leistung erzielen soll, so muß der Ableitungsschlauch eine größere Nennweite haben als der Zuleitungsschlauch.

**RACCORDEMENTS PNEUMATIQUES**
**Conduite d'amenée**
La résistance de l'air augmente avec la longueur des flexibles. Avec des flexibles d'une longueur maximum de 3 m, nous recommandons les sections figurant dans le tableau. Pour les conduites d'amenée plus longues, nous recommandons des sections plus importantes.
**Conduite d'évacuation**
Si l'air sortant est évacué, il est nécessaire que le flexible d'évacuation présente un diamètre supérieur à celui de la conduite d'amenée d'air.

**COLLEGAMENTI PNEUMATICI**
**Linea di alimentazione**
La resistenza dell'aria aumenta con la lunghezza del tubo. In caso di tubi fino a 3 metri di lunghezza, si raccomandano le sezioni minime indicate in tabella. Per tubi di lunghezza superiore, si consiglia di utilizzare sezioni maggiori.
**Scarico dell'aria**
In caso di scarico dell'aria che fuoriesce e se il vibratore è a piena potenza, il tubo di scarico deve avere uno spessore nominale maggiore di quello del tubo di alimentazione.

**The air inlet has a smaller opening than the air outlet. Both are marked on the front side by arrows.**
**The pressurized air infeed must be fixed safely.**
**Mixing up air inlet and air outlet leads to loss in performance.**

**Der Lufteinlaß hat eine kleinere Öffnung als der Luftauslaß. Beide sind auf der Vorderseite durch Pfeile gekennzeichnet.**
**Die Druckluftzuführung muß sicher befestigt werden.**
**Eine Verwechslung von Luftein- und Luftausgang hat einen Leistungsverlust zur Folge.**

**L'entrée d'air a une ouverture plus petite que la sortie d'air. Toutes les deux sont marquées avec des flèches. La conduite d'air comprimé doit être fixée de manière sûre.**
**La confusion d'entrée et sortie a comme conséquence une perte de performance.**

**L'entrata dell'aria presenta un'apertura più piccola rispetto all'uscita. Entrambe sono contrassegnate sulla parte anteriore da frecce.**
**Il raccordo di alimentazione dell'aria sotto pressione deve essere fissato in modo sicuro.**
**La miscelazione di aria in entrata e in uscita provoca perdite nelle prestazioni.**

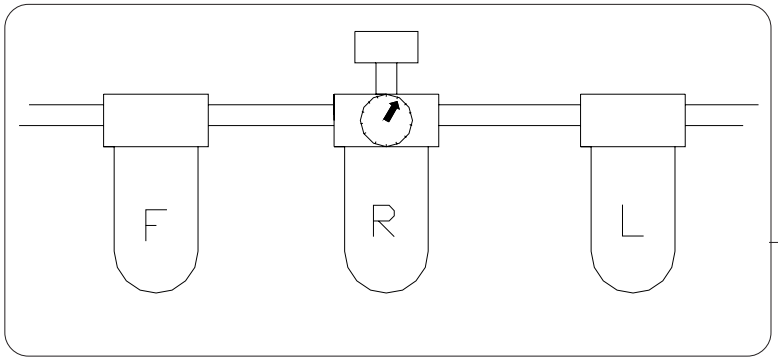


use oil only - *Nur Öl benutzen*
Utiliser uniquement de l'huile - *usare solo olio*

**ISOVG5**
**(5 cST / 40°C)**

**ATTENTION: use pipes and accessories suitable for the operating temperatures.**

**WARNING: Fix flexible compressed air hose pipes and provide necessary precautions against unwanted detachment of a pipe section.**

**ACHTUNG: Leitungen und Zubehörteile benutzen, die für die Betriebstemperaturen geeignet sind.**
**WARTUNG: Die Druckluftschläuche fachmännisch befestigen und die notwendigen Vorkehrungen gegen ein unvorgesehenes Ablösen eines Teils der Leitung treffen.**

**ATTENTION: adopter des tuyauteries et des accessoires appropriés aux températures d'utilisation.**
**IMPORTANT: Fixer correctement les tuyaux d'air comprimé et prendre les précautions nécessaires contre le décrochage soudain d'un tronçon de tuyauterie.**

**ATTENZIONE :adottare tubazioni e accessori idonei alle temperature d'utilizzo.**

**IMPORTANTE: Fissare correttamente i tubi flessibili dell'aria compressa e predisporre le dovute precauzioni contro il distacco improvviso di un tratto di tubazione.**

**ELECTRICAL CONTROLLER**
Connect the earth wire to the point provided on the pneumatic vibrator.

**Set the component in safety status before carrying out any operation.**

**COMMISSIONING AND OPERATION**
The vibrator can be commissioned immediately after the correct installation. Make sure that the pressure in the air system is able to meet the air consumption value specified in the operating instructions. Otherwise the vibrator will not be able to work according to the technical specifications.

**Screw connections must be checked and retightened after 1 hour of operation and then at regular intervals (normally every month).**

**ELEKTRISCHE ANSCHLÜSSE**
Das Erdungskabel mit der Stelle verbinden, die auf dem pneumatischen Vibrator dafür vorgesehen ist.

**Vor der Ausführung jeder beliebigen Arbeit das Bauteil in einen sicheren Zustand versetzen.**

**INBETRIEBNAHME UND BETRIEB**
Die Inbetriebnahme der Vibratoren erfolgt sofort nach der fachgerechten Montage. Sicherstellen, daß der in der Betriebsanleitung angegebene Luftverbrauchswert vom Druckluftsystem auch geliefert wird. Andernfalls wird der Vibrator die technischen Daten nicht erzielen.

**Nach einer Stunde Betrieb die Schraubverbindungen erstmalig, danach regelmäßig (möglichst einmal monatlich) überprüfen und ggfls. nachziehen.**

**RACCORDEMENTS ÉLECTRIQUES**
Brancher le câble de mise à la terre à l'endroit prévu sur le vibrateur pneumatique.

**Avant toute opération mettre le composant en condition de sécurité.**

**MISE EN SERVICE ET UTILISATION**
À l'issue d'un montage approprié, la mise en service du vibrateur peut intervenir immédiatement. Assurez-vous que la consommation d'air indiquée dans les instructions de service peut être effectivement fournie par votre système d'alimentation en air comprimé. Sinon, le vibrateur ne pourra atteindre les caractéristiques techniques prévues.

**Les vis visses devront être vérifiées après la première heure de service, puis régulièrement (tous les mois). Le cas échéant, les vis seront resserrées.**

**COLLEGAMENTI ELETTRICI**
Collegare il cavo di messa a terra all'apposito punto dedicato sul vibratore pneumatico

**Prima di qualsiasi intervento mettere il componente in sicurezza.**

**MESSA IN FUNZIONE E USO**
Se installato correttamente, il vibratore può essere messo immediatamente in funzione. Assicurarsi che la pressione del sistema pneumatico sia in grado di soddisfare il valore di consumo d'aria specificato nelle istruzioni per l'uso. In caso contrario il vibratore non potrà funzionare in conformità alle specifiche tecniche.

**Controllare i raccordi a vite e serrarli di nuovo dopo un'ora di funzionamento e poi a intervalli regolari (in genere una volta al mese).**

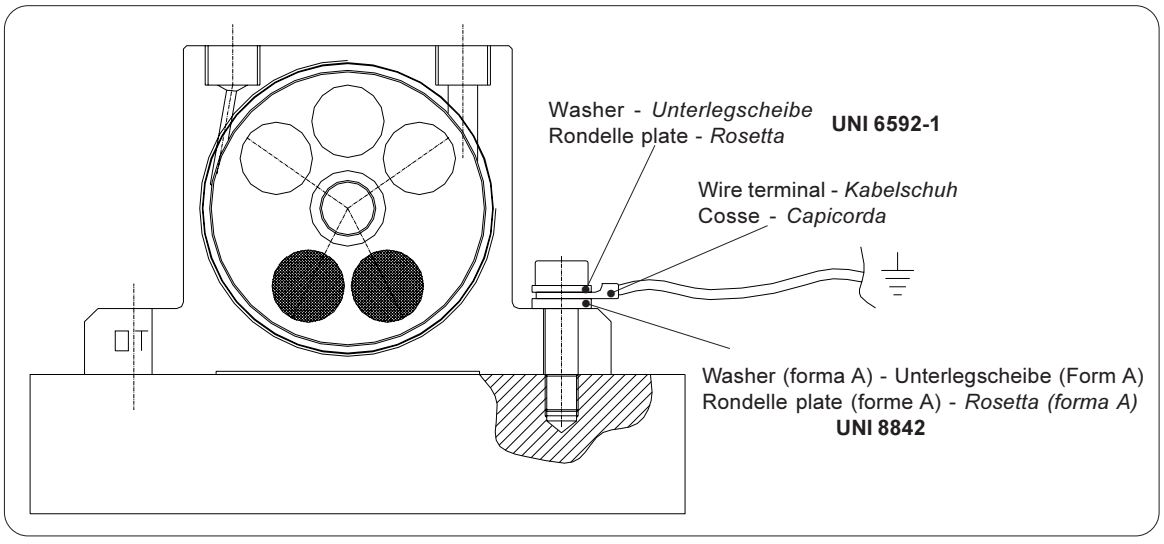

**Set the component in safety status before carrying out any operation.**

- If work is to be carried out on parts at the top of the pneumatic vibrator, use a work area platform which must be selected in such a manner as to avoid risk of slipping, tripping or falling of operators.

**S** and **OR**-vibrators are maintenance-free. From outside they can be cleaned with a water jet. Operate the vibrator for a short while after.

**WARNING**
**Dirty compressed air causes clogging of filter and silencer.**
**If necessary empty the filter, clean filter element and silencer (wash out).**

**REPLACING "OT" SERIES BEARINGS**

**Vor der Ausführung jeder beliebiger Arbeit ist der Bauteil in einen Zustand versetzen.**

- Wo sich Teile des pneumatischen Vibrators in größerer Höhe befinden, eine Arbeitsplattform zu benutzen, die so zu wählen ist, dass eine Gefährdung des Personals in Form von Ausrutschen, Hängenbleiben oder Absturz vermieden wird.

**S-**und **OR**- Vibratoren sind wartungsfrei. Sie können von außen mit einem Wasserstrahl gereinigt werden. Nach der Reinigung den Vibrator kurz betätigen.

**ACHTUNG**
**Schmutzige Druckluft führt zur Verschmutzung von Filter und Schalldämpfer.**
**Filter ggfls. leeren, den Filtereinsatz und den Schalldämpfer reinigen bzw. auswaschen.**

**ERSETZEN DER LAGER SERIEN „OT"**

**Avant toute opération mettre le composant en condition de sécurité.**

- Pour atteindre des parties du vibrateur pneumatique en hauteur, utiliser une plate-forme aérienne de travail qui devra être choisie de manière à éviter tout danger de glissement ou de chute des opérateurs.

Les **S** et **OR** ne réclament pas d'entretien. Ils peuvent être nettoyés extérieurement à l'eau sous pression. Après le nettoyage, faire brièvement fonctionner le vibrateur.

**ATTENTION**
**L'air chargé d'impuretés provoque l'encrassement du filtre et du silencieux.**
**En cas de nécessité, purger le filtre, nettoyer la garniture du filtre et le silencieux (en les lavant).**

**REMPLACEMENT DES ROULEMENTS SERIE "OT"**

**Prima di qualsiasi intervento mettere il componente in sicurezza.**

- Là dove si debbano raggiungere parti del vibratore pneumatico in quota utilizzare una piattaforma aerea di lavoro che dovrà essere scelta in modo da evitare pericoli di scivolamento, inciampo o caduta per gli operatori.

I vibratori **S** e **OR** sono esenti da manutenzione. Possono essere puliti esternamente mediante getto d'acqua. Dopo avere eseguito questa operazione, farli funzionare per un breve intervallo di tempo.

**ATTENZIONE**
**L'aria compressa contenente impurità provoca l'insudiciamento del filtro e del silenziatore. Se necessario, svuotare il filtro, pulire la cartuccia e il silenziatore (risciacquo).**

**SOSTITUZIONE CUSCINETTI SERIE "OT"**

**REPLACING "OT" SERIES BEARINGS**

**AUSTAUSCH DER LAGER SERIE „OT"**

**REMPLACEMENT DES ROULEMENTS SERIE "OT"**

**SOSTITUZIONE CUSCINETTI SERIE "OT"**

1

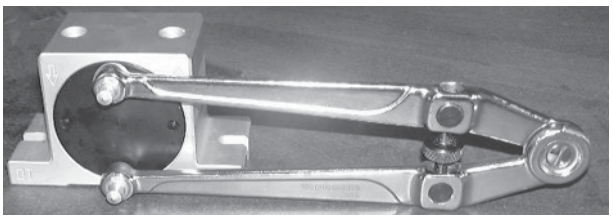

2

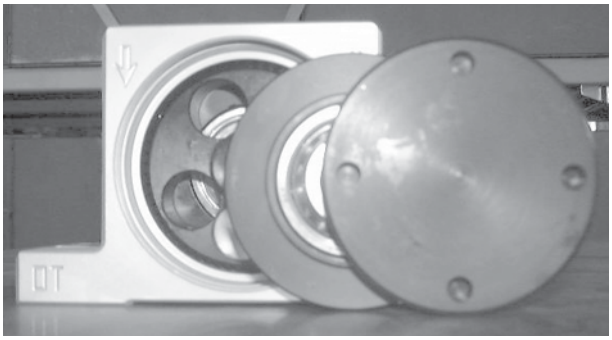

3

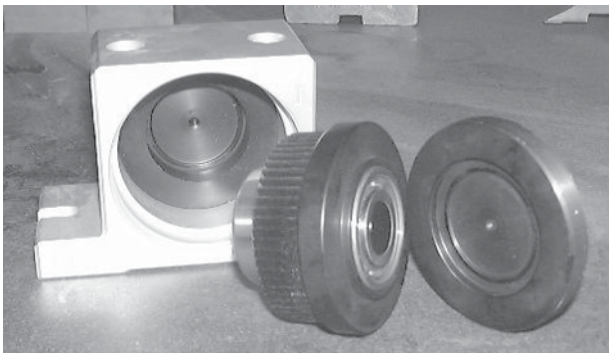

4

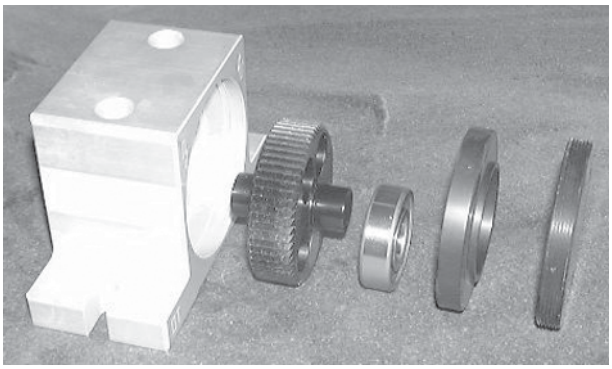

Use exclusively bearings of the following type for replacement:

Ausschließlich Lager des folgenden Typs verwenden:

Remplacer exclusivement avec des roulements type:

Sostituire esclusivamente con cuscinetti tipo:

| OT type | SKF bearing type |
|---|---|
| OT 8 | 607 ZTN9/C3 |
| OT 10 | |
| OT 10 S | |
| OT 13 | 6000 ZTN9/C3 |
| OT 16 | |
| OT 16 S | |
| OT 20 | 6203 ZTN9/C3 |
| OT 25 | |
| OT 25 S | |
| OT 30 | 6303 ZTN9/C3 |
| OT 36 | |
| OT 36 S | |

## PERIODIC CHECKS

**Set the component in safety status before carrying out any operation.**

- Clean dust deposits on a weekly basis.
- Check the tightening of the screw connectors on a monthly basis.
- Check tightening torque of the fixing screws on a monthly basis.
- Check the equipotential with the structure on which the vibrator is mounted, on a monthly basis.
- Change the ball bearings on the OT model every 3000 hours.

## CLEANING

**Set the component in safety status before carrying out any operation.**

While cleaning the dust deposited on the component, avoid throwing up dust into the surroundings and avoid dust deposits.

- The user must choose suitable cleaning products depending on the type of plant and the product handled, taking care to avoid toxic and inflammable products.
- If the pneumatic vibrator is to be used with food products, use non toxic detergents suitable for the type of application.
- The cleaning frequency depends on the type of product handled and the plant.
- In case of harmful, toxic products, cleaning wastes must be conveyed into closed tanks and disposed off according to the indications in the products safety sheet.

## REGELMÄSSIGE KONTROLLEN

**Vor der Ausführung beliebiger Arbeiten das Bauteil in einen sicheren Zustand versetzen.**

- Etwaige Staubansammlungen einmal pro Woche entfernen.
- Die Schraubanschlüsse einmal pro Monat auf festen Sitz prüfen.
- Einmal pro Monat das Anzugsmoment der Befestigungsschrauben prüfen.
- Einmal pro Monat die Struktur, an der der Vibrator befestigt ist, auf Potentialausgleich prüfen.
- Alle 3000 Betriebsstunden bei Modell OT die Kugellager prüfen.

## REINIGUNG

**Vor der Ausführung beliebiger Arbeiten das Bauteil in einen sicheren Zustand versetzen.**

Beim Entfernen von Staub, der sich eventuell auf dem Bauteil gebildet hat, dafür sorgen, dass der Staub nicht in die Umgebung verteilt wird, und vermeiden, dass sich zu viel Staub ansammelt.

- Der Anwender muss Reinigungsmittel verwenden, die zum Typ der Anlage und zum behandelten Produkt passen. Er muss auf jeden Fall dafür sorgen, dass keine giftigen oder feuergefährlichen Produkte verwendet werden.
- Falls der pneumatische Vibrator zum Verarbeiten von Lebensmitteln benutzt wird, ist es vorgeschrieben, ungiftige Reinigungsmittel zu verwenden, die zur Anwendung passen.
- Die Häufigkeit der Reinigung hängt von der Beschaffenheit des zu behandelnden Produkts und der Anlage ab.
- Falls man schädliche oder giftige Erzeugnisse verarbeitet, müssen die Reinigungsabwässer in einer geeigneten, geschlossenen Wanne gesammelt und gemäß den Angaben auf dem Sicherheits-Datenblatt entsorgt werden.

## CONTROLES PERIODIQUES

**Avant toute operation mettre le composant en condition de sécurité.**

- Chaque semaine éliminer les dépôts de poussière qui se sont accumulés.
- Tous les mois vérifier le serrage des raccords à vis.
- Tous les mois vérifier le couple de serrage des vis de fixation.
- Tous les mois vérifier l'équipotentialité avec la structure sur laquelle est fixé le vibrateur.
- Tous les 3000 heures remplacer les roulements à bille sur le modèle OT.

## NETTOYAGE

**Avant toute operation mettre le composant en condition de sécurité.**

En éliminant la poussière présente sur le composant faire attention à ne pas la disperser dans le milieu environnant et éviter toute accumulation.

- L'utilisateur doit utiliser des produits appropriés pour le nettoyage en fonction du type d'installation et du produit traité, en faisant attention à ne pas employer de produits toxique ou inflammables.
- Si le vibrateur pneumatique travaille avec des produits alimentaires il est obligatoire d'utiliser des détergents non toxiques, mais appropriés au type d'application.
- La fréquence des opérations de nettoyage dépend de la nature du produit traité et de l'équipement.
- En cas de produits nocifs ou toxiques, les eaux usées du nettoyage doivent être convoyées dans une cuve fermée adéquate et éliminées conformément à ce qui est prévu par la fiche de sécurité du produit.

## CONTROLLI PERIODICI

**Prima di qualsiasi intervento mettere il componente in sicurezza.**

- Settimanalmente rimuovere eventuali cumuli di polvere di deposito.
- Verificare mensilmente, il serraggio dei raccordi a vite.
- Verificare mensilmente, la coppia di serraggio delle viti di fissaggio.
- Verificare mensilmente, l'equipotenzialità con la struttura su cui viene fissato il vibratore.
- Sostituire ogni 3000 ore sul modello OT i cuscinetti a sfera.

## PULIZIA

**Prima di qualsiasi intervento mettere il componente in sicurezza.**

**Nella rimozione della polvere eventualmente presente nel componente, aver cura di non disperdere la polvere stessa nell'ambiente circostante e avere cura di evitare cumuli.**

- L'utilizzatore dovrà provvedere alla scelta dei prodotti idonei alle fasi di pulizia in base alla tipologia di impianto ed al prodotto trattato facendo comunque attenzione a non usare prodotti tossici o infiammabili.
- Nel caso che il vibratore pneumatico operi con prodotti alimentari è obbligatorio usare detergenti non tossici, ma idonei al tipo di applicazione.
- La frequenza delle operazioni di pulizia dipendono dalla natura del prodotto trattato e dell'impianto.
- Nel caso di prodotti nocivi, tossici, i reflui della pulitura dovranno essere convogliati in idonea vasca chiusa e smaltiti secondo quanto previsto dalla scheda di sicurezza del prodotto.

On the basis of the use of the pneumatic vibrator, the installer must inform the operator by means of specific signals, regarding the residual risks:

**1. Mechanical risk**

For maintenance operations, it is compulsory for the operator to always use personal protection equipment.

Special warning notices on each section of the machine indicate the obligatory personal protection equipment:




**2. Presence of possible residual high temperature after percussion gun stop**

During the course of maintenance and cleaning operations and in certain operating sections, the operator may enter into contact with very hot parts of the percussion gun, with the machine stopped.

Special warning notices, located at strategic points indicate the risk due to the presence of very hot surfaces and the obligation for the operator to wear personal protection equipment, especially protective gloves.




**3. Presence of potentially hazardous dusts**

In the event of both routine and extraordinary maintenance, the operator must wear suitable personal protection equipment, and in particular, use a safety mask for the respiratory tract depending on the type of dust daalt as well as gloves and clothing.

For more details, refer to the safety chart of the product handled.




Je nach Verwendung des Druckluft Vibratoren muss der Installateur das Personal durch besondere Hinweisschilder auf folgende Restrisiken hinweisen:

**1.Gefahren mechanischer Art**

Für die Wartungsarbeiten muss das Personal immer seine persönlichen Schutzausrüstungen benutzen.

Besondere Warnschilder an den einzelnen Abschnitten des Geräts geben an, welche persönlichen Schutzausrüstungen jeweils erforderlich sind:




**2. Vorliegen möglicher hoher Temperaturen nach dem Stillstand der Klopfer**

Im Laufe einiger Wartungs- und Reinigungsarbeiten und in einigen Arbeitsabschnitten kann das Personal bei stehendem Gerät in Kontakt mit Teilen der Klopfer geraten, die eine hohe Temperatur aufweisen.

Besondere Warnschilder, die an den strategischen Stellen angebracht sind, weisen auf die Gefahren hin, die sich durch die hohe Temperatur der Oberflächen ergeben und weisen das Personal darauf hin, dass es zur Verwendung der persönlichen Schutzausrüstungen verpflichtet ist, insbesondere zum Tragen von Schutzhandschuhen..




**3. Vorhandensein potentiell gefährlicher Stäube**

Bei regelmäßiger und außerordentlicher Wartung muss das Personal geeignete pers önliche Schutzausrüstungen verwenden und insbesondere Masken zum Schutz der Atemwege mit geeigneter Klasse für den aufbereiteten Staub, wie auch Schutzhandschuhe und Schutzkleidung tragen.

Für nähere Angaben ist Bezug auf das Sicherheitsdatenblatt des verwendeten Produkts zu nehmen.




L'installateur, en fonction de l'utilisation du vibrateur pneumatiques, doit informer les opérateurs, au moyen d'indications et de signalisations prévues à cet effet, sur les risques résiduels suivants :

**1. Dangers de nature mécanique**

Pour les activités d'entretien l'opérateur a l'obligation d'utiliser toujours les dispositifs de protection individuelle.

Des plaques d'avertissements apposées dans chaque section de la machine indiquent quels sont les dispositifs de protection individuelle qui sont obligatoires :




**2. Présence de hautes températures résiduelles après l'arrêt du percuteur**

Au cours des interventions d'entretien et de nettoyage et dans certaines sections de travail, l'opérateur peut entrer en contact, quand la machine est arrêtée, avec des parties du filtre dont les surfaces sont à des températures élevées.

Des plaques d'avertissement, apposées dans les endroits stratégiques, signalent le danger dû à la présence de surfaces à des températures élevées et l'obligation de l'opérateur d'utiliser les dispositifs de protection individuelle, en particulier des gants de protection.




**3. Présence de poussières potentiellement dangereuses**

Aussi bien dans le cas d'interventions d'entretien ordinaires ou extraordinaires, l'opérateur doit se doter des dispositifs de protection individuelle et en particulier il doit utiliser des masques de classe appropriée pour protéger les voies respiratoires en fonction du type de poussière traitée ainsi que de gants ou de vêtements adéquats.

Pour plus de détails consulter la fiche de sécurité du produit utilisé.




L'installatore, in base all'utilizzo del vibratore pneumatico, deve informare gli operatori, tramite appositi segnali, in merito ai seguenti rischi residui :

**1. Pericoli di natura meccanica**

Per le attività di manutenzione è fatto obbligo all'operatore di impiegare sempre i dispositivi di protezione individuale.

Apposite targhe monitorie nelle singole sezioni di macchina indicano quali dispositivi di protezione individuale si rendono obbligatori:




**2. Presenza di possibili alte temperature residue dopo l'arresto del percussore**

Nel corso di interventi manutentivi e di pulizia e in alcune sezioni di lavoro, l'operatore può entrare in contatto, a macchina ferma, con parti del percussore pneumatico con superfici ad elevata temperatura.

Apposite targhe monitorie, collocate nei punti strategici indicano il pericolo dovuto alla presenza di superfici ad elevata temperatura e l'obbligo per l'operatore di utilizzare dispositivi di protezione individuale, in particolare guanti protettivi.




**3. Presenza di polveri potenzialmente pericolose**

Nel caso di interventi sia ordinari che straordinari di manutenzione l'operatore deve dotarsi di idonei dispositivi di protezione individuale ed in particolare deve utilizzare maschere a protezione delle vie respiratorie di classe idonea in base al tipo di polvere trattata nonché di guanti o indumenti.

Per maggiori dettagli si deve far riferimento alla scheda di sicurezza del prodotto utilizzato.



- In certain handling of dusts, where hazardous substances are present, the operator concerned who has to access the machine for routine and extraordinary maintenance operations must wear suitable protective devices as indicated on the notice signs provided.




In case of operations involving heating (welding, cutting) it is necessary to clean the surface of the pneumatic vibrator first, removing all dust deposits (the layers, the deposits and accumulated combustible powder MUST be considered like any other source which can result in an explosive atmosphere).
Authorization for operations involving heating MUST be given by technical personnel specializ-ed and trained in the risk of explosion from dusts (capable of checking residual risk, suitability of tools and a knowledge of the procedures).
(The person responsible for safety must issue a “Fire Permit” to the operator).

**4. Hazards deriving from pressurized circuits (hydraulic, pneumatic)**

During mainten- ance and/or repair operations pressure must be discharged from the plants and accumulators (if present), according to the instructions given along-side the components and in the respective user manuals.

**5. Hazard generated by noise**

The user and employer are obliged to respect the legal standards as regards protection from daily personal exposure of operators to noise (in Italy L.D.277/91).

- Bei bestimmten Staubbehandlungen, wo schädliche Substanzen auftreten, muss das Personal, falls es im Laufe der regelmäßigen oder außerordentlichen Wartung damit in Kontakt kommt, persönliche Schutzausrüstungen tragen, so wie auf den vorhandenen Schildern angegeben.




Bei der Ausführung von erhitzenden Arbeiten (Schweißen, Schneiden) ist es erforderlich, die Oberfläche des pneumatischen Vibrators vorbeugend zu behandeln, um alle Staubablagerungen und in Abwesenheit atembarer Stäube durchgeführt werden. Bei der Ausführung von erhitzenden Arbeiten (Schweißen, Schneiden) ist es erforderlich, den Vibrator so vorzubereiten, dass alle Staubablagerungen entfernt werden (Schichten, Ablagerungen und Ansammlungen von brennbarem Staub MÜSSEN wie jede andere Staubquelle betrachtet werden, die zur Entstehung einer explosiven Atmosphäre beitragen kann).
Die Genehmigung zur Ausführung von Arbeiten im erwärmten Zustand DARF NUR durch spezialisiertes technisches Personal erteilt werden, das über die Explosionsgefahr durch Staub unterrichtet ist (das in der Lage ist, das Restrisiko festzustellen, das die geeigneten Werkzeuge und auch die Prozeduren kennt). Der Werkschutzverantwortliche muss dem Personal eine „Genehmigung zur Feuerarbeit” ausstellen.

**4. Gefahren durch unter Druck stehende Leitungen (hydraulisch, pneumatisch)**

Während der Wartungsarbeiten und/oder Reparaturen sind die Anlagen und die etwaigen Akkumulatoren zu entleeren, so wie es in den Anweisungen an de jeweiligen Komponenten oder in den entsprechenden Handbüchern steht.

**5. Gefährdung der Arbeitnehmer durch Lärm**

Der Anwender und der Arbeitgeber sind zur Einhaltung der gesetzlichen Bestimmungen in Sachen Schutz gegen tägliche persönliche Lärmexposition der Arbeitnehmer verpflichtet (in Italien D.Lgs.277/91).

- Dans des traitements déterminés de poussières où il y a la présence de substances nocives, l’opérateur qui doit y avoir accès, dans le cours des interventions ordinaires ou extraordinaires, doit porter les dispositifs de protection appropriés comme signalé par les panneaux indicateurs qui s’y trouvent.




Tous les entretiens à l’intérieur du vibrateur pnumatique DOIVENT être effectués quand l’installation est arrêtée et en absence de poussière dispersée dans l’air. Dans le cas de travaux à chaud (soudure, découpe) il faut préalablement nettoyer les surfaces du vibrateur pneumatique,, en éliminant tous les dépôts de poussière (les couches, les dépôts et les tas de poussière combustible DOIVENT être considérés comme une autre source pouvant donner lieu à une atmosphère explosive).
L'autorisation à l’exécution des travaux à chaud DOIT être donnée par du personnel technique spécialisé et formé sur le risque d’explosion des poussières (en mesure4 de vérifier le risque résiduel, l’aptitude des outils et la connaissance des procédures).
Le responsable de la sécurité devra délivrer un “permis de feu” à l’opérateur.

**4. Dangers dérivant des circuits sous pression (hydrauliques, pneumatiques)**

Pendant les opérations d’entretien et/ou de réparation il faut décharger les installations et les éventuels accumulateurs, conformément aux instructions qui se trouvent à proximité des composants et dans les notices d’instructions correspondantes.

**5. Dangers provoqués par le bruit**

L’utilisateur ainsi que l’employeur ont l’obligation de faire respecter les normes de loi en matière de protection contre l’exposition personnelle quotidienne des opérateurs au bruit (en Italie D.Lgs.277/91).

- In determinati trattamenti di polveri dove vi è la presenza di sostanze nocive, l'operatore che dovesse accedere, nel corso di interventi ordinari o straordinari, deve indossare gli idonei dispositivi di protezione come indicato dalla cartellonistica ivi presente.




Tutte le manutenzioni all'interno del vibratore pneumatico DEVONO essere effettuate ad impianto fermo e in assenza di polvere aerodispersa. In caso di lavori a caldo (saldatura, taglio) è necessario bonificare preventivamente le superfici del vibratore pneumatico, rimuovendo tutti i depositi di polvere (gli strati, i depositi ed i cumuli di polvere combustibile DEVONO essere considerati come qualsiasi altra sorgente che può dare origine ad un'atmosfera esplosiva).
L'autorizzazione all'esecuzione dei lavori a caldo DEVE essere data da personale tecnico specializzato e formato sul rischio esplosione da polveri (in grado di verificare il rischio residuo, l'idoneità degli utensili e la conoscenza delle procedure). Il responsabile della sicurezza dovrà rilisciare un “permesso di lavoro fuoco” all’operatore.

**4. Pericoli derivanti da circuiti in pressione (idraulici, pneumatici)**

Durante le operazioni di manutenzione e/o riparazione occorre porre in scarico gli impianti e gli eventuali accumulatori, secondo le istruzioni riportate in prossimità dei componenti e nei rispettivi manuali d'uso.

**5. Pericoli generati da rumore**

E' fatto obbligo all'utilizzatore e al datore di lavoro di rispettare le norme di legge in termine di protezione contro l'esposizione personale quotidiana degli operatori al rumore (in Italia D.Lgs.277/91).

| FAULT | ACTION |
|---|---|
| The vibrator does not start | Check the presence of compressed-air |
| | Check the presence of foreign elements in the piping or in the vibrator |
| The vibrator increase in noisiness | Check the fastening of the fixing screws and in case, make the supporting plate stiff |
| | Lubrificate the pneumatic line |
| The vibrator loose its vibrating effect | Check the feed pressure (MAX 6 BAR) |
| | Check the fastening of the fixing screws and in case, make the supporting plate stiff |
| | Lubrificate the pneumatic line |

| STÖRUNG | ABHILFE |
|---|---|
| Der Rüttler starts nicht | Die Druckluft kontrollieren |
| | Eventuelle Fremdkörper in der Leitung oder in den Rüttler kontrollieren |
| Mehr Rüttlergeräusch | Den Spanndruck der Befestigungsschrauben kontrollieren und die Stutzplatte eventuell verstärken |
| | Die pneumatische Vorrichtung schmieren |
| Verlust an Vibrierwirkung | Den Einlassdruck (MAX 6 BAR) kontrollieren |
| | Den Spanndruck der Befestigungsschrauben kontrollieren und die Stutzplatte eventuell verstärken |
| | Die pneumatische Vorrichtung schmieren |

| PROBLÈME | SOLUTION |
|---|---|
| Le vibrateur ne démarre pas | Vérifier la présence d'air comprimé |
| | Vérifier la présence d'éléments étrangers dans la tubuluru ou le vibrateur |
| Il rumore del vibratore aumenta | Vérifier le serrage des vis et éventuellement raidir la plaque d'appui |
| | Lubrifier la ligne pneumatique |
| Il vibratore cala l'effetto vibrante | Vérifier la pression d'alimentation (MAX 6 BAR) |
| | Vérifier le serrage des vis et éventuellement raidir la plaque d'appui |
| | Lubrifier la ligne pneumatique |

| PROBLEMA | SOLUZIONE |
|---|---|
| Il vibratore non parte | Controllare presenza aria compressa |
| | Controllare presenza elementi estranei nella tubazione o nel vibratore |
| Il rumore del vibratore aumenta | Controllare il serraggio delle viti di fissaggio ed eventualmente irrigidire la piastra di supporto |
| | Lubrificare la linea pneumatica |
| Il vibratore cala l'effetto vibrante | Controllare la pressione di alimentazione (MAX 6 BAR) |
| | Controllare il serraggio delle viti di fissaggio ed eventualmente irrigidire la piastra di supporto |
| | Lubrificare la linea pneumatica |

**SCRAPPING COMPONENT**

- Before proceeding with disposal of the pneumatic vibrator, clean it thoroughly and dispose off the residual dust in accordance with the indications in the safety chart.
- The operators in charge of disposal must use suitable personal protection equipment.
- For scrapping or demolition of the component, separate the plastic parts (seals and components) and send these to special collection centres.
- The other parts must be sent for recycling ferrous materials.

**VERSCHROTTUNG DES BAUTEILS**

- Bevor das Druckluft Vibrator entsorgt wird, dieses vollkommen reinigen und den enthaltenen Reststaub in Übereinstimmung mit dem Sicherheitsdatenblatt entsorgen.
- Die Arbeitnehmer, die sich um die Entsorgung kümmern, müssen angemessene persönliche Schutzausrüstungen verwenden.
- Wenn der Bauteil verschrottet werden soll, sind die kunststoffhaltigen Teile (Dichtungen und Komponenten) auszubauen und über die entsprechenden Sammelstellen dem Recycling zuzuleiten.
- Die restlichen Teile sind als Eisenschrott zu behandeln.

**DEMANTELEMENT DU COMPOSANT**

- Avant mettre le vibrateur pneumatique à la décharge le nettoyer complètement et éliminer les poussières restantes conformément aux indications fournies par la fiche de sécurité.
- Les personnes préposées à la mise à la décharge doivent porter des dispositifs personnels de protection appropriés.
- - En cas de mise à la décharge ou de démantèlement du composan, il faut démonter les pièces en matière plastique (joints et composants) et les mettre à la décharge dans des déchetteries spécialisées.
- Les pièces restantes sont à destiner à la récupération des matériaux ferreux.

**ROTTAMAZIONE COMPONENTE**

- Prima di procedere allo smaltimento del vibratore pneumatico provvedere alla sua completa pulizia ed allo smaltimento delle polveri residue in accordo con le indicazioni della scheda di sicurezza.
- Gli operatori addetti allo smaltimento devono indossare dispositivi di protezione personale adeguati.
- In caso di rottamazione o demolizione a fine vita del componente, avere cura di smontare le parti in materiale plastico (guarnizioni e componenti) e destinarle agli appositi centri di raccolta.
- Le restanti parti sono da destinare al recupero dei materiali ferrosi.

**RETURNING THE MACHINE**

When returning the component, use the original packaging if it has been preserved, otherwise place it in a box and cover it with nylon shrink-wrap, to protect it as best as possible from impact during transport. In any event, make sure there is no residue material inside the component.

**RÜCKGABE DES GERÄTES**

Falls der Bauteil zurückgegeben werden soll und man die Originalverpackung aufbewahrt hat, ist er darin einzupacken. Andernfalls ist er in einen Karton zu packen und mit Schrumpffolie zu schützen, wobei man versucht, sie so gut wie möglich vor etwaigen Stößen beim Transport zu schützen. Auf jeden Fall sicherstellen, dass sich keine Materialreste mehr in der Bauteil befinden.

**RESTITUTION MACHINE**

En cas de restitution du composant, si l'emballage a été conservé, le remettre dans celui-ci, sinon le mettre dans une caisse et le protéger avec du nylon thermorétractable, en essayant de la protéger le plus possible contre les chocs provoqués par le transport. Dans tous les cas s'assurer que la machine ne contient pas de résidus de matière.

**RESO MACCHINA**

In caso di reso del componente se si è conservato l'imballo reinserirla nello stesso, altrimenti inserirlo in una scatola e proteggerlo con del nylon termoretraibile, cercando di proteggerlo al meglio da eventuali urti derivanti dal trasporto. In ogni caso assicurarsi che il componente non abbia residui di materiale.

*N.B. Rights reserved to modify technical specifications*
*N.B. Angaben ohne Gewähr. Änderungen können ohne Vorankündigung vorgenommen werden.*
*N.B. Toutes données portées dans le présent catalogue n'engagent pas le fabricant. Elles peuvent être modifiéés à tout moment.*
*N.B. Tutti i dati riportati nel presente catalogo non sono impegnativi e possono subire variazioni in qualsiasi momento.*

OLI®

**O.L.I. S.r.l.**
Via Canalazzo, 35 - Rovereto s/S
I - 41036 Medolla - (MO)
ITALY

☎ +39 / 0535 / 46400
**fax** +39 / 0535 / 46350
**e-mail** olivibra@tin.it
**internet** www.olivibra.it

# DISCHARGE ROTARY VALVE

| | |
|---|---|
| **# Sinox :** | 49730.999.901 |
| **Valve type:** | ACS VALVES,Rotary Airlock |
| **Valve dimension :** | 8’’ |
| **Motor size:** | 0.75 |
| **Speed :** | 20 RPM |
| **Quantity per receiver:** | 1x |

# Installation, Operation & Maintenance Manual

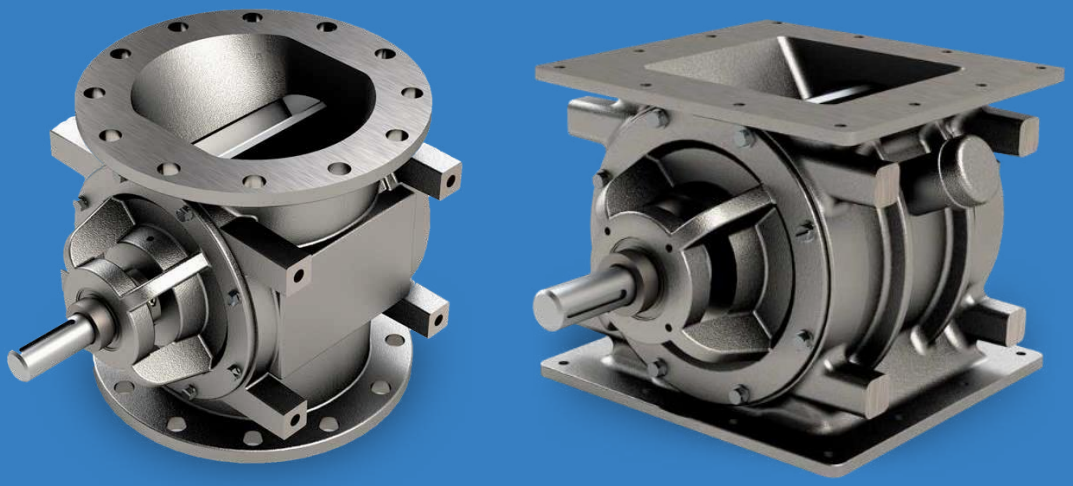

ACS Rotary Airlock Valve/Feeders

ACS VALVES

# Introduction

These instructions are intended to familiarize the user with the product and its permitted use. Operating the product in compliance with these instructions helps to ensure reliability in service and avoid risks. Installation and maintenance of equipment should always be performed by qualified personnel in compliance with applicable codes and regulations.

Equipment owners are responsible for understanding the contents of this document and compliance with applicable government laws and regulations and appropriate industry standards.

**Control of the equipment must be in accordance with OSHA Standard 1910.147 "Control of Hazardous Energy (Lockout-Tagout)" or similar hazardous energy control procedure as defined by CSA or ANSI. "Lockout/Tagout" refers to specific practices and procedures to safeguard employees from the unexpected energization or startup of machinery and equipment, or the release of hazardous energy during service or maintenance activities.** This requires, in part, that a designated individual turns off and disconnects the machinery or equipment from its energy source(s) before performing service or maintenance and that the authorized employee(s) either lock or tag the energy- isolating device(s) to prevent the release of hazardous energy and take steps to verify that the energy has been isolated effectively.





# Rotary Valve for Metering, Feeding and Airlock Applications

ACS valves are designed and built to application-specific requirements, including custom rotor configurations, factory-applied internal coatings, and sanitary materials of construction.

# Table of Contents


Introduction ..... 1
Safety First ..... 3
General Information ..... 6
Receiving Your Equipment ..... 7
Design and Construction ..... 8
Rotor Types. ..... 9
Operation ..... 10
Installation ..... 11
Accessories ..... 12
Initial Start-up Procedure ..... 14
Maintenance Procedures ..... 15
ACS Rotary Valve Lubrication Chart ..... 22
Troubleshooting ..... 24
Spare Parts and Service ..... 26

# Safety First

## SAFETY ALERT SYMBOLS



This Safety alert symbol is used to call your attention to an important safety message on equipment, safety decals and in manuals, to warn you of possible danger to your personal safety. When you see this symbol, be alert; your personal safety or the safety of the other persons is involved.

### THE FOLLOWING DEFINITIONS FOR IDENTIFYING HAZARD LEVELS ARE:



DANGER (RED) – Danger is used to indicate the presence of a hazard that WILL cause SEVERE personal injury, death, or substantial property damage of the warning is ignored.



WARNING (ORANGE) – Warning is used to indicate the presence of a hazard that CAN cause SEVERE personal injury, death, or substantial property damage if the warning is ignored ends maintenance cycles.



CAUTION (YELLOW) – Caution is used to indicate the presence of a hazard that WILL, or CAN cause MINOR personal injury or property damage if the warning is ignored.

## SAFETY PRECAUTIONS

Prior to starting work on the equipment, we recommend the following:

1. Always de-energize all electrical equipment by following lock out/tag out procedures. If working on a quick clean design valve, disconnect all sources of power before cleaning or performing maintenance on your quick clean valve.
2. Do not operate rotary airlock valves & feeders with the inlet or the outlet flange openings unguarded or disconnected from system components. Inlet & outlet flange guards are mandatory. These flange guards are available for purchase upon request.
3. Always allow equipment to come to a complete stop. Never attempt to artificially brake the motion of the equipment.
4. Warning labels must be located on the equipment and near access openings to remind operating personnel of the risk.
5. Block the rotor from turning if the drive chain is disconnected or the gear drive has been removed.

## HAZARD WARNINGS AND SAFETY PRECAUTIONS



The safety warnings below are basic guidelines and by no means all inclusive. National and local safety codes and even common sense should be used by qualified personnel to carry out installation and maintenance of the equipment. The hazards listed below are the most likely to be encountered during installation, operation and maintenance of your equipment.

### Shear Hazard



There are shear points wherever the rotor and housing meet. Contact with moving rotor blades will amputate fingers, hands, arms or legs and may result in death. Accidents can occur when operators reach through upstream or downstream equipment mounted adjacent to the valve through access openings to clean or remove blockage.

### Drive Chain Hazard



There are pinch points where the chain and sprocket engage. Exposed moving parts can cause severe injury or death. Never operate the valve without the guard installed. Follow Lockout/Tagout procedure before removing guard.

### Exposed Rotating Shafts

Exposed shaft locations exist at the seal access area and tail shaft. Contact with rotating shafts can crush or amputate fingers, hands or arms. Avoid touching or contact with the exposed shaft. Tail shaft guards are available as an option.

### Electrical Hazard

Electrocution accidents are most likely during maintenance of the electrical system. Follow Lockout/Tagout procedures before working on the equipment.

### Automatic Startup of the Valve - Quick Clean on Rail Design

Rotary airlocks are often controlled by an automated system and may start without warning. Ensure that Lockout/Tagout procedure is followed before working on the equipment. The quick clean on rail design is specifically designed for ease of cleaning by the operator without tools. There is a factory supplied safety switch for protection of personnel and equipment which must be installed and operational to prevent accidental start-up of the valve.

### Pressurized System

Danger from opening of equipment if the process is under pressure or from compressed air. Ensure that process pressure has been relieved prior to opening unit.

ACS VALVES

## SAFETY LABELS AND GUARDS

This piece of equipment contains several warning decals located in many different locations. It is the owner/operator's responsibility to maintain the integrity of these decals and to ensure that all operators of the equipment are aware of them and understand their meaning. Replacement decals are available free of charge by calling customer service department at 1-800-655-3447 or 1-905-765-2004.













This piece of equipment may contain one or more safety guards to protect the operator(s) from injury. It is the owner/operator's responsibility to maintain and ensure that they are in place when the equipment is in operation. If you have any safety or operational questions related to the design or applications of the Rotary Airlock Feeder we encourage you to contact our factory at 1-800-665-3447 or 1-905-765-2004.



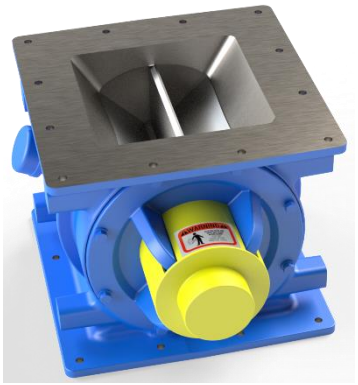



# General Information

Record the MODEL and SERIAL NUMBER of the ACS Rotary Airlock, including the same information for the auxiliary equipment (gearmotors, motors, sheaves size, type and any special modifications to standard).

For additional information, application assistance or special service, contact the factory. For ready reference, please record this information on the lines in the adjacent table. The SERIAL NUMBER is clearly indicated on the valve nameplate installed on the valve.




Typical Nameplate showing Serial Number location. Serial no. should be provided when consulting the factory

MODEL

SERIAL NUMBER

MODEL

SERIAL NUMBER

MODEL

DATE OF DELIVERY

ACS VALVES

WARNING – All owners and operators should read this manual, or be instructed in safe operating and maintenance procedures, before attempting to uncrate, install, operate, adjust or service this equipment. Read All Instructions contained in this manual before installing and operating this equipment.

# Receiving Your Equipment

Equipment should be carefully inspected immediately after receipt to make certain the unit is in good condition and all items listed on the packing list are included. All damages or shortages should be reported immediately to ACS. Purchaser should take immediate steps to file reports and damage claims with the carrier. All damages incurred to the units in transit are the responsibilities of the common carrier. Any claims for in transit damage or shortage must be brought against the carrier by the Purchaser.

## HANDLING AND STORAGE OF YOUR EQUIPMENT

Moving the valve during unloading or installation site should always be done with the use of a hand truck, forklift or overhead crane with slings. Do not lift by its flanges or shaft. We recommend installing lifting eyes on the inlet flange for lifting chains or slings. Take care to prevent the unit from rotating due to unbalanced weight distribution.

### Short Term Storage

If the equipment is not put into immediate use it should be stored in a clean, dry location. Care should be taken to keep the equipment covered when moving from a cold location to a warm location, otherwise condensation may occur. If condensation does occur, allow it to dry thoroughly before applying power. If the unit is not going to be installed shortly after arrival, it should be stored in a warm, dry location to protect from corrosion to the machined surfaces. Flange covers should be left in place until ready to install.

### Long Term Storage

If the equipment storage is required for longer than 90 days, additional precautions are required.

1. Storage should be indoors in a temperature-controlled facility such as a warehouse or enclosed building.
2. Leave weatherproof covering in place. Keep vented parts exposed.
3. Make certain unpainted portions are covered and retouch any scratches or flaked areas.
4. If condensate plugs or drain plugs have been used, make sure they are operative.
5. Consult vendors instruction manual for guidance on recommendations for long term storage. i.e., If motor is equipped with space heaters make sure space heaters are properly connected and operative.
6. A systematic inspection and maintenance schedule should be established. If rotating apparatus is to be stored for 6 months or longer, it should, in addition to the precautions above, be given a visual inspection every month.
7. Contact ACS for recommendations where equipment has been in storage for periods longer than 12 months.

# Design and Construction



Rotary airlock construction consists of a housing with two endplates, rotor and drive package. The housing has a top inlet and bottom outlet and is precision machined to provide close tolerances between the rotor and housing internal surfaces. The endplates have a raised face that extend into the body bore to provide sealing and proper alignment of the rotor. The rotor is a one piece design with multiple vanes that extend radially from the shaft to the housing. The rotor shaft extends through the endplates and is supported by two outboard bearings. Product sealing uses a glandless teflon sleeve with elastomeric seal rings.

## Model Nomenclature

This is the model designation and size. A CI 12 is our CI series with a 12-inch inlet and outlet.

## C.F.R.

Cubic Feet per Revolution, or the displaced volume of material that the airlock moves from inlet to the outlet in one revolution of the rotor. C.F.R. is calculated assuming that the rotor pockets are 100% filled; actual C.F.R. will vary due to pocket fill efficiency and rotor speed. Capacity can be determined by multiplying the C.F.R. by the speed and density of the product.

ROTARY VALVE CAPACITY (CUBIC FEET/HR.)

| VALVE SIZE (INCHES) | ROTOR SPEED (RPM) | | | | | | | | | |
|---|---|---|---|---|---|---|---|---|---|---|
| **6** | 6 | 30 | 48 | 60 | 72 | 84 | 96 | 108 | 120 | 132 |
| **8** | 12 | 60 | 96 | 120 | 144 | 168 | 192 | 216 | 240 | 264 |
| **10** | 24 | 120 | 192 | 240 | 288 | 336 | 384 | 432 | 480 | 528 |
| **12** | 45 | 225 | 360 | 450 | 540 | 630 | 720 | 810 | 900 | 990 |
| **14** | 66 | 330 | 528 | 660 | 792 | 924 | 1056 | 1188 | 1320 | 1452 |
| **16** | 84 | 420 | 672 | 840 | 1008 | 1176 | 1344 | 1512 | 1680 | 1848 |
| **18** | 162 | 810 | 1296 | 1620 | 1944 | 2268 | 2592 | 2916 | 3240 | 3564 |
| **22** | 276 | 1380 | 2208 | 2760 | 3312 | 3864 | 4416 | 4968 | 5520 | 6072 |
| **24** | 384 | 1920 | 3072 | 3840 | 4608 | 5376 | 6144 | 6912 | 7680 | 8448 |
| **26** | 540 | 2700 | 4320 | 5400 | 6480 | 7560 | 8640 | 9720 | 10800 | 11880 |
| | 1 | 5 | 8 | 10 | 12 | 14 | 16 | 18 | 20 | 22 |

## Clearance

This refers to the measurement between the rotor vane tip and housing and/or endplate. The standard design clearances are 0.004"-0.007" for sizes up to 12" but these are increased for higher temperatures or special materials such as stainless steel.

## Temperature Ratings

The standard temperature rating is 250 F. Special high-temperature airlocks rated at temperatures above 250 F are available on special order. Refer to the Order documentation for the temperature rating of your airlock

# Rotor Types

Several Rotor options are available including open or closed end design, adjustable or fixed vanes, additional vanes on higher differential pressure services, serrated vane edges, rounded pockets for sanitary services, flexible tips, reduced volume or metering styles and staggered pockets.

## Open End Rotor

Open end rotors are easier to clean and maintain compared to closed end, which could ultimately lead to less material build up and wear on your valve. They are also better suited to mechanical seal applications. This is also a better option with lighter materials, as closed end rotors are more likely to have materials escape into the space between the endplates and the rotor disc.

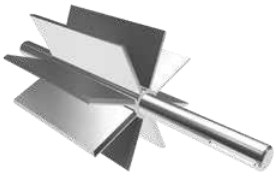

Open End Rotor

## Closed End Rotor

A closed end rotor has a round disc at both ends that are welded to the blades and shaft. There is a gap between the disc and the endplates that allows any material that does end up outside of the rotor to fall out the bottom easily. Closed end rotors are used with extremely abrasive material, and flake or chip material as the shield protects the outboard bearings and endplates from damage. It also prevents material from building up on the endplates, causing wear.



Closed End Rotor

## Adjustable Rotor

With very harsh and abrasive material, tips will wear prematurely. With this type of valve, you can adjust the tips by sliding them up as they wear to keep them compliant and keep the clearance as close to their starting point as possible. This ultimately helps your valves last longer. This is available for open or closed type rotors.

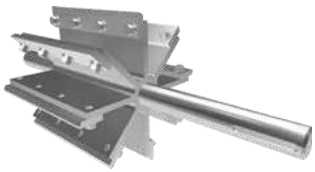

Adjustable Rotor

## Flex Tip Style Rotor

There are a few different types of flex tip rotors, depending on what material you're working with, but various grades of EPDM, Polyurethane or Rubber Belting are the most common. The purpose of this type of rotor is to prevent material jams inside the valve. Unlike the helical rotor, which slices the jammed material, the flex tips can bend out of the way while moving the material through the valve and keeping a tight seal.

**IMPORTANT: Flex Tip Rotors are not compliant for NFPA services.**

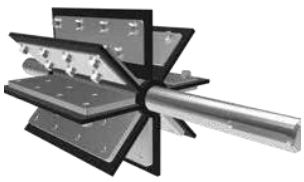

Flex Tip Rotor

# Operation

The Rotary Airlock is one of the most important units in your material handling system. The function of the airlock is to hold pressure or vacuum in a pneumatic system and to meter products into conveying lines or storage areas, (bins, tanks, hopper, etc.). The airlock operates by filling each rotor pocket with material at the high point of rotation and then empties into conveying lines or storage areas at the low point of rotation.

In the case of conveying lines, a blow-through is used to allow the velocity of the air to move the material through the conveying line. After each rotor pocket has emptied into the blow-through it still contains pressurized air. With some products, this air can escape up through the bulk material as soon as the edge of the rotor blade passes the edge of the inlet opening. The release of this pressurized air assists in maintaining a continuous flow of product to the airlock inlet. With some products, this air must be vented to atmosphere or to a system that has a negative pressure such as a dust collector, as it tends to prevent the flow of material into the airlock. The rotation produces a continuous flow of material at the discharge end of the conveying line.

The airlock rotor is precision machined to obtain the desired high degree of accuracy and close tolerance. Rotors may be supplied either with fixed or adjustable tips. The airlock rotor is mounted on bearings at each end of the rotor shaft. Rotor clearance is small to prevent excessive air leakage back to the product inlet.

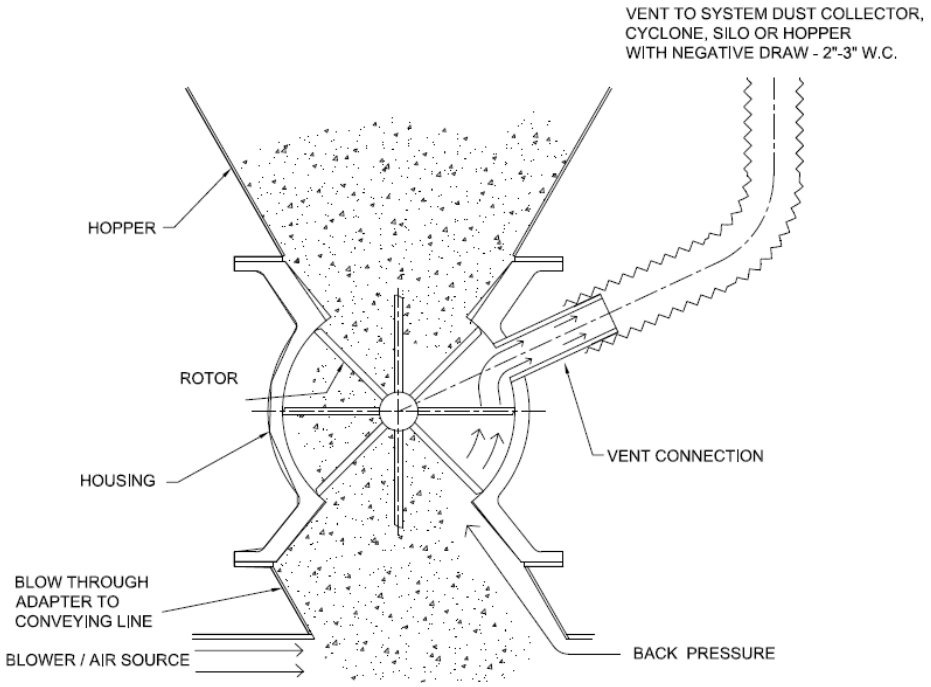


Rotary Airlock Installed on Pressure Conveying Line with Vent

CAUTION – Equipment is shipped factory assembled. Accessories such as blow through adaptors may be mounted to the inlet of the valve for safe shipping even though they are designed to be mounted on the outlet of the valve.

Always check the general arrangement drawing, rotation arrows or contact ACS factory if there are any questions regarding how the equipment and accessories are to be installed and mounted.

# Installation

## Inspection:

Once the protective flange cover and shipping materials are removed, check the valve and drive components. Remove the guard and drive chain to confirm that the rotor turns freely without any binding. Don't attempt to turn the rotor assembly by hand as the rotor vane is sharp and can easily cut or pinch hands or fingers. Use a soft push bar (such as a wooden 2 x 4) to ensure that it rotates freely.

The as-built clearance is recorded on the inlet flange and can be measured with feeler gauges. If the clearance measured has changed, this is an indication that the rotor has shifted during shipment. If adjustable tips are provided, re-adjust as per instructions found in maintenance section of this manual. If airlock clearances and rotations are correct, replace chain drive, position and anchor package.

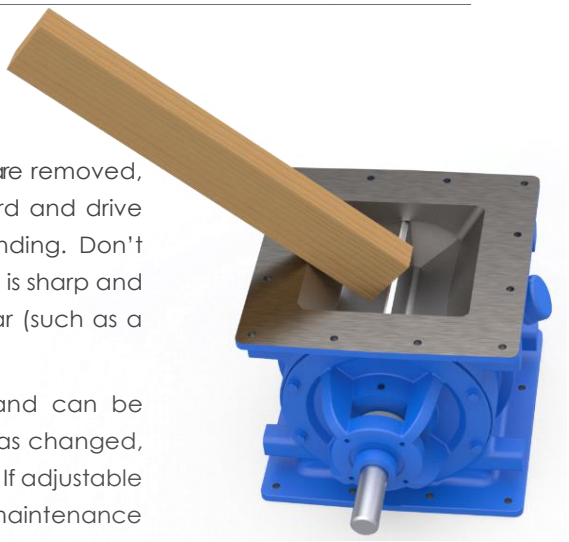

After removing the protective flange cover, use soft push bar to turn the rotor

## Mounting to Inlet and Discharge:

Numerous types of bulk materials feeding devices can be connected to the inlet opening of an airlock. Bins, hoppers, mixers and screw conveyors can be adapted for attachment to the airlock by rigidly attaching to the airlock flange using silicone caulk or flexible gasket to obtain an air-tight connection. Be sure all seams in the feeding device are air-tight. Moving feed devices such as sifters require special consideration to support the valve and a flexible connection.

If the airlock package is to be hung from a hopper, storage tank, etc. it may be necessary for some type of structural steel support. However, in most cases, the hopper or tank flange will have enough strength to support the weight of the airlock package. It is not good practice to use the airlock to support equipment loads either in compression on the top flange or in tension from the bottom flange. Excessive loads will cause the housing to distort, which will cause reduced clearance with the rotor. This will result in excessive noise, binding and galling. Flanges of components, which attach to the airlock must be flat and "square" with the airlock flanges. The flanges of the airlock housing should never be forced in place or attached to warped or twisted mating connections. This practice can result in broken airlock housing or loss of clearance as noted above.

If the airlock is to be installed with either the inlet or discharge exposed, a guard must be mounted to the appropriate flange to reduce the risk of personal injury to operators, maintenance personnel and others who may be near the equipment. Any object placed in the inlet area or discharge area of the airlock will be sheared off. Inlet and discharge guards are available from ACS. Contact Sales for further information.

# Accessories

## Inlet Shear Protector

Prevents shearing of material, as well as jamming of material in rotor clearances. Available for various flange configurations and materials, flat or spool style, vented or without. The vented style is provided for connecting to a vent sock or dust collection system where pressure from the discharge can disrupt material entering the inlet. It is designed to be bolted above the inlet using sealant or flexible gaskets. Available for square (CI) or round (MD), vented,

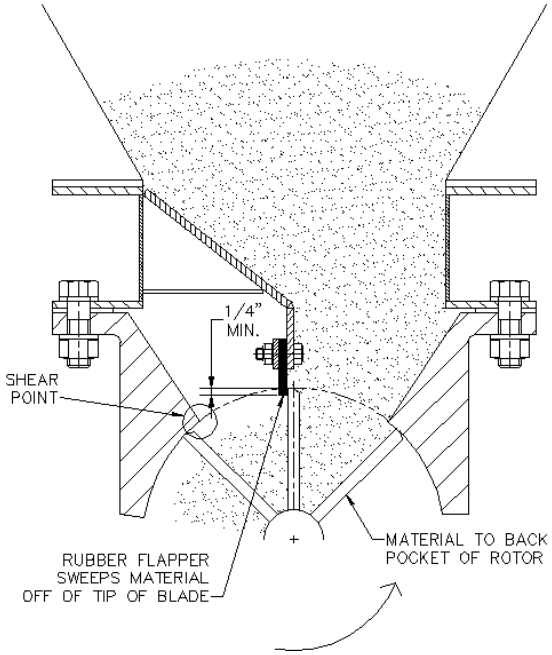


Inlet Shear Protector

## Maintenance Slide Gate

Designed for gravity-flow applications; variable slide gate actuation settings enable partial material flow, as well as full-open or closed settings. They allow the airlock to be removed or serviced without removing material from the feed hopper. Available in various configurations, materials. Manual, air or electric actuators are available. The slide gate is installed directly above the inlet and the mounting arrangement can be oriented for easier access.

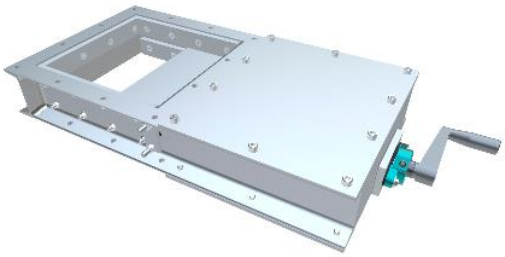

Maintenance Slide Gate

## Blow Through Adapter

Adapter to connect the discharge of the rotary valve to a pneumatic or vacuum conveying line. Install using sealant or flexible gasket and through bolts.

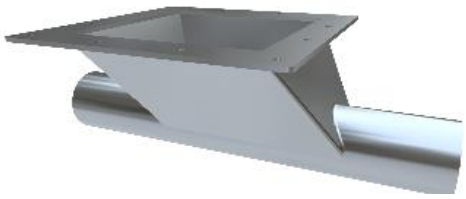

Blow Through Adapter

## Flange Guard

Mandatory safety feature for rotary valves with an open or exposed discharge. Available in steel or stainless steel construction. They are designed to mount directly on the inlet or discharge with sealant or flexible gasket.



Flange Guard

## Zero Speed Switch Assembly

Shaft speed-monitoring device, which signals when the shaft has stopped rotating. The switch is mounted on the non-drive end of the valve. Typically, the drive shaft is drilled and tapped for mounting but there is an optional magnetic mounted connector for field retro-fit.

Standard assembly includes: motion switch, target, bracket and guard.

**Refer to manufacturer's instruction manual for installation and maintenance or settings.**




Zero Speed Switch Assembly

## Air Purge Kit

The Air Purge Kit is used to provide compressed air the shaft seal area and/or rotor pocket on airlocks with either open or closed end rotors. This kit may also be used to provide compressed air to the end plate cavity on the airlocks with closed end rotors. The Air Purge Kit includes a Filter/ Regulator, 0-30 psi pressure gauge, poly tubing and miscellaneous push to connect fittings.



Rotor Pocket Purge Kit

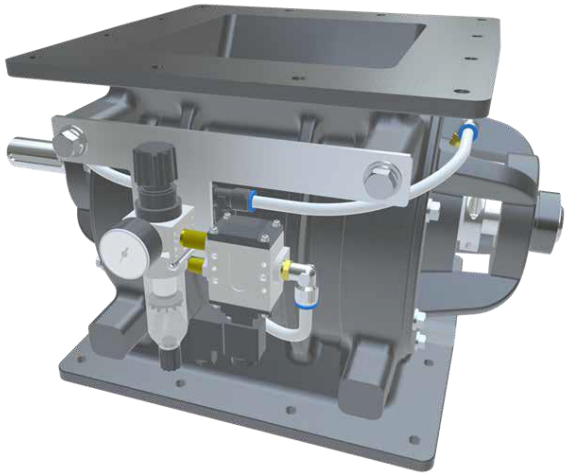

Shaft Seal Purge Kit



WARNING – Equipment must be wired in accordance with local, state and national electrical codes to the appropriate power circuits before it can be operated. This installation is the responsibility of the airlock owner. Installation must be done by qualified personnel who are familiar with proper installation practices of the equipment and with the control functions of the devices they are installing.

# Initial Start-up Procedure

## Prior to Starting

1. Remove the drive guard. Make sure that the drive chain is properly tensioned. If this is a direct drive unit, skip to 4.
2. Check tension in drive chain. There should be 3/8 to ½" slack in the top of the chain. Adjust if necessary.
3. Make sure the chain is properly lubricated. The chains are pre-lubricated by the vendor.
4. The gearmotors are shipped filled with oil. Check the oil level in the drive gearbox and top off if necessary. Oil level and drain plugs must be accessible. Remove any shipping provisions from the breather plug. Refer to the manufacturer's instructions included with the shipment.
5. Make sure that the airlock, feed device, and conveying line are free of foreign material.
6. Verify that all electrical connections have been properly made.
7. Replace all guards and covers.

## Start-Up

1. Energize the electrical service (and instrument air if applicable.)
2. Jog the airlock to verify the direction of rotation is correct. Listen for sounds of unwanted mechanical contact and correct if necessary. Reverse operation can result in jamming and possible motor overload.
3. Start the airlock and operate it for a period with no load. Check for excessive noise or other indications of improper operation. Investigate and correct if necessary.
4. Start feed device or fill the hopper. As material flows into the airlock, listen for excessive noise or other indications of improper operation. Investigate and correct.
5. Verify that the current draw of the motor does not exceed its full load amp rating. Refer to motor nameplate for rating.
6. While the system is operating check for air leaks. Correct as needed.
7. Monitor the operation of the main components for heat, noise or vibration as these are indications of a potential problem.

WARNING – Prior to beginning any service or maintenance activities, ensure that "Lockout/ tagout" procedures have been completed to safeguard employees from the unexpected energization or start-up of machinery and equipment. If working on a quick clean design valve, disconnect all sources of power before cleaning or performing maintenance on your quick clean valve.

# Maintenance Procedures

Regular maintenance is important to the operation and life of your airlock. Areas requiring regular inspection and maintenance are the rotor clearance, seals and/or packing and the drive package including motor, gear and drive chain.

## General Disassembly Procedure

1. Remove the auxiliary equipment (zero speed switch, air purge piping) if supplied.
2. For chain driven units, loosen and remove chain drive guard.
3. Loosen the 4 tensioning nuts at the motor mount until there is slack in the chain. Remove the chain and rotor sprocket from drive shaft.
4. For direct driven units, remove the gearmotor. Remove the end cap from the gearmotor. **NOTE:** some models (FT Direct Drive) use a retaining bolt and lock washer in the end of the shaft which must be removed first.
5. Remove the (4) hex bolts located on mounting plate. Use the (2) 3/8"-16 NC threaded holes for installing jacking bolts to separate the gearmotor from the mounting plate.
6. While supporting the weight of the gearmotor, move the gearmotor away from the mounting plate and remove from driveshaft once it is clear.
7. With the gearmotor removed, the motor mounting plate is accessible. Remove fasteners and motor mount.

## Removing Endplates

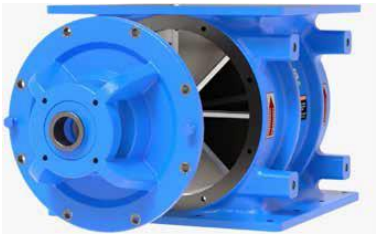

Removing Endplates

1. Remove bolts that attach end cover to housing.
2. Loosen and remove bearing lock collar. Remove set screw from collar and flatten the mark formed by set screw using a small flat punch. Loosen collar by rotating collar in direction opposite shaft rotation. Use drift pin in the non-threaded hole. Tap with hammer to rotate collar. Slide collar off shaft.
3. If equipped with an ACST-4 Shaft Seal, use a 1/4" Allen key (5/16" for larger valves) loosen the lock collar clamping the teflon seal to the shaft (both sides). NOTE: On valves equipped with "Push Type" seal assembly, loosen the pusher nuts, allowing pusher to retract from teflon packing.
4. Attach wheel puller behind bearing housing. Tighten slowly until cover moves away from housing. If cover tends to bind on shaft, tap puller bolt with rubber mallet as you tighten.
5. With the endplate removed, the rotor and housing is accessible.

## Removing Rotor

The rotor can be removed if damaged or clearances are worn. Usually the drive side is pulled to avoid removing drive sprocket, but the procedure is similar for both cases. The rotor should be accessible from the inlet or outlet side of the housing.

1. Remove the auxiliary equipment and drive package. Refer to general disassembly procedure.
2. Loosen and remove bearing lock-collar on non-drive end. Remove set screw from collar and flatten mark formed by set screw using a small flat punch. Loosen collar by rotating collar in the same direction as the shaft rotation. Use drift pin in the non-threaded set screw hole and tap with hammer to rotate collar. Slide collar off shaft. Remove any burrs left from the set screw.
3. For airlocks supplied with packing gland seals, loosen the packing gland bolts (2 ea.) on the non- drive side. For airlocks with Teflon shaft seals, loosen the shaft seal collar, located within the end plate bearing port.
4. Remove the bolts on end cover (side to be pulled).
5. Attach wheel puller behind bearing housing. Tighten slowly until cover slides off shaft. If cover tends to bind on shaft, tap puller bolt with rubber mallet as you tighten.
   Note: Larger model sizes have jacking holes to assist with removing the endplate.
6. Slowly remove rotor from housing.

## Replacing Rotor

1. Carefully check to see if rotor or housing have burrs. (shaft, blade tips, shrouds, and housing matching surfaces). If burrs are found, file them smooth using a fine file and then polish with emery paper.
2. Wipe off rotor and shaft to clean any foreign material. Also, check end cover to see that matching edges to housing are clean.
3. Gently slide rotor into housing. Rotor normally will not slide the last few inches easily. Use a rubber mallet to move rotor vanes past the end of the housing, far enough to start end cover bolts. Install endplate,
4. Centre rotor in housing by tapping end of shaft. Check end clearance with feeler gauge or dial indicator in case of a closed rotor and re-position until the end clearance is equal.
5. Tighten bearing lock collars in the direction opposite to shaft rotation.
6. Tighten packing gland bolts evenly or tighten shaft seal collar.
7. Turn rotor by hand. Check clearances and see that rotor turns freely in housing. If rotor does not turn freely, adjust as necessary.

## Replacing Bearings and Seals

Our standard design uses sealed permanently lubricated bearings and ACST-4 seals consisting of a PTFE (teflon) sleeve and 3 quad rings with shaft collar which require replacement when worn. It's recommended to always replace the seals and bearings at the same time.

1. Remove endplate from housing as described in procedure REMOVING ENDPLATES.
2. The bearing, split locking collar, teflon bushing and quad ring seals will come out with the endplate.
3. Remove bearing by pressing away from the seal arrangement. Use of a small diameter soft punch can also be used to "drive" the bearing out of its seat.
4. Pry the lock collar off teflon seal and set aside. Pry the teflon seal straight up and out of the quad ring assembly. Remove quad rings by poking with a sharp object and prying out of seat. Repeat for remaining two (2) rings.
5. Install new quad rings and Teflon sleeve in end plate. Apply a small amount of lubricant to the teflon seal and gently push into the quad ring bore.
6. Install teflon seal lock collar.
7. Align bearing with machined hole in end cover taking care to make sure of direction and orientation before pressing the new bearing in place.
8. Install endplate onto driveshaft, move into position, install and tighten fasteners.
9. Slide bearing collar on shaft. Rotate the collar in the opposite direction of shaft rotation until eccentric faces of collar and inner bearing ring engage.
10. Check clearances and see that rotor turns freely in housing. If rotor does not turn freely, adjust as necessary.
11. Lock the bearing in place by rotating the collar using a drift or flat punch in the non-threaded hole and tapping the collar with a light weight hammer in the opposite direction of rotation until snug. Tighten set screws.
12. Position teflon sleeve and shaft seal collar. Tighten seal collar.

## Rotor Machining

Rotor machining may be required if there are operating problems caused by the rotor clearances being too small for the application. In this case the rotor can be removed and machined to suit. **Please contact ACS for directions and instructions.**



CAUTION –The rotor is precision machined to extremely close operating clearances between the rotor vane tips and the housing. Take extra care to protect the shaft center holes on the rotor in the event there is repairs or rework needed.

## Checking Rotor Clearance

Rotor clearance should be checked as part of the maintenance program as increased clearance will affect the performance. Rotor clearance should be within the allowable range as indicated in the table below (See table or if your model isn't shown contact ACS) determined by its size and design operating conditions.

Fixed and flexible tip rotors have no adjustment at tips but should be checked for wear or damage to determine if the airlock is functioning in the system properly.

| ROTOR CLEARANCE | | |
|---|---|---|
| **Model & Size** | **Standard** | **High Temperature** |
| CI / MD / DR-S 4 through 12 | 0.004" to 0.007" | 0.007" to 0.010" |
| CI / MD 14 through 16 | 0.007" to 0.010" | 0.012" to 0.016" |
| CI 18 through 22 | 0.012" to 0.016" | 0.016" to 0.020" |
| CI 24 through 30 | Refer to Factory | Refer to Factory |

If the inlet or outlet of the valve is accessible, the clearances can be measured directly through this opening. Remove the drive guard and disconnect the drive chain (if applicable).

1. Number each blade for ease of checking and measure the gap between the rotor blade and housing at each end of the blade and center.
2. Check the inlet and outlet. Measure the side clearance between end of the blade and the endplate.

   Increased clearances will allow more leakage through the airlock resulting in reduced performance. The allowable loss of performance will indicate when repair or replacement is required.

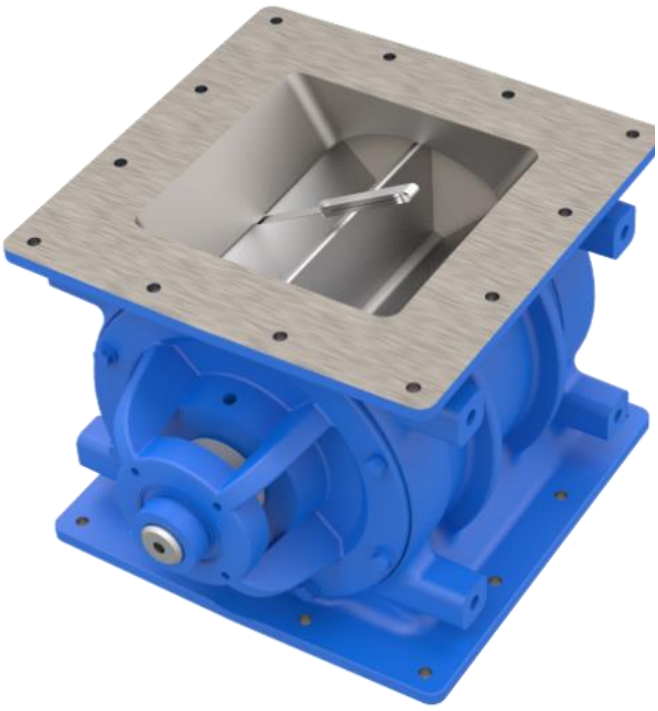

Checking clearance of rotor with feeler gauge

If the inlet or outlet is not accessible, inspection is performed with the endplate removed. It's easier to do this from the tail side (non-drive end) as it's not necessary to remove your drive package.

1. Loosen, but don't remove the shaft seal and bearing locking collars on both ends as described in the general disassembly procedure.
2. To measure the clearance between the rotor and the endplate, attach a dial indicator to the end of the shaft and push the shaft towards one endplate.
3. Set the indicator to zero and then push the shaft towards the other endplate. The indicator will show the total clearance. The side clearance is half the total measurement.
4. Remove tail side endplate by following the disassembly procedure.
5. Insert the feeler gauges between the housing and both the bottom and top rotor blades until you feel friction from both feeler gauges.

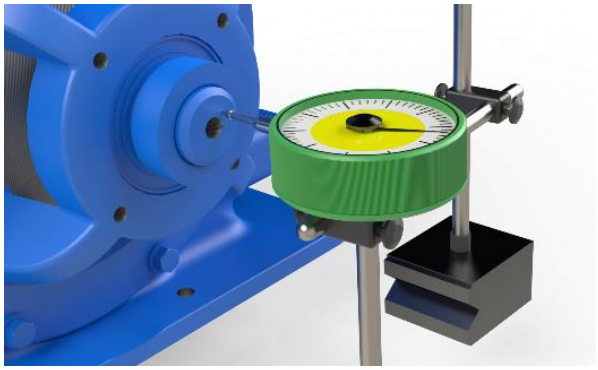

Side clearance check with indicator

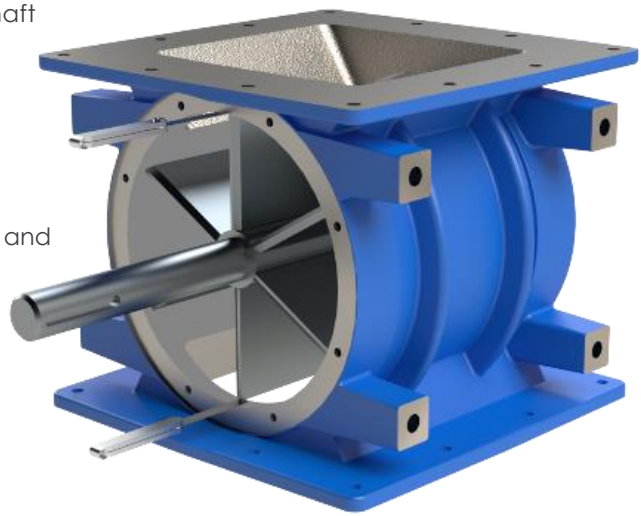

Clearance check with endplate removed with feeler gauges

## Adjustable Rotor Tip Clearance

Airlocks equipped with adjustable rotor tips can have their clearances renewed when worn for extended operating life.

1. With the drive chain disconnected, number the blades as a means of showing when the adjustment has been completed. Loosen, but do not remove the fasteners.
2. Insert 2 sets of the appropriate size of feeler gauge between the rotor tip and housing on the inlet side. One at each end. Push blade against the feeler gauge and tighten fasteners.
3. Turn rotor so that the same blade appears on the outlet side and measure the clearance to determine which position is tighter. Adjustment should be made on the remaining blades from the side of the airlock that is tighter.

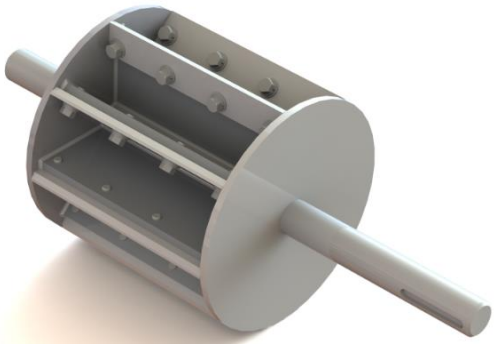

Adjustable Rotor-Closed type

4. Make a final check of clearances by turning the rotor and checking each blade at each end, center and both sides of the housing.

## Adjustable Rotor Tip Adjustment and Replacement

For adjustment of rotor clearances, see Checking Rotor Clearance

1. Remove drive guard and chain.
2. Remove the rotor blade fasteners and rotor vanes to be replaced. It is recommended that you replace the backing plates and hardware in the same position they were removed.
3. Make sure the blades are on the leading edge of the rotor.
4. Fasten the new blades onto the valve using a thread adhesive. As you tighten each bolt, ensure the blade is centered between end caps.
5. Begin tightening the bolts one at a time starting from the end caps. Note that flexible material expands when it's tightened so take care not to over compress the vane tips.
6. Turn rotor by hand all the way around. Be sure the clearance is not any less for the full rotation. When tightening each bolt and blade, ensure the rotor can be turned by hand.

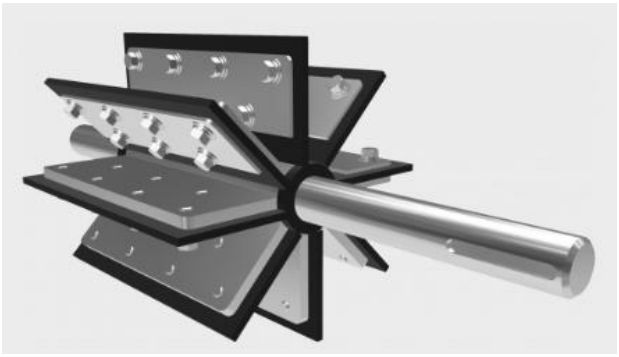

Flexible Tip Rotor

7. Repeat this procedure until all blades are installed and rotor can still be turned by hand.
8. Replace chain.
9. Adjust motor plate & replace guard.

## Checking and Adjusting Drive Chain

Check tension of airlock drive chain every 200 hours of operation. Chain tension will change due to normal wear.

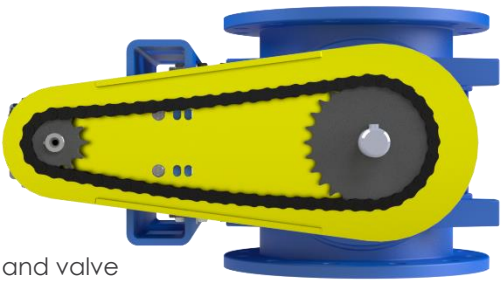

Drive Chain

1. Remove chain guard. Airlock drive chain should have a small amount of slack (3/8" to 1/2") between gearmotor and valve sprockets. The chain should be loose enough to allow a slight up and down motion with hand pressure applied midway between sprockets. To adjust airlock drive chain, loosen two bolts securing gearmotor and change position of gearmotor to obtain desired degree of tightness. Tighten mounting parts and reinstall chain guard.
2. Chain manufacturer's guidelines recommend to clean and lubricate the chain periodically.

## Zero Speed Switch

Refer to the manufacturer's instruction manual for installation details. If sensor does not detect Whirligig Target check the sensing range of the sensor being used and move sensor closer to the target.

## Gear Drive and Motor

Inspect, lubricate and service the gear drive and motor in accordance with the manufacturer's instructions.

## Air Purge Pressure Adjustment

Shut off the compressed air supply and bleed off air pressure before attempting to install or service the air purge assembly. After installation is complete and while the filter/regulator is shut off completely, the air supply should be turned on.

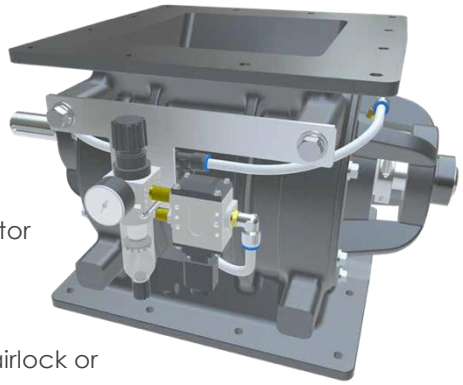

Purge Kit

1. After verifying that all connections are tight the regulator should be adjusted to provide the appropriate purge pressure to the airlock using the following guidelines.
2. Initial setting, prior to conveying product through the airlock or system should be 5 PSIG.
3. If the airlock is either receiving product from or discharging product to a pressure system, the regulator should be set at 5 PSIG above the system conveying pressure.
4. If the airlock is used in a gravity flow application or is receiving or discharging only to a vacuum system, the regulator should remain set at 5 PSIG.

| AIR PURGE ASSEMBLY FOR AIRLOCKS WITH OPEN OR CLOSED END ROTORS | | |
|---|---|---|
| **Item** | **Qty** | **Description** |
| 1 | 1 | Filter/Regulator with gauge and bracket |
| 2 | 1 | 3/8" Male Branch Tee Poly fitting |
| 3 | 4 ft. | 3/8" O.D. Seal Tubing |
| 4* | 2 | 3/8" PTC to 1/8" MNPT Connector |
| 5 | 1 | 0-30 PSI, 2" Face, 1/4" CTR Back Gauge |
| 6** | 2 | 3/8" Poly to 3/8" MNPT Connector |
| 7** | 2 | 3/8" Union Tee |
| 8** | 2 | 3/4" x 3/8" Hex Bushing |
| | 1 | Air Purge Kit (includes items 1 thru 8) |

Please Note: *Fittings for purging shaft seal **Fittings for purging end plate cavity

# ACS Rotary Valve Lubrication Chart

Standard bearings on CI and MD series airlocks are sealed for life bearings and do not require lubrication, but greaseable bearings are supplied according to the service conditions.

The following chart is a list of oil lubrication product suppliers including a maintenance schedule for gear reducers based upon an ambient factory atmosphere and normal factory operating conditions. This chart is only a suggested list of suppliers and maintenance schedule times, end users may select from their own list of supplier products and adjust the recommended scheduled maintenance times to suit their own facility conditions.

| SEW EURODRIVE GEAR REDUCERS | | | | |
|---|---|---|---|---|
| **Reducer** | **Application** | **Oil or Grease Type (s)** | **Quantity (L)** | **Frequency (Hours)** |
| SEW Eurodrive<br>R series<br>FAF series<br>KAF series | Standard (-15°C to +40°C) | Shell Omala S2 G 220<br>Mobil Mobilgear 600 XP 220<br>Castrol Optigear BM 220 | R series standard M6 Pos. R37(0.95), R47(1.50) R57(1.70), R67(2.00) R77(3.40), R87(6.50<br><br>FAF series standard M1 Pos. FAF37(0.95), FAF47(1.50) FAF57(2.70), FAF67(2.70) FAF77(5.90), FAF87(10.80)<br><br>KAF series standard M1 Pos. KAF37(0.50), KAF47(0.80) KAF57(1.20), KAF67(1.10) KAF77(2.10), KAF87(3.70) | Check oil every 3,000 hrs Replace oil every 10,000 hrs |
| | High temperature (-20°C to +80°C) | Shell Omala S4 WE 220<br>Mobil Glygoyle 220<br>Castrol Optiflex A 220 | | Check oil every 3,000 hrs. Replace oil every 6,000 hrs. |
| | Low temperature (-40°C to +40°C) | Shell Omala S4 GX 150<br>Mobil SHC 629<br>Castrol Optigear Synthetic X 150 | | Check oil every 3,000 hrs. Replace oil every 18,000 hrs. |
| | Food grade (-20°C to +30°C) | Shell Cassida Fluid GL 220<br>Mobil SHC Cibus 220<br>Castrol Optileb GT 220 | | Check oil every 3,000 hrs. Replace oil every 12,000 hrs. |
| SEW Eurodrive<br>S series<br>SAF series | Standard (0°C to +40°C) | Shell Omala S2 G 680<br>Mobil Mobilgear 600 XP 680<br>Castrol Optigear BM 680 | S series standard M1 Pos. S37(0.25), S47(0.35) S57(0.50), S67(1.00) S77(1.90), S87(3.30)<br><br>SAF series standard M4 Pos. SAF37(0.50), SAF47(1.00) SAF57(1.50), SAF67(2.90) SAF77(5.80), SAF87(10.80) | Check oil every 3,000 hrs. Replace oil every 10,000 hrs. |
| | High temperature (-20°C to +80°C) | Shell Omala S4 WE 680<br>Mobil Glygoyle 680<br>Castrol Optiflex A 680 | | Check oil every 3,000 hrs. Replace oil every 6,000 hrs. |
| | Low temperature (-40°C to +30°C) | Shell Omala S4 GX 150<br>Mobil SHC 629<br>Castrol Optigear Synthetic X 150 | | Check oil every 3,000 hrs. Replace oil every 18,000 hrs. |

The following chart is a list of grease lubrication product suppliers including a maintenance schedule for bearing and roller chains based upon an ambient factory atmosphere and normal factory operating conditions. This chart is only a suggested list of suppliers and maintenance schedule times, end users may select from their own list of supplier products and adjust the recommended scheduled maintenance times to suit their own facility conditions.

| BEARINGS AND ROLLER CHAIN | | | | |
|---|---|---|---|---|
| **Component** | **Application** | **Oil or grease type(s)** | **Quantity (ml)** | **Frequency (hrs)** |
| Greaseable Insert Bearing | Standard (-30°C to +130°C) | Shell Alvania RL2<br>Mobil Mobilith SHC 220<br>Castrol Tribol 4020-220-2 | ø1.000" (20), ø1.500" (30) ø1.938" (35), ø2.438" (38) ø2.500" (40), ø2.938" (45) | Grease every 3,000 hrs. |
| | High temperature (-20°C to +180°C) | Shell Stamina RL2<br>Mobil Mobiltemp SHC 100<br>Castrol Tribol 4747-220-2 | | Grease every 2,200 hrs |
| | Food grade (-10°C to +100°C) | Shell Cassida Grease RLS2 Mobil Mobilith SHC 220<br>Castrol Molub-Alloy 823-2 FM | | Grease every 2,200 hrs |
| Linear Bearing sets for Quick Clean RotorRail Design | Standard (-20°C to 80°C) | NLGI 00 or 2, DIN 51818 or DIN 51825, KP2K-20 Lithium based High Performance grease | Lubricate on shaft until lubricant emerges | Grease every 3,000 hrs.<br>See Note |
| Roller Drive Chain | Manual lubrication where the user applies oil periodically with a brush or aerosol spray. Roller chain manufacturer's recommend frequency is once every eight hours, but a longer interval may be used if experience shows it is adequate. The amount of oil and the frequency of its application must be adequate to prevent the formation of a reddish brown discoloration in the chain joints. Manufacturer's recommend high quality oil be used. SAE 20 is recommended for ambient temperatures below 32 F (0 C), SAE 30 from 32 to 104 F (0 to 40 C) and SAE 40 The chain should be periodically cleaned with a petroleum cleaner and inspected. | | | |

Note:

Linear bearing sets for quick clean on rails come pre- lubricated by the manufacturer. Service lubrication intervals are dependent on the severity of the service and the environment they are installed. Monitor the lubrication condition of the Linear Bushings and Linear Sets after start-up. If necessary, adapt the lubrication intervals.

Between in-service lubrication intervals, check that:

- there is no dirt, even coolants/ cutting fluids can be critical;
- no chips can become trapped around the Linear Bushing guideway;
- there is no red-brown discoloration of the lubricant. if there is, lubricate immediately, increase the lube quantity, reduce the lubrication interval, ask for advice if in doubt;
- the seals are functioning correctly.

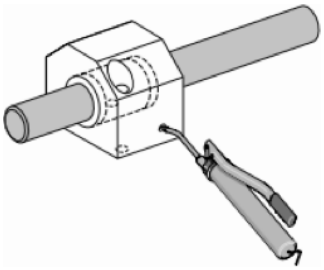

Clean shafts and shaft support rails if necessary.

# Troubleshooting

Inspection and repair procedures given below provide guidance for restoring the package to peak operation. In many cases, repair consists of component replacement.

A. If airlock is not operating efficiently or satisfactory, remove from system, inspect and repair in accordance with preceding information.

B. Inspect airlock drive chain and sprockets for wear, loose links, and damage. Replace chain and sprockets if damage is noted. Be sure the same size sprockets are replacements for original sprockets.

C. Inspect base structure, chain guard, and brackets, for damage and deformation. Replace defective parts.

D. Check all accessory equipment to assure proper operation. Replace any components found to be defective.

**When requesting service assistance, please have the following information at hand.**

1. Serial no. and/or ACS Sales Order no. or drawing number if available.
2. Application conditions of service including such as product, temperature, ambient temperature.
3. Vacuum or pressure gauge reading above and below the valve,
4. Airlock speed.
5. Method of feeding the valve.
6. Blower speed.
7. Pressure switch setting.
8. Blower motor amperage reading.
9. Gearmotor amperage reading
10. Conveying line length. a) Horizontal run b) Vertical run c) Number of elbows.
11. Photos or video of the installation.

ACS VALVES

| FAULTS, CAUSES AND REMEDIES | | |
|---|---|---|
| **Fault** | **Possible Cause** | **Possible Remedy** |
| Excessive noise during operation | Incorrect direction of rotation. | Check markings for correct direction.<br>Rewire motor if necessary, to correct. |
| | Insufficient rotor clearance due to material buildup or thermal expansion | Check clearances and for signs of contact.<br>Clean material buildup.<br>Adjust clearance as described in manual.<br>Contact ACS for assistance. |
| | Drive chain rubbing on guard | Adjust guard and/or sprocket position. |
| | Drive shaft rubbing on guard | Adjust guard position. |
| | Bearing failure | Remove and inspect bearings.<br>Replace if necessary, as described in manual. |
| Airlock does not rotate | No power to airlock | Check motor, settings for electrical issues. |
| | Chain not connected | Check chain for signs of wear, repair or replace chain. |
| | Foreign object caught in inlet throat | Inspect and remove. |
| | Faulty or damaged gearbox | Check for signs of wear or damage.<br>Replace gearbox if necessary. |
| Material flow problems | Supply source or feed device plugged, empty, or not operating | Check supply source. |
| | Conveying line piping layout, size or increased pressure | Inspect and review conveying line layout. |
| | Airlock turning too fast | Adjust motor speed or replace sprockets. |
| | Excessive rotor pocket fill | Inlet shear protector. |
| | Excessive moisture in Product | Clean rotor.<br>Check flange connections for proper seal.<br>Check process for proper product condition. |
| | Excessive blowby air | Check and adjust rotor clearances. Install vent or vented shear protector. |
| Short seal life | Conveying line piping layout | Inspect and review conveying line layout. |
| | Incorrect air purge pressure | Adjust air purge pressure as described in relevant section in Instruction Manual |
| | Seal out of position | Inspect and reposition seal. |

# Spare Parts and Service

Use only ACS replacement parts. Parts are available from ACS directly or our authorized representative. For prompt, efficient service, always provide the following information when ordering parts: Serial number, model number and part description and reference number, as given in this manual.

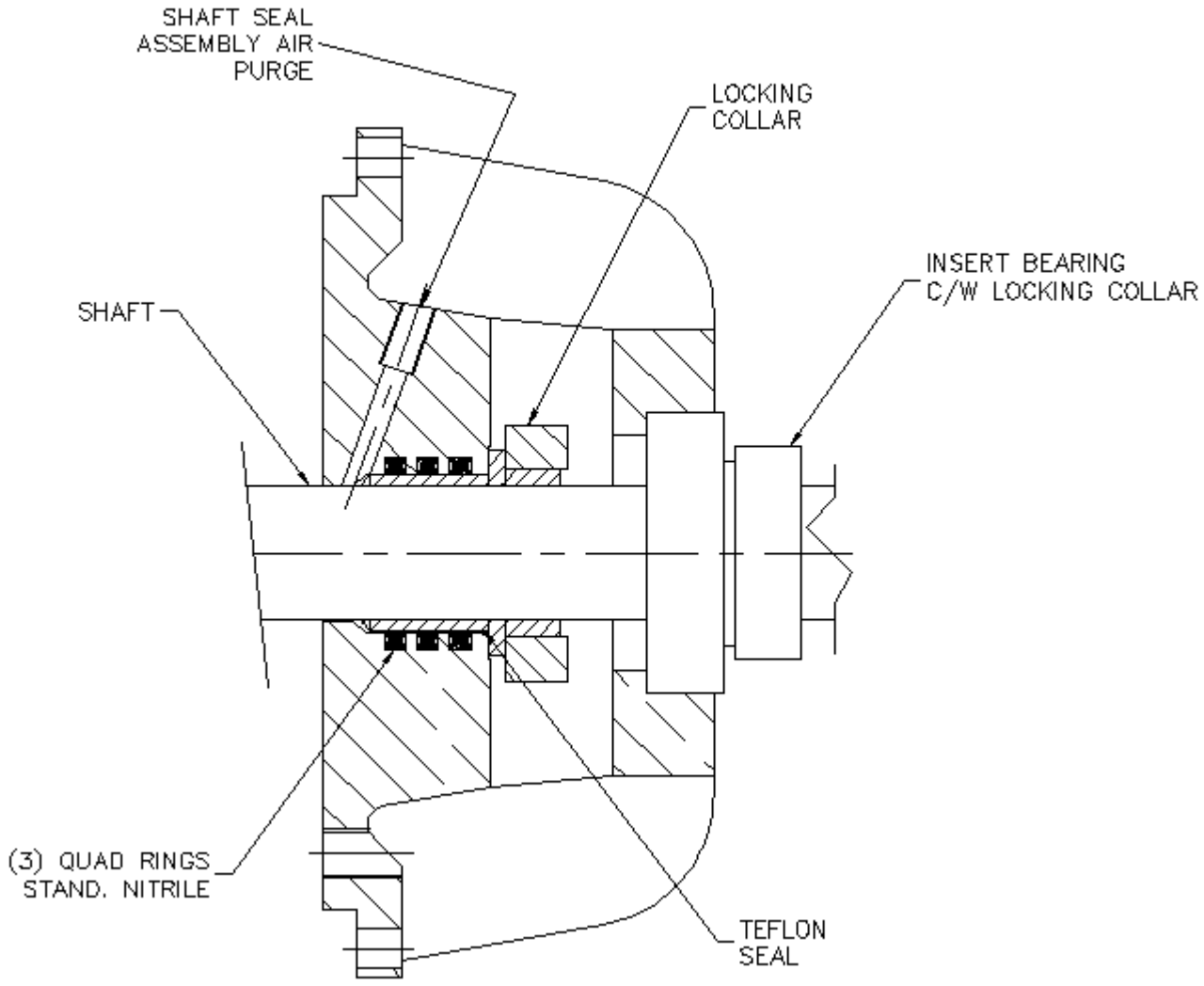


ACST-4 SEAL AND BEARING DETAIL

# Spare Parts and Service

For assistance in service or ordering parts, contact the Sales Department at:

**ACS Valves**

611 Argyle Street North, Caledonia, ON, N3W1M1 Phone: 1-800-665-3447 / 905-765-2004

**Or visit our website at http://www.acsvalves.com**

| ACS MD or CI Rotary Airlock Spare Parts | Part Number |
|---|---|
| MD or CI Rotary Airlock Complete Less Drive | CI** OR MD**-1 |
| Housing | CI** OR MD**-2 |
| Rotor | CI** OR MD**-3 |
| Endplate (2 Per Unit) | CI** OR MD**-4 |
| Quad Rings (3 Per Seal, 6 Per Unit) | CI** OR MD**-5 |
| ACST-4 Teflon Sleeve (2 Per Unit) | CI** OR MD**-6 |
| Shaft Seal Locking Collar (2 Per Unit) | CI** OR MD**-7 |
| Bearing (2 Per Unit) | CI** OR MD**-8 |
| Pusher* (2 Per Unit) | CI** OR MD**-9 |
| Lip Seal* (Optional 2 Per Unit) | CI** OR MD**-10 |
| Lantern Ring* (Optional 2 Per Unit) | CI** OR MD**-11 |
| Packing Rings* (Optional 2 Per Unit) | CI** OR MD**-12 |
| *Packed Box Construction **Denotes Model Size | |

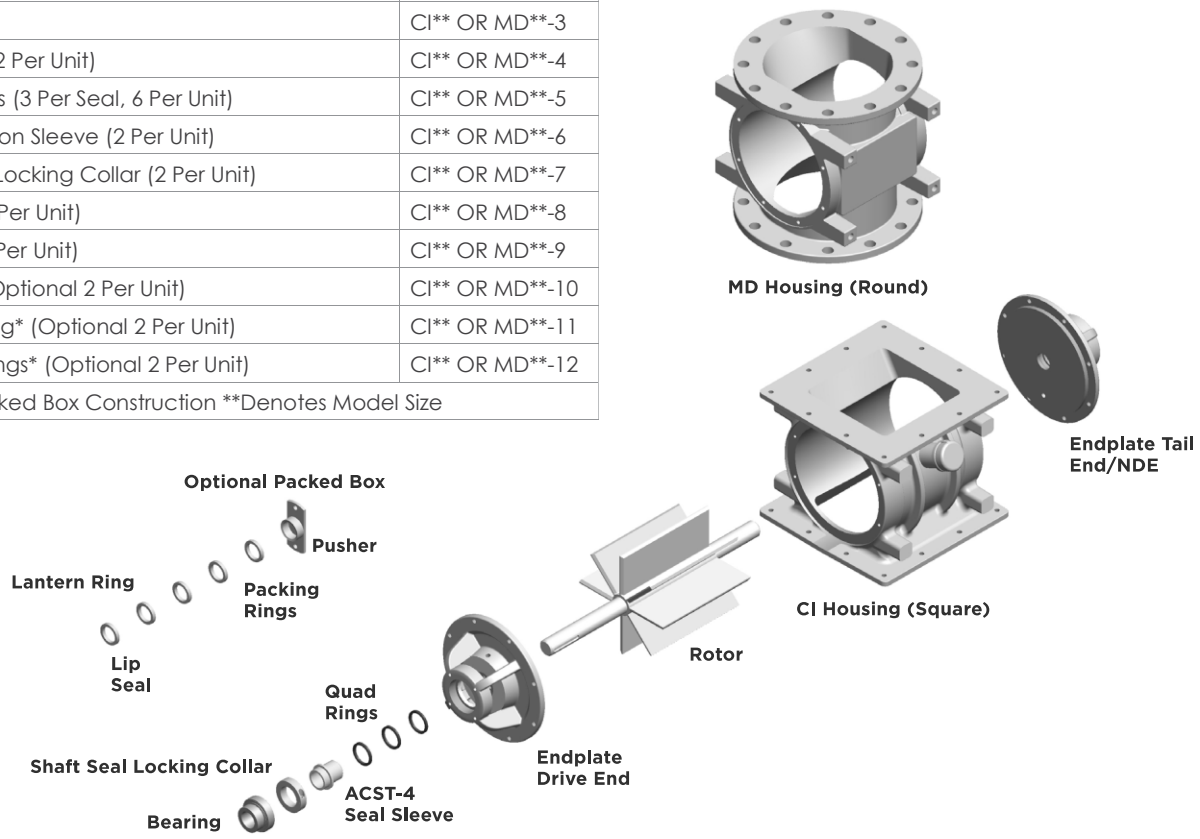


## Motor and Speed Reducer Parts and Service

The motor and speed reducer are covered by their own manufacturer's warranty. If there is a problem, check with the local supplier or service representative referencing the manufacturer model and serial number for prompt service or contact ACS Valves Sales for support.

800-655-3447
acsvalves.com

# Gearmotors and Gear Reducers

**OPERATING INSTRUCTIONS**

**01 805 52 US**

## GENERAL
These operationg instructions are intended to help you install and operate the drive. For trouble free service, proper installation and operation are essential. Additionally, these instructions contain important recommendations on maintenance.

Before shipment, every SEW-Eurodrive gear unit is tested, checked and properly packed. However, please inspect the drive immediately upon arrival for shortage or transit damage. Note the damage or shortage on the freight bill of lading and file a claim with the carrier. Also, notify SEW-Eurodrive of the shortage or damage.

## LUBRICANTS
All gearmotors and gear reducers are supplied with the correct grade and quantity of lubricating oil for the specified mounting position. Exceptions include reducers shipped without input assemblies. The recommended lubricants are found on page 2.

## LONG TERM STORAGE
If the drive is not installed immediately, it should be stored in a dry, protected area. If the drive is to be stored for an extended period of time and was not ordered from SEW for long term storage, contact your nearest SEW assembly plant for information on Long Term Storage or request **Document #2115**.

Drives which are used for standby service should be stored as a sealed gearcase.

## INSTALLATION OF COMPONENTS ON DRIVE SHAFTS
Do not hammer on the shafts. Hammering can cause brinelling of the reducer's bearings shortening the bearing life. We recommend heating the components to approximately 175°F (when possible) and sliding them on the shaft. This will reduce possible damage to the reducer's bearings. **Document #2116**.

For both standard and metric SEW shaft tolerances, refer to the SEW Catalog or request **Document #2154.**

Shaft couplings should be properly aligned to prevent vibration, coupling wear, and premature failure of the shaft bearings.

To prevent the output shaft and bearings from being subjected to excessive loads, the maximum overhung load, as shown in SEW-Eurodrive catalogs, should not be exceeded. Please consult our engineering department if the load may exceed the recommended figure given or where there are combined radial and axial loads. In such cases, the exact operating conditions must be stated including speed, direction of rotation, position, magnitude and direction of the external radial and axial loads being applied.

## SHAFT MOUNTED REDUCERS
SEW-Eurodrive supplies the recommended hollowshaft mounting paste with every hollowshaft reducer. The mounting paste is to be applied on the keyed output shaft. The mounting paste is to aid in the prevention of rusting and fretting corrosion between the reducer hollowshaft and the shaft of the driven machine. The mounting paste will aid in shaft removal when necessary.

**Warning! Always ensure exposed, rotating parts are properly covered to ensure safety.**

For additional information on shaft mounted reducers, drive shaft configuration and tolerances, refer to the SEW-Eurodrive Catalog or request **Documents #2201 and #2202**.

## INSTALLATION AND OPERATION
The drive installation site should be selected to ensure:

- Ambient temperatures below 40°C (104°F).
- Unimpeded flow of air to the motor and variable speed units.
- Accessibility to the drain, level and breather plugs.
- Adequate space for the removal of brakemotor fanguard for brake adjustment and maintenance.

The drive unit should be mounted on a flat, vibration damping, and torsionally rigid structure. Careful alignment is critical. Mounting to an uneven surface will cause housing distortion. The flatness tolerance of the supporting surface should not exceed:

- For gear units size 80 and smaller — 0.004 inch.
- For gear units above size 80 — 0.008 inch.

Fig. 1

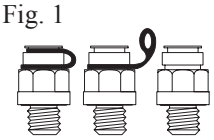

**For transportation, the units are supplied with the breather plug already mounted. After the unit is installed, the black rubber seal located on the breather MUST BE REMOVED (Fig. 1).** In addition, the oil level should be checked. Remove the plated (non-painted) oil level plug. The oil level is correct when the surface of the oil is level with the lowest point of that tapped hole, the exception is S37. Units W20 and W30 are sealed in any position.

After installation, the actual mounting position should be confirmed against the mounting postion shown on the gear reducer nameplate. Adequate lubrication is only guaranteed if the unit is mounted in the specific nameplated mounting position.

Refer to the SEW Catalog or request **Document #2111, #2112, #2113, or #2114 (R, F, K, orS, respectively)** if a specific mounting position diagram is needed.

## MAINTENANCE
**Warning! Always ensure equipment is secure and electrical power is off before removing or performing maintenance on the drive assembly.** Oil levels and oil quality should be checked at regular intervals, determined by usage and the environment. Grease and oil should be changed per the recommendations on page 2. Check coupling alignment, chain or belt tension, and mounting bolt torque periodically. Keep the drive relatively free of dust and dirt.

***For additional information, call the SEW FAXline, 1-800-601-6195, and request document number shown.***


SEW EURODRIVE

**SOUTHEAST MANUFACTURING & ASSEMBLY CENTER**
1295 Old Spartanburg Hwy, Lyman, SC 29365
(864) 439-7537 Fax: (864) 439-7830

**SOUTHWEST ASSEMBLY CENTER**
3950 Platinum Way, Dallas, TX 75237
(214) 330-4824 Fax: (214) 330-4724

**MIDWEST ASSEMBLY CENTER**
2001 West Main Street, Troy, OH 45373
(937) 335-0036 Fax: (937) 222-4104

**EAST COAST ASSEMBLY CENTER**
200 High Hill Road, Bridgeport, NJ 08014
(856) 467-2277 Fax: (856) 330-4724

**WEST COAST ASSEMBLY CENTER**
30599 San Antonio Road, Hayward, CA 94544
(510) 487-3560 Fax: (510) 487-6381


ISO 9002

# LUBRICANTS

| LUBRICATION SCHEDULE FOR SEW-EURODRIVE GEAR UNITS | | | | | | | | | |
|---|---|---|---|---|---|---|---|---|---|
| **Gear Reducer Type**[1)] | **Lubrication Type** | **Ambient air temperature range °F** | **ISO Viscosity Grade** | **Mobil Oil Co.** | **CHEVRON Oil Co.** | **Shell Oil Co.** | **Texaco Oil Co.** | **BP Oil Co.** | **Kluber Oil Co.** |
| **R F K** | **Oil** | +14 to +104 | VG220 | Mobilgear 630 | Chevron Non-Leaded Gear Compound 220 | Shell Omala Oil 220 | Meropa 220 | BP Energol GP-XP 220 | Kluberoil GEM 1-220 |
| | | -4 to +77 | VG150 VG100 | Mobilgear 629 | Chevron Non-Leaded Gear Compound 150 | Shell Omala Oil 100 | Meropa 150 | BP Energol GP-XP 100 | Kluberoil GEM 1-150 |
| **S** | **Oil** | +32 to +104 | VG680 | Mobilgear 636 | Chevron Non-Leaded Gear Compound 680 | Shell Omala Oil 680 | Meropa 680 | BP Energol GP-XP 680 | Kluberoil GEM 1-680 |
| | | +5 to +77 | VG220 | Mobilgear 630 | Chevron Non-Leaded Gear Compound 220 | Shell Omala Oil 220 | Meropa 220 | BP Energol GP-XP 220 | Kluberoil GEM 1-220 |
| **General** | **Synth. Oil** | +176 to -40 | Consult Factory For Use of Synthetic Oils | | | | | | |
| | **Synth. Grease** | +176 to -40 | Consult Factory For Use of Grease Filled Reducers | | | | | | |
| **Ball & Roller Bearings** | **Grease** Used for normal application Temp. Range: -22°F to 140°F | | | **Mobilux EP2** | **Chevron Dura-Lith EP2** | **Shell Alvania Grease R3** | **Multifak EP2** | **BP Energrease LS3** | **CENTOPLEX 2EP** |

[1)] Applies to all reducers with or without motor and input shaft.

Oil levels and oil quality should be checked at frequent intervals, depending on usage. Oil changes are required at intervals of 10,000 operating hours or every two years, whichever comes first. If a synthetic oil lubricant is used, then this period can be extended to 20,000 operating hours or every four years, whichever comes first. In applications where hostile operating conditions exist, such as high humidity, corrosive environment, or large temperature changes, the lubricant should be changed at more frequent intervals.

The gear units W20 and W30 are supplied with a synthetic oil which is good for the life of the reducer, independent of the mounting position.

Grease packed bearings should be cleaned and regreased every 10,000 hours or 20,000 hours for synthetic grease. Input (high speed) bearings should not be overgreased. They should be filled with grease not to exceed 1/3 of the bearing's free volume. For output bearings and bearings with replaceable grease shields, fill to 2/3 of their free volume.

## ATTENTION

When the recommended lubricant is not avilable, it is permissible to use a lubricant having equivalent characteristics but we do not recommend that lubricants of different brands be mixed. Under no circumstances should synthetic lubricants be mixed with one another or with one having a mineral base.

# LUBRICANTS

The approximate lubricant in US **gallons and liters** per mounting position is as follows:

| | Mounting Position | | | | | | | | | | | |
|---|---|---|---|---|---|---|---|---|---|---|---|---|
| | M1 [1] | | M2 [1] | | M3 [2] | | M4 | | M5 [2] | | M6 [2] | |
| Gear Unit | Gallons | Liters | Gallons | Liters | Gallons | Liters | Gallons | Liters | Gallons | Liters | Gallons | Liters |
| RX57 | 0.16 | 0.6 | 0.21 | 0.8 | 0.34 | 1.3 | 0.34 | 1.3 | 0.24 | 0.9 | 0.24 | 0.9 |
| RX67 | 0.21 | 0.8 | 0.21 | 0.8 | 0.45 | 1.7 | 0.50 | 1.9 | 0.29 | 1.1 | 0.29 | 1.1 |
| RX77 | 0.29 | 1.1 | 0.40 | 1.5 | 0.69 | 2.6 | 0.71 | 2.7 | 0.42 | 1.6 | 0.42 | 1.6 |
| RX87 | 0.45 | 1.7 | 0.66 | 2.5 | 1.27 | 4.8 | 1.27 | 4.8 | 0.77 | 2.9 | 0.77 | 2.9 |
| RX97 | 0.55 | 2.1 | 0.90 | 3.4 | 1.96 | 7.4 | 1.85 | 7 | 1.27 | 4.8 | 1.27 | 4.8 |
| RX107 | 1.03 | 3.9 | 1.48 | 5.6 | 3.06 | 11.6 | 3.14 | 11.9 | 2.03 | 7.7 | 2.03 | 7.7 |
| RXF57 | 0.13 | 0.5 | 0.21 | 0.8 | 0.29 | 1.1 | 0.29 | 1.1 | 0.18 | 0.7 | 0.18 | 0.7 |
| RXF67 | 0.18 | 0.7 | 0.21 | 0.8 | 0.40 | 1.5 | 0.45 | 1.7 | 0.26 | 1 | 0.26 | 1 |
| RXF77 | 0.24 | 0.9 | 0.40 | 1.5 | 0.63 | 2.4 | 0.66 | 2.5 | 0.42 | 1.6 | 0.42 | 1.6 |
| RXF87 | 0.42 | 1.6 | 0.66 | 2.5 | 1.29 | 4.9 | 1.24 | 4.7 | 0.77 | 2.9 | 0.77 | 2.9 |
| RXF97 | 0.55 | 2.1 | 0.95 | 3.6 | 1.88 | 7.1 | 1.85 | 7 | 1.27 | 4.8 | 1.27 | 4.8 |
| RXF107 | 0.82 | 3.1 | 1.56 | 5.9 | 2.96 | 11.2 | 2.77 | 10.5 | 1.90 | 7.2 | 1.90 | 7.2 |
| R17/R17F | 0.07 | 0.25 | 0.16 | 0.6 | 0.09 | 0.35 | 0.16 | 0.6 | 0.09 | 0.35 | 0.09 | 0.35 |
| R27/R27F | 0.07 (0.11) | 0.25 (0.4) | 0.18 | 0.7 | 0.11 | 0.4 | 0.18 | 0.7 | 0.11 | 0.4 | 0.11 | 0.4 |
| R37/R37F | 0.08 (0.26) | 0.3 (1) | 0.24 | 0.9 | 0.26 | 1 | 0.29 | 1.1 | 0.21 | 0.8 | 0.26 | 1 |
| R47/R47F | 0.18 (0.40) | 0.7 (1.5) | 0.42 | 1.6 | 0.40 | 1.5 | 0.45 | 1.7 | 0.40 | 1.5 | 0.40 | 1.5 |
| R57/R57F | 0.21 (0.45) | 0.8 (1.7) | 0.50 | 1.9 | 0.45 | 1.7 | 0.55 | 2.1 | 0.45 | 1.7 | 0.45 | 1.7 |
| R67/R67F | 0.29 (0.61) | 1.1 (2.3) | 0.69 (0.92) | 2.6 (3.5) | 0.74 | 2.8 | 0.85 | 3.2 | 0.48 | 1.8 | 0.53 | 2 |
| R77/R77F | 0.32 (0.79) | 1.2 (3) | 1.00 (1.14) | 3.8 (4.3) | 0.95 | 3.6 | 1.14 | 4.3 | 0.66 | 2.5 | 0.90 | 3.4 |
| R87/R87F | 0.61 (1.59) | 2.3 (6) | 1.77 (2.22) | 6.7 (8.4) | 1.90 | 7.2 | 2.03 | 7.7 | 1.66 | 6.3 | 1.72 | 6.5 |
| R97 | 1.22 (2.59) | 4.6 (9.8) | 3.09 (3.70) | 11.7 (14) | 3.09 | 11.7 | 3.54 | 13.4 | 2.99 | 11.3 | 3.09 | 11.7 |
| R107 | 1.59 (3.62) | 6 (13.7) | 4.31 | 16.3 | 4.46 | 16.9 | 5.07 | 19.2 | 3.49 | 13.2 | 4.20 | 15.9 |
| R137 | 2.64 (6.61) | 10 (25) | 7.40 | 28 | 7.79 | 29.5 | 8.32 | 31.5 | 6.61 | 25 | 6.61 | 25 |
| R147 | 4.07 (10.57) | 15.4 (40) | 12.29 | 46.5 | 12.68 | 48 | 13.74 | 52 | 10.44 | 39.5 | 10.83 | 41 |
| R167 | 7.13 (18.49) | 27 (70) | 21.66 | 82 | 20.61 | 78 | 23.25 | 88 | 17.44 | 66 | 18.23 | 69 |
| RF17 | 0.07 | 0.25 | 0.16 | 0.6 | 0.09 | 0.35 | 0.16 | 0.6 | 0.09 | 0.35 | 0.09 | 0.35 |
| RF27 | 0.07 (0.11) | 0.25 (0.4) | 0.18 | 0.7 | 0.11 | 0.4 | 0.18 | 0.7 | 0.11 | 0.4 | 0.11 | 0.4 |
| RF37 | 0.11 (0.26) | 0.4 (1) | 0.24 | 0.9 | 0.26 | 1 | 0.29 | 1.1 | 0.21 | 0.8 | 0.26 | 1 |
| RF47 | 0.18 (0.40) | 0.7 (1.5) | 0.42 | 1.6 | 0.40 | 1.5 | 0.45 | 1.7 | 0.40 | 1.5 | 0.40 | 1.5 |
| RF/RM57 | 0.21 (0.45) | 0.8 (1.7) | 0.48 | 1.8 | 0.45 | 1.7 | 0.53 | 2 | 0.45 | 1.7 | 0.45 | 1.7 |
| RF/RM67 | 0.32 (0.66) | 1.2 (2.5) | 0.71 (0.95) | 2.7 (3.6) | 0.71 | 2.7 | 0.82 | 3.1 | 0.50 | 1.9 | 0.55 | 2.1 |
| RF/RM77 | 0.32 (0.69) | 1.2 (2.6) | 1.00 (1.08) | 3.8 (4.1) | 0.87 | 3.3 | 1.08 | 4.1 | 0.63 | 2.4 | 0.79 | 3 |
| RF/RM87 | 0.63 (1.59) | 2.4 (6) | 1.8 (2.09) | 6.8 (7.9) | 1.88 | 7.1 | 2.03 | 7.7 | 1.66 | 6.3 | 1.69 | 6.4 |
| RF/RM97 | 1.35 (2.69) | 5.1 (10.2) | 3.14 (3.70) | 11.9 (14) | 2.96 | 11.2 | 3.70 | 14 | 2.96 | 11.2 | 3.12 | 11.8 |
| RF/RM107 | 1.66 (3.94) | 6.3 (14.9) | 4.20 | 15.9 | 4.49 | 17 | 5.07 | 19.2 | 3.46 | 13.1 | 4.20 | 15.9 |
| RF/RM137 | 2.51 (6.61) | 9.5 (25) | 7.13 | 27 | 7.66 | 29 | 8.59 | 32.5 | 6.61 | 25 | 6.61 | 25 |
| RF/RM147 | 4.33 (11.10) | 16.4 (42) | 12.42 | 47 | 12.68 | 48 | 13.74 | 52 | 11.10 | 42 | 11.10 | 42 |
| RF/RM167 | 6.87 (18.49) | 26 (70) | 21.66 | 82 | 20.61 | 78 | 23.25 | 88 | 17.17 | 65 | 18.76 | 71 |

[1] On compound gear units the primary (larger) gear unit is provided with the oil quantity in parenthesis.

[2] On compound gear units having mounting positions M3, M5, or M6 the secondary (smaller) gear unit is provided with the oil filling of the M1 flanged mounting position.

***For additional information on R-Series mounting positions, refer to the SEW Catalog or call the SEW FAXline, 1-800-601-6195, and request Document #2111.***

# LUBRICANTS

The approximate lubricant in US **gallons and liters** per mounting position is as follows:

| Gear Unit | Mounting Position | | | | | | | | | | | |
|---|---|---|---|---|---|---|---|---|---|---|---|---|
| | M1 | | M2 | | M3 | | M4 | | M5 | | M6 | |
| | Gallons | Liters | Gallons | Liters | Gallons | Liters | Gallons | Liters | Gallons | Liters | Gallons | Liters |
| F27 | 0.16 | 0.6 | 0.21 | 0.8 | 0.18 | 0.7 | 0.18 | 0.7 | 0.16 | 0.6 | 0.16 | 0.6 |
| F37 | 0.26 | 1 | 0.32 | 1.2 | 0.18 | 0.7 | 0.32 | 1.2 | 0.26 | 1 | 0.29 | 1.1 |
| F47 | 0.40 | 1.5 | 0.48 | 1.8 | 0.29 | 1.1 | 0.50 | 1.9 | 0.40 | 1.5 | 0.45 | 1.7 |
| F57 | 0.69 | 2.6 | 0.98 | 3.7 | 0.55 | 2.1 | 0.92 | 3.5 | 0.74 | 2.8 | 0.77 | 2.9 |
| F67 | 0.71 | 2.7 | 1.00 | 3.8 | 0.50 | 1.9 | 1.00 | 3.8 | 0.77 | 2.9 | 0.85 | 3.2 |
| F77 | 1.32 | 5 | 1.93 | 7.3 | 1.14 | 4.3 | 2.11 | 8 | 1.59 | 6 | 1.66 | 6.3 |
| F87 | 2.64 | 10 | 3.43 | 13 | 2.03 | 7.7 | 3.65 | 13.8 | 2.85 | 10.8 | 2.91 | 11 |
| F97 | 4.89 | 18.5 | 5.94 | 22.5 | 3.33 | 12.6 | 6.66 | 25.2 | 4.89 | 18.5 | 5.28 | 20 |
| F107 | 6.47 | 24.5 | 8.45 | 32 | 5.15 | 19.5 | 9.91 | 37.5 | 7.13 | 27 | 7.13 | 27 |
| F127 | 10.70 | 40.5 | 14.53 | 55 | 8.98 | 34 | 16.12 | 61 | 12.29 | 46.5 | 12.42 | 47 |
| F157 | 18.23 | 69 | 27.48 | 104 | 16.64 | 63 | 27.74 | 105 | 22.72 | 86 | 20.61 | 78 |
| FF27 | 0.16 | 0.6 | 0.21 | 0.8 | 0.18 | 0.7 | 0.18 | 0.7 | 0.16 | 0.6 | 0.16 | 0.6 |
| FF37 | 0.26 | 1 | 0.32 | 1.2 | 0.18 | 0.7 | 0.34 | 1.3 | 0.26 | 1 | 0.29 | 1.1 |
| FF47 | 0.42 | 1.6 | 0.50 | 1.9 | 0.29 | 1.1 | 0.50 | 1.9 | 0.40 | 1.5 | 0.45 | 1.7 |
| FF57 | 0.74 | 2.8 | 1.00 | 3.8 | 0.55 | 2.1 | 0.98 | 3.7 | 0.77 | 2.9 | 0.79 | 3 |
| FF67 | 0.71 | 2.7 | 1.00 | 3.8 | 0.50 | 1.9 | 1.00 | 3.8 | 0.77 | 2.9 | 0.85 | 3.2 |
| FF77 | 1.35 | 5.1 | 1.93 | 7.3 | 1.14 | 4.3 | 2.14 | 8.1 | 1.59 | 6 | 1.66 | 6.3 |
| FF87 | 2.72 | 10.3 | 3.49 | 13.2 | 2.06 | 7.8 | 3.73 | 14.1 | 2.91 | 11 | 2.96 | 11.2 |
| FF97 | 5.02 | 19 | 5.94 | 22.5 | 3.33 | 12.6 | 6.74 | 25.5 | 4.99 | 18.9 | 5.42 | 20.5 |
| FF107 | 6.74 | 25.5 | 8.45 | 32 | 5.15 | 19.5 | 10.17 | 38.5 | 7.27 | 27.5 | 7.40 | 28 |
| FF127 | 10.96 | 41.5 | 14.80 | 56 | 8.98 | 34 | 16.64 | 63 | 12.29 | 46.5 | 12.95 | 49 |
| FF157 | 19.02 | 72 | 27.74 | 105 | 16.91 | 64 | 28.01 | 106 | 22.99 | 87 | 20.87 | 79 |
| FA/FH/FV27<br>FAF/FHF/FVF27<br>FAZ/FHZ/FVZ27 | 0.16 | 0.6 | 0.21 | 0.8 | 0.18 | 0.7 | 0.18 | 0.7 | 0.16 | 0.6 | 0.16 | 0.6 |
| FA/FH/FV37<br>FAF/FHF/FVF37<br>FAZ/FHZ/FVZ37 | 0.26 | 1 | 0.32 | 1.2 | 0.18 | 0.7 | 0.32 | 1.2 | 0.26 | 1 | 0.29 | 1.1 |
| FA/FH/FV47<br>FAF/FHF/FVF47<br>FAZ/FHZ/FVZ47 | 0.40 | 1.5 | 0.48 | 1.8 | 0.29 | 1.1 | 0.50 | 1.9 | 0.40 | 1.5 | 0.45 | 1.7 |
| FA/FH/FV57<br>FAF/FHF/FVF57<br>FAZ/FHZ/FVZ57 | 0.71 | 2.7 | 1.00 | 3.8 | 0.55 | 2.1 | 0.95 | 3.6 | 0.77 | 2.9 | 0.79 | 3 |
| FA/FH/FV67<br>FAF/FHF/FVF67<br>FAZ/FHZ/FVZ67 | 0.71 | 2.7 | 1.00 | 3.8 | 0.50 | 1.9 | 1.00 | 3.8 | 0.77 | 2.9 | 0.85 | 3.2 |
| FA/FH/FV77<br>FAF/FHF/FVF77<br>FAZ/FHZ/FVZ77 | 1.32 | 5 | 1.93 | 7.3 | 1.14 | 4.3 | 2.11 | 8 | 1.59 | 6 | 1.66 | 6.3 |
| FA/FH/FV87<br>FAF/FHF/FVF87<br>FAZ/FHZ/FVZ87 | 2.64 | 10 | 3.43 | 13 | 2.03 | 7.7 | 3.65 | 13.8 | 2.85 | 10.8 | 2.91 | 11 |
| FA/FH/FV97<br>FAF/FHF/FVF97<br>FAZ/FHZ/FVZ97 | 4.89 | 18.5 | 5.94 | 22.5 | 3.33 | 12.6 | 6.61 | 25 | 4.89 | 18.5 | 5.28 | 20 |
| FA/FH/FV107<br>FAF/FHF/FVF107<br>FAZ/FHZ/FVZ107 | 6.47 | 24.5 | 8.45 | 32 | 5.15 | 19.5 | 9.91 | 37.5 | 7.13 | 27 | 7.13 | 27 |
| FA/FH/FV127<br>FAF/FHF/FVF127<br>FAZ/FHZ/FVZ127 | 10.30 | 39 | 14.53 | 55 | 8.98 | 34 | 16.12 | 61 | 11.89 | 45 | 12.29 | 46.5 |
| FA/FH/FV157<br>FAF/FHF/FVF157<br>FAZ/FHZ/FVZ157 | 17.97 | 68 | 27.21 | 103 | 16.38 | 62 | 27.48 | 104 | 22.46 | 85 | 20.34 | 77 |



***For additional information on F-Series mounting positions, refer to the SEW Catalog or call the SEW FAXline, 1-800-601-6195, and request Document #2112.***

# LUBRICANTS

The approximate lubricant in US **gallons and liters** per mounting position is as follows:

| Gear Unit | Mounting Position | | | | | | | | | | | |
|---|---|---|---|---|---|---|---|---|---|---|---|---|
| | M1 | | M2 | | M3 | | M4 | | M5 | | M6 | |
| | Gallons | Liters | Gallons | Liters | Gallons | Liters | Gallons | Liters | Gallons | Liters | Gallons | Liters |
| K37 | 0.13 | 0.5 | 0.26 | 1 | 0.26 | 1 | 0.34 | 1.3 | 0.26 | 1 | 0.26 | 1 |
| K47 | 0.21 | 0.8 | 0.34 | 1.3 | 0.40 | 1.5 | 0.53 | 2 | 0.42 | 1.6 | 0.42 | 1.6 |
| K57 | 0.32 | 1.2 | 0.61 | 2.3 | 0.66 | 2.5 | 0.79 | 3 | 0.69 | 2.6 | 0.63 | 2.4 |
| K67 | 0.29 | 1.1 | 0.63 | 2.4 | 0.69 | 2.6 | 0.90 | 3.4 | 0.69 | 2.6 | 0.69 | 2.6 |
| K77 | 0.58 | 2.2 | 1.08 | 4.1 | 1.16 | 4.4 | 1.56 | 5.9 | 1.11 | 4.2 | 1.16 | 4.4 |
| K87 | 0.98 | 3.7 | 2.11 | 8 | 2.30 | 8.7 | 2.88 | 10.9 | 2.06 | 7.8 | 2.11 | 8 |
| K97 | 1.85 | 7 | 3.70 | 14 | 4.15 | 15.7 | 5.28 | 20 | 4.15 | 15.7 | 4.10 | 15.5 |
| K107 | 2.64 | 10 | 5.55 | 21 | 6.74 | 25.5 | 8.85 | 33.5 | 6.34 | 24 | 6.34 | 24 |
| K127 | 5.55 | 21 | 10.96 | 41.5 | 11.62 | 44 | 14.27 | 54 | 10.57 | 40 | 10.83 | 41 |
| K157 | 8.19 | 31 | 16.38 | 62 | 17.17 | 65 | 23.78 | 90 | 15.32 | 58 | 16.38 | 62 |
| K/KH167 | 9.25 | 35 | 26.42 | 100 | 26.42 | 100 | 33.03 | 125 | 22.46 | 85 | 22.46 | 85 |
| K/KH187 | 15.85 | 60 | 44.91 | 170 | 44.91 | 170 | 54.16 | 205 | 34.35 | 130 | 34.35 | 130 |
| KF37 | 0.13 | 0.5 | 0.29 | 1.1 | 0.29 | 1.1 | 0.40 | 1.5 | 0.26 | 1 | 0.26 | 1 |
| KF47 | 0.21 | 0.8 | 0.34 | 1.3 | 0.45 | 1.7 | 0.58 | 2.2 | 0.42 | 1.6 | 0.42 | 1.6 |
| KF57 | 0.34 | 1.3 | 0.61 | 2.3 | 0.71 | 2.7 | 0.79 | 3 | 0.77 | 2.9 | 0.71 | 2.7 |
| KF67 | 0.29 | 1.1 | 0.63 | 2.4 | 0.74 | 2.8 | 0.95 | 3.6 | 0.71 | 2.7 | 0.71 | 2.7 |
| KF77 | 0.55 | 2.1 | 1.08 | 4.1 | 1.16 | 4.4 | 1.59 | 6 | 1.19 | 4.5 | 1.19 | 4.5 |
| KF87 | 0.98 | 3.7 | 2.17 | 8.2 | 2.38 | 9 | 3.14 | 11.9 | 2.22 | 8.4 | 2.22 | 8.4 |
| KF97 | 1.85 | 7 | 3.88 | 14.7 | 4.57 | 17.3 | 5.68 | 21.5 | 4.15 | 15.7 | 4.36 | 16.5 |
| KF107 | 2.64 | 10 | 5.81 | 22 | 6.87 | 26 | 9.25 | 35 | 6.61 | 25 | 6.61 | 25 |
| KF127 | 5.55 | 21 | 10.96 | 41.5 | 12.15 | 46 | 14.53 | 55 | 10.83 | 41 | 10.83 | 41 |
| KF157 | 8.19 | 31 | 17.44 | 66 | 18.23 | 69 | 24.31 | 92 | 16.38 | 62 | 16.38 | 62 |
| KA/KH/KV37<br>KAF/KHF/KVF37<br>KAZ/KHZ/KVZ37 | 0.13 | 0.5 | 0.26 | 1 | 0.26 | 1 | 0.37 | 1.4 | 0.26 | 1 | 0.26 | 1 |
| KA/KH/KV47<br>KAF/KHF/KVF47<br>KAZ/KHZ/KVZ47 | 0.21 | 0.8 | 0.34 | 1.3 | 0.42 | 1.6 | 0.55 | 2.1 | 0.42 | 1.6 | 0.42 | 1.6 |
| KA/KH/KV57<br>KAF/KHF/KVF57<br>KAZ/KHZ/KVZ57 | 0.34 | 1.3 | 0.61 | 2.3 | 0.71 | 2.7 | 0.79 | 3 | 0.77 | 2.9 | 0.71 | 2.7 |
| KA/KH/KV67<br>KAF/KHF/KVF67<br>KAZ/KHZ/KVZ67 | 0.29 | 1.1 | 0.63 | 2.4 | 0.71 | 2.7 | 0.95 | 3.6 | 0.69 | 2.6 | 0.69 | 2.6 |
| KA/KH/KV77<br>KAF/KHF/KVF77<br>KAZ/KHZ/KVZ77 | 0.55 | 2.1 | 1.08 | 4.1 | 1.22 | 4.6 | 1.59 | 6 | 1.16 | 4.4 | 1.16 | 4.4 |
| KA/KH/KV87<br>KAF/KHF/KVF87<br>KAZ/KHZ/KVZ87 | 0.98 | 3.7 | 2.17 | 8.2 | 2.32 | 8.8 | 2.93 | 11.1 | 2.11 | 8 | 2.11 | 8 |
| KA/KH/KV97<br>KAF/KHF/KVF97<br>KAZ/KHZ/KVZ97 | 1.85 | 7 | 3.88 | 14.7 | 4.15 | 15.7 | 5.28 | 20 | 4.15 | 15.7 | 4.15 | 15.7 |
| KA/KH/KV107<br>KAF/KHF/KVF107<br>KAZ/KHZ/KVZ107 | 2.64 | 10 | 5.42 | 20.5 | 6.34 | 24 | 8.45 | 32 | 6.34 | 24 | 6.34 | 24 |
| KA/KH/KV127<br>KAF/KHF/KVF127<br>KAZ/KHZ/KVZ127 | 5.55 | 21 | 10.96 | 41.5 | 11.36 | 43 | 13.74 | 52 | 10.57 | 40 | 10.57 | 40 |
| KA/KH/KV157<br>KAF/KHF/KVF157<br>KAZ/KHZ/KVZ157 | 8.19 | 31 | 17.44 | 66 | 17.70 | 67 | 22.99 | 87 | 16.38 | 62 | 16.38 | 62 |



***For additional information on K-Series mounting positions, refer to the SEW Catalog or call the SEW FAXline, 1-800-601-6195, and request Document #2113.***

# LUBRICANTS

The approximate lubricant in US **gallons and liters** per mounting position is as follows:

| | Mounting Position | | | | | | | | | | | |
|---|---|---|---|---|---|---|---|---|---|---|---|---|
| | M1 | | M2 | | M3 [1] | | M4 | | M5 | | M6 | |
| Gear Unit | Gallons | Liters | Gallons | Liters | Gallons | Liters | Gallons | Liters | Gallons | Liters | Gallons | Liters |
| S37 | 0.07 | 0.25 | 0.11 | 0.4 | 0.13 | 0.5 | 0.16 | 0.6 | 0.11 | 0.4 | 0.11 | 0.4 |
| S47 | 0.09 | 0.35 | 0.21 | 0.8 | 0.18 (0.24) | 0.7 (0.9) | 0.29 | 1.1 | 0.21 | 0.8 | 0.21 | 0.8 |
| S57 | 0.13 | 0.5 | 0.32 | 1.2 | 0.26 (0.32) | 1 (1.2) | 0.40 | 1.5 | 0.34 | 1.3 | 0.34 | 1.3 |
| S67 | 0.26 | 1 | 0.53 | 2 | 0.58 (0.82) | 2.2 (3.1) | 0.85 | 3.2 | 0.69 | 2.6 | 0.69 | 2.6 |
| S77 | 0.50 | 1.9 | 1.11 | 4.2 | 0.98 (1.43) | 3.7 (5.4) | 1.59 | 6 | 1.16 | 4.4 | 1.16 | 4.4 |
| S87 | 0.87 | 3.3 | 2.14 | 8.1 | 1.82 (2.75) | 6.9 (10.4) | 3.17 | 12 | 2.22 | 8.4 | 2.22 | 8.4 |
| S97 | 1.80 | 6.8 | 3.96 | 15 | 3.54 (4.76) | 13.4 (18) | 5.94 | 22.5 | 4.49 | 17 | 4.49 | 17 |
| SF37 | 0.07 | 0.25 | 0.11 | 0.4 | 0.13 | 0.5 | 0.16 | 0.6 | 0.11 | 0.4 | 0.11 | 0.4 |
| SF47 | 0.11 | 0.4 | 0.24 | 0.9 | 0.24 (0.29) | 0.9 (1.1) | 0.32 | 1.2 | 0.26 | 1 | 0.26 | 1 |
| SF57 | 0.13 | 0.5 | 0.32 | 1.2 | 0.26 (0.40) | 1 (1.5) | 0.42 | 1.6 | 0.37 | 1.4 | 0.37 | 1.4 |
| SF67 | 0.26 | 1 | 0.58 | 2.2 | 0.61 (0.79) | 2.3 (3) | 0.85 | 3.2 | 0.71 | 2.7 | 0.71 | 2.7 |
| SF77 | 0.50 | 1.9 | 1.08 | 4.1 | 1.03 (1.53) | 3.9 (5.8) | 1.72 | 6.5 | 1.29 | 4.9 | 1.29 | 4.9 |
| SF87 | 1.00 | 3.8 | 2.11 | 8 | 1.88 (2.67) | 7.1 (10.1) | 3.17 | 12 | 2.40 | 9.1 | 2.40 | 9.1 |
| SF97 | 1.96 | 7.4 | 3.96 | 15 | 3.65 (4.97) | 13.8 (18.8) | 6.24 | 23.6 | 4.76 | 18 | 4.76 | 18 |
| SA/SH37 SAF/SHF37 SAZ/SHZ37 | 0.07 | 0.25 | 0.11 | 0.4 | 0.13 | 0.5 | 0.16 | 0.6 | 0.11 | 0.4 | 0.11 | 0.4 |
| SA/SH47 SAF/SHF47 SAZ/SHZ47 | 0.11 | 0.4 | 0.21 | 0.8 | 0.18 (0.24) | 0.7 (0.9) | 0.29 [2] | 1.1 [2] | 0.21 | 0.8 | 0.21 | 0.8 |
| SA/SH57 SAF/SHF57 SAZ/SHZ57 | 0.13 | 0.5 | 0.29 | 1.1 | 0.26 (0.40) | 1 (1.5) | 0.42 | 1.6 | 0.32 | 1.2 | 0.32 | 1.2 |
| SA/SH67 SAF/SHF67 SAZ/SHZ67 | 0.26 | 1 | 0.53 | 2 | 0.48 (0.69) | 1.8 (2.6) | 0.77 | 2.9 | 0.66 | 2.5 | 0.66 | 2.5 |
| SA/SH77 SAF/SHF77 SAZ/SHZ77 | 0.48 | 1.8 | 1.03 | 3.9 | 0.95 (1.32) | 3.6 (5) | 1.56 | 5.9 | 1.19 | 4.5 | 1.19 | 4.5 |
| SA/SH87 SAF/SHF87 SAZ/SHZ87 | 1.00 | 3.8 | 1.96 | 7.4 | 1.59 (2.30) | 6 (8.7) | 2.96 | 11.2 | 2.11 | 8 | 2.11 | 8 |
| SA/SH97 SAF/SHF97 SAZ/SHZ97 | 1.85 | 7 | 3.70 | 14 | 3.01 (4.23) | 11.4 (16) | 5.55 | 21 | 4.15 | 15.7 | 4.15 | 15.7 |

[1] On compound gear units the primary (larger) gear unit is provided with the oil quantity in parenthesis.

[2] When combined with a 2-pole motor at M4 mounting position, the oil quantity must be reduced to 0.28 gallons (1.05 liters).

***For additional information on S-Series mounting positions, refer to the SEW Catalog or call the SEW FAXline, 1-800-601-6195, and request Document #2114.***

For compound drives the R reducer requires its own oil filling as shown in the chart:

| | Mounting Position | | | | | |
|---|---|---|---|---|---|---|
| | M1/M3/M5/M6 | | M2 | | M4 | |
| Gear Unit | Gallons | Liters | Gallons | Liters | Gallons | Liters |
| R17 | 0.07 | 0.25 | 0.16 | 0.6 | 0.16 | 0.6 |
| R37 | 0.11 | 0.4 | 0.24 | 0.9 | 0.29 | 1.1 |
| R57 | 0.21 | 0.8 | 0.48 | 1.8 | 0.53 | 2 |
| R77 | 0.32 | 1.2 | 1.00 | 3.8 | 1.08 | 4.1 |
| R87 | 0.63 | 2.4 | 1.8 | 6.8 | 2.03 | 7.7 |
| R97 | 1.35 | 5.1 | 3.14 | 11.9 | 3.70 | 14 |
| R107 | 1.66 | 6.3 | 4.20 | 15.9 | 5.07 | 19.2 |

# SCALE HOPPER

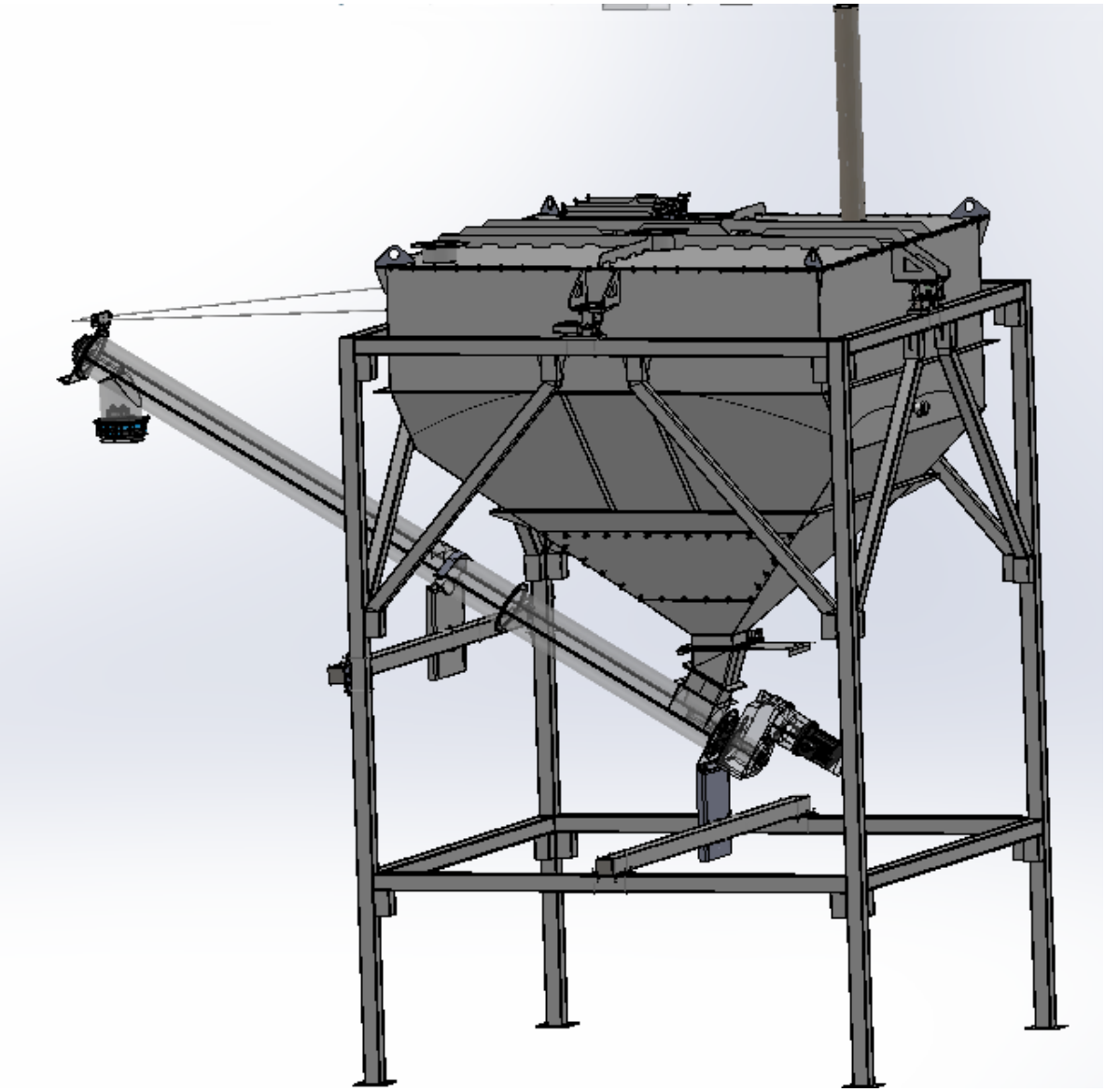

# Table of contents

SCALE HOPPER ..... 1
GERERAL INFORMATIONS ..... 3
Warnings ..... 4
OPERATION ..... 5
BEFORE OPERATION ..... 6
CLEANING AND MAINTENANCE ..... 7
TECHNICAL INFORMATION ..... 9
DRAWINGS ..... 10
TROUBLESHOOTING ..... 11
Reduced product flow ..... 11
Solenoid valve not responding ..... 12
STANDARD EQUIPMENT TECHNICAL DATA ..... 13
HIGH LEVEL SENSOR ..... 13
VIBRATOR & AIR SEAL SOLENOID VALVE ..... 14
PNEUMATIC VIBRATOR ..... 15
IMPACTOR ..... 16
LOADCELL ..... 17
VIBRATOR & IMPACTOR PRESSURE REGULATOR ..... 18

# GERERAL INFORMATIONS

- The owner is responsible for making sure that the installed equipment is safe and does not compromise the health of the people working with or near the machine.

- The owner is responsible to make sure that the equipment does meet the environmental standards of the country where the equipment is installed.

- The owner has the responsibility to correctly train everybody working near or with the machine and to make sure that they are familiar with the potential risks.

- The owner is responsible for getting the proper authorizations from his insurer.

- The owner is responsible for the proper cleaning and maintenance of the equipment in order to get its best performance and reliability.

- Even though the pieces of equipment are installed by qualified Groupe Sinox employees, the owner is responsible for cleaning out the machine before its first start-up and to make sure there is no risk of food contamination.

- The owner is not authorized to alter or modify the equipment. The client might make minor changes or tuning with only the approbation of Groupe Sinox.

- Make sure every piece of equipment is de-energized with all sources of energy and locked-out, tagged-out, and tried-out (LOTOTO) before working on the system. Not doing so may result in severe injuries or death.

# Warnings

This machine may have one or more moving or rotating parts, protected or not, and pressurized systems. Different energy sources like hydraulic or pneumatic systems, heavy moving parts and electrical circuits may be part of the machine.

The safe use of the machine, the supervision and proper training of the workers is the owner's responsibilities. The employer must guarantee that the machine is safe for his employees. Not using the machine as prescribed in this manual or using it in an unsafe way may result in serious injuries or death.

Groupe Sinox will do its best to deliver a safe equipment and give the assistance needed to make the system safe but cannot guarantee that every information contained in this manual will result in a complete elimination of all hazards.

# OPERATION

The scale hopper is design to receive a quantity of product through the filter receiver. As the scale hopper is the equipped with an exhaust the air will need to be filtered and then can be released.

# BEFORE OPERATION

- Make sure every part is well placed and secured.
- Make sure the workers are well trained and informed of the potential hazards.
- Make sure every steps of the start-up are done.
- Make sure the machine is plugged and that the energy sources are as prescribed.
- Make sure that the compressed air is free of any contaminant and water.
- If components are installed outside, make sure to have the right air dryer.
- Make sure every mechanical part is lubricated as required.
- Make sure every protection device is correctly installed.
- Make sure the machine is clean.
- Do not stay in front or close to moving and pressurized parts as particles can be projected in the air.
- Make sure every rotating part turns the correct direction.
- **WARNING:** Some parts can break if the rotation occurs in the wrong direction.
- If it is possible, put all adjustment speed at their slowest set point.
- Introduce products gradually in the system.
- Make sure the system meets all requirements.
- Trigger manually every sensor to make they are functioning properly.

- Make sure you are familiar with every aspect of the control operation before introducing new equipment in your system.

## CLEANING AND MAINTENANCE

We recommend checking and cleaning the equipment periodically to assure the best efficiency.

Pneumatic conveying systems must be stopped when opening access traps and doors. Not doing so may result in a production shutdown, a higher risk of component breakage or injuries.

IMPORTANT: Make sure that all energy sources are shut down and that locking procedures are respected before doing any maintenance on the equipment.

Refer to the manufacturer's standard equipment manuals included in this document for any details about operations and maintenance on these items.

We recommend following this procedure before proceeding to maintenance jobs:

- Unplug every electric source
- Unplug the control wire
- Close and unplug the compressed air source
- Purge every air tank
- Proceed to visual inspections frequently to detect possible product leaks on different parts of the system.
- Proceed to check the interior by opening of the top of the collector. Make sure there is no product accumulation. If it is the case, check every component of the system to make sure they work properly.

- Make sure the rotary valve is working properly.
- We recommend checking the filters monthly or as needed.
- Filter clogging may affect conveying efficiency.
- We recommend filter cleaning or replacements 2 times a year.

# TECHNICAL INFORMATION

| | |
|---|---|
| **Sinox number:** | 49733 |
| **Conception:** | Lightly Vacuum (exhaust fan) |
| **Volume:** | 263 cubic feet |
| **Product inlet diameter:** | 2x 8'' dia. flanged |
| **Air inlet diameter:** | 5-9/16'' flanged |
| **Air exhaust diameter:** | 8'' Flanged |
| **Unloading outlet diameter**: | 9-3/8'' square flanged |
| **Unloading valve type:** | through a manual gate valve |

**Accessories:**

Pneumatic vibrator: Oli Vibrator , # 2033

High level sensor: Endress & Hauser # 2017

Impactor: Oli linear vibrator #2036

Loadcell :15 000 lbs capacity, # 50192

# DRAWINGS

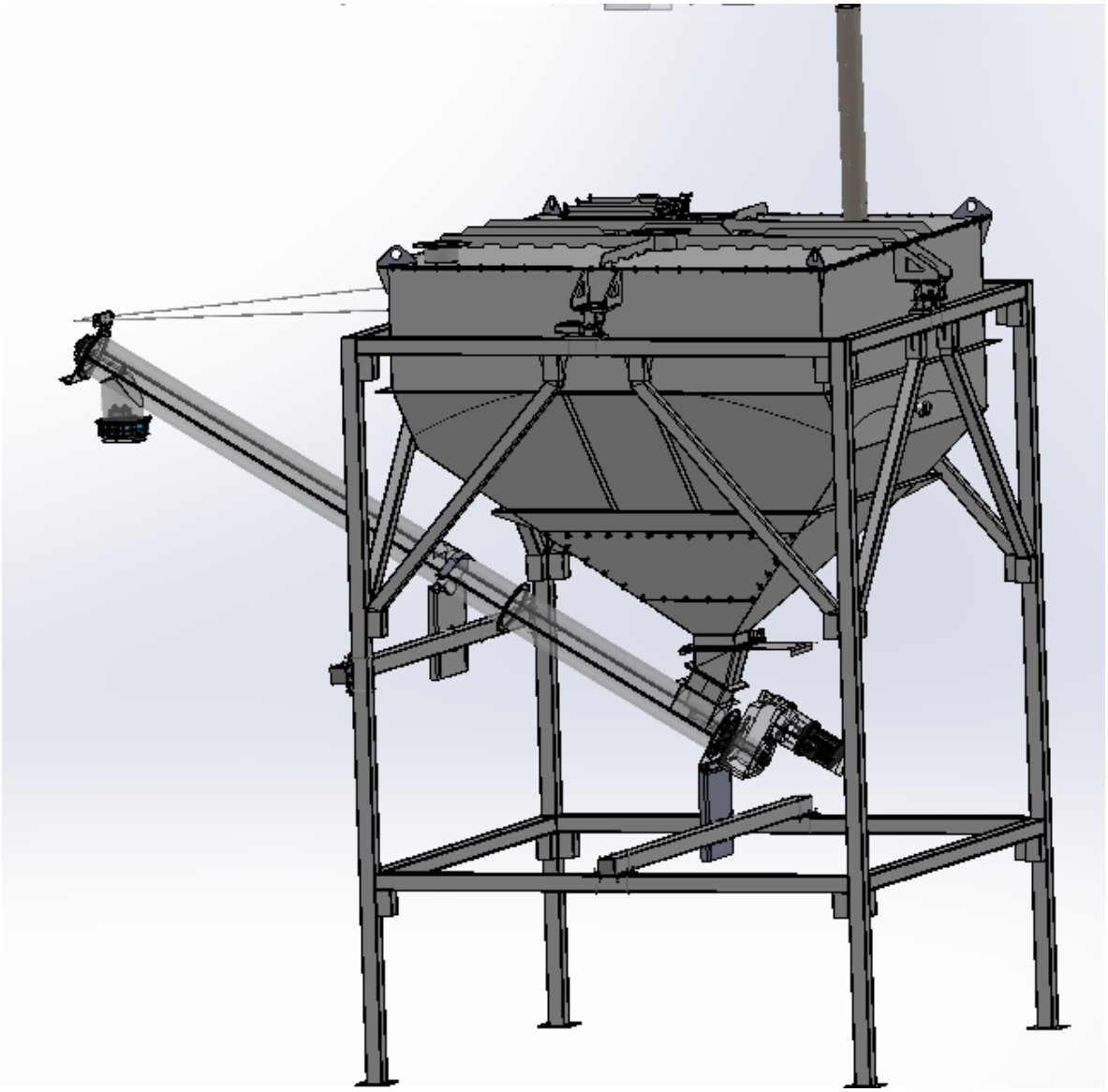

# TROUBLESHOOTING

## Reduced product flow

- Check the dosing equipment. Rotating valves speed or screw doser speed.
- Check the blower's belt tension.
- Check the blower's power supply
- Check pressure sensors adjustments and settings.
- Inspect your system for leaks in pipe sections or access doors.
- Check diverter valve position and look for internal leaks.
- Check if rotary valve vents clear from products.
- Check the rotary valve conditions. Product stuck in the cells may impact efficiency.
- Look out for humidity in the product. If so, find out the main cause.
- Check blower filter. If it is dirty, find out the main cause.
- Check and clean receptors' filters.

## Solenoid valve not responding

- You should hear “CLIC” and the valve port should move.
- If no sound is produced when activating the solenoid valve, proceed to disassembly and clean moving parts.
- Check that the electrical signal goes to the solenoid valve and that it is the correct type (24VDC or 110VAC).
- Check the pneumatic pressure in the valve’s inlet. Some valve needs a minimum pressure to open. This information is contained in the manufacturer technical data sheets. Adjust pressure regulator as needed.

# STANDARD EQUIPMENT TECHNICAL DATA

## HIGH LEVEL SENSOR

| | |
|---|---|
| **# Sinox:** | ELE-00002 |
| **Manufacturer :** | Endress & Hauser |
| **Model :** | FTM20-CN46A |
| **Connection :** | 1/2” NPT |
| **Voltage :** | 120VAC/24VDC |
| **Quantity per scale hopper:** | 1x |

Level | Pressure | Flow | Temperature | Liquid Analysis | Registration | Systems Components | Services | Solutions

Technical Information

# Minicap FTC260, FTC262

## Capacitive Limit Detection
## Compact switch for limit detection with active build-up compensation; No calibration necessary
## Version available for dust explosion areas



**Applications**

Minicap is designed for limit detection of light bulk solids, with a grain size up to max. 30 mm and a dielectric constant $\varepsilon_r \geq 1.6$, e.g. grain products, flour, milk powder, animal feed, cement, chalk or gypsum.

Versions:

- Minicap FTC260 (left): with 140 mm rod probe, with FDA listed material; for bulk solids and liquids
- Minicap FTC262 (right): with max. 6 m rope probe; for bulk solids
- Relay output (potential-free change-over contact / SPDT) with AC or DC power
- PNP output with three-wire DC power

**Your Benefits**

- Complete unit consisting of the probe and electronic insert:
  – simple mounting
  – no calibration on start-up
- Active build-up compensation
  – accurate switch point even with heavy build-up on the probe
  – high operational safety
- Mechanically rugged
  – no wearing parts
  – long operating life
  – no maintenance
- The rope probe of the Minicap FTC262 can be shortened
  – optimum matching to the measuring point in the silo
  – less stocks required

TI287F/00/EN/05.10
71115351

Endress+Hauser
People for Process Automation

# Table of contents

**Function and system design . . . 3**
General Information . . . 3
Measuring principle . . . 3
Measuring System . . . 6

**Input . . . 7**
Measured variable . . . 7
Measuring range . . . 7

**Output . . . 7**
Output signal . . . 7
Signal on alarm . . . 7
Switching delay when free or covered . . . 7
Overvoltage category . . . 7
Protection class . . . 7

**Power supply . . . 7**
Electrical connection . . . 7
Supply voltage . . . 8
Terminal compartment . . . 8

**Performance characteristics . . . 9**
Reference operating conditions . . . 9
Hysteresis . . . 9
Switch point . . . 9
Power up response . . . 9
Long-term drift . . . 9
Influence of medium temperature . . . 9

**Operating conditions . . . 9**
Installation . . . 9
Installation instructions FTC260 . . . 10
Installation instructions FTC262 . . . 11

**Environment . . . 12**
Ambient temperature range T1 . . . 12
Ambient temperature limits . . . 12
Storage temperature . . . 12
Climate class . . . 12
Degree of protection . . . 12
Shock resistance . . . 12
Vibrational resistance . . . 12
Electromagnetic compatibility . . . 12

**Process . . . 12**
Process temperature range T2 . . . 12
Process temperature limits . . . 12
Process pressure range pe . . . 12
Temperature diagrams . . . 12

**Mechanical construction . . . 13**
Design, Dimensions (in mm) . . . 13
Material for wetted parts . . . 14
Process connections . . . 14
Housing . . . 14

**Human interface . . . 14**
Display elements . . . 14
Operating elements . . . 14

**Certificates and approvals . . . 14**
CE approval . . . 14
Ex approval . . . 14
Overspill protection FTC260 . . . 14

**Ordering information . . . 15**
Product structure FTC260 . . . 15
Product structure FTC262 . . . 16

**Accessories . . . 17**
Adapter . . . 17
Transparent cover . . . 17
Rope shortening set . . . 17

**Supplementary documentation . . . 17**
Operating manual (BA) . . . 17
Safety instructions (XA) . . . 17

# Function and system design

**General Information**

Technical specifications to DIN 19259

**Measuring principle**

### Limit Detection

A metal plate at the end of the probe, within the insulation, and the integrated counter-electrode together with the surroundings combine to form the two electrodes of a capacitor.
If the probe is covered or free of material, then the capacitance changes and the Minicap switches.

### Active Build-up Compensation

The Minicap detects build-up on the probe and compensates for its effects so that the switch point is always accurate. The effects of build-up compensation depend on:

- the thickness of the build-up on the probe,
- conductivity of the material,
- the sensitivity setting on the electronic insert.

### Setting the Sensitivity

The Minicap is so calibrated at the factory that it correctly switches in most cases.
Greater sensitivity can be set using a multi-pole switch on the electronic insert. This is only necessary, however,if there is very strong build-up on the probe, or if the dielectric constant of the material $\varepsilon_r$ is very small.

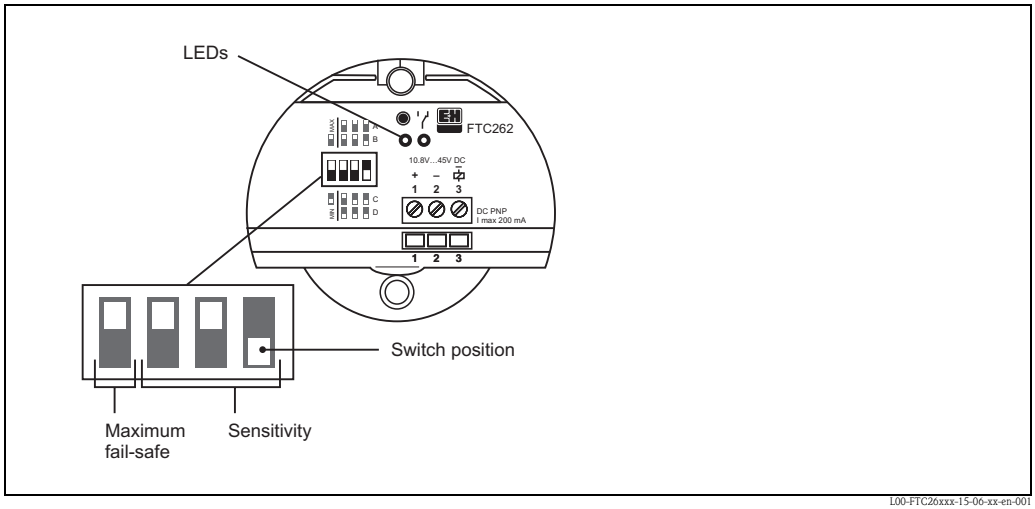


*Factory setting on switches*

### Function Range

There is a loose relationship between the dielectric constant $\varepsilon_r$ and density $\rho$ of the material.
However, this depends on the solid.
The table on the left indicates whether the Minicap can be used or if application limits are exceeded.

| **Grain, seed, legumes and their products** | | | |
|---|---|---|---|
| Examples | $\rho$ in g/l (approx.) | $\varepsilon_r$ (approx.) | Function |
| Rice | 770 | 3.0 | yes |
| Cornstarch (packed) | 680 | 2.6 | yes |
| Flour (wheat) | 580 | 2.4 | yes |
| Corn grist | 500 | 2.1 | yes |
| Sunflower seeds | 380 | 1.9 | yes |
| Noodles | 370 | 1.9 | yes |
| Bran (wheat) | 250 | 1.7 | yes |
| Popcorn | 30 | 1,1 | no |
| | | | |
| **Minerals, inorganic materials** | | | |
| Cement | 1050 | 2.2 | yes |
| Plaster | 730 | 1.8 | yes |
| Chalk (packed) | 540 | 1.6 | (yes) |
| Chalk (loose) | 360 | 1.4 | no |
| | | | |
| **Plastics** | | | |
| ABS granulate | 630 | 1.7 | yes |
| PA granulate | 620 | 1.7 | yes |
| PE granulate | 560 | 1.5 | no |
| PVC powder | 550 | 1.4 | no |
| PU-PU dust | 80 | 1.1 | no |
| | | | |
| Grey background:<br>Application limits of Minicap exceeded.<br>Recommendation:<br>Soliphant FTM to be used. | | | |

In general:
If the dielectric constant of the solid is not known, then the density (apparent weight) of the solid is a deciding factor.
Under normal conditions the Minicap functions in foodstuffs with a density of 250 g/l and above or in plastic or mineral materials with a density of 600 g/l and above.

### Minimum/Maximum Fail-Safe Mode

The Minicap FTC260 can be set to minimum or maximum fail-safe mode (see following table).

*AC or DC version with relay output*
*(potential-free change-over contact):*

- Maximum fail-safe mode:
  The relay is de-energised when the probe is covered or the power supply fails.
- Minimum fail-safe mode:
  The relay is de-energised when the probe is free or the power supply fails.

*DC version with PNP output:*

- Maximum fail-safe mode:
  The switch output is blocked when the probe is covered or the power supply fails.
- Minimum fail-safe mode:
  The switch output is blocked when the probe is free or the power supply fails.

| Switch position | Level | Relay output SPDT | Transistor output PNP | Red LED for switching status | Green LED for stand-by |
|---|---|---|---|---|---|
|  Maximum fail-safe mode | 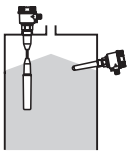 Probe covered |  3 4 5 Relay de-energised |  1 3 L+ blocked | ☼ | ☼ |
| | 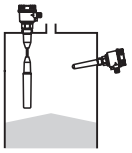 Probe free |  3 4 5 Relay energised | 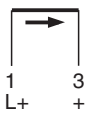 1 3 L+ + connected | ● | ☼ |
|  Minimum fail-safe mode | 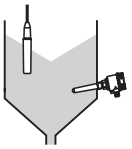 Probe covered |  3 4 5 Relay energised | 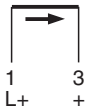 1 3 L+ + connected | ● | ☼ |
| | 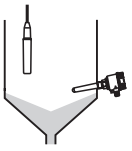 Probe free |  3 4 5 Relay de-energised |  1 3 L+ blocked | ☼ | ☼ |
| 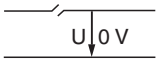 Power failure | |  3 4 5 Relay de-energised |  1 3 L+ blocked | ● | ● |

L00-FTC26xxx-15-06-xx-en-002

*Selecting the switch position and function*

**Measuring System**

Minicap is an electronic switch. The complete measuring system consists of:

- the Minicap FTC260 or FTC262
- a power supply and
- controllers, switching devices, signal transmitters (e.g. lamps, horns, PCS, PLC, etc.)

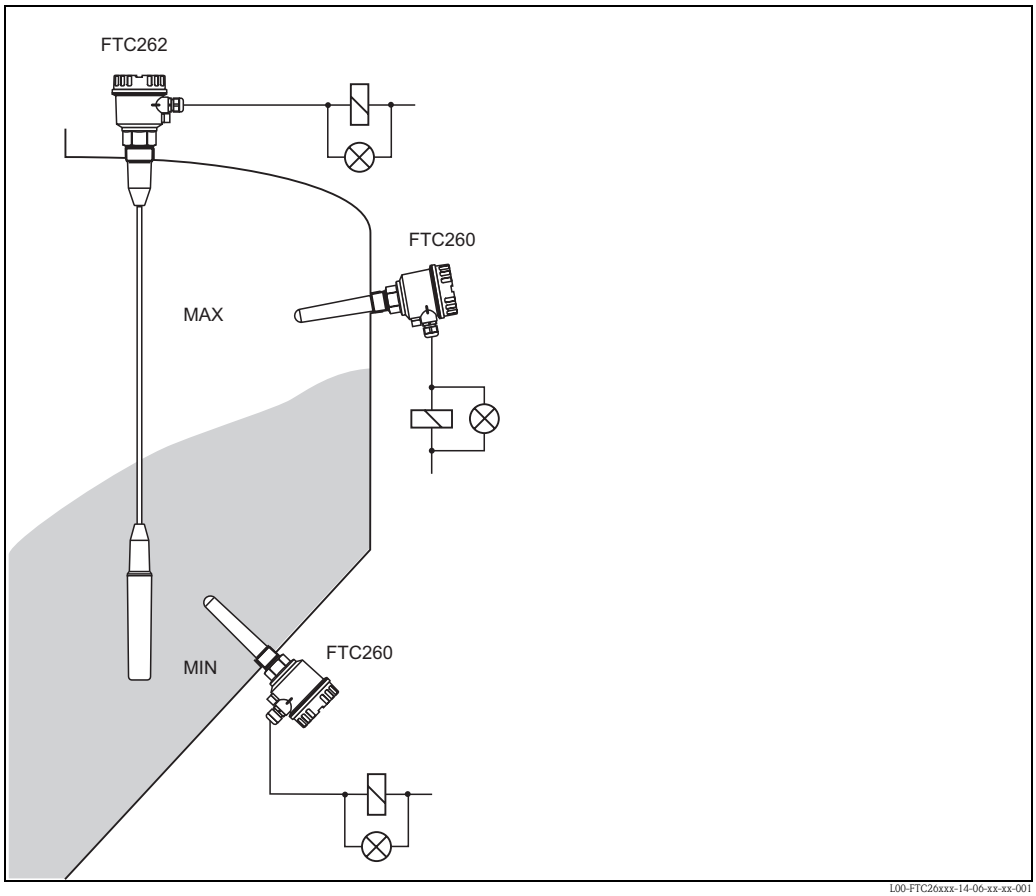


*Limit detection in silos containing solids*

# Input

**Measured variable**

Limit detection

**Measuring range**

- FTC260: $\varepsilon_r \geq 1.6$
- FTC262: $\varepsilon_r \geq 1.5$

# Output

**Output signal**

- DC, PNP transistor output:
  Switching: PNP
  $I_{max}$ 200 mA
  – overload and short circuit protection
  – residual voltage at transistor
  at $I_{max} < 2.9$ V
- AC / DC, Relay output:
  Contact: change-over,
  potential-free
  $U\sim_{max}$ 253 V, $I\sim_{max}$ 4 A (AC)
  $P\sim_{max}$ 1000 VA, cos φ = 1
  $P\sim_{max}$ 500 VA, cos φ > 0.7
  $I\overline{\overline{\ }}_{max}$ 4 A up to $U\overline{\overline{\ }}$ 30 V (DC)
  $I\overline{\overline{\ }}_{max}$ 0.2 A up to $U\overline{\overline{\ }}$ 253 V (DC)

**Signal on alarm**

- DC, PNP transistor output:
  < 100 µA
- AC / DC, Relay output:
  relay de-energised

**Switching delay when free or covered**

- FTC260: 0.5 s
- FTC262: 0.8 s

**Overvoltage category**

Category III (EN 61010)

**Protection class**

Protection class to EN 61010-1

- FTC260: Class II
- FTC262: Class I

# Power supply

**Electrical connection**

To ensure that the Minicap operates safely and without electrical interference, it must be connected to an earthed silo with metal or reinforced concrete walls.
For silos made of non-conductive materials, the external earth wire of the Minicap must be connected to a conductive and earthed component which is earthed near to the silo.
The protective earth can be connected to the internal earth terminal of the Minicap.
Connections can be made with standard instrument cabling.

See TI241F/00/EN for information on EMC (testing procedures, installation).

Connect the potential matching lead (PAL) when using in dust explosion hazardous areas.
Note national regulations!

**Minicap AC or DC connection and relay output**

F1: Fine-wire fuse to protect the relay contact, dependent on the connected load

F2: Fine-wire fuse, 500 mA

M: Earth connection to silo or metal components on silo

E: Earth

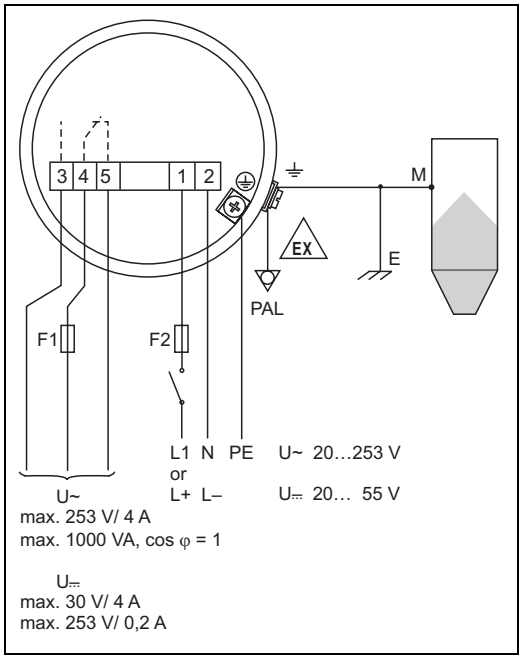


No ground lines (PE) or potential matching lines (PAL) are required with Minicap FTC260.

**Minicap with three-cable DC connection; Transistor output PNP**

F: Fine-wire fuse, 500 mA

R: Connected load, e.g. PLC, PCS, relay

M: Earth connection to silo or metal components on silo

E: Earth

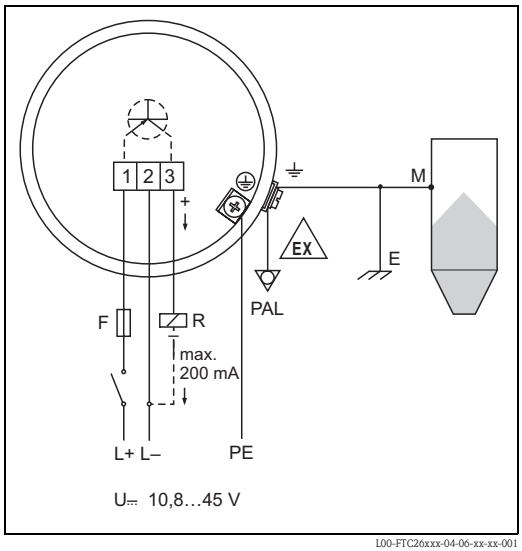


Minicap is protected against reverse polarity. The green LED for standby goes out if the connections are reversed.

No ground lines (PE) or potential matching lines (PAL) are required with Minicap FTC260.

**Supply voltage**

- DC, PNP transistor output:
  U⎓ 10.8...45 V
  – transient pulses to 55 V
  – current consumption max. 30 mA
  – reverse polarity protected
- AC / DC, Relay output:
  U~ 20...253 V
  or U⎓ 20...55 V
  – current consumption max. 130 mA

**Terminal compartment**

- Stranded wires max. 1.5 mm$^2$ in end sleeves
- Electric wire max. 2.5 mm$^2$

# Performance characteristics

**Reference operating conditions**

(for plastic vessels)

- Ambient temperature: 23 °C
- Medium temperature: 23 °C
- Medium pressure $p_e$: 0 bar
- Medium: dielectric constant $\varepsilon_r = 2.6$
- Conductivity: < 1 µS
- Sensitivity setting: C

**Hysteresis**

- FTC260: Horizontal 4 mm,
  Vertical 7 mm
- FTC262: Vertical 5 mm

**Switch point**

- FTC260: Horizontal: centre of probe –5 mm,
  Vertical: 40 mm above probe tip
- FTC262: Vertical: 35 mm above probe tip

**Power up response**

- FTC260: Correct switching aftermax. 1.5 s
- FTC262: Correct switching after max. 2 s

**Long-term drift**

- FTC260: Horizontal 3 mm,
  Vertical 6 mm
- FTC262: Vertical 6 mm

**Influence of medium temperature**

- FTC260: Depending on material to be measured
- FTC262: Depending on material to be measured

# Operating conditions

**Installation**

**Silo Material**

The Minicap can be installed in a wide range of silos made of different materials (e.g. metal, plastic, concrete).

**Mounting Point**

Note the angle of the material mounds and the outlet funnel when determining the mounting point or probe length of the FTC262.

The Minicap switches when the probe tip is covered by a few centimeters of material or when it is free.

Material flow should not be directed at the probe.

**Installation instructions FTC260**

Correct Installation

Incorrect Installation

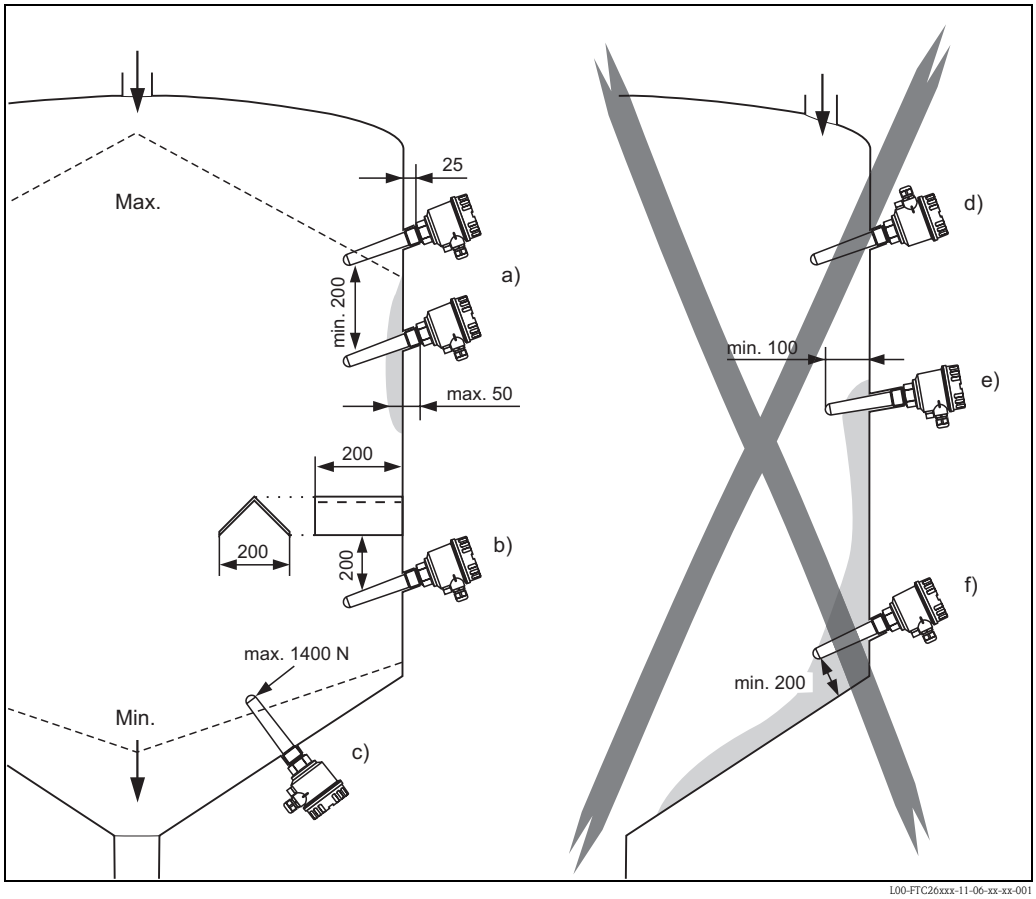


*General information and recommendations for installing the Minicap FTC260 limit switch (Dimensions in mm)*

### Correct Installation

a. Minimum distance:
To prevent mutual interference with the FTC260, the probes must be at least 200 mm from each other.

b. Mounting point:
The tip of the probes must point slightly downwards so that the material can slide off more easily.
The protective cover protects the probe rod from collapsing mounds or mechanical strain at the outflow when the Minicap FTC260 is set to minimum detection.

c. Mechanical load:
The maximum lateral load on the probe rod must be taken into account when used for minimum detection. It should therefore only be used for minimum detection with loose materials that have good flow characteristics.

### Incorrect Installation

d. The probe can be damaged by the inflowing material and cause faulty switching.
Cable gland pointed upwards can allow moisture to enter.

e. Threaded socket too long with material build-up on the silo wall.
(less than the minimum mounting depth of 100 mm).

f. Mounted near build-up in the silo.
The probe tip is too near to a silo wall (less than a minimum distance of 200 mm).

**Installation instructions FTC262**

Correct Installation

Incorrect Installation

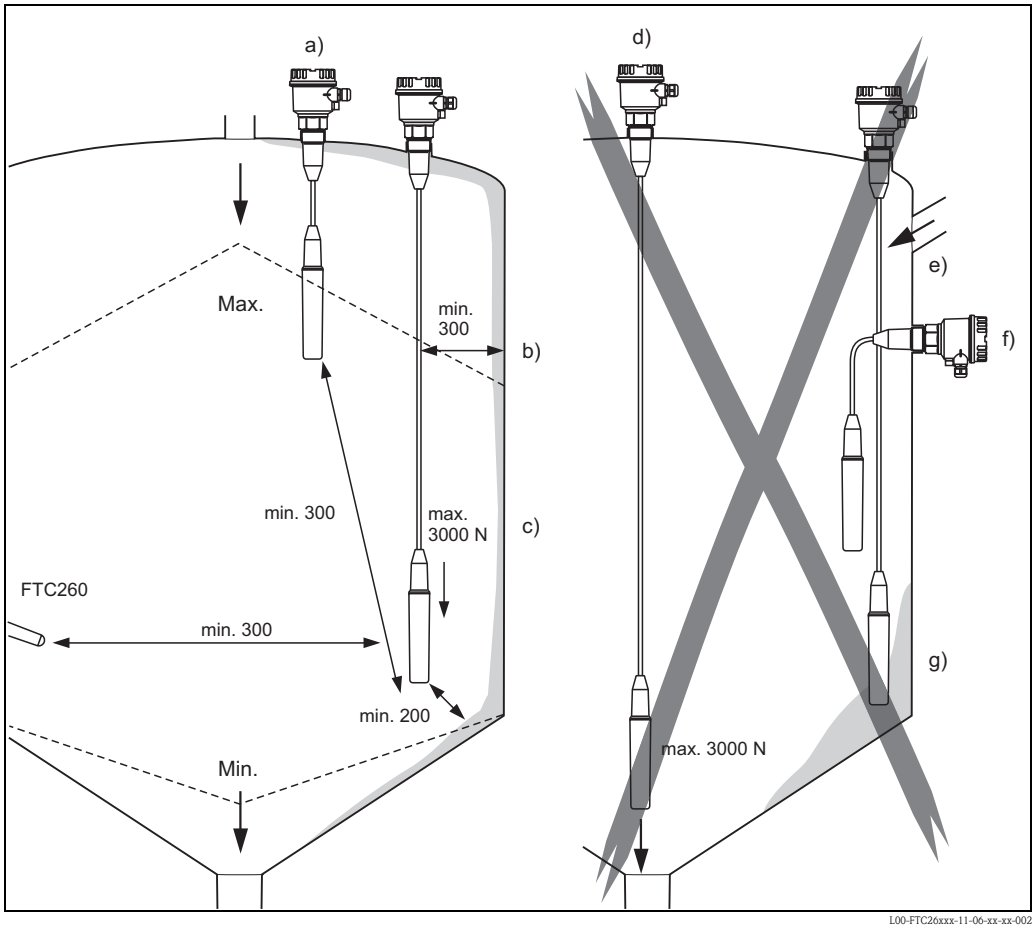


*General information and recommendations for installing the Minicap FTC262 limit switch (Dimensions in mm)*

**Correct Installation**

a. Minimum distances:
Sufficent distance from the material filling curtain and the other probe.

b. Mounting point:
Do not install in the centre of the outlet cone. Ensure there is sufficient distance from the silo wall and from material build-up on the wall.

c. Mechanical load:
Note the tensile strain on the probe rope and the strength of the silo roof when used for minimum detection.
Very high tensile forces may occur at the material outlet especially with heavy, powdery bulk materials which tend to form build-up. These forces are significantly greater over the outlet than at the silo wall. For minimum detection Minicap FTC262 should only be used for light, easily flowing solids, and that do not tend to form build-up.

**Incorrect Installation**

d. In the centre of the material outflow; the high tensile forces at this point may tear off the probe or damage the silo roof.

e. The probe may be damaged by inflowing material.

f. Mounted laterally

g. Too near silo wall; when swinging gently the probe can hit the wall or touch any build-up which may have formed. This can result in error switching

# Environment

| | |
|---|---|
| **Ambient temperature range** *T1* | –40…+70 °C (–40…+160 °F) (…+60 °C, Dust-Ex version] (see the temperature diagrams) |
| **Ambient temperature limits** | –40…+80 °C (–40…+180 °F) (…+60 °C, Dust-Ex version] (see the temperature diagrams; grey background) |
| **Storage temperature** | –40…+80 °C (–40…+180 °F) |
| **Climate class** | IEC 68 part 2-38 |
| **Degree of protection** | IP66; NEMA 4X |
| **Shock resistance** | Probe: 7 J |
| **Vibrational resistance** | EN 60068-2-64 (IEC 68-2-64), 20…2000 Hz, spectral rate of velocity 0.5, 100 min per axis |
| **Electromagnetic compatibility** | Interference Emission to EN 61326, Electrical Equipment Class B<br>Interference Immunity to EN 61326, Annex A (Industrial) and NAMUR Recommendation NE 21 (EMC)<br>See TI241F/00/EN for general instructions regarding the EMC test conditions for E+H instruments. |

# Process

| | |
|---|---|
| **Process temperature range** *T2* | ■ FTC260: –40…+120 °C (–40…+250 °F) (…+80 °C, Dust-Ex version)<br>■ FTC262: –40…+70 °C (–40…+160 °F)<br>(see the temperature diagrams) |
| **Process temperature limits** | ■ FTC260: –40…+130 °C (–40…+270 °F) (…+80 °C, Dust-Ex version)<br>■ FTC262: –40…+80 °C (–40…+180 °F)<br>(see the temperature diagrams; grey background) |
| **Process pressure range $p_e$** | ■ FTC260: –1…+25 bar (–14,5…+360 psi)<br>■ FTC262: –1…+6 bar (–14,5…+90 psi) |
| **Temperature diagrams** | FTC260 |

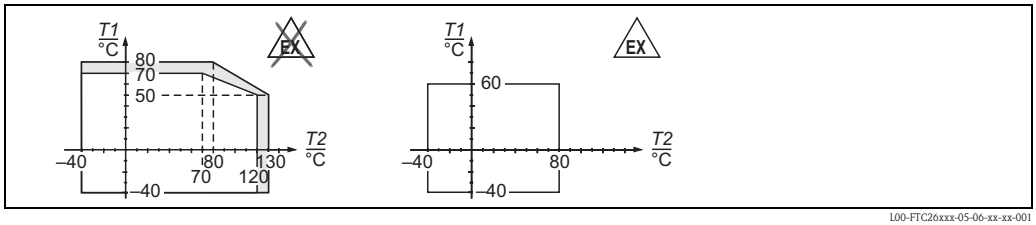


L00-FTC26xxx-05-06-xx-xx-001

FTC262

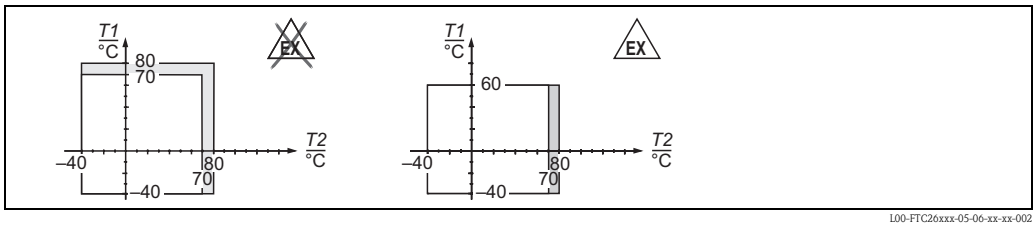


L00-FTC26xxx-05-06-xx-xx-002

# Mechanical construction

**Design, Dimensions (in mm)**

Minicap FTC260

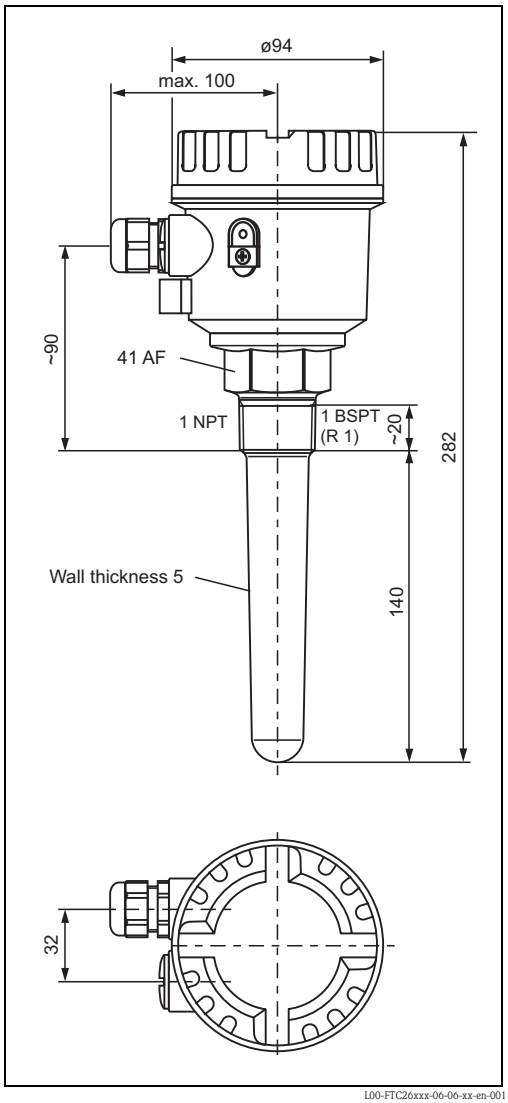


Adapter for FTC260

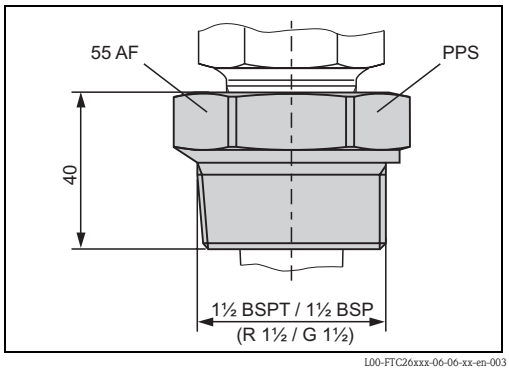


Probe length tolerances:

| Probe length L | Tolerances |
|---|---|
| bis 1000 mm | +0, –10 mm |
| bis 3000 mm | +0, –20 mm |
| bis 6000 mm | +0, –30 mm |

Minicap FTC262

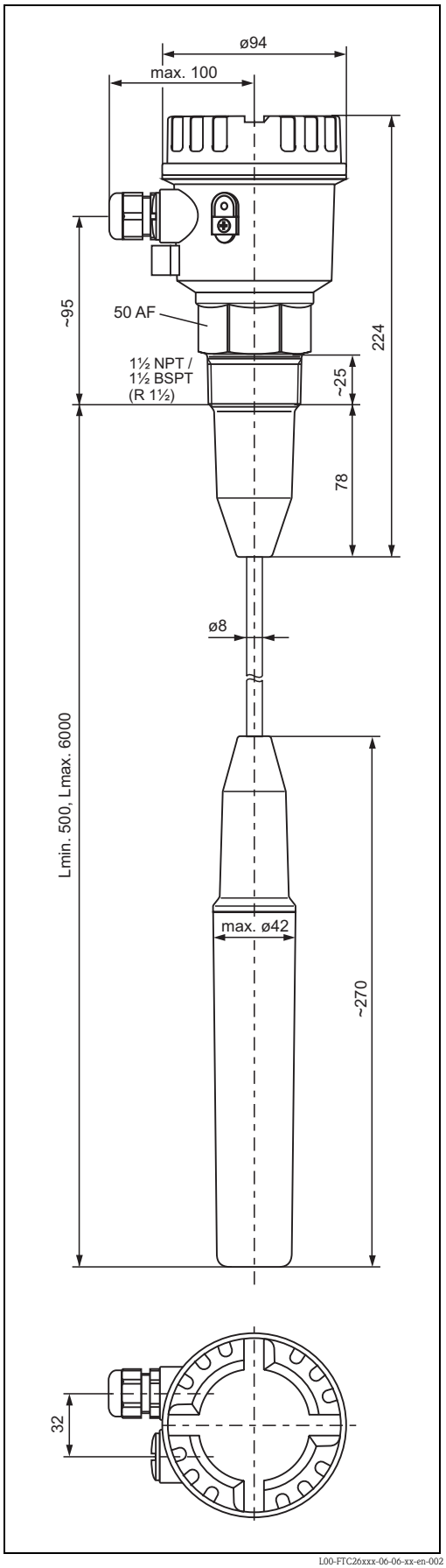

**Material for wetted parts**

- Probe rod FTC260: PPS = Polyphenylene sulphide (glass fibre content approx. 40%), FDA listed
- Probe length:
  FTC260: 140 mm,
  FTC262: min. 500 mm, max. 6000 mm
- Flexural strength FTC260: 1400 N (at probe tip)
- Probe rope FTC262: Surface in High Density PE over steel coating
- Other probe parts FTC262: PPS = Polyphenylene sulphide (glass fibre content approx. 40 %)
- Tensile strength *F* of FTC262: Max. 3000 N up to 40 °C, max. 2800 N at 80 °C

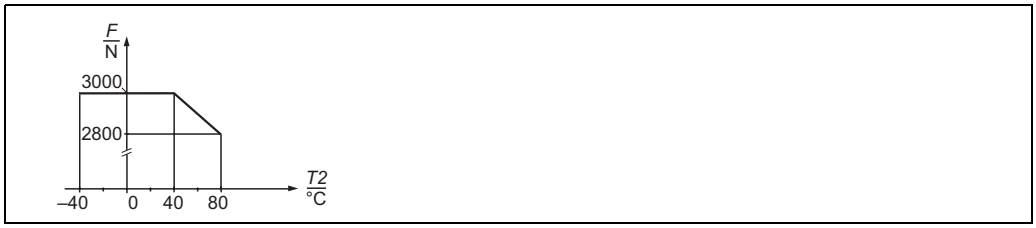


L00-FTC26xxx-05-06-xx-xx-003

**Process connections**

Threaded boss:

- FTC260: – 1 BSPT (R 1, ISO 7/1);
  Adapter for 1½ BSPT and 1½ BSP (G 1½) see accessories
  – 1 NPT, ANSI B 1.20.1;
  Adapter for 1¼ NPT see accessories
- FTC262: – 1½ BSPT (R 1½, ISO 7/1)
  – 1½ NPT, ANSI B 1.20.1

**Housing**

Housing F14: Polyester PBT-FR, IP66

# Human interface

**Display elements**

- Green LED: stand-by
- Red LED: switch status

**Operating elements**

Switch on electronic insert

- switching between minimum and maximum fail-safe mode
  – sensitivity setting
  (depends on the dielectric constant $\varepsilon_r$ and build-up).
  A sensitivity adjustment is normally not required (see section "Measuring principle")

# Certificates and approvals

**CE approval**

In attaching the CE Mark, Endress+Hauser confirms that the device conforms to all relevant EU directives.

**Ex approval**

ATEX, FM, CSA
See section ”Product structure”

**Overspill protection FTC260**

DIBt, General design approval

# Ordering information

**Product structure FTC260**

| 10 | Approval |
|---|---|
| A | Non-hazardous area |
| D | Non-hazardous area, WHG |
| B | ATEX II 1/3 D |
| U | CSA, General purpose |
| S | CSA, DIP Cl. II Gr. E-G, Cl. III |
| J | FM, DIP Cl. II, III Gr. E-G, T5 |
| 2 | NEPSI DIP |
| Y | Special version |

| 20 | Process connection |
|---|---|
| A | Thread DIN2999 R 1, PPS |
| B | Thread ANSI NPT 1, PPS |
| Y | Special version |

| 30 | Switch output |
|---|---|
| 2 | 3-wire PNP 10.8...45 V DC |
| 4 | Relay 20...253 V AC / 20...55 V DC |
| 9 | Special version |

| 40 | Housing, Cable entry |
|---|---|
| D | F14 Polyester IP66 Gland M20 |
| B | F14 Polyester IP66 Thread NPT ½ |
| C | F14 Polyester IP66 Thread G ½ |
| Y | Special version |

| 50 | Additional option |
|---|---|
| 1 | Basic version |
| 2 | Transparent cover |
| 9 | Special version |

| 995 | Marking |
|---|---|
| 1 | Tagging (TAG) |
| FTC260 | Product designation |

## Product structure FTC262

| 10 | Approval |
|---|---|
| A | Non-hazardous area |
| B | ATEX II 1/3 D |
| U | CSA, General purpose |
| S | CSA, DIP Cl. II, III Gr. G+coal dust Cl. III |
| J | FM, DIP Cl. II, III Gr. E-G, T5 |
| Y | Special version |

| 20 | | Process connection | | | |
|---|---|---|---|---|---|
| | A | Thread | EN10226 | R 1 ½, | PPS |
| | B | Thread | ANSI | NPT 1 ½, | PPS |
| | Y | Special version | | | |

| 30 | | | Probe length, L=500...6000 mm (20...236 inch) | | |
|---|---|---|---|---|---|
| | | 1 | ... mm L (500...6000 mm) | steel | HD-PE insulated |
| | | 2 | ... inch L ( 20... 236 inch) | steel | HD-PE insulated |
| | | 3 | 1500 mm ( 59 inch) | steel | HD-PE insulated |
| | | 4 | 2500 mm ( 98 inch) | steel | HD-PE insulated |
| | | 5 | 4000 mm (157 inch) | steel | HD-PE insulated |
| | | 6 | 6000 mm (236 inch) | steel | HD-PE insulated |
| | | 9 | Special version | | |

| 40 | | | | Switch output | | |
|---|---|---|---|---|---|---|
| | | | 2 | 3-wire | PNP | 10.8...45 V DC |
| | | | 4 | Relay 20...253 V AC / 20...55 V DC | | |
| | | | 9 | Special version | | |

| 50 | | | | | Housing, Cable entry | | |
|---|---|---|---|---|---|---|---|
| | | | | D | F14 Polyester | IP66 | Gland M20 |
| | | | | B | F14 Polyester | IP66 | Thread NPT ½ |
| | | | | C | F14 Polyester | IP66 | Thread G ½ |
| | | | | Y | Special version | | |

| 60 | | | | | | Additional option | |
|---|---|---|---|---|---|---|---|
| | | | | | 1 | Basic version | |
| | | | | | 2 | Transparent cover | |
| | | | | | 9 | Special version | |

| 995 | | | | | | | Marking | |
|---|---|---|---|---|---|---|---|---|
| | | | | | | | 1 | Tagging (TAG) |
| FTC260 | | | | | | | | Product designation |

# Accessories

**Adapter**

- FTC260, 1 BSPT female ($R_c$1), ISO 7/1 (see dimensional sketch):
  Part No.: 943215-1001, for 1½ BSPT (R 1½ ISO 7/1), PPS
  Part No.: 943215-1021, for 1½ BSP (G 1½ DIN ISO228), PPS
- FTC260, 1 NPT female:
  Part No.: 943215-0042, for 1¼ NPT, steel
  Part No.: 943215-0043, for 1¼ NPT, AISI 316Ti (1.4571)

**Transparent cover**

- FTC260/262:
  Part No.: 943201-1001

**Rope shortening set**

- FTC262:
  Part No.: 52005918

# Supplementary documentation

**Operating manual (BA)**

- Minicap FTC260
  KA093F/00/A6
  017476-0000
- Minicap FTC262
  KA155F/00/A6
  52005985
- Rope shortening set for FTC262
  KA157F/00/A6

**Safety instructions (XA)**

- Safety instructions (ATEX) for FTC260
  XA011F/00/a3
  CE ⟨Ex⟩ II 1/3 D
  52000928
- Safety instructions (ATEX) for FTC262
  XA092F/00/A3
  CE ⟨Ex⟩ II 1/3 D
  52005988

**Instruments International**

Endress+Hauser
Instruments International AG
Kaegenstrasse 2
4153 Reinach
Switzerland

Tel. +41 61 715 81 00
Fax +41 61 715 25 00
www.endress.com
info@ii.endress.com

Endress+Hauser

People for Process Automation

TI287F/00/EN/05.10
71115351
CCS/FM + SGML6.0

71115351

# VIBRATOR & AIR SEAL SOLENOID VALVE

| | |
|---|---|
| **# Sinox:** | 2099 |
| **Manufacturer:** | ASCO |
| **Voltage:** | 24-120 VDC/VAC |
| **Pneumatic connexion**: | 3/8 NPT |
| **Operating pressure:** | 150 PSI MAX. |
| **Quantity per scale hopper:** | 2x |

# PNEUMATIC VIBRATOR

| | |
|---|---|
| **# Sinox:** | 2033 |
| **Manufacturer :** | Oli |
| **Model :** | OT16 |
| **Quantity per scale hopper:** | 1x |

OLI®

WAMGROUP

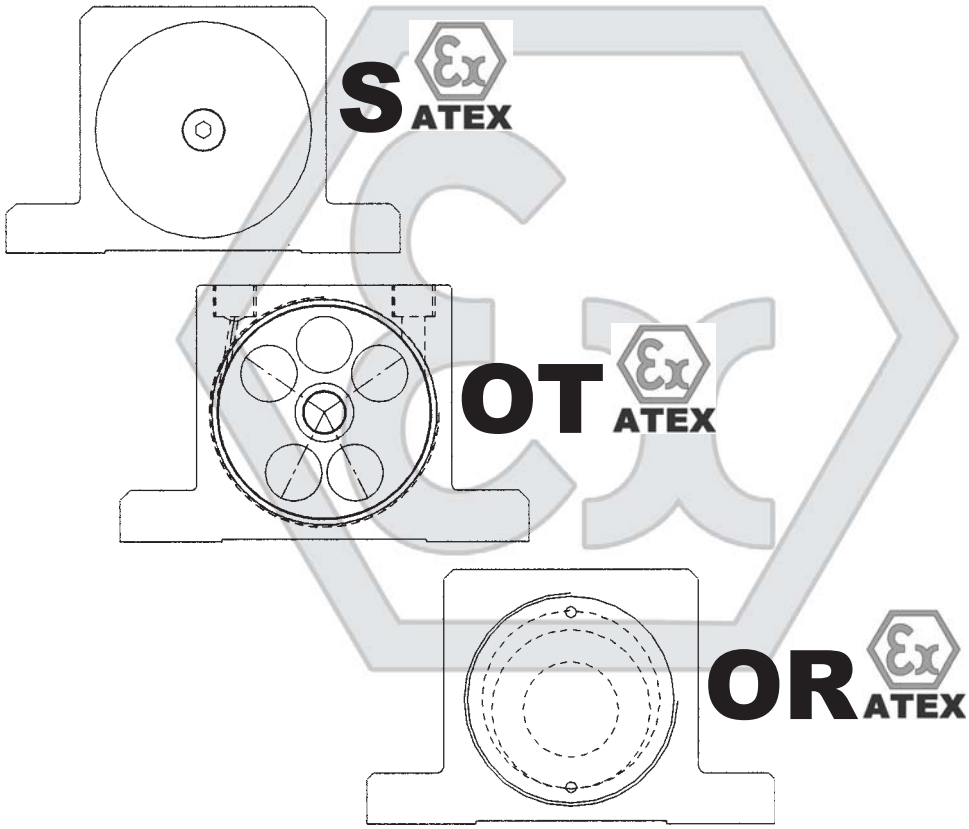


- **EXTERNAL PNEUMATIC VIBRATORS**
- ***DRUCKLUFTAUSSENVIBRATOREN***
- **VIBRATEURS EXTERNES PNEUMATIQUES**
- ***VIBRATORI PNEUMATICI ESTERNI***

*All rights reserved © WAMGROUP*

| CATALOGUE No. | **OL.2000 EX** | | CREATION DATE |
|---|---|---|---|
| ISSUE<br>**A** | CIRCULATION<br>**100** | DATE OF LATEST UPDATE | **06 - 2004** |

## 2 MAINTENANCE CATALOGUE — WARTUNGS-KATALOG


| | | |
|---|---|---|
| DESCRIPTION | BESCHREIBUNG | **M.3** |
| PNEUMATIC BALL VIBRATORS S | DRUCKLUFT - KUGELVIBRATOREN S | **.4** |
| PNEUMATIC TURBINE VIBRATORS T | PNEUMATISCHE DRUCKLUFT - TURBINEN VIBRATOREN T | **.5→.6** |
| PNEUMATIC ROLL VIBRATORS R | DRUCKLUFT - ROLLEN VIBRATOREN R | **.7** |
| MANUFACTURING DATA | KONSTRUKTIONSDATEN | **.8** |
| SCOPE AND IMPORTANCE OF THE MANUAL | ZWEK UND BEDEUTUNG DES HANDBUCHS | **.9** |
| CERTIFICATE OF CONFORMITY | KONFORMITÄTSBESCEINIGUNG | **.11→.13** |
| WARNINGS | HINWEISE | **.14** |
| INDICATIONS FOR USE | ANGABEN ZUM GEBRAUCH | **.15 →.17** |
| OPERATING CONDITIONS | EINSATZEINSCHRÄNKUNGEN | **.18** |
| WARRANTY CONDITIONS | GARANTIEBEDINGUNGEN | **.19** |
| TRANSPORT AND PACKING | TRANSPORT UND PACKUNG | **.20** |
| STORAGE | LAGERHALTUNG | **.21** |
| INSTALLATION | EINBAU | **.22 →.25** |
| MAINTENANCE | WARTUNG | **.26 →.28** |
| RESIDUAL RISKS | RESTRISIKEN | **.29 →.30** |
| FAULT FINDING | BETRIEBSSTÖRUNGEN UND ABHILFE | **.31** |
| SCRAPPING - RETURNING THE COMPONENT | VERSCHROTTUNG - RÜCKGABE BEAUTEIL | **.32** |


## 2 CATALOGUE D'ENTRETIEN — CATALOGO DI MANUTENZIONE


| | | |
|---|---|---|
| DESCRIPTION | DESCRIZIONE | **M.3** |
| VIBRATEUR PNEUMATIQUES A BILLE S | VIBRATORI PNEUMATICI A SFERA TIPO S | **.4** |
| VIBRATEURS PNEUMATIQUES A TURBINE T | VIBRATORI PNEUMATICI A TURBINA T | **.5→.6** |
| VIBRATEURS PNEUMATIQUES A ROULEX R | VIBRATORI PNEUMATICI A RULLI R | **.7** |
| DONNÉES CONSTRUCTIVES | DATI COSTRUZIONE | **.8** |
| BUT ET IMPORTANCE DU MANUEL | SCOPO E IMPORTANZA DEL MANUALE | **.9** |
| CERTIFICAT DE CONFORMITÉ | ATTESTATO DI CONFORMITA' | **.11→.13** |
| RECOMMANDATIONS | AVVERTENZE | **.14** |
| INDICATIONS POUR L'UTILISATION | INDICAZIONI PER L'USO | **.15 →.17** |
| LIMITES DE EMPLOI | LIMITI DI IMPIEGO | **.18** |
| CONDITIONS DE GARANTIE | CONDIZIONI DI GARANZIA | **.19** |
| TRANSPORT EMBALLAGE | TRASPORTO IMBALLO | **.20** |
| EMMAGASINAGE | IMMAGAZZINAGGIO | **.21** |
| INSTALLATION | INSTALLAZIONE | **.22 →.25** |
| ENTRETIEN | MANUTENZIONE | **.26 →.28** |
| RISQUES RESIDUELS | RISCHI RESIDUI | **.29 →.30** |
| INCONVENIENTS ET SOLUTIONS | INCONVENIENTI E SOLUZIONI | **.31** |
| DEMANTELEMENT - RESTITUTION COMPOSANT | ROTTAMAZIONE - RESO COMPONENTE | **.32** |

**GENERAL NOTES**
The vibrators are made in accordance with the EC machine regulation 89/392/E1EC. The standards EN 292, part 1 and part 2 have been particularly observed.
The vibrators produce non-directed vibrations. They are used to keep a constant flow in hoppers and silo's, to drive chutes and are also used in screens and vibrating tables. Generally for loosening, conveying and separating of bulk materials and for the reduction of friction.
The vibrators are ideal for use in the food industry, explosive atmosphere's, wet environment's and outside. The frequency and the centrifugal force are determined by the operating pressure.

**NOTE**
For extraordinary maintenance, if necessary, contact:

**ALLGEMEINES**
Die Vibratoren der Serie **S**, **OR** und **OT** entsprechen der EU-Maschinenrichtlinie 89/392/EWG und insbesondere den Normen EN 292, Teil 1 und 2.
Dieser Vibratortyp erzeugt ungerichtete Schwingungen.
Sie werden zur Behälterentleerung, als Antriebe für Rinnen, Siebe und Vibrationstische eingesetzt und im allgemeinen zum Lösen, Fördern, Verdichten und Trennen von Schüttgütern und zur Reduzierung von Reibung.
Unter Beachtung der Bedienungsvorschriften des Betreibers können diese Vibratoren auch für die Nahrungsmittelherstellung sowie in EX- und Naßbereichen eingesetzt werden.
Ein Einsatz der Vibratoren im Freien ist möglich.
Frequenz und die davon abhängige Zentrifugalkraft werden durch den Betriebsdruck bestimmt.

**HINWEIS**
Für etwaige außerordentliche Wartungsarbeiten wenden Sie sich bitte ausschließlich an:

**REMARQUES GÉNÉRALES**
Les vibrateurs **S**, **OT** et **OR** correspondent à la directive Machines 89/392/C.E.E. Il a été tenu compte des normes EN 292, l' et 1-2 parties. Ces vibrateurs génèrent des vibrations multidirectionnelles. Ils sont utilisés pour le vidage de silos, l'entraînement de goulottes l'activation de couloirs vibrants, de tamis et de tables vibrantes et, d'une façcon generale en général, pour ,décolmater, transporter, compacter, et séparer les matières en vrac et réduire les frictions. Si les prescriptions d'emploi élaborées par l'utilisateur sont respectées, ils peuvent être mis en oeuvre pour la fabrication de denrées alimentaires ainsi qu'en milieu explosif ou humide. Les vibrateurs peuvent aussi fonctionner à l'extérieur. La fréquence et la force centrifuge sont déterminées par la pression de service.

**REMARQUE**
Pour les entretiens extraordinaires s'adresser exclusivement à :

**NOTE GENERALI**
I vibratori sono costruiti in conformità alla norma 89/392/CE sui macchinari. Si è in particolare tenuto conto di quanto stabilito dalle norme EN 292, parte 1 e parte 2.
I vibratori producono vibrazioni multidirezionali. Sono impiegati per mantenere un flusso costante nelle tramogge e nei sili, per attivare dosatori, vagli e tavole vibranti e in generale per distaccare, trasportare, compattare e separare materiale sfuso e per ridurre l'attrito.
I vibratori sono perfettamente indicati per l'impiego nell'industria alimentare, in atmosfera esplosiva, in ambienti umidi e all'esterno. La frequenza delle vibrazioni e la forza centrifuga sono determinati dalla pressione d'esercizio.

**NOTA**
Per eventuali manutenzioni straordinarie rivlgersi esclusivamente a:

**OLI** SRL
Via Canalazzo, 35
41036 Medolla (MO)
ITALY

Tel.: + 39.0535 - 46400
Fax: + 39.0535 - 46350

**General indications**
- Ball vibrators "S" consist of an anodized aluminium body inside which a tempered steel ball rotates on an anti-wear tempered steel seating. Vibrator "S" generates vibrations of small amplitudes.

**Examples of application**
- Separation, transport, compacting of materials.
- Gushing of material from of silos, hoppers, screens, etc.
- Cleaning filters.
- On conveyor chains (for examples cans, bottles, etc.) they facilitate the flow and eliminate problems of blockage.

**Maximum operating temperature**:
- 20°C / +200°C

**Allgemeine Angaben**
- Die Kugelvibratoren Serie „S" bestehen aus einem Gehäuse aus eloxiertem Aluminium, innerhalb dessen sich eine Kugel aus gehärtetem Stahl in einem Sitz aus gehärtetem verschleißfestem Stahl dreht. Der Vibrator „S" erzeugt Schwingungen kleinern Ausmaßes.

**Anwendungsbeispiele**
- Materialien abscheiden, befördern, verdichten.
- Silos, Trichtern, Sieben, etc. freimachen.
- Filter reinigen.
- Auf Förderketten (z.B. Dosen, Flaschen, etc.) vereinfachen sie den Materialfluss und beseitigen Probleme mit etwaigen Blockierungen.

**Max. Betriebstemperatur**
-20°C / +200°C

**Indications générales**
- Les vibrateurs à bille de la série "S" sont constitués d'un corps en aluminium anodisé dans lequel tourne une bille en acier trempé sur un siège en acier trempé anti-usure. Le vibrateur "S" produit des vibrations de petite amplitude.

**Exemples d'application**
- Séparation, transport, compactage de produits
- Débourrage de silos, trémie, tamis, etc.
- Nettoyage des filtres.
- Sur les chaînes de transport (par ex. boîtes, bouteilles, etc.) ils facilitent l'écoulement et éliminent les problèmes de blocage.

**Température maximum de service**
-20°C / +200°C

**Indicazioni generali**
- I vibratori a sfera serie "S" sono costituiti da un corpo in alluminio anodizzato all'interno del quale ruota una sfera in acciaio temprato su una sede di acciaio temprato antiusura. Il vibratore "S" genera vibrazioni di piccola ampiezza di spostamento.

**Esempi di applicazione**
- Separazione, trasporto, compattazione materiali.
- Sgorgo di sili, tramogge, vagli, ecc.
- Pulizia filtri.
- Su catene di trasporto (per es. barattoli, bottiglie, ecc.) facilitano il deflusso ed eliminano i problemi di bloccaggio.

**Temperatura massima d'esercizio**
- 20°C / +200°C

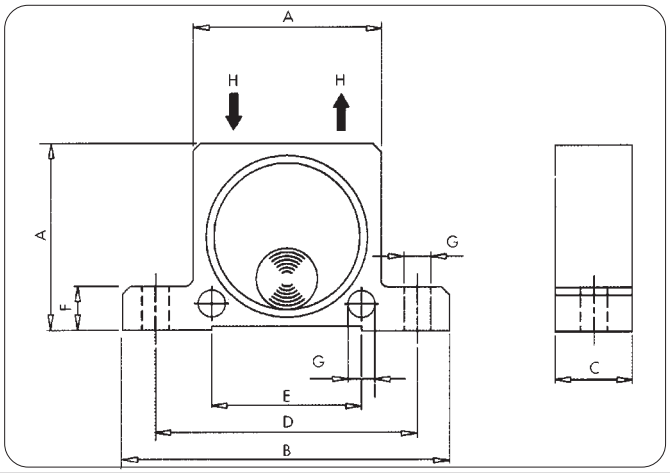


**DIMENSIONS - *ABMESSUNGEN* - DIMENSIONS - *DIMENSIONI***

| Type | A | | B | | C | | D | | E | | F | | G | | H | Weights - *Gewichte* Poids - *Pesi* | |
|---|---|---|---|---|---|---|---|---|---|---|---|---|---|---|---|---|---|
| | mm | in | mm | in | mm | in | mm | in | mm | in | mm | in | mm | in | | kg | lbs |
| **S 8**<br>**S 10** | 50 | 1.97 | 86 | 3.38 | 20 | 0.79 | 68 | 2.68 | 4 | 1.57 | 12 | 0.47 | 7 | 0.27 | 1/4" | 0.13 | 0.29 |
| **S 13**<br>**S 16** | 65 | 2.56 | 113 | 4.45 | 24<br>27 | 1.91<br>1.06 | 90 | 3.54 | 50 | 1.97 | 16 | 0.63 | 9 | 0.35 | 1/4" | 0.26<br>0.30 | 0.57<br>0.66 |
| **S 20**<br>**S 25** | 80 | 3.15 | 128 | 5.04 | 33<br>38 | 1.30<br>1.50 | 104 | 4.09 | 60 | 2.36 | 16 | 0.63 | 9 | 0.35 | 1/4" | 0.53<br>0.63 | 1.17<br>1.39 |
| **S 30**<br>**S 36** | 100 | 3.94 | 160 | 6.30 | 44<br>50 | 1.73<br>1.97 | 130 | 5.12 | 80 | 3.15 | 20 | 0.79 | 11 | 0.43 | 3/8" | 1.13<br>1.34 | 2.49<br>2.95 |

**PERFORMANCE DATA - *LEISTUNGSDATEN*- PERFORMANCE - *PRESTAZIONI***

| Type | Vibrations - *Schwingungen* *Vibrations - Vibrazioni* min $^{-1}$ | | | Fc max. kg | | | | | | Air consumption - *Lufterverbrauch* Consommation d'air - *Consumo d'aria* l/min | | | | | |
|---|---|---|---|---|---|---|---|---|---|---|---|---|---|---|---|
| | 2 bar= 29 psi | 4 bar= 58 psi | 6 bar= 87 psi | 2 bar= 29 psi | | 4 bar= 58 psi | | 6 bar= 87 psi | | 2 bar= 29 psi | | 4 bar= 58 psi | | 6 bar= 87 psi | |
| | | | | kg | lbs | kg | lbs | kg | lbs | $dm^3$ | cf | $dm^3$ | cf | $dm^3$ | cf |
| **S 8**<br>**S 10** | 25,500<br>22,500 | 31,000<br>28,000 | 35,000<br>34,000 | 13<br>25 | 29<br>56 | 26<br>47 | 58<br>106 | 36<br>71 | 81<br>160 | 83<br>92 | 2.6<br>3.2 | 145<br>150 | 5.1<br>5.3 | 195<br>200 | 6.9<br>7.1 |
| **S 13**<br>**S 16** | 15,000<br>13,000 | 18,500<br>17,000 | 22,500<br>19,500 | 32<br>45 | 72<br>101 | 55<br>80 | 124<br>180 | 87<br>110 | 196<br>248 | 94<br>122 | 3.3<br>4.3 | 158<br>200 | 5.6<br>7.1 | 225<br>280 | 7.9<br>9.9 |
| **S 20**<br>**S 25** | 10,500<br>9,200 | 14,500<br>12,200 | 16,500<br>14,000 | 72<br>93 | 162<br>209 | 122<br>157 | 275<br>353 | 172<br>205 | 387<br>461 | 130<br>160 | 4.6<br>5.6 | 230<br>290 | 8.1<br>10.2 | 340<br>425 | 12.0<br>15.0 |
| **S 30**<br>**S 36** | 7,800<br>7,300 | 9,700<br>9,000 | 12,500<br>10,000 | 151<br>206 | 340<br>464 | 247<br>315 | 556<br>709 | 321<br>405 | 722<br>911 | 215<br>260 | 7.6<br>9.2 | 375<br>475 | 13.2<br>16.8 | 570<br>675 | 20.0<br>24.0 |

**General indications**
- Vibration is generated by a strongly unbalanced turbine which rotates on two high-speed ball bearings.
- OT vibrators develop a high work moment and a high vibration frequency.
- Vibrations present a large amplitude even with low operating pressure.

**Examples of application**
- Food and Pharmacentical industries.
- Bins and hoppers.
- Goreens.

**Maximum operating temperature**:
- 20°C / +120°C

**Allgemeines**
- Die Vibration wird durch eine exzentrisch angeordnete Turbine erzeugt, die sich mit hoher Geschwindigkeit auf 2 Kugellagern dreht.
- Zwei überdimensionierte, für den Dauereinsatz bei hohen Drehzahlen geeignete Lager garantieren einen hohen Wirkungsgrad und ermöglichen den Einsatz ungeölter Druckluft.
- OT Vibratoren sind vollkommen wartungsfrei und zeichnen sich aus durch hohe Drehzahlen bei gleichzeitig geringem Luftverbrauch.

**Anwendungsbeispiele**
- Nahrungsmittel und Pharmaindustrie.
- Trichter und Behälterbau.
- Siebanlagen.

**Max. Betriebstemperatur**
-20°C / +120°C

**Indications générales**
- la vibration est engendrée par une turbine déséquilibrée montée sur 2 roulements à bille à haute vitesse.
- Les vibrateur à turbine OT engendrent un couple élevé et une haute fréquence de vibration.
- Les vibrations ont une amplitude de considérable même à basse pression d'exercice.

**Exemple d'application**
- Industries alimentaire et pharmaceutique
- Trémies et d'autres récipients.
- Tamis.

**Température maximum de service**
-20°C / +120°C

**Indicazioni generali**
- La vibrazione è generata da una turbina sbilanciata che gira su 2 cuscinetti a sfera ad alta velocità.
- I vibratori a turbina OT generano un elevato momento di lavoro ed una alta frequenza di vibrazione.
- Le vibrazioni hanno una notevole ampiezza anche a basse pressioni di esercizio.

**Esempi di applicazione**
- Industria alimentare e farmaceutica.
- Sili e tramogge.
- Vagli.

**Temperatura massima d'esercizio**
- 20°C / +120°C

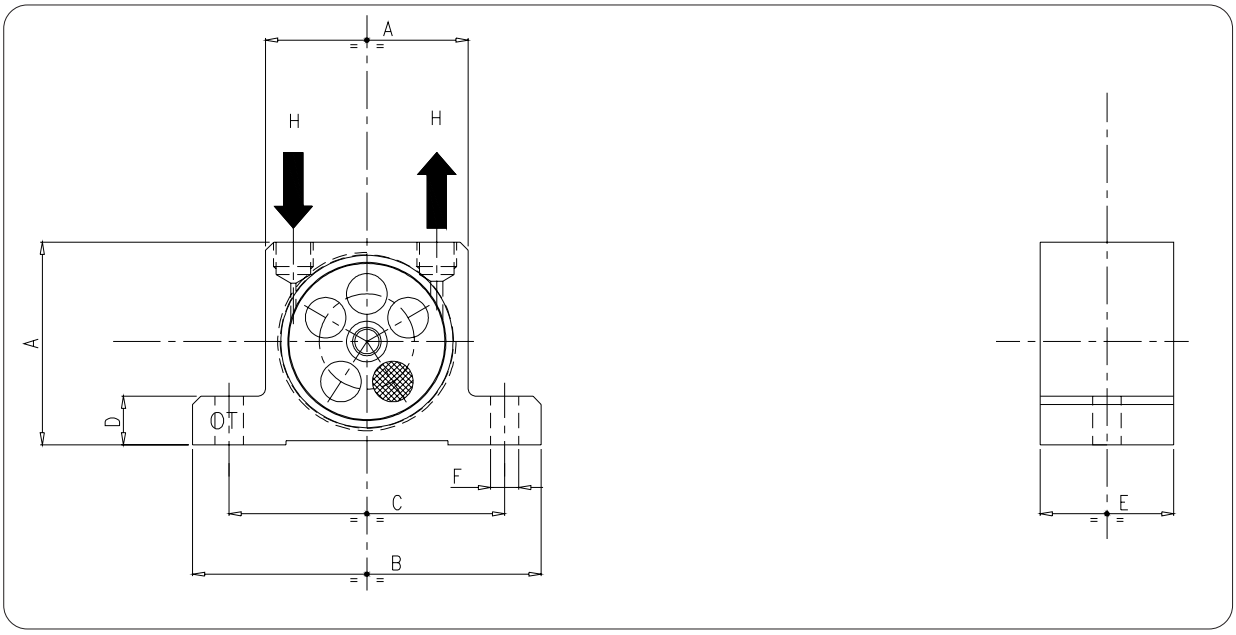


**DIMENSIONS - *ABMESSUNGEN* - DIMENSIONS - *DIMENSIONI***

| Type | A | | B | | C | | D | | E | | F | | x-y | Weights - *Gewichte* - Poids - *Pesi* | |
|---|---|---|---|---|---|---|---|---|---|---|---|---|---|---|---|
| | mm | in | mm | in | mm | in | mm | in | mm | in | mm | in | | kg | lbs |
| **OT 8** | | | | | | | | | | | | | | .250 | .55 |
| **OT 10** | 50 | 1.97 | 86 | 3.38 | 68 | 2.68 | 12 | 0.47 | 33 | 1.30 | 7 | 0.27 | 1/8" | .255 | .56 |
| **OT 10-S** | | | | | | | | | | | | | | .263 | .58 |
| **OT 13** | | | | | | | | | | | | | | .565 | 1.24 |
| **OT 16** | 65 | 2.56 | 113 | 4.45 | 90 | 3.54 | 16 | 0.63 | 42 | 1.65 | 9 | 0.53 | 1/4" | .580 | 1.28 |
| **OT 16-S** | | | | | | | | | | | | | | .614 | 1.35 |
| **OT 20** | | | | | | | | | | | | | | 1.090 | 2.40 |
| **OT 25** | 80 | 3.15 | 128 | 5.04 | 104 | 4.09 | 16 | 0.63 | 56 | 2.20 | 9 | 0.35 | 1/4" | 1.120 | 2.46 |
| **OT 25-S** | | | | | | | | | | | | | | 1.200 | 2.64 |
| **OT 30** | | | | | | | | | | | | | | 2.200 | 4.85 |
| **OT 36** | 100 | 3.94 | 160 | 6.30 | 130 | 5.12 | 20 | 0.79 | 73 | 2.87 | 11 | 0.43 | 3/8" | 2.300 | 5.10 |
| **OT 36-S** | | | | | | | | | | | | | | 2.530 | 5.57 |

**PERFORMANCE DATA - *LEISTUNGSDATEN*- PERFORMANCE - *PRESTAZIONI***

| Type | Vibrations - *Schwingungen* *Vibrations - Vibrazioni* vpm | | | Fc max. | | | | | | Air consumption - *Lufterverbrauch* Consommation d'air - *Consumo d'aria* | | | | | |
|---|---|---|---|---|---|---|---|---|---|---|---|---|---|---|---|
| | 2 bar= 29 psi | 4 bar= 58 psi | 6 bar= 87 psi | 2 bar= 29 psi | | 4 bar= 58 psi | | 6 bar= 87 psi | | 2 bar= 29 psi | | 4 bar= 58 psi | | 6 bar= 87 psi | |
| | | | | kg | lbs | kg | lbs | kg | lbs | $dm^3$ | cf | $dm^3$ | cf | $dm^3$ | cf |
| **OT 8** | 34000 | 38000 | 42000 | 110 | 242 | 205 | 451 | 292 | 641 | 45 | 1.6 | 81 | 2.9 | 110 | 3.9 |
| **OT 10** | 26000 | 33000 | 38000 | 105 | 231 | 171 | 377 | 252 | 554 | 45 | 1.6 | 81 | 2.9 | 110 | 3.9 |
| **OT 10-S** | 17200 | 23400 | 26000 | 72 | 159 | 147 | 323 | 187 | 410 | 45 | 1.6 | 81 | 2.9 | 110 | 3.9 |
| **OT 13** | 24500 | 28500 | 31000 | 202 | 444 | 263 | 579 | 300 | 659 | 122 | 4.3 | 204 | 7.2 | 285 | 10.1 |
| **OT 16** | 18000 | 20000 | 21000 | 194 | 427 | 239 | 527 | 264 | 581 | 122 | 4.3 | 204 | 7.2 | 285 | 10.1 |
| **OT 16-S** | 11500 | 15000 | 17500 | 129 | 285 | 196 | 431 | 234 | 516 | 122 | 4.3 | 204 | 7.2 | 285 | 10.1 |
| **OT 20** | 14500 | 19000 | 23000 | 251 | 552 | 404 | 888 | 526 | 1157 | 184 | 6.5 | 318 | 11.2 | 452 | 16.0 |
| **OT 25** | 13200 | 15500 | 17000 | 244 | 537 | 336 | 740 | 508 | 1117 | 184 | 6.5 | 318 | 11.2 | 452 | 16.0 |
| **OT 25-S** | 9000 | 11000 | 13500 | 214 | 471 | 335 | 738 | 483 | 1063 | 184 | 6.5 | 318 | 11.2 | 452 | 16.0 |
| **OT 30** | 11000 | 12500 | 14500 | 351 | 771 | 721 | 1586 | 781 | 1718 | 322 | 11.4 | 542 | 19.1 | 749 | 26.5 |
| **OT 36** | 8500 | 11500 | 12000 | 341 | 751 | 698 | 1536 | 749 | 1648 | 322 | 11.4 | 542 | 19.1 | 749 | 26.5 |
| **OT 36-S** | 6000 | 7000 | 8500 | 406 | 893 | 706 | 1554 | 754 | 1660 | 322 | 11.4 | 542 | 19.1 | 749 | 26.5 |

N.B.: data abtained from a vibrating table supported by springs that perfectly simulates the major part of the applications possible. Frequency and centrifugla force increase when the vibrator is applied to more rigid structures.

**For activation a 2/2 way electrovalve and filtered compressed air are required.**

N.B.: daten wurden auf einem gefederten Rütteltisch ermittelt, aud dem die Mehrzahl der möglichen Anwendungen perfekt simuliert wurde. Frequenz und Zentrifugalkraft nehmen bei einer Befestigung des Vibrators auf weniger elastischen Unterlagen zu.

**Zur Betätigung ist ein 2/2 Wege-Ventil und gefilter Druckluft erforderlich**

N.B.: les données ont été relevées sur un banc vibrant à ressorts, de manière à simuler parfaitement la plupart des applications possibles. La frequence et la force centrifuge seront plus grandes où le vibrateur est appliqué sur une structure plus rigide.

**Pour l'actionnement on a besoin d'une èlectrovanne à 2/2 voies et d'air filtré**

N.B.: dati rilevati utilizzando un banco vibrante a molle, in modo da simulare perfettamente la maggior parte delle possibili applicazioni. Frequenza e forza centriga saranno maggiori applicando il vibratore su strutture più rigide.

**Per l'azionamento occorrono una elettrovalvola a 2/2 vie ed aria filtrata.**

**General indications**
- The roller vibrators series "R" are formed by an anodized aluminium body inside which a hardened steel roller wheels an a cast iron race.
- Vibration is generated by a rotor which describes an epicycloidal movement inside a steel race.
- The OR vibrators generate a very high frequency with low consumption as compared to the force given.

**Examples of application**
- Bins and hoppers
- Moulding dies
- Compacting
- Separation

**Maximum operating temperature**
0°C / +200°C

**Allgemeines**
- Die Rollen „R" Rüttler bestehen aus einemm Körper aus eloxiertem Aluminium, innerhalb mit einer Rolle aus gehärtetem Stahl, die auf Gusseisen Laufbahn rotiert.
- Die Vibration wird durch eine Rolle erzeugt, die innerhalb eines speziell gehärteten Stahlringes eine epizyklische Bewegung beschreibt.
- OR Vibratoren entwickeln hohe Fliehkräfte und laufen in jeder Einbaulage sicher an.

**Anwendungsbeispiele**
- Trichter und Behälter
- Gussformen
- Verdichter
- Klassierer

**Max. Betriebstemperatur**
0°C / +200°C

**Indications générales**
- Les vibrateurs à rouleaux, série "R", comprennent un corps en aluminium anodisé avec un rouleau en acier trempé sur piste en fonte roulant à l'interieur.
- La vibration est engendrée par un rouleau qui accomplit un mouvement épicycloïdal à l'intérieur d'une piste en acier.
- Les vibrateurs à rouleau OR, engendrent une fréquence trés élevée avec une consommation d'air réduite par rapport à la force développée.

**Exemple d'application**
- Trémies et d'autres récipients
- Moules
- Compactage
- Séparation

**Température maximum de service**
0°C / +200°C

**Indicazioni generali**
- I vibratori a rulli serie "R" sono costituiti da un corpo in alluminio anodizzato all'interno del quale ruota un rullo in acciaio temprato su pista in ghisa.
- La vibrazione è generata da un rotore che compie un movimento epicicloidale all'interno di una pista di acciaio.
- I vibratori a rullo OR generano una frequenza molto elevata con un consumo ridotto, in relazione alla forza resa.

**Esempi di applicazione**
- Sili e tramogge
- Forme
- Compattazione
- Separazione

**Temperatura massima d'esercizio**
0°C / +200°C

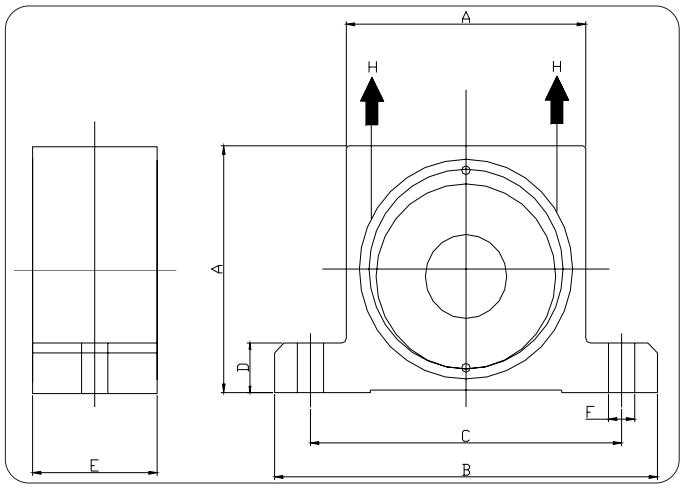


**DIMENSIONS - *ABMESSUNGEN* - DIMENSIONS - *DIMENSIONI***

| Type | A | | B | | C | | D | | E | | F | | H | Weights - *Gewichte* - Poids - *Pesi* | |
|---|---|---|---|---|---|---|---|---|---|---|---|---|---|---|---|
| | mm | in | mm | in | mm | in | mm | in | mm | in | mm | in | | kg | lbs |
| **OR 50** | 50 | 1.97 | 86 | 3.38 | 68 | 2.68 | 12 | 0.47 | 30 | 1.18 | 7 | 0.27 | 1/8" | 0.370 | 0.82 |
| **OR 65** | 65 | 2.56 | 113 | 4.45 | 90 | 3.54 | 16 | 0.63 | 36 | 1.42 | 9 | 0.35 | 1/4" | 0.760 | 1.68 |
| **OR 80** | 80 | 3.15 | 128 | 5.04 | 104 | 4.09 | 16 | 0.63 | 40 | 1.57 | 9 | 0.35 | 1/4" | 1.270 | 2.80 |
| **OR 100** | 100 | 3.94 | 160 | 6.30 | 130 | 5.12 | 20 | 0.79 | 52 | 2.05 | 11 | 0.43 | 3/8" | 2.600 | 5.73 |

**PERFORMANCE DATA - *LEISTUNGSDATEN*- PERFORMANCE - *PRESTAZIONI***

| Type | Vibrations - *Schwingungen* *Vibrations - Vibrazioni* vpm | | | Fc max. | | | | | | Air consumption - *Lufterverbrauch* Consommation d'air - *Consumo d'aria* | | | | | |
|---|---|---|---|---|---|---|---|---|---|---|---|---|---|---|---|
| | 2 bar= 29 psi | 4 bar= 58 psi | 6 bar= 87 psi | 2 bar= 29 psi | | 4 bar= 58 psi | | 6 bar= 87 psi | | 2 bar= 29 psi | | 4 bar= 58 psi | | 6 bar= 87 psi | |
| | | | | kg | lbs | kg | lbs | kg | lbs | $dm^3$ | cf | $dm^3$ | cf | $dm^3$ | cf |
| **OR 50** | 21000 | 25000 | 29500 | 1840 | 413 | 2760 | 620 | 3480 | 782 | 78 | 2.7 | 144 | 5.0 | 204 | 7.2 |
| **OR 65** | 19000 | 22000 | 26000 | 2303 | 518 | 4306 | 968 | 5420 | 1218 | 100 | 3.5 | 198 | 6.9 | 296 | 10.4 |
| **OR 80** | 14000 | 16000 | 21500 | 3354 | 754 | 5762 | 1295 | 6124 | 1377 | 122 | 4.3 | 255 | 9.0 | 378 | 13.3 |
| **OR 100** | 6750 | 9750 | 11000 | 2839 | 638 | 5924 | 1332 | 7678 | 1726 | 132 | 4.6 | 284 | 10.0 | 412 | 14.5 |

N.B.: data abtained from a vibrating table supported by springs that perfectly simulates the major part of the applications possible. Frequency and centrifugla force increase when the vibrator is applied to more rigid structures.

**For activation a 2/2 way electrovalve and filtered compressed air are required.**

N.B.: daten wurden auf einem gefederten Rütteltisch ermittelt, aud dem die Mehrzahl der möglichen Anwendungen perfekt simuliert wurde. Frequenz und Zentrifugalkraft nehmen bei einer Befestigung des Vibrators auf weniger elastischen Unterlagen zu.

**Zur Betätigung ist ein 2/2 Wege-Ventil und gefilter Druckluft erforderlich**

N.B.: les données ont été relevées sur un banc vibrant à ressorts, de manière à simuler parfaitement la plupart des applications possibles. La frequence et la force centrifuge seront plus grandes où le vibrateur est appliqué sur une structure plus rigide.

**Pour l'actionnement on a besoin d'une èlectrovanne à 2/2 voies et d'air filtré**

N.B.: dati rilevati utilizzando un banco vibrante a molle, in modo da simulare perfettamente la maggior parte delle possibili applicazioni. Frequenza e forza centriga saranno maggiori applicando il vibratore su strutture più rigide.

**Per l'azionamento occorrono una elettrovalvola a 2/2 vie ed aria filtrata.**

**Rating plate for S or OR vibrator - *Schild für Vibrator S oder OR***
**Plaque pour vibrateur S ou OR - *Targhetta per vibratore S e OR***

**B) IDENTIFICATION OF COMPONENT**
For correct identification of the component, refer to the code on the rating plate.

**NOTE: The pneumatic vibrator must not be CE marked since it is a component.**

**B) IDENTIFIKATION DES BAUTEILS**
Zur korrekten Identifikation des Bauteils Bezug auf den Code nehmen, der auf dem Schild steht.

**Anm.: Der pneumatische Vibrator darf nicht mit der CE-Kennzeichnung versehen werden, da es sich um ein Bauteil handelt.**

**IDENTIFICATION DU COMPOSANT**
Pour identifier correctement le composant, faire référence au code qui se trouve sur la plaque signalétique.

**N.B. : En tant que composant le vibrateur pneumatique ne porte pas le marquage CE.**

**IDENTIFICAZIONE DELCOMPONENTE**
Per una corretta identificazione del componente, bisogna fare riferimento al codice che si trova sulla targhetta.

**N.B.: il vibratore pneumatico non deve essere marcato CE in quanto componente.**

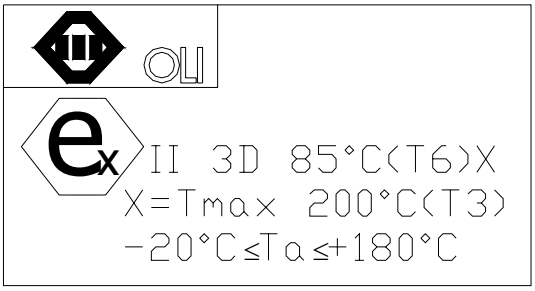


1) Machine code
2) Machine serial number
3) Assembly operator code
4) Year of construction
5) Group and category
6) Surface Tmax with T amb. -20 °C / +180°C

1) Maschinencode
2) Serien-Nr. Maschine
3) Monteur-Code
4) Baujahr der Maschine
5) Gruppe und Kategorie
6) Tmax Oberfläche mit T amb. -20 °C / +180°C

1) Code machine
2) Matricule de la machine
3) Code opérateur assembleur
4) Année de fabrication machine
5) Groupe et catégorie
6) Tmax superficiel avec T amb. -20 °C / +180°C

1) Codice macchina
2) Numero matricola
3) Codice operatore assemblatore
4) Anno di costruzione macchina
5) Gruppo e categoria
6) Tmax superficiale con T amb. -20 °C / +180°C

**Rating plate for OT vibrator- *Schild für Vibrator OT***
**Plaque pour vibrateur OT - *Targhetta per vibratore* OT**

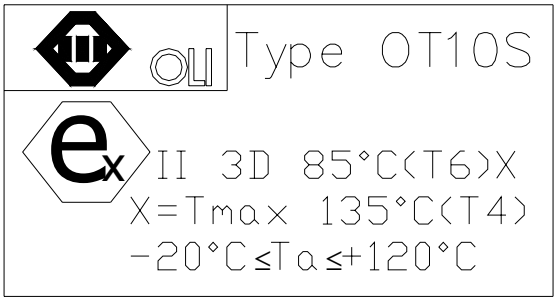


1) Machine code
2) Machine serial number
3) Assembly operator code
4) Year of construction
5) Group and category
6) Surface Tmax with T amb. -20 °C / +120°C

1) Maschinencode
2) Serien-Nr. Maschine
3) Monteur-Code
4) Baujahr der Maschine
5) Gruppe und Kategorie
6) Tmax Oberfläche mit T amb. -20 °C / +120°C

1) Code machine
2) Matricule de la machine
3) Code opérateur assembleur
4) Année de fabrication machine
5) Groupe et catégorie
6) Tmax superficiel avec T amb. -20 °C / +120°C

1) Codice macchina
2) Numero matricola
3) Codice operatore assemblatore
4) Anno di costruzione macchina
5) Gruppo e categoria
6) Tmax superficiale con T amb. -20 °C / +120°C

This manual, prepared by the manufacturer, forms an integral part of the pneumatic vibrator S/OR/OT supply. It must therefore accompany the filter right up to its final scrapping, and must be available ready at hand for quick consultation by the operators concerned and those in charge of operations at the work site. If the machine changes hands, this manual must be handed over to the new owner. Before carrying out any operation on or using the pneumatic vibrator, the personnel concerned must have read this manual carefully and completely. If the manual is lost, or in such a condition as to make it illegible, download a new copy from the OLI s.r.l internet site, and check the date of the last revision. This manual provides warnings and indications concerning the safety regulations for preventing accidents at the work site. However, the operators MUST scrupulously follow the safety regulations meant for them according to the existing legislation. Modifications to the safety regulations made over time must be integrated and implemented.

With the basic features of the machines as described, the Manufacturer reserves every right to make modifications to parts, details and accessories considered to be necessary for improving the product for design or commercial reasons, at any time without any obligation to update the publication imme-diately.
The latest version of the present catalogue is available under **www.olivibra.it**

Dieses Handbuch, das vom Hersteller erstellt wurde, ist integrierender Teil des Druckluft Vibrator S/OR/OT. Daher muss es unbedingt dem Filter folgen, bis er demontiert wird, und leicht zu finden sein, wenn der Bediener oder die Baustellenleitung in ihm nachschlagen wollen. Bei einem Besitzerwechsel des Gerätes muss das Handbuch dem neuen Besitzer ausgehändigt wer-den. Bevor das Betriebspersonal irgendwelche Arbeiten an oder mit Druckluft Vibrator ausführt, muss es dieses Handbuch unbedingt mit großer Aufmerksamkeit durchgelesen haben. Falls das Handbuch verloren geht oder unleserlich wird, kann man sich eine neue Kopie von den Internetseiten des Herstellers OLI s.r.l herunterladen, um dann das Datum der letzten Aktualisierung des Handbuchs zu prüfen. Dieses Handbuch liefert Hinweise und Angaben zu den Sicherheits- und Unfallverhütungsbestimmungen am Arbeitsplatz. Die Sicherheitsbestimmungen, die laut der geltenden Bestimmungen vom Bedienungspersonal zu beachten sind, müssen auf jeden Fall immer beachtet werden.
Etwaige Änderungen der Sicherheitsbestimmungen, die im Laufe der Zeit vorgenommen werden, sind immer zu erfassen und umzusetzen.

Der Hersteller behält sich das Recht vor, unter Beibehaltung der wesentlichen Eigenschaften der beschriebenen Geräte etwaige Änderungen an Organen, Teilen und Zubehör vorzunehmen, die im Zuge der Produktverbesserung erforderlich sind oder aus konstruktiven oder kommerziellen Erfordernissen heraus ausgeführt werden. Solche Änderungen können jederzeit vorgenommen werden und verpflichten den Hersteller nicht, diese Veröffentlichung gleichzeitig auf den neuesten Stand zu bringen.
Die letzte Version dieses Katalogs steht im Internet unter **www.olivibra.it**

Le présent Manuel, rédigé par le constructeur, fait partie intégrante de la fourniture du vibrateur pneumatique S/OR/OT; comme tel il doit absolument suivre le filtre jusqu'à son démantèlement et être à portée de la main pour une consultation rapide de la part des opérateurs concernés et par la direction des travaux du chantier. En cas de changement de propriété de la machine, le manuel doit être remis au nouveau propriétaire. Avant d'effectuer une quelconque opération avec ou sur le vibrateur pneumatique, le personnel concerné doit absolument et obligatoirement avoir lu très attentivement le présent manuel. Si le manuel est égaré ou abîmé de manière à ne plus être lisible, une copie doit être téléchargée à partir du site internet de OLI s.r.l en vérifiant la date de la dernière mise à jour. Le présent manuel fournit les recommandations et les indications concernant les consignes de sécurité pour la prévention contre les accidents du travail. Dans tous les cas les consignes de sécurité conformément aux normes en vigueur doivent être observées avec la plus grande attention par les différents opérateurs.
Les modifications éventuelles des consignes de sécurité devront être adoptées et mises en oeuvre.

Les caractéristiques essen tielles des machines décrites étant entendues, le constru cteur se réserve le droit d'ap porter à tout moment et sans engagement de mettre à jour en temps utile cette publication, des modifications aux organes, pièces et accessoires qu'il retiendra avantageuses pour l'amélioration du produit ou pour des exigences de fabrication ou de commer cialisation.
La version toujours mise à jour de ce catalogue est dis-ponible sul le site internet **www.olivibra.it**

Il presente manuale, redatto dal costruttore, è parte integrante del vibratore pneumatico S/OR/OT; come tale deve assolutamente seguire il filtro fino al suo smantellamento ed essere facilmente reperibile per una rapida consultazione da parte degli operatori interessati e della direzione lavori del cantiere. In caso di cambio di proprietà della macchina il manuale deve essere consegnato alla nuova proprietà. Prima di eseguire qualsiasi operazione con, o sul vibratore pneumatico ; il personale interessato deve assolutamente ed obbligatoriamente aver letto con la massima attenzione il presente manuale. Qualora il manuale venga smarrito, sgualcito e tale da non essere completamente leggibile, si deve scaricare una nuova copia dal sito internet della OLI s.r.l e verificarne la data dell'ultimo aggiornamento. Il presente manuale fornisce avvertenze ed indicazioni relative alle norme di sicurezza per la prevenzione degli infortuni sul lavoro. Vanno comunque, ed in ogni caso, osservate con il massimo scrupolo da parte dei vari operatori le norme di sicurezza poste a loro carico dalle vigenti normative.
Eventuali modifiche delle norme di sicurezza che nel tempo dovessero aver luogo dovranno essere recepite ed attuate.

Ferme restando le caratteristiche essenziali delle macchine descritte, il costruttore si riserva il diritto di apportare le eventuali modifiche di organi, dettagli ed accessori che riterrà convenienti per il miglioramento del prodotto, o per esigenze di carattere costruttivo o commerciale, in qualunque momento e senza impegnarsi ad aggiornare tempestivamente questa pubblicazione.
La versione sempre aggiornata del presente catalogo è reperibile sul sito internet **www.olivibra.it**

**CERTIFICATE OF CONFORMITY**

The equipment is accompanied by a declaration of conformity to existing regulations, but, since it is a component to be integrated into a system or plant, its safety is connected to compliance with all the directives applicable in final assembly of the machine.
Improper use of the pneumatic vibrator without following the instructions in this manual frees the Manufacturer of all responsibility for poor working of the pneumatic vibrator.
As this is a subject in the process of significant technical and normative evolution, the Manufacturer reserves the right to upgrade its products as fast as possible with all the technological know-how and official standards applicable (EN, UNI) which are available at the time.

**KONFORMITÄTSERKLÄRUNG**

Das Gerät wird von einer den geltenden Richtlinien entsprechenden Konformitäts-erklärung begleitet, aber als Bestandteil einer kompletten Anlage ist seine Betriebs-sicherheit mit der Beachtung aller Richtlinien verbunden, die nach dem Einbau in die Anlage oder Maschine anwendbar sind.
Jede bestimmungswidrige Benutzung des Druckluft Vibrator ohne Befolgung der Angaben dieses Handbuchs entbindet den Hersteller von jeglicher Haftung hinsichtlich der fehlerhaften Funktion des Druckluft Vibrator.
Da es sich um Produkte handelt, die einer schnellen technischen Entwicklung unterliegen, behält es sich der Hersteller vor, die eigenen Erzeugnisse so schnell wie möglich an alle technologischen Erkenntnisse und die anwendbaren offiziellen Normen (EN, UNI) anzupassen, die von Fall zu Fall erforderlich sind.

**CERTIFICAT DE CONFORMITÉ**

L'appareillage est accompagné d'une déclaration de conformité aux directives en vigueur, mais en tant que composant devant s'intégrer dans une installation complète, sa sécurité est étro itement lié au respect de toutes les directives applicables dans l'assemblage de la machine finale.
Toute utilisation impropre du vibrateur pneumatique sans suivre les indications du présent manuel dégage le constructeur de toutes responsabilités ayant trait à un mauvais fonctionnement du vibrateur pneumatique lui-même.
Etant donnée qu'il s'agit d'une matière en forte évolution technique et réglementaire, le constructeur se réserve d'adapter avec rapidité ses propres produits manufacturés à toutes les connaissances techno logiques et les normes of ficielles applicables (EN, UNI) au fur et à mesure de leur parution.

**ATTESTATO DI CONFORMITA'**

L'apparecchiatura è accompagnata da una dichiarazione di conformità alle direttive vigenti, ma, in quanto componente da integrarsi in un impianto completo, la sua sicurezza è legata al rispetto di tutte le direttive applicabili nell'assemblamento della macchina finale.
Ogni utilizzo improprio del vibratore pneumatico senza seguire le indicazioni del presente manuale solleverà il costruttore da ogni responsabilità inerenti ad un cattivo funzionamento del vibratore pneumatico stesso.
Trattandosi di materia in forte evoluzione tecnica e normativa, il costruttore si riserva di adeguare con la massima celerità i propri manufatti a tutte le conoscenze tecnologiche e le norme ufficiali applicabili (EN, UNI) che di volta in volta si rendessero disponibili.

# OLI S.r.l.

Via Canalazzo, 35 – I - Medolla (MO)
ITALY

## CERTIFICATE OF CONFORMITY
## with the Directives of the European Union

The OLI percussion guns model
**S/OR/OT....ATEX** (Code: SX....)
are manufactured in conformity with the following directives:

- Directive "Machines" **98/37/CE** of 22nd June, 1998
- Directive "ATEX" **94/9/CE** of 23rd March, 1994

The conformity has been verified according to the conditions included in the following standard documents:

- **EN 1127-1**
- **EN 13463-1**
- **EN 292-1-2**
- **EN 1050**

**Serie S, OR, OT ⟨Ex⟩ II 3 D 85°C (T6) X**

Serie S, OR, X Tmax.=200°C (T3) Tamb. -20°C +180°C
Serie OT, X Tmax.=135°C (T4) Tamb. -20°C +120°C

This equipment must never be put into operation before the machine or plant into which it has been integrated has been declared in conformity with the Directives in force.

Medolla, 1st November, 2003
OLI S.r.l.

Adriano Marchesini
(General Manager)

# OLI S.r.l.

Via Canalazzo, 35 – I - Medolla (MO)
ITALY

## BESCHEINIGUNG DER KONFORMITÄT mit den Richtlinien der Europäischen Union

Die Familie der pneumatischen Vibratoren OLI
Modell **S/OR/OT....ATEX** (Code: SX....) wurde
konstruiert und wird gefertigt in Konformität mit den folgenden Direktiven:

- Direktive "Maschinen" **98/37/CE** vom 22. Juni 1998
- Direktive "ATEX" **94/9/CE** vom 23. März 1994

Die Konformität wurde gemäß den in den folgenden Normendokumenten enthaltenen Bedingungen verifiziert:

- **EN 1127-1**
- **EN 292-1-2**
- **EN 13463-1**
- **EN 1050**

## Serie S, OR, OT ⟨Ex⟩II 3 D 85°C (T6) X

Serie S, OR, X Tmax.=200°C (T3) Tamb. -20°C +180°C
Serie OT, X Tmax.=135°C (T4) Tamb. -20°C +120°C

Dieses Bauteil darf niemals in Betrieb genommen werden, bevor die Maschine/Anlage, in welche es eingebaut wurde, mit den Bestimmungen der geltenden Richtlinien für konform erklärt wurde.

Medolla, den 1. November 2003
OLI S.r.l.

Adriano Marchesini
(Geschäftsführer)

# OLI S.r.l.

Via Canalazzo, 35 – I - Medolla (MO)
ITALY

## CERTIFICAT DE CONFORMITE
## aux Directives de l'Union Européenne

La famille des percuteurs pneumatiques OLI
Modèle **S/OR/OT....ATEX** (Code: SX....)
a été projetée et produite en conformité aux directives suivantes:

- Directive "Machines" **98/37/CE** du 22 Juin 1998
- Directive "ATEX" **94/9/CE** du 23 Mars 1994

La conformité a été vérifiée sur la base des conditins requises par les normes ou les documents normatifs reportés de suite:

- **EN 1127-1**
- **EN 13463-1**
- **EN 292-1-2**
- **EN 1050**

**Serie S, OR, OT ⟨Ex⟩ II 3 D 85°C (T6) X**

Serie S, OR, X Tmax.=200°C (T3) Tamb. -20°C +180°C
Serie OT, X Tmax.=135°C (T4) Tamb. -20°C +120°C

Ce composant ne doit pas être mis en service tant que la machine dans laquelle il a été incorporé n'a pas été déclarée conforme aux dispositions des directives en vigueur.

Medolla, le 1 novembre 2003
OLI S.r.l.

Adriano Marchesini
(Directeur Général)

# OLI S.r.l.

Via Canalazzo, 35 – I - Medolla (MO)
ITALY

## ATTESTATO DI CONFORMITA'
## alle Direttive Della Comunità Europea

La famiglia dei vibratori pneumatici **OLI**
modello **S/OR/OT....ATEX** (Code: SX....)
è stata progettata e costruita in conformità alle direttive:

- Direttiva "Macchine" **98/37/CE** del 22 giugno 1998
- Direttiva "ATEX" **94/9/CE** del 23 marzo 1994

La conformità è stata verificata sulla base dei requisiti delle norme o dei documenti normativi riportati di seguito:

- **EN 1127-1**
- **EN 292-1-2**
- **EN 13463-1**
- **EN 1050**

**Serie S, OR, OT ⟨Ex⟩II 3 D 85°C (T6) X**

Serie S, OR, X Tmax.=200°C (T3) Tamb. -20°C +180°C
Serie OT, X Tmax.=135°C (T4) Tamb. -20°C +120°C

Il presente componente non deve essere messo in servizio prima che la macchina all'interno della quale sia stata incorporata non sia stata dichiarata conforme alle disposizioni delle Direttive vigenti.

Medolla, 1 Novembre 2003
OLI S.r.l.

Adriano Marchesini
(General Manager)

**SAFETY**
Whilst carrying out any work on the **S**, **OT** or **OR** Pneumatic Vibrators Make sure that the compressed air is shut off on any supply lines. All pipes must be tightly connected.
A pipe coming loose under pressure may cause injury. Vibrations can cause loosening of bolted connections and equipment. This may cause damage to persons and machines.
**Take note of the enclosed drawings.**

**Alterations to the unit may change the characteristics of the vibrator or even damage the unit and will cause the rejection of any warranty claims.**

**SICHERHEIT**
Sicherstellen, daß während des Einbaus oder bei Arbeiten am Vibrator und an den Zuleitungen, die Druckluft abgestellt ist. Die Schlauchleitungen müssen fest verbunden sein.
Ein unter Druck stehender, sich lösender Schlauch, kann Verletzungen verursachen. Des weiteren können Vibrationen ein Lösen der Schraubverbindungen und Geräte verursachen. Personen- und Materialschäden können die Folge sein.
**Die beiliegenden Zeichnungen sind zu beachten.**

**Veränderungen am Gerät können dessen Eigenschaften verändern bzw. dasselbe beschädigen, was zum Erlöschen aller Garantieansprüche führen kann.**

**SÉCURITÉ**
Assurez-vous, lors du montage ou de tous autres travaux effectués sur le vibrateur ou les conduites d'amenée, que l'alimentation en air comprimé est interrompue. Les flexibles doivent être solidement raccordés. Un flexible sous pression qui se détache peut provoquer des blessures. Les raccords vissés et les appareils peuvent se desserrer sous l'effet des vibrations, ce qui risque de provoquer des dommages corporels et matériels.
**Tenez compte des croquis, ci-joint.**

**Toute modification du vibrateur est susceptible d'en altérer les propriétés ou de le détruire et rend caduque tous recours en garantie entraîne l'extinction des droits de garantie.**

**SICUREZZA**
Durante l'installazione o in caso di interventi ai vibratori pneumatici **S**, **OR** o **OT**, assicurarsi di avere interrotto l'alimentazione d'aria compressa su tutte le linee. Tutti i tubi devono essere saldamente collegati.
Il distacco di un tubo sotto pressione può provocare lesioni. Le vibrazioni possono allentare i raccordi a vite e gli apparecchi, con rischio di danni a persone e macchinari.
**Prendere visione dei disegni inclusi.**

**Eventuali modifiche apportate all'unità possono variare le caratteristiche del vibratore, se non addirittura danneggiare l'unità stessa, con conseguente annullamento di qualsiasi diritto di garanzia.**

**Air Compressor**
The Air Compressor needs to be kept clean and filtered (filter <50pm). Compressed air or nitrogen of 2 to 6 bar (30 to 90 PSI) is required. **The vibrators are designed for lubrication-free operation. The life time of the S and OR vibrator will be extended with lubrication. Non-filtered air will damage the vibrators.**

**Antriebsmittel**
Saubere, gefilterte (Filter < 50µm) Druckluft oder Stickstoff (2 bis 6 bar). **Die Verwendung nicht gefilterter Luft führt zum Ausfall der Vibratoren. Alle Vibratoren können ölfrei betrieben werden, ein Nebelöler verlängert die Lebensdauer von S und OR.**

**Fluide d'entraînement**
Le fluide d'entraînement est l'air comprimé exempt d'impuretés et filtré (filtre < 50 µm), ou l'azote, sous une pression de 2 à 6 bars (30 à 90 PSI). **Les vibrateurs sont conçus pour fonctionner sans huile, un graisseur prolongera la durée de vie des S et OR.**
**L'utilisation d'air non filtré entraîne la défaillance des vibrateurs.**

**Compressore pneumatico**
Il compressore pneumatico va tenuto pulito e l'aria filtrata (filtro < 60 mm). Si richiede azoto o aria compressa alla pressione compresa tra 2 e 6 bar (da 30 a 90 PSI). **I vibratori sono progettati per l'uso esente da lubrificante. La lubrificazione prolunga la durata dei vibratori S e OR. L'impiego di aria non filtrata danneggia il vibratore.**

**Maximum operating pressure**

The maximum operating pressure must not exceed 6 bar (90 PSI).

**Max. Betriebsdruck**

Der max. Betriebsdruck darf 6 bar (90PSI) nicht überschreiten.

**Pression maximale de service**

La pression maximale de service ne doit pas dépasser 6 bars (90 PSI).

**Pressione massima d'esercizio**

La pressione massima d'esercizio non deve superare i 6 bar (90 PSI).

The **pneumatic vibrators** described in this Manual are designed and tested for use in potentially explosive areas classified as zone 22 cat. II 3 D according to directive 94/9/CE.
The powders handled must have explosiveness index St1 or St2 and this must be notified to OLI s.r.l. at the time of placing the order to allow correct selection of the component.

The user must make sure the plant in which the **pneumatic vibrator** is installed has been set in safety condition from the point of view of explosion risk before being started up, and that the "document on protection against explosions" has also been prepared as specified by Directive ATEX 99/92/CE. (This only applies to the European market).

Die **pneumatischen Vibratoren**, die in diesem Handbuch beschrieben werden, sind für den Einsatz in explosionsgefährdeter Bereichen ausgelegt und konstruiert worden, die als Zone 22 Kat. II 3 D gemäß der Richtlinie 94/9/EG klassifiziert worden sind. Die aufbereiteten Stäube müssen Staubexplosionsklasse St1 oder St2 haben und müssen der Firma OLI s.r.l. bei der Bestellung angegeben werden, um eine korrekte Auslegung des Bauteils zu ermöglichen.

Der Anwender muss sicherstellen, dass die Anlage, in welcher der **pneumatische Vibrator** installiert werden soll, hinsichtlich der Explosionsgefahr auf ausreichende Weise in einen sicheren Zustand gebracht worden ist, bevor sie in Betrieb genommen wird, und dass zudem das „Explosionsschutzdokument" verfasst worden ist, so wie es die ATEX-Richtlinie 99/92/EG vorsieht (Dies gilt nur für den europäischen Markt).

**Les vibrateurs pneumatiques** décrits dans ce manuel ont été conçus et testés pour être utilisé dans les environnement explosibles classés comme zone 22 cat. II 3 D d'après la directive 94/9/CE. Les poussières traitées doivent avoir des indices d'explosivité St1 ou St2 ; pour un choix correct du composant celles-ci doivent être indiquées à OLI s.r.l. au moment de la commande.

L'utilisateur doit contrôler, avant la mise en marche, que l'installation dans laquelle est monté le **vibrateur pneumatique** a été mise en sécurité en ce qui concerne le risque d'explosion. Il faut aussi que le "document sur la protection contre les explosions" ait été rédigé conformément à la Directive ATEX 99/92/CE (Ceci n'est valable que pour le marché européen).

**I vibratori pneumatici** descritti in questo manuale sono stati progettati e testati per un utilizzo in zone potenzialmente esplosive classificate come zona 22 cat. II 3 D secondo la direttiva 94/9/CE. Le polveri trattate dovranno avere indici di esplosività St1 o St2 e devono essere comunicate alla OLI s.r.l. al momento dell'ordine per una scelta corretta del componente.

L'utilizzatore dovrà assicurarsi che l'impianto all'interno del quale verrà installato il **vibratore pneumatico** sia stato adeguatamente messo in sicurezza da un punto di vista di rischio esplosione prima di essere avviato e che inoltre sia stato redatto il "documento sulla protezione contro le esplosioni" come previsto dalla Direttiva ATEX 99/92/CE. (Questo vale unicamente per il mercato europeo).

The caracteristic of the dusts must be communicated to OLI to allow correct sizing of the machine and safety devices.

Der behandelte Staub sollen bei der Bestellung OLI bekanz gegeben, damit das Filter und die Sicherheitsvorrichtungen korrekt ausgelegt werden können.

Les poudres traitées doivent être communiquées à la Sté OLI au moment de la commande pour dimensionner correctement la machine et les dispositifs de sécurité.

Le caratteristiche delle polveri devono essere comunicate a OLI per un corretto dimensionamento della macchina e dei dispositivi di sicurezza.

| ***POWDER* - STAUB - POUSSIÈRE - *POLVERE*** | | | | | |
|---|---|---|---|---|---|
| **Parameter - *Parameter*<br>Paramètre - *Parametro*** | | **Design value - *Auslegungswer*<br>Valeur de conception<br>*Valore di progetto*** | **Operating data - *Betriebsdaten*<br>Données de fonctionnement<br>*Valore operativo*** | | |
| | | | **min.** | **nominal** | **max.** |
| Description - *Bezeichnung* - Description - *Descrizione* | - | | | | |
| Particle size (Median, D50) - *Partikelgröße (Median, D50)*<br>Dimension particulaire (Median, D50) - *Granulometria (Median, D50)* | $_{\mu}$m | | | | |
| Kst | bar m/s | | | | |
| 5 mm layer ignition (GT) - 5 Millimeter Schichtzündung (GT)<br>5 mm d'allumage de couche (GT)<br>*Temperatura minima di ignizione di uno strato di polvere di 5 mm (GT)* | °C | | | | |
| Min. ignition temperature of dust suspension (IT)<br>*Min. Zündungtemperatur der Staubaufhebung (IT)*<br>La température d'inflammation minimale de la suspension de la poussière (IT)<br>*Temperatura minima di ignizione di polvere sospesa (IT)* | °C | | | | |
| Min. explosible concentration (LEL)<br>*Min. explosible Konzentration (LEL)*<br>Concentration explosible minimale (LEL)<br>Concentrazione minima di esplosione (LEL) | g/m$^3$ | | | | |
| Min. ignition energy (MIE) - *Min. Zündungenergie (MIE)*<br>Énergie minimale d'allumage (MIE)<br>*Energia minima di ignizione (MIE)* | mJ | | | | |
| Max. explosion pressure ($P_{max}$)<br>*Max. Explosiondruck ($P_{max}$)*<br>Pression maximale d'explosion ($P_{max}$)<br>*Pressione massima di esplosione ($P_{max}$)* | bar | | | | |
| Limiting oxygen concentration (LOC)<br>*Begrenzen von von Sauerstoffkonzentration (LOC)*<br>Limitation de la concentration d'oxygène (LOC)<br>*Concentrazione limite di ossigeno (LOC)* | % by volum | | | | |
| Specific Resistance of Product<br>*Spezifischer Widerstand des Produktes*<br>Résistance spécifique de produit *Resistenza specifica del prodotto* | GOhm*m | | | | |
| Dust Classification - *Staub-Klassifikation*<br>Classification De la Poussière - *Classificazione della polvere* | St 1 | St 2 | | St 3 | |

| **ATEX PARAMETERS - *ATEX PARAMETERS* - ATEX PARAMÈTERS - *PARAMETRI ATEX*** | | | |
|---|---|---|---|
| **Ex zone - *Ex Zone* - Ex zone - *Ex zona*** | | **Inside number - *Nummer für Innenbereich*<br>Nombre intérieur - *Numero interno*** | **Outside number<br>Nummer für Aussenbereich<br>Nombre extérieur<br>*Numero esterno*** |
| Atex category - *Atex Kategorie* - ATEX catégorie - *Categoria ATEX* | | | |
| Reduced pressure ($Pr_{ed}$) - Reduzierter Explosionsüberdruck $Pr_{ed}$)<br>*Pression réduite ($P_{red}$) - Pressione ridotta ($P_{red}$)* | bar | | |

| **GENERAL DATA - *GENERAL DATA* - DONNEES GENERALES - *DATI GENERALI*** | | | | | |
|---|---|---|---|---|---|
| **Parameter - *Parameter*<br>Paramètre - *Parametro*** | | **Design value - *Auslegungswer*<br>Valeur de conception<br>*Valore di progetto*** | **Operating data - *Betriebsdaten*<br>Données de fonctionnement<br>*Valore operativo*** | | |
| | | | **min.** | **nominal** | **max.** |
| Volumetric flow rate - *Volumenstrom - Dèbit volumétrique - Portata d'aria* | m$^3$/h | | | | |
| Bulk density - *Schüttdichte* - Densité - *Peso specifico* | kg/m$^3$ | | | | |
| Dry content - *Trockengehalt* - Humidité - Umidità | % | | | | |
| Temperature - *Temperatur* - Température - *Temperatura* | °C | | | | |
| Corrosive constituente - *Korrosive bastandteile*<br>Constituants corrosifs - *Componenti corrosivi* | - | | | | |
| pH | - | | | | |

**N.B.** in accordance with standard 94/9/CE, VDI 3673 and VDI 2263. - *gemäß Richtlinie 94/9/EG, VDI 3673 and VDI 2263.*
conformément aux normes 94/9/CE, VDI 3673 and VDI 2263 - *secondo le norme 94/9/CE, VDI 3673 and VDI 2263.*

In accordance with the Directive ATEX 94/9/CE, the manufacturer defines the outside of the pneumatic vibrator as:

**CAT. II 3 D**

**IMPORTANT: specify that the non ATEX versions must not be used in potentially explosive environments**.

The **pneumatic vibrators** are designed and constructed in such a manner as to avoid unusual overheating during operation. To operate in safe conditions, **check to make sure the powders handled have a minimum ignition temperature higher than the temperature value indicated on the code plate**.

- The **pneumatic vibrators** must be installed with sufficient clearance around to allow assembly/disassembly operations, cleaning and maintenance.

**Before carrying out any operation on the component, make sure it is in safe condition**.

**IMPORTANT**: In this Manual "**setting the component in safety condition**" will include the following operations:

- **Make sure the component is disconnected from all electric supply sources.**
- **Make sure the component is disconnected from all compressed air supply sources.**
- **The area around the component must be suitably lighted (operators can be provided with electric lights suitable for zone 22 cat. II 3 D).**

For carrying out operations on the components (maintenance and cleaning), the operators must use suitable personal protection devices (PPD):

- **Antistatic safety footwear (certified)**
- Antistatic protective clothing (certified)
- Helmet
- Antistatic cut proof gloves
- **Protective masks**

It is also necessary to use all the safety devices specified in the safety sheet of the product handled.

**NOTE: All the electrical equipment used for maintenance or cleaning operations on the outside of the component must be ATEX certified for zone 22 cat. II 3 D.**

Im Sinne der ATEX-Richtlinie 94/9/EG definiert der Hersteller die Außenumgebung des pneumatischen Klopfers als:

**KAT. II 3 D**

**WICHTIG: Die Versionen, die nicht ATEX sind, dürfen nicht in explosionsgefährdeten Bereichen arbeiten.**

**Die pneumatischen Vibratoren** sind so entwickelt und konstruiert worden, dass es während ihres Betriebs nicht zu Überhitzungen kommt. Um unter sicheren Voraussetzungen arbeiten zu können, **ist sicherzustellen, dass die aufbereiteten Stäube eine Mindestzündtemperatur haben, die unterhalb des Temperaturwerts liegt, der auf dem Typenschild steht.**

- **Die pneumatischen Vibratoren** müssen so installiert werden, dass ringsum genügend Raum zur Verfügung steht, um die normalen Arbeiten für Ein- und Ausbau, Reinigung und Wartung vornehmen zu können.

**Bevor man irgendeinen Eingriff an dem Bauteil vornimmt, ist sicherzustellen, dass es sich in einem sicheren Zustand befindet.**

**WICHTIG:** Auf den weiteren Seiten dieses Handbuchs werden wir die Ausdrucksweise „**den Bauteil in einen sicheren Zustand versetzen"** benutzen, um folgende Vorgänge anzugeben:

- **Sicherstellen, dass der Bauteil von allen elektrischen Versorgungsquellen abgetrennt ist.**
- **Sicherstellen, dass der Bauteil von allen pneumatischen Versorgungsquellen abgetrennt ist.**
- **Dafür sorgen, dass der Bereich rings um den Bauteil korrekt ausgeleuchtet wird (indem die Arbeitnehmer eventuell mit elektrischen Lampen ausgestattet werden, die für die Zone 22 Kat. II 3 D geeignet sind).**

Für jeden Eingriff, der auf dem Bauteil vorzunehmen ist (Wartungen und Reinigungen), müssen die Arbeitnehmer mit angemessenen persönlichen Schutzausrüstungen (PSA) versehen sein:

- **antistatisches unfallsicheres Schuhwerk (zertifiziert)**
- **antistatische Schutzkleidung (zertifiziert)**
- **Schutzhelm**
- **antistatische Schnittschutzhandschuhe**
- **Schutzmasken**

Außerdem sind alle Schutzvorrichtungen zu verwenden, die von dem Sicherheitsdatenblatt des behandelten Produkts vorgesehen sind.

**Anm.: Alle elektrische Ausrüstungen, die eventuell für die Wartungseingriffe und die Reinigung außerhalb des Bauteils benutzt werden, müssen für Zone 22 Kat. II 3 D nach ATEX zertifiziert sein.**

Le constructeur, aux termes de la directive ATEX 94/9/CE, définit l'extérieur du vibrateur pneumatique comme:

**CAT. II 3 D**

**IMPORTANT: Spécifier que les versions non ATEX ne doivent pas travailler dans des atmosphères explosibles.**

**Les vibrateurs pneumatiques** ont été conçus et construits de manière à ne pas provoquer d'échauffements anormaux pendant le fonctionnement. Pour travailler en condition de sécurité **il faut vérifier que les poussières traitées on une température d'inflammation minimale supérieure à la valeur de température indiqué sur la plaque signalétique**.

- **Les vibrateurs pneumatiques** doivent être installés avec autour un espace suffisant pour effectuer les opérations ordinaires de montage/démontage, nettoyage et maintenance.

**Avant d'effectuer toute intervention sur le composant vérifier que celui-ci a été mis en sécurité.**

**IMPORTANT**: Dans le présent manuel nous indiquons par "**mettre en sécurité le composant"** les opérations suivantes:

- **Contrôler si le composant est débranché de toutes les alimentations électriques.**
- **Contrôler si le composant est débranché de toutes les alimentations pneumatiques.**
- **Eclairer correctement la zone qui entoure le composant (en dotant éventuellement les opérateurs de lampes électriques appropriées pour zone 22 cat. II 3 D).**

Pour toute opération à effectuer sur le composant (entretien et nettoyage), les opérateurs doivent être munis des équipements de protection individuelle (EPI):

- **Chaussures de protection antistatiques (certifiées)**
- **Vêtements de protection antistatiques (certifiés)**
- **Casque**
- **Gants anti-coupure antistatiques**
- **Masques de protection**

Il faut aussi utiliser tous les dispositifs de protection prévus par la fiche de sécurité du produit traité.

**N.B.: Tous les appareillages électriques, utilisés pour les interventions de maintenance et de nettoyage réalisées à l'extérieur du composant doivent être certifiés ATEX pour zone 22 cat. II 3 D.**

Il costruttore, ai sensi della direttiva ATEX 94/9/CE, definisce l'esterno del vibratore pneumatico come:

**CAT. II 3 D**

**IMPORTANTE: Specificare che le versioni non ATEX non devono operare in atmosfere potenzialmente esplosive.**

**I vibratori pneumatici** sono stati progettati e costruiti in modo tale da non provocare surriscaldamenti anomali durante il funzionamento. Per poter operare in condizioni di sicurezza **occorre verificare che le polveri trattate abbiano una minima temperatura di ignizione superiore al valore di temperatura indicato sulla targhetta.**

- **I vibratori pneumatici** dovranno essere installati con uno spazio circostante sufficiente per effettuare le normali operazioni di montaggio/smontaggio, pulitura e manutenzione.

**Prima di effettuare un qualsiasi intervento sul componente assicurarsi che questa sia messa in sicurezza.**

**IMPORTANTE:** In seguito nel presente manuale indicheremo con la dicitura **"mettere in sicurezza il componente"** le seguenti operazioni:

- **Accertarsi che il componente sia scollegata da tutte le alimentazioni elettriche.**
- **Accertarsi che il componente sia scollegata da tutte le alimentazioni pneumatiche.**
- **Provvedere a illuminare correttamente la zona circostante al componente (eventualmente dotando gli operatori di lampade elettriche idonee per zona 22 cat. II 3 D.**

Per qualsiasi operazione da effettuarsi sul componente (manutenzioni e pulizia), gli operatori dovranno essere muniti degli appositi dispositivi di protezione individuale (DPI):

- **Scarpe antinfortunistiche antistatiche (certificate)**
- **Indumenti protettivi antistatici (certificati)**
- **Casco**
- **Guanti antitaglio antistatici**
- **Mascherine protettive**

Inoltre occorre utilizzare tutti i dispositivi di protezione previsti dalla scheda di sicurezza del prodotto trattato.

**N.B. Tutte le apparecchiature elettriche eventualmente utilizzate per interventi manutentivi o di pulizia eseguiti all'esterno componente devono essere certificate ATEX per zona 22 cat. II 3 D.**

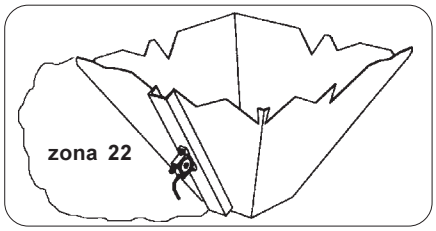

**Noise level**
Depending on the type of vibrator and air pressure the noise level is 75-85 dB(A) (with silencer). If the air pressure is lower, the noise level is also lower. We recommend in order to avoid unnecessary noise for the environment, the vibrators should not be operated without a silencer.

NOTE
- The employer must take the necessary measures in the work area to reduce to the minimum the risk deriving from daily exposure to noise.

**Betriebsgeräusche**
Je nach Typ (mit Schalldämpfer) und 6 bar Luftdruck bei 75 - 85 dB(A), bei geringerem Luftdruck weniger. Ein Betrieb ohne Schalldämpfer ist nicht empfehlenswert, um die Lärm-Umweltbelastung so gering wie möglich zu halten.

ANM.:
- Der Arbeitgeber muss im Betrieb alle technischen Maßnahmen durchführen, um Gefahren, die sich aus der täglichen Lärmexposition ergeben, auf ein Minimum zu reduzieren.

**Niveau de bruit**
En fonction du type de vibrateur (avec silencieux) et pour une pression de 6 bars,( 90 PSI) le niveau de bruit est compris entre 75 et 85 dB(A). Il est plus faible quand la pression est moindre. Ne pas faire fonctionner le vibrateur sans silencieux pour ne pas provoquer des nuisances sonores inutiles.

REMARQUE:
- L'employeur doit mettre en oeuvre, dans le milieu de travail, les mesures techniques appropriées pour limiter au minimum les risques dérivants de l'exposition journalière au bruit.

**Rumorosità**
A seconda del tipo di vibratore e della pressione dell'aria, il livello di rumorosità sarà pari a 75-85 dB(A) (con silenziatore). In caso di pressione dell'aria inferiore, anche la rumorosità risulterà ridotta. Al fine di evitare rumori inutili nell'ambiente, si raccomanda di azionare sempre il vibratore provvisto di silenziatore.

NOTA
- Il datore di lavoro dorà attuare, nell'ambiente di lavoro, le misure tecniche adeguate per ridurre al minimo i rischi derivanti dall'esposizione giornaliera al rumore.

**Permissible operating conditions**
Permissible temperature range:
S/OR -20°C to +200°C
OT -20°C to +120°C

**S** and **OR** require heat resistant hose nipples and silencers for temperatures above 120°C (272°F)
**OT Vibrators may be operated inside liquids if the exhaust air is piped into the atmosphere.**

**Zulässige Betriebsbedingungen**
Betriebstemperaturen
S / OR -20°C bis 200°C
OT -20°C bis 120°C.

**S**-und **OR**-Vibratoren Betriebstemperaturen über 120°C erfordern den Einsatz von Anschlußtüllen und Schalldämpfern in temperaturbeständiger Ausführung. Sofern vorhanden, den Nebelöler einstellen (2-5 Tropfen/h).
**OT-Vibratoren**
**Der Betrieb in Flüssigkeiten erfordert die Abführung der Druckluft an die Atmosphäre.**

**Conditions de service admissibles**
Températures admissibles:
S/OR -20° C à 200° C
OT -20° C à 120° C

Pendant le fonctionnement la plage de température admissible de -20°C à +120°C ne doit pas être dépassé. Des températures d'utilisation entre 120°C et 200°C nécessitent des raccords et des silencieux appropriés.
**Pour l'utilisation des OT sous l'eau l'échappement doit se faire a l'air libre**

**Condizioni d'esercizio ammesse**
Range di temperatura ammesso:
S/OR da -20°C a +200°C
OT da -20°C a +120°C

In caso di temperature superiori a 120°C (272°F), i vibratori **S** e **OR** dovranno essere dotati di silenziatori e raccordi per flessibili resistenti al calore.
**I vibratori OT possono essere azionati all'interno di liquidi purché l'aria di scarico sia convogliata nell'atmosfera.**

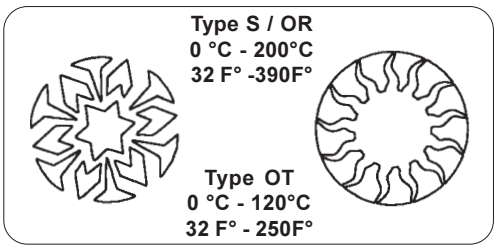





**Features of powders - *Eigenschaften der stäube*- Caracteristiques des poussières - *Caratteristiche delle polveri***

| | Powders - *Staub* Poussières - *Polveri* St 1 | Powders - *Staub* Poussières - *Polveri* St 2 |
|---|---|---|
| **MINIMUM IGNITION ENERGY (mj) WITHOUT INDUCTANCE** *ZÜNDENERGIE* **(mj)** *OHNE INDUKTANZ* **ENERGIE D'INFLAMMATION MINIMUM (mj) SANS INDUCTANCE** *MINIMA ENERGIA DI IGNIZIONE* **(mj)** *SENZA INDUTTANZA* | > 3 | > 3 |
| **MINIMUM IGNITION TEMPERATURE (°C) MIT** *TIEFSTE ZÜNDTEMPERATUR (°C) MIT* **TEMPERATURE MINIMUM D'INFLAMMABILITE' (°C) MIT** *MINIMA TEMPERATURA DI IGNIZIONE (°C) MIT* | ≥ 200 | ≥ 200 |
| **IGNITION TEMPERATURE OF POWDER LAYER DEPOSITED (°C) L.I.T.** *ZÜNDTEMPERATUR DER ABGELAGERTEN STAUBSCHICHT (°C) L.I.T.* **TEMP. D'INFLAMMATION DE LA COUCHE DE POUSSIÈRE DÉPOSÉE (°C) L.I.T.** *TEMPERAURA DI IGNIZIONE DELLO STRATO D POLVERE DEPOSITATO (°C) L.I.T.* | ≥ 200 | ≥ 200 |
| **MAXIMUM EXPLOSION PRESSURE (bar)** *HÖCHSTER EXPLOSIONSDRUCK (bar)* **PRESSION MAXIMUM D'EXPLOSION (bar)** *MASSIMA PRESSIONE DI ESPLOSIONE (bar)* | ≤ 9 | ≤ 9 |
| **REACTIVITY PARAMETER KST (bar m/s)** *REAKTIVITÄTSPARAMETER KST (bar m/s)* **PARAMÉTRE DE RÉACTIVITÉ KST (bar m/s)** *PARAMETRO DI REATTIVITA' KST (bar m/s)* | < 300 | < 300 |
| **SURFACE RESISTIVITY (Ω m)** *OBERFLÄCHENWIDERSTAND* **(Ω m)** **RÉSISTIVITÉ SUPERFICIELLE (Ω m)** *RESISTIVITA' SUPERFICIALE* **(Ω m)** | $< 1 \times 10^{12}$ | $< 1 \times 10^{12}$ |

OLI S.r.l provides a 12-month warranty on their products. This period starts from the date of the consignment note.
The warranty is not applicable for breakage and/or defects caused by incorrect installation or use, or incorrect maintenance, or modifications not authorized by the Manufacturer.
The warranty does not extend to parts that wear out following normal use and electrical components.
The warranty elapses if the pneumatic vibrator:
- has been tampered with or modified,
- has not been used correctly,
- has been used without respecting the limits indicated in this manual and/or has been subjected to excessive mecha nical stress,
- has not been subjected to the necessary maintenance or these operations have been carried out partly and/or incorrectly,
- has been damaged due to carelessness during transport, installation and use,
- has been fitted with spare parts that are not original.

On receiving the product, the user must check these for defects deriving from transport and/or incomplete supply.
Defects, damage or incom pleteness of the supply must be immediately communicated to the Manufacturer in writing and countersigned by the haulage transporter.

OLI S.r.l. gewährt auf ihre Erzeugnisse eine Garantie von 12 Monaten. Die Garantiezeit beginnt mit dem Datum des Lieferscheins.
Die Garantie ist nicht anwendbar, wenn es sich um Schäden und/oder Defekte handelt, die auf falschem Einbau oder Gebrauch, nicht korrekter Wartung oder Änderungen beruhen, die ohne die Genehmigung des Herstellers ausgeführt wurden.
Die Garantie deckt keine Teile ab, die infolge des normalen Gebrauchs verschleißen, und auch keine elektrischen Teile.
Genauer geagt verfällt die Garantie in folgenden Fällen:
- Das Druckluft Vibratoren wurde manipuliert oder abgeändert;
- wurde nicht angewandt;
- bei seinem Gebrauch wurden die in diesem Handbuch genannten Einsatzbeschränkungen nicht beachtet und/oder es wurde zu starken mechanischen Belastun gen ausgesetzt;
- er wurde nicht der erforderlichen Wartung unterzogen oder diese wurde nur teilweise und/oder nicht korrekt ausgeführt;
- es wurde beschädigt, weil Transport, Einbau oder Gebrauch ohne die erforderliche Sorgfalt vorgenommen wurden;
- es wurden keine Original-Ersatzteile verwendet.

Beim Empfang der Ware hat der Empfänger sicherzustellen, dass die Ware keine durch den Transport verursachten Schäden oder Defekte aufweist, und/ oder dass der Lieferumfang vollstän-dig ist.
Etwaige Defekte, Schäden oder Fehlmengen sind mittels schriftlicher und vom Frachtführer gegengezeichneter Mitteilung sofort dem Hersteller zu melden.

La Société OLI S.r.l reconnaît une période de 12 mois de garantie sur les produits de sa fabrication. La période prend effet à compter de la date indiquée sur le bon de livraison.
La garantie ne s'applique pas à la suite de ruptures et/ou de défauts provoqués par un montage et une utilisation impropre, des entretiens qui ne sont réalisés correctement ou des modifications apportées sans autorisation du constructeur.
La garantie s'étend aux pièces qui s'usent à la suite d'une utilisation normale et aux parties électriques.
Plus précisément la garantie est sans effet si le vibrateurs pneumatique :
- a été manipulé ou modifié,
- a été utilisé de manière incor recte,
- a été utilisé sans respecter les limites indiquées dans la présen te notice et/ou qu'il a été soumis à des contraintes mécaniques excessives
- il n'a pas été soumis aux entretiens nécessaires ou que ces opérations ont été effectuées partiellement, de manière incom plète ou incorrecte
- a subit des dommages par négligence pendant le transport, la mise en place et l'utilisation,
- a été réparé avec des pièces qui ne sont pas d'origine.

Dès réception de la marchan dise, le destinataire doit vérifier que celle-ci n'a pas de défauts ou subit de dégâts dus au tran sport et que la fourniture n'est pas incomplète.
Tout défaut, dommage ou four niture incomplète doit immédia tement être signalée au construc teur par communication écrite et contresignée par le tran sporteur.

La OLI S.r.l riconosce un periodo di 12 mesi di garanzia sui prodotti di propria costruzione. Il periodo decorre dalla data della bolla di consegna.
La garanzia non è applicabile a seguito di rotture e/o difetti causati da errata installazione o utilizzo, oppure da manutenzioni non corrette o modifiche apportate senza autorizzazione del costruttore.
La garanzia non si estende alle parti che si logorano in seguito al normale uso e alle parti elettriche.
A miglior precisazione la garanzia decade nei casi in cui il vibratore pneumatico:
- sia stato manomesso o modificato,
- sia stato utilizzato non correttamente,
- sia stato utilizzato non rispettando i limiti indicati nel presente manuale e/o sia stato sottoposto ad eccessive sollecitazioni meccaniche,
- non sia stato sottoposto alle necessarie manutenzioni o queste siano state eseguite solo in parte e/o non correttamente,
- abbia subito danni per incuria durante il trasporto, l'installazione e l'utilizzo,
- siano state inserite parti di ricambio non originali.

Al ricevimento del prodotto, il destinatario deve verificare che lo stesso non presenti difetti o danni derivanti dal trasporto e/o incompletezza della fornitura.
Eventuali difetti, danni o incompletezza vanno immediatamente segnalati al costruttore mediante comunicazione scritta e controfirmata dal vettore.

**TRANSPORT**

When the filter is delivered, make sure that the type and quantity of the materials consigned comply with the information on the order confirmation.
Immediately inform the haulage contractor in writing if damage is discovered, using the relative space on the consignment form.
The driver is obliged to accept the complaint and to issue you with a copy. If the filter has been supplied carriage forward, either sent your complaint to us or straight to the haulage contractor. Damages will only be reimbursed if you have notified the matter on receipt of the goods.
Prevent all type of damage during the unloading and handling operations.
Always bear in mind you are dealing with mechanical equipment which must be treated with care.

**TRANSPORT**

Bei Erhalt der Ware sicherstellen, ob Typ und Menge mit den Daten auf der Bestellung übereinstimmen.
Etwaige Transportschäden sind sofort auf dem Schriftwege zu melden, und zwar durch Eintragen auf dem Lieferschein.
Der Fahrer ist verpflichtet, diese Reklamation anzunehmen und Ihnen eine Kopie davon auszuhändigen. Wenn die Lieferung frei Haus erfolgt, senden Sie Ihre Reklamation an uns, andernfalls direkt an den Frachtführer. Die Entschädigung erfolgt nur, wenn der Schaden gleich bei Empfang der Ware gemeldet wird.
Vermeiden Sie jede Art der Beschädigung beim Abladen und Bewegen.
Immer berücksichtigen, daß es sich um mechanische Elemente handelt, die mit Vorsicht zu behandeln sind.

**TRANSPORT**

Au moment où vous recevez la machine, vérifiez si la typologie et la quantité correspondent bien aux données qui se trouvent sur la confirmation de la commande.
Si vous constatez des dommages, vous devez immédiatement le déclarer en l'écrivant dans l'emplacement réservé à cet effet sur la lettre de voiture.
Le chauffeur est obligé d'accepter votre réclamation et de vous en laisser une copie. Si la fourniture a été livrée franco destination, envoyez-nous votre réclamation, sinon envoyez-la directement au transporteur.
Vous ne pourrez être remboursé des dommages et intérêts que si vous avez déclaré le dommage au moment où vous avez reçu la machine. Faites bien attention à ne pas abîmer la machine durant son déchargement et sa manutention.
Rappelez-vous qu'il s'agit de matériel mécanique qui doit être déplacé avec le plus grand soin.

**TRASPORTO**

Al ricevimento della merce controllare se la tipologia e la quantità corrispondono con i dati della conferma d'ordine.
Eventuali danni devono essere fatti presenti immediatamente per iscritto nell'apposito spazio della lettera di vettura.
L'autista è obbligato ad accettare un tale reclamo e lasciarne una copia a Voi. Se la fornitura è franco destino, inviate il vs. reclamo e noi, altrimenti direttamente allo spedizioniere. Il risarcimento avviene soltanto se avete fatto presente il danno all'atto del ricevimento.
Evitate ogni tipo di danneggiamento durante lo scarico e le movimentazioni.
Tenete conto che si tratta di materiale meccanico che deve essere movimentato con cura.

**PACKING**

NOTE:
It is the installer's responsibility to dispose off the packaging in a suitable manner, in compliance with existing legislation.

**PACKUNG**

N.B.:
Der Anlagenaufsteller ist dafür verantwortlich, das Verpackungsmaterial auf angemessene Art und in Übereinstimmung mit den einschlägigen, geltenden Gesetzen zu entsorgen.

**EMBALLAGE**

N.B.:
L'installateur doit, à ses frais, éliminer les emballages de manière adéquate et conformément aux lois en vigueur en la matière.

**IMBALLO**

N.B.:
è a cura dell'installatore smaltire gli imballi in modo adeguato e secondo le leggi vigenti in materia.

**1)STORAGE PRIOR TO INSTALLATION**
- Avoid damp, salty environments, if possible.
- Place the component on wooden platforms and store it protected from unfavourable weather conditions.

**2)PROLONGED MACHINE SHUTDOWNS AFTER ASSEMBLY**
- Before starting up the component, set it in safety status.
- Before starting up the component, check the condition of the electric and pneumatic system and all parts for which long shutdowns may affect working.

**3) POSSIBLE REUSE AFTER PERIODS OF INACTIVITY**
- During component halts, avoid-damp, salty environments.
- Place the component on wooden platforms and store it protected from unfavourable weather conditions.
- Set the component in safety status before starting it up.
- Before starting up the component, check the condition of the electric and pneumatic systems and all parts for which long shutdowns may affect working.
- Before starting up the component, clean it thoroughly by following the indications on the powder safety sheet.
- If the component operates in conditions and with materials different from the previous application, check the compatibility of this use according to the indications in the INDICATIONS FOR USE section.

**1) EINLAGERUNG VOR DEM EINBAU**
- Feuchte und salzhaltige Luft für die Einlagerung vermeiden.
- Den Bauteil auf einer Holzpalette setzen und vor Witterung schützen.

**2) LÄNGERE BETRIEBSRUHE NACH DEM EINBAU**
- Vor der Inbetriebnahme ist der Bauteil in einen sicheren Zustand zu bringen.
- Vor der Inbetriebnahme des Bauteils die elektrische und pneumatische Anlage und alle Teile, deren Funktionstüchtigkeit die bei einem längeren Stillstand in Frage gestellt werden könnte, prüfen.

**3) MÖGLICHE WIEDERVERWENDUNG NACH EINEM LÄNGEREN STILLSTAND**
- Während des Stillstands des Bauteils Räume mit feuchter und salzhaltiger Luft vermeiden.
- Den Bauteil auf eine Holzpalette setzen und vor Witterung schützen.
- Vor der Inbetriebnahme ist der Bauteil in einen sicheren Zustand zu bringen.
- Vor der Inbetriebnahme des Bauteils die elektrische und pneumatische Anlage und alle Teile, deren Funktionstüchtigkeit die bei einem längeren Stillstand in Frage gestellt werden könnte, prüfen.
- Vor der Inbetriebnahme des Bauteils ist ein vollständiger Abreinigungszyklus vorzunehmen, wobei das zu beachten ist, was auf dem Sicherheits-Datenblatt des entsprechenden Erzeugnisses steht.
- Wenn der Bauteil unter Bedingungen oder mit Material betrieben wird, das vom vorherigen Einsatz abweicht, ist die Verträglichkeit für den neuen Einsatz mit den BEDIENSUNGSANLEITUNG zu vergleichen.

**1) EMMAGASINAGE AVANT LA MISE EN PLACE**
- Si possible éviter les locaux humides et les saumâtres
- Placer le composant sur des palettes en bois et les ranger à l'abri des intempéries.

**2) ARRÊT MACHINE PROLONGÉ APRÈS LE MONTAGE**
- Avant la mise en service mettre le composant en sécurité.
- Avant la mise en service du composant contrôler l'intégrité de l'équipement électrique et de toutes les parties pour lesquelles un arrêt prolongé pourrait compromettre le fonctionnement.

**3) RÉ-UTILISATION APRÈS UNE PÉRIODE D'INACTIVITÉ**
- Pendant la période d'inactivité du composant éviter les locaux humides et saumâtres
- Placer le composant sur des palettes en bois et les ranger à l'abri des intempéries.
- Avant la mise en service mettre le composant en sécurité
- Avant la mise en service du composant contrôler l'intégrité de l'équipement électrique et de toutes les parties pour lesquelles un arrêt prolongé pourrait compromettre le fonctionnement.
- Avant la mise en service du composant effectuer un cycle complet de nettoyage en respectant ce qui est indiqué sur la fiche de sécurité de la poussière.
- Si le composant travaille dans des conditions et avec des matières différentes de l'application précédente, vérifier la compatibilité de cette utilisation d'après ce qui est indiqué dans la section MODE D'EMPLOI.

**1) IMMAGAZZINAGGIO PRIMA DELL'INSTALLAZIONE**
- Evitare possibilmente ambienti umidi e salmastri.
- Sistemare il componente su pedane di legno e locarle al riparo dalle intemperie.

**2) FERMO COMPONENTE PROLUNGATO DOPO IL MONTAGGIO**
- Prima della messa in servizio mettere in sicurezza il componente.
- Prima della messa in servizio del componente controllare l'integrità dell'impianto elettrico, pneumatico, e di tutte le parti per le quali un prolungato arresto potrebbe compromettere la funzionalità.

**3)POSSIBILE REIMPIEGO DOPO PERIODO DI INATTIVITA'**
- Durante il fermo componente evitare ambienti umidi e salmastri.
- Sistemare il componente su pedane di legno e locarle al riparo dalle intemperie.
- Prima della messa in servizio mettere in sicurezza il componente.
- Prima della messa in servizio del componente controllare l'integrità dell'impianto elettrico, pneumatico, e delle parti per le quali un prolungato arresto potrebbe compromettere la funzionalità.
- Prima della messa in servizio del componente eseguire un ciclo completo di pulizia rispettando quanto riportato sulla scheda di sicurezza della polvere.
- Se il componente opera in condizioni e con materiali diversi dall'applicazione precedente, verificare la compatibilità di tale utilizzo secondo quanto riportato nel sezione INDICAZIONE PER L'USO.

NOTE
The pneumatic vibrator must be positioned in such a manner that:
- the area around the pneumatic vibrator must be made safe as per Directive ATEX 94/9/CE.

By safe place is meant an outside area in which suitable warning notices are present during the working of the pneumatic vibrator, see Sect. 26 residual risks, and where there are no plant parts that can get damaged or inflammable material deposit.

**INSTALLATION**
The unit must be fastened to a clean and level surface with two fastening screws (for screw size and tightening torque see table).
Use self-locking screw retention washers (no spring washers).
Use self-locking nuts or e.g. Loctite 270 against loosening.

**It is highly recommended to use a reinforcement section (U-section) as substructure. This reinforcement section should be welded to the object. This allows optimal transfer of the vibration energy - and saves any direct damage to the object.**

**ASSEMBLY INSTRUCTIONS:**
The frame on which the pneumatic vibrator is mounted must be in equipotential.
The vibrator must be fixed to the frame by means of bolts and washers; the toothed washer (UNI8842) must be fitted in contact with the body.
The wire terminal must be connected to an earth wire.
**Checklist for Assembly and Commissioning:**
1) Install the unit carefully. Secure the fastening screws.
2) Install service unit (filter, regulator), valve and supply line.
3) If necessary install lubricator and adjust oil flow (2 to 5 drops an hour) .
4) Check: Are fastening screws secured?
   Have notes on hose length and nominal width been observed?

ANM
Der pneumatische Vibrator muss so angeordnet werden, dass:
- der Bereich rings um den pneumatischen Vibrator gemäß der Richtlinie ATEX 94/9/EG sicher gestaltet ist.

Unter einem sicheren Ort versteht man einen Außenbereich, in dem während des Betriebs des pneumatischen Klopfers eine entsprechende Beschilderung angebracht ist. Siehe Teil 26 Restrisiken. Außerdem dürfen keine Anlagenteile vorhanden sein, die beschädigt werden könnten, oder Lager mit entflammbaren Materialien.
**EINBAU**
Der Einbau erfolgt mittels zweier Befestigungsschrauben. Die Oberfläche muß sauber und eben sein (Schraubengröße und Anzugsmomente: siehe Tabelle).
Selbstsichernde Unterlegscheiben, jedoch keine Federringe verwenden.
Selbstsichernde Muttern gegen Lösen oder aber z.B. Loctite 270 verwenden.

**Besonders zu empfehlen ist ein Versteifungsprofil (U-Stahl) als Unterbau. Das Versteifungsprofil muß an das zu vibrierende Objekt angeschweißt werden. Dadurch wird die Vibrationsenergie optimal übertragen.**

**MONTAGEANLEITUNGEN:**
Die Struktur, auf welcher der pneumatische Vibrator installiert ist, muss Potentialausgleich haben.
Der Vibrator muss mit den dafür bestimmten Schrauben und Unterlegscheiben an der Struktur befestigt werden. Die Zahnscheibe (UNI8842) muss im Kontakt mit dem Gehäuse montiert werden. Die Kabelöse muss an einem Erdungskabel angeschlossen werden.
**Checkliste für Montage und Inbetriebnahme**
1) Geräte sorgfältig montieren. Befestigungsschrauben sichern.
2) Wartungseinheit (Filter, Regler), Ventil, Zuleitung einbauen.
3) Ggfls. Nebelöler einstellen (2-5 Tropfen/h) und Abluft ableiten.
4) Prüfen, ob Befestigungsschrauben gesichert sind und Angaben über Schlauchlänge und Nennweite beachtet wurden.

REMARQUE
Le vibrateur pneumatique doit être mis en place en respectant les règles suivantes :
- la zone tout autour du vibrateur pneumatique doit être mise en sécurité conformément à la directive ATEX 94/4/CE.

Par lieu sûr on entend une zone extérieure dans laquelle, pendant le fonctionnement du vibrateur pneumatique, sont apposés des panneaux de signalisation appropriés (voir sect. 26 risques résiduels). En outre il ne doit pas y avoir de parties d'installation endommageables ou des dépôts de matières inflammables.
**MONTAGE**
Le montage est réalisé par deux vis de fixation sur une surface propre et plane (taille des vis et couple de serrage, voir tableau) et avec des rondelles d'arrêt autobloquantes (pas de rondelles ressorts). Contre le desserrage, utilisez des écrous indesserrables ou un agent liquide antidesserrage, par ex. Loctite 270.

**Nous recommandons de prévoir comme support un profilé de raidissement (fer U) soudé sur l'objet à vibrer, ce qui permet une transmission optimale de l'énergie de vibration.**

**INSTRUCTIONS DE MONTAGE:**
La structure sur laquelle est monté le vibrateur pneumatique doit être en équipotentialité.
Le vibrateur doit être fixé à la structure au moyen de vis et de rondelles; la rondelle crantée (UNI8842) doit être montée en contact avec le corps. La cosse doit être branchée à un câble de mise à la terre.
**Check-list de montage et de mise en service** :
1) Monter soigneusement l'appareil, serrer et bloquer les vis de fixation.
2) Monter l'unité de conditionnement (filtre, régulateur), la vanne, la conduite d'amenée.
3) En cas de nécessité, régler le graisseur.
4) Vérification: Les vis de fixation sont-elles freinées ?
   La longueur des flexibles et leur diamètre nominal ont-elles été respectées ?

NOTA
Il vibratore pneumatico, deve essere posizionato in modo che:
- la zona circostante al vibratore pneumatico deve essere resa sicura come da direttiva ATEX 94/9/CE.

Per luogo sicuro s'intende una zona esterna nella quale durante il funzionamento vibratore pneumatico, sia apposta l'adeguata cartellonistica, vedi sez.26 rischi residui, inoltre non siano presenti parti d'impianto danneggiabili o depositi di materiali infiammabili.

**INSTALLAZIONE**
- Fissare l'unità ad una superficie piana e pulita utilizzando due viti di serraggio (per la misura delle viti e la coppia di serraggio si veda la tabella).
- Utilizzare rondelle d'arresto autobloccanti (non utilizzare rondelle elastiche). Per evitare che le rondelle si allentino, utilizzare dadi antobloccanti o Loctite 270.

**Si raccomanda di impiegare come sottostruttura un profilato di rinforzo (sezione a U), da saldare all'oggetto in lavorazione. Ciò consente il trasferimento ottimale dell'energia vibrante, preservando l'oggetto da eventuali danneggiamenti.**

**ISTRUZIONI PER IL MONTAGGIO :**
La struttura su cui è montato il vibratore pneumatico deve essere in equipotenzialità.
Il vibratore deve essere fissato alla struttura mediante le apposite viti e rondelle; la rondella dentata (UNI8842) deve essere montata a contatto con il corpo.
Il capicorda deve essere collegato ad un cavo per la messa a terra.
**Checklist per montaggio e messa in funzione**:
1) Installare l'unità con precauzione. Serrare le viti di fissaggio.
2) Installare l'unità di servizio (filtro, regolatore), la valvola e la linea di alimentazione.
3) Se necessario, installare il lubrificatore e regolare il flusso d'olio (da 2 a 5 gocce all'ora).
4) Controllare: Le viti di fissaggio sono serrate?
   Sono state rispettare le indicazioni relative alla lunghezza del tubo e allo spessore nominale?

| Type | Thread<br>*Gewinde*<br>Filetage<br>*Filetto* | Tightening torque<br>*Anzugsmoment*<br>Couple de serrage<br>*Coppia di serraggio* | Supply line thread<br>*Anschlußgewinde*<br>Filetage<br>*Filettatura ingresso aria* | Supply line diameter<br>*Zuleitung*<br>Conduite d'amenée<br>*ø Nominale tubo alimentazione* |
|---|---|---|---|---|
| **S8 - S10** | M 6 | 10.4 Nm | 1/8" | DN 6 |
| **S13 - S16 - S20 - S25** | M 8 | 25.0 Nm | 1/4" | DN 10 |
| **S30 - S36** | M 10 | 51.0 Nm | 3/8" | DN 12 |
| **OR50** | M 6 | 10.4 Nm | 1/8" | DN 6 |
| **OR65** | M 8 | 25.0 Nm | 1/4" | DN 10 |
| **OR80** | M 10 | 51.0 Nm | 1/4" | DN 12 |
| **OR100** | M 12 | 85.0 Nm | 3/8" | DN 12 |
| **OT8 - OT10 - OT105** | M 6 | 10.4 Nm | 1/8" | DN 6 |
| **OT13 - OT16 - OT165** | M 8 | 25.0 Nm | 1/4" | DN 8 |
| **OT20 - OT25 - OT255** | M 8 | 25.0 Nm | 1/4" | DN 10 |
| **OT30 - OT36 - OT365** | M 10 | 51.0 Nm | 3/8" | DN 12 |

- The user is entirely responsible if the pneumatic vibrator is installed in any way other than that indicated above.
- The component does not require special lighting; the component installer is however responsible for ensuring uniform lighting in the area on the basis of the indications of the relevant regulation.
- It is the installer's responsibility to check the suitability of the site for plant installation.
- Depending on the assembly height, the necessary Personal Protection Devices (PPD) must be provided.

- Positionierungen des pneumatischen Vibrators, die von denen abweichen als oben angegeben sind, führen dazu, dass die gesamte Verantwortlichkeit auf den Anwender übergeht.
- Der Bauteil braucht keine besondere Beleuchtung. Der Monteur des Bauteils ist auf jeden Fall dazu angehalten, das Vorhandensein einer gleichmäßigen Ausleuchtung des Bereichs zu gewährleisten, so wie es die geltenden Bestimmungen angeben.
- Der Monteur ist dafür verantwortlich, die Eignung des Raums zu prüfen, in dem die Anlage aufgestellt wird.
- Je nach der Einbauhöhe sind angemessene PSA (persönliche Schutzausrüstungen) bereitzustellen.

- Tout positionnement différent du vibrateur pneumatique rend l'utilisateur entièrement responsable.
- Le composant n'exige pas un éclairage particulier; l'installateur du composant doit assurer la présence d'un éclairage approprié dans la zone sur la base des indications de la réglementation concernée.
- L'installateur doit vérifier la conformité du site qui accueille l'installation.
- En fonction de la hauteur de montage prévoir les DPI (dispositifs de protection individuelle) nécessaires.

- Posizionamenti del vibratore pneumatico diversi da quanto sopra indicato determinano la totale assunzione di responsabilità da parte dell'utilizzatore.
- Il componente non necessita di un'illuminazione particolare; l'installatore del componente è comunque tenuto ad assicurare la presenza di un'omogenea illuminazione nell'area in base alle indicazioni della normativa pertinente.
- E' a carico dell'installatore verificare l'idoneità del sito che ospiterà l'impianto.
- In funzione dell'altezza di montaggio predisporre i DPI (dispositivi di protezione individuali) necessari".

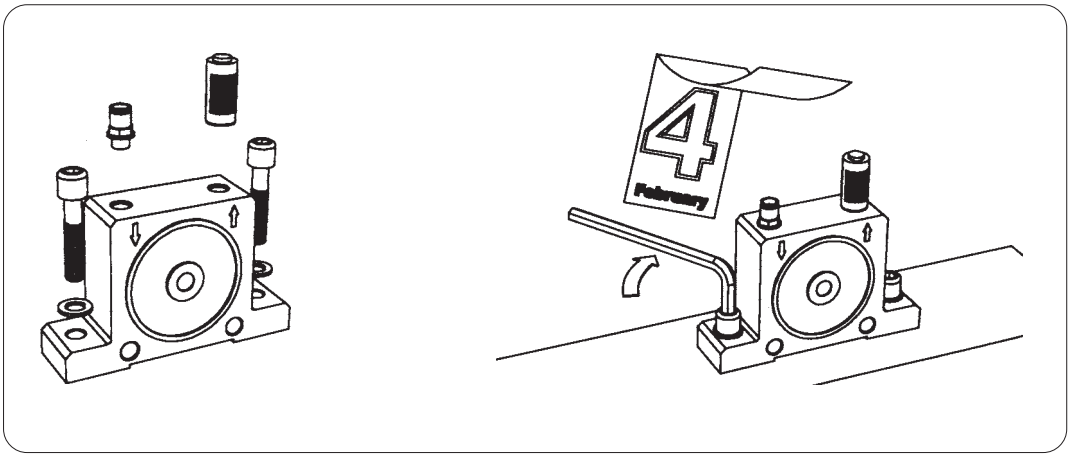


| NOTE | ANM.: | REMARQUE | NOTA |
|---|---|---|---|
| Check the earth connection. | Die Erdung prüfen. | Vérifier la mise à la terre. | Verificare la messa a terra. |

**COMPRESSED AIR REQUISITES**
The compressed air supplied to the various utilities must have certain special features:
1) **clean**: free of scale which could damage the solenoid valves present on the pneumatic actuator.
2) **dehumidified**: use of a condensate trap is advisable.
3) **lubricated**: Specify the models that require lubrication and those that do not (Tables Data)

**Attention**: before connecting the compressed air to the pneumatic actuator utilities, empty the pipes

**ANFORDERUNGEN AN DIE DRUCKLUFT**
Die Druckluft, die verschiedene Verbraucher versorgen muss, muss folgende Eigenschaften haben:
1) **rein:** sie darf keine Teilchen enthalten, mit denen die Magnetventile des pneumatischen Antriebs beschädigt werden könnten.
2) **trocken:** Die Verwendung eines Kondensatabscheiders ist empfehlenswert.
3) **geschmiert:** Die Modelle benutzen, die Schmierung brauchen bzw. nicht (Daten der Tabellen).

**Achtung.** Vor dem Anschließen der Druckluft an die Verbraucher des pneumatischen Antriebs sind die Leitungen zu entleeren.

**AIR COMPRIMÉ REQUIS**
L'air comprimé qui doit alimenter les différentes utilisations doit avoir les requis suivants :
1) **Propre**: sans impuretés pouvant endommager les électrovannes présentes sur le percuteur pneumatique.
2) **Déshumidifié**: il convient de prévoir l'utilisation d'un séparateur d'eau de condensation.
3) **Lubrifié**.

**Attention**: avant de brancher l'air comprimé aux utilisations du vibrateur pneumatique vider les tuyauterie

s.

**REQUISITI ARIA COMPRESSA**
L'aria compressa che deve alimentare le varie utenze ha bisogno di particolari caratteristiche:
**1) pulita:** esente da scorie che potrebbero danneggiare le elettrovalvole presenti sull'attuatore pneumatico.
**2) deumidificata:** è opportuno prevedere l'utilizzo di un separatore di condensa.
**3) lubrificata:** Inserire i modelli che richiedono lubrificazione e quali no. (Dati tabelle)

**Attenzione:** prima di collegare l'aria compressa alle utenze dell'attuatore pneumatico vuotare le tubazioni.

**PNEUMATIC CONNECTION**
**Supply line**
The air resistance increases with the length of the pipe. For pipe lengths of up to 3m then the minimum length is required for the following cross section. For longer supply lines it is recommended to use bigger cross sections.
**Air discharge**
If the air flowing out is discharged and the vibrator is at full power, the discharge pipe must have a bigger nominal width than the supply pipe.

**PNEUMATISCHE ANSCHLÜSSE**
**Zuleitung**
Der Luftwiderstand steigt mit der Schlauchlänge. Bei Schlauchlängen bis max. 3 m bis zum nächstgrößeren Leitungsquerschnitt sind die in der Tabelle angegebenen Mindestquerschnitte zu empfehlen.
Für längere Zuleitungen sollten die Querschnitte größer sein.
**Ableitung**
Wenn die austretende Luft abgeführt wird und der Vibrator die volle Leistung erzielen soll, so muß der Ableitungsschlauch eine größere Nennweite haben als der Zuleitungsschlauch.

**RACCORDEMENTS PNEUMATIQUES**
**Conduite d'amenée**
La résistance de l'air augmente avec la longueur des flexibles. Avec des flexibles d'une longueur maximum de 3 m, nous recommandons les sections figurant dans le tableau. Pour les conduites d'amenée plus longues, nous recommandons des sections plus importantes.
**Conduite d'évacuation**
Si l'air sortant est évacué, il est nécessaire que le flexible d'évacuation présente un diamètre supérieur à celui de la conduite d'amenée d'air.

**COLLEGAMENTI PNEUMATICI**
**Linea di alimentazione**
La resistenza dell'aria aumenta con la lunghezza del tubo. In caso di tubi fino a 3 metri di lunghezza, si raccomandano le sezioni minime indicate in tabella. Per tubi di lunghezza superiore, si consiglia di utilizzare sezioni maggiori.
**Scarico dell'aria**
In caso di scarico dell'aria che fuoriesce e se il vibratore è a piena potenza, il tubo di scarico deve avere uno spessore nominale maggiore di quello del tubo di alimentazione.

**The air inlet has a smaller opening than the air outlet. Both are marked on the front side by arrows.**
**The pressurized air infeed must be fixed safely.**
**Mixing up air inlet and air outlet leads to loss in performance.**

**Der Lufteinlaß hat eine kleinere Öffnung als der Luftauslaß. Beide sind auf der Vorderseite durch Pfeile gekennzeichnet.**
**Die Druckluftzuführung muß sicher befestigt werden.**
**Eine Verwechslung von Luftein- und Luftausgang hat einen Leistungsverlust zur Folge.**

**L'entrée d'air a une ouverture plus petite que la sortie d'air. Toutes les deux sont marquées avec des flèches. La conduite d'air comprimé doit être fixée de manière sûre.**
**La confusion d'entrée et sortie a comme conséquence une perte de performance.**

**L'entrata dell'aria presenta un'apertura più piccola rispetto all'uscita. Entrambe sono contrassegnate sulla parte anteriore da frecce.**
**Il raccordo di alimentazione dell'aria sotto pressione deve essere fissato in modo sicuro.**
**La miscelazione di aria in entrata e in uscita provoca perdite nelle prestazioni.**

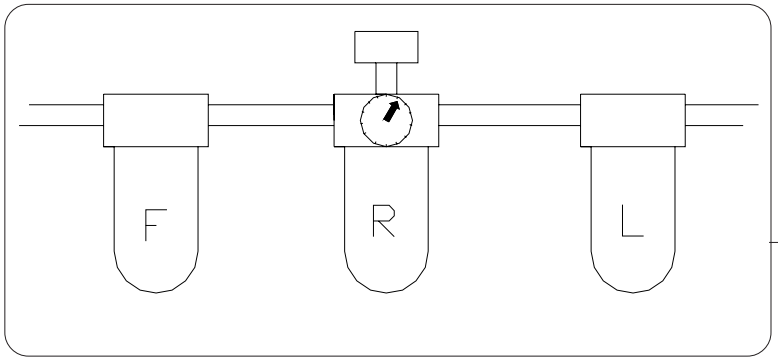


use oil only - *Nur Öl benutzen*
Utiliser uniquement de l'huile - *usare solo olio*

**ISOVG5**
**(5 cST / 40°C)**

**ATTENTION: use pipes and accessories suitable for the operating temperatures.**

**WARNING: Fix flexible compressed air hose pipes and provide necessary precautions against unwanted detachment of a pipe section.**

**ACHTUNG: Leitungen und Zubehörteile benutzen, die für die Betriebstemperaturen geeignet sind.**
**WARTUNG: Die Druckluftschläuche fachmännisch befestigen und die notwendigen Vorkehrungen gegen ein unvorgesehenes Ablösen eines Teils der Leitung treffen.**

**ATTENTION: adopter des tuyauteries et des accessoires appropriés aux températures d'utilisation.**
**IMPORTANT: Fixer correctement les tuyaux d'air comprimé et prendre les précautions nécessaires contre le décrochage soudain d'un tronçon de tuyauterie.**

**ATTENZIONE :adottare tubazioni e accessori idonei alle temperature d'utilizzo.**

**IMPORTANTE: Fissare correttamente i tubi flessibili dell'aria compressa e predisporre le dovute precauzioni contro il distacco improvviso di un tratto di tubazione.**

**ELECTRICAL CONTROLLER**
Connect the earth wire to the point provided on the pneumatic vibrator.

**Set the component in safety status before carrying out any operation.**

**COMMISSIONING AND OPERATION**
The vibrator can be commissioned immediately after the correct installation. Make sure that the pressure in the air system is able to meet the air consumption value specified in the operating instructions. Otherwise the vibrator will not be able to work according to the technical specifications.

**Screw connections must be checked and retightened after 1 hour of operation and then at regular intervals (normally every month).**

**ELEKTRISCHE ANSCHLÜSSE**
Das Erdungskabel mit der Stelle verbinden, die auf dem pneumatischen Vibrator dafür vorgesehen ist.

**Vor der Ausführung jeder beliebigen Arbeit das Bauteil in einen sicheren Zustand versetzen.**

**INBETRIEBNAHME UND BETRIEB**
Die Inbetriebnahme der Vibratoren erfolgt sofort nach der fachgerechten Montage. Sicherstellen, daß der in der Betriebsanleitung angegebene Luftverbrauchswert vom Druckluftsystem auch geliefert wird. Andernfalls wird der Vibrator die technischen Daten nicht erzielen.

**Nach einer Stunde Betrieb die Schraubverbindungen erstmalig, danach regelmäßig (möglichst einmal monatlich) überprüfen und ggfls. nachziehen.**

**RACCORDEMENTS ÉLECTRIQUES**
Brancher le câble de mise à la terre à l'endroit prévu sur le vibrateur pneumatique.

**Avant toute opération mettre le composant en condition de sécurité.**

**MISE EN SERVICE ET UTILISATION**
À l'issue d'un montage approprié, la mise en service du vibrateur peut intervenir immédiatement. Assurez-vous que la consommation d'air indiquée dans les instructions de service peut être effectivement fournie par votre système d'alimentation en air comprimé. Sinon, le vibrateur ne pourra atteindre les caractéristiques techniques prévues.

**Les vis visses devront être vérifiées après la première heure de service, puis régulièrement (tous les mois). Le cas échéant, les vis seront resserrées.**

**COLLEGAMENTI ELETTRICI**
Collegare il cavo di messa a terra all'apposito punto dedicato sul vibratore pneumatico

**Prima di qualsiasi intervento mettere il componente in sicurezza.**

**MESSA IN FUNZIONE E USO**
Se installato correttamente, il vibratore può essere messo immediatamente in funzione. Assicurarsi che la pressione del sistema pneumatico sia in grado di soddisfare il valore di consumo d'aria specificato nelle istruzioni per l'uso. In caso contrario il vibratore non potrà funzionare in conformità alle specifiche tecniche.

**Controllare i raccordi a vite e serrarli di nuovo dopo un'ora di funzionamento e poi a intervalli regolari (in genere una volta al mese).**

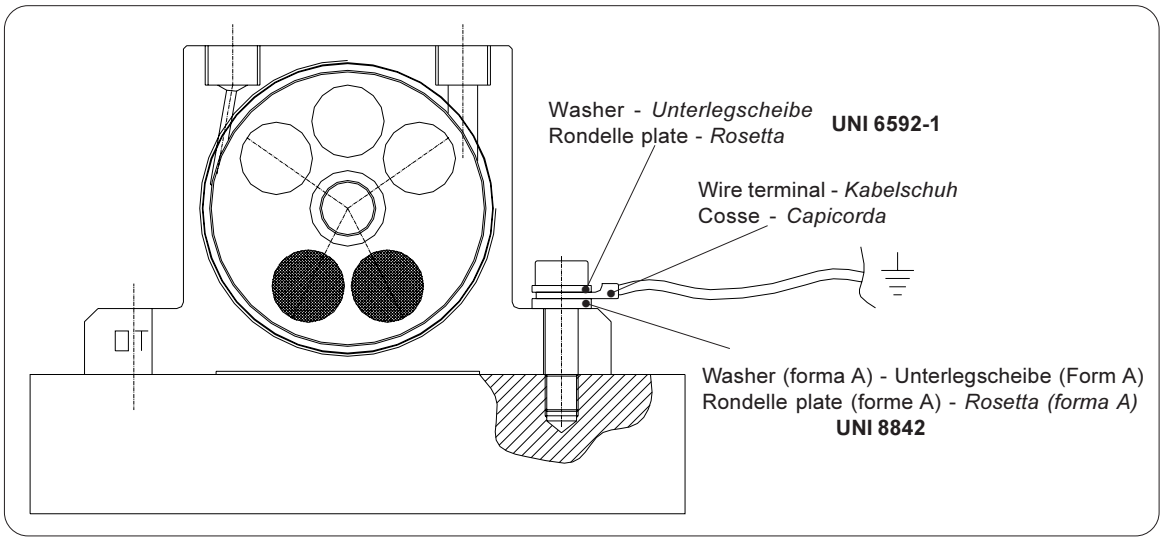

**Set the component in safety status before carrying out any operation.**

- If work is to be carried out on parts at the top of the pneumatic vibrator, use a work area platform which must be selected in such a manner as to avoid risk of slipping, tripping or falling of operators.

**S** and **OR**-vibrators are maintenance-free. From outside they can be cleaned with a water jet. Operate the vibrator for a short while after.

**WARNING**
**Dirty compressed air causes clogging of filter and silencer.**
**If necessary empty the filter, clean filter element and silencer (wash out).**

**REPLACING "OT" SERIES BEARINGS**

**Vor der Ausführung jeder beliebiger Arbeit ist der Bauteil in einen Zustand versetzen.**

- Wo sich Teile des pneumatischen Vibrators in größerer Höhe befinden, eine Arbeitsplattform zu benutzen, die so zu wählen ist, dass eine Gefährdung des Personals in Form von Ausrutschen, Hängenbleiben oder Absturz vermieden wird.

**S-**und **OR**- Vibratoren sind wartungsfrei. Sie können von außen mit einem Wasserstrahl gereinigt werden. Nach der Reinigung den Vibrator kurz betätigen.

**ACHTUNG**
**Schmutzige Druckluft führt zur Verschmutzung von Filter und Schalldämpfer.**
**Filter ggfls. leeren, den Filtereinsatz und den Schalldämpfer reinigen bzw. auswaschen.**

**ERSETZEN DER LAGER SERIEN „OT"**

**Avant toute opération mettre le composant en condition de sécurité.**

- Pour atteindre des parties du vibrateur pneumatique en hauteur, utiliser une plate-forme aérienne de travail qui devra être choisie de manière à éviter tout danger de glissement ou de chute des opérateurs.

Les **S** et **OR** ne réclament pas d'entretien. Ils peuvent être nettoyés extérieurement à l'eau sous pression. Après le nettoyage, faire brièvement fonctionner le vibrateur.

**ATTENTION**
**L'air chargé d'impuretés provoque l'encrassement du filtre et du silencieux.**
**En cas de nécessité, purger le filtre, nettoyer la garniture du filtre et le silencieux (en les lavant).**

**REMPLACEMENT DES ROULEMENTS SERIE "OT"**

**Prima di qualsiasi intervento mettere il componente in sicurezza.**

- Là dove si debbano raggiungere parti del vibratore pneumatico in quota utilizzare una piattaforma aerea di lavoro che dovrà essere scelta in modo da evitare pericoli di scivolamento, inciampo o caduta per gli operatori.

I vibratori **S** e **OR** sono esenti da manutenzione. Possono essere puliti esternamente mediante getto d'acqua. Dopo avere eseguito questa operazione, farli funzionare per un breve intervallo di tempo.

**ATTENZIONE**
**L'aria compressa contenente impurità provoca l'insudiciamento del filtro e del silenziatore. Se necessario, svuotare il filtro, pulire la cartuccia e il silenziatore (risciacquo).**

**SOSTITUZIONE CUSCINETTI SERIE "OT"**

**REPLACING "OT" SERIES BEARINGS**

**AUSTAUSCH DER LAGER SERIE „OT"**

**REMPLACEMENT DES ROULEMENTS SERIE "OT"**

**SOSTITUZIONE CUSCINETTI SERIE "OT"**

1

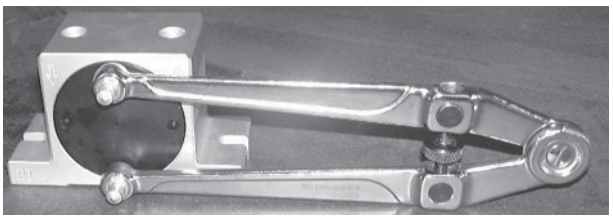

2

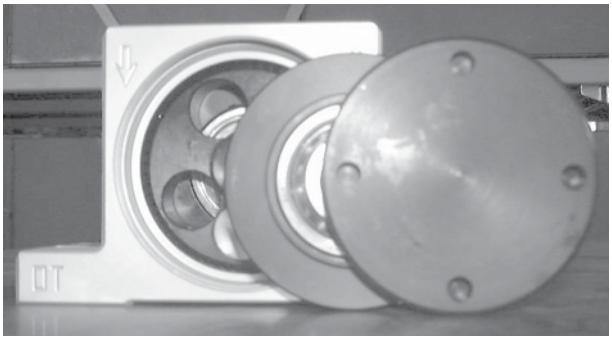

3

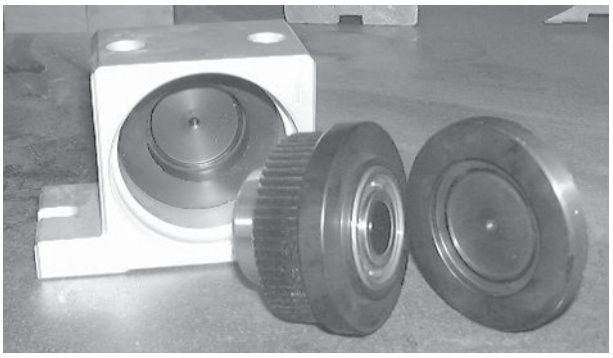

4

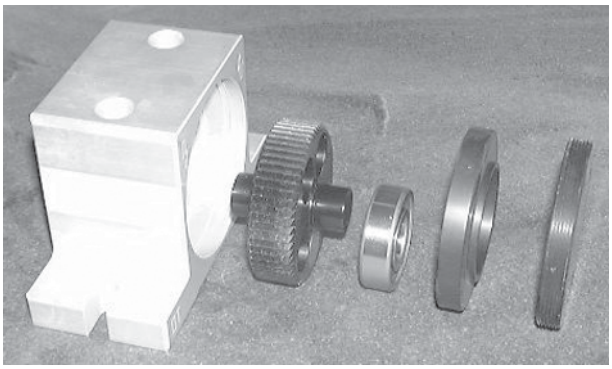

Use exclusively bearings of the following type for replacement:

Ausschließlich Lager des folgenden Typs verwenden:

Remplacer exclusivement avec des roulements type:

Sostituire esclusivamente con cuscinetti tipo:

| OT type | SKF bearing type |
|---|---|
| OT 8 | 607 ZTN9/C3 |
| OT 10 | |
| OT 10 S | |
| OT 13 | 6000 ZTN9/C3 |
| OT 16 | |
| OT 16 S | |
| OT 20 | 6203 ZTN9/C3 |
| OT 25 | |
| OT 25 S | |
| OT 30 | 6303 ZTN9/C3 |
| OT 36 | |
| OT 36 S | |

## PERIODIC CHECKS

**Set the component in safety status before carrying out any operation.**

- Clean dust deposits on a weekly basis.
- Check the tightening of the screw connectors on a monthly basis.
- Check tightening torque of the fixing screws on a monthly basis.
- Check the equipotential with the structure on which the vibrator is mounted, on a monthly basis.
- Change the ball bearings on the OT model every 3000 hours.

## CLEANING

**Set the component in safety status before carrying out any operation.**

While cleaning the dust deposited on the component, avoid throwing up dust into the surroundings and avoid dust deposits.

- The user must choose suitable cleaning products depending on the type of plant and the product handled, taking care to avoid toxic and inflammable products.
- If the pneumatic vibrator is to be used with food products, use non toxic detergents suitable for the type of application.
- The cleaning frequency depends on the type of product handled and the plant.
- In case of harmful, toxic products, cleaning wastes must be conveyed into closed tanks and disposed off according to the indications in the products safety sheet.

## REGELMÄSSIGE KONTROLLEN

**Vor der Ausführung beliebiger Arbeiten das Bauteil in einen sicheren Zustand versetzen.**

- Etwaige Staubansammlungen einmal pro Woche entfernen.
- Die Schraubanschlüsse einmal pro Monat auf festen Sitz prüfen.
- Einmal pro Monat das Anzugsmoment der Befestigungsschrauben prüfen.
- Einmal pro Monat die Struktur, an der der Vibrator befestigt ist, auf Potentialausgleich prüfen.
- Alle 3000 Betriebsstunden bei Modell OT die Kugellager prüfen.

## REINIGUNG

**Vor der Ausführung beliebiger Arbeiten das Bauteil in einen sicheren Zustand versetzen.**

Beim Entfernen von Staub, der sich eventuell auf dem Bauteil gebildet hat, dafür sorgen, dass der Staub nicht in die Umgebung verteilt wird, und vermeiden, dass sich zu viel Staub ansammelt.

- Der Anwender muss Reinigungsmittel verwenden, die zum Typ der Anlage und zum behandelten Produkt passen. Er muss auf jeden Fall dafür sorgen, dass keine giftigen oder feuergefährlichen Produkte verwendet werden.
- Falls der pneumatische Vibrator zum Verarbeiten von Lebensmitteln benutzt wird, ist es vorgeschrieben, ungiftige Reinigungsmittel zu verwenden, die zur Anwendung passen.
- Die Häufigkeit der Reinigung hängt von der Beschaffenheit des zu behandelnden Produkts und der Anlage ab.
- Falls man schädliche oder giftige Erzeugnisse verarbeitet, müssen die Reinigungsabwässer in einer geeigneten, geschlossenen Wanne gesammelt und gemäß den Angaben auf dem Sicherheits-Datenblatt entsorgt werden.

## CONTROLES PERIODIQUES

**Avant toute operation mettre le composant en condition de sécurité.**

- Chaque semaine éliminer les dépôts de poussière qui se sont accumulés.
- Tous les mois vérifier le serrage des raccords à vis.
- Tous les mois vérifier le couple de serrage des vis de fixation.
- Tous les mois vérifier l'équipotentialité avec la structure sur laquelle est fixé le vibrateur.
- Tous les 3000 heures remplacer les roulements à bille sur le modèle OT.

## NETTOYAGE

**Avant toute operation mettre le composant en condition de sécurité.**

En éliminant la poussière présente sur le composant faire attention à ne pas la disperser dans le milieu environnant et éviter toute accumulation.

- L'utilisateur doit utiliser des produits appropriés pour le nettoyage en fonction du type d'installation et du produit traité, en faisant attention à ne pas employer de produits toxique ou inflammables.
- Si le vibrateur pneumatique travaille avec des produits alimentaires il est obligatoire d'utiliser des détergents non toxiques, mais appropriés au type d'application.
- La fréquence des opérations de nettoyage dépend de la nature du produit traité et de l'équipement.
- En cas de produits nocifs ou toxiques, les eaux usées du nettoyage doivent être convoyées dans une cuve fermée adéquate et éliminées conformément à ce qui est prévu par la fiche de sécurité du produit.

## CONTROLLI PERIODICI

**Prima di qualsiasi intervento mettere il componente in sicurezza.**

- Settimanalmente rimuovere eventuali cumuli di polvere di deposito.
- Verificare mensilmente, il serraggio dei raccordi a vite.
- Verificare mensilmente, la coppia di serraggio delle viti di fissaggio.
- Verificare mensilmente, l'equipotenzialità con la struttura su cui viene fissato il vibratore.
- Sostituire ogni 3000 ore sul modello OT i cuscinetti a sfera.

## PULIZIA

**Prima di qualsiasi intervento mettere il componente in sicurezza.**

**Nella rimozione della polvere eventualmente presente nel componente, aver cura di non disperdere la polvere stessa nell'ambiente circostante e avere cura di evitare cumuli.**

- L'utilizzatore dovrà provvedere alla scelta dei prodotti idonei alle fasi di pulizia in base alla tipologia di impianto ed al prodotto trattato facendo comunque attenzione a non usare prodotti tossici o infiammabili.
- Nel caso che il vibratore pneumatico operi con prodotti alimentari è obbligatorio usare detergenti non tossici, ma idonei al tipo di applicazione.
- La frequenza delle operazioni di pulizia dipendono dalla natura del prodotto trattato e dell'impianto.
- Nel caso di prodotti nocivi, tossici, i reflui della pulitura dovranno essere convogliati in idonea vasca chiusa e smaltiti secondo quanto previsto dalla scheda di sicurezza del prodotto.

On the basis of the use of the pneumatic vibrator, the installer must inform the operator by means of specific signals, regarding the residual risks:

**1. Mechanical risk**

For maintenance operations, it is compulsory for the operator to always use personal protection equipment.

Special warning notices on each section of the machine indicate the obligatory personal protection equipment:




**2. Presence of possible residual high temperature after percussion gun stop**

During the course of maintenance and cleaning operations and in certain operating sections, the operator may enter into contact with very hot parts of the percussion gun, with the machine stopped.

Special warning notices, located at strategic points indicate the risk due to the presence of very hot surfaces and the obligation for the operator to wear personal protection equipment, especially protective gloves.




**3. Presence of potentially hazardous dusts**

In the event of both routine and extraordinary maintenance, the operator must wear suitable personal protection equipment, and in particular, use a safety mask for the respiratory tract depending on the type of dust daalt as well as gloves and clothing.

For more details, refer to the safety chart of the product handled.




Je nach Verwendung des Druckluft Vibratoren muss der Installateur das Personal durch besondere Hinweisschilder auf folgende Restrisiken hinweisen:

**1.Gefahren mechanischer Art**

Für die Wartungsarbeiten muss das Personal immer seine persönlichen Schutzausrüstungen benutzen.

Besondere Warnschilder an den einzelnen Abschnitten des Geräts geben an, welche persönlichen Schutzausrüstungen jeweils erforderlich sind:




**2. Vorliegen möglicher hoher Temperaturen nach dem Stillstand der Klopfer**

Im Laufe einiger Wartungs- und Reinigungsarbeiten und in einigen Arbeitsabschnitten kann das Personal bei stehendem Gerät in Kontakt mit Teilen der Klopfer geraten, die eine hohe Temperatur aufweisen.

Besondere Warnschilder, die an den strategischen Stellen angebracht sind, weisen auf die Gefahren hin, die sich durch die hohe Temperatur der Oberflächen ergeben und weisen das Personal darauf hin, dass es zur Verwendung der persönlichen Schutzausrüstungen verpflichtet ist, insbesondere zum Tragen von Schutzhandschuhen..




**3. Vorhandensein potentiell gefährlicher Stäube**

Bei regelmäßiger und außerordentlicher Wartung muss das Personal geeignete pers önliche Schutzausrüstungen verwenden und insbesondere Masken zum Schutz der Atemwege mit geeigneter Klasse für den aufbereiteten Staub, wie auch Schutzhandschuhe und Schutzkleidung tragen.

Für nähere Angaben ist Bezug auf das Sicherheitsdatenblatt des verwendeten Produkts zu nehmen.




L'installateur, en fonction de l'utilisation du vibrateur pneumatiques, doit informer les opérateurs, au moyen d'indications et de signalisations prévues à cet effet, sur les risques résiduels suivants :

**1. Dangers de nature mécanique**

Pour les activités d'entretien l'opérateur a l'obligation d'utiliser toujours les dispositifs de protection individuelle.

Des plaques d'avertissements apposées dans chaque section de la machine indiquent quels sont les dispositifs de protection individuelle qui sont obligatoires :




**2. Présence de hautes températures résiduelles après l'arrêt du percuteur**

Au cours des interventions d'entretien et de nettoyage et dans certaines sections de travail, l'opérateur peut entrer en contact, quand la machine est arrêtée, avec des parties du filtre dont les surfaces sont à des températures élevées.

Des plaques d'avertissement, apposées dans les endroits stratégiques, signalent le danger dû à la présence de surfaces à des températures élevées et l'obligation de l'opérateur d'utiliser les dispositifs de protection individuelle, en particulier des gants de protection.




**3. Présence de poussières potentiellement dangereuses**

Aussi bien dans le cas d'interventions d'entretien ordinaires ou extraordinaires, l'opérateur doit se doter des dispositifs de protection individuelle et en particulier il doit utiliser des masques de classe appropriée pour protéger les voies respiratoires en fonction du type de poussière traitée ainsi que de gants ou de vêtements adéquats.

Pour plus de détails consulter la fiche de sécurité du produit utilisé.




L'installatore, in base all'utilizzo del vibratore pneumatico, deve informare gli operatori, tramite appositi segnali, in merito ai seguenti rischi residui :

**1. Pericoli di natura meccanica**

Per le attività di manutenzione è fatto obbligo all'operatore di impiegare sempre i dispositivi di protezione individuale.

Apposite targhe monitorie nelle singole sezioni di macchina indicano quali dispositivi di protezione individuale si rendono obbligatori:




**2. Presenza di possibili alte temperature residue dopo l'arresto del percussore**

Nel corso di interventi manutentivi e di pulizia e in alcune sezioni di lavoro, l'operatore può entrare in contatto, a macchina ferma, con parti del percussore pneumatico con superfici ad elevata temperatura.

Apposite targhe monitorie, collocate nei punti strategici indicano il pericolo dovuto alla presenza di superfici ad elevata temperatura e l'obbligo per l'operatore di utilizzare dispositivi di protezione individuale, in particolare guanti protettivi.




**3. Presenza di polveri potenzialmente pericolose**

Nel caso di interventi sia ordinari che straordinari di manutenzione l'operatore deve dotarsi di idonei dispositivi di protezione individuale ed in particolare deve utilizzare maschere a protezione delle vie respiratorie di classe idonea in base al tipo di polvere trattata nonché di guanti o indumenti.

Per maggiori dettagli si deve far riferimento alla scheda di sicurezza del prodotto utilizzato.



- In certain handling of dusts, where hazardous substances are present, the operator concerned who has to access the machine for routine and extraordinary maintenance operations must wear suitable protective devices as indicated on the notice signs provided.




In case of operations involving heating (welding, cutting) it is necessary to clean the surface of the pneumatic vibrator first, removing all dust deposits (the layers, the deposits and accumulated combustible powder MUST be considered like any other source which can result in an explosive atmosphere).
Authorization for operations involving heating MUST be given by technical personnel specializ-ed and trained in the risk of explosion from dusts (capable of checking residual risk, suitability of tools and a knowledge of the procedures).
(The person responsible for safety must issue a “Fire Permit” to the operator).

**4. Hazards deriving from pressurized circuits (hydraulic, pneumatic)**

During mainten- ance and/or repair operations pressure must be discharged from the plants and accumulators (if present), according to the instructions given along-side the components and in the respective user manuals.

**5. Hazard generated by noise**

The user and employer are obliged to respect the legal standards as regards protection from daily personal exposure of operators to noise (in Italy L.D.277/91).

- Bei bestimmten Staubbehandlungen, wo schädliche Substanzen auftreten, muss das Personal, falls es im Laufe der regelmäßigen oder außerordentlichen Wartung damit in Kontakt kommt, persönliche Schutzausrüstungen tragen, so wie auf den vorhandenen Schildern angegeben.




Bei der Ausführung von erhitzenden Arbeiten (Schweißen, Schneiden) ist es erforderlich, die Oberfläche des pneumatischen Vibrators vorbeugend zu behandeln, um alle Staubablagerungen und in Abwesenheit atembarer Stäube durchgeführt werden. Bei der Ausführung von erhitzenden Arbeiten (Schweißen, Schneiden) ist es erforderlich, den Vibrator so vorzubereiten, dass alle Staubablagerungen entfernt werden (Schichten, Ablagerungen und Ansammlungen von brennbarem Staub MÜSSEN wie jede andere Staubquelle betrachtet werden, die zur Entstehung einer explosiven Atmosphäre beitragen kann).
Die Genehmigung zur Ausführung von Arbeiten im erwärmten Zustand DARF NUR durch spezialisiertes technisches Personal erteilt werden, das über die Explosionsgefahr durch Staub unterrichtet ist (das in der Lage ist, das Restrisiko festzustellen, das die geeigneten Werkzeuge und auch die Prozeduren kennt). Der Werkschutzverantwortliche muss dem Personal eine „Genehmigung zur Feuerarbeit” ausstellen.

**4. Gefahren durch unter Druck stehende Leitungen (hydraulisch, pneumatisch)**

Während der Wartungsarbeiten und/oder Reparaturen sind die Anlagen und die etwaigen Akkumulatoren zu entleeren, so wie es in den Anweisungen an de jeweiligen Komponenten oder in den entsprechenden Handbüchern steht.

**5. Gefährdung der Arbeitnehmer durch Lärm**

Der Anwender und der Arbeitgeber sind zur Einhaltung der gesetzlichen Bestimmungen in Sachen Schutz gegen tägliche persönliche Lärmexposition der Arbeitnehmer verpflichtet (in Italien D.Lgs.277/91).

- Dans des traitements déterminés de poussières où il y a la présence de substances nocives, l’opérateur qui doit y avoir accès, dans le cours des interventions ordinaires ou extraordinaires, doit porter les dispositifs de protection appropriés comme signalé par les panneaux indicateurs qui s’y trouvent.




Tous les entretiens à l’intérieur du vibrateur pnumatique DOIVENT être effectués quand l’installation est arrêtée et en absence de poussière dispersée dans l’air. Dans le cas de travaux à chaud (soudure, découpe) il faut préalablement nettoyer les surfaces du vibrateur pneumatique,, en éliminant tous les dépôts de poussière (les couches, les dépôts et les tas de poussière combustible DOIVENT être considérés comme une autre source pouvant donner lieu à une atmosphère explosive).
L'autorisation à l’exécution des travaux à chaud DOIT être donnée par du personnel technique spécialisé et formé sur le risque d’explosion des poussières (en mesure4 de vérifier le risque résiduel, l’aptitude des outils et la connaissance des procédures).
Le responsable de la sécurité devra délivrer un “permis de feu” à l’opérateur.

**4. Dangers dérivant des circuits sous pression (hydrauliques, pneumatiques)**

Pendant les opérations d’entretien et/ou de réparation il faut décharger les installations et les éventuels accumulateurs, conformément aux instructions qui se trouvent à proximité des composants et dans les notices d’instructions correspondantes.

**5. Dangers provoqués par le bruit**

L’utilisateur ainsi que l’employeur ont l’obligation de faire respecter les normes de loi en matière de protection contre l’exposition personnelle quotidienne des opérateurs au bruit (en Italie D.Lgs.277/91).

- In determinati trattamenti di polveri dove vi è la presenza di sostanze nocive, l'operatore che dovesse accedere, nel corso di interventi ordinari o straordinari, deve indossare gli idonei dispositivi di protezione come indicato dalla cartellonistica ivi presente.




Tutte le manutenzioni all'interno del vibratore pneumatico DEVONO essere effettuate ad impianto fermo e in assenza di polvere aerodispersa. In caso di lavori a caldo (saldatura, taglio) è necessario bonificare preventivamente le superfici del vibratore pneumatico, rimuovendo tutti i depositi di polvere (gli strati, i depositi ed i cumuli di polvere combustibile DEVONO essere considerati come qualsiasi altra sorgente che può dare origine ad un'atmosfera esplosiva).
L'autorizzazione all'esecuzione dei lavori a caldo DEVE essere data da personale tecnico specializzato e formato sul rischio esplosione da polveri (in grado di verificare il rischio residuo, l'idoneità degli utensili e la conoscenza delle procedure). Il responsabile della sicurezza dovrà rilisciare un “permesso di lavoro fuoco” all’operatore.

**4. Pericoli derivanti da circuiti in pressione (idraulici, pneumatici)**

Durante le operazioni di manutenzione e/o riparazione occorre porre in scarico gli impianti e gli eventuali accumulatori, secondo le istruzioni riportate in prossimità dei componenti e nei rispettivi manuali d'uso.

**5. Pericoli generati da rumore**

E' fatto obbligo all'utilizzatore e al datore di lavoro di rispettare le norme di legge in termine di protezione contro l'esposizione personale quotidiana degli operatori al rumore (in Italia D.Lgs.277/91).

| FAULT | ACTION |
|---|---|
| The vibrator does not start | Check the presence of compressed-air |
| | Check the presence of foreign elements in the piping or in the vibrator |
| The vibrator increase in noisiness | Check the fastening of the fixing screws and in case, make the supporting plate stiff |
| | Lubrificate the pneumatic line |
| The vibrator loose its vibrating effect | Check the feed pressure (MAX 6 BAR) |
| | Check the fastening of the fixing screws and in case, make the supporting plate stiff |
| | Lubrificate the pneumatic line |

| STÖRUNG | ABHILFE |
|---|---|
| Der Rüttler starts nicht | Die Druckluft kontrollieren |
| | Eventuelle Fremdkörper in der Leitung oder in den Rüttler kontrollieren |
| Mehr Rüttlergeräusch | Den Spanndruck der Befestigungsschrauben kontrollieren und die Stutzplatte eventuell verstärken |
| | Die pneumatische Vorrichtung schmieren |
| Verlust an Vibrierwirkung | Den Einlassdruck (MAX 6 BAR) kontrollieren |
| | Den Spanndruck der Befestigungsschrauben kontrollieren und die Stutzplatte eventuell verstärken |
| | Die pneumatische Vorrichtung schmieren |

| PROBLÈME | SOLUTION |
|---|---|
| Le vibrateur ne démarre pas | Vérifier la présence d'air comprimé |
| | Vérifier la présence d'éléments étrangers dans la tubuluru ou le vibrateur |
| Il rumore del vibratore aumenta | Vérifier le serrage des vis et éventuellement raidir la plaque d'appui |
| | Lubrifier la ligne pneumatique |
| Il vibratore cala l'effetto vibrante | Vérifier la pression d'alimentation (MAX 6 BAR) |
| | Vérifier le serrage des vis et éventuellement raidir la plaque d'appui |
| | Lubrifier la ligne pneumatique |

| PROBLEMA | SOLUZIONE |
|---|---|
| Il vibratore non parte | Controllare presenza aria compressa |
| | Controllare presenza elementi estranei nella tubazione o nel vibratore |
| Il rumore del vibratore aumenta | Controllare il serraggio delle viti di fissaggio ed eventualmente irrigidire la piastra di supporto |
| | Lubrificare la linea pneumatica |
| Il vibratore cala l'effetto vibrante | Controllare la pressione di alimentazione (MAX 6 BAR) |
| | Controllare il serraggio delle viti di fissaggio ed eventualmente irrigidire la piastra di supporto |
| | Lubrificare la linea pneumatica |

**SCRAPPING COMPONENT**

- Before proceeding with disposal of the pneumatic vibrator, clean it thoroughly and dispose off the residual dust in accordance with the indications in the safety chart.
- The operators in charge of disposal must use suitable personal protection equipment.
- For scrapping or demolition of the component, separate the plastic parts (seals and components) and send these to special collection centres.
- The other parts must be sent for recycling ferrous materials.

**VERSCHROTTUNG DES BAUTEILS**

- Bevor das Druckluft Vibrator entsorgt wird, dieses vollkommen reinigen und den enthaltenen Reststaub in Übereinstimmung mit dem Sicherheitsdatenblatt entsorgen.
- Die Arbeitnehmer, die sich um die Entsorgung kümmern, müssen angemessene persönliche Schutzausrüstungen verwenden.
- Wenn der Bauteil verschrottet werden soll, sind die kunststoffhaltigen Teile (Dichtungen und Komponenten) auszubauen und über die entsprechenden Sammelstellen dem Recycling zuzuleiten.
- Die restlichen Teile sind als Eisenschrott zu behandeln.

**DEMANTELEMENT DU COMPOSANT**

- Avant mettre le vibrateur pneumatique à la décharge le nettoyer complètement et éliminer les poussières restantes conformément aux indications fournies par la fiche de sécurité.
- Les personnes préposées à la mise à la décharge doivent porter des dispositifs personnels de protection appropriés.
- - En cas de mise à la décharge ou de démantèlement du composan, il faut démonter les pièces en matière plastique (joints et composants) et les mettre à la décharge dans des déchetteries spécialisées.
- Les pièces restantes sont à destiner à la récupération des matériaux ferreux.

**ROTTAMAZIONE COMPONENTE**

- Prima di procedere allo smaltimento del vibratore pneumatico provvedere alla sua completa pulizia ed allo smaltimento delle polveri residue in accordo con le indicazioni della scheda di sicurezza.
- Gli operatori addetti allo smaltimento devono indossare dispositivi di protezione personale adeguati.
- In caso di rottamazione o demolizione a fine vita del componente, avere cura di smontare le parti in materiale plastico (guarnizioni e componenti) e destinarle agli appositi centri di raccolta.
- Le restanti parti sono da destinare al recupero dei materiali ferrosi.

**RETURNING THE MACHINE**

When returning the component, use the original packaging if it has been preserved, otherwise place it in a box and cover it with nylon shrink-wrap, to protect it as best as possible from impact during transport. In any event, make sure there is no residue material inside the component.

**RÜCKGABE DES GERÄTES**

Falls der Bauteil zurückgegeben werden soll und man die Originalverpackung aufbewahrt hat, ist er darin einzupacken. Andernfalls ist er in einen Karton zu packen und mit Schrumpffolie zu schützen, wobei man versucht, sie so gut wie möglich vor etwaigen Stößen beim Transport zu schützen. Auf jeden Fall sicherstellen, dass sich keine Materialreste mehr in der Bauteil befinden.

**RESTITUTION MACHINE**

En cas de restitution du composant, si l'emballage a été conservé, le remettre dans celui-ci, sinon le mettre dans une caisse et le protéger avec du nylon thermorétractable, en essayant de la protéger le plus possible contre les chocs provoqués par le transport. Dans tous les cas s'assurer que la machine ne contient pas de résidus de matière.

**RESO MACCHINA**

In caso di reso del componente se si è conservato l'imballo reinserirla nello stesso, altrimenti inserirlo in una scatola e proteggerlo con del nylon termoretraibile, cercando di proteggerlo al meglio da eventuali urti derivanti dal trasporto. In ogni caso assicurarsi che il componente non abbia residui di materiale.

*N.B. Rights reserved to modify technical specifications*
*N.B. Angaben ohne Gewähr. Änderungen können ohne Vorankündigung vorgenommen werden.*
*N.B. Toutes données portées dans le présent catalogue n'engagent pas le fabricant. Elles peuvent être modifiéés à tout moment.*
*N.B. Tutti i dati riportati nel presente catalogo non sono impegnativi e possono subire variazioni in qualsiasi momento.*

OLI®

**O.L.I. S.r.l.**
Via Canalazzo, 35 - Rovereto s/S
I - 41036 Medolla - (MO)
ITALY

☎ +39 / 0535 / 46400
**fax** +39 / 0535 / 46350
**e-mail** olivibra@tin.it
**internet** www.olivibra.it

# IMPACTOR

| | |
|---|---|
| **# Sinox:** | 2036 |
| **Manufacturer :** | OLI |
| **Model :** | K45 |
| **Quantity per scale hopper:** | 1x |

OLI®

WAMGROUP

2

MAINTENANCE

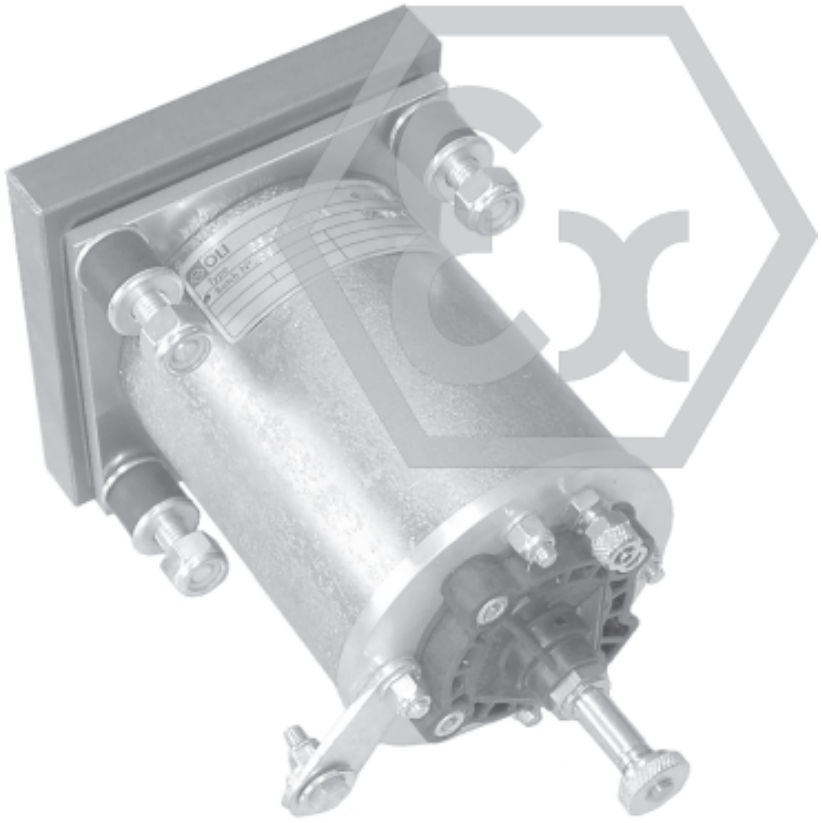

# MARTSHOCK

ATEX

- **PNEUMATIC HAMMERS**
  INSTALLATION, OPERATION AND MAINTENANCE
- ***PNEUMATIKKLOPFER***
  EINBAU-, BETRIEBS- UND WARTUNGSANLEITUNG
- **PERCUTEURS PNEUMATIQUES**
  INSTALLATION, UTILISATION ET ENTRETIEN
- ***PERCUSSORI PNEUMATICI***
  INSTALLAZIONE, USO E MANUTENZIONE

All rights reserved © WAMGROUP


| CATALOGUE No. | OL.3000 EX M. | | CREATION DATE |
|---|---|---|---|
| ISSUE | CIRCULATION | DATE OF LATEST UPDATE | 06 - 2004 |
| A | 100 | | |

## 2 MAINTENANCE CATALOGUE — WARTUNG


| | | |
|---|---|---|
| DESCRIPTION | BESCHREIBUNG | **M.3** |
| MANUFACTURING DATA | KONSTRUKTIONSDATEN | **.4** |
| SCOPE AND IMPORTANCE OF THE MANUAL | ZWECK UND BEDEUTUNG DES HANDBUCHS | **.5** |
| CERTIFICATE OF CONFORMITY INDICATIONS FOR USE | KONFORMITÄTSBESCHEINIGUNGANGABEN ZUM GEBRAUCH | **.6** |
| INDICATIONS FOR USE | ANGABEN ZUM GEBRAUCH | **.7→.9** |
| OPERATING CONDITIONS | EINSATZEINSCHRÄNKUNGEN | **.10** |
| CERTIFICATE OF CONFORMITY | KONFORMITÄTSBESCHEINIGUNG | **.11→.14** |
| WARRANTY CONDITIONS | GARANTIEBEDINGUNGEN | **.15** |
| TRANSPORT - WEIGHTS - OVERALL DIMENSIONS | TRANSPORT - GEWICHTE - PLATZBEDARF | **.16** |
| STORAGE AND LIFTING | LAGERUNG UND HANDLINGN | **.17** |
| INSTALLATION | EINBAU | **.18 →.22** |
| PERIODIC CHEKS | REGELMÄSSIGE KONTROLLEN | **.23** |
| CLEANING | REINIGUNG | **.24** |
| RESIDUAL RISKS | RESTRISIKEN | **.25 →.26** |
| FAULT FINDING | BETRIEBSSTÖRUNGEN UND ABHILFE | **.27 →.28** |
| SCRAPPING - RETURNING THE COMPONENTS | VERSCHROTTUNG - RÜCKGABE DER BAUTEILE | **.29** |


## 2 CATALOGUE D'ENTRETIEN — CATALOGO DI MANUTENZIONE


| | | |
|---|---|---|
| DESCRIPTION | DESCRIZIONE | **M.3** |
| DONNÉES CONSTRUCTIVES | DATI COSTRUZIONE | **.4** |
| BUT ET IMPORTANCE DU MANUEL | SCOPO E IMPORTANZA DEL MANUALE | **.5** |
| CERTIFICAT DE CONFORMITÉ INDICATIONS POUR L'UTILIS | ATTESTATO DI CONFORMITA' INDICAZIONI PER L'USO | **.6** |
| INDICATIONS POUR L'UTILISATION | INDICAZIONI PER L'USO | **.7→.9** |
| LIMITES DE EMPLOI | LIMITI DI IMPIEGO | **.10** |
| CERTIFICAT DE CONFORMITÉ | ATTESTATO DI CONFORMITA' | **.11→.14** |
| CONDITIONS DE GARANTIE | CONDIZIONI DI GARANZIA | **.15** |
| TRANSPORT - POIDS - ENCOMBREMENT | TRASPORTO - PESI - INGOMBRI | **.16** |
| EMMAGASINAGE ET SOULEVEMENT | IMMAGAZZINAGGIO E SOLLEVAMENTO | **.17** |
| INSTALLATION | INSTALLAZIONE | **.18 →.22** |
| CONTROLES PERIODIQUES | CONTROLLI PERIODICI | **.23** |
| NETTOYAGE | PULIZIA | **.24** |
| RISQUES RESIDUELS | RISCHI RESIDUI | **.25 →.26** |
| INCONVENIENTS ET SOLUTIONS | INCONVENIENTI E SOLUZIONI | **.27 →.28** |
| DEMANTELEMENT - RESTITUTION COMPOSANT | ROTTAMAZIONE - RESO COMPONENTE | **.29** |


## 3 SPARE PARTS CATALOGUE — ERSATZTEILKATALOG


| | | |
|---|---|---|
| SPARE PARTS | ERSATZTEILE | **R.32 →.33** |


## 3 CATALOGUE PIECES DE RECHANGE — CATALOGO RICAMBI


| | | |
|---|---|---|
| PIECES DE RECHANGE | PEZZI DI RICAMBIO | **R.32 →.33** |

- Operation is governed by an electrical control panel and the pressurisation of the reservoir inside the percussion gun is achieved by means of a compressed air supply system.

When the electrical control panel sends an electrical signal to a solenoid valve the following occurs:
- a mass is projected against the wall of the silo/hopper causing vibrations (see Tab.).

- Der Betrieb wird über eine Schalttafel überwacht, während eine pneumatische Versorgungsleitung für die Druckbeaufschlagung des Raums/ Behälters innerhalb des Klopfers sorgt.

Wenn die elektrische Schalttafel einem Magnetventil, das auf dem Klopfer montiert ist, ein Signal sendet, kommt es zum:
- Ausstoß einer Masse gegen die Silo-/Trichterwand, was zu Vibrationen führt (siehe Tab.).

- Le fonctionnement est contrôlé par un tableau électrique et une ligne d'alimentation pneumatique garantit le remplissage sous pression du compartiment/réservoir à l'intérieur du percuteur.

L'impulsion transmise par le tableau électrique à une électrovanne montée sur le percuteur produit l'effet suivant :
- lancement d'une masse contre la paroi du silo/trémie en provoquant une vibration (Voir tab.).

- Il funzionamento è controllato da un quadro elettrico mentre da una linea di alimentazione pneumatica viene assicurato il riempimento in pressione del vano/serbatoio all'interno del percussore.

A seguito di un impulso trasmesso dal quadro elettrico ad una elettrovalvola montata sul percussore si ha:
- il lancio di una massa contro la parete del silo/tramoggia provocando una vibrazione (vedi tab.).

| **Model - *Modell* - Modèle - *Modello* PS** | **ENERGY - *ENERGIE* - ENERGIE - ENERGIA J** | |
|---|---|---|
| | **3 bar** | **6 bar** |
| 032 | 4.2 | 7.1 |
| 040 | 8.4 | 18.1 |
| 063 | 28.8 | 62 |
| 080 | 59.2 | 153 |

**A) ADDRESS OF LOCAL DEALER OR LOCAL SERVICE POINT**

**A) ADRESSE DES HÄNDLERS ODER DES KUNDENDIENSTES VOR ORT**

**A) ADRESSE DU REVENDEUR OU DU SERVICE APRES-VENTE LOCAL**

**A) INDIRIZZO RIVENDITORE O PUNTO DI ASSISTENZA LOCALE**

N.B.: The installer must provide the customer with the entire manufacturer's documentation together with the sheet filled in by the customer regarding the features of the powders to be handled, so that during all operations of the percussion gun, the safety precautions relevant to the powders handled are clearly indicated.

N.B.: Der Monteur muss der Dokumentation des Herstellers die vom Kunden ausgefüllte Karte mit den Eigenschaften der aufzubereitenden Stäube beilegen und dem Kunden alles selbst aushändigen. So werden während jedes Eingriffs am pneumatischen Klopfer alle Vorsichtsmaßnahmen beachtet, die spezifisch für die zu behandelnden Stäube anwendbar sind.

N.B.: l'installateur devra joindre à la documentation du constructeur, la fiche des caractéristiques des poudres à traiter rédigée par le client et remettre le tout à ce même client. De cette manière chaque intervention sur le percuteur pneumatique indiquera les consignes de sécurité spécifiques des matières traitées.

N.B.: l'installatore dovrà allegare assieme alla documentazione del costruttore, la scheda compilata dal cliente sulle caratteristiche delle polveri da trattare, e consegnare il tutto al cliente stesso, in modo tale che durante ogni intervento al percussore pneumatico siano indicate le precauzioni di sicurezza specifiche delle polveri trattate.

**B) IDENTIFICATION OF COMPONENT**

Refer to the code on the rating plate affixed to the machine, to identify equipment.

**N.B.: the pneumatic vibrator must not be CE marked since it is a component.**

**B) IDENTIFIKATION DES BAUTEILS**

Zur korrekten identifikation auf den Bestellcode in der Auftragsbestätigung, in der Rechnung und auf der Verpackung Bezug nehmen.

**N.B.: Der pneumatische Klopfer braucht nicht mit der CE-Kennzeichnung versehen zu werden, insofern es sich um ein Bauteil handelt.**

**IDENTIFICATION DU COMPOSANT**

Pour identifier correctement le composant, faire référence au code qui se trouve sur la plaque signalétique.

**N.B.: En tant que composant le vibrateur pneumatique ne porte pas le marquage CE.**

**IDENTIFICAZIONE DELCOMPONENTE**

Per una corretta identificazione del componente, bisogna fare riferimento al codice che si trova sulla targhetta.

**N.B.: il vibratore pneumatico non deve essere marcato CE in quanto componente.**

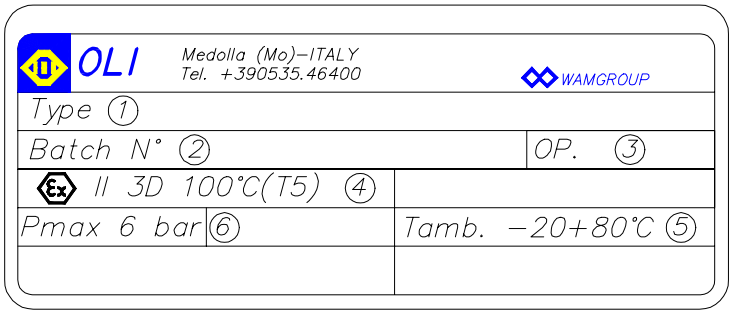


1) Component code
2) Batch No. Year/Month of manufacture)
3) Assembly operator code
4) Group and category
5) Ambient temperature
6) Maximum operating pressure

1) Code des Bauteils
2) Losgrößen-Nr. (Baujahr/-monat)
3) Monteur-Code
4) Gruppe und Kategorie
5) Raumtemperatur
6) Max. Betriebsdruck

1) Code composant
2) Batch N° (Année/ mois de fabrication)
3) Code assembleur
4) Groupe et catégorie
5) Température ambiante
6) Pression maxi. de fonctionnement

1) Codice componente
2) Batch n° (Anno/mese di costruzione)
3) Codice operatore assemblatore
4) Gruppo e categoria
5) Temperatura dell'ambiente
6) Pressione max di funzionamento

This manufacturer's Manual forms an integral part of the MARTSHOCK pneumatic percussion gun supply, and must therefore accompany the equipment right up to its demolition and must be available close at hand for rapid consultation by the operators concerned and the works manager. If the component changes hands, the Manual must be handed over to the new owner. Before carrying out any operation with or on the percussion gun, the personnel concerned must have compulsorily read this Manual carefully.
If the Manual is lost, crumpled or becomes illegible, a copy can be downloaded from the OLI s.r.l. website and the date of the last update must be checked.
This Manual contains all the warnings and indications relative to the safety regulations for the prevention of accidents at the work site. In any case, maximum care must be taken by the different operators concerned to strictly follow the Safety regulations imposed on them by existing standards.
Modifications made to the safety regulations over time will be duly noted and implemented.

Dieses vom Hersteller abgefasste Handbuch ist integrierender Bestandteil des Lieferumfangs des pneumatischen Klopfers MARTSHOCK und muss als solcher dem Bauteil unbedingt bis zu seiner Verschrottung folgen und einfach zu finden sein, damit der Bediener oder die Baustellenleitung bei Bedarf schnell darin nachschlagen kann. Bei einem Besitzerwechsel muss das Handbuch dem neuen Besitzer ausgehändigt werden. Bevor irgendwelche Arbeiten an oder mit dem pneumatischen Klopfer ausgeführt wird, muss das betreffende Personal dieses Handbuch aufmerksam durchlesen.
Sollte das Handbuch verloren gehen, unleserlich oder unbrauchbar sein, kann man von der Website des Herstellers OLI s.r.l. eine neue Ausfertigung herunterladen, um dann das Datum der letzten Aktualisierung zu prüfen. Dieses Handbuch liefert Hinweise und Angaben zu den Sicherheitsbestimmungen für die Unfallverhütung am Arbeitsplatz. Die Sicherheitsbestimmungen, die von den geltenden Normen als verbindlich vorgeschrieben werden, müssen vom Personal in jedem Fall gewissenhaft beachtet werden.
Etwaige Änderungen der Sicherheitsnormen, die im Laufe der Zeit vorgenommen werden, müssen erfasst und umgesetzt werden.

Le présent manuel, rédigé par le fabricant, fait partie intégrante du percuteur pneumatique MARTSHOCK et comme tel doit absolument suivre la machine jusqu'à son démantèlement. Il doit être facilement consultable par les opérateurs concernés et par la direction des travaux du chantier. En cas de changement de propriétaire du composant, le manuel doit être remis au nouveau propriétaire. Avant d'effectuer toute opération avec ou sur le percuteur pneumatique, le personnel concerné doit absolument avoir lu attentivement le présent manuel.
Si le manuel a été égaré ou n'est plus complètement lisible, télécharger une nouvelle copie sur le site Internet de OLI s.r.l. et vérifier la date de la dernière mise à jour. Le présent manuel fournit des recommandations et des indications sur les consignes de sécurité pour la prévention contre les accidents du travail. Les consignes de sécurité prévues par les normes en vigueur doivent, dans tous les cas, être scrupuleusement respectées.
Toute modification aux normes de sécurité devra être mise en conformité.

Il presente manuale, redatto dal costruttore, è parte integrante del corredo del percussore pneumatico MARTSHOCK, come tale deve assolutamente seguire il componente fino al suo smantellamento ed essere facilmente reperibile per una rapida consultazione da parte degli operatori interessati e della direzione lavori del cantiere. In caso di cambio di proprietà del componente il manuale deve essere consegnato alla nuova proprietà. Prima di eseguire qualsiasi operazione con, o sul percussore pneumatico; il personale interessato deve assolutamente ed obbligatoriamente aver letto con la massima attenzione il presente manuale. Qualora il manuale venga smarrito, sgualcito e tale da non essere completamente leggibile, si deve scaricare una nuova copia dal sito internet della OLI s.r.l. e verificarne la data dell'ultimo aggiornamento. Il presente manuale fornisce avvertenze ed indicazioni relative alle norme di sicurezza per la prevenzione degli infortuni sul lavoro. Vanno in ogni modo, ed in ogni caso, osservate con il massimo scrupolo da parte dei vari operatori le norme di sicurezza poste a loro carico dalle vigenti normative.
Eventuali modifiche delle norme di sicurezza che nel tempo dovessero aver luogo dovranno essere recepite ed attuate.

The latest version of the present catalogue is available under www.olivibra.it.

Die jüngste Version dieses Katalogs steht im Internet unter www.olivibra.it.

La version toujours mise à jour de ce catalogue est disponible sul le site internet www.olivibra.it.

La versione sempre aggiornata del presente catalogo è reperibile sul sito internet www.olivibra.it.

**The equipment is accompanied by a certificate of conformity to applicable directives, but as it is a component to be included in a complete plant, its safety is linked to compliance with all the directives applicable in the assembly of the final component. Any improper use of the Pneumatic Hammer with failure to follow the indications given in this Manual will free the Manufacturer of all responsibility for faulty working of the Pneumatic Hammer. Since the subject is undergoing considerable technical and normative evolution, the Manufacturer reserves the right to update all its products as soon as possible with all the technological know-how and official standards applicable (EN, UNI) that are available from time to time.**

**Zum Lieferumfang des Geräts gehört eine Konformitätsbescheinigung mit Bezugnahme auf die geltenden Richtlinien. Da es sich hier aber um ein Bauteil handelt, das in eine komplette Anlage eingebaut wird, ist seine Sicherheit mit der Beachtung aller Richtlinien verbunden, die sich auf den abschließenden Einbau des Bauteils beziehen. Jede bestimmungswidrige Verwendung des pneumatischen Klopfers unter Nichtbefolgung der Angaben in dem vorliegenden Handbuch enthebt den Hersteller von jeder Haftung hinsichtlich eines fehlerhaften Betriebs des Klopfers. Da es sich um Geräte handelt, die hinsichtlich Technik und Normenwerken ständiger Weiterentwicklung unterliegen, behält es sich der Hersteller vor, die eigenen Erzeugnisse so rasch wie möglich an alle technologischen Fortschritte und die anwendbaren offiziellen Normen (EN, UNI) anzupassen, die von Fall zu Fall zur Verfügung stehen.**

**L'appareillage est accompagné d'un certificat de conformité aux directives en vigueur, mais en tant que composant à intégrer dans une installation complète, sa sécurité est liée au respect de toutes les directives applicables dans l'assemblage du composant final. Toute utilisation impropre du percuteur pneumatique sans suivre les indications du présent manuel dégage OLI s.r.l. de toute responsabilité due à un mauvais fonctionnement du percuteur. S'agissant de matériel en forte évolution technique et réglementaire, OLI s.r.l. se réserve le droit d'adapter ses produits le plus rapidement possible à toutes les connaissances technologiques et aux normes officielles applicables (EN, UNI) rendues disponibles.**

**L'apparecchiatura è accompagnata da una attestato di conformità alle direttive vigenti, ma, in quanto componente da integrarsi in un impianto completo, la sua sicurezza è legata al rispetto di tutte le direttive applicabili nell'assemblamento del componente finale. Ogni utilizzo improprio del percussore pneumatico senza seguire le indicazioni del presente manuale solleverà la OLI s.r.l. da ogni responsabilità inerenti ad un cattivo funzionamento del percussore stesso. Trattandosi di materia in forte evoluzione tecnica e normativa, OLI s.r.l. si riserva di adeguare con la massima celerità i propri manufatti a tutte le conoscenze tecnologiche e le norme ufficiali applicabili (EN, UNI) che di volta in volta si rendessero disponibili.**

**WARNING**
This equipment is NOT suitable for use with food-grade materials.

**WARNHINWEISE**
Diese Geräte eignen sich auf NICHT für die Benutzung mit Lebensmitteln.

**RECOMMANDATIONS**
Ces machines NE sont PAS indiquées pour les applications sur les produits alimentaires

**AVVERTENZE**
Queste macchine NON sono comunque idonee per applicazioni per prodotti alimentari.

**INDICATIONS FOR USE**
The **Pneumatic Hammers** described in this Manual are designed and tested for use in potentially explosive areas classified as zone 22 cat. II 3 D according to directive 94/9/CE. The powders handled must have explosiveness index St1 or St2 and this must be notified to the Manufacturer at the time of placing the order to allow correct selection of the component.

The user must make sure the plant in which the **Pneumatic Hammer** is installed has been set in safety condition from the point of view of explosion risk before being started up, and that the "document on protection against explosions" has also been prepared as specified by Directive ATEX 99/92/CE. (This only applies to the European market).

**GEBRAUCHSANWEISUNGEN**
Die **pneumatischen Klopfer**, die in diesem Handbuch beschrieben werden, wurden zum Einsatz in explosionsgefährdeten Bereichen konstruiert und getestet, die nach der Richtlinie 94/9/EG als Zone 22 Kat. II 3 D eingestuft wurden. Die aufbereiteten Stäube müssen Staubexplosionsklasse St1 oder St2 haben und müssen dem Hersteller bei Bestellung angegeben werden, um eine korrekte Auslegung des Bauteils zu ermöglichen.

Der Anwender muss sicherstellen, dass die Anlage, in welche der **pneumatische Klopfer** installiert werden soll, hinsichtlich der Explosionsgefahr auf ausreichende Weise in einen sicheren Zustand versetzt wurde, bevor sie in Betrieb genommen wird, und dass zudem das „Explosionsschutzdokument" verfasst erstellt wurde, so wie es die ATEX-Richtlinie 99/92/EG vorsieht (gilt nur für den europäischen Markt)..

**INDICATIONS D'UTILISATION**
**Les percuteurs pneumatiques** décrits dans ce manuel ont été conçus et testés pour être utilisé dans les environnement explosibles classés comme zone 22 cat. II 3 D d'après la directive 94/9/CE. Les poussières traitées doivent avoir des indices d'explosivité St1 ou St2 ; pour un choix correct du composant celles-ci doivent être indiquées à OLI s.r.l. au moment de la commande.

L'utilisateur doit contrôler, avant la mise en marche, que l'installation dans laquelle est monté le **percuteur pneumatique** a été mise en sécurité en ce qui concerne le risque d'explosion. Il faut aussi que le "document sur la protection contre les explosions" ait été rédigé conformément à la Directive ATEX 99/92/CE (Ceci n'est valable que pour le marché européen).

**INDICAZIONI PER L'USO**
**I percussori pneumatici** descritti in questo manuale sono stati progettati e testati per un utilizzo
in zone potenzialmente esplosive classificate come zona 22 cat. II 3 D secondo la direttiva 94/9/CE. Le polveri trattate dovranno avere indici di esplosività St1 o St2 e devono essere comunicate alla OLI s.r.l. al momento dell'ordine per una scelta corretta del componente.

L'utilizzatore dovrà assicurarsi che l'impianto all'interno del quale verrà installato il **percussore pneumatico** sia stato adeguatamente messo in sicurezza da un punto di vista di rischio esplosione prima di essere avviato e che inoltre sia stato redatto il "documento sulla protezione contro le esplosioni" come previsto dalla Direttiva ATEX 99/92/CE. (Questo vale unicamente per il mercato europeo).

At the time of placing the order, the client must specify the features of the powders to be handled as well as the process temperatures (see Table below).

Es ist wichtig, dass der Kunde bei der Bestellung die Eigenschaften der aufzubereitenden Pulver und auch die Prozesstemperatur angibt. Siehe folgende Tabelle.

Dans la phase de commande il est important que le client spécifie les caractéristiques des poudres à traiter ainsi que les températures du processus, voir tableau ci-dessous.

E' importante da parte del cliente in fase d'ordine specifiche le caratteristiche delle polveri da trattare e anche le temperature di processo, vedi tabella sotto.

| ***POWDER* - STAUB - POUSSIERE - *POLVERE*** | | | | | |
|---|---|---|---|---|---|
| **Parameter - *Parameter*<br>Paramètre - *Parametro*** | | **Design Value<br>*Auslegungswert*<br>Valeur de conception<br>*Valore di progetto*** | **Operating data - *Betriebsdaten*<br>Données de fonctionnement<br>*Valore operativo*** | | |
| | | | **min.** | **nominal** | **max.** |
| Description - *Bezeichnung* - Description - *Descrizione* | - | | | | |
| Particle size (Median, D50) - *Partikelgröße (Median, D50)*<br>Dimension particulaire (Median, D50) - *Granulometria (Median, D50)* | µm | | | | |
| Kst | bar m/s | | | | |
| 5 mm layer ignition (GT) - 5 Millimeter Schichtzündung (GT)<br>5 mm d'allumage de couche (GT)<br>*Temperatura minima di ignizione di uno strato di polvere di 5 mm (GT)* | °C | | | | |
| Min. ignition temperature of dust suspension (IT)<br>*Min. Zündungstemperatur der Staubsuspension (IT)*<br>La température d'inflammation minimale de la suspension de la poussière (IT)<br>*Temperatura minima di ignizione di polvere sospesa (IT)* | °C | | | | |
| Min. explosible concentration (LEL) - *Min. Explosionskonzentration (LEL)*<br>Concentration explosible minimale (LEL) - Concentrazione minima di esplosione (LEL) | g/m³ | | | | |
| Min. ignition energy (MIE) - *Min. Zündungsenergie (MIE)*<br>Énergie minimale d'allumage (MIE) - *Energia minima di ignizione (MIE)* | mJ | | | | |
| Max. explosion pressure (Pmax) - *Max. Explosionsdruck (Pmax)*<br>Pression maximale d'explosion (Pmax) - *Pressione massima di esplosione (Pmax)* | bar | | | | |
| Oxygen concentration limit (LOC)<br>*Sauerstoffkonzentrationslimit (LOC)*<br>Limitation de la concentration d'oxygène (LOC)<br>*Concentrazione limite di ossigeno (LOC)* | % by volum | | | | |
| Specific Resistance of Product - *Spezifischer Widerstand des Produktes*<br>Résistance spécifique de produit - *Resistenza specifica del prodotto* | GOhm*m | | | | |
| Dust Classification - *Staub-Klassifikation*<br>Classification De la Poussière - *Classificazione della polvere* | St 1 | St 2 | | St 3 | |

| **ATEX PARAMETERS - *ATEX-PARAMETER* - ATEX PARAMÈTRES - *PARAMETRI ATEX*** | | | |
|---|---|---|---|
| **Ex zone - *Ex-Zone* - Ex zone - *Ex zona*** | | **Inside number - *Nummer für Innenbereich*<br>Nombre intérieur - *Numero interno*** | **Outside number<br>*Nummer für Aussenbereich*<br>Nombre extérieur<br>*Numero esterno*** |
| Atex category - *Atex-Kategorie* - ATEX catégorie - *Categoria ATEX* | | | |
| Reduced pressure (Pred) - Reduzierter Explosionsüberdruck Pred)<br>*Pression réduite (Pred) - Pressione ridotta (Pred)* | bar | | |

| **GENERAL DATA - *ALLGEMEINE DATEN* - DONNEES GENERALES - *DATI GENERALI*** | | | | | |
|---|---|---|---|---|---|
| **Parameter - *Parameter*<br>Paramètre - *Parametro*** | | **Design Value - *Auslegungswert*<br>Valeur de conception<br>*Valore di progetto*** | **Operating data - *Betriebsdaten*<br>Données de fonctionnement<br>*Valore operativo*** | | |
| | | | **min.** | **nominal** | **max.** |
| Volumetric flow rate - *Volumenstrom - Débit volumétrique - Portata d'aria* | m³/h | | | | |
| Specific Weight - Spezifisches Gewicht - Densité- *Peso specifico* | kg/m³ | | | | |
| Moisture - *Feuchte* - Humidité - Umidità | % | | | | |
| Temperature - *Temperatur* - Température - *Temperatura* | °C | | | | |
| Corrosive constituents - *Korrosive Bestandteile*<br>Constituants corrosifs - *Componenti corrosivi* | - | | | | |
| pH | - | | | | |

In accordance with the Directive ATEX 94/9/CE, the manufacturer defines the outside of the percussion gun as:

**CAT. II 3 D**

- **IMPORTANT: specify that the non ATEX versions must not be used in potentially explosive environments.**
- The **percussion guns** are designed and constructed in such a manner as to avoid unusual overheating during operation. To operate in safe conditions, check to **make sure the powders handled have a minimum ignition temperature higher than the temperature value indicated on the code plate**.
- The **percussion guns** must be installed with sufficient clearance around to allow assembly/disassembly operations, cleaning and maintenance.

Before carrying out any operation on the component, make sure it is in safe condition.

Im Sinne der ATEX-Richtlinie 94/9/EG definiert der Hersteller die äußere Umgebung des pneumatischen Klopfers als:

**KAT. II 3 D**

- **WICHTIG: Die Versionen, die nicht ATEX sind, dürfen nicht in explosionsgefährdeten Bereichen betrieben werden.**
- Die **pneumatischen Klopfer** wurden so entwickelt und konstruiert, dass es während ihres Betriebs nicht zu Überhitzungen kommt. Um unter sicheren **Voraussetzungen arbeiten zu können, ist sicherzustellen, dass die aufbereiteten Stäube eine Mindestzündtemperatur haben, die unterhalb des Temperaturwerts liegt, der auf dem Typenschild steht.**
- **Die pneumatischen Klopfer** müssen so installiert werden, dass ringsum genügend Raum zur Verfügung steht, um die normalen Arbeiten für Ein- und Ausbau, Reinigung und Wartung vornehmen zu können.

Bevor man irgendeinen Eingriff an dem Bauteil vornimmt, ist sicherzustellen, dass es sich in einem sicheren Zustand befindet.

Le constructeur, aux termes de la directive ATEX 94/9/CE, définit l'extérieur du percuteur pneumatique comme:

**CAT. II 3 D**

- **IMPORTANT: les versions non ATEX ne doivent pas travailler dans des atmosphères explosibles.**
- **Les percuteurs pneumatiques** ont été conçus et construits de manière à ne pas provoquer d'échauffements anormaux pendant le fonctionnement. Pour travailler en condition de sécurité **il faut vérifier que les poussières traitées on une température d'inflammation minimale supérieure à la valeur de température indiqué sur la plaque signalétique**.
- **Les percuteurs pneumatiques** doivent être installés avec autour un espace suffisant pour effectuer les opérations ordinaires de montage/démontage, nettoyage et maintenance.

Avant d'effectuer toute intervention sur le composant vérifier que celui-ci a été mis en sécurité.

Il costruttore, ai sensi della direttiva ATEX 94/9/CE, definisce l'esterno del percussore pneumatico come:

**CAT. II 3 D**

- **IMPORTANTE: le versioni non ATEX non devono operare in atmosfere potenzialmente esplosive.**
- **I percussori pneumatici** sono stati progettati e costruiti in modo tale da non provocare surriscaldamenti anomali durante il funzionamento. Per poter operare in condizioni di sicurezza **occorre verificare che le polveri trattate abbiano una minima temperatura di ignizione superiore al valore di temperatura indicato sulla targhetta.**
- **I percussori pneumatici** dovranno essere installati con uno spazio circostante sufficiente per effettuare le normali operazioni di montaggio/smontaggio, pulitura e manutenzione.

Prima di effettuare un qualsiasi intervento sul componente assicurarsi che questo sia messa in sicurezza.

**IMPORTANT**: In this Manual "**setting the component in safety condition**" will include the following operations:

- **Make sure the component is disconnected from all electric supply sources.**
- **Make sure the component is disconnected from all compressed air supply sources.**
- **The area around the component must be suitably lighted (operators can be provided with electric lights suitable for zone 22 cat. II 3 D)**.

**WICHTIG:** Auf den folgenden Seiten dieses Handbuchs wird die Formulierung **„das Bauteil in einen sicheren Zustand versetzen"** verwendet, um folgende Aktivitäten zu beschreiben:

- **Sicherstellen, dass das Bauteil von allen elektrischen Versorgungsquellen getrennt ist.**
- **Sicherstellen, dass das Bauteil von allen pneumatischen Versorgungsquellen getrennt ist.**
- **Dafür sorgen, dass der Bereich rings um das Bauteil ausreichend beleuchtet ist (eventuell Personal mit elektrischen Lampen ausstatten, die für Zone 22 Kat. II 3 D geeignet sind).**

**IMPORTANT**: Dans le présent manuel nous indiquons par "**mettre en sécurité le composant"** les opérations suivantes:

- Contrôler si le composant est débranché de toutes les alimentations électriques.
- Contrôler si le composant est débranché de toutes les alimentations pneumatiques.
- Eclairer correctement la zone qui entoure le composant (en dotant éventuellement les opérateurs de lampes électriques appropriées pour zone 22 cat. II 3 D).

**IMPORTANTE:** In seguito nel presente manuale indicheremo con la dicitura **"mettere in sicurezza il componente"** le seguenti operazioni:

- **Accertarsi che il componente sia scollegato da tutte le alimentazioni elettriche.**
- **Accertarsi che il componente sia scollegato da tutte le alimentazioni pneumatiche.**
- **Provvedere a illuminare correttamente la zona circostante al componente (eventualmente dotando gli operatori di lampade elettriche idonee per zona 22 cat. II 3 D).**

For carrying out operations on the components (maintenance and cleaning), the operators must use suitable personal protection devices (PPD):

- **Antistatic safety footwear (certified)**
- **Antistatic protective clothing (certified)**
- **Helmet**
- **Antistatic cut proof gloves**
- **Protective masks**

Für jeden Eingriff, der am Bauteil vorzunehmen ist (Wartung und Reinigungen), muss das Personal mit geeigneten persönlichen Schutzausrüstungen (PSA) ausgestattet werden:

- **antistatisches, unfallsicheres Schuhwerk (zertifiziert)**
- **antistatische Schutzkleidung (zertifiziert)**
- **Schutzhelm**
- **antistatische Schnittschutzhandschuhe**
- **Schutzmasken**

Pour toute opération à effectuer sur le composant (entretien et nettoyage), les opérateurs doivent être munis des équipements de protection individuelle (EPI):

- **Chaussures de protection antistatiques (certifiées)**
- **Vêtements de protection antistatiques (certifiés)**
- **Casque**
- **Gants anti-coupure antistatiques**
- **Masques de protection**

Per qualsiasi operazione da effettuarsi sul componente (manutenzioni e pulizia), gli operatori dovranno essere muniti degli appositi dispositivi di protezione individuale (DPI):

- **Scarpe antinfortunistiche antistatiche (certificate)**
- **Indumenti protettivi antistatici (certificati)**
- **Casco**
- **Guanti antitaglio antistatici**
- **Mascherine protettive**

**It is also necessary to use all the safety devices specified in the safety sheet of the product handled.**

**N.B.: All the electrical equipment used for maintenance or cleaning operations on the outside of the component must be ATEX certified for zone 22 cat. II 3 D.**

**Außerdem sind alle Schutzvorrichtungen zu verwenden, die das Sicherheitsdatenblatt des behandelten Produkts vorsieht.**

**N.B.: Alle elektrische Ausrüstungen, die eventuell für die Wartungseingriffe und die Reinigung außerhalb des Bauteils benutzt werden, müssen für Zone 22 Kat. II 3 D nach ATEX zertifiziert sein.**

**Il faut aussi utiliser tous les dispositifs de protection prévus par la fiche de sécurité du produit traité.**

**N.B.: Tous les appareillages électriques, utilisés pour les interventions de maintenance et de nettoyage extérieur doivent être certifiés ATEX pour zone 22 cat. II 3 D.**

**Inoltre occorre utilizzare tutti i dispositivi di protezione previsti dalla scheda di sicurezza del prodotto trattato.**

**N.B. Tutte le apparecchiature elettriche eventualmente utilizzate per interventi manutentivi o di pulizia eseguiti all'esterno componente devono essere certificate ATEX per zona 22 cat. II 3 D.**

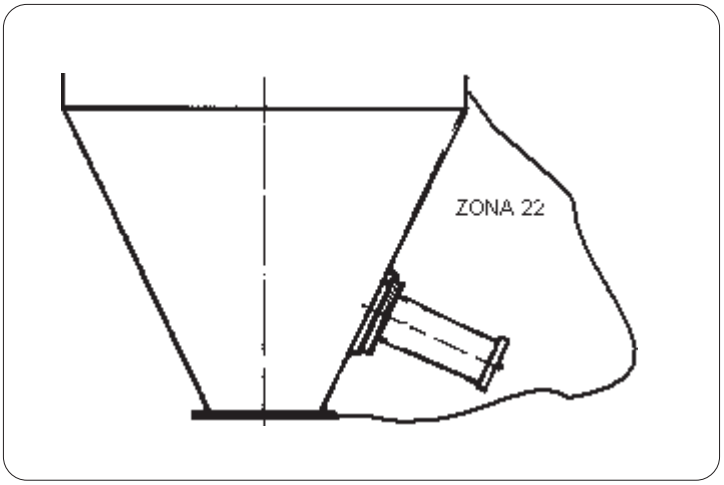

**NOISE**
The operating noise levels of the PS percussion guns depend on a number of factors amongst which the more important are:
1) thickness and size of the metal panels
2) filling coefficient
3) type of material
4) operating pressure
- The values given in Table 4 are only indicative.
- Measurements were taken at a distance of 1 m with the percussion gun installed on a full hopper at a height of 1,6 m from the ground.

**LÄRM**
Der Lärmpegel der Modelle PS hängt von unterschiedlichen Faktoren ab, von denen folgende einen großen Einfluss haben:
1) Stärke und Größe des Blechs
2) Füllkgrad
3) Beschaffenheit des Materials
4) Betriebsdruck
- Die Tabelle 4 ist daher nur als richtungsgebend zu verstehen.
- Die Tabellewerte wurden im Abstand von 1 Meter mit auf dem gefüllten Trichter installierten Klopfer in 1,6 m Höhe über dem Boden gemessen.

**BRUIT**
Le niveau sonore des modèles PS dépend de plusieurs facteurs dont les suivants sont considérés particulièrement importants:
1) épaisseur et dimension de la tôle
2) coefficient de remplissage
3) nature du produit
4) pression de service
- Le tableau 4 n'a qu'une valeur indicative.
- Les valeurs indiquées ont été mesurées à la distance de 1 m avec le percuteur monté sur une trémie remplie de produit à 1,6 m du sol.

**RUMORE**
Il livello di rumorosità del modelli PS dipende da diversi fattori tra i quali rivestono particolare importanza:
1) spessore e dimensione della lamiera
2) coefficiente di riempimento
3) natura del materiale
4) pressione di esercizio
- La tabella 4 ha pertanto un valore indicativo.
- I valori riportati sono stati misurati alla distanza di 1m con il percussore installato su tramoggia piena di materiale a 1,6 m da terra.

| **Type** *Tipo* | **Outdoor Surroundings - *Umgebung im Freien* Milieu ouvert - *Ambiente all'aperto*** | | **Indoor Surroundings - *Geschlossene Umgebung* Milieu fermé - *Ambiente all'interno*** | |
|---|---|---|---|---|
| | **3 bar** | **6 bar** | **3 bar** | **6 bar** |
| **PS 032** | 50 dB (A) | 65 dB (A) | 65 dB (A) | 80 dB (A) |
| **PS 040** | 65 dB (A) | 85 dB (A) | 75 dB (A) | 95 dB (A) |
| **PS 063** | 75 dB (A) | 95 dB (A) | 85 dB (A) | 110 dB (A) |
| **PS 080** | 85 dB (A) | 105 dB (A) | 95 dB (A) | 125 dB (A) |

**CONSUMPTION AIR** | **LUFTVERBRAUCH** | **CONSOMMATION D'AIR** | **CONSUMO D'ARIA**

| **Type** *Tipo* | **AIR CONSUMPTION PER CYCLE - *LUFTVERBRAUCH PRO ZYKLUS* CONSOMMATION D'AIR PAR CYCLE - *CONSUMO ARIA PER CICLO* (Nl)** | | **Ø Inlet tube - *Einlaufrohr* Tube entrée - *Tubo ingresso*** |
|---|---|---|---|
| **PS** | **3 bar** | **6 bar** | |
| **032** | 0.3 | 0.7 | 6 mm |
| **040** | 0.6 | 1.3 | 6 mm |
| **063** | 1.1 | 2.3 | 8 mm |
| **080** | 2.3 | 4.8 | 8 mm |

**POWDERS CHARACTERISTICS** | **EIGENSCHAFTEN DER STÄUBE** | **CARACTERISTIQUES DES POUSSIÈRES** | **CARATTERISTICHE DELLE POLVERI**

| | **Powders - *Staub* Poussières - *Polveri* St 1** | **Powders - *Staub* Poussières - *Polveri* St 2** |
|---|---|---|
| **MINIMUM IGNITION ENERGY (mJ)** *ZÜNDENERGIE* **(mJ)** **ENERGIE D'INFLAMMATION MINIMUM (mJ)** *MINIMA ENERGIA DI IGNIZIONE* **(mJ)** | > 3 | > 3 |
| **MINIMUM IGNITION TEMPERATURE (°C) M.I.T.** *TIEFSTE ZÜNDTEMPERATUR (°C)* **M.I.T.** **TEMPERATURE MINIMUM D'INFLAMMABILITE' (°C) M.I.T.** *MINIMA TEMPERATURA DI IGNIZIONE (°C)* **M.I.T.** | > = 200 | > = 200 |
| **MAXIMUM EXPLOSION PRESSURE (bar)** *HÖCHSTER EXPLOSIONSDRUCK (bar)* **PRESSION MAXIMUM D'EXPLOSION(bar)** *MASSIMA PRESSIONE DI ESPLOSIONE(bar)* | < = 9 | < = 9 |
| **IGNITION TEMPERATURE OF POWDER LAYER DEPOSITED (°C) L.I.T.** *ZÜNDTEMPERATUR DER ABGELAGERTEN STAUBSCHICHT (°C) L.I.T.* **TEMP. D'INFLAMMATION DE LA COUCHE DE POUSSIÈRE DÉPOSÉE (°C) L.I.T.** *TEMPERAURA DI IGNIZIONE DELLO STRATO D POLVERE DEPOSITATO (°C) L.I.T.* | > = 200 | > = 200 |
| **REACTIVITY PARAMETER KST (bar m/s)** *REAKTIVITÄTSPARAMETER KST (bar m/s)* **PARAMÉTRE DE RÉACTIVITÉ KST (bar m/s)** *PARAMETRO DI REATTIVITA' KST (bar m/s)* | $0<K_{st} \leq 300$ | $200<K_{st} \leq 300$ |
| **SURFACE RESISTIVITY (Ω m)** *OBERFLÄCHENWIDERSTAND* **(Ω m)** **RÉSISTIVITÉ SUPERFICIELLE (Ω m)** *RESISTIVITA' SUPERFICIALE* **(Ω m)** | $1*10^{12}$ | $1*10^{12}$ |

# OLI S.r.l.

Via Canalazzo, 35 – I - Medolla (MO)
ITALY

## CERTIFICATE OF CONFORMITY
## with the Directives of the European Union

The OLI Pneumatic Hammers model
**PS....ATEX** (Code: PSX....)
are manufactured in conformity with the following directives:

- Directive "Machines" **98/37/CE** of 22nd June, 1998
- Directive "ATEX" **94/9/CE** of 23rd March, 1994

The conformity has been verified according to the conditions included in the following standard documents:

- **EN 1127-1**
- **EN 292-1-2**
- **EN 13463-1**
- **EN 1050**

**Serie PS Ex II 3 D 100°C (T5)**

Ambient temperature from -20°C to +80°C

This equipment must never be put into operation before the machine or plant into which it has been integrated has been declared in conformity with the Directives in force.

Medolla, 1st November, 2003
OLI S.r.l.

Adriano Marchesini
(General Manager)

# OLI S.r.l.

Via Canalazzo, 35 – I - Medolla (MO)
ITALY

## BESCHEINIGUNG DER KONFORMITÄT mit den Richtlinien der Europäischen Union

Die Familie der pneumatischen Klopfer OLI
Modell **PS....ATEX** (Code: PSX....) wurde
konstruiert und wird gefertigt in Konformität mit den folgenden Direktiven:

- Direktive "Maschinen" **98/37/CE** vom 22. Juni 1998
- Direktive "ATEX" **94/9/CE** vom 23. März 1994

Die Konformität wurde gemäß den Anforderungen der folgenden Normen oder Normendokumente verifiziert:

- **EN 1127-1**
- **EN 13463-1**
- **EN 292-1-2**
- **EN 1050**

**Serie PS ⟨Ex⟩ II 3 D 100°C (T5)**

Umgebungstemperatur -20°C bis +80°C

Dieses Bauteil darf niemals in Betrieb genommen werden, bevor die Maschine/Anlage, in welche es eingebaut wurde, den Bestimmungen der geltenden Richtlinien als konform erklärt wurde.

Medolla, den 1. November 2003
OLI S.r.l.

Adriano Marchesini
(Geschäftsführer)



# OLI S.r.l.

Via Canalazzo, 35 – I - Medolla (MO)
ITALY

## CERTIFICAT DE CONFORMITE
## aux Directives de l'Union Européenne

La famille des percuteurs pneumatiques OLI
Modèle **PS....ATEX** (Code: PSX....)
a été projetée et produit conformément aux directives suivantes:

- Directive "Machines" **98/37/CE** du 22 Juin 1998
- Directive "ATEX" **94/9/CE** du 23 Mars 1994

La conformité a été vérifiée sur la base des conditions requises par les normes ou les documents normatifs reportés ci-dessous:

- **EN 1127-1**
- **EN 292-1-2**
- **EN 13463-1**
- **EN 1050**

**Serie PS Ex II 3 D 100°C (T5)**

Temperature ambiente -20°C à +80°C

Ce composant ne doit pas être mis en service tant que la machine dans laquelle il a été incorporé n'a pas été déclarée conforme aux dispositions des directives en vigueur.

Medolla, le 1 novembre 2003
OLI S.r.l.

Adriano Marchesini
(Directeur Général)

# OLI S.r.l.

Via Canalazzo, 35 – I - Medolla (MO)
ITALY

## ATTESTATO DI CONFORMITA'
## alle Direttive Della Comunità Europea

La famiglia dei percussori pneumatici **OLI**
modello **PS....ATEX** (Code: PSX....)
è stata progettata e costruita in conformità alle direttive:

- Direttiva "Macchine" **98/37/CE** del 22 giugno 1998
- Direttiva "ATEX" **94/9/CE** del 23 marzo 1994

La conformità è stata verificata sulla base dei requisiti delle norme o dei documenti normativi riportati di seguito:

- **EN 1127-1**
- **EN 13463-1**
- **EN 292-1-2**
- **EN 1050**

**Serie PS Ex II 3 D 100°C (T5)**

T. amb. -20°C +80°C

Il presente componente non deve essere messo in servizio prima che la macchina all'interno della quale sia stata incorporata non sia stata dichiarata conforme alle disposizioni delle Direttive vigenti.

Medolla, 1 Novembre 2003
OLI S.r.l.

Adriano Marchesini
(General Manager)



The Manufacturer provides a 12-month warranty on their products. This period starts from the date of the consignment note.
The warranty is not applicable for breakage and/or defects caused by incorrect installation or use, or incorrect maintenance, or modifications not authorized by the Manufacturer.
The warranty does not extend to parts that wear out following normal use and electrical components.
The warranty elapses if the filter:
- has been tampered with or modified,
- has not been used correctly,
- has been used without respecting the limits indicated in this manual and/or has been subjected to excessive mecha nical stress,
- has not been subjected to the necessary maintenance or these operations have been carried out partly and/or incorrectly,
- has been damaged due to carelessness during transport, installation and use,
- has been fitted with spare parts that are not original.

On receiving the product, the user must check these for defects deriving from transport and/or incomplete supply.
Defects, damage or incom pleteness of the supply must be immediately communicated to the Manufacturer in writing and countersigned by the haulage transporter.

Der Hersteller gewährt auf seine Erzeugnisse eine Garantie von 12 Monaten. Die Garantiezeit beginnt mit dem Datum des Lieferscheins.
Die Garantie ist nicht anwendbar, wenn es sich um Schäden und/oder Defekte handelt, die auf falschem Einbau oder Gebrauch, nicht korrekter Wartung oder Änderungen beruhen, die ohne die Genehmigung des Herstellers ausgeführt wurden.
Die Garantie deckt keine Teile ab, die infolge des normalen Gebrauchs verschleißen, und auch keine elektrischen Teile.
Die Garantie verfällt in folgenden Fällen:
- Das Gerät wurde manipuliert oder abgeändert;
- wurde nicht korrekt verwendet;
- bei seinem Gebrauch wurden die in diesem Handbuch genannten Einsatzbeschränkungen nicht beachtet und/oder es wurde zu starken mechanischen Belastungen ausgesetzt;
- er wurde nicht der erforderlichen Wartung unterzogen, oder diese wurde nur teilweise und/oder nicht korrekt ausgeführt;
- es wurde beschädigt, weil Transport, Einbau oder Gebrauch ohne die erforderliche Sorgfalt vorgenommen wurden;
- es wurden keine Original-Ersatzteile verwendet.

Beim Empfang der Ware hat der Empfänger sicherzustellen, dass die Ware keine durch Transport verursachten Schäden oder Defekte aufweist und/oder dass der Lieferumfang vollständig ist.
Etwaige Defekte, Schäden oder Fehlmengen sind mittels schriftlicher und vom Frachtführer gegengezeichneter Mitteilung sofort dem Hersteller zu melden.

Le constructeur reconnaît une période de 12 mois de garantie sur les produits de sa fabrication. La période prend effet à compter de la date indiquée sur le bon de livraison.
La garantie ne s'applique pas à la suite de ruptures et/ou de défauts provoqués par un montage et une utilisation impropre, des entretiens qui ne sont réalisés correctement ou des modifications apportées sans autorisation du constru cteur.
La garantie s'étend aux pièces qui s'usent à la suite d'une utilisation normale et aux parties électriques.
Plus précisément la garantie est sans effet si le filtre :
- a été manipulé ou modifié,
- a été utilisé de manière incor recte,
- a été utilisé sans respecter les limites indiquées dans la présen te notice et/ou qu'il a été soumis à des contraintes mécaniques excessives
- il n'a pas été soumis aux entretiens nécessaires ou que ces opérations ont été effectuées partiellement, de manière incom plète ou incorrecte
- a subit des dommages par négligence pendant le transport, la mise en place et l'utilisation,
- a été réparé avec des pièces qui ne sont pas d'origine.

Dès réception de la marchan dise, le destinataire doit vérifier que celle-ci n'a pas de défauts ou subit de dégâts dus au tran sport et que la fourniture n'est pas incomplète.
Tout défaut, dommage ou four niture incomplète doit immédia tement être signalée au constru cteur par communication écrite et contresignée par le tran sporteur.

Il costruttore riconosce un periodo di 12 mesi di garanzia sui prodotti di propria costruzione. Il periodo decorre dalla data della bolla di consegna.
La garanzia non è applicabile a seguito di rotture e/o difetti causati da errata installazione o utilizzo, oppure da manutenzioni non corrette o modifiche apportate senza autorizzazione del costruttore.
La garanzia non si estende alle parti che si logorano in seguito al normale uso e alle parti elettriche.
A miglior precisazione la garanzia decade nei casi in cui il filtro:
- sia stato manomesso o modificato,
- sia stato utilizzato non correttamente,
- sia stato utilizzato non rispettando i limiti indicati nel presente manuale e/o sia stato sottoposto ad eccessive sollecitazioni meccaniche,
- non sia stato sottoposto alle necessarie manutenzioni o queste siano state eseguite solo in parte e/o non correttamente,
- abbia subito danni per incuria durante il trasporto, l'installazione e l'utilizzo,
- siano state inserite parti di ricambio non originali.

Al ricevimento del prodotto, il destinatario deve verificare che lo stesso non presenti difetti o danni derivanti dal trasporto e/o incompletezza della fornitura.
Eventuali difetti, danni o incompletezza vanno immediatamente segnalati al costruttore mediante comunicazione scritta e controfirmata dal vettore.

On delivery, check that the nature and quantity of the goods comply with the acknowledgement of order.

Bei Erhalt der Ware sicherstellen, dass Typ und Menge den Daten der Auftragsbestätigung entsprechen.

A la réception de la marchandise contrôler que la typologie et la quantité correspond à ce qui est indiqué sur la confirmation de commande.

Al ricevimento della merce controllare se la tipologia e la quantità corrispondono con i dati della conferma d'ordine.

If any parts are damaged during transport, immediately state your claim in writing in the space provided on the consignment note (way bill). The driver is obliged to accept such a claim and to leave you a copy. If you received the goods free destination send your claim directly to us or to your shipping agent. If you fail to state your claim immediately on receipt of the goods, acceptance may be denied.

Etwaige Schäden müssen sofort auf dem Schriftweg in dem dafür vorgesehenen Feld auf dem Frachtbrief bekannt gegeben werden. Der Fahrer ist verpflichtet, eine solche Reklamation entgegen zu nehmen und dem Warenempfänger eine Kopie davon auszuhändigen. Wenn die Lieferung frei Haus erfolgt, die Reklamation an den Hersteller senden, ansonsten direkt an den Frachtführer. Eine Entschädigung kann nur erfolgen, wenn der Schaden beim Wareneingang erklärt wurde.

Les dommages éventuels doivent être signalés immédiatement par écrit dans l'espace réservé à cet effet sur la lettre de voiture. Le conducteur a l'obligation d'accepter cette déclaration et vous en remettre une copie. Si la fourniture est franco destination, envoyer votre réclamation à nous, sinon directement au transporteur. Le dédommagement n'est possible que si vous avez signalé les dégâts au moment de la réception.

Eventuali danni devono essere fatti presenti immediatamente per iscritto nell'apposito spazio della lettera di vettura. L'autista è obbligato ad accettare un tale reclamo e lasciarne una copia a Voi. Se la fornitura è franco destino, inviate il Vs. reclamo a noi, altrimenti direttamente allo spedizioniere. Il risarcimento avviene soltanto se avete fatto presente il danno all'atto del ricevimento.

Avoid damaging the parts during the unloading and handling operations.

Vorsichtig mit der Ware umgehen, um jede Art der Beschädigung beim Abladen und Handling zu vermeiden.

Mouvementer avec soin des vagues éviter chaque type d'endommagement pendant le déchargement et les mouvementement.

Movimentare con cura onde evitare ogni tipo di danneggiamento durante lo scarico e le movimentazioni.

| **Type**<br>***Tipo*** | **Weight including packing - *Gewicht inkl. Verpackung***<br>**Poids emballage inclus - *Peso compreso imballo***<br>**(kg)** |
|---|---|
| **PS032** | 5.9 |
| **PS040** | 8.0 |
| **PS063** | 15.6 |
| **PS080** | 29.9 |

**UNPACKING**

N.B.: It is the installer's responsibility to dispose off the packaging in a suitable manner, in compliance with existing legislation.

**AUSPACKEN**

N.B.: Der Anlagenaufsteller ist dafür verantwortlich, das Verpackungsmaterial auf angemessene Art und in Übereinstimmung mit den einschlägigen, geltenden Gesetzen zu entsorgen.

**ELIMINATION DE L'EMBALLAGE**

N.B.: L'installateur a l'obligation d'éliminer les emballages conformément aux lois en la matière.

**RIMOZIONE IMBALLO**

N.B.: E' a cura dell'installatore smaltire gli imballi in modo adeguato e secondo le leggi vigenti in materia.

**1)STORAGE PRIOR TO INSTALLATION**
- Avoid damp, salty environments, if possible.
- Place the component on wooden platforms and store it protected from unfavourable weather conditions.

**2)PROLONGED MACHINE SHUTDOWNS AFTER ASSEMBLY**
- Before starting up the component, set it in safety status.
- Before starting up the component, check the condition of the electric and pneumatic system and all parts for which long shutdowns may affect working.

**3) POSSIBLE REUSE AFTER PERIODS OF INACTIVITY**
- During component halts, avoid-damp, salty environments.
- Place the component on wooden platforms and store it protected from unfavourable weather conditions.
- Set the component in safety status before starting it up.
- Before starting up the component, check the condition of the electric and pneumatic systems and all parts for which long shutdowns may affect working.
- If the component operates in conditions and with materials different from the previous application, check the compatibility of this use according to the indications in the INDICATIONS FOR USE section.

**LIFTING**
When the total weight of the equipment does not exceed 30 kg it can be handled manually bearing in mind that the weight that can be lifted by an adult male is 30 kg while that for an adult female is 20 kg.
(L.D. 626/94).

**1) EINLAGERUNG VOR DEM EINBAU**
- Feuchte und salzhaltige Luft bei der Einlagerung vermeiden.
- Das Bauteil auf eine Holzpalette setzen und vor Witterung schützen.

**2) LÄNGERE BETRIEBSUNTERBRECHUNG NACH EINBAU**
- Vor der Inbetriebnahme ist das Bauteil in einen sicheren Zustand zu bringen.
- Vor Inbetriebnahme des Bauteils die elektrische und pneumatische Anlage und alle Teile, deren Funktionstüchtigkeit bei einem längeren Stillstand in Frage gestellt werden könnte, prüfen.

**3) MÖGLICHE WIEDERVERWENDUNG NACH EINEM LÄNGEREN STILLSTAND**
- Während des Stillstands des Bauteils Räume mit feuchter und salzhaltiger Luft vermeiden.
- Das Bauteil auf eine Holzpalette setzen und vor Witterung schützen.
- Vor Inbetriebnahme das Bauteil in einen sicheren Zustand bringen.
- Vor Inbetriebnahme des Bauteils die elektrische und pneumatische Anlage und alle Teile, deren Funktionstüchtigkeit bei einem längeren Stillstand in Frage gestellt werden könnte, prüfen.
- Wenn das Bauteil unter Bedingungen oder mit Material betrieben wird, die vom vorherigen Einsatz abweichen, die Verträglichkeit mit den neuen Einsatzbedingungen mit der BEDIENSUNGSANLEITUNG vergleichen.

**HEBEN**
Wenn das Gewicht der Ausrüstung nicht mehr als 30 kg ausmacht, kann das Handling der Last von Hand vorgenommen werden. Dabei ist zu berücksichtigen, dass ein erwachsener Mann 30 kg und eine erwachsene Frau 20 kg heben können.
(lt. Gesetzeserlass 626/94).

**1) EMMAGASINAGE AVANT LA MISE EN PLACE**
- Si possible éviter les locaux humides et les saumâtres
- Placer le composant sur des palettes en bois et les ranger à l'abri des intempéries.

**2) ARRÊT MACHINE PROLONGÉ APRÈS LE MONTAGE**
- Avant la mise en service mettre le composant en sécurité.
- Avant la mise en service du composant contrôler l'intégrité de l'équipement électrique et de toutes les parties pour lesquelles un arrêt prolongé pourrait compromettre le fonctionnement.

**3) RÉ-UTILISATION APRÈS UNE PÉRIODE D'INACTIVITÉ**
- Pendant la période d'inactivité du composant éviter les locaux humides et saumâtres
- Placer le composant sur des palettes en bois et les ranger à l'abri des intempéries.
- Avant la mise en service mettre le composant en sécurité
- Avant la mise en service du composant contrôler l'intégrité de l'équipement électrique et de toutes les parties pour lesquelles un arrêt prolongé pourrait compromettre le fonctionnement.
- Si le composant travaille dans des conditions et avec des matières différentes de l'application précédente, vérifier la compatibilité de cette utilisation d'après ce qui est indiqué dans la section MODE D'EMPLOI.

**SOULÈVEMENT**
Quand le poids de l'appareillage ne dépasse pas au total le poids de 30 kg, la manutention de la charge peut être faite manuellement sans oublier que le poids pouvant être soulevé est de 30 kg pour les mâles et de 20 kg pour les femmes adultes.
(D.Leg. 626/94).

**1) IMMAGAZZINAGGIO PRIMA DELL'INSTALLAZIONE**
- Evitare possibilmente ambienti umidi e salmastri.
- Sistemare il componente su pedane di legno e locarle al riparo dalle intemperie.

**2) FERMO MACCHINA PROLUNGATO DOPO IL MONTAGGIO**
- Prima della messa in servizio mettere in sicurezza il componente.
- Prima della messa in servizio del componente controllare l'integrità dell'impianto elettrico, pneumatico, e di tutte le parti per le quali un prolungato arresto potrebbe compromettere la funzionalità.

**3)POSSIBILE REIMPIEGO DOPO PERIODO DI INATTIVITA'**
- Durante il fermo componente evitare ambienti umidi e salmastri.
- Sistemare il componente su pedane di legno e locarle al riparo dalle intemperie.
- Prima della messa in servizio mettere in sicurezza il componente.
- Prima della messa in servizio del componente controllare l'integrità dell'impianto elettrico, pneumatico, e delle parti per le quali un prolungato arresto potrebbe compromettere la funzionalità.
- Se il componente opera in condizioni e con materiali diversi dall'applicazione precedente, verificare la compatibilità di tale utilizzo secondo quanto riportato nel sezione INDICAZIONE PER L'USO.

**SOLLEVAMENTO**
Quando il peso dell'apparecchiatura non supera il peso complessivo di 30 kg la movimentazione del carico può essere fatta manualmente ricordando che il peso sollevabile per i maschi adulti e di 30 kg mentre di kg 20 per femmine adulte.
(D.lgs 626/94).

The percussion gun must be positioned in such a manner that:

- the area around the percussion gun must be made safe as per Directive ATEX 94/9/CE.
- By safe place is meant an outside area in which suitable warning notices are present during the working of the percussion gun, see Sect. 26 residual risks, and where there are no plant parts that can get damaged or inflammable material deposits.
- The user is entirely responsible if the percussion gun is installed in any way other than that indicated above.
- The component does not require special lighting; the component installer is however responsible for ensuring uniform lighting in the area on the basis of the indications of the relevant regulation.

**N.B.:**
- If the percussion gun is installed in new plants, make sure these are free of dust and then proceed with the installation.
- If the percussion gun is installed on operating parts of the plant already containing powder, make sure these are free of powders before proceeding with the installation.

**The installer must have a fire permit before proceeding with the installation**.

Der pneumatische Klopfer ist so anzuordnen, dass:

- der Bereich rings um den pneumatischen Klopfer gemäß den Angaben der ATEX-Richtlinie 94/9/EG gesichert ist.
- Unter einem sicheren Ort versteht man einen Außenbereich, in dem während des Betriebs des pneumatischen Klopfers eine entsprechende Beschilderung angebracht ist. Siehe Teil 26 Restrisiken. Außerdem dürfen keine Anlagenteile vorhanden sein, die beschädigt werden könnten, oder Lager mit entflammbaren Materialien.
- Anordnungen des pneumatischen Klopfers, die von der oben genannten abweichen, führen dazu, dass der Anwender die Haftung in vollem Umfang selbst übernimmt.
- Das Bauteil verlangt keine besondere Beleuchtung. Der Monteur hat jedoch darauf zu achten, dass der Bereich aufgrund der Angaben der einschlägigen Normen gleichmäßig beleuchtet wird.

**N.B.:**
- Falls der Klopfer auf neuen Anlagenteilen installiert wird, sicherstellen, dass sie staubfrei sind und dann mit der Installation beginnen.
- Falls der Klopfer auf Teilen der Anlage installiert wird, die in Betrieb sind und Stäube enthalten, vor Beginn der Installation sicherstellen, dass diese keine Stäube enthalten und erst dann die Installation vornehmen.

**Es ist erforderlich, dass der Monteur mit Genehmigung für Feuerarbeiten ausgestattet ist, bevor er mit der Installation beginnt.**

Le percuteur pneumatique doit être mis en place en respectant les règles suivantes :

- une zone tout autour du percuteur pneumatique doit être mise en sécurité conformément à la directive ATEX 94/4/CE.
- Par lieu sûr on entend une zone extérieure dans laquelle, pendant le fonctionnement du percuteur pneumatique, sont apposés des panneaux de signalisation appropriés (voir sect. 26 risques résiduels). En outre il ne doit pas y avoir de parties d'installation endommageables ou des dépôts de matières inflammables.
- Tout positionnement différent du percuteur pneumatique rend l'utilisateur entièrement responsable.
- Le composant n'exige pas un éclairage particulier; l'installateur du composant doit assurer la présence d'un éclairage approprié dans la zone sur la base des indications de la réglementation concernée.

**N.B.:**
- En cas d'installation du percuteur sur des parties d'installation neuves, s'assurer que celles-ci sont sans poussières et procéder avec l'installation.
- Au cas où l'installation du percuteur sur les parties d'installation en service contenant des poussières, avant de procéder à l'installation s'assurer que celles-ci sont sans poussières et procéder à l'installation.

**Il faut que l'installateur soit munie d'un permis de travail au feu avant de procéder à l'installation.**

Il percussore pneumatico, deve essere posizionato in modo che:

- la zona circostante al percussore pneumatico deve essere resa sicura come da direttiva ATEX 94/9/CE.
- Per luogo sicuro s'intende una zona esterna nella quale durante il funzionamento percussore pneumatico, sia apposta l'adeguata cartellonistica, vedi sez.26 rischi residui, inoltre non siano presenti parti d'impianto danneggiabili o depositi di materiali infiammabili.
- Posizionamenti del percussore pneumatico diversi da quanto sopra indicato determinano la totale assunzione di responsabilità da parte dell'utilizzatore.
- Il componente non necessita di un'illuminazione particolare; l'installatore del componente è comunque tenuto ad assicurare la presenza di un'omogenea illuminazione nell'area in base alle indicazioni della normativa pertinente.

**N.B.:**
· Nel caso dell'installazione del percussore su parti di impianto nuove, assicurarsi che queste siano prive di polvere e procedere con l'installazione.
· Nel caso dell'installazione del percussore su parti di impianto in funzione contenente polvere, prima di procedere all'installazione assicurarsi che queste siano prive di polvere e procedere con l'installazione.

**Occorre che l'installatore sia provvisto di permesso di lavoro a fuoco prima di procedere all'installazione.**

**A) Installation area**
- Clean the surface to be welded by removing paints and impurities.
- Weld the striker "1" using a Rutil Basic DIN 1913E5153B (R10) A VSE7016 electrode, making sure the earth wire of the welding gun is **not** connected to the striker stud bolts.
- Weld anchoring for chain "7".

**Before inserting the seal, make sure the striker and the surrounding area have reached room temperature**.

B) Insert gaskets "2" and "3" and percussion gun "4" on the corresponding stud bolts of the striker.
C) Insert vibration dampers "4", washers "5" and self-locking nuts "6".
D) Tighten the self-locking nuts to bring the value of "M" to the value indicated in the Table below.

**A) Installationsbereich**
- Die zu schweißende Fläche reinigen, indem man Anstriche oder Schmutz unterschiedlicher Art entfernt.
- Die Schlagvorrichtung „1" mit der Elektrode Rutil Basico DIN 1913E5153B (R10) AVSE7016 schweißen, wobei darauf zu achten ist, dass das Massekabel der Schweißmaschine **NICHT** an die Stiftschrauben der Schlagvorrichtung angeschlossen wird.
- Die Verankerung für die Kette „7" anschweißen.

**Vor dem Aufstecken der Dichtung ist es erforderlich, dass die Schlagvorrichtung und die Bereiche ringsum auf Raumtemperatur abgekühlt sind.**

B) Die Dichtungen „2" und „3" und den Klopfer „4" auf die Stiftschrauben der Schlagvorrichtung stecken.
C) Die Stossdämpfer „4", die Unterlegscheiben „5" und die selbstsichernden Muttern „6" aufstecken.
D) Die selbstsichernden Muttern anziehen, bis der Wert „M" auf die Werte der folgenden Tabelle gebracht wird.

**A) Zone d'installation**
- Nettoyer la surface à souder en enlevant les peintures ou les impuretés.
- Souder l'enclume "1" avec l'électrode Rutil Basico DIN 1913E5153B (R10) AVSE7016, en prenant soin de **NE PAS** relier les fils de masse de la machine à souder aux goujons de l'enclume.
- Souder l'ancrage pour chaîne "7".

**Avant d'insérer le joint, il faut que l'enclume et les zones limitrophes aient atteint la température ambiante.**

B) Monter les joints "2" et "3" et le percuteur "4" sur les goujons de l'enclume.
C) Placer les amortisseurs "4", les rondelles "5" et les écrous de sûreté "6".
D) Serrer les écrous autobloquants jusqu'à mettre la mesure "M" aux valeurs du tableau placé dessous.

**A) Zona d'installazione**
- Pulire la superficie da saldare asportando vernici o impurità varie.
- Saldare l'incudine "1" con elettrodo Rutil Basico DIN 1913E5153B (R10) A VSE7016, avendo cura di **NON** collegare il filo di massa della saldatrice ai prigionieri dell'incudine.
- Saldare ancoraggio per catena "7".

**Prima di inserire la guarnizione, occorre che l'incudine e le zone limitrofe abbiano raggiunto la temperatura ambiente.**

B) Inserire guarnizioni "2" e "3" e il percussore "4" sui corrispondenti prigionieri dell'incudine.
C) Inserire gli amoortizzatori "4", le rondelle "5" e i dadi autobloccanti "6".
D) Serrare i dadi autobloccanti fino a portare la quota "M" ai valori della tabella sottostante.

| Type | M (mm) |
|---|---|
| **PS 032-040** | 16 |
| **PS 063-080** | 25 |

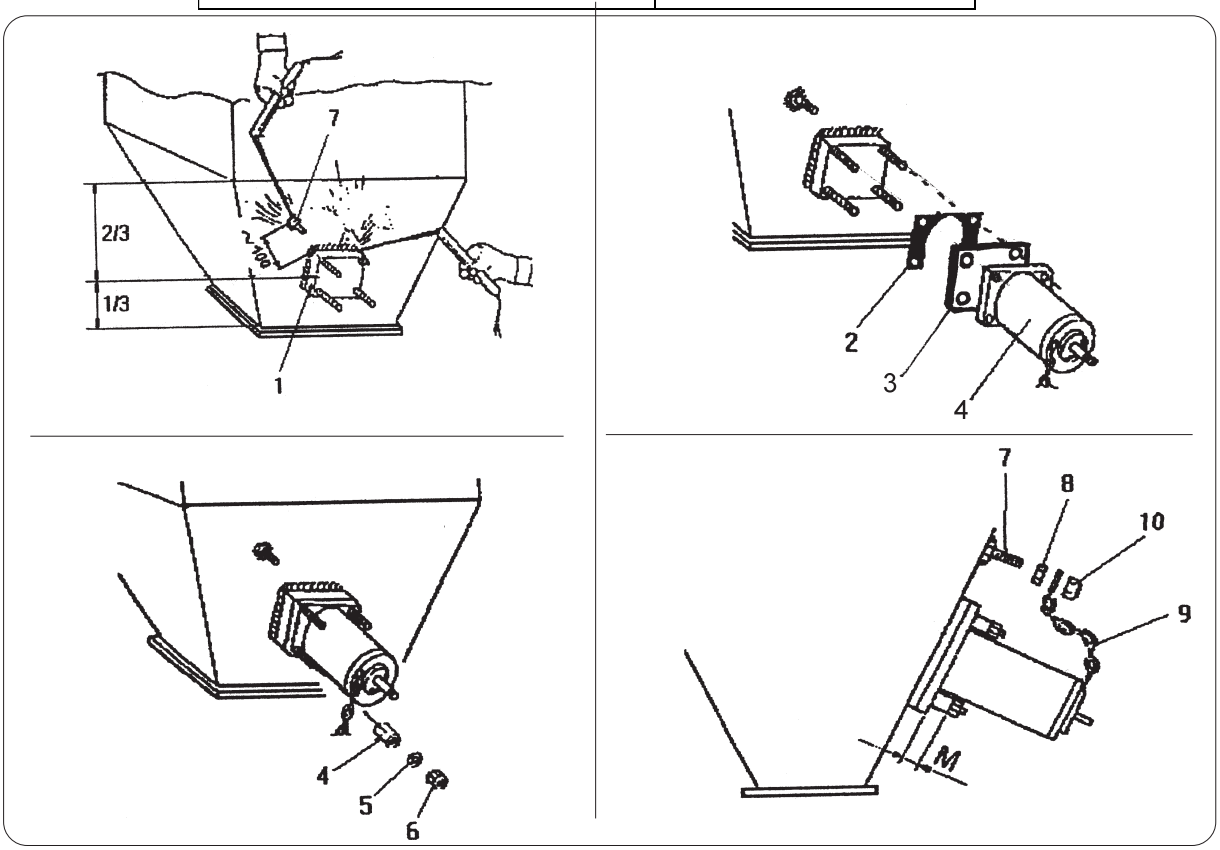

**COMPRESSED AIR REQUISITES**

The compressed air supplied to the various utilities must have certain special features:

1) **clean**: free of scale which could damage the solenoid valves present on the percussion gun.
2) **dehumidified**: use of a condensate trap is advisable.
3) **lubricated**:

**Attention**: before connecting the compressed air to the percussion gun utilities, empty the pipes.

**ANFORDERUNGEN AN DIE DRUCKLUFT**

Die Druckluft, die verschiedene Verbraucher versorgen muss, muss folgende Eigenschaften haben:

1) **rein:** sie darf keine Teilchen enthalten, mit denen die Magnetventile der pneumatischen Klopfer beschädigt werden könnten.
2) **trocken:** ein Kondensatabscheider ist empfehlenswert.
3) **geschmiert**.

**Achtung:** Vor dem Anschließen der Druckluft an die Verbraucher der pneumatischen Klopfer sind die Leitungen zu entleeren.

**AIR COMPRIME REQUIS**

L'air comprimé qui doit alimenter les différentes utilisations doit avoir les requis suivants :

1) **Propre**: sans impuretés pouvant endommager les électrovannes présentes sur le percuteur pneumatique.
2) **Déshumidifié**: il convient de prévoir l'utilisation d'un séparateur d'eau de condensation.
3) **Lubrifié**.

**Attention**: avant de brancher l'air comprimé aux utilisations du percuteur pneumatique vider les tuyauteries.

**REQUISITI ARIA COMPRESSA**

L'aria compressa che deve alimentare le varie utenze ha bisogno di particolari caratteristiche:

**1) pulita:** esente da scorie che potrebbero danneggiare le elettrovalvole presenti sul percussore pneumatico.
**2) deumidificata:** è opportuno prevedere l'utilizzo di un separatore di condensa.
**3) lubrificata:**

**Attenzione:** prima di collegare l'aria compressa alle utenze del percussore pneumatico vuotare le tubazioni.

| | |
|---|---|
| Connect to electric panel kit code13008170A or code 13008190A *or to the plant control PLC* | *Anschluss an elektrische Schalttafel Code 13008170A oder Code 13008190A oder an SPS zur Steuerung der Anlage vornehmen* |
| Brancher au kit tableau électrique Code 13008170A ou Code 13008190A ou au PC de gestion de l'installation | *Collegare a kit quadro elettrico cod.13008170A o cod.13008190A o al PLC di gestione dell'impianto* |

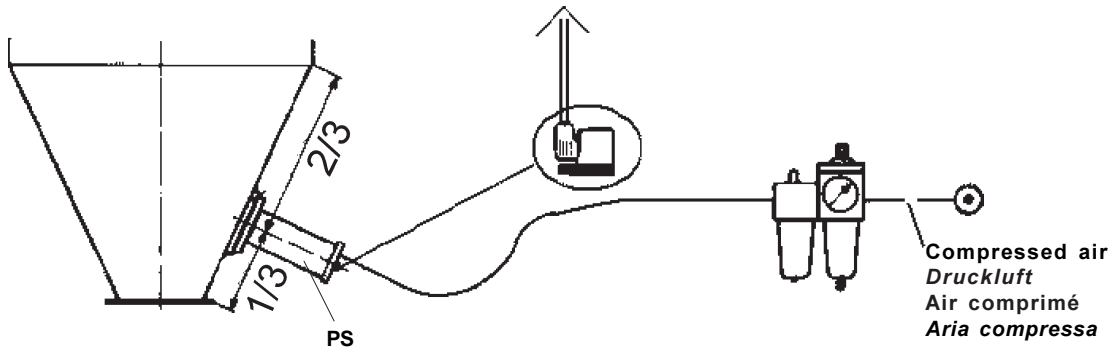


**COMPRESSED AIR CONNECTION**

- The operating pressure shall never exceed 6 bar!
- Connection to the compressed air supply shall be sized to guarantee filling of the percussion gun reservoir in a time less than the cleaning time.
- Blowing air consumption (see page.M.10).

**ATTENTION**
**Use pipes and accessories suitable for the operating temperatures!**

**It is the installer's responsibility to fix the compressed air hose pipes correctly and provide the necessary protection from sudden detachment of a section of the piping.**

**PNEUMATISCHER ANSCHLUSS**

- Der Betriebsdruck darf nie über 6 bar liegen!
- Der Anschluss der pneumatischen Versorgungsquelle muss so ausgelegt werden, dass die Füllung des Behälters des Klopfers in einer Zeitspanne erfolgt, die kürzer als das Abreinigungsintervall ist.
- Druckluftverbrauch pro Abreinigung (siehe Seite M.10).

**ACHTUNG**
**Die für die Einsatztemperaturen geeigneten Leitungen und Zubehör verwenden.**

**Der Monteur hat dafür zu sorgen, dass die Druckluftschläuche korrekt befestigt sind sowie auch dafür, dass die Schutzvorrichtungen gegen das plötzliche Abtrennen einer Schlauchstrecke angebracht werden.**

**RACCORDEMENT PNEUMATIQUE**

- La pression de service ne doit jamais dépasser les 6 bars !
- Le raccordement de l'alimentation pneumatique doit être dimensionné pour garantir le remplissage du réservoir du percuteur en un temps inférieur à l'intervalle d'impulsion.
- Consommation d'air par impulsion (voir page M.10).

**ATTENTION**
**Adopter des tuyauteries et des accessoires appropriés à la température d'utilisation !**

**L'installateur doit fixer correctement les tuyaux flexibles de l'air comprimé et prévoir les protections appropriées contre le détachement soudain d'un tronçon de tuyauterie.**

**COLLEGAMENTO PNEUMATICO**

- La pressione di esercizio non deve mai superare 6 bar !
- Il collegamento alimentazione pneumatica deve essere dimensionato per garantire il riempimento del serbatoio del percussore in un tempo inferiore all'intervallo di sparo.
- Consumo d'aria per sparo (vedi pag.M.10).

**ATTENZIONE**
**Adottare tubazioni e accessori idonei alla temperatura di utilizzo!**

**E' a cura dell'installatore fissare correttamente i tubi flessibili dell'aria compressa e predisporre le dovute protezioni contro il distacco improvviso di un tratto di tubazione.**

| Solenoid coil - *Spule* - Bobine - *Bobina* Code | Description - *Benennung* Désignation - *Descrizione* | Volt | Hz | W |
|---|---|---|---|---|
| BOB 024 50 EX | Solenoid coil with connector *Spule mit Steckverbinder* Bobine avec connecteur *Bobina con connettore* | 24 | 50/60 | 5.3 |
| BOB 024 CC EX | | 24 | = | 5.4 |
| BOB 048 50 EX | | 48 | 50/60 | 5.3 |
| BOB 110 50 EX | | 110 | 50/60 | 5.3 |
| BOB 220 50 EX | | 220 | 50/60 | 5.3 |

**Set the percussion gun in equipotential using the special point provided for the purpose on the percussion gun.**

**Den Potentialausgleich des pneumatischen Klopfers herstellen, indem man die Stelle benutzt, die auf dem pneumatischen Klopfer dafür gekennzeichnet ist.**

**Mettre le percuteur pneumatique en équipotentialité en utilisant le point prévu.**

**Mettere in equipotenzialità il percussore pneumatico utilizzando l'apposito punto dedicato sul percussore pneumatico.**

**START-UP**
**Before carrying out any operation on the component, make sure it is in safety status**.

1) Switch on the compressed air supply.
2) Check that minimum and maximum pressures are within the allowable range.
3) Switch on the power supply adjusting:
a) duration of impulse max. 30 ms
b) impulse interval >= 30" depending on requirements
4) Adjust the operating pressure to obtain the desired percussion.

**EINSCHALTEN**
**Bevor irgendwelche Einriffe an dem Bauteil vorgenommen werden, sicherstellen, dass es sich in einem sicheren Zustand befindet.**
1) Die pneumatische Versorgung einschalten.
2) Sicherstellen dass die oberen und unteren Grenzwerte der zulässigen Drücke eingehalten werden.
3) Die elektrische Versorgung aktivieren und wie folgt regeln:
a) Impulsdauer max. 300 ms
b) Impulsintervall > = 30“ je nach Bedarf
4) Den Betriebsdruck so einstellen, dass die gewünschte Klopfwirkung erhalten wird.

**PROCEDURE DE MISE EN MARCHE**
**Avant toute intervention sur le composant s’assurer que celui-ci est mis en sécurité.**

1) Mettre en marche l’alimentation pneumatique.
2) Vérifier que les valeurs minimales et maximales admissibles de pression sont respectées.
3) Activer l’alimentation électrique en réglant:
a) Durée d’impulsion maxi. 300 ms
b) Intervalle impulsions > = 30" en fonction des exigences
4) Régler la pression de service pour obtenir l’effet de percussion voulu.

**PROCEDURA AVVIAMENTO**
**Prima di effettuare un qualsiasi intervento sul componente assicurarsi che questo sia messo in sicurezza.**

1) Attivare alimentazione pneumatica.
2) Verificare che siano rispettati i valori minimi e massimi di pressione ammessi
3) Attivare alimentazione elettrica regolando:
a) durata impulso max 300 ms
b) intervallo impulsi >= 30" in funzione delle esigenze
4) Regolare la pressione di esercizio per ottenere l’effetto voluto di percussione.

**SWITCHING OFF**
Before proceeding with disassembly of the percussion gun or its component parts, make sure the electrical and compressed air supplies are disconnected.
**Check to make sure the lock is not pressurized**.

**ABSCHALTEN**
Bevor man den Ausbau des pneumatischen Klopfers oder eines seiner Bauteile vornimmt, sicherstellen, dass die elektrische und pneumatische Versorgung unterbrochen wurde.
**Sicherstellen, dass der Anzug nicht unter Druck steht.**

**PROCEDURE DE MISE HORS SERVICE**
Avant de procéder au démontage du percuteur ou de chacun de ses composants, s’assurer que les alimentations électriques et pneumatiques ont été débranchées.
**Vérifier que le serrage n’est pas sous pression.**

**PROCEDURA SPEGNIMENTO**
Prima di procedere allo smontaggio del percussore o di ogni sua parte componenete, assicurarsi che le alimentazioni elettriche e pneumatiche siano state slacciate.
**Verificare che il serraggio non sia in pressione.**

**MAINTENANCE**
**Before carrying out any operation on the component, make sure it is in safety status.**

If work is to be carried out on parts at the top of the percussion gun, use a work area platform which must be selected in such a manner as to avoid risk of slipping, tripping or falling of operators.

**WARTUNG**
**Bevor irgendwelche Eingriffe an dem Bauteil vorgenommen werden, sicherstellen, dass es sich in einem sicheren Zustand befindet.**

Falls man Teile des pneumatischen Klopfers erreichen muss, die sich in größerer Höhe befinden, ist eine Arbeitsplattform zu benutzen, die so zu wählen ist, dass die Gefährdung des Personals durch Ausrutschen, Hängenbleiben oder Absturz vermieden wird.

**MAINTENANCE**
**Avant d’effectuer toute intervention sur le composant s’assurer qu’il est mis en sécurité.**

Pour atteindre des parties du percuteur pneumatique en hauteur, utiliser une plate-forme aérienne de travail qui devra être choisie de manière à éviter tout danger de glissement ou de chute.

**MANUTENZIONE**
**Prima di effettuare un qualsiasi intervento sul componente assicurarsi che questa sia messa in sicurezza.**

La dove si debbano raggiungere parti del percussore pneumatico in quota utilizzare una piattaforma aerea di lavoro che dovrà essere scelta in modo da evitare pericoli di scivolamento, inciampo o caduta per gli operatori.

- Clean dust deposits on a weekly basis.

- Check tightening of the percussion gun fixing screws and coil on a monthly basis.

- Check the tightening of the screw connectors on a weekly basis.

- Check the equipotential with the structure on which the percussion gun is mounted, on a monthly basis.

- The estimated safe working of the PS percussion gun is 150,000 strikes, after which the component must be replaced, or complete overhauling is required by the dealer or authorized service centre. (see page M.3)

- On a yearly basis, check the seals against which the striker mass acts.

- Check the rating plate and if it is damaged, contact the manufacturer for a replacement.

- Staubansammlungen einmal pro Woche entfernen.

- Die Befestigungsschrauben des Klopfers und der Spule einmal pro Monat auf festen Sitz prüfen.

- Die Schraubanschlüsse einmal pro Monat auf festen Sitz prüfen.

- Einmal im Monat den Potentialausgleich mit der Struktur prüfen, an welcher der Klopfer befestigt ist.

- Der sichere Betrieb des Klopfers PS wird auf 150.000 Schläge geschätzt. Danach ist der Austusch des Bauteils vorzunehmen oder das Teil einer Generalüberholung durch den Händler oder durch eine Vertragswerkstatt unterziehen zu lassen (siehe Seite M.3).

- Einmal pro Jahr den Zustand der Dichtung prüfen, auf den die Klopfmasse einwirkt.

- Das Typenschild auf seine Unversehrtheit prüfen. Wenn es beschädigt ist, beim Hersteller eine Kopie anfordern.

- Chaque semaine éliminer les dépôts de poussière qui se sont accumulés.

- Tous les mois vérifier le serrage des vis de fixation du percuteur et de la bobine.

- Tous les mois vérifier l'équipotentialité avec la structure sur laquelle est fixé le percuteur.

- Le fonctionnement du percuteur PS estimé est de 150.000 coups après quoi il est prévu le remplacement du composant ou la révision complète par le revendeur ou le service après vente agréé (voir page M.3).

- Chaque année vérifier l'état du joint sur lequel intervient la masse percutante.

- Vérifier l'intégrité de la plaque, si elle est endommagée, demander une copie au constructeur.

- Settimanalmente rimuovere eventuali cumuli di polvere di deposito.

- Verificare mensilmente, il serraggio delle viti di fissaggio del percussore e della bobina.

- Verificare mensilmente, il serraggio dei raccordi a vite.

- Verificare mensilmente, l'equipotenzialità con la struttura su cui viene fissato il percussore.

- Il funzionamento sicuro del percussore PS stimato è di 150.000 colpi dopo di che è prevista la sostituzione del componente o la completa revisione da parte del rivenditore o del punto di assistenza autorizzato. (vedi a pag. M.3)

- Annualmente verificare lo stato della guarnizione su cui va ad agire la massa battente.

- Verificare l'integrità della targhetta, se danneggiata, occorre chiederne una copia al costruttore.

**Before carrying out any operation on the component, make sure it is in safety status**.

While cleaning the dust deposited on the component, avoid throwing up dust into the surroundings and avoid dust deposits.
The frequency of cleaning operations depends on the type of product handled and the plant.
Do not direct water jets against the electrical components.

**Bevor irgendwelche Eingriffe an dem Bauteil vorgenommen werden, sicherstellen, dass es sich in einem sicheren Zustand befindet.**

Beim Entfernen des eventuell im Bauteil vorhandenen Staubs dafür sorgen, dass der Staub nicht in der Umgebung verteilt wird, und dafür sorgen, dass sich kein Staub ansammelt.

Die Häufigkeit der Reinigungsarbeiten hängt von der Beschaffenheit des behandelten Produkts und von der Anlage ab. Den Wasserstrahl nicht auf elektrische Bauteile richten.

**Avant d'effectuer toute intervention sur le composant s'assurer qu'il est mis en sécurité.**

En éliminant la poussière présente sur le composant faire attention à ne pas la disperser dans le milieu environnant et éviter toute accumulation.

La fréquence des opérations de nettoyage dépend de la nature du produit traité et de l'équipement. Ne pas diriger le jet d'eau sur les composants électriques.

**Prima di effettuare un qualsiasi intervento sul componente assicurarsi che questa sia messa in sicurezza.**

Nella rimozione della polvere eventualmente presente nel componente aver cura di non disperdere la polvere stessa nell'ambiente circostante e avere cura ad evitare cumuli.

La frequenza delle operazioni di pulizia dipendono dalla natura del prodotto trattato e dell'impianto.
Non dirigere direttamente il getto d'acqua sui componenti elettrici.

On the basis of the use of the percussion gun, the installer must inform the operator by means of specific signals, regarding the residual risks:

**1. Mechanical risk**

For maintenance operations, it is compulsory for the operator to always use personal protection equipment.

Special warning notices on each section of the machine indicate the obligatory personal protection equipment:




**2. Presence of possible residual high temperature after percussion gun stop**

During the course of maintenance and cleaning operations and in certain operating sections, the operator may enter into contact with very hot parts of the percussion gun, with the machine stopped.

Special warning notices, located at strategic points indicate the risk due to the presence of very hot surfaces and the obligation for the operator to wear personal protection equipment, especially protective gloves.




**3. Presence of potentially hazardous dusts**

In the event of both routine and extraordinary maintenance, the operator must wear suitable personal protection equipment, and in particular, use a safety mask for the respiratory tract depending on the type of dust dealt as well as gloves and clothing.

For more details, refer to the safety chart of the product handled.




Je nach Verwendung des pneumatischen Klopfers muss der Monteur das Personal durch besondere Hinweisschilder auf folgende Restrisiken hinweisen:

**1.Gefahren mechanischer Art**

Für die Wartungsarbeiten muss das Personal immer seine persönlichen Schutzausrüstungen benutzen.

Besondere Warnschilder an den einzelnen Abschnitten des Geräts geben an, welche persönlichen Schutzausrüstungen jeweils erforderlich sind:




**2. Vorliegen möglicher hoher Temperaturen nach dem Stillstand der Klopfer**

Im Laufe einiger Wartungs- und Reinigungsarbeiten und in einigen Arbeitsabschnitten kann das Personal bei stehendem Gerät in Kontakt mit Teilen der Klopfer geraten, die eine hohe Temperatur aufweisen.

Besondere Warnschilder, die an den strategischen Stellen angebracht sind, weisen auf die Gefahren hin, die sich durch die hohe Temperatur der Oberflächen ergeben und weisen das Personal darauf hin, dass es zur Verwendung der persönlichen Schutzausrüstungen verpflichtet ist, insbesondere zum Tragen von Schutzhandschuhen.




**3. Vorhandensein potentiell gefährlicher Stäube**

Bei regelmäßiger und außerordentlicher Wartung muss das Personal geeignete persönliche Schutzausrüstungen verwenden und insbesondere Masken zum Schutz der Atemwege mit geeigneter Klasse für den aufbereiteten Staub, wie auch Schutzhandschuhe und Schutzkleidung tragen.

Für nähere Angaben ist Bezug auf das Sicherheitsdatenblatt des verwendeten Produkts zu nehmen.




L'installateur, en fonction de l'utilisation du percuteur pneumatique, doit informer les opérateurs, au moyen d'indications et de signalisations prévues à cet effet, sur les risques résiduels suivants :

**1. Dangers de nature mécanique**

Pour les activités d'entretien l'opérateur a l'obligation d'utiliser toujours les dispositifs de protection individuelle.

Des plaques d'avertissements apposées dans chaque section de la machine indiquent quels sont les dispositifs de protection individuelle qui sont obligatoires :




**2. Présence de hautes températures résiduelles après l'arrêt du percuteur**

Au cours des interventions d'entretien et de nettoyage et dans certaines sections de travail, l'opérateur peut entrer en contact, quand la machine est arrêtée, avec des parties du filtre dont les surfaces sont à des températures élevées.

Des plaques d'avertissement, apposées dans les endroits stratégiques, signalent le danger dû à la présence de surfaces à des températures élevées et l'obligation de l'opérateur d'utiliser les dispositifs de protection individuelle, en particulier des gants de protection.




**3. Présence de poussières potentiellement dangereuses**

Aussi bien dans le cas d'interventions d'entretien ordinaires ou extraordinaires, l'opérateur doit se doter des dispositifs de protection individuelle et en particulier il doit utiliser des masques de classe appropriée pour protéger les voies respiratoires en fonction du type de poussière traitée ainsi que de gants ou de vêtements adéquats.

Pour plus de détails consulter la fiche de sécurité du produit utilisé.




L'installatore, in base all'utilizzo del percussore pneumatico, deve informare gli operatori, tramite appositi segnali, in merito ai seguenti rischi residui :

**1. Pericoli di natura meccanica**

Per le attività di manutenzione è fatto obbligo all'operatore di impiegare sempre i dispositivi di protezione individuale.

Apposite targhe monitorie nelle singole sezioni di macchina indicano quali dispositivi di protezione individuale si rendono obbligatori:




**2. Presenza di possibili alte temperature residue dopo l'arresto del percussore**

Nel corso di interventi manutentivi e di pulizia e in alcune sezioni di lavoro, l'operatore può entrare in contatto, a macchina ferma, con parti del percussore pneumatico con superfici ad elevata temperatura.

Apposite targhe monitorie, collocate nei punti strategici indicano il pericolo dovuto alla presenza di superfici ad elevata temperatura e l'obbligo per l'operatore di utilizzare dispositivi di protezione individuale, in particolare guanti protettivi.




**3. Presenza di polveri potenzialmente pericolose**

Nel caso di interventi sia ordinari che straordinari di manutenzione l'operatore deve dotarsi di idonei dispositivi di protezione individuale ed in particolare deve utilizzare maschere a protezione delle vie respiratorie di classe idonea in base al tipo di polvere trattata nonché di guanti o indumenti.

Per maggiori dettagli si deve far riferimento alla scheda di sicurezza del prodotto utilizzato.



- In certain handling of dusts, where hazardous substances are present, the operator concerned who has to access the machine for routine and extraordinary maintenance operations must wear suitable protective devices as indicated on the notice signs provided.




**All maintenance operations on the outside of the percussion gun MUST BE done with the plant stopped and in the absence of airborne dust.** In case of operations involving heating (welding, cutting) it is necessary to clean the percussion gun first, removing all dust deposits (the layers, the deposits and accumulated combustible powder MUST be considered like any other source which can result in an explosive atmosphere).

Authorization for operations involving heating MUST be given by technical personnel specializ-ed and trained in the risk of explosion from dusts (capable of checking residual risk, suitability of tools and a knowledge of the procedures).

(The person responsible for safety must issue a “Fire Permit” to the operator).

**4. Hazards deriving from pressurized circuits (hydraulic, pneumatic)**

During mainten- ance and/or repair operations pressure must be discharged from the plants and accumulators (if present), according to the instructions given along-side the components and in the respective user manuals.

**5. Hazard generated by noise**

The user and employer are obliged to respect the legal standards as regards protection from daily personal exposure of operators to noise (in Italy L.D.277/91).

- Bei bestimmten Staubbehandlungen, wo schädliche Substanzen auftreten, muss das Personal, falls es im Laufe der regelmäßigen oder außerordentlichen Wartung damit in Kontakt kommt, persönliche Schutzausrüstungen tragen, so wie auf den vorhandenen Schildern angegeben.




**Alle Wartungsarbeiten außerhalb des pneumatischen Klopfers MÜSSEN bei abgeschalteter Anlage und in Abwesenheit atembarer Stäube durchgeführt werden**. . Bei der Ausführung von erhitzenden Arbeiten (Schweißen, Schneiden) ist es erforderlich, die Fläche der Struktur, auf welcher der Klopfer PS installiert werden soll, vorbeugend zu behandeln, um alle Staubablagerungen und entfernt werden (Schichten, Ablagerungen und Ansammlungen von brennbarem Staub MÜSSEN wie jede andere Staubquelle betrachtet werden, die zur Entstehung einer explosiven Atmosphäre beitragen kann).

Die Genehmigung zur Ausführung von Arbeiten im erwärmten Zustand DARF NUR durch spezialisiertes, technisches Personal erteilt werden, das über die Explosionsgefahr durch Staub unterrichtet ist (das in der Lage ist, das Restrisiko festzustellen, das die geeigneten Werkzeuge und auch die Prozeduren kennt).

(Der Werkschutzverantwortliche muss dem Arbeitnehmer eine „Genehmigung zur Feuerarbeit” ausstellen.)

**4. Gefahren durch unter Druck stehende Leitungen (hydraulisch, pneumatisch)**

Während der Wartungsarbeiten und/oder Reparaturen sind die Anlagen und die etwaigen Akkumulatoren zu entleeren, so wie es in den Anweisungen an die jeweiligen Komponenten oder in den entsprechenden Handbüchern steht.

**5. Gefährdung der Arbeitnehmer durch Lärm**

Der Anwender und der Arbeitgeber sind zur Einhaltung der gesetzlichen Bestimmungen in Sachen Schutz gegen tägliche persönliche Lärmexposition der Arbeitnehmer verpflichtet (in Italien D.Lgs.277/91).

- Dans des traitements déterminés de poussières où il y a la présence de substances nocives, l’opérateur qui doit y avoir accès, dans le cours des interventions ordinaires ou extraordinaires, doit porter les dispositifs de protection appropriés comme signalé par les panneaux indicateurs qui s’y trouvent.




**Tous les entretiens à l’extérieur du percuteur pneumatique DOIVENT être effectués quand l’installation est arrêtée et en absence de poussière dispersée dans l’air**. Dans le cas de travaux à chaud (soudure, découpe) il faut préalablement nettoyer la surface de la structure sur laquelle doit être monté le percuteur PS, en éliminant tous les dépôts de poussière (les couches, les dépôts et les tas de poussière combustible DOIVENT être considérés comme une autre source pouvant donner lieu à une atmosphère explosive).

L’autorisation à l’exécution des travaux à chaud DOIT être donnée par du personnel technique spécialisé et formé sur le risque d’explosion des poussières (en mesure de vérifier le risque résiduel, l’aptitude des outils et la connaissance des procédures).

(Le responsable de la sécurité devra délivrer un “permis de feu” à l’opérateur.)

**4. Dangers dérivant des circuits sous pression (hydrauliques, pneumatiques)**

Pendant les opérations d’entretien et/ou de réparation il faut décharger les installations et les éventuels accumulateurs, conformément aux instructions qui se trouvent à proximité des composants et dans les notices d’instructions correspondantes.

**5. Dangers provoqués par le bruit**

L’utilisateur ainsi que l’employeur ont l’obligation de faire respecter les normes de loi en matière de protection contre l’exposition personnelle quotidienne des opérateurs au bruit (en Italie D.Lgs.277/91).

- In determinati trattamenti di polveri dove vi è la presenza di sostanze nocive, l'operatore che dovesse accedere, nel corso di interventi ordinari o straordinari, deve indossare gli idonei dispositivi di protezione come indicato dalla cartellonistica ivi presente.




**Tutte le manutenzioni all'esterno del percussore pneumatico DEVONO essere effettuate ad impianto fermo e in assenza di polvere aerodispersa.** In caso di lavori a caldo (saldatura, taglio) è necessario bonificare preventivamente la superficie della struttura su cui andrà installato il percussore PS, rimuovendo tutti i depositi di polvere (gli strati, i depositi ed i cumuli di polvere combustibile DEVONO essere considerati come qualsiasi altra sorgente che può dare origine ad un'atmosfera esplosiva).

L'autorizzazione all'esecuzione dei lavori a caldo DEVE essere data da personale tecnico specializzato e formato sul rischio esplosione da polveri (in grado di verificare il rischio residuo, l'idoneità degli utensili e la conoscenza delle procedure).

(Il responsabile della sicurezza dovrà rilasciare un “permesso di lavoro fuoco” all’operatore).

**4. Pericoli derivanti da circuiti in pressione (idraulici, pneumatici)**

Durante le operazioni di manutenzione e/o riparazione occorre porre in scarico gli impianti e gli eventuali accumulatori, secondo le istruzioni riportate in prossimità dei componenti e nei rispettivi manuali d'uso.

**5. Pericoli generati da rumore**

E' fatto obbligo all'utilizzatore e al datore di lavoro di rispettare le norme di legge in termine di protezione contro l'esposizione personale quotidiana degli operatori al rumore (in Italia D.Lgs.277/91).

| PROBLEM | POSSIBLE CAUSE | SOLUTION |
|---|---|---|
| **Ruptured membrane (Item 25, spare parts).**<br>**A** | 1) Operating and supply pressure > 6 bar. | 1) Replace the membrane..<br>2) Adjust the pressure setting. |
| **Limited percussion of fluidisation effect.**<br>**B** | 1) Operating pressure too low. | 1) Adjust to > 2 bar until desired effect is obtained |
| | 2) The reservoir does not recharge completely between firings. | 2a) Increase interval between firings.<br>2b) Increase air supply rate.<br>2c) Check that there are no restrictions in the supply tube. |
| | 3) Another pneumatic appliance connected in parallel. | 3) Install a check valve at the inlet of the pneumatic hammer. |
| | 4) Failure of return spring. | 4) Replace spring. |
| **No effect.**<br>**C** | 1) Ruptured membrane (Item 25 spare parts). | 1) See point "A". |
| | 2) Percussion mass blocked. | 2) Replace mass. |
| | 3) Solenoid does not receive electrical signal. | |
| | 4) No compressed air supply. | |
| | 5) Faulty solenoid. | 5) Replace solenoid. |
| | 6) Pilot blocked inside stem<br>(Item 24 in spare parts list) | 6a) Replace stem.<br>6b) Remove any dirt that may have accumulated. |
| **Damaged seals.**<br>**D** | 1) Ambient temperature not within allowable range (standard -20 +80° C) | 1) Replace seals. |
| **Damaged membrane.**<br>**(only PJ - item 30 in spare parts list)**<br>**E** | 1) Material temperature too high (> 80° C) | 1) Replace membrane |
| | 2) Material with incompatible characteristics:<br>- high acidity<br>- highly adhesive | 2) Contact the Manufacturer. |

| PROBLEM | MÖGLICHE URSACHE | LÖSUNG |
|---|---|---|
| **(A) Membran gerissen (Pos. 25 Ersatzteilliste)** | 1) Betriebs- und Leitungsdruck zu hoch > 6 bar. | 1) Membran ersetzen. |
| **(B) Reduzierte Schlag- und Luftauflockerungswirkung.** | 1) Betriebsdruck zu niedrig. | 2) Tarierdruck einstellen. |
| | 2) Der Behälter kann sich zwischen einem Impuls und dem nächsten nicht ganz füllen. | 1) Anlage > 2 bar tarieren bis die gewünschte Wirkung erzielt ist. |
| | 3) Vorhandensein eines anderen parallel angeschlossenen Verbrauchers. | 2a) Abstand zwischen Impulsen vergrößern. |
| | 4) Rückholfeder gebrochen. | 2b) Luftzufuhr verstärken. |
| **(C) Keine Wirkung** | 1) Membran gerissen (Pos. 25 Ersatzteilliste). | 2c) Sicherstellen, dass in pneumatischem Anschluss keine Verengungen vorhanden sind. |
| | 2) Klopfmasse blockiert. | 3) Im Eingang zum Klopfer ein Rückschlagventil montieren. |
| | 3) Spule erhält keinen elektrischen Impuls. | 1) Siehe Punkt „A”. |
| | 4) Es kommt keine Druckluft an. | 2) Klopfmasse ersetzen. |
| | 5) Spule defekt. | 5) Spule ersetzen. |
| | 6) Vorsteuerung innerhalb des Rohrs blockiert (Pos. 24 Ersatzteilliste). | 6a) Rohr ersetzen. |
| **(D) Dichtringe beschädigt.** | 1) Raumtemperatur unzulässig (Standardwerte -20° / +80°C) | 6b) Etwaigen Schmutz entfernen. |
| **(E) Membran beschädigt (nur PJ - Pos. 30 Eratzteilliste)** | 1) Produkttemperatur sehr hoch (> 80°C) | 1) Dichtungssatz ersetzen. |
| | 2) Produkt mit unverträglichen Eigenschaften:<br>- hoher Säuregrad<br>- hohe Klebrigkeit | 1) Membran ersetzen. |

| PROBLEME | CAUSE PROBABLE | REMÈDE |
|---|---|---|
| **Rupture membrane (Pos. 25 liste pièces détachées)**<br>**A** | 1) Pression de service et de ligne élevée > 6 bars. | 1) Remplacer la membrane.<br>2) Régler l'étalonnage de la pression. |
| **Effet percussion et fluidification réduite**<br>**B** | 1) Pression de service trop bas. | 1) Etalonnage l'installation > 2 bars jusqu'à obtenir l'efficacité voulue. |
| | 2) Le réservoir ne se charge pas complètement entre une impulsion et l'autre. | 2a) Augmenter l'intervalle entre les impulsions.<br>2b) Augmenter l'alimentation de l'air.<br>2c) Vérifier qu'il n'y ait pas de bridages le long de la connexion pneumatique. |
| | 3) Présence d'une autre utilisation reliée en parallèle. | 3) Monter la vanne unidirectionnelle en entrée du percuteur. |
| | 4) Rupteur ressort de retour. | 4) Remplacer le ressort |
| **Aucun effet**<br>**C** | 1) Rupture membrane (Pos. 25 liste pièces détachées) | 1) Voir point "A". |
| | 2) Blocage masse percutante. | 2) Remplacer la masse percutante. |
| | 3) L'impulsion électrique n'arrive pas à la bobine. | |
| | 4) L'air comprimé n'arrive pas. | |
| | 5) Bobine épuisée. | 5) Remplacer les bobines. |
| | 6) Blocage du pilote à l'intérieur du fourreau (Pos. 24 liste pièces détachées). | 6a) Remplacer le fourreau.<br>6b) Nettoyer de toute impureté. |
| **Anneaux d'étanchéité endommagés.**<br>**D** | 1) Température ambiante non autorisée ( Standar -20 +80°C) | 1) Remplacer le kit des joints. |
| **Membrane endommagée (seulement PJ - réf. 30 liste pièces détachées)**<br>**E** | 1) Température produit élevée (> 80°C) | 1) Remplacer la membrane. |
| | 2) Produit avec caractéristiques incompatibles:<br>- acidité élevée<br>- caractéristiques d'adhérence élevées | 2) Consulter notre Bureau Technique. |

| PROBLEMA | POSSIBILE MOTIVO | SOLUZIONE |
|---|---|---|
| **Rottura membrana (Pos. 25 lista ricambi).**<br>**A** | 1) Pressione esercizio e di linea elevata > 6 bar. | 1) Sostituire la membrana.<br>2) Regolare taratura pressione. |
| **Effetto percussione e fluidificazione ridotto.**<br>**B** | 1) Pressione esercizio troppo bassa. | 1) Tarare impianto > 2 bar fino ad ottenere l'efficacia voluta. |
| | 2) Il serbatoio non si carica completamente fra un impulso e l'altro. | 2a) Aumentare l'intervallo fra gli impulsi.<br>2b) Potenziare l'alimentazione dell'aria.<br>2c) Verificare che non ci siano strozzature lungo il collegamento pneumatico. |
| | 3) Presenza di un'altro utilizzo collegato in parallelo. | 3) Montare valvola unidirezionale in ingresso al percussore. |
| | 4) Rottura molla di ritorno. | 4) Sostituire molla |
| **Nessun effetto.**<br>**C** | 1) Rottura membrana (Pos. 25 lista ricambi). | 1) Vedi punto "A". |
| | 2) Blocco massa battente. | 2) Sostituire massa battente. |
| | 3) Non arriva l'impulso elettrico alla bobina. | |
| | 4) Non arriva aria compressa. | |
| | 5) Bobina esausta. | 5) Sostituire bobina. |
| | 6) Blocco del pilota all'interno del canotto (Pos. 24 lista ricambi). | 6a) Sostituire canotto.<br>6b) Pulire da eventuale presenza di impurità. |
| **Anelli di tenuta danneggiati.**<br>**D** | 1) Temperatura ambiente non consentita (standard -20 +80° C) | 1) Sostituire kit guarnizioni. |
| **Membrana danneggiata.**<br>**(solo PJ - rif. 30 lista ricambi)**<br>**E** | 1) Temperatura prodotto elevata (> 80° C) | 1) Sostituire membrana |
| | 2) Prodotto con caratteristiche incompatibili:<br>- elevata acidità<br>- elevate caratteristiche di adesione | 2) Consultare il ns. Uff. Tecnico |

**SCRAPPING THE COMPONENT**

- Before proceeding with scrapping of the percussion gun, clean it thoroughly and dispose off the residual powder in accordance with the indications in the safety sheet.
- The operators responsible for disposal must use suitable personal protection devices.
- In case of scrapping or demolition at the end of life of the component, remove the plastic parts (gaskets and components) and send these to the special collection centres.
- The remaining parts must be sent to the scrap yards.
- For scrapping of the component, observe the lifting procedure indicated in the special sheet supplied.

**VERSCHROTTUNG DES BAUTEILS**

- Bevor man den pneumatischen Klopfer verschrottet, muss er vollständig gereinigt werden, um auch den restlichen Staub, der in ihm enthalten ist, gemäß den Angaben des Sicherheits-Datenblatts zu entsorgen.
- Das Personal, das sich mit der Entsorgung befasst ist, muss geeignete persönliche Schutzausrüstung benutzen.
- Bei der etwaigen Verschrottung oder Demolierung des Bauteils ist darauf zu achten, dass die Kunststoffteile (Dichtungen und Bestandteile) ausgebaut und den entsprechenden Sammelstellen zugeleitet werden.
- Die restlichen Teile sind als Alteisen für die Rückgewinnung des Materials bestimmt.
- Während der Verschrottung des Bauteils sind die Verfahren zum Handling zu beachten, so wie sie auf dem entsprechenden Blatt angegeben sind.

**DEMANTELEMENT COMPOSANT**

- Avant de procéder au démantèlement du percuteur pneumatique, le nettoyer complètement et éliminer tous les résidus de poussière conformément aux indications de la fiche de sécurité.
- Les opérateurs préposés au démantèlement doivent porter des équipements de protection individuelle appropriés.
- En cas de mise à la décharge ou de démantèlement en fin de vie du composant, ne pas oublier de démonter les parties en matière plastique (joints et composants) et de les destiner aux centres de tri spécialisés.
- Les autres parties sont à destiner à la récupération des matières ferreuses.
- Pendant les phases de démantèlement du composant respecter les procédures de levage comme indiqué dans la feuille spécifique.

**ROTTAMAZIONE COMPONENTE**

- Prima di procedere alla rottamazione del percussore pneumatico provvedere alla sua completa pulizia ed allo smaltimento delle polveri residue in accordo con le indicazioni della scheda di sicurezza.
- Gli operatori addetti allo smaltimento devono indossare dispositivi di protezione personale adeguati.
- In caso di rottamazione o demolizione a fine vita del componente, avere cura di smontare le parti in materiale plastico (guarnizioni e componenti) e destinarle agli appositi centri di raccolta.
- Le restanti parti sono da destinare al recupero dei materiali ferrosi.
- Durante le fasi di smantellamento del componente osservare le procedure di sollevamento come indicato nel foglio specifico.

**RETURNING THE COMPONENT**

- To return the component, replace it in the original packaging if available, or pack it in a box and cover it with heat-shrink nylon to protect it as far as possible from impact during transport.
- In any case, make sure the component does not contain material residue.

**RÜCKGABE DES BAUTEILS**

- Bei einer etwaigen Rückgabe des Bauteils, ist die Originalverpackung zu verwenden, sofern sie noch vorhanden ist. Ansonsten ist das Bauteil in einen Karton zu packen und dieser mit Schrumpffolie zu verschließen, wobei man versucht, das Teil so gut wie möglich vor Stößen während des Transports zu schützen.
- Auf jeden Fall sicherstellen, dass keine Materialreste mehr im Bauteil vorhanden sind.

**RESTITUTION DU COMPOSANT**

- En cas de restitution du composant, si on a conservé l'emballage, le remettre dans celui-ci, sinon le mettre dans une caisse et le recouvrir avec du nylon thermorétractable, en essayant de le protéger contre les chocs pendant le transport.
- Dans tous les cas s'assurer que le composant ne contient pas de résidus de matière.

**RESO COMPONENTE**

- In caso di reso del componente, se si è conservato l'imballo, reinserirla nello stesso, altrimenti inserirla in una scatola e ricoprirla con del nylon termoretraibile, cercando di proteggerla al meglio da eventuali urti derivanti dal trasporto.
- In ogni caso assicurarsi che il componente non abbia residui di materiale.

OLI®

WAMGROUP

3

SPARE PARTS

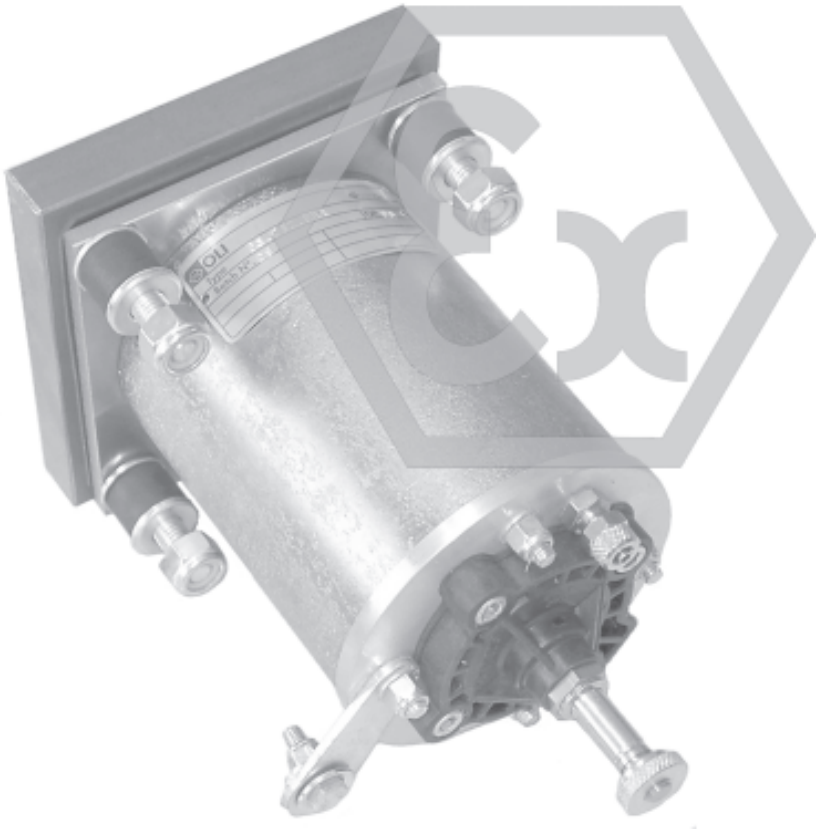

# MARTSHOCK

- **PERCUSSION GUNS**
  SPARE PARTS CATALOGUE
- ***KLOPFER***
  ERSATZTEILKATALOG
- **PERCUTEURS**
  PIECES DE RECHANGE
- ***PERCUSSORI***
  PEZZI DI RICAMBIO

All rights reserved © WAMGROUP


| CATALOGUE No. | OL.3000EX R. | | CREATION DATE |
|---|---|---|---|
| ISSUE | CIRCULATION | DATE OF LATEST UPDATE | 05 - 2004 |
| A | 100 | | |

**SPARE PARTS**
See the following tables to identify the spare parts required.

**ERSATZTEILE**
Für die Identifizierung der Ersatzteile folgende Tabelle zu benutzen.

**PIECES DE RECHANGE**
Pour l'identification des pièces de rechange voir le tableau de la page suivante

**RICAMBI**
Per l'identificazione dei pezzi di ricambio vedi tabelle riportate qui a seguito.

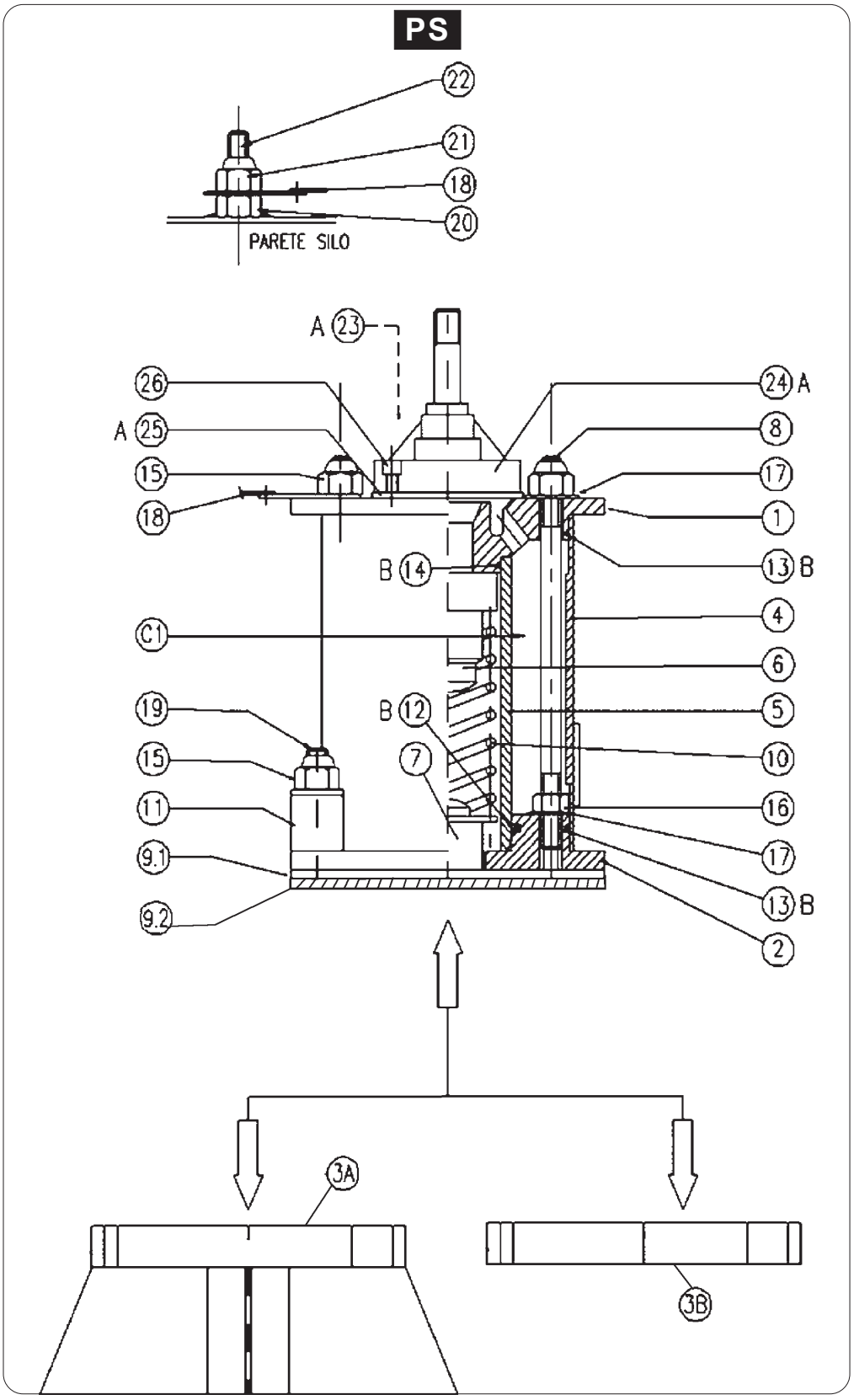

| POS | Q. | Normen Norme | DESCRIPTION | BENENNUNG | DESIGNATION | DESCRIZIONE | 032 | 040 | 063 | 080 |
|---|---|---|---|---|---|---|---|---|---|---|
| A | 1 | | Electropneum. kit | Elektropneumatischer Bausatz | Kit Electropneum. | KIT elettropneum. | 13005690A | 13005690A | 13005700A | 13005700A |
| (23) | 1 | | Tube | Anschluss | Raccord | Raccordo | - | - | - | - |
| (24) | 1 | | Cover kit | Bausatz Deckel | Kit couvercle | KIT coperchio | 13006280A | 13006280A | 13005320A | 13005320A |
| (25) | 1 | | Membrane | Membran | Membrane | Membrana | 6723KP1011 | 6723KP1011 | 20990645A | 20990645A |
| B | 1 | | Internal seals kit | Bausatz innere Dichtungen | Kit joints internes | KIT tenute interne | 13006110A | 13006120A | 13006130A | 13006140A |
| (12) | 1 | PARKER | O-Ring | O-Ring | Joint torique | Anello OR | 2-29 | 2-32 | 2-147 | 2-153 |
| (13) | 2 | PARKER | O-Ring | O-Ring | Joint torique | Anello OR | 2-43 | 2-44 | 2-159 | 2-164 |
| (14) | 1 | PARKER | O-Ring | O-Ring | Joint torique | Anello OR | 2-23 | 2-27 | 2-138 | 2-151 |
| 1 | 1 | | Upper bearing | Oberes Lager | Tête supérieure | Testata superiore | 20959391A | 20959401A | 20959411A | 20959421A |
| 2 | 1 | | Lower bearing | Unteres Lager | Tête inférieure | Testata inferiore | 20958951A | 20958961A | 20958971A | 20958981A |
| 3a | 1 | | Support "A" | Träger "A" | Palier "A" | Supporto "A" | - | - | - | - |
| 3b | | | Support "B" | Träger "B" | Palier "B" | Supporto "B" | - | - | - | - |
| 4 | 1 | | External tube | Außenrohr | Tube extérieur | Tubo esterno | 20988681A | 20988691A | 20988701A | 20988711A |
| 5 | 1 | | Sleeve | Laufbuchse | Chemise | Camicia | 20988721A | 20988731A | 20988741A | 20988751A |
| 6 | | | Striking mass | Klopfmasse | Masse percutante | Massa battente | 20974741A | 20974751A | 20974781A | 20974791A |
| 7 | | | Striking plate | Klopfplatte | Masse battue | Massa battuta | // | // | 20974761A | 20974771A |
| 8 | 4 | | Stud bolt | Stiftschraube | Goujon | Prigioniero | 20684941A | 20684951A | 20684961A | 20684971A |
| 9.1 | 1 | | Square gasket | Vierkantdichtung | Joint carré | Guarnizione quadra | 20992321A | 20992331A | 20992341A | 20992351A |
| 9.2 | 1 | | Antistatic polyurethane plate | Antistatische PUR-Platte | Plaque en polyuréthanne antistatique | Piastra in poliuretano antistatico | 20992322A | 20992332A | 20992342A | 20992352A |
| 10 | 1 | | Spring | Feder | Ressort | Molla | 76983391A | 76983401A | 76983411B | 76983421A |
| 11 | 4 | | Vibration damper | Schwingungsdämpfer | Silentbloc | Antivibrante | 20983351A | 20983351A | 20983361A | 20983361A |
| 15 | 8 | DIN982 | Self-locking nut | Selbstsperrende Mutter | Ecrou de sûreté | Dado autobloccante | M6 | M8 | M10 | M12 |
| 16 | 4 | DIN934 | HH nut | SK-Mutter | Ecrou hexagonal | Dado esagonale | M6 | M8 | M10 | M12 |
| 17 | 8 | DIN125A | Bevelled washer | Schräge Beilagscheibe | Rondelle biseautée | Rondella bisellata | M6 | M8 | M10 | M12 |
| 18 | 1 | | Safety chain | Sicherungskette | Chaîne de sécurité | Catena di sicurezza | 20988771A | 20988771A | 20988761A | 20988761A |
| 19 | 4 | DIN933 | HH screw | SK-Schraube | Vis H. | Vite T.E. | M6X50 | M8X70 | M10X80 | M12X80 |
| 20 | 1 | DIN934 | HH nut | SK-Mutter | Ecrou hexagonal | Dado esagonale | M8 | M8 | M12 | M12 |
| 21 | 1 | DIN982 | Self-locking nut | Selbstsperrende Mutter | Ecrou de sûreté | Dado autobloccante | M8 | M8 | M12 | M12 |
| 22 | 1 | DIN933 | HH screw | SK-Schraube | Vis H. | Vite T.E. | M8X20 | M8X20 | M12X25 | M12X25 |
| 26 | 4 | DIN912 | Socket screw | Innensechskantschraube | Vis Hc | Vite T.C.E.I. | M6X20 | M6X20 | M6X20 | M6X20 |

*N.B. Rights reserved to modify technical specifications*
*N.B. Angaben ohne Gewähr. Änderungen können ohne Vorankündigung vorgenommen werden.*
*N.B. Toutes données portées dans le présent catalogue n'engagent pas le fabricant. Elles peuvent être modifiéés à tout moment.*
*N.B. Tutti i dati riportati nel presente catalogo non sono impegnativi e possono subire variazioni in qualsiasi momento.*


OLI®

**O.L.I. S.r.l.**
Via Canalazzo, 35
I - 41036 Medolla - (MO)
ITALY

☎ +39 / 0535 / 46400
**fax** +39 / 0535 / 46350
**e-mail** olivibra@tin.it
**internet** www.olivibra.it

# LOADCELL

| | |
|---|---|
| **# Sinox:** | 50192 |
| **Manufacturer :** | AMCELLS |
| **Model :** | Compression |
| **Capacity :** | 15 000lbs |
| **Quantity per scale hopper:** | 4x |

SSB Series
• Single-Ended Shear Beam • Alloy Steel
• NTEP Approved (C of C# 97-163)
Ordering Code : SSB – (capacity)
* Specifications subject to change without notice.



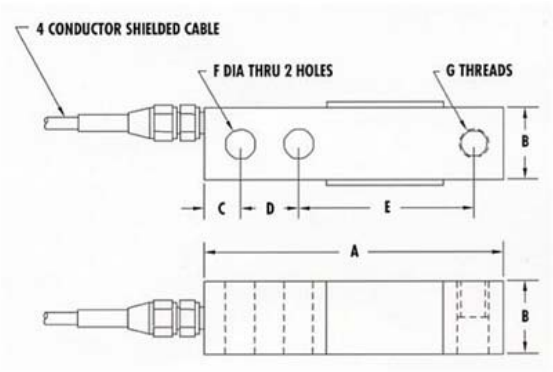


Capacities 100, 250, 500, 1K, 2K, 2.5K, 3K, 4K, 5Kse,
5K, 10K, 15K, 20K lb
Rated Output (R.O.) 3.0 MV/V ± 1%
CABLE LENGTH : 20 feet

| CAPACITY (lb) | A | B | C | D | E | F | G |
|---|---|---|---|---|---|---|---|
| 100 — 5Kse | 5.12 | 1.25 | 0.62 | 1.00 | 3.00 | 0.53 | 1/2—20 |
| 5K — 10K | 6.75 | 1.50 | 0.75 | 1.50 | 3.75 | 0.78 | 3/4—16 |
| 15K — 20K | 8.75 | 2.00 | 1.00 | 2.00 | 4.75 | 1.03 | 1—12 |

previous

# SSB Series

- Single-Ended Shear Beam
- Alloy Steel
- NTEP Approved [C of C #97-163]

Ordering Code: SSB-(capacity)

* Specifications subject to change without notice.




## SPECIFICATIONS:

| | |
|---|---|
| ***Capacities:*** | 100, 250, 500, 1K, 2K, 2.5K, 3K, 4K, 5Ksc, 5K, 10K, 15K, 20K Lb |
| ***Rated Output (R.O.):*** | 3.0 MV/V ± 1% |
| ***Zero Balance:*** | ± 2% of R.O. |
| ***Non-Linearity:*** | 0.02% of R.O. |
| ***Hysteresis:*** | 0.02% of R.O |
| ***Non-Repeatability:*** | 0.02% of R.O |
| ***Creep (1 Hour):*** | 0.05% of Load |
| ***Insulation:*** | > 5,000M Ohm |
| ***Input Impedance:*** | 385 ± 30 Ohm |
| ***Output Impedance:*** | 350 ± 4 Ohm |
| ***Safe Overload:*** | 150% F.S. |
| ***Ultimate Overload:*** | 300% F.S. |
| ***Compensated Temperature Range:*** | -10°C to 40°C |
| ***Operating Temperature Range:*** | -40°C to 80°C |
| ***Temperature Effect on Output:*** | 20 ppm/°C of Load |
| ***Temperature Effect on Zero:*** | 20 ppm/°C of R.O. |
| ***Recommended Excitation:*** | 10V DC/AC |
| ***Maximum Excitation:*** | 20V DC/AC |

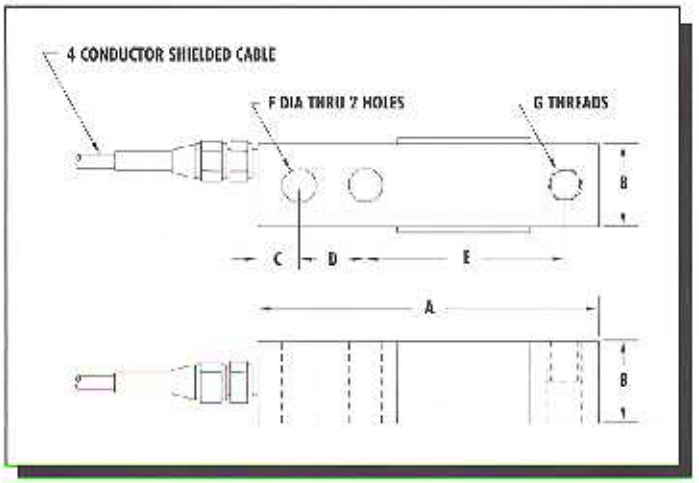


| Capacity (lb) | A | B | C | D | E | F | G |
|---|---|---|---|---|---|---|---|
| 100 - 5Kse | 5.12 | 1.25 | 0.62 | 1.00 | 3.00 | 0.53 | 1/2-20 |
| 5K - 10K | 6.75 | 1.50 | 0.75 | 1.50 | 3.75 | 0.78 | 3/4-16 |
| 15K - 20K | 8.75 | 2.00 | 1.00 | 2.00 | 4.75 | 1.03 | 1-1¼ |

***Color Code: Red + Excitation, Green + Signal, Black - Excitation, White - Signal***
***Cable Length: 20 ft.***

NATIONAL CONFERENCE ON WEIGHTS AND MEASURES NTEP

# VIBRATOR & IMPACTOR PRESSURE REGULATOR

| | |
|---|---|
| **# Sinox:** | PNE-00112 |
| **Manufacturer:** | FESTO FESTO, 529419, REGULATEUR MS4-LR-1/4-D7-AS |
| **Pneumatic connexion**: | 1/4 NPT |
| **Operating range:** | 0-150PSI |
| **Quantity per receiver:** | 1x |

# Pressure Regulators MS4N-LR/LRB – Inch Series



The pressure regulator maintains a constant working pressure (secondary side), regardless of the pressure variations in the system (primary side) and the air consumption.

- Pressure regulators
  – MS4-LR
  – MS4-LRB, manifold units
- Pneumatic connection: ⅛ NPT, ¼ NPT, ⅜ NPT
- Supply pressure: 12 … 206 psi
- Controlled pressure range: 4.4 … 176 psi
- Flow rate: 10.6 … 74.1 scfm

**Product Range Overview**

| Type | Flow rate [scfm] | Pneumatic connections | | Pressure regulation range [psi] | | | | Pressure indicator | | | | | Pressure adjustment | | Reverse flow |
|---|---|---|---|---|---|---|---|---|---|---|---|---|---|---|---|
| | | Body thread | Port plate | 4.4 … 59 | 4.4 … 103 | 7.4 … 176 | 7.4 … 235 | Cover plate (without pressure gauge) | Integrated MS pressure gauge | Adapter for pressure gauge ⅛ NPT | Adapter for pressure gauge ¼ NPT | Pressure sensor with display | Rotary knob, lockable | Rotary knob, long | Flow direction from right to left |
| MS4N | | | AG… | D5 | D6 | D7 | D8 | VS | AG | A8 | A4 | AD… | AS | LD | Z |
| LR | 35.3 … 74.1 | ⅛ NPT, ¼ NPT | ⅛ NPT, ¼ NPT, ⅜ NPT | ■ | ■ | ■ | – | ■ | ■ | ■ | ■ | ■ | ■ | ■ | ■ |
| LRB | 10.6 … 67.1 | ¼ NPT | ⅛ NPT, ¼ NPT, ⅜ NPT | ■ | ■ | ■ | – | ■ | ■ | ■ | ■ | ■ | ■ | ■ | ■ |

**Contents**

**MS4N-LR**


| | |
|---|---|
| Technical Data | ➔ 176 |
| Dimensional Drawings | ➔ 178 |
| Ordering Data | ➔ 181 |
| Accessories | ➔ 184 |
| Replacement Parts | ➔ 205 |


➔ www.festo.com/catalog/ms4n-lr

**MS4N-LRB**


| | |
|---|---|
| Technical Data | ➔ 186 |
| Dimensional Drawings | ➔ 188 |
| Ordering Data | ➔ 191 |
| Accessories | ➔ 194 |
| Replacement Parts | ➔ 205 |


➔ www.festo.com/catalog/ms4n-lrb

# Pressure Regulators MS4N-LR – Inch Series

Technical Data

ISO Symbol

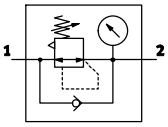


- Good control characteristics with low hysteresis and primary pressure compensation
- High flow rate with minimal pressure drop
- Available with or without secondary venting
- Setting values are secured by locking the rotary knob
- Lockable rotary knob
- Three pressure regulation ranges
- Two pressure gauge connections for different fitting options
- Reverse flow option for exhausting from output 2 to output 1
- Optional pressure sensor with display
- Optional rotary knob pressure gauge



| General Technical Data | | | | |
|---|---|---|---|---|
| Pneumatic connection 1, 2 | | | 1/8 NPT | 1/4 NPT |
| Supply pressure | | [psi] | 12 ... 206 | |
| Pressure regulation range | D5 | [psi] | 4.4 ... 59 | |
| | D6 | [psi] | 4.4 ... 103 | |
| | D7 | [psi] | 7.4 ... 176 (7.4 ... 147 with variant pressure sensor AD... ) | |
| Max. hysteresis | | [psi] | 3.7 | |

| Standard Nominal Flow Rate qnN[1] [scfm] | | | |
|---|---|---|---|
| Pneumatic connection 1, 2 | | 1/8 NPT | 1/4 NPT |
| Pressure regulation range | D5 | 42.4[2] | 74.1[2] |
| | D6 | 40.6 | 63.5 |
| | D7 | 35.3 | 60.0 |

1) Measured at p1 = 147 psi and p2 = 88 psi, Δp = 15 psi
2) Measured at p1 = 147 psi and p2 = 44 psi, Δp = 15 psi

| Operating and Environmental Conditions | | | |
|---|---|---|---|
| Variant | | Standard | Pressure sensor with display AD... |
| Operating medium | | Compressed air | Filtered compressed air, lubricated or unlubricated, filtration grade 40 µm |
| Ambient temperature | [°F] | 14 ... 140 | 32 ... 122 |
| Temperature of medium | [°F] | 14 ... 140 | 32 ... 122 |
| Storage temperature | [°F] | 14 ... 140 | 14 ... 140 |
| Assembly position | | Any | |
| Corrosion resistance | CRC[1] | 2 | |

1) Corrosion resistance class 2 according to Festo standard 940 070
Components requiring moderate corrosion resistance. Externally visible parts with primarily decorative surface requirements which are in direct contact with a normal industrial environment or media such as coolants or lubricating agents.

# Pressure Regulators MS4N-LR – Inch Series

Technical Data

| Weights [lb] | |
|---|---|
| Pressure regulator | 0.45 |

- Wearing parts kits ➔ 205
- For spare parts go to: www.festo.com/en/spare_parts_service

## Standard Flow Rate qn as a Function of Output Pressure p2

Primary pressure p1 = 147 psi

MS4N-LR-⅛

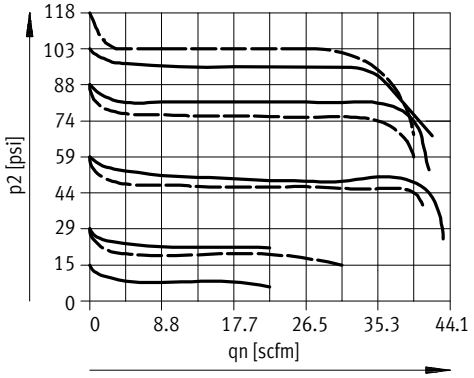


MS4N-LR-¼

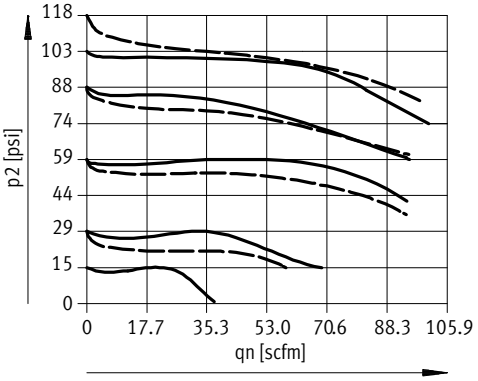


D6: 4.4 ... 103 psi

D7: 7.4 ... 176 psi

## Materials

Sectional view

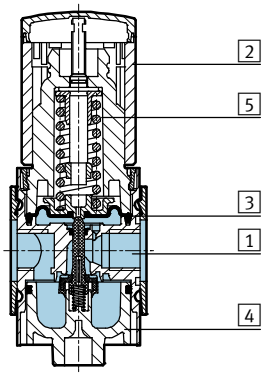


| Pressure regulator | | |
|---|---|---|
| 1 | Body | Die-cast aluminum |
| 2 | Regulating knob | Polyamide/polyacetate |
| 3 | Diaphragm | Nitrile rubber |
| 4 | Bottom cap | Polyester, fiberglass reinforced |
| 5 | Springs | Steel |
| – | Seals | Nitrile rubber |
| | Note on materials | Free of copper and PTFE only with cover plate VS |

# Pressure Regulators MS4N-LR – Inch Series

Dimensional Drawings

**Dimensions[1] – Standard** Download CAD Data ➔ **www.festo.com/us/cad**

With pressure gauge, display unit [psi]

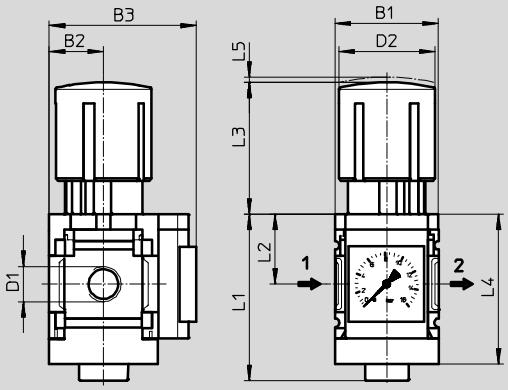


➔ Flow direction

| Type | B1 | B2 | B3 | D1 | D2 | L1 | L2 | L3 | L4 | L5 |
|---|---|---|---|---|---|---|---|---|---|---|
| MS4N-LR-⅛ | 1.57 | 0.83 | 2.24 | ⅛ NPT | 1.46 | 2.54 | 1.06 | 2.01 | 2.28 | 0.08 |
| MS4N-LR-¼ | | | | ¼ NPT | | | | | | |

1) Dimensions are in inches, unless otherwise noted.

**Dimensions[1] – Alternative Mounting Position** Download CAD Data ➔ **www.festo.com/us/cad**

Rotary knob underneath KD, standard rotary knob, with pressure gauge

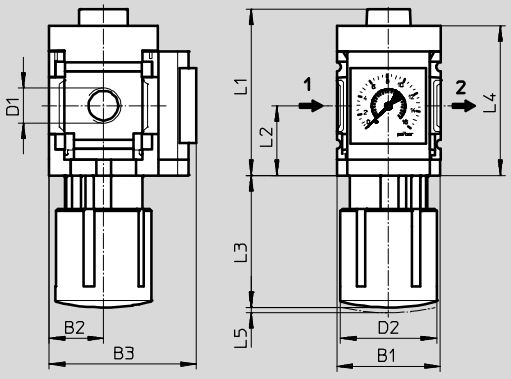


➔ Flow direction

| Type | B1 | B2 | B3 | D1 | D2 | L1 | L2 | L3 | L4 | L5 |
|---|---|---|---|---|---|---|---|---|---|---|
| MS4N-LR-⅛-...-KD | 1.57 | 0.83 | 2.24 | ⅛ NPT | 1.46 | 2.54 | 1.06 | 2.01 | 2.28 | 0.08 |
| MS4N-LR-¼-...-KD | | | | ¼ NPT | | | | | | |

1) Dimensions are in inches, unless otherwise noted.

# Pressure Regulators MS4N-LR – Inch Series

Dimensional Drawings

**Dimensions[1] – Pressure Gauge Alternatives**

Download CAD Data ➔ **www.festo.com/us/cad**

Cover plate VS

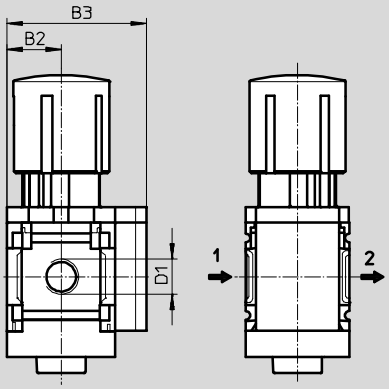


➔ Flow direction

Adapter plate A8/A4 for EN pressure gauge 1/8/1/4, without pressure gauge

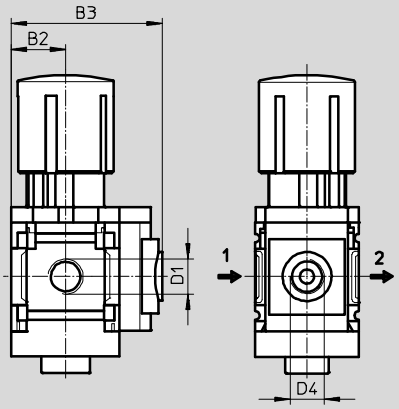


➔ Flow direction

Pressure sensor with display AD1 ... AD4

Technical data SDE1 ➔ www.festo.com/catalog/sde1

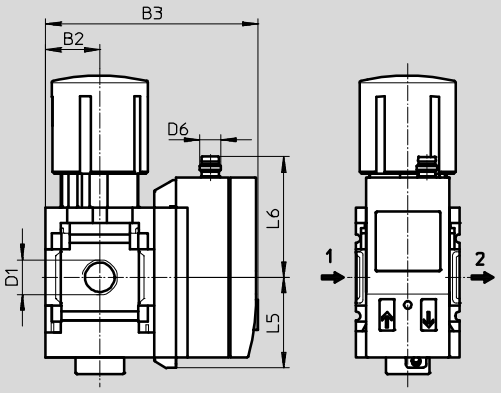


➔ Flow direction

AD1 variants:
SDE1-D10-G2-MS-L-P1-M8 with 3-pin plug M8x1, 1 switching output PNP

AD2 variants:
SDE1-D10-G2-MS-L-N1-M8 with 3-pin plug M8x1, 1 switching output NPN

AD3 variants:
SDE1-D10-G2-MS-L-PI-M12 with 4-pin plug M12x1, 1 switching output PNP and 4 ... 20 mA analog

AD4 variants:
SDE1-D10-G2-MS-L-NI-M12 with 4-pin plug M12x1, 1 switching output NPN and 4 ... 20 mA analog

| Type | B2 | B3 | D1 | D4 | D6 | L5 | L6 |
|---|---|---|---|---|---|---|---|
| MS4N-LR-1/8-...-VS | 0.83 | 2.13 | 1/8 NPT | – | – | – | – |
| MS4N-LR-1/4-...-VS | | | 1/4 NPT | | | | |
| MS4N-LR-1/8-...-A8 | 0.83 | 2.30 | 1/8 NPT | G1/8 | – | – | – |
| MS4N-LR-1/4-...-A8 | | | 1/4 NPT | | | | |
| MS4N-LR-1/8-...-A4 | 0.83 | 2.30 | 1/8 NPT | G1/4 | – | – | – |
| MS4N-LR-1/4-...-A4 | | | 1/4 NPT | | | | |
| MS4N-LR-1/8-...-AD1/AD2 | 0.83 | 3.25 | 1/8 NPT | – | M8x1 | 1.38 | 1.84 |
| MS4N-LR-1/4-...-AD1/AD2 | | | 1/4 NPT | | | | |
| MS4N-LR-1/8-...-AD3/AD4 | 0.83 | 3.25 | 1/8 NPT | – | M12x1 | 1.38 | 2.20 |
| MS4N-LR-1/4-...-AD3/AD4 | | | 1/4 NPT | | | | |

1) Dimensions are in inches, unless otherwise noted.

# Pressure Regulators MS4N-LR – Inch Series

Dimensional Drawings

## Dimensions[1] – Rotary Knob Pressure Gauge

Download CAD Data ➔ **www.festo.com/us/cad**

Small DM1

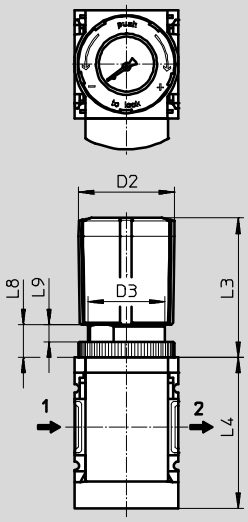


➔ Flow direction

Large DM2

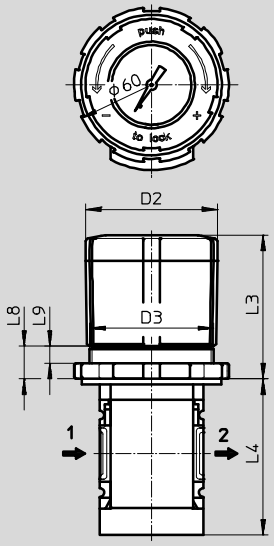


**Note**

Due to the protruding rotary knob, only a MS4N-FRM distribution block can be connected as a directly adjacent service unit.

➔ Flow direction

| Type | D2 | D3 | L3 | L4 | L8 | L9 |
|---|---|---|---|---|---|---|
| MS4N-LR-...-DM1 | 1.46 | M30x1.5 | 2.13 | 2.30 | 0.51 | 0.26 |
| MS4N-LR-...-DM2 | 2.01 | M48x1.5 | 2.19 | 2.38 | 0.51 | 0.26 |

1) Dimensions are in inches, unless otherwise noted.

## Dimensions – Rotary Knob

Download CAD Data ➔ **www.festo.com/us/cad**

For installation into control panel

Standard

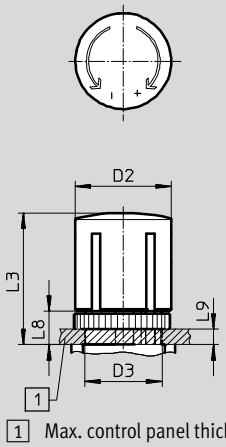


Standard, lockable AS

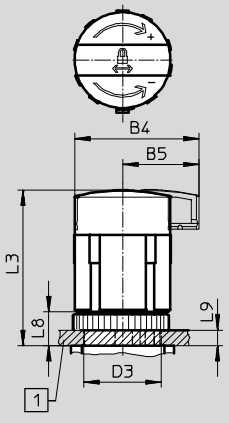


1 Max. control panel thickness

Long LD

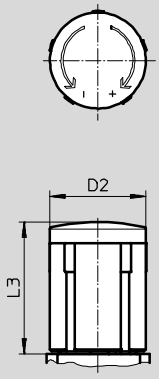


Long, lockable LD-AS

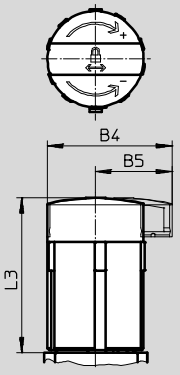


| Type | B4 | B5 | D2 | D3 +0.04 | L3 | L8 | L9 |
|---|---|---|---|---|---|---|---|
| MS4N-LR-... | – | – | 1.46 | 1.18 | 2.01 | 0.51 | 0.24 |
| MS4N-LR-...-AS | 1.90 | 1.17 | | | 2.37 | | |
| MS4N-LR-...-LD | – | – | 1.46 | – | 2.01 | – | – |
| MS4N-LR-...-LD-AS | 1.90 | 1.17 | | | 2.37 | | |

# Pressure Regulators MS4N-LR – Inch Series

Ordering Data – Pre-configured Products

| Ordering Data | | | |
|---|---|---|---|
| Pressure gauge, lockable standard type rotary knob | | | |
| Connection | Part No. | Type | LT |
| Pressure regulation range 4.4 ... 59 psi | | | |
| 1/8 NPT | **531419** | **MS4N-LR-1/8-D5-AS** | 1D |
| 1/4 NPT | **531418** | **MS4N-LR-1/4-D5-AS** | 1D |
| Pressure regulation range 4.4 ... 103 psi | | | |
| 1/8 NPT | **531423** | **MS4N-LR-1/8-D6-AS** | 1D |
| 1/4 NPT | **531422** | **MS4N-LR-1/4-D6-AS** | 1D |
| Pressure regulation range 7.4 ...176 psi | | | |
| 1/8 NPT | **531427** | **MS4N-LR-1/8-D7-AS** | 1D |
| 1/4 NPT | **531426** | **MS4N-LR-1/4-D7-AS** | 1D |

**LT** = Lead time **1D** typically ships same day/next day **3D** typically ships within 3 days

# Pressure Regulators MS4N-LR – Inch Series

Ordering Data – Configurable Products

FESTO

[M] **Mandatory Data** →

| Part No. | Series | Size | Thread | | Function | | Connection size | | Pressure regulation range |
|---|---|---|---|---|---|---|---|---|---|
| 527691 | MS | 4 | N | | LR | | 1/8, 1/4,<br>AQK, AQN, AQP | | D5<br>D6<br>D7 |
| **Order example** | | | | | | | | | |
| **527691** | **MS** | **4** | **N** | **–** | **LR** | **–** | **AQN** | **–** | **D6** |

**Ordering Table**

| Grid dimension [mm] | 40 | Conditions | Code | | Enter code |
|---|---|---|---|---|---|
| [M] Part No. | **527691** | | | | |
| Series | Standard | | **MS** | | MS |
| Size | 4 | | **4** | | 4 |
| Thread | NPT thread | | **N** | | N |
| Function | Pressure regulator | | **-LR** | | -LR |
| Connection size | Body thread 1/8 NPT | | **-1/8** | | |
| | Body thread 1/4 NPT | | **-1/4** | | |
| | Port plate 1/8 NPT (dimensions → 200) | | **-AQK** | | |
| | Port plate 1/4 NPT (dimensions → 200) | | **-AQN** | | |
| | Port plate 3/8 NPT (dimensions → 200) | | **-AQP** | | |
| Pressure regulation range | 4.4 ... 59 psi | | **-D5** | | |
| | 4.4 ... 103 psi | | **-D6** | | |
| ↓ | 7.4 ... 176 psi | [1] | **-D7** | | |

[1] **D7** Not with rotary knob alternatives DM1, DM2

**Transfer order code**

| | | | | | | | | | |
|---|---|---|---|---|---|---|---|---|---|
| **527691** | **MS** | **4** | **N** | **–** | **LR** | **–** | | **–** | |

# Pressure Regulators MS4N-LR – Inch Series

Ordering Data – Configurable Products

FESTO

➔ [0] **Options**

| | Pressure gauge alternatives | | Alternative pressure gauge scale | | Secondary venting | | Rotary knob alternative | | Alternative assembly position | | Security | | Type of mounting | | Reverse flow direction |
|---|---|---|---|---|---|---|---|---|---|---|---|---|---|---|---|
| | VS<br>A8<br>A4<br>AD1<br>AD2<br>AD3<br>AD4 | | BAR<br>MPA | | OS | | LD<br>DM1<br>DM2 | | KD | | AS | | WR<br>WP<br>WPM<br>WB<br>WBM | | Z |
| – | **AD3** | – | | – | **OS** | – | **LD** | – | | – | **AS** | – | **WB** | – | **Z** |

**Ordering Table**

| Grid dimension [mm] | 40 | Conditions | Code | Enter code |
|---|---|---|---|---|
| [0] Pressure gauge alternatives | Cover plate | | **-VS** | |
| | Adapter plate for EN pressure gauge ⅛, without pressure gauge | | **-A8** | |
| | Adapter plate for EN pressure gauge ¼, without pressure gauge | | **-A4** | |
| | Pressure sensor with display, plug M8, 1 switch output PNP, 3-pin | [2] | **-AD1** | |
| | Pressure sensor with display, plug M8, 1 switch output NPN, 3-pin | [2] | **-AD2** | |
| | Pressure sensor with display, plug M12, 1 switch output PNP, 4-pin, analog output 4 … 20 mA | [2] | **-AD3** | |
| | Pressure sensor with display, plug M12, 1 switch output NPN, 4-pin, analog output 4 … 20 mA | [2] | **-AD4** | |
| Alternative pressure gauge scale | bar | [3] | **-BAR** | |
| | MPa | [3] | **-MPA** | |
| Secondary venting | Without secondary venting | [4] | **-OS** | |
| Rotary knob alternative | Long rotary knob | | **-LD** | |
| | Rotary knob pressure gauge, small | [5] | **-DM1** | |
| | Rotary knob pressure gauge, large | [5] | **-DM2** | |
| Alternative assembly position | Rotary knob at bottom | [6] | **-KD** | |
| Security | Lockable rotary knob | [7] | **-AS** | |
| Type of mounting | Mounting bracket with knurled nut for regulator head (dimensions ➔ 198) | [8] | **-WR** | |
| | Mounting bracket (dimensions ➔ 201) | [9] | **-WP** | |
| | Mounting bracket (dimensions ➔ 201) | [9] | **-WPM** | |
| | Mounting bracket (dimensions ➔ 197) | [10] | **-WB** | |
| | Mounting bracket (dimensions ➔ 197) | | **-WBM** | |
| Reverse flow direction | Flow direction from right to left | | **-Z** | |

[2] **AD1 … AD4** Measuring range max. 147 psi.
Not with rotary knob alternative DM2

[3] **BAR, MPA** Not with pressure gauge alternatives VS, A8, A4, AD1, AD2, AD3, AD4

[4] **OS** Not with rotary knob alternatives DM1, DM2

[5] **DM1, DM2** Only with one pressure gauge alternative VS, A8, A4, AD1, AD2, AD3 or AD4

[6] **KD** Not with alternative pressure gauge scale MPA.
Not with mounting type WP.
Not with rotary knob alternatives DM1, DM2

[7] **AS** Not with rotary knob alternatives DM1, DM2

[8] **WR** Not with long rotary knob LD.
Not with rotary knob alternative DM2

[9] **WP, WPM** Only with port plate AQK, AQN or AQP

[10] **WB** Not with rotary knob alternative DM2

**Transfer order code**

| – | | – | | – | | – | | – | | – | | – | | – | |
|---|---|---|---|---|---|---|---|---|---|---|---|---|---|---|---|

## Mounting Attachments and Accessories

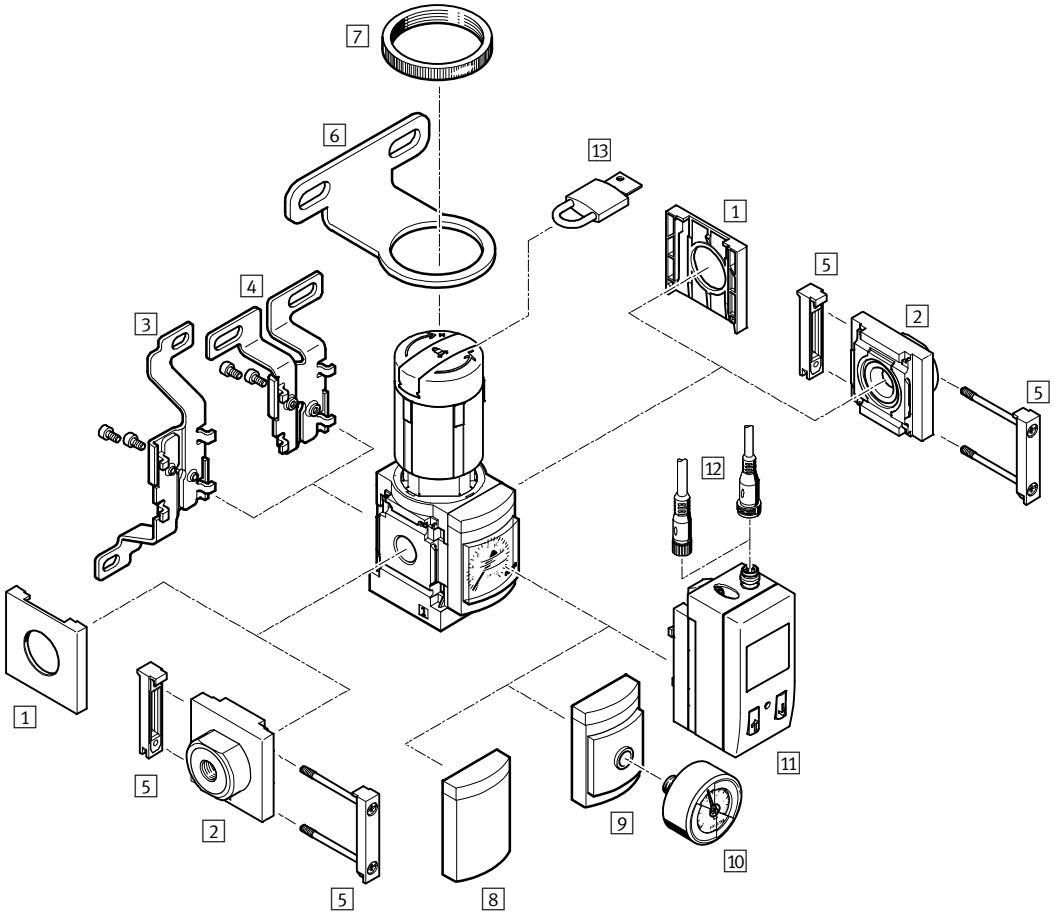


Single unit and combination unit mounting brackets.

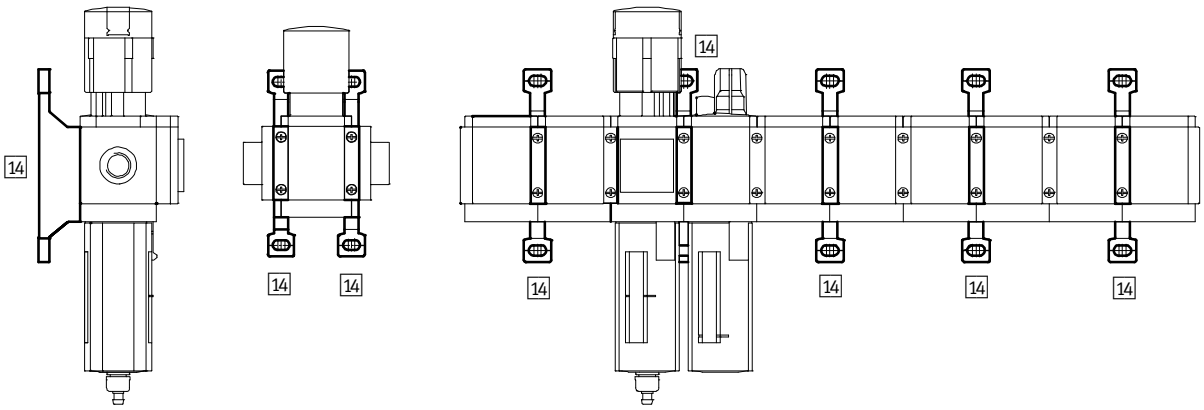

# Pressure Regulators MS4N-LR – Inch Series

Accessories Overview

| Mounting Attachments and Accessories | | | | | | |
|---|---|---|---|---|---|---|
| | | Single unit | | Combination unit ➔ 2.1-49 | | ➔ Page |
| | | without port plate | with port plate | without port plate | with port plate | |
| 1 | Cover cap<br>MS4-END | ■ | – | ■ | – | 199 |
| 2 | Port plate<br>MS4N-AQ... | – | ■ | – | ■ | 200 |
| 3 | Mounting bracket<br>MS4-WB | ■ | ■ | – | – | 197 |
| 4 | Mounting bracket<br>MS4-WBM | ■ | ■ | – | – | 197 |
| 5 | Body connector<br>MS4-MV | – | ■ | ■ | ■ | 200 |
| 6 | Regulator wall bracket<br>MS4-WR | ■ | ■ | – | – | 198 |
| 7 | Knurled nut (included in scope of delivery)<br>MS-LR | ■ | ■ | – | – | – |
| 8 | Cover plate<br>VS | ■ | ■ | ■ | ■ | 182 |
| 9 | Adapter for EN pressure gauge 1/8/1/4<br>A8/A4 | ■ | ■ | ■ | ■ | 182 |
| 10 | Pressure gauge<br>MA | ■ | ■ | ■ | ■ | 204 |
| 11 | Pressure sensor SDE1-...-MS<br>AD1 ... AD4 | ■ | ■ | ■ | ■ | 182 |
| 12 | Plug socket with cable<br>SIM-M8-3.../SIM-M12-4... | ■ | ■ | ■ | ■ | 204 |
| 13 | Padlock<br>LRVS-D | ■ | ■ | ■ | ■ | 204 |
| 14 | Mounting bracket<br>MS4-WP/WPB/WPM | – | ■ | ■ | ■ | 201 |

# Pressure Regulators MS4N-LRB – Inch Series

Technical Data

ISO Symbol

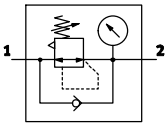


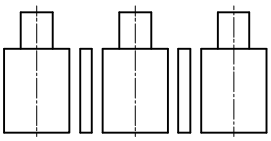

LRB-manifold
with through pressure supply for manifold assembly

- This pressure regulator is suitable for manifold assemblies with through air supply on both sides. Pressure output is at the front or rear.
- For configuring a regulator manifold with independent pressure regulation ranges
- Good control characteristics with low hysteresis and primary pressure compensation
- Available with or without secondary venting
- Setting values are secured by locking the rotary knob
- Lockable rotary knob
- Four pressure regulation ranges
- Reverse flow option for exhausting from output 2 to output 1
- Optional pressure sensor with display



| General Technical Data | | | |
|---|---|---|---|
| Size | | | MS4 |
| Pneumatic connection 1 | | | ¼ NPT |
| Pneumatic connection 2 | | | ¼ NPT |
| | | | QS-¼-U push-in tubing connector |
| | | | QS-5/16-U push-in tubing connector |
| Supply pressure | | [psi] | 12 ... 206 |
| Pressure regulation range | D5 | [psi] | 4.4 ... 59 |
| | D6 | [psi] | 4.4 ... 103 |
| | D7 | [psi] | 7.4 ... 176 (7.4 ... 147 with variant pressure sensor AD... ) |
| Max. hysteresis | | [psi] | 3.7 |

| Standard Nominal Flow Rate qnN[1] [scfm] | | | | |
|---|---|---|---|---|
| Variant | | Standard | Angled outlet block | |
| | | | QS-¼-U | QS-5/16-U |
| Pressure regulation range | D5 | 67.1[2] | 10.6[2] | 22.9[2] |
| | D6 | 60.0 | 12.4 | 29.7 |
| | D7 | 53.0 | 12.4 | 22.6 |

1) Measured at p1 = 147 psi and p2 = 88 psi, □p = 15 psi
2) Measured at p1 = 147 psi and p2 = 44 psi, □p = 15 psi

# Pressure Regulators MS4N-LRB – Inch Series

Technical Data

| Operating and Environmental Conditions | | | |
|---|---|---|---|
| Variant | | Standard | Pressure sensor with display<br>AD... |
| Operating medium | | Compressed air | Filtered compressed air, lubricated or unlubricated,<br>filtration grade 40 µm |
| Ambient temperature | [°F] | 14 ... 140 | 32 ... 122 |
| Temperature of medium | [°F] | 14 ... 140 | 32 ... 122 |
| Storage temperature | [°F] | 14 ... 140 | 14 ... 140 |
| Assembly position | | Any | |
| Corrosion resistance | CRC[1)] | 2 | |

1) Corrosion resistance class 2 according to Festo standard 940 070
Components requiring moderate corrosion resistance. Externally visible parts with primarily decorative surface requirements which are in direct contact with a normal industrial environment or media such as coolants or lubricating agents.

| Weights [lb] | |
|---|---|
| Pressure regulator | 0.44 |

- Wearing parts kits ➔ 205
- For spare parts go to: www.festo.com/en/spare_parts_service

## Standard Flow Rate qn as a Function of Output Pressure p2

MS4N-LRB-¼

Primary pressure p1 = 147 psi

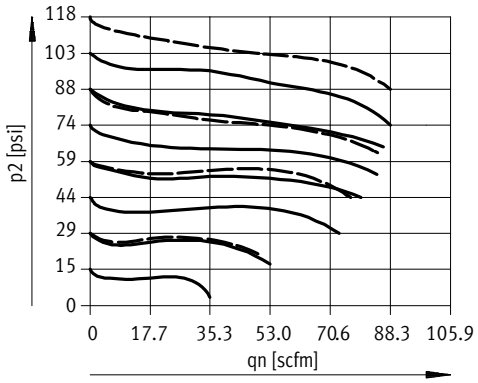


D6: 4.4 ... 103 psi
D7: 7.4 ... 176 psi

## Materials

Sectional view

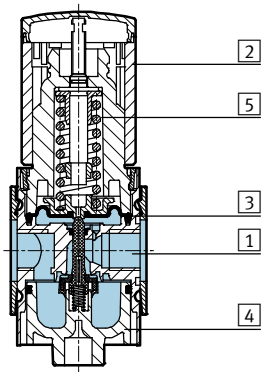


| Pressure regulator (manifold assembly) | | |
|---|---|---|
| 1 | Body | Die-cast aluminum |
| 2 | Regulating knob | Polyamide/polyacetate |
| 3 | Diaphragm | Nitrile rubber |
| 4 | Bottom cap | Polyester, fiberglass reinforced |
| 5 | Springs | Steel |
| – | Seals | Nitrile rubber |
| | Note on materials | Free of copper and PTFE only with cover plate VS |

# Pressure Regulators MS4N-LRB – Inch Series

Dimensional Drawings

**Dimensions[1] – Standard** Download CAD Data ➔ **www.festo.com/us/cad**

With pressure gauge, display unit [psi]

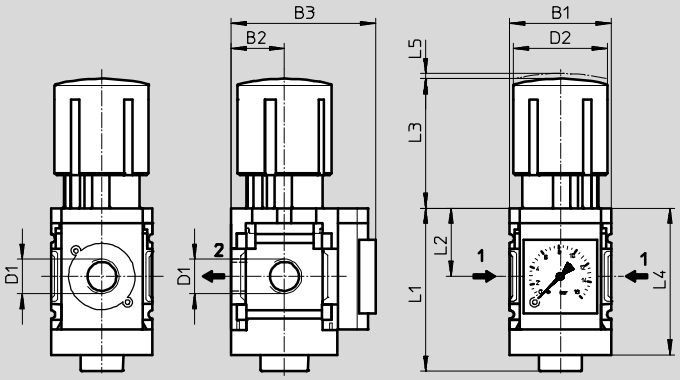


➔ Flow direction

| Type | B1 | B2 | B3 | D1 | D2 | L1 | L2 | L3 | L4 | L5 |
|---|---|---|---|---|---|---|---|---|---|---|
| MS4N-LRB-¼ | 1.57 | 0.83 | 2.24 | ¼ NPT | 1.46 | 2.54 | 1.06 | 2.01 | 2.28 | 0.08 |

1) Dimensions are in inches, unless otherwise noted.

**Dimensions[1] – Alternative Mounting Position** Download CAD Data ➔ **www.festo.com/us/cad**

Rotary knob underneath KD, standard rotary knob, with pressure gauge

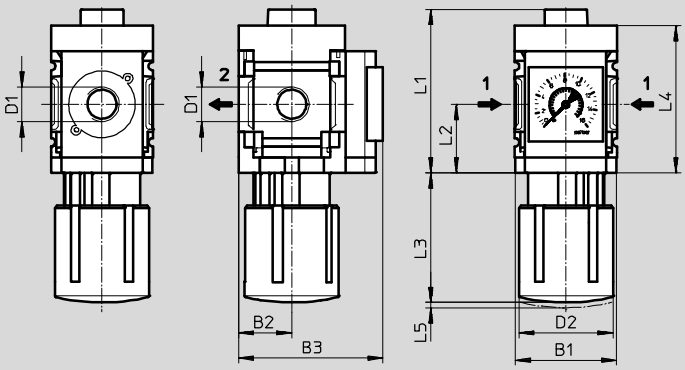


➔ Flow direction

| Type | B1 | B2 | B3 | D1 | D2 | L1 | L2 | L3 | L4 | L5 |
|---|---|---|---|---|---|---|---|---|---|---|
| MS4N-LRB-¼-...-KD | 1.57 | 0.83 | 2.24 | ¼ NPT | 1.46 | 2.54 | 1.06 | 2.01 | 2.28 | 0.08 |

1) Dimensions are in inches, unless otherwise noted.

# Pressure Regulators MS4N-LRB – Inch Series

Dimensional Drawings

**Dimensions[1] – Pressure Gauge Alternatives** Download CAD Data ➔ **www.festo.com/us/cad**

Cover plate VS

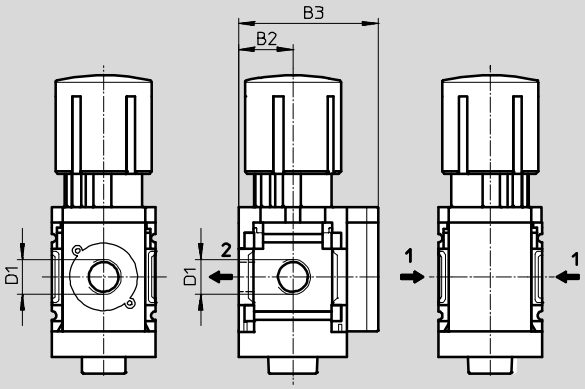


➔ Flow direction

Adapter plate A8/A4 for EN pressure gauge 1/8/1/4, without pressure gauge

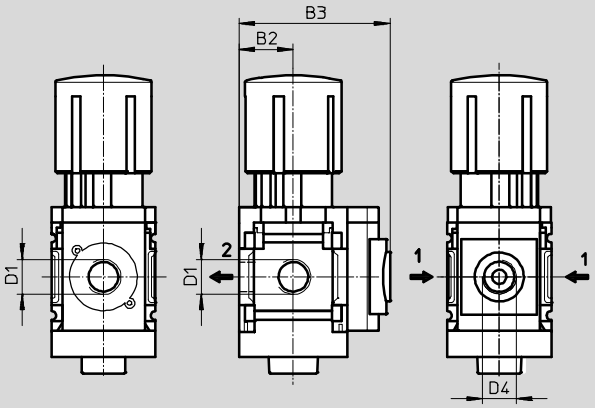


➔ Flow direction

Pressure sensor with display AD1 ... AD4 Technical data SDE1 ➔ www.festo.com/catalog/sde1

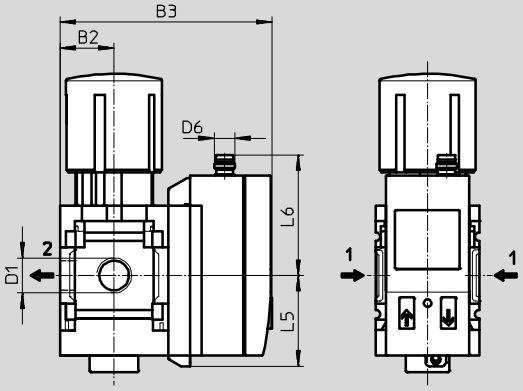


➔ Flow direction

AD1 variants:
SDE1-D10-G2-MS-L-P1-M8 with 3-pin plug M8x1, 1 switching output PNP

AD2 variants:
SDE1-D10-G2-MS-L-N1-M8 with 3-pin plug M8x1, 1 switching output NPN

AD3 variants:
SDE1-D10-G2-MS-L-PI-M12 with 4-pin plug M12x1, 1 switching output PNP and 4 ... 20 mA analog

AD4 variants:
SDE1-D10-G2-MS-L-NI-M12 with 4-pin plug M12x1, 1 switching output NPN and 4 ... 20 mA analog

| Type | B2 | B3 | D1 | D4 | D6 | L5 | L6 |
|---|---|---|---|---|---|---|---|
| MS4N-LRB-1/4-...-VS | 0.83 | 2.13 | 1/4 NPT | – | – | – | – |
| MS4N-LRB-1/4-...-A8 | 0.83 | 2.30 | 1/4 NPT | G1/8 | – | – | – |
| MS4N-LRB-1/4-...-A4 | 0.83 | 2.30 | 1/4 NPT | G1/4 | – | – | – |
| MS4N-LRB-1/4-...-AD1/AD2 | 0.83 | 3.25 | 1/4 NPT | – | M8x1 | 1.38 | 1.84 |
| MS4N-LRB-1/4-...-AD3/AD4 | 0.83 | 3.25 | 1/4 NPT | – | M12x1 | 1.38 | 2.20 |

1) Dimensions are in inches, unless otherwise noted.

# Pressure Regulators MS4N-LRB – Inch Series

Dimensional Drawings

**Dimensions[1] – Angled Outlet Block BH/BI** Download CAD Data ➔ **www.festo.com/us/cad**

Pressure output at rear

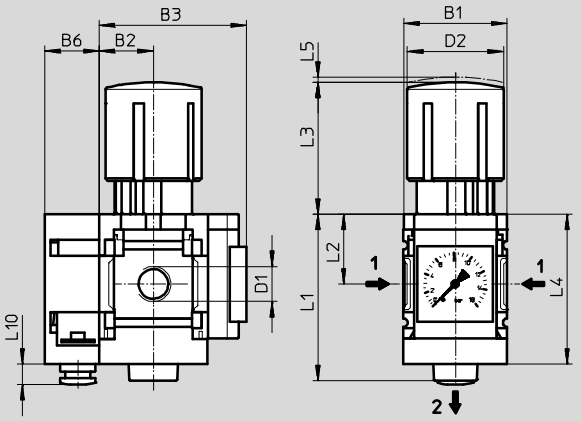


Pressure output to front Z

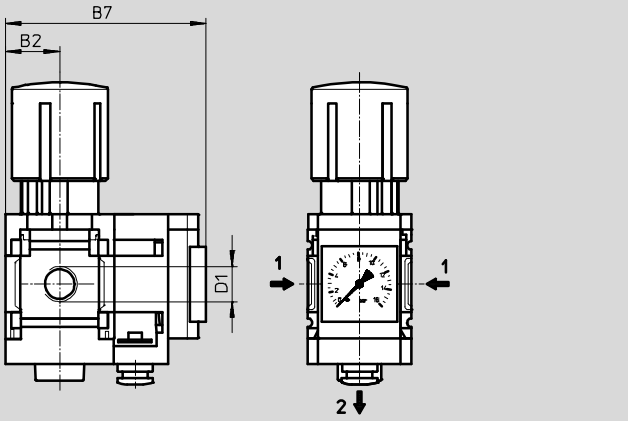


| Type | B1 | B2 | B3 | B6 | B7 | D1 | D2 | L1 | L2 | L3 | L4 | L5 | L10 |
|---|---|---|---|---|---|---|---|---|---|---|---|---|---|
| MS4N-LRB-¼-...-B... | 1.57 | 0.83 | 2.24 | 0.83 | 3.07 | ¼ NPT | 1.46 | 2.54 | 1.06 | 2.01 | 2.28 | 0.08 | 0.31 |

1) Dimensions are in inches, unless otherwise noted.

**Dimensions[1] – Rotary Knob** Download CAD Data ➔ **www.festo.com/us/cad**

For installation into control panel

Standard

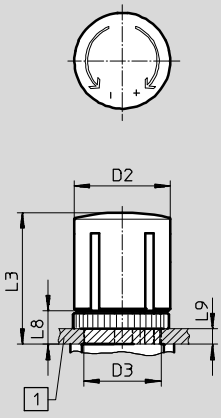


Standard, lockable AS

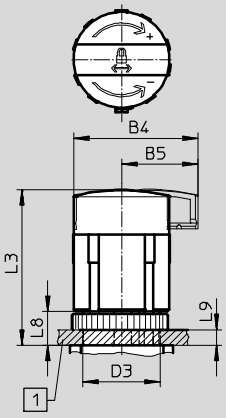


Long LD

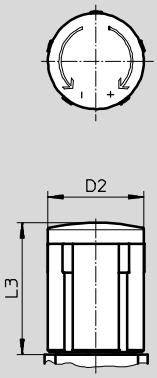


Long, lockable LD-AS

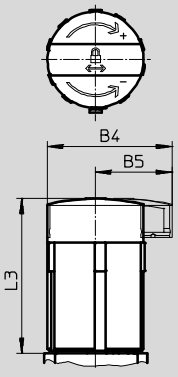


1 Max. control panel thickness

| Type | B4 | B5 | D2 | D3 +0.04 | L3 | L8 | L9 |
|---|---|---|---|---|---|---|---|
| MS4N-LRB-... | – | – | 1.46 | 1.18 | 2.01 | 0.51 | 0.24 |
| MS4N-LRB-...-AS | 1.90 | 1.17 | | | 2.37 | | |
| MS4N-LRB-...-LD | – | – | 1.46 | – | 2.01 | – | – |
| MS4N-LRB-...-LD-AS | 1.90 | 1.17 | | | 2.37 | | |

1) Dimensions are in inches, unless otherwise noted.

# Pressure Regulators MS4N-LRB – Inch Series

Ordering Data – Pre-configured Products

| Ordering Data | | | | | | | |
|---|---|---|---|---|---|---|---|
| Pressure gauge, lockable standard type rotary knob | | | | | | | |
| Connection | Pressure output to rear without angled outlet block | | | | Pressure output to rear with angled outlet block QS-5/16-U | | |
| | Part No. | Type | LT | | Part No. | Type | LT |
| Pressure regulation range 4.4 ... 59 psi | | | | | | | |
| 1/4 NPT | **531780** | **MS4N-LRB-1/4-D5-AS** | 1D | | **531786** | **MS4N-LRB-1/4-D5-AS-BI** | Q |
| Pressure regulation range 4.4 ... 103 psi | | | | | | | |
| 1/4 NPT | **531782** | **MS4N-LRB-1/4-D6-AS** | 1D | | **531788** | **MS4N-LRB-1/4-D6-AS-BI** | Q |
| Pressure regulation range 7.4 ... 176 psi | | | | | | | |
| 1/4 NPT | **531784** | **MS4N-LRB-1/4-D7-AS** | 1D | | **531790** | **MS4N-LRB-1/4-D7-AS-BI** | Q |

| Ordering Data | | | |
|---|---|---|---|
| Adapter plate A8 for EN pressure gauge 1/8, lockable standard-type rotary knob | | | |
| Connection | Pressure output to rear without angled outlet block | | |
| | Part No. | Type | LT |
| Pressure regulation range 4.4 ... 59 psi | | | |
| 1/4 NPT | **531792** | **MS4N-LRB-1/4-D5-A8-AS** | Q |
| Pressure regulation range 4.4 ... 103 psi | | | |
| 1/4 NPT | **531793** | **MS4N-LRB-1/4-D6-A8-AS** | Q |
| Pressure regulation range 7.4 ... 176 psi | | | |
| 1/4 NPT | **531794** | **MS4N-LRB-1/4-D7-A8-AS** | Q |

**LT** = Lead time **1D** typically ships same day/next day **3D** typically ships within 3 days

# Pressure Regulators MS4N-LRB – Inch Series

Ordering Data – Configurable Products

FESTO

| M Mandatory Data | | | | | | | | O Options ➔ |
|---|---|---|---|---|---|---|---|---|
| **Part No.** | **Series** | **Size** | **Thread** | **Function** | **Connection size** | **Pressure regulation range** | | **Pressure gauge alternatives** |
| 527693 | MS | 4 | N | LRB | ¼<br>AQK<br>AQN<br>AQP | D5<br>D6<br>D7 | | VS<br>A8<br>A4<br>AD1<br>AD2<br>AD3<br>AD4 |
| **Order example** | | | | | | | | |
| **527693** | **MS** | **4** | **N** | **–** **LRB** | **–** **AQP** | **–** **D5** | **–** | **A4** |

**Ordering Table**

| Grid dimension [mm] | | 40 | Conditions | Code | | Enter code |
|---|---|---|---|---|---|---|
| M | Part No. | **527693** | | | | |
| | Series | Standard | | **MS** | | MS |
| | Size | 4 | | **4** | | 4 |
| | Thread | NPT thread | | **N** | | N |
| | Function | Pressure regulator for manifold assembly | | **-LRB** | | -LRB |
| | Connection size | Body thread ¼ NPT | | **-¼** | | |
| | | Port plate ⅛ NPT (dimensions ➔ 200) | | **-AQK** | | |
| | | Port plate ¼ NPT (dimensions ➔ 200) | | **-AQN** | | |
| | | Port plate ⅜ NPT (dimensions ➔ 200) | | **-AQP** | | |
| | Pressure regulation range | 4.4 … 59 psi | | **-D5** | | |
| | | 4.4 … 103 psi | | **-D6** | | |
| | | 7.4 … 176 psi | | **-D7** | | |
| O | Pressure gauge alternatives | Cover plate | 1 | **-VS** | | |
| | | Adapter plate for EN pressure gauge ⅛, without pressure gauge | 2 | **-A8** | | |
| | | Adapter plate for EN pressure gauge ¼, without pressure gauge | 2 | **-A4** | | |
| | | Pressure sensor with display, plug M8, 1 switching output PNP, 3-pin | 2 3 | **-AD1** | | |
| | | Pressure sensor with display, plug M8, 1 switching output NPN, 3-pin | 2 3 | **-AD2** | | |
| | | Pressure sensor with display, plug M12, 1 switching output PNP, 4-pin, analog output 4 … 20 mA | 2 3 | **-AD3** | | |
| ↓ | | Pressure sensor with display, plug M12, 1 switching output NPN, 4-pin, analog output 4 … 20 mA | 2 3 | **-AD4** | | |

1 **VS** Must be selected if alternative flow direction Z is selected without alternative assembly position KD and without pressure output BH, BI.
Must be selected if alternative assembly position KD is selected without alternative flow direction Z and without pressure output BH, BI

2 **A8, A4, AD1 … AD4** In combination with alternative flow direction Z only with alternative assembly position KD

3 **AD1 … AD4** Measuring range max. 147 psi

**Transfer order code**

| | | | | | | | | | | |
|---|---|---|---|---|---|---|---|---|---|---|
| **527693** | **MS** | **4** | **N** | **–** | **LRB** | **–** | | **–** | | **–** |

# Pressure Regulators MS4N-LRB – Inch Series

Ordering Data – Configurable Products

FESTO

➔ [0] **Options**

| Alternative pressure gauge scale | Secondary venting | Rotary knob alternative | Alternative assembly position | Security | Pressure output | Type of mounting | Reverse flow direction |
|---|---|---|---|---|---|---|---|
| BAR<br>MPA | OS | LD | KD | AS | BH<br>BI | WR<br>WP<br>WPM<br>WPB<br>WB<br>WBM | Z |
| – | – **OS** | – **LD** | – | – **AS** | – **BH** | – **WP** | – |

**Ordering Table**

| Grid dimension [mm] | | 40 | Conditions | Code | | Enter code |
|---|---|---|---|---|---|---|
| ↓ | Alternative pressure gauge scale | bar | [4] | **-BAR** | | |
| [0] | | MPa | [4] | **-MPA** | | |
| | Secondary venting | Without secondary venting | | **-OS** | | |
| | Rotary knob alternative | Long rotary knob | | **-LD** | | |
| | Alternative assembly position | Rotary knob, underneath | [5] | **-KD** | | |
| | Security | Lockable rotary knob | | **-AS** | | |
| | Pressure output ($p_{max}$ = 147 psi) | Angled outlet block QS-¼-U | | **-BH** | | |
| | | Angled outlet block QS-5/16-U | | **-BI** | | |
| | Type of mounting | Mounting bracket with knurled nut for regulator head (dimensions ➔ 198) | [6] [7] | **-WR** | | |
| | | Mounting bracket (dimensions ➔ 201) | [8] [9] | **-WP** | | |
| | | Mounting bracket (dimensions ➔ 201) | [6] [8] | **-WPM** | | |
| | | Mounting bracket for large wall gap (dimensions ➔ 201) | [8] [10] | **-WPB** | | |
| | | Mounting bracket (dimensions ➔ 197) | [6] | **-WB** | | |
| | | Mounting bracket (dimensions ➔ 197) | [6] | **-WBM** | | |
| | Reverse flow direction | Pressure output at front (for gauge connection an angled outlet block is required) | | **-Z** | | |

[4] **BAR, MPA** Not with pressure gauge alternatives VS, A8, A4, AD1, AD2, AD3, AD4.
Not with alternative assembly position KD.
In combination with alternative flow direction Z only with pressure output BH, BI

[5] **KD** With alternative pressure gauge scale BAR only if alternative flow direction Z or pressure output BH, BI has been selected.
Not with mounting type WP, WPB.
In combination with mounting type WR, WPM, WB, WBM not with alternative flow direction Z.
In combination with pressure gauge alternatives A8, A4, AD1, AD2, AD3, AD4 only with alternative flow direction Z

[6] **WR, WPM, WB, WBM**
In combination with alternative flow direction Z not with alternative assembly position KD

[7] **WR** Only with alternative flow direction Z.
Not with rotary knob alternative LD

[8] **WP, WPM, WPB**
Only with port plate AQK, AQN, AQP

[9] **WP** Only with alternative flow direction Z and/or only with pressure output BH, BI

[10] **WPB** Not with alternative flow direction Z.
Not with pressure output BH, BI

**Transfer order code**

| – | | – | | – | | – | | – | | – | | – | | – | |
|---|---|---|---|---|---|---|---|---|---|---|---|---|---|---|---|

# Pressure Regulators MS4N-LRB – Inch Series

Accessories Overview

**Mounting Attachments and Accessories**

Pressure output at rear

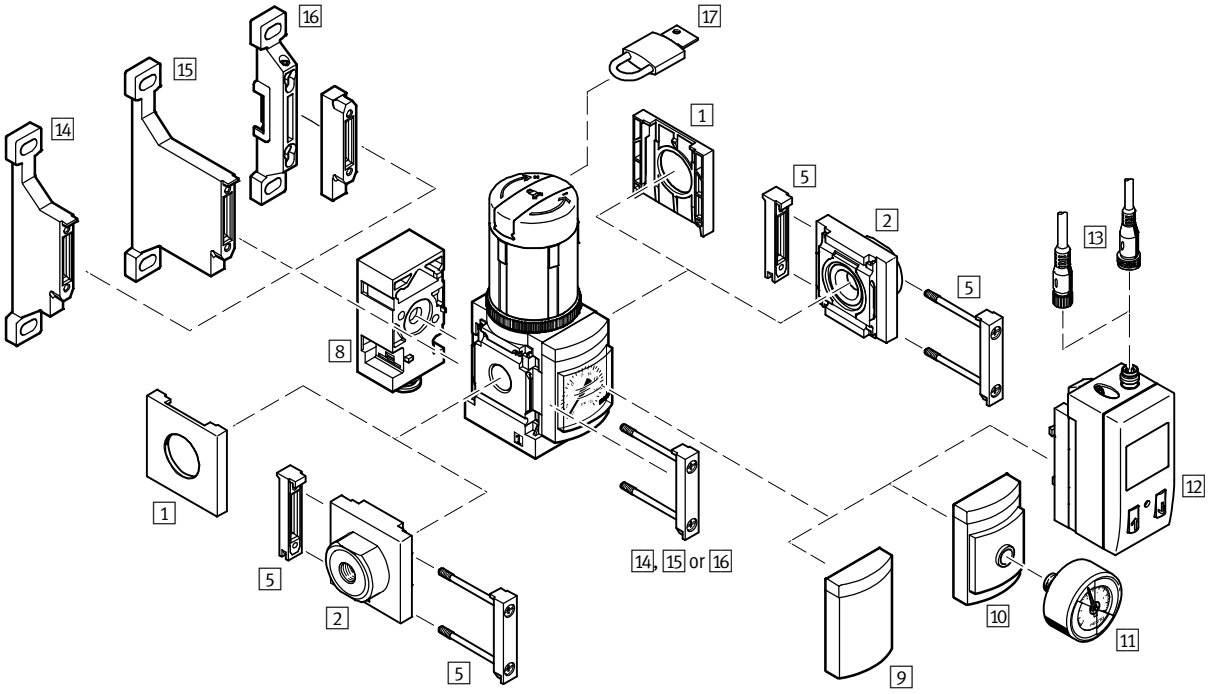


Single unit and combination unit mounting brackets.

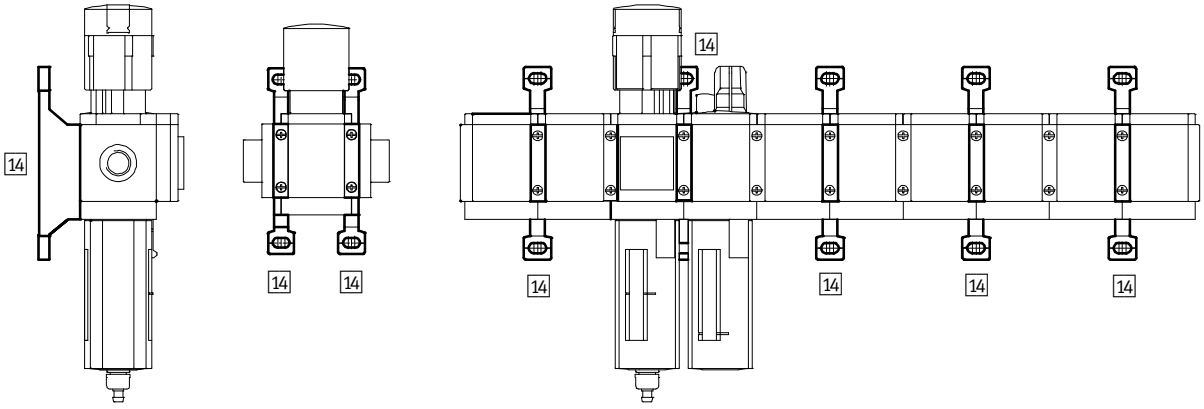

# Pressure Regulators MS4N-LRB – Inch Series

Accessories Overview

Pressure output at front

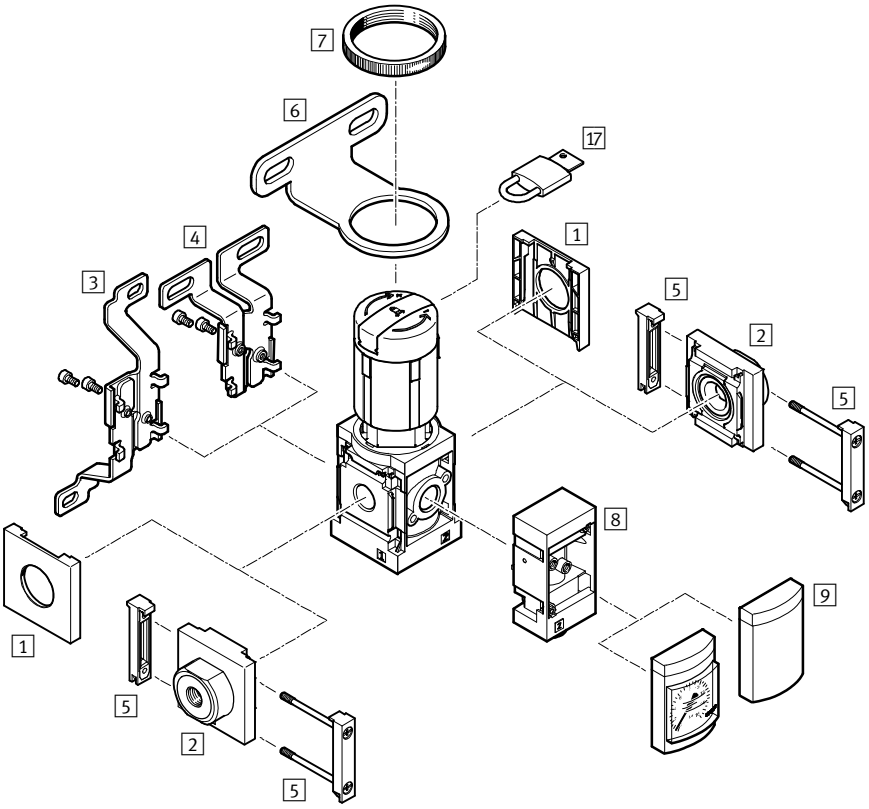

# Pressure Regulators MS4N-LRB – Inch Series

Accessories Overview

| Mounting Attachments and Accessories | | | | | | |
|---|---|---|---|---|---|---|
| | | Single unit | | Combination unit ➔ 2.1-49 | | ➔ Page |
| | | without port plate | with port plate | without port plate | with port plate | |
| 1 | Cover cap<br>MS4-END | ■ | – | ■ | – | 199 |
| 2 | Port plate<br>MS4N-AQ... | – | ■ | – | ■ | 200 |
| 3 | Mounting bracket<br>MS4-WB | ■ | ■ | – | – | 197 |
| 4 | Mounting bracket<br>MS4-WBM | ■ | ■ | – | – | 197 |
| 5 | Body connector<br>MS4-MV | – | ■ | ■ | ■ | 200 |
| 6 | Regulator wall bracket<br>MS4-WR | ■ | ■ | – | – | 198 |
| 7 | Knurled nut (included in scope of delivery)<br>MS-LR | ■ | ■ | – | – | – |
| 8 | Angled outlet block<br>B... | ■ | ■ | ■ | ■ | 193 |
| 9 | Cover plate<br>VS | ■ | ■ | ■ | ■ | 192 |
| 10 | Adapter for EN pressure gauge 1/8/1/4<br>A8/A4 | ■ | ■ | ■ | ■ | 192 |
| 11 | Pressure gauge<br>MA | ■ | ■ | ■ | ■ | 204 |
| 12 | Pressure sensor SDE1-...-MS<br>AD1 ... AD4 | ■ | ■ | ■ | ■ | 182 |
| 13 | Plug socket with cable<br>SIM-M8-3.../SIM-M12-4... | ■ | ■ | ■ | ■ | 204 |
| 14 | Mounting bracket<br>MS4-WP | – | ■ | ■ | ■ | 201 |
| 15 | Mounting bracket<br>MS4-WPB | – | ■ | ■ | ■ | 201 |
| 16 | Mounting bracket<br>MS4-WPM | – | ■ | ■ | ■ | 201 |
| 17 | Padlock<br>LRVS-D | ■ | ■ | ■ | ■ | 204 |

3 **Mounting bracket MS4-WB**
- For wall mounting

Material:
Steel



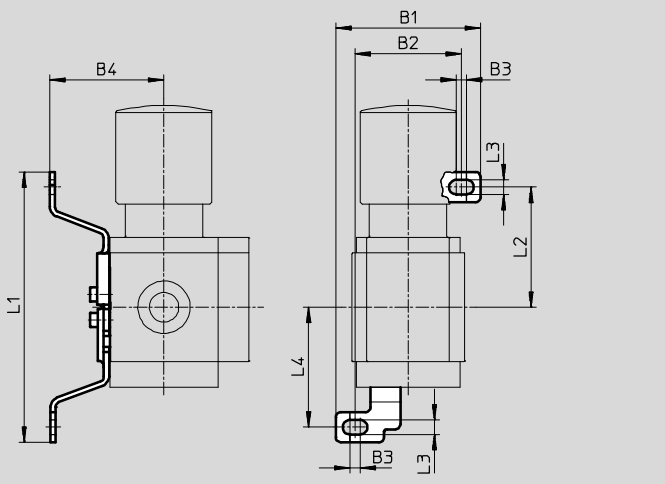


**Dimensions and Ordering Data**

| B1 | B2 | B3 | B4 | L1 | L2 | L3 | L4 | Weight [lb] | Part No. | Type |
|---|---|---|---|---|---|---|---|---|---|---|
| 2.21 | 1.62 | 0.16 | 1.74 | 4.12 | 1.83 | 0.22 | 1.83 | 0.09 | **532185** | **MS4-WB** |

4 **Mounting bracket MS4-WBM**
- For wall mounting

Material:
Steel



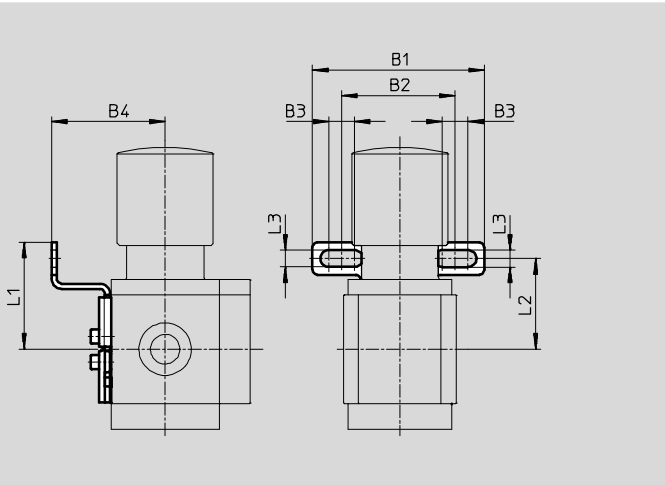


**Dimensions and Ordering Data**

| B1 | B2 | B3 | B4 | L1 | L2 | L3 | Weight [lb] | Part No. | Type |
|---|---|---|---|---|---|---|---|---|---|
| 2.62 | 1.73 | 0.39 | 1.73 | 1.63 | 1.38 | 0.26 | 0.10 | **526062** | **MS4-WBM** |

6 **Mounting bracket MS4-WR**
- For wall mounting a filter regulator and pressure regulator

Material:
Steel

**Note**
The hex nut for attaching components to this bracket must be ordered separately.



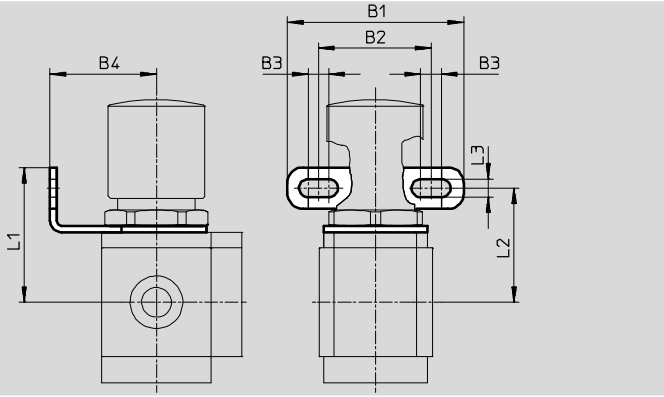


**Dimensions and Ordering Data**

| B1 | B2 | B3 | B4 | L1 | L2 | L3 | Weight [lb] | Part No. | Type |
|---|---|---|---|---|---|---|---|---|---|
| 2.68 | 1.73 | 0.31 | 1.61 | 2.05 | 1.73 | 0.28 | 0.10 | **526064** | **MS4-WR** |

**Hex nut MS4-WRS**
- For front panel mounting
- For attaching components to the mounting bracket MS4-WR

Material:
Aluminum



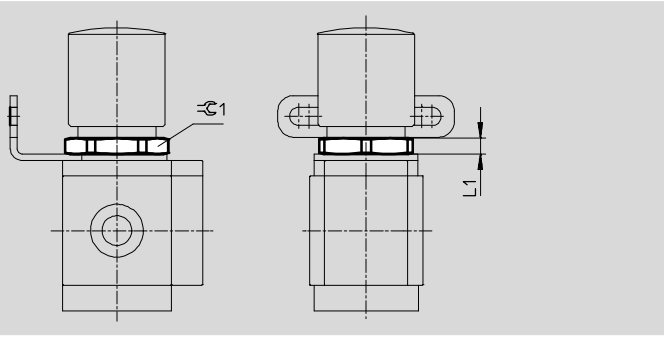


**Dimensions and Ordering Data**

| L1 | ⌀1 | Weight [lb] | Part No. | Type |
|---|---|---|---|---|
| 0.24 | 1.42 | 0.01 | **532187** | **MS4-WRS** |

**Cover cap MS4-END**

- Can be used to cover the body sides of the first and last module if port plates are not used.

Material:
Reinforced polyamide
Free of copper and PTFE



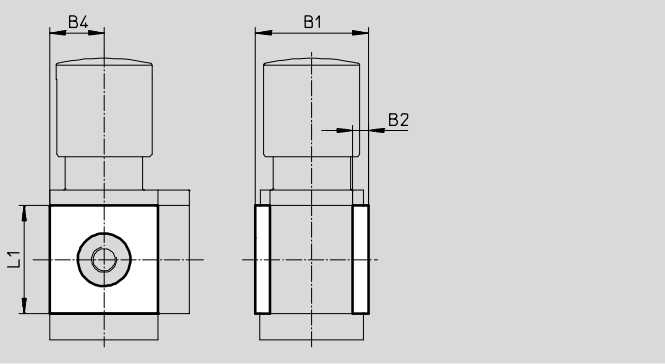


**Dimensions and Ordering Data**

| B1 | B2 | B4 | L1 | Part No. | Type |
|---|---|---|---|---|---|
| 1.72 | 0.24 | 0.83 | 1.65 | **538779** | **MS4-END** |

**Mounting plate MS4-AEND**

- In combination with mounting bracket MS-WP or MS-WPB for mounting an individual unit on a wall with body thread

Material:
Reinforced polyamide
Conforms to RoHS
Free of copper and PTFE



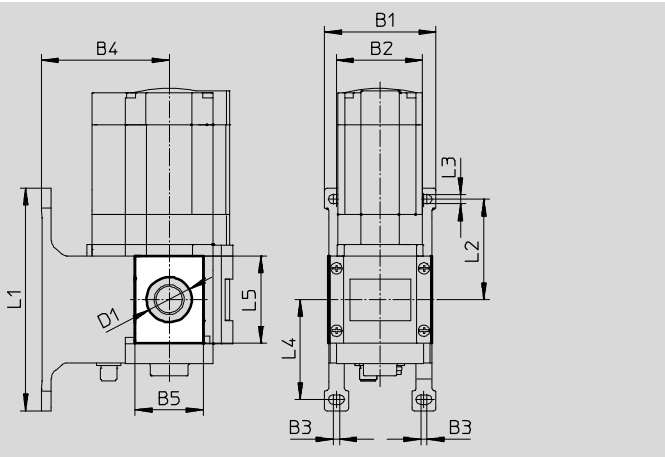


**Dimensions and Ordering Data**

| B1 | B2 | B3 | B4 | | B5 | D1 | L1 | L2 | L3 | L4 | L5 | CRC[1)] | Weight | Part No. | Type |
|---|---|---|---|---|---|---|---|---|---|---|---|---|---|---|---|
| | | | WP | WPB | | ∅ | | | | | | | [lb] | | |
| 2.17 | 1.58 | 0.16 | 1.73 | 2.60 | 1.20 | 0.80 | 4.17 | 1.83 | 0.22 | 1.84 | 1.65 | 2 | 0.01 | **542966** | **MS4-AEND** |

1) Corrosion resistance class 2 according to Festo standard 940 070
Components requiring moderate corrosion resistance. Externally visible parts with primarily decorative surface requirements which are in direct contact with a normal industrial environment or media such as coolants or lubricating agents.

**Port plate MS4N-AQ...**
- Adapter for pneumatic connection

Material:
Aluminum



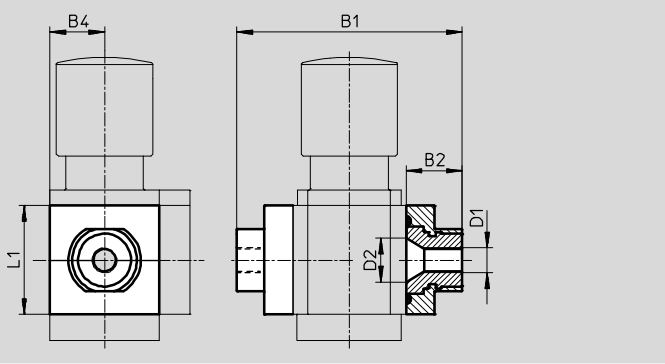


**Dimensions and Ordering Data**

| B1 | B2 | B4 | D1 | D2 | L1 | Weight [lb] | Part No. | Type |
|---|---|---|---|---|---|---|---|---|
| 3.29 | 0.85 | 0.83 | 1⁄8 NPT | 0.66 | 1.65 | 0.26 | **526065** | **MS4N-AQK** |
| | | | 1⁄4 NPT | | | | **526066** | **MS4N-AQN** |
| | | | 3⁄8 NPT | | | | **526067** | **MS4N-AQP** |

**Body connector MS4-MV**
- For connecting modules

Material:
Stainless steel/polyacetate



**Ordering Data**

| Weight [lb] | Part No. | Type |
|---|---|---|
| 0.07 | **532798** | **MS4-MV** |

## 14 Mounting Bracket MS4-WP...

Suggested placement of wall mounting brackets when mounting air preparation combinations

1 unit: 1.575 in

2 units: 3.15 in

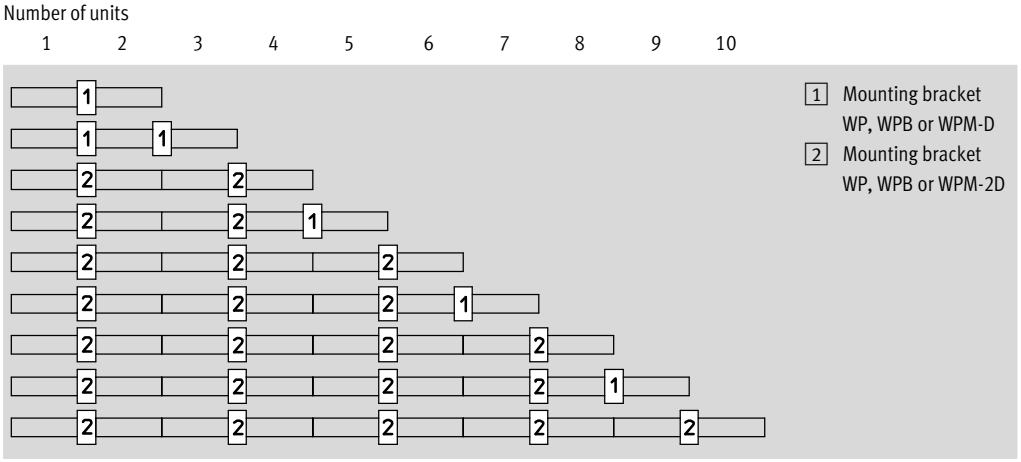


## Mounting dimensions

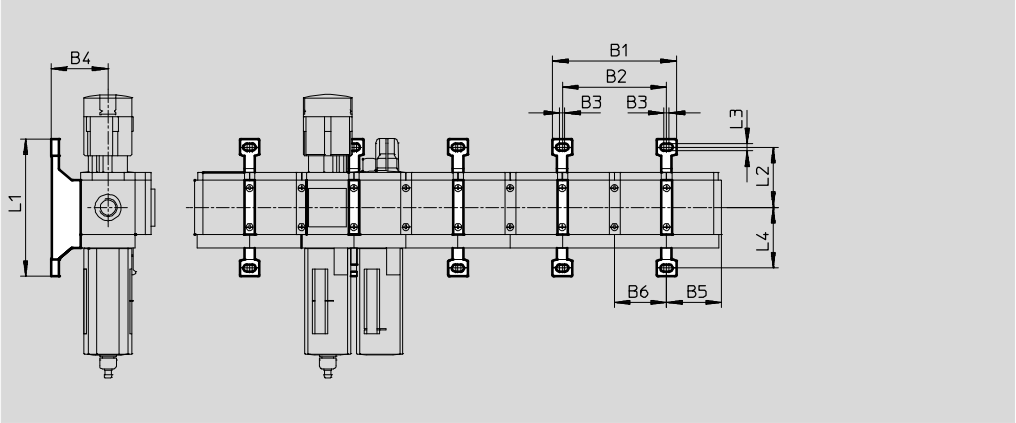


| Type | B1 | B2 | B3 | B4 | B5 | B6 | L1 | L2 | L3 | L4 |
|---|---|---|---|---|---|---|---|---|---|---|
| **MS4-WP** | 3.75 | 3.15 | 0.16 | 1.73 | 1.65 | 1.57 | 4.17 | 1.83 | 0.22 | 1.84 |
| **MS4-WPB** | | | | 2.60 | | | | | | |
| **MS4-WPM-...D** | | | | 1.73 | | | 3.65 | 1.37 | | 1.57 |

**Mounting bracket MS4-WP**
- To connect the modules for wall mounting
- In combination with a port plate MS-AG... for mounting an individual unit on a wall
- In combination with mounting plate MS-AEND or for mounting an individual unit with body thread on a wall
- For pressure regulator LRB with angled outlet block B... at rear

Material:
Die-cast aluminum



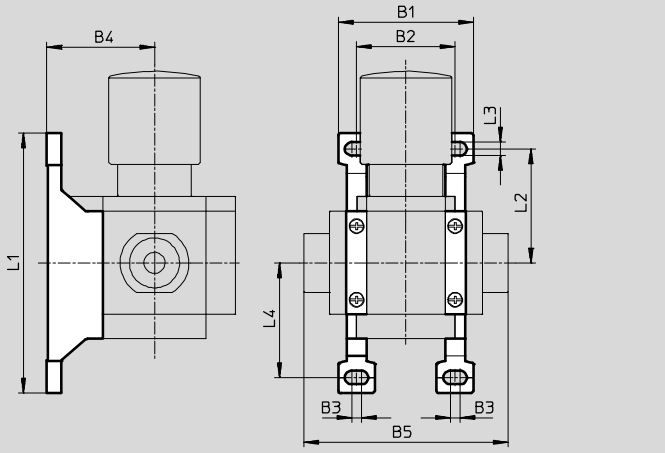


**Dimensions and Ordering Data**

| B1 | B2 | B3 | B4 | B5 | L1 | L2 | L3 | L4 | Weight [lb] | Part No. | Type |
|---|---|---|---|---|---|---|---|---|---|---|---|
| 2.17 | 1.58 | 0.16 | 1.73 | 3.28 | 4.17 | 1.83 | 0.22 | 1.84 | 0.08 | **532184** | **MS4-WP** |

**Mounting bracket MS4-WPB**
- To connect the modules for wall mounting
- In combination with a port plate MS-AG... for mounting an individual unit on a wall
- In combination with mounting plate MS-AEND or for mounting an individual unit with direct thread on a wall
- Provides large wall gap for pressure regulator

Material:
Die-cast aluminum



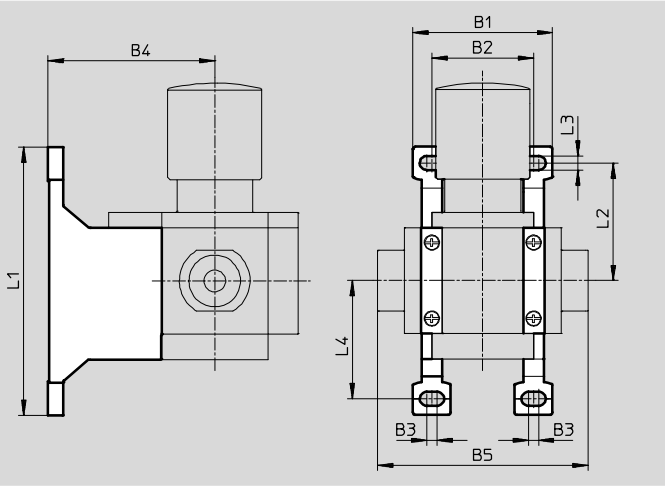


**Dimensions and Ordering Data**

| B1 | B2 | B3 | B4 | B5 | L1 | L2 | L3 | L4 | Weight [lb] | Part No. | Type |
|---|---|---|---|---|---|---|---|---|---|---|---|
| 2.17 | 1.58 | 0.16 | 2.60 | 3.28 | 4.17 | 1.83 | 0.22 | 1.84 | 0.11 | **526063** | **MS4-WPB** |

**Mounting bracket MS4-WPM**
- To connect the modules for wall mounting
- In combination with a port plate MS-AG... for mounting an individual unit on a wall
- Speedy attachment and detachment
- For installation of modules with regulating knob pointing downwards

The distance piece D or 2D (designated in the type code) is included in the scope of delivery and ensures the correct clearance

Material:
Die-cast aluminum



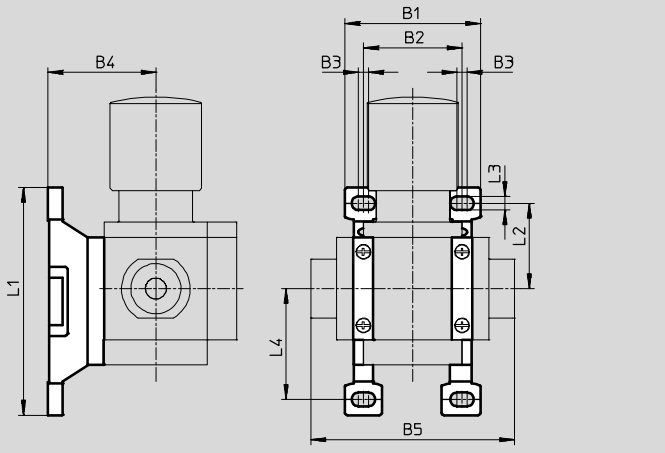


**Dimensions and Ordering Data**

| B1 | B2 | B3 | B4 | B5 | L1 | L2 | L3 | L4 | Clearance | Weight [lb] | Part No. | Type |
|---|---|---|---|---|---|---|---|---|---|---|---|---|
| 2.17 | 1.57 | 0.16 | 1.73 | 3.28 | 3.65 | 1.37 | 0.22 | 1.78 | 1.57 | 0.09 | **526060** | **MS4-WPM-D** |
| 3.75 | 3.15 | | | 4.86 | | | | | 3.15 | 0.11 | **526061** | **MS4-WPM-2D** |

**Body connector MS4-MVM**
- For installation of modules with regulating knob pointing downwards

Material:
Die-cast aluminum



**Ordering Data**

| Size | Part No. | Type |
|---|---|---|
| MS4 | **532800** | **MS4-MVM** |

**12 Ordering Data – Plug Socket with Cable SIM-M8** — Technical data ➔ www.festo.com/catalog/sim-m8

| | Electrical connection | Cable length [ft] | Part No. | Type |
|---|---|---|---|---|
|  | M8x1, 3-pin | 8.2 | **159420** | **SIM-M8-3GD-2,5-PU** |
| | | 16.4 | **159421** | **SIM-M8-3GD-5-PU** |
| | | 32.8 | **192964** | **SIM-M8-3GD-10-PU** |
|  | M8x1, 3-pin | 8.2 | **159422** | **SIM-M8-3WD-2,5-PU** |
| | | 16.4 | **159423** | **SIM-M8-3WD-5-PU** |
| | | 32.8 | **192965** | **SIM-M8-3WD-10-PU** |

**Ordering Data – Plug Socket with Cable SIM-M12** — Technical data ➔ www.festo.com/catalog/sim-m12

| | Electrical connection | Cable length [ft] | Part No. | Type |
|---|---|---|---|---|
| 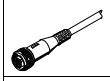 | M12x1, 4-pin | 16.4 | **164259** | **SIM-M12-4GD-5-PU** |
|  | M12x1, 4-pin | 16.4 | **164258** | **SIM-M12-4WD-5-PU** |

**10 Ordering Data – Pressure Gauge MA** — Technical data ➔ www.festo.com/catalog/ma

| | Nominal size | Pneumatic connection | Indicating range [bar] | Indicating range [psi] | Part No. | Type |
|---|---|---|---|---|---|---|
|  | Pressure gauge MA, DIN EN 837-1 | | | | | |
| | 1.57 | ¼ NPT | 0 … 16 | 0 … 232 | **183908** | **MA-40-16-N¼-EN** |
| | Pressure gauge MA, DIN EN 837-1, with red-green range | | | | | |
| | 1.57 | ⅛ NPT | – | 0 … 232 | **530388** | **MA-40-232-N⅛-PSI-E-RG** |
| | 1.97 | ¼ NPT | – | 0 … 232 | **530391** | **MA-50-232-N¼-PSI-E-RG** |

**13 Ordering Data – Padlock LRVS-D**

| | Description | Weight [lb] | Part No. | Type |
|---|---|---|---|---|
| 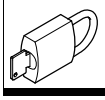 | for regulators, filter/regulators and manual on-off valves | 0.24 | **193786** | **LRVS-D** |

# Pressure Regulators MS4N-LR/LRB – Inch Series

Replacement Parts

| Ordering Data – Wearing Parts Kits | | | |
|---|---|---|---|
| Size | Description | Part No. | Type |
| MS4 | Snap-ring, membrane, bellows, O-rings, screws, stem | **673649** | **MS4-LR/LRB** |

- For spare parts go to: www.festo.com/en/spare_parts_service

# Festo - Your Partner in Automation













**1 Festo Inc.**

5300 Explorer Drive
Mississauga, ON L4W 5G4
Canada

**Festo Customer Interaction Center**
Tel: 1 877 463 3786
Fax: 1 877 393 3786
Email: customer.service.ca@festo.com

**2 Festo Pneumatic**

Av. Ceylán 3,
Col. Tequesquináhuac
54020 Tlalnepantla,
Estado de México

**Multinational Contact Center**
01 800 337 8669

ventas.mexico@festo.com

**3 Festo Corporation**

1377 Motor Parkway
Suite 310
Islandia, NY 11749

**4 Regional Service Center**

7777 Columbia Road
Mason, OH 45040

**Festo Customer Interaction Center**
1 800 993 3786
1 800 963 3786
customer.service.us@festo.com

**Connect with us**

www.festo.com/socialmedia

**www.festo.com**

Subject to change

# BLOWER PACKAGE

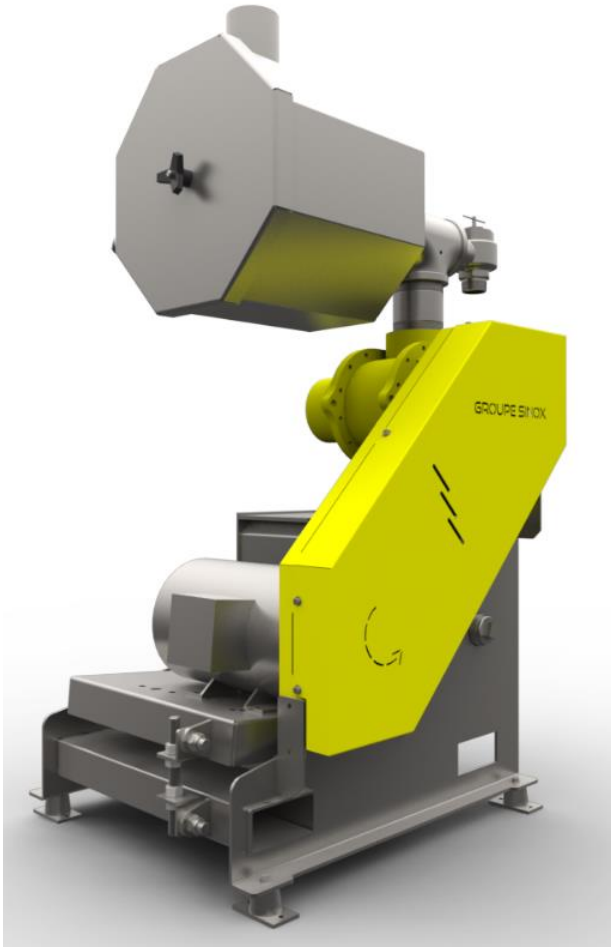

# Table of contents

BLOWER PACKAGE ..... 1
1.1. GENERAL NOTES ..... 3
1.2. VERIFICATION BEFORE START UP ..... 4
1.3. TROUBLESHOOTING ..... 4
2. BLOWER PACKAGE DETAIL ..... 6
2.1. BLOWER PACKAGE J-45966 (FLOUR LINE) ..... 6
2.2. BLOWER PACKAGE J-45980 (BBU LINE) ..... **Erreur ! Signet non défini.**
2.3. DRAWING ..... 7
2.4. OPERATION AND MAINTENANCE ..... 8
2.5. TECHNICALS DATA ..... 9
Tuthill blower ..... 9
Baldor electric motor ..... 10
Kunkle relief valve ..... 11
Pressure transmitter ..... 12

## 1.1. GENERAL NOTES

- The system was designed based on the information and instructions provided by our client. However, the customer has the responsibility to ensure that the system provided will suit the application for which it is intended.
- The customer must ensure that the system provided meets all standards and not compromise the health or safety of staff working with or near the equipment.
- The customer must ensure that air emissions from the system conform to standards and is responsible for obtaining the necessary permit application if necessary.
- The customer is responsible for ensuring that all persons who will work with or around equipment are properly trained and familiar with potential hazards.
- The customer is also responsible for verifying approval by the insurer.
- Even when the system is installed by Sinox, the customer is responsible for cleaning all components and be sure to flush and clean the system to eliminate any possibility of contaminant entry in the final product.
- The customer is also responsible for maintaining the system provided to ensure optimal performances at all time.
- The customer cannot make any modifications of any kind without the expressed approval from Sinox. The End user will be responsible for making minor adjustments and modifications even when they are approved by Sinox.
- The customer is responsible to make sure that the equipment is no longer energized and that proper Lock-out, Tag-out, Try-out (LOTOTO) procedures are duly respected when maintaining / repairing the equipment supplied by Sinox.

## 1.2.VERIFICATION BEFORE START UP

- Check that the power & voltages are correct for the equipment.
- Ensure that the compressed air line is free of dirt, water or clogged before and during connection/operation.
- Drain the water supply line for a while and check that it is free of dirt or trapped air.
- Check all openings, man holes, doors, etc. to be sure these are not open and that the switches if present are making proper contact.
- Verify that all temporary supports or braces have been removed.
- Verify that the dust collector filtration devices are in place.
- Verify that the air outlet of the receiver isn't plugged or obstructed.
- Simulate all systems conditions and verify if all sequences are as expected including all alarm conditions.
- Get familiar with all aspects of the controls before introducing product into the system.

## 1.3.TROUBLESHOOTING

### REDUCED CONVEYING RATE

• Check the adjustment of dosing equipment Ex: rotary valves or auger speed.

• Check the fit collars suction probes when applicable.

• Check if there are sliding belts on the blower.

• Check the power supply of the blower

• Check adjustments of pressure sensors and reaction along with position of all the different valves and check for possible internal leakage valves

• Check for leaks in the piping or doors and access doors

• Make sure the vent lines of rotary valves are not blocked

• Check if the product remains stuck inside the pocket of rotary valves reducing their effectiveness

• Check if the product is unusually wet, or if the security filters are clogged.

## LOW DURATION LIFE FILTERS

• Check if the compressed air used for cleaning pulse is dry. Moisture causes damage and reduces the life of the filter

• Make sure there are no oil in the compressed air

• Check the air supply is sufficient. The pressure should be at least 80 psi

• Make sure not to fill the hopper above the filter level. This has the effect of reducing the cleaning efficiency and the lifetime of the filters. Adjust the fill time if required

• Check whether all pulse valves are functioning normally.

• Check the cleaning cycle

• Make sure the receiver is used for the purpose for which it was designed.

## POOR FILTRATION

• Check the filters are not breakthroughs, damaged or clogged and replace them if required

• Check if there are leaks in the seal under the flange of the filter. Verification is done by inspecting the clean side.

## INOPERATIVE SOLENOID VALVE

• To check if the solenoid valve is working, you should hear a click when activated and should hear air escaping it.

• If no click is heard, remove the valve and clean moving parts. If the heart is damaged or does not move freely, it must be replaced. Spare parts kits are available

• If there is no air flow, check if the power goes well (24Volts). If there is current, check the voltage across the solenoid. If the voltage rises to its maximum during normal operation cycle is that it is damaged. You must change the valve.

# 2. BLOWER PACKAGE DETAIL

## 2.1. BLOWER PACKAGE J-49730

Design : Vacuum
Flow : 227 CFM at 8.68" Hg
Vacuum inlet connection : 4'' OD
Exhaust air outlet : 4'' FNPT
Power/Voltage : 15 HP, 460VAC,3 phases, 60 Hz
Motor speed : 1750 RPM
Blower model : Competitor 4005 - 2 lobes
Blower set speed : 3182 RPM
Relief valve model : Kunkle
Relief valve set point : 15''Hg max
Motor pulley : 2B80
Blower pulley : 2B42
Belts : BX61
Filter cartridge : Sinox # 3028

## 2.2.DRAWING

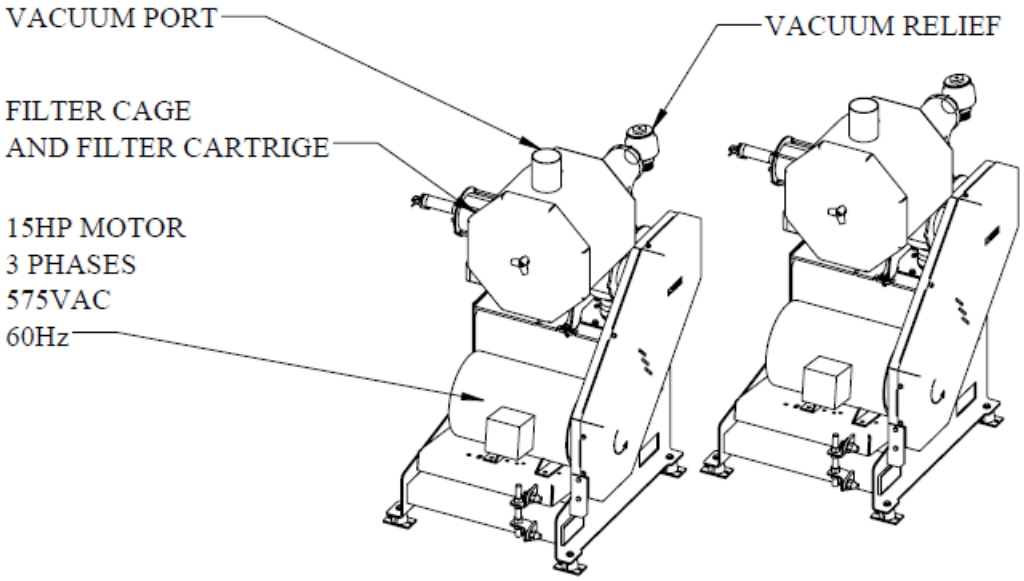
VACUUM PORT
VACUUM RELIEF
FILTER CAGE
AND FILTER CARTRIGE
15HP MOTOR
3 PHASES
575VAC
60Hz

## 2.3.OPERATION AND MAINTENANCE

Refer to manufacturers' manuals included in Section **Technical data** of this document for specific operation instruction and maintenance of each component.

### *Tension adjustment system*

NOTE: Make sure that power is OFF before performing belt adjustment or verification.



Belts can be easily adjusted by turning a simple nut.
NOTE: Over tightening belts could damage blower shaft or bearings.

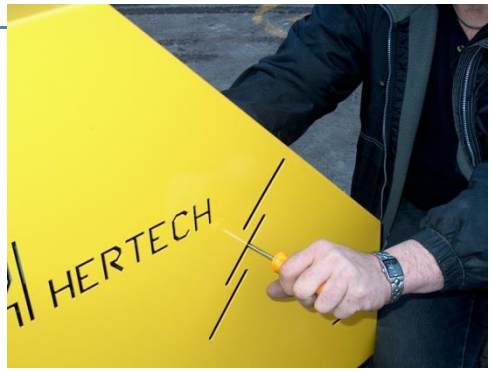


The slotted holes in the guards permit an easy and fast verification of the belt tensioning.
Refer to the belt supplier recommendations for more precise adjustment.

### *Lubrification and Maintenance*

Refer to blower manual enclos

T 418 885-8276 1 888 440-8276
16, rue Turgeon, Saint-Anselme (QC) G0R 2N0

## 2.4.TECHNICALS DATA

### Tuthill blower

Tuthill
PUMP YOUR HEART INTO IT

**M-D Pneumatics™**
**Rotary Positive Displacement Blower**

Manual 2017 Rev C p/n 2017

**WARNING: Do Not Operate Before Reading Manual**

# CP Series
# OPERATOR'S MANUAL



Models

| | | | | | |
|---|---|---|---|---|---|
| 2002 | 3002 | 4002 | 5003 | 6005 | 7006 |
| 2004 | 3003 | 4005 | 5006 | 6008 | 7011 |
| | 3006 | 4007 | 5009 | 6015 | 7018 |

Grease Lubrication / Air Service
Splash Lubrication / Air Service



Copyright © 2018 Tuthill Vacuum & Blower Systems
All rights reserved. Product information and specifications subject to change.



Operator's Manual: Tuthill CP Series Rotary Positive Displacement Blower

**Disclaimer Statement:**
All information, illustrations and specifications in this manual are based on the latest information available at the time of publishing. The illustrations used in this manual are intended as representative reference views only. Products are under a continuous improvement policy. Thus, information, illustrations and/or specifications to explain and/or exemplify a product, service or maintenance improvement may be changed at any time without notice.

**Rights Reserved Statement:**
No part of this publication may be reproduced or used in any form by any means – graphic, electronic or mechanical, including photocopying, recording, taping or information storage and retrieval systems – without the written permission of Tuthill Vacuum & Blower Systems.

Copyright © 2018 Tuthill Vacuum & Blower Systems
All rights reserved. Product information and specifications subject to change.

# Table of Contents

**Introduction ..... 1**

Applicable Documentation ..... 1

Scope of Manual ..... 1

**Conventions and Data Plate ..... 2**

Graphic Conventions in this Manual ..... 2

Data Plate ..... 3

**Lifting ..... 5**

**Description ..... 6**

Flow by Direction and Rotation ..... 7

Specifications ..... 8

**Installation ..... 11**

General ..... 11

Location ..... 13

Foundation ..... 13

Blower Air Intake ..... 13

Soft Foot ..... 14

Safety ..... 14

Lubrication ..... 15

Filling Procedure ..... 16

Frequently Asked Questions Regarding Lubrication ..... 17

Hazards Associated With Breakdown or Ignition of Lubrication ..... 17

Release Lubricated Bearings – Grease Lubrication Series Only ..... 17

Piping Connections ..... 18

Hazards Associated With Hazardous Process Fluids ..... 18

Blockage or Restriction ..... 18

Motor Drives ..... 19

Direct Coupled ..... 19

V-Belts ..... 19

Setting V-Belt Tension ..... 20

V-Belt Troubleshooting ..... 21

Motor and Electrical Connections ..... 22

**Operation ..... 23**

General ..... 23

Start-Up Checklist ..... 24

Stopping ..... 25

Recommended Shutdown Procedure to Minimize Risk of Freezing or Corrosion ..... 26

**Maintenance ..... 27**

General ..... 27

Regular Maintenance ..... 27

Spare Parts ..... 28

Factory Service and Repair ..... 28

Long-Term Storage ..... 29

**Disassembly and Reassembly ..... 30**

Disassembly of Blower ..... 30

Reassembly of Blower ..... 33

Adjusting Rotor Interlobe Clearance ..... 36

Lubrication, Final Assembly and Mounting ..... 37

**Troubleshooting ..... 38**

**Assembly Clearances ..... 40**

Torque Chart ..... 41

**Recommended Lubricants ..... 42**

Recommended Lubricants for Rotary Blowers and Vacuum Boosters ..... 42

**Special Tool Drawings ..... 44**

**Parts List ..... 46**

Cutaway Drawing for Grease Lubrication / Air Service ..... 46

Parts List for Model CP Series – Grease Lubrication / Air Service ..... 47

Cutaway Drawing for Splash Lubrication / Air Service ..... 48

Parts List for Model CP Series – Splash Lubrication / Air Service ..... 49

**Declaration of Incorporation ..... 51**

**Warranty – Blower Products ..... 52**

**Operating Data Form / Product Registration ..... 53**

# 01

# INTRODUCTION

**CONGRATULATIONS** on the purchase of a new **CP Series Rotary Positive Displacement Blower** from Tuthill Vacuum & Blower Systems. Please examine the blower for shipping damage, and if any damage is found, report it immediately to the carrier. If the blower is to be installed at a later date, make sure it is stored in a clean, dry location and rotated regularly. Make sure covers are kept on all openings. If the blower is stored outdoors, be sure to protect it from weather and corrosion.

**CP Series** blowers are built to exacting standards and, if properly installed and maintained, will provide many years of reliable service. Read and follow every step of these instructions when installing and maintaining the blower.

**NOTE: Record the blower model and serial numbers of the machine in the OPERATING DATA form on the inside back cover of this manual. Use this identification on any replacement part orders, or if service or application assistance is required.**

## APPLICABLE DOCUMENTATION

The applicable documents associated with this manual are:

- 2006/42/CE – Machinery Directive
- EN 1012-1:1996 - Compressors and vacuum pumps - Safety Requirements - Part 1: Compressors

## SCOPE OF MANUAL

The scope of this manual and the Declaration of Incorporation includes the bare shaft rotary positive displacement blower.

# 02

# CONVENTIONS AND DATA PLATE

## GRAPHIC CONVENTIONS IN THIS MANUAL

This manual is the result of a risk assessment according to the applicable documents referenced in ***Applicable Documentation on page 1***. The following hazard levels are referenced within this manual:

**⚠ DANGER**

**Indicates a hazardous situation that, if not avoided, will result in death or serious injury.**

**⚠ WARNING**

**Indicates a hazardous situation that, if not avoided, could result in death or serious injury.**

**⚠ CAUTION**

**Indicates a hazardous situation that, if not avoided, could result in minor or moderate injury.**

***NOTICE***

*Indicates a situation that can cause damage to the engine, personal property, and/or the environment or cause the equipment to operate improperly.*

**NOTE: Indicates a procedure, practice, or condition that should be followed in order for the equipment to function in the manner intended.**

**⚠ CAUTION**



**Read manual before operation or bodily harm may result. Attention should be given to the safety related sections of this manual.**

## DATA PLATE

MODEL NUMBER | SERIAL NUMBER | MAWP | YEAR

Tuthill

Tuthill Vacuum & Blower Systems
4840 West Kearney Street
Springfield, Missouri USA 65803

MAX RPM ____ ____

**READ INSTRUCTION MANUAL BEFORE OPERATION OR BODILY HARM MAY RESULT**




http://www.tuthill.com (800) 825-6937 Made in the USA

*Figure 2-1 – General Operation and Symbols on Data Plate*

The following information is contained on the data plate:

**⚠ WARNING**



**Keep body and clothing away from machine.**

**During operation, keep body and clothing away from inlet and outlet of the blower.**

**⚠ WARNING**



**Do not operate without guards in place.**

**⚠ CAUTION**



**Hearing protection is required while the blower is in operation. Noise levels may reach as high as 81 dBA.**

**⚠ CAUTION**



**Do not touch hot surfaces.**

**The upper limit of the blower operation is 400°F (205°C). Do not touch the blower while it is in operation and assure blower is cool when not in operation.**

| | |
|---|---|
| **MODEL NUMBER:** | The specific model of the blower |
| **SERIAL NUMBER:** | Unique to each blower |
| **YEAR:** | Year of manufacture |
| **MAWP:** | Maximum Allowable Working Pressure<br><br>The standard MAWP is per ***Table 4-2 – Maximum Operating Limits on page 9***. The MAWP shall not be exceeded. |

# 03

# LIFTING

**⚠ WARNING**

**The blower must be handled using an appropriate device such as a fork truck or appropriate lifting device. *See Table 4-1 on page 8* for approximate weights. Care should be taken to assure blower does not over-turn during handling and installation.**

# 04

# DESCRIPTION

**NOTICE**

*Refer to specific data sheets for flow capacities and vacuum capacities.*

**NOTE: Refer to diagrams in this manual for proper rotation and orientation in inlet and discharge.**

Tuthill Vacuum & Blower Systems CP Series model rotary lobe blowers are positive displacement type units, whose pumping capacity is determined by size, operating speed, and differential pressure conditions. Blowers employ rotors rotating in opposite directions within a housing closed at the ends by end plates.

The inlet to the discharge is sealed with operating clearances that are very small. Internal lubrication is not needed, as there is no moving contact.

Clearances between the rotors during rotation are maintained by a pair of accurately machined helical timing gears, mounted on the two shafts extended outside the air chamber. The intermeshing rotary lobes are designed to rotate and trap air or gas between each rotor and the housing. As the rotor lobes rotate past the edge of the suction port, the trapped air or gas is essentially at suction pressure and temperature. Since the blower is a constant volume device, the trapped air remains at suction pressure until the leading rotor lobe opens into the discharge port. The close clearances between the rotors inhibit back slippage of the trapped volume from between the rotors, and the trapped volume is forced into the discharge piping. Compression occurs not internal to the blower but by the amount of restriction, either downstream of the blower discharge port or upstream of the blower inlet port.

***Figure 4-1*** illustrates the air movement within the machine. In addition, the machine can operate in either direction.

Never attempt to control capacity by means of a throttle valve in the intake or discharge piping. This will increase the power load on the drive system, will increase operating temperatures, and can overload and/or seriously damage the blower. Likewise, if the possibility exists that flow to the blower inlet may be cut off during normal operation of a process, install an adequate vacuum relief valve. A pressure-type relief valve in the discharge line near the blower is also recommended for protection against cutoff or blocking in this line. Use check valves on each blower when more than one blower is connected to a discharge line.

When a belt drive is used, it is possible to adjust blower speed to obtain the desired capacity by changing the diameter of one or both sheaves, or by using a variable-speed motor pulley. In a direct-coupled arrangement, a variable-speed motor or transmission is required. Gas blowers can use bypasses, but some applications may require additional cooling. If there is a large volume of high-pressure air or gas downstream of the blower, a check valve in the piping downstream of the blower will protect the blower from overspeeding in a backward direction upon shutdown.

Consult a Tuthill Vacuum & Blower Systems sales professional if questions arise.

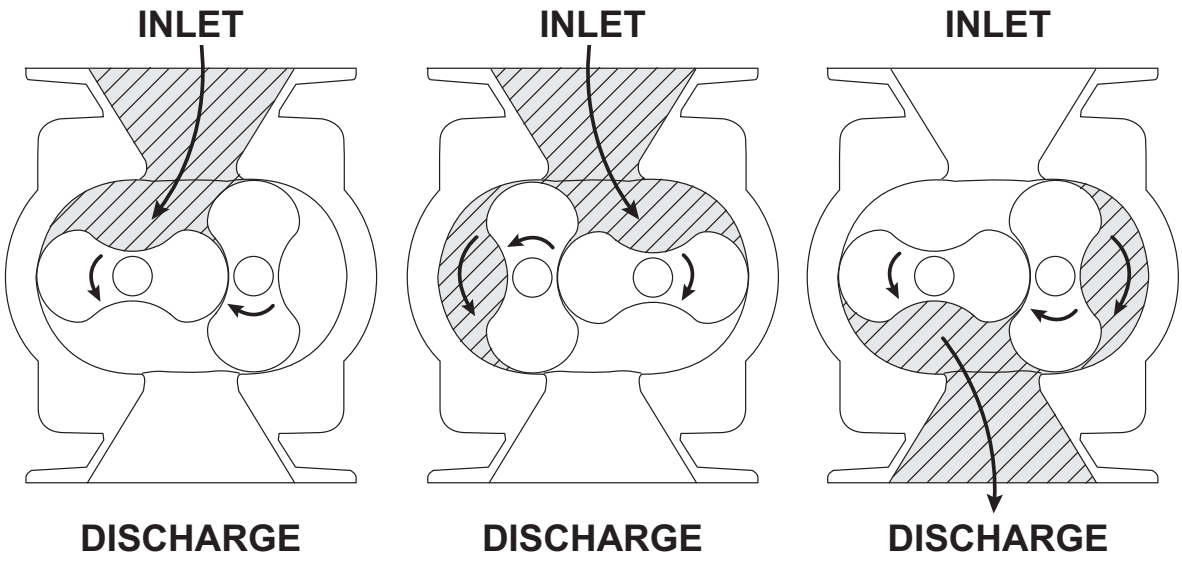


*Figure 4-1 – General Operation Principle*

## FLOW BY DIRECTION AND ROTATION

**⚠ WARNING**

**Refer to diagrams in this manual for proper rotation and orientation in inlet and discharge.**

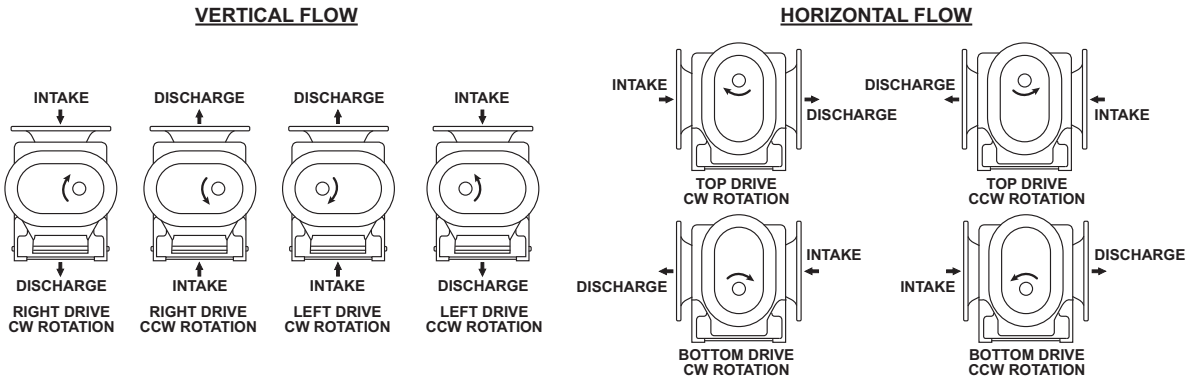


*Figure 4-2 – Flow Direction by Rotation*

# SPECIFICATIONS

| MODEL | APPROXIMATE OIL CAPACITY[1] | | | | PORT SIZE | MAXIMUM RPM | APPROXIMATE WEIGHT |
|---|---|---|---|---|---|---|---|
| | VERTICAL FLOW | | HORIZONTAL FLOW | | | | |
| | GEAR END[2] | DRIVE END[3] | GEAR END[2] | DRIVE END[3] | | | |
| 2002 | 3.4 oz (101 mL) | – | 1.7 oz (50 mL) | – | 1 in. (25 mm) | 5,275 | 41 lb (19 kg) |
| 2004 | 3.4 oz (101 mL) | – | 1.7 oz (50 mL) | – | 2 in. (51 mm) | 5,275 | 53 lb (24 kg) |
| 3002 | 6.0 oz (177 mL) | 4.0 oz (118 mL) | 3.4 oz (101 mL) | 2.5 oz (74 mL) | 1.25 in. (32 mm) | 3,600 | 78 lb (35 kg) |
| 3003 | 6.0 oz (177 mL) | 4.0 oz (118 mL) | 3.4 oz (101 mL) | 2.5 oz (74 mL) | 2 in. (51 mm) | 3,600 | 83 lb (38 kg) |
| 3006 | 6.0 oz (177 mL) | 4.0 oz (118 mL) | 3.4 oz (101 mL) | 2.5 oz (74 mL) | 2.5 in. (64 mm) | 3,600 | 113 lb (51 kg) |
| 4002 | 8.5 oz (251 mL) | 6.4 oz (189 mL) | 5.8 oz (172 mL) | 4.7 oz (139 mL) | 1.5 in. (38 mm) | 3,600 | 95 lb (43 kg) |
| 4005 | 8.5 oz (251 mL) | 6.4 oz (189 mL) | 5.8 oz (172 mL) | 4.7 oz (139 mL) | 2.5 in. (64 mm) | 3,600 | 127 lb (58 kg) |
| 4007 | 8.5 oz (251 mL) | 6.4 oz (189 mL) | 5.8 oz (172 mL) | 4.7 oz (139 mL) | 3 in. (76 mm) | 3,600 | 146 lb (66 kg) |
| 5003 | 18.3 oz (541 mL) | 10.2 oz (302 mL) | 7.1 oz (210 mL) | 5.4 oz (160 mL) | 2.5 in. (64 mm) | 2,850 | 152 lb (69 kg) |
| 5006 | 18.3 oz (541 mL) | 10.2 oz (302 mL) | 7.1 oz (210 mL) | 5.4 oz (160 mL) | 4 in. (102 mm) | 2,850 | 185 lb (84 kg) |
| 5009 | 18.3 oz (541 mL) | 10.2 oz (302 mL) | 7.1 oz (210 mL) | 5.4 oz (160 mL) | 4 in. (102 mm) | 2,850 | 222 lb (101 kg) |
| 6005 | 25.5 oz (754 mL) | 18.0 oz (532 mL) | 16.9 oz (500 mL) | 9.0 oz (266 mL) | 3 in. (76 mm) | 2,350 | 250 lb (113 kg) |
| 6008 | 25.5 oz (754 mL) | 18.0 oz (532 mL) | 16.9 oz (500 mL) | 9.0 oz (266 mL) | 5 in. (127 mm) | 2,350 | 310 lb (141 kg) |
| 6015 | 25.5 oz (754 mL) | 18.0 oz (532 mL) | 16.9 oz (500 mL) | 9.0 oz (266 mL) | 6 in. (152 mm) | 2,350 | 456 lb (207 kg) |
| 7006 | 28.7 oz (849 mL) | – | 20.3 oz (600 mL) | – | 4 in. (102 mm) | 2,050 | 425 lb (193 kg) |
| 7011 | 28.7 oz (849 mL) | – | 20.3 oz (600 mL) | – | 6 in. (152 mm) | 2,050 | 555 lb (252 kg) |
| 7018 | 28.7 oz (849 mL) | – | 20.3 oz (600 mL) | – | 8 in. (152 mm) | 2,050 | 675 lb (306 kg) |

[1] Oil capacities are based on filling from dry condition. Less oil may be needed depending on emptiness of oil reservoir(s) after draining. Always fill the gear housing until oil drips out of the oil level hole. Replace plugs in their respective holes. Following this procedure will ensure proper oil level.
[2] Gear End amounts apply to all CP Series blowers.
[3] Drive End amounts apply only to Splash Lubrication models.

*Table 4-1 – Specifications*

| MODEL | MAXIMUM RPM | MAXIMUM PRESSURE DIFFERENTIAL* | MAXIMUM VACUUM* | MAXIMUM TEMPERATURE RISE* | MAWP |
|---|---|---|---|---|---|
| 2002 | 5,275 | 12 psi (827 mbar) | 16 inch-Hg (542 mbar) | 225°F (125°C) | 15 psi (1,034 bar) |
| 2004 | 5,275 | 7 psi (483 mbar) | 16 inch-Hg (542 mbar) | 185°F (103°C) | 15 psi (1,034 bar) |
| 3002 | 3,600 | 15 psi (1,034 mbar) | 16 inch-Hg (542 mbar) | 210°F (117°C) | 15 psi (1,034 bar) |
| 3003 | 3,600 | 12 psi (827 mbar) | 15 inch-Hg (508 mbar) | 180°F (100°C) | 15 psi (1,034 bar) |
| 3006 | 3,600 | 7 psi (483 mbar) | 15 inch-Hg (508 mbar) | 170°F (94°C) | 15 psi (1,034 bar) |
| 4002 | 3,600 | 15 psi (1,034 mbar) | 16 inch-Hg (542 mbar) | 220°F (122°C) | 17 psi (1,172 bar) |
| 4005 | 3,600 | 10 psi (690 mbar) | 16 inch-Hg (542 mbar) | 210°F (117°C) | 15 psi (1,034 bar) |
| 4007 | 3,600 | 7 psi (483 mbar) | 15 inch-Hg (508 mbar) | 170°F (94°C) | 15 psi (1,034 bar) |
| 5003 | 2,850 | 15 psi (1,034 mbar) | 16 inch-Hg (542 mbar) | 195°F (108°C) | 17 psi (1,172 bar) |
| 5006 | 2,850 | 15 psi (1,034 mbar) | 16 inch-Hg (542 mbar) | 195°F (108°C) | 15 psi (1,034 bar) |
| 5009 | 2,850 | 7 psi (483 mbar) | 15 inch-Hg (508 mbar) | 160°F (89°C) | 15 psi (1,034 bar) |
| 6005 | 2,350 | 18 psi (1,241 mbar) | 16 inch-Hg (542 mbar) | 250°F (139°C) | 18 psi (1,241 bar) |
| 6008 | 2,350 | 14 psi (965 mbar) | 16 inch-Hg (542 mbar) | 240°F (133°C) | 15 psi (1,034 bar) |
| 6015 | 2,350 | 7 psi (483 mbar) | 12 inch-Hg (406 mbar) | 180°F (100°C) | 15 psi (1,034 bar) |
| 7006 | 2,050 | 15 psi (1,034 mbar) | 16 inch-Hg (542 mbar) | 235°F (131°C) | 17 psi (1,172 bar) |
| 7011 | 2,050 | 10 psi (690 mbar) | 16 inch-Hg (542 mbar) | 210°F (117°C) | 15 psi (1,034 bar) |
| 7018 | 2,050 | 6 psi (414 mbar) | 12 inch-Hg (406 mbar) | 120°F (67°C) | 15 psi (1,034 bar) |

* Maximum conditions based upon 70°F (21°C) inlet temperature and 14.7 psi (1 bar) absolute inlet pressure.

*Table 4-2 – Maximum Operating Limits*

**⚠ WARNING**

**The maximum pressure differential is based on the difference between the inlet pressure and the outlet pressure. The maximum pressure differential shall not be exceeded. Exceeding the maximum pressure differential will cause serious damage to the equipment and could cause bodily injury.**

**⚠ WARNING**

**The maximum allowable working pressure (MAWP) is based on the absolute pressure of the blower housing and is NOT the maximum allowable pressure differential. Exceeding the MAWP will cause serious damage to the equipment and could cause bodily injury.**

To permit continued satisfactory performance, a blower must be operated within certain approved limiting conditions. The manufacturer's warranty is, of course, also contingent on such operation.

Maximum limits for pressure, temperature, and speed are specified in ***Table 4-2 on page 9*** for various blower sizes when operated under the standard atmospheric conditions. Do not exceed any of these limits.

**NOTICE**

*Specially ordered blowers with nonstandard construction, or with rotor end clearances greater than shown in **Assembly Clearances on page 40**, will not have the operating limits specified here. Contact your Tuthill Vacuum & Blower Systems sales representative for specific information.*

**NOTICE**

*Special attention must be paid when a blower has a higher than standard ambient suction temperature. Special recommendations for operating parameters and/or additional cooling may be recommended. Consult the factory or local representative for appropriate information.*

# 05

# INSTALLATION

## GENERAL

**⚠ DANGER**

**The blower is not intended to be used with explosive products or in explosive environments. The blower is not intended to be used in applications that include hazardous and toxic gases. Consult the factory for support.**

**⚠ DANGER**

**It is the responsibility of the installer to assure that proper guarding is in place and compliant with all applicable regulatory requirements.**

**⚠ WARNING**



**The bare shaft blower can generate excessive noise. Methods to reduce the noise levels by installing inlet and outlet silencers will be required. Even with inlet and outlet silencers, hearing protection will be required.**

**⚠ WARNING**

**Customers are warned to provide adequate protection, warning and safety equipment necessary to protect personnel against hazards in the installation and operation of this equipment in the system or facility.**

**⚠ WARNING**

**The standard MAWP is per *Table 4-2*. The MAWP shall not be exceeded unless specific factory testing of the pressure containing components of the blower has been performed.**

**⚠ WARNING**

***Table 4-2* states the maximum operating speed in RPM (rotations per minute) and maximum temperature. Do not exceed these limits. The installation of the blower shall take these critical operating parameters into account and adequate control features implemented.**

**⚠ WARNING**

**Upon completion of the installation, and before applying power, rotate the drive shaft by hand. It must move freely. If it does not, look for uneven mounting, piping strain, excessive belt tension or coupling misalignment or any other cause of binding. If blower is removed and still does not move freely, check inside the blower housing for foreign material.**

**NOTICE**

*Remove the protective covers from the shaft and inspect for damage.*

Carefully check to ensure that no transit damage has been sustained. If damage has occurred from shipment, file a claim with the carrier immediately. Preserve the shipping container for inspection by the carrier.

**NOTICE**

*In the event that your unit sustains damage while being shipped to your facility, do not return it to the factory without first obtaining shipping instructions from us.*

Do not remove protective covers and plugs until the connections are complete. Mount the blower on a flat, level surface. Use a baseplate that is rigid, solidly supported, and structurally sound. Shim under the legs where necessary so that each leg of the blower supports an equal share of the blower weight. This is necessary to prevent twisting of the blower. Make sure the feet rest evenly on the mounting surface before fastening down. Twisting or cramping the blower during mounting will cause rotor contact and binding during operation, resulting in a condition called “soft foot.” ***See Soft Foot on page 14*** for further details and preventative measures.

A blower that is factory-mounted on a base should not require such adjustments. However, since the assembly can become twisted in shipping or installation, check for soft foot after installing the base. Shims may be needed for alignment. Loosen the foot hold-down screws to check foot contact with the mounting surface. Mount the base on a solid foundation or heavy flooring, using shims as necessary at bolting points to prevent warping the assembly.

Transmission of small operating vibrations to a support structure may be objectionable in some applications. Use of vibration isolators or vibration-absorbing materials can be effective in overcoming this transmission. To avoid causing distortion, apply the treatment under the common motor/blower base or mounting plate rather than directly under the feet alone.

Make sure piping is accurately squared with the blower and supported independently. Stress imparted from incorrectly aligned piping or mounting will create problems with bearing and seal life, possibly leading to premature internal contact. The blower should sit stress free and evenly on its supporting surface. Take care to evenly tighten the mounting bolts to avoid imparting undue stress into the blower. Stress can be checked in a free state with feeler stock or verified on a previously installed blower with the aid of a dial indicator. Spring or gap should be less than 0.002 in. (0.05 mm).

Use only clean, new pipe and make certain it is free of scale, cuttings, weld beads, dirt, or any other foreign material. To guard against damage to the blower, make sure that an inlet filter is used. Clean the filter of collected debris after 3 hours of operation and periodically thereafter. ***See Piping Connections on page 18*** for additional details.

***Figure 5-1*** shows a typical complete installation of the blower and accessories. Note the absence of throttle or shut-off valves in both discharge and intake piping. If it is possible for airflow to be cut off in either line, add a pressure and/or vacuum relief valve. In some installations, it may be desirable to use only an inlet silencer-cleaner supported directly from the blower connection. Keep the weight of accessories and piping to a minimum to prevent blower casing distortion. If the weight exceeds 10% of blower weight, support the components independently of the blower and connect them with a flexible hose or connectors. The approximate weight of the blower is listed in ***Table 4-1 on page 8***.

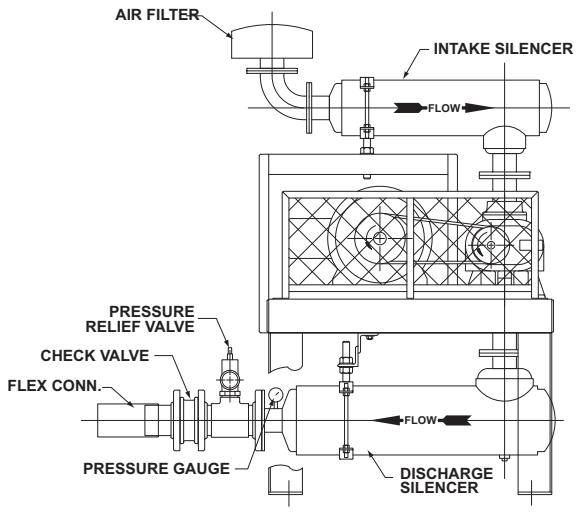


*Figure 5-1 – Typical Blower Installation*

A blower may be driven by direct-coupling to the driver or by V-belt drive for the purpose of obtaining other speeds within the approved range. ***See Motor Drives on page 19*** for more information.

Blowers from Tuthill Vacuum & Blower Systems are internally and externally treated after factory assembly and testing to protect against rusting in normal atmospheric conditions prior to installation. The maximum period of internal protection is considered to be 6 months under average conditions, provided closing plugs and seals are not removed. Protection against chemical or salt-water atmosphere is not provided. Avoid opening the blower until ready to begin installation, as protection will be quickly lost due to evaporation. For recommended preparations for long-term storage (longer than 6 months), ***see Long-Term Storage on page 29***.

## Location

Install the blower in a room or outdoor area that supplies adequate space and lighting for routine maintenance. Make sure that indoor installation areas are well ventilated and kept as cool as possible, because operating the blower at elevated temperatures can result in nuisance overload or temperature shutdowns. An unprotected outdoor installation is satisfactory only when correct lubrication for the expected temperatures is provided, as per ***Recommended Lubricants on page 42***.

## Foundation

The blower does not need a special foundation. However, it does require a solid, level floor and adequate frame support. Bolt the blower system to the floor and seal any cracks.

## Blower Air Intake

To minimize maintenance, supply the blower with the cleanest air possible. The air must not contain any flammable or toxic gases, as the blower will concentrate these gases. This could result in damage to the blower and surrounding property and lead to personal injury or death. Do not block or restrict the opening of the blower, as the motor could overheat and fail.

Do not use blowers on explosive or hazardous gases. Do not exceed the limits described in ***Table 4-2 on page 9*** on performance criteria such as pressure differential, running speed, and discharge temperature.

If it is necessary to take air from a remote source, such as in a vacuum application, make sure the diameter of the piping is at least equal to the diameter of the blower inlet. For distances greater than 20 ft (6 m), enlarge the pipe diameter to reduce inlet restriction. Excessive restriction will reduce the efficiency of the blower and elevate its discharge temperature. The piping used should also be corrosion-resistant and free of scale and dirt. Keep the inlet covered to keep out foreign objects and rain. Vacuum kits are available.

## Soft Foot

Soft foot is a condition in which one of the blower feet does not sit flat on the base. Soft foot is usually due to irregularities in the surface to which the blower is mounted. When the bolt on the foot gets tightened, a slight distortion occurs that can affect bearing and seal life as well as internal contact between parts.

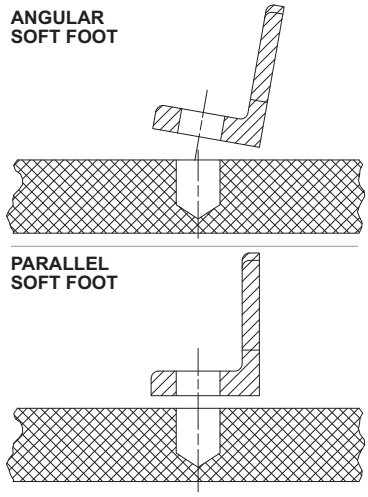


*Figure 5-2 – Illustrations of Soft Foot*

1. Place the blower on the base.
2. Check each foot for gaps between the foot and base (soft foot). Shim as necessary to fill the gap within 0.002 in. (0.05 mm).
   ***Figure 5-2*** shows the two most common types of soft foot conditions. If either type is present at a measurement of more than 0.003 in. (0.076 mm), the blower may fail prematurely.
3. Tighten all bolts.
4. Mount a dial indicator on the base contacting one foot at 12 o'clock position.
5. Loosen the bolt on that foot. Observe indicator travel and add shims as needed to reduce "spring" to less than 0.002 in. (0.05 mm). Repeat steps 4 and 5 on the remaining feet.

## SAFETY

Tuthill Vacuum & Blower Systems recommends the use of relief valves to protect against excessive pressure or vacuum conditions. Test these valves at initial start-up to be sure they are properly adjusted to relieve at or below the maximum pressure differential rating of the blower.

**⚠ DANGER**



**It is the responsibility of the installer to assure that proper guarding is in place and compliant with all applicable regulatory requirements.**

**⚠ DANGER**



**Internal and external rotating parts of the blower and driving equipment can produce serious physical injuries. The blower should never be run with the inlet or discharge piping removed. If it becomes necessary to inspect the rotating parts of the blower or to change V-belts, be absolutely sure that all power to the motor controls has been shut off, the motor controls are locked out, and properly tagged before proceeding.**

**⚠ DANGER**

**Assure that properly sized vacuum breaks/ relief valves are used on the inlet side of the blower. Also assure that properly sized pressure relief valves are used on the outlet of the blower. The sizing shall be such to assure that the proper flow can be achieved without exceeding the rated vacuum and pressure ratings.**

**⚠ DANGER**



**Blower housing and associated piping or accessories may become hot enough to cause major skin burns on contact.**

**⚠ WARNING**



**Use lock out/tag out procedures to disable the electrical energy source before any service or work is done on the blower.**

**⚠ WARNING**



**Avoid extended exposure in close proximity to machinery with high intensity noise levels. Wear adequate ear protection.**

**NOTE: Use proper care and good procedures in handling, lifting, installing, operating, and maintaining the equipment.**

## LUBRICATION

Every blower from Tuthill Vacuum & Blower Systems is factory-tested, oil-drained, and shipped dry to its installation point. Fill both independent oil reservoirs to the proper level before operation.

Shaft bearings at the gear end of the blower are splash-lubricated by one or both gears dipping into an oil reservoir formed in the gear end plate and cover. Shaft bearings at the drive end of the blower are lubricated by a slinger assembly dipping into an oil reservoir. Before starting the blower, fill the oil sumps as described in ***Filling Procedure on page 16***.

Add oil to the blower in the quantity listed in***Table 4-1 on page 8***. Make sure oil level is maintained within the notched area of the sight glass. ***See Figure 5-3***. Lower drive blowers have “bull’s eye” type oil level gauges. Maintain oil levels at the center of the glass.

**⚠ WARNING**

**Never attempt to change or add lubrication while the blower is running. Failure to heed this warning could result in damage to the equipment or personal injury. Oil must be checked when the blower is NOT running.**

**⚠ WARNING**

**Properly dispose of the spent lubricants. Refer to the manufacturer of the lubricant and any regulations to assure proper and safe disposal.**

**⚠ WARNING**

**Do not start the blower until you are sure oil has been put in the gear housing and rear cover. Operation of the blower without proper lubrication will cause the blower to fail and void the warranty.**

**NOTICE**

*Most CP Series blowers are shipped from the factory in a left hand drive, vertical flow configuration. If drive shaft location is changed, the oil level plugs, sight glasses and breathers must be relocated to proper positions, as shown in **Figure 5-3**. Failure to change plug location will result in blower failure and void the product warranty.*

## Filling Procedure

***See Figure 5-3. See Recommended Lubricants on page 42*** for suggested lubricants and grease.

1. Remove the fill plugs or breathers from both gear end and drive end plates.
2. Slowly pour oil through the fill until oil appears in the oil sight glass. Bring the oil level to the center of the sight glass.
3. Verify oil level is at proper level in both gear end and drive end sight glasses.
4. Replace the fill plugs or breathers that were removed in step 1.

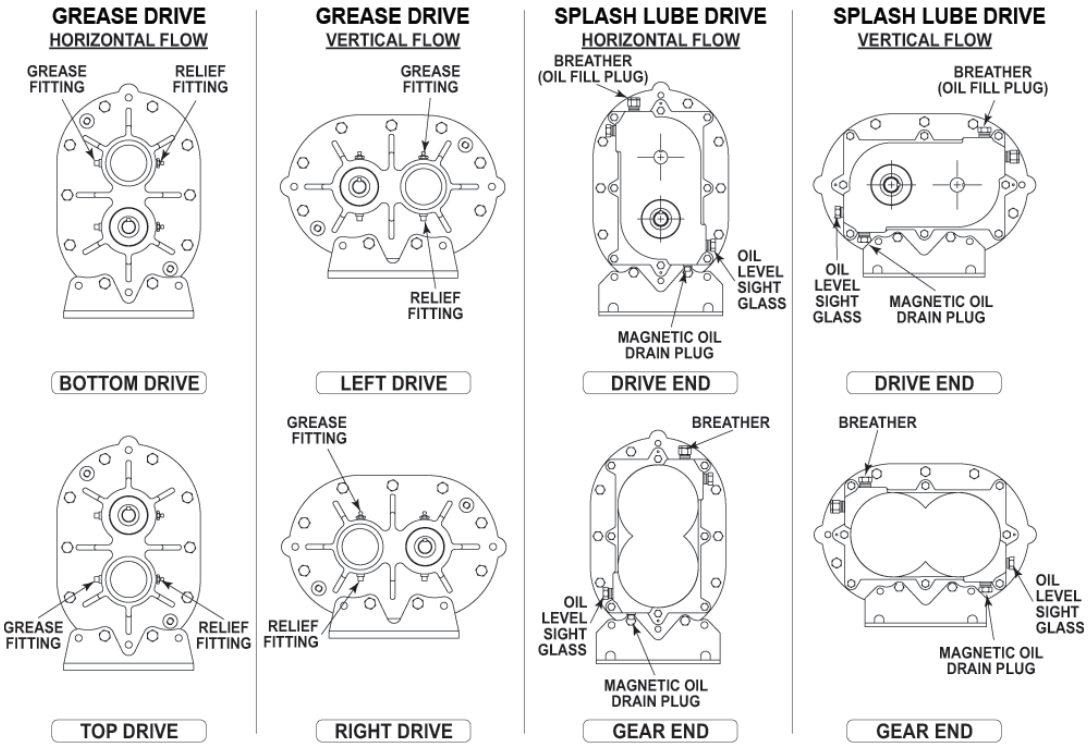


*Figure 5-3 – Location of Oil Fill, Drain and Level Gauges on CP Series Blowers*

## Frequently Asked Questions Regarding Lubrication

**What is the functional detriment if the "wrong oil" is used?**

The lubricant is selected based on bearing speed, gear speed, and operating temperature. If the lubricant is too light, it increases wear by not separating the sliding surfaces and it will not remove the heat adequately. If the lubricant is too thick, the drag in the bearings is increased, causing them to run hotter. Thicker lubricant will not flow as readily into the gears and it will reduce the available backlash. Lubricants at our conditions are incompressible.

**What is the functional detriment if the oil is not serviced?**

If the lubricant is not serviced at the proper interval, the shearing action in the bearing and the gears will begin to take its toll and the lubricant will thicken. The blower will run hotter and the wear on moving parts will increase. The lubricant will generally appear dirtier, caused by material rubbing off the components. The lubricant will discolor because of overheating. An indicator of the breakdown of a lubricant is the increase in the Total Acid Number (TAN) and a change of 10 percent in the base viscosity.

Several things are happening as the lubricant goes through the blower. First, it is absorbing frictional energy in the form of heat. This heat has to be dissipated through either surface contact with cooler materials or in a rest volume of lubricant. While reducing the friction, the lubricant is also going through a shearing process and the molecular structure is broken down.

The result is that the lubricant will begin to thicken because of the shorter molecular chains and the drop out of additive packages. The thickened lubricant will cause more drag, increasing the friction and heat and further degrading the lubricant.

Operation of the blower (environment, run time, speed, and pressure) has a direct effect on duty cycles. The published cycles are based on worst-case conditions.

## Hazards Associated With Breakdown or Ignition of Lubrication

**⚠ DANGER**



**There is a risk associated with the lubrication media breaking down and resulting in a hazardous fluid or vapor. There may also be a hazard associated with the ignition of the lubrication media. Refer to the lubrication manufacturer's applicable instruction for safety precautions.**

## Release Lubricated Bearings – Grease Lubrication Series Only

Service the drive end bearing at regular intervals (see ***Table 5-1***). Use NLGI #2 premium-grade, petroleum-base grease with high temperature resistance and good mechanical stability, such as PneuLube grease, available from a local Tuthill Vacuum & Blower System professional. Use a pressure gun to force new grease into each bearing until traces of clean grease come out of the relief fitting.

| SPEED IN RPM | OPERATING HOURS PER DAY | | |
|---|---|---|---|
| | 8 | 16 | 24 |
| | GREASING INTERVALS IN WEEKS | | |
| 750 – 1,000 | 7 | 4 | 2 |
| 1,000 – 1,500 | 5 | 2 | 1 |
| 1,500 – 2,000 | 4 | 2 | 1 |
| 2,000 – 2,500 | 3 | 1 | 1 |
| 2,500 – 3,000 | 2 | 1 | 1 |
| 3,000 and up | 1 | 1 | 1 |

*Table 5-1 – Suggested Lubrication Intervals for Grease Lubricated Bearings*

**NOTICE**

*To avoid blowing out the drive shaft seal, do not grease too rapidly.*

**NOTE: See *Figure 5-3* for locations of grease fittings and grease reliefs for horizontal and vertical flow blowers.**

## PIPING CONNECTIONS

**⚠ WARNING**

**Pipe loading on the blower should be negligible as pipe loading can cause distortion of the blower. Use proper supports and pipe hangers to assure that there is no loading.**

**NOTICE**

*Remove the protective covers from the inlet and outlet ports and inspect for dirt and foreign material.*

Inlet and outlet connections on all blowers are large enough to handle maximum volume with minimum friction loss. Maintain same-diameter piping. Do not support silencers by the blower. Avoid stress loads and bending moments.

Be certain all piping is clean internally before connecting to the blower. Place a 16-mesh wire screen backed with hardware cloth at or near the inlet connections for the first 50 hours of use until the system is clean. Clean the screen after 3 hours of operation and completely discard it once the system is clean, as it will eventually deteriorate and small pieces going into the blower can cause serious damage. A horizontal or vertical airflow piping configuration is easily achieved by rearranging the mounting feet position.

### Hazards Associated With Hazardous Process Fluids

**⚠ DANGER**



**It shall be the responsibility of the installer to ensure that piping is adequate, sealing between pipe joints is adequate for the process fluids and proper process and pressure protection devices are in place. It is also the responsibility of the installer to assure that process gases are not vented in a manner that would be hazardous.**

**Refer to the manufacturer of the process media to assure that proper safety precautions are in place.**

### Blockage or Restriction

**⚠ WARNING**

**Damage to the blower could occur if there is blockage in the inlet or outlet ports or piping. Care should be taken when installing the blower to assure that there are no foreign objects or restrictions in the ports or piping.**

# MOTOR DRIVES

Two drive connections commonly used are direct drive and V-belt drive.

## Direct Coupled

When installing the motor directly to the blower, align the shafts to the coupling according to the coupling manufacturer's instructions. Blowers shipped with the motor directly coupled and mounted on a common base have been aligned prior to shipment. Further alignment is not normally necessary, but be sure to check the alignment and make adjustments if necessary prior to starting the blower.

Coupling halves must correctly fit the blower and drive shafts so that only light tapping is required to install each half. The two shafts must be accurately aligned. A direct-coupled blower and motor must be aligned with the two shafts having no more than 0.005 in. (13 mm) Total Indicator Reading (TIR). Make sure the face is aligned within 0.002 in. (0.05 mm).

Establish proper gap between coupling halves according to the coupling manufacturer's instructions with the motor armature. Proper gap will minimize the chance for end thrust on the blower shaft. Re-align and grease all direct-coupled base-mounted blowers after field installation.

## V-Belts

If the motor and blower are V-belt connected, the sheaves on both the motor and blower shafts should be as close to the shaft bearings as possible. Blower sheave is not more than 1/4 in. (6.5 mm) from the blower drive end cover. The drive sheave is as close to the driver bearing as possible. Take care when installing sheaves on the blower and motor shafts. Make sure the face is accurately in line to minimize belt wear.

Adjust the belt tension to the manufacturer's specifications using a belt tension tester. Check new belts for proper tension after 24 hours of run time. When manufacturer data is not available, industry guidelines recommend 1/64 in. deflection for each inch of span (0.157 mm deflection per centimeter of span) at 8 – 10 lb (3.6 – 4.5 kg) of force in the center of the belt.

Insufficient tensioning is often indicated by slipping (squealing) at start-up. Do not use belt dressing on V-belts. Keep sheaves and V-belts free of oil and grease. Remove tension from belts if the drive is to be inactive for an extended period of time. For more specific information, consult the drive manufacturer. In a V-belt drive, the blower sheave must fit its shaft accurately, run true, and be mounted as close to the bearing housing as possible to minimize bearing loads.

A tight or driving fit will force the drive shaft out of its normal position and cause internal damage. A loose fit will result in shaft damage or breaking. Make sure the motor sheave fits correctly and is properly aligned with the blower sheave.

Adjust the motor position on its sliding base so that belt tension is in accordance with drive manufacturer's instructions. Always avoid excessive belt tension. Recheck tension after the first 10 hours of operation and periodically thereafter to avoid slippage and loss of blower speed.

Check the blower after installation and before applying power by rotating the drive shaft by hand.

If the drive shaft does not rotate freely:

- Look for uneven mounting, piping strain, excessive belt tension, or coupling misalignment
- Check the blower to make sure oil was added to the reservoirs

## Setting V-Belt Tension

Proper belt tension is essential to long blower life. ***Figure 5-4***, ***Figure 5-5***, and the following procedure are provided to aid in field-adjusting V-belts (when the blower is so equipped) for maximum performance. A visual inspection of the V-belt drive should yield the appearance shown in ***Figure 5-4***.

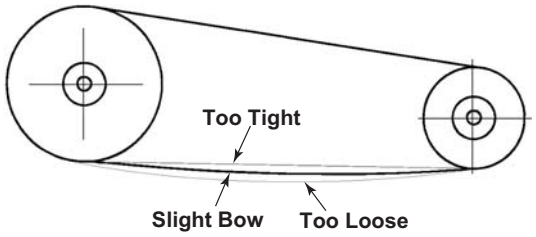


*Figure 5-4 – General appearance of a V-belt drive*

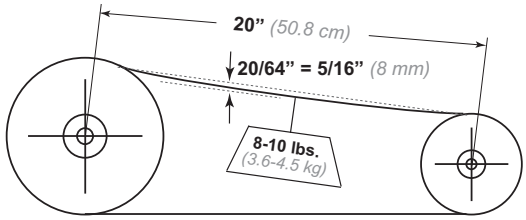


*Figure 5-5 – Setting of proper tension for a V-belt drive*

Factors outside the control of the belt tensioning system used on an individual blower package assembly, such as environmental factors and quality of the belts installed, may contribute to decreased belt life. Such factors can cause wear of the belts beyond the ability of the tensioning system to compensate.

As such, it is recommended to check belt tension monthly and make any manual adjustments found necessary.

1. Turn off and lock out power.
2. Remove the belt guard fasteners (if equipped).
3. Remove the belt guard.
4. Check and adjust the belt tension as necessary. Tension should be 1/64 in. deflection per inch of span (0.157 mm deflection per centimeter of span) between sheaves, with 8 – 10 lb (3.6 – 4.5 kg) force applied at the center point of the top section of belt.
5. Install the belt guard, making sure that all drive components are free of contact with the guard.
6. Install the belt guard fasteners that were removed in step 2.
7. Unlock the power and start the blower.
8. Resume normal operation.

## V-Belt Troubleshooting

| PROBLEM | POSSIBLE CAUSES | SOLUTION |
|---|---|---|
| Belts slip (sidewalls glazed) | Not enough tension | Replace belts; apply proper tension. |
| Drive squeals | Shock load | Apply proper tension. |
| | Not enough arc of contact | Increase center distance. |
| | Heavy starting load | Increase belt tension. |
| Belt(s) turned over | Broken cord caused by prying on sheave | Replace set of belts and install correctly. |
| | Overloaded drive | Redesign drive. |
| | Impulse loads | Apply proper tension. |
| | Misalignment of sheave and shaft | Re-align drive. |
| | Worn sheave grooves | Replace sheaves. |
| | Excessive belt vibration | Check drive design.<br>Check equipment for solid mounting.<br>Consider use of banded belts. |
| Mismatched belts | New belts installed with old belts | Replace belts in matched sets only. |
| Breakage of belt(s) | Shock loads | Apply proper tension; recheck drive. |
| | Heavy starting loads | Apply proper tension; recheck drive.<br>Use compensator starting. |
| | Belt pried over sheaves | Replace set of belts correctly. |
| | Foreign objects in drives | Provide drive guard. |
| Rapid belt wear | Sheave grooves worn | Replace sheaves. |
| | Sheave diameter too small | Redesign drive. |
| | Mismatched belts | Replace with matched belts. |
| | Drive overloaded | Redesign drive. |
| | Belt slips | Increase tension. |
| | Sheaves misaligned | Align sheaves. |
| | Oil or heat condition | Eliminate oil. Ventilate drive. |

# MOTOR AND ELECTRICAL CONNECTIONS

**⚠ WARNING**

**The motor and connections shall be protected to assure that product and environmental condensation does not come in contact with the electrical connections.**

***NOTICE***

*It is the responsibility of the installer to assure that the motor is in compliance with the latest edition of IEC 60204-1 and all electrical connections are performed per IEC 60204-1, this includes overcurrent protection.*

Wire the motor and other electrical devices, such as solenoid valves and temperature switch, to the proper voltage and amperage as indicated on the nameplate of the component being wired. Turn the blower by hand after wiring is completed to determine that there are no obstructions and that the blower turns freely. Then, momentarily start the blower to check the direction of rotation. ***Figure 4-2*** shows direction of airflow in relation to rotor rotation. The airflow direction can be reversed by reversing the appropriate motor leads.

# 06

# OPERATION

## GENERAL

**⚠ DANGER**

**The blower is not intended to be used with explosive products or in explosive environments. The blower is not intended to be used in applications that include hazardous and toxic gases. Consult the factory for support.**

**⚠ WARNING**





**Do not operate without guards in place.**

**⚠ WARNING**

**Maximum operating speed: *Table 4-2* states the maximum operating speed in RPM (rotations per minute), the maximum pressure differential, maximum vacuum and maximum temperature rise. Do not exceed these limits.**

**⚠ WARNING**



**The blower can generate excessive noise. Hearing protection is required while the unit is in operation.**

Before starting the blower for the first time under power, recheck the installation thoroughly to reduce the likelihood of difficulties. Use the following checklist as a guide, but consider any other special conditions in your installation.

1. Be certain no bolts, rags, or dirt have been left in blower.
2. Be certain that inlet piping is free of debris. If an open outdoor air intake is used, be sure the opening is clean and protected by an inlet filter. This also applies to indoor use.
3. If installation is not recent, check blower leveling, drive alignment, belt tension, and tightness of all mounting bolts.
4. Be certain the proper volume of oil is in the oil reservoir chambers.
5. Be certain the driving motor is properly lubricated and connected through suitable electrical overload devices.
6. With electrical power off and locked out to prevent accidental starting, rotate the blower shaft several times by hand to make sure the blower is rotating freely. Unevenness or tight spots are indicators of a condition that should be corrected before progressing.

7. Check motor rotation by momentarily pushing the START button and then checking the flow direction of the blower. Reverse the motor connections if the flow is in the wrong direction.

Carry out initial operation under “no load” conditions by opening all valves and venting the discharge to the atmosphere, if possible. Then, start the motor briefly, listen for unusual noises, and make sure the blower coasts freely to a stop. If no problem appears, repeat this check and let the motor run slightly longer. If any questions exist, investigate before proceeding.

Assuming all tests are satisfactory, the blower will now be ready for continuous full-load operation. During the first several days, check periodically to make sure all conditions remain acceptable and steady. These checks may be particularly important if the blower is part of a process system where conditions may vary. At the first opportunity, stop the blower and clean or remove the inlet filter. Also recheck leveling, coupling alignment or belt tension, and mounting bolts for tightness.

## START-UP CHECKLIST

It is recommended that these start-up procedures be followed in sequence and checked off ( ☑ ) in the boxes provided in any of the following cases.

| | |
|---|---|
| • During initial installation<br>• After any shutdown period | • After maintenance work has been performed<br>• After blower has been moved to a new location |
| **DATES CHECKED:** | ☐ ☐ ☐ |
| ☐☐☐☐ | Check the unit for proper lubrication. Proper oil level is critical. ***See Lubrication on page 15***. ***See Recommended Lubricants on page 42*** for information on acceptable lubricants for the product. |
| ☐☐☐☐ | Check the V-belt drive for proper belt alignment and tension. |
| ☐☐☐☐ | Carefully turn the rotors by hand to be certain they do not bind. |

**⚠ WARNING**

**Disconnect power. Make certain power is off and locked out before touching any rotating element of the blower, motor, or drive components.**

| | |
|---|---|
| ☐☐☐☐ | “Bump” the unit with the motor to check rotation (counterclockwise when facing the shaft) and to be certain it turns freely and smoothly. |
| ☐☐☐☐ | Start the unit and operate it for 30 minutes at no load. During this time, feel the cylinder for hot spots. If minor hot spots occur, ***see Troubleshooting on page 38.*** |
| ☐☐☐☐ | Apply the load and observe the operation of the unit for 1 hour. |
| ☐☐☐☐ | If minor malfunctions occur, discontinue operation and ***see Troubleshooting on page 38***. |

**⚠ DANGER**

**The blower is not intended to be used with explosive products or in explosive environments. The blower is not intended to be used in applications that include hazardous and toxic gases. Consult the factory for support.**

**⚠ WARNING**

**Physical harm may occur if human body parts are in contact or exposed to the process vacuum. Assure that all connections are protected from human contact.**

**⚠ WARNING**

**If rated vacuum or pressure levels are exceeded, process fluids will migrate to other parts of the blower and system.**

**⚠ CAUTION**



**Do not touch hot surfaces.**

**Do not touch the blower while it is in operation and assure blower is cool when not in operation.**

***NOTICE***

*The upper temperature limits are not intended for continuous operation. Consult with factory for detailed information assistance.*

## STOPPING

**⚠ CAUTION**

**Do not stop the blower if there are high outlet pressures in the outlet piping. Unload the outlet piping prior to shutting down the blower.**

Stop the blower by turning off the motor. Isolate the blower from the vacuum system and vent the blower to the atmosphere.

# RECOMMENDED SHUTDOWN PROCEDURE TO MINIMIZE RISK OF FREEZING OR CORROSION

When an air piping system has high humidity or moisture, water condensation can occur after the blower is shut down and it begins to cool. Condensation creates an environment favorable to corrosion of the iron internal surfaces and to ice formation in cold weather. Both conditions can close the operating clearances, causing the blower to fail upon future start-up.

The following shutdown procedure minimizes the risk of moisture condensation, corrosion, and freezing.

**NOTICE**

*Care must be taken not to overload or overheat the blower during this procedure.*

1. Isolate the blower from the moist system piping, allowing the blower to intake atmospheric air. Operate the blower under a slight load, allowing the blower to heat within safe limits. The heat generated by the blower will quickly evaporate residual moisture.
2. For carpet cleaning applications, after the work is completed, allow the blower to run 3 – 5 minutes with the suction hose and wand attached. The suction hose and wand will provide enough load to the blower to evaporate the moisture quickly.
3. For extended shutdown, inject a small amount of a light lubricating oil such as 3-in-One® or a spray lubricant such as WD-40® into the inlet of the blower just before shutdown *(3-in-One and WD-40 are registered trademarks of WD-40 Company)*. The lubricant will provide an excellent protective coating on the internal surfaces. If using a spray lubricant, take care to prevent the applicator tube from getting sucked into the blower. The applicator tube will damage the blower, likely to a degree where repair would be required.
4. If the blower is being taken out of commission for an extended period of time, ***see Long-Term Storage on page 29***.

# 07

# MAINTENANCE

## GENERAL

Regular inspection of the blower and its installation, along with complete checks on operating conditions, will pay dividends in added life and usefulness. Also, service the drive per the manufacturer's instructions and lubricate the coupling or check the belt drive tension. Use thermometers and gauges to make sure that blower operating temperature and pressure remain within allowed limits.

**⚠ DANGER**



**The blower and parts may contain hazardous media. Assure that pump and parts are evacuated of hazardous media prior to servicing.**

**⚠ CAUTION**

**The electrical service must be isolated and de-energized prior to maintenance. Apply appropriate procedures to assure electrical supply is de-energized and cannot be inadvertently energized during maintenance.**

**Assure piping and product is isolated prior to maintenance of blower. Apply appropriate procedures to assure piping and product is isolated and that inadvertent opening of valves cannot occur during maintenance.**

**⚠ CAUTION**

**During routine maintenance, inspect and assure that guards are in place and secure.**

Pay special attention to lubrication of timing gears and bearings according to the information in ***Lubrication on page 15***.

When a blower is taken out of service, it may require internal protection against rusting or corrosion. The need for such protection must be a matter of judgment based on existing conditions as well as length of downtime. Under atmospheric conditions producing rapid corrosion, protect the blower immediately. ***See Long-Term Storage on page 29***.

## REGULAR MAINTENANCE

A well-designed maintenance program will add years of service to the blower.

Check a newly installed blower frequently during the first month of operation, especially lubrication. With the blower at rest, check the oil level in both the gear (drive) end and free (non-drive) end of the blower and add oil as needed. Complete oil changes are recommended every 1,000 – 1,200 operating hours, or more frequently depending on the type of oil and operating temperature. Also change the oil more frequently if pumping corrosive vapors or where excessive operating temperatures are encountered. The following is recommended as a minimum maintenance program.

| DAILY | WEEKLY | MONTHLY |
|---|---|---|
| 1. Check and maintain oil level, and add oil as necessary.<br>2. Check for unusual noise or vibration (***see Troubleshooting on page 38***). | 1. Clean all air filters. A clogged air filter can seriously affect the efficiency of the blower and cause overheating and oil usage.<br>2. Check the relief valve to make sure it is operating properly. | 1. Inspect the entire system for leaks.<br>2. Inspect the condition of the oil and change if necessary.<br>3. Check drive belt tension and tighten if necessary. |

**NOTICE**

*Oil levels should be checked every 24 hours of operation.*

Proper oil drain schedules require oil be changed before the contaminant load becomes so great that the lubricating function of the oil is impaired or heavy disposition of suspended contaminants occurs. To check the condition of the oil, drain a sample into a clean container and check for the presence of water or solids. Slight discoloration of the oil should not necessitate an oil change.

## SPARE PARTS

Should adjustments or replacement be needed, repairs can often be performed locally as described in this manual after obtaining the required parts. Personnel should have a good background of mechanical experience and be thoroughly familiar with the procedures outlined in this manual. For major repairs not covered in this manual, contact the nearest Tuthill Vacuum & Blower Systems service representative.

When ordering parts, supply the blower nameplate information, as well as the item number and parts description as per the parts lists and assembly drawings. Repair kits are available for all models. These kits contain all the seals, bearings, O-rings, locks, and special retaining screws necessary for an overhaul. For convenience when ordering parts, complete the **Operating Data Form** included on the inside back cover of this manual.

In developing a stock of spare parts, consider the following factors:

- The degree of importance in maintaining the blower in a “ready” condition
- The time lag in parts procurement
- Cost
- Shelf life (seals and O-rings)

## FACTORY SERVICE AND REPAIR

With proper care, Tuthill Vacuum & Blower Systems blowers will give years of reliable service. The parts are machined to close tolerances and require special tools by mechanics who are skilled at this work. Should major repairs become necessary, contact the factory for the location of the nearest service facility. Blowers that are still under warranty must be returned to the factory, freight prepaid, for service.

**NOTICE**

*Current regulations require Material Safety Data Sheet to be completed and forwarded to Tuthill Corporation on any unit being returned for any reason which has been handling or involved with hazardous gases or materials. This is for the protection of the employees of Tuthill Corporation who are required to perform service on this equipment. Failure to do so will result in service delays.*

**NOTICE**

*When returning a blower to the factory for repair, under warranty, please note the factory will not accept any unit that arrives without authorization. Contact the Service Department for return authorization.*

## LONG-TERM STORAGE

Any time the blower will be stored for an extended period of time, make sure it is protected from corrosion by following this procedure:

1. Spray the interior (lobes, housing, and end plates) with rust preventative. Repeat as conditions dictate and on an at least a yearly basis.
2. Fill both end covers completely full of oil.
3. Firmly attach a prominent tag stating that the end covers are full of oil and must be drained and refilled to proper levels before start-up.
4. Apply a rust-preventative grease to the drive shaft.
5. Spray all exposed surfaces, including the inlet and discharge flanges, with rust preventative.
6. Seal the inlet, discharge, and vent openings. It is not recommended that the blower be set in place, piped to the system, and allowed to remain idle for a prolonged amount of time. If any component is left open to the atmosphere, the rust preventative will escape and lose its effectiveness.
7. During storage, make sure the blower does not experience excessive vibration.
8. Attach a desiccant bag to one of the covers to prevent condensation from occurring inside the blower. Make sure any desiccant bag (or bags) is attached to the covers so that they will be removed before start-up of the blower.
9. Store the blower in an air conditioned and heated building if possible. If air conditioned and heated storage is not possible, make conditions as dry as possible.
10. If possible, rotate the drive shaft by hand at least monthly to prevent seals from setting in one position.

# 08

# DISASSEMBLY AND REASSEMBLY

## DISASSEMBLY OF BLOWER

**⚠ WARNING**

**Before performing any repair or replacement, disconnect and lock out power.**

With proper maintenance and lubrication, normal life expectancy for gears, bearings, and seals can be achieved. However, over time these parts must be repaired or replaced to maintain the efficiency of the blower. This section is written in a way that will allow you to completely disassemble the blower. The inspection of certain repairable or replaceable parts is referred to at the point of disassembly where these parts are exposed. If repair or replacement is deemed necessary at any point of inspection, appropriate instruction is given to achieve.

1. Remove the oil drain plugs in the bottom of the end covers and drain the oil.
2. Remove eight cap screws and remove the gear cover.

**NOTE: It may be necessary to tap the sides with a mallet or wooden block to break the seal joint.**

Gears are not exposed for visual inspection prior to disassembly.

Inspect the gears for the following:

- Broken teeth
- Chipped teeth
- Uneven wear
- Excessive wear
- Any other abnormalities

3. Position the blower with the drive gear on the left when facing the gears. Remove the socket-head screws and washers.
4. Align the timing marks, count 3 teeth up, and place reference marks on the gears (see ***Figure 8-1***).

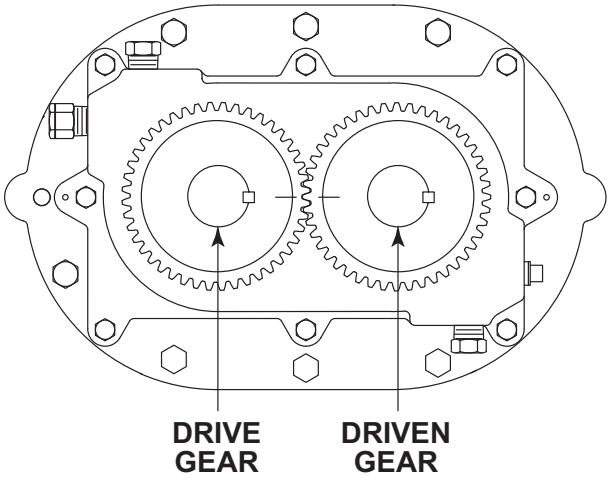


*Figure 8-1 – Timing Marks Matched*

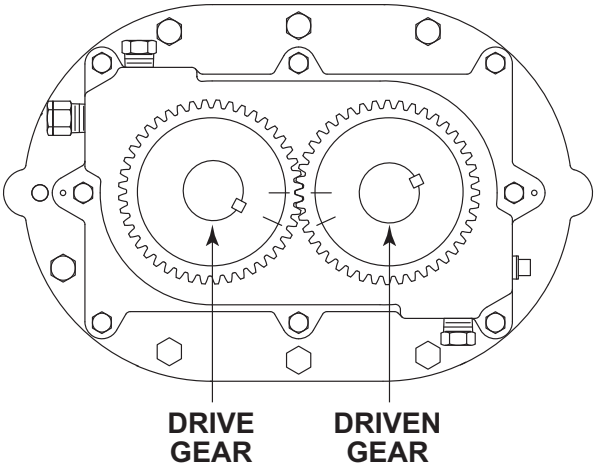


*Figure 8-2 – Timing Marks Advanced 3 Teeth (Reference Marks Aligned)*

5. Align the reference marks (see ***Figure 8-2***).
6. Use a puller to remove the driven gear. A bar puller or jaw puller (see ***Figure 8-3***) can be used.

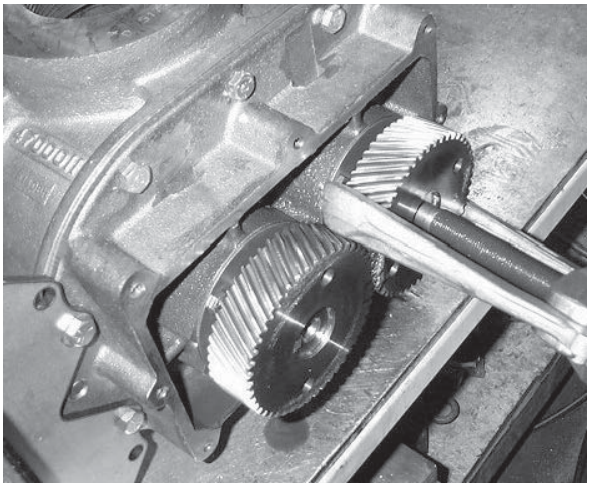

*Figure 8-3 – Pulling Driven Gear with Jaw Puller or Bar Puller*

7. Remove the drive gear using a bar puller or jaw puller (see ***Figure 8-4***).



*Figure 8-4 – Pulling Driven Gear with Bar Puller*

**NOTE: If the unit becomes locked up, switch gears.**

8. Remove the shim and spacer, and note from which shaft the shim is removed.
9. Turn the blower around and remove the 8 cap screws securing the drive end cover.
10. Remove the cover.
11. Loosen the set screws on the oil slingers and remove the oil slingers from the rotor shafts (see ***Figure 8-5***).

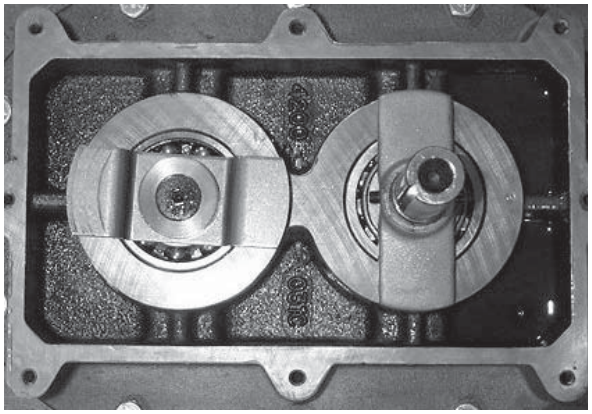

*Figure 8-5 – Set Screws for Slingers*

12. Remove the 10 cap screws that secure the drive end plate to the housing.

13. Use a jaw puller or jackscrews to remove the drive end plate (see ***Figure 8-6*** and ***Figure 8-7***).

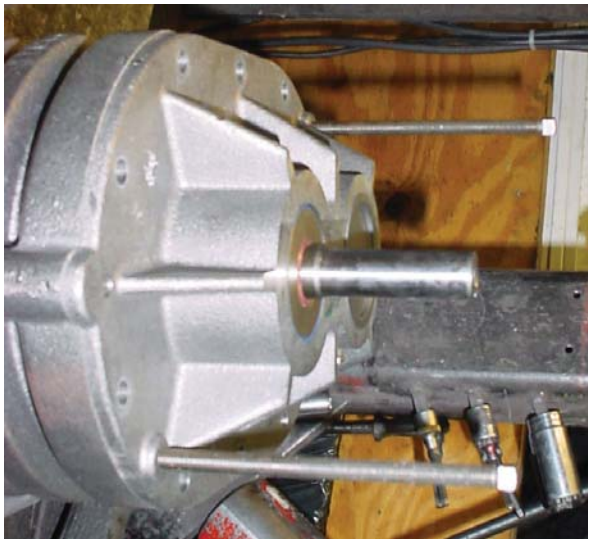

*Figure 8-6 – Removing Drive End End Plate Using Jackscrews (21 Series)*

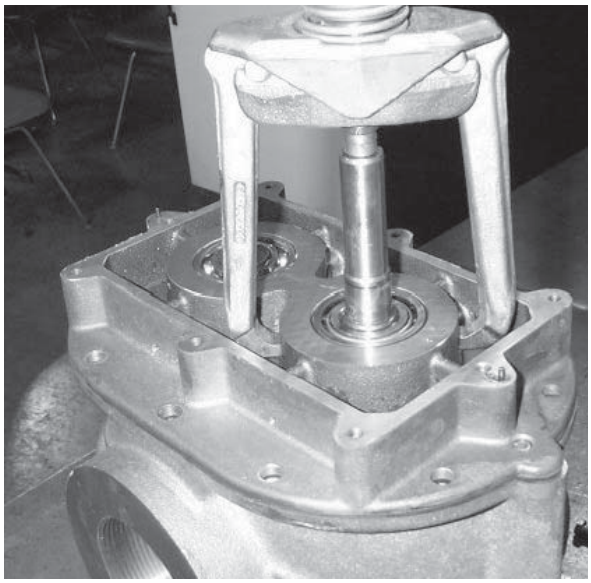

*Figure 8-7 – Pulling Drive End Plate (22 Series)*

14. Press the rotors out of the free (non-drive) end plate in press if available. If press is not available, support the end plate and rotors in the housing. Block up the housing and use a soft mallet to drive the rotors out (see ***Figure 8-8***). A jaw-type puller can also be used.

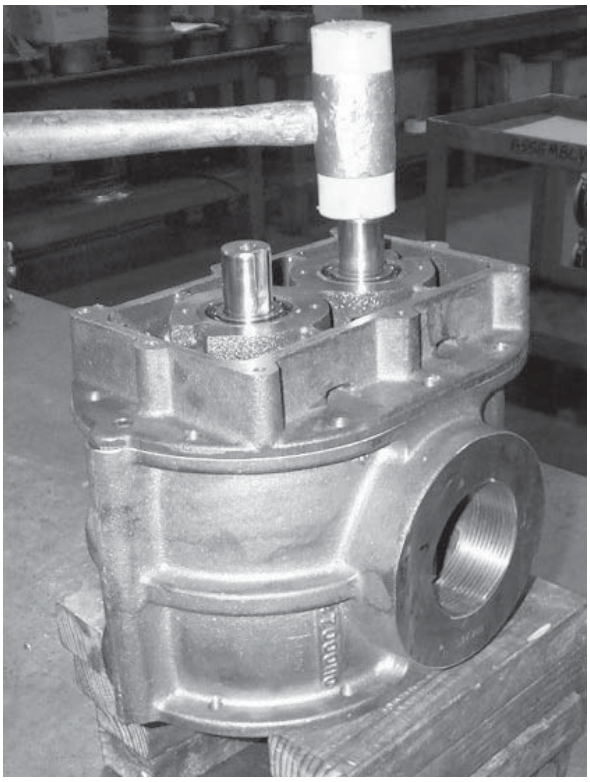

*Figure 8-8 – Driving Rotors Out Using Soft Mallet*

15. Using a tube or round bar of a slightly smaller diameter than the shaft clearance holes in the end plates, tap the bearings out of the end plates. Remove the bearing retainers before knocking out the bearings (see ***Figure 8-9***).

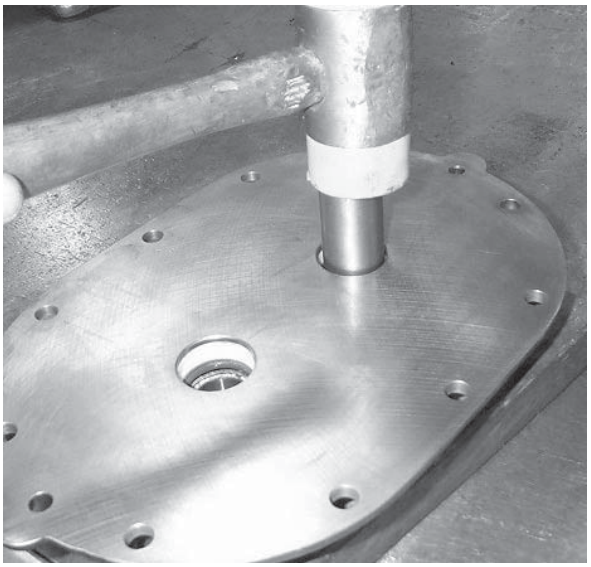

*Figure 8-9 – Tapping Bearings Out of End Plates*

16. Remove the seals from both end plates with a punch or dull chisel. The seals will be damaged during removal and must be replaced. Inspect all parts for wear or damage.

17. Clean and inspect all parts for burrs, and polish the seal journals with at least 320-grit emery or crocus cloth.

## REASSEMBLY OF BLOWER

After thoroughly cleaning the seal and bearing bores of both end plates, apply a thin coat of sealant on the outside diameter of the new seals and press them into the end plate using a tool that will bear on the outer edge of the seal. The spring side of the seal should be facing you. Apply a thin coat of grease to the seal lip.

See ***Special Tool Drawings on page 44*** for drawings and dimensions of the seal and bearing pressing tools.

Using the drive end plate as a fixture, support the plate high enough so the input shaft of the drive rotor clears the assembly surface (see ***Figure 8-10***). Place the rotors in the fixture with the drive rotor to the left (see ***Figure 8-10*** and ***Figure 8-14***).

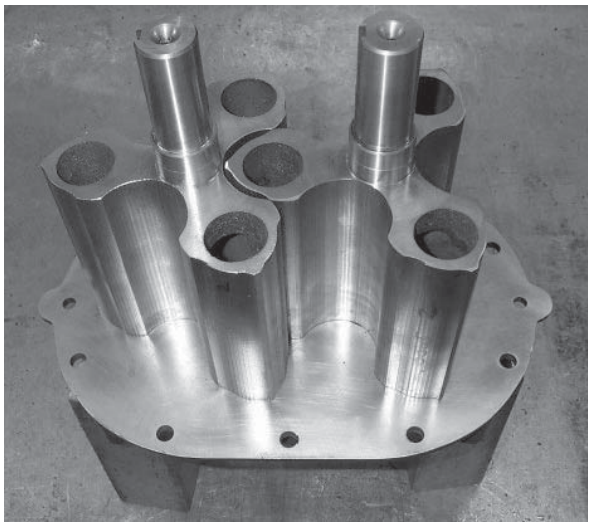

*Figure 8-10 – Rotors Assembled on Drive End Plate (Model 4000 with Tri-Lobe Rotors Shown)*

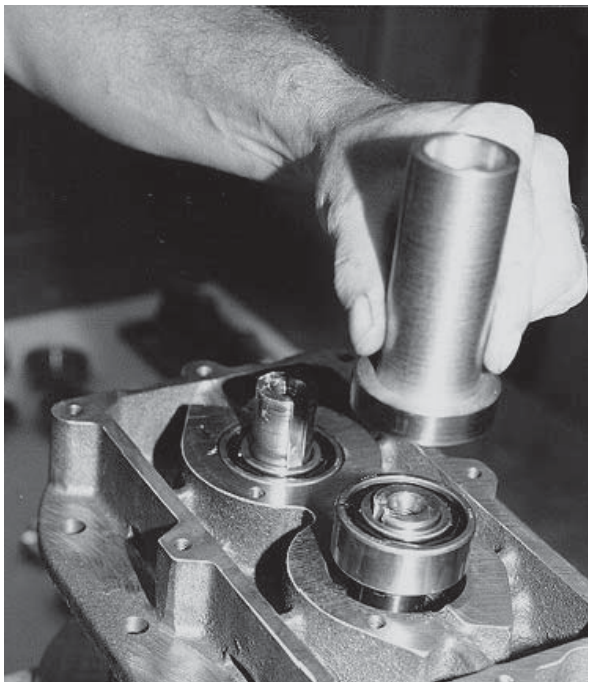

*Figure 8-11 – Tapping Bearings into End Plates*

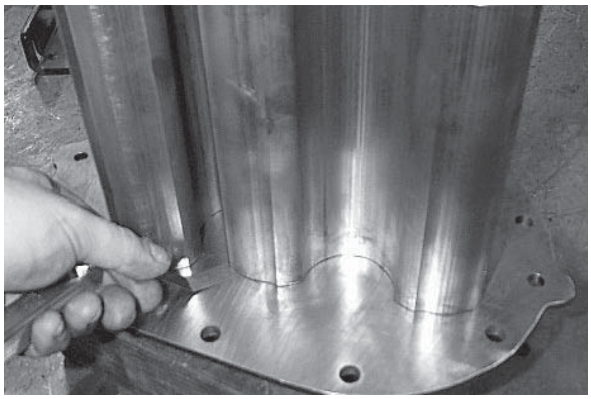

*Figure 8-12 – Checking Gear End Clearances*



*Figure 8-13 – Check Drive End Clearances*

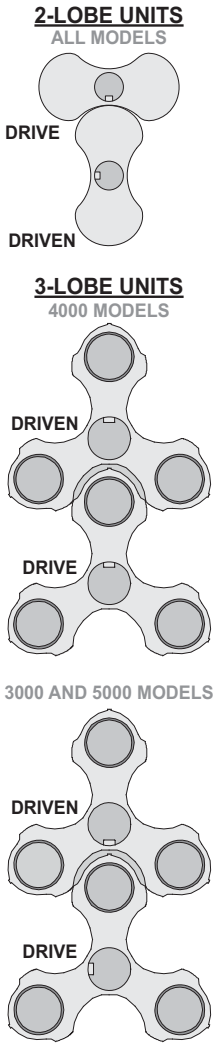


*Figure 8-14 – Rotor Keyway Positions*

1. Place end plate on rotors.
2. Apply a thin coat of lubricant on the rotor shafts and the inner race of the bearings. Tap the bearings into place using a tube with a flanged end that will contact both the inner and outer bearing races (see ***Figure 8-11***).
3. Install bearing retainers to both bearings.
4. Check clearances between the end of the rotors and the face of the end plate. ***See Assembly Clearances on page 40*** for proper clearances for your model blower.

5. If clearances check OK, put a spacer on each shaft. Timing shims that were removed should be put back on the shaft from which they were removed.

6. Add keys to keyways.

7. Lubricate shafts and bores on gears. Begin by pressing on the DRIVE gear. This will be pressed on the drive rotor, which is to the left.

8. Start the driven gear on the shaft and align the reference timing marks and press gear on. Lock gears in place with socket head screw and washer. Turn assembly over and rest the unit on the socket head screws and washers on the gear end, securing the unit with support blocks.

9. Set dowel pins in housing and position housing over the rotors and fasten with cap screws. Check drive end clearance (see ***Figure 8-13***). A depth mic can be used.

10. Press seals into drive endplate.

11. Set on drive end plate and fasten with cap screws.

12. Lubricate shafts and bearings. Install the ball bearing on the driven rotor and the roller bearing on the input shaft. Install oil slingers to appropriate rotors.

**NOTE: Oil slingers are on the Splash Lubrication/ Air Service models only. The Grease Lubrication/Air Service blowers will not have oil slingers.**

13. Apply a bead of a good quality RTV silicone sealant to the inner surface of the drive end cover that mates to the drive end plate. Install drive end cover and drive shaft seal.

14. Install any removed plugs and sight glasses, and replace breather if required.

**⚠ WARNING**



**Keep hands and loose clothing away from lobes and gears.**

## Adjusting Rotor Interlobe Clearance

1. Use feeler gauges to take interlobe readings, and record them on each side of housing as indicated in ***Figure 8-15***. As shim is removed or added behind the helical gear, the gear rotates as it is moved in or out and the driven rotor turns with it, thus changing the clearance between rotor lobes.

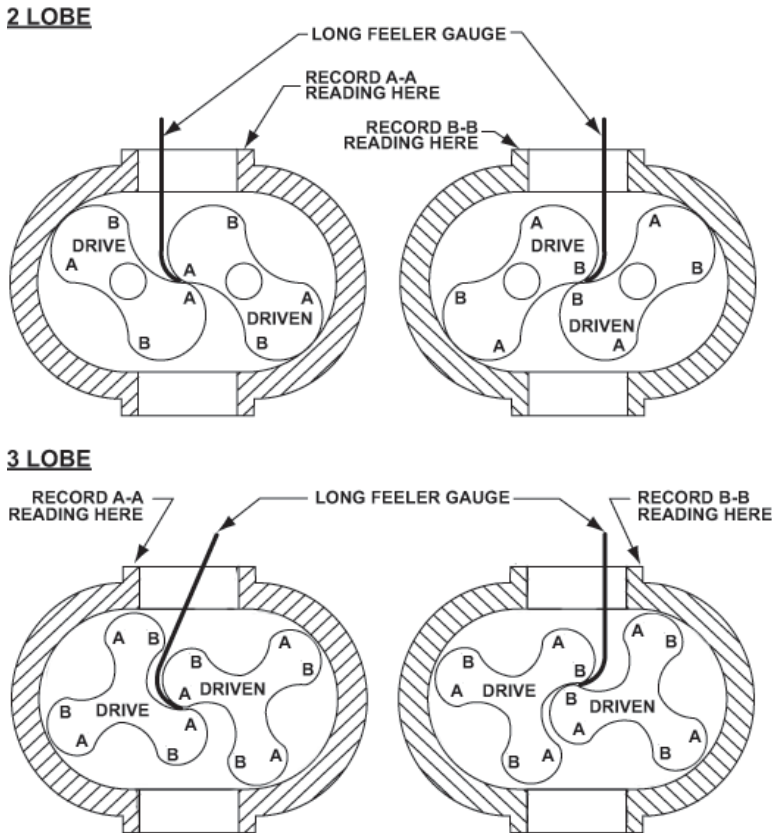


*Figure 8-15 – Checking Rotor Interlobe Clearances*

2. Changing the shim thickness will change the rotor lobe clearance.

3. To determine the amount of shim to add or remove, subtract the smaller value from the larger value.

*EXAMPLE:* Referring to ***Figure 8-15***, check the clearance at AA (right-hand reading) and BB (left-hand reading). If the AA reading is 0.009 in. (0.23 mm) and the BB reading 0.003 in. (0.08 mm), adjust by removing 0.006 in. (0.15 mm) shims from the driven rotor. The readings will change one half the amount removed: 0.003 in. (0.08 mm). AA should then read 0.006 in. (0.15 mm) and BB should read 0.006 in. (0.15 mm). The final readings should be within 0.002 in. (0.05 mm) of each other.

| MODEL | CHANGE | SHIM CHANGE |
|---|---|---|
| 2000 | 1 | 1 |
| 3000/4000/5000 | 1 | 1 |
| 6000 | 1 | 1.5 |
| 7000 | 1 | 1.8 |

**NOTE: Both the drive and driven gears can be shimmed.**

## Lubrication, Final Assembly and Mounting

1. Apply a bead of a high-quality RTV silicone sealant to the inner surface of the gear end cover that mates to the gear end plate. Install the gear end cover with cap screws and tighten evenly.

2. Fill both end covers with oil. ***See Lubrication on page 15*** for the filling procedure, and see ***Recommended Lubricants on page 42*** for recommended lubricants.

3. To make sure the blower has not been distorted during mounting in the installation, turn the lobes by hand to make sure they are not making contact before connecting to the driver.

# 09

# TROUBLESHOOTING

Although Tuthill Vacuum & Blower Systems blowers are well designed and manufactured, problems may occur due to normal wear and the need for readjustment. The following chart lists symptoms that may occur along with probable causes and remedies.

| SYMPTOM | PROBABLE CAUSE | REMEDIES |
|---|---|---|
| Loss of oil | Gear housing not tightened properly | Tighten gear housing bolts. |
| | Lip seal failure | Disassemble and replace lip seal. |
| | Insufficient sealant | Remove gear housing and replace sealant. ***See Disassembly of Blower on page 30***. |
| | Loose drain plug | Tighten drain plug. |
| Excessive bearing or gear wear | Improper lubrication | Correct oil level. Replace dirty oil. ***See Lubrication on page 15***. |
| | Excessive belt tension | Check belt manufacturer's specifications for tension and adjust accordingly. |
| | Coupling misalignment | Check carefully. Re-align if necessary. |
| Lack of volume | Slipping belts | Check belt manufacturer's specifications for tension and adjust accordingly. |
| | Worn lobe clearances | Check for proper clearances. ***See Assembly Clearances on page 40***. |
| | Speed too low | Increase blower speed within limits. |
| | Obstruction in piping | Check system to ensure an open flow path. |
| Knocking | Blower out of time | Re-time. |
| | Distortion due to improper mounting or pipe strains | Check mounting alignment and relieve pipe strains. |
| | Excessive pressure differential | Reduce to manufacturer's recommended pressure. Examine relief valve and reset if necessary. |
| | Worn gears | Replace timing gears. ***See Disassembly of Blower on page 30***. |

| SYMPTOM | PROBABLE CAUSE | REMEDIES |
|---|---|---|
| Excessive blower temperature | Too much or too little oil in gear reservoir | Check oil level. ***See Lubrication on page 15***. |
| | Too low operating speed | Increase blower speed within limits. |
| | Clogged filter or silencer | Remove cause of obstruction. |
| | Excessive pressure differential | Reduce pressure differential across the blower. |
| | Elevated inlet temperature | Reduce inlet temperature. |
| | Worn lobe clearances | Check for proper clearances. ***See Assembly Clearances on page 40***. |
| Rotor end or tip drag | Insufficient assembled clearances | Correct clearances. ***See Assembly Clearances on page 40***. |
| | Case or frame distortion | Check mounting and pipe strain. |
| | Excessive operating pressure | Reduce pressure differential. |
| | Excessive operating temperature | Reduce pressure differential or reduce inlet temperature. |
| Vibration | Belt or coupling misalignment | Check carefully. Re-align if necessary. |
| | Lobes rubbing | Check cylinder for hot spots, and then check for lobe contact at these points. Correct clearances. ***See Assembly Clearances on page 40***. |
| | Worn bearings or gears | Check condition of gears and bearings. Replace if necessary. |
| | Unbalanced or rubbing lobes | Possible build-up on casing or lobes, or inside lobes. Remove build-up and restore clearances. |
| | Driver or blower loose | Check mounting and tighten if necessary. |
| | Piping resonance | Check pipe supports, check resonance of nearby equipment, and check foundation. |

# 10

# ASSEMBLY CLEARANCES

| MODEL | LOBES TO END PLATES | | | INTERLOBE | LOBE TO CASING | |
|---|---|---|---|---|---|---|
| | DRIVE END | GEAR END | TOTAL | | TIP-DOWEL | TIP-PORT |
| 2002 | 0.004 – 0.007 in. (0.10 – 0.18 mm) | 0.003 – 0.005 in. (0.08 – 0.13 mm) | 0.008 – 0.011 in. (0.20 – 0.28 mm) | 0.005 – 0.009 in. (0.13 – 0.23 mm) | 0.002 – 0.004 in. (0.05 – 0.10 mm) | 0.003 – 0.006 in. (0.08 – 0.15 mm) |
| 2004 | 0.004 – 0.007 in. (0.10 – 0.18 mm) | 0.003 – 0.005 in. (0.08 – 0.13 mm) | 0.008 – 0.011 in. (0.20 – 0.28 mm) | 0.005 – 0.009 in. (0.13 – 0.23 mm) | 0.002 – 0.004 in. (0.05 – 0.10 mm) | 0.003 – 0.006 in. (0.08 – 0.15 mm) |
| 3002 | 0.004 – 0.007 in. (0.10 – 0.18 mm) | 0.003 – 0.005 in. (0.08 – 0.13 mm) | 0.008 – 0.012 in. (0.20 – 0.30 mm) | 0.006 – 0.012 in. (0.15 – 0.30 mm) | 0.002 – 0.005 in. (0.05 – 0.13 mm) | 0.004 – 0.007 in. (0.10 – 0.18 mm) |
| 3003 | 0.005 – 0.008 in. (0.13 – 0.20 mm) | 0.003 – 0.005 in. (0.08 – 0.13 mm) | 0.009 – 0.012 in. (0.23 – 0.30 mm) | 0.010 – 0.014 in. (0.25 – 0.36 mm) | 0.002 – 0.005 in. (0.05 – 0.13 mm) | 0.004 – 0.007 in. (0.10 – 0.18 mm) |
| 3006 | 0.006 – 0.010 in. (0.15 – 0.25 mm) | 0.003 – 0.005 in. (0.08 – 0.13 mm) | 0.010 – 0.013 in. (0.25 – 0.33 mm) | 0.010 – 0.014 in. (0.25 – 0.36 mm) | 0.002 – 0.005 in. (0.05 – 0.13 mm) | 0.004 – 0.007 in. (0.10 – 0.18 mm) |
| 4002 | 0.004 – 0.009 in. (0.10 – 0.23 mm) | 0.004 – 0.006 in. (0.10 – 0.15 mm) | 0.009 – 0.013 in. (0.23 – 0.33 mm) | 0.012 – 0.016 in. (0.30 – 0.41 mm) | 0.003 – 0.006 in. (0.08 – 0.15 mm) | 0.005 – 0.008 in. (0.13 – 0.20 mm) |
| 4005 | 0.005 – 0.010 in. (0.12 – 0.25 mm) | 0.004 – 0.006 in. (0.10 – 0.15 mm) | 0.010 – 0.014 in. (0.25 – 0.36 mm) | 0.012 – 0.016 in. (0.30 – 0.41 mm) | 0.003 – 0.006 in. (0.08 – 0.15 mm) | 0.005 – 0.008 in. (0.13 – 0.20 mm) |
| 4007 | 0.005 – 0.010 in. (0.12 – 0.25 mm) | 0.004 – 0.006 in. (0.10 – 0.15 mm) | 0.010 – 0.014 in. (0.25 – 0.36 mm) | 0.012 – 0.016 in. (0.30 – 0.41 mm) | 0.003 – 0.006 in. (0.08 – 0.15 mm) | 0.005 – 0.008 in. (0.13 – 0.20 mm) |
| 5003 | 0.004 – 0.009 in. (0.10 – 0.23 mm) | 0.004 – 0.006 in. (0.10 – 0.15 mm) | 0.009 - 0.013 in. (0.29 - 0.33 mm) | 0.014 – 0.018 in. (0.36 – 0.46 mm) | 0.003 – 0.006 in. (0.08 – 0.15 mm) | 0.005 – 0.008 in. (0.13 – 0.20 mm) |
| 5006 | 0.005 – 0.010 in. (0.13 – 0.25 mm) | 0.004 – 0.006 in. (0.10 – 0.15 mm) | 0.010 – 0.014 in. (0.25 – 0.36 mm) | 0.014 – 0.018 in. (0.36 – 0.46 mm) | 0.003 – 0.006 in. (0.08 – 0.15 mm) | .005 – .008 in. (0.13 – 0.20 mm) |
| 5009 | 0.005 – 0.010 in. (0.13 – 0.25 mm) | 0.004 – 0.006 in. (0.10 – 0.15 mm) | 0.010 – 0.014 in. (0.25 – 0.36 mm) | 0.014 – 0.018 in. (0.36 – 0.46 mm) | 0.003 – 0.006 in. (0.08 – 0.15 mm) | 0.005 – 0.008 in. (0.13 – 0.20 mm) |
| 6005 | 0.008 – 0.013 in. 0.20 – 0.33 mm) | 0.005 – 0.007 in. (0.12 – 0.18 mm) | 0.015 – 0.019 in. (0.38 – 0.48 mm) | 0.010 – 0.014 in. (0.25 – 0.36 mm) | 0.004 – 0.007 in. (0.10 – 0.18 mm) | 0.006 – 0.009 in. (0.15 – 0.23 mm) |
| 6008 | 0.008 - 0.013 in. (0.20 - 0.33 mm) | 0.005 – 0.007 in. (0.12 – 0.18 mm) | 0.015 – 0.019 in. (0.38 – 0.48 mm) | 0.010 – 0.014 in. (0.25 – 0.36 mm) | 0.004 – 0.007 in. (0.10 – 0.18 mm) | 0.006 – 0.009 in. (0.15 – 0.23 mm) |
| 6015 | 0.009 – 0.014 in. (0.23 – 0.36 mm) | 0.005 – 0.007 in. (0.13 – 0.18 mm) | 0.016 – 0.020 in. (0.40 – 0.50 mm) | 0.010 – 0.014 in. (0.25 – 0.36 mm) | 0.004 – 0.007 in. (0.10 – 0.18 mm) | 0.006 – 0.009 in. (0.15 – 0.23 mm) |
| 7006 | 0.008 – 0.012 in. (0.20 – 0.30 mm) | 0.005 – 0.007 in. (0.13 – 0.18 mm) | 0.015 – 0.018 in. (0.38 – 0.46 mm) | 0.012 – 0.016 in. (0.30 – 0.41 mm) | 0.004 – 0.007 in. (0.10 – 0.18 mm) | 0.006 – 0.009 in. (0.15 – 0.23 mm) |
| 7011 | 0.010 – 0.014 in. (0.25 – 0.36 mm) | 0.005 – 0.007 in. (0.13 – 0.18 mm) | 0.017 – 0.020 in. (0.43 – 0.51 mm) | 0.012 – 0.016 in. (0.30 – 0.41 mm) | 0.004 – 0.007 in. (0.10 – 0.18 mm) | 0.006 – 0.009 in. (0.15 – 0.23 mm) |
| 7018 | 0.010 – 0.014 in. (0.25 – 0.36 mm) | 0.005 – 0.007 in. (0.13 – 0.18 mm) | 0.017 – 0.020 in. (0.43 – 0.51 mm) | 0.012 – 0.016 in. (0.30 – 0.41 mm) | 0.004 – 0.007 in. (0.10 – 0.18 mm) | 0.006 – 0.009 in. (0.15 – 0.23 mm) |

# 11

# TORQUE CHART

Data shown represents “wet” torque values in foot-pounds and *(Newton-meters)*.

| PART DESCRIPTION | TORQUE |
|---|---|
| CAP SCREW 10-32UNF | 3 ft-lb<br>*(4 N-m)* |
| CAP SCREW 1/4"-20UNC GR5 | 6 ft-lb<br>*(8 N-m)* |
| CAP SCREW 5/16"-18UNC GR5 | 13 ft-lb<br>*(17 N-m)* |
| CAP SCREW 3/8"-16UNC GR5 | 23 ft-lb<br>*(31 N-m)* |
| CAP SCREW 1/2"-13UNC GR5 | 57 ft-lb<br>*(77 N-m)* |
| CAP SCREW 5/8"-14UNC GR5 | 113 ft-lb<br>*(153 N-m)* |
| CAP SCREW 3/4"-10UNC GR5 | 200 ft-lb<br>*(271 N-m)* |

# 12

# RECOMMENDED LUBRICANTS

## RECOMMENDED LUBRICANTS FOR ROTARY BLOWERS AND VACUUM BOOSTERS

| RECOMMENDED SYNTHETIC BASED LUBRICANTS FOR BLOWERS | | | | |
|---|---|---|---|---|
| **AMBIENT TEMPERATURE** | **TUTHILL** | **VISCOSITY GRADE** | **ISO 100** | **ISO 150** |
| 0° to 32°F (-18° to 0°C) | PneuLube™ (ISO 100) | Specific Gravity 16°C (62°F) | 0.859 | 0.865 |
| | | Viscosity 40°C (104°F) | 91.8 cSt | 142.7 cSt |
| 32° to 90°F (0° to 32°C) | | Viscosity 100°C (212°F) | 13.1 cSt | 18.0 cSt |
| | | Viscosity Index | 142 | 140 |
| | | Pour Point | -51°C (-60°F) | -51°C (-60°F) |
| 90° to 120°F* (32° to 50°C) | | Flash Point | 246°C (475°F) | 246°C (475°F) |
| | | Copper Corrosion Rating | 1A | 1A |

| RECOMMENDED SYNTHETIC BASED, FOOD GRADE LUBRICANTS FOR BLOWERS | | |
|---|---|---|
| **AMBIENT TEMPERATURE** | **LUBRICANT MEETING U.S. FDA REGULATION 21 CFR 178.3570 GOVERNING PETROLEUM PRODUCTS WHICH MAY HAVE INCIDENTAL CONTACT WITH FOOD, AND USDA H1 REQUIREMENTS** | **LUBRICANT MEETING U.S. FDA REGULATIONS 21 CFR 172.878 AND 178.3620(A) FOR DIRECT AND INDIRECT FOOD CONTACT** |
| 0° to 32°F (-18° to 0°C) | PneuLube™ FG (ISO 100) | CONSULT FACTORY |
| 32° to 90°F (0° to 32°C) | | |
| 90° to 120°F* (32° to 50°C) | | |

| RECOMMENDED LUBRICANTS FOR M-D VACUUM BOOSTERS | |
|---|---|
| REQUIREMENTS | |
| • Suitable for high vacuum service<br>• 100 cSt @ 40°C<br>• Vapor pressure of 1 micron or less @ 70°F (21°C)<br>• Straight mineral (no additives) or PAO synthetic oil | |
| **RECOMMENDED GREASE FOR CP BLOWERS:** | |
| **TUTHILL** | |
| Tuthill PneuLube™ NLGI #2 premium grade, petroleum base lithium grease. | Food Grade HTEP grease, NLGI No. 2 grade. Must meet all requirements of FDA Regulation 21 CFR 178.3570 (the former USDA H-1 approval requirements) for lubricants having incidental contact with food. |
| * For higher ambient temperatures, please consult the factory. | |
| **RECOMMENDED OIL FOR OXYGEN-ENRICHED SERVICE** | |
| Blowers used in oxygen-enriched service should use only non-flammable, PFPEsynthetic lubricant. Blowers used in hydrogen service should use only PneuLube synthetic oil. Tuthill Vacuum & Blower Systems cannot accept responsibility for damage to seals, O-rings and gaskets caused by use of synthetic lubricants not recommended by Tuthill Vacuum and Blower Systems | |

Tuthill

# 13

# SPECIAL TOOL DRAWINGS

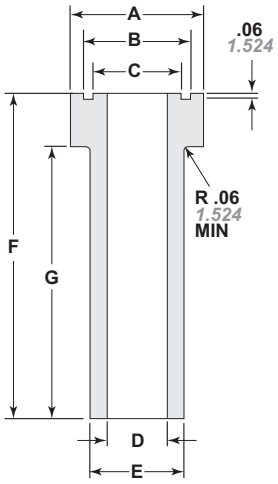


| MODEL | A ±.001 ± 0.0254 | B ±.005 ± 0.127 | C ±.005 ± 0.127 | D ±.005 ± 0.127 | E ±.005 ± 0.127 | F ±.005 ± 0.127 | G ±.005 ± 0.127 |
|---|---|---|---|---|---|---|---|
| 2000 | 1.560<br>*39.624* | 1.27<br>*32.258* | .98<br>*24.892* | .70<br>*17.78* | 1.10<br>*27.94* | 3.50<br>*88.9* | 3.00<br>*76.2* |
| 3000 | 2.035<br>*51.689* | 1.70<br>*43.18* | 1.335<br>*33.909* | 1.015<br>*25.781* | 1.415<br>*35.941* | 3.75<br>*95.25* | 3.00<br>*76.2* |
| 4000 | 2.425<br>*61.595* | 2.02<br>*51.308* | 1.61<br>*40.894* | 1.21<br>*30.734* | 1.61<br>*40.894* | 4.50<br>*114.3* | 3.75<br>*95.25* |
| 5000 | 2.820<br>*71.628* | 2.42<br>*61.468* | 1.81<br>*45.974* | 1.41<br>*35.814* | 1.81<br>*45.974* | 5.00<br>*127* | 4.25<br>*107.95* |
| 6000 | 3.135<br>*79.629* | 2.73<br>*69.342* | 2.00<br>*50.8* | 1.605<br>*40.767* | 2.00<br>*50.8* | 6.25<br>*158.75* | 5.50<br>*139.7* |
| 7000 | 3.525<br>*89.535* | 2.98<br>*75.692* | 2.46<br>*62.484* | 1.605<br>*40.767* | 2.00<br>*50.8* | 6.25<br>*158.75* | 5.50<br>*139.7* |

*Figure 13-1 – Bearing Pressing Tool*

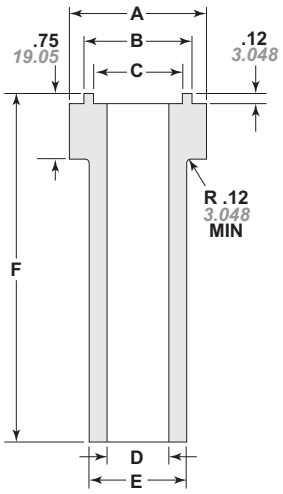


| MODEL | A ±.001 ± 0.0254 | B ±.005 ± 0.127 | C ±.005 ± 0.127 | D ±.005 ± 0.127 | E ±.005 ± 0.127 | F ±.005 ± 0.127 |
|---|---|---|---|---|---|---|
| 2000 | 1.560<br>*39.624* | 1.24<br>*31.496* | 1.04<br>*26.416* | .70<br>*17.78* | 1.10<br>*27.94* | 4.00<br>*101.6* |
| 3000 | 2.035<br>*51.689* | 1.74<br>*44.196* | 1.54<br>*39.116* | 1.015<br>*25.781* | 1.415<br>*35.941* | 4.37<br>*110.99* |
| 4000 | 2.425<br>*61.595* | 1.865<br>*47.371* | 1.665<br>*42.291* | 1.21<br>*30.734* | 1.61<br>*40.894* | 5.25<br>*133.35* |
| 5000 | 2.820<br>*71.628* | 2.427<br>*61.645* | 2.227<br>*56.565* | 1.41<br>*35.814* | 1.81<br>*45.974* | 5.68<br>*144.272* |
| 6000 | 3.135<br>*79.629* | 2.74<br>*69.596* | 2.54<br>*64.516* | 1.605<br>*40.767* | 2.00<br>*50.8* | 7.00<br>*177.8* |
| 7000 | 3.525<br>*89.535* | 2.99<br>*75.946* | 2.79<br>*70.866* | 1.605<br>*40.767* | 2.00<br>*50.8* | 7.00<br>*177.8* |

*Figure 13-2 – Seal Pressing Tool*

**This Page Intentionally Left Blank**

## Cutaway Drawing for Grease Lubrication / Air Service

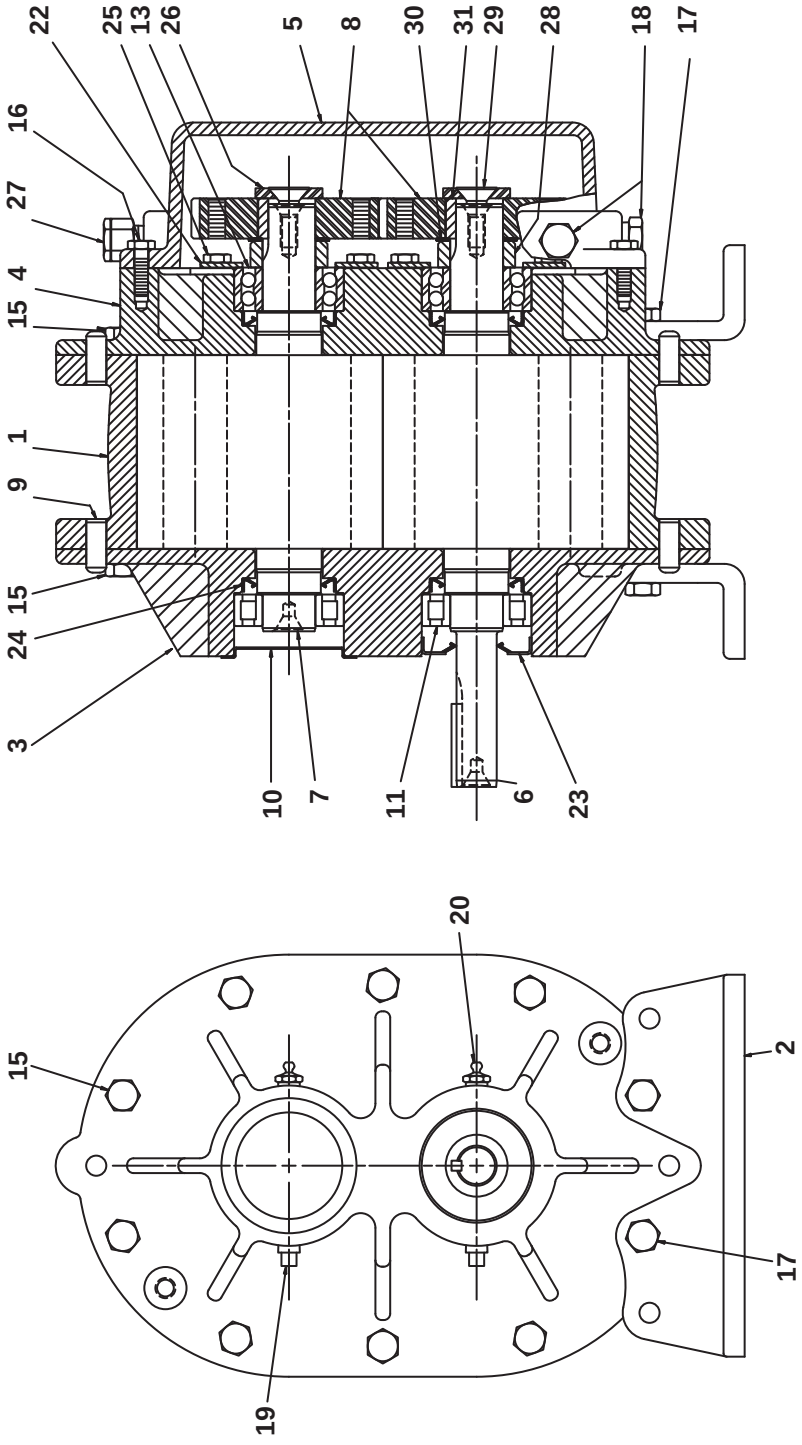

# PARTS LIST

## Parts List for Model CP Series – Grease Lubrication / Air Service

| ITEM NO. | PART DESCRIPTION | QTY |
|---|---|---|
| 1 | Housing | 1 |
| 2 | Mounting Foot | 2 |
| 3 | Drive End Plate | 1 |
| 4 | Gear End Plate | 1 |
| 5 | Gear Cover | 1 |
| 6 | Drive Rotor | 1 |
| 7 | Driven Rotor | 1 |
| 8 | Gear Set | 1 |
| 9 | Dowel Pin | 4 |
| 10 | Cover Grease | 1 |
| 11 | Bearing | 1 |
| 12* | Bearing | 1 |
| 13 | Bearing | 2 |
| 15 | Screw, Socket Head | 14 |
| 16 | Screw, Socket Head | 8 |
| 17 | Screw, Socket Head | 6 |
| 18 | Pipe Plug | 3 |
| 18 | Magnetic Plug | 2 |
| 19 | Relief Fitting | 2 |
| 20 | Grease Fitting | 2 |
| 22 | Bearing Retainer | 2 |
| 23 | Lip Seal | 1 |
| 24 | Lip Seal | 4 |
| 25 | Screw, Hex Head | 8 |
| 26 | Washer | 2 |
| 27 | Breather | 1 |
| 28 | Spacer | 2 |
| 29 | Cap Screw | 2 |
| 30 | Shim | 6 |
| 30 | Shim | 2 |
| 30 | Shim | 2 |
| 31 | Key Gear | 2 |
| 42* | Nameplate | 1 |

| ITEM NO. | PART DESCRIPTION | QTY |
|---|---|---|
| 45* | Lifting Lug | 2 |

* Not shown

NOTES:

- QUANTITIES SHOWN ARE MAXIMUM VALUES. QUANTITIES MAY VARY BETWEEN BLOWER.

**PARTS KITS ARE AVAILABLE. CONSULT AUTHORIZED REPRESENTATIVE FOR PART NUMBERS.**

## Cutaway Drawing for Splash Lubrication / Air Service

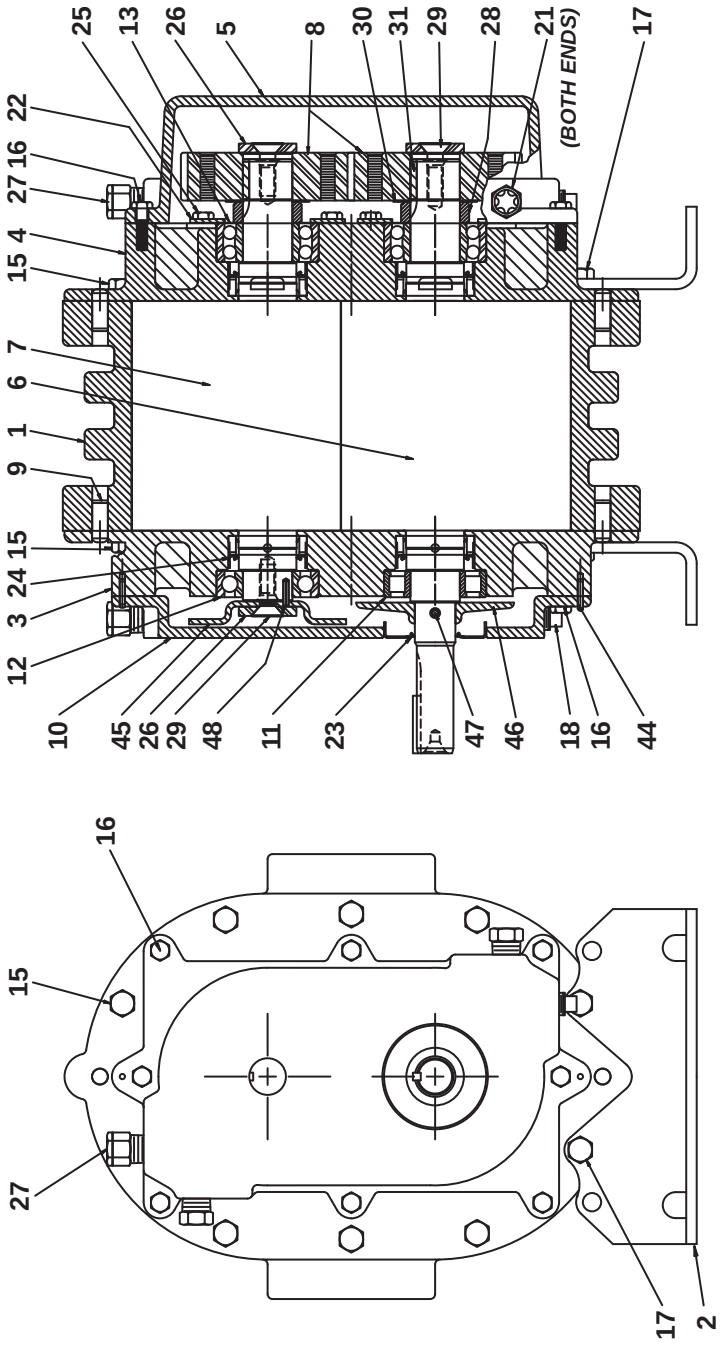

## Parts List for Model CP Series – Splash Lubrication / Air Service

| ITEM NO. | PART DESCRIPTION | QTY |
|---|---|---|
| 1 | Housing | 1 |
| 2 | Mounting Foot | 2 |
| 3 | Drive End Plate | 1 |
| 4 | Gear End Plate | 1 |
| 5 | Gear End Cover | 1 |
| 6 | Drive Rotor | 1 |
| 7 | Driven Rotor | 1 |
| 8 | Gear Set | 1 |
| 9 | Dowel Pin | 4 |
| 10 | Drive End Cover | 1 |
| 11 | Bearing | 1 |
| 12 | Bearing | 1 |
| 13 | Bearing Ball | 2 |
| 15 | Screw, Socket Head | 14 |
| 16 | Screw, Socket Head | 16 |
| 17 | Screw, Socket Head | 6 |
| 18 | Pipe Plug | 8 |
| 18 | Magnetic Plug | 4 |
| 21 | Oil Sight Glass | 4 |
| 22 | Bearing Retainer | 2 |
| 23 | Lip Seal | 1 |
| 24 | Lip Seal | 4 |
| 25 | Screw, Hex Head | 8 |
| 26 | Washer | 3 |
| 27 | Breather | 2 |
| 28 | Spacer | 2 |
| 29 | Cap Screw | 3 |
| 30 | Shim | 6 |
| 30 | Shim | 2 |
| 30 | Shim | 2 |
| 31 | Key Gear | 2 |
| 42* | Nameplate | 1 |
| 44 | Roll Pin | 2 |
| 45* | Lifting Lug | 2 |
| 46* | Slinger Oil-2, Machine-1 | 2 |
| 48* | Roll Pin | 2 |

* Not shown

NOTES:

- QUANTITIES SHOWN ARE MAXIMUM VALUES. QUANTITIES MAY VARY BETWEEN BLOWER.

**PARTS KITS ARE AVAILABLE. CONSULT AUTHORIZED REPRESENTATIVE FOR PART NUMBERS.**

**This Page Intentionally Left Blank**

Tuthill
PUMP YOUR HEART INTO IT

4840 W. KEARNEY ST., SPRINGFIELD, MO 65803 • P (417) 865-8715 • F (417) 865-2950

CE

## DECLARATION OF INCORPORATION

Herewith we declare that the items detailed below are in conformity with the provisions of the Machinery Directive 2006/42/EC.

Information on the items detailed are compiled per the Machinery Directive 2006/42/EC, Annex VII, part A and are the responsibility of the person listed below.

The items detailed below must not be put into service until the machinery into which it is to be incorporated has been declared in conformity with the provisions of the relevant directive(s).

Other directives and standards that apply to this Declaration of Incorporation:

EN 1012-1:1996 - Compressors and vacuum pumps - Safety requirements - Part 1: Compressors

The scope of the Declaration of Incorporation is for bare shaft Rotary Positive Displacement (CP Series) Blowers

2000, 3000, 4000, 5000, 6000, 7000

David L. Schardt

David Schardt
Vice President of Engineering
Tuthill Vacuum & Blower Systems

# WARRANTY – BLOWER PRODUCTS

Subject to the terms and conditions hereinafter set forth and set forth in General Terms of Sale, Tuthill Vacuum & Blower Systems (the Seller) warrants products and parts of its manufacture, when shipped, and its work (including installation and start-up) when performed, will be of good quality and will be free from defects in material and workmanship. This warranty applies only to Seller's equipment, under use and service in accordance with seller's written instructions, recommendations and ratings for installation, operating, maintenance and service of products, for a period as stated in the table below. Because of varying conditions of installation and operation, all guarantees of performance are subject to plus or minus 5% variation. (Non-standard materials are subject to a plus or minus 10% variation)

| PRODUCT TYPE | TYPE OF APPLICATION | |
|---|---|---|
| | ATMOSPHERIC AIR OR PROCESS AIR WITHOUT LIQUIDS PRESENT | PROCESS GASES OTHER THAN AIR, OR ANY LIQUID INJECTED APPLICATION |
| **New** *(Qx™ models only)* | 30 months from date of shipment, or 24 months after initial startup date, whichever occurs first. | Consult Factory |
| **New** *(all other models)* | 24 months from date of shipment, or 18 months after initial startup date, whichever occurs first | 18 months from date of shipment, or 12 months after initial startup date, whichever occurs first |
| **Repair/Reman** | 12 months from date of shipment, or remaining warranty period, whichever is greater | 12 months from date of shipment, or remaining warranty period, whichever is greater |

THIS WARRANTY EXTENDS ONLY TO BUYER AND/OR ORIGINAL END USER, AND IN NO EVENT SHALL THE SELLER BE LIABLE FOR PROPERTY DAMAGE SUSTAINED BY A PERSON DESIGNATED BY THE LAW OF ANY JURISDICTION AS A THIRD PARTY BENEFICIARY OF THIS WARRANTY OR ANY OTHER WARRANTY HELD TO SURVIVE SELLER'S DISCLAIMER.

All accessories furnished by Seller but manufactured by others bear only that manufacturer's standard warranty.

All claims for defective products, parts, or work under this warranty must be made in writing immediately upon discovery and, in any event within one (1) year from date of shipment of the applicable item and all claims for defective work must be made in writing immediately upon discovery and in any event within one (1) year from date of completion thereof by Seller. Unless done with prior written consent of Seller, any repairs, alterations or disassembly of Seller's equipment shall void warranty. Installation and transportation costs are not included and defective items must be held for Seller's inspection and returned to Seller's Ex-works point upon request.

THERE ARE NO WARRANTIES, EXPRESSED, IMPLIED OR STATUTORY WHICH EXTEND BEYOND THE DESCRIPTION ON THE FACE HEREOF, INCLUDING WITHOUT LIMITATION, THE IMPLIED WARRANTIES OF MERCHANTABILITY AND FITNESS OF PURPOSE.

After Buyer's submission of a claim as provided above and its approval, Seller shall at its option either repair or replace its product, part, or work at the original Ex-works point of shipment, or refund an equitable portion of the purchase price.

The products and parts sold hereunder are not warranted for operation with erosive or corrosive material or those which may lead to build up of material within the product supplied, nor those which are incompatible with the materials of construction. The Buyer shall have no claim whatsoever and no product or part shall be deemed to be defective by reason of failure to resist erosive or corrosive action nor for problems resulting from build-up of material within the unit nor for problems due to incompatibility with the materials of construction.

Any improper use, operation beyond capacity, substitution of parts not approved by Seller, or any alteration or repair by others in such manner as in Seller's judgment affects the product materially and adversely shall void this warranty.

No employee or representative of Seller other than an Officer of the Company is authorized to change this warranty in any way or grant any other warranty. Any such change by an Officer of the Company must be in writing.

The foregoing is Seller's only obligation and Buyer's only remedy for breach of warranty, and except for gross negligence, willful misconduct and remedies permitted under the General Terms of Sale in the sections on CONTRACT PERFORMANCE, INSPECTION AND ACCEPTANCE and the PATENTS Clause hereof, the foregoing is BUYER'S ONLY REMEDY HEREUNDER BY WAY OF BREACH OF CONTRACT, TORT OR OTHERWISE, WITHOUT REGARD TO WHETHER ANY DEFECT WAS DISCOVERED OR LATENT AT THE TIME OF DELIVERY OF THE PRODUCT OR WORK. In no event shall Buyer be entitled to incidental or consequential damages. Any action for breach of this agreement must commence within one (1) year after the cause of action has occurred.

May 2008

# OPERATING DATA FORM / PRODUCT REGISTRATION

It is to the user's advantage to have the requested data filled in below and available in the event a problem should develop in the blower or the system. This information is also helpful when ordering spare parts.

Model No. _____ V-Belt Size _____ Length _____

Serial No. _____ Type of Lubrication _____

Start-up Date _____ _____

Pump RPM _____ Operating Vacuum _____

Pump Sheave Diameter _____ Any Other Special Accessories Supplied or in Use:

Motor Sheave Diameter _____ _____

Motor RPM _____ HP _____ _____

**NOTES:** _____

_____

_____

_____

## IMPORTANT

All blowers manufactured by Tuthill Vacuum & Blower Systems are date-coded at time of shipment. In order to assure you of the full benefits of the product warranty, please complete, tear out and return the product registration card, or register online at **tuthillvacuumblower.com**.

**Technical Support: 1-877-955-TECH (8324)**

**Service & Repair or Product Sales:**

**Tuthill Vacuum & Blower Systems**
4840 West Kearney Street
Springfield, Missouri USA 65803-8702
O 417.865.8715  800.825.6937
F 417.865.2950
**www.tuthillvacuumblower.com**

**Manual 2017 Rev C p/n 2017**
4/18

Copyright © 2018 Tuthill Vacuum & Blower Systems
All rights reserved. Product information and specifications subject to change.

M-D Pneumatics® KINNEY®

## Performance Datasheet

| | | | |
|---|---|---|---|
| Customer | : | Quote number | : |
| Customer reference | : | Size | : 4005 CP Series (2-lobe) |
| Item | : Default | Based on curve number | : 0-4005 |
| Application | : | Date last saved | : 19 May 2021 2:55 PM |
| Material | : Cast Iron | | |

## *Operating Conditions*

### ***Standard conditions :***

*( 14.70 psi.a , 70.00 deg F , 0.00 % )*

| | | |
|---|---|---|
| Condition | 1 | |
| System inlet volume flow | 321.2 | CFM |
| Flow at standard conditions , dry | 227.0 | SCFM |
| Mass flow | 0.28 | lbm/s |
| System inlet temperature | 68.00 | deg F |
| System inlet pressure | 8.68 | in Hg vac |
| Inlet pressure loss | | psi |
| Product inlet pressure | 8.68 | in Hg vac |
| Product discharge pressure | 0.00 | psi.g |
| Discharge pressure loss | | psi |
| System discharge pressure [p2] | 0.00 | psi.g |
| Product differential pressure | 4.26 | psi |
| System differential pressure [dp] | 4.26 | psi |
| Vacuum Relief Setting | 15.00 | in Hg vac |
| Actual system discharge volume | 253.4 | CFM |

### ***Site Conditions***

| | | |
|---|---|---|
| Atmospheric pressure | 14.70 | psi.a |
| Elevation above sea level | 0.00 | ft |
| Ambient temperature | 68.00 | deg F |
| Relative humidity | 36.00 | % |
| Site Supply Frequency | 60 | Hz |
| Set inlet to ambient site conditions | No | |

### ***Gas Data***

| | | |
|---|---|---|
| Type of gas | Air | |
| Molecular weight (MW) | 28.84 | |
| Specific gravity | 0.996 | |
| Specific heat (Cp) | 0.2418 | Btu/(lb.deg F) |
| Ratio of specific heat (k) | 1.40 | |

### ***Performance***

| | | |
|---|---|---|
| Actual inlet volumetric flow | 321.2 | CFM |
| Power, shaft [Ps] | 7.78 | hp |
| Inertial power | 3.00 | hp |
| Torque | 0.25 | hp/100 rpm |
| % of max torque | 44.34 | % |
| Quantity of units operating | 1 | |
| Speed | 3170 | rpm |
| % of max speed | 88.07 | % |
| Noise (with inlet and discharge silencers) | 91 | dB |
| Efficiency, volumetric [#,v] | 83.73 | % |
| Temperature rise | 58.67 | deg F |
| Discharge temperature | 126.7 | deg F |
| % of max temperature rise | 27.94 | % |
| % of max pressure rise | 42.63 | % |

### ***Vacuum Relief Condition***

| | | |
|---|---|---|
| Power, shaft @ Vacuum Relief | 12.97 | hp |
| Temperature rise @ Vacuum relief | 153.7 | deg F |
| Discharge temperature @ Vacuum Relief | 221.7 | deg F |
| % of max temperature rise @ Vacuum Relief | 73.21 | % |
| % of max pressure rise @ Vacuum Relief | 73.67 | % |

# M-D Pneumatics® KINNEY®

## Performance Datasheet

| | | | |
|---|---|---|---|
| Customer | : | Quote number | : |
| Customer reference | : | Size | : 4005 CP Series (2-lobe) |
| Item | : Default | Based on curve number | : 0-4005 |
| Application | : | Date last saved | : 19 May 2021 2:55 PM |
| Material | : Cast Iron | | |

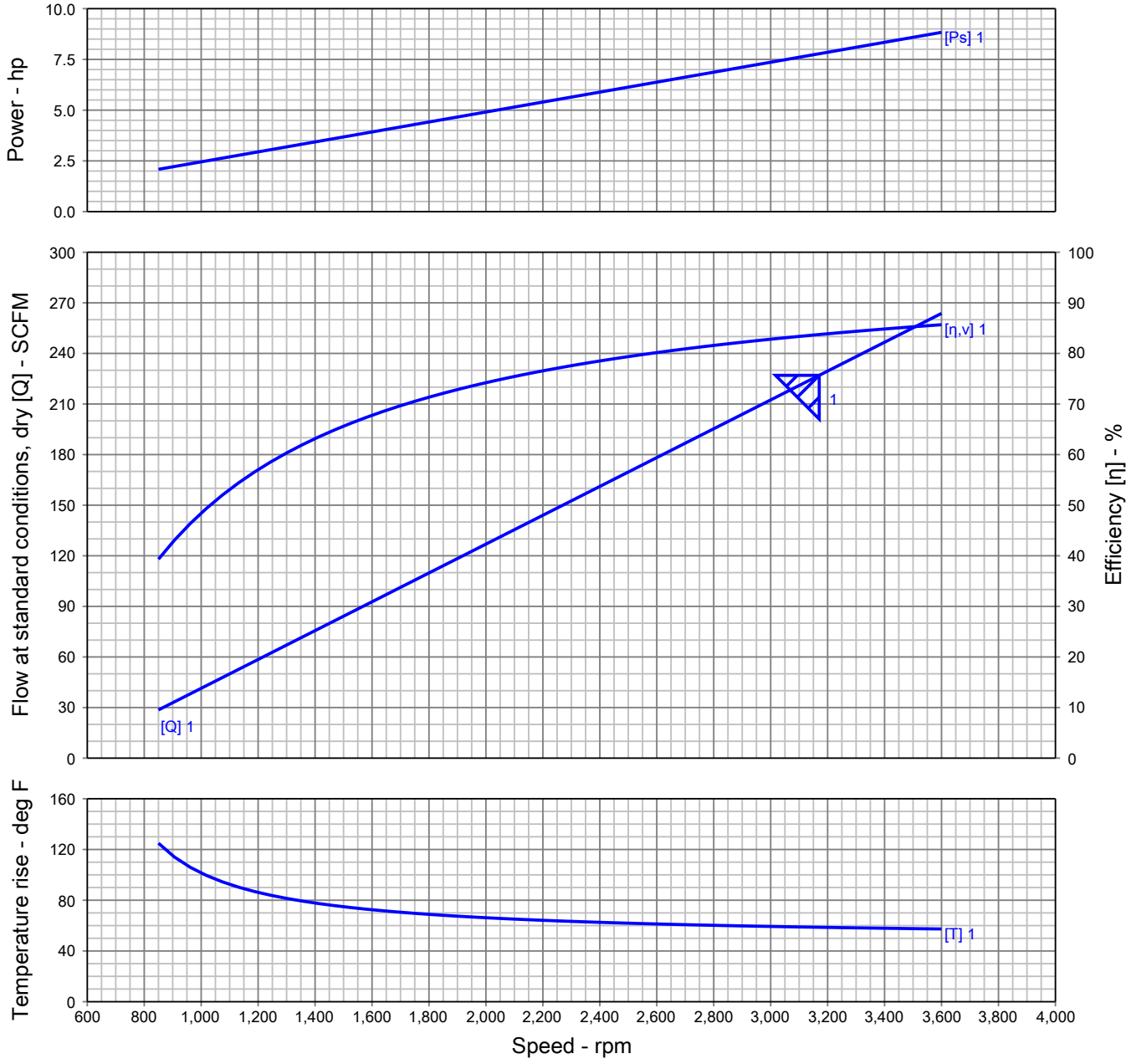

# RECOMMENDED LUBRICANTS

## RECOMMENDED MINERAL BASED LUBRICANTS

| AMBIENT TEMPERATURE | SHELL | CITGO | CHEVRON TEXACO | EXXONMOBIL |
|---|---|---|---|---|
| **0° F (-18° C) to 32° F (0° C)** | TELLUS® PLUS 68 (ISO 68) | A/W 68 (ISO 68) | RANDO HD 68 (ISO 68) | DTE HEAVY MEDIUM (ISO 68) |
| **32° F (0° C) to 90° F (32° C)** | TELLUS® PLUS 100 (ISO 100) | A/W 100 (ISO 100) | RANDO HD 100 (ISO 100) | DTE HEAVY (ISO 100) |
| **90° F (32° C) to 120° F (50° C)** | TELLUS® PLUS 150 (ISO 150) | A/W 150 (ISO 150) | RANDO HD 150 (ISO 150) | DTE EXTRA HEAVY (ISO 150) |

## RECOMMENDED SYNTHETIC BASED LUBRICANTS

| AMBIENT TEMPERATURE | TUTHILL | EXXONMOBIL | SHELL |
|---|---|---|---|
| **0° F (-18° C) to 32° F (0° C)** | **PneuLube™** (ISO 100) | SHC 626 (ISO 68) | MADRELA® AS 68 (ISO 68) |
| **32° F (0° C) to 90° F (32° C)** | | SHC 627 (ISO 100) | MADRELA® P 100 (ISO 100) |
| **90° F (32° C) to 120° F (50° C)** | | SHC 629 (ISO 150) | MADRELA® P 150 (ISO 150) |

NOTE: Tuthill Vacuum & Blower Systems cannot accept responsibility for damage to seals, O-rings and gaskets caused by use of synthetic lubricants not recommended by Tuthill Vacuum and Blower Systems.

Due to its superior viscosity index, Tuthill PneuLube™ provides the greatest ambient temperature flexibility. Contact your local Tuthill Vacuum & Blower Systems Sales Professional for availability of this superior lubricant.

## RECOMMENDED MINERAL BASED, FOOD GRADE LUBRICANTS

| AMBIENT TEMPERATURE | Lubricant meeting U. S. FDA regulation 21 CFR 178.3570 governing petroleum products which may have incidental contact with food, and USDA H1 requirements | Lubricant meeting U.S. FDA regulations 21 CFR 172.878 and 178.3620(a) for direct and indirect food contact |
|---|---|---|
| **0° F (-18° C) to 32° F (0° C)** | CITGO CLARION® A/W 68 (ISO 68) | CITGO CLARION® 350 FOOD GRADE (ISO 68) |
| **32° F (0° C) to 90° F (32° C)** | CITGO CLARION® A/W 100 (ISO 100) | CONSULT FACTORY |
| **90° F (32° C) to 120° F (50° C)** | CONSULT FACTORY | CONSULT FACTORY |

## RECOMMENDED SYNTHETIC BASED, FOOD GRADE LUBRICANTS

| AMBIENT TEMPERATURE | Lubricant meeting U. S. FDA regulation 21 CFR 178.3570 governing petroleum products which may have incidental contact with food, and USDA H1 requirements | Lubricant meeting U.S. FDA regulations 21 CFR 172.878 and 178.3620(a) for direct and indirect food contact |
|---|---|---|
| **0° F (-18° C) to 32° F (0° C)** | **PneuLube™ FG** (ISO 100) | CONSULT FACTORY |
| **32° F (0° C) to 90° F (32° C)** | | |
| **90° F (32° C) to 120° F (50° C)** | | |

T 418 885-8276 1 888 440-8276
16, rue Turgeon, Saint-Anselme (QC) G0R 2N0

## Baldor electric motor

BALDOR • RELIANCE

# Integral Horsepower
# AC Induction Motors
# ODP, WPI Enclosures
# TENV, TEAO, TEFC Enclosure
# Explosion Proof

7/14 Installation & Operating Manual MN408

Any trademarks used in this manual are the property of their respective owners.

**Important:**
Be sure to check www.baldor.com to download the latest version of this manual in Adobe Acrobat PDF format.

# Table of Contents


**Section 1**
**General Information** . . . . . 1-1
- Overview . . . . . 1-1
- Limited Warranty . . . . . 1-1
- Safety Notice . . . . . 1-1
- Receiving . . . . . 1-2
- Handling . . . . . 1-2
- Storage . . . . . 1-3
- Removal From Storage . . . . . 1-4
- Equipment Marking for IEC Certified Product . . . . . 1-5
- EMC Compliance Statement for European Union . . . . . 1-5

**Section 2**
**Installation & Operation** . . . . . 2-1
- Overview . . . . . 2-1
- Location . . . . . 2-1
- Mounting Location . . . . . 2-1
  - Frame Mounting Holes . . . . . 2-2
  - Alignment . . . . . 2-2
  - Doweling & Bolting . . . . . 2-2
  - Guarding . . . . . 2-3
- Power Connection . . . . . 2-3
  - Grounding . . . . . 2-3
  - Conduit Box . . . . . 2-3
  - AC Power . . . . . 2-4
  - Rotation . . . . . 2-4
- Connection Diagrams . . . . . 2-5
- Initial Lubrication . . . . . 2-7
- First Time Start Up . . . . . 2-7
- Coupled Start Up . . . . . 2-8
- Jogging and Repeated Starts . . . . . 2-8
- Hazardous Locations . . . . . 2-8
  - Selection . . . . . 2-8
  - Protection Concepts . . . . . 2-8
- Repair of Motors used in Hazardous Locations . . . . . 2-10

**Section 3**
**Maintenance & Troubleshooting** . . . . . 3-1
- General Inspection . . . . . 3-1
- Relubrication & Bearings . . . . . 3-1
- Relubrication Intervals . . . . . 3-2
- Relubrication Procedure . . . . . 3-4
- Shaker Duty Motors only . . . . . 3-4
- Troubleshooting Chart . . . . . 3-5
- Suggested bearing and winding RTD setting guidelines for Non–Hazardous Locations ONLY . . . . . 3-6

# Section 1

## General Information

**Overview** This manual contains general procedures that apply to Baldor Motor products. Be sure to read and understand the Safety Notice statements in this manual. For your protection, do not install, operate or attempt to perform maintenance procedures until you understand the Warning and Caution statements.
A Warning statement indicates a possible unsafe condition that can cause harm to personnel.
A Caution statement indicates a condition that can cause damage to equipment.

**Important:** **This instruction manual is not intended to include a comprehensive listing of all details for all procedures required for installation, operation and maintenance. This manual describes general guidelines that apply to most of the motor products shipped by Baldor. If you have a question about a procedure or are uncertain about any detail, Do Not Proceed. Please contact your Baldor distributor for more information or clarification.**

Before you install, operate or perform maintenance, become familiar with the following:

- NEMA Publication MG-2, Safety Standard for Construction and guide for Selection, Installation and Use of Electric Motors and Generators.
- IEC 34–1 Electrical and IEC72–1 Mechanical specifications
- ANSI C51.5, the National Electrical Code (NEC) and local codes and practices.

**Limited Warranty**

www.baldor.com/support/warranty_standard.asp

**Safety Notice:** **This equipment contains high voltage! Electrical shock can cause serious or fatal injury. Only qualified personnel should attempt installation, operation and maintenance of electrical equipment. Be sure that you are completely familiar with NEMA publication MG-2, safety standards for construction and guide for selection, installation and use of electric motors and generators, the National Electrical Code and local codes and practices. Unsafe installation or use can cause conditions that lead to serious or fatal injury. Only qualified personnel should attempt the installation, operation and maintenance of this equipment.**

**WARNING:** **Do not touch electrical connections before you first ensure that power has been disconnected. Electrical shock can cause serious or fatal injury. Only qualified personnel should attempt the installation, operation and maintenance of this equipment.**

**WARNING:** **Disconnect all electrical power from the motor windings and accessory devices before disassembly of the motor. Electrical shock can cause serious or fatal injury.**

**WARNING:** **Be sure the system is properly grounded before applying power. Do not apply AC power before you ensure that all grounding instructions have been followed. Electrical shock can cause serious or fatal injury. National Electrical Code and Local codes must be carefully followed.**

**WARNING:** **Avoid extended exposure to machinery with high noise levels. Be sure to wear ear protective devices to reduce harmful effects to your hearing.**

**WARNING:** **Surface temperatures of motor enclosures may reach temperatures which can cause discomfort or injury to personnel accidentally coming into contact with hot surfaces. When installing, protection should be provided by the user to protect against accidental contact with hot surfaces. Failure to observe this precaution could result in bodily injury.**

**WARNING:** **This equipment may be connected to other machinery that has rotating parts or parts that are driven by this equipment. Improper use can cause serious or fatal injury. Only qualified personnel should attempt to install operate or maintain this equipment.**

**WARNING:** **Do not by-pass or disable protective devices or safety guards. Safety features are designed to prevent damage to personnel or equipment. These devices can only provide protection if they remain operative.**

**WARNING:** **Avoid the use of automatic reset devices if the automatic restarting of equipment can be hazardous to personnel or equipment.**

**WARNING:** **Be sure the load is properly coupled to the motor shaft before applying power. The shaft key must be fully captive by the load device. Improper coupling can cause harm to personnel or equipment if the load decouples from the shaft during operation.**

**WARNING:** **UL Listed motors must only be serviced by UL Approved Authorized Baldor Service Centers if these motors are to be returned to a hazardous and/or explosive atmosphere.**

**WARNING:** **Thermostat contacts automatically reset when the motor has slightly cooled down. To prevent injury or damage, the control circuit should be designed so that automatic starting of the motor is not possible when the thermostat resets.**

**WARNING:** **Use proper care and procedures that are safe during handling, lifting, installing, operating and maintaining operations. Improper methods may cause muscle strain or other harm.**

**WARNING:** **Pacemaker danger – Magnetic and electromagnetic fields in the vicinity of current carrying carrying conductors and permanent magnet motors can result result in a serious health hazard to persons with cardiac pacemakers, metal implants, and hearing aids. To avoid risk, stay way from the area surrounding a permanent magnet motor.**

**WARNING:** **Before performing any motor maintenance procedure, be sure that the equipment connected to the motor shaft cannot cause shaft rotation. If the load can cause shaft rotation, disconnect the load from the motor shaft before maintenance is performed. Unexpected mechanical rotation of the motor parts can cause injury or motor damage.**

Continued on next page.

**Safety Notice** Continued

**WARNING:** **Do not use non UL/CSA listed explosion proof motors in the presence of flammable or combustible vapors or dust. These motors are not designed for atmospheric conditions that require explosion proof operation.**

**WARNING:** **Motors that are to be used in flammable and/or explosive atmospheres must display the UL label on the nameplate along with CSA listed logo. Specific service conditions for these motors are defined in NFPA 70 (NEC) Article 500.**

**WARNING:** **Guards must be installed for rotating parts such as couplings, pulleys, external fans, and unused shaft extensions, should be permanently guarded to prevent accidental contact by personnel. Accidental contact with body parts or clothing can cause serious or fatal injury.**

**Caution:** **To prevent premature equipment failure or damage, only qualified maintenance personnel should perform maintenance.**

**Caution:** **Do not over tension belts. Excess tension may damage the motor or driven equipment.**

**Caution:** **Do not over–lubricate motor as this may cause premature bearing failure.**

**Caution:** **Do not lift the motor and its driven load by the motor lifting hardware. The motor lifting hardware is adequate for lifting only the motor. Disconnect the load (gears, pumps, compressors, or other driven equipment) from the motor shaft before lifting the motor.**

**Caution:** **If eye bolts are used for lifting a motor, be sure they are securely tightened. The lifting direction should not exceed a 20 º angle from the shank of the eye bolt or lifting lug. Excessive lifting angles can cause damage.**

**Caution:** **To prevent equipment damage, be sure that the electrical service is not capable of delivering more than the maximum motor rated amps listed on the rating plate.**

**Caution:** **If a HI POT test (High Potential Insulation test) must be performed, follow the precautions and procedure in NEMA MG1 and MG2 standards to avoid equipment damage.**

**Caution:** **The space heaters are designed to operate at or below the maximum surface temperature stated on the nameplate. If the marked ambient and/or voltage are exceeded this maximum surface temperature can be exceeded and can damage the motor windings. If applied in a division 2 or zone 2 environment this excessive temperature may cause ignition of hazardous materials.**

**Caution:** **Shaker Duty motors must be properly lubricated prior to Start Up to prevent damage. See Section 3.**

If you have any questions or are uncertain about any statement or procedure, or if you require additional information please contact your Baldor distributor or an Authorized Baldor Service Center.

## Receiving

Each Baldor Electric Motor is thoroughly tested at the factory and carefully packaged for shipment. When you receive your motor, there are several things you should do immediately.

1. Observe the condition of the shipping container and report any damage immediately to the commercial carrier that delivered your motor.
2. Verify that the part number of the motor you received is the same as the part number listed on your purchase order.

## Handling

The motor should be lifted using the lifting lugs or eye bolts provided.

**Caution:** **Do not lift the motor and its driven load by the motor lifting hardware. The motor lifting hardware is adequate for lifting only the motor. Disconnect the load (gears, pumps, compressors, or other driven equipment) from the motor shaft before lifting the motor.**

1. Use the lugs or eye bolts provided to lift the motor. Never attempt to lift the motor and additional equipment connected to the motor by this method. The lugs or eye bolts provided are designed to lift only the motor. Never lift the motor by the motor shaft or the hood of a WPII motor.
2. To avoid condensation inside the motor, do not unpack until the motor has reached room temperature. (Room temperature is the temperature of the room in which it will be installed). The packing provides insulation from temperature changes during transportation.
3. When lifting a WPII (Weather Proof Type 2) motor, do not lift the motor by inserting lifting lugs into holes on top of the cooling hood. These lugs are to be used for hood removal only. A spreader bar should be used to lift the motor by the cast lifting lugs located on the motor frame.
4. If the motor must be mounted to a plate with the driven equipment such as pump, compressor etc., it may not be possible to lift the motor alone. For this case, the assembly should be lifted by a sling around the mounting base. The entire assembly can be lifted as an assembly for installation. Do not lift the assembly using the motor lugs or eye bolts provided. Lugs or eye bolts are designed to lift motor only. If the load is unbalanced (as with couplings or additional attachments) additional slings or other means must be used to prevent tipping. In any event, the load must be secure before lifting. If the load is unbalanced (as with couplings or additional attachments) additional slings or other means must be used to prevent tipping. In any event, the load must be secure before lifting.

## Storage

Storage requirements for motors and generators that will not be placed in service for at least six months from date of shipment.

Improper motor storage will result in seriously reduced reliability and failure. An electric motor that does not experience regular usage while being exposed to normally humid atmospheric conditions is likely to develop rust in the bearings or rust particles from surrounding surfaces may contaminate the bearings. The electrical insulation may absorb an excessive amount of moisture leading to the motor winding failure.

A wooden crate "shell" should be constructed to secure the motor during storage. This is similar to an export box but the sides & top must be secured to the wooden base with lag bolts (not nailed as export boxes are) to allow opening and reclosing many times without damage to the "shell".

Minimum resistance of motor winding insulation is 5 Meg ohms or the calculated minimum, which ever is greater. Minimum resistance is calculated as follows: Rm = kV + 1

where: (Rm is minimum resistance to ground in Meg–Ohms and kV is rated nameplate voltage defined as Kilo–Volts.)

Example: For a 480VAC rated motor Rm =1.48 meg–ohms (use 5 M Ω).

For a 4160VAC rated motor Rm = 5.16 meg–ohms.

### Preparation for Storage

1. Some motors have a shipping brace attached to the shaft to prevent damage during transportation. The shipping brace, if provided, must be removed and stored for future use. The brace must be reinstalled to hold the shaft firmly in place against the bearing before the motor is moved.
2. Store in a clean, dry, protected warehouse where control is maintained as follows:
   a. Shock or vibration must not exceed 2 mils maximum at 60 hertz, to prevent the bearings from brinelling. If shock or vibration exceeds this limit vibration isolation pads must be used.
   b. Storage temperatures of 10 ºC (50 ºF) to 49 ºC (120 ºF) must be maintained.
   c. Relative humidity must not exceed 60%.
   d. Motor space heaters (when present) are to be connected and energized whenever there is a possibility that the storage ambient conditions will reach the dew point. Space heaters are optional.

Note: Remove motor from containers when heaters are energized, reprotect if necessary.

3. Measure and record the resistance of the winding insulation (dielectric withstand) every 30 days of storage.
   a. If motor insulation resistance decreases below the minimum resistance, contact your Baldor District office.
   b. Place new desiccant inside the vapor bag and re–seal by taping it closed.
   c. If a zipper–closing type bag is used instead of the heat–sealed type bag, zip the bag closed instead of taping it. Be sure to place new desiccant inside bag after each monthly inspection.
   d. Place the shell over the motor and secure with lag bolts.
4. Where motors are mounted to machinery, the mounting must be such that the drains and breathers are fully operable and are at the lowest point of the motor. Vertical motors must be stored in the vertical position. Storage environment must be maintained as stated in step 2.
5. Motors with anti–friction bearings are to be greased at the time of going into extended storage with periodic service as follows:
   a. Motors marked "Do Not Lubricate" on the nameplate do not need to be greased before or during storage.
   b. Ball and roller bearing (anti–friction) motor shafts are to be rotated manually every 3 months and greased every 6 months in accordance with the Maintenance section of this manual.
   c. Sleeve bearing (oil lube) motors are drained of oil prior to shipment. The oil reservoirs must be refilled to the indicated level with the specified lubricant, (see Maintenance). The shaft should be rotated monthly by hand at least 10 to 15 revolutions to distribute oil to bearing surfaces.
   d. "Provisions for oil mist lubrication" – These motors are packed with grease. Storage procedures are the same as paragraph 5b.
   e. "Oil Mist Lubricated" – These bearings are protected for temporary storage by a corrosion inhibitor. If stored for greater than 3 months or outdoor storage is anticipated, connected to the oil mist system while in storage. If this is not possible, add the amount of grease indicated under "Standard Condition" in Section 3, then rotate the shaft 15 times by hand.

6. All breather drains are to be fully operable while in storage (drain plugs removed). The motors must be stored so that the drain is at the lowest point. All breathers and automatic “T” drains must be operable to allow breathing and draining at points other than through the bearings around the shaft. Vertical motors should be stored in a safe stable vertical position.
7. Coat all external machined surfaces with a rust preventing material.
   An acceptable product for this purpose is Exxon Rust Ban # 392.
8. Carbon brushes should be lifted and held in place in the holders, above the commutator, by the brush holder fingers. The commutator should be wrapped with a suitable material such as cardboard paper as a mechanical protection against damage.

#### Non–Regreaseable Motors

Non–regreasable motors with “Do Not Lubricate” on the nameplate should have the motor shaft rotated 15 times to redistribute the grease within the bearing every 3 months or more often.

#### All Other Motor Types

Before storage, the following procedure must be performed.

1. Remove the grease drain plug, if supplied, (opposite the grease fitting) on the bottom of each bracket prior to lubricating the motor.
2. The motor with regreasable bearing must be greased as instructed in Section 3 of this manual.
3. Replace the grease drain plug after greasing.
4. The motor shaft must be rotated a minimum of 15 times after greasing.
5. Motor Shafts are to be rotated at least 15 revolutions manually every 3 months and additional grease added every nine months (see Section 3) to each bearing.
6. Bearings are to be greased at the time of removal from storage.

## Removal From Storage

1. Remove all packing material.
2. Measure and record the electrical resistance of the winding insulation resistance meter at the time of removal from storage. The insulation resistance must not be less than 50% from the initial reading recorded when the motor was placed into storage. A decrease in resistance indicates moisture in the windings and necessitates electrical or mechanical drying before the motor can be placed into service. If resistance is low, contact your Baldor District office.
3. Regrease the bearings as instructed in Section 3 of this manual.
4. Reinstall the original shipping brace if motor is to be moved. This will hold the shaft firmly against the bearing and prevent damage during movement.

## Equipment Marking for IEC Certified Product

IEC certified products have special markings that identify the protection concept and environment requirements. An example is shown in Figure 1-1.

**Figure 1-1 IEC Certified Product Markings**

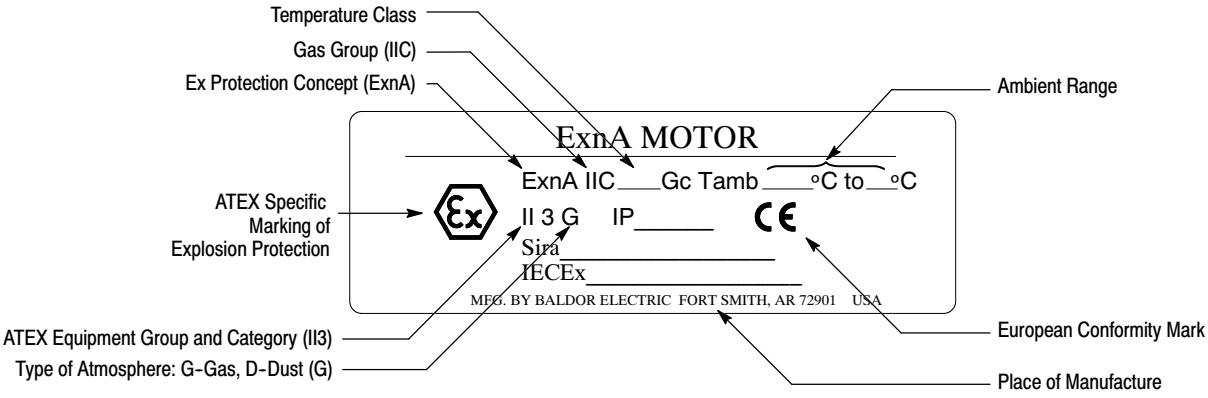


**Specific Conditions of Use:**

If the motor certificate number is followed by the symbol "X", this indicates that the motor has specific conditions of use which are indicated on the certificate. It is necessary to review the product certification certificate in conjunction with this instruction manual.

**Operation On Frequency Converters:**

If the motor is evaluated for operation with an adjustable speed drive, the type of converter (for example PWM for Pulse Width Modulated) and safe speed ranges (for example 0- 120Hz) will be specified in the certification documents or on motor nameplates. It is necessary to consult the adjustable speed drive

manual for proper set up. IECEx Certificates are available online at www.iecex.com

| Unit Conversions | |
|---|---|
| Inches to Millimeters | Inches x 25.4 = mm |
| Millimeters to Inches | mm x .03937 = Inches |
| Horsepower to Kilowatts | Hp x .746 = Kw |
| Kilowatts to Horsepower | Kw x 1.341 = Hp |
| Pounds to Kilograms | Lbs x .454 = Kg |
| Kilograms to Pounds | Kg x 2.205 = Lbs |

## EMC Compliance Statement for European Union

The motors described in this instruction manual are designed to comply 2004/108/EC . These motors are commercial in design and not intended for residential use. When used with converters, please consult converter manufacturers literature regarding recommendations on cable types, cable shielding, cable shielding termination, connection recommendations and any filters which may be recommended for EMC compliance. For additional information, consult Baldor MN1383.

# Section 2

## Installation & Operation

### Overview

Installation should conform to the National Electrical Code as well as local codes and practices. When other devices are coupled to the motor shaft, be sure to install protective devices to prevent future accidents. Some protective devices include, coupling, belt guard, chain guard, shaft covers etc. These protect against accidental contact with moving parts. Machinery that is accessible to personnel should provide further protection in the form of guard rails, screening, warning signs etc.

### Location

It is important that motors be installed in locations that are compatible with motor enclosure and ambient conditions. Improper selection of the motor enclosure and ambient conditions can lead to reduced operating life of the motor.

Proper ventilation for the motor must be provided. Obstructed airflow can lead to reduction of motor life.

1. **Open Drip–Proof/WPI** motors are intended for use indoors where atmosphere is relatively clean, dry, well ventilated and non–corrosive.
2. **Totally Enclosed and WPII** motors may be installed where dirt, moisture or dust are present and in outdoor locations.

**Severe Duty,** IEEE 841 and Washdown Duty enclosed motors are designed for installations with high corrosion or excessive moisture conditions. These motors should not be placed into an environment where there is the presence of flammable or combustible vapors, dust or any combustible material, unless specifically designed for this type of service. IEEE841 motors are suitable for application in Class I Division 2 and Class I Zone 2 areas on sine wave power in accordance with the applicable codes and standards.

**Hazardous Locations** are those where there is a risk of ignition or explosion due to the presence of combustible gases, vapors, dust, fibers, or flyings. Facilities requiring special equipment for hazardous locations are typically classified in accordance with local requirements. In the US market, guidance is provided by the National Electric Code.

**EMC Compliance Statement for European Union**

The motors described in this instruction manual are designed to comply 2004/108/EC . These motors are commercial in design and not intended for residential use.

### Mounting Location

The motor should be installed in a location compatible with the motor enclosure and specific ambient. To allow adequate air flow, the following clearances must be maintained between the motor and any obstruction:

**Table 2-1 Enclosure Clearance**

| | |
|---|---|
| TEFC / TENV ( IC0141 ) Enclosures | |
| Fan Cover Air Intake | 180 – 210T Frame 1” ( 25mm) |
| Fan Cover Air Intake | 250 – 449T Frame 4” (100mm) |
| | IEC 112 – 132 1” ( 25mm) |
| | IEC 160 – 280 4” (100mm) |
| Exhaust | Envelope equal to the P Dimension on the motor dimension sheet |
| OPEN/Protected Enclosures | |
| Bracket Intake | Same as TEFC |
| Frame Exhaust | Exhaust out the sides envelope<br>A minimum of the P dimension plus 2” (50mm)<br>Exhaust out the end same as intake. |

The motor must be securely installed to a rigid foundation or mounting surface to minimize vibration and maintain alignment between the motor and shaft load. Failure to provide a proper mounting surface may cause vibration, misalignment and bearing damage.

Foundation caps and sole plates are designed to act as spacers for the equipment they support. If these devices are used, be sure that they are evenly supported by the foundation or mounting surface.

When installation is complete and accurate alignment of the motor and load is accomplished, the base should be grouted to the foundation to maintain this alignment.

The standard motor base is designed for horizontal or vertical mounting. Adjustable or sliding rails are designed for horizontal mounting only. Consult your Baldor distributor or authorized Baldor Service Center for further information.

**Frame Mounting Holes**

Some motors have standardized frames containing 6 or 8 mounting holes. 6 hole frames are not suitable for field reversal of mounting from F–1 to F–2, etc. Figure 2-1 indicates the proper mounting holes to use.

**Figure 2-1 6 & 8 Hole Motor Frame Mounting**

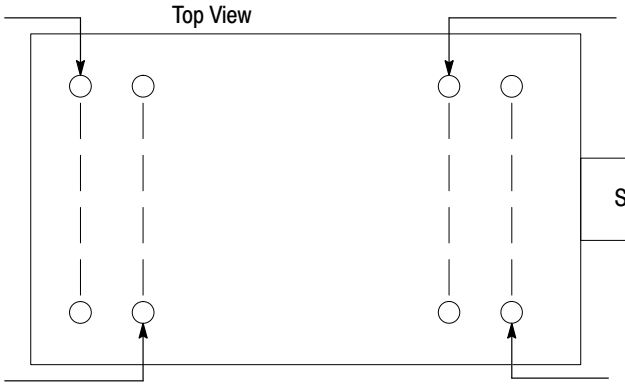


For short frame designations 182, 213, 254, 284, 324, 364, 404, 444 (NEMA)

Allows F-1 to F-2 Conversion on 8 hole frames.
Not present on 6 hole frames.
Not used on 8 hole frames.

For long frame designations 184, 215, 256, 286, 326, 365, 405, 445 (NEMA) (IEC) 112M, 132M, 160L, 200L, 225M, 250M, 280M

Always use these holes, closer to the shaft 112S, 132S, 160M, 180M, 200M, 225S, 250S, 280S, (IEC)

**Caution:** **Do not lift the motor and its driven load by the motor lifting hardware. The motor lifting hardware is adequate for lifting only the motor. Disconnect the load (gears, pumps, compressors, or other driven equipment) from the motor shaft before lifting the motor.**

In the case of assemblies on a common base, any lifting means provided on the motor should not be used to lift the assembly and base but, rather, the assembly should be lifted by a sling around the base or by other lifting means provided on the base. Assure lifting in the direction intended in the design of the lifting means. Likewise, precautions should be taken to prevent hazardous overloads due to deceleration, acceleration or shock forces.

## Alignment

Accurate alignment of the motor with the driven equipment is extremely important. The pulley, sprocket, or gear used in the drive should be located on the shaft as close to the shaft shoulder as possible. It is recommended to heat the pulley, sprocket, or gear before installing on the motor shaft. Forcibly driving a unit on the motor shaft will damage the bearings.

1. Direct Coupling
   For direct drive, use flexible couplings if possible. Consult the drive or equipment manufacturer for more information. Mechanical vibration and roughness during operation may indicate poor alignment. Use dial indicators to check alignment. The space between coupling hubs should be maintained as recommended by the coupling manufacturer.
2. End-Play Adjustment
   The axial position of the motor frame with respect to its load is also extremely important. The standard motor bearings are not designed for excessive external axial thrust loads. Improper adjustment will cause failure.
3. Pulley Ratio
   The best practice is to not exceed an 8:1 pulley ratio.

**Caution:** **Do not over tension belts. Excess tension may damage the motor or driven equipment.**

4. Belt Drive
   Align sheaves carefully to minimize belt wear and axial bearing loads (see End-Play Adjustment). Belt tension should be sufficient to prevent belt slippage at rated speed and load. However, belt slippage may occur during starting.

## Doweling & Bolting

After proper alignment is verified, dowel pins should be inserted through the motor feet into the foundation. This will maintain the correct motor position should motor removal be required. (Baldor•Reliance motors are designed for doweling.)

1. Drill dowel holes in diagonally opposite motor feet in the locations provided.
2. Drill corresponding holes in the foundation.
3. Ream all holes.
4. Install proper fitting dowels.
5. Mounting bolts must be carefully tightened to prevent changes in alignment.

Use a flat washer and lock washer under each nut or bolt head to hold the motor feet secure.

Flanged nuts or bolts may be used as an alternative to washers.

**WARNING:** **Guards must be installed for rotating parts such as couplings, pulleys, external fans, and unused shaft extensions, should be permanently guarded to prevent accidental contact by personnel. Accidental contact with body parts or clothing can cause serious or fatal injury.**

**Guarding**

Guards must be installed for rotating parts such as couplings, pulleys, external fans, and unused shaft extensions. This is particularly important where the parts have surface irregularities such as keys, key ways or set screws. Some satisfactory methods of guarding are:

1. Covering the machine and associated rotating parts with structural or decorative parts of the driven equipment.
2. Providing covers for the rotating parts. Covers should be sufficiently rigid to maintain adequate guarding during normal service.

## Power Connection

Motor and control wiring, overload protection, disconnects, accessories and grounding should conform to the National Electrical Code and local codes and practices.

For ExnA hazardous location motors, it is a specific condition of use that all terminations in a conduit box be fully insulated. Fully insulated and lugged terminations must be bolted and provided with lock washer to prevent rotation. Flying leads must be insulated with two full wraps of electrical grade insulating tape or heat shrink tubing.

**Grounding**

In the USA consult the National Electrical Code, Article 430 for information on grounding of motors and generators, and Article 250 for general information on grounding. In making the ground connection, the installer should make certain that there is a solid and permanent metallic connection between the ground point, the motor or generator terminal housing, and the motor or generator frame. In non–USA locations consult the appropriate national or local code applicable.

Motors with resilient cushion rings usually must be provided with a bonding conductor across the resilient member. Some motors are supplied with the bonding conductor on the concealed side of the cushion ring to protect the bond from damage. Motors with bonded cushion rings should usually be grounded at the time of installation in accordance with the above recommendations for making ground connections. When motors with bonded cushion rings are used in multimotor installations employing group fusing or group protection, the bonding of the cushion ring should be checked to determine that it is adequate for the rating of the branch circuit over current protective device being used.

There are applications where grounding the exterior parts of a motor or generator may result in greater hazard by increasing the possibility of a person in the area simultaneously contacting ground and some other nearby live electrical parts of other ungrounded electrical equipment. In portable equipment it is difficult to be sure that a positive ground connection is maintained as the equipment is moved, and providing a grounding conductor may lead to a false sense of security.

Select a motor starter and over current protection suitable for this motor and its application. Consult motor starter application data as well as the National Electric Code and/or other applicable local codes.

For motors installed in compliance with IEC requirements, the following minimum cross sectional area of the protective conductors should be used:

| Crosssectional area of phase conductors, $S$ | Minimum crosssectional area of the corresponding protective conductor, $S_p$ |
|---|---|
| $mm^2$ | $mm^2$ |
| $S < 16$ | $S$ |
| $16 < S \leq 35$ | 16 |
| $S > 35$ | $0{,}5\ S$ |

Equipotential bonding connection shall made using a conductor with a cross-sectional area of at least 4 $mm^2$.

**Conduit Box**

For ease of making connections, an oversize conduit box is provided. Most conduit boxes can be rotated 360 ° in 90 ° increments. Auxiliary conduit boxes are provided on some motors for accessories such as space heaters, RTD's etc.

**AC Power**

Motors with flying lead construction must be properly terminated and insulated.

Connect the motor leads as shown on the connection diagram located on the name plate or inside the cover on the conduit box. Be sure the following guidelines are met:

1. AC power is within ±10% of rated voltage with rated frequency. (See motor name plate for ratings).

**OR**

2. AC power is within ±5% of rated frequency with rated voltage.

**OR**

3. A combined variation in voltage and frequency of ±10% (sum of absolute values) of rated values, provided the frequency variation does not exceed ±5% of rated frequency.

Performance within these voltage and frequency variations are shown in Figure 2-3.

**Figure 2-2 Accessory Connections**

| | |
|---|---|
| 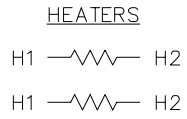 | One heater is installed in each end of motor.<br>Leads for each heater are labeled H1 & H2.<br>(Like numbers should be tied together). |
| 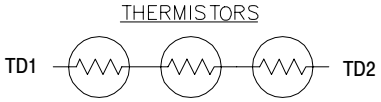 | Three thermistors are installed in windings and tied in series.<br>Leads are labeled TD1 & TD2. |
| 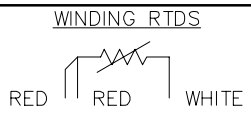 | Winding RTDs are installed in windings (2) per phase.<br>Each set of leads is labeled 1TD1, 1TD2, 1TD3, 2TD1, 2TD2, 2TD3 etc. |
| 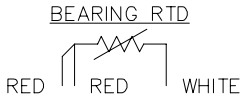 | * One bearing RTD is installed in Drive endplate (PUEP), leads are labeled RTDDE.<br>* One bearing RTD is installed in Opposite Drive endplate (FREP), leads are labeled RTDODE.<br>* Note RTD may have 2–Red/1–White leads; or 2–White/1–Red Lead. |

**Rotation**

All three phase motors are reversible. To reverse the direction of rotation, disconnect and lock out power and interchange any two of the three line leads for three phase motors. For single phase motors, check the connection diagram to determine if the motor is reversible and follow the connection instructions for lead numbers to be interchanged. Not all single phase motors are reversible.

Adjustable Frequency Power Inverters used to supply adjustable frequency power to induction motors produce wave forms with lower order harmonics with voltage spikes superimposed. Turn–to–turn, phase–to–phase, and ground insulation of stator windings are subject to the resulting dielectric stresses. Suitable precautions should be taken in the design of these drive systems to minimize the magnitude of these voltage spikes. Consult the drive instructions for maximum acceptable motor lead lengths, and proper grounding.

Note: Main power leads for CE Marked Motors may be marked U,V,W – for standard configurations, please consult connection diagrams.

**Caution:** **The space heaters are designed to operate at or below the maximum surface temperature stated on the nameplate. If the marked ambient and/or voltage are exceeded this maximum surface temperature can be exceeded and can damage the motor windings. If applied in a division 2 or zone 2 environment this excessive temperature may cause ignition of hazardous materials.**

### AC Motor Connection Diagram

IEC VERSUS NEMA LEAD MARKING

EXAMPLE COMPARISIONS OF IEC AND NEMA LEADING MARKINGS FOR COMMON CONNECTION TYPES ARE SHOWN BELOW.

SINGLE PHASE MOTORS

SINGLE VOLTAGE NON REVERSIBLE

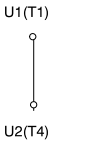


SINGLE VOLTAGE REVERSIBLE

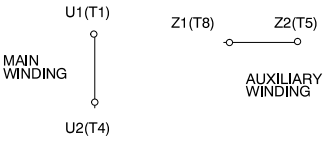


DUAL VOLTAGE REVERSIBLE

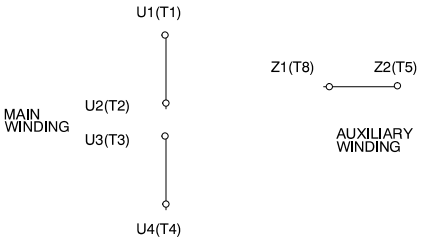


### AC Motor Connection Diagram

THREE PHASE

FOR SINGLE WINDING 3 PHASE MOTORS, LEAD MARKINGS CAN BE DIRECTLY TRANSLATED BETWEEN IEC AND NEMA DESIGNATIONS. FOR THESE MOTORS, THE LEAD MARKINGS ARE EQUIVALENT AS FOLLOWS:

| | | | |
|---|---|---|---|
| U1=T1 | U2=T4 | U5=T7 | U6=T10 |
| V1=T2 | V2=T5 | V5=T8 | V6=T11 |
| W1=T3 | W2=T6 | W5=T9 | W6=T12 |

EXAMPLES OF COMMON CONNECTIONS ARE GIVEN BELOW.

THREE LEADS

WYE CONNECT

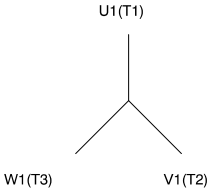


WIRING DIAGRAM

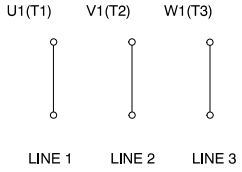


DELTA CONNECT

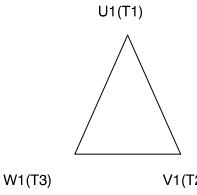


WIRING DIAGRAM

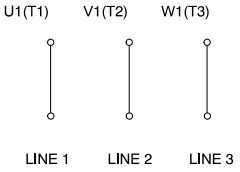


### AC Motor Connection Diagram

SIX LEADS

DELTA-WYE CONNECT

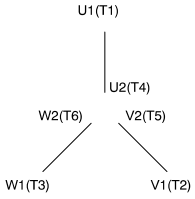


DUAL VOLTAGE-HIGH TO LOW VOLTAGE RATIO 1.73:1

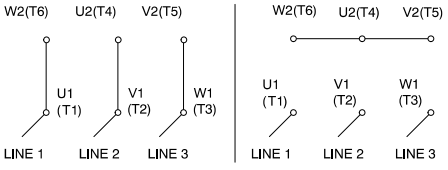


WYE-DELTA CONNECT

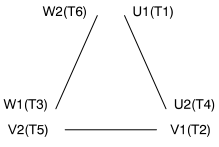


WYE START-DELTA RUN SINGLE VOLTAGE

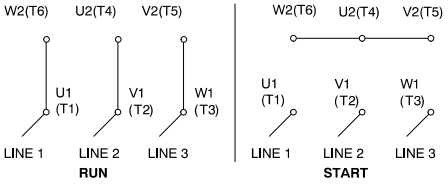


### AC Motor Connection Diagram

NINE LEADS

DUAL VOLTAGE-HIGH TO LOW VOLTAGE RATIO 2:1

WYE CONNECT

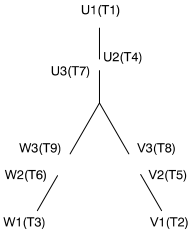


WIRING DIAGRAM

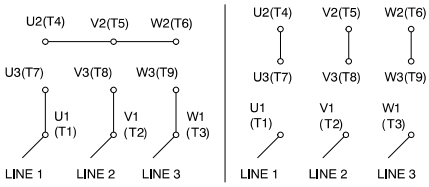


DELTA CONNECT

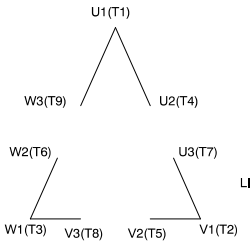


WIRING DIAGRAM

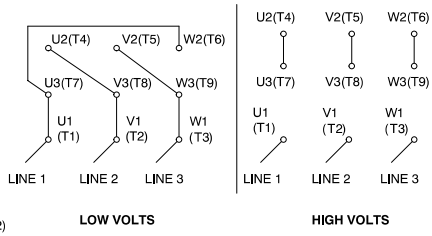

## AC Motor Connection Diagram

TWELVE LEADS

DUAL VOLTAGE WYE START – DELTA – RUN

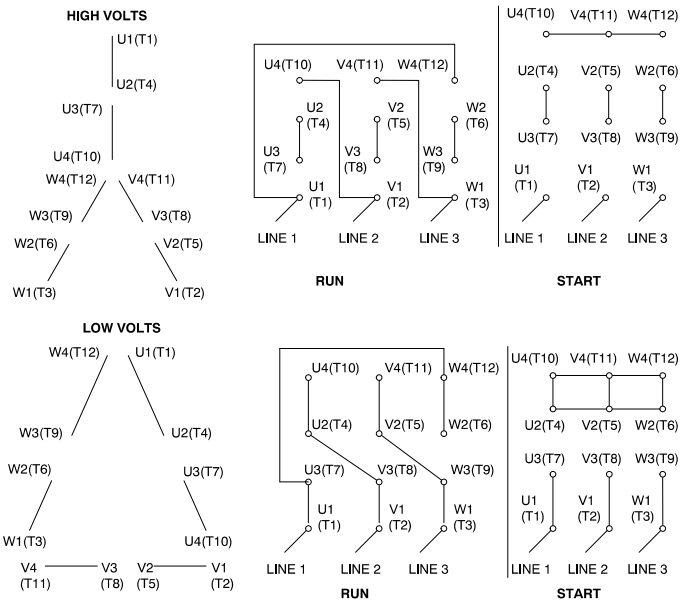


## AC Motor Connection Diagram

SINGLE WINDING MULTI-SPEEDS CONSTANT TORQUE

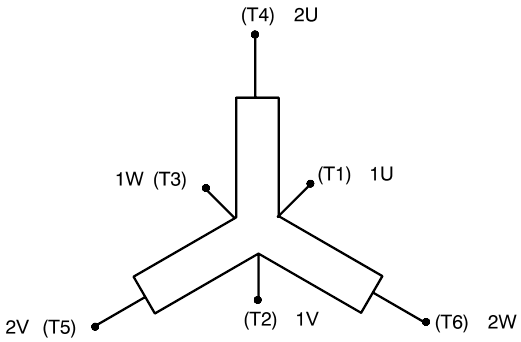


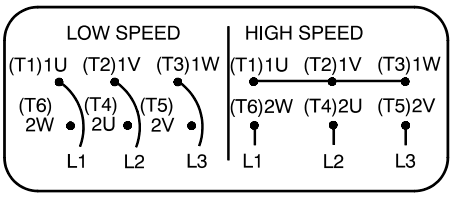


(N.P. 1634–DE)

## AC Motor Connection Diagram

SINGLE WINDING MULTI-SPEEDS CONSTANT HP.

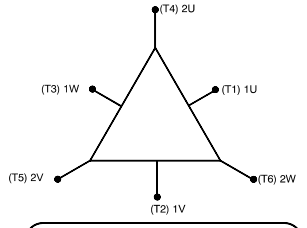


TWO SPEED TWO WINDING

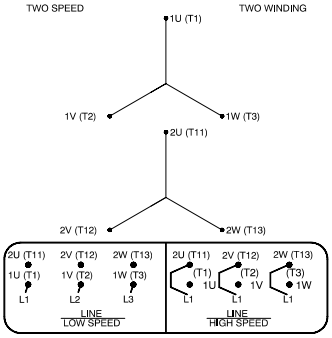


## DC Motor Connection Diagram

WIRING DIAGRAM TYPE "T" MOTOR

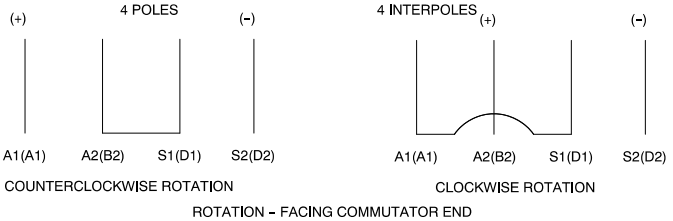


ROTATION – FACING COMMUTATOR END

COMPARISON OF IEC AND NEMA LEAD MARKINGS
FOR DIRECT CURRENT MOTORS

A1--A1
A2--B2
S1--D1

S2--D2

**MOTOR WINDING THERMOSTATS**

CONTACTS _____ @ _____ °C
FIGURE NUMBER _____

**CONTACT RATING**

| VOLTS | CONTINUOUS AMPERES | INRUSH AMPERES |
|---|---|---|
| 110 - 120 | 3.0 | 30 |
| 220 - 240 | 1.5 | 15 |
| 440 - 480 | 0.75 | 7.5 |
| 550 - 600 | 0.60 | 6.0 |

**THERMOSTATS**

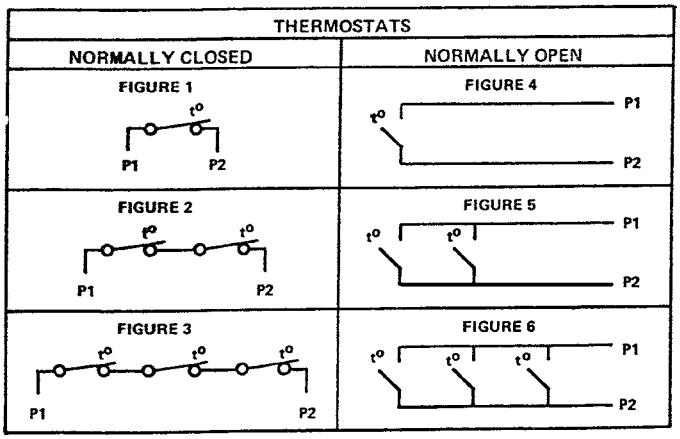

**Figure 2-3 Typical Motor Performance VS Voltage Variations**

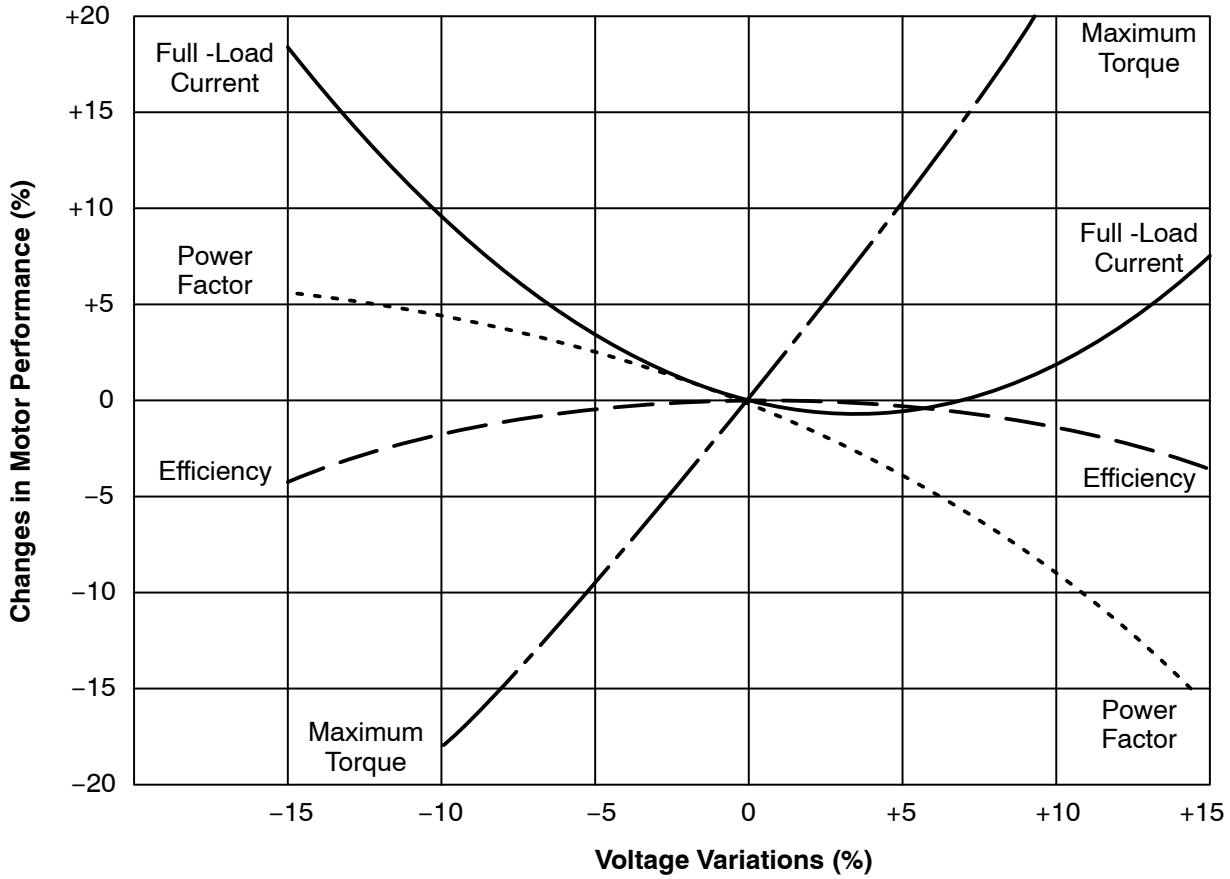


## Initial Lubrication

Baldor•Reliance motors are shipped from the factory with the bearings properly packed with grease and ready to operate. Where the unit has been subjected to extended storage (6 months or more) the bearings should be relubricated (regreasable type) prior to starting. When motors are equipped for oil mist lubrication refer to the instruction manual for installation, operation, and maintenance of oil mist lubrication systems.

**Caution:** **Shaker Duty motors must be properly lubricated prior to Start Up to prevent damage. See Section 3.**

## First Time Start Up

Be sure that all power to motor and accessories is off. Be sure the motor shaft is disconnected from the load and will not cause mechanical rotation of the motor shaft.

1. Make sure that the mechanical installation is secure. All bolts and nuts are tightened etc.
2. If motor has been in storage or idle for some time, check winding insulation integrity.
3. Inspect all electrical connections for proper termination, clearance, mechanical strength and electrical continuity.
4. Be sure all shipping materials and braces (if used) are removed from motor shaft.
5. Manually rotate the motor shaft to ensure that it rotates freely.
6. Replace all panels and covers that were removed during installation.
7. Momentarily apply power and check the direction of rotation of the motor shaft.
8. If motor rotation is wrong, be sure power is off and change the motor lead connections. Verify rotation direction before you continue.
9. Start the motor and ensure operation is smooth without excessive vibration or noise. If so, run the motor for 1 hour with no load connected.

10. After 1 hour of operation, disconnect power and connect the load to the motor shaft.
    Verify all coupling guards and protective devices are installed. Ensure motor is properly ventilated.
11. If motor is totally enclosed fan–cooled or non–ventilated it is recommended that condensation drain plugs, if present, be removed. These are located in the lower portion of the end–shields. Totally enclosed fan–cooled “XT” motors are normally equipped with automatic drains which may be left in place as received.

## Coupled Start Up

This procedure assumes a coupled start up. Also, that the first time start up procedure was successful.

1. Check the coupling and ensure that all guards and protective devices are installed.
2. Check that the coupling is properly aligned and not binding.
3. The first coupled start up should be with no load. Apply power and verify that the load is not transmitting excessive vibration back to the motor though the coupling or the foundation.
   Vibration should be at an acceptable level.
4. Run for approximately 1 hour with the driven equipment in an unloaded condition.

The equipment can now be loaded and operated within specified limits. Do not exceed the name plate ratings for amperes for steady continuous loads.

## Jogging and Repeated Starts

Repeated starts and/or jogs of induction motors generally reduce the life of the motor winding insulation. A much greater amount of heat is produced by each acceleration or jog than by the same motor under full load. If it is necessary to repeatedly start or jog the motor, it is advisable to check the application with your local Baldor distributor or Baldor Service Center.

**Heating** - Duty rating and maximum ambient temperature are stated on the motor name plate.
Do not exceed these values. If there is any question regarding safe operation, contact your local Baldor distributor or Baldor Service Center.

## Hazardous Locations

Hazardous locations are those where there is a risk of ignition or explosion due to the presence of combustible gases, vapors, dust, fibers or flyings.

### Selection

Facilities requiring special equipment for hazardous locations are typically classified in accordance with local requirements. In the US market, guidance is provided by the National Electric Code. In international hazardous location areas, guidance for gas / vapor / mist classification is given in IEC60079–14, or for dust in IEC61241–14. This classification process lets the installer know what equipment is suitable for installation in that environment, and identifies what the maximum safe temperature or temperature class is required.
It is the customer or users responsibility to determine the area classification and select proper equipment.

Areas are classified with respect to risk and exposure to the hazard. In the US market, areas are typically classified as follows Class, Division, Group and Temperature Class. In some newer installations in the US and in most international markets, areas are classified in Zones.

#### Protection Concepts

**Class I Division 1 / Zone 1 [Equipment Group I (mining) or II (surface), Equipment Protection Level (EPL) Gb, Mb ]**

Baldor offers a range of motors suitable for installation in a Division 1 or Zone 1 environment.
These motors are known as explosion proof or flameproof.
Motors that are explosion proof or flameproof use specially machined flameproof joints between the end bell or bracket and the frame, as well as along the rotating shaft and at connection box covers and entries.
The fit of these flameproof joints are designed to contain the combustion or quench the flame of an explosive gas atmosphere prior to it exiting the motor. These flameproof joints have lengths and widths selected and tested based on the gas group present in the atmosphere. Baldor•Reliance motors are typically designed to meet Class I (Division 1) Group C and D (explosion proof) or Ex d IIB (flameproof).

An application note regarding equipment applied in accordance with the US National Electric Code (NFPA 70–2008) – according to Article 500.8(C) Marking, sub clause (2) in the fine print note, it is noted that Equipment not marked to indicate a division is suitable for both Division 1 and Division 2 locations.
These motors are not gas tight. To the contrary, this protection concept assumes that due to the normal heating and cooling cycle of motor operation that any gas present will be drawn into the motor. Since flameproof or explosion proof motors are designed to contain the combustion and extinguish any flame transmission, for this protection concept, only external surface temperatures are of concern. Thermal limiting devices such as thermostats, thermistors or RTDs may be provided on these motors to limit the external surface temperature during overload conditions.

If thermostats are provided as a condition of certification, it is the installer's responsibility to make sure that these devices are properly connected to a suitable switching device. The ATEX directive requires that motor shutdown on thermal trip be accomplished without an intermediate software command. Where intermediate circuitry is involved the circuit shall fall within the scope of a safety, controlling and regulating device as defined in article 1(2) of European Directive 94/9/EC, and shall be covered by an appropriate EC Type Examination Certificate.

Flameproof motors, internationally referred to as Ex d use a protection concept similar to that used in Class I Division 1 motors, with minor differences in the flameproof joints and cable entry designs. Flameproof and explosion proof motors are both type tested. Representative motors are connected to a reference gas and ignited in laboratory conditions to verify that the flame is not transmitted outside the motor enclosure and to determine the maximum internal pressure encountered.

Explosion proof and Flame proof motors shipped without a conduit box require use of a certified box of suitable dimensions and that is appropriate for the classification. Openings in connection boxes must be closed with suitably certified and dimensioned device.

Hazardous location motors equipped with NPT pipe nipples are designed and built such that the pipe nipple is securely attached to the motor frame. This is accomplished externally by interference between the threads as well as tack welding. The conduit box is securely attached to the pipe nipple at the factory per:

1. Standard Commercial NPT & Explosion Proof IEC/ATEX parts : L-1 gauging notch +/- 1 thread (ref. ANSI/ASME B1.20.1 and Clarification Sheet ExNB/98/06/010/CS) Note: Clarification Sheet ExNB/98/06/010/CS provides inspection criteria to meet (6 threads minimum per engineering part drawing for ATEX parts).
2. Explosion Proof UL conduit boxes & MSHA parts: L-1 gauging notch "+1 min to + 3 1/2 max threads. Note: Provides inspection criteria to meet (5 threads minimum per engineering part drawing for MSHA parts and meet UL 1203 requirement for L-1 gauging notch flush to + 3 1/2 max threads).

This allows the end user to position the conduit box according to the application then secure when in place. For obvious reasons having the conduit box snug prior to affixing to the pipe nipple is preferable. However, the guidance in numbers 1 and 2 above can be used in determining thread engagement.

Note: In the United States most non-mining applications have rigid conduit for cabling, therefore not tack welding the conduit box to the pipe nipple is standard. In markets outside the United States, flexible conduit/cabling are common and end users should take note to secure the conduit box to the pipe nipple once in position. Further, the flexible leads should be secured to inhibit forces acting on the conduit box.

**Class I Division 2 / Zone 2 Ex nA, [Equipment Protection Level (EPL) Gc ]**

This protection concept relies on having no sources of ignition present such as arcing parts or hot surfaces. For this protection concept, internal temperatures as well as external temperatures are considered. In many cases, the internal temperatures are higher than the external temperatures and therefore become the limiting factor in determination of temperature code designation. In these applications, it is very important to use a motor that has been evaluated thermally for use with an inverter or converter, if variable speed operation is desired. Thermostats used for Class I Division 2 and Ex nA motors are used to protect the motor only. For motors using flying lead construction, it is important to use connection lugs and insulate with heat shrink tubing or a double wrap of insulation grade electrical tape to avoid the risk of spark or ignition.

**Class II Division 1 / Zone 21 [Equipment Group III, Equipment Protection Level (EPL) Db ]**

This area classification is one where the risk of ignitable concentrations of dust is present at all or some of the time. The protection concepts used for Class II Division 1 is similar to flamepath, except with additional dust exclusion paths designed for the rotating shaft. In the international designations, this concept is referred to as dust ignition proof or Ex tD. External surface temperature remains the limiting factor. Thermal limiting devices such as thermostats, thermistors or RTDs may be provided on these motors to limit the external surface temperature during overload conditions. If thermostats are provided as a condition of certification, it is the installer's responsibility to make sure that these devices are properly connected to a suitable switching device.

Note: In the North American area classification system, Class III exists for fibers and flyings.
In the IEC designation, both dusts and flyings are absorbed into Group III.

**Class II Division 2 / Zone 22 [Equipment Group III, Equipment Protection Level (EPL) Dc ]**

This area classification is one where the risk of exposure to ignitable concentrations of dust are not likely to occur under normal operating conditions and relies heavily on the housekeeping practices within the installation.

**Sine Wave Power Operation for Division 1 or 2 and Zone 1 or 2 and Zone 21 or 22 Hazardous Location.**

These motors are designed to operate at or below the maximum surface temperature (or T–Code) stated on the nameplate. Failure to operate the motor properly can cause this maximum surface temperature to be exceeded. If applied in a Division 1 or 2 / Zone 1 or 2 and Zone 21 or 22 environment, this excessive temperature may cause ignition of hazardous materials. Operating the motor at any of the following conditions can cause the marked surface temperature to be exceeded.

1. Motor load exceeding service factor nameplate value
2. Ambient temperatures above nameplate value
3. Voltages above or below nameplate value
4. Unbalanced voltages
5. Loss of proper ventilation
6. Altitude above 3300 feet / 1000 meters
7. Severe duty cycles of repeated starts
8. Motor stall
9. Motor reversing
10. Single phase operation of polyphase equipment
11. Variable frequency operation

**Variable Frequency Power Operation for Division 1 or 2 and Zone 1 or 2 and Zone 21 or 22**

Hazardous Location (motors with maximum surface temperature listed on the nameplate).
Only motors with nameplates marked for use on inverter (variable frequency) power, and labeled for specific hazardous areas may be used in those hazardous areas on inverter power. The motor is designed to operate at or below the maximum surface temperature (or T−Code) stated on the nameplate.
Failure to operate the motor properly can cause this maximum surface temperature to be exceeded.

If applied in a Division 1 or 2 / Zone 1 or 2 and Zone 21 or 22 environment, this excessive temperature may cause ignition of hazardous materials. Operating the motor at any of the following conditions can cause the marked surface temperature to be exceeded.

1. Motor load exceeding service factor nameplate value
2. Ambient temperature above nameplate value
3. Voltage (at each operating frequency) above or below rated nameplate value
4. Unbalanced voltages
5. Loss of proper ventilation
6. Operation outside of the nameplate speed / frequency range
7. Altitudes above 3300 feet / 1000 meters
8. Single phase operation of polyphase equipment
9. Unstable current wave forms
10. Lower than name plate minimum carrier frequency

**Thermal Limiting**
Thermal limiting devices are temperature sensing control components installed inside the motor to limit the internal temperature of the motor frame by interrupting the circuit of the holding coil of the magnetic switch or contactor. They are required for most Division 1 and Zone 1 applications. For Division 2 or Zone 2 applications, motors should be selected that preclude running temperatures from exceeding the ignition temperatures for the designated hazardous material. In Division 2 or Zone 2 classified locations, thermal limiting devices should only be used for winding protection and not considered for limiting all internal motor temperatures to specific ignition temperatures.

**Equipotential Bonding and Shaft Current Reduction**
Larger motors (ie WP construction) may require proper bonding between motor enclosures and covers to avoid the risk of stray currents during start up. Fastening methods and bonding straps must not be modified. Bearing currents can exist in some motors for both line−fed and inverter−fed applications. Larger line−fed motors may require at least one insulated bearing to prevent a flow of current through the bearings. Do not defeat such insulation whether the motor is line−fed or inverter−fed applications. Inverter−fed motors may require additional bearing insulation or even a shaft brush. Do not defeat such features. When the motor and the coupled load are not on a common conductive baseplate, it may also be necessary to electrically bond together the stationary parts of the motor and the coupled equipment.

## Repair of Motors used in Hazardous Locations

Repair of hazardous certified motors requires additional information, skill, and care. It is the customer's responsibility to select service shops with proper qualifications to repair hazardous location motors. Contact the manufacture for additional repair details. Use only original manufacturer's parts.

**Repair of Explosion Proof or Flame Proof Motors Class I Division 1 and Zone 1**

In the North American market, recertification programs are offered by Underwriters Laboratories and Canadian Standards Association which allow authorized service shops to mark the rebuilt motors as certified. In the international markets using IEC based requirements, repair should be undertaken only after consulting IEC60079–19 Explosive Atmospheres–Part 19 Equipment repair, overhaul and reclamation. If use of a certified repair facility is desired, consult the IECEX Repair Scheme at http://www.iecex.com/service_facilities.htm

Explosion proof and flameproof motors achieve their safety based on the mechanical construction – flameproof joints and bearing clearance, and the electrical design including any thermal limiting devices. If it is necessary to repair a flameproof or explosion proof motor, it is critical that the mechanical flameproof joints be maintained. Consult Baldor Electric Company for flameproof joint construction details.
Use only Baldor•Reliance supplied parts. Baldor does not recommend reclamation of parts.
Since this protection method also relies on temperature being maintained, make sure that any rewinding uses the original electrical designs, including any thermal protection that may be present.

**Repair of Dust Ignition Proof Motors – Class II Division 1 and 2, Zone 21 and 22.**

For Dust Ignition Proof, proper sealing is required. Do not modify the motor construction to add any additional opening, and ensure that proper sealing is maintained in the connection box and at the shaft seal. Since this protection method also relies on temperature being maintained, make sure that any rewinding uses the original electrical designs, including any thermal protection that may be present

**Repair of Class I Division 2 and Zone 2 motors**

For Division 2 and Zone 2, the internal and external temperatures are of concern. Since this protection method also relies on temperature being maintained, make sure that any rewinding uses the original electrical designs, including any thermal protection that may be present. Use only Baldor replacement thermostats, if provided.

# Section 3

## Maintenance & Troubleshooting

**WARNING: UL and EX Listed motors must only be serviced by UL or EX Approved Authorized Baldor Service Centers if these motors are to be returned to a hazardous and/or explosive atmosphere.**

### General Inspection

Inspect the motor at regular intervals, approximately every 500 hours of operation or every 3 months, whichever occurs first. Keep the motor clean and the ventilation openings clear. The following steps should be performed at each inspection:

**WARNING: Do not touch electrical connections before you first ensure that power has been disconnected. Electrical shock can cause serious or fatal injury. Only qualified personnel should attempt the installation, operation and maintenance of this equipment.**

1. Check that the motor is clean. Check that the interior and exterior of the motor is free of dirt, oil, grease, water, etc. Oily vapor, paper pulp, textile lint, etc. can accumulate and block motor ventilation. If the motor is not properly ventilated, overheating can occur and cause early motor failure.
2. Perform a dielectric with stand test periodically to ensure that the integrity of the winding insulation has been maintained. Record the readings. Immediately investigate any significant decrease in insulation resistance.
3. Check all electrical connectors to be sure that they are tight.

### Relubrication & Bearings

Bearing grease will lose its lubricating ability over time, not suddenly. The lubricating ability of a grease (over time) depends primarily on the type of grease, the size of the bearing, the speed at which the bearing operates and the severity of the operating conditions. Good results can be obtained if the following recommendations are used in your maintenance program.

**Type of Grease** A high grade ball or roller bearing grease should be used. Baldor motors are pregreased, normally with Polyrex EM (Exxon Mobil) or as stated on the nameplate.
Do not mix greases unless compatibility has been checked and verified.

#### Ball Bearing Motors

Operating Temperature –25 ºC (–15 ºF) to 50 ºC (120 ºF)

| | |
|---|---|
| EXXON | POLYREX EM (Standard on Baldor motors) |
| EXXON | UNIREX N2 |
| EXXON | BEACON 325 |
| CHEVRON OIL | SRI NO. 2 ( Compatible with Polyrex EM ) |
| CHEVRON OIL | BLACK PEARL |
| TEXACO, INC. | PREMIUM RB |
| TEXACO, INC. | POLYSTAR |
| AMOCO | RYKON # 2 |
| PENNZOIL | PENNZLUBE EM–2 |
| DARMEX | DARMEX 707 |
| DARMEX | DARMEX 711 |
| PETRO–CANADA | PEERLESS LLG |
| SHELL OIL | DOLIUM BRB |

Minimum Starting Temperature –60 ºC (–76 ºF)

| | |
|---|---|
| SHELL OIL CO. | AEROSHELL 7 (Standard on Baldor motors) |
| MOBIL | MOBIL 28 |
| MOBIL | MOBILITH SHC 100 (Low Temperature – Arctic Duty) |

#### Roller Bearing Motors

Operating Temperature –25 ºC (–15 ºF) to 50 ºC (120 ºF)

| | |
|---|---|
| TEXACO, INC. | PREMIUM RB |
| MOBIL | MOBILITH SHC 220 (Standard on Baldor motors) |
| CHEVRON OIL | BLACK PEARL |

## Relubrication Intervals

Recommended relubrication intervals are shown in Table 3-1. It is important to realize that the recommended intervals of Table 3-2 are based on average use.

Refer to additional information contained in Tables 3-2, 3-3 and 3-4.

**Table 3-1 Relubrication Intervals ***

| NEMA / (IEC) Frame Size | Rated Speed - RPM | | | | | |
|---|---|---|---|---|---|---|
| | **10000** | **6000** | **3600** | **1800** | **1200** | **900** |
| Up to 210 incl. (132) | ** | 2700 Hrs. | 5500 Hrs. | 12000 Hrs. | 18000 Hrs. | 22000 Hrs. |
| Over 210 to 280 incl. (180) | | ** | 3600 Hrs. | 9500 Hrs. | 15000 Hrs. | 18000 Hrs. |
| Over 280 to 360 incl. (225) | | ** | * 2200 Hrs. | 7400 Hrs. | 12000 Hrs. | 15000 Hrs. |
| Over 360 to 449 incl. (315) | | ** | *2200 Hrs. | 3500 Hrs. | 7400 Hrs. | 10500 Hrs. |

* Relubrication intervals are for ball bearings.
For vertically mounted motors and roller bearings, divide the relubrication interval by 2.

** For motors operating at speeds greater than 3600 RPM, contact Baldor for relubrication recommendations.

**Table 3-2 Service Conditions**

| Severity of Service | Hours per day of Operation | Ambient Temperature Maximum | Atmospheric Contamination |
|---|---|---|---|
| Standard | 8 | 40 ºC | Clean, Little Corrosion |
| Severe | 16 Plus | 50 ºC | Moderate dirt, Corrosion |
| Extreme | 16 Plus | >50 ºC* or Class H Insulation | Severe dirt, Abrasive dust, Corrosion, Heavy Shock or Vibration |
| Low Temperature | | <–29 ºC ** | |

* Special high temperature grease is recommended (Dow Corning DC44). Note that Dow Corning DC44 grease does not mix with other grease types. Thoroughly clean bearing & cavity before adding grease.

** Special low temperature grease is recommended (Aeroshell 7).

**Table 3-3 Relubrication Interval Multiplier**

| Severity of Service | Multiplier |
|---|---|
| Standard | 1.0 |
| Severe | 0.5 |
| Extreme | 0.1 |
| Low Temperature | 1.0 |

Some motor designs use different bearings on each motor end. This is normally indicated on the motor nameplate. In this case, the larger bearing is installed on the motor Drive endplate. For best relubrication results, only use the appropriate amount of grease for each bearing size (not the same for both).

**Table 3-4 Bearings Sizes and Types**

| Frame Size NEMA (IEC) | Bearing Description (These are the "Large" bearings (Shaft End) in each frame size) | | | |
|---|---|---|---|---|
| | Bearing | Weight of Grease to add * oz (Grams) | Volume of grease to be added | |
| | | | $in^3$ | teaspoon |
| 56 to 140 (90) | 6203 | 0.08 (2.4) | 0.15 | 0.5 |
| 140 (90) | 6205 | 0.15 (3.9) | 0.2 | 0.8 |
| 180 (100–112) | 6206 | 0.19 (5.0) | 0.3 | 1.0 |
| 210 (132) | 6307 | 0.30 (8.4) | 0.6 | 2.0 |
| 250 (160) | 6309 | 0.47 (12.5) | 0.7 | 2.5 |
| 280 (180) | 6311 | 0.61 (17) | 1.2 | 3.9 |
| 320 (200) | 6312 | 0.76 (20.1) | 1.2 | 4.0 |
| 360 (225) | 6313 | 0.81 (23) | 1.5 | 5.2 |
| 400 (250) | 6316 | 1.25 (33) | 2.0 | 6.6 |
| 440 (280) | 6318 | 1.52(40) | 2.5 | 8.2 |
| 440 (280) | 6319 | 2.12 (60) | 4.1 | 13.4 |
| 5000 to 5800 (315–355) | 6328 | 4.70 (130) | 9.2 | 30.0 |
| 5000 to 5800 (315–355) | NU328 | 4.70 (130) | 9.2 | 30.0 |
| 360 to 449 (225–280) | NU319 | 2.12 (60) | 4.1 | 13.4 |
| **AC Induction Servo** | | | | |
| 76 Frame 180 (112) | 6207 | 0.22 (6.1) | 0.44 | 1.4 |
| 77 Frame 210 (132) | 6210 | 0.32 (9.0) | 0.64 | 2.1 |
| 80 Frame 250(160) | 6213 | 0.49 (14.0) | 0.99 | 3.3 |

* Weight in grams = .005 DB of grease to be added

Note: Not all bearing sizes are listed. For intermediate bearing sizes, use the grease volume for the next larger size bearing.

**Caution:** **To avoid damage to motor bearings, grease must be kept free of dirt. For an extremely dirty environment, contact your Baldor distributor or an authorized Baldor Service Center for additional information.**

Relubrication Procedure Be sure that the grease you are adding to the motor is compatible with the grease already in the motor. Consult your Baldor distributor or an authorized service center if a grease other than the recommended type is to be used.

**Caution:** **Do not over–lubricate motor as this may cause premature bearing failure.**

**With Grease Outlet Plug**

1. With the motor stopped, clean all grease fittings with a clean cloth.
2. Remove grease outlet plug.

**Caution:** **Over–lubricating can cause excessive bearing temperatures, premature lubrication breakdown and bearing failure.**

3. Add the recommended amount of grease.
4. Operate the motor for 15 minutes with grease plug removed. This allows excess grease to purge.
5. Re-install grease outlet plug.

**Without Grease Provisions**

Note: Only a Baldor authorized and UL or CSA certified service center can disassemble a UL/CSA listed explosion proof motor to maintain it's UL/CSA listing.

1. Disassemble the motor.
2. Add recommended amount of grease to bearing and bearing cavity. (Bearing should be about 1/3 full of grease and outboard bearing cavity should be about 1/2 full of grease.)
3. Assemble the motor.

#### Sample Relubrication Determination

Assume - NEMA 286T (IEC 180), 1750 RPM motor driving an exhaust fan in an ambient temperature of 43 °C and the atmosphere is moderately corrosive.

1. Table 3-2 list 9500 hours for standard conditions.
2. Table 3-3 classifies severity of service as "Severe".
3. Table 3-5 shows that 1.2 $in^3$ or 3.9 teaspoon of grease is to be added.

Note: Smaller bearings in size category may require reduced amounts of grease.

## Shaker Duty Motors only

**Caution:** **Shaker Duty motors must be properly lubricated prior to Start Up to prevent damage. See Table 3-6.**

Lubrication should be performed before Start Up and at regular maintenance intervals. Follow these recommendations to ensure proper lubrication.

#### Recommended Lubricant

For ambient temperatures between –15 °F to 120 °F the following lubricants are recommended: Mobil PolyrexEM, Texaco Premium RB, Exxon Unirex N–2.

Do not mix greases unless compatibility has been checked and verified.

**Table 3-5 Lubrication Volume**

| NEMA Frame Size | Volume in Cubic Inches | | | | | |
|---|---|---|---|---|---|---|
| | Normal Duty | | Severe Duty | | Extreme Duty | |
| | Start Up | Relub | Start Up | Relub | Start Up | Relub |
| 184TY | 1.4 | 0.5 | 1.4 | 0.5 | 2.7 | 0.5 |
| 215TY | 1.6 | 0.5 | 1.6 | 0.5 | 4.5 | 1 |
| 256TY | 7 | 1 | | | 11 | 2 |
| 286TY | 9 | 1 | | | 15 | 3 |

#### Lubrication Frequency

Normal Duty 8 hours per day (16 hours per day in a clean environment). Lubricate every 2 months.

Severe Duty 16 hours per day or more in a dirty environment (corrosive atmosphere, chemical fumes, acids, alkalies or extreme high humidity). Lubricate every month or 700 hours of operation.

Extreme Duty operation in extremely dirty or dusty environments and high ambient temperatures exceeding 104 °F (40 °C). Lubricate twice a month or 350 hours of operation.

#### Lubrication Procedure

1. Locate the grease inlet and outlet. Clean the areas.
2. Remove the plug(s) and install a grease fitting in the inlet if grease fitting is not already installed.
3. Add the recommended amount of lubricant.
4. Run the motor for two hours with the outlet plug removed.
5. Install outlet plug.

Note: To loosen hardened grease it may be necessary to insert a rod or wire into the grease inlet and outlet holes.

**Table 3-6 Troubleshooting Chart**

| Symptom | Possible Causes | Possible Solutions |
|---|---|---|
| Motor will not start | Usually caused by line trouble, such as, single phasing at the starter. | Check source of power. Check overloads, fuses, controls, etc. |
| Excessive humming | High Voltage.<br>Eccentric air gap. | Check input line connections.<br>Have motor serviced at local Baldor service center. |
| Motor Over Heating | Overload. Compare actual amps (measured) with nameplate rating. | Locate and remove source of excessive friction in motor or load.<br>Reduce load or replace with motor of greater capacity. |
| | Single Phasing. | Check current at all phases (should be approximately equal) to isolate and correct the problem. |
| | Improper ventilation. | Check external cooling fan to be sure air is moving properly across cooling fins.<br>Excessive dirt build-up on motor. Clean motor. |
| | Unbalanced voltage. | Check voltage at all phases (should be approximately equal) to isolate and correct the problem. |
| | Rotor rubbing on stator. | Check air gap clearance and bearings.<br>Tighten “Thru Bolts”. |
| | Over voltage or under voltage. | Check input voltage at each phase to motor. |
| | Open stator winding. | Check stator resistance at all three phases for balance. |
| | Grounded winding. | Perform dielectric test and repair as required. |
| | Improper connections. | Inspect all electrical connections for proper termination, clearance, mechanical strength and electrical continuity. Refer to motor lead connection diagram. |
| Bearing Over Heating | Misalignment. | Check and align motor and driven equipment. |
| | Excessive belt tension. | Reduce belt tension to proper point for load. |
| | Excessive end thrust. | Reduce the end thrust from driven machine. |
| | Excessive grease in bearing. | Remove grease until cavity is approximately 3/4 filled. |
| | Insufficient grease in bearing. | Add grease until cavity is approximately 3/4 filled. |
| | Dirt in bearing. | Clean bearing cavity and bearing. Repack with correct grease until cavity is approximately 3/4 filled. |
| Vibration | Misalignment. | Check and align motor and driven equipment. |
| | Rubbing between rotating parts and stationary parts. | Isolate and eliminate cause of rubbing. |
| | Rotor out of balance. | Have rotor balance checked are repaired at your Baldor Service Center. |
| | Resonance. | Tune system or contact your Baldor Service Center for assistance. |
| Noise | Foreign material in air gap or ventilation openings. | Remove rotor and foreign material. Reinstall rotor. Check insulation integrity. Clean ventilation openings. |
| Growling or whining | Bad bearing. | Replace bearing. Clean all grease from cavity and new bearing. Repack with correct grease until cavity is approximately 3/4 filled. |

## Suggested bearing and winding RTD setting guidelines for Non–Hazardous Locations ONLY

Most large frame AC Baldor motors with a 1.15 service factor are designed to operate below a Class B (80 ºC) temperature rise at rated load and are built with a Class H winding insulation system. Based on this low temperature rise, RTD (Resistance Temperature Detectors) settings for Class B rise should be used as a starting point. Some motors with 1.0 service factor have Class F temperature rise.

The following tables show the suggested alarm and trip settings for RTDs. Proper bearing and winding RTD alarm and trip settings should be selected based on these tables unless otherwise specified for specific applications.

If the driven load is found to operate well below the initial temperature settings under normal conditions, the alarm and trip settings may be reduced so that an abnormal machine load will be identified.

The temperature limits are based on the installation of the winding RTDs imbedded in the winding as specified by NEMA. Bearing RTDs should be installed so they are in contact with the outer race on ball or roller bearings or in direct contact with the sleeve bearing shell.

**Table 3-7 Winding RTDs – Temperature Limit In ºC (40 ºC Maximum Ambient)**

| Motor Load (Typical Design) | Class B Temp Rise ≤ 80 ºC | | Class F Temp Rise ≤ 105 ºC | | Class H Temp Rise ≤ 125 ºC | |
|---|---|---|---|---|---|---|
| | Alarm | Trip | Alarm | Trip | Alarm | Trip |
| ≤ Rated Load | 130 | 140 | 155 | 165 | 175 | 185 |
| Rated Load to 1.15 S.F. | 140 | 150 | 160 | 165 | 180 | 185 |

Note: • Winding RTDs are factory production installed, not from Mod–Express.

When Class H temperatures are used, consider bearing temperatures and relubrication requirements.

**Table 3-8 Bearing RTDs – Temperature Limit In oC (40 ºC Maximum Ambient)**

| Bearing Type Oil or Grease | Anti–Friction | | Sleeve | |
|---|---|---|---|---|
| | Alarm | Trip | Alarm | Trip |
| Standard* | 95 | 100 | 85 | 95 |
| High Temperature** | 110 | 115 | 105 | 110 |

Notes: * Bearing temperature limits are for standard design motors operating at Class B temperature rise.

** High temperature lubricants include some special synthetic oils and greases.

Greases that may be substituted that are compatible with Polyrex EM (but considered as “standard” lubricants include the following:

– Texaco Polystar – Rykon Premium #2 – Chevron SRI #2

– Mobilith SHC–100 – Pennzoil Pennzlube EM–2 – Chevron Black Pearl

– Darmex 707 – Darmex 711 – Petro–Canada Peerless LLG

See the motor nameplate for replacement grease or oil recommendation.

Contact Baldor application engineering for special lubricants or further clarifications.

# Baldor Sales Offices

**UNITED STATES**

**ARIZONA**
**PHOENIX**
4211 S 43RD PLACE
PHOENIX, AZ 85040
PHONE: 602-470-0407
FAX: 602-470-0464

**ARKANSAS**
**CLARKSVILLE**
706 WEST MAIN STREET
CLARKSVILLE, AR 72830
PHONE: 479-754-9108
FAX: 479-754-9205

**CALIFORNIA**
**LOS ANGELES**
6480 FLOTILLA STREET
COMMERCE, CA 90040
PHONE: 323-724-6771
FAX: 323-721-5859

**HAYWARD**
21056 FORBES STREET
HAYWARD, CA 94545
PHONE: 510-785-9900
FAX: 510-785-9910

**COLORADO**
**DENVER**
3855 FOREST STREET
DENVER, CO 80207
PHONE: 303-623-0127
FAX: 303-595-3772

**CONNECTICUT**
**WALLINGFORD**
65 SOUTH TURNPIKE ROAD
WALLINGFORD, CT 06492
PHONE: 203-269-1354
FAX: 203-269-5485

**FLORIDA**
**TAMPA/PUERTO RICO/**
**VIRGIN ISLANDS**
3906 EAST 11TH AVENUE
TAMPA, FL 33605
PHONE: 813-248-5078
FAX: 813-241-9514

**GEORGIA**
**ATLANTA**
62 TECHNOLOGY DRIVE
ALPHARETTA, GA 30005
PHONE: 770-772-7000
FAX: 770-772-7200

**ILLINOIS**
**CHICAGO**
340 REMINGTON BLVD.
BOLINGBROOK, IL 60440
PHONE: 630-296-1400
FAX: 630-226-9420

**INDIANA**
**INDIANAPOLIS**
5525 W. MINNESOTA STREET
INDIANAPOLIS, IN 46241
PHONE: 317-246-5100
FAX: 317-246-5110

**IOWA**
**DES MOINES**
1943 HULL AVENUE
DES MOINES, IA 50313
PHONE: 515-263-6929
FAX: 515-263-6515

**MARYLAND**
**BALTIMORE**
7071A DORSEY RUN RD
ELKRIDGE, MD 21075
PHONE: 410-579-2135
FAX: 410-579-2677

**MASSACHUSETTS**
**BOSTON**
6 PULLMAN STREET
WORCESTER, MA 01606
PHONE: 508-854-0708
FAX: 508-854-0291

**MICHIGAN**
**DETROIT**
5993 PROGRESS DRIVE
STERLING HEIGHTS, MI 48312
PHONE: 586-978-9800
FAX: 586-978-9969

**MINNESOTA**
**MINNEAPOLIS**
13098 GEORGE WEBER DR, SUITE 400
ROGERS, MN 55374
PHONE: 763-428-3633
FAX: 763-428-4551

**MISSOURI**
**ST LOUIS**
13678 LAKEFRONT DRIVE
EARTH CITY, MO 63045
PHONE: 314-373-3032
FAX: 314-373-3038

**KANSAS CITY**
9810 INDUSTRIAL BLVD.
LENEXA, KS 66215
PHONE: 816-587-0272
FAX: 816-587-3735

**NEW YORK**
**AUBURN**
ONE ELLIS DRIVE
AUBURN, NY 13021
PHONE: 315-255-3403
FAX: 315-253-9923

**NORTH CAROLINA**
**GREENSBORO**
1220 ROTHERWOOD ROAD
GREENSBORO, NC 27406
PHONE: 336-272-6104
FAX: 336-273-6628

**OHIO**
**CINCINNATI**
2929 CRESCENTVILLE ROAD
WEST CHESTER, OH 45069
PHONE: 513-771-2600
FAX: 513-772-2219

**OHIO (Continued)**
**CLEVELAND**
8929 FREEWAY DRIVE
MACEDONIA, OH 44056
PHONE: 330-468-4777
FAX: 330-468-4778

**OKLAHOMA**
**TULSA**
5555 E. 71ST ST., SUITE 9100
TULSA, OK 74136
PHONE: 918-366-9320
FAX: 918-366-9338

**OREGON**
**PORTLAND**
12651 SE CAPPS ROAD
CLACKAMAS, OR 97015
PHONE: 503-691-9010
FAX: 503-691-9012

**PENNSYLVANIA**
**PHILADELPHIA**
103 CENTRAL AVENUE
SUITE 400B
MOUNT LAUREL, NJ 08054
PHONE: 856-840-8011
FAX: 856-840-0811

**PITTSBURGH**
159 PROMINENCE DRIVE
NEW KENSINGTON, PA 15068
PHONE: 724-889-0092
FAX: 724-889-0094

**TENNESSEE**
**MEMPHIS**
4000 WINCHESTER ROAD
MEMPHIS, TN 38118
PHONE: 901-365-2020
FAX: 901-365-3914

**TEXAS**
**DALLAS**
2920 114TH STREET SUITE 100
GRAND PRAIRIE, TX 75050
PHONE: 214-634-7271
FAX: 214-634-8874

**HOUSTON**
10355 W. LITTLE YORK ROAD
SUITE 300
HOUSTON, TX 77041
PHONE: 281-977-6500
FAX: 281-977-6510

**UTAH**
**SALT LAKE CITY**
2230 SOUTH MAIN STREET
SALT LAKE CITY, UT 84115
PHONE: 801-832-0127
FAX: 801-832-8911

**WISCONSIN**
**MILWAUKEE**
1960 SOUTH CALHOUN ROAD
NEW BERLIN, WI 53151
PHONE: 262-784-5940
FAX: 262-784-1215

**INTERNATIONAL SALES**
**FORT SMITH, AR**
P.O. BOX 2400
FORT SMITH, AR 72902
PHONE: 479-646-4711
FAX: 479-648-5895

**CANADA**
**EDMONTON, ALBERTA**
4053-92 STREET
EDMONTON, ALBERTA T6E 6R8
PHONE: 780-434-4900
FAX: 780-438-2600

**TORONTO**
**OAKVILLE, ONTARIO**
2910 BRIGHTON ROAD
OAKVILLE, ONTARIO, CANADA L6H 5S3
PHONE: 905-829-3301
FAX: 905-829-3302

**MONTREAL, QUEBEC**
5155 J-ARMAND BOMBARDIER
SAINT-HUBERT, QUÉBEC
CANADA J3Z 1G4
PHONE: 514-933-2711
FAX: 514-933-8639

**VANCOUVER,**
**BRITISH COLUMBIA**
1538 KEBET WAY
PORT COQUITLAM,
BRITISH COLUMBIA V3C 5M5
PHONE 604-421-2822
FAX: 604-421-3113

**WINNIPEG, MANITOBA**
54 PRINCESS STREET
WINNIPEG, MANITOBA R3B 1K2
PHONE: 204-942-5205
FAX: 204-956-4251




**Baldor Electric Company**

P.O. Box 2400, Fort Smith, AR 72902-2400 U.S.A., Ph: (1) 479.646.4711, Fax (1) 479.648.5792, International Fax (1) 479.648.5895
**www.baldor.com**

© Baldor Electric Company
All Rights Reserved. Printed in USA.
MN408
7/14

T 418 885-8276 1 888 440-8276
16, rue Turgeon, Saint-Anselme (QC) G0R 2N0

# Kunkle relief valve

# PRESSURE AND VACUUM RELIEF VALVE 1351-1352-1361-1362 MAINTENANCE

TUTHILL CORPORATION | M-D Pneumatics
A Tuthill Subsidary

P.O. Box 2877, Springfield, MO 65801-0877 • (417) 865-8715 • TWX 910-775-4704 • FAX 417-865-2950

10/88/500

TUTHILL CORPORATION | M-D Pneumatics
A Tuthill Subsidary

P.O. Box 2877, Springfield, MO 65801-0877 • (417) 865-8715 • TWX 910-775-4704 • FAX 417-865-2950

## MAINTENANCE:

1. Check pop off pressure every 2 to 6 months.
2. Inspect for dirt build up in bodies frequently.
3. Remove yearly for testing, inspection, and overhaul.

Valve failure may be caused by seizing of parts, scored or wire drawn seats and corroded or eroded springs. The first case may be corrected by careful cleaning followed by light sanding of the seating surfaces. For correction of the second, the seating surface may be remachined or carefully hand lapped if damage is less severe. Springs rarely required replacement, but may be purchased from manufacturer should replacement be necessary.

## DISASSEMBLY

1351 & 1361 Series - Refer to Relief Valve Assembly Drgs. 1351 & 1361.

1. Remove Regulator Ring Set Screw.
2. Remove hood and mark relative positions of pressure screws, lockn t and cap.
3. Loosen pressure screw locknut and pressure screw to release pressure of spring.
4. Remove Cap.
5. Remove spring and spring plates, spindle and spindle retainer.
6. Mark location of regulator ring and remove.

1352 Series - Refer to Pressure Relief Valve Assembly Drg. 1352.

1. Remove fillister head machine screw.
2. Remove roll pin, washer, lever and pressure screw.
3. Remove the spring and disc assembly.
4. Disassemble the disc assembly.

1362 Series - Refer to Vacuum Relief Valve Assembly Drg. 1362

1. Remove fillister head machine screw.
2. Remove pressure screw.
3. Remove the spring and disc assembly.
4. Disassemble the disc assembly.

To Reassemble: Reverse the above procedures - being careful to return parts to their marked positions.
After reassembly, reset valves according to instructions under adjustment, setting and testing.

## ADJUSTMENT, SETTING AND TESTING

Popping Pressure: 1351 & 1361 Series
Refer to Relief Valve Test Set Ups.
Make sure of gauge accuracy before beginning. Remove hood - exposing pressure screw and locknut, Loosen locknut and raise pressure or vacuum until valve opens or pops. If opening pressure or vacuum is too low, turn down on pressure screw. If pressure or vacuum is too high, back-off pressure screw. After proper pressure has been reached, securely tighten locknut and replace hood.

1352 & 1362 Series
Refer to Relief Valve Test Set Ups.
Make sure of gauge accuracy before beginning. Remove filister head machine screws. Raise pressure or vacuum until valve opens or pops. If opening pressure or vacuum is too low, turn down on pressure screw. If pressure or vacuum is too high, back-off pressure screw. After proper setting has been reached, replace filister head screws, making sure they align with slots provided in pressure screw.

## BLOWDOWN ADJUSTMENT

1351 & 1361 Series
When popping pressure is changed, a slight adjustment in blow down may be required. Raising the popping pressure or vacuum lengthens the blow down, and lowering the popping pressure or vacuum shortens the blow down. Raising the regulator ring - towards the disc - will increase blowdown and should be made a notch at a time as the adjustment is sensitive. The normal position would be three or four notches down from touching the disc, but this figure will vary with conditions.
CAUTION: Retighten regulator ring set screw.

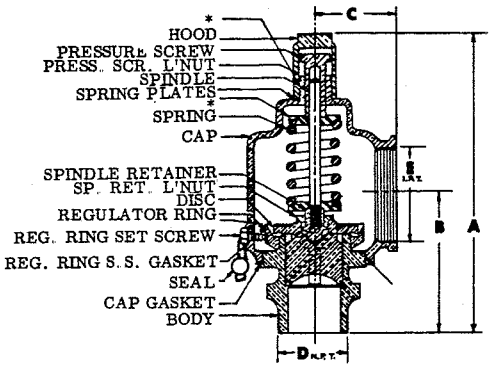


## 1351 & 1361 RELIEF VALVE

1351 Denotes Pressure Valve
1361 Denotes Vacuum Valve
*Joints sealed on 1361 Vacuum Valves with Crane Pipe Compound or equiv.

| PART NO. | SEAT DIA. | VALVE SIZE | WT. LBS. | A | B | C | D | E |
|---|---|---|---|---|---|---|---|---|
| 1351-1 | 1/2 | 1/2 | 1-3/8 | 4.63 | 2.38 | 1.12 | 1/2 | 3/4 |
| 1351-2 | 3/4 | 3/4 | 2-1/4 | 6.66 | 2.53 | 1.50 | 3/4 | 1-1/4 |
| 1351-3 | 1 | 1 | 3 | 6.97 | 2.75 | 1.81 | 1 | 1-1/2 |
| 1351-4 | 1-1/4 | 1-1/4 | 5-1/2 | 8.59 | 3.97 | 2.18 | 1-1/4 | 2 |
| 1351-5 | 1-1/2 | 1-1/2 | 7-3/4 | 9.59 | 4.31 | 2.31 | 1-1/2 | 2-1/2 |
| 1351-6 | 2 | 2 | 11-1/2 | 10.91 | 4.88 | 2.62 | 2 | 3 |
| 1351-7 | 2-1/2 | 2-1/2 | 20-1/2 | 13.75 | 6.09 | 3.50 | 2-1/2 | 3 |
| 1351-8 | 3 | 3 | 29 | 14.75 | 7.06 | 4.12 | 3 | 4 |

NOTE: SERVICE RECOMMENDATIONS
AIR OR GAS MAX. 60 PSIG AT 450° F.

INSTRUCTIONS:

1. AVOID OVERTIGHTENING OF VALVE DURING INSTALLATION.
2. VACUUM SETTING MAY BE VARIED APPROX. ± 10% OF ORIGINAL SETTING BY REMOVING HOOD AND RUNNING PRESSURE SCREW IN OR OUT AS DESIRED. (CAUTION: RETIGHTEN LOCKNUT AFTER EACH ADJUSTMENT)
3. VALVE MAY BE CLEANED BY REMOVING DISC AND CLEANI NG SEAT SURFACE WITH A SOFT CLOTH. SEATING SURFACE MAY BE LAPPED IN CASE OF LEAKAGE BY USING A FINE GRIT COMPOUND.

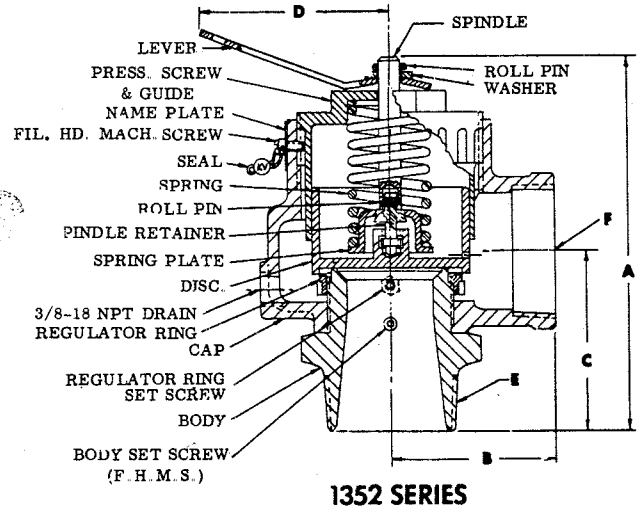


## 1352 SERIES

| PART NO. | SEAT DIA. | VALVE SIZE | Wt. LBS. | A | B | C | D | E | F |
|---|---|---|---|---|---|---|---|---|---|
| 1352-6 | 2 | 2 | 7-1/2 | 7.18 | 2.94 | 3.18 | 3.38 | 2 | 2 |
| 1352-7 | 2 -1/2 | 2-1/2 | 12-1/4 | 8.00 | 3.50 | 3.75 | 4.12 | 2-1/2 | 2-1/2 |
| 1352-8 | 3 | 3 | 18-3/4 | 9.00 | 4.0 | 4.18 | 4.18 | 3 | 3 |

NOTE: SERVICE RECOMMENDATIONS
AIR OR GAS MAX. 60 PSIG AT 450° F.

INSTRUCTIONS:

1. AVOID OVERTIGHTENING OF VALVE DURING INSTALLATION.
2. VACUUM SETTING MAY BE VARIED APPROX. ± 10% OF ORIGINAL SETTING BY REMOVING HOOD AND RUNNING PRESSURE SCREW IN OR OUT AS DESIRED. (CAUTION: RETIGHTEN LOCKNUT AFTER EACH ADJUSTMENT)
3. VALVE MAY BE CLEANED BY REMOVING DISC AND CLEANING SEAT SURFACE WITH A SOFT CLOTH. SEATING SURFACE MAY BE LAPPED IN CASE OF LEAKAGE BY USING A FINE GRIT COMPOUND.

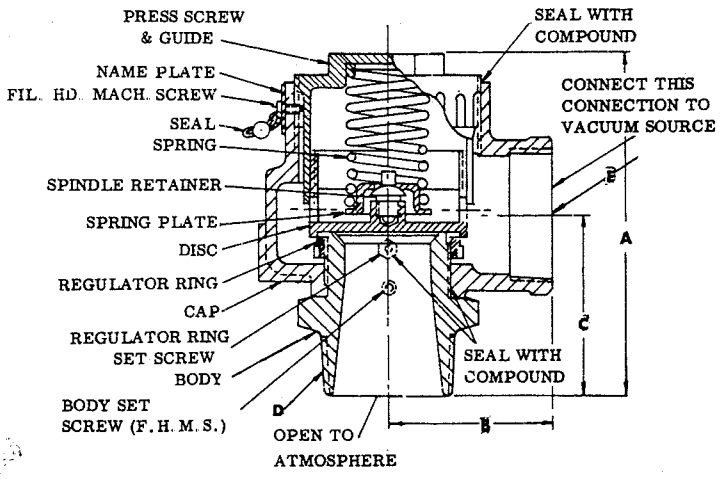


## 1362 SERIES

| PART NO. | SEAT DIA. | VALVE SIZE | WT. LBS. | A | B | C | D | E |
|---|---|---|---|---|---|---|---|---|
| 1362-6 | 2 | 2 | 7 | 5.88 | 3.18 | 2.94 | 2 | 2 |
| 1362-7 | 2-1/2 | 2-1/2 | 11-3/4 | 6.94 | 3.50 | 3.75 | 2-1/2 | 2-1/2 |
| 1362-8 | 3 | 3 | 18-1/2 | 7.88 | 4.00 | 4.18 | 3 | 3 |

NOTE: SERVICE RECOMMENDATIONS
AIR OR GAS MAX. - 30 HG AT 450° F.

INSTRUCTIONS:

1. AVOID OVERTIGHTENING OF VALVE DURING INSTALLATION.
2. PRESSURE SETTING MAY BE VARIED APPROX. ± 10% OF ORIGINAL SETTING BY REMOVING AND LOOSENING THE FILLISTER HEAD MACHINE SCREW AND THEN RUNNING THE PRESSURE SCREW IN OR OUT AS DESIRED.
3. VALVE MAY BE CLEANED BY REMOVING DISC AND CLEANING SEAT SURFACE WITH A SOFT CLOTH. SEATING SURFACE MAY BE LAPPED IN CASE OF LEAKAGE BY USING A FINE GRIT COMPOUND.

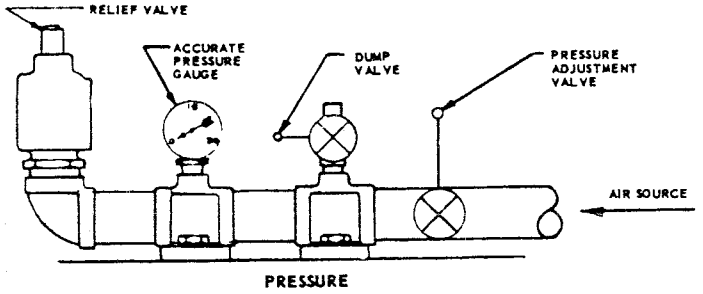


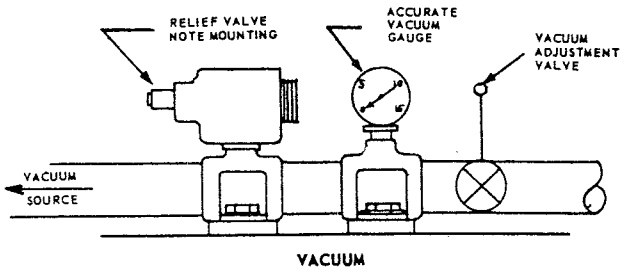


## MGD PNEUMATICS PRESSURE RELIEF VALVES RATED AIR CAPACITIES

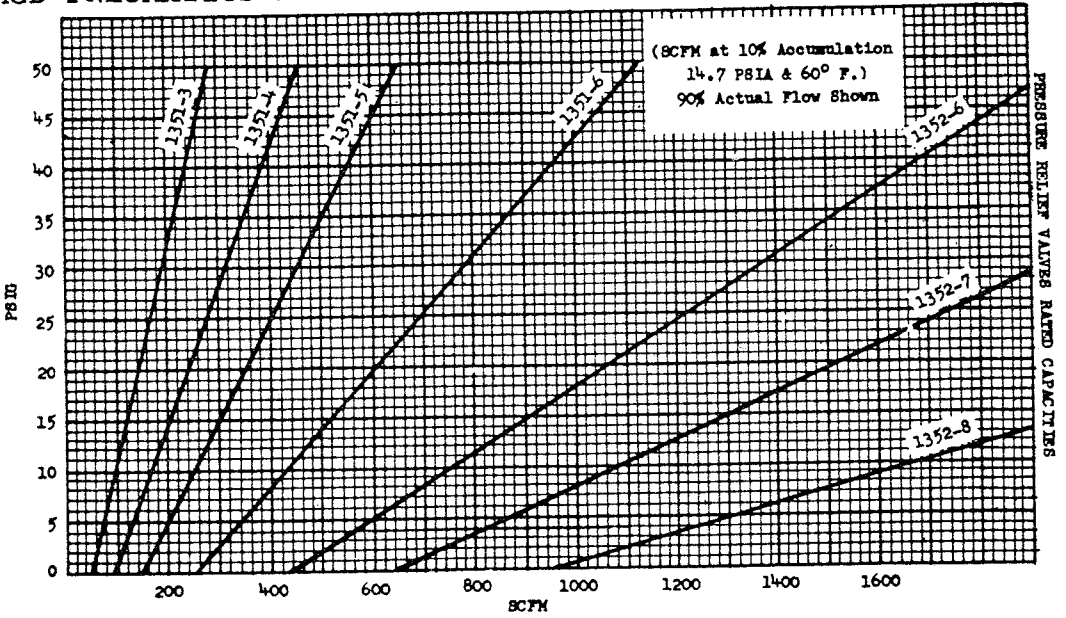


## MGD PNEUMATICS VACUUM RELIEF VALVES RATED AIR CAPACITIES

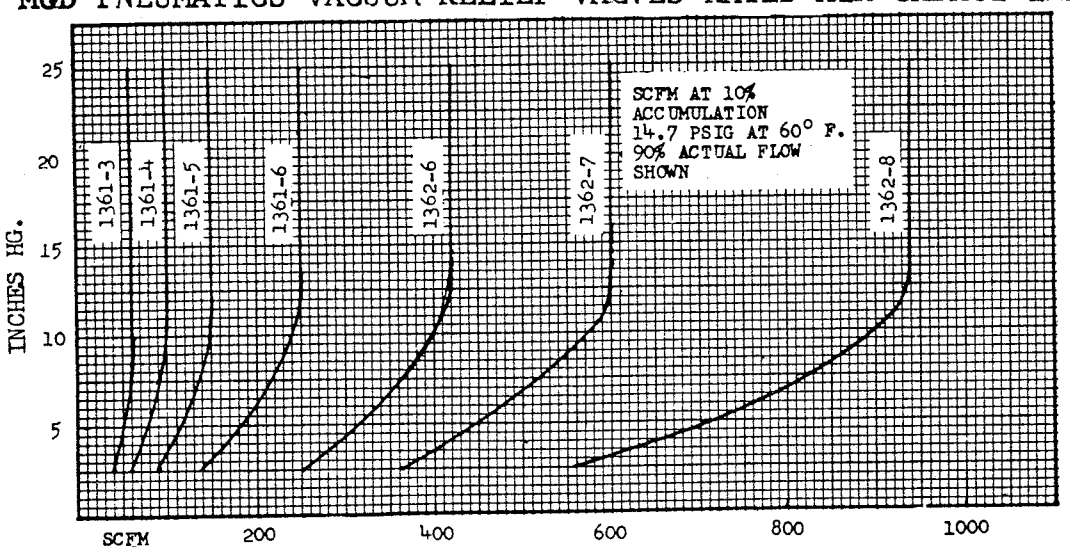


TUTHILL CORPORATION | M-D Pneumatics
A Tuthill Subsidary

P.O. Box 2877, Springfield, MO 65801-0877 • (417) 865-8715 • TWX 910-775-4704 • FAX 417-865-2950

T 418 885-8276 1 888 440-8276
16, rue Turgeon, Saint-Anselme (QC) G0R 2N0

## Pressure transmitter

AUTOMATIONDIRECT.com
the #1 value in automation

# EU Declaration of Conformity (DoC)

**We:**

| | |
|---|---|
| Company Name: | AutomationDirect.com |
| Postal address: | 3505 Hutchinson Road |
| City: | Cumming |
| State: | Georgia |
| Postal Code: | 30040 |
| Telephone: | (800) 633-0405 |

**Declare that the DoC is issued under sole responsibility and belongs to the following products:**

ProSense - Digital Pressure Sensor

QPSH-AN-42

QPSH-AP-42

QPSL-AN-42

QPSL-AP-42

**The objects of the declaration describe above is in conformity with the relevant Union harmonization legislation:**

EMC: 2014/30/EU

LV: 2014/35/EU

RoHS2: 2011/65/EU

**The following harmonized standards and technical specification have been applied:**
**Title, Date of standard/specification:**

EN 61326-1: 2013

EN 61010-1: 2010

EN 50581: 2012

**Notes:**

**Signed for and on behalf of:**

| Cumming GA | 2019 / 04 / 02 | Joshua Waters | Product Engineer |
|---|---|---|---|
| Place of issue | yyyy-mm-dd | Name | Function |



Signature

# ProSense™ Digital Pressure Switch / Transmitter

## Instructions

2014-12-10

5012611001-QP01

AUTOMATIONDIRECT.com

3505 HUTCHINSON ROAD
CUMMING, GA 30040-5860

**Models:**

**QPSL-AP-42**
**QPSL-AN-42**
**QPSH-AP-42**
**QPSH-AN-42**

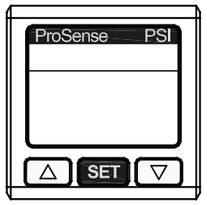


Compact combination Pressure Switch / Transmitter with 2 digital outputs (NPN or PNP) which may be set individually and an analog 4-20mA output. Perfect for the factory floor or installed in a control cabinet. The unit comes with a 2 meter cable for easy installation and has 2 optional mounting brackets available.

**Box Contents and Unpacking Instructions**

- Unpack the QPS Pressure Switch from its shipping carton. Included in the carton is the switch, cable and pressure units label and these instructions.
- Inspect all equipment for completeness. If anything is missing or damaged, immediately call the AutomationDirect returns department @ 1-800-633-0405.
- Inspect the part number to ensure the model received matches the output type required.

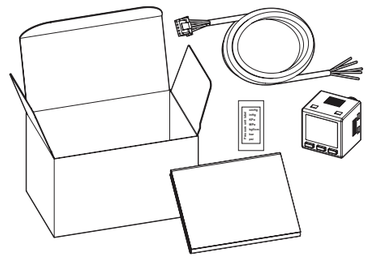

| ProSense QPS Digital Pressure Switch / Transmitter Specifications | | | | | |
|---|---|---|---|---|---|
| **Model** | | **QPSL-AP-42** | **QPSL-AN-42** | **QPSH-AP-42** | **QPSH-AN-42** |
| **Rated Pressure** | | -14.5 to +14.5 psi | | -14.5 to +145 psi | |
| **Maximum Pressure (Proof)** | | 29psi | | 217psi | |
| **Maximum Vacuum** | | -14.5 psi | | | |
| **Pressure Accuracy** | | ± 3% of full scale | | | |
| **Temperature Influence @ 25°C** | | ± 2% of full scale | | | |
| **Fluid Measured** | | Air, Non-corrosive gas, Non-flammable gas | | | |
| **Input Power** | | 10.8 to 26.4 VDC | | | |
| **Power Consumption** | | 260mA maximum | | | |
| **Digital Outputs** | **Output Type** | 2-PNP | 2-NPN | 2-PNP | 2-NPN |
| | **Maximum Current** | 100mA each | | | |
| | **Response Time** | 2ms, 4ms, 10ms, 30ms, 50ms, 100ms, 250ms, 500ms, 1,000ms, 5,000ms selectable | | | |
| | **Residual Voltage** | 1.5 VDC | | | |
| **Analog Output** | **Output Type** | 4-20mA | | | |
| | **Maximum Output Load Resistance** | 400ΩΩ | | | |
| | **Linear Accuracy** | < ± 2% of full scale | | | |
| **Process Connection** | | 1/8" NPT outer / M5 inner bore (Nickel Plated Brass) | | | |
| **Case Materials** | | Case = ABS Plastic, Lens = Polycarbonate | | | |
| **Shock Immunity** | | 10 ~ 500 Hz, 10mm 3 axes for 2 hours | | | |
| **Vibration Immunity** | | Max. 100m / s2 3 axes 6 directions, 3 times each | | | |
| **Operating Temperature** | | 0°C to +50°C (32°F to 122°F) | | | |
| **Storage Temperature** | | -20°C to +65°C (-4°F to 149°F) | | | |
| **Altitude** | | < 2,000m | | | |
| **Ambient Humidity** | | 35% ~ 80% (non-condensing) | | | |
| **Approvals** | | cULus - UL 508 (E157382), CE, RoHS | | | |

WARNING: To minimize the risk of potential safety problems, you should follow all applicable local and national codes that regulate the installation and operation of your equipment. These codes vary from area to area and it is your responsibility to determine which codes should be followed, and to verify that the equipment, installation, and operation are in compliance with the latest revision of these codes.

Equipment damage or serious injury to personnel can result from the failure to follow all applicable codes and standards. We do not guarantee the products described in this publication are suitable for your particular application, nor do we assume any responsibility for your product design, installation, or operation.

If you have any questions concerning the installation or operation of this equipment, or if you need additional information, please call us at 1-800-633-0405 or 770-844-4200.

This publication is based on information that was available at the time it was printed. At Automationdirect.com® we constantly strive to improve our products and services, so we reserve the right to make changes to the products and/or publications at any time without notice and without obligation. This publication may also discuss features that may not be available in certain revisions of the product.

**WARNING! Electric shock danger**

**ProSense QPS is a pressure measurement device. DO NOT use it out of its specification. Improper pressure or incorrect wiring may cause injuries to staff or damages to other devices.**

1. Keep away from high-voltage and high-frequency environment during the installation to prevent interference. Avoid using the device in environments which contain: (a) dust or corrosive gas; (b) high humidity and high radiation; (c) shock and vibration
2. QPS can only be used for air pressure measurement and should avoid corrosive, inflammable or toxic gas measurement.
3. Make sure the input power is switched off when installing or uninstalling the QPS and the pressure source is off to prevent harm to personnel or equipment.
4. Before switching on the input power, check the signal connection, e.g. the input voltage and polarity. Voltage that is too high may cause damage to the QPS.
5. Use dry cloth and DO NOT use acid or alkaline liquid to clean the device.
6. Outputs remain active in Setup Mode.

## Dimensions

**mm [in]**

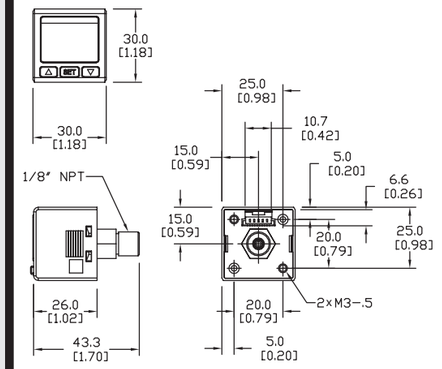


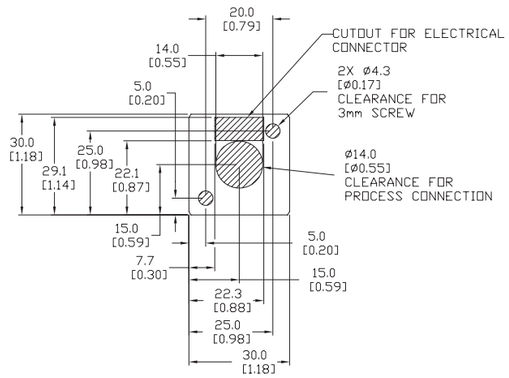


SURFACE MOUNT TEMPLATE

QPS-PMK - Optional Panel Mount Kit

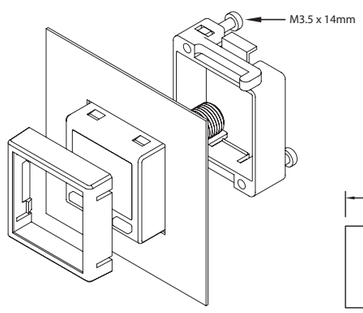





PANEL CUTOUT

QPS-FMK - Optional Frame Mount Kit

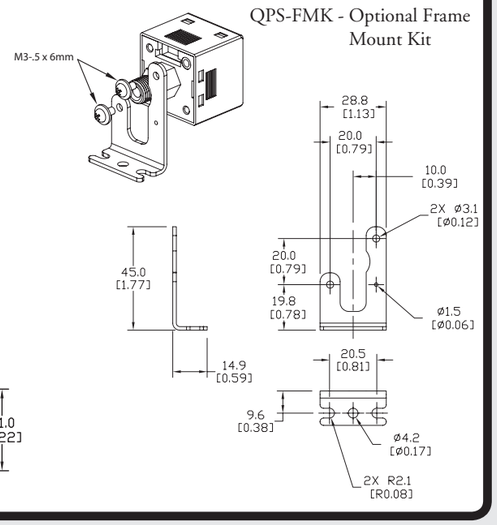


## Wiring

QPSL-AN-42
QPSH-AN-42
NPN
(4-20mA output)

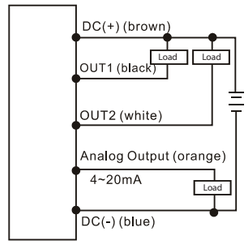


QPSL-AP-42
QPSH-AP-42
PNP
(4-20mA output)

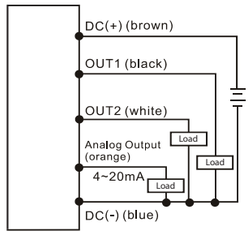


QPS-CBL (Included with each QPS switch/transmitter)

Dimensions
mm [in]

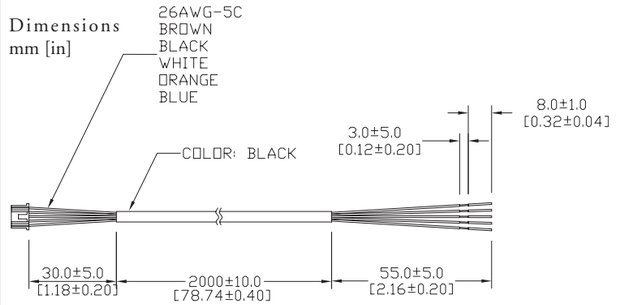


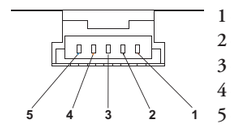


1 - Positive input power (brown)
2 - Digital output 1 signal (black)
3 - Digital output 2 signal (white)
4 - Analog output signal (orange)
5 - Negative power supply input (blue)

## Display, KeyPad and Connections

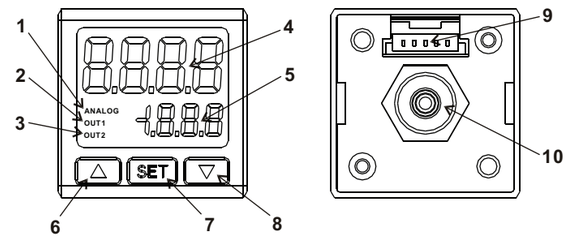


1 - Analog output indicator
2 - Digital output 1 indicator
3 - Digital output 2 indicator
4 - Pressure Value (PV)/parameter display (8mm digits)
5 - Setpoint Value (SV)/setup item display (4mm digits)
6 - Increment UP button
7 - SET or Enter button
8 - Increment DOWN button
9 - Cable connection
10 - Pressure connection

## Menu Navigation

Changing modes:

The QPS will be in the "Run Mode" when it is powered on, displaying PV and SV. Press SET for more than 2 seconds in this mode to switch to the "Quick Setup Mode". Press SET for more than 4 seconds in the "Run Mode" to switch to "Pro Setup Mode". Press SET more than 2 seconds in the "Quick Setup Mode" or "Pro Setup Mode" to return to the "Run Mode".

Setting up parameters:

In the three modes, press SET once to select the parameter to set up. When you find the parameter to set up or modify, use ▼ ▲ to modify the setting.

Resetting the ProSense QPS to factory default values:

Hold SET button for 4-5 seconds until display changes to read Pro. Press the SET button 9 times until the display shows oFF rSt

Using the ▼▲ buttons change the value to on and press SET

When complete the display will read Std SUb

**Caution:** Outputs remain active in Setup Mode

Accessing QPS Setup Modes:

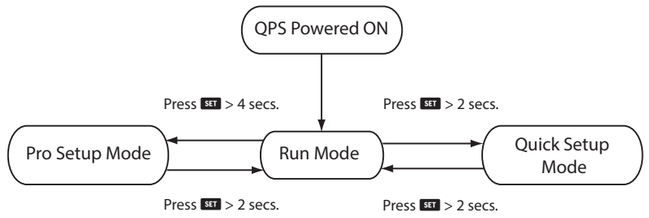


## Run Mode

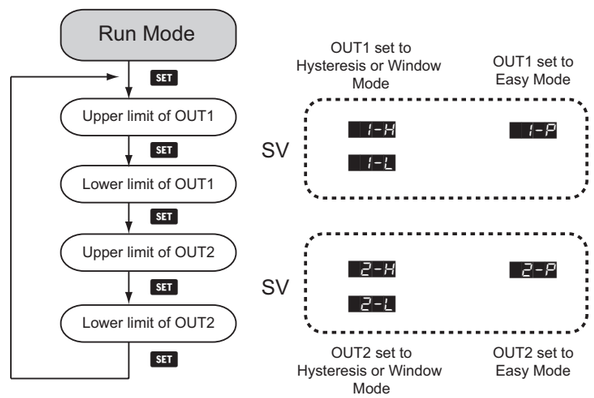


| Run Mode | |
|---|---|
| 1-H | Output 1 high setpoint for hysteresis or window modes |
| 1-L | Output 1 low setpoint for hysteresis or window modes |
| 1-P | Output 1 high setpoint for easy mode |
| 2-H | Output 2 high setpoint for hysteresis or window modes |
| 2-L | Output 2 low setpoint for hysteresis or window modes |
| 2-P | Output 2 high setpoint for easy mode |

Copyright 2017, *Automationdirect.com* Incorporated/All Rights Reserved Worldwide



## Quick Setup Mode

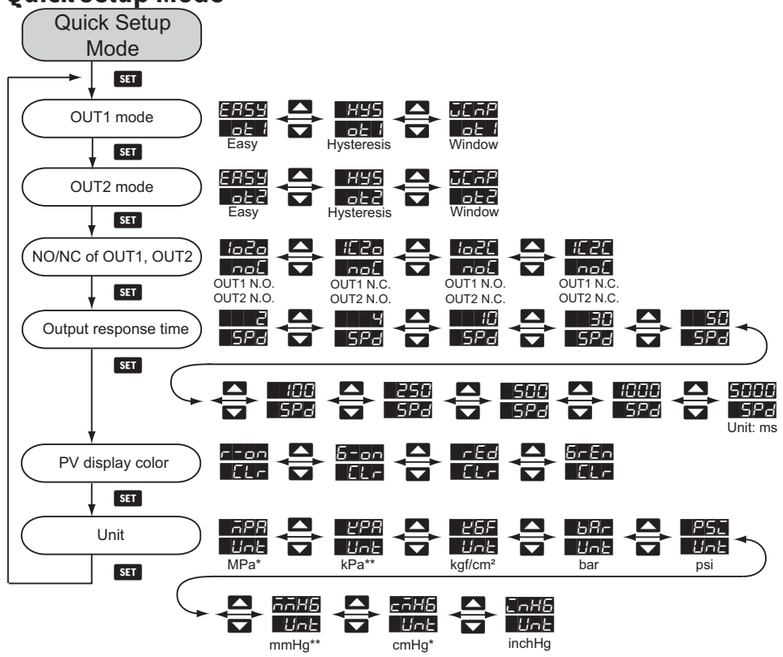


* Will not be displayed in low pressure type sensor. (QPSL)
** Will not be displayed in high pressure type sensor. (QPSH)

| Quick Setup Mode | | | |
|---|---|---|---|
| ot1 | Mode Selection for Output 1 | | |
| ot2 | Mode Selection for Output 2 | | |
| | EASY | Easy Mode (Default) (see examples on Page 4) | |
| | HYS | Hysteresis Mode (see examples on Page 4) | |
| | dEAd | Window Mode (see examples on Page 4) | |
| noC | Normally Open /Normally Closed output selection | | |
| | no2o | Output 1 Normally Open & Output 2 Normally Open (Default) | |
| | nC2o | Output 1 Normally Closed & Output 2 Normally Open | |
| | no2C | Output 1 Normally Open & Output 2 Normally Closed | |
| | nC2C | Output 1 Normally Closed & Output 2 Normally Closed | |
| SPd | Output Response Time in milli-seconds - use to minimize digital output fluctuations due to pressure variations (Default = 2) | | |
| CLr | Color - set how display color will change based on parameter dPy in Pro Setup Mode | | |
| | r-on | PV display turns red based on output status as set by parameter dPy in Pro Setup Mode (Default) | |
| | G-on | PV display turns green based on output status as set by parameter dPy in Pro Setup Mode | |
| | rEd | PV display is always red regardless of Out1 and/or Out2 state | |
| | GrEn | PV display is always green regardless of Out1 and/or Out2 state | |
| Unt | Select Engineering Units | | |
| | Engineering Units | Display Resolution | |
| | | QPSH | QPSL |
| | MPa | MPa available only on QPSH-Ax-42 | 0.001 | - |
| | kPA | kPa- available only on QPSL-Ax-42 | - | 0.1 |
| | kGF | kgf/cm² | 0.01 | 0.001 |
| | bAr | bar | 0.01 | 0.001 |
| | PSI | psi (Default) | 0.1 | 0.01 |
| | mmHG | mm Hg available only on QPSL-Ax-42 | - | 1 |
| | CmHG | cm Hg avialalbe only on QPSH-Ax-42 | 1 | - |
| | InHG | inch Hg | 1 | 0.1 |

## Additional Help and Support

- For additional technical support and questions, call our Technical Support team @ 1-800-633-0405 or 770-844-4200



## Pro Setup Mode

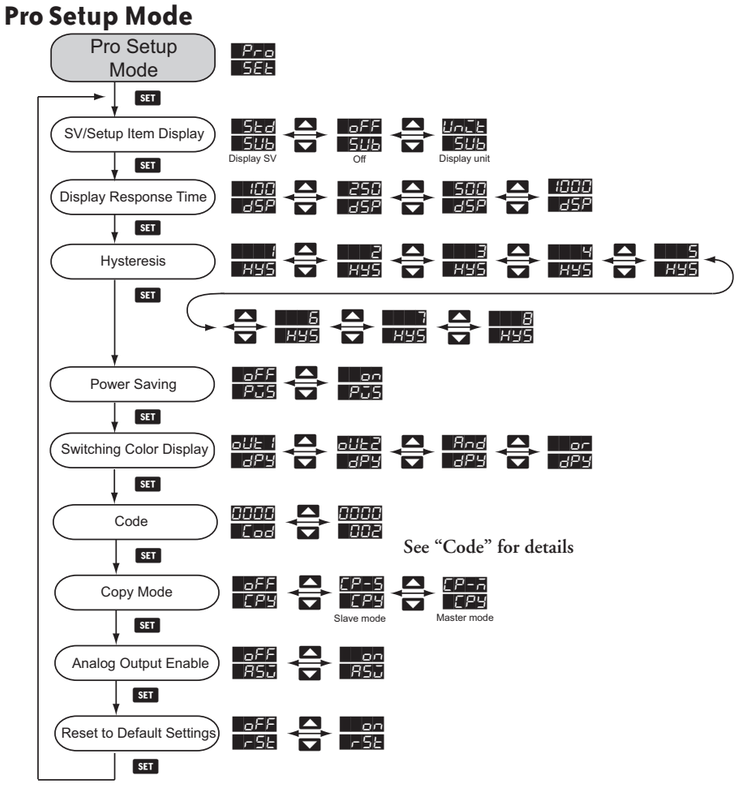


| Pro Setup Mode | | | |
|---|---|---|---|
| Pro | Pro Setup Mode - Displays when entering Pro Setup Mode | | |
| SEt | Setup - Displays when entering Pro Setup Mode | | |
| SUb | SV / Setup Item Display selection | | |
| | Std | Display shows SV (Default) | |
| | oFF | OFF | |
| | UnIt | Display shows Engineering unit, set by Unt in Quick Setup Mode | |
| dSP | Display response time rate in milli-seconds (Default = 100) | | |
| HYS | Hysteresis setting for outputs in EASY and WINDOW modes (Default = 3), applies to both outputs | | |
| | | QPSH | |
| | MPa(MPA) | 1 = 0.001 MPa thru 8 = 0.008 MPa | - |
| | kPa(kPA) | - | 1 = 0.1 kPa thru 8 = 0.8 kPa |
| | kgf/cm²(kGF) | 1 = 0.01 kgf/cm² thru 8 = 0.08 kgf/cm² | 1 = 0.001 kgf/cm² thru 8 = 0.008 kgf/cm² |
| | bar(bAr) | 1 = 0.01 bar thru 8 = 0.08 bar | 1 = 0.001 bar thru 8 = 0.008 bar |
| | psi(PSI) | 1 = 0.1 psi thru 8 = 0.8 psi | 1 = 0.01 psi thru 8 = 0.08 psi |
| | mm Hg(mmHG) | - | 1 = 1 mm Hg thru 8 = 8 mm Hg |
| | cm Hg(CmHG) | 1 = 1 cm Hg thru 8 = 8 cm Hg | - |
| | In Hg(InHG) | 1 = 1 in Hg thru 8 = 8 in Hg | 1 = 0.1 in Hg thru 8 = 0.8 in Hg |
| PuS | Power Saving Mode - Turns display back light off. Display values can be viewed momentarily by pressing the SET button | | |
| dPy | Switching color display - sets when display changes colors (as set by parameter CLr) based on output status | | |
| | out1 | Color changes when Output 1 is ON (Default) | |
| | out2 | Color changes when Output 2 is ON | |
| | And | Color changes when Output 1 and Output 2 are ON | |
| | or | Color changes when Output 1 or Output 2 is ON | |
| Cod | Code - quick reference to determine the settings of the QPS device (See Code Reference Table - Page 3) | | |
| CPy | Copy - used to select master and slave when copying settings to other QPS devices | | |
| | CP-S | Copy Slave Mode | |
| | CP-n | Copy Master Mode | |
| ASo | Analog Output Enable (Default = ON) | | |
| rSt | Reset QPS to Factory Defaults | | |

## CODE (Pro Setup Mode Parameter Cod)

CODE provides a quick method to determine the settings of the QPS parameters (Factory Default 0000 302)

| Code | 1st digit | | 2nd digit | | 3rd digit | 4th digit | |
|---|---|---|---|---|---|---|---|
| | OUT1 mode | N.O./N.C. | OUT2 mode | N.O./N.C. | Output Response Time | Color | Switching Color Display |
| 0 | Easy | N.O. | Easy | N.O. | 2ms | Red when ON | OUT1 |
| 1 | | N.C. | | N.C. | 4ms | | OUT2 |
| 2 | Hysteresis | N.O. | Hysteresis | N.O. | 10ms | | OUT1 and OUT2 |
| 3 | | N.C. | | N.C. | 30ms | | OUT1 or OUT2 |
| 4 | Window | N.O. | Window | N.O. | 50ms | Green when ON | OUT1 |
| 5 | | N.C. | | N.C. | 100ms | | OUT2 |
| 6 | – | – | – | – | 250ms | | OUT1 and OUT2 |
| 7 | – | – | – | – | 500ms | | OUT1 or OUT2 |
| 8 | – | – | – | – | 1,000ms | Red | OUT1 |
| 9 | – | – | – | – | – | | OUT2 |
| A | – | – | – | – | – | | OUT1 and OUT2 |
| b | – | – | – | – | – | Red | OUT1 or OUT2 |
| C | – | – | – | – | – | Green | OUT1 |
| d | – | – | – | – | – | | OUT2 |
| E | – | – | – | – | – | | OUT1 and OUT2 |
| F | – | – | – | – | – | | OUT1 or OUT2 |

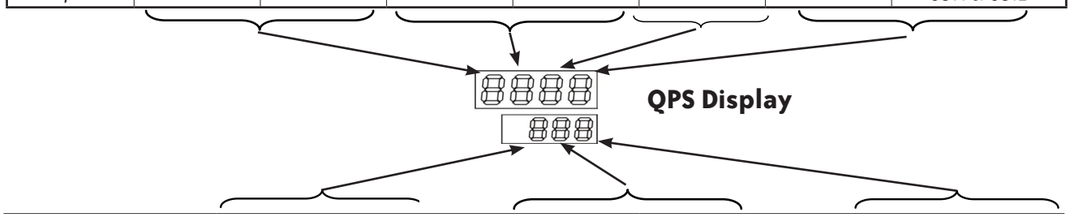


| Code | 6th digit | 7th digit | | 8th digit |
|---|---|---|---|---|
| | Pressure Unit | Display Response Time | SV/Setup Item Display | Hysteresis Setting |
| 0 | kPa or MPa | 100ms | Standard | 1 |
| 1 | kgf/cm² | | Off | 2 |
| 2 | bar | | Unit | 3 |
| 3 | psi | 250ms | Standard | 4 |
| 4 | mm Hg or cm Hg | | Off | 5 |
| 5 | inch Hg | | Unit | 6 |
| 6 | – | 500ms | Standard | 7 |
| 7 | – | | Off | 8 |
| 8 | – | | Unit | – |
| 9 | – | 1,000ms | Standard | – |
| A | – | | Off | – |
| b | – | | Unit | – |

## QPS is able to copy the parameters from one device to another.

**Electrical connection for copying parameters:**

Connect Pin 2 (black) on master to Pin 3 (white) on slave; Pin 3 (white) on master to Pin 2 (black) on slave; Pin 5 (blue) on master and slave to COM on power supply; Pin 1 (brown) on master and slave to +24V on power supply.

**Setup for copying paramters:**

**Slave device:** In the "Run Mode", press SET for more than 4 seconds and release the key after you see Pro SEt. You are now in "Pro Setup Mode". Press SET 7 times and find the parameter for setting up the copy function (See Pro Setup Mode chart). Use ▼▲ to select CP-S CPy (CP-S refers to Copy-Slave).

**Master device:** In the "Run Mode", press SET for more than 2 seconds and release the key after you see Pro SEt. You are now in the "Pro Setup Mode". Press 7 times and find the parameter for setting up the copy function (See Pro Setup Mode chart). Use ▼▲ to select CP-M CPy (CP-M refers to the Copy-Master).

Next, press SET for more than 2 seconds and return to the "Run Mode".

Now you will see CP-A on the display and CP-S on the slave device, indicating that the two devices have been connected. In the lower display Cnt you will see numbers counting up, referring to the number of parameters transmitted successfully between the two devices.

Once the copy of parameters completes, you will see CP-A oK on the master device and CP-S oK on the slave device.

After the copy is complete, power the units off and re-connect them according to the wiring diagram.

## Locking the Keys

**Lock On:** Press SET and ▲ together for 2 seconds until Lock on is displayed. You will then see the display of pressure value (PV) and setpoint value (SV).

**Lock Off:** Press SET and ▼ together for 2 seconds until Lock oFF is displayed. You will then see the display of pressure value (PV) and setpoint value (SV).

Lock Display: Press any key in the key locking mode, and you will see the display of pressure value (PV) and LCd (SV). Release the key and the PV and SV will return to original values.

## Resetting Zero Pressure:

Remove pressure from device before starting.

In the "Run Mode", press ▼▲ simultaneously, and you will see 0000 AdJ. The zeroing will start. Release the keys to end the zeroing sequence.

## Process Connection

Use a suitable thread sealant Teflon® tape. Do not use liquid thread sealant. Always tighten with an open end or adjustable wrench on the wrench flats. Never use any part of the pressure gauge to tighten other than the wrench flats that are on the gauge socket. Failure to do so will severely damage the pressure gauge.

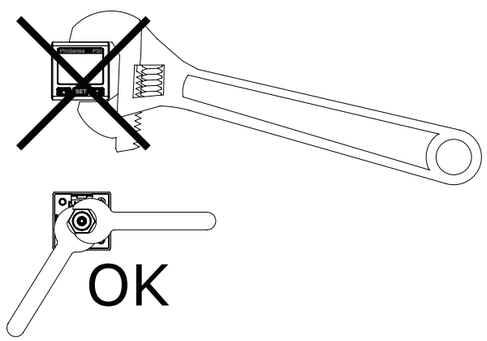


## Analog Output

The analog output is directly proportional to the process pressure over the full range of the device. For example if the process pressure is 0 psi the 4-20 mA output of a QPSL will be approximately 12 mA or for the QPSH the pressure at 12 mA would be 65.3 psi and for 0 psi the output would be 5.45 mA. The analog output is enabled as the factory default. It can be disabled with the "Analog Output Enable" parameter in Pro Setup Mode.

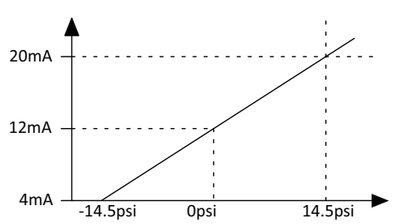


QPSL-xx-42

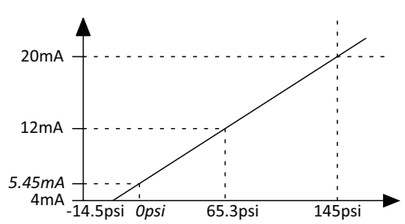


QPSH-xx-42

Easy Mode: When the measured pressure is greater than pressure setpoint plus the hysteresis setting (SV+hysteresis), the output will change state. When the measured pressure is less than the pressure setpoint (<SV), the output will change state. Each digital output can be individually set.

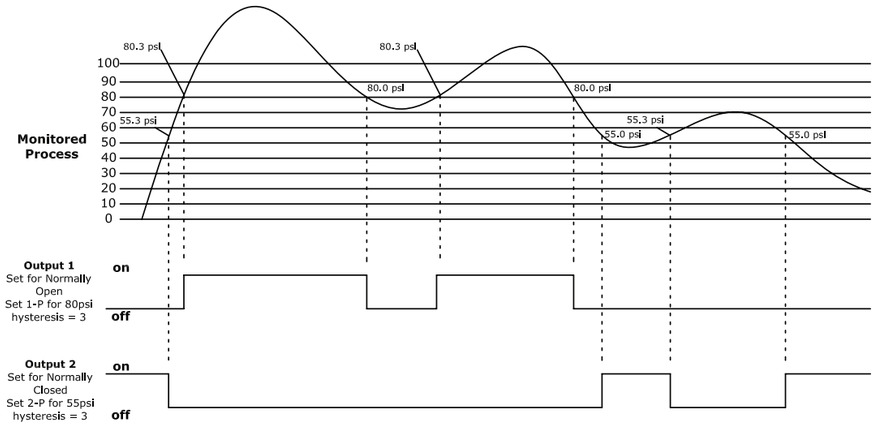


**Using EASY Mode to Set up a Simple Alarm**

Hold SET button for 2-3 seconds until display changes.
Verify Ot1 is set to EASY, if not use the ▼▲ to change and press SET button.
Verify Ot2 is set to EASY, if not use the ▼▲ to change and press SET button.
Verify noC is set to NC2o, if not use the ▼▲ to change and press SET button.
Press and hold the SET button until the display changes to show the Setpoint and Process values.
Using the ▼▲ set the output 1 ON level for 1-P to 80psi.
Briefly press and release the SET button to change to 2-P and set the output 2 ON level to 55psi.
Hold SET button for 4-5 seconds until display changes to Pro.
Press the SET button 3 times so that HYS is on the display.
Verify the value 3 is in the lower display, if not use the ▼▲ to change and press SET button
Press and hold the SET button until the display changes to show the Setpoint and Pressure copy values.

**Hysteresis Mode:** When the measured pressure is greater than the Hi setpoint, the output will change state. When the measured pressure is less than the Lo setpoint, the output will change state. Each digital output can be individually set.

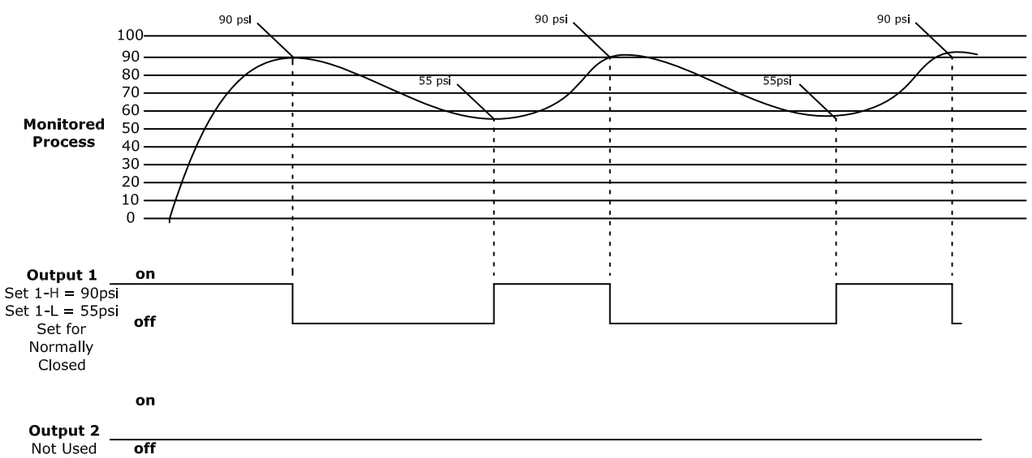


**Using Hysteresis Mode to control the pressure in a tank**

Hold SET button for 2-3 seconds until display changes.
Verify Ot1 is set to HYS, if not use the ▼▲ to change and press SET button.
Verify Ot2 is set to EASY, if not use the ▼▲ to change and press SET button.
Verify noC is set to NC2o, if not use the ▼▲ to change and press SET button.
Press and hold the SET button until the display changes to show the Setpoint and Process values.
Using the ▼▲ set the output 1 1-H level to 90psi.
Briefly press and release the SET button to change to 1-L and set it to 55psi.

**Hysteresis** is defined as: The lag in response of the output in reacting to changes in the process affecting it. For example Setpoint 1-P is set to 80 PSI for output 1 but the output does not change state when the pressure is increasing until the actual pressure reaches 80.3 PSI (1-P+hysteresis), the output will then change back to its neutral state once the pressure drops below the Setpoint of 80 PSI. This function known as Hysteresis is used to prevent the outputs from chattering if the process pressure were to hover close to the Setpoint.

**Window Mode:** In the example below the output will change state when the measured pressure increases to 55.3psi (1-L SU + HYS)and will change state again when the pressure increases to 90.3psi (1-H SU + HYS). As the measured pressure decreases back to 90psi (1-H SU) the output will change state and will change state again when the pressure decreases to 55psi (1-L SU). Each digital output can be individually set.

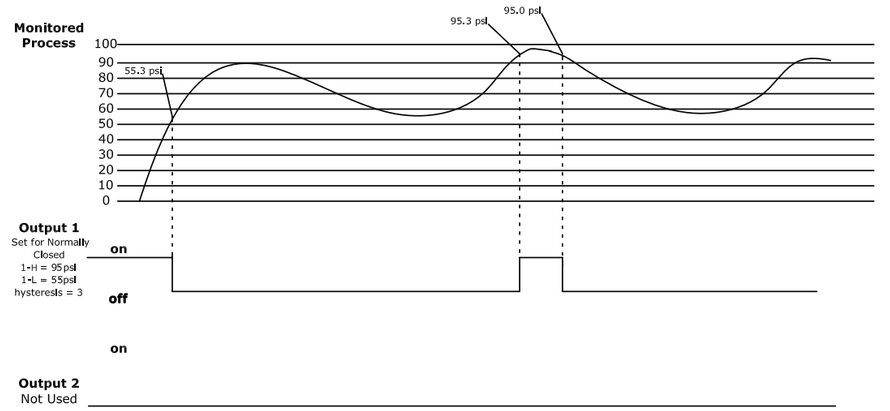


**Using Window Mode to create alarm condition**

Hold SET button for 2-3 seconds until display changes.
Verify Ot1 is set to dirAP, if not use the ▼▲ to change and press SET button.
Verify Ot2 is set to EASY, if not use the ▼▲ to change and press SET button.
Verify noC is set to NC2o, if not use the ▼▲ to change and press SET button.
Press and hold the SET button until the display changes to show the Setpoint and Process values.
Using the ▼▲ set the output 1 1-H level to 95psi.
Briefly press and release the SET button to change to 1-L and set it to 55psi.
Hold SET button for 4-5 seconds until display changes to Pro.
Press the SET button 3 times so that HYS is on the display.
Verify the value 3 is in the lower display, if not use the ▼▲ to change and press SET button
Press and hold the SET button until the display changes to show the Setpoint and Process values.

Hysteresis & Window Modes of operation for control and alarming

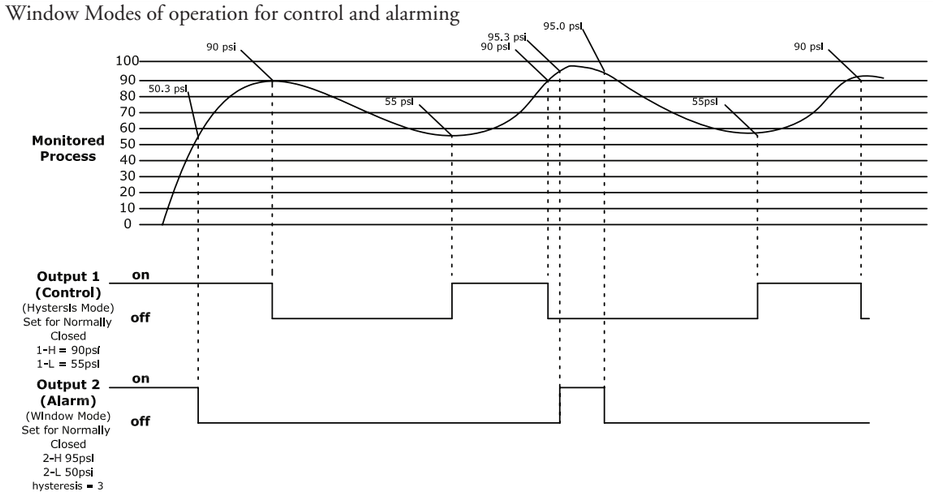


**Using Hysteresis mode to control the pressure in a tank and window mode to generate an alarm**

Wire the QPS using the connection diagrams supplied.
Hold SET button for 2-3 seconds until display changes.
Verify Ot1 is set to HYS, if not use the ▼▲ to change and press button.
Verify Ot2 is set to dirAP, if not use the ▼▲ to change and press button.
Verify noC is set to NC2C, if not use the ▼▲ to change and press button.
Press and hold the SET button until the display changes to show the Setpoint and Process values.
Using the ▼▲ set the output 1 1-H level to 90psi.
Briefly press and release the SET button to change to 1-L and set it to 55psi.
Briefly press and release the SET button to change to 2-H and set it to 95psi.
Briefly press and release the SET button to change to 2-L and set it to 50psi.
Hold SET button for 4-5 seconds until display changes to P-o.
Press the SET button 3 times so that HYS is on the display.
Verify the value 3 is in the lower display, if not use the ▼▲ to change and press SET button.
Press and hold the SET button until the display changes to show the Setpoint and Process values.

Copyright 2017, *Automationdirect.com* Incorporated/All Rights Reserved Worldwide

# ProSense® Digital Pressure Switch / Transmitter




## Overview

- Precision digital pressure switch/transmitter with 2 meter cable
- Two digital outputs (NPN or PNP) which may be set individually and a 4-20 mA analog output
- Two vacuum to pressure ranges (-14.5 to 14.5 and -14.5 psig to 145 psig)
- Air, non-corrosive/non-flammable gases only
- Three operation modes: Easy, Window and Hysteresis
- 3-color digital LCD display
- 6 pressure unit conversions
- Lockable keypad
- Unit parameters are easily copied to other units
- Selectable response times to eliminate output chattering
- Fast zero reset
- Optional panel mount and bracket kits
- 2-year warranty

E157382

| ProSense QPS Digital Pressure Switch / Transmitter | | | | |
|---|---|---|---|---|
| **Part Number** | **Description** | **Pcs/Pkg** | **Wt (lb)** | **Price** |
| QPSL-AP-42 | Digital pressure switch/transmitter -14.5 to 14.5 psig, 2 PNP out, 4-20 mA out, cable included | 1 | 0.24 | |
| QPSL-AN-42 | Digital pressure switch/transmitter -14.5 to 14.5 psig, 2 NPN out, 4-20 mA out, cable included | 1 | 0.24 | |
| QPSH-AP-42 | Digital pressure switch/transmitter -14.5 to 145 psig, 2 PNP out, 4-20 mA out, cable included | 1 | 0.24 | |
| QPSH-AN-42 | Digital pressure switch/transmitter -14.5 to 145 psig, 2 NPN out, 4-20 mA out, cable included | 1 | 0.24 | |

| ProSense QPS Digital Pressure Switch / Transmitter Specifications | | | | | |
|---|---|---|---|---|---|
| **Model** | | QPSL-AP-42 | QPSL-AN-42 | QPSH-AP-42 | QPSH-AN-42 |
| Pressure Range | | -14.5 to +14.5 psig | | -14.5 to +145 psig | |
| Maximum Pressure (Proof) | | 29 psig | | 217 psig | |
| Maximum Vacuum | | -14.5 psig | | | |
| Pressure Accuracy | | ± 3% of full scale | | | |
| Temperature Influence @ 25°C | | ± 2% of full scale | | | |
| Fluid Measured | | Air, Non-corrosive gas, Non-flammable gas | | | |
| Input Power | | 10.8 to 26.4 VDC | | | |
| Power Consumption | | 260mA maximum | | | |
| Digital Outputs | Output Type | 2-PNP | 2-NPN | 2-PNP | 2-NPN |
| | Maximum Current | 100mA | | | |
| | Response Time | 2ms, 4ms, 10ms, 30ms, 50ms, 100ms, 250ms, 500ms, 1,000ms, 5,000ms selectable | | | |
| | Residual Voltage | 1.5 VDC | | | |
| Analog Outputs | Output Type | 4-20 mA | | | |
| | Maximum Output Load Resistance | 400Ω | | | |
| | Linear Accuracy | < ± 2% of full scale | | | |
| Process Connection | | 1/8" NPT outer / M5 inner bore (Nickel Plated Brass) | | | |
| Cable | | Included with each unit, 2 meter (6.6 feet), 5 conductor, 26AWG, PVC jacket, and 50mm pigtail leads<br>Replacement cable : QPS-CBL | | | |
| IP Rating | | IP 40 | | | |
| Case Materials | | Case = ABS Plastic, Lens = Polycarbonate | | | |
| Shock Immunity | | 10 ~ 500 Hz, 10mm 3 axes for 2 hours | | | |
| Vibration Immunity | | Max. 100m / s2 3 axes 6 directions, 3 times each | | | |
| Operating Temperature | | 0°C to +50°C (32°F to 122°F) | | | |
| Storage Temperature | | -20°C to +65°C (-4°F to 149°F) | | | |
| Altitude | | < 2,000m | | | |
| Ambient Humidity | | 35% to 80% (non-condensing) | | | |
| Approvals | | cULus (E157382), CE, RoHS | | | |

# ProSense® Digital Pressure Switch / Transmitter

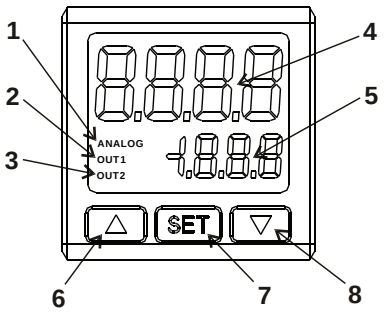


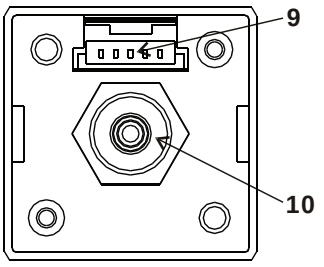


## Display, KeyPad, Connections

1 - Analog output indicator
2 - Digital output 1 indicator
3 - Digital output 2 indicator
4 - Pressure Value (PV)/parameter display (8 mm digits)
5 - Setpoint Value (SV)/setup item display (4 mm digits)
6 - Increment UP button
7 - SET or Enter button
8 - Decrement DOWN button
9 - Cable connection
10 - Pressure connection

## Dimensions

**mm [inches]**

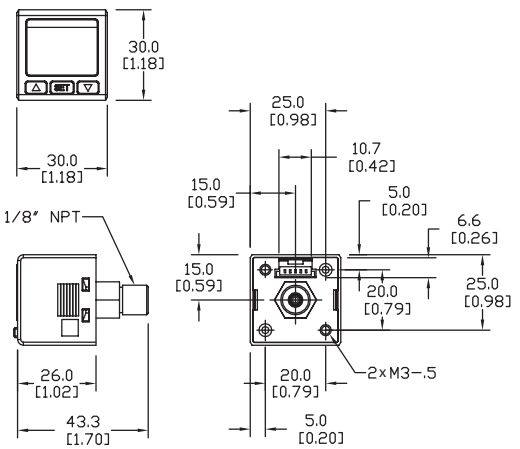


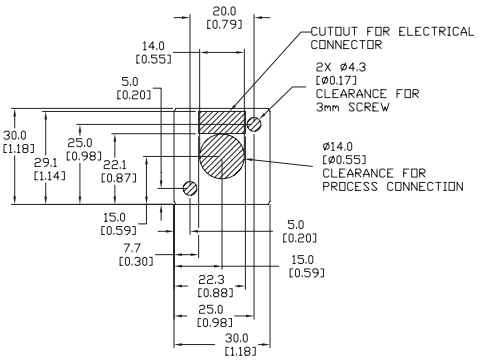


SURFACE MOUNT TEMPLATE

***See our website www.AutomationDirect.com for complete Engineering drawings.***

## Cable Connection Terminals

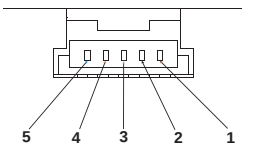


1 - Positive power supply input (brown)
2 - Digital output 1 signal (black)
3 - Digital output 2 signal (white)
4 - Analog output signal (orange)
5 - Negative power supply input (blue)

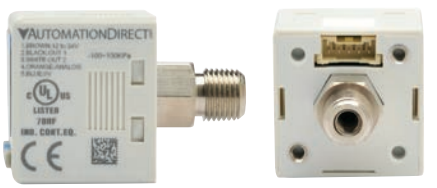

## Wiring

**QPSL-AN-42**
**QPSH-AN-42**

Outputs:
NPN discrete
4-20mA analog

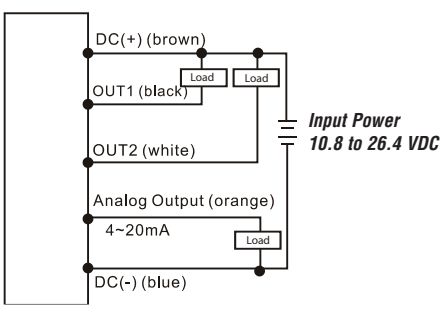


**QPSL-AP-42**
**QPSH-AP-42**

Outputs:
PNP discrete
4-20mA analog

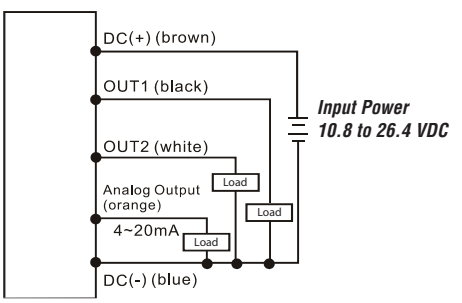

# ProSense® Digital Pressure Switch / Transmitter

## Operating Modes:

**Easy Mode:** When the measured pressure is greater than pressure setpoint plus the hysteresis setting (SV+hysteresis), the output will change state. When the measured pressure is less than the pressure setpoint (<SV), the output will change state. Each digital output can be individually set.

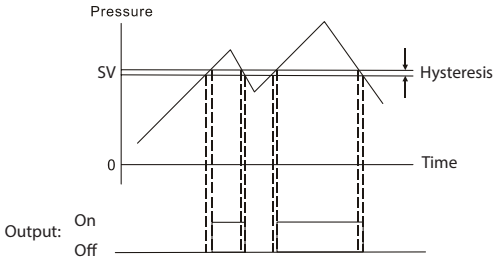


**Hysteresis Mode:** When the measured pressure is greater than the Hi setpoint, the output will change state. When the measured pressure is less than the Lo setpoint, the output will change state. Each digital output can be individually set.

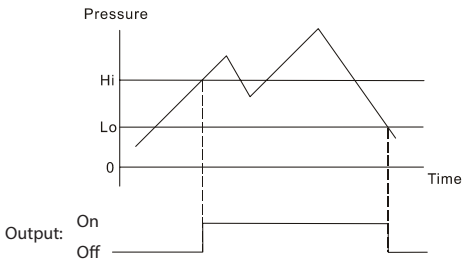


**Window Mode:** The output will change state when the measured pressure increases to the Lo setpoint plus the hysteresis setting (Lo+hysteresis) and will change state again when the pressure increases to the Hi setpoint plus the hysteresis setting (Hi+hysteresis). When the pressure decreases to the Hi setpoint the output will change state and will change state again when the pressure decreases to the Lo setpoint.

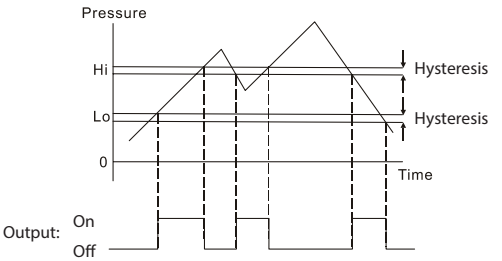


**Analog Output (4-20mA):** The analog output is directly proportional to the process pressure over the full range of the device. For example if the process pressure is 0 psig the 4-20 mA output of a QPSL will be approximately 12 mA or for the QPSH the pressure at 12 mA would be 65.3 psig and for 0 psig the output would be 5.45mA. The analog output is enabled as the factory default. It can be disabled with the "Analog Output Enable" parameter in Pro Setup Mode.

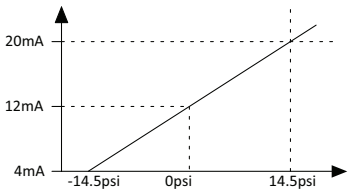


QPSL-xx-42

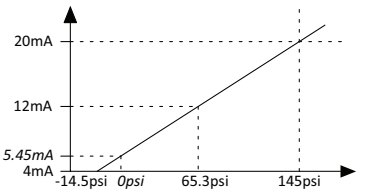


QPSH-xx-42

# ProSense® Digital Pressure Switch / Transmitter Accessories

| ProSense QPS Digital Pressure Switch / Transmitter Accessories | | | | |
|---|---|---|---|---|
| **Part Number** | **Description** | **Pcs/Pkg** | **Wt (lb)** | **Price** |
| **QPS-PMK** | Panel mount kit for QPS series | 1 | 0.1 | |
| **QPS-FMK** | Bracket mount kit for QPS series | 1 | 0.1 | |
| **QPS-CBL** | Replacement cable for QPS series digital pressure switch and transmitter, 2 meters (6.6 feet) | 1 | 0.1 | |

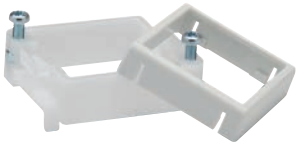

*QPS-PMK*



*QPS-FMK*



*QPS-CBL*

## Dimensions

**mm [inches]**

### QPS-PMK - Optional Panel Mount Kit

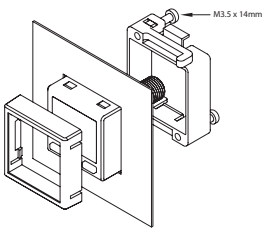


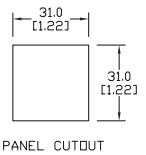


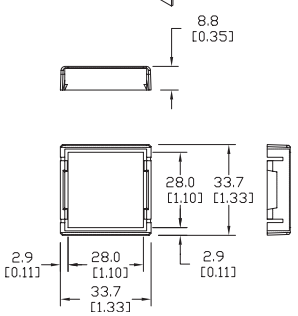


*PMK Front Bezel*

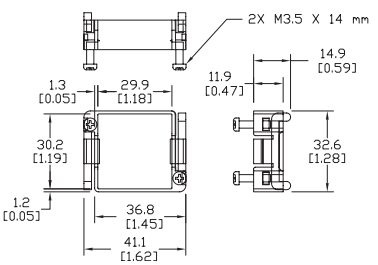


*PMK Back Retaining Clip*

### QPS-FMK - Optional Frame Mount Kit

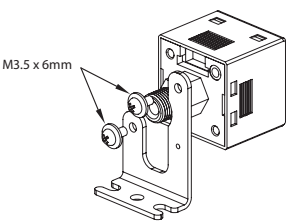


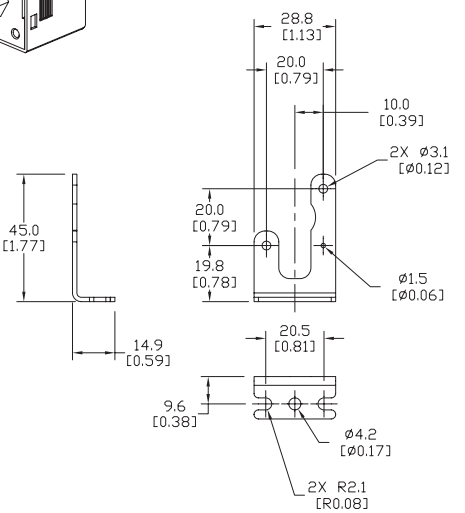


**Note: See the NITRA Pneumatics section for Push-to-Connect fittings and tubing**

### QPS-CBL

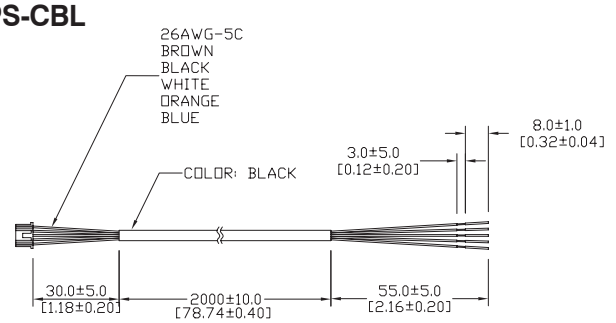


**Note: Cable included with each QPS series switch/transmitter**

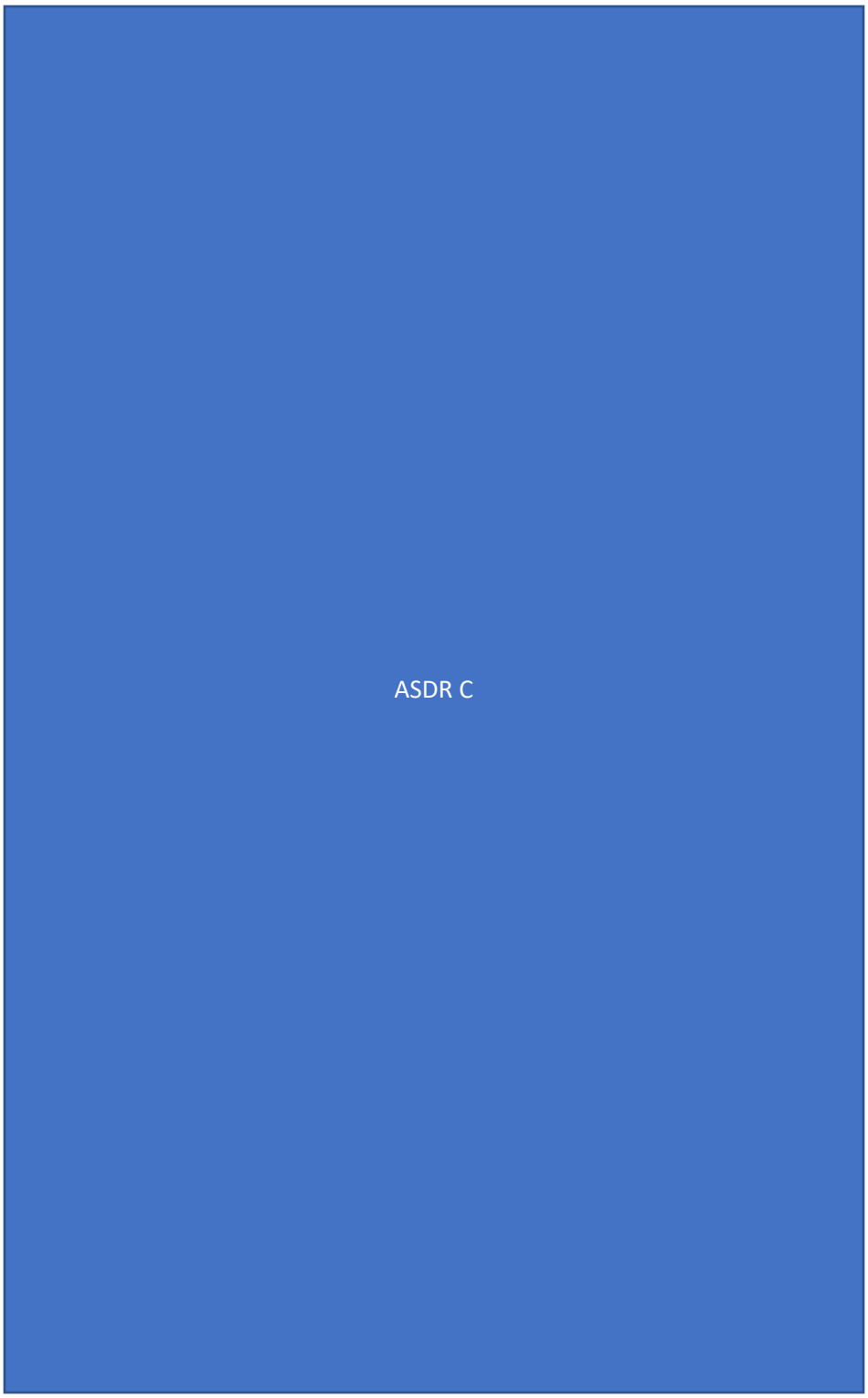
ASDR C

# Hypochlorite Make Down and Dosing

Pompes & équipements

# CALCIUM HYPOCHLORITE SOLID HANDLING SYSTEM
## PACKAGE NUMBER: 6526-S-265-605D

**Workshop drawing :**

- ☐ Approuved as is
- ☐ Approuved with correction(s)
- ☐ Rejected

**Approuved by**

Name : _____

Title : _____

Compagnie : _____

Signature : _____

AGNICO EAGLE

**Vendor Document Status**

1 ☐ Proceed to next submission and status.

2 ☐ Proceed with exceptions as noted to next submission and status.

3 ☐ Do not proceed.
Revise as noted and resubmit next submission and status.

4 ☑ Complete, no further submission required.

By: Sébastien Perron Instrumentation Date: 2021-06-30

Review and authorization to fabricate are only for general conformance with the design concept of the Project as expressed in the Contract Documents. Sole responsibility for the accuracy and completeness of this document, including but not limited to dimensions and quantities, remains with the Supplier/Contractor. Agnico Eagle does not warrant the accuracy or completeness of any of the information contained herein, nor does Agnico Eagle authorize or approve any construction means, methods, techniques, sequences or any safety precautions or procedures.

Agnico Eagle No. 6526-S-265-605D-CALCIUM HYPOCHLORITE SOLID DISTRIBUTION SYSTEM_DOC R: DOC_R1

**DOCUMENT FOR INFORMATION**

*3076 A, Bernard-Pilon, St-Mathieu de Beloeil, Qc, J3G 4S5 Tél.: (450) 922-4224 / Fax: (450) 922-4223*

# CALCIUM HYPOCHLORITE MIXING TANK

## 65CUV68007

**Workshop drawing :**

- □ Approuved as is
- □ Approuved with correction(s)
- □ Rejected

**Approved by**

Name : _____

Title : _____

Compagnie : _____

Signature : _____

*3076 A, Bernard-Pilon, St-Mathieu de Beloeil, Qc, J3G 4S5 Tél.: (450) 922-4224 / Fax: (450) 922-4223*

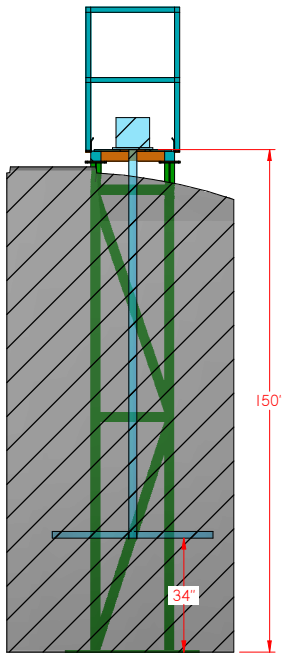


SECTION B-B

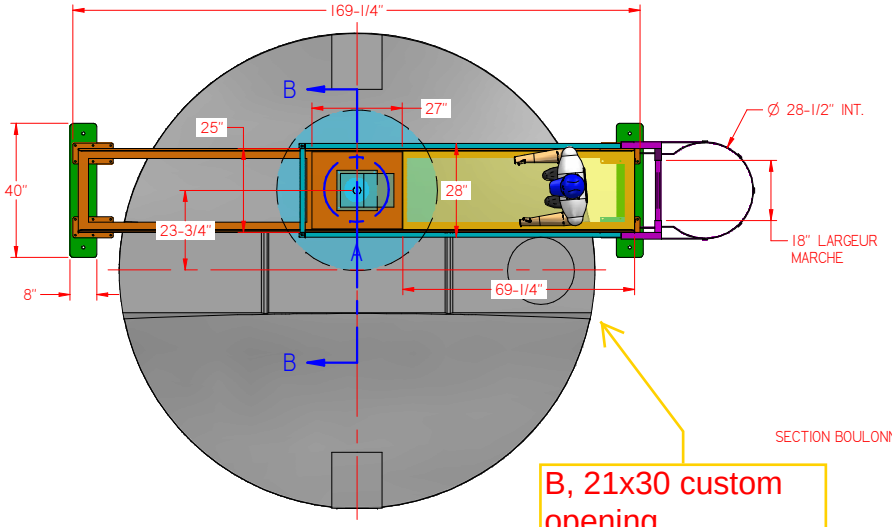


B, 21x30 custom opening

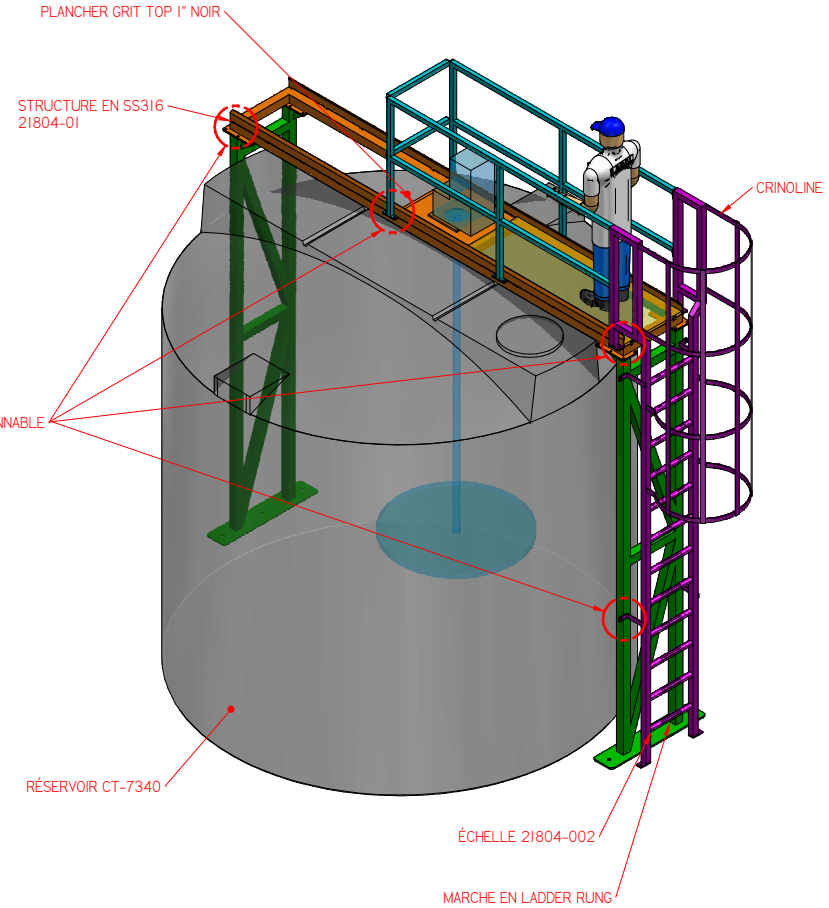


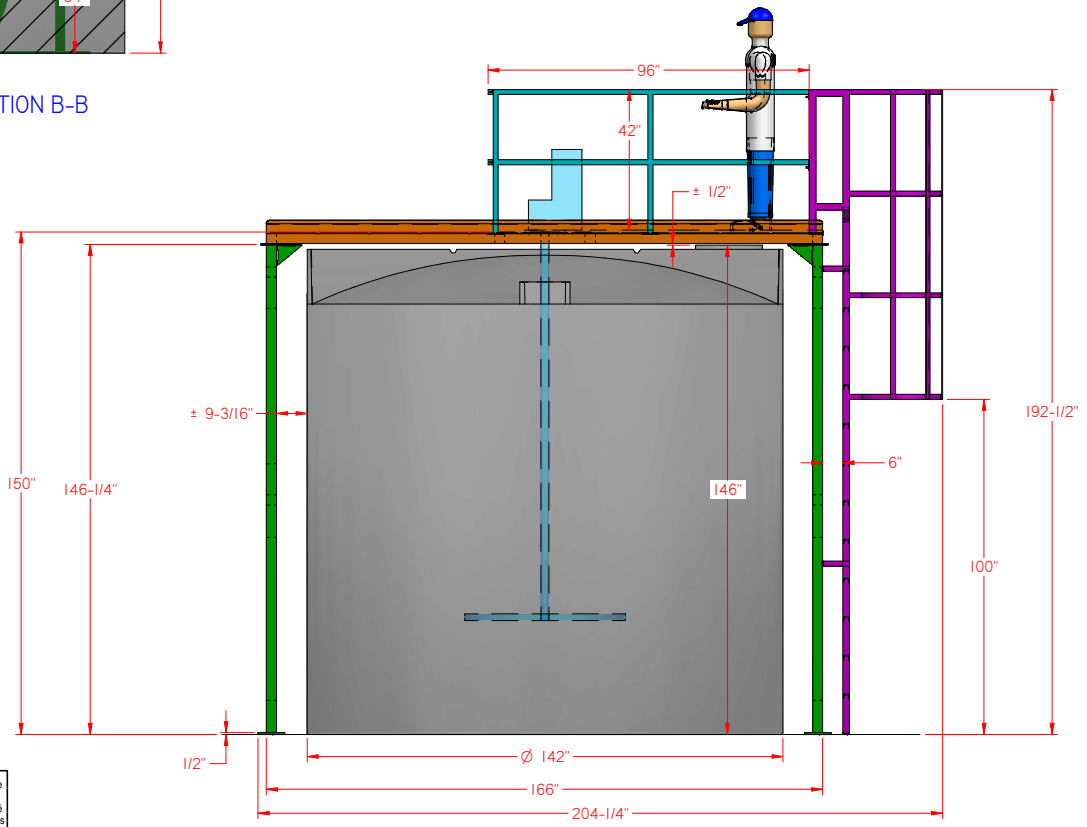


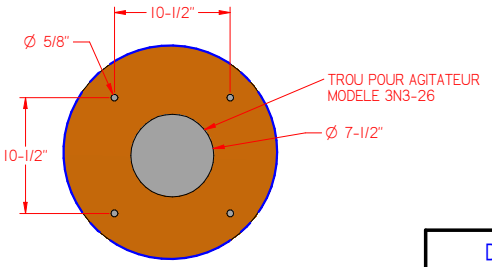


DETAIL A

| DESSIN D'APPROBATION | |
|---|---|
| DATE: | |
| APPROUVÉ PAR (LETTRES MOULÉES): | |
| SIGNATURE: | |

QTÉ: IX

Ce document est la propriété de **Lacal Technologie Inc.**
Il ne doit pas être dévoilé, utilisé ou reproduit en tout ou en parties sans l'autorisation écrite de **Lacal Technologie Inc.**

| Tolérancement Sauf indications contraires | |
|---|---|
| Coupe: | ± 1/16" |
| Pliage | ± 0.5° |
| Usinage | ± 0.005" |
| Montage | ± 1/16" |

LACAL

| | | | |
|---|---|---|---|
| Projet: | 21804-01/02 PCP | | Pages: 1/1 |
| Titre: | Structure de soutien de mixer pour réservoir CT-7340 | | |
| Dess. par: DM | Date: 03-06-2021 | Vérif. par: JF | |
| No dessin: | 21804.BB01-BB02.A00 | | |

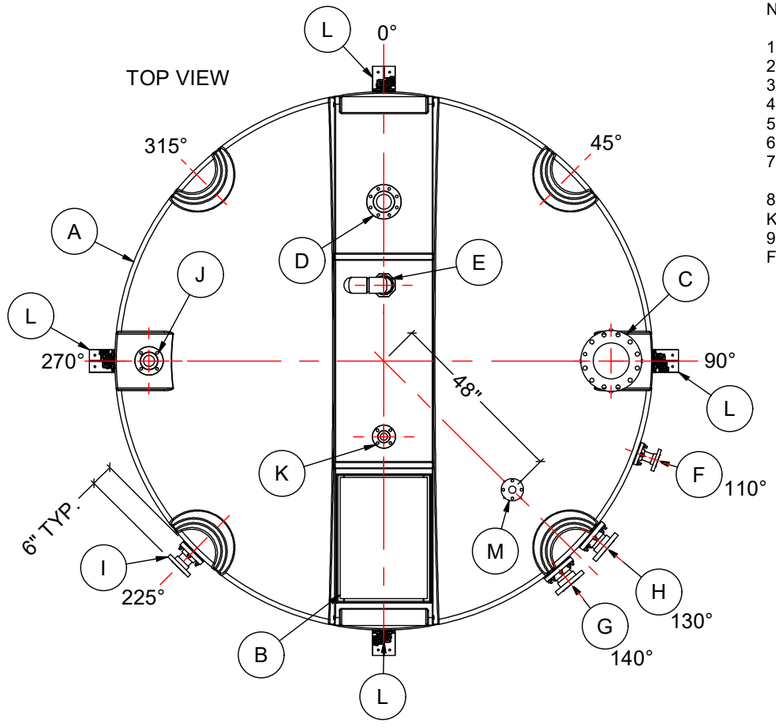


NOTES:

1. TANK IS MANUFACTURED FROM HDPE. (1.9 SG)
2. TANK IS MANUFACTURED TO ASTM-D-1998 STANDARD.
3. ALL TANK DIMENSIONS ARE SUBJECT TO A +/-3% TOLERENCE.
4. FLEXIBLE COUPLINGS ARE REQUIRED FOR ALL EXTERNAL PIPING.
5. ALL FITTING GASKETS ARE EPDM.
6. ACO RECOMMENDS ALL FLANGE GASKETS TO BE MIN. 1/4" THICK.
7. ON LARGER SIZED TANKS SOME MECHANICAL FITTINGS MAY NEED TO BE REMOVED IN ORDER TO AVOID WIDE OR OVERSIZED LOADS.
8. HDPE ALIGNMENT WEDGES ARE REQUIRED ON SOME TOP FITTINGS TO KEEP THEM PERPENDICULAR TO THE GROUND.
9. TANK MUST BE PROPERLY VENTED TO PREVENT PRESSURE OR VACUUM FROM DEVELOPING AS THE TANK IS FILLING OR EMPTYING.

| MATERIALS LIST | | |
|---|---|---|
| ITEMS | DESCRIPTION | NOTES |
| A | CT-7340 CLOSED TOP TANK | |
| B | CUSTOM STEEL AND HDPE LID (~21" X 30" ACCESS) | |
| C | 10" HDPE GUSSETED FLANGE | FEED |
| D | 4" PVC SPOOL FLANGE W/ SS-EPDM DONKER BOLTS | LEVEL |
| E | 3" FNPT PVC TANK ADAPTER WITH PVC U-VENT ASSEMBLY | VENT |
| F | 2" PVC SPOOL FLANGE W/ SS-EPDM DONKER BOLTS | DRAIN |
| G | 4" PVC SPOOL FLANGE W/ SS-EPDM DONKER BOLTS | SUCTION |
| H | 4" PVC SPOOL FLANGE W/ SS-EPDM DONKER BOLTS | SUCTION |
| I | 3" PVC SPOOL FLANGE W/ SS-EPDM DONKER BOLTS | OVERFLOW |
| J | 3" PVC SPOOL FLANGE W/ SS-EPDM DONKER BOLTS | WATER |
| K | 2" PVC SPOOL FLANGE W/ SS-EPDM DONKER BOLTS | AGITATOR |
| L | NON-SEISMIC HOLD DOWN ASSEMBLY | 4 PLACES |
| M | 2" HDPE GUSSETED FLANGE | SUMP |

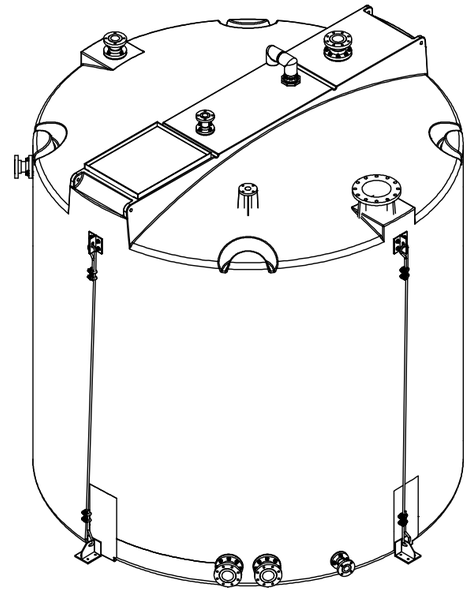

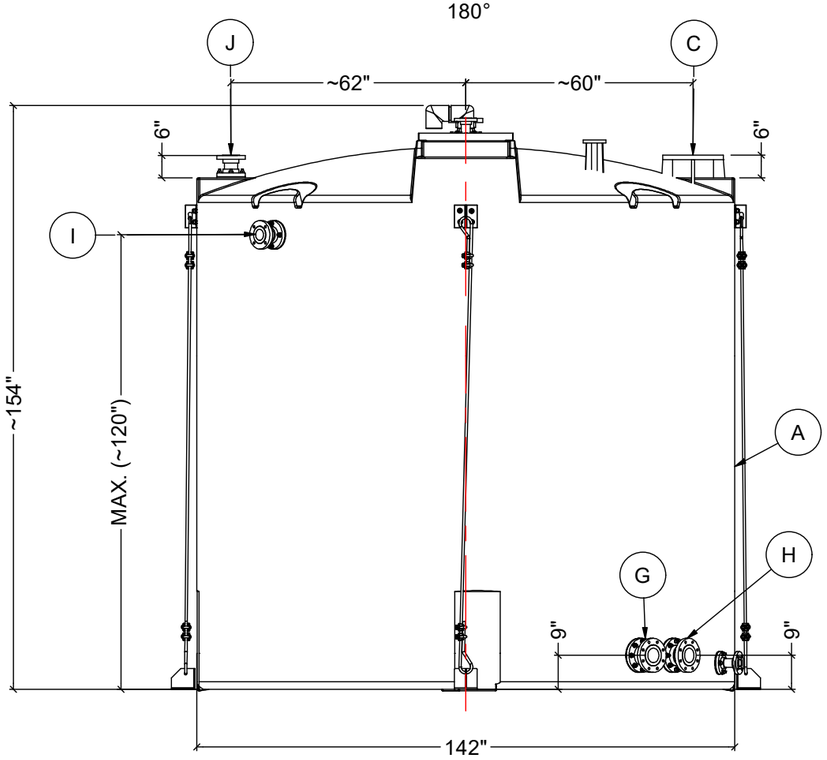


FRONT VIEW

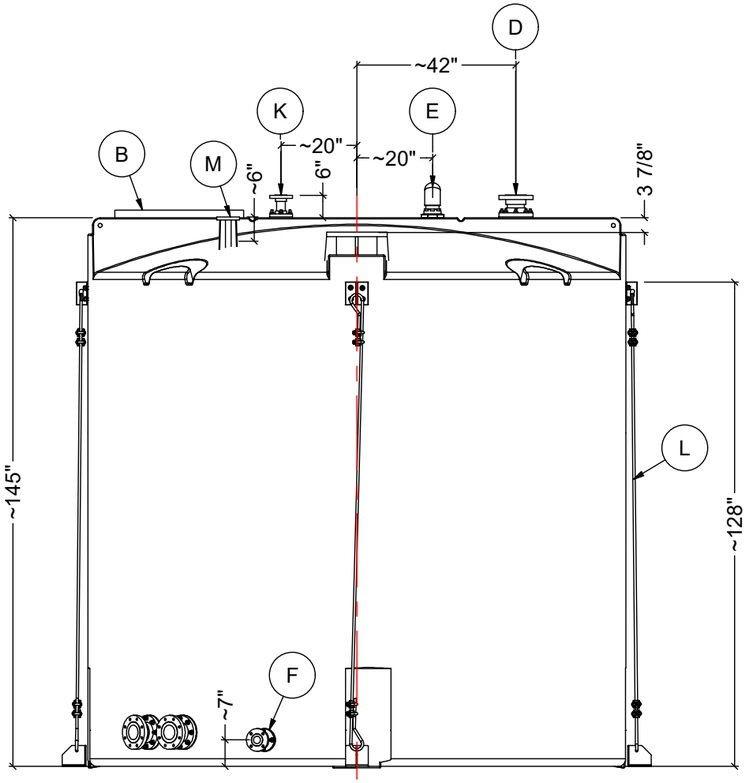


SIDE VIEW

| REV | DATE | DESCRIPTION | BY | APPD | REVD |
|---|---|---|---|---|---|
| 2 | JUN-23-21 | LID TO CUSTOM, MVD FTGS | WM | | |
| 1 | JUN-22-21 | ADDED M, G&H TO 4IN, MVD FTGS | WM | | |

REVISIONS

CUSTOMER: PCP POMPES

TITLE: 7300 IG CLOSED TOP TANK

ACO JOB NO: 78462
PURCHASE ORDER NO:
PURCHASER'S EQUIP. NO:

THIS DRAWING IS THE PROPERTY OF ROTOPLAST INC. AND SHALL NOT BE COPIED OR TRANSFERRED WITHOUT THE WRITTEN CONSENT OF ROTOPLAST INC.

ENGINEERS SEAL

ACO CONTAINER SYSTEMS
DIVISION OF ROTOPLAST INC.
PICKERING - ONTARIO - CANADA
ACO CONTAINER SYSTEMS
DIVISON OF ROTOPLAST INC.
794 MCKAY RD.
PICKERING, ONTARIO, CANADA
TEL. 905-683-8222
FAX 905-683-2969

| | |
|---|---|
| DESIGNED | |
| DRAWN | WM |
| CHECKED | |
| APPROVED | |
| SCALE | N.T.S. |
| DATE | JUN-09-2021 |

DWG No: CT-7340-78462
REV: 2

# CALCIUM HYPOCHLORITE MIXING TANK AGITATOR

## 65AGI68025

**Workshop drawing :**

- □ Approuved as is
- □ Approuved with correction(s)
- □ Rejected

**Approved by**

Name : _____

Title : _____

Compagnie : _____

Signature : _____

*3076 A, Bernard-Pilon, St-Mathieu de Beloeil, Qc, J3G 4S5 Tél.: (450) 922-4224 / Fax: (450) 922-4223*

Sharpe Mixers

20819 72nd Avenue S., Suite 630
Kent, WA 98032
United States
www.sharpemixers.com

Hayward Gordon GROUP

# MIXER DATA SHEET



**Customer: PCP**

**Sharpe Ref.# :** 341883A
**Customer Ref.# :** C5-205026

**Application :** Calcium Hypochlorite Tank 1

**Design conditions :** Viscosity(cps): 1 , Sp.Grav: 1.10 Temp.: Ambient Pressure: Atmospheric

**Tank dimensions :** 142 Dia. Tank x 150.0 " overall height from mixer base to tank floor
Tank Volume (gallons)= 8800 Mounted off-center 24"

| | |
|---|---|
| **Equipment :** | **N-SERIES HELICAL DRIVE TOP-ENTERING MIXER**<br>Quantity : 1 **Mixer Model # 3N3 -26** |
| **Motor :** | 3.00 Horsepower, @ 1750 RPM, 3PH, 60Hz, 575 VOLTS CHEM/INV-DUTY<br>182TC Frame, Motor Furnished by Sharpe , Mounted by Sharpe<br>Cast iron construction, corrosion resistant, Inverter ready with 10:1 turn-down |
| **Mixer Drive :** | N3 Parallel Helical Gearbox 25.9:1 Ratio, Rated at 8.03 Horsepower |
| **Mixer mounting :** | Mounting Plate Furnished |
| | |
| **Wetted Parts :** | Mild Steel 1/8" THICK RUBBER COVERED |
| **Shaft :** | 2.38 "Dia. X 116 " long from mounting base, turning @ 68 RPM<br>Includes No In-Tank Shaft Coupling |
| **Impellers :** | 48.0 "dia HYF-218 Hydrofoil Impeller ***21 " min. opening required to install impeller***<br>Bolted Blade Design<br>Pumping Down, Turning Clockwise Looking Down |
| | Includes rubber covering field kit |

*Shipping Weight,each = 500 lbs*
*Design Torque = 4900 lbs-in*
*Design OHM = 8300 lbs-in*

Drawing not to scale. Dimensions are for reference only. Use certified prints for construction. Dimensions in inches.

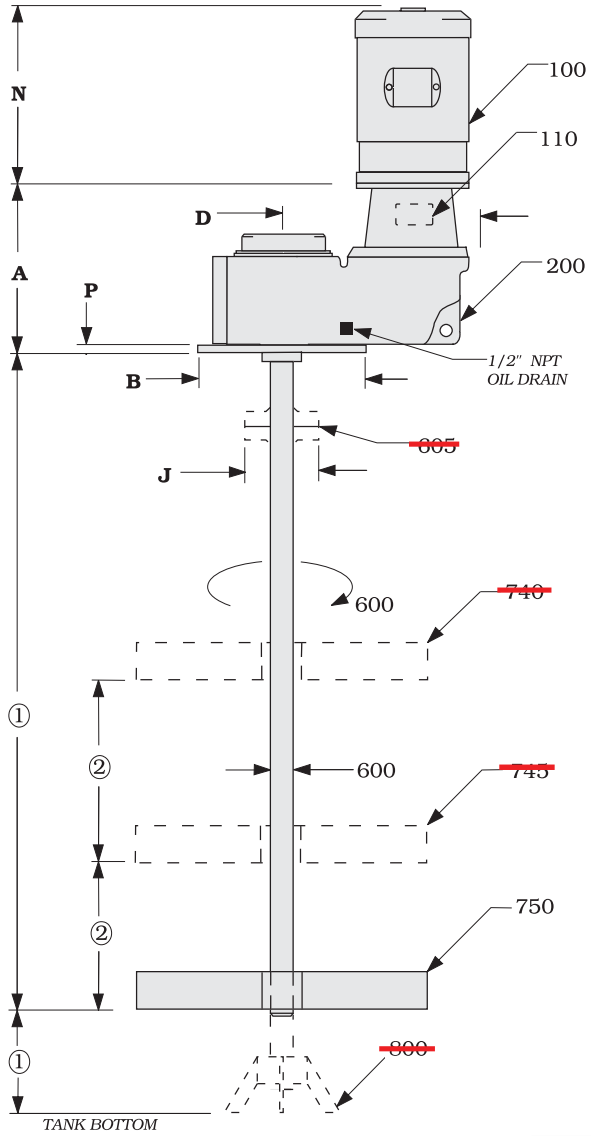


100 - MOTOR ①

110 - FLEXIBLE MOTOR COUPLING

200 - GEAR REDUCER ①

600 - SHAFT ①

~~605 - RIGID SHAFT COUPLING ②~~

~~740 - UPPER IMPELLER ②~~

~~745 - MIDDLE IMPELLER ②~~

750 - LOWER IMPELLER ①

~~800 - STEADY BEARING ②~~

①Impeller(s), shaft and other details are dependent on specific application and will be described in the Quotation/Data Sheet.

② Items are optional and will be described in the Quotation/Data Sheet if provided

③Basic weight shown in lbs is for mixer drive only, less motor and wetted parts.

MOUNTING DETAIL
PLATE MOUNT
(furnished)

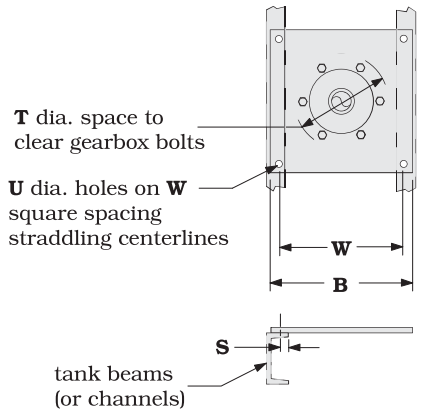


MOTOR DIM'S

| HP * | NEMA FRAME | 'N' | WT* |
|---|---|---|---|
| 1/3 -2 | 56C | 11 | 37 |
| 1-1.5 | 143TC | 11.3 | 41 |
| 1.5-2 | 145TC | 11.3 | 50 |
| 3 | 182TC | 11.8 | 65 |
| 5 | 184TC | 12.8 | 87 |
| 7.5 | 213TC | 15 | 145 |
| 10 | 215TC | 16.5 | 160 |
| 15 | 254TC | 19.6 | 310 |
| 20 | 256TC | 21.3 | 345 |
| 25 | 284TC | 20.3 | 425 |
| 30 | 286TC | 21.8 | 455 |
| 40 | 324TC | 26.5 | 575 |
| 50 | 326TC | 26.5 | 634 |
| | | | |

*NEMA frames shown are for 1750 rpm motors. Weights and Outline dimensions (A,B,D,N) are approximate.

PCP
P.O. NO.: C5-205026
SHARPE SN: 341883A
MIXER MODEL NO.: 3N3-26

OVERALL DIMENSIONS

| | N1 | N2 | N3 | N4 | N5 | N6 | N7 | N8 | N9 |
|---|---|---|---|---|---|---|---|---|---|
| **A** (MAX) | 10.94 | 11.77 | 12.83 | 15.33 | 17.23 | 18.03 | 21.78 | 23.49 | 24.89 |
| **B** | 11 | 11 | 12 | 14 | 16 | 18 | 21 | 24 | 30 |
| **D** | 7.95 | 9.73 | 11.03 | 13.03 | 15 | 16.1 | 17.75 | 20.63 | 25.95 |
| **J** (MAX) | 6 | 6.5 | 7.5 | 9 | 12.5 | 12.5 | 12.5 | 15.5 | 18.5 |
| **P** | .38 | .38 | .5 | .63 | .75 | .88 | 1 | 1.25 | 1.5 |
| **S** | .63 | .63 | .75 | .75 | .88 | .88 | .88 | .88 | 1 |
| **T** | 5.5 | 6 | 7.5 | 8.75 | 9.5 | 11.75 | 13.25 | 15.5 | 17.25 |
| **U** | .43 | .43 | .56 | .56 | .68 | .88 | .94 | 1.13 | 1.31 |
| **W** | 9 | 9 | 10.5 | 12 | 14 | 16 | 18 | 21 | 27 |
| ③ **WT** | 60 | 90 | 120 | 190 | 270 | 430 | 600 | 850 | 1400 |

# N - SERIES

HOLLOW GEARBOX OUTPUT PLATE MOUNT W/ C-FACE MOTOR

DWG NO.: S4617

CADD# N.PLATE.HOLLOW.CFACE.S 6-06

**SHARPE MIXERS** P.O. BOX 3906 SEATTLE, WA 98124 FAX (206) 767-9170 (206) 767-5660

BLADE INSTALLATION: TURBINES PUMP DOWN TURNING CLOCKWISE LOOKING DOWN. APPLY A THIN COAT OF RUBBER REPAIR TO ALL MATING SURFACES AND ASSEMBLE TURBINES ON SHAFT AS SHOWN. TORQUE NUTS WITH LOCKWASHERS ONTO WELDED STUDS. DO NOT USE FLATWASHERS. APPLY RUBBER REPAIR TO THE BOTTOM OF EACH NUT COVER AND THE MATING SURFACES ON THE BRACKETS. INSTALL THREADED NUT COVERS AS SHOWN AND TIGHTEN WITH A STRAP WRENCH. USE THE RUBBER REPAIR PRIMER & PATCH KIT PROVIDED TO COVER THE EXPOSED METAL SEAMS AROUND THE EDGES OF THE BOLT PLATES AND NUT COVERS (SEE INSTRUCTIONS ON KIT).

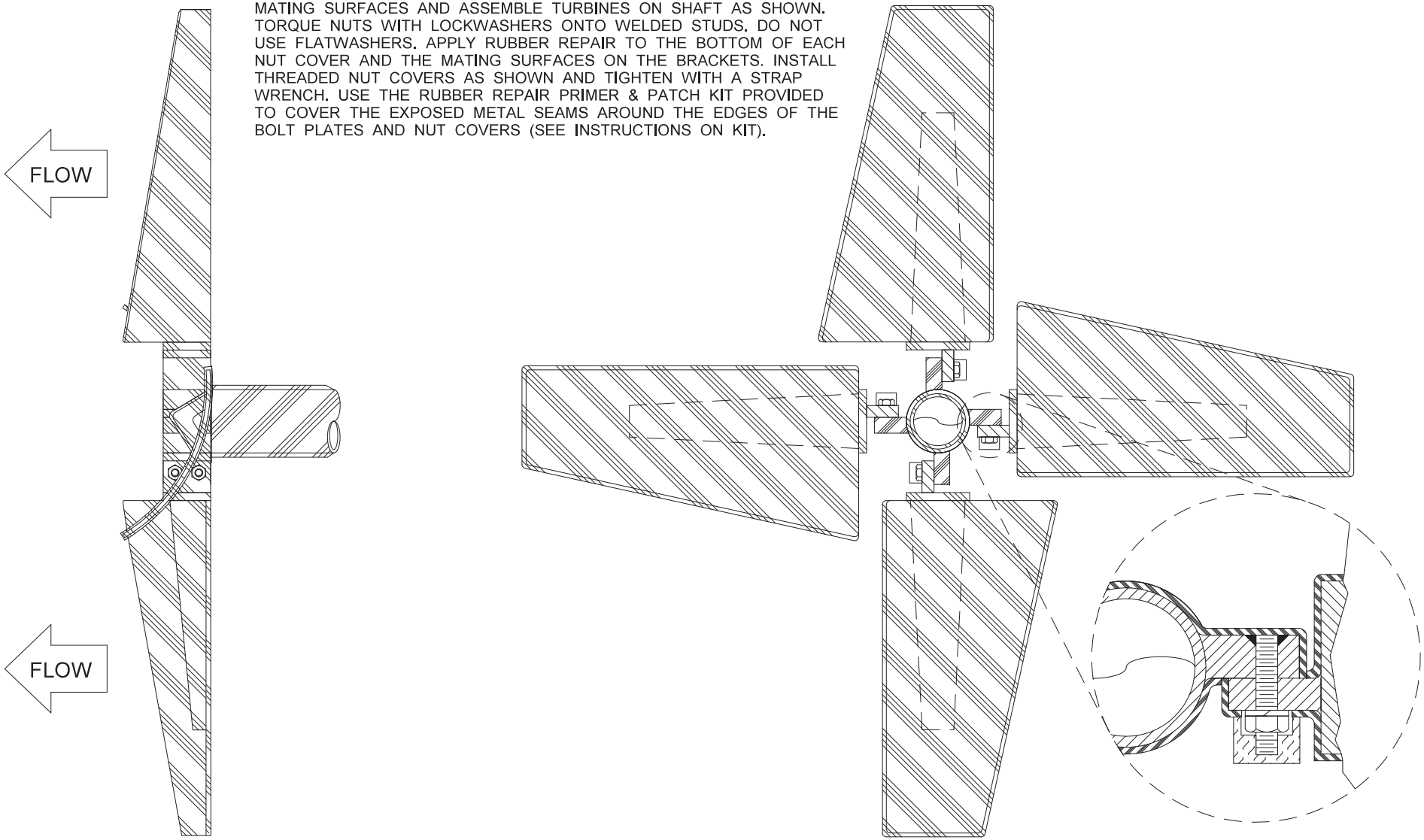


PCP
P.O. NO.: C5-205026
SHARPE SN: 341883A
MIXER MODEL NO.: 3N3-26

# BOLT ON ENERGY EFFICIENT HYFLO II IMPELLER

RUBBER COVERED

DWG NO.: A9694.1

*HYF2.BOLT.RUBBER.S revision: 0

**SHARPE MIXERS** P.O.BOX 3906 SEATTLE, WA. 98124 (206) 767-5660 FAX (206) 767-9170

For reference only; use certified drawings for construction. Dimensions are in inches

Sharpe Mixers a division of Hayward Gordon GROUP

**FOR APPROVAL**

☐ - APPROVED WITHOUT CHANGES, RELEASE FOR CONSTRUCTION
☐ - APPROVED AS NOTED, RELEASE FOR CONSTRUCTION
☐ - REJECTED, REVISE AND RESUBMIT

SIGNATURE: _____

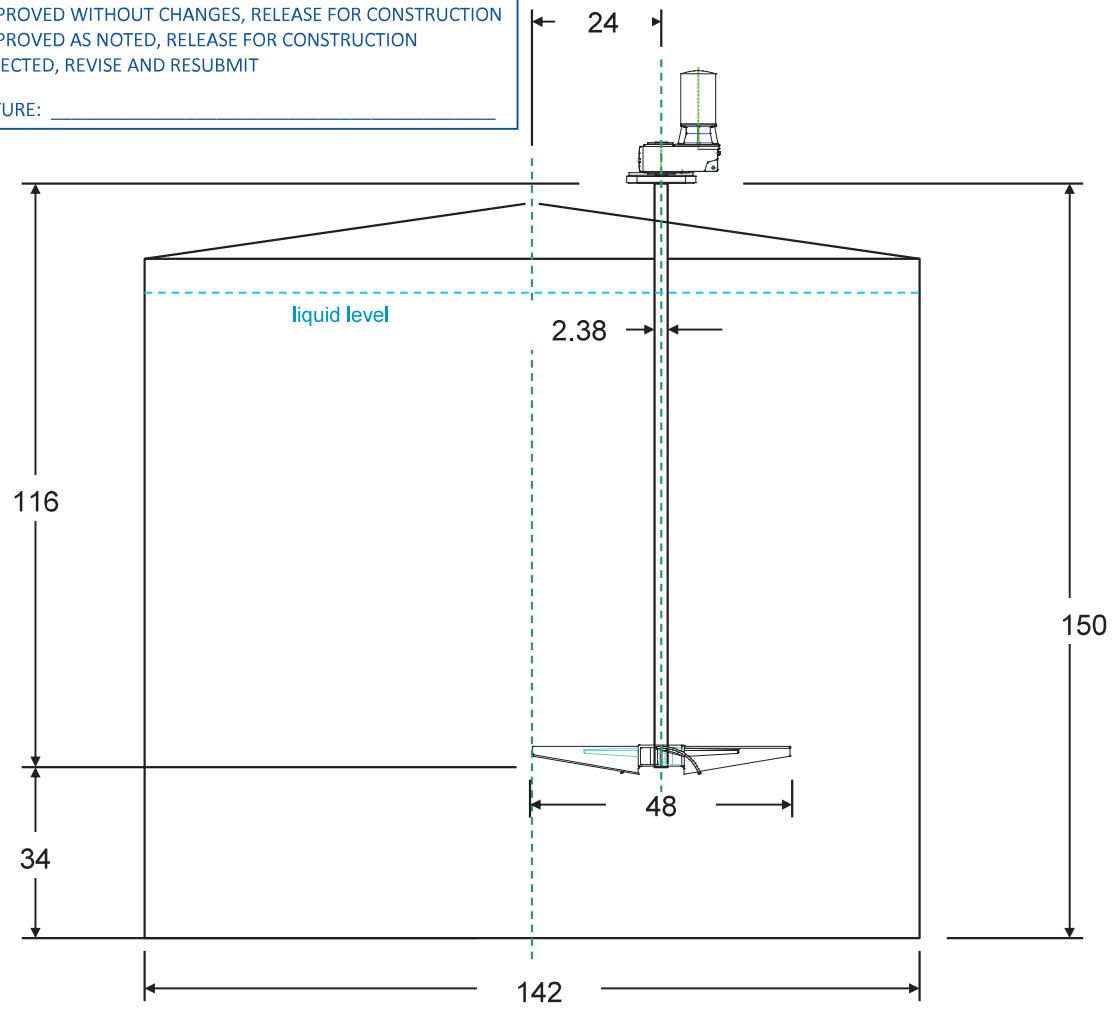


NOTES: Tank / Mixer Layout intended for scaled view of in-tank components only. Mixer drive proportions may vary slightly depending on motor type or other options. Please review drawing carefully and inform Sharpe Mixers immediately if any tank dimensions are inaccurate. Drawing generated by Sharpe Mixers Q1QP mixer selection program, Copyright 2005, Seattle, WA.

| | | |
|---|---|---|
| Mixer weight = | 500 lbs | |
| Design Torque = | 4830 lbs-in | |
| Design OHM = | 8223 lbs-in | |
| est. full tank volume = | 9507 gal | *(35989 L)* |
| est. volume @ liquid level = | 8793 gal | *(33285 L)* |

Sharpe Mixers

## TOP ENTERING MIXER / TANK LAYOUT DETAIL

***Mixer Model #*** ***3N3 -26*** ***Quantity:*** ***1***

***Customer:*** ***PCP*** p.o.#: C5-205026 **Sharpe #** ***341883A***

***Application:*** ***Calcium Hypochlorite Tank 1*** **Drawing #** ***L41883A***

BALDOR • RELIANCE

# Product Information Packet

# CECP83661T-5

## 3HP,1755RPM,3PH,60HZ,182TC,0632M,TEFC,F1

Copyright © All product information within this document is subject to ABB Motors and Mechanical Inc. copyright © protection, unless otherwise noted.

## Part Detail

| | | | | | | | |
|---|---|---|---|---|---|---|---|
| **Revision:** | AA | **Status:** | PRD/A | **Change #:** | | **Proprietary:** | No |
| **Type:** | AC | **Elec. Spec:** | 06WGX319 | **CD Diagram:** | CD0006 | **Mfg Plant:** | |
| **Mech. Spec:** | 06H770 | **Layout:** | 06LYH770 | **Poles:** | 04 | **Created Date:** | 10-03-2011 |
| **Base:** | RG | **Eff. Date:** | 10-30-2020 | **Leads:** | 3#16 | | |

## Specs

| | | | |
|---|---|---|---|
| **Catalog Number:** | CECP83661T-5 | **Inverter Code:** | Inverter Duty |
| **Enclosure:** | TEFC | **KVA Code:** | J |
| **Frame:** | 182TC | **Lifting Lugs:** | Standard Lifting Lugs |
| **Frame Material:** | Iron | **Locked Bearing Indicator:** | Locked Bearing |
| **Output @ Frequency:** | 3.000 HP @ 60 HZ | **Motor Lead Quantity/Wire Size:** | 3 @ 16 AWG |
| **Synchronous Speed @ Frequency:** | 1800 RPM @ 60 HZ | **Motor Lead Exit:** | Ko Box |
| **Voltage @ Frequency:** | 575.0 V @ 60 HZ | **Motor Lead Termination:** | Flying Leads |
| **XP Class and Group:** | CLI GP A,B,C,D | **Motor Type:** | 0632M |
| **XP Division:** | Division II | **Mounting Arrangement:** | F1 |
| **Agency Approvals:** | UR | **Power Factor:** | 77 |
| | CSA EEV | **Product Family:** | Chem Process S/P 32-8 IEEE 841 |
| | CSA | **Pulley End Bearing Type:** | Ball |
| **Auxillary Box:** | No Auxillary Box | **Pulley Face Code:** | C-Face |
| **Auxillary Box Lead Termination:** | None | **Pulley Shaft Indicator:** | Standard |
| **Base Indicator:** | Rigid | **Rodent Screen:** | None |
| **Bearing Grease Type:** | Polyrex EM (-20F +300F) | **Shaft Extension Location:** | Pulley End |
| **Blower:** | None | **Shaft Ground Indicator:** | No Shaft Grounding |
| **Constant Torque Speed Range:** | 1.5 | **Shaft Rotation:** | Reversible |

| | | | |
|---|---|---|---|
| **Current @ Voltage:** | 3.300 A @ 575.0 V | **Shaft Slinger Indicator:** | Shaft Slinger |
| **Design Code:** | B | **Speed Code:** | Single Speed |
| **Drip Cover:** | No Drip Cover | **Motor Standards:** | NEMA |
| **Duty Rating:** | CONT | **Starting Method:** | Direct on line |
| **Electrically Isolated Bearing:** | Not Electrically Isolated | **Thermal Device - Bearing:** | None |
| **Feedback Device:** | NO FEEDBACK | **Thermal Device - Winding:** | None |
| **Front Face Code:** | Standard | **Vibration Sensor Indicator:** | No Vibration Sensor |
| **Front Shaft Indicator:** | None | **Winding Thermal 1:** | None |
| **Heater Indicator:** | No Heater | **Winding Thermal 2:** | None |
| **Insulation Class:** | F | **XP Temp Code:** | T3C |

## Nameplate NP3235E

| | | | | | | | |
|---|---|---|---|---|---|---|---|
| **CAT.NO.** | CECP83661T-5 | | | | | | |
| **SPEC.** | 06H770X319G1 | | | | | | |
| **HP** | 3 TE | | | **IP** | 56 | | |
| **VOLTS** | 575 | | | | | | |
| **AMPS** | 3.3 | | | | | | |
| **R.P.M.** | 1755 | | | | | | |
| **FRAME** | 182TC | **HZ** | 60 | | | **PH** | 3 |
| **SER.F.** | 1.15 | **CODE** | J | **DES.** | B | **CLASS** | F |
| **RATING** | 40C AMB-CONT | | | | | | |
| **SN** | | | | | | | |
| **DE** | 6206 | **ODE** | 6206 | | | | |
| **NEMA NOM. EFF.** | 89.5 | **P.F.** | 77 | | | | |
| **GUAR. MIN. EFF.** | 87.5 | **CC** | 010A | | | | |
| **T. CODE** | T3C | **TEMP=** | 160 | | | | |

## Nameplate NP3186E

| | | | | | |
|---|---|---|---|---|---|
| SPEC. | 06H770X319G1 | | | | |
| D.E. BRG. | 30BC02XP30X | | | | |
| O.D.E. BRG. | 30BC02X30X | | | | |
| GREASE | POLYREX EM | | | | |
| WEIGHT | 122 | # OF ROTOR BARS | 28 | # OF STATOR SLOTS | 36 |
| RPM MAX | 2700 | MAX. KVAR | .86 | | |
| BLANK | | | | | |
| INV.TYPE | PWM | | | | |
| T= | 160 | | | | |
| C HP FR | 60 | C HP TO | 90 | | |
| CT HZ FROM | 1.5 | CT HZ TO | 60 | | |
| VT HZ FROM | 0- | VT HZ TO | 60 | | |
| HTR-VOLTS | N/A | HTR-AMPS | N/A | | |
| HTR-WATTS | | MAX. SPACE HEATER TEMP. | N/A | | |

**AC Induction Motor Performance Data**
Record # 47008
Typical performance - not guaranteed values

| **Winding:** 06WGX319-R011 | **Type:** 0632M | **Enclosure:** TEFC |
|---|---|---|

| **Nameplate Data** | | | | **575 V, 60 Hz: Single Voltage Motor** | |
|---|---|---|---|---|---|
| **Rated Output (HP)** | | | 3 | **Full Load Torque** | 9.05 LB-FT |
| **Volts** | | | 575 | **Start Configuration** | direct on line |
| **Full Load Amps** | | | 3.3 | **Breakdown Torque** | 33 LB-FT |
| **R.P.M.** | | | 1755 | **Pull-up Torque** | 18.2 LB-FT |
| **Hz** | 60 | **Phase** | 3 | **Locked-rotor Torque** | 20.3 LB-FT |
| **NEMA Design Code** | B | **KVA Code** | J | **Starting Current** | 23.8 A |
| **Service Factor (S.F.)** | | | 1.15 | **No-load Current** | 1.7 A |
| **NEMA Nom. Eff.** | 89.5 | **Power Factor** | 77 | **Line-line Res. @ 25ºC** | 6.22 Ω |
| **Rating - Duty** | | | 40C AMB-CONT | **Temp. Rise @ Rated Load** | 35°C |
| **S.F. Amps** | | | | **Temp. Rise @ S.F. Load** | 42°C |
| | | | | **Rotor inertia** | 0.298 LB-FT2 |

**Load Characteristics 575 V, 60 Hz, 3 HP**

| **% of Rated Load** | **25** | **50** | **75** | **100** | **125** | **150** | **S.F.** |
|---|---|---|---|---|---|---|---|
| **Power Factor** | 38 | 59 | 71 | 77 | 81 | 83 | 79 |
| **Efficiency** | 83.1 | 88.4 | 89.8 | 89.6 | 89.1 | 87.7 | 89.3 |
| **Speed** | 1790 | 1779 | 1769 | 1757 | 1744 | 1730 | 1749 |
| **Line amperes** | 1.86 | 2.22 | 2.71 | 3.27 | 3.92 | 4.69 | 3.66 |

# CALCIUM HYPOCHLORITE TRANSFER PUMP

## #1: 65PSO68004
## #2: 65PSO68005

**Workshop drawing :**

- □ Approuved as is
- □ Approuved with correction(s)
- □ Rejected

**Approuved by**

Name : _____

Title : _____

Compagnie : _____

Signature : _____

*3076 A, Bernard-Pilon, St-Mathieu de Beloeil, Qc, J3G 4S5 Tél.: (450) 922-4224 / Fax: (450) 922-4223*

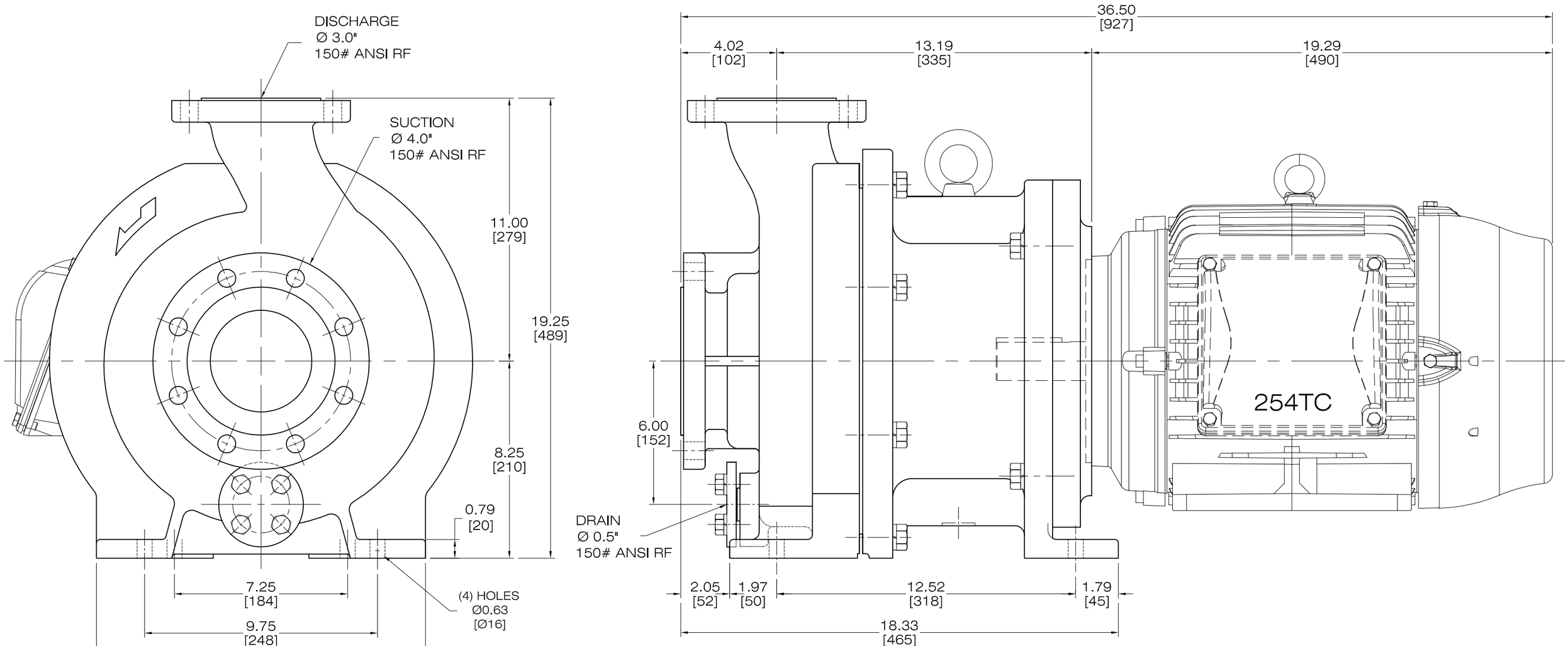


F1 CONDUIT LOCATION SHOWN

CUSTOMER: VISSERS SALES
LOCATION: AURORA, ONTARIO - CANADA
P.O. NO.: PO00017759
SERVICE: 10% SODIUM HYPOCHLORITE
TAG NO.: N/A
PUMP MODEL: MTA-A70-P-F20-4-EE
SERIAL NO.: 3522675-2A/B
MOTOR: 15HP/ 1800RPM/ TEFC/ 3-60-575V/ 254TC
WEIGHT: APPROX. 775 LBS TOTAL

CERTIFIED

APPROVED
By Neal Gunn at 2:16 pm, 5/21/21

REVISIONS | ALL DIMENSIONS ± 0.12" [3mm]

| CONFIDENTIAL | NO. | DATE | COMMENT | INT |
|---|---|---|---|---|
| This drawing is the property of Magnatex Pumps Inc. and is confidential. Not for use for any manufacturing purpose without documented authorization of Magnatex Pumps Inc. | 1 | | | |
| | 2 | | | |
| | 3 | | | |

MAGNATEX Pumps, Inc.

GENERAL ASSEMBLY
MTA Series Close-Coupled Pump

| DRAWN BY: | DATE: | SCALE: | PAGE: |
|---|---|---|---|
| K HUFFER | 5/19/21 | NTS | 1 OF 1 |

**3522675-2A/B**

GA-MTA-A70-254TC

COPYRIGHT 2021 MAGNATEX PUMPS INC.

# Pump Data Sheet - Magnatex

Company: Magnatex Pumps
Name: Amy Fry
Date: 03/23/2021

## Pump:

| | | | |
|---|---|---|---|
| Model: | MTA-A70-10 | Dimensions: Suction: | 4 in |
| Type: | MTA | Discharge: | 3 in |
| Synch Speed: | 1800 rpm | | |
| Dia: | 8 in | | |
| Magnet: | DBD3-884X | | |
| Size: | 4 x 3 x 10 | | |

## Search Criteria:

| | | | |
|---|---|---|---|
| Flow: | 450 US gpm | Near Miss: | 50% of Head |
| Head: | 45 ft | Static Head: | 0 ft |

## Pump Selection Warnings:

None

## Fluid:

| | | | |
|---|---|---|---|
| Name: | CALCIUM HYPOCHLORITE | | |
| SG: | 1.12 | Vapor Pressure: | 1 psi a |
| Density: | 69.8 lb/ft³ | Atm Pressure: | 14.7 psi a |
| Viscosity: | 1.1 cP | | |
| Temperature: | 70 °F | | |

## Pump Limits:

| | | | |
|---|---|---|---|
| Temperature: | 212 °F | Sphere Size: | --- |
| Wkg Pressure: | 116 psi g | Power: | 55 hp |

## Motor:

| | | | |
|---|---|---|---|
| Standard: | NEMA | Size: | 15 hp |
| Enclosure: | TEFC | Speed: | 1800 rpm |
| Frame: | 254T | | |
| Sizing Criteria: | Max Power on Design Curve | | |

### --- Duty Point ---

| | |
|---|---|
| Flow: | 462 US gpm |
| Head: | 47.3 ft |
| Eff: | 54.3% |
| Power: | 11.4 hp |
| NPSHr: | 18.1 ft |
| Speed: | 1750 rpm |

### --- Design Curve ---

| | |
|---|---|
| Shutoff Head: | 65.7 ft |
| Shutoff dP: | 31.8 psi |
| Min Flow: | 80 US gpm |

BEP: 59.6% @ 320 US gpm
NOL Power:
12.4 hp @ 520 US gpm

### --- Max Curve ---

Max Power:
23.5 hp @ 520 US gpm

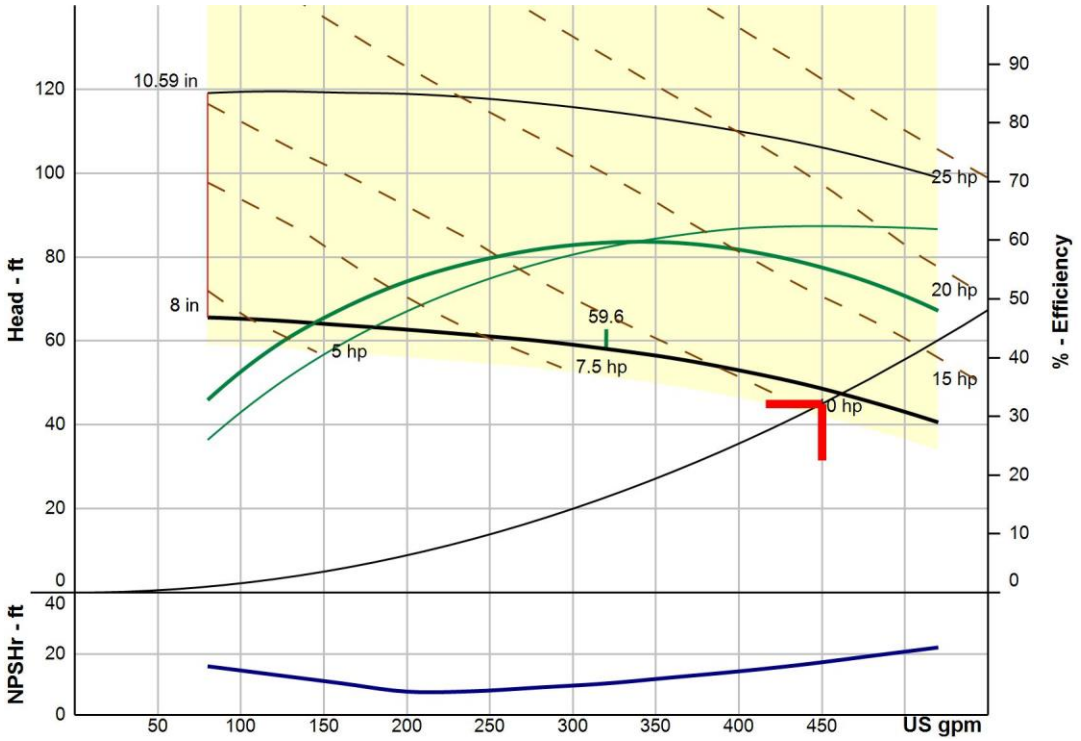


## Performance Evaluation:

| Flow | Speed | Head | Efficiency | Power | NPSHr |
|---|---|---|---|---|---|
| | rpm | | % | | |
| 540 | 1750 | --- | --- | --- | --- |
| 450 | 1750 | 48.6 | 55.3 | 11.2 | 17.3 |
| 360 | 1750 | 55.9 | 59.6 | 9.54 | 12.3 |
| 270 | 1750 | 60.4 | 57.9 | 7.94 | 8.71 |
| 180 | 1750 | 63.3 | 50.6 | 6.34 | 9.03 |

# DATA SHEET

## Three Phase Induction Motor - Squirrel Cage

| | |
|---|---|
| Customer | : Vissers |
| Customer reference | : 3522675-2 |

| | | | |
|---|---|---|---|
| Product line | : W22 NEMA Premium Efficiency Three-Phase | Product code : | 12446946 |
| | | Catalog # : | 01518ET3H254TC-W22 |

| | | | |
|---|---|---|---|
| Frame | : 254/6TC | Locked rotor time | : 55s (cold) 31s (hot) |
| Output | : 15 HP (11 kW) | Temperature rise | : 80 K |
| Poles | : 4 | Duty cycle | : Cont.(S1) |
| Frequency | : 60 Hz | Ambient temperature | : -20°C to +40°C |
| Rated voltage | : 575 V | Altitude | : 1000 m.a.s.l. |
| Rated current | : 14.4 A | Protection degree | : IP55 |
| L. R. Amperes | : 92.2 A | Cooling method | : IC411 - TEFC |
| LRC | : 6.4x(Code G) | Mounting | : F-1 |
| No load current | : 5.76 A | Rotation[1] | : Both (CW and CCW) |
| Rated speed | : 1770 rpm | Noise level[2] | : 64.0 dB(A) |
| Slip | : 1.67 % | Starting method | : Direct On Line |
| Rated torque | : 6.15 kgfm | Approx. weight[3] | : 143 kg |
| Locked rotor torque | : 220 % | | |
| Breakdown torque | : 260 % | | |
| Insulation class | : F | | |
| Service factor | : 1.25 | | |
| Moment of inertia (J) | : 0.1104 kgm² | | |
| Design | : B | | |

| Output | 25% | 50% | 75% | 100% |
|---|---|---|---|---|
| Efficiency (%) | 90.2 | 91.0 | 91.7 | 92.4 |
| Power Factor | 0.43 | 0.68 | 0.78 | 0.83 |

| Foundation loads | |
|---|---|
| Max. traction | : 180 kgf |
| Max. compression | : 323 kgf |

| | | Drive end | Non drive end |
|---|---|---|---|
| Bearing type | : | 6309 C3 | 6209 C3 |
| Sealing | : | V'Ring | V'Ring |
| Lubrication interval | : | 20000 h | 20000 h |
| Lubricant amount | : | 13 g | 9 g |
| Lubricant type | : | Mobil Polyrex EM | |

Notes

This revision replaces and cancel the previous one, which must be eliminated.
(1) Looking the motor from the shaft end.
(2) Measured at 1m and with tolerance of +3dB(A).
(3) Approximate weight subject to changes after manufacturing process.
(4) At 100% of full load.

These are average values based on tests with sinusoidal power supply, subject to the tolerances stipulated in NEMA MG-1.

| Rev. | Changes Summary | Performed | Checked | Date |
|---|---|---|---|---|
| | | | | |

| | | | | |
|---|---|---|---|---|
| Performed by | | | | |
| Checked by | | | Page | Revision |
| Date | 25/05/2021 | | 1 / 6 | |

This document is exclusive property of WEG S/A. Reprinting is not allowed without written authorization of WEG S/A.
Subject to change without notice

# TORQUE AND CURRENT VS SPEED CURVE

## Three Phase Induction Motor - Squirrel Cage

| | |
|---|---|
| Customer | : Vissers |
| Customer reference | : 3522675-2 |

| | | | |
|---|---|---|---|
| Product line | : W22 NEMA Premium Efficiency Three-Phase | Product code : | 12446946 |
| | | Catalog # : | 01518ET3H254TC-W22 |

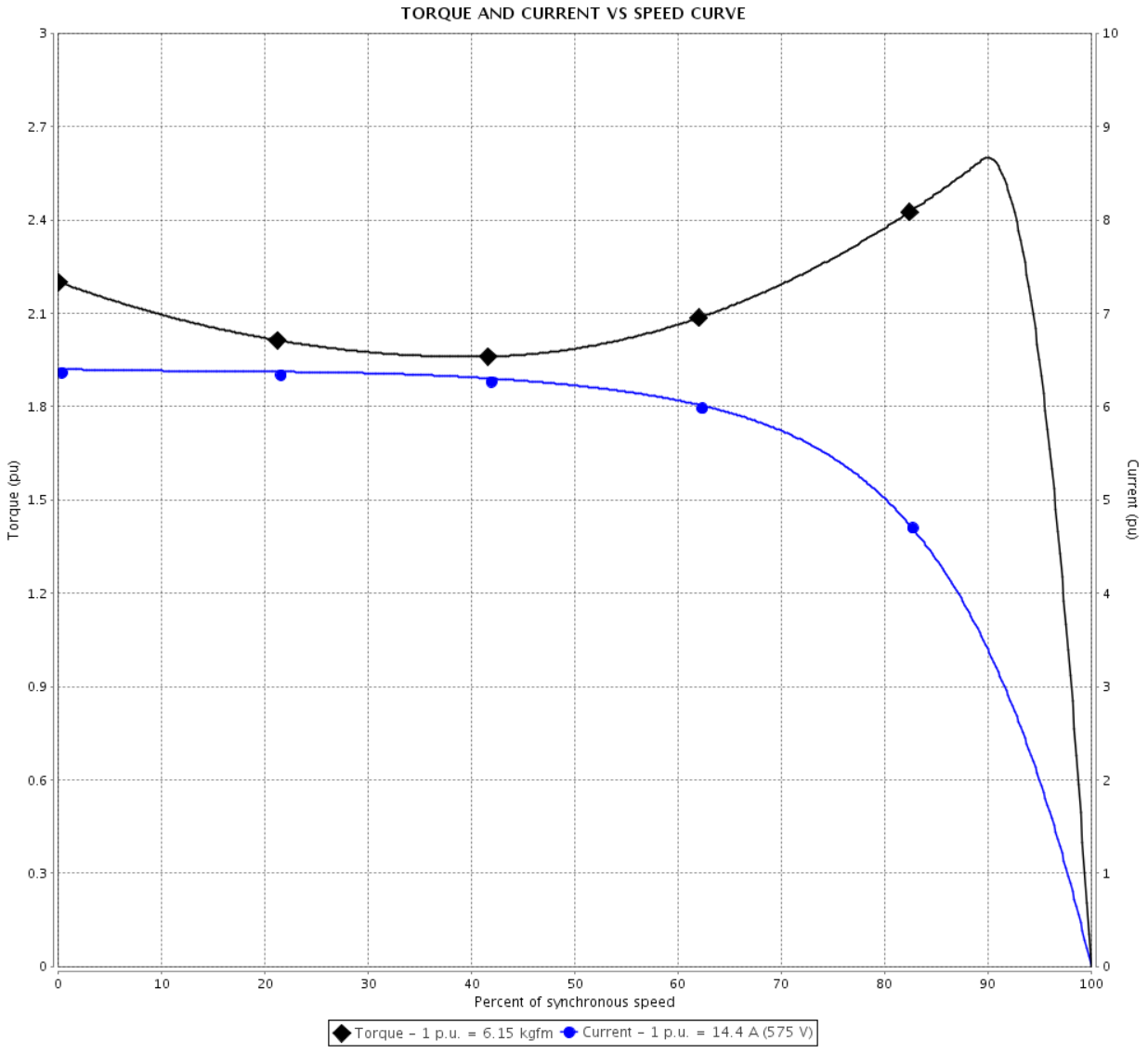


| | |
|---|---|
| Performance | : 575 V 60 Hz 4P |

| | | | |
|---|---|---|---|
| Rated current | : 14.4 A | Moment of inertia (J) | : 0.1104 kgm² |
| LRC | : 6.4 | Duty cycle | : Cont.(S1) |
| Rated torque | : 6.15 kgfm | Insulation class | : F |
| Locked rotor torque | : 220 % | Service factor | : 1.25 |
| Breakdown torque | : 260 % | Temperature rise | : 80 K |
| Rated speed | : 1770 rpm | Design | : B |

| | |
|---|---|
| Locked rotor time | : 55s (cold) 31s (hot) |

| Rev. | Changes Summary | Performed | Checked | Date |
|---|---|---|---|---|
| | | | | |

| | | | | |
|---|---|---|---|---|
| Performed by | | | | |
| Checked by | | | Page | Revision |
| Date | 25/05/2021 | | 2 / 6 | |

This document is exclusive property of WEG S/A. Reprinting is not allowed without written authorization of WEG S/A.
Subject to change without notice

# LOAD PERFORMANCE CURVE

## Three Phase Induction Motor - Squirrel Cage

| | |
|---|---|
| Customer | : Vissers |
| Customer reference | : 3522675-2 |

| | | | |
|---|---|---|---|
| Product line | : W22 NEMA Premium Efficiency Three-Phase | Product code : | 12446946 |
| | | Catalog # : | 01518ET3H254TC-W22 |

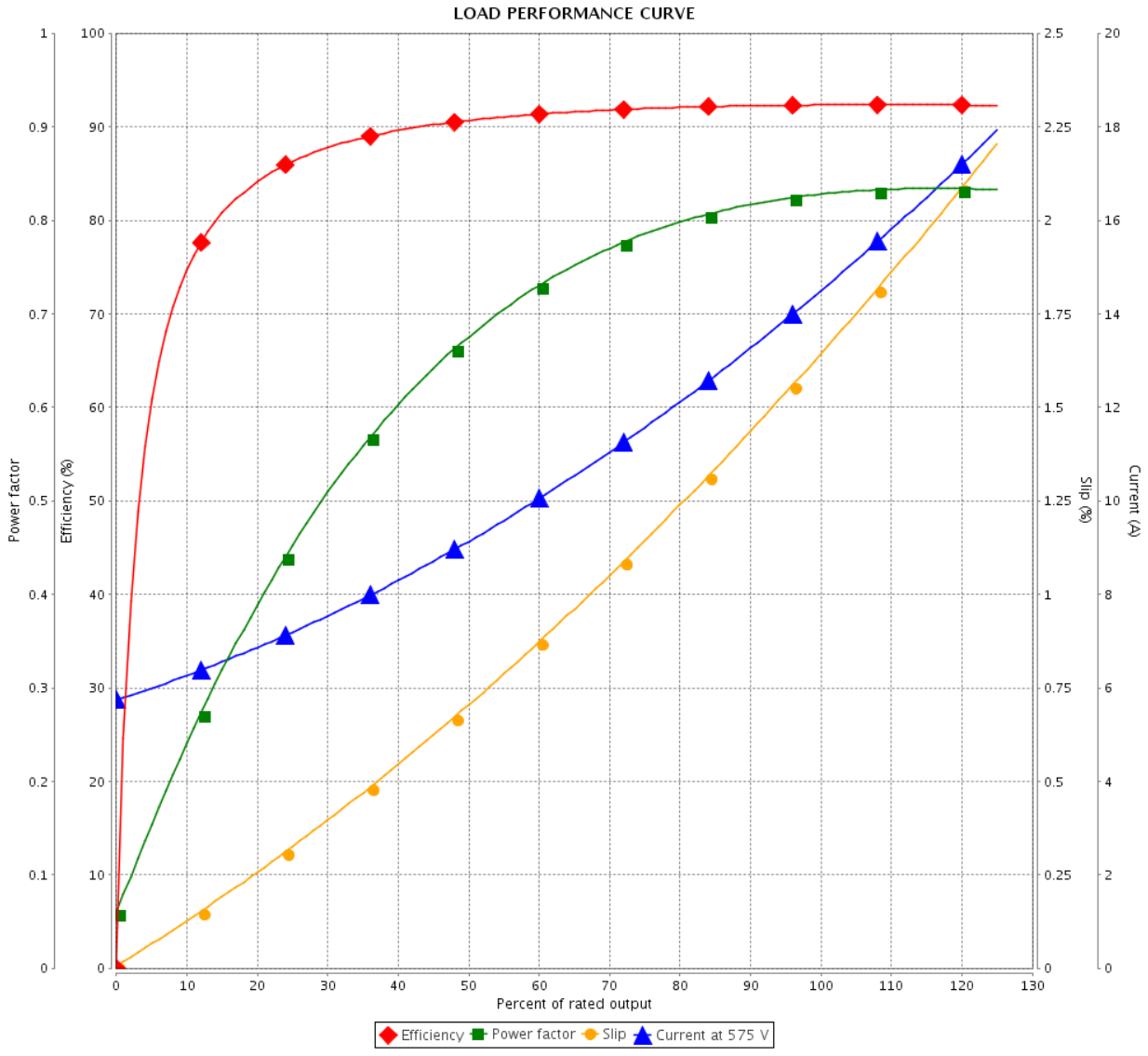


| | |
|---|---|
| Performance | : 575 V 60 Hz 4P |

| | | | |
|---|---|---|---|
| Rated current | : 14.4 A | Moment of inertia (J) | : 0.1104 kgm² |
| LRC | : 6.4 | Duty cycle | : Cont.(S1) |
| Rated torque | : 6.15 kgfm | Insulation class | : F |
| Locked rotor torque | : 220 % | Service factor | : 1.25 |
| Breakdown torque | : 260 % | Temperature rise | : 80 K |
| Rated speed | : 1770 rpm | Design | : B |

| Rev. | Changes Summary | Performed | Checked | Date |
|---|---|---|---|---|
| | | | | |

| | | | | |
|---|---|---|---|---|
| Performed by | | | | |
| Checked by | | | Page | Revision |
| Date | 25/05/2021 | | 3 / 6 | |

This document is exclusive property of WEG S/A. Reprinting is not allowed without written authorization of WEG S/A.
Subject to change without notice

# THERMAL LIMIT CURVE

## Three Phase Induction Motor - Squirrel Cage

| | |
|---|---|
| Customer | : Vissers |
| Customer reference | : 3522675-2 |

| | | | |
|---|---|---|---|
| Product line | : W22 NEMA Premium Efficiency Three-Phase | Product code : | 12446946 |
| | | Catalog # : | 01518ET3H254TC-W22 |

| | |
|---|---|
| Performance | : 575 V 60 Hz 4P |

| | | | |
|---|---|---|---|
| Rated current | : 14.4 A | Moment of inertia (J) | : 0.1104 kgm² |
| LRC | : 6.4 | Duty cycle | : Cont.(S1) |
| Rated torque | : 6.15 kgfm | Insulation class | : F |
| Locked rotor torque | : 220 % | Service factor | : 1.25 |
| Breakdown torque | : 260 % | Temperature rise | : 80 K |
| Rated speed | : 1770 rpm | Design | : B |

| | |
|---|---|
| Heating constant | |
| Cooling constant | |

| Rev. | Changes Summary | Performed | Checked | Date |
|---|---|---|---|---|
| | | | | |

| | | | | |
|---|---|---|---|---|
| Performed by | | | | |
| Checked by | | | Page | Revision |
| Date | 25/05/2021 | | 4 / 6 | |

This document is exclusive property of WEG S/A. Reprinting is not allowed without written authorization of WEG S/A.
Subject to change without notice

# THERMAL LIMIT CURVE

## Three Phase Induction Motor - Squirrel Cage

Customer : Vissers
Customer reference : 3522675-2

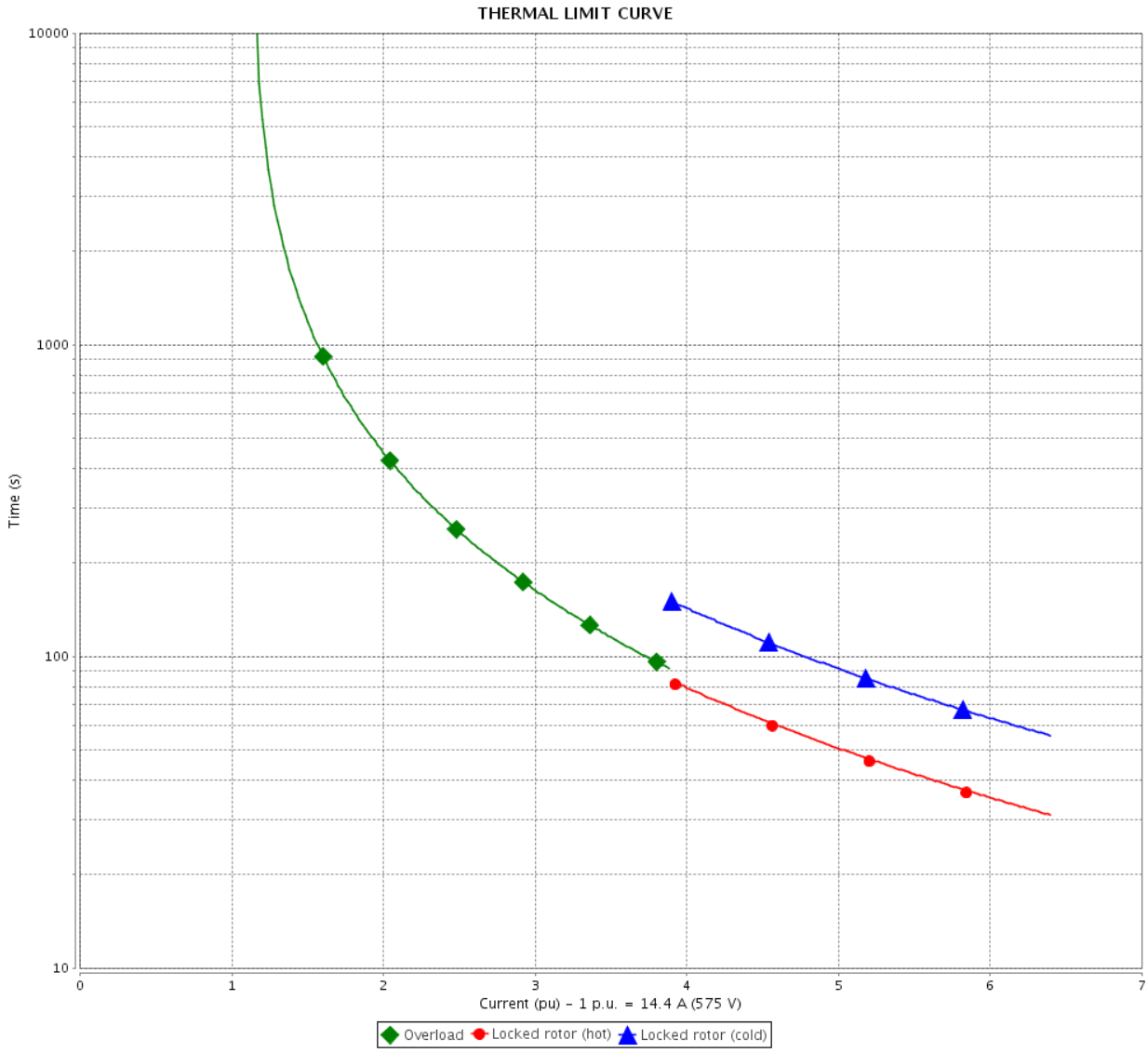


| Rev. | Changes Summary | Performed | Checked | Date |
|---|---|---|---|---|
| | | | | |

| | | | | |
|---|---|---|---|---|
| Performed by | | | | |
| Checked by | | | Page | Revision |
| Date | 25/05/2021 | | 5 / 6 | |

This document is exclusive property of WEG S/A. Reprinting is not allowed without written authorization of WEG S/A.
Subject to change without notice

# VFD OPERATION CURVE

## Three Phase Induction Motor - Squirrel Cage

| | |
|---|---|
| Customer | : Vissers |
| Customer reference | : 3522675-2 |

| | | | |
|---|---|---|---|
| Product line | : W22 NEMA Premium Efficiency Three-Phase | Product code : | 12446946 |
| | | Catalog # : | 01518ET3H254TC-W22 |

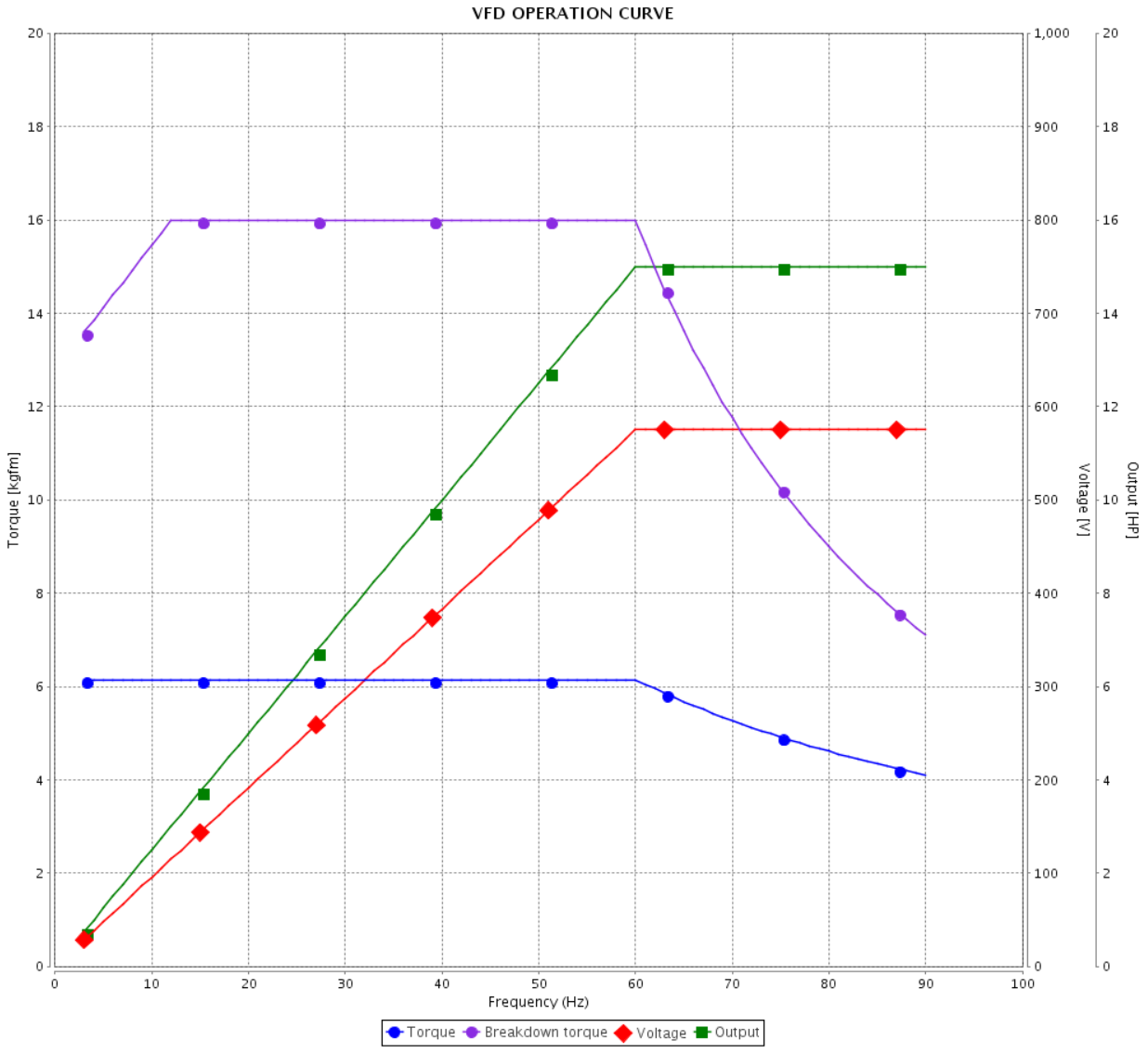


| | |
|---|---|
| Performance | : 575 V 60 Hz 4P |

| | | | |
|---|---|---|---|
| Rated current | : 14.4 A | Moment of inertia (J) | : 0.1104 kgm² |
| LRC | : 6.4 | Duty cycle | : Cont.(S1) |
| Rated torque | : 6.15 kgfm | Insulation class | : F |
| Locked rotor torque | : 220 % | Service factor | : 1.25 |
| Breakdown torque | : 260 % | Temperature rise | : 80 K |
| Rated speed | : 1770 rpm | Design | : B |

| Rev. | Changes Summary | Performed | Checked | Date |
|---|---|---|---|---|
| | | | | |

| | | | | |
|---|---|---|---|---|
| Performed by | | | | |
| Checked by | | | Page | Revision |
| Date | 25/05/2021 | | 6 / 6 | |

This document is exclusive property of WEG S/A. Reprinting is not allowed without written authorization of WEG S/A.
Subject to change without notice

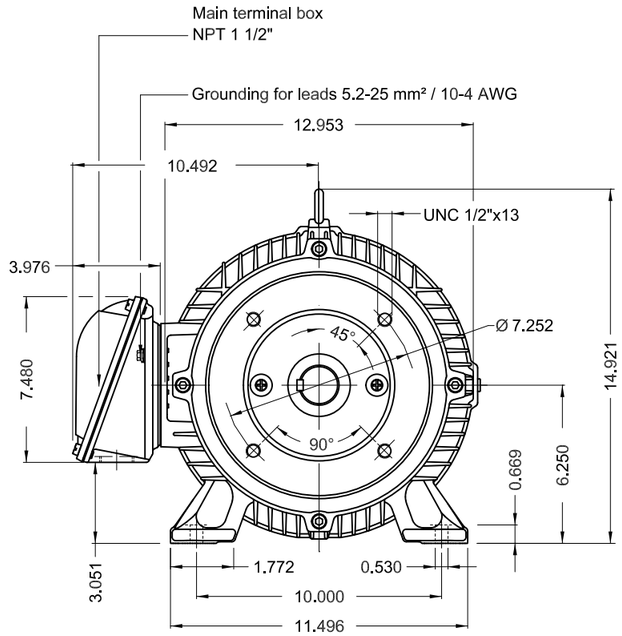


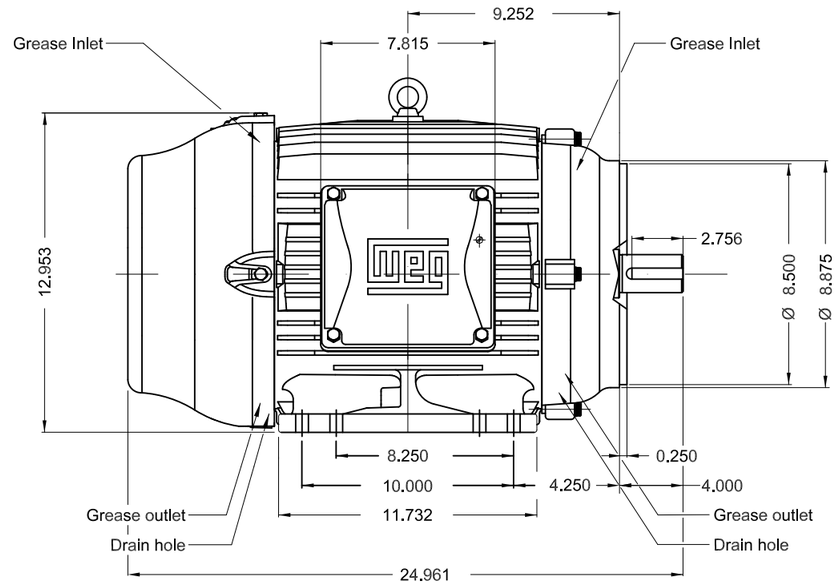


Color RAL 5009

Painting plan 203A

Mounting B34R(D)

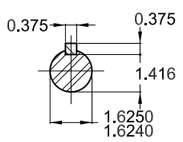


15 HP 04 Poles 60Hz | A

| ECM | LOC | SUMMARY OF MODIFICATIONS | EXECUTED | CHECKED | RELEASED | DATE | VER |
|---|---|---|---|---|---|---|---|

| | | | |
|---|---|---|---|
| EXECUTED | PIRWBUSER | THREE PHASE W22 MOTOR - NEMA PREMIUM EFF | PREVIEW |
| CHECKED | | FRAME 254/6TC IP55 TEFC | WDD |
| RELEASED | | | |
| REL DT. | | WMO Jaragua do Sul Product Engineering | SHEET 1 / 1 |

Dimensions in inches

XME A3

WEG's property. Forbidden reproduction without previous authorization.

NEMA Premium W22

3PT9 LISTED C US

FOR SAFE AREA
Mod.TE1BF0X0N
CC029A

C US Energy Verified

Class I, Div 2, Gr A, B, C and D – T3
Class I, Zone 2, IIC – T3
Class II, Div 2, Gr F and G – T4
For use on PWM: Gr. A, B, C, D and F,
VT 1000:1, CT 20:1, 1.00SF – T3A

CT015S04NPW22

Inverter Duty Motor
Severe Duty

MADE IN BRAZIL
12446946

PH3 60Hz Fr. 254/6TC 1000m.a.s.l. IP55 TEFC 315lb

| | | |
|---|---|---|
| V 575 | A 14.4 | |
| HP 15 | kW 11 | |
| SF 1.25 | SFA 18.0 | |
| RPM 1770 | PF 0.83 | |
| AMB 40°C | INS cl. F DT80K | NEMA NOM EFF 92.4% |
| DUTY CONT. | DES B Code G | |

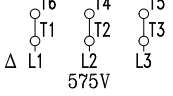





MOBIL POLYREX EM (20000h)

MTA

MAGNATEX® Pumps, Inc.

PFA Lined Magnetic Drive Process Pumps



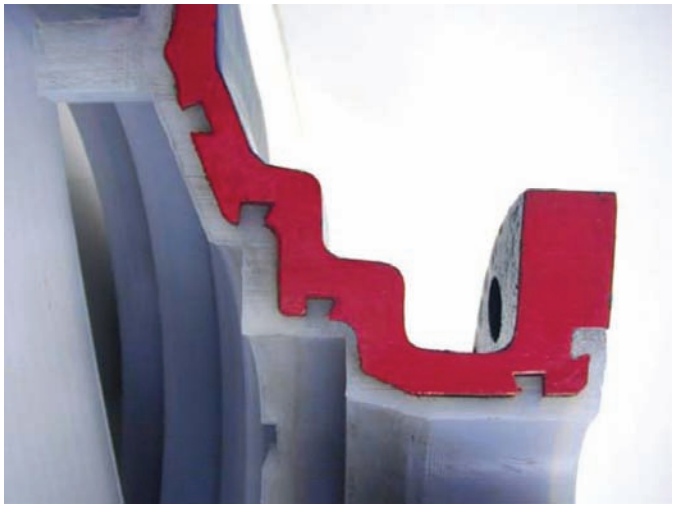

# TEXEL® PFA Lined MTA Series Pump Features

- PFA (Perfluoroalkoxytetrafluoroethylene) is a high-strength, high-temperature and abrasion-resistant fluoropolymer material
- Standard lining thickness is 5-6 mm
- PFA lining is mechanically secured to the ductile iron casing armoring by means of recessed dovetails that are cast into the ductile iron casing armor
- Extra long main shaft bushing
- Proprietary high pressure (1200 psi) transfer compression molding process
- Completely seamless inner magnet lining.

## Competitive Comparator

| MAGNATEX | COMPETITION |
|---|---|
| PFA offers the broadest range of resistance to chemical attack, lowest permeation rate and highest temperature capability of all the fluoropolymer materials, which ensures the maximum possible service life for Magnatex® lined magnetic drive pumps. | Generally only available in cheaper ETFE (Ethylene Tetrafluoro-ethylene) material, which has less chemical resistance, higher permeability and lower temperature resistance than PFA. |
| Magnatex PFA linings are 5–6mm thick and therefore will last longer in service than thinner ones of the same material and even longer when compared to the ETFE and PVDF linings offered by most of our competitors. | Most competitors' linings are just 3–4 mm thick, which means they have proportionately less corrosion and permeation resistance than Magnatex lined pumps. |
| High-pressure molding at 1200 psi produces a positive locking of the lining material and prevents lining movement in high vacuum or low suction pressure applications. | Most competitors have no mechanical means of restraining the casing liner, which can result in lining movement in high vacuum or low suction pressure applications. Shifting or movement of the lining may result in linings collapsing onto the internal rotating ele-ments leading to catastrophic failure of the pump. |
| The extra long main shaft bushing provides greater stability for operation across the entire hydraulic range of the pump, with smooth, quiet operation and extremely low vibration. Greater shaft support surface area means lower hydraulic loading, less wear and longer service life | Competitors generally offer shorter main shaft bushings, resulting in a smaller surface area to support dynamic shaft loads, which results in a shorter pump life. |
| High-pressure transfer molding @ 1200psi produces a lining with a dense, uniform thickness and superior surface finish, all of which contribute to superior service life in demanding chemical services. High pressure molding also eliminates any air pockets between the casing lining and the armoring, which is critical in high tem-perature services. | Competitors use a cheaper, atmospheric pressure, rotomolding process, which results in a thinner, less dense, and more perme-able lining material with a less uniform surface finish. Rotomolded linings may have air bubbles trapped behind them, which can lead to linings cracking in high-temperature applications. |
| Completely seamless inner magnet lining eliminates a potential leak path for the process fluid to reach and attack the inner mag-net. Shape secured main bushing eliminates keyed construction; easing related stress points. | Most competitors have seams in the inner magnet lining that can allow aggressive chemicals to penetrate the lining, which cause the magnet segments to swell and corrode, leading to catastrophic failure of the pump. |

COPYRIGHT 2010 MAGNATEX PUMPS INC.

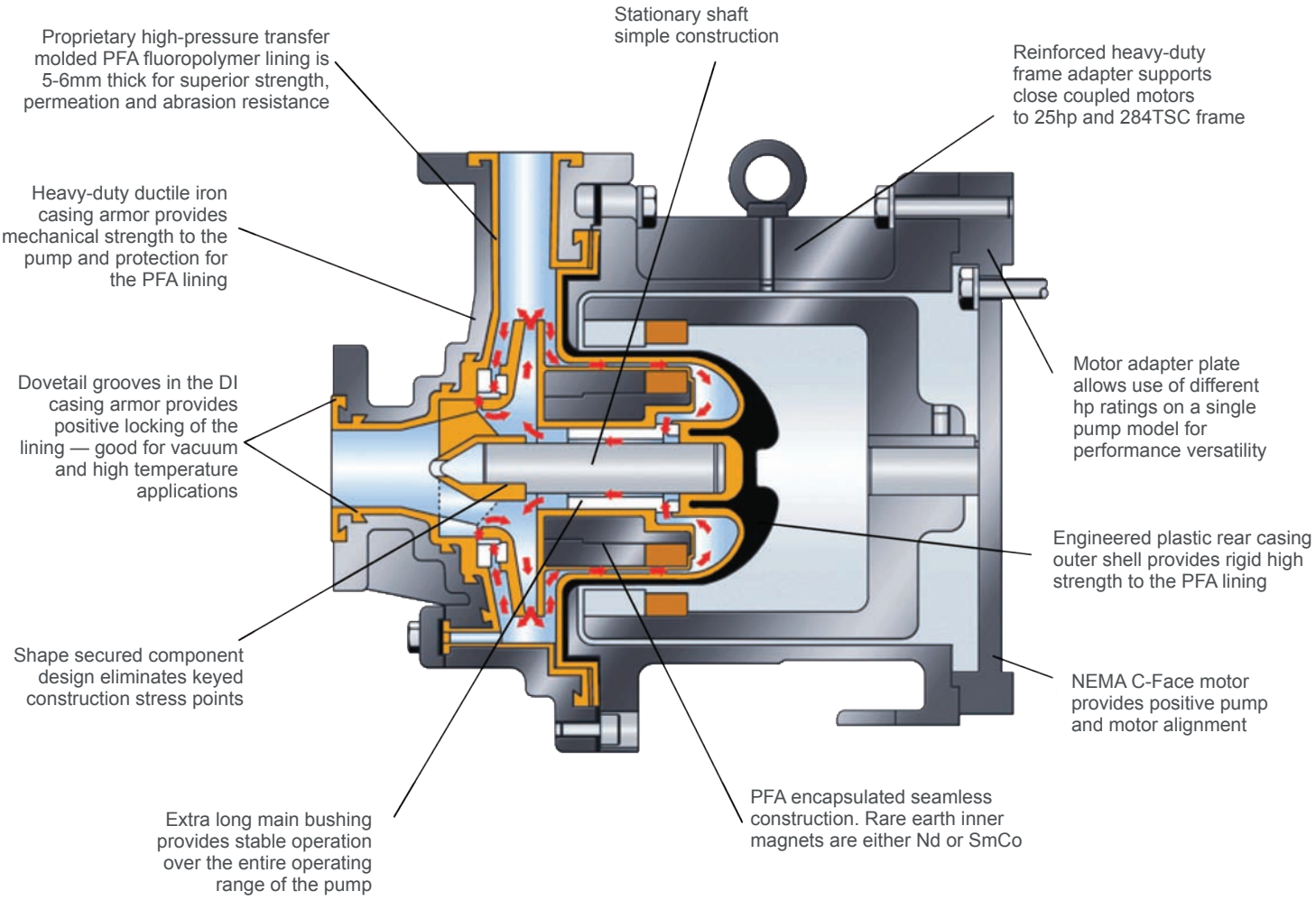




COPYRIGHT 2010 MAGNATEX PUMPS INC.

MAGNATEX® Pumps, Inc.

3575 West 12th Street Houston, TX 77008
tel: 713.972.8666 toll free: 866.MAGPUMP fax: 713.972.8665
www.magnatexpumps.com

# CALCIUM HYPOCHLORITE DISTRIBUTION TANK

## 65CUV68008

**Workshop drawing :**

- □ Approuved as is
- □ Approuved with correction(s)
- □ Rejected

**Approved by**

Name : _____

Title : _____

Compagnie : _____

Signature : _____

*3076 A, Bernard-Pilon, St-Mathieu de Beloeil, Qc, J3G 4S5 Tél.: (450) 922-4224 / Fax: (450) 922-4223*

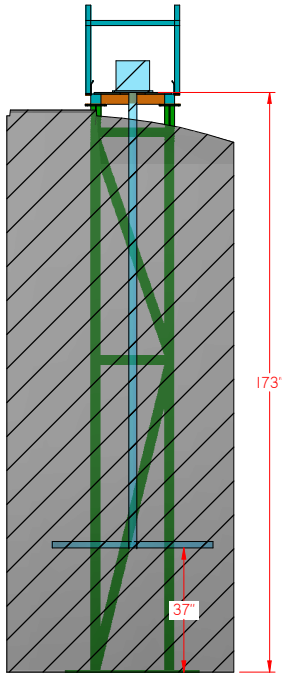


SECTION B-B

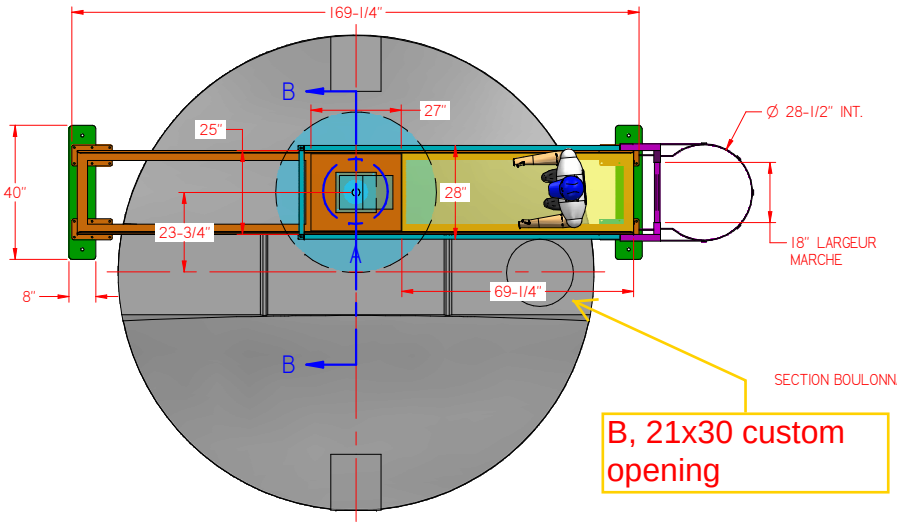


B, 21x30 custom opening

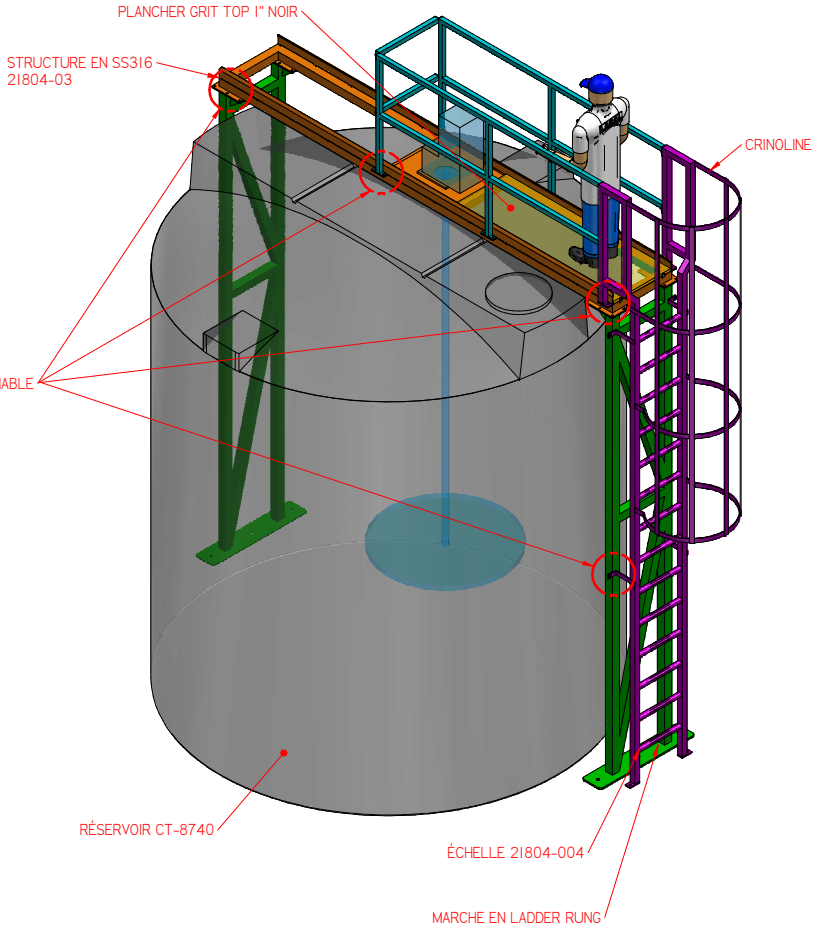


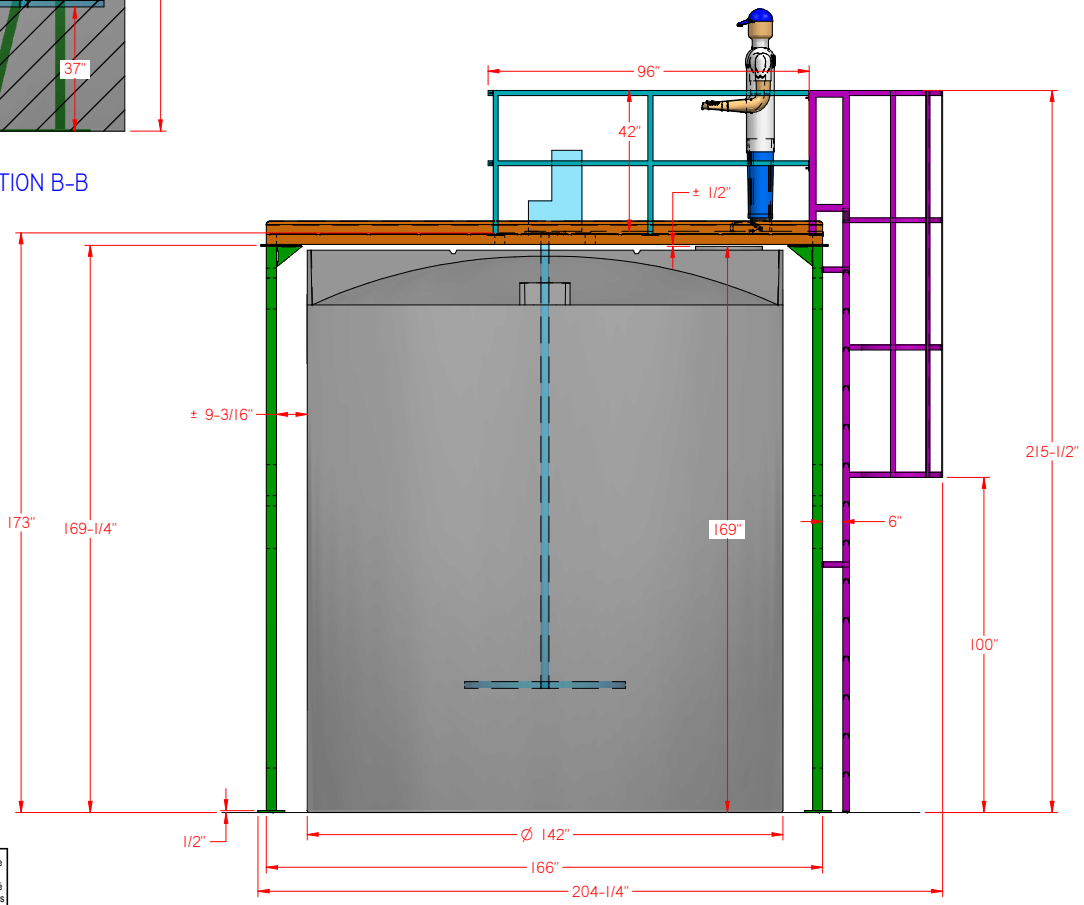


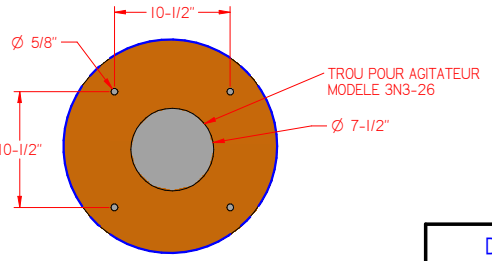


DETAIL A

QTÉ: IX

| DESSIN D'APPROBATION | |
|---|---|
| DATE: | |
| APPROUVÉ PAR (LETTRES MOULÉES): | |
| SIGNATURE: | |

Ce document est la propriété de **Lacal Technologie Inc.**
Il ne doit pas être dévoilé, utilisé ou reproduit en tout ou en parties sans l'autorisation écrite de **Lacal Technologie Inc.**

| Tolérancement Sauf indications contraires | |
|---|---|
| Coupe: | ± 1/16" |
| Pliage: | ± 0.5° |
| Usinage: | ± 0.005" |
| Montage: | ± 1/16" |

LACAL

| | | | |
|---|---|---|---|
| Projet: | 21804-03/04 PCP | | Pages: 1/1 |
| Titre: | Structure de soutien de mixer pour réservoir CT-8740 | | |
| Dess. par: DM | Date: 09-06-2021 | Vérif. par: JF | |
| No dessin: | 21804.BB03-BB04.A00 | | |

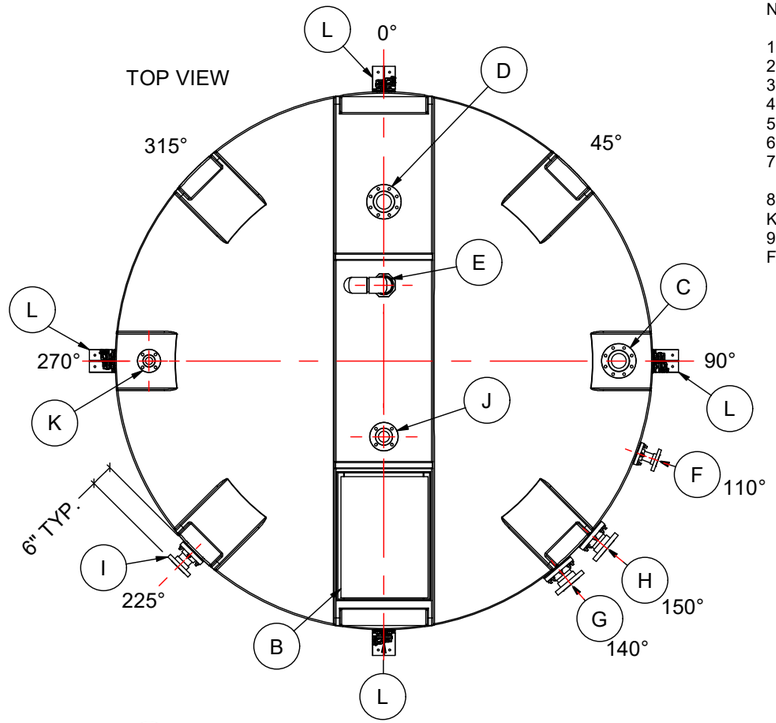


NOTES:

1. TANK IS MANUFACTURED FROM HDPE. (1.9 SG)
2. TANK IS MANUFACTURED TO ASTM-D-1998 STANDARD.
3. ALL TANK DIMENSIONS ARE SUBJECT TO A +/-3% TOLERENCE.
4. FLEXIBLE COUPLINGS ARE REQUIRED FOR ALL EXTERNAL PIPING.
5. ALL FITTING GASKETS ARE EPDM.
6. ACO RECOMMENDS ALL FLANGE GASKETS TO BE MIN. 1/4" THICK.
7. ON LARGER SIZED TANKS SOME MECHANICAL FITTINGS MAY NEED TO BE REMOVED IN ORDER TO AVOID WIDE OR OVERSIZED LOADS.
8. HDPE ALIGNMENT WEDGES ARE REQUIRED ON SOME TOP FITTINGS TO KEEP THEM PERPENDICULAR TO THE GROUND.
9. TANK MUST BE PROPERLY VENTED TO PREVENT PRESSURE OR VACUUM FROM DEVELOPING AS THE TANK IS FILLING OR EMPTYING.

| MATERIALS LIST | | |
|---|---|---|
| ITEMS | DESCRIPTION | NOTES |
| A | CT-8740 CLOSED TOP TANK | |
| B | CUSTOM STEEL AND HDPE LID (~21" X 30" ACCESS) | |
| C | 4" PVC SPOOL FLANGE W/ SS-EPDM DONKER BOLTS | FEED |
| D | 4" PVC SPOOL FLANGE W/ SS-EPDM DONKER BOLTS | LEVEL |
| E | 3" FNPT PVC TANK ADAPTER WITH PVC U-VENT ASSEMBLY | VENT |
| F | 2" PVC SPOOL FLANGE W/ SS-EPDM DONKER BOLTS | DRAIN |
| G | 4" PVC SPOOL FLANGE W/ SS-EPDM DONKER BOLTS | SUCTION |
| H | 4" PVC SPOOL FLANGE W/ SS-EPDM DONKER BOLTS | SUCTION |
| I | 3" PVC SPOOL FLANGE W/ SS-EPDM DONKER BOLTS | OVERFLOW |
| J | 3" PVC SPOOL FLANGE W/ SS-EPDM DONKER BOLTS | AGITATOR |
| K | 2" PVC SPOOL FLANGE W/ SS-EPDM DONKER BOLTS | RETURN |
| L | NON-SEISMIC HOLD DOWN ASSEMBLY | 4 PLACES |

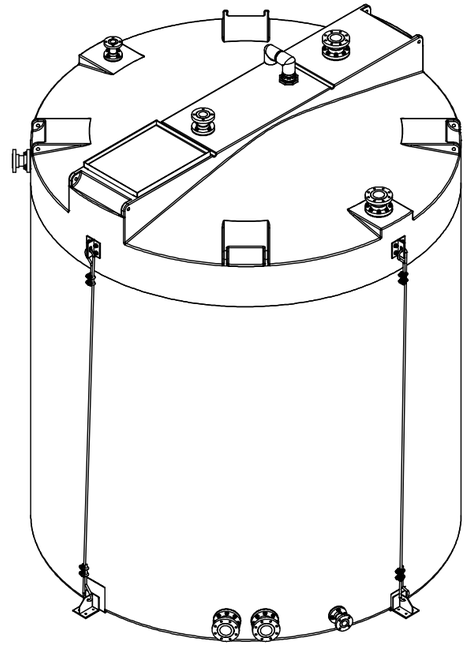

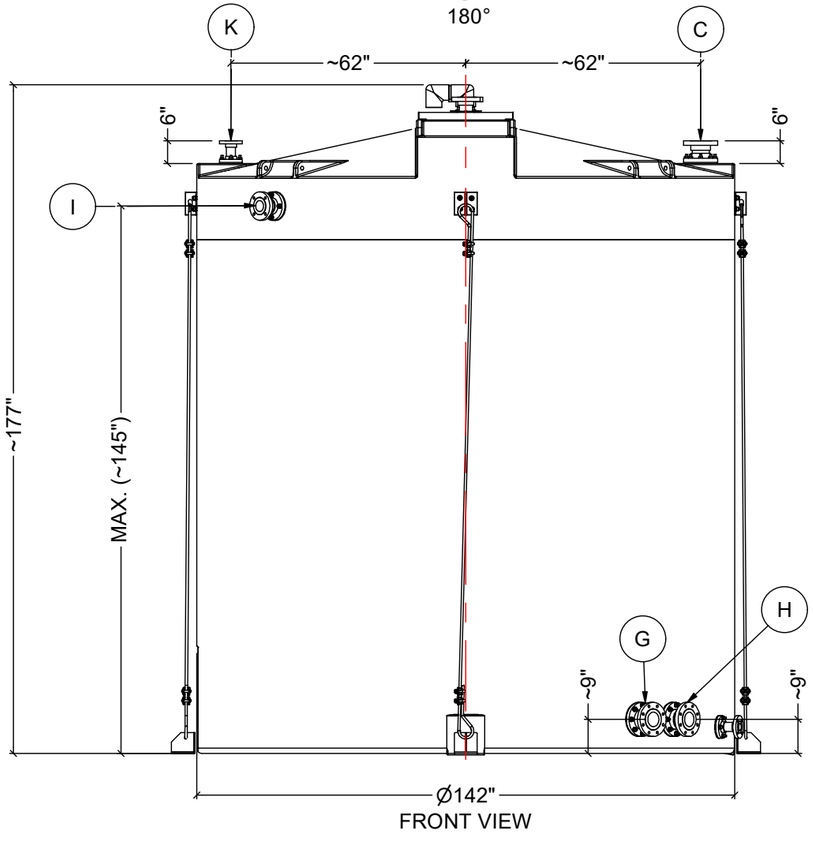

FRONT VIEW

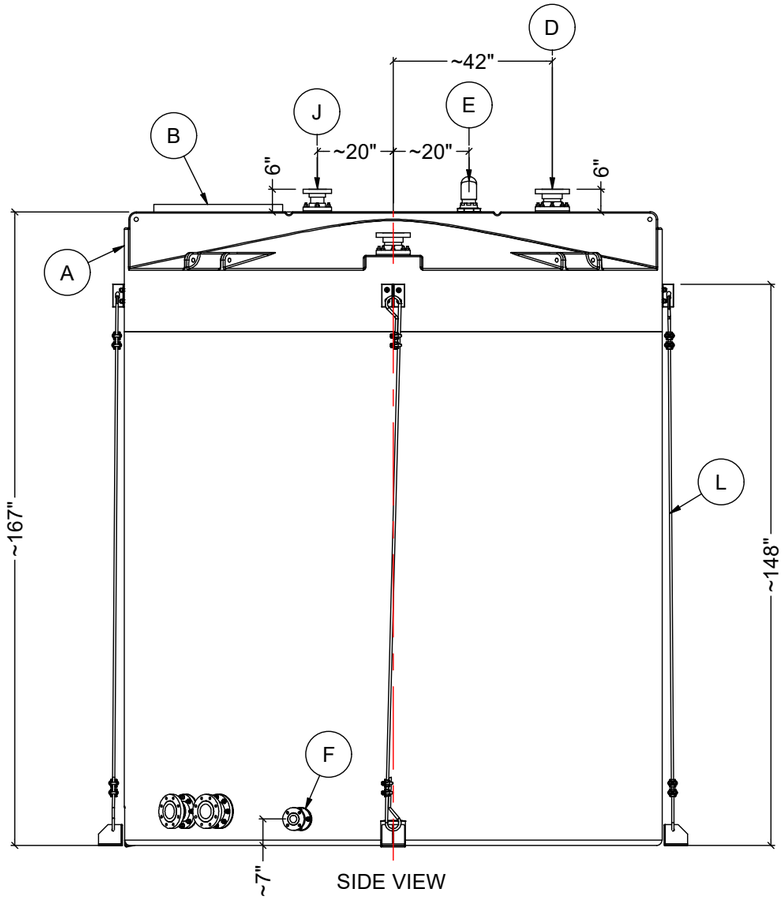

SIDE VIEW

| REV | DATE | DESCRIPTION | BY | APPD | REVD |
|---|---|---|---|---|---|
| 2 | JUN-23-21 | LID TO CUSTOM, MVD FTGS | WM | | |
| 1 | JUN-22-21 | ADDED C, G&H TO 4", MVD FTGS | WM | | |

REVISIONS

CUSTOMER: PCP POMPES

TITLE: 8700 IG CLOSED TOP TANK

ACO JOB NO: 78462
PURCHASE ORDER NO:
PURCHASER'S EQUIP. NO:

THIS DRAWING IS THE PROPERTY OF ROTOPLAST INC. AND SHALL NOT BE COPIED OR TRANSFERRED WITHOUT THE WRITTEN CONSENT OF ROTOPLAST INC.

ENGINEERS SEAL

ACO CONTAINER SYSTEMS
DIVISION OF ROTOPLAST INC.
PICKERING - ONTARIO - CANADA
ACO CONTAINER SYSTEMS
DIVISON OF ROTOPLAST INC.
794 MCKAY RD.
PICKERING, ONTARIO, CANADA
TEL. 905-683-8222
FAX 905-683-2969

| | |
|---|---|
| DESIGNED | |
| DRAWN | WM |
| CHECKED | |
| APPROVED | |
| SCALE | N.T.S. |
| DATE | JUN-09-2021 |

DWG No: CT-8740-78462
REV: 2

## Performance Graph at 575V, 60Hz, 3.0HP Typical performance - Not guaranteed values

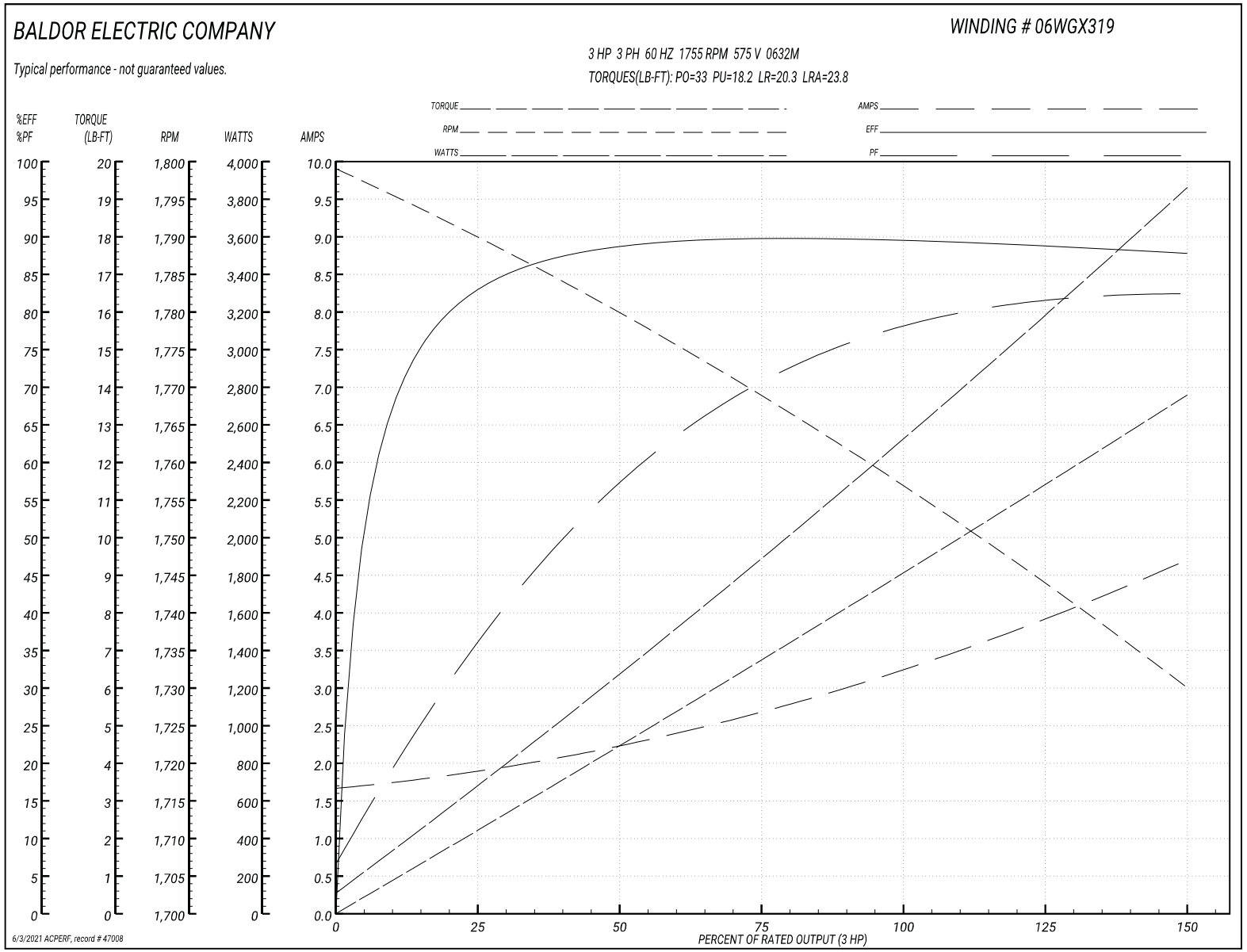

# CALCIUM HYPOCHLORITE DISTRIBUTION TANK AGITATOR

## 65AGI68026

**Workshop drawing :**

- □ Approuved as is
- □ Approuved with correction(s)
- □ Rejected

**Approuved by**

Name : _____

Title : _____

Compagnie : _____

Signature : _____

*3076 A, Bernard-Pilon, St-Mathieu de Beloeil, Qc, J3G 4S5 Tél.: (450) 922-4224 / Fax: (450) 922-4223*

Sharpe Mixers

20819 72nd Avenue S., Suite 630
Kent, WA 98032
United States
www.sharpemixers.com

Hayward Gordon GROUP

# MIXER DATA SHEET



**Customer: PCP**

**Sharpe Ref.# :** 341883B
**Customer Ref.# :** C5-205026

**Application :** Calcium Hypochlorite Tank 2

**Design conditions :** Viscosity(cps): 1 , Sp.Grav: 1.10 Temp.: Ambient Pressure: Atmospheric

**Tank dimensions :** 142 Dia. Tank x 173.0 " overall height from mixer base to tank floor
Tank Volume (gallons)= 10200 Mounted off-center 24"

| | |
|---|---|
| **Equipment :** | **N-SERIES HELICAL DRIVE TOP-ENTERING MIXER**<br>Quantity : 1 **Mixer Model # 3N3 -26** |
| **Motor :** | 3.00 Horsepower, @ 1750 RPM, 3PH, 60Hz, 575 VOLTS CHEM/INV-DUTY<br>182TC Frame, Motor Furnished by Sharpe , Mounted by Sharpe<br>Cast iron construction, corrosion resistant, Inverter ready with 10:1 turn-down |
| **Mixer Drive :** | N3 Parallel Helical Gearbox 25.9:1 Ratio, Rated at 8.03 Horsepower |
| **Mixer mounting :** | Mounting Plate Furnished |
| | |
| **Wetted Parts :** | Mild Steel 1/8" THICK RUBBER COVERED |
| **Shaft :** | 2.38 "Dia. X 136 " long from mounting base, turning @ 68 RPM<br>Includes No In-Tank Shaft Coupling |
| **Impellers :** | 48.0 "dia HYF-218 Hydrofoil Impeller ***21 " min. opening required to install impeller***<br>Bolted Blade Design<br>Pumping Down, Turning Clockwise Looking Down |
| | Includes rubber covering field kit |

*Shipping Weight,each = 500 lbs*
*Design Torque = 4900 lbs-in*
*Design OHM = 8600 lbs-in*

Drawing not to scale. Dimensions are for reference only. Use certified prints for construction. Dimensions in inches.

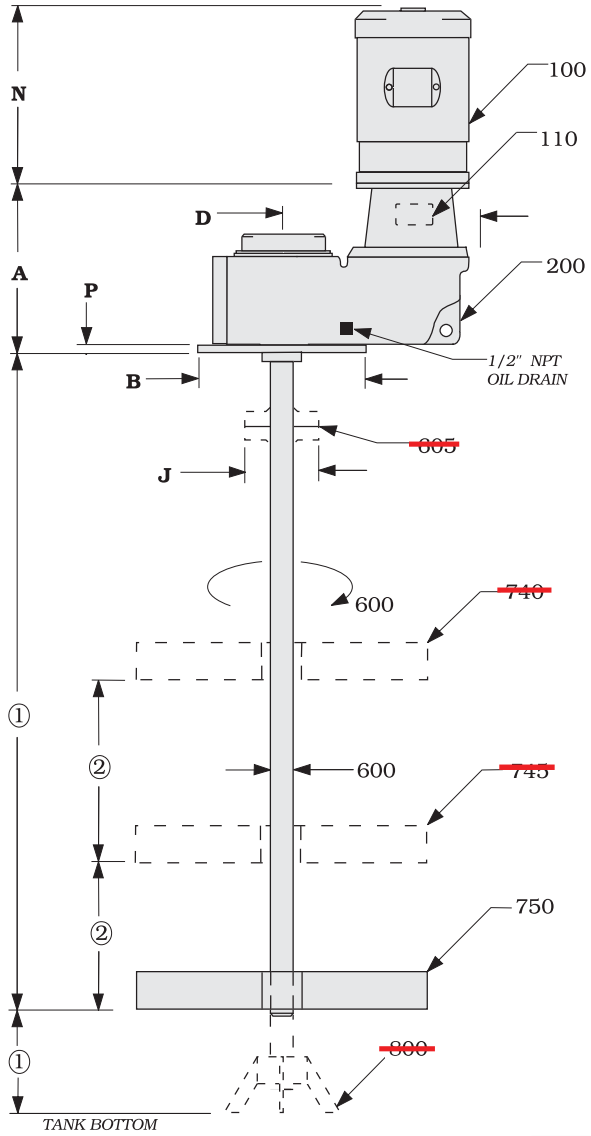


100 - MOTOR ①

110 - FLEXIBLE MOTOR COUPLING

200 - GEAR REDUCER ①

600 - SHAFT ①

~~605 - RIGID SHAFT COUPLING ②~~

~~740 - UPPER IMPELLER ②~~

~~745 - MIDDLE IMPELLER ②~~

750 - LOWER IMPELLER ①

~~800 - STEADY BEARING ②~~

①Impeller(s), shaft and other details are dependent on specific application and will be described in the Quotation/Data Sheet.

② Items are optional and will be described in the Quotation/Data Sheet if provided

③Basic weight shown in lbs is for mixer drive only, less motor and wetted parts.

MOUNTING DETAIL
PLATE MOUNT
(furnished)

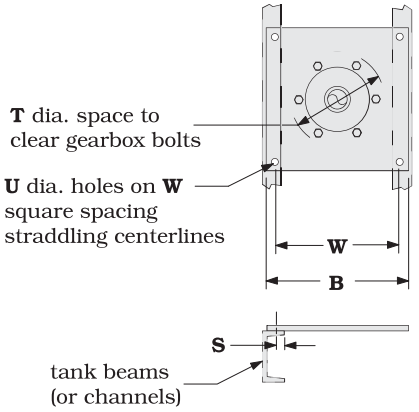


MOTOR DIM'S

| HP * | NEMA FRAME | 'N' | WT* |
|---|---|---|---|
| 1/3 -2 | 56C | 11 | 37 |
| 1-1.5 | 143TC | 11.3 | 41 |
| 1.5-2 | 145TC | 11.3 | 50 |
| 3 | 182TC | 11.8 | 65 |
| 5 | 184TC | 12.8 | 87 |
| 7.5 | 213TC | 15 | 145 |
| 10 | 215TC | 16.5 | 160 |
| 15 | 254TC | 19.6 | 310 |
| 20 | 256TC | 21.3 | 345 |
| 25 | 284TC | 20.3 | 425 |
| 30 | 286TC | 21.8 | 455 |
| 40 | 324TC | 26.5 | 575 |
| 50 | 326TC | 26.5 | 634 |
| | | | |

*NEMA frames shown are for 1750 rpm motors. Weights and Outline dimensions (A,B,D,N) are approximate.

PCP
P.O. NO.: C5-205026
SHARPE SN: 341883B
MIXER MODEL NO.: 3N3-26

OVERALL DIMENSIONS

| | N1 | N2 | N3 | N4 | N5 | N6 | N7 | N8 | N9 |
|---|---|---|---|---|---|---|---|---|---|
| **A** (MAX) | 10.94 | 11.77 | 12.83 | 15.33 | 17.23 | 18.03 | 21.78 | 23.49 | 24.89 |
| **B** | 11 | 11 | 12 | 14 | 16 | 18 | 21 | 24 | 30 |
| **D** | 7.95 | 9.73 | 11.03 | 13.03 | 15 | 16.1 | 17.75 | 20.63 | 25.95 |
| **J** (MAX) | 6 | 6.5 | 7.5 | 9 | 12.5 | 12.5 | 12.5 | 15.5 | 18.5 |
| **P** | .38 | .38 | .5 | .63 | .75 | .88 | 1 | 1.25 | 1.5 |
| **S** | .63 | .63 | .75 | .75 | .88 | .88 | .88 | .88 | 1 |
| **T** | 5.5 | 6 | 7.5 | 8.75 | 9.5 | 11.75 | 13.25 | 15.5 | 17.25 |
| **U** | .43 | .43 | .56 | .56 | .68 | .88 | .94 | 1.13 | 1.31 |
| **W** | 9 | 9 | 10.5 | 12 | 14 | 16 | 18 | 21 | 27 |
| ③ **WT** | 60 | 90 | 120 | 190 | 270 | 430 | 600 | 850 | 1400 |

# N - SERIES

HOLLOW GEARBOX OUTPUT PLATE MOUNT W/ C-FACE MOTOR

DWG NO.: S4617

CADD# N.PLATE.HOLLOW.CFACE.S 6-06

**SHARPE MIXERS** P.O. BOX 3906 SEATTLE, WA 98124 FAX (206) 767-9170 (206) 767-5660

BLADE INSTALLATION: TURBINES PUMP DOWN TURNING CLOCKWISE LOOKING DOWN. APPLY A THIN COAT OF RUBBER REPAIR TO ALL MATING SURFACES AND ASSEMBLE TURBINES ON SHAFT AS SHOWN. TORQUE NUTS WITH LOCKWASHERS ONTO WELDED STUDS. DO NOT USE FLATWASHERS. APPLY RUBBER REPAIR TO THE BOTTOM OF EACH NUT COVER AND THE MATING SURFACES ON THE BRACKETS. INSTALL THREADED NUT COVERS AS SHOWN AND TIGHTEN WITH A STRAP WRENCH. USE THE RUBBER REPAIR PRIMER & PATCH KIT PROVIDED TO COVER THE EXPOSED METAL SEAMS AROUND THE EDGES OF THE BOLT PLATES AND NUT COVERS (SEE INSTRUCTIONS ON KIT).

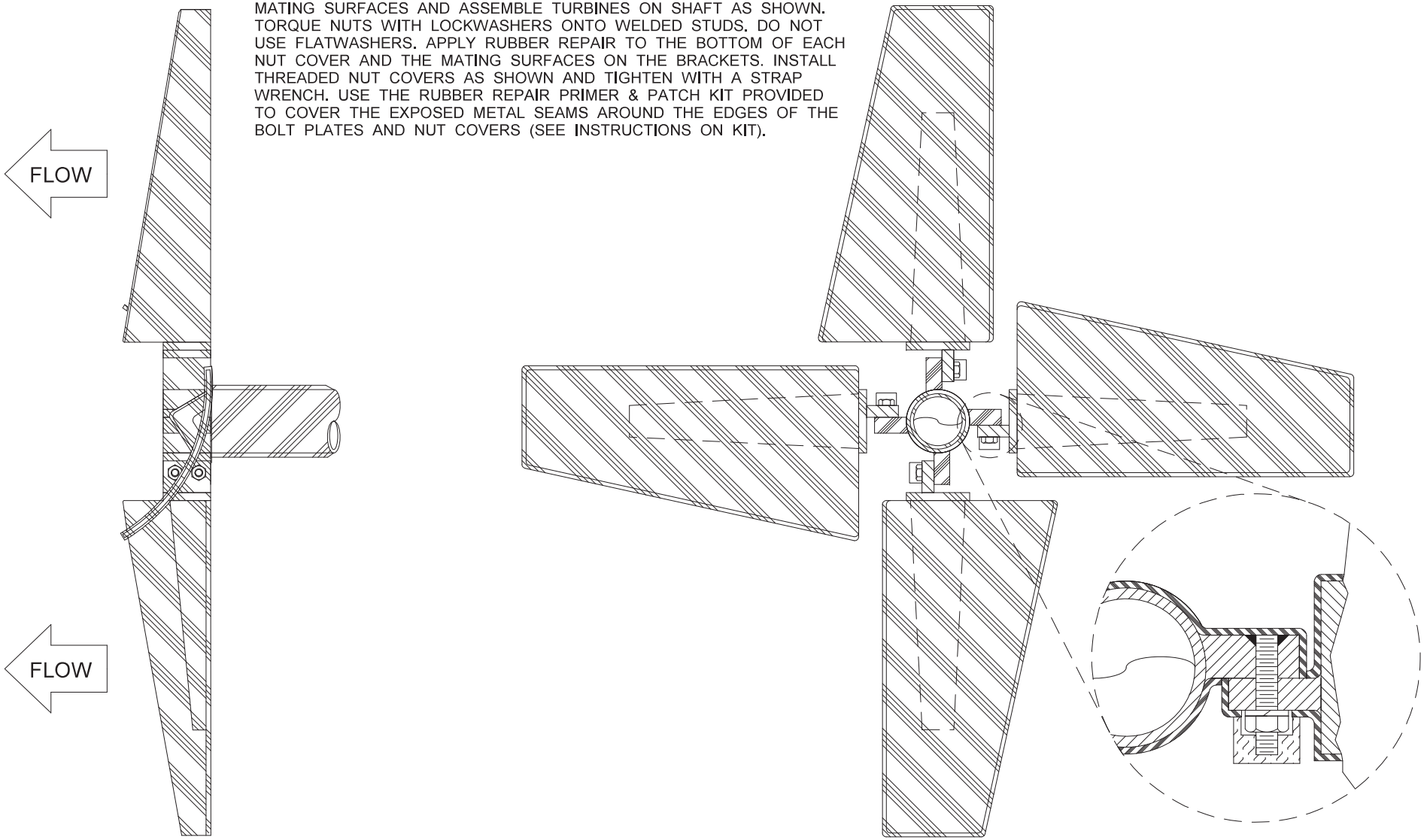


PCP
P.O. NO.: C5-205026
SHARPE SN: 341883B
MIXER MODEL NO.: 3N3-26

# BOLT ON ENERGY EFFICIENT HYFLO II IMPELLER

RUBBER COVERED

DWG NO.: A9694.1

*HYF2.BOLT.RUBBER.S revision: 0

**SHARPE MIXERS** P.O.BOX 3906 SEATTLE, WA. 98124 (206) 767-5660 FAX (206) 767-9170

For reference only; use certified drawings for construction. Dimensions are in inches

Sharpe Mixers a division of Hayward Gordon GROUP

**FOR APPROVAL**

☐ - APPROVED WITHOUT CHANGES, RELEASE FOR CONSTRUCTION
☐ - APPROVED AS NOTED, RELEASE FOR CONSTRUCTION
☐ - REJECTED, REVISE AND RESUBMIT

SIGNATURE: _____

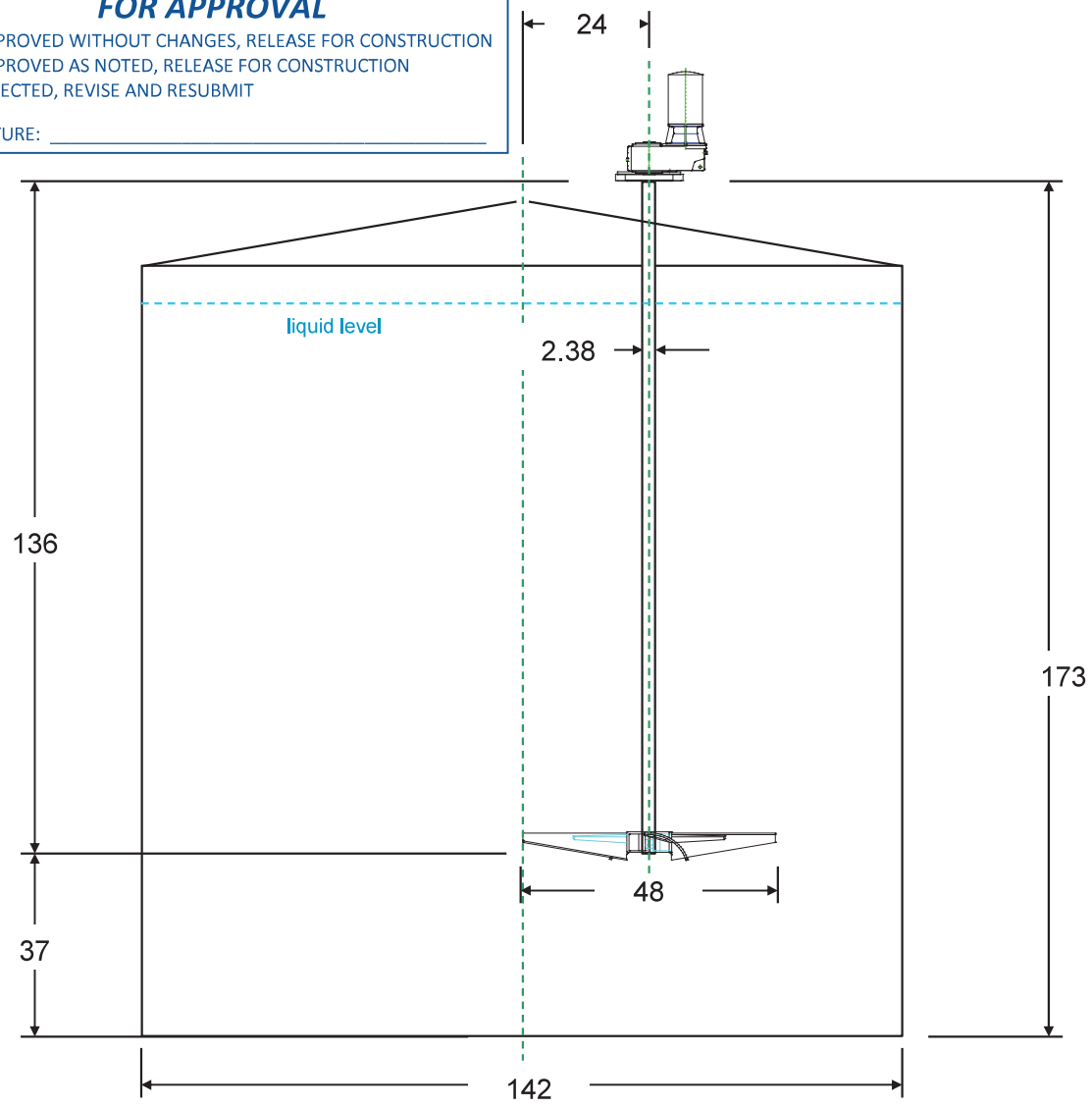


| | | |
|---|---|---|
| Mixer weight = | 500 lbs | |
| Design Torque = | 4830 lbs-in | |
| Design OHM = | 8598 lbs-in | |
| est. full tank volume = | 10993 gal | *(41612 L)* |
| est. volume @ liquid level = | 10161 gal | *(38463 L)* |

NOTES: Tank / Mixer Layout intended for scaled view of in-tank components only. Mixer drive proportions may vary slightly depending on motor type or other options. Please review drawing carefully and inform Sharpe Mixers immediately if any tank dimensions are inaccurate. Drawing generated by Sharpe Mixers Q1QP mixer selection program, Copyright 2005, Seattle, WA.

Sharpe Mixers

## TOP ENTERING MIXER / TANK LAYOUT DETAIL

***Mixer Model #*** ***3N3 -26*** ***Quantity:*** ***1***

***Customer:*** ***PCP*** p.o.#: C5-205026 **Sharpe #** ***341883B***

***Application:*** ***Calcium Hypochlorite Tank 2*** **Drawing #** ***L41883B***

BALDOR • RELIANCE

# Product Information Packet

# CECP83661T-5

## 3HP,1755RPM,3PH,60HZ,182TC,0632M,TEFC,F1

Copyright © All product information within this document is subject to ABB Motors and Mechanical Inc. copyright © protection, unless otherwise noted.

## Part Detail

| | | | | | | | |
|---|---|---|---|---|---|---|---|
| **Revision:** | AA | **Status:** | PRD/A | **Change #:** | | **Proprietary:** | No |
| **Type:** | AC | **Elec. Spec:** | 06WGX319 | **CD Diagram:** | CD0006 | **Mfg Plant:** | |
| **Mech. Spec:** | 06H770 | **Layout:** | 06LYH770 | **Poles:** | 04 | **Created Date:** | 10-03-2011 |
| **Base:** | RG | **Eff. Date:** | 10-30-2020 | **Leads:** | 3#16 | | |

## Specs

| | | | |
|---|---|---|---|
| **Catalog Number:** | CECP83661T-5 | **Inverter Code:** | Inverter Duty |
| **Enclosure:** | TEFC | **KVA Code:** | J |
| **Frame:** | 182TC | **Lifting Lugs:** | Standard Lifting Lugs |
| **Frame Material:** | Iron | **Locked Bearing Indicator:** | Locked Bearing |
| **Output @ Frequency:** | 3.000 HP @ 60 HZ | **Motor Lead Quantity/Wire Size:** | 3 @ 16 AWG |
| **Synchronous Speed @ Frequency:** | 1800 RPM @ 60 HZ | **Motor Lead Exit:** | Ko Box |
| **Voltage @ Frequency:** | 575.0 V @ 60 HZ | **Motor Lead Termination:** | Flying Leads |
| **XP Class and Group:** | CLI GP A,B,C,D | **Motor Type:** | 0632M |
| **XP Division:** | Division II | **Mounting Arrangement:** | F1 |
| **Agency Approvals:** | UR | **Power Factor:** | 77 |
| | CSA EEV | **Product Family:** | Chem Process S/P 32-8 IEEE 841 |
| | CSA | **Pulley End Bearing Type:** | Ball |
| **Auxillary Box:** | No Auxillary Box | **Pulley Face Code:** | C-Face |
| **Auxillary Box Lead Termination:** | None | **Pulley Shaft Indicator:** | Standard |
| **Base Indicator:** | Rigid | **Rodent Screen:** | None |
| **Bearing Grease Type:** | Polyrex EM (-20F +300F) | **Shaft Extension Location:** | Pulley End |
| **Blower:** | None | **Shaft Ground Indicator:** | No Shaft Grounding |
| **Constant Torque Speed Range:** | 1.5 | **Shaft Rotation:** | Reversible |

| | | | |
|---|---|---|---|
| **Current @ Voltage:** | 3.300 A @ 575.0 V | **Shaft Slinger Indicator:** | Shaft Slinger |
| **Design Code:** | B | **Speed Code:** | Single Speed |
| **Drip Cover:** | No Drip Cover | **Motor Standards:** | NEMA |
| **Duty Rating:** | CONT | **Starting Method:** | Direct on line |
| **Electrically Isolated Bearing:** | Not Electrically Isolated | **Thermal Device - Bearing:** | None |
| **Feedback Device:** | NO FEEDBACK | **Thermal Device - Winding:** | None |
| **Front Face Code:** | Standard | **Vibration Sensor Indicator:** | No Vibration Sensor |
| **Front Shaft Indicator:** | None | **Winding Thermal 1:** | None |
| **Heater Indicator:** | No Heater | **Winding Thermal 2:** | None |
| **Insulation Class:** | F | **XP Temp Code:** | T3C |

## Nameplate NP3235E

| | | | | | | | |
|---|---|---|---|---|---|---|---|
| **CAT.NO.** | CECP83661T-5 | | | | | | |
| **SPEC.** | 06H770X319G1 | | | | | | |
| **HP** | 3 TE | | | **IP** | 56 | | |
| **VOLTS** | 575 | | | | | | |
| **AMPS** | 3.3 | | | | | | |
| **R.P.M.** | 1755 | | | | | | |
| **FRAME** | 182TC | **HZ** | 60 | | | **PH** | 3 |
| **SER.F.** | 1.15 | **CODE** | J | **DES.** | B | **CLASS** | F |
| **RATING** | 40C AMB-CONT | | | | | | |
| **SN** | | | | | | | |
| **DE** | 6206 | **ODE** | 6206 | | | | |
| **NEMA NOM. EFF.** | 89.5 | **P.F.** | 77 | | | | |
| **GUAR. MIN. EFF.** | 87.5 | **CC** | 010A | | | | |
| **T. CODE** | T3C | **TEMP=** | 160 | | | | |

## Nameplate NP3186E

| | | | | | |
|---|---|---|---|---|---|
| SPEC. | 06H770X319G1 | | | | |
| D.E. BRG. | 30BC02XP30X | | | | |
| O.D.E. BRG. | 30BC02X30X | | | | |
| GREASE | POLYREX EM | | | | |
| WEIGHT | 122 | # OF ROTOR BARS | 28 | # OF STATOR SLOTS | 36 |
| RPM MAX | 2700 | MAX. KVAR | .86 | | |
| BLANK | | | | | |
| INV.TYPE | PWM | | | | |
| T= | 160 | | | | |
| C HP FR | 60 | C HP TO | 90 | | |
| CT HZ FROM | 1.5 | CT HZ TO | 60 | | |
| VT HZ FROM | 0- | VT HZ TO | 60 | | |
| HTR-VOLTS | N/A | HTR-AMPS | N/A | | |
| HTR-WATTS | | MAX. SPACE HEATER TEMP. | N/A | | |

**AC Induction Motor Performance Data**
Record # 47008
Typical performance - not guaranteed values

| **Winding:** 06WGX319-R011 | **Type:** 0632M | **Enclosure:** TEFC |
|---|---|---|

| **Nameplate Data** | | | | **575 V, 60 Hz: Single Voltage Motor** | |
|---|---|---|---|---|---|
| **Rated Output (HP)** | | | 3 | **Full Load Torque** | 9.05 LB-FT |
| **Volts** | | | 575 | **Start Configuration** | direct on line |
| **Full Load Amps** | | | 3.3 | **Breakdown Torque** | 33 LB-FT |
| **R.P.M.** | | | 1755 | **Pull-up Torque** | 18.2 LB-FT |
| **Hz** | 60 | **Phase** | 3 | **Locked-rotor Torque** | 20.3 LB-FT |
| **NEMA Design Code** | B | **KVA Code** | J | **Starting Current** | 23.8 A |
| **Service Factor (S.F.)** | | | 1.15 | **No-load Current** | 1.7 A |
| **NEMA Nom. Eff.** | 89.5 | **Power Factor** | 77 | **Line-line Res. @ 25ºC** | 6.22 Ω |
| **Rating - Duty** | | | 40C AMB-CONT | **Temp. Rise @ Rated Load** | 35°C |
| **S.F. Amps** | | | | **Temp. Rise @ S.F. Load** | 42°C |
| | | | | **Rotor inertia** | 0.298 LB-FT2 |

**Load Characteristics 575 V, 60 Hz, 3 HP**

| **% of Rated Load** | **25** | **50** | **75** | **100** | **125** | **150** | **S.F.** |
|---|---|---|---|---|---|---|---|
| **Power Factor** | 38 | 59 | 71 | 77 | 81 | 83 | 79 |
| **Efficiency** | 83.1 | 88.4 | 89.8 | 89.6 | 89.1 | 87.7 | 89.3 |
| **Speed** | 1790 | 1779 | 1769 | 1757 | 1744 | 1730 | 1749 |
| **Line amperes** | 1.86 | 2.22 | 2.71 | 3.27 | 3.92 | 4.69 | 3.66 |

## Performance Graph at 575V, 60Hz, 3.0HP Typical performance - Not guaranteed values

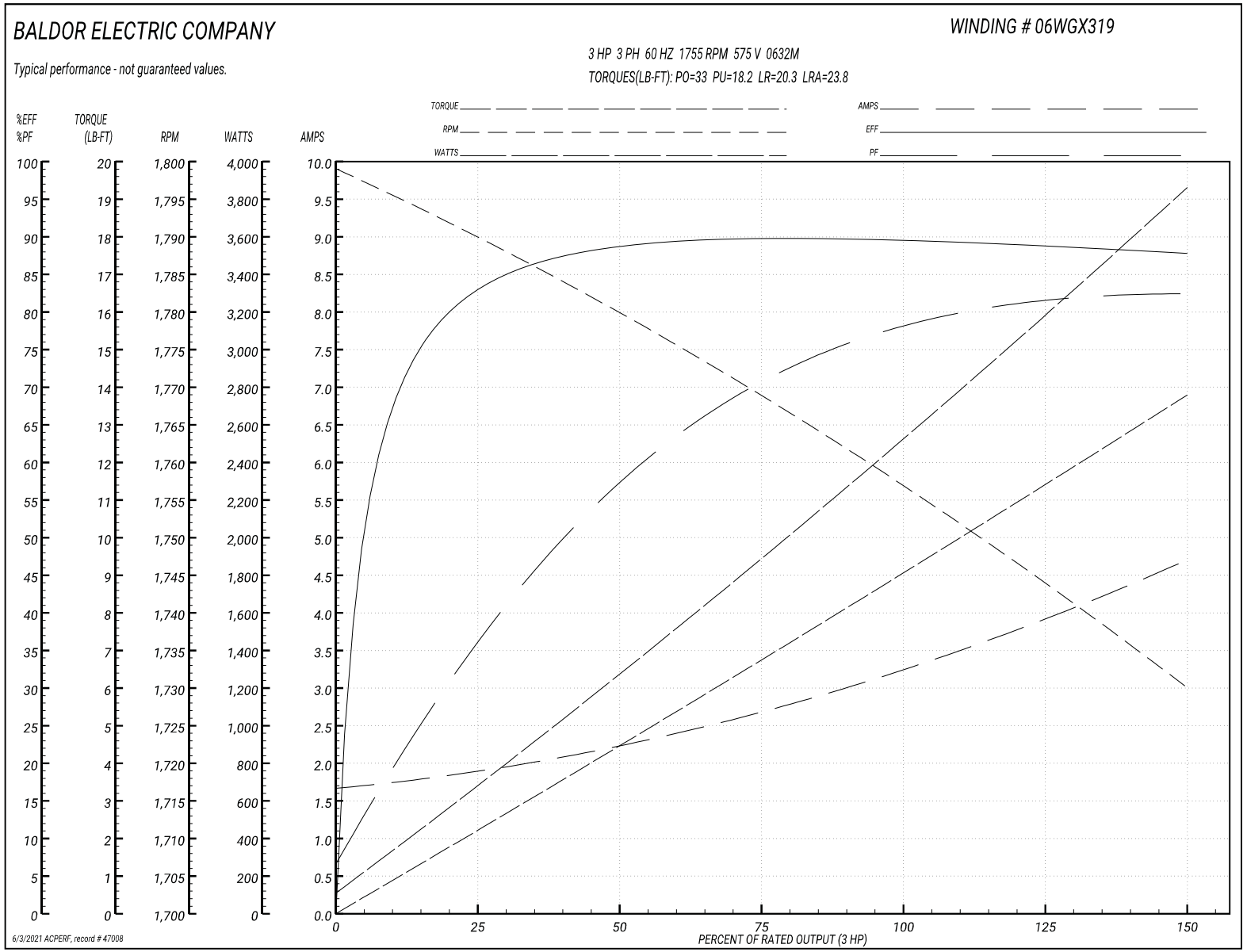

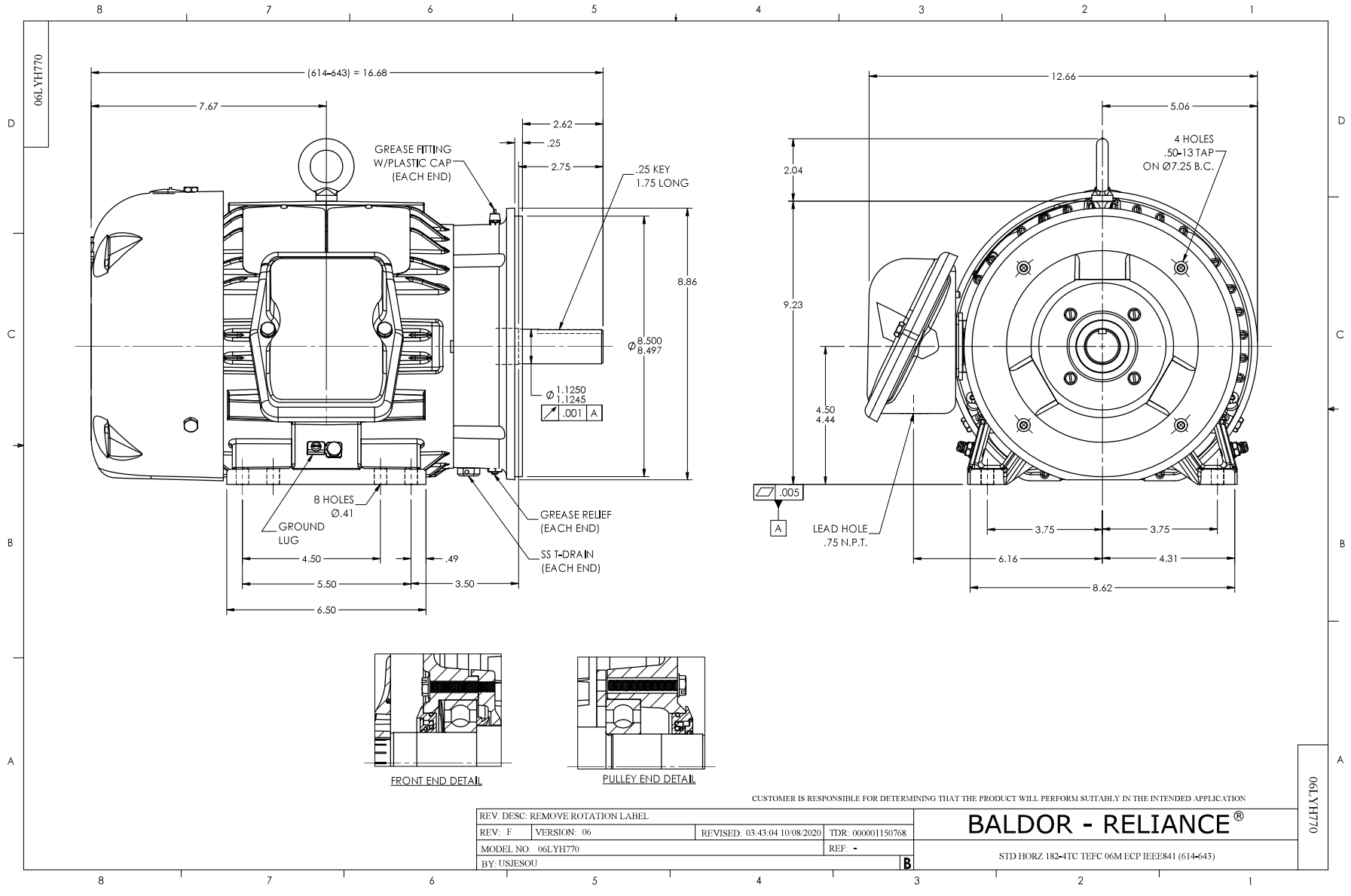
06LYH770
(614-643) = 16.68
7.67
2.62
.25
2.75
GREASE FITTING
W/PLASTIC CAP
(EACH END)
.25 KEY
1.75 LONG
8.86
Ø 8.500
8.497
Ø 1.1250
1.1245
.001 A
8 HOLES
Ø.41
GROUND
LUG
GREASE RELIEF
(EACH END)
SS T-DRAIN
(EACH END)
4.50
.49
5.50
3.50
6.50
12.66
5.06
4 HOLES
.50-13 TAP
ON Ø7.25 B.C.
2.04
9.23
4.50
4.44
.005
A
LEAD HOLE
.75 N.P.T.
3.75
3.75
6.16
4.31
8.62
FRONT END DETAIL
PULLEY END DETAIL
CUSTOMER IS RESPONSIBLE FOR DETERMINING THAT THE PRODUCT WILL PERFORM SUITABLY IN THE INTENDED APPLICATION
REV. DESC: REMOVE ROTATION LABEL
REV: F
VERSION: 06
REVISED: 03:43:04 10/08/2020
TDR: 000001150768
MODEL NO. 06LYH770
REF: -
BY: USJESOU
B
BALDOR - RELIANCE®
STD HORZ 182-4TC TEFC 06M ECP IEEE841 (614-643)
06LYH770

CD0006

TYPICAL WYE–CONNECTED MOTOR

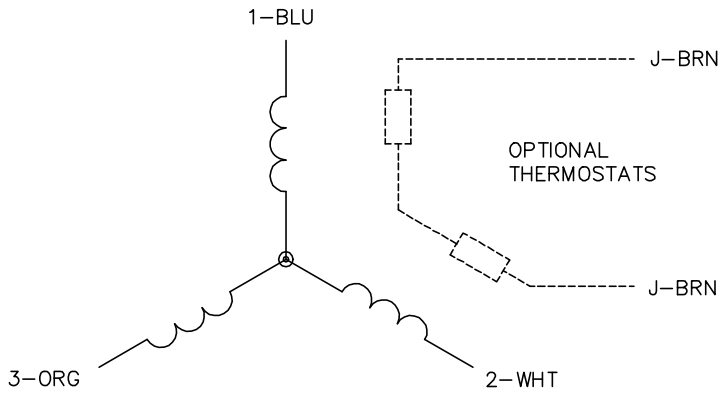


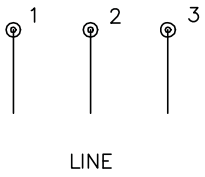


TYPICAL DELTA–CONNECTED MOTOR

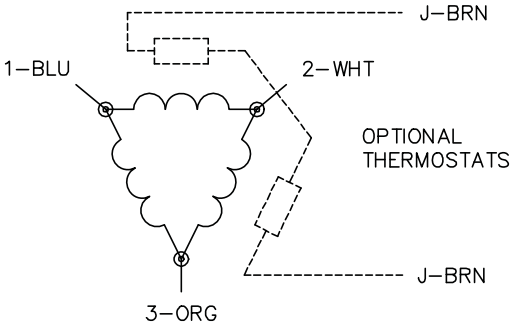


NOTES:

1. THREE LEAD MOTOR MAY BE EITHER WYE CONNECTED OR DELTA CONNECTED.
2. INTERCHANGE ANY TWO LINE LEADS TO REVERSE ROTATION.
3. OPTIONAL THERMOSTATS ARE PROVIDED WHEN SPECIFIED.
4. ACTUAL NUMBER OF INTERNAL PARALLEL CIRCUITS MAY VARY.
5. LEAD COLORS ARE OPTIONAL. LEADS MUST BE NUMBERED AS SHOWN.

CD0006

| | | |
|---|---|---|
| REV. DESC: ADD CLASS CONN00000007 | | |
| REV. LTR: E | VERSION: 01 | TDR: 000001099922 |
| FILE: \AAA\00005\141 | REVISED: 10:24:49 02/19/2019 | BY: ENBRIRO |
| MTL: – | | |

BALDOR - RELIANCE®

3PH, SV, 3 LEADS, WYE OR DELTA CONNECTED

SH 1 of 1

Sharpe Mixers
A Hayward Gordon Company

## N-SERIES AND B-SERIES

Sharpe Mixers' N-Series premium line mixer drives are extremely efficient, durable, and best choice in a diverse range of applications that provide may years of quiet service. Built specifically with strict specifications to meet the high demands of mixing products.

Vertical N-Series and right angle B-Series mixers are available in top and side entering designs, ranging from simple plate mounted with open tank models to complex mechanical seal systems; from high speed dispersers to ultra low speed helix mixers. Sizes range from fractional to over 200 horsepower.

***Benefits:***

- *Oil safe designs*
- *Custom impellers and seal designs*
- *Special alloys*
- *Polishing and coatings*

### Standard Features:

- Heavy duty construction cast iron housing, SAE Class 30
- NEMA frame motors
- SAE 8620 steel helical gearing with overload protection AGMA quality level 12
- Oversized tapered roller bearings
- C-face motor mounting or foot mounted motors
- Oil lubricated gears and bearings with oversize sight glass and fill/drain fittings
- Durable 2-part epoxy finish to provide optimum protection against corrosion
- Flexible high speed coupling isolates motor from shock loads
- Rain cap/shaft guard on hollow quill units protecting personnel from rotating parts and weather conditions






1541 S. 92nd Pl., Seattle, WA 98108 | 206-767-5660 | 800-237-8815 | sharpemixers.com | sales@sharpemixers.com

# Oil Safe Design Considerations

- Input bearing cylinders are modified to accept a grease fitting for re-greasable bearings. Larger units include a "charged" greasing cylinder, automatically re-greasing the bearings at set intervals.
- Oversize tapered roller bearings are used for all output bearings to provide excess capacity and maximum life.
- Oversize sight glasses are installed for easy viewing of oil levels.
- Gearbox cases are tapped to accept oil fill/oil drain fittings, which are included for ease of maintenance.
- Hollow quill units are equipped with Sharpe's custom fit rain cap/shaft guard covers to protect the output shaft from weather and to protect personnel from rotating parts. The hollow quill shaft design allows for precise attachment to the mixer shaft without the use of an in-tank coupling. Solid shaft and coupling designs are also available.
- Heat and shock loading is isolated with a flexible coupling between the motor and the gearbox. Standard NEMA frame c-face motor mounting is designed for simple trouble-free installation, with positive registers for repeatable alignment. Motor scoops are also available if foot mounted motors are preferred.
- The entire drive including the motor is covered with a premium 2-part epoxy coating, baked on for maximum corrosion resistance and durability.
- The all-helical gearing is made from SAE 8620 steel, carburized to hardness of 58 to 62 Rockwell C and ground to AGMA Quality Level 12, assuring quiet operation and long life.

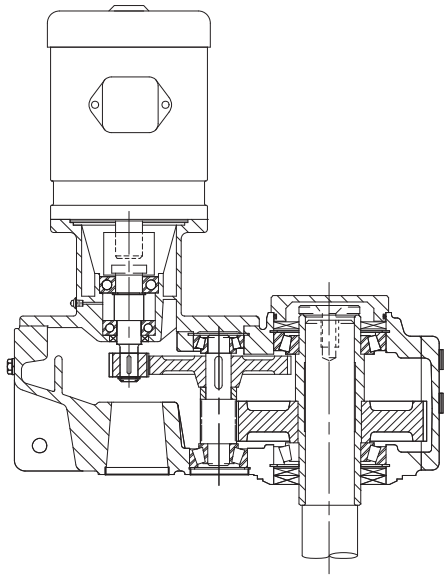

## TYPICAL MIXING

### Industries

- Food & Beverage
- Pharmaceutical & Biotech
- Cosmetic & Personal Care
- Pulp & Paper
- Petroleum
- Chemical
- Municipal
- Waste Treatment
- Mining



Oil Safe Design

### Options

- Synthetic lubricating oil
- High or low temperature lubricating oil
- Fluid grease lubricant
- Food grade lubricating oil
- Long term storage preparation

c UL us LISTED

MADE IN THE USA

P.O. Box 3906, Seattle, WA 98124
206-767-5660 | 800-237-8815
sharpemixers.com | sales@sharpemixers.com

# CALCIUM HYPOCHLORITE DISTRIBUTION PUMP

## #1: 65PSO68006
## #2: 65PSO68007

**Workshop drawing :**

- □ Approuved as is
- □ Approuved with correction(s)
- □ Rejected

**Approuved by**

Name : _____

Title : _____

Compagnie : _____

Signature : _____

*3076 A, Bernard-Pilon, St-Mathieu de Beloeil, Qc, J3G 4S5  Tél.: (450) 922-4224 / Fax: (450) 922-4223*

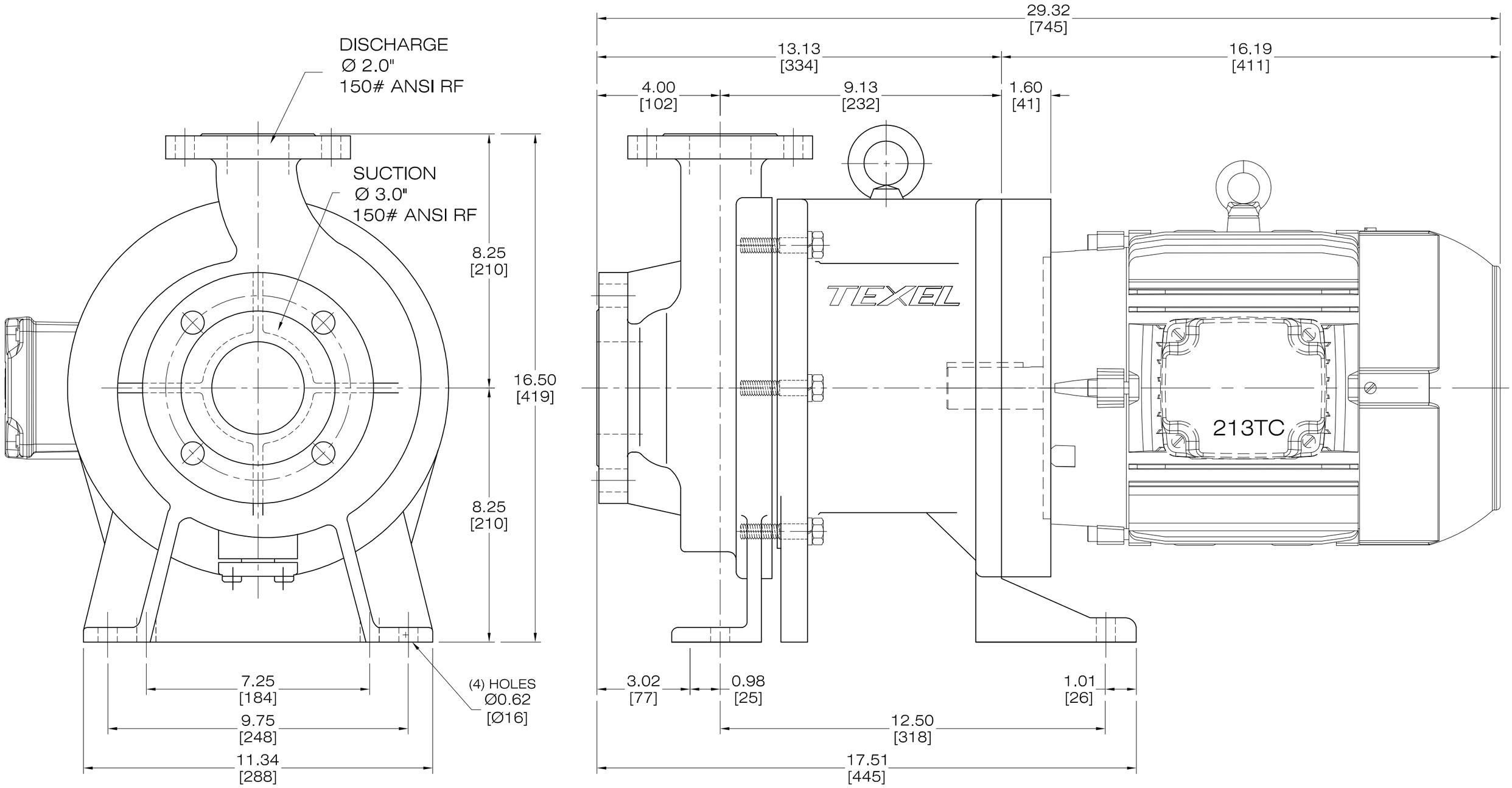


F1 CONDUIT LOCATION SHOWN

CUSTOMER: VISSERS SALES
LOCATION: AURORA, ONTARIO - CANADA
P.O. NO.: PO00017759
SERVICE: 10% SODIUM HYPOCHLORITE
TAG NO.: N/A
PUMP MODEL: MTA-A10-P-F10-2-FE
SERIAL NO.: 3522675-1A/B
MOTOR: 7.5HP/ 3600RPM/ TEFC/ 3-60-575V/ 213TC
WEIGHT: APPROX. 320 LBS TOTAL

CERTIFIED

APPROVED
By Neal Gunn at 2:28 pm, 5/21/21

REVISIONS 2 | ALL DIMENSIONS ± 0.12" [3mm]

CONFIDENTIAL
This drawing is the property of Magnatex Pumps Inc. and is confidential. Not for use for any manufacturing purpose without documented authorization of Magnatex Pumps Inc.

| NO. | DATE | COMMENT | INT |
|---|---|---|---|
| 2 | 5/19/21 | CONDUIT BOX LOCATION | KJH |
| 3 | | | |
| 4 | | | |

MAGNATEX® Pumps, Inc.

GENERAL ASSEMBLY
MTA Series Close-Coupled Pump

| DRAWN BY: | DATE: | SCALE: | PAGE: |
|---|---|---|---|
| B VALENTIN | 07/19/12 | NTS | 1 OF 1 |

**3522675-1A/B**

GA-MTA-A10-213TC

COPYRIGHT 2021 MAGNATEX PUMPS INC.

# Pump Data Sheet - Magnatex

Company: PCP INC
Name:
Date:

## Pump:

| | | | |
|---|---|---|---|
| Model: | MTA-A10 | Dimensions: Suction: | 3 in |
| Type: | MTA | Discharge: | 2 in |
| Synch Speed: | 3600 rpm | | |
| Dia: | 4.4 in | | |
| Magnet: | T-230 | | |
| Size: | 3 x 2 x 6 | | |

## Search Criteria:

| | | | |
|---|---|---|---|
| Flow: | 220 US gpm | Near Miss: | |
| Head: | 40 ft | Static Head: | 0 ft |

## Pump Selection Warnings:

The design point is outside of the pump's selection window.

## Fluid:

| | | | |
|---|---|---|---|
| Name: | CALCIUM HYPOCHLORITE | | |
| SG: | 1.12 | Vapor Pressure: | 1 psi a |
| Density: | 69.8 lb/ft³ | Atm Pressure: | 14.7 psi a |
| Viscosity: | 1.1 cP | | |
| Temperature: | 70 °F | | |

## Pump Limits:

| | | | |
|---|---|---|---|
| Temperature: | 250 °F | Sphere Size: | --- |
| Wkg Pressure: | 150 psi g | Power: | 28.8 hp |

## Motor:

| | | | |
|---|---|---|---|
| Standard: | NEMA | Size: | 5 hp |
| Enclosure: | TEFC | Speed: | 3600 rpm |
| Frame: | 184T | | |
| Sizing Criteria: | Max Power on Design Curve | | |

### --- Duty Point ---

| | |
|---|---|
| Flow: | 229 US gpm |
| Head: | 43.3 ft |
| Eff: | 53.7% |
| Power: | 5.16 hp |
| NPSHr: | 19.4 ft |
| Speed: | 3500 rpm |

### --- Design Curve ---

| | |
|---|---|
| Shutoff Head: | 76 ft |
| Shutoff dP: | 36.8 psi |
| Min Flow: | 13 US gpm |

BEP: 57.7% @ 184 US gpm
NOL Power:
5.4 hp @ 262 US gpm

### --- Max Curve ---

Max Power:
20.8 hp @ 351 US gpm

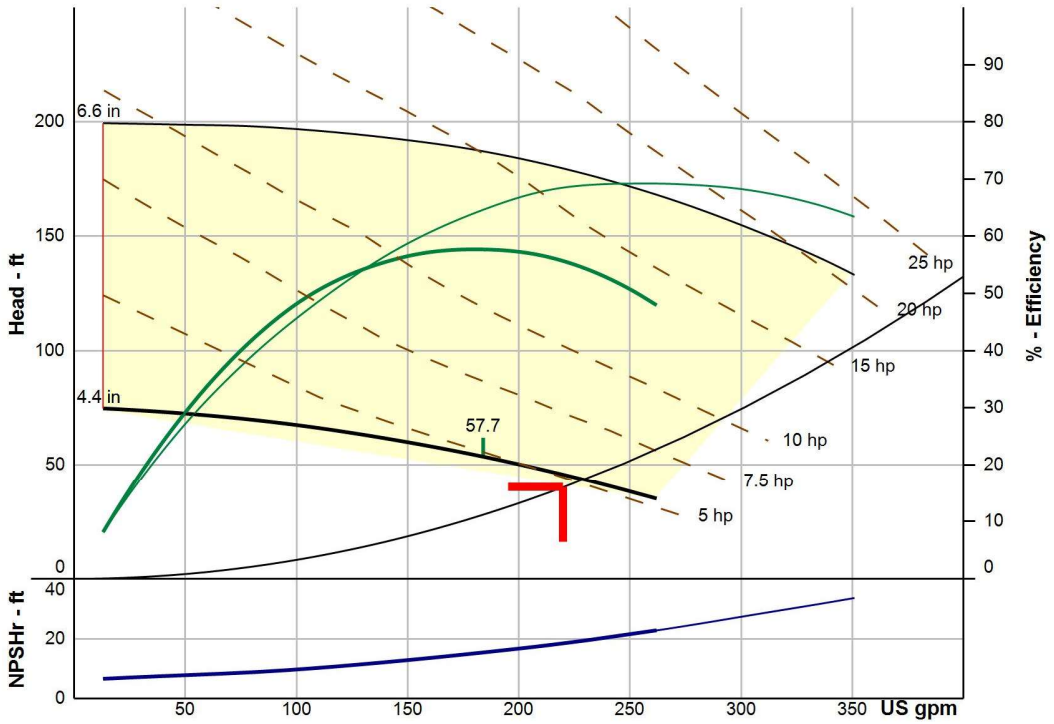


## Performance Evaluation:

| Flow | Speed | Head | Efficiency | Power | NPSHr |
|---|---|---|---|---|---|
| | rpm | | % | | |
| 264 | 3500 | --- | --- | --- | --- |
| 220 | 3500 | 45.5 | 55.2 | 5.1 | 18.5 |
| 176 | 3500 | 55.1 | 57.4 | 4.75 | 14.8 |
| 132 | 3500 | 62.7 | 53.5 | 4.31 | 11.7 |
| 88 | 3500 | 68.7 | 43.5 | 3.86 | 9.22 |

Selected from catalog: Magnatex.60, Vers 1.18

# DATA SHEET

## Three Phase Induction Motor - Squirrel Cage

| | |
|---|---|
| Customer | : Vissers |
| Customer reference | : 3522675-1 |

| | | | |
|---|---|---|---|
| Product line | : W22 NEMA Premium Efficiency Three-Phase | Product code : | 12446716 |
| | | Catalog # : | 00736ET3H213TC-W22 |

| | | | |
|---|---|---|---|
| Frame | : 213/5TC | Locked rotor time | : 39s (cold) 22s (hot) |
| Output | : 7.5 HP (5.5 kW) | Temperature rise | : 80 K |
| Poles | : 2 | Duty cycle | : Cont.(S1) |
| Frequency | : 60 Hz | Ambient temperature | : -20°C to +40°C |
| Rated voltage | : 575 V | Altitude | : 1000 m.a.s.l. |
| Rated current | : 7.01 A | Protection degree | : IP55 |
| L. R. Amperes | : 50.5 A | Cooling method | : IC411 - TEFC |
| LRC | : 7.2x(Code H) | Mounting | : F-1 |
| No load current | : 2.16 A | Rotation[1] | : Both (CW and CCW) |
| Rated speed | : 3520 rpm | Noise level[2] | : 68.0 dB(A) |
| Slip | : 2.22 % | Starting method | : Direct On Line |
| Rated torque | : 11.2 ft.lb | Approx. weight[3] | : 161 lb |
| Locked rotor torque | : 210 % | | |
| Breakdown torque | : 300 % | | |
| Insulation class | : F | | |
| Service factor | : 1.25 | | |
| Moment of inertia (J) | : 0.4665 sq.ft.lb | | |
| Design | : B | | |

| Output | 25% | 50% | 75% | 100% |
|---|---|---|---|---|
| Efficiency (%) | 87.2 | 87.5 | 89.5 | 89.5 |
| Power Factor | 0.52 | 0.75 | 0.84 | 0.88 |

Foundation loads

| | |
|---|---|
| Max. traction | : 108 lb |
| Max. compression | : 270 lb |

| | | Drive end | Non drive end |
|---|---|---|---|
| Bearing type | : | 6308 ZZ | 6207 ZZ |
| Sealing | : | V'Ring | V'Ring |
| Lubrication interval | : | - | - |
| Lubricant amount | : | - | - |
| Lubricant type | : | Mobil Polyrex EM | |

Notes

This revision replaces and cancel the previous one, which must be eliminated.
(1) Looking the motor from the shaft end.
(2) Measured at 1m and with tolerance of +3dB(A).
(3) Approximate weight subject to changes after manufacturing process.
(4) At 100% of full load.

These are average values based on tests with sinusoidal power supply, subject to the tolerances stipulated in NEMA MG-1.

| Rev. | Changes Summary | Performed | Checked | Date |
|---|---|---|---|---|
| | | | | |

| | | | | |
|---|---|---|---|---|
| Performed by | | | | |
| Checked by | | | Page | Revision |
| Date | 25/05/2021 | | 1 / 6 | |

This document is exclusive property of WEG S/A. Reprinting is not allowed without written authorization of WEG S/A.
Subject to change without notice

# TORQUE AND CURRENT VS SPEED CURVE

## Three Phase Induction Motor - Squirrel Cage

| | |
|---|---|
| Customer | : Vissers |
| Customer reference | : 3522675-1 |

| | | | |
|---|---|---|---|
| Product line | : W22 NEMA Premium Efficiency Three-Phase | Product code : | 12446716 |
| | | Catalog # : | 00736ET3H213TC-W22 |

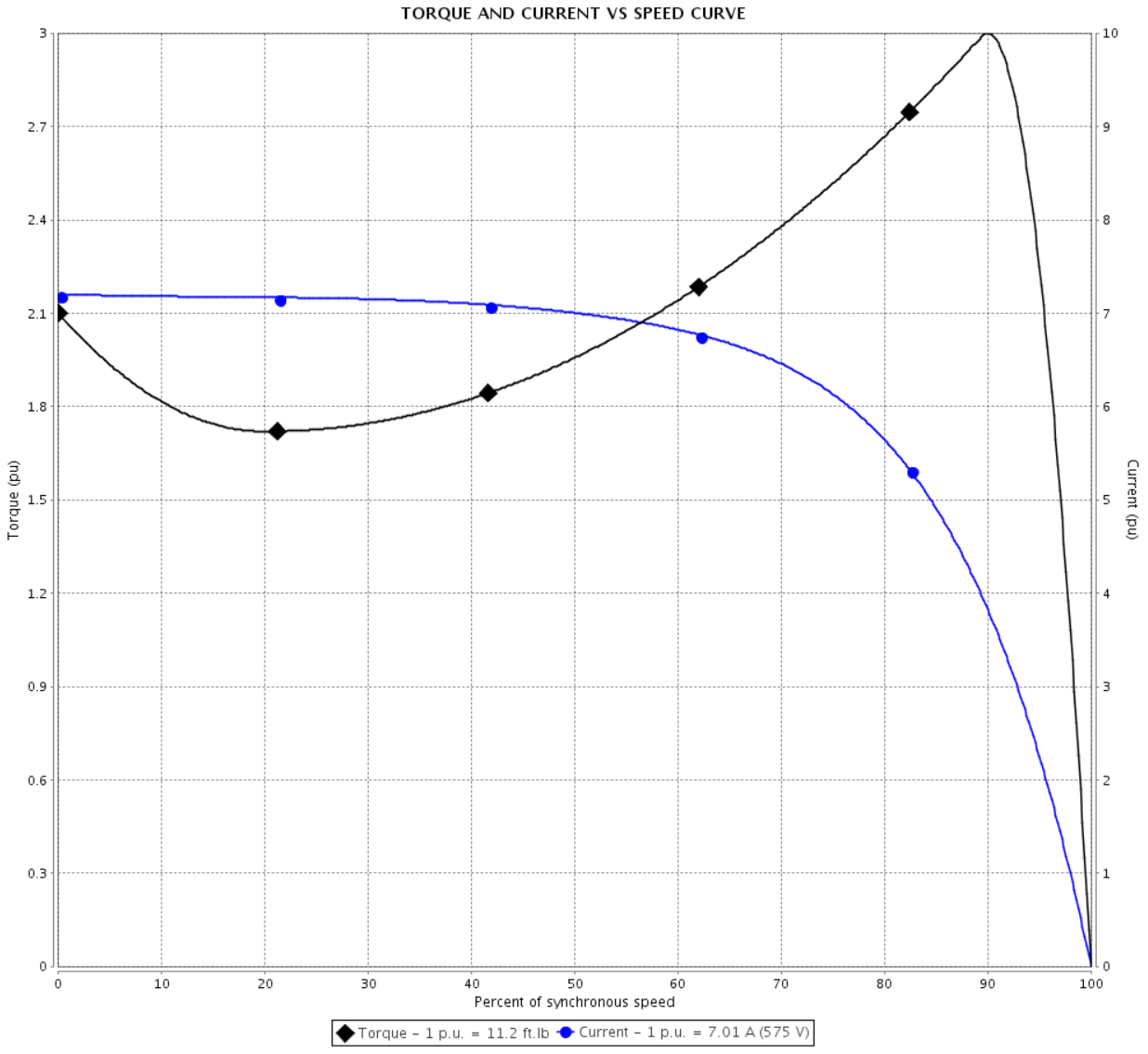


| | |
|---|---|
| Performance | : 575 V 60 Hz 2P |

| | | | |
|---|---|---|---|
| Rated current | : 7.01 A | Moment of inertia (J) | : 0.4665 sq.ft.lb |
| LRC | : 7.2 | Duty cycle | : Cont.(S1) |
| Rated torque | : 11.2 ft.lb | Insulation class | : F |
| Locked rotor torque | : 210 % | Service factor | : 1.25 |
| Breakdown torque | : 300 % | Temperature rise | : 80 K |
| Rated speed | : 3520 rpm | Design | : B |

| | |
|---|---|
| Locked rotor time | : 39s (cold) 22s (hot) |

| Rev. | Changes Summary | Performed | Checked | Date |
|---|---|---|---|---|
| | | | | |

| | | | | |
|---|---|---|---|---|
| Performed by | | | | |
| Checked by | | | Page | Revision |
| Date | 25/05/2021 | | 2 / 6 | |

This document is exclusive property of WEG S/A. Reprinting is not allowed without written authorization of WEG S/A.
Subject to change without notice

# LOAD PERFORMANCE CURVE

## Three Phase Induction Motor - Squirrel Cage

| | |
|---|---|
| Customer | : Vissers |
| Customer reference | : 3522675-1 |

| | | | |
|---|---|---|---|
| Product line | : W22 NEMA Premium Efficiency Three-Phase | Product code : | 12446716 |
| | | Catalog # : | 00736ET3H213TC-W22 |

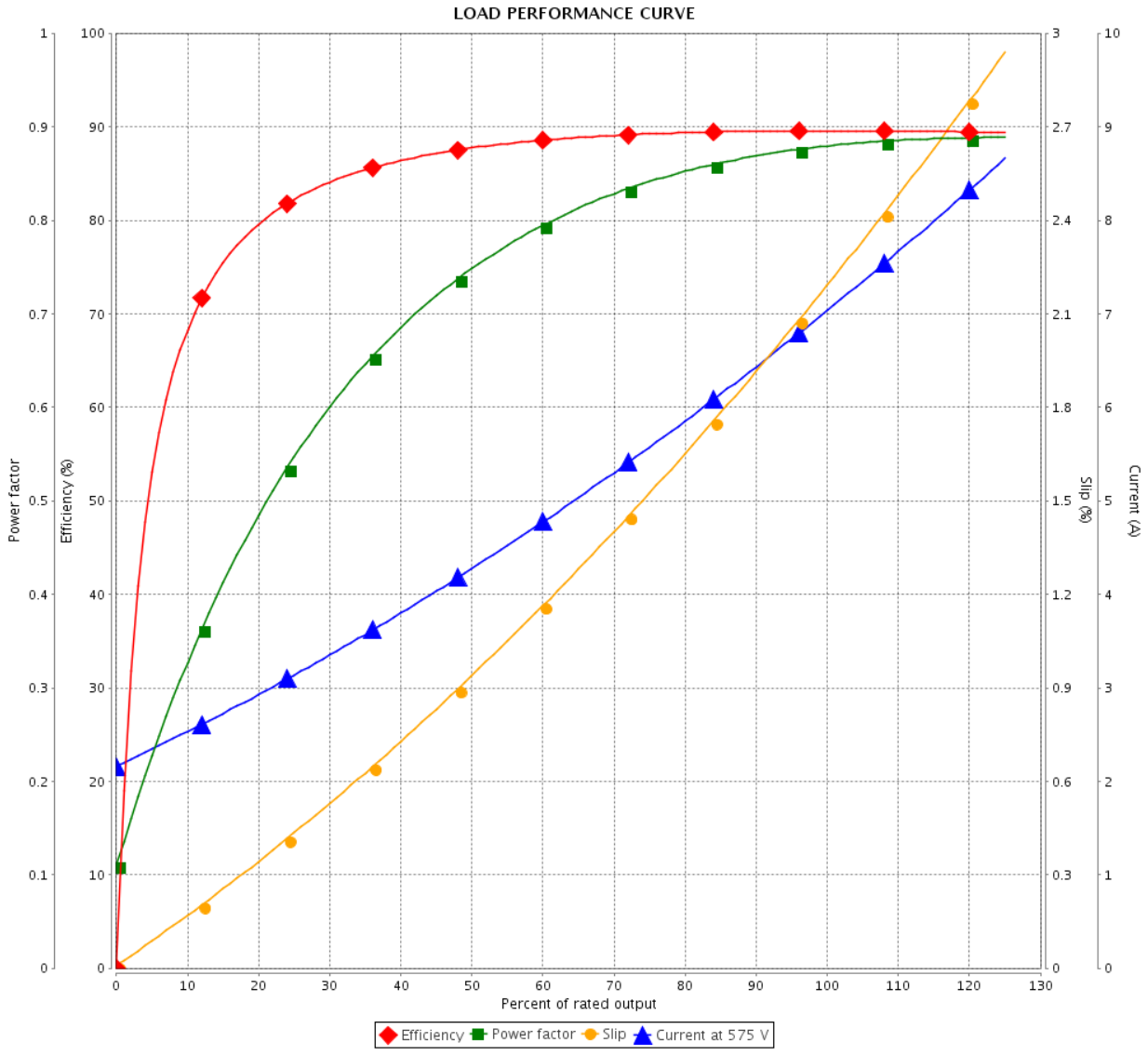


| | |
|---|---|
| Performance | : 575 V 60 Hz 2P |

| | | | |
|---|---|---|---|
| Rated current | : 7.01 A | Moment of inertia (J) | : 0.4665 sq.ft.lb |
| LRC | : 7.2 | Duty cycle | : Cont.(S1) |
| Rated torque | : 11.2 ft.lb | Insulation class | : F |
| Locked rotor torque | : 210 % | Service factor | : 1.25 |
| Breakdown torque | : 300 % | Temperature rise | : 80 K |
| Rated speed | : 3520 rpm | Design | : B |

| Rev. | Changes Summary | Performed | Checked | Date |
|---|---|---|---|---|
| | | | | |

| | | | | |
|---|---|---|---|---|
| Performed by | | | | |
| Checked by | | | Page | Revision |
| Date | 25/05/2021 | | 3 / 6 | |

This document is exclusive property of WEG S/A. Reprinting is not allowed without written authorization of WEG S/A.
Subject to change without notice

# THERMAL LIMIT CURVE

## Three Phase Induction Motor - Squirrel Cage

| | |
|---|---|
| Customer | : Vissers |
| Customer reference | : 3522675-1 |

| | | | |
|---|---|---|---|
| Product line | : W22 NEMA Premium Efficiency Three-Phase | Product code : | 12446716 |
| | | Catalog # : | 00736ET3H213TC-W22 |

| | |
|---|---|
| Performance | : 575 V 60 Hz 2P |

| | | | |
|---|---|---|---|
| Rated current | : 7.01 A | Moment of inertia (J) | : 0.4665 sq.ft.lb |
| LRC | : 7.2 | Duty cycle | : Cont.(S1) |
| Rated torque | : 11.2 ft.lb | Insulation class | : F |
| Locked rotor torque | : 210 % | Service factor | : 1.25 |
| Breakdown torque | : 300 % | Temperature rise | : 80 K |
| Rated speed | : 3520 rpm | Design | : B |

| | |
|---|---|
| Heating constant | |
| Cooling constant | |

| Rev. | Changes Summary | Performed | Checked | Date |
|---|---|---|---|---|
| | | | | |

| | | | | |
|---|---|---|---|---|
| Performed by | | | | |
| Checked by | | | Page | Revision |
| Date | 25/05/2021 | | 4 / 6 | |

This document is exclusive property of WEG S/A. Reprinting is not allowed without written authorization of WEG S/A.
Subject to change without notice

# THERMAL LIMIT CURVE

## Three Phase Induction Motor - Squirrel Cage

Customer : Vissers
Customer reference : 3522675-1

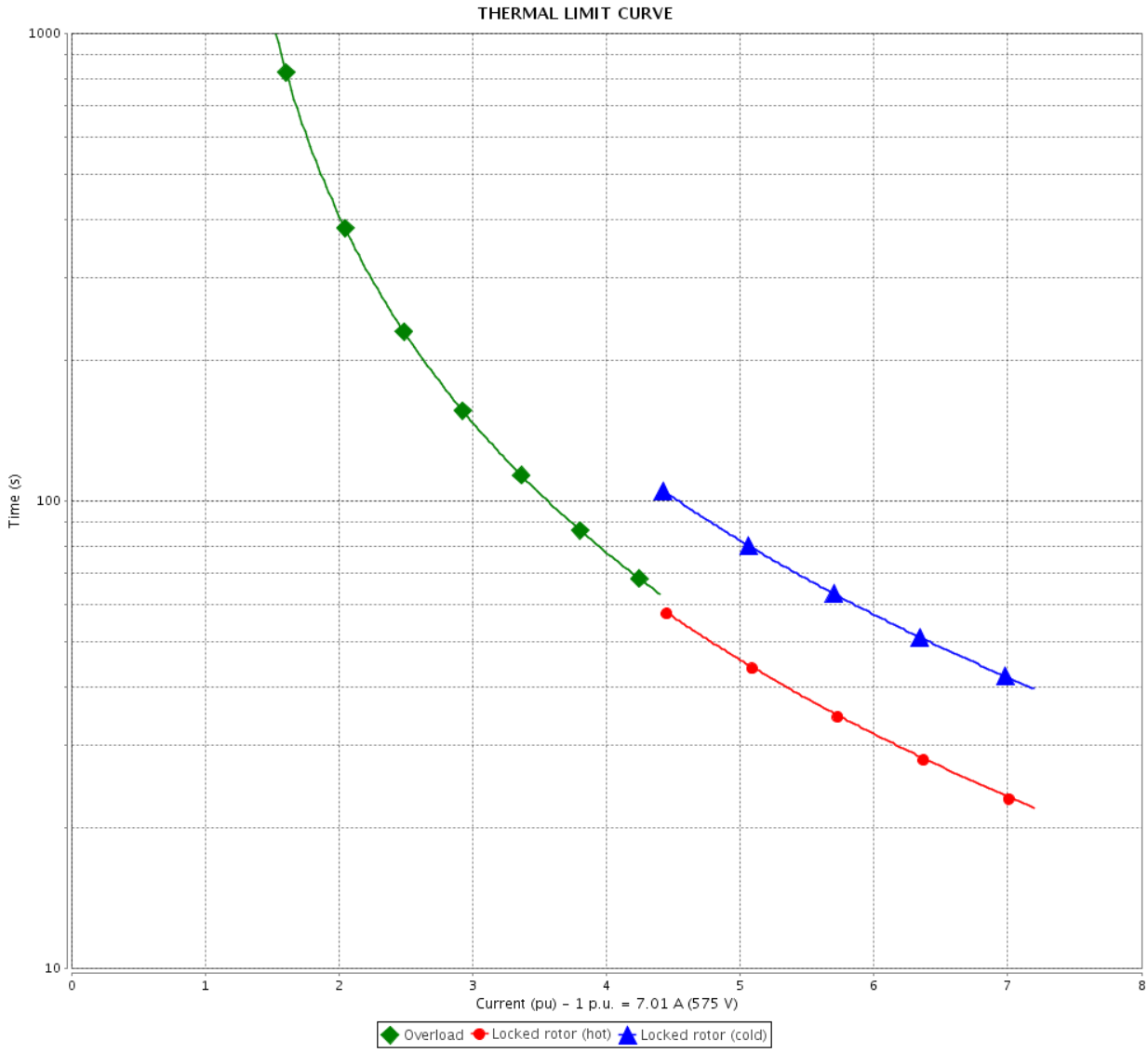


| Rev. | Changes Summary | Performed | Checked | Date |
|---|---|---|---|---|
| | | | | |

| | | | | |
|---|---|---|---|---|
| Performed by | | | | |
| Checked by | | | Page | Revision |
| Date | 25/05/2021 | | 5 / 6 | |

This document is exclusive property of WEG S/A. Reprinting is not allowed without written authorization of WEG S/A.
Subject to change without notice

# VFD OPERATION CURVE

## Three Phase Induction Motor - Squirrel Cage

| | |
|---|---|
| Customer | : Vissers |
| Customer reference | : 3522675-1 |

| | | | |
|---|---|---|---|
| Product line | : W22 NEMA Premium Efficiency Three-Phase | Product code : | 12446716 |
| | | Catalog # : | 00736ET3H213TC-W22 |

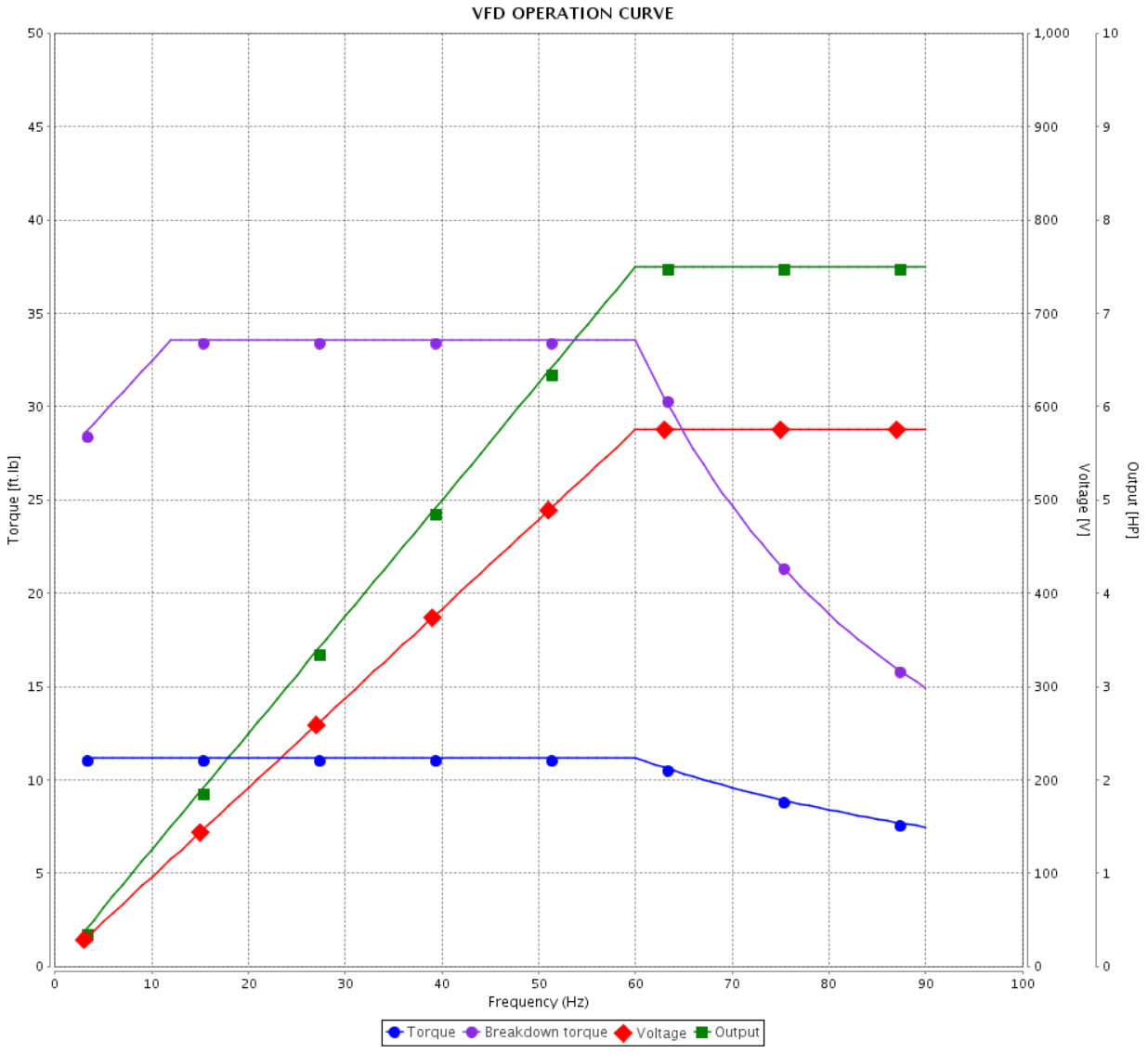


| | |
|---|---|
| Performance | : 575 V 60 Hz 2P |

| | | | |
|---|---|---|---|
| Rated current | : 7.01 A | Moment of inertia (J) | : 0.4665 sq.ft.lb |
| LRC | : 7.2 | Duty cycle | : Cont.(S1) |
| Rated torque | : 11.2 ft.lb | Insulation class | : F |
| Locked rotor torque | : 210 % | Service factor | : 1.25 |
| Breakdown torque | : 300 % | Temperature rise | : 80 K |
| Rated speed | : 3520 rpm | Design | : B |

| Rev. | Changes Summary | Performed | Checked | Date |
|---|---|---|---|---|
| | | | | |

| | | | | |
|---|---|---|---|---|
| Performed by | | | | |
| Checked by | | | Page | Revision |
| Date | 25/05/2021 | | 6 / 6 | |

This document is exclusive property of WEG S/A. Reprinting is not allowed without written authorization of WEG S/A.
Subject to change without notice

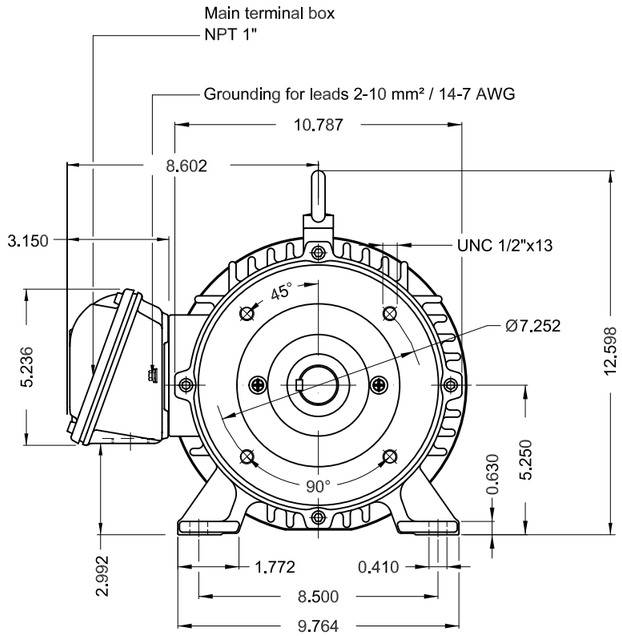


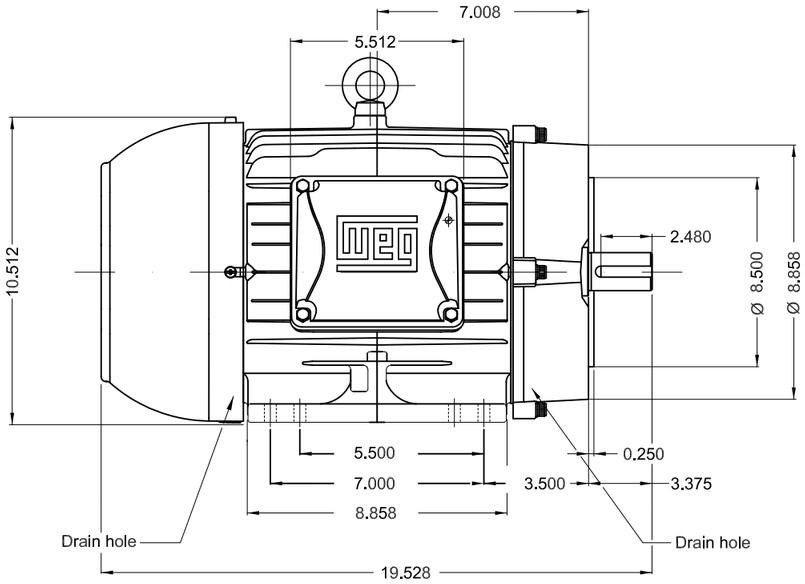


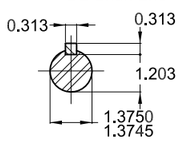


Bearing cap
Color RAL 5009
Painting plan 207A
Mounting B34R(D)

7.5 HP 02 Poles 60Hz | A

| ECM | LOC | SUMMARY OF MODIFICATIONS | EXECUTED | CHECKED | RELEASED | DATE | VER |
|---|---|---|---|---|---|---|---|

| | | | |
|---|---|---|---|
| EXECUTED | PIRWBUSER | THREE PHASE W22 MOTOR - NEMA PREMIUM EFF | PREVIEW |
| CHECKED | | FRAME 213/5TC IP55 TEFC | WDD |
| RELEASED | | | |
| REL DT. | | WMO Jaragua do Sul Product Engineering | SHEET 1 / 1 |

Dimensions in inches

XME A3

WEG's property. Forbidden reproduction without previous authorization.

WEG

NEMA Premium®

W22

MADE IN BRAZIL 12446716

MODEL 00736ET3H213TC-W22

Inverter Duty Motor
Severe Duty

C US Energy Verified

Class I, Div 2, Gr A, B, C and D - T3
Class I, Zone 2, IIC - T3
Class II, Div 2, Gr F and G - T4
For use on PWM: Gr. A, B, C, D and F,
VT 1000:1, CT 20:1, 1.00SF - T3A

C UL US 3PT9 LISTED

FOR SAFE AREA
Mod.TE1BF0X0N
CC029A

PH3 60Hz Fr. 213/5TC 1000m.a.s.l. IP55 TEFC 161lb

| | | | |
|---|---|---|---|
| V 575 | | A 7.01 | |
| HP 7.5 | | kW 5.5 | |
| SF 1.25 | | SFA 8.76 | |
| RPM 3520 | | PF 0.88 | |
| AMB 40°C | | INS cl. F DT80K | NEMA NOM EFF 89.5% |
| DUTY CONT. | | DES B Code H | |

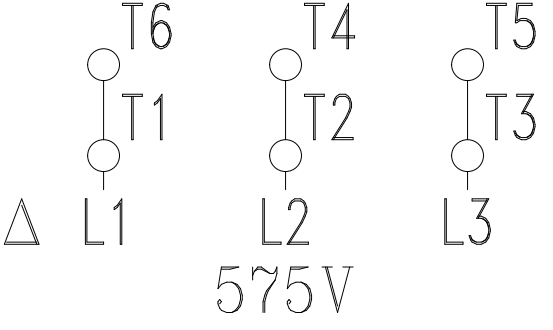


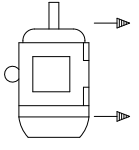


MOBIL POLYREX EM

MTA

MAGNATEX® Pumps, Inc.

PFA Lined Magnetic Drive Process Pumps



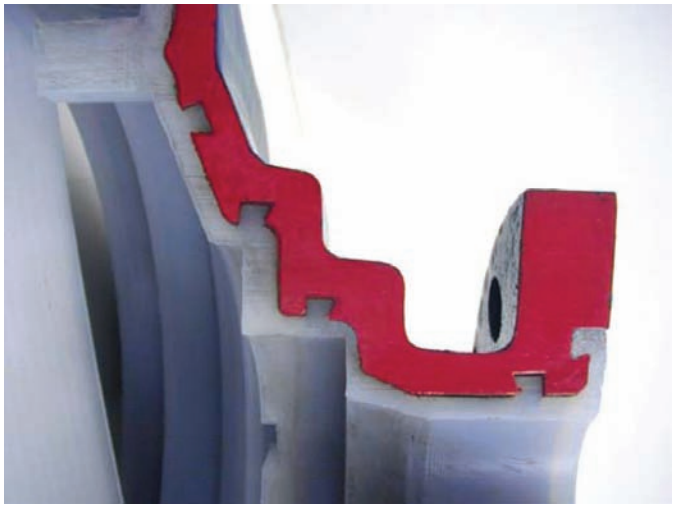

# TEXEL® PFA Lined MTA Series Pump Features

- PFA (Perfluoroalkoxytetrafluoroethylene) is a high-strength, high-temperature and abrasion-resistant fluoropolymer material
- Standard lining thickness is 5-6 mm
- PFA lining is mechanically secured to the ductile iron casing armoring by means of recessed dovetails that are cast into the ductile iron casing armor
- Extra long main shaft bushing
- Proprietary high pressure (1200 psi) transfer compression molding process
- Completely seamless inner magnet lining.

## Competitive Comparator

| MAGNATEX | COMPETITION |
|---|---|
| PFA offers the broadest range of resistance to chemical attack, lowest permeation rate and highest temperature capability of all the fluoropolymer materials, which ensures the maximum possible service life for Magnatex® lined magnetic drive pumps. | Generally only available in cheaper ETFE (Ethylene Tetrafluoro-ethylene) material, which has less chemical resistance, higher permeability and lower temperature resistance than PFA. |
| Magnatex PFA linings are 5–6mm thick and therefore will last longer in service than thinner ones of the same material and even longer when compared to the ETFE and PVDF linings offered by most of our competitors. | Most competitors' linings are just 3–4 mm thick, which means they have proportionately less corrosion and permeation resistance than Magnatex lined pumps. |
| High-pressure molding at 1200 psi produces a positive locking of the lining material and prevents lining movement in high vacuum or low suction pressure applications. | Most competitors have no mechanical means of restraining the casing liner, which can result in lining movement in high vacuum or low suction pressure applications. Shifting or movement of the lining may result in linings collapsing onto the internal rotating ele-ments leading to catastrophic failure of the pump. |
| The extra long main shaft bushing provides greater stability for operation across the entire hydraulic range of the pump, with smooth, quiet operation and extremely low vibration. Greater shaft support surface area means lower hydraulic loading, less wear and longer service life | Competitors generally offer shorter main shaft bushings, resulting in a smaller surface area to support dynamic shaft loads, which results in a shorter pump life. |
| High-pressure transfer molding @ 1200psi produces a lining with a dense, uniform thickness and superior surface finish, all of which contribute to superior service life in demanding chemical services. High pressure molding also eliminates any air pockets between the casing lining and the armoring, which is critical in high tem-perature services. | Competitors use a cheaper, atmospheric pressure, rotomolding process, which results in a thinner, less dense, and more perme-able lining material with a less uniform surface finish. Rotomolded linings may have air bubbles trapped behind them, which can lead to linings cracking in high-temperature applications. |
| Completely seamless inner magnet lining eliminates a potential leak path for the process fluid to reach and attack the inner mag-net. Shape secured main bushing eliminates keyed construction; easing related stress points. | Most competitors have seams in the inner magnet lining that can allow aggressive chemicals to penetrate the lining, which cause the magnet segments to swell and corrode, leading to catastrophic failure of the pump. |

COPYRIGHT 2010 MAGNATEX PUMPS INC.

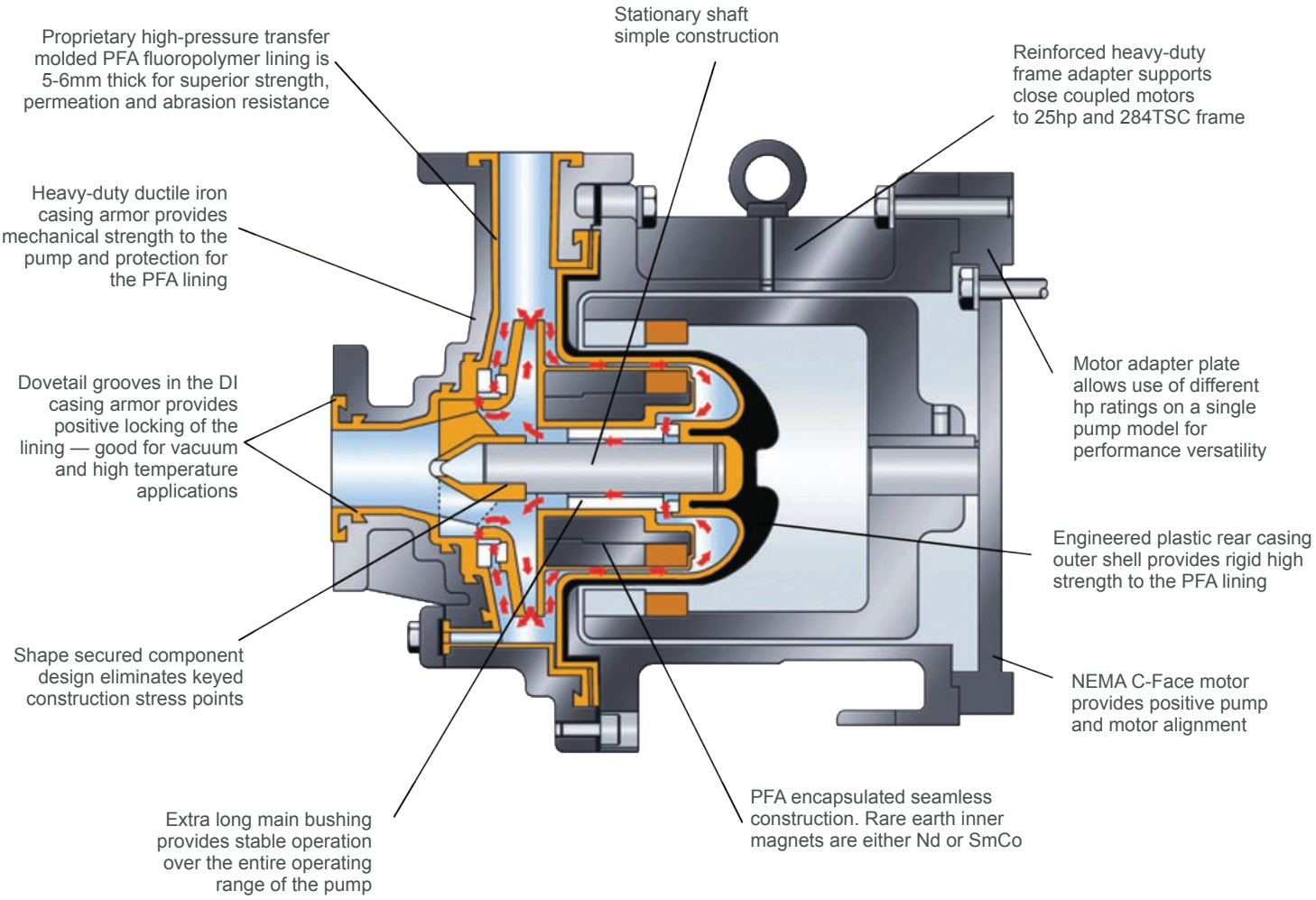




COPYRIGHT 2010 MAGNATEX PUMPS INC.

MAGNATEX® Pumps, Inc.

3575 West 12th Street Houston, TX 77008
tel: 713.972.8666 toll free: 866.MAGPUMP fax: 713.972.8665
www.magnatexpumps.com

Sharpe Mixers
A Hayward Gordon Company

# IMPELLER TECHNOLOGY

No single impeller can perform well in all applications. Sharpe Mixers provides a variety of industry standard and specialized proprietary impeller designs that are optimized for specific mixing applications.

## Hyflo Impellers

Sharpe Mixers' most popular hydrofoil style impeller generates the most flow for the least amount of power, reducing operating costs and improved performance. Each impeller model is designed for specific applications using high, medium, or low viscosity blending.

### HYF-218:

- Best for low viscosity products
- Low blade angle and hydrofoil blade shape reduce shear rates
- Four blade design

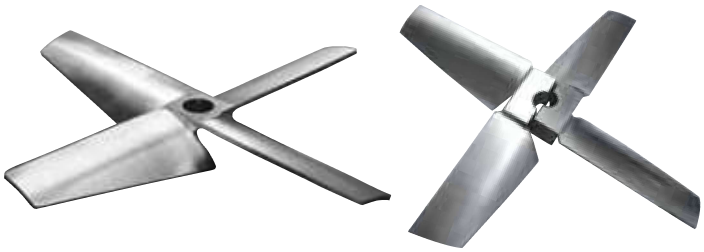

### HYF-518:

- Wide blade "Hyflo" high-efficiency hydrofoil impeller
- Best for medium viscosity ($N_{Re}$<500) products
- Provides equal flow with half the power
- High-solidity design optimum for gas handling applications
- Four blade design



### FHY-345:

- Collapsible blades that will fit through small diameter openings
- No tank access required to install mixer
- Patented 3-blade folding impeller

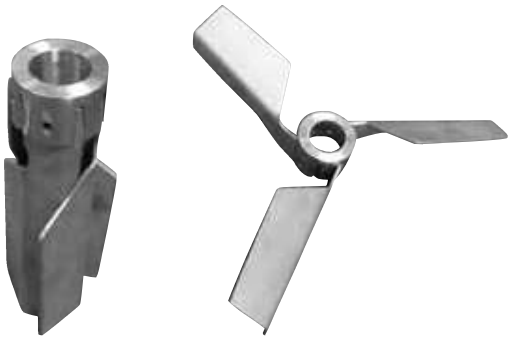

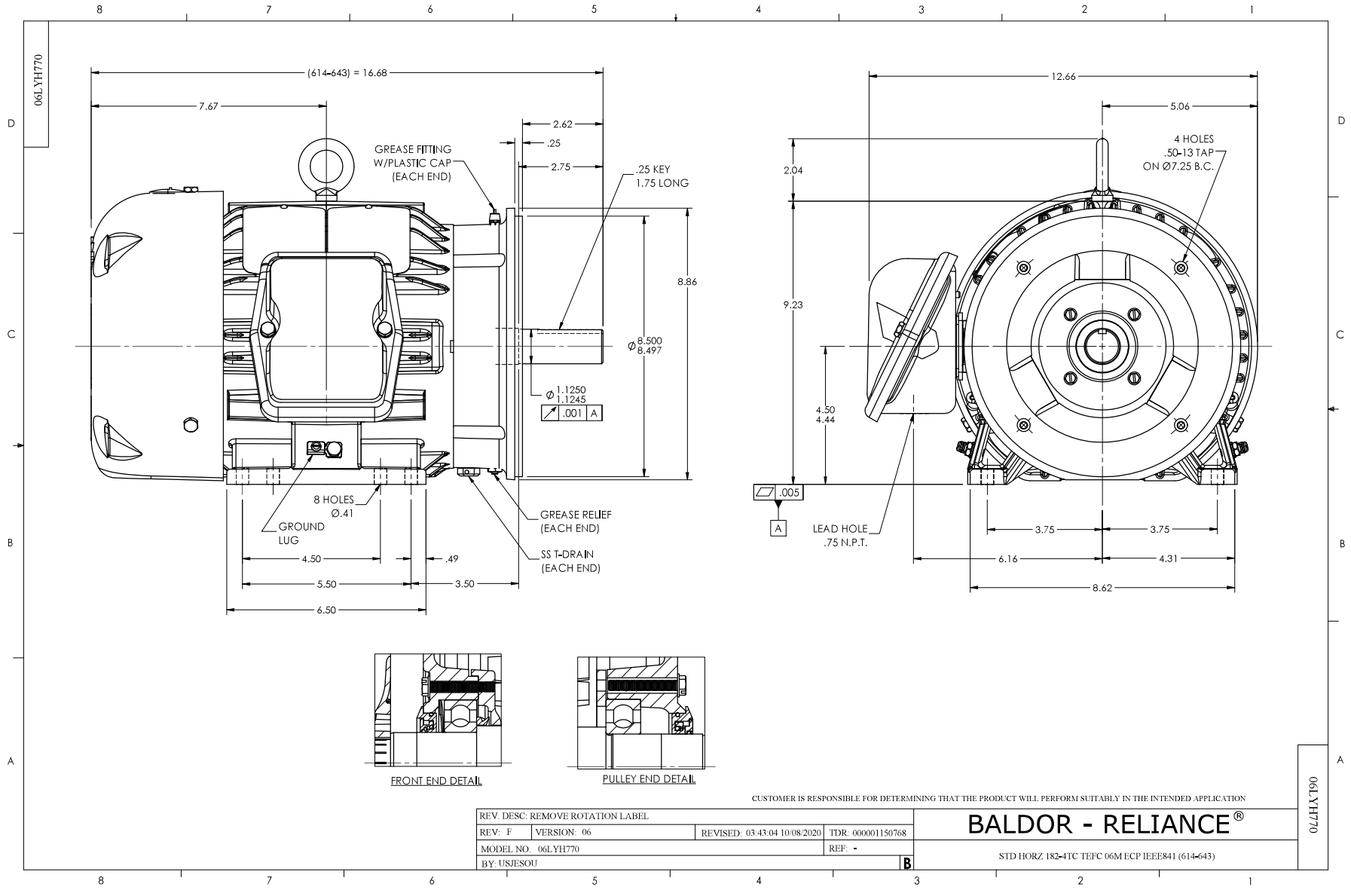
06LYH770
(614-643) = 16.68
7.67
2.62
.25
2.75
GREASE FITTING
W/PLASTIC CAP
(EACH END)
.25 KEY
1.75 LONG
8.86
Ø 8.500
8.497
Ø 1.1250
1.1245
.001 A
8 HOLES
Ø.41
GROUND
LUG
GREASE RELIEF
(EACH END)
SS T-DRAIN
(EACH END)
4.50
.49
5.50
3.50
6.50
12.66
5.06
4 HOLES
.50-13 TAP
ON Ø7.25 B.C.
2.04
9.23
4.50
4.44
.005
A
LEAD HOLE
.75 N.P.T.
3.75
3.75
6.16
4.31
8.62
FRONT END DETAIL
PULLEY END DETAIL
CUSTOMER IS RESPONSIBLE FOR DETERMINING THAT THE PRODUCT WILL PERFORM SUITABLY IN THE INTENDED APPLICATION
REV. DESC: REMOVE ROTATION LABEL
REV: F
VERSION: 06
REVISED: 03:43:04 10/08/2020
TDR: 000001150768
MODEL NO. 06LYH770
REF: -
BY: USJESOU
B
BALDOR - RELIANCE®
STD HORZ 182-4TC TEFC 06M ECP IEEE841 (614-643)
06LYH770

CD0006

TYPICAL WYE–CONNECTED MOTOR

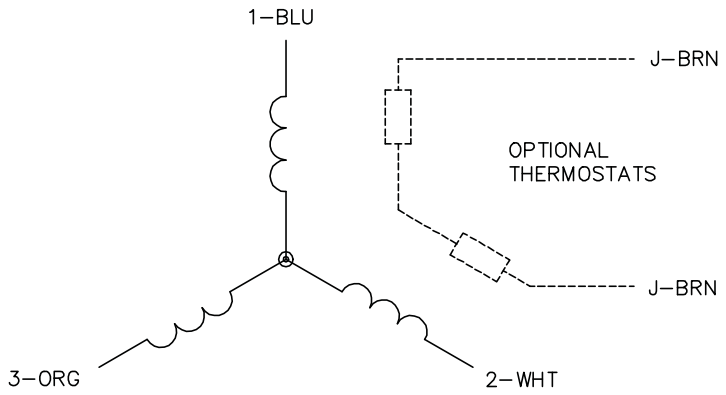


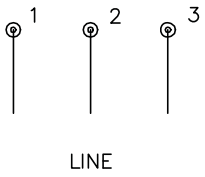


TYPICAL DELTA–CONNECTED MOTOR

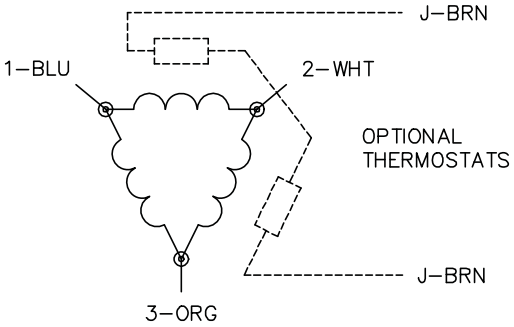


NOTES:

1. THREE LEAD MOTOR MAY BE EITHER WYE CONNECTED OR DELTA CONNECTED.
2. INTERCHANGE ANY TWO LINE LEADS TO REVERSE ROTATION.
3. OPTIONAL THERMOSTATS ARE PROVIDED WHEN SPECIFIED.
4. ACTUAL NUMBER OF INTERNAL PARALLEL CIRCUITS MAY VARY.
5. LEAD COLORS ARE OPTIONAL. LEADS MUST BE NUMBERED AS SHOWN.

CD0006

| | | |
|---|---|---|
| REV. DESC: ADD CLASS CONN00000007 | | |
| REV. LTR: E | VERSION: 01 | TDR: 000001099922 |
| FILE: \AAA\00005\141 | REVISED: 10:24:49 02/19/2019 | BY: ENBRIRO |
| MTL: – | | |

BALDOR - RELIANCE®

3PH, SV, 3 LEADS, WYE OR DELTA CONNECTED

SH 1 of 1

Sharpe Mixers
A Hayward Gordon Company

## N-SERIES AND B-SERIES

Sharpe Mixers' N-Series premium line mixer drives are extremely efficient, durable, and best choice in a diverse range of applications that provide may years of quiet service. Built specifically with strict specifications to meet the high demands of mixing products.

Vertical N-Series and right angle B-Series mixers are available in top and side entering designs, ranging from simple plate mounted with open tank models to complex mechanical seal systems; from high speed dispersers to ultra low speed helix mixers. Sizes range from fractional to over 200 horsepower.

***Benefits:***

- *Oil safe designs*
- *Custom impellers and seal designs*
- *Special alloys*
- *Polishing and coatings*

### Standard Features:

- Heavy duty construction cast iron housing, SAE Class 30
- NEMA frame motors
- SAE 8620 steel helical gearing with overload protection AGMA quality level 12
- Oversized tapered roller bearings
- C-face motor mounting or foot mounted motors
- Oil lubricated gears and bearings with oversize sight glass and fill/drain fittings
- Durable 2-part epoxy finish to provide optimum protection against corrosion
- Flexible high speed coupling isolates motor from shock loads
- Rain cap/shaft guard on hollow quill units protecting personnel from rotating parts and weather conditions






1541 S. 92nd Pl., Seattle, WA 98108 | 206-767-5660 | 800-237-8815 | sharpemixers.com | sales@sharpemixers.com

# Oil Safe Design Considerations

- Input bearing cylinders are modified to accept a grease fitting for re-greasable bearings. Larger units include a "charged" greasing cylinder, automatically re-greasing the bearings at set intervals.
- Oversize tapered roller bearings are used for all output bearings to provide excess capacity and maximum life.
- Oversize sight glasses are installed for easy viewing of oil levels.
- Gearbox cases are tapped to accept oil fill/oil drain fittings, which are included for ease of maintenance.
- Hollow quill units are equipped with Sharpe's custom fit rain cap/shaft guard covers to protect the output shaft from weather and to protect personnel from rotating parts. The hollow quill shaft design allows for precise attachment to the mixer shaft without the use of an in-tank coupling. Solid shaft and coupling designs are also available.
- Heat and shock loading is isolated with a flexible coupling between the motor and the gearbox. Standard NEMA frame c-face motor mounting is designed for simple trouble-free installation, with positive registers for repeatable alignment. Motor scoops are also available if foot mounted motors are preferred.
- The entire drive including the motor is covered with a premium 2-part epoxy coating, baked on for maximum corrosion resistance and durability.
- The all-helical gearing is made from SAE 8620 steel, carburized to hardness of 58 to 62 Rockwell C and ground to AGMA Quality Level 12, assuring quiet operation and long life.

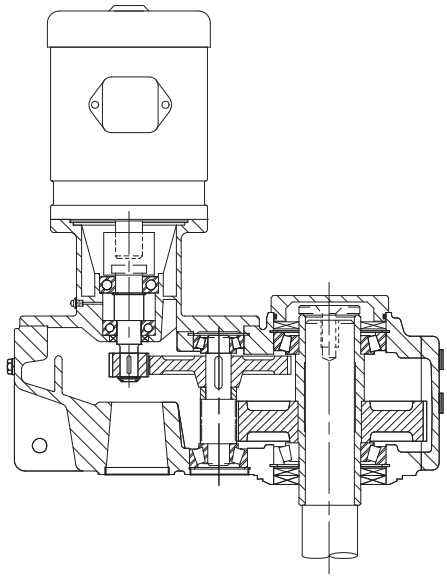

## TYPICAL MIXING

### Industries

- Food & Beverage
- Pharmaceutical & Biotech
- Cosmetic & Personal Care
- Pulp & Paper
- Petroleum
- Chemical
- Municipal
- Waste Treatment
- Mining



Oil Safe Design

### Options

- Synthetic lubricating oil
- High or low temperature lubricating oil
- Fluid grease lubricant
- Food grade lubricating oil
- Long term storage preparation

c UL us LISTED

MADE IN THE USA

P.O. Box 3906, Seattle, WA 98124
206-767-5660 | 800-237-8815
sharpemixers.com | sales@sharpemixers.com

Sharpe Mixers
A Hayward Gordon Company

# IMPELLER TECHNOLOGY

No single impeller can perform well in all applications. Sharpe Mixers provides a variety of industry standard and specialized proprietary impeller designs that are optimized for specific mixing applications.

## Hyflo Impellers

Sharpe Mixers' most popular hydrofoil style impeller generates the most flow for the least amount of power, reducing operating costs and improved performance. Each impeller model is designed for specific applications using high, medium, or low viscosity blending.

### HYF-218:

- Best for low viscosity products
- Low blade angle and hydrofoil blade shape reduce shear rates
- Four blade design

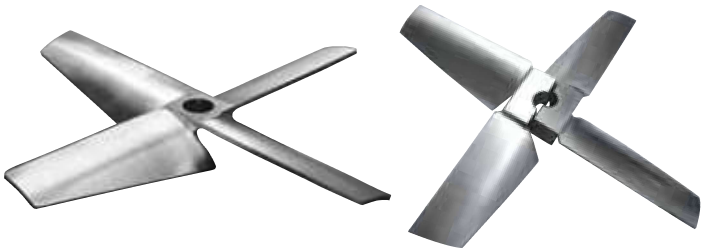

### HYF-518:

- Wide blade "Hyflo" high-efficiency hydrofoil impeller
- Best for medium viscosity ($N_{Re}$<500) products
- Provides equal flow with half the power
- High-solidity design optimum for gas handling applications
- Four blade design



### FHY-345:

- Collapsible blades that will fit through small diameter openings
- No tank access required to install mixer
- Patented 3-blade folding impeller

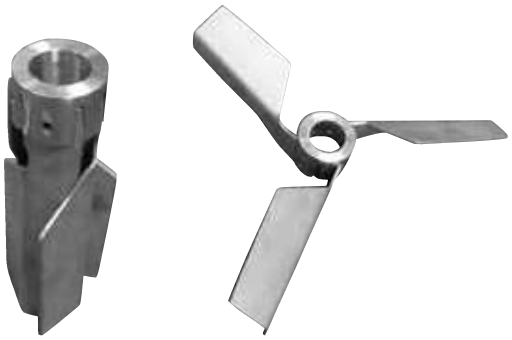

# SECTION C

## N - SERIES GEARBOX LUBRICATION

**C1.1 N-SERIES GEARBOXES:** See data sheet and/or assembly drawing at the front of this manual to find the model number and number of gear reductions for gearbox supplied. Unit case sizes N9 and smaller have been lubricated at the factory with the proper type (for an ambient temperature range of 20° - 104°F; for different ambient conditions, change to appropriate oil shown in Table C1.3) and amount of lubrication for mixer service. To prevent leakage, the gearbox vent has been replaced with a temporary plug for shipment. The vent is included separately.

**WARNING: VENT MUST BE REINSTALLED PRIOR TO START-UP OR DAMAGE TO GEARBOX WILL OCCUR.** (If gearbox is supplied with OT or OA, see section at end of manual for venting instruction.)

Check that the oil level is to the proper level before start-up (see Figure C1.1), and that none was lost during shipment/installation. Units with an oil tank(OT) or expansion chamber (OA) will require a lube top off before mixer operation. If an OT or OA is supplied, see section at the end of manual for proper oil level. Change the oil every 10,000 hours or 2 years for mineral lube, 20,000 hours or 4 years with synthetic lube, whichever occurs first. Under extreme conditions it is recommended that the lubricant in the gearbox be changed more frequently. Pipe fittings may be provided to assist in oil draining/filling (see Section C1.2). Refer to Table C1.3 for the lubricant recommended for temperatures in your area. When changing to a different lubricant, clean gearbox with mineral spirits before refilling. Regrease input bearings every 1,000 hours or 6 months, whichever occurs first. See page C-9, Table C2.4 for recommended grease. Open and clean the grease outlet (opposite zirc). Add grease until new grease is forced through the outlet. Remove excess grease. Run one half hour before replacing the grease outlet plugs. Some gearboxes may be supplied with automatic bearing lubricators and will not have a grease fitting on the input. See section C2.3 for more information.

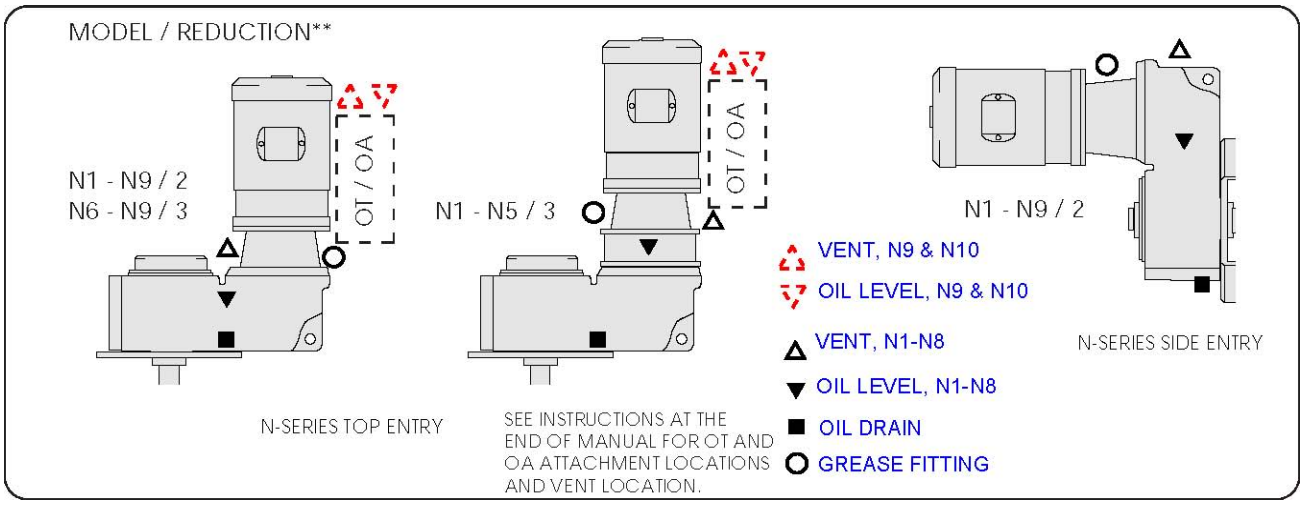


*FIGURE C1.1*

**N-SERIES DOUBLE REDUCTION** LUBRICATION CAPACITIES (Qts./LITERS)***

| MODEL | N1 | N2 | N3 | N4 | N5 | N6 | N7 | N8 | N9 | N10 |
|---|---|---|---|---|---|---|---|---|---|---|
| SIDE ENTRY | 0.95/0.90 | 1.74/1.65 | 3.3/3.2 | 5.0/4.7 | 7.9/7.5 | 18.0/17.0 | 26.4/25.0 | 39.1/37.0 | 78.2/74.0 | 95.1/90.0 |
| TOP ENTRY | 1.3/1.2 | 2.1/2.0 | 4.3/4.1 | 5.7/5.4 | 9.3/8.8 | 18.5/17.5 | 28.5/27.0 | 43.3/41.0 | 76.1/72.0 | 95.1/90.0 |

**N-SERIES TRIPLE REDUCTION** LUBRICATION CAPACITIES (Qts./LITERS)***

| MODEL | N1 | N2 | N3 | N4 | N5 | N6 | N7 | N8 | N9 | N10 |
|---|---|---|---|---|---|---|---|---|---|---|
| TOP ENTRY | 2.2/2.1 | 3.3/3.1 | 5.9/5.6 | 8.8/8.3 | 14.8/14.0 | 19.0/18.0 | 26.4/25.0 | 40.2/38.0 | 78.2/74.0 | 105.7/100 |

***IF (OT) OR (OA) IS SUPPLIED, SEE BACK OF MANUAL FOR ADDITIONAL LUBRICATION INFORMATION.*** *TABLE C1.2*

*VOLUMES SHOWN ARE AVERAGE VALUES.

**SEE DATA SHEET IN FRONT OF MANUAL FOR NUMBER OF GEAR REDUCTIONS

## RECOMMENDED LUBRICANTS FOR HELICAL AND HELICAL-BEVEL GEARBOXES

| LUBRICANT CHARACTERISTICS | | | | | | | |
|---|---|---|---|---|---|---|---|
| **AMBIENT TEMP. RANGE** | 20° to 104° F (-5° to +40° C) *Factory filled* | -5° to +75° F (-21° to +24° C) | -10° to +75° F (-23° to 24° C) | -40° to +50° F (-40° to 10° C) | -13° to 140° F (-25° to 60° C) (synthetic oils) | 14° to 176° F (-10° to 80° C) (synthetic oils) | 5° - 125° F (-15° to 52° C) Fluid Grease |
| **SSU VISCOSITY at 104° F (40° C)** | 918 to 1122 | 626 to 765 | 417 to 510 | 67 to 83 | 100 to 1000 | 130 to 1112 | ... |
| **AGMA LUBRICANT NO.** | 5EP | 4EP | 3EP | ... | ... | ... | ... |
| **ASTM VISCOSITY GRADE** | S1000 / C220 | S700/C150 | S465/C100 | ... | ... | ... | ... |
| **ISO GRADE** | VG220 | VG150 | VG100 | VG15 | ... | ... | ... |
| **LUBRICANT MANUFACTURERS** | | | | | | | |
| **CASTROL** | Alpha SP 220<br>Alpha MW220<br>Alpha MAX 220<br><br>Vitalube GS 220<br>(food grade) | ... | Alpha SP 100<br>Alpha MW 100<br>Alpha MAX 100 | Hyspin AWS 15<br>Hyspin SP 15<br>Hyspin ZZ 15 | Isolube EP220 | Alphasyn PG 220 | Alpha Gel 00 |
| **CHEVRON** | NL GEAR compound 220<br><br>FM ISO 220<br>(food grade) | NL GEAR compound 150 | ... | E.P. Hydraulic Oil 22 | ... | ... | ... |
| **EXXON/ESSO** | Spartan EP 220<br><br>Gear Oil FM 220<br>(food grade) | Spartan EP 150 | Spartan EP 100 | Univis J13 | ... | Glycolube 220 | ... |
| **MOBIL** | Mobilgear 630<br>Mobilgear XMP 220<br><br>Mobil DTE FM 220<br>(food grade) | Mobilgear 629 | Mobilgear 627<br><br>Mobilgear XMP 110 | DTE 11M | Glygoyle HE 680 | Mobil SHC 630<br><br>Glygoyle HE 220 | Mobilux EP023<br>Mobilith SHC 007<br>Glygoyle Grease 00 |
| **SHELL** | Omala EP220<br><br>Cassida Fluid GL220 (food grade) | ... | Omala EP100 | Tellus T 15<br><br>Omala HP 32 (synthetic) | Omala HD 220<br><br>Tivela S 680 | Omala HD 680<br>Tivela WB<br>Tivela S 220 | Tivela Comp. A<br><br>Tivela GL 00 |
| **TEXACO** | Meropa 220 | Meropa 150 | ... | Pinnacle EP32 (synthetic) | | Pinnacle EP680 | Multifak HD00 (ISO 680) |

*TABLE C1.3*

FOOD GRADE: SHELL FM ISO 220
SYNTHETIC FOOD GRADE: MOBILE SHC CIBUS 220
ARCTIC SHC 230 OR 234, OILJAX MAGNAPLATE 85W140-FG

**C1.2** On units smaller than N9 pipe fittings have been provided to assist in filling and draining gearbox oil. Install these fittings in place of the 1/2" N.P.T. drain in the side of the gearbox (See Figure C1.4).

Refer to table C1.2 for approximate oil quantities for your gearbox size.

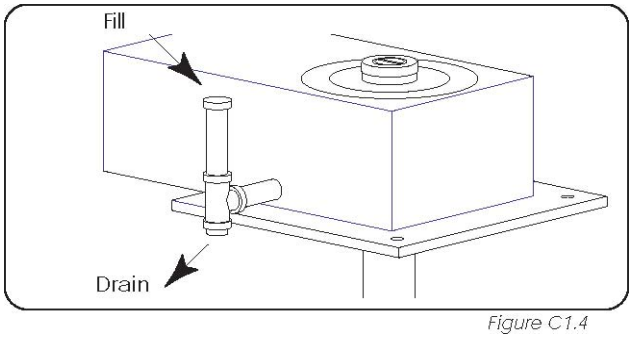


*Figure C1.4*

## GEARBOX PARTS

**C2.1** See data sheet and/or assembly drawing in the front of this manual to find the model number of gearbox supplied. The following drawings (Figures C2.1, C2.2, & C2.3) show standard parts for the N-Series gearbox, your model may vary slightly due to size and ratio. C-face motor adapter is shown in assembly drawings. See page C-8 (Figure C2.4) for motor scoop input adapter parts. Bearing and seal part numbers are shown on Tables C2.1 and C2.2. When requesting other part numbers, have serial number and model number off mixer nameplate readily available. If disassembling gearbox, contact factory for complete instructions and exact drawing for accurate placement of shims, snap rings, etc.

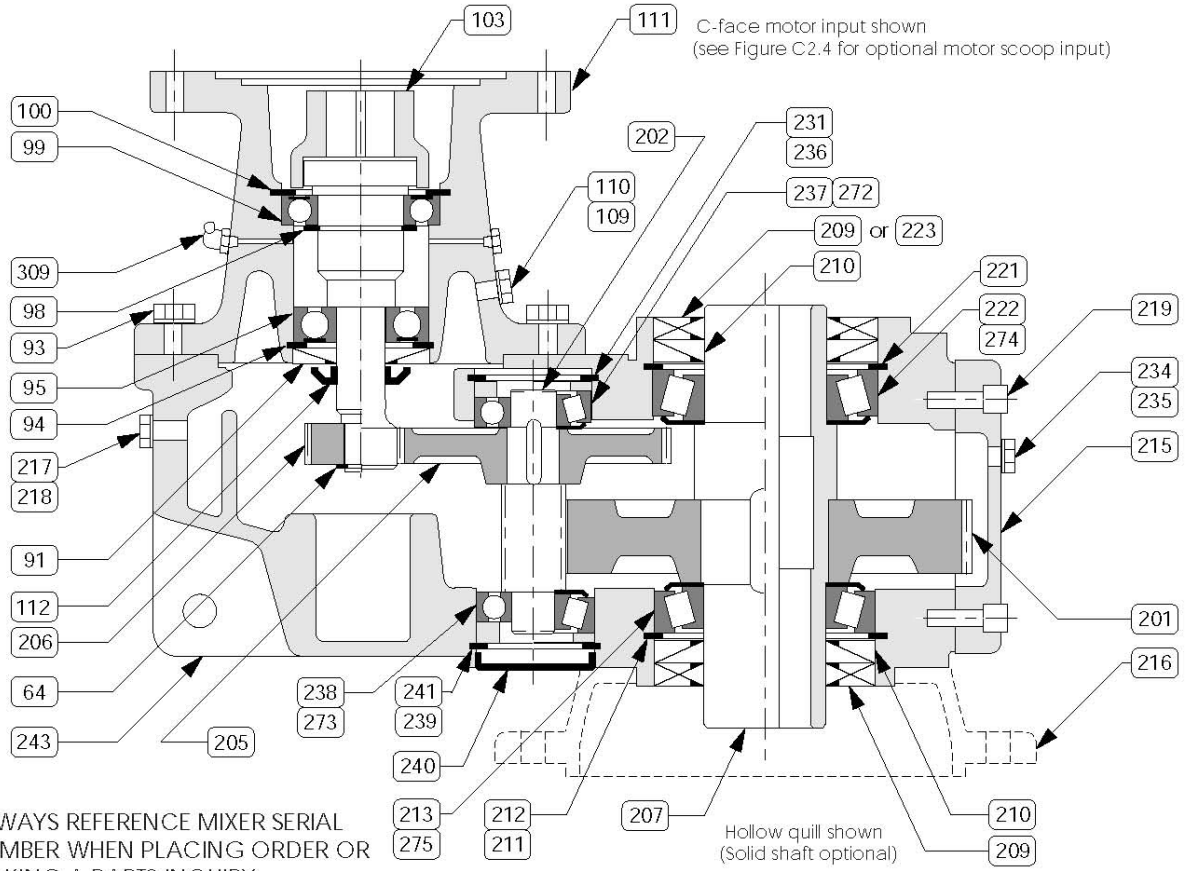


ALWAYS REFERENCE MIXER SERIAL NUMBER WHEN PLACING ORDER OR MAKING A PARTS INQUIRY.

## DOUBLE REDUCTION PARTS LIST *(N1- N10)*

| ITEM | PART NAME |
|---|---|
| 64 | Snap ring |
| 66 | Key *(input pinion)* |
| •91 | Oil seal |
| 93 | Input mounting bolt |
| 94 | Snap ring |
| •95 | Lower input bearing |
| 98 | Snap ring |
| •99 | Upper input bearing |
| 100 | Snap ring |
| 102 | Key *(input coupling)* |
| •103 | Input coupling |
| 109 | Plug gasket |
| 110 | Plug / Vent* |
| 111 | C-face motor adapter housing |
| 112 | Oil slinger (optional) |
| 116 | Spacer |
| 117 | Snap ring |
| •201 | Output gear |
| •202 | Output pinion/shaft |
| ITEM | PART NAME |
| •205 | Input gear |
| •206 | Input pinion/shaft |
| 207 | Output shaft *(hollow shaft shown)* |
| 208 | Key *(output shaft)* |
| •209 | Oil seal |
| •210 | Oil seal |
| 211 | Snap ring |
| •212 | Shim kit |
| •213 | Lower output bearing |
| 215 | Inspection cover |
| 216 | Ring base adapter *(optional)* |
| 217 | Plug / Vent* |
| 218 | Plug gasket |
| 219 | Inspection cover bolt |
| 220 | Key *(output gear)* |
| 221 | Snap ring |
| •222 | Upper output bearing |
| 223 | Seal plug *(solid output shaft only)* |
| 229 | Spacer |
| ITEM | PART NAME |
| 231 | Snap ring |
| 233 | Key *(intermediate gear)* |
| 234 | Plug |
| 235 | Plug gasket |
| 236 | Spacer |
| •237 | Upper intermediate bearing |
| •238 | Lower intermediate bearing |
| 239 | Snap ring |
| 240 | Seal plug |
| •241 | Shim kit |
| 242 | Spacer |
| 243 | Housing |
| 253 | Ring base bolt |
| ••272 | Nilos ring |
| ••273 | Nilos ring |
| ••274 | Nilos ring |
| ••275 | Nilos ring |
| 309 | Input bearing grease fitting |

(See section C2.3 for optional automatic greaser)

• = Recommended spare part

•• = Conditionally used part

*See page C1 for proper vent placement

*FIGURE C2.1*

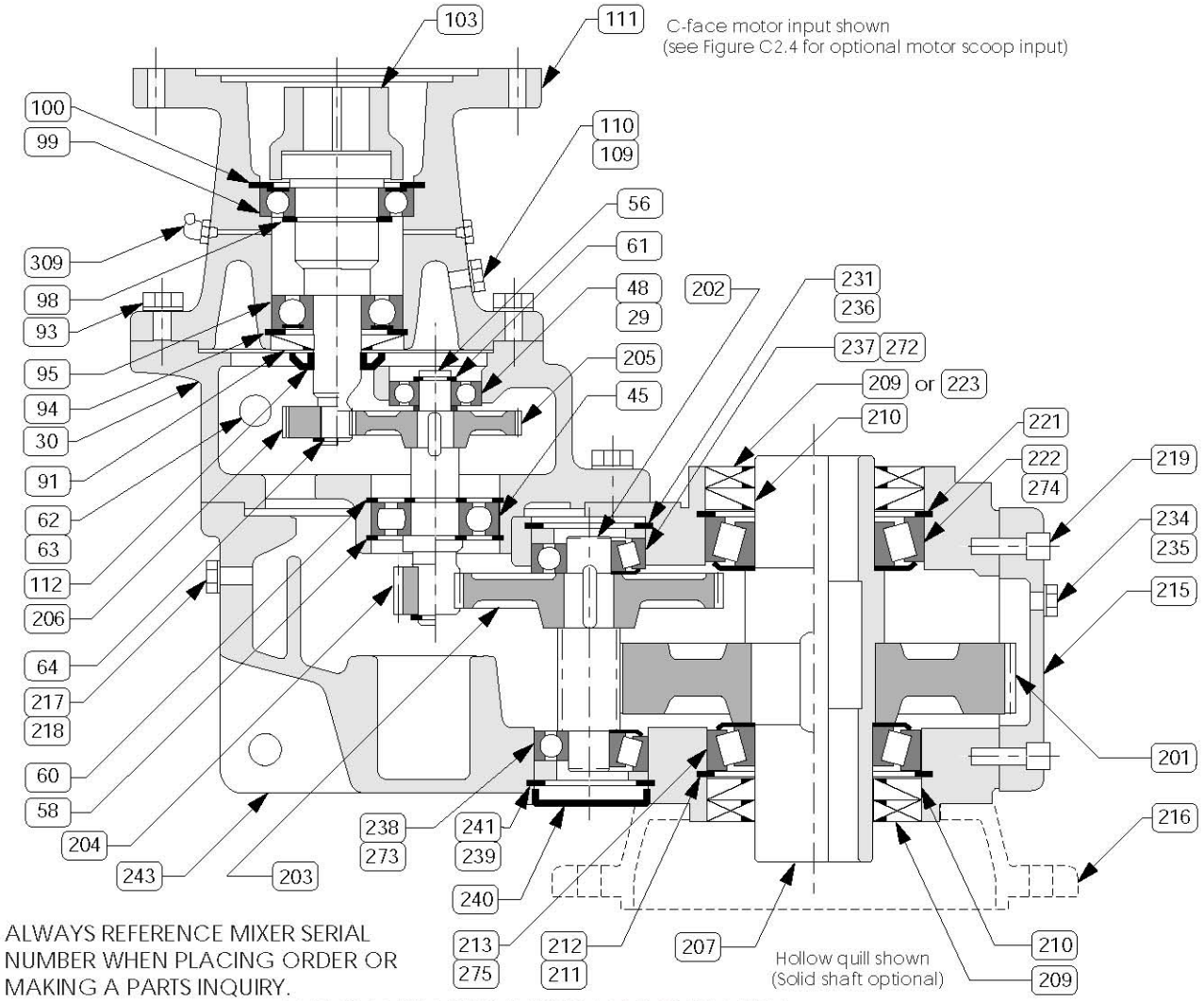


ALWAYS REFERENCE MIXER SERIAL NUMBER WHEN PLACING ORDER OR MAKING A PARTS INQUIRY.

## TRIPLE REDUCTION PARTS LIST *(N1 - N5)*

| ITEM | PART NAME |
|---|---|
| 27 | 1st stage mounting bolt |
| 29 | Spacer |
| 30 | 1st stage reduction housing |
| •45 | Lower 1st stage bearing |
| 46 | Key *(first stage gear)* |
| •48 | Upper 1st stage bearing |
| 52 | Snap ring |
| 53 | Key *(1st stage pinion)* |
| 54 | Snap ring |
| 56 | 1st stage reduction shaft |
| 57 | Snap ring |
| 58 | Snap ring |
| •59 | Shim set |
| 60 | Snap ring |
| 61 | Snap ring |
| 62 | Plug |
| 63 | Plug gasket |
| 64 | Snap ring |
| 66 | Key *(input pinion)* |
| •91 | Oil seal |
| 93 | Input mounting bolt |
| •95 | Lower input bearing |
| 98 | Snap ring |
| •99 | Upper input bearing |
| 100 | Snap ring |

| ITEM | PART NAME |
|---|---|
| 102 | Key *(input coupling)* |
| •103 | Input coupling |
| 109 | Plug gasket |
| 110 | Plug / Vent* |
| 111 | C-face motor adapter housing |
| 112 | Oil slinger (optional) |
| 116 | Spacer |
| 117 | Snap ring |
| •201 | Output gear |
| •202 | Output pinion/shaft |
| •203 | Second stage gear |
| •204 | 1st stage pinion |
| •205 | 1st stage gear |
| •206 | Input pinion/shaft |
| 207 | Output shaft |
| 208 | Key *(output shaft)* |
| •209 | Oil seal |
| •210 | Oil seal |
| 211 | Snap ring |
| •212 | Shim kit |
| •213 | Lower output bearing |
| 215 | Inspection cover |
| 216 | Ring base adapter *(optional)* |
| 217 | Plug / Vent |
| 218 | Plug gasket |

| ITEM | PART NAME |
|---|---|
| 219 | Inspection cover bolt |
| 220 | Key *(output gear)* |
| 221 | Snap ring |
| •222 | Upper output bearing |
| 223 | Seal plug *(solid output shaft)* |
| 229 | Spacer |
| 231 | Snap ring |
| 233 | Key *(second stage gear)* |
| 234 | Plug |
| 235 | Plug gasket |
| 236 | Spacer |
| •237 | Upper intermediate bearing |
| •238 | Lower intermediate bearing |
| 239 | Snap ring |
| •240 | Seal plug |
| •241 | Shim kit |
| 242 | Spacer |
| 243 | Housing |
| 253 | Ring base bolt |
| ••272 | Nilos ring |
| ••273 | Nilos ring |
| ••274 | Nilos ring |
| ••275 | Nilos ring |
| ••309 | Input bearing grease fitting |

(See section C2.3 for optional automatic greaser)

• = Recommended spare part

•• = Conditionally used part

*See page C1 for proper vent placement

*FIGURE C2.2*

ALWAYS REFERENCE MIXER SERIAL NUMBER WHEN PLACING ORDER OR MAKING A PARTS INQUIRY.

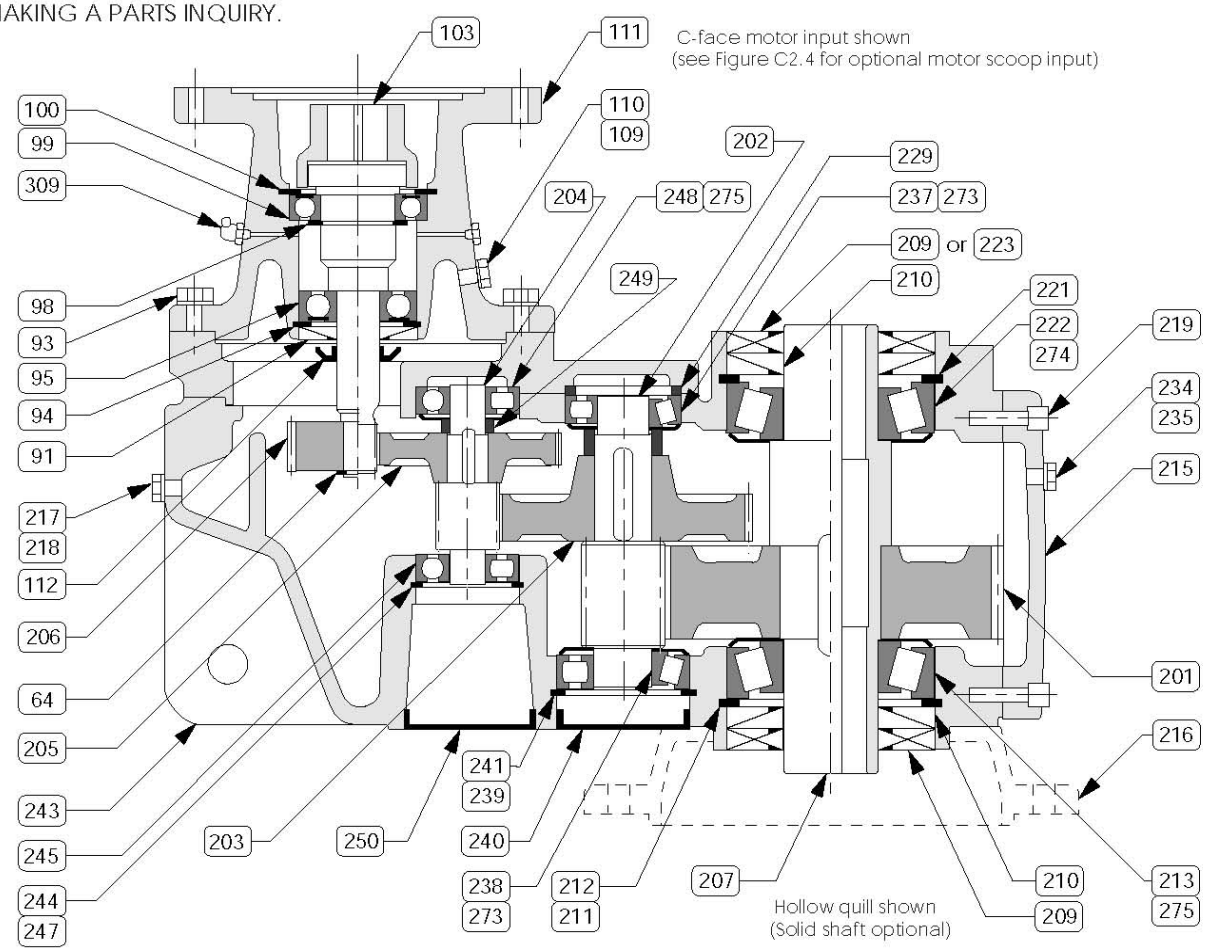


## TRIPLE REDUCTION PARTS LIST *(N6 - N10)*

| ITEM | PART NAME |
|---|---|
| 64 | Snap ring |
| 66 | Key *(input pinion)* |
| •91 | Oil seal |
| 93 | Input mounting bolt |
| •95 | Lower input bearing |
| 98 | Snap ring |
| •99 | Upper input bearing |
| 100 | Snap ring |
| 102 | Key *(input coupling)* |
| •103 | Input coupling |
| 109 | Plug gasket |
| 110 | Plug / Vent* |
| 111 | C-face motor adapter housing |
| 112 | Oil slinger (optional) |
| 116 | Spacer |
| 117 | Snap ring |
| •201 | Output gear |
| •202 | Second stage pinion shaft |
| •203 | Second stage gear |
| •204 | First stage pinion shaft |
| •205 | First stage input gear |
| •206 | Input pinion/shaft |
| 207 | Output shaft |
| 208 | Key *(output shaft)* |
| •209 | Oil seal |
| •210 | Oil seal |

| ITEM | PART NAME |
|---|---|
| 211 | Snap ring |
| 212 | Shim kit |
| •213 | Lower output bearing |
| 215 | Inspection cover |
| 216 | Ring base adapter *(optional)* |
| 217 | Plug / Vent* |
| 218 | Plug gasket |
| 219 | Inspection cover bolt |
| 220 | Key *(output gear)* |
| 221 | Snap ring |
| •222 | Upper output bearing |
| •223 | Seal plug *(solid output shaft only)* |
| 227 | Input cover bolt |
| 229 | Spacer |
| 230 | Input cover |
| 233 | Key *(second stage gear)* |
| 234 | Plug |
| 235 | Plug gasket |
| 236 | Spacer |
| •237 | Upper 2nd stage bearing |
| •238 | Lower 2nd stage bearing |
| 239 | Snap ring |
| •240 | Seal plug |
| •241 | Shim kit |
| 242 | Spacer |

| ITEM | PART NAME |
|---|---|
| 243 | Housing |
| 244 | Snap ring |
| •245 | Lower 1st stage bearing |
| •247 | Shim kit |
| •248 | Upper 1st stage bearing |
| 249 | Spacer |
| 253 | Ring base bolt |
| •250 | Seal plug |
| ••271 | Nilos ring |
| ••272 | Nilos ring |
| ••273 | Nilos ring |
| ••274 | Nilos ring |
| ••275 | Nilos ring |
| 309 | Input bearing grease fitting (See section C2.3 for optional automatic greaser) |

• = Recommended spare part
•• = Conditionally used part

*See page C1 for proper vent placement

*FIGURE C2.3*

## DOUBLE REDUCTION INPUT BEARINGS AND SEALS

*Contact factory for all other parts.*

| | C-Face Inputs | | | | | | | Foot Motors | |
|---|---|---|---|---|---|---|---|---|---|
| *ITEM* | *POS.* | 56C | 140TC | 180TC | 210TC | 250TC | 280TC | *POS.* | MTR SCOOP |
| **N1** | | | | | | | | | ***160S*** |
| Oil seal | 91 | 20x52x10A | 20x52x10A | | | | | 67 | 20x47x7A |
| Lower bearing | 95 | 6304-Z | 6304-Z | | | | | 71 | 6204-Z |
| Upper bearing | 99 | 6007-Z | 6007-Z | | | | | 75 | 6204-Z |
| **N2** | | | | | | | | | ***250S*** |
| Oil seal | 91 | 30x72x10A | 30x72x10A | 30x72x10A | 40x90x12A | | | 67 | 30x72x10A |
| Lower bearing | 95 | 6306-Z | 6306-Z | 6306-Z | 6308-Z | | | 71 | 6306-Z |
| Upper bearing | 99 | 6007-Z | 6007-Z | 6208-Z | 6211-Z | | | 75 | 6306-Z |
| **N3** | | | | | | | | | ***250S*** |
| Oil seal | 91 | 30x72x10A | 30x72x10A | 30x72x10A | 40x90x12A | | | 67 | 30x72x10A |
| Lower bearing | 95 | 6306-Z | 6306-Z | 6306-Z | 6308-Z | | | 71 | 6306-Z |
| Upper bearing | 99 | 6007-Z | 6007-Z | 6208-Z | 6211-Z | | | 75 | 6306-Z |
| **N4** | | | | | | | | | ***300S*** |
| Oil seal | 91 | 30x72x10A | 30x72x10A | *see factory* | 50x80x10A | 55x85x10A | | 67 | 40x100x10A |
| Lower bearing | 95 | 6306-Z | 6306-Z | *see factory* | 6310-Z | 6311-Z | | 71 | 6309-Z |
| Upper bearing | 99 | 6207-Z | 6207-Z | *see factory* | 6311-Z | 6312-Z | | 75 | 6308-Z |
| **N5** | | | | | | | | | ***300S*** |
| Oil seal | 91 | 30x72x10A | 30x72x10A | *see factory* | 50x80x10A | 55x85x10A | | 67 | 60x100x12A |
| Lower bearing | 95 | 6306-Z | 6306-Z | *see factory* | 6310-Z | 6311-Z | | 71 | 6309-Z |
| Upper bearing | 99 | 6207-Z | 6207-Z | *see factory* | 6311-Z | 6312-Z | | 75 | 6308-Z |
| **N6** | | | | | | | | | ***DIA 250*** |
| Oil seal | 91 | | | 50x80x10A | 50x80x10A | 75x115x13A | 75x115x13A | 67 | 65x120x10A |
| Lower bearing | 95 | | | 6310-Z | 6310-Z | NU215mm | NU215mm | 71 | NU311E |
| Upper bearing | 99 | | | 6311-Z | 6311-Z | 3216-Z | 3216-Z | 75 | 6311-Z |
| **N7** | | | | | | | | | ***DIA 250*** |
| Oil seal | 91 | | | 50x80x10A | 50x80x10A | 75x115x13A | 75x115x13A | 67 | 65x120x10A |
| Lower bearing | 95 | | | 6310-Z | 6310-Z | NU215mm | NU215mm | 71 | NU311E |
| Upper bearing | 99 | | | 6311-Z | 6311-Z | 3216-Z | 3216-Z | 75 | 6311-Z |
| **N8** | | | | | | | | | ***DIA 250*** |
| Oil seal | 91 | | | 50x80x10A | 50x80x10A | 75x115x13A | 75x115x13A | 67 | 65x120x10A |
| Lower bearing | 95 | | | 6310-Z | 6310-Z | NU215mm | NU215mm | 71 | NU311E |
| Upper bearing | 99 | | | 6311-Z | 6311-Z | 3216-Z | 3216-Z | 75 | 6311-Z |
| **N9** | | | | | | | | | |
| Oil seal | 91 | | | 50x80x10A | 50x80x10A | 75x115x13A | 75x115x13A | 67 | Ratio |
| Lower bearing | 95 | | | 6310-Z | 6310-Z | NU215mm | NU215mm | 71 | Dependant |
| Upper bearing | 99 | | | 6311-Z | 6311-Z | 6216-Z | 6216-Z | 75 | *see factory* |
| **N10** | | | | | | | | | |
| Oil seal | 91 | CONTACT FACTORY FOR N10 BEARINGS AND SEALS | | | | | | 67 | Ratio |
| Lower bearing | 95 | | | | | | | 71 | Dependant |
| Upper bearing | 99 | | | | | | | 75 | *see factory* |

*TABLE C2.1*

**C2.2** Input bearings are sheilded on one side only. When replacing bearings, be sure to install them with the sheild facing away from the grease fitting on the input cylinder. NOTE: GEARBOXES SHIPPED BEFORE 1995 MAY REQUIRE DOUBLE SEALED BEARINGS ON THE INPUT. PLEASE CONSULT THE FACTORY TO VERIFY.

CAUTION: DO NOT DISASSEMBLE GEARBOX WITHOUT PRIOR AUTHORIZATION FROM SHARPE MIXERS OR WARRANTY WILL BE VOID. (DISREGARD WHEN MIXER IS OUT OF WARRANTY PERIOD.)

## TRIPLE REDUCTION INPUT BEARINGS AND SEALS

*Contact factory for all other parts.*

| | C-Face Inputs | | | | | | | Foot Motors | |
|---|---|---|---|---|---|---|---|---|---|
| *ITEM* | *POS.* | 56C | 140TC | 180TC | 210TC | 250TC | 280TC | *POS.* | MTR SCOOP |
| **N1** | | | | | | | | | ***160S*** |
| Oil seal | 91 | 20x52x10A | 20x52x10A | | | | | 67 | 20x47x7A |
| Lower bearing | 95 | 6304-Z | 6304-Z | | | | | 71 | 6204-Z |
| Upper bearing | 99 | 6007-Z | 6007-Z | | | | | 75 | 6204-Z |
| **N2** | | | | | | | | | ***160S*** |
| Oil seal | 91 | 20x52x10A | 20x52x10A | | | | | 67 | 20x47x7A |
| Lower bearing | 95 | 6304-Z | 6304-Z | | | | | 71 | 6204-Z |
| Upper bearing | 99 | 6007-Z | 6007-Z | | | | | 75 | 6204-Z |
| **N3** | | | | | | | | | ***160S*** |
| Oil seal | 91 | 20x52x10A | 30x72x10A | | | | | 67 | 20x47x7A |
| Lower bearing | 95 | 6304-Z | 6304-Z | | | | | 71 | 6204-Z |
| Upper bearing | 99 | 6007-Z | 6007-Z | | | | | 75 | 6204-Z |
| **N4** | | | | | | | | | ***250S*** |
| Oil seal | 91 | 30x72x10A | 30x72x10A | *see factory* | 40x90x12A | | | 67 | 30x72x10A |
| Lower bearing | 95 | 6306-Z | 6306-Z | *see factory* | 6308-Z | | | 71 | 6306-Z |
| Upper bearing | 99 | 6007-Z | 6007-Z | *see factory* | 6211-Z | | | 75 | 6306-Z |
| **N5** | | | | | | | | | ***250S*** |
| Oil seal | 91 | 30x72x10A | 30x72x10A | *see factory* | 40x90x12A | | | 67 | 30x72x10A |
| Lower bearing | 95 | 6306-Z | 6306-Z | *see factory* | 6308-Z | | | 71 | 6306-Z |
| Upper bearing | 99 | 6007-Z | 6007-Z | *see factory* | 6211-Z | | | 75 | 6306-Z |
| **N6** | | | | | | | | | ***300S*** |
| Oil seal | 91 | 30x72x10A | 30x72x10A | *see factory* | 50x80x10A | 55x85x10A | | 67 | 60x100x12A |
| Lower bearing | 95 | 6306-Z | 6306-Z | *see factory* | 6310-Z | 6311-Z | | 71 | 6309-Z |
| Upper bearing | 99 | 6207-Z | 6207-Z | *see factory* | 6311-Z | 6312-Z | | 75 | 6308-Z |
| **N7** | | | | | | | | | ***DIA 250*** |
| Oil seal | 91 | | | 50x80x10A | 50x80x10A | 75x115x13A | 75x115x13A | 67 | 65x120x10A |
| Lower bearing | 95 | | | 6310-Z | 6310-Z | NU215mm | NU215mm | 71 | NU311E |
| Upper bearing | 99 | | | 6311-Z | 6311-Z | 3216-Z | 3216-Z | 75 | 6311-Z |
| **N8** | | | | | | | | | ***DIA 250*** |
| Oil seal | 91 | | | 50x80x10A | 50x80x10A | 75x115x13A | 75x115x13A | 67 | 65x120x10A |
| Lower bearing | 95 | | | 6310-Z | 6310-Z | NU215mm | NU215mm | 71 | NU311E |
| Upper bearing | 99 | | | 6311-Z | 6311-Z | 3216-Z | 3216-Z | 75 | 6311-Z |
| **N9** | | | | | | | | | |
| Oil seal | 91 | | | 50x80x10A | 50x80x10A | 75x115x13A | 75x115x13A | 67 | Ratio |
| Lower bearing | 95 | | | 6310-Z | 6310-Z | NU215mm | NU215mm | 71 | Dependant |
| Upper bearing | 99 | | | 6311-Z | 6311-Z | 3216-Z | 6216-Z | 75 | *see factory* |
| **N10** | | | | | | | | | |
| Oil seal | 91 | CONTACT FACTORY FOR N10 BEARINGS AND SEALS | | | | | | 67 | Ratio |
| Lower bearing | 95 | | | | | | | 71 | Dependant |
| Upper bearing | 99 | | | | | | | 75 | *see factory* |

*TABLE C2.2*

ALWAYS REFERENCE THE MIXER SERIAL NUMBER WHEN PLACING ORDER OR MAKING PARTS INQUIRY. THIS SERIAL NUMBER IS LOCATED ON THE ***SHARPE MIXER*** NAMEPLATE & ON THE FRONT COVER OF THE SERVICE MANUAL.

## GEARBOX BEARINGS AND SEALS

*Contact factory for all other parts.*

| GEARBOX | OIL SEALS | BEARINGS | | |
|---|---|---|---|---|
| MODEL/ REDUCTION | LOW SPEED Pos. Nos. 209/210 | INTERMEDIATE Pos. Nos. 245/248 or 45/48 | INTERMEDIATE Pos. Nos. 237/238 | LOW SPEED Pos. Nos. 213/222 |
| **N1 / 2** | 45x75x7AS/45x75x7A | | 6302/6302-2Z | 32009/32009 |
| **N1 / 3** | 45x75x7AS/45x75x7A | *contact factory* | 6302/6302-2Z | 32009/32009 |
| **N2 / 2** | 50x90x8AS/50x90x10A | | 6303TMB/6303TMB | 30210/30210 |
| **N2 / 3** | 50x90x8AS/50x90x10A | *contact factory* | 6303TMB/6303TMB | 30210/30210 |
| **N3 / 2** | 55x100x10AS/55x100x10A | | 30304/32304 | 30211/30211 |
| **N3 / 3** | 55x100x10AS/55x100x10A | *contact factory* | 30304/32304 | 30211/30211 |
| **N4 / 2** | 70x125x12AS/70x125x12A | | 32305/32305 | 30214/30214 |
| **N4 / 3** | 70x125x12AS/70x125x12A | NUP305E/TMB303 | 32305/32305 | 30214/30214 |
| **N5 / 2** | 85x150x12AS/85x150x12A | | 30306/32306 | 30217/30217 |
| **N5 / 3** | 85x150x12AS/85x150x12A | NUP307E/NUP304E | 30306/32306 | 30217/30217 |
| **N6 / 2** | 100x180x12AS/100x180x12A | | NJ407/22308E | 30220/30220 |
| **N6 / 3** | 100x180x12AS/100x180x12A | NJ306E/6404 | NJ407/22308E | 30220/30220 |
| **N7 / 2** | 110x200x13AS/110x200x13A | | 32308/32309 | 30222/30222 |
| **N7 / 3** | 110x200x13AS/110x200x13A | NJ307E/6405 | 31308E/32309 | 30222/30222 |
| **N8 / 2** | 130x230x14AS/130x230x14A | | 32309/32310 | 30226/30226 |
| **N8 / 3** | 130x230x14AS/130x230x14A | NJ309E/6407 | 31309/32310 | 30226/30226 |
| **N9 / 2** | 160x290x18AS/160x290x18A | | 22311E/22314E | 30232/30232 |
| **N9 / 3** | 160x290x18AS/160x290x18A | 22308E/22308E | 22311E/22314E | 30232/30232 |
| **N10 / 2**<br>**N10 / 3** | CONTACT FACTORY FOR N10 BEARINGS AND SEALS | | | |

*TABLE C2.3*

## MOTOR SCOOP INPUT PARTS LIST (ALL SIZES)

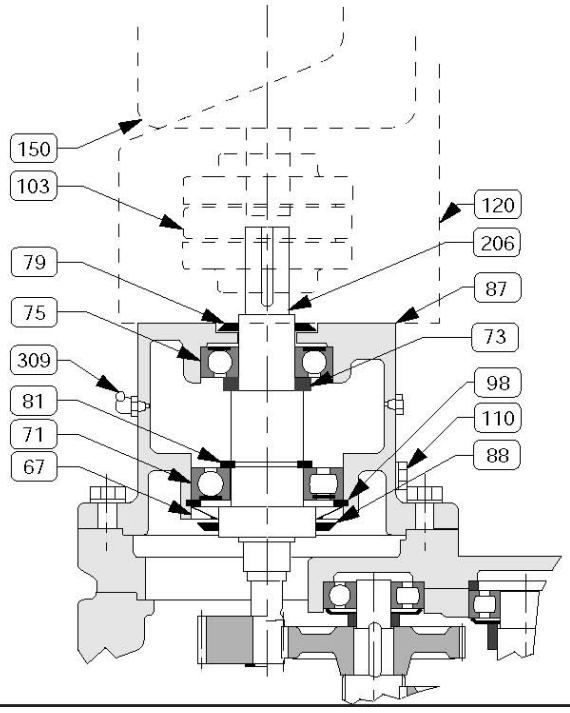


Alternate to C-face input assembly shown in Gearbox assemblies, Figures C2.1 through C2.3

| ITEM | PART NAME |
|---|---|
| •67 | Oil seal |
| •71 | Lower input bearing |
| 73 | Spacer |
| •75 | Upper input bearing |
| 79 | Oil slinger |
| 81 | Snap ring |
| 87 | Input cylinder |
| 88 | Oil slinger |
| 98 | Snap ring |
| •103 | Input coupling |
| 110 | Plug / Vent |
| 120 | Motor scoop |
| 150 | Motor |
| •206 | Input shaft / pinion |
| 309 | Input bearing grease fitting |

• = Recommended spare part

*FIGURE C2.4*

**C2.3** The input bearings requires relubrication at regular intervals. To lubricate the bearings of the input shaft, add about 0.75 oz of grease every 1,000 hours or 6 months, whichever occurs first. See C1.1 for instructions and table C2.4 for recommended bearing greases. Automatic lubricators are available on request.

The optional automatic lubricators feed grease lubricant to the outboard adapter bearing continuously over time. The lubricator contains 4 oz. (120 cc) of grease. **Each automatic lubricator must be activated by turning the plastic eyelet into the canister until the eyelet breaks off**. This pressurizes the canister and releases grease. With 8 hours/day of operation it must be replaced every 12 months. For longer operating times the replacement interval decreases accordingly.

The automatic lubricator is designed for normal service conditions at ambient temperatures between 32°F (0°C) and 104°F (40°C). If the ambient temperature is outside this range for prolonged periods of time, special lubricants should be used. Consult factory. A canister with food grade lubricant is also available.

**C2.4** When replacing output bearings and seals on the gearbox be sure to re-pack bearings and seals with grease (see figure C2.6). See table C2.4 for recommended grease options.

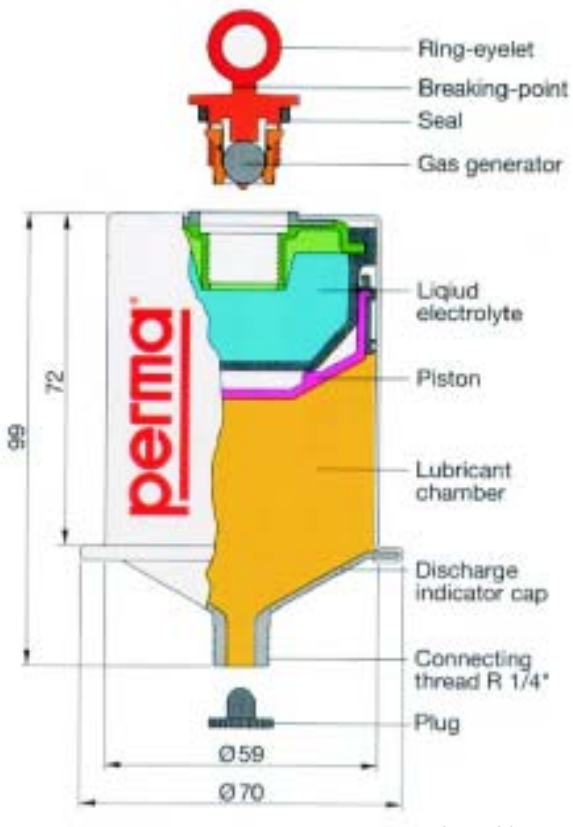


*FIGURE C2.5*
*(dimensions in mm )*

**Grease Options (applied to greased bearings and seal cavities)**

| NLGI Grade | Grease Type/Thickener | Ambient Temperature Range | Manufacturer Brand/Type |
|---|---|---|---|
| **NLGI 2** | Standard/Li-Complex | -22 to 140 deg F (-30 to 60 deg C) | Shell Albida EP 2 |
| | High-Temperature/Polyurea | -13 to 176 deg F (-25 to 80 deg C) | Mobil Polyrex EP 2 |
| | Food-Grade/Al-Complex | -13 to 104 deg F (-25 to 104 deg C) | Mobil Grease FM222 |

*TABLE C2.4*

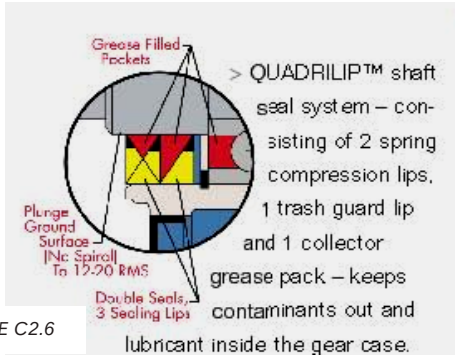


*FIGURE C2.6*

Notes: _____

- END OF SECTION C -

MAGNATEX®
Pumps, Inc.

# Operation and Maintenance Manual

## TEXEL MTA Series
## ANSI Close-Coupled Pumps

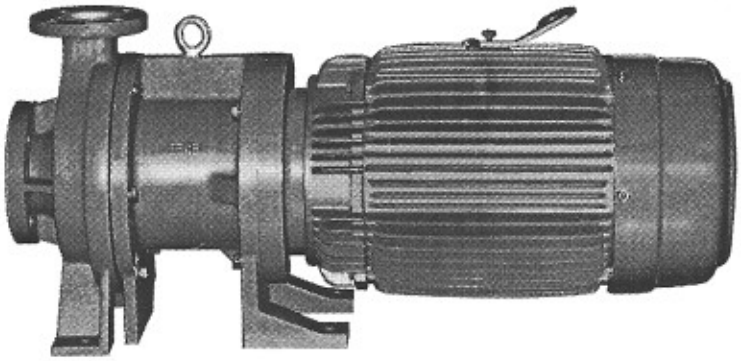

## PFA-Lined
## Magnetic Drive
## Sealless Pumps

**Magnatex Pumps, Inc.**
**3575 West 12th Street**
**Houston, TX 77008**
**Phone (713) 972-8666  Fax (713) 972-8665**
**www.magnatexpumps.com**

**!WARNING! - MAG DRIVE PUMP**

DO NOT WORK ON THIS PUMP IF YOU ARE WEARING A MEDICAL DEVICE (DEFIBRILLATOR, PACEMAKER, ETC.) PERSONNEL WHO EXPERIENCE INTERFERENCE WITH THEIR MEDICAL DEVICE SHOULD MOVE AWAY FROM THE PUMP AND REFRAIN FROM HANDLING MAGNETIC PUMP COMPONENTS. SEEK IMMEDIATE MEDICAL ATTENTION IF YOU HAVE EXPERIENCED INTERFERENCE WITH YOUR MEDICAL DEVICE.

The rare earth permanent magnets in this pump have been manufactured such that the magnetic field is directional toward each half of the magnetic coupling. For this reason, the magnetic field that exists outside of the assembled magnetic coupling is minimal. When the two halves are apart, the magnetic field is exposed, which is why we recommend that personnel wearing medical devices DO NOT HANDLE the magnetic coupling components. When the pump is assembled, the magnetic fields from the magnetic coupling components are not exposed and it is safe for wearers of medical devices to be in the general proximity of the assembled pump, whether the pump is in operation or not.

# TABLE OF CONTENTS

TABLE OF CONTENTS

INTRODUCTION

RECEIVING INSPECTION

SAFETY PRECAUTIONS

STORAGE PROCEDURES

INSTALLATION AND PIPING

OPERATING PROCEDURES

MAINTENANCE SCHEDULES

DISASSEMBLY

ASSEMBLY

SHAFT REPLACEMENT

BEARING REPLACEMENT

THRUST RING(S)/MOUTH RING REPLACEMENT

SHAFT SUPPORT INSTALLATION

EXPLODED VIEW DRAWINGS

PARTS LIST

RECOMMENDED SPARES

NOZZLE LOADING

TROUBLESHOOTING

# OPERATING & MAINTENANCE INSTRUCTIONS
# *TEXEL*® MTA SERIES CLOSE-COUPLED PUMPS

## 1. RECEIVING INSPECTION

A. Before uncrating, check for physical damage to the pump assembly. Notify the common carrier **IMMEDIATELY** if any damage is found.

B. Check the nameplate on the pump against receiving and purchase order documents to be sure the correct pump size and materials of construction have been supplied. If a motor has been supplied, check for correct horsepower, speed and voltage.

C. Check to see if flange protectors are intact. If not, check for foreign objects that may have found their way into the pump casing through the flange openings.

D. Remove the motor fan cover and make sure the pump freely rotates by hand using the motor shaft. Only slight resistance should be felt. If the pump has a heavy resistance, or if any noise is heard, call your **TEXEL** representative or **MAGNATEX® PUMPS, INC.** at (713) 972-8666.

## 2. SAFETY PRECAUTIONS

For safe operation and to prevent personal injury and/or damage to equipment or property, read and follow all warnings described below.

A. Handling the Pump

The pump may be lifted by the eyebolt, however additional support, such as slings or chains or other lifting devices must be used once a motor is attached.

B. Inspection

When conducting operational tests after installation or maintenance, make certain that all drain bolts, casing bolts etc., are tight.

Copyright 2000 Magnatex Pumps. Inc.

C. Application

This pump has been designed and constructed for specific operating conditions and specifications. If pump is to be used for other services, consult with your representative or **MAGNATEX® Pumps, Inc.** at (713)972-8666.

**WARNING!**
**When working on magnetically driven pumps…**

- Strong magnetic fields may damage watches, credit cards, computer disks, calculators and computer tapes.

- People with pacemakers should be cautioned that the strong magnetic field might upset the timing or cause the pacemaker to malfunction.

- When working on the pumps, be aware that tools or metal parts brought within close proximity to the magnets may suddenly be attracted trapping fingers in the process.

## 3. STORAGE PROCEDURES

Storage up to three months:

A. Do not remove flange protectors until time of installation.
B. Store in dry, adequately ventilated room.
C. Tape the motor terminal box opening to prevent foreign matter from entering.

Storage for longer than three months:

A. Follow above steps for storage up to 3 months.
B. Remove the fan cover from the motor and rotate motor and pump several times every 3 months.
C. Motor insulation can degrade over time due to moisture absorption. Therefore, measure and record insulation resistance on delivery of pump/motor assembly and check periodically. Dry motor if required. (Refer to motor instruction manual.)

Storage for longer than one year

A. Follow above steps, for storage longer than 3 months.
B. Perform internal pump inspection and replace gasket.

Copyright 2000 Magnatex Pumps. Inc.

## 4. INSTALLATION AND PIPING

### A. FOUNDATION

The foundation should be firm and heavy to reduce vibrations. The foundation bolts should be mounted in concrete to provide a firm and positive support.

### B. LOCATION & PIPING

1. Locate the pump as close as practical to the source of the liquid supply.

2. The suction line should be as short and straight as possible and contain a minimum number of elbows. Any elbow should be the large radius type. Elbows and fittings should be no closer than 10 pipe diameters to the pump suction to allow undisturbed flow to the pump impeller.

3. Generally, suction piping should be one or two sizes larger than the pipe suction. This will keep friction losses to a minimum. This becomes more important as the distance between the pump and the liquid supply increases, or if fittings are located closer than 10 pipe diameters to the pump's suction.

4. The suction piping should have no high spots where air pockets can collect. All joints in the suction line should be tight to prevent air from entering into the system and creating the possibility of vapor locking. This is especially important when suction pressure is lower than atmospheric pressure. A pressure gauge should be installed in the suction line as close as possible to the suction flange.

5. An air vent should be installed at the initial high point in the pump discharge line. A check valve and shut-off valve should be installed as close as possible to the pump discharge nozzle. The check valve is installed to protect the pump from excessive back pressure, including reverse flow/rotation, and back flow during shut down or driver failure. The discharge valve is to regulate the flow and isolate the pump for servicing. A pressure gage should also be installed as close as possible to the discharge nozzle between the pump and the discharge valve.

6. Large particles can block the bushing lubrication ports in the pump causing serious damage. In addition, metallic particles can magnetically attach to the inner magnet also resulting in damage. If possible, a temporary start-up strainer with a 40x40 mesh screen should be installed in the pump's suction line. **BE VERY CAREFUL** not to allow the temporary strainer to be plugged to the point of starving the pump of liquid. This may result in cavitation and the possibility of running the pump dry, which can destroy the pump's bushings. It is recommended to install a pressure gauge between the strainer and pump to monitor possible plugging of the strainer. The discharge pressure should also be closely monitored. Any drop in the discharge pressure without discharge valve throttling could suggest strainer plugging (assuming constant demand to the system).

Copyright 2000 Magnatex Pumps. Inc.

7. ***TEXEL®*** pumps, although very rugged, are not designed to handle excessive stress(see p.18). The resulting forces and moments can result in possible damage to the pump. Piping must be anchored and supported as close as possible to, but independent from the pump. Pump and pipe flanges must be positioned together before attempting to tighten flange bolts.

8. The pump **MUST NOT RUN DRY.** Adequate liquid should always be available to the pump suction. A flow sensor and/or amp/watt monitor should be installed to shut the pump down in the event of dry run. MAGNATEX provides optional protection devices to prevent dry run.

## 5. OPERATING PROCEDURES

### ROTATION CHECK

To confirm the direction of rotation against the rotation arrow on the pump casing use the following procedures:

A. Open the suction and discharge valve and allow the pump to be filled with liquid.

**WARNING! NEVER RUN THE PUMP DRY**

B. Remove the motor fan cover for visual inspection and rotation.

C. Bump the motor by quickly pushing the motor start & stop buttons. Rotation should be clockwise as seen from motor end. If the direction of rotation is incorrect, reverse two of the three-phase power leads to the motor.

D. After confirming proper rotation, replace the motor fan cover.

### PRIMING AND START-UP

A. Open the suction and discharge valves and allow the pump to fill with liquid.
(If the direction of rotation has not been checked, this must be done as detailed in the Rotation Check section above.)

**WARNING! NEVER RUN THE PUMP DRY**

B. Close the discharge valve to ¼ open.

Copyright 2000 Magnatex Pumps. Inc.

C. Start the motor and immediately check the discharge pressure gauge. The pressure should rise quickly and hold steady. If the pressure rises and then falls back, there is air or vapor in the system. **STOP THE PUMP IMMEDIATELY.** Wait 15 to 20 seconds before restarting the pump.

D. If after repeating step C several times, the pressure gauge does not hold steady or does not yield the expected pressure (from performance curve), contact your TEXEL representative, or **MAGNATEX® PUMPS, Inc**. for assistance. Do not continue to operate the pump under these conditions.

E. Once the pump is fully primed and the discharge pressure is satisfactory, slowly open the discharge valve until the desired operating point is reached.

F. Operators should make frequent visual inspections to insure the pump is running smoothly without noise or vibration. The discharge pressure should hold steady without fluctuation. Any excessive heating of the pump or motor bearings is cause for alarm. The unit should be shut down immediately, an investigation made to find the cause, and corrective action taken.

G. Follow the motor manufacturer's recommendations and keep the motor bearings lubricated properly.

**WARNING!**

**Never throttle the pump by closing the valve on the suction side of the pump. Throttling the suction side can cause serious damage to the pump. Throttle only from the discharge valve.**

**WARNING!**

**Never operate the pump against a closed discharge valve. Low flow operation can cause rapid heating of the pumped liquid with possible vaporization and the pump bushing running dry, resulting in serious damage to the pump.**

## SHUT DOWN

A. Normally pump should be stopped only after discharge valve is closed. If suction valve is close first, cavitations and pump seizure may occur.

B. If suction is flooded, close suction valve after pump is stopped.

C. If pump is shut down for long periods of time, drain liquid from the pump. Freezing liquid may cause pump damage.

Copyright 2000 Magnatex Pumps. Inc.

## 6. MAINTENANCE SCHEDULE

A. Daily check

- Check pump for any abnormal noise or vibration.
- Check suction and discharge pressure as well as liquid level of the suction tank,
- Check motor amp draw versus motor rated amps.

B. Periodic Check

For smooth and safe operation of the pump, check each part of the pump during normal preventive maintenance in accordance with instructions given below. Special care should be taken when handling the shaft, thrust rings and bushings.

| PART NAME | CHECK POINTS |
|---|---|
| CASING | • Accumulation of dirt.<br>• Presence of cracks.<br>• Wearing or rubbing. |
| IMPELLER | • Dirt or foreign matter in the impeller.<br>• Contact of inlet area.<br>• Wear condition of mouth ring. |
| INNER MAGNET | • Rubbing of the outer surface.<br>• Presence of cracks.<br>• Accumulation of dirt.<br>• Wear condition of bushing.<br>• Clogging of cooling passage in Bushing. |
| REAR CASING | • Rubbing of rear casing.<br>• Accumulation of dirt.<br>• Wear condition of rear thrust ring.<br>• Presence of cracks. |
| SHAFT | • Presence of cracks.<br>• Wear condition of bushing. |
| OUTER MAGNET | • Rubbing of the inner surface.<br>• Position of motor shaft. |
| MOTOR BEARING | • Presence of abnormal noise. |

Copyright 2000 Magnatex Pumps. Inc.

C. Maximum allowable bushing dimensional losses.

| | A (inch/mm) | B (∅) (inch/mm) | C (inch/mm) |
|---|---|---|---|
| New | 0.236/6.0 | 1.024/26 | 0.315/8.0 |
| At replacement | 0.197/5.0 | 1.063/27 | 0.276/7.0 |

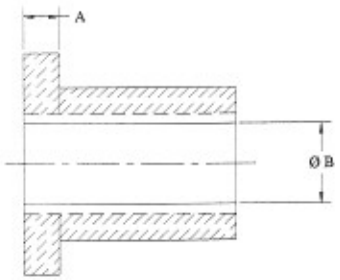


Bushing




Mouth Ring

## 7. DISASSEMBLY OF PUMP

SAFETY PRECAUTIONS:

A. Always wear protective clothing and equipment such as rubber/insulated gloves and safety glasses when disassembling the pump.

**WARNING!**
**There is a danger from chemical contact with skin during and after disassembling the pump.**

B. After disassembling the pump, take the proper precautions when handling the shaft and bushing. They can be easily damaged by sharp contact.

C. The inner magnet and outer magnet can exert strong magnetic forces. Do not allow metal chips or metal materials to come close to the Magnets.

**WARNING!**
**Magnet strength results in strong magnetic forces that could cause physical damage to hands and fingers. Caution must be taken to keep fingers and hands from between magnets.**

Copyright 2000 Magnatex Pumps. Inc.

## PREPARATION FOR DISASSEMBLY

A. Check for safety of the working environment.

B. Lock out the main power supply to avoid unintentional operation. Before disassembling the pump, be sure the work area is appropriately defined with proper warning notices and lockouts are in place.

**WARNING!**

**The pump is a mechanical rotating device… if the pump is switched on with the rotating parts exposed while disassembled, sever injury to personnel may result.**

C. Fully close the suction and discharge valves before removing the pump from the piping.

D. Wear protective rubber gloves and safety glasses before loosening flange bolts. Drain the liquid from the pump and piping.

E. If the pump is provided with a casing drain, the following procedure and precaution should be taken for draining the pump.

1. Open the drain cap or remove the drain bolts holding the drain plug to the casing.

2. Slowly loosen the four (4) flange bolts and nuts of the pump discharge flange, until the trapped liquid begins to drain. Be properly positioned to prevent personnel contact while the liquid is draining.

**WARNING!**

**Do not loosen all four bolts that secure the pump flange or the discharge side at the same time. Liquid may leak or splash out causing severe bodily harm. It is dangerous to work in front of the drain port while draining the fluid. Be properly positioned before and during the process of draining the pump.**

3. When the pump and discharge piping are completely drained, remove the four (4) bolts and nuts from the discharge flange.

Copyright 2000 Magnatex Pumps. Inc.

## DISASSEMBLY

**The *TEXEL*® MTA series is a back pull out type pump. Disassemble in accordance with instructions (A) through (G).**

**A. Detach the bracket foot bolt(s)**

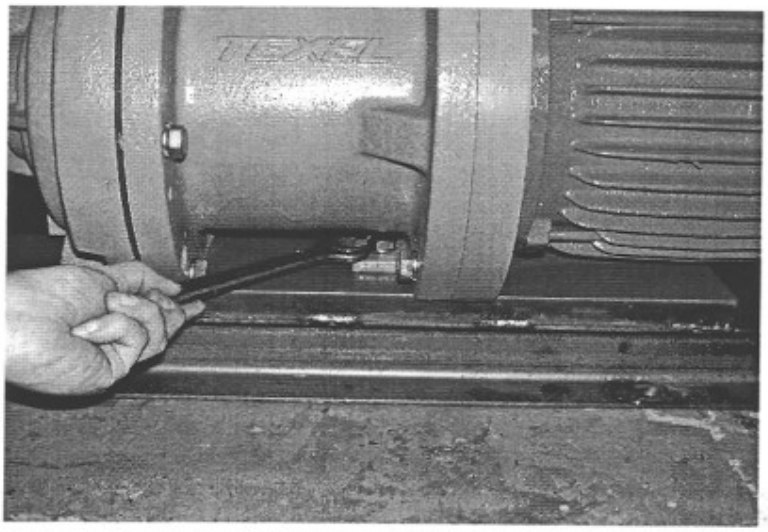


**B. Detach the six (6) casing bolts (104-3).**

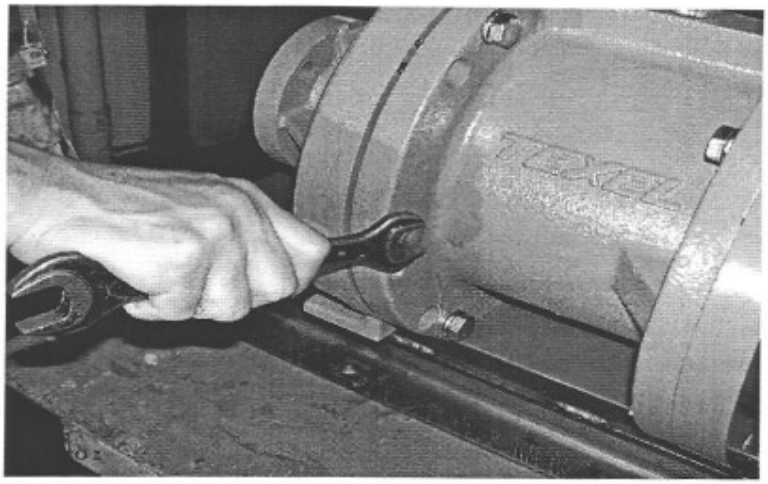


Copyright 2000 Magnatex Pumps. Inc.

C. **Remove the casing bolts (104-3); leave the two (2) disassembly/assembly bolts (104-58) in the tapped holes on either side of the bracket (028). Use these bolts to separate the bracket (028) from the casing (001) (photo 3).**

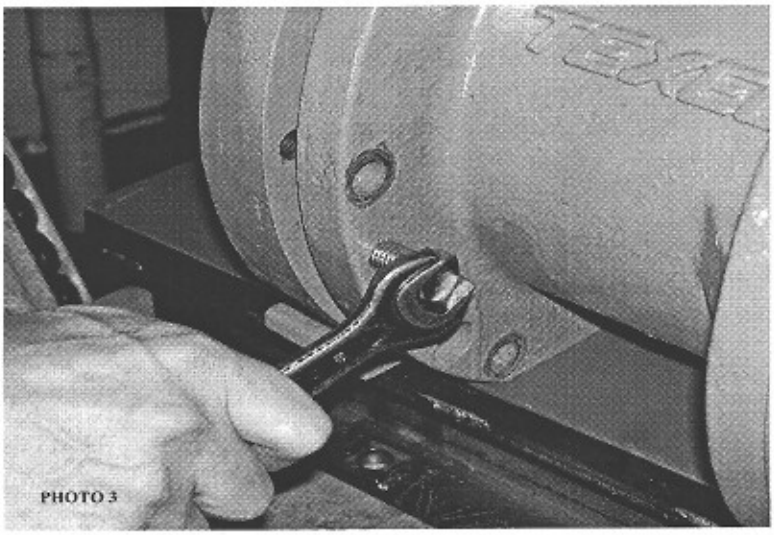

PHOTO 3

D. **Detach the four (4) rear casing bolts (104-54) and remove the rear casing (060) by moving it backward (photo 4). <u>NOTE: Don't use a wrench when assembling.</u>**

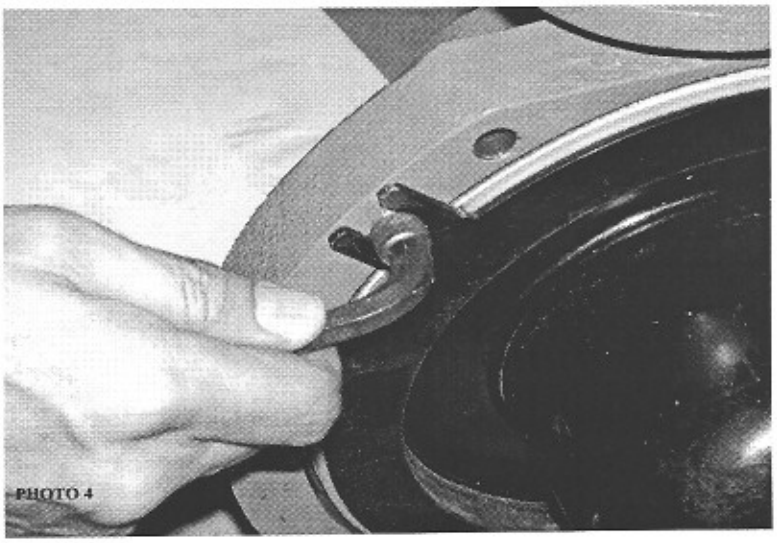

PHOTO 4

Copyright 2000 Magnatex Pumps. Inc.

**E.** **Remove the inner magnet/ impeller (058+013) by sliding it off the shaft (018) (photo 5).**

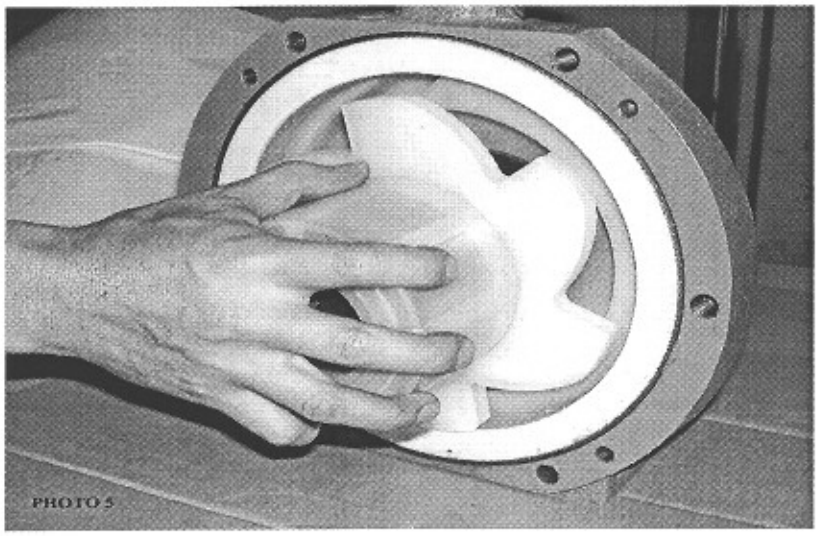
PHOTO 5

**F.** **Detach the four (4) motor liner bolts (104-33) and remove the motor with the outer magnet (057) (photo 6).**

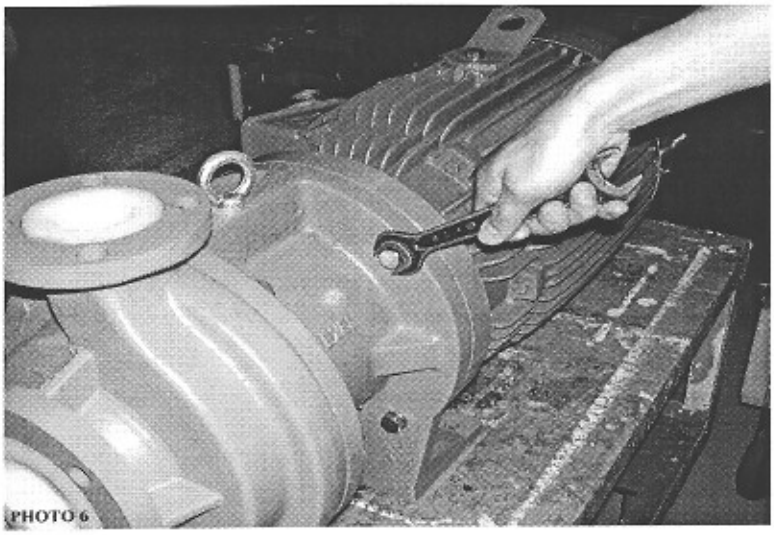
PHOTO 6

Copyright 2000 Magnatex Pumps. Inc.

**G.** **Loosen the two (2) outer magnet screws (104-46) and remove the outer magnet ( 057) (photo 7).**




## 8. ASSEMBLY OF PUMP

**To assemble the pump, follow the disassembly procedure in reverse order.**

**F.** **Slip the outer magnet (057) on the motor shaft (018) until the inner surface of the magnet hub is flush with the motor shaft, as shown in (Fig. 3)**

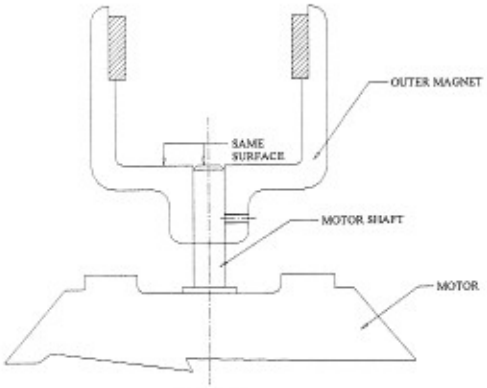


FIG. 3

**G.** **Bolt the bracket (028) to the motor (901) using the motor liner (902).**

**H.** **Slide the Inner Magnet/Impeller (058+013) on to the Shaft (018).**

Copyright 2000 Magnatex Pumps. Inc.

I. **Install the casing gasket (101-1) on the casing (001) and attach the rear casing (060) to the casing using the four (4) rear casing bolts (104-54). (Tighten the rear casing bolts lightly by hand). DO NOT USE A WRENCH.**

**WARNING!**

**Since the Inner Magnet and Outer Magnet strongly attract each other, be careful to avoid trapping your fingers between the casing and bracket.**

J. **Assemble the casing (001) to the bracket (028). Tighten the casing bolts in a cris-cross pattern to ensure even tightness.**

K. **Install the bracket foot bolt(s) (104-17) and tighten.**

L. **At the completion of assembly, check to assure the motor fan turns smoothly by rotating it with a screwdriver.**

## 9. REMOVAL AND INSTALLATION OF SHAFT

**A.** When removing the shaft, insert a small drift punch or plus driver through the hole in the shaft support and tap the driver head gently with a resin mallet.

**B.** To install the shaft, align the notches in the shaft and the shaft support. Lightly tap the rear of the shaft with a resin mallet until the shaft seats in the shaft support.

## 10. REMOVAL AND REPLACEMENT OF BUSHING

**A.** When removing the bushing from the inner magnet, place a small wooden dowel on the impeller side of the bushing and lightly tap out using a resin hammer.

**B.** To install the bushing, align the bushing notches and the inner magnet side notches. Tap into position using a resin mallet.

## 11. REMOVAL AND INSTALLATION OF FRONT/REAR THRUST RING(S) AND MOUTH RING.

**The front/rear thrust rings (054/056) and mouth ring (052) is held in place by holding tabs in two or three places.**

Copyright 2000 Magnatex Pumps. Inc.

**A.** When replacing the thrust rings and mouth ring, melt and deform these tabs using a hot air gun welder.

**B.** To install the thrust rings and mouth ring, align the notches, re-melt the holding tabs using a hot air gun welder. Use a small wooden dowel (0.16) to flatten any excess tab material.

## 12. INSTALLATION OF THE SHAFT SUPPORT

**The shaft support is pressed in and welded to the Casing. When replacing the Shaft support, remove the welded portion and detach the support from the Casing. When installing the Shaft support, use PFA welding rod and hot air gun welder.**

Copyright 2000 Magnatex Pumps. Inc.

## 13. EXPLODED VIEW DRAWING

### MODEL: MTA-AA6/AA8

| Item no. | Description |
|---|---|
| 001 | Casing |
| 015 | Shaft support |
| 018 | Shaft |
| 028 | Bracket |
| 051 | Bushing |
| 052 | Mouth ring |
| 054 | Front thrust ring |
| 056 | Rear thrust ring |
| 057 | Outer magnet |
| 058+013 | Inner magnet + Impeller |
| 060 | Rear casing |
| 101-1 | Casing gasket |
| 101-5 | Drain gasket |
| 102 | Drain flange |
| 902 | Motor adapter |

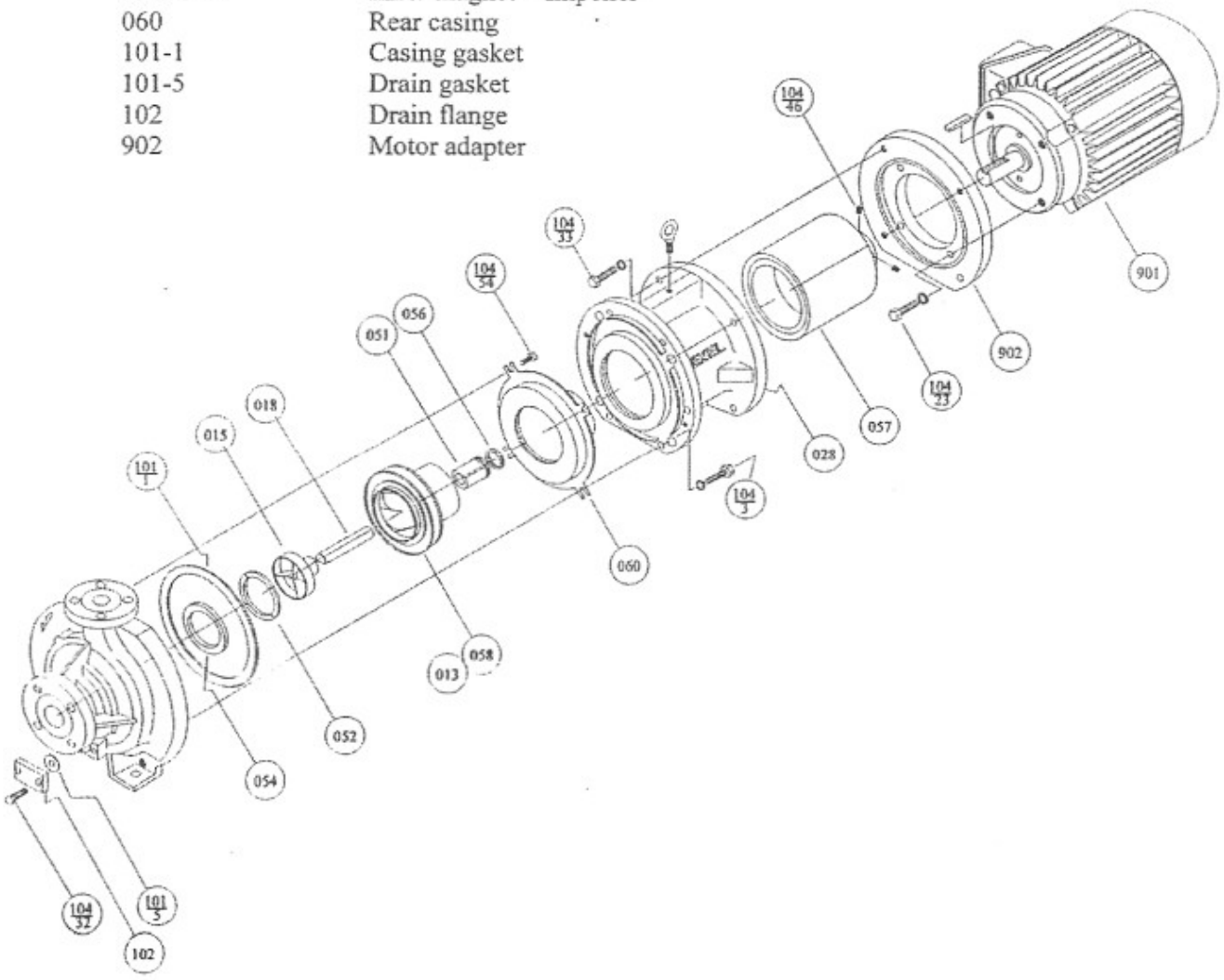


Copyright 2000 Magnatex Pumps. Inc.

## 13b. EXPLODED VIEW DRAWING

### MODEL MTA-A10

| Item no. | Description |
|---|---|
| 001 | Casing |
| 015 | Shaft support |
| 018 | Shaft |
| 028 | Bracket |
| 051 | Bushing |
| 052 | Mouth ring |
| 054 | Front thrust ring |
| 056 | Rear thrust ring |
| 057 | Outer magnet |
| 058+013 | Inner magnet + Impeller |
| 060 | Rear casing |
| 101-1 | Casing gasket |
| 101-5 | Drain gasket |
| 102 | Drain flange |
| 902 | Motor adapter |

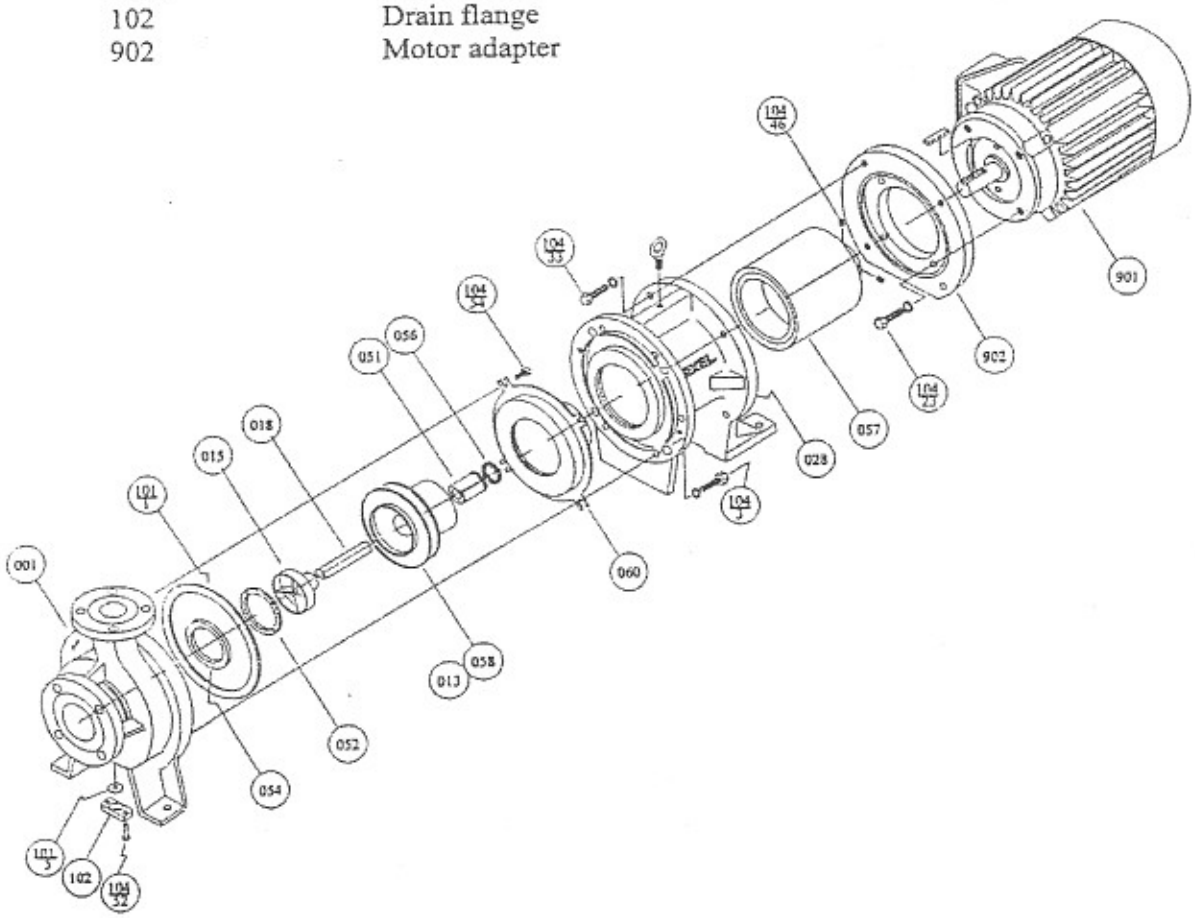


Copyright 2000 Magnatex Pumps. Inc.

## 14. PARTS LIST

| Item No. | Part Name | Material | Qty |
|---|---|---|---|
| 001 | Casing | PFA + ductile iron | 1 |
| 015 | Shaft support | PFA | 1 |
| 018 | Shaft | SiC ceramics | 1 |
| 028 | Bracket | Cast iron | 1 |
| 051 | Bushing | C-PTFE / SiC ceramic | 1 |
| 052 | Mouth ring | C-PTFE / SiC ceramic | 1 |
| 054 | Front thrust ring | SiC ceramic | 1 |
| 056 | Rear thrust ring | SiC ceramic | 1 |
| 057 | Outer magnet | Rare earth | 1 |
| 058+013 | Inner magnet + Impeller | PFA / rare Earth | 1 |
| 060 | Rear casing | PFA + eng. plastic | 1 |
| 101-1 | Casing gasket | PTFE | 1 |
| 101-5 | Drain gasket | PTFE | 1 |
| 102 | Drain flange | Cast iron | 1 |
| 104-3 | Casing bolt | 304SS | 6 |
| 104-17 | Bracket bolt | 304SS | 1 set |
| 104-23 | Motor bolt | 304SS | 4 |
| 104-33 | Motor adapter bolt | 304SS | 4 |
| 104-46 | Outer magnet set screw | 304SS | 2 |
| 104-52 | Drain bolt | 304SS | 2 |
| 104-54 | Rear casing bolt | 304SS | 4 |
| 104-58 | Assembly / disassembly bolt | 304SS | 2 |
| 901 | Motor | | 1 |
| 902 | Motor adapter | Ductile Iron | 1 |

## 15. RECOMMENDED SPARES

| Item No. | Part Name | Material | Qty |
|---|---|---|---|
| 051 | Bushing | C-PTFE / SiC ceramic | 1 |
| 052 | Mouth ring | C-PTFE / SiC ceramic | 1 |
| 054 | Front thrust ring | SiC ceramic | 1 |
| 056 | Rear thrust ring | SiC ceramic | 1 |
| 101-1 | Casing gasket | PTFE | 1 |
| 101-5 | Drain gasket | PTFE | 1 |

Copyright 2000 Magnatex Pumps. Inc.

## 16. NOZZLE LOADING CRITERIA

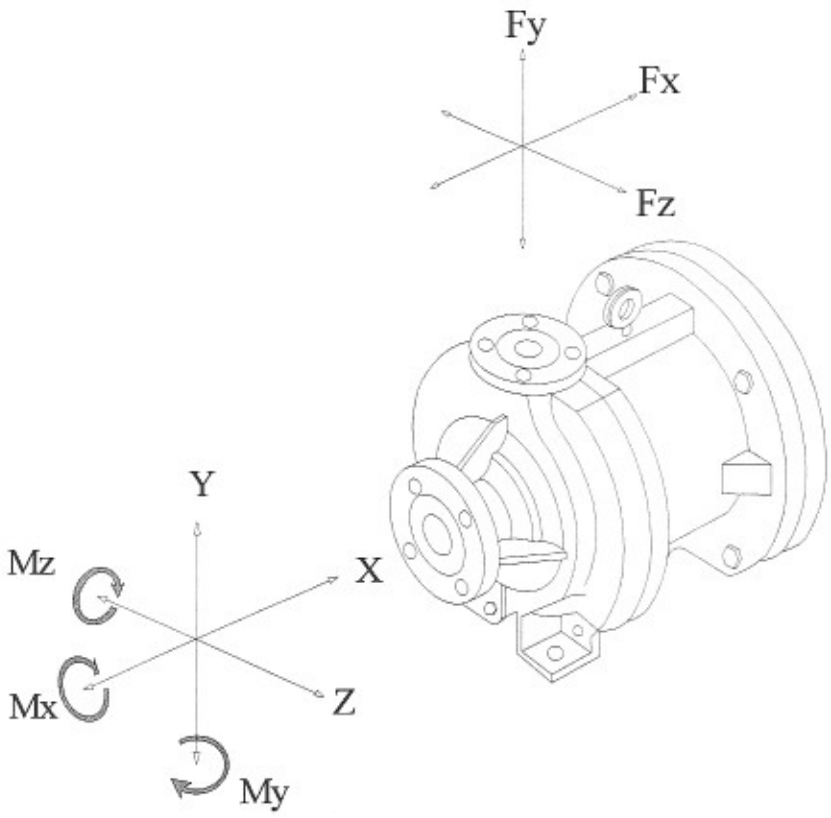


| MODEL | SUCTION | | | | | | DISCHARGE | | | | | |
|---|---|---|---|---|---|---|---|---|---|---|---|---|
| | FORCES (LBS) | | | MOMENTS (FT-LBS) | | | FORCES (LBS) | | | MOMENTS (FT-LBS) | | |
| | FX | FY | FZ | MX | MY | MZ | FX | FY | FZ | MX | MY | MZ |
| AA6/AA8 | 173.8 | 88.0 | 145.2 | 433.0 | 288.8 | 216.5 | 138.6 | 70.4 | 116.6 | 346.4 | 230.9 | 173.2 |
| A10 | 356.4 | 178.2 | 297.0 | 887.6 | 591.7 | 447.4 | 286.0 | 143.0 | 237.6 | 707.2 | 476.3 | 360.8 |

Copyright 2000 Magnatex Pumps. Inc.

# Troubleshooting Chart

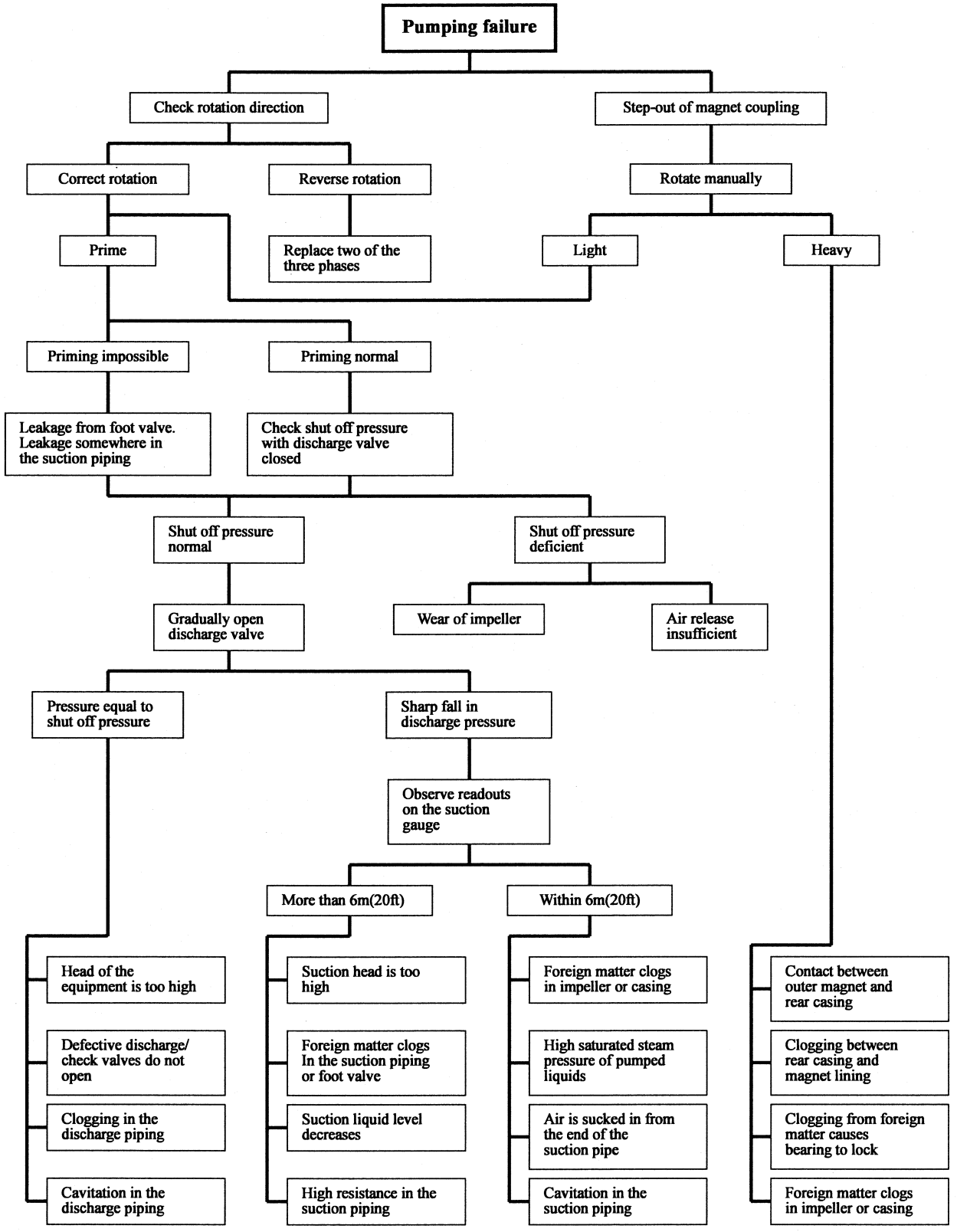

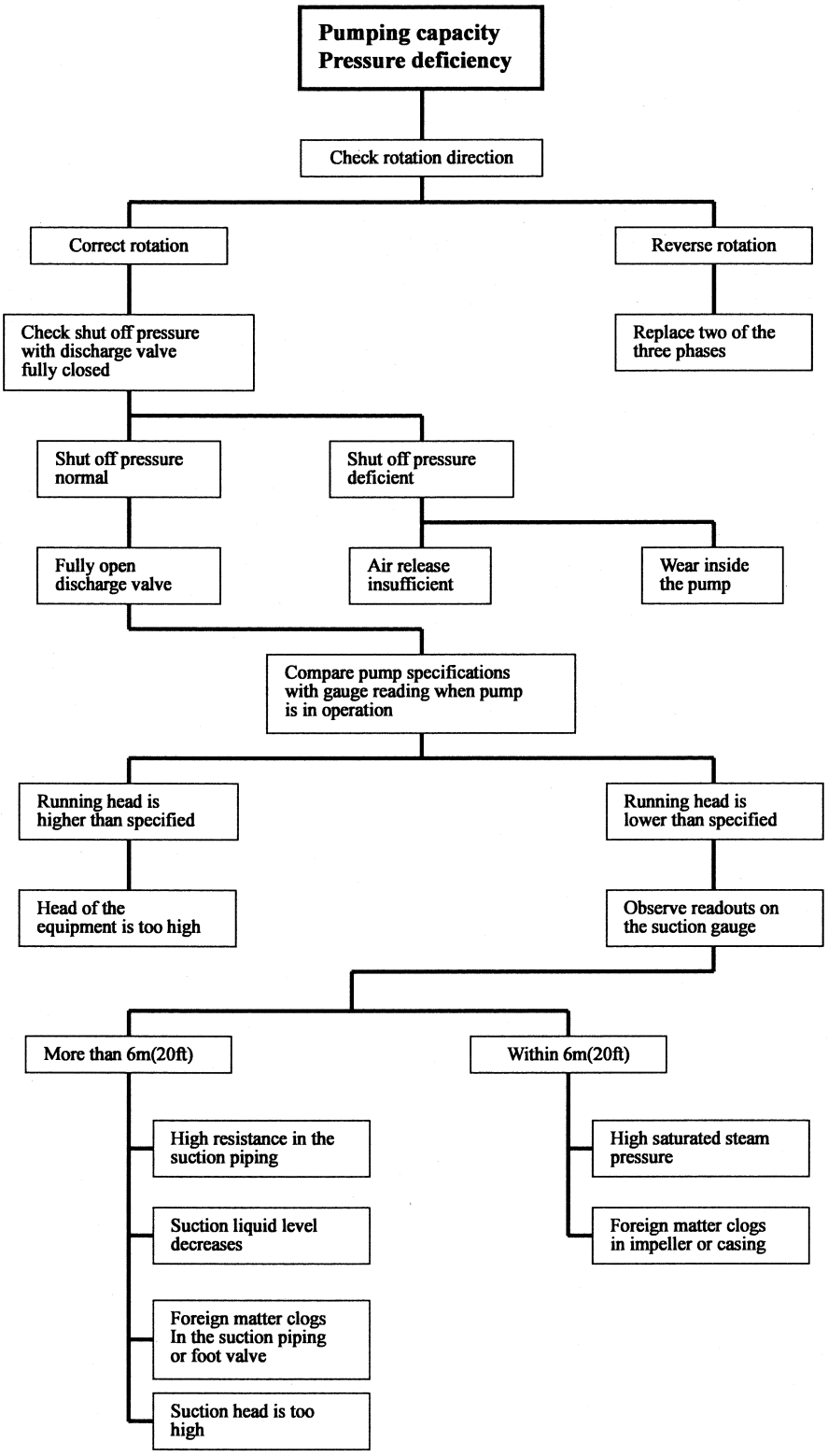
Pumping capacity
Pressure deficiency
Check rotation direction
Correct rotation
Reverse rotation
Check shut off pressure with discharge valve fully closed
Replace two of the three phases
Shut off pressure normal
Shut off pressure deficient
Fully open discharge valve
Air release insufficient
Wear inside the pump
Compare pump specifications with gauge reading when pump is in operation
Running head is higher than specified
Running head is lower than specified
Head of the equipment is too high
Observe readouts on the suction gauge
More than 6m(20ft)
Within 6m(20ft)
High resistance in the suction piping
Suction liquid level decreases
Foreign matter clogs In the suction piping or foot valve
Suction head is too high
High saturated steam pressure
Foreign matter clogs in impeller or casing

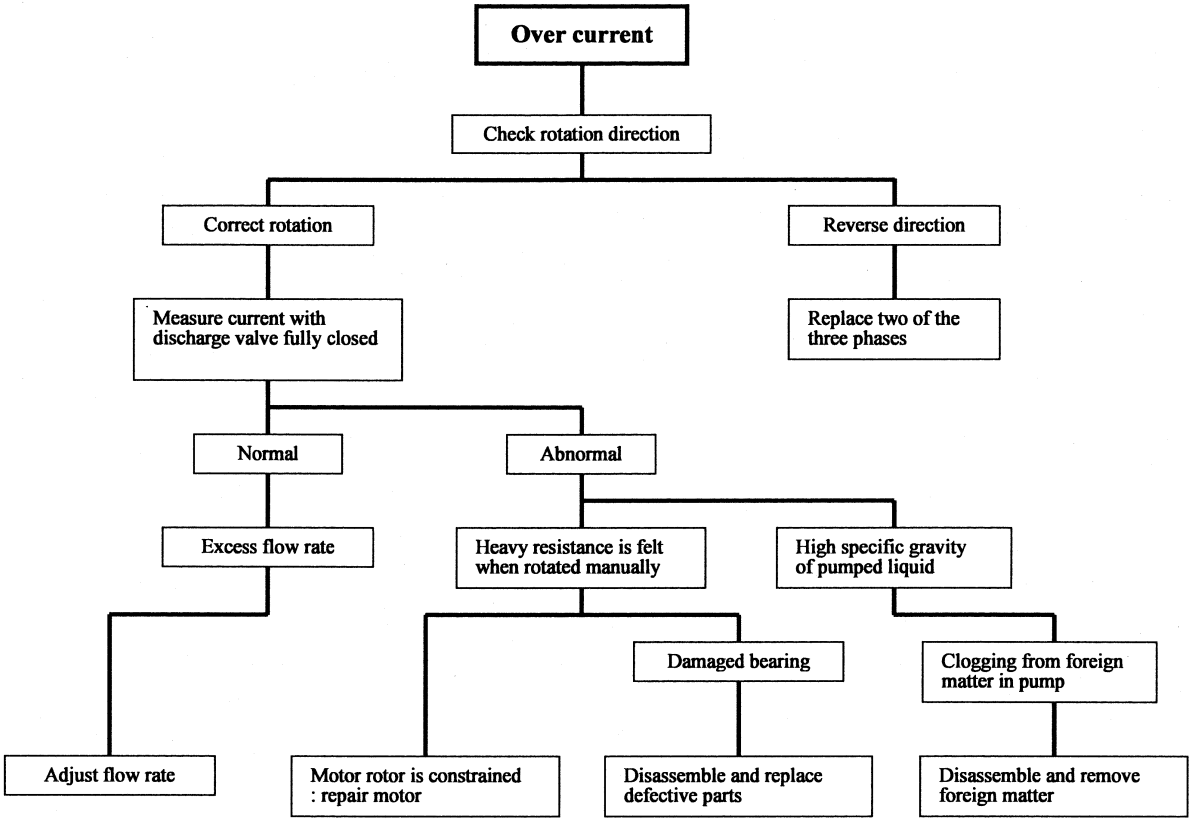
Over current
Check rotation direction
Correct rotation
Reverse direction
Measure current with discharge valve fully closed
Replace two of the three phases
Normal
Abnormal
Excess flow rate
Heavy resistance is felt when rotated manually
High specific gravity of pumped liquid
Damaged bearing
Clogging from foreign matter in pump
Adjust flow rate
Motor rotor is constrained : repair motor
Disassemble and replace defective parts
Disassemble and remove foreign matter

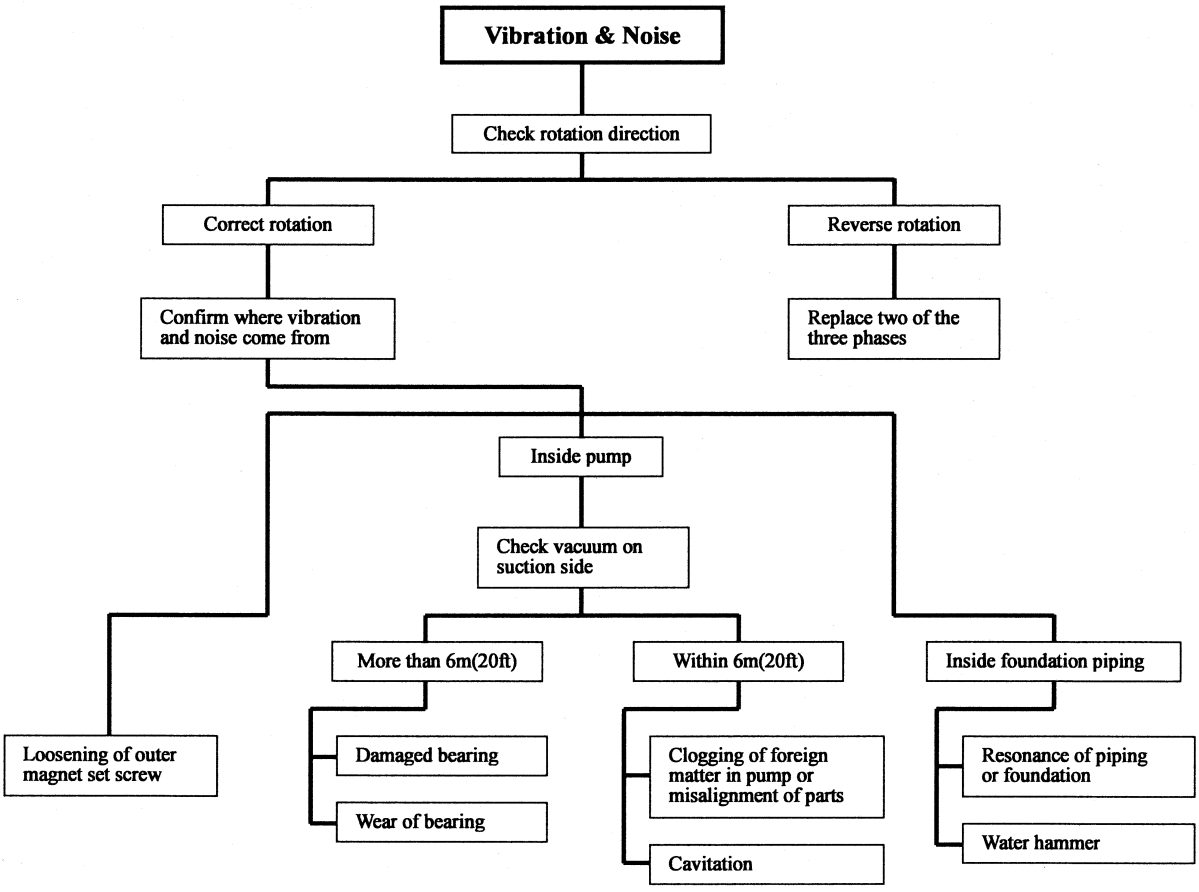
Vibration & Noise
Check rotation direction
Correct rotation
Reverse rotation
Confirm where vibration and noise come from
Replace two of the three phases
Inside pump
Check vacuum on suction side
More than 6m(20ft)
Within 6m(20ft)
Inside foundation piping
Loosening of outer magnet set screw
Damaged bearing
Wear of bearing
Clogging of foreign matter in pump or misalignment of parts
Cavitation
Resonance of piping or foundation
Water hammer

| No | Quantité | Description | Longueur |
|---|---|---|---|
| A10 | 1 | ASS. STRUCTURE A10 | |
| A20 | 1 | ASS. PATTE A20 | |
| A30 | 1 | ASS. PATTE A30 | |

# FINI BILLE DE VERRE

# SOUDURE AU MIG

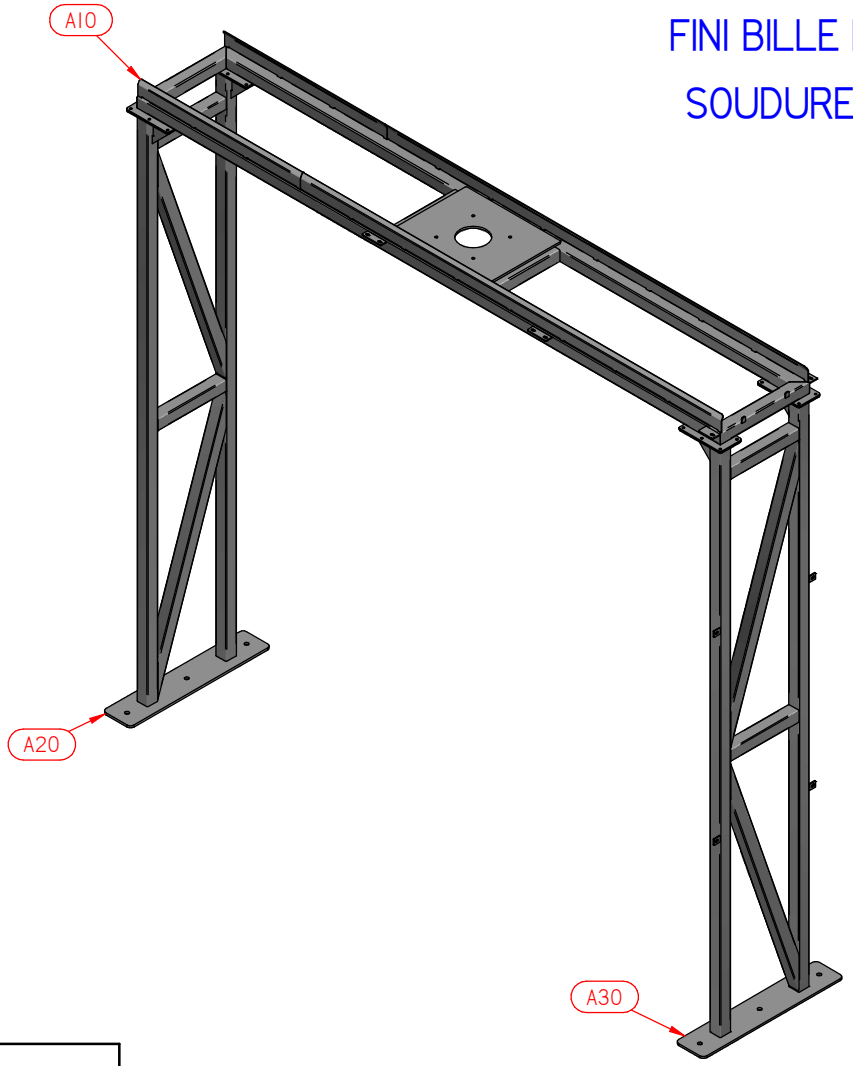


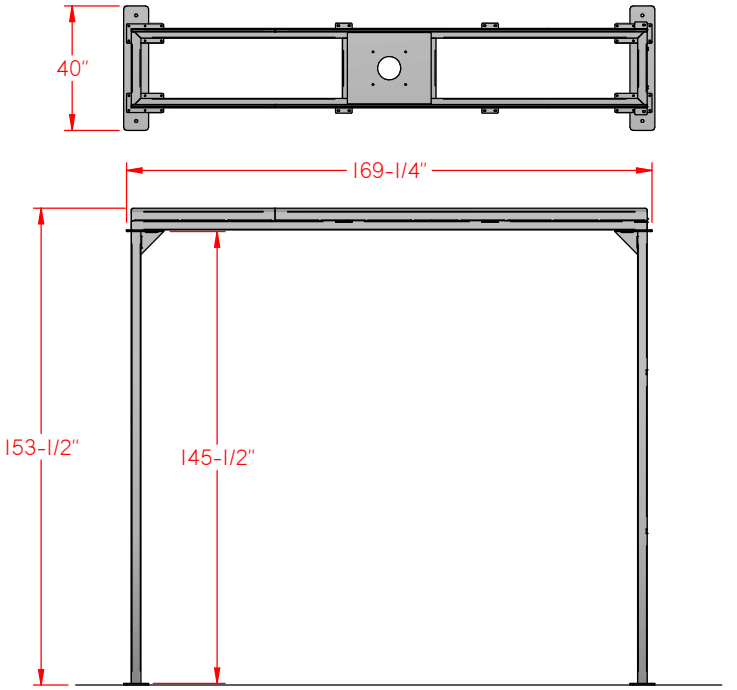


QTÉ: 1X

-------ATTENTION PROJET EN SS316--------

| | |
|---|---|
| Tolérancement (Sauf indications contraires) | |
| Coupe: | ± 1/16" |
| Pliage: | ± 0.5° |
| Usinage: | ± 0.005" |
| Montage | ± 1/16" |

VÉRIFIÉ PAR: Initiales:

Nom de l'équipement: STRUCTURE DE SOUTIEN DE MIXER POUR RÉSERVOIR

No produit: 2199-001 | Client: 21804-01 PCP

Département: ASSEMBLAGE SOUDÉ | Pages: 1/7

Dessiné par: DM | Date: 14-06-2021 | Chargé de projet: JF

No dessin: 21804.01.A00-B

Sceau:

Code barre:

Ce document est la propriété de **Lacal Technologie Inc.**
Il ne doit pas être dévoilé, utilisé ou reproduit en tout ou en parties sans l'autorisation écrite de **Lacal Technologie Inc.**

SOLID EDGE HOME USE

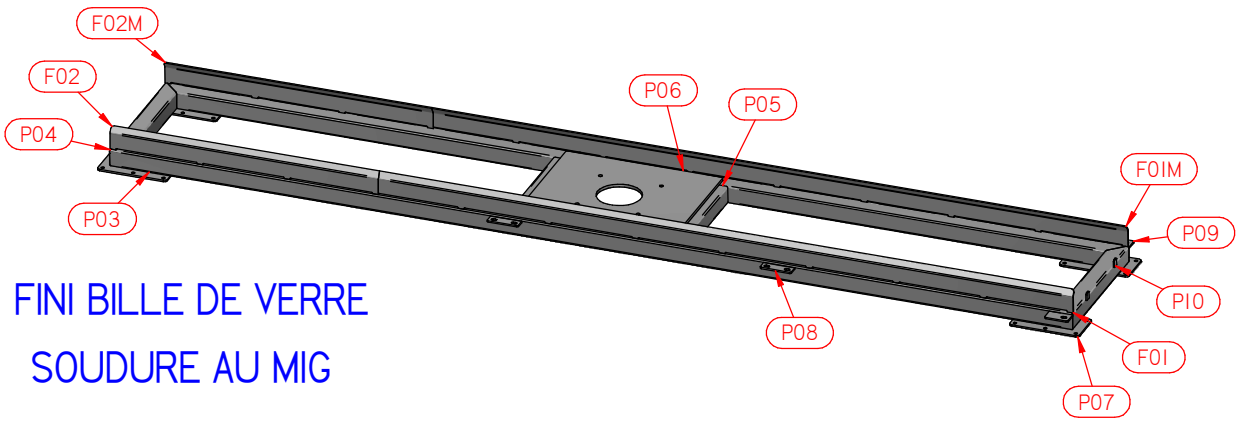


FINI BILLE DE VERRE

SOUDURE AU MIG

| No | Quantité | Description | Longueur |
|---|---|---|---|
| F01 | 1 | F 0.187 LASER MAT.SS316 | |
| F01M | 1 | F 0.187 LASER MAT.SS316 | |
| F02 | 1 | F 0.187 LASER MAT.SS316 | |
| F02M | 1 | F 0.187 LASER MAT.SS316 | |
| P03 | 2 | TC 3" X 1/4" SS316 | 166.000 |
| P04 | 2 | TC 3" X 1/4" SS316 | 25.376 |
| P05 | 2 | TC 3" X 1/4" SS316 | 19.375 |
| P06 | 1 | F 0.500 LASER MAT.SS316 | |
| P07 | 4 | F 0.250 LASER MAT.SS316 | |
| P08 | 4 | F 0.250 LASER MAT.SS316 | |
| P09 | 2 | F 0.187 LASER MAT.SS316 | |
| P10 | 2 | F 0.187 LASER MAT.SS316 | |

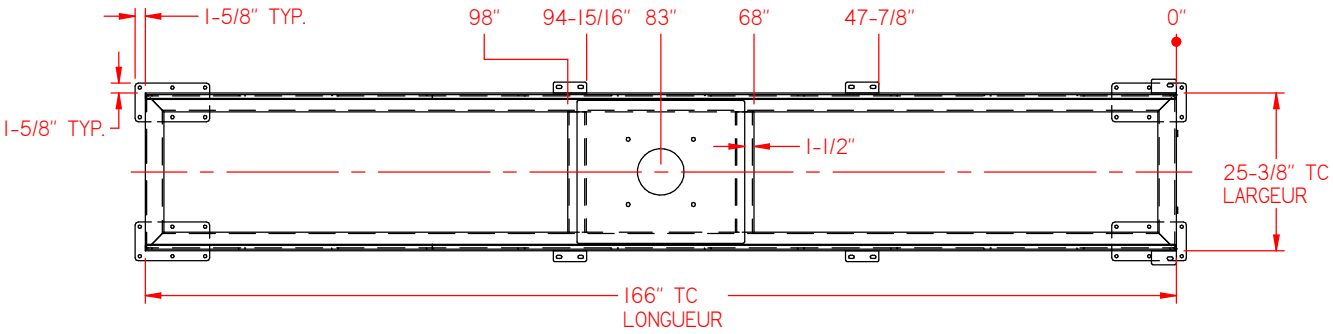


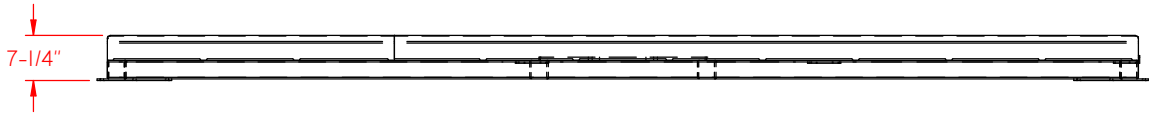


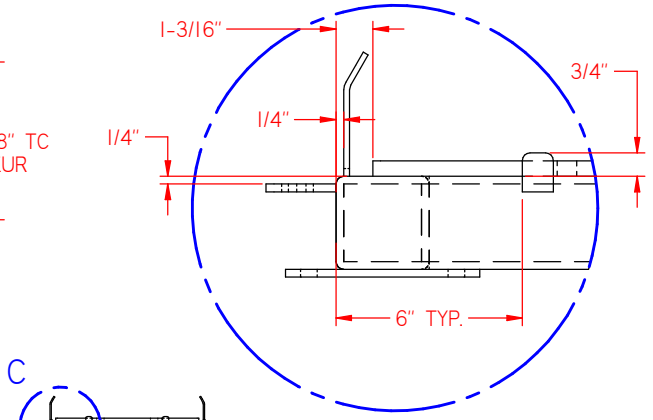





DETAIL C

Ce document est la propriété de **Lacal Technologie Inc.**
Il ne doit pas être dévoilé, utilisé ou reproduit en tout ou en parties sans l'autorisation écrite de **Lacal Technologie Inc.**

QTÉ: 1X
A10

Code barre

Sceau

Tolérancement
Sauf indications contraires

| | |
|---|---|
| Coupe: | ± 1/16" |
| Pliage: | ± 0.5° |
| Usinage: | ± 0.005" |
| Montage | ± 1/16" |

LACAL

-------ATTENTION PROJET EN SS316--------

VÉRIFIÉ PAR: | Initiales:

Nom de l'équipement: STRUCTURE DE SOUTIEN DE MIXER POUR RÉSERVOIR

No produit: 2199-001 | Client: 21804-01 PCP

Département: ASSEMBLAGE SOUDÉ | Pages: 2/7

Dessiné par: DM | Date: 14-06-2021 | Chargé de projet: JF

No dessin: 21804.01.A00-B

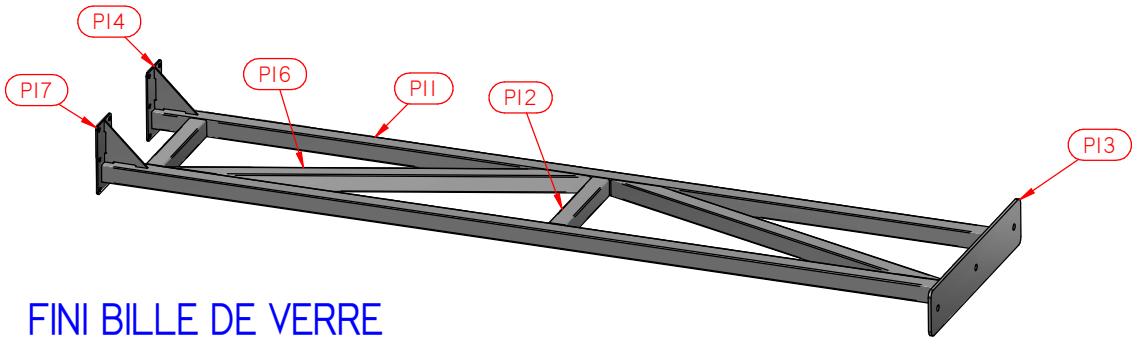


| No | Quantité | Description | Longueur |
|---|---|---|---|
| PI1 | 2 | TC 3" X 3/16" SS316 | 145.500 |
| PI2 | 2 | TC 3" X 3/16" SS316 | 19.375 |
| PI3 | 1 | F 0.500 LASER MAT.SS316 | |
| PI4 | 2 | F 0.250 LASER MAT.SS316 | |
| PI6 | 2 | TC 3" X 3/16" SS316 | |
| PI7 | 2 | F 0.250 LASER MAT.SS316 | |

# FINI BILLE DE VERRE

# SOUDURE AU MIG

QTÉ: IX

A20

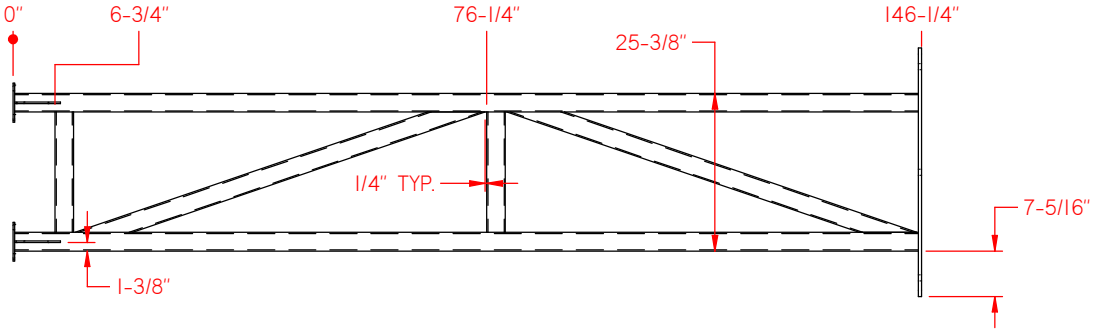


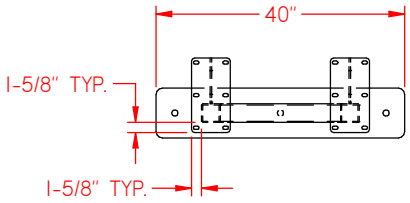


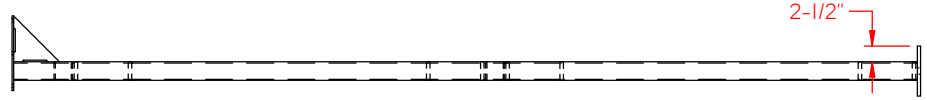


Ce document est la propriété de **Lacal Technologie Inc.**
Il ne doit pas être dévoilé, utilisé ou reproduit en tout ou en parties sans l'autorisation écrite de **Lacal Technologie Inc.**

SOLID EDGE HOME USE

Code barre:

Sceau:

**Tolérancement**
Sauf indications contraires

| | |
|---|---|
| Coupe: | ± 1/16" |
| Pliage: | ± 0.5° |
| Usinage: | ± 0.005" |
| Montage | ± 1/16" |

LACAL

--------ATTENTION PROJET EN SS316--------

VÉRIFIÉ PAR: | Initiales:

Nom de l'équipement: STRUCTURE DE SOUTIEN DE MIXER POUR RÉSERVOIR

No produit: 2199-001 | Client: 21804-01 PCP

Département: ASSEMBLAGE SOUDÉ | Pages: 3/7

Dessiné par: DM | Date: 14-06-2021 | Chargé de projet: JF

No dessin: 21804.01.A00-B

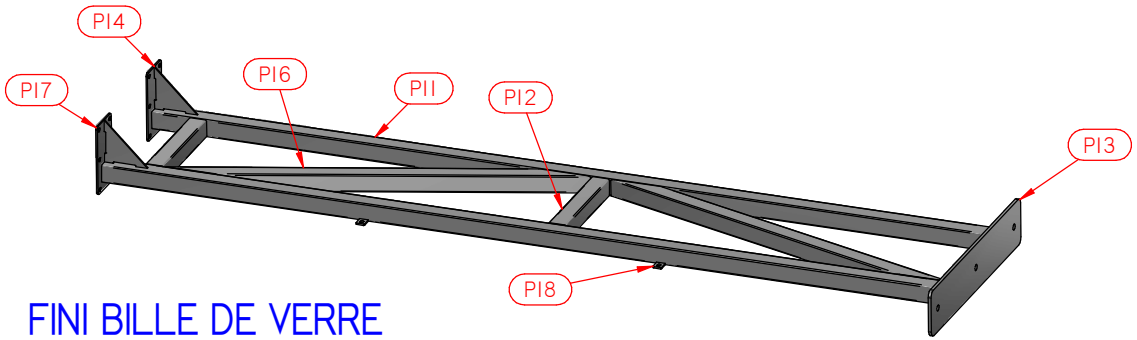


| No | Quantité | Description | Longueur |
|---|---|---|---|
| PI1 | 2 | TC 3" X 3/16" SS316 | 145.500 |
| PI2 | 2 | TC 3" X 3/16" SS316 | 19.375 |
| PI3 | 1 | F 0.500 LASER MAT.SS316 | |
| PI4 | 2 | F 0.250 LASER MAT.SS316 | |
| PI6 | 2 | TC 3" X 3/16" SS316 | |
| PI7 | 2 | F 0.250 LASER MAT.SS316 | |
| PI8 | 4 | F 0.250 LASER MAT.SS316 | |

FINI BILLE DE VERRE

SOUDURE AU MIG

QTÉ: IX

A30

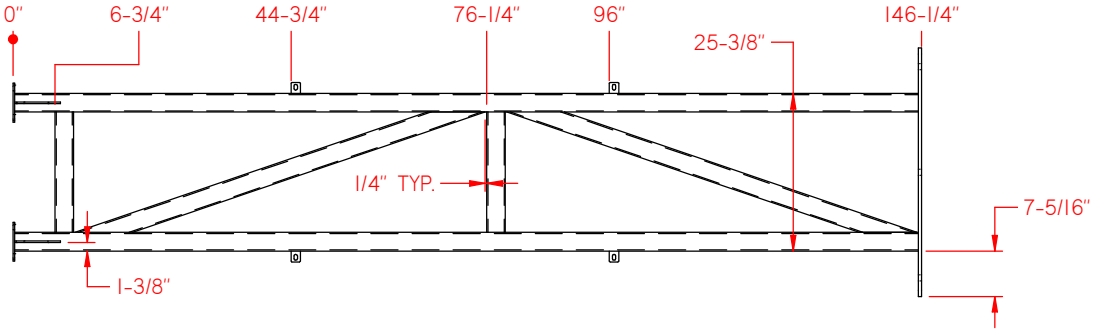


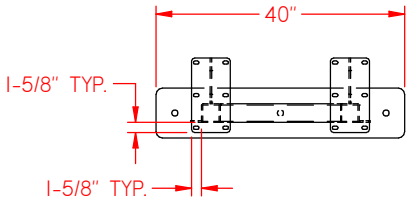


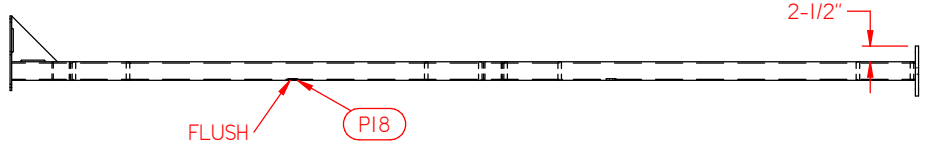


Ce document est la propriété de **Lacal Technologie Inc.**
Il ne doit pas être dévoilé, utilisé ou reproduit en tout ou en parties sans l'autorisation écrite de **Lacal Technologie Inc.**

SOLID EDGE HOME USE

Sceau:

Code barre:

**Tolérancement**
Sauf indications contraires

| | |
|---|---|
| Coupe: | ± 1/16" |
| Pliage: | ± 0.5° |
| Usinage: | ± 0.005" |
| Montage | ± 1/16" |

LACAL

*--------ATTENTION PROJET EN SS316--------*

VÉRIFIÉ PAR: | Initiales:

Nom de l'équipement: STRUCTURE DE SOUTIEN DE MIXER POUR RÉSERVOIR

No produit: 2199-001 | Client: 21804-01 PCP

Département: ASSEMBLAGE SOUDÉ | Pages: 4/7

Dessiné par: DM | Date: 14-06-2021 | Chargé de projet: JF

No dessin: 21804.01.A00-B

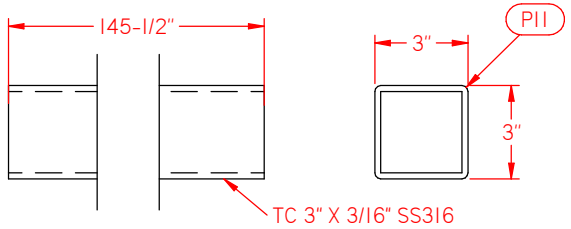


QTÉ: 4X

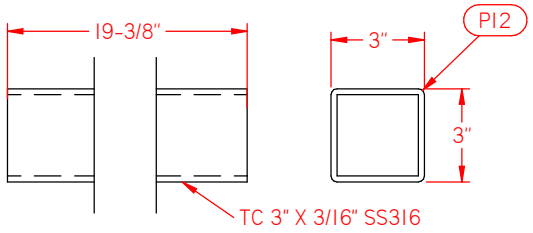


QTÉ: 4X

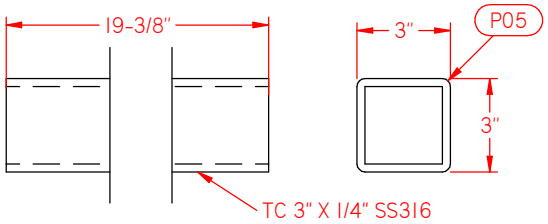


QTÉ: 2X

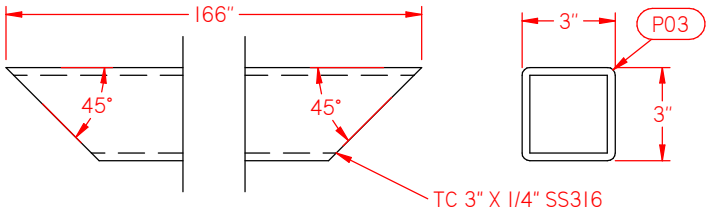


QTÉ: 2X

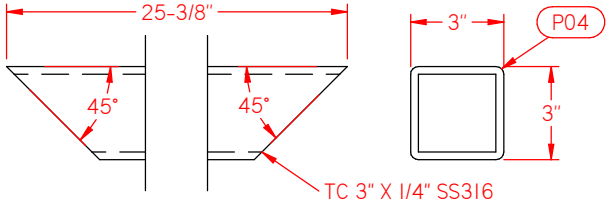


QTÉ: 2X

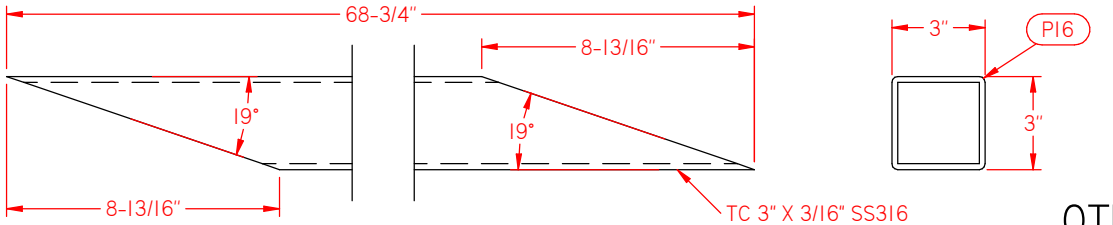





QTÉ: 4X

Ce document est la propriété de **Lacal Technologie Inc.**
Il ne doit pas être dévoilé, utilisé ou reproduit en tout ou en parties sans l'autorisation écrite de **Lacal Technologie Inc.**

SOLID EDGE HOME USE

Code barre:

Sceau:

**Tolérancement**
Sauf indications contraires

| | |
|---|---|
| Coupe: | ± 1/16" |
| Pliage: | ± 0.5° |
| Usinage: | ± 0.005" |
| Montage | ± 1/16" |

LACAL

--------ATTENTION PROJET EN SS316--------

| | | | |
|---|---|---|---|
| VÉRIFIÉ PAR: | Initiales: | | |
| Nom de l'équipement: | STRUCTURE DE SOUTIEN DE MIXER POUR RÉSERVOIR | | |
| No produit: | 2199-001 | Client: | 21804-01 PCP |
| Département: | ASSEMBLAGE SOUDÉ | | Pages: 5/7 |
| Dessiné par: | DM | Date: 14-06-2021 | Chargé de projet: JF |
| No dessin: | 21804.01.A00-B | | |

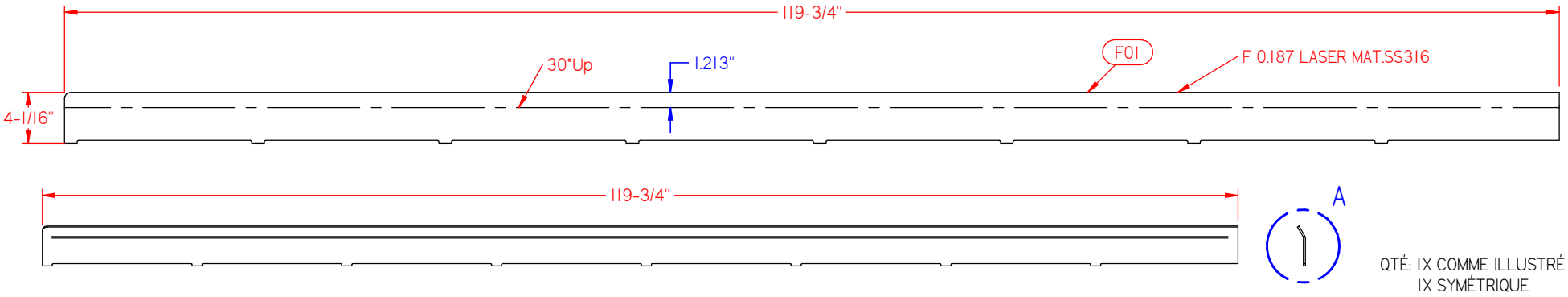


QTÉ: IX COMME ILLUSTRÉ
IX SYMÉTRIQUE

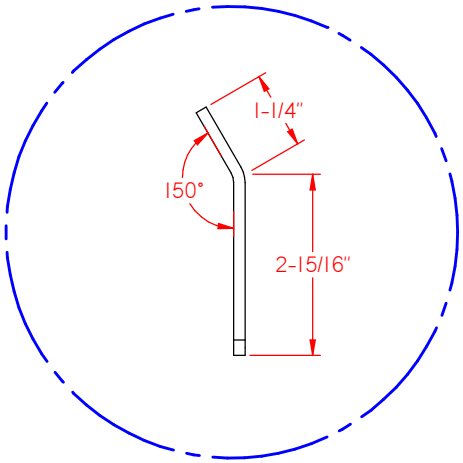


DETAIL A

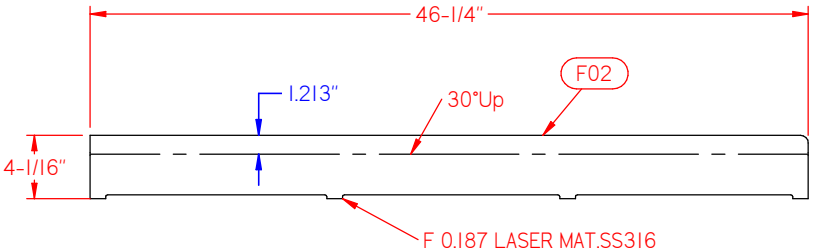


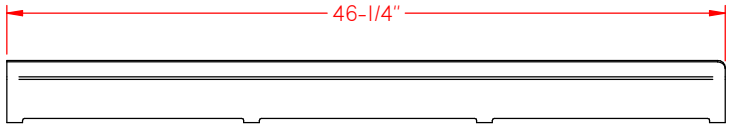


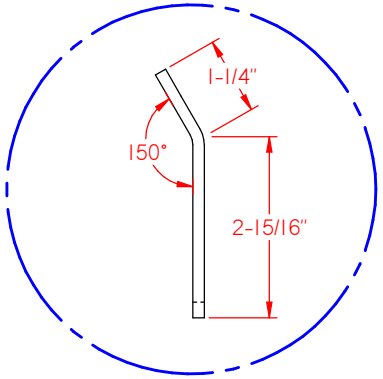


B

DETAIL B

QTÉ: IX COMME ILLUSTRÉ
IX SYMÉTRIQUE

*--------ATTENTION PROJET EN SS316--------*

Ce document est la propriété de **Lacal Technologie Inc.**
Il ne doit pas être dévoilé, utilisé ou reproduit en tout ou en parties sans l'autorisation écrite de **Lacal Technologie Inc.**

SOLID EDGE HOME USE

Sceau:

Code barre:

**Tolérancement**
Sauf indications contraires

| | |
|---|---|
| Coupe: | ± 1/16" |
| Pliage: | ± 0.5° |
| Usinage: | ± 0.005" |
| Montage | ± 1/16" |

LACAL

VÉRIFIÉ PAR: | Initiales:

Nom de l'équipement: STRUCTURE DE SOUTIEN DE MIXER POUR RÉSERVOIR

No produit: 2199-001 | Client: 21804-01 PCP

Département: ASSEMBLAGE SOUDÉ | Pages: 6/7

Dessiné par: DM | Date: 14-06-2021 | Chargé de projet: JF

No dessin: 21804.01.A00-B

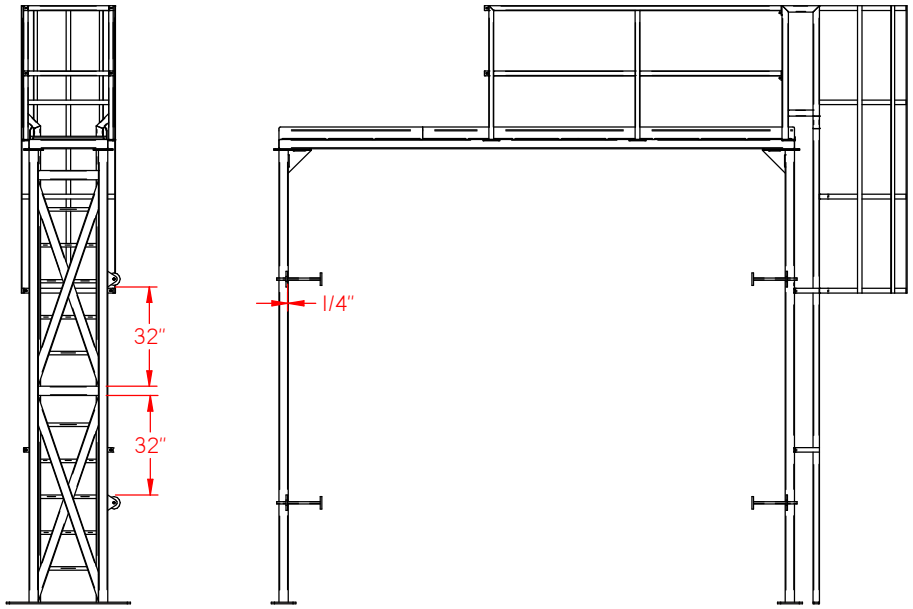


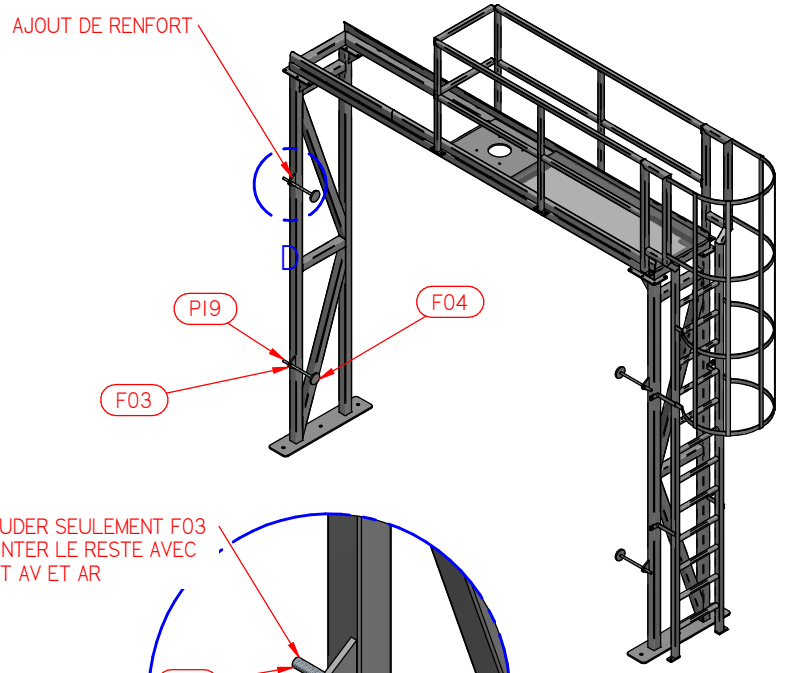


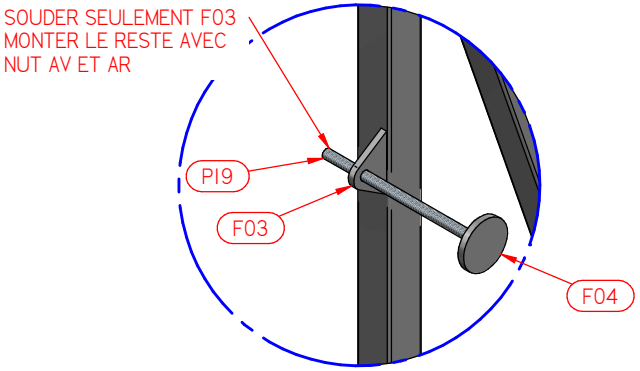


DETAIL D

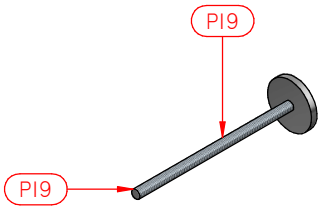


| No | Quantité | Description | Longueur |
|---|---|---|---|
| F04 | 1 | F 0.500 LASER MAT.SS316 | |
| PI9 | 1 | TF 3/4 SS304 | |

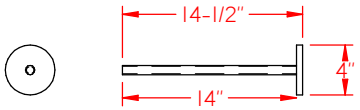


QTE:4X

--------ATTENTION PROJET EN SS316--------

Ce document est la propriété de **Lacal Technologie Inc.**
Il ne doit pas être dévoilé, utilisé ou reproduit en tout ou en parties sans l'autorisation écrite de **Lacal Technologie Inc.**

SOLID EDGE HOME USE

Code barre:

Sceau:

**Tolérancement**
Sauf indications contraires

| | |
|---|---|
| Coupe: | ± 1/16" |
| Pliage: | ± 0.5° |
| Usinage: | ± 0.005" |
| Montage | ± 1/16" |

LACAL

VÉRIFIÉ PAR: | Initiales:

Nom de l'équipement: STRUCTURE DE SOUTIEN DE MIXER POUR RÉSERVOIR

No produit: 2199-001 | Client: 21804-01 PCP

Département: ASSEMBLAGE SOUDÉ | Pages: 7/7

Dessiné par: DM | Date: 14-06-2021 | Chargé de projet: JF

No dessin: 21804.01.A00-B

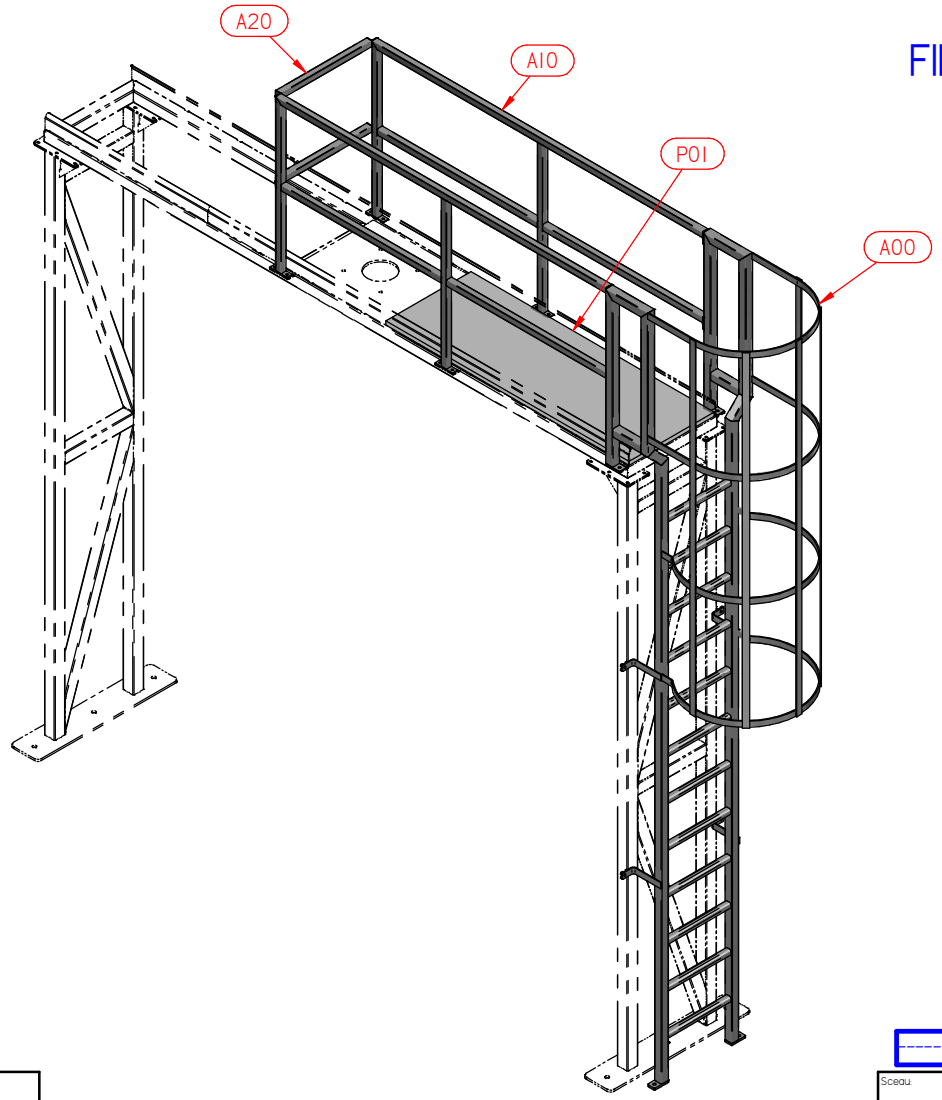


# FINI BILLE DE VERRE
# SOUDURE AU TIG

| No | Quantité | Description | Longueur |
|---|---|---|---|
| A00 | 1 | ASS. ÉCHELLE | |
| A10 | 2 | ASS. RAMPE A10 | |
| A20 | 2 | ASS. RAMPE A20 | |
| P01 | 1 | GRIT TOP 1" NOIR | 69.250 in |

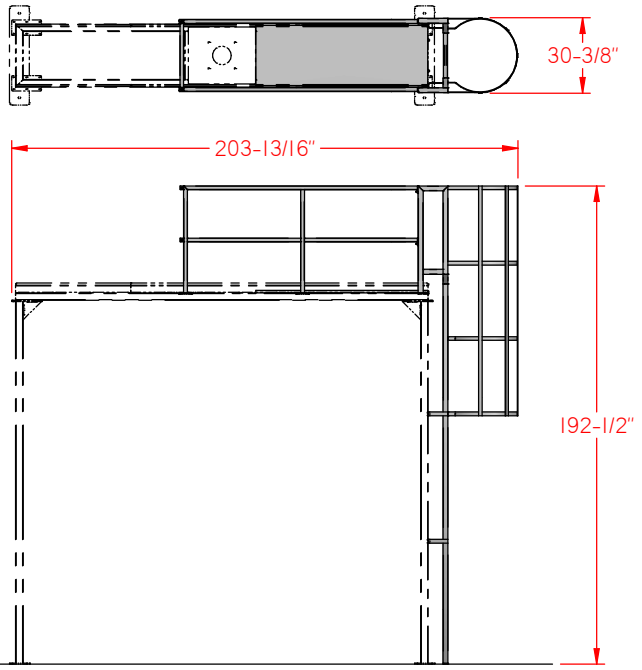


Ce document est la propriété de **Lacal Technologie Inc.**
Il ne doit pas être dévoilé, utilisé ou reproduit en tout ou en parties sans l'autorisation écrite de **Lacal Technologie Inc.**

QTÉ: IX

Code barre

Sceau

-------ATTENTION PROJET EN SS316--------

Tolérancement
Sauf indications contraires

| | |
|---|---|
| Coupe: | ± 1/16" |
| Pliage: | ± 0.5° |
| Usinage: | ± 0.005" |
| Montage | ± 1/16" |

LACAL

VÉRIFIÉ PAR: | Initiales:

Nom de l'équipement: ÉCHELLE ET PASSERELLE ACCÈS POUR MIXER

No produit: 2199-002 | Client: 21804-02 PCP

Département: ASSEMBLAGE SOUDÉ | Pages: 1/8

Dessiné par: DM | Date: 14-06-2021 | Chargé de projet: JF

No dessin: 21804.02.A00-B

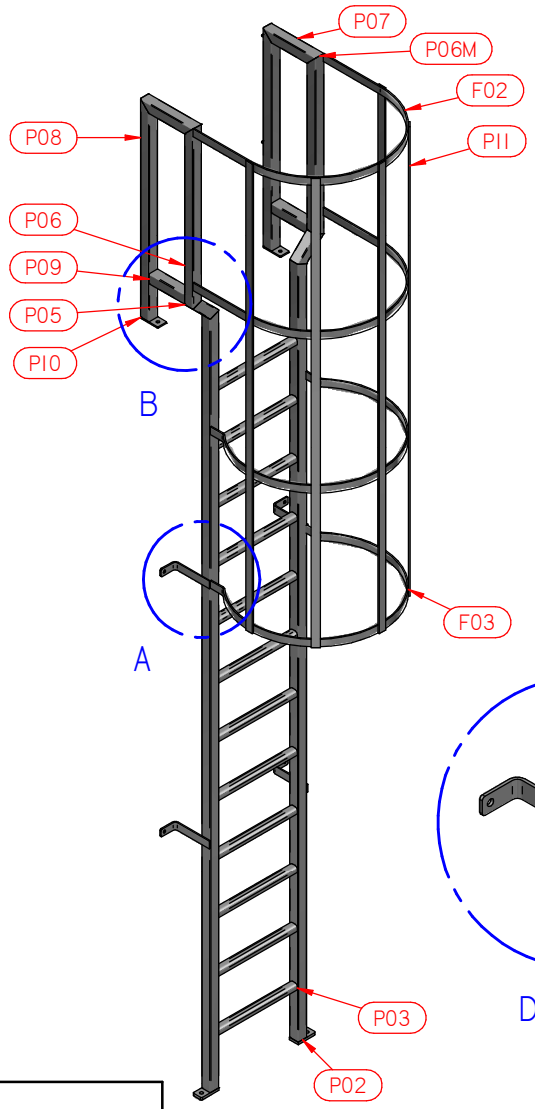


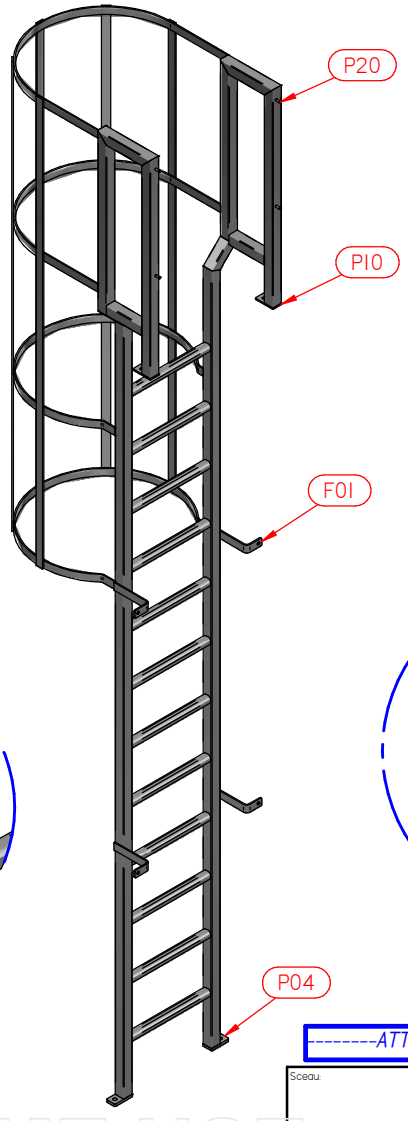


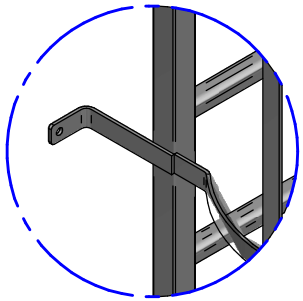

DETAIL A

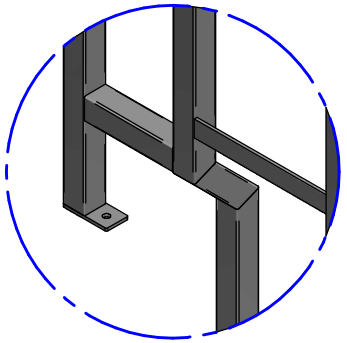

DETAIL B

| No | Quantité | Description | Longueur |
|---|---|---|---|
| F01 | 4 | F 0.250 LASER MAT.SS316 | |
| F02 | 2 | BP 1/4" X 1 1/2" SS316 | |
| F03 | 2 | BP 1/4" X 1 1/2" SS316 | |
| P02 | 2 | TC 2" X 1/8" SS316 | 153.328 in |
| P03 | 12 | LADDER RUNG 14GA SS316 | |
| P04 | 2 | F 0.500 LASER MAT.SS316 | |
| P05 | 2 | TC 2" X 1/8" SS316 | |
| P06 | 1 | TC 2" X 1/8" SS316 | 35.562 in |
| P06M | 1 | TC 2" X 1/8" SS316 | |
| P07 | 2 | TC 2" X 1/8" SS316 | 12.000 in |
| P08 | 2 | TC 2" X 1/8" SS316 | 43.000 in |
| P09 | 2 | TC 2" X 1/8" SS316 | 8.000 in |
| P10 | 2 | F 0.250 LASER MAT.SS316 | |
| P11 | 5 | BP 1/4" X 1 1/2" SS316 | 92.500 in |
| P20 | 4 | TF 3/8" SS316 | 0.875 in |

FINI BILLE DE VERRE
SOUDURE AU TIG

QTÉ: IX

--------ATTENTION PROJET EN SS316--------

Ce document est la propriété de **Lacal Technologie Inc.**
Il ne doit pas être dévoilé, utilisé ou reproduit en tout ou en parties sans l'autorisation écrite de **Lacal Technologie Inc.**

SOLID EDGE HOME USE

Code barre:

Sceau:

Tolérancement
Sauf indications contraires

| | |
|---|---|
| Coupe: | ± 1/16" |
| Pliage: | ± 0.5° |
| Usinage: | ± 0.005" |
| Montage | ± 1/16" |

LACAL

VÉRIFIÉ PAR: | Initiales:

Nom de l'équipement: ÉCHELLE ET PASSERELLE ACCÈS POUR MIXER

No produit: 2199-002 | Client: 21804-02 PCP

Département: ASSEMBLAGE SOUDÉ | Pages: 2/8

Dessiné par: DM | Date: 14-06-2021 | Chargé de projet: JF

No dessin: 21804.02.A00-B

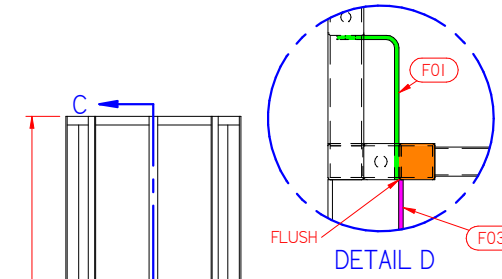


DETAIL D

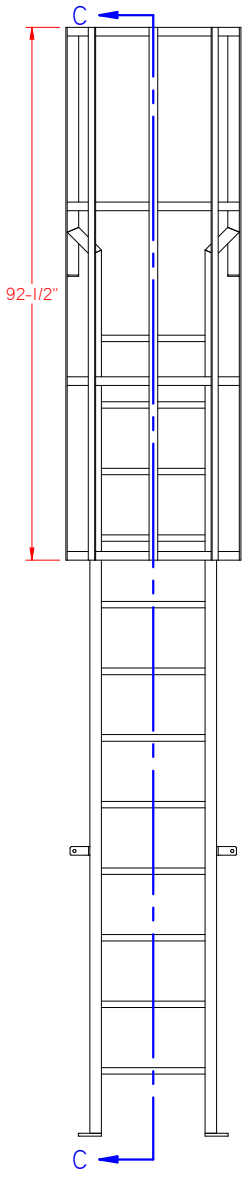


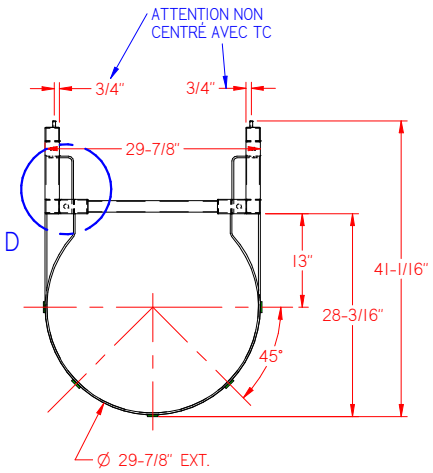





SECTION C-C

--------ATTENTION PROJET EN SS316--------

Code barre:

VÉRIFIÉ PAR: Initiales:

Nom de l'équipement: ÉCHELLE ET PASSERELLE ACCÈS POUR MIXER

No produit: 2199-002 | Client: 21804-02 PCP

Département: ASSEMBLAGE SOUDÉ | Pages: 3/8

Dessiné par: DM | Date: 14-06-2021 | Chargé de projet: JF

No dessin: 21804.02.A00-B

Ce document est la propriété de Lacal Technologie Inc.
Il ne doit pas être divulgué, utilisé ou reproduit en tout ou en partie sans l'autorisation écrite de Lacal Technologie Inc.

Sceau:

Tolérancement
Sauf indications contraires

| | |
|---|---|
| Coupe | ± 1/16" |
| Plaque | ± 0.5° |
| Usinage | ± 0.005" |
| Montage | ± 1/16" |

LACAL

KNOWLEDGE HOME USE

FINI BILLE DE VERRE

SOUDURE AU TIG

| No | Quantité | Description | Longueur |
|---|---|---|---|
| PI3 | 1 | TC 1 1/2" X 1/16" SS316 MF | 94.130 in |
| PI4 | 1 | TC 1 1/2" X 1/16" SS316 MF | 43.000 in |
| PI5 | 1 | TC 1 1/2" X 1/16" SS316 MF | 41.500 in |
| PI6 | 2 | F 0.250 LASER MAT.SS316 | |
| PI7 | 2 | TC 1 1/2" X 1/16" SS316 MF | 45.565 in |
| PI9 | 2 | F 0.250 LASER MAT.SS316 | |
| P20 | 2 | TF 3/8" SS316 | 0.875 in |

QTÉ: 2X

A10

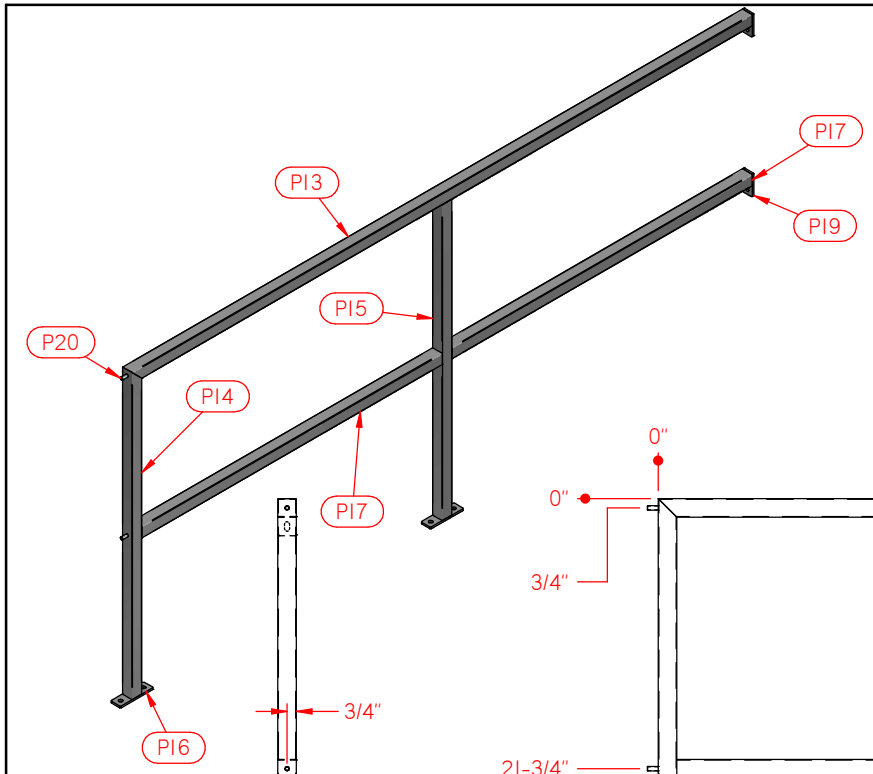


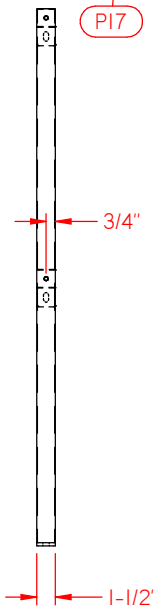


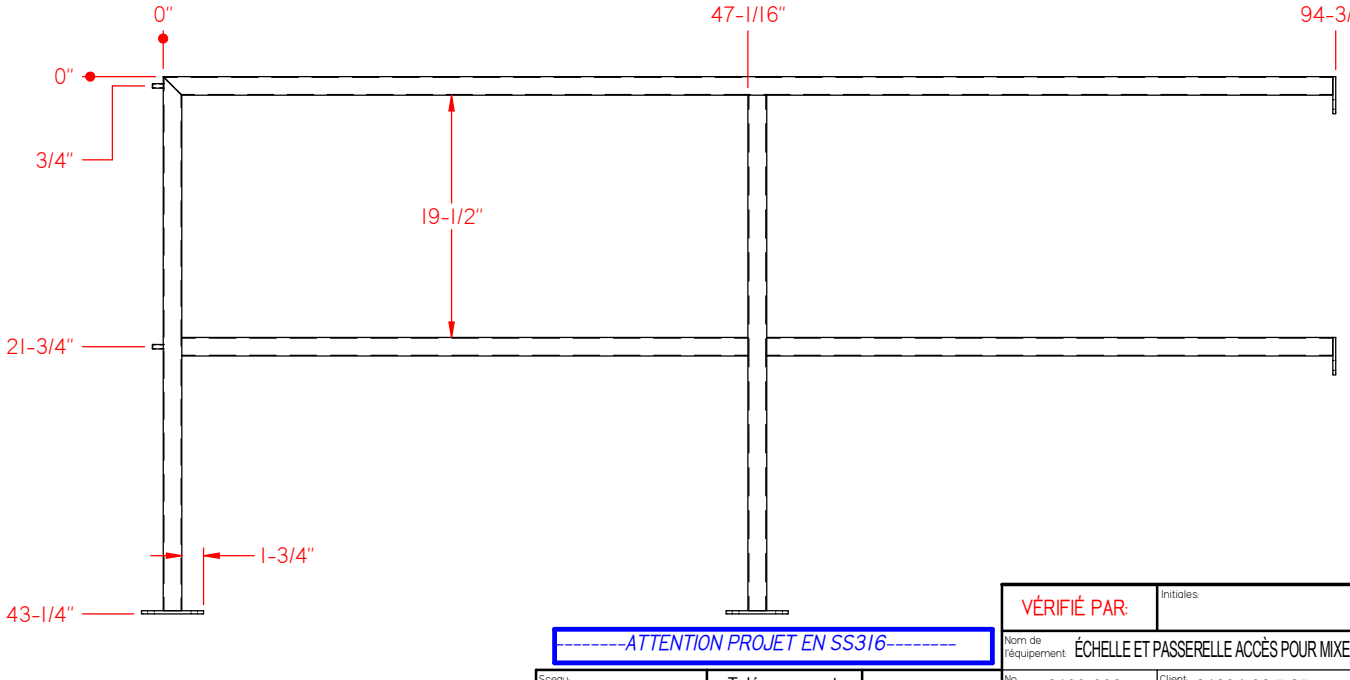


--------ATTENTION PROJET EN SS316--------

Ce document est la propriété de **Lacal Technologie Inc.**
Il ne doit pas être dévoilé, utilisé ou reproduit en tout ou en parties sans l'autorisation écrite de **Lacal Technologie Inc.**

Code barre

Sceau

Tolérancement
Sauf indications contraires

| | |
|---|---|
| Coupe: | ± 1/16" |
| Pliage: | ± 0.5° |
| Usinage: | ± 0.005" |
| Montage | ± 1/16" |

LACAL

VÉRIFIÉ PAR: | Initiales:

Nom de l'équipement: ÉCHELLE ET PASSERELLE ACCÈS POUR MIXER

No produit: 2199-002 | Client: 21804-02 PCP

Département: ASSEMBLAGE SOUDÉ | Pages: 4/8

Dessiné par: DM | Date: 14-06-2021 | Chargé de projet: JF

No dessin: 21804.02.A00-B

# FINI BILLE DE VERRE
# SOUDURE AU TIG

| No | Quantité | Description | Longueur |
|---|---|---|---|
| P21 | 1 | TC 1 1/2" X 1/16" SS316 MF | 25.875 in |
| P22 | 2 | F/A 1 1/2" X 1/8" SS304 | 1.500 in |

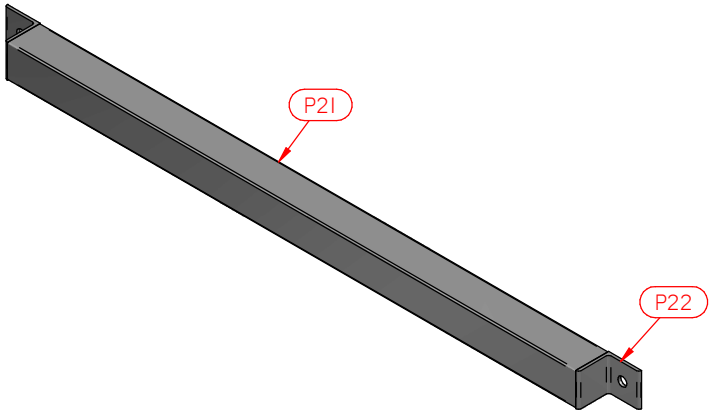


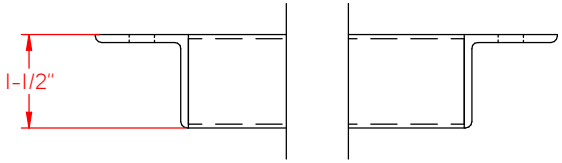


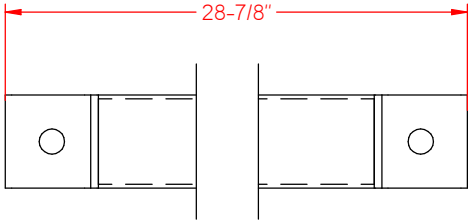


QTÉ: 2X
A20

--------ATTENTION PROJET EN SS316--------

VÉRIFIÉ PAR: | Initiales:

Nom de l'équipement: ÉCHELLE ET PASSERELLE ACCÈS POUR MIXER

No produit: 2199-002 | Client: 21804-02 PCP

Département: ASSEMBLAGE SOUDÉ | Pages: 5/8

Dessiné par: DM | Date: 14-06-2021 | Chargé de projet: JF

No dessin: 21804.02.A00-B

Sceau:

Code barre:

Tolérancement
Sauf indications contraires

| | |
|---|---|
| Coupe: | ± 1/16" |
| Pliage: | ± 0.5° |
| Usinage: | ± 0.005" |
| Montage | ± 1/16" |

LACAL

Ce document est la propriété de **Lacal Technologie inc.**
Il ne doit pas être dévoilé, utilisé ou reproduit en tout ou en parties sans l'autorisation écrite de **Lacal Technologie Inc.**

SOLID EDGE HOME USE

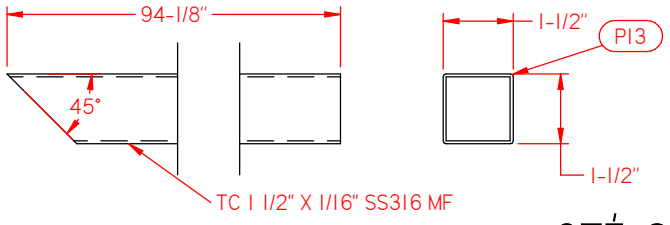


QTÉ: 2X

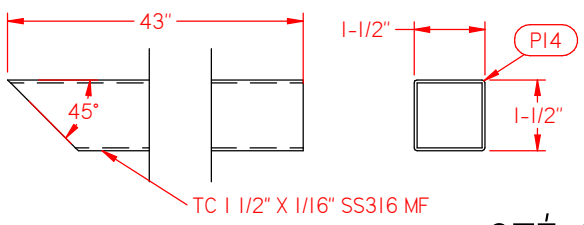


QTÉ: 2X

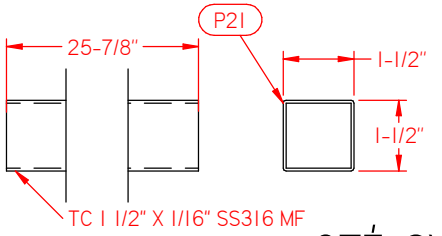


QTÉ: 2X

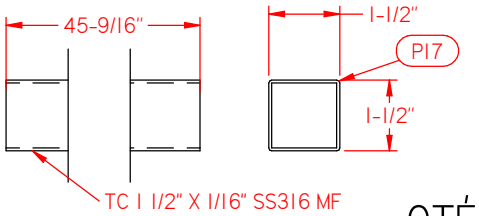


QTÉ: 4X

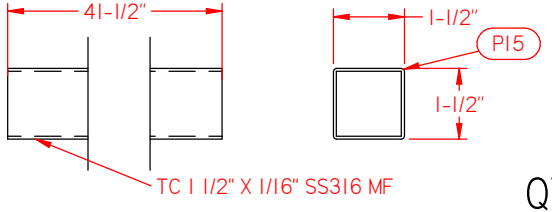


QTÉ: 2X

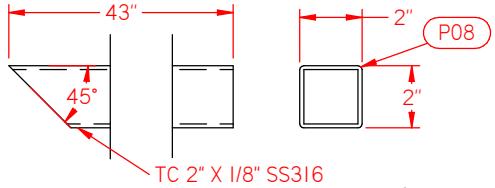


QTÉ: 2X

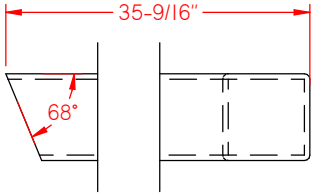


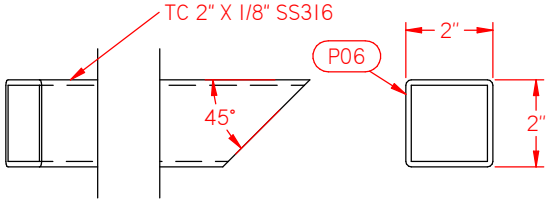


QTÉ: 1X COMME ILLUSTRÉ
1X SYMÉTRIQUE

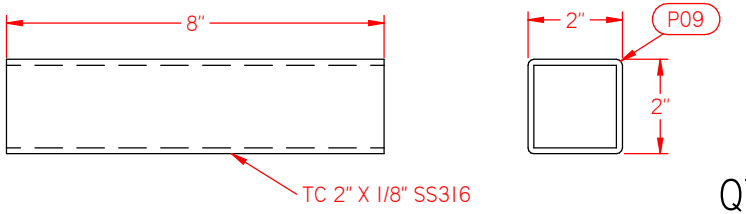


QTÉ: 2X

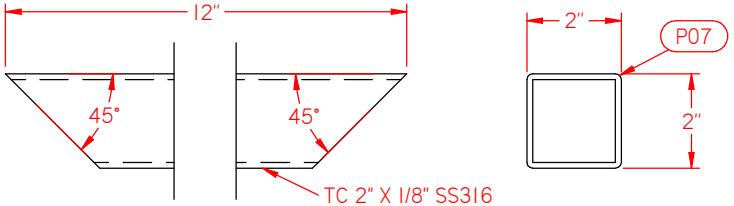


QTÉ: 2X

-------ATTENTION PROJET EN SS316--------

Ce document est la propriété de **Lacal Technologie Inc.**
Il ne doit pas être dévoilé, utilisé ou reproduit en tout ou en parties sans l'autorisation écrite de **Lacal Technologie Inc.**

Sceau:

Code barre:

| Tolérancement Sauf indications contraires | |
|---|---|
| Coupe: | ± 1/16" |
| Pliage: | ± 0.5° |
| Usinage: | ± 0.005" |
| Montage | ± 1/16" |

LACAL

| | |
|---|---|
| VÉRIFIÉ PAR: | Initiales: |
| Nom de l'équipement: | ÉCHELLE ET PASSERELLE ACCÈS POUR MIXER |
| No produit: 2199-002 | Client: 21804-02 PCP |
| Département: | ASSEMBLAGE SOUDÉ |
| Dessiné par: DM | Date: 14-06-2021 |
| No dessin: 21804.02.A00-B | Chargé de projet: JF |
| Pages: | 6/8 |

SOLID EDGE HOME USE

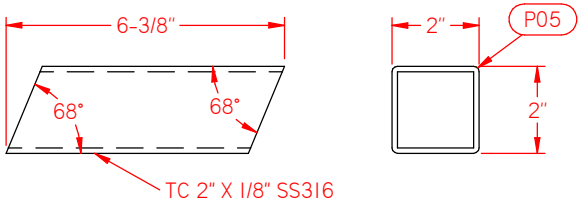





QTÉ: 2X

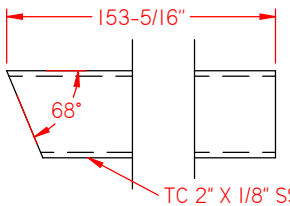


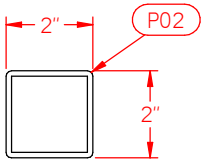


QTÉ: 2X

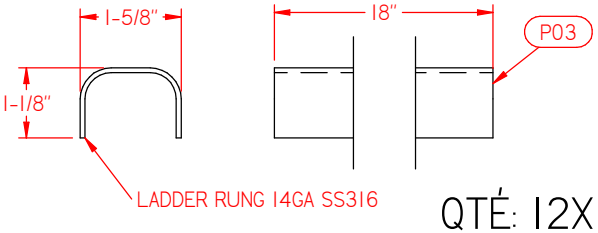


QTÉ: 12X

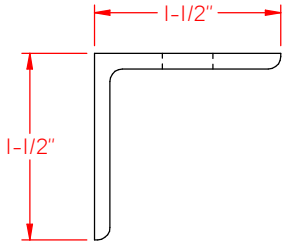


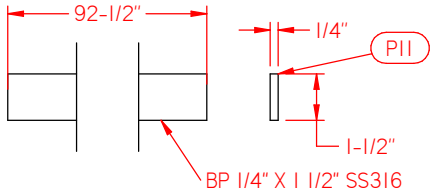


QTÉ: 5X




QTÉ: 8X

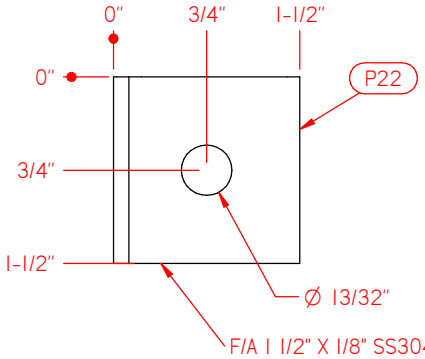


QTÉ: 4X

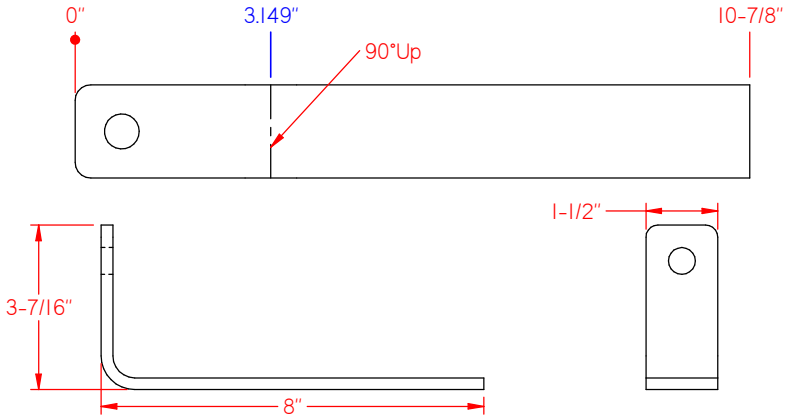


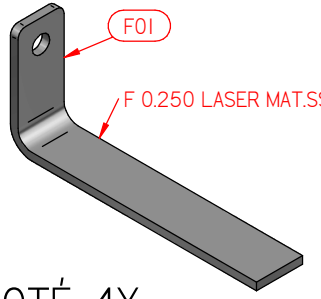


QTÉ: 4X

--------ATTENTION PROJET EN SS316--------

Ce document est la propriété de **Lacal Technologie inc.**
Il ne doit pas être dévoilé, utilisé ou reproduit en tout ou en parties sans l'autorisation écrite de **Lacal Technologie Inc.**

SOLID EDGE HOME USE

Sceau:

Code barre:

**Tolérancement**
Sauf indications contraires

| | |
|---|---|
| Coupe: | ± 1/16" |
| Pliage: | ± 0.5° |
| Usinage: | ± 0.005" |
| Montage | ± 1/16" |

LACAL

| | | | |
|---|---|---|---|
| VÉRIFIÉ PAR: | Initiales: | | |
| Nom de l'équipement: | ÉCHELLE ET PASSERELLE ACCÈS POUR MIXER | | |
| No produit: 2199-002 | Client: 21804-02 PCP | | |
| Département: ASSEMBLAGE SOUDÉ | | | Pages: 7/8 |
| Dessiné par: DM | Date: 14-06-2021 | Chargé de projet: JF | |
| No dessin: 21804.02.A00-B | | | |

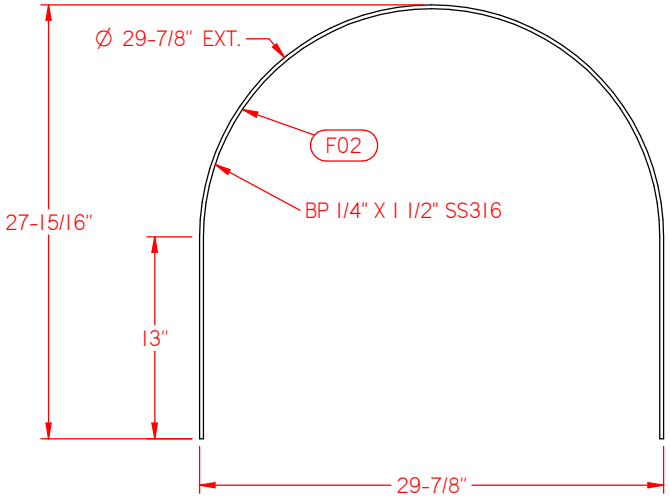


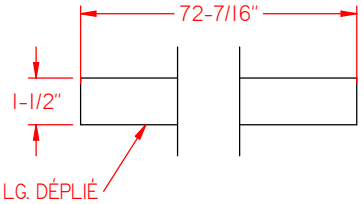


QTÉ: 2X

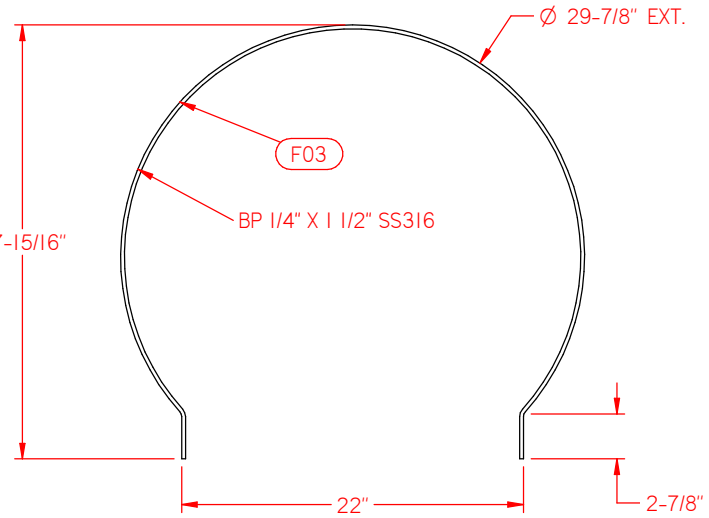


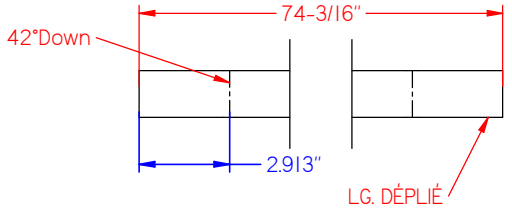


QTÉ: 2X

Ce document est la propriété de **Lacal Technologie Inc.**
Il ne doit pas être dévoilé, utilisé ou reproduit en tout ou en parties sans l'autorisation écrite de **Lacal Technologie Inc.**

SOLID EDGE HOME USE

Code barre

Sceau

*--------ATTENTION PROJET EN SS316--------*

| Tolérancement Sauf indications contraires | |
|---|---|
| Coupe: | ± 1/16" |
| Pliage: | ± 0.5° |
| Usinage: | ± 0.005" |
| Montage | ± 1/16" |

LACAL

VÉRIFIÉ PAR: | Initiales:

Nom de l'équipement: ÉCHELLE ET PASSERELLE ACCÈS POUR MIXER

No produit: 2199-002 | Client: 21804-02 PCP

Département: ASSEMBLAGE SOUDÉ | Pages: 8/8

Dessiné par: DM | Date: 14-06-2021 | Chargé de projet: JF

No dessin: 21804.02.A00-B

| No | Quantité | Description | Longueur |
|---|---|---|---|
| A10 | 1 | ASS. STRUCTURE A10 | |
| A20 | 1 | ASS. PATTE A20 | |
| A30 | 1 | ASS. PATTE A30 | |

# FINI BILLE DE VERRE

# SOUDURE AU MIG

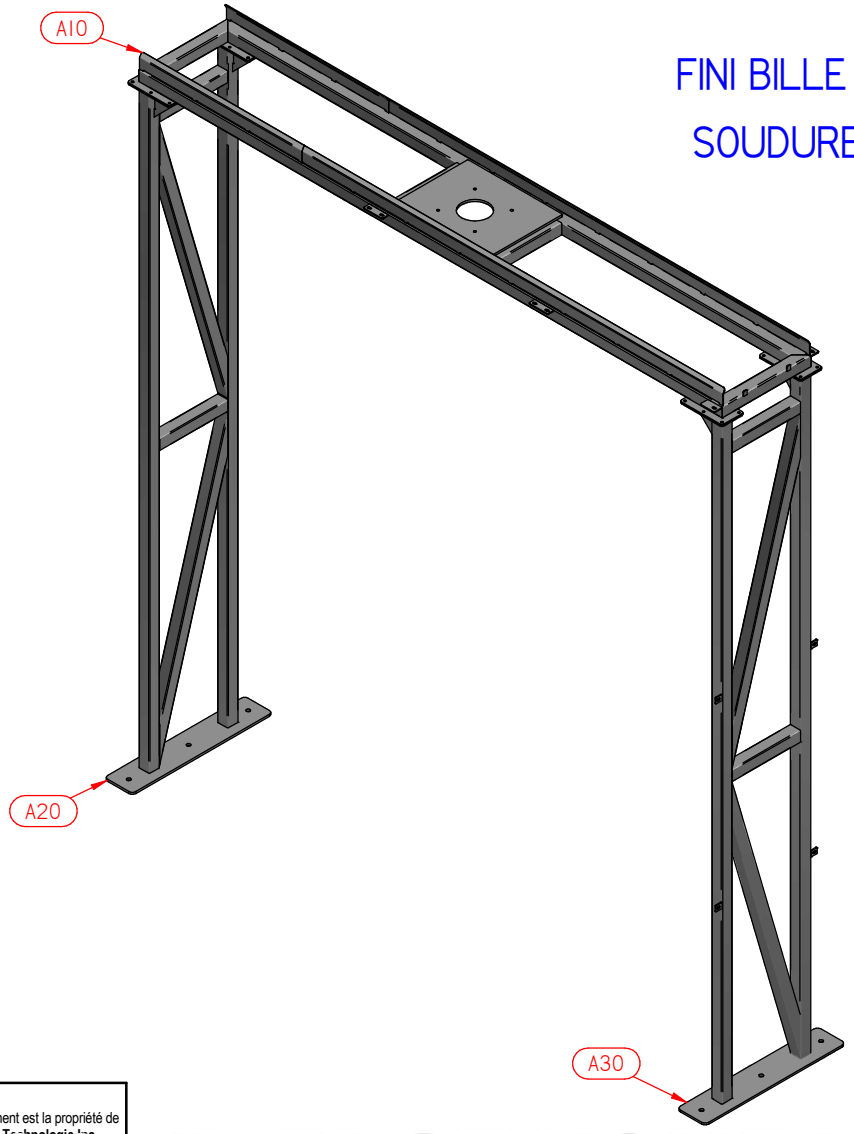


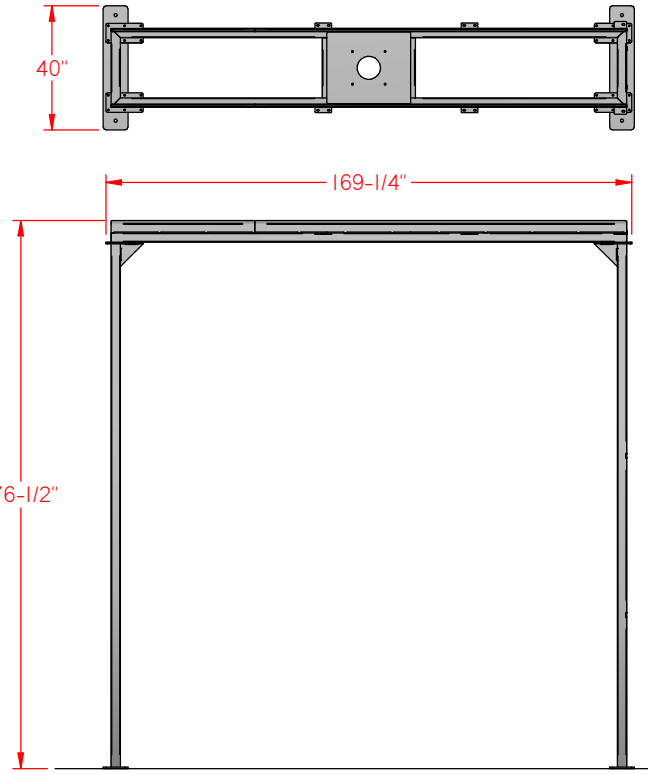


QTÉ: 1X

-------ATTENTION PROJET EN SS316--------

| | |
|---|---|
| VÉRIFIÉ PAR: | Initiales: |
| Nom de l'équipement: | STRUCTURE DE SOUTIEN DE MIXER POUR RÉSERVOIR |
| No produit: 2199-003 | Client: 21804-03 PCP |
| Département: | ASSEMBLAGE SOUDÉ |
| Dessiné par: DM | Date: 16-06-2021 |
| No dessin: 21804.03.A00-B | Chargé de projet: JF |
| Pages: | 1/7 |

Tolérancement
Sauf indications contraires

| | |
|---|---|
| Coupe: | ± 1/16" |
| Pliage: | ± 0.5° |
| Usinage: | ± 0.005" |
| Montage | ± 1/16" |

Sceau:

Code barre:

LACAL

Ce document est la propriété de **Lacal Technologie Inc.**
Il ne doit pas être dévoilé, utilisé ou reproduit en tout ou en parties sans l'autorisation écrite de **Lacal Technologie Inc.**

SOLID EDGE HOME USE

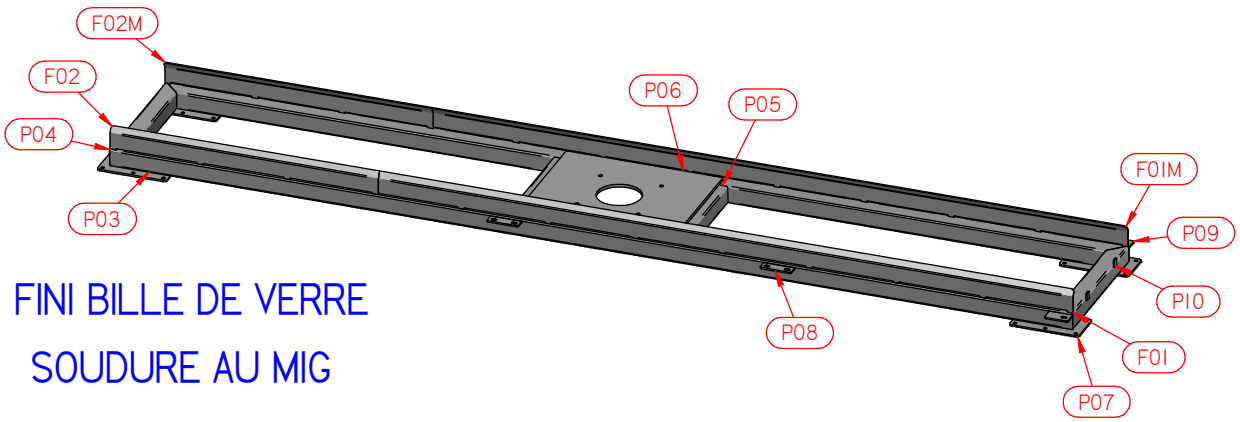


FINI BILLE DE VERRE

SOUDURE AU MIG

| No | Quantité | Description | Longueur |
|---|---|---|---|
| F01 | 1 | F 0.187 LASER MAT.SS316 | |
| F01M | 1 | F 0.187 LASER MAT.SS316 | |
| F02 | 1 | F 0.187 LASER MAT.SS316 | |
| F02M | 1 | F 0.187 LASER MAT.SS316 | |
| P03 | 2 | TC 3" X 1/4" SS316 | 166.000 |
| P04 | 2 | TC 3" X 1/4" SS316 | 25.376 |
| P05 | 2 | TC 3" X 1/4" SS316 | 19.375 |
| P06 | 1 | F 0.500 LASER MAT.SS316 | |
| P07 | 4 | F 0.250 LASER MAT.SS316 | |
| P08 | 4 | F 0.250 LASER MAT.SS316 | |
| P09 | 2 | F 0.187 LASER MAT.SS316 | |
| P10 | 2 | F 0.187 LASER MAT.SS316 | |

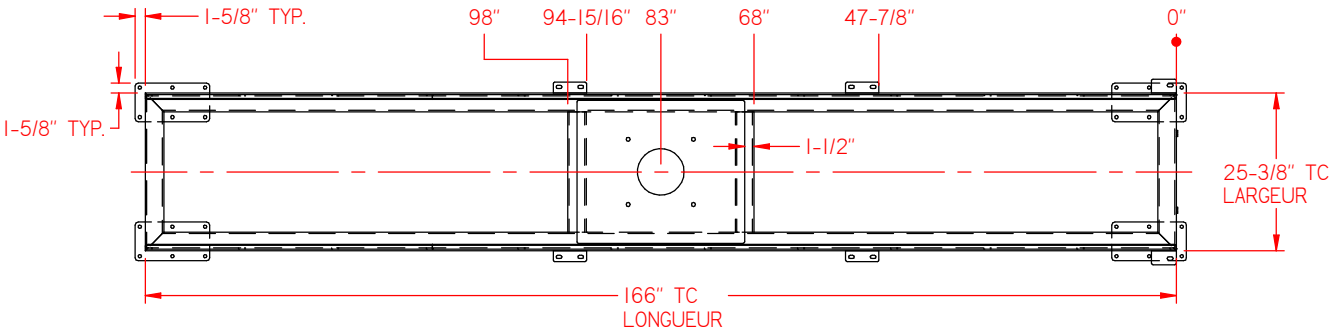


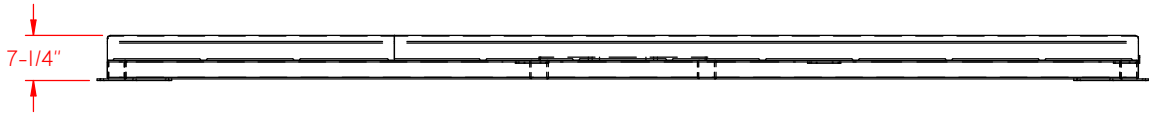


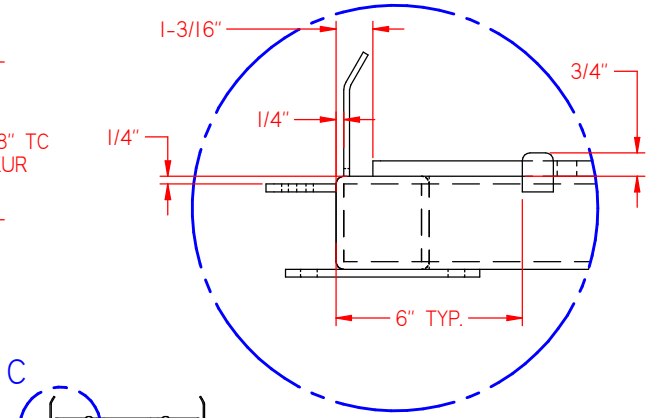





DETAIL C

Ce document est la propriété de **Lacal Technologie inc.**
Il ne doit pas être dévoilé, utilisé ou reproduit en tout ou en parties sans l'autorisation écrite de **Lacal Technologie Inc.**

QTÉ: 1X
A10

Code barre:

Sceau:

Tolérancement
Sauf indications contraires

| | |
|---|---|
| Coupe: | ± 1/16" |
| Pliage: | ± 0.5° |
| Usinage: | ± 0.005" |
| Montage | ± 1/16" |

LACAL

*--------ATTENTION PROJET EN SS316--------*

VÉRIFIÉ PAR: | Initiales:

Nom de l'équipement: STRUCTURE DE SOUTIEN DE MIXER POUR RÉSERVOIR

No produit: 2199-003 | Client: 21804-03 PCP

Département: ASSEMBLAGE SOUDÉ | Pages: 2/7

Dessiné par: DM | Date: 16-06-2021 | Chargé de projet: JF

No dessin: 21804.03.A00-B

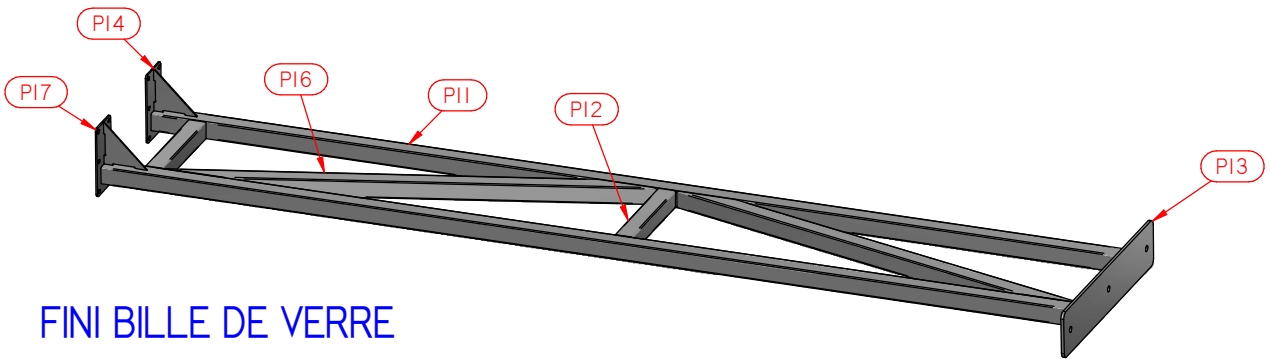


| No | Quantité | Description | Longueur |
|---|---|---|---|
| PI1 | 2 | TC 3" X 3/16" SS316 | 168.500 |
| PI2 | 2 | TC 3" X 3/16" SS316 | 19.375 |
| PI3 | 1 | F 0.500 LASER MAT.SS316 | |
| PI4 | 2 | F 0.250 LASER MAT.SS316 | |
| PI6 | 2 | TC 3" X 3/16" SS316 | |
| PI7 | 2 | F 0.250 LASER MAT.SS316 | |

FINI BILLE DE VERRE

SOUDURE AU MIG

QTÉ: IX

A20

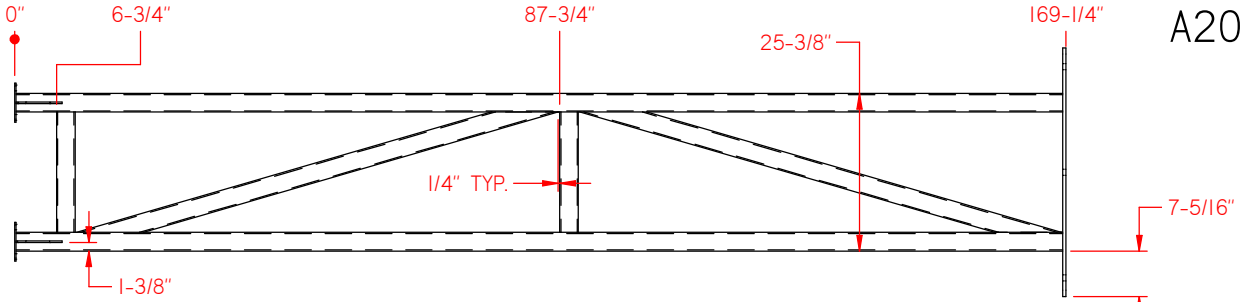


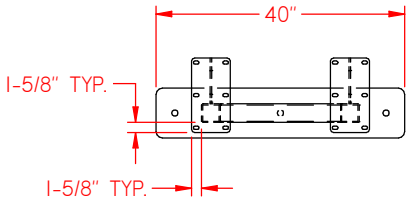





Ce document est la propriété de **Lacal Technologie Inc.**
Il ne doit pas être dévoilé, utilisé ou reproduit en tout ou en parties sans l'autorisation écrite de **Lacal Technologie Inc.**

SOLID EDGE HOME USE

Code barre:

Sceau:

Tolérancement
Sauf indications contraires

| | |
|---|---|
| Coupe: | ± 1/16" |
| Pliage: | ± 0.5° |
| Usinage: | ± 0.005" |
| Montage | ± 1/16" |

LACAL

--------ATTENTION PROJET EN SS316--------

VÉRIFIÉ PAR: | Initiales:

Nom de l'équipement: STRUCTURE DE SOUTIEN DE MIXER POUR RÉSERVOIR

No produit: 2199-003 | Client: 21804-03 PCP

Département: ASSEMBLAGE SOUDÉ | Pages: 3/7

Dessiné par: DM | Date: 16-06-2021 | Chargé de projet: JF

No dessin: 21804.03.A00-B

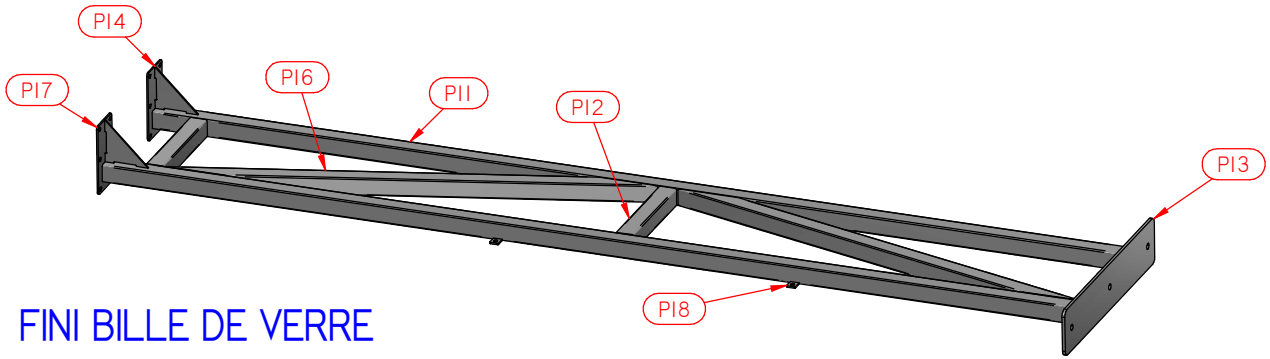


| No | Quantité | Description | Longueur |
|---|---|---|---|
| PI1 | 2 | TC 3" X 3/16" SS316 | 168.500 |
| PI2 | 2 | TC 3" X 3/16" SS316 | 19.375 |
| PI3 | 1 | F 0.500 LASER MAT.SS316 | |
| PI4 | 2 | F 0.250 LASER MAT.SS316 | |
| PI6 | 2 | TC 3" X 3/16" SS316 | |
| PI7 | 2 | F 0.250 LASER MAT.SS316 | |
| PI8 | 4 | F 0.250 LASER MAT.SS316 | |

# FINI BILLE DE VERRE

# SOUDURE AU MIG

QTÉ: IX

A30

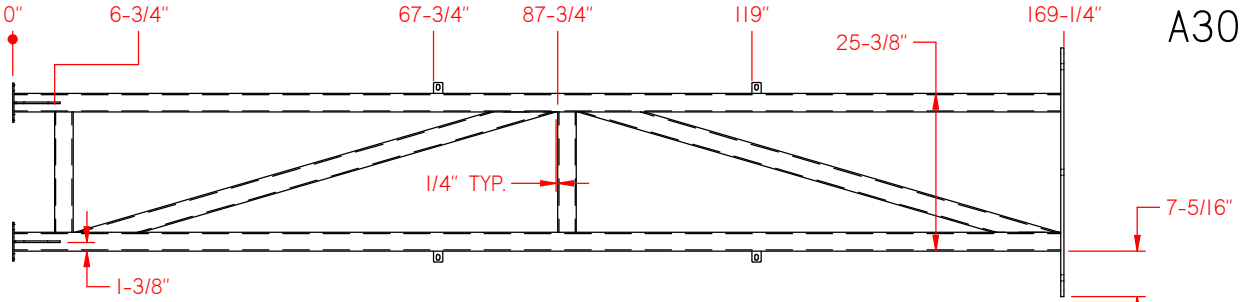


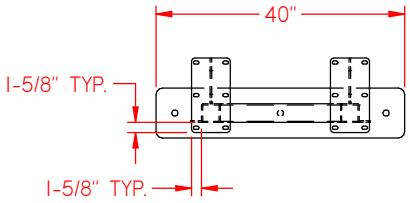


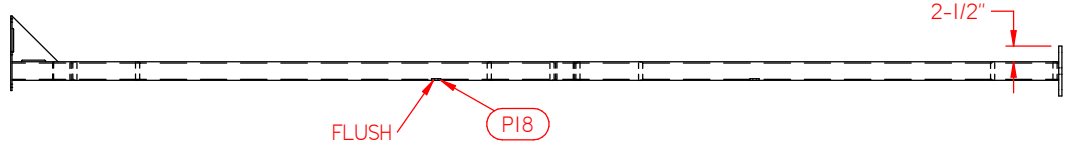


-------ATTENTION PROJET EN SS316--------

VÉRIFIÉ PAR: | Initiales:

Nom de l'équipement: STRUCTURE DE SOUTIEN DE MIXER POUR RÉSERVOIR

No produit: 2199-003 | Client: 21804-03 PCP

Département: ASSEMBLAGE SOUDÉ | Pages: 4/7

Dessiné par: DM | Date: 16-06-2021 | Chargé de projet: JF

No dessin: 21804.03.A00-B

Tolérancement
Sauf indications contraires

| | |
|---|---|
| Coupe: | ± 1/16" |
| Pliage: | ± 0.5° |
| Usinage: | ± 0.005" |
| Montage | ± 1/16" |

Sceau:

Code barre:

LACAL

Ce document est la propriété de **Lacal Technologie Inc.**
Il ne doit pas être dévoilé, utilisé ou reproduit en tout ou en parties sans l'autorisation écrite de **Lacal Technologie Inc.**

SOLID EDGE HOME USE

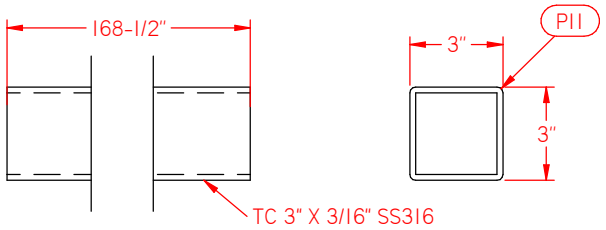


QTÉ: 4X

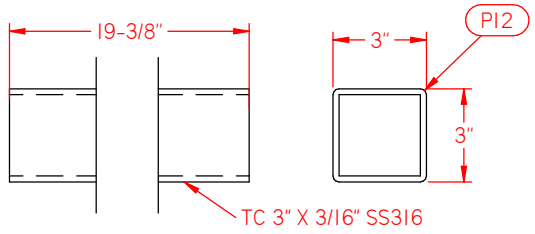


QTÉ: 4X

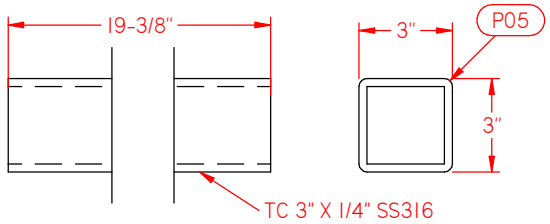


QTÉ: 2X

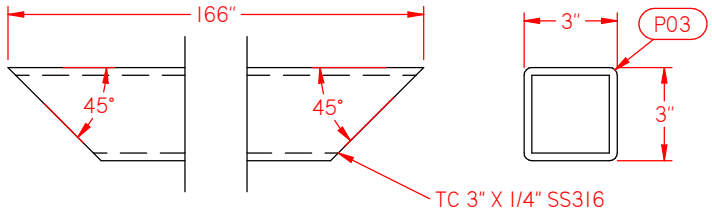


QTÉ: 2X

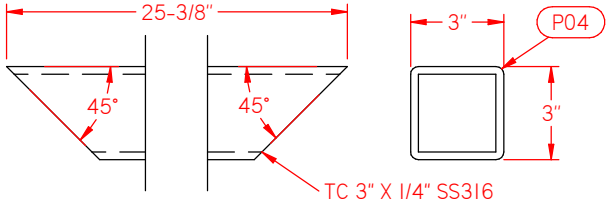


QTÉ: 2X

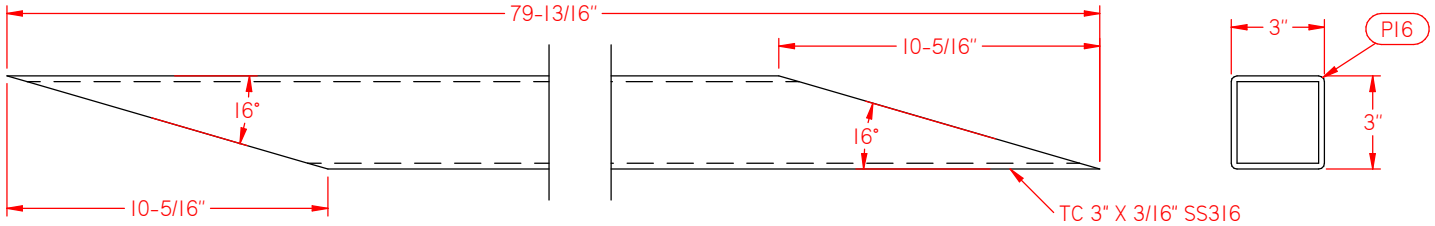


QTÉ: 4X

Ce document est la propriété de **Lacal Technologie Inc.**
Il ne doit pas être dévoilé, utilisé ou reproduit en tout ou en parties sans l'autorisation écrite de **Lacal Technologie Inc.**

SOLID EDGE HOME USE

Code barre:

Sceau:

**Tolérancement**
Sauf indications contraires

| | |
|---|---|
| Coupe: | ± 1/16" |
| Pliage: | ± 0.5° |
| Usinage: | ± 0.005" |
| Montage | ± 1/16" |

LACAL

--------ATTENTION PROJET EN SS316--------

| | |
|---|---|
| VÉRIFIÉ PAR: | Initiales: |
| Nom de l'équipement: | STRUCTURE DE SOUTIEN DE MIXER POUR RÉSERVOIR |
| No produit: 2199-003 | Client: 21804-03 PCP |
| Département: | ASSEMBLAGE SOUDÉ |
| Dessiné par: DM | Date: 16-06-2021 |
| No dessin: 21804.03.A00-B | Chargé de projet: JF |

Pages: 5 / 7

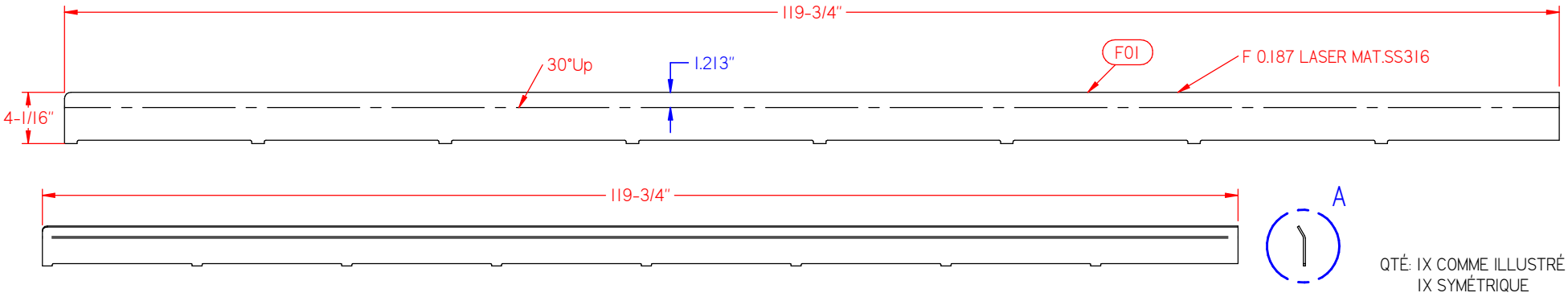


QTÉ: IX COMME ILLUSTRÉ
IX SYMÉTRIQUE

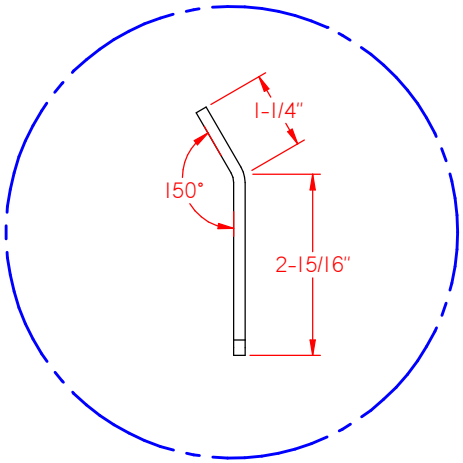


DETAIL A

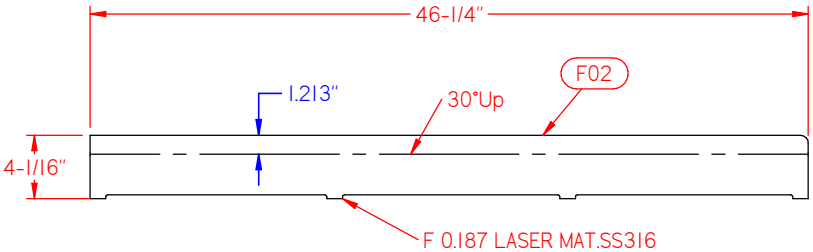


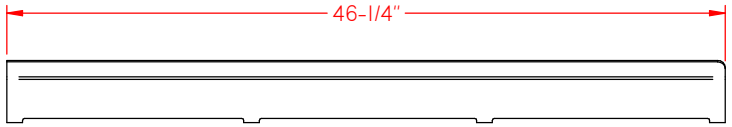


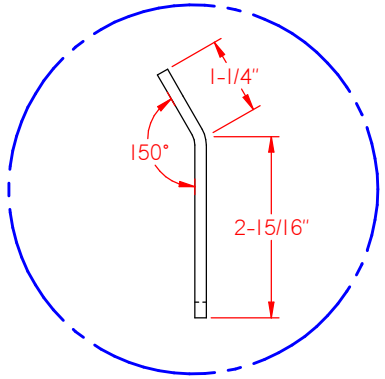


B

DETAIL B

QTÉ: IX COMME ILLUSTRÉ
IX SYMÉTRIQUE

*--------ATTENTION PROJET EN SS316--------*

Ce document est la propriété de **Lacal Technologie Inc.**
Il ne doit pas être dévoilé, utilisé ou reproduit en tout ou en parties sans l'autorisation écrite de **Lacal Technologie Inc.**

SOLID EDGE HOME USE

Sceau:

Code barre:

**Tolérancement**
Sauf indications contraires

| | |
|---|---|
| Coupe: | ± 1/16" |
| Pliage: | ± 0.5° |
| Usinage: | ± 0.005" |
| Montage | ± 1/16" |

LACAL

VÉRIFIÉ PAR: | Initiales:

Nom de l'équipement: STRUCTURE DE SOUTIEN DE MIXER POUR RÉSERVOIR

No produit: 2199-003 | Client: 21804-03 PCP

Département: ASSEMBLAGE SOUDÉ | Pages: 6/7

Dessiné par: DM | Date: 16-06-2021 | Chargé de projet: JF

No dessin: 21804.03.A00-B

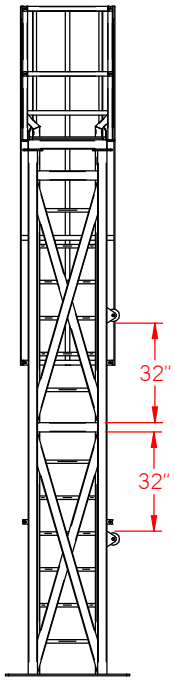


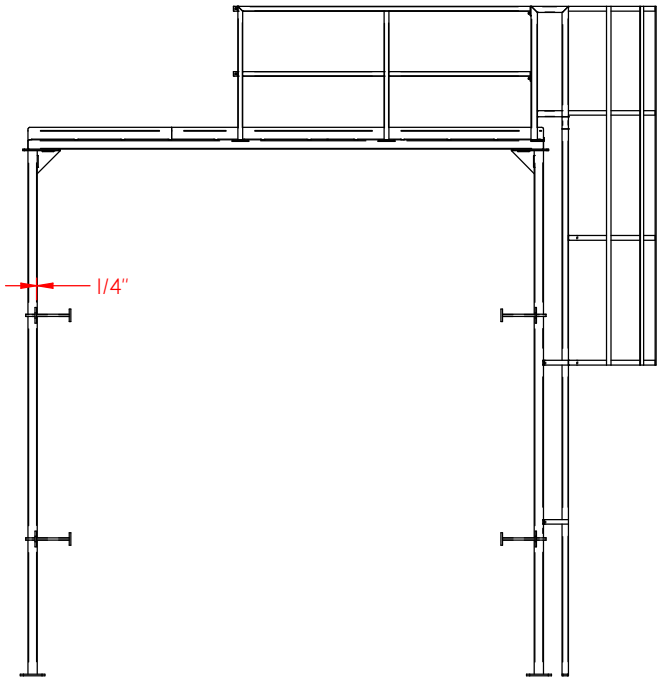


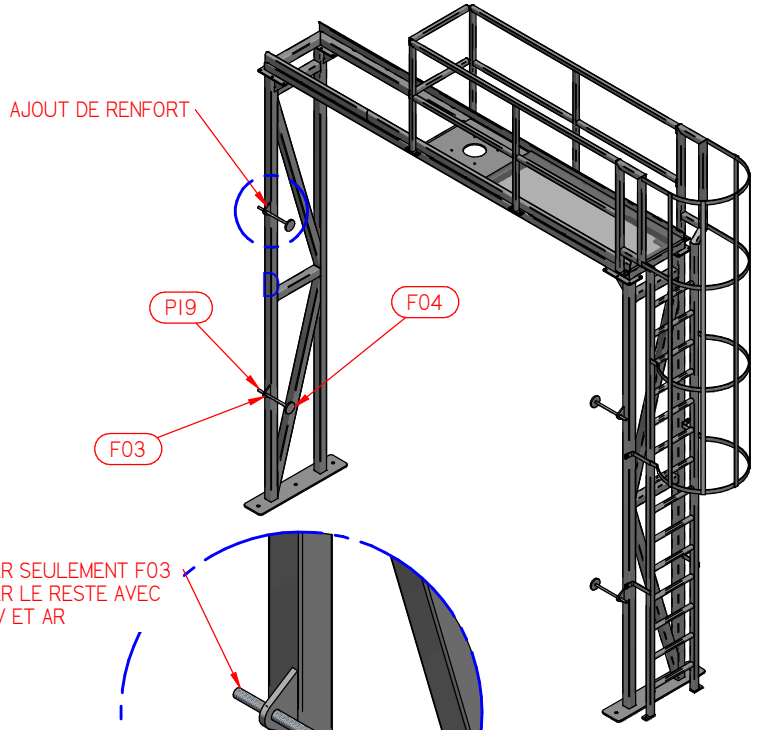





DETAIL D

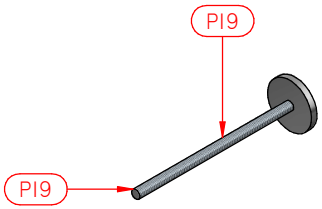


| No | Quantité | Description | Longueur |
|---|---|---|---|
| F04 | 1 | F 0.500 LASER MAT.SS316 | |
| P19 | 1 | TF 3/4 SS316 | |

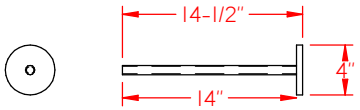


o

QTE:4X

-------ATTENTION PROJET EN SS316--------

Ce document est la propriété de **Lacal Technologie Inc.**
Il ne doit pas être dévoilé, utilisé ou reproduit en tout ou en parties sans l'autorisation écrite de **Lacal Technologie Inc.**

SOLID EDGE HOME USE

Code barre:

Sceau:

**Tolérancement**
Sauf indications contraires

| | |
|---|---|
| Coupe: | ± 1/16" |
| Pliage: | ± 0.5° |
| Usinage: | ± 0.005" |
| Montage | ± 1/16" |

LACAL

VÉRIFIÉ PAR: | Initiales:

Nom de l'équipement: STRUCTURE DE SOUTIEN DE MIXER POUR RÉSERVOIR

No produit: 2199-003 | Client: 21804-03 PCP

Département: ASSEMBLAGE SOUDÉ | Pages: 7/7

Dessiné par: DM | Date: 16-06-2021 | Chargé de projet: JF

No dessin: 21804.03.A00-B

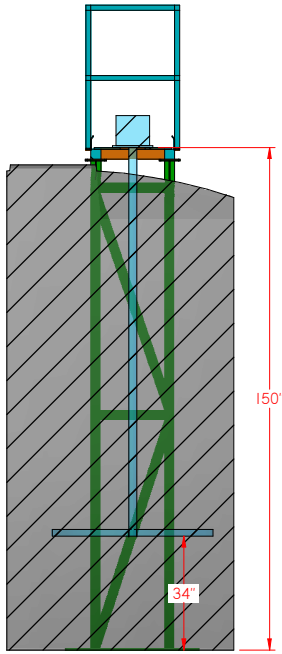


SECTION B-B

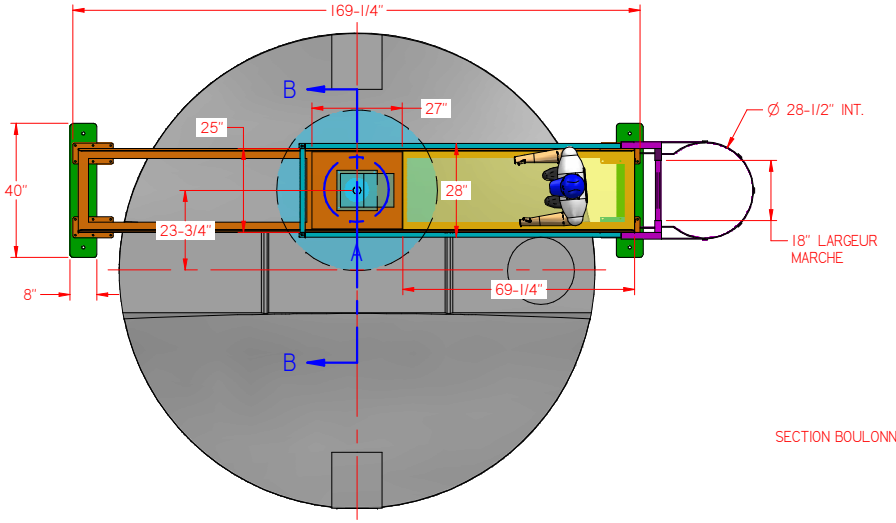


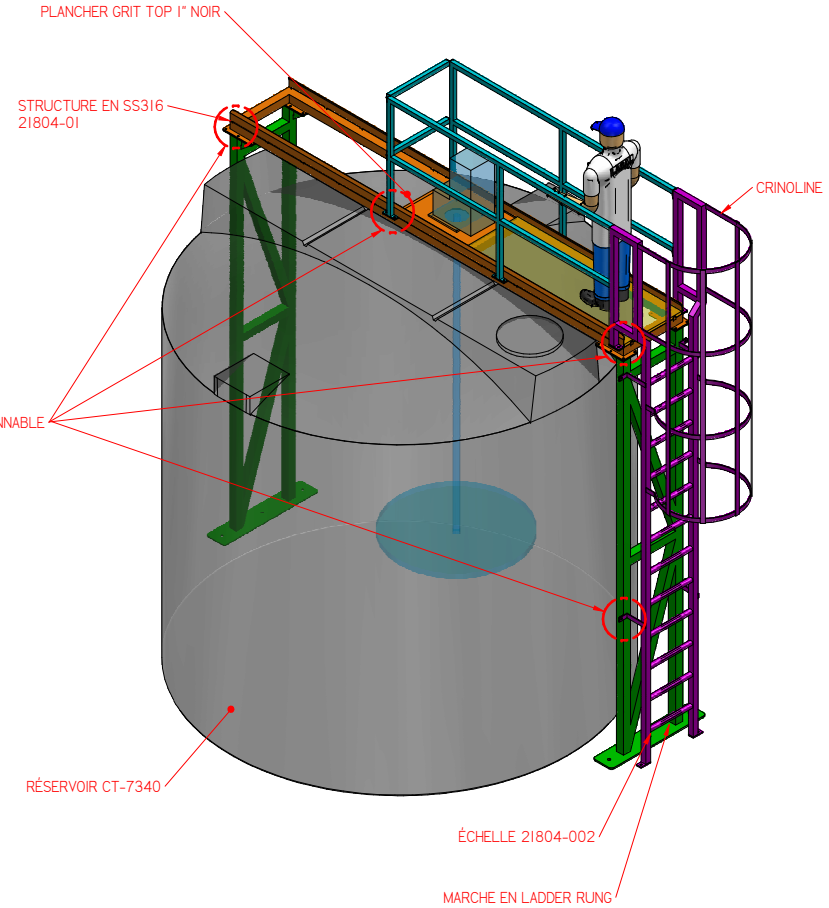


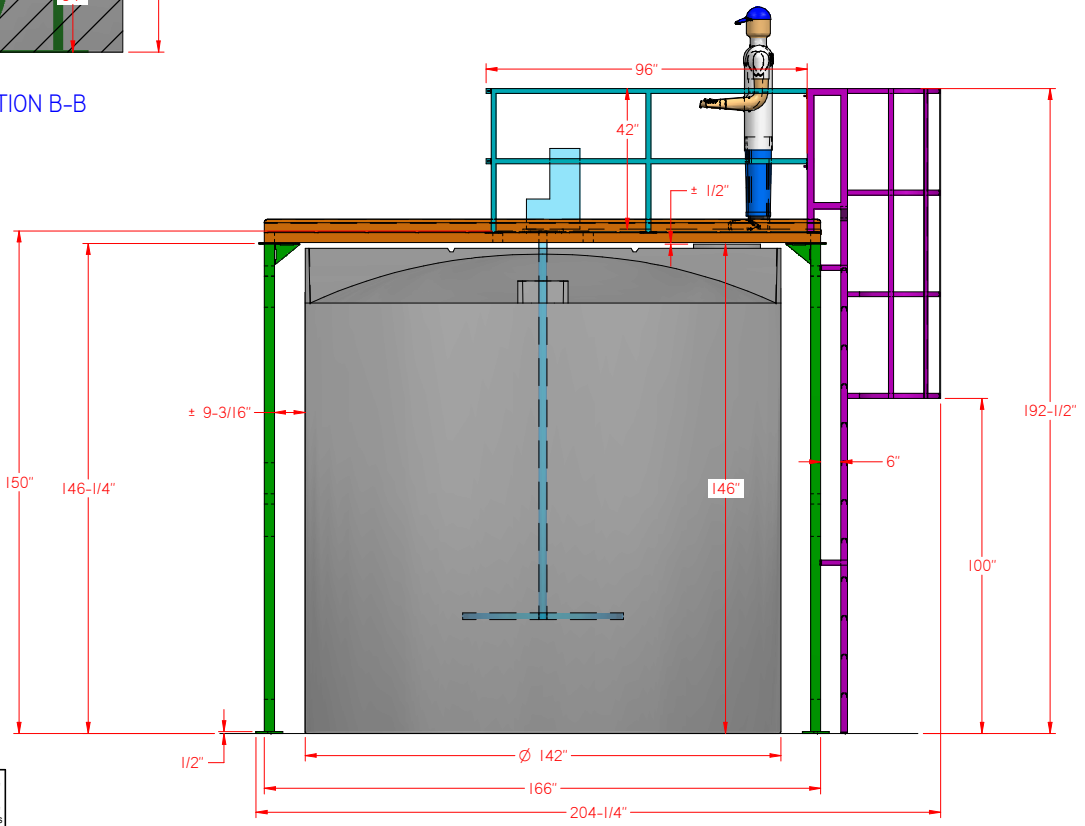


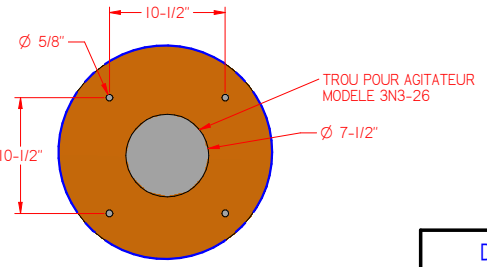


DETAIL A

| DESSIN D'APPROBATION | |
|---|---|
| DATE: | |
| APPROUVÉ PAR (LETTRES MOULÉES): | |
| SIGNATURE: | |

QTÉ: IX

Ce document est la propriété de **Lacal Technologie Inc.**
Il ne doit pas être dévoilé, utilisé ou reproduit en tout ou en parties sans l'autorisation écrite de **Lacal Technologie Inc.**

| Tolérancement (Sauf indications contraires) | |
|---|---|
| Coupe: | ± 1/16" |
| Pliage: | ± 0.5° |
| Usinage: | ± 0.005" |
| Montage: | ± 1/16" |

LACAL

| | | | |
|---|---|---|---|
| Projet: 21804-01/02 PCP | | | Pages: 1/2 |
| Titre: Structure de soutien de mixer pour réservoir CT-7340 | | | |
| Dess. par: DM | Date: 03-06-2021 | Vérif. par: JF | |
| No dessin: 21804.BB01-BB02.A00 | | | |

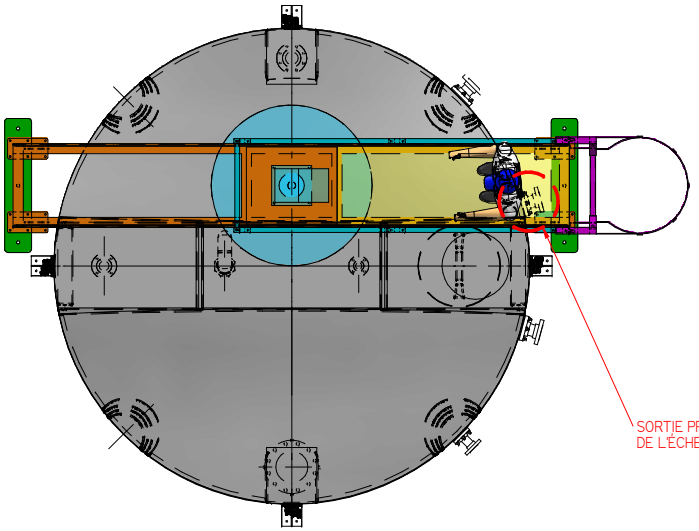

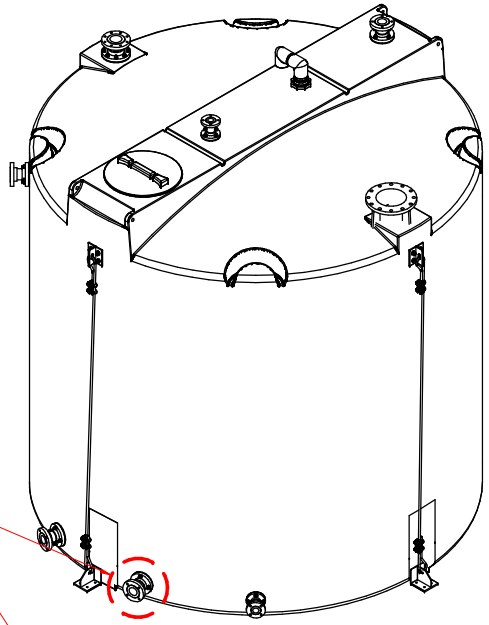

SORTIE PRÈS
DE L'ÉCHELLE

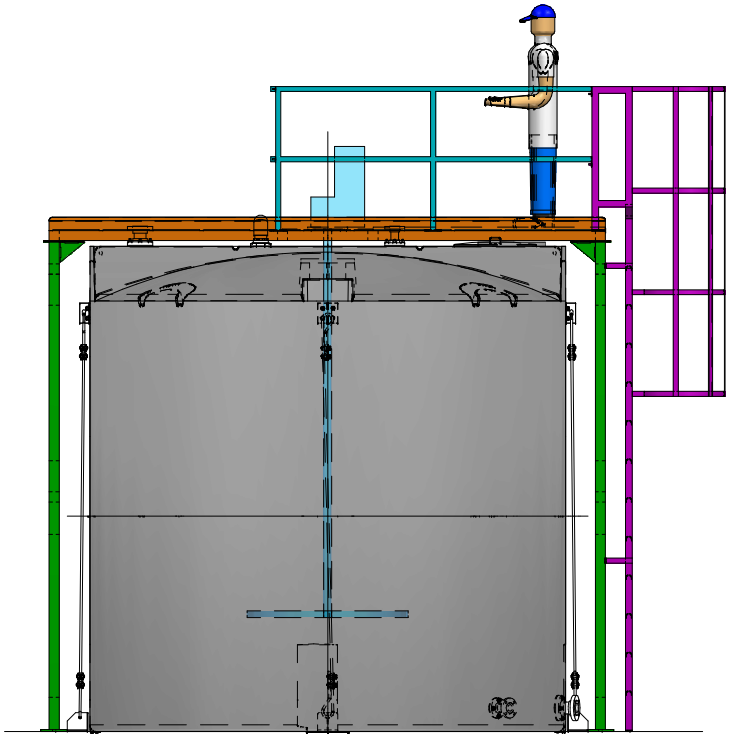

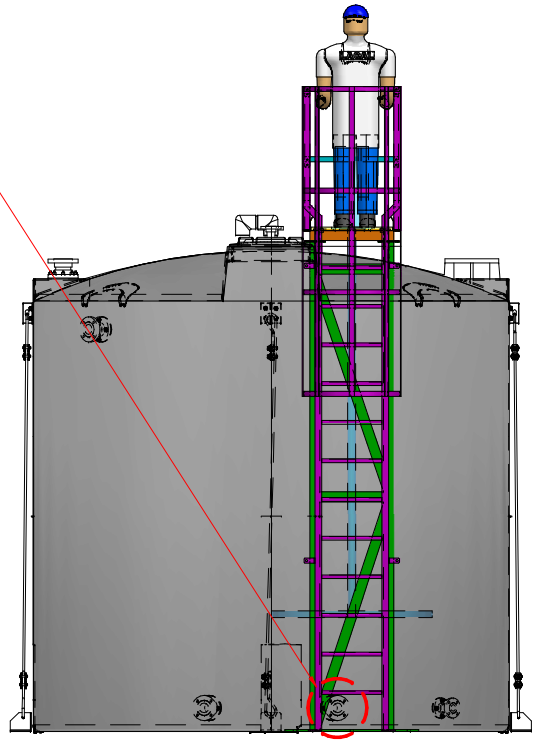

Ce document est la propriété de
**Lacal Technologie Inc.**
Il ne doit pas être dévoilé, utilisé
ou reproduit en tout ou en parties
sans l'autorisation écrite de
**Lacal Technologie Inc.**

| Tolérancement | |
|---|---|
| Sauf indications contraires | |
| Coupe | ± 1/16" |
| Pliage | ± 0.5° |
| Usinage | ± 0.005" |
| Montage | ± 1/16" |

LACAL

| | | | |
|---|---|---|---|
| Projet: 21804-01/02 PCP | | | Pages: 2/2 |
| Titre: Structure de soutien de mixer pour réservoir CT-7340 | | | |
| Dess. par: DM | Date: 03-06-2021 | Vérif. par: JF | |
| No dessin: 21804.BB01-BB02.A00 | | | |

TOP VIEW

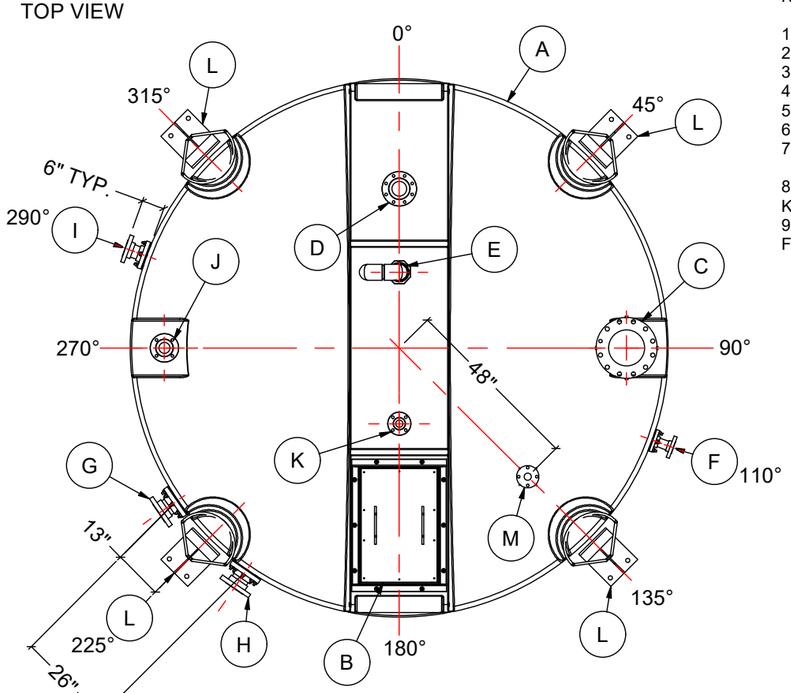


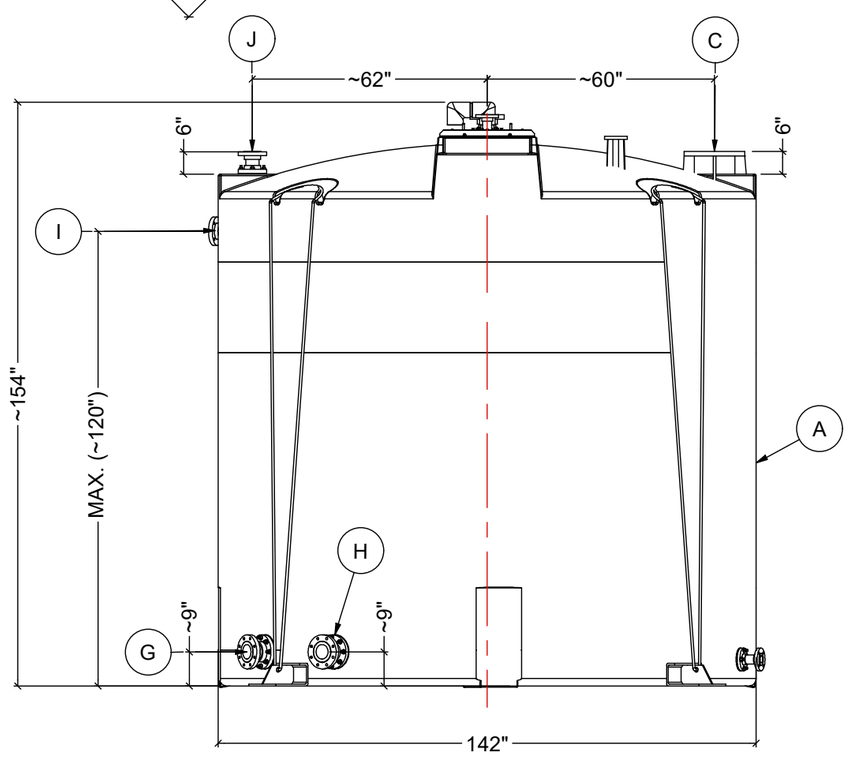


FRONT VIEW

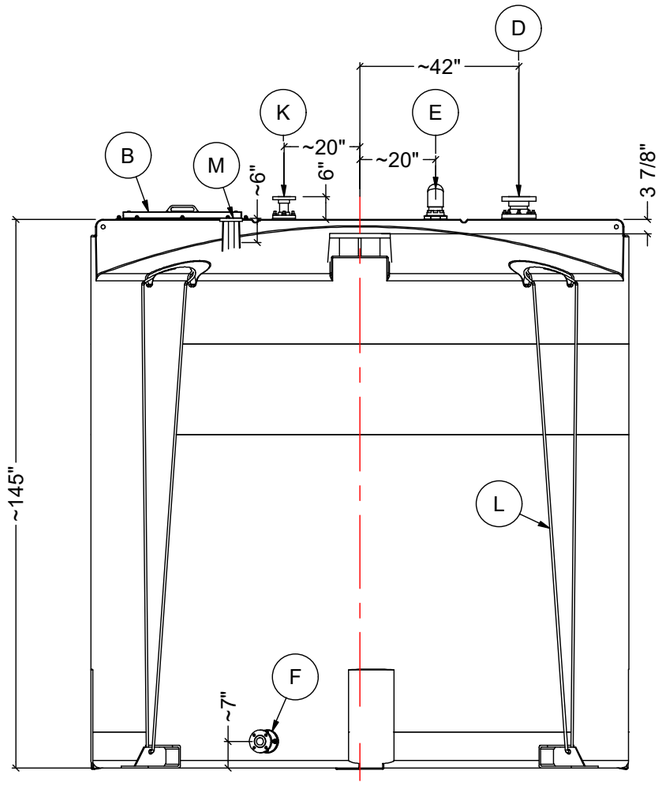


SIDE VIEW

NOTES:

1. TANK IS MANUFACTURED FROM HDPE. (1.9 SG)
2. TANK IS MANUFACTURED TO ASTM-D-1998 STANDARD.
3. ALL TANK DIMENSIONS ARE SUBJECT TO A +/-3% TOLERENCE.
4. FLEXIBLE COUPLINGS ARE REQUIRED FOR ALL EXTERNAL PIPING.
5. ALL FITTING GASKETS ARE EPDM.
6. ACO RECOMMENDS ALL FLANGE GASKETS TO BE MIN. 1/4" THICK.
7. ON LARGER SIZED TANKS SOME MECHANICAL FITTINGS MAY NEED TO BE REMOVED IN ORDER TO AVOID WIDE OR OVERSIZED LOADS.
8. HDPE ALIGNMENT WEDGES ARE REQUIRED ON SOME TOP FITTINGS TO KEEP THEM PERPENDICULAR TO THE GROUND.
9. TANK MUST BE PROPERLY VENTED TO PREVENT PRESSURE OR VACUUM FROM DEVELOPING AS THE TANK IS FILLING OR EMPTYING.

| MATERIALS LIST | | |
|---|---|---|
| ITEMS | DESCRIPTION | NOTES |
| A | CT-7340 CLOSED TOP TANK | |
| B | CUSTOM STEEL AND HDPE LID (~17" X 27" ACCESS) W/ SS-EPDM DONKER BOLTS | |
| C | 10" HDPE GUSSETED FLANGE | FEED |
| D | 4" PVC SPOOL FLANGE W/ SS-EPDM DONKER BOLTS | LEVEL |
| E | 3" FNPT PVC TANK ADAPTER WITH PVC U-VENT ASSEMBLY | VENT |
| F | 2" PVC SPOOL FLANGE W/ SS-EPDM DONKER BOLTS | DRAIN |
| G | 4" PVC SPOOL FLANGE W/ SS-EPDM DONKER BOLTS | SUCTION |
| H | 4" PVC SPOOL FLANGE W/ SS-EPDM DONKER BOLTS | SUCTION |
| I | 3" PVC SPOOL FLANGE W/ SS-EPDM DONKER BOLTS | OVERFLOW |
| J | 3" PVC SPOOL FLANGE W/ SS-EPDM DONKER BOLTS | WATER |
| K | 2" PVC SPOOL FLANGE W/ SS-EPDM DONKER BOLTS | AGITATOR |
| M | 2" HDPE GUSSETED FLANGE | SUMP |
| L | SEISMIC HOLD DOWN ASSEMBLY | 4 PLACES |

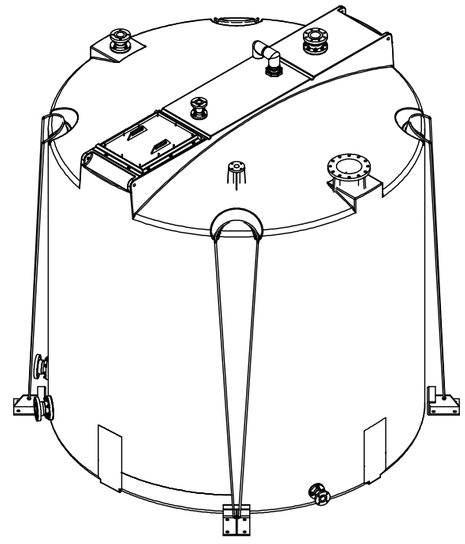

| REV | DATE | DESCRIPTION | BY | APPD | REVD |
|---|---|---|---|---|---|
| 4 | SEP-08-21 | CHGD TO SEISMIC HDL, MVD FTGS | WM | | |
| 3 | JUL-12-21 | CHGD LID | WM | | |
| 2 | JUN-23-21 | LID TO CUSTOM, MVD FTGS | WM | | |
| 1 | JUN-22-21 | ADDED M, G&H TO 4IN, MVD FTGS | WM | | |

REVISIONS

CUSTOMER: PCP POMPES

TITLE: 7300 IG CLOSED TOP TANK

ACO JOB NO: 78462
PURCHASE ORDER NO:
PURCHASER'S EQUIP. NO:

THIS DRAWING IS THE PROPERTY OF ROTOPLAST INC. AND SHALL NOT BE COPIED OR TRANSFERRED WITHOUT THE WRITTEN CONSENT OF ROTOPLAST INC.

ENGINEERS SEAL

ACO CONTAINER SYSTEMS
DIVISION OF ROTOPLAST INC.
PICKERING - ONTARIO - CANADA

ACO CONTAINER SYSTEMS
DIVISON OF ROTOPLAST INC.
794 MCKAY RD.
PICKERING, ONTARIO, CANADA
TEL. 905-683-8222
FAX 905-683-2969

| | |
|---|---|
| DESIGNED | |
| DRAWN | WM |
| CHECKED | |
| APPROVED | |
| SCALE | N.T.S. |
| DATE | JUN-09-2021 |

DWG No: CT-7340-78462
REV: 4

TOP VIEW

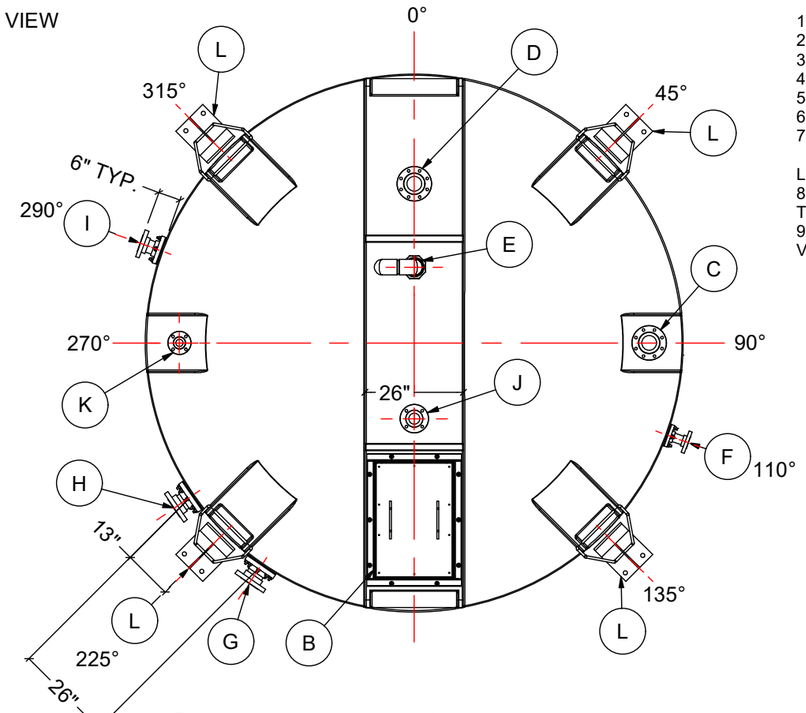


NOTES:

1. TANK IS MANUFACTURED FROM HDPE. (1.9 SG)
2. TANK IS MANUFACTURED TO ASTM-D-1998 STANDARD.
3. ALL TANK DIMENSIONS ARE SUBJECT TO A +/-3% TOLERENCE.
4. FLEXIBLE COUPLINGS ARE REQUIRED FOR ALL EXTERNAL PIPING.
5. ALL FITTING GASKETS ARE EPDM.
6. ACO RECOMMENDS ALL FLANGE GASKETS TO BE MIN. 1/4" THICK.
7. ON LARGER SIZED TANKS SOME MECHANICAL FITTINGS MAY NEED TO BE REMOVED IN ORDER TO AVOID WIDE OR OVERSIZED LOADS.
8. HDPE ALIGNMENT WEDGES ARE REQUIRED ON SOME TOP FITTINGS TO KEEP THEM PERPENDICULAR TO THE GROUND.
9. TANK MUST BE PROPERLY VENTED TO PREVENT PRESSURE OR VACUUM FROM DEVELOPING AS THE TANK IS FILLING OR EMPTYING.

| MATERIALS LIST | | |
|---|---|---|
| ITEMS | DESCRIPTION | NOTES |
| A | CT-8740 CLOSED TOP TANK | |
| B | CUSTOM STEEL AND HDPE LID (~17" X 27" ACCESS) W/ SS-EPDM DONKER BOLTS | |
| C | 4" PVC SPOOL FLANGE W/ SS-EPDM DONKER BOLTS | FEED |
| D | 4" PVC SPOOL FLANGE W/ SS-EPDM DONKER BOLTS | LEVEL |
| E | 3" FNPT PVC TANK ADAPTER WITH PVC U-VENT ASSEMBLY | VENT |
| F | 2" PVC SPOOL FLANGE W/ SS-EPDM DONKER BOLTS | DRAIN |
| G | 4" PVC SPOOL FLANGE W/ SS-EPDM DONKER BOLTS | SUCTION |
| H | 4" PVC SPOOL FLANGE W/ SS-EPDM DONKER BOLTS | SUCTION |
| I | 3" PVC SPOOL FLANGE W/ SS-EPDM DONKER BOLTS | OVERFLOW |
| J | 3" PVC SPOOL FLANGE W/ SS-EPDM DONKER BOLTS | AGITATOR |
| K | 2" PVC SPOOL FLANGE W/ SS-EPDM DONKER BOLTS | RETURN |
| L | SEISMIC HOLD DOWN ASSEMBLY | 4 PLACES |

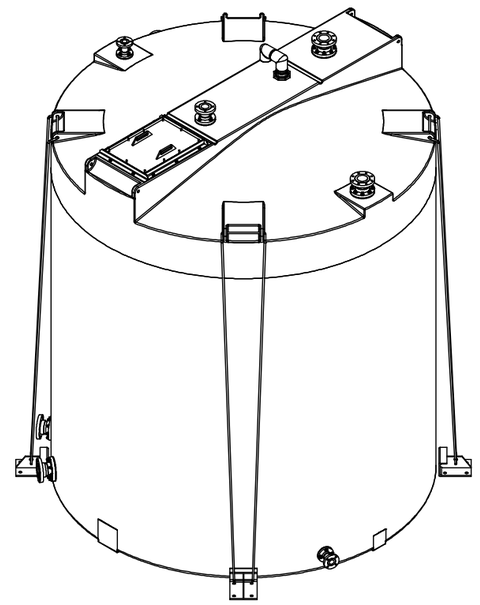

| REV | DATE | DESCRIPTION | BY | APPD | REVD |
|---|---|---|---|---|---|
| 4 | SEP-08-21 | CHD TO SEISMIC HDL, MVD FTGS | WM | | |
| 3 | JUL-12-21 | CHGD LID | WM | | |
| 2 | JUN-23-21 | LID TO CUSTOM, MVD FTGS | WM | | |
| 1 | JUN-22-21 | ADDED C, G&H TO 4", MVD FTGS | WM | | |

REVISIONS

CUSTOMER: PCP POMPES

TITLE: 8700 IG CLOSED TOP TANK

ACO JOB NO: 78462
PURCHASE ORDER NO:
PURCHASER'S EQUIP. NO:

THIS DRAWING IS THE PROPERTY OF ROTOPLAST INC. AND SHALL NOT BE COPIED OR TRANSFERRED WITHOUT THE WRITTEN CONSENT OF ROTOPLAST INC.

ENGINEERS SEAL

ACO CONTAINER SYSTEMS
DIVISION OF ROTOPLAST INC.
PICKERING - ONTARIO - CANADA
ACO CONTAINER SYSTEMS
DIVISON OF ROTOPLAST INC.
794 MCKAY RD.
PICKERING, ONTARIO, CANADA
TEL. 905-683-8222
FAX 905-683-2969

| | |
|---|---|
| DESIGNED | |
| DRAWN | WM |
| CHECKED | |
| APPROVED | |
| SCALE | N.T.S. |
| DATE | JUN-09-2021 |

DWG No: CT-8740-78462
REV: 4

CONTAINER SYSTEMS
*A division of Rotoplast Inc.*

# Certificate of Compliance

September 24, 2021

**PCP POMPES CLERMONT PELLETIER INC**
**3076 rue BERNARD-PILON**
**BUREAU A**
**SAINT-MATHIEU de BELOEIL QC J3G4S5**

Attn: Quality Control Department

Re: Purchase Order No.: C12-205018
ACO No.: 78337
Project No.: NA

This document is to certify that the rotationally molded polyethylene containers i.e., one CT-7340- PE 1.9sg Closed Tank (142"D x 146"T, 33200L) & one CT-8740 PE 1.9sg Closed Tank (142"D x 169"T, 39600L) with Serial numbers 2108289356 & 2108289346 respectively; manufactured for the above referenced purchase order as well as all required parts were manufactured and tested (including the Hydrostatic /Leak Test) in accordance to your purchase order, ACO Container Systems' ISO 9001:2015 quality standards and ACO Container Systems' packing slip.

We trust this will meet your satisfaction and appreciate the opportunity to be of service to you and your valued client.

Thank you for your business,

Tasneem Alam
Manager Quality & Continuous Improvement
ACO Container Systems
794 McKay Road
Pickering, ON L1W 2Y4
Tel: 800-542-9942
Fax: 800-542-2969

MAGNATEX®
Pumps, Inc.

# DECLARATION OF COMPLIANCE

| | |
|---|---|
| Date: | 10/13/2021 |
| Customer: | VISSERS SALES CORP. |
| Customer Order No.: | 00017759 |
| Description: | MTA-A10-P-F10-2-FE w/ 7.5HP-2P MOTOR |
| Service: | 10% SODIUM HYPOCHLORITE |
| Tag Nos.: | N/A |
| Serial Numbers: | 3522675-1A/B |
| Magnatex Order No.: | 3522675 |

I have reviewed the order documents and hereby certify that the products supplied are in compliance with the requirements of the order in accordance with EN 10204:2004, Type 2.1. Product contact materials are:

- Pump Casing, Rear Casing, Impeller, Inner Magnet lining, and Shaft Support are virgin PFA
- Casing Gasket is PTFE
- Bushing and Mouth Ring are C-PTFE
- Shaft and Thrust Rings are SiC

Amy L. Fry
Applications Engineering Manager

Neal Gunn
Technical Manager

PH: 713-972-8666 3575 W. 12th Street Houston, TX 77008 FAX: 713-972-8665
Website: www.magnatexpumps.com E-Mail: inquiries@magnatexpumps.com

MAGNATEX®
Pumps, Inc.

# DECLARATION OF COMPLIANCE

| | |
|---|---|
| Date: | 10/13/2021 |
| Customer: | VISSERS SALES CORP. |
| Customer Order No.: | 00017759 |
| Description: | MTA-A70-P-F20-4-EE w/ 15HP-4P MOTOR |
| Service: | 10% SODIUM HYPOCHLORITE |
| Tag Nos.: | N/A |
| Serial Numbers: | 3522675-2A/B |
| Magnatex Order No.: | 3522675 |

I have reviewed the order documents and hereby certify that the products supplied are in compliance with the requirements of the order in accordance with EN 10204:2004, Type 2.1. Product contact materials are:

- Rear Casing, Impeller, and Inner Magnet lining are virgin PFA
- Pump Casing, Shaft Support, are ETFE
- Casing Gasket and Impeller Set Ring are PTFE
- Mouth Ring and Bushing are C-PTFE
- Shaft and Thrust Rings are SiC

Amy L. Fry
Applications Engineering Manager

Neal Gunn
Technical Manager

PH: 713-972-8666 3575 W. 12th Street Houston, TX 77008 FAX: 713-972-8665
Website: www.magnatexpumps.com E-Mail: inquiries@magnatexpumps.com

# CONTRÔLE QUALITÉ

| | |
|---|---|
| **N° Item:** | 21804.01 |
| **Date:** | 13-07-2021 |
| **Client:** | PCP |
| **Nom du vérificateur:** | P. G. Aubois |
| **Produit transporté:** | |
| **Vitesse de courroie ou vis:** | |
| **Charge à soulever ou à transporter:** | |

SIGNATURE:

DATE: 13-07-2021

| PMI À RAJOUTER? |
|---|
| |

| N° | Liste des points à vérifier: | Vérifié: | Date: | Commentaire |
|---|---|---|---|---|
| 1 | Vérifier les cotes hors tout. | PGD | 13-07-21 | |
| 2 | Vérifier les notes et commentaires de fabrication et d'installation cités dans les dessins (PMI). | PGD | 13-07-21 | |
| 3 | Vérifier la régularité et la qualité des joints de soudure, exemption de toute pollution, tenue mécanique suffisante.Valider l'état de surface requis: Sand blast, traitement à l'acide, polissage, peinture ou tout autre traitement spécial selon demande. | PGD | 13-07-21 | |
| 4 | Tester le fonctionnement des mécanismes: Système d'entrainement , porte, barrure, courroie, chaine, hydraulique, pneumatique, etc. | PGD | 13-07-21 | |
| 5 | Lubrifier au besoin chaines, roue dentée, pignon... ( choisir le type du lubrifiant selon l'application: alimentaire, pharmaceutique, industriel, etc.). Vérifier à ce que la maille "patente" des chaînes soient du bon côté | | | |
| 6 | Vérifier s'il n'y a pas de fuite d'air ou d'huile dans les systèmes d'alimentation. Vérifier à ce que tout les conduits pneumatiques et hydrauliques soient fixés et placés de façon à éviter l'usure/coupure par la vibration de l'équipement. Vérifier que chaque fils soient à l'abri d'un happement causé par un mouvement de partie d'équipement. | | | |
| 7 | Vérifier l'alignement des axes, chaines, courroies, rail, etc. | PGD | 13-07-21 | |

# CONTRÔLE QUALITÉ

| N° | Liste des points à vérifier: | Vérifié: | Date: | Commentaire |
|---|---|---|---|---|
| 8 | Vérifier le serrage des boulons et de toute fixation boulonnée. Vérifier à ce que le bout fileté des boulons ne dépassent pas trop de l'écrou. Vérifier si les "lock washers" sont présents là où nécessaire. | PGD | 13-07-21 | -remontage chez le client |
| 9 | Vérifier l'étanchéité des équipements: bassin, réservoir, couvercle et tout système qui devra satisfaire cette qualité. | | | |
| 10 | Vérifier la sécurité machine : Garde pour chaine, système d'entrainement, garde corps sur passerelle, plate forme et escalier. **Utiliser le sécurimètre pour vérifier les distances dangereuses.** | PGD | 13-07-21 | rail et garde corps |
| 11 | Vérifier l'ampérage du moteur au fonctionnement. | | | |
| 12 | Vérifier à ce que chaque boutons soient bien identifiés sur le panneau de contrôle. Vérifier à ce que chaque fils soient bien fixés dans le panneau de contrôle. | | | |
| 13 | Vérifier que chaque capteurs soient bien fixés en place et que chaque fils soient bien fixés et placés de façon à éviter l'usure/coupure par la vibration de l'équipement. Vérifier que chaque fils soient à l'abri d'un happement causé par un mouvement de partie d'équipement. | | | |
| 14 | Vérifier à ce que l'équipement fonctionne de la façon dont il a été conçu. Tester les séquences normales d'opération à pleine vitesse et à pleine charge. **Si requis, faire test selon une durée déterminée par le chargé de projet.** | PGD | 13-07-21 | |
| 15 | Apposer la plaque signalétique sur l'équipement. | PGD | 13-07-21 | |
| 16 | Vérification du projet par le CDP | | | JF |
| 17 | Prise de photos et vidéos | PGD | 13-07-21 | |

Project #: 6526-S-265-605C
Client: Agnico-Eagle Mines (Meliadine)
Project: Calcium Hypochlorite handling

Prépared by: Dan Misiano
Revision: R0
Revision date: 2021-11-01

## 6526-S-265-605B-135-Spare Parts List

| Item Description | Qty | Model/company | Supplier | Client tag# | Material | Comments: |
|---|---|---|---|---|---|---|
| **1.0 CALCIUM HYPOCHLORITE HOPPER (65HOP68009)** | | | | | | |
| high level sensor SS316, 1 1/2 NPT | 1 | Endress & Hauser | ASDR | 65HOP68009 | - | |
| Pneumatic vibrator K45 | 1 | Sinox | ASDR | 65HOP68009 | - | |
| STAINLESS Ball in 440C , 1 1/2 "Ø | 1 | | ASDR | 65HOP68009 | | |
| Pressure regulator 1/4", 0-150PSI | 1 | | ASDR | 65HOP68009 | | |
| Vallve Red Hat , 3/8 NPT, 24-120 VAC/VDC | 1 | | ASDR | 65HOP68009 | | |
| Filtration cartridges 5-3/4X51 16OZ POLY | 1 | | ASDR | 65HOP68009 | | |
| Loadcell Compressive 15'000lbs | 1 | SSB-15KLB | ASDR | 65HOP68009 | | |
| **2.0 CALCIUM HYPOCHLORITE VIBRATOR (65VIB680--)** | | | | | | |
| Solenoid valves for vibrator | 2 | | ASDR | 65VIB680-- | | |
| **3.0 Vacuum Blower #1 & #2 (65BLO680--)** | | | | | | |
| Surpressor | 1 | CP Serie, 4005 | ASDR | 65BLO680-- | | |
| Pressure interruptor 0-15 PSI | 1 | | ASDR | 65BLO680-- | | |
| Vacuum relief set at 15 in.HG | 1 | | ASDR | 65BLO680-- | | |
| Pulley | 1 | 2B80-SK | ASDR | 65BLO680-- | | |
| Pulley | 1 | 2B42-SH | ASDR | 65BLO680-- | | |
| Belt | 1 | BX61 | ASDR | 65BLO680-- | | |
| **4.0 Calcium Hypochlorite Mixing tank agitator (65AGI68025 & 65AGI0826)** | | | | | | |
| Agitator 5HP | 1 | 3N3-26 / Sharpe Mixer | ASDR | 65AGI68025 | | |
| **5.0 Calcium Hypochlorite transfer pump (65PS068004 & 65PSO68005)** | | | | | | |
| transfer pump | 1 | MTA-A70-10 / Magnatex | ASDR | 65PSO68004 | | |
| **6.0 Calcium Hypochlorite distribution pump (65PSO68006 & 65PSO68007)** | | | | | | |
| transfer pump | 1 | MTA-A10 / Magnatex | ASDR | 65PSO68004 | | |

# Appendix G

# Nitrogen, Ammonia

DOC316.53.01079

**Salicylate Method** **Method 10031**

**0.4 to 50.0 mg/L $NH_3$–N (HR)** **Test 'N Tube™ Vials**

**Scope and application:** For water, wastewater and seawater.

## Test preparation

### Instrument-specific information

Table 1 shows all of the instruments that have the program for this test. The table also shows adapter and light shield requirements for the instruments that use them.

To use the table, select an instrument, then read across to find the applicable information for this test.

**Table 1 Instrument-specific information for test tubes**

| Instrument | Adapters | Light shield |
|---|---|---|
| DR 6000, DR 5000 | — | — |
| DR 3900 | — | LZV849 |
| DR 3800, DR 2800, DR 2700 | — | LZV646 |
| DR 1900 | 9609900 (D[1]) | — |
| DR 900 | 4846400 | Cover supplied with the instrument |

### Before starting

| |
|---|
| Install the instrument cap on the DR 900 cell holder before ZERO or READ is pushed. |
| DR 3900, DR 3800, DR 2800 and DR 2700: Install the light shield in Cell Compartment #2 before this test is started. |
| Small sample sizes (such as 0.1 mL) may not be representative of the entire sample. Mix the sample well before the test or use a different portion of the sample to repeat the test. |
| The reagents that are used in this test contain sodium nitroferricyanide. **Keep cyanide solutions at pH > 11 to prevent exposure to hydrogen cyanide gas.** Collect the reacted samples for safe disposal. |
| Keep the samples sealed at all times to prevent ammonia contamination from the air. |
| To prevent airborne cross-contamination of the blank, complete the preparation of the blank before samples and standards are opened. If the sample or standard containers are open, move to a separate area of the lab to prepare the blank. |
| Review the Safety Data Sheets (MSDS/SDS) for the chemicals that are used. Use the recommended personal protective equipment. |
| Dispose of reacted solutions according to local, state and federal regulations. Refer to the Safety Data Sheets for disposal information for unused reagents. Refer to the environmental, health and safety staff for your facility and/or local regulatory agencies for further disposal information. |

### Items to collect

| Description | Quantity |
|---|---|
| Light shield (For information about sample cells, adapters or light shields, refer to Instrument-specific information on page 1.) | 1 |
| High Range Test 'N Tube™ AmVer® 3 Nitrogen Ammonia Reagent Set | 2 |

[1] The D adapter is not available with all instrument versions.

## Items to collect (continued)

| Description | Quantity |
|---|---|
| Funnel, micro (for reagent addition) | 1 |
| Pipet, TenSette® 0.1 to 1.0 mL, with tips | varies |

Refer to Consumables and replacement items on page 5 for order information.

## Sample collection and storage

- Collect samples in clean glass or plastic bottles.
- Analyze the samples as soon as possible for best results.
- If chlorine is known to be present, add one drop of 0.1 N Sodium Thiosulfate to 1 L of sample for each 0.3 mg/L $Cl_2$.
- To preserve samples for later analysis, adjust the sample pH to less than 2 with concentrated hydrochloric acid (about 2 mL per liter). No acid addition is necessary if the sample is tested immediately.
- Keep the preserved samples at or below 6 °C (43 °F) for a maximum of 28 days.
- Let the sample temperature increase to room temperature before analysis.
- Before analysis, adjust the pH to 7 with 5.0 N sodium hydroxide standard solution.
- Correct the test result for the dilution caused by the volume additions.

## Test 'N Tube procedure




**1.** Start program **343 N, Ammonia HR TNT**. For information about sample cells, adapters or light shields, refer to Instrument-specific information on page 1.

***Note:** Although the program name can be different between instrumentss, the program number does not change.*



**2. Prepare the blank:** Add 0.1 mL of **ammonia-free water** to one AmVer™ Diluent Reagent Test 'N Tube for High Range Ammonia Nitrogen.



**3. Prepare the sample:** Add 0.1 mL of **sample** to one AmVer™ Diluent Reagent Test 'N Tube for High Range Ammonia Nitrogen.



**4.** Add the contents of one Ammonia Salicylate Reagent Powder Pillow for 5-mL samples to each vial.



**5.** Add the contents of one Ammonia Cyanurate Reagent Powder Pillow to each vial.

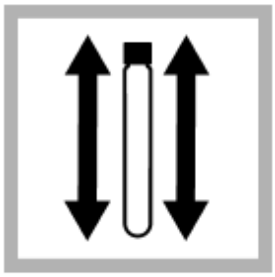

**6.** Put the caps on both vials. Shake thoroughly to dissolve the powder.




**7.** Start the instrument timer. A 20-minute reaction time starts.

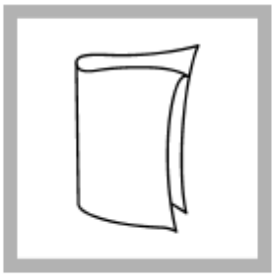

**8.** Clean the blank vial.



**9.** Insert the blank vial into the 16-mm cell holder.

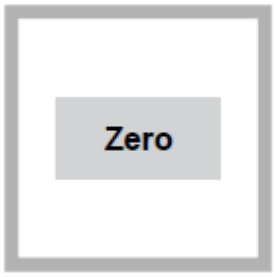


**10.** Push **ZERO**. The display shows 0.0 mg/L $NH_3$–N.

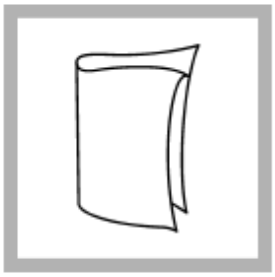

**11.** Clean the sample vial.



**12.** Insert the sample vial into the 16-mm cell holder.

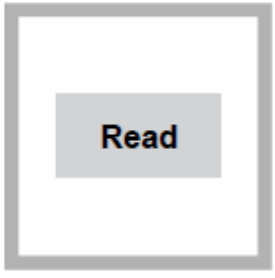


**13.** Push **READ**. Results show in mg/L $NH_3$–N.

## Interferences

| Interfering substance | Interference level |
|---|---|
| Calcium | 50,000 mg/L as $CaCO_3$ |
| Iron | All levels. Correct for iron interference as follows:<br>1. Use one of the Iron, Total procedures to measure the iron concentration of the sample.<br>2. Use an iron standard solution to add iron to the deionized water blank so that the blank has the same iron concentration as the sample. The iron interference will be zeroed out from the test result. |
| Magnesium | 300,000 mg/L as $CaCO_3$ |
| Monochloramine | Monochloramine that is in chloraminated drinking water interferes directly at all levels and gives high results. Use a Free Ammonia and Monochloramine method to determine free ammonia in these sample matrices. |

| Interfering substance | Interference level |
|---|---|
| Nitrate | 5000 mg/L as $NO_3^-$–N |
| Nitrite | 600 mg/L as $NO_2^-$–N |
| pH | Adjust acidic or basic samples to approximately pH 7. Use 1 N sodium hydroxide standard solution for acidic samples and 1 N hydrochloric acid standard solution for basic samples. |
| Phosphate | 5000 mg/L as $PO_4^{3-}$–P |
| Sulfate | 6000 mg/L as $SO_4^{2-}$ |
| Sulfide | Sulfide will intensify the color. Remove sulfide interference as follows:<br>1. Measure approximately 350 mL of sample in a 500-mL Erlenmeyer flask.<br>2. Add the contents of one Sulfide Inhibitor Reagent Powder Pillow. Swirl to mix.<br>3. Filter the sample through a folded filter paper and filter funnel.<br>4. Use the filtered sample in the test procedure. |
| Other substances | Less common interferences such as hydrazine and glycine cause intensified colors in the prepared sample. Turbidity and color will give incorrect high values. Samples with severe interferences require distillation. Use the distillation procedure that is supplied with the distillation set. |

## Accuracy check

### Standard additions method (sample spike)

Use the standard additions method (for applicable instruments) to validate the test procedure, reagents and instrument and to find if there is an interference in the sample.

Items to collect:

- Nitrogen, Ammonia Ampule Standard, 150-mg/L $NH_3$–N
- Ampule breaker
- Pipet, TenSette®, 0.1–1.0 mL and tips
- 25-mL mixing cylinders (3)

1. Use the test procedure to measure the concentration of the sample, then keep the (unspiked) sample in the instrument.
2. Go to the Standard Additions option in the instrument menu.
3. Select the values for standard concentration, sample volume and spike volumes.
4. Open the standard solution.
5. Prepare three spiked samples: use the TenSette pipet to add 0.2 mL, 0.4 mL and 0.6 mL of the standard solution, respectively, to three 25-mL portions of fresh sample. Mix well.
6. Use the test procedure to measure the concentration of each of the spiked samples. Start with the smallest sample spike. Measure each of the spiked samples in the instrument.
7. Select **Graph** to compare the expected results to the actual results.

   ***Note:*** *If the actual results are significantly different from the expected results, make sure that the sample volumes and sample spikes are measured accurately. The sample volumes and sample spikes that are used should agree with the selections in the standard additions menu. If the results are not within acceptable limits, the sample may contain an interference.*

### Standard solution method

Use the standard solution method to validate the test procedure, the reagents and the instrument.

Items to collect:

- 100-mg/L Ammonia Nitrogen standard
- 50-mL volumetric flask, Class A
- 20-mL volumetric pipet, Class A and pipet filler safety bulb

- Deionized water

1. Prepare a 40.0 mg/L ammonia nitrogen standard solution as follows:
   a. Use a pipet to add 20.0 mL of 100 mg/L ammonia nitrogen standard solution into the volumetric flask.
   b. Dilute to the mark with deionized water. Mix well. Prepare this solution daily.
2. Use the test procedure to measure the concentration of the prepared standard solution.
3. Compare the expected result to the actual result.

   ***Note:*** *The factory calibration can be adjusted slightly with the standard adjust option so that the instrument shows the expected value of the standard solution. The adjusted calibration is then used for all test results. This adjustment can increase the test accuracy when there are small variations in the reagents or instruments.*

## Method performance

The method performance data that follows was derived from laboratory tests that were measured on a spectrophotometer during ideal test conditions. Users can get different results under different test conditions.

| Program | Standard | Precision (95% confidence interval) | Sensitivity<br>Concentration change per 0.010 Abs change |
|---|---|---|---|
| 343 | 40.00 mg/L $NH_3$–N | 38.1–41.9 mg/L $NH_3$–N | 0.312 mg/L $NH_3$–N |

## Summary of method

Ammonia compounds combine with chlorine to form monochloramine. Monochloramine reacts with salicylate to form 5-aminosalicylate. The 5-aminosalicylate is oxidized in the presence of a sodium nitroprusside catalyst to form a blue colored compound. The blue color is masked by the yellow color from the excess reagent present to give a green-colored solution. The measurement wavelength is 655 nm for spectrophotometers or 610 nm for colorimeters.

## Pollution prevention and waste management

The ammonia salicylate reagent contains sodium nitroferricyanide which, when digested, is converted to total cyanide and can have an effect on total cyanide limits in the effluent. Dispose of reacted solutions according to local, state and federal regulations.

## Consumables and replacement items

### Required reagents

| Description | Quantity/test | Unit | Item no. |
|---|---|---|---|
| Nitrogen Ammonia, Reagent Set, High Range Test 'N Tube™ AmVer™ | 2 | 25 tests | 2606945 |

### Required apparatus

| Description | Quantity/test | Unit | Item no. |
|---|---|---|---|
| Funnel, micro, poly | 1 | each | 2584335 |
| Pipet, TenSette®, 0.1–1.0 mL | 1 | each | 1970001 |
| Pipet tips, for TenSette® Pipet, 0.1–1.0 mL | 2 | 50/pkg | 2185696 |
| Test tube rack | 1 | each | 1864100 |

## Recommended standards

| Description | Unit | Item no. |
|---|---|---|
| Nitrogen, Ammonia Standard Solution, 10-mg/L $NH_3$-N | 500 mL | 15349 |
| Nitrogen, Ammonia Standard Solution, 100-mg/L $NH_3$-N | 500 mL | 2406549 |
| Nitrogen, Ammonia Standard Solution, 10-mL Voluette® Ampules, 150 mg/L | 16/pkg | 2128410 |
| Nitrogen Ammonia Standard Solution, 10-mL Voluette® Ampule, 50-mg/L $NH_3$–N | 16/pkg | 1479110 |
| Wastewater Effluent Standard Solution, Mixed Parameter, for $NH_3$-N, $NO_3$-N, $PO_4^{3-}$, COD, $SO_4^{2-}$, TOC | 500 mL | 2833249 |
| Water, deionized | 4 L | 27256 |

## Optional reagents and apparatus

| Description | Unit | Item no. |
|---|---|---|
| Mixing cylinder, graduated, 25-mL | each | 2088640 |
| Distillation apparatus set, general purpose | each | 2265300 |
| Filter paper, folded, 3–5-micron, 12.5-cm | 100/pkg | 69257 |
| Pipet tips for TenSette® Pipet, 0.1–1.0 mL | 1000/pkg | 2185628 |
| Ampule Breaker, 10-mL Voluette® Ampules | each | 2196800 |
| Distillation heater and support for apparatus set, 115 VAC option | each | 2274400 |
| Distillation heater and support for apparatus set, 230 VAC option | each | 2274402 |
| Funnel, poly, 65 mm | each | 108367 |
| Pipet, serological, 2 mL | each | 50549 |
| Pipet filler, safety bulb | each | 1465100 |
| Hydrochloric Acid, concentrated | 500 mL | 13449 |
| Hydrochloric Acid Standard Solution, 1 N | 1000 mL | 2321353 |
| Sodium Hydroxide Standard Solution, 1.0 N | 100 mL MDB | 104532 |
| Sulfide Inhibitor Reagent Powder Pillows | 100/pkg | 241899 |
| Sodium Hydroxide Solution, 5 N | 50 mL | 245026 |
| Sodium Thiosulfate, 0.1 N | 100 mL | 32332 |



© Hach Company/Hach Lange GmbH, 1989–2015. All rights reserved.

# Chlorine, Free

DOC316.53.01303

**USEPA DPD Method[2]** **Method 10245[1]**

**0.05 to 4.00 mg/L $Cl_2$ (MR)** **Powder Pillows**

**Scope and application:** For free chlorine (hypochlorous acid and hypochlorite ion) measurements in water, treated waters, estuary and seawater. This product has not been evaluated to test for chlorine and chloramines in medical applications in the United States.

[1] USEPA accepted for reporting wastewater and drinking water analyses.
[2] Procedure is equivalent to USEPA method 330.5 for wastewater and Standard Method 4500-Cl G for drinking water.

## Test preparation

### Instrument-specific information

Table 1 shows all of the instruments that have the program for this test. The table also shows sample cell and adapter requirements for this test.

To use the table, select an instrument, then read across to find the applicable information for this test.

**Table 1 Instrument-specific information**

| Instrument | Adapter | Sample cell |
|---|---|---|
| DR6000 | — | 2427606  |
| DR5000 | A23618 | |
| DR3900 | LZV846 (A) | |
| DR3800<br>DR2800<br>DR2700 | LZV584 (C) | |
| DR1900 | 9609900 or 9609800 (C) | |
| DR900 | — | 2401906  |

### Before starting

| |
|---|
| Analyze the samples immediately. The samples cannot be preserved for later analysis. |
| Install the instrument cap on the DR900 cell holder before ZERO or READ is pushed. |
| Do not use the same sample cells for free and total chlorine. If trace iodide from the total chlorine reagent is carried over into the free chlorine determination, monochloramine will interfere. It is best to use separate, dedicated sample cells for free and total chlorine measurements. |
| If the test result is over-range, or if the sample temporarily turns yellow after the reagent addition, dilute the sample with a known volume of high quality, chlorine demand-free water and do the test again. Some loss of chlorine may occur due to the dilution. Multiply the result by the dilution factor. Additional methods are available to measure chlorine without dilution. |
| For the best results, measure the reagent blank value for each new lot of reagent. Replace the sample with deionized water in the test procedure to determine the reagent blank value. Subtract the reagent blank value from the sample results automatically with the reagent blank adjust option. |
| Cold waters can cause condensation on the sample cells during color development. Examine the sample cells for condensation before measurements. |

| |
|---|
| Review the Safety Data Sheets (MSDS/SDS) for the chemicals that are used. Use the recommended personal protective equipment. |
| Dispose of reacted solutions according to local, state and federal regulations. Refer to the Safety Data Sheets for disposal information for unused reagents. Refer to the environmental, health and safety staff for your facility and/or local regulatory agencies for further disposal information. |

## Items to collect

| Description | Quantity |
|---|---|
| DPD Free Chlorine Reagent Powder Pillows, 25-mL | 1 |
| Sample cells (For information about sample cells, adapters or light shields, refer to Instrument-specific information on page 1.) | 2 |

Refer to Consumables and replacement items on page 5 for order information.

## Sample collection

- Analyze the samples immediately. The samples cannot be preserved for later analysis.
- Chlorine is a strong oxidizing agent and is unstable in natural waters. Chlorine reacts quickly with various inorganic compounds and more slowly with organic compounds. Many factors, including reactant concentrations, sunlight, pH, temperature and salinity influence the decomposition of chlorine in water.
- Collect samples in clean glass bottles. Do not use plastic containers because these can have a large chlorine demand.
- Pretreat glass sample containers to remove chlorine demand. Soak the containers in a weak bleach solution (1 mL commercial bleach to 1 liter of deionized water) for at least 1 hour. Rinse fully with deionized or distilled water. If sample containers are rinsed fully with deionized or distilled water after use, only occasional pretreatment is necessary.
- Make sure to get a representative sample. If the sample is taken from a spigot or faucet, let the water flow for at least 5 minutes. Let the container overflow with the sample several times and then put the cap on the sample container so that there is no headspace (air) above the sample.

## Powder pillow procedure




1. Start program **87 Chlorine, F&T PP MR**. For information about sample cells, adapters or light shields, refer to Instrument-specific information on page 1.

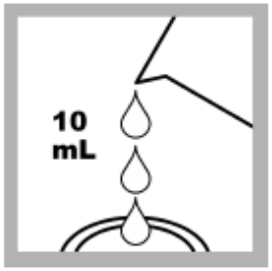


2. **Prepare the blank**: Fill the sample cell with 10 mL of sample.

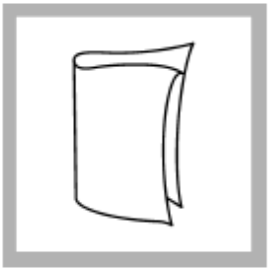

3. Clean the blank sample cell.



4. Insert the blank into the cell holder.



2022-01-06 This document is valid 24 hours after printing

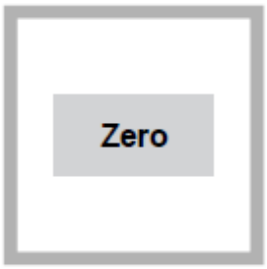


5. Push **ZERO**. The display shows 0.00 mg/L $Cl_2$.

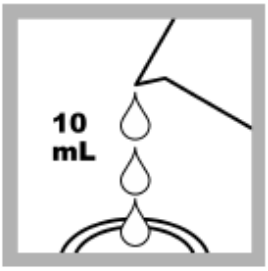


6. **Prepare the sample:** Fill a second sample cell with 10 mL of sample.



7. Add the contents of one DPD Free Chlorine Powder Pillow for 25-mL sample to the prepared sample cell.

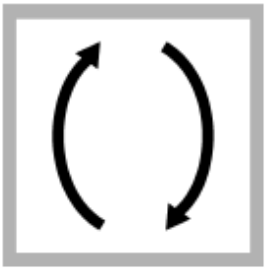

8. Put the stopper on the prepared sample cell. Invert the sample cell several times to mix. A pink color shows if chlorine is present. Go to the next step immediately.

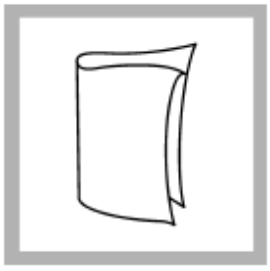

9. Clean the prepared sample cell.



10. Within one minute of the reagent addition, insert the prepared sample into the cell holder.




11. Push **READ**. Results show in mg/L $Cl_2$.

## Interferences

| Interfering substance | Interference level |
|---|---|
| Acidity | More than 150 mg/L $CaCO_3$. The full color may not develop or the color may fade instantly. Adjust to pH 6–7 with 1 N Sodium Hydroxide. Measure the amount to add on a separate sample aliquot, then add the same amount to the sample that is tested. Correct the test result for the dilution from the volume addition. |
| Alkalinity | More than 250 mg/L $CaCO_3$. The full color may not develop or the color may fade instantly. Adjust to pH 6–7 with 1 N Sulfuric Acid. Measure the amount to add on a separate sample aliquot, then add the same amount to the sample that is tested. Correct the test result for the dilution from the volume addition. |
| Bromine, $Br_2$ | Positive interference at all levels |
| Chlorine Dioxide, $ClO_2$ | Positive interference at all levels |
| Inorganic chloramines | Positive interference at all levels |
| Chloramines, organic | May interfere in the result for total chlorine analysis |
| Hardness | No effect at less than 1000 mg/L as $CaCO_3$ |


2022-01-06 This document is valid 24 hours after printing

| Interfering substance | Interference level |
|---|---|
| Manganese, Oxidized ($Mn^{4+}$, $Mn^{7+}$) or Chromium, Oxidized ($Cr^{6+}$) | Pre-treat the sample as follows:<br>1. Adjust the sample pH to 6–7.<br>2. Add 3 drops of Potassium Iodide (30-g/L) to 10 mL of sample.<br>3. Mix and wait 1 minute.<br>4. Add 3 drops of Sodium Arsenite (5-g/L) and mix.<br>5. Use the test procedure to measure the concentration of the treated sample.<br>6. Subtract this result from the result without the treatment to obtain the correct chlorine concentration. |
| Ozone | Positive interference at all levels |
| Peroxides | May interfere |
| Highly buffered samples or extreme sample pH | Can prevent the correct pH adjustment (of the sample) by the reagents. Sample pretreatment may be necessary. Adjust to pH 6–7 with acid (Sulfuric Acid, 1.000 N) or base (Sodium Hydroxide, 1.00 N). |

### Monochloramine interference

For conventional free chlorine disinfection (beyond the breakpoint), typical monochloramine concentrations are very low. If monochloramine is present in the sample, its interference in the free chlorine test depends on the sample temperature, relative amount of monochloramine to free chlorine and the time required to do the analysis. Typical interference levels of monochloramine as mg/L $Cl_2$ in the free chlorine test are shown in Table 2 (1 minute test time). Measure the monochloramine levels with method 10200 for Chloramine (Mono) and Free Ammonia.

**Table 2 Monochloramine interference at different sample temperatures**

| $NH_2Cl$ (as $Cl_2$) | 5 °C (41 °F) | 10 °C (50 °F) | 20 °C (68 °F) | 30 °C (83 °F) |
|---|---|---|---|---|
| 1.2 mg/L | 0.15 | 0.19 | 0.30 | 0.29 |
| 2.2 mg/L | 0.35 | 0.38 | 0.55 | 0.61 |
| 3.2 mg/L | 0.38 | 0.56 | 0.69 | 0.73 |

## Accuracy check

### Standard additions method (sample spike)

Use the standard additions method (for applicable instruments) to validate the test procedure, reagents and instrument and to find if there is an interference in the sample.

Items to collect:

- Chlorine Standard Solution, 2-mL PourRite® Ampule, 25–30 (or 50–75) mg/L
- Ampule breaker
- Pipet, TenSette®, 0.1–1.0 mL and tips

1. Use the test procedure to measure the concentration of the sample, then keep the (unspiked) sample in the instrument.
2. Go to the Standard Additions option in the instrument menu.
3. Select the values for standard concentration, sample volume and spike volumes.
4. Open the standard solution.
5. Prepare three spiked samples: use the TenSette pipet to add 0.1 mL, 0.2 mL and 0.3 mL of the standard solution, respectively, to three 10-mL portions of fresh sample. Mix well.
6. Use the test procedure to measure the concentration of each of the spiked samples. Start with the smallest sample spike. Measure each of the spiked samples in the instrument.


2022-01-06 This document is valid 24 hours after printing

7. Select **Graph** to compare the expected results to the actual results.

***Note:*** *If the actual results are significantly different from the expected results, make sure that the sample volumes and sample spikes are measured accurately. The sample volumes and sample spikes that are used should agree with the selections in the standard additions menu. If the results are not within acceptable limits, the sample may contain an interference.*

## Verification of on-line analyzers

This procedure can be used to meet the requirements of USEPA Method 334.0 - Determination of Residual Chlorine in Drinking Water Using an On-line Chlorine Analyzer. The procedure and requirements for compliance with EPA Method 334.0 can be downloaded directly from http://www.hach.com/method334.

## Method performance

The method performance data that follows was derived from laboratory tests that were measured on a spectrophotometer during ideal test conditions. Users can get different results under different test conditions.

| Program | Standard | Precision (95% confidence interval) | Sensitivity<br>Concentration change per 0.010 Abs change |
|---|---|---|---|
| 87 | 2.68 mg/L $Cl_2$ | 2.63–2.73 mg/L $Cl_2$ | 0.03 mg/L $Cl_2$ |

## Summary of method

Chlorine in the sample as hypochlorous acid or hypochlorite ion (free chlorine or free available chlorine) immediately reacts with DPD (N,N-diethyl-p-phenylenediamine) indicator to form a pink color, the intensity of which is proportional to the chlorine concentration. The measurement wavelength is 530 nm for spectrophotometers or 520 nm for colorimeters.

## Consumables and replacement items

### Required reagents

| Description | Quantity/test | Unit | Item no. |
|---|---|---|---|
| DPD Free Chlorine Reagent Powder Pillow, 25 mL | 1 | 100/pkg | 1407099 |
| Sample cell, 10-mL round, 25 mm x 60 mm | 1 | 6/pkg | 2427606 |

### Recommended standards

| Description | Unit | Item no. |
|---|---|---|
| Chlorine Standard Solution, 2-mL PourRite® Ampules, 25–30 mg/L | 20/pkg | 2630020 |
| Ampule Breaker, 10-mL Voluette® Ampules | each | 2196800 |
| PourRite® Ampule Breaker, 2-mL | each | 2484600 |
| Chlorine Standard Solution, 2-mL PourRite® Ampules, 50–75 mg/L | 20/pkg | 1426820 |
| Chlorine Standard Solution, 10-mL Voluette® Ampule, 50–75 mg/L | 16/pkg | 1426810 |

### Optional reagents and apparatus

| Description | Unit | Item no. |
|---|---|---|
| Sodium Hydroxide Standard Solution, 1.0 N | 100 mL MDB | 104532 |
| Sulfuric Acid Standard Solution, 1 N | 100 mL MDB | 127032 |
| Potassium Iodide, 30-g/L | 100 mL | 34332 |
| Sodium Arsenite, 5-g/L | 100 mL | 104732 |
| Pipet, TenSette®, 0.1–1.0 mL | each | 1970001 |

**Optional reagents and apparatus (continued)**

| Description | Unit | Item no. |
|---|---|---|
| Pipet tips for TenSette® Pipet, 0.1–1.0 mL | 50/pkg | 2185696 |
| Pipet tips for TenSette® Pipet, 0.1–1.0 mL | 1000/pkg | 2185628 |
| Paper, pH, 0–14 pH range | 100/pkg | 2601300 |
| DPD Free Chlorine Reagent Powder Pillows, 25 mL | 1000/pkg | 1407028 |
| SpecCheck™ Secondary Standard Kit, Chlorine DPD, MR | each | 2980500 |
| Water, organic-free | 500 mL | 2641549 |
| Freechlor F Reagent Solution | 50 mL SCDB | 2964926 |
| Monochlor F Reagent Powder Pillows | 100/pkg | 2802299 |

DRAFT

| Authorization (Print Name) |
|---|

Approved: _____ Date: _____
Name

Approved: _____ Date: _____
Name

Approved: _____
Name Date: _____

# Chlorine, Total, MR

DOC316.53.01304

**USEPA[1] DPD Method[2]** **Method 10250**

**0.05 to 4.00 mg/L $Cl_2$ (MR)** **Powder Pillows**

**Scope and application:** For testing residual chlorine and chloramines in water, wastewater, estuary water and seawater; USEPA-accepted for reporting drinking and wastewater analyses. This product has not been evaluated to test for chlorine and chloramines in medical applications in the United States.

[1] Procedure is equivalent to USEPA and Standard Method 4500-Cl G for drinking water and wastewater analyses.
[2] Adapted from Standard Methods for the Examination of Water and Wastewater.

## Test preparation

### Instrument-specific information

Table 1 shows all of the instruments that have the program for this test. The table also shows sample cell and adapter requirements for this test.

To use the table, select an instrument, then read across to find the applicable information for this test.

**Table 1 Instrument-specific information**

| Instrument | Adapter | Sample cell |
|---|---|---|
| DR 6000 | — | 2427606  |
| DR 5000 | A23618 | |
| DR 3900 | LZV846 (A) | |
| DR 3800<br>DR 2800<br>DR 2700 | LZV584 (C) | |
| DR 1900 | 9609900 or 9609800 (C) | |
| DR 900 | — | 2401906  |

### Before starting

| |
|---|
| Samples must be analyzed immediately after collection and cannot be preserved for later analysis. |
| Install the instrument cap on the DR 900 cell holder before ZERO or READ is pushed. |
| If the test result is over-range, or if the sample temporarily turns yellow after the reagent addition, dilute the sample with a known volume of high quality, chlorine demand-free water and do the test again. Some loss of chlorine may occur due to the dilution. Multiply the result by the dilution factor. Additional methods are available to measure chlorine without dilution. |
| For the best results, measure the reagent blank value for each new lot of reagent. Replace the sample with deionized water in the test procedure to determine the reagent blank value. Subtract the reagent blank value from the sample results automatically with the reagent blank adjust option. |
| A powder pillow for 25-mL samples is intentionally added to 10 mL of sample in this test to get the correct working range. |
| Review the Safety Data Sheets (MSDS/SDS) for the chemicals that are used. Use the recommended personal protective equipment. |

| |
|---|
| Dispose of reacted solutions according to local, state and federal regulations. Refer to the Safety Data Sheets for disposal information for unused reagents. Refer to the environmental, health and safety staff for your facility and/or local regulatory agencies for further disposal information. |
| For chloramination disinfection control, use one of the available Chloramine (Mono) methods. |
| Cold waters can cause condensation on the sample cells during color development. Examine the sample cells for condensation before measurements. |
| Do not use the same sample cells for free and total chlorine. If trace iodide from the total chlorine reagent is carried over into the free chlorine determination, monochloramine will interfere. It is best to use separate, dedicated sample cells for free and total chlorine measurements. |

## Items to collect

| Description | Quantity |
|---|---|
| DPD Total Chlorine Reagent powder pillow, 25-mL | 1 |
| Sample cells (For information about sample cells, adapters or light shields, refer to Instrument-specific information on page 1.) | 2 |

Refer to Consumables and replacement items on page 5 for order information.

## Sample collection

- Analyze the samples immediately. The samples cannot be preserved for later analysis.
- Chlorine is a strong oxidizing agent and is unstable in natural waters. Chlorine reacts quickly with various inorganic compounds and more slowly with organic compounds. Many factors, including reactant concentrations, sunlight, pH, temperature and salinity influence the decomposition of chlorine in water.
- Collect samples in clean glass bottles. Do not use plastic containers because these can have a large chlorine demand.
- Pretreat glass sample containers to remove chlorine demand. Soak the containers in a weak bleach solution (1 mL commercial bleach to 1 liter of deionized water) for at least 1 hour. Rinse fully with deionized or distilled water. If sample containers are rinsed fully with deionized or distilled water after use, only occasional pretreatment is necessary.
- Make sure to get a representative sample. If the sample is taken from a spigot or faucet, let the water flow for at least 5 minutes. Let the container overflow with the sample several times and then put the cap on the sample container so that there is no headspace (air) above the sample.

## Powder pillow procedure




**1.** Start program **87 Chlorine,F&T PP MR**. For information about sample cells, adapters or light shields, refer to Instrument-specific information on page 1.

***Note:*** *Although the program name can be different between instruments, the program number does not change.*

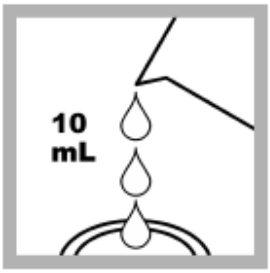


**2. Prepare the sample:** Fill a sample cell with 10 mL of sample.



**3.** Add the contents of one DPD Total Chlorine Reagent Powder Pillow (for 25-mL samples).

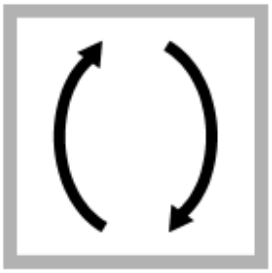

**4.** Put the stopper on the sample cell. Invert the sample cell for 20 seconds. It is not necessary for all of the reagent to dissolve.




**5.** Start the instrument timer. A 3-minute reaction time starts.

Do the next four steps during the timer period.

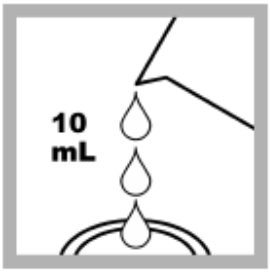


**6. Prepare the blank:** Fill a second sample cell with 10 mL of sample.

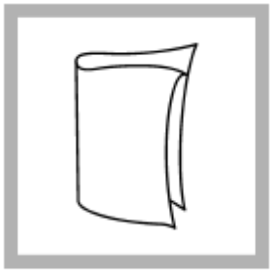

**7.** Clean the blank sample cell.



**8.** Insert the blank into the cell holder.

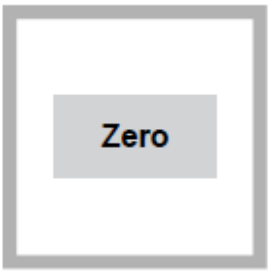


**9.** Push **ZERO**. The display shows 0.00 mg/L $Cl_2$.

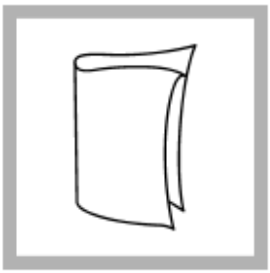

**10.** Clean the prepared sample cell.



**11.** Within 3 minutes after the timer expires, insert the prepared sample into the cell holder.




**12.** Push **READ**. Results show in mg/L $Cl_2$.

## Interferences

| Interfering substance | Interference level |
|---|---|
| Acidity | More than 150 mg/L $CaCO_3$. The full color may not develop or the color may fade instantly. Adjust to pH 6–7 with 1 N Sodium Hydroxide. Measure the amount to add on a separate sample aliquot, then add the same amount to the sample that is tested. Correct the test result for the dilution from the volume addition. |
| Alkalinity | More than 250 mg/L $CaCO_3$. The full color may not develop or the color may fade instantly. Adjust to pH 6–7 with 1 N Sulfuric Acid. Measure the amount to add on a separate sample aliquot, then add the same amount to the sample that is tested. Correct the test result for the dilution from the volume addition. |
| Bromine, $Br_2$ | Positive interference at all levels |
| Chlorine Dioxide, $ClO_2$ | Positive interference at all levels |
| Inorganic chloramines | Positive interference at all levels |
| Chloramines, organic | May interfere |
| Hardness | No effect at less than 1000 mg/L as $CaCO_3$ |
| Manganese, Oxidized ($Mn^{4+}$, $Mn^{7+}$) or Chromium, Oxidized ($Cr^{6+}$) | Pre-treat the sample as follows:<br>1. Adjust the sample pH to 6–7.<br>2. Add 3 drops of Potassium Iodide (30-g/L) to 10 mL of sample.<br>3. Mix and wait 1 minute.<br>4. Add 3 drops of Sodium Arsenite (5-g/L) and mix.<br>5. Use the test procedure to measure the concentration of the treated sample.<br>6. Subtract this result from the result without the treatment to obtain the correct chlorine concentration. |
| Ozone | Positive interference at all levels |
| Peroxides | May interfere |
| Highly buffered samples or extreme sample pH | Can prevent the correct pH adjustment of the sample by the reagents. Sample pre-treatment may be necessary. Adjust to pH 6–7 with acid (Sulfuric Acid, 1.000 N) or base (Sodium Hydroxide, 1.00 N). |

## Accuracy check

### Standard additions method (sample spike)

Use the standard additions method (for applicable instruments) to validate the test procedure, reagents and instrument and to find if there is an interference in the sample.

Items to collect:

- Chlorine Standard Solution, 2-mL PourRite® Ampule, 25–30 mg/L or 50–75 mg/L (use mg/L on label)
- Ampule breaker
- Pipet, TenSette®, 0.1–1.0 mL and tips

1. Use the test procedure to measure the concentration of the sample, then keep the (unspiked) sample in the instrument.
2. Go to the Standard Additions option in the instrument menu.
3. Select the values for standard concentration, sample volume and spike volumes.
4. Open the standard solution.
5. Prepare three spiked samples: use the TenSette pipet to add 0.1 mL, 0.2 mL and 0.3 mL of the standard solution, respectively, to three 10-mL portions of fresh sample. Mix well.


2022-01-06 This document is valid 24 hours after printing

6. Use the test procedure to measure the concentration of each of the spiked samples. Start with the smallest sample spike. Measure each of the spiked samples in the instrument.
7. Select **Graph** to compare the expected results to the actual results.

***Note:*** *If the actual results are significantly different from the expected results, make sure that the sample volumes and sample spikes are measured accurately. The sample volumes and sample spikes that are used should agree with the selections in the standard additions menu. If the results are not within acceptable limits, the sample may contain an interference.*

## Verification of on-line analyzers

This procedure can be used to meet the requirements of USEPA Method 334.0 - Determination of Residual Chlorine in Drinking Water Using an On-line Chlorine Analyzer. The procedure and requirements for compliance with EPA Method 334.0 can be downloaded directly from http://www.hach.com/method334.

## Method performance

The method performance data that follows was derived from laboratory tests that were measured on a spectrophotometer during ideal test conditions. Users can get different results under different test conditions.

| Program | Standard | Precision (95% confidence interval) | Sensitivity<br>Concentration change per 0.010 Abs change |
|---|---|---|---|
| 87 | 2.10 mg/L $Cl_2$ | 2.07–2.13 mg/L $Cl_2$ | 0.02 mg/L $Cl_2$ |

## Summary of method

Chlorine can be present in water as free chlorine and as combined chlorine. Both forms can exist in the same water and be determined together as total chlorine. Free chlorine is present as hypochlorous acid and/or hypochlorite ion. Combined chlorine exists as monochloramine, dichloramine, nitrogen trichloride and other chloro derivatives. The combined chlorine oxidizes iodide in the reagent to iodine. The iodine and free chlorine react with DPD (N,N-diethyl-p-phenylenediamine) to form a pink color which is proportional to the total chlorine concentration.

To find the concentration of combined chlorine, run a free chlorine test and a total chlorine test. Subtract the results of the free chlorine test from the total chlorine test to obtain the combined chlorine concentration. The measurement wavelength is 530 nm for spectrophotometers or 520 nm for colorimeters.

## Consumables and replacement items

### Required reagents

| Description | Quantity/test | Unit | Item no. |
|---|---|---|---|
| DPD Total Chlorine Reagent Powder Pillow, 25-mL | 1 | 100/pkg | 1406499 |

### Recommended standards and apparatus

| Description | Unit | Item no. |
|---|---|---|
| Chlorine Standard Solution, 2-mL PourRite® Ampules, 25–30 mg/L | 20/pkg | 2630020 |
| Chlorine Standard Solution, 2-mL PourRite® Ampules, 50–75 mg/L | 20/pkg | 1426820 |
| Chlorine Standard Solution, 10-mL Voluette® Ampule, 50–75 mg/L | 16/pkg | 1426810 |
| Ampule Breaker, 10-mL Voluette® Ampules | each | 2196800 |
| PourRite® Ampule Breaker, 2-mL | each | 2484600 |

## Optional reagents and apparatus

| Description | Unit | Item no. |
|---|---|---|
| Beaker, 50-mL | each | 50041H |
| Mixing cylinder, graduated, 25-mL | each | 2088640 |
| Water, deionized | 4 L | 27256 |
| Potassium Iodide, 30-g/L | 100 mL | 34332 |
| Sodium Arsenite, 5-g/L | 100 mL | 104732 |
| Sodium Hydroxide Standard Solution, 1.0 N | 100 mL MDB | 104532 |
| Sulfuric Acid Standard Solution, 1 N | 100 mL MDB | 127032 |
| Pipet, TenSette®, 0.1–1.0 mL | each | 1970001 |
| Pipet tips for TenSette® Pipet, 0.1–1.0 mL | 50/pkg | 2185696 |
| Pipet tips for TenSette® Pipet, 0.1–1.0 mL | 1000/pkg | 2185628 |
| Paper, pH, 0–14 pH range | 100/pkg | 2601300 |
| DPD Total Chlorine Reagent Powder Pillows, 25-mL | 1000/pkg | 1406428 |
| SpecCheck™ Secondary Standard Kit, Chlorine DPD, MR | each | 2980500 |
| Water, organic-free | 500 mL | 2641549 |

DRAFT

**Authorization (Print Name)**

Approved: _____ Date: _____
Name

Approved: _____ Date: _____
Name

Approved: _____
Name Date: _____